INTRODUCTION AND CUSTOMER INFORMATION

T164945B -UN-03FEB03



RIGHT-HAND SIDE VIEW OF JOHN DEERE 135CRTS EXCAVATOR
(MANUFACTURED 2003-)

TO THE CUSTOMER

THE PART NUMBERS IN THIS PARTS CATALOG WERE CORRECT AT THE TIME YOUR CATALOG WAS PUBLISHED. IT IS OUR POLICY TO CONSTANTLY IMPROVE OUR MACHINES AND, THEREFORE, PART NUMBERS MAY CHANGE. WHEN ORDERING PARTS, VERIFY PART NUMBERS THROUGH YOUR DEALER WHO HAS AN UP-TO-DATE PARTS LISTING.

(SPECIFICATIONS AND DESIGN SUBJECT TO CHANGE WITHOUT NOTICE.)

COPYRIGHT © 2004 DEERE & COMPANY Moline, Illinois All rights reserved

SERIAL NUMBER LOCATIONS

EACH 135CRTS EXCAVATOR HAS SIX SERIAL NUMBER PLATES:

A PRODUCT IDENTIFICATION NUMBER PLATE, AN ENGINE SERIAL NUMBER PLATE, A HYDRAULIC PUMP SERIAL NUMBER PLATE, A LEFT-HAND PROPEL MOTOR SERIAL NUMBER PLATE, A RIGHT-HAND PROPEL MOTOR SERIAL NUMBER PLATE AND A SWING MOTOR SERIAL NUMBER PLATE.

THE PRODUCT IDENTIFICATION PLATE IS LOCATED ON THE BOTTOM FRONT RIGHT CORNER OF THE OPERATOR COMPARTMENT.

THE ENGINE SERIAL NUMBER PLATE IS LOCATED ON TOP OF THE ROCKER ARM COVER.

IF PRODUCT IDENTIFICATION NUMBERS OR SERIAL NUMBERS ARE REQUIRED FOR WARRANTY CLAIMS OR CORRESPONDENCE PERTAINING TO THIS PRODUCT, IT IS EXTREMELY IMPORTANT THAT ALL CHARACTERS BE FURNISHED. THIS POINT CANNOT BE OVEREMPAHSIZED.

PRODUCT IDENTIFICATION NUMBER

TP66644 -UN-13SEP99

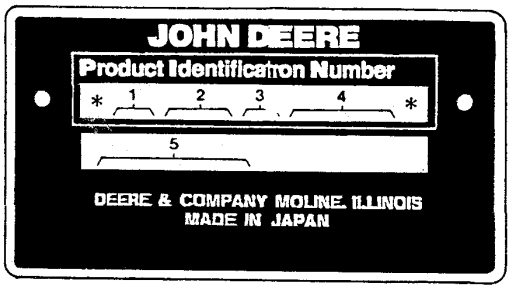

TP66644

1. DESIGNATES EXCAVATOR MANUFACTURER	FF - JOHN DEERE-HITACHI
2. DESIGNATES EXCAVATOR MODEL	135C
3. DESIGNATES EXCAVATOR CONFIGURATION	X
4. DESIGNATES EXCAVATOR SERIAL NUMBER	000000
5. DESIGNATES UNIT TYPE	EXCAVATOR

ENGINE SERIAL NUMBER

TP66723 -UN-01OCT99

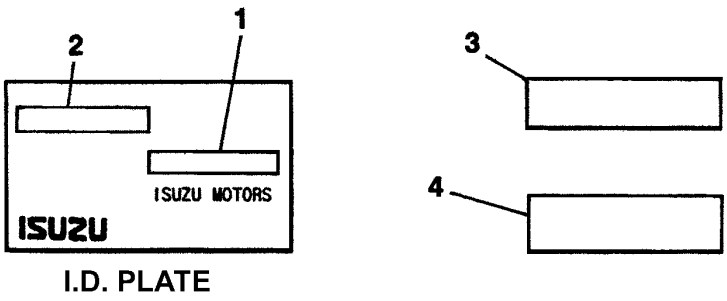

I.D. PLATE

TP66723

1. DESIGNATES MANUFACTURE DATE CODE
2. DESIGNATES ENGINE MODEL NAME CC-4BG1
3. DESIGNATES ENGINE SERIAL NUMBER
4. DESIGNATES ENGINE MODEL NUMBER TCG

SERIAL NUMBER LISTING INFORMATION

SERIAL NUMBER INFORMATION IS LISTED TO SHOW ON WHICH MACHINES EACH PART CAN BE USED; FOR EXAMPLE:

-	THE PART CAN BE USED ON ALL MACHINES.
000000-	THE PART CAN BE USED ON ALL MACHINES BEGINNING WITH THE SERIAL NUMBER LISTED.
-000000	THE PART CAN BE USED ON ALL MACHINES UP TO AND INCLUDING THE SERIAL NUMBER LISTED.
000000-000000	THE PART CAN BE USED ON ALL MACHINES BETWEEN AND INCLUDING THE SERIAL NUMBERS LISTED.

WHEN XXXXXX'S ARE LISTED IN PLACE OF A SERIAL NUMBER, A SERIAL NUMBER CHANGE WAS MADE BUT THE EXACT SERIAL NUMBER WAS NOT AVAILABLE WHEN THE CATALOG WAS PRODUCED.

DIRECTION ARROW

ARROWS ARE USED WITH ILLUSTRATIONS TO INDICATE THE FRONT OF THE UNIT. "RIGHT-HAND" AND "LEFT-HAND" SIDES ARE DETERMINED BY FACING IN THE DIRECTION OF MACHINE FORWARD TRAVEL.

BOX-ENCLOSED ILLUSTRATIONS

A KEY NUMBER, SHOWN IN THE PARTS LIST, IS ASSIGNED TO A BOX ENCLOSING ALL PARTS SOLD AS A SERVICE ASSEMBLY.

COMPLETE GOODS LISTINGS

COMPLETE GOODS ARE LISTED IN BOLD FACE TYPE. ORDER SEPARATELY. DO NOT INCLUDE ON REPLACEMENT PARTS ORDER.

SI UNITS OF MEASURE

METRIC DIMENSIONS ARE GIVEN, WHERE APPLICABLE, THROUGHOUT THIS PARTS CATALOG.

CHANGE INDICATOR LINE

CHANGES AFFECTING THE ORDERING OF PARTS ARE IDENTIFIED BY VERTICAL LINES MARKED IN THE LEFT-HAND MARGIN OF REVISED PARTS LISTING IMAGES. A LINE IS ALSO AT THE LEFT-HAND EDGE OF THE SAME PART NUMBER IN THE NUMERICAL INDEX TO SHOW THE LOCATION OF REVISED INFORMATION.

ALPHABETICAL INDEX

GRID		PAGE
	A	
1F6	ACCELERATOR PEDAL BRACKET	0505 - 3
2E13	ACCESS COVER, ENGINE BOTTOM	1910 - 16
2E13	ACCESS COVERS, MACHINE BOTTOM	1910 - 16
3E19	ADAPTER, PUMP HOUSING, PUMP TO ENGINE	3361 - 6
1B6	ADDITIONAL STEP	0131 - 6
1B16	ADJUSTER ASSEMBLY (FRONT TRACK SPRING)	0134 - 4
1B16	ADJUSTER, FRONT IDLER	0134 - 4
1G7	AIR CLEANER	0521 - 6
1G3	AIR CLEANER ELEMENT (S.N. -062992)	0521 - 2
1G3	AIR CLEANER HOUSING (S.N. -062992)	0521 - 2
1G5	AIR CLEANER INTAKE HOSES	0521 - 4
1G5	AIR CLEANER INTAKE LINES	0521 - 4
1G3	AIR CLEANER RESTRICTION INDICATOR (S.N. -062992)	0521 - 2
1G5	AIR CLEANER SUPPORT	0521 - 4
1G3	AIR CLEANER, ENGINE (S.N. -062992)	0521 - 2
2D9	AIR CONDITIONER	1833 - 2
2D17	AIR CONDITIONER AND HEATER BLOWER MOTOR	1833 - 10
2D19	AIR CONDITIONER AND HEATER BLOWER MOTOR (CONTINUED)	1833 - 12
2D17	AIR CONDITIONER AND HEATER COMPONENTS	1833 - 10
2D19	AIR CONDITIONER AND HEATER COMPONENTS (CONTINUED)	1833 - 12
2D9	AIR CONDITIONER AND HEATER CONTROLLER	1833 - 2
2D17	AIR CONDITIONER AND HEATER ELECTRIC MOTOR	1833 - 10
2D19	AIR CONDITIONER AND HEATER ELECTRIC MOTOR (CONTINUED)	1833 - 12
2D17	AIR CONDITIONER AND HEATER RELAY	1833 - 10
2D19	AIR CONDITIONER AND HEATER RELAY (CONTINUED)	1833 - 12
2D17	AIR CONDITIONER AND HEATER SWITCH	1833 - 10
2D19	AIR CONDITIONER AND HEATER SWITCH (CONTINUED)	1833 - 12
2D17	AIR CONDITIONER AND HEATER TRANSISTOR	1833 - 10
2D19	AIR CONDITIONER AND HEATER TRANSISTOR (CONTINUED)	1833 - 12
2D17	AIR CONDITIONER CASE	1833 - 10
2D19	AIR CONDITIONER CASE (CONTINUED)	1833 - 12
2D17	AIR CONDITIONER EVAPORATOR	1833 - 10
2D19	AIR CONDITIONER EVAPORATOR (CONTINUED)	1833 - 12
2D7	AIR CONDITIONING BELT TENSIONER PULLEY	1832 - 2
2D7	AIR CONDITIONING BELTS	1832 - 2
2D13	AIR CONDITIONING COMPRESSOR	1833 - 6
2D7	AIR CONDITIONING COMPRESSOR BELT TENSIONER	1832 - 2
2D7	AIR CONDITIONING COMPRESSOR DRIVE BELT	1832 - 2
2D7	AIR CONDITIONING COMPRESSOR MOUNTING BRACKETS	1832 - 2
2D13	AIR CONDITIONING CONDENSER	1833 - 6
2D15	AIR CONDITIONING CONDENSOR NET	1833 - 8
2D1	AIR CONDITIONING DUCTS	1831 - 4
2D9	AIR CONDITIONING EVAPORATOR	1833 - 2
2D1	AIR CONDITIONING FILTER	1831 - 4
2D9	AIR CONDITIONING HOSES	1833 - 2
2D7	AIR CONDITIONING LINES OFF COMPRESSOR	1832 - 2
2D11	AIR CONDITIONING LINES TO ENGINE	1833 - 4
2D13	AIR CONDITIONING SENSOR	1833 - 6
2D13	AIR CONDITIONING SENSOR, TEMPERATURE	1833 - 6
1F9	AIR COOLER, CHARGE AIR, NET	0511 - 4
1F7	AIR COOLER, HOSES	0511 - 2
2D3	AIR DUCT, CAB REAR	1831 - 6
2D1	AIR DUCT, HEATER AND AIR CONDITIONING	1831 - 4
2D9	AIR DUCT, HVAC UNIT TO CAB	1833 - 2
1G5	AIR FILTER SUPPORT	0521 - 4
1G3	AIR FILTER, ENGINE (S.N. -062992)	0521 - 2
1D21	AIR INTAKE MANIFOLD, ENGINE	0414 - 2
1G3	AIR RESTRICTION INDICATOR (S.N. -062992)	0521 - 2
2E24	ALARM, PROPEL	2004 - 4
2E24	ALARM, REVERSE	2004 - 4
1E19	ALTERNATOR	0423 - 2
1E21	ALTERNATOR MOUNTING	0429 - 2
2E16	AM/FM RADIO	2001 - 2
2B8	ANTENNA	1810 - 6
2E16	ANTENNA CABLE	2001 - 2
3J5	ANTI-DRIFT KIT, ARM	3363 - 56
3J7	ANTI-DRIFT KIT, BOOM	3363 - 58
3J5	ANTI-DRIFT VALVE (ARM)	3363 - 56
3J7	ANTI-DRIFT VALVE (BOOM)	3363 - 58
1G20	ANTI-SLIP MATS	1322 - 2
3J5	ARM ANTI-DRIFT KIT	3363 - 56
3D20	ARM ASSEMBLY KIT (2.52M ARM)(REPLACEMENT ARM)	3344 - 5A
3D24	ARM ASSEMBLY KIT (3.01M ARM)(REPLACEMENT ARM)	3344 - 7A
3D18	ARM BUSHINGS, STANDARD (2.52M) (FACTORY INSTALLED ARM)	3344 - 4
3I21	ARM CYLINDER HOSES, FROM BOOM LINE	3363 - 48
3I21	ARM CYLINDER HYDRAULIC LINES	3363 - 48
3H11	ARM CYLINDER LINE, HOSES FROM CONTROL VALVE	3363 - 14
3K1	ARM CYLINDER SEAL KIT	3365 - 20
3D20	ARM CYLINDER TO ARM PIN (2.52M ARM)(REPLACEMENT ARM)	3344 - 5A
3D24	ARM CYLINDER TO ARM PIN (3.01M ARM)(REPLACEMENT ARM)	3344 - 7A
3J23	ARM HYDRAULIC CYLINDER	3365 - 18
3K1	ARM HYDRAULIC CYLINDER (COMPONENTS)	3365 - 20
3E5	ARM HYDRAULIC CYLINDER TO ARM LINK	3344 - 12
3E3	ARM HYDRAULIC CYLINDER TO BUCKET LINK	3344 - 10
3D18	ARM HYDRAULIC CYLINDER TO BUCKET LINK PIN (2.52M ARM)(FACTORY INSTALLED ARM)	3344 - 4
3I3	ARM IN PRESSURE SENSOR	3363 - 30
3E5	ARM LINK	3344 - 12
3D18	ARM PINS, STANDARD (2.52M) (FACTORY INSTALLED ARM)	3344 - 4
3D20	ARM TO ARM CYLINDER PIN (2.52M ARM)(REPLACEMENT ARM)	3344 - 5A
3D24	ARM TO ARM CYLINDER PIN (3.01M ARM)(REPLACEMENT ARM)	3344 - 7A
3D18	ARM TO BOOM PIN (2.52M ARM) (FACTORY INSTALLED ARM)	3344 - 4
3D20	ARM TO BUCKET CYLINDER PIN (2.52M ARM)(REPLACEMENT ARM)	3344 - 5A
3D24	ARM TO BUCKET CYLINDER PIN (3.01M ARM)(REPLACEMENT ARM)	3344 - 7A
3D20	ARM TO BUCKET LINKAGE PIN (2.52M ARM)(REPLACEMENT ARM)	3344 - 5A
3D24	ARM TO BUCKET LINKAGE PIN (3.01M ARM)(REPLACEMENT ARM)	3344 - 7A
3D20	ARM TO BUCKET PIN (2.52M ARM)(REPLACEMENT ARM)	3344 - 5A
3D24	ARM TO BUCKET PIN (3.01M ARM)(REPLACEMENT ARM)	3344 - 7A
3D22	ARM, (LONG) (3.01 M) (FACTORY INSTALLED ARM)	3344 - 6

ALPHABETICAL INDEX - CONTINUED

GRID		PAGE
3D18	ARM, (STANDARD) (2.52 M) (FACTORY INSTALLED ARM)	3344 - 4
3F11	ARM, HOSE RUPTURE VALVE LINES	3362 - 10
3D20	ARM, LONG (2.52M ARM) (REPLACEMENT ARM)	3344 - 5A
3D24	ARM, LONG (3.01M ARM) (REPLACEMENT ARM)	3344 - 7A
1D5	ARM, ROCKER (ENGINE)	0409 - 4
2B8	ARM, WIPER	1810 - 6
2C15	ARMREST	1821 - 10
2C7	ASHTRAY	1816 - 4
1B16	ASSEMBLY, TRACK ADJUSTER	0134 - 4
3I23	ATTACHMENTS, AUXILIARY HOSES	3363 - 50
3J3	ATTACHMENTS, AUXILIARY HOSES, ARM	3363 - 54
3J1	ATTACHMENTS, AUXILIARY HOSES, BOOM	3363 - 52
3I5	ATTENUATOR (PILOT SIGNAL MANIFOLD)	3363 - 32
3I23	AUXILIARY BOOM LINES	3363 - 50
3J3	AUXILIARY BOOM LINES, ARM	3363 - 54
3J1	AUXILIARY BOOM LINES, BOOM	3363 - 52
3E11	AUXILIARY CONTROL HANDLE SWITCH	3360 - 6
3E13	AUXILIARY ELECTRIC FOOT SWITCH	3360 - 8
3E11	AUXILIARY ELECTRIC HAND CONTROLLER (2 SOLENOIDS)	3360 - 6
3I23	AUXILIARY HOSES OPTION	3363 - 50
3J3	AUXILIARY HOSES OPTION, ARM	3363 - 54
3J1	AUXILIARY HOSES OPTION, BOOM	3363 - 52
3I23	AUXILIARY HOSES, FROM BOOM LINE	3363 - 50
3J3	AUXILIARY HOSES, FROM BOOM LINE, ARM	3363 - 54
3J1	AUXILIARY HOSES, FROM BOOM LINE, BOOM	3363 - 52
3E7	AUXILIARY SOLENOID AND FLOW CONTROL VALVE KIT (1-WAY)	3360 - 2

B

2E24	BACK-UP WARNING ALARM	2004 - 4
3K12	BALL, SWING BEARING	4351 - 2
3K9	BARREL, BLADE CYLINDER (LEFT)	3365 - 28
3K7	BARREL, BLADE CYLINDER (RIGHT)	3365 - 26
2C13	BASE, CAB FLOOR PLATE	1821 - 4
2C19	BASE, SEAT	1821 - 14
1H7	BATTERY	1671 - 2
1H7	BATTERY CABLES	1671 - 2
1H7	BATTERY CLAMPS	1671 - 2
1H7	BATTERY COVER	1671 - 2
1H7	BATTERY MOUNTING	1671 - 2
1H7	BATTERY RELAY	1671 - 2
1H7	BATTERY RELAY COVER	1671 - 2
1B12	BEARING, LOWER TRACK ROLLER	0133 - 4
3K12	BEARING, SWING	4351 - 2
3K14	BEARING, SWING (HARDWEAR)	4351 - 4
1B10	BEARING, TRACK UPPER ROLLER	0133 - 2
1C11	BEARINGS, MAIN, ENGINE	0401 - 2
1C9	BELT, FAN	0400 - 2
2C21	BELT, SEAT	1821 - 16
2C17	BELT, SEAT (3.00 INCH)	1821 - 12
2D7	BELTS, AIR CONDITIONING	1832 - 2
2C9	BEVERAGE HOLDER	1816 - 6
3B19	BLADE	3301 - 6
3B15	BLADE CONTROL VALVE HOSES TO PILOT SHUTOFF VALVE	3301 - 2
3B15	BLADE CONTROL VALVE HOSES TO SHUTTLE VALVE	3301 - 2
3K9	BLADE CYLINDER BARREL (LEFT)	3365 - 28
3K7	BLADE CYLINDER BARREL (RIGHT)	3365 - 26
3K9	BLADE CYLINDER COMPONENTS (LEFT)	3365 - 28
3K7	BLADE CYLINDER COMPONENTS (RIGHT)	3365 - 26
3B19	BLADE CYLINDER COVER	3301 - 6
3K9	BLADE CYLINDER OIL LINE (LEFT)	3365 - 28
3K7	BLADE CYLINDER OIL LINE (RIGHT)	3365 - 26
3K9	BLADE CYLINDER ROD (LEFT)	3365 - 28
3K7	BLADE CYLINDER ROD (RIGHT)	3365 - 26
3K9	BLADE CYLINDER SEAL KIT (LEFT)	3365 - 28
3K7	BLADE CYLINDER SEAL KIT (RIGHT)	3365 - 26
3B19	BLADE CYLINDER TO BLADE PIN	3301 - 6
3B19	BLADE CYLINDER TO FRAME PIN	3301 - 6
3J9	BLADE CYLINDER TO ROTARY MANIFOLD HOSE	3363 - 86
3C7	BLADE FRAME, TRACK	3301 - 16
3C5	BLADE HYDRAULIC HOSES (BLADE OPTION) (BLADE CONTROL VALVE)	3301 - 14
3C5	BLADE HYDRAULIC HOSES (BLADE OPTION) (PUMP TO CONTROL VALVE)	3301 - 14
3B21	BLADE OPTION, ROTARY MANIFOLD SUPPORTS	3301 - 8
3B17	BLADE PILOT CONTROL LEVER	3301 - 4
3B23	BLADE PILOT HOSES (BLADE CONTROL VALVE TO SHUTTLE VALVE)	3301 - 10
3C1	BLADE PILOT HOSES (BLADE CONTROL VALVE TO SHUTTLE VALVE)	3301 - 11A
3B23	BLADE PILOT HOSES (CONTROL VALVE TO SHUTTLE VALVE)	3301 - 10
3C1	BLADE PILOT HOSES (CONTROL VALVE TO SHUTTLE VALVE)	3301 - 11A
3B23	BLADE PILOT HOSES (SOLENOID VALVE TO SHUTTLE VALVE)	3301 - 10
3C1	BLADE PILOT HOSES (SOLENOID VALVE TO SHUTTLE VALVE)	3301 - 11A
3C3	BLADE RETURN HOSES (BLADE OPTION) (BLADE CONTROL VALVE)	3301 - 12
3C3	BLADE RETURN HOSES (BLADE OPTION) (CONTROL VALVE)	3301 - 12
3C3	BLADE RETURN HOSES (BLADE OPTION) (SHUTTLE VALVE)	3301 - 12
3B19	BLADE TO BLADE CYLINDER PIN	3301 - 6
3B19	BLADE TO FRAME PIN	3301 - 6
2B8	BLADE, WIPER	1810 - 6
1C15	BLOCK, CYLINDER	0404 - 2
2D17	BLOWER MOTOR, HEATER AND AIR CONDITIONER	1833 - 10
2D19	BLOWER MOTOR, HEATER AND AIR CONDITIONER (CONTINUED)	1833 - 12
1D3	BOLTS, HEAD, ENGINE	0409 - 2
3J7	BOOM ANTI-DRIFT KIT	3363 - 58
1I6	BOOM BOTTOM PIN	1740 - 4
3J19	BOOM CYLINDER (LEFT)	3365 - 6
3J21	BOOM CYLINDER (LEFT) (COMPONENTS)	3365 - 8
3J15	BOOM CYLINDER (RIGHT)	3365 - 2
3J17	BOOM CYLINDER (RIGHT) (COMPONENTS)	3365 - 4
3J17	BOOM CYLINDER (RIGHT) SEAL KIT	3365 - 4
3H9	BOOM CYLINDER HOSES FROM CONTROL VALVE	3363 - 12
1I6	BOOM FOOT PIN	1740 - 4
1H9	BOOM LIGHT BULB	1673 - 2
1H19	BOOM LIGHT WIRING HARNESS	1674 - 8

ALPHABETICAL INDEX - CONTINUED

GRID		PAGE
3D20	BOOM LINE TO BUCKET CYLINDER HOSE (2.52M ARM)(REPLACEMENT ARM)	3344 - 5A
3D24	BOOM LINE TO BUCKET CYLINDER HOSE (3.01M ARM)(REPLACEMENT ARM)	3344 - 7A
3I21	BOOM LINES TO ARM CYLINDER	3363 - 48
3I23	BOOM LINES TO AUXILIARY	3363 - 50
3J3	BOOM LINES TO AUXILIARY, ARM	3363 - 54
3J1	BOOM LINES TO AUXILIARY, BOOM	3363 - 52
3I21	BOOM LINES TO BUCKET CYLINDER	3363 - 48
1H3	BOOM LUBRICATION LINES	1370 - 2
3D16	BOOM STANDARD	3344 - 2
3D18	BOOM TO ARM HYDRAULIC CYLINDER HOSE (2.52M ARM)(FACTORY INSTALLED ARM)	3344 - 4
3I3	BOOM UP PRESSURE SENSOR	3363 - 30
1H9	BOOM WORK LIGHTS	1673 - 2
3F9	BOOM, HOSE RUPTURE VALVE LINES	3362 - 8
3D2	BOOT, PILOT CONTROLLER (DIG AND SWING)	3315 - 2
1F17	BOTTLE, RADIATOR OVERFLOW	0511 - 12
2E13	BOTTOM ACCESS COVER, ENGINE	1910 - 16
1B4	BOTTOM COVER, TRACK FRAME	0131 - 4
2E13	BOTTOM COVERS	1910 - 16
2E13	BOTTOM PROTECTION COVER	1910 - 16
1F9	BRACKET, CHARGE AIR COOLER SCREEN MOUNTING BRACKET	0511 - 4
2D15	BRACKET, CONDENSOR NET MOUNTING	1833 - 8
3F5	BRACKET, CONTROL VALVE MOUNTING	3362 - 4
1D13	BRACKET, FUEL FILTER (ENGINE)	0413 - 8
2C19	BRACKET, SEAT BASE	1821 - 14
2C21	BRACKET, SEAT BELT	1821 - 16
2D7	BRACKETS, AIR CONDITIONING COMPRESSOR MOUNTING	1832 - 2
1G11	BRACKETS, ENGINE MOUNTING	0540 - 2
1D11	BRACKETS, GOVERNOR LINKAGES, ENGINE	0413 - 6
3H23	BRAKE RELEASE HOSE	3363 - 26
3G5	BRAKE VALVE PROPEL	3362 - 28
3G1	BRAKE VALVE SWING MOTOR	3362 - 24
3G3	BRAKE VALVE, PROPEL	3362 - 26
3G3	BRAKE VALVE, TRAVEL	3362 - 26
3L1	BRAKE, PARK, SWING	4367 - 6
1C17	BREATHER, ENGINE VENTILATION	0404 - 4
3I21	BUCKET CYLINDER HYDRAULIC LINES	3363 - 48
3K5	BUCKET CYLINDER SEAL KIT	3365 - 24
3D20	BUCKET CYLINDER TO ARM PIN (2.52M ARM)(REPLACEMENT ARM)	3344 - 5A
3D24	BUCKET CYLINDER TO ARM PIN (3.01M ARM)(REPLACEMENT ARM)	3344 - 7A
3D20	BUCKET CYLINDER TO BOOM LINE HOSE (2.52M ARM)(REPLACEMENT ARM)	3344 - 5A
3D24	BUCKET CYLINDER TO BOOM LINE HOSE (3.01M ARM)(REPLACEMENT ARM)	3344 - 7A
3D20	BUCKET CYLINDER TO LINKAGE PIN (2.52M ARM)(REPLACEMENT ARM)	3344 - 5A
3D24	BUCKET CYLINDER TO LINKAGE PIN (3.01M ARM)(REPLACEMENT ARM)	3344 - 7A
3K3	BUCKET HYDRAULIC CYLINDER	3365 - 22
3K5	BUCKET HYDRAULIC CYLINDER (COMPONENTS)	3365 - 24
3E3	BUCKET LINK	3344 - 10
3D20	BUCKET LINKAGE TO ARM PIN (2.52M ARM)(REPLACEMENT ARM)	3344 - 5A
3D24	BUCKET LINKAGE TO ARM PIN (3.01M ARM)(REPLACEMENT ARM)	3344 - 7A
3D20	BUCKET LINKAGE TO BUCKET PIN (2.52M ARM)(REPLACEMENT ARM)	3344 - 5A
3D24	BUCKET LINKAGE TO BUCKET PIN (3.01M ARM)(REPLACEMENT ARM)	3344 - 7A
3D20	BUCKET LINKAGE TO CYLINDER PIN (2.52M ARM)(REPLACEMENT ARM)	3344 - 5A
3D24	BUCKET LINKAGE TO CYLINDER PIN (3.01M ARM)(REPLACEMENT ARM)	3344 - 7A
3D1	BUCKET PIN-UP DATA (GENERAL PURPOSE AND HEAVY DUTY)	3302 - 16
3D20	BUCKET TO ARM PIN (2.52M ARM)(REPLACEMENT ARM)	3344 - 5A
3D24	BUCKET TO ARM PIN (3.01M ARM)(REPLACEMENT ARM)	3344 - 7A
3D20	BUCKET TO LINKAGE PIN (2.52M ARM)(REPLACEMENT ARM)	3344 - 5A
3D24	BUCKET TO LINKAGE PIN (3.01M ARM)(REPLACEMENT ARM)	3344 - 7A
3C23	BUCKET, DITCH CLEANING	3302 - 14
3C17	BUCKET, GENERAL PURPOSE	3302 - 8
3C19	BUCKET, GENERAL PURPOSE (CONTINUED)	3302 - 10
3C21	BUCKET, HEAVY DUTY	3302 - 12
3C13	BUCKET, TOOTH ASSEMBLY	3302 - 4
3C15	BUCKET, TOOTH ASSEMBLY	3302 - 6
1H9	BULB, BOOM LIGHT	1673 - 2
1H9	BULBS, BOOM WORK LIGHTS	1673 - 2
3E3	BUSHING, BUCKET LINK	3344 - 10
3D22	BUSHINGS, ARM (LONG) (3.01 M) (FACTORY INSTALLED ARM)	3344 - 6
3D18	BUSHINGS, ARM (STANDARD) (2.52 M) (FACTORY INSTALLED ARM)	3344 - 4
3D16	BUSHINGS, STANDARD BOOM	3344 - 2

C

2B6	CAB	1810 - 4
2D13	CAB AIR CONDITIONING SENSOR	1833 - 6
2D1	CAB AIR DUCTS	1831 - 4
2D1	CAB AIR FILTER	1831 - 4
2B6	CAB ASSEMBLY	1810 - 4
2B8	CAB COMPONENTS	1810 - 6
2C5	CAB CONSOLE	1816 - 2
1H13	CAB CONSOLE WIRING HARNESS	1674 - 4
2C7	CAB CONSOLE, COVER	1816 - 4
2C5	CAB CONTROLLER CONSOLE	1816 - 2
2C7	CAB CONTROLLER CONSOLE, COVER	1816 - 4
3D2	CAB CONTROLLERS, PILOT (DIG AND SWING)	3315 - 2
2C9	CAB COVER, RIGHT SIDE, CUPHOLDER	1816 - 6
1H24	CAB DISPLAY UNIT	1676 - 2
1I1	CAB DISPLAY UNIT	1676 - 4
2B12	CAB DOOR ASSEMBLY	1810 - 10
2C11	CAB FLOOR MAT	1821 - 2
2C13	CAB FLOOR PLATE	1821 - 4
1H15	CAB FUSEBOX	1674 - 6
2D3	CAB HEATER DUCTS, REAR COVER	1831 - 6
2C23	CAB HEATER LINES	1831 - 2
2D3	CAB INTERIOR, REAR COVER	1831 - 6
2D5	CAB INTERIOR, REAR COVERCOMPONENTS	1831 - 8
2B4	CAB ISOLATORS	1810 - 2
1G20	CAB LABELS	1322 - 2
3D8	CAB LOCK LEVER	3315 - 6
2E18	CAB MIRROR, LEFT SIDE	2002 - 2
1H24	CAB MONITOR	1676 - 2
1I1	CAB MONITOR	1676 - 4
2B4	CAB MOUNTING	1810 - 2
3D6	CAB PILOT CONTROLLERS, PROPEL	3315 - 4
2F1	CAB POWER SUPPLY (12 VOLT)	2006 - 2
2D3	CAB REAR AIR DUCT	1831 - 6

ALPHABETICAL INDEX - CONTINUED

GRID		PAGE
2D3	CAB REAR HVAC DUCT	1831 - 6
2D3	CAB REAR TRAY	1831 - 6
2D5	CAB REAR TRAY COMPONENTS	1831 - 8
2D5	CAB REAR TRAY COVER	1831 - 8
2F3	CAB SUN VISOR	2007 - 2
1H13	CAB SWITCH PANEL	1674 - 4
2B20	CAB TOP HATCH	1810 - 20
2B20	CAB TOP HATCH SEAL	1810 - 20
1H15	CAB WIRING HARNESS	1674 - 6
1H15	CAB WIRING HARNESS DIODES	1674 - 6
1H15	CAB WIRING HARNESS FUSES	1674 - 6
1H15	CAB WIRING HARNESS RELAYS	1674 - 6
2F1	CAB 12V POWER SUPPLY	2006 - 2
1H15	CAB 12V POWER SUPPLY, WIRING HARNESS	1674 - 6
1F21	CABLE SPEED CONTROL	0515 - 2
2E16	CABLE, ANTENNA	2001 - 2
2B18	CABLE, DOOR RELEASE	1810 - 16
1G1	CABLE, EMERGENCY ENGINE STOP	0515 - 6
1G1	CABLE, ENGINE STOP	0515 - 6
1H17	CABLE, MIC	1674 - 7A
3D8	CABLE, PROPEL PILOT CONTROLLER SHUTOFF LEVER	3315 - 6
1H7	CABLES, BATTERY	1671 - 2
1D5	CAMSHAFT (ENGINE)	0409 - 4
1C13	CAP, FILLER, ROCKER ARM COVER	0402 - 2
1G15	CAP, FUEL TANK	0564 - 2
3J11	CAP, HYDRAULIC RESERVOIR	3364 - 2
1B10	CARRIER ROLLER	0133 - 2
2D17	CASE, AIR CONDITIONER	1833 - 10
2D19	CASE, AIR CONDITIONER (CONTINUED)	1833 - 12
1E23	CASE, TIMING GEAR	0433 - 2
1G20	CAUTION LABELS	1322 - 2
3K16	CENTER JOINT	4362 - 2
1F11	CHARGE AIR COOLER	0511 - 6
1F9	CHARGE AIR COOLER NET	0511 - 4
1F9	CHARGE AIR COOLER SCREEN	0511 - 4
1F9	CHARGE AIR COOLER SCREEN MOUNTING BRACKET	0511 - 4
1F7	CHARGE AIR COOLER TO INTAKE MANIFOLD LINES	0511 - 2
1F7	CHARGE AIR COOLER TO TURBOCHARGER LINES	0511 - 2
1F7	CHARGE AIR COOLER, HOSES	0511 - 2
1G9	CLAMP, EXHAUST	0531 - 2
3H11	CLAMP, HOSE ON HOSES TO BOOM LINES	3363 - 14
1H7	CLAMPS, BATTERY	1671 - 2
1G7	CLEANER, AIR	0521 - 6
1G3	CLEANER, AIR (S.N. -062992)	0521 - 2
2E1	COMPARTMENT DOOR, LEFT REAR	1910 - 4
2E1	COMPARTMENT DOOR, RIGHT REAR	1910 - 4
2D23	COMPARTMENT PANELING, LEFT REAR	1910 - 2
2E11	COMPARTMENT, COOLING PACKAGE TOP	1910 - 14
2E11	COMPARTMENT, ENGINE DOOR	1910 - 14
3K1	COMPONENTS, ARM CYLINDER	3365 - 20
3J17	COMPONENTS, BOOM CYLINDER (RIGHT)	3365 - 4
3D4	COMPONENTS, DIG AND SWING PILOT CONTROLLER	3315 - 3A
3J21	COMPONENTS, LEFT BOOM CYLINDER	3365 - 8
3E1	COMPONENTS, LONG ARM	3344 - 8
3L1	COMPONENTS, SWING MOTOR	4367 - 6
1E1	COMPONENTS, TURBOCHARGER	0416 - 4
2D13	COMPRESSOR, AIR CONDITIONING	1833 - 6
2D13	CONDENSER, AIR CONDITIONING	1833 - 6
2D15	CONDENSOR NET, AIR CONDITIONING	1833 - 8
2D15	CONDENSOR SCREEN, AIR CONDITIONING	1833 - 8
1C11	CONNECTING RODS	0401 - 2
1H13	CONSOLE WIRING HARNESS	1674 - 4
2C5	CONSOLE, CAB	1816 - 2
2C7	CONSOLE, CAB, COVER	1816 - 4
3B17	CONTROL CABLE, BLADE PILOT CONTROL LEVER	3301 - 4
1F21	CONTROL CABLE, ENGINE SPEED	0515 - 2
3B17	CONTROL LEVER, PILOT, BLADE	3301 - 4
1F23	CONTROL MOTOR, ENGINE SPEED	0515 - 4
3D10	CONTROL PATTERN SELECTOR KIT	3315 - 8
2D9	CONTROL UNIT, AIR CONDITIONING	1833 - 2
1H15	CONTROL UNIT, PUMP AND VALVE	1674 - 6
3F3	CONTROL VALVE	3362 - 2
3F17	CONTROL VALVE (BOTTOM)	3362 - 16
3F23	CONTROL VALVE (MANIFOLD O-RINGS)	3362 - 22
3F5	CONTROL VALVE (SUPPORTS)	3362 - 4
3F13	CONTROL VALVE (4-SPOOL SIDE)	3362 - 12
3F21	CONTROL VALVE (4-SPOOL TOP)	3362 - 20
3F15	CONTROL VALVE (5-SPOOL SIDE)	3362 - 14
3F19	CONTROL VALVE (5-SPOOL TOP)	3362 - 18
2E9	CONTROL VALVE COMPARTMENT DOOR	1910 - 12
2E7	CONTROL VALVE COMPARTMENT FRONT COVER AND STEPS	1910 - 10
3E9	CONTROL VALVE HOSE TO PILOT SIGNAL MANIFOLD (PILOT SYSTEM)	3360 - 4
3H7	CONTROL VALVE HOSE TO SWING MOTOR	3363 - 10
3H1	CONTROL VALVE HOSES FROM HYDRAULIC PUMP	3363 - 4
3H9	CONTROL VALVE HOSES TO BOOM CYLINDER	3363 - 12
3H11	CONTROL VALVE HOSES TO BOOM LINES TO ARM CYLINDER	3363 - 14
3I17	CONTROL VALVE HOSES TO RESERVOIR	3363 - 44
3H15	CONTROL VALVE HOSES TO ROTARY MANIFOLD	3363 - 18
3H13	CONTROL VALVE HOSES TO SWING MOTOR	3363 - 16
3H5	CONTROL VALVE LINES FROM HEAT EXCHANGER	3363 - 8
3H5	CONTROL VALVE LINES FROM OIL COOLER	3363 - 8
3F5	CONTROL VALVE MOUNTING	3362 - 4
3I3	CONTROL VALVE SENSOR (4-SPOOL SIDE)	3363 - 30
3E7	CONTROL VALVE TO HYDRAULIC RESERVOIR HOSE (AUXILIARY SOLENOID/FLOW CONTROL)	3360 - 2
3D14	CONTROL VALVE TO PILOT CONTROL VALVE HOSE (FOOT PEDAL CONTROL KIT)	3315 - 12
3E7	CONTROL VALVE TO SIGNAL MANIFOLD HOSE (AUXILIARY SOLENOID/FLOW CONTROL)	3360 - 2
3I11	CONTROL VALVE, LEFT PILOT HOSES TO PILOT SHUTOFF VALVE	3363 - 38
3I13	CONTROL VALVE, RIGHT PILOT HOSES TO PILOT SHUTOFF VALVE	3363 - 40
1F6	CONTROL, ACCELERATOR PEDAL BRACKET	0505 - 3
2C7	CONTROLLER BASE, CAB CONSOLE	1816 - 4
2D9	CONTROLLER, AIR CONDITIONER AND HEATER	1833 - 2
3I11	CONTROLLER, LEFT PILOT, HOSES TO PILOT SIGNAL MANIFOLD	3363 - 38
3D4	CONTROLLER, PILOT (COMPONENTS) (DIG AND SWING)	3315 - 3A
3D8	CONTROLLER, PROPEL PILOT (SHUTOFF)	3315 - 6
3I13	CONTROLLER, RIGHT, PILOT, HOSES TO PILOT SIGNAL MANIFOLD	3363 - 40
3D2	CONTROLLERS, PILOT (DIG AND SWING)	3315 - 2
1H21	CONVERTER (24-VOLT TO 12-VOLT)	1674 - 10
1C9	COOLANT OVERHEAT SWITCH	0400 - 2
1F17	COOLANT RESERVE TANK, RADIATOR	0511 - 12
1F17	COOLANT RESERVOIR	0511 - 12
1E3	COOLANT WATER PUMP	0417 - 2
3H3	COOLER RETURN LINES	3363 - 6
1F7	COOLER, CHARGE AIR, HOSES	0511 - 2
1F9	COOLER, CHARGE AIR, NET	0511 - 4
1F9	COOLER, CHARGE AIR, SCREEN	0511 - 4

ALPHABETICAL INDEX - CONTINUED

GRID		PAGE
1E9	COOLER, ENGINE OIL	0419 - 2
1F11	COOLING PACKAGE	0511 - 6
2E1	COOLING PACKAGE AND HYDRAULIC PUMP COMPARTMENT DOORS	1910 - 4
2E11	COOLING PACKAGE COMPARTMENT TOP	1910 - 14
1F11	COOLING PACKAGE MOUNTING BRACKET	0511 - 6
1F13	COOLING PACKAGE SUPPORT	0511 - 8
1H1	COOLSCAN PLUS TEST KIT, FLUID ANALYSIS PRODUCTS	1369 - 6
1E3	CORROSION RESISTOR (WATER PUMP)	0417 - 2
3G3	COUNTERBALANCE VALVE, PROPEL BRAKE VALVE	3362 - 26
1I8	COUNTERWEIGHT	1749 - 2
3E17	COUPLER, ENGINE TO HYDRAULIC PUMP	3361 - 4
3E17	COUPLER, HYDRAULIC PUMP TO ENGINE	3361 - 4
1D19	COUPLING, INJECTION PUMP	0413 - 14
1C13	COVER VALVE	0402 - 2
1H7	COVER, BATTERY	1671 - 2
1H7	COVER, BATTERY RELAY	1671 - 2
3B19	COVER, BLADE CYLINDER	3301 - 6
2E13	COVER, BOTTOM	1910 - 16
1B4	COVER, BOTTOM TRACK FRAME	0131 - 4
2C7	COVER, CAB CONSOLE	1816 - 4
2C9	COVER, CAB RIGHT	1816 - 6
2E7	COVER, CONTROL VALVE COMPARTMENT	1910 - 10
2E5	COVER, ENGINE COMPARTMENT FRONT	1910 - 8
1C17	COVER, ENGINE SIDE	0404 - 4
2E3	COVER, EXHAUST COMPARTMENT	1910 - 6
1F19	COVER, FAN	0511 - 14
2E9	COVER, FRONT RIGHT SIDE	1910 - 12
1C3	COVER, PROPEL MOTOR INSIDE	0267 - 6
3E19	COVER, PUMP HOUSING, PUMP TO ENGINE	3361 - 6
1C17	COVER, PUSH ROD	0404 - 4
1F15	COVER, RADIATOR	0511 - 10
2D3	COVER, REAR CAB	1831 - 6
2D5	COVER, REAR CAB COMPONENTS	1831 - 8
2C9	COVER, RIGHT SIDE CAB CONSOLE	1816 - 6
1C13	COVER, ROCKER ARM	0402 - 2
1B4	COVER, SWING BEARING	0131 - 4
1E23	COVER, TIMING GEAR	0433 - 2
2C1	COVER, WINDOW	1810 - 26
1C11	CRANKSHAFT	0401 - 2
1C11	CRANKSHAFT DAMPER PULLEY	0401 - 2
1C11	CRANKSHAFT GEAR	0401 - 2
3G1	CROSSOVER RELIEF BRAKE VALVE	3362 - 24
2C9	CUPHOLDER, CAB	1816 - 6
3C23	CUTTING EDGE, DITCH CLEANING BUCKET	3302 - 14
3C17	CUTTING EDGE, GENERAL PURPOSE BUCKET	3302 - 8
3C19	CUTTING EDGE, GENERAL PURPOSE BUCKET (CONTINUED)	3302 - 10
3C21	CUTTING EDGE, HEAVY DUTY BUCKET	3302 - 12
3C11	CUTTING EDGES, ESCO	3302 - 2
3K9	CYLINDER BARREL, BLADE (LEFT)	3365 - 28
3K7	CYLINDER BARREL, BLADE (RIGHT)	3365 - 26
1C15	CYLINDER BLOCK	0404 - 2
1C17	CYLINDER BLOCK SIDE COVERS	0404 - 4
3K9	CYLINDER COMPONENTS, BLADE (LEFT)	3365 - 28
3K7	CYLINDER COMPONENTS, BLADE (RIGHT)	3365 - 26
1D3	CYLINDER HEAD, ENGINE	0409 - 2
3I21	CYLINDER HOSES, ARM, BOOM BOOM LINE	3363 - 48
1C15	CYLINDER LINER	0404 - 2
1C15	CYLINDER LINER KITS	0404 - 2
3K9	CYLINDER ROD, BLADE (LEFT)	3365 - 28
3K7	CYLINDER ROD, BLADE (RIGHT)	3365 - 26
3J23	CYLINDER, ARM	3365 - 18
3K1	CYLINDER, ARM (COMPONENTS)	3365 - 20
3I21	CYLINDER, ARM, LINES	3363 - 48
3K1	CYLINDER, ARM, SEAL KIT	3365 - 20
3J19	CYLINDER, BOOM (LEFT)	3365 - 6
3J21	CYLINDER, BOOM (LEFT) (COMPONENTS)	3365 - 8
3J21	CYLINDER, BOOM (LEFT) SEAL KIT	3365 - 8
3J15	CYLINDER, BOOM (RIGHT)	3365 - 2
3J17	CYLINDER, BOOM (RIGHT) (COMPONENTS)	3365 - 4
3J17	CYLINDER, BOOM (RIGHT) SEAL KIT	3365 - 4
3K3	CYLINDER, BUCKET	3365 - 22
3K5	CYLINDER, BUCKET (COMPONENTS)	3365 - 24
3I21	CYLINDER, BUCKET, LINES	3363 - 48
3K5	CYLINDER, BUCKET, SEAL KIT	3365 - 24
1B16	CYLINDER, TRACK ADJUSTER	0134 - 4

D

1C11	DAMPER PULLEY, CRANKSHAFT	0401 - 2
1C9	DC GENERATOR	0400 - 2
3E13	DECAL, AUXILIARY CONTROL	3360 - 8
1G20	DECALS	1322 - 2
3H1	DELIVERY HOSES, (PUMP TO CONTROL VALVE) (HIGH PRESSURE)	3363 - 4
1C9	DIESEL ENGINE (WHOLE ASSEMBLY)	0400 - 2
1H2	DIESELSCAN TEST KIT, FLUID ANALYSIS PRODUCTS	1369 - 7
3D4	DIG AND SWING PILOT CONTROLLER COMPONENTS	3315 - 3A
1H15	DIODES, CAB WIRING HARNESS	1674 - 6
1D1	DIPSTICK, ENGINE	0407 - 8
1H24	DISPLAY MONITOR	1676 - 2
1I1	DISPLAY MONITOR	1676 - 4
3C23	DITCH CLEANING BUCKET	3302 - 14
2B12	DOOR ASSEMBLY, CAB	1810 - 10
2B18	DOOR RELEASE CABLE	1810 - 16
2E9	DOOR, CONTROL VALVE COMPARTMENT	1910 - 12
2E1	DOOR, COOLING PACKAGE COMPARTMENT	1910 - 4
2E11	DOOR, ENGINE COMPARTMENT	1910 - 14
2E9	DOOR, FRONT RIGHT SIDE	1910 - 12
2E1	DOOR, HYDRAULIC PUMP COMPARTMENT	1910 - 4
2E11	DOOR, LEFT COMPARTMENT TOP	1910 - 14
2E1	DOOR, LEFT REAR COMPARTMENT	1910 - 4
2E1	DOOR, RADIATOR COMPARTMENT	1910 - 4
2E1	DOOR, RIGHT REAR COMPARTMENT	1910 - 4
1F11	DRAIN HOSE, RADIATOR	0511 - 6
3C3	DRAIN HOSES, (BLADE OPTION) (BLADE CONTROL VALVE)	3301 - 12
3C3	DRAIN HOSES, (BLADE OPTION) (CONTROL VALVE)	3301 - 12
3C3	DRAIN HOSES, (BLADE OPTION) (SHUTTLE VALVE)	3301 - 12
3H7	DRAIN LINE, PROPELMOTOR	3363 - 10
3H7	DRAIN LINE, SWING MOTOR	3363 - 10
1D23	DRAIN LINE, TURBOCHARGER	0416 - 2
1G15	DRAIN PLUG, FUEL TANK	0564 - 2
1B23	DRIVE GEARS, PROPEL MOTOR	0267 - 2
3E11	DUAL CONTROL HANDLE WITH WIRING (2 SOLENOIDS)	3360 - 6
2D1	DUCT, AIR, HEATER AND AIR CONDITIONING	1831 - 4
2D9	DUCT, HVAC UNIT TO CAB	1833 - 2

ALPHABETICAL INDEX - CONTINUED

GRID		PAGE
	E	
3C23	EAR ASSEMBLY, DITCH CLEANING BUCKET	3302 - 14
3C17	EAR ASSEMBLY, GENERAL PURPOSE BUCKET	3302 - 8
3C19	EAR ASSEMBLY, GENERAL PURPOSE BUCKET (CONTINUED)	3302 - 10
3C21	EAR ASSEMBLY, HEAVY DUTY BUCKET	3302 - 12
1H15	ECU	1674 - 6
1G7	ELEMENT, AIR CLEANER	0521 - 6
1G3	ELEMENT, AIR CLEANER (S.N. -062992)	0521 - 2
1C19	ELEMENT, ENGINE OIL FILTER	0407 - 2
1D13	ELEMENT, FUEL FILTER (ENGINE)	0413 - 8
1E13	ELEMENT, FUEL FILTER, SECONDARY	0420 - 4
3H17	ELEMENT, HYDRAULIC OIL FILTER	3363 - 20
1G1	EMERGENCY ENGINE STOP CABLE	0515 - 6
1G1	EMERGENCY FUEL SHUT-OFF CABLE	0515 - 6
1C9	ENGINE (WHOLE ASSEMBLY)	0400 - 2
1G3	ENGINE AIR CLEANER (S.N. -062992)	0521 - 2
1G5	ENGINE AIR FILTER SUPPORT	0521 - 4
1E21	ENGINE ALTERNATOR MOUNTING	0429 - 2
1C15	ENGINE BLOCK FITTINGS AND SEALS	0404 - 2
2E13	ENGINE BOTTOM ACCESS COVER	1910 - 16
1D11	ENGINE BRACKETS, GOVERNOR LINKAGES	0413 - 6
1D5	ENGINE CAMSHAFT	0409 - 4
2E5	ENGINE COMPARTMENT FRONT COVER	1910 - 8
2E5	ENGINE COMPARTMENT FRONT PANEL	1910 - 8
2E5	ENGINE COMPARTMENT PANELING	1910 - 8
2E11	ENGINE COMPARTMENT TOP DOOR	1910 - 14
1H22	ENGINE CONTROL, SWITCH BOX	1674 - 12
1F17	ENGINE COOLANT LEVEL SENSOR	0511 - 12
1F17	ENGINE COOLANT RESERVOIR	0511 - 12
1C9	ENGINE COOLANT TEMPERATURE SWITCH	0400 - 2
1D3	ENGINE CYLINDER HEAD	0409 - 2
1G1	ENGINE EMERGENCY STOP CABLE	0515 - 6
1D7	ENGINE EXHAUST MANIFOLD	0410 - 2
1D7	ENGINE EXHAUST MANIFOLD (ENGINE)	0410 - 2
1D7	ENGINE EXHAUST MANIFOLD GASKET	0410 - 2
1E21	ENGINE FAN BELT	0429 - 2
1F13	ENGINE FAN ISOLATOR	0511 - 8
1D13	ENGINE FUEL FILTER	0413 - 8
1E11	ENGINE FUEL FILTER	0420 - 2
1D13	ENGINE FUEL FILTER BRACKET	0413 - 8
1D13	ENGINE FUEL FILTER LINES	0413 - 8
1E13	ENGINE FUEL FILTER, SECONDARY	0420 - 4
1D17	ENGINE FUEL INJECTION PUMP COLLAR	0413 - 12
1D9	ENGINE FUEL INJECTOR	0413 - 2
1H15	ENGINE GLOW PLUG TIMER	1674 - 6
1D3	ENGINE GLOW PLUGS	0409 - 2
1D3	ENGINE HANGERS	0409 - 2
1D3	ENGINE HEAD BOLTS	0409 - 2
1D3	ENGINE HEAD GASKET	0409 - 2
1D17	ENGINE INJECTION PUMP MOUNTING	0413 - 12
1D21	ENGINE INTAKE MANIFOLD	0414 - 2
1H15	ENGINE LEARNING SWITCH	1674 - 6
1C11	ENGINE MAIN BEARINGS	0401 - 2
1D21	ENGINE MANIFOLD, INTAKE	0414 - 2
1G11	ENGINE MOUNTING	0540 - 2
1E9	ENGINE OIL COOLER	0419 - 2
1C19	ENGINE OIL COOLER TO OIL FILTER HOSE	0407 - 2
1D1	ENGINE OIL DIPSTICK	0407 - 8
1C19	ENGINE OIL FILTER ELEMENT	0407 - 2
1C19	ENGINE OIL FILTER TO OIL COOLER HOSE	0407 - 2
1C9	ENGINE OIL LEVEL SENSOR	0400 - 2
1C9	ENGINE OIL LEVEL SWITCH	0400 - 2
1C23	ENGINE OIL LINES,(TO TURBOCHARGER AND INJECTION PUMP)	0407 - 6
1D1	ENGINE OIL PAN	0407 - 8
1C9	ENGINE OIL PRESSURE SENSOR	0400 - 2
1C9	ENGINE OIL PRESSURE SWITCH	0400 - 2
1C21	ENGINE OIL PUMP	0407 - 4
1F1	ENGINE OVERHAUL GASKET SETS	0452 - 2
1D5	ENGINE PUSH RODS	0409 - 4
1D5	ENGINE ROCKER ARM	0409 - 4
1F23	ENGINE SPEED CONTROL MOTOR	0515 - 4
1F21	ENGINE SPEED CONTROLS	0515 - 2
1G1	ENGINE STOP CABLE	0515 - 6
2D11	ENGINE TO AIR CONDITIONER LINES	1833 - 4
2C23	ENGINE TO CAB HEATER LINES	1831 - 2
3E17	ENGINE TO HYDRAULIC PUMP COUPLER	3361 - 4
1C23	ENGINE VACUUM LINES	0407 - 6
1D5	ENGINE VALVES	0409 - 4
1C17	ENGINE VENTILATION SYSTEM	0404 - 4
1F11	ENGINE WATER COOLER	0511 - 6
1C9	ENGINE WIRING LEAD	0400 - 2
1E19	ENGINE, ALTERNATOR	0423 - 2
1D11	ENGINE, BRACKETS, GOVERNOR LINKAGES	0413 - 6
1C9	ENGINE, ENGINE SENSORS, GENERATOR, AND FAN BELT	0400 - 2
1E21	ENGINE, FAN	0429 - 2
1D9	ENGINE, FUEL INJECTION PUMP	0413 - 2
1D9	ENGINE, FUEL INJECTOR	0413 - 2
1E19	ENGINE, GENERATOR	0423 - 2
1E19	ENGINE, GLOW PLUG CONTROLLER	0423 - 2
1D11	ENGINE, GOVERNOR AND INJECTION PUMP LINKAGES	0413 - 6
1D9	ENGINE, LINES, FUEL INJECTION PUMP	0413 - 2
1D9	ENGINE, NOZZLE, FUEL INJECTOR	0413 - 2
1D11	ENGINE, SPEED CONTROL LINKAGE (GOVERNOR)	0413 - 6
1E19	ENGINE, STARTER	0423 - 2
3C11	ESCO BUCKET CUTTING EDGES	3302 - 2
2D17	EVAPORATOR, AIR CONDITIONER	1833 - 10
2D19	EVAPORATOR, AIR CONDITIONER (CONTINUED)	1833 - 12
2D9	EVAPORATOR, AIR CONDITIONING	1833 - 2
1I4	EXCAVATOR MAIN FRAME	1740 - 2
1G9	EXHAUST CLAMP	0531 - 2
2E3	EXHAUST COMPARTMENT COVER	1910 - 6
2E3	EXHAUST COMPARTMENT SUPPORT	1910 - 6
1F7	EXHAUST HOSE (FROM TURBOCHARGER TO CHARGE AIR COOLER)	0511 - 2
1D7	EXHAUST MANIFOLD (ENGINE)	0410 - 2
1G9	EXHAUST PIPE GASKET	0531 - 2
1G9	EXHAUST PIPE, MUFFLER	0531 - 2
1D5	EXHAUST VALVE (ENGINE)	0409 - 4
1D23	EXHAUST, TURBOCHARGER	0416 - 2
	F	
1E21	FAN BELT	0429 - 2
1C9	FAN BELT, ENGINE	0400 - 2
1F19	FAN SHROUD	0511 - 14
1E21	FAN, ENGINE	0429 - 2
1E15	FEED PUMP, PRIMARY FUEL	0421 - 2
1E17	FEED PUMP, SECONDARY FUEL	0421 - 4
1C13	FILLER CAP, ROCKER ARM COVER	0402 - 2
3J13	FILTER RESTRICTION INDICATOR, HYDRAULIC	3364 - 4

ALPHABETICAL INDEX - CONTINUED

GRID		PAGE
1G3	FILTER, ENGINE AIR (S.N. -062992)	0521 - 2
1C19	FILTER, ENGINE OIL	0407 - 2
1D13	FILTER, FUEL (ENGINE)	0413 - 8
1E13	FILTER, FUEL, SECONDARY	0420 - 4
2D1	FILTER, HVAC	1831 - 4
3J11	FILTER, HYDRAULIC RESERVOIR	3364 - 2
3H17	FILTER, PILOT	3363 - 20
1E11	FILTER, PRIMARY FUEL	0420 - 2
1C15	FITTINGS AND SEALS, ENGINE BLOCK	0404 - 2
3D10	FITTINGS, CONTROL PATTERN SELECTOR KIT	3315 - 8
3H3	FITTINGS, HEAT EXCHANGER TO RESERVOIR LINES	3363 - 6
3H7	FITTINGS, HYDRAULIC HOSES,(ROTARY MANIFOLD TO RESERVOIR)	3363 - 10
3H7	FITTINGS, HYDRAULIC LINES (CONTROL VALVE TO SWING MOTOR)	3363 - 10
3H7	FITTINGS, HYDRAULIC LINES (SWING MOTOR TO RESERVOIR)	3363 - 10
3J11	FITTINGS, HYDRAULIC RESERVOIR	3364 - 2
1D15	FITTINGS, INJECTION LINES	0413 - 10
3D12	FITTINGS, MECHANICAL PATTERN CHANGER VALVE	3315 - 9A
3H3	FITTINGS, OIL COOLER TO RESERVOIR LINES	3363 - 6
3E19	FLANGE HOUSING, PUMP TO ENGINE	3361 - 6
1G15	FLOAT, FUEL LEVEL	0564 - 2
2C13	FLOOR PLATE, CAB	1821 - 4
2C11	FLOORMAT, CAB	1821 - 2
3G21	FLOW CONTROL VALVE	3362 - 46
3E7	FLOW REGULATOR TO SIGNAL MANIFOLD HOSE (AUXILIARY SOLENOID/FLOW CONTROL)	3360 - 2
1H1	FLUID ANALYSIS PRODUCTS (COOLSCAN PLUS TEST KIT)	1369 - 6
1H2	FLUID ANALYSIS PRODUCTS (DIESELSCAN TEST KIT)	1369 - 7
1G24	FLUID ANALYSIS PRODUCTS (OILSCAN PLUS TEST KIT)	1369 - 4
1C11	FLYWHEEL	0401 - 2
1E23	FLYWHEEL HOUSING	0433 - 2
2E16	FM/AM RADIO	2001 - 2
3D14	FOOT PEDAL CONTROL KIT	3315 - 12
1I6	FOOT PIN, BOOM	1740 - 4
3D6	FOOT RESTS, CAB	3315 - 4
3E13	FOOT SWITCH, AUXILIARY ELECTRIC	3360 - 8
3D6	FOOTREST, OPERATOR	3315 - 4
1B4	FRAME BOTTOM COVER	0131 - 4
1B6	FRAME STEP, SECONDARY	0131 - 6
3B19	FRAME TO BLADE CYLINDER PIN	3301 - 6
3B19	FRAME TO BLADE PIN	3301 - 6
1I4	FRAME, MAIN	1740 - 2
3K12	FRAME, SWING BEARING	4351 - 2
3K14	FRAME, SWING BEARING (HARDWEAR)	4351 - 4
1B2	FRAME, TRACK	0131 - 2
3C7	FRAME, TRACK (BLADE OPTION)	3301 - 16
2E7	FRONT COVER, CONTROL VALVE COMPARTMENT	1910 - 10
3I21	FRONT HYDRAULIC LINES	3363 - 48
3I23	FRONT HYDRAULIC LINES, AUXILIARY	3363 - 50
3J3	FRONT HYDRAULIC LINES, AUXILIARY, ARM	3363 - 54
3J1	FRONT HYDRAULIC LINES, AUXILIARY, BOOM	3363 - 52
1B14	FRONT IDLER	0134 - 2
1B16	FRONT IDLER ADJUSTER	0134 - 4
1B16	FRONT IDLER SPRING	0134 - 4
2E9	FRONT RIGHT SIDE COVER	1910 - 12
2B14	FRONT WINDOW	1810 - 12
1G1	FUEL CUTOFF SWITCH	0515 - 6
1D13	FUEL FILTER (ENGINE)	0413 - 8
1D13	FUEL FILTER BRACKET (ENGINE)	0413 - 8
1E11	FUEL FILTER, PRIMARY	0420 - 2
1E13	FUEL FILTER, SECONDARY	0420 - 4
1D9	FUEL INJECTION PUMP	0413 - 2
1D17	FUEL INJECTION PUMP COLLAR	0413 - 12
1D19	FUEL INJECTION PUMP COUPLING	0413 - 14
1D9	FUEL INJECTOR	0413 - 2
1G13	FUEL LINES	0563 - 2
1E17	FUEL PUMP, SECONDARY	0421 - 4
1G15	FUEL STRAINER	0564 - 2
1G15	FUEL TANK	0564 - 2
1G15	FUEL TANK AND MOUNTING	0564 - 2
1G17	FUEL TANK BOLTS (MOUNTING TO BOTTOM OF FUEL TANK)	0564 - 4
1G15	FUEL TANK CAP	0564 - 2
1G15	FUEL TANK DRAIN VALVE	0564 - 2
1G15	FUEL TANK FLOAT	0564 - 2
1G15	FUEL TANK LEVEL SENDING UNIT	0564 - 2
1G17	FUEL TANK MOUNTING	0564 - 4
1G15	FUEL TANK STRAINER	0564 - 2
1E15	FUEL TRANSFER PUMP, PRIMARY	0421 - 2
1G13	FUEL, WATER SEPARATOR	0563 - 2
1H15	FUSEBOX, CAB	1674 - 6
1H15	FUSES AND WIRING, CAB	1674 - 6
1H15	FUSES, CAB WIRING HARNESS	1674 - 6

G

1F1	GASKET SETS, ENGINE OVERHAUL	0452 - 2
1D7	GASKET, ENGINE EXHAUST MANIFOLD (ENGINE)	0410 - 2
1G9	GASKET, EXHAUST PIPE TO EXHAUST MANIFOLD	0531 - 2
1E11	GASKET, FUEL FILTER	0420 - 2
1D3	GASKET, HEAD, ENGINE	0409 - 2
1D17	GASKET, INJECTION PUMP MOUNTING	0413 - 12
1D21	GASKET, INTAKE MANIFOLD	0414 - 2
1D1	GASKET, OIL PAN, ENGINE	0407 - 8
1C13	GASKET, ROCKER ARM COVER	0402 - 2
1E5	GASKET, THERMOSTAT	0418 - 2
1D23	GASKET, TURBOCHARGER	0416 - 2
1C13	GASKET, VALVE COVER	0402 - 2
1H24	GAUGES, CAB MONITOR	1676 - 2
1I1	GAUGES, CAB MONITOR	1676 - 4
1B23	GEAR BOX, PROPEL MOTOR	0267 - 2
3F1	GEAR PUMP (COMPONENTS)	3361 - 12
1C11	GEAR, CRANKSHAFT	0401 - 2
3K22	GEARBOX, SWING	4367 - 2
1B23	GEARBOX, TRAVEL	0267 - 2
3C17	GENERAL PURPOSE BUCKET	3302 - 8
3C19	GENERAL PURPOSE BUCKET (CONTINUED)	3302 - 10
1E19	GENERATOR	0423 - 2
1C9	GENERATOR, DC	0400 - 2
1E19	GLOW PLUG CONTROLLER	0423 - 2
1D3	GLOW PLUGS, ENGINE	0409 - 2
1D11	GOVERNOR AND INJECTION PUMP LINKAGES	0413 - 6
1H3	GREASE HOSES	1370 - 2
1H3	GREASE LINES	1370 - 2
2E16	GRILLE, RADIO SPEAKER	2001 - 2
3B17	GRIP, BLADE PILOT CONTROL LEVER	3301 - 4
3D2	GRIP, PILOT CONTROLLER (DIG AND SWING)	3315 - 2
3D6	GRIP, PROPEL PILOT CONTROLLER	3315 - 4

ALPHABETICAL INDEX - CONTINUED

GRID		PAGE
3D8	GRIP, PROPEL PILOT CONTROLLER SHUTOFF LEVER	3315 - 6
3J11	GUAGE, SIGHT, HYDRAULIC OIL TANK	3364 - 2
2C1	GUARD KIT, VANDAL	1810 - 26
1B4	GUARD, BOTTOM TRACK FRAME	0131 - 4
1C3	GUARD, PROPEL MOTOR INSIDE	0267 - 6
3I5	GUARDS, PILOT HOSES	3363 - 32
2B16	GUARDS, RIGHT WINDOW	1810 - 14
2C1	GUARDS, WINDOW	1810 - 26

H

2B8	HAMMER	1810 - 6
2B12	HANDLE, DOOR, LEFT	1810 - 10
2E11	HANDLE, ENGINE COMPARTMENT DOOR	1910 - 14
3D2	HANDLE, PILOT CONTROLLER (DIG AND SWING)	3315 - 2
3E11	HANDLE, PILOT DUAL CONTROL (2 SOLENOIDS)	3360 - 6
3D6	HANDLE, PROPEL PILOT CONTROLLER	3315 - 4
3D8	HANDLE, PROPEL PILOT CONTROLLER SHUTOFF	3315 - 6
2B22	HANDLE, SECONDARY EXIT	1810 - 22
2B10	HANDRAIL, CAB	1810 - 8
2E7	HANDRAIL, RIGHT SIDE	1910 - 10
2D7	HARDWARE, AIR CONDITIONING MOUNTING	1832 - 2
1C1	HARDWARE, PROPEL MOTOR	0267 - 4
3K18	HARDWEAR, ROTARY MANIFOLD (LOWER)	4362 - 4
1H19	HARNESS, BOOM LIGHT	1674 - 8
3J13	HARNESS, HYDRAULIC FILTER RESTRICTION INDICATOR WIRING	3364 - 4
1H13	HARNESS, IGNITION SWITCH	1674 - 4
1H11	HARNESS, MACHINE, WIRING	1674 - 2
3E11	HARNESS, SOLENOID VALVE DUAL CONTROL (2 SOLENOIDS)	3360 - 6
1G7	HARNESS, WIRE, AIR CLEANER	0521 - 6
3E13	HARNESS, WIRE, FOOT SWITCH	3360 - 8
1H13	HARNESS, WIRING, CAB CONSOLE	1674 - 4
2B20	HATCH, CAB TOP	1810 - 20
1D3	HEAD BOLTS, ENGINE	0409 - 2
1D3	HEAD GASKET, ENGINE	0409 - 2
1D3	HEAD, CYLINDER, ENGINE	0409 - 2
3H5	HEAT EXCHANGER TO CONTROL VALVE, RETURN LINES	3363 - 8
3H3	HEAT EXCHANGER TO RESERVOIR FITTINGS	3363 - 6
3H3	HEAT EXCHANGER TO RESERVOIR LINES	3363 - 6
2D17	HEATER	1833 - 10
2D19	HEATER (CONTINUED)	1833 - 12
2D1	HEATER AIR FILTER	1831 - 4
2D17	HEATER AND AIR CONDITIONER BLOWER MOTOR	1833 - 10
2D19	HEATER AND AIR CONDITIONER BLOWER MOTOR (CONTINUED)	1833 - 12
2D17	HEATER AND AIR CONDITIONER ELECTRIC MOTOR	1833 - 10
2D19	HEATER AND AIR CONDITIONER ELECTRIC MOTOR (CONTINUED)	1833 - 12
2D17	HEATER AND AIR CONDITIONER RELAY	1833 - 10
2D19	HEATER AND AIR CONDITIONER RELAY (CONTINUED)	1833 - 12
2D17	HEATER AND AIR CONDITIONER SWITCH	1833 - 10
2D19	HEATER AND AIR CONDITIONER SWITCH (CONTINUED)	1833 - 12
2D17	HEATER AND AIR CONDITIONER TRANSISTOR	1833 - 10
2D19	HEATER AND AIR CONDITIONER TRANSISTOR (CONTINUED)	1833 - 12
2D3	HEATER DUCTS, REAR COVER	1831 - 6
2C23	HEATER HOSES	1831 - 2
2C23	HEATER LINES, ENGINE TO CAB	1831 - 2
2D1	HEATING DUCTS	1831 - 4
3C21	HEAVY DUTY BUCKET	3302 - 12
3H1	HIGH PRESSURE HOSES (PUMP TO CONTROL VALVE)	3363 - 4
3H15	HIGH PRESSURE HOSES, PROPEL	3363 - 18
2B18	HOLD OPEN LATCH	1810 - 16
2E11	HOLD OPEN LATCH, ENGINE COMPARTMENT DOOR	1910 - 14
1D3	HOOKS, ENGINE HANGERS	0409 - 2
2E22	HORN	2004 - 2
3H11	HOSE CLAMP ON HOSES TO BOOM LINES	3363 - 14
3I5	HOSE PROTECTOR, PILOT HOSES	3363 - 32
3F11	HOSE RUPTURE VALVE LINES (ARM)	3362 - 10
3F9	HOSE RUPTURE VALVE LINES (BOOM)	3362 - 8
3J9	HOSE, BLADE CYLINDER TO ROTARY MANIFOLD	3363 - 86
3D20	HOSE, BOOM LINE TO BUCKET CYLINDER (2.52M ARM)(REPLACEMENT ARM)	3344 - 5A
3D24	HOSE, BOOM LINE TO BUCKET CYLINDER (3.01M ARM)(REPLACEMENT ARM)	3344 - 7A
3D18	HOSE, BOOM TO ARM HYDRAULIC CYLINDER (2.52M ARM)(FACTORY INSTALLED ARM)	3344 - 4
3H23	HOSE, BRAKE RELEASE	3363 - 26
3D20	HOSE, BUCKET CYLINDER TO BOOM LINE (2.52M ARM)(REPLACEMENT ARM)	3344 - 5A
3D24	HOSE, BUCKET CYLINDER TO BOOM LINE (3.01M ARM)(REPLACEMENT ARM)	3344 - 7A
3D10	HOSE, CONTROL PATTERN SELECTOR KIT	3315 - 8
3D14	HOSE, CONTROL VALVE TO PILOT CONTROL VALVE (FOOT PEDAL CONTROL KIT)	3315 - 12
3E9	HOSE, CONTROL VALVE TO PILOT SIGNAL MANIFOLD (PILOT SYSTEM)	3360 - 4
3E7	HOSE, CONTROL VALVE TO RESERVOIR (AUX SOLENOID AND FLOW CONTROL)(1-WAY)	3360 - 2
3E7	HOSE, CONTROL VALVE TO SIGNAL MANIFOLD (AUXILIARY SOLENOID/FLOW CONTROL)	3360 - 2
1C19	HOSE, ENGINE OIL COOLER TO OIL FILTER	0407 - 2
1C19	HOSE, ENGINE OIL FILTER TO OIL COOLER	0407 - 2
3E7	HOSE, FLOW REGULATOR TO SIGNAL MANIFOLD (AUXILIARY SOLENOID/FLOW CONTROL)	3360 - 2
3E9	HOSE, FROM PILOT SHUT-OFF VALVE TO SOLENOID (PILOT SYSTEM)	3360 - 4
3D10	HOSE, FROM PILOT SIGNAL MANIFOLDTO SOLENOID VALVE	3315 - 8
3E9	HOSE, FROM SOLENOID TO PILOT SHUT-OFF VALVE (PILOT SYSTEM)	3360 - 4
3D10	HOSE, FROM SOLENOID VALVE TO PILOT SIGNAL MANIFOLD	3315 - 8
3J13	HOSE, HYDRAULIC FILTER RESTRICTION INDICATOR	3364 - 4
3E9	HOSE, HYDRAULIC RESERVOIR TO SOLENOID (PILOT SYSTEM)	3360 - 4
3D14	HOSE, PILOT CONTROL VALVE TO CONTROL VALVE (FOOT PEDAL CONTROL KIT)	3315 - 12
3D14	HOSE, PILOT SHUT-OFF VALVE TO PILOT VALVE (FOOT PEDAL CONTROL KIT)	3315 - 12
3E7	HOSE, PILOT SIG. MAN. TO CONTROL VALVE (AUXILIARY SOLENOID/FLOW CONTROL)	3360 - 2
3E7	HOSE, PILOT SIG. MAN. TO SOLENOID VALVE (AUXILIARY SOLENOID/FLOW CONTROL)	3360 - 2
3E9	HOSE, PILOT SIGNAL MANIFOLD TO CONTROL VALVE (PILOT SYSTEM)	3360 - 4
3E9	HOSE, PILOT SIGNAL MANIFOLD TO SOLENOID (PILOT SYSTEM)	3360 - 4
3D14	HOSE, PILOT VALVE TO PILOT SHUT-OFF VALVE (FOOT PEDAL CONTROL KIT)	3315 - 12

ALPHABETICAL INDEX - CONTINUED

GRID		PAGE
1F11	HOSE, RADIATOR DRAIN	0511 - 6
1F17	HOSE, RADIATOR OVERFLOW	0511 - 12
1F17	HOSE, RADIATOR RESERVE	0511 - 12
3E7	HOSE, RESERVOIR TO CONTROL VALVE (AUX SOLENOID AND FLOW CONTROL)(1-WAY)	3360 - 2
3E7	HOSE, RESERVOIR TO SOLENOID VALVE (AUXILIARY SOLENOID/FLOW CONTROL)	3360 - 2
3J9	HOSE, ROTARY MANIFOLD TO BLADE CYLINDER	3363 - 86
3E7	HOSE, SHUT-OFF VALVE TO SOLENOID VALVE (AUXILIARY SOLENOID/FLOW CONTROL)	3360 - 2
3E7	HOSE, SIGNAL MANIFOLD TO FLOW REGULATOR (AUXILIARY SOLENOID/FLOW CONTROL)	3360 - 2
3E9	HOSE, SOLENOID TO HYDRAULIC RESERVOIR (PILOT SYSTEM)	3360 - 4
3E9	HOSE, SOLENOID TO PILOT SIGNAL MANIFOLD (PILOT SYSTEM)	3360 - 4
3E7	HOSE, SOLENOID VALVE TO RESERVOIR (AUXILIARY SOLENOID/FLOW CONTROL)	3360 - 2
3E7	HOSE, SOLENOID VALVE TO SHUT-OFF VALVE (AUXILIARY SOLENOID/FLOW CONTROL)	3360 - 2
3E7	HOSE, SOLENOID VALVE TO SIGNAL MANIFOLD (AUXILIARY SOLENOID/FLOW CONTROL)	3360 - 2
3G23	HOSES FROM RESERVOIR TO PUMP	3363 - 2
1G5	HOSES, AIR CLEANER INTAKE	0521 - 4
2D9	HOSES, AIR CONDITIONING	1833 - 2
3D22	HOSES, ARM HYDRAULICS (LONG) (3.01 M)(FACTORY INSTALLED ARM)	3344 - 6
3D18	HOSES, ARM HYDRAULICS (STANDARD) (2.52 M)(FACTORY INSTALLED ARM)	3344 - 4
1F7	HOSES, CHARGE AIR COOLER TO ENGINE	0511 - 2
2C23	HOSES, ENGINE TO HEATER	1831 - 2
3I21	HOSES, FROM BOOM LINE TO ARM CYLINDER	3363 - 48
3I23	HOSES, FROM BOOM LINE TO AUXILIARY	3363 - 50
3J3	HOSES, FROM BOOM LINE TO AUXILIARY, ARM	3363 - 54
3J1	HOSES, FROM BOOM LINE TO AUXILIARY, BOOM	3363 - 52
1H3	HOSES, GREASE	1370 - 2
2C23	HOSES, HEATER	1831 - 2
3H1	HOSES, HIGH PRESSURE (PUMP TO CONTROL VALVE)	3363 - 4
3H15	HOSES, HIGH PRESSURE, PROPEL	3363 - 18
3H7	HOSES, HYDRAULIC (CONTROL VALVE TO SWING MOTOR)	3363 - 10
3H7	HOSES, HYDRAULIC (ROTARY MANIFOLD TO RESERVOIR)	3363 - 10
3H7	HOSES, HYDRAULIC (SWING MOTOR TO RESERVOIR)	3363 - 10
1B21	HOSES, HYDRAULIC, PROPEL MOTOR	0263 - 2
3G23	HOSES, LOW PRESSURE (RESERVOIR TO PUMP)	3363 - 2
1H3	HOSES, LUBRICATION	1370 - 2
3C5	HOSES, MAIN (BLADE OPTION) (BLADE CONTROL VALVE)	3301 - 14
3C5	HOSES, MAIN (BLADE OPTION) (PUMP TO CONTROL VALVE)	3301 - 14
3H11	HOSES, MAIN HYDRAULIC (CONTROL VALVE TO ARM CYLINDER LINES ON BOOM)	3363 - 14
3H9	HOSES, MAIN HYDRAULIC (CONTROL VALVE TO BOOM CYLINDER)	3363 - 12
3H15	HOSES, MAIN HYDRAULIC (CONTROL VALVE TO ROTARY MANIFOLD)	3363 - 18
3H13	HOSES, MAIN HYDRAULIC (CONTROL VALVE TO SWING MOTOR)	3363 - 16
3D12	HOSES, MECHANICAL PATTERN CHANGER	3315 - 9A
3B15	HOSES, PILOT (BLADE CONTROL VALVE TO PILOT SHUTOFF VALVE)	3301 - 2
3B15	HOSES, PILOT (BLADE CONTROL VALVE TO SHUTTLE VALVE)	3301 - 2
3B23	HOSES, PILOT (BLADE OPTION) (BLADE CONTROL VALVE TO SHUTTLE VALVE)	3301 - 10
3C1	HOSES, PILOT (BLADE OPTION) (BLADE CONTROL VALVE TO SHUTTLE VALVE)	3301 - 11A
3B23	HOSES, PILOT (BLADE OPTION) (CONTROL VALVE TO SHUTTLE VALVE)	3301 - 10
3C1	HOSES, PILOT (BLADE OPTION) (CONTROL VALVE TO SHUTTLE VALVE)	3301 - 11A
3I11	HOSES, PILOT (LEFT PILOT CONTROL VALVE TO PILOT SHUTOFF VALVE)	3363 - 38
3I15	HOSES, PILOT HYDRAULIC (CONTROL VALVE TO RESERVOIR)	3363 - 42
3I17	HOSES, PILOT HYDRAULIC (CONTROL VALVE TO RESERVOIR)	3363 - 44
3H23	HOSES, PILOT HYDRAULIC (CONTROL VALVE TO SOLENOID VALVE)	3363 - 26
3H17	HOSES, PILOT HYDRAULIC (FILTER TO SOLENOID VALVE)	3363 - 20
3I15	HOSES, PILOT HYDRAULIC (PILOT REGULATING VALVE AND FILTER TO RESERVOIR)	3363 - 42
3I19	HOSES, PILOT HYDRAULIC (PILOT SHUTOFF VALVE TO PILOT SIGNAL MANIFOLD)	3363 - 46
3I19	HOSES, PILOT HYDRAULIC (PILOT SHUTOFF VALVE TO RESERVOIR)	3363 - 46
3I19	HOSES, PILOT HYDRAULIC (PILOT SHUTOFF VALVE TO SOLENOID VALVE)	3363 - 46
3I11	HOSES, PILOT HYDRAULIC (PILOT SIGNAL MANIFOLD TO LEFT PILOT CONTROLLER)	3363 - 38
3I7	HOSES, PILOT HYDRAULIC (PILOT SIGNAL MANIFOLD TO PROPEL CONTROL VALVE)	3363 - 34
3I15	HOSES, PILOT HYDRAULIC (PILOT SIGNAL MANIFOLD TO RESERVOIR)	3363 - 42
3I17	HOSES, PILOT HYDRAULIC (PILOT SIGNAL MANIFOLD TO RESERVOIR)	3363 - 44
3I13	HOSES, PILOT HYDRAULIC (PILOT SIGNAL MANIFOLD TO RIGHT PILOT CONTROLLER)	3363 - 40
3H23	HOSES, PILOT HYDRAULIC (PILOT SIGNAL MANIFOLD TO SWING MOTOR)	3363 - 26
3I5	HOSES, PILOT HYDRAULIC (PILOT SIGNAL MANIFOLD)	3363 - 32
3H19	HOSES, PILOT HYDRAULIC (PUMP TO RESERVOIR)	3363 - 22
3H17	HOSES, PILOT HYDRAULIC (PUMP TO FILTER)	3363 - 20
3H19	HOSES, PILOT HYDRAULIC (PUMP TO PILOT SIGNAL MANIFOLD)	3363 - 22
3H17	HOSES, PILOT HYDRAULIC (SOLENOID VALVE TO RESERVOIR)	3363 - 20
3H21	HOSES, PILOT HYDRAULIC (SOLENOID VALVE TO ROTARY MANIFOLD)	3363 - 24
3B23	HOSES, PILOT(BLADE OPTION) (SOLENOID VALVE TO SHUTTLE VALVE)	3301 - 10
3C1	HOSES, PILOT(BLADE OPTION) (SOLENOID VALVE TO SHUTTLE VALVE)	3301 - 11A
3I9	HOSES, PILOT, (PROPEL PILOT VALVE TO PILOT SHUTOFF VALVE)	3363 - 36
1F13	HOSES, RADIATOR	0511 - 8
3C3	HOSES, RETURN (BLADE OPTION) (BLADE CONTROL VALVE)	3301 - 12
3C3	HOSES, RETURN (BLADE OPTION) (CONTROL VALVE)	3301 - 12
3C3	HOSES, RETURN (BLADE OPTION) (SHUTTLE VALVE)	3301 - 12
3H3	HOSES, RETURN (HEAT EXCHANGER TO RESERVOIR)	3363 - 6
3H5	HOSES, RETURN (HEAT EXCHANGER TO CONTROL VALVE)	3363 - 8

ALPHABETICAL INDEX - CONTINUED

GRID		PAGE
3H3	HOSES, RETURN (OIL COOLER TO RESERVOIR)	3363 - 6
3H5	HOSES, RETURN (OIL COOLER TO CONTROL VALVE)	3363 - 8
1E13	HOSES, SECONDARY FUEL FILTER	0420 - 4
1G5	HOSES, TURBOCHARGER TO AIR CLEANER	0521 - 4
1E7	HOSES, WATER FROM WATER PUMP TO THERMOSTAT	0418 - 4
2C3	HOSES, WINDSHIELD WASHER RESERVOIR	1814 - 2
1G3	HOUSING, AIR CLEANER (S.N. -062992)	0521 - 2
1E23	HOUSING, FLYWHEEL	0433 - 2
3G7	HOUSING, PILOT VALVE	3362 - 32
1B19	HOUSING, PROPEL MOTOR	0260 - 6
3E19	HOUSING, PUMP, PUMP TO ENGINE	3361 - 6
1E5	HOUSING, THERMOSTAT	0418 - 2
1E1	HOUSING, TURBOCHARGER	0416 - 4
2D3	HVAC DUCT, CAB REAR	1831 - 6
2D1	HVAC DUCTS AND FILTER	1831 - 4
2D9	HVAC UNIT TO CAB DUCT	1833 - 2
3F3	HYDRAULIC CONTROL VALVE	3362 - 2
3F5	HYDRAULIC CONTROL VALVE(SUPPORTS)	3362 - 4
3J23	HYDRAULIC CYLINDER, ARM	3365 - 18
3K1	HYDRAULIC CYLINDER, ARM (COMPONENTS)	3365 - 20
3K3	HYDRAULIC CYLINDER, BUCKET	3365 - 22
3K5	HYDRAULIC CYLINDER, BUCKET (COMPONENTS)	3365 - 24
3J13	HYDRAULIC FILTER RESTRICTION INDICATOR HOSE	3364 - 4
3J13	HYDRAULIC FILTER RESTRICTION INDICATOR KIT	3364 - 4
3J13	HYDRAULIC FILTER RESTRICTION INDICTATOR SWITCH	3364 - 4
3J13	HYDRAULIC FILTER RESTRICTION INDICTATOR WIRING HARNESS	3364 - 4
3C5	HYDRAULIC HOSES (BLADE OPTION) (BLADE CONTROL VALVE)	3301 - 14
3C5	HYDRAULIC HOSES (BLADE OPTION) (PUMP TO CONTROL VALVE)	3301 - 14
3H11	HYDRAULIC HOSES (CONTROL VALVE TO ARM C YLINDER LINES ON BOOM)	3363 - 14
3H9	HYDRAULIC HOSES (CONTROL VALVE TO BOOM C YLINDER)	3363 - 12
3H15	HYDRAULIC HOSES (CONTROL VALVE TO ROTARY MANIFOLD)	3363 - 18
3H13	HYDRAULIC HOSES (CONTROL VALVE TO SWING MOTOR)	3363 - 16
3I17	HYDRAULIC HOSES, PILOT (CONTROL VALVE TO RESERVOIR)	3363 - 44
3H23	HYDRAULIC HOSES, PILOT (CONTROL VALVE TO SOLENOID VALVE)	3363 - 26
3I19	HYDRAULIC HOSES, PILOT (PILOT SHUTOFF VALVE TO PILOT SIGNAL MANIFOLD)	3363 - 46
3I19	HYDRAULIC HOSES, PILOT (PILOT SHUTOFF VALVE TO RESERVOIR)	3363 - 46
3I19	HYDRAULIC HOSES, PILOT (PILOT SHUTOFF VALVE TO SOLENOID VALVE)	3363 - 46
3I11	HYDRAULIC HOSES, PILOT (PILOT SIGNAL MANIFOLD TO LEFT PILOT CONTROLLER)	3363 - 38
3I7	HYDRAULIC HOSES, PILOT (PILOT SIGNAL MANIFOLD TO PROPEL CONTROL VALVE)	3363 - 34
3I17	HYDRAULIC HOSES, PILOT (PILOT SIGNAL MANIFOLD TO RESERVOIR)	3363 - 44
3I13	HYDRAULIC HOSES, PILOT (PILOT SIGNAL MANIFOLD TO RIGHT PILOT CONTROLLER)	3363 - 40
3H23	HYDRAULIC HOSES, PILOT (PILOT SIGNAL MANIFOLD TO SWING MOTOR)	3363 - 26
3H19	HYDRAULIC HOSES, PILOT (PUMP TO RESERVOIR)	3363 - 22
3H19	HYDRAULIC HOSES, PILOT (PUMP TO PILOT SIGNAL MANIFOLD)	3363 - 22
3H21	HYDRAULIC HOSES, PILOT (SOLENOID VALVE TO ROTARY MANIFOLD)	3363 - 24
3H7	HYDRAULIC LINES (CONTROL VALVE TO SWING MOTOR)	3363 - 10
3I3	HYDRAULIC LINES (PILOT SIGNAL MANIFOLD TO BOTTOM OF CONTROL VALVE)	3363 - 30
3I21	HYDRAULIC LINES, ARM CYLINDER	3363 - 48
3I23	HYDRAULIC LINES, AUXILIARY	3363 - 50
3J3	HYDRAULIC LINES, AUXILIARY, ARM	3363 - 54
3J1	HYDRAULIC LINES, AUXILIARY, BOOM	3363 - 52
3I21	HYDRAULIC LINES, BUCKET CYLINDER	3363 - 48
1B21	HYDRAULIC LINES, CENTER JOINT TO PROPEL MOTOR	0263 - 2
3I21	HYDRAULIC LINES, FRONT	3363 - 48
3I15	HYDRAULIC LINES, PILOT (CONTROL VALVE TO RESERVOIR)	3363 - 42
3H17	HYDRAULIC LINES, PILOT (FILTER TO SOLENOID VALVE)	3363 - 20
3I15	HYDRAULIC LINES, PILOT (PILOT REGULATING VALVE AND FILTER TO RESERVOIR)	3363 - 42
3I3	HYDRAULIC LINES, PILOT (PILOT SIGNAL MANIFOLD TO BOTTOM OF CONTROL VALVE)	3363 - 30
3I15	HYDRAULIC LINES, PILOT (PILOT SIGNAL MANIFOLD TO RESERVOIR)	3363 - 42
3H21	HYDRAULIC LINES, PILOT (PILOT SIGNAL MANIFOLD TO SOLENOID VALVE)	3363 - 24
3I1	HYDRAULIC LINES, PILOT (PILOT SIGNAL MANIFOLD TO TOP OF CONTROL VALVE)	3363 - 28
3I5	HYDRAULIC LINES, PILOT (PILOT SIGNAL MANIFOLD)	3363 - 32
3H17	HYDRAULIC LINES, PILOT (PUMP TO FILTER)	3363 - 20
3H17	HYDRAULIC LINES, PILOT (SOLENOID VALVE TO RESERVOIR)	3363 - 20
1B21	HYDRAULIC LINES, PROPEL MOTOR	0263 - 2
3K24	HYDRAULIC MOTOR MOUNTING	4367 - 4
3K22	HYDRAULIC MOTOR, SWING	4367 - 2
1F11	HYDRAULIC OIL COOLER	0511 - 6
3H17	HYDRAULIC OIL FILTER	3363 - 20
3I15	HYDRAULIC OIL FILTER HOSES TO RESERVOIR	3363 - 42
3J11	HYDRAULIC OIL RETURN FILTER	3364 - 2
3J11	HYDRAULIC OIL TANK	3364 - 2
3J11	HYDRAULIC OIL TANK FILTER	3364 - 2
3J11	HYDRAULIC OIL TANK SIGHT GAUGE	3364 - 2
3B23	HYDRAULIC PILOT HOSES (BLADE OPTION) (BLADE CONTROL VALVE TO SHUTTLE VALVE)	3301 - 10
3C1	HYDRAULIC PILOT HOSES (BLADE OPTION) (BLADE CONTROL VALVE TO SHUTTLE VALVE)	3301 - 11A
3B23	HYDRAULIC PILOT HOSES (BLADE OPTION) (CONTROL VALVE TO SHUTTLE VALVE)	3301 - 10
3C1	HYDRAULIC PILOT HOSES (BLADE OPTION) (CONTROL VALVE TO SHUTTLE VALVE)	3301 - 11A
3B23	HYDRAULIC PILOT HOSES(BLADE OPTION) (SOLENOID VALVE TO SHUTTLE VALVE)	3301 - 10
3C1	HYDRAULIC PILOT HOSES(BLADE OPTION) (SOLENOID VALVE TO SHUTTLE VALVE)	3301 - 11A
3B15	HYDRAULIC PILOT HOSES, (BLADE CONTROL VALVE TO PILOT SHUTOFF VALVE)	3301 - 2
3B15	HYDRAULIC PILOT HOSES, (BLADE CONTROL VALVE TO SHUTTLE VALVE)	3301 - 2
1B19	HYDRAULIC PROPEL MOTOR	0260 - 6
2E1	HYDRAULIC PUMP COMPARTMENT DOOR	1910 - 4
3E19	HYDRAULIC PUMP COMPONENTS	3361 - 6
3E23	HYDRAULIC PUMP REGULATOR (PUMP 1)	3361 - 10

ALPHABETICAL INDEX - CONTINUED

GRID		PAGE
3E21	HYDRAULIC PUMP REGULATOR (PUMP 2)	3361 - 8
3E19	HYDRAULIC PUMP SENSOR	3361 - 6
3E17	HYDRAULIC PUMP TO ENGINE COUPLER	3361 - 4
3E15	HYDRAULIC PUMP, MAIN	3361 - 2
3F1	HYDRAULIC PUMP, PILOT (COMPONENTS)	3361 - 12
3E17	HYDRAULIC PUMP, PILOT PUMP, AND REGULATOR ASSEMBLY	3361 - 4
3J11	HYDRAULIC RESERVOIR	3364 - 2
3E9	HYDRAULIC RESERVOIR HOSE TO SOLENOID (PILOT SYSTEM)	3360 - 4
3E7	HYDRAULIC RESERVOIR TO CONTROL VALVE HOSE (AUXILIARY SOLENOID/FLOW CONTROL)	3360 - 2
3E7	HYDRAULIC RESERVOIR TO SOLENOID VALVE HOSE (AUXILIARY SOLENOID/FLOW CONTROL)	3360 - 2
3C3	HYDRAULIC RETURN HOSES (BLADE OPTION) (BLADE CONTROL VALVE)	3301 - 12
3C3	HYDRAULIC RETURN HOSES (BLADE OPTION) (CONTROL VALVE)	3301 - 12
3C3	HYDRAULIC RETURN HOSES (BLADE OPTION) (SHUTTLE VALVE)	3301 - 12

I

1B14	IDLER, FRONT	0134 - 2
1B16	IDLER, FRONT SPRING	0134 - 4
1H13	IGNITION SWITCH	1674 - 4
1H13	IGNITION SWITCH HARNESS	1674 - 4
1G7	INDICATOR, AIR CLEANER	0521 - 6
1G3	INDICATOR, AIR CLEANER RESTRICTION (S.N. -062992)	0521 - 2
3J13	INDICATOR, HYDRAULIC FILTER	3364 - 4
1D15	INJECTION LINES, FITTINGS	0413 - 10
1D11	INJECTION PUMP AND GOVERNOR LINKAGES	0413 - 6
1D17	INJECTION PUMP COLLAR	0413 - 12
1D19	INJECTION PUMP COUPLING	0413 - 14
1D17	INJECTION PUMP MOUNTING	0413 - 12
1D9	INJECTION PUMP, FUEL	0413 - 2
1E15	INJECTION PUMP, PRIMARY FUEL (TRANSFER PUMP)	0421 - 2
1E17	INJECTION PUMP, SECONDARY FUEL	0421 - 4
1D9	INJECTOR, FUEL	0413 - 2
1D21	INLET MANIFOLD	0414 - 2
1F7	INTAKE AIR COOLER HOSES	0511 - 2
1G3	INTAKE AIR FILTER (S.N. -062992)	0521 - 2
1F7	INTAKE HOSE (FROM COOLER TO INTAKE MANIFOLD)	0511 - 2
1D21	INTAKE MANIFOLD	0414 - 2
1F7	INTAKE MANIFOLD TO CHARGE AIR COOLER LIN LINES	0511 - 2
1D5	INTAKE VALVE (ENGINE)	0409 - 4
1F13	ISOLATOR, ENGINE FAN	0511 - 8
2B4	ISOLATORS, CAB	1810 - 2
1G11	ISOLATORS, ENGINE	0540 - 2
2D23	ISOLATORS, LEFT REAR COMPARTMENT	1910 - 2

J

3K16	JOINT, CENTER	4362 - 2
3D2	JOYSTICK, CAB CONTROLLERS (DIG AND SWING)	3315 - 2

GRID		PAGE

K

1G1	KILL SWITCH, ENGINE	0515 - 6
3J5	KIT, ANTI-DRIFT ARM	3363 - 56
3J7	KIT, ANTI-DRIFT BOOM	3363 - 58
3D20	KIT, ARM ASSEMBLY (2.52M ARM)(REPLACEMENT ARM)	3344 - 5A
3D24	KIT, ARM ASSEMBLY (3.01M ARM)(REPLACEMENT ARM)	3344 - 7A
3K9	KIT, BLADE CYLINDER SEAL (LEFT)	3365 - 28
3K7	KIT, BLADE CYLINDER SEAL (RIGHT)	3365 - 26
3D10	KIT, CONTROL PATTERN SELECTOR	3315 - 8
3D14	KIT, FOOT PEDAL CONTROL	3315 - 12
3J13	KIT, HYDRAULIC FILTER RESTRICTION INDICATOR	3364 - 4
3D12	KIT, MECHANICAL PATTERN CHANGER	3315 - 9A
1H17	KIT, MIC CUSTOMER	1674 - 7A
1G22	KIT, O-RING, METRIC	1369 - 2
1B23	KIT, PROPEL MOTOR GEAR BOX SEAL	0267 - 2
1B19	KIT, SEAL PROPEL MOTOR	0260 - 6
3K1	KIT, SEAL, ARM CYLINDER	3365 - 20
3J17	KIT, SEAL, BOOM CYLINDER (RIGHT)	3365 - 4
3K5	KIT, SEAL, BUCKET CYLINDER	3365 - 24
3J21	KIT, SEAL, LEFT BOOM CYLINDER	3365 - 8
3E21	KIT, SEAL, PUMP REGULATOR (PUMP 2)	3361 - 8
2C15	KIT, SEAT FOAM	1821 - 10
2C15	KIT, SEAT LUMBAR	1821 - 10
2C19	KIT, SEAT SLIDE TRACK	1821 - 14
2B22	KIT, SECONDARY EXIT	1810 - 22
3E7	KIT, SOLENOID CONTROL AND FLOW CONTROL (1-WAY)	3360 - 2
1H2	KIT, TEST FLUID ANALYSIS PRODUCTS (DIESELSCAN)	1369 - 7
1E1	KIT, TURBOCHARGER COMPONENTS	0416 - 4
2C1	KIT, VANDAL PROTECTION	1810 - 26
2C1	KIT, WINDOW GUARDS	1810 - 26
2C17	KIT, 3.00 INCH SEAT BELT ,	1821 - 12
3E9	KIT,SOLENOID VALVE, 1WAY/2WAY, WITHOUT PRESSURE SWITCH	3360 - 4
1C15	KITS, PISTON- CYLINDER LINER	0404 - 2

L

3E13	LABEL, AUXILIARY CONTROL	3360 - 8
3E1	LABEL, LONG ARM	3344 - 8
3D10	LABEL, PILOT CONTROL LEVER	3315 - 8
2B22	LABEL, SECONDARY EXIT	1810 - 22
1G20	LABELS	1322 - 2
2E1	LATCH, COMPARTMENT DOOR, LEFT & RIGHT REAR	1910 - 4
2E11	LATCH, ENGINE COMPARTMENT DOOR	1910 - 14
2B12	LATCH, LEFT DOOR	1810 - 10
3J19	LEFT BOOM CYLINDER	3365 - 6
3J21	LEFT BOOM CYLINDER (COMPONENTS)	3365 - 8
3J21	LEFT BOOM CYLINDER SEAL KIT	3365 - 8
2E11	LEFT COMPARTMENT TOP DOOR	1910 - 14
2B12	LEFT DOOR ASSEMBLY	1810 - 10
2E1	LEFT REAR COMPARTMENT DOOR	1910 - 4
2D23	LEFT REAR COMPARTMENT PANELING	1910 - 2
2C5	LEFT SIDE CAB CONSOLE	1816 - 2
2E18	LEFT SIDE CAB MIRROR	2002 - 2
2B10	LEFT SIDE CAB WINDOW	1810 - 8
3D8	LEVER, LOCK	3315 - 6
3B17	LEVER, PILOT CONTROL, BLADE	3301 - 4

ALPHABETICAL INDEX - CONTINUED

GRID		PAGE
3D6	LEVER, PROPEL PILOT CONTROLLER	3315 - 4
3D8	LEVER, PROPEL PILOT CONTROLLER (SHUTOFF)	3315 - 6
2B14	LIGHT SWITCH, FRONT WINDOW	1810 - 12
1H19	LIGHT WIRING HARNESS, BOOM	1674 - 8
1H9	LIGHTS, BOOM	1673 - 2
1G9	LINE FROM EXHAUST MANIFOLD TO MUFFLER	0531 - 2
3K9	LINE, BLADE CYLINDER OIL (LEFT)	3365 - 28
3K7	LINE, BLADE CYLINDER OIL (RIGHT)	3365 - 26
1D23	LINE, DRAIN, TURBOCHARGER	0416 - 2
1C15	LINER, CYLINDER	0404 - 2
3J15	LINES RIGHT BOOM CYLINDER	3365 - 2
1G5	LINES, AIR CLEANER INTAKE	0521 - 4
1G5	LINES, AIR CLEANER TO TURBOCHARGER	0521 - 4
2D7	LINES, AIR CONDITIONING	1832 - 2
2D11	LINES, AIR CONDITIONING TO ENGINE	1833 - 4
3I21	LINES, ARM CYLINDER	3363 - 48
3I23	LINES, AUXILIARY	3363 - 50
3J3	LINES, AUXILIARY, ARM	3363 - 54
3J1	LINES, AUXILIARY, BOOM	3363 - 52
1H3	LINES, BOOM LUBRICATION	1370 - 2
3I21	LINES, BUCKET CYLINDER	3363 - 48
1F7	LINES, CHARGE AIR COOLER TO ENGINE	0511 - 2
2D11	LINES, ENGINE TO AIR CONDITIONER	1833 - 4
1G13	LINES, FUEL (FROM SEPARATOR TO INJECTION PUMP)	0563 - 2
1G13	LINES, FUEL (FROM TANK TO SEPARATOR)	0563 - 2
1D13	LINES, FUEL FILTER (ENGINE)	0413 - 8
1D9	LINES, FUEL INJECTION PUMP	0413 - 2
1D15	LINES, FUEL, TO FILTER	0413 - 10
1H3	LINES, GREASE	1370 - 2
3F11	LINES, HOSE RUPTURE VALVE (ARM)	3362 - 10
3F9	LINES, HOSE RUPTURE VALVE (BOOM)	3362 - 8
3H7	LINES, HYDRAULIC (CONTROL VALVE TO SWING MOTOR)	3363 - 10
1B21	LINES, HYDRAULIC, PROPEL MOTOR	0263 - 2
1D15	LINES, INJECTION, FITTINGS	0413 - 10
3J19	LINES, LEFT BOOM CYLINDER	3365 - 6
3E1	LINES, LONG ARM	3344 - 8
3H11	LINES, MAIN HYDRAULIC (CONTROL VALVE TO ARM CYLINDER LINES ON BOOM)	3363 - 14
3H9	LINES, MAIN HYDRAULIC (CONTROL VALVE TO BOOM CYLINDER)	3363 - 12
3H15	LINES, MAIN HYDRAULIC (CONTROL VALVE TO ROTARY MANIFOLD)	3363 - 18
3H13	LINES, MAIN HYDRAULIC (CONTROL VALVE TO SWING MOTOR)	3363 - 16
3I9	LINES, PILOT (PROPEL PILOT VALVE TO PILOT SHUTOFF VALVE)	3363 - 36
3I15	LINES, PILOT HYDRAULIC (CONTROL VALVE TO RESERVOIR)	3363 - 42
3H23	LINES, PILOT HYDRAULIC (CONTROL VALVE TO SOLENOID VALVE)	3363 - 26
3H17	LINES, PILOT HYDRAULIC (FILTER TO SOLENOID VALVE)	3363 - 20
3I15	LINES, PILOT HYDRAULIC (PILOT REGULATING VALVE AND FILTER TO RESERVOIR)	3363 - 42
3I3	LINES, PILOT HYDRAULIC (PILOT SIGNAL MANIFOLD TO BOTTOM OF CONTROL VALVE)	3363 - 30
3I11	LINES, PILOT HYDRAULIC (PILOT SIGNAL MANIFOLD TO LEFT PILOT CONTROLLER)	3363 - 38
3I15	LINES, PILOT HYDRAULIC (PILOT SIGNAL MANIFOLD TO RESERVOIR)	3363 - 42
3H21	LINES, PILOT HYDRAULIC (PILOT SIGNAL MANIFOLD TO SOLENOID VALVE)	3363 - 24
3H23	LINES, PILOT HYDRAULIC (PILOT SIGNAL MANIFOLD TO SWING MOTOR)	3363 - 26
3I1	LINES, PILOT HYDRAULIC (PILOT SIGNAL MANIFOLD TO TOP OF CONTROL VALVE)	3363 - 28
3I5	LINES, PILOT HYDRAULIC (PILOT SIGNAL MANIFOLD)	3363 - 32
3H19	LINES, PILOT HYDRAULIC (PUMP TO RESERVOIR)	3363 - 22
3H17	LINES, PILOT HYDRAULIC (PUMP TO FILTER)	3363 - 20
3H19	LINES, PILOT HYDRAULIC (PUMP TO PILOT SIGNAL MANIFOLD)	3363 - 22
3H17	LINES, PILOT HYDRAULIC (SOLENOID VALVE TO RESERVOIR)	3363 - 20
3H21	LINES, PILOT HYDRAULIC (SOLENOID VALVE TO ROTARY MANIFOLD)	3363 - 24
1B21	LINES, PROPEL MOTOR TO ROTARY MANIFOLD	0263 - 2
3H3	LINES, RETURN (CONTROL VALVE TO RESERVOIR)	3363 - 6
3H3	LINES, RETURN (HEAT EXCHANGER TO RESERVOIR)	3363 - 6
3H5	LINES, RETURN (HEAT EXCHANGER TO CONTROL VALVE)	3363 - 8
3H3	LINES, RETURN (OIL COOLER TO RESERVOIR)	3363 - 6
3H5	LINES, RETURN (OIL COOLER TO CONTROL VALVE)	3363 - 8
1B21	LINES, ROTARY MANIFOLD TO PROPEL MOTOR	0263 - 2
1E13	LINES, SECONDARY FUEL FILTER	0420 - 4
1C23	LINES, VACUUM (ENGINE)	0407 - 6
1E7	LINES, WATER FROM WATER PUMP TO THERMOSTAT	0418 - 4
1C23	LINES,OIL (TO TURBOCHARGER AND INJECTION PUMP) (ENGINE)	0407 - 6
3E5	LINK, ARM	3344 - 12
3E5	LINK, ARM HYDRAULIC CYLINDER TO ARM	3344 - 12
3E3	LINK, ARM HYDRAULIC CYLINDER TO BUCKET	3344 - 10
3E3	LINK, BUCKET	3344 - 10
1D11	LINKAGES, GOVERNOR AND INJECTION PUMP	0413 - 6
1B8	LINKS, TRACK	0132 - 2
3D8	LOCK LEVER	3315 - 6
3D20	LONG ARM (2.52M ARM) (REPLACEMENT ARM)	3344 - 5A
3D22	LONG ARM (3.01 M) (FACTORY INSTALLED ARM)	3344 - 6
3D24	LONG ARM (3.01M ARM) (REPLACEMENT ARM)	3344 - 7A
3E1	LONG ARM COMPONENTS	3344 - 8
3G23	LOW PRESSURE HOSES (RESERVOIR TO PUMP)	3363 - 2
1B12	LOWER ROLLER, TRACK	0133 - 4
1H3	LUBRICATION LINES	1370 - 2
1H3	LUBRICATION SYSTEM	1370 - 2
1H3	LUBRICATION, BOOM LINES	1370 - 2

M

1H15	MACHINE INFORMATION CENTER	1674 - 6
1H11	MACHINE WIRING HARNESS	1674 - 2
1C11	MAIN BEARINGS, ENGINE	0401 - 2
3F3	MAIN CONTROL VALVE	3362 - 2
3F5	MAIN CONTROL VALVE (SUPPORTS)	3362 - 4
1I4	MAIN FRAME	1740 - 2
3C5	MAIN HOSES (BLADE OPTION) (BLADE CONTROL VALVE)	3301 - 14
3C5	MAIN HOSES (BLADE OPTION) (PUMP TO CONTROL VALVE)	3301 - 14

ALPHABETICAL INDEX - CONTINUED

GRID		PAGE
3H15	MAIN HYDRAULIC HOSES (CONTROL VALVE TO ROTARY MANIFOLD)	3363 - 18
3H13	MAIN HYDRAULIC HOSES (CONTROL VALVE TO SWING MOTOR)	3363 - 16
3H11	MAIN HYDRAULIC HOSES (CONTROL VALVE TO A RM CYLINDER LINES ON BOOM)	3363 - 14
3H9	MAIN HYDRAULIC HOSES (CONTROL VALVE TO B OOM CYLINDER)	3363 - 12
3E15	MAIN HYDRAULIC PUMP	3361 - 2
3E23	MAIN HYDRAULIC PUMP REGULATOR (PUMP 1)	3361 - 10
3E21	MAIN HYDRAULIC PUMP REGULATOR (PUMP 2)	3361 - 8
3E19	MAIN HYDRAULIC PUMP, PARTS	3361 - 6
1H11	MAIN WIRING HARNESS	1674 - 2
1D7	MANIFOLD, EXHAUST (ENGINE)	0410 - 2
1D21	MANIFOLD, INLET	0414 - 2
1D21	MANIFOLD, INTAKE	0414 - 2
3G11	MANIFOLD, PILOT BLOCK (HOUSING AND GASKETS)	3362 - 36
3G13	MANIFOLD, PILOT BLOCK (VALVE SECTION)	3362 - 38
3G17	MANIFOLD, PILOT SIGNAL (CONTROL VALVE SIDE)	3362 - 42
3G11	MANIFOLD, PILOT SIGNAL (HOUSING AND GASKETS)	3362 - 36
3G13	MANIFOLD, PILOT SIGNAL (VALVE SECTION)	3362 - 38
3G19	MANIFOLD, PILOT SIGNAL (VALVES & SPOOLS)	3362 - 44
3I19	MANIFOLD, PILOT SIGNAL HOSES FROM PILOT SHUTOFF VALVE	3363 - 46
3I15	MANIFOLD, PILOT SIGNAL, HOSES TO RESERVOIR	3363 - 42
3I17	MANIFOLD, PILOT SIGNAL, HOSES TO RESERVOIR	3363 - 44
3G11	MANIFOLD, PILOT VALVE (HOUSING AND GASKETS)	3362 - 36
3G13	MANIFOLD, PILOT VALVE (VALVE SECTION)	3362 - 38
3K16	MANIFOLD, ROTARY	4362 - 2
3K20	MANIFOLD, ROTARY (SUPPORT) (UPPER)	4362 - 6
3B21	MANIFOLD, ROTARY SUPPORTS, BLADE OPTION	3301 - 8
3K18	MANIFOLD, ROTARY(HARDWEAR) (LOWER)	4362 - 4
1H22	MANUAL ENGINE CONTROL SWITCH BOX	1674 - 12
2C11	MAT, CAB FLOOR	1821 - 2
1G20	MATS ANTI-SLIP	1322 - 2
3D12	MECHANICAL PATTERN CHANGER KIT	3315 - 9A
3D12	MECHANICAL PATTERN CHANGER VALVE	3315 - 9A
1G22	METRIC O-RING KIT	1369 - 2
1H17	MIC CABLE	1674 - 7A
1H17	MIC CUSTOMER KIT	1674 - 7A
2E18	MIRROR, LEFT SIDE CAB	2002 - 2
2E20	MIRROR, REAR VIEW (BACK OF MACHINE)	2002 - 4
2E7	MIRROR, RIGHT SIDE	1910 - 10
3E11	MODUAL RELAY FOR DUAL AUXILIARY CONTROL (2 SOLENOIDS)	3360 - 6
3C17	MOLDBOARD, GENERAL PURPOSE BUCKET	3302 - 8
3C19	MOLDBOARD, GENERAL PURPOSE BUCKET (CONTINUED)	3302 - 10
3C21	MOLDBOARD, HEAVY DUTY BUCKET	3302 - 12
1H24	MONITOR CONTROLLER AND DISPLAY	1676 - 2
1I1	MONITOR CONTROLLER AND DISPLAY	1676 - 4
1H24	MONITOR, CAB	1676 - 2
1I1	MONITOR, CAB	1676 - 4
1F23	MOTOR, ENGINE SPEED CONTROL	0515 - 4
1B19	MOTOR, PROPEL	0260 - 6
1B19	MOTOR, PROPEL COMPONENTS	0260 - 6
1C1	MOTOR, PROPEL HARDWARE	0267 - 4
1C3	MOTOR, PROPEL INSIDE COVER	0267 - 6
1C1	MOTOR, PROPEL MOUNTING	0267 - 4
1B23	MOTOR, PROPEL, DRIVE GEARS	0267 - 2
1B21	MOTOR, PROPEL, HYDRAULIC LINES	0263 - 2
3K22	MOTOR, SWING	4367 - 2
3L1	MOTOR, SWING (COMPONENTS)	4367 - 6
1B19	MOTOR, TRAVEL	0260 - 6
2B8	MOTOR, WIPER	1810 - 6
1F11	MOUNTING BRACKET, COOLING PACKAGE	0511 - 6
2D7	MOUNTING BRACKETS, AIR CONDITIONING COMPRESSOR	1832 - 2
1G11	MOUNTING BRACKETS, ENGINE	0540 - 2
1F11	MOUNTING BRACKETS, RADIATOR	0511 - 6
2D5	MOUNTING HARDWARE, REAR COVER, CAB	1831 - 8
2D7	MOUNTING, AIR CONDITIONING SYSTEM	1832 - 2
1H7	MOUNTING, BATTERY	1671 - 2
2E13	MOUNTING, BOTTOM COVERS	1910 - 16
2D15	MOUNTING, CONDENSOR SCREEN, AIR CONDITIONING	1833 - 8
3F5	MOUNTING, CONTROL VALVE	3362 - 4
1I8	MOUNTING, COUNTERWEIGHT	1749 - 2
1D13	MOUNTING, FUEL FILTER (ENGINE)	0413 - 8
1G17	MOUNTING, FUEL TANK	0564 - 4
3J11	MOUNTING, HYDRAULIC RESERVOIR	3364 - 2
3E15	MOUNTING, MAIN HYDRAULIC PUMP	3361 - 2
1F19	MOUNTING, RADIATOR	0511 - 14
2E16	MOUNTING, RADIO	2001 - 2
2E20	MOUNTING, REAR VIEW MIRROR (BACK OF MACHINE)	2002 - 4
3K14	MOUNTING, SWING BEARING	4351 - 4
3K24	MOUNTING, SWING MOTOR	4367 - 4
1G9	MUFFLER	0531 - 2
1G9	MUFFLER SUPPORT	0531 - 2

N

2D15	NET, AIR CONDITIONING CONDENSOR	1833 - 8
1F9	NET, CHARGE AIR COOLER	0511 - 4
1D9	NOZZLE, FUEL INJECTOR	0413 - 2

O

1G22	O-RING KIT, METRIC	1369 - 2
3F23	O-RINGS, MANIFOLD, CONTROL VALVE	3362 - 22
3H3	OIL COOLER BYPASS LINE	3363 - 6
3H5	OIL COOLER LINES TO CONTROL VALVE	3363 - 8
3H3	OIL COOLER TO RESERVOIR FITTINGS	3363 - 6
3H3	OIL COOLER TO RESERVOIR LINES	3363 - 6
1E9	OIL COOLER, ENGINE	0419 - 2
1F11	OIL COOLER, HYDRAULIC	0511 - 6
3H17	OIL FILTER, HYDRAULIC	3363 - 20
1D1	OIL LEVEL GAUGE, ENGINE	0407 - 8
3K9	OIL LINE, BLADE CYLINDER (LEFT)	3365 - 28
3K7	OIL LINE, BLADE CYLINDER (RIGHT)	3365 - 26
1D23	OIL LINE, TURBOCHARGER	0416 - 2
1C23	OIL LINES,(TO TURBOCHARGER AND INJECTION PUMP) (ENGINE)	0407 - 6
1B19	OIL MOTOR (TRAVEL)	0260 - 6
1D1	OIL PAN, ENGINE	0407 - 8
1C21	OIL PUMP, ENGINE	0407 - 4

ALPHABETICAL INDEX - CONTINUED

GRID		PAGE
1C21	OIL STRAINER, ENGINE	0407 - 4
3J11	OIL TANK, HYDRAULIC	3364 - 2
1G24	OILSCAN PLUS TEST KIT, FLUID ANALYSIS	1369 - 4
3E9	ONEWAY/2WAY SOLENOID VALVE KIT, WITHOUT PRESSURE SWITCH	3360 - 4
3D6	OPERATOR FOOTREST	3315 - 4
2B6	OPERATORS ENCLOSURE	1810 - 4
1F17	OVERFLOW TANK, RADIATOR	0511 - 12
1D15	OVERFLOW VALVE	0413 - 10
1F1	OVERHAUL GASKET SETS	0452 - 2

P

1D1	PAN, OIL, ENGINE	0407 - 8
2E5	PANEL, ENGINE COMPARTMENT FRONT	1910 - 8
2D23	PANEL, REAR, COOLING PACKAGE COMPARTMENT	1910 - 2
2E5	PANELING, ENGINE COMPARTMENT	1910 - 8
2D23	PANELING, LEFT REAR COMPARTMENT	1910 - 2
3L1	PARK BRAKE, SWING	4367 - 6
3D12	PATTERN CHANGER VALVE, MECHANICAL	3315 - 9A
3D10	PATTERN SELECTOR CONTROL KIT	3315 - 8
3G7	PEDAL VALVE, PROPEL	3362 - 32
1F6	PEDAL, ACCELERATOR BRACKET	0505 - 3
3D6	PEDALS, PILOT CONTROLLERS	3315 - 4
3G11	PILOT BLOCK MANIFOLD (HOUSING AND GASKETS)	3362 - 36
3G13	PILOT BLOCK MANIFOLD (VALVE SECTION)	3362 - 38
3D10	PILOT CONTROL LEVER LABEL	3315 - 8
3B17	PILOT CONTROL LEVER, BLADE	3301 - 4
3D2	PILOT CONTROL VALVE (DIG AND SWING)	3315 - 2
3D14	PILOT CONTROL VALVE TO CONTROL VALVE HOSE (FOOT PEDAL CONTROL KIT)	3315 - 12
3D14	PILOT CONTROL VALVE, FOOT CONTROL (FOOT PEDAL CONTROL KIT)	3315 - 12
3D6	PILOT CONTROL VALVE, PROPEL	3315 - 4
3D2	PILOT CONTROLLER BOOT (DIG AND SWING)	3315 - 2
3D2	PILOT CONTROLLER GRIP (DIG AND SWING)	3315 - 2
3D2	PILOT CONTROLLER HANDLE (DIG AND SWING)	3315 - 2
3D4	PILOT CONTROLLER VALVE COMPONENTS (DIG AND SWING)	3315 - 3A
3I11	PILOT CONTROLLER, LEFT, HOSES TO PILOT SIGNAL MANIFOLD	3363 - 38
3I13	PILOT CONTROLLER, RIGHT, HOSES TO PILOT SIGNAL MANIFOLD	3363 - 40
3D2	PILOT CONTROLLERS (DIG AND SWING)	3315 - 2
3D6	PILOT CONTROLLERS, PROPEL	3315 - 4
3E11	PILOT DUAL CONTROL HANDLE (2 SOLENOIDS)	3360 - 6
3H17	PILOT FILTER	3363 - 20
3I5	PILOT HOSE GUARDS	3363 - 32
3B15	PILOT HOSES (BLADE CONTROL VALVE TO PILOT SHUTOFF VALVE)	3301 - 2
3B15	PILOT HOSES (BLADE CONTROL VALVE TO SHUTTLE VALVE)	3301 - 2
3B23	PILOT HOSES (BLADE OPTION) (BLADE CONTROL VALVE TO SHUTTLE VALVE)	3301 - 10
3C1	PILOT HOSES (BLADE OPTION) (BLADE CONTROL VALVE TO SHUTTLE VALVE)	3301 - 11A
3B23	PILOT HOSES (BLADE OPTION) (CONTROL VALVE TO SHUTTLE VALVE)	3301 - 10
3C1	PILOT HOSES (BLADE OPTION) (CONTROL VALVE TO SHUTTLE VALVE)	3301 - 11A
3I11	PILOT HOSES (LEFT PILOT CONTROL VALVE TO PILOT SHUTOFF VALVE)	3363 - 38
3I13	PILOT HOSES (RIGHT CONTROL VALVE TO PILOT SHUTOFF VALVE)	3363 - 40
3B23	PILOT HOSES(BLADE OPTION) (SOLENOID VALVE TO SHUTTLE VALVE)	3301 - 10
3C1	PILOT HOSES(BLADE OPTION) (SOLENOID VALVE TO SHUTTLE VALVE)	3301 - 11A
3I9	PILOT HOSES, (PROPEL PILOT VALVE TO PILOT SHUTOFF VALVE)	3363 - 36
3I17	PILOT HYDRAULIC HOSES (CONTROL VALVE TO RESERVOIR)	3363 - 44
3H23	PILOT HYDRAULIC HOSES (CONTROL VALVE TO SOLENOID VALVE)	3363 - 26
3I17	PILOT HYDRAULIC HOSES (CONTROLLER SIDE OF PILOT SIGNAL MANIFOLD TO RESERVOIR)	3363 - 44
3I19	PILOT HYDRAULIC HOSES (PILOT SHUTOFF VALVE TO PILOT SIGNAL MANIFOLD)	3363 - 46
3I19	PILOT HYDRAULIC HOSES (PILOT SHUTOFF VALVE TO RESERVOIR)	3363 - 46
3I19	PILOT HYDRAULIC HOSES (PILOT SHUTOFF VALVE TO SOLENOID VALVE)	3363 - 46
3I11	PILOT HYDRAULIC HOSES (PILOT SIGNAL MANIFOLD TO LEFT PILOT CONTROLLER)	3363 - 38
3I7	PILOT HYDRAULIC HOSES (PILOT SIGNAL MANIFOLD TO PROPEL CONTROL VALVE)	3363 - 34
3I13	PILOT HYDRAULIC HOSES (PILOT SIGNAL MANIFOLD TO RIGHT PILOT CONTROLLER)	3363 - 40
3H23	PILOT HYDRAULIC HOSES (PILOT SIGNAL MANIFOLD TO SWING MOTOR)	3363 - 26
3H19	PILOT HYDRAULIC HOSES (PUMP TO RESERVOIR)	3363 - 22
3H19	PILOT HYDRAULIC HOSES (PUMP TO PILOT SIGNAL MANIFOLD)	3363 - 22
3H21	PILOT HYDRAULIC HOSES (SOLENOID VALVE TO ROTARY MANIFOLD)	3363 - 24
3I15	PILOT HYDRAULIC LINES (CONTROL VALVE TO RESERVOIR)	3363 - 42
3H17	PILOT HYDRAULIC LINES (FILTER TO SOLENOID VALVE)	3363 - 20
3I3	PILOT HYDRAULIC LINES (PILOT SIGNAL MANIFOLD TO BOTTOM OF CONTROL VALVE)	3363 - 30
3I15	PILOT HYDRAULIC LINES (PILOT SIGNAL MANIFOLD TO RESERVOIR)	3363 - 42
3H21	PILOT HYDRAULIC LINES (PILOT SIGNAL MANIFOLD TO SOLENOID VALVE)	3363 - 24
3I1	PILOT HYDRAULIC LINES (PILOT SIGNAL MANIFOLD TO TOP OF CONTROL VALVE)	3363 - 28
3I5	PILOT HYDRAULIC LINES (PILOT SIGNAL MANIFOLD)	3363 - 32
3H17	PILOT HYDRAULIC LINES (PUMP TO FILTER)	3363 - 20
3H17	PILOT HYDRAULIC LINES (SOLENOID VALVE TO RESERVOIR)	3363 - 20
3I15	PILOT HYDRAULIC LINES(PILOT REGULATING VALVE AND FILTER TO RESERVOIR)	3363 - 42
3I9	PILOT LINES (PROPEL PILOT VALVE TO PILOT SHUTOFF VALVE)	3363 - 36
3F1	PILOT PUMP (COMPONENTS)	3361 - 12
3I15	PILOT REGULATING VALVE HOSES TO RESERVOIR	3363 - 42
3E9	PILOT SHUT-OFF VALVE HOSE TO SOLENOID (PILOT SYSTEM)	3360 - 4
3D14	PILOT SHUT-OFF VALVE TO PILOT VALVE HOSE (FOOT PEDAL CONTROL KIT)	3315 - 12
3G21	PILOT SHUTOFF VALVE (COMPONENTS)	3362 - 46

ALPHABETICAL INDEX - CONTINUED

GRID		PAGE
3I11	PILOT SHUTOFF VALVE HOSES FROM LEFT PILOT CONTROL VALVE	3363 - 38
3I13	PILOT SHUTOFF VALVE HOSES FROM RIGHT PILOT CONTROL VALVE	3363 - 40
3B15	PILOT SHUTOFF VALVE HOSES TO BLADE CONTROL VALVE	3301 - 2
3I19	PILOT SHUTOFF VALVE HOSES TO PILOT SIGNAL MANIFOLD	3363 - 46
3I19	PILOT SHUTOFF VALVE HOSES TO SOLENOID VALVE	3363 - 46
3I9	PILOT SHUTOFF VALVE TO PROPEL PILOT VALVE PILOT HYDRAULIC LINES	3363 - 36
3E7	PILOT SIG. MAN. TO CONTROL VALVE HOSE (AUXILIARY SOLENOID/FLOW CONTROL)	3360 - 2
3E7	PILOT SIG. MAN. TO FLOW REGULATOR HOSE (AUXILIARY SOLENOID/FLOW CONTROL)	3360 - 2
3E7	PILOT SIG. MAN. TO SOLENOID VALVE HOSE (AUXILIARY SOLENOID/FLOW CONTROL)	3360 - 2
3G17	PILOT SIGNAL MANIFOLD (CONTROL VALVE SIDE)	3362 - 42
3G11	PILOT SIGNAL MANIFOLD (HOUSING AND GASKETS)	3362 - 36
3G15	PILOT SIGNAL MANIFOLD (PILOT CONTROLLER SIDE FITTINGS)	3362 - 40
3G13	PILOT SIGNAL MANIFOLD (VALVE SECTION)	3362 - 38
3G19	PILOT SIGNAL MANIFOLD (VALVES & SPOOLS)	3362 - 44
3E9	PILOT SIGNAL MANIFOLD HOSE TO CONTROL VALVE (PILOT SYSTEM)	3360 - 4
3E9	PILOT SIGNAL MANIFOLD HOSE TO SOLENOID (PILOT SYSTEM)	3360 - 4
3I19	PILOT SIGNAL MANIFOLD HOSES FROM PILOT SHUTOFF VALVE	3363 - 46
3I17	PILOT SIGNAL MANIFOLD HOSES TO RESERVOIR	3363 - 44
3I11	PILOT SIGNAL MANIFOLD HOSES TO LEFT PILOT CONTROLLER	3363 - 38
3I7	PILOT SIGNAL MANIFOLD HOSES TO PROPEL CONTROL VALVE	3363 - 34
3I15	PILOT SIGNAL MANIFOLD HOSES TO RESERVOIR	3363 - 42
3I13	PILOT SIGNAL MANIFOLD HOSES TO RIGHT PILOT CONTROL VALVE	3363 - 40
3H21	PILOT SIGNAL MANIFOLD LINES TO SOLENOID VALVE	3363 - 24
3I3	PILOT SIGNAL MANIFOLD SENSOR	3363 - 30
3G7	PILOT VALVE (PROPEL)	3362 - 32
3G7	PILOT VALVE HOUSING	3362 - 32
3G11	PILOT VALVE MANIFOLD (HOUSING AND GASKETS)	3362 - 36
3G13	PILOT VALVE MANIFOLD (VALVE SECTION)	3362 - 38
3D14	PILOT VALVE TO PILOT SHUT-OFF VALVE HOSE (FOOT PEDAL CONTROL KIT)	3315 - 12
3D1	PIN-UP DATA, BUCKET (GENERAL PURPOSE AND HEAVY DUTY)	3302 - 16
3D20	PIN, ARM CYLINDER TO ARM (2.52M ARM)(REPLACEMENT ARM)	3344 - 5A
3D24	PIN, ARM CYLINDER TO ARM (3.01M ARM)(REPLACEMENT ARM)	3344 - 7A
3D18	PIN, ARM HYDRAULIC CYLINDER TO BUCKET LINK(2.52M ARM)(FACTORY INSTALLED ARM)	3344 - 4
3D20	PIN, ARM TO ARM CYLINDER (2.52M ARM)(REPLACEMENT ARM)	3344 - 5A
3D24	PIN, ARM TO ARM CYLINDER (3.01M ARM)(REPLACEMENT ARM)	3344 - 7A
3D18	PIN, ARM TO BOOM (2.52M ARM) (FACTORY INSTALLED ARM)	3344 - 4
3D20	PIN, ARM TO BUCKET (2.52M ARM)(REPLACEMENT ARM)	3344 - 5A
3D24	PIN, ARM TO BUCKET (3.01M ARM)(REPLACEMENT ARM)	3344 - 7A
3D20	PIN, ARM TO BUCKET CYLINDER (2.52M ARM)(REPLACEMENT ARM)	3344 - 5A
3D24	PIN, ARM TO BUCKET CYLINDER (3.01M ARM)(REPLACEMENT ARM)	3344 - 7A
3D20	PIN, ARM TO BUCKET LINKAGE (2.52M ARM)(REPLACEMENT ARM)	3344 - 5A
3D24	PIN, ARM TO BUCKET LINKAGE (3.01M ARM)(REPLACEMENT ARM)	3344 - 7A
3B19	PIN, BLADE CYLINDER TO BLADE	3301 - 6
3B19	PIN, BLADE CYLINDER TO FRAME	3301 - 6
3B19	PIN, BLADE TO BLADE CYLINDER	3301 - 6
3B19	PIN, BLADE TO FRAME	3301 - 6
1I6	PIN, BOOM FOOT	1740 - 4
3D20	PIN, BUCKET CYLINDER TO ARM (2.52M ARM)(REPLACEMENT ARM)	3344 - 5A
3D24	PIN, BUCKET CYLINDER TO ARM (3.01M ARM)(REPLACEMENT ARM)	3344 - 7A
3D20	PIN, BUCKET CYLINDER TO LINKAGE (2.52M ARM)(REPLACEMENT ARM)	3344 - 5A
3D24	PIN, BUCKET CYLINDER TO LINKAGE (3.01M ARM)(REPLACEMENT ARM)	3344 - 7A
3D20	PIN, BUCKET LINKAGE TO ARM (2.52M ARM)(REPLACEMENT ARM)	3344 - 5A
3D24	PIN, BUCKET LINKAGE TO ARM (3.01M ARM)(REPLACEMENT ARM)	3344 - 7A
3D20	PIN, BUCKET LINKAGE TO CYLINDER (2.52M ARM)(REPLACEMENT ARM)	3344 - 5A
3D24	PIN, BUCKET LINKAGE TO CYLINDER (3.01M ARM)(REPLACEMENT ARM)	3344 - 7A
3D20	PIN, BUCKET TO ARM (2.52M ARM)(REPLACEMENT ARM)	3344 - 5A
3D24	PIN, BUCKET TO ARM (3.01M ARM)(REPLACEMENT ARM)	3344 - 7A
3D20	PIN, BUCKET TO LINKAGE (2.52M ARM)(REPLACEMENT ARM)	3344 - 5A
3D24	PIN, BUCKET TO LINKAGE (3.01M ARM)(REPLACEMENT ARM)	3344 - 7A
3B19	PIN, FRAME TO BLADE	3301 - 6
3B19	PIN, FRAME TO BLADE CYLINDER	3301 - 6
3D20	PIN, LINKAGE TO BUCKET (2.52M ARM)(REPLACEMENT ARM)	3344 - 5A
3D24	PIN, LINKAGE TO BUCKET (3.01M ARM)(REPLACEMENT ARM)	3344 - 7A
3D18	PINS, STANDARD ARM (2.52M) (FACTORY INSTALLED ARM)	3344 - 4
1B8	PINS, TRACK	0132 - 2
1C15	PISTON - CYLINDER LINER KITS	0404 - 2
1C11	PISTON CONNECTING RODS	0401 - 2
3E19	PISTON GROUP, MAIN HYDRAULIC PUMP	3361 - 6
1C11	PISTON RINGS	0401 - 2
1C11	PISTONS	0401 - 2
2C13	PLATE, CAB FLOOR	1821 - 4
1D3	PLUGS, GLOW, ENGINE	0409 - 2
2F1	POWER SUPPLY (12 VOLT)	2006 - 2
3I3	PRESSURE SENSOR, ARM IN	3363 - 30
3I3	PRESSURE SENSOR, BOOM UP	3363 - 30
3I3	PRESSURE SENSOR, PROPEL	3363 - 30
3I3	PRESSURE SENSOR, SWING	3363 - 30
1E11	PRIMARY FUEL FILTER	0420 - 2
1E15	PRIMARY FUEL PUMP	0421 - 2
1B2	PRIMARY STEP, TRACK FRAME	0131 - 2

ALPHABETICAL INDEX - CONTINUED

GRID		PAGE
1E17	PRIMER, FUEL INJECTION SYSTEM	0421 - 4
2E24	PROPEL ALARM	2004 - 4
2E24	PROPEL ALARM SWITCH	2004 - 4
2E24	PROPEL ALARM WIRING HARNESS	2004 - 4
3G3	PROPEL BRAKE VALVE	3362 - 26
3I7	PROPEL CONTROL VALVE HOSES FROM PILOT SIGNAL MANIFOLD	3363 - 34
3H7	PROPEL DRAIN LINE	3363 - 10
3H15	PROPEL HIGH PRESSURE HOSES	3363 - 18
1B19	PROPEL MOTOR	0260 - 6
1B19	PROPEL MOTOR COMPONENTS	0260 - 6
1B23	PROPEL MOTOR GEAR BOX	0267 - 2
1C1	PROPEL MOTOR HARDWARE	0267 - 4
1B21	PROPEL MOTOR HYDRAULIC LINES	0263 - 2
1C3	PROPEL MOTOR INSIDE COVER	0267 - 6
1B21	PROPEL MOTOR LINES TO ROTARY MANIFOLD	0263 - 2
1C1	PROPEL MOTOR MOUNTING	0267 - 4
3G7	PROPEL MOTOR PILOT VALVE	3362 - 32
1C3	PROPEL MOTOR SHIELDS	0267 - 6
1B23	PROPEL MOTOR SPROCKET	0267 - 2
1B23	PROPEL MOTOR, DRIVE GEARS	0267 - 2
3G7	PROPEL PEDAL VALVE	3362 - 32
3D6	PROPEL PILOT CONTROLLER GRIP	3315 - 4
3D8	PROPEL PILOT CONTROLLER SHUTOFF LEVER	3315 - 6
3D8	PROPEL PILOT CONTROLLER SHUTOFF LEVER CABLE	3315 - 6
3D8	PROPEL PILOT CONTROLLER SHUTOFF LEVER GRIP	3315 - 6
3D6	PROPEL PILOT CONTROLLER VALVE	3315 - 4
3D6	PROPEL PILOT CONTROLLERS	3315 - 4
3I9	PROPEL PILOT VALVE TO PILOT SHUTOFF VALVE PILOT HYDRAULIC LINES	3363 - 36
3I3	PROPEL PRESSURE SENSOR	3363 - 30
3G5	PROPEL, BRAKE VALVE	3362 - 28
2D7	PULLEY, AIR CONDITIONING BELT TENSIONER	1832 - 2
1C11	PULLEY, CRANKSHAFT DAMPER	0401 - 2
1B14	PULLEY, FRONT IDLER	0134 - 2
1E3	PULLEY, WATER PUMP	0417 - 2
1H15	PUMP AND VALVE CONTROL UNIT	1674 - 6
3G23	PUMP INLET HOSES (RESERVOIR TO PUMP)	3363 - 2
3H1	PUMP OUT HOSES, (PUMP TO CONTROL VALVE) (HIGH PRESSURE)	3363 - 4
3E23	PUMP REGULATOR (PUMP 1)	3361 - 10
3E21	PUMP REGULATOR (PUMP 2)	3361 - 8
3E23	PUMP REGULATOR SENSOR (PUMP 1)	3361 - 10
3E21	PUMP REGULATOR SENSOR (PUMP 2)	3361 - 8
3H1	PUMP TO CONTROL VALVE HOSES (HIGH PRESSURE)	3363 - 4
1D9	PUMP, FUEL INJECTION	0413 - 2
3E19	PUMP, HYDRAULIC, COMPONENTS	3361 - 6
1D19	PUMP, INJECTION, COUPLING	0413 - 14
1D17	PUMP, INJECTION, MOUNTING COLLAR	0413 - 12
3E15	PUMP, MAIN HYDRAULIC	3361 - 2
1C21	PUMP, OIL, ENGINE	0407 - 4
3F1	PUMP, PILOT (COMPONENTS)	3361 - 12
1E15	PUMP, PRIMARY FUEL TRANSFER	0421 - 2
1E17	PUMP, SECONDARY FUEL TRANSFER	0421 - 4
3E19	PUMP, SENSOR	3361 - 6
1E3	PUMP, WATER	0417 - 2
2C3	PUMP, WINDSHIELD WASHERRESERVOIR	1814 - 2
1C17	PUSH ROD ACCESS COVER	0404 - 4
1D5	PUSH RODS (ENGINE)	0409 - 4

R

1F11	RADIATOR	0511 - 6
2E1	RADIATOR COMPARTMENT DOOR	1910 - 4
2D23	RADIATOR COMPARTMENT REAR PANEL	1910 - 2
1F15	RADIATOR COVER	0511 - 10
1F11	RADIATOR DRAIN HOSE	0511 - 6
1F13	RADIATOR HOSES	0511 - 8
1F19	RADIATOR MOUNTING	0511 - 14
1F17	RADIATOR OVERFLOW HOSE	0511 - 12
1F17	RADIATOR OVERFLOW TANK	0511 - 12
1F15	RADIATOR PLATE, REAR	0511 - 10
1F17	RADIATOR RESERVE HOSE	0511 - 12
1F17	RADIATOR RESERVE TANK	0511 - 12
1F17	RADIATOR RESERVOIR	0511 - 12
1F13	RADIATOR SUPPORT	0511 - 8
1F19	RADIATOR SUPPORTS	0511 - 14
1F15	RADIATOR TOP COVER	0511 - 10
2E16	RADIO	2001 - 2
2E16	RADIO SPEAKER GRILLE	2001 - 2
2E16	RADIO SPEAKERS	2001 - 2
2B10	REAR CAB WINDOW	1810 - 8
2D5	REAR COVER COMPONENTS, CAB INTERIOR	1831 - 8
2D3	REAR COVER, CAB INTERIOR	1831 - 6
2D23	REAR PANEL, COOLING PACKAGE COMPARTMENT	1910 - 2
2D3	REAR TRAY, CAB	1831 - 6
2E20	REAR VIEW MIRROR (BACK OF MACHINE)	2002 - 4
2E18	REAR VIEW MIRROR, LEFT SIDE	2002 - 2
1I8	REAR WEIGHT	1749 - 2
2E7	REARVIEW MIRROR, RIGHT SIDE	1910 - 10
2D13	RECEIVER-DRYER, AIR CONDITIONING	1833 - 6
3E23	REGULATOR (PUMP 1)	3361 - 10
3E21	REGULATOR (PUMP 2)	3361 - 8
3E23	REGULATOR SENSOR (PUMP 1)	3361 - 10
3E21	REGULATOR SENSOR (PUMP 2)	3361 - 8
3E21	REGULATOR, PUMP (PUMP 2)	3361 - 8
1H7	RELAY, BATTERY	1671 - 2
1E19	RELAY, ENGINE	0423 - 2
2D17	RELAY, HEATER AND AIR CONDITIONER	1833 - 10
2D19	RELAY, HEATER AND AIR CONDITIONER (CONTINUED)	1833 - 12
3E11	RELAY, MODUAL FOR DUAL AUXILIARY CONTROL (2 SOLENOIDS)	3360 - 6
1H15	RELAYS, CAB WIRING HARNESS	1674 - 6
3H23	RELEASE, BRAKE HOSE	3363 - 26
2B18	RELEASE, DOOR, CABLE	1810 - 16
3G1	RELIEF BRAKE VALVE, CROSSOVER	3362 - 24
3G5	RELIEF VALVE	3362 - 28
3G3	RELIEF VALVE, PROPEL BRAKE	3362 - 26
1F17	RESERVE TANK, RADIATOR	0511 - 12
1F17	RESERVOIR COOLANT	0511 - 12
3G23	RESERVOIR TO PUMP, HOSES(LOW PRESSURE)	3363 - 2
3J11	RESERVOIR, HYDRAULIC	3364 - 2
2C3	RESERVOIR, WINDSHIELD WASHER	1814 - 2
3J11	RETURN FILTER, HYDRAULIC OIL TANK	3364 - 2
3C3	RETURN HOSES (BLADE OPTION) (BLADE CONTROL VALVE)	3301 - 12
3C3	RETURN HOSES (BLADE OPTION) (CONTROL VALVE)	3301 - 12
3C3	RETURN HOSES (BLADE OPTION) (SHUTTLE VALVE)	3301 - 12
3H3	RETURN LINES (HEAT EXCHANGER TO RESERVOIR)	3363 - 6
3H5	RETURN LINES (HEAT EXCHANGER TO CONTROL VALVE)	3363 - 8
3H3	RETURN LINES (OIL COOLER TO RESERVOIR)	3363 - 6
3H5	RETURN LINES (OIL COOLER TO CONTROL VALVE)	3363 - 8
2E24	REVERSE ALARM	2004 - 4

ALPHABETICAL INDEX - CONTINUED

GRID		PAGE
3J15	RIGHT BOOM CYLINDER	3365 - 2
3J17	RIGHT BOOM CYLINDER (COMPONENTS)	3365 - 4
2C9	RIGHT COVER, CAB	1816 - 6
2E1	RIGHT REAR COMPARTMENT DOOR	1910 - 4
2C5	RIGHT SIDE CAB CONSOLE	1816 - 2
2E7	RIGHT SIDE HANDRAIL	1910 - 10
2E7	RIGHT SIDE MACHINE STEPS	1910 - 10
2E7	RIGHT SIDE MIRROR	1910 - 10
2E7	RIGHT SIDE REARVIEW MIRROR	1910 - 10
2B16	RIGHT SIDE WINDOW	1810 - 14
1B23	RING GEAR, PROPEL MOTOR GEAR BOX	0267 - 2
1C11	RINGS, PISTON	0401 - 2
1D5	ROCKER ARM (ENGINE)	0409 - 4
1C13	ROCKER ARM COVER	0402 - 2
1C13	ROCKER ARM COVER GASKET	0402 - 2
3K9	ROD, BLADE CYLINDER (LEFT)	3365 - 28
3K7	ROD, BLADE CYLINDER (RIGHT)	3365 - 26
1D5	ROD, PUSH (ENGINE)	0409 - 4
2B14	ROLLER ASSEMBLY, FRONT WINDOW	1810 - 12
1B10	ROLLER UPPER, TRACK	0133 - 2
1B12	ROLLER, LOWER, TRACK	0133 - 4
1B10	ROLLER, TRACK CARRIER	0133 - 2
3K16	ROTARY MANIFOLD	4362 - 2
3K18	ROTARY MANIFOLD (HARDWEAR) (LOWER)	4362 - 4
3K20	ROTARY MANIFOLD (SUPPORT) (UPPER)	4362 - 6
3H7	ROTARY MANIFOLD HOSE TO RESERVOIR	3363 - 10
3H15	ROTARY MANIFOLD HOSES FROM CONTROL VALVE	3363 - 18
1B21	ROTARY MANIFOLD LINES TO PROPEL MOTOR	0263 - 2
3B21	ROTARY MANIFOLD SUPPORTS, BLADE OPTION	3301 - 8
3J9	ROTARY MANIFOLD TO BLADE CYLINDER HOSE	3363 - 86
3E19	ROTATE GROUP, MAIN HYDRAULIC PUMP	3361 - 6
3L1	ROTATE MOTOR	4367 - 6
2C11	RUBBER FLOORMAT, CAB	1821 - 2
2B4	RUBBER ISOLATORS, CAB	1810 - 2
1G11	RUBBER MOUNTING, ENGINE	0540 - 2
1B8	RUBBER SHOE, TRACK LINKS	0132 - 2
3F11	RUPTURE VALVE LINES, (ARM)	3362 - 10
3F9	RUPTURE VALVE LINES, (BOOM)	3362 - 8

S

2D15	SCREEN, AIR CONDITIONING CONDENSOR	1833 - 8
1F9	SCREEN, CHARGE AIR COOLER	0511 - 4
3K1	SEAL KIT, ARM CYLINDER	3365 - 20
3K9	SEAL KIT, BLADE CYLINDER (LEFT)	3365 - 28
3K7	SEAL KIT, BLADE CYLINDER (RIGHT)	3365 - 26
3J17	SEAL KIT, BOOM CYLINDER (RIGHT)	3365 - 4
3K5	SEAL KIT, BUCKET CYLINDER	3365 - 24
3J21	SEAL KIT, LEFT BOOM CYLINDER	3365 - 8
3E19	SEAL KIT, MAIN HYDRAULIC PUMP	3361 - 6
1B19	SEAL KIT, PROPEL MOTOR	0260 - 6
1B23	SEAL KIT, PROPEL MOTOR BEAR BOX	0267 - 2
3E21	SEAL KIT, PUMP REGULATOR (PUMP 2)	3361 - 8
2B20	SEAL, CAB TOP HATCH	1810 - 20
1F1	SEALS AND GASKETS, ENGINE OVERHAUL	0452 - 2
3F23	SEALS, CONTROL VALVE (MANIFOLD O-RINGS)	3362 - 22
2C15	SEAT	1821 - 10
2C19	SEAT BASE	1821 - 14
2C19	SEAT BASE BRACKET	1821 - 14
2C13	SEAT BASE, CAB FLOOR PLATE	1821 - 4
2C21	SEAT BELT	1821 - 16
2C17	SEAT BELT (3.00 INCH)	1821 - 12
2C21	SEAT BELT BRACKET	1821 - 16
2C17	SEAT BELT KIT, (3.00 INCH)	1821 - 12
2C15	SEAT FOAM KIT	1821 - 10
2C15	SEAT LUMBAR KIT	1821 - 10
2C19	SEAT SLIDE TRACK KIT	1821 - 14
2C15	SEAT SUSPENSION	1821 - 10
2B22	SECONDARY EXIT HANDLE	1810 - 22
2B22	SECONDARY EXIT KIT	1810 - 22
2B22	SECONDARY EXIT LABEL	1810 - 22
1E13	SECONDARY FUEL FILTER	0420 - 4
1E17	SECONDARY FUEL PUMP	0421 - 4
1B6	SECONDARY STEP	0131 - 6
1E11	SEDIMENTARY BOWL, FUEL FILTER	0420 - 2
1G15	SENDING UNIT, FUEL TANK LEVEL	0564 - 2
2D13	SENSOR, AIR CONDITIONING	1833 - 6
3I3	SENSOR, CONTROL VALVE(4-SPOOL SIDE)	3363 - 30
1C15	SENSOR, CYLINDER BLOCK	0404 - 2
1E19	SENSOR, ENGINE	0423 - 2
1F17	SENSOR, ENGINE COOLANT LEVEL	0511 - 12
1D1	SENSOR, ENGINE OIL	0407 - 8
1C9	SENSOR, ENGINE OIL LEVEL	0400 - 2
1C9	SENSOR, ENGINE OIL PRESSURE	0400 - 2
1G15	SENSOR, FUEL LEVEL	0564 - 2
3E19	SENSOR, HYDRAULIC PUMP	3361 - 6
3I3	SENSOR, PILOT SIGNAL MANIFOLD	3363 - 30
3I3	SENSOR, PRESSURE, ARM IN	3363 - 30
3I3	SENSOR, PRESSURE, PROPEL	3363 - 30
3I3	SENSOR, PRESSURE, SWING	3363 - 30
3E23	SENSOR, PUMP REGULATOR (PUMP 1)	3361 - 10
3E21	SENSOR, PUMP REGULATOR (PUMP 2)	3361 - 8
3I1	SENSOR, SWING MOTOR	3363 - 28
2D13	SENSOR, TEMPERATURE, AIR CONDITIONING	1833 - 6
3I3	SENSOR,, PRESSURE, BOOM UP	3363 - 30
1G13	SEPARATOR, FUEL	0563 - 2
1E11	SEPERATOR, WATER, PRIMARY FUEL FILTER	0420 - 2
1D5	SHAFT, CAM (ENGINE)	0409 - 4
3C13	SHANK, BUCKET TOOTH	3302 - 4
3C15	SHANK, BUCKET TOOTH	3302 - 6
3C23	SHANK, DITCH CLEANING BUCKET	3302 - 14
1C3	SHIELDS, PROPEL MOTOR	0267 - 6
1B8	SHOE, TRACK LINKS	0132 - 2
1F19	SHROUD, FAN	0511 - 14
3E7	SHUT-OFF VALVE TO SOLENOID VALVE HOSE (AUXILIARY SOLENOID/FLOW CONTROL)	3360 - 2
3D8	SHUTOFF LEVER, PROPEL PILOT CONTROLLER	3315 - 6
3G21	SHUTOFF VALVE, PILOT (COMPONENTS)	3362 - 46
3I19	SHUTOFF VALVE, PILOT HOSES TO PILOT SIGNAL MANIFOLD	3363 - 46
3I19	SHUTOFF VALVE, PILOT HOSES TO SOLENOID VALVE	3363 - 46
3I9	SHUTOFF VALVE, PILOT, TO PROPEL PILOT VALVE PILOT HYDRAULIC LINES	3363 - 36
3G17	SHUTTLE VALVE (CONTROL VALVE SIDE)	3362 - 42
3G11	SHUTTLE VALVE (HOUSING AND GASKETS)	3362 - 36
3G15	SHUTTLE VALVE (PILOT CONTROLLER SIDE FITTINGS)	3362 - 40
3G13	SHUTTLE VALVE (VALVE SECTION)	3362 - 38
3G19	SHUTTLE VALVE (VALVES & SPOOLS)	3362 - 44
3B15	SHUTTLE VALVE HOSES TO BLADE CONTROL VALVE	3301 - 2
3C17	SIDE CUTTERS, GENERAL PURPOSE BUCKET	3302 - 8

ALPHABETICAL INDEX - CONTINUED

GRID		PAGE
3C19	SIDE CUTTERS, GENERAL PURPOSE BUCKET (CONTINUED)	3302 - 10
3C21	SIDE CUTTERS, HEAVY DUTY BUCKET	3302 - 12
2E7	SIDE MIRROR	1910 - 10
3J11	SIGHT GAUGE, HYDRAULIC OIL TANK	3364 - 2
3G17	SIGNAL MANIFOLD, PILOT (CONTROL VALVE SIDE)	3362 - 42
3G15	SIGNAL MANIFOLD, PILOT (PILOT CONTROLLER SIDE FITTINGS)	3362 - 40
3G19	SIGNAL MANIFOLD, PILOT (VALVES & SPOOLS)	3362 - 44
3I15	SIGNAL MANIFOLD, PILOT, HOSES TO RESERVOIR	3363 - 42
2F1	SOCKET, 12V POWER SUPPLY	2006 - 2
3E7	SOLENOID CONTROL AND FLOW CONTROL KIT (1-WAY)	3360 - 2
3E7	SOLENOID CONTROL VALVE, AUXILIARY (1-WAY)	3360 - 2
3E9	SOLENOID HOSE TO HYDRAULIC RESERVOIR (PILOT SYSTEM)	3360 - 4
3E9	SOLENOID HOSE TO PILOT SHUT-OFF VALVE (PILOT SYSTEM)	3360 - 4
3E9	SOLENOID HOSE TO PILOT SIGNAL MANIFOLD (PILOT SYSTEM)	3360 - 4
3F7	SOLENOID VALVE	3362 - 6
3G9	SOLENOID VALVE (COMPONENTS)	3362 - 34
3E11	SOLENOID VALVE DUAL CONTROL HARNESS (2 SOLENOIDS)	3360 - 6
3I19	SOLENOID VALVE HOSES FROM PILOT SHUTOFF VALVE	3363 - 46
3E9	SOLENOID VALVE KIT, 1WAY/2WAY, WITHOUT PRESSURE SWITCH	3360 - 4
3H21	SOLENOID VALVE LINES TO PILOT SIGNAL MANIFOLD	3363 - 24
3H21	SOLENOID VALVE LINES TO ROTARY MANIFOLD	3363 - 24
3E7	SOLENOID VALVE TO HYDRAULIC RESERVOIR HOSE (AUXILIARY SOLENOID/FLOW CONTROL)	3360 - 2
3E7	SOLENOID VALVE TO SHUT-OFF VALVE HOSE (AUXILIARY SOLENOID/FLOW CONTROL)	3360 - 2
3E7	SOLENOID VALVE TO SIGNAL MANIFOLD HOSE (AUXILIARY SOLENOID/FLOW CONTROL)	3360 - 2
3D10	SOLENOID VALVE, CONTROL PATTERN SELECTOR KIT	3315 - 8
2E16	SOUND SYSTEM	2001 - 2
2E16	SPEAKER GRILLE, RADIO	2001 - 2
2E16	SPEAKERS	2001 - 2
2E16	SPEAKERS, RADIO	2001 - 2
1D11	SPEED CONTROL LINKAGE (GOVERNOR)	0413 - 6
1F23	SPEED CONTROL MOTOR	0515 - 4
1F21	SPEED CONTROLS, ENGINE	0515 - 2
3F17	SPOOL, CONTROL VALVE (BOTTOM)	3362 - 16
3F13	SPOOL, CONTROL VALVE (4-SPOOL SIDE)	3362 - 12
3F21	SPOOL, CONTROL VALVE (4-SPOOL TOP)	3362 - 20
3F15	SPOOL, CONTROL VALVE (5-SPOOL SIDE)	3362 - 14
3F19	SPOOL, CONTROL VALVE (5-SPOOL TOP)	3362 - 18
1B16	SPRING, FRONT IDLER	0134 - 4
1B16	SPRING, TRACK ADJUSTER	0134 - 4
1B23	SPROCKET, PROPEL MOTOR	0267 - 2
3D18	STANDARD ARM (2.52 M) (FACTORY INSTALLED ARM)	3344 - 4
3D18	STANDARD ARM BUSHINGS (2.52M) (FACTORY INSTALLED ARM)	3344 - 4
3D18	STANDARD ARM PINS (2.52M) (FACTORY INSTALLED ARM)	3344 - 4
3D16	STANDARD BOOM	3344 - 2
1E19	STARTER, ENGINE	0423 - 2
1B8	STEEL SHOE, TRACK LINK	0132 - 2
1B6	STEP EXTENSIONS	0131 - 6
1I4	STEP, FRAME	1740 - 2
1B2	STEP, PRIMARY, TRACK FRAME	0131 - 2
1B6	STEP, SECONDARY	0131 - 6
1G20	STEPS, ANTI-SLIP MATS	1322 - 2
2E7	STEPS, MACHINE RIGHT SIDE	1910 - 10
2E7	STEPS, RIGHT SIDE, TOP ACCESS	1910 - 10
1G20	STICKERS (LABELS AND DECALS)	1322 - 2
1G1	STOP CABLE, ENGINE	0515 - 6
1G15	STRAINER, FUEL	0564 - 2
1C21	STRAINER, OIL, ENGINE	0407 - 4
3G23	SUCTION HOSES (RESERVOIR TO PUMP)	3363 - 2
2F3	SUN VISOR, CAB	2007 - 2
2B20	SUNSHADE, CAB TOP HATCH	1810 - 20
1G5	SUPPORT, AIR CLEANER	0521 - 4
1F13	SUPPORT, COOLING PACKAGE	0511 - 8
2E3	SUPPORT, EXHAUST COMPARTMENT	1910 - 6
1G17	SUPPORT, FUEL TANK	0564 - 4
1G9	SUPPORT, MUFFLER	0531 - 2
1F13	SUPPORT, RADIATOR	0511 - 8
3K20	SUPPORT, ROTARY MANIFOLD (UPPER)	4362 - 6
1H7	SUPPORTS, BATTERY	1671 - 2
1G11	SUPPORTS, ENGINE	0540 - 2
3F5	SUPPORTS, HYDRAULIC CONTROL VALVE	3362 - 4
1F19	SUPPORTS, RADIATOR	0511 - 14
3B21	SUPPORTS, ROTARY MANIFOLD (BLADE OPTION)	3301 - 8
2C15	SUSPENSION, SEAT	1821 - 10
3K12	SWING BEARING	4351 - 2
3K14	SWING BEARING (HARDWEAR)	4351 - 4
3K12	SWING BEARING BALL	4351 - 2
1B4	SWING BEARING COVER	0131 - 4
3K14	SWING BEARING MOUNTING	4351 - 4
3H7	SWING DRAIN LINE	3363 - 10
3K22	SWING GEARBOX	4367 - 2
3L1	SWING GEARBOX MOTOR (COMPONENTS)	4367 - 6
3K22	SWING MOTOR	4367 - 2
3L1	SWING MOTOR (COMPONENTS)	4367 - 6
3G1	SWING MOTOR BRAKE VALVE	3362 - 24
3H7	SWING MOTOR HOSE FROM CONTROL VALVE	3363 - 10
3H7	SWING MOTOR HOSE TO RESERVOIR	3363 - 10
3H13	SWING MOTOR HOSES FROM CONTROL VALVE	3363 - 16
3K24	SWING MOTOR MOUNTING	4367 - 4
3I1	SWING MOTOR SENSOR	3363 - 28
3L1	SWING PARK BRAKE	4367 - 6
3I3	SWING PRESSURE SENSOR	3363 - 30
1H22	SWITCH BOX, MANUAL ENGINE CONTROL	1674 - 12
1H13	SWITCH PANEL, CAB	1674 - 4
3E11	SWITCH, AUXILIARY CONTROL HANDLE	3360 - 6
1C9	SWITCH, COOLANT OVERHEAT	0400 - 2
1E19	SWITCH, ENGINE	0423 - 2
1C9	SWITCH, ENGINE COOLANT TEMPERATURE	0400 - 2
1H15	SWITCH, ENGINE LEARNING	1674 - 6
1C9	SWITCH, ENGINE OIL LEVEL	0400 - 2
1C9	SWITCH, ENGINE OIL PRESSURE	0400 - 2
3E13	SWITCH, FOOT, AUXILIARY ELECTRIC	3360 - 8
2D17	SWITCH, HEATER AND AIR CONDITIONER	1833 - 10
2D19	SWITCH, HEATER AND AIR CONDITIONER (CONTINUED)	1833 - 12
3J13	SWITCH, HYDRAULIC FILTER RESTRICTION INDICATOR	3364 - 4
1H13	SWITCH, IGNITION	1674 - 4
2B14	SWITCH, LIGHT, FRONT WINDOW	1810 - 12
2E24	SWITCH, PROPEL ALARM	2004 - 4

ALPHABETICAL INDEX - CONTINUED

GRID		PAGE
	T	
1G15	TANK, FUEL	0564 - 2
3J11	TANK, HYDRAULIC OIL	3364 - 2
1F17	TANK, RADIATOR OVERFLOW	0511 - 12
1F17	TANK, RADIATOR RESERVE	0511 - 12
2C3	TANK, WINDSHIELD WASHER	1814 - 2
3C13	TEETH, BUCKET	3302 - 4
3C15	TEETH, BUCKET	3302 - 6
3C23	TEETH, DITCH CLEANING BUCKET	3302 - 14
3C11	TEETH, ESCO	3302 - 2
2D13	TEMPERATURE SENSOR, AIR CONDITIONING	1833 - 6
2D7	TENSIONER, AIR CONDITIONING COMPRESSOR BELT	1832 - 2
1H1	TEST KIT, FLUID ANALYSIS PRODUCTS (COOLSCAN)	1369 - 6
1H2	TEST KIT, FLUID ANALYSIS PRODUCTS (DIESELSCAN)	1369 - 7
1G24	TEST KIT, FLUID ANALYSIS PRODUCTS (OILSCAN)	1369 - 4
1E5	THERMOSTAT	0418 - 2
1E5	THERMOSTAT HOUSING	0418 - 2
1F21	THROTTLE CONTROLS AND CABLE	0515 - 2
1I4	THRUST WASHER, FRAME	1740 - 2
3D22	THRUST WASHERS, ARM (LONG) (3.01 M)(FACTORY INSTALLED ARM)	3344 - 6
3D18	THRUST WASHERS, ARM (STANDARD) (2.52 M)(FACTORY INSTALLED ARM)	3344 - 4
3D16	THRUST WASHERS, STANDARD BOOM	3344 - 2
1H15	TIMER, ENGINE GLOW PLUG	1674 - 6
1E23	TIMING GEAR CASE	0433 - 2
1E23	TIMING GEAR COVER	0433 - 2
1D5	TIMING GEAR, CAMSHAFT (ENGINE)	0409 - 4
3C13	TOOTH ASSEMBLY	3302 - 4
3C15	TOOTH ASSEMBLY	3302 - 6
3C23	TOOTH, DITCH CLEANING BUCKET	3302 - 14
3C11	TOOTH, ESCO	3302 - 2
2E11	TOP, COOLING PACKAGE COMPARTMENT	1910 - 14
1B16	TRACK ADJUSTER ASSEMBLY	0134 - 4
1B10	TRACK CARRIER ROLLER	0133 - 2
1B8	TRACK CHAIN	0132 - 2
1B23	TRACK DRIVE GEARS	0267 - 2
1B2	TRACK FRAME	0131 - 2
3C7	TRACK FRAME (BLADE OPTION)	3301 - 16
1B4	TRACK FRAME BOTTOM COVER	0131 - 4
1B14	TRACK FRONT IDLER	0134 - 2
1B19	TRACK HYDRAULIC MOTOR	0260 - 6
1B8	TRACK LINKS	0132 - 2
1B12	TRACK LOWER ROLLER	0133 - 4
1B8	TRACK PINS	0132 - 2
1B10	TRACK UPPER ROLLER	0133 - 2
3K12	TRACK, SWING BEARING	4351 - 2
3K14	TRACK, SWING BEARING (HARDWEAR)	4351 - 4
1E15	TRANSFER PUMP, PRIMARY FUEL	0421 - 2
1E17	TRANSFER PUMP, SECONDARY FUEL	0421 - 4
2D17	TRANSISTOR, HEATER AND AIR CONDITIONER	1833 - 10
2D19	TRANSISTOR, HEATER AND AIR CONDITIONER (CONTINUED)	1833 - 12
3G3	TRAVEL BRAKE VALVE	3362 - 26
1B23	TRAVEL DEVICE	0267 - 2
1B23	TRAVEL GEARBOX	0267 - 2
1B23	TRAVEL MOTOR, DRIVE GEARS	0267 - 2
2D3	TRAY, REAR, CAB	1831 - 6
1D23	TURBOCHARGER	0416 - 2
1E1	TURBOCHARGER COMPONENTS	0416 - 4
1G5	TURBOCHARGER TO AIR CLEANER HOSES	0521 - 4
1G5	TURBOCHARGER TO AIR CLEANER LINES	0521 - 4
1F7	TURBOCHARGER TO CHARGE AIR COOLER LINES	0511 - 2
1H15	TWELVE VOLT POWER SUPPLY, CAB	1674 - 6
	U	
1B4	UNDER COVER, TRACK FRAME	0131 - 4
1B10	UPPER ROLLER, TRACK	0133 - 2
	V	
1C23	VACUUM LINES (ENGINE)	0407 - 6
3D4	VALVE COMPONENTS, PILOT CONTROLLER (DIG AND SWING)	3315 - 3A
1C13	VALVE COVER	0402 - 2
1C13	VALVE COVER GASKET	0402 - 2
1D3	VALVE GUIDE, ENGINE	0409 - 2
3E9	VALVE KIT,SOLENOID, 1WAY/2WAY, WITHOUT PRESSURE SWITCH	3360 - 4
1D5	VALVE SPRINGS (ENGINE)	0409 - 4
3J5	VALVE, ANTI-DRIFT (ARM)	3363 - 56
3J7	VALVE, ANTI-DRIFT (BOOM)	3363 - 58
3G3	VALVE, BRAKE PROPEL	3362 - 26
3G1	VALVE, BRAKE SWING MOTOR	3362 - 24
3G3	VALVE, BRAKE TRAVEL	3362 - 26
3F3	VALVE, CONTROL	3362 - 2
3F17	VALVE, CONTROL (BOTTOM)	3362 - 16
3F23	VALVE, CONTROL (MANIFOLD O-RINGS)	3362 - 22
3F5	VALVE, CONTROL (SUPPORTS)	3362 - 4
3F13	VALVE, CONTROL (4-SPOOL SIDE)	3362 - 12
3F21	VALVE, CONTROL (4-SPOOL TOP)	3362 - 20
3F15	VALVE, CONTROL (5-SPOOL SIDE)	3362 - 14
3F19	VALVE, CONTROL (5-SPOOL TOP)	3362 - 18
3I17	VALVE, CONTROL HOSES TO RESERVOIR	3363 - 44
1D5	VALVE, EXHAUST (ENGINE)	0409 - 4
1D5	VALVE, INTAKE (ENGINE)	0409 - 4
3D12	VALVE, MECHANICAL PATTERN CHANGER	3315 - 9A
1D15	VALVE, OVERFLOW	0413 - 10
3G7	VALVE, PILOT (PROPEL)	3362 - 32
3D14	VALVE, PILOT CONTROL, FOOT CONTROL (FOOT PEDAL CONTROL KIT)	3315 - 12
3D2	VALVE, PILOT CONTROLLER (DIG AND SWING)	3315 - 2
3G21	VALVE, PILOT SHUTOFF (COMPONENTS)	3362 - 46
3I11	VALVE, PILOT SHUTOFF HOSES FROM LEFT PILOT CONTROL VALVE	3363 - 38
3I13	VALVE, PILOT SHUTOFF HOSES FROM RIGHT PILOT CONTROL VALVE	3363 - 40
3I19	VALVE, PILOT SHUTOFF, HOSES TO SOLENOID VALVE	3363 - 46
3I19	VALVE, PILOT SHUTOFF, HOSES TO PILOT SIGNAL MANIFOLD	3363 - 46
3D6	VALVE, PROPEL PILOT CONTROLLER	3315 - 4
3I9	VALVE, PROPEL PILOT VALVE TO PILOT SHUTOFF VALVE	3363 - 36
3G5	VALVE, RELIEF	3362 - 28
3G17	VALVE, SHUTTLE (CONTROL VALVE SIDE)	3362 - 42
3G11	VALVE, SHUTTLE (HOUSING AND GASKETS)	3362 - 36
3G15	VALVE, SHUTTLE (PILOT CONTROLLER SIDE FITTINGS)	3362 - 40
3G13	VALVE, SHUTTLE (VALVE SECTION)	3362 - 38

ALPHABETICAL INDEX - CONTINUED

GRID		PAGE
3G19	VALVE, SHUTTLE (VALVES & SPOOLS)	3362 - 44
3F7	VALVE, SOLENOID	3362 - 6
3G9	VALVE, SOLENOID (COMPONENTS)	3362 - 34
3D10	VALVE, SOLENOID (CONTROL PATTERN SELECTOR KIT)	3315 - 8
3I19	VALVE, SOLENOID HOSES FROM PILOT SHUTOFF VALVE	3363 - 46
3I15	VALVE, SOLENOID, HOSES TO RESERVOIR	3363 - 42
2C1	VANDAL COVER KIT	1810 - 26
2C1	VANDAL GUARD KIT	1810 - 26
1H15	VEHICLE CONTROLLER	1674 - 6
2D1	VENT, HEATER AND AIR CONDITIONING	1831 - 4
1C17	VENTILATION, ENGINE	0404 - 4
2F3	VISOR SUN, CAB	2007 - 2

W

2E24	WARNING ALARM, BACK-UP	2004 - 4
1G20	WARNING LABELS	1322 - 2
2C3	WASHER RESERVOIR, WINDSHIELD	1814 - 2
1E7	WATER LINES FROM WATER PUMP TO THERMOSTAT	0418 - 4
1E3	WATER PUMP	0417 - 2
1G13	WATER SEPARATOR, FUEL LINES	0563 - 2
1E11	WATER SEPERATOR, PRIMARY FUEL FILTER	0420 - 2
3C23	WEAR BAR, DITCH CLEANING BUCKET	3302 - 14
3C17	WEAR BARS, GENERAL PURPOSE BUCKET	3302 - 8
3C19	WEAR BARS, GENERAL PURPOSE BUCKET (CONTINUED)	3302 - 10
3C21	WEAR BARS, HEAVY DUTY BUCKET	3302 - 12
2B20	WEATHERSTRIP, CAB TOP HATCH	1810 - 20
1I8	WEIGHT, REAR	1749 - 2
2C1	WINDOW GUARDS	1810 - 26
2B20	WINDOW, CAB TOP HATCH	1810 - 20
2B14	WINDOW, FRONT	1810 - 12
2B12	WINDOW, LEFT DOOR	1810 - 10
2B10	WINDOW, LEFT SIDE CAB	1810 - 8
2B10	WINDOW, REAR CAB	1810 - 8
2B16	WINDOW, RIGHT SIDE	1810 - 14
2C3	WINDSHIELD WASHER RESERVOIR	1814 - 2
2C3	WINDSHIELD WASHER TANK	1814 - 2
2C3	WINSHIELD WASHER PUMP	1814 - 2
2B8	WIPER ARM	1810 - 6
2B8	WIPER BLADE	1810 - 6
2B8	WIPER MOTOR	1810 - 6
1G7	WIRE HARNESS	0521 - 6
3E13	WIRE HARNESS, FOOT SWITCH	3360 - 8
1H7	WIRING HARNESS (FROM BATTERY)	1671 - 2
1H19	WIRING HARNESS, BOOM LIGHT	1674 - 8
1H15	WIRING HARNESS, CAB	1674 - 6
1H13	WIRING HARNESS, CAB CONSOLE	1674 - 4
2D5	WIRING HARNESS, CAB REAR COVER	1831 - 8
1H13	WIRING HARNESS, CONSOLE	1674 - 4
2B14	WIRING HARNESS, FRONT WINDOW	1810 - 12
3J13	WIRING HARNESS, HYDRAULIC FILTER RESTRICTION INDICATOR	3364 - 4
1H11	WIRING HARNESS, MAIN	1674 - 2
2F1	WIRING HARNESS, POWER SUPPLY (12 VOLT)	2006 - 2
2E24	WIRING HARNESS, PROPEL ALARM	2004 - 4
2E16	WIRING HARNESS, RADIO	2001 - 2
1C9	WIRING LEAD, ENGINE	0400 - 2
1H9	WORK LIGHTS, BOOM	1673 - 2

MEMORANDA

TRACK FRAME

T163121 -UN-23DEC02

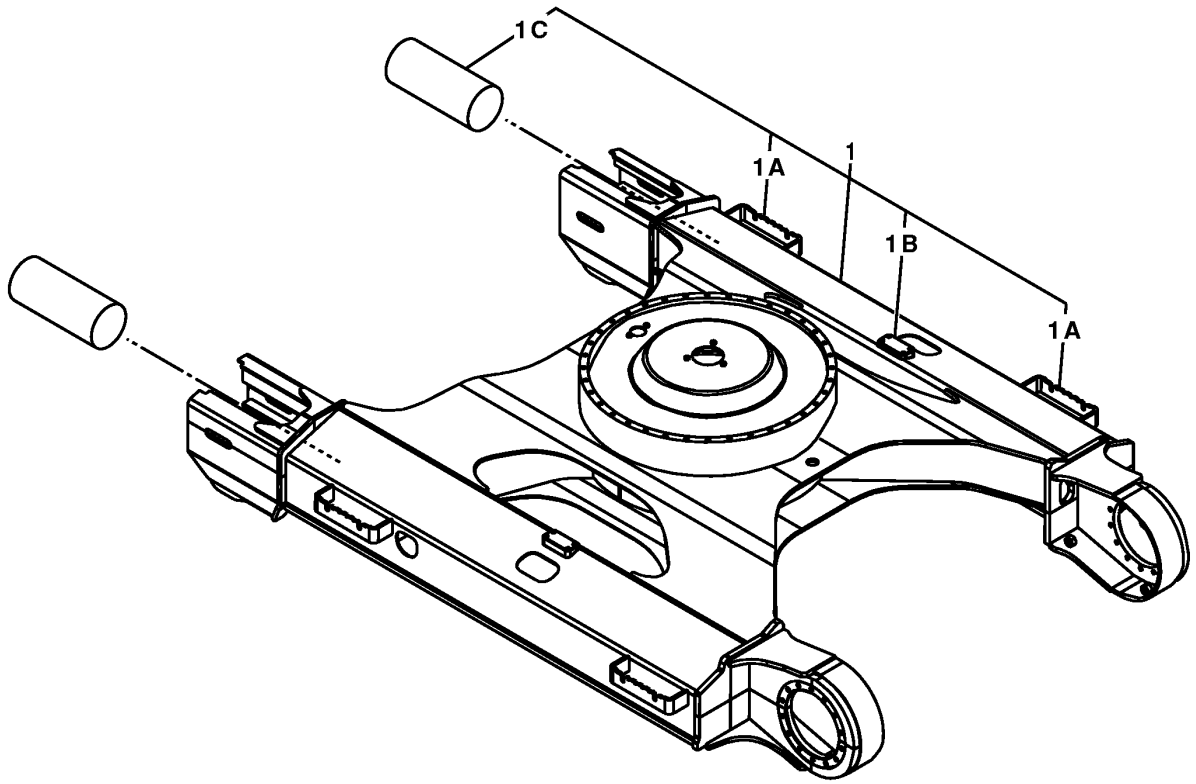

T163121

TRACK FRAME

KEY	PART NO.	PART NAME	QTY	SERIAL NO.	REMARKS
1	5007022	FRAME	1		
1A	4447431	STEP	4		
1B	3087511	BRACKET	2		
1C	4339337	OIL LINE	2		

TRACK FRAME UNDER COVER

T163122 -UN-23DEC02

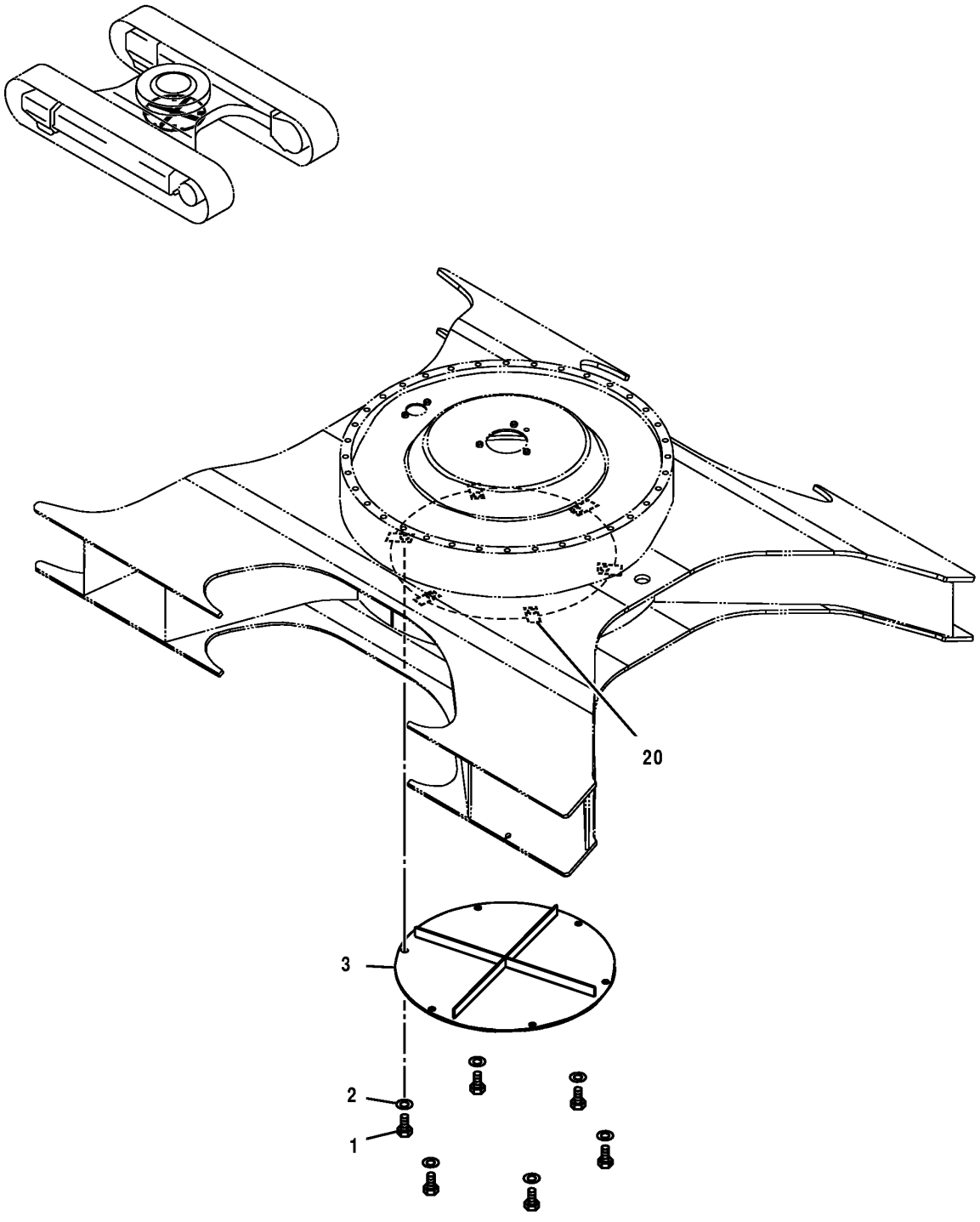

T163122

TRACK FRAME UNDER COVER

KEY	PART NO.	PART NAME	QTY	SERIAL NO.	REMARKS
1	19M7872	CAP SCREW	6		M12 X 25
2	24M7345	WASHER	6		13.500 X 24 X 2.500 MM
3	8081016	COVER	1		
20	4156540	RETAINER	6		

FRAME STEP (SECONDARY)

T163124 -UN-23DEC02

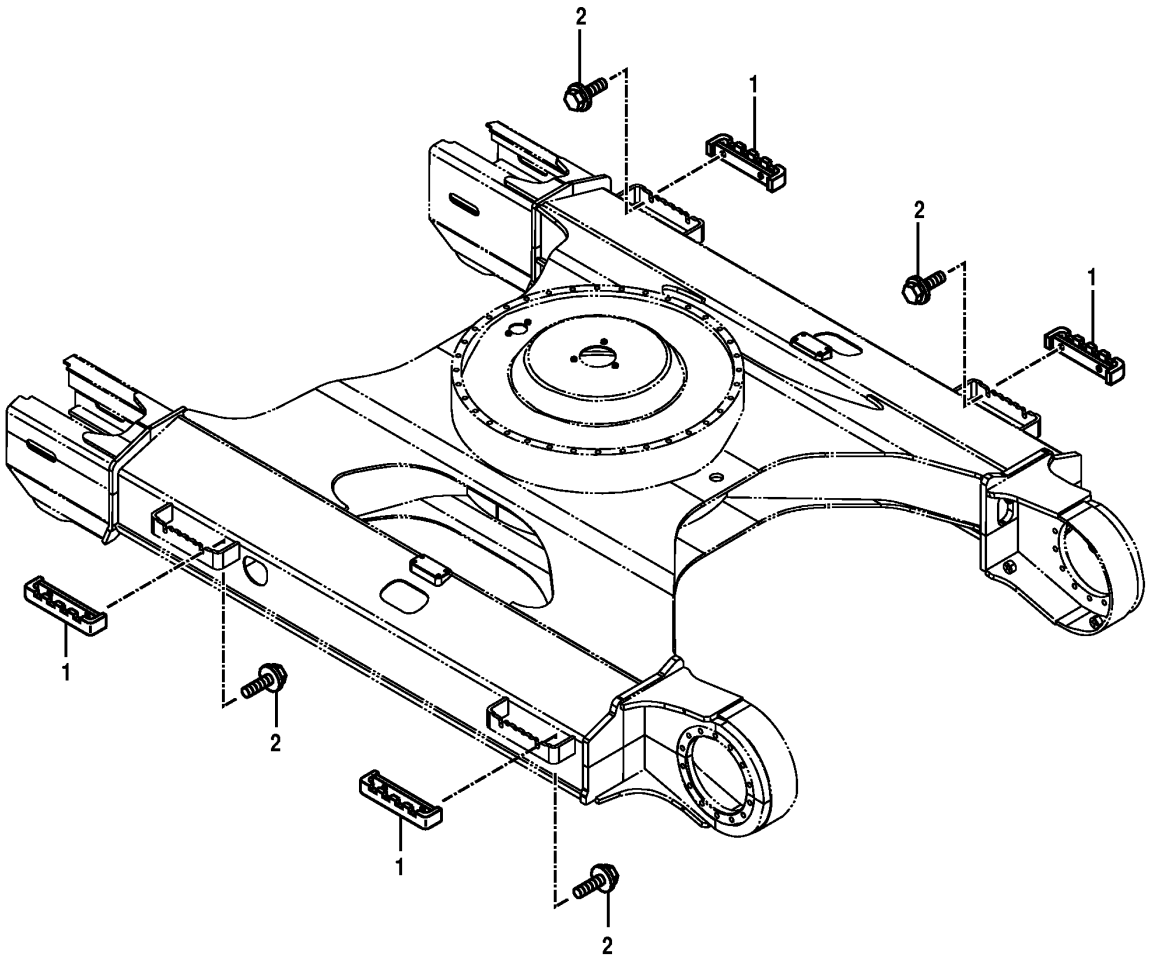

T163124

FRAME STEP (SECONDARY)

KEY	PART NO.	PART NAME	QTY	SERIAL NO.	REMARKS
1	9755978	STEP	4		
2	J031240	CAP SCREW	8		

TRACK LINKS

T153230 -UN-05APR02

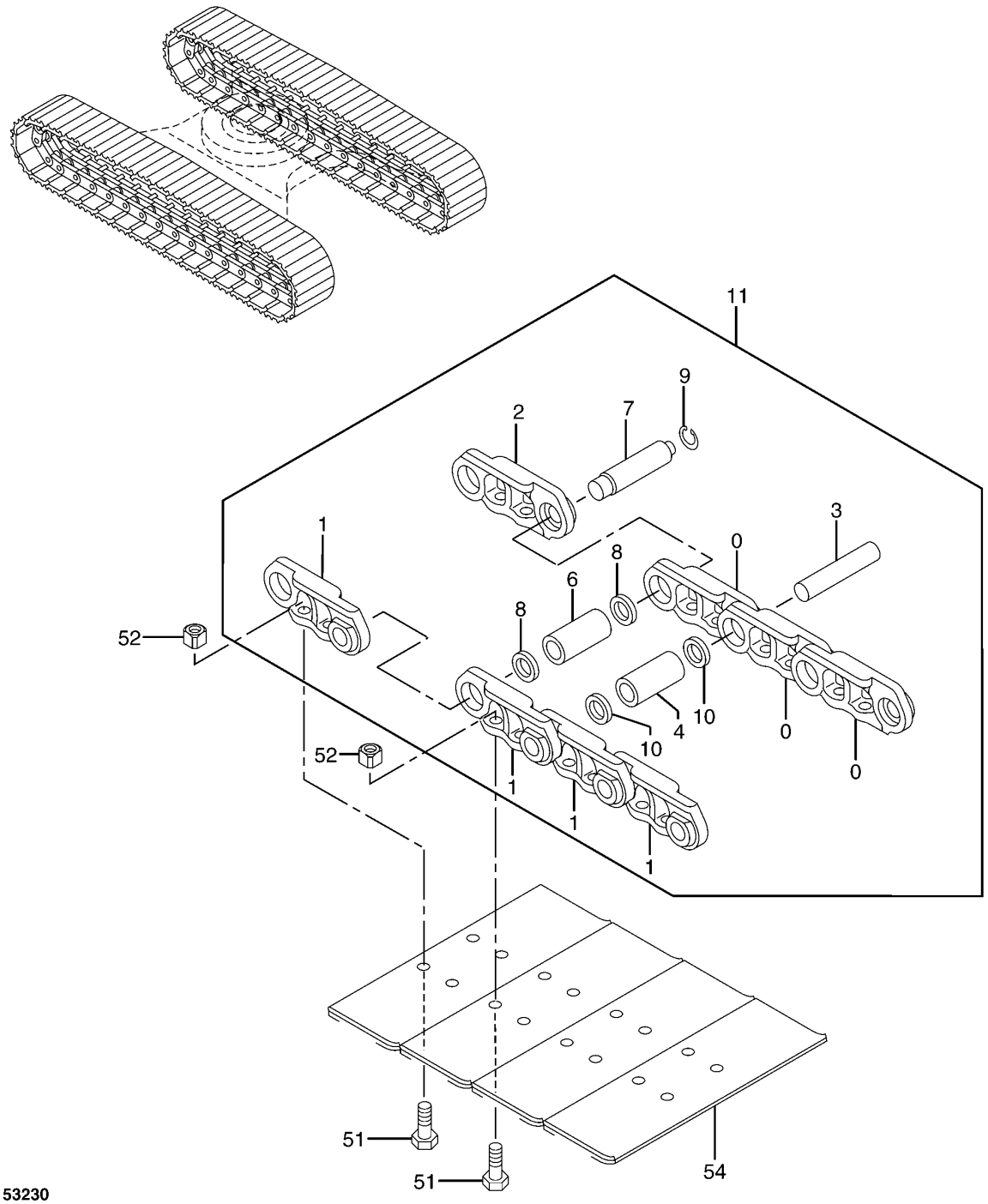

T153230

TRACK LINKS

KEY	PART NO.	PART NAME	QTY	SERIAL NO.	REMARKS
0	AT185783	STRUTTED LINK-RH	43		
1	AT185784	STRUTTED LINK-LH	44		
2	AT185785	MASTER TRACK LINK-RH	1		
3	AT185786	PIN	43		
4	4344785	BUSHING	43		
6	4345599	BUSHING	1		
7	AT185788	TRACK PIN	1		
8	AT185789	SPACER	2		
9	TH108899	RING	1		
10	AT185787	SEAL	86		
11	AT185781	TRACK CHAIN W/O SHOES	1		
51	AT180444	BOLT	176		
52	AT180443	NUT	176		
54	TH111657	OPEN CENTER 3 BAR SHOE	44		(STEEL 600 MM)
	2024425	OPEN CENTER 3 BAR SHOE	44		(STEEL 700 MM)
	4405321	FLAT SHOE	44		(RUBBER PAD)

UPPER ROLLER

T162558 -UN-16DEC02

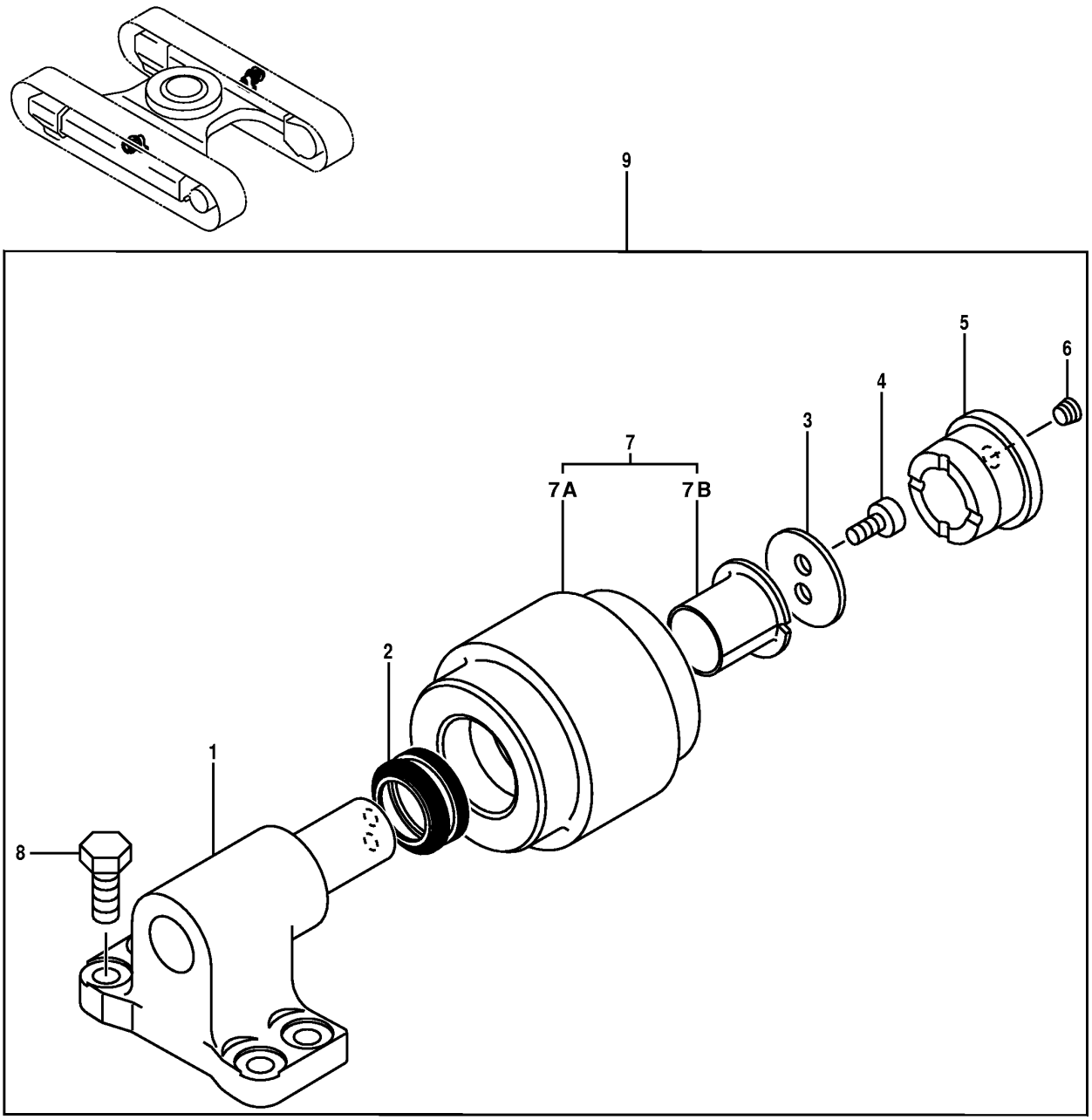

T162558

1B11

UPPER ROLLER

KEY	PART NO.	PART NAME	QTY	SERIAL NO.	REMARKS
1	9134794	BRACKET	1		
2	TH100452	SEAL	1		
3	4282841	WASHER	1		
4	M351018	BOLT	2		
5	3068629	COVER	1		
6	94-2011	FITTING PLUG	1		
7	9196026	ROLLER	1		
7A	.....	ROLLER	1		
7B	4327613	BUSHING	1		
8	19M7403	CAP SCREW	8		M12 X 35, (SUB FOR J921235)
9	9160680	ROLLER	2		

LOWER ROLLER

T158696 -UN-27AUG02

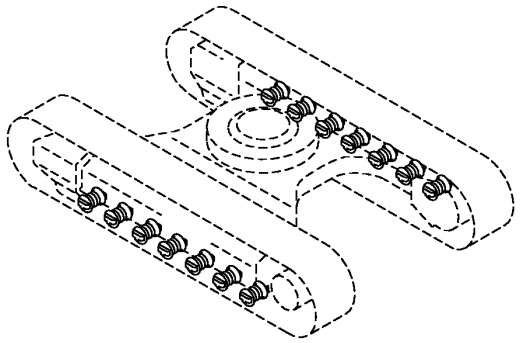

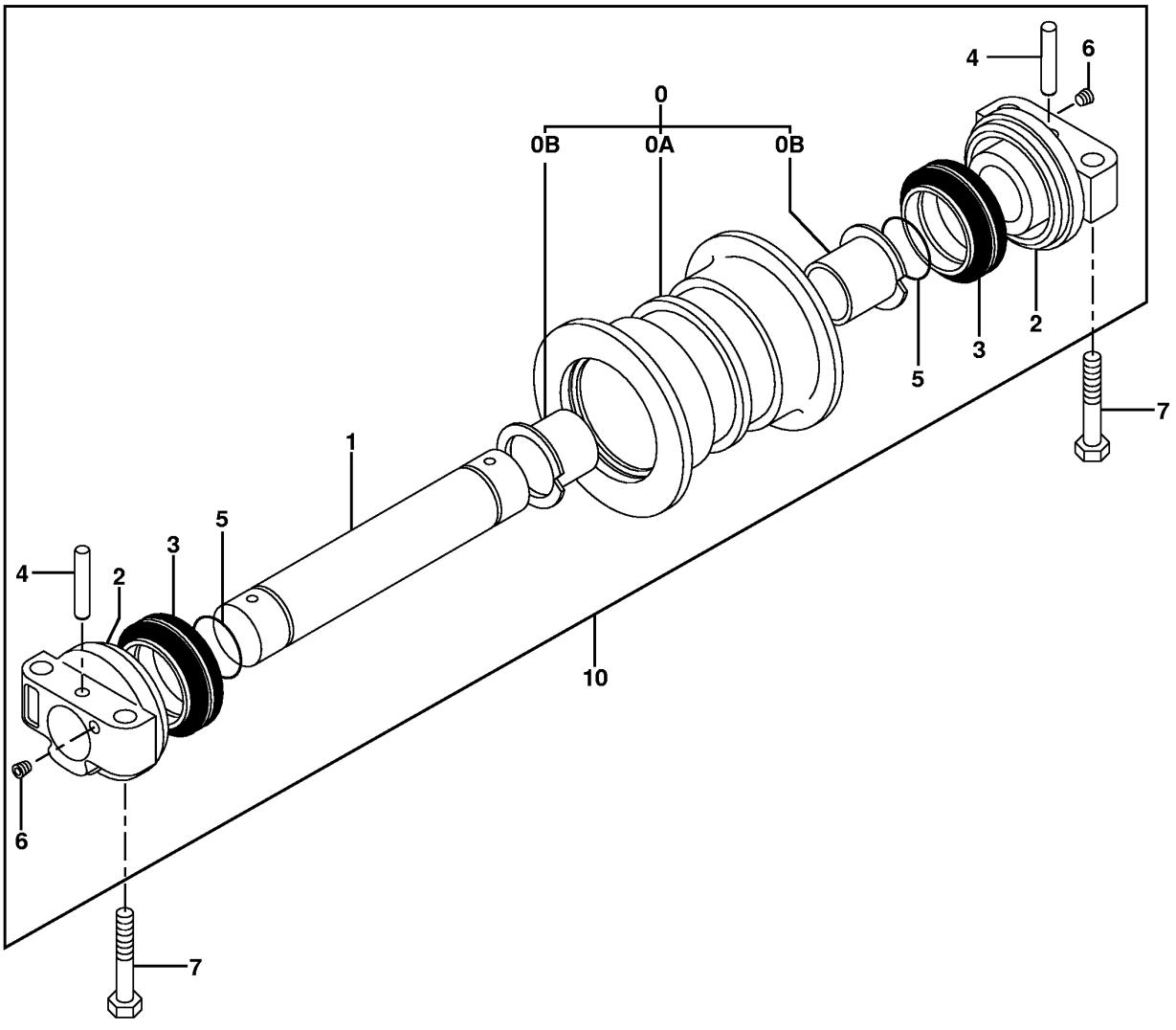

T158696

LOWER ROLLER

KEY	PART NO.	PART NAME	QTY	SERIAL NO.	REMARKS
0	9114664	ROLLER	1		
0A	.....	ROLLER	1		
0B	3050414	BUSHING	2		
1	3022832	SHAFT	1		
2	2044683	BUSHING	2		
3	AT128492	SEAL KIT	2		
4	34M7073	SPRING PIN	2		
5	CH13520	PACKING	2		
6	94-2011	FITTING PLUG	2		
7	19M8529	CAP SCREW	56		M16 X 70
10	9190194	ROLLER	14		

FRONT IDLER

TP61325 -UN-16OCT98

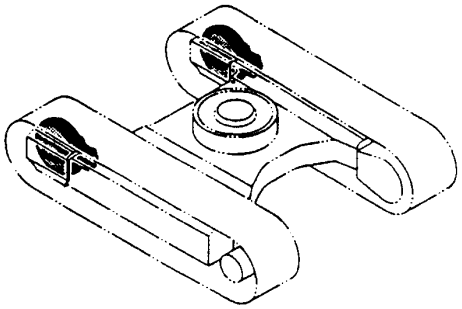

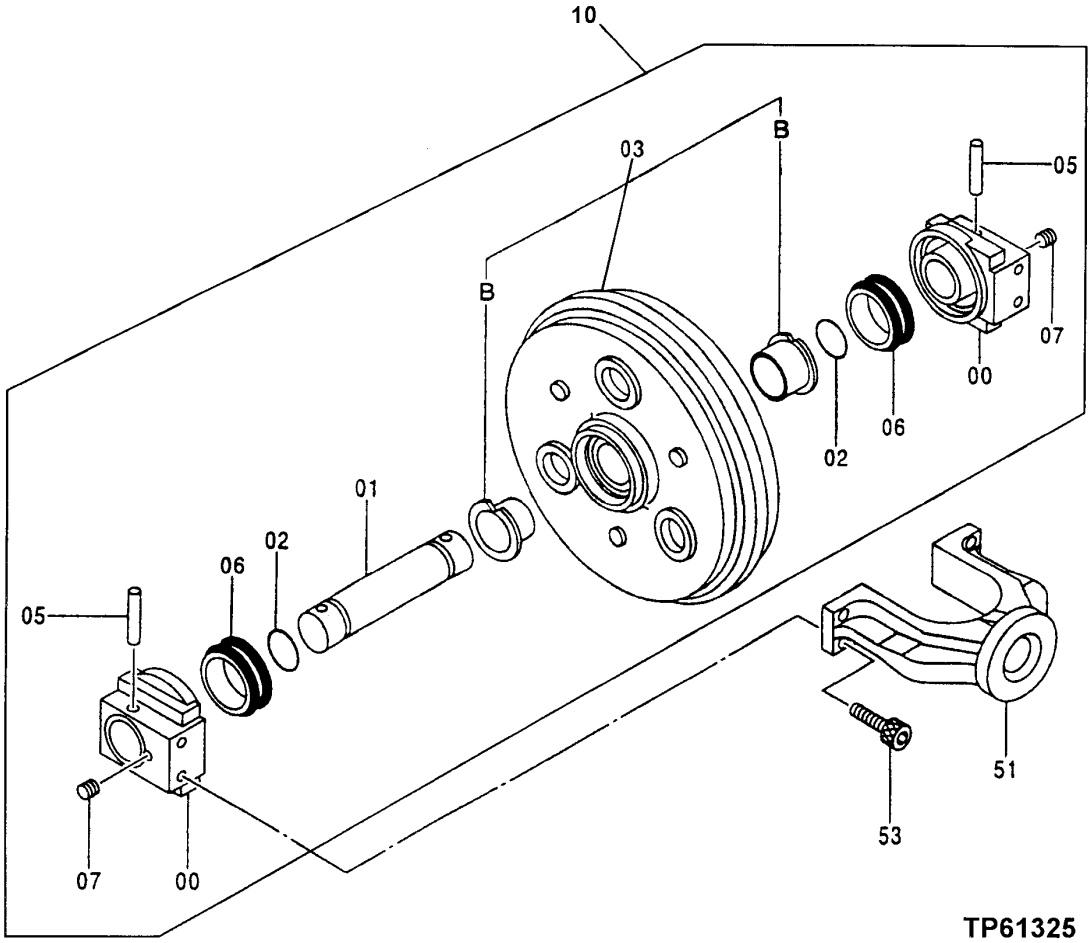

1B15

FRONT IDLER

KEY	PART NO.	PART NAME	QTY	SERIAL NO.	REMARKS
0	1020173	BEARING	2		
1	3035618	AXLE	1		
2	CH11571	PACKING	2		
3	9165599	PULLEY	1		
3B	3069556	BUSHING	2		
5	4255804	PIN	2		
6	4317586	SEAL	2		
7	94-2011	FITTING PLUG	2		
10	9165598	IDLER SPROCKET	1		
51	1026807	YOKE	1		
53	19M8035	CAP SCREW	4		M16 X 35

FRONT IDLER SPRING AND ADJUSTER ASSEMBLY

T162559 -UN-16DEC02

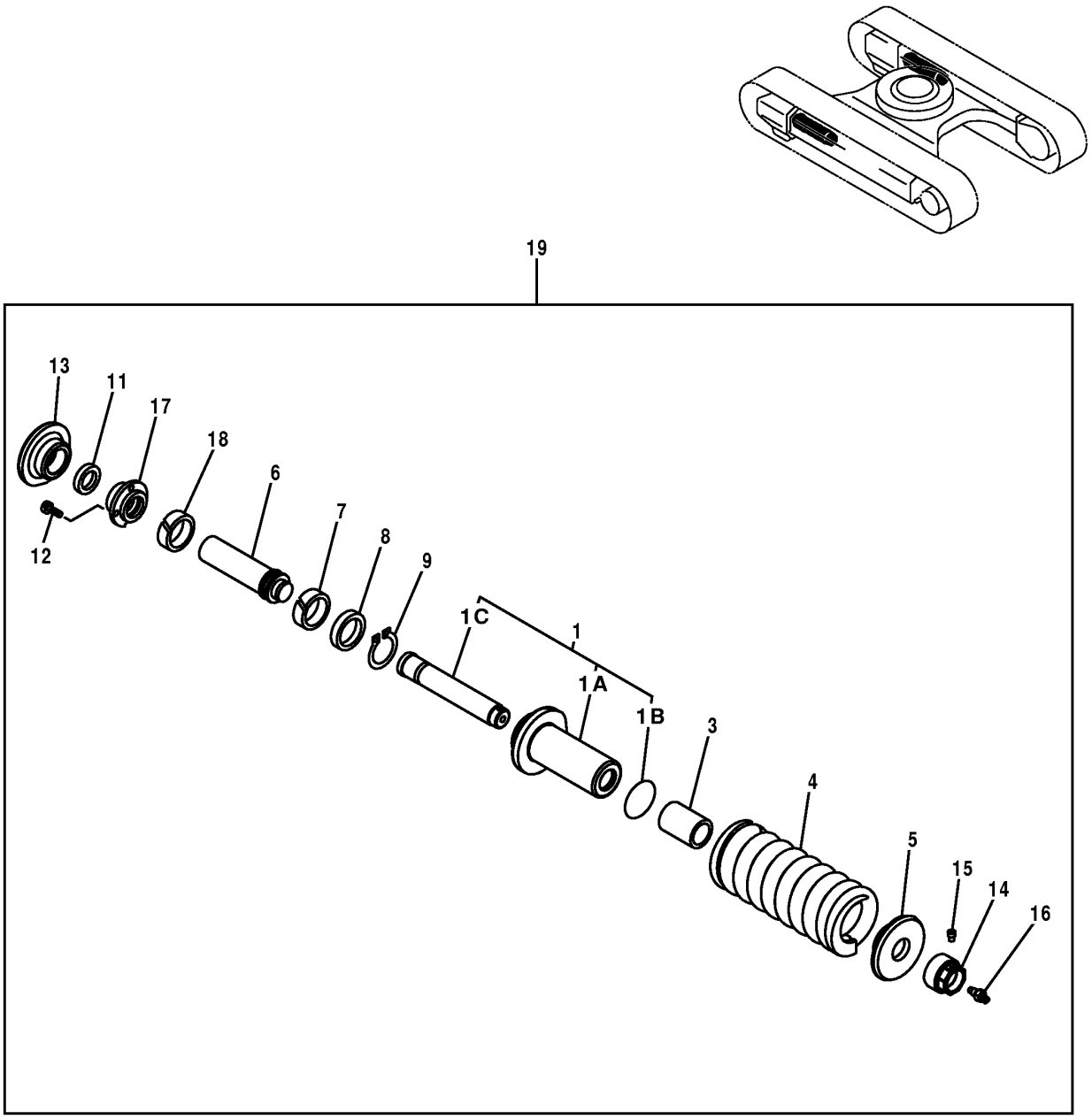

T162559

1B17

FRONT IDLER SPRING AND ADJUSTER ASSEMBLY

KEY	PART NO.	PART NAME	QTY	SERIAL NO.	REMARKS
1	9188234	CYLINDER	1		
1A	3088313	CYLINDER	1		
1B	4360347	O-RING	1		
1C	3088212	ROD	1		
3	4433550	SPACER	1		
4	3098283	SPRING	1		(SUB FOR 3088646)
5	4357538	WASHER	1		
6	3088314	ROD	1		
7	TH108869	WEAR RING	1		
8	4179303	PACKING	1		
9	40M7047	SNAP RING	1		
11	4413075	SEAL	1		
12	19M8446	SCREW	3		M8 X 20
13	4431711	HOLDER	1		
14	4357539	NUT	1		
15	4248106	FITTING PLUG	1		
16	4255055	VALVE	1		
17	3091349	FLANGE	1		
18	4449766	WEAR RING	1		
19	9188233	ADJUSTER	2		

PROPEL MOTOR

T161926 -UN-12DEC02

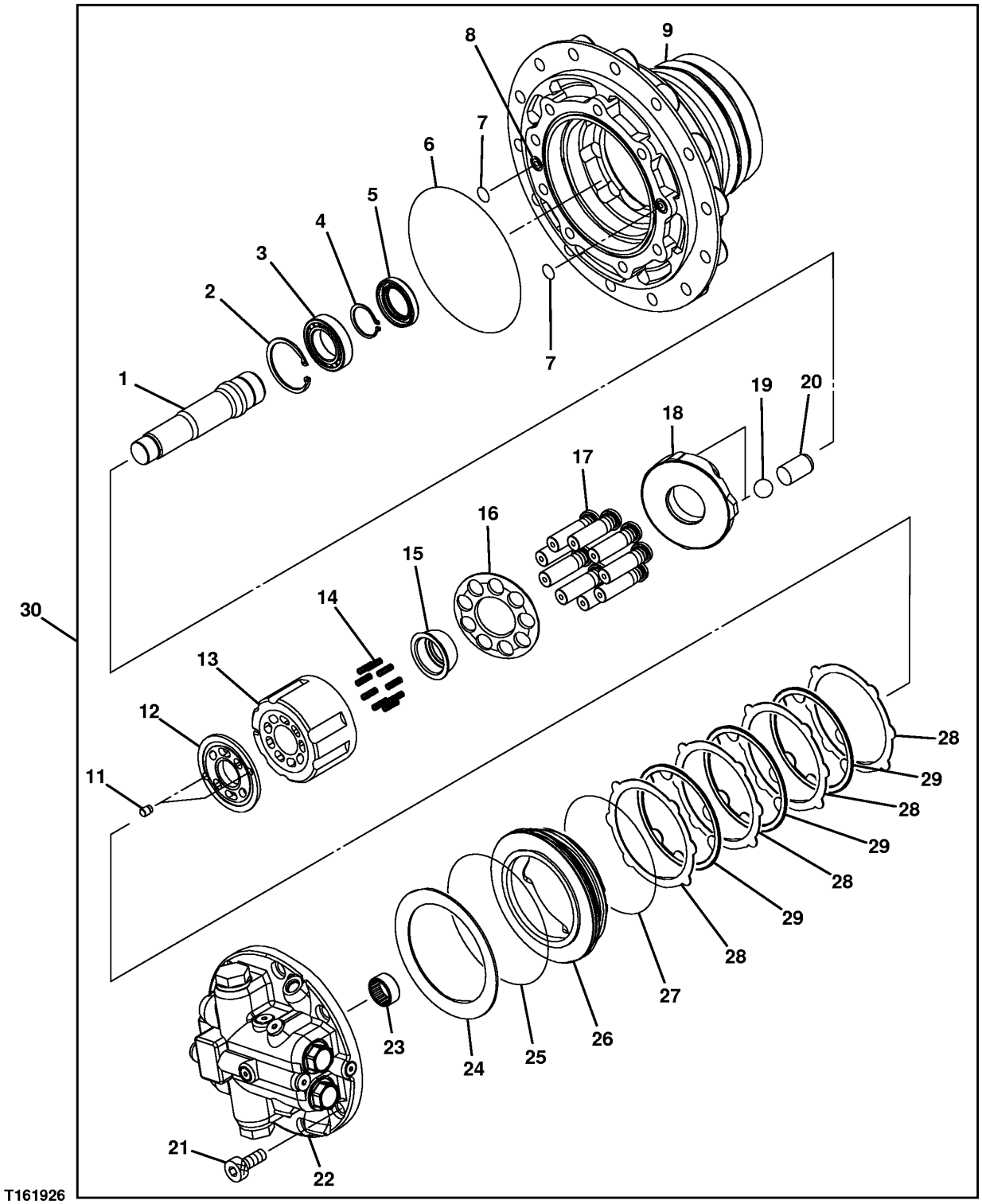

PROPEL MOTOR

KEY	PART NO.	PART NAME	QTY	SERIAL NO.	REMARKS
1	3085780	SHAFT	1		
2	40M7090	SNAP RING	1		
3	4427427	CYLINDRICAL ROLLER BEARING	1		
4	962002	SNAP RING	1		
5	4364328	SEAL	1		
6	4364323	O-RING	1		
7	T111819	O-RING	2		(SUB FOR 4506415)
8	.....	O-RING	2		
9	.....	HOUSING	1		
11	4271350	PIN	2		
12	3085697	PLATE	1		
13	2043791	ROTOR	1		
14	4312681	COMPRESSION SPRING	9		
15	4419159	BUSHING	1		
16	3085713	RETAINER	1		
17	8076030	PISTON	9		
18	3085761	PLATE	1		
19	4419238	BALL	2		
20	4417431	PISTON	1		
21	M341432	SCREW	8		
22	9196236	VALVE	1		
23	AT154167	NEEDLE BEARING	1		
24	4364329	DISK SPRING	4		
25	4430357	O-RING	1		
26	3082754	PISTON	1		
27	4430356	O-RING	1		
28	3085871	PLATE	4		
29	3085844	PLATE	3		
30	9196240	HYDRAULIC MOTOR	1		

PROPEL HYDRAULIC LINES

T162565 -UN-16DEC02

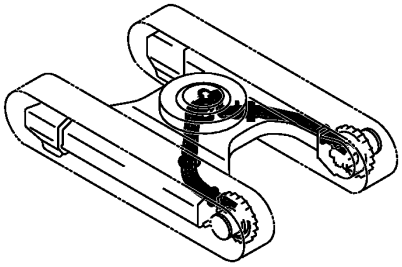

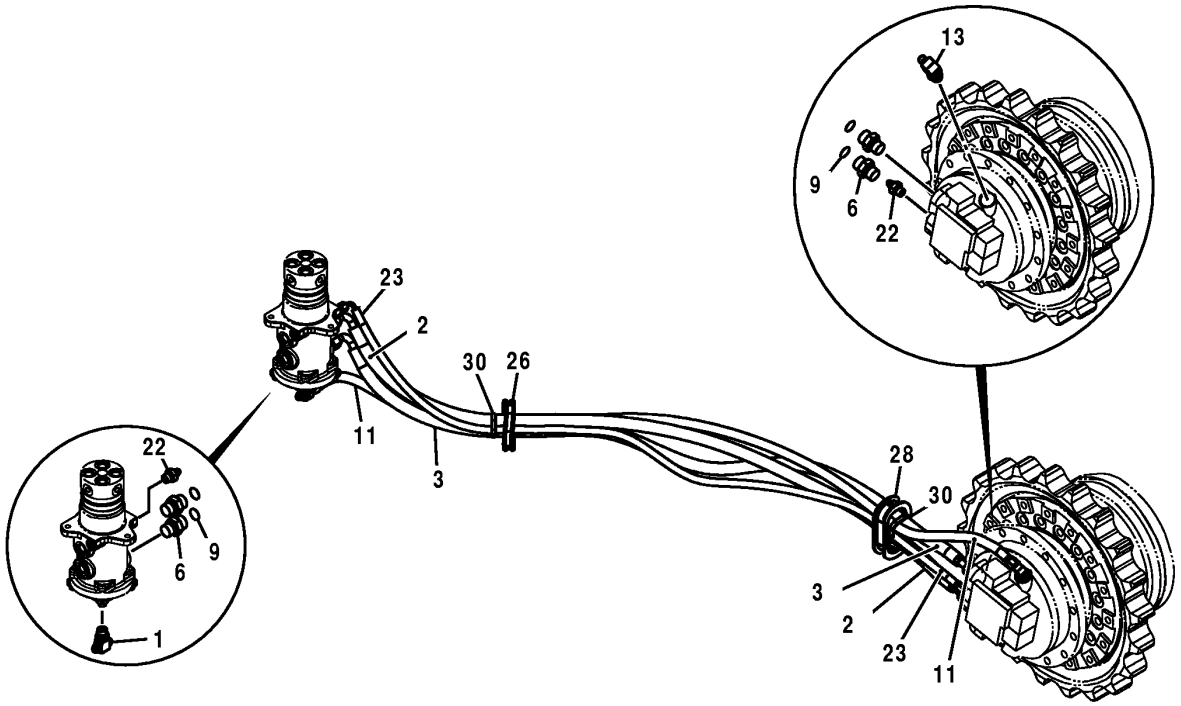

T162565

PROPEL HYDRAULIC LINES

KEY	PART NO.	PART NAME	QTY	SERIAL NO.	REMARKS
1	A852543	TEE FITTING	1		
	4506418	O-RING	1		
2	P60471	HYDRAULIC HOSE - FABRICATE	1		
3	4219356	HYDRAULIC HOSE - FABRICATE	1		
6	A853144	ADAPTER	4		
	4506418	O-RING	1		
9	T77857	O-RING	4		
11	4447483	HYDRAULIC HOSE - FABRICATE	1		
13	A852333	ELBOW FITTING	1		
	CH11570	O-RING	1		
22	A852122	ADAPTER	2		
	M800650	PACKING	1		
23	4447490	HYDRAULIC HOSE - FABRICATE	1		
26	4445210	BUSHING	1		
28	4426662	BUSHING	1		
30	H77698	TIE BAND	2		

PROPEL MOTOR AND DRIVE GEARS

T162551 -UN-13DEC02

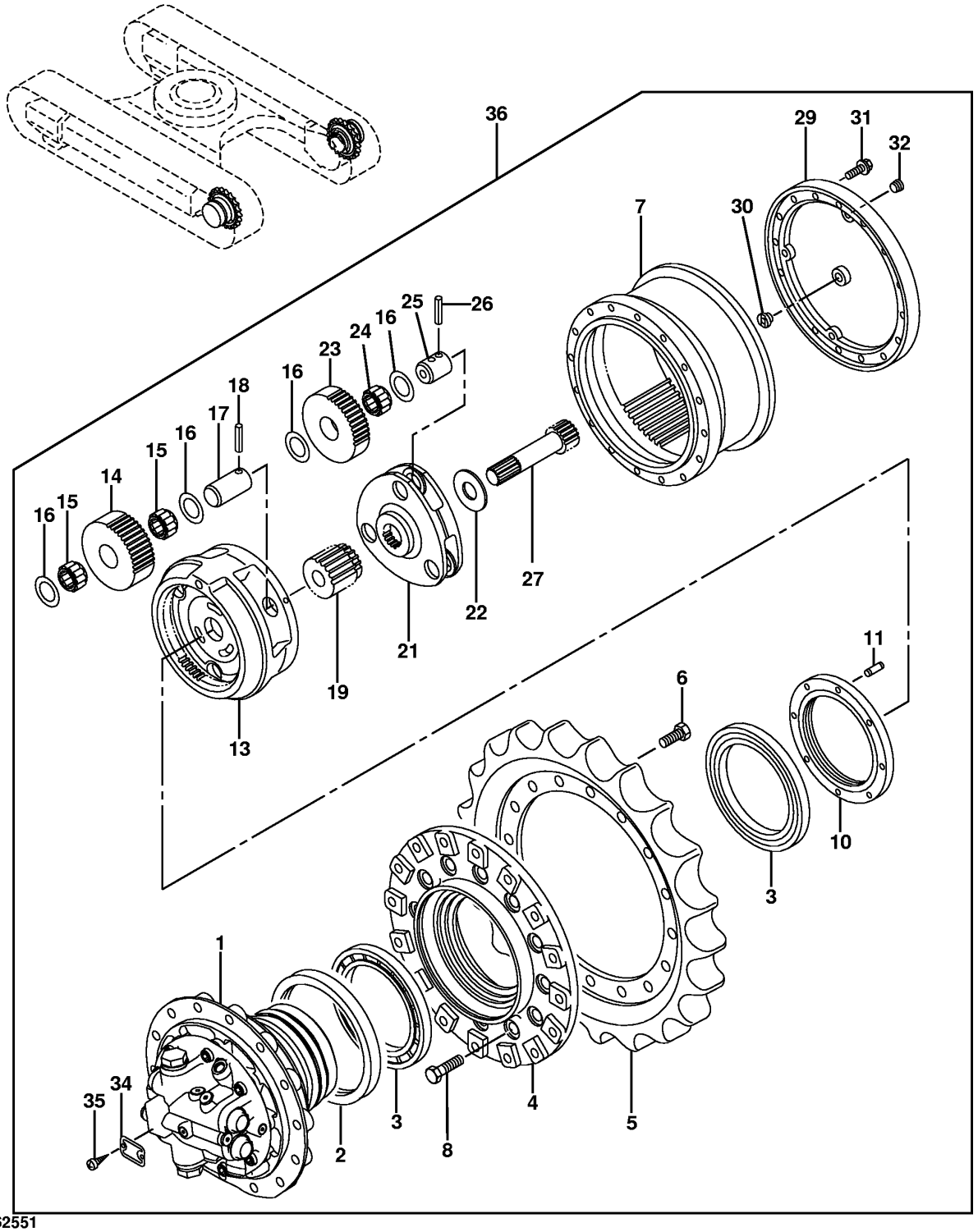

T162551

PROPEL MOTOR AND DRIVE GEARS

KEY	PART NO.	PART NAME	QTY	SERIAL NO.	REMARKS
1	9196240	HYDRAULIC MOTOR	1		
2	AT154151	SEAL	1		(SUB FOR TH4110369)
3	4321887	CYLINDRICAL ROLLER BEARING	2		
4	1028028	DRUM	1		
5	1028027	DRIVE SPROCKET	1		
6	19M7488	CAP SCREW	16		M16 X 40
7	1028042	GEAR	1		
8	19M7369	CAP SCREW	16		M16 X 60
10	3085728	NUT	1		
11	4436242	PIN FASTENER	1		
13	1028041	PLANET PINION CARRIER	1		
14	3088341	GEAR	3		
15	4442789	NEEDLE BEARING	6		
16	4192982	PLATE	12		
17	4245966	PIN	3		
18	4144020	SPRING PIN	3		
19	3085569	GEAR	1		
21	2044805	PLANET PINION CARRIER	1		
22	4418771	SPACER	1		
23	3087676	GEAR	3		
24	4442788	NEEDLE BEARING	3		
25	4178203	BUSHING	3		
26	4192020	SPRING PIN	3		
27	2043769	SHAFT	1		
29	2044809	COVER	1		
30	4258916	PIN	1		
31	19M8011	CAP SCREW	12		M12 X 30
	12M7067	LOCK WASHER	12		12 MM
32	TH4245797	PIPE PLUG	3		
34	3053559	LABEL	1		
35	37H99	SCREW	2		0.100" X 1/4"
36	9188777	HYDRAULIC MOTOR	2		

PROPEL MOTOR MOUNTING

T162553 -UN-13DEC02

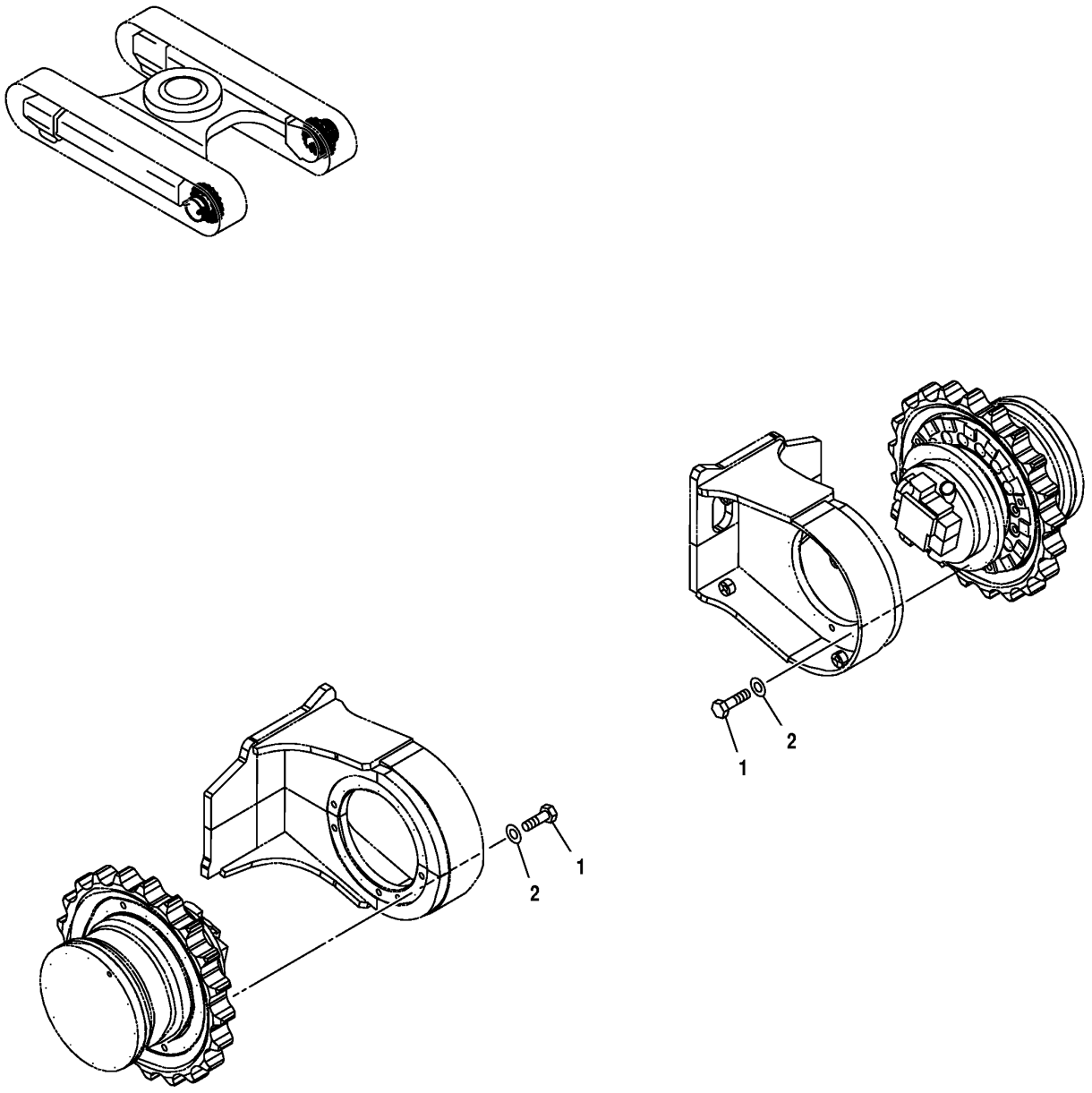

T162553

PROPEL MOTOR MOUNTING

KEY	PART NO.	PART NAME	QTY	SERIAL NO.	REMARKS
1	4272305	BOLT	28		
2	24M7338	WASHER	28		17 X 30 X 3 MM, (SUB FOR J222016)

PROPEL MOTOR COVERS

TP54494 -UN-17JAN97

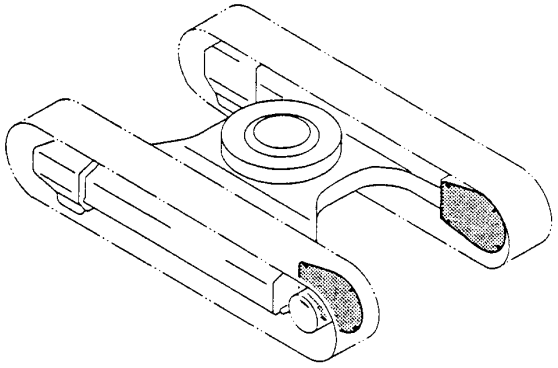

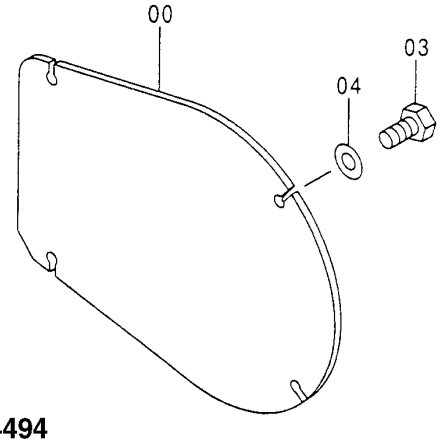

TP54494

PROPEL MOTOR COVERS

KEY	PART NO.	PART NAME	QTY	SERIAL NO.	REMARKS
0	4418698	COVER	2		
3	19M6332	CAP SCREW	8		M14 X 35, (SUB FOR J901435)
4	J222014	WASHER	8		

ENGINE

T162023 -UN-12DEC02

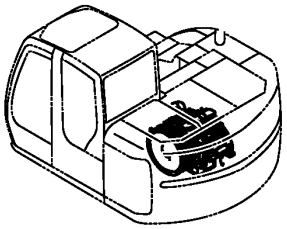

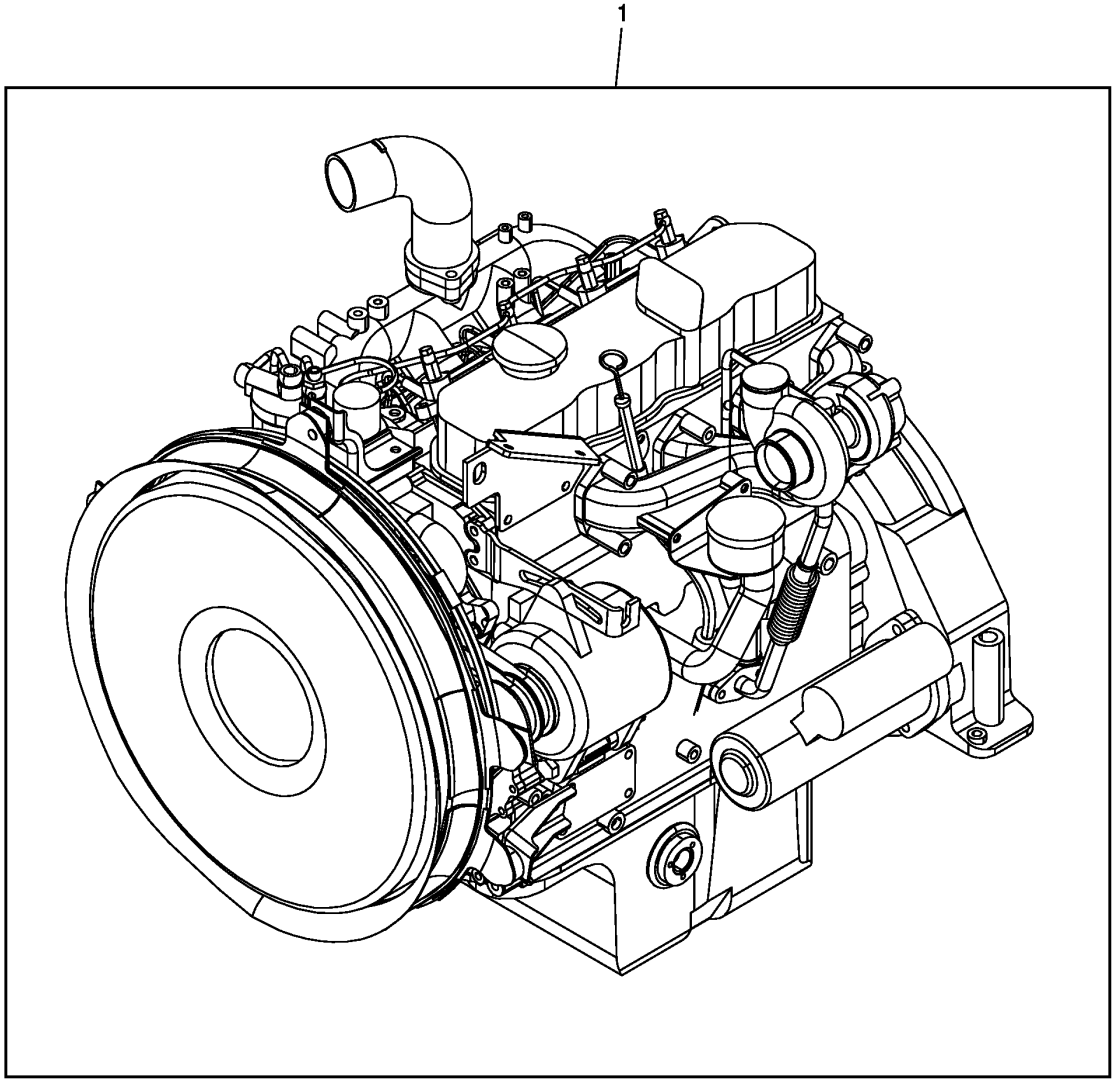

T162023

ENGINE

KEY	PART NO.	PART NAME	QTY	SERIAL NO.	REMARKS
1	4BG1TCG	DIESEL ENGINE	1		
	TH4440813	FLAT BELT	1		FAN BELT
	4S00246	FILTER ELEMENT	1		FINAL FUEL FILTER
	4371903	SWITCH	1		ENGINE OIL LEVEL SWITCH
	4454117	SWITCH	1		ENGINE OIL PRESSURE SWITCH
	4371318	SWITCH	1		COOLANT OVERHEAT SWITCH
	1812004710	ALTERNATOR	1		(SUB FOR 4454118)

CRANKSHAFT, MAIN BEARINGS, FLYWHEEL, AND PISTONS

T162746 -UN-11JAN03

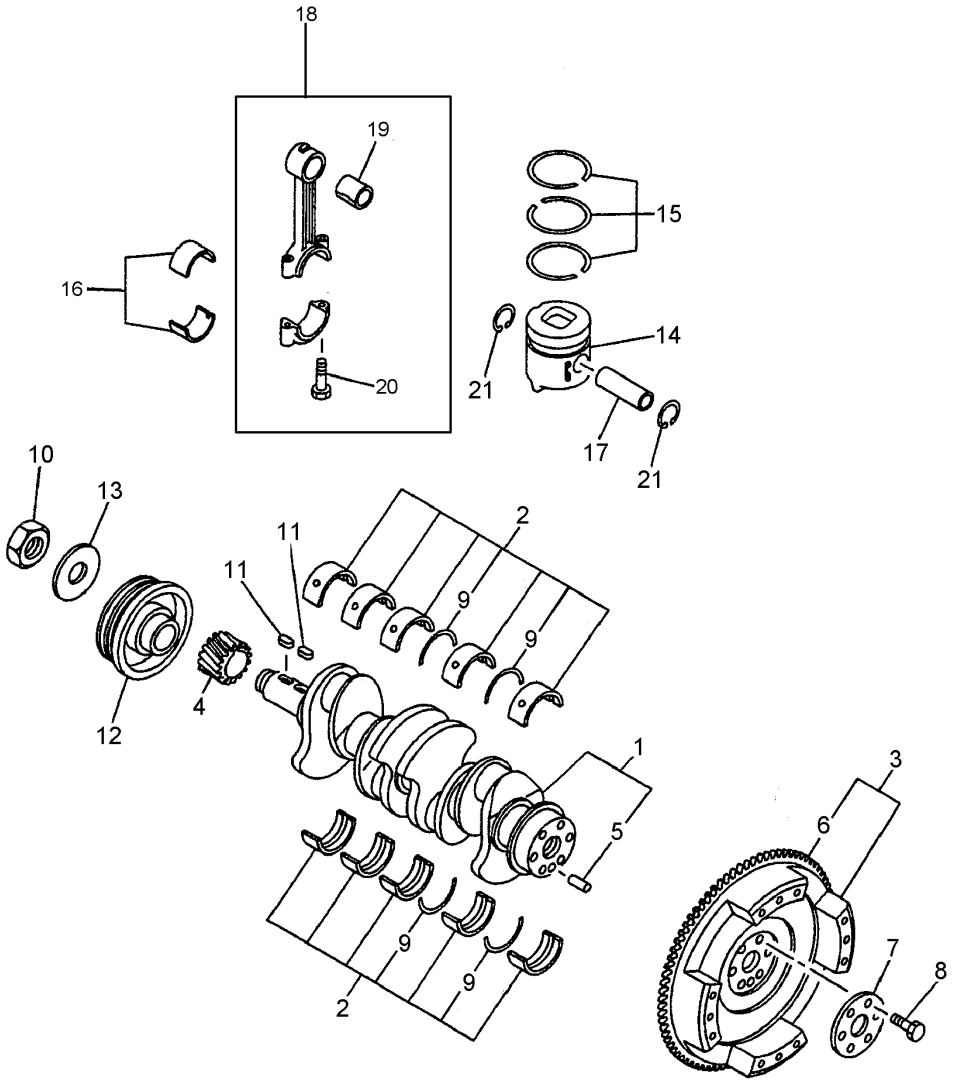

T162746

CRANKSHAFT, MAIN BEARINGS, FLYWHEEL, AND PISTONS

KEY	PART NO.	PART NAME	QTY	SERIAL NO.	REMARKS
1	8943398951	CRANKSHAFT	1		(SUB FOR 8943398950)
2	8970716610	BEARING	1		
3	8971069894	FLYWHEEL	1		(SUB FOR 8971069892 OR 8971069893)
4	8971379102	GEAR	1		(SUB FOR 8971379100 OR 8971379101)
5	9081612200	PIN FASTENER	1		
6	8971759020	RING	1		
7	5123360030	MOUNTING PARTS	1		
8	5123340030	BOLT	6		
9	8970713580	WASHER	2		
10	5123780020	NUT	1		
11	8941075970	SHAFT KEY	2		
12	8971720400	PULLEY	1		
13	5095030240	WASHER	1		
14	8972873990	PISTON	4		GRADE=AX
	8972874000	PISTON	4		GRADE=CX
15	1121211460	PISTON RING KIT	4		
16	8970110310	KIT	4		(SUB FOR 9122716080)
17	1122110332	PIN FASTENER	4		
18	1122301291	CONNECTING ROD	4		
19	1122510320	BUSHING	4		
20	1122350271	BOLT	8		
21	8941075751	RING	8		

ROCKER ARM COVER

T162729 -UN-11JAN03

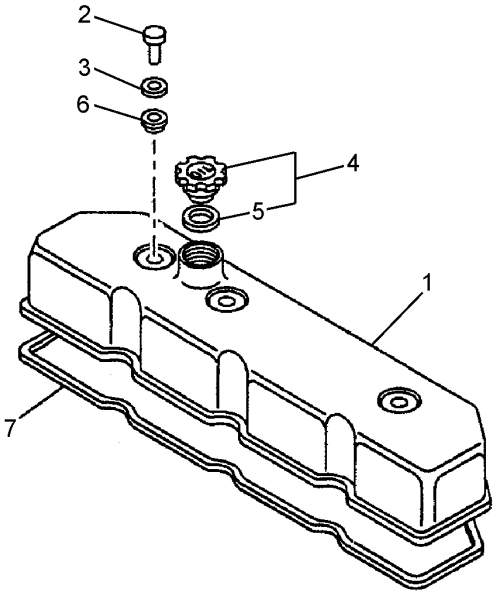

T162729

ROCKER ARM COVER

KEY	PART NO.	PART NAME	QTY	SERIAL NO.	REMARKS
1	8972237600	COVER	1		
2	9111750120	NUT	3		
3	9111791050	WASHER	3		
4	8943997230	FILLER CAP	1		
5	8943996890	O-RING	1		
6	1096390320	PACKING	3		
7	8973262510	PACKING	1		(SUB FOR 5111730160)

CYLINDER BLOCK

T162738 -UN-13JAN03

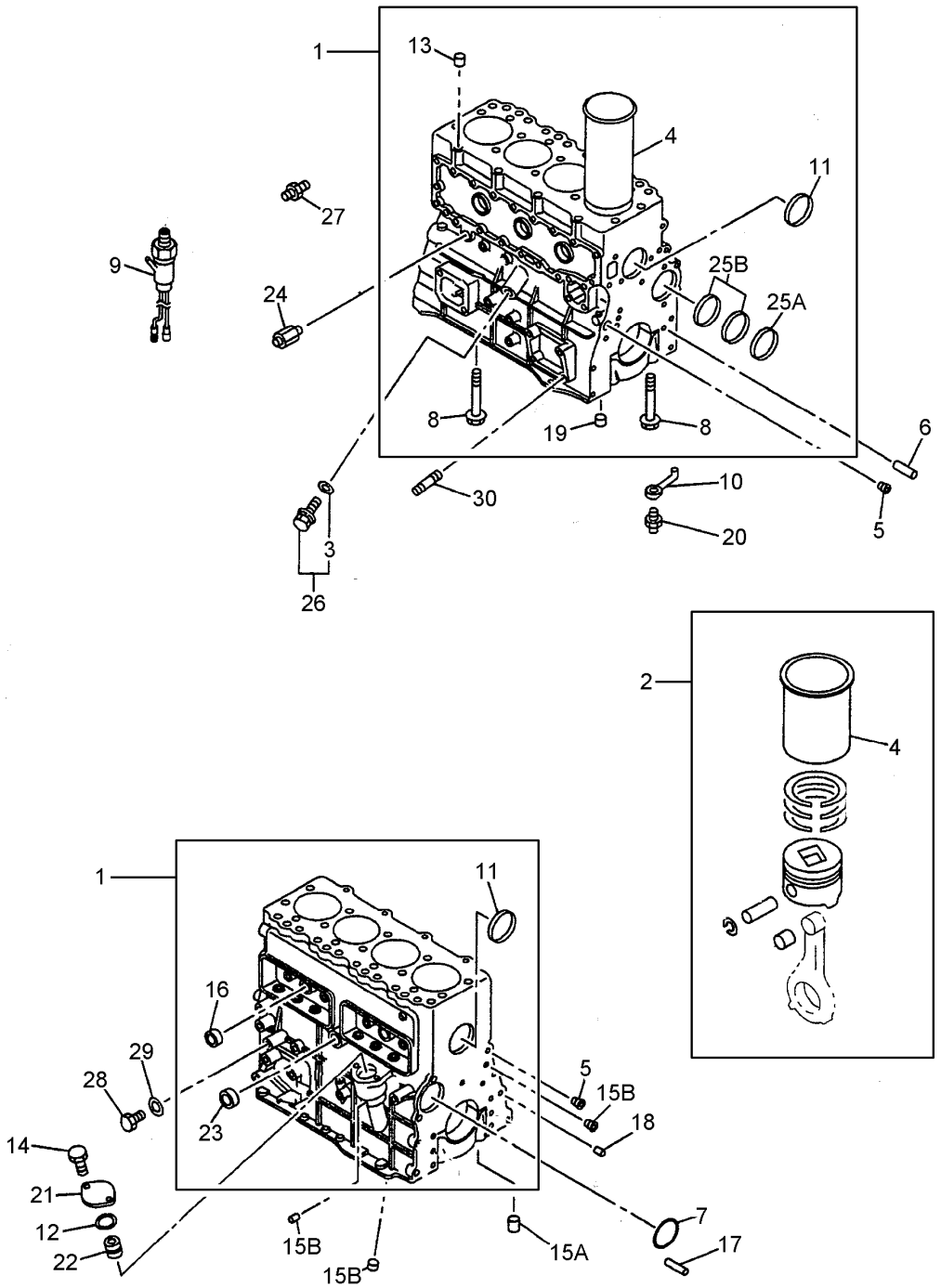

T162738

CYLINDER BLOCK

KEY	PART NO.	PART NAME	QTY	SERIAL NO.	REMARKS
1	8971239542	MANIFOLD	1		
2	5878144590	PISTON-LINER KIT	4		(SUB FOR 5878141000) GRADE=1
	5878141010	PISTON-LINER KIT	4		GRADE=2
	5878144610	CYLINDER LINER	4		(SUB FOR 5878141020) GRADE=3
	5878144620	CYLINDER LINER	4		(SUB FOR 5878141030) GRADE=4
3	5096230350	GASKET	1		
4	1112612480	CYLINDER LINER	4		OD GRADE=1, ID GRADE=AX
	1112612490	CYLINDER LINER	4		OD GRADE=1, ID GRADE=CX
	1112612500	CYLINDER LINER	4		OD GRADE=2, ID GRADE=AX
	1112612510	CYLINDER LINER	4		OD GRADE=2, ID GRADE=CX
	1112612520	CYLINDER LINER	4		OD GRADE=3, ID GRADE=AX
	1112612530	CYLINDER LINER	4		OD GRADE=3, ID GRADE=CX
	1112612540	CYLINDER LINER	4		OD GRADE=4, ID GRADE=AX
	1112612550	CYLINDER LINER	4		OD GRADE=4, ID GRADE=CX
5	1096050681	PIPE PLUG	2		
6	1097400780	PIN FASTENER	1		
7	8943444620	PACKING	1		
8	1090004692	BOLT	10		(SUB FOR 1090004691)
9	1824101990	OIL PRESSURE WARNING SWITCH	1		
10	1133421320	JET	4		
11	1096000520	BEARING CUP	2		
12	1096234650	GASKET	1		
13	8941480790	DOWEL PIN	2		
14	19M7866	SCREW	2		M8 X 20
15A	5096050050	PIPE PLUG	1		(SUB FOR AT254825)
15B	5096050180	PLUG	7		
16	1096000121	BEARING CUP	2		(SUB FOR AT254809)
17	9081510180	DOWEL PIN	2		
18	9081508160	PIN FASTENER	2		(SUB FOR AT255014)
19	5112570011	DOWEL PIN	1		
20	1131610120	FLOW CONTROL HYD. VALVE	4		
21	1112191291	COVER	1		
22	5112240040	BUSHING	1		
23	5112190140	PACKING	1		
24	1096800250	HAND OPERATED VALVE	1		
25A	9116910480	KIT	1		
25B	9116930350	BEARING	2		
26	8943930771	VALVE	1		
27	5096600330	THREADED NIPPLE	1		
28	9992023140	PIPE PLUG	1		(SUB FOR AT255036)
29	AT255026	O-RING	1		
30	1093000130	STUD	1		

CYLINDER BLOCK SIDE COVERS

T162785 -UN-15JAN03

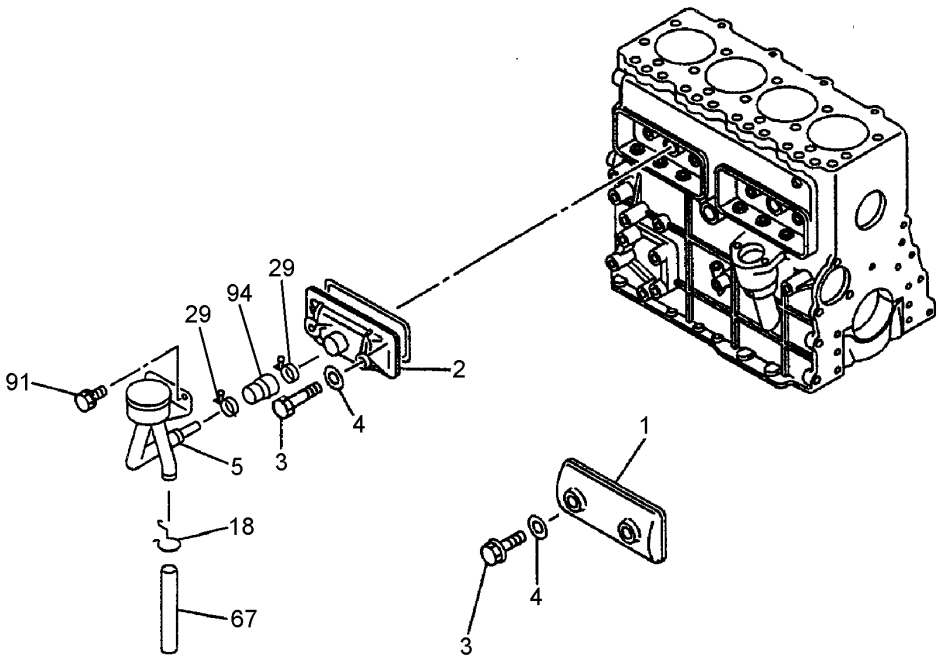

T162785

CYLINDER BLOCK SIDE COVERS

KEY	PART NO.	PART NAME	QTY	SERIAL NO.	REMARKS
1	8972221041	COVER	1		
2	1112902541	COVER	1		
3	8943675301	BOLT	2		M8 X 56
	8944299951	BOLT	2		M8 X 84
4	9095720080	GASKET	4		
5	8972533510	BREATHER	1		
6	.....	GASKET	2		(8943673681 NO LONGER AVAILABLE)
18	5097040331	CLIP	1		
29	9099155121	CLIP	1		
	1097040660	CLIP	1		
67	8941376820	HOSE	1		
91	0280808120	BOLT	2		M8 X 12
94	8972242050	HOSE	1		

OIL FILTER HOSES AND ELEMENT

T162025 -UN-26DEC02

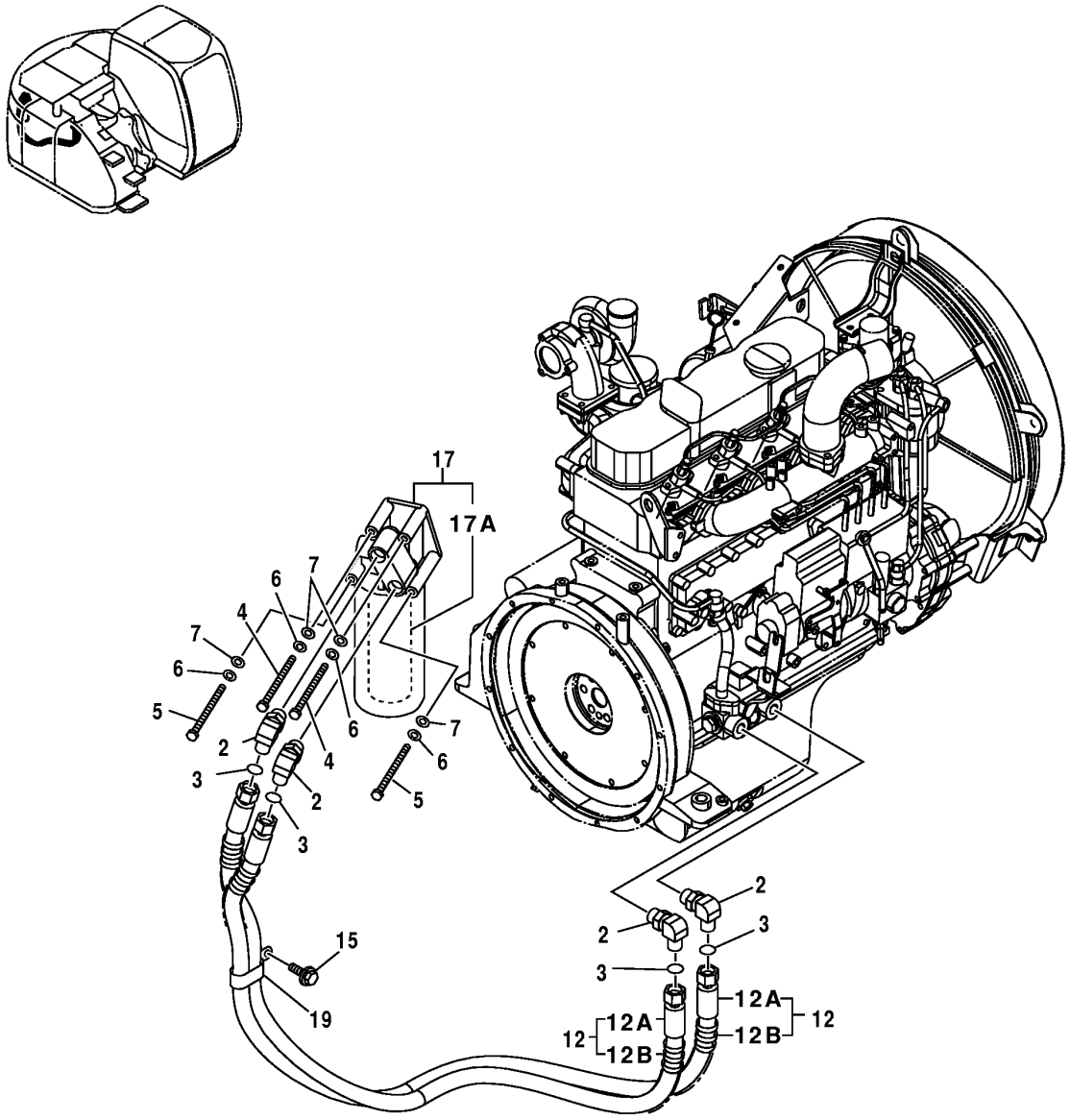

T162025

OIL FILTER HOSES AND ELEMENT

KEY	PART NO.	PART NAME	QTY	SERIAL NO.	REMARKS
2	4428831	ELBOW FITTING	4		
	4153103	O-RING	4		(SUB FOR 4437309)
3	4430912	O-RING	4		
4	19M8343	CAP SCREW	2		M10 X 120, (SUB FOR J901004)
5	19M8003	CAP SCREW	2		M10 X 140, (SUB FOR J901010)
6	12M7066	LOCK WASHER	4		10 MM, (SUB FOR A590910)
7	24M7028	WASHER	4		10.500 X 20 X 2 MM, (SUB FOR A590110)
12	.....	HYDRAULIC HOSE	2		(9197980 NO LONGER AVAILABLE FOR SERVICE - ORDER INDIVIDUAL COMPONENTS)
12A	4627105	HYDRAULIC HOSE - FABRICATE	2		(SUB FOR 4449307)
12B	4446406	HOSE GUARD	4		
15	19M7938	CAP SCREW	1		M10 X 20, (SUB FOR J011020)
17	4452166	FILTER	1		
17A	AT308576	FILTER ELEMENT	1		(SUB FOR 4448336)
19	4411911	SNAP RING	1		

ENGINE OIL PUMP

T162964 -UN-11JAN03

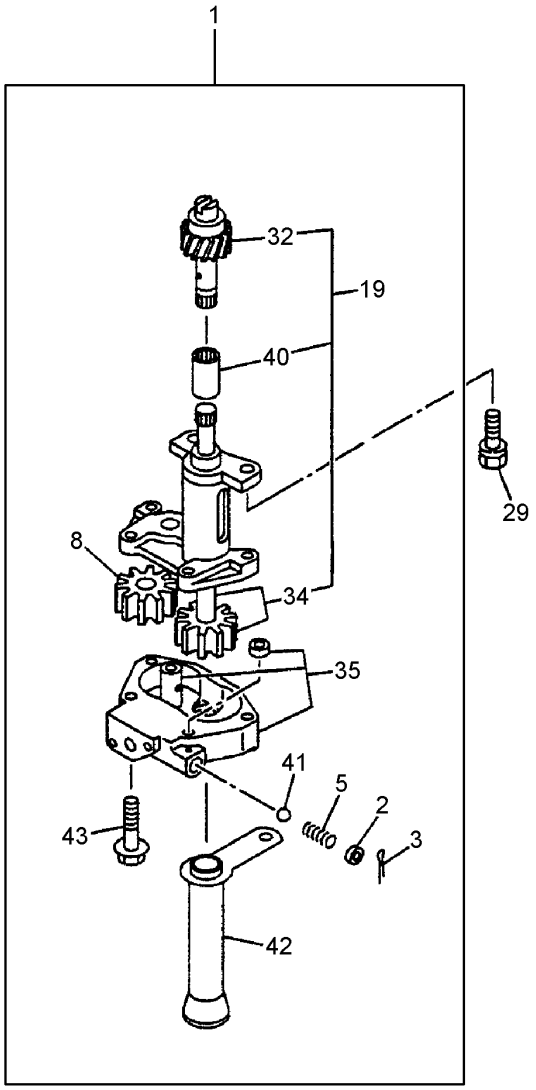

T162964

ENGINE OIL PUMP

KEY	PART NO.	PART NAME	QTY	SERIAL NO.	REMARKS
1	8970653840	HYDRAULIC PUMP	1		
2	5131650040	VALVE SEAT	1		
3	9081140300	PIN FASTENER	1		
5	5095800980	SPRING	1		
8	8941635950	GEAR	1		
19	5878120080	GEAR	1		
29	0280210250	BOLT	2		
32	1131280180	PINION	1		
34	8941635940	SHAFT	1		
35	8941635970	COVER	1		
40	1131230160	COUPLING	1		
41	5098430030	BALL	1		
42	1131401160	STRAINER	1		
43	8943445910	BOLT	4		

ENGINE OIL AND VACUUM LINES

T162974 -UN-11JAN03

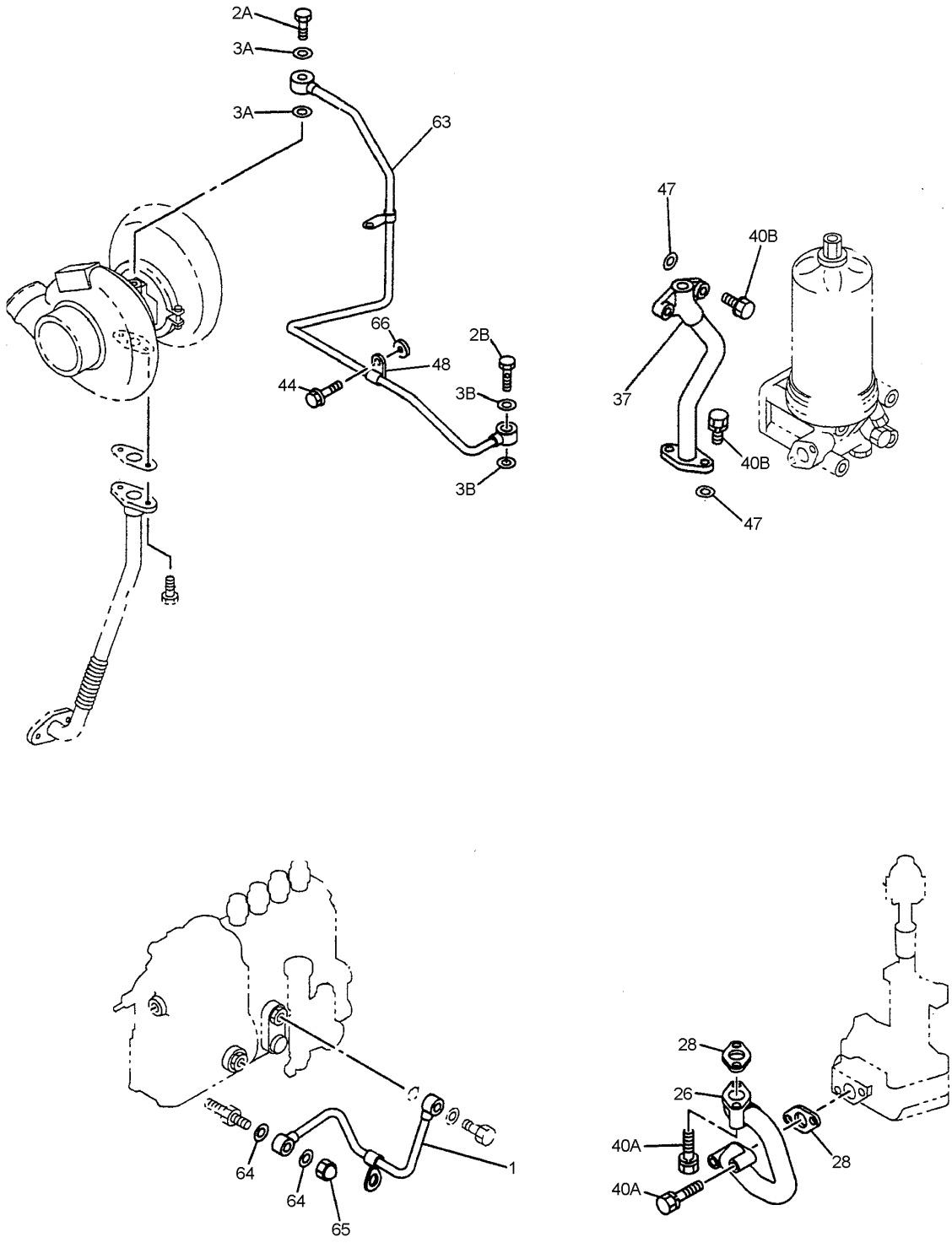

T162974

ENGINE OIL AND VACUUM LINES

KEY	PART NO.	PART NAME	QTY	SERIAL NO.	REMARKS
1	8971242340	PIPE	1		
2A	9099062051	BOLT	1		
2B	1096751600	BOLT	1		
3A	9095714100	GASKET	2		
3B	1096300840	GASKET	2		
26	8941310603	PIPE	1		
28	.....	GASKET	2		(9099211880 NO LONGER AVAILABLE)
37	8972221220	PIPE	1		
40A	0500408450	BOLT	4		M8 X 45 MM (WITH LOCK WASHER)
40B	0286808350	BOLT	1		(SUB FOR AT259941) M8 X 35 MM
	19M7866	SCREW	3		(SUB FOR AT259925) M8 X 20 MM
44	0280808120	BOLT	1		M8 X 12 MM
	0280810300	BOLT	1		M10 X 30 MM
47	8970265900	GASKET	1		
	1096234620	GASKET	1		
48	1097006952	CLIP	1		
63	8972221201	PIPE	1		(SUB FOR 8972221200)
64	9095720100	GASKET	2		
65	9098440220	NUT	1		
66	5123790010	SPACER	1		

ENGINE OIL PAN AND DIPSTICK

T162742 -UN-11JAN03

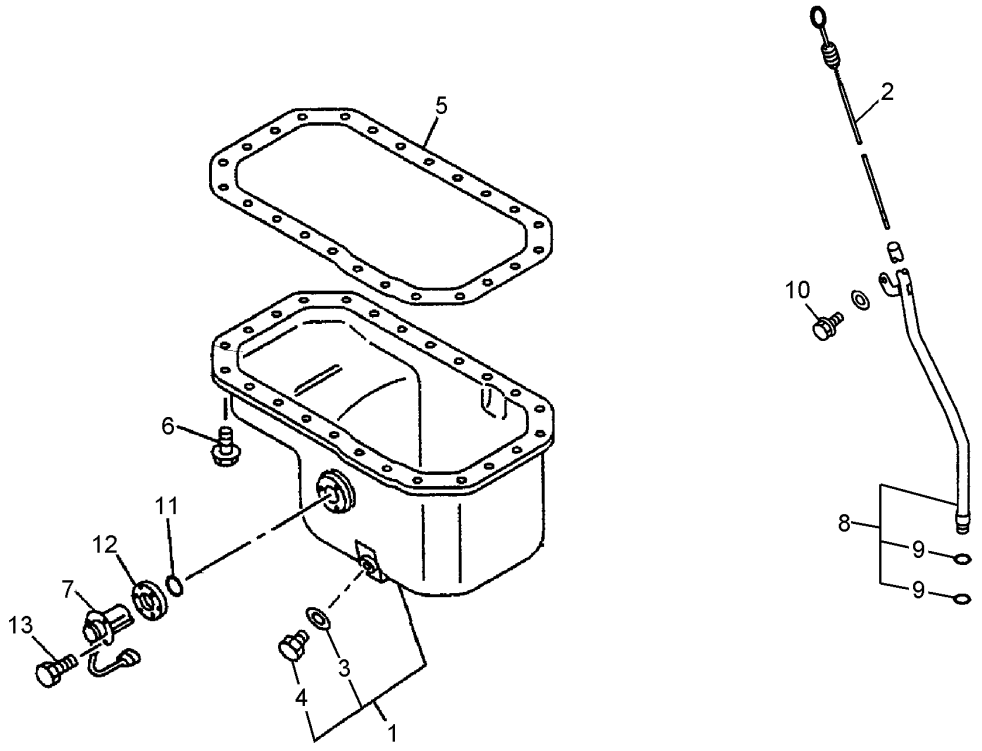

T162742

ENGINE OIL PAN AND DIPSTICK

KEY	PART NO.	PART NAME	QTY	SERIAL NO.	REMARKS
1	8973105600	OIL PAN	1		
2	8972321350	DIPSTICK	1		LENGTH=473MM
3	1096231830	GASKET	1		(SUB FOR AT254814)
4	9096620120	PIPE PLUG	1		(SUB FOR AT255027)
5	.....	GASKET	1		(8973524030 NO LONGER AVAILABLE) (SUB FOR 8943706660)
6	0500408180	BOLT	24		M8 X 18
7	8973105620	SENSOR	1		ENGINE OIL LEVEL
8	8970209320	TUBE	1		
9	5096230020	GASKET	2		
10	0280808120	BOLT	1		M8 X 12
11	1096233550	PACKING	1		
12	5113690720	SPACER	1		
13	0280806220	BOLT	3		

ENGINE CYLINDER HEAD

T162731 -UN-11JAN03

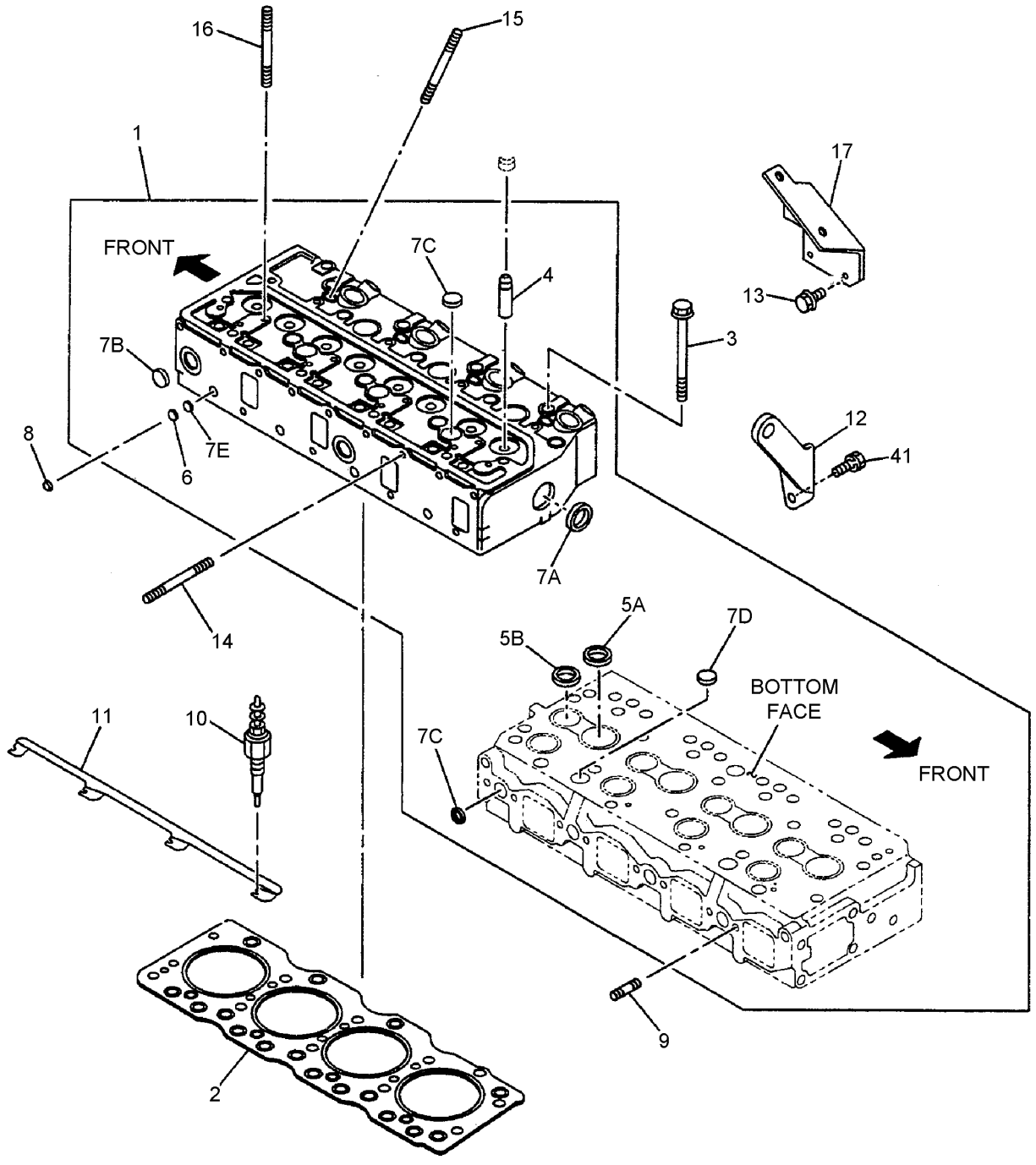

T162731

ENGINE CYLINDER HEAD

KEY	PART NO.	PART NAME	QTY	SERIAL NO.	REMARKS
1	8972221090	CYLINDER HEAD	1		
2	8972221171	ENGINE CYLINDER HEAD GASKET	1		(SUB FOR 8972221170)
3	1090701001	BOLT	4		M12 X 100
	1090701011	BOLT	14		(SUB FOR 1090701010) M12 X 113
4	1117210130	GUIDE	8		
5A	8970376860	VALVE SEAT	4		OD=47 (INLET)
5B	5117110280	INSERT	4		OD=39 (EXHAUST)
6	9096600340	PLATE	4		
7A	1096000580	BEARING CUP	1		
7B	1096000121	BEARING CUP	2		(SUB FOR AT254809)
7C	1096000160	BEARING CUP	7		
7D	9111291280	BEARING CUP	2		
7E	5096000130	BEARING CUP	4		(SUB FOR AT254823)
8	9111296010	BEARING CUP	4		
9	9041108250	STUD	4		
10	1825130451	PLUG	4		
11	5197320022	ELECTRICAL CONNECTOR ASSY	1		
12	9117778050	HANGER	1		
13	4447335	BOLT	2		(SUB FOR AT196259, AT259931, 0500410200)
14	8941569390	STUD	2		M8 X 75 L=87
	8941569400	STUD	2		M8 X 60 L=72
15	1093000180	STUD	8		
16	5093000650	STUD	3		(SUB FOR AT254819)
17	8971315880	HANGER	1		
41	4447335	BOLT	2		(SUB FOR AT196259, AT259931, 0500410200)

ENGINE CAMSHAFT AND VALVES

T162744 -UN-11JAN03

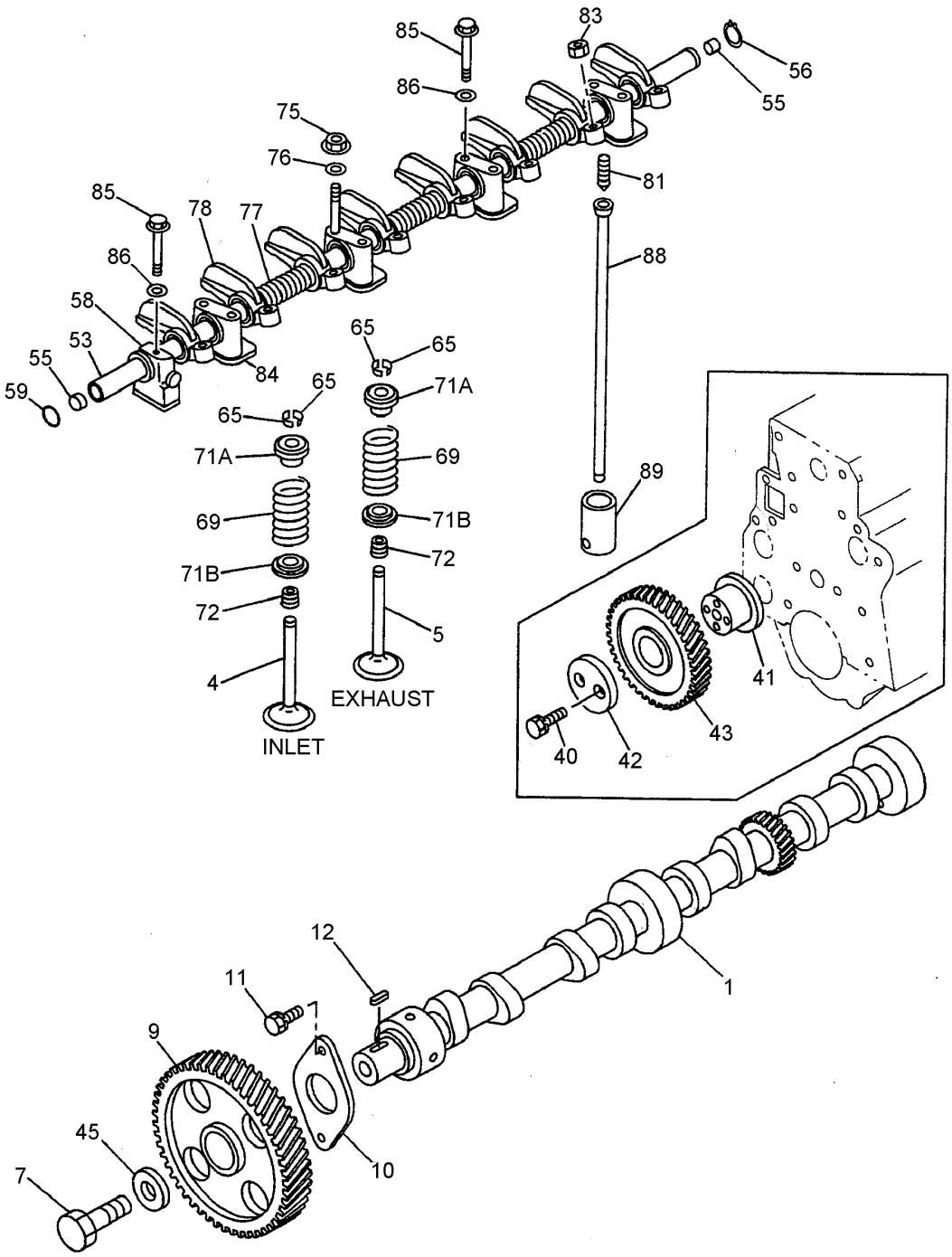

T162744

ENGINE CAMSHAFT AND VALVES

KEY	PART NO.	PART NAME	QTY	SERIAL NO.	REMARKS
1	8970145731	CAMSHAFT	1		
4	1125511650	INTAKE VALVE	4		
5	1125521110	EXHAUST VALVE	4		
7	5090002360	BOLT	1		
9	1125220162	GEAR	1		
10	9116810150	PLATE	1		
11	0500408250	BOLT	2		
12	9080107200	SHAFT KEY	1		
40	5090300381	BOLT	2		
41	8971012810	SHAFT	1		
42	5125350011	BUSHING	1		
43	8941339373	GEAR	1		
45	9098518503	WASHER	1		
53	8972222450	SHAFT	1		
55	9126260050	PLUG	2		
56	9091800190	RING	1		
58	5126280120	BRACKET	1		
59	5096230600	GASKET	1		
65	5125650060	BUSHING	12		
69	1125610991	SPRING	8		(SUB FOR 1125610990)
71A	8941145790	VALVE SEAT	8		UPPER
71B	5125630010	VALVE SEAT	8		LOWER
72	8971201670	SEAL	8		
75	1094001160	NUT	3		
76	5095000120	WASHER	3		
77	1095803350	SPRING	3		
78	1126112490	ROCKER ARM	8		
81	9126160420	SCREW	8		
83	14M7151	NUT	8		M8, (SUB FOR 9091115080)
84	9126281050	BRACKET	4		
85	1090005670	BOLT	6		
86	5095000120	WASHER	6		
88	1125750360	PUSH ROD	8		
89	5125710033	TAPPET	8		(SUB FOR 5125710032)

ENGINE EXHAUST MANIFOLD

T162784 -UN-11JAN03

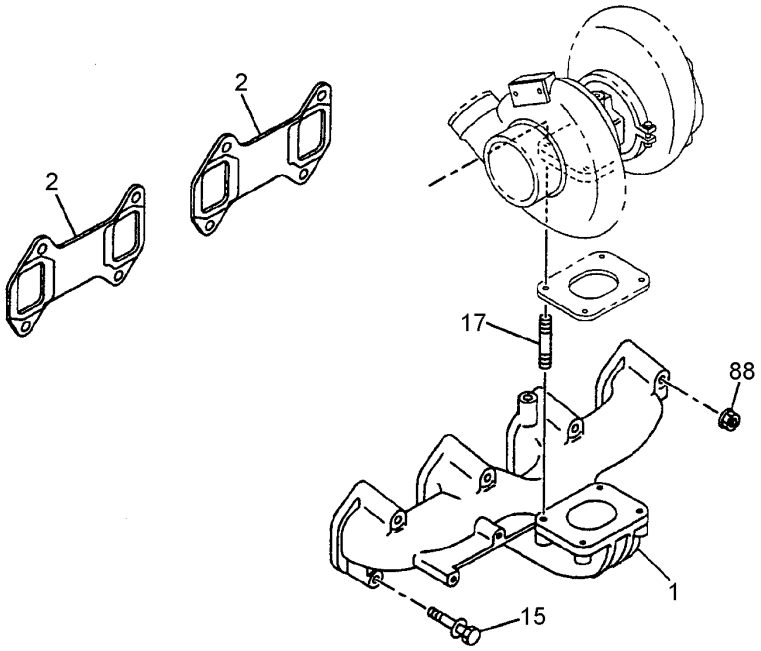

T162784

ENGINE EXHAUST MANIFOLD

KEY	PART NO.	PART NAME	QTY	SERIAL NO.	REMARKS
1	8943660210	EXHAUST MANIFOLD	1		
2	.....	GASKET	2		(SUB FOR 8944046100)
15	8943185540	BOLT	2		M8 X 63
	8943185550	BOLT	2		M8 X 75
17	8973780610	STUD	4		(SUB FOR 8941417731)
88	14M7298	FLANGE NUT	4		M8, (SUB FOR 8970614011)

FUEL INJECTION PUMP

T162807 -UN-11JAN03

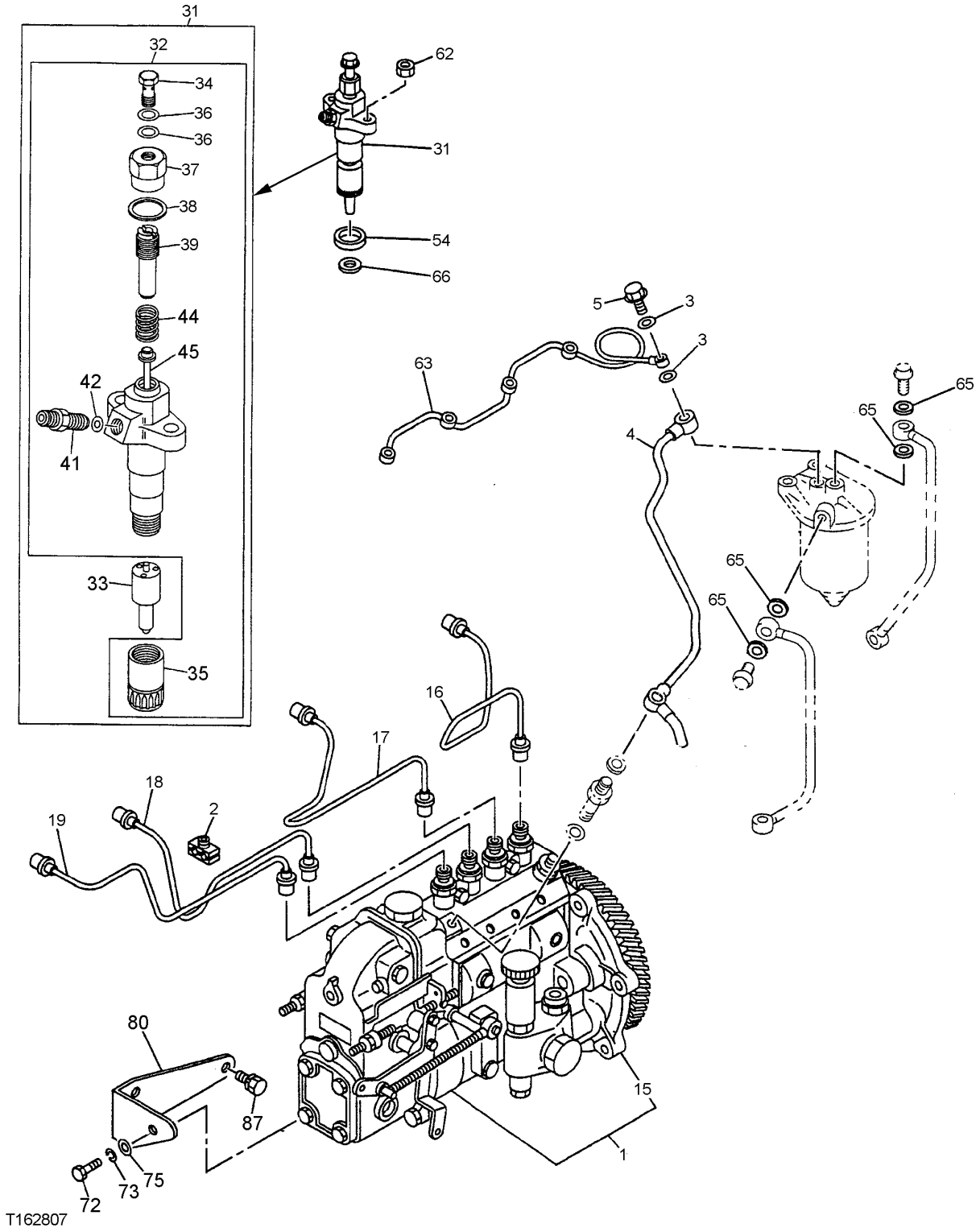

FUEL INJECTION PUMP

KEY	PART NO.	PART NAME	QTY	SERIAL NO.	REMARKS
1	8972490840	FUEL PUMP	1		
2	5154190131	CLIP	3		
3	9095714080	GASKET	2		
4	8972572570	PIPE	1		
5	AT263948	EYEBOLT	1		
15	8972475920	COUPLING	1		
16	8970314672	PIPE	1		(SUB FOR 8970314671)
17	8970314682	PIPE	1		(SUB FOR 8970314681)
18	8970314692	PIPE	1		(SUB FOR 8970314691)
19	8970314702	PIPE	1		(SUB FOR 8970314701)
31	8972221700	INJECTION NOZZLE	4		
32	8971348410	HOLDER	4		
33	1153113010	INJECTION NOZZLE	4		
34	AT263948	EYEBOLT	4		
35	1153320170	NUT	4		
36	1096300820	GASKET	8		
37	5153320060	NUT	4		
38	5153390600	GASKET	4		
39	8941695030	SCREW	4		
41	8943203080	ELECTRICAL CONNECTOR ASSY	4		
42	5513390030	GASKET	4		
44	5153430050	SPRING	4		
45	8941695020	ROD	4		
54	9153390510	DUST SHIELD	4		
62	4447338	NUT	8		(SUB FOR AT259945)
63	8970209371	PIPE	1		
65	AT255026	O-RING	1		
66	1153150131	GASKET	4		
72	4447335	BOLT	1		(SUB FOR AT196259, AT259931, 0500410200)
73	1099853450	WASHER	1		
75	AT264142	WASHER	1		
80	8972221710	BRACKET	1		
87	4447335	BOLT	2		(SUB FOR AT196259, AT259931, 0500410200)

GOVERNOR AND INJECTION PUMP LINKAGES

T162837 -UN-11JAN03

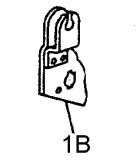

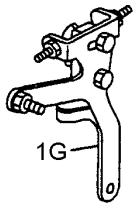

T162837

GOVERNOR AND INJECTION PUMP LINKAGES

KEY	PART NO.	PART NAME	QTY	SERIAL NO.	REMARKS
1B	1157256700	LEVER	1		
1G	8972224200	LEVER	1		

FUEL FILTER AND BRACKET

T162840 -UN-11JAN03

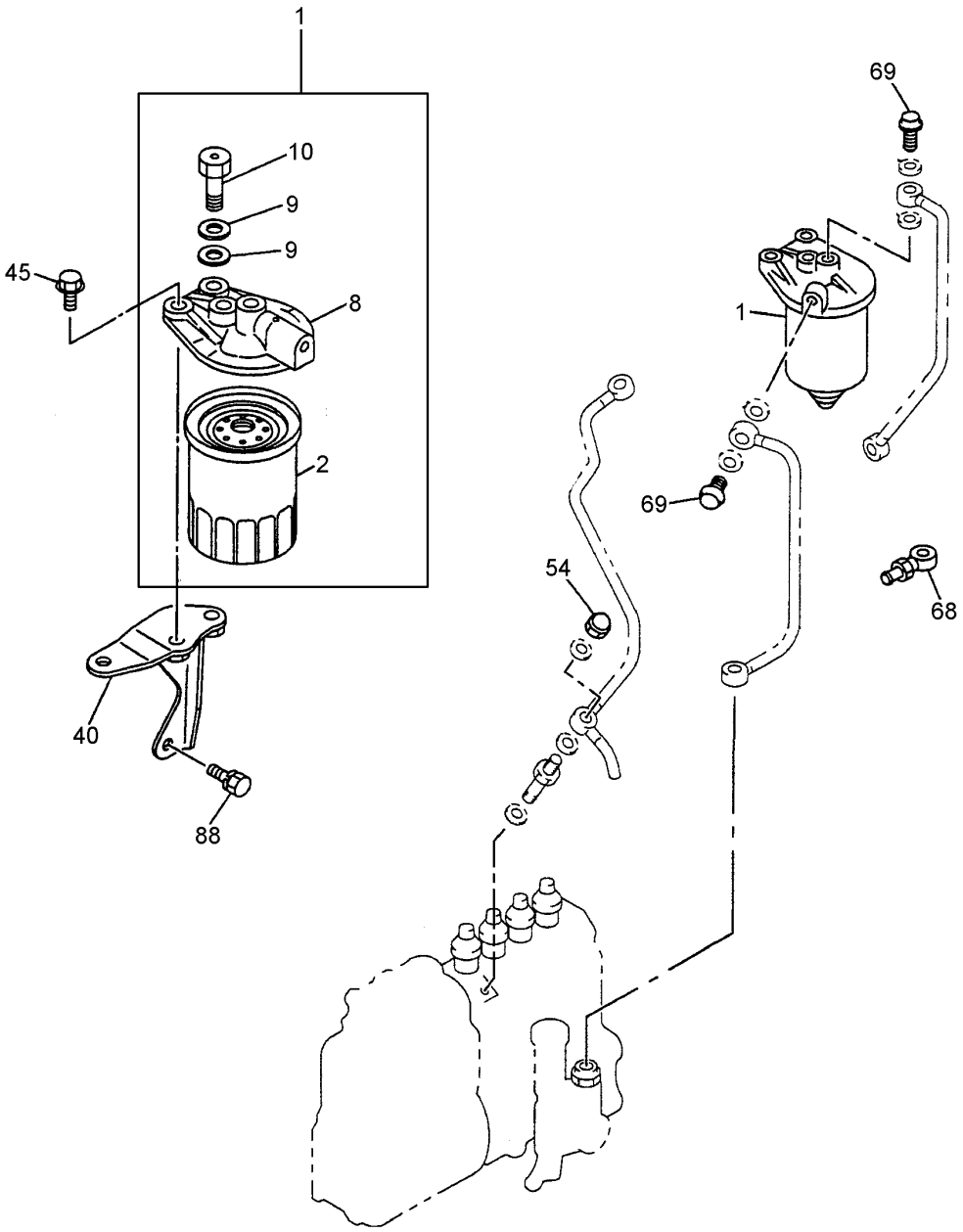

T162840

FUEL FILTER AND BRACKET

KEY	PART NO.	PART NAME	QTY	SERIAL NO.	REMARKS
1	8971798541	FILTER	1		
2	4S00246	FILTER ELEMENT	1		(SUB FOR 8971725490)
8	8941329480	COVER	1		
9	AT263852	WASHER	2		
10	1132600470	FLOW CONTROL HYD. VALVE	1		
40	5197550010	BRACKET	1		
45	0280810300	BOLT	2		
54	AT263876	BOLT	1		
68	4452162	PIPE	2		
69	1096751460	BOLT	2		
88	4447335	BOLT	2		(SUB FOR AT196259, AT259931, 0500410200)

INJECTION LINES

T162843 -UN-23JAN03

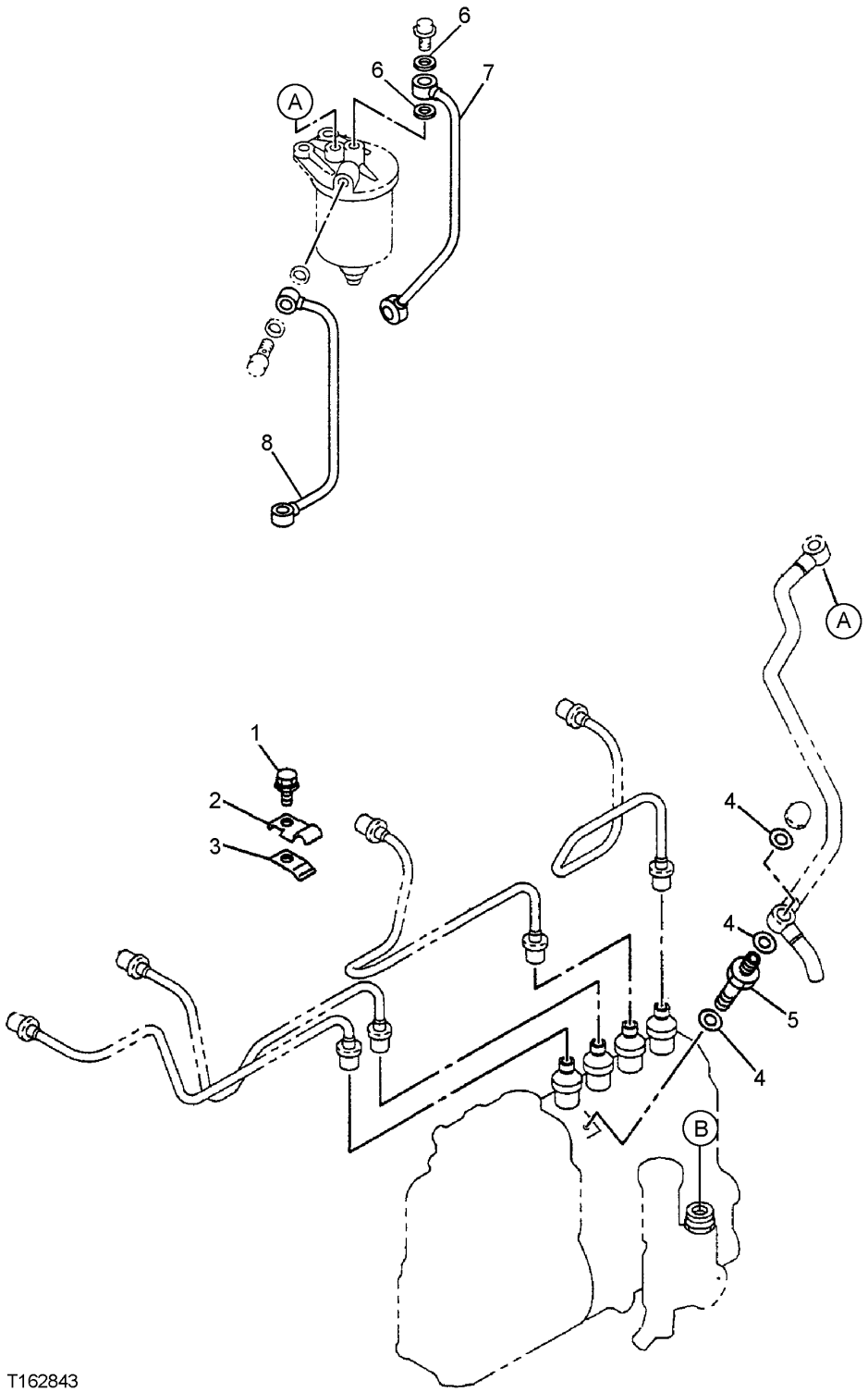

INJECTION LINES

KEY	PART NO.	PART NAME	QTY	SERIAL NO.	REMARKS
1	0286806160	BOLT	1		
2	5154190040	CLIP	1		
3	5154190051	CLIP	1		
4	.....	PACKING	3		(SUB FOR 4452165)
5	8972254470	FLOW CONTROL HYD. VALVE	1		
6	9095720140	PACKING	2		
7	8970209340	PIPE	1		
8	8970209330	PIPE	1		

FUEL INJECTION PUMP COLLAR AND MOUNTING

T162981 -UN-11JAN03

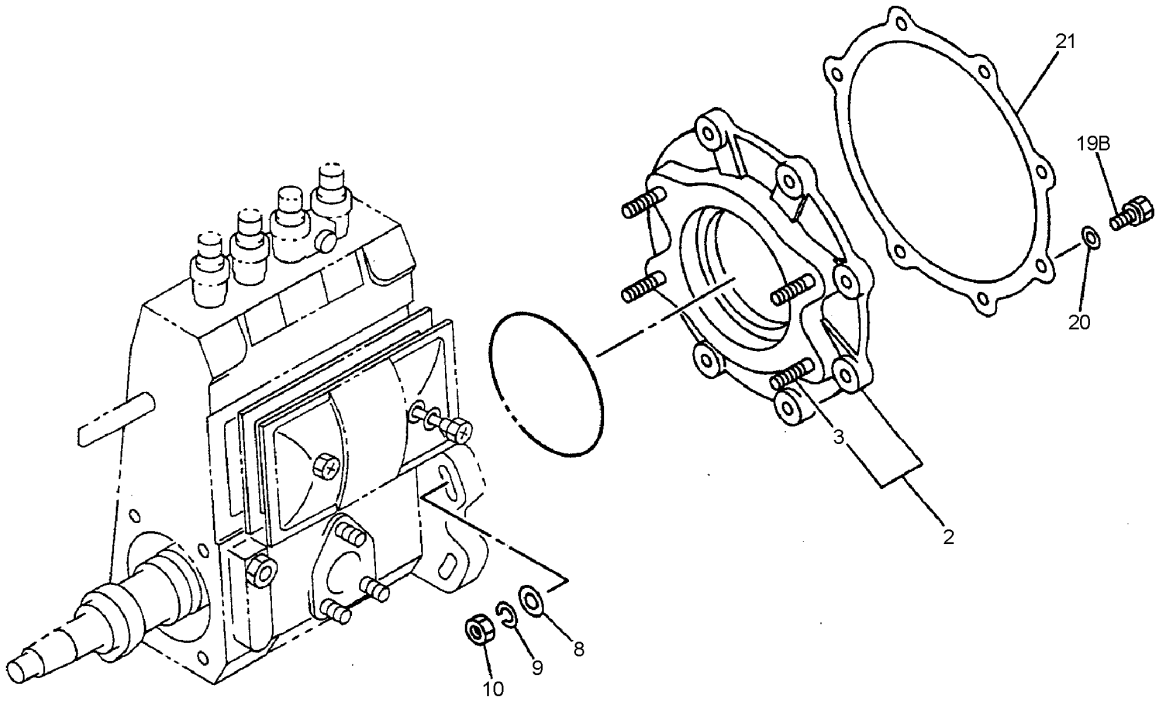

T162981

FUEL INJECTION PUMP COLLAR AND MOUNTING

KEY	PART NO.	PART NAME	QTY	SERIAL NO.	REMARKS
2	5197510500	BRACKET	1		
3	9044110300	STUD	4		
8	9091645100	WASHER	4		
9	1099851850	WASHER	4		
10	5156390020	NUT	4		
19B	5090002221	BOLT	1		
	1090440711	BOLT	6		
20	9095720080	GASKET	1		
21	8943706750	GASKET	1		

FUEL INJECTION PUMP COUPLING

T162982 -UN-11JAN03

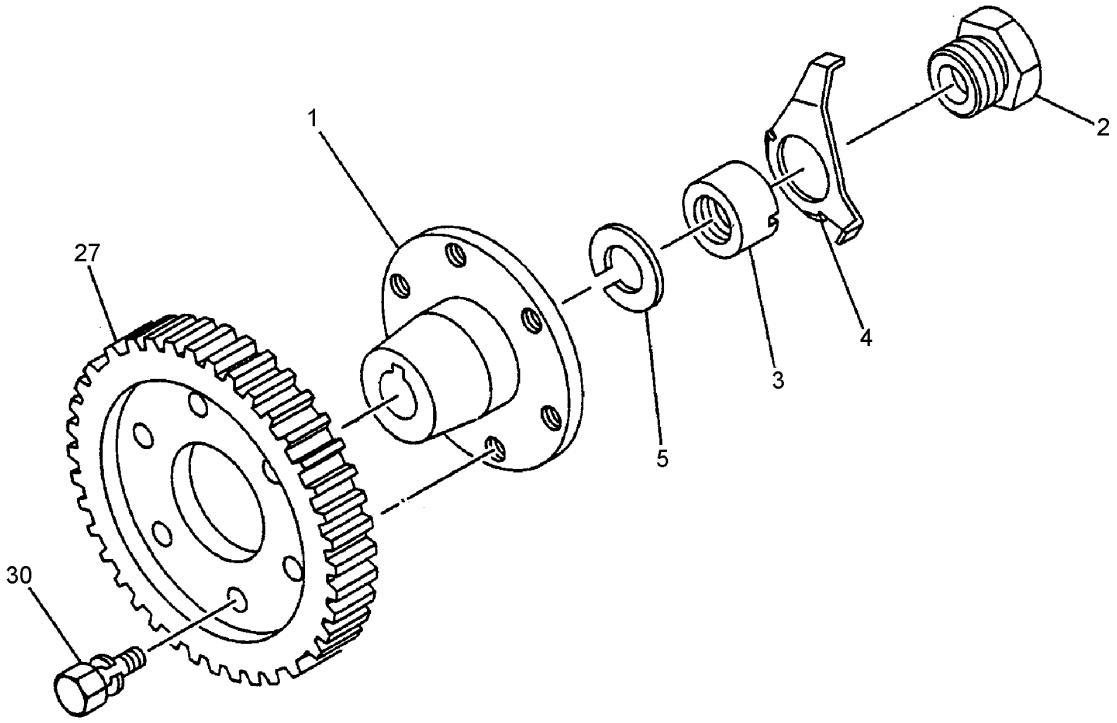

T162982

FUEL INJECTION PUMP COUPLING

KEY	PART NO.	PART NAME	QTY	SERIAL NO.	REMARKS
1	5157810030	COUPLING	1		
2	9096620070	BOLT	1		
3	9884105020	NUT	1		
4	1156192470	PLATE	1		
5	5156190480	WASHER	1		
27	1125240520	GEAR	1		
30	8944575170	BOLT	6		

ENGINE AIR INTAKE MANIFOLD

T162782 -UN-11JAN03

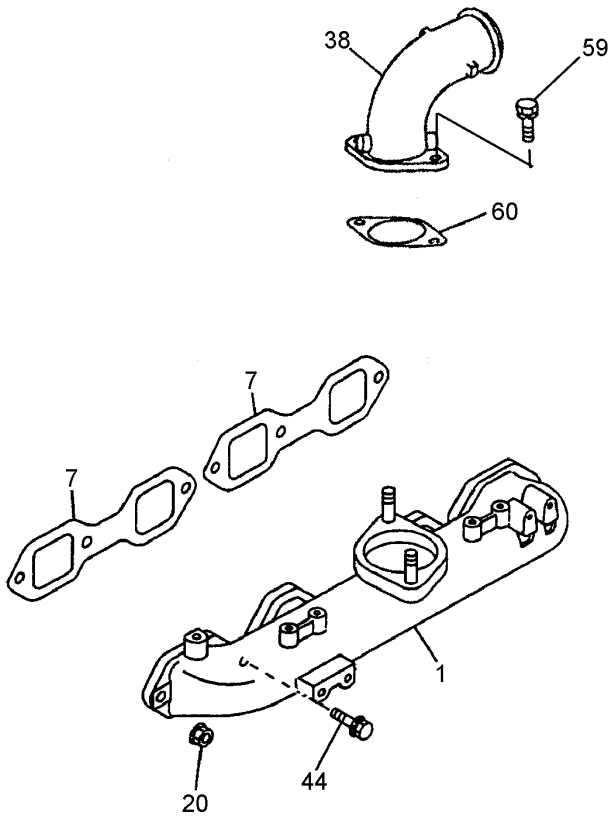

T162782

ENGINE AIR INTAKE MANIFOLD

KEY	PART NO.	PART NAME	QTY	SERIAL NO.	REMARKS
1	8972488530	INTAKE MANIFOLD	1		
7	1141151040	GASKET	2		(SUB FOR 8972357881)
20	4447338	NUT	4		
38	AT263879	BOLT	1		
44	0500408250	BOLT	4		
59	0287810300	BOLT	2		
60	.....	PACKING	1		(SUB FOR 8943706760)

TURBOCHARGER AND MOUNTING

T162802 -UN-11JAN03

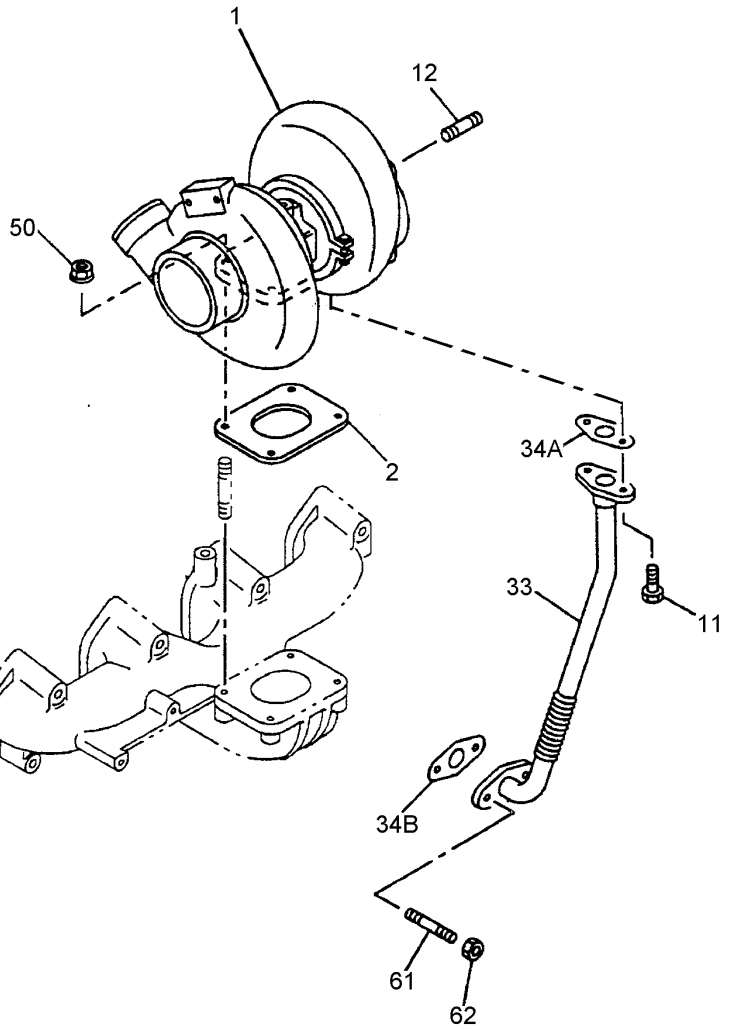

T162802

TURBOCHARGER AND MOUNTING

KEY	PART NO.	PART NAME	QTY	SERIAL NO.	REMARKS
1	8972221720	TURBOCHARGER	1		
2	8943690230	GASKET	1		
11	0280906160	BOLT	2		(SUB FOR AT191641 AND AT259918)
12	8973780620	STUD	3		(SUB FOR 8944762820)
33	8972221210	PIPE	1		
34A	8943690220	PACKING	1		
34B	.....	GASKET	1		(8943706630 NO LONGER AVAILABLE)
50	14M7298	FLANGE NUT	4		M8, (SUB FOR 8970614011)
61	9041108220	STUD	2		
62	4447338	NUT	2		

TURBOCHARGER COMPONENTS

T162805 -UN-11JAN03

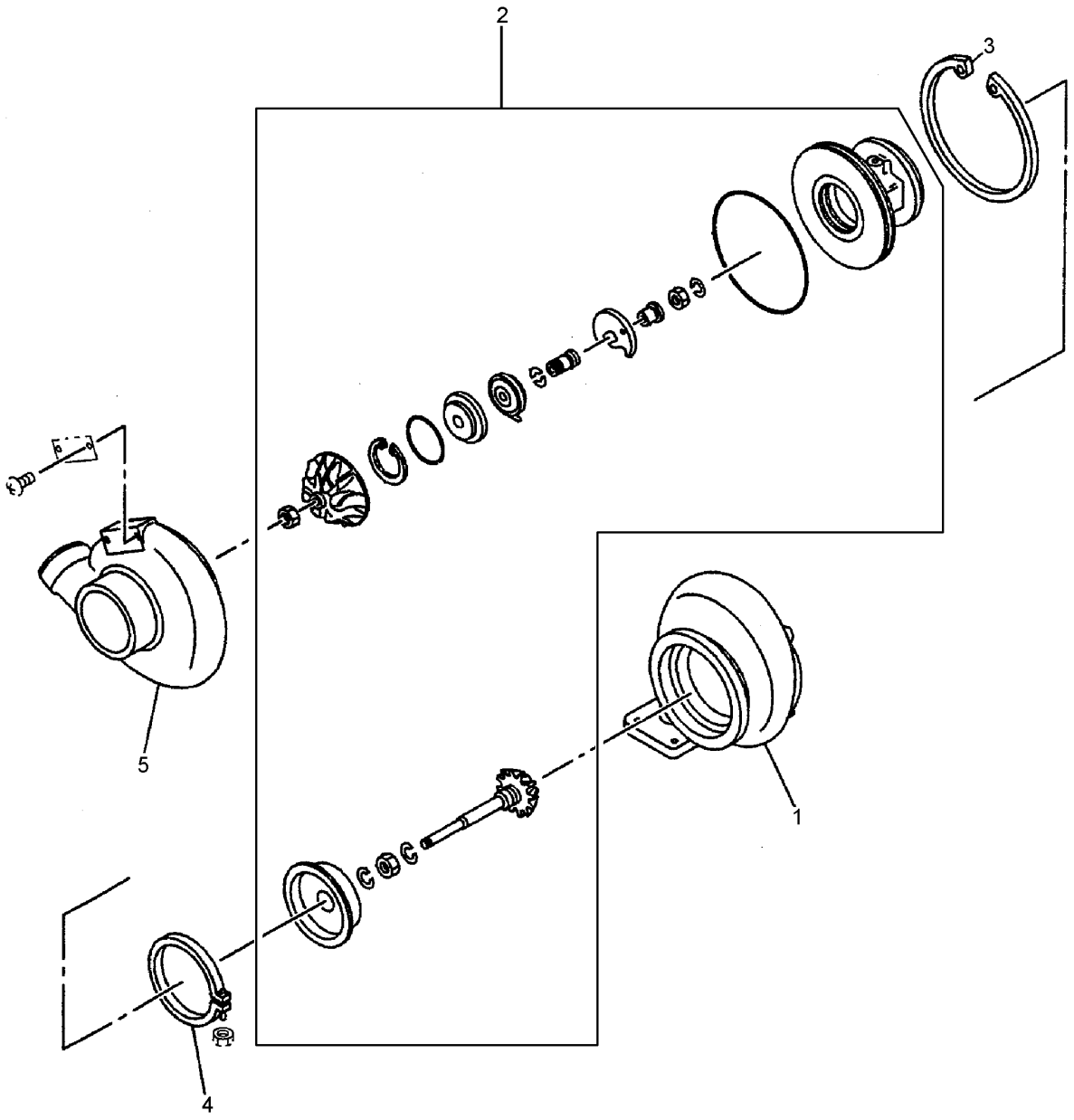

T162805

TURBOCHARGER COMPONENTS

KEY	PART NO.	PART NAME	QTY	SERIAL NO.	REMARKS
1	8971731310	HOUSING	1		
2	8972333090	KIT	1		
3	8971731470	RING	1		
4	8971731460	CLAMP	1		
5	8972333080	HOUSING	1		

WATER PUMP

T162794 -UN-11JAN03

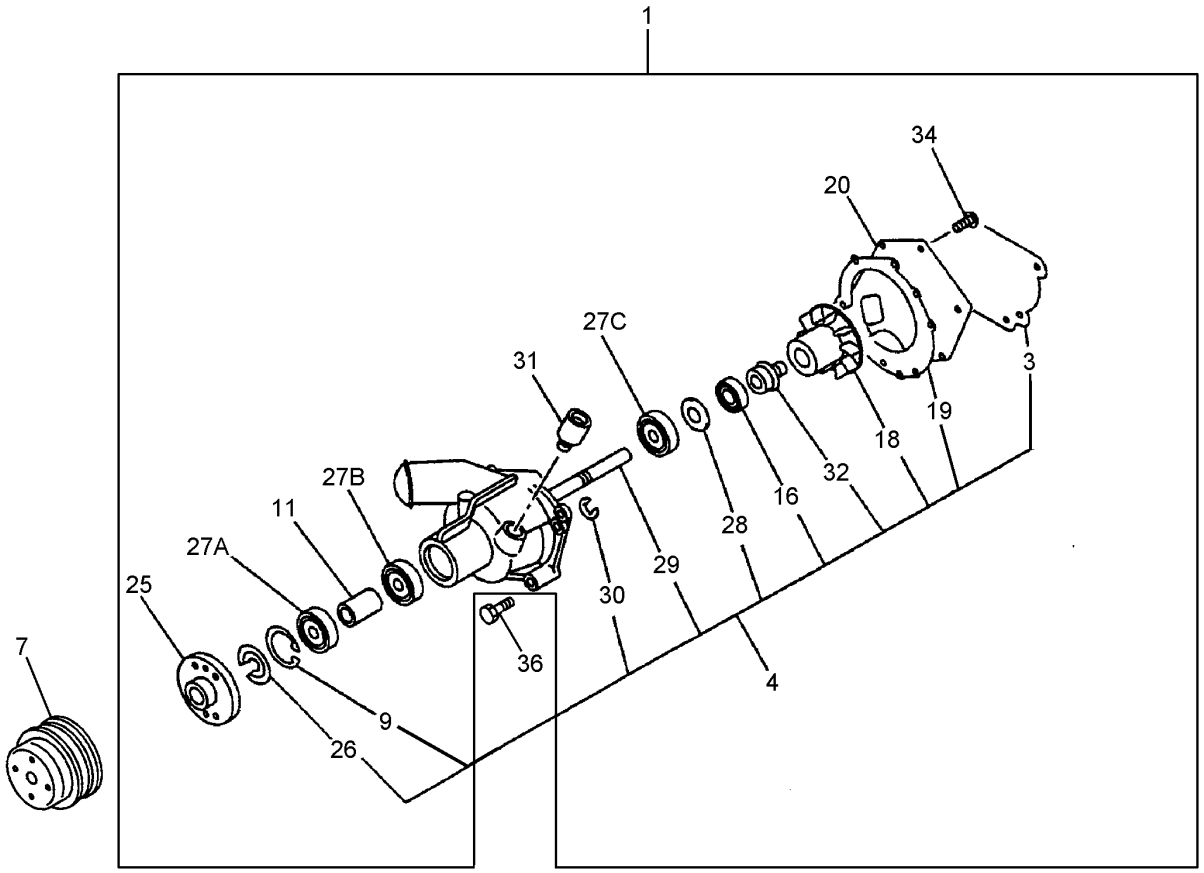

T162794

WATER PUMP

KEY	PART NO.	PART NAME	QTY	SERIAL NO.	REMARKS
1	8972530281	WATER PUMP	1		
3	4210234	PACKING	1		(SUB FOR 8943706610)
4	8972530300	KIT	1		
7	1136411910	PULLEY	1		
9	9091801520	RING	1		
11	5136340020	SPACER	1		
16	1096255450	SEAL	1		
18	8972322500	IMPELLER	1		
19	8972322480	GASKET	1		
20	8972322470	COVER	1		
25	5136420072	CENTER LINK	1		
26	5136390010	COVER	1		
27A	5098000510	BEARING	1		
27B	5098000500	BEARING	1		
27C	1098001700	BEARING	1		
28	1095030700	WASHER	1		
29	1136310740	SHAFT	1		
30	9099521430	SNAP RING	1		
31	8972498951	PIPE	1		
32	1136200230	UNIT STANDARD	1		
34	9030908200	SCREW	3		(SUB FOR AT260103)
36	0280810350	BOLT	1		M10 X 35
	0280810450	EYEBOLT	2		M10 X 45
	AT259932	BOLT	1		M10 X 70

THERMOSTAT AND HOUSING

T162795 -UN-11JAN03

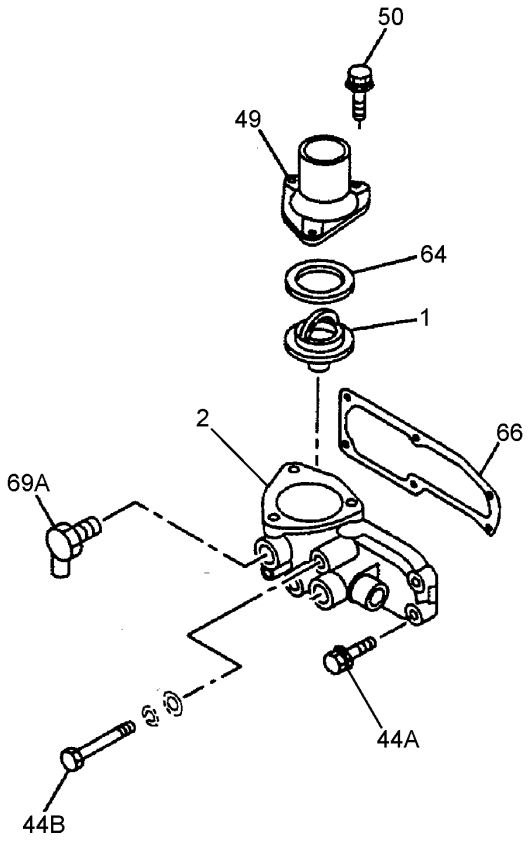

T162795

THERMOSTAT AND HOUSING

KEY	PART NO.	PART NAME	QTY	SERIAL NO.	REMARKS
1	1137700700	THERMOSTAT	1		
2	1137118042	HOUSING	1		
44A	0280810300	BOLT	1		
	0280810350	BOLT	2		
	0280810900	BOLT	3		
44B	0280810800	BOLT	1		
49	8972873820	PIPE	1		
50	0280808220	BOLT	1		
	0280808300	BOLT	2		(SUB FOR AT259926)
64	1137430160	GASKET	1		
66	.....	GASKET	1		(8972357891 NO LONGER AVAILABLE)
69A	5137210341	PIPE	1		

WATER LINES FROM PUMP TO THERMOSTAT

T162797 -UN-11JAN03

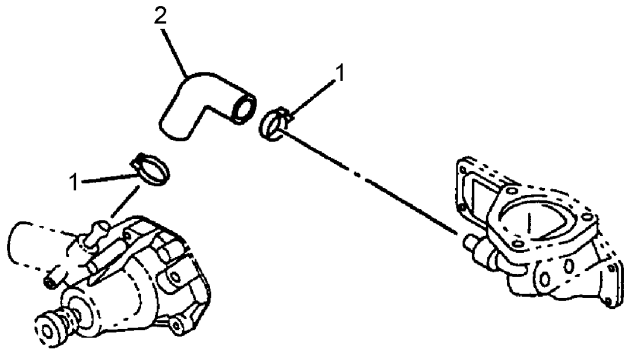

T162797

WATER LINES FROM PUMP TO THERMOSTAT

KEY	PART NO.	PART NAME	QTY	SERIAL NO.	REMARKS
1	TY22467	CLAMP	2		(SUB FOR 5097040460)
2	8972242040	HOSE	1		

ENGINE OIL COOLER

T190115 -UN-06MAY03

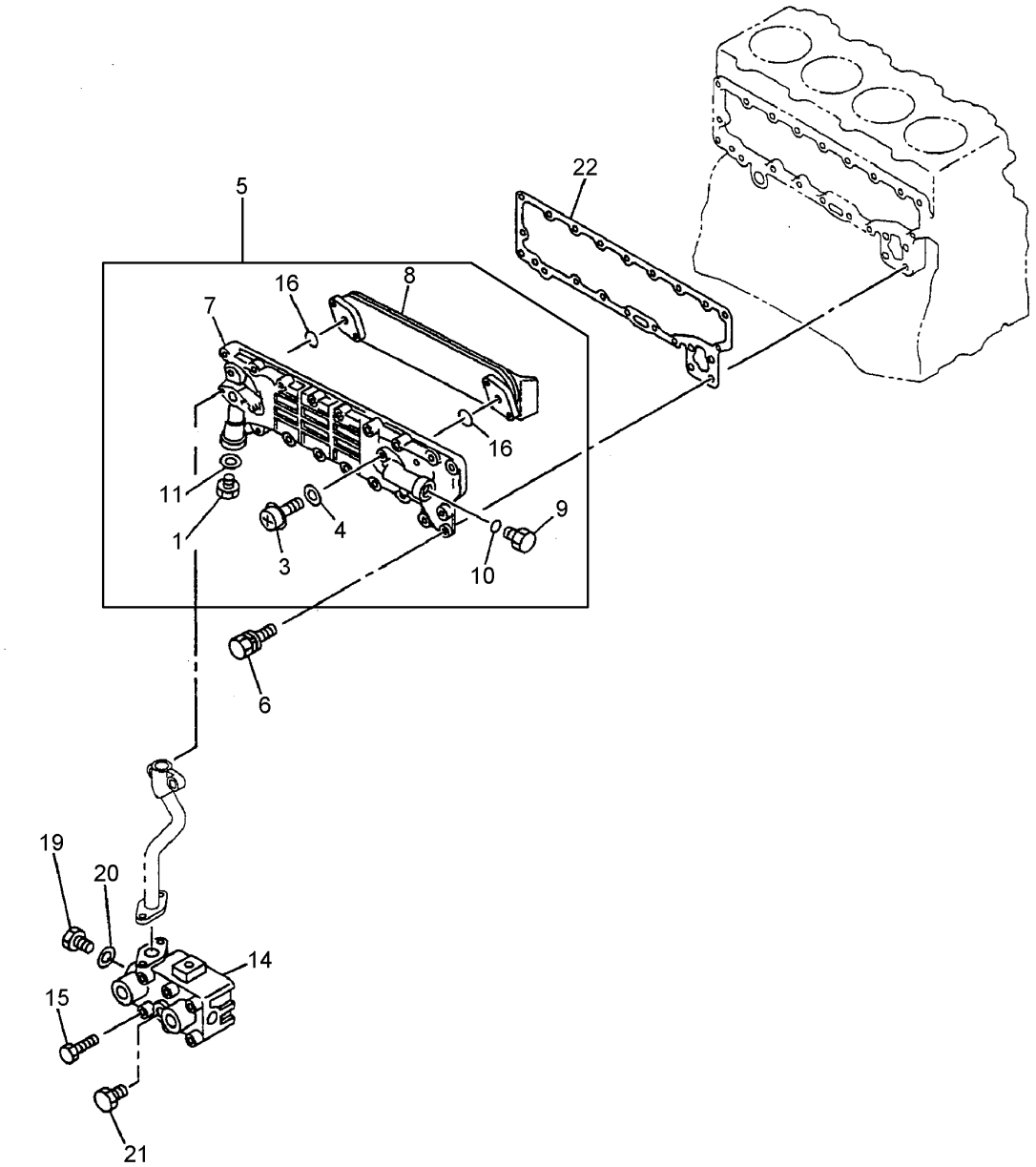

T190115

ENGINE OIL COOLER

KEY	PART NO.	PART NAME	QTY	SERIAL NO.	REMARKS
1	5112880020	FLOW CONTROL HYD. VALVE	1		
3	5112890090	BOLT	4		
4	1217290430	GASKET	4		
5	8970200372	OIL COOLER	1		
6	0500408250	BOLT	11		
	0500408200	BOLT	2		
	8942059861	BOLT	1		
	0500408450	BOLT	12		
7	5112800111	OIL COOLER	1		(SUB FOR 8944496440, 8944496441 OR 8970321101)
8	8970320250	CORE	1		(SUB FOR 5112890030)
9	8971281500	PLUG	1		
10	9095652250	GASKET	1		
11	9095716200	GASKET	1		
14	8972234300	COVER	1		
15	0280810900	BOLT	4		
16	5112820110	GASKET	2		
19	8943109170	PLUG	1		
20	9095714200	GASKET	1		(SUB FOR AT256023)
21	1132600980	PRESSURE RELIEF VALVE	1		
22	.....	GASKET	1		(8972333022 NO LONGER AVAILABLE)

PRIMARY FUEL FILTER (WATER/SEDIMENTARY BOWL)

T163104 -UN-11JAN03

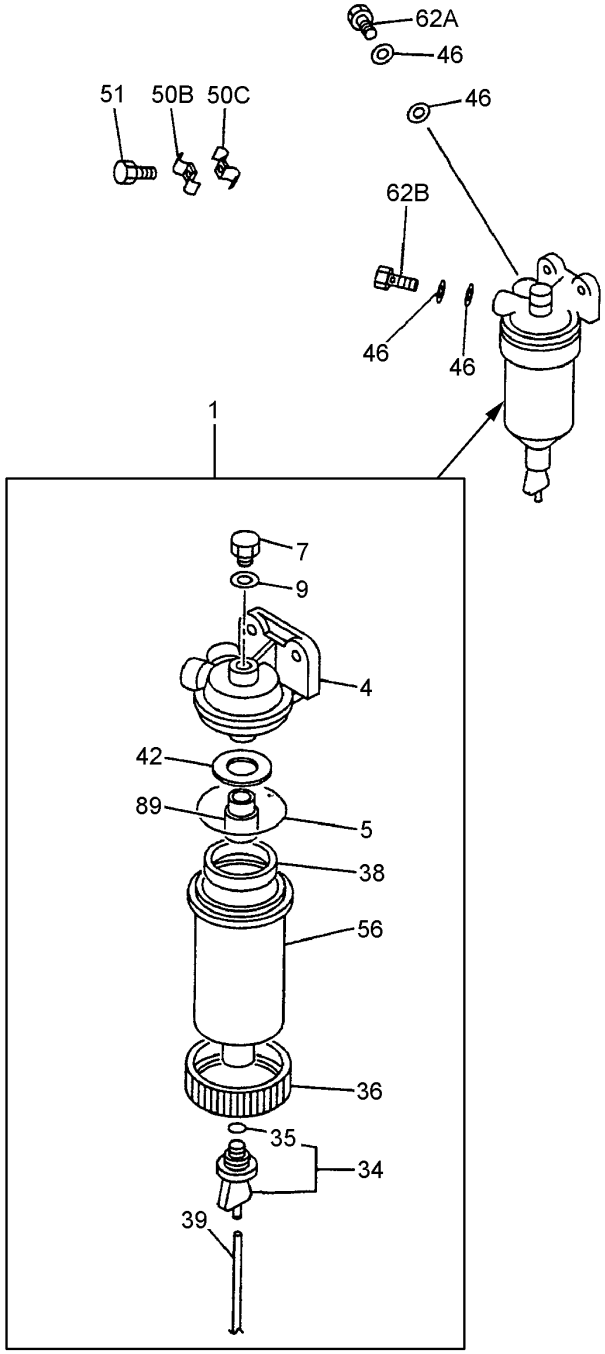

T163104

PRIMARY FUEL FILTER (WATER/SEDIMENTARY BOWL)

KEY	PART NO.	PART NAME	QTY	SERIAL NO.	REMARKS
1	8972186470	FUEL FILTER	1		
4	8972891170	COVER	1		
5	8941551830	GASKET	1		(SUB FOR AT256027)
7	8972134730	PLUG	1		
9	51M7105	O-RING	1		(SUB FOR 8972134740)
34	8972891320	PLUG	1		
35	8972891330	GASKET	1		
36	8972891310	RING	1		
38	8972891250	FLOAT	1		
39	TY24396	BULK HOSE	1		(SUB FOR 8972891360)
42	8972891340	PLATE	1		
46	AT263852	WASHER	4		
50B	1097007590	CLIP	2		
50C	1097007600	CLIP	2		
51	19M7866	SCREW	2		(SUB FOR AT259925) M6 X 20 MM
56	8972891180	SEDIMENT BOWL	1		
62A	AT263712	BOLT	1		
62B	1096750630	BOLT	1		
89	8972891350	ADAPTER	1		

SECONDARY FUEL FILTER

T162045 -UN-26DEC02

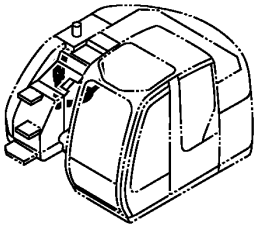

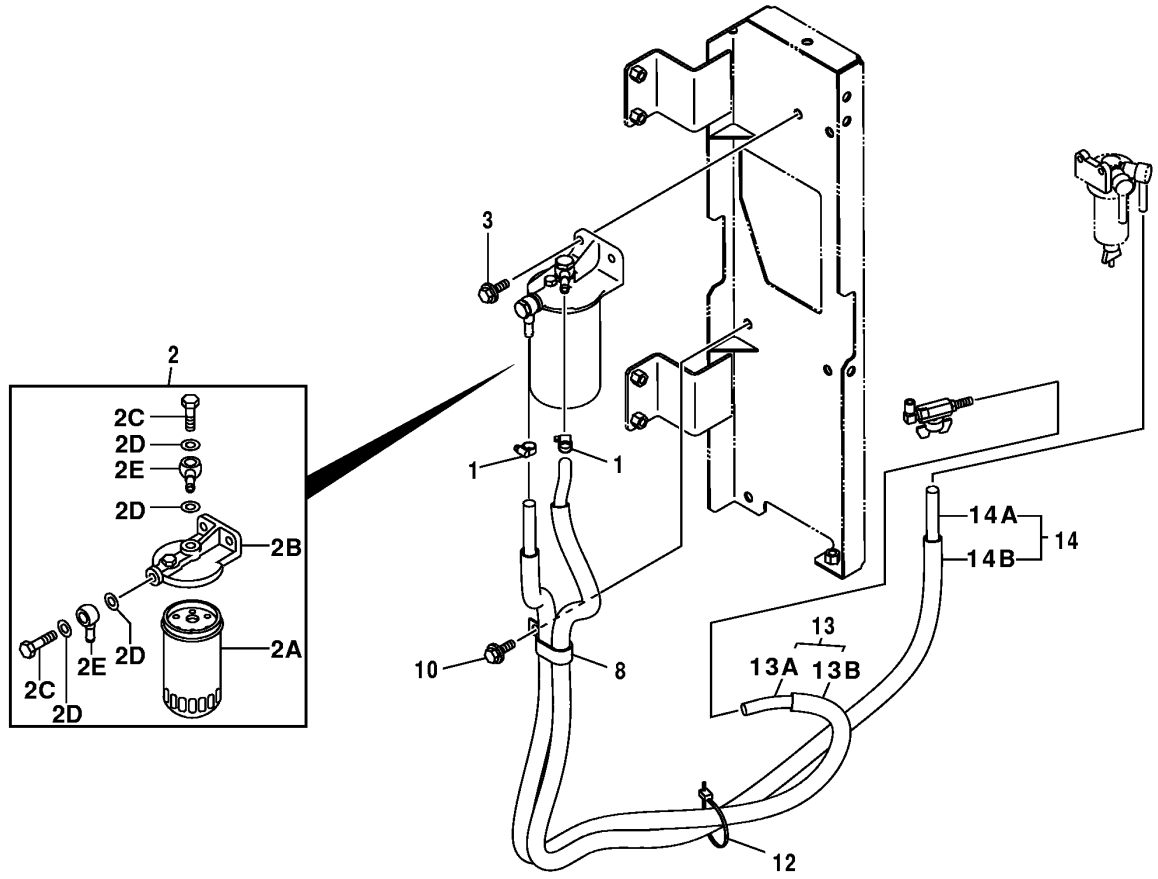

T162045

SECONDARY FUEL FILTER

KEY	PART NO.	PART NAME	QTY	SERIAL NO.	REMARKS
1	TY22464	CLAMP	2		(SUB FOR AR21836)
2	4335136	FILTER	1		
2A	4S00483	FILTER ELEMENT	1		(USE IF AVAILABLE - IF 4S00483 NOT AVAILABLE, SUB 4616544)
	4616544	FUEL FILTER	1		(SUB FOR 4S00483)
2B	4326807	CYLINDER HEAD	1		
2C	4326740	BOLT	2		
2D	4326741	GASKET	4		
2E	4326742	PIPE	2		
3	19M7550	CAP SCREW	2		M10 X 35, (SUB FOR J021035)
	12M7066	LOCK WASHER	2		10 MM
8	4192034	CLIP	1		
10	19M7938	CAP SCREW	1		M10 X 20, (SUB FOR J011020)
	12M7066	LOCK WASHER	1		10 MM
12	H77698	TIE BAND	1		
13	.....	HOSE	1		(9203824 NO LONGER AVAILABLE FOR SERVICE - ORDER INDIVIDUAL COMPONENTS)
13A	.....	HOSE	1		(FURNISH TY24398, AS REQUIRED)
13B	4457965	SLEEVE	1		
14	.....	HOSE	1		(9203825 NO LONGER AVAILABLE FOR SERVICE - ORDER INDIVIDUAL COMPONENTS)
14A	4388235	HOSE	1		
14B	4457967	SLEEVE	1		

PRIMARY FUEL TRANSFER PUMP

T202604 -UN-02SEP04

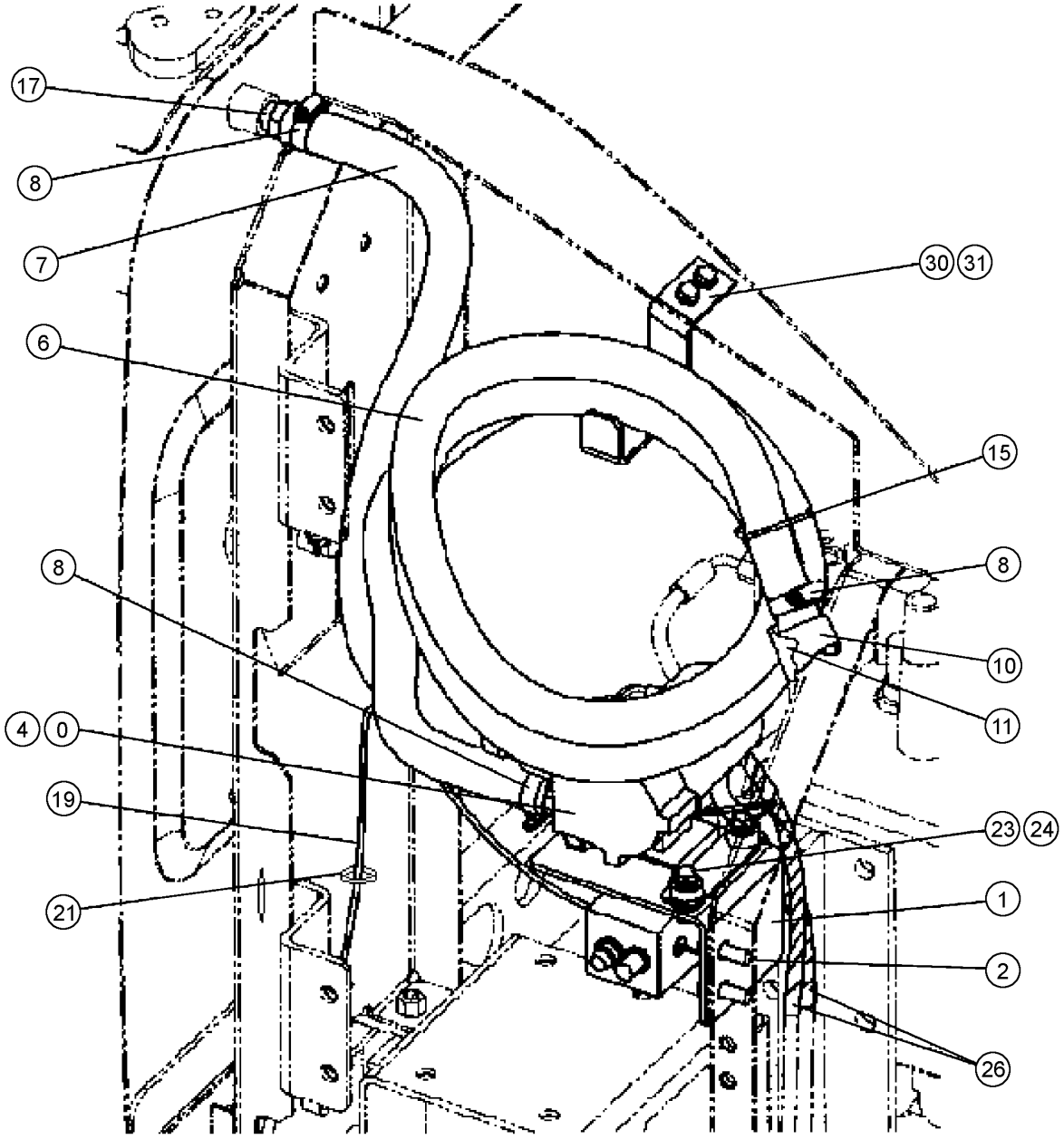

T202604

PRIMARY FUEL TRANSFER PUMP

KEY	PART NO.	PART NAME	QTY	SERIAL NO.	REMARKS
0	4455541	PUMP	1		
1	8091483	BRACKET	1		
2	19M7662	CAP SCREW	2		M10 X 30, (ALSO ORDER 24M7346) (SUB FOR J271030)
	24M7346	WASHER	2		11 X 20 X 2 MM
4	21M7267	SCREW	2		M6 X 20, (ALSO ORDER 24M7293 AND 12M7006) (SUB FOR J460620)
	24M7293	WASHER	2		6.500 X 13 X 1.600 MM
	12M7006	LOCK WASHER	2		6 MM
6	4051160	HOSE	1		
7	4602161	HOSE	1		
8	4504367	HOSE CLAMP	1		
10	4103527	STRAINER	1		
11	4507650	CAP	1		
13	9760447	BRACKET	1		
14	19M7402	CAP SCREW	1		M10 X 25, (SUB FOR J271025)
15	4055312	TIE BAND	1		
17	4004589	ADAPTER	1		
19	4600161	WIRING HARNESS	1		
21	H77698	TIE BAND	15		(SUB FOR 4055312)
23	19M7298	CAP SCREW	3		M8 X 35, (ALSO ORDER 19M7298 AND 24M7055) (SUB FOR J260835)
	24M7055	WASHER	3		8.400 X 16 X 1.600 MM
24	24M7055	WASHER	3		8.400 X 16 X 1.600 MM, (SUB FOR A590108)
26	4327293	HOSE GUARD	2		
30	8099268	BRACKET	1		
31	19M7139	CAP SCREW	1		M8 X 20, (ALSO ORDER 24M7055) (SUB FOR J260820)
	24M7055	WASHER	1		8.400 X 16 X 1.600 MM

SECONDARY FUEL TRANSFER PUMP

T162829 -UN-13JAN03

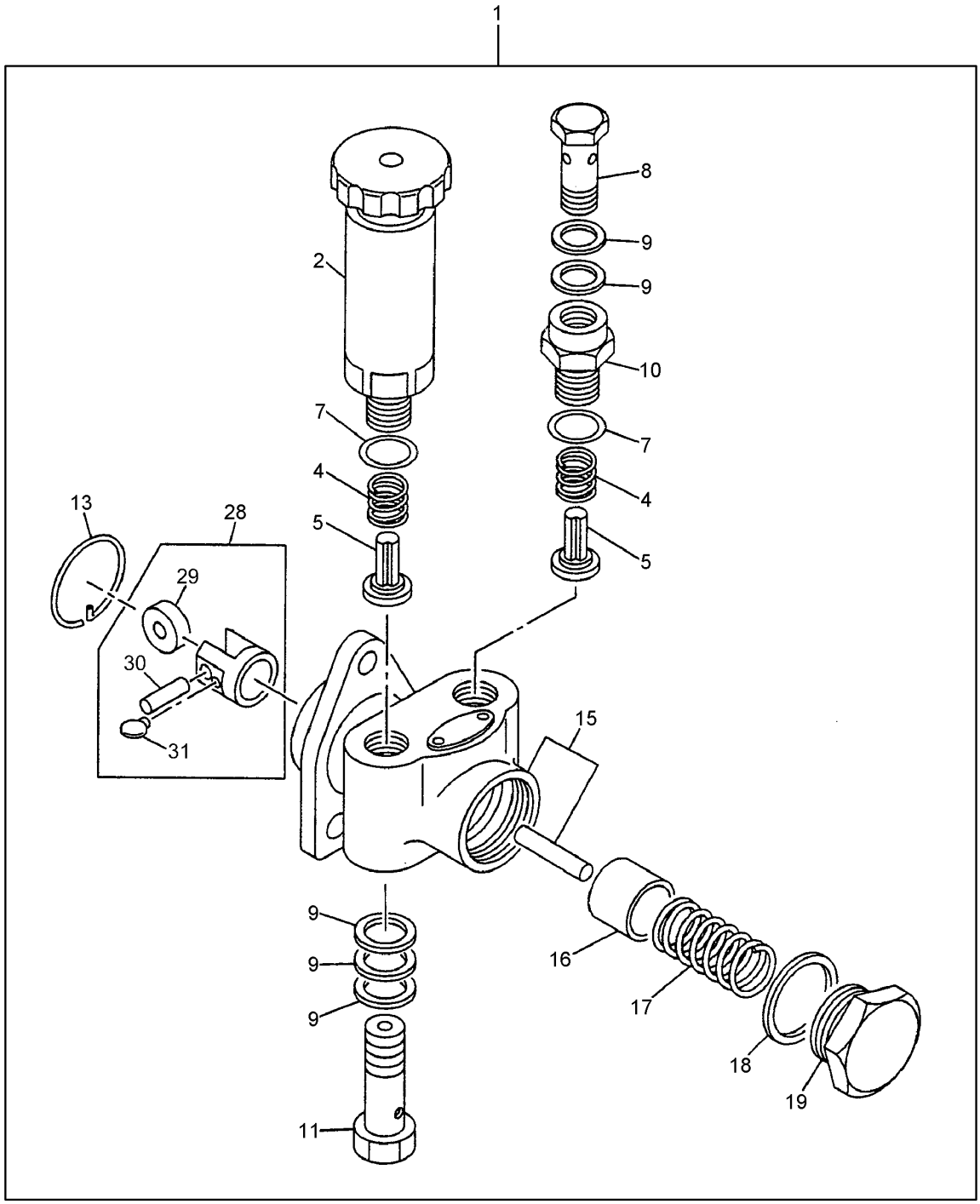

T162829

SECONDARY FUEL TRANSFER PUMP

KEY	PART NO.	PART NAME	QTY	SERIAL NO.	REMARKS
1	8973572650	FUEL PUMP	1		(SUB FOR 8971219100)
2	1157610061	HAND PRIMER	1		(SUB FOR 1157610060)
4	9813517020	SPRING	2		
5	1157550020	FLOW CONTROL HYD. VALVE	2		
7	1156230160	O-RING	2		
8	1156190820	BOLT	1		
9	9095720140	PACKING	5		(SUB FOR 1157590010)
10	1157590030	ADAPTER	1		
11	5157590270	BOLT	1		
13	9813550250	RING	1		
15	5157510120	HOUSING	1		
16	9813512050	PISTON	1		
17	9813513020	SPRING	1		
18	9813550350	GASKET	1		
19	8941711850	PLUG	1		
28	5157540010	TAPPET	1		
29	9813514030	ROLLER	1		
30	9813514100	PIN FASTENER	1		
31	1157590020	GUIDE	2		

ENGINE ELECTRICAL CONTROL COMPONENTS

T164661 -UN-28JAN03

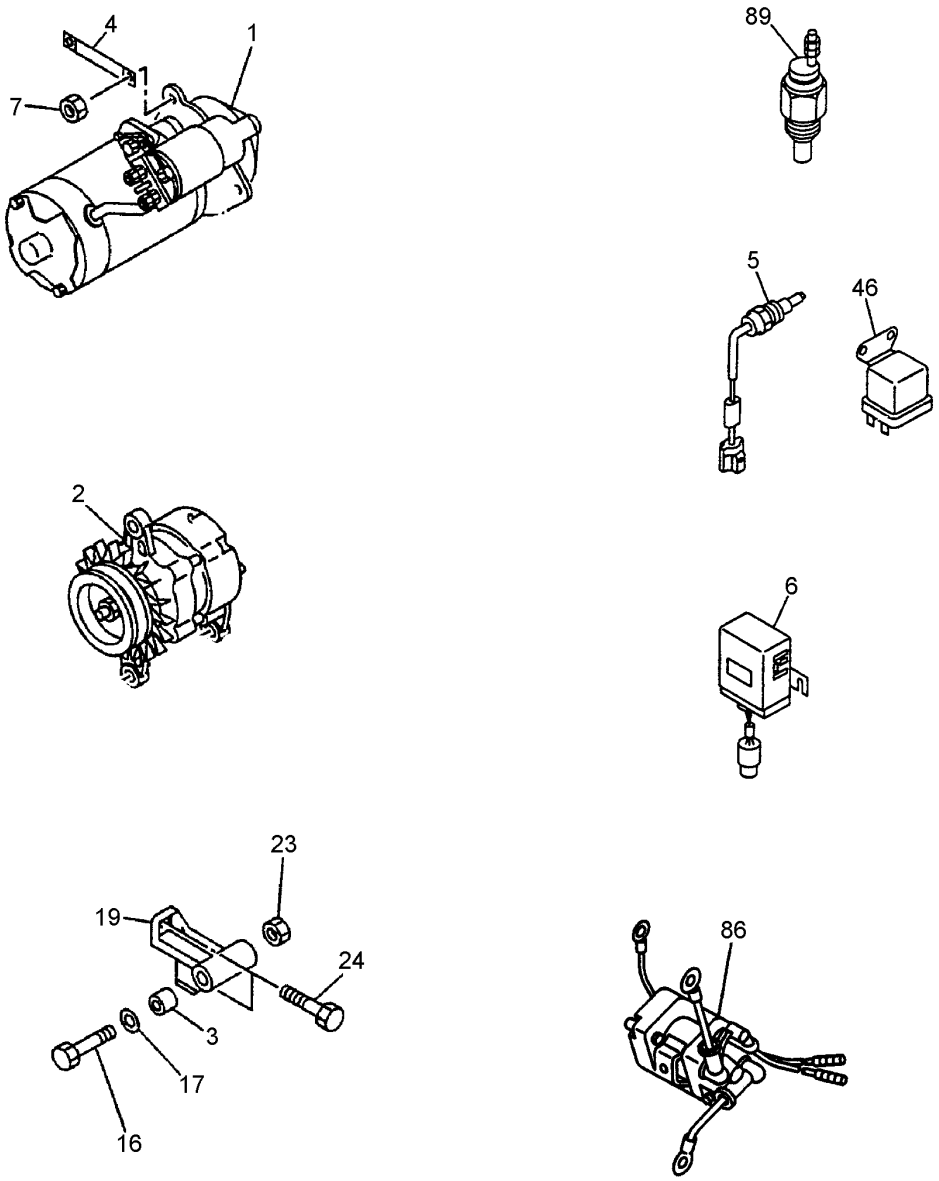

T164661

ENGINE ELECTRICAL CONTROL COMPONENTS

KEY	PART NO.	PART NAME	QTY	SERIAL NO.	REMARKS
1	8970298637	STARTER MOTOR	1		(SUB FOR 8972251991) (24V - 4.5KW)
2	1812004710	ALTERNATOR	1		(24V - 50A)
3	8944749260	SPACER	1		
4	9829315110	CABLE	1		
5	1831610330	SWITCH	1		COOLANT TEMPERATURE SWITCH
6	1825503250	CENTRAL CONTROL UNIT	1		GLOW PLUG TIMER
7	1094400040	NUT	2		
16	1090001331	BOLT	1		M14 X 135 MM
17	9091645140	WASHER	1		ID=14, OD=26, T=2.3
19	8970324991	BRACKET	1		
23	0911602140	NUT	1		
24	0280210250	BOLT	1		M10 X 25 MM
46	8944233140	RELAY	1		GLOW PLUG RELAY
86	8972567160	RELAY	1		STARTER RELAY
89	8971256011	SWITCH	1		

FAN AND FAN BELT

T162798 -UN-11JAN03

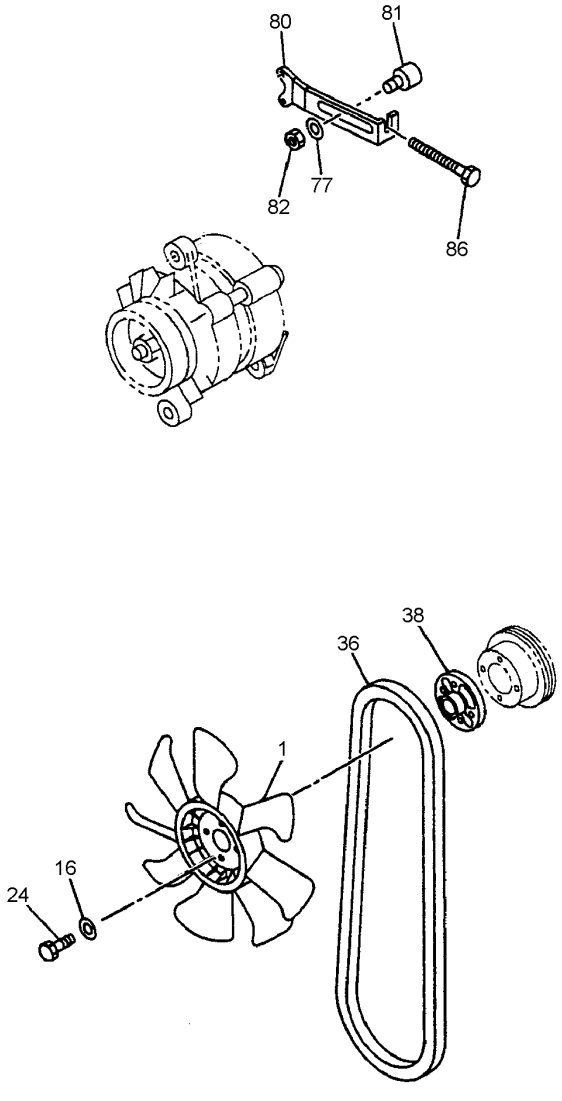

T162798

FAN AND FAN BELT

KEY	PART NO.	PART NAME	QTY	SERIAL NO.	REMARKS
1	1136603450	FAN	1		D=550-7
16	24H1136	WASHER	4		(SUB FOR 1143190342)
24	5090300421	BOLT	4		
36	8972322520	V-BELT	1		2-PIECE SET, L=1246
38	1136420531	SPACER	1		
77	9091647120	WASHER	1		
80	1136741192	PLATE	1		
81	AT264064	ADJUSTER	1		
82	0911501120	NUT	1		(SUB FOR AT259943)
86	1090091131	BOLT	1		M10 X 135

TIMING GEAR CASE AND FLYWHEEL HOUSING

T189527 -UN-15APR03

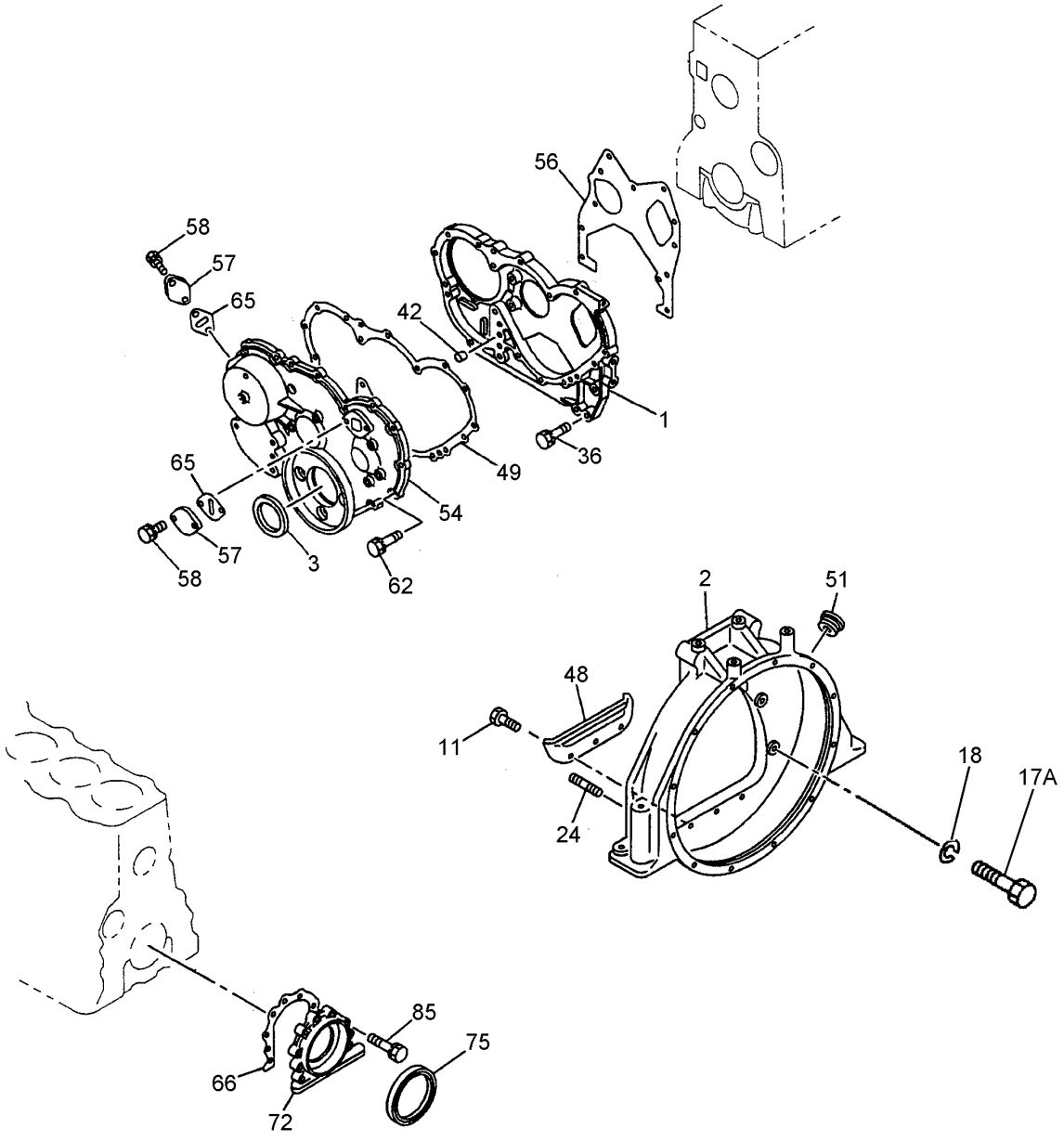

T189527

TIMING GEAR CASE AND FLYWHEEL HOUSING

KEY	PART NO.	PART NAME	QTY	SERIAL NO.	REMARKS
1	8944509752	CASE	1		
2	8970452072	HOUSING	1		
3	1096254380	SEAL	1		
11	AT263853	SCREW	6		
17A	0108064500	BOLT	2		
	0108064650	BOLT	4		
18	AT264141	WASHER	6		
24	9944112350	STUD	2		(SUB FOR AT260115)
36	0280808220	BOLT	4		M8 X 22
	AT259927	BOLT	2		M8 X 40
42	9112290581	DOWEL PIN	1		(SUB FOR AT255033)
48	8970428010	COVER	1		
49	.....	GASKET	1		(8972333010 NO LONGER AVAILABLE)
51	9113491341	COVER	1		
54	8971298300	COVER	1		
56	8943706710	GASKET	1		
57	5113210090	COVER	2		
58	0280806120	BOLT	4		
62	0280808220	BOLT	7		M8 X 22
	0280808800	BOLT	1		(SUB FOR AT259930) M8 X 80
	AT263859	BOLT	3		M10 X 50
	1090440711	BOLT	2		M8 X 55
65	.....	GASKET	2		(8971186980 NO LONGER AVAILABLE)
66	8943706640	PACKING	1		
72	8970795200	RETAINER	1		
75	8970728231	SEAL	1		
85	AT259939	BOLT	7		

ENGINE OVERHAUL GASKET SETS

T162726 -UN-13JAN03

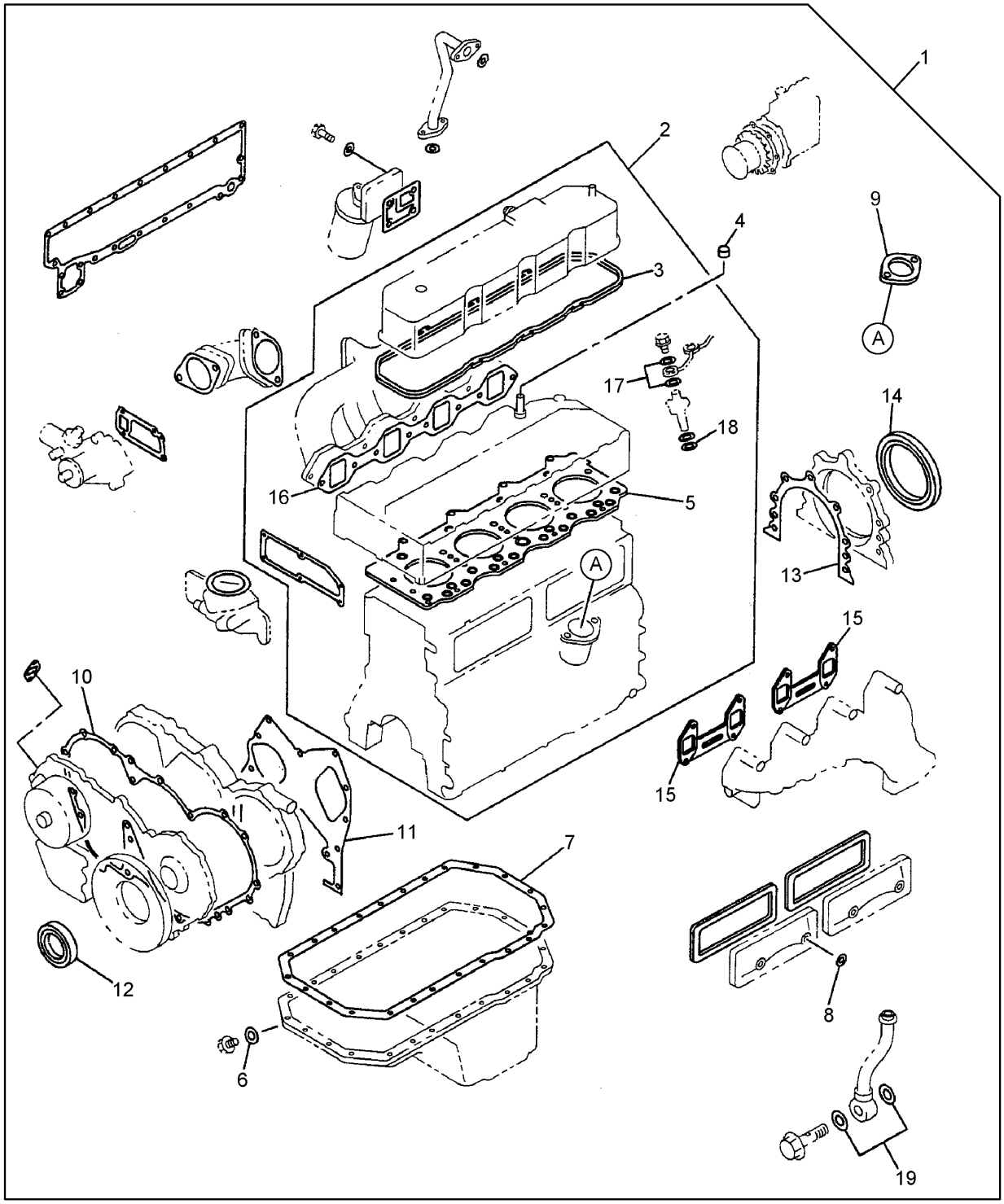

T162726

ENGINE OVERHAUL GASKET SETS

KEY	PART NO.	PART NAME	QTY	SERIAL NO.	REMARKS
1	5878138412	GASKET KIT	1		(SUB FOR 5878138410) ENGINE REBUILD KIT
2	5878138421	GASKET KIT	1		(SUB FOR 5878138420) ENGINE CYLINDER HEAD GASKET SET
3	8973262510	PACKING	1		(SUB FOR 5111730160) ROCKER ARM COVER GASKET
4	1096390320	PACKING	3		
5	8972221171	ENGINE CYLINDER HEAD GASKET	1		(SUB FOR 8972221170) CYLINDER HEAD GASKET
6	1096231830	GASKET	1		OIL PAN PLUG SEAL
7	.....	GASKET	1		(8973524030 NO LONGER AVAILABLE) (SUB FOR 8943706660) OIL PAN GASKET
8	9095720080	GASKET	4		
9	1096234650	GASKET	1		
10	.....	GASKET	1		(8972333010 NO LONGER AVAILABLE) TIMING GEAR COVER GASKET
11	8943706710	GASKET	1		
12	1096254380	SEAL	1		
13	8943706640	PACKING	1		
14	8970795200	RETAINER	1		
15	.....	GASKET	2		(SUB FOR 8944046100)
16	1141151040	GASKET	2		(SUB FOR 8972357881)
17	1096300820	GASKET	8		
18	1153150131	GASKET	4		
19	9095714080	GASKET	2		

MEMORANDA

ACCELERATOR PEDAL CONTROL BRACKET

T162985 -UN-11JAN03

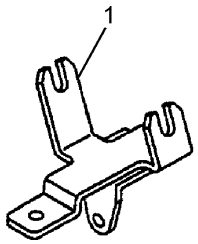

T162985

KEY	PART NO.	PART NAME	QTY	ENGINE SERIAL NO.	REMARKS
1	8972221740	BRACKET	1		

CHARGE AIR COOLER

T162026 -UN-26DEC02

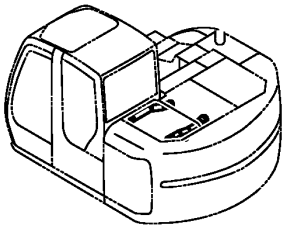

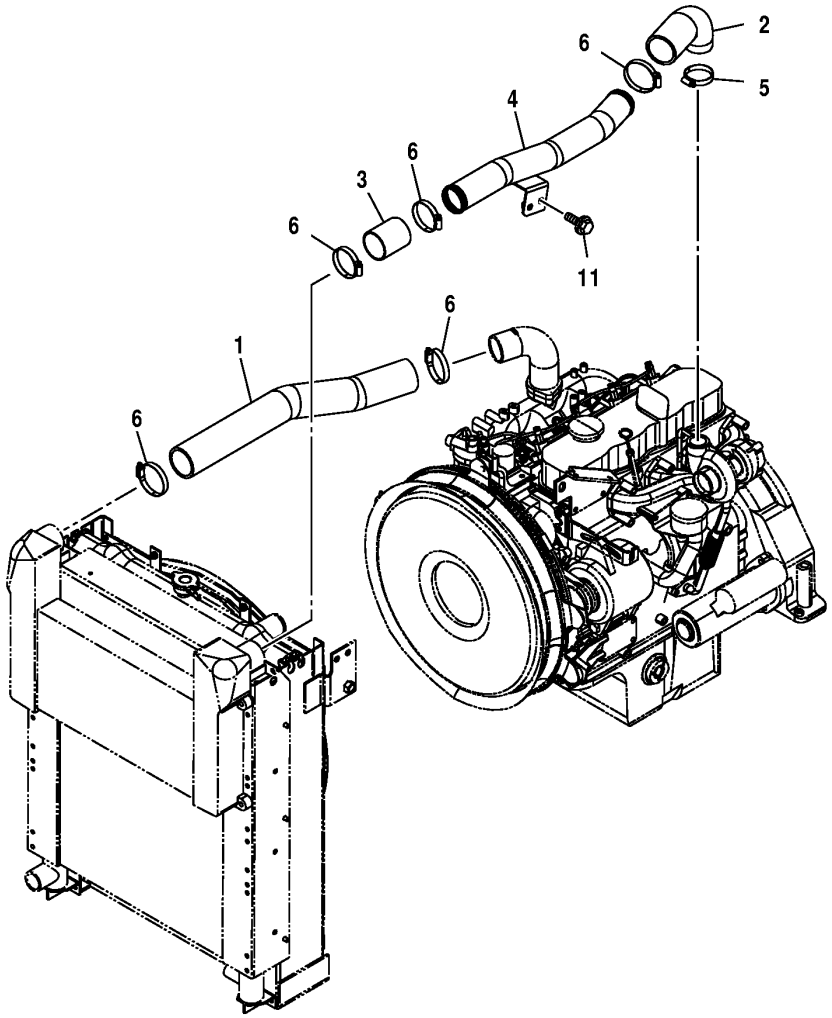

T162026

CHARGE AIR COOLER

KEY	PART NO.	PART NAME	QTY	SERIAL NO.	REMARKS
1	3086845	HOSE	1		
2	4423995	HOSE	1		
3	4411793	HOSE	1		
4	8077280	PIPE	1		
5	AT145651	CLAMP	1		
6	AT145651	CLAMP	5		
11	19M7662	CAP SCREW	2		M10 X 30, (SUB FOR J021030)
	12M7066	LOCK WASHER	2		10 MM
	24M7028	WASHER	2		10.500 X 20 X 2 MM

CHARGE AIR COOLER NET

T162027 -UN-03JAN03

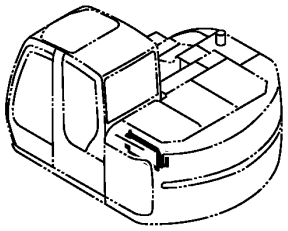

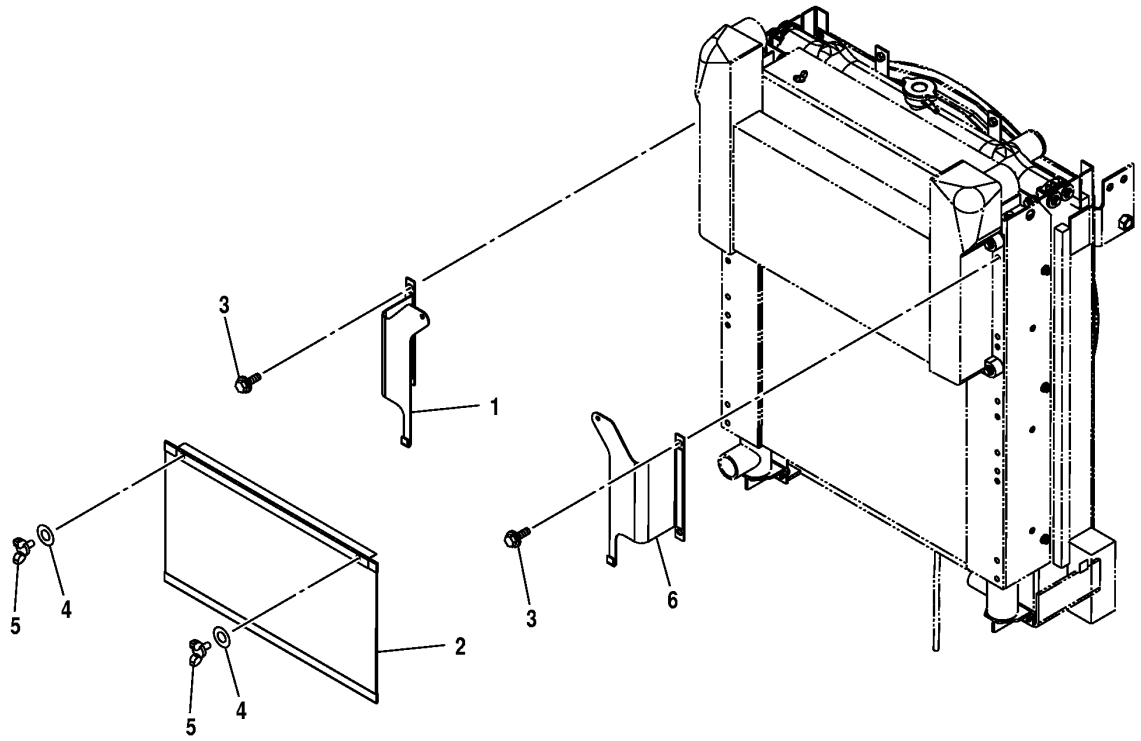

T162027

CHARGE AIR COOLER NET

KEY	PART NO.	PART NAME	QTY	SERIAL NO.	REMARKS
1	4453759	BRACKET	1		
2	4453755	SCREEN	1		
3	19M7932	CAP SCREW	4		M8 X 16, (SUB FOR J010816)
	12M7065	LOCK WASHER	4		8 MM
4	24M7054	WASHER	2		6.400 X 12 X 1.600 MM
5	21M1690	WING SCREW	2		M6 X 16, (SUB FOR M360614)
6	4453774	BRACKET	1		

RADIATOR

T162030 -UN-26DEC02

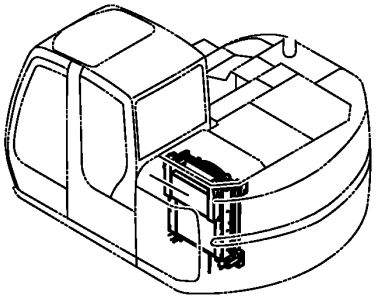

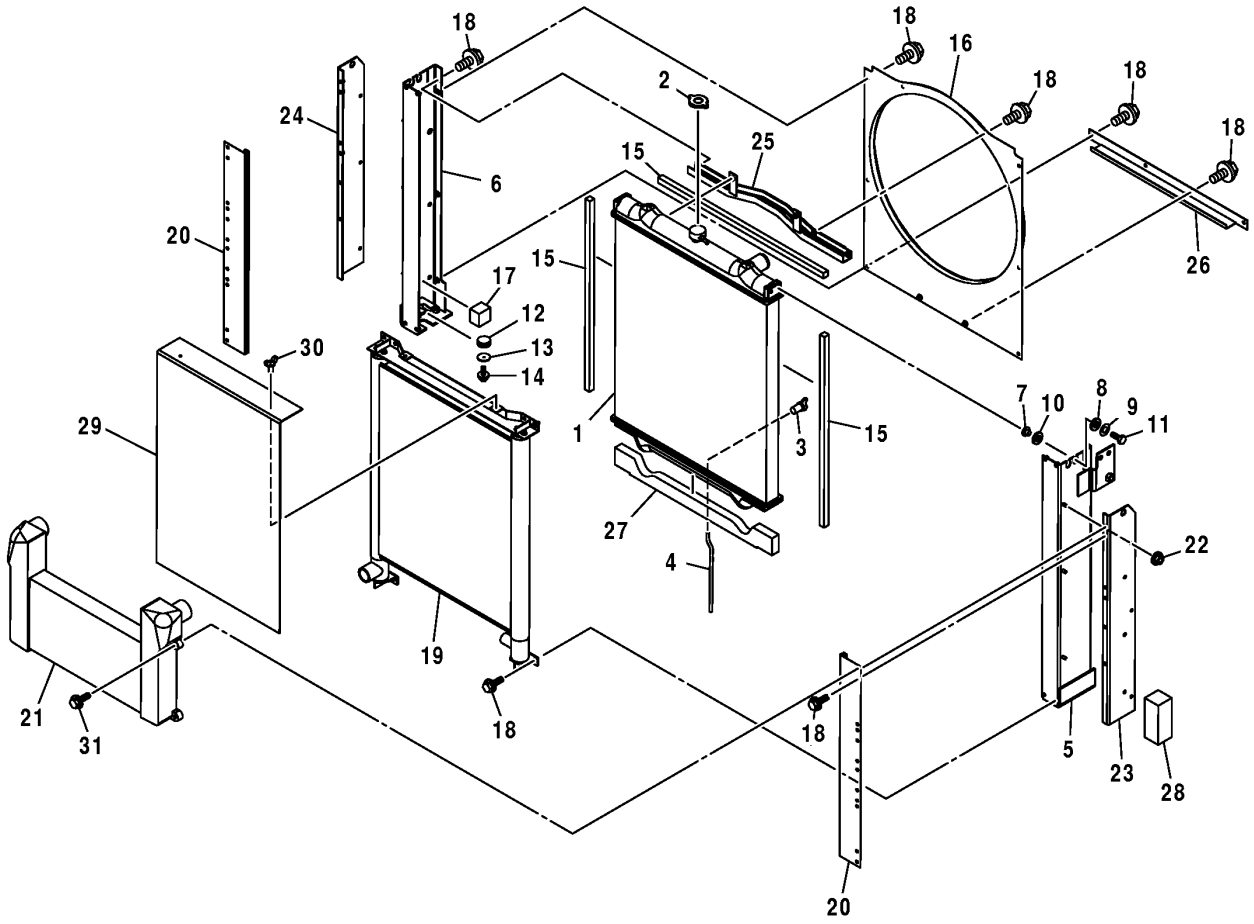

T162030

RADIATOR

KEY	PART NO.	PART NAME	QTY	SERIAL NO.	REMARKS
1	4448372	RADIATOR	1		
2	4343268	CAP	1		
3	4454090	PIPE PLUG	1		
4	4454091	HOSE	1		
5	4453604	BRACKET	1		
6	4454052	BRACKET	1		
7	4454094	BUSHING	4		
8	4454095	ISOLATOR	4		
9	4454096	WASHER	4		
10	4454097	ISOLATOR	4		
11	4454098	BOLT	4		
12	4454099	ISOLATOR	2		
13	4454100	WASHER	2		
14	R516181	SCREW	2		M6 X 12, (SUB FOR 4371242)
15	4454101	PACKING	4		
16	4455223	SHROUD	1		
17	4454103	PACKING	2		
18	4382207	BOLT	22		(SUB FOR 4371258)
19	4448373	OIL COOLER	1		
20	4454057	BRACKET	2		
21	4449139	INTERCOOLER	1		
22	4454105	NUT	6		
23	4454058	BRACKET	1		
24	4454059	BRACKET	1		
25	4454060	BRACKET	1		
26	4454061	PLATE	1		
27	4454062	ISOLATOR	1		
28	4454111	PACKING	1		
29	4454063	SCREEN	1		
30	21M1689	WING SCREW	2		M6 X 12, (SUB FOR 4229973)
31	4454065	BOLT	4		

RADIATOR SUPPORT

T162031 -UN-26DEC02

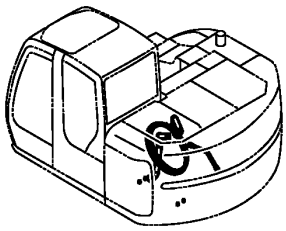

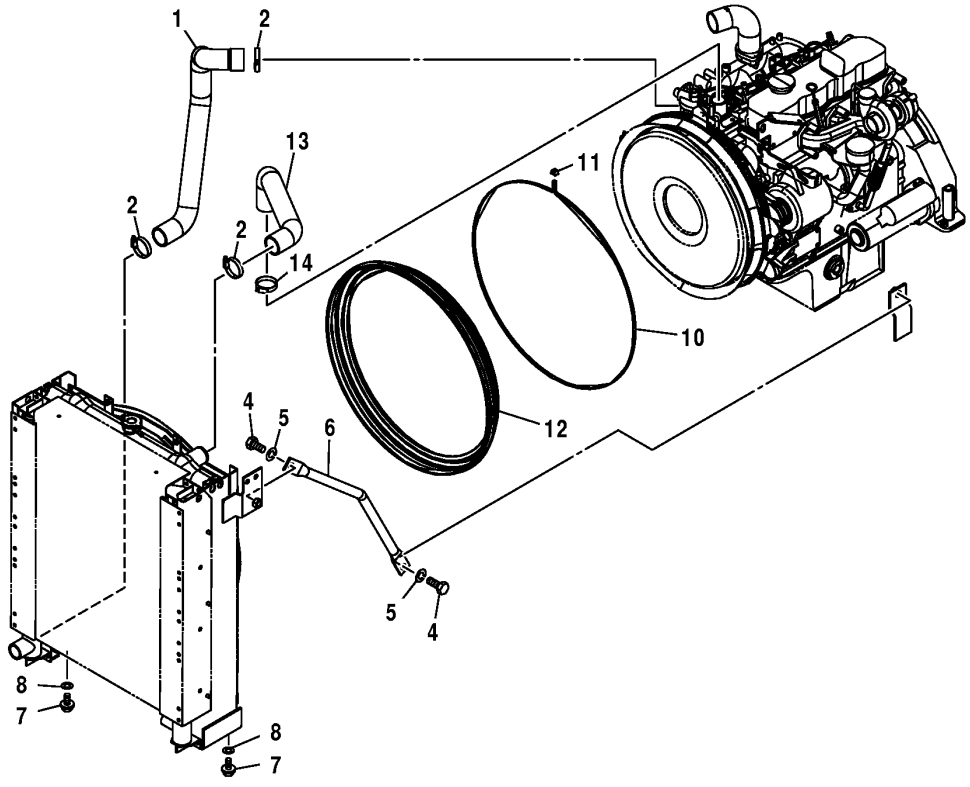

T162031

RADIATOR SUPPORT

KEY	PART NO.	PART NAME	QTY	SERIAL NO.	REMARKS
1	2046565	RADIATOR HOSE	1		
2	AR65293	CLAMP	3		
4	19M8035	CAP SCREW	2		M16 X 35, (SUB FOR J921635)
5	12H294	LOCK WASHER	2		5/8", (SUB FOR A590916)
6	3088910	LATCH	1		
7	19M8011	CAP SCREW	4		M12 X 30, (SUB FOR J011230)
	12M7067	LOCK WASHER	4		12 MM
8	24M7345	WASHER	4		13.500 X 24 X 2.500 MM, (SUB FOR J222012)
10	4426225	BAND	1		
11	4426044	LOCK	1		
12	4444905	ISOLATOR	1		
13	4618712	RADIATOR HOSE	1		(SUB FOR 4446034, 4456330)
14	4357297	HOSE CLAMP	1		

RADIATOR COVER

T162034 -UN-26DEC02

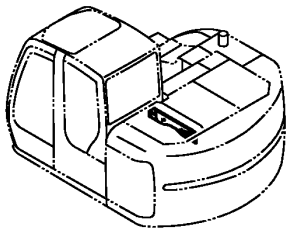

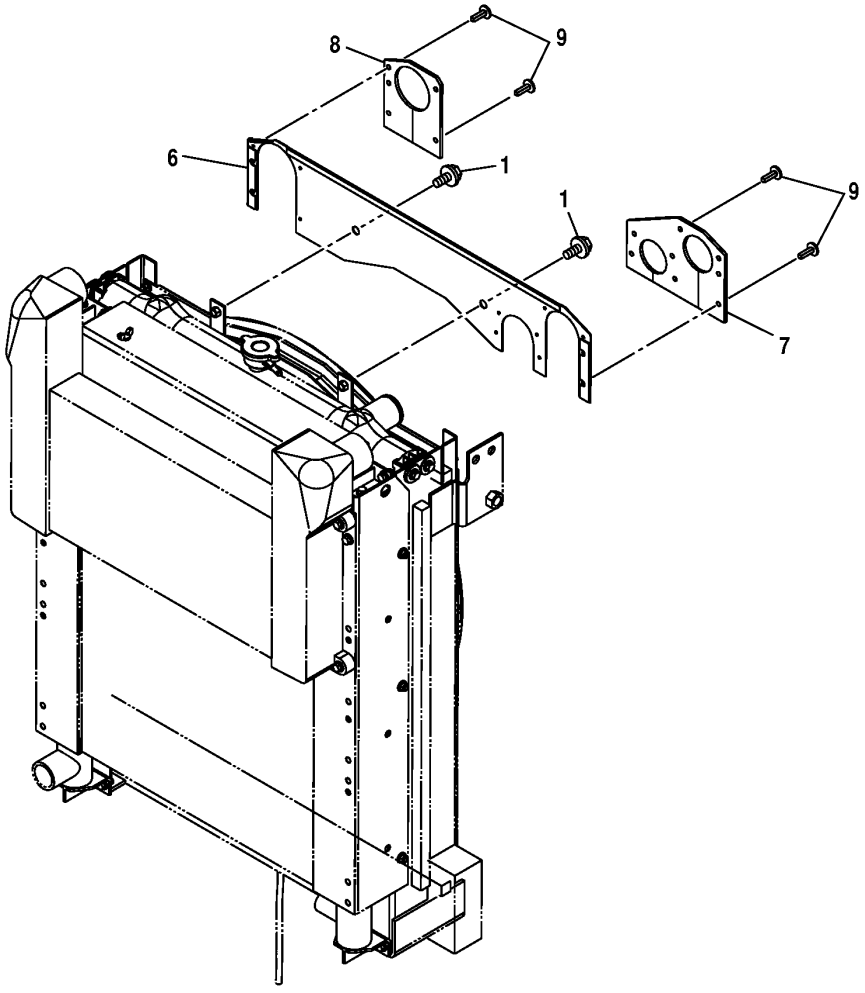

T162034

RADIATOR COVER

KEY	PART NO.	PART NAME	QTY	SERIAL NO.	REMARKS
1	19M7402	CAP SCREW	2		M10 X 25, (SUB FOR J021025)
	12M7066	LOCK WASHER	2		10 MM
	24M7028	WASHER	2		10.500 X 20 X 2 MM
6	3091371	COVER	1		
7	4449793	ISOLATOR	1		
8	4450300	ISOLATOR	1		
9	4443487	SNAP RING	13		

COOLANT RESERVOIR / RESERVE TANK

T162035 -UN-26DEC02

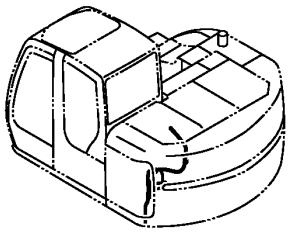

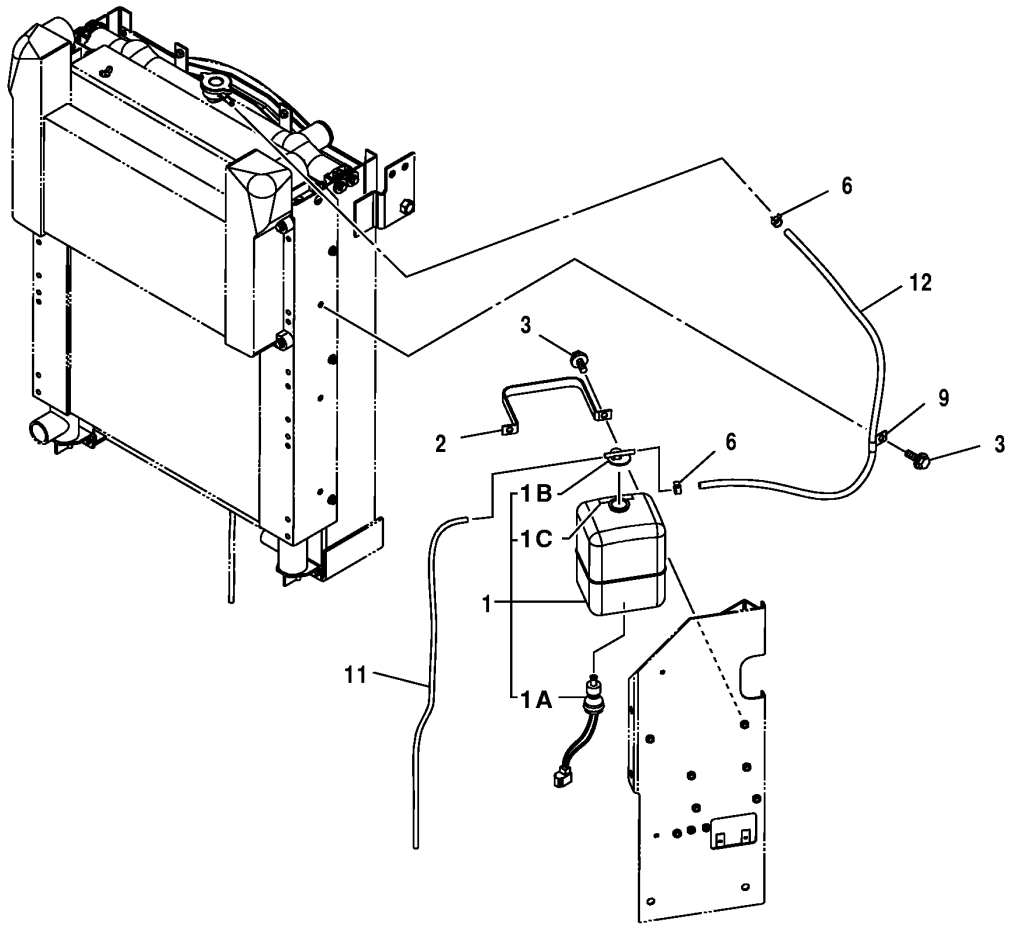

T162035

COOLANT RESERVOIR / RESERVE TANK

KEY	PART NO.	PART NAME	QTY	SERIAL NO.	REMARKS
1	4130139	TANK	1		
1A	4153251	SENDER	1		
1B	4396809	CAP	1		
1C	4288260	PLATE	1		
2	4180555	BRACKET	1		
3	19M7139	CAP SCREW	3		M8 X 20, (SUB FOR J020820)
	12M7065	LOCK WASHER	3		8 MM
	24M7055	WASHER	3		8.400 X 16 X 1.600 MM
6	.....	CLAMP	2		(USE 4425139 IF AVAILABLE)
9	4190272	CLIP	1		
11	.....	HOSE	1		(USE TH4434297 IF AVAILABLE)
12	4276493	HOSE	1		

FAN SHROUD, RADIATOR SUPPORTS AND MOUNTING

T163102 -UN-13JAN03

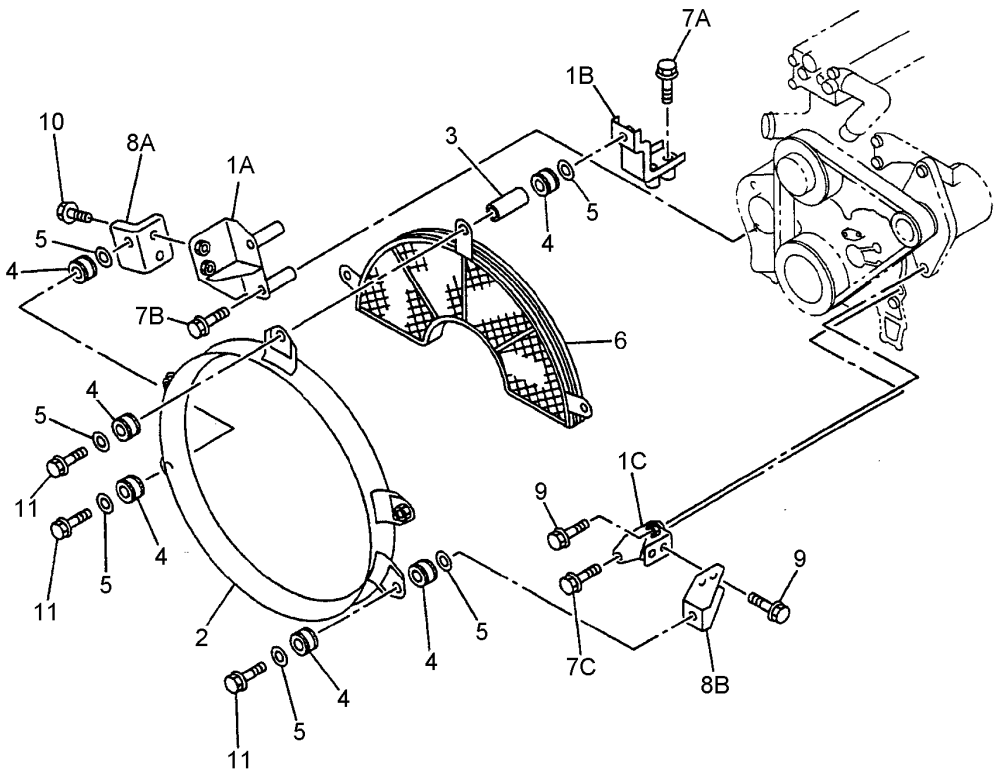

T163102

FAN SHROUD, RADIATOR SUPPORTS AND MOUNTING

KEY	PART NO.	PART NAME	QTY	SERIAL NO.	REMARKS
1A	8972222341	BRACKET	1		
1B	8972470950	BRACKET	1		
1C	8972530930	BRACKET	1		
2	8972470890	GUIDE	1		
3	1225590260	TUBE	3		
4	1093370170	ISOLATOR	6		
5	9091647100	WASHER	8		
6	8972527080	GUARD	1		
7A	AT263875	BOLT	2		
7B	0280858120	BOLT	2		
7C	0280808500	BOLT	1		
8A	8972470900	LATCH	1		
8B	8972470920	LATCH	1		
9	0280210250	BOLT	4		
10	0280210250	BOLT	2		
11	0280810450	EYEBOLT	3		

ENGINE SPEED CONTROLS

T162147 -UN-23DEC02

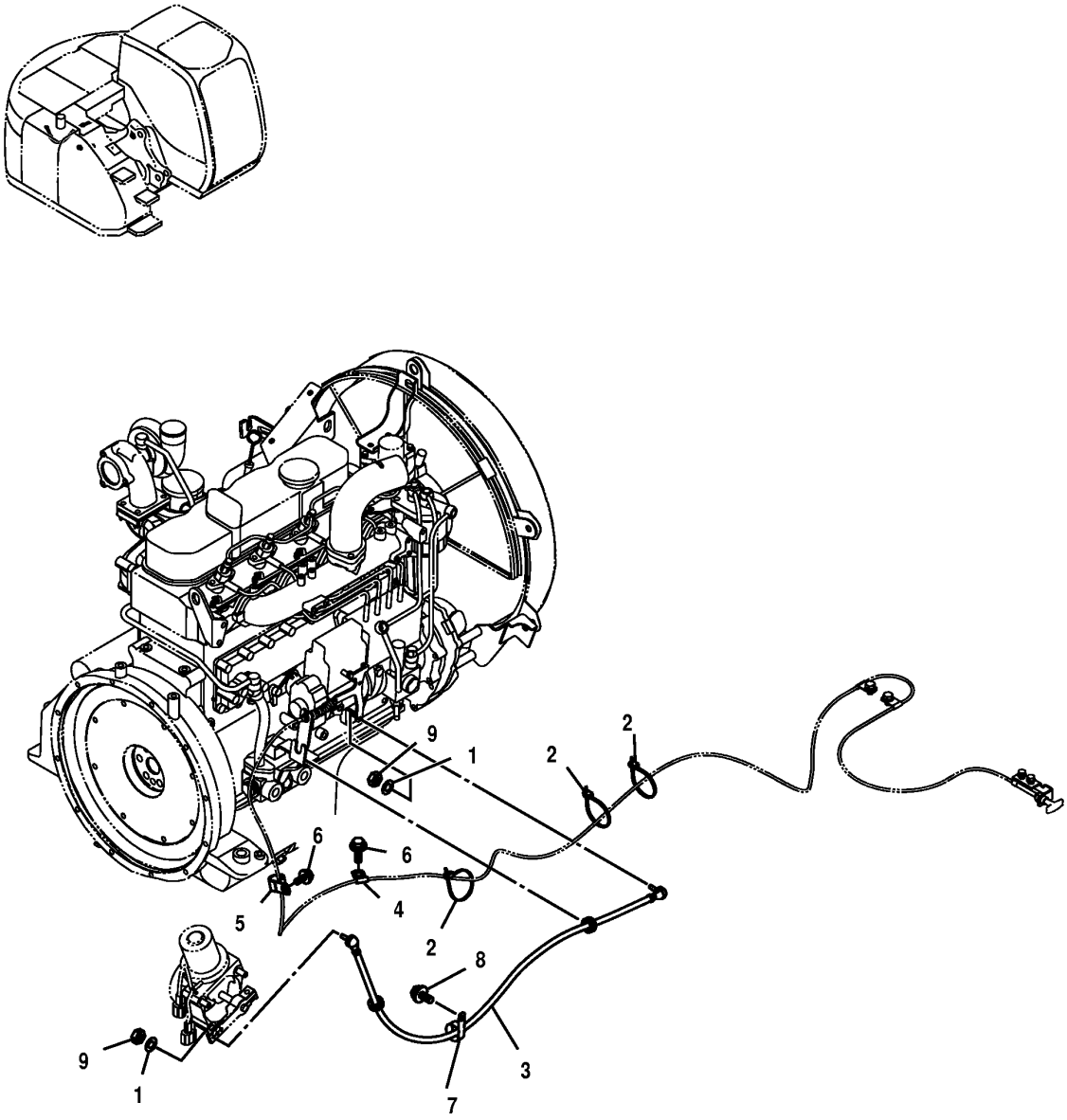

T162147

ENGINE SPEED CONTROLS

KEY	PART NO.	PART NAME	QTY	SERIAL NO.	REMARKS
1	12M7006	LOCK WASHER	2		6 MM, (SUB FOR A590906)
2	H77698	TIE BAND	3		(SUB FOR 4055312)
3	4425163	CABLE	1		
4	T38377	CLIP	1		(SUB FOR 4190276)
5	4190273	CLIP	1		
6	19M7938	CAP SCREW	2		M10 X 20, (SUB FOR J011020)
	12M7066	LOCK WASHER	2		10 MM
7	4190261	CLIP	1		
8	19M7402	CAP SCREW	1		M10 X 25, (SUB FOR J021025)
9	14M7272	NUT	2		M6, (SUB FOR M500605)

ENGINE CONTROL MOTOR

T162148 -UN-23DEC02

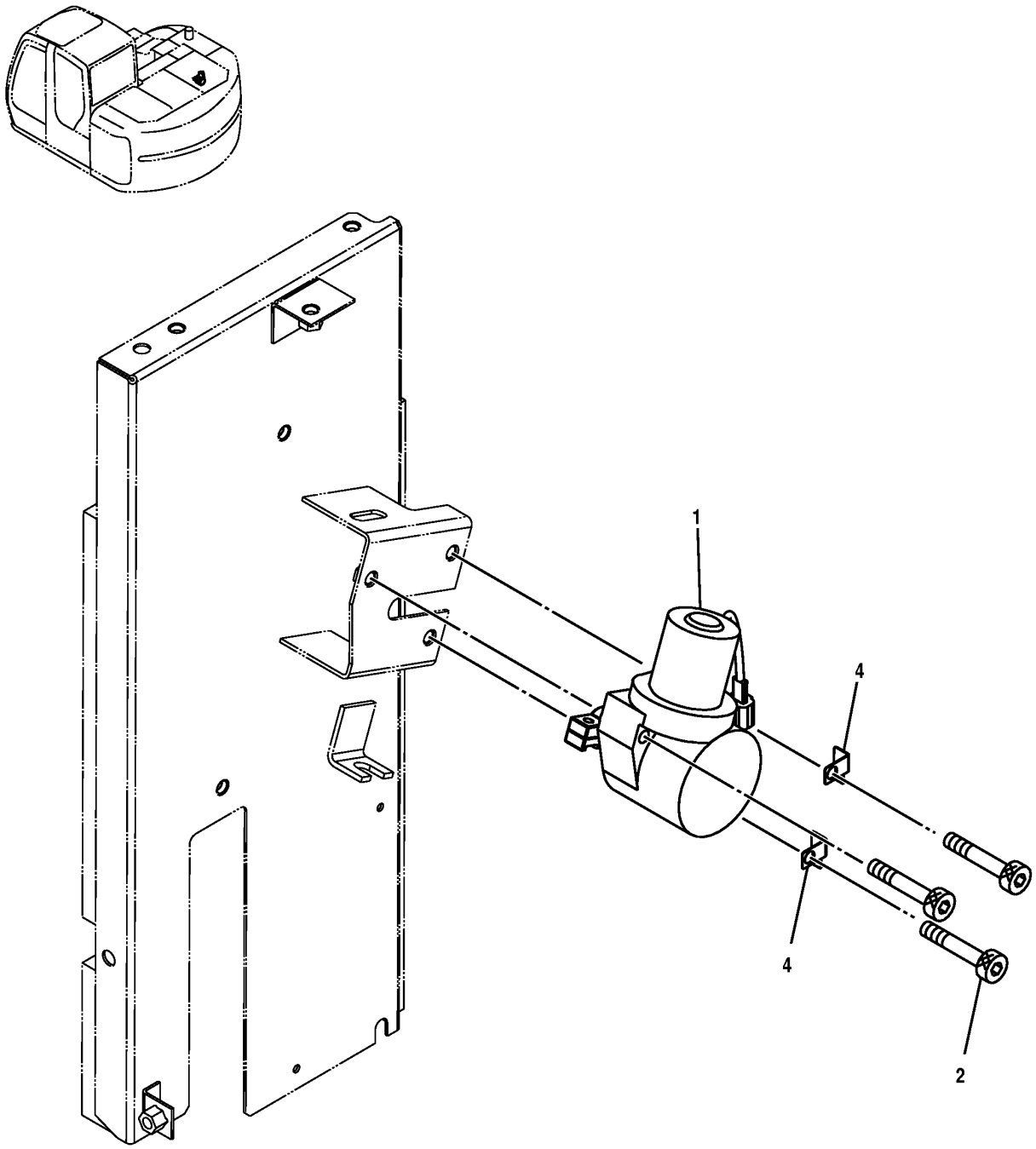

T162148

ENGINE CONTROL MOTOR

KEY	PART NO.	PART NAME	QTY	SERIAL NO.	REMARKS
1	4614911	MOTOR	1		(SUB FOR 4360509)
2	19M8954	SCREW	3		M10 X 60, (SUB FOR J781060)
4	4257159	BRACKET	2		

ENGINE STOP CABLE

T162158 -UN-23DEC02

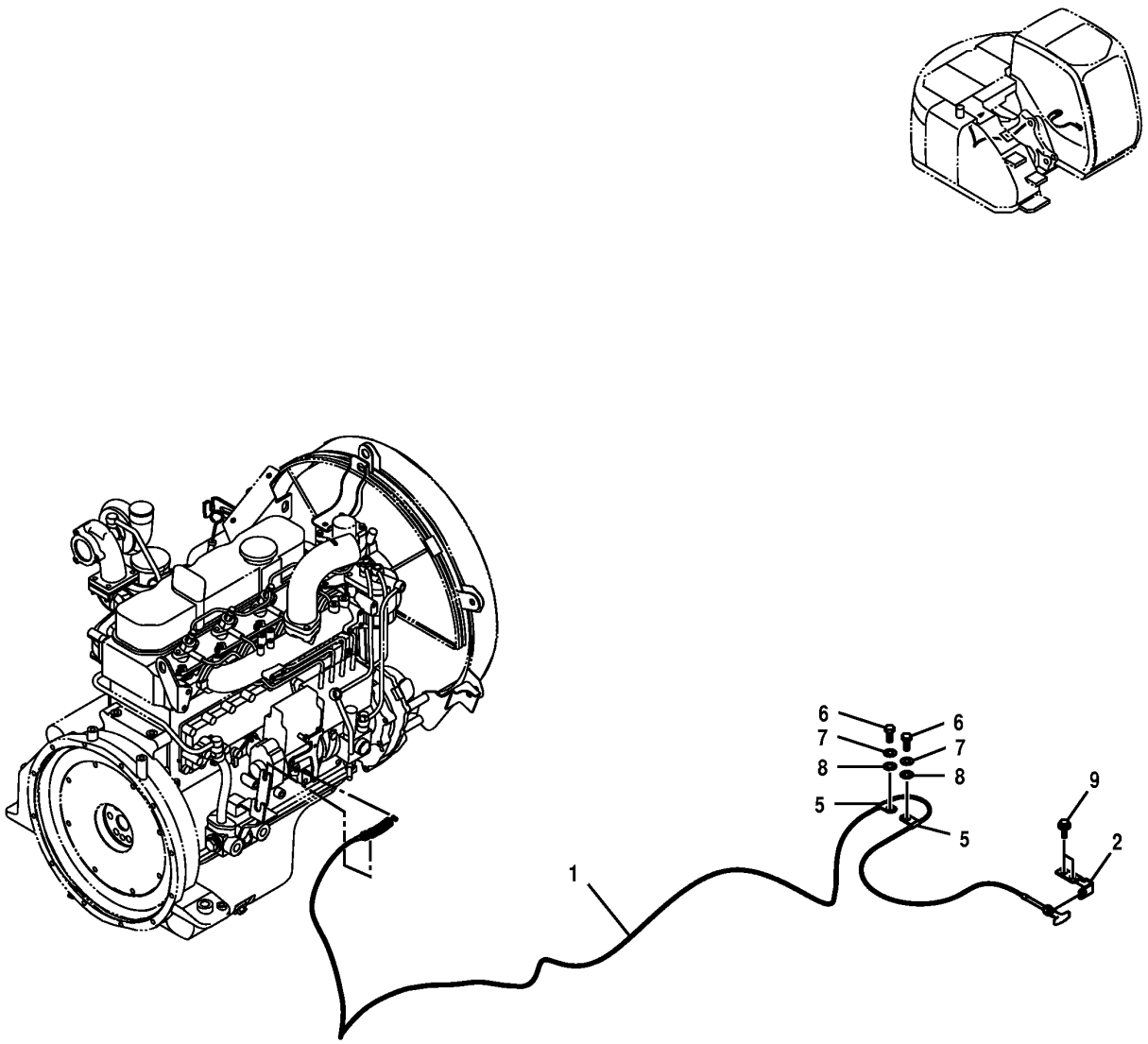

T162158

ENGINE STOP CABLE

KEY	PART NO.	PART NAME	QTY	SERIAL NO.	REMARKS
1	4440626	CABLE	1		
2	8083555	BRACKET	1		
5	T38377	CLIP	2		(SUB FOR T38377)
6	19M8324	CAP SCREW	2		M10 X 16, (SUB FOR J901016)
7	12M7066	LOCK WASHER	2		10 MM, (SUB FOR A590910)
8	24M7028	WASHER	2		10.500 X 20 X 2 MM, (SUB FOR A590110)
9	19M7881	SCREW	2		M8 X 20, (SUB FOR J090820)
	24M7055	WASHER	2		8.400 X 16 X 1.600 MM
	12M7065	LOCK WASHER	2		8 MM

AIR CLEANER (SERIAL NUMBER -062992)

T162039 -UN-26DEC02

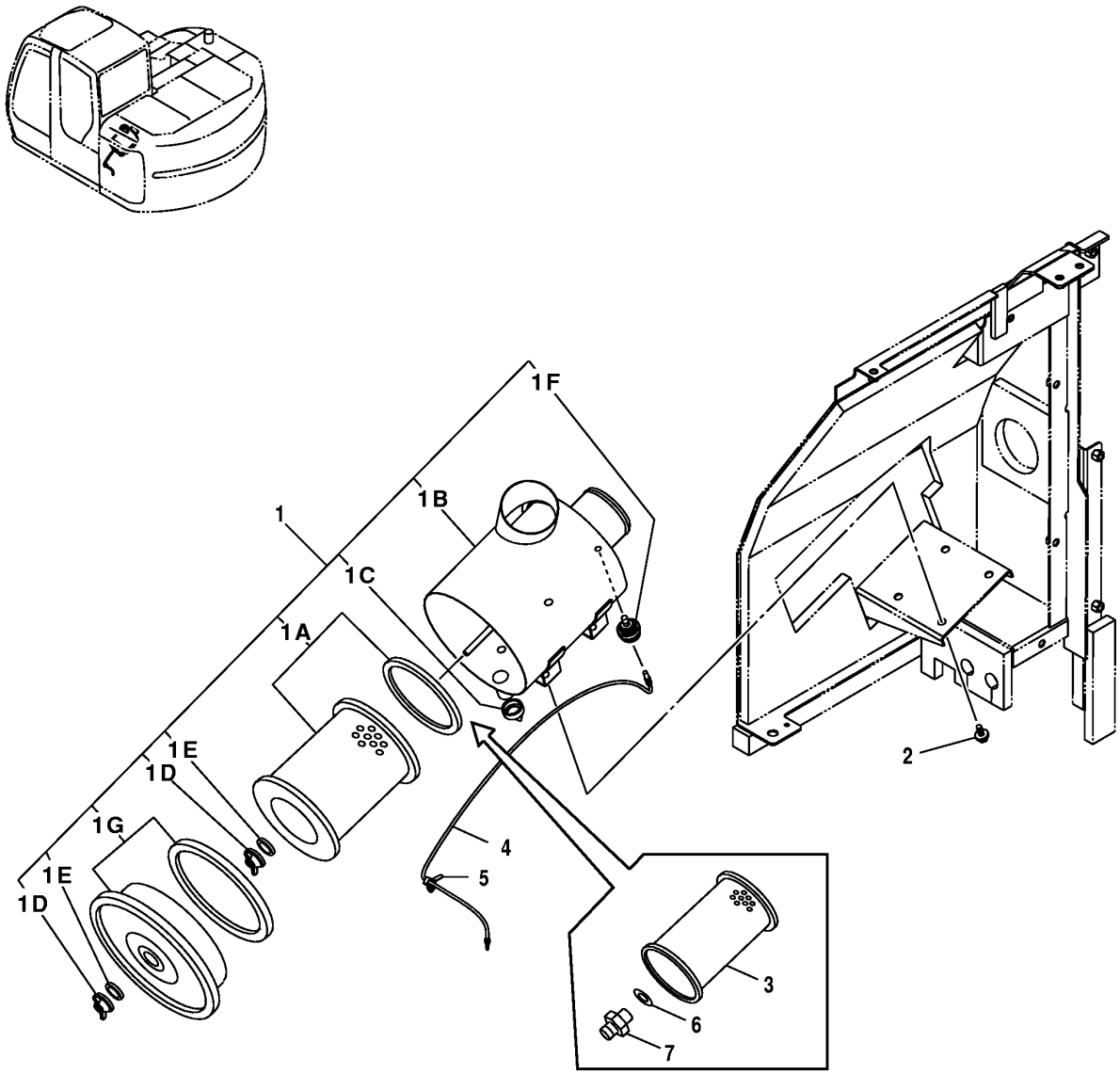

T162039

AIR CLEANER (SERIAL NUMBER -062992)

KEY	PART NO.	PART NAME	QTY	SERIAL NO.	REMARKS
1	4438008	AIR CLEANER	1		
1A	4484539	FILTER ELEMENT	1	-300003	(OUTER) (SUB FOR 4379815)
	KV16429	AIR FILTER	1	300004-	(OUTER) (SUB FOR AT199500)
1B	.....	HOUSING	1		
1C	4206552	VALVE	1		
1D	4206553	NUT	2		(SUB FOR 4285621)
1E	4285622	PACKING	2		
1F	4334759	AIR RESTRICTION INDICATOR	1		
1G	4414713	COVER	1		
2	19M7402	CAP SCREW	4		M10 X 25, (SUB FOR J021025)
	12M7066	LOCK WASHER	4		10 MM
	24M7028	WASHER	4		10.500 X 20 X 2 MM
3	4484534	FILTER ELEMENT	1	-300003	(INNER) (SUB FOR 4209588)
	AT199501	FILTER ELEMENT	1	300004-	(INNER)
4	4437614	WIRING HARNESS	1		
5	4336420	CLIP	1		
6	4178404	PACKING	1		
7	4178406	NUT	1		

AIR CLEANER SUPPORT

T162040 -UN-26DEC02

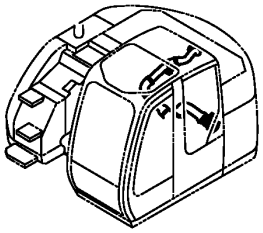

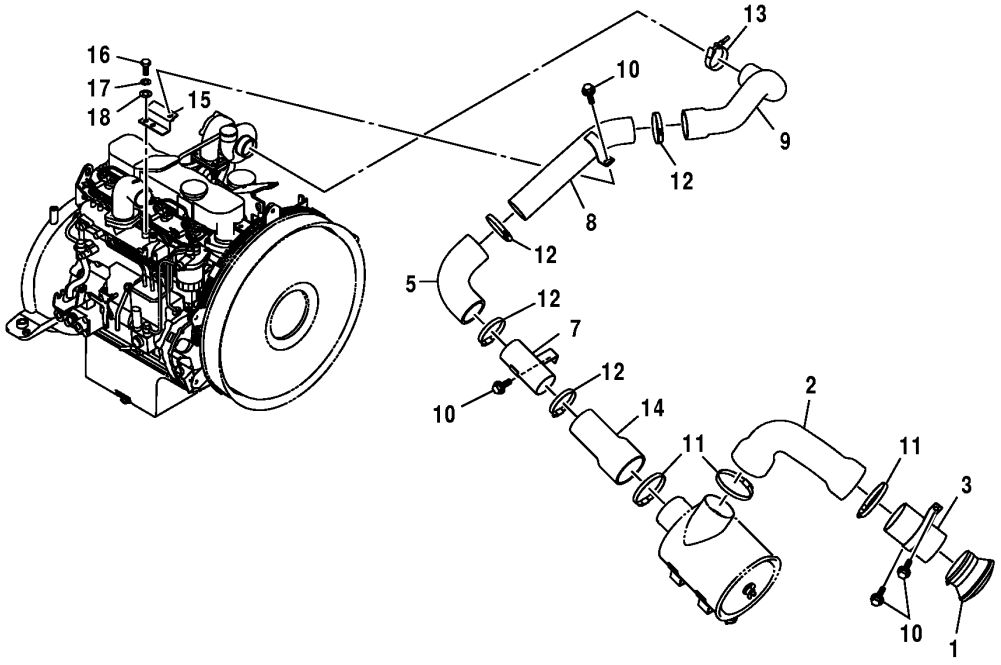

T162040

AIR CLEANER SUPPORT

KEY	PART NO.	PART NAME	QTY	SERIAL NO.	REMARKS
1	AT206888	CAP	1		
2	3089206	HOSE	1		
3	8083141	PIPE	1		
5	3089204	HOSE	1		
7	9754768	PIPE	1		
8	8080486	PIPE	1		
9	3091395	HOSE	1		
10	19M7402	CAP SCREW	4		M10 X 25, (SUB FOR J021025)
	12M7066	LOCK WASHER	4		10 MM
	24M7028	WASHER	4		10.500 X 20 X 2 MM
11	AH103182	HOSE CLAMP	3		
12	AR62936	CLAMP	4		
13	AT37693	HOSE CLAMP	1		
14	4418927	HOSE	1		
15	9754766	BRACKET	1		
16	M111020	CASE	2		
17	12M7066	LOCK WASHER	2		10 MM, (SUB FOR A590910)
18	24M7028	WASHER	2		10.500 X 20 X 2 MM, (SUB FOR A590110)

AIR CLEANER

T197966 -UN-23FEB04

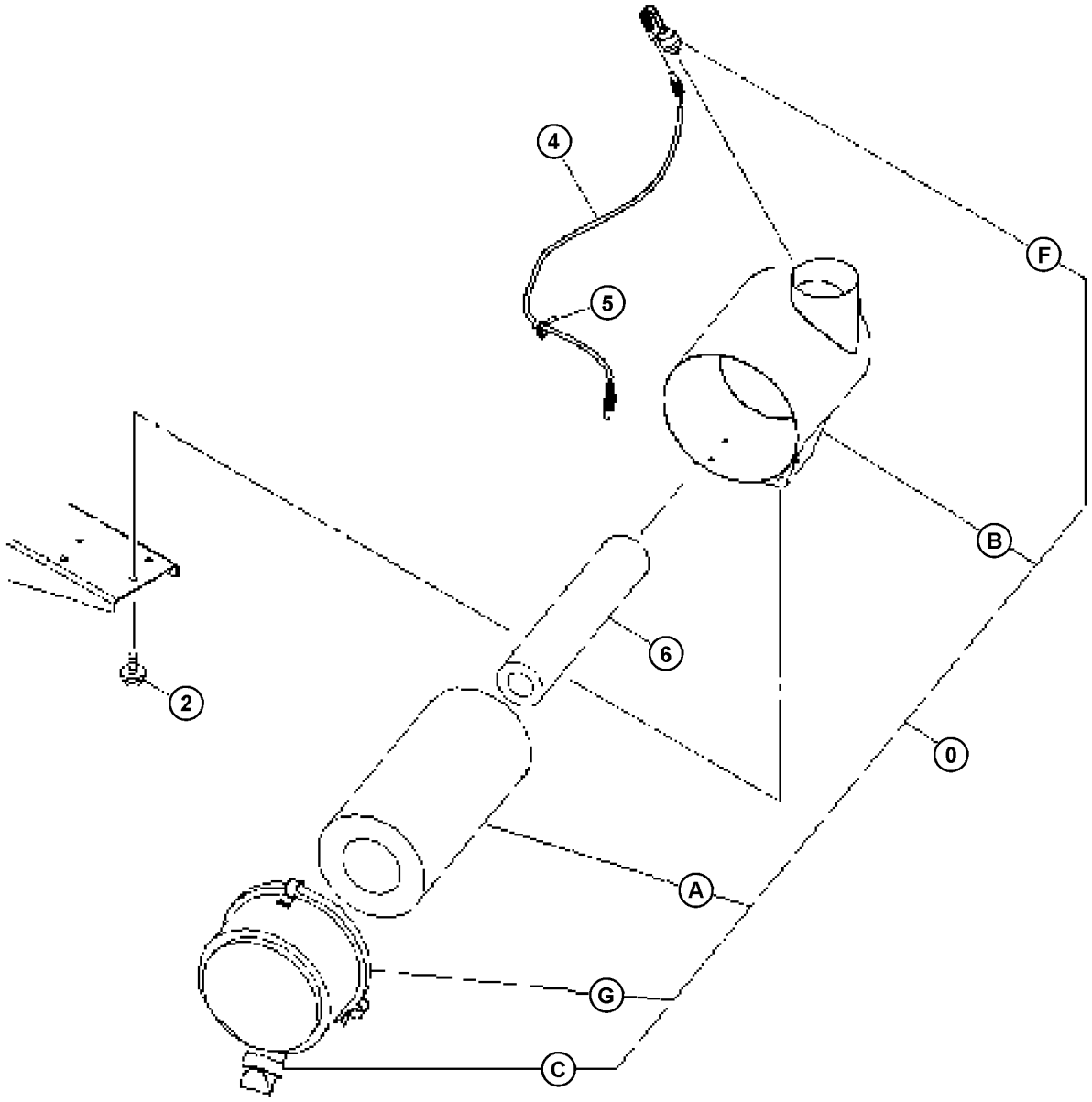

T197966

AIR CLEANER

KEY	PART NO.	PART NAME	QTY	SERIAL NO.	REMARKS
0	4484771	AIR FRESHENER	1		
0A	4486002	AIR FILTER	1		
0B	.....	HOUSING	1		
0C	4486015	VALVE	1		
0F	4224238	INDICATOR	1		
0G	4486017	COVER	1		
2	J260816	BOLT	4		
2A	19M7932	CAP SCREW	1		
2B	24M7055	WASHER	1		
4	4473652	WIRING HARNESS	1		
5	4254600	CLIP	1		
6	4486014	AIR FILTER	1		

MUFFLER

T162041 -UN-26DEC02

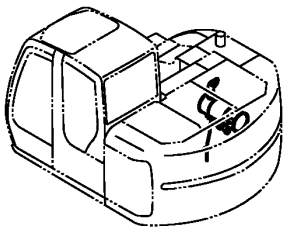

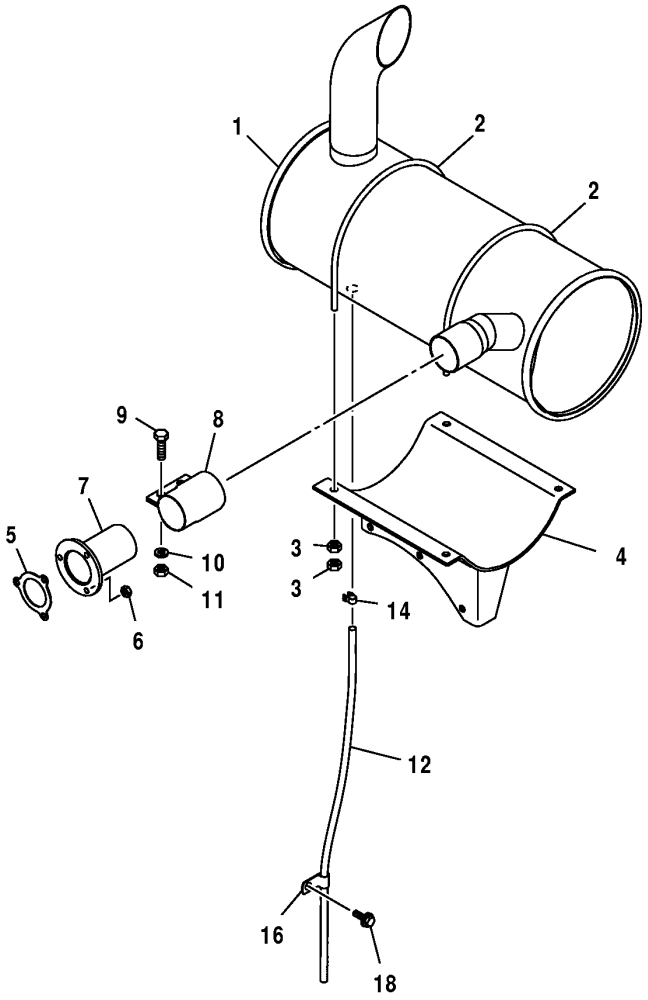

T162041

MUFFLER

KEY	PART NO.	PART NAME	QTY	SERIAL NO.	REMARKS
1	4419850	MUFFLER	1		
2	4427493	BOLT	2		
3	14M7274	NUT	8		M10, (SUB FOR J950010)
4	7037152	BRACKET	1		
5	4263386	GASKET	1		
6	E64256	LOCK NUT	3		
7	8060437	PIPE	1		
8	4213017	CLAMP	1		
9	19M7493	CAP SCREW	2		M12 X 40, (SUB FOR J901240)
10	12H301	LOCK WASHER	2		1/2", (SUB FOR A590912)
11	14M7275	NUT	2		M12, (SUB FOR M520012)
12	4297136	STRUCTURAL TUBING	1		(SUB FOR 4249788, 4276831 AND 4435717)
14	TY22462	CLAMP	1		(SUB FOR AR48236) (SUB FOR 4396451)
16	4344303	CLIP	1		
18	19M7938	CAP SCREW	1		M10 X 20, (SUB FOR J011020)
	12M7066	LOCK WASHER	1		10 MM

ENGINE MOUNTING

T162024 -UN-12DEC02

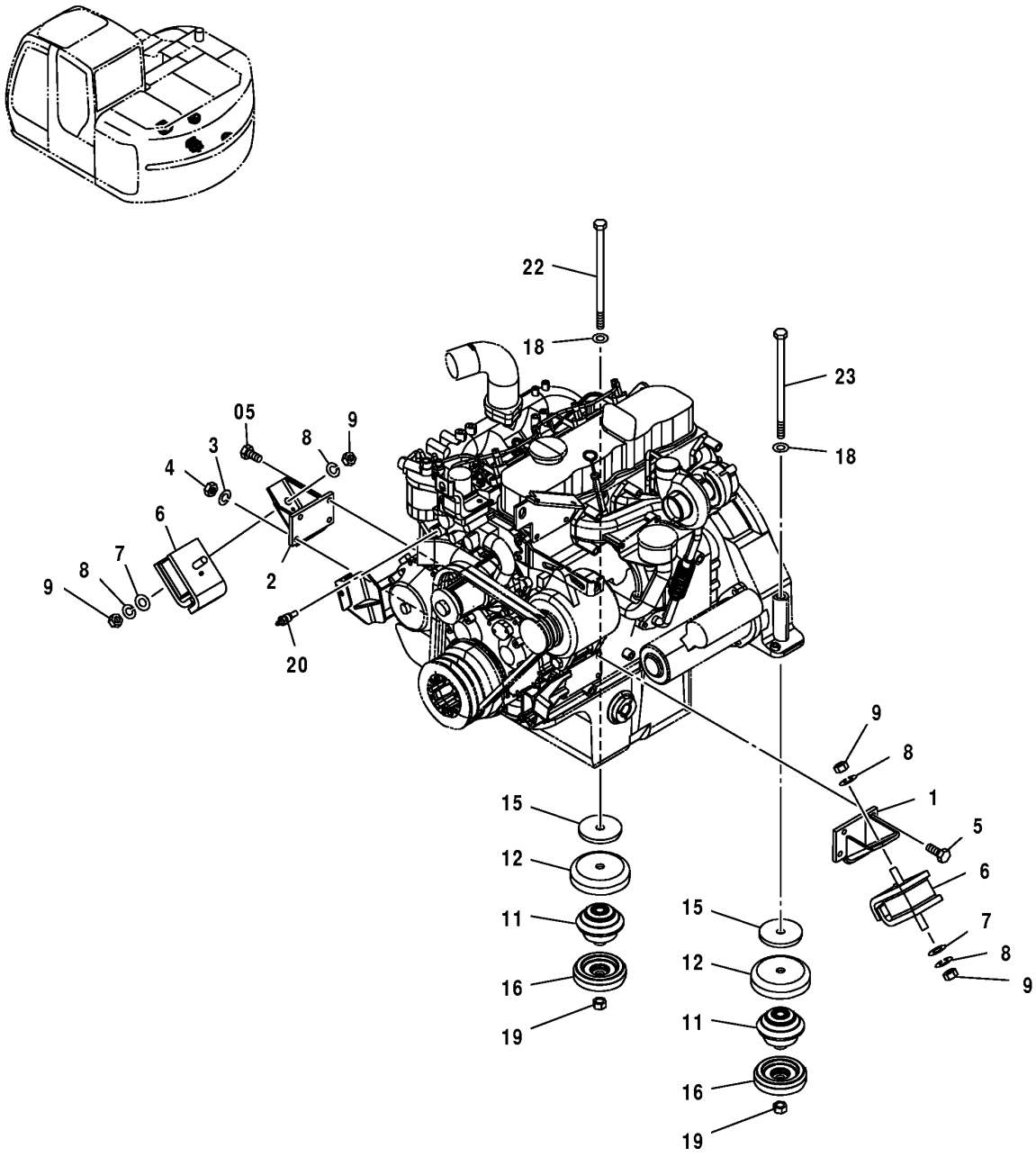

T162024

ENGINE MOUNTING

KEY	PART NO.	PART NAME	QTY	SERIAL NO.	REMARKS
1	8064364	BRACKET	1		
2	8064357	BRACKET	1		
3	12M7066	LOCK WASHER	1		10 MM, (SUB FORA590910)
4	J952010	NUT	1		
5	M171025	BOLT AND NUT	7		
6	4334526	ISOLATOR	2		
7	AT130666	WASHER	2		(SUB FOR 4086894)
8	12H317	LOCK WASHER	4		9/16", (SUB FOR A590914)
9	14M7141	NUT	4		M14, (SUB FOR J950014)
11	4426636	ISOLATOR	2		
12	4428242	STOP	2		
15	4366699	RETAINER	2		
16	4426637	ISOLATOR	2		
18	24M7338	WASHER	2		17 X 30 X 3 MM, (SUB FOR J222016)
19	14M7276	NUT	2		M16, (SUB FOR J950016)
20	4436537	SENSOR	1		ENGINE AIR TEMPERATURE SENDER
22	J921612	BOLT	1		
23	4437177	BOLT	1		

FUEL LINES

T162044 -UN-26DEC02

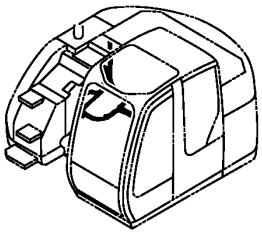

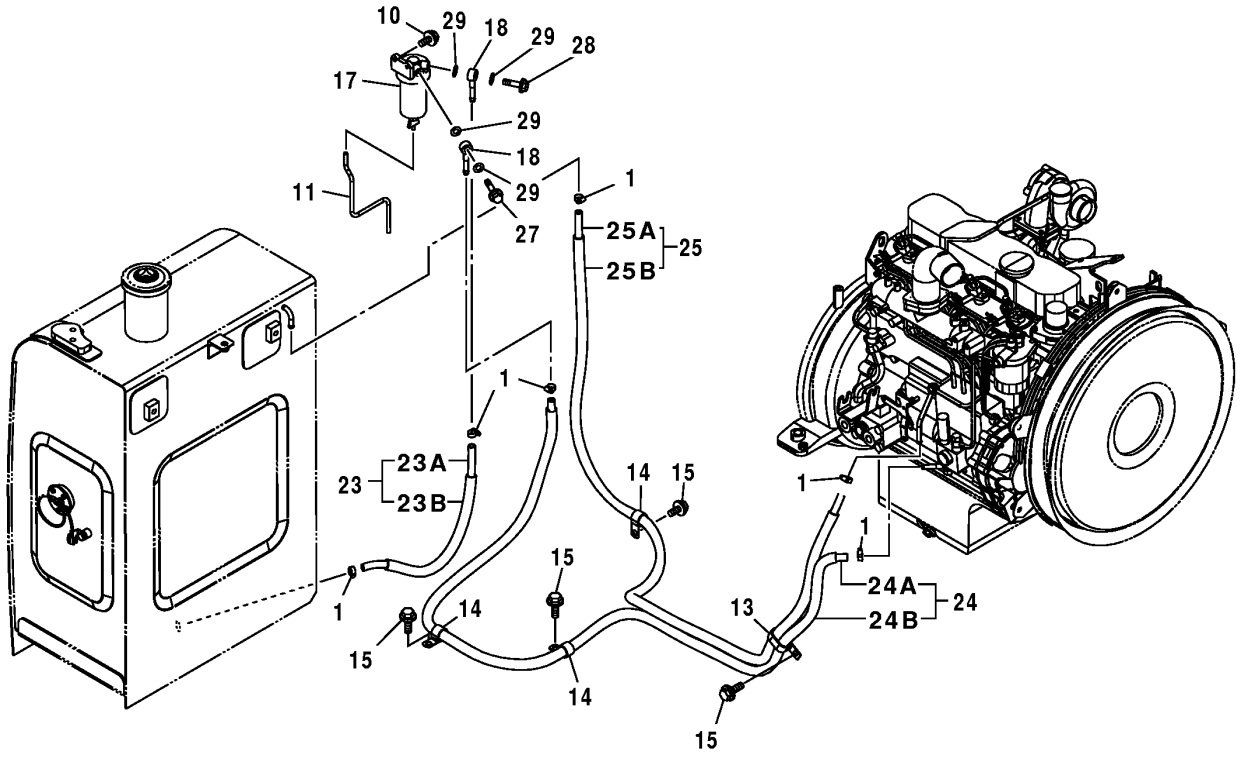

T162044

FUEL LINES

KEY	PART NO.	PART NAME	QTY	SERIAL NO.	REMARKS
1	TY22464	CLAMP	6		(SUB FOR AR21836) (SUB FOR 4514700)
10	19M7288	CAP SCREW	2		M8 X 30, (SUB FOR J010830, ALONG WITH 12M7065)
	12M7065	LOCK WASHER	2		8 MM (0.315")
11	4171509	HOSE	1		
13	4192034	CLIP	1		
14	4235654	CLIP	3		
15	19M7938	CAP SCREW	4		M10 X 20, (SUB FOR J011020)
17	4452913	SEPARATOR	1		
18	4452162	PIPE	2		
23	.....	HOSE	1		(9193281 NO LONGER AVAILABLE FOR SERVICE - ORDER INDIVIDUAL COMPONENTS)
23A	.....	BULK HOSE	1		(USE 4441611 IF AVAILABLE)
23B	4441612	WIRE	1		
24	.....	HOSE	1		(9202059 NO LONGER AVAILABLE FOR SERVICE - ORDER INDIVIDUAL COMPONENTS)
24A	.....	HOSE	1		(FURNISH TY24398, AS REQUIRED)
24B	4455515	SLEEVE	1		
25	.....	HOSE	1		(9202060 NO LONGER AVAILABLE FOR SERVICE - ORDER INDIVIDUAL COMPONENTS)
25A	.....	HOSE	1		(FURNISH TY24398, AS REQUIRED)
25B	4455516	SLEEVE	1		
27	.....	BOLT	1		(USE 4452163 IF AVAILABLE)
28	4452164	BOLT	1		
29	.....	PACKING	4		(SUB FOR 4452165)

FUEL TANK

T189246 -UN-17APR03

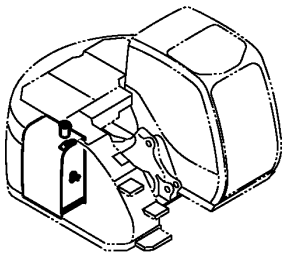

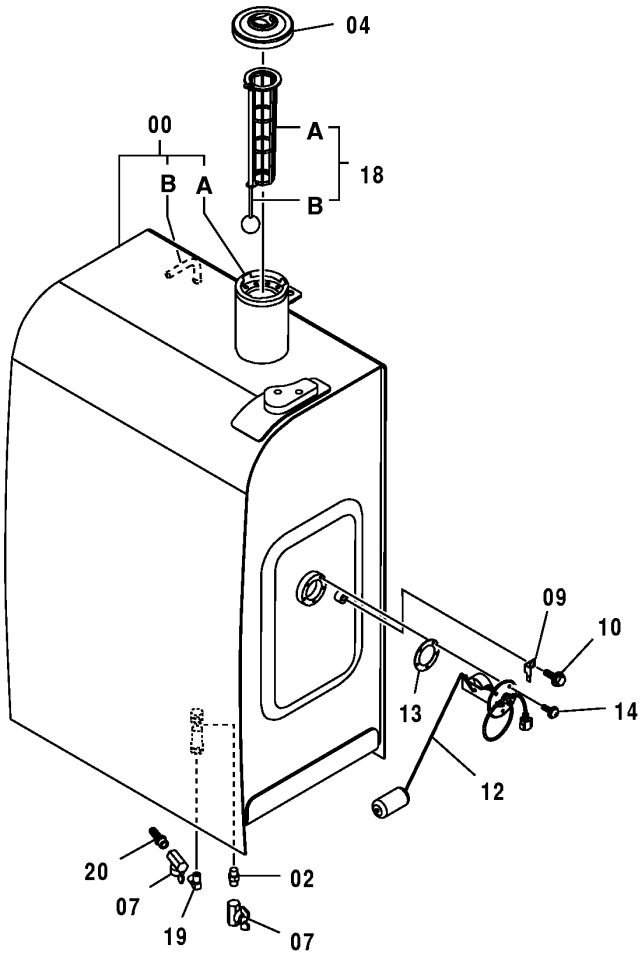

T189246

FUEL TANK

KEY	PART NO.	PART NAME	QTY	SERIAL NO.	REMARKS
0	6018813	FUEL TANK	1		
0A	4121497	BUSHING	1		
0B	4249777	PIPE	1		
2	T116057	FITTING	1		(SUB FOR J70782)
4	4361638	FILLER CAP	1		
7	4374265	DRAIN VALVE	2		
9	4257159	BRACKET	1		
10	19M8324	CAP SCREW	1		M10 X 16, (SUB FOR J011016)
	12M7067	LOCK WASHER	1		12 MM
12	4257128	FLOAT	1		
13	U42323	GASKET	1		(SUB FOR 4269607)
14	21M7278	SCREW	5		M5 X 10, (SUB FOR J450510)
18	4353560	STRAINER	1		
18A	4353560	STRAINER	1		(SUB FOR 4372619)
18B	4372620	FLOAT	1		
19	4449361	ELBOW FITTING	1		
20	4449362	ADAPTER	1		

FUEL TANK SUPPORT

T162043 -UN-26DEC02

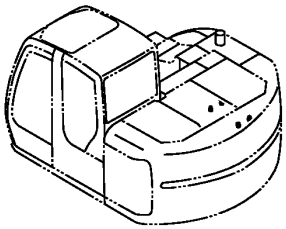

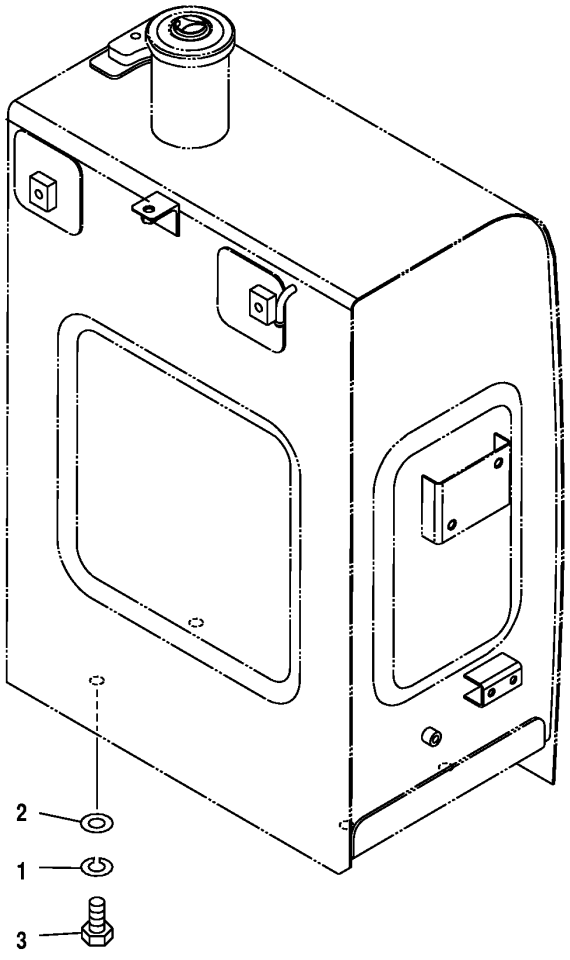

T162043

FUEL TANK SUPPORT

KEY	PART NO.	PART NAME	QTY	SERIAL NO.	REMARKS
1	12H294	LOCK WASHER	4		5/8", (SUB FOR A590916)
2	24M7338	WASHER	4		17 X 30 X 3 MM
3	4288155	BOLT	4		

LABELS AND DECALS

T188921 -UN-01APR03

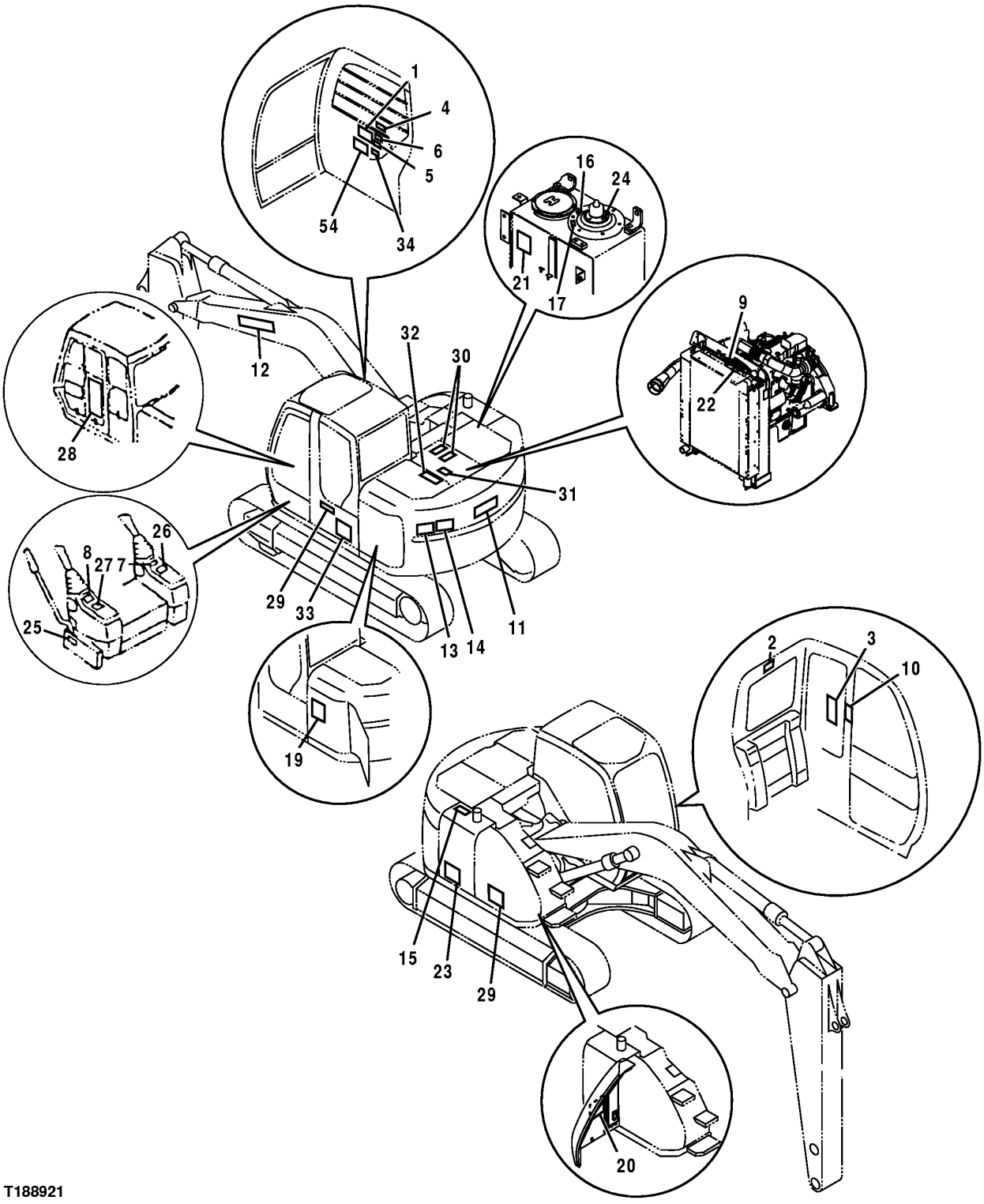

T188921

LABELS AND DECALS

KEY	PART NO.	PART NAME	QTY	SERIAL NO.	REMARKS
1	T200476	LABEL	1		ENGINE OPERATION
2	T187535	LABEL	1		CAUTION FRONT WINDOW
3	T200313	LABEL	1		LIFT CHART
4	T146668	SAFETY SIGN	1		BOOM CRUSH
5	T159887	SAFETY SIGN	1		READ MANUAL
6	T146667	SAFETY SIGN	1		ELECTRIC LINES
7	.....	LABEL	1		(SUB T201519) (SUB FOR T159842, THIS APPLICATION) RIGHT SIDE CONTROLLER OPERATION
8	.....	LABEL	1		(SUB T201519) (SUB FOR T159841, THIS APPLICATION) LEFT SIDE CONTROLLER OPERATION
9	T146671	SAFETY SIGN	1		RADIATOR CAP
10	T190393	LABEL	1		HAMMER
11	T180076	LABEL	1		DEERE (ON COUNTERWEIGHT)
12	T184020	LABEL	2		DEERE (ON BOOM)
13	T145893	SAFETY SIGN	2		STAY CLEAR
14	JD5909	REFLECTOR	2		RED REFLECTOR
15	T79632	LABEL	1		DIESEL ONLY
16	T101942	LABEL	1		HYDRAULIC OIL ONLY
17	P63448	LABEL	1		OIL TANK
18	T146103	SAFETY SIGN	1		ENGINE STARTER (NOT ILLUSTRATED)
19	4450833	LABEL	1		AIR CLEANER
20	T200340	LABEL	1		PERIODIC MAINTENANCE
21	T149983	LABEL	1		OIL LEVEL CHECK
22	3088018	LABEL	1		RADIATOR FLUID
23	T200341	LABEL	1		135C RTS (RIGHT SIDE)
24	T187710	LABEL	1		BREATHER CAP, HYDRAULIC OIL TANK
25	4299059	LABEL	1		PILOT SHUTOFF LEVER
26	4288417	LABEL	1		CAB KEY SWITCH
27	4288971	LABEL	1		ETHER AID TRAVEL ALARM
28	2050226	LABEL	1		LABEL VANDAL COVER
29	JD5765	LABEL	2		LEAPING DEERE
30	T25838	MAT	2		NO SLIP
31	H21259	MAT	1		(CUT TO 300 X 100 MM)
32	H21259	MAT	1		(CUT TO 120 X 350 MM)
33	T200343	LABEL	1		135C RTS (LEFT SIDE)
34	T163997	LABEL	1		BLADE CONTROL
54	T201519	LABEL	1		(PATTERN CHANGE DECAL) (SUB FOR T159842 AND T159841)

METRIC O-RING KIT

T164493 -UN-23JAN03

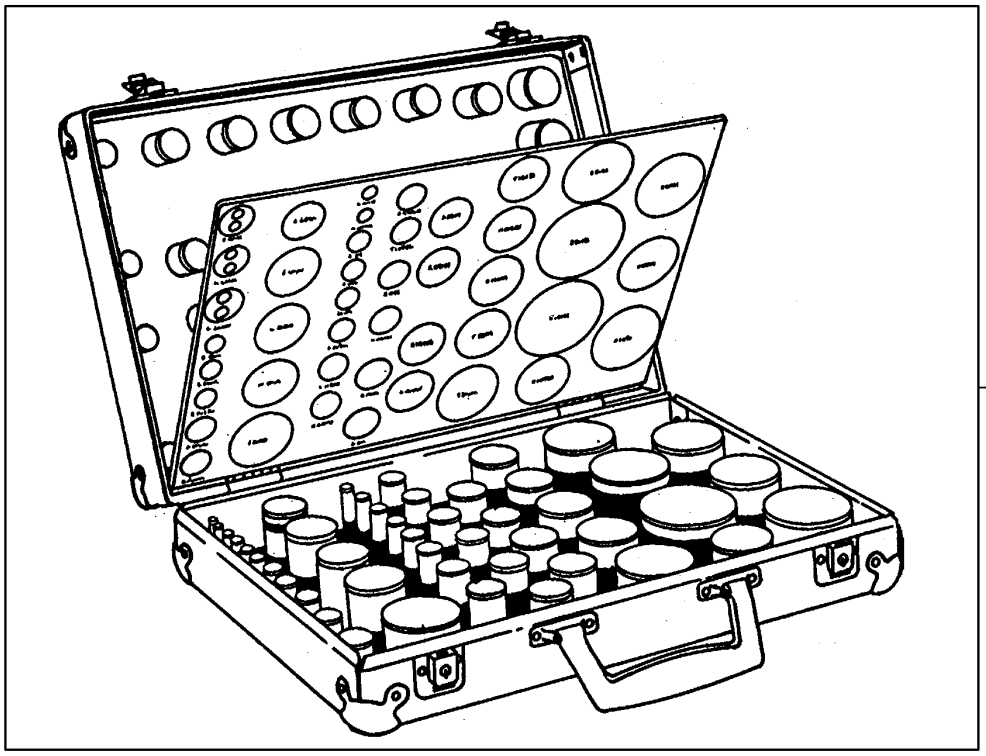

T164493

METRIC O-RING KIT

KEY	PART NO.	PART NAME	QTY	SERIAL NO.	REMARKS
1	AT130157	O-RING KIT	1		(CONTAINS ALL ITEMS LISTED BELOW)
..	CH11436	O-RING	5		49.400 X 3.100 MM (1.945" X 0.122")
..	CH11569	PACKING	5		
..	CH11570	O-RING	5		
..	CH11571	PACKING	5		
..	CH11572	PACKING	2		
..	CH12329	PACKING	5		
..	CH14634	O-RING	5		
..	CH14701	O-RING	5		
..	CH17167	O-RING	2		
..	CH19111	O-RING	5		
..	M800650	PACKING	10		
..	M800893	PACKING	5		
..	AT264324	O-RING	5		(SUB FOR TH100044)
..	4506424	O-RING	10		(SUB FOR TH100055)
..	AT264347	O-RING	5		(SUB FOR TH100136, 4506428)
..	A811030	O-RING	5		(SUB FOR TH101300)
..	4506408	O-RING	2		(SUB FOR TH101490)
..	TH101926	O-RING	5		28.700 X 3.500 MM (1.130" X 0.138")
..	957474	O-RING	2		(SUB FOR TH102706)
..	A811040	O-RING	2		(SUB FOR TH102992)
..	4153084	O-RING	2		(SUB FOR TH103446)
..	AT264354	O-RING	5		(SUB FOR TH103574)
..	970860	O-RING	2		(SUB FOR TH104634)
..	AT264360	O-RING	2		(SUB FOR TH104930, 4506430)
..	T110590	PACKING	5		
..	T110593	PACKING	5		
..	T59014	O-RING	5		24.994 X 3.531 MM (63/64" X 0.139")
..	A811045	O-RING	5		(SUB FOR T74492)
..	U10778	O-RING	5		16.358 X 2.210 MM (0.644" X 0.087")
..	U17409	O-RING	5		26.619 X 2.946 MM (1.048" X 0.116")
..	4506418	O-RING	10		(SUB FOR U46489)

FLUID ANALYSIS PRODUCTS (OILSCAN PLUS TEST KIT)

T135474 -UN-15NOV00



T135474

FLUID ANALYSIS PRODUCTS (OILSCAN PLUS TEST KIT)

KEY	PART NO.	PART NAME	QTY	SERIAL NO.	REMARKS
1	.....	KIT	1		STANDARD ENGINE, SELF EXTRACTION (12 PER PACKAGE)(INCLUDES SPECTROCHEMICAL ANALYSIS, VISCOSITY, ° WATER, FUEL DILUTION, GLYCOL, FUEL SOOT) (SUB FOR AT178843) (AT178840 NO LONGER AVAILABLE FOR SERVICE - SUB AT180333)
	AT180333	KIT	1		STANDARD ENGINE, 4 OZ BOTTLE (10 PER PACKAGE) (SAME AS AT178840) (SUB FOR AT180335)
	.....	KIT	1		COMPREHENSIVE ENGINE W/TBN (EXTENDED DRAIN) (12 PER PACKAGE)(SAME AS AT178840 PLUS TBN) (AT178842 NO LONGER AVAILABLE FOR SERVICE - SUB AT180334)
	AT180334	KIT	1		COMPREHENSIVE ENGINE W/TBN (EXTENDED DRAIN) 4 OZ BOTTLE (10 PRT PACKAGE) (SAME AS AT178842)
	AT303189	KIT	1		COMPREHENSIVE HYDRAULIC & HYDROSTATIC SYSTEMS, 4 OZ BOTTLE (10 PER PACKAGE) (REQUIRES USE OF A SAMPLING VALVE FOR ACCURATE RESULTS) (SUB FOR AT178844)
	ISPKIT3	PUMP	1		OIL EXTRACTION (1 PER PACKAGE)(CAN BE USED WITH AT180333, AT180334, AND AT180335 KITS TO EXTRACT OIL SAMPLE)
	DSO345	TUBE	1		500'ROLL (USED WITH IPSKIT3 PUMP TO EXTRACT SAMPLE)
	DSO346	TUBE	1		100' ROLL (USED WITH IPSKIT3 PUMP TO EXTRACT SAMPLE)

FLUID ANALYSIS PRODUCTS (COOLSCAN PLUS TEST KIT)

T135475 -UN-15NOV00



T135475

KEY	PART NO.	PART NAME	QTY	SERIAL NO.	REMARKS
1	AT183016	KIT	1		COOLANT ANALYSIS (6 PER PACKAGE)(TESTS FREEZE POINT, ° ANTIFREEZE, PH, RESERVE ALKALINITY, NITRITE, MOLYBDATE, SILICATE, VISUAL ASSESSMENT & CORROSION METALS (IRON, COPPER, ALUMINUM & LEAD))

FLUID ANALYSIS PRODUCTS (DIESELSCAN TEST KIT)

T135476 -UN-15NOV00



T135476

KEY	PART NO.	PART NAME	QTY	SERIAL NO.	REMARKS
1	AT180344	KIT	1		DIESEL ANALYSIS (6 PER PACKAGE)(USED TO VERIFY TYPE, SUITABILITY FOR COLD TEMPERATURE OPERATIONS, CLEANLINESS, WATER CONTENT AND IF FUEL IS WITHIN ASTM SPECIFICATIONS. CHECKS API GRAVITY, VISCOSITY AT 40C, SULFUR, CETANE INDEX, DISTILLATION, CLOUD POINT, POUR POINT AND COLD FILTER PLUGGING POINT.

BOOM LUBRICATION LINES

T162716 -UN-10JAN03

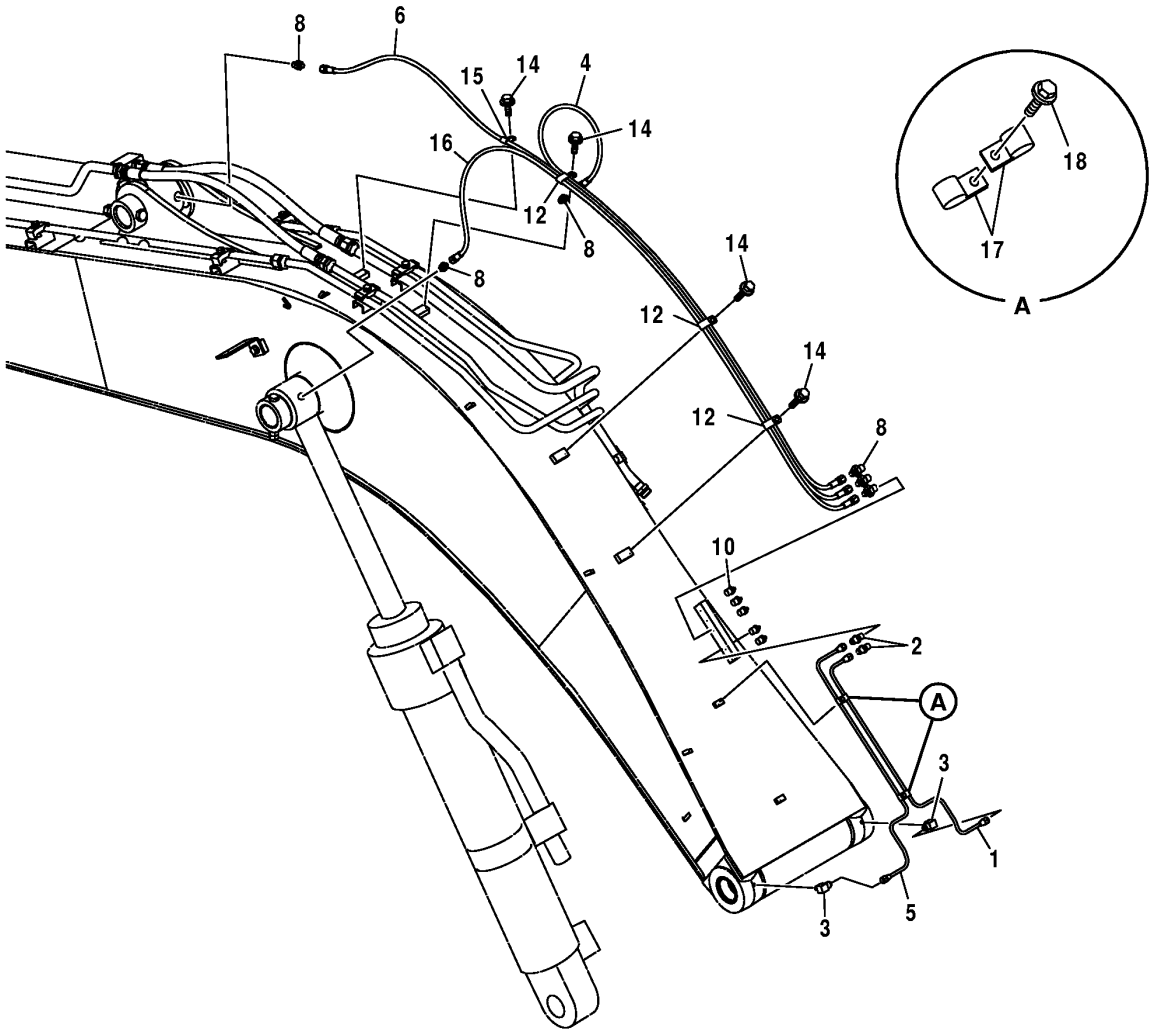

T162716

BOOM LUBRICATION LINES

KEY	PART NO.	PART NAME	QTY	SERIAL NO.	REMARKS
1	4384917	OIL LINE	1		
2	4360981	ADAPTER	2		
3	4345297	ELBOW FITTING	2		
4	4449244	HOSE	1		
5	4384949	OIL LINE	1		
6	4437134	HYDRAULIC HOSE - FABRICATE	1		
8	4154651	ADAPTER	6		
10	TH100364	LUBRICATION FITTING	5		
12	T152608	CLAMP	3		(SUB FOR AT154207)
14	19M8324	CAP SCREW	4		M10 X 16, (SUB FOR J011016)
	12M7067	LOCK WASHER	4		12 MM
15	4190261	CLIP	1		
16	4455116	HOSE	1		
17	4000854	PLATE	4		
18	J020614	BOLT	2		

BATTERY AND BATTERY MOUNTING

T162365 -UN-27DEC02

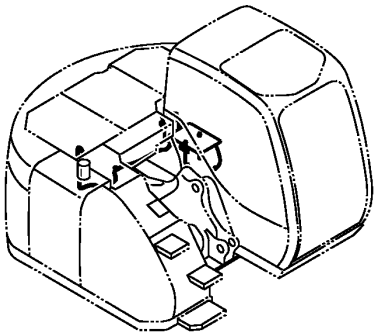

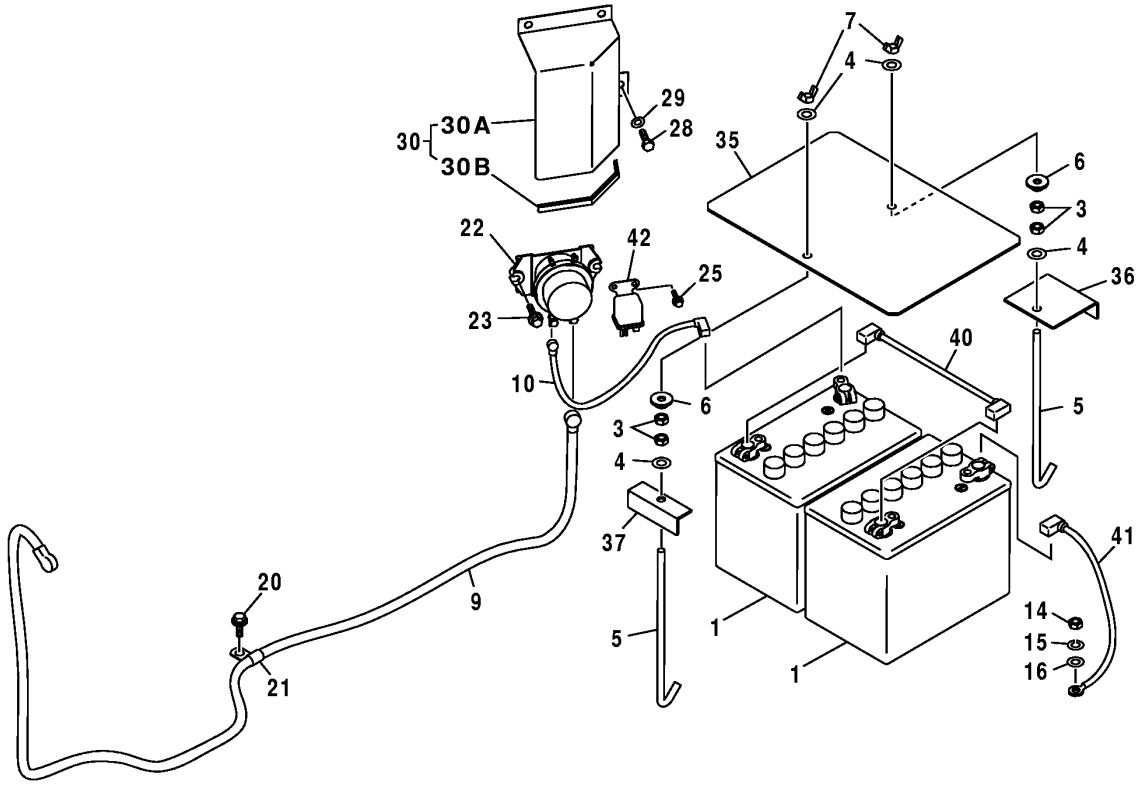

T162365

BATTERY AND BATTERY MOUNTING

KEY	PART NO.	PART NAME	QTY	SERIAL NO.	REMARKS
1	4341012	DRY CHARGED BATTERY	2		
3	14M7274	NUT	4		M10
4	24M7028	WASHER	4		10.500 X 20 X 2 MM, (SUB FOR A590110)
5	4257034	HOOK BOLT	2		
6	9749010	BUSHING	2		
7	14M7025	WING NUT	2		M10, (SUB FOR M570010)
9	4437074	WIRING HARNESS	1		
10	4363079	WIRING HARNESS	1		
14	14M7274	NUT	1		M10
15	12M7066	LOCK WASHER	1		10 MM, (SUB FOR A590910)
16	24M7028	WASHER	1		10.500 X 20 X 2 MM, (SUB FOR A590110)
20	19M7938	CAP SCREW	1		M10 X 20, (SUB FOR J011020)
	12M7066	LOCK WASHER	1		10 MM
21	4190275	CLIP	1		
22	4255762	RELAY	1		
23	19M7513	CAP SCREW	2		M8 X 30, (SUB FOR J020830)
25	19M7077	CAP SCREW	2		M6 X 20, (SUB FOR J020620)
28	19M7932	CAP SCREW	3		M8 X 16, (SUB FOR J900816)
	12M7065	LOCK WASHER	3		8 MM
29	24M7055	WASHER	3		8.400 X 16 X 1.600 MM, (SUB FOR A590108)
30	3089604	COVER	1		
30A	.....	COVER	1		
30B	.....	SEALING TRIM	1		
35	4439019	COVER	1		
36	4439020	SUPPORT	1		
37	4445961	SUPPORT	1		
40	4447905	WIRING HARNESS	1		
41	4363081	WIRING HARNESS	1		
42	4452159	RELAY	1		

BOOM WORK LIGHTS

T162370 -UN-26DEC02

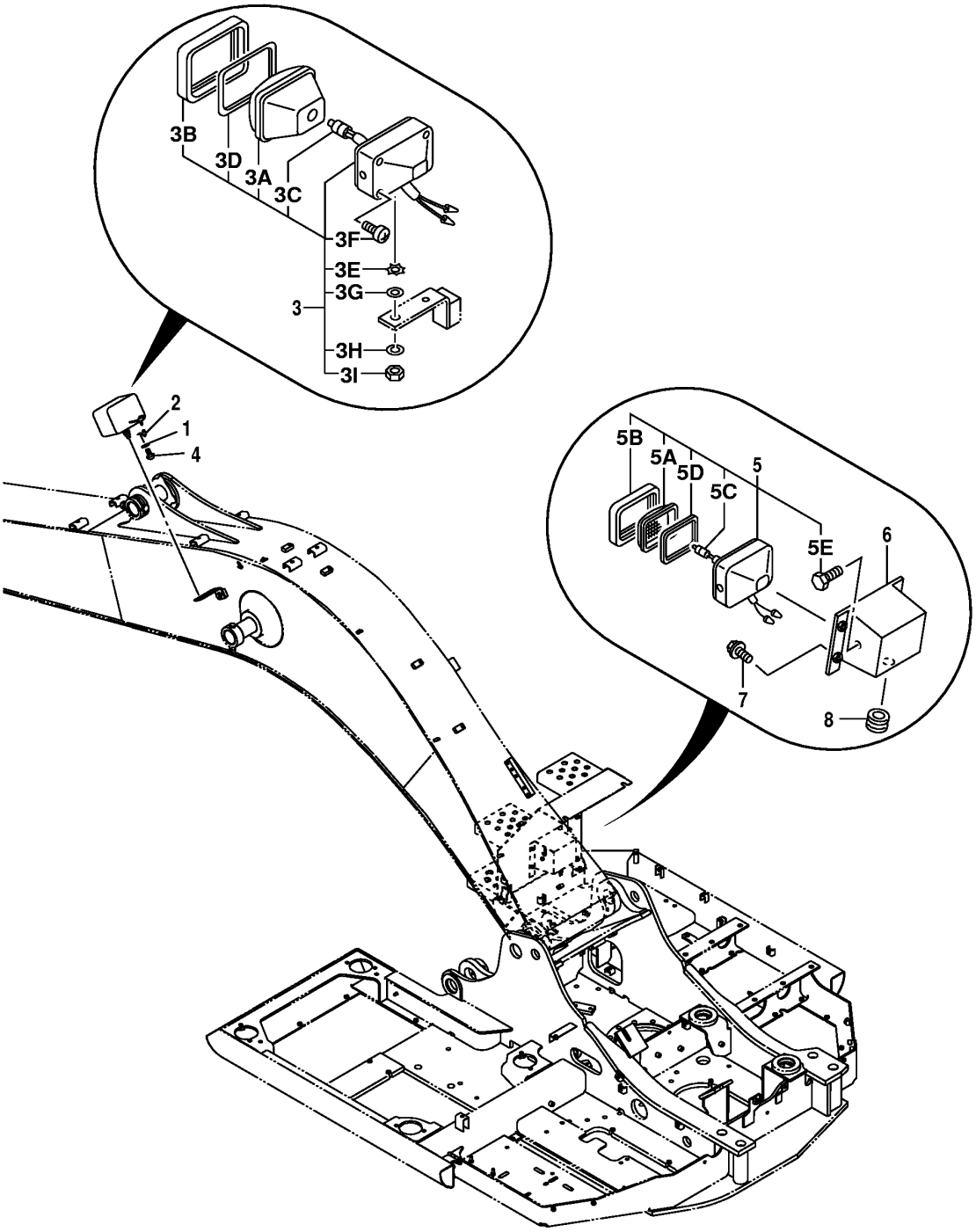

T162370

BOOM WORK LIGHTS

KEY	PART NO.	PART NAME	QTY	SERIAL NO.	REMARKS
1	12M7006	LOCK WASHER	1		6 MM, (SUB FOR A590906)
2	4254604	WIRING HARNESS	1		
3	4326800	LAMP	1		
3A	4326801	LENS	1		
3B	4326802	FRAME	1		
3C	AT154990	BULB	1		(SUB FOR 4285648)
3D	4326803	GASKET	1		
3E	4307026	WASHER	1		
3F	4307027	SCREW	1		
3G	24M7085	WASHER	1		15 X 28 X 2.500 MM
3H	12H317	LOCK WASHER	1		9/16", (SUB FOR A590914)
3I	J952014	NUT	1		
4	21M7285	SCREW	1		M6 X 12, (SUB FOR M430613)
5	4274478	FLOODLAMP	1		
5A	4285646	LENS	1		
5B	4285647	RIM	1		
5C	AT154990	BULB	1		(SUB FOR 4285648)
5D	4288342	GASKET	1		
5E	19M8425	CAP SCREW	2		M6 X 16, (SUB FOR J900616)
	12M7006	LOCK WASHER	2		6 MM
6	8061757	HOUSING	1		
7	19M7139	CAP SCREW	4		M8 X 20, (SUB FOR J020820)
	12M7065	LOCK WASHER	4		8 MM
	24M7055	WASHER	4		8.400 X 16 X 1.600 MM
8	94-2807	GROMMET	1		

WIRING HARNESS

T162373 -UN-26DEC02

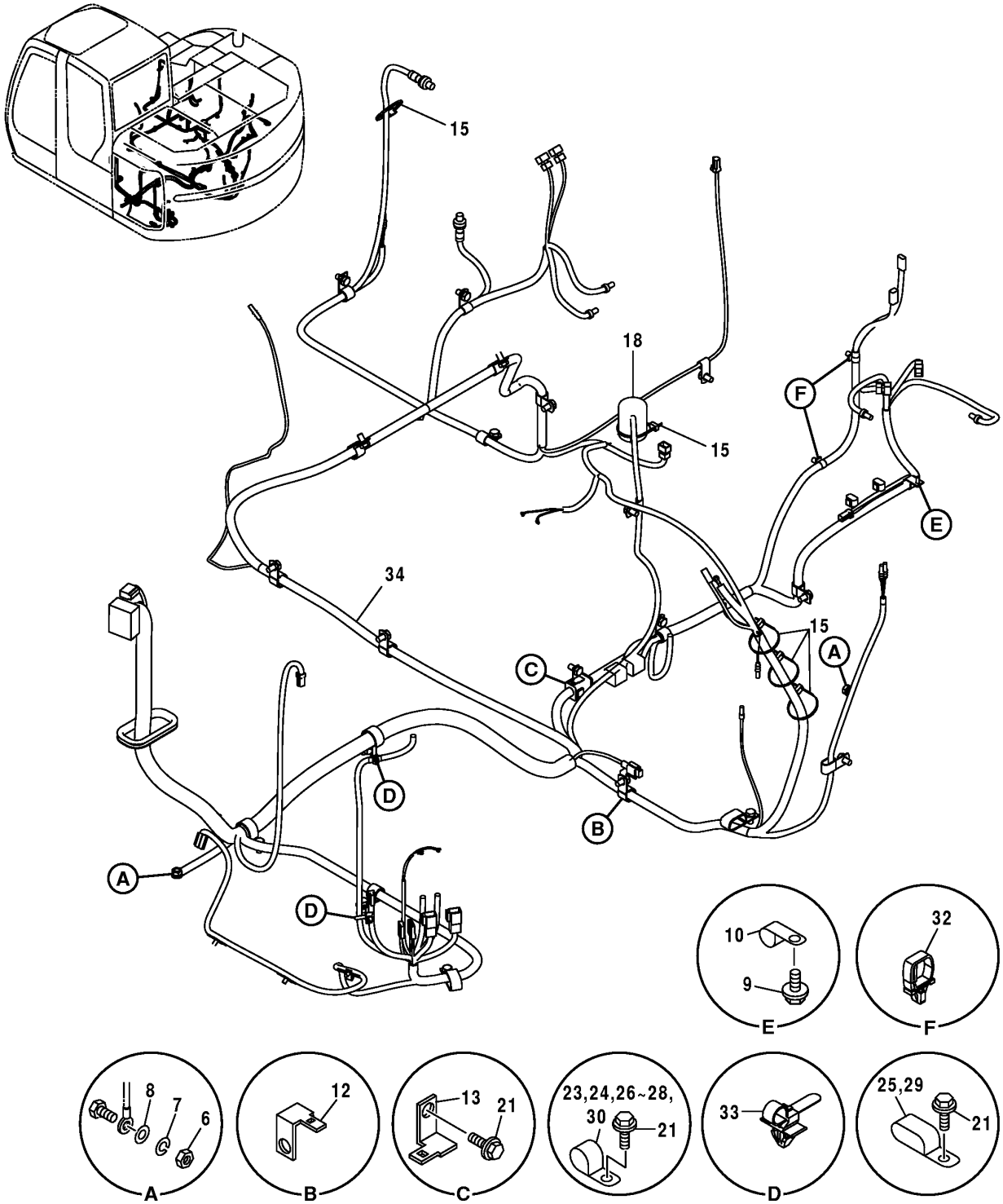

T162373

WIRING HARNESS

KEY	PART NO.	PART NAME	QTY	SERIAL NO.	REMARKS
6	14M7274	NUT	2		M10, (SUB FOR J950010)
7	12M7066	LOCK WASHER	2		10 MM, (SUB FOR A590910)
8	24M7028	WASHER	2		10.500 X 20 X 2 MM, (SUB FOR A590110)
9	19M7560	CAP SCREW	1		M6 X 16, (SUB FOR J010616)
	12M7006	LOCK WASHER	1		6 MM
10	4000860	CLAMP	1		
12	4257159	BRACKET	1		
13	4418301	BRACKET	1		
15	H77698	TIE BAND	5		
18	4277223	CAP	1		
21	19M7938	CAP SCREW	21		M10 X 20, (SUB FOR J011020)
	12M7066	LOCK WASHER	21		10 MM
23	4190272	CLIP	3		
24	4190275	CLIP	1		
25	4190292	CLIP	1		
26	4190273	CLIP	2		
27	4190274	CLIP	4		
28	T24432	CLAMP	5		(SUB FOR 4190277)
29	4190266	CLIP	2		
30	4193848	CLIP	2		(SUB FOR 4190291) (SUB FOR 4190264)
32	4449250	CLIP	2		
33	4254600	CLIP	2		
34	0003812	WIRING HARNESS	1		

IGNITION SWITCH AND HARNESS

T162379 -UN-26DEC02

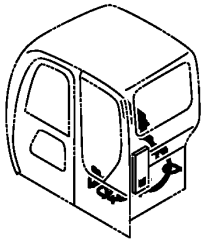

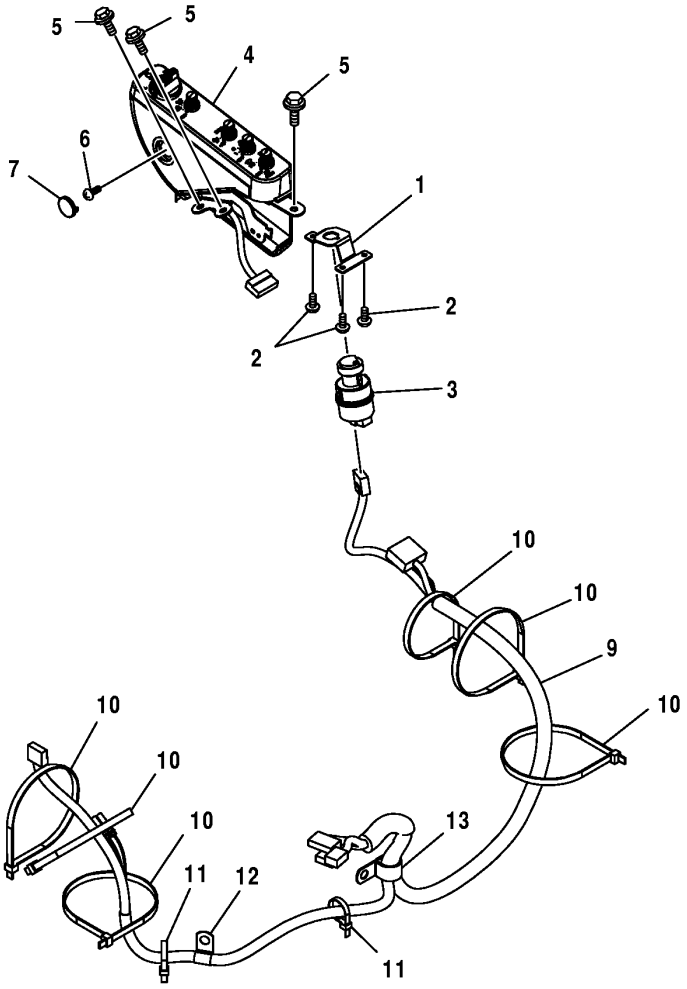

T162379

IGNITION SWITCH AND HARNESS

KEY	PART NO.	PART NAME	QTY	SERIAL NO.	REMARKS
1	3087882	BRACKET	1		
2	4361800	SCREW	3		
3	4477373	SWITCH	1		
	AT194969	KEY	1		
4	4454518	CONTROL CONSOLE	1		
5	J010814	SCREW WITH WASHER	3		
6	4381572	SCREW	1		
7	4426354	CAP	1		
9	2045532	WIRING HARNESS	1		
10	H77698	TIE BAND	6		
11	H77698	TIE BAND	2		
12	4190261	CLIP	1		
13	TH108594	CLIP	1		

CONTROLLER, FUSES AND WIRING HARNESS

T162380 -UN-03JAN03

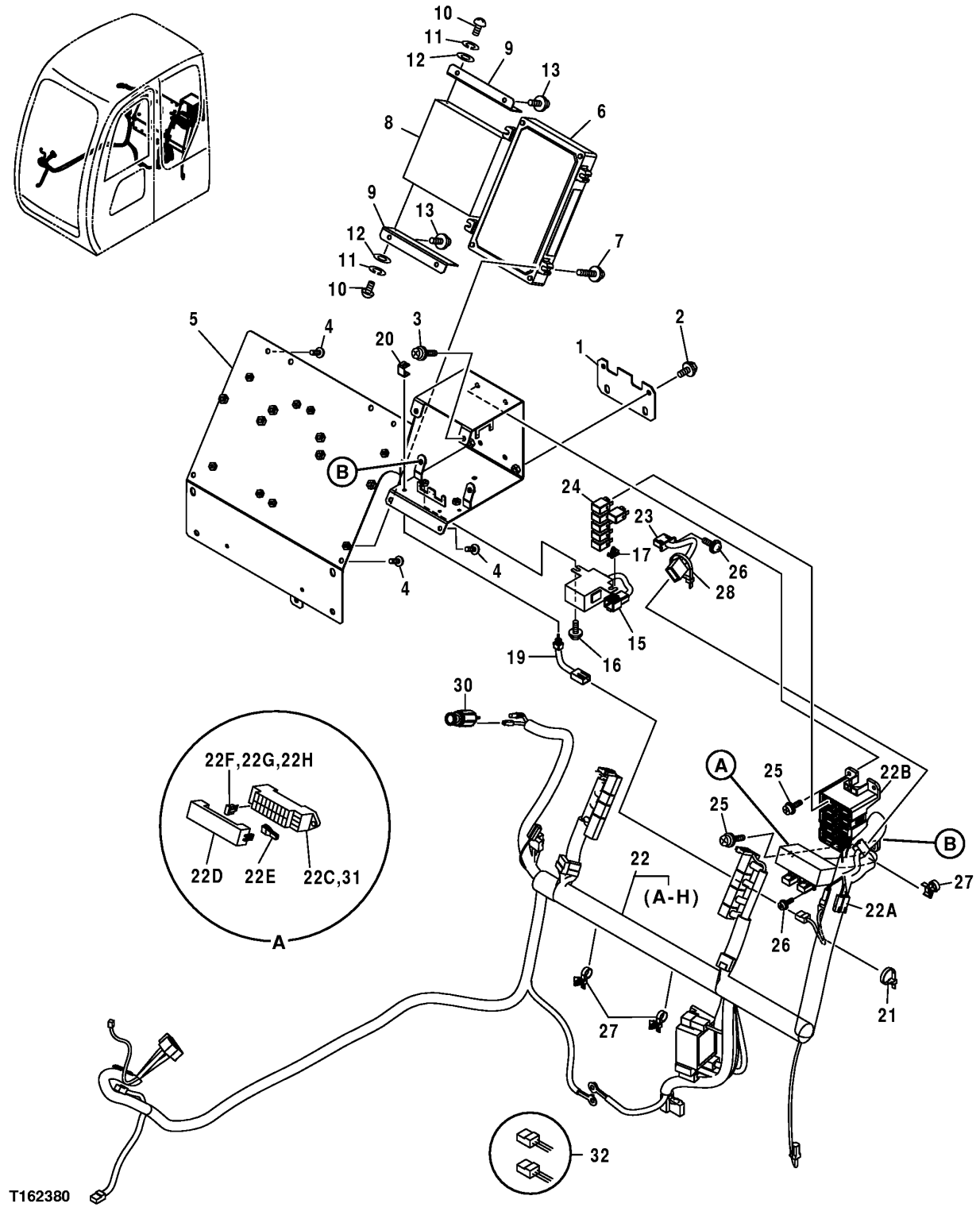

CONTROLLER, FUSES AND WIRING HARNESS

KEY	PART NO.	PART NAME	QTY	SERIAL NO.	REMARKS
1	4450291	BRACKET	1		
2	19M7162	CAP SCREW	2		M8 X 16, (SUB FOR J020816)
	12M7065	LOCK WASHER	2		8 MM
	24H1136	WASHER	2		11/32" X 11/16" X 0.065"
3	19M8425	CAP SCREW	2		M6 X 16, (SUB FOR J460616)
	12M7006	LOCK WASHER	2		6 MM
	24M7293	WASHER	2		6.500 X 13 X 1.600 MM
4	4444700	SCREW	6		
5	7040006	BRACKET	1		
6	9226744	VEHICLE CONTROLLER	1		(SUB FOR 4452331)
7	19M7177	CAP SCREW	4		M6 X 35, (SUB FOR J460635)
	12M7006	LOCK WASHER	4		6 MM
	24M7293	WASHER	4		6.500 X 13 X 1.600 MM
8	9239568	VEHICLE CONTROLLER	1		(SUB FOR 9212078)
9	3090457	BRACKET	2		
10	21M7265	SCREW	4		M5 X 12
11	12M7064	LOCK WASHER	4		5 MM
12	24M7027	WASHER	4		5.300 X 10 X 1 MM
13	J460614	SCREW	4		
15	4452160	RELAY	1		
16	21M7267	SCREW	2		M6 X 20, (SUB FOR J460620)
	24M7293	WASHER	2		6.500 X 13 X 1.600 MM
	12M7006	LOCK WASHER	2		6 MM
17	.....	CLIP	1		
19	4359384	SWITCH	1		
20	4367375	BRACKET	1		
21	H77698	TIE BAND	1		
22	0003890	WIRING HARNESS	1		
22A	4456778	DIODE	4		
22B	4427429	CIRCUIT BOX	1		
22C	.....	FUSE HOLDER	1		
22D	4443490	COVER	1		
22E	.....	SPECIAL SERVICE TOOL	1		
22F	4428910	FUSE	10		
22G	4428911	FUSE	7		
22H	4436736	FUSE	2		
23	4439897	WIRING HARNESS	1		
24	4436534	RELAY	6		
25	21M7267	SCREW	6		M6 X 20
	24M7293	WASHER	6		6.500 X 13 X 1.600 MM
	12M7006	LOCK WASHER	6		6 MM
26	J460310	SCREW	6		
27	4254600	CLIP	3		
28	H77698	TIE BAND	1		
30	AR60937	ELECTRICAL LIGHTER	1		(12 VOLT)
	AU42809	RESISTOR	1		(12 VOLT)
	AT78634	WIRING LEAD	1		(12 VOLT)
	AT78633	HOUSING	1		(12 VOLT)
	.....	ELECTRICAL LIGHTER	1		(4357862 NO LONGER AVAILABLE) (24 VOLT)
31	4460037	FUSE BOX	1		
32	4369817	ELECTRICAL CONNECTOR ASSY	1		

MIC CUSTOMER KIT AND CABLE

T192372A -UN-19JUN03

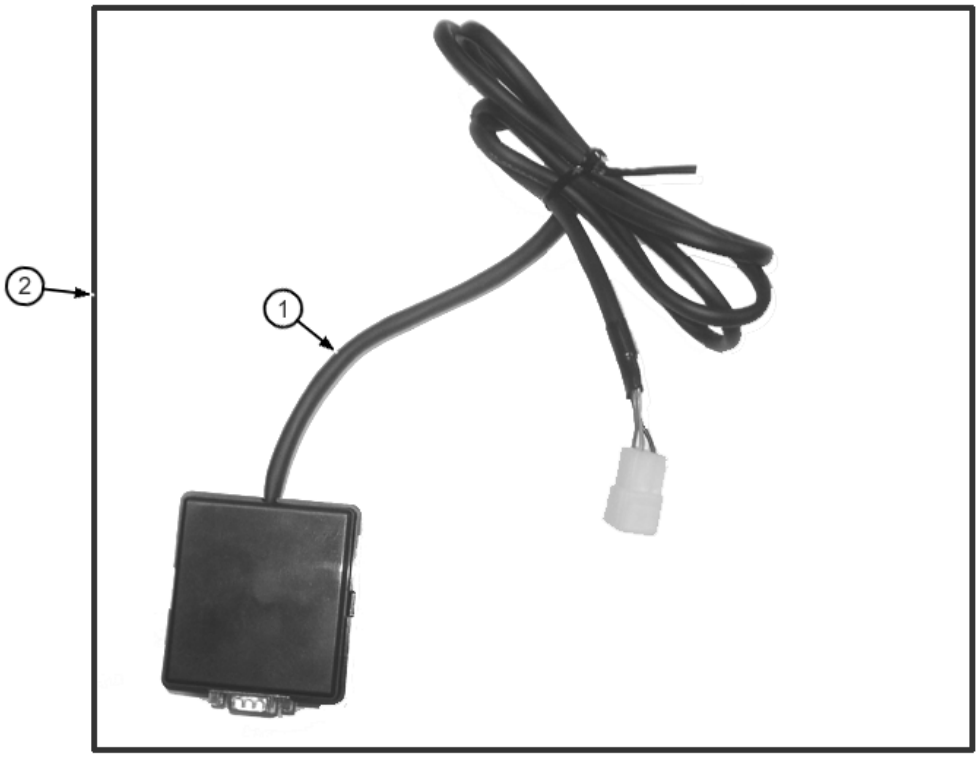

MIC CUSTOMER KIT AND CABLE

KEY	PART NO.	PART NAME	QTY	SERIAL NO.	REMARKS
1	TH3100010	CABLE	1		
2	AT301723	KIT	1		(WHOLEGOODS)(MIC CUSTOMER KIT)(INCLUDES SOFTWARE AND CABLE)

BOOM LIGHT HARNESS

T162381 -UN-26DEC02

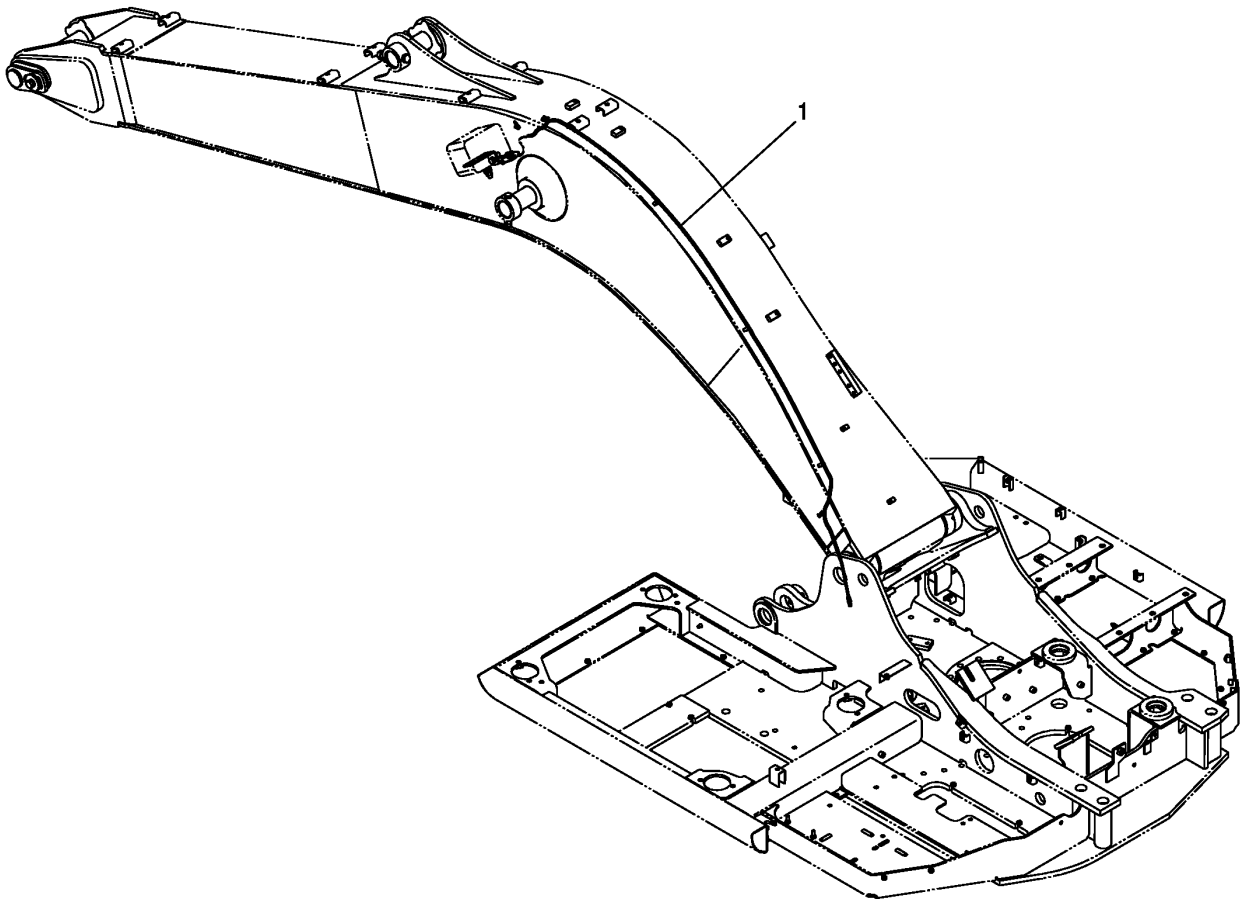

T162381

BOOM LIGHT HARNESS

KEY	PART NO.	PART NAME	QTY	SERIAL NO.	REMARKS
1	4430382	WIRING HARNESS	1		

1H21

CONVERTER (24-VOLT TO 12-VOLT)

TP32780 -UN-01JAN94

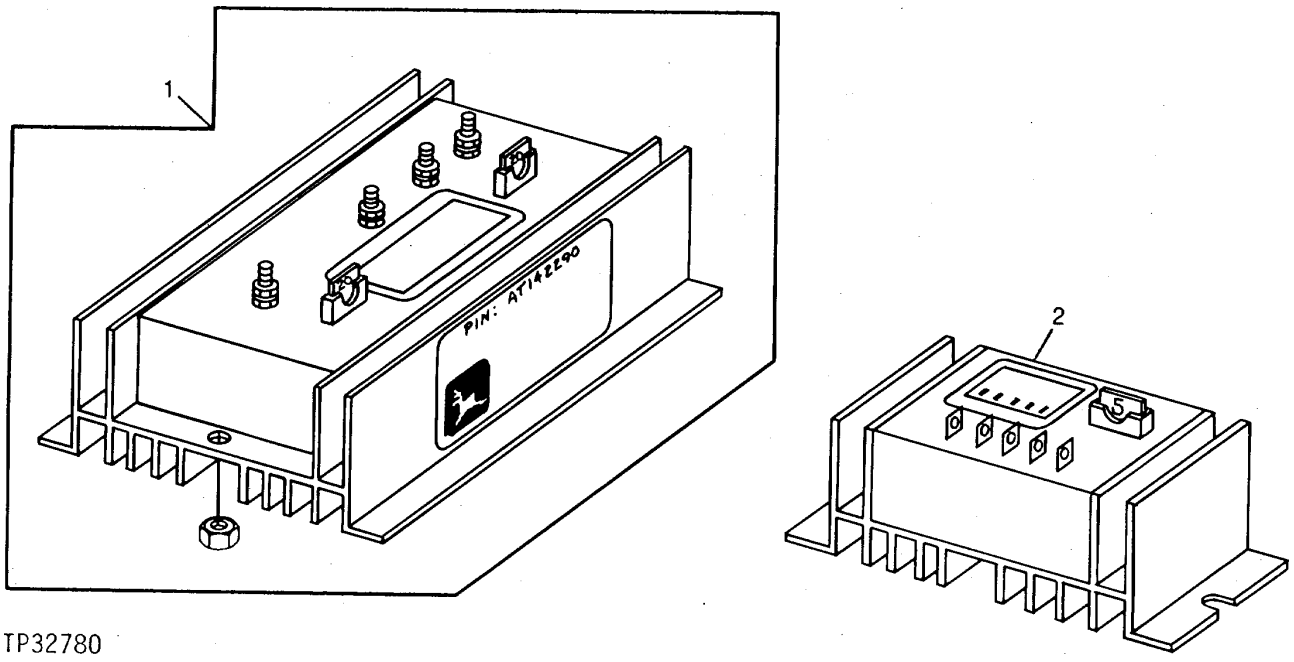

KEY	PART NO.	PART NAME	QTY	SERIAL NO.	REMARKS
1	AT142288	CONVERTER	1		(10/20 AMP - 24/12 VOLT)
	14H786	NUT	2		1/4", (NOT ILLUSTRATED)
2	AT164676	CONVERTER	1		(5 AMP - 24/12 VOLT)

MEMORANDA

MANUAL ENGINE CONTROL SWITCH BOX

T197096 -UN-07JAN04

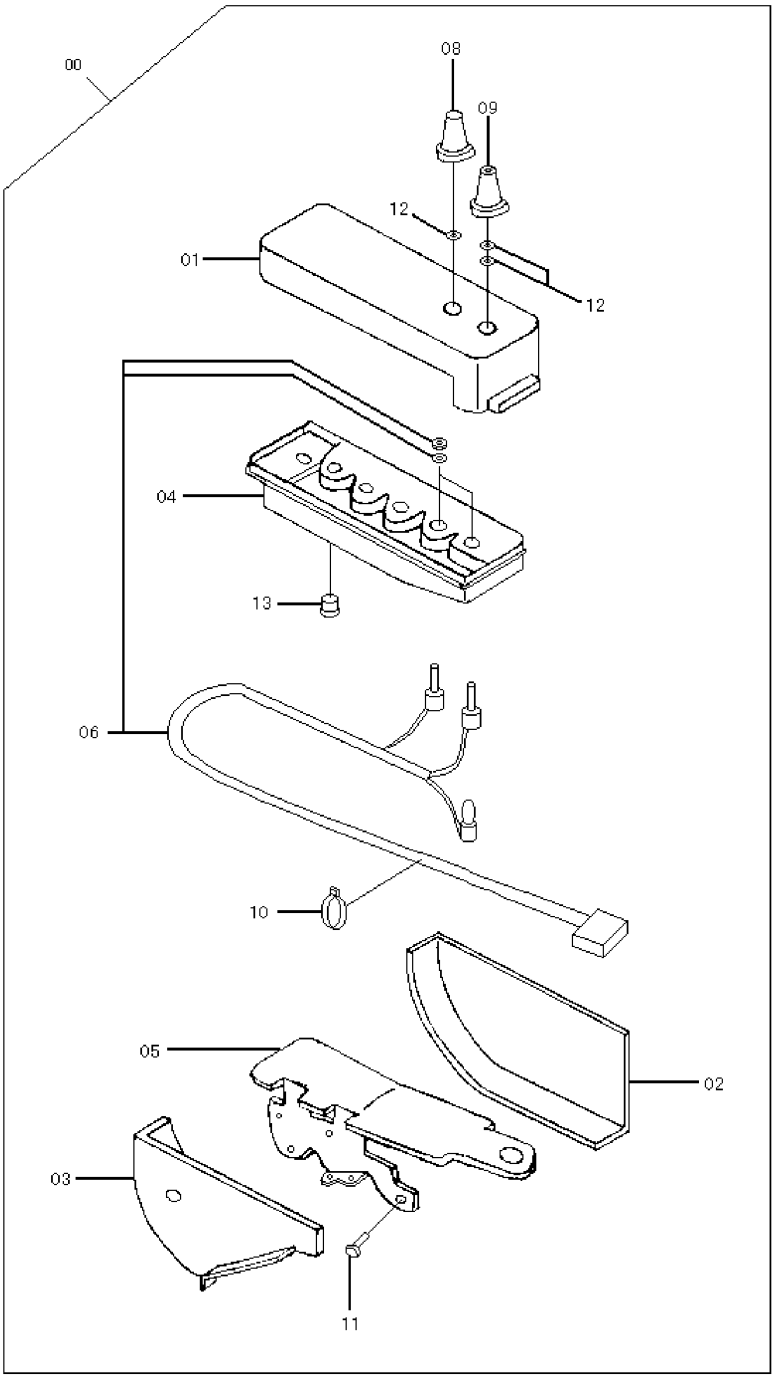

T197096

MANUAL ENGINE CONTROL SWITCH BOX

KEY	PART NO.	PART NAME	QTY	SERIAL NO.	REMARKS
0	4451764	SWITCH	1		
1	4483282	CASE	1		
2	4483202	COVER	1		
3	4483203	COVER	1		
4	4483204	CIRCUIT BOARD	1		
5	4483205	BRACKET	1		
6	4483283	SWITCH	1		
8	4483208	DIAL KNOB	4		
9	4483209	DIAL KNOB	1		
10	4426700	CLAMP	1		
11	4381572	SCREW	7		
12	4485825	O-RING	3		
13	4288796	CAP	1		

CAB MONITOR

T162825 -UN-12DEC02

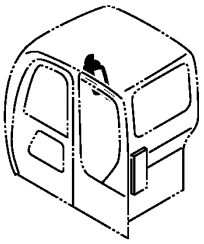

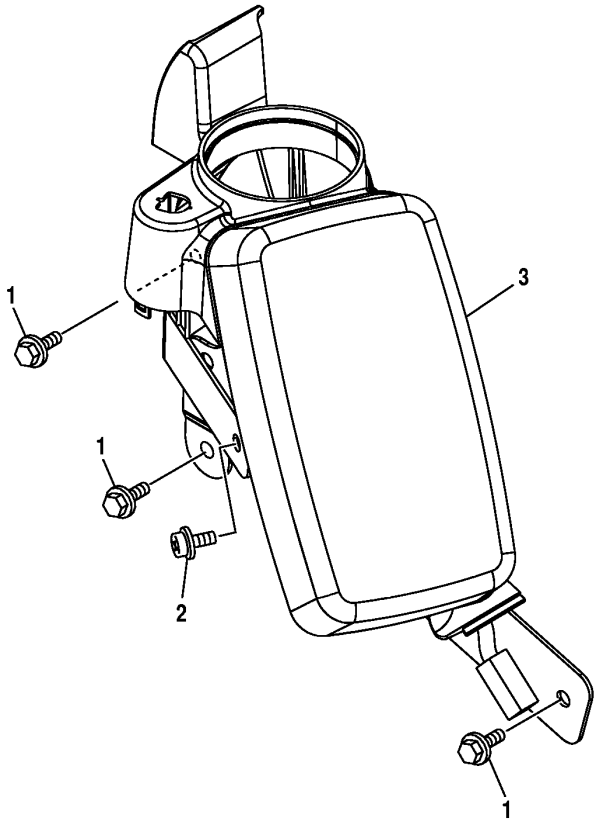

T162825

CAB MONITOR

KEY	PART NO.	PART NAME	QTY	SERIAL NO.	REMARKS
1	19M7932	CAP SCREW	3		M8 X 16, (SUB FOR J010816)
	12M7065	LOCK WASHER	3		8 MM
2	J460614	SCREW	1		
3	4454519	MONITOR	1		

CAB MONITOR

T192466 -UN-24JUN03

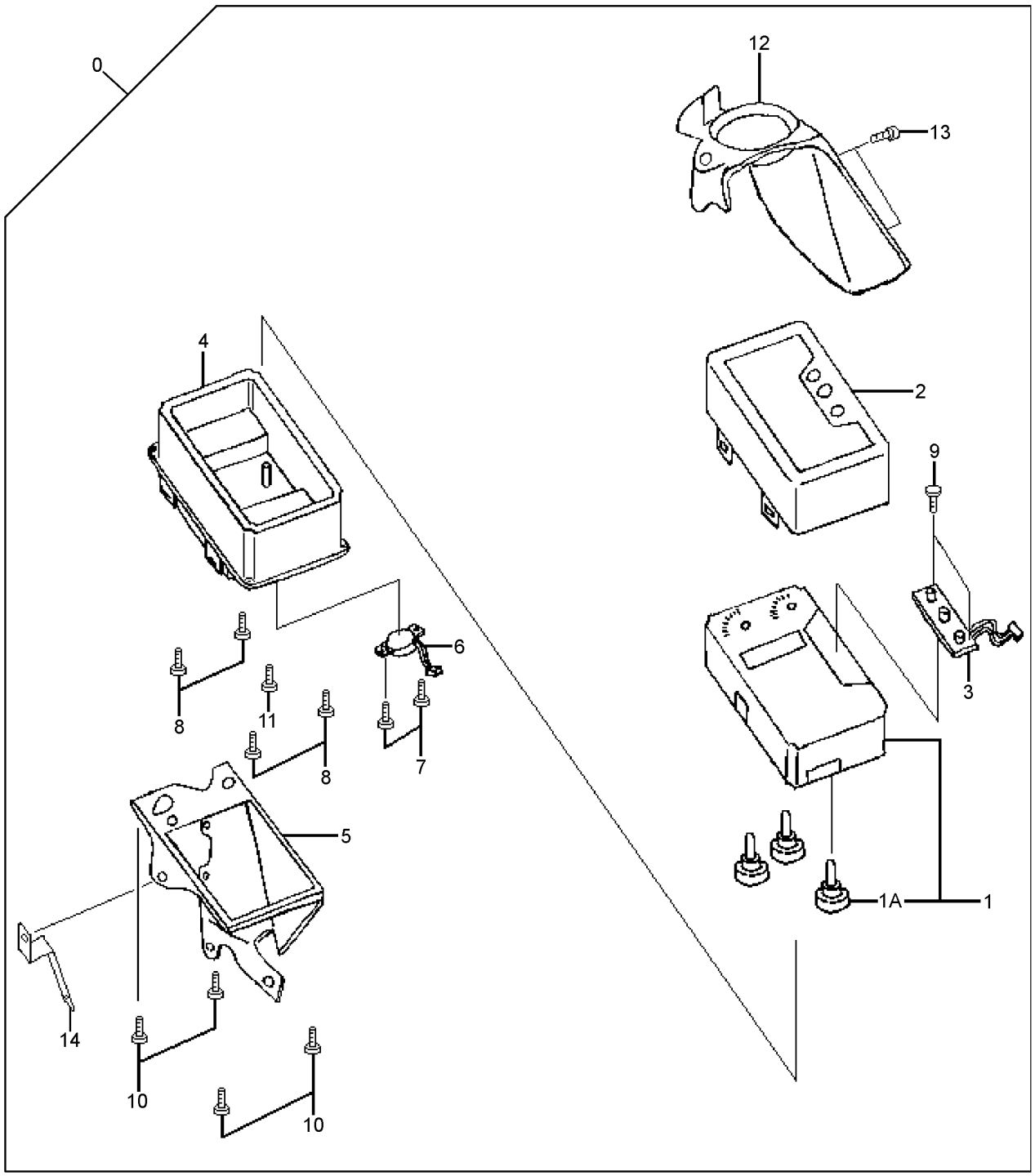

T192466

CAB MONITOR

KEY	PART NO.	PART NAME	QTY	SERIAL NO.	REMARKS
0	4609756	MONITOR	1		(4454519 OR 4468480 NOT USED FOR THIS APPLICATION)
1	4483035	METER	1		
1A	4426362	LAMP	3		
2	4483028	CASE	1		
3	4482980	PRINTED CIRCUIT	1		
4	4482601	CASE	1		
5	4482602	BRACKET	1		
6	4482603	TRAVEL WARNING ALARM	1		
7	4482604	SCREW	2		
8	4482973	SCREW	4		
9	4388962	SCREW	2		
10	4482973	SCREW	4		
11	4426370	SCREW	1		
12	4426353	COVER	1		
13	12M7063	LOCK WASHER	2		
	24M7117	WASHER	2		
	21M7250	SCREW	2		
14	4482976	BRACKET	1		

FRAME

T162013 -UN-10JAN03

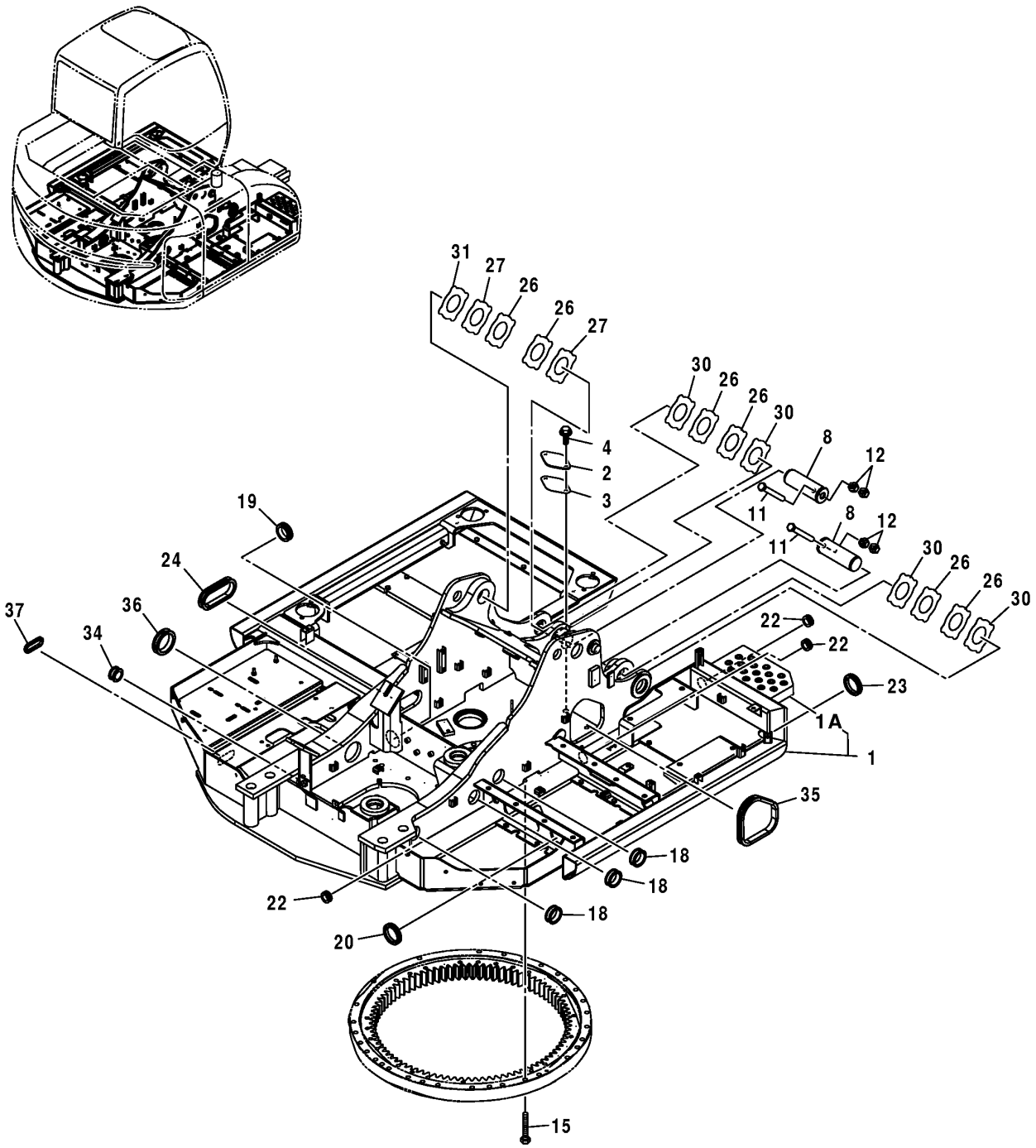

T162013

FRAME

KEY	PART NO.	PART NAME	QTY	SERIAL NO.	REMARKS
1	5007061	FRAME	1		
1A	8081763	STEP	1		
2	4255799	COVER	1		
3	4161735	GASKET	1		
4	19M7402	CAP SCREW	2		M10 X 25, (SUB FOR J021025)
	12M7066	LOCK WASHER	2		10 MM
	24M7028	WASHER	2		10.500 X 20 X 2 MM
8	AT154899	PIN	2		
11	4338863	BUSHING	2		
12	4279257	BUSHING	4		
15	4221019	BUSHING	1		
18	4435124	PIN FASTENER	2		
19	14M7276	NUT	4		M16, (SUB FOR J950016)
20	J921890	BOLT	1		(SUB FOR P61970)
22	4255567	BUSHING	3		
23	4208279	GROMMET	1		
24	4438533	BUSHING	1		
26	4444288	THRUST WASHER	6		
27	4444289	THRUST WASHER	2		
30	4444289	THRUST WASHER	4		
31	4460371	THRUST WASHER	1		
34	4221018	BUSHING	1		
35	3092179	BUSHING	1		
36	4190960	GROMMET	1		
37	4457108	BUSHING	1		

BOOM FOOT PIN

T162016 -UN-13DEC02

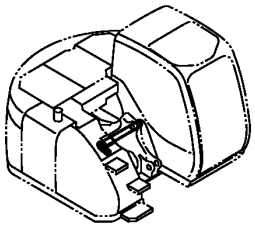

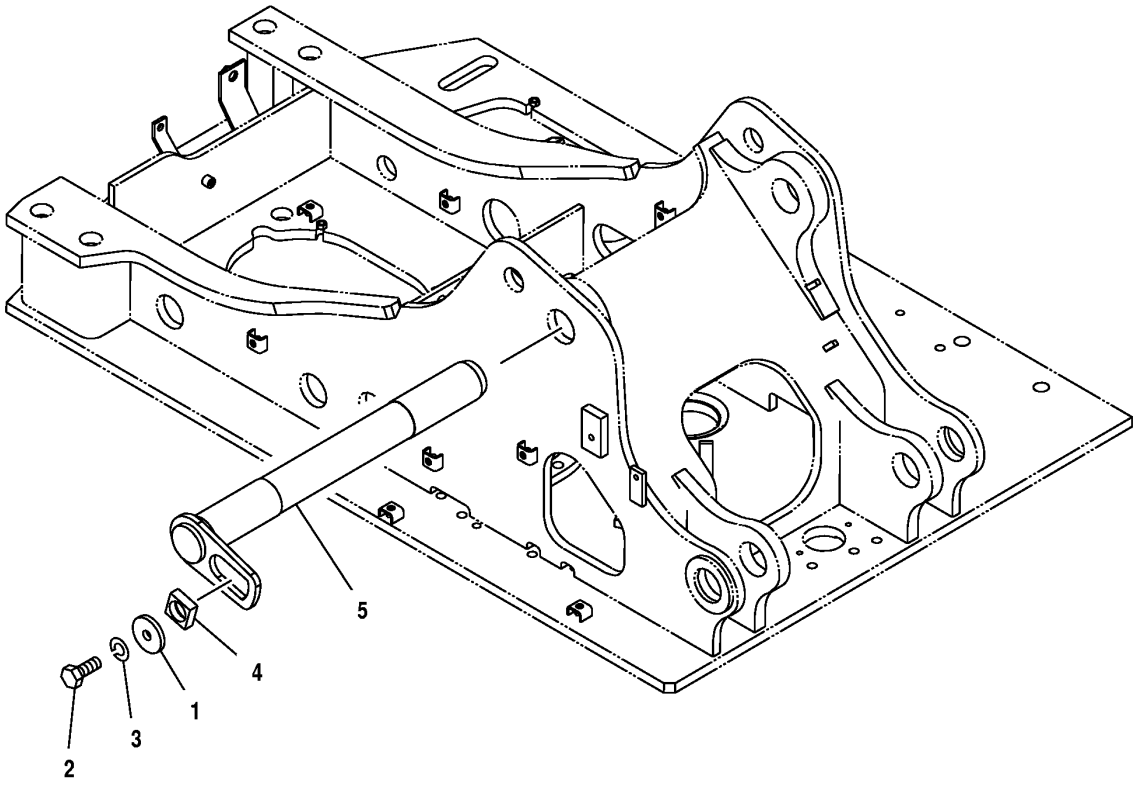

T162016

BOOM FOOT PIN

KEY	PART NO.	PART NAME	QTY	SERIAL NO.	REMARKS
1	4426128	WASHER	1		
2	T116332	BOLT	1		
3	J257218	LOCK WASHER	1		
4	4424425	MANIFOLD	1		
5	8094471	PIN FASTENER	1		(SUB FOR 8081497)

COUNTERWEIGHT

T162020 -UN-03JAN03

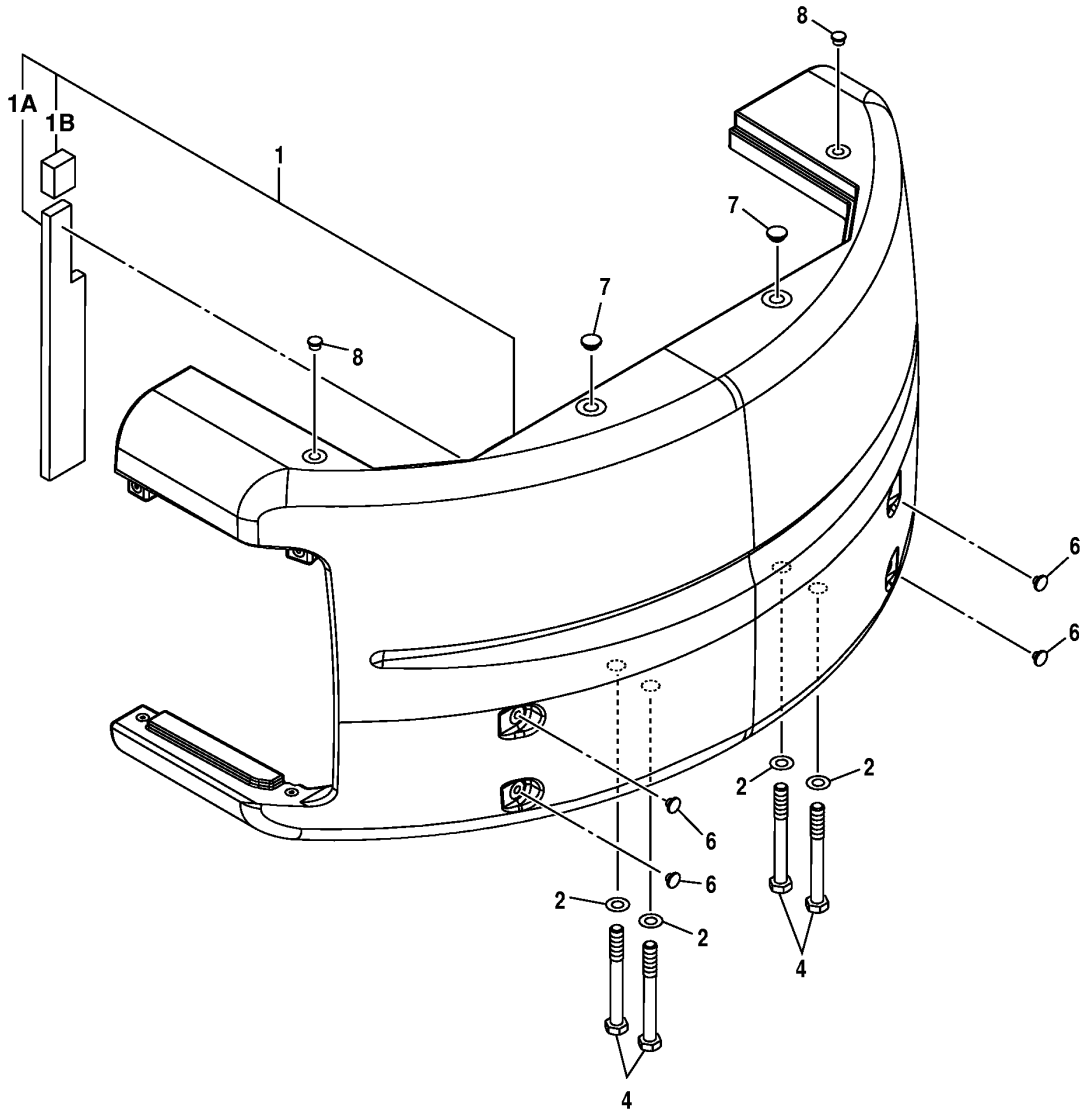

T162020

COUNTERWEIGHT

KEY	PART NO.	PART NAME	QTY	SERIAL NO.	REMARKS
1	5007091	COUNTERWEIGHT	1		
1A	4430616	ISOLATOR	1		
1B	4461625	ISOLATOR	1		
2	4083438	WASHER	4		
4	J833324	BOLT	4		
6	4453013	CAP	4		
7	4436493	CAP	2		
8	4453252	CAP	2		

CAB ISOLATORS AND MOUNTING

T160834 -UN-30OCT02

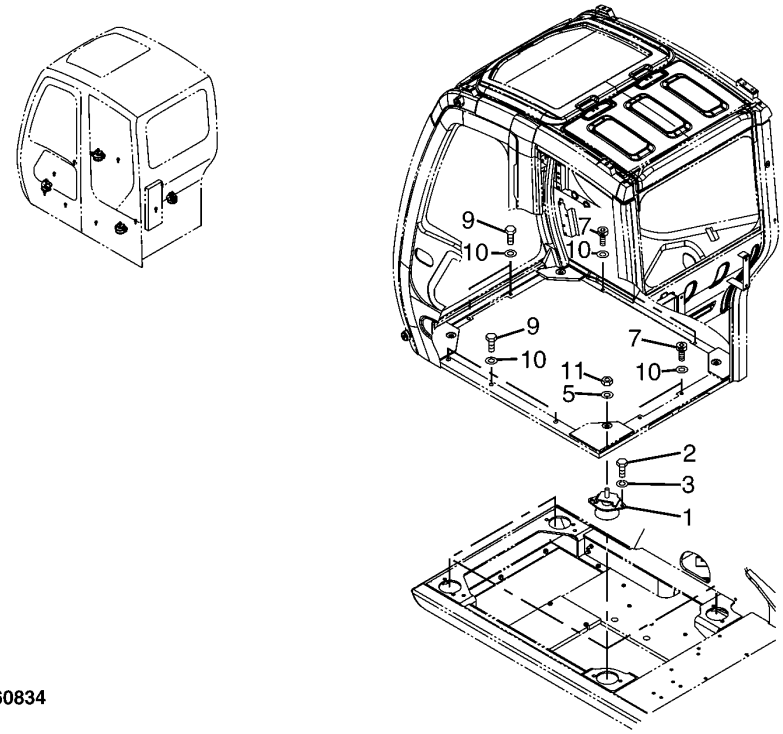

T160834

CAB ISOLATORS AND MOUNTING

KEY	PART NO.	PART NAME	QTY	SERIAL NO.	REMARKS
1	4409999	ISOLATOR	4		
2	J921240	CAP SCREW	8		(SUB FOR 4330785)
3	12H301	LOCK WASHER	8		1/2", (SUB FOR A590912)
5	24M7338	WASHER	4		17 X 30 X 3 MM
7	J781035	BOLT	4		
9	19M7662	CAP SCREW	5		M10 X 30, (SUB FOR J901030)
10	24M7346	WASHER	9		11 X 20 X 2 MM, (SUB FOR J222010)
11	14M7328	LOCK NUT	4		M16, (SUB FOR 4423699)

CAB ASSEMBLY

T160835 -UN-30OCT02

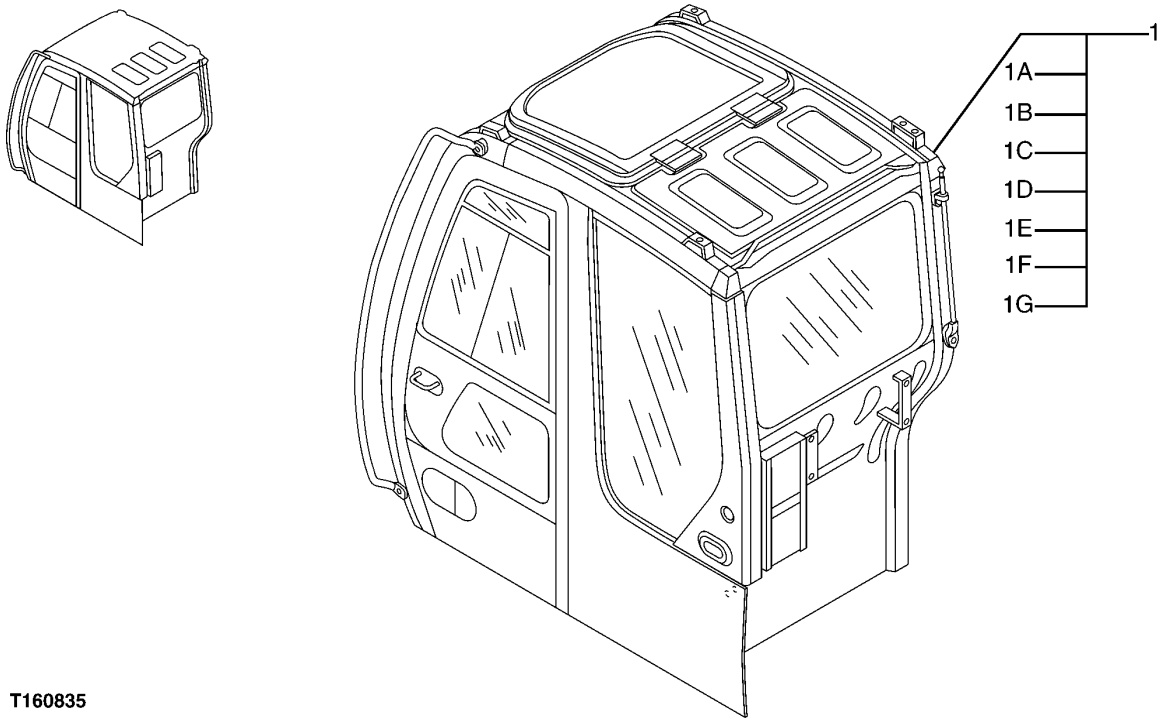

T160835

CAB ASSEMBLY

KEY	PART NO.	PART NAME	QTY	SERIAL NO.	REMARKS
1	9231217	CAB	1		
1A	.....	CAB	1		(WINDSHIELD WIPER SYSTEM) SEE SEPARATE PAGE LISTING FOR COMPONENTS
1B	.....	CAB	1		(SIDE AND REAR WINDOWS) SEE SEPARATE PAGE LISTING FOR COMPONENTS
1C	.....	CAB	1		(CAB DOOR ASSEMBLY) SEE SEPARATE PAGE LISTING FOR COMPONENTS
1D	.....	CAB	1		(FRONT WINDOW) SEE SEPARATE PAGE LISTING FOR COMPONENTS
1E	.....	CAB	1		(RIGHT SIDE WINDOW) SEE SEPARATE PAGE LISTING FOR COMPONENTS
1F	.....	CAB	1		(DOOR ACTUATOR CABLE) SEE SEPARATE PAGE LISTING FOR COMPONENTS
1G	.....	CAB	1		(SECONDARY EXIT) SEE SEPARATE PAGE LISTING FOR COMPONENTS

CAB COMPONENTS (WINDSHIELD WIPER SYSTEM)

T160836 -UN-30OCT02

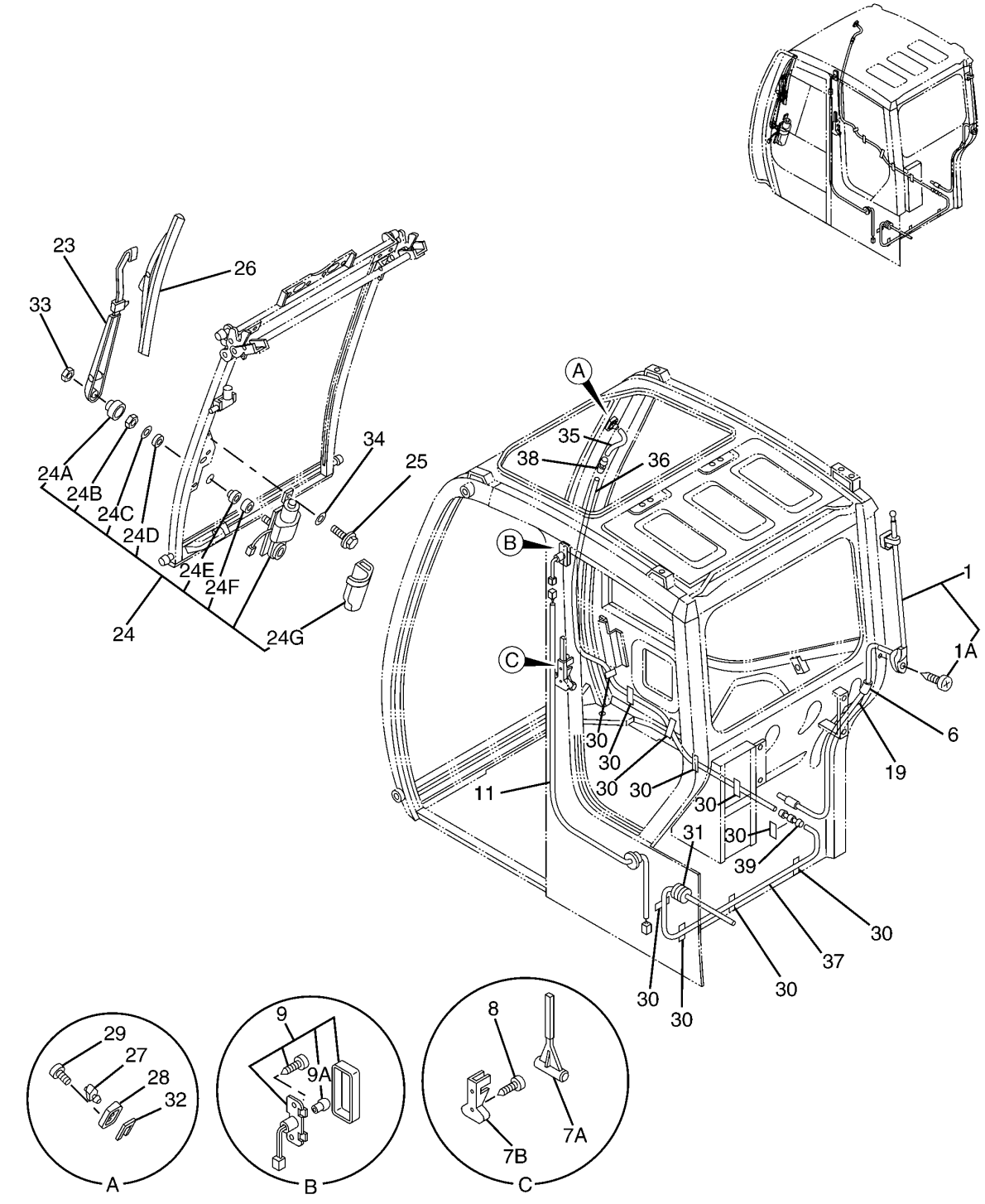

T160836

CAB COMPONENTS (WINDSHIELD WIPER SYSTEM)

KEY	PART NO.	PART NAME	QTY	SERIAL NO.	REMARKS
1	4464381	ANTENNA	1		
1A	4464383	SCREW	2		
6	4464382	ISOLATOR	1		
7A	4362700	HAMMER	1		
7B	2038764	BRACKET	1		
8	4463959	SCREW	2		
9	4464384	LAMP	1		
9A	4466872	BULB	1		
11	4464387	WIRING HARNESS	1		
19	.....	TAPE	1		(4461947 NOT AVAILABLE FOR SERVICE)
23	4453433	WIPER ARM	1		
24	4458336	WIPER MOTOR	1		
24A	4419735	CAP	1		
24B	4419734	NUT	1		
24C	4419733	WASHER	1		
24D	4419732	ISOLATOR	1		
24E	4465105	ISOLATOR	1		
24F	4419730	SPACER	1		
24G	4465106	COVER	1		
25	4464393	BOLT	3		
26	4453434	WIPER BLADE	1		
27	4464394	NOZZLE	1		
28	4464397	HOUSING	1		
29	4464398	SCREW	1		
30	.....	TAPE	10		(4461947 NOT AVAILABLE FOR SERVICE)
31	4464399	BUSHING	1		
32	4464400	SEAL	1		
33	4464401	NUT	1		
34	4464783	WASHER	3		
35	.....	HOSE	1		(ORDER TY22566 - CUT TO LENGTH)
36	.....	HOSE	1		(ORDER TY22566 - CUT TO LENGTH)
37	.....	HOSE	1		(ORDER TY22566 - CUT TO LENGTH)
38	4464785	FLOW CONTROL HYD. VALVE	1		
39	4464786	ELECTRICAL CONNECTOR ASSY	1		

CAB COMPONENTS - CONTINUED (SIDE AND REAR WINDOWS)

T160837 -UN-30OCT02

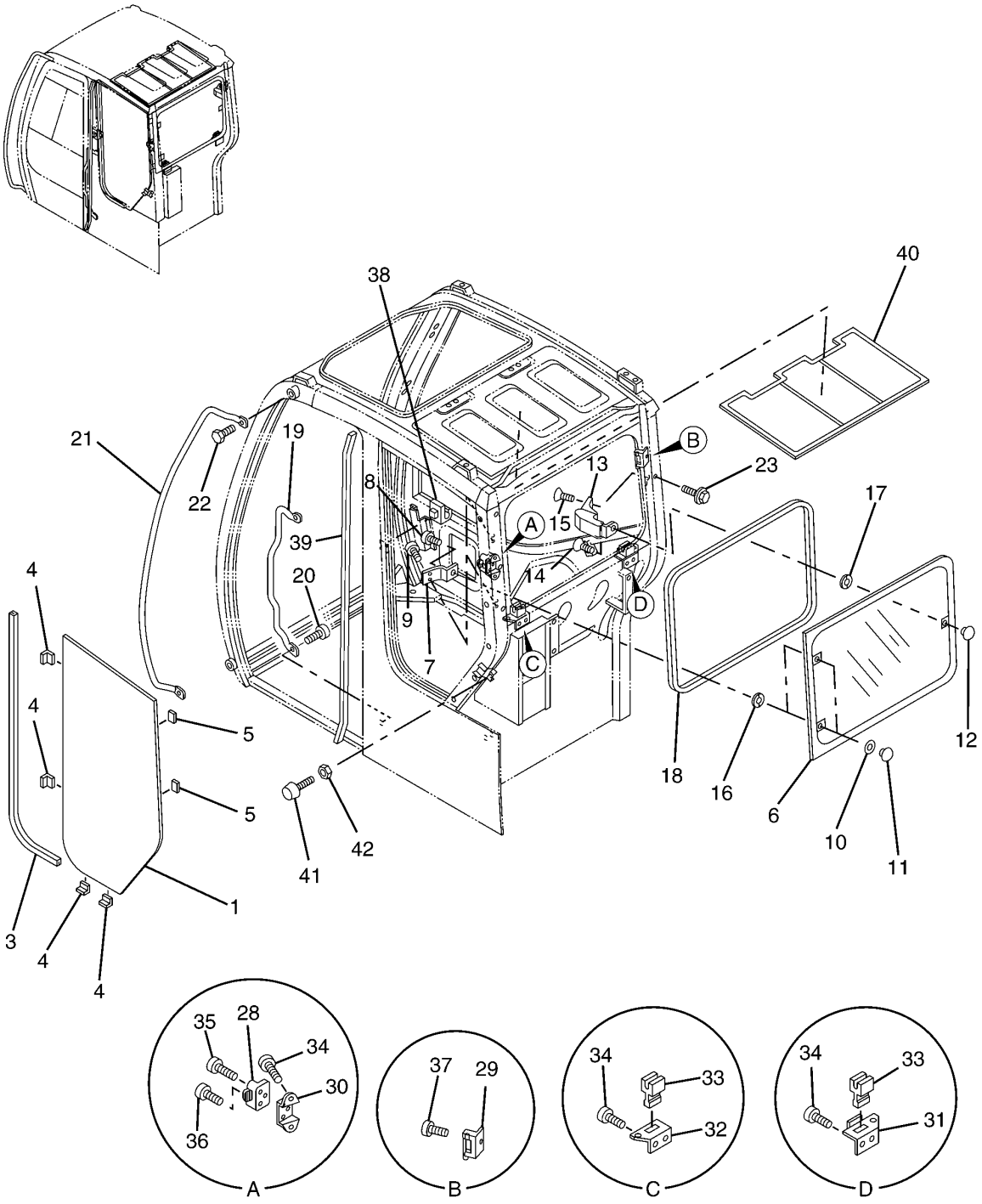

T160837

CAB COMPONENTS - CONTINUED (SIDE AND REAR WINDOWS)

KEY	PART NO.	PART NAME	QTY	SERIAL NO.	REMARKS
1	4457178	WINDOWPANE	1		
3	4464234	ISOLATOR	1		
4	4458466	SPACER	4		
5	4458470	SPACER	2		
6	4457180	WINDOWPANE	1		
7	4464248	HINGE	2		
8	4464249	SCREW	2		
9	4463914	SCREW	4		
10	4464251	BUSHING	2		
11	4464252	NUT	2		
12	4464253	NUT	1		
13	4464254	LOCK	1		
14	4464255	SCREW	1		
15	4464256	SCREW	2		
16	4464250	BUSHING	2		
17	4464263	BUSHING	1		
18	4464264	WEATHERSTRIP	1		
19	4464267	HANDRAIL	1		
20	4464268	BOLT	2		
21	4624878	HANDRAIL	1		(JOHN DEERE GRAY)
22	4464270	BOLT	2		
23	4464788	BOLT	1		
28	4464273	HOLDER	1		
29	4464305	HOLDER	1		
30	4464306	BRACKET	1		
31	4464307	BRACKET	1		
32	4464308	BRACKET	1		
33	4464309	HOLDER	2		
34	4463914	SCREW	6		
35	4464271	SCREW	2		
36	4464272	SCREW	1		
37	4464239	SCREW	1		
38	4464337	HANGER	1		
39	4461955	ISOLATOR	1		
40	4464240	SHEET	1		
41	4464336	STOP	1		
	4463916	ISOLATOR	1		
42	4463920	NUT	1		

CAB COMPONENTS - CONTINUED (DOOR ASSEMBLY)

T162451 -UN-26DEC02

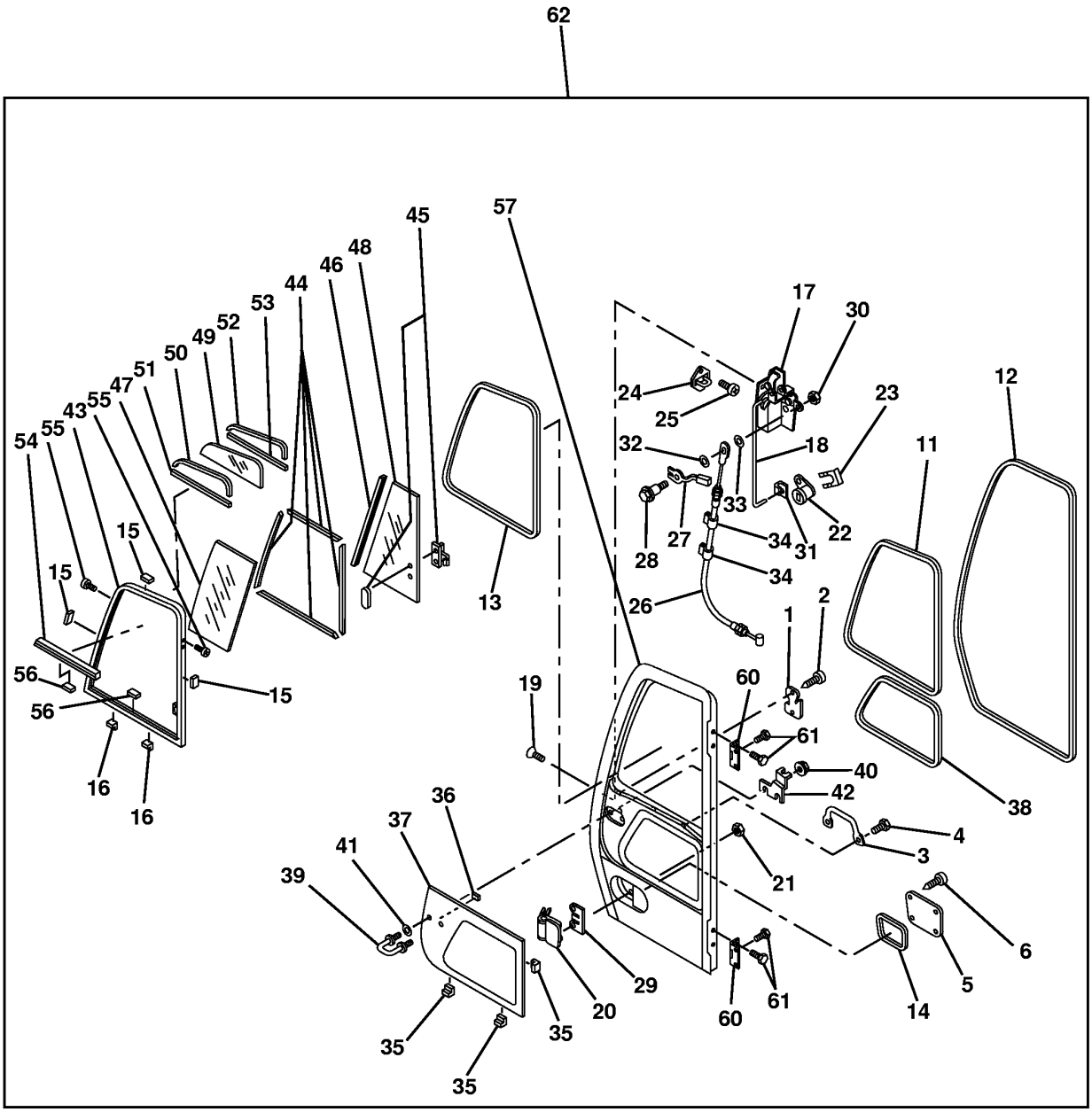

T162451

CAB COMPONENTS - CONTINUED (DOOR ASSEMBLY)

KEY	PART NO.	PART NAME	QTY	SERIAL NO.	REMARKS
1	4624880	COVER	1		
2	4463959	SCREW	2		
3	4463960	HANDRAIL	1		
4	4463961	BOLT	2		
5	4624881	COVER	1		
6	4463959	SCREW	4		
11	4463965	ISOLATOR	1		
12	4463966	WEATHERSTRIP	1		
13	4463963	SEAL	1		
14	4463964	SEAL	1		
15	4464227	SPACER	3		
16	4464228	SPACER	2		
17	4461933	LOCK	1		
18	4461934	ROD	1		
19	4461935	SCREW	3		
20	4369645	HANDLE	1		
21	14M7303	FLANGE NUT	2		M6, (SUB FOR 4464245)
22	4362135	LOCK	1		
23	4372091	CLIP	1		
24	4461937	STRIKER	1		
25	4461938	SCREW	2		
26	4461939	PUSH PULL CABLE	1		
27	4461940	LEVER	1		
28	4461941	BOLT	1		
29	4461936	COVER	1		
30	4461943	NUT	1		
31	4461944	HOLDER	1		
32	4461945	WASHER	1		
33	4461946	WASHER	1		
34	.....	TAPE	2		(4461947 NOT AVAILABLE FOR SERVICE)
35	4458469	SPACER	3		
36	4458470	SPACER	1		
37	4457176	WINDOWPANE	1		
38	4464236	ISOLATOR	1		
39	4461956	STRIKER	1		
40	4461957	NUT	2		
41	4464338	WASHER	2		
42	4464339	BRACKET	1		
43	4466873	FRAME	1		
44	4466874	FRAME	1		
45	4466875	LOCK	1		
46	4467438	SEAL	1		
47	4457173	WINDOWPANE	1		
48	4457174	WINDOWPANE	1		
49	4457175	WINDOWPANE	1		
50	4467439	SEAL	1		
51	4467440	SEAL	1		
52	4467441	SEAL	1		
53	4467442	SEAL	1		
54	4467443	FRAME	1		
55	4467444	SCREW	4		
56	4467445	STOP	2		
57	.....	DOOR	1		(FURNISH 4467205)
60	4624882	HINGE	2		
61	4467450	BOLT	8		
62	4624879	DOOR	1		

CAB COMPONENTS - CONTINUED (FRONT WINDOW)

T195393 -UN-09OCT03

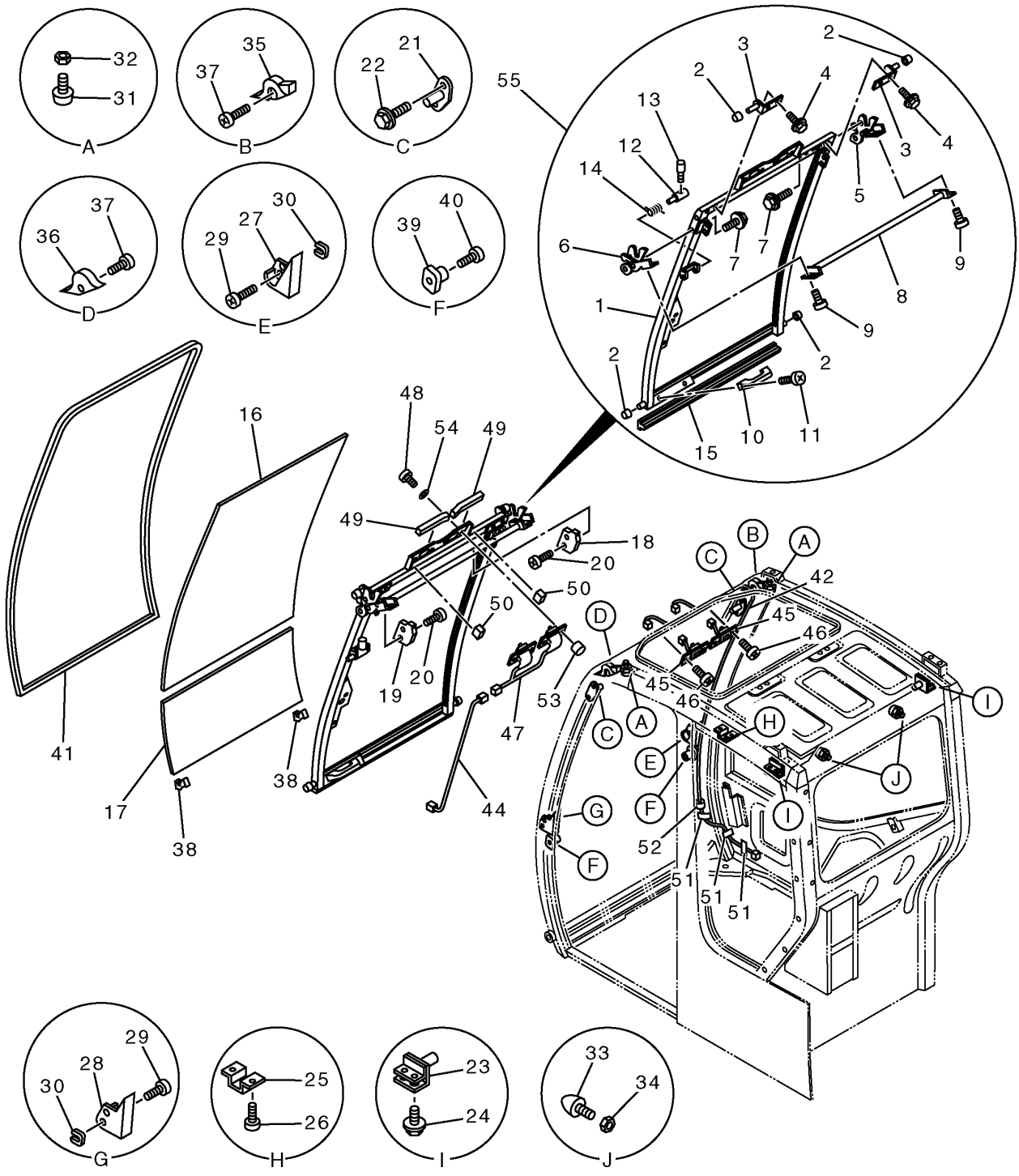

T195393

CAB COMPONENTS - CONTINUED (FRONT WINDOW)

KEY	PART NO.	PART NAME	QTY	SERIAL NO.	REMARKS
1	4463856	FRAME	1		
2	4463857	GUIDE	4		
3	4463858	BRACKET	2		
4	4463859	BOLT	4		
5	4463860	LOCK	1		
6	4463861	LOCK	1		
7	4463859	BOLT	4		
8	4463863	GRIP	1		
9	4463864	SCREW	4		
10	4463942	GRIP	1		
11	4463943	SCREW	1		
12	4463944	PIN FASTENER	1		
13	4463945	LEVER	1		
14	4463946	SPRING	1		
15	4463949	WEATHERSTRIP	1		
16	4457160	WINDOWPANE	1		
17	4457161	WINDOWPANE	1		
18	4463862	COVER	1		
19	4463913	COVER	1		
20	4463914	SCREW	4		
21	4463915	STRIKER	2		
22	4463859	BOLT	4		
23	4463917	STRIKER	2		
24	4463918	BOLT	4		
25	4463919	BRACKET	1		
26	4463914	SCREW	2		
27	4463732	ISOLATOR	1		
28	4463733	ISOLATOR	1		
29	4463734	SCREW	4		
30	4463735	CLIP	4		
31	4463916	ISOLATOR	2		
32	4463920	NUT	2		
33	4463921	ISOLATOR	2		
34	4463920	NUT	2		
35	4463947	ISOLATOR	1		
36	4463948	ISOLATOR	1		
37	4463914	SCREW	2		
38	4463682	ISOLATOR	2		
39	4463736	ISOLATOR	2		
40	4463737	SCREW	2		
41	4463941	WEATHERSTRIP	1		
42	4464386	WIRING HARNESS	1		
44	4464388	WIRING HARNESS	1		
45	4464389	SWITCH	2		
46	4464256	SCREW	4		
47	4464385	SWITCH	1		
48	4463737	SCREW	4		
49	4464390	ISOLATOR	2		
50	4464391	ISOLATOR	2		
51	.....	TAPE	3		(4461947 NOT AVAILABLE FOR SERVICE)
52	4464382	ISOLATOR	1		
53	4464392	CAP	4		
54	4464787	WASHER	4		
55	4466871	FRAME	1		
56	4618252	SPACER	2		(GOES ON UPPER ROLLER OF WINDSHIELD-USES THE 17MM LONG SPACER) (NOT ILLUSTRATED)
57	4614046	SPACER	2		(GOES ON LOSER ROLLER OF WINDSHIELD-USES THE 13.5MM LONG SPACER) (NOT ILLUSTRATED)

CAB COMPONENTS - CONTINUED (RIGHT SIDE WINDOW)

T160840 -UN-30OCT02

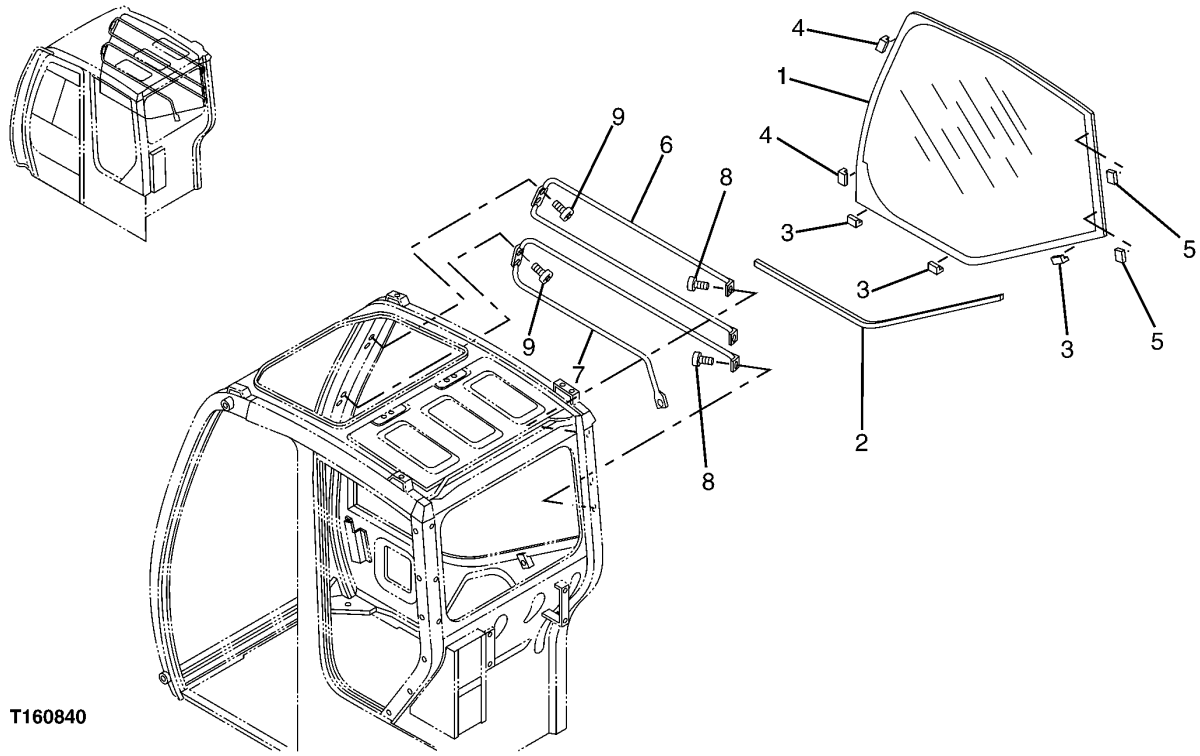

T160840

2B17

CAB COMPONENTS - CONTINUED (RIGHT SIDE WINDOW)

KEY	PART NO.	PART NAME	QTY	SERIAL NO.	REMARKS
1	4457141	WINDOWPANE	1		
2	4464233	ISOLATOR	1		
3	4458466	SPACER	3		
4	4458469	SPACER	2		
5	4458470	SPACER	2		
6	4464265	GUARD	1		
7	4464266	GUARD	1		
8	4463914	SCREW	4		
9	4463737	SCREW	4		

CAB COMPONENTS - CONTINUED (DOOR ACTUATOR CABLE)

T160850 -UN-30OCT02

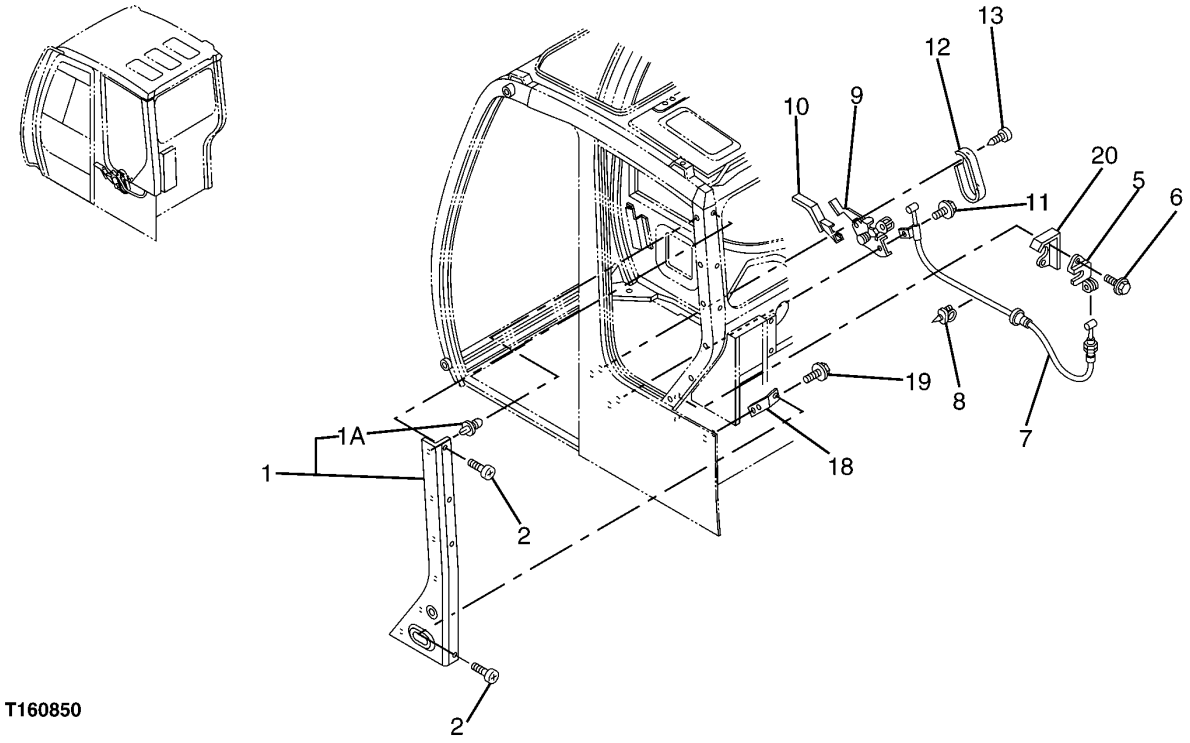

T160850

CAB COMPONENTS - CONTINUED (DOOR ACTUATOR CABLE)

KEY	PART NO.	PART NAME	QTY	SERIAL NO.	REMARKS
1	4461954	COVER	1		
1A	4464899	CLIP	6		
2	4463914	SCREW	4		
5	4463203	CATCH	1		
6	4464320	BOLT	2		
7	4464329	PUSH PULL CABLE	1		
8	4464330	CLIP	1		
9	4464331	LEVER	1		
10	4464332	HANDLE	1		
11	4463918	BOLT	2		
12	4464334	COVER	1		
13	4464335	SCREW	2		
18	4464340	BRACKET	1		
19	4464230	BOLT	2		
20	4464333	BRACKET	1		

CAB TOP HATCH

T165361 -UN-20FEB03

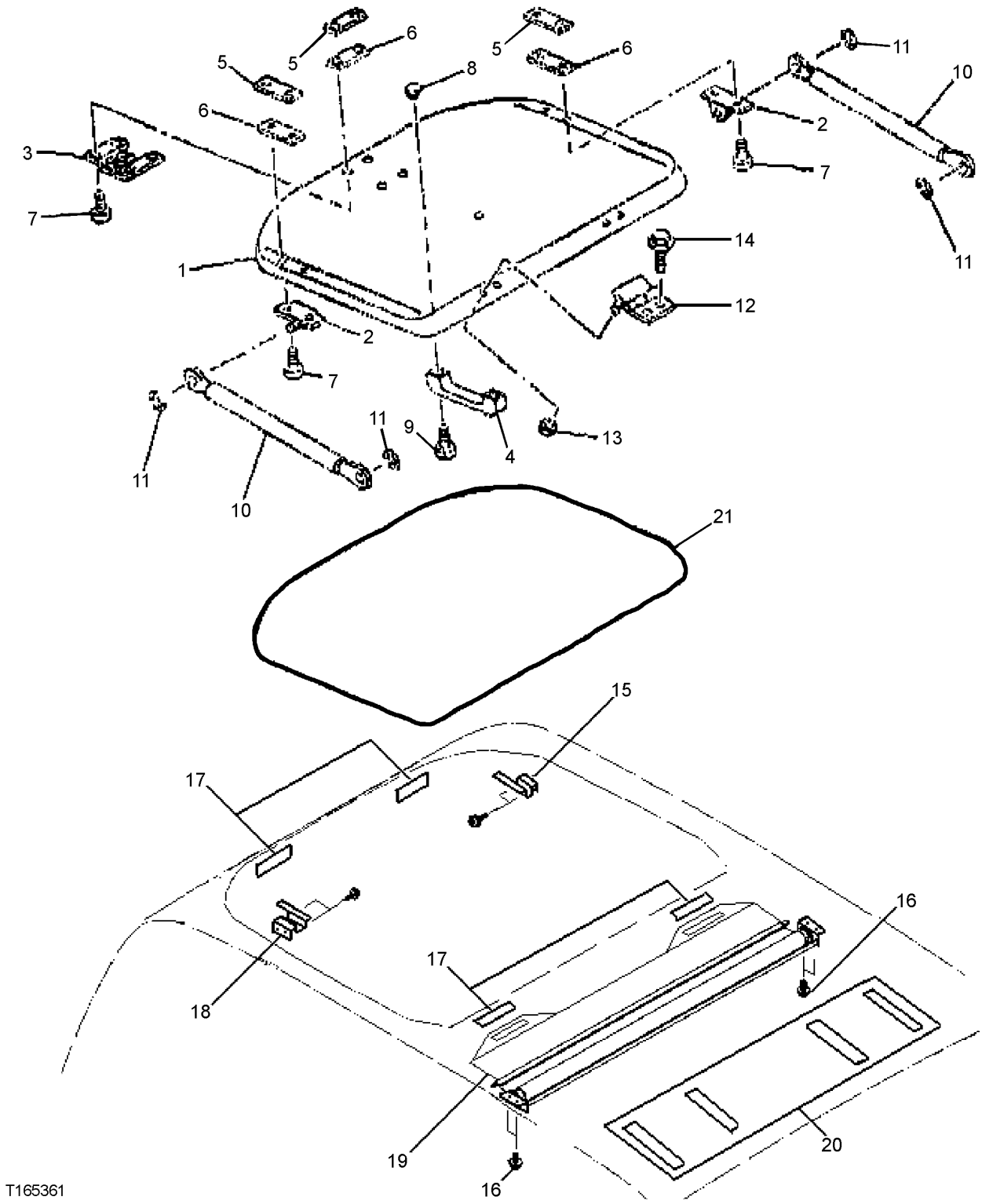

CAB TOP HATCH

KEY	PART NO.	PART NAME	QTY	SERIAL NO.	REMARKS
1	4459547	WINDOW	1		
2	4487040	BRACKET	2		
3	4487041	BRACKET	1		
4	4463942	GRIP	1		
5	4487042	RETAINER	4		
6	4487043	PACKING	4		
7	J650510	CAP SCREW	8		
8	4487045	RETAINER	2		
9	4487046	CAP SCREW	2		
10	4464231	SPRING	2		
11	4464232	SNAP RING	4		
12	4624883	HINGE	2		
13	14M7303	FLANGE NUT	4		M6, (SUB FOR 4464245)
14	4464230	BOLT	4		
15	4611308	HOOK	1		
16	4464272	SCREW	2		
17	4611311	DUAL LOCK FASTENER	4		
18	4611309	HOOK	1		(SUB FOR AT176636)
19	4611307	SHADE CURTAIN	1		
20	4611310	HEADLINER	1		
21	4464241	WEATHERSTRIP	1		

SECONDARY EXIT KIT

T189831 -UN-23APR03

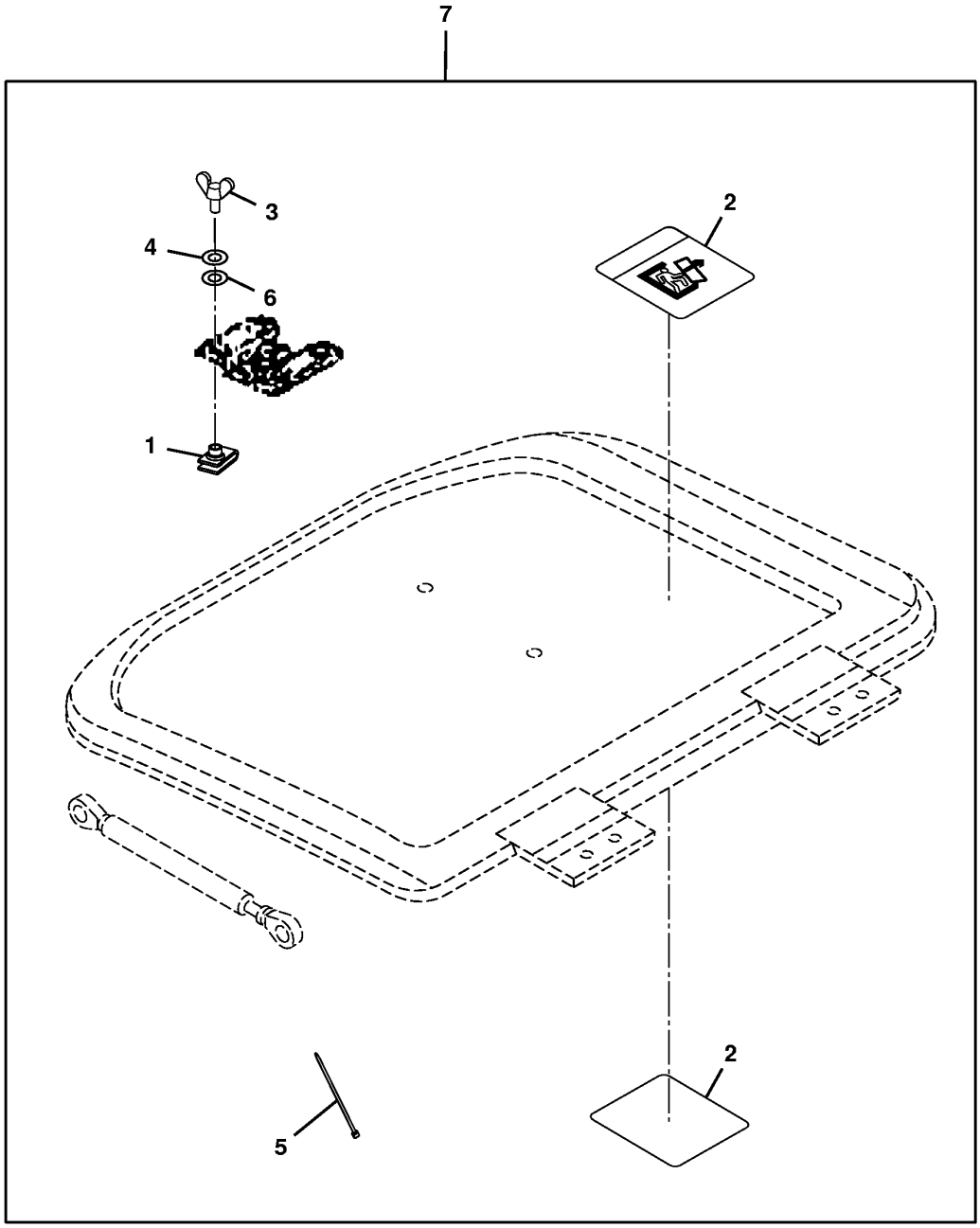

T189831

2B23

SECONDARY EXIT KIT

KEY	PART NO.	PART NAME	QTY	SERIAL NO.	REMARKS
1	M84972	NUT	4		
2	T167256	LABEL	2		
3	24M7344	WASHER	4		22 X 37 X 3 MM
4	24M7139	WASHER	4		6.400 X 18 X 1.600 MM
5	R44302	TIE BAND	2		(NOT REQUIRED, THIS APPLICATION)
6	T125809	WASHER	4		6.375 X 15.748 X 1.956 MM
7	**AT303431**	**KIT**	**1**		**(WHOLEGOODS)(SECONDARY EXIT KIT)**

MEMORANDA

2B24

CAB TOP HATCH

KEY	PART NO.	PART NAME	QTY	SERIAL NO.	REMARKS
1	4459547	WINDOW	1		
2	4487040	BRACKET	2		
3	4487041	BRACKET	1		
4	4463942	GRIP	1		
5	4487042	RETAINER	4		
6	4487043	PACKING	4		
7	J650510	CAP SCREW	8		
8	4487045	RETAINER	2		
9	4487046	CAP SCREW	2		
10	4464231	SPRING	2		
11	4464232	SNAP RING	4		
12	4487047	HINGE	2		
13	14M7303	FLANGE NUT	4		M6, (SUB FOR 4464245)
14	4464230	BOLT	4		
15	4611308	HOOK	1		
16	4464272	SCREW	2		
17	4611311	DUAL LOCK FASTENER	4		
18	4611309	HOOK	1		(SUB FOR AT176636)
19	4611307	SHADE CURTAIN	1		
20	4611310	HEADLINER	1		
21	4464241	WEATHERSTRIP	1		

CAB VANDAL PROTECTION KIT

T164574 -UN-24JAN03

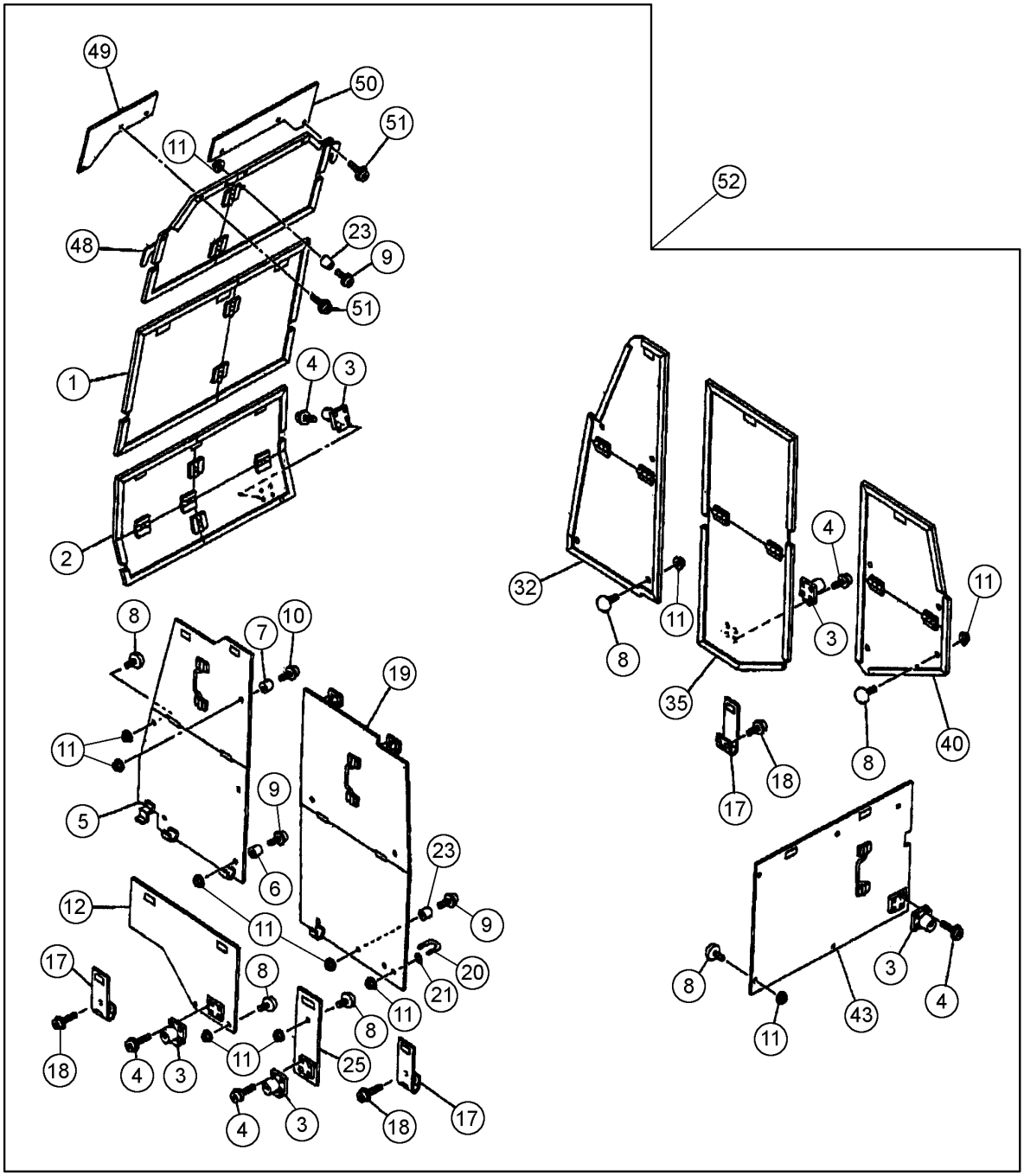

T164574

CAB VANDAL PROTECTION KIT

KEY	PART NO.	PART NAME	QTY	SERIAL NO.	REMARKS
1	4604759	ASSEMBLY LINE PARTS	1		
2	4604760	ASSEMBLY LINE PARTS	1		
3	4361601	LOCK	5		
4	21M7022	SCREW	20		
	12M7064	LOCK WASHER	20		
5	4604761	ASSEMBLY LINE PARTS	1		
6	4604762	ASSEMBLY LINE PARTS	2		
7	4604763	ASSEMBLY LINE PARTS	2		
8	9738682	STOP	18		
9	21M7022	SCREW	7		
10	21M7251	SCREW	4		
11	19M7297	CAP SCREW	29		
12	4604764	ASSEMBLY LINE PARTS	1		
17	TH108983	HINGE	3		(SUB FOR 4207538)
18	21M7249	SCREW	4		(SUB FOR AT176636)
19	4604765	ASSEMBLY LINE PARTS	1		
20	4604766	ASSEMBLY LINE PARTS	1		
21	24M7027	WASHER	4		
23	4604767	ASSEMBLY LINE PARTS	5		
25	4604768	ASSEMBLY LINE PARTS	1		
32	4604769	ASSEMBLY LINE PARTS	1		
35	4604770	ASSEMBLY LINE PARTS	1		
40	4604771	ASSEMBLY LINE PARTS	1		
43	4604772	ASSEMBLY LINE PARTS	1		
48	4608027	ASSEMBLY LINE PARTS	1		
49	4608028	ASSEMBLY LINE PARTS	1		
50	4608029	COVER	1		
51	J680516	SCREW	6		
52	**9227382**	**KIT**	**1**		**(WHOLEGOODS)(CAB VANDAL PROTECTION)**

WINDOW WASHER RESERVOIR & LINES

T162465 -UN-16DEC02

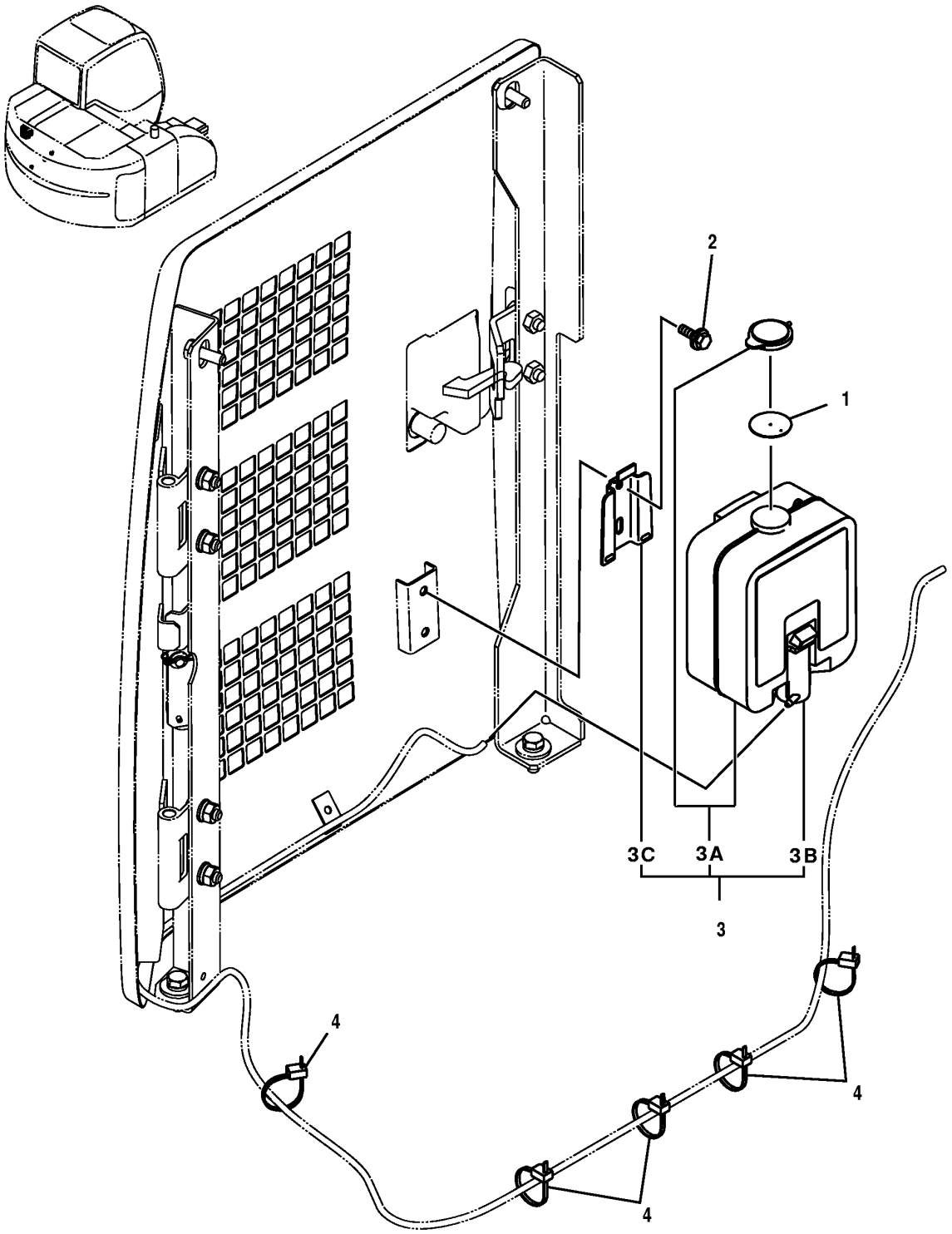

T162465

WINDOW WASHER RESERVOIR & LINES

KEY	PART NO.	PART NAME	QTY	SERIAL NO.	REMARKS
1	.....	PACKING	1		
2	19M7923	CAP SCREW	2		M6 X 12, (SUB FOR J020616)
	12M7006	LOCK WASHER	2		6 MM
	24M7054	WASHER	2		6.400 X 12 X 1.600 MM
3	4333185	WINDSHIELD WASHER	1		
3A	4369472	RESERVOIR	1		
3B	4326095	PUMP	1		
3C	4338974	BRACKET	1		
4	H77698	TIE BAND	5		(SUB FOR 4055311)

CONSOLE

T163330 -UN-02JAN03

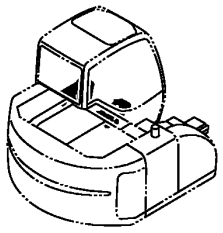

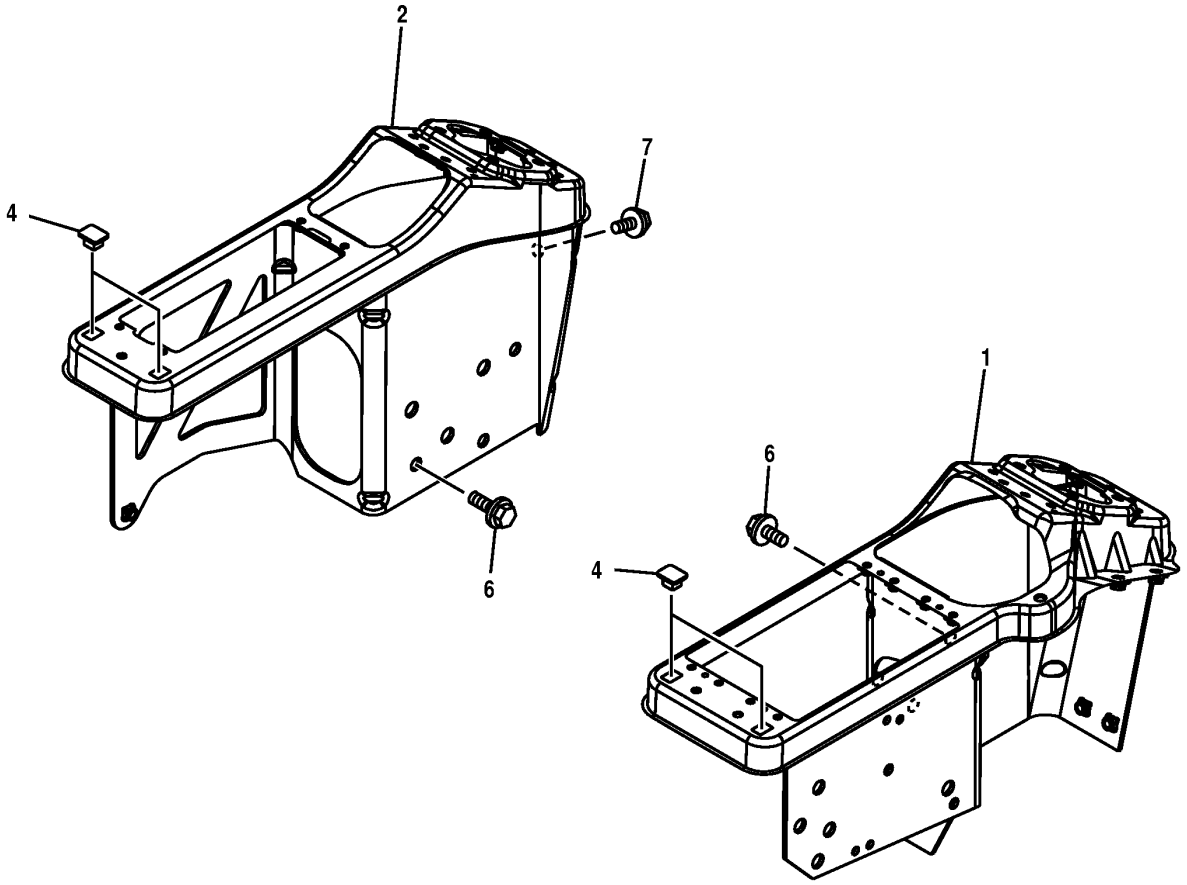

T163330

CONSOLE

KEY	PART NO.	PART NAME	QTY	SERIAL NO.	REMARKS
1	7039797	CONSOLE	1		
2	7039796	CONSOLE	1		
4	4351255	CLIP	4		
6	19M7402	CAP SCREW	6		M10 X 25, (SUB FOR J051025)
	24M7096	WASHER	6		10.500 X 18 X 1.600 MM
	12M7066	LOCK WASHER	6		10 MM
7	19M7163	CAP SCREW	1		M8 X 25, (SUB FOR J020825)
	12M7065	LOCK WASHER	1		8 MM
	24M7055	WASHER	1		8.400 X 16 X 1.600 MM

CONSOLE COVER

T162196 -UN-26DEC02

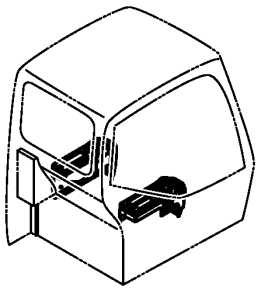

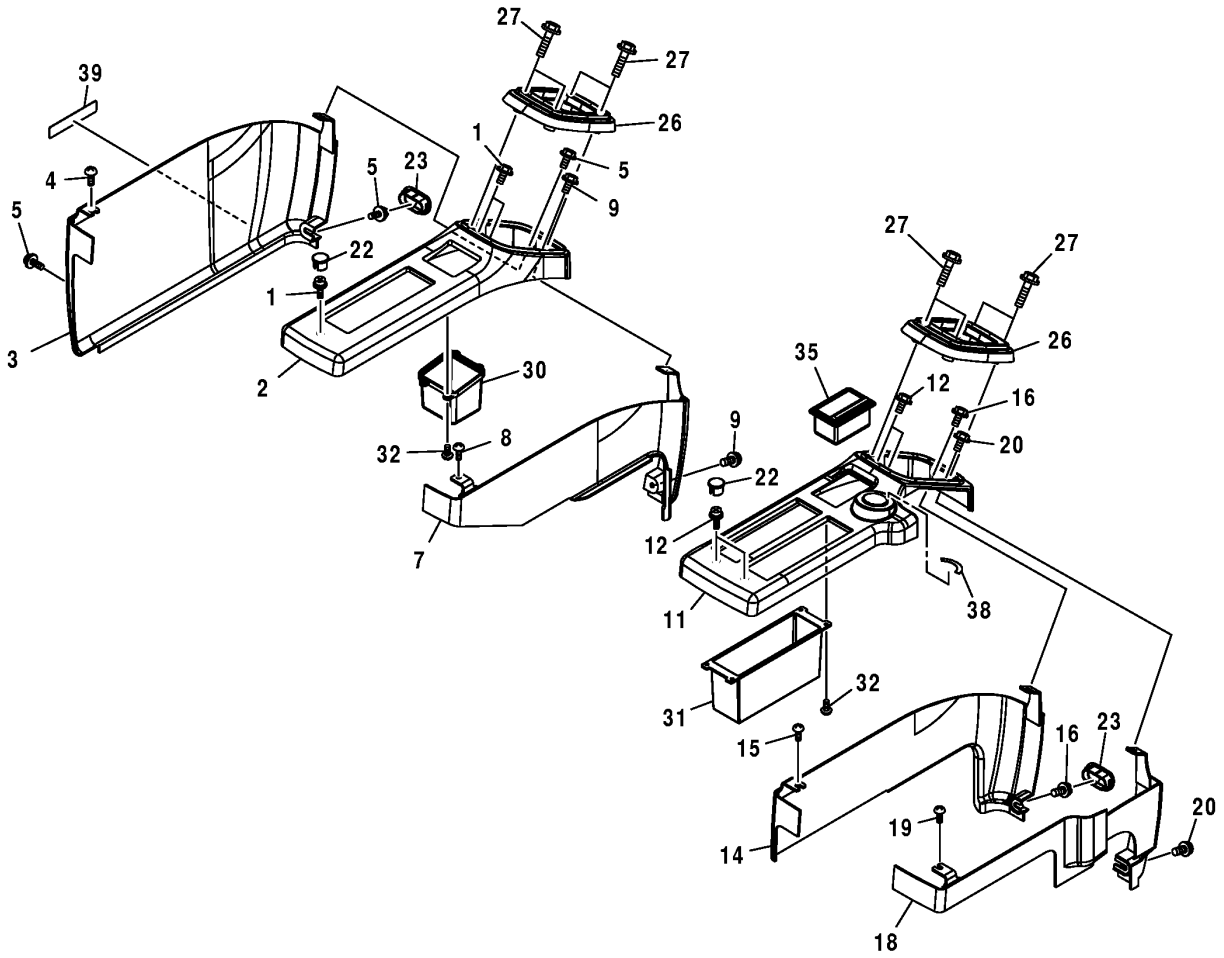

T162196

CONSOLE COVER

KEY	PART NO.	PART NAME	QTY	SERIAL NO.	REMARKS
1	J680616	SCREW	3		
2	4420875	COVER	1		
3	4464048	COVER	1		(SUB FOR 4441967)
4	4361802	SCREW	1		
5	J680616	SCREW	3		
7	4441968	COVER	1		
8	4361802	SCREW	1		
9	J680616	SCREW	2		
11	4420878	COVER	1		
12	J680616	SCREW	4		
14	4441965	COVER	1		
15	4361802	SCREW	1		
16	J680616	SCREW	2		
18	4446207	COVER	1		
19	4361802	SCREW	1		
20	J680616	SCREW	2		
22	4448990	CAP	3		
23	4441117	CAP	2		
26	2045509	COVER	2		
27	19M7177	CAP SCREW	8		M6 X 35, (SUB FOR J460635)
	12M7006	LOCK WASHER	8		6 MM
	24M7293	WASHER	8		6.500 X 13 X 1.600 MM
30	3090024	HOLDER	1		
31	3090025	HOLDER	1		
32	4361800	SCREW	8		
35	4415024	ASHTRAY	1		
38	4264805	LABEL	1		
39	4299059	LABEL	1		

RIGHT COVER

T162198 -UN-26DEC02

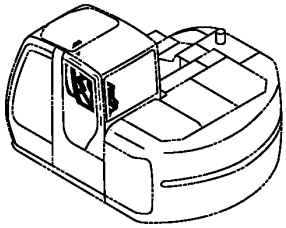

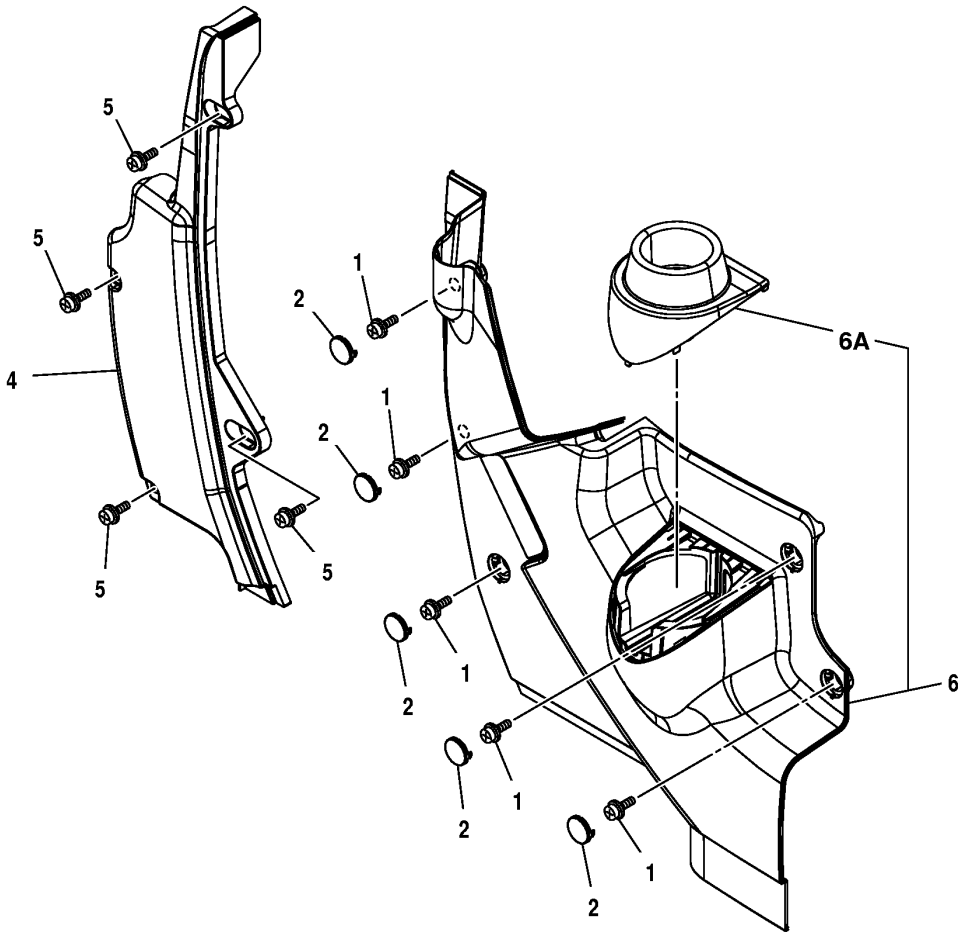

T162198

RIGHT COVER

KEY	PART NO.	PART NAME	QTY	SERIAL NO.	REMARKS
1	19M8425	CAP SCREW	5		M6 X 16, (SUB FOR J460616)
	12M7006	LOCK WASHER	5		6 MM
	24M7293	WASHER	5		6.500 X 13 X 1.600 MM
2	4426354	CAP	5		
4	4453350	COVER	1		
5	J680616	SCREW	4		
6	4441969	COVER	1		
6A	4445932	HOLDER	1		

FLOOR MAT

T162474 -UN-16DEC02

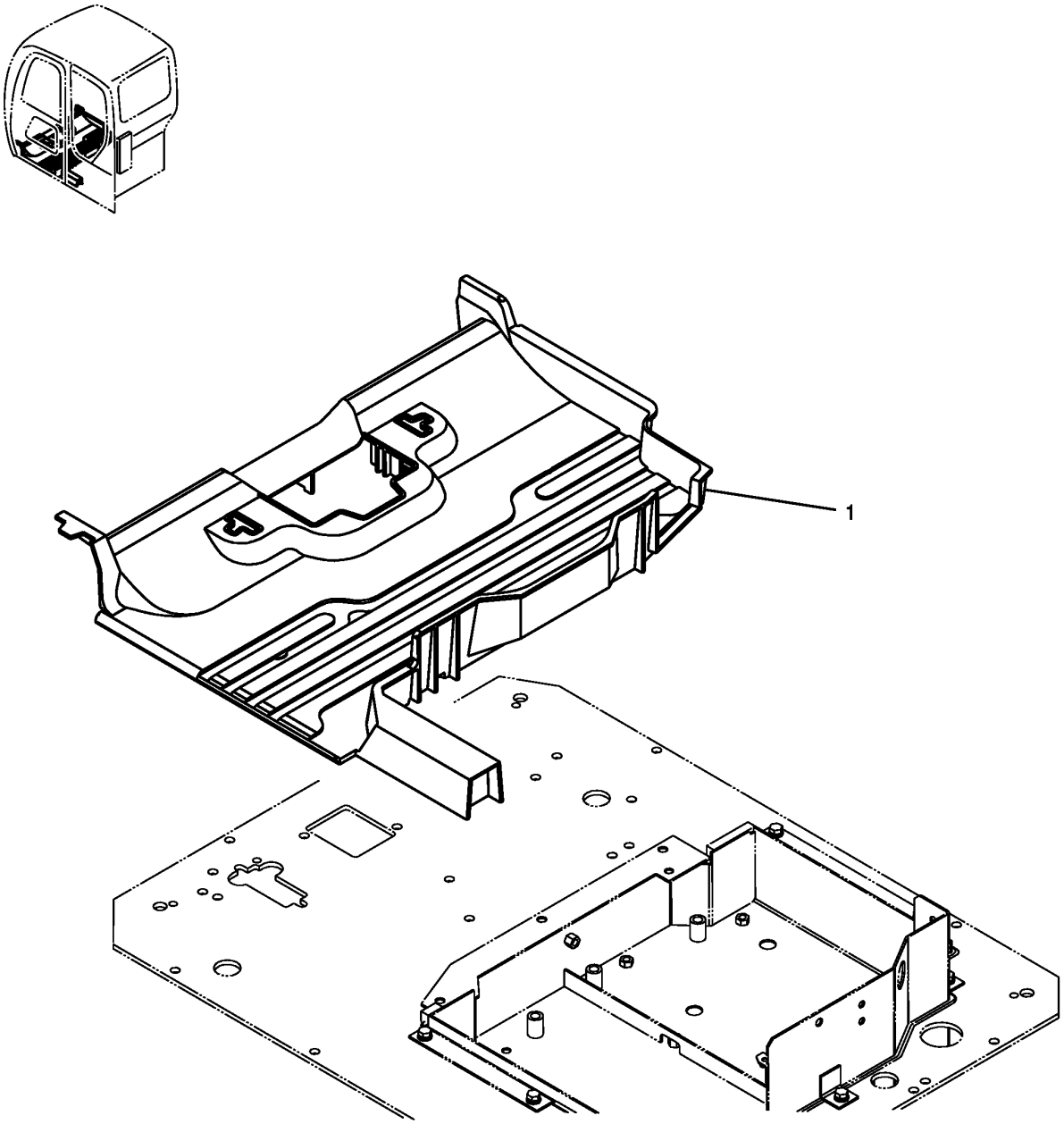

T162474

FLOOR MAT

KEY	PART NO.	PART NAME	QTY	SERIAL NO.	REMARKS
1	0004140	MAT	1		

FLOOR PLATE AND COMPONENTS

T162472 -UN-16DEC02

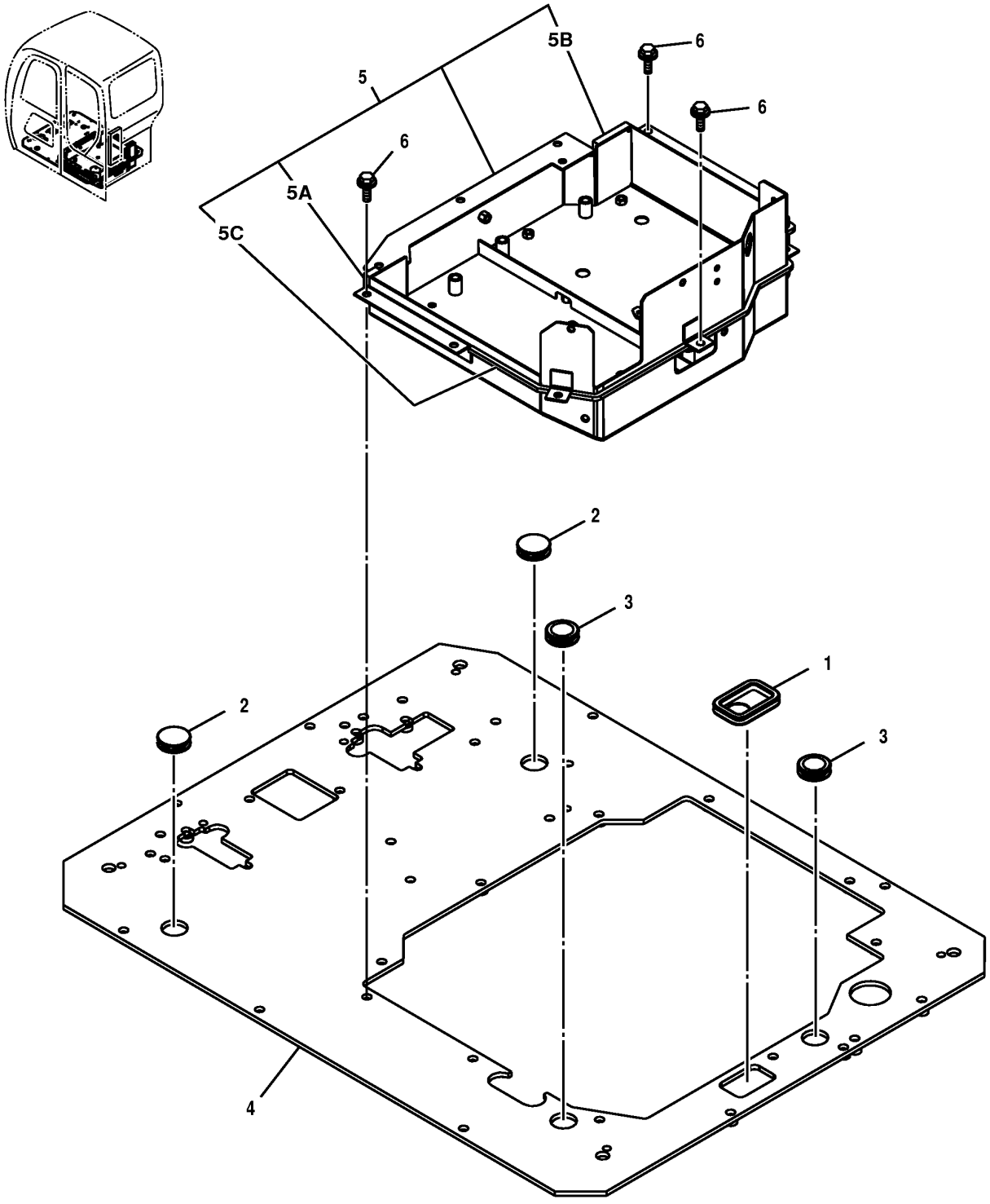

T162472

FLOOR PLATE AND COMPONENTS

KEY	PART NO.	PART NAME	QTY	SERIAL NO.	REMARKS
1	4461384	BUSHING	1		(SUB FOR 4444021)
2	4288445	BUSHING	2		
3	4387501	BUSHING	2		
4	6019229	PLATE	1		
5	5007260	FRAME	1		
5A	4449808	ISOLATOR	1		
5B	4449809	ISOLATOR	1		
5C	4449810	ISOLATOR	1		
6	19M7402	CAP SCREW	7		M10 X 25, (SUB FOR J021025)
	12M7066	LOCK WASHER	7		10 MM
	24M7028	WASHER	7		10.500 X 20 X 2 MM

SEAT AND SEAT SUSPENSION

T195609 -UN-24OCT03

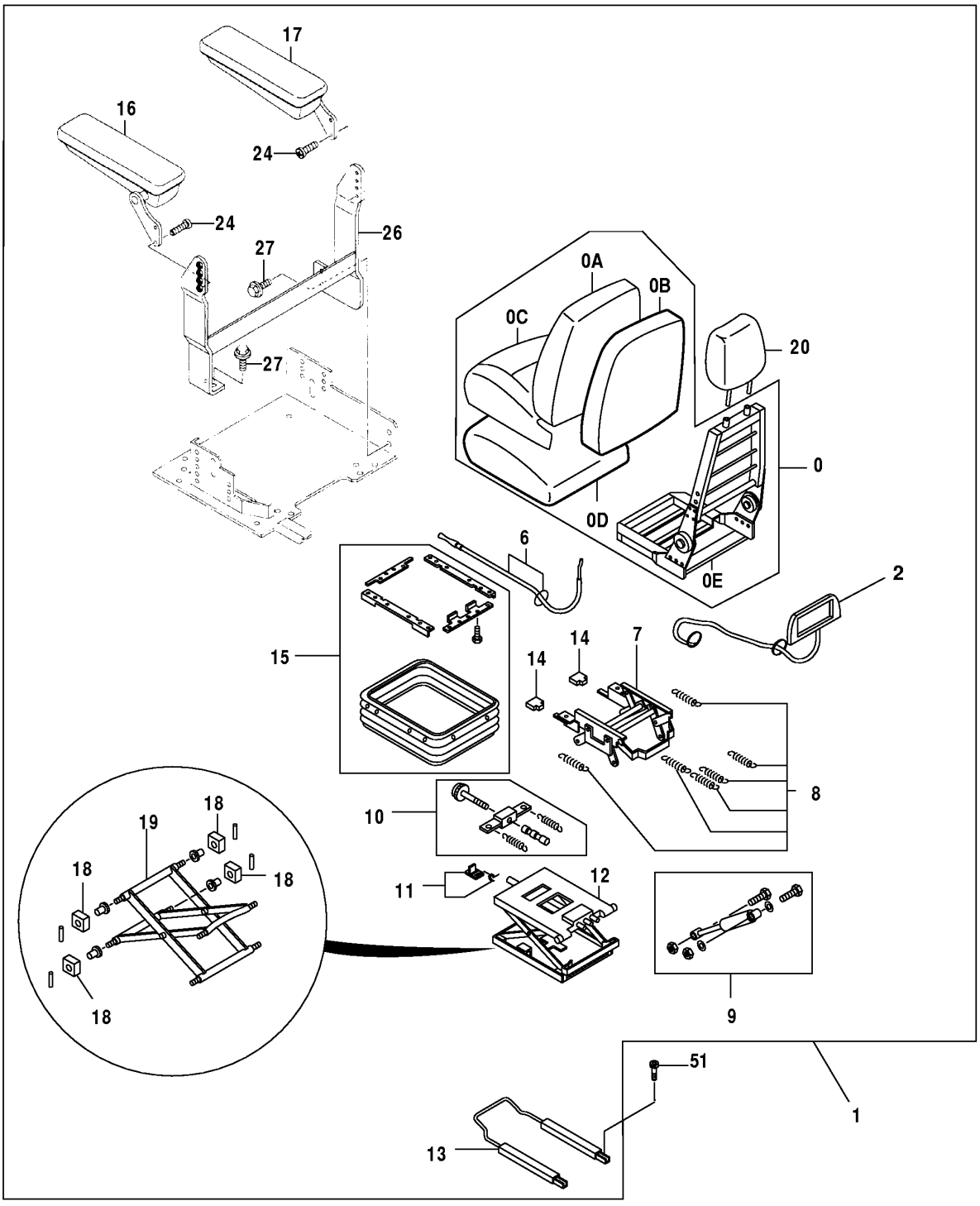

T195609

SEAT AND SEAT SUSPENSION

KEY	PART NO.	PART NAME	QTY	SERIAL NO.	REMARKS
0	AT195286	SEAT BACK	1		SEAT UPPER KIT
0A	AT309263	CUSHION COVER	1		
0B	AT309264	PAD	1		
0C	AT195278	CUSHION	1		(FABRIC)
0D	AT195279	PAD	1		(SEAT)
0E	.....	FRAME	1		
1	AT193964	SEAT	1		FABRIC
2	AT195284	KIT	1		(AIR LUMBAR KIT)
6	AT216522	CABLE	1		
7	4392801	STAND	1		RECLINER CABLE KIT
8	AT195287	SPRING	1		
9	4392803	TORSIONAL DAMPER	1		(KIT)
10	4392804	ADJUSTER	1		HEIGHT RISER SPRING
11	4392805	STOP	1		
12	4392806	SEAT SUSPENSION	1		
13	4392807	ADJUSTER	1		
14	AT216532	KIT	1		(KNOB)
15	4392809	COVER	1		(SUSPENSION COVER KIT)
16	4463702	ARMREST KIT	1		LEFT
17	4463703	ARMREST KIT	1		RIGHT
18	4392812	BUSHING	1		KIT
19	AT180980	LINK	1		LEVER/CENTER PIVOT KIT
20	AT195280	HEAD RESTRAINT	1		
24	21M7161	SCREW	4		M8 X 30
26	8085910	BRACKET	1		
27	19M7662	CAP SCREW	4		M10 X 30, (SUB FOR J021030)
	12M7066	LOCK WASHER	4		10 MM
	24M7028	WASHER	4		10.500 X 20 X 2 MM
51	19M7647	SCREW	4		M8 X 16, (SUB FOR AT217709)

3.00 INCH SEAT BELT KIT

T191801 -UN-13JUN03

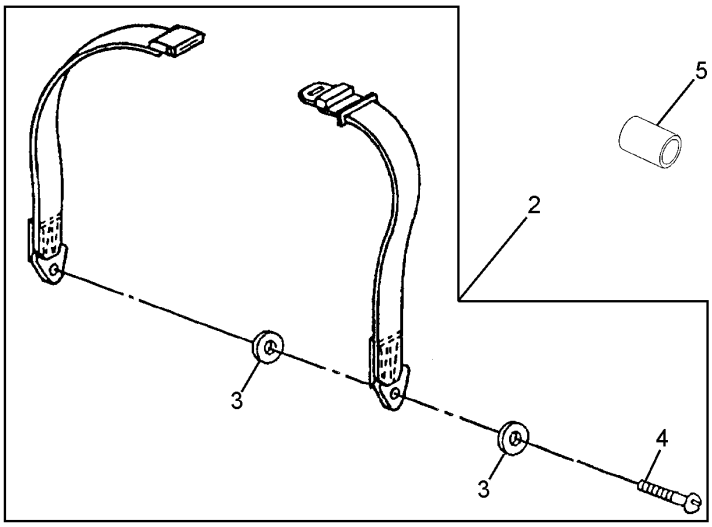

T191801

3.00 INCH SEAT BELT KIT

KEY	PART NO.	PART NAME	QTY	SERIAL NO.	REMARKS
2	**AT173678**	**SEAT BELT**	**1**		**WHOLEGOODS (INCLUDES HARDWARE)**
	T157779	FLANGE NUT	2		7/16" (NOT ILLUSTRATED)
3	T105740	WASHER	4		
4	R41778	BOLT	2		11.125 X 31.750 MM
5	R58462	WASHER	1		

SEAT BASE

T142631 -UN-28JUN01

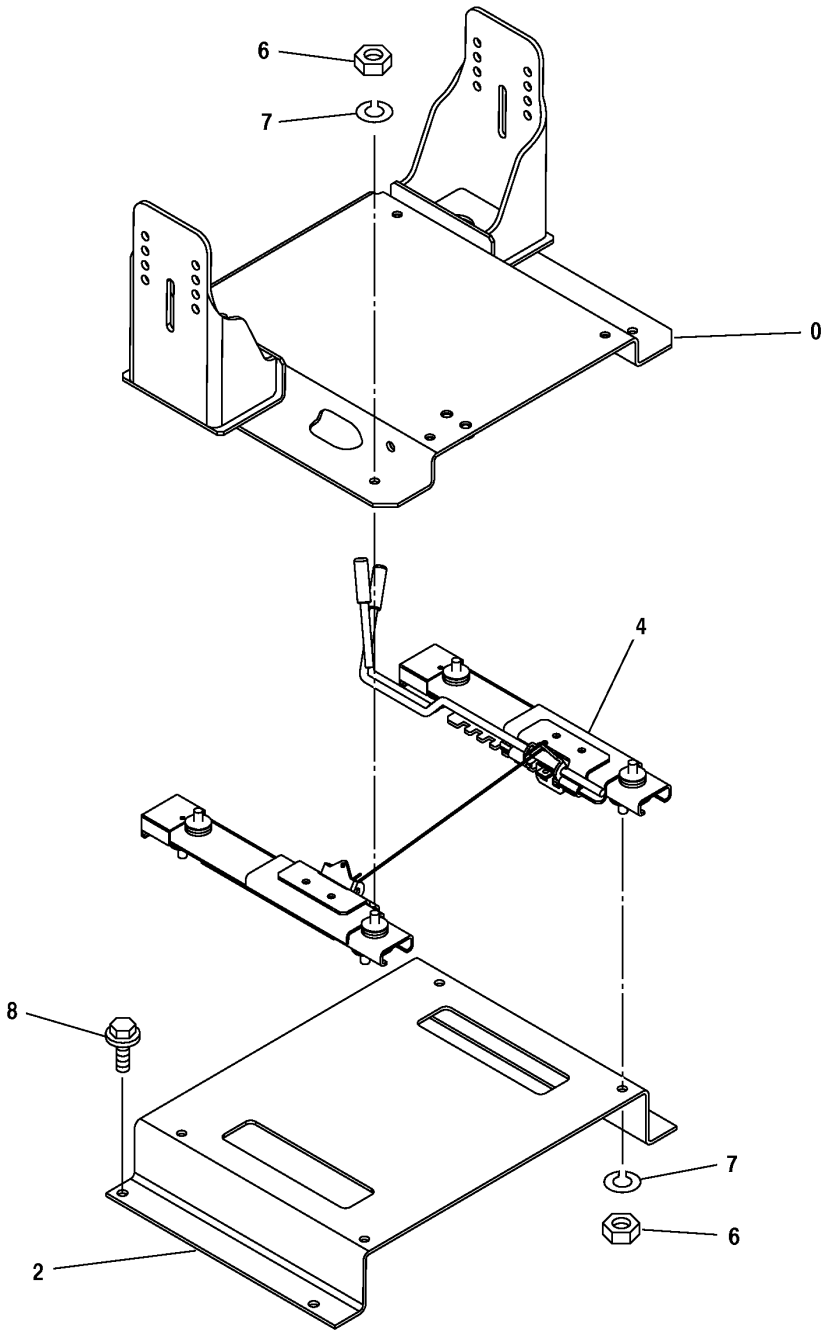

T142631

SEAT BASE

KEY	PART NO.	PART NAME	QTY	SERIAL NO.	REMARKS
0	6020125	BRACKET	1		(SUB FOR TH6020171)
2	TH3089486	BRACKET	1		
4	TH4405128	SEAT SLIDE TRACK KIT	1		
6	J952010	NUT	8		(SUB FOR TH104196)
7	12M7066	LOCK WASHER	8		10 MM
8	19M7402	CAP SCREW	4		M10 X 25

SEAT BELT

T189425 -UN-17APR03

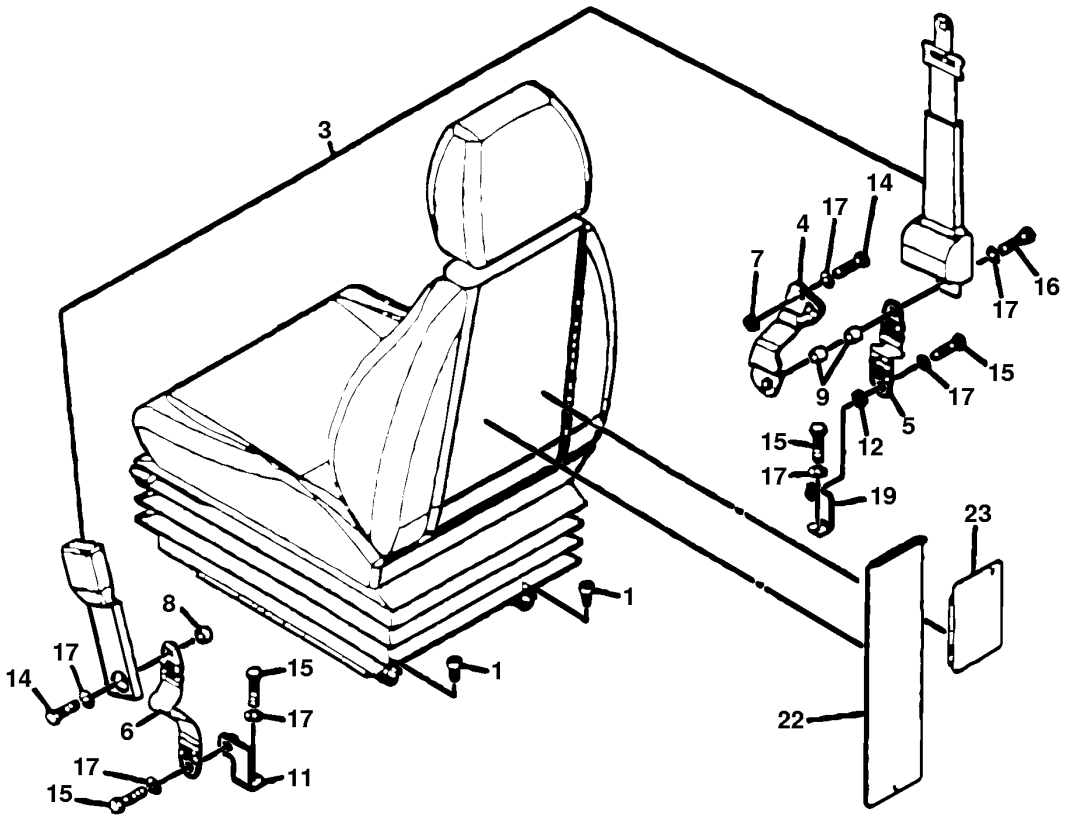

T189425

SEAT BELT

KEY	PART NO.	PART NAME	QTY	SERIAL NO.	REMARKS
1	M340816	BOLT	4		
3	4384239	SEAT BELT	1		
4	7041769	BRACKET	1		
5	4455566	BELT SET	1		
6	4366871	STRAP	1		
7	4372200	SPACER	1		
8	4453874	SPACER	1		
9	4468596	SPACER	2		
11	9756725	BRACKET	1		
12	4372200	SPACER	1		
14	4333835	BOLT	2		
15	19H3187	CAP SCREW	3		7/16" X 1-1/2", (SUB FOR 4235232)
16	4380534	CAP SCREW	1		
17	J219167	SPRING WASHER	6		
19	9758228	BRACKET	1		
22	3092010	COVER	1		
23	8083855	COVER	1		

HEATER HOSES

T162439 -UN-27DEC02

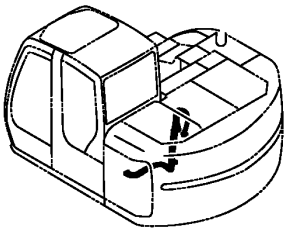

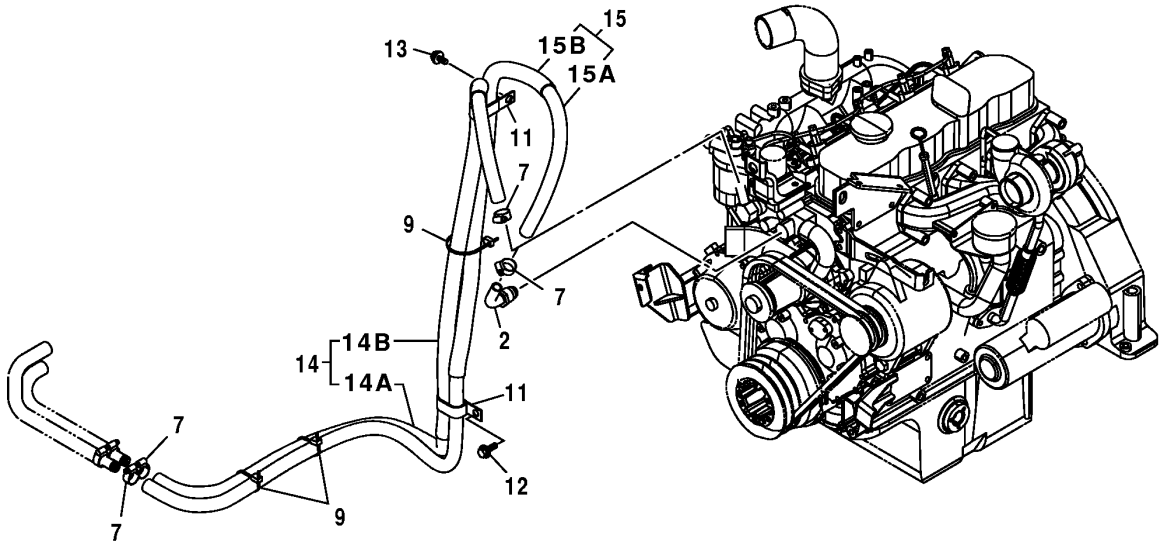

T162439

HEATER HOSES

KEY	PART NO.	PART NAME	QTY	SERIAL NO.	REMARKS
2	9745899	FITTING	1		
7	AA34965	HOSE CLAMP	4		(SUB FOR 4514699)
9	H77698	TIE BAND	3		
11	4192034	CLIP	2		
12	19M7402	CAP SCREW	1		M10 X 25, (SUB FOR J011025)
	12M7066	LOCK WASHER	1		10 MM
13	19M7162	CAP SCREW	2		M8 X 16, (SUB FOR J020816)
	12M7065	LOCK WASHER	2		8 MM
	24H1136	WASHER	2		11/32" X 11/16" X 0.065"
14	.....	HOSE	1		(9199704 NO LONGER AVAILABLE FOR SERVICE - ORDER INDIVIDUAL COMPONENTS)
14A	.....	HOSE	1		(FURNISH TY22328 AS NEEDED) (4439340 NO LONGER AVAILABLE FOR SERVICE)
14B	4327294	HOSE GUARD	2		(SUB FOR 4320661)
15	.....	HOSE	1		(9199705 NO LONGER AVAILABLE FOR SERVICE - ORDER INDIVIDUAL COMPONENTS)
15A	.....	HOSE	1		(FURNISH TY22328 AS NEEDED) (4439346 NO LONGER AVAILABLE FOR SERVICE)
15B	4327294	HOSE GUARD	2		(SUB FOR 4320661)

HEATING AND AIR CONDITIONING DUCTS

T162441 -UN-27DEC02

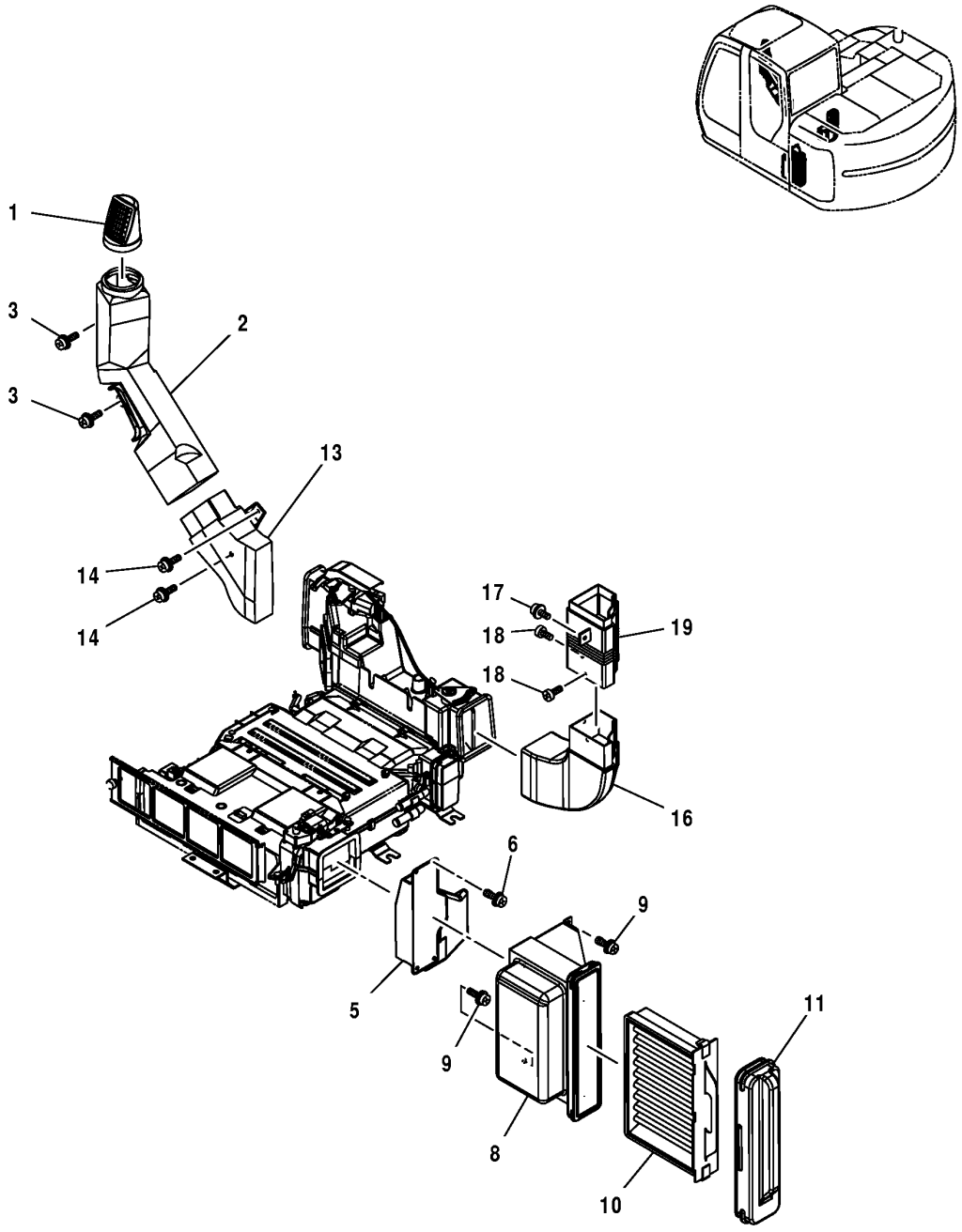

T162441

HEATING AND AIR CONDITIONING DUCTS

KEY	PART NO.	PART NAME	QTY	SERIAL NO.	REMARKS
1	4449068	AIR DUCT	1		
2	4426159	AIR DUCT	1		
3	19M8425	CAP SCREW	2		M6 X 16, (SUB FOR J460616)
	12M7006	LOCK WASHER	2		6 MM
	24M7293	WASHER	2		6.500 X 13 X 1.600 MM
5	4445708	AIR DUCT	1		
6	21M7267	SCREW	4		M6 X 20, (SUB FOR J460620)
	24M7293	WASHER	4		6.500 X 13 X 1.600 MM
	12M7006	LOCK WASHER	4		6 MM
8	4445709	AIR DUCT	1		
9	21M7267	SCREW	4		M6 X 20, (SUB FOR J460620)
	24M7293	WASHER	4		6.500 X 13 X 1.600 MM
	12M7006	LOCK WASHER	4		6 MM
10	4350249	FILTER ELEMENT	1		
11	4445710	AIR DUCT	1		
13	4445707	AIR DUCT	1		
14	19M8425	CAP SCREW	2		M6 X 16, (SUB FOR J460616)
	12M7006	LOCK WASHER	2		6 MM
	24M7293	WASHER	2		6.500 X 13 X 1.600 MM
16	4445711	AIR DUCT	1		
17	21M7267	SCREW	1		M6 X 20, (SUB FOR J460620)
	24M7293	WASHER	1		6.500 X 13 X 1.600 MM
	12M7006	LOCK WASHER	1		6 MM
18	4457412	SCREW	2		
19	4455512	AIR DUCT	1		

REAR COVER AND HEATER DUCTS

T162442 -UN-27DEC02

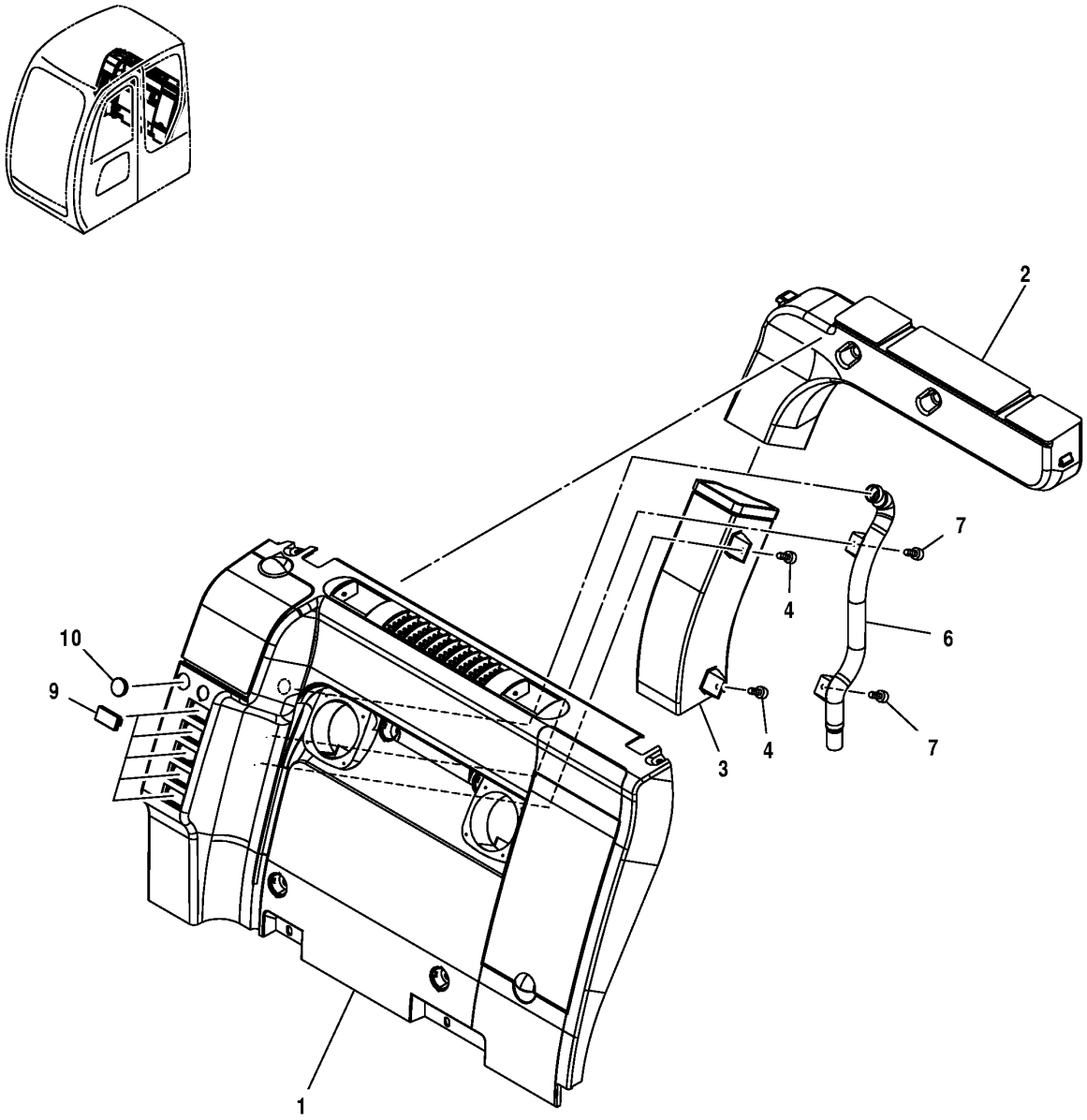

T162442

REAR COVER AND HEATER DUCTS

KEY	PART NO.	PART NAME	QTY	SERIAL NO.	REMARKS
1	4448178	COVER	1		
2	4445713	AIR DUCT	1		
3	4445712	AIR DUCT	1		
4	4444700	SCREW	2		
6	8083687	AIR DUCT	1		
7	4444700	SCREW	2		
9	4449166	CAP	5		
10	4447072	BUSHING	1		

REAR COVER COMPONENTS

T162444 -UN-27DEC02

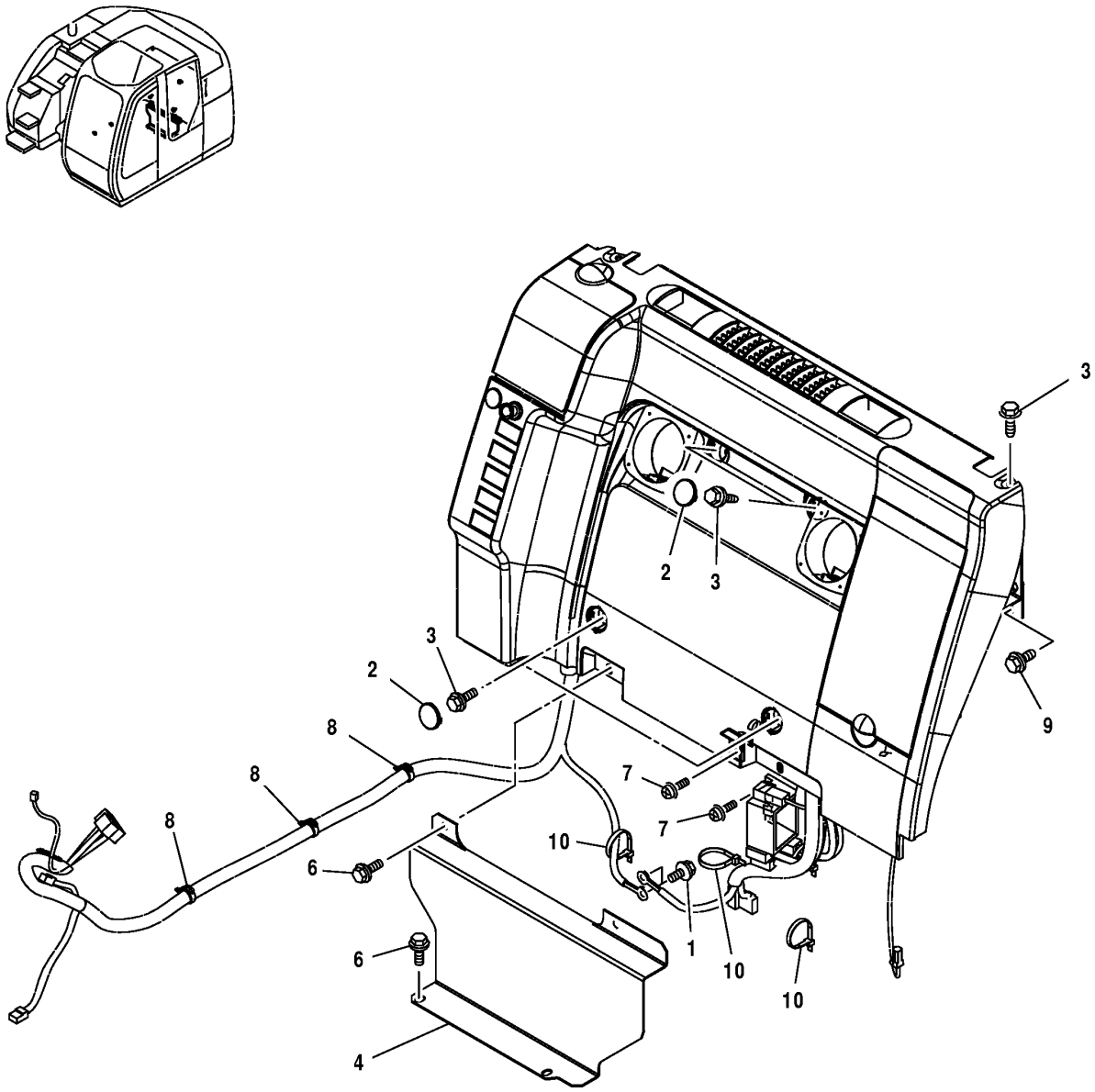

T162444

REAR COVER COMPONENTS

KEY	PART NO.	PART NAME	QTY	SERIAL NO.	REMARKS
1	19M7162	CAP SCREW	2		M8 X 16, (SUB FOR J050816)
	12M7065	LOCK WASHER	2		8 MM
	24H1136	WASHER	2		11/32" X 11/16" X 0.065"
2	4449165	CAP	4		
3	19M7407	CAP SCREW	6		M8 X 25, (SUB FOR J090825)
	24M7055	WASHER	6		8.400 X 16 X 1.600 MM
	12M7065	LOCK WASHER	6		8 MM
4	2045680	COVER	1		
6	19M7407	CAP SCREW	4		M8 X 25, (SUB FOR J090825)
	24M7055	WASHER	4		8.400 X 16 X 1.600 MM
	12M7065	LOCK WASHER	4		8 MM
7	21M7267	SCREW	3		M6 X 20, (SUB FOR J460620)
	24M7293	WASHER	3		6.500 X 13 X 1.600 MM
	12M7006	LOCK WASHER	3		6 MM
8	.....	CLIP	3		(IF AVAILABLE ORDER 4452727)
9	19M7162	CAP SCREW	2		M8 X 16, (SUB FOR J050816)
	12M7065	LOCK WASHER	2		8 MM
	24H1136	WASHER	2		11/32" X 11/16" X 0.065"
10	H77698	TIE BAND	3		

AIR CONDITIONING LINES AND BELTS

T162403 -UN-26DEC02

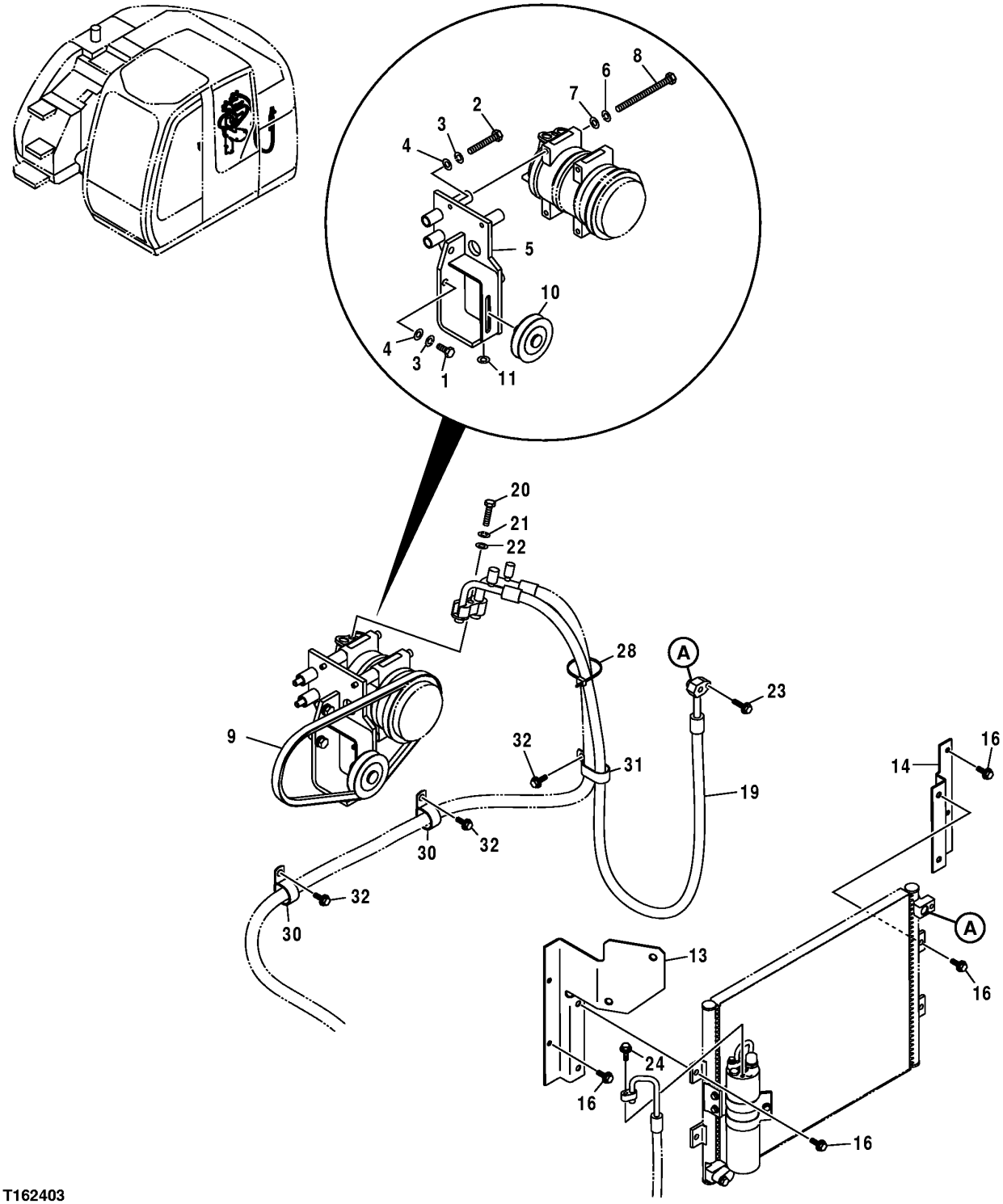

T162403

1 1

AIR CONDITIONING LINES AND BELTS

KEY	PART NO.	PART NAME	QTY	SERIAL NO.	REMARKS
1	T116333	BOLT	2		
2	M111063	PEDAL	2		
3	12M7066	LOCK WASHER	4		10 MM, (SUB FOR A590910)
4	24M7028	WASHER	4		10.500 X 20 X 2 MM, (SUB FOR A590110)
5	7038421	BRACKET	1		
6	12M7065	LOCK WASHER	4		8 MM, (SUB FOR A590908)
7	24M7055	WASHER	4		8.400 X 16 X 1.600 MM, (SUB FOR A590108)
8	J780808	BOLT	4		
9	4612283	V-BELT	1		(SUB FOR 4198588)
10	4346770	PULLEY	1		
11	24M7055	WASHER	1		8.400 X 16 X 1.600 MM, (SUB FOR A590108)
13	8080568	BRACKET	1		
14	9754878	BRACKET	1		
16	19M7163	CAP SCREW	8		M8 X 25, (SUB FOR J020825)
	12M7065	LOCK WASHER	8		8 MM
	24M7055	WASHER	8		8.400 X 16 X 1.600 MM
19	4439707	REFRIGERANT HOSE	1		
	4421946	O-RING	2		(ONE FOR EACH END OF 4439707)
20	19M8260	CAP SCREW	1		M10 X 40
21	12M7066	LOCK WASHER	1		10 MM, (SUB FOR A590910)
22	24M7028	WASHER	1		10.500 X 20 X 2 MM, (SUB FOR A590110)
23	J020835	BOLT	1		
24	19M7286	CAP SCREW	1		M6 X 25, (SUB FOR J020625)
	12M7006	LOCK WASHER	1		6 MM
	24M7054	WASHER	1		6.400 X 12 X 1.600 MM
28	H77698	TIE BAND	1		
30	4190263	CLIP	2		
31	4411911	SNAP RING	1		
32	19M7938	CAP SCREW	3		M10 X 20, (SUB FOR J011020)
	12M7066	LOCK WASHER	3		10 MM

AIR CONDITIONING (EVAPORATOR AND LINES)

T162383 -UN-26DEC02

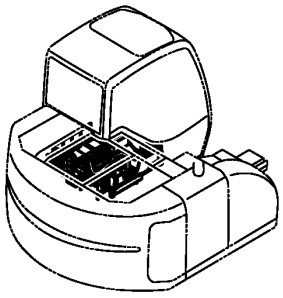

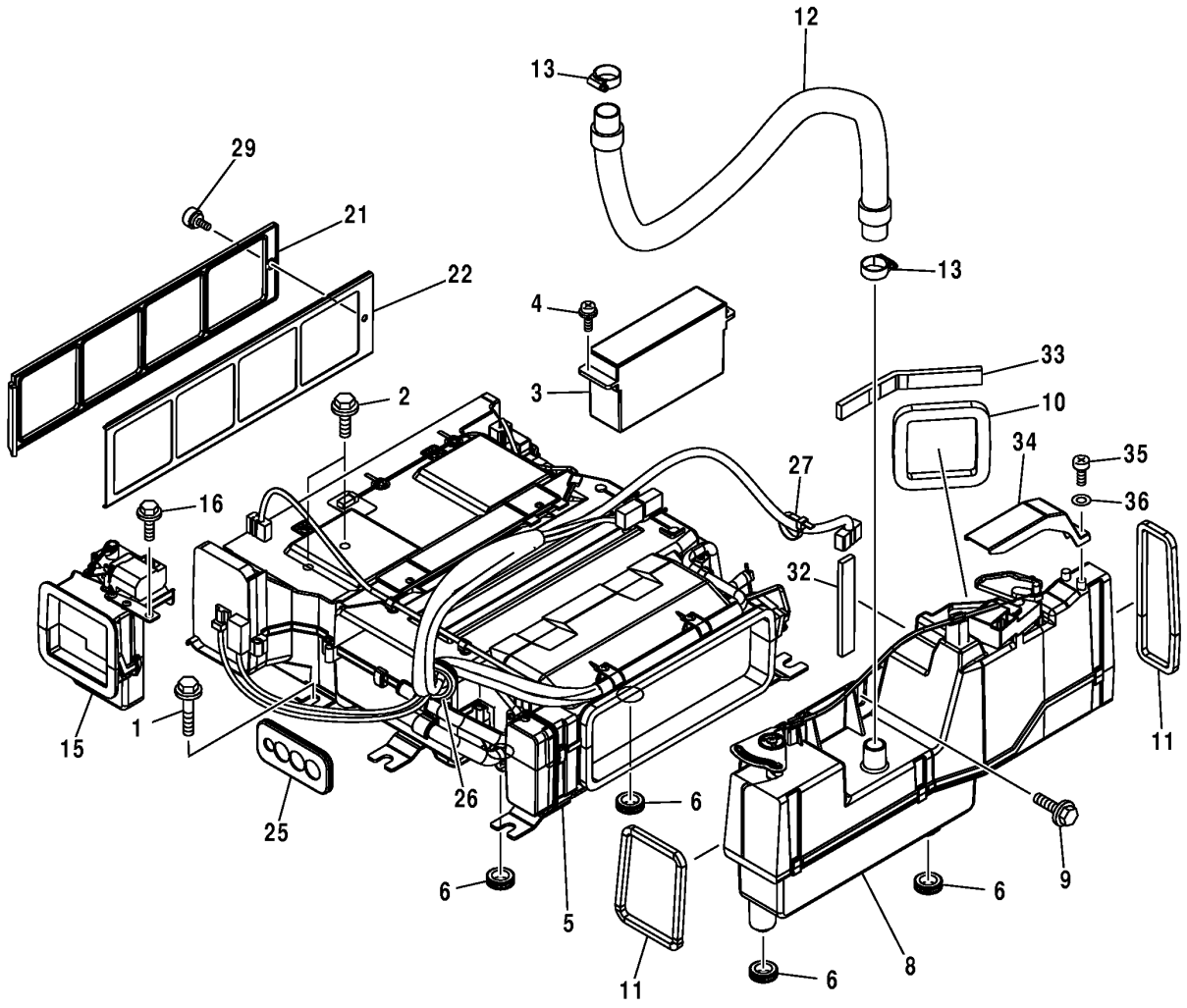

T162383

AIR CONDITIONING (EVAPORATOR AND LINES)

KEY	PART NO.	PART NAME	QTY	SERIAL NO.	REMARKS
1	19M7935	CAP SCREW	6		M10 X 55
2	19M7402	CAP SCREW	2		M10 X 25, (SUB FOR J021020)
	24M7096	WASHER	2		10.500 X 18 X 1.600 MM
	12M7066	LOCK WASHER	2		10 MM
3	4450315	BASIC CONTROL UNIT	1		
4	21M7265	SCREW	4		M5 X 12, (SUB FOR J460514)
5	.....	AIR CONDITIONER	1	-064324	(4438289 NO LONGER AVAILABLE) (FURNISH 4609051 ALONG WITH 4611360, (2) 4475767, AND (2) 4464483)
	4609051	AIR CONDITIONER	1	064325-	(USE WITH 4611360)
6	4326229	BUSHING	4		
8	4447332	AIR DUCT	1		
9	19M7662	CAP SCREW	2		M10 X 30, (SUB FOR J021030)
	12M7066	LOCK WASHER	2		10 MM
	24M7028	WASHER	2		10.500 X 20 X 2 MM
10	4449878	ISOLATOR	1		
11	4449879	ISOLATOR	2		
12	4451258	HYDRAULIC HOSE	1		
13	AT145650	HOSE CLAMP	2		
15	4447331	AIR DUCT	1		
16	19M7139	CAP SCREW	2		M8 X 20, (SUB FOR J020820)
	12M7065	LOCK WASHER	2		8 MM
	24M7055	WASHER	2		8.400 X 16 X 1.600 MM
21	4445864	BREATHER	1		
22	4442825	BRACKET	1		
25	4444022	BUSHING	1		
26	4184582	GROMMET	1		
27	H77698	TIE BAND	1		
29	4446097	KNOB	1		
32	4455712	ISOLATOR	1		
33	4455713	ISOLATOR	1		
34	4453351	COVER	1		
35	4452613	SCREW	2		
36	24H1281	WASHER	2		5/32" X 3/8" X 0.049", (SUB FOR J253104)

AIR CONDITIONER LINES

T162432 -UN-26DEC02

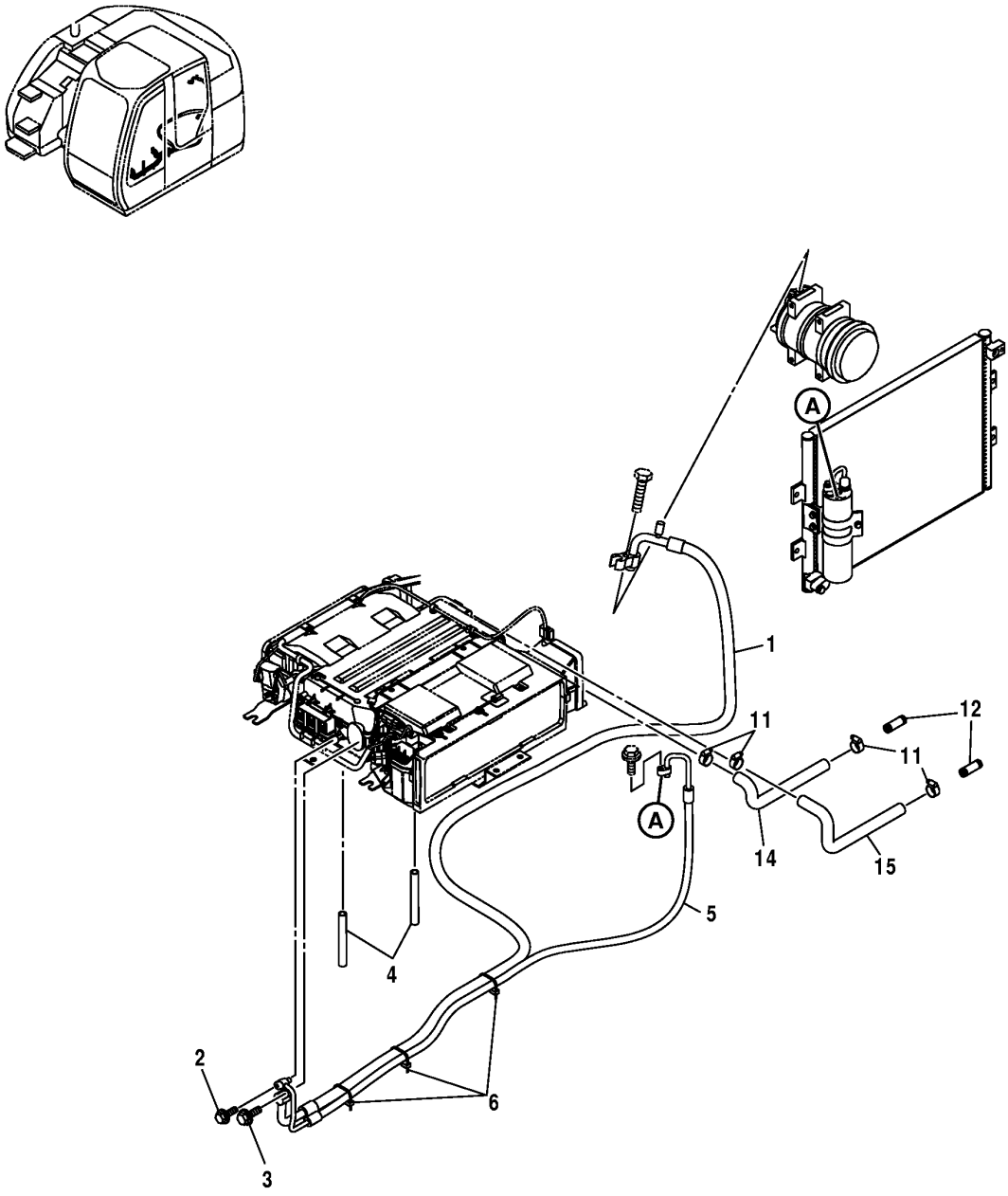

T162432

AIR CONDITIONER LINES

KEY	PART NO.	PART NAME	QTY	SERIAL NO.	REMARKS
1	4439709	REFRIGERANT HOSE	1		
	19M8260	CAP SCREW	1		M10 X 40
	12M7054	LOCK WASHER	1		19 MM
	12M7066	LOCK WASHER	1		10 MM
	4421939	O-RING	2		(NOT ILLUSTRATED)
2	19M7874	CAP SCREW	1		M6 X 30, (SUB FOR J020630)
	24M7054	WASHER	1		6.400 X 12 X 1.600 MM
	12H302	LOCK WASHER	1		1/4"
3	19M7163	CAP SCREW	1		M8 X 25, (SUB FOR J020825)
	12M7065	LOCK WASHER	1		8 MM
	24M7055	WASHER	1		8.400 X 16 X 1.600 MM
4	.....	HOSE	2		(FURNISH BULK MATERIAL TY24398 AS NEEDED)
5	4439708	REFRIGERANT HOSE	1		
	4422000	O-RING	2		(NOT ILLUSTRATED)
6	H77698	TIE BAND	3		
11	AA34965	HOSE CLAMP	4		(SUB FOR 4514699)
12	4347396	FITTING	2		
14	4444297	REFRIGERANT HOSE	1		
15	4444298	REFRIGERANT HOSE	1		

AIR CONDITIONING COMPRESSOR & CONDENSER

T159761 -UN-24SEP02

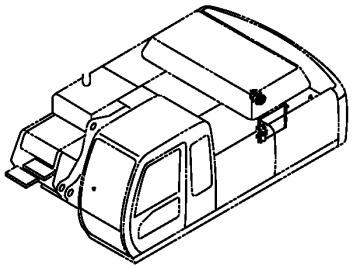

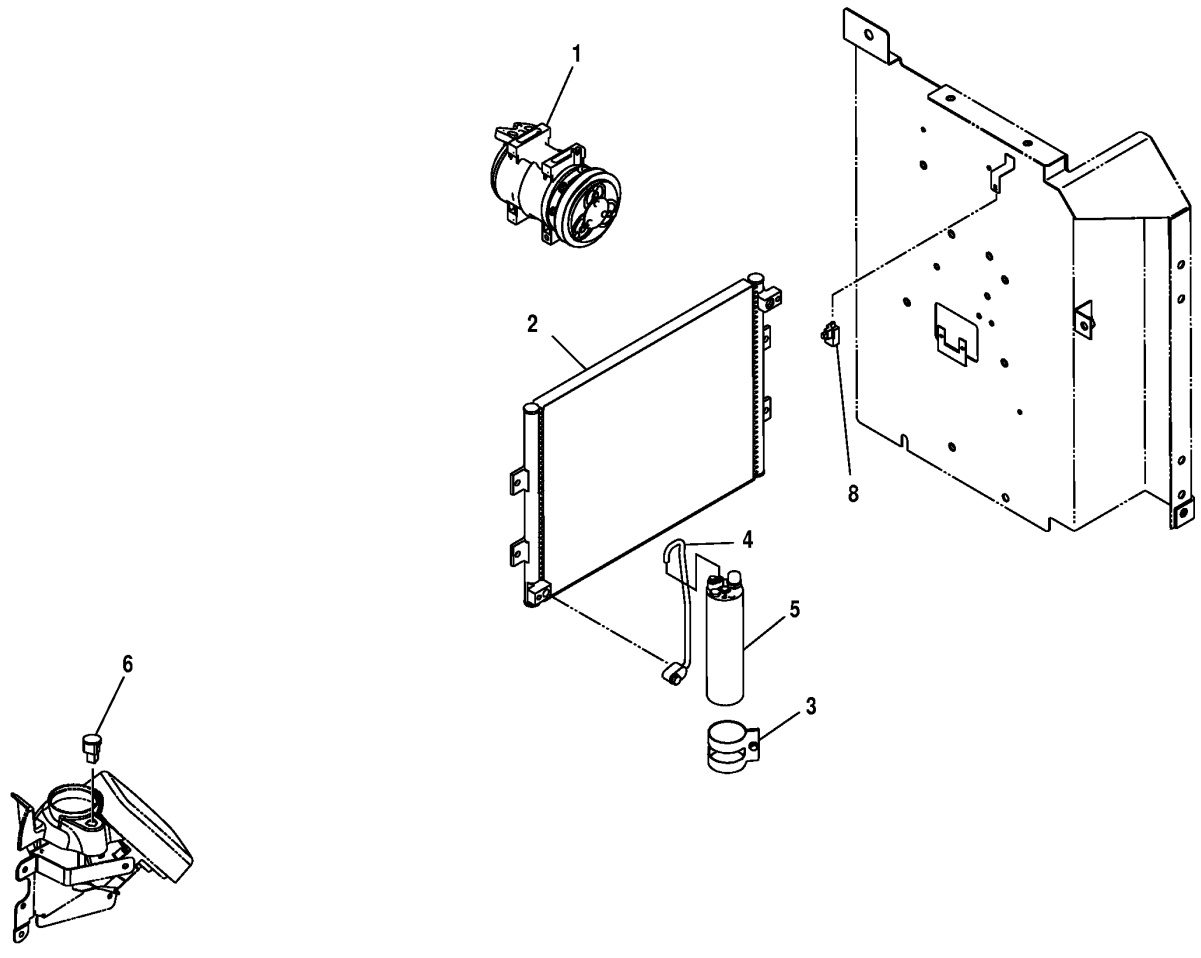

T159761

AIR CONDITIONING COMPRESSOR & CONDENSER

KEY	PART NO.	PART NAME	QTY	SERIAL NO.	REMARKS
1	4456130	COMPRESSOR	1		
	4623638	CLUTCH	1		(MAGNETIC CLUTCH)
2	4602578	VAPOR CONDENSER	1		(SUB FOR 4426046)
3	4460399	BRACKET	1		
	19M7077	CAP SCREW	4		M6 X 20
4	4477526	PIPE	1		
	J020835	BOLT	1		(HOLDS PIPE ONTO CONDENSOR)
5	4448179	RECEIVER-DRYER	1		
	19M7874	CAP SCREW	2		M6 X 30, (HOLDS PIPING ON RECIEVER-DRYER) (ALSO ORDER 24M7054 AND 12H302) (SUB FOR J020630)
	24M7054	WASHER	2		6.400 X 12 X 1.600 MM
	12H302	LOCK WASHER	2		6.350 MM
6	4405166	SENSOR	1		CAB AIR TEMPERATURE SENSOR
8	4405164	SENSOR	1		AMBIENT AIR TEMPERTURE

AIR CONDITIONING CONDENSER SCREEN

T162437 -UN-27DEC02

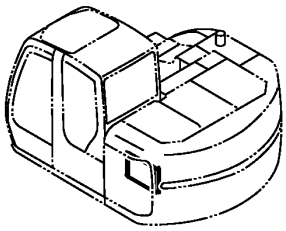

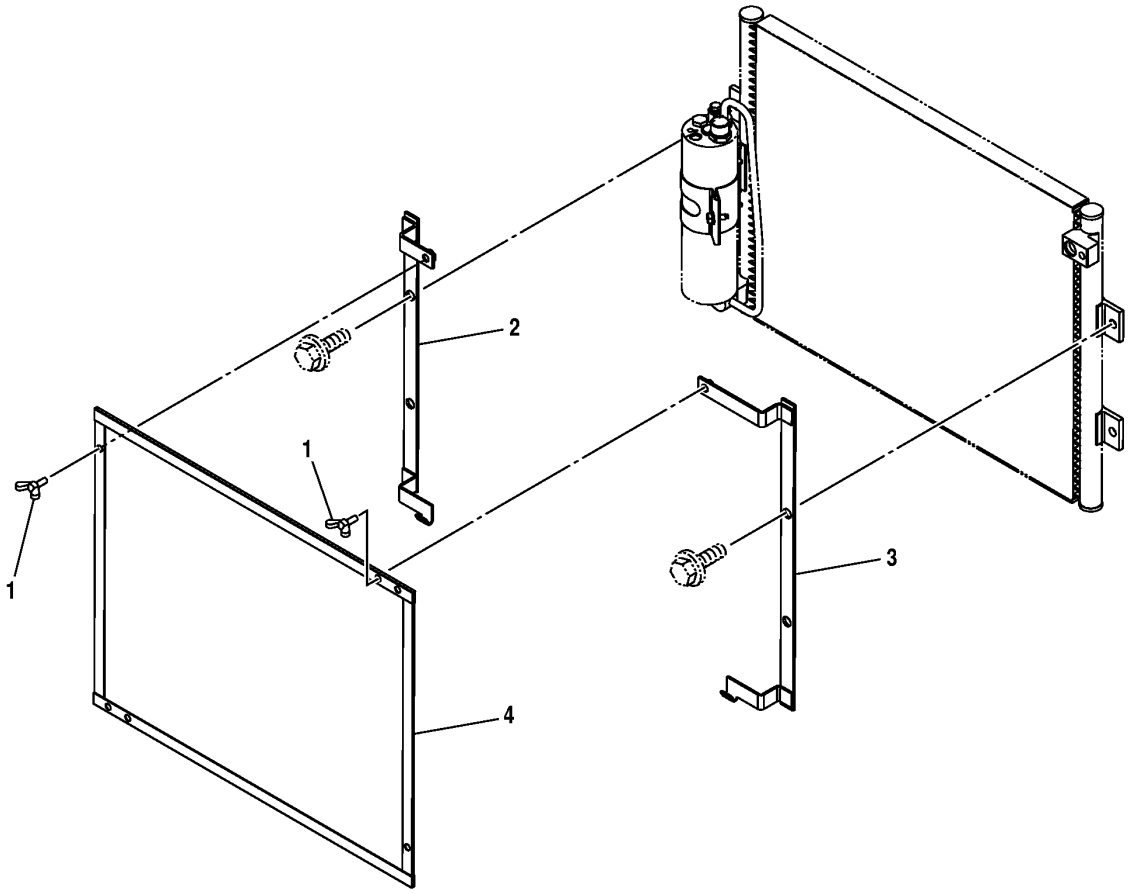

T162437

2D16

AIR CONDITIONING CONDENSER SCREEN

KEY	PART NO.	PART NAME	QTY	SERIAL NO.	REMARKS
1	J981845	SCREW	2		
2	8083708	BRACKET	1		
3	8083709	BRACKET	1		
4	8078936	SCREEN	1		

AIR CONDITIONER AND HEATER COMPONENTS

T197354 -UN-20JAN04

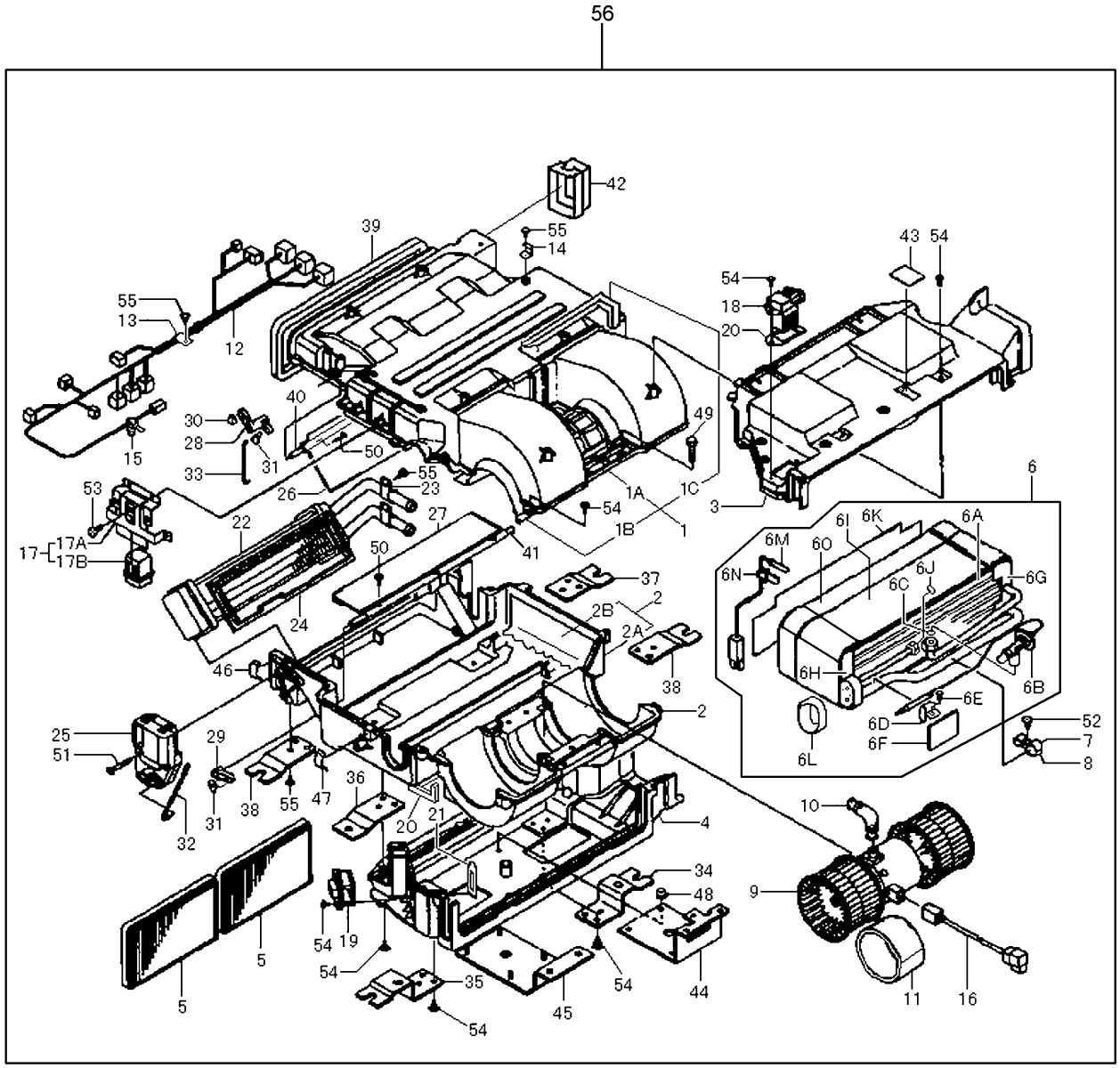

T197354

AIR CONDITIONER AND HEATER COMPONENTS

KEY	PART NO.	PART NAME	QTY	SERIAL NO.	REMARKS
1	.....	CASE	1	-064324	(4475659 NO LONGER AVAILABLE) (FURNISH 4614287)
	4614287	CASE	1	064325-	
1A	4475660	CASE	1		
1B	4475661	LINING	1	-064324	
1C	4475662	LINING	1		
2	.....	CASE	1	-064324	(4475663 NO LONGER AVAILABLE) (FURNISH 4614288)
	4614288	CASE	1	064325-	
2A	4475664	CASE	1		
2B	4475665	LINING	1	-064324	
2C	4475666	LINING	1		
3	4475667	COVER	1		
4	4475687	COVER	1		
5	4455778	AIR FILTER	2		
6	.....	EVAPORATOR	1	-064324	(4475688 NO LONGER AVAILABLE) (FURNISH 4614289)
	4614289	EVAPORATOR	1	064325-	
6A	4475689	EVAPORATOR	1		
6B	4475690	BALL COCK VALVE	1		
6C	4351478	O-RING	1		
6D	4475691	CLIP	1		
6E	4370310	SCREW	1		
6F	4416975	INSULATOR	1		
6G	4475692	LINING	1		
6H	4475693	LINING	1		
6I	.....	LINING	1	-064324	(4475694 NO LONGER AVAILABLE) (FURNISH 4614290)
	4614290	CASE	1	064325-	
6J	4475695	O-RING	1		
6K	4475710	FILTER	1		
6L	4475711	LINING	1		
6M	4475712	THERMOSTAT	1		
6N	4475713	CLIP	1		
6O	4614291	CASE	1	064325-	
7	4475714	CLIP	1		
8	4475715	CLIP	1		
9	4475716	MOTOR	1		
10	4464473	HOSE	1		
11	4475717	ISOLATOR	1		
12	4475718	AC COMPRESSOR WRG HARNESS	1	-064324	
13	4475767	CLIP	2	-064324	
14	4475768	CLIP	3		
15	4475769	CLIP	3		
16	4475770	AC COMPRESSOR WRG HARNESS	1		
17	4475771	RELAY	1		
17A	4475772	BRACKET	1		
17B	4475773	RELAY	3		
18	4464279	TRANSISTOR	1		
19	4464278	RESISTOR	1		
20	4464474	SEAL	1		
21	4475774	PLATE	1		
22	4475775	HEATER	1		
23	4475801	CLIP	1		
24	4475802	PLATE	1		
25	4475803	MOTOR	1		
26	4475804	DOOR	1		
27	4475805	DOOR	1		
28	4475806	LEVER	1		
29	4475807	LEVER	1		
30	4370306	CLIP	1		
31	4464477	CLIP	2		
32	4475808	ROD	1		
33	4475809	ROD	1		
34	4475822	BRACKET	1		
35	4475823	BRACKET	1		
36	4475824	BRACKET	1		
37	4475825	BRACKET	1		

AIR CONDITIONER AND HEATER COMPONENTS (CONTINUED)

T197354 -UN-20JAN04

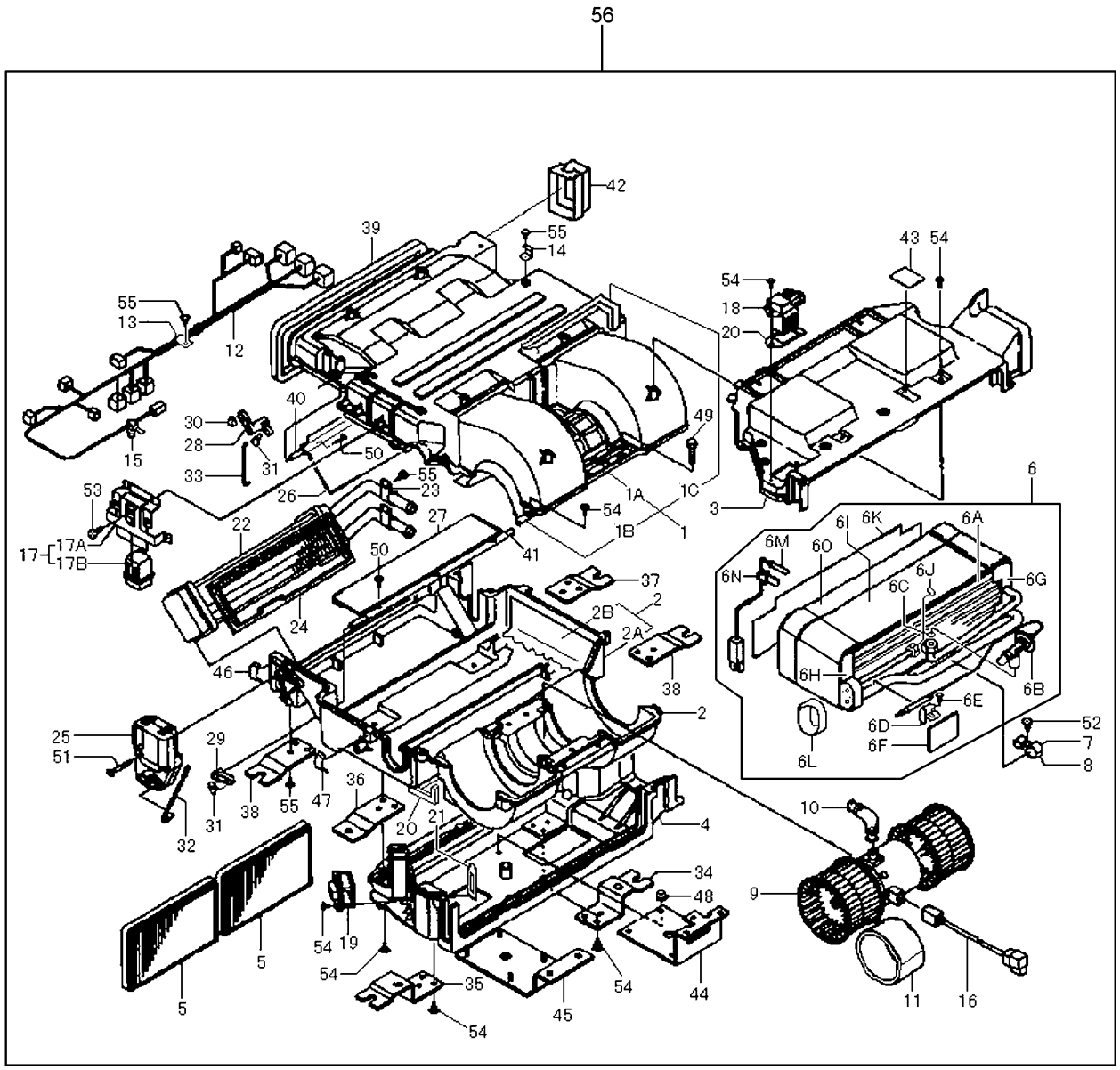

T197354

AIR CONDITIONER AND HEATER COMPONENTS (CONTINUED)

KEY	PART NO.	PART NAME	QTY	SERIAL NO.	REMARKS
38	4475826	BRACKET	2		
39	4475827	LINING	1		
40	4475828	SHAFT	1		
41	4475829	SHAFT	1		
42	4475830	COVER	1		
43	4475832	TAPE	1		
44	4475833	BRACKET	1		
45	4475834	BRACKET	1		
46	4464478	CLIP	3		
47	4475835	CLIP	1		
48	4475836	NUT	4		
49	4475837	BOLT	3		
50	4475838	CAP SCREW	6		
51	4370308	SCREW	3		
52	4475839	SCREW	1		
53	4475840	SCREW	1		
54	4370309	SCREW	29		
55	4464483	SCREW	27		
56	.....	AIR CONDITIONER	1	-064324	(4438289 NO LONGER AVAILABLE) (FURNISH 4609051 ALONG WITH 4611360, (2) 4475767, AND (2) 4464483)
	4609051	AIR CONDITIONER	1	064325-	

LEFT SIDE COMPARTMENT PANELING

T162477 -UN-16DEC02

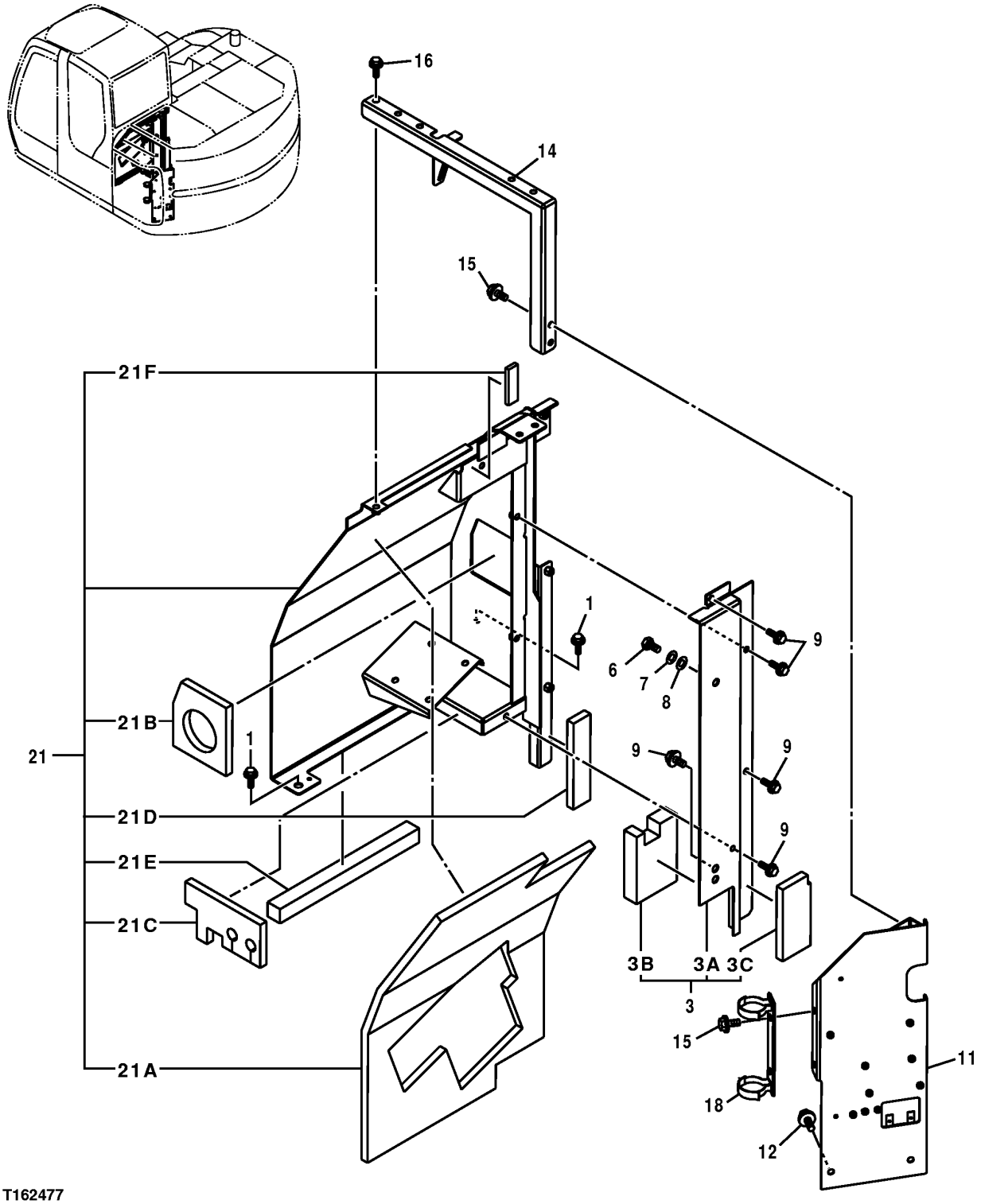

T162477

LEFT SIDE COMPARTMENT PANELING

KEY	PART NO.	PART NAME	QTY	SERIAL NO.	REMARKS
1	19M7662	CAP SCREW	2		M10 X 30, (SUB FOR J031030)
	12M7067	LOCK WASHER	2		12 MM
	24M7346	WASHER	2		11 X 20 X 2 MM
3	8080263	COVER	1		
3A	.....	COVER	1		
3B	4437752	ISOLATOR	1		
3C	4439703	ISOLATOR	1		
6	19M8035	CAP SCREW	1		M16 X 35
7	12H294	LOCK WASHER	1		5/8", (SUB FOR A590916)
8	24M7053	WASHER	1		17 X 30 X 3 MM, (SUB FOR A590116)
9	J031025	BOLT	5		
11	7040026	SUPPORT	1		
12	19M7662	CAP SCREW	2		M10 X 30, (SUB FOR J021025)
	12M7066	LOCK WASHER	2		10 MM
	24M7028	WASHER	2		10.500 X 20 X 2 MM
14	7040023	SUPPORT	1		
15	19M7662	CAP SCREW	4		M10 X 30, (SUB FOR J021030)
	12M7066	LOCK WASHER	4		10 MM
	24M7028	WASHER	4		10.500 X 20 X 2 MM
16	19M7550	CAP SCREW	1		M10 X 35, (SUB FOR J021035)
	12M7066	LOCK WASHER	1		10 MM
	24M7028	WASHER	1		10.500 X 20 X 2 MM
18	4375688	HOLDER	1		
21	5007137	COVER	1		
21A	3089435	ISOLATOR	1		
21B	4437749	ISOLATOR	1		
21C	4437748	ISOLATOR	1		
21D	4438213	ISOLATOR	1		
21E	4437750	ISOLATOR	1		
21F	4450524	ISOLATOR	1		

LEFT AND RIGHT SIDE COMPARTMENT DOORS

T162514 -UN-16DEC02

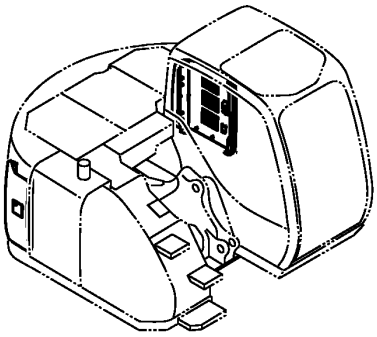

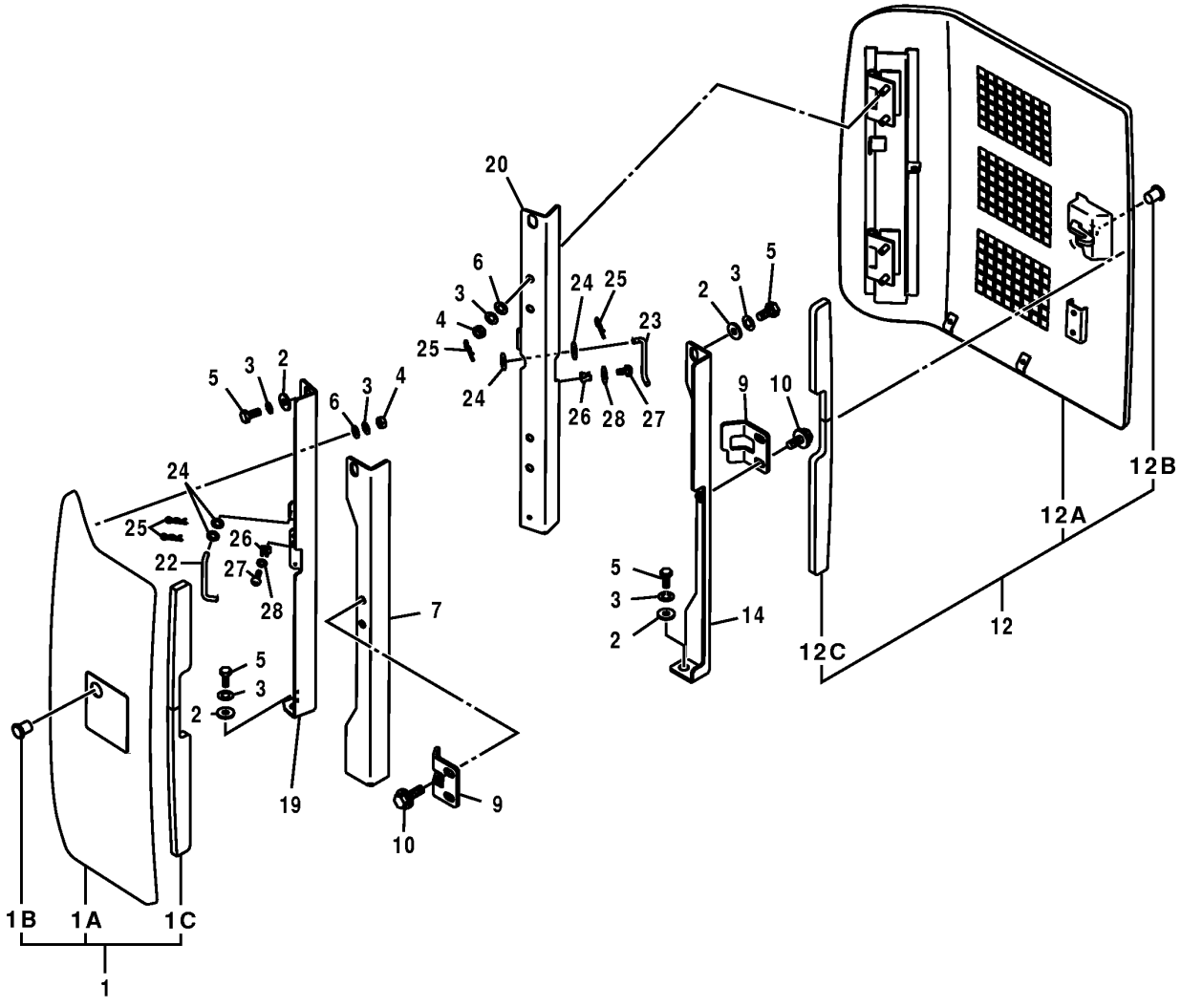

T162514

LEFT AND RIGHT SIDE COMPARTMENT DOORS

KEY	PART NO.	PART NAME	QTY	SERIAL NO.	REMARKS
1	7042472	DOOR	1		(ASSEMBLY) (SUB FOR 7038512)
	4464839	ISOLATOR	1		(NOT ILLUSTRATED)
1A	.....	DOOR	1		
1B	4379989	CYLINDER	1		
1C	3089314	ISOLATOR	1		
2	24M7101	WASHER	8		11 X 34 X 3 MM
3	12M7066	LOCK WASHER	16		10 MM, (SUB FOR A590910)
4	14M7274	NUT	8		M10
5	19M7662	CAP SCREW	8		M10 X 30
6	24M7028	WASHER	8		10.500 X 20 X 2 MM, (SUB FOR A590110)
7	8080220	SUPPORT	1		
9	4437536	STOP	2		
10	19M7662	CAP SCREW	4		M10 X 30, (SUB FOR J021030)
	12M7067	LOCK WASHER	4		12 MM
	24M7346	WASHER	4		11 X 20 X 2 MM
12	7042471	DOOR	1		(ASSEMBLY) (ALSO ORDER 4464839) (SUB FOR 7038523)
	4464839	ISOLATOR	1		
12A	.....	DOOR	1		(6019203 NOT AVAILABLE)
12B	4379989	CYLINDER	1		
12C	3089314	ISOLATOR	1		
14	8080233	SUPPORT	1		
19	8081891	BRACKET	1		
20	8082029	BRACKET	1		
22	4451169	LATCH	1		
23	4451170	LATCH	1		
24	24M7055	WASHER	4		8.400 X 16 X 1.600 MM, (SUB FOR A590108)
25	H132922	COTTER PIN	4		(SUB FOR 4022697)
26	4330276	HOLDER	2		
27	21M7396	SCREW	2		M4 X 10
28	24M7117	WASHER	2		4.300 X 9 X 0.800 MM, (SUB FOR A590104)

EXHAUST COMPARTMENT COVER

T162515 -UN-16DEC02

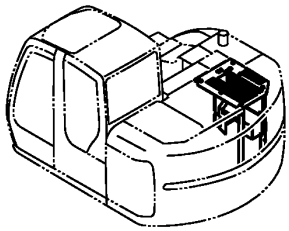

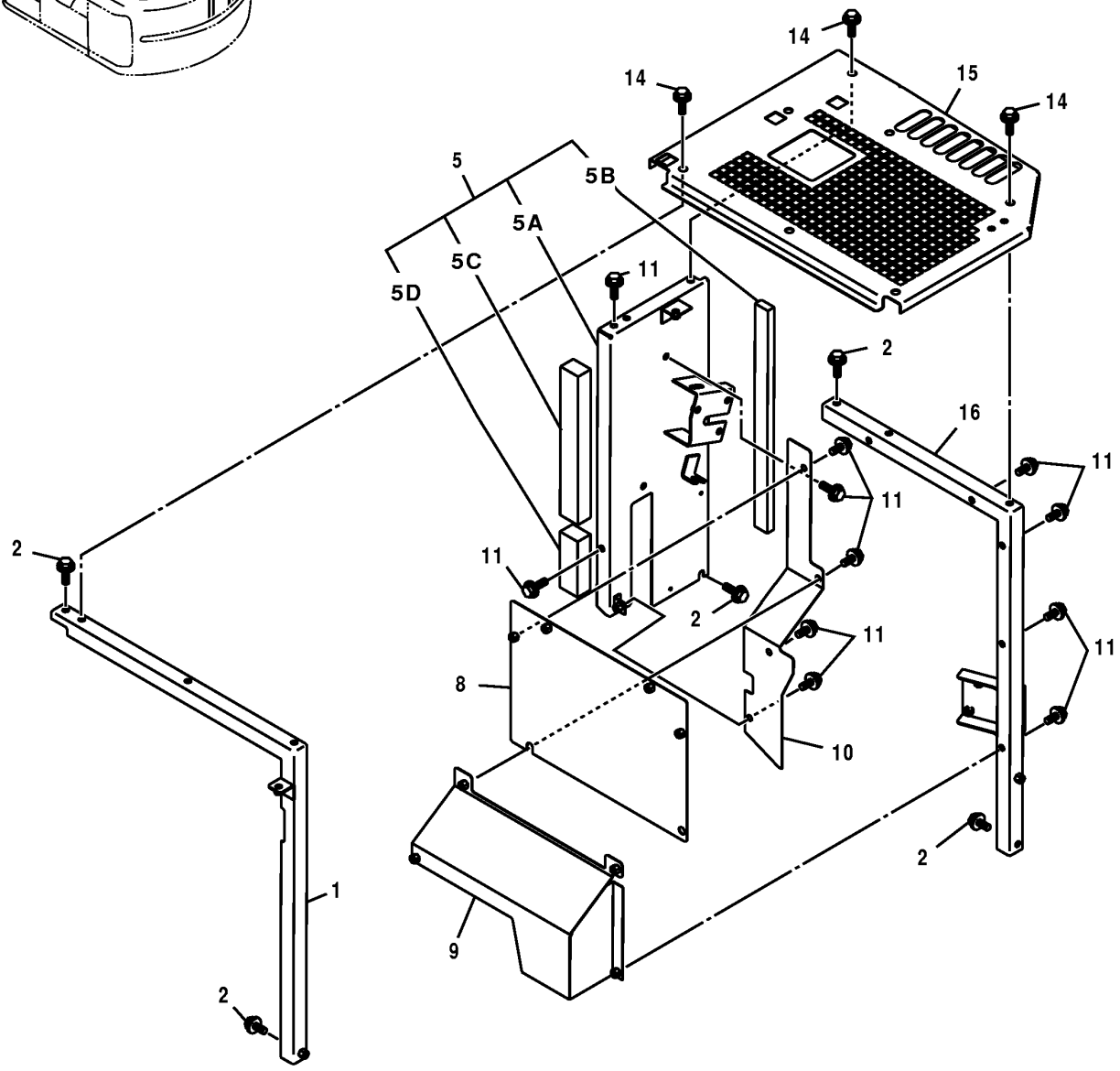

T162515

EXHAUST COMPARTMENT COVER

KEY	PART NO.	PART NAME	QTY	SERIAL NO.	REMARKS
1	7037516	SUPPORT	1		
2	19M7662	CAP SCREW	5		M10 X 30, (SUB FOR J021030)
	12M7066	LOCK WASHER	5		10 MM
	24M7028	WASHER	5		10.500 X 20 X 2 MM
5	7037046	COVER	1		
5A	.....	COVER	1		
5B	4437447	ISOLATOR	1		
5C	4439153	ISOLATOR	1		
5D	4439154	ISOLATOR	1		
8	7039964	COVER	1		
9	7038398	COVER	1		
10	3089620	COVER	1		
11	19M7402	CAP SCREW	13		M10 X 25, (SUB FOR J021025)
	12M7066	LOCK WASHER	13		10 MM
	24M7028	WASHER	13		10.500 X 20 X 2 MM
14	19M7662	CAP SCREW	7		M10 X 30, (SUB FOR J031030)
	12M7067	LOCK WASHER	7		12 MM
	24M7346	WASHER	7		11 X 20 X 2 MM
15	7039846	COVER	1	-300003	
	7041807	COVER	1	300004-	
16	7045286	SUPPORT	1		(ALSO ORDER (2) 19M7742 AND (2) 24M7346) (SUB FOR 7039839)
	19M7742	CAP SCREW	2		M10 X 65, (NOT ILLUSTRATED)
	24M7346	WASHER	2		11 X 20 X 2 MM, (NOT ILLUSTRATED)

ENGINE COMPARTMENT PANELING

T162516 -UN-16DEC02

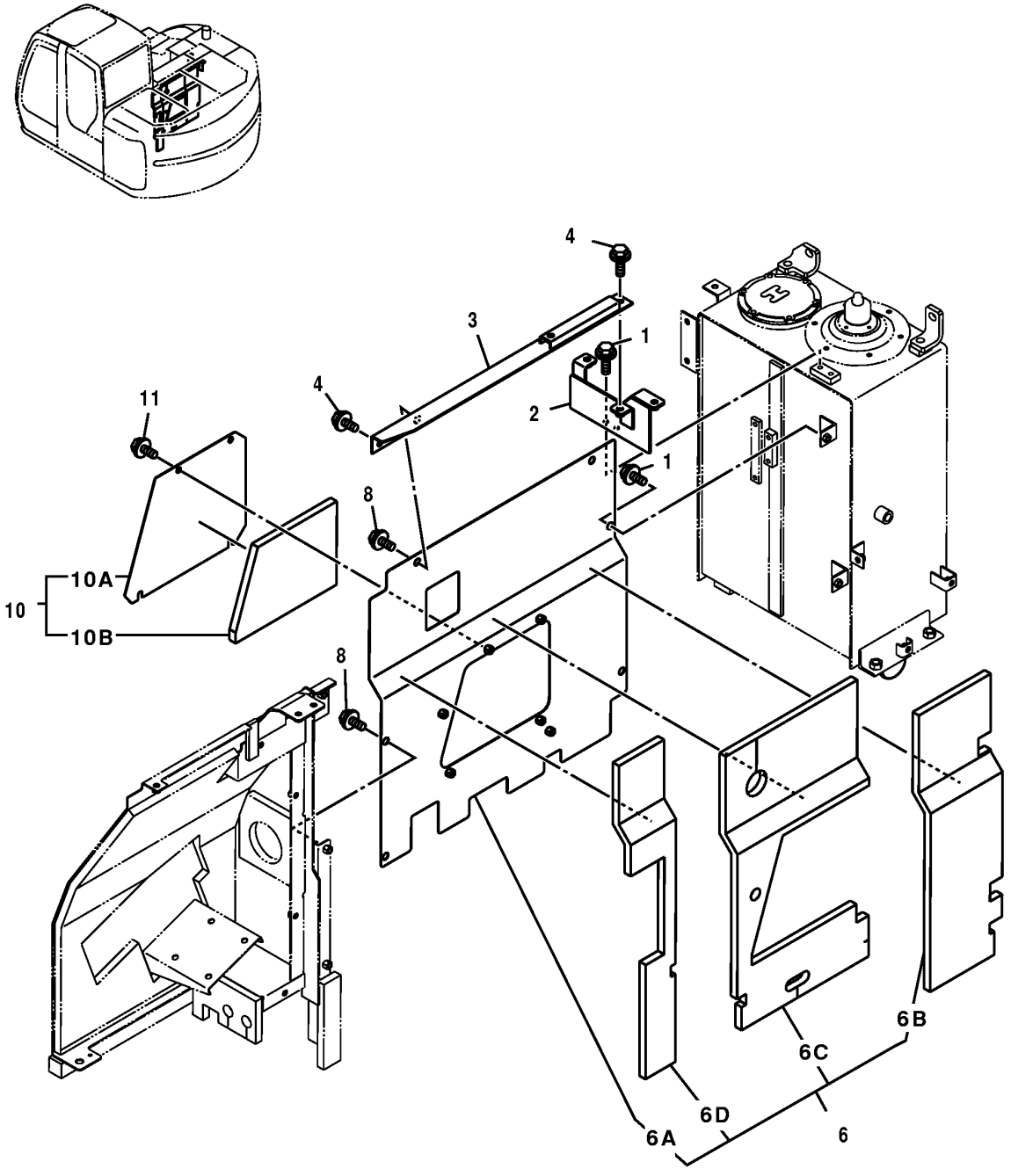

T162516

ENGINE COMPARTMENT PANELING

KEY	PART NO.	PART NAME	QTY	SERIAL NO.	REMARKS
1	19M7402	CAP SCREW	4		M10 X 25, (SUB FOR J021025)
	12M7066	LOCK WASHER	4		10 MM
	24M7028	WASHER	4		10.500 X 20 X 2 MM
2	8080538	BRACKET	1		
3	7038563	SUPPORT	1		
4	19M7662	CAP SCREW	2		M10 X 30, (SUB FOR J021030)
	12M7066	LOCK WASHER	2		10 MM
	24M7028	WASHER	2		10.500 X 20 X 2 MM
6	7038561	COVER	1		
6A	.....	COVER	1		
6B	3089780	ISOLATOR	1		
6C	3089781	ISOLATOR	1		
6D	3089782	ISOLATOR	1		
8	19M7662	CAP SCREW	4		M10 X 30, (SUB FOR J031030)
	12M7067	LOCK WASHER	4		12 MM
	24M7346	WASHER	4		11 X 20 X 2 MM
10	8080266	COVER	1		
10A	.....	COVER	1		
10B	4437754	ISOLATOR	1		
11	J031025	BOLT	4		

STEPS HANDRAILS AND RIGHT SIDE MIRROR

T162519 -UN-16DEC02

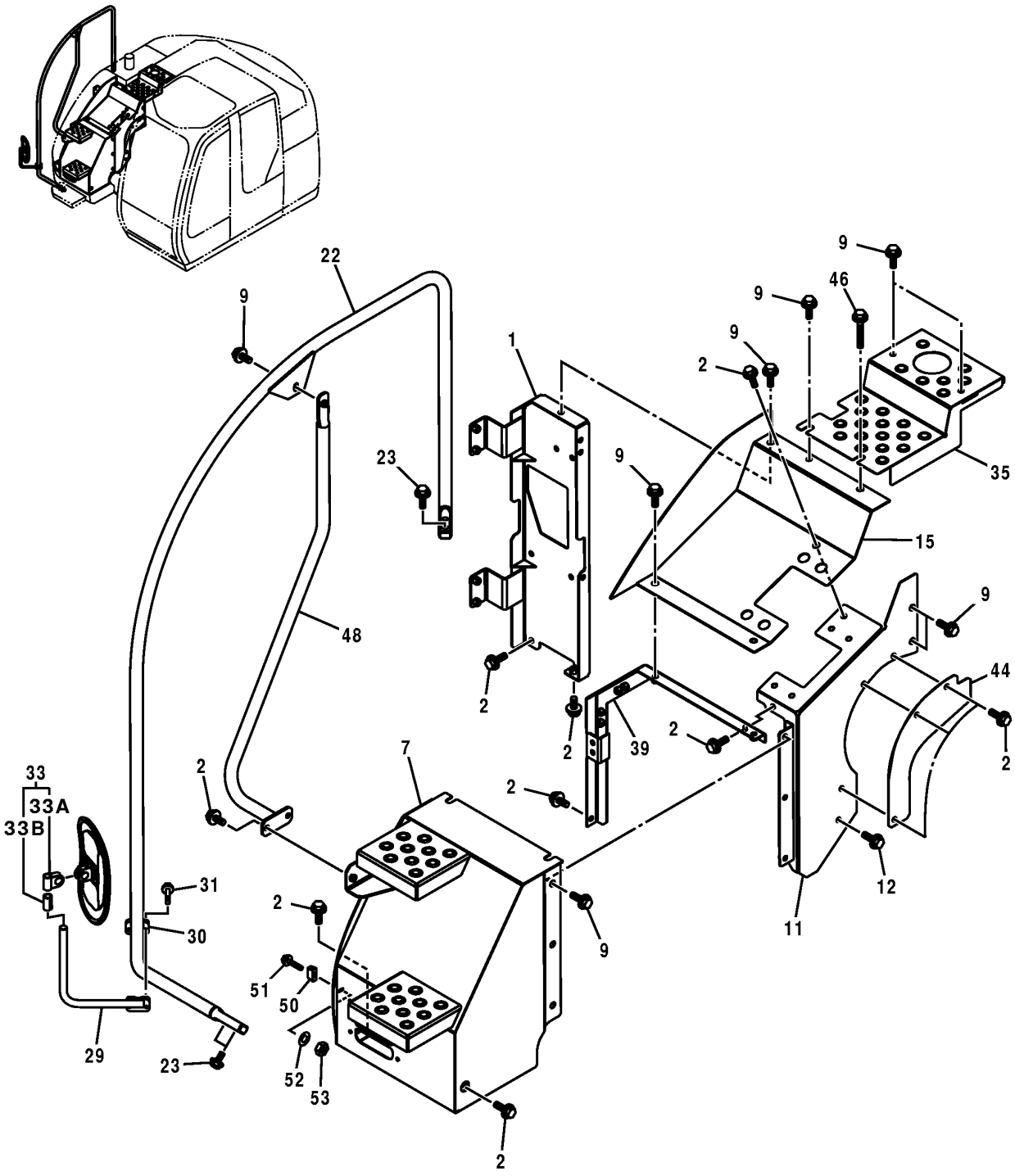

T162519

STEPS HANDRAILS AND RIGHT SIDE MIRROR

KEY	PART NO.	PART NAME	QTY	SERIAL NO.	REMARKS
1	7038988	SUPPORT	1		
2	19M7662	CAP SCREW	12		M10 X 30, (SUB FOR J021030)
	12M7066	LOCK WASHER	12		10 MM
	24M7028	WASHER	12		10.500 X 20 X 2 MM
7	6019450	COVER	1		
9	19M7662	CAP SCREW	12		M10 X 30, (SUB FOR J031030)
	12M7067	LOCK WASHER	12		12 MM
	24M7346	WASHER	12		11 X 20 X 2 MM
11	7038795	COVER	1	-062992	
	.....	COVER	1	062993-064097	(7043846 NO LONGER AVAILABLE - FURNISH 7045324)
	7045324	COVER	1	064098-	
12	19M7550	CAP SCREW	1		M10 X 35, (SUB FOR J021035)
	12M7066	LOCK WASHER	1		10 MM
	24M7028	WASHER	1		10.500 X 20 X 2 MM
15	7038785	COVER	1	-062992	
	7043845	COVER	1	062993-	
22	7038983	LATCH	1		
23	19M7493	CAP SCREW	4		M12 X 40, (SUB FOR J011240)
	12H301	LOCK WASHER	4		1/2"
29	8077521	BRACKET	1		
30	4425481	HOSE CLAMP	1		
31	19M7184	CAP SCREW	2		M8 X 55, (SUB FOR J010855)
	12M7065	LOCK WASHER	2		8 MM
33	4420724	REAR VIEW MIRROR	1		(SUB FOR 4416704)
33A	.....	HOLDER	1		
33B	.....	ISOLATOR	1		
35	7040882	COVER	1	-062992	
	7041812	COVER	1	062993-	
39	7039863	SUPPORT	1		
44	3091499	COVER	1	-062992	(USE WITH 7038795)
46	J031090	BOLT	1		
48	8083426	LATCH	1		
50	4424157	STOP	1		
51	J020640	BOLT	1		
52	24M7054	WASHER	1		6.400 X 12 X 1.600 MM, (SUB FOR A590106)
53	14M7272	NUT	1		M6, (SUB FOR M500605)

RIGHT FRONT SIDE COVER

T197837 -UN-12FEB04

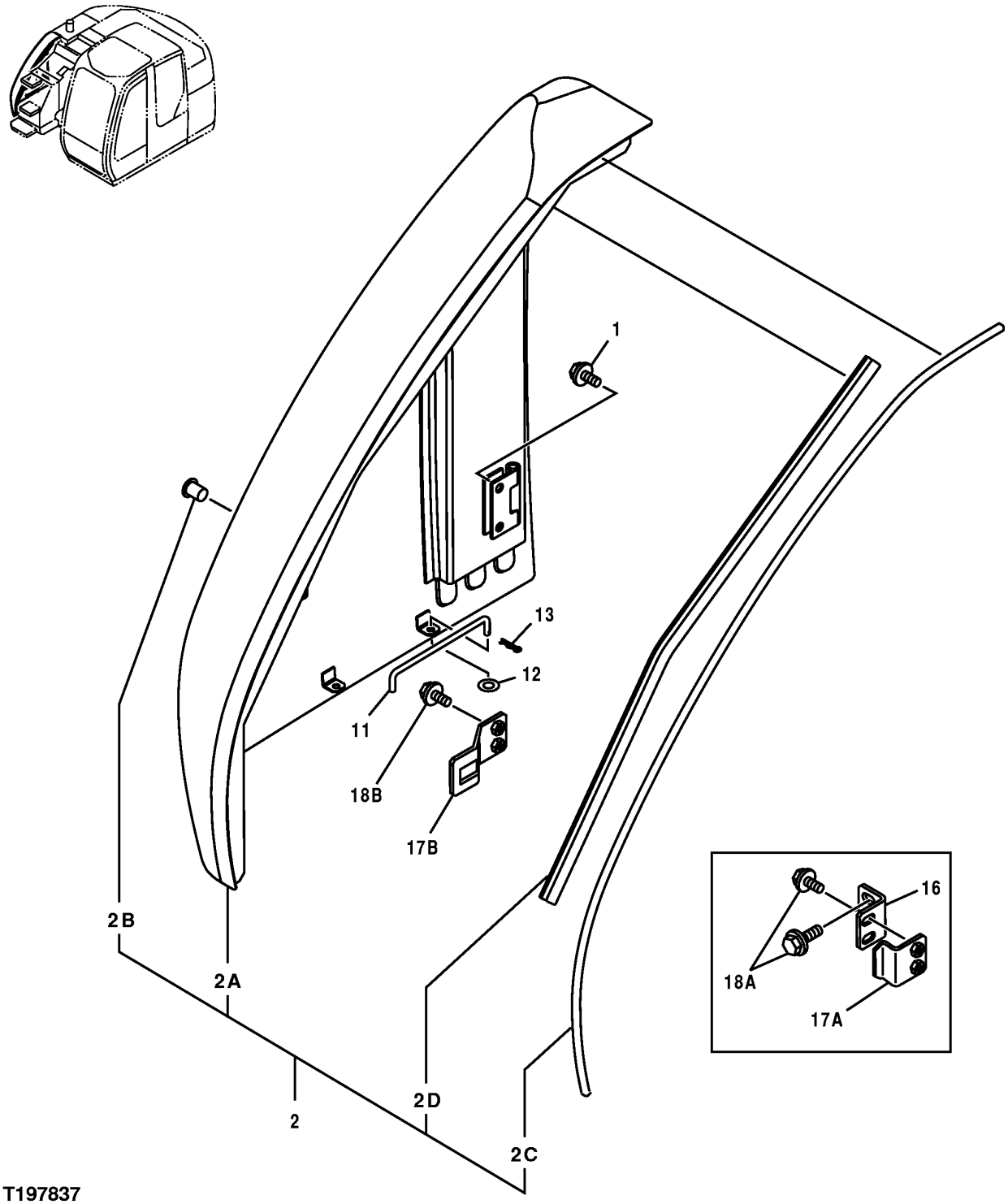

RIGHT FRONT SIDE COVER

KEY	PART NO.	PART NAME	QTY	SERIAL NO.	REMARKS
1	19M7662	CAP SCREW	4		M10 X 30, (SUB FOR J031030)
	12M7067	LOCK WASHER	4		12 MM
	24M7346	WASHER	4		11 X 20 X 2 MM
2	7039015	COVER	1	-061903	
	7041693	COVER	1	061904-	
2A	.....	COVER	1		
2B	4379989	CYLINDER	1		
2C	4462581	SEALING TRIM	1		(SUB FOR 4451150)
2D	4451151	ISOLATOR	1		
11	4341788	ROD	1		
12	24M7055	WASHER	1		8.400 X 16 X 1.600 MM, (SUB FOR A590108)
13	4022697	COTTER PIN	1		
16	4462398	BRACKET	1	-061903	
17A	9757493	STOP	1	-061903	
17B	4464840	STOP	1	061904-	
18A	19M7662	CAP SCREW	4	-061003	M10 X 30
	12M7067	LOCK WASHER	4	-061003	12 MM
	24M7346	WASHER	4	-061003	11 X 20 X 2 MM
18B	19M7662	CAP SCREW	2	061004-	M10 X 30
	12M7067	LOCK WASHER	2	061004-	12 MM
	24M7346	WASHER	2	061004-	11 X 20 X 2 MM

ENGINE COMPARTMENT TOP DOOR AND LEFT COMPARTMENT TOP COVER

T162530 -UN-13DEC02

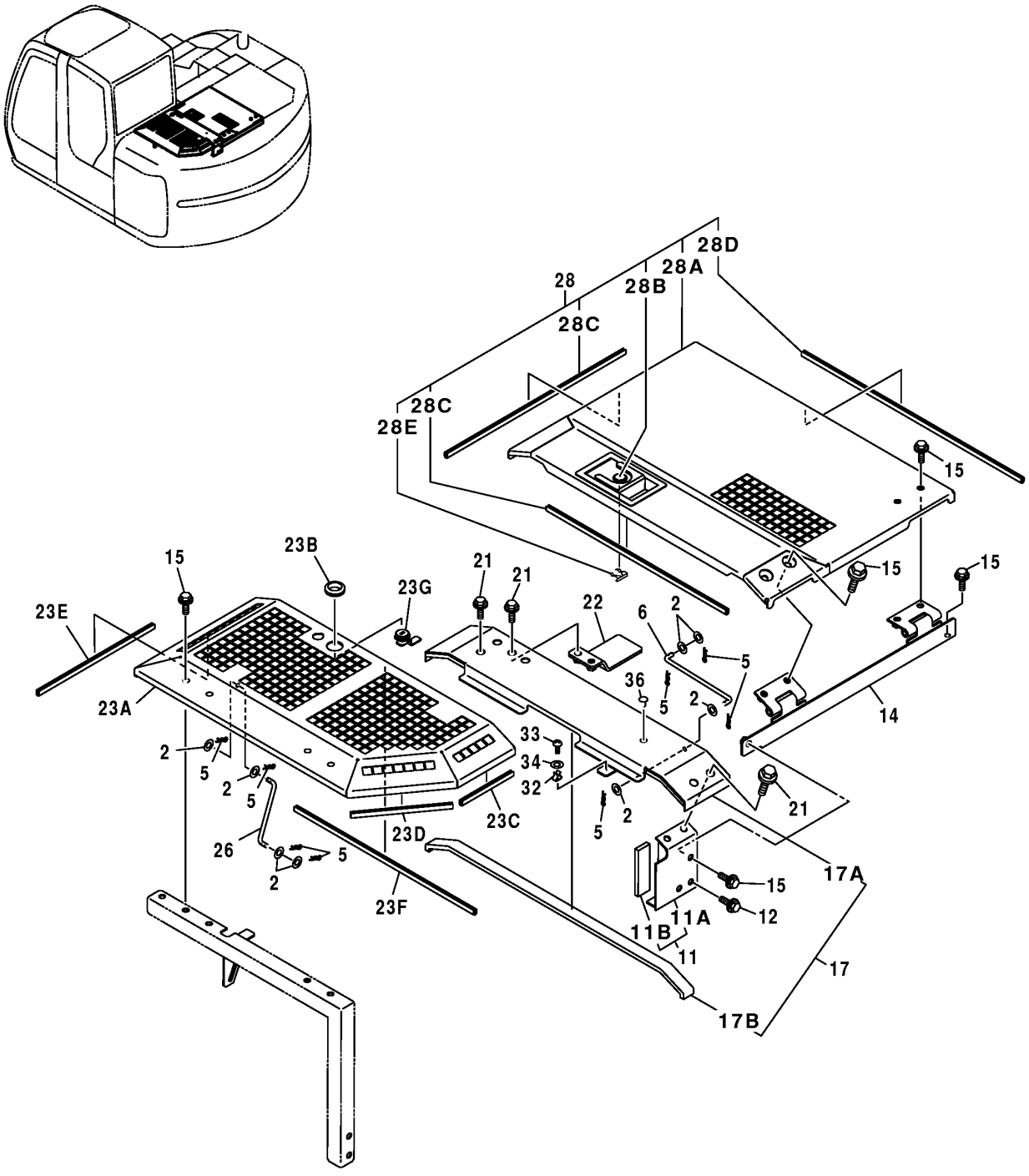

T162530

ENGINE COMPARTMENT TOP DOOR AND LEFT COMPARTMENT TOP COVER

KEY	PART NO.	PART NAME	QTY	SERIAL NO.	REMARKS
2	24M7028	WASHER	8		10.500 X 20 X 2 MM, (SUB FOR A590110)
5	H132922	COTTER PIN	8		(SUB FOR 4022697)
6	4455208	LATCH	1		
11	8083301	SUPPORT	1		
11A	.....	SUPPORT	1		
11B	4450754	ISOLATOR	1		
12	19M8162	SCREW	2		(SUB FOR J021045)
14	8083316	SUPPORT	1		
15	19M7662	CAP SCREW	10		M10 X 30, (SUB FOR J021030)
	12M7066	LOCK WASHER	10		10 MM
	24M7028	WASHER	10		10.500 X 20 X 2 MM
17	8083303	COVER	1		
17A	.....	COVER	1		
17B	4450759	ISOLATOR	1		
21	19M7662	CAP SCREW	6		M10 X 30, (SUB FOR J031030)
	12M7067	LOCK WASHER	6		12 MM
	24M7346	WASHER	6		11 X 20 X 2 MM
22	9756652	STOP	1		
23	8083304	COVER	1		
23A	.....	COVER	1		
23B	94-2810	GROMMET	1		
23C	4450859	ISOLATOR	1		
23D	4450860	ISOLATOR	1		
23E	4450861	ISOLATOR	1		
23F	4450862	ISOLATOR	1		
23G	4361458	LOCK	1		
26	4450669	LATCH	1		
28	7040042	COVER	1		
28A	.....	COVER	1		
28B	4409396	LOCK	1		
28C	4450862	ISOLATOR	2		
28D	4450864	ISOLATOR	1		
28E	4461342	CLIP	1		
32	4330276	HOLDER	1		
33	21M7396	SCREW	1		M4 X 10
34	24M7117	WASHER	1		4.300 X 9 X 0.800 MM
36	4280359	PLUG	1		

BOTTOM PROTECTION COVER

T162533 -UN-13DEC02

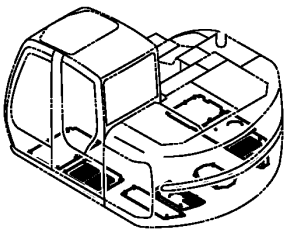

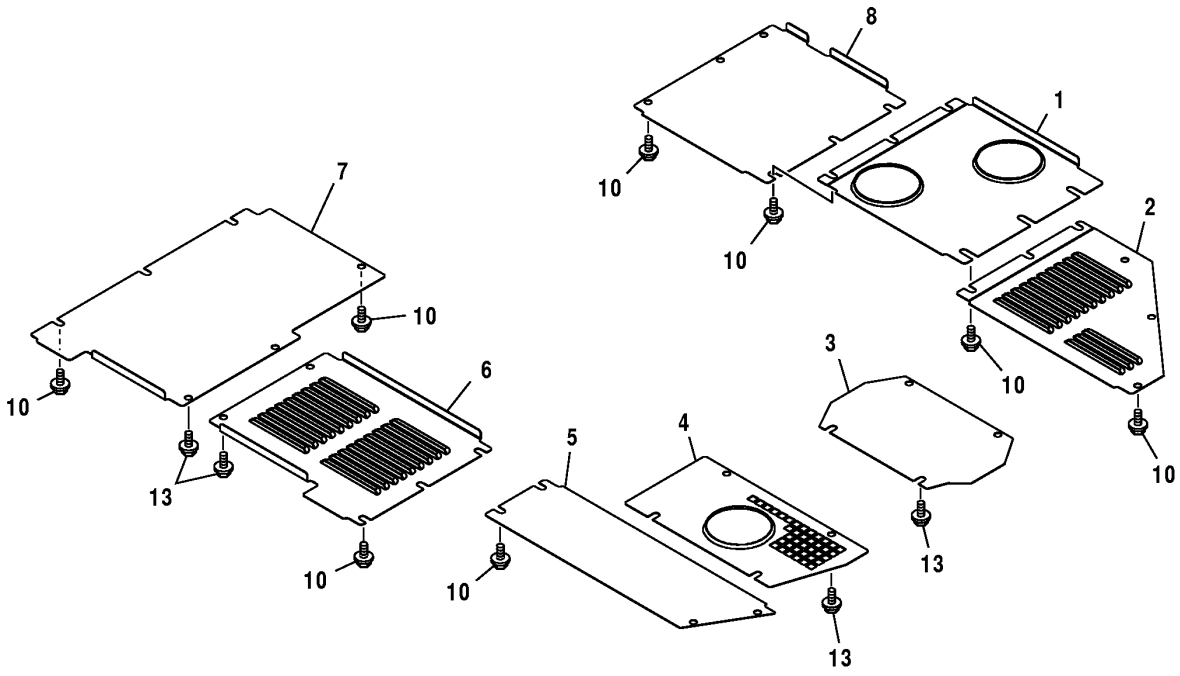

T162533

BOTTOM PROTECTION COVER

KEY	PART NO.	PART NAME	QTY	SERIAL NO.	REMARKS
1	2045328	COVER	1		
2	3089647	COVER	1		
3	3089648	COVER	1		
4	3089649	COVER	1		
5	3089650	COVER	1		
6	3089687	COVER	1		
7	3089689	COVER	1		
8	3089646	COVER	1		
10	19M7550	CAP SCREW	23		M10 X 35, (SUB FOR J071035)
	12M7066	LOCK WASHER	23		10 MM
	24M7346	WASHER	23		11 X 20 X 2 MM
13	J031040	BOLT	12		

RADIO AND SPEAKERS

T162359 -UN-27DEC02

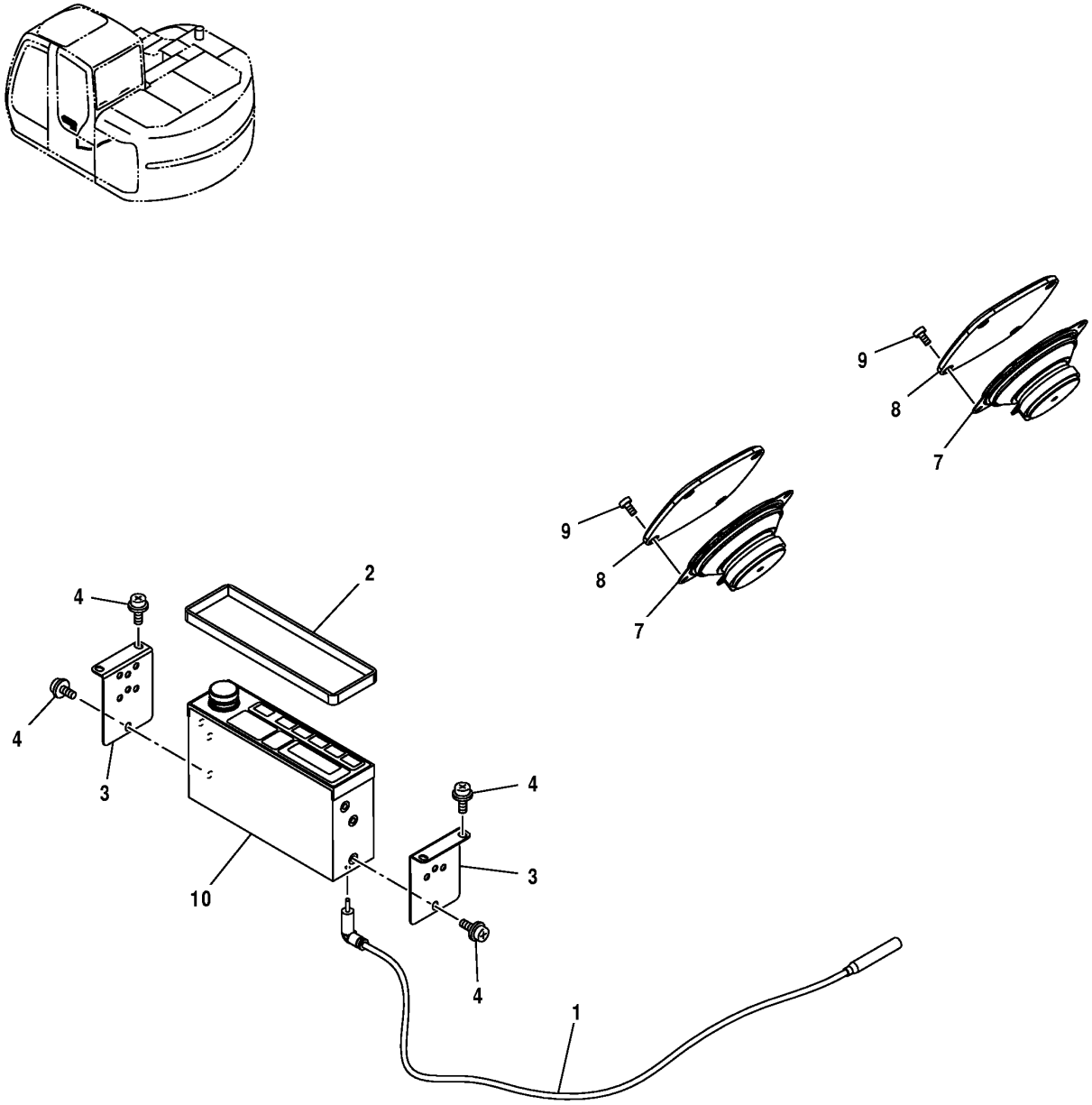

T162359

RADIO AND SPEAKERS

KEY	PART NO.	PART NAME	QTY	SERIAL NO.	REMARKS
1	4321872	FEEDER HOUSE	1		
2	4368973	ISOLATOR	1		
3	4341706	BRACKET	2		
4	19M7700	CAP SCREW	10		M5 X 10, (SUB FOR J460510)
	12M7064	LOCK WASHER	10		5 MM
	24M7348	WASHER	10		5.500 X 10 X 1 MM
7	4361302	SPEAKER	2		
8	4364504	GRILLE	2		
9	4452613	SCREW	8		
10	4613913	RADIO	1		(SUB FOR 4351187) (AM: 530-1710 KHZ)(FM: 87.7-107.9 KHZ)

LEFT SIDE CAB MIRROR

T162457 -UN-08JAN03

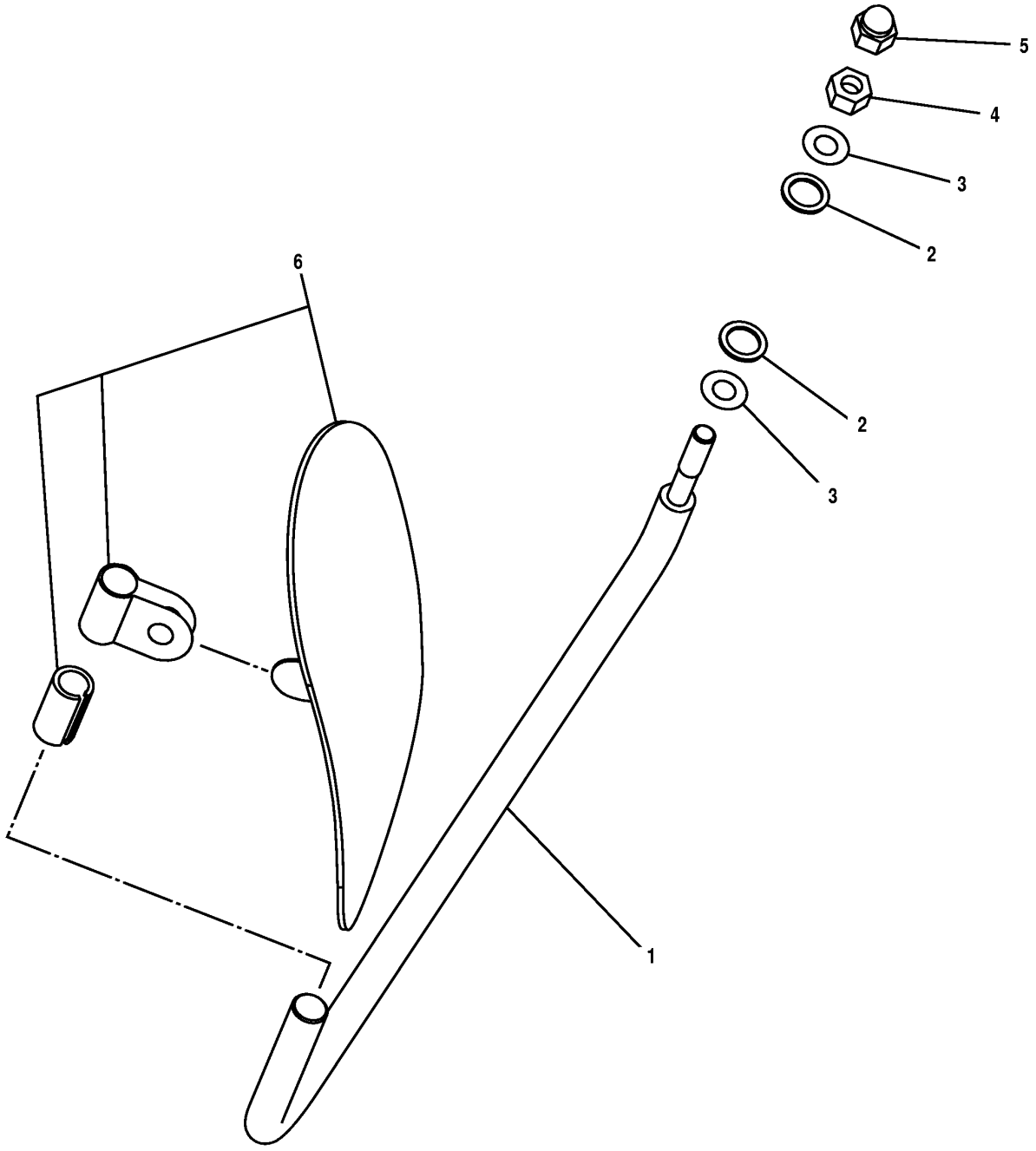

T162457

LEFT SIDE CAB MIRROR

KEY	PART NO.	PART NAME	QTY	SERIAL NO.	REMARKS
1	3091096	BRACKET	1		
2	4172172	WASHER	2		
3	J253112	WASHER	2		
4	14M7275	NUT	1		M12
5	4449509	NUT	1		
6	4420724	REAR VIEW MIRROR	1		

REAR VIEW MIRROR

T162461 -UN-16DEC02

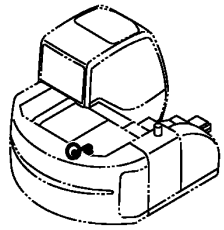

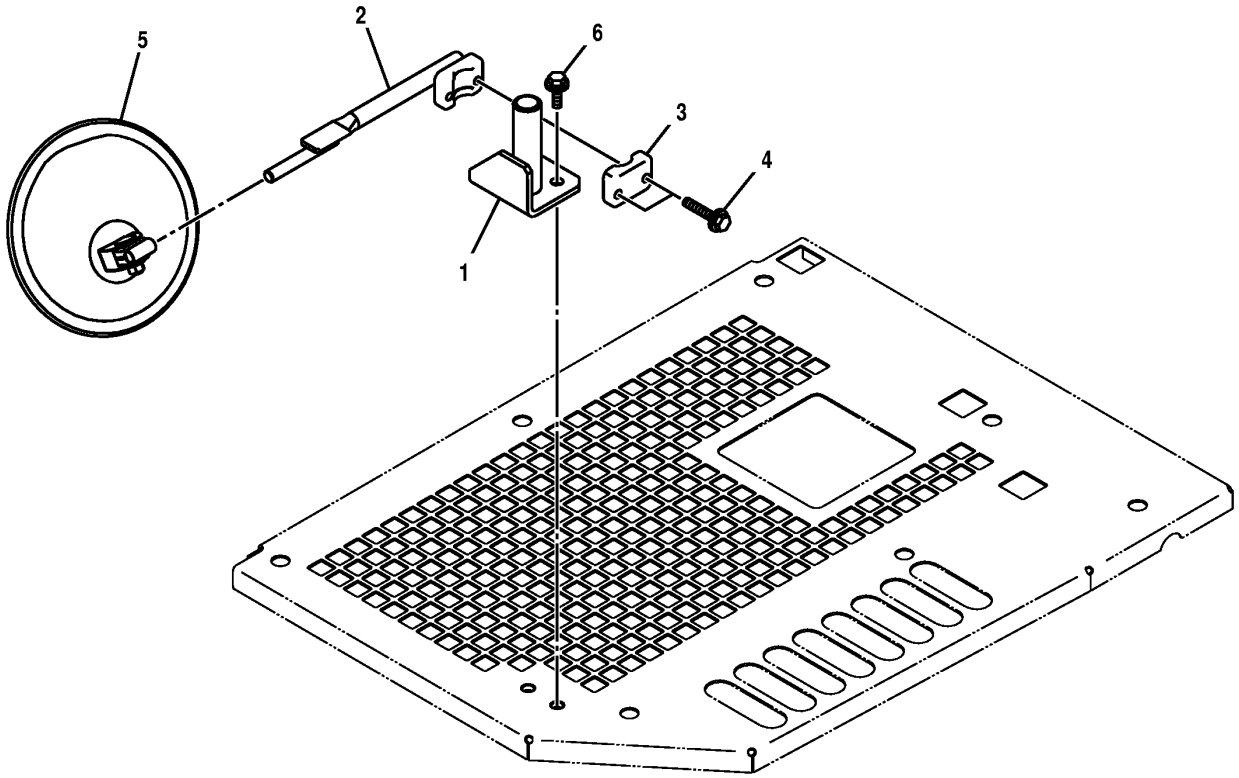

T162461

REAR VIEW MIRROR

KEY	PART NO.	PART NAME	QTY	SERIAL NO.	REMARKS
1	8084093	BRACKET	1		
2	8084094	LATCH	1		
3	4454285	CLAMP	1		
4	19M8359	CAP SCREW	2		M8 X 45, (SUB FOR J010845)
	12M7065	LOCK WASHER	2		8 MM
5	4208674	REAR VIEW MIRROR	1		
6	19M7402	CAP SCREW	2		M10 X 25, (SUB FOR J011025)
	12M7066	LOCK WASHER	2		10 MM

HORN

TP47966 -UN-21MAY96

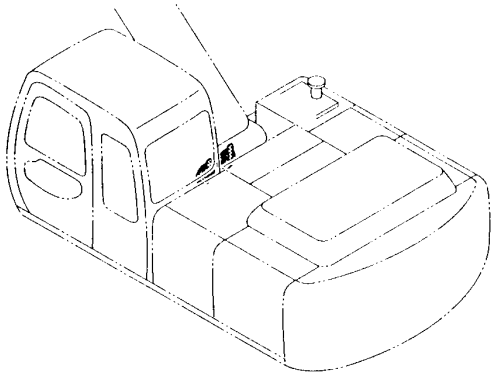

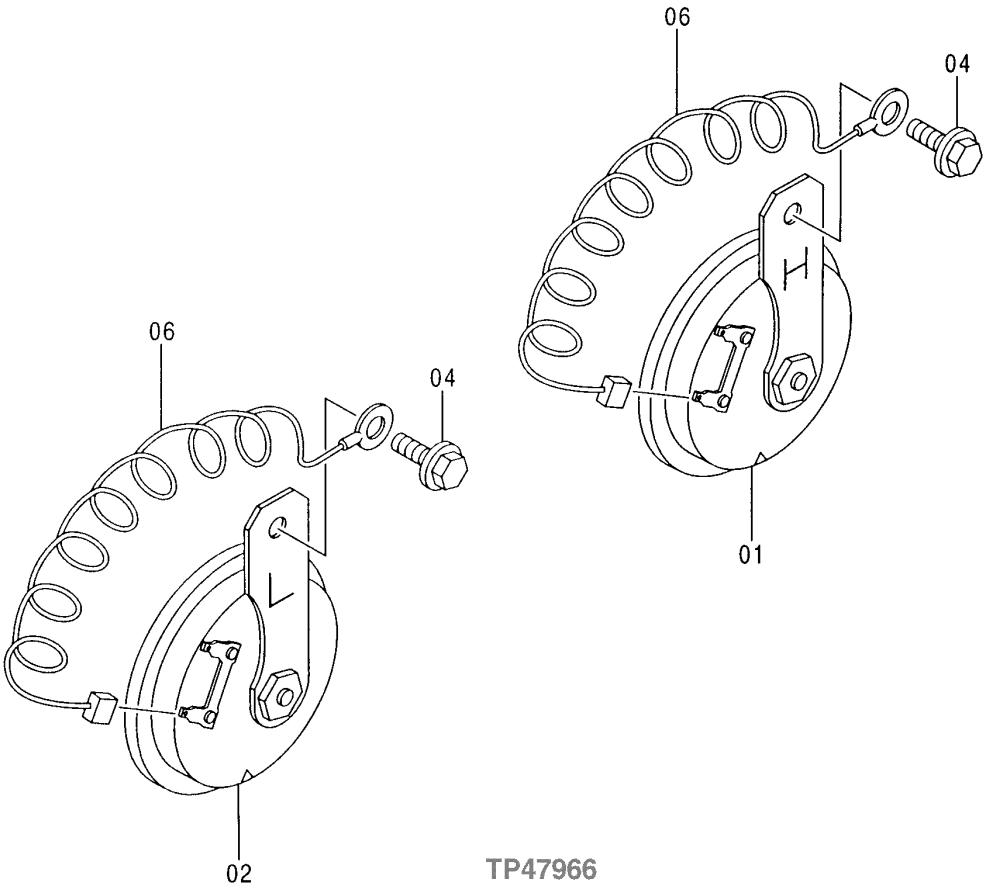

HORN

KEY	PART NO.	PART NAME	QTY	SERIAL NO.	REMARKS
1	AT64237	HORN	1		
2	AT64237	HORN	1		
4	19M7163	CAP SCREW	2		M8 X 25, (SUB FOR J020825)
	12M7065	LOCK WASHER	2		8 MM
	24M7055	WASHER	2		8.400 X 16 X 1.600 MM
6	4254603	WIRING HARNESS	2		

REVERSE ALARM

T162382 -UN-23JAN03

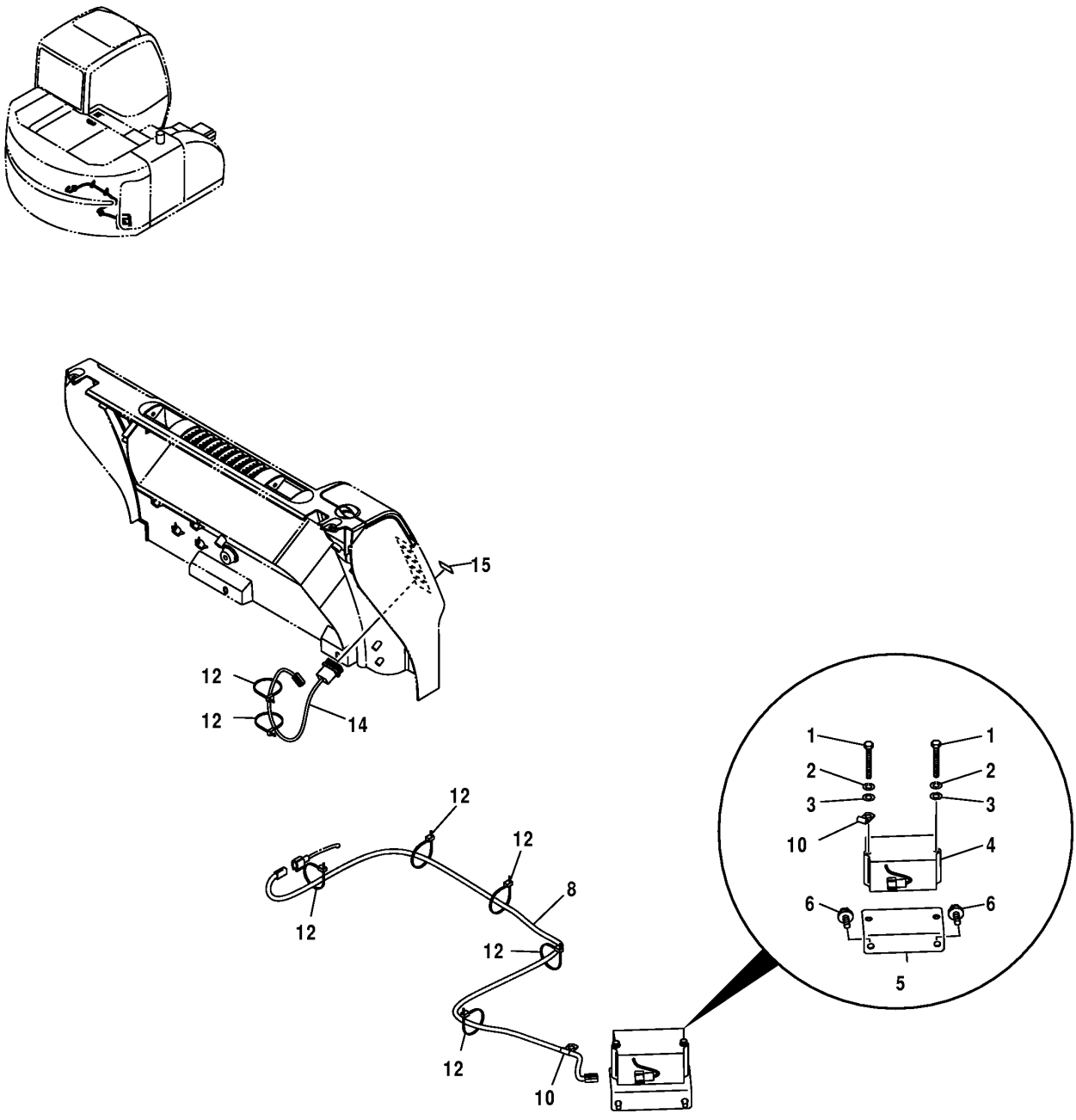

T162382

REVERSE ALARM

KEY	PART NO.	PART NAME	QTY	SERIAL NO.	REMARKS
1	19M8456	CAP SCREW	2		M8 X 100, (SUB FOR J900800)
2	12M7065	LOCK WASHER	2		8 MM, (SUB FOR A590908)
3	24M7055	WASHER	2		8.400 X 16 X 1.600 MM, (SUB FOR A590108)
4	AT301074	ALARM SYSTEM	1		(SUB FOR 4283028)
5	.....	BRACKET	1		
6	19M7402	CAP SCREW	2		M10 X 25, (SUB FOR J021025)
	12M7066	LOCK WASHER	2		10 MM
	24M7028	WASHER	2		10.500 X 20 X 2 MM
8	3091694	WIRING HARNESS	1		
10	4190261	CLIP	1		
12	H77698	TIE BAND	8		
14	4384758	SWITCH	1		
15	4450174	LABEL	1		(SUB FOR 4441246)

POWER SUPPLY (12 VOLT)

T162445 -UN-27DEC02

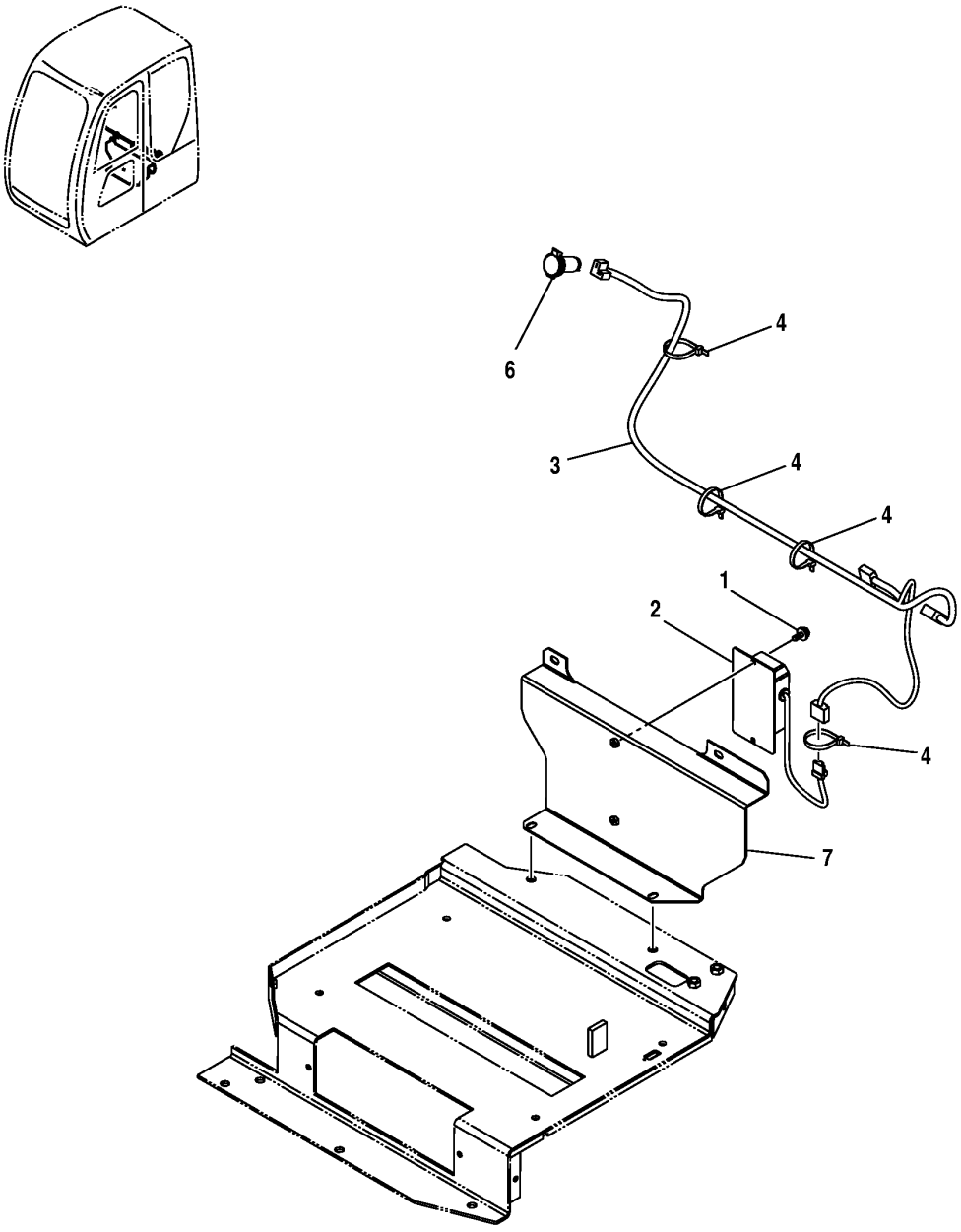

T162445

POWER SUPPLY (12 VOLT)

KEY	PART NO.	PART NAME	QTY	SERIAL NO.	REMARKS
1	19M8425	CAP SCREW	2		M6 X 16, (SUB FOR J460616)
	12M7006	LOCK WASHER	2		6 MM
	24M7293	WASHER	2		6.500 X 13 X 1.600 MM
2	4450008	POWER SUPPLY	1		
3	3092650	WIRING HARNESS	1		
4	H77698	TIE BAND	4		
6	4432965	ELEC. CONNECTOR TERMINAL	1		
7	7040364	COVER	1		

SUN VISOR

T162468 -UN-26DEC02

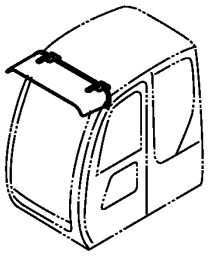

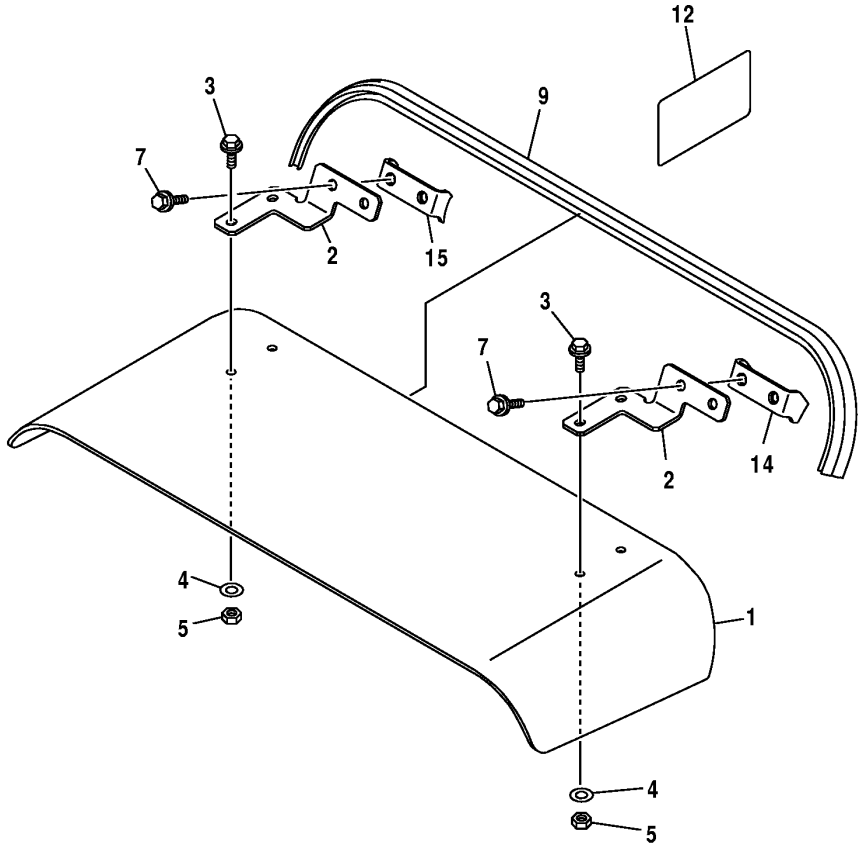

T162468

SUN VISOR

KEY	PART NO.	PART NAME	QTY	SERIAL NO.	REMARKS
1	2047238	SUN VISOR	1		
2	3092820	BRACKET	2		
3	19M7407	CAP SCREW	4		M8 X 25, (SUB FOR J090825)
	24M7055	WASHER	4		8.400 X 16 X 1.600 MM
	12M7065	LOCK WASHER	4		8 MM
4	12M7036	LOCK PLATE	4		
5	14M7273	NUT	4		M8, (SUB FOR J231108)
7	19M7662	CAP SCREW	4		M10 X 30, (SUB FOR J051030)
	24M7096	WASHER	4		10.500 X 18 X 1.600 MM
	12M7066	LOCK WASHER	4		10 MM
9	4356604	BUSHING	1		
12	.....	LABEL	1		(3079531 NO LONGER AVAILABLE - JAPANESE VERSION)
14	4459224	BRACKET	1		
15	4459225	BRACKET	1		

PILOT HOSES (BLADE CONTROL VALVE TO SHUTTLE VALVE) (BLADE CONTROL VALVE TO PILOT SHUTOFF VALVE)

T188411 -UN-25MAR03

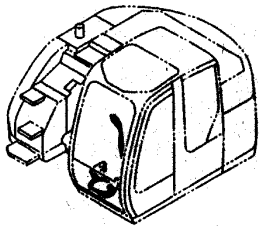

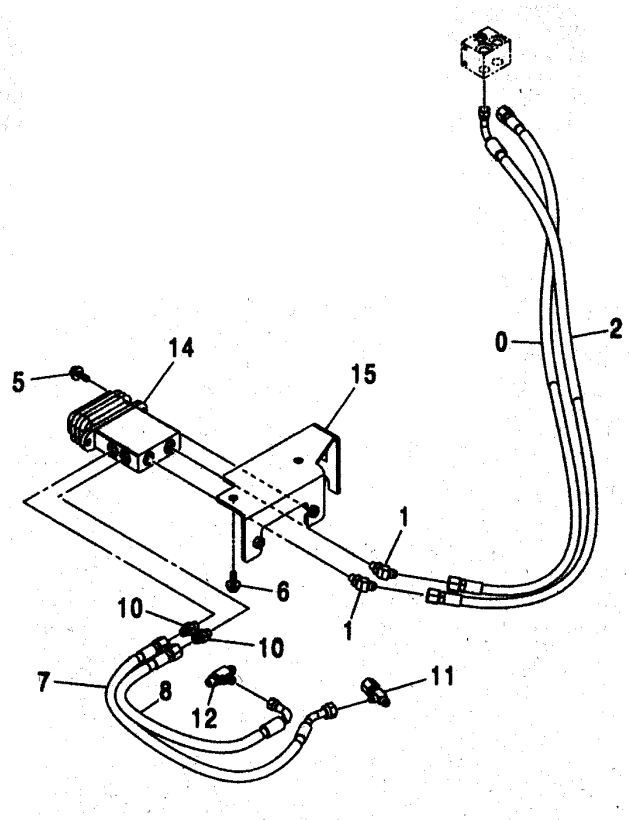

T188411

3B16

PILOT HOSES (BLADE CONTROL VALVE TO SHUTTLE VALVE) (BLADE CONTROL VALVE TO PILOT SHUTOFF VALVE)

KEY	PART NO.	PART NAME	QTY	SERIAL NO.	REMARKS
0	9201413	HYDRAULIC HOSE - FABRICATE	1		
1	A852223	ELBOW FITTING	2		
	M800650	PACKING	2		
2	9201414	HYDRAULIC HOSE - FABRICATE	1		
5	19M7662	CAP SCREW	2		M10 X 30
	12M7066	LOCK WASHER	2		10 MM
	24M7028	WASHER	2		10.500 X 20 X 2 MM
6	19M7402	CAP SCREW	2		M10 X 25
	12M7066	LOCK WASHER	2		10 MM
	24M7028	WASHER	2		10.500 X 20 X 2 MM
7	9201415	HYDRAULIC HOSE - FABRICATE	1		
8	9203779	HYDRAULIC HOSE - FABRICATE	1		
10	A852123	ADAPTER	2		
	M800650	PACKING	2		
11	4246672	TEE FITTING	1		
12	A852423	TEE FITTING	1		
	M800650	PACKING	1		
14	4357586	HYDR./PILOT CONTROL VALVE	1		
15	8083349	BRACKET	1		

PILOT CONTROL LEVER (BLADE)

T160688 -UN-31OCT02

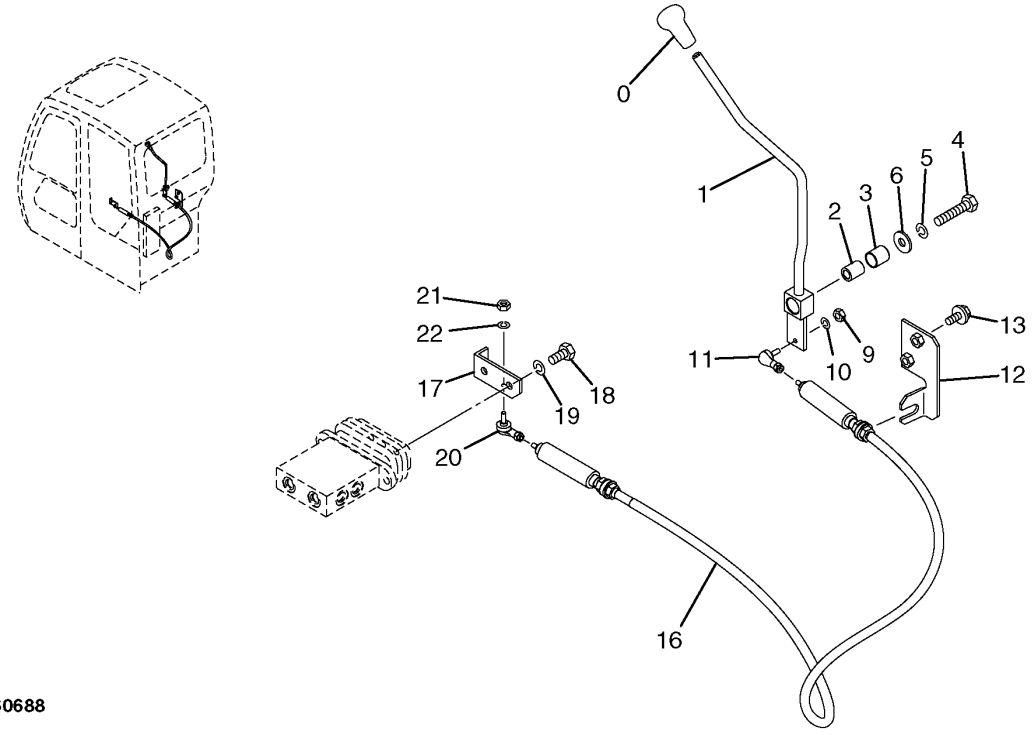

T160688

PILOT CONTROL LEVER (BLADE)

KEY	PART NO.	PART NAME	QTY	SERIAL NO.	REMARKS
0	4280117	GRIP	1		(USE WITH 8081981)
	4363754	GRIP	1		(USE WITH 7045626)
1	7045626	LEVER	1		(SUB FOR 8081981)
	8094751	BRACKET	1		(NOT ILLUSTRATED)
2	4279507	BUSHING	1		
3	4396083	BUSHING	1		
4	19M7362	CAP SCREW	1		M12 X 55
5	12H301	LOCK WASHER	1		1/2"
6	Z449490	WASHER	1		
9	14M7272	NUT	1		M6
10	12M7006	LOCK WASHER	1		6 MM (0.236")
11	4056017	BALL JOINT	1		
12	8080381	BRACKET	1		
13	19M7402	CAP SCREW	2		M10 X 25
	12M7066	LOCK WASHER	2		10 MM (0.394")
	24M7028	WASHER	2		10.500 X 20 X 2 MM (0.413" X 0.787" X 0.079")
16	4454725	PUSH PULL CABLE	1		
17	9754977	BRACKET	1		
18	19M7938	CAP SCREW	2		M10 X 20, (SUB FOR J901020)
19	12M7066	LOCK WASHER	2		10 MM (0.394")
20	4056017	BALL JOINT	1		
21	14M7272	NUT	1		M6
22	12M7006	LOCK WASHER	1		6 MM (0.236")

BLADE AND PINS

T191060 -UN-15MAY03

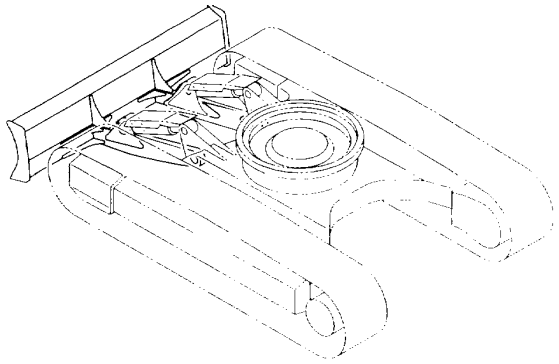

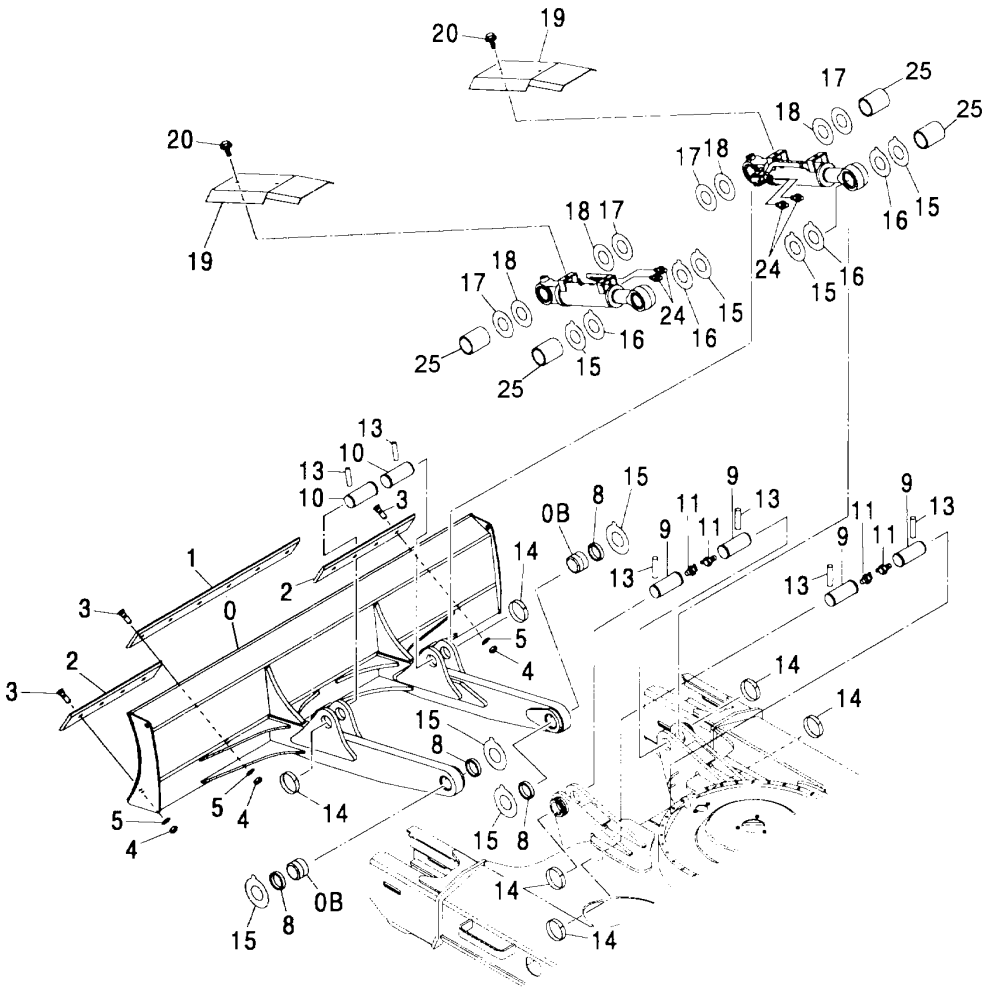

T191060

BLADE AND PINS

KEY	PART NO.	PART NAME	QTY	SERIAL NO.	REMARKS
0	7037910	BLADE	1		(2490MM WIDE, FOR USE WITH 500 OR 600MM SHOES)
	7041539	BLADE	1		(2690MM WIDE, FOR USE WITH 700MM WIDE SHOES)
0B	4376210	BUSHING	2		(FOR USE WITH ALL BLADES)
1	3091707	CUTTING EDGE	1		(FOR USE WITH ALL BLADES)
2	3091708	CUTTING EDGE	2		(WITH 2490MM BLADE, FOR USE WITH 500 OR 600MM SHOES)
	3093961	CUTTING EDGE	2		(WITH 2690MM BLADE, FOR USE WITH 700MM SHOES)
3	4184865	BOLT	14		
4	K40016	LOCK NUT	14		
5	N231749	WASHER	14		
8	TH104472	SEAL	4		
9	4348569	PIN FASTENER	4		
10	4347428	PIN FASTENER	2		
11	T116334	LUBRICATION FITTING	4		
13	4106307	PIN	6		
14	4098716	RING	6		
15	P61821	PLATE	8		
16	P61822	PLATE	4		
17	4366692	THRUST WASHER	4		
18	4367410	THRUST WASHER	4		
19	3091704	COVER	2		
20	J031230	BOLT	4		
22	9187647	CYLINDER	1		
23	9187648	CYLINDER	1		
24	A852133	ADAPTER	4		
	CH11570	O-RING	4		
25	4376210	BUSHING	4		(SUB FOR 4432511) (ALSO ORDER (4) TH104472)

SUPPORTS, ROTARY MANIFOLD (BLADE OPTION)

T164155 -UN-22JAN03

ART NOT AVAILABLE AT TIME OF PUBLICATION

CALL DTAC FOR ASSISTANCE

T164155

SUPPORTS, ROTARY MANIFOLD (BLADE OPTION)

KEY	PART NO.	PART NAME	QTY	SERIAL NO.	REMARKS
2	24M7345	WASHER	4		13.500 X 24 X 2.500 MM, (SUB FOR (4) J222012)
3	9755255	STOP	1		
4	4425270	COVER	1		
6	19M7403	CAP SCREW	2		(SUB FOR (2) 19M7403)
7	12H301	LOCK WASHER	2		(SUB FOR (2) 12H301)

PILOT LINES(FROM SOLENOID VALVE, PILOT SIGNAL MANIFOLD, AND CONTROL VALVE TO BUCKET SHUTTLE VALVE)
T198714 -UN-16APR04

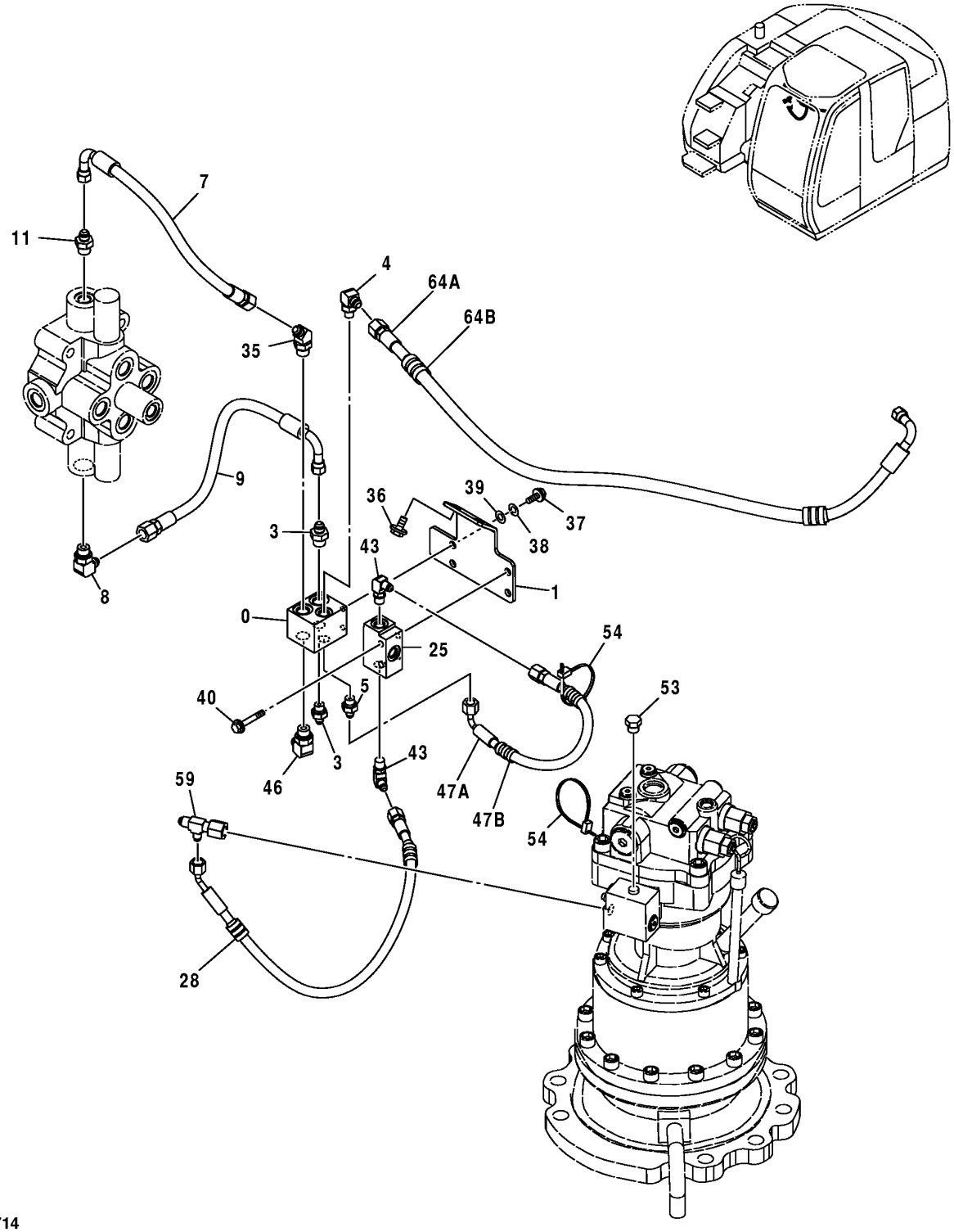

T198714

PILOT LINES(FROM SOLENOID VALVE, PILOT SIGNAL MANIFOLD, AND CONTROL VALVE TO BUCKET SHUTTLE VALVE)

KEY	PART NO.	PART NAME	QTY	SERIAL NO.	REMARKS
0	4330230	VALVE	1		
1	8083335	BRACKET	1		
3	A852133	ADAPTER	2		
	CH11570	O-RING	2		
4	A852323	ELBOW FITTING	1		
	M800650	PACKING	1		
5	A852122	ADAPTER	1		
	M800650	PACKING	1		
7	4451119	HYDRAULIC HOSE - FABRICATE	1		
8	A852333	ELBOW FITTING	1		
	CH11570	O-RING	1		
9	4451089	HYDRAULIC HOSE - FABRICATE	1		
11	A852133	ADAPTER	1		
	CH11570	O-RING	1		
25	4203447	VALVE	2		
28	9203735	HYDRAULIC HOSE - FABRICATE	1		
35	4190244	ELBOW FITTING	1		
	CH11570	O-RING	1		
36	19M7402	CAP SCREW	2		
	12M7066	LOCK WASHER	2		
	24M7028	WASHER	2		
37	19M7139	CAP SCREW	2		
38	24M7055	WASHER	2		8.400 X 16 X 1.600 MM, (SUB FOR A590108)
39	12M7065	LOCK WASHER	2		8 MM, (SUB FOR A590908)
40	J020850	SCREW WITH WASHER	2		
43	4154670	ELBOW FITTING	2		(SUB FOR A852322, P67984 OR THA852322)
	M800650	PACKING	2		
46	A852333	ELBOW FITTING	1		
	CH11570	O-RING	1		
47A	4442219	HYDRAULIC HOSE - FABRICATE	1		(SUB FOR 9203708, ALONG WITH 4449646)
47B	4449646	GUARD	1		
53	A885002	PIPE PLUG	1		
	M800650	PACKING	1		
54	H77698	TIE BAND	2		
59	4425484	UNION FITTING	1		
64A	4463196	HOSE	1		(SUB FOR 9207014, ALONG WITH (2) 4327293)
64B	4327293	HOSE GUARD	2		

PILOT LINES(FROM SOLENOID VALVE, PILOT SIGNAL MANIFOLD, AND CONTROL VALVE TO BUCKET SHUTTLE VALVE)
T198703 -UN-16APR04

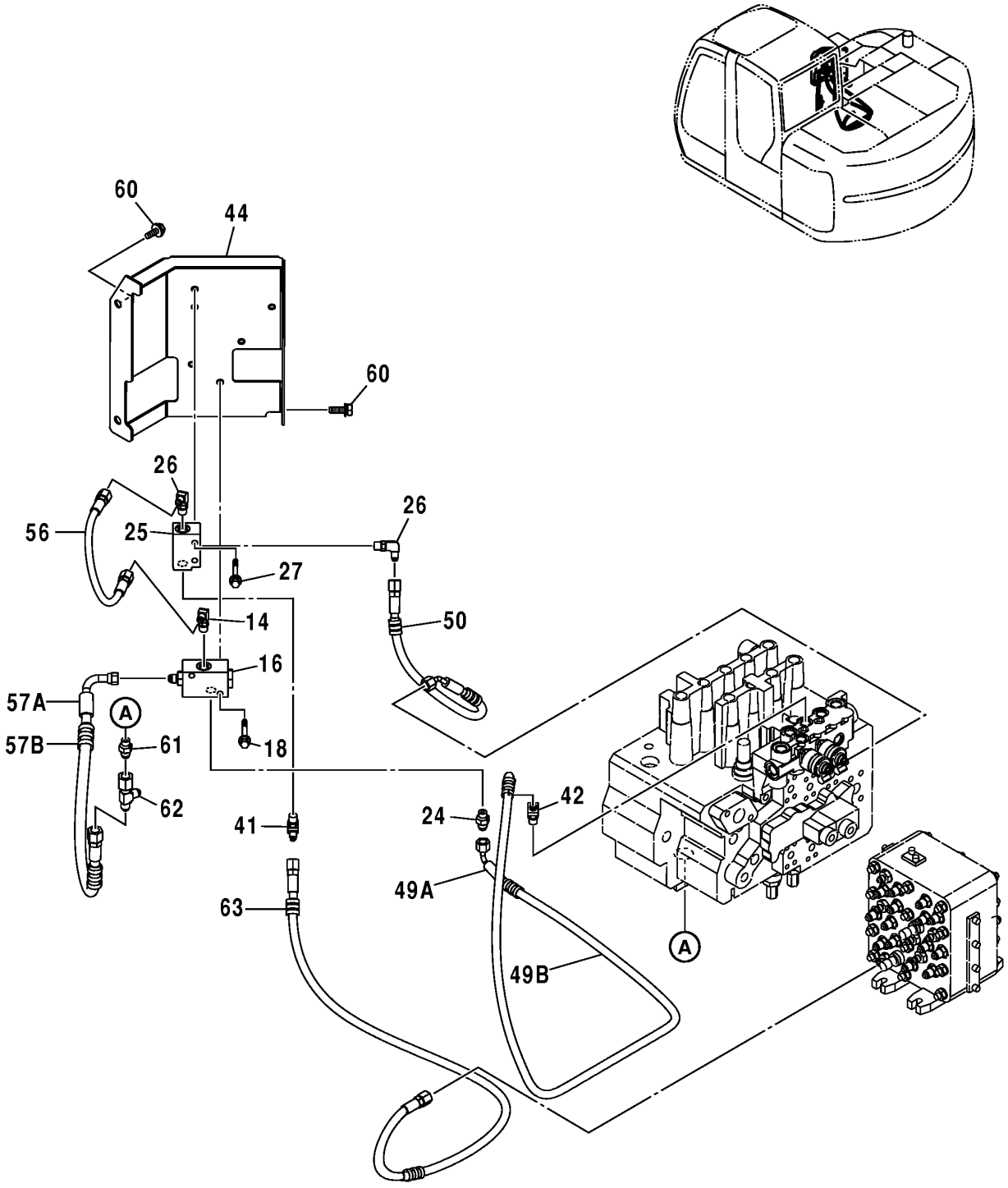

T198703

PILOT LINES(FROM SOLENOID VALVE, PILOT SIGNAL MANIFOLD, AND CONTROL VALVE TO BUCKET SHUTTLE VALVE)

KEY	PART NO.	PART NAME	QTY	SERIAL NO.	REMARKS
14	4154670	ELBOW FITTING	1		(SUB FOR A852322, P67984 OR THA852322)
	M800650	PACKING	1		
16	4337928	VALVE	1		
18	J020850	SCREW WITH WASHER	2		
24	A852122	ADAPTER	1		
	M800650	PACKING	1		
25	4203447	VALVE	1		
26	4154670	ELBOW FITTING	2		(SUB FOR A852322, P67984 OR THA852322)
	M800650	PACKING	2		
27	J020850	SCREW WITH WASHER	2		
41	A852222	ELBOW FITTING	1		
	M800650	PACKING	1		
42	A852222	ELBOW FITTING	1		
	M800650	PACKING	1		
44	8083432	BRACKET	1		
49A	4451128	HOSE	1		(SUB FOR 9201408, ALONG WITH 4327293)
49B	4327293	HOSE GUARD	1		
50	9201410	HYDRAULIC HOSE - FABRICATE	1		
56	4200496	HYDRAULIC HOSE - FABRICATE	1		
57A	4451924	HYDRAULIC HOSE - FABRICATE	1		(SUB FOR 9201407, ALONG WITH 4327293)
57B	4327293	HOSE GUARD	1		
60	19M7662	CAP SCREW	3		
	12M7066	LOCK WASHER	3		
	24M7028	WASHER	3		
61	A852123	ADAPTER	1		
	M800650	PACKING	1		
62	4246672	TEE FITTING	1		
63	9207016	HYDRAULIC HOSE - FABRICATE	1		

RETURN HOSES (FROM BLADE CONTROL VALVE TO RESERVOIR) (CONTROL VALVE TO RESERVOIR)

T198890 -UN-07APR04

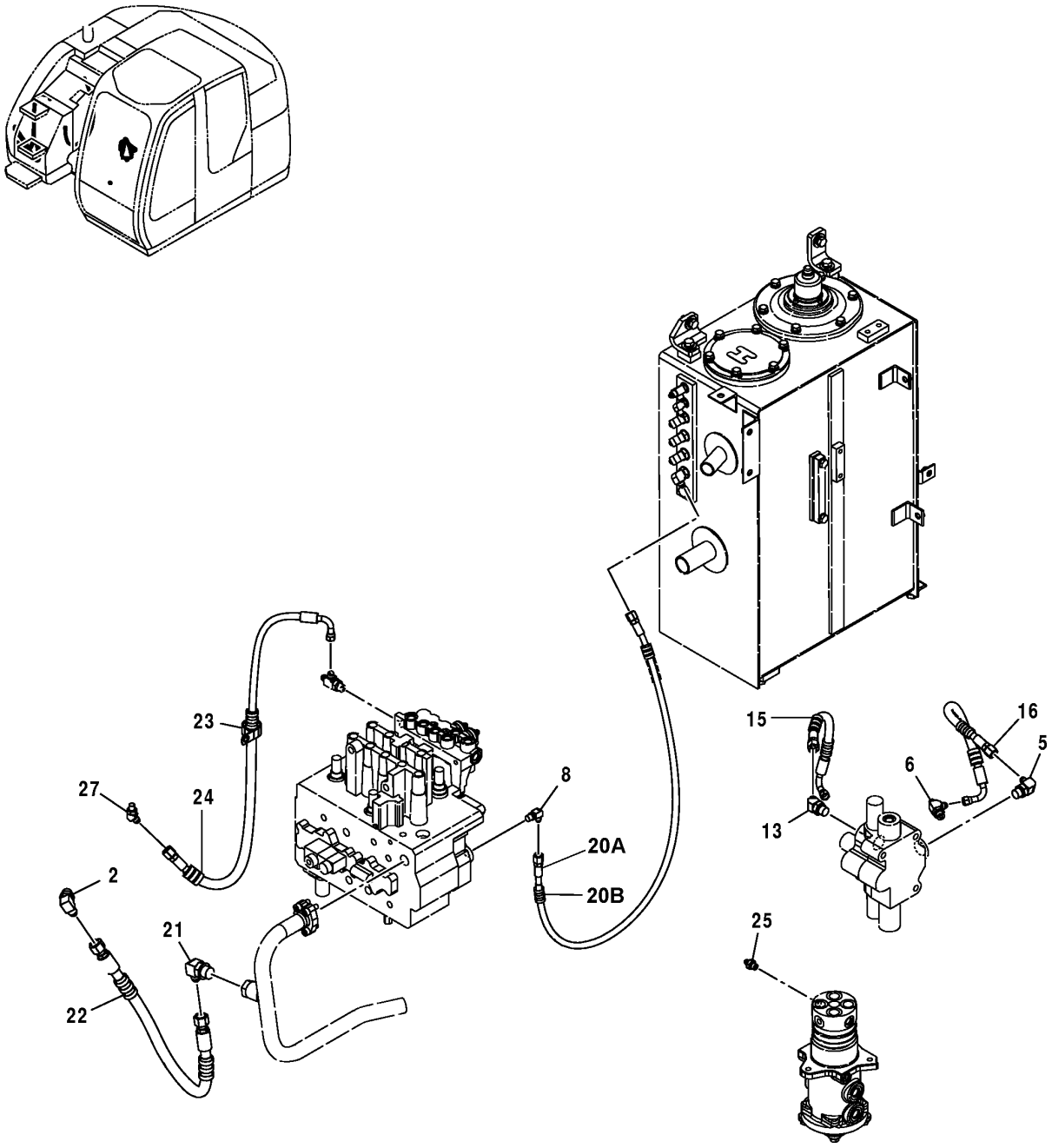

T198890

RETURN HOSES (FROM BLADE CONTROL VALVE TO RESERVOIR) (CONTROL VALVE TO RESERVOIR)

KEY	PART NO.	PART NAME	QTY	SERIAL NO.	REMARKS
2	A852344	ELBOW FITTING	1		
	4506418	O-RING	1		
5	A852343	ELBOW FITTING	1		
	4506418	O-RING	1		
6	A852433	TEE FITTING	1		
	CH11570	O-RING	1		
8	4154670	ELBOW FITTING	1		(SUB FOR A852322, P67984 OR THA852322)
	M800650	PACKING	1		
11	A852433	TEE FITTING	1		
	CH11570	O-RING	1		
13	A852243	ELBOW FITTING	1		
	4506418	O-RING	1		
15	9203706	HYDRAULIC HOSE	1		
16	9203707	HYDRAULIC HOSE	1		
20A	4451090	HOSE	1		(SUB FOR 9207011, ALONG WITH (2) 4327293)
20B	4327293	HOSE GUARD	2		
21	4353073	ELBOW FITTING	1		
	4506424	O-RING	1		
22	9207021	HYDRAULIC HOSE	1		
23	4190265	CLIP	1		
24	9207012	HYDRAULIC HOSE	1		
25	A852122	ADAPTER	1		
	M800650	PACKING	1		
27	A852223	ELBOW FITTING	1		
	M800650	PACKING	1		

MAIN HOSES (BLADE OPTION) (PUMP TO CONTROL VALVE) (CONTROL VALVE TO BLADE CONTROL VALVE)

T198700 -UN-16APR04

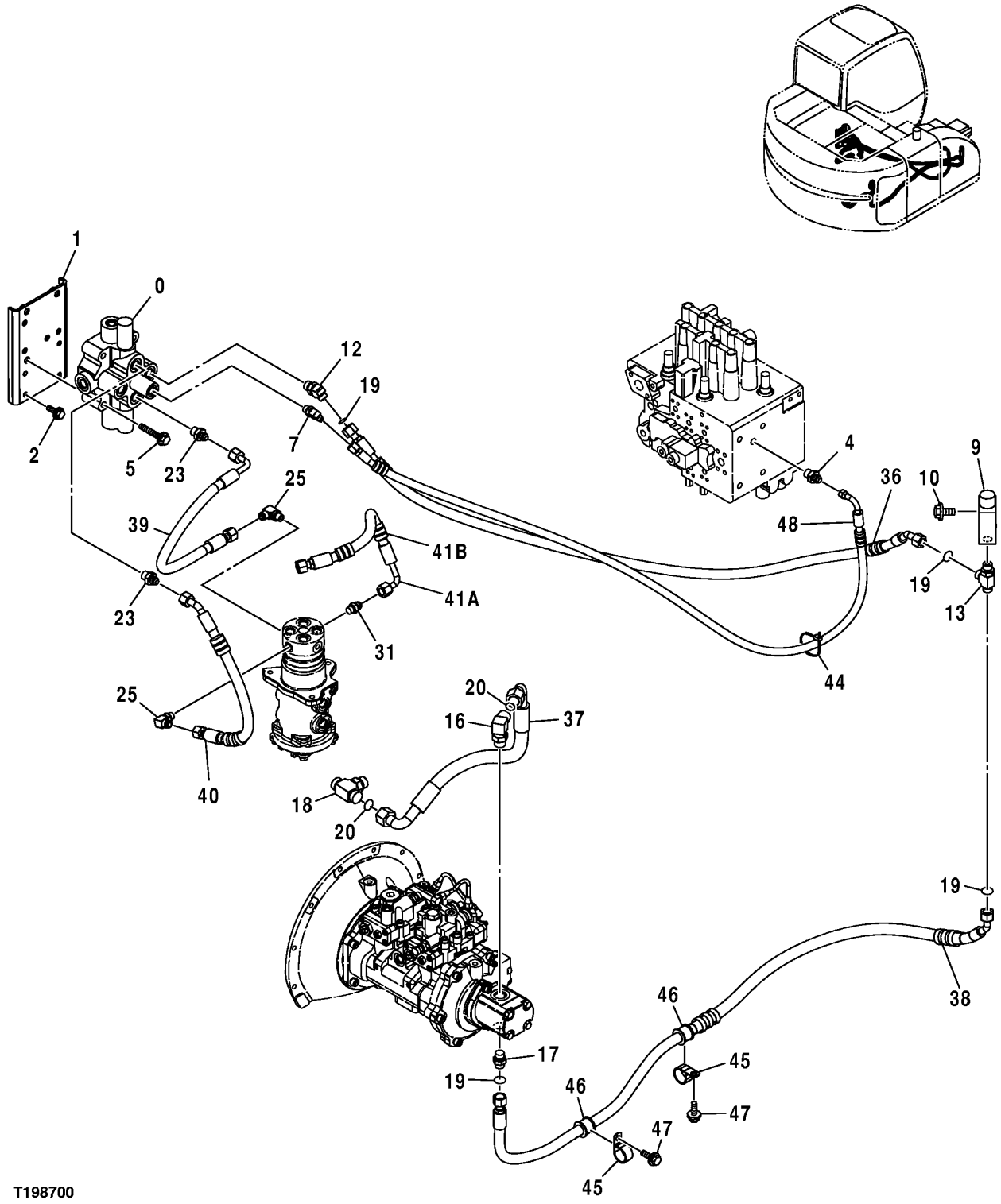

MAIN HOSES (BLADE OPTION) (PUMP TO CONTROL VALVE) (CONTROL VALVE TO BLADE CONTROL VALVE)

KEY	PART NO.	PART NAME	QTY	SERIAL NO.	REMARKS
0	4401481	CONTROL VALVE	1		
1	8083333	BRACKET	1		
2	19M7402	CAP SCREW	4		
	12M7066	LOCK WASHER	4		
4	4376657	ADAPTER	1		
	CH11570	O-RING	1		
5	J011280	BOLT	3		
7	4190244	ELBOW FITTING	1		
	CH11570	O-RING	1		
9	4411019	PRESSURE RELIEF VALVE	1		
10	19M7981	CAP SCREW	2		
	12M7065	LOCK WASHER	2		
	24M7096	WASHER	2		
12	A853244	TEE FITTING	1		
	4506418	O-RING	1		
13	A853444	TEE FITTING	1		
	4506418	O-RING	1		
16	A853366	ELBOW FITTING	1		
	4506424	O-RING	1		
17	A853144	ADAPTER	1		
	4506418	O-RING	1		
18	A853566	TEE FITTING	1		
	4506424	O-RING	1		
19	T77857	O-RING	4		
20	T77858	O-RING	2		
23	A852144	ADAPTER	2		
	4506418	O-RING	2		
25	A852334	ELBOW FITTING	2		
	CH11570	O-RING	2		
31	A852134	ADAPTER	1		
	CH11570	O-RING	1		
36	9203700	HYDRAULIC HOSE - FABRICATE	1		
37	4454538	HYDRAULIC HOSE - FABRICATE	1		
38	9204313	HYDRAULIC HOSE - FABRICATE	1		
39	9201403	HYDRAULIC HOSE - FABRICATE	1		
40	9201404	HYDRAULIC HOSE - FABRICATE	1		
41A	4420423	HYDRAULIC HOSE - FABRICATE	1		(SUB FOR 9201406, ALONG WITH 4327294)
41B	4327294	HOSE GUARD	1		
44	H77698	TIE BAND	1		
45	4193848	CLIP	2		(SUB FOR 4190264)
46	4457233	BUSHING	2		
47	19M7938	CAP SCREW	2		
	12M7066	LOCK WASHER	2		
48	9184663	HYDRAULIC HOSE - FABRICATE	1		
	4327293	HOSE GUARD	4		

BLADE AND BLADE CYLINDERS

T188464 -UN-25MAR03

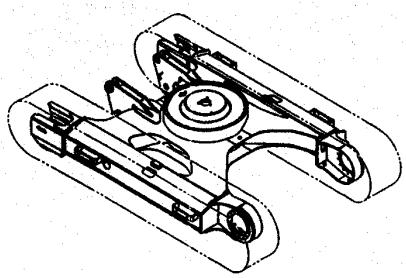

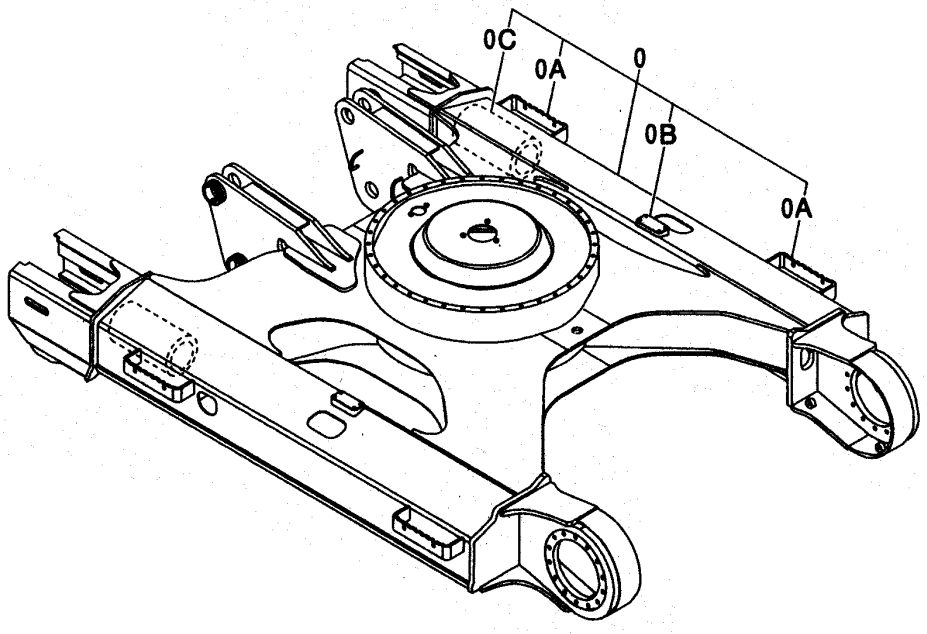

T188464

BLADE AND BLADE CYLINDERS

KEY	PART NO.	PART NAME	QTY	SERIAL NO.	REMARKS
0	5007845	FRAME	1		
0A	4447431	STEP	4		
0B	3087511	BRACKET	2		
0C	4284441	PIPE	2		

PILOT PIPING (BLADE)

T164155 -UN-22JAN03

ART NOT AVAILABLE AT TIME OF PUBLICATION

CALL DTAC FOR ASSISTANCE

T164155

PILOT PIPING (BLADE)

KEY	PART NO.	PART NAME	QTY	SERIAL NO.	REMARKS
2	4450544	HYDRAULIC HOSE - FABRICATE	1		
3	4450527	HYDRAULIC HOSE - FABRICATE	1		
5	A852522	TEE FITTING	1		
	M800650	PACKING	1		
6	A852132	ADAPTER	1		
	CH11570	O-RING	1		
7	H77698	TIE BAND	1		
9	4190274	CLIP	1		
10	19M7938	CAP SCREW	2		M10 X 20
	12M7066	LOCK WASHER	2		10 MM (0.394")
11	T30367	CLAMP	1		
12	4327294	HOSE GUARD	2		
13	4411911	SNAP RING	1		
14	4457105	HYDRAULIC HOSE - FABRICATE	1		
15	4450976	HYDRAULIC HOSE - FABRICATE	1		

ESCO BUCKET CUTTING EDGES, TEETH AND ADAPTERS

T149713 -UN-04JAN02

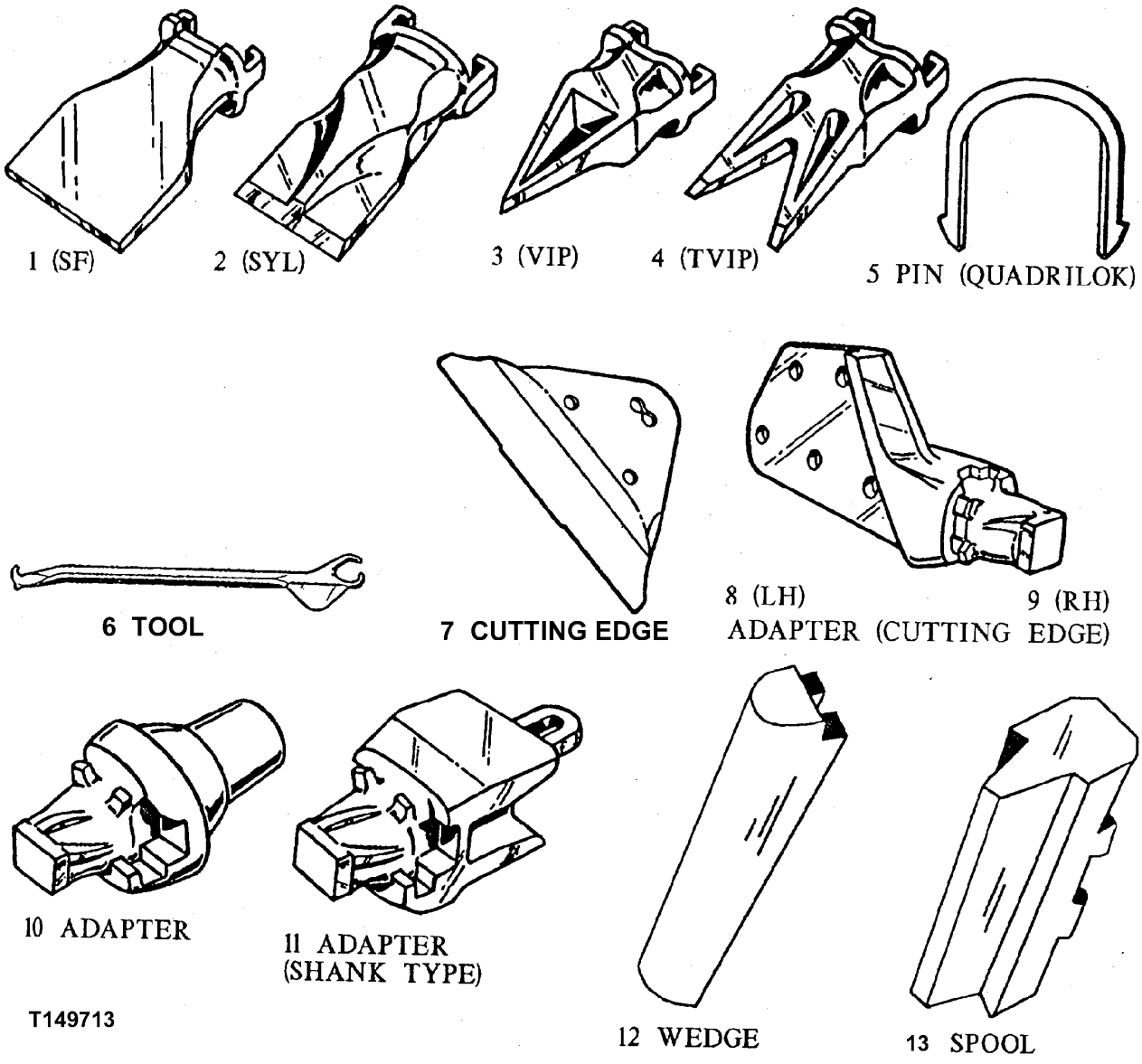

ESCO BUCKET CUTTING EDGES, TEETH AND ADAPTERS

KEY	PART NO.	PART NAME	QTY	SERIAL NO.	REMARKS
1	EX21S5F	TOOTH	AR		
2	EX21SYL	TOOTH	AR		
	EX47SYL	TOOTH	AR		
	EX27SYL	TOOTH	AR		
	EX37SYL	TOOTH	AR		
3	EX21VIP	TOOTH	AR		
4	EX21TVIP	TOOTH	AR		
5	EX21LK	PIN	AR		
	EX47LK	PIN	AR		
	EX27LK	PIN	AR		
	EX37LK	PIN	AR		
	EX27VPN	PIN	AR		
6	EX21-27QRT	TOOL	AR		
7	TPDE31329	SHROUD	AR		(SUB FOR EX31329-X)
8	.....	BUCKET TOOTH ADAPTER	AR		(EX1550-21 NLA)
9	.....	BUCKET TOOTH ADAPTER	AR		(EX1551-21 NLA)
10	EX360-21	BUCKET TOOTH ADAPTER	AR		
11	EX119-21	BUCKET TOOTH ADAPTER	AR		
	EX129A-37	BUCKET TOOTH ADAPTER	AR		
	EX5824-37	BUCKET TOOTH ADAPTER	AR		
	EX1829A-47	BUCKET TOOTH ADAPTER	AR		
	EX4894-21	SHANK	AR		
	EX5850-27V	BUCKET TOOTH ADAPTER	AR		(SUB FOR EX5827-27, ALONG WITH EX27VPN AND EX27VPL)
	EX5854-21	BUCKET TOOTH ADAPTER	AR		
	EX119-27	BUCKET TOOTH ADAPTER	AR		
12	EX29W1	WEDGE	AR		
	EX20W1	WEDGE	AR		
13	EX20SP	SPOOL	AR		
	EX29SP	SPOOL	AR		
14	EX27VPL	PLUG	AR		(NOT ILLUSTRATED)

BUCKET TOOTH ASSEMBLY (GENERAL PURPOSE OR HEAVY DUTY) (18,24,30,36,42 OR 48 INCH BUCKET)

TP43732 -UN-01JAN94

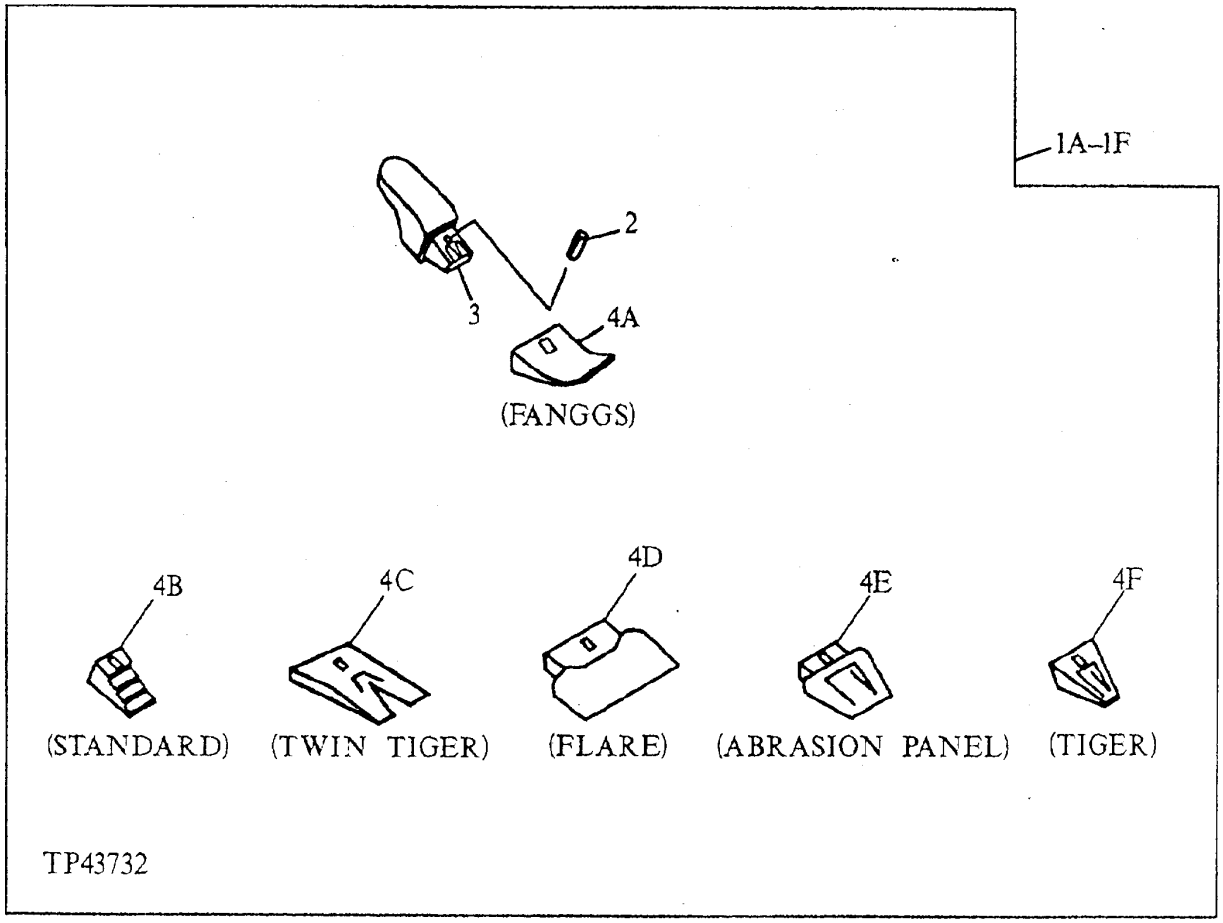

ORDER 3 SETS WITH 18 INCH BUCKET

ORDER 4 SETS WITH 24 INCH BUCKET

ORDER 4 SETS WITH 30 INCH BUCKET

ORDER 5 SETS WITH 36 INCH BUCKET

ORDER 6 SETS WITH 42 INCH BUCKET

ORDER 7 SETS WITH 48 INCH BUCKET

THIS PARTS LISTING IS CONTINUED

BUCKET TOOTH ASSEMBLY (GENERAL PURPOSE OR HEAVY DUTY) (18,24,30,36,42 OR 48 INCH BUCKET)

KEY	PART NO.	PART NAME	QTY	SERIAL NO.	REMARKS
1A	.....	KIT	1		(TOOTH) WHOLEGOODS (FANGGS 220 TOOTH ASSEMBLY) (AT163528 ONLY AVAILABLE WHEN ORDERING BUCKET)
	.....	KIT	1		(TOOTH) WHOLEGOODS (FANGGS 290 TOOTH ASSEMBLY) (AT178738 ONLY AVAILABLE WHEN ORDERING BUCKET)
1B	.....	KIT	1		(TOOTH) WHOLEGOODS (STANDARD 220 TOOTH ASSEMBLY) (AT163532 ONLY AVAILABLE WHEN ORDERING BUCKET)
	.....	KIT	1		(TOOTH) WHOLEGOODS (STANDARD 290 TOOTH ASSEMBLY) (AT178739 ONLY AVAILABLE WHEN ORDERING BUCKET)
1C	.....	KIT	1		(TOOTH) WHOLEGOODS (TWIN TIGER 220 TOOTH ASSEMBLY) (AT163536 ONLY AVAILABLE WHEN ORDERING BUCKET)
	.....	KIT	1		(TOOTH) WHOLEGOODS (TWIN TIGER 290 TOOTH ASSEMBLY) (AT178741 ONLY AVAILABLE WHEN ORDERING BUCKET)
1D	.....	KIT	1		(TOOTH) WHOLEGOODS (FLARE) (AT163535 ONLY AVAILABLE WHEN ORDERING BUCKET)
1E	.....	KIT	1		(TOOTH) WHOLEGOODS (ABRASION PANEL) (AT163534 ONLY AVAILABLE WHEN ORDERING BUCKET)
1F	.....	KIT	1		(TOOTH) WHOLEGOODS (TIGER 220 TOOTH ASSEMBLY) (AT163533 ONLY AVAILABLE WHEN ORDERING BUCKET)
	.....	KIT	1		(TOOTH) WHOLEGOODS (TIGER 290 TOOTH ASSEMBLY) (AT178740 ONLY AVAILABLE WHEN ORDERING BUCKET)
1G	.....	KIT	1		(TOOTH) WHOLEGOODS (ESCO STANDARD TOOTH ASSEMBLY) (NOT ILLUSTRATED) (AT167184 ONLY AVAILABLE WHEN ORDERING BUCKET)
1H	.....	KIT	1		(TOOTH) WHOLEGOODS (ESCO TWIN TIGER TOOTH ASSEMBLY) (NOT ILLUSTRATED) (AT167186 ONLY AVAILABLE WHEN ORDERING BUCKET)
1I	.....	KIT	1		(TOOTH) WHOLEGOODS (ESCO FLARE TOOTH ASSEMBLY) (NOT ILLUSTRATED) (AT167187 ONLY AVAILABLE WHEN ORDERING BUCKET)
1J	.....	KIT	1		(TOOTH) WHOLEGOODS (ESCO TIGER TOOTH ASSEMBLY) (NOT ILLUSTRATED) (AT167185 ONLY AVAILABLE WHEN ORDERING BUCKET)
1K	.....	KIT	1		(TOOTH) WHOLEGOODS (CATERPILLAR REPLACEMENT FANGGS TOOTH ASSEMBLY) (NOT ILLUSTRATED) (AT167188 ONLY AVAILABLE WHEN ORDERING BUCKET)
1L	.....	KIT	1		(TOOTH) WHOLEGOODS (CATERPILLAR REPLACEMENT STANDARD TOOTH ASSEMBLY) (NOT ILLUSTRATED) (AT167189 ONLY AVAILABLE WHEN ORDERING BUCKET)
1M	.....	KIT	1		(TOOTH) WHOLEGOODS (CATERPILLAR REPLACEMENT TWIN TIGER TOOTH ASSEMBLY) (NOT ILLUSTRATED) (AT167191 ONLY AVAILABLE WHEN ORDERING BUCKET)
1N	.....	KIT	1		(TOOTH) WHOLEGOODS (CATERPILLAR REPLACEMENT TIGER TOOTH ASSEMBLY) (NOT ILLUSTRATED) (AT167190 ONLY AVAILABLE WHEN ORDERING BUCKET)
1O	.....	KIT	1		(TOOTH) WHOLEGOODS (V-STYLE EV23SYL TOOTH KIT) (AT199349 ONLY AVAILABLE WHEN ORDERING BUCKET)

BUCKET TOOTH ASSEMBLY (GENERAL PURPOSE OR HEAVY DUTY) (18,24,30,36,42 OR 48 INCH BUCKET)

TP43732 -UN-01JAN94

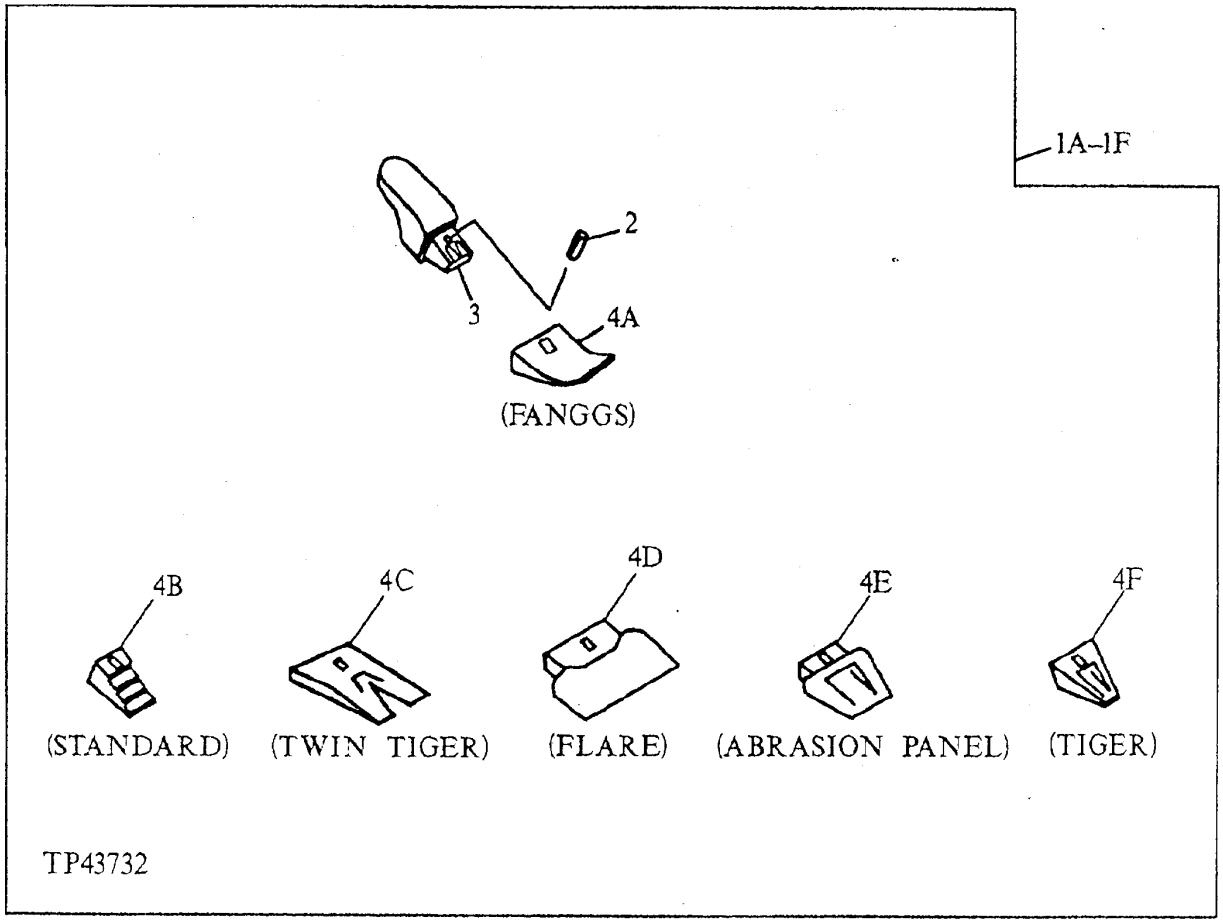

ORDER 3 SETS WITH 18 INCH BUCKET

ORDER 4 SETS WITH 24 INCH BUCKET

ORDER 4 SETS WITH 30 INCH BUCKET

ORDER 5 SETS WITH 36 INCH BUCKET

ORDER 6 SETS WITH 42 INCH BUCKET

ORDER 7 SETS WITH 48 INCH BUCKET

THIS PARTS LISTING IS CONTINUED

BUCKET TOOTH ASSEMBLY (GENERAL PURPOSE OR HEAVY DUTY) (18,24,30,36,42 OR 48 INCH BUCKET)

KEY	PART NO.	PART NAME	QTY	SERIAL NO.	REMARKS
2	TP160L	SPRING PIN	1		(SUB FOR TP160, THIS APPLICATION) (USE WITH 220 TOOTH ASSEMBLIES)
	TK290	PIN	1		(USE WITH 290 TOOTH ASSEMBLIES)
	EX21LK	PIN	1		(ESCO) (NOT ILLUSTRATED ON THIS PAGE - SEE ESCO TOOTH PAGE)
	T9J2308	PIN FASTENER	1		(CATERPILLAR) (NOT ILLUSTRATED)
	EV23PN	PIN FASTENER	1		(FOR V-STYLE EV23SYL TOOTH KIT)
3	T109X220	BUCKET TOOTH ADAPTER	1		(USE WITH 220 TOOTH ASSEMBLIES)
	T127X290	BUCKET TOOTH ADAPTER	1		(USE WITH 290 TOOTH ASSEMBLIES)
	EX5849-21	BUCKET TOOTH ADAPTER	1		(ESCO) (NOT ILLUSTRATED ON THIS PAGE - SEE ESCO TOOTH PAGE)
	T3G6304	BUCKET TOOTH ADAPTER	1		(CATERPILLAR) (NOT ILLUSTRATED)
	EV5849-V23	BUCKET TOOTH ADAPTER	1		(FOR V-STYLE EV23SYL TOOTH KIT)
4A	TF220	TOOTH	1		(ALSO ORDER TP160L) (FANGGS 220)
	TF290	TOOTH	1		(FANGGS 290)
4B	TX220	TOOTH	1		(ALSO ORDER TP160L) (STANDARD 220)
	TX290	TOOTH	1		(STANDARD 290)
4C	TX220WT	TOOTH	1		(ALSO ORDER TP160L) (TWIN TIGER 220)
	TX290WT	TOOTH	1		(TWIN TIGER 290)
4D	TX220F	TOOTH	1		(ALSO ORDER TP160L)
4E	TX220AP	TOOTH	1		(ALSO ORDER TP160L)
4F	TT220	TOOTH	1		(ALSO ORDER TP160L) (TIGER 220)
	TT290	TOOTH	1		(TIGER 290)
4G	EX21SYL	TOOTH	1		(ESCO STANDARD) (NOT ILLUSTRATED ON THIS PAGE - SEE ESCO TOOTH PAGE)
4H	EX21TVIP	TOOTH	1		(ESCO TWIN TIGER) (NOT ILLUSTRATED ON THIS PAGE - SEE ESCO TOOTH PAGE)
4I	EX21S5F	TOOTH	1		(ESCO FLARE) (NOT ILLUSTRATED ON THIS PAGE - SEE ESCO TOOTH PAGE)
4J	EX21VIP	TOOTH	1		(ESCO TIGER) (NOT ILLUSTRATED ON THIS PAGE - SEE ESCO TOOTH PAGE)
4K	TF1U3302D	TOOTH	1		(CATERPILLAR REPLACEMENT FANGGS) (NOT ILLUSTRATED)
4L	T1U3302	TOOTH	1		(CATERPILLAR REPLACEMENT STANDARD) (NOT ILLUSTRATED)
4M	TX1U3302WT	TOOTH	1		(CATERPILLAR REPLACEMENT TWIN TIGER) (NOT ILLUSTRATED)
4N	TT1U3302	TOOTH	1		(CATERPILLAR REPLACEMENT TIGER) (NOT ILLUSTRATED)
4O	EV23SYL	TOOTH	1		(FOR V-STYLE EV23SYL TOOTH KIT)
5	T3G9609	WASHER	1		(CATERPILLAR REPLACEMENT) (NOT ILLUSTRATED)

BUCKET (GENERAL PURPOSE) (ALSO ORDER BUCKET TOOTH ASSEMBLIES)

TP70466 -UN-08SEP00

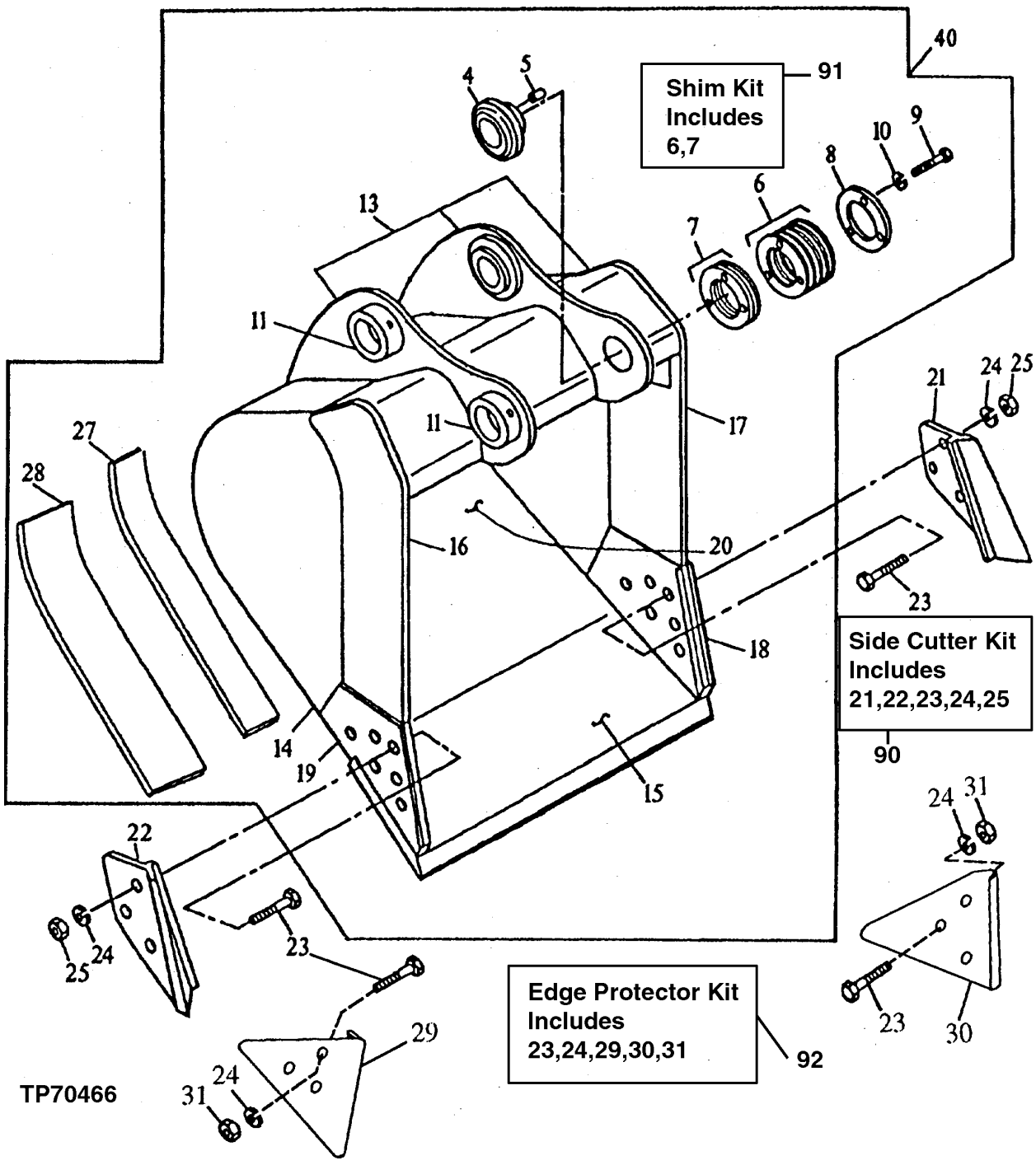

BUCKET (GENERAL PURPOSE) (ALSO ORDER BUCKET TOOTH ASSEMBLIES)

KEY	PART NO.	PART NAME	QTY	SERIAL NO.	REMARKS
4	TH100346	BUSHING	1		
5	TH103619	PIN	1		
6	.....	WASHER	7		(SUB AT146242) (K2) (TH100348 NO LONGER AVAILABLE)
7	.....	SHIM	3		(SUB AT146242) (K2) (TH100349 NO LONGER AVAILABLE)
8	TH100347	WASHER	1		
9	19M7404	CAP SCREW	3		M14 X 40
10	12H317	LOCK WASHER	3		9/16"
11	TH108649	BUSHING	2		
13	C610778	PIVOT	1		(F) (BUCKET EAR BLANK ASSEMBLY)
14	.....	PLATE	2		(F) (RIGHT AND LEFT SIDE)
	.....	PLATE	2		(F) (RIGHT AND LEFT SIDE) (FOR USE WITH AT163573 42 INCH - .79 CUBIC YARD BUCKET ONLY)
15	AT131081	CUTTING EDGE	1		(CUT TO LENGTH) (72 INCH LENGTH)
16	.....	VERTICAL CUTTER	1		(F) (UPPER RIGHT SIDE CUTTER)
	.....	VERTICAL CUTTER	1		(F) (UPPER RIGHT SIDE CUTTER) (FOR USE WITH AT163573 42 INCH - .79 CUBIC YARD BUCKET ONLY)
17	.....	VERTICAL CUTTER	1		(F) (UPPER LEFT SIDE CUTTER)
	.....	VERTICAL CUTTER	1		(F) (UPPER LEFT SIDE CUTTER) (FOR USE WITH AT163573 42 INCH - .79 CUBIC YARD BUCKET ONLY)
18	304953	VERTICAL CUTTER	1		(F) (LEFT SIDE CUTTER INSERT)
19	304952	VERTICAL CUTTER	1		(F) (RIGHT SIDE CUTTER INSERT)
20	.....	MOLDBOARD	1		(F) (18 INCH BUCKET)
	.....	MOLDBOARD	1		(F) (24 INCH BUCKET)
	.....	MOLDBOARD	1		(F) (30 INCH BUCKET)
	.....	MOLDBOARD	1		(F) (36 INCH BUCKET)
	.....	MOLDBOARD	1		(F) (42 INCH - .79 CUBIC YARD BUCKET)
	.....	MOLDBOARD	1		(F) (42 INCH - .92 CUBIC YARD BUCKET)
	.....	MOLDBOARD	1		(F) (48 INCH BUCKET)
90	AT131080	END BIT	1		INCLUDES ALL (K) PARTS
91	AT146242	SHIM	1		INCLUDES ALL (K1) PARTS
92	AT167874	KIT	1		INCLDES ALL (K2) PARTS (EDGE PROTECTOR KIT)

(F) CENTRAL FABRICATORS' PARTS. JOHN DEERE DEALER ORDER DIRECTLY FROM CENTRAL FABRICATORS.

BUCKET (GENERAL PURPOSE) (ALSO ORDER BUCKET TOOTH ASSEMBLIES)

TP70466 -UN-08SEP00

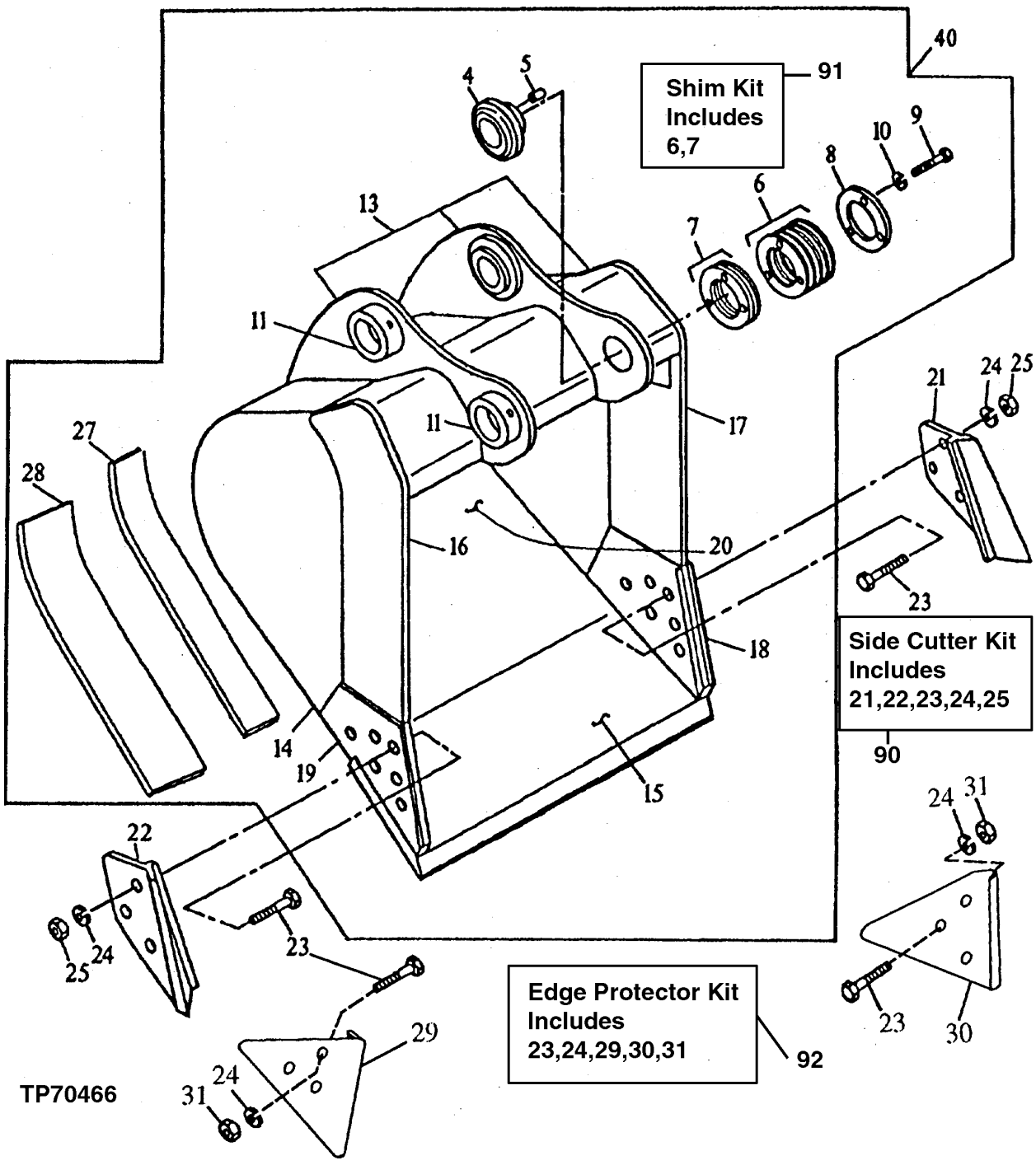

BUCKET (GENERAL PURPOSE) (ALSO ORDER BUCKET TOOTH ASSEMBLIES)

KEY	PART NO.	PART NAME	QTY	SERIAL NO.	REMARKS
21	.....	CUTTING EDGE	1		(K) (SUB AT131080)
22	.....	CUTTING EDGE	1		(K) (SUB AT131080)
23	09H1770	BOLT	6		(K) 7/8" X 2-1/2"
24	12H245	LOCK WASHER	6		(K) 7/8"
25	14H1077	NUT	6		(K) 7/8"
27	.....	BAR	1		(F) (INNER WEAR)
28	.....	BAR	2		(F) (OUTER WEAR)
29	.....	SHROUD	1		(SUB AT167874) (K3) (WEAR SHROUD)
30	.....	SHROUD	1		(SUB AT167874) (K3) (WEAR SHROUD)
31	14H1044	NUT	6		22.225 MM (7/8") (K3)
40	**AT301635**	**EXCAVATOR BUCKET**	**1**		**WHOLEGOODS (18 INCH - .35 CUBIC YARD) (AVAILABLE TOOTH ASSEMBLIES ON SEPARATE PAGE)**
	AT301636	**EXCAVATOR BUCKET**	**1**		**WHOLEGOODS (24 INCH - .50 CUBIC YARD) (AVAILABLE TOOTH ASSEMBLIES ON SEPARATE PAGE)**
	AT301637	**EXCAVATOR BUCKET**	**1**		**WHOLEGOODS (30 INCH - .66 CUBIC YARD) (AVAILABLE TOOTH ASSEMBLIES ON SEPARATE PAGE)**
	AT301638	**EXCAVATOR BUCKET**	**1**		**WHOLEGOODS (36 INCH - .82 CUBIC YARD) (AVAILABLE TOOTH ASSEMBLIES ON SEPARATE PAGE)**
	AT301639	**EXCAVATOR BUCKET**	**1**		**WHOLEGOODS (42 INCH - .98 CUBIC YARD) (AVAILABLE TOOTH ASSEMBLIES ON SEPARATE PAGE)**
	AT301640	**EXCAVATOR BUCKET**	**1**		**WHOLEGOODS (48 INCH - 1.15 CUBIC YARD) (AVAILABLE TOOTH ASSEMBLIES ON SEPARATE PAGE)**
90	AT131080	END BIT	1		INCLUDES ALL (K1) PARTS
91	AT146242	SHIM	1		INCLUDES ALL (K2) PARTS
92	AT167874	KIT	1		INCLUDES ALL (K3) PARTS (EDGE PROTECTOR KIT)

(F) CENTRAL FABRICATORS' PARTS. JOHN DEERE DEALER ORDER DIRECTLY FROM CENTRAL FABRICATORS.

BUCKET (HEAVY DUTY) (ALSO ORDER BUCKET TOOTH ASSEMBLIES)

TP70466 -UN-08SEP00

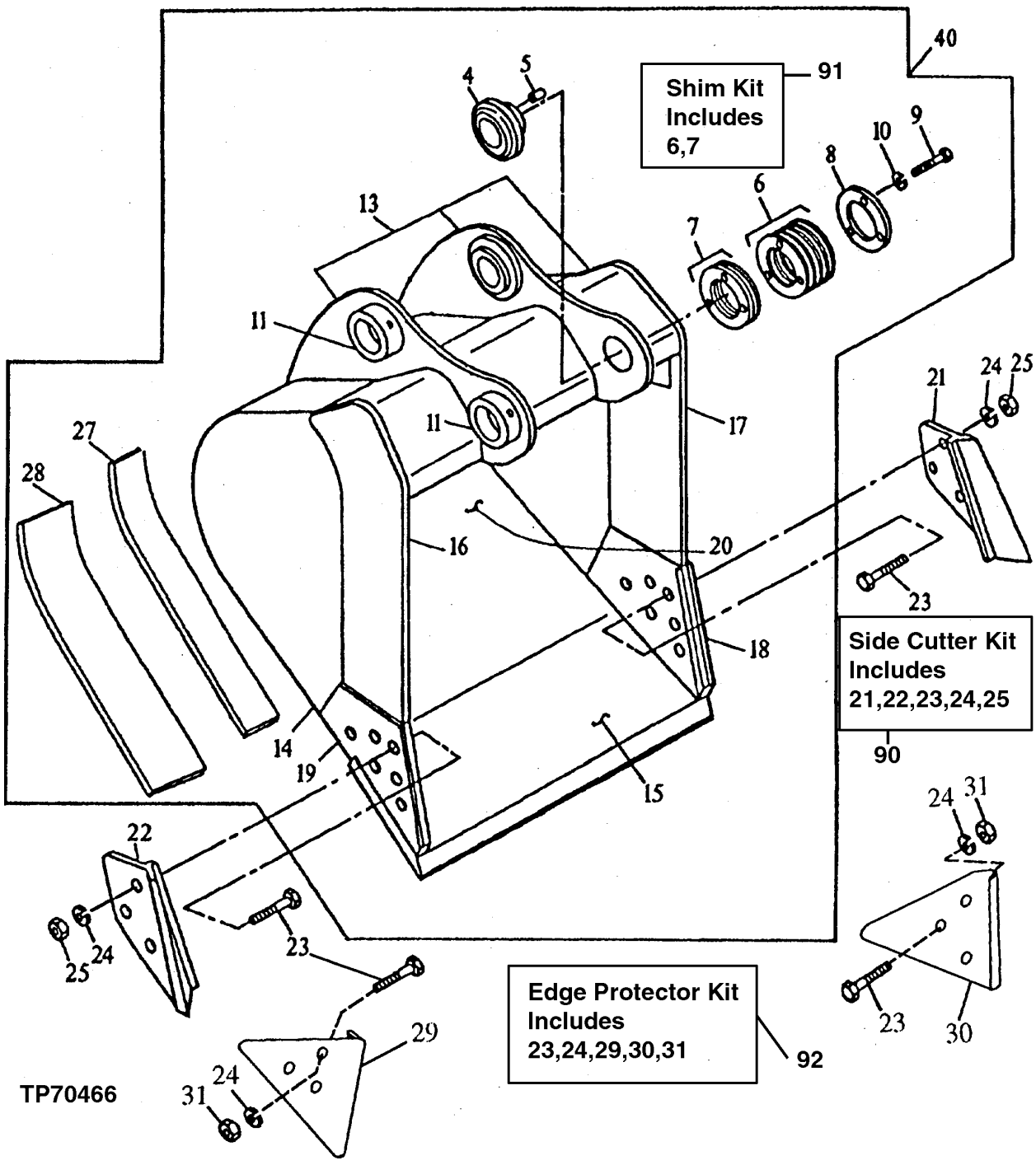

BUCKET (HEAVY DUTY) (ALSO ORDER BUCKET TOOTH ASSEMBLIES)

KEY	PART NO.	PART NAME	QTY	SERIAL NO.	REMARKS
4	TH100346	BUSHING	1		
5	TH103619	PIN	1		
6	.....	WASHER	7		(SUB AT146242) (K2) (TH100348 NO LONGER AVAILABLE)
7	.....	SHIM	3		(SUB AT146242) (K2) (TH100349 NO LONGER AVAILABLE)
8	TH100347	WASHER	1		
9	19M7404	CAP SCREW	3		
10	12H317	LOCK WASHER	3		9/16"
11	TH108649	BUSHING	2		
13	C610778	PIVOT	1		(F) (BUCKET EAR BLANK ASSEMBLY)
14	.....	PLATE	2		(F) (RIGHT AND LEFT SIDE)
15	AT131081	CUTTING EDGE	1		(CUT TO LENGTH)
16	.....	VERTICAL CUTTER	1		(F) (UPPER RIGHT SIDE CUTTER)
17	.....	VERTICAL CUTTER	1		(F) (UPPER LEFT SIDE CUTTER)
18	304968	VERTICAL CUTTER	1		(F) (LEFT SIDE CUTTER INSERT)
19	304967	VERTICAL CUTTER	1		(F) (RIGHT SIDE CUTTER INSERT)
20	.....	MOLDBOARD	1		(F) (18 INCH BUCKET)
	.....	MOLDBOARD	1		(F) (24 INCH BUCKET)
	.....	MOLDBOARD	1		(F) (30 INCH BUCKET)
	.....	MOLDBOARD	1		(F) (36 INCH BUCKET)
21	.....	CUTTING EDGE	1		(K) (SUB AT131080)
22	.....	CUTTING EDGE	1		(K) (SUB AT131080)
23	09H1770	BOLT	6		(K) 7/8" X 2-1/2", (K3)
24	12H245	LOCK WASHER	6		(K) 7/8", (K3)
25	14H1077	NUT	6		(K) 7/8"
27	.....	BAR	1		(F) (INNER WEAR)
28	.....	BAR	2		(F) (OUTER WEAR)
29	.....	SHROUD	1		(WEAR SHROUD) (SUB AT167874) (K3)
30	.....	SHROUD	1		(WEAR SHROUD) (SUB AT167874) (K3)
31	14H1044	NUT	6		22.225 MM (7/8") (K3)
40	**AT301641**	**EXCAVATOR BUCKET**	**1**		**WHOLEGOODS (18 INCH - .35 CUBIC YARD) (AVAILABLE TOOTH ASSEMBLIES ON SEPARATE PAGE)**
	AT301642	**EXCAVATOR BUCKET**	**1**		**WHOLEGOODS (24 INCH - .50 CUBIC YARD) (AVAILABLE TOOTH ASSEMBLIES ON SEPARATE PAGE)**
	AT301643	**EXCAVATOR BUCKET**	**1**		**WHOLEGOODS (30 INCH - .66 CUBIC YARD) (AVAILABLE TOOTH ASSEMBLIES ON SEPARATE PAGE)**
	AT301644	**EXCAVATOR BUCKET**	**1**		**WHOLEGOODS (36 INCH - .82 CUBIC YARD) (AVAILABLE TOOTH ASSEMBLIES ON SEPARATE PAGE)**
	AT301645	**EXCAVATOR BUCKET**	**1**		**WHOLEGOODS (42 INCH - 0.98 CUBIC YARD) (AVAILABLE TOOTH ASSEMBLIES ON SEPARATE PAGE)**
	AT301646	**EXCAVATOR BUCKET**	**1**		**WHOLEGOODS (48 INCH - 1.15 CUBIC YARD) (AVAILABLE TOOTH ASSEMBLIES ON SEPARATE PAGE)**
90	AT131080	END BIT	1		INCLUDES ALL (K1) PARTS
91	AT146242	SHIM	1		INCLUDES ALL (K2) PARTS
92	AT167874	KIT	1		INCLUDES ALL (K3) PARTS (EDGE PROTECTOR KIT)

(F) CENTRAL FABRICATORS' PARTS. JOHN DEERE DEALER ORDER DIRECTLY FROM CENTRAL FABRICATORS.

BUCKET (DITCH CLEANING)

TP70467 -UN-29SEP00

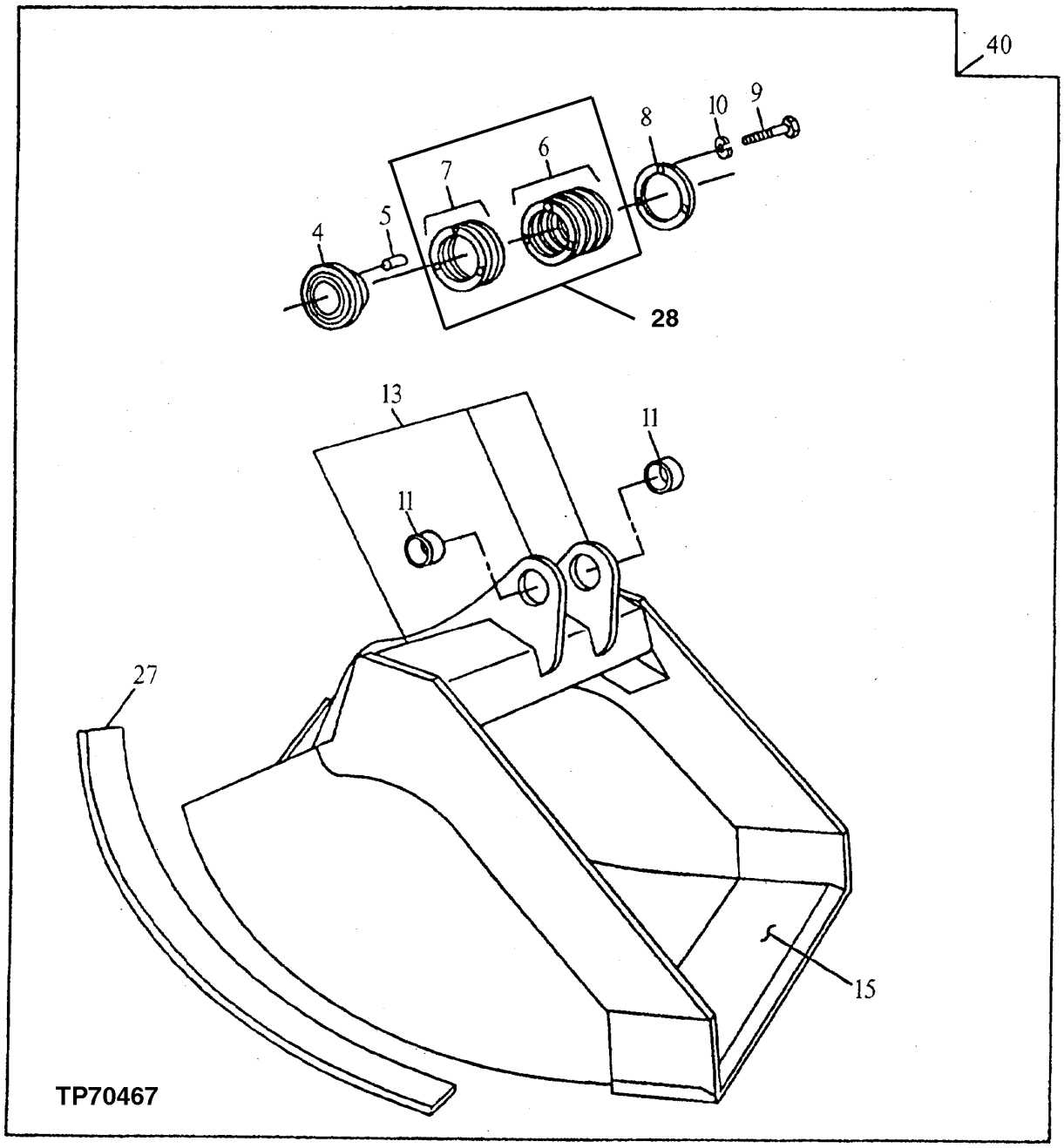

BUCKET (DITCH CLEANING)

KEY	PART NO.	PART NAME	QTY	SERIAL NO.	REMARKS
4	TH100346	BUSHING	1		
5	TH103619	PIN	1		
6	.....	WASHER	7		(SUB AT146242) (K2) (TH100348 NO LONGER AVAILABLE)
7	.....	SHIM	3		(SUB AT146242) (K2) (TH100349 NO LONGER AVAILABLE)
8	TH100347	WASHER	1		
9	19M7404	CAP SCREW	3		M14 X 40
10	12H317	LOCK WASHER	3		9/16"
11	TH108649	BUSHING	2		
13	C610778	PIVOT	1		(F) (BUCKET EAR BLANK ASSEMBLY)
15	.....	CUTTING EDGE	1		(CUT TO LENGTH FROM AT131089 BULK MATERIAL)
27	.....	BAR	4		(F) (WEAR STRIP)
28	AT146242	SHIM	1		INCLUDES ALL (K2) PARTS
40	AT301647	EXCAVATOR BUCKET	1		WHOLEGOODS (48 INCH - .67 CUBIC YARD)
	AT301648	EXCAVATOR BUCKET	1		WHOLEGOODS (60 INCH - .90 CUBIC YARD)
	AT301649	EXCAVATOR BUCKET	1		(72" 1.06 CUBIC YARD)

(F) CENTRAL FABRICATORS' PARTS.YOUR JOHN DEERE DEALER CAN ORDER DIRECTLY FROM CENTRAL FABRICATORS.

GENERAL PURPOSE AND HEAVY DUTY BUCKET PIN-UP DATA

T188616 -UN-27MAR03

EXCAVATOR BUCKET PIN-UP DATA

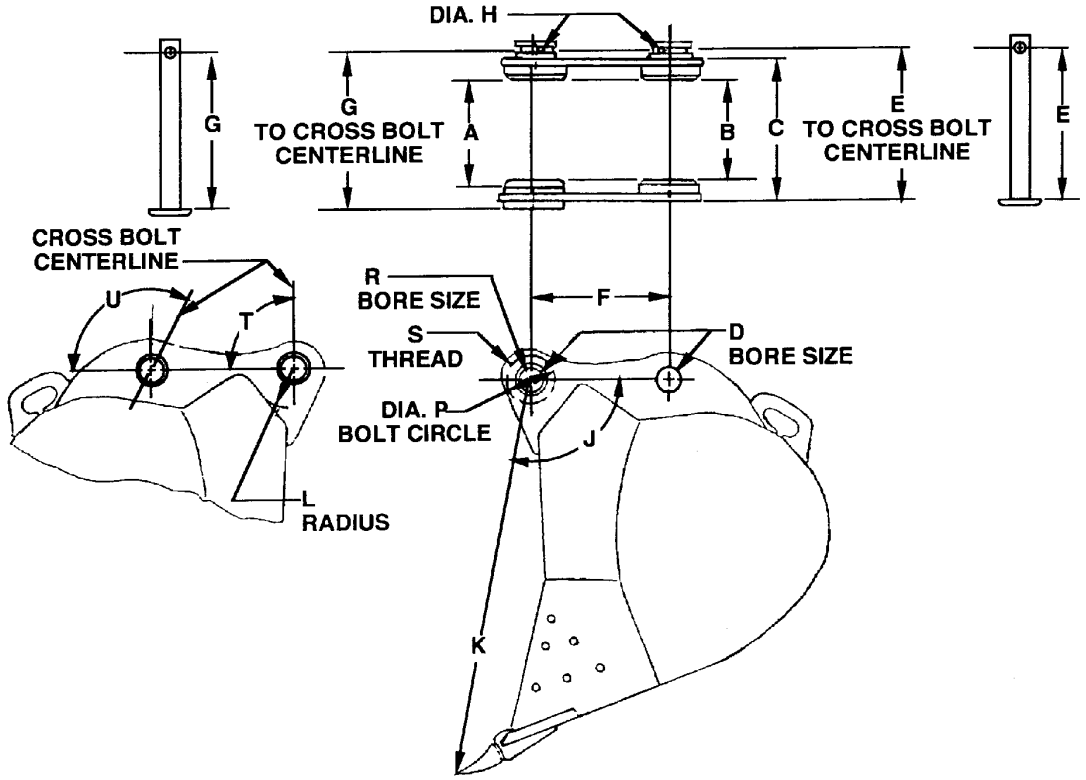

MODEL	490	490D 495D	135C RTS	MODEL	490	490D 495D	135C RTS
A	[272] 10.71	[273] 10.75	[273] 10.75	J (ANGLE)	106°	109°	109°
B	[255] 10.04	[255] 10.04	[255] 10.04	K	[1230] 48.43	[1230] 48.43	[1162.5] 46.50
C	[357] 14.04	[357] 14.04	[357] 14.04	L	[101.6] 4.00	[90] 3.54	[90] 3.54
D	[65] 2.559	[65] 2.559	[65] 2.559	P	[125] 4.92	[125] 4.92	[125] 4.92
E	[377] 14.84	[386] 15.20	[386] 15.20	R	[100] 3.94	[100] 3.94	[100] 3.94
F	[410.5] 16.16	[420] 16.54	[362] 14.25	S (3 HOLES)	M14 X 2	M14 X 2	M14 X 2
G	------- -------	[400] 15.75	[400] 15.75	T (ANGLE)	165°	165°	165°
H	-------	[17] 0.67	[17] 0.67	U (ANGLE)	75°	75°	75°

T188616

THIS PARTS LISTING IS CONTINUED

MEMORANDA

PILOT CONTROLLERS

T162150 -UN-08JAN03

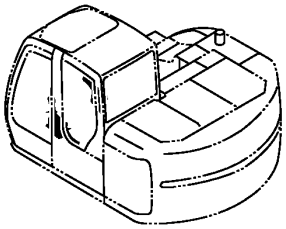

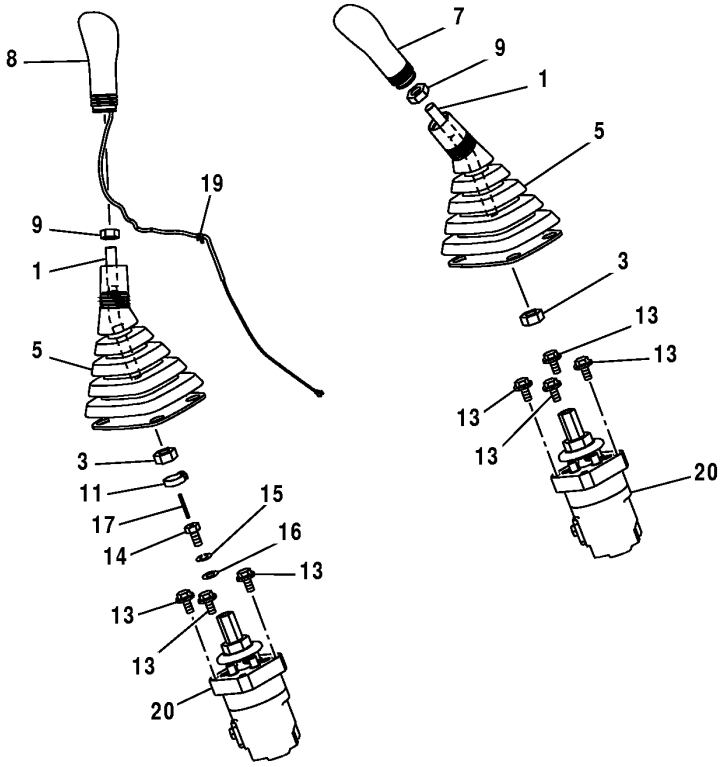

T162150

PILOT CONTROLLERS

KEY	PART NO.	PART NAME	QTY	SERIAL NO.	REMARKS
1	4445322	LEVER	2		
3	14M7141	NUT	2		M14, (SUB FOR J950014)
5	2045470	BOOT	2		
7	2045473	GRIP	1		
8	2045472	GRIP	1		
9	14M7357	NUT	2		M12, (SUB FOR J952012)
11	H77698	TIE BAND	1		(SUB FOR 4055311)
13	19M7162	CAP SCREW	6	-065802	M8 X 16, (SUB FOR J020816)
	12M7065	LOCK WASHER	6	-065802	8 MM
	24H1136	WASHER	6	-065802	11/32" X 11/16" X 0.065"
	19M7139	CAP SCREW	6	065803-	(SUB FOR J260820 OR J900820)
	24M7055	WASHER	6	065803-	(SUB FOR A590108)
14	4438279	BOLT	2	-065802	
	4609956	BOLT	2	065802-	
15	12M7065	LOCK WASHER	1		8 MM, (SUB FOR A590908)
16	24M7055	WASHER	1		8.400 X 16 X 1.600 MM, (SUB FOR A590108)
17	34M7086	SPRING PIN	1		(SUB FOR 4144011)
19	H77698	TIE BAND	1		
20	9195304	HYDR./PILOT CONTROL VALVE	2	-065802	(USE IF AVAILABLE - IF NOT AVAILABLE SUB 9239583, ALONG WITH (3) 19M7139, (3) 24M7055, AND 4609956)
	9239583	HYDR./PILOT CONTROL VALVE	2	065803-	

**PILOT CONTROLLER VALVE COMPONENTS
(DIG AND SWING)**

T142561 -UN-18JUN01

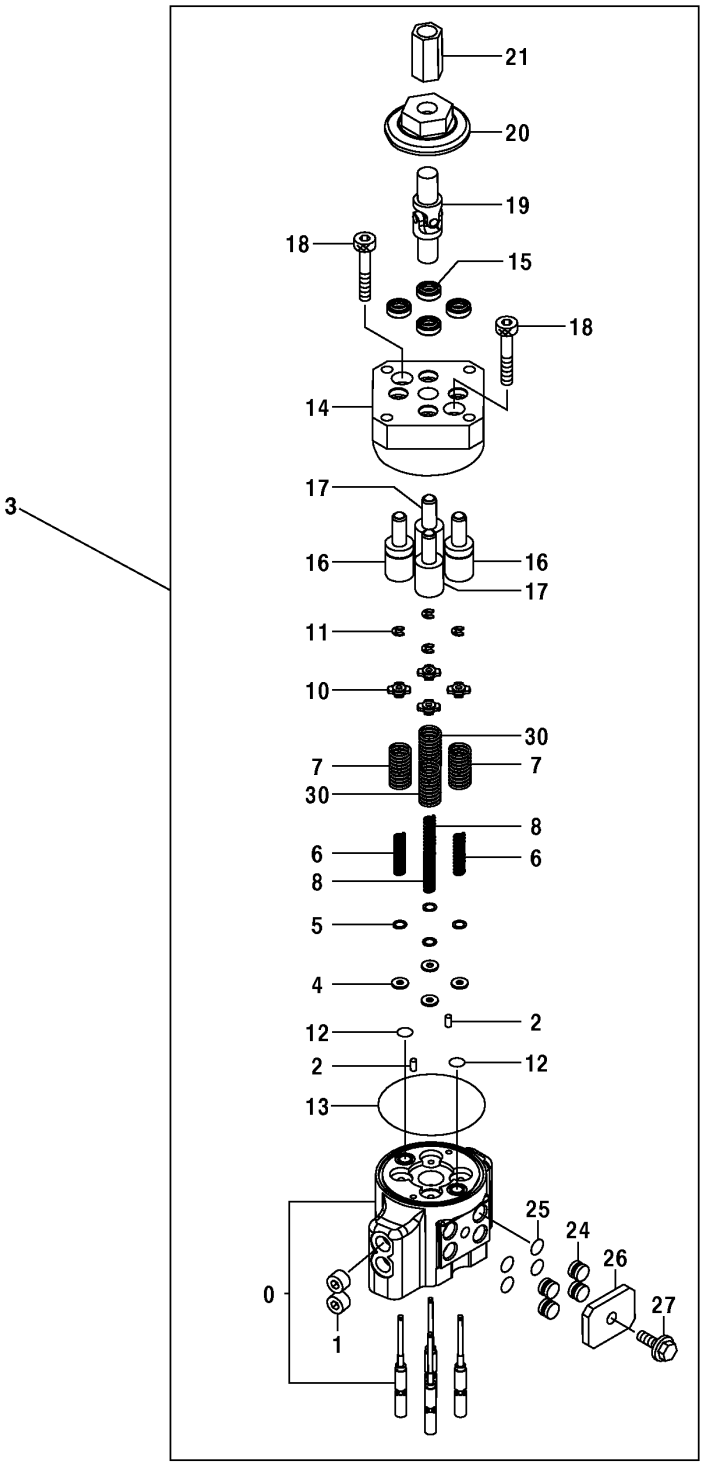

T142561

PILOT CONTROLLER VALVE COMPONENTS
(DIG AND SWING)

KEY	PART NO.	PART NAME	QTY	COMPONENT SERIAL NO.	REMARKS
0	.....	CASE	1		(TH8081319 NOT AVAILABLE)
1	94-2011	FITTING PLUG	2		
2	J400408	PIN	2		
3	9195304	HYDR./PILOT CONTROL VALVE	1	-065802	(USE IF AVAILABLE - IF NOT AVAILABLE SUB 9239583, ALONG WITH (3) 19M7139, (3) 24M7055, AND 4609956)
	9239583	HYDR./PILOT CONTROL VALVE	1	065803-	(COMPONENTS NOT CURRENTLY AVAILABLE)
4	4410898	SPACER	4		
5	4173208	SHIM	12		
6	4425414	SPRING	2		
7	4421771	SPRING	2		
8	4429120	SPRING	2		
10	4429119	GUIDE	4		
11	4437333	SNAP RING	4		
12	4431914	O-RING	2		
13	4431915	O-RING	1		
14	.....	MANIFOLD	1		(2044350 NO LONGER AVAILABLE) (SUB 9234284, (4) 4477852, (2) 9759158 AND (2) 9759157)
	9234284	MANIFOLD	1		(MANIFOLD HAS ONE PUNCH MARK ON TOP FACE) (SUB FOR 2044350, ALONG WITH (4) 4477852, (2) 9759158 AND(2) 9759157) (MANIFOLD HAS TWO PUNCH MARKS ON TOP FACE)
15	.....	SEAL	4		(4447050 NO LONGER AVAILABLE) (SUB 9234284, (4) 4477852, (2) 9759158 AND (2) 9759157)
	.....	SEAL	4		(USE WITH 2044350) (SUB FOR 4447050, ALONG WITH 9234284, (2) 9759158, AND (2) 9759157) (USE WITH 9234284) (4477852 NO LONGER AVAILABLE FOR SERVICE)
16	.....	PISTON	2		(9754825 NO LONGER AVAILABLE) (SUB 9234284, (4) 4477852, (2) 9759158 AND (2) 9759157) (USE WITH 2044350)
	9759157	PISTON	2		(SUB FOR 9754825, ALONG WITH (4) 4477852, 9234284, AND (2) 9759158) (USE WITH 9234284)
17	.....	PISTON	2		(9754826 NO LONGER AVAILABLE) (SUB 9234284, (4) 4477852, (2) 9759158 AND (2) 9759157) (USE WITH 2044350)
	9759158	PISTON	2		(SUB FOR 9754826, ALONG WITH (4) 4477852, (2)9759158, AND 9234284) (USE WITH 9234284)
18	J780845	BOLT	2		
19	4335060	UNIVERSAL JOINT	1		
20	4437106	CAM	1		
21	4182067	JOINTER	1		
24	4442323	PIPE PLUG	4		
25	CH11560	PACKING	4		
26	4442339	PLATE	1		
27	19M7932	CAP SCREW	1		M8 X 16
30	4446960	SPRING	2		

PROPEL PILOT CONTROLLERS

T162153 -UN-08JAN03

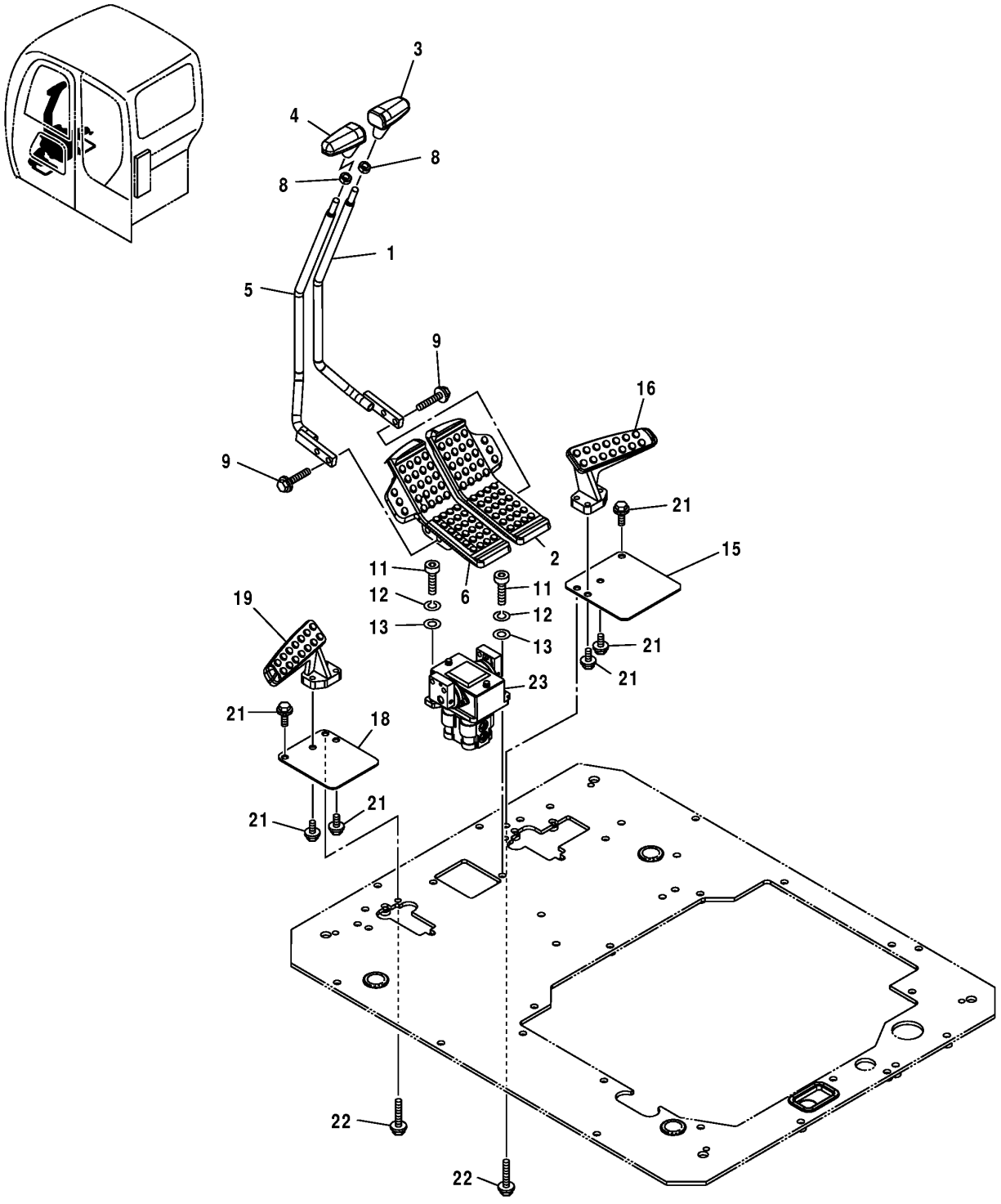

T162153

PROPEL PILOT CONTROLLERS

KEY	PART NO.	PART NAME	QTY	SERIAL NO.	REMARKS
1	8075450	LEVER	1		
2	1024384	PEDAL	1		
3	2051176	GRIP	1		(SUB FOR 2045468)
4	2051177	GRIP	1		(SUB FOR 2045469)
5	8075449	LEVER	1		
6	1024224	PEDAL	1		
8	4424185	NUT	2		
9	19M7658	CAP SCREW	4		M10 X 50, (SUB FOR J051050)
	12M7066	LOCK WASHER	4		10 MM
	24M7096	WASHER	4		10.500 X 18 X 1.600 MM
11	J781035	BOLT	2		
12	12M7066	LOCK WASHER	2		10 MM, (SUB FOR A590910)
13	24M7028	WASHER	2		10.500 X 20 X 2 MM, (SUB FOR A590110)
15	4442175	COVER	1		
16	1015478	FOOTREST	1		
18	3052543	COVER	1		
19	1015477	FOOTREST	1		
21	19M7402	CAP SCREW	6		M10 X 25, (SUB FOR J011025)
	12M7066	LOCK WASHER	6		10 MM
22	19M7550	CAP SCREW	2		M10 X 35, (SUB FOR J011035)
	12M7066	LOCK WASHER	2		10 MM
23	9195307	HYDR./PILOT CONTROL VALVE	1	-XXXXXX	
	9235551	HYDR./PILOT CONTROL VALVE	1	XXXXXX-	

PROPEL PILOT CONTROLLER SHUTOFF LEVER

T162154 -UN-12DEC02

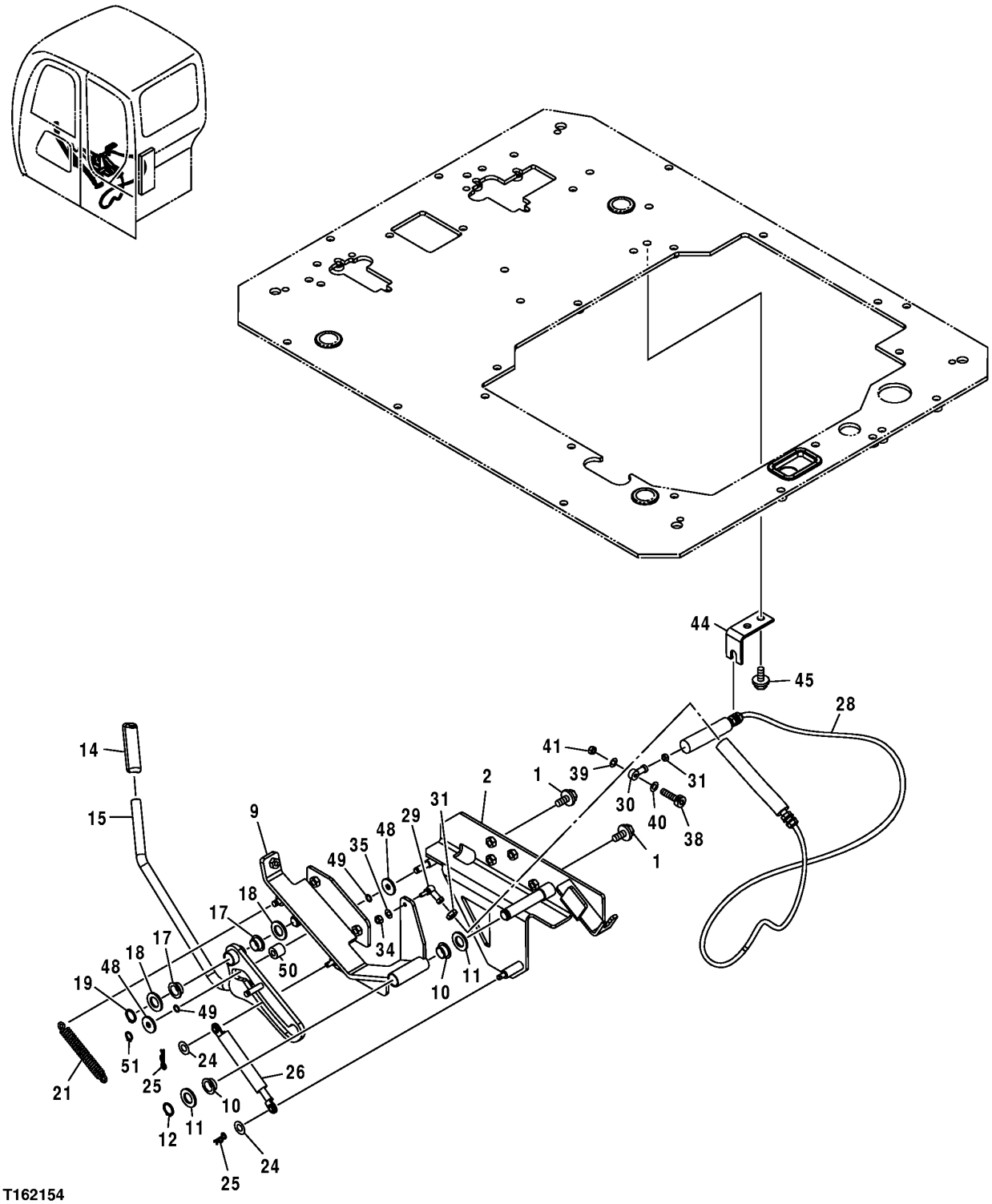

PROPEL PILOT CONTROLLER SHUTOFF LEVER

KEY	PART NO.	PART NAME	QTY	SERIAL NO.	REMARKS
1	19M7662	CAP SCREW	4		M10 X 30, (SUB FOR J051030)
	24M7096	WASHER	4		10.500 X 18 X 1.600 MM
	12M7066	LOCK WASHER	4		10 MM
2	7038944	BRACKET	1		
9	7038917	BRACKET	1		
10	4451809	BUSHING	2		
11	24M7051	WASHER	2		21 X 37 X 3 MM, (SUB FOR A590120)
12	40M7080	SNAP RING	1		(SUB FOR 959500)
14	4455772	GRIP	1		
15	7044736	LEVER	1		
17	4451809	BUSHING	2		
18	24M7051	WASHER	2		21 X 37 X 3 MM, (SUB FOR A590120)
19	40M7080	SNAP RING	1		(SUB FOR 959500)
21	4454270	SPRING	1		
24	24M7055	WASHER	2		8.400 X 16 X 1.600 MM, (SUB FOR A590108)
25	H132922	COTTER PIN	2		(SUB FOR 4022697)
26	4452249	LATCH	1		
28	4452142	CABLE	1		
29	4287791	BALL JOINT	1		
30	4286584	END	1		
31	14M7297	NUT	2		M5, (SUB FOR M500504)
34	14M7272	NUT	1		M6, (SUB FOR M500505)
35	12M7006	LOCK WASHER	1		6 MM, (SUB FOR A590906)
38	19M8505	SCREW	1		M6 X 25, (SUB FOR M340625)
39	12M7006	LOCK WASHER	1		6 MM, (SUB FOR A590906)
40	24M7054	WASHER	1		6.400 X 12 X 1.600 MM, (SUB FOR A590106)
41	14M7272	NUT	1		M6, (SUB FOR M500605)
44	4452007	BRACKET	1		
45	19M7402	CAP SCREW	2		M10 X 25, (SUB FOR J021020)
	24M7098	WASHER	2		19 X 30 X 3 MM
	12M7066	LOCK WASHER	2		10 MM
48	.....	WASHER	2		(IF AVAILABLE ORDER 4371706)
49	4454269	SHIM	2		
50	4454268	NEEDLE BEARING	1		
51	991334	SNAP RING	1		

CONTROL PATTERN SELECTOR KIT

T191711 -UN-04JUN03

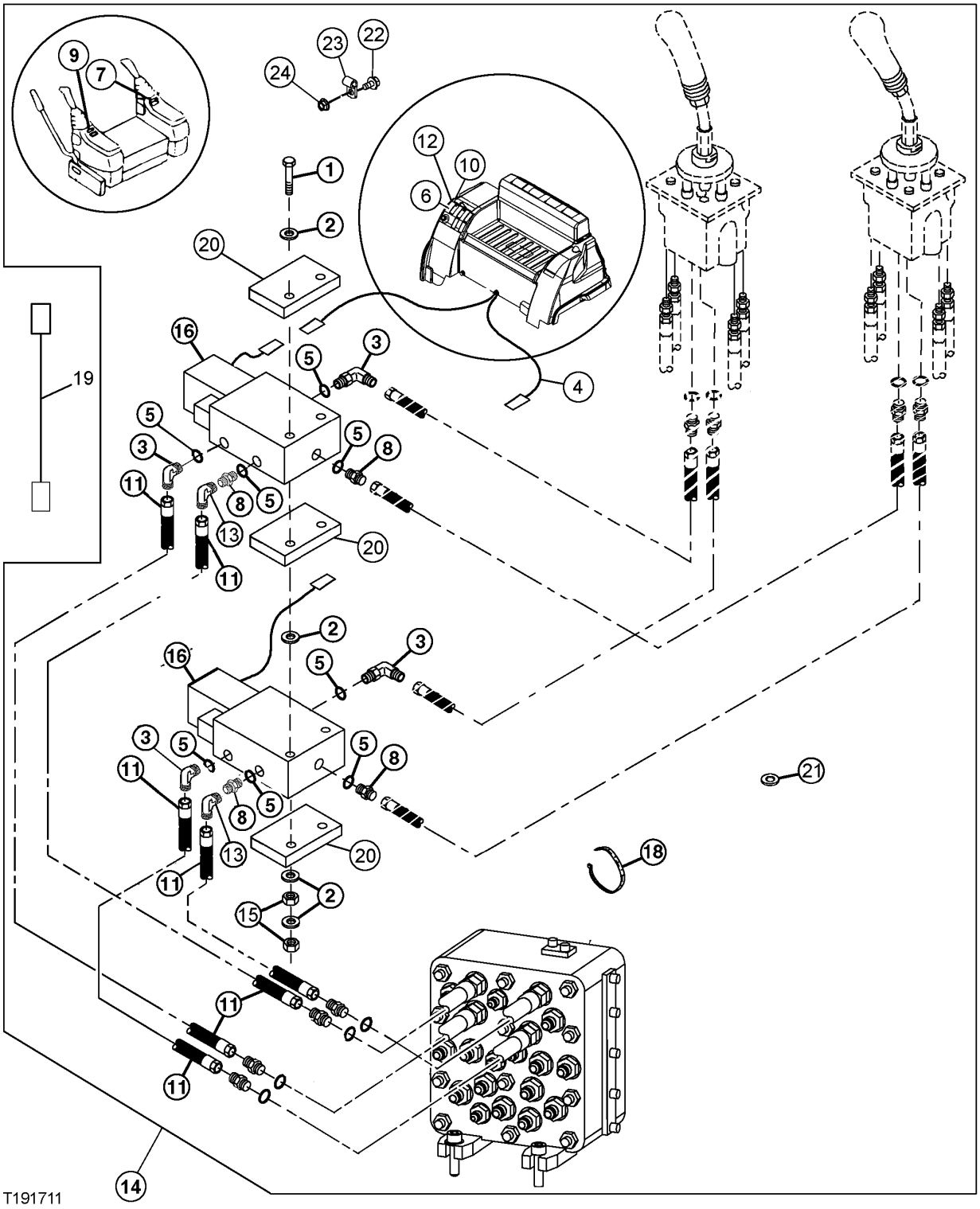

THIS PARTS LISTING IS CONTINUED

CONTROL PATTERN SELECTOR KIT

KEY	PART NO.	PART NAME	QTY	SERIAL NO.	REMARKS
1	19M8332	CAP SCREW	2		M6 X 90
2	24M7100	WASHER	10		6.600 X 22 X 2 MM
3	AT35121	ELBOW FITTING	4		37 DEG FLARE O-RING
4	AT307710	WIRING HARNESS	1		(SUB FOR AT190535)
5	R26448	O-RING	8		
6	AT83721	TOGGLE/ROCKER SWITCH	1		LOCKING
7	T159843	LABEL	4		CONTROL RIGHT
8	R27212	FITTING	4		
9	T159844	LABEL	1		CONTROL LEFT
10	T184858	LABEL	1		CONTROL PATTERN
11	AT71082	HYDRAULIC HOSE - FABRICATE	4		
12	37H43	SCREW	2		DRIVE SELF TAPPING
13	AE24616	ELBOW FITTING	2		
14	.....	KIT	1		(AT307709 NO LONGER AVAILABLE) (WHOLEGOODS) CONTROL PATTERN SELECTOR KIT (ALSO ORDER AT304407) (SUB FOR AT191397)
15	14M7272	NUT	4		M6
16	AT306723	ELEC.PROPORTIONAL VALVE	2		(SUB FOR AT116486 AND AT140041) PIN DISCONNECT
	.....	ELECTRICAL COIL	1		(AT140041 NO LONGER AVAILABLE)
18	R44302	TIE BAND	AR		
19	AT304407	WIRING HARNESS	1		(EXTENSION HARNESS)
20	T202379	BRACKET	3		
21	T63817	GROMMET	1		
22	19M7863	SCREW	3		
23	T22645	CLIP	4		
24	14M7272	NUT	3		
25	AR94101	DIODE	1		(NOT ILLUSTRATED)

MECHANICAL PATTERN CHANGER KIT

T197438 -UN-29JAN04

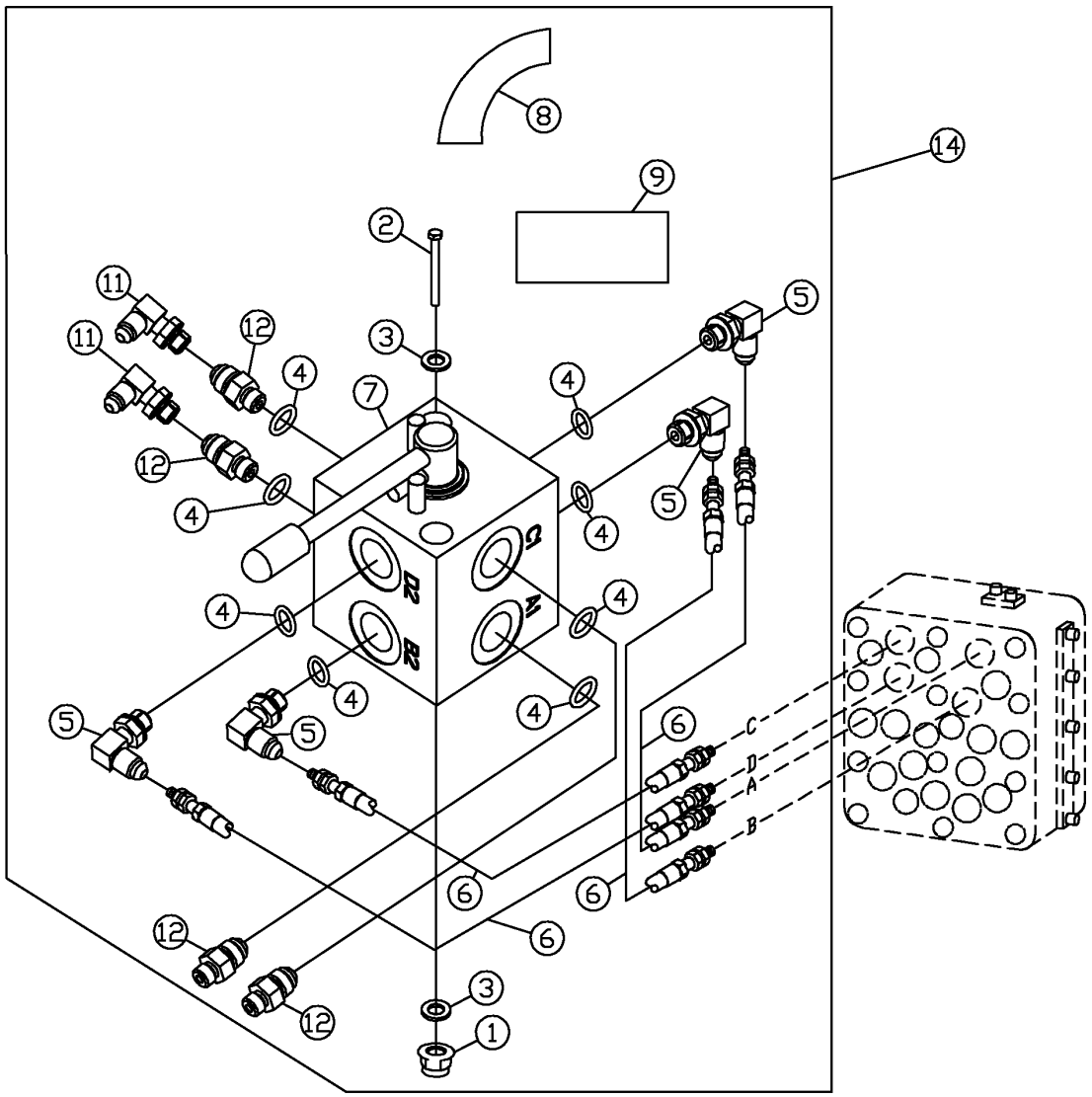

T197438

3D13

MECHANICAL PATTERN CHANGER KIT

KEY	PART NO.	PART NAME	QTY	SERIAL NO.	REMARKS
1	14M7396	LOCK NUT	2		M8
2	19M8504	CAP SCREW	2		M8 X 80
3	24M7095	WASHER	4		8.400 X 15 X 1.600 MM
4	R28782	O-RING	8		
5	AH63565	ELBOW FITTING	4		
6	AT306775	HYDRAULIC HOSE - FABRICATE	4		
7	AT306737	MANUAL HYDRAULIC VALVE	1		
8	T205175	LABEL	1		
9	T201519	LABEL	1		
11	AE24616	ELBOW FITTING	2		
12	T61120	ADAPTER	4		
14	**AT306757**	**KIT**	**1**		**(WHOLEGOODS)**

FOOT PEDAL CONTROL KIT

T192495 -UN-14JUL03

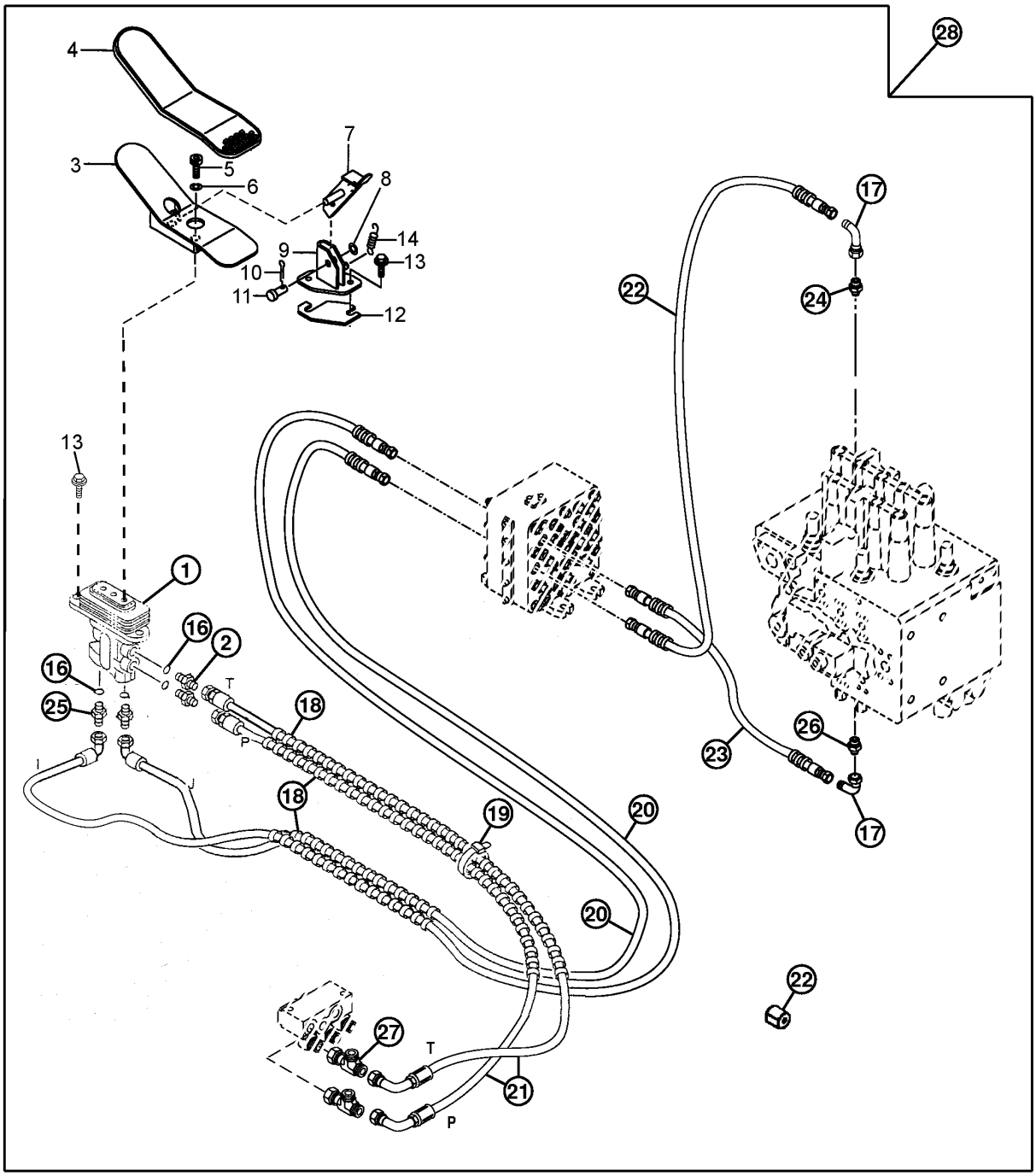

T192495

3D15

FOOT PEDAL CONTROL KIT

KEY	PART NO.	PART NAME	QTY	SERIAL NO.	REMARKS
1	4330467	VALVE	1		
2	4200465	ADAPTER	2		
3	8070805	PEDAL	1		
4	4283758	COVER	1		
5	J781020	BOLT	2		
6	12M7066	LOCK WASHER	2		10 MM
7	8061258	STOP	1		
8	24M7028	WASHER	1		10.500 X 20 X 2 MM
9	8060508	BRACKET	1		
10	11M7080	COTTER PIN	1		2.500 X 16 MM
11	4287795	PIN	1		
12	4402410	SOLID SHIM	3		
13	19M7550	CAP SCREW	4		M10 X 35
14	4279604	SPRING	1		
16	M800650	PACKING	4		
17	AE24616	ELBOW FITTING	4		
18	4133527	HOSE GUARD	4		
19	H77698	TIE BAND	5		
20	AT78124	HYDRAULIC HOSE - FABRICATE	2		
21	AT304330	HYDRAULIC HOSE - FABRICATE	2		
22	R31147	FITTING	1		
23	AT68901	HYDRAULIC HOSE - FABRICATE	2		
24	4202422	ADAPTER	1		
25	4200467	ADAPTER	2		
26	4200466	ADAPTER	5		
27	AT36921	TEE FITTING	2		
28	**AT303121**	**KIT**	**1**		**(NOT ILLUSTRATED)**

3D16

STANDARD BOOM

T162573 -UN-16DEC02

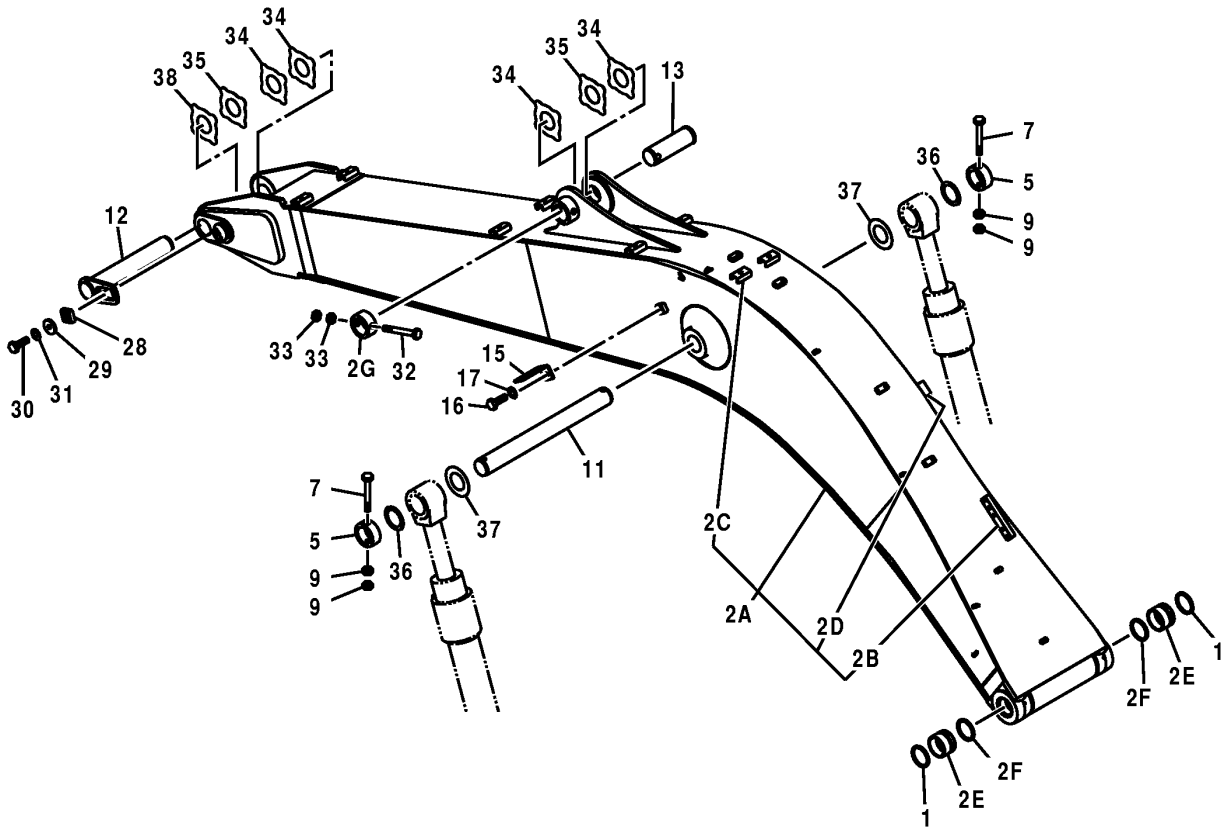

2 — 2A,2E,2F,2G

T162573

STANDARD BOOM

KEY	PART NO.	PART NAME	QTY	SERIAL NO.	REMARKS
1	TH104472	SEAL	2		
2	7039830	EXCAVATOR BOOM	1		
2A	.....	EXCAVATOR BOOM	1		
2B	.....	STRAP	1		
2C	9738322	SUPPORT	8		
2D	8073891	BRACKET	1		
2E	4443878	BUSHING	2		
2F	TH104472	SEAL	2		
2G	4434952	STOP	1		
5	4435239	STOP	2		
7	4435124	PIN FASTENER	2		
9	14M7276	NUT	4		M16
11	3095735	PIN	1		(SUB FOR 3089163)
12	8094523	PIN FASTENER	1		(SUB FOR 8081494)
13	3089156	PIN FASTENER	1		
15	4224631	BRACKET	1		
16	J901425	CAP SCREW	1		
17	12H317	LOCK WASHER	1		
28	4424425	MANIFOLD	1		
29	4426128	WASHER	1		
30	J921840	BOLT	1		
31	J257218	LOCK WASHER	1		
32	4435125	PIN FASTENER	1		
33	3063826	NUT	2		(SUB FOR J950020)
34	4444288	THRUST WASHER	4		
35	4444289	THRUST WASHER	2		
36	4444754	PLATE	2		
37	4450011	THRUST WASHER	2		
38	4460371	THRUST WASHER	1		

STANDARD ARM (2.52 M)(FACTORY INSTALLED ARM)

T192103 -UN-24JUN03

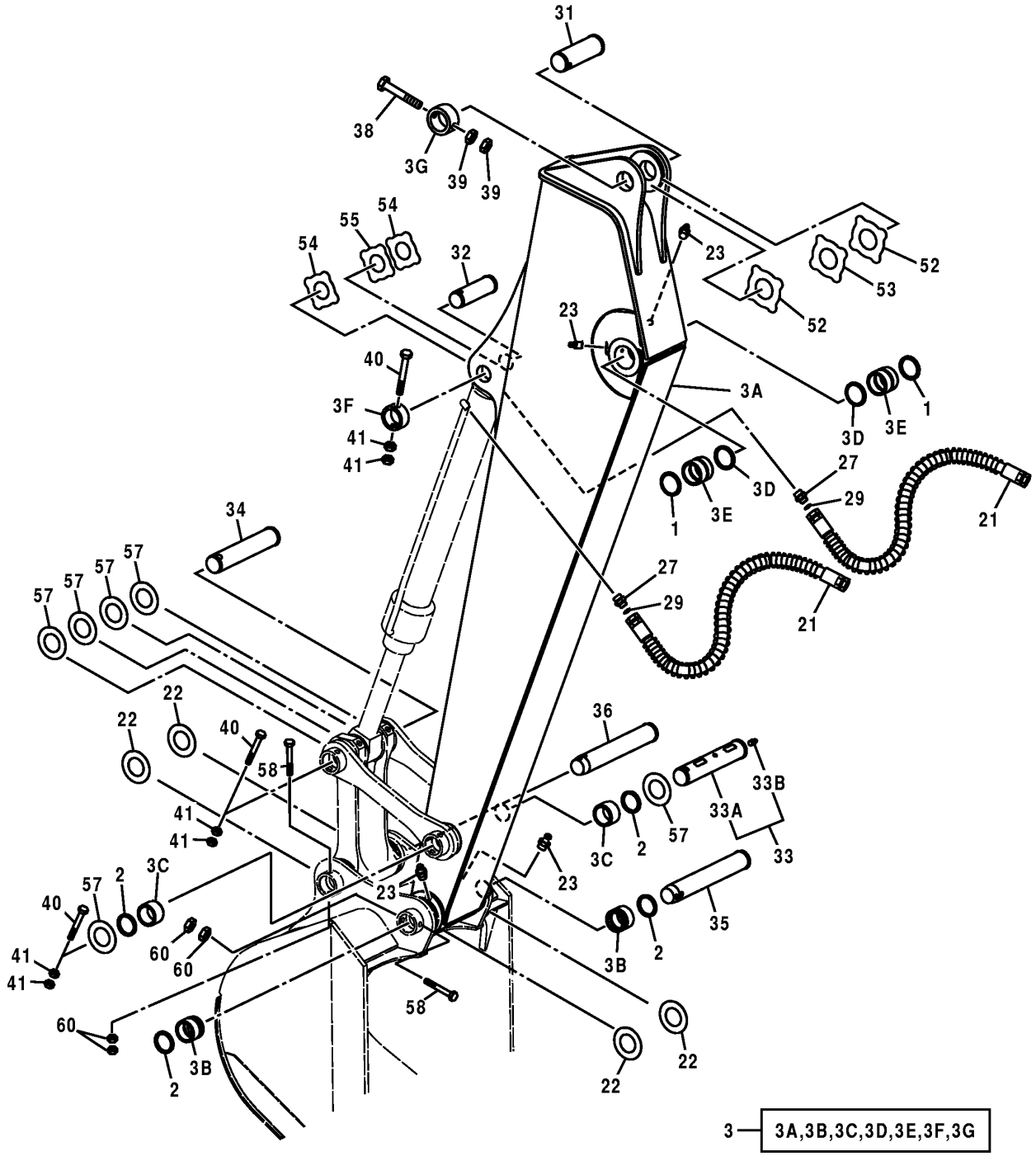

T192103

STANDARD ARM (2.52 M)(FACTORY INSTALLED ARM)

KEY	PART NO.	PART NAME	QTY	SERIAL NO.	REMARKS
1	TH104472	SEAL	2		
2	TH100374	SEAL	4		
3	.....	ARM	1		(7037102 NOT AVAILABLE) (SUB AP37202)
3A	.....	ARM	1		
3B	4424953	BUSHING	2		
3C	4344898	BUSHING	2		
3D	TH104472	SEAL	2		
3E	4443878	BUSHING	2		
3F	4434951	STOP	1		
3G	4434952	STOP	1		
21	4296276	HYDRAULIC HOSE - FABRICATE	2		(SUB FOR AT158479)
22	4276696	O-RING	4		
23	TH100074	LUBRICATION FITTING	4		
27	A853144	ADAPTER	2		
	4506418	O-RING	1		
29	T77857	O-RING	2		
31	3089156	PIN FASTENER	1		
32	3089107	PIN FASTENER	1		
33	9193963	PIN FASTENER	1		
33A	.....	PIN FASTENER	1		
33B	TH100074	LUBRICATION FITTING	1		
34	3089103	PIN FASTENER	1		
35	3089243	PIN FASTENER	1		
36	3089242	PIN FASTENER	1		
38	4435125	PIN FASTENER	1		
39	14M7277	NUT	2		M20
40	4435123	PIN FASTENER	3		
41	14M7276	NUT	6		M16
52	4444288	THRUST WASHER	2		
53	4444289	THRUST WASHER	1		
54	4444839	PLATE	2		
55	4444840	PLATE	1		
57	4450010	PLATE	6		
58	19M8043	CAP SCREW	2		M16 X 140
60	14M7276	NUT	4		M16

REPLACEMENT ARM AND PINS (STANDARD ARM, 2.52M)

T188634 -UN-10JUL03

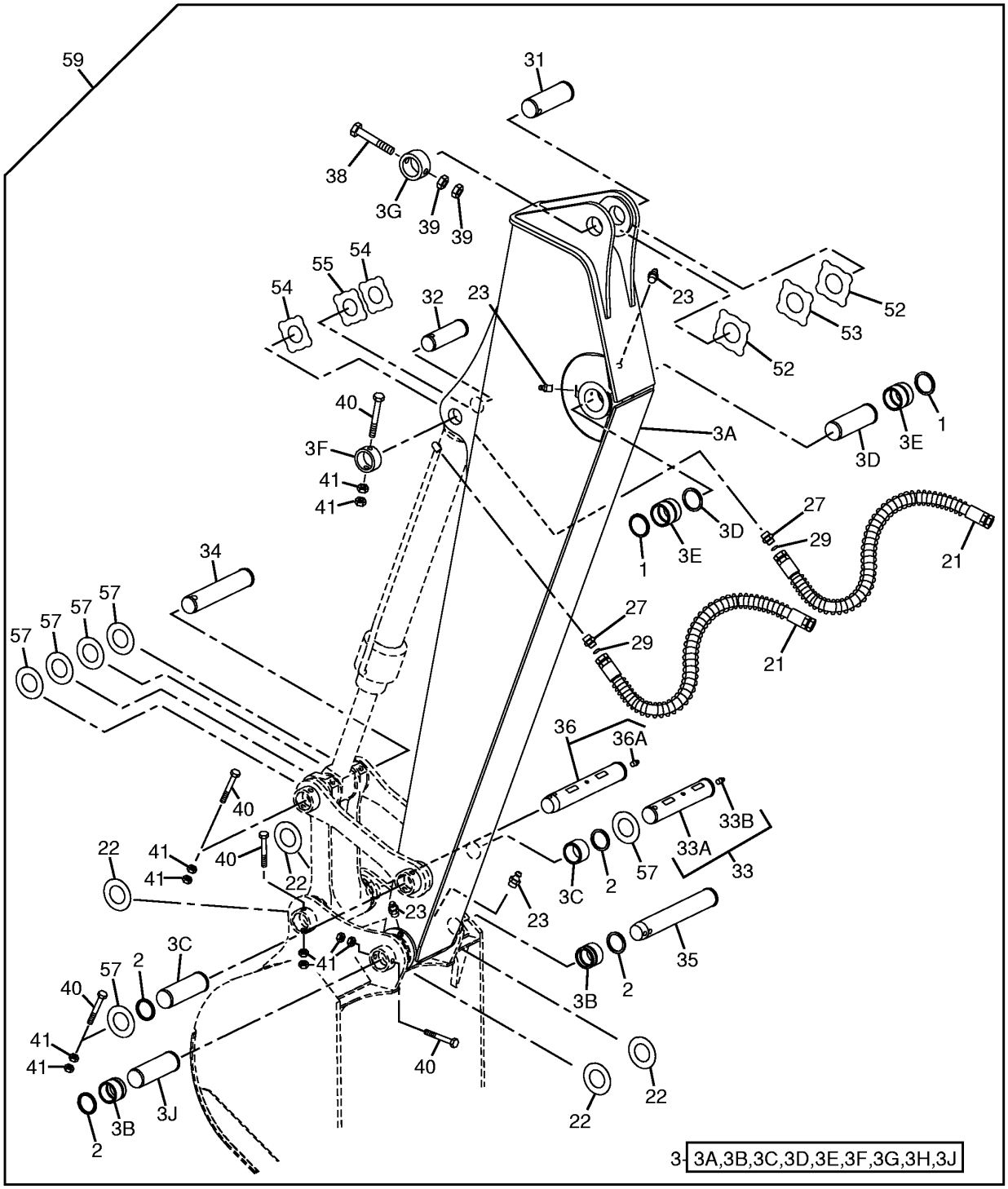

T188634

REPLACEMENT ARM AND PINS (STANDARD ARM, 2.52M)

KEY	PART NO.	PART NAME	QTY	SERIAL NO.	REMARKS
1	4084578	BACK-UP RING	2		
2	4065687	SEAL	4		
3	AP37202	ARM	1		
3A	.....	ARM	1		
3B	4424953	BUSHING	2		
3C	4344898	BUSHING	2		
3D	P63186	SPACER	1		(SUB FOR P68265)
3E	4443878	BUSHING	2		
3F	4434951	STOP	1		
3G	4434952	STOP	1		
3H	P68261	SPACER	1		
3J	P68263	SPACER	1		
21	4296276	HYDRAULIC HOSE - FABRICATE	2		
22	4276696	O-RING	4		
23	TH100074	LUBRICATION FITTING	4		
27	A853144	ADAPTER	2		
29	T77857	O-RING	2		
31	3089156	PIN FASTENER	1		
32	TH108939	PIN	1		
33	AP33639	PIN	1		
33A	.....	PIN	1		(3089106 NOT AVAILABLE FOR SERVICE)
33B	TH100074	LUBRICATION FITTING	1		
34	P66990	SHEAR PIN	1		
35	3089243	PIN FASTENER	1		
36	P68886	PIN	1		
36A	TH100074	LUBRICATION FITTING	1		
38	19M7907	SCREW	1		M20 X 140
39	14M7277	NUT	2		M20, (SUB FOR J950020)
40	19M8043	CAP SCREW	5		M16 X 140
41	14M7276	NUT	10		M16
52	TH108045	WASHER	2		
53	AT154378	WASHER	1		
54	TH105592	WASHER	2		
55	TH105593	WASHER	1		
57	TH108944	WASHER	6		
59	AP35346	KIT	1		(WHOLEGOODS) (INCLUDES ARM, BUCKET CYLINDER, HOSES, AND LINKAGE)

LONG ARM (3.01 M)(FACTORY INSTALLED ARM)

T192103 -UN-24JUN03

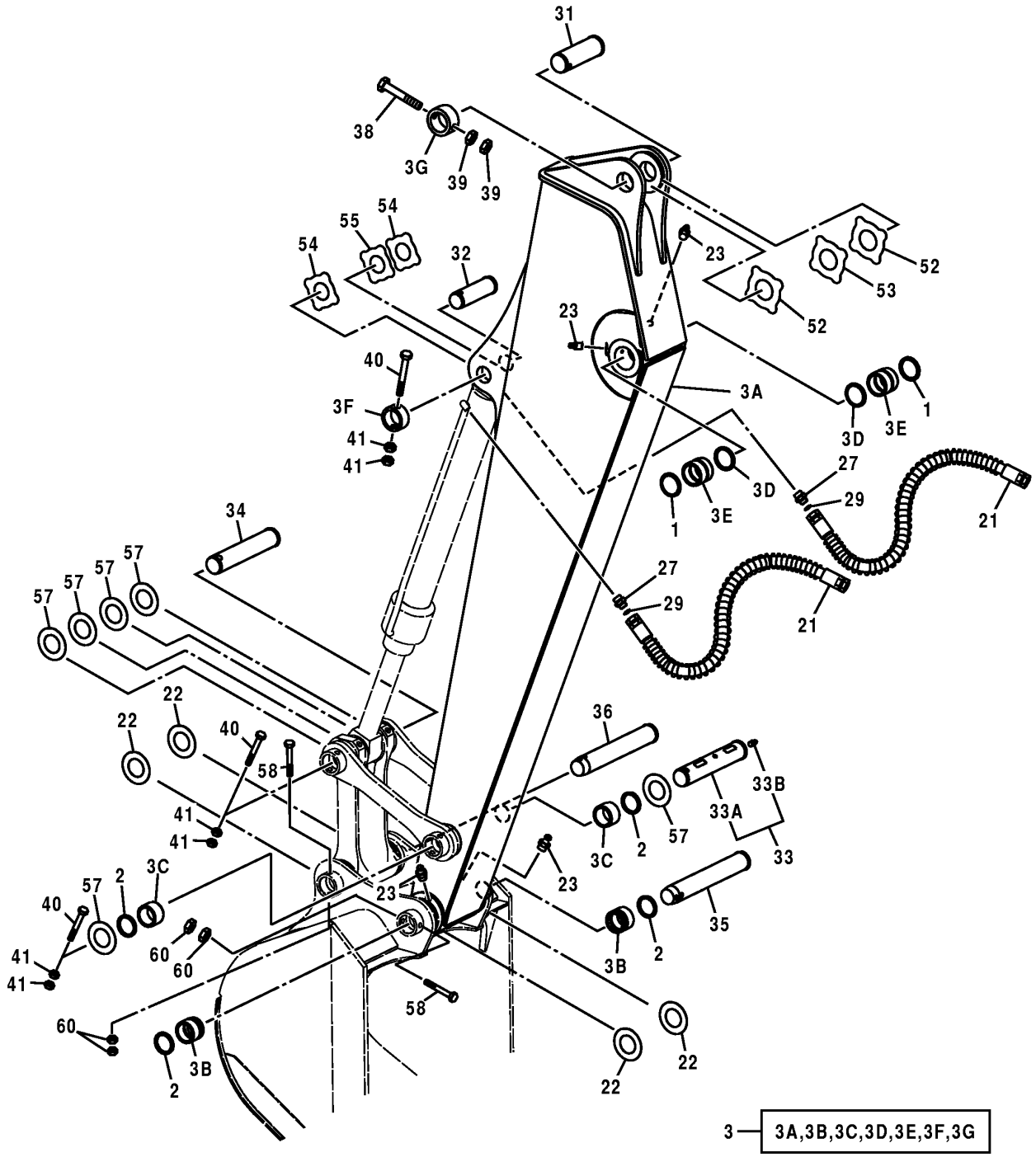

T192103

LONG ARM (3.01 M)(FACTORY INSTALLED ARM)

KEY	PART NO.	PART NAME	QTY	SERIAL NO.	REMARKS
1	TH104472	SEAL	2		
2	TH100374	SEAL	4		
3	.....	ARM	1		(7037678 NO LONGER AVAILABLE) (SUB AP37224)
3A	.....	ARM	1		
3B	4424953	BUSHING	2		
3C	4344898	BUSHING	2		
3D	TH104472	SEAL	2		
3E	4443878	BUSHING	2		
3F	4434951	STOP	1		
3G	4434952	STOP	1		
21	AT174905	HYDRAULIC HOSE - FABRICATE	2		
22	4276696	O-RING	4		
23	TH100074	LUBRICATION FITTING	4		
27	A853144	ADAPTER	2		
27A	4506418	O-RING	1		
29	T77857	O-RING	2		
31	3091546	PIN FASTENER	1		
32	3089107	PIN FASTENER	1		
33	9193963	PIN FASTENER	1		
33A	.....	PIN FASTENER	1		
33B	TH100074	LUBRICATION FITTING	1		
34	3089103	PIN FASTENER	1		
35	3089243	PIN FASTENER	1		
36	3089242	PIN FASTENER	1		
38	4435125	PIN FASTENER	1		
39	14M7277	NUT	2		M20
40	4435123	PIN FASTENER	3		
41	14M7276	NUT	6		M16
52	4444288	THRUST WASHER	2		
53	4444289	THRUST WASHER	1		
54	4444839	PLATE	2		
55	4444840	PLATE	1		
57	4450010	PLATE	6		
58	19M8043	CAP SCREW	2		M16 X 140
60	14M7276	NUT	4		M16

ARM, PINS, AND BUCKET CYLINDER HOSES (LONG ARM, 3.01M)

T188634 -UN-10JUL03

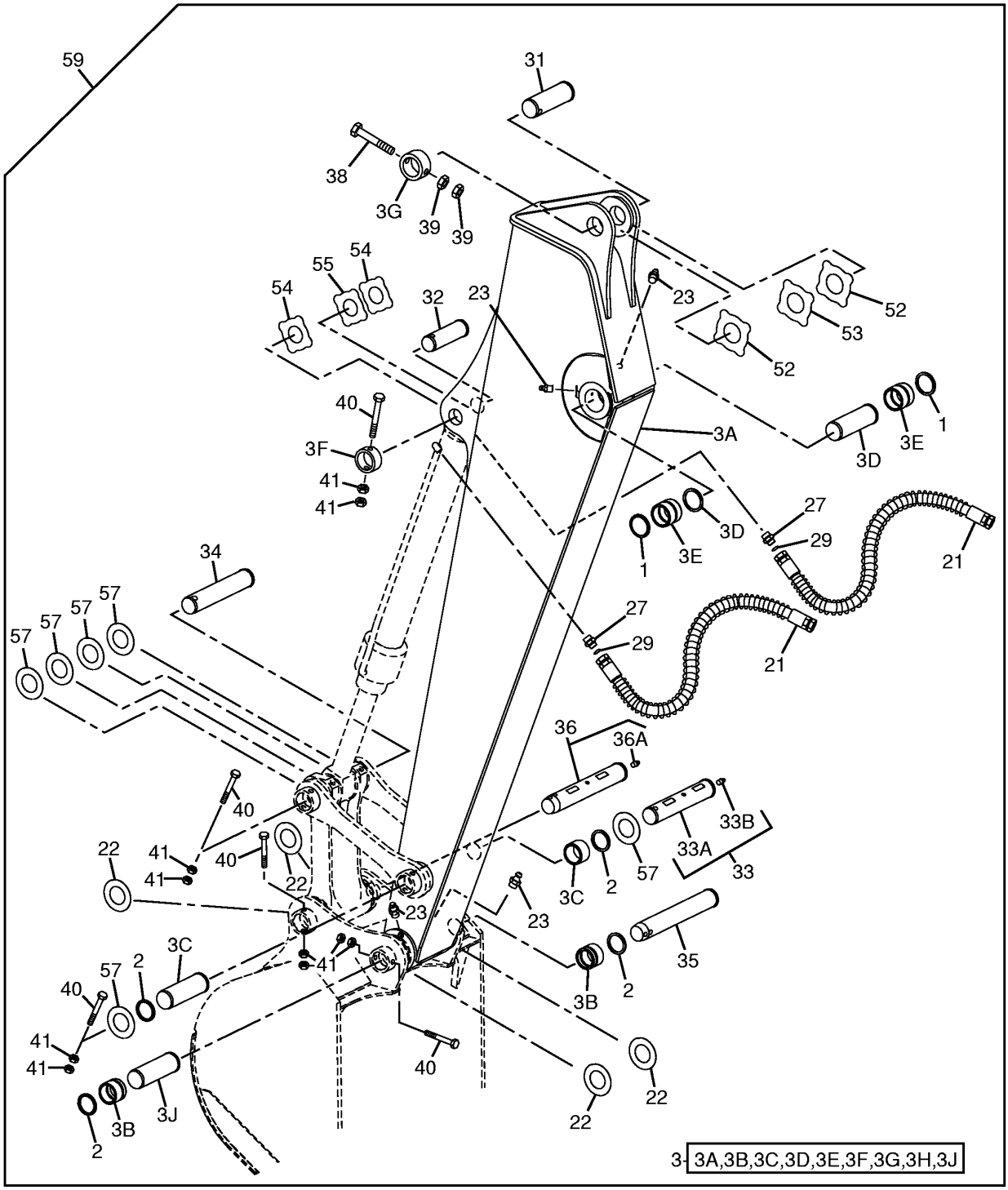

T188634

ARM, PINS, AND BUCKET CYLINDER HOSES (LONG ARM, 3.01M)

KEY	PART NO.	PART NAME	QTY	SERIAL NO.	REMARKS
1	4084578	BACK-UP RING	2		
2	4065687	SEAL	4		
3	AP37224	ARM	1		(SUB FOR 7037678)
3A	.....	ARM	1		
3B	4424953	BUSHING	2		
3C	4344898	BUSHING	2		
3D	P63186	SPACER	1		(SUB FOR P68265)
3E	4443878	BUSHING	2		
3F	4434951	STOP	1		
3G	4434952	STOP	1		
3H	P68261	SPACER	1		
3J	P68263	SPACER	1		
21	4359576	HYDRAULIC HOSE - FABRICATE	2		
22	4276696	O-RING	4		
23	TH100074	LUBRICATION FITTING	4		
27	A853144	ADAPTER	2		
29	T77857	O-RING	2		
31	3091546	PIN FASTENER	1		
	TH100074	LUBRICATION FITTING	1		
32	TH108939	PIN	1		
33	AP33639	PIN	1		
33A	.....	PIN	1		(3089106 NOT AVAILABLE FOR SERVICE)
33B	TH100074	LUBRICATION FITTING	1		
34	P66990	SHEAR PIN	1		
35	3089243	PIN FASTENER	1		
36	P68886	PIN	1		
36A	TH100074	LUBRICATION FITTING	1		
38	19M7907	SCREW	1		M20 X 140
39	14M7277	NUT	2		M20, (SUB FOR J950020)
40	19M8043	CAP SCREW	5		M16 X 140
41	14M7276	NUT	10		M16
52	TH108045	WASHER	2		
53	AT154378	WASHER	1		
54	TH105592	WASHER	2		
55	TH105593	WASHER	1		
57	TH108944	WASHER	6		
59	AP35347	KIT	1		(WHOLEGOODS) (INCLUDES ARM, BUCKET CYLINDER, HOSES, AND LINKAGE)

LONG ARM COMPONENTS

T162581 -UN-16DEC02

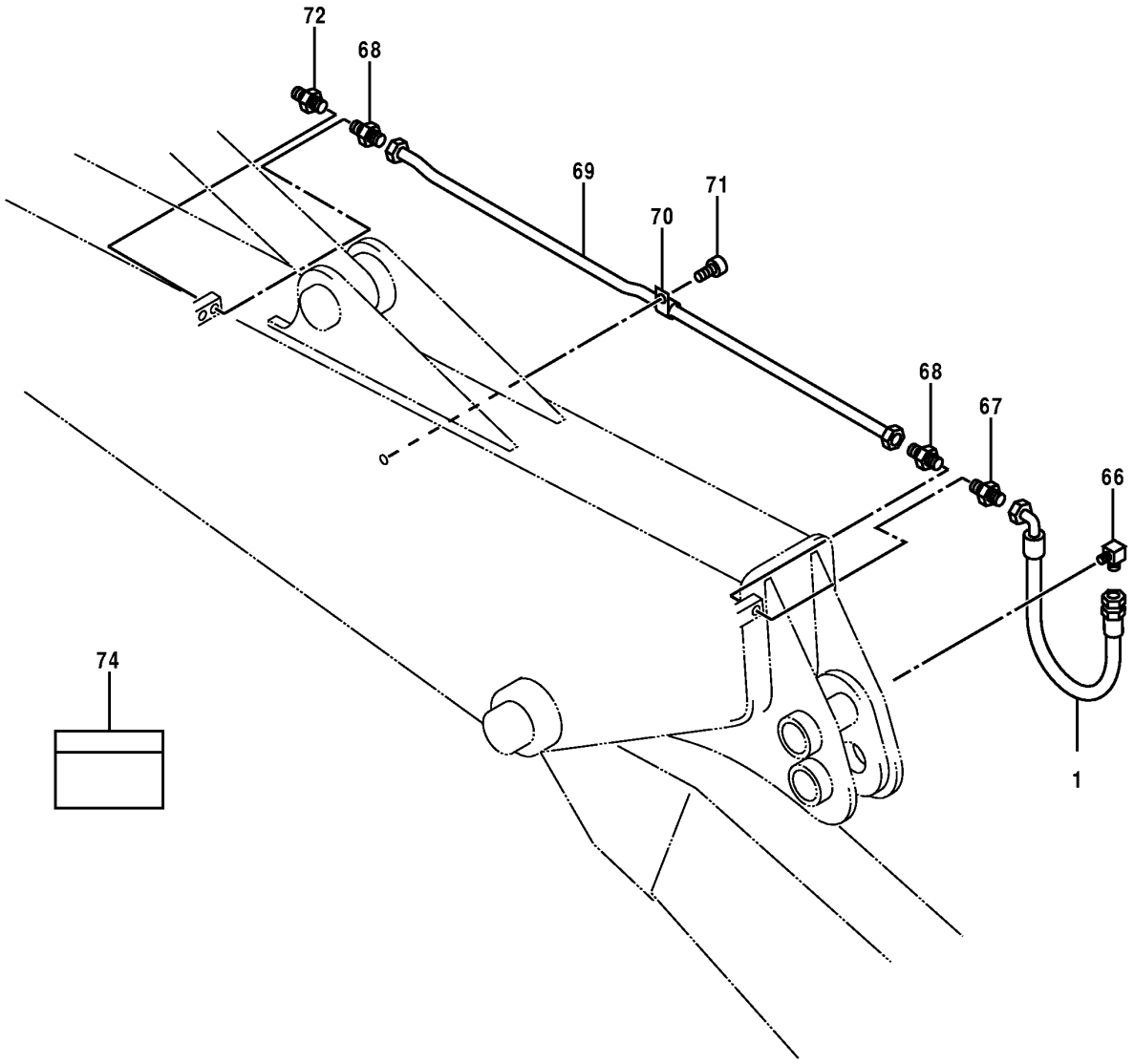

T162581

LONG ARM COMPONENTS

KEY	PART NO.	PART NAME	QTY	SERIAL NO.	REMARKS
1	TH111905	HYDRAULIC HOSE - FABRICATE	1	-063822	(SUB FOR 4227083)
	4451760	HOSE	1	063823-	
66	4154656	ELBOW FITTING	1		
67	4154651	ADAPTER	1		
68	4130169	FITTING	2		
69	4271447	PIPE	1	-063822	
	4605564	PIPE	1	063823-	
70	TH101388	CLIP	1		(SUB FOR 4000854)
71	21M7288	SCREW	1		M6 X 10, (SUB FOR M430610)
72	T116334	LUBRICATION FITTING	1	-063822	(SUB FOR J75581)
	TH100074	LUBRICATION FITTING	1	063823-	
74	4288402	LABEL	1		

BUCKET LINK

T162582 -UN-08JAN03

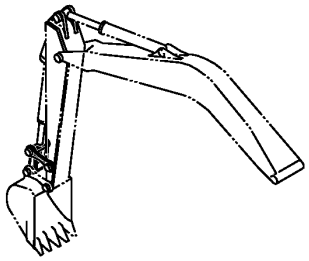

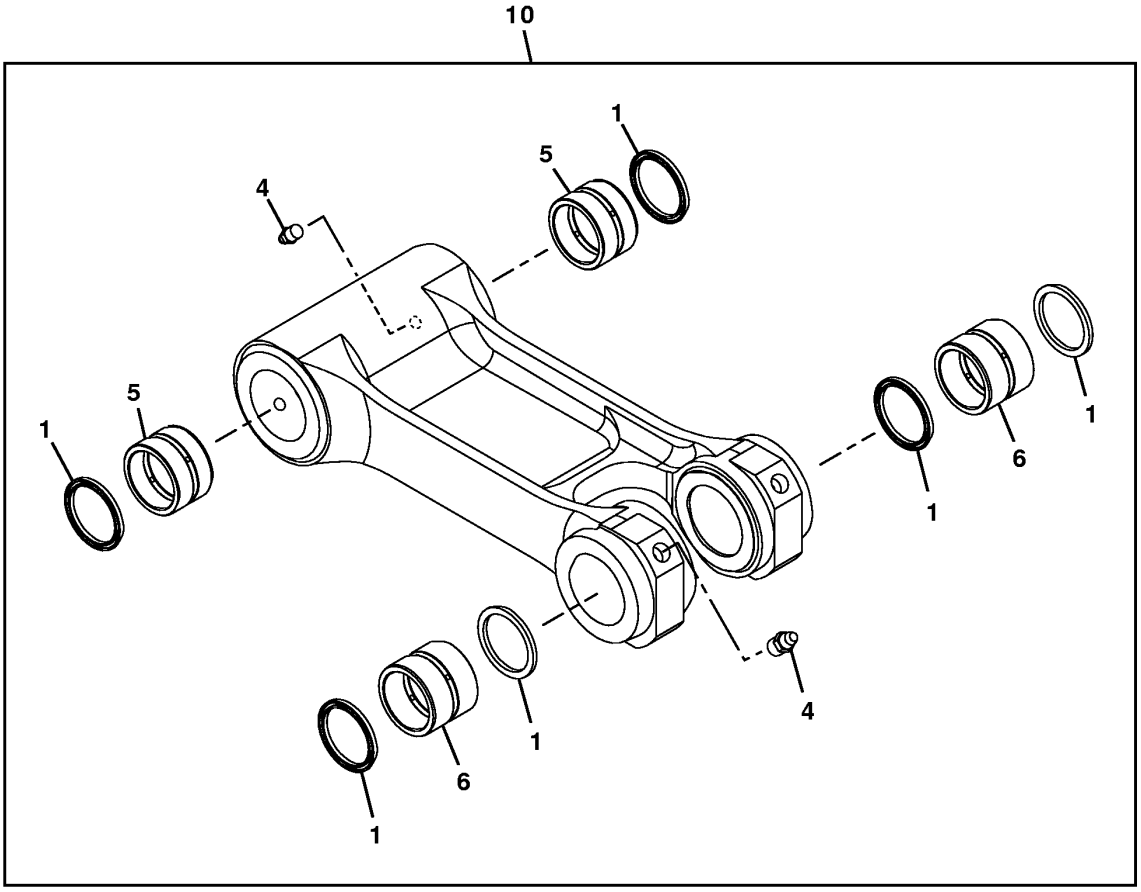

T162582

BUCKET LINK

KEY	PART NO.	PART NAME	QTY	SERIAL NO.	REMARKS
1	TH100374	SEAL	6		
4	TH100074	LUBRICATION FITTING	4		
5	4443879	BUSHING	2		
6	4444914	BUSHING	2		
10	8078142	LINK	1		

ARM LINK

T143326 -UN-28JUN01

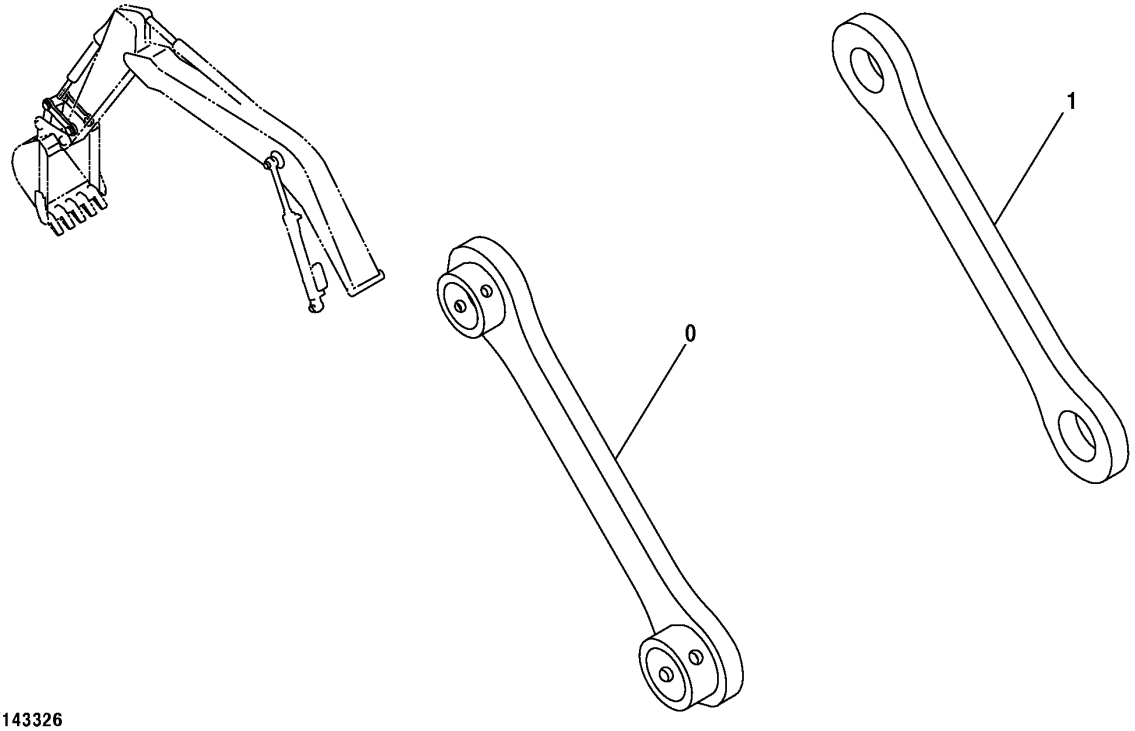

T143326

ARM LINK

KEY	PART NO.	PART NAME	QTY	SERIAL NO.	REMARKS
0	9753307	LINK	1		
1	4425937	LINK	1		

AUXILIARY SOLENOID AND FLOW CONTROL VALVE KIT (1-WAY)

T189802 -UN-21APR03

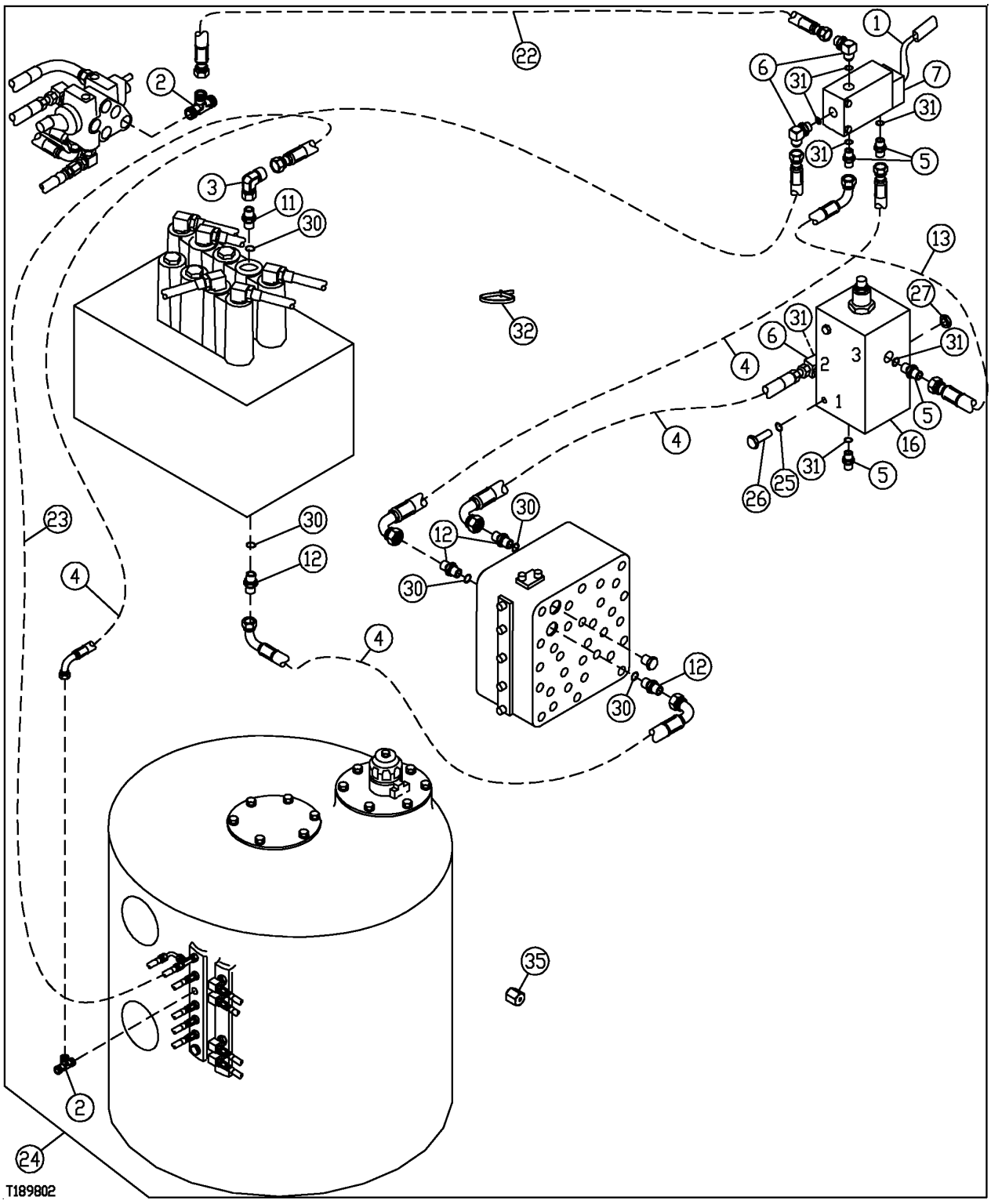

AUXILIARY SOLENOID AND FLOW CONTROL VALVE KIT (1-WAY)

KEY	PART NO.	PART NAME	QTY	SERIAL NO.	REMARKS
1	AT191297	WIRING HARNESS	1		
2	AT36921	TEE FITTING	3		
3	AE24616	ELBOW FITTING	1		
4	AT71732	HYDRAULIC HOSE - FABRICATE	4		
5	R27212	FITTING	4		
6	AT35121	ELBOW FITTING	4		
7	AT306723	ELEC.PROPORTIONAL VALVE	1		SOLENOID, (SUB FOR AT116486 AND AT140041)
	.....	ELECTRICAL COIL	1		(AT140041 NO LONGER AVAILABLE)
11	AT130053	ADAPTER	1		
12	4200466	ADAPTER	4		
13	AE42718	HYDRAULIC HOSE	1		
16	AT186623	HYDRAULIC PRESSURE VALVE	1		
22	AT130684	HYDRAULIC HOSE - FABRICATE	1		9/16" X 2 520 MM X 9/16"
23	AT71082	HYDRAULIC HOSE - FABRICATE	1		9/16" X 711 MM X 9/16"
24	**AT186622**	**SPOOL VALVE**	**1**		**(WHOLEGOODS) (COMPLETE KIT) (ALSO ORDER T188662 INSTRUCTIONS AND TH109285 PLUG)**
25	24M7139	WASHER	4		6.400 X 18 X 1.600 MM, (NOT ILLUSTRATED)
26	19M7529	CAP SCREW	4		M6 X 55
27	14M7272	NUT	4		M6
30	CH11570	O-RING	5		
31	R26448	O-RING	7		
32	R44302	TIE BAND	4		
33	AH75160	ELBOW FITTING	1		(NOT ILLUSTRATED)
35	R31147	FITTING	1		

ELECTRIC SOLENOID VALVE KIT
(1 WAY/2 WAY)
(WITHOUT PRESSURE SWITCH)

T200912 -UN-14JUN04

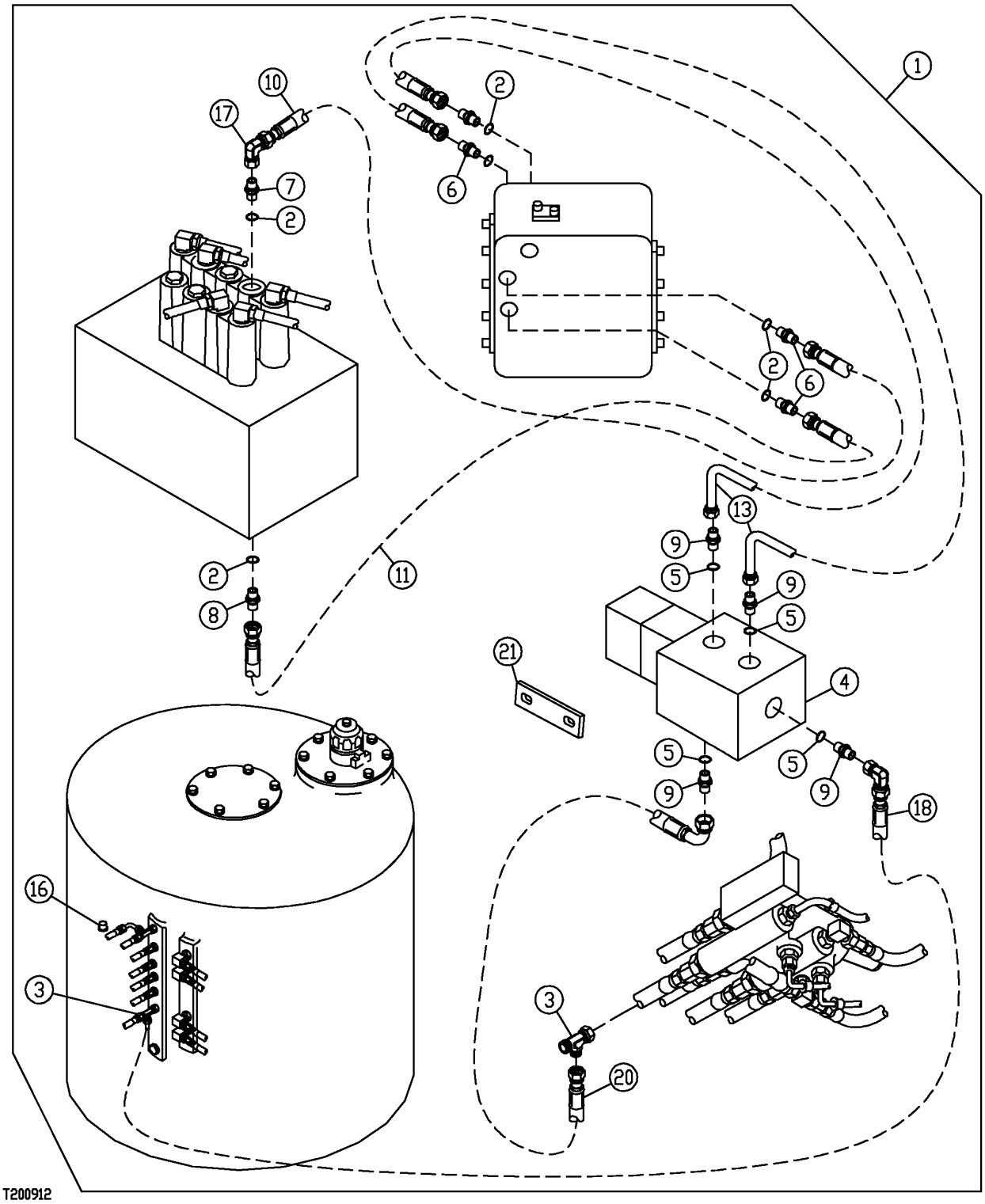

ELECTRIC SOLENOID VALVE KIT
(1 WAY/2 WAY)
(WITHOUT PRESSURE SWITCH)

KEY	PART NO.	PART NAME	QTY	SERIAL NO.	REMARKS
1	**AT195713**	**KIT**	**1**		**(WHOLEGOODS) ELECTRIC SOLENOID VALVE (INCLUDES H102543 FITTING)**
2	CH11570	O-RING	6		13.800 X 2.400 MM (0.543" X 0.094")
3	AT36921	TEE FITTING	2		
4	AT180585	SOLENOID	1		
5	R26448	O-RING	4		11.887 X 1.981 MM (0.468" X 5/64")
6	TH108320	ADAPTER	4		
7	AT130053	ADAPTER	1		
8	AT131445	ADAPTER	1		
9	R27212	FITTING	4		
10	AT108783	HYDRAULIC HOSE - FABRICATE	1		9/16" X 567 MM (22-1/4") X 9/16"
11	AR90081	HYDRAULIC HOSE	1		9/16" X 1 270 MM (50") X 9/16"
12	24M7054	WASHER	4		6.400 X 12 X 1.600 MM, (NOT ILLUSTRATED)
13	AT68901	HYDRAULIC HOSE - FABRICATE	2		9/16" X 965 MM (38") X 9/16"
14	14M7272	NUT	2		M6, (NOT ILLUSTRATED)
15	19M7529	CAP SCREW	2		M6 X 55, (NOT ILLUSTRATED)
16	R31147	FITTING	1		(CAP)
17	AE24616	ELBOW FITTING	1		
18	AT71732	HYDRAULIC HOSE - FABRICATE	1		9/16" X 1 422 MM (56") X 9/16"
20	AT78124	HYDRAULIC HOSE - FABRICATE	1		9/16" X 3 531 MM (139") X 9/16"
21	T202379	STRAP	2		

DUAL CONTROL HANDLE FOR AUXILIARY CONTROLS (2 SOLENOIDS)

T144288 -UN-06AUG01

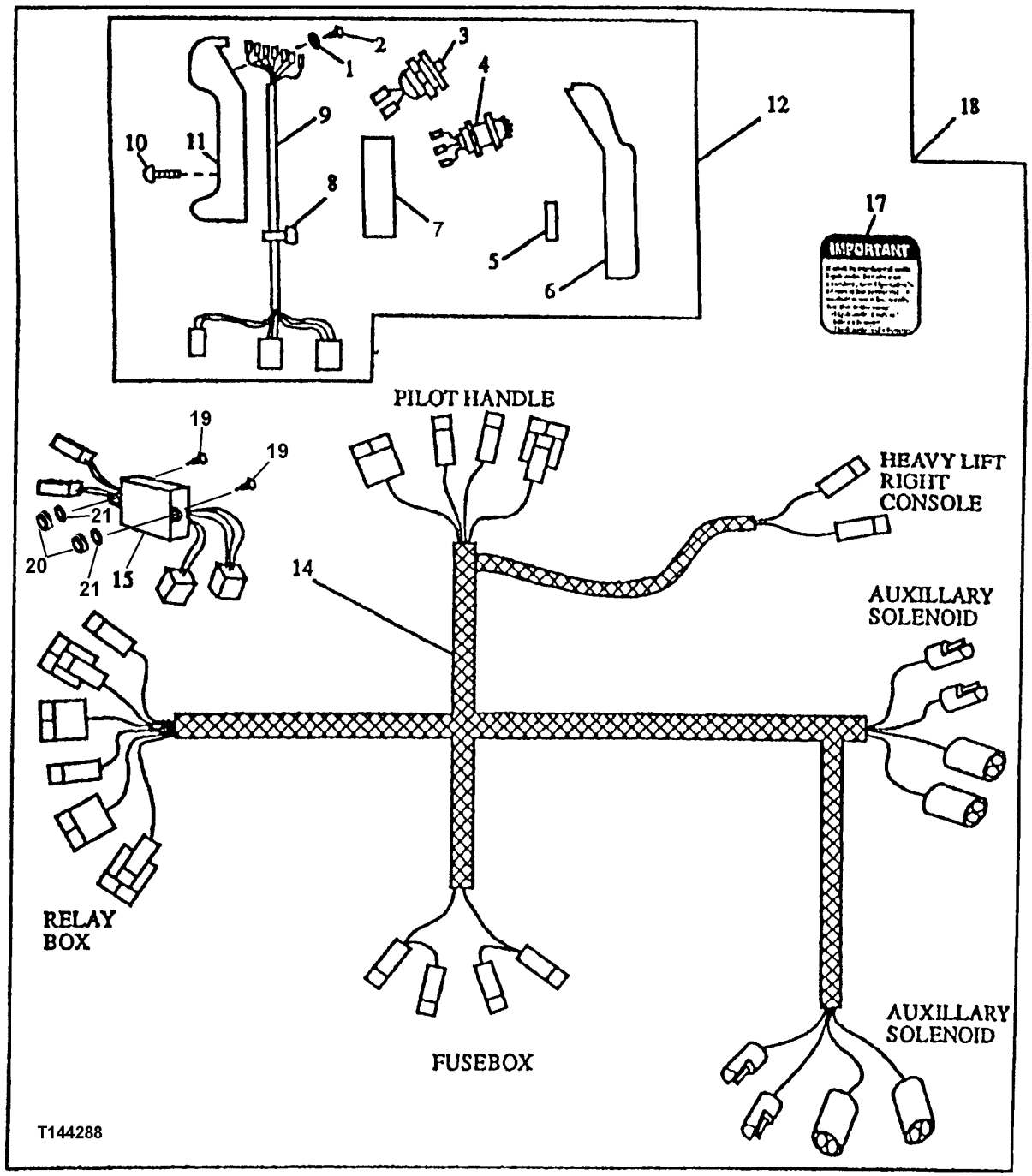

DUAL CONTROL HANDLE FOR AUXILIARY CONTROLS (2 SOLENOIDS)

KEY	PART NO.	PART NAME	QTY	SERIAL NO.	REMARKS
1	12H321	WASHER	7		0.138"
2	21H1308	SCREW	7		0.138" X 3/8"
3	AT139383	TOGGLE/ROCKER SWITCH	1		PUSH BUTTON (MOMENTARY)
4	AT139382	COVER	2		
5	R71799	NEEDLE ROLLER	2		
6	T114699	HANDLE	1		
7	T114698	SUPPORT	1		
8	R44302	TIE BAND	2		
9	AT195787	WIRING HARNESS	1		
10	T80394	SCREW	6		
11	AT115448	HANDLE	1		
12	AT195786	CONTROL LEVER	1		PILOT CONTROL
14	AT195788	WIRING HARNESS	1		SOLENOID VALVE
15	AT141562	RELAY MODULE	1		
17	T149434	LABEL	1		(IMPORTANT) (BETWEEN ASHTRAY AND OPERATOR'S CAUTION DECAL ON RIGHT SIDE OF CAB)
18	**AT195784**	**KIT**	**1**		**(CONTROL HANDLE WITH SWITCHES) (SUB FOR AT162242) WHOLEGOODS**
19	21M7246	SCREW	2		M6 X 16
20	14M7272	NUT	2		M6
21	24M7293	WASHER	2		6.500 X 13 X 1.600 MM

**ELECTRIC FOOT SWITCH
FOR AUXILIARY CONTROL (ONE SOLENOID)**

TP44347 -UN-01JAN94

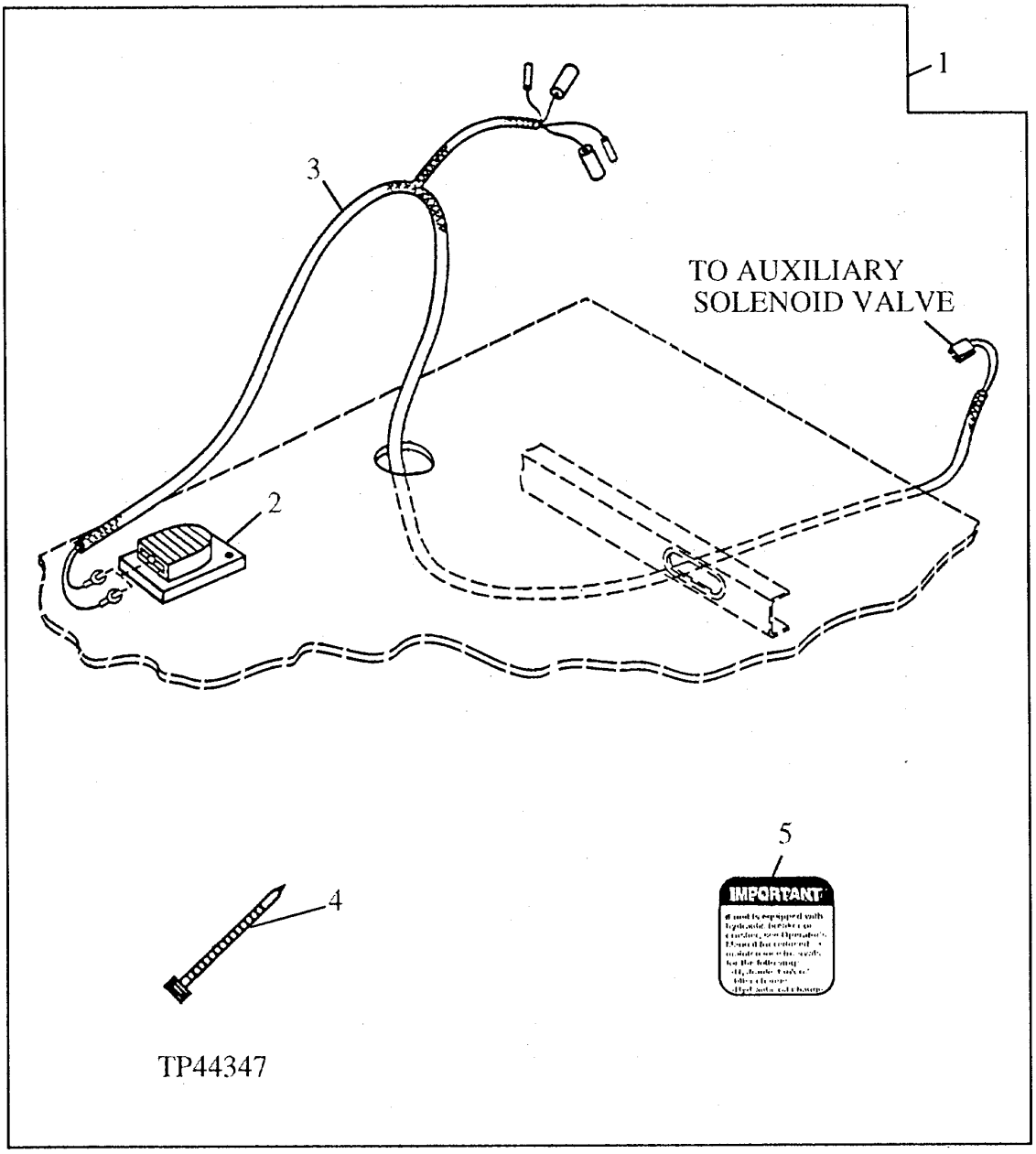

ELECTRIC FOOT SWITCH
FOR AUXILIARY CONTROL (ONE SOLENOID)

KEY	PART NO.	PART NAME	QTY	SERIAL NO.	REMARKS
1	**AT196587**	**SWITCH**	**1**		**(SUB FOR AT164896) WHOLEGOODS (ELECTRIC FOOT SWITCH FOR AUXILIARY VALVE)**
2	AT82210	SWITCH	1		(ELECTRIC FOOT CONTROL)
3	AT196588	WIRING HARNESS	1		
4	R44302	TIE BAND	2		(USE AS REQUIRED)
5	T149434	LABEL	1		(IMPORTANT - AUXILIARY ELECTRIC CONTROL)

MAIN HYDRAULIC PUMP

T162102 -UN-26DEC02

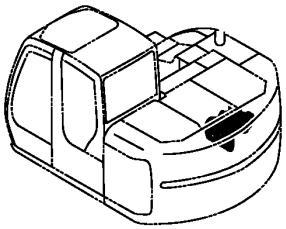

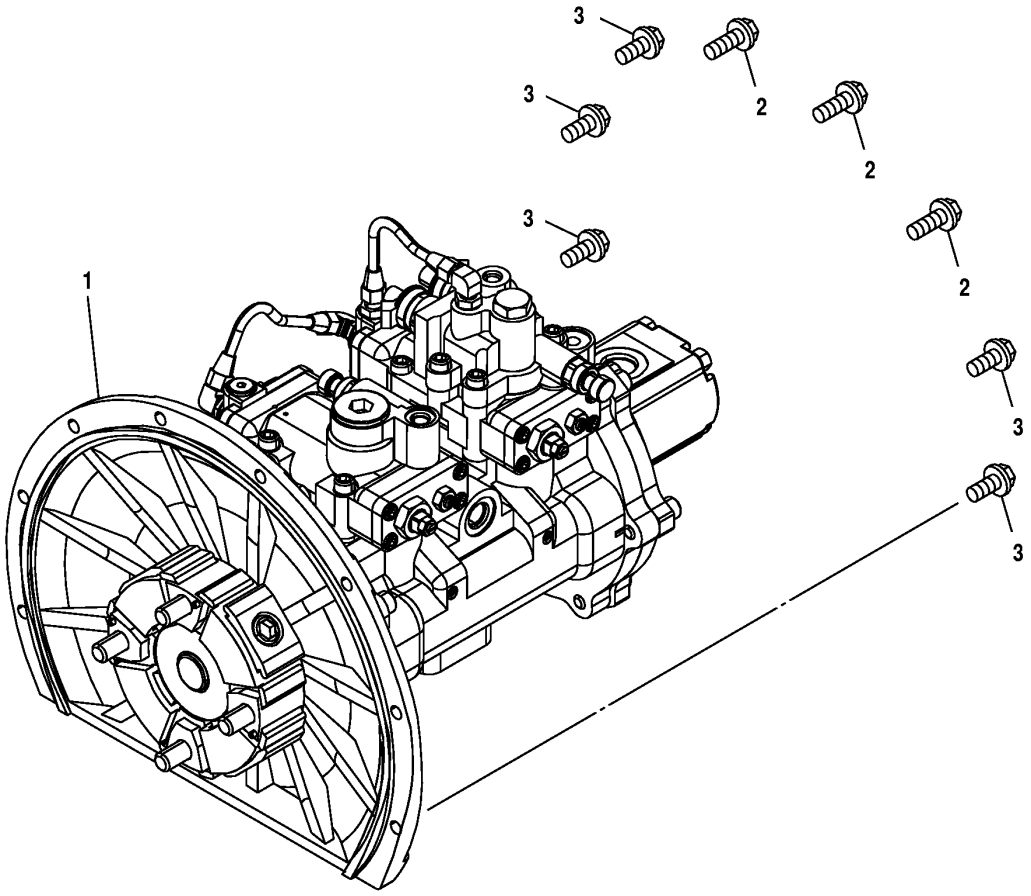

T162102

MAIN HYDRAULIC PUMP

KEY	PART NO.	PART NAME	QTY	SERIAL NO.	REMARKS
1	9197338	HYDRAULIC PUMP	1		
2	19M7550	CAP SCREW	3		M10 X 35, (SUB FOR J011035)
	12M7066	LOCK WASHER	3		10 MM
3	19M7662	CAP SCREW	5		M10 X 30, (SUB FOR J011030)
	12M7066	LOCK WASHER	5		10 MM

HYDRAULIC PUMP, PILOT PUMP, AND REGULATOR ASSEMBLY

T198908 -UN-21APR04

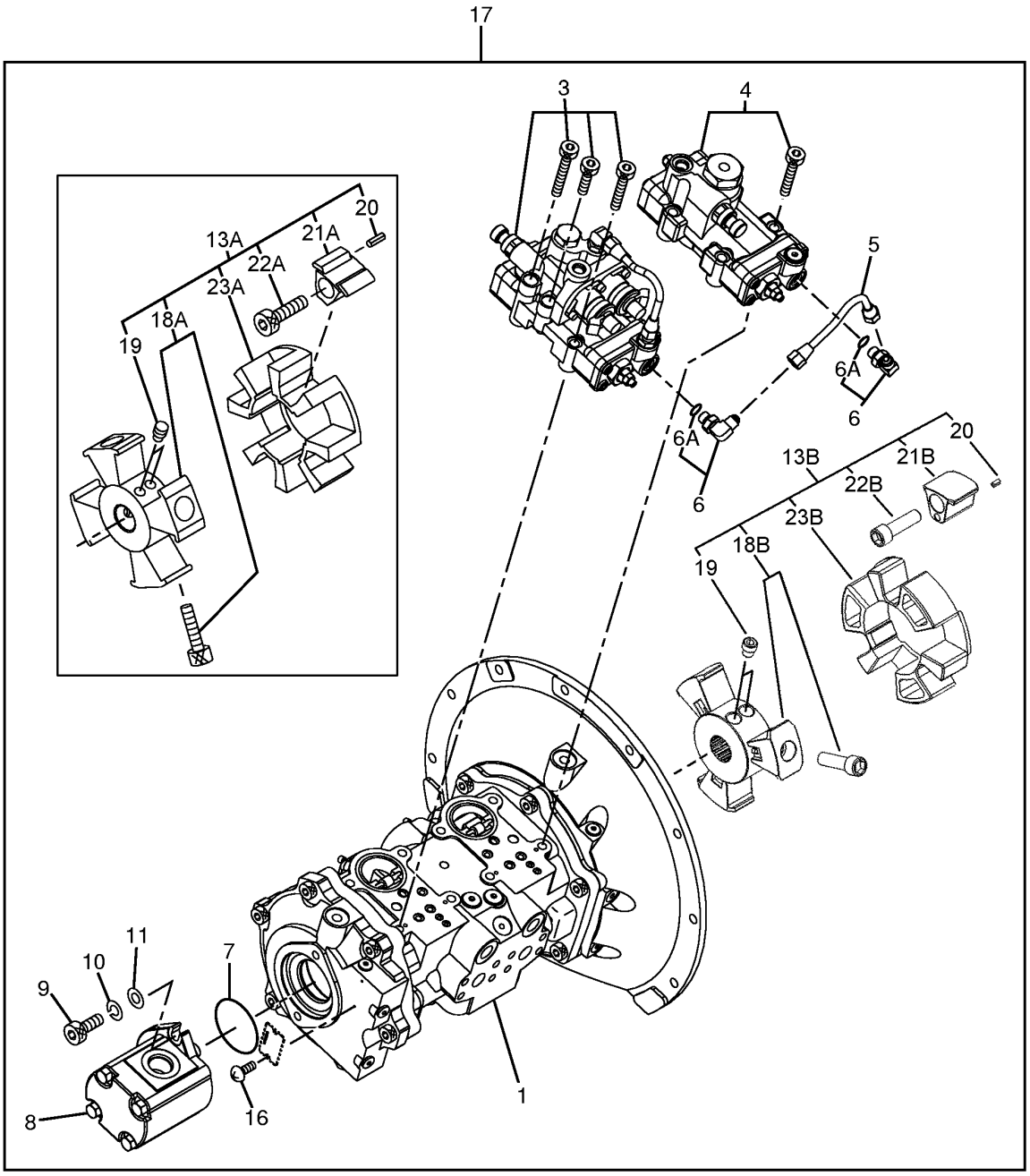

T198908

HYDRAULIC PUMP, PILOT PUMP, AND REGULATOR ASSEMBLY

KEY	PART NO.	PART NAME	QTY	SERIAL NO.	REMARKS
1	.....	HYDRAULIC PUMP	1		(9192497 NOT AVAILABLE FOR SERVICE)
3	9198153	REGULATOR	1		
4	9198154	REGULATOR	1		
5	4429488	PIPE	1		
6	4293950	ELBOW FITTING	2		
6A	M800650	PACKING	1		
7	4153543	O-RING	1		
8	9217993	PUMP	1		(SUB FOR 4181700)
9	19M8337	SCREW	2		M10 X 30
10	12M6791	LOCK WASHER	2		10.200 MM
11	4114402	WASHER	2		
13A	4340275	COUPLING	1	-300003	
13B	4464407	COUPLING	2	300004-	
16	37H99	SCREW	2		0.100" X 1/4"
17	9197338	HYDRAULIC PUMP	1	-300003	
	9227923	HYDRAULIC PUMP	1	300004-	
18A	4366376	HUB	1	-300003	
18B	4627119	HUB	1	300004-	
19	4334899	SET SCREW	2		
20	34M7117	SPRING PIN	4		5 X 10 MM, (SUB FOR 4101345)
21A	4334892	INSERT	4	-300003	
21B	4627120	INSERT	4	300004-	
22A	4334894	BOLT	4	-300003	
22B	4627121	BOLT	4	300004-	
23A	4334891	COUPLING	1	-300003	
23B	4627118	COUPLING	1	300004-	

HYDRAULIC PUMP COMPONENTS

T153110 -UN-05APR02

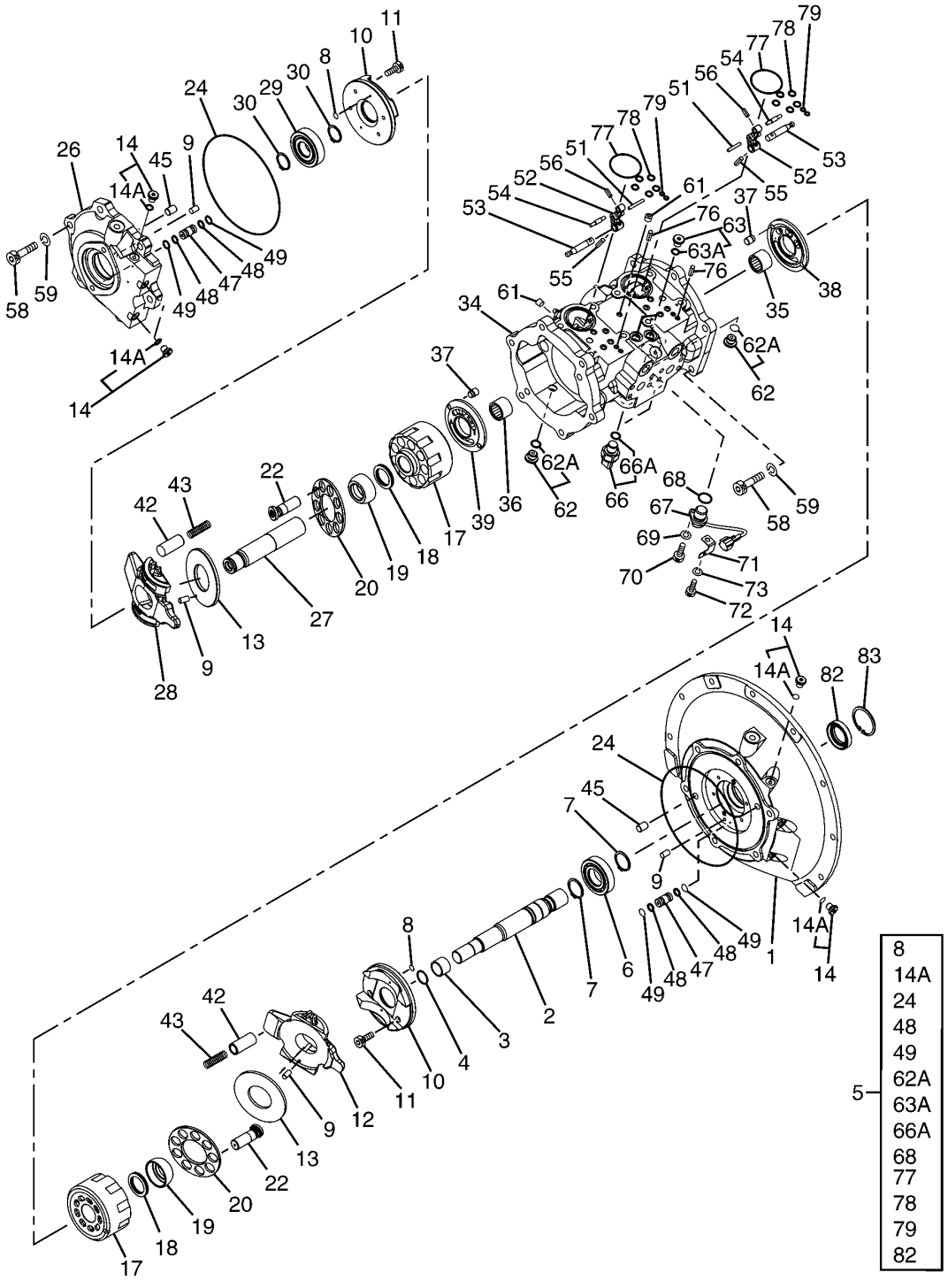

T153110

HYDRAULIC PUMP COMPONENTS

KEY	PART NO.	PART NAME	QTY	SERIAL NO.	REMARKS
1	1026892	CASE	1		
2	2038178	SHAFT	1		
3	4355286	BEARING RACE	1		
4	0268601	SNAP RING	1		
5	4463047	SEAL KIT	1		
6	4280841	CYLINDRICAL ROLLER BEARING	1		
7	40M7046	SNAP RING	2		
8	4343074	O-RING	4		
9	4198956	PIN FASTENER	4		
10	2042069	PLATE	2		
11	TH100738	BOLT	8		
12	1025666	PLATE	1		
13	4407464	PLATE	2		
14	9134109	DRAIN PLUG	6		
14A	4506408	O-RING	6		
17	2042059	ROTOR	2		
18	4289874	DISK SPRING	2		
19	3065991	BUSHING	2		
20	3065989	RETAINER	2		
22	8071391	PISTON	18		
24	4410166	O-RING	2		
26	1025540	CASE	1		
27	2038174	SHAFT	1		
28	1025667	PLATE	1		
29	4355279	CYLINDRICAL ROLLER BEARING	1		
30	40M7084	SNAP RING	2		
34	0003076	CASE	1		
35	4355272	NEEDLE BEARING	1		
36	4355277	NEEDLE BEARING	1		
37	4271350	PIN	4		
38	2044792	PLATE	1		
39	2044793	PLATE	1		
42	4428917	PISTON	6		
43	4397537	SPRING	6		
45	4409640	PIN FASTENER	2		
47	4432356	PIN FASTENER	2		
48	4436322	BACK-UP RING	4		
49	CH11560	PACKING	4		
51	4200227	DOWEL PIN	2		
52	3081504	LINK	2		
53	4397509	PIN FASTENER	2		
54	4404102	PIN FASTENER	2		
55	4144013	PIN FASTENER	2		
56	4116299	PIN FASTENER	2		
58	19M8395	SCREW	12		
59	12M7058	LOCK WASHER	12		12 MM (0.472")
61	4427347	PIPE PLUG	3		
62	9134111	PIPE PLUG	2		
62A	CH11570	O-RING	1		
63	9134110	PIPE PLUG	2		
63A	M800650	PACKING	1		
66	4436271	SENSOR	2		(SUB FOR AT179981 OR 4355012) PUMP PRESSURE
66A	TH102560	O-RING	1		
67	4265372	SENSOR	1		
68	4306888	O-RING	1		
69	24M7054	WASHER	1		
70	19M8553	SCREW	1		
71	4252767	BRACKET	1		
72	M340613	BOLT	1		
73	12M7133	LOCK WASHER	1		
76	34M3845	SPRING PIN	4		
77	4348665	O-RING	2		
78	CH11560	PACKING	10		
79	4343074	O-RING	4		
82	4320490	SEAL	1		
83	40M7228	SNAP RING	1		

REGULATOR (PUMP 2)

T161908 -UN-08JAN03

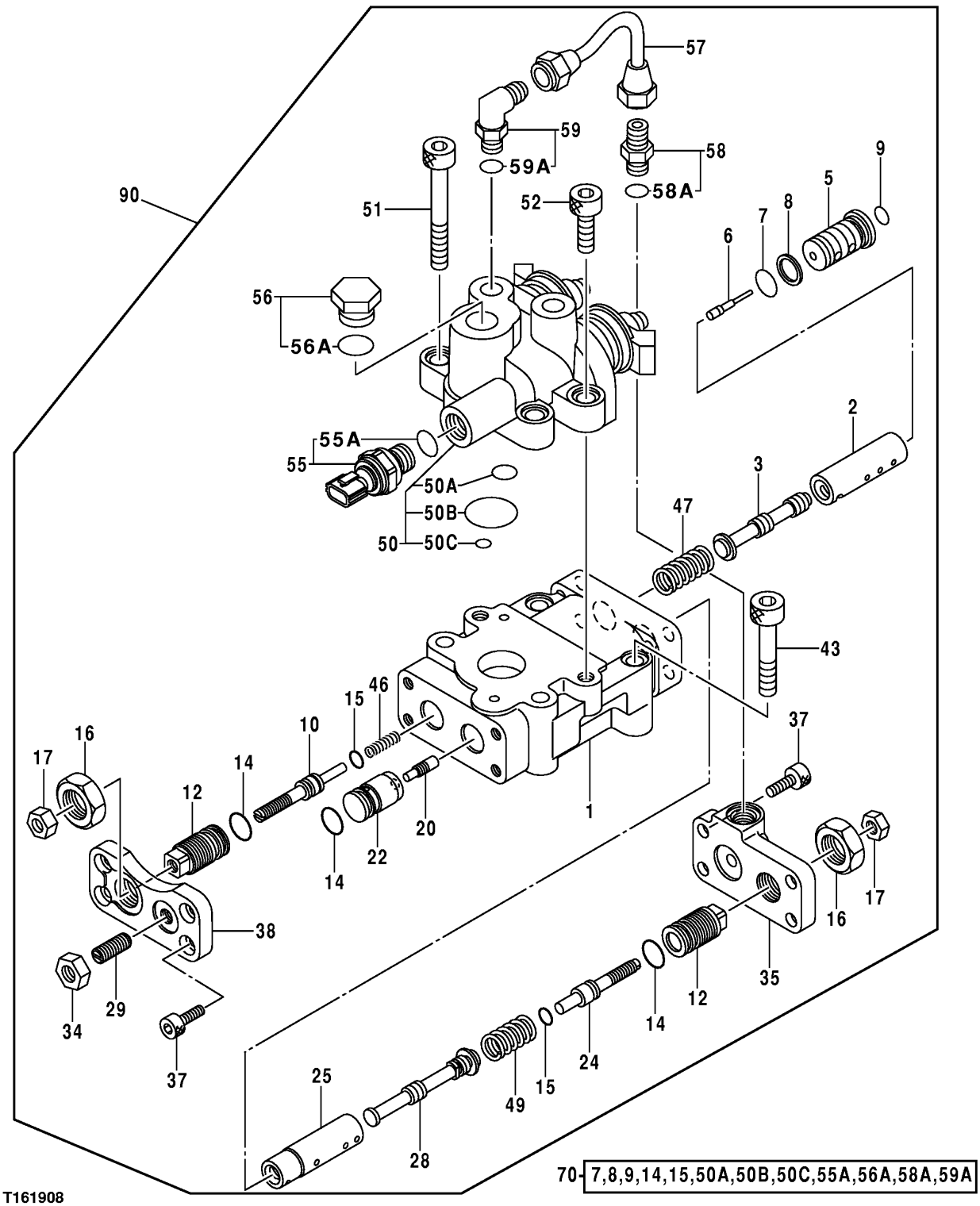

REGULATOR (PUMP 2)

KEY	PART NO.	PART NAME	QTY	SERIAL NO.	REMARKS
1	TH1026282	REGULATOR	1		
2	4179155	SLEEVE	1		
3	4179156	SPOOL	1		
5	4367385	PISTON	1		
6	4367500	PISTON	1		
7	TH102560	O-RING	1		
8	4085607	BACK-UP RING	1		
9	CH11560	PACKING	1		
10	4368619	STOP	1		
12	4179161	STOP	2		
14	4342843	O-RING	3		
15	4342841	O-RING	2		
16	4068898	NUT	2		
17	14M7273	NUT	2		
20	4179171	PISTON	1		
22	4451498	PISTON	1		
24	4347107	STOP	1		
25	4424628	SLEEVE	1		
28	4346521	VALVE SPOOL	1		
29	4265964	SET SCREW	1		
34	14M7274	NUT	1		
35	3075775	END PLATE	1		
37	19M8446	SCREW	8		
38	4433327	COVER	1		
43	19M8339	SCREW	2		
46	4332878	COMPRESSION SPRING	1		
47	4194176	COMPRESSION SPRING	1		
49	4350928	COMPRESSION SPRING	1		
50	4400442	SOLENOID VALVE	1		
50A	TH102560	O-RING	1		
50B	4153534	O-RING	1		
50C	4153087	O-RING	1		
51	M341080	BOLT	2		(SUB FOR TH101483, 0215218)
52	19M8337	SCREW	2		
55	4436536	SENSOR	1		PUMP CONTROL PRESSURE
55A	AT123487	O-RING	1		
56	4174541	DRAIN PLUG	1		
56A	4506418	O-RING	1		
57	4436800	OIL LINE	1		
58	4255304	ADAPTER	1		
58A	M800650	PACKING	1		(SUB FOR 957366)
59	4293950	ELBOW FITTING	1		
59A	M800650	PACKING	1		(SUB FOR 957366)
70	4455733	SEAL KIT	1		
90	9198153	REGULATOR	1		

REGULATOR (PUMP 1)

T147610 -UN-31OCT01

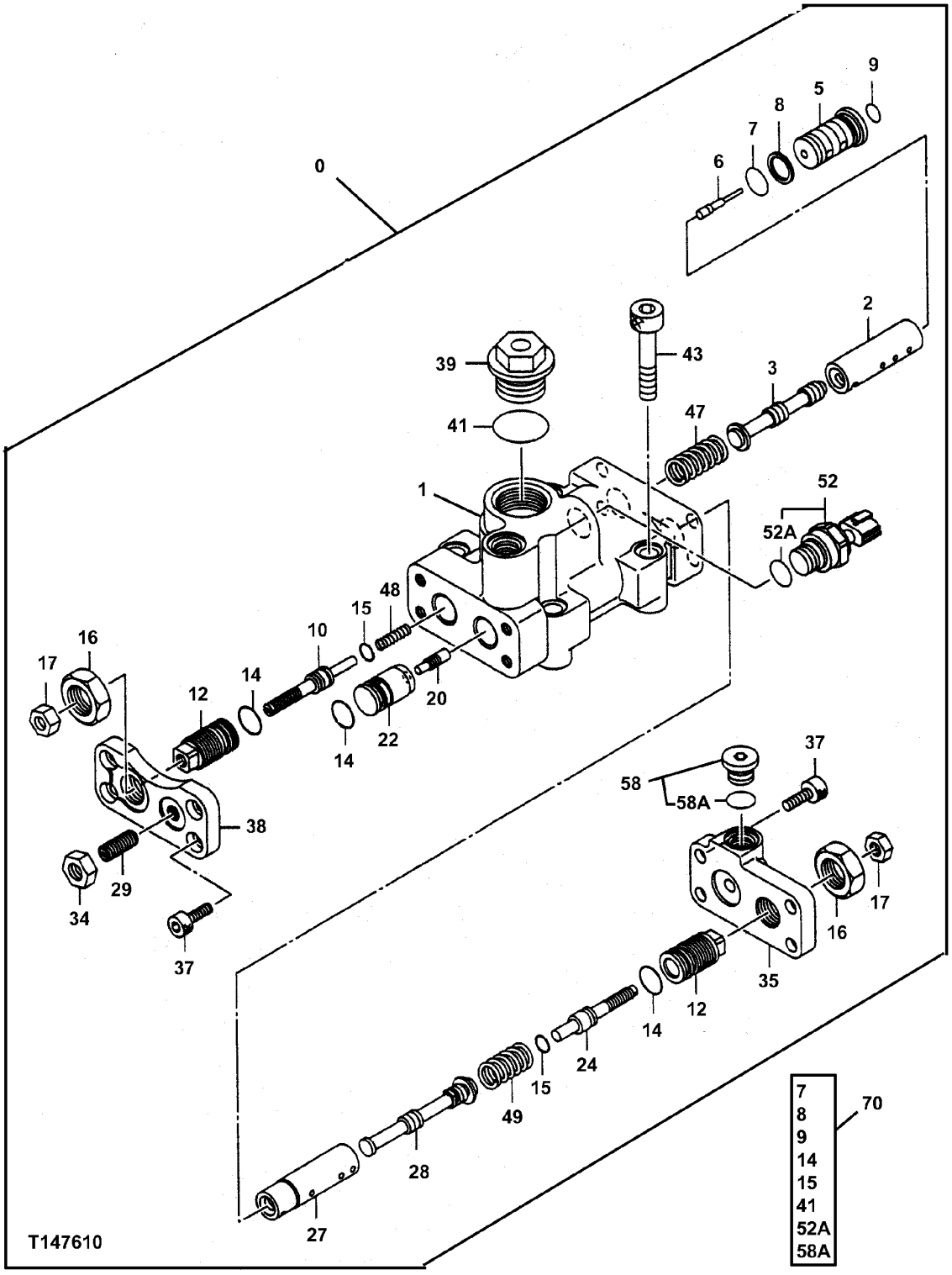

REGULATOR (PUMP 1)

KEY	PART NO.	PART NAME	QTY	SERIAL NO.	REMARKS
0	9198154	REGULATOR	1		
1	TH1027149	REGULATOR	1		
2	4179155	SLEEVE	1		
3	4179156	SPOOL	1		
5	4367385	PISTON	1		
6	4367500	PISTON	1		
7	TH102560	O-RING	1		
8	4085607	BACK-UP RING	1		
9	CH11560	PACKING	1		
10	4368619	STOP	1		
12	4179161	STOP	2		
14	4342843	O-RING	3		
15	4342841	O-RING	2		
16	4068898	NUT	2		
17	14M7273	NUT	2		
20	4179171	PISTON	1		
22	4451498	PISTON	1		
24	4347107	STOP	1		
27	4424628	SLEEVE	1		
28	4346521	VALVE SPOOL	1		
29	4265964	SET SCREW	1		
34	14M7274	NUT	1		
35	3075775	END PLATE	1		
37	19M8446	SCREW	8		
38	4433327	COVER	1		
39	4447264	PIPE PLUG	1		
41	4342846	O-RING	1		
43	19M8339	SCREW	4		
47	4194176	COMPRESSION SPRING	1		
48	4332878	COMPRESSION SPRING	1		
49	4350928	COMPRESSION SPRING	1		
52	4436536	SENSOR	1		PUMP CONTROL PRESSURE
52A	CH11570	O-RING	1		
58	9134110	PIPE PLUG	1		
58A	M800650	PACKING	1		(SUB FOR 957366)
70	4455719	SEAL KIT	1		

PILOT PUMP (COMPONENTS)

T163851 -UN-15JAN03

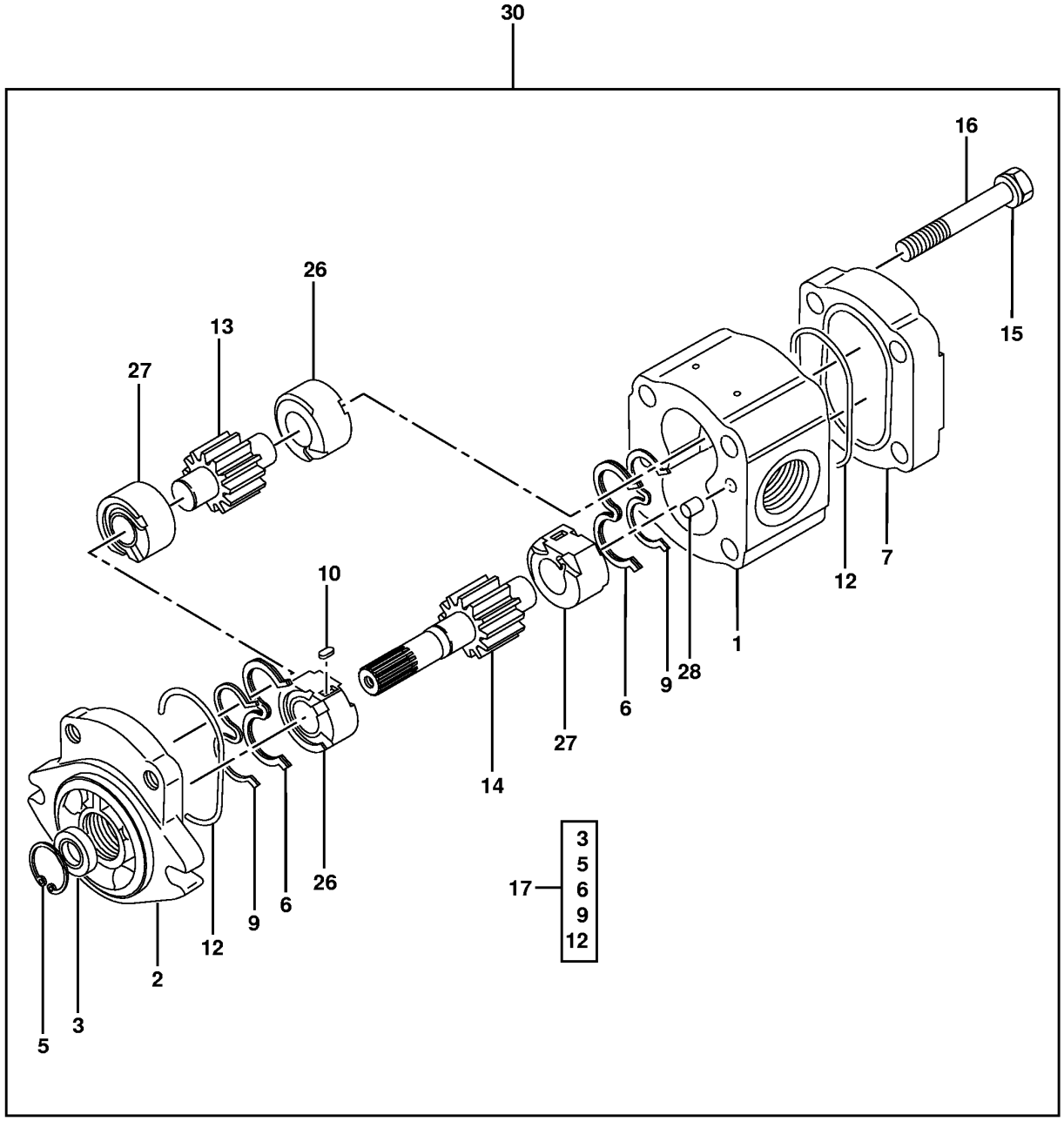

T163851

PILOT PUMP (COMPONENTS)

KEY	PART NO.	PART NAME	QTY	SERIAL NO.	REMARKS
1	.....	HOUSING	1		
2	.....	FLANGE	1		
3	TH109917	SEAL	1		
5	40M1855	SNAP RING	1		
6	.....	COVER	2		(USE 0408203 IF AVAILABLE)
7	.....	COVER	1		
9	.....	BACK-UP RING	2		(USE TH0354607 IF AVAILABLE)
10	4206162	KEY	2		
12	AT153835	O-RING	2		
13	.....	SPUR GEAR	1		
14	.....	PINION SHAFT	1		
15	0266736	WASHER	4		
16	19M8093	CAP SCREW	4		M10 X 100
17	0408207	SEAL KIT	1		
26	.....	BUSHING	2		
27	.....	BUSHING	2		
28	4206166	DOWEL PIN	2		
30	9217993	PUMP	1		

CONTROL VALVE

T162155 -UN-23DEC02

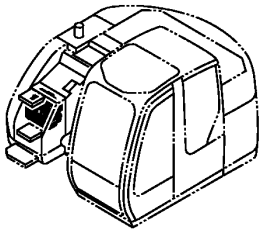

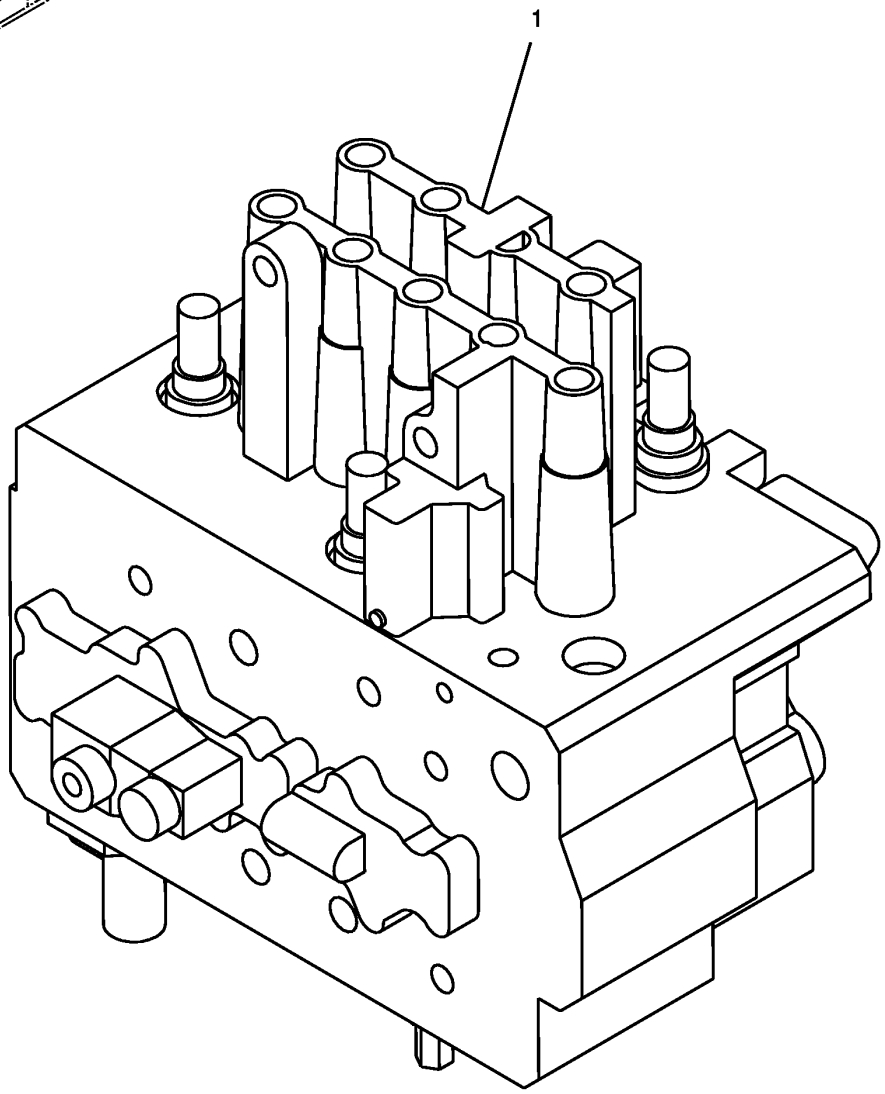

T162155

CONTROL VALVE

KEY	PART NO.	PART NAME	QTY	SERIAL NO.	REMARKS
1	4455085	HYD ACTUATED CONTROL VALVE	1		

CONTROL VALVE SUPPORT

T162159 -UN-23DEC02

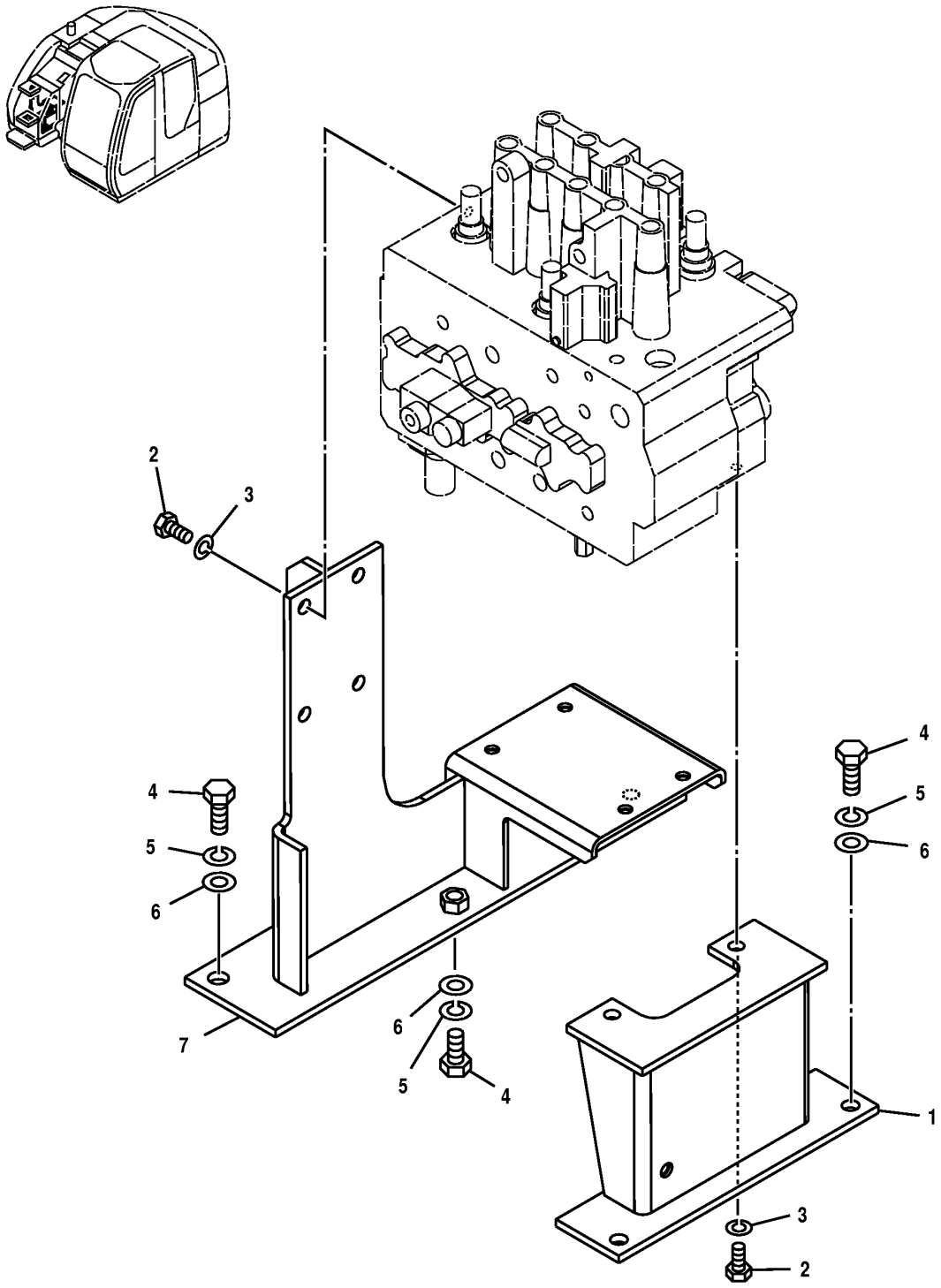

T162159

CONTROL VALVE SUPPORT

KEY	PART NO.	PART NAME	QTY	SERIAL NO.	REMARKS
1	8077221	BRACKET	1		
2	19M7877	CAP SCREW	6		M14 X 30, (SUB FOR J921430)
3	12H317	LOCK WASHER	6		9/16", (SUB FOR A590914)
4	19M7488	CAP SCREW	5		M16 X 40, (SUB FOR J921640)
5	12H294	LOCK WASHER	5		5/8", (SUB FOR A590916)
6	24M7053	WASHER	5		17 X 30 X 3 MM, (SUB FOR A590116)
7	7038316	BRACKET	1		

SOLENOID VALVE MANIFOLD

T162161 -UN-23DEC02

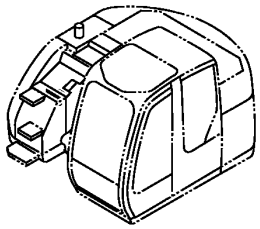

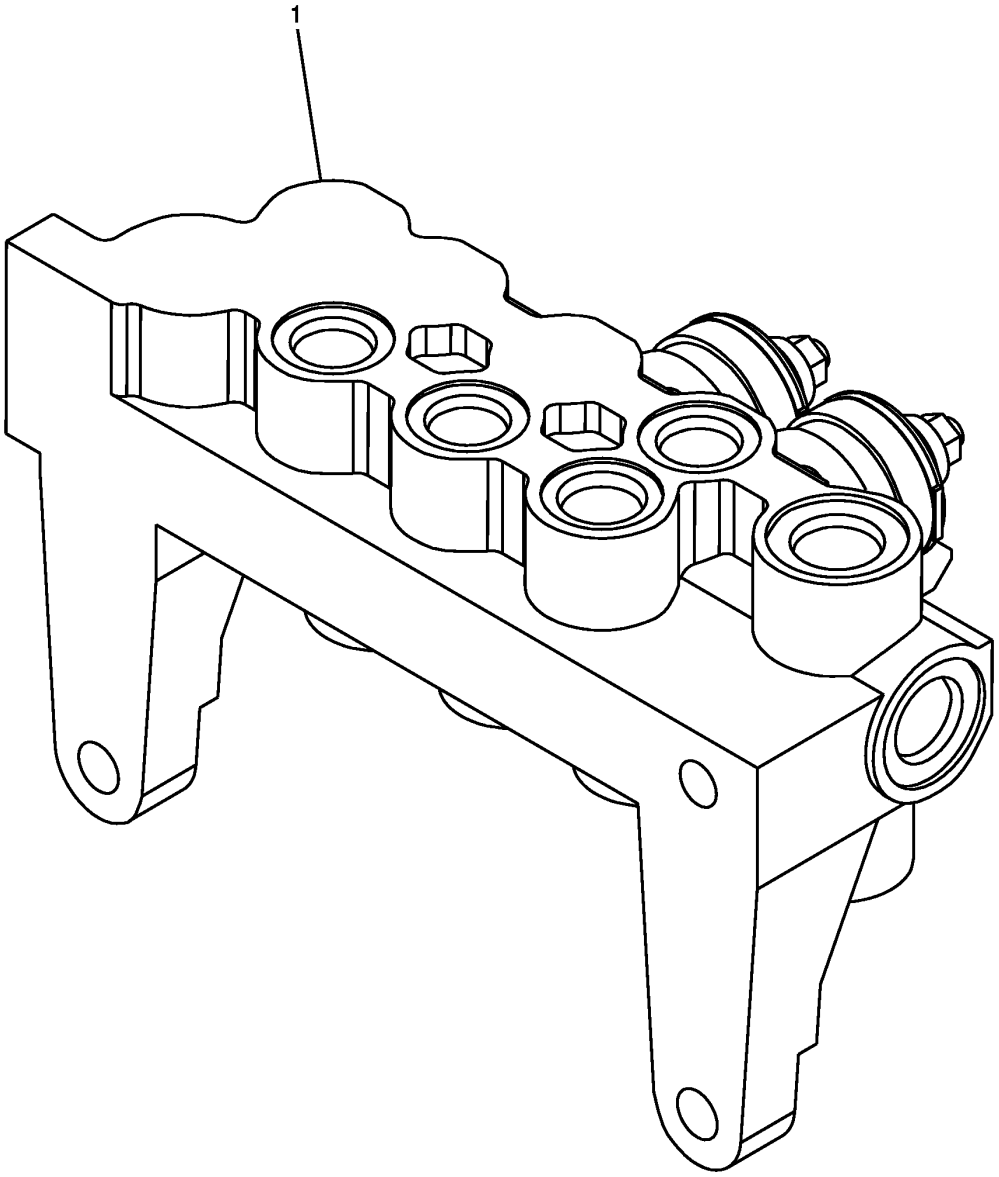

T162161

SOLENOID VALVE MANIFOLD

KEY	PART NO.	PART NAME	QTY	SERIAL NO.	REMARKS
1	9218271	SOLENOID VALVE	1		(SUB FOR 9214443) (4414761 NO LONGER AVAILABLE)

HOSE RUPTURE VALVE LINES (BOOM)

T162718 -UN-07JAN03

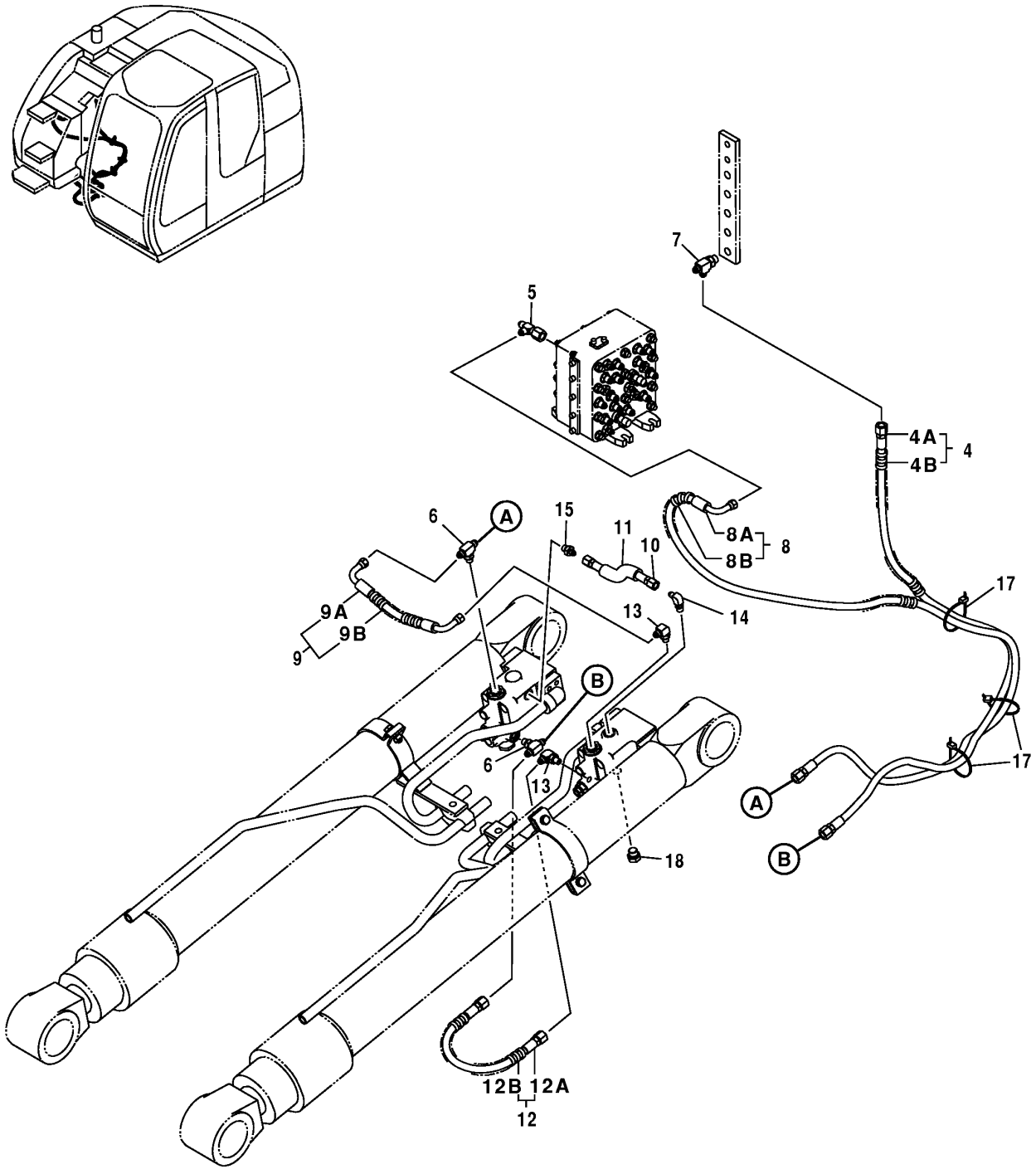

T162718

HOSE RUPTURE VALVE LINES (BOOM)

KEY	PART NO.	PART NAME	QTY	SERIAL NO.	REMARKS
4	.....	HYDRAULIC HOSE	1		(9200387 NO LONGER AVAILABLE FOR SERVICE - ORDER INDIVIDUAL COMPONENTS)
4A	4453083	HYDRAULIC HOSE	1		
4B	4327293	HOSE GUARD	2		
5	4246672	TEE FITTING	1		
6	A852523	TEE FITTING	2		
	M800650	PACKING	1		(SUB FOR 957366)
7	A852433	TEE FITTING	1		
	CH11570	O-RING	1		(SUB FOR 4509180)
8	.....	HYDRAULIC HOSE	1		(9203445 NO LONGER AVAILABLE FOR SERVICE - ORDER INDIVIDUAL COMPONENTS)
8A	4438673	HYDRAULIC HOSE	1		
8B	4327293	HOSE GUARD	3		
9	.....	HYDRAULIC HOSE	1		
9A	4436269	HYDRAULIC HOSE	1		
9B	4327293	HOSE GUARD	1		
10	4436270	HYDRAULIC HOSE	1		
11	4436292	SLEEVE	1		
12	.....	HYDRAULIC HOSE	1		
12A	4436267	HOSE	1		
12B	4327293	HOSE GUARD	1		
13	A852323	ELBOW FITTING	2		
	M800650	PACKING	1		(SUB FOR 957366)
14	4154670	ELBOW FITTING	1		(SUB FOR A852322, P67984 OR THA852322)
	M800650	PACKING	1		(SUB FOR 957366)
15	A852122	ADAPTER	1		
	M800650	PACKING	1		(SUB FOR 957366)
17	H77698	TIE BAND	3		
18	4422953	PIPE PLUG	1		
	4506416	O-RING	1		

HOSE RUPTURE VALVE LINES (ARM)

T162719 -UN-13DEC02

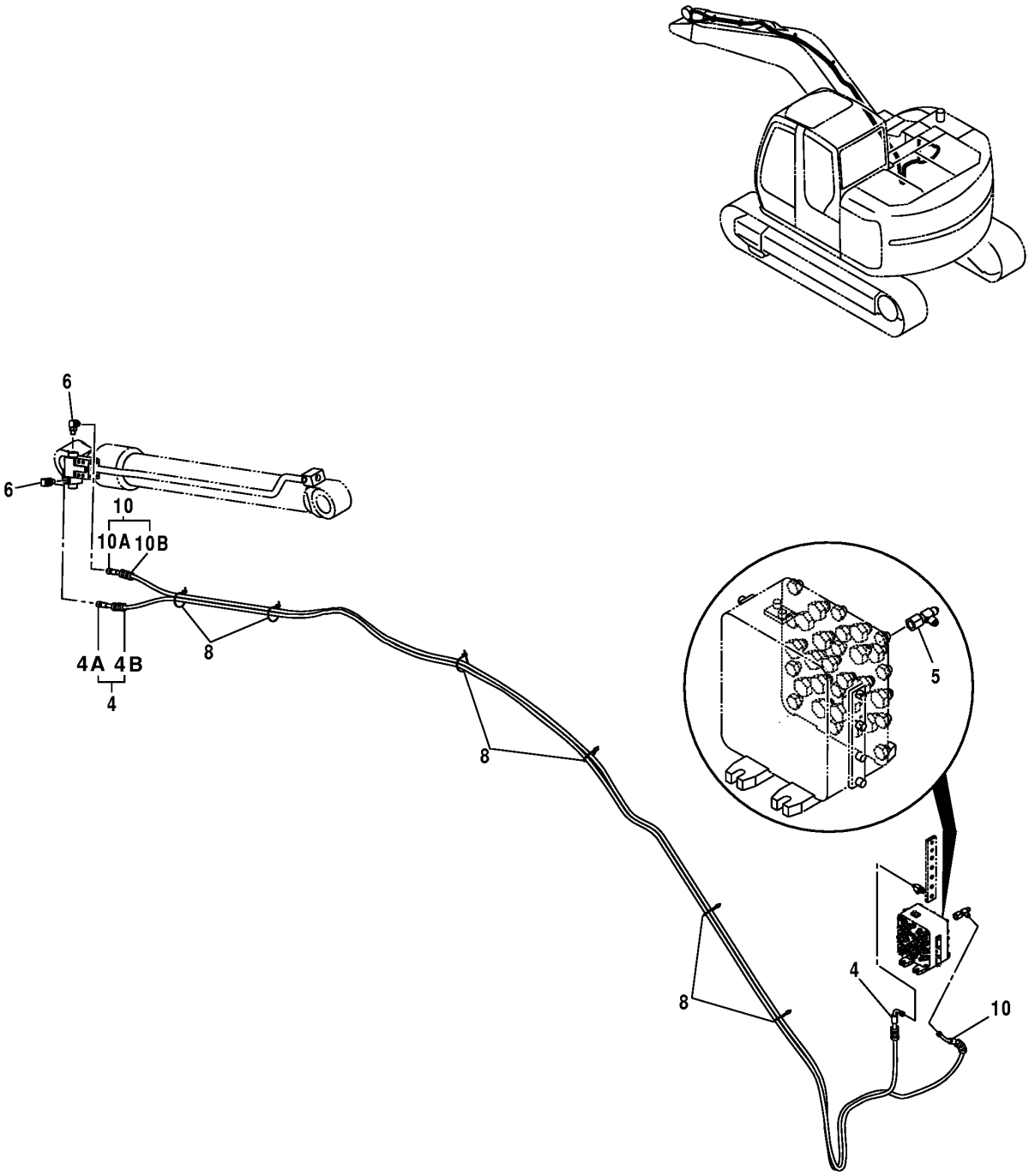

T162719

HOSE RUPTURE VALVE LINES (ARM)

KEY	PART NO.	PART NAME	QTY	SERIAL NO.	REMARKS
4	.....	HYDRAULIC HOSE	1		(9200386 NO LONGER AVAILABLE FOR SERVICE - ORDER INDIVIDUAL COMPONENTS)
4A	4453087	HYDRAULIC HOSE	1		
4B	4327293	HOSE GUARD	10		
5	4246672	TEE FITTING	1		
6	A852323	ELBOW FITTING	2		
	M800650	PACKING	1		(SUB FOR 957366)
8	H77698	TIE BAND	6		
10	.....	HYDRAULIC HOSE	1		(9191883 NO LONGER AVAILABLE FOR SERVICE - ORDER INDIVIDUAL COMPONENTS)
10A	4439578	HYDRAULIC HOSE	1		
10B	4327293	HOSE GUARD	10		

CONTROL VALVE (4-SPOOL SIDE)

T161934 -UN-12DEC02

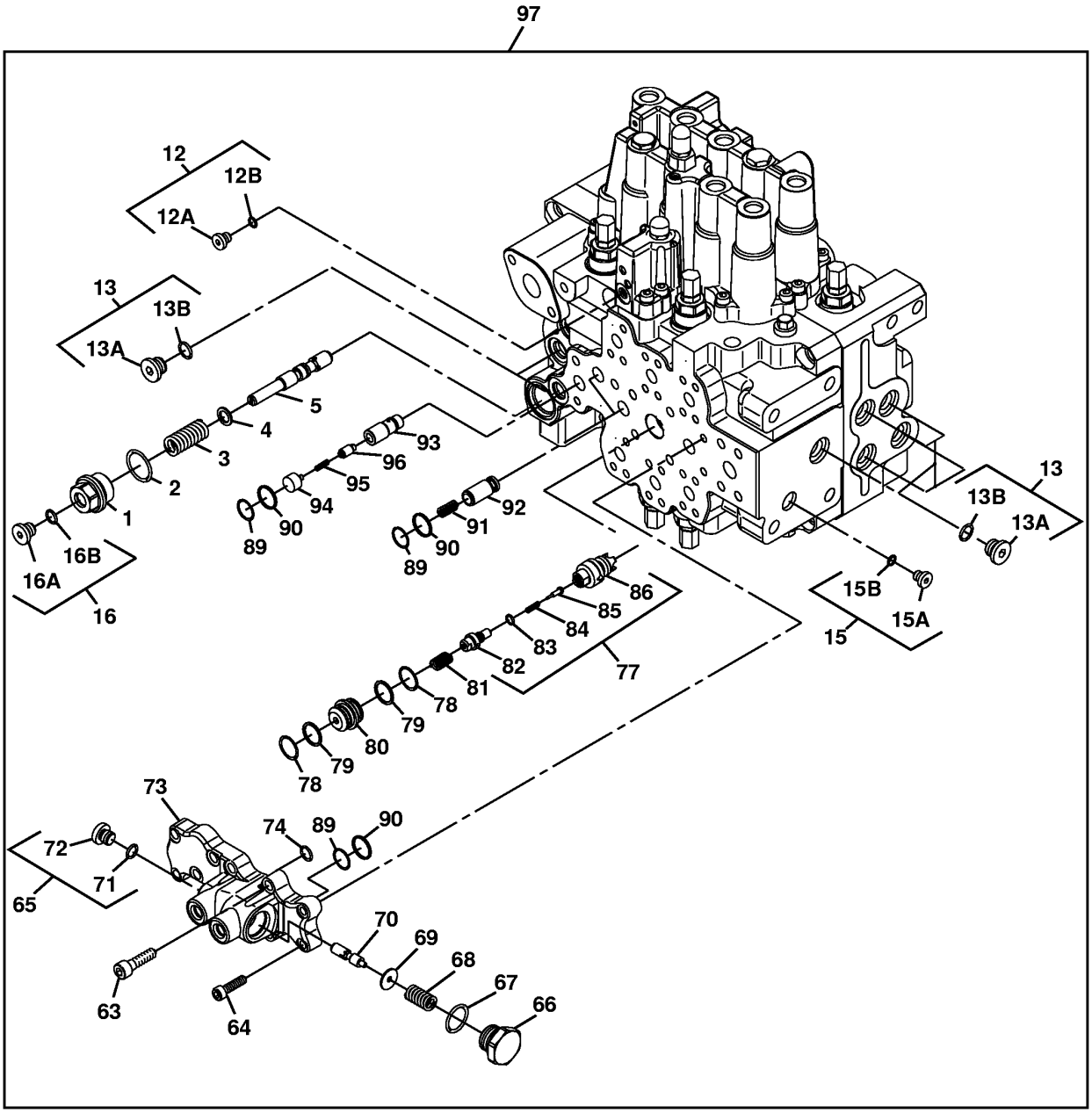

T161934

CONTROL VALVE (4-SPOOL SIDE)

KEY	PART NO.	PART NAME	QTY	SERIAL NO.	REMARKS
1	0793209	PIPE PLUG	1		
2	AT264347	O-RING	1		
3	0793208	SPRING	1		
4	0670303	WASHER	1		
5	0793207	VALVE SPOOL	1		
12	0669502	PIPE PLUG	1		
12A	0669503	FITTING PLUG	1		
12B	4506408	O-RING	1		
13	AT203648	FITTING	7		
13A	0669504	FITTING PLUG	1		
13B	CH11570	O-RING	1		
15	0669502	PIPE PLUG	1		
15A	0669503	FITTING PLUG	1		
15B	4506408	O-RING	1		
16	.....	PIPE PLUG	1		(0669614 NO LONGER AVAILABLE FOR SERVICE - SUB COMPONENTS)
16A	4336166	PIPE PLUG	1		(SUB FOR 0669615)
16B	M800650	PACKING	1		
63	M341036	BOLT	7		
64	19M8735	SCREW	3		
65	.....	PIPE PLUG	1		(0669614 NO LONGER AVAILABLE FOR SERVICE - SUB 4336166 PLUG AND M800650 O-RING)
66	0793206	PIPE PLUG	1		
67	4506424	O-RING	1		
68	0669617	SPRING	1		
69	0669616	WASHER	1		
70	0669613	SPOOL VALVE	1		
71	957366	PACKING	1		
72	4336166	PIPE PLUG	1		(SUB FOR 0669615)
73	0793205	PLATE	1		
74	4506412	PACKING	1		
77	0669601	VALVE SEAT INSERT	1		
78	985099	O-RING	2		
79	0669608	BACK-UP RING	2		
80	0669607	BUSHING	1		
81	0669606	SPRING	1		
82	0669605	FITTING PLUG	1		
83	4506408	O-RING	1		
84	0669604	SPRING	1		
85	0669603	CHECK VALVE	1		
86	.....	VALVE SEAT	1		
89	0669624	O-RING	4		
90	0669625	BACK-UP RING	4		
91	0309413	SPRING	2		
92	0669801	CHECK VALVE	2		
93	0793201	BUSHING	1		
94	0793202	PIPE PLUG	1		
95	0793203	SPRING	1		
96	0793204	CHECK VALVE	1		
97	4455085	HYD ACTUATED CONTROL VALVE	1		(INCLUDES ALL COMPONENTS ON THIS PAGE AND FOLLOWING PAGES)

CONTROL VALVE (5-SPOOL SIDE)

T161949 -UN-07JAN03

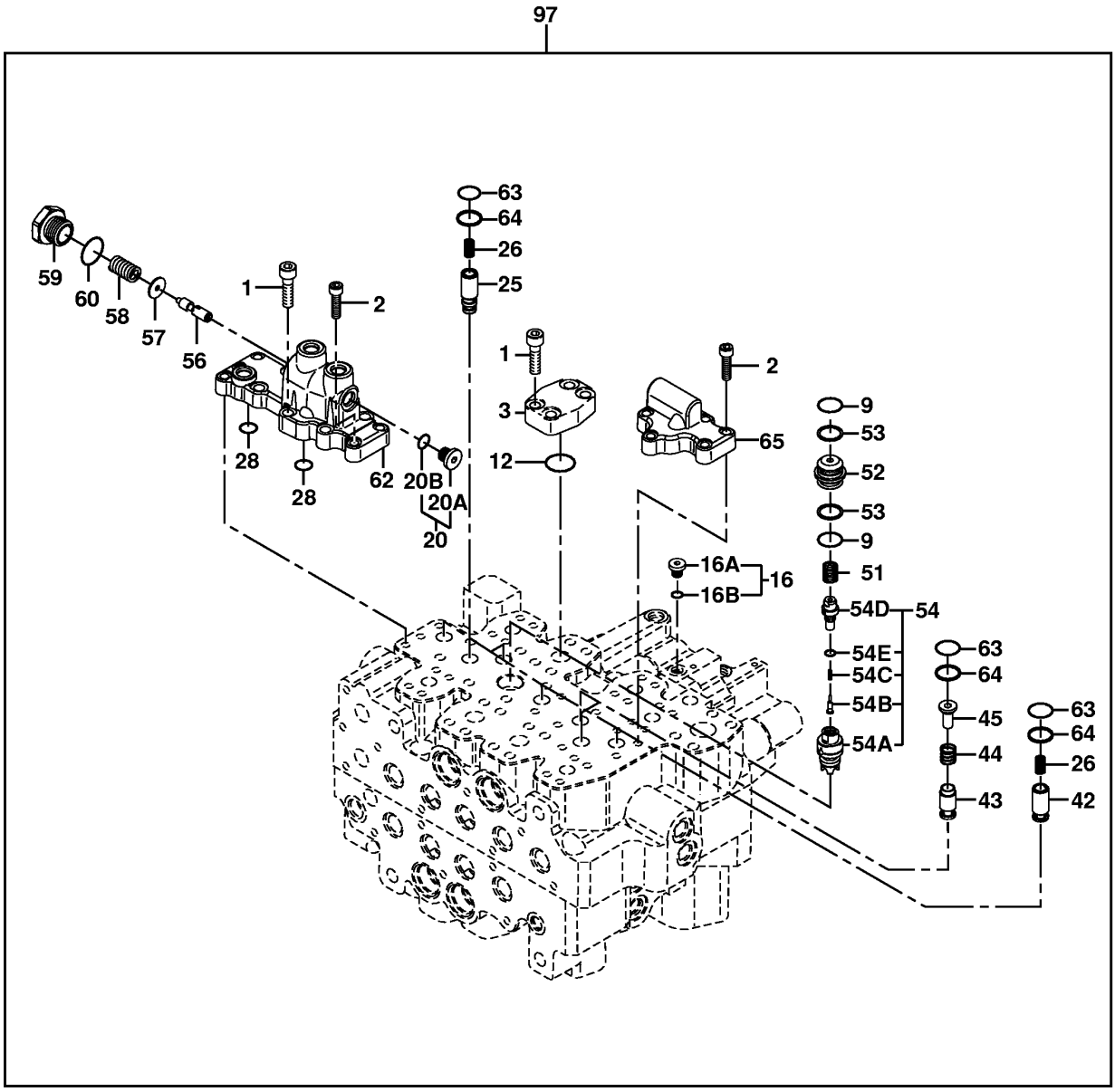

T161949

CONTROL VALVE (5-SPOOL SIDE)

KEY	PART NO.	PART NAME	QTY	SERIAL NO.	REMARKS
1	M341036	BOLT	14		
2	19M8735	SCREW	11		
3	0669701	COVER	2		
9	985099	O-RING	2		
12	0411901	O-RING	1		
16	0669502	PIPE PLUG	1		
16A	0669503	FITTING PLUG	1		
16B	4506408	O-RING	1		
20	.....	PIPE PLUG	1		(0669614 NO LONGER AVAILABLE FOR SERVICE - SUB COMPONENTS)
20A	4336166	PIPE PLUG	1		(SUB FOR 0669615)
20B	M800650	PACKING	1		
25	0793301	VALVE	1		
26	0309413	SPRING	5		
28	4506412	PACKING	2		
42	0669801	CHECK VALVE	4		
43	0669610	CHECK VALVE	2		
44	0669609	SPRING	2		
45	0669611	VALVE SEAT	2		
51	0669606	SPRING	1		
52	0669607	BUSHING	1		
53	0669608	BACK-UP RING	2		
54	0669802	FLOW CONTROL HYD. VALVE	1		
54A	.....	VALVE SEAT	1		
54B	0669603	CHECK VALVE	1		
54C	0669604	SPRING	1		
54D	0669605	FITTING PLUG	1		
54E	4506408	O-RING	1		
56	0669613	SPOOL VALVE	1		
57	0669616	WASHER	1		
58	0669617	SPRING	1		
59	0669618	FITTING PLUG	1		
60	4506424	O-RING	1		
62	0793302	MANIFOLD	1		
63	0669624	O-RING	7		
64	0669625	BACK-UP RING	7		
65	0793303	PLATE	1		
97	4455085	HYD ACTUATED CONTROL VALVE	1		(INCLUDES ALL COMPONENTS ON THIS PAGE AND PREVIOUS AND FOLLOWING PAGES)

CONTROL VALVE (BOTTOM)

T161950 -UN-07JAN03

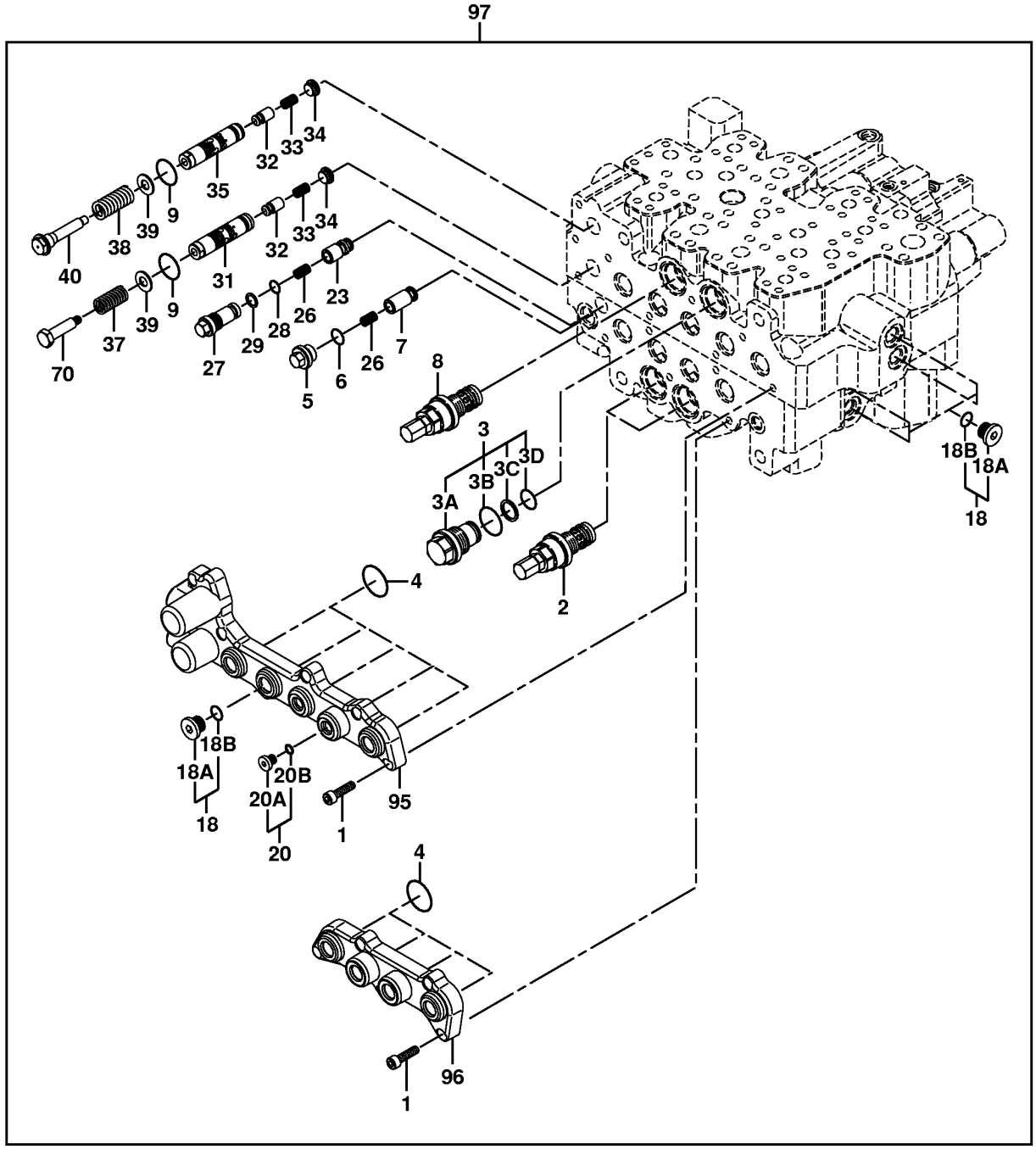

T161950

CONTROL VALVE (BOTTOM)

KEY	PART NO.	PART NAME	QTY	SERIAL NO.	REMARKS
1	19M8735	SCREW	14		
2	9200495	VALVE	2		(SUB FOR 0761702)
3	0309461	PLUG	1		
3A	.....	FITTING	1		
3B	AT264347	O-RING	1		
3C	2046498	SNAP RING	1		
3D	CH12329	PACKING	1		
4	0669906	O-RING	9		
5	0793414	PIPE PLUG	1		
6	4506416	O-RING	1		(SUB FOR 0669501)
7	0793413	CHECK VALVE	1		
8	4372683	PRESSURE RELIEF VALVE	1		
9	0393902	O-RING	2		
18	AT203648	FITTING	5		
18A	0669504	FITTING PLUG	1		
18B	CH11570	O-RING	1		
20	.....	PIPE PLUG	1		(0669614 NO LONGER AVAILABLE FOR SERVICE - SUB COMPONENTS)
20A	4336166	PIPE PLUG	1		(SUB FOR 0669615)
20B	M800650	PACKING	1		
23	0793401	VALVE	1		
26	0309413	SPRING	2		
27	0669902	FITTING PLUG	1		
28	4506412	PACKING	1		
29	2046494	BACK-UP RING	1		
31	0793402	SPOOL VALVE	1		
32	0793403	CHECK VALVE	2		
33	0793404	SPRING	2		
34	0793405	PIPE PLUG	2		
35	0793406	SPOOL VALVE	1		
37	0793407	SPRING	1		
38	0793408	SPRING	1		
39	0793409	WASHER	2		
40	0793410	BOLT	1		
70	0670305	SCREW	1		
95	0793412	HOUSING	1		
96	0793411	HOUSING	1		
97	4455085	HYD ACTUATED CONTROL VALVE	1		(INCLUDES ALL COMPONENTS ON THIS PAGE AND PREVIOUS AND FOLLOWING PAGES)

CONTROL VALVE (5-SPOOL TOP)

T161955 -UN-12DEC02

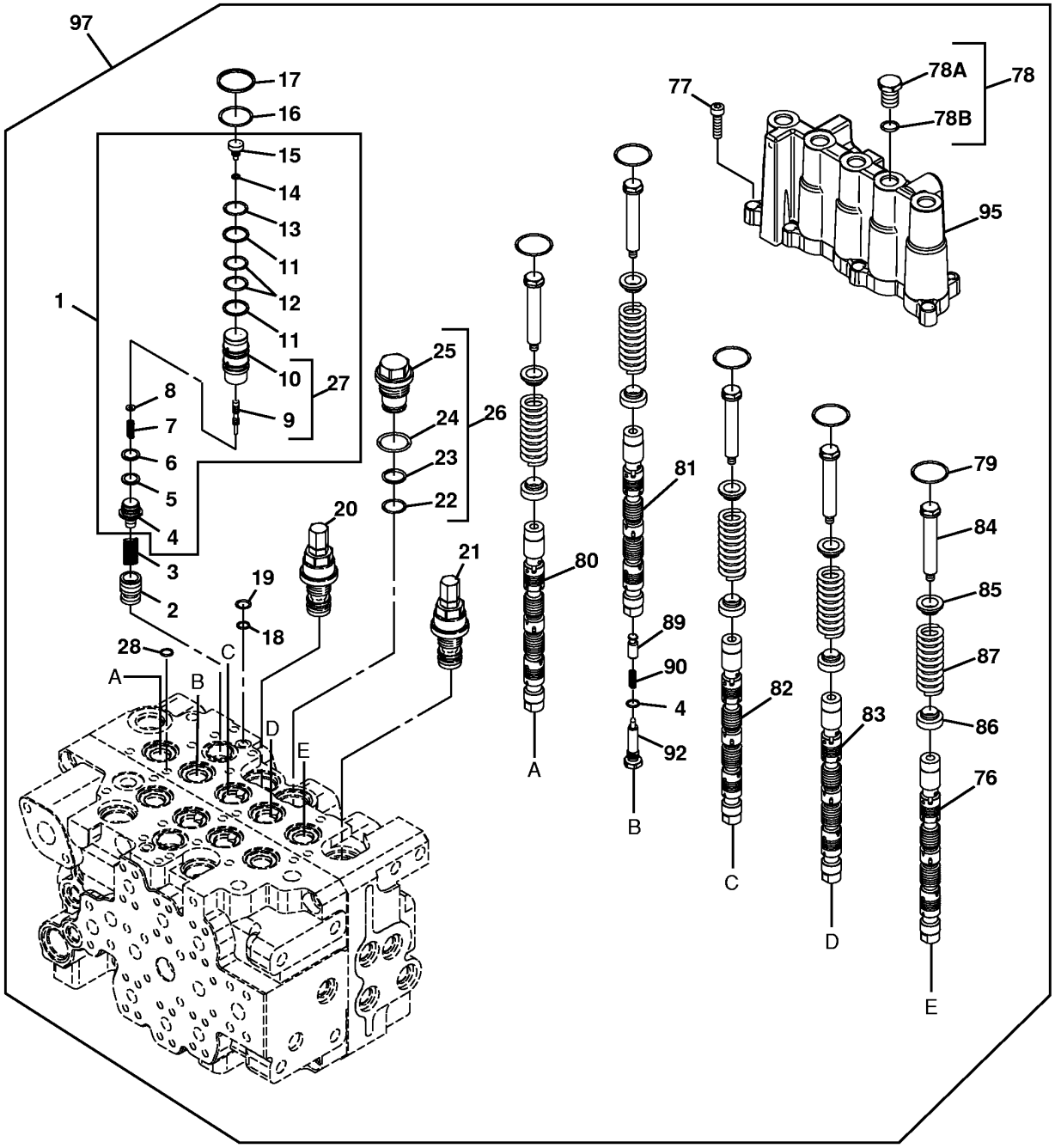

T161955

CONTROL VALVE (5-SPOOL TOP)

KEY	PART NO.	PART NAME	QTY	SERIAL NO.	REMARKS
1	4455788	VALVE	1		
2	0793601	VALVE	1		
3	0412212	SPRING	1		
4	0670107	FITTING PLUG	1		
5	CH11570	O-RING	1		
6	4297661	BACK-UP RING	1		
7	0793603	SPRING	1		
8	0670105	WASHER	1		
9	.....	SPOOL	1		
10	.....	SLEEVE	1		
11	0670104	BACK-UP RING	2		
12	AT264354	O-RING	2		(SUB FOR TH103574)
13	CH12329	PACKING	1		
14	4506405	O-RING	1		
15	.....	STOP	1		
16	0309402	O-RING	1		
17	0793605	BACK-UP RING	1		
18	CH17167	O-RING	2		
19	0793606	BACK-UP RING	1		
20	4372684	PRESSURE RELIEF VALVE	1		
21	4460797	PRESSURE RELIEF VALVE	1		
22	CH12329	PACKING	1		
23	2046498	SNAP RING	1		
24	AT264347	O-RING	1		
25	.....	FITTING	1		
26	0309461	PLUG	1		
27	.....	HOUSING	1		
28	4506408	O-RING	1		
76	.....	SPOOL VALVE	1		
77	19M8735	SCREW	10		
78	4385798	PIPE PLUG	1		
78A	TH109206	FITTING PLUG	1		
78B	CH11570	O-RING	1		
79	0669906	O-RING	5		
80	.....	VALVE SPOOL	1		
81	.....	VALVE SPOOL	1		
82	.....	VALVE SPOOL	1		
83	.....	VALVE SPOOL	1		
84	0670002	SCREW	5		
85	0670003	VALVE SEAT	5		
86	0670004	VALVE SEAT	5		
87	0793501	SPRING	5		
89	0412015	VALVE	1		
90	0412016	SPRING	1		
92	0670001	FITTING PLUG	1		
95	0793502	HOUSING	1		
97	4455085	HYD ACTUATED CONTROL VALVE	1		(INCLUDES ALL COMPONENTS ON THIS PAGE AND PREVIOUS AND FOLLOWING PAGES)

CONTROL VALVE (4-SPOOL TOP)

T161961 -UN-12DEC02

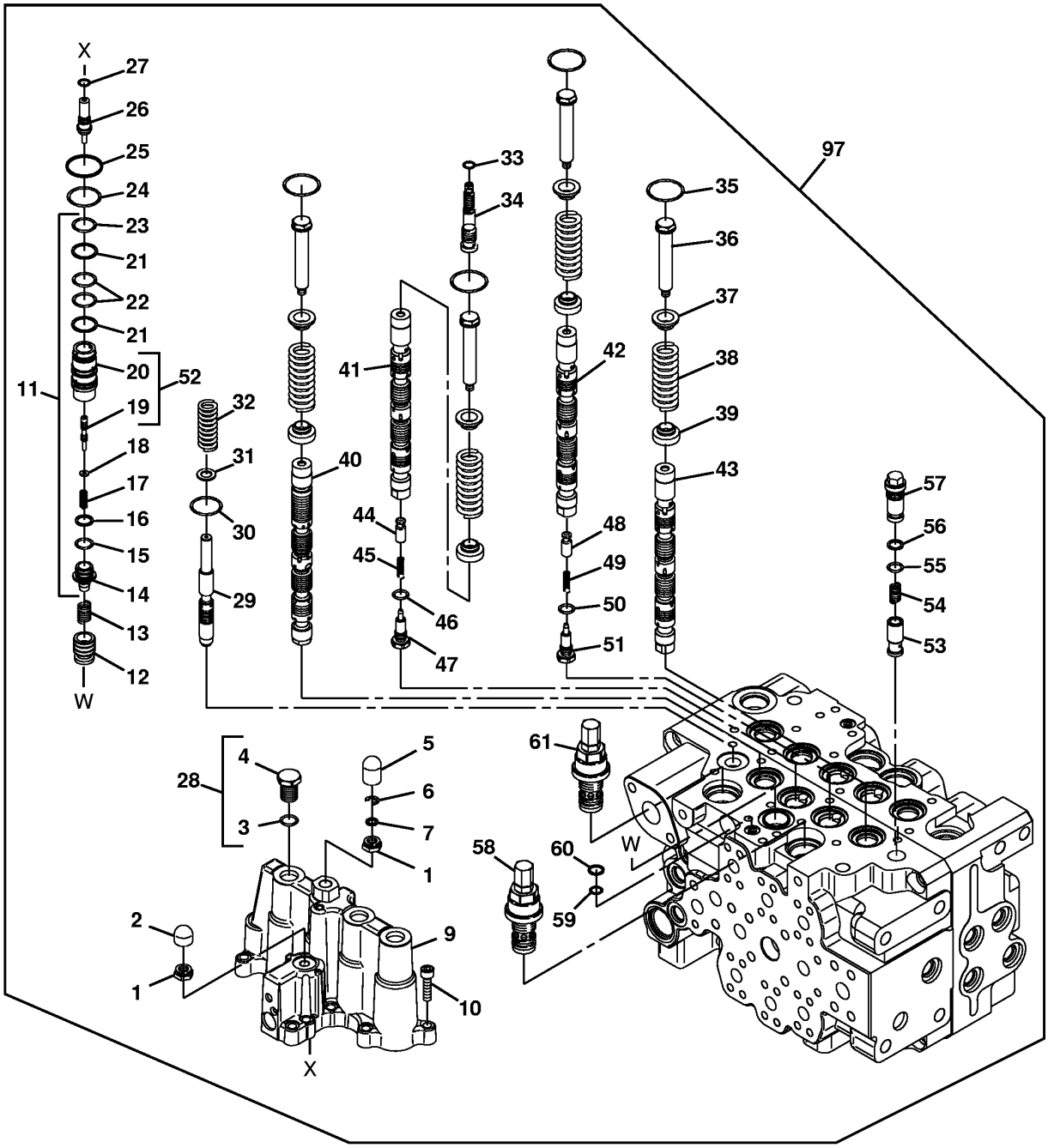

T161961

CONTROL VALVE (4-SPOOL TOP)

KEY	PART NO.	PART NAME	QTY	SERIAL NO.	REMARKS
1	0412202	NUT	2		
2	0412204	CAP	1		
3	CH11570	O-RING	1		
4	TH109206	FITTING PLUG	1		
5	0670207	CAP	1		
6	CH11490	RING	1		
7	0670208	WASHER	1		
9	0793701	HOUSING	1		
10	19M8735	SCREW	11		
11	4455787	VALVE	1		
12	0793601	VALVE	1		
13	0412212	SPRING	1		
14	0670107	FITTING PLUG	1		
15	CH11570	O-RING	1		
16	4297661	BACK-UP RING	1		
17	.....	SPRING	1		
18	0670105	WASHER	1		
19	.....	SPOOL	1		
20	.....	SLEEVE	1		
21	0670104	BACK-UP RING	2		
22	AT264354	O-RING	2		(SUB FOR TH103574)
23	CH12329	PACKING	1		
24	0309402	O-RING	1		
25	0793605	BACK-UP RING	1		
26	0793803	SCREW	1		
27	4506409	PACKING	1		
28	4385798	PIPE PLUG	1		
29	0793801	VALVE SPOOL	1		
30	0393902	O-RING	1		
31	0670303	WASHER	1		
32	0670307	SPRING	1		
33	CH11569	PACKING	1		
34	0670206	SCREW	1		
35	0669906	O-RING	4		
36	0670002	SCREW	4		
37	0670003	VALVE SEAT	4		
38	0793501	SPRING	4		
39	0670004	VALVE SEAT	4		
40	.....	SPOOL VALVE	1		
41	.....	SPOOL VALVE	1		
42	.....	SPOOL VALVE	1		
43	.....	SPOOL VALVE	1		
44	0412015	VALVE	1		
45	0412016	SPRING	1		
46	CH17167	O-RING	1		
47	0670201	FITTING PLUG	1		
48	0412015	VALVE	1		
49	0412016	SPRING	1		
50	CH17167	O-RING	2		
51	0670201	FITTING PLUG	2		
52	.....	HOUSING	1		
53	0793804	CHECK VALVE	1		
54	0309413	SPRING	1		
55	4506412	PACKING	1		
56	2046494	BACK-UP RING	1		
57	0669902	FITTING PLUG	1		
58	4372684	PRESSURE RELIEF VALVE	1		
59	4506320	O-RING	1		
60	0793606	BACK-UP RING	1		
61	4372683	PRESSURE RELIEF VALVE	1		
97	4455085	HYD ACTUATED CONTROL VALVE	1		(INCLUDES ALL COMPONENTS ON THIS PAGE AND PREVIOUS AND FOLLOWING PAGES)

CONTROL VALVE (MANIFOLD)

T161962 -UN-12DEC02

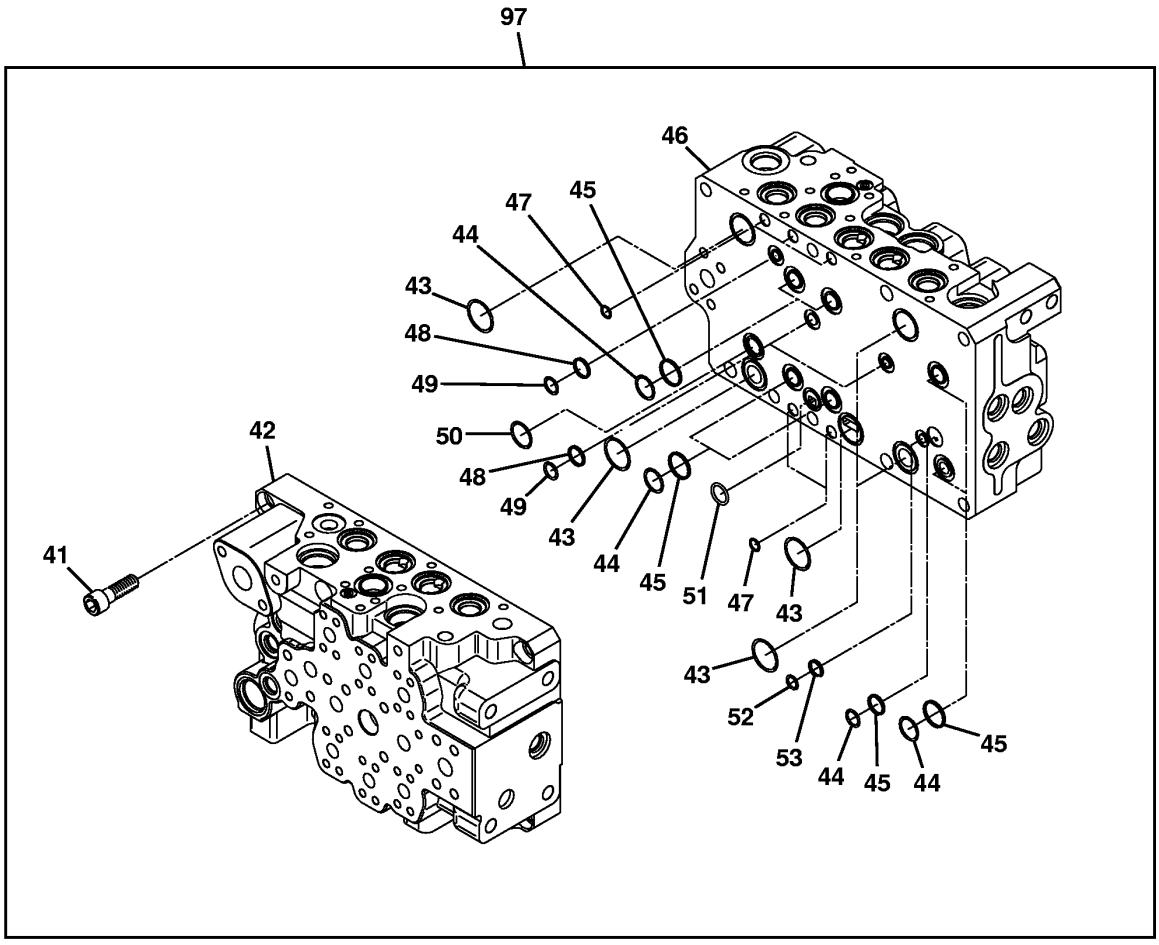

T161962

CONTROL VALVE (MANIFOLD)

KEY	PART NO.	PART NAME	QTY	SERIAL NO.	REMARKS
41	M341445	SCREW	9		
42	.....	HOUSING	1		
43	0309402	O-RING	5		
44	985099	O-RING	7		
45	0309401	BACK-UP RING	7		
46	.....	HOUSING	1		
47	CH17167	O-RING	5		
48	2046493	BACK-UP RING	3		
49	CH11570	O-RING	3		
50	0411901	O-RING	1		
51	CH12329	PACKING	1		
52	M800650	PACKING	1		
53	2046599	BACK-UP RING	1		
97	4455085	HYD ACTUATED CONTROL VALVE	1		(INCLUDES ALL COMPONENTS ON THIS PAGE AND PREVIOUS AND FOLLOWING PAGES)

BRAKE VALVE (SWING)

T161923 -UN-26DEC02

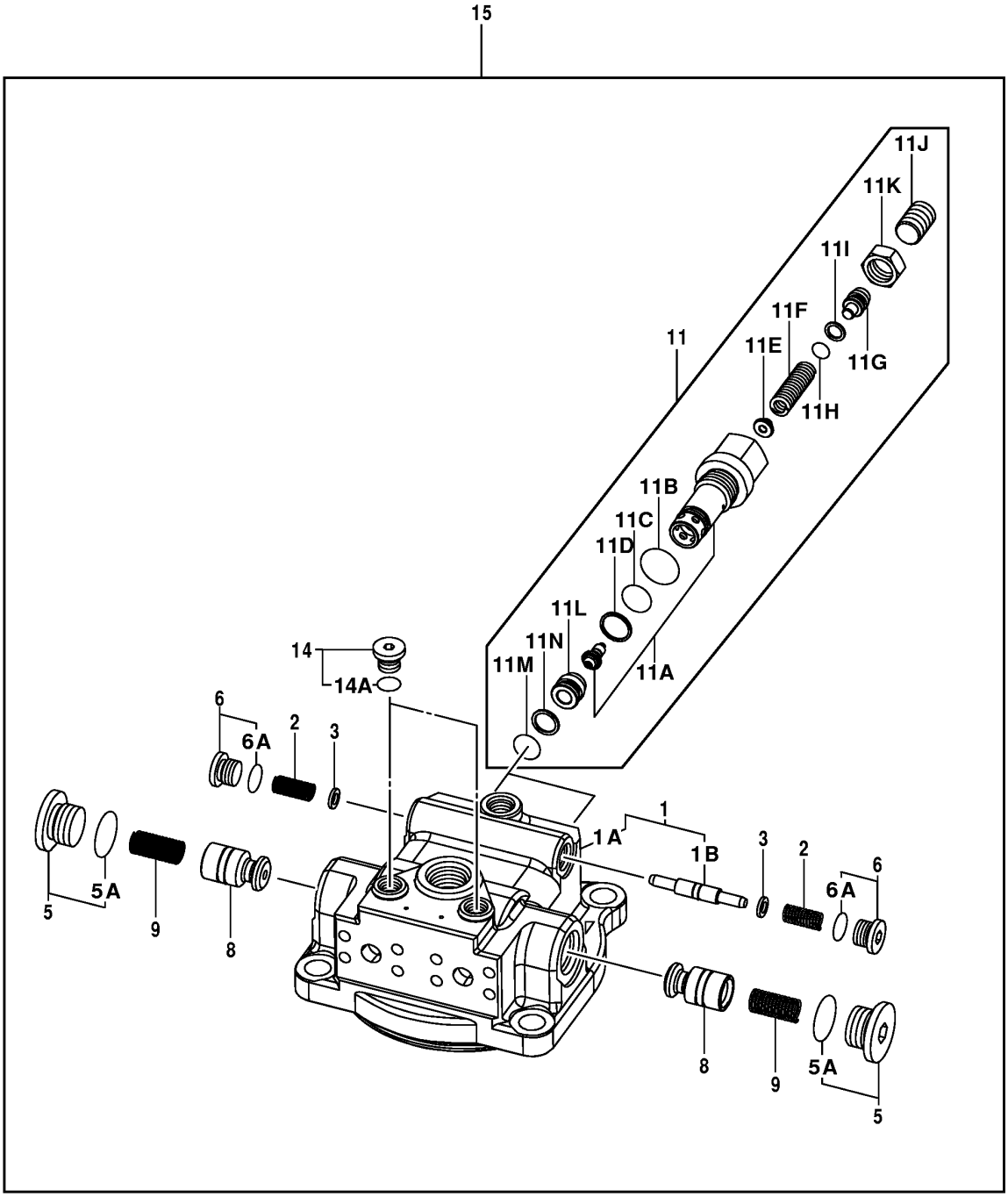

T161923

BRAKE VALVE (SWING)

KEY	PART NO.	PART NAME	QTY	SERIAL NO.	REMARKS
1	8075038	CASE	1		
1A	.....	CASE	1		
1B	.....	SPOOL	1		
2	4413859	SPRING	2		
3	4413752	RING	2		
5	9134113	PIPE PLUG	2		
5A	4506424	O-RING	2		
6	9134111	PIPE PLUG	2		
6A	CH11570	O-RING	2		
8	4408141	POPPET	2		
9	4396103	SPRING	2		
11	9168631	VALVE	2		
11A	.....	FILTER ELEMENT	1		
11B	4506424	O-RING	1		
11C	.....	O-RING	1		
11D	.....	BACK-UP RING	1		
11E	.....	GUIDE	1		
11F	.....	COMPRESSION SPRING	1		
11G	.....	STOP	1		
11H	TH106280	O-RING	1		
11I	TH110461	BACK-UP RING	1		
11J	.....	CAP SCREW	1		
11K	.....	NUT	1		
11L	.....	SEAT	1		
11M	T111819	O-RING	1		(SUB FOR 4506415)
11N	4040814	BACK-UP RING	1		
14	9134110	PIPE PLUG	2		
14A	M800650	PACKING	1		
15	9198979	VALVE	1		

BRAKE VALVE (TRAVEL)

T161932 -UN-12DEC02

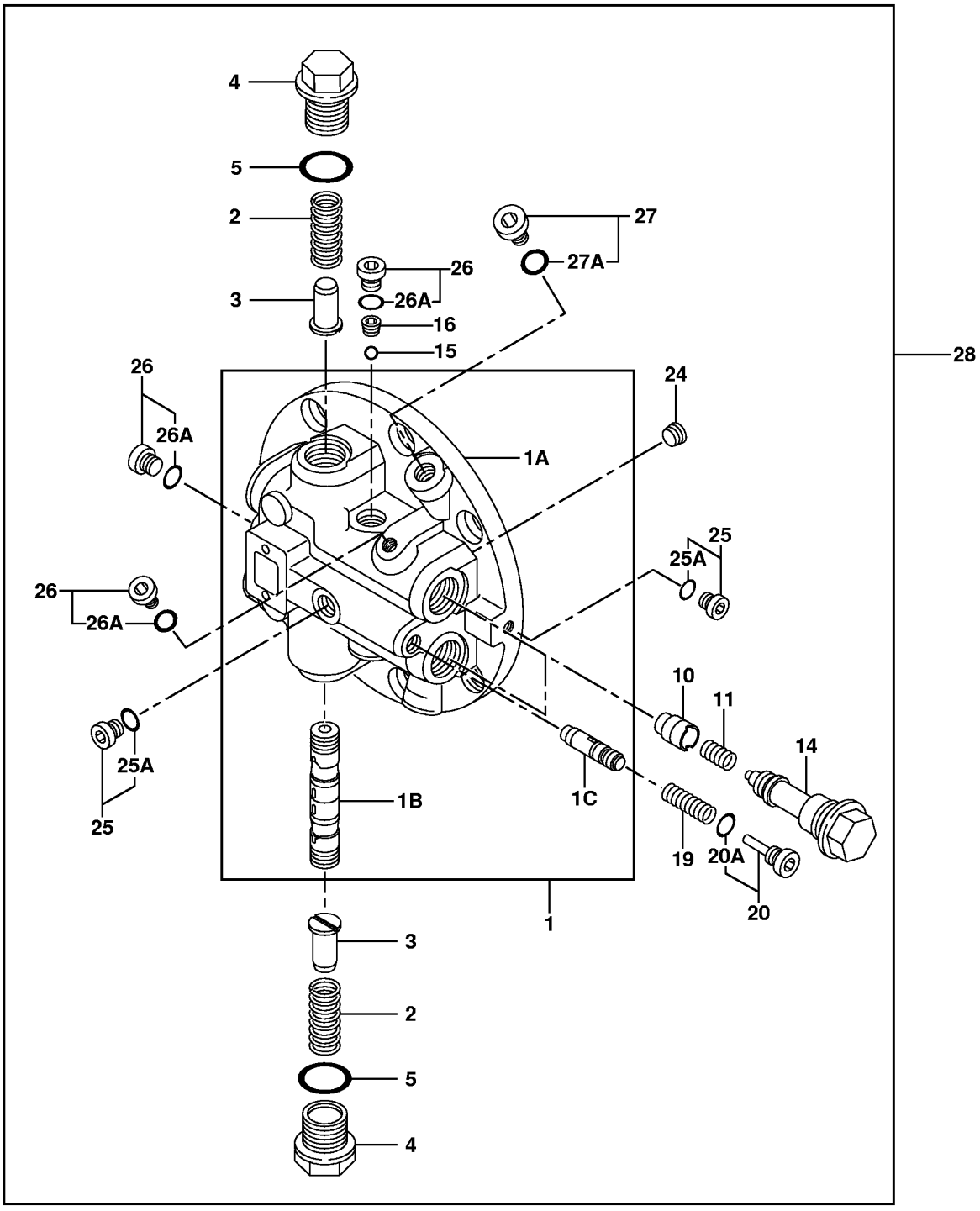

T161932

BRAKE VALVE (TRAVEL)

KEY	PART NO.	PART NAME	QTY	SERIAL NO.	REMARKS
1	8076163	CASE	1		
1A	.....	CASE	1		
1B	.....	SPOOL	1		
1C	.....	SPOOL	1		
2	4372079	SPRING	2		
3	4427428	STOP	2		
4	4229631	DRAIN PLUG	2		
5	TH101926	O-RING	2		
10	4300918	POPPET	2		
11	4383067	SPRING	2		
14	9159923	PRESSURE RELIEF VALVE	2		
15	R26552	BALL	1		
16	.....	PLUG	1		
19	4297257	COMPRESSION SPRING	1		
20	9167977	PIPE PLUG	1		
20A	M800650	PACKING	1		
24	15H560	PIPE PLUG	1		
25	9134109	DRAIN PLUG	2		
25A	4506408	O-RING	1		
26	9134110	PIPE PLUG	4		
26A	M800650	PACKING	4		
27	9134111	PIPE PLUG	1		
27A	CH11570	O-RING	1		
28	9196236	VALVE	1		

RELIEF VALVE

T161933 -UN-07JAN03

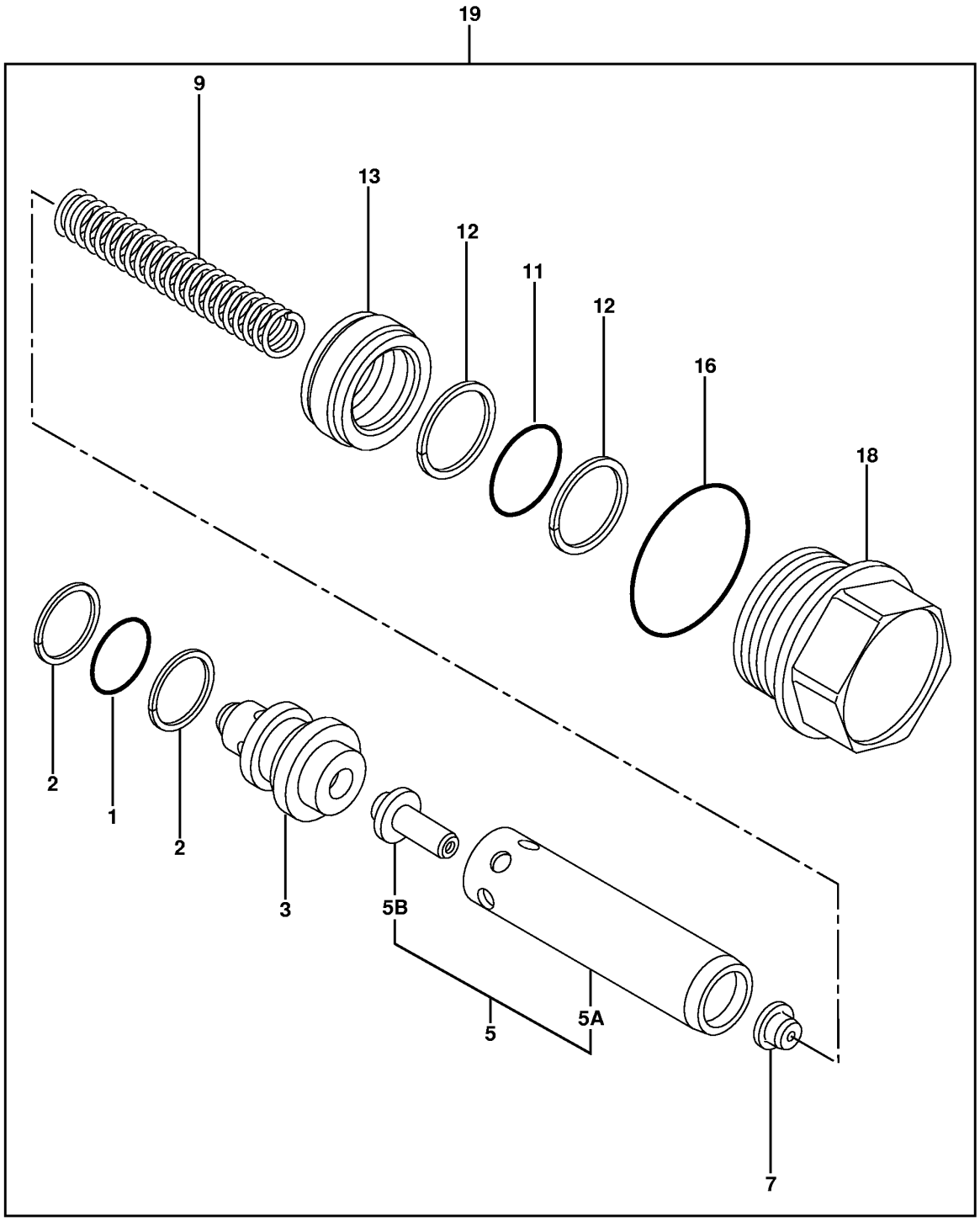

T161933

RELIEF VALVE

KEY	PART NO.	PART NAME	QTY	SERIAL NO.	REMARKS
1	CH11570	O-RING	1		
2	4038533	BACK-UP RING	2		
3	4382901	SLEEVE	1		
5	9745380	RELIEF VALVE	1		
5A	.....	RELIEF VALVE	1		
5B	.....	POPPET	1		
7	4272420	GUIDE	1		
9	4311378	COMPRESSION SPRING	1		
11	4506418	O-RING	1		
12	4033725	BACK-UP RING	2		
13	4272425	PISTON	1		
16	U17409	O-RING	1		
18	4311779	CAP SCREW	1		
19	9159923	PRESSURE RELIEF VALVE	1		

PROPEL PILOT CONTROLLER

T161969 -UN-12DEC02

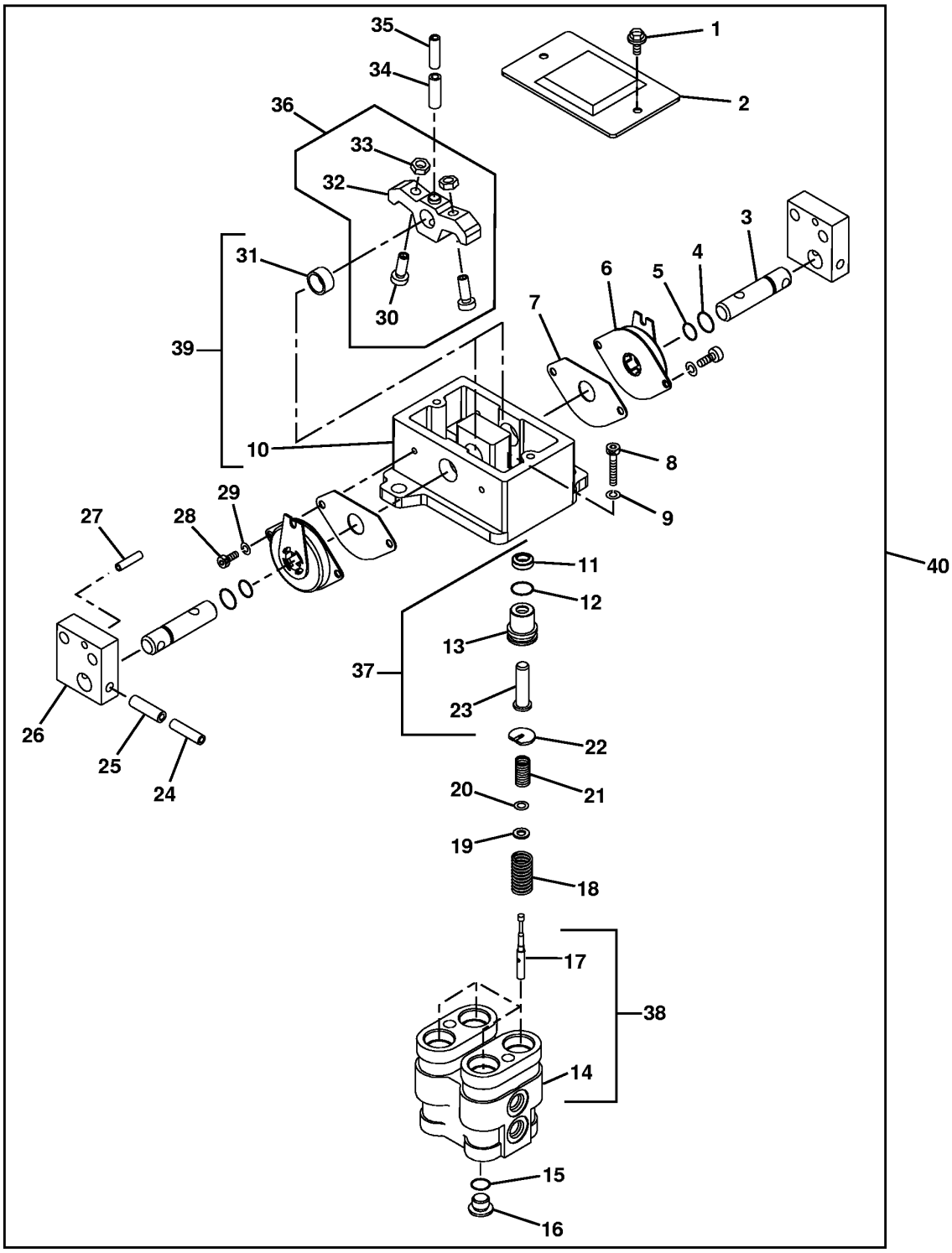

T161969

PROPEL PILOT CONTROLLER

KEY	PART NO.	PART NAME	QTY	SERIAL NO.	REMARKS
1	J020614	BOLT	2		
2	8077903	COVER	1		
3	4425305	PIN FASTENER	2		
4	4447067	O-RING	2		
5	4185600	O-RING	2		
6	4428902	ABSORBER	2		
7	4437432	GASKET	2		
8	J781030	SCREW	2		
9	12M7066	LOCK WASHER	2		
10	.....	HOUSING	1		
11	4447050	SEAL	1		
12	CH11562	O-RING	1		
13	3065877	BUSHING	1		
14	.....	HOUSING	1		
15	CH11561	PACKING	1		
16	4208977	DRAIN PLUG	1		
17	.....	SPOOL VALVE	4		
18	4368630	COMPRESSION SPRING	4		
19	4319299	SPACER	4		
20	4203411	SHIM	12		
21	4368629	COMPRESSION SPRING	4		
22	4364970	GUIDE	4		
23	3072517	PLUNGER	1		
24	34M7062	SPRING PIN	2		
25	34M7216	SPRING PIN	2		
26	3087987	BRACKET	2		
27	4051262	SPRING PIN	2		
28	J780612	BOLT	4		
29	12M7006	LOCK WASHER	4		
30	4425290	SCREW	2		
31	4437433	BUSHING	4		
32	.....	ROCKER	1		
33	CH11562	O-RING	2		
34	34M6402	SPRING PIN	2		
35	4213419	SPRING PIN	2		
36	9199146	KIT	2		
37	9151724	PLUNGER	4		
38	8063718	HOUSING	1		
39	9184275	HOLDER	1		
40	9195307	HYDR./PILOT CONTROL VALVE	1		

SOLENOID VALVE

T153137 -UN-05APR02

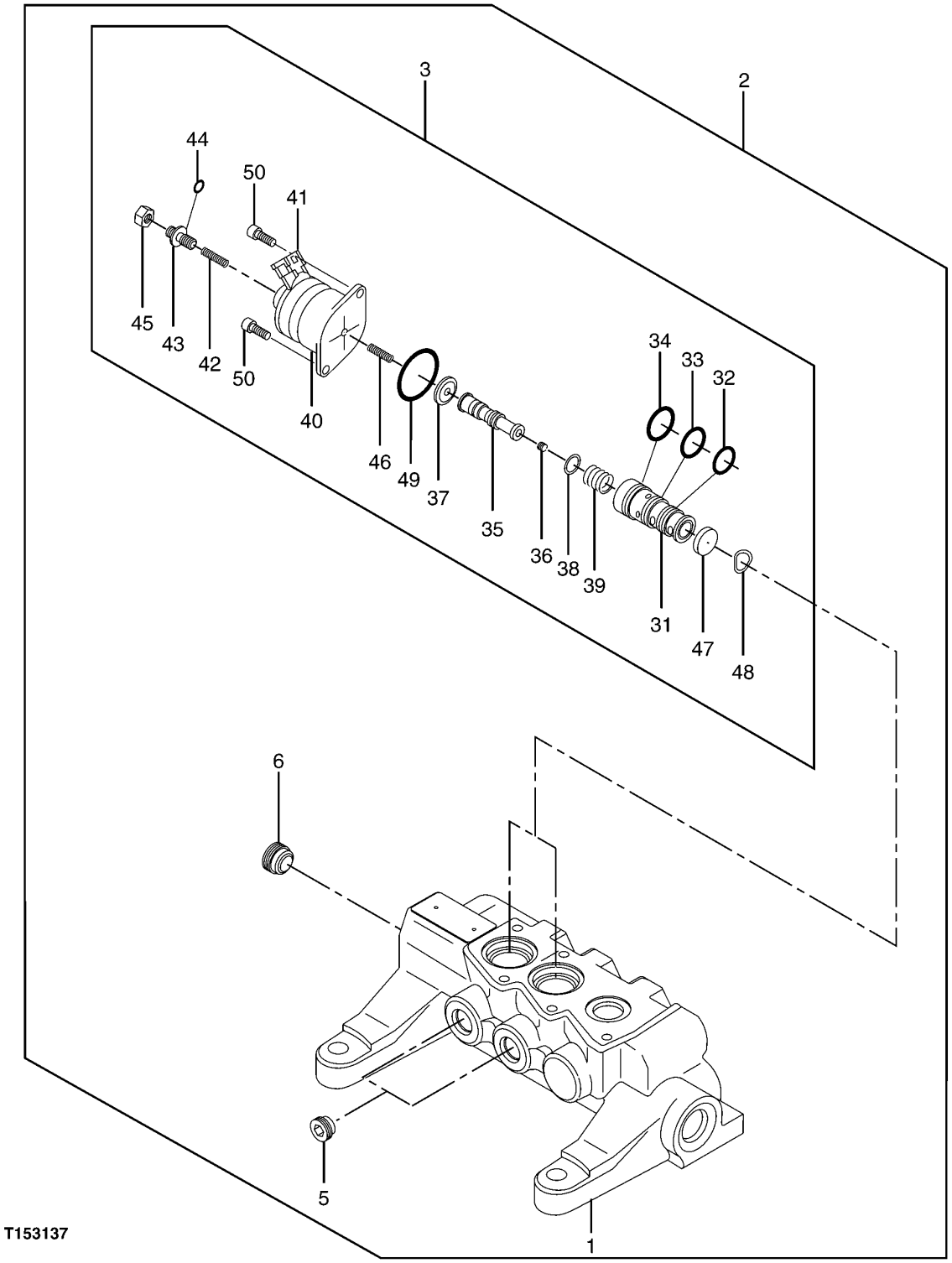

SOLENOID VALVE

KEY	PART NO.	PART NAME	QTY	SERIAL NO.	REMARKS
1	.....	HOUSING	1		
2	9218271	SOLENOID VALVE	1		(SUB FOR 9214443)
3	4455991	SOLENOID VALVE	2		
5	4455986	PIPE PLUG	2		
6	4455987	PIPE PLUG	1		
31	.....	SLEEVE	1		
32	4185600	O-RING	1		
33	R99052	O-RING	1		
34	0408411	O-RING	1		
35	.....	SPOOL VALVE	1		
36	.....	ORIFICE	1		
37	.....	DIAPHRAGM	1		
38	.....	WASHER	1		
39	.....	SPRING	1		
40	.....	SOLENOID	1		
41	.....	SOCKET	1		
42	.....	SPRING	1		
43	.....	SCREW	1		
44	.....	O-RING	1		
45	.....	NUT	1		
46	.....	SPRING	1		
47	.....	PLATE	1		
48	4455990	WASHER	1		
49	4455989	SEAL	1		
50	0387804	SCREW	2		

PILOT SIGNAL MANIFOLD (HOUSING AND GASKETS)

T149601 -UN-17JAN02

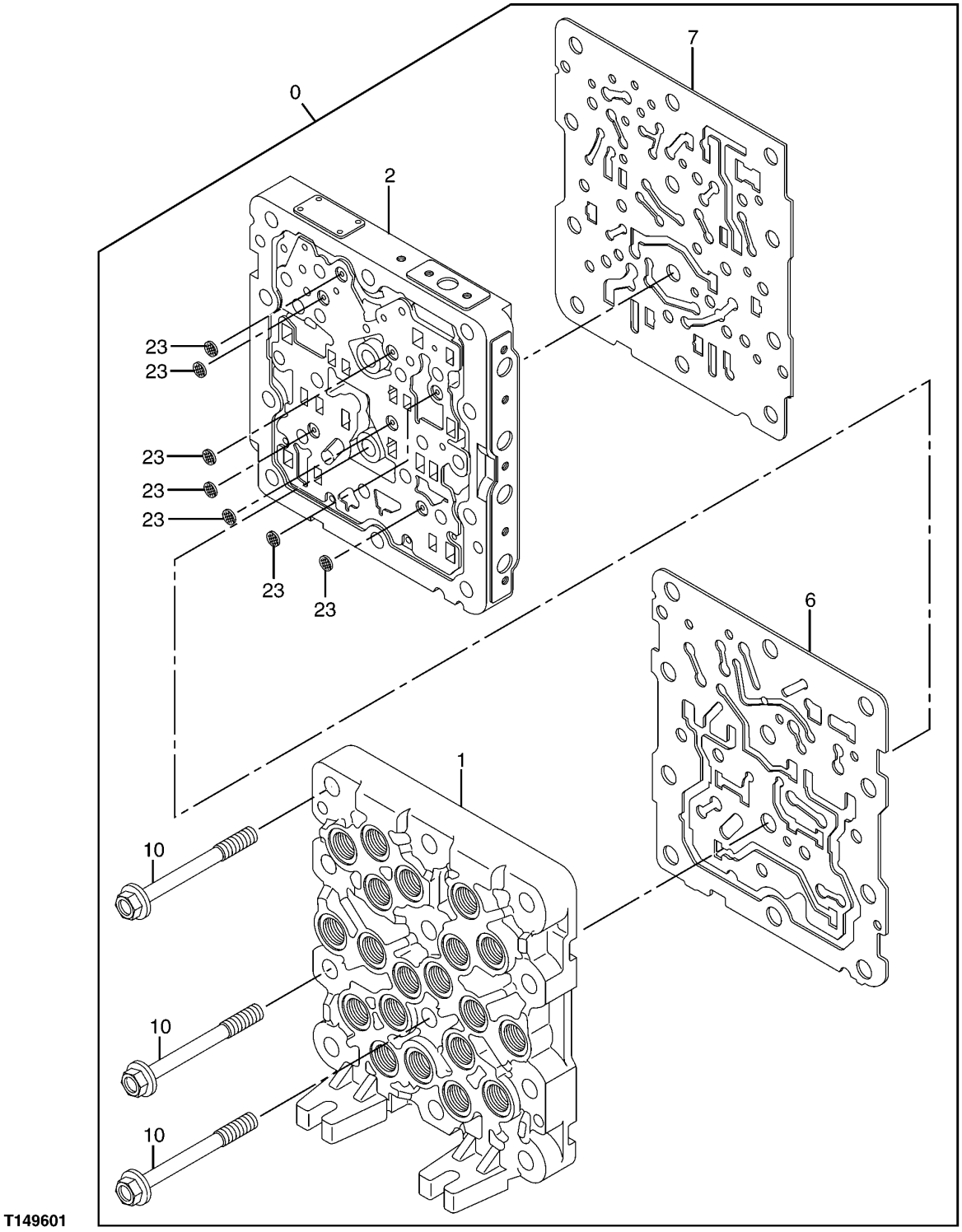

T149601

PILOT SIGNAL MANIFOLD (HOUSING AND GASKETS)

KEY	PART NO.	PART NAME	QTY	SERIAL NO.	REMARKS
0	4468336	FLOW CONTROL HYD. VALVE	1		(SUB FOR 4452625) (INCLUDES ALL COMPONENTS ON THIS PAGE AND FOLLOWING PAGES)
1	.....	HOUSING	1		
2	.....	HOUSING	1		
6	.....	GASKET	1		
7	.....	GASKET	1		
10	.....	BOLT	12		
23	.....	FILTER ELEMENT	7		
24	4467088	HOSE	1		(NOT ILLUSTRATED)
25	A852123	ADAPTER	1		(NOT ILLUSTRATED)

PILOT SIGNAL MANIFOLD (VALVE SECTION)

T149603 -UN-17JAN02

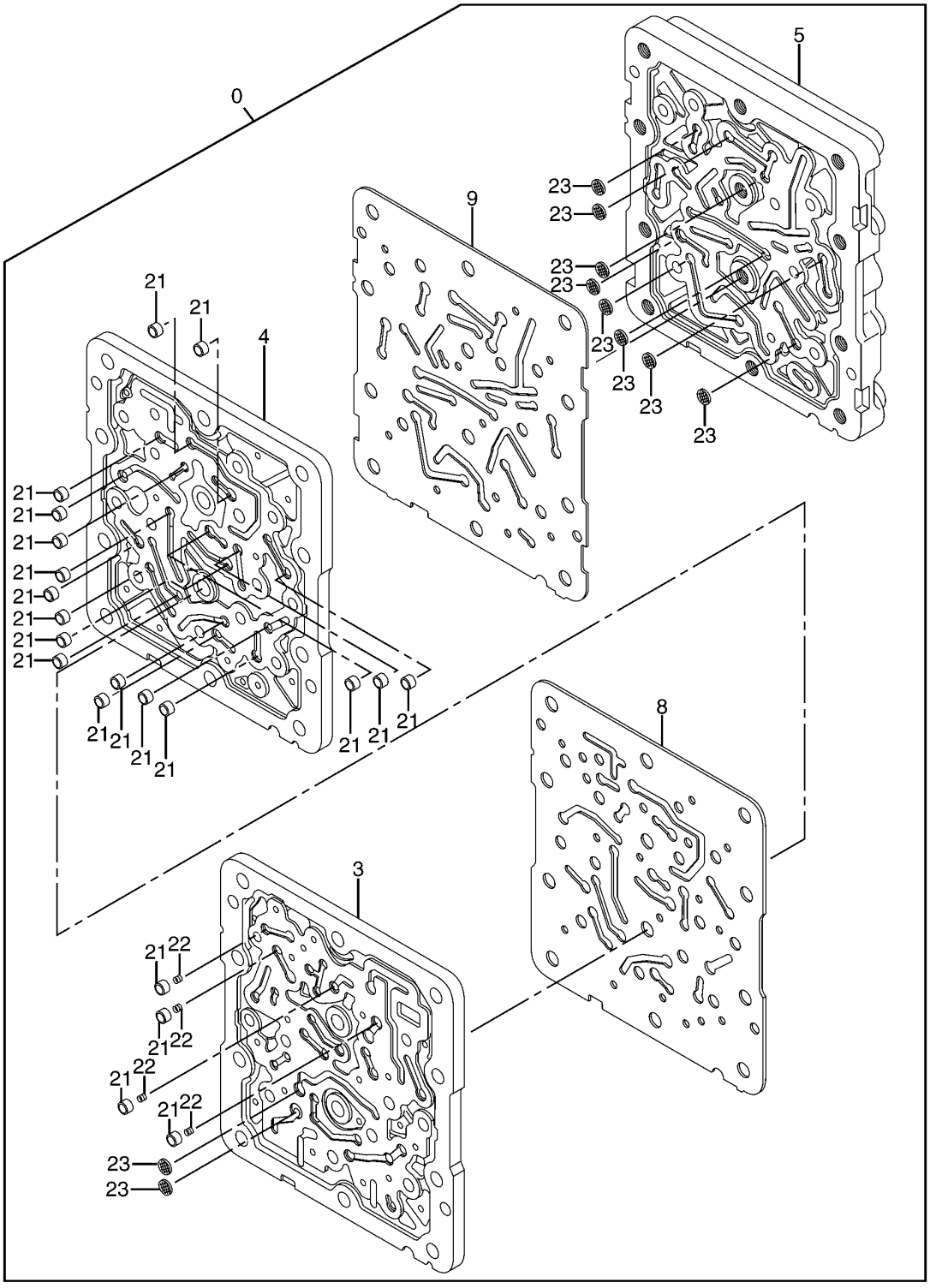

PILOT SIGNAL MANIFOLD (VALVE SECTION)

KEY	PART NO.	PART NAME	QTY	SERIAL NO.	REMARKS
0	4468336	FLOW CONTROL HYD. VALVE	1		(SUB FOR 4452625) (INCLUDES ALL COMPONENTS ON THIS PAGE AND PREVIOUS AND FOLLOWING PAGES)
3	.....	HOUSING	1		
4	.....	HOUSING	1		
5	.....	HOUSING	1		
8	.....	GASKET	1		
9	.....	GASKET	1		
21	.....	SLEEVE	21		
22	.....	SPRING	4		
23	.....	FILTER ELEMENT	10		
24	4467088	HOSE	1		(NOT ILLUSTRATED)
25	A852123	ADAPTER	1		(NOT ILLUSTRATED)

PILOT SIGNAL MANIFOLD (PILOT CONTROLLER SIDE)

T149604 -UN-17JAN02

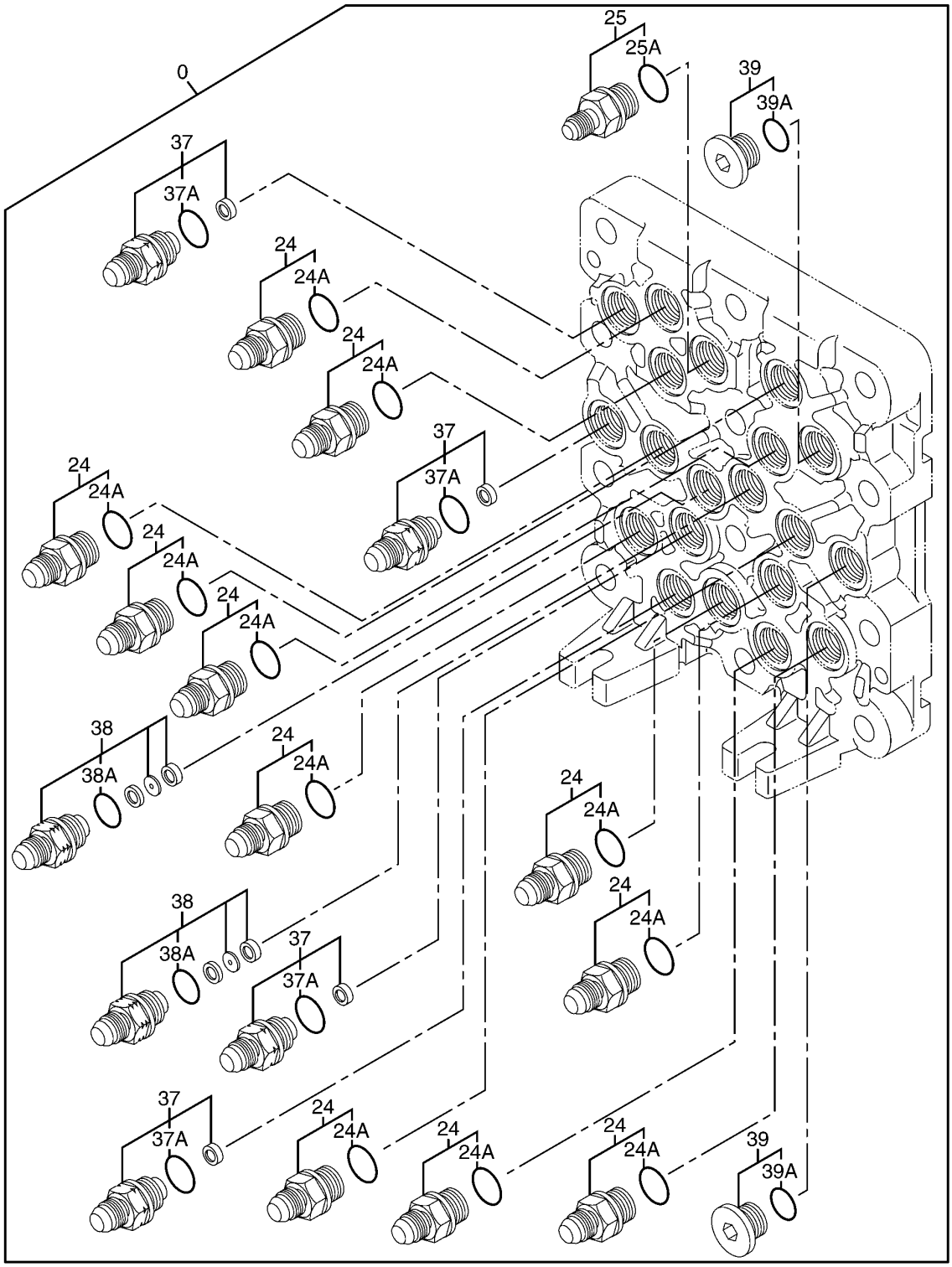

PILOT SIGNAL MANIFOLD (PILOT CONTROLLER SIDE)

KEY	PART NO.	PART NAME	QTY	SERIAL NO.	REMARKS
0	4468336	FLOW CONTROL HYD. VALVE	1		(SUB FOR 4452625) (INCLUDES ALL COMPONENTS ON THIS PAGE AND PREVIOUS AND FOLLOWING PAGES)
24	4451784	ADAPTER	11		
24A	CH11570	O-RING	11		
25	4451785	ADAPTER	2		
25A	CH11570	O-RING	2		
37	4451787	ADAPTER	3		
37A	CH11570	O-RING	3		
38	4482233	ADAPTER	2		(SUB FOR TH4451788 OR 4451788)
38A	CH11570	O-RING	2		
39	4451789	PIPE PLUG	2		
39A	CH11570	O-RING	2		
40	4467088	HOSE	1		(NOT ILLUSTRATED)
41	A852123	ADAPTER	1		(NOT ILLUSTRATED)

PILOT SIGNAL MANIFOLD (CONTROL VALVE SIDE)

T149605 -UN-17JAN02

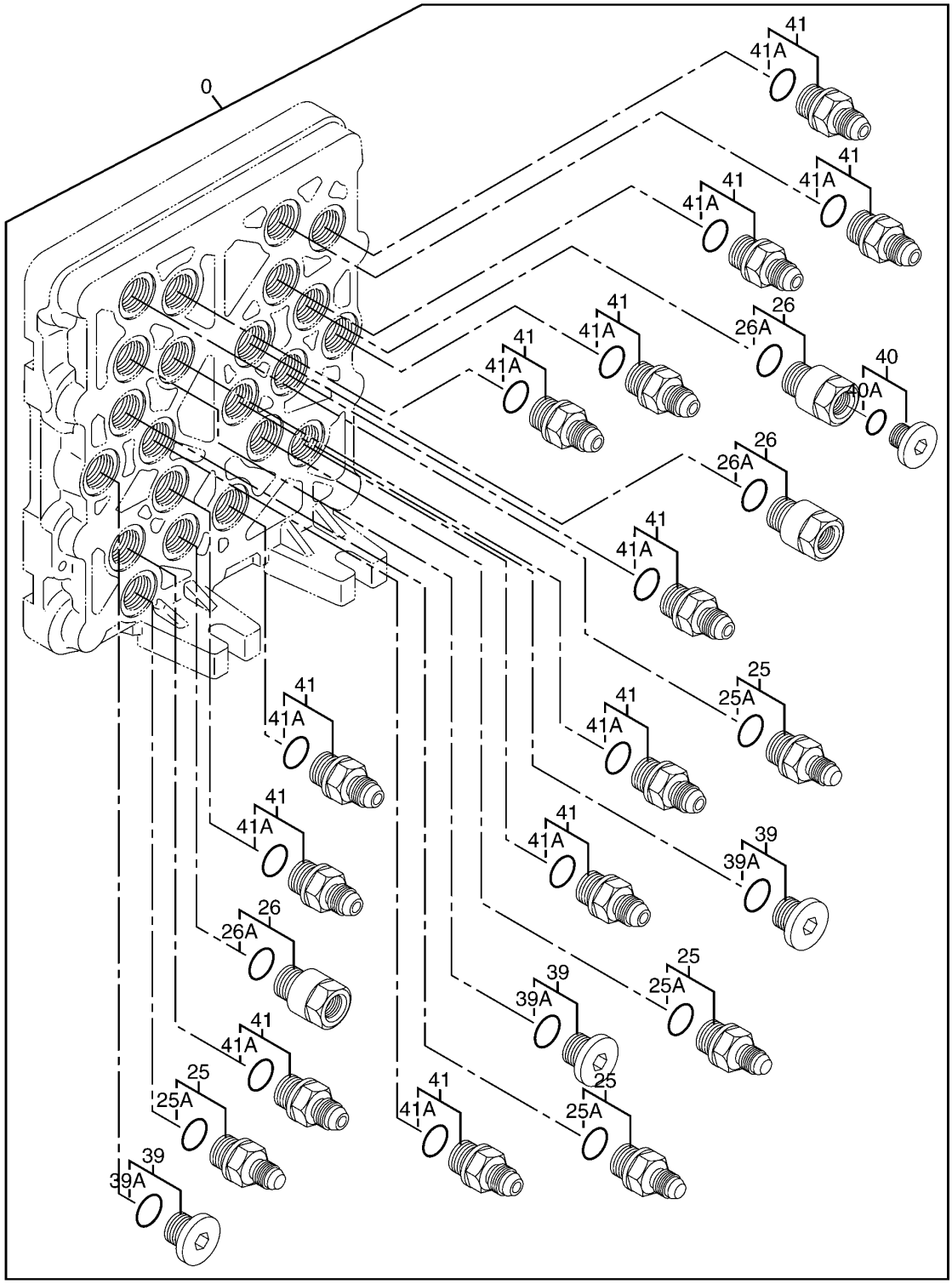

PILOT SIGNAL MANIFOLD (CONTROL VALVE SIDE)

KEY	PART NO.	PART NAME	QTY	SERIAL NO.	REMARKS
0	4468336	FLOW CONTROL HYD. VALVE	1		(SUB FOR 4452625) (INCLUDES ALL COMPONENTS ON THIS PAGE AND PREVIOUS AND FOLLOWING PAGES)
25	4451785	ADAPTER	4		
25A	CH11570	O-RING	4		
26	4451786	REDUCER	3		
26A	CH11570	O-RING	3		
39	4451789	PIPE PLUG	3		
39A	CH11570	O-RING	3		
40	4451790	PIPE PLUG	1		
40A	M800650	PACKING	1		
41	4451797	ADAPTER	12		
41A	CH11570	O-RING	12		
42	4467088	HOSE	1		(NOT ILLUSTRATED)
43	A852123	ADAPTER	1		(NOT ILLUSTRATED)

PILOT SIGNAL MANIFOLD VALVES

T149606 -UN-17JAN02

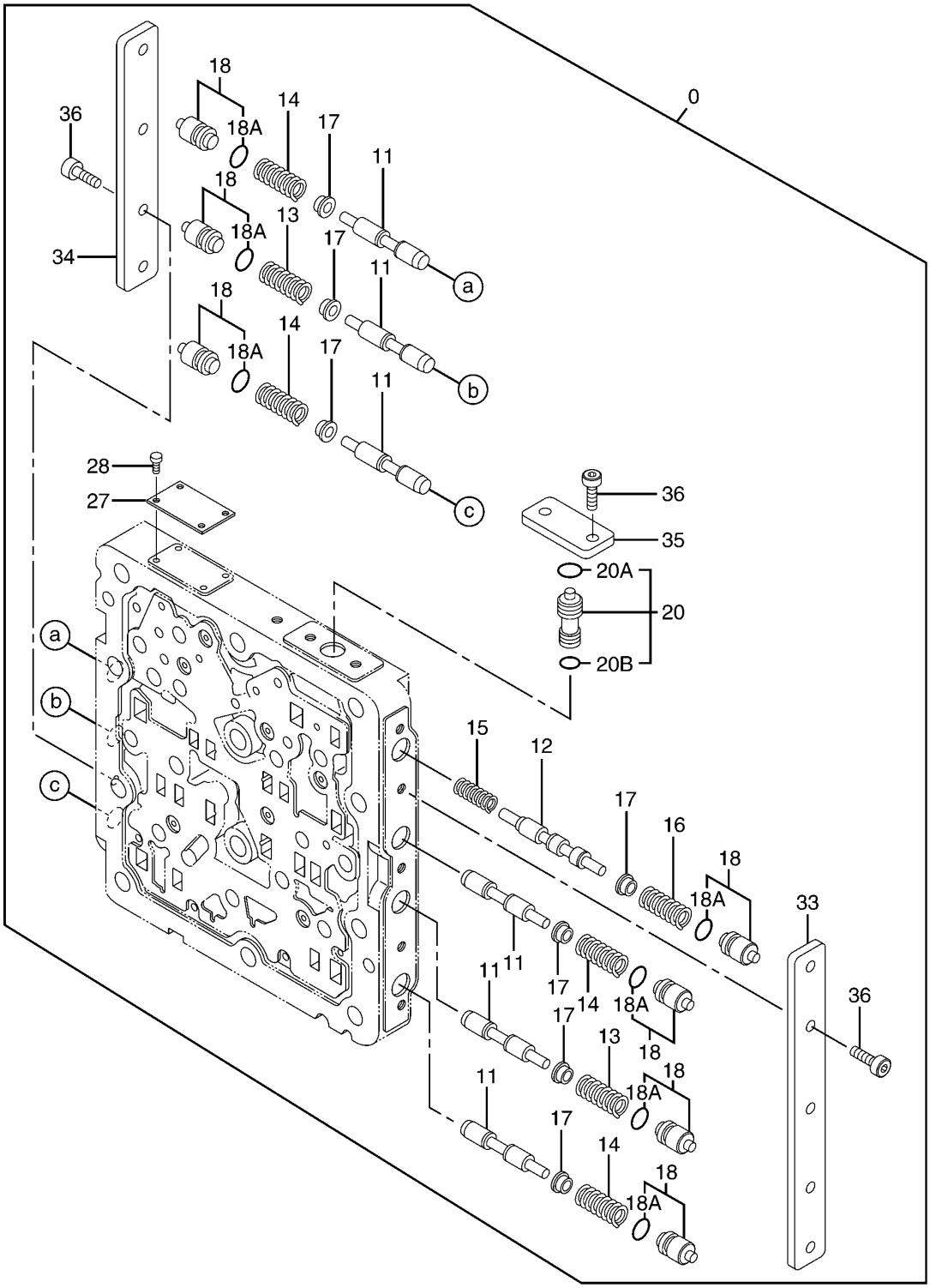

T149606

PILOT SIGNAL MANIFOLD VALVES

KEY	PART NO.	PART NAME	QTY	SERIAL NO.	REMARKS
0	4468336	FLOW CONTROL HYD. VALVE	1		(SUB FOR 4452625) (INCLUDES ALL COMPONENTS ON THIS PAGE AND PREVIOUS PAGES)
11	4453819	SPOOL VALVE	6		
12	4453820	SPOOL VALVE	1		
13	0788703	SPRING	2		
14	0788704	SPRING	4		
15	0788705	SPRING	1		
16	0788706	SPRING	1		
17	0788707	VALVE SEAT	7		
18	4452647	PIPE PLUG	7		
18A	939356	PACKING	7		
20	4452649	VALVE	1		
20A	939356	PACKING	1		
20B	CH10567	PACKING	1		
27	.....	IDENTIFICATION PLATE	1		
28	.....	SCREW	4		
33	0788710	PLATE	1		
34	0788711	PLATE	1		
35	0788712	PLATE	1		
36	0788713	BOLT	11		
37	4467088	HOSE	1		(NOT ILLUSTRATED)
38	A852123	ADAPTER	1		(NOT ILLUSTRATED)

PILOT CONTROL SHUT-OFF VALVE

T161990 -UN-26DEC02

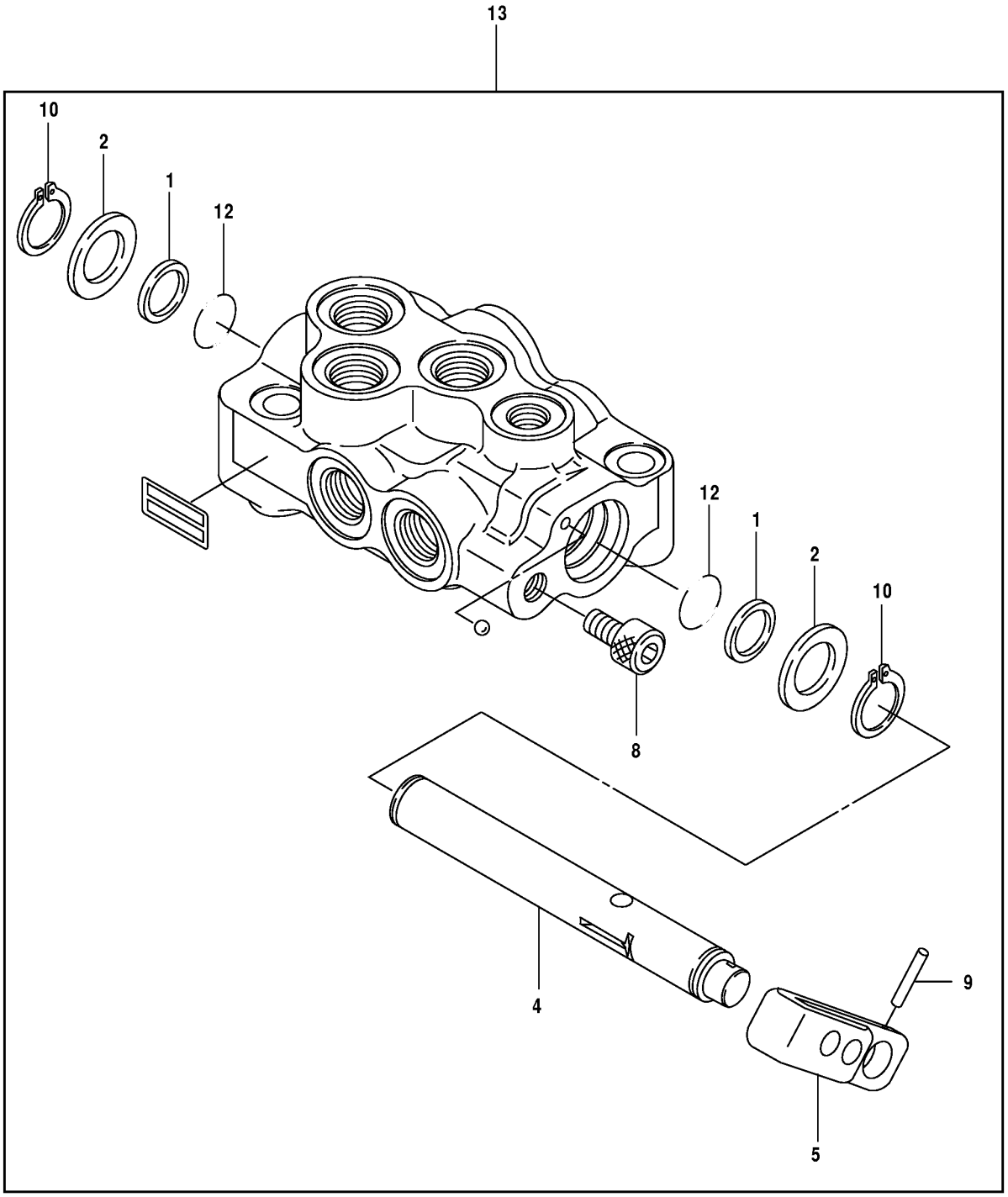

T161990

PILOT CONTROL SHUT-OFF VALVE

KEY	PART NO.	PART NAME	QTY	SERIAL NO.	REMARKS
1	0309904	BACK-UP RING	2		
2	0396603	WASHER	2		
4	0668303	VALVE SPOOL	1		
5	0804501	LEVER	1		
8	M340813	BOLT	1		
9	0668304	SPRING PIN	1		
10	0396605	SNAP RING	2		
12	CH14634	O-RING	2		
13	4462892	FLOW CONTROL HYD. VALVE	1		(SUB FOR 4451909)

LOW PRESSURE LINES (RESERVOIR TO PUMP)

T162118 -UN-26DEC02

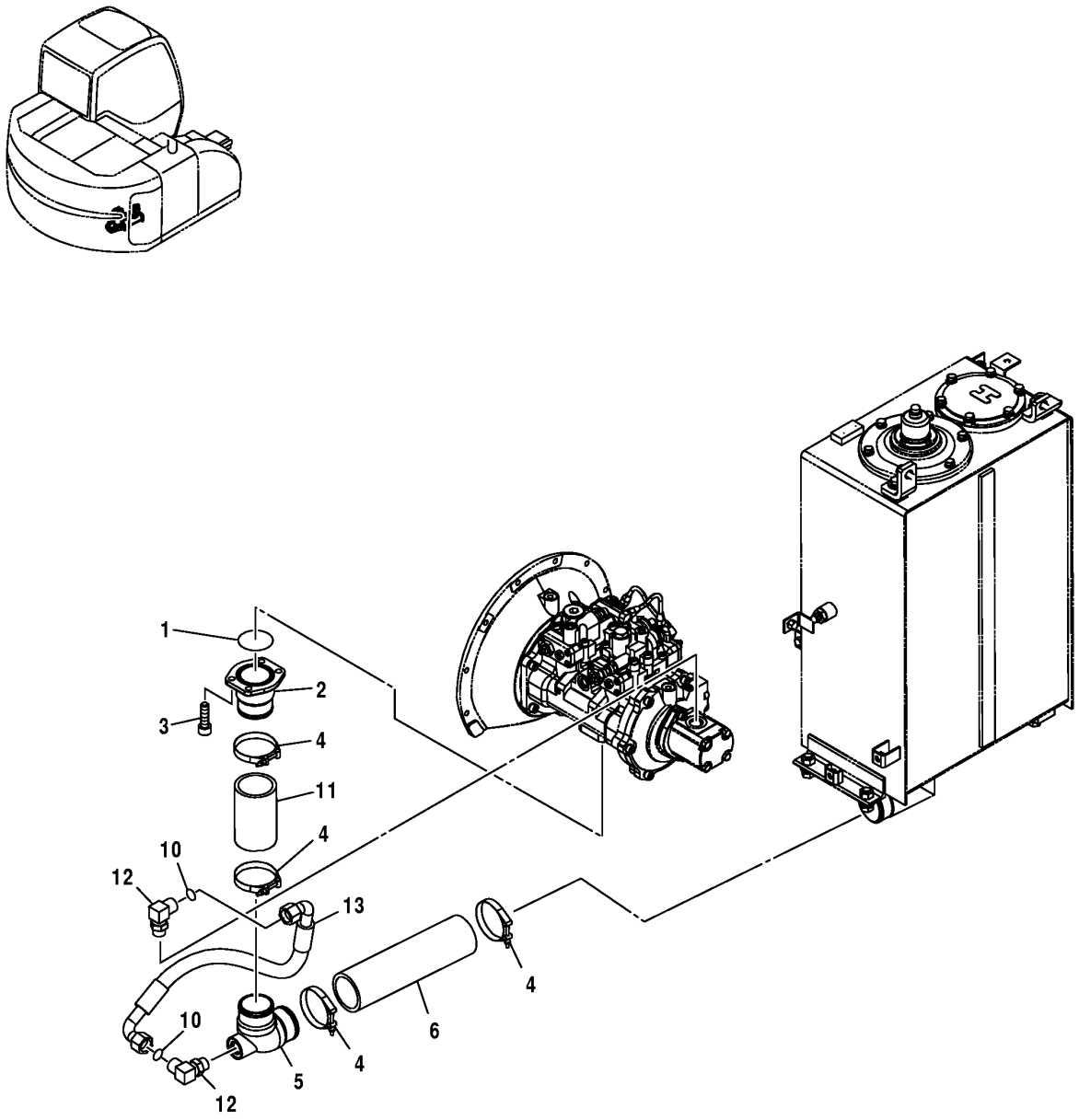

T162118

LOW PRESSURE LINES (RESERVOIR TO PUMP)

KEY	PART NO.	PART NAME	QTY	SERIAL NO.	REMARKS
1	TH105684	O-RING	1		
2	3087133	PIPE	1		
3	J781230	SCREW	4		
4	AT43291	HOSE CLAMP	4		(SUB FOR 4282483)
5	3073276	PIPE	1		
6	4437192	HOSE	1		
10	T77858	O-RING	2		(SUB FOR 4187308)
11	4449325	HOSE	1		
12	A853366	ELBOW FITTING	2		
	4506424	O-RING	1		
13	4449353	HYDRAULIC HOSE - FABRICATE	1		

HIGH PRESSURE LINES (PUMP TO CONTROL VALVE)

T162121 -UN-26DEC02

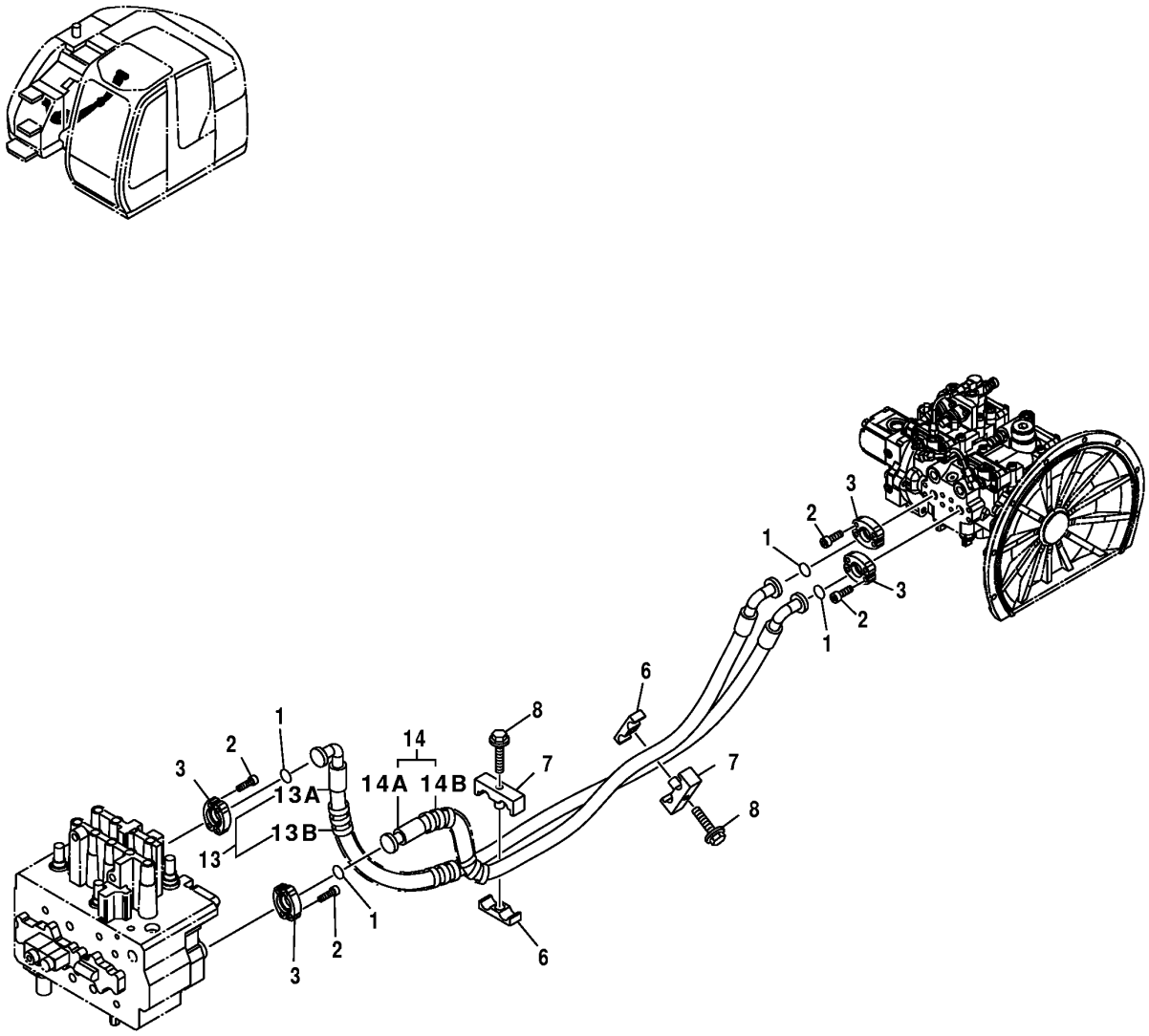

T162121

HIGH PRESSURE LINES (PUMP TO CONTROL VALVE)

KEY	PART NO.	PART NAME	QTY	SERIAL NO.	REMARKS
1	T59014	O-RING	4		(SUB FOR 971489)
2	J781035	BOLT	16		
3	T107446	FLANGE FITTING	8		(SUB FOR 4506459)
6	4285722	CLAMP	2		
7	4285723	CLAMP	2		
8	19M8088	CAP SCREW	2		M12 X 75, (SUB FOR J011275)
	12H301	LOCK WASHER	2		1/2"
13	.....	HYDRAULIC HOSE	1		(9202044 NO LONGER AVAILABLE FOR SERVICE - ORDER INDIVIDUAL COMPONENTS)
13A	4455500	HYDRAULIC HOSE - FABRICATE	1		
13B	4327294	HOSE GUARD	1		
14	.....	HYDRAULIC HOSE	1		(9202045 NO LONGER AVAILABLE FOR SERVICE - ORDER INDIVIDUAL COMPONENTS)
14A	4455499	HYDRAULIC HOSE - FABRICATE	1		
14B	4327294	HOSE GUARD	1		

RETURN LINES (HEAT EXCHANGER TO RESERVOIR)

T165467 -UN-20FEB03

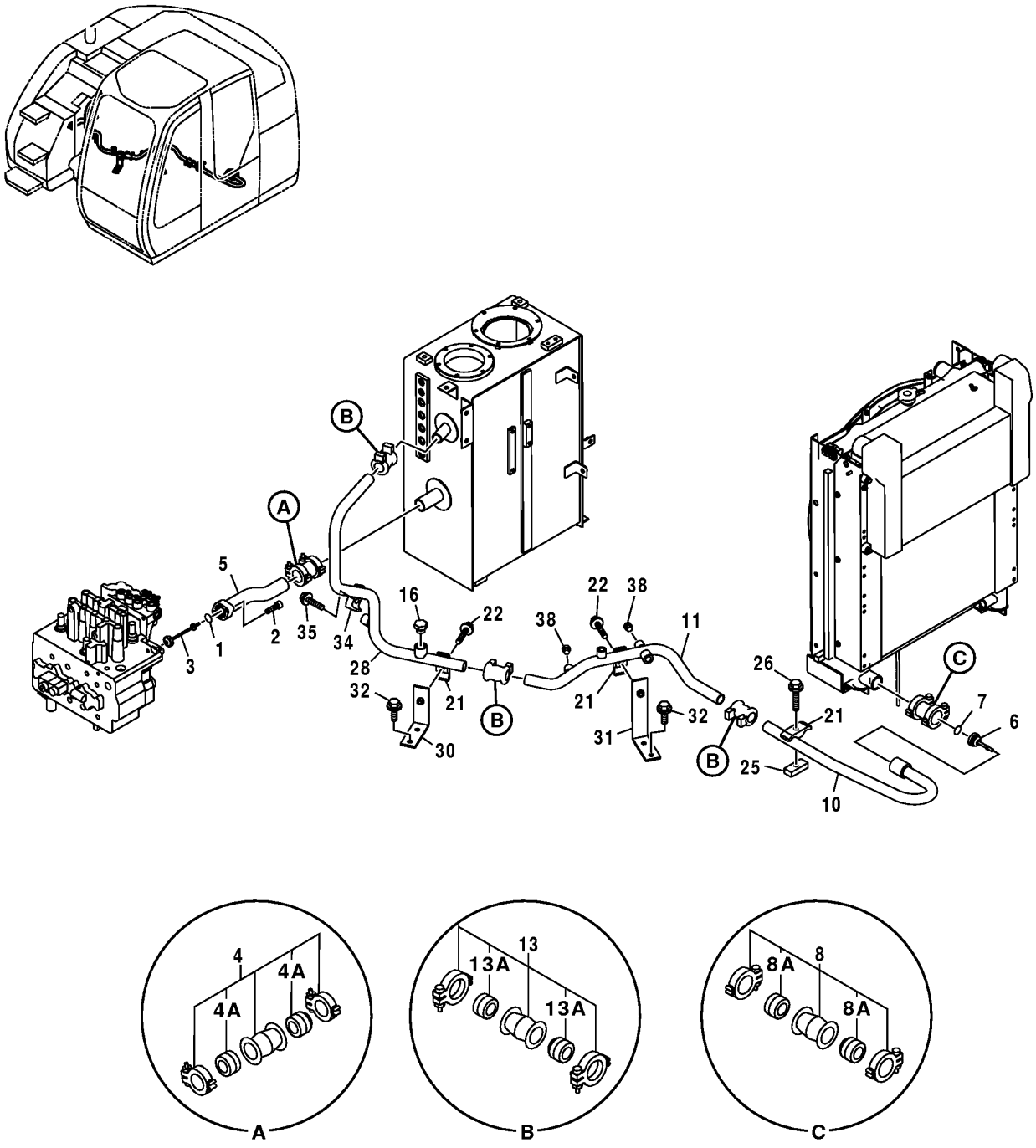

T165467

RETURN LINES (HEAT EXCHANGER TO RESERVOIR)

KEY	PART NO.	PART NAME	QTY	SERIAL NO.	REMARKS
1	A811040	O-RING	1		
2	J781040	SCREW	2		
3	4266481	VALVE	1		
4	4069801	COUPLING	1		
4A	4196259	SEAL	2		
5	8079979	OIL LINE	1		(OIL COOLER BYPASS LINE)
6	4276584	VALVE	1		
7	40M1861	SNAP RING	1		(SUB FOR 991718)
8	4067834	COUPLING	1		
8A	4196260	SEAL	2		
10	7038335	OIL LINE	1		
11	7038336	OIL LINE	1		
13	4071213	COUPLING	3		
13A	4196258	SEAL	2		
16	A885006	PLUG	1		
	4506424	O-RING	1		
21	4189860	CLAMP	2		
22	19M7753	CAP SCREW	2		M12 X 70, (SUB FOR 011270)
	12H301	LOCK WASHER	2		1/2"
25	T108225	STRAP	1		(SUB FOR 4137298)
26	19M7362	CAP SCREW	1		M12 X 55, (SUB FOR J011255)
	12H301	LOCK WASHER	1		1/2"
28	7039779	OIL LINE	1		
30	8080202	BRACKET	1		
31	8082984	BRACKET	1		
32	19M7872	CAP SCREW	4		M12 X 25
34	4190127	CLAMP	1		
35	19M7363	CAP SCREW	1		M12 X 60, (SUB FOR J011260)
	12H301	LOCK WASHER	1		
38	A885003	PIPE PLUG	2		
	CH11570	O-RING	1		(SUB FOR 4509180)

RETURN LINES (CONTROL VALVE TO HEAT EXCHANGER)

T162129 -UN-03JAN03

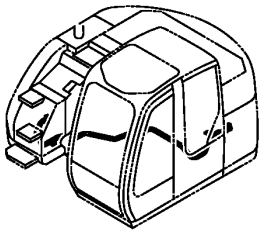

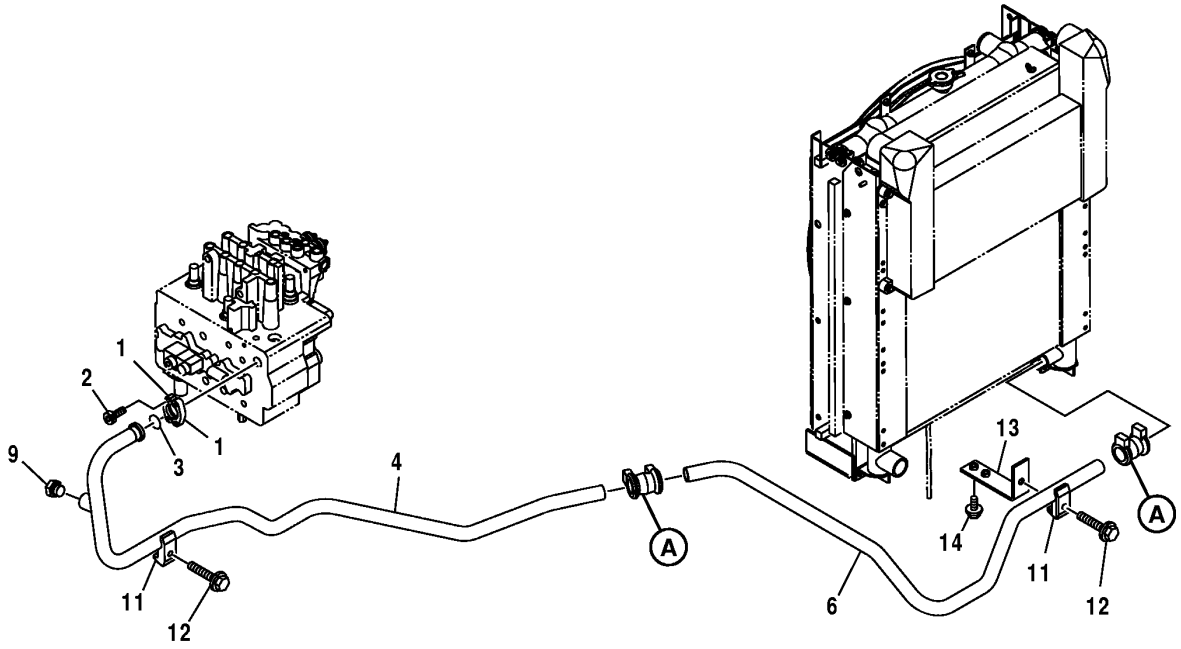

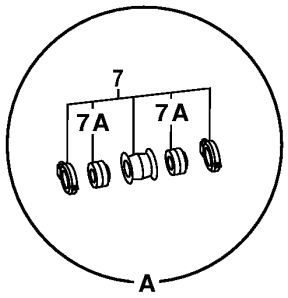

T162129

RETURN LINES (CONTROL VALVE TO HEAT EXCHANGER)

KEY	PART NO.	PART NAME	QTY	SERIAL NO.	REMARKS
1	H61354	FLANGE FITTING	2		(SUB FOR 962453)
2	J781030	SCREW	4		
3	T78313	O-RING	1		(SUB FOR 966993)
4	7038334	OIL LINE	1		
6	2045094	OIL LINE	1		
7	4071213	COUPLING	2		
7A	4196258	SEAL	2		
9	A885006	PLUG	1		
	4506424	O-RING	1		
11	4190127	CLAMP	2		
12	19M7753	CAP SCREW	2		M12 X 70, (SUB FOR J011270)
	12H301	LOCK WASHER	2		1/2"
13	8079978	BRACKET	1		
14	19M7662	CAP SCREW	2		M10 X 30, (SUB FOR J021030)
	24M7028	WASHER	2		10.500 X 20 X 2 MM
	12M7066	LOCK WASHER	2		10 MM

HYDRAULIC LINES (CONTROL VALVE TO SWING MOTOR)

T162134 -UN-26DEC02

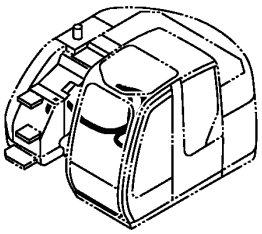

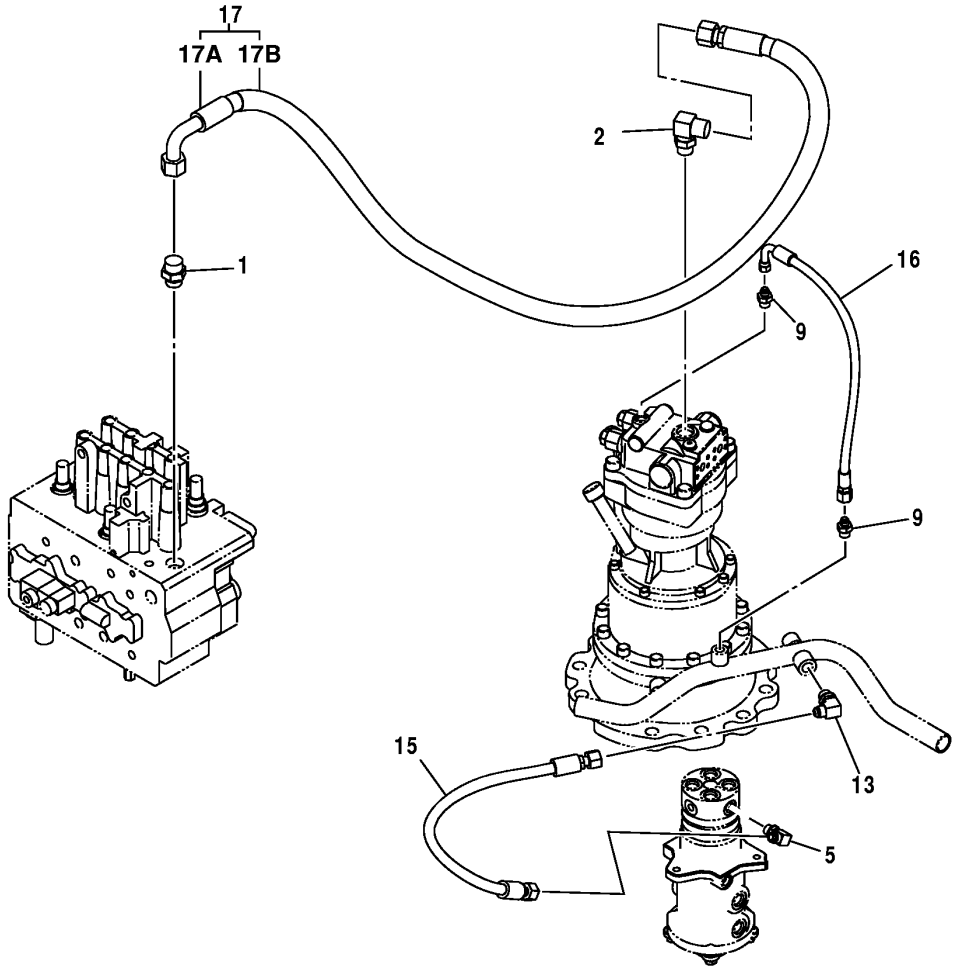

T162134

HYDRAULIC LINES (CONTROL VALVE TO SWING MOTOR)

KEY	PART NO.	PART NAME	QTY	SERIAL NO.	REMARKS
1	A853166	ADAPTER	1		
	4506424	O-RING	1		
2	A853366	ELBOW FITTING	1		
	4506424	O-RING	1		
5	A852334	ELBOW FITTING	1		
	CH11570	O-RING	1		
9	A852133	ADAPTER	2		
	CH11570	O-RING	1		
13	A852344	ELBOW FITTING	1		
	4506418	O-RING	1		
15	4389009	HYDRAULIC HOSE - FABRICATE	1		
16	4451924	HYDRAULIC HOSE - FABRICATE	1		
17	.....	HYDRAULIC HOSE	1		(9201692 NO LONGER AVAILABLE FOR SERVICE - ORDER INDIVIDUAL COMPONENTS)
17A	4387251	HYDRAULIC HOSE - FABRICATE	1		
17B	4327294	HOSE GUARD	4		

MAIN HYDRAULIC LINES (CONTROL VALVE TO BOOM CYLINDER)

T162135 -UN-26DEC02

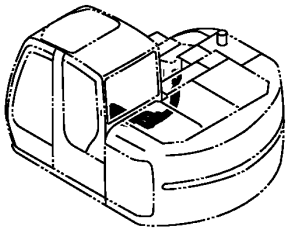

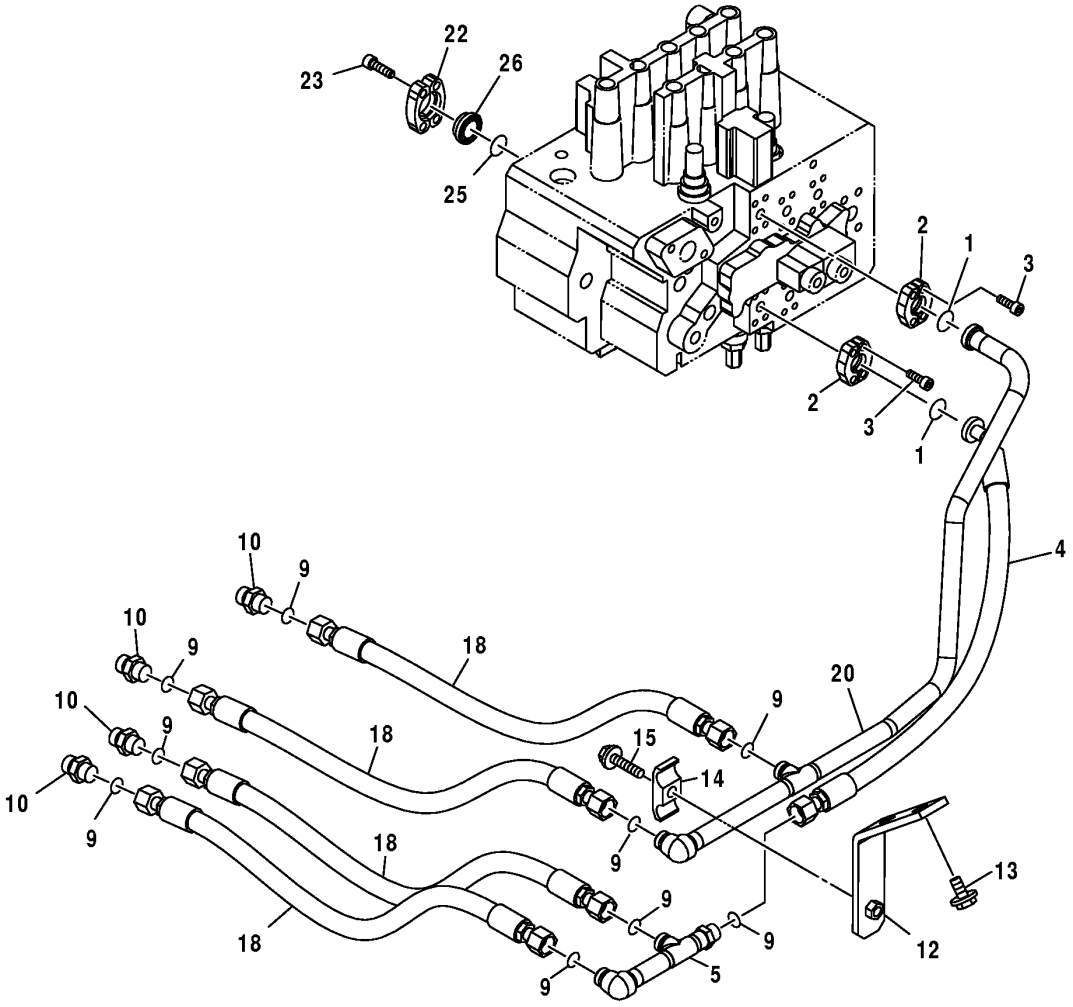

T162135

MAIN HYDRAULIC LINES (CONTROL VALVE TO BOOM CYLINDER)

KEY	PART NO.	PART NAME	QTY	SERIAL NO.	REMARKS
1	R69667	O-RING	2		(SUB FOR 4510167)
2	4510173	FLANGE FITTING	4		
3	J780825	SCREW	8		(SUB FOR P61954) (SUB FOR 4510173)
4	4437722	HYDRAULIC HOSE	1		
5	9746058	OIL LINE	1		
9	T77857	O-RING	9		(SUB FOR 4138938)
10	A853144	ADAPTER	4		
	4506418	O-RING	1		
12	8079994	SUPPORT	1		
13	19M7872	CAP SCREW	2		M12 X 25, (SUB FOR J021225)
	12H301	LOCK WASHER	2		1/2"
14	4189858	CLAMP	1		
15	19M7363	CAP SCREW	1		M12 X 60, (SUB FOR J011260)
	12H301	LOCK WASHER	1		1/2"
18	4285798	HYDRAULIC HOSE - FABRICATE	4		
20	8083749	OIL LINE	1		
22	986910	FLANGE FITTING	2		
23	J781030	SCREW	4		
25	971489	O-RING	1		
26	4183242	COVER	1		

MAIN HYDRAULIC LINES (CONTROL VALVE TO ARM CYLINDER)

T162142 -UN-26DEC02

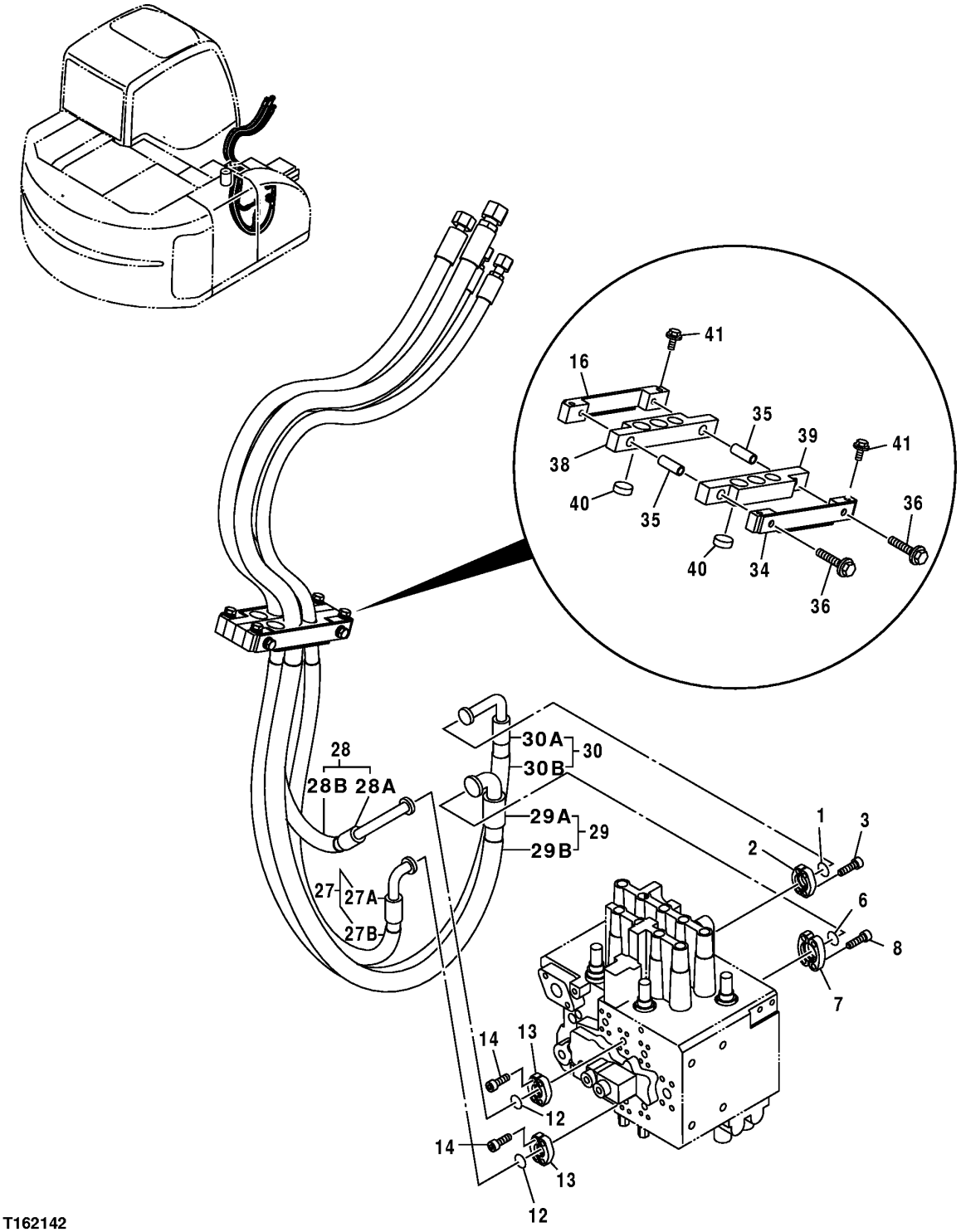

T162142

MAIN HYDRAULIC LINES (CONTROL VALVE TO ARM CYLINDER)

KEY	PART NO.	PART NAME	QTY	SERIAL NO.	REMARKS
1	R69667	O-RING	1		(SUB FOR 4510167)
2	4510173	FLANGE FITTING	2		
3	J780825	SCREW	4		(SUB FOR P61954)
6	T59014	O-RING	1		(SUB FOR 971489)
7	R29424	FLANGE FITTING	2		(SUB FOR 986910)
8	J781030	SCREW	4		
12	R69667	O-RING	2		(SUB FOR 4510167)
13	4510173	FLANGE FITTING	4		
14	J780825	SCREW	8		(SUB FOR P61954)
16	8076645	BRACKET	1		
27	.....	HYDRAULIC HOSE	1		(9201708 NO LONGER AVAILABLE FOR SERVICE - ORDER INDIVIDUAL COMPONENTS)
27A	4437725	HYDRAULIC HOSE - FABRICATE	1		
27B	4327294	HOSE GUARD	2		
28	.....	HYDRAULIC HOSE	1		(9201709 NO LONGER AVAILABLE FOR SERVICE - ORDER INDIVIDUAL COMPONENTS)
28A	4437726	HYDRAULIC HOSE	1		
28B	4327294	HOSE GUARD	1		
29	.....	HYDRAULIC HOSE	1		(9201710 NO LONGER AVAILABLE FOR SERVICE - ORDER INDIVIDUAL COMPONENTS)
29A	4437747	HYDRAULIC HOSE - FABRICATE	1		
29B	4327294	HOSE GUARD	3		
30	.....	HYDRAULIC HOSE	1		(9201711 NO LONGER AVAILABLE FOR SERVICE - ORDER INDIVIDUAL COMPONENTS)
30A	4437762	HYDRAULIC HOSE	1		
30B	4327294	HOSE GUARD	3		
34	8078188	BRACKET	1		
35	4428830	SPACER	2		
36	J021090	BOLT	2		
38	3092223	HOSE CLAMP	1		
39	3092224	HOSE CLAMP	1		
40	4455225	PLUG	2		
41	19M7662	CAP SCREW	4		M10 X 30, (SUB FOR J021030)
	24M7028	WASHER	4		10.500 X 20 X 2 MM
	12M7066	LOCK WASHER	4		10 MM

MAIN HYDRAULIC LINES (CONTROL VALVE TO SWING MOTOR)

T162143 -UN-26DEC02

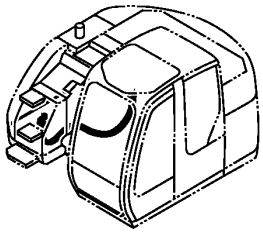

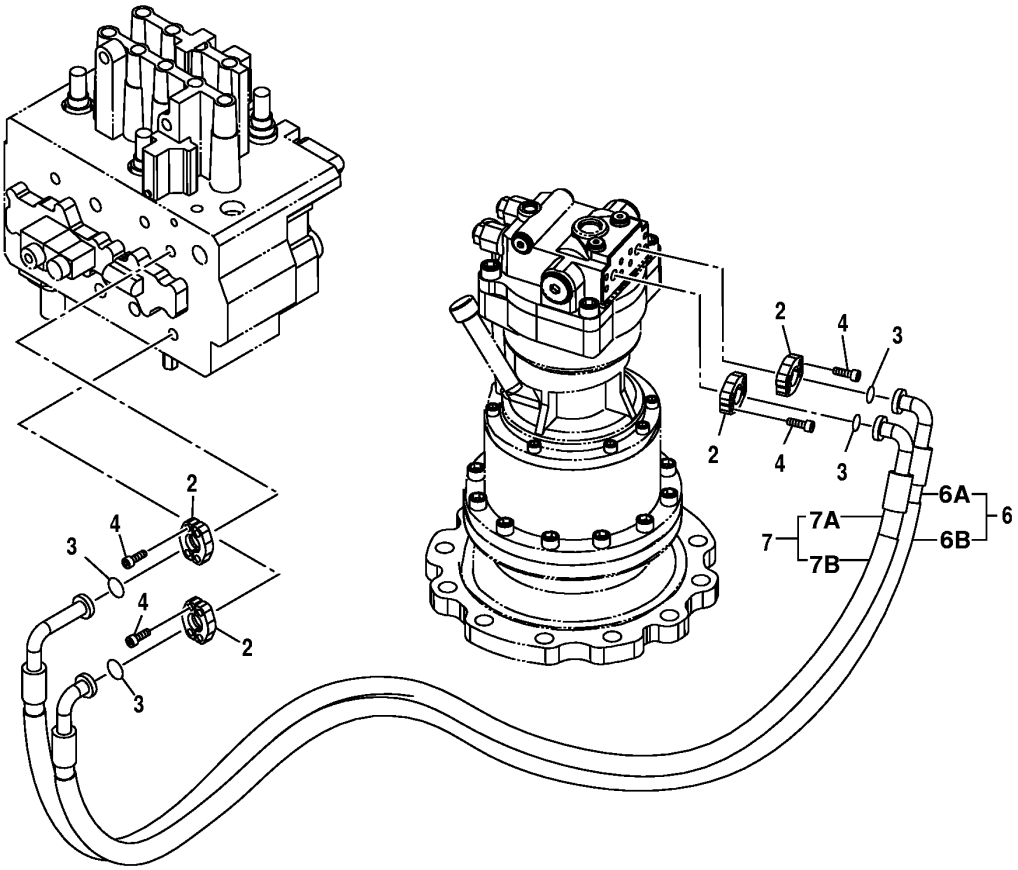

T162143

MAIN HYDRAULIC LINES (CONTROL VALVE TO SWING MOTOR)

KEY	PART NO.	PART NAME	QTY	SERIAL NO.	REMARKS
2	4510173	FLANGE FITTING	8		
3	R69667	O-RING	4		(SUB FOR 4510167)
4	J780825	SCREW	16		(SUB FOR P61954)
6	.....	HYDRAULIC HOSE	1		(9197721 NO LONGER AVAILABLE FOR SERVICE - ORDER INDIVIDUAL COMPONENTS)
6A	4448855	HYDRAULIC HOSE - FABRICATE	1		
6B	4327294	HOSE GUARD	4		
7	.....	HYDRAULIC HOSE	1		
7A	4448858	HYDRAULIC HOSE	1		
7B	4327294	HOSE GUARD	4		

MAIN HYDRAULIC LINES (CONTROL VALVE TO ROTARY MANIFOLD)

T162145 -UN-23DEC02

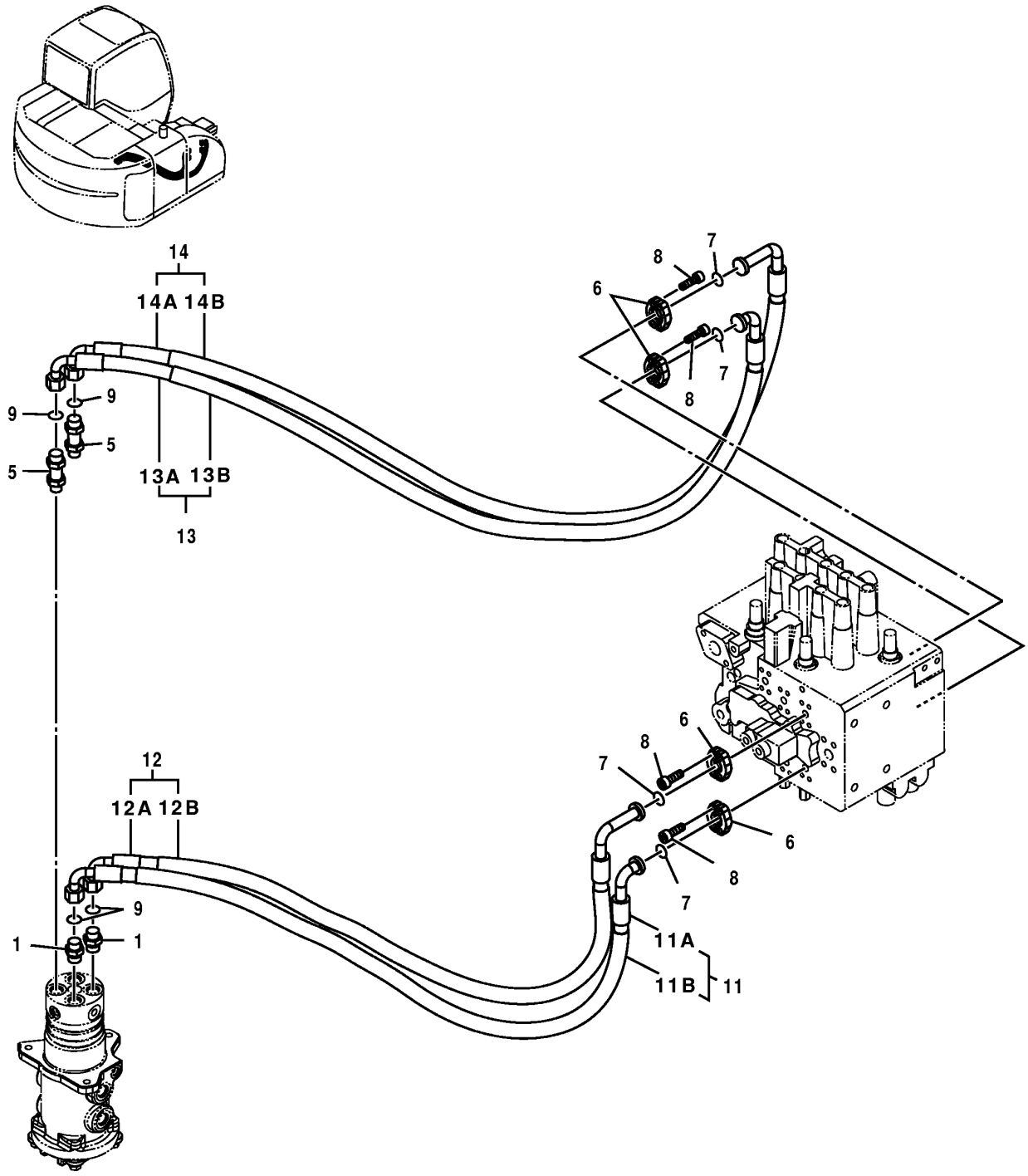

T162145

MAIN HYDRAULIC LINES (CONTROL VALVE TO ROTARY MANIFOLD)

KEY	PART NO.	PART NAME	QTY	SERIAL NO.	REMARKS
1	A853144	ADAPTER	2		
	4506418	O-RING	1		
5	4199247	ADAPTER	2		
	4506418	O-RING	1		
6	4510173	FLANGE FITTING	8		
7	R69667	O-RING	4		(SUB FOR 4510167)
8	J780825	SCREW	16		(SUB FOR P61954)
9	T77857	O-RING	4		(SUB FOR 4138938)
11	.....	HYDRAULIC HOSE	1		(9197717 NO LONGER AVAILABLE FOR SERVICE - ORDER INDIVIDUAL COMPONENTS)
11A	4448839	HYDRAULIC HOSE - FABRICATE	1		
11B	4327294	HOSE GUARD	3		
12	.....	HYDRAULIC HOSE	1		(9197718 NO LONGER AVAILABLE FOR SERVICE - ORDER INDIVIDUAL COMPONENTS)
12A	4437779	HYDRAULIC HOSE	1		
12B	4327294	HOSE GUARD	3		
13	.....	HYDRAULIC HOSE	1		(9197719 NO LONGER AVAILABLE FOR SERVICE - ORDER INDIVIDUAL COMPONENTS)
13A	4448849	HYDRAULIC HOSE - FABRICATE	1		
13B	4327294	HOSE GUARD	3		
14	.....	HYDRAULIC HOSE	1		(9197720 NO LONGER AVAILABLE FOR SERVICE - ORDER INDIVIDUAL COMPONENTS)
14A	4448851	HYDRAULIC HOSE	1		
14B	4327294	HOSE GUARD	3		

PILOT HYDRAULIC LINES (PUMP TO FILTER) (FILTER TO SOLENOID VALVE)

T200661 -UN-07JUN04

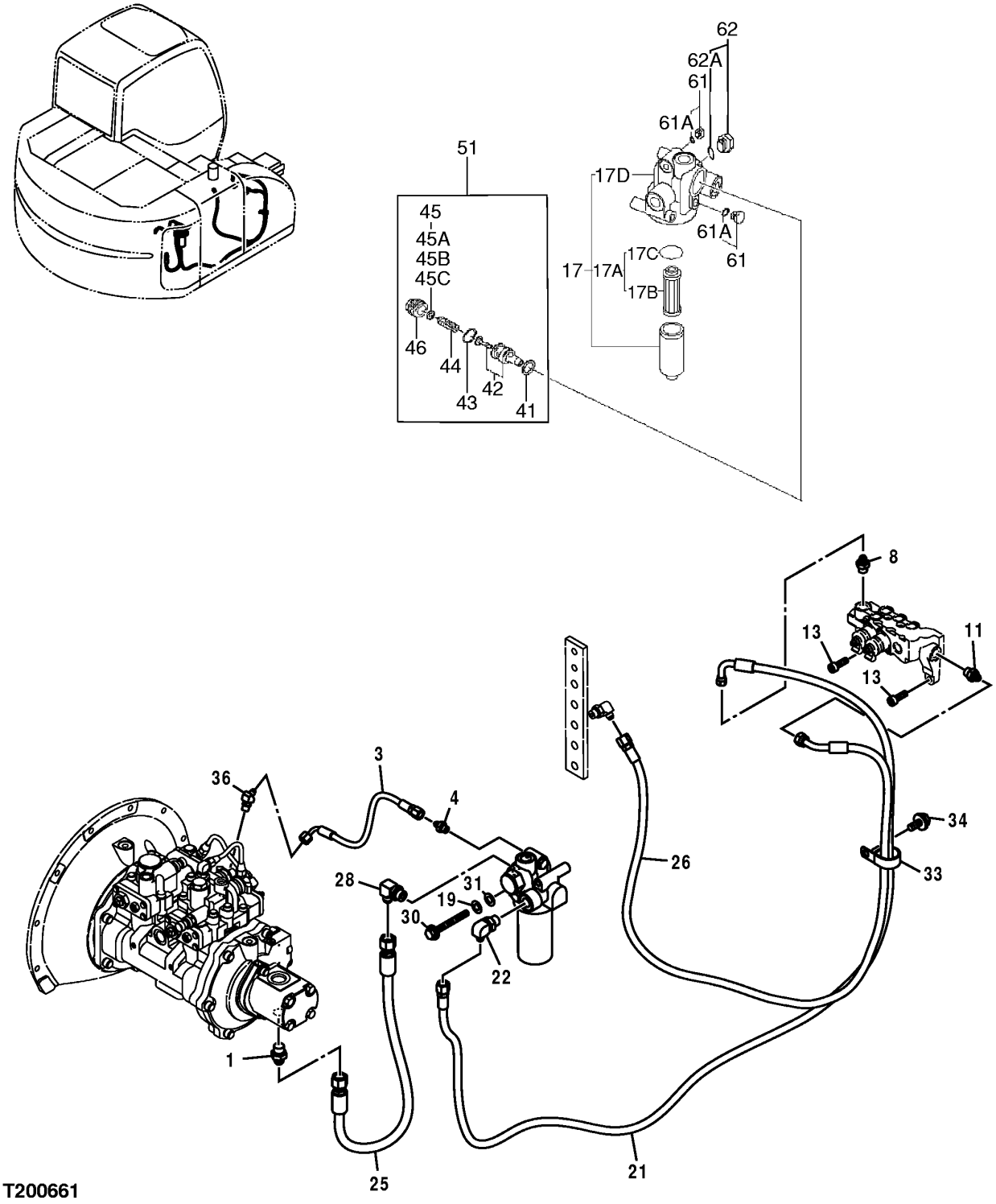

PILOT HYDRAULIC LINES (PUMP TO FILTER) (FILTER TO SOLENOID VALVE)

KEY	PART NO.	PART NAME	QTY	SERIAL NO.	REMARKS
1	A852144	ADAPTER	1		
	4506418	O-RING	1		
3	4436293	HYDRAULIC HOSE - FABRICATE	1		
4	A852122	ADAPTER	1		
	M800650	PACKING	1		(SUB FOR 957366)
8	A852133	ADAPTER	1		
	CH11570	O-RING	1		(SUB FOR 4509180)
11	A852133	ADAPTER	1		
	CH11570	O-RING	1		(SUB FOR 4509180)
13	J781030	SCREW	2		
17	4611025	OIL FILTER	1		(SUB FOR 4408959)
17A	AT186554	FILTER ELEMENT	1		(SUB FOR 4370435 OR AT214263)
17B	.....	FILTER ELEMENT	1		(4191301 NOT AVAILABLE FOR SERVICE)
17C	TH105683	O-RING	1		(SUB FOR A811060, 4153538, TH0430809 OR 0430809)
17D	4472430	PRESSURE RELIEF VALVE	1		
19	12M7066	LOCK WASHER	2		10 MM, (SUB FOR A590910)
21	4448748	HYDRAULIC HOSE - FABRICATE	1		
22	A852343	ELBOW FITTING	1		
	4506418	O-RING	1		
25	4425095	HYDRAULIC HOSE - FABRICATE	1		
26	4452005	HYDRAULIC HOSE - FABRICATE	1		
28	A852344	ELBOW FITTING	1		
	4506418	O-RING	1		
30	J901002	BOLT	2		
31	24M7028	WASHER	2		10.500 X 20 X 2 MM, (SUB FOR A590110)
33	4193848	CLIP	1		(SUB FOR 4190264) (SUB FOR 4190291)
34	19M7662	CAP SCREW	1		M10 X 30, (SUB FOR J011030)
	12M7066	LOCK WASHER	1		10 MM
36	A852222	ELBOW FITTING	1		
	M800650	PACKING	1		(SUB FOR 957366)
41	0308704	GASKET	1		
42	0308703	PRESSURE RELIEF VALVE	1		
43	0308705	O-RING	1		
44	.....	SPRING	1		
45	4293211	SHIM	1		
45A	4309836	SHIM	2		
45B	4309837	SHIM	2		
45C	4309838	SHIM	2		
46	0308709	FITTING PLUG	1		
51	0709701	RELIEF VALVE	1		
61	4174541	DRAIN PLUG	2		
61A	M800650	PACKING	1		
62	A885002	PIPE PLUG	1		
62A	4506418	O-RING	1		

PILOT HYDRAULIC LINES (PUMP TO PILOT SIGNAL MANIFOLD)

T162164 -UN-23DEC02

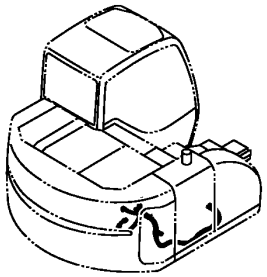

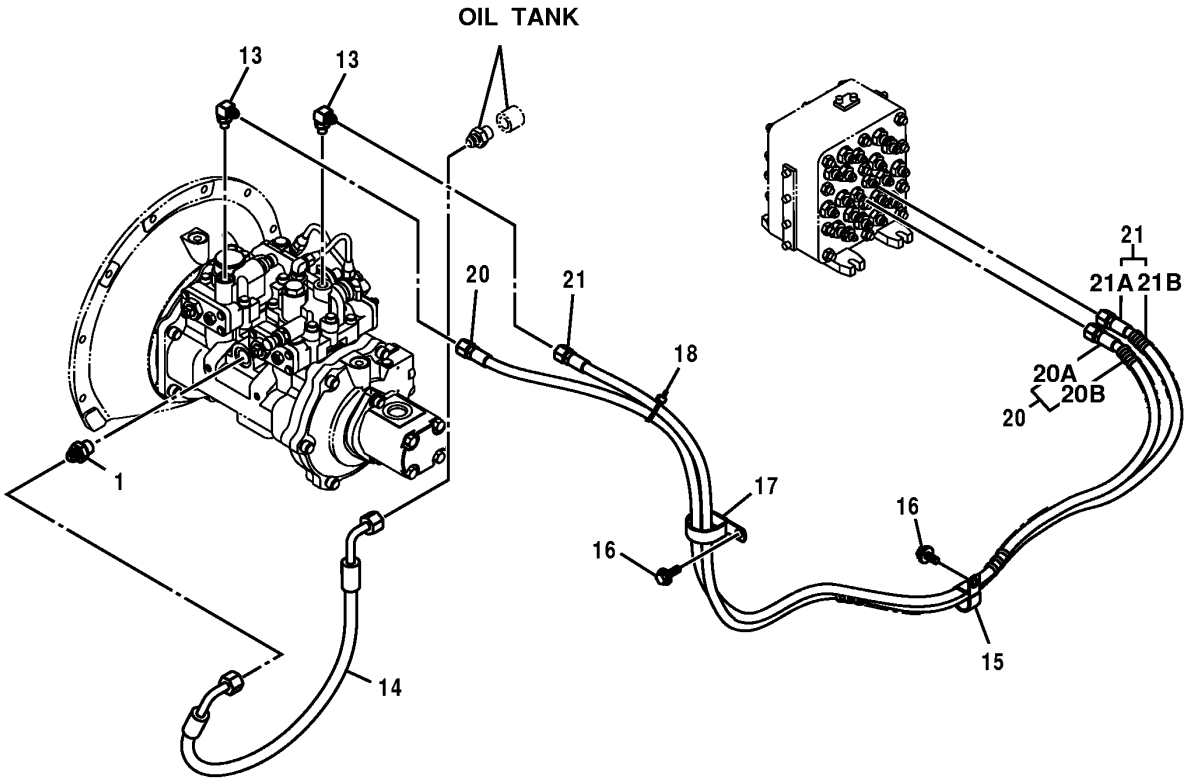

T162164

PILOT HYDRAULIC LINES (PUMP TO PILOT SIGNAL MANIFOLD)

KEY	PART NO.	PART NAME	QTY	SERIAL NO.	REMARKS
1	A852144	ADAPTER	1		
	4506418	O-RING	1		
13	A852323	ELBOW FITTING	2		
	M800650	PACKING	1		(SUB FOR 957366)
14	4449354	HYDRAULIC HOSE - FABRICATE	1		
15	4193848	CLIP	1		(SUB FOR 4190264)
16	19M7938	CAP SCREW	2		M10 X 20
17	4190265	CLIP	1		
18	H77698	TIE BAND	1		(SUB FOR 4055311)
20	.....	HYDRAULIC HOSE	1		(9204019 NO LONGER AVAILABLE FOR SERVICE - ORDER INDIVIDUAL COMPONENTS)
20A	4449326	HYDRAULIC HOSE - FABRICATE	1		
20B	4327293	HOSE GUARD	1		
21	.....	HYDRAULIC HOSE	1		(9204019 NO LONGER AVAILABLE FOR SERVICE - ORDER INDIVIDUAL COMPONENTS)
21A	4449326	HYDRAULIC HOSE - FABRICATE	1		(SUB FOR 4449328)
21B	4327293	HOSE GUARD	2		

PILOT HYDRAULIC LINES (SOLENOID VALVE TO ROTARY MANIFOLD)(SOLENOID VALVE TO PILOT SIGNAL MANIFOLD)

T162169 -UN-23DEC02

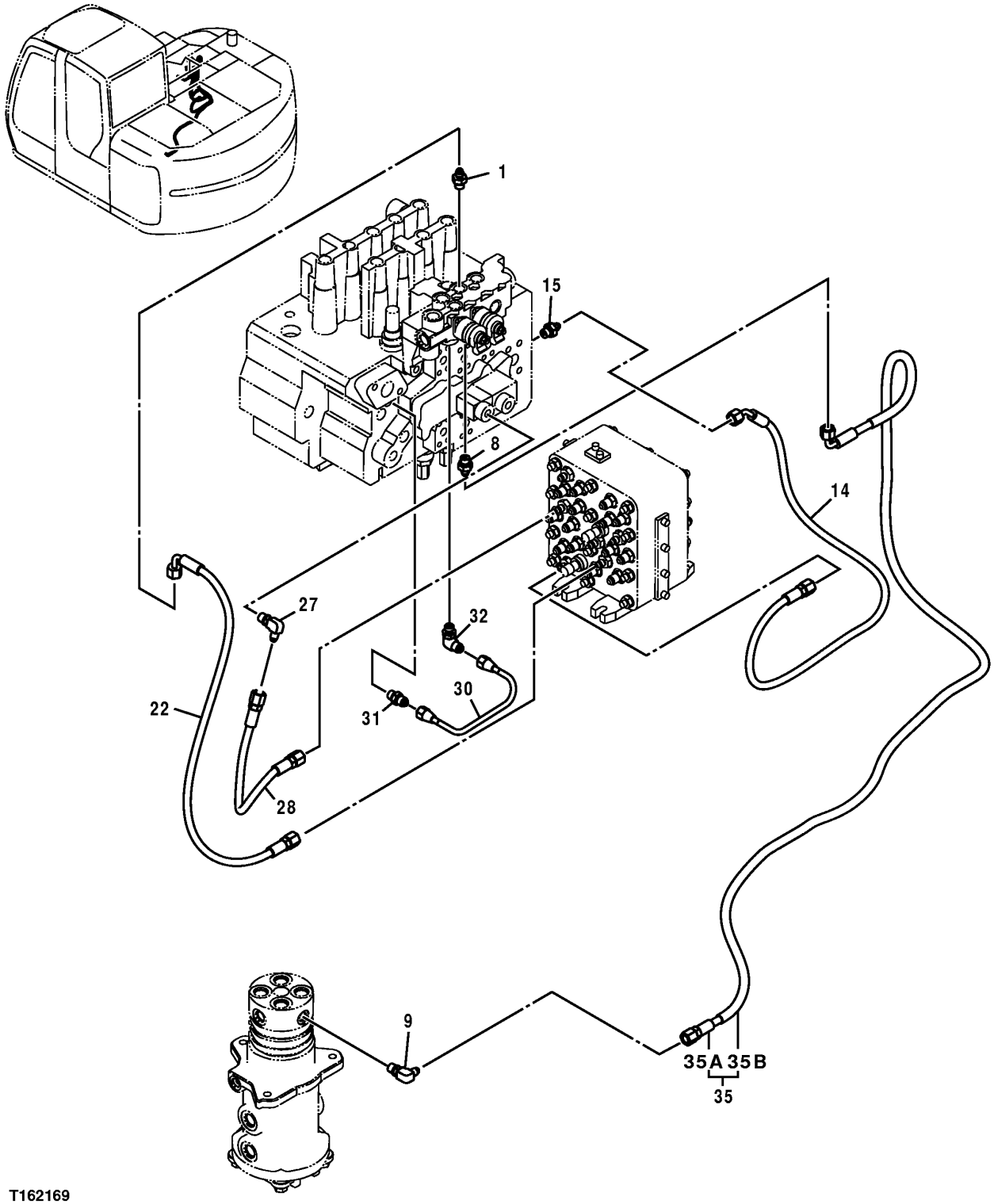

T162169

PILOT HYDRAULIC LINES (SOLENOID VALVE TO ROTARY MANIFOLD)(SOLENOID VALVE TO PILOT SIGNAL MANIFOLD)

KEY	PART NO.	PART NAME	QTY	SERIAL NO.	REMARKS
1	A852122	ADAPTER	1		
	M800650	PACKING	1		(SUB FOR 957366)
8	A852122	ADAPTER	1		
	M800650	PACKING	1		(SUB FOR 957366)
9	4154670	ELBOW FITTING	1		(SUB FOR A852322, P67984 OR THA852322)
	M800650	PACKING	1		(SUB FOR 957366)
14	4436383	HYDRAULIC HOSE - FABRICATE	1		
15	A852122	ADAPTER	1		
	M800650	PACKING	1		(SUB FOR 957366)
22	4436299	HYDRAULIC HOSE - FABRICATE	1		
27	4154670	ELBOW FITTING	1		(SUB FOR A852322, P67984 OR THA852322)
	M800650	PACKING	1		(SUB FOR 957366)
28	.....	HYDRAULIC HOSE - FABRICATE	1		(IF AVAILABLE ORDER 4451995)
30	4452289	PIPE	1		
31	4255304	ADAPTER	1		
	M800650	PACKING	1		(SUB FOR 957366)
32	4293950	ELBOW FITTING	1		
	M800650	PACKING	1		(SUB FOR 957366)
35	.....	HYDRAULIC HOSE	1		(9201838 NO LONGER AVAILABLE FOR SERVICE)
35A	4436309	HYDRAULIC HOSE - FABRICATE	1		
35B	4327293	HOSE GUARD	4		

PILOT HYDRAULIC LINES (PILOT SIGNAL MANIFOLD TO SWING MOTOR)

T162171 -UN-23DEC02

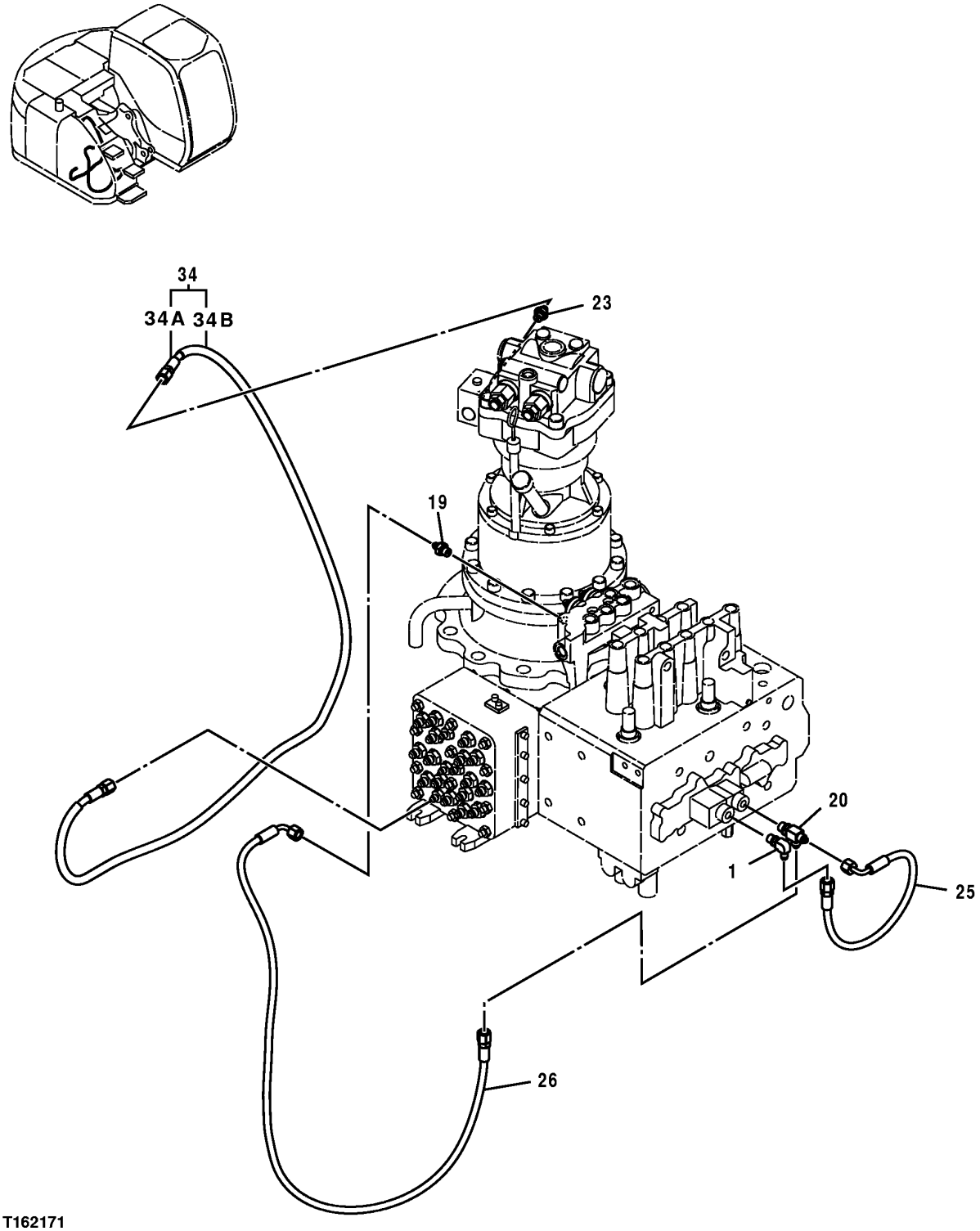

T162171

PILOT HYDRAULIC LINES (PILOT SIGNAL MANIFOLD TO SWING MOTOR)

KEY	PART NO.	PART NAME	QTY	SERIAL NO.	REMARKS
1	4154670	ELBOW FITTING	1		(SUB FOR A852322, P67984 OR THA852322)
	M800650	PACKING	1		(SUB FOR 957366)
19	A852122	ADAPTER	1		
	M800650	PACKING	1		(SUB FOR 957366)
20	A852422	TEE FITTING	1		
	M800650	PACKING	1		(SUB FOR 957366)
23	A852122	ADAPTER	1		
	M800650	PACKING	1		(SUB FOR 957366)
25	4442219	HYDRAULIC HOSE - FABRICATE	1		
26	4451993	HYDRAULIC HOSE - FABRICATE	1		
34	.....	HYDRAULIC HOSE	1		(9196443 NO LONGER AVAILABLE FOR SERVICE - ORDER INDIVIDUAL COMPONENTS)
34A	4436304	HYDRAULIC HOSE - FABRICATE	1		
34B	4327293	HOSE GUARD	3		

PILOT HYDRAULIC LINES (PILOT SIGNAL MANIFOLD TO TOP OF CONTROL VALVE)

T162172 -UN-23DEC02

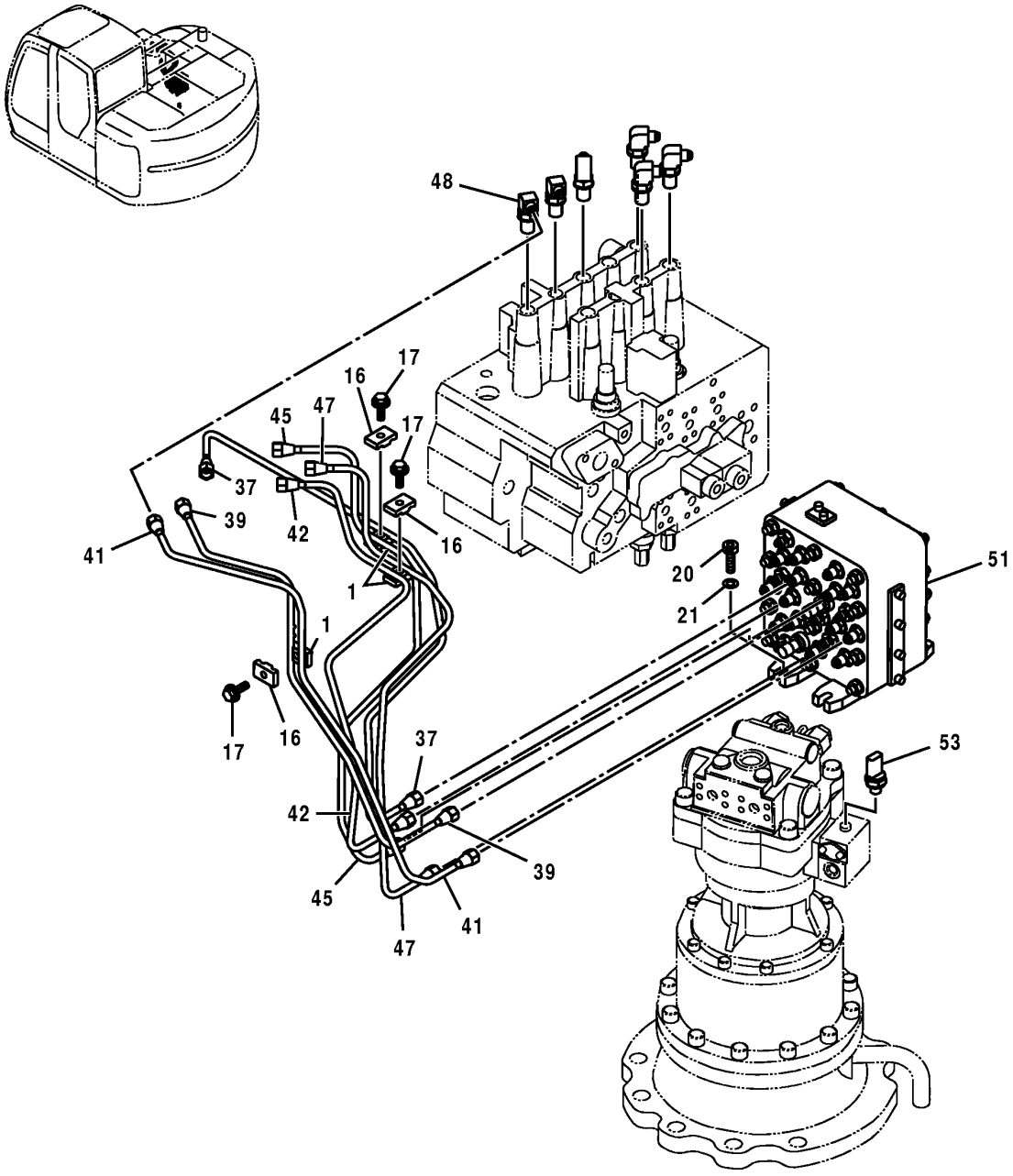

T162172

PILOT HYDRAULIC LINES (PILOT SIGNAL MANIFOLD TO TOP OF CONTROL VALVE)

KEY	PART NO.	PART NAME	QTY	SERIAL NO.	REMARKS
1	9735305	CLAMP	3		(SUB FOR AP33637)
16	9735306	CLAMP	3		(SUB FOR AP33638)
17	19M7163	CAP SCREW	3		M8 X 25, (SUB FOR J010825)
	12M7065	LOCK WASHER	3		8 MM
20	J781040	SCREW	4		
21	24M7028	WASHER	4		10.500 X 20 X 2 MM, (SUB FOR A590110)
37	3091817	OIL LINE	1		
39	3091819	OIL LINE	1		
41	3091821	OIL LINE	1		
42	3091822	OIL LINE	1		
45	3091825	OIL LINE	1		
47	3091827	OIL LINE	1		
48	4420392	FITTING	6		
	CH11570	O-RING	1		(SUB FOR 4509180)
51	4468336	FLOW CONTROL HYD. VALVE	1		(SUB FOR 4452625) (ALSO ORDER 4467088, A852123)
53	4436535	SENSOR	1		DIG AND SWING PRESSURE
54	4467088	HOSE	1		(NOT ILLUSTRATED)
55	A852123	ADAPTER	1		(NOT ILLUSTRATED)

PILOT HYDRAULIC LINES (PILOT SIGNAL MANIFOLD TO BOTTOM OF CONTROL VALVE)

T162173 -UN-26DEC02

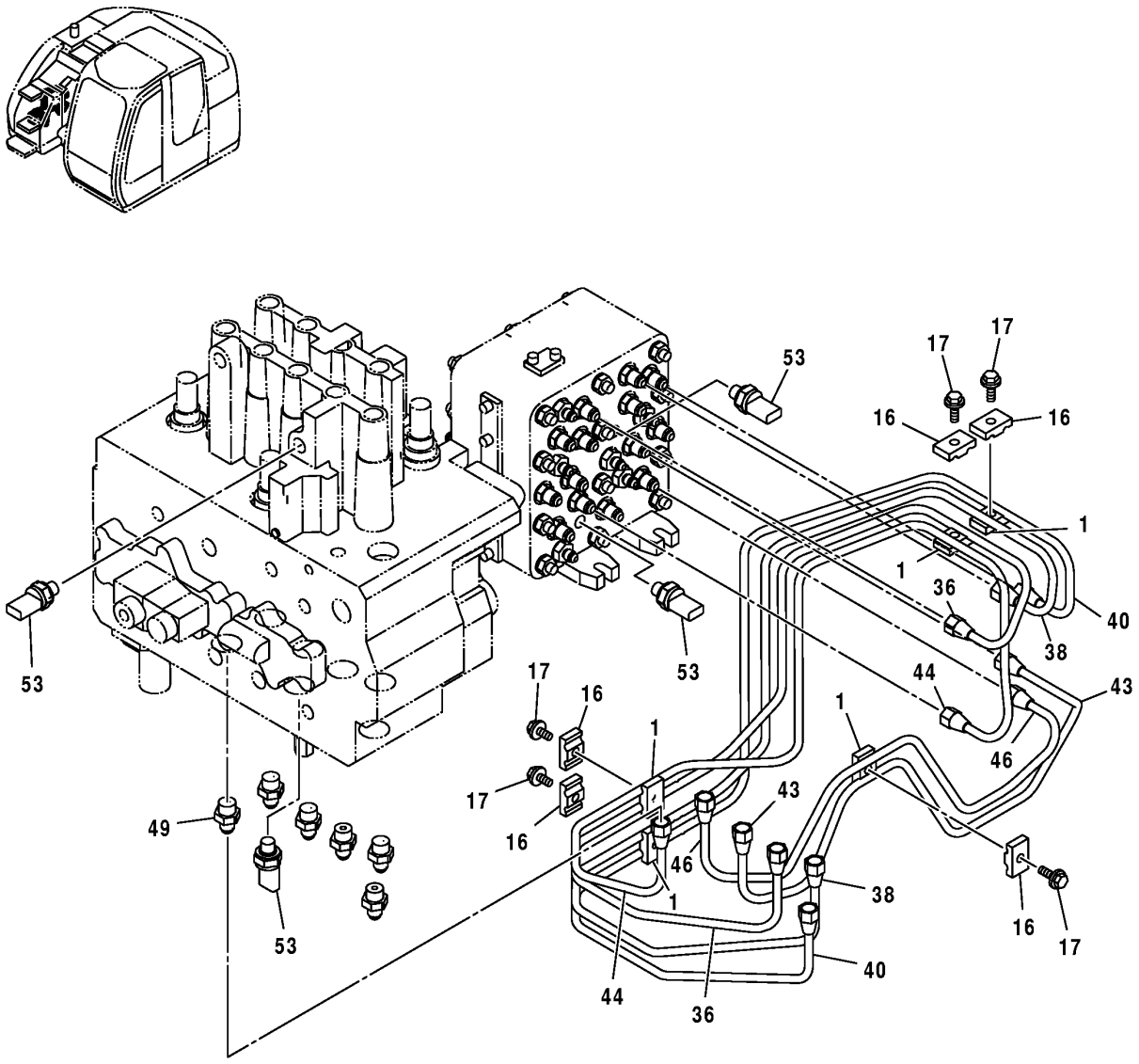

T162173

PILOT HYDRAULIC LINES (PILOT SIGNAL MANIFOLD TO BOTTOM OF CONTROL VALVE)

KEY	PART NO.	PART NAME	QTY	SERIAL NO.	REMARKS
1	9735305	CLAMP	5		(SUB FOR AP33637)
16	9735306	CLAMP	5		(SUB FOR AP33638)
17	19M7163	CAP SCREW	5		M8 X 25, (SUB FOR J010825)
	12M7065	LOCK WASHER	5		8 MM
36	3091816	OIL LINE	1		
38	3091818	OIL LINE	1		
40	3091820	OIL LINE	1		
43	3091823	OIL LINE	1		
44	3091824	OIL LINE	1		
46	3091826	OIL LINE	1		
49	4255305	ADAPTER	6		
	CH11570	O-RING	1		(SUB FOR 4509180)
53	4436535	SENSOR	4		ARM IN PRESSURE
	4436535	SENSOR	1		BOOM UP PRESSURE
	4436535	SENSOR	1		PROPEL PRESSURE
	4436535	SENSOR	1		SWING PRESSURE

PILOT HYDRAULIC LINES (PILOT SIGNAL MANIFOLD)

T162177 -UN-03JAN03

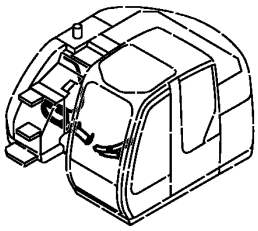

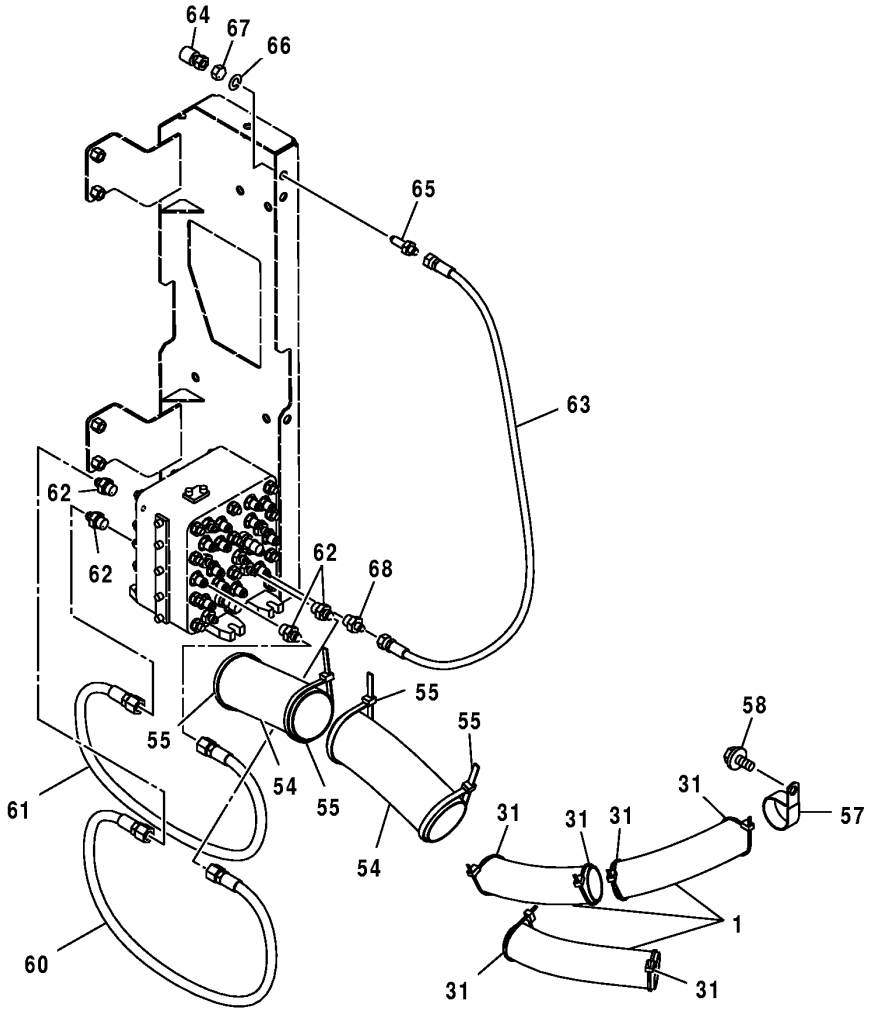

T162177

PILOT HYDRAULIC LINES (PILOT SIGNAL MANIFOLD)

KEY	PART NO.	PART NAME	QTY	SERIAL NO.	REMARKS
1	4219918	BUSHING	3		
31	H77698	TIE BAND	6		
54	4453084	GROMMET	2		
55	H77698	TIE BAND	4		
57	4190265	CLIP	1		
58	19M7938	CAP SCREW	1		M10 X 20, (SUB FOR J011020)
	12M7066	LOCK WASHER	1		10 MM
60	4455995	HYDRAULIC HOSE - FABRICATE	1		
61	4455994	HYDRAULIC HOSE - FABRICATE	1		
62	A852133	ADAPTER	4		
	CH11570	O-RING	1		(SUB FOR 4509180)
63	4457402	HYDRAULIC HOSE - FABRICATE	1		
64	4177307	UNION FITTING	1		
65	4248117	ADAPTER	1		
66	12H301	LOCK WASHER	1		1/2", (SUB FOR A590912)
67	14H1047	NUT	1		7/16", (SUB FOR 4209198)
68	A852132	ADAPTER	1		
	CH11570	O-RING	1		(SUB FOR 4509180)

PILOT HYDRAULIC LINES (PILOT SIGNAL MANIFOLD TO PROPEL VALVE)

T162178 -UN-26DEC02

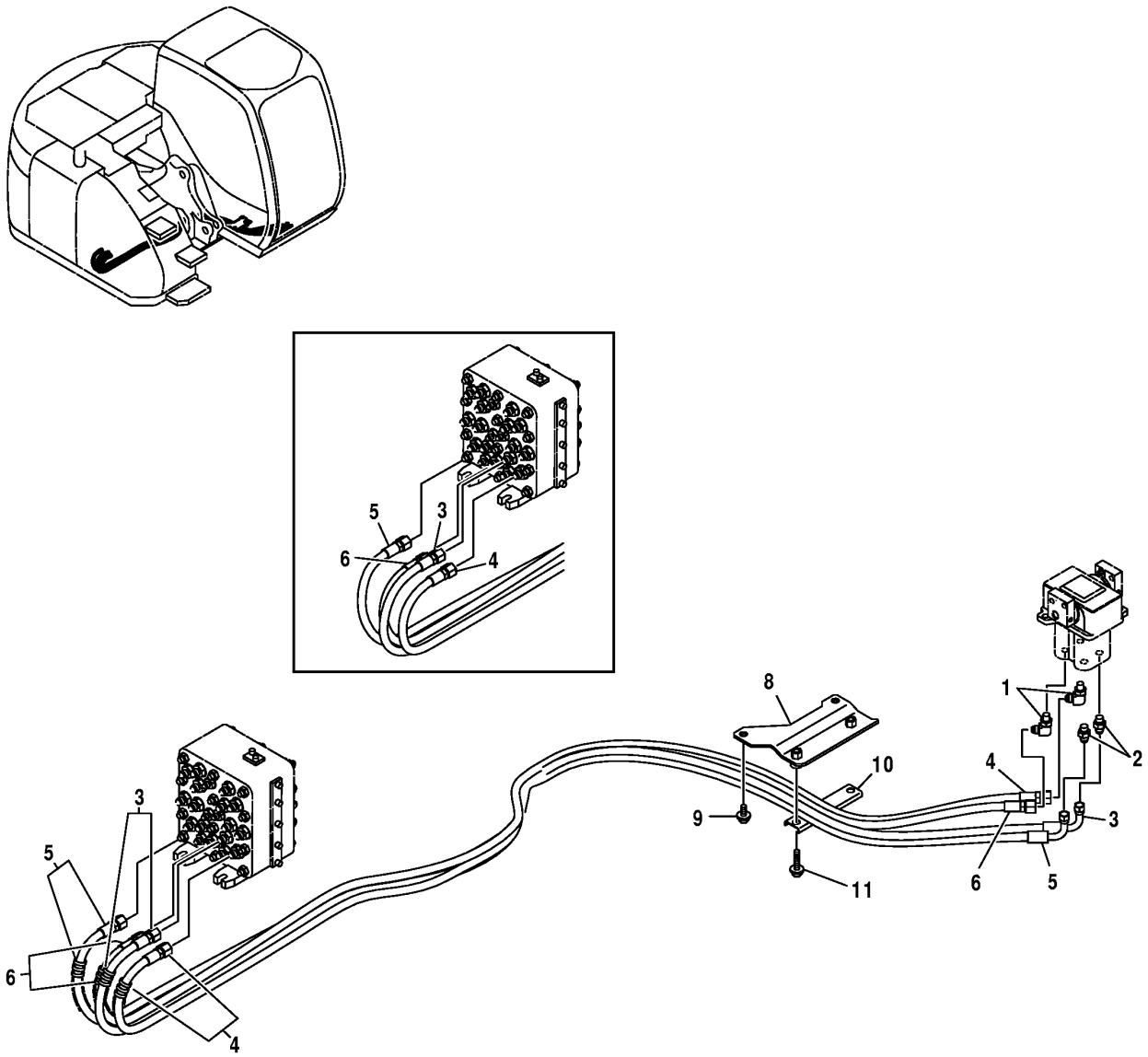

T162178

PILOT HYDRAULIC LINES (PILOT SIGNAL MANIFOLD TO PROPEL VALVE)

KEY	PART NO.	PART NAME	QTY	SERIAL NO.	REMARKS
1	A852323	ELBOW FITTING	2		
	M800650	PACKING	1		(SUB FOR 957366)
2	A852123	ADAPTER	2		
	M800650	PACKING	1		(SUB FOR 957366)
3	4448768	HYDRAULIC HOSE - FABRICATE	1		
	4327293	HOSE GUARD	1		
4	4448759	HYDRAULIC HOSE - FABRICATE	1		
	4327293	HOSE GUARD	1		
5	4451814	HYDRAULIC HOSE - FABRICATE	1		
	4327293	HOSE GUARD	1		
6	4447441	HOSE	1		(SUB FOR 4448758)
	4327293	HOSE GUARD	1		
8	8083070	BRACKET	1		
9	19M7402	CAP SCREW	2		M10 X 25, (SUB FOR J021025)
	12M7066	LOCK WASHER	2		10 MM
	24M7028	WASHER	2		10.500 X 20 X 2 MM
10	4412666	CLAMP	1		
11	19M7835	SCREW	2		M10 X 35, (SUB FOR J021040)

PILOT LINES (PROPEL PILOT VALVE TO PILOT SHUTOFF VALVE)

T162208 -UN-12DEC02

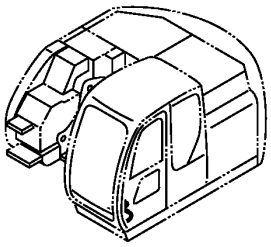

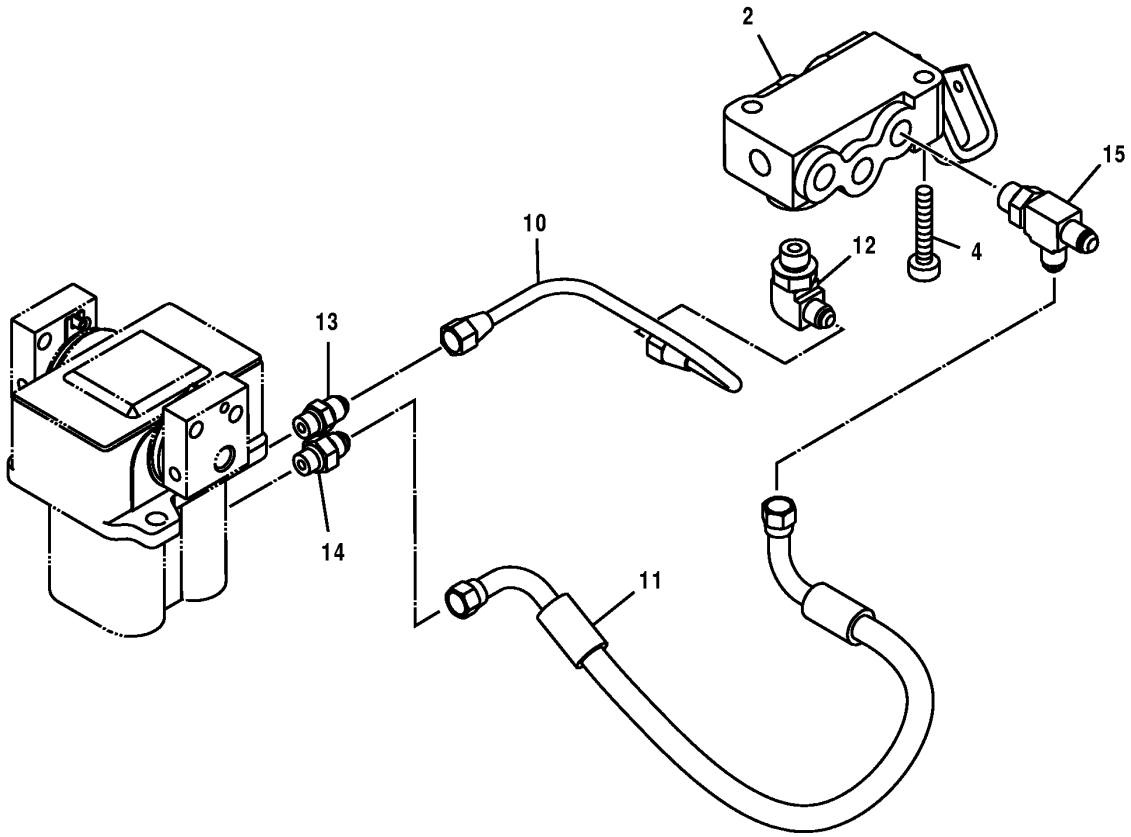

T162208

PILOT LINES (PROPEL PILOT VALVE TO PILOT SHUTOFF VALVE)

KEY	PART NO.	PART NAME	QTY	SERIAL NO.	REMARKS
2	4462892	FLOW CONTROL HYD. VALVE	1		(SUB FOR 4451909)
4	J781045	SCREW	2		
10	4447700	OIL LINE	1		
11	4455156	HYDRAULIC HOSE - FABRICATE	1		
12	4349712	ELBOW FITTING	1		
	CH11570	O-RING	1		
13	4255304	ADAPTER	1		
	M800650	PACKING	1		
14	A852123	ADAPTER	1		
	M800650	PACKING	1		
15	4367031	FILTER	1		
	CH11570	O-RING	1		

PILOT HYDRAULIC LINES (PILOT SIGNAL MANIFOLD TO PILOT CONTROLLER)

T162182 -UN-26DEC02

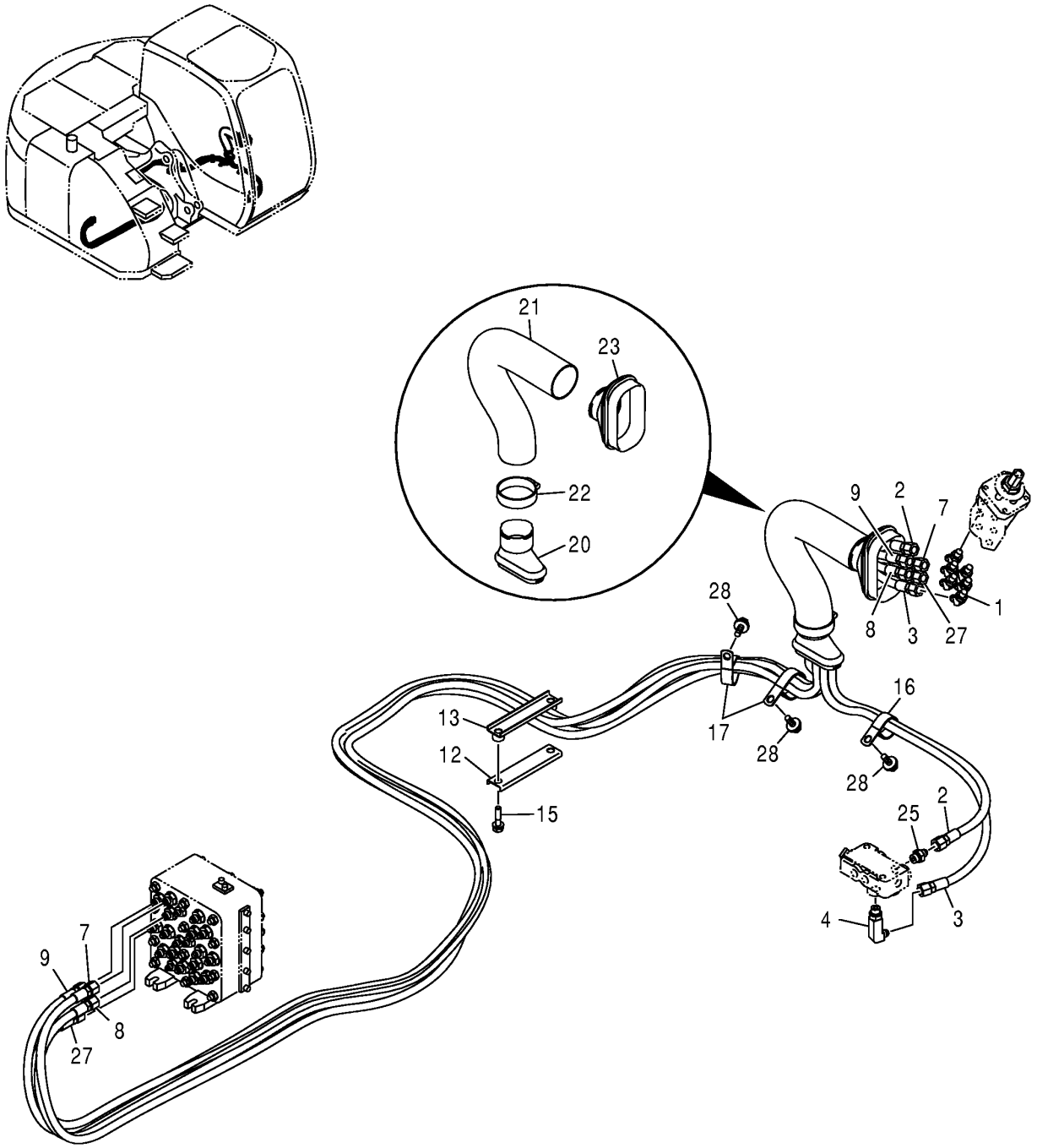

T162182

PILOT HYDRAULIC LINES (PILOT SIGNAL MANIFOLD TO PILOT CONTROLLER)

KEY	PART NO.	PART NAME	QTY	SERIAL NO.	REMARKS
1	A852223	ELBOW FITTING	6		
	M800650	PACKING	1		(SUB FOR 957366)
2	4437095	HYDRAULIC HOSE - FABRICATE	1		
3	4437096	HYDRAULIC HOSE - FABRICATE	1		
4	4277650	ELBOW FITTING	1		
	CH11570	O-RING	1		(SUB FOR 4509180)
7	4436312	HYDRAULIC HOSE - FABRICATE	1		
8	4436313	HYDRAULIC HOSE - FABRICATE	1		
9	4436314	HYDRAULIC HOSE - FABRICATE	1		
12	4412666	CLAMP	1		
13	9751787	CLAMP	1		
15	19M8162	SCREW	2		M10 X 40, (SUB FOR J021045)
16	4193848	CLIP	1		(SUB FOR AT131725)
17	4190265	CLIP	2		
20	2046296	BUSHING	1		
21	.....	HOSE	1		(IF AVAILABLE ORDER 4351175)
22	4351774	CLAMP	1		
23	2045998	BUSHING	1		
25	4261938	FITTING	1		
	CH11570	O-RING	1		(SUB FOR 4509180)
27	4448918	HYDRAULIC HOSE - FABRICATE	1		
28	19M7938	CAP SCREW	3		M10 X 20
	12M7066	LOCK WASHER	3		10 MM

PILOT HYDRAULIC LINES (PILOT SIGNAL MANIFOLD TO PILOT CONTROLLER)

T162183 -UN-23JAN03

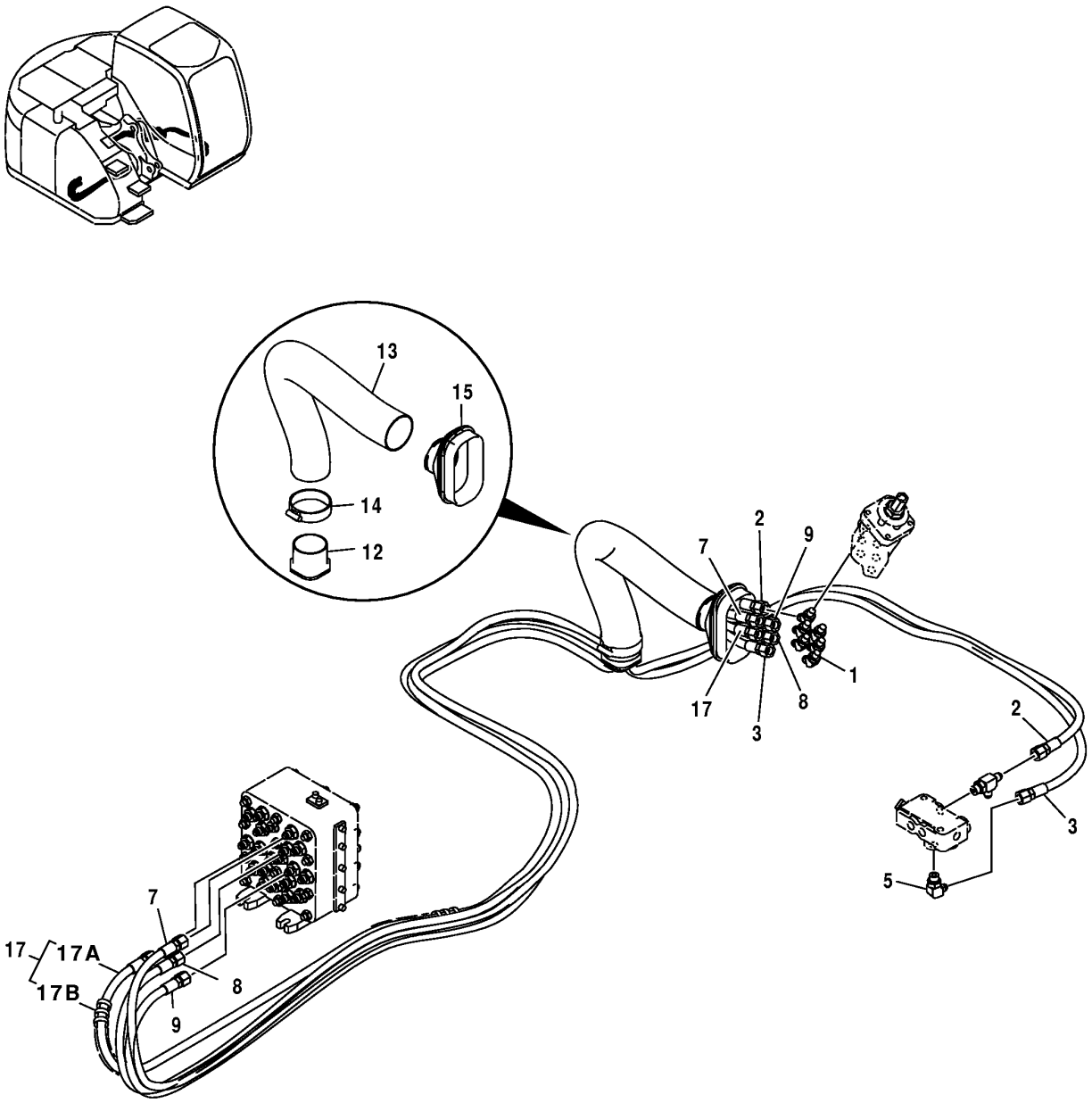

T162183

PILOT HYDRAULIC LINES (PILOT SIGNAL MANIFOLD TO PILOT CONTROLLER)

KEY	PART NO.	PART NAME	QTY	SERIAL NO.	REMARKS
1	A852223	ELBOW FITTING	6		
	M800650	PACKING	1		(SUB FOR 957366)
2	4437093	HYDRAULIC HOSE - FABRICATE	1		
3	4437094	HYDRAULIC HOSE - FABRICATE	1		
5	A852333	ELBOW FITTING	1		
	CH11570	O-RING	1		(SUB FOR 4509180)
7	4436316	HYDRAULIC HOSE - FABRICATE	1		
8	4436317	HYDRAULIC HOSE - FABRICATE	1		
9	4436319	HYDRAULIC HOSE - FABRICATE	1		
12	3079728	BUSHING	1		
13	4379665	HYDRAULIC HOSE	1		
14	4351774	CLAMP	1		
15	2045998	BUSHING	1		
17	.....	HYDRAULIC HOSE	1		(9205129 NO LONGER AVAILABLE FOR SERVICE - ORDER INDIVIDUAL COMPONENTS)
17A	4457353	HYDRAULIC HOSE - FABRICATE	1		
17B	4327293	HOSE GUARD	2		

**PILOT HYDRAULIC LINES (PILOT SIGNAL MANIFOLD TO TANK)
(SOLENOID VALVE TO TANK) (PILOT REGULATING VALVE TO TANK)**

T162184 -UN-26DEC02

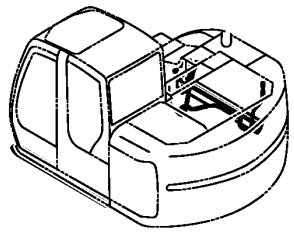

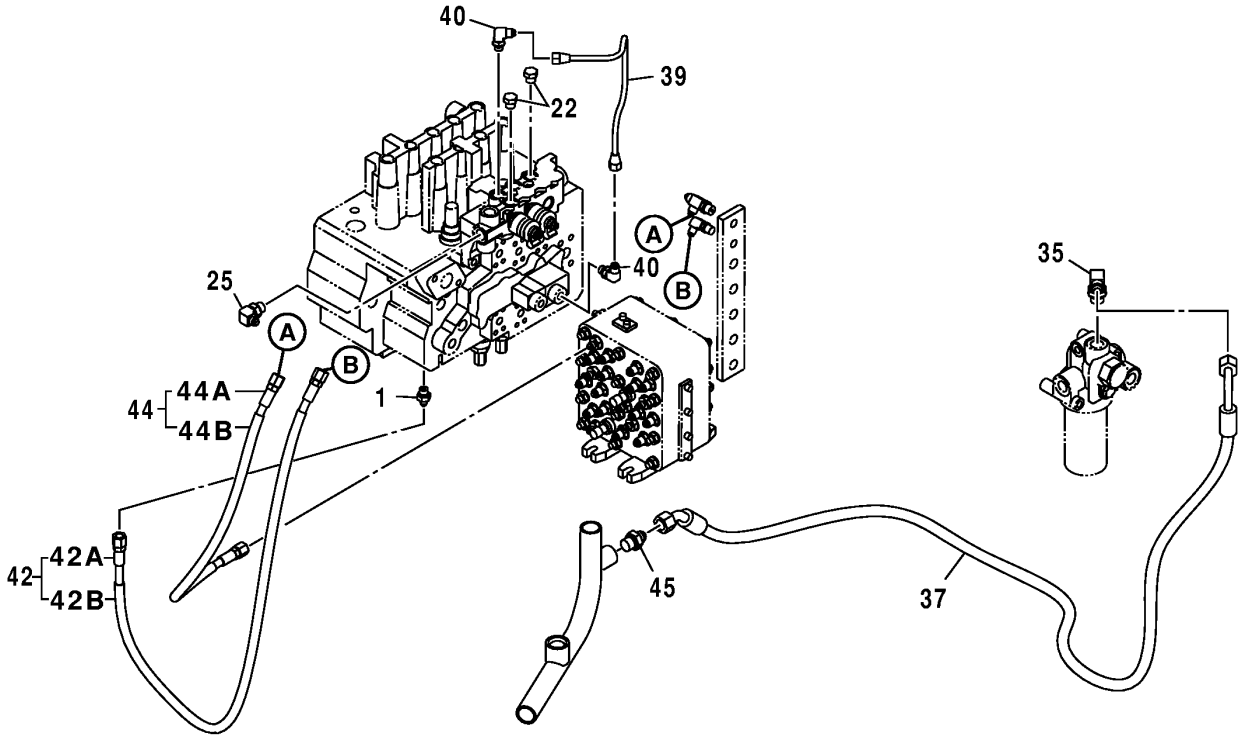

T162184

**PILOT HYDRAULIC LINES (PILOT SIGNAL MANIFOLD TO TANK)
(SOLENOID VALVE TO TANK) (PILOT REGULATING VALVE TO TANK)**

KEY	PART NO.	PART NAME	QTY	SERIAL NO.	REMARKS
1	A852122	ADAPTER	1		
	M800650	PACKING	1		(SUB FOR 957366)
22	A885002	PIPE PLUG	2		
	M800650	PACKING	2		(SUB FOR 957366)
25	A852333	ELBOW FITTING	1		
	CH11570	O-RING	1		(SUB FOR 4509180)
35	A852344	ELBOW FITTING	1		
	4506418	O-RING	1		
37	4451999	HYDRAULIC HOSE - FABRICATE	1		
39	4452393	PIPE	1		
40	4293950	ELBOW FITTING	2		
	M800650	PACKING	1		(SUB FOR 957366)
42	.....	HYDRAULIC HOSE	1		(9201837 NO LONGER AVAILABLE FOR SERVICE - ORDER INDIVIDUAL COMPONENTS)
42A	4436435	HYDRAULIC HOSE - FABRICATE	1		
42B	4327293	HOSE GUARD	2		
44	.....	HYDRAULIC HOSE	1		(9203267 NO LONGER AVAILABLE FOR SERVICE - ORDER INDIVIDUAL COMPONENTS)
44A	4457440	HYDRAULIC HOSE - FABRICATE	1		
44B	4327293	HOSE GUARD	2		
45	A852144	ADAPTER	1		
	4506418	O-RING	1		

PILOT HYDRAULIC LINES (PILOT SIGNAL MANIFOLD TO TANK) (CONTROL VALVE TO TANK)

T162187 -UN-26DEC02

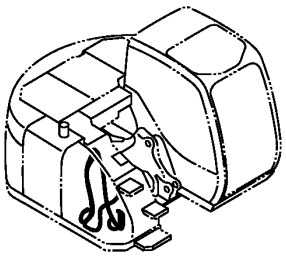

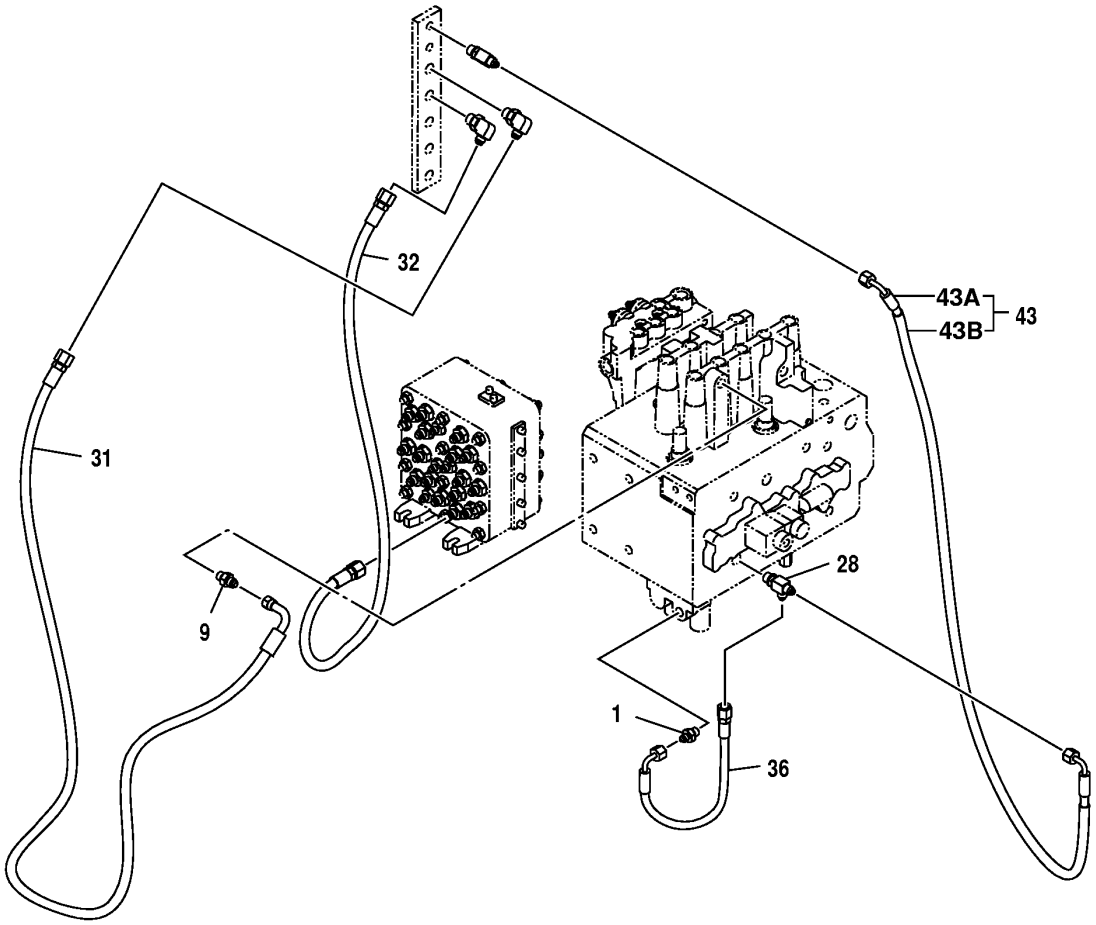

T162187

PILOT HYDRAULIC LINES (PILOT SIGNAL MANIFOLD TO TANK) (CONTROL VALVE TO TANK)

KEY	PART NO.	PART NAME	QTY	SERIAL NO.	REMARKS
1	A852122	ADAPTER	1		
	M800650	PACKING	1		(SUB FOR 957366)
9	A852123	ADAPTER	1		
	M800650	PACKING	1		(SUB FOR 957366)
28	A852422	TEE FITTING	1		
	M800650	PACKING	1		(SUB FOR 957366)
31	4448750	HYDRAULIC HOSE - FABRICATE	1		
32	4448751	HYDRAULIC HOSE - FABRICATE	1		
36	4442219	HYDRAULIC HOSE - FABRICATE	1		
43	.....	HYDRAULIC HOSE	1		(9201839 NO LONGER AVAILABLE FOR SERVICE - ORDER INDIVIDUAL COMPONENTS)
43A	4436721	HYDRAULIC HOSE - FABRICATE	1		
43B	4327293	HOSE GUARD	3		

PILOT HYDRAULIC LINES (PILOT SIGNAL MANIFOLD TO SOLENOID)

T162191 -UN-26DEC02

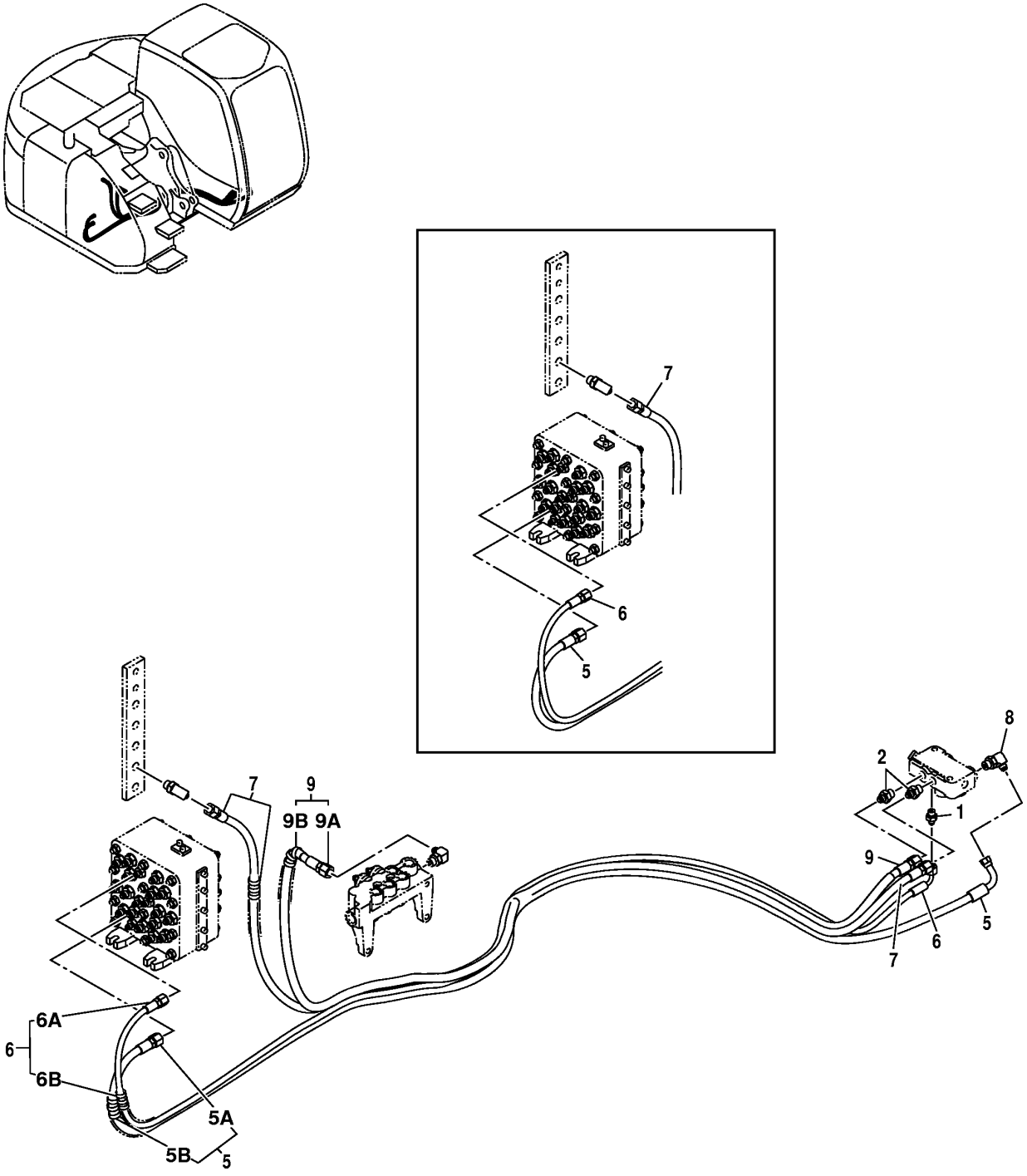

T162191

PILOT HYDRAULIC LINES (PILOT SIGNAL MANIFOLD TO SOLENOID)

KEY	PART NO.	PART NAME	QTY	SERIAL NO.	REMARKS
1	A852122	ADAPTER	1		
	M800650	PACKING	1		(SUB FOR 957366)
2	A852133	ADAPTER	2		
	CH11570	O-RING	2		(SUB FOR 4509180)
5	.....	HYDRAULIC HOSE	1		
5A	4448765	HYDRAULIC HOSE - FABRICATE	1		
5B	4327293	HOSE GUARD	1		
6	.....	HYDRAULIC HOSE	1		
6A	4451813	HYDRAULIC HOSE - FABRICATE	1		
6B	4327293	HOSE GUARD	1		
7	4455183	HYDRAULIC HOSE	1		
	4327293	HOSE GUARD	1		
8	A852333	ELBOW FITTING	1		
	CH11570	O-RING	1		(SUB FOR 4509180)
9	.....	HYDRAULIC HOSE	1		(9203266 NO LONGER AVAILABLE FOR SERVICE - ORDER INDIVIDUAL COMPONENTS)
9A	4448756	HYDRAULIC HOSE - FABRICATE	1		
9B	4327293	HOSE GUARD	4		

FRONT HYDRAULIC LINES

T162583 -UN-15JAN03

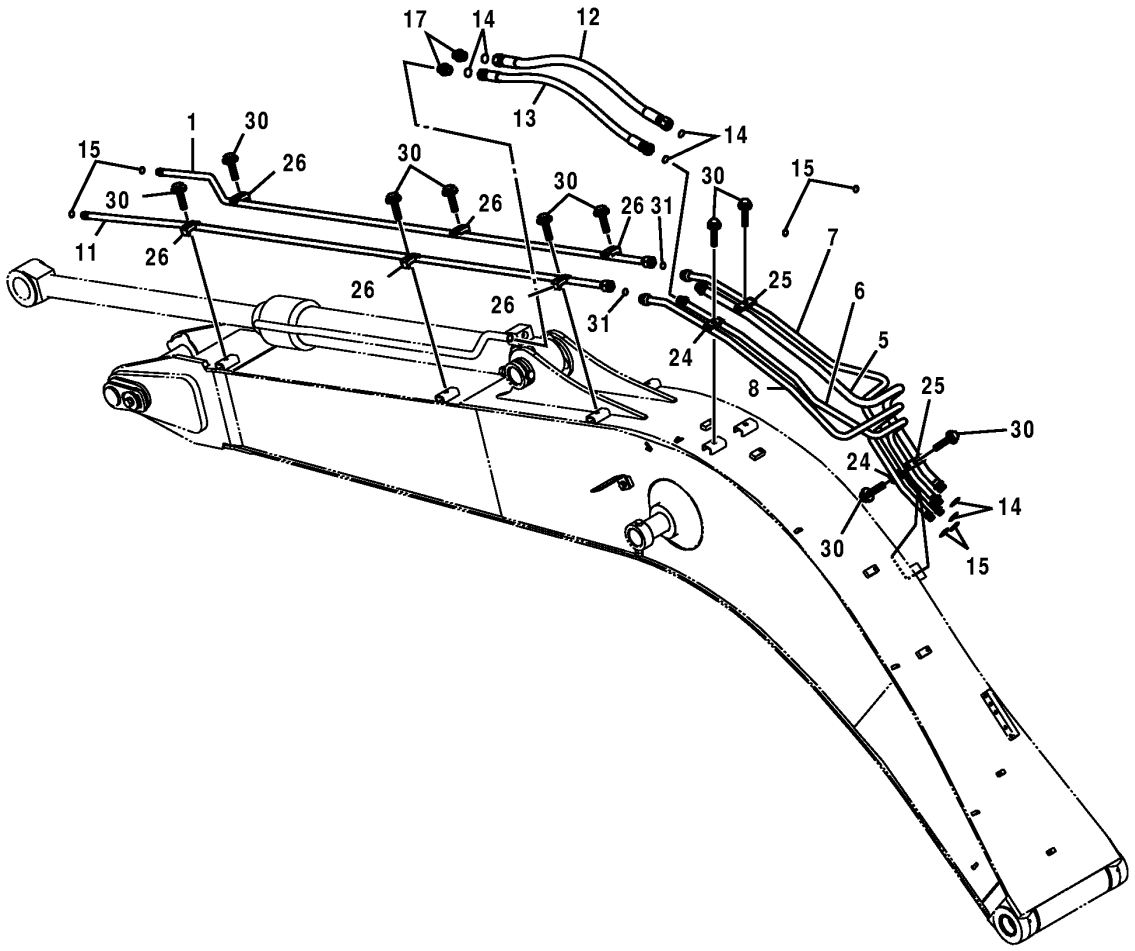

T162583

FRONT HYDRAULIC LINES

KEY	PART NO.	PART NAME	QTY	SERIAL NO.	REMARKS
1	8081210	OIL LINE	1		
5	8080318	OIL LINE	1		
6	8080319	OIL LINE	1		
7	8080316	OIL LINE	1		
8	8080317	OIL LINE	1		
11	8082947	OIL LINE	1		
12	4260127	HYDRAULIC HOSE - FABRICATE	1		(SUB FOR AT131297)
13	4259322	HYDRAULIC HOSE - FABRICATE	1		
14	T77858	O-RING	6		
15	T77857	O-RING	4		
17	A853166	ADAPTER	2		
	4506424	O-RING	2		
24	4189858	CLAMP	2		
25	4141806	CLAMP	2		
26	4190125	CLAMP	6		
30	19M7362	CAP SCREW	10		M12 X 55, (SUB FOR J011255)
	12H301	LOCK WASHER	10		1/2"
31	T77858	O-RING	2		

AUXILIARY HYDRAULIC HOSES (BASE AUX KIT)

T198887 -UN-07APR04

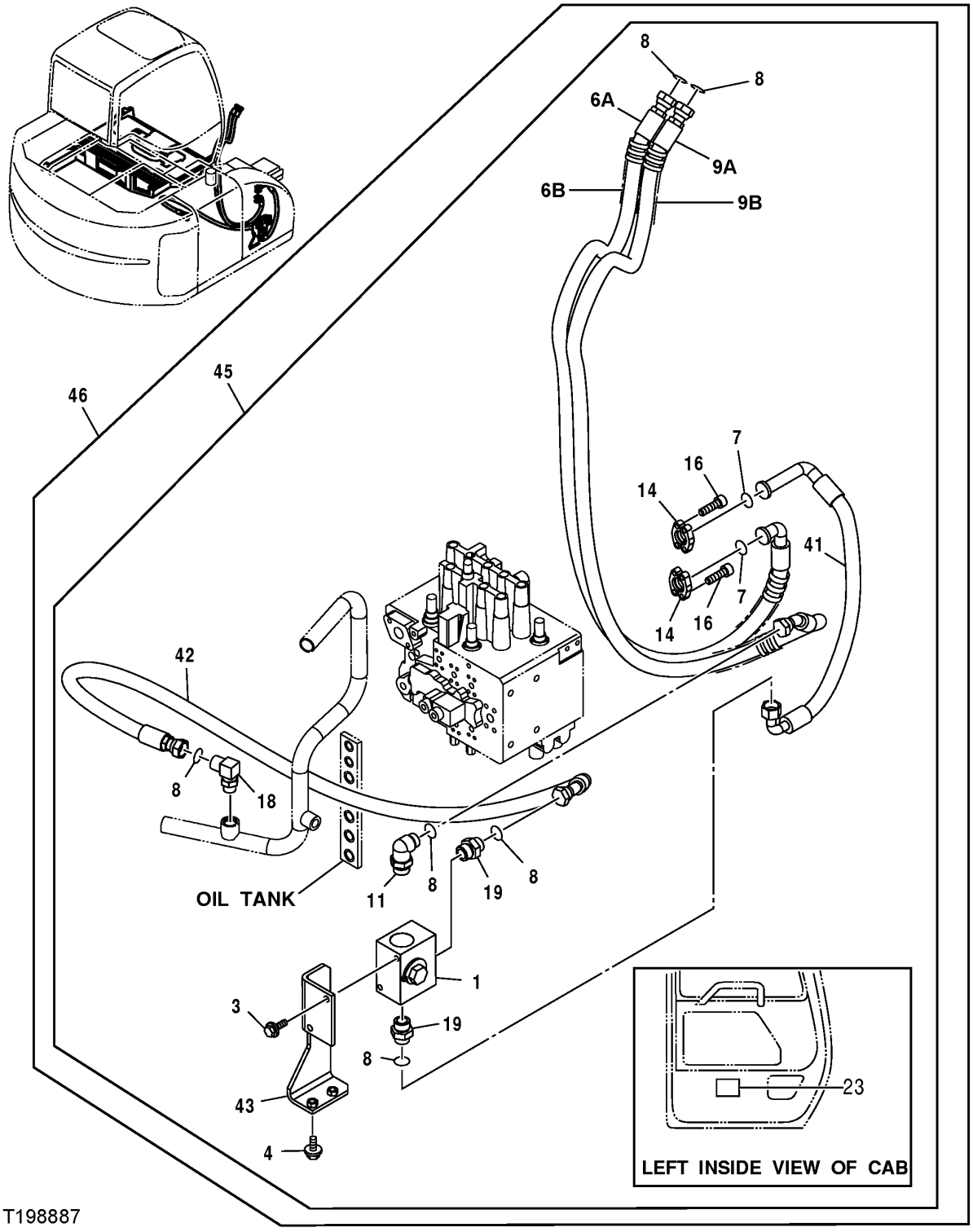

AUXILIARY HYDRAULIC HOSES (BASE AUX KIT)

KEY	PART NO.	PART NAME	QTY	SERIAL NO.	REMARKS
1	4455599	MANIFOLD	1		
3	19M8011	CAP SCREW	2		
	12M7067	LOCK WASHER	2		
4	19M7403	CAP SCREW	2		
	12H301	LOCK WASHER	2		
6A	4463135	HOSE	1		(SUB FOR 9206961, ALONG WITH (4) 4327294)
6B	4327294	HOSE GUARD	4		
7	T59014	O-RING	2		
8	T77858	O-RING	6		
9A	4463134	HOSE	1		(SUB FOR 9206960 ALONG WITH (5) 4327294)
9B	4327294	HOSE GUARD	5		
11	A853386	ELBOW FITTING	1		
14	Z986910	FLANGE FITTING	4		
16	J781030	SCREW	8		
18	A853366	ELBOW FITTING	1		
19	A853186	ADAPTER	2		
23	4245758	PLATE	1		
41	4461963	HYDRAULIC HOSE	1		
42	4461966	HYDRAULIC HOSE - FABRICATE	1		
43	8085618	BRACKET	1		
45	.....	KIT	1		(9199386 NO LONGER AVAILABLE)
46	**AT302700**	**FIELD INSTALLATION KIT**	**1**		**(ALSO INCLUDES FOLLOWING PAGES OF AUXILIARY HYDRAULIC LINES) (FOR MACHINES WITH LONG ARM (3.01M), ALSO ORDER (2) AT305719 HOSES)**

AUXILIARY HYDRAULIC LINES (BOOM LINES)

T190219 -UN-07MAY03

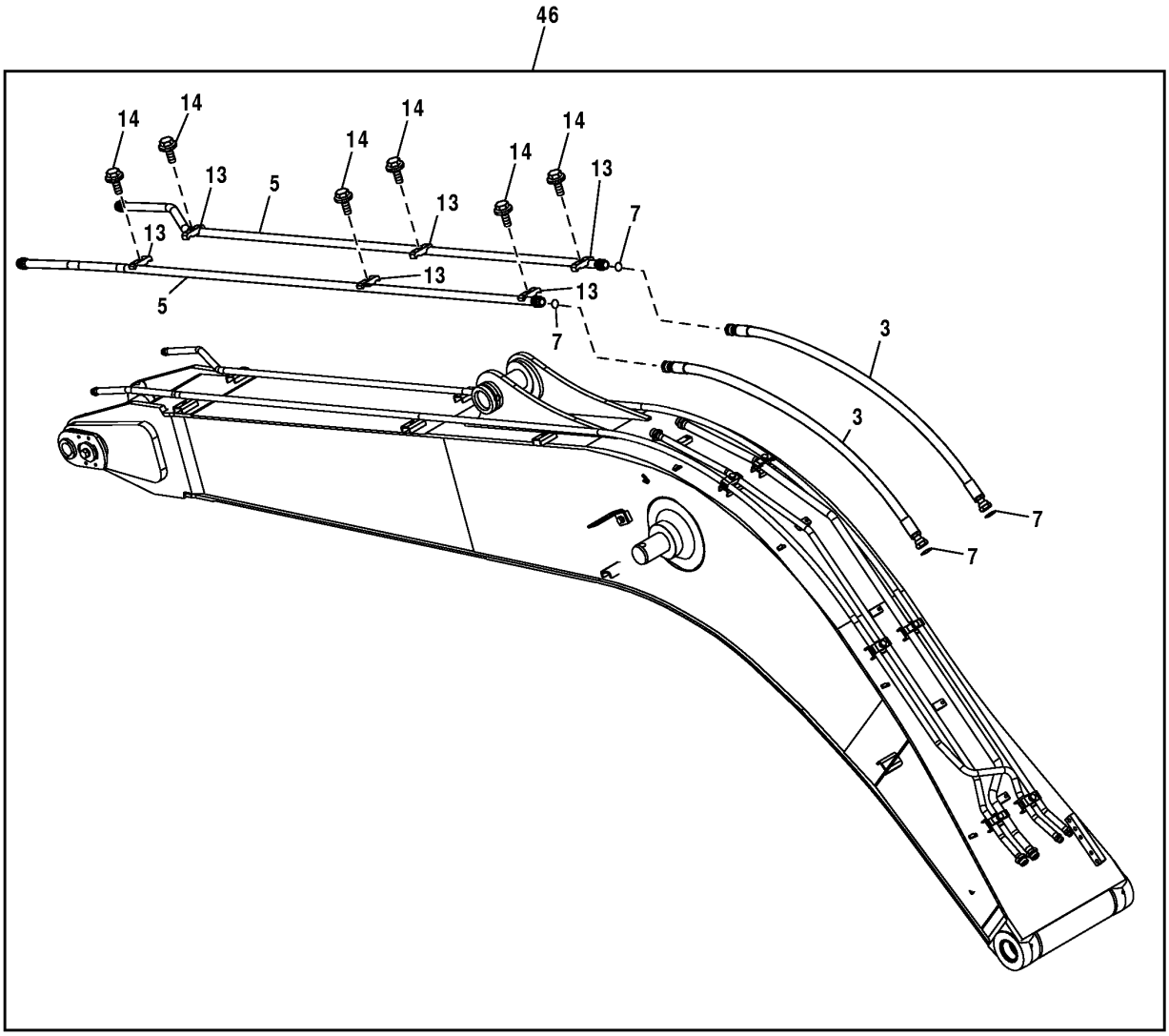

T190219

AUXILIARY HYDRAULIC LINES (BOOM LINES)

KEY	PART NO.	PART NAME	QTY	SERIAL NO.	REMARKS
3	AT302876	HYDRAULIC HOSE - FABRICATE	2		
5	AT160159	OIL TUBE	2		
7	T77858	O-RING	2		
13	4141806	CLAMP	6		
14	19M7363	CAP SCREW	6		
46	**AT302700**	**KIT**	**1**		**(AUXILIARY HYDRAULIC LINE KIT)(INCLUDES ITEMS ON PREVIOUS AND FOLLOWING PAGES) (FOR MACHINES WITH LONG ARM (3.01M), ALSO ORDER (2) AT305719 HOSES)**

AUXILIARY HYDRAULIC LINES (ARM LINES)

T191190 -UN-22MAY03

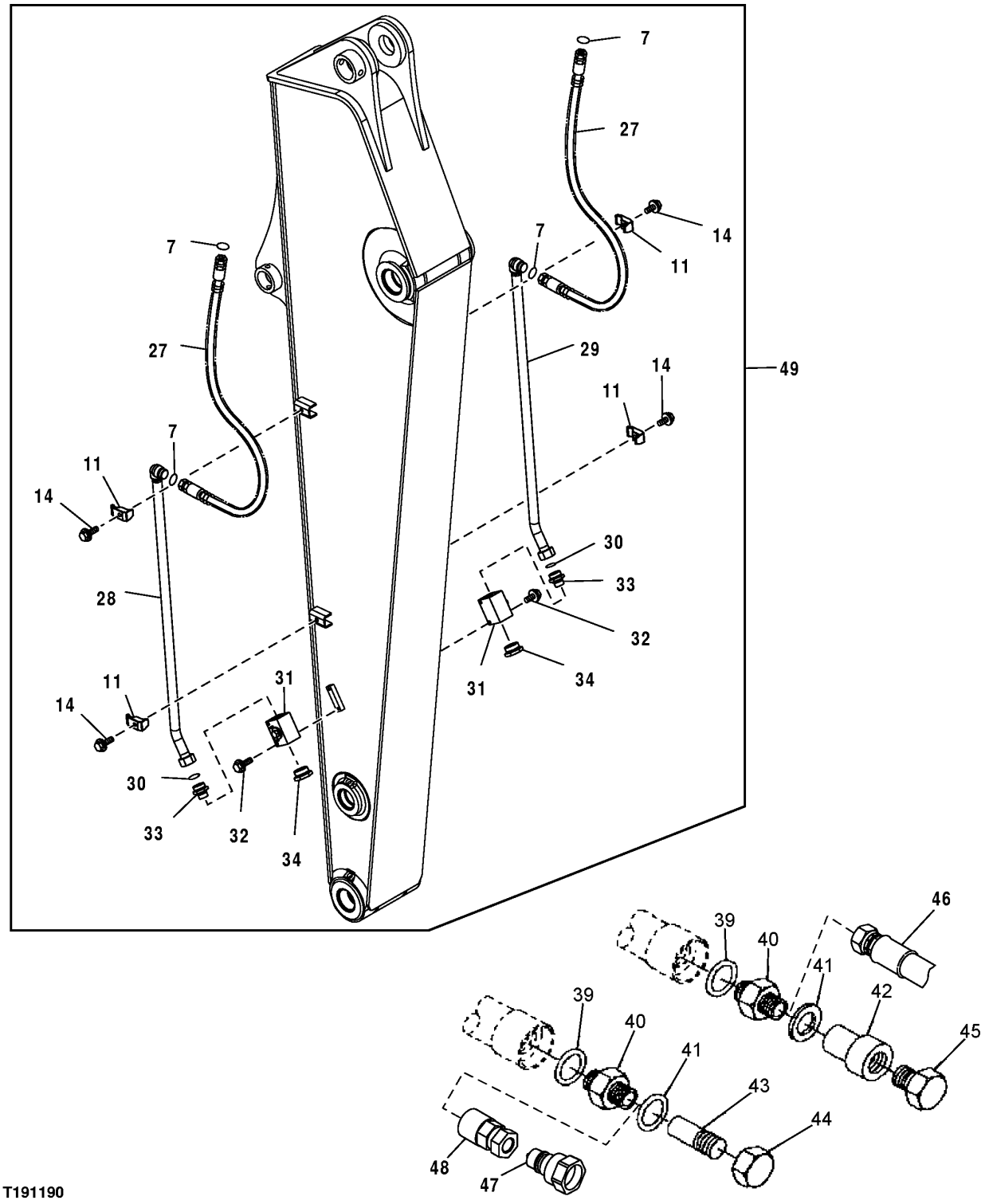

T191190

AUXILIARY HYDRAULIC LINES (ARM LINES)

KEY	PART NO.	PART NAME	QTY	SERIAL NO.	REMARKS
7	T77858	O-RING	2		
11	4190126	CLAMP	4		
13	4141806	CLAMP	6		
14	19M7363	CAP SCREW	6		
27	AT176051	HYDRAULIC HOSE	2		(SUB FOR AT302877)
28	8083834	PIPE	1		
29	8084096	PIPE	1		
30	T76938	O-RING	2		
31	4600164	CHECK VALVE	2		
33	A853188	ADAPTER	2		
34	4113926	DRAIN PLUG	2		
39	TH101926	O-RING	2		
40	4189535	ADAPTER	2		(1" ORFS)
	4189537	ADAPTER	2		(3/4" ORFS)
	AT301151	FITTING	2		(1" SAE, MALE)
	X12-16F4OMXS	ADAPTER	2		(3/4", 37 DEGREE)
	X16F4OMXS	ADAPTER	2		(1" 37 DEGREE)
	AT305641	FITTING	2		(3/4" SAE, MALE)
41	R29936	O-RING	2		
42	AT186111	QUICK COUPLER	1		(1" FEMALE)(SCREW TOGETHER COUPLER)
	.....	KIT	1		(AT189410 NO LONGER AVAILABLE)
43	AT186112	QUICK COUPLER	1		(1" MALE)(SCREW TOGETHER COUPLER)
	.....	KIT	1		(AT189409 NO LONGER AVAILABLE)
44	AT186113	CAP	1		
45	AT186114	PLUG	1		
46	X1JS78-20-16	HOSE FITTING	2		HOSE END - STRAIGHT - 1 1/4 X 1 IN
	X1J978-20-16	ELBOW FITTING	2		HOSE END - 90 DEG 1 1/4 X 1 IN
47	AT117365	HYDR.QUICK COUPLER PLUG	2		MALE QUICK COUPLER (-12) 1 1/16 SAE O-RING
	AT120498	COUPLING	2		MALE QUICK COUPLER (-16) 1 5/16 SAE O-RING
48	AT117364	HYDR.QUICK COUPLER SOCKET	2		FEMALE QUICK COUPLER (-12) 1 1/16 SAE O-RING
	AT120499	COUPLING	2		FEMALE QUICK COUPLER (-16) 1 5/16 SAE O-RING
49	**AT302700**	**KIT**	**1**		**(AUXILIARY HYDRAULIC LINE KIT)(ADDITIONAL COMPONENTS ON PREVIOUS PAGES) (FOR MACHINES WITH LONG ARM (3.01M), ALSO ORDER (2) AT305719 HOSES)**

ARM ANTI-DRIFT KIT

T192468 -UN-02JUL03

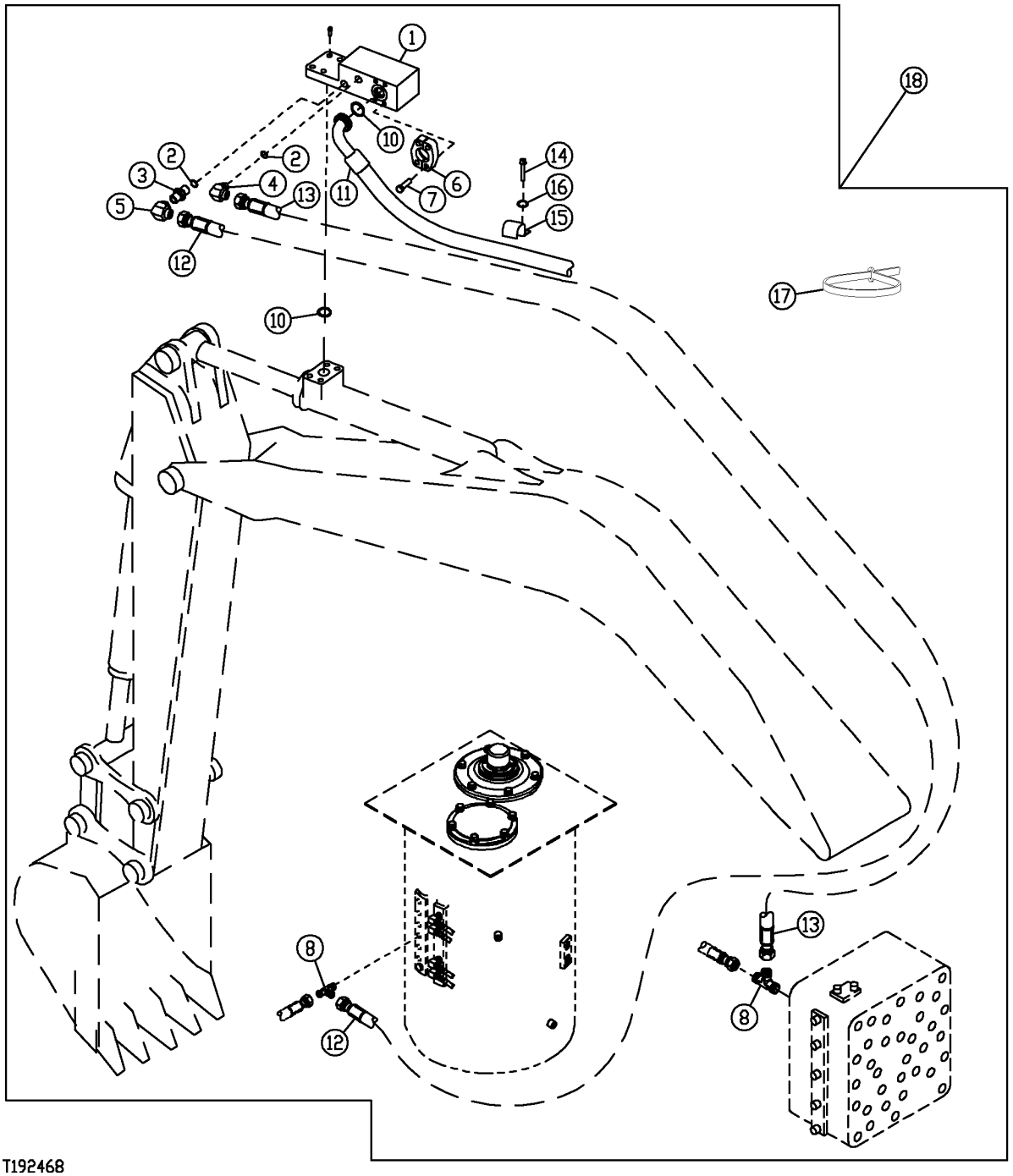

ARM ANTI-DRIFT KIT

KEY	PART NO.	PART NAME	QTY	SERIAL NO.	REMARKS
1	AT303703	CHECK VALVE	1		
2	AT300313	SEALING RING	2		
3	X6F4OMXS	ADAPTER	1		
4	X6C4OMXS	ELBOW FITTING	1		
5	AE24616	ELBOW FITTING	1		
6	T107446	FLANGE FITTING	2		
7	19M8395	SCREW	4		
8	AT36921	TEE FITTING	2		
10	T72888	O-RING	2		
11	AT303666	HYDRAULIC HOSE - FABRICATE	1		
12	AT303668	HYDRAULIC HOSE - FABRICATE	1		
13	AT303667	HYDRAULIC HOSE - FABRICATE	1		
14	19M7872	CAP SCREW	1		
15	T126057	CLAMP	1		
16	24M7044	WASHER	1		
17	H77698	TIE BAND	20		
18	**AT303665**	**KIT**	**1**		**ARM ANTI-DRIFT KIT (ALSO ORDER AT303666. NOT INCLUDED IN KIT)**

BOOM ANTI-DRIFT KIT

T191664 -UN-16JUN03

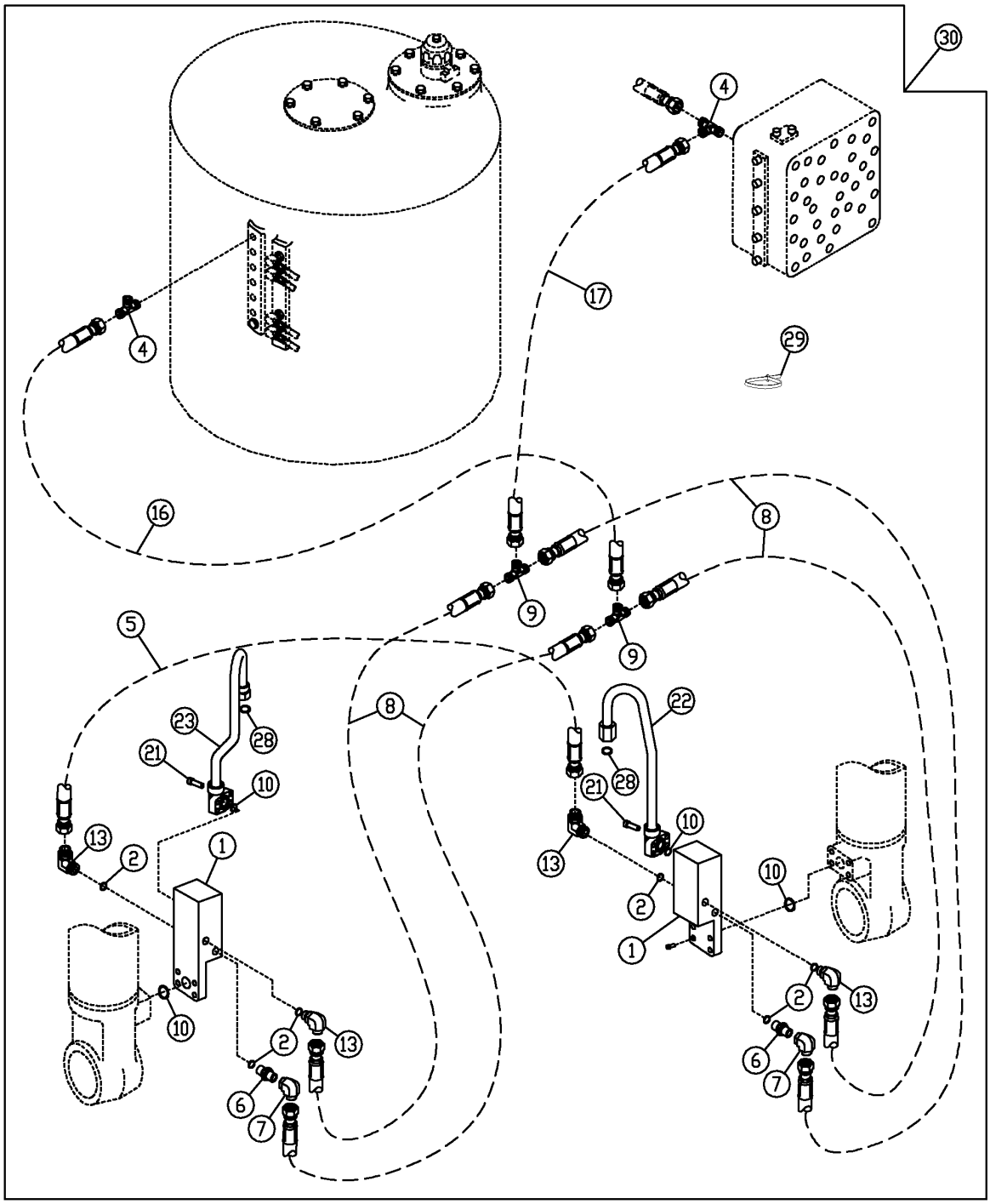

T191664

BOOM ANTI-DRIFT KIT

KEY	PART NO.	PART NAME	QTY	SERIAL NO.	REMARKS
1	AT303955	CHECK VALVE	2		
2	AT300313	SEALING RING	6		
4	AT36921	TEE FITTING	2		
5	AT300337	HYDRAULIC HOSE - FABRICATE	1		
6	X6F4OMXS	ADAPTER	2		
7	AE24616	ELBOW FITTING	2		
8	AT303956	HYDRAULIC HOSE - FABRICATE	4		
9	X6JTX-S	TEE FITTING	2		
10	T72888	O-RING	4		
13	X6C4OMXS	ELBOW FITTING	4		
16	AT300465	HYDRAULIC HOSE - FABRICATE	1		
17	AT300466	HYDRAULIC HOSE - FABRICATE	1		
21	19M8412	SCREW	8		
22	AT303468	OIL LINE	1		(LEFT OIL TUBE)
23	AT302830	OIL LINE	1		(RIGHT OIL TUBE)
28	T77857	O-RING	2		
29	H77698	TIE BAND	20		
30	**AT303957**	**KIT**	**1**		**BOOM ANTI-DRIFT KIT**

ROTARY MANIFOLD TO BLADE CYLINDER HOSES

T191057 -UN-13MAY03

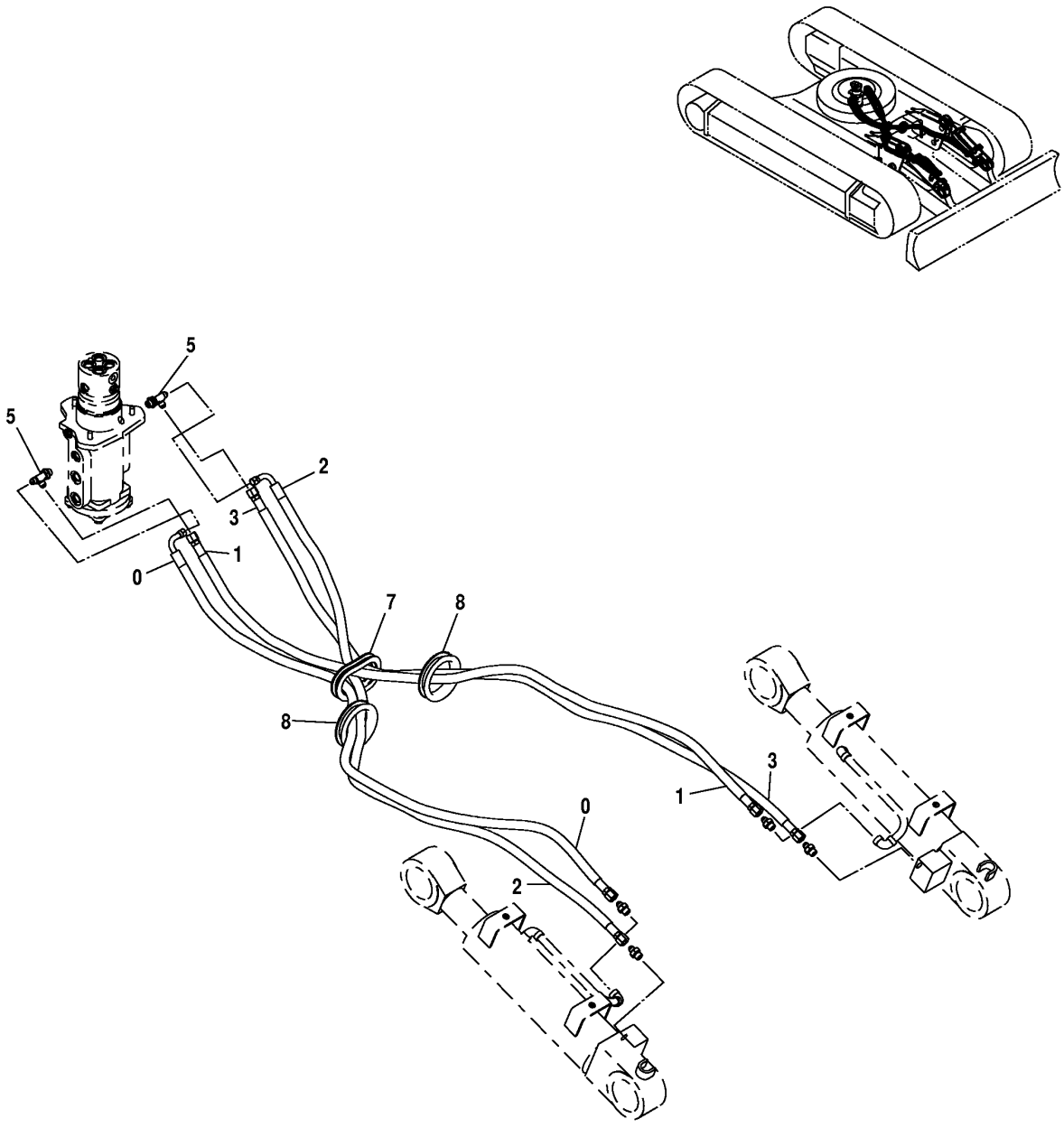

T191057

ROTARY MANIFOLD TO BLADE CYLINDER HOSES

KEY	PART NO.	PART NAME	QTY	SERIAL NO.	REMARKS
0	4432763	HYDRAULIC HOSE - FABRICATE	1		
1	4432764	HYDRAULIC HOSE - FABRICATE	1		
2	4432765	HYDRAULIC HOSE - FABRICATE	1		
3	4432766	HYDRAULIC HOSE - FABRICATE	1		
5	A852433	TEE FITTING	2		
	CH11570	O-RING	2		
7	4334566	BUSHING	1		
8	4201986	GROMMET	2		

HYDRAULIC OIL TANK

T191818 -UN-11JUN03

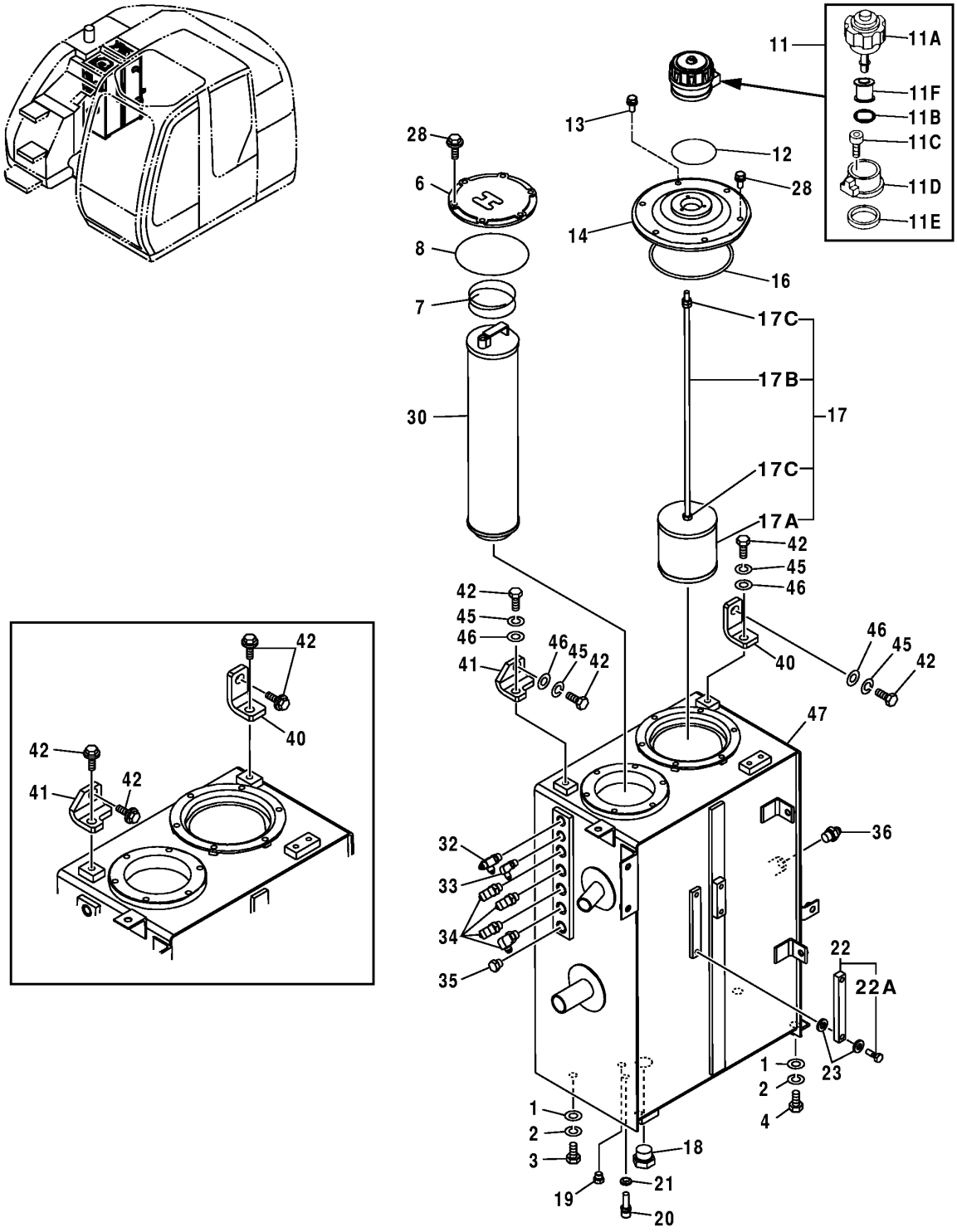

T191818

HYDRAULIC OIL TANK

KEY	PART NO.	PART NAME	QTY	SERIAL NO.	REMARKS
1	24M7338	WASHER	4		17 X 30 X 3 MM, (SUB FOR J222016)
2	12H294	LOCK WASHER	4		5/8", (SUB FOR A590916)
3	19M8035	CAP SCREW	2		M16 X 35, (SUB FOR J921635)
4	19M7488	CAP SCREW	2		M16 X 40
6	4443782	COVER	1		
7	4444482	SPRING	1		
8	997330	O-RING	1		
11	.....	BREATHER	1		(AT167079 NOT AVAILABLE)
11A	4326285	CAP	1		
11B	953612	O-RING	1		
11C	19M8146	SCREW	1		M5 X 16
11D	4222875	BASE	1		
11E	4222876	PACKING	1		
11F	4251384	FILTER ELEMENT	1		
12	CH11571	PACKING	1		
13	J770616	BOLT	3		
14	8084816	COVER	1		
16	TH100679	O-RING	1		
17	.....	FILTER	1		
17A	4285577	STRAINER	1		
17B	.....	ROD	1		
17C	14M7274	NUT	3		M10, (SUB FOR J950010)
18	THA885008	PIPE PLUG	1		(SUB FOR A885008)
	TH101926	O-RING	1		
19	A885002	PIPE PLUG	1		
	M800650	PACKING	1		
20	4250260	SENSOR	1		HYDRAULIC OIL LEVEL
21	4250261	GASKET	1		
22	8053499	LEVEL GAUGE	1		
22A	4100967	FITTING	2		
23	449558	WASHER	4		
28	19M7402	CAP SCREW	12		M10 X 25, (SUB FOR J021025)
	12M7066	LOCK WASHER	12		10 MM
	24M7028	WASHER	12		10.500 X 20 X 2 MM
30	4443596	FILTER ELEMENT	1		
32	A852422	TEE FITTING	1		
	M800650	PACKING	1		
33	4154670	ELBOW FITTING	1		(SUB FOR A852322, P67984 OR THA852322)
	M800650	PACKING	1		
34	A852333	ELBOW FITTING	4		
	CH11570	O-RING	1		
35	A885003	PIPE PLUG	1		
	CH11570	O-RING	1		
36	A852144	ADAPTER	1		
	4506418	O-RING	1		
40	4455437	BRACKET	1		
41	4455367	BRACKET	1		
42	J031230	BOLT	4		
45	12H301	LOCK WASHER	4		1/2", (SUB FOR A590912)
46	24M7345	WASHER	4		13.500 X 24 X 2.500 MM, (SUB FOR J222012)
47	5007083	HYDRAULIC RESERVOIR	1		

HYDRAULIC FILTER RESTRICTION INDICATOR

T188695 -UN-27MAR03

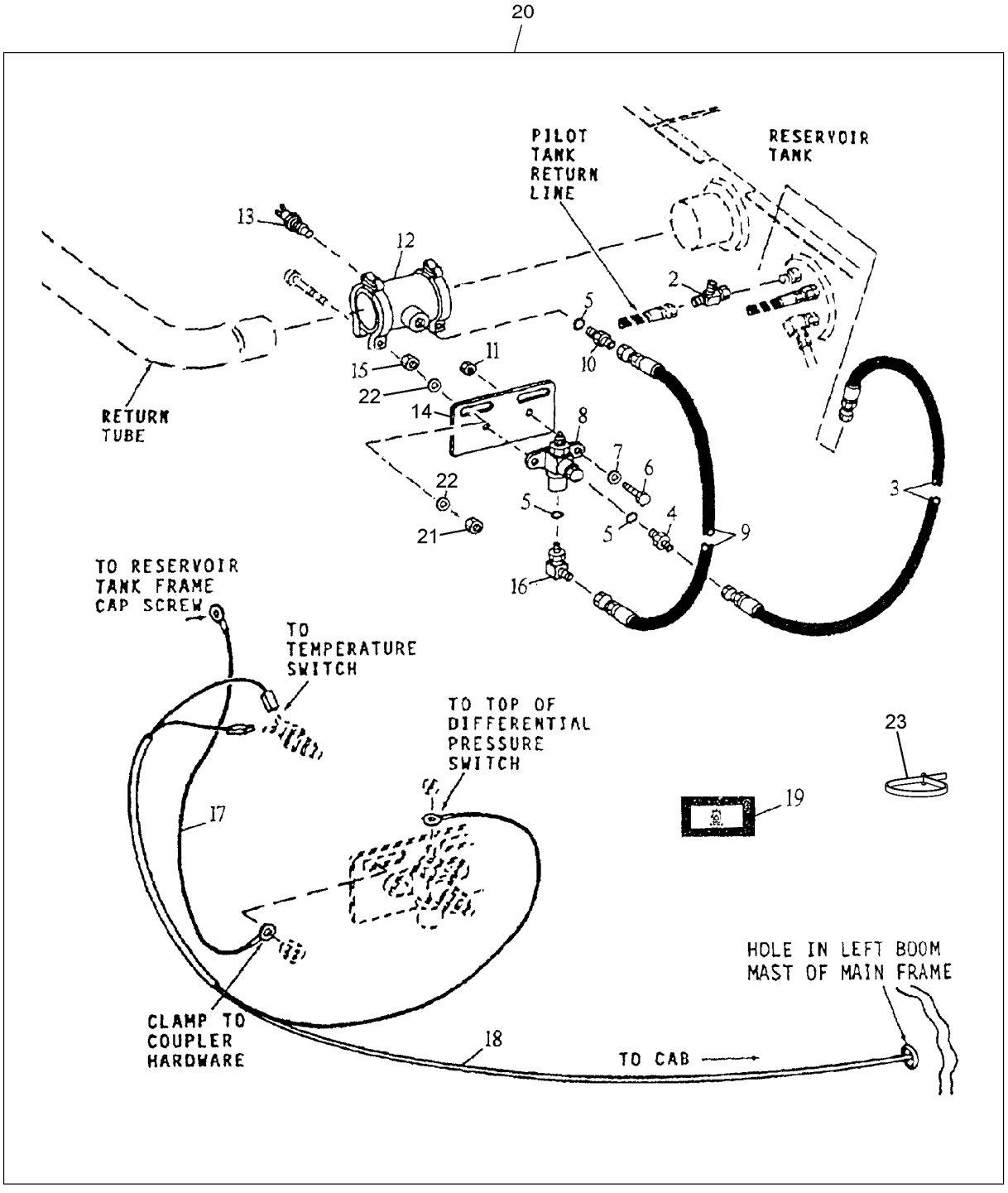

T188695

HYDRAULIC FILTER RESTRICTION INDICATOR

KEY	PART NO.	PART NAME	QTY	SERIAL NO.	REMARKS
2	AE45056	TEE FITTING	1		
3	AH97777	HYDRAULIC HOSE	1		7/16" X 407 MM (16") X 7/16"
4	H75414	ADAPTER	1		
5	T70177	O-RING	3		
6	19H1919	CAP SCREW	2		1/4" X 5/8"
7	24H1286	WASHER	2		9/32" X 1/2" X 1/16"
8	AT131436	PRESSURE SWITCH	1		
9	AT38628	HYDRAULIC HOSE - FABRICATE	1		
10	R27212	FITTING	1		
11	14H786	NUT	2		1/4"
12	AT134345	COUPLING	1		
13	AT131437	SWITCH	1		
14	T138910	BRACKET	1		
15	14M7274	NUT	2		M10
16	AT35121	ELBOW FITTING	1		
17	AR76140	WIRING LEAD	1		
18	AT196334	WIRING HARNESS	1		(SUB FOR AT157668)
19	T153187	LABEL	1		(AMBER)
20	AT189638	KIT	1		INCLUDES AT134345, WHOLEGOODS
21	14M7273	NUT	2		M8
22	24M7036	WASHER	2		9 X 16 X 1.600 MM
23	R44302	TIE BAND	AR		

BOOM CYLINDER (RIGHT)

T153245 -UN-05APR02

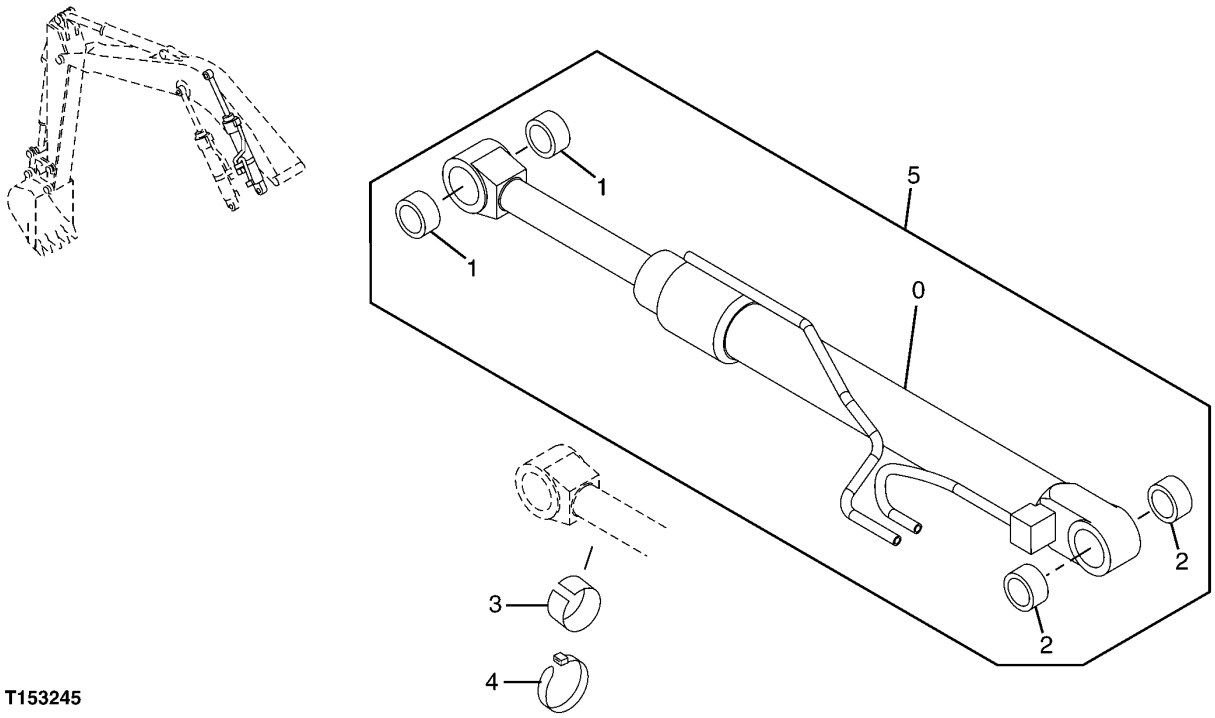

T153245

BOOM CYLINDER (RIGHT)

KEY	PART NO.	PART NAME	QTY	SERIAL NO.	REMARKS
0	.....	CYLINDER	1		
1	4352400	BUSHING	2		
2	4352638	BUSHING	2		
3	TH4451668	ISOLATOR	1		
4	4167948	CLIP	1		
5	9197518	HYDRAULIC CYLINDER	1		

BOOM CYLINDER (RIGHT)

T162012 -UN-11DEC02

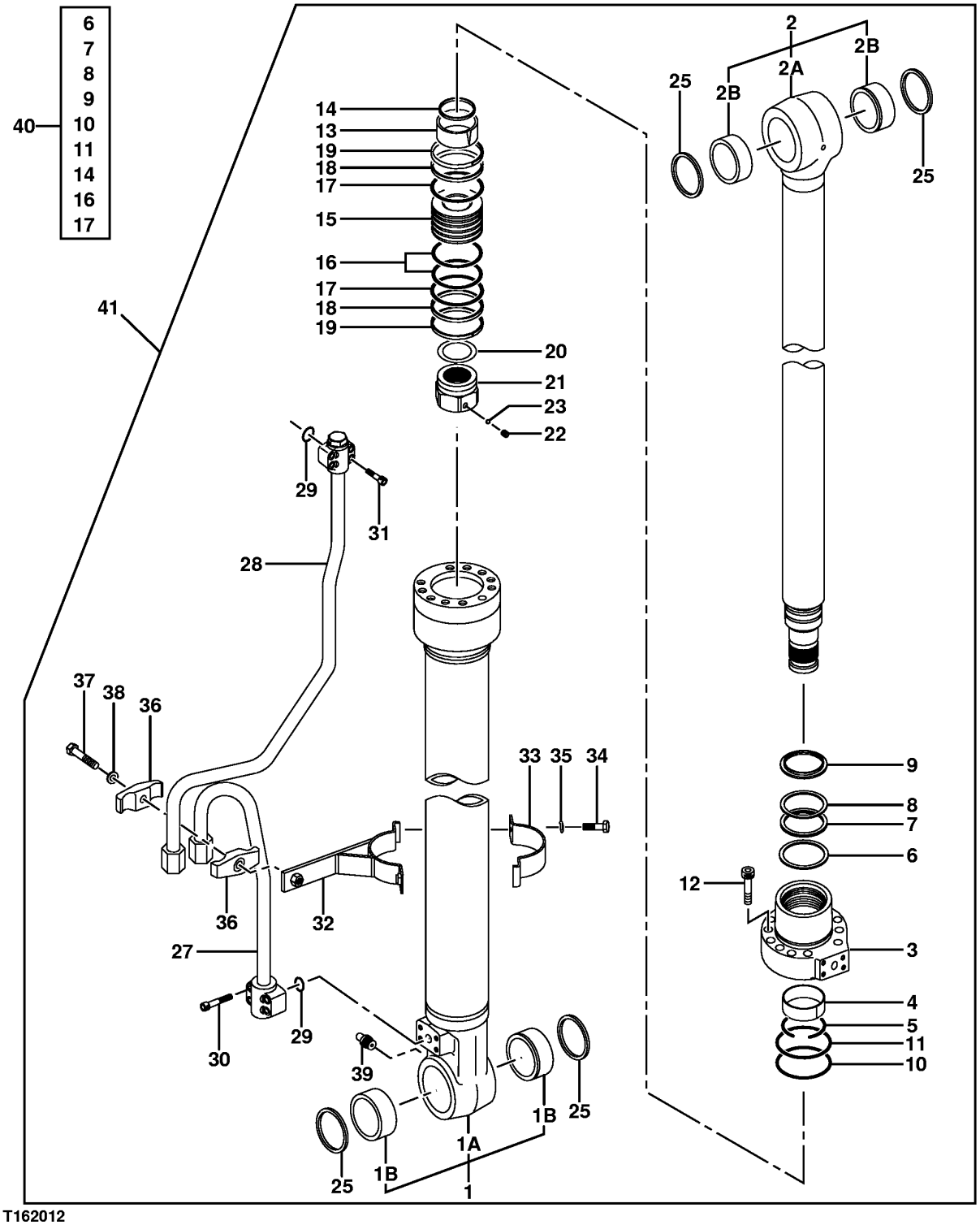

T162012

BOOM CYLINDER (RIGHT)

KEY	PART NO.	PART NAME	QTY	SERIAL NO.	REMARKS
1	0804601	BARREL	1		(HYDRAULIC CYLINDER)
1A	.....	HYDRAULIC CYLINDER BARREL	1		
1B	4352638	BUSHING	2		
2	0804603	ROD	1		
2A	.....	ROD	1		
2B	4352400	BUSHING	2		
3	0789305	CYLINDER HEAD	1		
4	0310304	SPACER	1		
5	0271304	SNAP RING	1		
6	0789306	RING	1		
7	AT264256	PACKING	1		(SUB FOR AT133633, 0271309)
8	AT264257	BACK-UP RING	1		(SUB FOR 0271310, AT133634)
9	0666806	SCRAPER RING	1		
10	AT264319	O-RING	1		(SUB FOR A811100)
11	0310506	BACK-UP RING	1		
12	0408805	SCREW	12		
13	0408806	BEARING	1		
14	H158461	SEAL	1		
15	H158463	PISTON	1		(SUB FOR 0408808)
16	AT264387	RING	1		(SUB FOR 0310508)
17	0408809	BACK-UP RING	2		
18	0666808	SCRAPER RING	2		
19	AT264388	RING	2		(SUB FOR TH109324, 0310510, 4S00155)
20	0310514	SHIM	1		
21	0789307	NUT	1		
22	0309011	SET SCREW	1		
23	0111707	BALL	1		
25	TH104472	SEAL	4		(SUB FOR 0408810)
27	AH149467	OIL LINE	1		(SUB FOR 0408811)
28	0804606	OIL LINE	1		
29	AT264354	O-RING	2		(SUB FOR 4509181, TH103574)
30	0309019	SCREW	4		
31	TH109332	BOLT	4		
32	0408814	BAND	1		
33	0310707	BAND	1		
34	19M7550	CAP SCREW	2		
35	12M7066	LOCK WASHER	2		(SUB FOR 0325913)
36	0310312	BUSHING	2		
37	0224115	CAP SCREW	1		
38	0208516	LOCK WASHER	1		
39	J75481	LUBRICATION FITTING	1		
40	4448395	SEAL KIT	1		
41	9197518	HYDRAULIC CYLINDER	1		

BOOM CYLINDER (LEFT)

T153245 -UN-05APR02

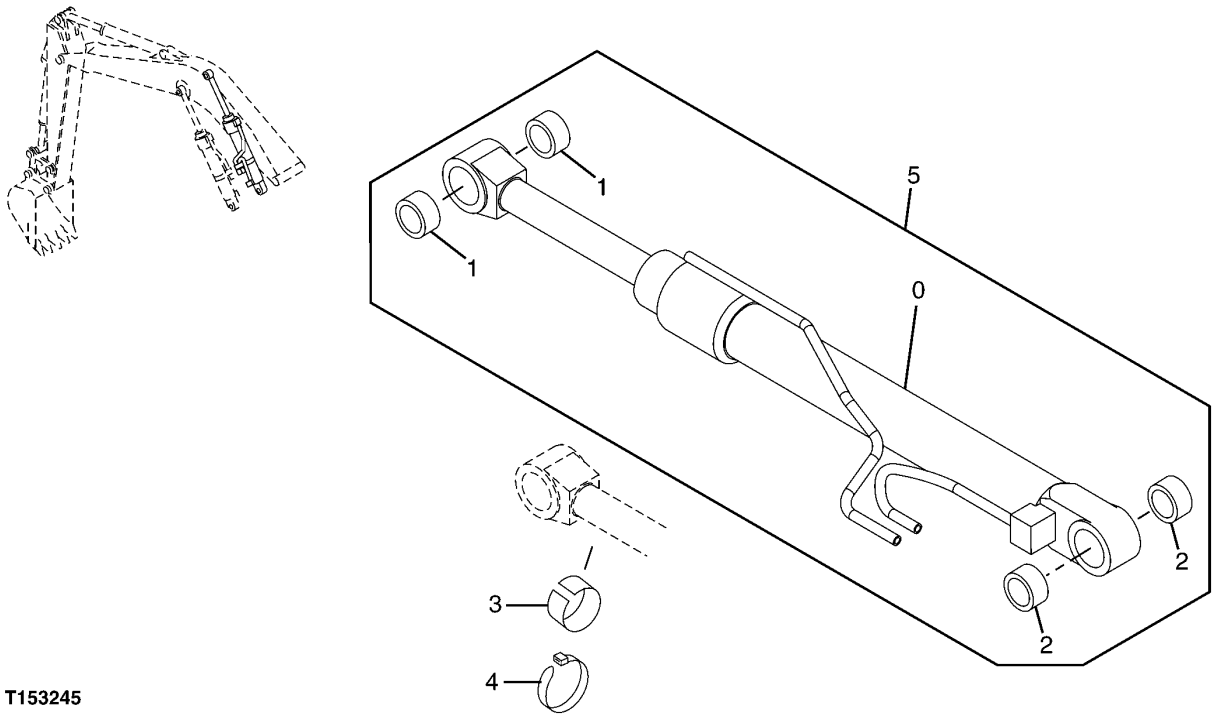

T153245

BOOM CYLINDER (LEFT)

KEY	PART NO.	PART NAME	QTY	SERIAL NO.	REMARKS
0	.....	CYLINDER	1		
1	4352400	BUSHING	2		
2	4352638	BUSHING	2		
3	.....	FELT	1		
4	4167948	CLIP	1		
5	9197517	HYDRAULIC CYLINDER	1		

BOOM CYLINDER (LEFT)

T162702 -UN-12DEC02

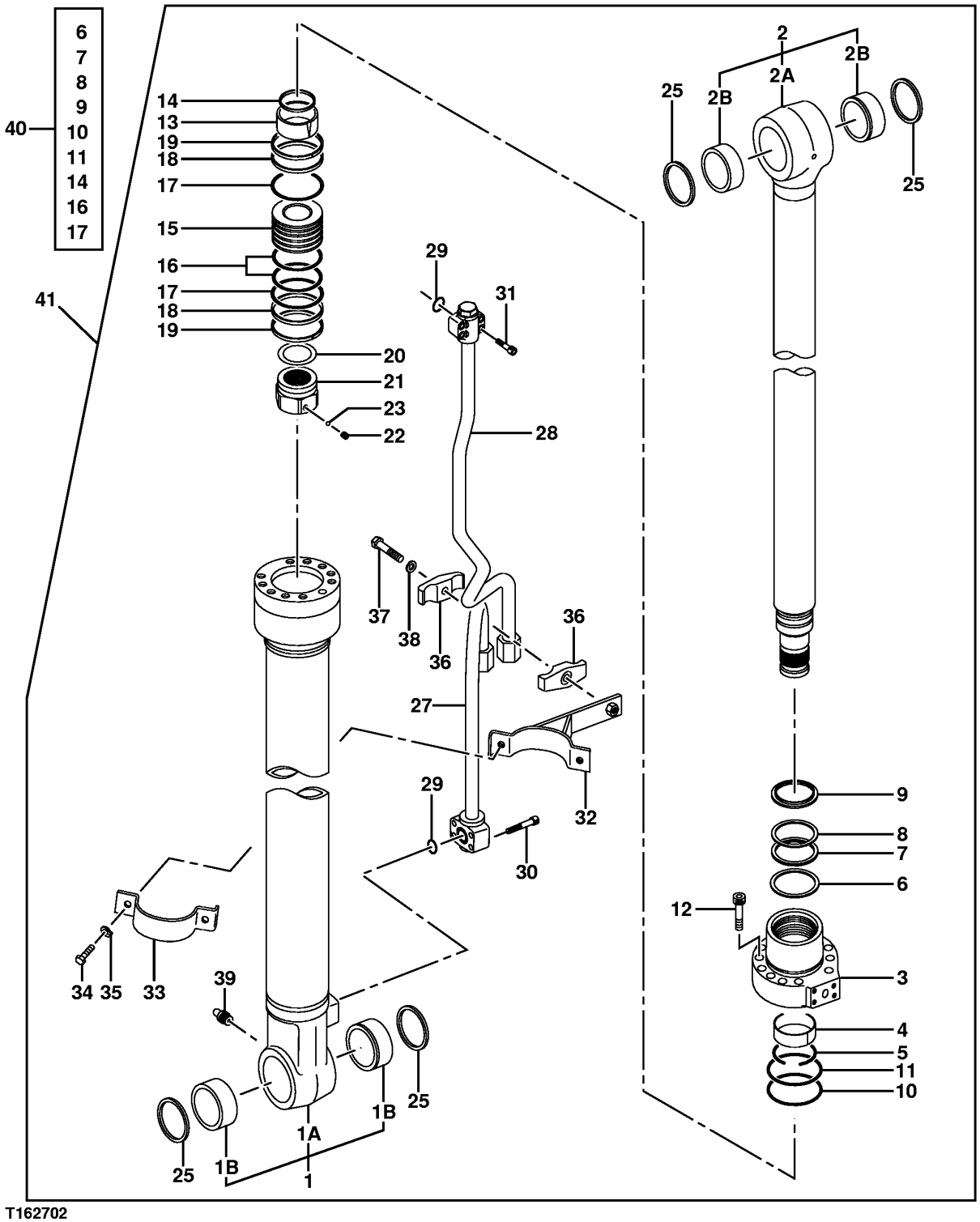

T162702

BOOM CYLINDER (LEFT)

KEY	PART NO.	PART NAME	QTY	SERIAL NO.	REMARKS
1	0804701	HYDRAULIC CYLINDER BARREL	1		
1A	.....	HYDRAULIC CYLINDER BARREL	1		
1B	4352638	BUSHING	2		
2	0789303	ROD	1		
2A	.....	ROD	1		(0789304 NO LONGER AVAILABLE FOR SERVICE)
2B	4352400	BUSHING	2		
3	0789305	CYLINDER HEAD	1		
4	AT133645	BUSHING	1		
5	0271304	SNAP RING	1		
6	0789306	RING	1		
7	AT264256	PACKING	1		
8	.....	BACK-UP RING	1		
9	H158453	SCRAPER RING	1		
10	.....	BACK-UP RING	1		
11	TH109318	BACK-UP RING	1		
12	M341465	BOLT	12		
13	0408806	BEARING	1		
14	H158461	SEAL	1		
15	H158463	PISTON	1		(SUB FOR 0408808)
16	AT264387	RING	2		(SUB FOR TH109322)
17	AT153919	BACK-UP RING	2		
18	H158459	SCRAPER RING	2		
19	AT264388	RING	2		(SUB FOR TH109324, 0310510 AND 4S00155)
20	0310514	SHIM	1		
21	0789307	NUT	1		
22	22M6684	SET SCREW	1		
23	T13624	BALL	1		
25	TH104472	SEAL	4		
27	AH149465	OIL LINE	1		(SUB FOR 0408902)
28	AH149464	OIL LINE	1		
29	AT264354	O-RING	2		
30	19M8213	SCREW	4		
31	T116311	BOLT	4		(0310310 NOT AVAILABLE FOR SERVICE)
32	0408814	BAND	1		
33	0310707	BAND	1		
34	19M7550	CAP SCREW	2		
35	12M7066	LOCK WASHER	2		
36	TH109337	CLAMP	2		
37	19M8348	CAP SCREW	1		
38	12M7067	LOCK WASHER	1		
39	TH100074	LUBRICATION FITTING	1		
40	4448395	SEAL KIT	1		
41	9197517	HYDRAULIC CYLINDER	1		

ARM HYDRAULIC CYLINDER

T162705 -UN-13DEC02

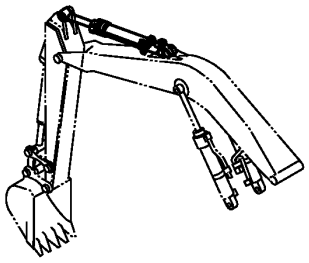

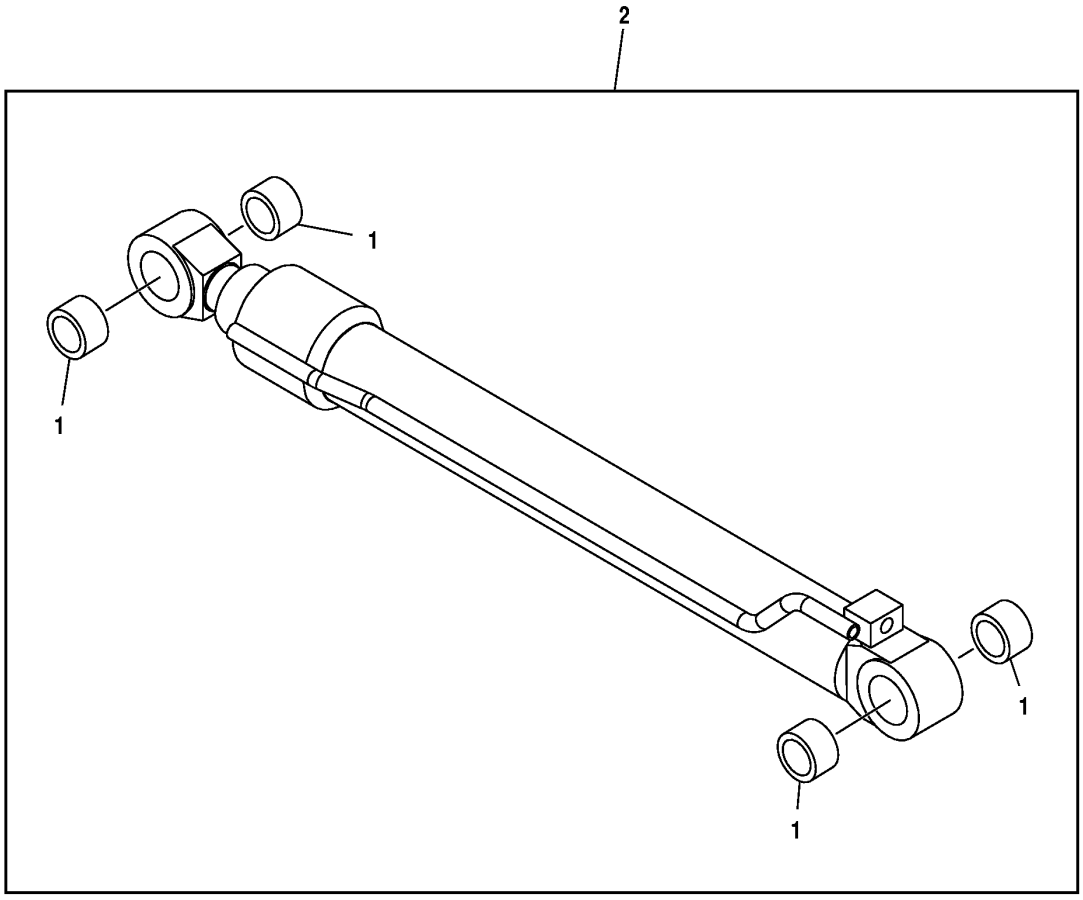

T162705

ARM HYDRAULIC CYLINDER

KEY	PART NO.	PART NAME	QTY	SERIAL NO.	REMARKS
1	4352400	BUSHING	4		
2	9197519	HYDRAULIC CYLINDER	1		

ARM HYDRAULIC CYLINDER COMPONENTS

T202711 -UN-07SEP04

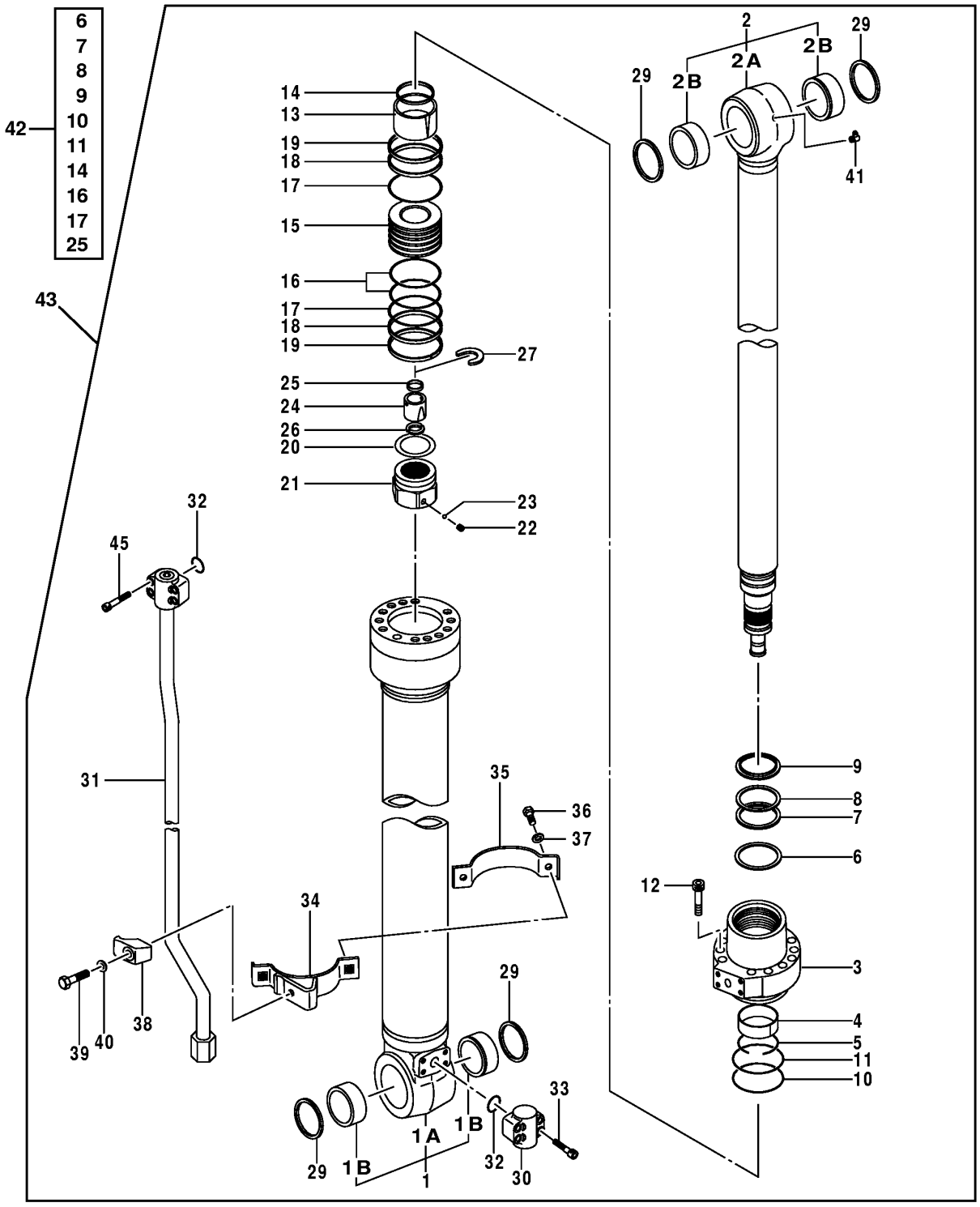

T202711

ARM HYDRAULIC CYLINDER COMPONENTS

KEY	PART NO.	PART NAME	QTY	SERIAL NO.	REMARKS
1	0804801		1		
1A	.....	HYDRAULIC CYLINDER BARREL	1		
1B	4352400	BUSHING	2		
2	0789503	ROD	1		
2A	.....	ROD	1		(0789504 NO LONGER AVAILABLE FOR SERVICE)
2B	4352400	BUSHING	2		
3	0789205	CYLINDER HEAD	1		
4	.....	WEAR RING	1		(IF AVAILABLE ORDER AT264314)
5	.....	SNAP RING	1		(IF AVAILABLE ORDER TH104908)
6	0789206	RING	1		
7	.....	PACKING	1		(IF AVAILABLE ORDER AT264357)
8	.....	BACK-UP RING	1		(IF AVAILABLE ORDER AT264358)
9	H157235	SCRAPER RING	1		
10	AT264320	O-RING	1		(SUB FOR T110448)
11	TH109353	BACK-UP RING	1		
12	19M8931	SCREW	10		M16 X 75
13	0409005	BEARING	1		
14	H157237	SEAL	1		
15	0789505	PISTON	1		
16	TH105767	RING	1		
17	H163431	BACK-UP RING	2		
18	H163432	SCRAPER RING	2		
19	AT309610	RING	2		(SUB FOR 4S00157)
20	0409010	SHIM	1		
21	0789506	NUT	1		
22	22M7009	SET SCREW	1		M12 X 12
23	T13624	BALL	1		
24	0409012	BEARING	1		
25	0667010	SEAL	1		
26	0409014	STOP	2		
27	0409015	RING	1		
29	TH104472	SEAL	4		
30	0409016	UNIVERSAL JOINT	1		
31	0789508	MUFFLER EXTENSION	1		(SUB FOR 0789507, ALONG WITH (4) 19M7662 SCREWS)
32	AT264360	O-RING	2		
33	19M8213	SCREW	4		M10 X 50
34	AH156744	CLAMP	1		
35	H163434	BAND	1		
36	19M7550	CAP SCREW	1		M10 X 35
37	12M7066	LOCK WASHER	2		10 MM
38	T108036	CLAMP	2		
39	19M7362	CAP SCREW	1		M12 X 55
40	12M7067	LOCK WASHER	1		12 MM
41	JD7781	LUBRICATION FITTING	1		
42	4448396	SEAL KIT	1		
43	9197519	HYDRAULIC CYLINDER	1		
45	19M8213	SCREW	4		M10 X 50, (USE WITH 0789507)
	19M7662	CAP SCREW	4		M10 X 30, (USE WITH 0789508)

BUCKET CYLINDER

T162715 -UN-13DEC02

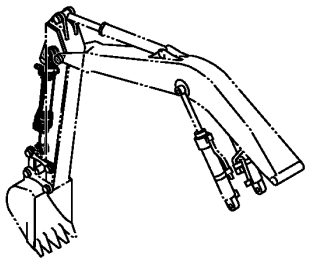

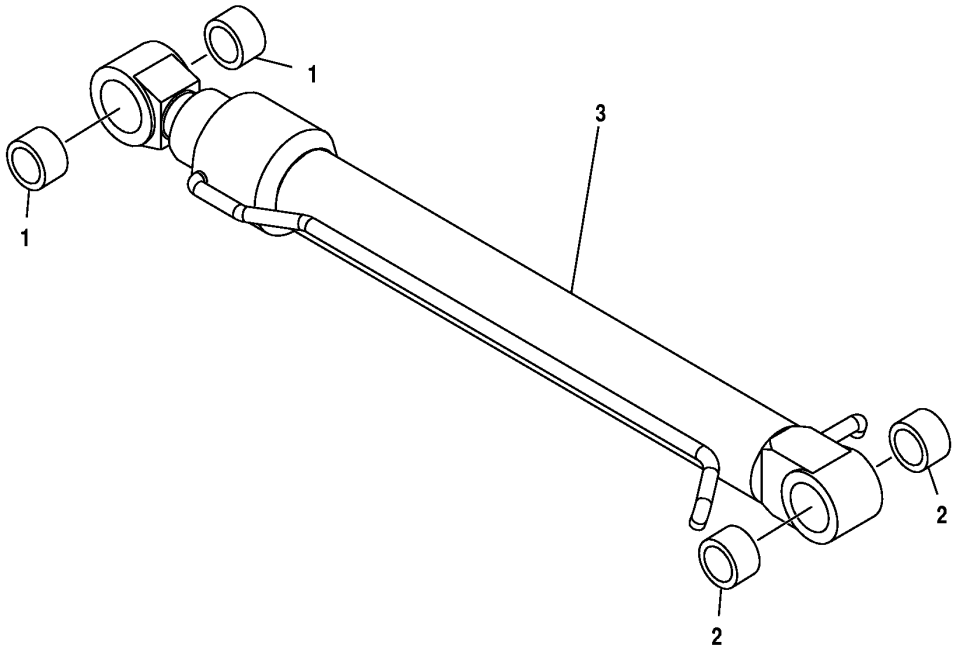

T162715

BUCKET CYLINDER

KEY	PART NO.	PART NAME	QTY	SERIAL NO.	REMARKS
1	4365448	BUSHING	2		
2	4365897	BUSHING	2		
3	9183014J	HYDRAULIC CYLINDER	1		(SUB FOR 4423853Y) (PAINTED PART - YELLOW)

BUCKET CYLINDER COMPONENTS

T162711 -UN-10JAN03

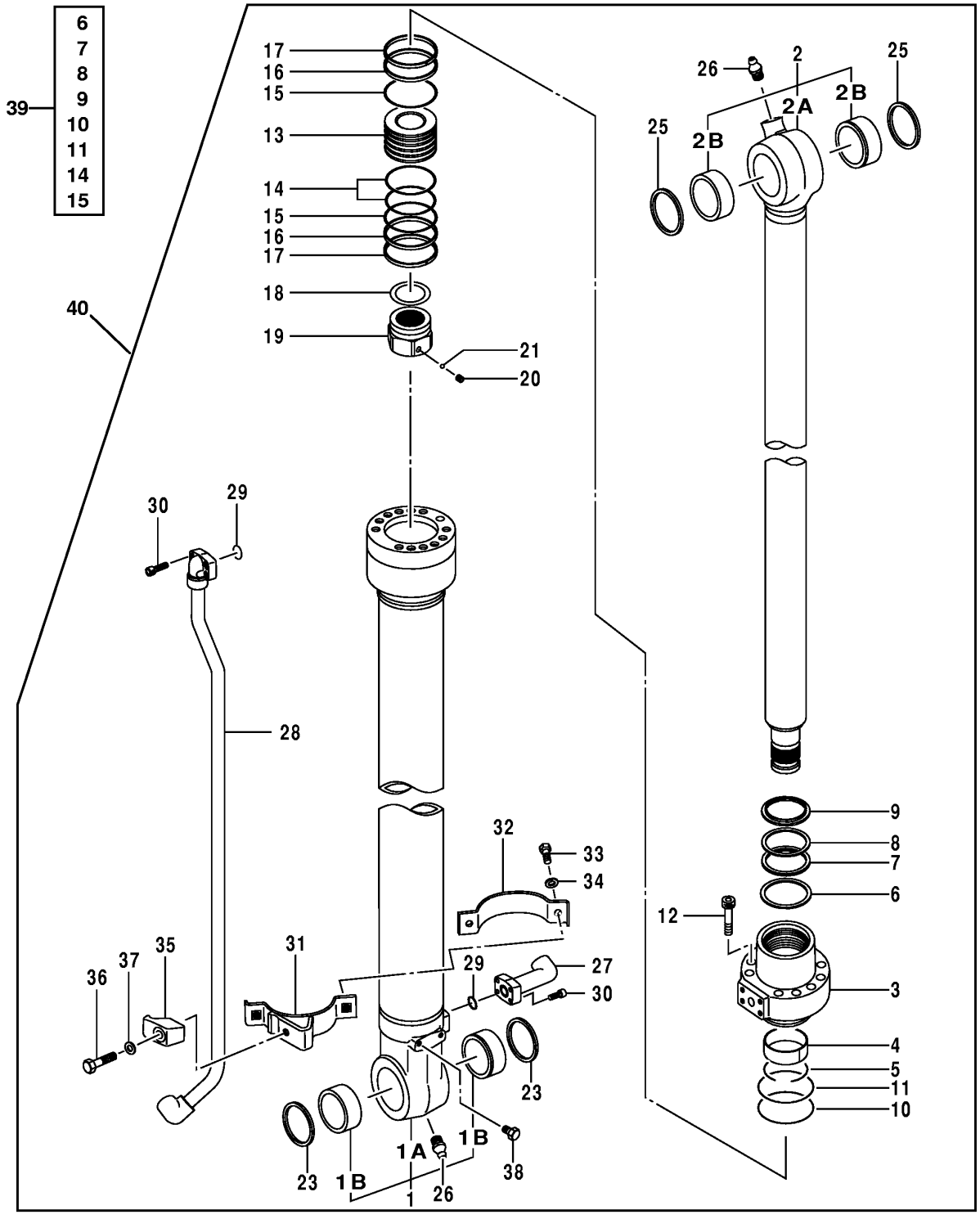

T162711

BUCKET CYLINDER COMPONENTS

KEY	PART NO.	PART NAME	QTY	SERIAL NO.	REMARKS
1	TH0789601	HYDRAULIC CYLINDER BARREL	1		
1A	.....	HYDRAULIC CYLINDER BARREL	1		(TH0789602 NO LONGER AVAILABLE)
1B	4365897	BUSHING	1		
2	TH0789603	ROD	2		
2A	.....	ROD	1		
2B	4365448	BUSHING	1		
3	TH0789605	CYLINDER HEAD	2		
4	0310304	SPACER	1		
5	0271304	SNAP RING	1		
6	0789306	RING	1		
7	AT264256	PACKING	1		
8	.....	BACK-UP RING	1		(IF AVAILABLE ORDER AT133634)
9	H158453	SCRAPER RING	1		
10	.....	O-RING	1		(IF AVAILABLE ORDER T110446)
11	0254905	BACK-UP RING	1		
12	M341465	BOLT	12		
13	0686705	PISTON	1		
14	0240807	RING	1		
15	0686706	BACK-UP RING	2		
16	0686707	RING	2		
17	0254908	RING	2		
18	0326007	SHIM	1		
19	0789606	NUT	1		
20	22M7139	SET SCREW	1		M10 X 10
21	400R	BALL	1		
23	TH105979	SEAL	2		
25	TH100374	SEAL	2		
26	TH100074	LUBRICATION FITTING	2		
27	0409113	UNIVERSAL JOINT	1		(ELBOW JOINT)
28	0789610	OIL LINE	1		(SUB FOR TH0789607)
29	AT264354	O-RING	2		
30	19M8439	SCREW	8		M8 X 25
31	TH0789609	CLAMP	1		
32	0326012	CLAMP	1		
33	19M7550	CAP SCREW	2		M10 X 35
34	12M7066	LOCK WASHER	2		10 MM
35	0310616	CLAMP	1		
36	19M7361	CAP SCREW	1		M12 X 50
37	12M7067	LOCK WASHER	1		12 MM
38	J901218	BOLT	2		(SUB FOR AT131538)
39	4448397	SEAL KIT	1		
40	9183014J	HYDRAULIC CYLINDER	1		(SUB FOR 4423853Y) (PAINTED PART - YELLOW)

RIGHT BLADE CYLINDER COMPONENTS AND OIL LINES

T188910 -UN-28MAR03

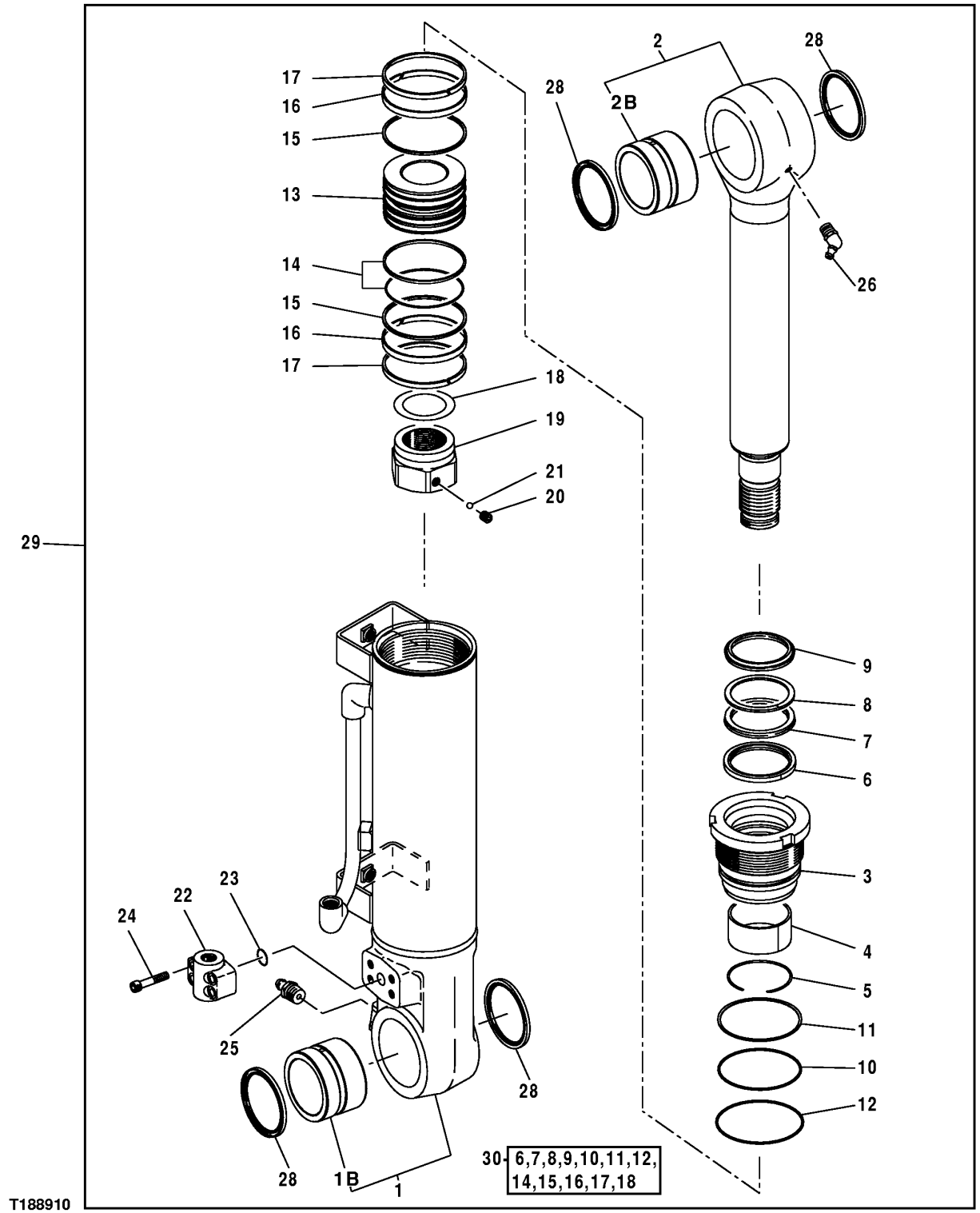

RIGHT BLADE CYLINDER COMPONENTS AND OIL LINES

KEY	PART NO.	PART NAME	QTY	SERIAL NO.	REMARKS
1	0779201	HYDRAULIC CYLINDER BARREL	1		
1B	0779302	BUSHING	1		
2	0779303	ROD	1		
2B	0779302	BUSHING	1		
3	0686704	HYDRAULIC CYLINDER CAP	1		
4	0683402		1		
5	0271304	SNAP RING	1		
6	AT133635	GUIDE	1		
7	AT133633	PACKING	1		
8	AT133634	BACK-UP RING	1		
9	H158453	SCRAPER RING	1		
10	T110446	O-RING	1		
11	0254905	BACK-UP RING	1		
12	CH16109	PACKING	1		
13	0686705	PISTON	1		
14	0240807	RING	1		
15	0686706	BACK-UP RING	2		
16	0686707	RING	2		
17	0254908	RING	2		
18	0326007	SHIM	1		
19	H158175	NUT	1		
20	21M7139	SCREW	1		
21	400R	BALL	1		
22	0686708	ADAPTER	1		
23	AT264354	O-RING	1		
24	0310310	PART NOT CODED	4		
25	TH100074	LUBRICATION FITTING	1		
26	T116334	LUBRICATION FITTING	1		
28	TH104472	SEAL	4		(SUB FOR AT153920)
29	9187648	CYLINDER	1		
30	4388027	SEAL KIT	1		

LEFT BLADE CYLINDER COMPONENTS AND OIL LINES

T188916 -UN-28MAR03

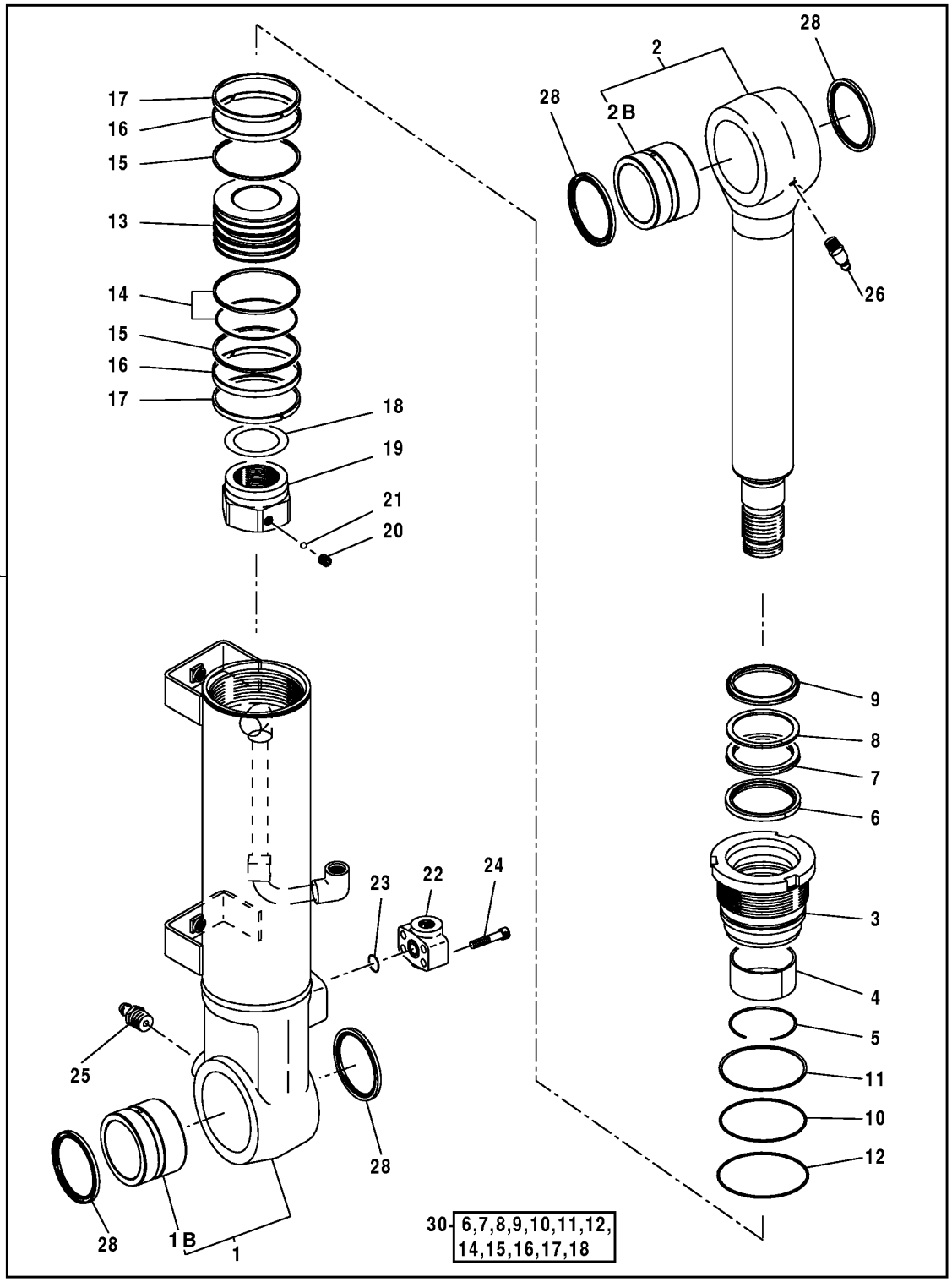

LEFT BLADE CYLINDER COMPONENTS AND OIL LINES

KEY	PART NO.	PART NAME	QTY	SERIAL NO.	REMARKS
1	0779301	HYDRAULIC CYLINDER BARREL	1		
1B	0779302	BUSHING	1		
2	0779303	ROD	1		
2B	0779302	BUSHING	1		
3	0686704	HYDRAULIC CYLINDER CAP	1		
4	0683402		1		
5	0271304	SNAP RING	1		
6	AT133635	GUIDE	1		
7	AT133633	PACKING	1		
8	AT133634	BACK-UP RING	1		
9	H158453	SCRAPER RING	1		
10	T110446	O-RING	1		
11	0254905	BACK-UP RING	1		
12	CH16109	PACKING	1		
13	0686705	PISTON	1		
14	0240807	RING	1		
15	0686706	BACK-UP RING	2		
16	0686707	RING	2		
17	0254908	RING	2		
18	0326007	SHIM	1		
19	H158175	NUT	1		
20	21M7139	SCREW	1		
21	400R	BALL	1		
22	0686708	ADAPTER	1		
23	AT264354	O-RING	1		
24	0310310	PART NOT CODED	4		
25	TH100074	LUBRICATION FITTING	1		
26	T116334	LUBRICATION FITTING	1		
28	TH104472	SEAL	4		(SUB FOR AT153920)
29	9187647	CYLINDER	1		
30	4388027	SEAL KIT	1		

SWING BEARING

T162535 -UN-13DEC02

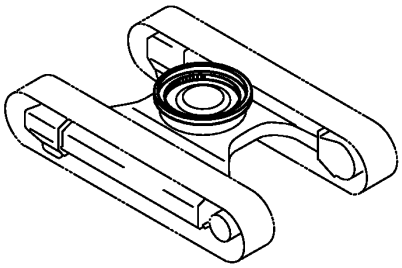

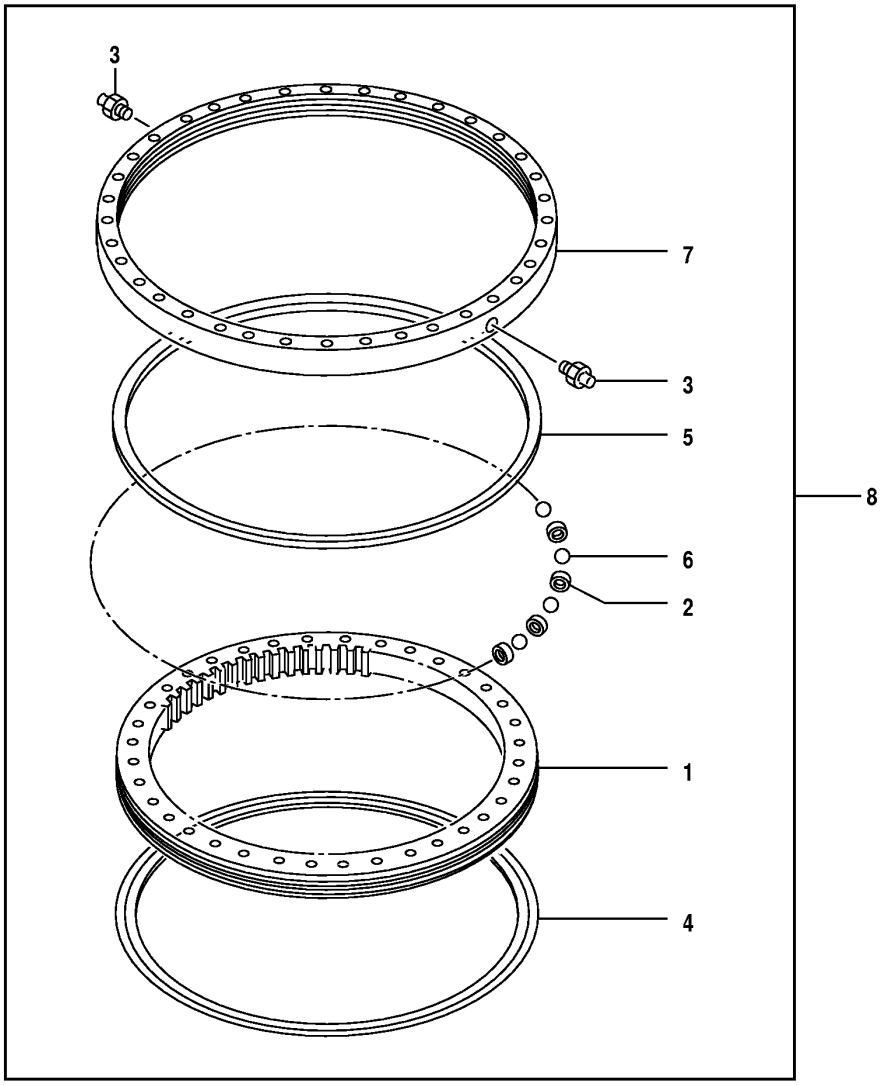

T162535

SWING BEARING

KEY	PART NO.	PART NAME	QTY	SERIAL NO.	REMARKS
1	.....	BEARING RACE	1		
2	4127708	SPACER	99		
3	TH100074	LUBRICATION FITTING	2		(SUB FOR J75481)
4	4633528	SEAL	1		(SUB FOR 4289757)
5	4315493	SEAL	1		
6	4428919	BALL	99		
7	.....	BEARING RACE	1		
8	9184497	SWING BEARING	1		

SWING BEARING HARDWEAR

T162536 -UN-13DEC02

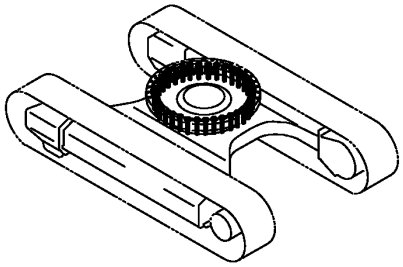

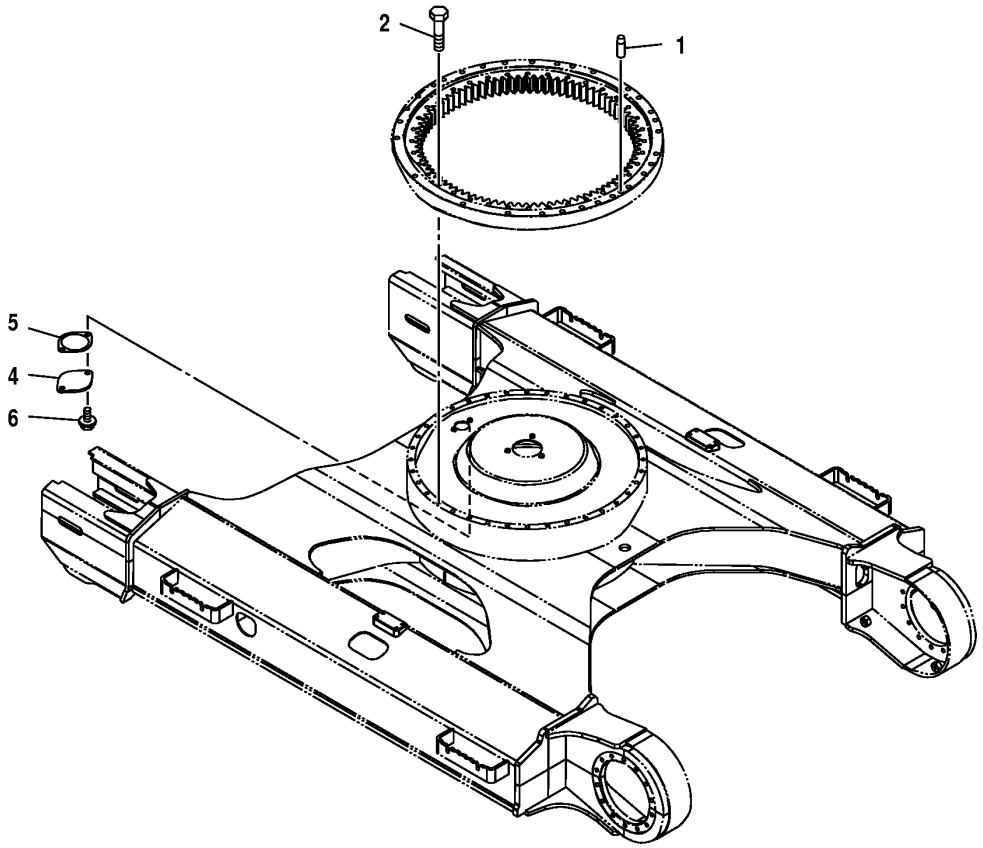

T162536

SWING BEARING HARDWEAR

KEY	PART NO.	PART NAME	QTY	SERIAL NO.	REMARKS
1	4425980	PIN FASTENER	1		
2	J931695	BOLT	36		
4	4128863	PLATE	1		
5	4272297	GASKET	1		
6	19M7402	CAP SCREW	2		M10 X 25, (SUB FOR J011025)
	12M7066	LOCK WASHER	2		10 MM

ROTARY MANIFOLD

T162562 -UN-16DEC02

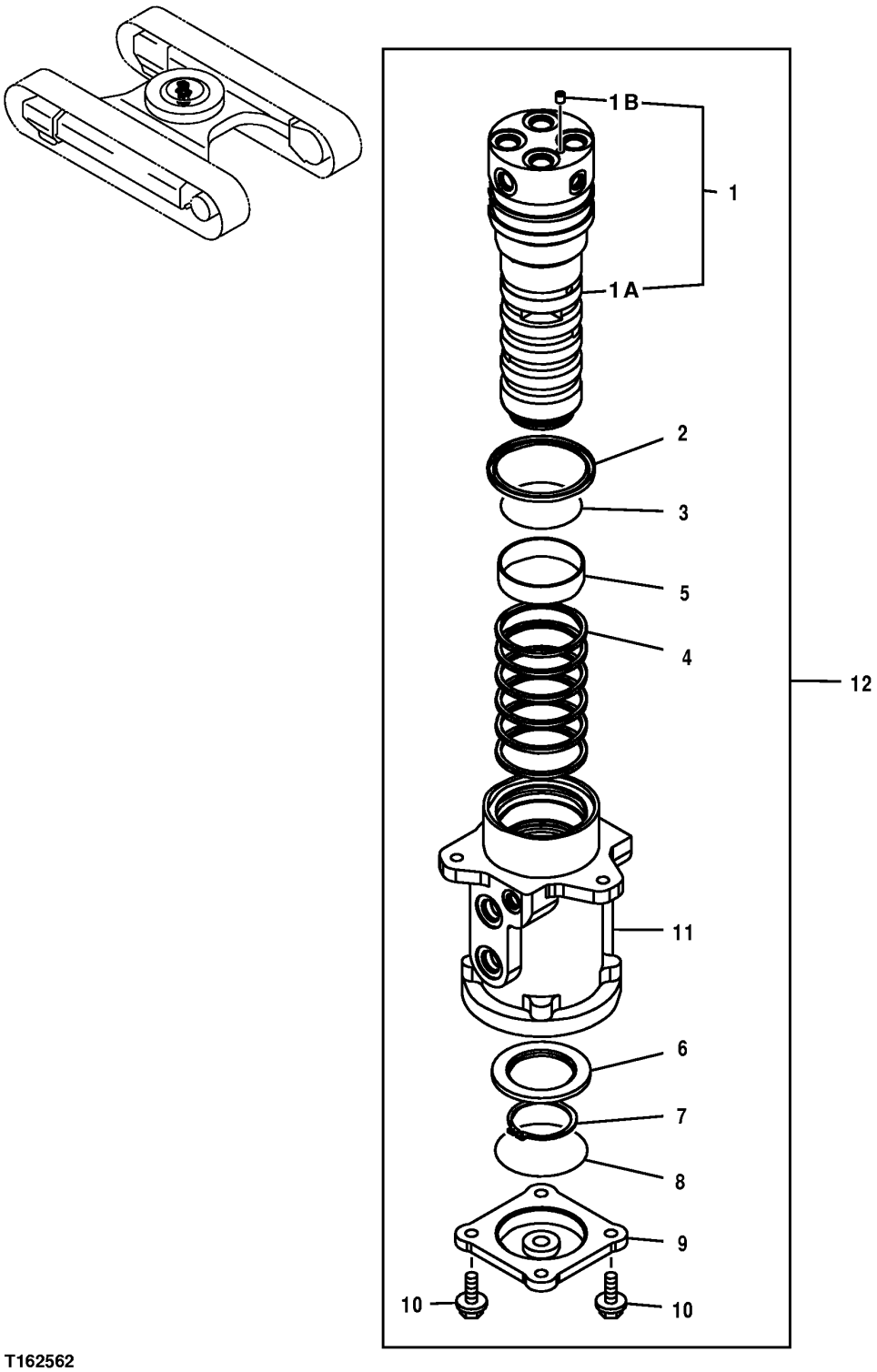

T162562

ROTARY MANIFOLD

KEY	PART NO.	PART NAME	QTY	SERIAL NO.	REMARKS
1	.....	SPINDLE	1		
1A	.....	SPINDLE	1		
1B	4239611	PLUG	1		
2	4410445	SEAL	1		
3	4410446	O-RING	1		
4	4406165	SEAL	6		
5	4410066	BUSHING	1		
6	3070250	RING	1		
7	40M7048	SNAP RING	1		
8	CH16109	PACKING	1		
9	2034607	COVER	1		
10	19M7662	CAP SCREW	4		M10 X 30, (SUB FOR J011030)
	12M7066	LOCK WASHER	4		10 MM
11	.....	HOUSING	1		
12	9195313	FRAME	1		

ROTARY MANIFOLD MOUNTING BOLTS

TP48002 -UN-28MAY96

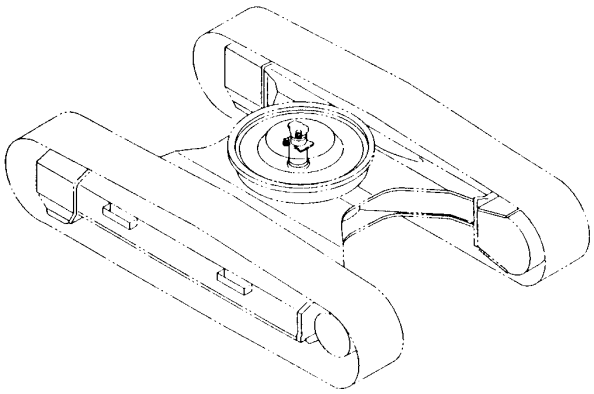

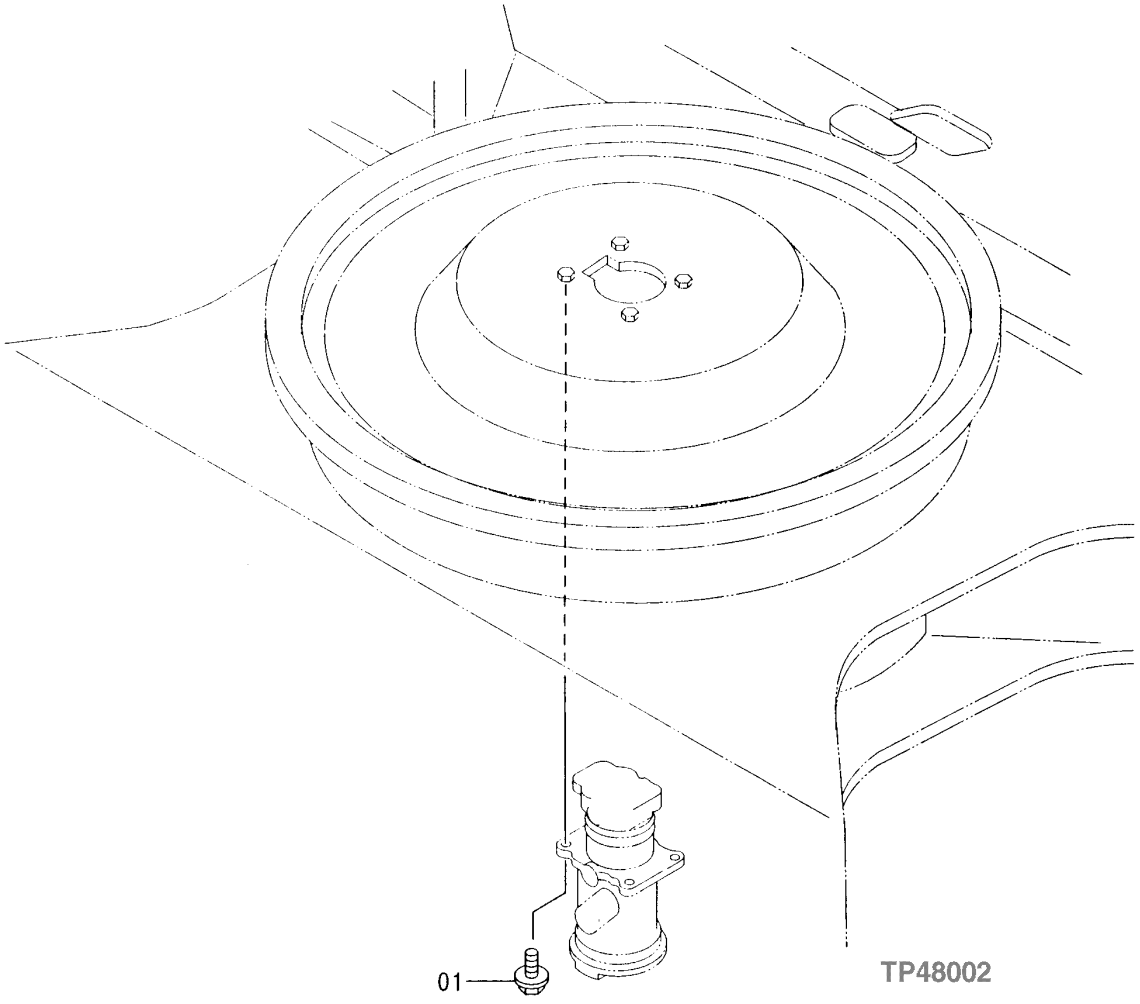

ROTARY MANIFOLD MOUNTING BOLTS

KEY	PART NO.	PART NAME	QTY	SERIAL NO.	REMARKS
1	19M7550	CAP SCREW	3		M10 X 35, (SUB FOR J011035)
	12M7066	LOCK WASHER	3		10 MM

ROTARY MANIFOLD SUPPORT

T162018 -UN-13DEC02

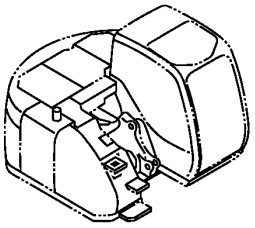

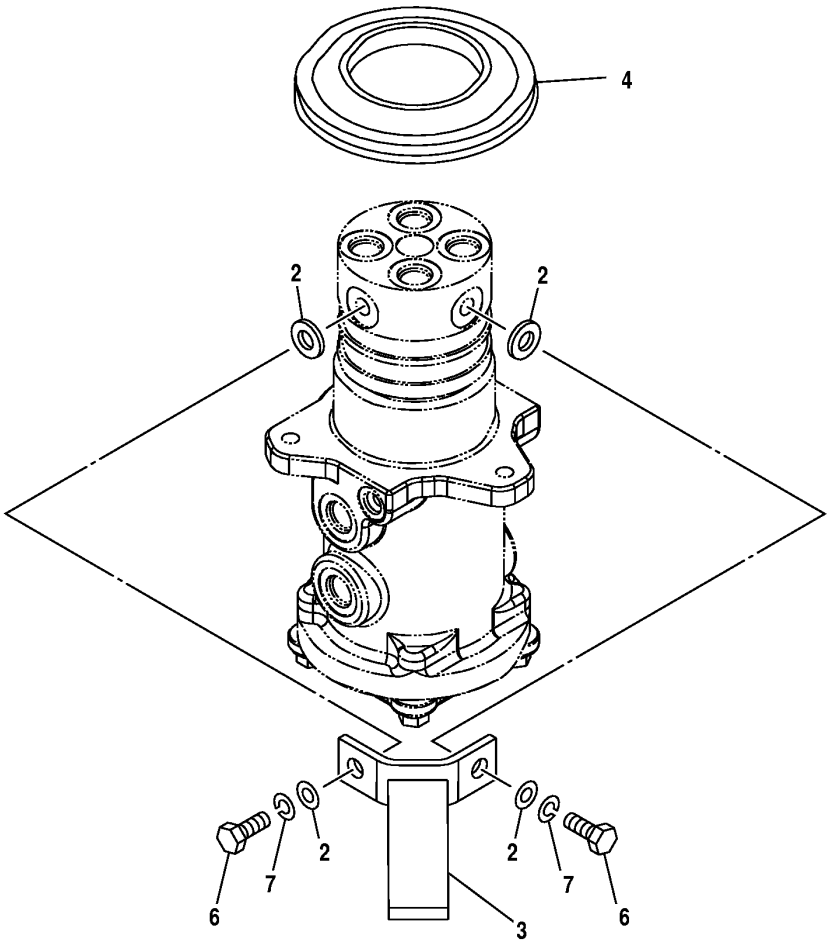

T162018

ROTARY MANIFOLD SUPPORT

KEY	PART NO.	PART NAME	QTY	SERIAL NO.	REMARKS
2	24M7345	WASHER	4		13.500 X 24 X 2.500 MM, (SUB FOR J222012)
3	8082204	BRACKET	1		
4	4425270	COVER	1		
6	J931235	BOLT	2		
7	12H301	LOCK WASHER	2		(SUB FOR A590912)

SWING MOTOR AND GEARBOX COMPONENTS

T163918 -UN-15JAN03

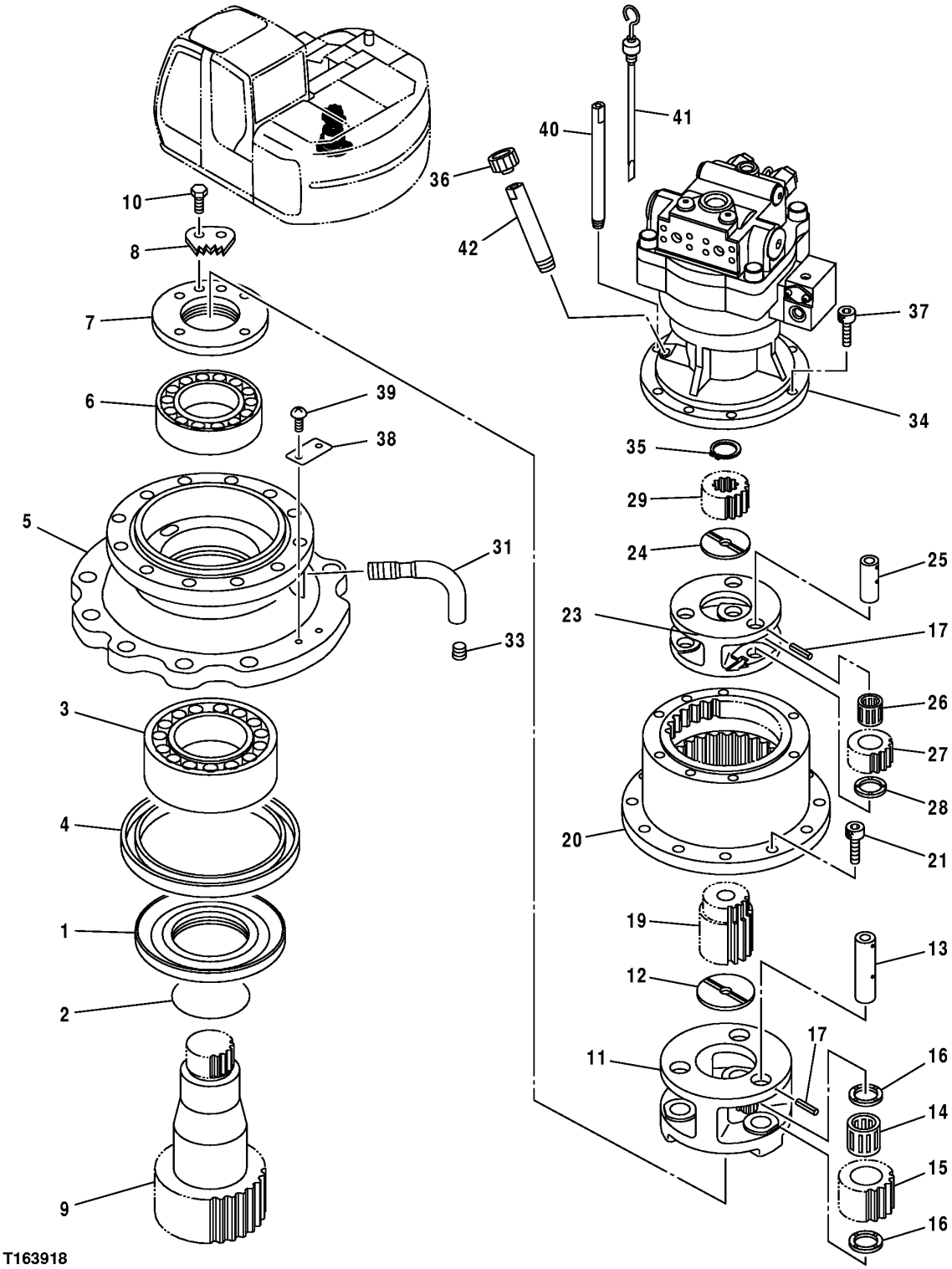

T163918

SWING MOTOR AND GEARBOX COMPONENTS

KEY	PART NO.	PART NAME	QTY	SERIAL NO.	REMARKS
1	3083710	SLEEVE	1		
2	CH17447	PACKING	1		(SUB FOR A811095 AND T110446)
3	4430041	CYLINDRICAL ROLLER BEARING	1		
4	4411143	SEAL	1		
5	1027901	HOUSING	1		
6	4408119	CYLINDRICAL ROLLER BEARING	1		
7	3083674	PLATE	1		
8	4407745	PLATE	1		
9	2044629	SHAFT	1		
10	19M7938	CAP SCREW	2		M10 X 20, (SUB FOR J901020)
11	2042965	PLANET PINION CARRIER	1		
12	4176070	PLATE	1		
13	4408102	PIN FASTENER	3		
14	4414855	NEEDLE BEARING	3		
15	3084940	GEAR	3		
16	4414833	PLATE	6		
17	4116308	SPRING PIN	6		
19	3092035	SUN GEAR	1		
20	2045146	RING GEAR	1		
21	M341440	SCREW	12		
23	2042964	PLANET PINION CARRIER	1		
24	4244904	PLATE	1		
25	4408122	PIN FASTENER	3		
26	4430040	NEEDLE BEARING	3		
27	3083741	GEAR	3		
28	4408002	PLATE	3		
29	3083740	SUN GEAR	1		
31	3087949	PIPE	1		
33	94-2012	FITTING PLUG	1		
34	9196961	HYDRAULIC MOTOR	1		
35	40M7084	SNAP RING	1		(SUB FOR 927488)
36	4298608	CAP	1		
37	19M8440	SCREW	7		M10 X 25, (SUB FOR M341025 AND 4259780)
38	.....	PLATE	1		
39	37H99	SCREW	2		0.100" X 1/4", (SUB FOR M492564)
40	4449144	PIPE	1		
41	3090862	DIPSTICK	1		
42	4449182	PIPE	1		

SWING MOTOR MOUNTING

TP48193 -UN-05NOV96

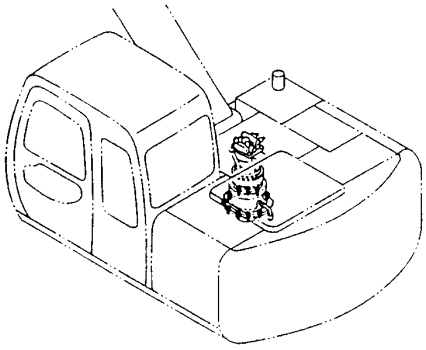

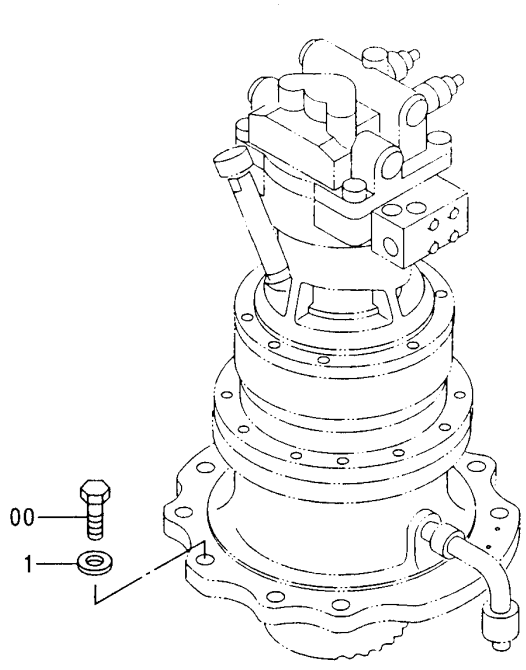

TP48193

SWING MOTOR MOUNTING

KEY	PART NO.	PART NAME	QTY	SERIAL NO.	REMARKS
0	J922060	CAP SCREW	10		
1	J222020	WASHER	10		

SWING MOTOR (COMPONENTS)

T161922 -UN-26DEC02

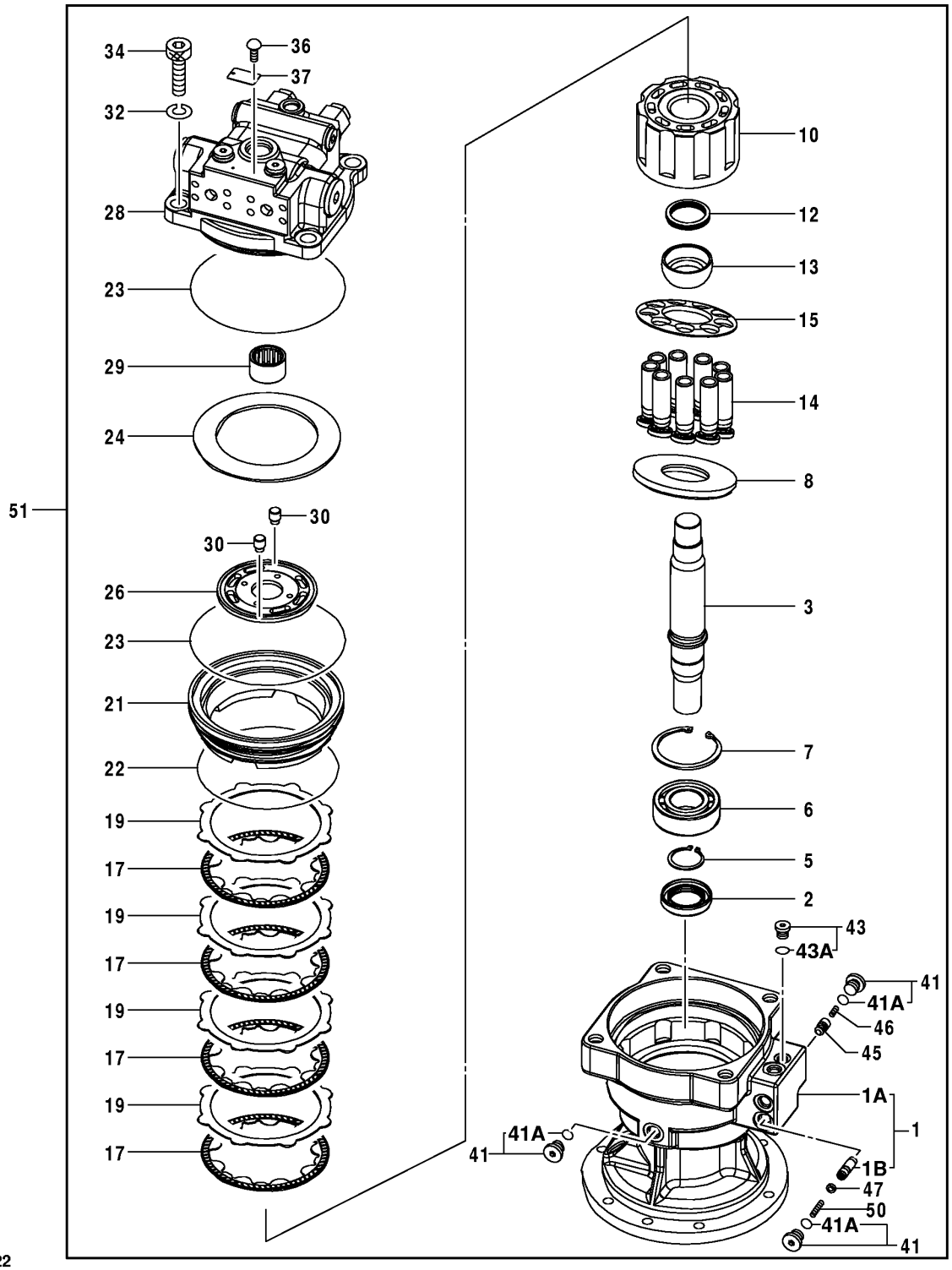

T161922

SWING MOTOR (COMPONENTS)

KEY	PART NO.	PART NAME	QTY	SERIAL NO.	REMARKS
1	8080152	CASE	1		
1A	.....	CASE	1		
1B	.....	PLUNGER	1		
2	4320490	SEAL	1		
3	3085794	SHAFT	1		
5	40M7046	SNAP RING	1		
6	4402669	CYLINDRICAL ROLLER BEARING	1		
7	40M7044	SNAP RING	1		
8	4396102	PLATE	1		
10	2043442	ROTOR	1		
12	4413753	SPRING	1		
13	4413700	BUSHING	1		
14	8071556	PISTON	9		
15	3081727	RETAINER	1		
17	3087818	PLATE	4		
19	3075729	PLATE	4		
21	3084716	PISTON	1		
22	4413765	O-RING	1		
23	4413764	O-RING	2		
24	4434436	SPRING	1		
26	3089613	PLATE	1		
28	9198979	VALVE	1		
29	4413768	NEEDLE BEARING	1		
30	4413761	PIN FASTENER	2		
32	12H294	LOCK WASHER	4		
34	19M8208	SCREW	4		
36	37H99	SCREW	2		
37	.....	PLATE	1		
41	9134110	PIPE PLUG	3		
41A	M800650	PACKING	3		
43	9134109	DRAIN PLUG	1		
43A	4506408	O-RING	1		
45	4399892	POPPET	1		
46	4398846	SPRING	1		
47	4452178	WASHER	1		
50	4398889	SPRING	1		
51	9196961	HYDRAULIC MOTOR	1		(SWING MOTOR)

MEMORANDA

NUMERICAL INDEX

PART NO.	GRID	KEY	PAGE
AA34965	2C24	7	1831 - 3
AA34965	2D12	11	1833 - 5
AE24616	3D11	13	3315 - 9
AE24616	3D13	11	3315 - 9B
AE24616	3D15	17	3315 - 13
AE24616	3E8	3	3360 - 3
AE24616	3E10	17	3360 - 5
AE24616	3J6	5	3363 - 57
AE24616	3J8	7	3363 - 59
AE42718	3E8	13	3360 - 3
AE45056	3J14	2	3364 - 5
AH103182	1G6	11	0521 - 5
AH149464	3J22	28	3365 - 9
AH149465	3J22	27	3365 - 9
AH149467	3J18	27	3365 - 5
AH156744	3K2	34	3365 - 21
AH63565	3D13	5	3315 - 9B
AH75160	3E8	33	3360 - 3
AH97777	3J14	3	3364 - 5
AP33637	3I2	1	3363 - 29
AP33637	3I4	1	3363 - 31
AP33638	3I2	16	3363 - 29
AP33638	3I4	16	3363 - 31
AP33639	3D21	33	3344 - 5B
AP33639	3D25	33	3344 - 7B
AP35346	3D21	59	3344 - 5B
AP35347	3D25	59	3344 - 7B
AP37202	3D19	3	3344 - 5
AP37202	3D21	3	3344 - 5B
AP37224	3D23	3	3344 - 7
AP37224	3D25	3	3344 - 7B
AR21836	1E14	1	0420 - 5
AR21836	1G14	1	0563 - 3
AR48236	1G10	14	0531 - 3
AR60937	1H16	30	1674 - 7
AR62936	1G6	12	0521 - 5
AR65293	1F14	2	0511 - 9
AR76140	3J14	17	3364 - 5
AR90081	3E10	11	3360 - 5
AR94101	3D11	25	3315 - 9
AT108783	3E10	10	3360 - 5
AT115448	3E12	11	3360 - 7
AT116486	3D11	16	3315 - 9
AT116486	3E8	7	3360 - 3
AT117364	3J4	48	3363 - 55
AT117365	3J4	47	3363 - 55
AT120498	3J4	47	3363 - 55
AT120499	3J4	48	3363 - 55
AT123487	3E22	55A	3361 - 9
AT128492	1B13	3	0133 - 5
AT130053	3E8	11	3360 - 3
AT130053	3E10	7	3360 - 5
AT130157	1G23	1	1369 - 3
AT130666	1G12	7	0540 - 3
AT130684	3E8	22	3360 - 3
AT131080	3C18	90	3302 - 9
AT131080	3C20	21	3302 - 11
AT131080	3C20	22	3302 - 11
AT131080	3C20	90	3302 - 11
AT131080	3C22	21	3302 - 13
AT131080	3C22	22	3302 - 13
AT131080	3C22	90	3302 - 13
AT131081	3C18	15	3302 - 9
AT131081	3C22	15	3302 - 13
AT131089	3C24	15	3302 - 15
AT131297	3I22	12	3363 - 49
AT131436	3J14	8	3364 - 5
AT131437	3J14	13	3364 - 5
AT131445	3E10	8	3360 - 5
AT131538	3K6	38	3365 - 25
AT131725	3I12	16	3363 - 39
AT133633	3J18	7	3365 - 5
AT133633	3K8	7	3365 - 27
AT133633	3K10	7	3365 - 29
AT133634	3J18	8	3365 - 5
AT133634	3K6	8	3365 - 25
AT133634	3K8	8	3365 - 27
AT133634	3K10	8	3365 - 29
AT133635	3K8	6	3365 - 27
AT133635	3K10	6	3365 - 29
AT133645	3J22	4	3365 - 9
AT134345	3J14	12	3364 - 5
AT134345	3J14	20	3364 - 5
AT139382	3E12	4	3360 - 7
AT139383	3E12	3	3360 - 7
AT140041	3D11	16	3315 - 9
AT140041	3E8	7	3360 - 3
AT141562	3E12	15	3360 - 7
AT142288	1H21	1	1674 - 10
AT145650	2D10	13	1833 - 3
AT145651	1F8	5	0511 - 3
AT145651	1F8	6	0511 - 3
AT146242	3C18	6	3302 - 9
AT146242	3C18	7	3302 - 9
AT146242	3C18	91	3302 - 9
AT146242	3C20	91	3302 - 11
AT146242	3C22	6	3302 - 13
AT146242	3C22	7	3302 - 13
AT146242	3C22	91	3302 - 13
AT146242	3C24	6	3302 - 15
AT146242	3C24	7	3302 - 15
AT146242	3C24	28	3302 - 15
AT153835	3F2	12	3361 - 13
AT153919	3J22	17	3365 - 9
AT153920	3K8	28	3365 - 27
AT153920	3K10	28	3365 - 29
AT154151	1B24	2	0267 - 3
AT154167	1B20	23	0260 - 7
AT154207	1H4	12	1370 - 3
AT154378	3D21	53	3344 - 5B
AT154378	3D25	53	3344 - 7B
AT154899	1I5	8	1740 - 3
AT154990	1H10	3C	1673 - 3
AT154990	1H10	5C	1673 - 3
AT157668	3J14	18	3364 - 5
AT158479	3D19	21	3344 - 5
AT160159	3J2	5	3363 - 53
AT162242	3E12	18	3360 - 7
AT163528	3C14	1A	3302 - 5
AT163532	3C14	1B	3302 - 5
AT163533	3C14	1F	3302 - 5
AT163534	3C14	1E	3302 - 5
AT163535	3C14	1D	3302 - 5
AT163536	3C14	1C	3302 - 5
AT163573	3C18	14	3302 - 9
AT163573	3C18	16	3302 - 9
AT163573	3C18	17	3302 - 9
AT164676	1H21	2	1674 - 10
AT164896	3E14	1	3360 - 9
AT167079	3J12	11	3364 - 3
AT167184	3C14	1G	3302 - 5
AT167185	3C14	1J	3302 - 5
AT167186	3C14	1H	3302 - 5
AT167187	3C14	1I	3302 - 5
AT167188	3C14	1K	3302 - 5
AT167189	3C14	1L	3302 - 5
AT167190	3C14	1N	3302 - 5
AT167191	3C14	1M	3302 - 5
AT167874	3C18	92	3302 - 9
AT167874	3C20	29	3302 - 11
AT167874	3C20	30	3302 - 11
AT167874	3C20	92	3302 - 11
AT167874	3C22	29	3302 - 13
AT167874	3C22	30	3302 - 13
AT167874	3C22	92	3302 - 13
AT173678	2C18	2	1821 - 13
AT174905	3D23	21	3344 - 7
AT176051	3J4	27	3363 - 55
AT178738	3C14	1A	3302 - 5
AT178739	3C14	1B	3302 - 5
AT178740	3C14	1F	3302 - 5
AT178741	3C14	1C	3302 - 5
AT178840	1G25	1	1369 - 5
AT178842	1G25	1	1369 - 5
AT178843	1G25	1	1369 - 5
AT178844	1G25	1	1369 - 5
AT179981	3E20	66	3361 - 7
AT180333	1G25	1	1369 - 5
AT180334	1G25	1	1369 - 5
AT180335	1G25	1	1369 - 5
AT180344	1H2	1	1369 - 7
AT180443	1B9	52	0132 - 3
AT180444	1B9	51	0132 - 3
AT180585	3E10	4	3360 - 5
AT180980	2C16	19	1821 - 11
AT183016	1H1	1	1369 - 6
AT185781	1B9	11	0132 - 3
AT185783	1B9	0	0132 - 3
AT185784	1B9	1	0132 - 3
AT185785	1B9	2	0132 - 3
AT185786	1B9	3	0132 - 3
AT185787	1B9	10	0132 - 3
AT185788	1B9	7	0132 - 3
AT185789	1B9	8	0132 - 3
AT186111	3J4	42	3363 - 55
AT186112	3J4	43	3363 - 55
AT186113	3J4	44	3363 - 55
AT186114	3J4	45	3363 - 55
AT186554	3H18	17A	3363 - 21
AT186622	3E8	24	3360 - 3
AT186623	3E8	16	3360 - 3
AT189409	3J4	43	3363 - 55
AT189410	3J4	42	3363 - 55
AT189638	3J14	20	3364 - 5
AT190535	3D11	4	3315 - 9
AT191297	3E8	1	3360 - 3
AT191397	3D11	14	3315 - 9
AT191641	1D24	11	0416 - 3
AT193964	2C16	1	1821 - 11
AT194969	1H14	3	1674 - 5
AT195278	2C16	0C	1821 - 11
AT195279	2C16	0D	1821 - 11
AT195280	2C16	20	1821 - 11
AT195284	2C16	2	1821 - 11
AT195286	2C16	0	1821 - 11
AT195287	2C16	8	1821 - 11
AT195713	3E10	1	3360 - 5
AT195784	3E12	18	3360 - 7
AT195786	3E12	12	3360 - 7
AT195787	3E12	9	3360 - 7
AT195788	3E12	14	3360 - 7

NUMERICAL INDEX - CONTINUED

PART NO.	GRID	KEY	PAGE
AT196259	1D4	13	0409 - 3
AT196259	1D4	41	0409 - 3
AT196259	1D10	72	0413 - 3
AT196259	1D10	87	0413 - 3
AT196259	1D14	88	0413 - 9
AT196334	3J14	18	3364 - 5
AT196587	3E14	1	3360 - 9
AT196588	3E14	3	3360 - 9
AT199349	3C14	1O	3302 - 5
AT199500	1G4	1A	0521 - 3
AT199501	1G4	3	0521 - 3
AT203648	3F14	13	3362 - 13
AT203648	3F18	18	3362 - 17
AT206888	1G6	1	0521 - 5
AT214263	3H18	17A	3363 - 21
AT216522	2C16	6	1821 - 11
AT216532	2C16	14	1821 - 11
AT217709	2C16	51	1821 - 11
AT254809	1C16	16	0404 - 3
AT254809	1D4	7B	0409 - 3
AT254814	1D2	3	0407 - 9
AT254819	1D4	16	0409 - 3
AT254823	1D4	7E	0409 - 3
AT254825	1C16	15A	0404 - 3
AT255014	1C16	18	0404 - 3
AT255026	1C16	29	0404 - 3
AT255026	1D10	65	0413 - 3
AT255027	1D2	4	0407 - 9
AT255033	1E24	42	0433 - 3
AT255036	1C16	28	0404 - 3
AT256023	1E10	20	0419 - 3
AT256027	1E12	5	0420 - 3
AT259918	1D24	11	0416 - 3
AT259925	1C24	40B	0407 - 7
AT259925	1E12	51	0420 - 3
AT259926	1E6	50	0418 - 3
AT259927	1E24	36	0433 - 3
AT259930	1E24	62	0433 - 3
AT259931	1D4	13	0409 - 3
AT259931	1D4	41	0409 - 3
AT259931	1D10	72	0413 - 3
AT259931	1D10	87	0413 - 3
AT259931	1D14	88	0413 - 9
AT259932	1E4	36	0417 - 3
AT259939	1E24	85	0433 - 3
AT259941	1C24	40B	0407 - 7
AT259943	1E22	82	0429 - 3
AT259945	1D10	62	0413 - 3
AT260103	1E4	34	0417 - 3
AT260115	1E24	24	0433 - 3
AT263712	1E12	62A	0420 - 3
AT263852	1D14	9	0413 - 9
AT263852	1E12	46	0420 - 3
AT263853	1E24	11	0433 - 3
AT263859	1E24	62	0433 - 3
AT263875	1F20	7A	0511 - 15
AT263876	1D14	54	0413 - 9
AT263879	1D22	38	0414 - 3
AT263948	1D10	5	0413 - 3
AT263948	1D10	34	0413 - 3
AT264064	1E22	81	0429 - 3
AT264141	1E24	18	0433 - 3
AT264142	1D10	75	0413 - 3
AT264256	3J18	7	3365 - 5
AT264256	3J22	7	3365 - 9
AT264256	3K6	7	3365 - 25
AT264257	3J18	8	3365 - 5
AT264314	3K2	4	3365 - 21
AT264319	3J18	10	3365 - 5
AT264320	3K2	10	3365 - 21
AT264324	1G23	..	1369 - 3
AT264347	1G23	..	1369 - 3
AT264347	3F14	2	3362 - 13
AT264347	3F18	3B	3362 - 17
AT264347	3F20	24	3362 - 19
AT264354	1G23	..	1369 - 3
AT264354	3F20	12	3362 - 19
AT264354	3F22	22	3362 - 21
AT264354	3J18	29	3365 - 5
AT264354	3J22	29	3365 - 9
AT264354	3K6	29	3365 - 25
AT264354	3K8	23	3365 - 27
AT264354	3K10	23	3365 - 29
AT264357	3K2	7	3365 - 21
AT264358	3K2	8	3365 - 21
AT264360	1G23	..	1369 - 3
AT264360	3K2	32	3365 - 21
AT264387	3J18	16	3365 - 5
AT264387	3J22	16	3365 - 9
AT264388	3J18	19	3365 - 5
AT264388	3J22	19	3365 - 9
AT300313	3J6	2	3363 - 57
AT300313	3J8	2	3363 - 59
AT300337	3J8	5	3363 - 59
AT300465	3J8	16	3363 - 59
AT300466	3J8	17	3363 - 59
AT301074	2E25	4	2004 - 5
AT301151	3J4	40	3363 - 55
AT301635	3C20	40	3302 - 11
AT301636	3C20	40	3302 - 11
AT301637	3C20	40	3302 - 11
AT301638	3C20	40	3302 - 11
AT301639	3C20	40	3302 - 11
AT301640	3C20	40	3302 - 11
AT301641	3C22	40	3302 - 13
AT301642	3C22	40	3302 - 13
AT301643	3C22	40	3302 - 13
AT301644	3C22	40	3302 - 13
AT301645	3C22	40	3302 - 13
AT301646	3C22	40	3302 - 13
AT301647	3C24	40	3302 - 15
AT301648	3C24	40	3302 - 15
AT301649	3C24	40	3302 - 15
AT301723	1H18	2	1674 - 7B
AT302700	3I24	46	3363 - 51
AT302700	3J2	46	3363 - 53
AT302700	3J4	49	3363 - 55
AT302830	3J8	23	3363 - 59
AT302876	3J2	3	3363 - 53
AT302877	3J4	27	3363 - 55
AT303121	3D15	28	3315 - 13
AT303189	1G25	1	1369 - 5
AT303431	2B23	7	1810 - 23
AT303468	3J8	22	3363 - 59
AT303665	3J6	18	3363 - 57
AT303666	3J6	11	3363 - 57
AT303666	3J6	18	3363 - 57
AT303667	3J6	13	3363 - 57
AT303668	3J6	12	3363 - 57
AT303703	3J6	1	3363 - 57
AT303955	3J8	1	3363 - 59
AT303956	3J8	8	3363 - 59
AT303957	3J8	30	3363 - 59
AT304330	3D15	21	3315 - 13
AT304407	3D11	14	3315 - 9
AT304407	3D11	19	3315 - 9
AT305641	3J4	40	3363 - 55
AT305719	3I24	46	3363 - 51
AT305719	3J2	46	3363 - 53
AT305719	3J4	49	3363 - 55
AT306723	3D11	16	3315 - 9
AT306723	3E8	7	3360 - 3
AT306737	3D13	7	3315 - 9B
AT306757	3D13	14	3315 - 9B
AT306775	3D13	6	3315 - 9B
AT307709	3D11	14	3315 - 9
AT307710	3D11	4	3315 - 9
AT308576	1C20	17A	0407 - 3
AT309263	2C16	0A	1821 - 11
AT309264	2C16	0B	1821 - 11
AT309610	3K2	19	3365 - 21
AT35121	3D11	3	3315 - 9
AT35121	3E8	6	3360 - 3
AT35121	3J14	16	3364 - 5
AT36921	3D15	27	3315 - 13
AT36921	3E8	2	3360 - 3
AT36921	3E10	3	3360 - 5
AT36921	3J6	8	3363 - 57
AT36921	3J8	4	3363 - 59
AT37693	1G6	13	0521 - 5
AT38628	3J14	9	3364 - 5
AT43291	3G24	4	3363 - 3
AT64237	2E23	1	2004 - 3
AT64237	2E23	2	2004 - 3
AT68901	3D15	23	3315 - 13
AT68901	3E10	13	3360 - 5
AT71082	3D11	11	3315 - 9
AT71082	3E8	23	3360 - 3
AT71732	3E8	4	3360 - 3
AT71732	3E10	18	3360 - 5
AT78124	3D15	20	3315 - 13
AT78124	3E10	20	3360 - 5
AT78633	1H16	30	1674 - 7
AT78634	1H16	30	1674 - 7
AT82210	3E14	2	3360 - 9
AT83721	3D11	6	3315 - 9
AU42809	1H16	30	1674 - 7
A590104	2E2	28	1910 - 5
A590106	2E8	52	1910 - 11
A590106	3D9	40	3315 - 7
A590108	1E16	24	0421 - 3
A590108	1H8	29	1671 - 3
A590108	2D8	7	1832 - 3
A590108	2D8	11	1832 - 3
A590108	2E2	24	1910 - 5
A590108	2E10	12	1910 - 13
A590108	2E25	3	2004 - 5
A590108	3B24	38	3301 - 11
A590108	3D3	13	3315 - 3
A590108	3D3	16	3315 - 3
A590108	3D9	24	3315 - 7
A590110	1C20	7	0407 - 3
A590110	1G2	8	0515 - 7
A590110	1G6	18	0521 - 5
A590110	1H8	4	1671 - 3
A590110	1H8	16	1671 - 3
A590110	1H12	8	1674 - 3
A590110	2D8	4	1832 - 3
A590110	2D8	22	1832 - 3
A590110	2E2	6	1910 - 5
A590110	2E12	2	1910 - 15

NUMERICAL INDEX - CONTINUED

PART NO.	GRID	KEY	PAGE
A590110	3D7	13	3315 - 5
A590110	3H18	31	3363 - 21
A590110	3I2	21	3363 - 29
A590116	2D24	8	1910 - 3
A590116	3F6	6	3362 - 5
A590120	3D9	11	3315 - 7
A590120	3D9	18	3315 - 7
A590906	1F22	1	0515 - 3
A590906	1H10	1	1673 - 3
A590906	3D9	35	3315 - 7
A590906	3D9	39	3315 - 7
A590908	2D8	6	1832 - 3
A590908	2E25	2	2004 - 5
A590908	3B24	39	3301 - 11
A590908	3D3	15	3315 - 3
A590910	1C20	6	0407 - 3
A590910	1G2	7	0515 - 7
A590910	1G6	17	0521 - 5
A590910	1H8	15	1671 - 3
A590910	1H12	7	1674 - 3
A590910	2D8	3	1832 - 3
A590910	2D8	21	1832 - 3
A590910	2E2	3	1910 - 5
A590910	3D7	12	3315 - 5
A590910	3H18	19	3363 - 21
A590912	1G10	10	0531 - 3
A590912	2B5	3	1810 - 3
A590912	3I6	66	3363 - 33
A590912	3J12	45	3364 - 3
A590912	3K21	7	4362 - 7
A590914	1G12	8	0540 - 3
A590914	1H10	3H	1673 - 3
A590914	3F6	3	3362 - 5
A590916	1F14	5	0511 - 9
A590916	1G18	1	0564 - 5
A590916	2D24	7	1910 - 3
A590916	3F6	5	3362 - 5
A590916	3J12	2	3364 - 3
A811030	1G23	..	1369 - 3
A811040	1G23	..	1369 - 3
A811040	3H4	1	3363 - 7
A811045	1G23	..	1369 - 3
A811060	3H18	17C	3363 - 21
A811095	3K23	2	4367 - 3
A811100	3J18	10	3365 - 5
A852122	1B22	22	0263 - 3
A852122	3B24	5	3301 - 11
A852122	3C2	24	3301 - 11B
A852122	3C4	25	3301 - 13
A852122	3F10	15	3362 - 9
A852122	3H18	4	3363 - 21
A852122	3H22	1	3363 - 25
A852122	3H22	8	3363 - 25
A852122	3H22	15	3363 - 25
A852122	3H24	19	3363 - 27
A852122	3H24	23	3363 - 27
A852122	3I16	1	3363 - 43
A852122	3I18	1	3363 - 45
A852122	3I20	1	3363 - 47
A852123	3B16	10	3301 - 3
A852123	3C2	61	3301 - 11B
A852123	3G12	25	3362 - 37
A852123	3G14	25	3362 - 39
A852123	3G16	41	3362 - 41
A852123	3G18	43	3362 - 43
A852123	3G20	38	3362 - 45
A852123	3I2	51	3363 - 29
A852123	3I2	55	3363 - 29
A852123	3I8	2	3363 - 35
A852123	3I10	14	3363 - 37
A852123	3I18	9	3363 - 45
A852132	3C10	6	3301 - 19
A852132	3I6	68	3363 - 33
A852133	3B20	24	3301 - 7
A852133	3B24	3	3301 - 11
A852133	3B24	11	3301 - 11
A852133	3H8	9	3363 - 11
A852133	3H18	8	3363 - 21
A852133	3H18	11	3363 - 21
A852133	3I6	62	3363 - 33
A852133	3I20	2	3363 - 47
A852134	3C6	31	3301 - 15
A852144	3C6	23	3301 - 15
A852144	3H18	1	3363 - 21
A852144	3H20	1	3363 - 23
A852144	3I16	45	3363 - 43
A852144	3J12	36	3364 - 3
A852222	3C2	41	3301 - 11B
A852222	3C2	42	3301 - 11B
A852222	3H18	36	3363 - 21
A852223	3B16	1	3301 - 3
A852223	3C4	27	3301 - 13
A852223	3I12	1	3363 - 39
A852223	3I14	1	3363 - 41
A852243	3C4	13	3301 - 13
A852322	3B24	43	3301 - 11
A852322	3C2	14	3301 - 11B
A852322	3C2	26	3301 - 11B
A852322	3C4	8	3301 - 13
A852322	3F10	14	3362 - 9
A852322	3H22	9	3363 - 25
A852322	3H22	27	3363 - 25
A852322	3H24	1	3363 - 27
A852322	3J12	33	3364 - 3
A852323	3B24	4	3301 - 11
A852323	3F10	13	3362 - 9
A852323	3F12	6	3362 - 11
A852323	3H20	13	3363 - 23
A852323	3I8	1	3363 - 35
A852333	1B22	13	0263 - 3
A852333	3B24	8	3301 - 11
A852333	3B24	46	3301 - 11
A852333	3I14	5	3363 - 41
A852333	3I16	25	3363 - 43
A852333	3I20	8	3363 - 47
A852333	3J12	34	3364 - 3
A852334	3C6	25	3301 - 15
A852334	3H8	5	3363 - 11
A852343	3C4	5	3301 - 13
A852343	3H18	22	3363 - 21
A852344	3C4	2	3301 - 13
A852344	3H8	13	3363 - 11
A852344	3H18	28	3363 - 21
A852344	3I16	35	3363 - 43
A852422	3H24	20	3363 - 27
A852422	3I18	28	3363 - 45
A852422	3J12	32	3364 - 3
A852423	3B16	12	3301 - 3
A852433	3C4	6	3301 - 13
A852433	3C4	11	3301 - 13
A852433	3F10	7	3362 - 9
A852433	3J10	5	3363 - 87
A852522	3C10	5	3301 - 19
A852523	3F10	6	3362 - 9
A852543	1B22	1	0263 - 3
A853144	1B22	6	0263 - 3
A853144	3C6	17	3301 - 15
A853144	3D19	27	3344 - 5
A853144	3D21	27	3344 - 5B
A853144	3D23	27	3344 - 7
A853144	3D25	27	3344 - 7B
A853144	3H10	10	3363 - 13
A853144	3H16	1	3363 - 19
A853166	3H8	1	3363 - 11
A853166	3I22	17	3363 - 49
A853186	3I24	19	3363 - 51
A853188	3J4	33	3363 - 55
A853244	3C6	12	3301 - 15
A853366	3C6	16	3301 - 15
A853366	3G24	12	3363 - 3
A853366	3H8	2	3363 - 11
A853366	3I24	18	3363 - 51
A853386	3I24	11	3363 - 51
A853444	3C6	13	3301 - 15
A853566	3C6	18	3301 - 15
A885002	3B24	53	3301 - 11
A885002	3H18	62	3363 - 21
A885002	3I16	22	3363 - 43
A885002	3J12	19	3364 - 3
A885003	3H4	38	3363 - 7
A885003	3J12	35	3364 - 3
A885006	3H4	16	3363 - 7
A885006	3H6	9	3363 - 9
A885008	3J12	18	3364 - 3
CH10567	3G20	20B	3362 - 45
CH11436	1G23	..	1369 - 3
CH11490	3F22	6	3362 - 21
CH11560	3D5	25	3315 - 3B
CH11560	3E20	49	3361 - 7
CH11560	3E20	78	3361 - 7
CH11560	3E22	9	3361 - 9
CH11560	3E24	9	3361 - 11
CH11561	3G8	15	3362 - 33
CH11562	3G8	12	3362 - 33
CH11562	3G8	33	3362 - 33
CH11569	1G23	..	1369 - 3
CH11569	3F22	33	3362 - 21
CH11570	1B22	13	0263 - 3
CH11570	1G23	..	1369 - 3
CH11570	3B20	24	3301 - 7
CH11570	3B24	3	3301 - 11
CH11570	3B24	8	3301 - 11
CH11570	3B24	11	3301 - 11
CH11570	3B24	35	3301 - 11
CH11570	3B24	46	3301 - 11
CH11570	3C4	6	3301 - 13
CH11570	3C4	11	3301 - 13
CH11570	3C6	4	3301 - 15
CH11570	3C6	7	3301 - 15
CH11570	3C6	25	3301 - 15
CH11570	3C6	31	3301 - 15
CH11570	3C10	6	3301 - 19
CH11570	3E8	30	3360 - 3
CH11570	3E10	2	3360 - 5
CH11570	3E20	62A	3361 - 7
CH11570	3E24	52A	3361 - 11
CH11570	3F10	7	3362 - 9
CH11570	3F14	13B	3362 - 13
CH11570	3F18	18B	3362 - 17
CH11570	3F20	5	3362 - 19
CH11570	3F20	78B	3362 - 19

NUMERICAL INDEX - CONTINUED

PART NO.	GRID	KEY	PAGE
CH11570	3F22	3	3362 - 21
CH11570	3F22	15	3362 - 21
CH11570	3F24	49	3362 - 23
CH11570	3G2	6A	3362 - 25
CH11570	3G4	27A	3362 - 27
CH11570	3G6	1	3362 - 29
CH11570	3G16	24A	3362 - 41
CH11570	3G16	25A	3362 - 41
CH11570	3G16	37A	3362 - 41
CH11570	3G16	38A	3362 - 41
CH11570	3G16	39A	3362 - 41
CH11570	3G18	25A	3362 - 43
CH11570	3G18	26A	3362 - 43
CH11570	3G18	39A	3362 - 43
CH11570	3G18	41A	3362 - 43
CH11570	3H4	38	3363 - 7
CH11570	3H8	5	3363 - 11
CH11570	3H8	9	3363 - 11
CH11570	3H18	8	3363 - 21
CH11570	3H18	11	3363 - 21
CH11570	3I2	48	3363 - 29
CH11570	3I4	49	3363 - 31
CH11570	3I6	62	3363 - 33
CH11570	3I6	68	3363 - 33
CH11570	3I10	12	3363 - 37
CH11570	3I10	15	3363 - 37
CH11570	3I12	4	3363 - 39
CH11570	3I12	25	3363 - 39
CH11570	3I14	5	3363 - 41
CH11570	3I16	25	3363 - 43
CH11570	3I20	2	3363 - 47
CH11570	3I20	8	3363 - 47
CH11570	3J10	5	3363 - 87
CH11570	3J12	34	3364 - 3
CH11570	3J12	35	3364 - 3
CH11571	1B15	2	0134 - 3
CH11571	1G23	..	1369 - 3
CH11571	3J12	12	3364 - 3
CH11572	1G23	..	1369 - 3
CH12329	1G23	..	1369 - 3
CH12329	3F18	3D	3362 - 17
CH12329	3F20	13	3362 - 19
CH12329	3F20	22	3362 - 19
CH12329	3F22	23	3362 - 21
CH12329	3F24	51	3362 - 23
CH13520	1B13	5	0133 - 5
CH14634	1G23	..	1369 - 3
CH14634	3G22	12	3362 - 47
CH14701	1G23	..	1369 - 3
CH16109	3K8	12	3365 - 27
CH16109	3K10	12	3365 - 29
CH16109	3K17	8	4362 - 3
CH17167	1G23	..	1369 - 3
CH17167	3F20	18	3362 - 19
CH17167	3F22	46	3362 - 21
CH17167	3F22	50	3362 - 21
CH17167	3F24	47	3362 - 23
CH17447	3K23	2	4367 - 3
CH19111	1G23	..	1369 - 3
C610778	3C18	13	3302 - 9
C610778	3C22	13	3302 - 13
C610778	3C24	13	3302 - 15
DSO345	1G25	1	1369 - 5
DSO346	1G25	1	1369 - 5
EV23PN	3C16	2	3302 - 7
EV23SYL	3C16	4O	3302 - 7
EV5849-V23	3C16	3	3302 - 7
EX119-21	3C12	11	3302 - 3
EX119-27	3C12	11	3302 - 3
EX129A-37	3C12	11	3302 - 3
EX1829A-47	3C12	11	3302 - 3
EX20SP	3C12	13	3302 - 3
EX20W1	3C12	12	3302 - 3
EX21-27QRT	3C12	6	3302 - 3
EX21LK	3C12	5	3302 - 3
EX21LK	3C16	2	3302 - 7
EX21SYL	3C12	2	3302 - 3
EX21SYL	3C16	4G	3302 - 7
EX21S5F	3C12	1	3302 - 3
EX21S5F	3C16	4I	3302 - 7
EX21TVIP	3C12	4	3302 - 3
EX21TVIP	3C16	4H	3302 - 7
EX21VIP	3C12	3	3302 - 3
EX21VIP	3C16	4J	3302 - 7
EX27LK	3C12	5	3302 - 3
EX27SYL	3C12	2	3302 - 3
EX27VPL	3C12	11	3302 - 3
EX27VPL	3C12	14	3302 - 3
EX27VPN	3C12	5	3302 - 3
EX27VPN	3C12	11	3302 - 3
EX29SP	3C12	13	3302 - 3
EX29W1	3C12	12	3302 - 3
EX31329-X	3C12	7	3302 - 3
EX360-21	3C12	10	3302 - 3
EX37LK	3C12	5	3302 - 3
EX37SYL	3C12	2	3302 - 3
EX47LK	3C12	5	3302 - 3
EX47SYL	3C12	2	3302 - 3
EX4894-21	3C12	11	3302 - 3
EX5824-37	3C12	11	3302 - 3
EX5827-27	3C12	11	3302 - 3
EX5849-21	3C16	3	3302 - 7
EX5850-27V	3C12	11	3302 - 3
EX5854-21	3C12	11	3302 - 3
E64256	1G10	6	0531 - 3
H102543	3E10	1	3360 - 5
H132922	2E2	25	1910 - 5
H132922	2E12	5	1910 - 15
H132922	3D9	25	3315 - 7
H157235	3K2	9	3365 - 21
H157237	3K2	14	3365 - 21
H158175	3K8	19	3365 - 27
H158175	3K10	19	3365 - 29
H158453	3J22	9	3365 - 9
H158453	3K6	9	3365 - 25
H158453	3K8	9	3365 - 27
H158453	3K10	9	3365 - 29
H158459	3J22	18	3365 - 9
H158461	3J18	14	3365 - 5
H158461	3J22	14	3365 - 9
H158463	3J18	15	3365 - 5
H158463	3J22	15	3365 - 9
H163431	3K2	17	3365 - 21
H163432	3K2	18	3365 - 21
H163434	3K2	35	3365 - 21
H21259	1G21	31	1322 - 3
H21259	1G21	32	1322 - 3
H61354	3H6	1	3363 - 9
H75414	3J14	4	3364 - 5
H77698	1B22	30	0263 - 3
H77698	1E14	12	0420 - 5
H77698	1E16	21	0421 - 3
H77698	1F22	2	0515 - 3
H77698	1H12	15	1674 - 3
H77698	1H14	10	1674 - 5
H77698	1H14	11	1674 - 5
H77698	1H16	21	1674 - 7
H77698	1H16	28	1674 - 7
H77698	2C4	4	1814 - 3
H77698	2C24	9	1831 - 3
H77698	2D6	10	1831 - 9
H77698	2D8	28	1832 - 3
H77698	2D10	27	1833 - 3
H77698	2D12	6	1833 - 5
H77698	2E25	12	2004 - 5
H77698	2F2	4	2006 - 3
H77698	3B24	54	3301 - 11
H77698	3C6	44	3301 - 15
H77698	3C10	7	3301 - 19
H77698	3D3	11	3315 - 3
H77698	3D3	19	3315 - 3
H77698	3D15	19	3315 - 13
H77698	3F10	17	3362 - 9
H77698	3F12	8	3362 - 11
H77698	3H20	18	3363 - 23
H77698	3I6	31	3363 - 33
H77698	3I6	55	3363 - 33
H77698	3J6	17	3363 - 57
H77698	3J8	29	3363 - 59
IPSKIT3	1G25	1	1369 - 5
ISPKIT3	1G25	1	1369 - 5
JD5765	1G21	29	1322 - 3
JD5909	1G21	14	1322 - 3
JD7781	3K2	41	3365 - 21
J010616	1H12	9	1674 - 3
J010814	1H14	5	1674 - 5
J010816	1F10	3	0511 - 5
J010816	1H25	1	1676 - 3
J010825	3I2	17	3363 - 29
J010825	3I4	17	3363 - 31
J010830	1G14	10	0563 - 3
J010845	2E21	4	2002 - 5
J010855	2E8	31	1910 - 11
J011016	1G16	10	0564 - 3
J011016	1H4	14	1370 - 3
J011020	1C20	15	0407 - 3
J011020	1E14	10	0420 - 5
J011020	1F22	6	0515 - 3
J011020	1G10	18	0531 - 3
J011020	1G14	15	0563 - 3
J011020	1H8	20	1671 - 3
J011020	1H12	21	1674 - 3
J011020	2D8	32	1832 - 3
J011020	3I6	58	3363 - 33
J011025	2C24	12	1831 - 3
J011025	2E21	6	2002 - 5
J011025	3D7	21	3315 - 5
J011025	3K15	6	4351 - 5
J011030	3E16	3	3361 - 3
J011030	3H18	34	3363 - 21
J011030	3K17	10	4362 - 3
J011035	3D7	22	3315 - 5
J011035	3E16	2	3361 - 3
J011035	3K19	1	4362 - 5
J011230	1F14	7	0511 - 9
J011240	2E8	23	1910 - 11
J011255	3H4	26	3363 - 7
J011255	3I22	30	3363 - 49
J011260	3H4	35	3363 - 7
J011260	3H10	15	3363 - 13
J011270	3H6	12	3363 - 9

NUMERICAL INDEX - CONTINUED

PART NO.	GRID	KEY	PAGE
J011275	3H2	8	3363 - 5
J011280	3C6	5	3301 - 15
J020614	1H4	18	1370 - 3
J020614	3G8	1	3362 - 33
J020616	2C4	2	1814 - 3
J020620	1H8	25	1671 - 3
J020625	2D8	24	1832 - 3
J020630	2D12	2	1833 - 5
J020630	2D14	5	1833 - 7
J020640	2E8	51	1910 - 11
J020816	1H16	2	1674 - 7
J020816	2C24	13	1831 - 3
J020816	3D3	13	3315 - 3
J020820	1F18	3	0511 - 13
J020820	1H10	7	1673 - 3
J020820	2D10	16	1833 - 3
J020825	2C6	7	1816 - 3
J020825	2D8	16	1832 - 3
J020825	2D12	3	1833 - 5
J020825	2E23	4	2004 - 3
J020830	1H8	23	1671 - 3
J020835	2D8	23	1832 - 3
J020835	2D14	4	1833 - 7
J020850	3B24	40	3301 - 11
J020850	3C2	18	3301 - 11B
J020850	3C2	27	3301 - 11B
J021020	2D10	2	1833 - 3
J021020	3D9	45	3315 - 7
J021025	1F16	1	0511 - 11
J021025	1F22	8	0515 - 3
J021025	1G4	2	0521 - 3
J021025	1G6	10	0521 - 5
J021025	1I5	4	1740 - 3
J021025	2C14	6	1821 - 5
J021025	2D24	12	1910 - 3
J021025	2E4	11	1910 - 7
J021025	2E6	1	1910 - 9
J021025	2E25	6	2004 - 5
J021025	3I8	9	3363 - 35
J021025	3J12	28	3364 - 3
J021030	1F8	11	0511 - 3
J021030	2C16	27	1821 - 11
J021030	2D10	9	1833 - 3
J021030	2D24	15	1910 - 3
J021030	2E2	10	1910 - 5
J021030	2E4	2	1910 - 7
J021030	2E6	4	1910 - 9
J021030	2E8	2	1910 - 11
J021030	2E12	15	1910 - 15
J021030	3H6	14	3363 - 9
J021030	3H12	41	3363 - 15
J021035	1E14	3	0420 - 5
J021035	2D24	16	1910 - 3
J021035	2E8	12	1910 - 11
J021040	3I8	11	3363 - 35
J021045	2E12	12	1910 - 15
J021045	3I12	15	3363 - 39
J021090	3H12	36	3363 - 15
J021225	3H10	13	3363 - 13
J031025	2D24	9	1910 - 3
J031025	2E6	11	1910 - 9
J031030	2D24	1	1910 - 3
J031030	2E4	14	1910 - 7
J031030	2E6	8	1910 - 9
J031030	2E8	9	1910 - 11
J031030	2E10	1	1910 - 13
J031030	2E12	21	1910 - 15
J031040	2E14	13	1910 - 17
J031090	2E8	46	1910 - 11
J031230	3B20	20	3301 - 7
J031230	3J12	42	3364 - 3
J031240	1B7	2	0131 - 7
J050816	2D6	1	1831 - 9
J050816	2D6	9	1831 - 9
J051025	2C6	6	1816 - 3
J051030	2F4	7	2007 - 3
J051030	3D9	1	3315 - 7
J051050	3D7	9	3315 - 5
J071035	2E14	10	1910 - 17
J090820	1G2	9	0515 - 7
J090825	2D6	3	1831 - 9
J090825	2D6	6	1831 - 9
J090825	2F4	3	2007 - 3
J219167	2C22	17	1821 - 17
J222010	2B5	10	1810 - 3
J222012	1F14	8	0511 - 9
J222012	3B22	2	3301 - 9
J222012	3J12	46	3364 - 3
J222012	3K21	2	4362 - 7
J222014	1C4	4	0267 - 7
J222016	1C2	2	0267 - 5
J222016	1G12	18	0540 - 3
J222016	3J12	1	3364 - 3
J222020	3K25	1	4367 - 5
J231108	2F4	5	2007 - 3
J253104	2D10	36	1833 - 3
J253112	2E19	3	2002 - 3
J257218	1I7	3	1740 - 5
J257218	3D17	31	3344 - 3
J260816	1G8	2	0521 - 7
J260820	1E16	31	0421 - 3
J260820	3D3	13	3315 - 3
J260835	1E16	23	0421 - 3
J271025	1E16	14	0421 - 3
J271030	1E16	2	0421 - 3
J400408	3D5	2	3315 - 3B
J450510	1G16	14	0564 - 3
J460310	1H16	26	1674 - 7
J460510	2E17	4	2001 - 3
J460514	2D10	4	1833 - 3
J460614	1H16	13	1674 - 7
J460614	1H25	2	1676 - 3
J460616	1H16	3	1674 - 7
J460616	2C10	1	1816 - 7
J460616	2D2	3	1831 - 5
J460616	2D2	14	1831 - 5
J460616	2F2	1	2006 - 3
J460620	1E16	4	0421 - 3
J460620	1H16	16	1674 - 7
J460620	2D2	6	1831 - 5
J460620	2D2	9	1831 - 5
J460620	2D2	17	1831 - 5
J460620	2D6	7	1831 - 9
J460635	1H16	7	1674 - 7
J460635	2C8	27	1816 - 5
J650510	2B21	7	1810 - 21
J650510	2B24	7	1810 - 25
J680516	2C2	51	1810 - 27
J680616	2C8	1	1816 - 5
J680616	2C8	5	1816 - 5
J680616	2C8	9	1816 - 5
J680616	2C8	12	1816 - 5
J680616	2C8	16	1816 - 5
J680616	2C8	20	1816 - 5
J680616	2C10	5	1816 - 7
J70782	1G16	2	0564 - 3
J75481	3J18	39	3365 - 5
J75481	3K13	3	4351 - 3
J75581	3E2	72	3344 - 9
J770616	3J12	13	3364 - 3
J780612	3G8	28	3362 - 33
J780808	2D8	8	1832 - 3
J780825	3H10	3	3363 - 13
J780825	3H12	3	3363 - 15
J780825	3H12	14	3363 - 15
J780825	3H14	4	3363 - 17
J780825	3H16	8	3363 - 19
J780845	3D5	18	3315 - 3B
J781020	3D15	5	3315 - 13
J781030	3G8	8	3362 - 33
J781030	3H6	2	3363 - 9
J781030	3H10	23	3363 - 13
J781030	3H12	8	3363 - 15
J781030	3H18	13	3363 - 21
J781030	3I24	16	3363 - 51
J781035	2B5	7	1810 - 3
J781035	3D7	11	3315 - 5
J781035	3H2	2	3363 - 5
J781040	3H4	2	3363 - 7
J781040	3I2	20	3363 - 29
J781045	3I10	4	3363 - 37
J781060	1F24	2	0515 - 5
J781230	3G24	3	3363 - 3
J833324	1I9	4	1749 - 3
J900616	1H10	5E	1673 - 3
J900800	2E25	1	2004 - 5
J900816	1H8	28	1671 - 3
J900820	3D3	13	3315 - 3
J901002	3H18	30	3363 - 21
J901004	1C20	4	0407 - 3
J901010	1C20	5	0407 - 3
J901016	1G2	6	0515 - 7
J901020	3B18	18	3301 - 5
J901020	3K23	10	4367 - 3
J901030	2B5	9	1810 - 3
J901218	3K6	38	3365 - 25
J901240	1G10	9	0531 - 3
J901425	3D17	16	3344 - 3
J901435	1C4	3	0267 - 7
J921235	1B11	8	0133 - 3
J921240	2B5	2	1810 - 3
J921430	3F6	2	3362 - 5
J921612	1G12	22	0540 - 3
J921635	1F14	4	0511 - 9
J921635	3J12	3	3364 - 3
J921640	3F6	4	3362 - 5
J921840	3D17	30	3344 - 3
J921890	1I5	20	1740 - 3
J922060	3K25	0	4367 - 5
J931235	3K21	6	4362 - 7
J931695	3K15	2	4351 - 5
J950010	1G10	3	0531 - 3
J950010	1H12	6	1674 - 3
J950010	3J12	17C	3364 - 3
J950014	1G12	9	0540 - 3
J950014	3D3	3	3315 - 3
J950016	1G12	19	0540 - 3
J950016	1I5	19	1740 - 3
J950020	3D17	33	3344 - 3
J950020	3D21	39	3344 - 5B
J950020	3D25	39	3344 - 7B

NUMERICAL INDEX - CONTINUED

PART NO.	GRID	KEY	PAGE
J952010	1G12	4	0540 - 3
J952010	2C20	6	1821 - 15
J952012	3D3	9	3315 - 3
J952014	1H10	3I	1673 - 3
J981845	2D16	1	1833 - 9
KV16429	1G4	1A	0521 - 3
K40016	3B20	4	3301 - 7
M111020	1G6	16	0521 - 5
M111063	2D8	2	1832 - 3
M171025	1G12	5	0540 - 3
M340613	3E20	72	3361 - 7
M340625	3D9	38	3315 - 7
M340813	3G22	8	3362 - 47
M340816	2C22	1	1821 - 17
M341025	3K23	37	4367 - 3
M341036	3F14	63	3362 - 13
M341036	3F16	1	3362 - 15
M341080	3E22	51	3361 - 9
M341432	1B20	21	0260 - 7
M341440	3K23	21	4367 - 3
M341445	3F24	41	3362 - 23
M341465	3J22	12	3365 - 9
M341465	3K6	12	3365 - 25
M351018	1B11	4	0133 - 3
M360614	1F10	5	0511 - 5
M430610	3E2	71	3344 - 9
M430613	1H10	4	1673 - 3
M492564	3K23	39	4367 - 3
M500504	3D9	31	3315 - 7
M500505	3D9	34	3315 - 7
M500605	1F22	9	0515 - 3
M500605	2E8	53	1910 - 11
M500605	3D9	41	3315 - 7
M520012	1G10	11	0531 - 3
M570010	1H8	7	1671 - 3
M800650	1B22	22	0263 - 3
M800650	1G23	..	1369 - 3
M800650	3B16	1	3301 - 3
M800650	3B16	10	3301 - 3
M800650	3B16	12	3301 - 3
M800650	3B24	4	3301 - 11
M800650	3B24	5	3301 - 11
M800650	3B24	43	3301 - 11
M800650	3B24	53	3301 - 11
M800650	3C2	14	3301 - 11B
M800650	3C2	24	3301 - 11B
M800650	3C2	26	3301 - 11B
M800650	3C2	41	3301 - 11B
M800650	3C2	42	3301 - 11B
M800650	3C2	61	3301 - 11B
M800650	3C4	8	3301 - 13
M800650	3C4	25	3301 - 13
M800650	3C4	27	3301 - 13
M800650	3C10	5	3301 - 19
M800650	3D15	16	3315 - 13
M800650	3E18	6A	3361 - 5
M800650	3E20	63A	3361 - 7
M800650	3E22	58A	3361 - 9
M800650	3E22	59A	3361 - 9
M800650	3E24	58A	3361 - 11
M800650	3F10	6	3362 - 9
M800650	3F10	13	3362 - 9
M800650	3F10	14	3362 - 9
M800650	3F10	15	3362 - 9
M800650	3F12	6	3362 - 11
M800650	3F14	16B	3362 - 13
M800650	3F14	65	3362 - 13
M800650	3F16	20B	3362 - 15
M800650	3F18	20B	3362 - 17
M800650	3F24	52	3362 - 23
M800650	3G2	14A	3362 - 25
M800650	3G4	20A	3362 - 27
M800650	3G4	26A	3362 - 27
M800650	3G18	40A	3362 - 43
M800650	3H18	4	3363 - 21
M800650	3H18	36	3363 - 21
M800650	3H18	61A	3363 - 21
M800650	3H20	13	3363 - 23
M800650	3H22	1	3363 - 25
M800650	3H22	8	3363 - 25
M800650	3H22	9	3363 - 25
M800650	3H22	15	3363 - 25
M800650	3H22	27	3363 - 25
M800650	3H22	31	3363 - 25
M800650	3H22	32	3363 - 25
M800650	3H24	1	3363 - 27
M800650	3H24	19	3363 - 27
M800650	3H24	20	3363 - 27
M800650	3H24	23	3363 - 27
M800650	3I8	1	3363 - 35
M800650	3I8	2	3363 - 35
M800650	3I10	13	3363 - 37
M800650	3I10	14	3363 - 37
M800650	3I12	1	3363 - 39
M800650	3I14	1	3363 - 41
M800650	3I16	1	3363 - 43
M800650	3I16	22	3363 - 43
M800650	3I16	40	3363 - 43
M800650	3I18	1	3363 - 45
M800650	3I18	9	3363 - 45
M800650	3I18	28	3363 - 45
M800650	3I20	1	3363 - 47
M800650	3J12	19	3364 - 3
M800650	3J12	32	3364 - 3
M800650	3J12	33	3364 - 3
M800650	3L2	41A	4367 - 7
M800893	1G23	..	1369 - 3
M84972	2B23	1	1810 - 23
N231749	3B20	5	3301 - 7
P60471	1B22	2	0263 - 3
P61821	3B20	15	3301 - 7
P61822	3B20	16	3301 - 7
P61954	3H10	3	3363 - 13
P61954	3H12	3	3363 - 15
P61954	3H12	14	3363 - 15
P61954	3H14	4	3363 - 17
P61954	3H16	8	3363 - 19
P61970	1I5	20	1740 - 3
P63186	3D21	3D	3344 - 5B
P63186	3D25	3D	3344 - 7B
P63448	1G21	17	1322 - 3
P66990	3D21	34	3344 - 5B
P66990	3D25	34	3344 - 7B
P67984	3B24	43	3301 - 11
P67984	3C2	14	3301 - 11B
P67984	3C2	26	3301 - 11B
P67984	3C4	8	3301 - 13
P67984	3F10	14	3362 - 9
P67984	3H22	9	3363 - 25
P67984	3H22	27	3363 - 25
P67984	3H24	1	3363 - 27
P67984	3J12	33	3364 - 3
P68261	3D21	3H	3344 - 5B
P68261	3D25	3H	3344 - 7B
P68263	3D21	3J	3344 - 5B
P68263	3D25	3J	3344 - 7B
P68265	3D21	3D	3344 - 5B
P68265	3D25	3D	3344 - 7B
P68886	3D21	36	3344 - 5B
P68886	3D25	36	3344 - 7B
R26448	3D11	5	3315 - 9
R26448	3E8	31	3360 - 3
R26448	3E10	5	3360 - 5
R26552	3G4	15	3362 - 27
R27212	3D11	8	3315 - 9
R27212	3E8	5	3360 - 3
R27212	3E10	9	3360 - 5
R27212	3J14	10	3364 - 5
R28782	3D13	4	3315 - 9B
R29424	3H12	7	3363 - 15
R29936	3J4	41	3363 - 55
R31147	3D15	22	3315 - 13
R31147	3E8	35	3360 - 3
R31147	3E10	16	3360 - 5
R41778	2C18	4	1821 - 13
R44302	2B23	5	1810 - 23
R44302	3D11	18	3315 - 9
R44302	3E8	32	3360 - 3
R44302	3E12	8	3360 - 7
R44302	3E14	4	3360 - 9
R44302	3J14	23	3364 - 5
R516181	1F12	14	0511 - 7
R58462	2C18	5	1821 - 13
R69667	3H10	1	3363 - 13
R69667	3H12	1	3363 - 15
R69667	3H12	12	3363 - 15
R69667	3H14	3	3363 - 17
R69667	3H16	7	3363 - 19
R71799	3E12	5	3360 - 7
R99052	3G10	33	3362 - 35
TF1U3302D	3C16	4K	3302 - 7
TF220	3C16	4A	3302 - 7
TF290	3C16	4A	3302 - 7
THA852322	3B24	43	3301 - 11
THA852322	3C2	14	3301 - 11B
THA852322	3C2	26	3301 - 11B
THA852322	3C4	8	3301 - 13
THA852322	3F10	14	3362 - 9
THA852322	3H22	9	3363 - 25
THA852322	3H22	27	3363 - 25
THA852322	3H24	1	3363 - 27
THA852322	3J12	33	3364 - 3
THA885008	3J12	18	3364 - 3
TH0354607	3F2	9	3361 - 13
TH0430809	3H18	17C	3363 - 21
TH0789601	3K6	1	3365 - 25
TH0789602	3K6	1A	3365 - 25
TH0789603	3K6	2	3365 - 25
TH0789605	3K6	3	3365 - 25
TH0789607	3K6	28	3365 - 25
TH0789609	3K6	31	3365 - 25
TH100044	1G23	..	1369 - 3
TH100055	1G23	..	1369 - 3
TH100074	3D19	23	3344 - 5
TH100074	3D19	33B	3344 - 5
TH100074	3D21	23	3344 - 5B
TH100074	3D21	33B	3344 - 5B
TH100074	3D21	36A	3344 - 5B
TH100074	3D23	23	3344 - 7
TH100074	3D23	33B	3344 - 7
TH100074	3D25	23	3344 - 7B

NUMERICAL INDEX - CONTINUED

PART NO.	GRID	KEY	PAGE
TH100074	3D25	31	3344 - 7B
TH100074	3D25	33B	3344 - 7B
TH100074	3D25	36A	3344 - 7B
TH100074	3E2	72	3344 - 9
TH100074	3E4	4	3344 - 11
TH100074	3J22	39	3365 - 9
TH100074	3K6	26	3365 - 25
TH100074	3K8	25	3365 - 27
TH100074	3K10	25	3365 - 29
TH100074	3K13	3	4351 - 3
TH100136	1G23	..	1369 - 3
TH100346	3C18	4	3302 - 9
TH100346	3C22	4	3302 - 13
TH100346	3C24	4	3302 - 15
TH100347	3C18	8	3302 - 9
TH100347	3C22	8	3302 - 13
TH100347	3C24	8	3302 - 15
TH100348	3C18	6	3302 - 9
TH100348	3C22	6	3302 - 13
TH100348	3C24	6	3302 - 15
TH100349	3C18	7	3302 - 9
TH100349	3C22	7	3302 - 13
TH100349	3C24	7	3302 - 15
TH100364	1H4	10	1370 - 3
TH100374	3D19	2	3344 - 5
TH100374	3D23	2	3344 - 7
TH100374	3E4	1	3344 - 11
TH100374	3K6	25	3365 - 25
TH100452	1B11	2	0133 - 3
TH100679	3J12	16	3364 - 3
TH100738	3E20	11	3361 - 7
TH101300	1G23	..	1369 - 3
TH101388	3E2	70	3344 - 9
TH101483	3E22	51	3361 - 9
TH101490	1G23	..	1369 - 3
TH101926	1G23	..	1369 - 3
TH101926	3G4	5	3362 - 27
TH101926	3J4	39	3363 - 55
TH101926	3J12	18	3364 - 3
TH102560	3E20	66A	3361 - 7
TH102560	3E22	7	3361 - 9
TH102560	3E22	50A	3361 - 9
TH102560	3E24	7	3361 - 11
TH1026282	3E22	1	3361 - 9
TH102706	1G23	..	1369 - 3
TH1027149	3E24	1	3361 - 11
TH102992	1G23	..	1369 - 3
TH103446	1G23	..	1369 - 3
TH103574	1G23	..	1369 - 3
TH103574	3F20	12	3362 - 19
TH103574	3F22	22	3362 - 21
TH103574	3J18	29	3365 - 5
TH103619	3C18	5	3302 - 9
TH103619	3C22	5	3302 - 13
TH103619	3C24	5	3302 - 15
TH104196	2C20	6	1821 - 15
TH104472	3B20	8	3301 - 7
TH104472	3B20	25	3301 - 7
TH104472	3D17	1	3344 - 3
TH104472	3D17	2F	3344 - 3
TH104472	3D19	1	3344 - 5
TH104472	3D19	3D	3344 - 5
TH104472	3D23	1	3344 - 7
TH104472	3D23	3D	3344 - 7
TH104472	3J18	25	3365 - 5
TH104472	3J22	25	3365 - 9
TH104472	3K2	29	3365 - 21
TH104472	3K8	28	3365 - 27
TH104472	3K10	28	3365 - 29
TH104634	1G23	..	1369 - 3
TH104908	3K2	5	3365 - 21
TH104930	1G23	..	1369 - 3
TH105592	3D21	54	3344 - 5B
TH105592	3D25	54	3344 - 7B
TH105593	3D21	55	3344 - 5B
TH105593	3D25	55	3344 - 7B
TH105683	3H18	17C	3363 - 21
TH105684	3G24	1	3363 - 3
TH105767	3K2	16	3365 - 21
TH105979	3K6	23	3365 - 25
TH106280	3G2	11H	3362 - 25
TH108045	3D21	52	3344 - 5B
TH108045	3D25	52	3344 - 7B
TH108320	3E10	6	3360 - 5
TH108594	1H14	13	1674 - 5
TH108649	3C18	11	3302 - 9
TH108649	3C22	11	3302 - 13
TH108649	3C24	11	3302 - 15
TH108869	1B17	7	0134 - 5
TH108899	1B9	9	0132 - 3
TH108939	3D21	32	3344 - 5B
TH108939	3D25	32	3344 - 7B
TH108944	3D21	57	3344 - 5B
TH108944	3D25	57	3344 - 7B
TH108983	2C2	17	1810 - 27
TH109206	3F20	78A	3362 - 19
TH109206	3F22	4	3362 - 21
TH109318	3J22	11	3365 - 9
TH109322	3J22	16	3365 - 9
TH109324	3J18	19	3365 - 5
TH109324	3J22	19	3365 - 9
TH109332	3J18	31	3365 - 5
TH109337	3J22	36	3365 - 9
TH109353	3K2	11	3365 - 21
TH109917	3F2	3	3361 - 13
TH110461	3G2	11I	3362 - 25
TH111657	1B9	54	0132 - 3
TH111905	3E2	1	3344 - 9
TH3089486	2C20	2	1821 - 15
TH3100010	1H18	1	1674 - 7B
TH4110369	1B24	2	0267 - 3
TH4245797	1B24	32	0267 - 3
TH4405128	2C20	4	1821 - 15
TH4434297	1F18	11	0511 - 13
TH4440813	1C10	1	0400 - 3
TH4451668	3J16	3	3365 - 3
TH4451788	3G16	38	3362 - 41
TH6020171	2C20	0	1821 - 15
TH8081319	3D5	0	3315 - 3B
TK290	3C16	2	3302 - 7
TPDE31329	3C12	7	3302 - 3
TP160	3C16	2	3302 - 7
TP160L	3C16	2	3302 - 7
TP160L	3C16	4A	3302 - 7
TP160L	3C16	4B	3302 - 7
TP160L	3C16	4C	3302 - 7
TP160L	3C16	4D	3302 - 7
TP160L	3C16	4E	3302 - 7
TP160L	3C16	4F	3302 - 7
TT1U3302	3C16	4N	3302 - 7
TT220	3C16	4F	3302 - 7
TT290	3C16	4F	3302 - 7
TX1U3302WT	3C16	4M	3302 - 7
TX220	3C16	4B	3302 - 7
TX220AP	3C16	4E	3302 - 7
TX220F	3C16	4D	3302 - 7
TX220WT	3C16	4C	3302 - 7
TX290	3C16	4B	3302 - 7
TX290WT	3C16	4C	3302 - 7
TY22328	2C24	14A	1831 - 3
TY22328	2C24	15A	1831 - 3
TY22462	1G10	14	0531 - 3
TY22464	1E14	1	0420 - 5
TY22464	1G14	1	0563 - 3
TY22467	1E8	1	0418 - 5
TY24396	1E12	39	0420 - 3
TY24398	2D12	4	1833 - 5
T1U3302	3C16	4L	3302 - 7
T101942	1G21	16	1322 - 3
T105740	2C18	3	1821 - 13
T107446	3H2	3	3363 - 5
T107446	3J6	6	3363 - 57
T108036	3K2	38	3365 - 21
T108225	3H4	25	3363 - 7
T109X220	3C16	3	3302 - 7
T110446	3K6	10	3365 - 25
T110446	3K8	10	3365 - 27
T110446	3K10	10	3365 - 29
T110448	3K2	10	3365 - 21
T110590	1G23	..	1369 - 3
T110593	1G23	..	1369 - 3
T111819	1B20	7	0260 - 7
T111819	3G2	11M	3362 - 25
T114698	3E12	7	3360 - 7
T114699	3E12	6	3360 - 7
T116057	1G16	2	0564 - 3
T116311	3J22	31	3365 - 9
T116332	1I7	2	1740 - 5
T116333	2D8	1	1832 - 3
T116334	3B20	11	3301 - 7
T116334	3E2	72	3344 - 9
T116334	3K8	26	3365 - 27
T116334	3K10	26	3365 - 29
T125809	2B23	6	1810 - 23
T126057	3J6	15	3363 - 57
T127X290	3C16	3	3302 - 7
T13624	3J22	23	3365 - 9
T13624	3K2	23	3365 - 21
T138910	3J14	14	3364 - 5
T145893	1G21	13	1322 - 3
T146103	1G21	18	1322 - 3
T146667	1G21	6	1322 - 3
T146668	1G21	4	1322 - 3
T146671	1G21	9	1322 - 3
T149434	3E12	17	3360 - 7
T149434	3E14	5	3360 - 9
T149983	1G21	21	1322 - 3
T152608	1H4	12	1370 - 3
T153187	3J14	19	3364 - 5
T157779	2C18	2	1821 - 13
T159841	1G21	8	1322 - 3
T159841	1G21	54	1322 - 3
T159842	1G21	7	1322 - 3
T159842	1G21	54	1322 - 3
T159843	3D11	7	3315 - 9
T159844	3D11	9	3315 - 9
T159887	1G21	5	1322 - 3
T163997	1G21	34	1322 - 3
T167256	2B23	2	1810 - 23
T180076	1G21	11	1322 - 3
T184020	1G21	12	1322 - 3

NUMERICAL INDEX - CONTINUED

PART NO.	GRID	KEY	PAGE
T184858	3D11	10	3315 - 9
T187535	1G21	2	1322 - 3
T187710	1G21	24	1322 - 3
T188662	3E8	24	3360 - 3
T190393	1G21	10	1322 - 3
T200313	1G21	3	1322 - 3
T200340	1G21	20	1322 - 3
T200341	1G21	23	1322 - 3
T200343	1G21	33	1322 - 3
T200476	1G21	1	1322 - 3
T201519	1G21	7	1322 - 3
T201519	1G21	8	1322 - 3
T201519	1G21	54	1322 - 3
T201519	3D13	9	3315 - 9B
T202379	3D11	20	3315 - 9
T202379	3E10	21	3360 - 5
T205175	3D13	8	3315 - 9B
T22645	3D11	23	3315 - 9
T24432	1H12	28	1674 - 3
T25838	1G21	30	1322 - 3
T3G6304	3C16	3	3302 - 7
T3G9609	3C16	5	3302 - 7
T30367	3C10	11	3301 - 19
T38377	1F22	4	0515 - 3
T38377	1G2	5	0515 - 7
T59014	1G23	..	1369 - 3
T59014	3H2	1	3363 - 5
T59014	3H12	6	3363 - 15
T59014	3I24	7	3363 - 51
T61120	3D13	12	3315 - 9B
T63817	3D11	21	3315 - 9
T70177	3J14	5	3364 - 5
T72888	3J6	10	3363 - 57
T72888	3J8	10	3363 - 59
T74492	1G23	..	1369 - 3
T76938	3J4	30	3363 - 55
T77857	1B22	9	0263 - 3
T77857	3C6	19	3301 - 15
T77857	3D19	29	3344 - 5
T77857	3D21	29	3344 - 5B
T77857	3D23	29	3344 - 7
T77857	3D25	29	3344 - 7B
T77857	3H10	9	3363 - 13
T77857	3H16	9	3363 - 19
T77857	3I22	15	3363 - 49
T77857	3J8	28	3363 - 59
T77858	3C6	20	3301 - 15
T77858	3G24	10	3363 - 3
T77858	3I22	14	3363 - 49
T77858	3I22	31	3363 - 49
T77858	3I24	8	3363 - 51
T77858	3J2	7	3363 - 53
T77858	3J4	7	3363 - 55
T78313	3H6	3	3363 - 9
T79632	1G21	15	1322 - 3
T80394	3E12	10	3360 - 7
T9J2308	3C16	2	3302 - 7
U10778	1G23	..	1369 - 3
U17409	1G23	..	1369 - 3
U17409	3G6	16	3362 - 29
U42323	1G16	13	0564 - 3
U46489	1G23	..	1369 - 3
X1JS78-20-16	3J4	46	3363 - 55
X1J978-20-16	3J4	46	3363 - 55
X12-16F4OMXS	3J4	40	3363 - 55
X16F4OMXS	3J4	40	3363 - 55
X6C4OMXS	3J6	4	3363 - 57
X6C4OMXS	3J8	13	3363 - 59
X6F4OMXS	3J6	3	3363 - 57
X6F4OMXS	3J8	6	3363 - 59
X6JTX-S	3J8	9	3363 - 59
Z449490	3B18	6	3301 - 5
Z986910	3I24	14	3363 - 51
0003076	3E20	34	3361 - 7
0003812	1H12	34	1674 - 3
0003890	1H16	22	1674 - 7
0004140	2C12	1	1821 - 3
0108064500	1E24	17A	0433 - 3
0108064650	1E24	17A	0433 - 3
0111707	3J18	23	3365 - 5
011270	3H4	22	3363 - 7
0208516	3J18	38	3365 - 5
0215218	3E22	51	3361 - 9
0224115	3J18	37	3365 - 5
0240807	3K6	14	3365 - 25
0240807	3K8	14	3365 - 27
0240807	3K10	14	3365 - 29
0254905	3K6	11	3365 - 25
0254905	3K8	11	3365 - 27
0254905	3K10	11	3365 - 29
0254908	3K6	17	3365 - 25
0254908	3K8	17	3365 - 27
0254908	3K10	17	3365 - 29
0266736	3F2	15	3361 - 13
0268601	3E20	4	3361 - 7
0271304	3J18	5	3365 - 5
0271304	3J22	5	3365 - 9
0271304	3K6	5	3365 - 25
0271304	3K8	5	3365 - 27
0271304	3K10	5	3365 - 29
0271309	3J18	7	3365 - 5
0271310	3J18	8	3365 - 5
0280210250	1C22	29	0407 - 5
0280210250	1E20	24	0423 - 3
0280210250	1F20	9	0511 - 15
0280210250	1F20	10	0511 - 15
0280806120	1E24	58	0433 - 3
0280806220	1D2	13	0407 - 9
0280808120	1C18	91	0404 - 5
0280808120	1C24	44	0407 - 7
0280808120	1D2	10	0407 - 9
0280808220	1E6	50	0418 - 3
0280808220	1E24	36	0433 - 3
0280808220	1E24	62	0433 - 3
0280808300	1E6	50	0418 - 3
0280808500	1F20	7C	0511 - 15
0280808800	1E24	62	0433 - 3
0280810300	1C24	44	0407 - 7
0280810300	1D14	45	0413 - 9
0280810300	1E6	44A	0418 - 3
0280810350	1E4	36	0417 - 3
0280810350	1E6	44A	0418 - 3
0280810450	1E4	36	0417 - 3
0280810450	1F20	11	0511 - 15
0280810800	1E6	44B	0418 - 3
0280810900	1E6	44A	0418 - 3
0280810900	1E10	15	0419 - 3
0280858120	1F20	7B	0511 - 15
0280906160	1D24	11	0416 - 3
0286806160	1D16	1	0413 - 11
0286808350	1C24	40B	0407 - 7
0287810300	1D22	59	0414 - 3
0308703	3H18	42	3363 - 21
0308704	3H18	41	3363 - 21
0308705	3H18	43	3363 - 21
0308709	3H18	46	3363 - 21
0309011	3J18	22	3365 - 5
0309019	3J18	30	3365 - 5
0309401	3F24	45	3362 - 23
0309402	3F20	16	3362 - 19
0309402	3F22	24	3362 - 21
0309402	3F24	43	3362 - 23
0309413	3F14	91	3362 - 13
0309413	3F16	26	3362 - 15
0309413	3F18	26	3362 - 17
0309413	3F22	54	3362 - 21
0309461	3F18	3	3362 - 17
0309461	3F20	26	3362 - 19
0309904	3G22	1	3362 - 47
0310304	3J18	4	3365 - 5
0310304	3K6	4	3365 - 25
0310310	3K8	24	3365 - 27
0310310	3K10	24	3365 - 29
0310312	3J18	36	3365 - 5
0310506	3J18	11	3365 - 5
0310508	3J18	16	3365 - 5
0310510	3J18	19	3365 - 5
0310510	3J22	19	3365 - 9
0310514	3J18	20	3365 - 5
0310514	3J22	20	3365 - 9
0310616	3K6	35	3365 - 25
0310707	3J18	33	3365 - 5
0310707	3J22	33	3365 - 9
0325913	3J18	35	3365 - 5
0326007	3K6	18	3365 - 25
0326007	3K8	18	3365 - 27
0326007	3K10	18	3365 - 29
0326012	3K6	32	3365 - 25
0387804	3G10	50	3362 - 35
0393902	3F18	9	3362 - 17
0393902	3F22	30	3362 - 21
0396603	3G22	2	3362 - 47
0396605	3G22	10	3362 - 47
0408203	3F2	6	3361 - 13
0408207	3F2	17	3361 - 13
0408411	3G10	34	3362 - 35
0408805	3J18	12	3365 - 5
0408806	3J18	13	3365 - 5
0408806	3J22	13	3365 - 9
0408808	3J18	15	3365 - 5
0408808	3J22	15	3365 - 9
0408809	3J18	17	3365 - 5
0408810	3J18	25	3365 - 5
0408811	3J18	27	3365 - 5
0408814	3J18	32	3365 - 5
0408814	3J22	32	3365 - 9
0408902	3J22	27	3365 - 9
0409005	3K2	13	3365 - 21
0409010	3K2	20	3365 - 21
0409012	3K2	24	3365 - 21
0409014	3K2	26	3365 - 21
0409015	3K2	27	3365 - 21
0409016	3K2	30	3365 - 21
0409113	3K6	27	3365 - 25
0411901	3F16	12	3362 - 15
0411901	3F24	50	3362 - 23
0412015	3F20	89	3362 - 19
0412015	3F22	44	3362 - 21
0412015	3F22	48	3362 - 21
0412016	3F20	90	3362 - 19
0412016	3F22	45	3362 - 21

NUMERICAL INDEX - CONTINUED

PART NO.	GRID	KEY	PAGE
0412016	3F22	49	3362 - 21
0412202	3F22	1	3362 - 21
0412204	3F22	2	3362 - 21
0412212	3F20	3	3362 - 19
0412212	3F22	13	3362 - 21
0430809	3H18	17C	3363 - 21
0500408180	1D2	6	0407 - 9
0500408200	1E10	6	0419 - 3
0500408250	1D6	11	0409 - 5
0500408250	1D22	44	0414 - 3
0500408250	1E10	6	0419 - 3
0500408450	1C24	40A	0407 - 7
0500408450	1E10	6	0419 - 3
0500410200	1D4	13	0409 - 3
0500410200	1D4	41	0409 - 3
0500410200	1D10	72	0413 - 3
0500410200	1D10	87	0413 - 3
0500410200	1D14	88	0413 - 9
0666806	3J18	9	3365 - 5
0666808	3J18	18	3365 - 5
0667010	3K2	25	3365 - 21
0668303	3G22	4	3362 - 47
0668304	3G22	9	3362 - 47
0669501	3F18	6	3362 - 17
0669502	3F14	12	3362 - 13
0669502	3F14	15	3362 - 13
0669502	3F16	16	3362 - 15
0669503	3F14	12A	3362 - 13
0669503	3F14	15A	3362 - 13
0669503	3F16	16A	3362 - 15
0669504	3F14	13A	3362 - 13
0669504	3F18	18A	3362 - 17
0669601	3F14	77	3362 - 13
0669603	3F14	85	3362 - 13
0669603	3F16	54B	3362 - 15
0669604	3F14	84	3362 - 13
0669604	3F16	54C	3362 - 15
0669605	3F14	82	3362 - 13
0669605	3F16	54D	3362 - 15
0669606	3F14	81	3362 - 13
0669606	3F16	51	3362 - 15
0669607	3F14	80	3362 - 13
0669607	3F16	52	3362 - 15
0669608	3F14	79	3362 - 13
0669608	3F16	53	3362 - 15
0669609	3F16	44	3362 - 15
0669610	3F16	43	3362 - 15
0669611	3F16	45	3362 - 15
0669613	3F14	70	3362 - 13
0669613	3F16	56	3362 - 15
0669614	3F14	16	3362 - 13
0669614	3F14	65	3362 - 13
0669614	3F16	20	3362 - 15
0669614	3F18	20	3362 - 17
0669615	3F14	16A	3362 - 13
0669615	3F14	72	3362 - 13
0669615	3F16	20A	3362 - 15
0669615	3F18	20A	3362 - 17
0669616	3F14	69	3362 - 13
0669616	3F16	57	3362 - 15
0669617	3F14	68	3362 - 13
0669617	3F16	58	3362 - 15
0669618	3F16	59	3362 - 15
0669624	3F14	89	3362 - 13
0669624	3F16	63	3362 - 15
0669625	3F14	90	3362 - 13
0669625	3F16	64	3362 - 15
0669701	3F16	3	3362 - 15
0669801	3F14	92	3362 - 13
0669801	3F16	42	3362 - 15
0669802	3F16	54	3362 - 15
0669902	3F18	27	3362 - 17
0669902	3F22	57	3362 - 21
0669906	3F18	4	3362 - 17
0669906	3F20	79	3362 - 19
0669906	3F22	35	3362 - 21
0670001	3F20	92	3362 - 19
0670002	3F20	84	3362 - 19
0670002	3F22	36	3362 - 21
0670003	3F20	85	3362 - 19
0670003	3F22	37	3362 - 21
0670004	3F20	86	3362 - 19
0670004	3F22	39	3362 - 21
0670104	3F20	11	3362 - 19
0670104	3F22	21	3362 - 21
0670105	3F20	8	3362 - 19
0670105	3F22	18	3362 - 21
0670107	3F20	4	3362 - 19
0670107	3F22	14	3362 - 21
0670201	3F22	47	3362 - 21
0670201	3F22	51	3362 - 21
0670206	3F22	34	3362 - 21
0670207	3F22	5	3362 - 21
0670208	3F22	7	3362 - 21
0670303	3F14	4	3362 - 13
0670303	3F22	31	3362 - 21
0670305	3F18	70	3362 - 17
0670307	3F22	32	3362 - 21
0683402	3K8	4	3365 - 27
0683402	3K10	4	3365 - 29
0686704	3K8	3	3365 - 27
0686704	3K10	3	3365 - 29
0686705	3K6	13	3365 - 25
0686705	3K8	13	3365 - 27
0686705	3K10	13	3365 - 29
0686706	3K6	15	3365 - 25
0686706	3K8	15	3365 - 27
0686706	3K10	15	3365 - 29
0686707	3K6	16	3365 - 25
0686707	3K8	16	3365 - 27
0686707	3K10	16	3365 - 29
0686708	3K8	22	3365 - 27
0686708	3K10	22	3365 - 29
0709701	3H18	51	3363 - 21
0761702	3F18	2	3362 - 17
0779201	3K8	1	3365 - 27
0779301	3K10	1	3365 - 29
0779302	3K8	1B	3365 - 27
0779302	3K8	2B	3365 - 27
0779302	3K10	1B	3365 - 29
0779302	3K10	2B	3365 - 29
0779303	3K8	2	3365 - 27
0779303	3K10	2	3365 - 29
0788703	3G20	13	3362 - 45
0788704	3G20	14	3362 - 45
0788705	3G20	15	3362 - 45
0788706	3G20	16	3362 - 45
0788707	3G20	17	3362 - 45
0788710	3G20	33	3362 - 45
0788711	3G20	34	3362 - 45
0788712	3G20	35	3362 - 45
0788713	3G20	36	3362 - 45
0789205	3K2	3	3365 - 21
0789206	3K2	6	3365 - 21
0789303	3J22	2	3365 - 9
0789304	3J22	2A	3365 - 9
0789305	3J18	3	3365 - 5
0789305	3J22	3	3365 - 9
0789306	3J18	6	3365 - 5
0789306	3J22	6	3365 - 9
0789306	3K6	6	3365 - 25
0789307	3J18	21	3365 - 5
0789307	3J22	21	3365 - 9
0789503	3K2	2	3365 - 21
0789504	3K2	2A	3365 - 21
0789505	3K2	15	3365 - 21
0789506	3K2	21	3365 - 21
0789507	3K2	31	3365 - 21
0789507	3K2	45	3365 - 21
0789508	3K2	31	3365 - 21
0789508	3K2	45	3365 - 21
0789606	3K6	19	3365 - 25
0789610	3K6	28	3365 - 25
0793201	3F14	93	3362 - 13
0793202	3F14	94	3362 - 13
0793203	3F14	95	3362 - 13
0793204	3F14	96	3362 - 13
0793205	3F14	73	3362 - 13
0793206	3F14	66	3362 - 13
0793207	3F14	5	3362 - 13
0793208	3F14	3	3362 - 13
0793209	3F14	1	3362 - 13
0793301	3F16	25	3362 - 15
0793302	3F16	62	3362 - 15
0793303	3F16	65	3362 - 15
0793401	3F18	23	3362 - 17
0793402	3F18	31	3362 - 17
0793403	3F18	32	3362 - 17
0793404	3F18	33	3362 - 17
0793405	3F18	34	3362 - 17
0793406	3F18	35	3362 - 17
0793407	3F18	37	3362 - 17
0793408	3F18	38	3362 - 17
0793409	3F18	39	3362 - 17
0793410	3F18	40	3362 - 17
0793411	3F18	96	3362 - 17
0793412	3F18	95	3362 - 17
0793413	3F18	7	3362 - 17
0793414	3F18	5	3362 - 17
0793501	3F20	87	3362 - 19
0793501	3F22	38	3362 - 21
0793502	3F20	95	3362 - 19
0793601	3F20	2	3362 - 19
0793601	3F22	12	3362 - 21
0793603	3F20	7	3362 - 19
0793605	3F20	17	3362 - 19
0793605	3F22	25	3362 - 21
0793606	3F20	19	3362 - 19
0793606	3F22	60	3362 - 21
0793701	3F22	9	3362 - 21
0793801	3F22	29	3362 - 21
0793803	3F22	26	3362 - 21
0793804	3F22	53	3362 - 21
0804501	3G22	5	3362 - 47
0804601	3J18	1	3365 - 5
0804603	3J18	2	3365 - 5
0804606	3J18	28	3365 - 5
0804701	3J22	1	3365 - 9
0804801	3K2	1	3365 - 21
0911501120	1E22	82	0429 - 3
0911602140	1E20	23	0423 - 3

NUMERICAL INDEX - CONTINUED

PART NO.	GRID	KEY	PAGE
1015477	3D7	19	3315 - 5
1015478	3D7	16	3315 - 5
1020173	1B15	0	0134 - 3
1024224	3D7	6	3315 - 5
1024384	3D7	2	3315 - 5
1025540	3E20	26	3361 - 7
1025666	3E20	12	3361 - 7
1025667	3E20	28	3361 - 7
1026807	1B15	51	0134 - 3
1026892	3E20	1	3361 - 7
1027901	3K23	5	4367 - 3
1028027	1B24	5	0267 - 3
1028028	1B24	4	0267 - 3
1028041	1B24	13	0267 - 3
1028042	1B24	7	0267 - 3
1090001331	1E20	16	0423 - 3
1090004691	1C16	8	0404 - 3
1090004692	1C16	8	0404 - 3
1090005670	1D6	85	0409 - 5
1090091131	1E22	86	0429 - 3
1090440711	1D18	19B	0413 - 13
1090440711	1E24	62	0433 - 3
1090701001	1D4	3	0409 - 3
1090701010	1D4	3	0409 - 3
1090701011	1D4	3	0409 - 3
1093000130	1C16	30	0404 - 3
1093000180	1D4	15	0409 - 3
1093370170	1F20	4	0511 - 15
1094001160	1D6	75	0409 - 5
1094400040	1E20	7	0423 - 3
1095030700	1E4	28	0417 - 3
1095803350	1D6	77	0409 - 5
1096000121	1C16	16	0404 - 3
1096000121	1D4	7B	0409 - 3
1096000160	1D4	7C	0409 - 3
1096000520	1C16	11	0404 - 3
1096000580	1D4	7A	0409 - 3
1096050681	1C16	5	0404 - 3
1096231830	1D2	3	0407 - 9
1096231830	1F2	6	0452 - 3
1096233550	1D2	11	0407 - 9
1096234620	1C24	47	0407 - 7
1096234650	1C16	12	0404 - 3
1096234650	1F2	9	0452 - 3
1096254380	1E24	3	0433 - 3
1096254380	1F2	12	0452 - 3
1096255450	1E4	16	0417 - 3
1096300820	1D10	36	0413 - 3
1096300820	1F2	17	0452 - 3
1096300840	1C24	3B	0407 - 7
1096390320	1C14	6	0402 - 3
1096390320	1F2	4	0452 - 3
1096750630	1E12	62B	0420 - 3
1096751460	1D14	69	0413 - 9
1096751600	1C24	2B	0407 - 7
1096800250	1C16	24	0404 - 3
1097006952	1C24	48	0407 - 7
1097007590	1E12	50B	0420 - 3
1097007600	1E12	50C	0420 - 3
1097040660	1C18	29	0404 - 5
1097400780	1C16	6	0404 - 3
1098001700	1E4	27C	0417 - 3
1099851850	1D18	9	0413 - 13
1099853450	1D10	73	0413 - 3
1112191291	1C16	21	0404 - 3
1112612480	1C16	4	0404 - 3
1112612490	1C16	4	0404 - 3
1112612500	1C16	4	0404 - 3
1112612510	1C16	4	0404 - 3
1112612520	1C16	4	0404 - 3
1112612530	1C16	4	0404 - 3
1112612540	1C16	4	0404 - 3
1112612550	1C16	4	0404 - 3
1112902541	1C18	2	0404 - 5
1117210130	1D4	4	0409 - 3
1121211460	1C12	15	0401 - 3
1122110332	1C12	17	0401 - 3
1122301291	1C12	18	0401 - 3
1122350271	1C12	20	0401 - 3
1122510320	1C12	19	0401 - 3
1125220162	1D6	9	0409 - 5
1125240520	1D20	27	0413 - 15
1125511650	1D6	4	0409 - 5
1125521110	1D6	5	0409 - 5
1125610990	1D6	69	0409 - 5
1125610991	1D6	69	0409 - 5
1125750360	1D6	88	0409 - 5
1126112490	1D6	78	0409 - 5
1131230160	1C22	40	0407 - 5
1131280180	1C22	32	0407 - 5
1131401160	1C22	42	0407 - 5
1131610120	1C16	20	0404 - 3
1132600470	1D14	10	0413 - 9
1132600980	1E10	21	0419 - 3
1133421320	1C16	10	0404 - 3
1136200230	1E4	32	0417 - 3
1136310740	1E4	29	0417 - 3
1136411910	1E4	7	0417 - 3
1136420531	1E22	38	0429 - 3
1136603450	1E22	1	0429 - 3
1136741192	1E22	80	0429 - 3
1137118042	1E6	2	0418 - 3
1137430160	1E6	64	0418 - 3
1137700700	1E6	1	0418 - 3
1141151040	1D22	7	0414 - 3
1141151040	1F2	16	0452 - 3
1143190342	1E22	16	0429 - 3
1153113010	1D10	33	0413 - 3
1153150131	1D10	66	0413 - 3
1153150131	1F2	18	0452 - 3
1153320170	1D10	35	0413 - 3
1156190820	1E18	8	0421 - 5
1156192470	1D20	4	0413 - 15
1156230160	1E18	7	0421 - 5
1157256700	1D12	1B	0413 - 7
1157550020	1E18	5	0421 - 5
1157590010	1E18	9	0421 - 5
1157590020	1E18	31	0421 - 5
1157590030	1E18	10	0421 - 5
1157610060	1E18	2	0421 - 5
1157610061	1E18	2	0421 - 5
1217290430	1E10	4	0419 - 3
1225590260	1F20	3	0511 - 15
1812004710	1C10	1	0400 - 3
1812004710	1E20	2	0423 - 3
1824101990	1C16	9	0404 - 3
1825130451	1D4	10	0409 - 3
1825503250	1E20	6	0423 - 3
1831610330	1E20	5	0423 - 3
2024425	1B9	54	0132 - 3
2034607	3K17	9	4362 - 3
2038174	3E20	27	3361 - 7
2038178	3E20	2	3361 - 7
2038764	2B9	7B	1810 - 7
2042059	3E20	17	3361 - 7
2042069	3E20	10	3361 - 7
2042964	3K23	23	4367 - 3
2042965	3K23	11	4367 - 3
2043442	3L2	10	4367 - 7
2043769	1B24	27	0267 - 3
2043791	1B20	13	0260 - 7
2044350	3D5	14	3315 - 3B
2044350	3D5	15	3315 - 3B
2044350	3D5	16	3315 - 3B
2044350	3D5	17	3315 - 3B
2044629	3K23	9	4367 - 3
2044683	1B13	2	0133 - 5
2044792	3E20	38	3361 - 7
2044793	3E20	39	3361 - 7
2044805	1B24	21	0267 - 3
2044809	1B24	29	0267 - 3
2045094	3H6	6	3363 - 9
2045146	3K23	20	4367 - 3
2045328	2E14	1	1910 - 17
2045468	3D7	3	3315 - 5
2045469	3D7	4	3315 - 5
2045470	3D3	5	3315 - 3
2045472	3D3	8	3315 - 3
2045473	3D3	7	3315 - 3
2045509	2C8	26	1816 - 5
2045532	1H14	9	1674 - 5
2045680	2D6	4	1831 - 9
2045998	3I12	23	3363 - 39
2045998	3I14	15	3363 - 41
2046296	3I12	20	3363 - 39
2046493	3F24	48	3362 - 23
2046494	3F18	29	3362 - 17
2046494	3F22	56	3362 - 21
2046498	3F18	3C	3362 - 17
2046498	3F20	23	3362 - 19
2046565	1F14	1	0511 - 9
2046599	3F24	53	3362 - 23
2047238	2F4	1	2007 - 3
2050226	1G21	28	1322 - 3
2051176	3D7	3	3315 - 5
2051177	3D7	4	3315 - 5
3022832	1B13	1	0133 - 5
3035618	1B15	1	0134 - 3
304952	3C18	19	3302 - 9
304953	3C18	18	3302 - 9
304967	3C22	19	3302 - 13
304968	3C22	18	3302 - 13
3050414	1B13	0B	0133 - 5
3052543	3D7	18	3315 - 5
3053559	1B24	34	0267 - 3
3063826	3D17	33	3344 - 3
3065877	3G8	13	3362 - 33
3065989	3E20	20	3361 - 7
3065991	3E20	19	3361 - 7
3068629	1B11	5	0133 - 3
3069556	1B15	3B	0134 - 3
3070250	3K17	6	4362 - 3
3072517	3G8	23	3362 - 33
3073276	3G24	5	3363 - 3
3075729	3L2	19	4367 - 7
3075775	3E22	35	3361 - 9
3075775	3E24	35	3361 - 11
3079531	2F4	12	2007 - 3
3079728	3I14	12	3363 - 41
3081504	3E20	52	3361 - 7
3081727	3L2	15	4367 - 7

NUMERICAL INDEX - CONTINUED

PART NO.	GRID	KEY	PAGE
3082754	1B20	26	0260 - 7
3083674	3K23	7	4367 - 3
3083710	3K23	1	4367 - 3
3083740	3K23	29	4367 - 3
3083741	3K23	27	4367 - 3
3084716	3L2	21	4367 - 7
3084940	3K23	15	4367 - 3
3085569	1B24	19	0267 - 3
3085697	1B20	12	0260 - 7
3085713	1B20	16	0260 - 7
3085728	1B24	10	0267 - 3
3085761	1B20	18	0260 - 7
3085780	1B20	1	0260 - 7
3085794	3L2	3	4367 - 7
3085844	1B20	29	0260 - 7
3085871	1B20	28	0260 - 7
3086845	1F8	1	0511 - 3
3087133	3G24	2	3363 - 3
3087511	1B3	1B	0131 - 3
3087511	3C8	0B	3301 - 17
3087676	1B24	23	0267 - 3
3087818	3L2	17	4367 - 7
3087882	1H14	1	1674 - 5
3087949	3K23	31	4367 - 3
3087987	3G8	26	3362 - 33
3088018	1G21	22	1322 - 3
3088212	1B17	1C	0134 - 5
3088313	1B17	1A	0134 - 5
3088314	1B17	6	0134 - 5
3088341	1B24	14	0267 - 3
3088646	1B17	4	0134 - 5
3088910	1F14	6	0511 - 9
3089103	3D19	34	3344 - 5
3089103	3D23	34	3344 - 7
3089107	3D19	32	3344 - 5
3089107	3D23	32	3344 - 7
3089156	3D17	13	3344 - 3
3089156	3D19	31	3344 - 5
3089156	3D21	31	3344 - 5B
3089163	3D17	11	3344 - 3
3089204	1G6	5	0521 - 5
3089206	1G6	2	0521 - 5
3089242	3D19	36	3344 - 5
3089242	3D23	36	3344 - 7
3089243	3D19	35	3344 - 5
3089243	3D21	35	3344 - 5B
3089243	3D23	35	3344 - 7
3089243	3D25	35	3344 - 7B
3089314	2E2	1C	1910 - 5
3089314	2E2	12C	1910 - 5
3089435	2D24	21A	1910 - 3
3089604	1H8	30	1671 - 3
3089613	3L2	26	4367 - 7
3089620	2E4	10	1910 - 7
3089646	2E14	8	1910 - 17
3089647	2E14	2	1910 - 17
3089648	2E14	3	1910 - 17
3089649	2E14	4	1910 - 17
3089650	2E14	5	1910 - 17
3089687	2E14	6	1910 - 17
3089689	2E14	7	1910 - 17
3089780	2E6	6B	1910 - 9
3089781	2E6	6C	1910 - 9
3089782	2E6	6D	1910 - 9
3090024	2C8	30	1816 - 5
3090025	2C8	31	1816 - 5
3090457	1H16	9	1674 - 7
3090862	3K23	41	4367 - 3
3091096	2E19	1	2002 - 3
3091349	1B17	17	0134 - 5
3091371	1F16	6	0511 - 11
3091395	1G6	9	0521 - 5
3091499	2E8	44	1910 - 11
3091546	3D23	31	3344 - 7
3091546	3D25	31	3344 - 7B
3091694	2E25	8	2004 - 5
3091704	3B20	19	3301 - 7
3091707	3B20	1	3301 - 7
3091708	3B20	2	3301 - 7
3091816	3I4	36	3363 - 31
3091817	3I2	37	3363 - 29
3091818	3I4	38	3363 - 31
3091819	3I2	39	3363 - 29
3091820	3I4	40	3363 - 31
3091821	3I2	41	3363 - 29
3091822	3I2	42	3363 - 29
3091823	3I4	43	3363 - 31
3091824	3I4	44	3363 - 31
3091825	3I2	45	3363 - 29
3091826	3I4	46	3363 - 31
3091827	3I2	47	3363 - 29
3092010	2C22	22	1821 - 17
3092035	3K23	19	4367 - 3
3092179	1I5	35	1740 - 3
3092223	3H12	38	3363 - 15
3092224	3H12	39	3363 - 15
3092650	2F2	3	2006 - 3
3092820	2F4	2	2007 - 3
3093961	3B20	2	3301 - 7
3095735	3D17	11	3344 - 3
3098283	1B17	4	0134 - 5
4BG1TCG	1C10	1	0400 - 3
4S00155	3J18	19	3365 - 5
4S00155	3J22	19	3365 - 9
4S00157	3K2	19	3365 - 21
4S00246	1C10	1	0400 - 3
4S00246	1D14	2	0413 - 9
4S00483	1E14	2A	0420 - 5
400R	3K6	21	3365 - 25
400R	3K8	21	3365 - 27
400R	3K10	21	3365 - 29
4000854	1H4	17	1370 - 3
4000854	3E2	70	3344 - 9
4000860	1H12	10	1674 - 3
4004589	1E16	17	0421 - 3
4022697	2E2	25	1910 - 5
4022697	2E10	13	1910 - 13
4022697	2E12	5	1910 - 15
4022697	3D9	25	3315 - 7
4033725	3G6	12	3362 - 29
4038533	3G6	2	3362 - 29
4040814	3G2	11N	3362 - 25
4051160	1E16	6	0421 - 3
4051262	3G8	27	3362 - 33
4055311	2C4	4	1814 - 3
4055311	3D3	11	3315 - 3
4055311	3H20	18	3363 - 23
4055312	1E16	15	0421 - 3
4055312	1E16	21	0421 - 3
4055312	1F22	2	0515 - 3
4056017	3B18	11	3301 - 5
4056017	3B18	20	3301 - 5
4065687	3D21	2	3344 - 5B
4065687	3D25	2	3344 - 7B
4067834	3H4	8	3363 - 7
4068898	3E22	16	3361 - 9
4068898	3E24	16	3361 - 11
4069801	3H4	4	3363 - 7
4071213	3H4	13	3363 - 7
4071213	3H6	7	3363 - 9
4083438	1I9	2	1749 - 3
4084578	3D21	1	3344 - 5B
4084578	3D25	1	3344 - 7B
4085607	3E22	8	3361 - 9
4085607	3E24	8	3361 - 11
4086894	1G12	7	0540 - 3
4098716	3B20	14	3301 - 7
4100967	3J12	22A	3364 - 3
4101345	3E18	20	3361 - 5
4103527	1E16	10	0421 - 3
4106307	3B20	13	3301 - 7
4113926	3J4	34	3363 - 55
4114402	3E18	11	3361 - 5
4116299	3E20	56	3361 - 7
4116308	3K23	17	4367 - 3
4121497	1G16	0A	0564 - 3
4127708	3K13	2	4351 - 3
4128863	3K15	4	4351 - 5
4130139	1F18	1	0511 - 13
4130169	3E2	68	3344 - 9
4133527	3D15	18	3315 - 13
4137298	3H4	25	3363 - 7
4138938	3H10	9	3363 - 13
4138938	3H16	9	3363 - 19
4141806	3I22	25	3363 - 49
4141806	3J2	13	3363 - 53
4141806	3J4	13	3363 - 55
4144011	3D3	17	3315 - 3
4144013	3E20	55	3361 - 7
4144020	1B24	18	0267 - 3
4153084	1G23	..	1369 - 3
4153087	3E22	50C	3361 - 9
4153103	1C20	2	0407 - 3
4153251	1F18	1A	0511 - 13
4153534	3E22	50B	3361 - 9
4153538	3H18	17C	3363 - 21
4153543	3E18	7	3361 - 5
4154651	1H4	8	1370 - 3
4154651	3E2	67	3344 - 9
4154656	3E2	66	3344 - 9
4154670	3B24	43	3301 - 11
4154670	3C2	14	3301 - 11B
4154670	3C2	26	3301 - 11B
4154670	3C4	8	3301 - 13
4154670	3F10	14	3362 - 9
4154670	3H22	9	3363 - 25
4154670	3H22	27	3363 - 25
4154670	3H24	1	3363 - 27
4154670	3J12	33	3364 - 3
4156540	1B5	20	0131 - 5
4161735	1I5	3	1740 - 3
4167948	3J16	4	3365 - 3
4167948	3J20	4	3365 - 7
4171509	1G14	11	0563 - 3
4172172	2E19	2	2002 - 3
4173208	3D5	5	3315 - 3B
4174541	3E22	56	3361 - 9
4174541	3H18	61	3363 - 21
4176070	3K23	12	4367 - 3
4177307	3I6	64	3363 - 33
4178203	1B24	25	0267 - 3

NUMERICAL INDEX - CONTINUED

PART NO.	GRID	KEY	PAGE
4178404	1G4	6	0521 - 3
4178406	1G4	7	0521 - 3
4179155	3E22	2	3361 - 9
4179155	3E24	2	3361 - 11
4179156	3E22	3	3361 - 9
4179156	3E24	3	3361 - 11
4179161	3E22	12	3361 - 9
4179161	3E24	12	3361 - 11
4179171	3E22	20	3361 - 9
4179171	3E24	20	3361 - 11
4179303	1B17	8	0134 - 5
4180555	1F18	2	0511 - 13
4181700	3E18	8	3361 - 5
4182067	3D5	21	3315 - 3B
4183242	3H10	26	3363 - 13
4184582	2D10	26	1833 - 3
4184865	3B20	3	3301 - 7
4185600	3G8	5	3362 - 33
4185600	3G10	32	3362 - 35
4187308	3G24	10	3363 - 3
4189535	3J4	40	3363 - 55
4189537	3J4	40	3363 - 55
4189858	3H10	14	3363 - 13
4189858	3I22	24	3363 - 49
4189860	3H4	21	3363 - 7
4190125	3I22	26	3363 - 49
4190126	3J4	11	3363 - 55
4190127	3H4	34	3363 - 7
4190127	3H6	11	3363 - 9
4190244	3B24	35	3301 - 11
4190244	3C6	7	3301 - 15
4190261	1F22	7	0515 - 3
4190261	1H4	15	1370 - 3
4190261	1H14	12	1674 - 5
4190261	2E25	10	2004 - 5
4190263	2D8	30	1832 - 3
4190264	1H12	30	1674 - 3
4190264	3C6	45	3301 - 15
4190264	3H18	33	3363 - 21
4190264	3H20	15	3363 - 23
4190265	3C4	23	3301 - 13
4190265	3H20	17	3363 - 23
4190265	3I6	57	3363 - 33
4190265	3I12	17	3363 - 39
4190266	1H12	29	1674 - 3
4190272	1F18	9	0511 - 13
4190272	1H12	23	1674 - 3
4190273	1F22	5	0515 - 3
4190273	1H12	26	1674 - 3
4190274	1H12	27	1674 - 3
4190274	3C10	9	3301 - 19
4190275	1H8	21	1671 - 3
4190275	1H12	24	1674 - 3
4190276	1F22	4	0515 - 3
4190277	1H12	28	1674 - 3
4190291	1H12	30	1674 - 3
4190291	3H18	33	3363 - 21
4190292	1H12	25	1674 - 3
4190960	1I5	36	1740 - 3
4191301	3H18	17B	3363 - 21
4192020	1B24	26	0267 - 3
4192034	1E14	8	0420 - 5
4192034	1G14	13	0563 - 3
4192034	2C24	11	1831 - 3
4192982	1B24	16	0267 - 3
4193848	1H12	30	1674 - 3
4193848	3C6	45	3301 - 15
4193848	3H18	33	3363 - 21
4193848	3H20	15	3363 - 23
4193848	3I12	16	3363 - 39
4194176	3E22	47	3361 - 9
4194176	3E24	47	3361 - 11
4196258	3H4	13A	3363 - 7
4196258	3H6	7A	3363 - 9
4196259	3H4	4A	3363 - 7
4196260	3H4	8A	3363 - 7
4198588	2D8	9	1832 - 3
4198956	3E20	9	3361 - 7
4199247	3H16	5	3363 - 19
4200227	3E20	51	3361 - 7
4200465	3D15	2	3315 - 13
4200466	3D15	26	3315 - 13
4200466	3E8	12	3360 - 3
4200467	3D15	25	3315 - 13
4200496	3C2	56	3301 - 11B
4201986	3J10	8	3363 - 87
4202422	3D15	24	3315 - 13
4203411	3G8	20	3362 - 33
4203447	3B24	25	3301 - 11
4203447	3C2	25	3301 - 11B
4206162	3F2	10	3361 - 13
4206166	3F2	28	3361 - 13
4206552	1G4	1C	0521 - 3
4206553	1G4	1D	0521 - 3
4207538	2C2	17	1810 - 27
4208279	1I5	23	1740 - 3
4208674	2E21	5	2002 - 5
4208977	3G8	16	3362 - 33
4209198	3I6	67	3363 - 33
4209588	1G4	3	0521 - 3
4210234	1E4	3	0417 - 3
4213017	1G10	8	0531 - 3
4213419	3G8	35	3362 - 33
4219356	1B22	3	0263 - 3
4219918	3I6	1	3363 - 33
4221018	1I5	34	1740 - 3
4221019	1I5	15	1740 - 3
4222875	3J12	11D	3364 - 3
4222876	3J12	11E	3364 - 3
4224238	1G8	0F	0521 - 7
4224631	3D17	15	3344 - 3
4227083	3E2	1	3344 - 9
4229631	3G4	4	3362 - 27
4229973	1F12	30	0511 - 7
4235232	2C22	15	1821 - 17
4235654	1G14	14	0563 - 3
4239611	3K17	1B	4362 - 3
4244904	3K23	24	4367 - 3
4245758	3I24	23	3363 - 51
4245966	1B24	17	0267 - 3
4246672	3B16	11	3301 - 3
4246672	3C2	62	3301 - 11B
4246672	3F10	5	3362 - 9
4246672	3F12	5	3362 - 11
4248106	1B17	15	0134 - 5
4248117	3I6	65	3363 - 33
4249777	1G16	0B	0564 - 3
4249788	1G10	12	0531 - 3
4250260	3J12	20	3364 - 3
4250261	3J12	21	3364 - 3
4251384	3J12	11F	3364 - 3
4252767	3E20	71	3361 - 7
4254600	1G8	5	0521 - 7
4254600	1H12	33	1674 - 3
4254600	1H16	27	1674 - 7
4254603	2E23	6	2004 - 3
4254604	1H10	2	1673 - 3
4255055	1B17	16	0134 - 5
4255304	3E22	58	3361 - 9
4255304	3H22	31	3363 - 25
4255304	3I10	13	3363 - 37
4255305	3I4	49	3363 - 31
4255567	1I5	22	1740 - 3
4255762	1H8	22	1671 - 3
4255799	1I5	2	1740 - 3
4255804	1B15	5	0134 - 3
4257034	1H8	5	1671 - 3
4257128	1G16	12	0564 - 3
4257159	1F24	4	0515 - 5
4257159	1G16	9	0564 - 3
4257159	1H12	12	1674 - 3
4258916	1B24	30	0267 - 3
4259322	3I22	13	3363 - 49
4260127	3I22	12	3363 - 49
4261938	3I12	25	3363 - 39
4263386	1G10	5	0531 - 3
4264805	2C8	38	1816 - 5
4265372	3E20	67	3361 - 7
4265964	3E22	29	3361 - 9
4265964	3E24	29	3361 - 11
4266481	3H4	3	3363 - 7
4269607	1G16	13	0564 - 3
4271350	1B20	11	0260 - 7
4271350	3E20	37	3361 - 7
4271447	3E2	69	3344 - 9
4272297	3K15	5	4351 - 5
4272305	1C2	1	0267 - 5
4272420	3G6	7	3362 - 29
4272425	3G6	13	3362 - 29
4274478	1H10	5	1673 - 3
4276493	1F18	12	0511 - 13
4276584	3H4	6	3363 - 7
4276696	3D19	22	3344 - 5
4276696	3D21	22	3344 - 5B
4276696	3D23	22	3344 - 7
4276696	3D25	22	3344 - 7B
4276831	1G10	12	0531 - 3
4277223	1H12	18	1674 - 3
4277650	3I12	4	3363 - 39
4279257	1I5	12	1740 - 3
4279507	3B18	2	3301 - 5
4279604	3D15	14	3315 - 13
4280117	3B18	0	3301 - 5
4280359	2E12	36	1910 - 15
4280841	3E20	6	3361 - 7
4282483	3G24	4	3363 - 3
4282841	1B11	3	0133 - 3
4283028	2E25	4	2004 - 5
4283758	3D15	4	3315 - 13
4284441	3C8	0C	3301 - 17
4285577	3J12	17A	3364 - 3
4285621	1G4	1D	0521 - 3
4285622	1G4	1E	0521 - 3
4285646	1H10	5A	1673 - 3
4285647	1H10	5B	1673 - 3
4285648	1H10	3C	1673 - 3
4285648	1H10	5C	1673 - 3
4285722	3H2	6	3363 - 5
4285723	3H2	7	3363 - 5
4285798	3H10	18	3363 - 13
4286584	3D9	30	3315 - 7

NUMERICAL INDEX - CONTINUED

PART NO.	GRID	KEY	PAGE
4287791	3D9	29	3315 - 7
4287795	3D15	11	3315 - 13
4288155	1G18	3	0564 - 5
4288260	1F18	1C	0511 - 13
4288342	1H10	5D	1673 - 3
4288402	3E2	74	3344 - 9
4288417	1G21	26	1322 - 3
4288445	2C14	2	1821 - 5
4288796	1H23	13	1674 - 13
4288971	1G21	27	1322 - 3
4289757	3K13	4	4351 - 3
4289874	3E20	18	3361 - 7
4293211	3H18	45	3363 - 21
4293950	3E18	6	3361 - 5
4293950	3E22	59	3361 - 9
4293950	3H22	32	3363 - 25
4293950	3I16	40	3363 - 43
4296276	3D19	21	3344 - 5
4296276	3D21	21	3344 - 5B
4297136	1G10	12	0531 - 3
4297257	3G4	19	3362 - 27
4297661	3F20	6	3362 - 19
4297661	3F22	16	3362 - 21
4298608	3K23	36	4367 - 3
4299059	1G21	25	1322 - 3
4299059	2C8	39	1816 - 5
4300918	3G4	10	3362 - 27
4306888	3E20	68	3361 - 7
4307026	1H10	3E	1673 - 3
4307027	1H10	3F	1673 - 3
4309836	3H18	45A	3363 - 21
4309837	3H18	45B	3363 - 21
4309838	3H18	45C	3363 - 21
4311378	3G6	9	3362 - 29
4311779	3G6	18	3362 - 29
4312681	1B20	14	0260 - 7
4315493	3K13	5	4351 - 3
4317586	1B15	6	0134 - 3
4319299	3G8	19	3362 - 33
4320490	3E20	82	3361 - 7
4320490	3L2	2	4367 - 7
4320661	2C24	14B	1831 - 3
4320661	2C24	15B	1831 - 3
4321872	2E17	1	2001 - 3
4321887	1B24	3	0267 - 3
4326095	2C4	3B	1814 - 3
4326229	2D10	6	1833 - 3
4326285	3J12	11A	3364 - 3
4326740	1E14	2C	0420 - 5
4326741	1E14	2D	0420 - 5
4326742	1E14	2E	0420 - 5
4326800	1H10	3	1673 - 3
4326801	1H10	3A	1673 - 3
4326802	1H10	3B	1673 - 3
4326803	1H10	3D	1673 - 3
4326807	1E14	2B	0420 - 5
4327293	1E16	26	0421 - 3
4327293	3B24	64A	3301 - 11
4327293	3B24	64B	3301 - 11
4327293	3C2	49A	3301 - 11B
4327293	3C2	49B	3301 - 11B
4327293	3C2	57A	3301 - 11B
4327293	3C2	57B	3301 - 11B
4327293	3C4	20A	3301 - 13
4327293	3C4	20B	3301 - 13
4327293	3C6	48	3301 - 15
4327293	3F10	4B	3362 - 9
4327293	3F10	8B	3362 - 9
4327293	3F10	9B	3362 - 9
4327293	3F10	12B	3362 - 9
4327293	3F12	4B	3362 - 11
4327293	3F12	10B	3362 - 11
4327293	3H20	20B	3363 - 23
4327293	3H20	21B	3363 - 23
4327293	3H22	35B	3363 - 25
4327293	3H24	34B	3363 - 27
4327293	3I8	3	3363 - 35
4327293	3I8	4	3363 - 35
4327293	3I8	5	3363 - 35
4327293	3I8	6	3363 - 35
4327293	3I14	17B	3363 - 41
4327293	3I16	42B	3363 - 43
4327293	3I16	44B	3363 - 43
4327293	3I18	43B	3363 - 45
4327293	3I20	5B	3363 - 47
4327293	3I20	6B	3363 - 47
4327293	3I20	7	3363 - 47
4327293	3I20	9B	3363 - 47
4327294	2C24	14B	1831 - 3
4327294	2C24	15B	1831 - 3
4327294	3C6	41A	3301 - 15
4327294	3C6	41B	3301 - 15
4327294	3C10	12	3301 - 19
4327294	3H2	13B	3363 - 5
4327294	3H2	14B	3363 - 5
4327294	3H8	17B	3363 - 11
4327294	3H12	27B	3363 - 15
4327294	3H12	28B	3363 - 15
4327294	3H12	29B	3363 - 15
4327294	3H12	30B	3363 - 15
4327294	3H14	6B	3363 - 17
4327294	3H14	7B	3363 - 17
4327294	3H16	11B	3363 - 19
4327294	3H16	12B	3363 - 19
4327294	3H16	13B	3363 - 19
4327294	3H16	14B	3363 - 19
4327294	3I24	6A	3363 - 51
4327294	3I24	6B	3363 - 51
4327294	3I24	9A	3363 - 51
4327294	3I24	9B	3363 - 51
4327613	1B11	7B	0133 - 3
4330230	3B24	0	3301 - 11
4330276	2E2	26	1910 - 5
4330276	2E12	32	1910 - 15
4330467	3D15	1	3315 - 13
4330785	2B5	2	1810 - 3
4332878	3E22	46	3361 - 9
4332878	3E24	48	3361 - 11
4333185	2C4	3	1814 - 3
4333835	2C22	14	1821 - 17
4334526	1G12	6	0540 - 3
4334566	3J10	7	3363 - 87
4334759	1G4	1F	0521 - 3
4334891	3E18	23A	3361 - 5
4334892	3E18	21A	3361 - 5
4334894	3E18	22A	3361 - 5
4334899	3E18	19	3361 - 5
4335060	3D5	19	3315 - 3B
4335136	1E14	2	0420 - 5
4336166	3F14	16A	3362 - 13
4336166	3F14	65	3362 - 13
4336166	3F14	72	3362 - 13
4336166	3F16	20A	3362 - 15
4336166	3F18	20A	3362 - 17
4336420	1G4	5	0521 - 3
4337928	3C2	16	3301 - 11B
4338863	1I5	11	1740 - 3
4338974	2C4	3C	1814 - 3
4339337	1B3	1C	0131 - 3
4340275	3E18	13A	3361 - 5
4341012	1H8	1	1671 - 3
4341706	2E17	3	2001 - 3
4341788	2E10	11	1910 - 13
4342841	3E22	15	3361 - 9
4342841	3E24	15	3361 - 11
4342843	3E22	14	3361 - 9
4342843	3E24	14	3361 - 11
4342846	3E24	41	3361 - 11
4343074	3E20	8	3361 - 7
4343074	3E20	79	3361 - 7
4343268	1F12	2	0511 - 7
4344303	1G10	16	0531 - 3
4344785	1B9	4	0132 - 3
4344898	3D19	3C	3344 - 5
4344898	3D21	3C	3344 - 5B
4344898	3D23	3C	3344 - 7
4344898	3D25	3C	3344 - 7B
4345297	1H4	3	1370 - 3
4345599	1B9	6	0132 - 3
4346521	3E22	28	3361 - 9
4346521	3E24	28	3361 - 11
4346770	2D8	10	1832 - 3
4347107	3E22	24	3361 - 9
4347107	3E24	24	3361 - 11
4347396	2D12	12	1833 - 5
4347428	3B20	10	3301 - 7
4348569	3B20	9	3301 - 7
4348665	3E20	77	3361 - 7
4349712	3I10	12	3363 - 37
4350249	2D2	10	1831 - 5
4350928	3E22	49	3361 - 9
4350928	3E24	49	3361 - 11
4351175	3I12	21	3363 - 39
4351187	2E17	10	2001 - 3
4351255	2C6	4	1816 - 3
4351478	2D18	6C	1833 - 11
4351774	3I12	22	3363 - 39
4351774	3I14	14	3363 - 41
4352400	3J16	1	3365 - 3
4352400	3J18	2B	3365 - 5
4352400	3J20	1	3365 - 7
4352400	3J22	2B	3365 - 9
4352400	3J24	1	3365 - 19
4352400	3K2	1B	3365 - 21
4352400	3K2	2B	3365 - 21
4352638	3J16	2	3365 - 3
4352638	3J18	1B	3365 - 5
4352638	3J20	2	3365 - 7
4352638	3J22	1B	3365 - 9
4353073	3C4	21	3301 - 13
4353560	1G16	18	0564 - 3
4353560	1G16	18A	0564 - 3
4355012	3E20	66	3361 - 7
4355272	3E20	35	3361 - 7
4355277	3E20	36	3361 - 7
4355279	3E20	29	3361 - 7
4355286	3E20	3	3361 - 7
4356604	2F4	9	2007 - 3
4357297	1F14	14	0511 - 9
4357538	1B17	5	0134 - 5
4357539	1B17	14	0134 - 5

NUMERICAL INDEX - CONTINUED

PART NO.	GRID	KEY	PAGE
4357586	3B16	14	3301 - 3
4357862	1H16	30	1674 - 7
4359384	1H16	19	1674 - 7
4359576	3D25	21	3344 - 7B
4360347	1B17	1B	0134 - 5
4360509	1F24	1	0515 - 5
4360981	1H4	2	1370 - 3
4361302	2E17	7	2001 - 3
4361458	2E12	23G	1910 - 15
4361601	2C2	3	1810 - 27
4361638	1G16	4	0564 - 3
4361800	1H14	2	1674 - 5
4361800	2C8	32	1816 - 5
4361802	2C8	4	1816 - 5
4361802	2C8	8	1816 - 5
4361802	2C8	15	1816 - 5
4361802	2C8	19	1816 - 5
4362135	2B13	22	1810 - 11
4362700	2B9	7A	1810 - 7
4363079	1H8	10	1671 - 3
4363081	1H8	41	1671 - 3
4363754	3B18	0	3301 - 5
4364323	1B20	6	0260 - 7
4364328	1B20	5	0260 - 7
4364329	1B20	24	0260 - 7
4364504	2E17	8	2001 - 3
4364970	3G8	22	3362 - 33
4365448	3K4	1	3365 - 23
4365448	3K6	2B	3365 - 25
4365897	3K4	2	3365 - 23
4365897	3K6	1B	3365 - 25
4366376	3E18	18A	3361 - 5
4366692	3B20	17	3301 - 7
4366699	1G12	15	0540 - 3
4366871	2C22	6	1821 - 17
4367031	3I10	15	3363 - 37
4367375	1H16	20	1674 - 7
4367385	3E22	5	3361 - 9
4367385	3E24	5	3361 - 11
4367410	3B20	18	3301 - 7
4367500	3E22	6	3361 - 9
4367500	3E24	6	3361 - 11
4368619	3E22	10	3361 - 9
4368619	3E24	10	3361 - 11
4368629	3G8	21	3362 - 33
4368630	3G8	18	3362 - 33
4368973	2E17	2	2001 - 3
4369472	2C4	3A	1814 - 3
4369645	2B13	20	1810 - 11
4369817	1H16	32	1674 - 7
4370306	2D18	30	1833 - 11
4370308	2D20	51	1833 - 13
4370309	2D20	54	1833 - 13
4370310	2D18	6E	1833 - 11
4370435	3H18	17A	3363 - 21
4371242	1F12	14	0511 - 7
4371258	1F12	18	0511 - 7
4371318	1C10	1	0400 - 3
4371706	3D9	48	3315 - 7
4371903	1C10	1	0400 - 3
4372079	3G4	2	3362 - 27
4372091	2B13	23	1810 - 11
4372200	2C22	7	1821 - 17
4372200	2C22	12	1821 - 17
4372619	1G16	18A	0564 - 3
4372620	1G16	18B	0564 - 3
4372683	3F18	8	3362 - 17
4372683	3F22	61	3362 - 21
4372684	3F20	20	3362 - 19
4372684	3F22	58	3362 - 21
4374265	1G16	7	0564 - 3
4375688	2D24	18	1910 - 3
4376210	3B20	0B	3301 - 7
4376210	3B20	25	3301 - 7
4376657	3C6	4	3301 - 15
4379665	3I14	13	3363 - 41
4379815	1G4	1A	0521 - 3
4379989	2E2	1B	1910 - 5
4379989	2E2	12B	1910 - 5
4379989	2E10	2B	1910 - 13
4380534	2C22	16	1821 - 17
4381572	1H14	6	1674 - 5
4381572	1H23	11	1674 - 13
4382207	1F12	18	0511 - 7
4382901	3G6	3	3362 - 29
4383067	3G4	11	3362 - 27
4384239	2C22	3	1821 - 17
4384758	2E25	14	2004 - 5
4384917	1H4	1	1370 - 3
4384949	1H4	5	1370 - 3
4385798	3F20	78	3362 - 19
4385798	3F22	28	3362 - 21
4387251	3H8	17A	3363 - 11
4387501	2C14	3	1821 - 5
4388027	3K8	30	3365 - 27
4388027	3K10	30	3365 - 29
4388235	1E14	14A	0420 - 5
4388962	1I2	9	1676 - 5
4389009	3H8	15	3363 - 11
4392801	2C16	7	1821 - 11
4392803	2C16	9	1821 - 11
4392804	2C16	10	1821 - 11
4392805	2C16	11	1821 - 11
4392806	2C16	12	1821 - 11
4392807	2C16	13	1821 - 11
4392809	2C16	15	1821 - 11
4392812	2C16	18	1821 - 11
4396083	3B18	3	3301 - 5
4396102	3L2	8	4367 - 7
4396103	3G2	9	3362 - 25
4396451	1G10	14	0531 - 3
4396809	1F18	1B	0511 - 13
4397509	3E20	53	3361 - 7
4397537	3E20	43	3361 - 7
4398846	3L2	46	4367 - 7
4398889	3L2	50	4367 - 7
4399892	3L2	45	4367 - 7
4400442	3E22	50	3361 - 9
4401481	3C6	0	3301 - 15
4402410	3D15	12	3315 - 13
4402669	3L2	6	4367 - 7
4404102	3E20	54	3361 - 7
4405164	2D14	8	1833 - 7
4405166	2D14	6	1833 - 7
4405321	1B9	54	0132 - 3
4406165	3K17	4	4362 - 3
4407464	3E20	13	3361 - 7
4407745	3K23	8	4367 - 3
4408002	3K23	28	4367 - 3
4408102	3K23	13	4367 - 3
4408119	3K23	6	4367 - 3
4408122	3K23	25	4367 - 3
4408141	3G2	8	3362 - 25
4408959	3H18	17	3363 - 21
4409396	2E12	28B	1910 - 15
4409640	3E20	45	3361 - 7
4409999	2B5	1	1810 - 3
4410066	3K17	5	4362 - 3
4410166	3E20	24	3361 - 7
4410445	3K17	2	4362 - 3
4410446	3K17	3	4362 - 3
4410898	3D5	4	3315 - 3B
4411019	3C6	9	3301 - 15
4411143	3K23	4	4367 - 3
4411793	1F8	3	0511 - 3
4411911	1C20	19	0407 - 3
4411911	2D8	31	1832 - 3
4411911	3C10	13	3301 - 19
4412666	3I8	10	3363 - 35
4412666	3I12	12	3363 - 39
4413075	1B17	11	0134 - 5
4413700	3L2	13	4367 - 7
4413752	3G2	3	3362 - 25
4413753	3L2	12	4367 - 7
4413761	3L2	30	4367 - 7
4413764	3L2	23	4367 - 7
4413765	3L2	22	4367 - 7
4413768	3L2	29	4367 - 7
4413859	3G2	2	3362 - 25
4414713	1G4	1G	0521 - 3
4414761	3F8	1	3362 - 7
4414833	3K23	16	4367 - 3
4414855	3K23	14	4367 - 3
4415024	2C8	35	1816 - 5
4416704	2E8	33	1910 - 11
4416975	2D18	6F	1833 - 11
4417431	1B20	20	0260 - 7
4418301	1H12	13	1674 - 3
4418698	1C4	0	0267 - 7
4418771	1B24	22	0267 - 3
4418927	1G6	14	0521 - 5
4419159	1B20	15	0260 - 7
4419238	1B20	19	0260 - 7
4419730	2B9	24F	1810 - 7
4419732	2B9	24D	1810 - 7
4419733	2B9	24C	1810 - 7
4419734	2B9	24B	1810 - 7
4419735	2B9	24A	1810 - 7
4419850	1G10	1	0531 - 3
4420392	3I2	48	3363 - 29
4420423	3C6	41A	3301 - 15
4420724	2E8	33	1910 - 11
4420724	2E19	6	2002 - 3
4420875	2C8	2	1816 - 5
4420878	2C8	11	1816 - 5
4421771	3D5	7	3315 - 3B
4421939	2D12	1	1833 - 5
4421946	2D8	19	1832 - 3
4422000	2D12	5	1833 - 5
4422953	3F10	18	3362 - 9
4423699	2B5	11	1810 - 3
4423853Y	3K4	3	3365 - 23
4423853Y	3K6	40	3365 - 25
4423995	1F8	2	0511 - 3
4424157	2E8	50	1910 - 11
4424185	3D7	8	3315 - 5
4424425	1I7	4	1740 - 5
4424425	3D17	28	3344 - 3
4424628	3E22	25	3361 - 9
4424628	3E24	27	3361 - 11
4424953	3D19	3B	3344 - 5

NUMERICAL INDEX - CONTINUED

PART NO.	GRID	KEY	PAGE
4424953	3D21	3B	3344 - 5B
4424953	3D23	3B	3344 - 7
4424953	3D25	3B	3344 - 7B
4425095	3H18	25	3363 - 21
4425139	1F18	6	0511 - 13
4425163	1F22	3	0515 - 3
4425270	3B22	4	3301 - 9
4425270	3K21	4	4362 - 7
4425290	3G8	30	3362 - 33
4425305	3G8	3	3362 - 33
4425414	3D5	6	3315 - 3B
4425481	2E8	30	1910 - 11
4425484	3B24	59	3301 - 11
4425937	3E6	1	3344 - 13
4425980	3K15	1	4351 - 5
4426044	1F14	11	0511 - 9
4426046	2D14	2	1833 - 7
4426128	1I7	1	1740 - 5
4426128	3D17	29	3344 - 3
4426159	2D2	2	1831 - 5
4426225	1F14	10	0511 - 9
4426353	1I2	12	1676 - 5
4426354	1H14	7	1674 - 5
4426354	2C10	2	1816 - 7
4426362	1I2	1A	1676 - 5
4426370	1I2	11	1676 - 5
4426636	1G12	11	0540 - 3
4426637	1G12	16	0540 - 3
4426662	1B22	28	0263 - 3
4426700	1H23	10	1674 - 13
4427347	3E20	61	3361 - 7
4427427	1B20	3	0260 - 7
4427428	3G4	3	3362 - 27
4427429	1H16	22B	1674 - 7
4427493	1G10	2	0531 - 3
4428242	1G12	12	0540 - 3
4428830	3H12	35	3363 - 15
4428831	1C20	2	0407 - 3
4428902	3G8	6	3362 - 33
4428910	1H16	22F	1674 - 7
4428911	1H16	22G	1674 - 7
4428917	3E20	42	3361 - 7
4428919	3K13	6	4351 - 3
4429119	3D5	10	3315 - 3B
4429120	3D5	8	3315 - 3B
4429488	3E18	5	3361 - 5
4430040	3K23	26	4367 - 3
4430041	3K23	3	4367 - 3
4430356	1B20	27	0260 - 7
4430357	1B20	25	0260 - 7
4430382	1H20	1	1674 - 9
4430616	1I9	1A	1749 - 3
4430912	1C20	3	0407 - 3
4431711	1B17	13	0134 - 5
4431914	3D5	12	3315 - 3B
4431915	3D5	13	3315 - 3B
4432356	3E20	47	3361 - 7
4432511	3B20	25	3301 - 7
4432763	3J10	0	3363 - 87
4432764	3J10	1	3363 - 87
4432765	3J10	2	3363 - 87
4432766	3J10	3	3363 - 87
4432965	2F2	6	2006 - 3
4433327	3E22	38	3361 - 9
4433327	3E24	38	3361 - 11
4433550	1B17	3	0134 - 5
4434436	3L2	24	4367 - 7
4434951	3D19	3F	3344 - 5
4434951	3D21	3F	3344 - 5B
4434951	3D23	3F	3344 - 7
4434951	3D25	3F	3344 - 7B
4434952	3D17	2G	3344 - 3
4434952	3D19	3G	3344 - 5
4434952	3D21	3G	3344 - 5B
4434952	3D23	3G	3344 - 7
4434952	3D25	3G	3344 - 7B
4435123	3D19	40	3344 - 5
4435123	3D23	40	3344 - 7
4435124	1I5	18	1740 - 3
4435124	3D17	7	3344 - 3
4435125	3D17	32	3344 - 3
4435125	3D19	38	3344 - 5
4435125	3D23	38	3344 - 7
4435239	3D17	5	3344 - 3
4435717	1G10	12	0531 - 3
4436242	1B24	11	0267 - 3
4436267	3F10	12A	3362 - 9
4436269	3F10	9A	3362 - 9
4436270	3F10	10	3362 - 9
4436271	3E20	66	3361 - 7
4436292	3F10	11	3362 - 9
4436293	3H18	3	3363 - 21
4436299	3H22	22	3363 - 25
4436304	3H24	34A	3363 - 27
4436309	3H22	35A	3363 - 25
4436312	3I12	7	3363 - 39
4436313	3I12	8	3363 - 39
4436314	3I12	9	3363 - 39
4436316	3I14	7	3363 - 41
4436317	3I14	8	3363 - 41
4436319	3I14	9	3363 - 41
4436322	3E20	48	3361 - 7
4436383	3H22	14	3363 - 25
4436435	3I16	42A	3363 - 43
4436493	1I9	7	1749 - 3
4436534	1H16	24	1674 - 7
4436535	3I2	53	3363 - 29
4436535	3I4	53	3363 - 31
4436536	3E22	55	3361 - 9
4436536	3E24	52	3361 - 11
4436537	1G12	20	0540 - 3
4436721	3I18	43A	3363 - 45
4436736	1H16	22H	1674 - 7
4436800	3E22	57	3361 - 9
4437074	1H8	9	1671 - 3
4437093	3I14	2	3363 - 41
4437094	3I14	3	3363 - 41
4437095	3I12	2	3363 - 39
4437096	3I12	3	3363 - 39
4437106	3D5	20	3315 - 3B
4437134	1H4	6	1370 - 3
4437177	1G12	23	0540 - 3
4437192	3G24	6	3363 - 3
4437309	1C20	2	0407 - 3
4437333	3D5	11	3315 - 3B
4437432	3G8	7	3362 - 33
4437433	3G8	31	3362 - 33
4437447	2E4	5B	1910 - 7
4437536	2E2	9	1910 - 5
4437614	1G4	4	0521 - 3
4437722	3H10	4	3363 - 13
4437725	3H12	27A	3363 - 15
4437726	3H12	28A	3363 - 15
4437747	3H12	29A	3363 - 15
4437748	2D24	21C	1910 - 3
4437749	2D24	21B	1910 - 3
4437750	2D24	21E	1910 - 3
4437752	2D24	3B	1910 - 3
4437754	2E6	10B	1910 - 9
4437762	3H12	30A	3363 - 15
4437779	3H16	12A	3363 - 19
4438008	1G4	1	0521 - 3
4438213	2D24	21D	1910 - 3
4438279	3D3	14	3315 - 3
4438289	2D10	5	1833 - 3
4438289	2D20	56	1833 - 13
4438533	1I5	24	1740 - 3
4438673	3F10	8A	3362 - 9
4439019	1H8	35	1671 - 3
4439020	1H8	36	1671 - 3
4439153	2E4	5C	1910 - 7
4439154	2E4	5D	1910 - 7
4439340	2C24	14A	1831 - 3
4439346	2C24	15A	1831 - 3
4439578	3F12	10A	3362 - 11
4439703	2D24	3C	1910 - 3
4439707	2D8	19	1832 - 3
4439708	2D12	5	1833 - 5
4439709	2D12	1	1833 - 5
4439897	1H16	23	1674 - 7
4440626	1G2	1	0515 - 7
4441117	2C8	23	1816 - 5
4441246	2E25	15	2004 - 5
4441611	1G14	23A	0563 - 3
4441612	1G14	23B	0563 - 3
4441965	2C8	14	1816 - 5
4441967	2C8	3	1816 - 5
4441968	2C8	7	1816 - 5
4441969	2C10	6	1816 - 7
4442175	3D7	15	3315 - 5
4442219	3B24	47A	3301 - 11
4442219	3H24	25	3363 - 27
4442219	3I18	36	3363 - 45
4442323	3D5	24	3315 - 3B
4442339	3D5	26	3315 - 3B
4442788	1B24	24	0267 - 3
4442789	1B24	15	0267 - 3
4442825	2D10	22	1833 - 3
4443487	1F16	9	0511 - 11
4443490	1H16	22D	1674 - 7
4443596	3J12	30	3364 - 3
4443782	3J12	6	3364 - 3
4443878	3D17	2E	3344 - 3
4443878	3D19	3E	3344 - 5
4443878	3D21	3E	3344 - 5B
4443878	3D23	3E	3344 - 7
4443878	3D25	3E	3344 - 7B
4443879	3E4	5	3344 - 11
4444021	2C14	1	1821 - 5
4444022	2D10	25	1833 - 3
4444288	1I5	26	1740 - 3
4444288	3D17	34	3344 - 3
4444288	3D19	52	3344 - 5
4444288	3D23	52	3344 - 7
4444289	1I5	27	1740 - 3
4444289	1I5	30	1740 - 3
4444289	3D17	35	3344 - 3
4444289	3D19	53	3344 - 5
4444289	3D23	53	3344 - 7
4444297	2D12	14	1833 - 5
4444298	2D12	15	1833 - 5

NUMERICAL INDEX - CONTINUED

PART NO.	GRID	KEY	PAGE
4444482	3J12	7	3364 - 3
4444700	1H16	4	1674 - 7
4444700	2D4	4	1831 - 7
4444700	2D4	7	1831 - 7
4444754	3D17	36	3344 - 3
4444839	3D19	54	3344 - 5
4444839	3D23	54	3344 - 7
4444840	3D19	55	3344 - 5
4444840	3D23	55	3344 - 7
4444905	1F14	12	0511 - 9
4444914	3E4	6	3344 - 11
4445210	1B22	26	0263 - 3
4445322	3D3	1	3315 - 3
4445707	2D2	13	1831 - 5
4445708	2D2	5	1831 - 5
4445709	2D2	8	1831 - 5
4445710	2D2	11	1831 - 5
4445711	2D2	16	1831 - 5
4445712	2D4	3	1831 - 7
4445713	2D4	2	1831 - 7
4445864	2D10	21	1833 - 3
4445932	2C10	6A	1816 - 7
4445961	1H8	37	1671 - 3
4446034	1F14	13	0511 - 9
4446097	2D10	29	1833 - 3
4446207	2C8	18	1816 - 5
4446406	1C20	12B	0407 - 3
4446960	3D5	30	3315 - 3B
4447050	3D5	15	3315 - 3B
4447050	3G8	11	3362 - 33
4447067	3G8	4	3362 - 33
4447072	2D4	10	1831 - 7
4447264	3E24	39	3361 - 11
4447331	2D10	15	1833 - 3
4447332	2D10	8	1833 - 3
4447335	1D4	13	0409 - 3
4447335	1D4	41	0409 - 3
4447335	1D10	72	0413 - 3
4447335	1D10	87	0413 - 3
4447335	1D14	88	0413 - 9
4447338	1D10	62	0413 - 3
4447338	1D22	20	0414 - 3
4447338	1D24	62	0416 - 3
4447431	1B3	1A	0131 - 3
4447431	3C8	0A	3301 - 17
4447441	3I8	6	3363 - 35
4447483	1B22	11	0263 - 3
4447490	1B22	23	0263 - 3
4447700	3I10	10	3363 - 37
4447905	1H8	40	1671 - 3
4448178	2D4	1	1831 - 7
4448179	2D14	5	1833 - 7
4448336	1C20	17A	0407 - 3
4448372	1F12	1	0511 - 7
4448373	1F12	19	0511 - 7
4448395	3J18	40	3365 - 5
4448395	3J22	40	3365 - 9
4448396	3K2	42	3365 - 21
4448397	3K6	39	3365 - 25
4448748	3H18	21	3363 - 21
4448750	3I18	31	3363 - 45
4448751	3I18	32	3363 - 45
4448756	3I20	9A	3363 - 47
4448758	3I8	6	3363 - 35
4448759	3I8	4	3363 - 35
4448765	3I20	5A	3363 - 47
4448768	3I8	3	3363 - 35
4448839	3H16	11A	3363 - 19
4448849	3H16	13A	3363 - 19
4448851	3H16	14A	3363 - 19
4448855	3H14	6A	3363 - 17
4448858	3H14	7A	3363 - 17
4448918	3I12	27	3363 - 39
4448990	2C8	22	1816 - 5
4449068	2D2	1	1831 - 5
4449139	1F12	21	0511 - 7
4449144	3K23	40	4367 - 3
4449165	2D6	2	1831 - 9
4449166	2D4	9	1831 - 7
4449182	3K23	42	4367 - 3
4449244	1H4	4	1370 - 3
4449250	1H12	32	1674 - 3
4449307	1C20	12A	0407 - 3
4449325	3G24	11	3363 - 3
4449326	3H20	20A	3363 - 23
4449326	3H20	21A	3363 - 23
4449328	3H20	21A	3363 - 23
4449353	3G24	13	3363 - 3
4449354	3H20	14	3363 - 23
4449361	1G16	19	0564 - 3
4449362	1G16	20	0564 - 3
4449509	2E19	5	2002 - 3
4449646	3B24	47A	3301 - 11
4449646	3B24	47B	3301 - 11
4449766	1B17	18	0134 - 5
4449793	1F16	7	0511 - 11
4449808	2C14	5A	1821 - 5
4449809	2C14	5B	1821 - 5
4449810	2C14	5C	1821 - 5
4449878	2D10	10	1833 - 3
4449879	2D10	11	1833 - 3
4450008	2F2	2	2006 - 3
4450010	3D19	57	3344 - 5
4450010	3D23	57	3344 - 7
4450011	3D17	37	3344 - 3
4450174	2E25	15	2004 - 5
4450291	1H16	1	1674 - 7
4450300	1F16	8	0511 - 11
4450315	2D10	3	1833 - 3
4450524	2D24	21F	1910 - 3
4450527	3C10	3	3301 - 19
4450544	3C10	2	3301 - 19
4450669	2E12	26	1910 - 15
4450754	2E12	11B	1910 - 15
4450759	2E12	17B	1910 - 15
4450833	1G21	19	1322 - 3
4450859	2E12	23C	1910 - 15
4450860	2E12	23D	1910 - 15
4450861	2E12	23E	1910 - 15
4450862	2E12	23F	1910 - 15
4450862	2E12	28C	1910 - 15
4450864	2E12	28D	1910 - 15
4450976	3C10	15	3301 - 19
4451089	3B24	9	3301 - 11
4451090	3C4	20A	3301 - 13
4451119	3B24	7	3301 - 11
4451128	3C2	49A	3301 - 11B
4451150	2E10	2C	1910 - 13
4451151	2E10	2D	1910 - 13
4451169	2E2	22	1910 - 5
4451170	2E2	23	1910 - 5
4451258	2D10	12	1833 - 3
4451498	3E22	22	3361 - 9
4451498	3E24	22	3361 - 11
4451760	3E2	1	3344 - 9
4451764	1H23	0	1674 - 13
4451784	3G16	24	3362 - 41
4451785	3G16	25	3362 - 41
4451785	3G18	25	3362 - 43
4451786	3G18	26	3362 - 43
4451787	3G16	37	3362 - 41
4451788	3G16	38	3362 - 41
4451789	3G16	39	3362 - 41
4451789	3G18	39	3362 - 43
4451790	3G18	40	3362 - 43
4451797	3G18	41	3362 - 43
4451809	3D9	10	3315 - 7
4451809	3D9	17	3315 - 7
4451813	3I20	6A	3363 - 47
4451814	3I8	5	3363 - 35
4451909	3G22	13	3362 - 47
4451909	3I10	2	3363 - 37
4451924	3C2	57A	3301 - 11B
4451924	3H8	16	3363 - 11
4451993	3H24	26	3363 - 27
4451995	3H22	28	3363 - 25
4451999	3I16	37	3363 - 43
4452005	3H18	26	3363 - 21
4452007	3D9	44	3315 - 7
4452142	3D9	28	3315 - 7
4452159	1H8	42	1671 - 3
4452160	1H16	15	1674 - 7
4452162	1D14	68	0413 - 9
4452162	1G14	18	0563 - 3
4452163	1G14	27	0563 - 3
4452164	1G14	28	0563 - 3
4452165	1D16	4	0413 - 11
4452165	1G14	29	0563 - 3
4452166	1C20	17	0407 - 3
4452178	3L2	47	4367 - 7
4452249	3D9	26	3315 - 7
4452289	3H22	30	3363 - 25
4452331	1H16	6	1674 - 7
4452393	3I16	39	3363 - 43
4452613	2D10	35	1833 - 3
4452613	2E17	9	2001 - 3
4452625	3G12	0	3362 - 37
4452625	3G14	0	3362 - 39
4452625	3G16	0	3362 - 41
4452625	3G18	0	3362 - 43
4452625	3G20	0	3362 - 45
4452625	3I2	51	3363 - 29
4452647	3G20	18	3362 - 45
4452649	3G20	20	3362 - 45
4452727	2D6	8	1831 - 9
4452913	1G14	17	0563 - 3
4453013	1I9	6	1749 - 3
4453083	3F10	4A	3362 - 9
4453084	3I6	54	3363 - 33
4453087	3F12	4A	3362 - 11
4453252	1I9	8	1749 - 3
4453350	2C10	4	1816 - 7
4453351	2D10	34	1833 - 3
4453433	2B9	23	1810 - 7
4453434	2B9	26	1810 - 7
4453604	1F12	5	0511 - 7
4453755	1F10	2	0511 - 5
4453759	1F10	1	0511 - 5
4453774	1F10	6	0511 - 5
4453819	3G20	11	3362 - 45
4453820	3G20	12	3362 - 45

NUMERICAL INDEX - CONTINUED

PART NO.	GRID	KEY	PAGE
4453874	2C22	8	1821 - 17
4454052	1F12	6	0511 - 7
4454057	1F12	20	0511 - 7
4454058	1F12	23	0511 - 7
4454059	1F12	24	0511 - 7
4454060	1F12	25	0511 - 7
4454061	1F12	26	0511 - 7
4454062	1F12	27	0511 - 7
4454063	1F12	29	0511 - 7
4454065	1F12	31	0511 - 7
4454090	1F12	3	0511 - 7
4454091	1F12	4	0511 - 7
4454094	1F12	7	0511 - 7
4454095	1F12	8	0511 - 7
4454096	1F12	9	0511 - 7
4454097	1F12	10	0511 - 7
4454098	1F12	11	0511 - 7
4454099	1F12	12	0511 - 7
4454100	1F12	13	0511 - 7
4454101	1F12	15	0511 - 7
4454103	1F12	17	0511 - 7
4454105	1F12	22	0511 - 7
4454111	1F12	28	0511 - 7
4454117	1C10	1	0400 - 3
4454118	1C10	1	0400 - 3
4454268	3D9	50	3315 - 7
4454269	3D9	49	3315 - 7
4454270	3D9	21	3315 - 7
4454285	2E21	3	2002 - 5
4454518	1H14	4	1674 - 5
4454519	1H25	3	1676 - 3
4454519	1I2	0	1676 - 5
4454538	3C6	37	3301 - 15
4454725	3B18	16	3301 - 5
4455085	3F4	1	3362 - 3
4455085	3F14	97	3362 - 13
4455085	3F16	97	3362 - 15
4455085	3F18	97	3362 - 17
4455085	3F20	97	3362 - 19
4455085	3F22	97	3362 - 21
4455085	3F24	97	3362 - 23
4455116	1H4	16	1370 - 3
4455156	3I10	11	3363 - 37
4455183	3I20	7	3363 - 47
4455208	2E12	6	1910 - 15
4455223	1F12	16	0511 - 7
4455225	3H12	40	3363 - 15
4455367	3J12	41	3364 - 3
4455437	3J12	40	3364 - 3
4455499	3H2	14A	3363 - 5
4455500	3H2	13A	3363 - 5
4455512	2D2	19	1831 - 5
4455515	1G14	24B	0563 - 3
4455516	1G14	25B	0563 - 3
4455541	1E16	0	0421 - 3
4455566	2C22	5	1821 - 17
4455599	3I24	1	3363 - 51
4455712	2D10	32	1833 - 3
4455713	2D10	33	1833 - 3
4455719	3E24	70	3361 - 11
4455733	3E22	70	3361 - 9
4455772	3D9	14	3315 - 7
4455778	2D18	5	1833 - 11
4455787	3F22	11	3362 - 21
4455788	3F20	1	3362 - 19
4455986	3G10	5	3362 - 35
4455987	3G10	6	3362 - 35
4455989	3G10	49	3362 - 35
4455990	3G10	48	3362 - 35
4455991	3G10	3	3362 - 35
4455994	3I6	61	3363 - 33
4455995	3I6	60	3363 - 33
4456130	2D14	1	1833 - 7
4456330	1F14	13	0511 - 9
4456778	1H16	22A	1674 - 7
4457105	3C10	14	3301 - 19
4457108	1I5	37	1740 - 3
4457141	2B17	1	1810 - 15
4457160	2B15	16	1810 - 13
4457161	2B15	17	1810 - 13
4457173	2B13	47	1810 - 11
4457174	2B13	48	1810 - 11
4457175	2B13	49	1810 - 11
4457176	2B13	37	1810 - 11
4457178	2B11	1	1810 - 9
4457180	2B11	6	1810 - 9
4457233	3C6	46	3301 - 15
4457353	3I14	17A	3363 - 41
4457402	3I6	63	3363 - 33
4457412	2D2	18	1831 - 5
4457440	3I16	44A	3363 - 43
4457965	1E14	13B	0420 - 5
4457967	1E14	14B	0420 - 5
4458336	2B9	24	1810 - 7
4458466	2B11	4	1810 - 9
4458466	2B17	3	1810 - 15
4458469	2B13	35	1810 - 11
4458469	2B17	4	1810 - 15
4458470	2B11	5	1810 - 9
4458470	2B13	36	1810 - 11
4458470	2B17	5	1810 - 15
4459224	2F4	14	2007 - 3
4459225	2F4	15	2007 - 3
4459547	2B21	1	1810 - 21
4459547	2B24	1	1810 - 25
4460037	1H16	31	1674 - 7
4460371	1I5	31	1740 - 3
4460371	3D17	38	3344 - 3
4460399	2D14	3	1833 - 7
4460797	3F20	21	3362 - 19
4461342	2E12	28E	1910 - 15
4461384	2C14	1	1821 - 5
4461625	1I9	1B	1749 - 3
4461933	2B13	17	1810 - 11
4461934	2B13	18	1810 - 11
4461935	2B13	19	1810 - 11
4461936	2B13	29	1810 - 11
4461937	2B13	24	1810 - 11
4461938	2B13	25	1810 - 11
4461939	2B13	26	1810 - 11
4461940	2B13	27	1810 - 11
4461941	2B13	28	1810 - 11
4461943	2B13	30	1810 - 11
4461944	2B13	31	1810 - 11
4461945	2B13	32	1810 - 11
4461946	2B13	33	1810 - 11
4461947	2B9	19	1810 - 7
4461947	2B9	30	1810 - 7
4461947	2B13	34	1810 - 11
4461947	2B15	51	1810 - 13
4461954	2B19	1	1810 - 17
4461955	2B11	39	1810 - 9
4461956	2B13	39	1810 - 11
4461957	2B13	40	1810 - 11
4461963	3I24	41	3363 - 51
4461966	3I24	42	3363 - 51
4462398	2E10	16	1910 - 13
4462581	2E10	2C	1910 - 13
4462892	3G22	13	3362 - 47
4462892	3I10	2	3363 - 37
4463047	3E20	5	3361 - 7
4463134	3I24	9A	3363 - 51
4463135	3I24	6A	3363 - 51
4463196	3B24	64A	3301 - 11
4463203	2B19	5	1810 - 17
4463682	2B15	38	1810 - 13
4463702	2C16	16	1821 - 11
4463703	2C16	17	1821 - 11
4463732	2B15	27	1810 - 13
4463733	2B15	28	1810 - 13
4463734	2B15	29	1810 - 13
4463735	2B15	30	1810 - 13
4463736	2B15	39	1810 - 13
4463737	2B15	40	1810 - 13
4463737	2B15	48	1810 - 13
4463737	2B17	9	1810 - 15
4463856	2B15	1	1810 - 13
4463857	2B15	2	1810 - 13
4463858	2B15	3	1810 - 13
4463859	2B15	4	1810 - 13
4463859	2B15	7	1810 - 13
4463859	2B15	22	1810 - 13
4463860	2B15	5	1810 - 13
4463861	2B15	6	1810 - 13
4463862	2B15	18	1810 - 13
4463863	2B15	8	1810 - 13
4463864	2B15	9	1810 - 13
4463913	2B15	19	1810 - 13
4463914	2B11	9	1810 - 9
4463914	2B11	34	1810 - 9
4463914	2B15	20	1810 - 13
4463914	2B15	26	1810 - 13
4463914	2B15	37	1810 - 13
4463914	2B17	8	1810 - 15
4463914	2B19	2	1810 - 17
4463915	2B15	21	1810 - 13
4463916	2B11	41	1810 - 9
4463916	2B15	31	1810 - 13
4463917	2B15	23	1810 - 13
4463918	2B15	24	1810 - 13
4463918	2B19	11	1810 - 17
4463919	2B15	25	1810 - 13
4463920	2B11	42	1810 - 9
4463920	2B15	32	1810 - 13
4463920	2B15	34	1810 - 13
4463921	2B15	33	1810 - 13
4463941	2B15	41	1810 - 13
4463942	2B15	10	1810 - 13
4463942	2B21	4	1810 - 21
4463942	2B24	4	1810 - 25
4463943	2B15	11	1810 - 13
4463944	2B15	12	1810 - 13
4463945	2B15	13	1810 - 13
4463946	2B15	14	1810 - 13
4463947	2B15	35	1810 - 13
4463948	2B15	36	1810 - 13
4463949	2B15	15	1810 - 13
4463959	2B9	8	1810 - 7
4463959	2B13	2	1810 - 11
4463959	2B13	6	1810 - 11
4463960	2B13	3	1810 - 11

NUMERICAL INDEX - CONTINUED

PART NO.	GRID	KEY	PAGE
4463961	2B13	4	1810 - 11
4463963	2B13	13	1810 - 11
4463964	2B13	14	1810 - 11
4463965	2B13	11	1810 - 11
4463966	2B13	12	1810 - 11
4464048	2C8	3	1816 - 5
4464227	2B13	15	1810 - 11
4464228	2B13	16	1810 - 11
4464230	2B19	19	1810 - 17
4464230	2B21	14	1810 - 21
4464230	2B24	14	1810 - 25
4464231	2B21	10	1810 - 21
4464231	2B24	10	1810 - 25
4464232	2B21	11	1810 - 21
4464232	2B24	11	1810 - 25
4464233	2B17	2	1810 - 15
4464234	2B11	3	1810 - 9
4464236	2B13	38	1810 - 11
4464239	2B11	37	1810 - 9
4464240	2B11	40	1810 - 9
4464241	2B21	21	1810 - 21
4464241	2B24	21	1810 - 25
4464245	2B13	21	1810 - 11
4464245	2B21	13	1810 - 21
4464245	2B24	13	1810 - 25
4464248	2B11	7	1810 - 9
4464249	2B11	8	1810 - 9
4464250	2B11	16	1810 - 9
4464251	2B11	10	1810 - 9
4464252	2B11	11	1810 - 9
4464253	2B11	12	1810 - 9
4464254	2B11	13	1810 - 9
4464255	2B11	14	1810 - 9
4464256	2B11	15	1810 - 9
4464256	2B15	46	1810 - 13
4464263	2B11	17	1810 - 9
4464264	2B11	18	1810 - 9
4464265	2B17	6	1810 - 15
4464266	2B17	7	1810 - 15
4464267	2B11	19	1810 - 9
4464268	2B11	20	1810 - 9
4464270	2B11	22	1810 - 9
4464271	2B11	35	1810 - 9
4464272	2B11	36	1810 - 9
4464272	2B21	16	1810 - 21
4464272	2B24	16	1810 - 25
4464273	2B11	28	1810 - 9
4464278	2D18	19	1833 - 11
4464279	2D18	18	1833 - 11
4464305	2B11	29	1810 - 9
4464306	2B11	30	1810 - 9
4464307	2B11	31	1810 - 9
4464308	2B11	32	1810 - 9
4464309	2B11	33	1810 - 9
4464320	2B19	6	1810 - 17
4464329	2B19	7	1810 - 17
4464330	2B19	8	1810 - 17
4464331	2B19	9	1810 - 17
4464332	2B19	10	1810 - 17
4464333	2B19	20	1810 - 17
4464334	2B19	12	1810 - 17
4464335	2B19	13	1810 - 17
4464336	2B11	41	1810 - 9
4464337	2B11	38	1810 - 9
4464338	2B13	41	1810 - 11
4464339	2B13	42	1810 - 11
4464340	2B19	18	1810 - 17
4464381	2B9	1	1810 - 7
4464382	2B9	6	1810 - 7
4464382	2B15	52	1810 - 13
4464383	2B9	1A	1810 - 7
4464384	2B9	9	1810 - 7
4464385	2B15	47	1810 - 13
4464386	2B15	42	1810 - 13
4464387	2B9	11	1810 - 7
4464388	2B15	44	1810 - 13
4464389	2B15	45	1810 - 13
4464390	2B15	49	1810 - 13
4464391	2B15	50	1810 - 13
4464392	2B15	53	1810 - 13
4464393	2B9	25	1810 - 7
4464394	2B9	27	1810 - 7
4464397	2B9	28	1810 - 7
4464398	2B9	29	1810 - 7
4464399	2B9	31	1810 - 7
4464400	2B9	32	1810 - 7
4464401	2B9	33	1810 - 7
4464407	3E18	13B	3361 - 5
4464473	2D18	10	1833 - 11
4464474	2D18	20	1833 - 11
4464477	2D18	31	1833 - 11
4464478	2D20	46	1833 - 13
4464483	2D10	5	1833 - 3
4464483	2D20	55	1833 - 13
4464483	2D20	56	1833 - 13
4464783	2B9	34	1810 - 7
4464785	2B9	38	1810 - 7
4464786	2B9	39	1810 - 7
4464787	2B15	54	1810 - 13
4464788	2B11	23	1810 - 9
4464839	2E2	1	1910 - 5
4464839	2E2	12	1910 - 5
4464840	2E10	17B	1910 - 13
4464899	2B19	1A	1810 - 17
4465105	2B9	24E	1810 - 7
4465106	2B9	24G	1810 - 7
4466871	2B15	55	1810 - 13
4466872	2B9	9A	1810 - 7
4466873	2B13	43	1810 - 11
4466874	2B13	44	1810 - 11
4466875	2B13	45	1810 - 11
4467088	3G12	24	3362 - 37
4467088	3G14	24	3362 - 39
4467088	3G16	40	3362 - 41
4467088	3G18	42	3362 - 43
4467088	3G20	37	3362 - 45
4467088	3I2	51	3363 - 29
4467088	3I2	54	3363 - 29
4467205	2B13	57	1810 - 11
4467438	2B13	46	1810 - 11
4467439	2B13	50	1810 - 11
4467440	2B13	51	1810 - 11
4467441	2B13	52	1810 - 11
4467442	2B13	53	1810 - 11
4467443	2B13	54	1810 - 11
4467444	2B13	55	1810 - 11
4467445	2B13	56	1810 - 11
4467450	2B13	61	1810 - 11
4468336	3G12	0	3362 - 37
4468336	3G14	0	3362 - 39
4468336	3G16	0	3362 - 41
4468336	3G18	0	3362 - 43
4468336	3G20	0	3362 - 45
4468336	3I2	51	3363 - 29
4468596	2C22	9	1821 - 17
4472430	3H18	17D	3363 - 21
4473652	1G8	4	0521 - 7
4475659	2D18	1	1833 - 11
4475660	2D18	1A	1833 - 11
4475661	2D18	1B	1833 - 11
4475662	2D18	1C	1833 - 11
4475663	2D18	2	1833 - 11
4475664	2D18	2A	1833 - 11
4475665	2D18	2B	1833 - 11
4475666	2D18	2C	1833 - 11
4475667	2D18	3	1833 - 11
4475687	2D18	4	1833 - 11
4475688	2D18	6	1833 - 11
4475689	2D18	6A	1833 - 11
4475690	2D18	6B	1833 - 11
4475691	2D18	6D	1833 - 11
4475692	2D18	6G	1833 - 11
4475693	2D18	6H	1833 - 11
4475694	2D18	6I	1833 - 11
4475695	2D18	6J	1833 - 11
4475710	2D18	6K	1833 - 11
4475711	2D18	6L	1833 - 11
4475712	2D18	6M	1833 - 11
4475713	2D18	6N	1833 - 11
4475714	2D18	7	1833 - 11
4475715	2D18	8	1833 - 11
4475716	2D18	9	1833 - 11
4475717	2D18	11	1833 - 11
4475718	2D18	12	1833 - 11
4475767	2D10	5	1833 - 3
4475767	2D18	13	1833 - 11
4475767	2D20	56	1833 - 13
4475768	2D18	14	1833 - 11
4475769	2D18	15	1833 - 11
4475770	2D18	16	1833 - 11
4475771	2D18	17	1833 - 11
4475772	2D18	17A	1833 - 11
4475773	2D18	17B	1833 - 11
4475774	2D18	21	1833 - 11
4475775	2D18	22	1833 - 11
4475801	2D18	23	1833 - 11
4475802	2D18	24	1833 - 11
4475803	2D18	25	1833 - 11
4475804	2D18	26	1833 - 11
4475805	2D18	27	1833 - 11
4475806	2D18	28	1833 - 11
4475807	2D18	29	1833 - 11
4475808	2D18	32	1833 - 11
4475809	2D18	33	1833 - 11
4475822	2D18	34	1833 - 11
4475823	2D18	35	1833 - 11
4475824	2D18	36	1833 - 11
4475825	2D18	37	1833 - 11
4475826	2D20	38	1833 - 13
4475827	2D20	39	1833 - 13
4475828	2D20	40	1833 - 13
4475829	2D20	41	1833 - 13
4475830	2D20	42	1833 - 13
4475832	2D20	43	1833 - 13
4475833	2D20	44	1833 - 13
4475834	2D20	45	1833 - 13
4475835	2D20	47	1833 - 13
4475836	2D20	48	1833 - 13
4475837	2D20	49	1833 - 13
4475838	2D20	50	1833 - 13
4475839	2D20	52	1833 - 13

NUMERICAL INDEX - CONTINUED

PART NO.	GRID	KEY	PAGE
4475840	2D20	53	1833 - 13
4477373	1H14	3	1674 - 5
4477526	2D14	4	1833 - 7
4477852	3D5	14	3315 - 3B
4477852	3D5	15	3315 - 3B
4477852	3D5	16	3315 - 3B
4477852	3D5	17	3315 - 3B
4482233	3G16	38	3362 - 41
4482601	1I2	4	1676 - 5
4482602	1I2	5	1676 - 5
4482603	1I2	6	1676 - 5
4482604	1I2	7	1676 - 5
4482973	1I2	8	1676 - 5
4482973	1I2	10	1676 - 5
4482976	1I2	14	1676 - 5
4482980	1I2	3	1676 - 5
4483028	1I2	2	1676 - 5
4483035	1I2	1	1676 - 5
4483202	1H23	2	1674 - 13
4483203	1H23	3	1674 - 13
4483204	1H23	4	1674 - 13
4483205	1H23	5	1674 - 13
4483208	1H23	8	1674 - 13
4483209	1H23	9	1674 - 13
4483282	1H23	1	1674 - 13
4483283	1H23	6	1674 - 13
4484534	1G4	3	0521 - 3
4484539	1G4	1A	0521 - 3
4484771	1G8	0	0521 - 7
4485825	1H23	12	1674 - 13
4486002	1G8	0A	0521 - 7
4486014	1G8	6	0521 - 7
4486015	1G8	0C	0521 - 7
4486017	1G8	0G	0521 - 7
4487040	2B21	2	1810 - 21
4487040	2B24	2	1810 - 25
4487041	2B21	3	1810 - 21
4487041	2B24	3	1810 - 25
4487042	2B21	5	1810 - 21
4487042	2B24	5	1810 - 25
4487043	2B21	6	1810 - 21
4487043	2B24	6	1810 - 25
4487045	2B21	8	1810 - 21
4487045	2B24	8	1810 - 25
4487046	2B21	9	1810 - 21
4487046	2B24	9	1810 - 25
4487047	2B24	12	1810 - 25
449558	3J12	23	3364 - 3
4504367	1E16	8	0421 - 3
4506320	3F22	59	3362 - 21
4506405	3F20	14	3362 - 19
4506408	1G23	..	1369 - 3
4506408	3E20	14A	3361 - 7
4506408	3F14	12B	3362 - 13
4506408	3F14	15B	3362 - 13
4506408	3F14	83	3362 - 13
4506408	3F16	16B	3362 - 15
4506408	3F16	54E	3362 - 15
4506408	3F20	28	3362 - 19
4506408	3G4	25A	3362 - 27
4506408	3L2	43A	4367 - 7
4506409	3F22	27	3362 - 21
4506412	3F14	74	3362 - 13
4506412	3F16	28	3362 - 15
4506412	3F18	28	3362 - 17
4506412	3F22	55	3362 - 21
4506415	1B20	7	0260 - 7
4506415	3G2	11M	3362 - 25
4506416	3F10	18	3362 - 9
4506416	3F18	6	3362 - 17
4506418	1B22	1	0263 - 3
4506418	1B22	6	0263 - 3
4506418	1G23	..	1369 - 3
4506418	3C4	2	3301 - 13
4506418	3C4	5	3301 - 13
4506418	3C4	13	3301 - 13
4506418	3C6	12	3301 - 15
4506418	3C6	13	3301 - 15
4506418	3C6	17	3301 - 15
4506418	3C6	23	3301 - 15
4506418	3D19	27	3344 - 5
4506418	3D23	27A	3344 - 7
4506418	3E22	56A	3361 - 9
4506418	3G6	11	3362 - 29
4506418	3H8	13	3363 - 11
4506418	3H10	10	3363 - 13
4506418	3H16	1	3363 - 19
4506418	3H16	5	3363 - 19
4506418	3H18	1	3363 - 21
4506418	3H18	22	3363 - 21
4506418	3H18	28	3363 - 21
4506418	3H18	62A	3363 - 21
4506418	3H20	1	3363 - 23
4506418	3I16	35	3363 - 43
4506418	3I16	45	3363 - 43
4506418	3J12	36	3364 - 3
4506424	1G23	..	1369 - 3
4506424	3C4	21	3301 - 13
4506424	3C6	16	3301 - 15
4506424	3C6	18	3301 - 15
4506424	3F14	67	3362 - 13
4506424	3F16	60	3362 - 15
4506424	3G2	5A	3362 - 25
4506424	3G2	11B	3362 - 25
4506424	3G24	12	3363 - 3
4506424	3H4	16	3363 - 7
4506424	3H6	9	3363 - 9
4506424	3H8	1	3363 - 11
4506424	3H8	2	3363 - 11
4506424	3I22	17	3363 - 49
4506428	1G23	..	1369 - 3
4506430	1G23	..	1369 - 3
4506459	3H2	3	3363 - 5
4507650	1E16	11	0421 - 3
4509180	3F10	7	3362 - 9
4509180	3H4	38	3363 - 7
4509180	3H18	8	3363 - 21
4509180	3H18	11	3363 - 21
4509180	3I2	48	3363 - 29
4509180	3I4	49	3363 - 31
4509180	3I6	62	3363 - 33
4509180	3I6	68	3363 - 33
4509180	3I12	4	3363 - 39
4509180	3I12	25	3363 - 39
4509180	3I14	5	3363 - 41
4509180	3I16	25	3363 - 43
4509180	3I20	2	3363 - 47
4509180	3I20	8	3363 - 47
4509181	3J18	29	3365 - 5
4510167	3H10	1	3363 - 13
4510167	3H12	1	3363 - 15
4510167	3H12	12	3363 - 15
4510167	3H14	3	3363 - 17
4510167	3H16	7	3363 - 19
4510173	3H10	2	3363 - 13
4510173	3H10	3	3363 - 13
4510173	3H12	2	3363 - 15
4510173	3H12	13	3363 - 15
4510173	3H14	2	3363 - 17
4510173	3H16	6	3363 - 19
4514699	2C24	7	1831 - 3
4514699	2D12	11	1833 - 5
4514700	1G14	1	0563 - 3
4600161	1E16	19	0421 - 3
4600164	3J4	31	3363 - 55
4602161	1E16	7	0421 - 3
4602578	2D14	2	1833 - 7
4604759	2C2	1	1810 - 27
4604760	2C2	2	1810 - 27
4604761	2C2	5	1810 - 27
4604762	2C2	6	1810 - 27
4604763	2C2	7	1810 - 27
4604764	2C2	12	1810 - 27
4604765	2C2	19	1810 - 27
4604766	2C2	20	1810 - 27
4604767	2C2	23	1810 - 27
4604768	2C2	25	1810 - 27
4604769	2C2	32	1810 - 27
4604770	2C2	35	1810 - 27
4604771	2C2	40	1810 - 27
4604772	2C2	43	1810 - 27
4605564	3E2	69	3344 - 9
4608027	2C2	48	1810 - 27
4608028	2C2	49	1810 - 27
4608029	2C2	50	1810 - 27
4609051	2D10	5	1833 - 3
4609051	2D20	56	1833 - 13
4609756	1I2	0	1676 - 5
4609956	3D3	14	3315 - 3
4609956	3D3	20	3315 - 3
4609956	3D5	3	3315 - 3B
4611025	3H18	17	3363 - 21
4611307	2B21	19	1810 - 21
4611307	2B24	19	1810 - 25
4611308	2B21	15	1810 - 21
4611308	2B24	15	1810 - 25
4611309	2B21	18	1810 - 21
4611309	2B24	18	1810 - 25
4611310	2B21	20	1810 - 21
4611310	2B24	20	1810 - 25
4611311	2B21	17	1810 - 21
4611311	2B24	17	1810 - 25
4611360	2D10	5	1833 - 3
4611360	2D20	56	1833 - 13
4612283	2D8	9	1832 - 3
4613913	2E17	10	2001 - 3
4614046	2B15	57	1810 - 13
4614287	2D18	1	1833 - 11
4614288	2D18	2	1833 - 11
4614289	2D18	6	1833 - 11
4614290	2D18	6I	1833 - 11
4614291	2D18	6O	1833 - 11
4614911	1F24	1	0515 - 5
4616544	1E14	2A	0420 - 5
4618252	2B15	56	1810 - 13
4618712	1F14	13	0511 - 9
4623638	2D14	1	1833 - 7
4624878	2B11	21	1810 - 9
4624879	2B13	62	1810 - 11
4624880	2B13	1	1810 - 11
4624881	2B13	5	1810 - 11

NUMERICAL INDEX - CONTINUED

PART NO.	GRID	KEY	PAGE
4624882	2B13	60	1810 - 11
4624883	2B21	12	1810 - 21
4627105	1C20	12A	0407 - 3
4627118	3E18	23B	3361 - 5
4627119	3E18	18B	3361 - 5
4627120	3E18	21B	3361 - 5
4627121	3E18	22B	3361 - 5
4633528	3K13	4	4351 - 3
5007022	1B3	1	0131 - 3
5007061	1I5	1	1740 - 3
5007083	3J12	47	3364 - 3
5007091	1I9	1	1749 - 3
5007137	2D24	21	1910 - 3
5007260	2C14	5	1821 - 5
5007845	3C8	0	3301 - 17
5090002221	1D18	19B	0413 - 13
5090002360	1D6	7	0409 - 5
5090300381	1D6	40	0409 - 5
5090300421	1E22	24	0429 - 3
5093000650	1D4	16	0409 - 3
5095000120	1D6	76	0409 - 5
5095000120	1D6	86	0409 - 5
5095030240	1C12	13	0401 - 3
5095800980	1C22	5	0407 - 5
5096000130	1D4	7E	0409 - 3
5096050050	1C16	15A	0404 - 3
5096050180	1C16	15B	0404 - 3
5096230020	1D2	9	0407 - 9
5096230350	1C16	3	0404 - 3
5096230600	1D6	59	0409 - 5
5096600330	1C16	27	0404 - 3
5097040331	1C18	18	0404 - 5
5097040460	1E8	1	0418 - 5
5098000500	1E4	27B	0417 - 3
5098000510	1E4	27A	0417 - 3
5098430030	1C22	41	0407 - 5
5111730160	1C14	7	0402 - 3
5111730160	1F2	3	0452 - 3
5112190140	1C16	23	0404 - 3
5112240040	1C16	22	0404 - 3
5112570011	1C16	19	0404 - 3
5112800111	1E10	7	0419 - 3
5112820110	1E10	16	0419 - 3
5112880020	1E10	1	0419 - 3
5112890030	1E10	8	0419 - 3
5112890090	1E10	3	0419 - 3
5113210090	1E24	57	0433 - 3
5113690720	1D2	12	0407 - 9
5117110280	1D4	5B	0409 - 3
5123340030	1C12	8	0401 - 3
5123360030	1C12	7	0401 - 3
5123780020	1C12	10	0401 - 3
5123790010	1C24	66	0407 - 7
5125350011	1D6	42	0409 - 5
5125630010	1D6	71B	0409 - 5
5125650060	1D6	65	0409 - 5
5125710032	1D6	89	0409 - 5
5125710033	1D6	89	0409 - 5
5126280120	1D6	58	0409 - 5
5131650040	1C22	2	0407 - 5
5136340020	1E4	11	0417 - 3
5136390010	1E4	26	0417 - 3
5136420072	1E4	25	0417 - 3
5137210341	1E6	69A	0418 - 3
5153320060	1D10	37	0413 - 3
5153390600	1D10	38	0413 - 3
5153430050	1D10	44	0413 - 3
5154190040	1D16	2	0413 - 11
5154190051	1D16	3	0413 - 11
5154190131	1D10	2	0413 - 3
5156190480	1D20	5	0413 - 15
5156390020	1D18	10	0413 - 13
5157510120	1E18	15	0421 - 5
5157540010	1E18	28	0421 - 5
5157590270	1E18	11	0421 - 5
5157810030	1D20	1	0413 - 15
5197320022	1D4	11	0409 - 3
5197510500	1D18	2	0413 - 13
5197550010	1D14	40	0413 - 9
5513390030	1D10	42	0413 - 3
5878120080	1C22	19	0407 - 5
5878138410	1F2	1	0452 - 3
5878138412	1F2	1	0452 - 3
5878138420	1F2	2	0452 - 3
5878138421	1F2	2	0452 - 3
5878141000	1C16	2	0404 - 3
5878141010	1C16	2	0404 - 3
5878141020	1C16	2	0404 - 3
5878141030	1C16	2	0404 - 3
5878144590	1C16	2	0404 - 3
5878144610	1C16	2	0404 - 3
5878144620	1C16	2	0404 - 3
6018813	1G16	0	0564 - 3
6019203	2E2	12A	1910 - 5
6019229	2C14	4	1821 - 5
6019450	2E8	7	1910 - 11
6020125	2C20	0	1821 - 15
7037046	2E4	5	1910 - 7
7037102	3D19	3	3344 - 5
7037152	1G10	4	0531 - 3
7037516	2E4	1	1910 - 7
7037678	3D23	3	3344 - 7
7037678	3D25	3	3344 - 7B
7037910	3B20	0	3301 - 7
7038316	3F6	7	3362 - 5
7038334	3H6	4	3363 - 9
7038335	3H4	10	3363 - 7
7038336	3H4	11	3363 - 7
7038398	2E4	9	1910 - 7
7038421	2D8	5	1832 - 3
7038512	2E2	1	1910 - 5
7038523	2E2	12	1910 - 5
7038561	2E6	6	1910 - 9
7038563	2E6	3	1910 - 9
7038785	2E8	15	1910 - 11
7038795	2E8	11	1910 - 11
7038795	2E8	44	1910 - 11
7038917	3D9	9	3315 - 7
7038944	3D9	2	3315 - 7
7038983	2E8	22	1910 - 11
7038988	2E8	1	1910 - 11
7039015	2E10	2	1910 - 13
7039779	3H4	28	3363 - 7
7039796	2C6	2	1816 - 3
7039797	2C6	1	1816 - 3
7039830	3D17	2	3344 - 3
7039839	2E4	16	1910 - 7
7039846	2E4	15	1910 - 7
7039863	2E8	39	1910 - 11
7039964	2E4	8	1910 - 7
7040006	1H16	5	1674 - 7
7040023	2D24	14	1910 - 3
7040026	2D24	11	1910 - 3
7040042	2E12	28	1910 - 15
7040364	2F2	7	2006 - 3
7040882	2E8	35	1910 - 11
7041539	3B20	0	3301 - 7
7041693	2E10	2	1910 - 13
7041769	2C22	4	1821 - 17
7041807	2E4	15	1910 - 7
7041812	2E8	35	1910 - 11
7042471	2E2	12	1910 - 5
7042472	2E2	1	1910 - 5
7043845	2E8	15	1910 - 11
7043846	2E8	11	1910 - 11
7044736	3D9	15	3315 - 7
7045286	2E4	16	1910 - 7
7045324	2E8	11	1910 - 11
7045626	3B18	0	3301 - 5
7045626	3B18	1	3301 - 5
8053499	3J12	22	3364 - 3
8060437	1G10	7	0531 - 3
8060508	3D15	9	3315 - 13
8061258	3D15	7	3315 - 13
8061757	1H10	6	1673 - 3
8063718	3G8	38	3362 - 33
8064357	1G12	2	0540 - 3
8064364	1G12	1	0540 - 3
8070805	3D15	3	3315 - 13
8071391	3E20	22	3361 - 7
8071556	3L2	14	4367 - 7
8073891	3D17	2D	3344 - 3
8075038	3G2	1	3362 - 25
8075449	3D7	5	3315 - 5
8075450	3D7	1	3315 - 5
8076030	1B20	17	0260 - 7
8076163	3G4	1	3362 - 27
8076645	3H12	16	3363 - 15
8077221	3F6	1	3362 - 5
8077280	1F8	4	0511 - 3
8077521	2E8	29	1910 - 11
8077903	3G8	2	3362 - 33
8078142	3E4	10	3344 - 11
8078188	3H12	34	3363 - 15
8078936	2D16	4	1833 - 9
8079978	3H6	13	3363 - 9
8079979	3H4	5	3363 - 7
8079994	3H10	12	3363 - 13
8080152	3L2	1	4367 - 7
8080202	3H4	30	3363 - 7
8080220	2E2	7	1910 - 5
8080233	2E2	14	1910 - 5
8080263	2D24	3	1910 - 3
8080266	2E6	10	1910 - 9
8080316	3I22	7	3363 - 49
8080317	3I22	8	3363 - 49
8080318	3I22	5	3363 - 49
8080319	3I22	6	3363 - 49
8080381	3B18	12	3301 - 5
8080486	1G6	8	0521 - 5
8080538	2E6	2	1910 - 9
8080568	2D8	13	1832 - 3
8081016	1B5	3	0131 - 5
8081210	3I22	1	3363 - 49
8081494	3D17	12	3344 - 3
8081497	1I7	5	1740 - 5
8081763	1I5	1A	1740 - 3
8081891	2E2	19	1910 - 5
8081981	3B18	0	3301 - 5
8081981	3B18	1	3301 - 5
8082029	2E2	20	1910 - 5

NUMERICAL INDEX - CONTINUED

PART NO.	GRID	KEY	PAGE
8082204	3K21	3	4362 - 7
8082947	3I22	11	3363 - 49
8082984	3H4	31	3363 - 7
8083070	3I8	8	3363 - 35
8083141	1G6	3	0521 - 5
8083301	2E12	11	1910 - 15
8083303	2E12	17	1910 - 15
8083304	2E12	23	1910 - 15
8083316	2E12	14	1910 - 15
8083333	3C6	1	3301 - 15
8083335	3B24	1	3301 - 11
8083349	3B16	15	3301 - 3
8083426	2E8	48	1910 - 11
8083432	3C2	44	3301 - 11B
8083555	1G2	2	0515 - 7
8083687	2D4	6	1831 - 7
8083708	2D16	2	1833 - 9
8083709	2D16	3	1833 - 9
8083749	3H10	20	3363 - 13
8083834	3J4	28	3363 - 55
8083855	2C22	23	1821 - 17
8084093	2E21	1	2002 - 5
8084094	2E21	2	2002 - 5
8084096	3J4	29	3363 - 55
8084816	3J12	14	3364 - 3
8085618	3I24	43	3363 - 51
8085910	2C16	26	1821 - 11
8091483	1E16	1	0421 - 3
8094471	1I7	5	1740 - 5
8094523	3D17	12	3344 - 3
8094751	3B18	1	3301 - 5
8099268	1E16	30	0421 - 3
8941075751	1C12	21	0401 - 3
8941075970	1C12	11	0401 - 3
8941145790	1D6	71A	0409 - 5
8941310603	1C24	26	0407 - 7
8941329480	1D14	8	0413 - 9
8941339373	1D6	43	0409 - 5
8941376820	1C18	67	0404 - 5
8941417731	1D8	17	0410 - 3
8941480790	1C16	13	0404 - 3
8941551830	1E12	5	0420 - 3
8941569390	1D4	14	0409 - 3
8941569400	1D4	14	0409 - 3
8941635940	1C22	34	0407 - 5
8941635950	1C22	8	0407 - 5
8941635970	1C22	35	0407 - 5
8941695020	1D10	45	0413 - 3
8941695030	1D10	39	0413 - 3
8941711850	1E18	19	0421 - 5
8942059861	1E10	6	0419 - 3
8943109170	1E10	19	0419 - 3
8943185540	1D8	15	0410 - 3
8943185550	1D8	15	0410 - 3
8943203080	1D10	41	0413 - 3
8943398950	1C12	1	0401 - 3
8943398951	1C12	1	0401 - 3
8943444620	1C16	7	0404 - 3
8943445910	1C22	43	0407 - 5
8943660210	1D8	1	0410 - 3
8943673681	1C18	6	0404 - 5
8943675301	1C18	3	0404 - 5
8943690220	1D24	34A	0416 - 3
8943690230	1D24	2	0416 - 3
8943706610	1E4	3	0417 - 3
8943706630	1D24	34B	0416 - 3
8943706640	1E24	66	0433 - 3
8943706640	1F2	13	0452 - 3
8943706660	1D2	5	0407 - 9
8943706660	1F2	7	0452 - 3
8943706710	1E24	56	0433 - 3
8943706710	1F2	11	0452 - 3
8943706750	1D18	21	0413 - 13
8943706760	1D22	60	0414 - 3
8943930771	1C16	26	0404 - 3
8943996890	1C14	5	0402 - 3
8943997230	1C14	4	0402 - 3
8944046100	1D8	2	0410 - 3
8944046100	1F2	15	0452 - 3
8944233140	1E20	46	0423 - 3
8944299951	1C18	3	0404 - 5
8944496440	1E10	7	0419 - 3
8944496441	1E10	7	0419 - 3
8944509752	1E24	1	0433 - 3
8944575170	1D20	30	0413 - 15
8944749260	1E20	3	0423 - 3
8944762820	1D24	12	0416 - 3
8970110310	1C12	16	0401 - 3
8970145731	1D6	1	0409 - 5
8970200372	1E10	5	0419 - 3
8970209320	1D2	8	0407 - 9
8970209330	1D16	8	0413 - 11
8970209340	1D16	7	0413 - 11
8970209371	1D10	63	0413 - 3
8970265900	1C24	47	0407 - 7
8970298637	1E20	1	0423 - 3
8970314671	1D10	16	0413 - 3
8970314672	1D10	16	0413 - 3
8970314681	1D10	17	0413 - 3
8970314682	1D10	17	0413 - 3
8970314691	1D10	18	0413 - 3
8970314692	1D10	18	0413 - 3
8970314701	1D10	19	0413 - 3
8970314702	1D10	19	0413 - 3
8970320250	1E10	8	0419 - 3
8970321101	1E10	7	0419 - 3
8970324991	1E20	19	0423 - 3
8970376860	1D4	5A	0409 - 3
8970428010	1E24	48	0433 - 3
8970452072	1E24	2	0433 - 3
8970614011	1D8	88	0410 - 3
8970614011	1D24	50	0416 - 3
8970653840	1C22	1	0407 - 5
8970713580	1C12	9	0401 - 3
8970716610	1C12	2	0401 - 3
8970728231	1E24	75	0433 - 3
8970795200	1E24	72	0433 - 3
8970795200	1F2	14	0452 - 3
8971012810	1D6	41	0409 - 5
8971069892	1C12	3	0401 - 3
8971069893	1C12	3	0401 - 3
8971069894	1C12	3	0401 - 3
8971186980	1E24	65	0433 - 3
8971201670	1D6	72	0409 - 5
8971219100	1E18	1	0421 - 5
8971239542	1C16	1	0404 - 3
8971242340	1C24	1	0407 - 7
8971256011	1E20	89	0423 - 3
8971281500	1E10	9	0419 - 3
8971298300	1E24	54	0433 - 3
8971315880	1D4	17	0409 - 3
8971348410	1D10	32	0413 - 3
8971379100	1C12	4	0401 - 3
8971379101	1C12	4	0401 - 3
8971379102	1C12	4	0401 - 3
8971720400	1C12	12	0401 - 3
8971725490	1D14	2	0413 - 9
8971731310	1E2	1	0416 - 5
8971731460	1E2	4	0416 - 5
8971731470	1E2	3	0416 - 5
8971759020	1C12	6	0401 - 3
8971798541	1D14	1	0413 - 9
8972134730	1E12	7	0420 - 3
8972134740	1E12	9	0420 - 3
8972186470	1E12	1	0420 - 3
8972221041	1C18	1	0404 - 5
8972221090	1D4	1	0409 - 3
8972221170	1D4	2	0409 - 3
8972221170	1F2	5	0452 - 3
8972221171	1D4	2	0409 - 3
8972221171	1F2	5	0452 - 3
8972221200	1C24	63	0407 - 7
8972221201	1C24	63	0407 - 7
8972221210	1D24	33	0416 - 3
8972221220	1C24	37	0407 - 7
8972221700	1D10	31	0413 - 3
8972221710	1D10	80	0413 - 3
8972221720	1D24	1	0416 - 3
8972221740	1F6	1	0505 - 3
8972222341	1F20	1A	0511 - 15
8972222450	1D6	53	0409 - 5
8972224200	1D12	1G	0413 - 7
8972234300	1E10	14	0419 - 3
8972237600	1C14	1	0402 - 3
8972242040	1E8	2	0418 - 5
8972242050	1C18	94	0404 - 5
8972251991	1E20	1	0423 - 3
8972254470	1D16	5	0413 - 11
8972321350	1D2	2	0407 - 9
8972322470	1E4	20	0417 - 3
8972322480	1E4	19	0417 - 3
8972322500	1E4	18	0417 - 3
8972322520	1E22	36	0429 - 3
8972333010	1E24	49	0433 - 3
8972333010	1F2	10	0452 - 3
8972333022	1E10	22	0419 - 3
8972333080	1E2	5	0416 - 5
8972333090	1E2	2	0416 - 5
8972357881	1D22	7	0414 - 3
8972357881	1F2	16	0452 - 3
8972357891	1E6	66	0418 - 3
8972470890	1F20	2	0511 - 15
8972470900	1F20	8A	0511 - 15
8972470920	1F20	8B	0511 - 15
8972470950	1F20	1B	0511 - 15
8972475920	1D10	15	0413 - 3
8972488530	1D22	1	0414 - 3
8972490840	1D10	1	0413 - 3
8972498951	1E4	31	0417 - 3
8972527080	1F20	6	0511 - 15
8972530281	1E4	1	0417 - 3
8972530300	1E4	4	0417 - 3
8972530930	1F20	1C	0511 - 15
8972533510	1C18	5	0404 - 5
8972567160	1E20	86	0423 - 3
8972572570	1D10	4	0413 - 3
8972873820	1E6	49	0418 - 3
8972873990	1C12	14	0401 - 3
8972874000	1C12	14	0401 - 3
8972891170	1E12	4	0420 - 3
8972891180	1E12	56	0420 - 3

NUMERICAL INDEX - CONTINUED

PART NO.	GRID	KEY	PAGE
8972891250	1E12	38	0420 - 3
8972891310	1E12	36	0420 - 3
8972891320	1E12	34	0420 - 3
8972891330	1E12	35	0420 - 3
8972891340	1E12	42	0420 - 3
8972891350	1E12	89	0420 - 3
8972891360	1E12	39	0420 - 3
8973105600	1D2	1	0407 - 9
8973105620	1D2	7	0407 - 9
8973262510	1C14	7	0402 - 3
8973262510	1F2	3	0452 - 3
8973524030	1D2	5	0407 - 9
8973524030	1F2	7	0452 - 3
8973572650	1E18	1	0421 - 5
8973780610	1D8	17	0410 - 3
8973780620	1D24	12	0416 - 3
9030908200	1E4	34	0417 - 3
9041108220	1D24	61	0416 - 3
9041108250	1D4	9	0409 - 3
9044110300	1D18	3	0413 - 13
9080107200	1D6	12	0409 - 5
9081140300	1C22	3	0407 - 5
9081508160	1C16	18	0404 - 3
9081510180	1C16	17	0404 - 3
9081612200	1C12	5	0401 - 3
9091115080	1D6	83	0409 - 5
9091645100	1D18	8	0413 - 13
9091645140	1E20	17	0423 - 3
9091647100	1F20	5	0511 - 15
9091647120	1E22	77	0429 - 3
9091800190	1D6	56	0409 - 5
9091801520	1E4	9	0417 - 3
9095652250	1E10	10	0419 - 3
9095714080	1D10	3	0413 - 3
9095714080	1F2	19	0452 - 3
9095714100	1C24	3A	0407 - 7
9095714200	1E10	20	0419 - 3
9095716200	1E10	11	0419 - 3
9095720080	1C18	4	0404 - 5
9095720080	1D18	20	0413 - 13
9095720080	1F2	8	0452 - 3
9095720100	1C24	64	0407 - 7
9095720140	1D16	6	0413 - 11
9095720140	1E18	9	0421 - 5
9096600340	1D4	6	0409 - 3
9096620070	1D20	2	0413 - 15
9096620120	1D2	4	0407 - 9
9098440220	1C24	65	0407 - 7
9098518503	1D6	45	0409 - 5
9099062051	1C24	2A	0407 - 7
9099155121	1C18	29	0404 - 5
9099211880	1C24	28	0407 - 7
9099521430	1E4	30	0417 - 3
9111291280	1D4	7D	0409 - 3
9111296010	1D4	8	0409 - 3
9111750120	1C14	2	0402 - 3
9111791050	1C14	3	0402 - 3
9112290581	1E24	42	0433 - 3
9113491341	1E24	51	0433 - 3
9114664	1B13	0	0133 - 5
9116810150	1D6	10	0409 - 5
9116910480	1C16	25A	0404 - 3
9116930350	1C16	25B	0404 - 3
9117778050	1D4	12	0409 - 3
9122716080	1C12	16	0401 - 3
9126160420	1D6	81	0409 - 5
9126260050	1D6	55	0409 - 5
9126281050	1D6	84	0409 - 5
9134109	3E20	14	3361 - 7
9134109	3G4	25	3362 - 27
9134109	3L2	43	4367 - 7
9134110	3E20	63	3361 - 7
9134110	3E24	58	3361 - 11
9134110	3G2	14	3362 - 25
9134110	3G4	26	3362 - 27
9134110	3L2	41	4367 - 7
9134111	3E20	62	3361 - 7
9134111	3G2	6	3362 - 25
9134111	3G4	27	3362 - 27
9134113	3G2	5	3362 - 25
9134794	1B11	1	0133 - 3
9151724	3G8	37	3362 - 33
9153390510	1D10	54	0413 - 3
9159923	3G4	14	3362 - 27
9159923	3G6	19	3362 - 29
9160680	1B11	9	0133 - 3
9165598	1B15	10	0134 - 3
9165599	1B15	3	0134 - 3
9167977	3G4	20	3362 - 27
9168631	3G2	11	3362 - 25
9183014J	3K4	3	3365 - 23
9183014J	3K6	40	3365 - 25
9184275	3G8	39	3362 - 33
9184497	3K13	8	4351 - 3
9184663	3C6	48	3301 - 15
9187647	3B20	22	3301 - 7
9187647	3K10	29	3365 - 29
9187648	3B20	23	3301 - 7
9187648	3K8	29	3365 - 27
9188233	1B17	19	0134 - 5
9188234	1B17	1	0134 - 5
9188777	1B24	36	0267 - 3
9190194	1B13	10	0133 - 5
9191883	3F12	10	3362 - 11
9193281	1G14	23	0563 - 3
9193963	3D19	33	3344 - 5
9193963	3D23	33	3344 - 7
9195304	3D3	20	3315 - 3
9195304	3D5	3	3315 - 3B
9195307	3D7	23	3315 - 5
9195307	3G8	40	3362 - 33
9195313	3K17	12	4362 - 3
9196026	1B11	7	0133 - 3
9196236	1B20	22	0260 - 7
9196236	3G4	28	3362 - 27
9196240	1B20	30	0260 - 7
9196240	1B24	1	0267 - 3
9196443	3H24	34	3363 - 27
9196961	3K23	34	4367 - 3
9196961	3L2	51	4367 - 7
9197338	3E16	1	3361 - 3
9197338	3E18	17	3361 - 5
9197517	3J20	5	3365 - 7
9197517	3J22	41	3365 - 9
9197518	3J16	5	3365 - 3
9197518	3J18	41	3365 - 5
9197519	3J24	2	3365 - 19
9197519	3K2	43	3365 - 21
9197717	3H16	11	3363 - 19
9197718	3H16	12	3363 - 19
9197719	3H16	13	3363 - 19
9197720	3H16	14	3363 - 19
9197721	3H14	6	3363 - 17
9197980	1C20	12	0407 - 3
9198153	3E18	3	3361 - 5
9198153	3E22	90	3361 - 9
9198154	3E18	4	3361 - 5
9198154	3E24	0	3361 - 11
9198979	3G2	15	3362 - 25
9198979	3L2	28	4367 - 7
9199146	3G8	36	3362 - 33
9199386	3I24	45	3363 - 51
9199704	2C24	14	1831 - 3
9199705	2C24	15	1831 - 3
9200386	3F12	4	3362 - 11
9200387	3F10	4	3362 - 9
9200495	3F18	2	3362 - 17
9201403	3C6	39	3301 - 15
9201404	3C6	40	3301 - 15
9201406	3C6	41A	3301 - 15
9201407	3C2	57A	3301 - 11B
9201408	3C2	49A	3301 - 11B
9201410	3C2	50	3301 - 11B
9201413	3B16	0	3301 - 3
9201414	3B16	2	3301 - 3
9201415	3B16	7	3301 - 3
9201692	3H8	17	3363 - 11
9201708	3H12	27	3363 - 15
9201709	3H12	28	3363 - 15
9201710	3H12	29	3363 - 15
9201711	3H12	30	3363 - 15
9201837	3I16	42	3363 - 43
9201838	3H22	35	3363 - 25
9201839	3I18	43	3363 - 45
9202044	3H2	13	3363 - 5
9202045	3H2	14	3363 - 5
9202059	1G14	24	0563 - 3
9202060	1G14	25	0563 - 3
9203266	3I20	9	3363 - 47
9203267	3I16	44	3363 - 43
9203445	3F10	8	3362 - 9
9203700	3C6	36	3301 - 15
9203706	3C4	15	3301 - 13
9203707	3C4	16	3301 - 13
9203708	3B24	47A	3301 - 11
9203735	3B24	28	3301 - 11
9203779	3B16	8	3301 - 3
9203824	1E14	13	0420 - 5
9203825	1E14	14	0420 - 5
9204019	3H20	20	3363 - 23
9204019	3H20	21	3363 - 23
9204313	3C6	38	3301 - 15
9205129	3I14	17	3363 - 41
9206960	3I24	9A	3363 - 51
9206961	3I24	6A	3363 - 51
9207011	3C4	20A	3301 - 13
9207012	3C4	24	3301 - 13
9207014	3B24	64A	3301 - 11
9207016	3C2	63	3301 - 11B
9207021	3C4	22	3301 - 13
9212078	1H16	8	1674 - 7
9214443	3F8	1	3362 - 7
9214443	3G10	2	3362 - 35
9217993	3E18	8	3361 - 5
9217993	3F2	30	3361 - 13
9218271	3F8	1	3362 - 7
9218271	3G10	2	3362 - 35
9226744	1H16	6	1674 - 7
9227382	2C2	52	1810 - 27
9227923	3E18	17	3361 - 5
9231217	2B7	1	1810 - 5

NUMERICAL INDEX - CONTINUED

PART NO.	GRID	KEY	PAGE
9234284	3D5	14	3315 - 3B
9234284	3D5	15	3315 - 3B
9234284	3D5	16	3315 - 3B
9234284	3D5	17	3315 - 3B
9235551	3D7	23	3315 - 5
9239568	1H16	8	1674 - 7
9239583	3D3	20	3315 - 3
9239583	3D5	3	3315 - 3B
927488	3K23	35	4367 - 3
939356	3G20	18A	3362 - 45
939356	3G20	20A	3362 - 45
94-2011	1B11	6	0133 - 3
94-2011	1B13	6	0133 - 5
94-2011	1B15	7	0134 - 3
94-2011	3D5	1	3315 - 3B
94-2012	3K23	33	4367 - 3
94-2807	1H10	8	1673 - 3
94-2810	2E12	23B	1910 - 15
953612	3J12	11B	3364 - 3
957366	3E22	58A	3361 - 9
957366	3E22	59A	3361 - 9
957366	3E24	58A	3361 - 11
957366	3F10	6	3362 - 9
957366	3F10	13	3362 - 9
957366	3F10	14	3362 - 9
957366	3F10	15	3362 - 9
957366	3F12	6	3362 - 11
957366	3F14	71	3362 - 13
957366	3H18	4	3363 - 21
957366	3H18	36	3363 - 21
957366	3H20	13	3363 - 23
957366	3H22	1	3363 - 25
957366	3H22	8	3363 - 25
957366	3H22	9	3363 - 25
957366	3H22	15	3363 - 25
957366	3H22	27	3363 - 25
957366	3H22	31	3363 - 25
957366	3H22	32	3363 - 25
957366	3H24	1	3363 - 27
957366	3H24	19	3363 - 27
957366	3H24	20	3363 - 27
957366	3H24	23	3363 - 27
957366	3I8	1	3363 - 35
957366	3I8	2	3363 - 35
957366	3I12	1	3363 - 39
957366	3I14	1	3363 - 41
957366	3I16	1	3363 - 43
957366	3I16	22	3363 - 43
957366	3I16	40	3363 - 43
957366	3I18	1	3363 - 45
957366	3I18	9	3363 - 45
957366	3I18	28	3363 - 45
957366	3I20	1	3363 - 47
957474	1G23	..	1369 - 3
959500	3D9	12	3315 - 7
959500	3D9	19	3315 - 7
962002	1B20	4	0260 - 7
962453	3H6	1	3363 - 9
966993	3H6	3	3363 - 9
970860	1G23	..	1369 - 3
971489	3H2	1	3363 - 5
971489	3H10	25	3363 - 13
971489	3H12	6	3363 - 15
9735305	3I2	1	3363 - 29
9735305	3I4	1	3363 - 31
9735306	3I2	16	3363 - 29
9735306	3I4	16	3363 - 31
9738322	3D17	2C	3344 - 3
9738682	2C2	8	1810 - 27
9745380	3G6	5	3362 - 29
9745899	2C24	2	1831 - 3
9746058	3H10	5	3363 - 13
9749010	1H8	6	1671 - 3
9751787	3I12	13	3363 - 39
9753307	3E6	0	3344 - 13
9754766	1G6	15	0521 - 5
9754768	1G6	7	0521 - 5
9754825	3D5	16	3315 - 3B
9754826	3D5	17	3315 - 3B
9754878	2D8	14	1832 - 3
9754977	3B18	17	3301 - 5
9755255	3B22	3	3301 - 9
9755978	1B7	1	0131 - 7
9756652	2E12	22	1910 - 15
9756725	2C22	11	1821 - 17
9757493	2E10	17A	1910 - 13
9758228	2C22	19	1821 - 17
9759157	3D5	14	3315 - 3B
9759157	3D5	15	3315 - 3B
9759157	3D5	16	3315 - 3B
9759157	3D5	17	3315 - 3B
9759158	3D5	14	3315 - 3B
9759158	3D5	15	3315 - 3B
9759158	3D5	16	3315 - 3B
9759158	3D5	17	3315 - 3B
9760447	1E16	13	0421 - 3
9813512050	1E18	16	0421 - 5
9813513020	1E18	17	0421 - 5
9813514030	1E18	29	0421 - 5
9813514100	1E18	30	0421 - 5
9813517020	1E18	4	0421 - 5
9813550250	1E18	13	0421 - 5
9813550350	1E18	18	0421 - 5
9829315110	1E20	4	0423 - 3
985099	3F14	78	3362 - 13
985099	3F16	9	3362 - 15
985099	3F24	44	3362 - 23
986910	3H10	22	3363 - 13
986910	3H12	7	3363 - 15
9884105020	1D20	3	0413 - 15
991334	3D9	51	3315 - 7
991718	3H4	7	3363 - 7
9944112350	1E24	24	0433 - 3
997330	3J12	8	3364 - 3
9992023140	1C16	28	0404 - 3
PART NO.	GRID	KEY	PAGE