M0098899-00 (en-us)
February 2019

RUTHZIL TRATOR COMERCIAL DE PEÇAS LTDA 11 97083-6812 ROLANDO

Parts Manual

140 GC Motor Grader

W921-UP (Machine)
E7A1-UP (Engine)

Powered By C7.1 Engine

Product and Dealer Information

Note: For product identification plate locations, see the section “Product Identification Information” in the Operation and Maintenance Manual.

Delivery Date: _____

Product Information

Model: _____

Product Identification Number: _____

Engine Serial Number: _____

Transmission Serial Number: _____

Generator Serial Number: _____

Attachment Serial Numbers: _____

Attachment Information: _____

Customer Equipment Number: _____

Dealer Equipment Number: _____

Dealer Information

Name: _____ Branch: _____

Address: _____

_____

_____

	Dealer Contact	Phone Number	Hours
Sales:	_____	_____	_____
Parts:	_____	_____	_____
Service:	_____	_____	_____

MEMORANDA

TABLE OF CONTENTS

NAME	PAGE
GENERAL INFORMATION	A5
REPAIR ALTERNATIVES	A8
SUPPLEMENTAL COOLANT ADDITIVES	A9
MAINTENANCE PARTS	A10
INDEX	A13
MACHINE ARRANGEMENT	1
CHASSIS AR	1
COLD WEATHER AR	1
COMMON AR	2
OPTION AR-WORK TOOL	2
ENGINE ARRANGEMENT	3
ENGINE AR-COMPLETE	3
ENGINE AR-PRIMARY	4
INSTALLATION AR-ENGINE	7
INSTALLATION GP-ENGINE	9
BASIC ENGINE	10
ADAPTER GP-AIR COMPRESSOR	10
BELT TENSIONER GP	11
BRACKET GP-MOUNTING	13
CAMSHAFT GP	14
CONNECTING ROD GP	15
COVER GP-VALVE MECHANISM	16
CRANKSHAFT GP	17
CYLINDER BLOCK AS	21
CYLINDER BLOCK GP	22
CYLINDER BLOCK GP-SHORT	23
CYLINDER HEAD AS	25
CYLINDER HEAD GP	26
DRIVE GP-FAN	30
FASTENER GP-DAMPER & PULLEY	31
FLYWHEEL GP	32
HOUSING GP-FLYWHEEL	33
HOUSING GP-FRONT	34
JET GP-PISTON COOLING	40
LIFTING GP-ENGINE	41
LINES GP-AIR COMPRESSOR	42
MOUNTING GP-ACCESSORY MODULE	43
MOUNTING GP-ENGINE	44
PAN GP-OIL	45
PISTON & ROD GP	46
PISTON GP	52
PLUG GP-CYLINDER BLOCK	54
PLUG GP-ENGINE	55
PULLEY GP-CRANKSHAFT	56
ROCKER ARM GP	57
LUBRICATION SYSTEM	61
FILLER GP-ENGINE OIL	61
FILTER GP-ENGINE OIL	64
GAUGE GP-OIL LEVEL (DIPSTICK)	65
LINES GP-ENGINE OIL DRAIN	66
PUMP GP-ENGINE OIL	68
VALVE GP-FLUID SAMPLING	69
COOLING SYSTEM	70
BASE GP-OIL COOLER & FILTER	70
CONNECTION GP-WATER	71
COOLER GP-ENGINE OIL	72
COOLING AR	73
FAN GP-SUCTION	74
LINES GP-WATER	76
PUMP GP-WATER	78
RADIATOR & MOUNTING GP	79
RADIATOR & OIL COOLER GP	81
TANK GP-COOLANT	83
TANK GP-EXPANSION	85
AIR INLET AND EXHAUST SYSTEM	86
AIR CLEANER GP	86
LINES GP-AIR	91
LINES GP-TURBOCHARGER AIR	92
MANIFOLD GP-EXHAUST	93
MANIFOLD GP-INLET	94
PLUG GP	95
TURBOCHARGER GP	96
FUEL SYSTEM	98
CONTROL GP-GOVERNOR	98
FILTER GP-FUEL	100
FILTER GP-WATER SEP & FUEL	103
INJECTOR GP-FUEL	104
LINES GP-FUEL	106
LINES GP-FUEL FILTER	116
LINES GP-FUEL INJECTION	120
PUMP GP-FUEL INJECTION	122
RAIL GP-FUEL	124
TANK & MTG GP-FUEL	125
TANK GP-FUEL	126
ELECTRICAL AND STARTING SYSTEM	127
ADAPTER GP-SENSOR	127
ALARM GP	128
ALTERNATOR GP-CHARGING	129
BATTERY & WIRING GP	130
BLOCK GP-JUNCTION	136
BRACKET GP-MOUNTING	137
CAMERA AR	140
CONTROL & MTG GP-ELECTRONIC	141
CONTROL GP-COMMUNICATION	142
CONTROL GP-ELECTRONIC	148
CONTROL GP-UNPROGRAMMED	149

TABLE OF CONTENTS

NAME	PAGE
CONVERTER GP-ELECTRICAL	151
ELECTRICAL AR	153
ELECTRONICS AR-MACHINE	153
ELECTRONICS GP-MONITOR	153
ELECTRONICS GP-POWER TRAIN	154
HARNESS AS-CAB	155
HARNESS AS-CONSOLE	156
HARNESS AS-CONTROL	158
HARNESS AS-ENGINE	159
HARNESS AS-FRONT	160
HARNESS AS-HEATER & AIR COND	160
HARNESS AS-LIGHTING	161
HARNESS AS-MONITOR	163
HARNESS AS-RADIO	164
HARNESS AS-REAR	165
HARNESS AS-REAR LIGHTING	168
HARNESS AS-SENSOR	169
HARNESS AS-WIRING	171
HEATER GP-JACKET WATER	172
LAMP GP	173
LAMP GP-DOME	174
LAMP GP-FLOOD	176
LAMP GP-HEAD & SIGNAL	179
LAMP GP-SIGNAL	183
LAMP GP-WARNING BEACON	187
LIGHTING AR-FLOOD & SIGNAL	188
LIGHTING AR-ROADING	188
LIGHTING GP-FLOOD	189
LIGHTING GP-FLOOD & SIGNAL	192
LIGHTING GP-ROADING	197
LIGHTING GP-WARNING BEACON	199
MOTOR GP-ELECTRIC	200
MOUNTING GP-ELECTRONIC CONTROL	201
SENSOR GP-ENGINE	202
SENSOR GP-POSITION	203
STARTING AID GP	204
STARTING AID GP-ETHER	205
STARTING MOTOR GP-ELECTRIC	207
SUPPORT GP-LIGHT	208
SWITCH GP-DISCONNECT	210
SWITCH GP-ROCKER	211
SWITCH GP-WIPER	213
WIRING GP-AIR CONDITIONER	215
WIRING GP-BLADE CUSHION	216
WIRING GP-CAB	217
WIRING GP-CAMERA	219
WIRING GP-CHASSIS	221
WIRING GP-CONSOLE	222
WIRING GP-ENGINE	228
WIRING GP-FRONT LIGHTING	229
WIRING GP-GRADE CONTROL	231
WIRING GP-REAR	232
WIRING GP-REAR LIGHTING	237
WIRING GP-SECONDARY STEERING	238
WIRING GP-SENSOR	240
POWER TRAIN	244
AXLE AR-REAR	244
AXLE GP-FRONT	247
AXLE GP-REAR	250
CARRIER GP-FINAL DRIVE	251
CHAIN GP-DRIVE	252
CONTROL GP-TRANSMISSION HYD	253
DIFFERENTIAL & BEVEL GEAR GP	254
DIFFERENTIAL GP	257
FILLER GP-POWER TRAIN OIL	259
DRIVE GP-FINAL	262
LINES GP-TRANSMISSION OIL	266
POWER TRAIN AR	268
RIM GP-DEMOUNTABLE	269
SHAFT GP-DRIVE	272
SHIM GP	275
SLIP JOINT GP	276
TANDEM & COVER GP	278
TRANSMISSION AR	281
TRANSMISSION GP	282
WHEEL & TIRE AR	283
WHEEL & TIRE GP	284
WHEEL AR	285
WHEEL GP	287
FRAME AND BODY	300
BOX GP-BATTERY	300
COUNTERWEIGHT GP-FRONT	302
COVER GP-ACCESS	303
COVER GP-CONTROL VALVE	306
FENDER GP	307
FENDER GP-REAR	309
FRAME AR	310
FRAME GP-FRONT	311
GRILL GP-RADIATOR	314
GUARD GP	315
GUARD GP-BOTTOM	316
GUARD GP-PLATFORM	317
HITCH GP-ARTICULATING	319
HOOD GP	322
LADDER GP	327
LINES GP-GREASE	328
LINK GP-STEERING	329
STEP GP	330
SUPPORT GP-BATTERY	332
SUPPORT GP-RADIATOR	333
WALKWAY GP	334
BRAKING SYSTEM	335
ACCUMULATOR GP-BRAKE	335

TABLE OF CONTENTS

NAME PAGE

CONTROL GP-SERVICE BRAKE 337
LINES GP-AIR TANK 338
LINES GP-SERVICE BRAKE 341

HYDRAULIC SYSTEM 346
ACCUMULATOR & MTG GP-HYDRAULIC 346
ACCUMULATOR AR-BLADE CUSHION 349
ACCUMULATOR GP-HYDRAULIC 350
CONTROL AR-HYDRAULIC 353
CYLINDER & MTG GP-ARTICULATION 354
CYLINDER & MTG GP-BLADE LIFT 355
CYLINDER & MTG GP-BLADE TIP 356
CYLINDER & MTG GP-CENTERSHIFT 357
CYLINDER & MTG GP-SIDESHIFT 358
CYLINDER & MTG GP-STEERING 359
CYLINDER & MTG GP-WHEEL LEAN 360
CYLINDER GP-ARTICULATION 361
CYLINDER GP-CENTERSHIFT 362
CYLINDER GP-HYDRAULIC 363
CYLINDER GP-STEERING 368
CYLINDER GP-WHEEL LEAN 370
DETENT GP-CONTROL VALVE 371
DRIVE GP-CIRCLE 372
HYDRAULIC AR 374
LINES GP-ACCUMULATOR 375
LINES GP-HYDRAULIC 377
LINES GP-HYDRAULIC FAN 391
LINES GP-IMPLEMENT 396
LINES GP-PUMP 398
LINES GP-RIPPER 403
LINES GP-SECONDARY STEERING 405
LINES GP-STEERING 407
LOCK AR-CENTERSHIFT 409
LOCK GP-CENTERSHIFT 410
MANIFOLD GP-CONTROL 413
MOTOR GP-GEAR 415
PUMP & MTG GP-STEERING 416
PUMP GP-PISTON 417
STEERING AR-SECONDARY 419
TANK GP-HYDRAULIC 420
VALVE & LINKAGE GP 423
VALVE & MOUNTING GP 429
VALVE GP-BANK 4 430
VALVE GP-BANK 5 432
VALVE GP-COMBINATION 434
VALVE GP-CONTROL 438
VALVE GP-PRESSURE REDUCING 464
VALVE GP-PURGE 466
VALVE GP-RELIEF 467
VALVE GP-SHUTTLE 475
VALVE GP-SOLENOID 476

NAME PAGE

IMPLEMENTS 478
CIRCLE GP 478
DRAWBAR AR 480
DRAWBAR GP 481

OPERATOR STATION 483
ADJUSTER GP-SEAT 483
AIR CONDITIONER & MOUNTING GP 486
AIR CONDITIONER AR 487
AIR CONDITIONER GP 491
BRACKET GP-MOUNTING 495
CAB AR 498
CAB GP 503
COMPRESSOR & MTG GP-REFRIG 507
COMPRESSOR GP-REFRIGERANT 508
CONDENSER & MTG GP-REFRIGERANT 509
CONSOLE GP-OPERATOR 510
CONTROL GP-CLUTCH 516
CONTROL GP-HYDRAULIC LOCKOUT 518
CONTROL GP-STEERING 519
COVER AS 520
COVER GP-CAB 521
DISPLAY GP-CAMERA 522
DISPLAY GP-MONITOR 523
DOOR GP-CAB 524
DUCT & CONTROL GP 527
DUCT GP-CAB AIR 528
FAN GP-CIRCULATING 529
FILTER GP-CAB AIR 534
HARDWARE GP-MOUNTING 535
HEATER GP-CAB 537
INDICATOR GP-LEVEL 543
INSTALLATION GP-CAB 544
INSTALLATION GP-RADIO 546
LINER GP-CAB 548
LINES GP-AIR CONDITIONER 552
LINES GP-HEATER 554
LOUVER GP-CAB 556
MIRROR GP-REAR VIEW 557
MODULE GP-DISPLAY 564
MOTOR GP-WINDOW WIPER 565
MOUNTING GP-CAB 566
MOUNTING GP-ROPS 567
RADIO GP 569
ROPS AR 570
ROPS GP 571
SCREEN GP-SUN 573
SEAT BELT GP 574
SEAT GP 575
SEAT GP-STATIC 579
SEAT GP-SUSPENSION 583
SUPPORT GP-SEAT 587
SUSPENSION GP-SEAT 589

TABLE OF CONTENTS

NAME	PAGE
TANK GP-WINDOW WASHER	591
WASHER GP-WINDOW	592
WINDOW GP-CAB	597
WIPER & WASHER GP-WINDOW	598
WIPER GP-WINDOW	599
WORK TOOLS	604
BLADE GP	604
BLADE GP-STRAIGHT	607
LIFT GP-BLADE	609
RIPPER AR	611
RIPPER GP	612
TOOTH GP-RIPPER	614
TOOTH GP-SCARIFIER	615
SERVICE EQUIPMENT AND SUPPLIES	616
BOX GP-TOOL	616
FILM GP	617
PARTS GP-MISCELLANEOUS	620
PLATE & FILM GP	621
PART NUMBER INDEX	B1

1. MACHINE IDENTIFICATION

Cat machines are identified by Product Identification Numbers (PIN). Some components included in a machine may be identified by Serial Numbers (S/N). Typical components that will be serialized include engines, transmissions, bulldozers, and rippers. The machine and engine are further identified by arrangement numbers and in some cases modification numbers. These numbers are shown on the product identification plate(s) and on the master plate in the operator's compartment.

Cat dealers need all of these numbers to determine accurate parts identification.

Effective First Quarter 2001 the Cat Product Identification Number (PIN) changed from 8 to 17 characters. In an effort to provide uniform equipment identification, Caterpillar and other construction equipment manufacturers are moving to comply with the latest version of the product identification numbering standard. Non-road machine PINs are defined by ISO 10261. The new PIN format will apply to all Cat machines and generator sets. The PIN plates and frame marking will display the 17 character PIN. The new format will look like the following:

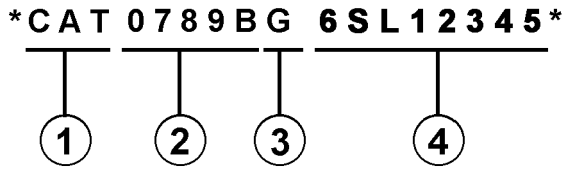

Where:

1. Caterpillar's World Manufacturing Code (characters 1-3)

2. Machine Descriptor (characters 4-8)

3. Check Character (character 9)

4. Machine Indicator Section (MIS) or Product Sequence Number (characters 10-17). These were previously referred to as the Serial Number.

Machines and generator sets produced before First Quarter 2001 will maintain their 8 character PIN format.

Components such as engines, transmissions, axles, etc. and work tools will continue to use an 8 character Serial Number (S/N).

2. ORDERING PARTS

⚠ WARNING

When replacement parts are required for this product Caterpillar recommends using Caterpillar replacement parts or parts with equivalent specifications including, but not limited to, physical dimensions, type, strength and material.

Failure to heed this warning can lead to premature failures, product damage, personal injury or death.

Quality Cat replacement parts are available from Cat dealers throughout the world. Their parts inventories are up to date and include all parts normally required to protect your investment in Cat machines. Dealers may offer repair kits or remanufactured parts to allow selection of the most effective repair alternative for a particular situation. When ordering parts, your order should specify the quantity, part number, part name, and the serial number/product identification number of the machine for which the parts are needed.

3. PARTS MANUAL ORGANIZATION

Product information in this manual is presented as "information elements" that represent all of the components for the specific model. Engine Arrangement and Seat Group are examples of information elements. The information elements are organized alphabetically by part name and secondarily by part number within each major section of the manual.

4. TABLE OF CONTENTS

A table of contents (TOC) is found at the beginning of the manual. The TOC lists each section of the manual with a complete list of all information elements organized as they appear in the manual. Page numbers are provided for quick reference to detailed parts identification illustrations and serviceable consist lists.

5. MAINTENANCE PARTS INDEX

The Maintenance Parts Index, located near the beginning of the manual, references most frequently used maintenance part numbers, providing description, quantity, usage and page number. This information is organized alphabetically by part description.

6. INDEX

The index located near the front of the manual is an alphabetical listing of all information elements included in the manual. Page numbers are provided for quick reference to detailed parts identification illustrations and serviceable consist lists.

7. PART NUMBER INDEX

A numerical index listing all part numbers and the corresponding page number(s) appears at the back of the manual.

8. CAPTIONS

Captions located at the beginning of each information element identify the part number and part name along with additional descriptive information. PIN and S/N information found in each caption should be used to select correct information for a specific machine. Field replacement options, identification of optional attachment components, and where used ("part of") information is also provided.

The first line of a caption is shown in larger type font to indicate the beginning of an information element. Captions for additional pages that may be required to illustrate an information element will be shown in standard type font and will include the term (contd.).

9. NON-SERVICED PARTS

In some instances it is necessary to display non-serviced parts that are a link to a lower level serviceable consist lists. These non-serviced part numbers are shown in italic type indicating that they are not available.

10. PARTS LIST REFERENCE NUMBERS

Numbers shown in the Ref No column correspond to numbers used in the associated graphic(s). An alphabetic suffix may be added to a reference number to identify lower level consist items. Numbers shown in the Graphic Ref column refer to the graphic number identifier displayed in the lower left corner of each illustration. The Graphic Ref number may be used in combination with the item Ref No to determine the correct part number. There may be intentional omission of a Ref No in a consist list as information is updated to reflect the latest serviceable part numbers.

11. INDENTED PART NAMES

When a part name is indented in a parts list, it is part of (included in) the group or assembly under which it is indented.

12. ILLUSTRATION REFERENCE LETTERS

When necessary, illustrations contain reference letters (A, B, C etc.) that are intended to track lines and harnesses from one point to another. They are also used to show where to reconnect illustrations that have been separated.

13. ABBREVIATIONS AND SYMBOLS

O.D. – Outside Diameter
I.D. – Inside Diameter
A – Not Part Of This Group
B – Use As Required
C – Change From Previous Type
D – Order By The Meter
E – Order By The Centimeter
F – Not Shown
G – Order By The Inch
I – Refer To Hydraulic Information System
M – Metric Part
R – Remfg Part May Be Available
Y – Separate Illustration
Z – Not Serviced Separately

14. DESCRIPTION OF TYPE CHANGES

Type - A type is defined as any configuration change that requires an additional Information Element for an Arrangement, Group, or Assembly. If serial number breaks for types are not available, a type # (Type 1, Type 2, etc.) will be displayed in the caption. These "type" changes are identified with a "C" note (change from previous type) in the Parts List. Only the "types" that apply to this Parts Manual will be included. Additional types may exist causing "C" notes to appear on an Information Element when no other types are shown.

15.<END>

This symbol indicates the end of an information element.

NOTE:

Continuing improvement and advancement of product design may cause changes to your machine which may not be included in this publication. Whenever a question arises regarding your Cat product or this publication, please consult your Cat dealer for the latest available information.

FRAME AND BODY

8E-3299 PLATFORM GP-CAB

PIN 38K1-99999

SMCS-7283 100090751

NOTE	REF NO	GRAPHIC REF	PART NUMBER	QTY	PART NAME (1 2 3 4 5 6 PRODUCT LEVEL)	SEE PAGE
	1	1	3T-3963	1	PLATE AS	
	2	1	5H-2962	25	BOLT (3/8-16X.750IN)	
	3	1	6P-1075	41	WASHER-HARD (3MM THK)	
	4	1	9F-1444	2	SUPPORT AS-FOOT	
	5	1	5P-2229	18	BOLT (1/2-13X1IN)	
		1	9J-[illegible]	18	WASHER-HARD (4MM THK)	
	6	1	9E-8134	1	COVER AS-LH	
		1	9F-2979	6	NUT-WELD (3/8-16 THD)	
		1	1F-9189	1	CLIP	
	7	1	7S-2411	4	COVER	
	8	1	5J-0468	19	SCREW-HEAD (3/8-16X.87SIN)	
	9	1	[illegible]074	1	COVER	
		1	9E-8[illegible]	1	GASKET	
	10	1	9E-3248	1	[illegible]	
		1	9E-3250	1	GASKET	
	11	1	3T-3930	1	HANDHOLD	
	12	1	9E-8078	1	COVER AS	
		1	9F-2979	6	NUT-WELD (3/8-16 THD)	
		1	9E-8079	1	GASKET	
	13	1	7T-0131	1	FLOORPLATE AS	
		1	1F-0748	4	NUT-WELD (1/2-13 THD)	
	14	1	7V-8067	1	PLUG-BUTTON	
	15	1	7T-0136	1	PLATE AS	
		1	9F-2979	5	NUT-WELD (3/8-16 THD)	
	16	1	7T-8066	1	COVER	
		1	7T-0779	1	GASKET	
	17	1	3T-3951	1	PLATE AS	
	18	1	9T-8364	4	BOLT (1/4-20X.62SIN)	
M		1	9T-4286	4	WASHER-HARD (2MM THK)	
	19	1	6I-8464	1	FLOOR MAT	
	20	1	8E-8846	1	MODULE AS-OPERATOR	
	21	1	3T-3934	1	HANDHOLD	
	22	1	9P-8571	2	PLUG	
	23	2	9T-8364	4	BOLT (1/4-20X.62SIN)	
M		2	9T-4286	4	WASHER-HARD (2MM THK)	
	24	2	5H-2962	17	BOLT (3/8-16X.750IN)	
	25	2	6P-1075	21	WASHER-HARD (3MM THK)	
	26	2	7T-0136	1	SEAL	
	27	2	7X-0375	2	BOLT (3/4-10X5IN)	
		2	7X-0662	2	WASHER-HARD (6MM THK)	
	28	2	3T-3462	2	PLATE	
	29	2	3T-8290	1	PLATE AS	
		2	7S-4028	6	SPACER	
	30	2	3T-8281	1	SEAL	
	31	2	7S-8017	1	GASKET	
	32	2	7S-8016	1	COVER AS	
		2	2R-2376	2	WASHER	
		2	6P-0626	2	SCREW-KNURLED	
	33	2	9W-3429	1	COVER	
	34	2	8E-8697	1	COVER	
	35	2	9D-3091	8	SCREW-SOCKET HEAD	
	36	2	9W-3142	8	MOUNTING	
	37	2	9W-9527	2	PLATE	
	38	2	7X-0390	2	BOLT (7/8-9X6IN)	
		2	7X-0672	2	WASHER-HARD	
	39	2	4L-8454	4	BOLT (3/8-16X1.0IN)	
	40	2	3T-4788	1	COVER	

12 FRAME AND BODY 1 of 4 SELP4570-01

FRAME AND BODY

8E-3299 PLATFORM GP-CAB (contd.)

100090751

NOTE	REF NO	GRAPHIC REF	PART NUMBER	QTY	PART NAME (1 2 3 4 5 6 PRODUCT LEVEL)	SEE PAGE
	41	2	8E-2515	1	COVER	
	42	2	7T-0134	1	PLATE	
	43	2	7T-0128	1	GASKET	
	44	2	7S-8724	1	GASKET	
	45	2	7S-8723	1	COVER	
	46	2	6V-1960	2	PLUG-BUTTON	

M-METRIC PART

SELP4570-01 2 of 4 FRAME AND BODY 13

FRAME AND BODY

8E-3299 PLATFORM GP-CAB (contd.)

100090751

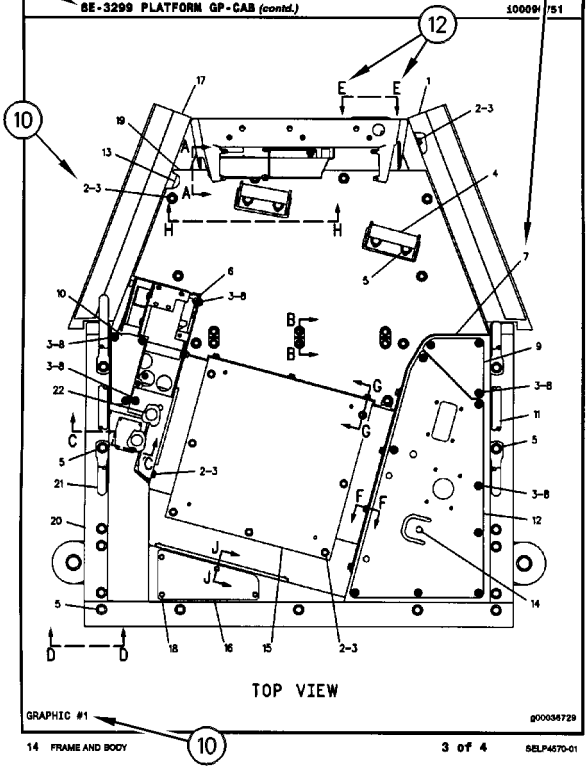

14 FRAME AND BODY 3 of 4 SELP4570-01

FRAME AND BODY

8E-3299 PLATFORM GP-CAB (contd.)

100090751

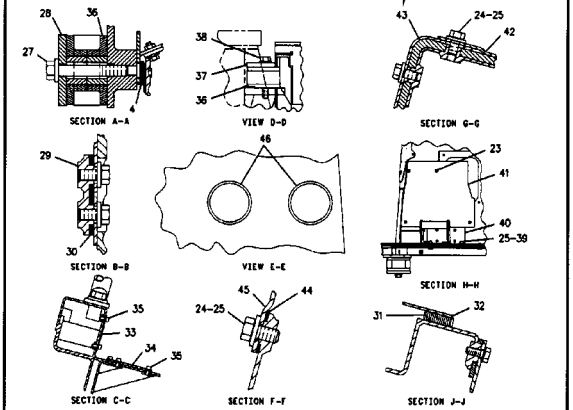

SELP4570-01 4 of 4 FRAME AND BODY 15

REMANUFACTURED COMPONENTS

As an option when making repairs consider Cat Remanufactured Components. Components that are available through the Cat Remanufactured Program are identified three ways in the parts book:

- with the letter R in the note field of the parts list
- with an R* at the beginning of the first line of the caption
- with an *R at the end of the first line of the caption

Typical components included in the Remanufacturing Program include:

ALTERNATORS
CONNECTING RODS
CRANKSHAFTS - UNDERSIZE
CRANKSHAFTS - UPGRADE TO NEW
CYLINDER HEADS
ELECTRONIC CONTROL MODULES (ECM)
ELECTRONIC SENSORS
FUEL INJECTORS
FUEL NOZZLES
FUEL PUMPS
GOVERNORS
OIL PUMPS
PISTONS
SHORT BLOCKS
STARTERS
TURBOCHARGERS - COMPLETE
TURBOCHARGER CARTRIDGES
WATER PUMPS

Cat Remanufactured engines for many engine arrangements are also available.

SUPPLEMENTAL COOLANT ADDITIVES

CUSTOMER BENEFITS:

Protects against cavitation, foam, erosion, corrosion, and scale buildup in cooling systems.

- Provides measured coolant conditioner.

DESCRIPTION:

Additives deplete from the coolant with normal operation. For this reason, Supplemental Coolant Additives (SCA) must be added to all heavy duty coolants at regular intervals. In addition, when not using a fully formulated, pre-charged antifreeze, like Cat DEAC, an initial charge of SCA must be added to the cooling system. The amount of SCA added to the system is dependent on the capacity of the system.

The SCA for initial fill is provided as a liquid. SCA's for maintenance intervals are available in liquid form and as a spin-on element. (No Spin-on available for 3600 Family of Engines)

NOTE:

The amount of SCA added at initial fill is not the same as the amount added at maintenance intervals.

The coolant additive elements can be used with any ethylene or propylene glycol type antifreeze which meets ASTM D4985 or ASTM D5345 Specifications.

NOTE:

For use with standard heavy duty coolant only, not for use with Extended Life Coolant.

PARTS NEEDED:

Cooling System Capacity		Liquid SCA at Initial Fill	Liquid SCA at Maintenance*	Spin-on SCA Maintenance Element*
Liters	Gallons			
22-30	(6-8)	3P-2044 (1)	6V-3542 (1)	111-2370 (1)
30-38	(8-10)	3P-2044 (1) 6V-3542 (1)	111-2372 (1)	111-2369 (1)
38-49	(10-13)	3P-2044 (1) 8T-1589 (1)	111-2372 (1)	111-2369 (1)
49-64	(13-17)	3P-2044 (2)	8T-1589 (1)	9N-3368 (1)
64-83	(17-22)	3P-2044 (2) 8T-1589 (1)	111-2372 (1) 6V-3542 (1)	111-2371 (1)
83-114	(22-30)	3P-2044 (3) 8T-1589 (1)	3P-2044 (1)	9N-3718 (1)
114-163	(30-43)	3P-2044 (5)	3P-2044 (1) 6V-3542 (1)	111-2371 (2)
163-242	(43-64)	3P-2044 (8)	3P-2044 (2)	9N-3718 (2)

* Normal maintenance period is 250 hrs. See your Operation and Maintenance Manual for complete coolant maintenance instructions.

( ) Indicates quantity required.

MAINTENANCE PARTS

DESCRIPTION	PART NUMBER	QTY	WHERE USED	PAGE
AIR INLET AND EXHAUST SYSTEM				
FILTER ELEMENT AS-AIR (SECONDARY)	245-6376	1	AIR CLEANER GP	86
FILTER ELEMENT-AIR (PRIMARY)	245-6375	1	AIR CLEANER GP	86
BASIC ENGINE				
BELT-SERPENTINE	283-1171	1	BELT TENSIONER GP	12
KEY	067-6344	2	ADAPTER GP-AIR COMPRESSOR	10
COOLING SYSTEM				
CAP AS-RADIATOR	332-4175	1	TANK GP-EXPANSION	85
GASKET-FILTER (ENGINE OIL)	277-2526	1	BASE GP-OIL COOLER & FILTER	70
GASKET-WATER REGULATOR (TEMPERATURE)	281-8744	1	CONNECTION GP-WATER	71
REGULATOR AS-WATER TEMPERATURE (INCLUDES CONNECTOR)	417-7782	1	CONNECTION GP-WATER	71
ELECTRICAL AND STARTING SYSTEM				
BATTERY GP (12-VOLT, MAINTENANCE FREE, WET)	153-5710	2	BATTERY & WIRING GP	133
CAP AS-FILLER	461-5232	6	BATTERY & WIRING GP	131
		6	BATTERY & WIRING GP	133
CAP AS-FILLER (7/8-9-THD)	123-1373	6	BATTERY & WIRING GP	133
CIRCUIT BREAKER AS (15-AMPERE, MANUAL RESET)	280-2709	4	WIRING GP-CONSOLE	223
CIRCUIT BREAKER AS (80-AMPERE)	171-2210	2	WIRING GP-REAR	232
FILTER (ETHER)	160-8761	1	STARTING AID GP-ETHER	205
FLASHER AS (12/24-VOLT)	431-8735	1	LIGHTING GP-FLOOD & SIGNAL	192
		1	LIGHTING GP-FLOOD & SIGNAL	194
		1	LIGHTING GP-ROADING	197
FUSE (10-AMPERE)	113-8490	22	WIRING GP-CONSOLE	222
FUSE (15-AMPERE)	113-8491	6	WIRING GP-CONSOLE	222
FUSE (20-AMPERE)	113-8492	3	WIRING GP-CONSOLE	222
FUSE (30-AMPERE)	124-3548	2	WIRING GP-CONSOLE	222
FUSE (7.5-AMPERE)	141-2760	3	WIRING GP-CONSOLE	222
GLOW PLUG (24-VOLT)	462-2235	6	STARTING AID GP	204
KEY (BATTERY DISCONNECT)	8H-5306	1	SWITCH GP-DISCONNECT	210
LAMP (24-VOLT, 0.17-AMPERE)	100-3245	1	LAMP GP-HEAD & SIGNAL	181
		1	LAMP GP-HEAD & SIGNAL	182
LAMP (24-VOLT, 0.17-AMPERE) (INDICATOR)	100-3245	1	WIRING GP-CONSOLE	226
LAMP (24-VOLT, 21-WATT)	8U-2622	1	LAMP GP	173
		1	LAMP GP-HEAD & SIGNAL	181
		1	LAMP GP-HEAD & SIGNAL	182
LAMP (24-VOLT, 21-WATT) (SIGNAL)	9X-4493	1	LAMP GP-SIGNAL	186
LAMP (24-VOLT, 5-WATT) (FLOODLIGHT)	130-3515	1	LAMP GP-HEAD & SIGNAL	179

MAINTENANCE PARTS

DESCRIPTION	PART NUMBER	QTY	WHERE USED	PAGE
		1	LAMP GP-HEAD & SIGNAL	180
LAMP (24-VOLT, 75/70-WATT)	9X-3465	1	LAMP GP-HEAD & SIGNAL	181
		1	LAMP GP-HEAD & SIGNAL	182
LAMP (24-VOLT, 75/70-WATT) (HIGH, LOW BEAM)	9X-3465	1	LAMP GP-HEAD & SIGNAL	179
		1	LAMP GP-HEAD & SIGNAL	180
LAMP (24-VOLT) (DOME LIGHT)	7N-9943	1	LAMP GP-DOME	175
LAMP GP-SIGNAL (24-VOLT, LED) (STOP, TAIL, TURN)	395-2113	2	WIRING GP-FRONT LIGHTING	229
		2	WIRING GP-FRONT LIGHTING	230
LAMP GP-SIGNAL (24-VOLT, STOP, TAIL)	334-8049	2	LIGHTING GP-FLOOD & SIGNAL	196
LAMP GP-SIGNAL (24-VOLT) (REVERSE)	379-3416	2	WIRING GP-FRONT LIGHTING	229
		2	WIRING GP-FRONT LIGHTING	230
		2	WIRING GP-REAR LIGHTING	237
LAMP GP-SIGNAL (24-VOLT) (STOP, TAIL LIGHTS)	259-8450	2	WIRING GP-REAR LIGHTING	237
LAMP GP-WARNING BEACON (12/24-VOLT, LED STROBE)	338-1132	1	LIGHTING GP-WARNING BEACON	199
LAMP-HALOGEN (24-VOLT, 70-WATT)	351-9918	1	LAMP GP-FLOOD	176
		1	LAMP GP-FLOOD	177
		1	LAMP GP-FLOOD	178
LAMP-TURN SIGNAL (24-VOLT, 21-WATT) (TURN SIGNAL)	242-0588	1	LAMP GP-HEAD & SIGNAL	179
		1	LAMP GP-HEAD & SIGNAL	180
FRAME AND BODY				
KEY	5P-8500	1	BOX GP-BATTERY	300
FUEL SYSTEM				
CAP AS-FUEL (LOCKABLE, VENTED)	349-7059	1	TANK GP-FUEL	126
FILTER AS-WATER SEP & FUEL	439-5037	1	FILTER GP-WATER SEP & FUEL	103
FILTER ELEMENT-FUEL	360-8960	1	FILTER GP-FUEL	100
KEY	5P-8500	1	TANK & MTG GP-FUEL	125
STRAINER-FUEL (FUEL TANK)	9P-7121	1	TANK GP-FUEL	126
HYDRAULIC SYSTEM				
CAP-FILLER (HYDRAULIC TANK FILL)	7H-1447	1	TANK GP-HYDRAULIC	420
FILTER ELEMENT AS-OIL (ADVANCED EFFICIENCY)	1R-0774	1	TANK GP-HYDRAULIC	420
KEY	5P-8500	1	TANK GP-HYDRAULIC	422
SEAL-INTEGRAL	101-0509	5	VALVE GP-BANK 4	430
		5	VALVE GP-BANK 4	431
		6	VALVE GP-BANK 5	432
		6	VALVE GP-BANK 5	433
STRAINER	9J-3047	1	TANK GP-HYDRAULIC	420
LUBRICATION SYSTEM				
CAP AS-OIL FILLER (ENGINE)	130-9888	1	FILLER GP-ENGINE OIL	61

MAINTENANCE PARTS

DESCRIPTION	PART NUMBER	QTY	WHERE USED	PAGE
		1	FILLER GP-ENGINE OIL	62
FILTER-ENGINE OIL	462-1171	1	FILTER GP-ENGINE OIL	64
OPERATOR STATION				
BELT-SERPENTINE	350-8742	1	COMPRESSOR & MTG GP-REFRIG	507
BLADE AS-WIPER (335-MM) (FRONT, LOWER)	123-4355	2	WIPER GP-WINDOW	602
BLADE AS-WIPER (450-MM)	6V-5853	1	WIPER GP-WINDOW	601
BLADE AS-WIPER (450-MM) (FRONT)	6V-5853	1	WIPER GP-WINDOW	599
DRYER AS-REFRIGERANT (IN-LINE)	257-3226	1	LINES GP-AIR CONDITIONER	552
FILTER ELEMENT AS-CAB AIR	231-4486	1	FILTER GP-CAB AIR	534
	231-4487	2	FILTER GP-CAB AIR	534
	232-1732	1	FILTER GP-CAB AIR	534
	7T-7358	1	FILTER GP-CAB AIR	534
FUSE (10-AMPERE)	9W-1442	2	MIRROR GP-REAR VIEW	561
		1	WIPER GP-WINDOW	601
FUSE (15-AMPERE) (HEATER)	9W-1441	1	HEATER GP-CAB	541
		1	HEATER GP-CAB	542
KEY	5P-8500	1	SEAT GP	575
		1	SEAT GP-STATIC	580
		1	SEAT GP-SUSPENSION	583
LAMP (24-VOLT, 0.17-AMPERE)	100-3245	1	AIR CONDITIONER GP	492
		1	HEATER GP-CAB	537
SCREEN AS	466-1003	1	SCREEN GP-SUN	573
SEAT BELT GP (ADJUSTABLE, 3-IN)	8Y-4030	1	SEAT GP	575
SEAT BELT GP (RETRACTABLE)	116-1965	1	SEAT GP-STATIC	580
		1	SEAT GP-SUSPENSION	583
POWER TRAIN				
BREATHER (ATMOSPHERIC) (POWER TRAIN OIL)	9G-5127	1	FILLER GP-POWER TRAIN OIL	259
BREATHER (TANDEM)	4H-6112	1	TANDEM & COVER GP	279
		1	TANDEM & COVER GP	280
BREATHER AS (TANDEM)	522-1860	2	TANDEM & COVER GP	278
FILTER AS	554-4809	1	TRANSMISSION GP	282
PLUG-MAGNETIC (DIFFERENTIAL)	5P-4484	1	DIFFERENTIAL & BEVEL GEAR GP	254
PLUG-MAGNETIC (DRAIN, HYDRAULIC OIL)	5P-4484	2	TANDEM & COVER GP	278
PLUG-MAGNETIC (OIL DRAIN)	5P-4484	2	TANDEM & COVER GP	279
		2	TANDEM & COVER GP	280
SERVICE EQUIPMENT AND SUPPLIES				
KEY	5P-8500	1	BOX GP-TOOL	616

INDEX

NAME PAGE

A

ACCUMULATOR & MTG GP-HYDRAULIC 346
347
ACCUMULATOR & MTG GP-HYDRAULIC–BRAKE 348
ACCUMULATOR AR-BLADE CUSHION 349
ACCUMULATOR GP-BRAKE–CHARGED 335
ACCUMULATOR GP-BRAKE–UNCHARGED 336
ACCUMULATOR GP-HYDRAULIC–CHARGED. . . 350
351
ACCUMULATOR GP-HYDRAULIC–UNCHARGED 352
ACCUMULATOR-REFRIGERANT 552
ADAPTER GP-AIR COMPRESSOR 10
ADAPTER GP-SENSOR 127
ADJUSTER GP-SEAT 483
485
AIR CLEANER GP 86
87
89
90
AIR CONDITIONER & MOUNTING GP 486
AIR CONDITIONER AR 487
488
AIR CONDITIONER AR–HEATER 489
490
AIR CONDITIONER AR–NON-HVAC 489
AIR CONDITIONER AR–WITH AIR COMPRESSOR 490
AIR CONDITIONER AR–WITHOUT AIR COMPRESSOR 489
AIR CONDITIONER GP 491
ALARM GP 128
ALTERNATOR GP-CHARGING 129
ARMREST GP (LH) 586
ARMREST GP (RH) 586
AXLE AR-REAR 244
245
246
AXLE GP-FRONT 247
AXLE GP-REAR 250

B

BAFFLE GP-RADIATOR 81
BASE GP-OIL COOLER & FILTER 70
BATTERY & WIRING GP 130
BATTERY & WIRING GP–HEAVY DUTY 133
BATTERY GP (12-VOLT, MAINTENANCE FREE, WET) 131
133
BELT TENSIONER GP 11
12
BELT-SERPENTINE 12
507
BLADE AS-WIPER (335-MM) (FRONT, LOWER) 602
BLADE AS-WIPER (450-MM) 601
BLADE AS-WIPER (450-MM) (FRONT) 599

NAME PAGE

BLADE GP 604
605
606
BLADE GP-STRAIGHT 607
BLOCK GP-JUNCTION–BATTERY 136
BOX GP-BATTERY 300
301
BOX GP-TOOL 616
BRACKET GP-MOUNTING 13
137
138
139
495
496
497
BREATHER (ATMOSPHERIC) (POWER TRAIN OIL) 259
BREATHER (TANDEM) 279
280
BREATHER AS (TANDEM) 278
BRIDGE GP-VALVE 59

C

CAB AR 498
499
CAB AR–CANOPY, ROPS 501
CAB AR–NON ROPS 501
502
CAB AR–ROPS 500
501
502
CAB GP 503
504
505
506
CAMERA AR 140
CAMSHAFT GP 14
CAP AS 259
CAP AS-FILLER 131
133
CAP AS-FILLER (7/8-9-THD) 133
CAP AS-FUEL (LOCKABLE, VENTED) 126
CAP AS-OIL FILLER (ENGINE) 61
62
CAP AS-RADIATOR 85
CAP GP-FUEL FILLER (DEBRIS BOOT) 126
CAP GP-PROTECTION 410
CAP-FILLER (HYDRAULIC TANK FILL) 420
CARRIER GP-FINAL DRIVE 251
CHAIN GP-DRIVE 252
CHASSIS AR–LIGHT FABS 1
CIRCLE GP 478
CIRCUIT BREAKER AS (15-AMPERE, MANUAL RESET) 223
CIRCUIT BREAKER AS (80-AMPERE) 232
COLD WEATHER AR 1
COMMON AR 2
COMPRESSOR & MTG GP-REFRIG 507
COMPRESSOR GP-REFRIGERANT 508

INDEX

NAME PAGE

CONDENSER & MTG GP-REFRIGERANT 509
CONNECTING ROD GP 15
46
48
50
CONNECTION GP-AIR 94
CONNECTION GP-WATER 71
CONSOLE GP-OPERATOR 510
514
CONTROL & MTG GP-ELECTRONIC 141
CONTROL AR-HYDRAULIC 353
CONTROL GP-CLUTCH 516
CONTROL GP-COMMUNICATION–PRODUCT LINK 631 SATELLITE 142
CONTROL GP-COMMUNICATION–PRODUCT LINK 641 146
CONTROL GP-COMMUNICATION–PRODUCT LINK 641 CELLULAR 144
CONTROL GP-ELECTRONIC–PRODUCT LINK ELITE 641 CELLULAR 148
CONTROL GP-GOVERNOR 98
CONTROL GP-HYDRAULIC LOCKOUT 518
CONTROL GP-SERVICE BRAKE 337
CONTROL GP-STEERING 519
CONTROL GP-TRANSMISSION HYD 253
CONTROL GP-UNPROGRAMMED 141
CONTROL GP-UNPROGRAMMED (ELECTRONIC) 240
CONTROL GP-UNPROGRAMMED–PRODUCT LINK ELITE 631 SATELLITE 150
CONTROL GP-UNPROGRAMMED–PRODUCT LINK ELITE 641 CELLULAR 149
CONVERTER GP-ELECTRICAL 151
152
COOLER GP-ENGINE OIL 72
COOLING AR 73
CORE AS-AFTERCOOLER 81
CORE AS-CONDENSER (AIR CONDITIONER) 509
CORE AS-HEATER 491
537
CORE AS-OIL COOLER 81
CORE AS-RADIATOR 81
COUNTERWEIGHT GP-FRONT 302
COVER AS 520
COVER GP-ACCESS 303
304
305
COVER GP-CAB 521
COVER GP-CONTROL VALVE 306
COVER GP-VALVE MECHANISM 16
CRANKSHAFT GP 17
19
CYLINDER & MTG GP-ARTICULATION 354
CYLINDER & MTG GP-BLADE LIFT 355
CYLINDER & MTG GP-BLADE TIP 356
CYLINDER & MTG GP-CENTERSHIFT 357
CYLINDER & MTG GP-SIDESHIFT 358
CYLINDER & MTG GP-STEERING 359
CYLINDER & MTG GP-WHEEL LEAN 360
CYLINDER BLOCK AS 21
CYLINDER BLOCK GP 22
CYLINDER BLOCK GP-SHORT 23
24
CYLINDER GP-ARTICULATION 361
CYLINDER GP-CENTERSHIFT 362
CYLINDER GP-HYDRAULIC 363
364
365
366
367
CYLINDER GP-STEERING 368
369
CYLINDER GP-WHEEL LEAN 370
CYLINDER HEAD AS 25
CYLINDER HEAD GP 26
27
28
29

D

DETENT GP-CONTROL VALVE 371
DIFFERENTIAL & BEVEL GEAR GP 254
DIFFERENTIAL GP 257
258
DISPLAY GP-CAMERA–WORK AREA VISUAL SYSTEM 522
DISPLAY GP-MONITOR 523
DISPLAY GP-MONITOR (INDICATION DISPLAY) 523
DOOR GP (AIR VENTED) 548
DOOR GP-CAB 524
DRAWBAR AR–WITH SLIP CLUTCH 480
DRAWBAR AR–WITHOUT SLIP CLUTCH 480
DRAWBAR GP 481
DRIVE GP-CIRCLE 372
373
DRIVE GP-FAN 30
DRIVE GP-FINAL 262
264
DRYER AS-REFRIGERANT (IN-LINE) 552
DUCT & CONTROL GP–HEATER, AIR CONDITIONER 527
DUCT GP-CAB AIR 528

E

ELECTRICAL AR 153
ELECTRONICS AR-MACHINE–SOFTWARE 153
ELECTRONICS GP-MONITOR 153
154
ELECTRONICS GP-POWER TRAIN 154
ENGINE AR-COMPLETE 3
ENGINE AR-PRIMARY 4
6

NAME PAGE

F

FAN GP-CIRCULATING–DEFROSTER, FRONT 532
FAN GP-CIRCULATING–DEFROSTER, REAR. . . 529 533
FAN GP-CIRCULATING–FRONT DEFROSTER. 530
FAN GP-SUCTION. 74
FASTENER GP-DAMPER & PULLEY 31
FENDER GP-REAR. 309
FENDER GP–LEFT 308
FENDER GP–RIGHT. 307
FILLER GP-ENGINE OIL 61 62
FILLER GP-POWER TRAIN OIL 259 261
FILM (SUN VISOR). 597
FILM GP. 617 618
FILM GP–ROPS, FOPS 619
FILM-CERTIFICATION (PL641 CELLULAR) 149
FILM-COVER (OPERATOR CONSOLE) 514
FILM-FACE (HEADLIGHTS HIGH, LOW BEAM). 192 194 197
FILM-IDENTIFICATION (140GC) 618
FILM-IDENTIFICATION (AIR CONDITIONER) . . . 537
FILM-IDENTIFICATION (ARTICULATION LOCK) 622 626
FILM-IDENTIFICATION (BELT ROUTING) 12
FILM-IDENTIFICATION (BLADE CENTERSHIFT) 622 626
FILM-IDENTIFICATION (CAT). 523 617 622 626
FILM-IDENTIFICATION (CAT) (LH). 618
FILM-IDENTIFICATION (CAT) (REAR). 618
FILM-IDENTIFICATION (CAT) (RH) 618
FILM-IDENTIFICATION (CIRCUIT BREAKER) . . . 622 626
FILM-IDENTIFICATION (DRAIN, ENGINE COOLANT). 76
FILM-IDENTIFICATION (FAN SPEED, TEMPERATURE) 491 537
FILM-IDENTIFICATION (FUSE/RELAY PANEL). 622 626
FILM-IDENTIFICATION (GREASE POINT) 622 626
FILM-IDENTIFICATION (LABEL) 148
FILM-IDENTIFICATION (LIFT POINT) 622 626
FILM-IDENTIFICATION (OIL GRADE, READ OMM). 622 626
FILM-IDENTIFICATION (PANEL) 622 626
FILM-IDENTIFICATION (POWER RECEPTACLE, 12-VOLT) 548
FILM-IDENTIFICATION (ROUND RED REFLECTIVE) 612
FILM-IDENTIFICATION (SIGHT GAUGE) 622 626
FILM-IDENTIFICATION (WATER SEPARATOR) 622 626
FILM-IDENTIFICATION (WRITE DATA) 226
FILM-INFORMATION (24-VOLT) 622 626
FILM-INFORMATION (BELT ROUTING) 507
FILM-INFORMATION (EXTENDED LIFE COOLANT). 622 626
FILM-INFORMATION (HYDRAULIC ACCUMULATOR) 335 336 350 351 352
FILM-INFORMATION (LIFT EYE, TIE-DOWN LOCATION) 622 626
FILM-INFORMATION (LUBRICATION CHART). 622 626
FILM-INFORMATION (PRODUCT LINK 641 CELLULAR) 149
FILM-INFORMATION (PRODUCT LINK, READ OMM). 622 626
FILM-INFORMATION (TIE-DOWN LOCATION) 622 626
FILM-INSTRUCTION (ENGINE OIL DRAIN). 66
FILM-INSTRUCTION (HYDRAULIC TANK OIL DRAIN) 622 626
FILM-NOTICE (SHIPPING, LIFTING, TIE-DOWN) 622 626
FILM-ROPS 619
FILM-STRIPE (RED) (11-CM EACH) 622 626
FILM-WARNING (COLD START, READ OMM). 626
FILM-WARNING (CRUSH HAZARD, READ OMM, INTL) 626
FILM-WARNING (CRUSH HAZARD, READ OMM, U.S.). 622
FILM-WARNING (CRUSH HAZARD, STAY BACK, INTL) 626
FILM-WARNING (CRUSH HAZARD, STAY BACK, U.S.). 622
FILM-WARNING (DO NOT OPERATE, READ OMM). 622

INDEX

NAME PAGE

FILM-WARNING (DO NOT SPRAY, READ OMM). 621
FILM-WARNING (DO NOT USE ETHER, U. S.). 622
FILM-WARNING (FALLING HAZARD, READ OMM). 622
FILM-WARNING (HIGH PRESSURE CYLINDER) 622
626
FILM-WARNING (HOT FLUID) 622
626
FILM-WARNING (HYDRAULIC STEERING) 622
FILM-WARNING (JUMP START, READ OMM, INTL) 626
FILM-WARNING (JUMP START, READ OMM, U. S.). 622
FILM-WARNING (NO DRILL, WELD, READ OMM). 622
626
FILM-WARNING (NO ETHER SPRAY/AIR INTK, INTL) 626
FILM-WARNING (NO STEP). 626
FILM-WARNING (NO WELD, NO DRILL, READ OMM). 622
626
FILM-WARNING (PRODUCT LINK RADIO, INTL) 626
FILM-WARNING (PRODUCT LINK RADIO, U. S.). 622
FILM-WARNING (ROTATING SHAFT, READ OMM). 622
626
FILM-WARNING (SEAT BELT, INTERNATIONAL) 626
FILM-WARNING (SEAT BELT, U.S.) 622
FILM-WARNING (UNIVERSAL WARNING) 621
FILM-WARNING (UNIVERSAL, READ OMM). . . . 626
FILTER (ETHER) 205
FILTER AS. 282
FILTER AS-WATER SEP & FUEL 103
FILTER ELEMENT AS-AIR (SECONDARY) 86
FILTER ELEMENT AS-CAB AIR 534
FILTER ELEMENT AS-OIL (ADVANCED EFFICIENCY). 420
FILTER ELEMENT-AIR (PRIMARY) 86
FILTER ELEMENT-FUEL 100
FILTER GP-CAB AIR 534
FILTER GP-ENGINE OIL. 64
FILTER GP-FUEL. 100
101
102
FILTER GP-WATER SEP & FUEL 103
FILTER-ENGINE OIL. 64
FLASHER AS (12/24-VOLT) 192
194
197
FLOOR MAT 317
544
FLYWHEEL GP 32
FRAME AR 310

NAME PAGE

FRAME GP-FRONT. 311
312
313
FUSE (10-AMPERE) 222
561
601
FUSE (15-AMPERE) 222
FUSE (15-AMPERE) (HEATER). 541
542
FUSE (20-AMPERE) 222
FUSE (30-AMPERE) 222
FUSE (7.5-AMPERE). 222

G

GASKET-FILTER (ENGINE OIL) 70
GASKET-WATER REGULATOR (TEMPERATURE). 71
GAUGE AS-OIL LEVEL (DIPSTICK). 65
261
GAUGE GP-OIL LEVEL (DIPSTICK) 65
GAUGE-OIL 259
GAUGE-SIGHT 420
GLOW PLUG (24-VOLT) 204
GRILL GP-RADIATOR–REAR. 314
GUARD GP 315
GUARD GP-BOTTOM. 316
GUARD GP-PLATFORM 317

H

HARDWARE GP-MOUNTING 535
536
601
HARNESS AS-CAB 155
HARNESS AS-CONSOLE 156
157
222
HARNESS AS-CONTROL–PRODUCT LINK 158
HARNESS AS-ENGINE 159
HARNESS AS-FRONT 160
HARNESS AS-HEATER & AIR COND 160
161
491
537
HARNESS AS-LIGHTING. 161
163
HARNESS AS-LIGHTING–BEACON 161
HARNESS AS-LIGHTING–HEADLIGHTS. 162
HARNESS AS-LIGHTING–LOW LIGHT BAR 162
HARNESS AS-MONITOR. 163
HARNESS AS-MONITOR–MESSAGE DISPLAY. 163
HARNESS AS-RADIO. 164
HARNESS AS-RADIO (AUXILIARY) 569
HARNESS AS-RADIO (BLUETOOTH) 569
HARNESS AS-REAR. 165
167
168

NAME PAGE

HARNESS AS-REAR LIGHTING 168
HARNESS AS-SENSOR. 169
170
HARNESS AS-SENSOR–BLADE SLOPE 171
HARNESS AS-STARTING AID. 204
HARNESS AS-WIRING. 159
171
233
HEATER GP-CAB 537
541
542
HEATER GP-JACKET WATER. 172
HITCH GP-ARTICULATING. 319
321
HOOD GP 322
323
HOUSING GP-FLYWHEEL 33
HOUSING GP-FRONT 34
36
38
HYDRAULIC AR. 374

I

INDICATOR GP-LEVEL 543
INDICATOR-LEVEL (MACHINE). 543
INJECTOR GP-FUEL 104
105
INSTALLATION AR-ENGINE–WITH AIR COMPRESSOR, WITH HVAC 7
INSTALLATION AR-ENGINE–WITHOUT AIR COMPRESSOR, WITH HVAC 7
INSTALLATION AR-ENGINE–WITHOUT AIR COMPRESSOR, WITHOUT HVAC 8
INSTALLATION GP-CAB 544
INSTALLATION GP-ENGINE. 9
INSTALLATION GP-RADIO 547
INSTALLATION GP-RADIO–CITIZEN BAND. 546

J

JET GP-PISTON COOLING 40

K

KEY 10
125
300
422
575
580
583
616
KEY (BATTERY DISCONNECT) 210

NAME PAGE

L

LADDER GP 327
LAMP (24-VOLT, 0.17-AMPERE). 181
182
492
537
LAMP (24-VOLT, 0.17-AMPERE) (INDICATOR). 226
LAMP (24-VOLT, 21-WATT) 173
181
182
LAMP (24-VOLT, 21-WATT) (SIGNAL) 186
LAMP (24-VOLT, 5-WATT) (FLOODLIGHT) 179
180
LAMP (24-VOLT, 75/70-WATT) 181
182
LAMP (24-VOLT, 75/70-WATT) (HIGH, LOW BEAM). 179
180
LAMP (24-VOLT) (DOME LIGHT) 175
LAMP GP. 173
LAMP GP-DOME 175
LAMP GP-DOME–LED 174
LAMP GP-FLOOD 176
177
178
LAMP GP-FLOOD (24-VOLT, 70-WATT) (FLOODLIGHT, FRONT). 191
LAMP GP-FLOOD (24-VOLT, 70-WATT) (FLOODLIGHTS, RIPPER). 190
LAMP GP-FLOOD (24-VOLT, 70-WATT) (WORK LIGHTS, FRONT). 189
190
LAMP GP-HEAD & SIGNAL. 180
181
182
LAMP GP-HEAD & SIGNAL–RH 179
LAMP GP-SIGNAL. 186
LAMP GP-SIGNAL (24-VOLT, LED) (STOP, TAIL, TURN). 229
230
LAMP GP-SIGNAL (24-VOLT, STOP, TAIL). 196
LAMP GP-SIGNAL (24-VOLT) (REVERSE) 229
230
237
LAMP GP-SIGNAL (24-VOLT) (STOP, TAIL LIGHTS) 237
LAMP GP-SIGNAL–LED. 184
185
LAMP GP-SIGNAL–STOP, TAIL. 183
LAMP GP-WARNING BEACON 187
LAMP GP-WARNING BEACON (12/24-VOLT, LED STROBE) 199
LAMP-HALOGEN (24-VOLT, 70-WATT). 176
177
178
LAMP-TURN SIGNAL (24-VOLT, 21-WATT) (TURN SIGNAL) 179
180
LIFT GP-BLADE. 609

INDEX

NAME PAGE

LIFTING GP-ENGINE 41
LIGHTING AR-FLOOD & SIGNAL–HIGH BAR. . . 188
LIGHTING AR-FLOOD & SIGNAL–LOW BAR . . . 188
LIGHTING AR-ROADING–LOW BAR 188
LIGHTING GP-FLOOD 190
LIGHTING GP-FLOOD & SIGNAL. 196
LIGHTING GP-FLOOD & SIGNAL–HIGH BAR . . 192
LIGHTING GP-FLOOD & SIGNAL–LOW BAR . . . 194
LIGHTING GP-FLOOD–CAB WORK LIGHTS. . . . 191
LIGHTING GP-FLOOD–HEEL, TOE 189
LIGHTING GP-ROADING–LOW BAR 197
LIGHTING GP-WARNING BEACON 199
LINER GP-CAB–COMPARTMENT 548
LINES GP-ACCUMULATOR 375
LINES GP-AIR COMPRESSOR 42
LINES GP-AIR CONDITIONER 552
LINES GP-AIR TANK 338
LINES GP-AIR–ATAAC. 91
LINES GP-ENGINE OIL DRAIN. 66
LINES GP-FUEL. 106
107
108
109
110
112
114
LINES GP-FUEL FILTER. 116
118
LINES GP-FUEL INJECTION 38
120
121
LINES GP-GREASE 328
LINES GP-HEATER. 554
LINES GP-HEATER–AUXILIARY HEATER 555
LINES GP-HYDRAULIC 377
382
384
386
388
390
LINES GP-HYDRAULIC FAN 391
393
LINES GP-HYDRAULIC–3 CIRCUITS. 379
LINES GP-IMPLEMENT 396
LINES GP-PUMP 398
LINES GP-RIPPER 403
LINES GP-SECONDARY STEERING 405
LINES GP-SERVICE BRAKE 341
LINES GP-STEERING. 407
LINES GP-TRANSMISSION OIL 266
LINES GP-TURBOCHARGER AIR 92
LINES GP-WATER. 76
LINK GP-STEERING 329
LINKAGE GP-IMPLEMENT 607
LOCK AR-CENTERSHIFT–HYDRAULIC FAN OIL 409
LOCK AR-CENTERSHIFT–PTO OIL 409
LOCK GP-CENTERSHIFT 410
411
LOUVER GP-CAB 556

NAME PAGE

M

MANIFOLD GP-CONTROL 413
414
MANIFOLD GP-EXHAUST. 93
MANIFOLD GP-INLET. 94
MIRROR GP-REAR VIEW. 557
558
562
MIRROR GP-REAR VIEW–DUAL INSIDE. 561
MIRROR GP-REAR VIEW–DUAL, INTERIOR . . . 563
MIRROR GP-REAR VIEW–EXTERIOR, LH 560
MIRROR GP-REAR VIEW–EXTERIOR, RH 559
MODULE GP-DISPLAY–CAMERA, REAR 564
MOTOR GP-ELECTRIC–CIRCULATING FAN. . . . 200
MOTOR GP-GEAR 415
MOTOR GP-WINDOW WIPER. 565
MOTOR GP-WINDOW WIPER (24-VOLT, 2-SPEED). 599
MOTOR GP-WINDOW WIPER (24-VOLT) (FRONT) 599
MOUNTING GP-ACCESSORY MODULE. 43
MOUNTING GP-CAB–ENCLOSED, NON-ROPS 566
MOUNTING GP-ELECTRONIC CONTROL 201
MOUNTING GP-ENGINE 44
MOUNTING GP-ROPS 567

O

OPTION AR-WORK TOOL–FRONT 2
ORIFICE AS-AIR CONDITIONER 552

P

PADLOCK GP. 125
300
422
575
580
583
616
PAN GP-OIL 23
45
PARTS GP-MISCELLANEOUS 620
PISTON & ROD GP 46
48
50
PISTON GP. 46
48
50
52
PLATE & FILM GP 621
PLATE & FILM GP–INTERNATIONAL 626
PLATE & FILM GP–U.S. 622
PLATE GP-COVER 38
PLUG GP. 95
PLUG GP-CONNECTOR (64-PIN). 159
PLUG GP-CYLINDER BLOCK 54

NAME PAGE

PLUG GP-ENGINE 55
PLUG-MAGNETIC (DIFFERENTIAL) 254
PLUG-MAGNETIC (DRAIN, HYDRAULIC OIL) . . . 278
PLUG-MAGNETIC (OIL DRAIN) 279
280
POWER TRAIN AR 268
PULLEY GP-CRANKSHAFT 56
PUMP & MTG GP-STEERING 416
PUMP GP-ENGINE OIL 68
PUMP GP-FUEL INJECTION 122
123
PUMP GP-GEAR 416
PUMP GP-METERING (HMU) 519
PUMP GP-PISTON 417
PUMP GP-WATER 78

R

RADIATOR & MOUNTING GP 79
RADIATOR & OIL COOLER GP 81
RADIO GP (AM/FM/USB/BLUETOOTH) 569
RADIO GP–AUX/USB/BLUETOOTH 569
RAIL GP-FUEL 124
REGULATOR AS-WATER TEMPERATURE (INCLUDES CONNECTOR) 71
RELAY AS (24-VOLT) 232
RELAY AS (24-VOLT) (BACKUP ALARM) 222
RELAY AS (24-VOLT) (FLOODLIGHTS, RIPPER) 190
191
RELAY AS (24-VOLT) (FORWARD HORN) 222
RELAY AS (24-VOLT) (POSITION LAMP, LH) 222
RELAY AS (24-VOLT) (POSITION LAMP, RH) 222
RELAY AS (24-VOLT) (SUPPRESSION) 192
194
197
RELAY AS (24-VOLT) (WORK LIGHTS, FRONT) 191
RELAY AS (24-VOLT) (WORK LIGHTS) 189
190
RIM GP-DEMOUNTABLE 269
270
271
RIPPER AR 611
RIPPER GP 612
ROCKER ARM GP 57
59
60
ROPS AR 570
ROPS GP 571

S

SCREEN AS 573
SCREEN GP-SUN–REAR 573
SEAL GP-DUO-CONE 247
292
294
SEAL-INTEGRAL 430
431
432
433
SEAT BELT GP (ADJUSTABLE, 3-IN) 575
SEAT BELT GP (RETRACTABLE) 580
583
SEAT BELT GP–RETRACTABLE 574
SEAT GP 576
SEAT GP-STATIC 579
580
581
SEAT GP-SUSPENSION 583
585
586
SEAT GP-SUSPENSION–CLOTH 584
SEAT GP–VINYL 575
577
SENDER AS-FUEL LEVEL 242
SENSOR (FUEL RAIL PRESSURE) 124
SENSOR AS-POSITION (INERTIAL MEASUREMENT UNIT) (BLADE ANGLE) 231
SENSOR AS-TEMPERATURE (2-PIN) 232
SENSOR AS-TEMPERATURE (2-PIN) (TRANSMISSION OIL) 254
SENSOR GP-ENGINE 4
6
202
SENSOR GP-LIQUID LEVEL 103
SENSOR GP-POSITION 203
SENSOR GP-POSITION (ROTARY) 98
232
SENSOR GP-PRESSURE 232
SENSOR GP-PRESSURE (ENGINE OIL) 202
SENSOR GP-PRESSURE (FUEL) 242
SENSOR GP-PRESSURE (HYDRAULIC) 352
SENSOR GP-PRESSURE (HYDRAULIC) (ACCUMULATOR) 351
SENSOR GP-PRESSURE (INLET MANIFOLD AIR) 202
SENSOR GP-SPEED 233
SENSOR GP-SPEED (ENGINE) 202
SENSOR-INDUCTIVE 282
SENSOR-PRESSURE (EJECTOR) 222
240
SENSOR-PRESSURE (EJECTOR) (BRAKE PUMP) 238
SENSOR-PRESSURE (EJECTOR) (STEERING ACCUMULATOR) 238
SENSOR-TEMPERATURE (2-PIN) (AIR INLET MANIFOLD) 202
SENSOR-TEMPERATURE (2-PIN) (COOLANT) 202
SENSOR-TEMPERATURE (2-PIN) (FUEL) 242
SHAFT GP-DRIVE 272
274
SHIM GP 275

INDEX

NAME	PAGE
SLIP JOINT GP	276, 277
SOFTWARE GP-MONITOR	153, 154
SOFTWARE GP-MONITOR (CELLULAR)	149
SOFTWARE GP-MONITOR (INSTRUMENT PANEL)	153, 523
SOFTWARE GP-MONITOR (SATELLITE RADIO)	150, 154
SOFTWARE GP-POWER TRAIN	154
SOLENOID	94
SOLENOID AS	282
STARTING AID GP	204
STARTING AID GP-ETHER	205
STARTING MOTOR GP-ELECTRIC	207
STEERING AR-SECONDARY	419
STEP GP	330, 331
STRAINER	420
STRAINER-FUEL (FUEL TANK)	126
SUPPORT GP-BATTERY	130, 332
SUPPORT GP-LIGHT	208, 209
SUPPORT GP-LINES	116, 118
SUPPORT GP-RADIATOR	333
SUPPORT GP-SEAT	587, 588
SUSPENSION GP-SEAT–ADJUSTABLE	589
SWITCH AS-BALL (CENTERSHIFT INDICATOR)	211
SWITCH AS-LIMIT (BRAKE PEDAL)	222
SWITCH AS-PRESSURE (A/C COMPRESSOR CLUTCH) (REFRIGERANT, LOW SIDE)	552
SWITCH AS-PRESSURE (HIGH, LOW) (REFRIGERANT)	552
SWITCH AS-ROCKER (24-VOLT)	237
SWITCH AS-ROCKER (24-VOLT) (BLADE CUSHION)	216, 375
SWITCH AS-ROCKER (24-VOLT) (CIRCULATING FAN)	532, 533
SWITCH AS-ROCKER (24-VOLT) (ECONOMY MODE)	226
SWITCH AS-ROCKER (24-VOLT) (FLOODLIGHT)	189, 190, 191
SWITCH AS-ROCKER (24-VOLT) (HAZARD WARNING LIGHTS)	192, 194, 197
SWITCH AS-ROCKER (24-VOLT) (HEADLIGHTS, TAIL LIGHTS)	192, 194, 197
SWITCH AS-ROCKER (24-VOLT) (PARKING BRAKE)	226
SWITCH AS-ROCKER (24-VOLT) (PIN PULLER)	211
SWITCH AS-ROCKER (24-VOLT) (SPEED CONTROL)	226
SWITCH AS-ROCKER (24-VOLT) (THROTTLE LOCK)	226
SWITCH AS-ROCKER (WARNING BEACON)	199
SWITCH AS-ROTARY (FAN SPEED)	492, 538
SWITCH AS-ROTARY (HIGH, LOW BEAM)	192, 194, 197
SWITCH AS-START (KEY)	226
SWITCH AS-TURN SIGNAL	192, 194, 197
SWITCH GP-DISCONNECT–BATTERY	210
SWITCH GP-ROCKER	211
SWITCH GP-TOGGLE	232
SWITCH GP-WIPER	214
SWITCH GP-WIPER (24-VOLT)	214
SWITCH GP-WIPER (24-VOLT) (REAR)	601
SWITCH GP-WIPER–CAB	213
SWITCH-TEMPERATURE	491
SWIVEL GP	380

T

NAME	PAGE
TANDEM & COVER GP	278, 279, 280
TANK & MTG GP-FUEL	125
TANK GP-COOLANT	83
TANK GP-EXPANSION–COOLANT	85
TANK GP-FUEL	126
TANK GP-HYDRAULIC	420, 422
TANK GP-WINDOW WASHER	591
TIE ROD GP	359
TIE ROD GP (LH THREAD, RH)	329
TIE ROD GP (RH THREAD, LH)	329
TOOTH GP-RIPPER–STRAIGHT	614
TOOTH GP-SCARIFIER	615
TRANSMISSION AR	281
TRANSMISSION GP	282
TURBOCHARGER GP	96

V

NAME	PAGE
VALVE & LINKAGE GP–DOZER, PLOW, RIPPER	427
VALVE & LINKAGE GP–RIPPER	423, 425
VALVE & MOUNTING GP	429
VALVE AS-PRESSURE RELIEF	508
VALVE GP-ACCUMULATOR CHARGING	351, 352

INDEX

NAME PAGE

VALVE GP-ACCUMULATOR CHARGING (HYDRAULIC ACCUMULATOR) 350
VALVE GP-BANK 4–LH 431
VALVE GP-BANK 4–RH 430
VALVE GP-BANK 5–LH 432
VALVE GP-BANK 5–RH 433
VALVE GP-BRAKE CONTROL 337
VALVE GP-CHARGING 429
VALVE GP-CHECK 393
405
438
440
448
450
452
454
456
460
462
VALVE GP-COMBINATION 434
VALVE GP-CONTROL 438
446
VALVE GP-CONTROL (PUMP) 417
VALVE GP-CONTROL–ARTICULATION 448
VALVE GP-CONTROL–BLADE LIFT 454
VALVE GP-CONTROL–BLADE LIFT 462
VALVE GP-CONTROL–BLADE TIP 456
VALVE GP-CONTROL–BULLDOZER LIFT, PLOW 440
VALVE GP-CONTROL–CENTERSHIFT 450
VALVE GP-CONTROL–CIRCLE DRIVE 458
VALVE GP-CONTROL–DOZER, PLOW, RIPPER 444
VALVE GP-CONTROL–RIPPER 442
VALVE GP-CONTROL–SIDESHIFT 460
VALVE GP-CONTROL–WHEEL LEAN 452
VALVE GP-FLUID SAMPLING 69
VALVE GP-PRESSURE REDUCING 382
464
465
VALVE GP-PURGE 466
VALVE GP-RELIEF 467
468
469
470
471
472
473
474
VALVE GP-SHUTTLE 475
VALVE GP-SOLENOID 476
477
VALVE GP-SOLENOID (24-VOLT) (BLADE CUSHION) 413
VALVE GP-SOLENOID (24-VOLT) (PARKING BRAKE) 414
VALVE GP-SOLENOID (CENTERSHIFT LOCK) 410
VALVE GP-SOLENOID (HYDRAULIC FAN MOTOR) 393
VALVE GP-SOLENOID (HYDRAULIC FAN) 393
VALVE GP-TIRE 290
291
VALVE-AIR RELIEF 338

W

WALKWAY GP 334
WASHER GP-WINDOW–FRONT 592
594
WASHER GP-WINDOW–REAR 596
WHEEL & TIRE AR 283
284
WHEEL & TIRE GP 284
285
WHEEL AR 285
286
WHEEL GP 287
288
289
290
291
296
297
298
299
WHEEL GP–TANDEM 292
294
WINDOW GP-CAB 597
WIPER & WASHER GP-WINDOW 598
WIPER GP-WINDOW 602
WIPER GP-WINDOW–FRONT 600
WIPER GP-WINDOW–FRONT–HIGH PROFILE 599
WIPER GP-WINDOW–REAR 601
WIRING GP-AIR CONDITIONER 215
WIRING GP-BLADE CUSHION 216
WIRING GP-CAB 217
WIRING GP-CAMERA 219
WIRING GP-CHASSIS 221
WIRING GP-CONSOLE–SHIFT 226
WIRING GP-CONSOLE–STEERING 222
WIRING GP-ENGINE 228
WIRING GP-FRONT LIGHTING 229
230
WIRING GP-GRADE CONTROL–BLADE SLOPE 231
WIRING GP-REAR 232
WIRING GP-REAR LIGHTING 237
WIRING GP-SECONDARY STEERING 238
WIRING GP-SENSOR 240
242

MEMORANDA

MACHINE ARRANGEMENT

537-1860 CHASSIS AR—LIGHT FABS

S/N: W921-UP

PART OF 525-9809 COMMON AR

SMCS-7000 **i07591100**

NOTE	PART NUMBER	QTY	PART NAME 1 2 3 4 5 6 (PRODUCT LEVEL)	SEE PAGE
Y	*536-0440*	1	BOX GP-BATTERY	300
Y	*539-5000*	1	HOOD GP	322
Y	*537-1820*	1	LADDER GP	327
Y	*536-7800*	1	TANK & MTG GP-FUEL	125
Y	*536-7743*	1	TANK GP-HYDRAULIC	422

Y - SEPARATE ILLUSTRATION

<END>

537-5645 COLD WEATHER AR

S/N: W921-UP

SMCS-7000 **i07552490**

NOTE	PART NUMBER	QTY	PART NAME 1 2 3 4 5 6 (PRODUCT LEVEL)	SEE PAGE
Y	*533-6221*	1	BATTERY & WIRING GP	130

Y - SEPARATE ILLUSTRATION

<END>

537-5646 COLD WEATHER AR

S/N: W921-UP

SMCS-7000 **i07552466**

NOTE	PART NUMBER	QTY	PART NAME 1 2 3 4 5 6 (PRODUCT LEVEL)	SEE PAGE
Y	*533-6222*	1	BATTERY & WIRING GP (HEAVY DUTY)	133
Y	*527-9474*	1	STARTING AID GP-ETHER	205

Y - SEPARATE ILLUSTRATION

<END>

537-5647 COLD WEATHER AR

S/N: W921-UP

SMCS-7000 **i07552448**

NOTE	PART NUMBER	QTY	PART NAME 1 2 3 4 5 6 (PRODUCT LEVEL)	SEE PAGE
Y	*533-6222*	1	BATTERY & WIRING GP (HEAVY DUTY)	133
Y	*267-0339*	1	HEATER GP-JACKET WATER	172
Y	*527-9474*	1	STARTING AID GP-ETHER	205

Y - SEPARATE ILLUSTRATION

<END>

525-9809 COMMON AR

S/N: W921-UP

SMCS-7000 **i07538454**

NOTE	PART NUMBER	QTY	PART NAME 1 2 3 4 5 6 (PRODUCT LEVEL)	SEE PAGE
Y	*526-2236*	1	CAB AR	498
Y	*533-4440*	1	COOLING AR	73
Y	*533-6200*	1	ELECTRICAL AR	153
Y	*568-0929*	1	ELECTRONICS AR-MACHINE (SOFTWARE)	153
Y	*525-9812*	1	FILM GP	618
Y	*529-7999*	1	FRAME AR	310
Y	*535-7143*	1	HYDRAULIC AR	374
Y	*535-7200*	1	HYDRAULIC AR	374
Y	*534-6698*	1	POWER TRAIN AR	268
Y	*537-1860*	1	CHASSIS AR	1
Y	*533-4647*	1	TRANSMISSION AR	281

Y - SEPARATE ILLUSTRATION

<END>

537-5608 OPTION AR-WORK TOOL—FRONT

S/N: W921-UP

SMCS-6700, 7000 **i07558758**

NOTE	PART NUMBER	QTY	PART NAME 1 2 3 4 5 6 (PRODUCT LEVEL)	SEE PAGE
Y	*527-0177*	1	BLADE GP-STRAIGHT	607
Y	*535-7196*	1	LINES GP-HYDRAULIC	390

Y - SEPARATE ILLUSTRATION

<END>

539-8166 ENGINE AR-COMPLETE

S/N: E7A1-UP

PART OF 527-9462, 527-9464 INSTALLATION AR-ENGINE

SMCS-1000 **i07576965**

NOTE	PART NUMBER	QTY	PART NAME 1 2 3 4 5 6 (PRODUCT LEVEL)	SEE PAGE
Y	*451-8385*	1	CYLINDER BLOCK GP-SHORT	24
Y	*452-6582*	1	CYLINDER HEAD GP (SHORT)	27
Y	*533-1826*	1	ENGINE AR-PRIMARY	4

Y - SEPARATE ILLUSTRATION

<END>

539-8217 ENGINE AR-COMPLETE

S/N: E7A1-UP

PART OF 527-9463 INSTALLATION AR-ENGINE

SMCS-1000 **i07577040**

NOTE	PART NUMBER	QTY	PART NAME 1 2 3 4 5 6 (PRODUCT LEVEL)	SEE PAGE
Y	*451-8385*	1	CYLINDER BLOCK GP-SHORT	24
Y	*452-6582*	1	CYLINDER HEAD GP (SHORT)	27
Y	*533-1840*	1	ENGINE AR-PRIMARY	6

Y - SEPARATE ILLUSTRATION

<END>

533-1826 ENGINE AR-PRIMARY

S/N: E7A1-UP

151 BRAKE KW (202 BHP) AT 2200 RPM

OPTIONAL FIELD REPLACEMENT ORDER 451-1222—PAGE: 23, 452-6584—PAGE: 28

PART OF 539-8166 ENGINE AR-COMPLETE

SMCS-1000 **i07577045**

NOTE	PART NUMBER	QTY	PART NAME 1 2 3 4 5 6 (PRODUCT LEVEL)	SEE PAGE
Y	*385-8001*	1	ALTERNATOR GP-CHARGING	129
Y	*346-0099*	1	BASE GP-OIL COOLER & FILTER	70
Y	*391-9609*	1	BELT TENSIONER GP	11
Y	*392-0634*	1	BRACKET GP-MOUNTING	13
Y	*396-2615*	1	CAMSHAFT GP	14
Y	*373-3607*	1	CONNECTION GP-WATER	71
Y	*495-3105*	1	CONTROL & MTG GP-ELECTRONIC	141
Y	*389-3346*	1	COVER GP-VALVE MECHANISM	16
Y	*371-2477*	1	CRANKSHAFT GP	17
Y	*390-0854*	1	CYLINDER BLOCK GP	22
Y	*385-2572*	1	CYLINDER HEAD GP	26
Y	*379-0965*	1	DRIVE GP-FAN	30
Y	*375-0098*	1	FASTENER GP-DAMPER & PULLEY	31
Y	*346-0009*	1	FILLER GP-ENGINE OIL	61
Y	*415-5625*	1	FILM GP	617
Y	*346-0220*	1	FILTER GP-ENGINE OIL	64
Y	*453-7163*	1	FILTER GP-FUEL	102
Y	*384-1176*	1	FLYWHEEL GP	32
Y	*505-5248*	1	GAUGE GP-OIL LEVEL (DIPSTICK)	65
Y	*416-1868*	1	HOUSING GP-FLYWHEEL	33
Y	*371-2716*	1	HOUSING GP-FRONT	34
Y	*371-2483*	1	INJECTOR GP-FUEL	104
Y	*371-2478*	1	JET GP-PISTON COOLING	40
Y	*371-2740*	1	LIFTING GP-ENGINE	41
Y	*426-3312*	1	LINES GP-FUEL FILTER	116
Y	*416-7808*	1	MANIFOLD GP-EXHAUST	93
Y	*391-5523*	1	MANIFOLD GP-INLET	94
Y	*395-0112*	1	MOUNTING GP-ELECTRONIC CONTROL	201
Y	*378-0595*	1	PAN GP-OIL	45
Y	*374-6301*	1	PISTON & ROD GP	50
Y	*378-8167*	1	PLATE & FILM GP	621
Y	*374-9295*	1	PLUG GP-CYLINDER BLOCK	54
Y	*346-2908*	1	PLUG GP-ENGINE	55
Y	*371-2555*	1	PULLEY GP-CRANKSHAFT	56
Y	*462-6685*	1	PUMP GP-ENGINE OIL	68
Y	*391-4811*	1	PUMP GP-FUEL INJECTION	123
Y	*372-2297*	1	PUMP GP-WATER	78
Y	*394-9639*	1	RAIL GP-FUEL	124
Y	*371-2480*	1	ROCKER ARM GP	59
Y	*395-0110*	1	SENSOR GP-ENGINE	202
Y	*395-0114*	1	STARTING AID GP	204
Y	*448-9771*	1	TURBOCHARGER GP	96
Y	*371-2745*	1	VALVE GP-FLUID SAMPLING	69
Y	*395-0113*	1	WIRING GP-ENGINE	228
	533-1319	1	ELECTRONICS GP-ENGINE	
	376-6464	1	PLATE GP (SERIAL NUMBER)	

533-1826 **ENGINE AR-PRIMARY (**contd.**)** **i07577045**

NOTE	PART NUMBER	QTY	PART NAME 1 2 3 4 5 6 (PRODUCT LEVEL)	SEE PAGE
Y - SEPARATE ILLUSTRATION				

<END>

533-1840 ENGINE AR-PRIMARY

S/N: E7A1-UP

151 BRAKE KW (202 BHP) AT 2200 RPM

OPTIONAL FIELD REPLACEMENT ORDER 451-1222—PAGE: 23, 452-6584—PAGE: 28

PART OF 539-8217 ENGINE AR-COMPLETE

SMCS-1000 **i07577044**

NOTE	PART NUMBER	QTY	PART NAME 1 2 3 4 5 6 (PRODUCT LEVEL)	SEE PAGE
Y	*385-8001*	1	ALTERNATOR GP-CHARGING	129
Y	*346-0099*	1	BASE GP-OIL COOLER & FILTER	70
Y	*391-9609*	1	BELT TENSIONER GP	11
Y	*392-0634*	1	BRACKET GP-MOUNTING	13
Y	*396-2615*	1	CAMSHAFT GP	14
Y	*373-3607*	1	CONNECTION GP-WATER	71
Y	*495-3105*	1	CONTROL & MTG GP-ELECTRONIC	141
Y	*389-3346*	1	COVER GP-VALVE MECHANISM	16
Y	*371-2477*	1	CRANKSHAFT GP	17
Y	*390-0854*	1	CYLINDER BLOCK GP	22
Y	*385-2572*	1	CYLINDER HEAD GP	26
Y	*379-0965*	1	DRIVE GP-FAN	30
Y	*375-0098*	1	FASTENER GP-DAMPER & PULLEY	31
Y	*503-8929*	1	FILLER GP-ENGINE OIL	62
Y	*415-5625*	1	FILM GP	617
Y	*346-0220*	1	FILTER GP-ENGINE OIL	64
Y	*453-7163*	1	FILTER GP-FUEL	102
Y	*384-1176*	1	FLYWHEEL GP	32
Y	*505-5248*	1	GAUGE GP-OIL LEVEL (DIPSTICK)	65
Y	*416-1868*	1	HOUSING GP-FLYWHEEL	33
Y	*448-9719*	1	HOUSING GP-FRONT	36
Y	*503-8948*	1	HOUSING GP-FRONT	38
Y	*371-2483*	1	INJECTOR GP-FUEL	104
Y	*371-2478*	1	JET GP-PISTON COOLING	40
Y	*371-2740*	1	LIFTING GP-ENGINE	41
Y	*487-0123*	1	LINES GP-FUEL FILTER	118
Y	*416-7808*	1	MANIFOLD GP-EXHAUST	93
Y	*391-5523*	1	MANIFOLD GP-INLET	94
Y	*448-9710*	1	MOUNTING GP-ACCESSORY MODULE	43
Y	*395-0112*	1	MOUNTING GP-ELECTRONIC CONTROL	201
Y	*378-0595*	1	PAN GP-OIL	45
Y	*374-6301*	1	PISTON & ROD GP	50
Y	*378-8167*	1	PLATE & FILM GP	621
Y	*371-2555*	1	PULLEY GP-CRANKSHAFT	56
Y	*462-6685*	1	PUMP GP-ENGINE OIL	68
Y	*391-4811*	1	PUMP GP-FUEL INJECTION	123
Y	*372-2297*	1	PUMP GP-WATER	78
Y	*394-9639*	1	RAIL GP-FUEL	124
Y	*371-2480*	1	ROCKER ARM GP	59
Y	*395-0110*	1	SENSOR GP-ENGINE	202
Y	*395-0114*	1	STARTING AID GP	204
Y	*448-9771*	1	TURBOCHARGER GP	96
Y	*371-2745*	1	VALVE GP-FLUID SAMPLING	69
Y	*395-0113*	1	WIRING GP-ENGINE	228
	533-1319	1	ELECTRONICS GP-ENGINE	
	376-6464	1	PLATE GP (SERIAL NUMBER)	

533-1840 **ENGINE AR-PRIMARY (**contd.**)** **i07577044**

NOTE	PART NUMBER	QTY	PART NAME 1 2 3 4 5 6 (PRODUCT LEVEL)	SEE PAGE
Y - SEPARATE ILLUSTRATION				

<END>

527-9462 INSTALLATION AR-ENGINE—WITHOUT AIR COMPRESSOR, WITH HVAC

S/N: W921-UP

SMCS-1000 **i07619221**

NOTE	PART NUMBER	QTY	PART NAME 1 2 3 4 5 6 (PRODUCT LEVEL)	SEE PAGE
Y	*527-9471*	1	AIR CLEANER GP	89
Y	*527-9477*	1	AIR CLEANER GP	90
Y	*539-8166*	1	ENGINE AR-COMPLETE	3
Y	*527-9470*	1	INSTALLATION GP-ENGINE	9
Y	*527-9472*	1	LINES GP-ENGINE OIL DRAIN	66
Y	*527-9469*	1	LINES GP-FUEL	112
Y	*527-9475*	1	LINES GP-FUEL	114
Y	*527-9488*	1	MOUNTING GP-ENGINE	44
Y - SEPARATE ILLUSTRATION				

<END>

527-9463 INSTALLATION AR-ENGINE—WITH AIR COMPRESSOR, WITH HVAC

S/N: W921-UP

SMCS-1000 **i07619244**

NOTE	PART NUMBER	QTY	PART NAME 1 2 3 4 5 6 (PRODUCT LEVEL)	SEE PAGE
Y	*527-9467*	1	AIR CLEANER GP	87
Y	*527-9471*	1	AIR CLEANER GP	89
Y	*539-8217*	1	ENGINE AR-COMPLETE	3
Y	*527-9470*	1	INSTALLATION GP-ENGINE	9
Y	*527-9468*	1	LINES GP-AIR COMPRESSOR	42
Y	*535-7147*	1	LINES GP-AIR TANK	338
Y	*527-9472*	1	LINES GP-ENGINE OIL DRAIN	66
Y	*527-9466*	1	LINES GP-FUEL	110
Y	*527-9469*	1	LINES GP-FUEL	112
Y	*527-9488*	1	MOUNTING GP-ENGINE	44
Y - SEPARATE ILLUSTRATION				

<END>

527-9464 INSTALLATION AR-ENGINE—WITHOUT AIR COMPRESSOR, WITHOUT HVAC

S/N: W921-UP

SMCS-1000 **i07619229**

NOTE	PART NUMBER	QTY	PART NAME 1 2 3 4 5 6 (PRODUCT LEVEL)	SEE PAGE
Y	*527-9471*	1	AIR CLEANER GP	89
Y	*527-9477*	1	AIR CLEANER GP	90
Y	*539-8166*	1	ENGINE AR-COMPLETE	3
Y	*527-9470*	1	INSTALLATION GP-ENGINE	9
Y	*527-9472*	1	LINES GP-ENGINE OIL DRAIN	66
Y	*527-9469*	1	LINES GP-FUEL	112
Y	*527-9475*	1	LINES GP-FUEL	114
Y	*527-9488*	1	MOUNTING GP-ENGINE	44
Y	*521-1264*	1	PLUG GP	95

Y - SEPARATE ILLUSTRATION

<END>

527-9470 INSTALLATION GP-ENGINE

S/N: W921-UP

PART OF 527-9462, 527-9463, 527-9464 INSTALLATION AR-ENGINE

SMCS-1000 **i07581858**

NOTE	REF NO	GRAPHIC REF	PART NUMBER	QTY	PART NAME 1 2 3 4 5 6 (PRODUCT LEVEL)	SEE PAGE
M	1	1	**521-2260**	6	BOLT (M10X1.5X30-MM)	
M	2	1	**524-3271**	2	BOLT (M10X1.5X25-MM)	
M	3	1	**6I-0364**	3	STUD (M10X1.5X45-MM)	
	4	1	**7C-1243**	1	RING	
	5	1	**355-0447**	1	MUFFLER AS	
	6	1	**464-2945**	1	BRACKET	
	8	1	**518-4417**	4	WASHER	
	9	1	*520-6290*	1	BRACKET AS	
M		1	**8T-3490**	4	NUT-WELD (M10X1.5-THD)	
		1	**118-9901**	4	SPACER (12X20X10-MM THK)	
	10	1	**521-1363**	6	WASHER (10.5X30X2.5-MM THK)	
	11	1	**521-2261**	5	BOLT-HEAD (M10X1.5X35-MM)	
	12	1	**539-1089**	1	EJECTOR (EXHAUST)	
	13	1	**539-1096**	3	NUT	
	14	1	**198-4777**	3	WASHER-HARD (11X25X10-MM THK)	
	15	1	**388-7012**	1	CLAMP-BENT BOLT	
	16	1	**446-6982**	1	TUBE	

M - METRIC PART

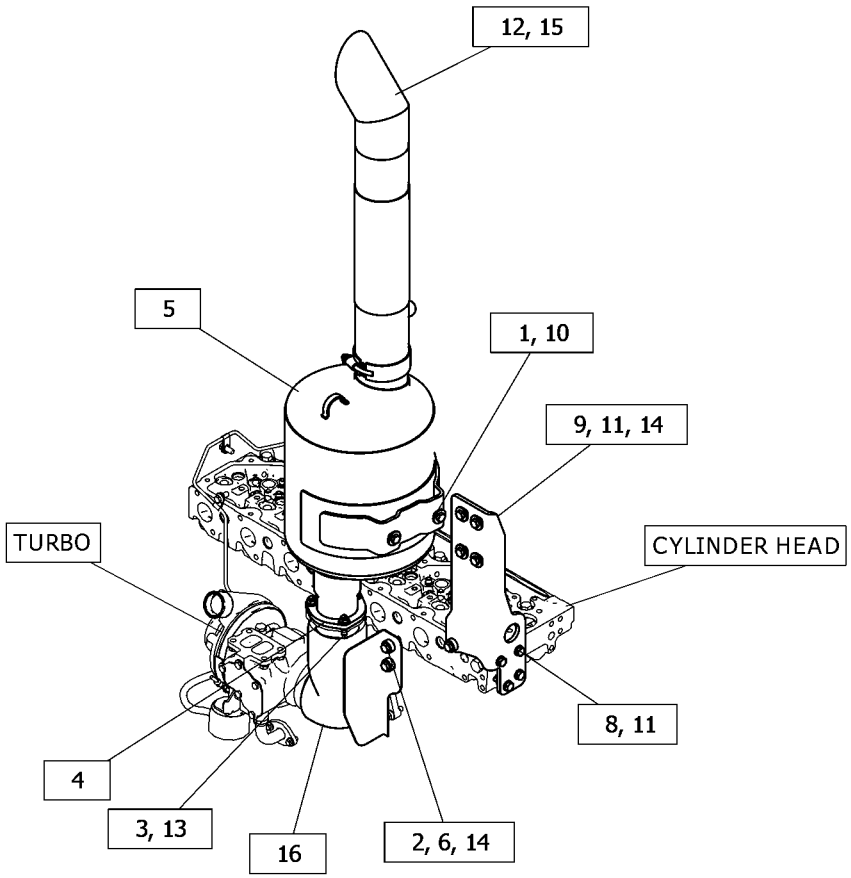

GRAPHIC #1 <END> g06376381

293-1877 ADAPTER GP-AIR COMPRESSOR

S/N: E7A1-UP

PART OF 503-8948 HOUSING GP-FRONT

SMCS-1803 **i07577590**

NOTE	REF NO	GRAPHIC REF	PART NUMBER	QTY	PART NAME 1 2 3 4 5 6 (PRODUCT LEVEL)	SEE PAGE
M	1	1	**6I-0254**	4	BOLT (M8X1.25X30-MM)	
	2	1	**7W-2562**	1	RING-SNAP	
	3	1	**6D-0044**	2	DOWEL	
	4	1	**067-6344**	2	KEY	
	5	1	**113-4598**	2	NUT	
	6	1	**113-4604**	1	GASKET	
	7	1	**126-3216**	2	STUD	
	8	1	**224-6635**	1	BUSHING	
	9	1	**302-4332**	1	HOUSING	
					PARTS SHOWN IN GRAPHIC(S) WITHOUT A REFERENCE NUMBER ARE NOT SERVICED SEPARATELY	

M - METRIC PART

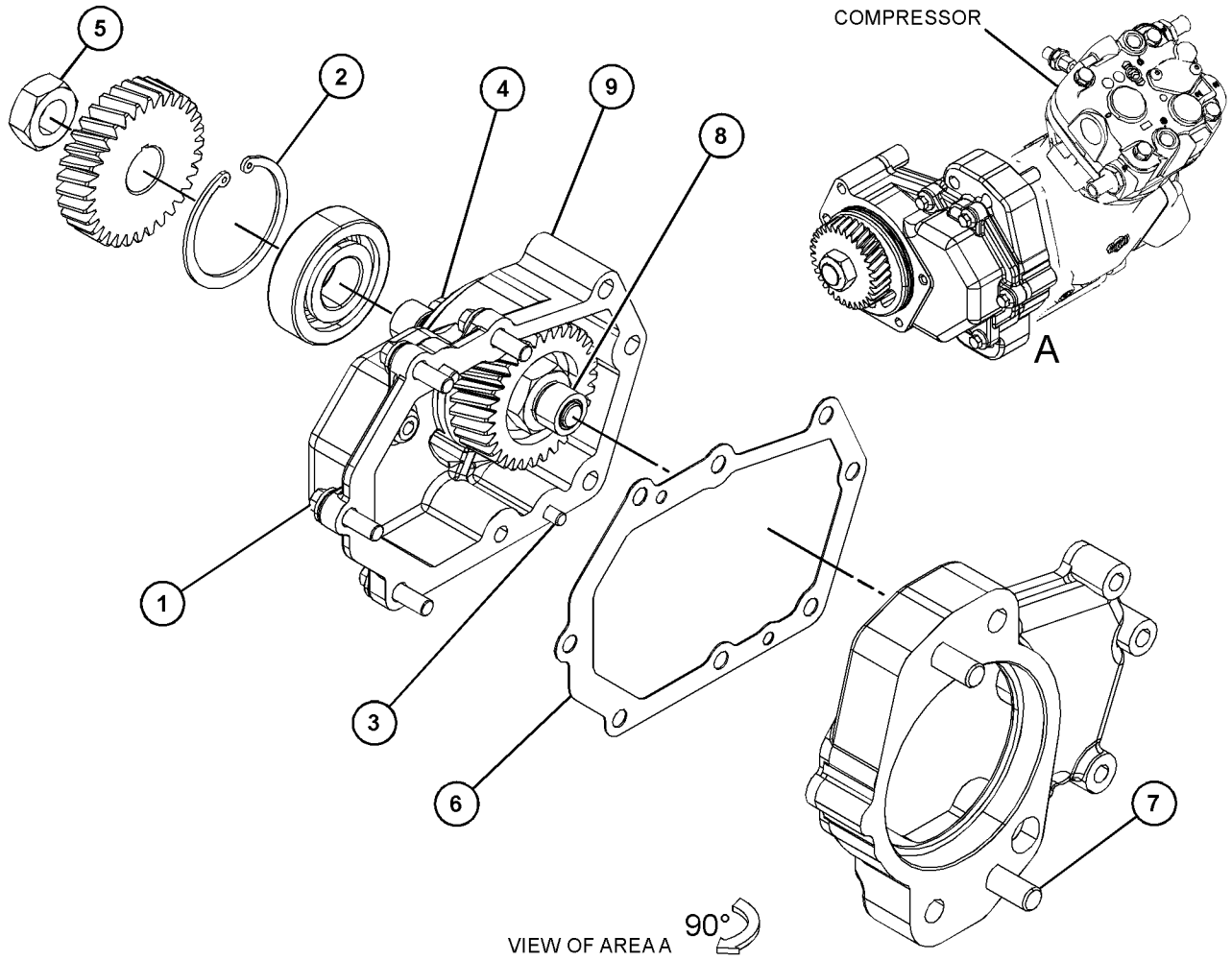

GRAPHIC #1

<END>

g06194937

391-9609 BELT TENSIONER GP

S/N: E7A1-UP

PART OF 533-1826, 533-1840 ENGINE AR-PRIMARY

SMCS-1357, 1358, 1397

i07577099

NOTE	REF NO	GRAPHIC REF	PART NUMBER	QTY	PART NAME 1 2 3 4 5 6 (PRODUCT LEVEL)	SEE PAGE
	1	1	**337-6324**	1	PULLEY (8-GROOVE)	

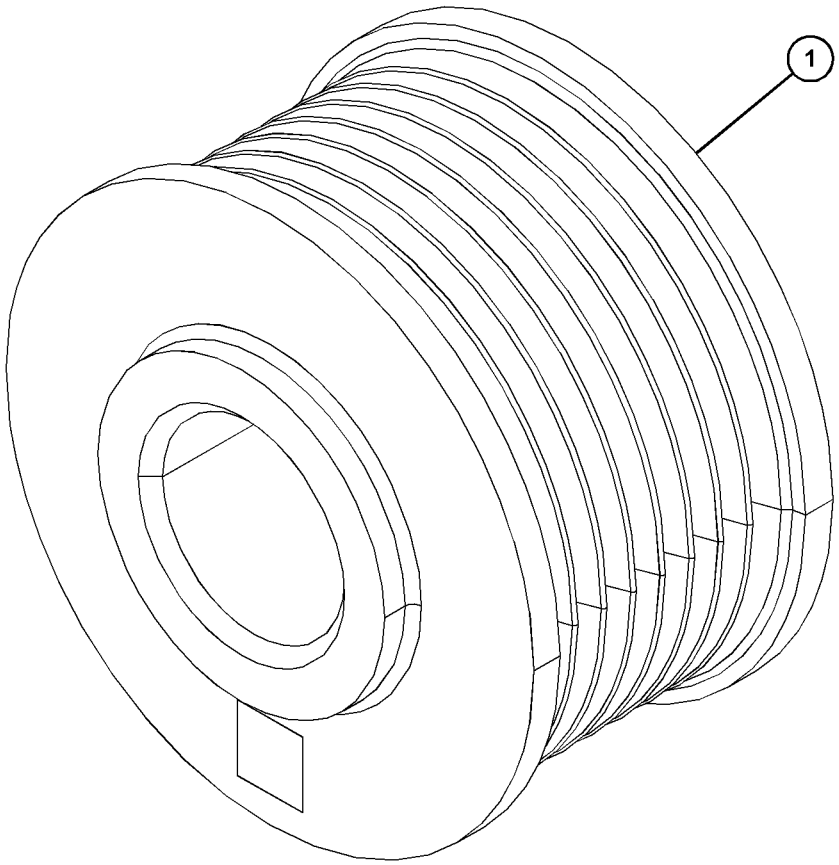

GRAPHIC #1 <END> g06369607

527-9483 BELT TENSIONER GP

S/N: W921-UP

PART OF 537-5615, 537-5616, 537-5617, 537-5619 AIR CONDITIONER AR

SMCS-1357, 1358, 1397 **i07570904**

NOTE	REF NO	GRAPHIC REF	PART NUMBER	QTY	PART NAME 1 2 3 4 5 6 (PRODUCT LEVEL)	SEE PAGE
	1	1	**441-0984**	1	BRACKET	
	2	1	**198-4777**	2	WASHER-HARD (11X25X10-MM THK)	
	3	1	**283-1171**	1	BELT-SERPENTINE	
	4	1	**377-9082**	1	BELT TENSIONER	
	5	1	**438-1119**	1	FILM-IDENTIFICATION (BELT ROUTING)	
	6	1	**518-4417**	2	WASHER	
M	7	1	**8T-4198**	2	BOLT (M10X1.5X100-MM)	
M	8	1	**8T-6685**	2	BOLT (M10X1.5X110-MM)	

M - METRIC PART

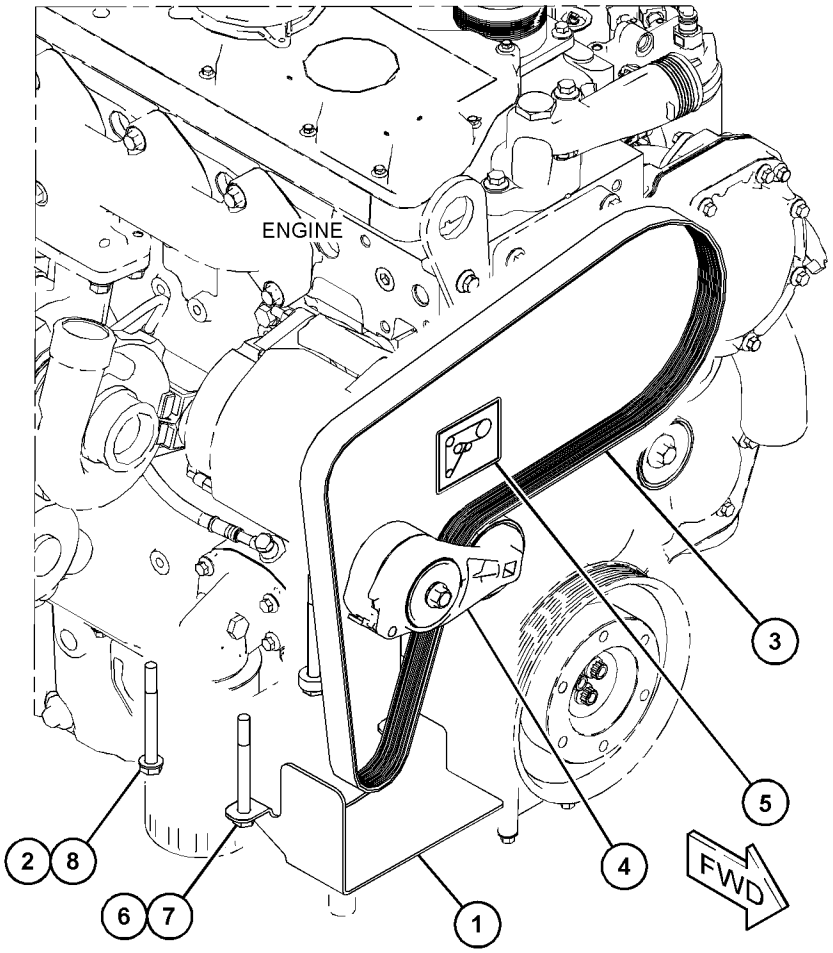

GRAPHIC #1 <END> g06369704

392-0634 BRACKET GP-MOUNTING

S/N: E7A1-UP

PART OF 533-1826, 533-1840 ENGINE AR-PRIMARY

SMCS-0635 **i07577066**

NOTE	REF NO	GRAPHIC REF	PART NUMBER	QTY	PART NAME 1 2 3 4 5 6 (PRODUCT LEVEL)	SEE PAGE
M	1	1	**105-2740**	3	BOLT (M8X1.25X40-MM)	
M	2	1	**124-3815**	3	BOLT (M8X1.25X16-MM)	
	3	1	**389-1995**	1	BRACKET AS	

M - METRIC PART

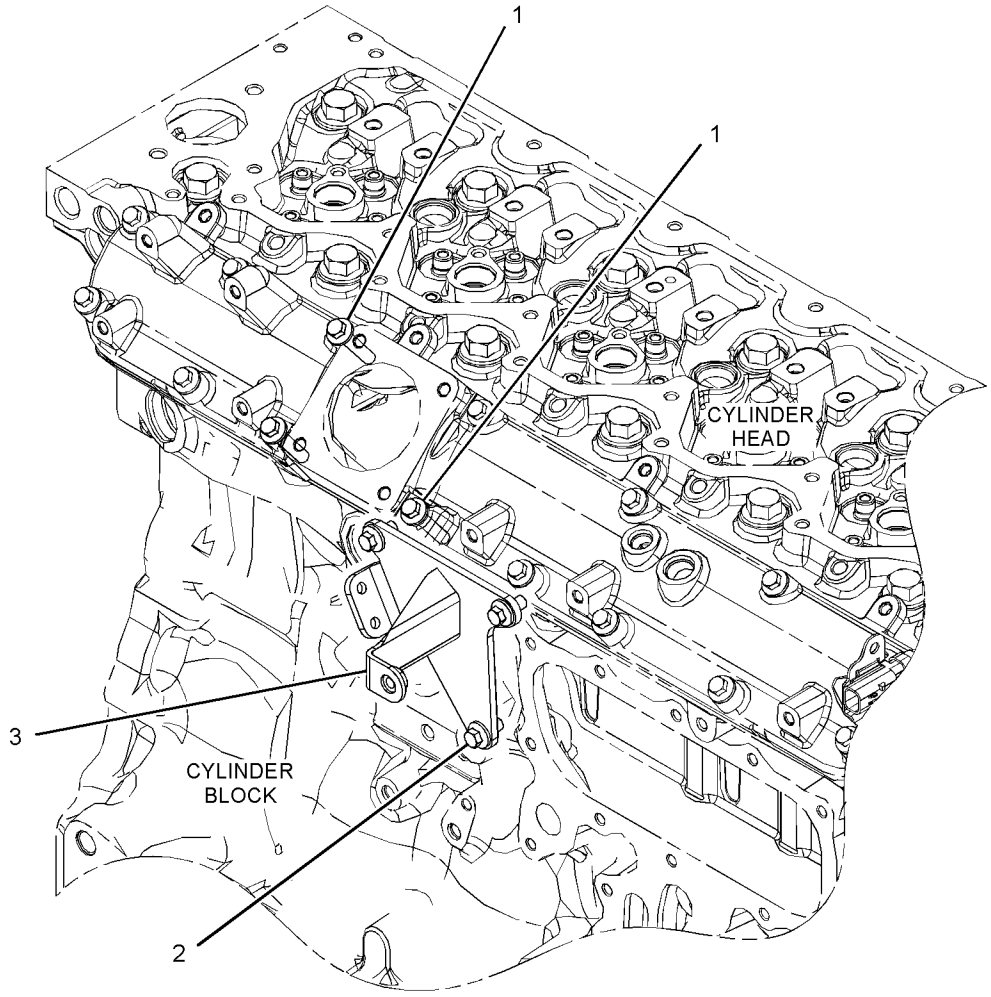

GRAPHIC #1 <END> g03479957

396-2615 CAMSHAFT GP

S/N: E7A1-UP

PART OF 533-1826, 533-1840 ENGINE AR-PRIMARY

SMCS-1210 **i07577067**

NOTE	REF NO	GRAPHIC REF	PART NUMBER	QTY	PART NAME 1 2 3 4 5 6 (PRODUCT LEVEL)	SEE PAGE
	1	1	**278-5125**	12	TAPPET	
	2	1	**396-8795**	1	CAMSHAFT GP	
	2A	1	**067-6135**	1	KEY-WOODRUFF	
	3	1	**319-8426**	12	PUSHROD	

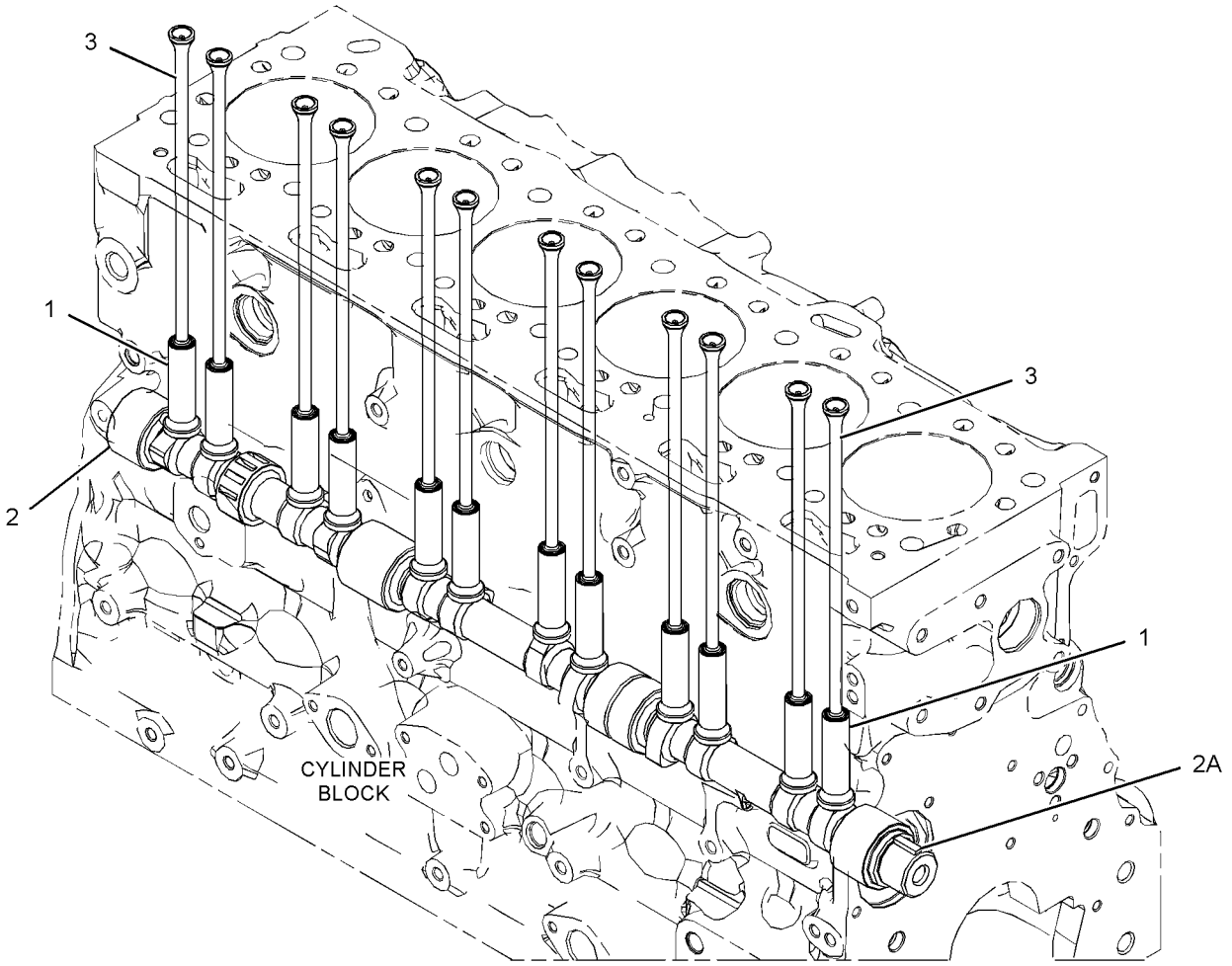

GRAPHIC #1 <END> g03380150

331-0290 CONNECTING ROD GP

S/N: E7A1-UP

PART OF 369-7304 PISTON & ROD GP

SMCS-1218 **i05574329**

NOTE	REF NO	GRAPHIC REF	PART NUMBER	QTY	PART NAME 1 2 3 4 5 6 (PRODUCT LEVEL)	SEE PAGE
	1	1	**276-7478**	1	BUSHING	
M	2	1	**323-9312**	2	BOLT (M10X1X50-MM)	

M - METRIC PART

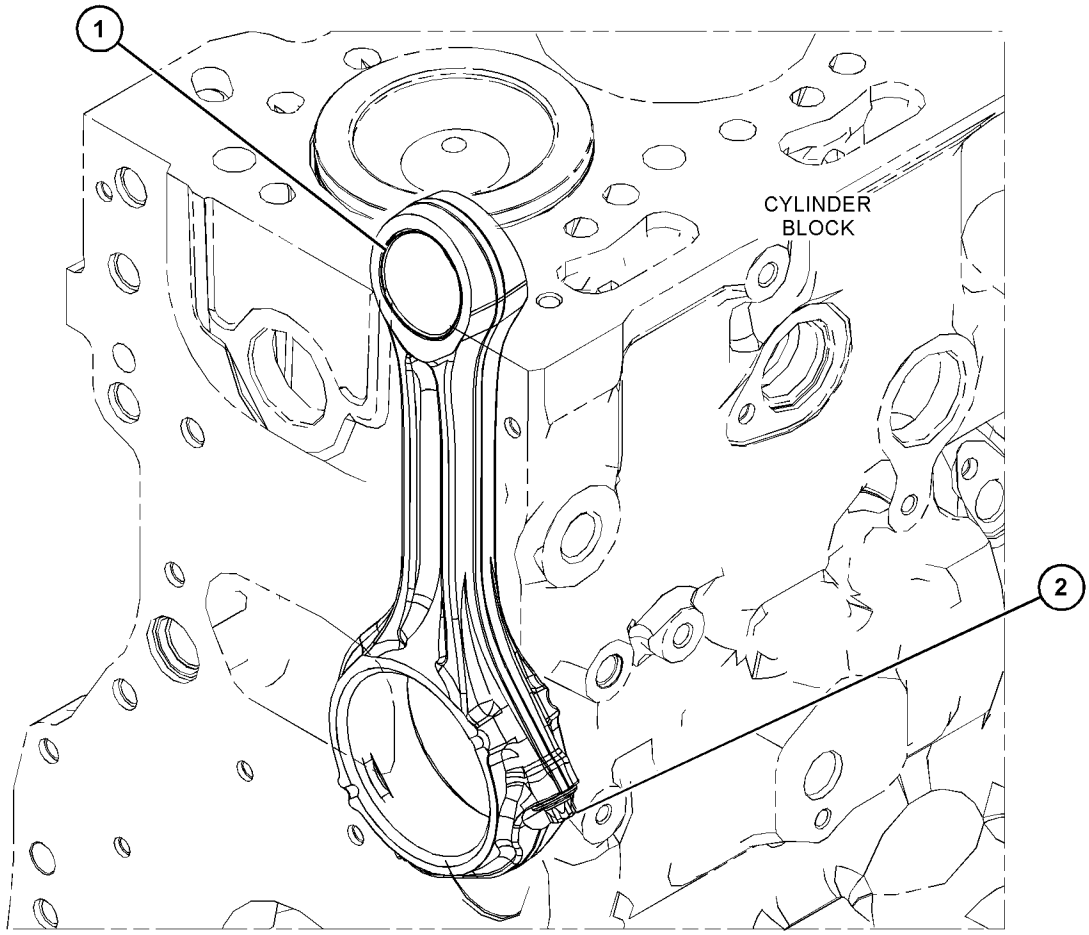

GRAPHIC #1 <END> g03551985

389-3346 COVER GP-VALVE MECHANISM

S/N: E7A1-UP

PART OF 533-1826, 533-1840 ENGINE AR-PRIMARY

SMCS-1107, 1120

i07636247

NOTE	REF NO	GRAPHIC REF	PART NUMBER	QTY	PART NAME 1 2 3 4 5 6 (PRODUCT LEVEL)	SEE PAGE
M	1	1	**101-3895**	9	BOLT (M8X1.25X35-MM)	
M	2	1	**103-5705**	6	BOLT (M8X1.25X110-MM)	
C	3	1	**527-1637**	1	COVER GP-VALVE MECHANISM	
M	3A	1	**195-9245**	3	SCREW (M4X0.7X10-MM)	
	3B	1	**527-1641**	1	SEAL	
	3C	1	**380-9615**	1	BREATHER	
		1	**326-7289**	1	SEAL-O-RING	
	4	1	**566-7931**	1	GASKET	
	5	1	**383-1388**	1	COVER-BASE	
M	6	1	**6I-0217**	14	BOLT (M8X1.25X20-MM)	

C - CHANGE FROM PREVIOUS TYPE
M - METRIC PART

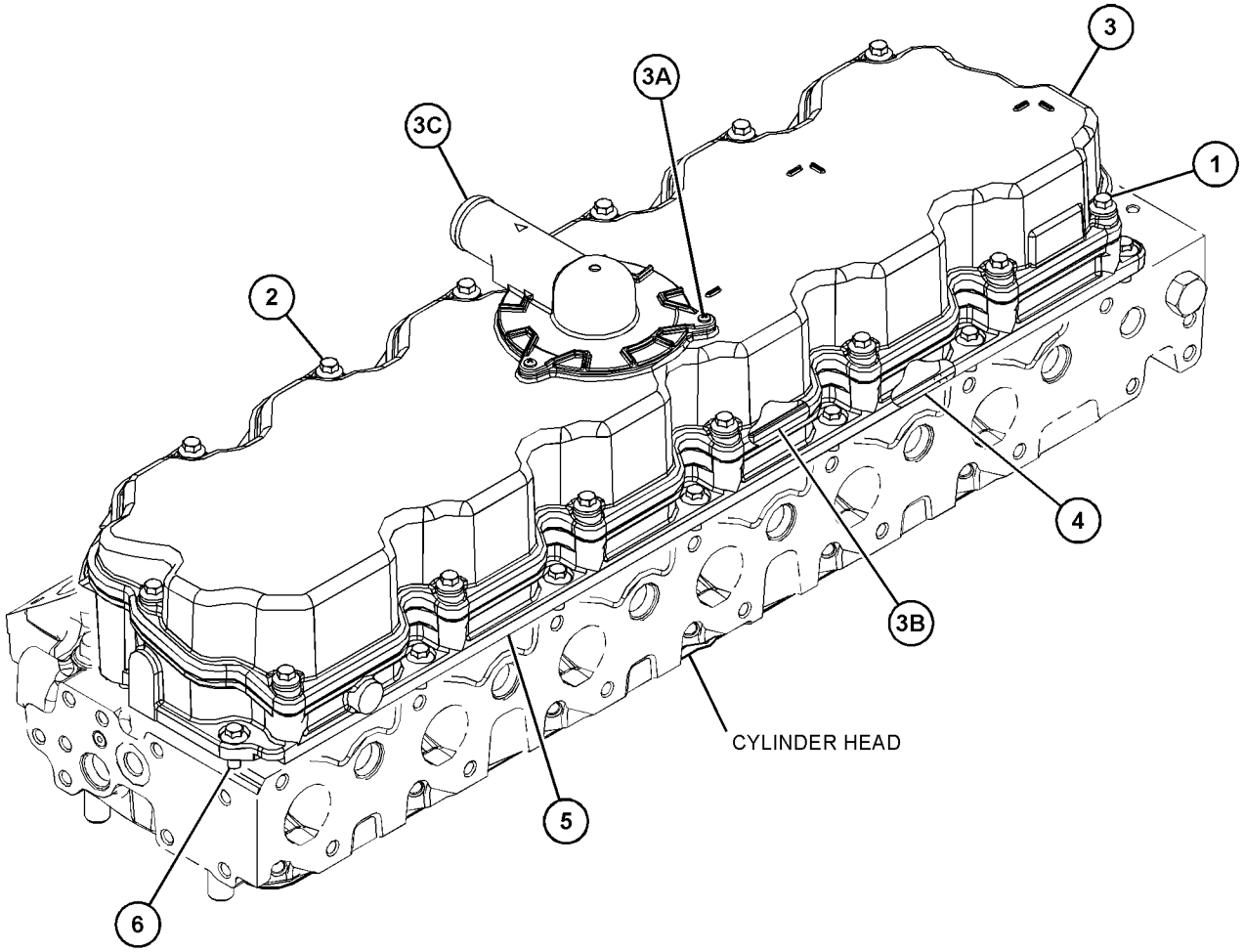

GRAPHIC #1 <END> g06145214

371-2477 CRANKSHAFT GP

S/N: E7A1-UP

PART OF 533-1826, 533-1840 ENGINE AR-PRIMARY

SMCS-1202, 1203, 1204, 1232 **i07577071**

NOTE	REF NO	GRAPHIC REF	PART NUMBER	QTY	PART NAME 1 2 3 4 5 6 (PRODUCT LEVEL)	SEE PAGE
	1	1	**067-6135**	1	KEY-WOODRUFF	
L	2	1	*470-8101*	7	BEARING-CRANKSHAFT (STANDARD-UPPER)	
L	3	1	*470-8171*	7	BEARING-CRANKSHAFT (STANDARD-LOWER)	
	4	1	**339-8780**	1	DOWEL	
	5	1	**342-6508**	1	SHIM (0.1-MM THK)	
J	6	1	*363-0559*	2	WASHER-THRUST	
	7	1	**376-4074**	1	CRANKSHAFT	
	8	1	**376-4078**	1	DISC-TIMING	
	9	1	**276-7391**	1	GEAR (34-TEETH)	
M	10	1	**276-7394**	3	SCREW (M6X1XX12-MM)	
					AVAILABLE REPAIR KIT(S):	
L			**360-1978**	1	KIT-BEARING (STANDARD) (CRANKSHAFT)	
					(INCLUDES BEARINGS)	
AB			**454-3745**		KIT-BEARING (0.254-MM US)	
					(INCLUDES BEARINGS)	
AB			**454-3931**		KIT-BEARING (0.508-MM US)	
					(INCLUDES BEARINGS)	
AB			**454-3935**		KIT-BEARING (0.762-MM US)	
					(INCLUDES BEARINGS)	
J			**364-5145**	1	KIT-WASHER (STANDARD) (CRANKSHAFT)	
					(INCLUDES WASHER)	
AB			**448-4227**		KIT-WASHER (0.20-MM US)	
					(INCLUDES WASHER)	

A - NOT PART OF THIS GROUP
B - USE AS REQUIRED
J - KIT MARKED J SERVICES PART(S) MARKED J
L - KIT MARKED L SERVICES PART(S) MARKED L
M - METRIC PART

371-2477 **CRANKSHAFT GP (**contd.**)** **i07577071**

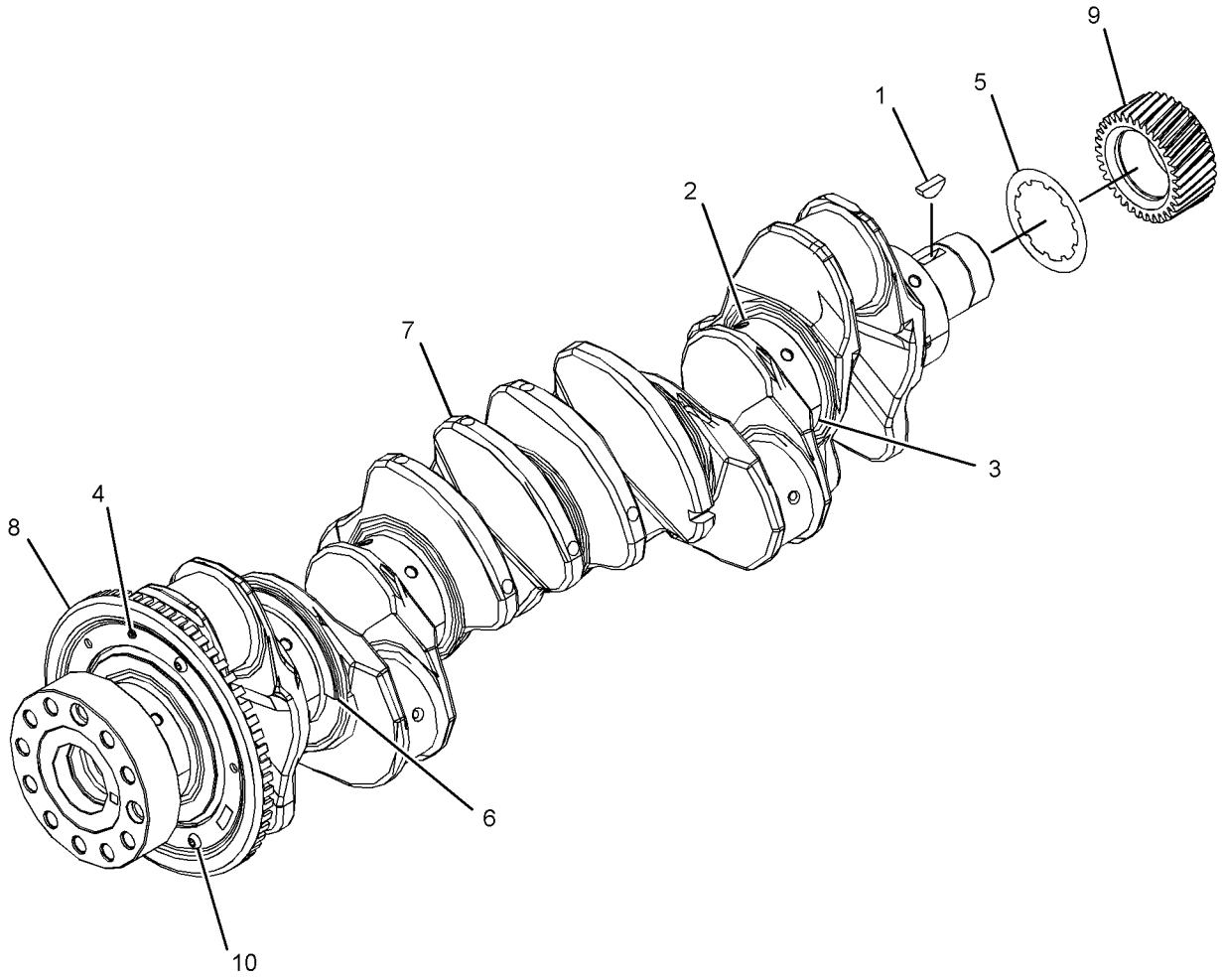

GRAPHIC #1 <END> g03482898

374-6300 CRANKSHAFT GP

S/N: E7A1-UP

PART OF 451-1222 CYLINDER BLOCK GP-SHORT

SMCS-1202, 1203, 1204, 1232 **i06986641**

NOTE	REF NO	GRAPHIC REF	PART NUMBER	QTY	PART NAME 1 2 3 4 5 6 (PRODUCT LEVEL)	SEE PAGE
	1	1	**067-6135**	1	KEY-WOODRUFF	
	2	1	**276-7391**	1	GEAR (34-TEETH)	
M	3	1	**276-7394**	3	SCREW (M6X1XX12-MM)	
	4	1	**339-8780**	1	DOWEL	
J	5	1	*363-0559*	2	WASHER-THRUST	
	6	1	**376-4074**	1	CRANKSHAFT	
	7	1	**376-4078**	1	DISC-TIMING	
CP	8	1	*470-8101*	7	BEARING-CRANKSHAFT (STANDARD-UPPER)	
CP	9	1	*470-8171*	7	BEARING-CRANKSHAFT (STANDARD-LOWER)	
					AVAILABLE REPAIR KIT(S):	
P			**448-4217**	1	KIT-BEARING (STANDARD)	
					(INCLUDES BEARINGS)	
AB			**448-4218**		KIT-BEARING (0.254-MM US)	
					(INCLUDES BEARINGS)	
AB			**448-4220**		KIT-BEARING (0.508-MM US)	
					(INCLUDES BEARINGS)	
AB			**448-4222**		KIT-BEARING (0.762-MM US)	
					(INCLUDES BEARINGS)	
J			**364-5145**	1	KIT-WASHER (STANDARD)	
					(INCLUDES WASHERS)	
AB			**448-4227**		KIT-WASHER (0.20-MM US)	
					(INCLUDES WASHERS)	

A - NOT PART OF THIS GROUP
B - USE AS REQUIRED
C - CHANGE FROM PREVIOUS TYPE
J - KIT MARKED J SERVICES PART(S) MARKED J
M - METRIC PART
P - KIT MARKED P SERVICES PART(S) MARKED P

374-6300 **CRANKSHAFT GP (**contd.**)** **i06986641**

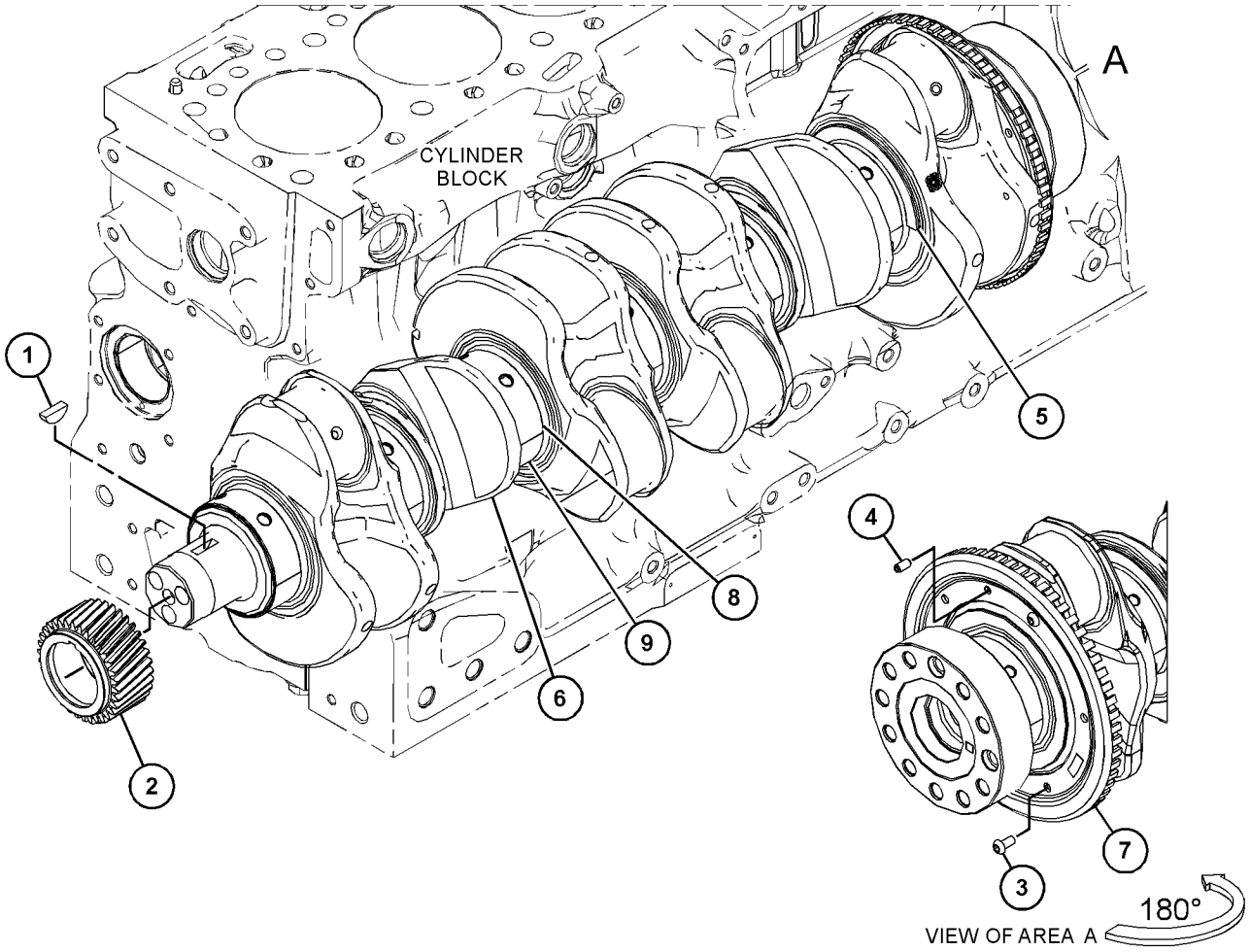

GRAPHIC #1 <END> g06188935

383-3581 CYLINDER BLOCK AS

S/N: E7A1-UP

PART OF 390-0854 CYLINDER BLOCK GP

SMCS-1201 **i07383702**

NOTE	REF NO	GRAPHIC REF	PART NUMBER	QTY	PART NAME 1 2 3 4 5 6 (PRODUCT LEVEL)	SEE PAGE
	1	1	**232-7597**	2	PLUG	
	2	1	**276-5602**	2	PLUG-CORE	
	3	1	**232-7596**	1	PLUG	
	4	1	**067-6043**	7	PLUG-SIDE	
	5	1	**067-6823**	1	PLUG	
	6	1	**185-0884**	2	DOWEL	
	7	1	**225-8858**	2	PLUG	
	8	1	**232-7599**	2	PLUG	
	9	1	**276-5600**	14	BOLT-SPECIAL (BEARING CAP)	
	10	1	**331-6835**	2	PLUG-SEAL	
F			**370-6545**	1	BUSHING-CAMSHAFT	

F - NOT SHOWN

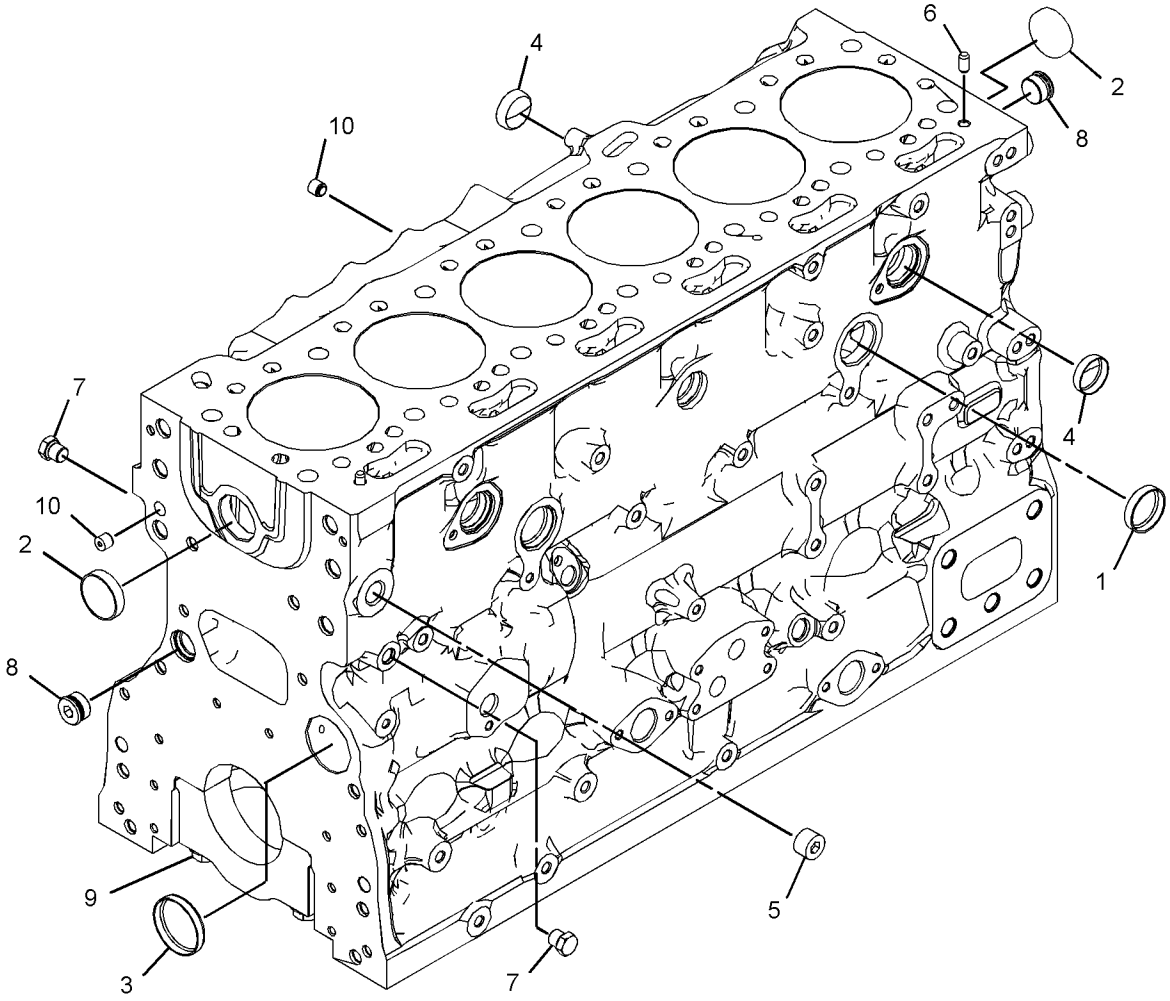

GRAPHIC #1 <END> g03351937

390-0854 CYLINDER BLOCK GP

S/N: E7A1-UP

PART OF 451-1222 CYLINDER BLOCK GP-SHORT, 533-1826, 533-1840 ENGINE AR-PRIMARY

SMCS-1201 **i05469150**

NOTE	REF NO	GRAPHIC REF	PART NUMBER	QTY	PART NAME 1 2 3 4 5 6 (PRODUCT LEVEL)	SEE PAGE
	1	1	**276-5603**	1	SEAL-O-RING	
Y	2	1	*383-3581*	1	CYLINDER BLOCK AS	21
M	3	1	**209-9219**	10	BOLT (M8X1.25X16-MM)	
	4	1	**232-7449**	1	HOUSING AS	
	5	1	**232-1322**	1	PLUG	

M - METRIC PART
Y - SEPARATE ILLUSTRATION

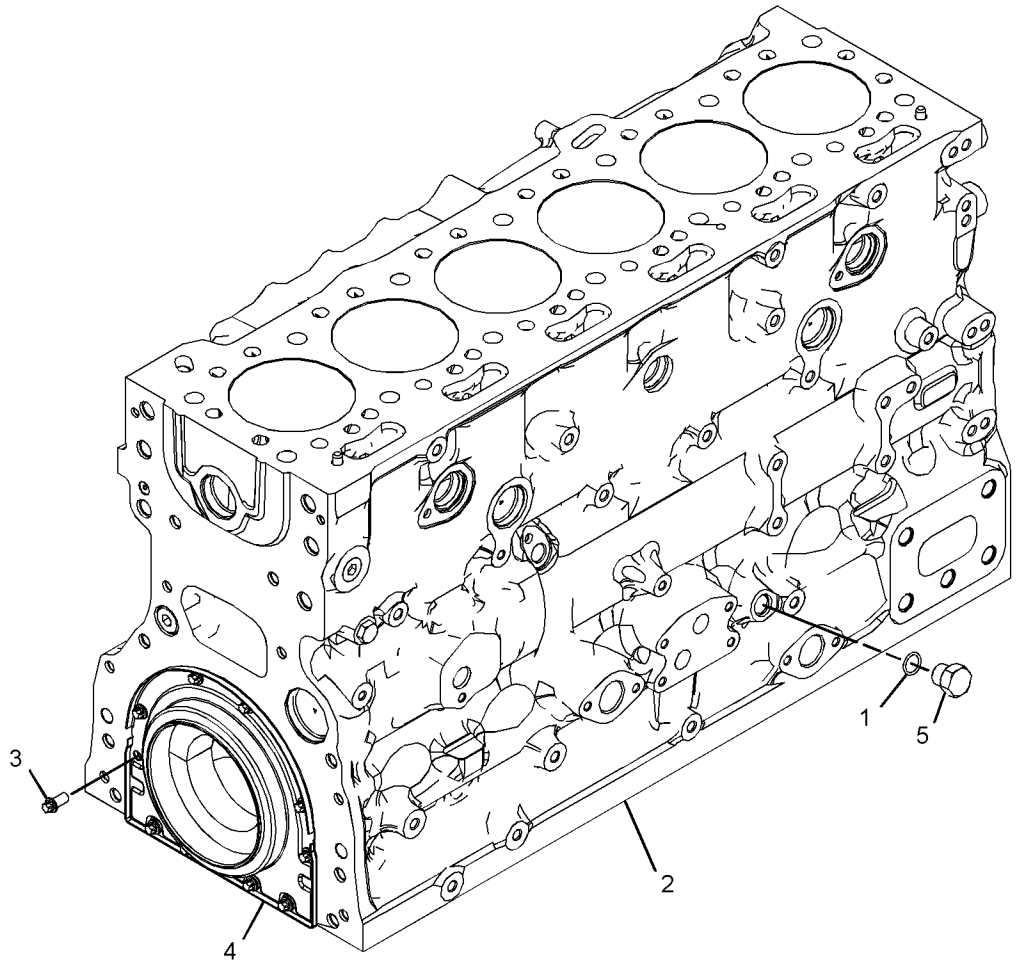

GRAPHIC #1 <END> g03384924

451-1222 CYLINDER BLOCK GP-SHORT

S/N: E7A1-UP

FIELD REPLACEMENT FOR 533-1826—PAGE: 4: FOR 533-1840—PAGE: 6

PART OF 451-8385 CYLINDER BLOCK GP-SHORT

SMCS-1117, 1200, 1201, 1211, 1216, 1217, 1221, 1222, 1223, 1224, 1238, 1239, 1240, 1331

i07577439

NOTE	REF NO	GRAPHIC REF	PART NUMBER	QTY	PART NAME 1 2 3 4 5 6 (PRODUCT LEVEL)	SEE PAGE
Y	1	1	*369-7304*	1	PISTON & ROD GP	48
Y	2	1	*371-2478*	1	JET GP-PISTON COOLING	40
Y	3	1	*374-6300*	1	CRANKSHAFT GP	19
	4	1	*451-8317*	1	PAN GP-OIL	
M	4A	1	**8T-0269**	2	BOLT-SOCKET HEAD (M6X1X20-MM)	
	4B	1	**230-8094**	1	BRIDGE	
Y	5	1	*390-0854*	1	CYLINDER BLOCK GP	22

M - METRIC PART
Y - SEPARATE ILLUSTRATION

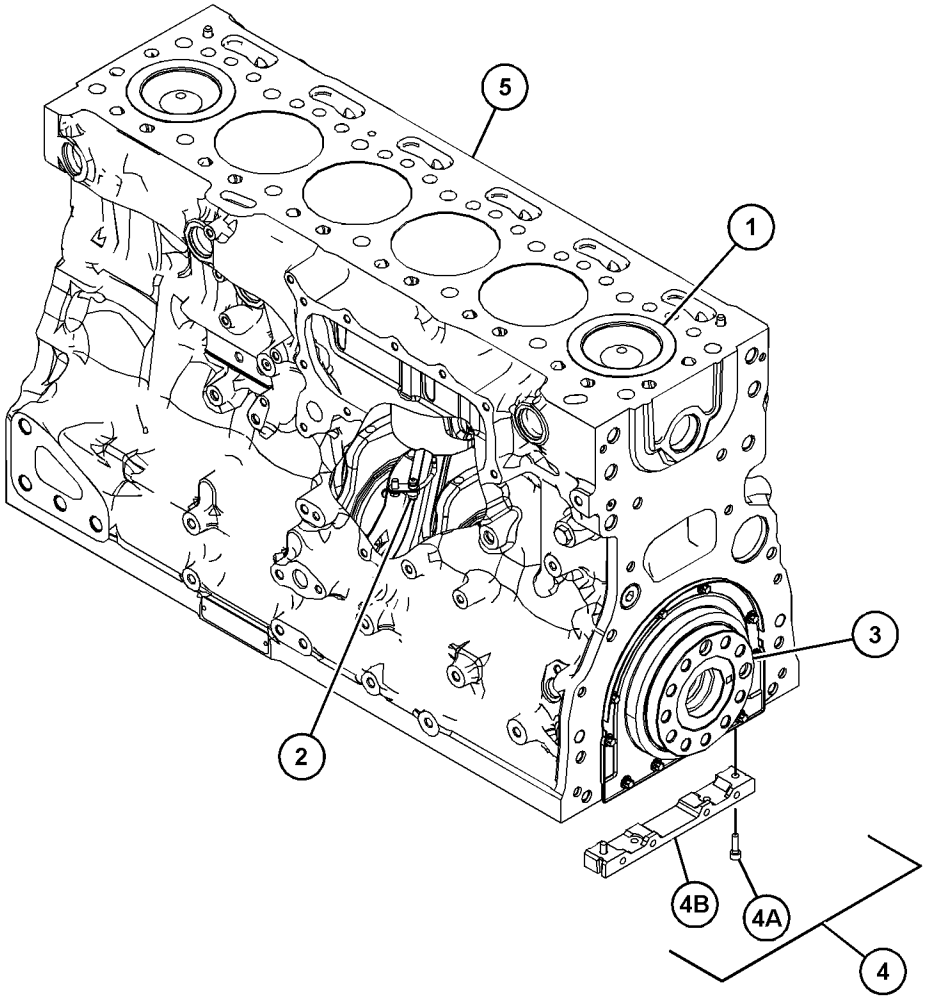

GRAPHIC #1 <END> g03733390

451-8385 CYLINDER BLOCK GP-SHORT

S/N: E7A1-UP

PART OF 539-8166, 539-8217 ENGINE AR-COMPLETE

SMCS-1117, 1200, 1201, 1211, 1216, 1217, 1221, 1222, 1223, 1224, 1238, 1239, 1240, 1331

i07576971

NOTE	REF NO	GRAPHIC REF	PART NUMBER	QTY	PART NAME 1 2 3 4 5 6 (PRODUCT LEVEL)	SEE PAGE
Y	1	1	**451-1222**	1	CYLINDER BLOCK GP-SHORT	23

Y - SEPARATE ILLUSTRATION

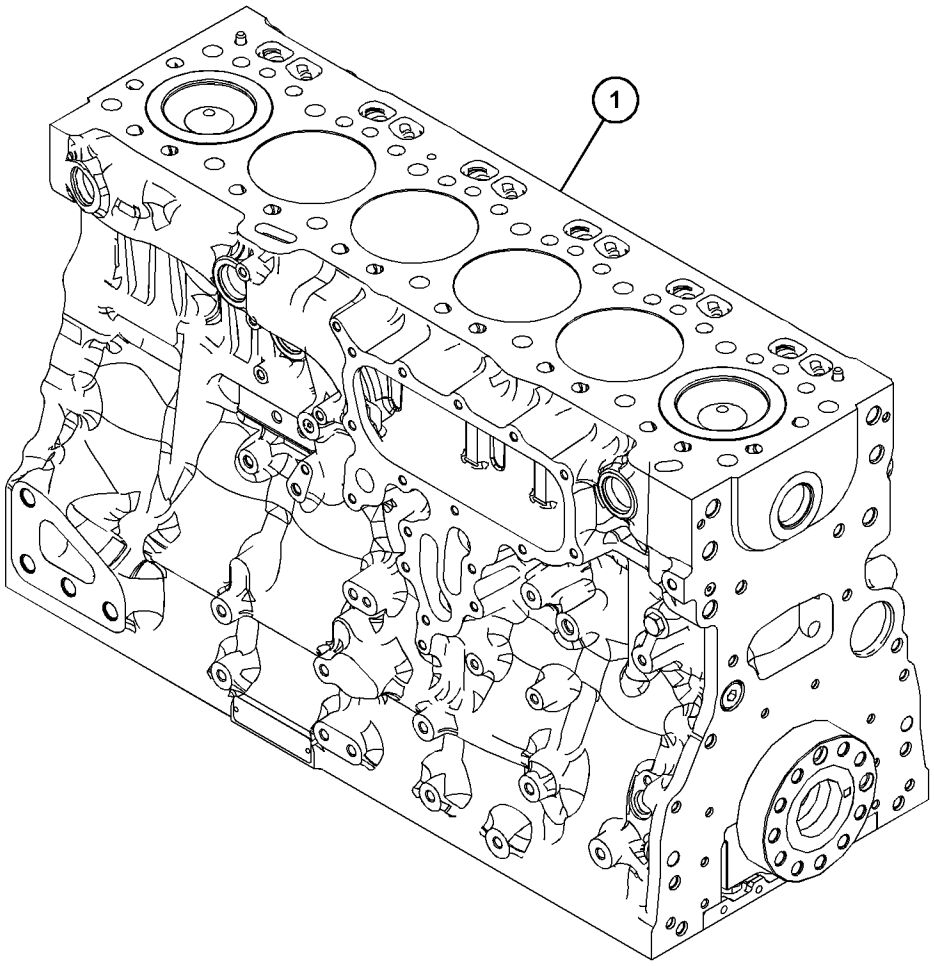

GRAPHIC #1 <END> g03697536

384-5313 CYLINDER HEAD AS

S/N: E7A1-UP

PART OF 385-2572, 452-6586 CYLINDER HEAD GP

SMCS-1100 **i05571837**

NOTE	REF NO	GRAPHIC REF	PART NUMBER	QTY	PART NAME 1 2 3 4 5 6 (PRODUCT LEVEL)	SEE PAGE
	1	1	**276-8116**	6	PLUG-CORE	
	2	1	**377-0400**	12	INSERT-VALVE SEAT (EXHAUST)	
	3	1	**377-0399**	12	INSERT-VALVE SEAT (INTAKE)	
	4	1	**276-8117**	13	PLUG-CORE	

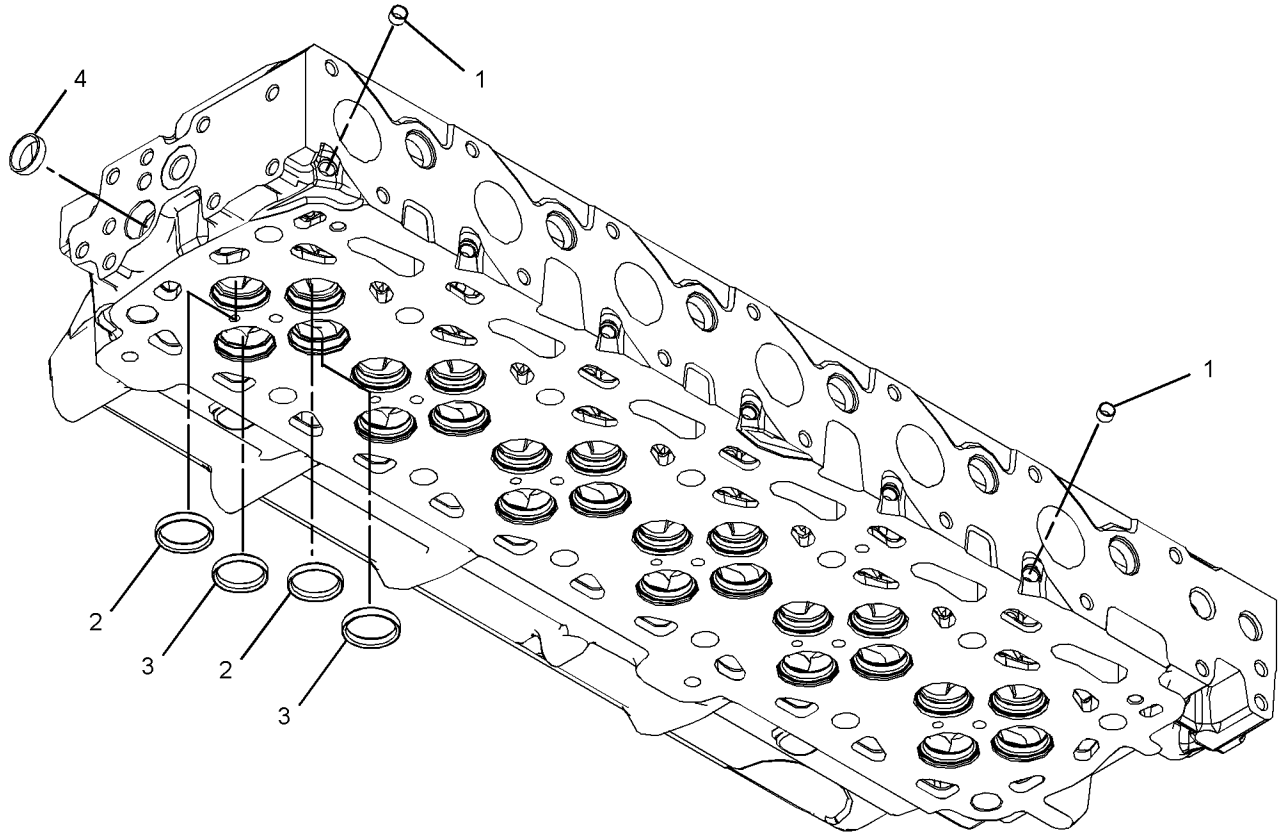

GRAPHIC #1 <END> g03379426

385-2572 CYLINDER HEAD GP

S/N: E7A1-UP

PART OF 533-1826, 533-1840 ENGINE AR-PRIMARY

SMCS-1100 **i05469171**

NOTE	REF NO	GRAPHIC REF	PART NUMBER	QTY	PART NAME 1 2 3 4 5 6 (PRODUCT LEVEL)	SEE PAGE
	1	1	**199-9751**	1	SEAL-O-RING	
Y	2	1	**384-5313**	1	CYLINDER HEAD AS	25
	3	1	**388-4707**	1	GASKET-CYLINDER HEAD	
	4	1	**232-1322**	1	PLUG	
	5	1	**276-8134**	14	BOLT-SPECIAL (CYLINDER HEAD)	
	6	1	**277-4302**	2	DOWEL	
	7	1	**295-6661**	1	PLUG	

Y - SEPARATE ILLUSTRATION

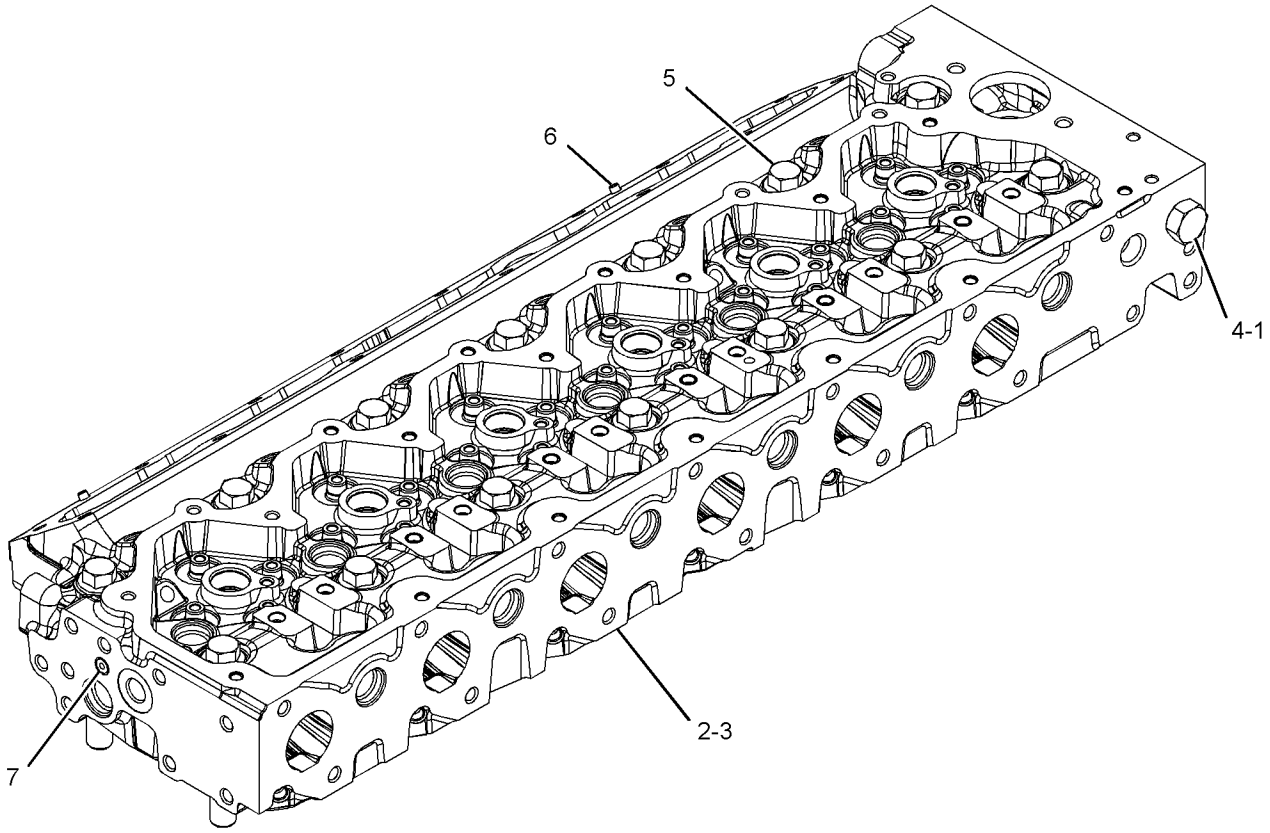

GRAPHIC #1 <END> g03379427

452-6582 CYLINDER HEAD GP

S/N: E7A1-UP

PART OF 539-8166, 539-8217 ENGINE AR-COMPLETE

SMCS-1100 **i07576972**

NOTE	REF NO	GRAPHIC REF	PART NUMBER	QTY	PART NAME 1 2 3 4 5 6 (PRODUCT LEVEL)	SEE PAGE
Y	1	1	**452-6584**	1	CYLINDER HEAD GP (SHORT)	28

Y - SEPARATE ILLUSTRATION

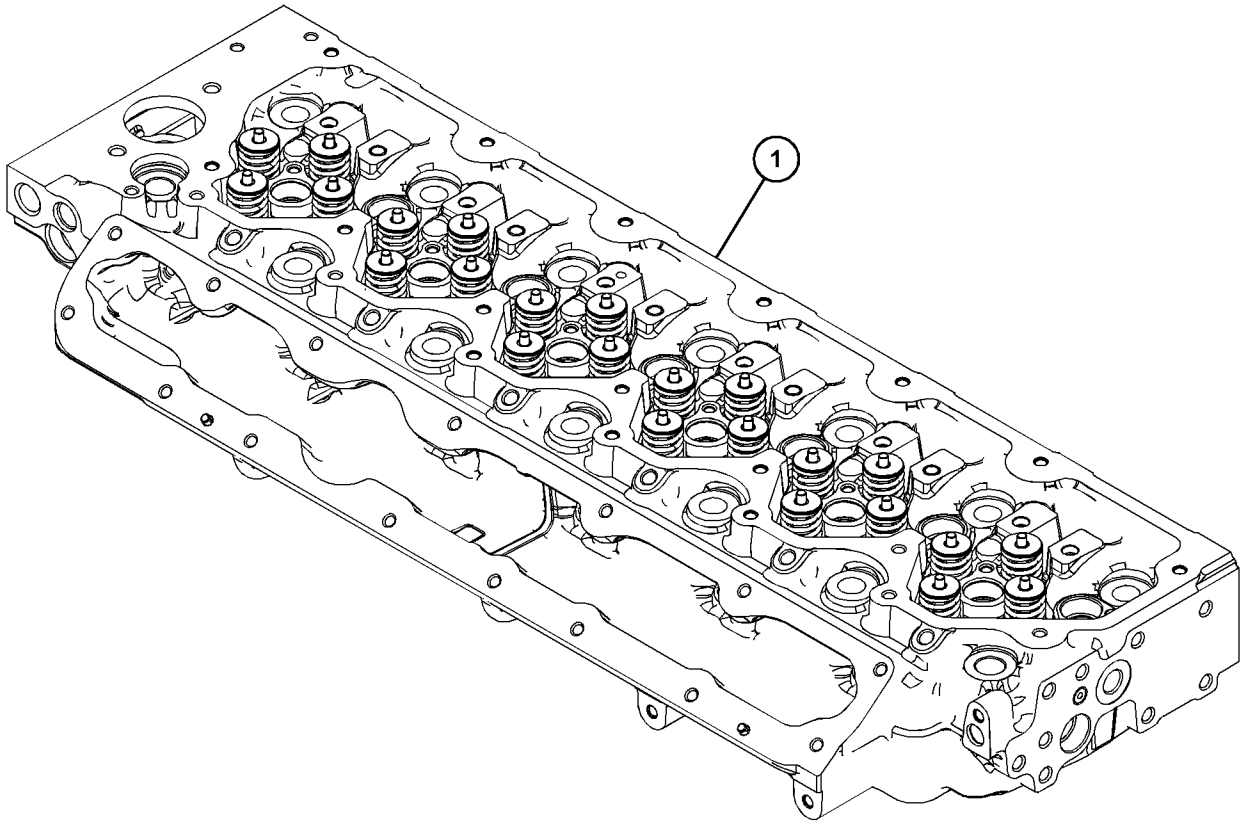

GRAPHIC #1 <END> g03697902

452-6584 CYLINDER HEAD GP

S/N: E7A1-UP

FIELD REPLACEMENT FOR 533-1826—PAGE: 4: FOR 533-1840—PAGE: 6

PART OF 452-6582 CYLINDER HEAD GP

SMCS-1100 **i07577440**

NOTE	REF NO	GRAPHIC REF	PART NUMBER	QTY	PART NAME 1 2 3 4 5 6 (PRODUCT LEVEL)	SEE PAGE
Y	1	1	*452-6585*	1	ROCKER ARM GP	60
Y	2	1	*452-6586*	1	CYLINDER HEAD GP	29

Y - SEPARATE ILLUSTRATION

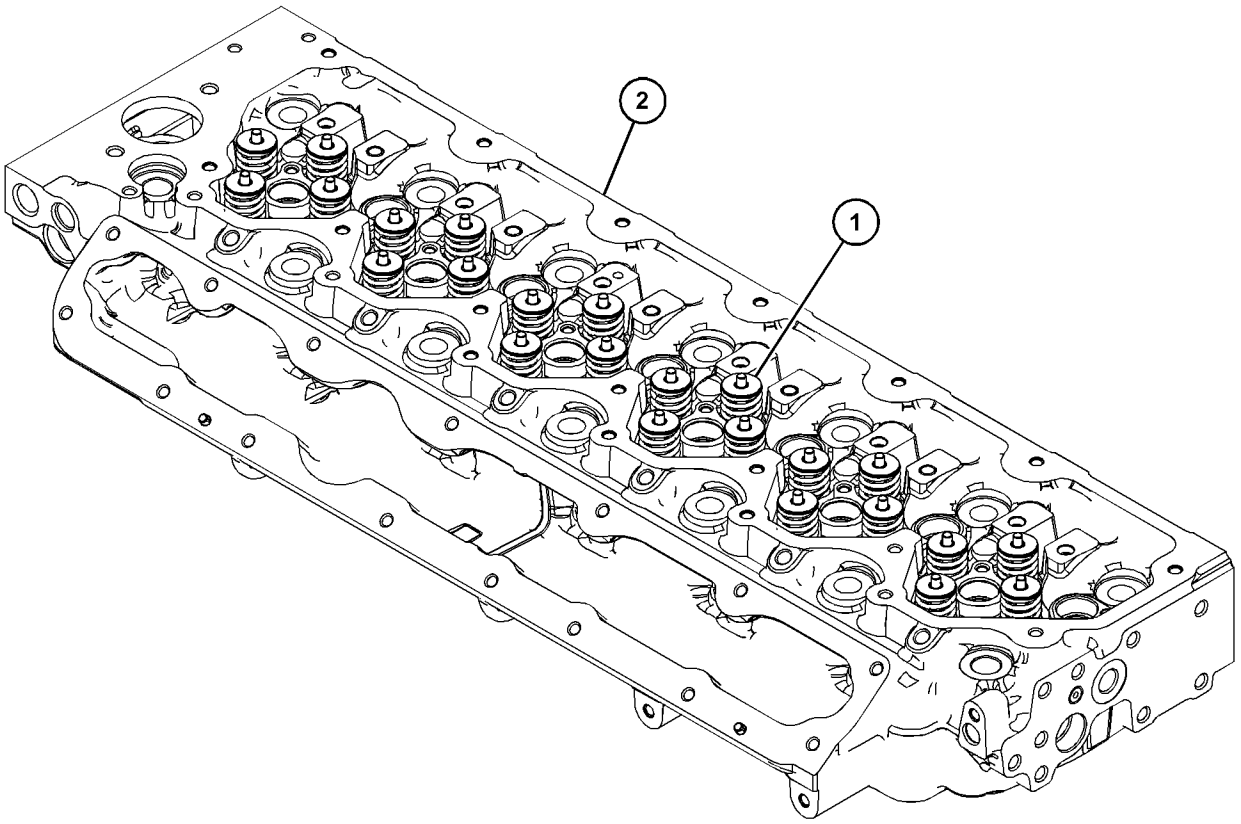

GRAPHIC #1 <END> g03674499

452-6586 CYLINDER HEAD GP

S/N: E7A1-UP

PART OF 452-6584 CYLINDER HEAD GP

SMCS-1100 **i07577453**

NOTE	REF NO	GRAPHIC REF	PART NUMBER	QTY	PART NAME 1 2 3 4 5 6 (PRODUCT LEVEL)	SEE PAGE
	1	1	**199-9751**	1	SEAL-O-RING	
	2	1	**277-4302**	2	DOWEL	
	3	1	**295-6661**	1	PLUG	
	4	1	**232-1322**	1	PLUG	
Y	5	1	*384-5313*	1	CYLINDER HEAD AS	25

Y - SEPARATE ILLUSTRATION

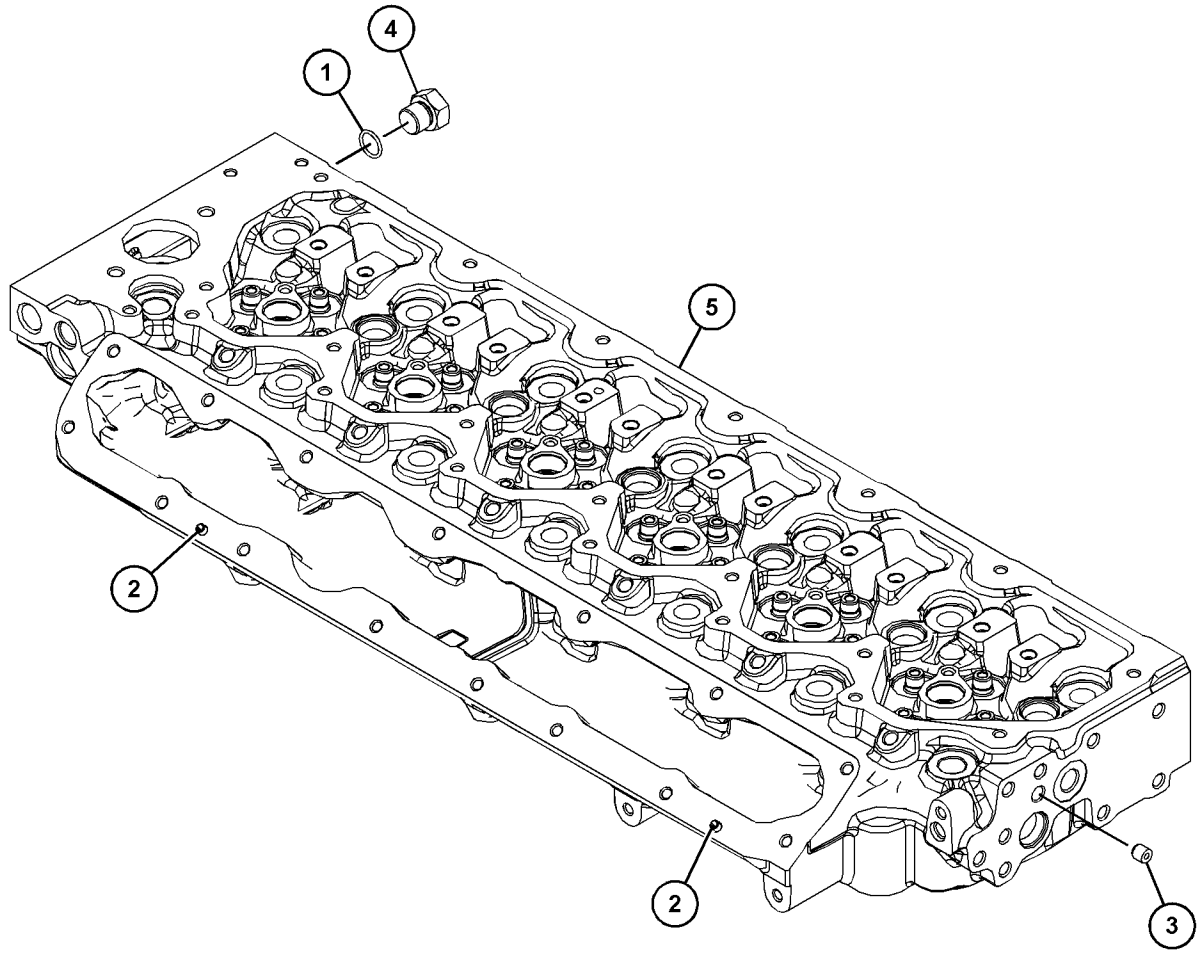

GRAPHIC #1 <END> g03714865

379-0965 DRIVE GP-FAN

S/N: E7A1-UP

PART OF 533-1826, 533-1840 ENGINE AR-PRIMARY

SMCS-1359 **i07577074**

NOTE	REF NO	GRAPHIC REF	PART NUMBER	QTY	PART NAME 1 2 3 4 5 6 (PRODUCT LEVEL)	SEE PAGE
M	1	1	**111-0859**	2	BOLT (M10X1.5X35-MM)	
	2	1	**371-8298**	1	BRACKET	
	3	1	**377-9255**	1	PULLEY AS (8-GROOVE)	
M	3A	1	**423-7576**	1	BOLT (M10X1.5X50-MM)	

M - METRIC PART

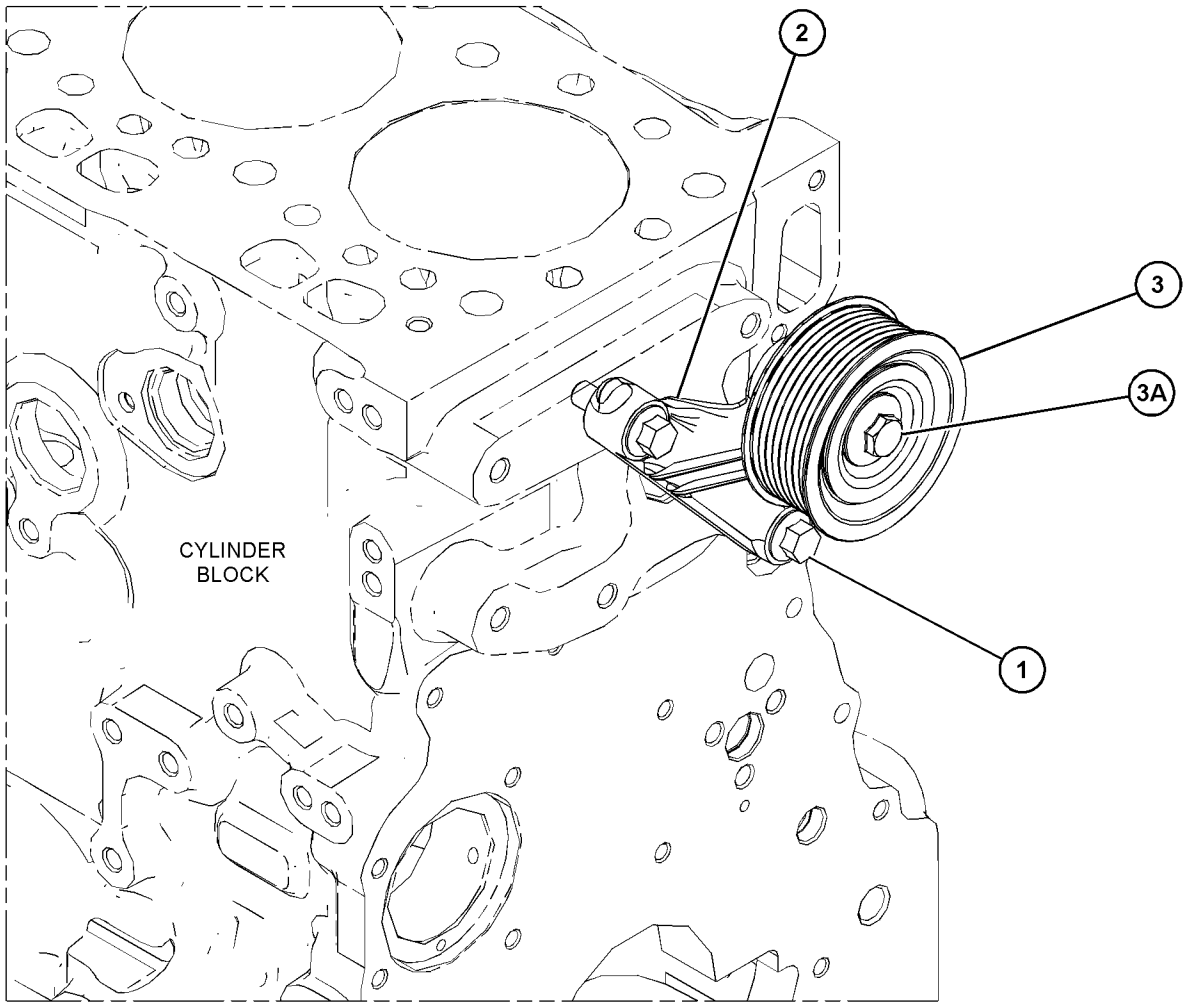

GRAPHIC #1 <END> g06032356

375-0098 FASTENER GP-DAMPER & PULLEY

S/N: E7A1-UP

PART OF 533-1826, 533-1840 ENGINE AR-PRIMARY

SMCS-1205, 7553

i05472855

NOTE	REF NO	GRAPHIC REF	PART NUMBER	QTY	PART NAME 1 2 3 4 5 6 (PRODUCT LEVEL)	SEE PAGE
M	1	1	**274-1935**	6	BOLT (M12X1.75X30-MM)	

M - METRIC PART

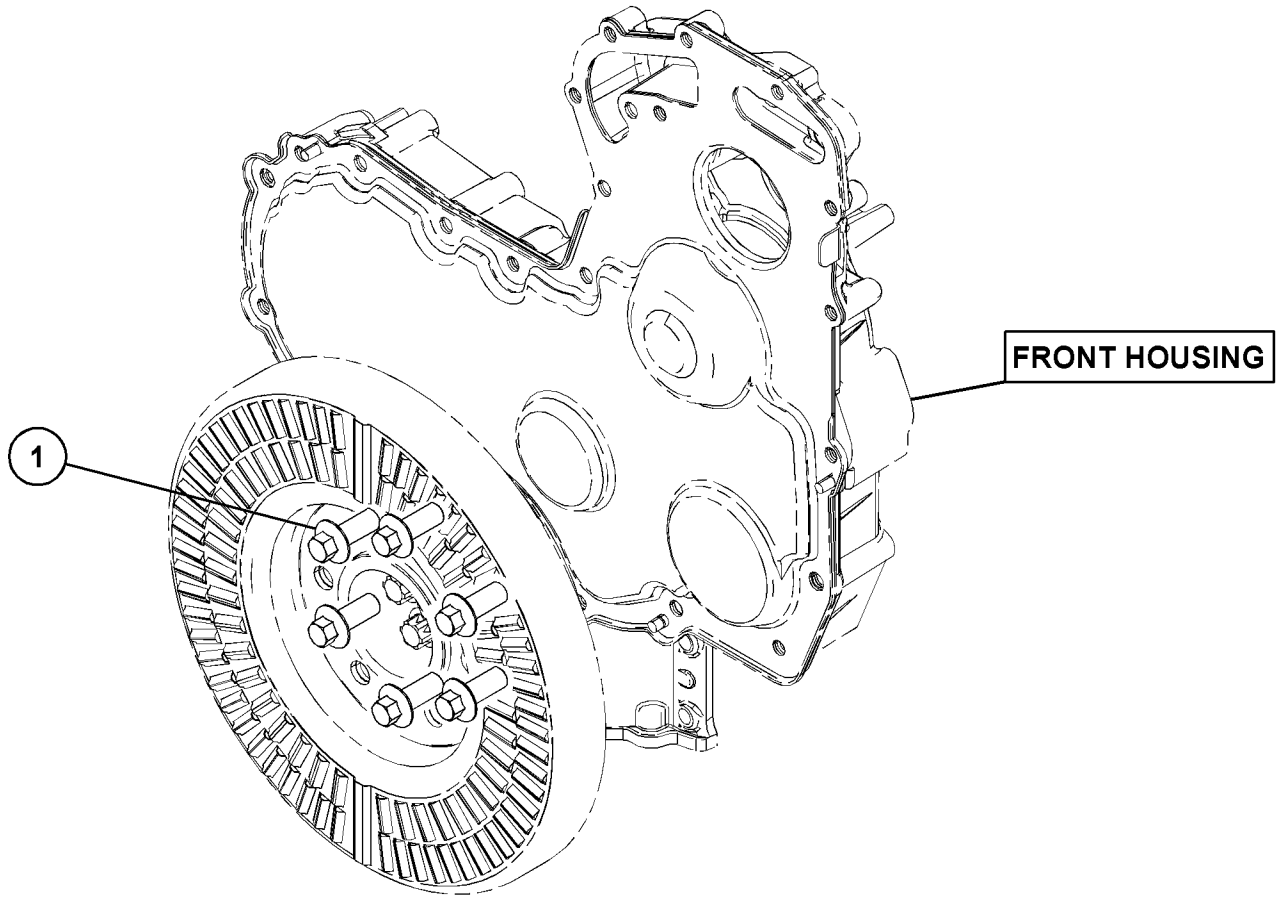

GRAPHIC #1 <END> g03172177

384-1176 FLYWHEEL GP

S/N: E7A1-UP

PART OF 533-1826, 533-1840 ENGINE AR-PRIMARY

SMCS-1156, 1158 **i07577396**

NOTE	REF NO	GRAPHIC REF	PART NUMBER	QTY	PART NAME 1 2 3 4 5 6 (PRODUCT LEVEL)	SEE PAGE
	1	1	**145-4911**	12	WASHER	
	2	1	**279-9254**	12	BOLT	
	3	1	**561-4970**	1	FLYWHEEL AS	

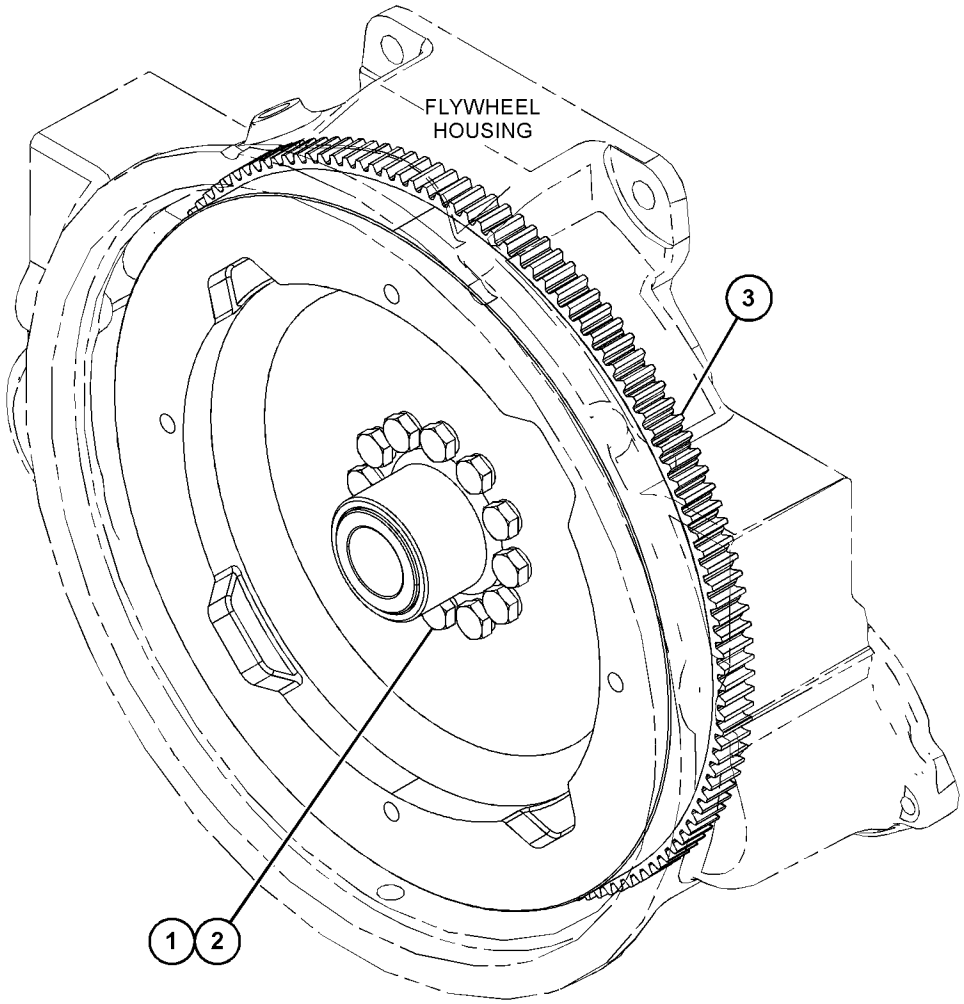

GRAPHIC #1 <END> g06369867

416-1868 HOUSING GP-FLYWHEEL

S/N: E7A1-UP

PART OF 533-1826, 533-1840 ENGINE AR-PRIMARY

SMCS-1157 **i07577397**

NOTE	REF NO	GRAPHIC REF	PART NUMBER	QTY	PART NAME 1 2 3 4 5 6 (PRODUCT LEVEL)	SEE PAGE
	1	1	**199-3109**	1	PLUG	
M	2	1	**283-4662**	2	BOLT-FLANGE HEAD (M12X1.75-THD)	
	3	1	**287-8597**	2	DOWEL	
M	4	1	**288-6974**	4	BOLT (M10X1.5X50-MM)	
M	5	1	**288-6975**	2	BOLT (M16X2X40-MM)	
	6	1	**354-8322**	3	PLUG (M16X1.5-THD)	
	7	1	**393-4006**	1	GASKET	
	8	1	**489-5884**	1	HOUSING-FLYWHEEL	

M - METRIC PART

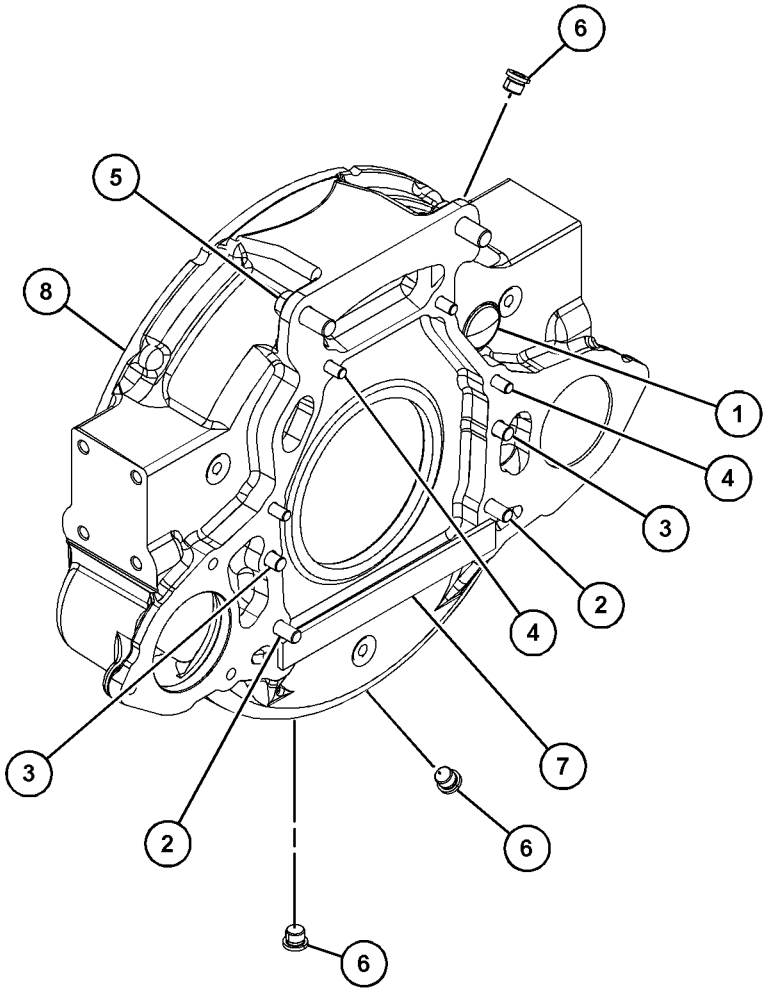

GRAPHIC #1 <END> g06369600

371-2716 HOUSING GP-FRONT

S/N: E7A1-UP

PART OF 533-1826 ENGINE AR-PRIMARY

SMCS-1151, 1162, 1206 **i07577086**

NOTE	REF NO	GRAPHIC REF	PART NUMBER	QTY	PART NAME 1 2 3 4 5 6 (PRODUCT LEVEL)	SEE PAGE
M	1	1	**6I-0217**	6	BOLT (M8X1.25X20-MM)	
M	2	1	**6I-0645**	4	BOLT (M8X1.25X25-MM)	
M	3	1	**6I-0650**	3	BOLT (M10X1.5X65-MM)	
M	4	1	**7C-4616**	1	BOLT (M12X1.75X45-MM)	
	5	1	**067-6179**	1	DOWEL	
M	6	1	**100-3751**	5	BOLT (M8X1.25X65-MM)	
M	7	1	**101-3895**	2	BOLT (M8X1.25X35-MM)	
M	8	1	**124-3815**	10	BOLT (M8X1.25X16-MM)	
	9	1	**133-1011**	1	WASHER	
	10	1	**425-7103**	1	GEAR (68-TEETH)	
	11	1	**232-3657**	1	COVER AS-FRONT	
	11A	1	**225-8287**	1	GASKET	
	12	1	**232-3666**	1	WASHER-THRUST	
	13	1	**277-3012**	1	GASKET-COVER	
	14	1	**277-3013**	1	SEAL	
	15	1	**324-0444**	1	HUB-IDLER GEAR	
	16	1	**346-0407**	1	GEAR-IDLER	
	17	1	**346-0408**	1	PLATE	
	18	1	**386-2112**	1	CASE-GEAR	

M - METRIC PART

371-2716 **HOUSING GP-FRONT (**contd.**)** **i07577086**

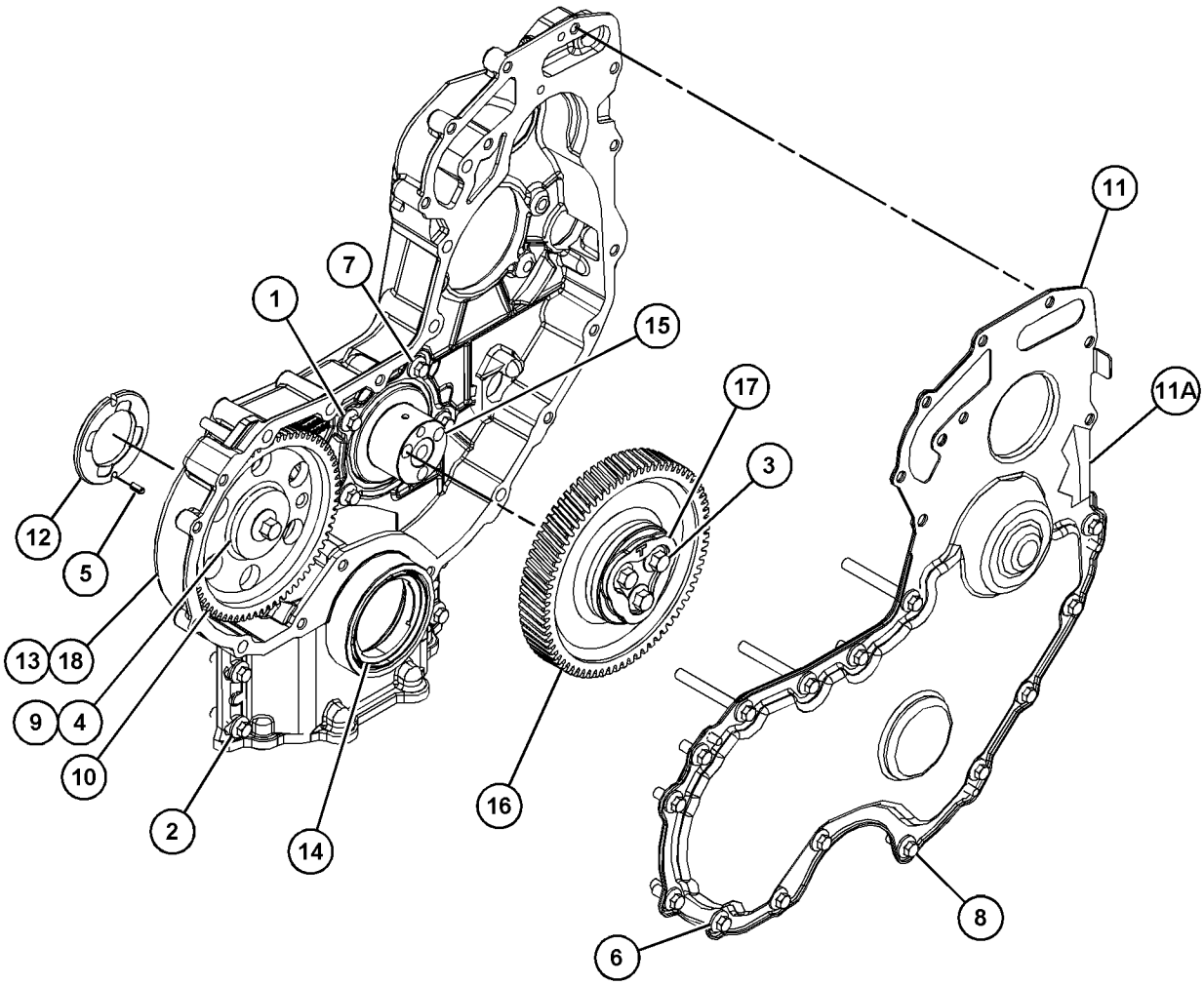

GRAPHIC #1 <END> g03483004

448-9719 HOUSING GP-FRONT

S/N: E7A1-UP

PART OF 533-1840 ENGINE AR-PRIMARY

SMCS-1151, 1162, 1206 **i07577475**

NOTE	REF NO	GRAPHIC REF	PART NUMBER	QTY	PART NAME 1 2 3 4 5 6 (PRODUCT LEVEL)	SEE PAGE
M	1	1	**6I-0650**	3	BOLT (M10X1.5X65-MM)	
M	2	1	**7C-4616**	1	BOLT (M12X1.75X45-MM)	
	3	1	**067-6179**	1	DOWEL	
M	4	1	**100-3751**	5	BOLT (M8X1.25X65-MM)	
	5	1	**273-3690**	1	BOLT	
M	6	1	**101-3895**	2	BOLT (M8X1.25X35-MM)	
M	7	1	**124-3815**	9	BOLT (M8X1.25X16-MM)	
	8	1	**133-1011**	1	WASHER	
	9	1	**232-3666**	1	WASHER-THRUST	
	10	1	**277-3013**	1	SEAL	
	11	1	**346-0408**	1	PLATE	
	12	1	**443-9076**	1	CASE-GEAR	
M	13	1	**6I-0217**	6	BOLT (M8X1.25X20-MM)	
M	14	1	**6I-0645**	4	BOLT (M8X1.25X25-MM)	
	15	1	**324-0444**	1	HUB-IDLER GEAR	
	16	1	**425-7103**	1	GEAR (68-TEETH)	
	17	1	**226-8767**	1	COVER AS-FRONT	
		1	**226-8766**	1	GASKET-COVER	
	18	1	**251-4336**	1	GEAR AS-IDLER (73-TEETH)	
	19	1	**277-3012**	1	GASKET-COVER	

M - METRIC PART

448-9719 **HOUSING GP-FRONT (**contd.**)** **i07577475**

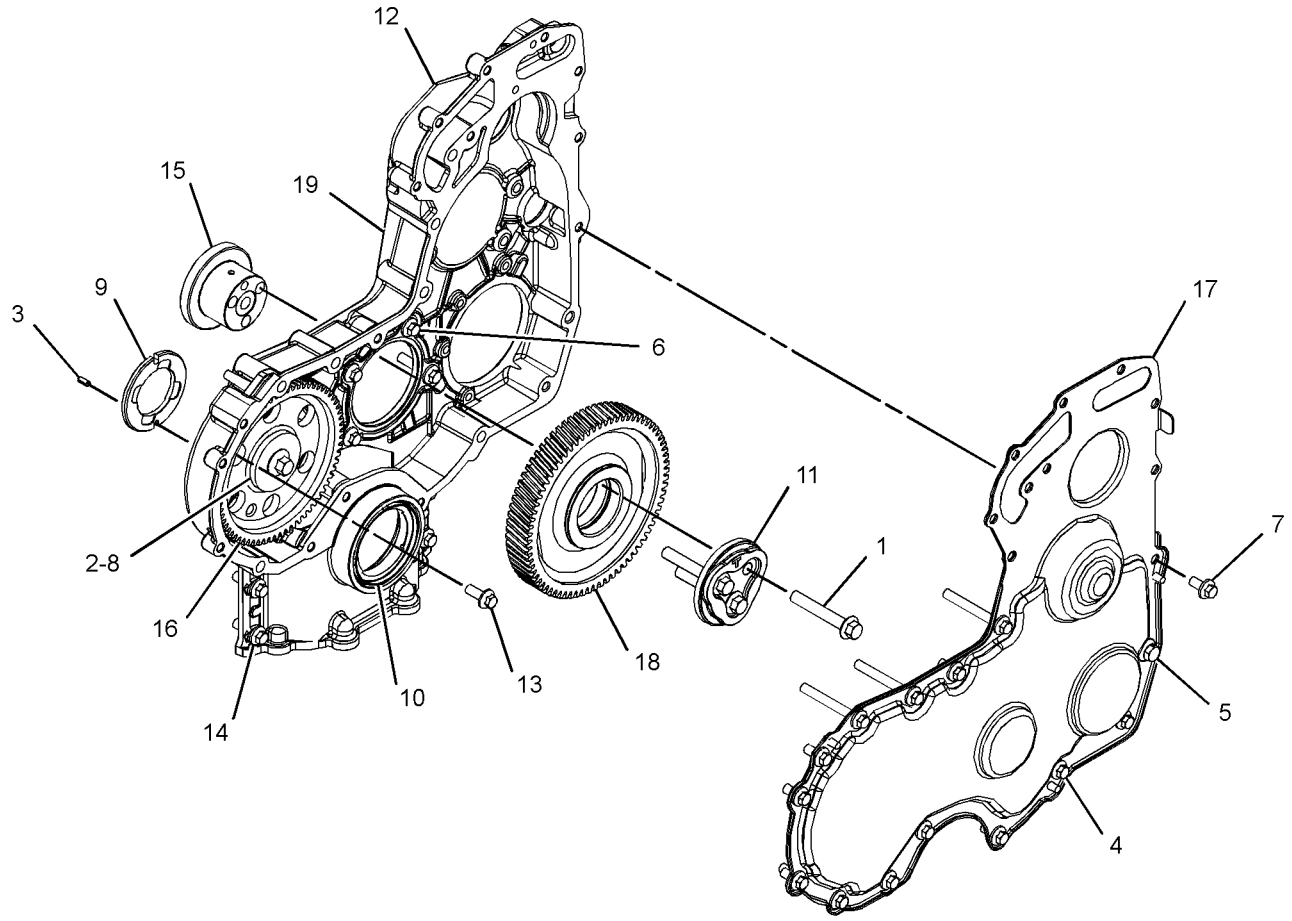

GRAPHIC #1 <END> g06171608

503-8948 HOUSING GP-FRONT

S/N: E7A1-UP

PART OF 533-1840 ENGINE AR-PRIMARY

SMCS-1151, 1162, 1206 **i07577481**

NOTE	REF NO	GRAPHIC REF	PART NUMBER	QTY	PART NAME 1 2 3 4 5 6 (PRODUCT LEVEL)	SEE PAGE
M	1	1	**6I-0217**	2	BOLT (M8X1.25X20-MM)	
M	2	1	**6I-0302**	2	BOLT (M10X1.5X25-MM)	
	3	1	**035-8017**	1	UNION	
	4	1	**102-2073**	1	SEAL-O-RING	
	5	1	**113-8076**	1	PIN	
	6	1	**126-3219**	1	SEAL-O-RING	
M	7	1	**6I-0654**	2	BOLT (M10X1.5X25-MM)	
	8	1	**214-3203**	1	WASHER (SEALING)	
	9	1	**247-4928**	2	WASHER (16.5X20.5X1.6-MM THK)	
	10	1	**259-2623**	1	GEAR (34-TEETH)	
M	11	1	**273-3691**	4	BOLT (M8X1.25X80-MM)	
	12	1	**293-1876**	1	BRACKET	
	13	1	**293-1878**	1	CONNECTION	
	14	1	**321-6120**	1	LINES GP-FUEL INJECTION	
	15	1	**369-3866**	1	PLATE GP-COVER	
	15A	1	**365-5317**	1	SEAL	
	16	1	**451-1179**	1	COMPRESSOR	
M	17	1	**184-0983**	2	NUT-HEX FLANGE (M12X1.75-THD)	
	18	1	**209-6825**	2	ADAPTER	
Y	19	1	**293-1877**	1	ADAPTER GP-AIR COMPRESSOR	10

M - METRIC PART
Y - SEPARATE ILLUSTRATION

503-8948 **HOUSING GP-FRONT (**contd.**)** **i07577481**

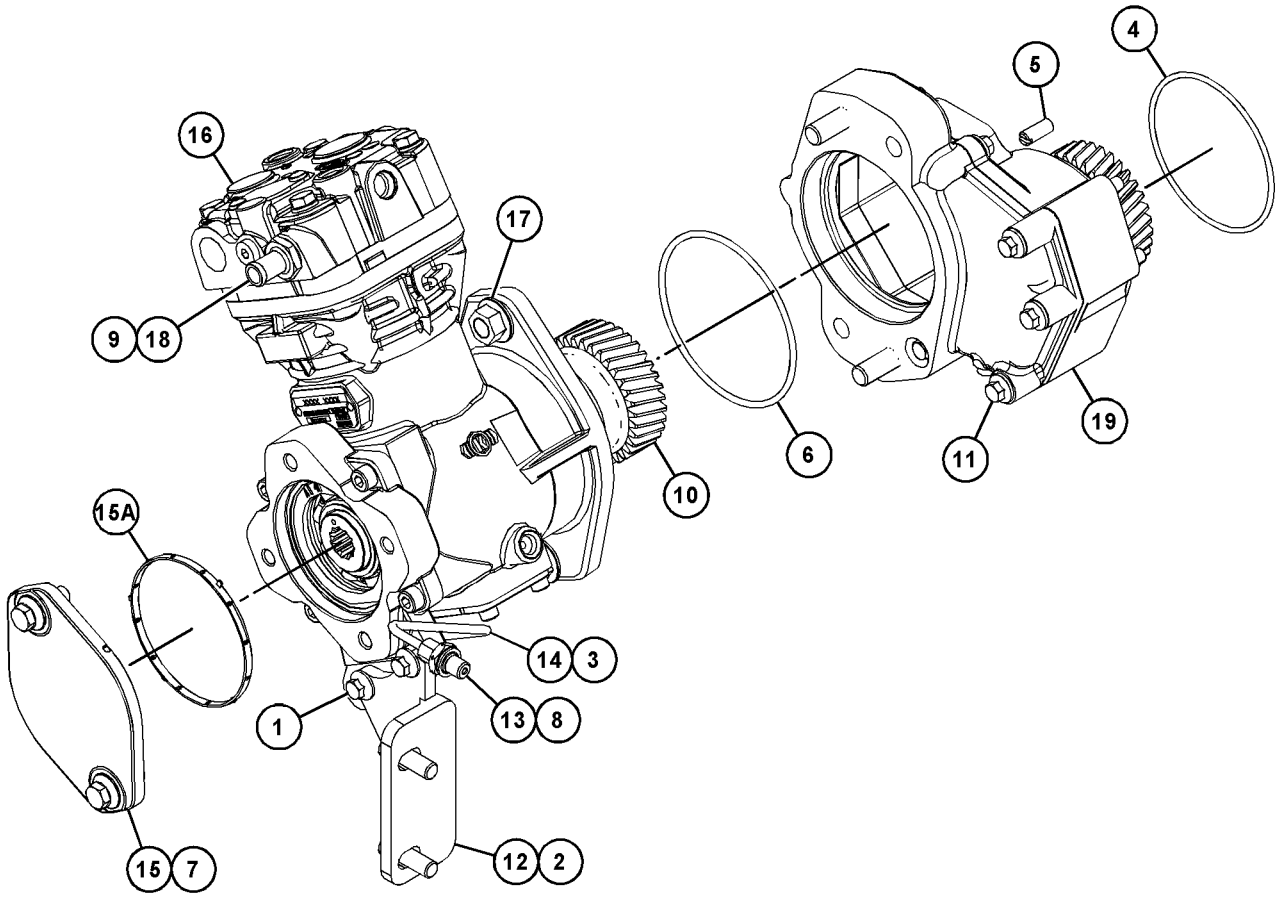

GRAPHIC #1 <END> g06366147

371-2478 JET GP-PISTON COOLING

S/N: E7A1-UP

PART OF 451-1222 CYLINDER BLOCK GP-SHORT, 533-1826, 533-1840 ENGINE AR-PRIMARY

SMCS-1331 **i05472511**

NOTE	REF NO	GRAPHIC REF	PART NUMBER	QTY	PART NAME 1 2 3 4 5 6 (PRODUCT LEVEL)	SEE PAGE
M	1	1	**100-4841**	6	BOLT (M6X1X10-MM)	
	2	1	**329-3796**	6	TUBE AS-OIL JET	

M - METRIC PART

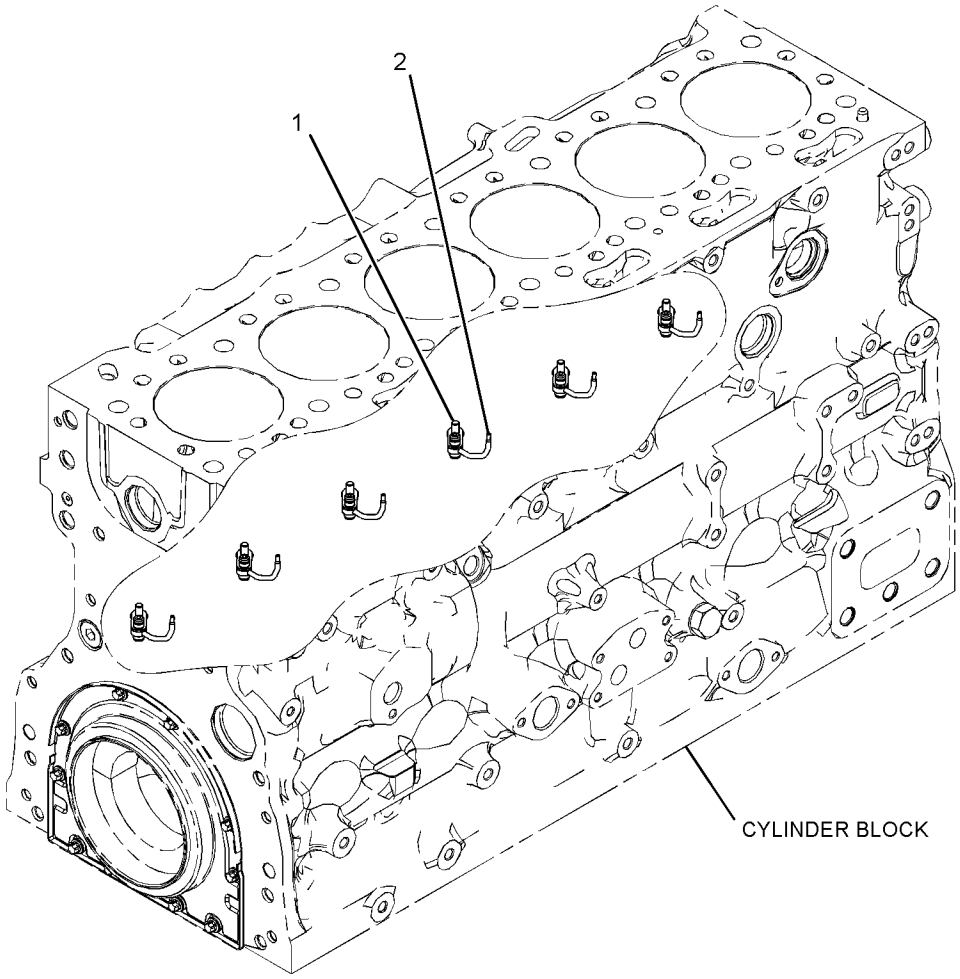

GRAPHIC #1 <END> g03378569

371-2740 LIFTING GP-ENGINE

S/N: E7A1-UP

PART OF 533-1826, 533-1840 ENGINE AR-PRIMARY

SMCS-1122 **i05493911**

NOTE	REF NO	GRAPHIC REF	PART NUMBER	QTY	PART NAME 1 2 3 4 5 6 (PRODUCT LEVEL)	SEE PAGE
	1	1	**279-9651**	1	PLATE-LIFTING	
	2	1	**304-5062**	1	BRACKET	
M	3	1	**6I-0654**	2	BOLT (M10X1.5X25-MM)	
M	4	1	**123-2899**	4	BOLT (M10X1.5X40-MM)	
	5	1	**415-1604**	1	BRACKET-LIFTING	

M - METRIC PART

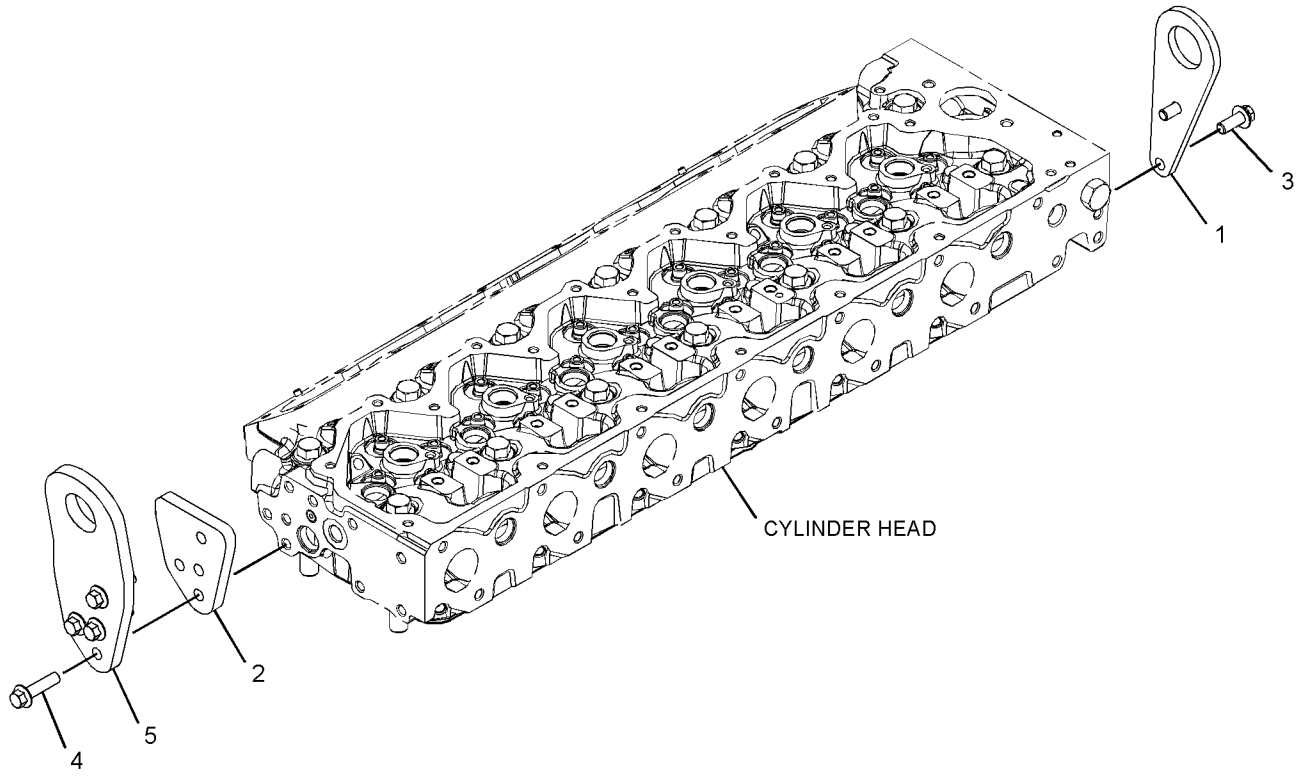

GRAPHIC #1 <END> g03456846

527-9468 LINES GP-AIR COMPRESSOR

S/N: W921-UP

PART OF 527-9463 INSTALLATION AR-ENGINE

SMCS-1803 **i07593125**

NOTE	REF NO	GRAPHIC REF	PART NUMBER	QTY	PART NAME 1 2 3 4 5 6 (PRODUCT LEVEL)	SEE PAGE
	1	1	**1Y-0413**	1	TEE	
	2	1	**2H-3940**	1	ELBOW	
	3	1	**033-3168**	1	ELBOW	
	4	1	*250-1482*	1	CONNECTOR AS	
		1	**3K-0360**	1	SEAL-O-RING	
		1	**5P-9615**	1	CONNECTOR	
	5	1	**416-7151**	2	RING-RETAINER	
	6	1	**002-6454**	1	CONNECTOR	
	7	1	**032-3631**	1	ELBOW	
	8	1	*170-0967*	1	ELBOW AS	
		1	**3K-0360**	1	SEAL-O-RING	
		1	**5P-4906**	1	ELBOW	
	9	1	**228-7102**	2	SEAL-O-RING	
	10	1	**3J-5389**	1	PLUG (EXTERNAL)	
	11	1	**8T-7862**	2	CONNECTOR	
	12	1	**9X-2488**	4	CLAMP-HOSE	
E	13	1	**5P-0767**		HOSE (48-CM)	
E	13A	1	**5P-0767**		HOSE (22-CM)	

E - ORDER BY THE CENTIMETER

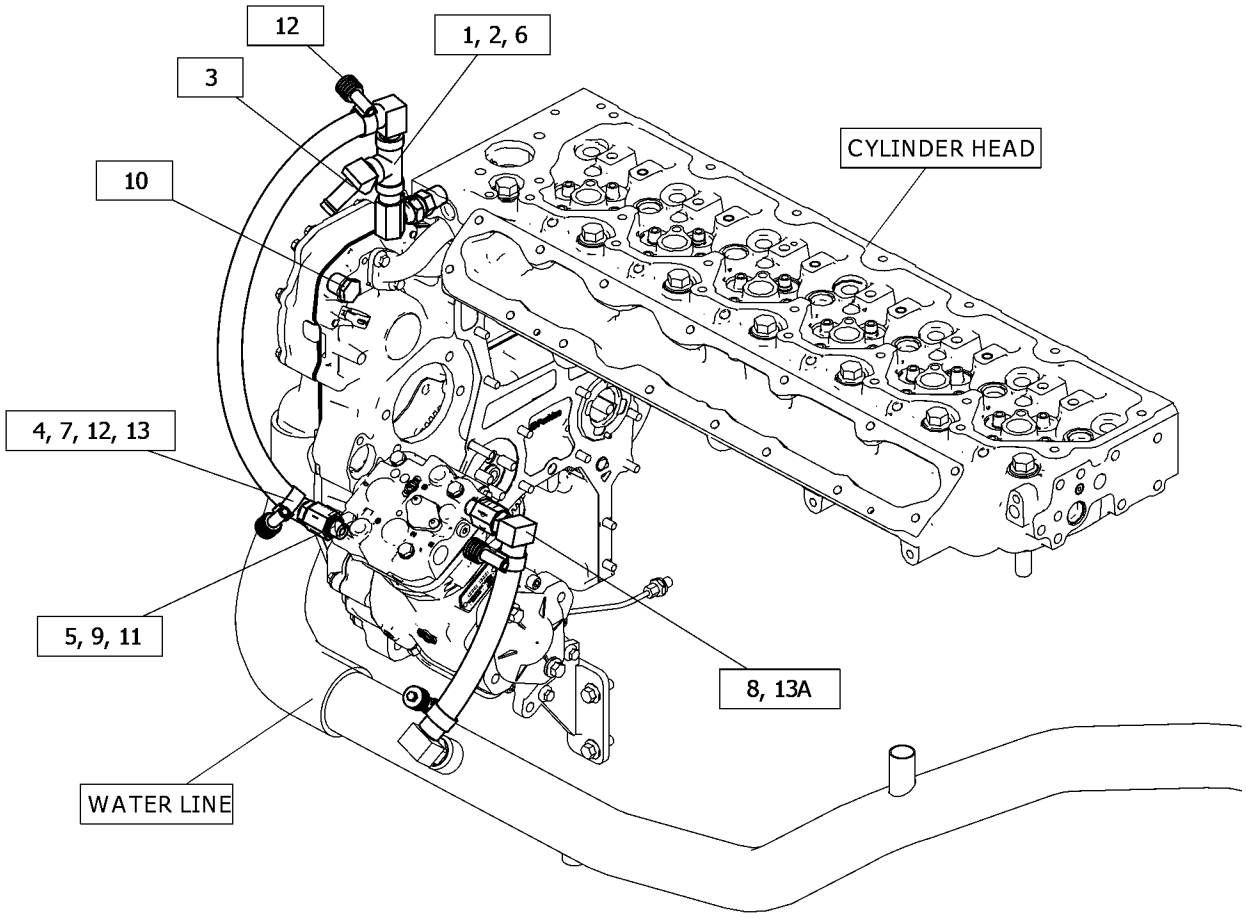

GRAPHIC #1 <END> g06375426

448-9710 MOUNTING GP-ACCESSORY MODULE

S/N: E7A1-UP

PART OF 533-1840 ENGINE AR-PRIMARY

SMCS-7263 **i07577484**

NOTE	REF NO	GRAPHIC REF	PART NUMBER	QTY	PART NAME 1 2 3 4 5 6 (PRODUCT LEVEL)	SEE PAGE
	1	1	**067-6823**	1	PLUG	
	2	1	**113-4616**	1	CONNECTOR	
	3	1	**293-1881**	1	ELBOW	

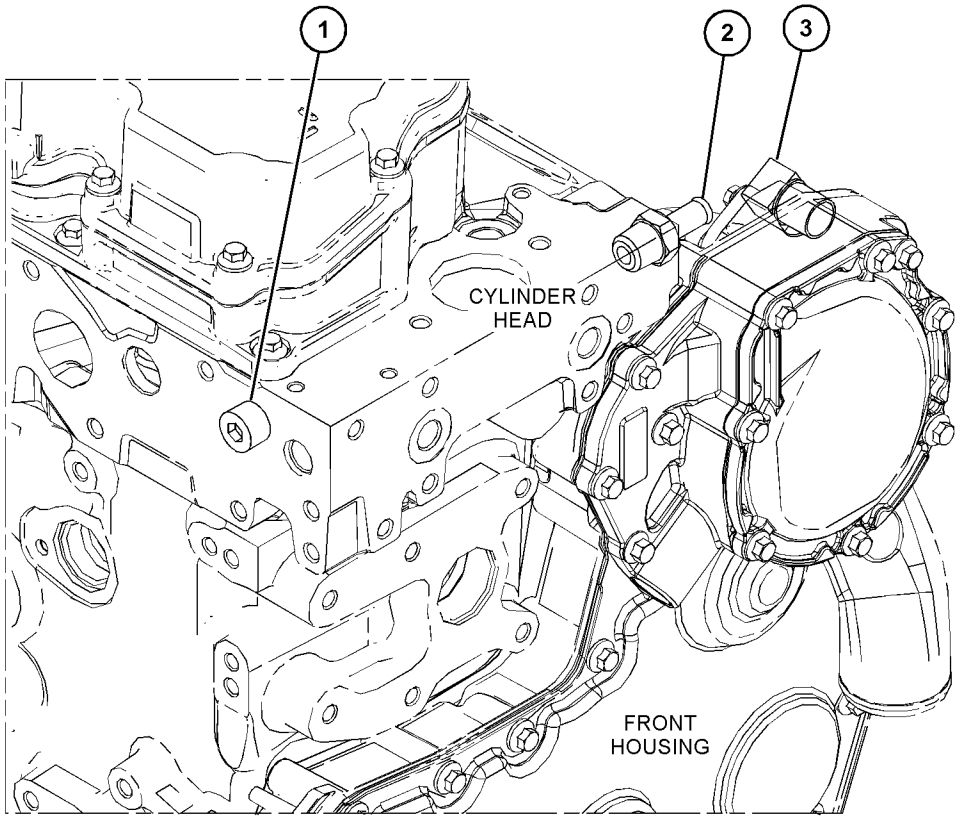

GRAPHIC #1 <END> g03820198

527-9488 MOUNTING GP-ENGINE

S/N: W921-UP

PART OF 527-9462, 527-9463, 527-9464 INSTALLATION AR-ENGINE

SMCS-1152, 1153, 1154 **i07581917**

NOTE	REF NO	GRAPHIC REF	PART NUMBER	QTY	PART NAME 1 2 3 4 5 6 (PRODUCT LEVEL)	SEE PAGE
	1	1	**198-4780**	8	WASHER-HARD (17.5X32X8-MM THK)	
	2	1	**518-1818**	8	BOLT (M16X2X50-MM)	
	3	1	**518-4417**	4	WASHER	
	4	1	**518-8351**	2	BOLT (M20X2.5X130-MM)	
	5	1	**521-9811**	2	MOUNT AS	
	6	1	**521-9812**	2	WASHER	
	7	1	**539-1082**	1	BRACKET AS	
	8	1	**539-1086**	1	BRACKET AS	
M	9	1	**8T-6466**	4	BOLT (M10X1.5X60-MM)	

M - METRIC PART

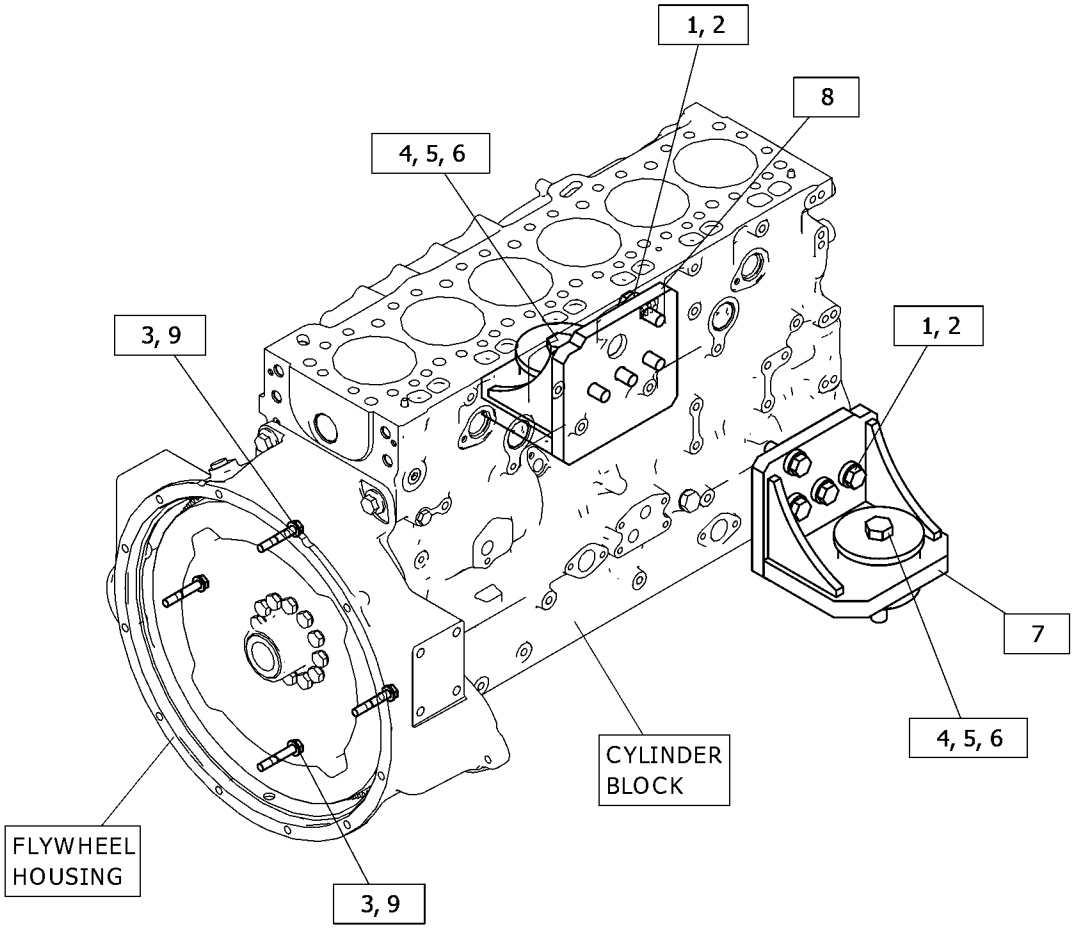

GRAPHIC #1 <END> g06374331

378-0595 PAN GP-OIL

S/N: E7A1-UP

PART OF 533-1826, 533-1840 ENGINE AR-PRIMARY

SMCS-1302 **i07577089**

NOTE	REF NO	GRAPHIC REF	PART NUMBER	QTY	PART NAME 1 2 3 4 5 6 (PRODUCT LEVEL)	SEE PAGE
M	1	1	**8T-0269**	2	BOLT-SOCKET HEAD (M6X1X20-MM)	
	2	1	**230-8094**	1	BRIDGE	
	3	1	**348-8607**	1	TUBE AS	
	4	1	**351-4749**	1	GASKET-OIL PAN	
	5	1	**539-8912**	1	PAN GP-OIL	
	5A	1	**8L-2786**	2	SEAL-O-RING	
	5B	1	**9S-4185**	2	PLUG (3/4-16-THD)	
M	6	1	**6I-0217**	28	BOLT (M8X1.25X20-MM)	
M	7	1	**6I-0260**	2	BOLT (M8X1.25X25-MM)	
M	8	1	**6I-0572**	2	BOLT (M8X1.25X20-MM)	
	9	1	**6I-4681**	1	GASKET	

M - METRIC PART

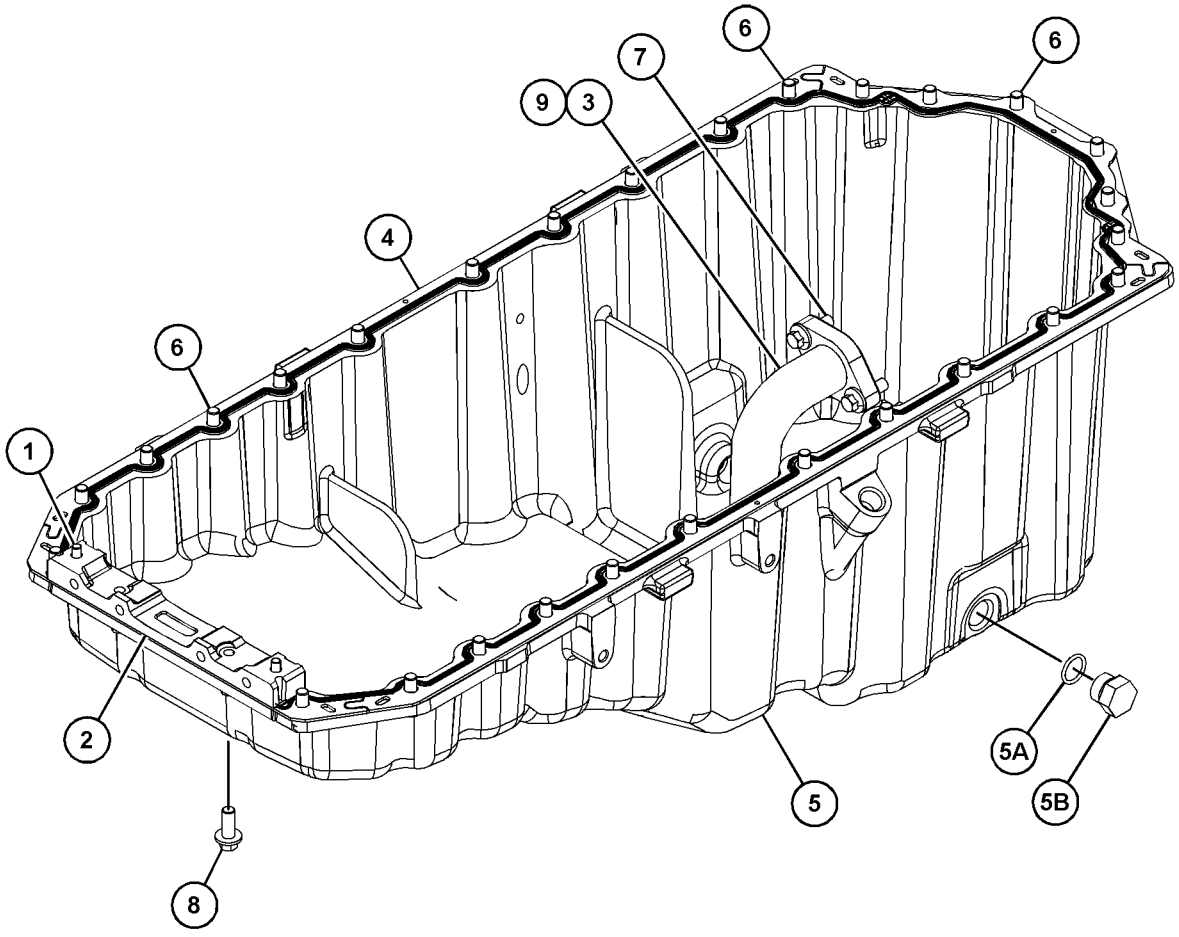

GRAPHIC #1 <END> g06316941

369-7304 PISTON & ROD GP

S/N: E7A1-UP

PART OF 451-1222 CYLINDER BLOCK GP-SHORT

SMCS-1225 **i07053220**

NOTE	REF NO	GRAPHIC REF	PART NUMBER	QTY	PART NAME 1 2 3 4 5 6 (PRODUCT LEVEL)	SEE PAGE
Y	1	1	**331-0290**	6	CONNECTING ROD GP	15
CPTY	2	1	*504-2903*	6	PISTON GP	52
J	3	1	*317-5482*	6	BEARING	
J	4	1	*470-8038*	6	BEARING	
PQS	5	1	**124-3536**	12	RING-RETAINING	
					AVAILABLE REPAIR KIT(S):	
BJ			**436-7781**		KIT-BEARING (CONNECTING ROD)	
					(INCLUDES BEARINGS)	
AB			**480-4489**		KIT-BEARING (0.254-MM US)	
					(INCLUDES BEARINGS)	
AB			**480-4490**		KIT-BEARING (0.51-MM US)	
					(INCLUDES BEARINGS)	
AB			**480-4491**		KIT-BEARING (0.762-MM US)	
					(INCLUDES BEARINGS)	
BP			**443-9475**	1	KIT-PISTON (STANDARD)	
					(KIT INCLUDES RETAINING RING, PIN, PISTON RINGS & PISTON)	
ABQ			**443-9898**		KIT-PISTON (0.5-MM OS)	
					(KIT INCLUDES RETAINING RING, PIN, PISTON RINGS & PISTON)	
ABS			**443-9919**		KIT-PISTON (1-MM OS)	
					(KIT INCLUDES RETAINING RING, PIN, PISTON RINGS & PISTON)	
T			**276-7476**	1	KIT-PISTON RING	
					(INCLUDES PISTON RINGS)	
AB			**380-2065**		KIT-PISTON RING (0.5-MM OS)	
					(INCLUDES PISTON RINGS)	
AB			**466-4849**		KIT-PISTON RING (1-MM OS)	
					(INCLUDES PISTON RINGS)	

A - NOT PART OF THIS GROUP
B - USE AS REQUIRED
C - CHANGE FROM PREVIOUS TYPE
J - KIT MARKED J SERVICES PART(S) MARKED J
P - KIT MARKED P SERVICES PART(S) MARKED P
Q - KIT MARKED Q SERVICES PART(S) MARKED Q
S - KIT MARKED S SERVICES PART(S) MARKED S
T - KIT MARKED T SERVICES PART(S) MARKED T
Y - SEPARATE ILLUSTRATION

369-7304 **PISTON & ROD GP (**contd.**)** **i07053220**

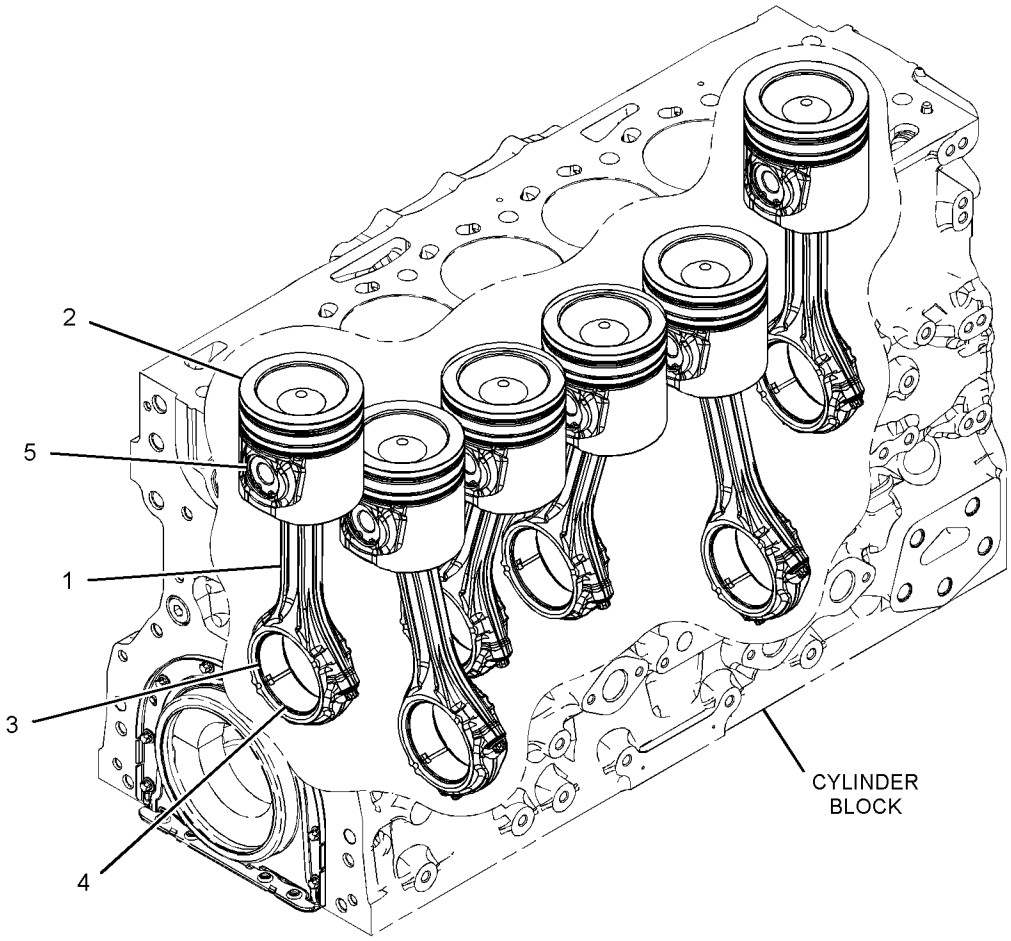

GRAPHIC #1 <END> g03532656

369-7304 PISTON & ROD GP

S/N: E7A1-UP

PART OF 451-1222 CYLINDER BLOCK GP-SHORT

SMCS-1225 **i06995800**

NOTE	REF NO	GRAPHIC REF	PART NUMBER	QTY	PART NAME 1 2 3 4 5 6 (PRODUCT LEVEL)	SEE PAGE
Y	1	1	**331-0290**	6	CONNECTING ROD GP	15
LP	2	1	**369-3186**	6	PISTON GP	
J	3	1	*317-5482*	6	BEARING	
J	4	1	*470-8038*	6	BEARING	
P	5	1	**124-3536**	12	RING-RETAINING	
					AVAILABLE REPAIR KIT(S):	
BJ			**436-7781**		KIT-BEARING (CONNECTING ROD)	
BJ			**458-7918**		KIT-BEARING (0.25-MM US)	
BJ			**458-7939**		KIT-BEARING (0.50-MM US)	
BJ			**458-7940**		KIT-BEARING (0.75-MM US)	
BL			**276-7476**	1	KIT-PISTON RING (STANDARD)	
					(INCLUDES ONE SET RINGS)	
BL			**466-4849**	1	KIT-PISTON RING (1-MM OS)	
					(INCLUDES ONE SET RINGS)	
BP			**443-9475**	1	KIT-PISTON (STANDARD)	
					(INCLUDES PISTON AND SET OF RINGS)	
BP			**443-9898**	1	KIT-PISTON (0.5-MM OS) (0.5-MM OS)	
					(INCLUDES PISTON AND SET OF RINGS)	
BP			**443-9919**		KIT-PISTON (1-MM OS) (1-MM OS)	
					(INCLUDES PISTON AND SET OF RINGS)	

B - USE AS REQUIRED
J - KIT MARKED J SERVICES PART(S) MARKED J
L - KIT MARKED L SERVICES PART(S) MARKED L
P - KIT MARKED P SERVICES PART(S) MARKED P
Y - SEPARATE ILLUSTRATION

369-7304 **PISTON & ROD GP (**contd.**)** **i06995800**

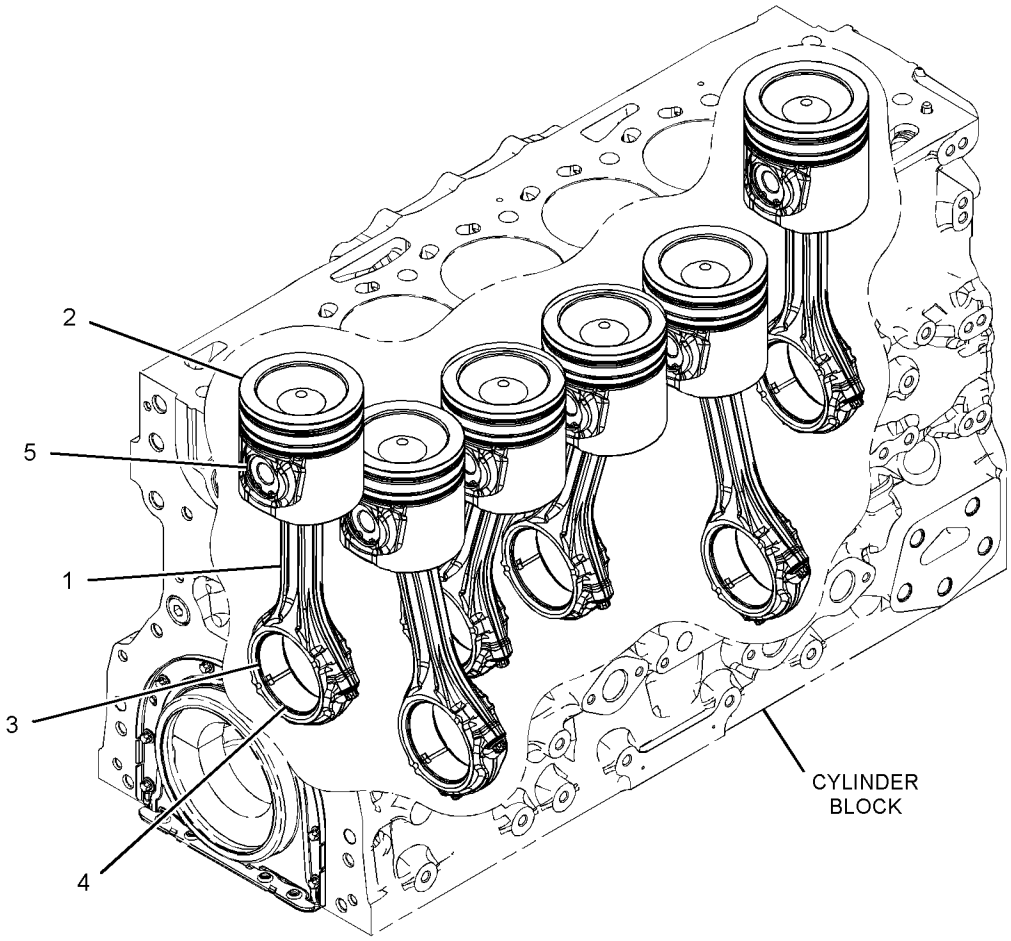

GRAPHIC #1 <END> g03532656

374-6301 PISTON & ROD GP

S/N: E7A1-UP

PART OF 533-1826, 533-1840 ENGINE AR-PRIMARY

SMCS-1225 **i07577090**

NOTE	REF NO	GRAPHIC REF	PART NUMBER	QTY	PART NAME 1 2 3 4 5 6 (PRODUCT LEVEL)	SEE PAGE
	1	1	**331-0290**	6	CONNECTING ROD GP	
					(EACH INCLUDES)	
	1A	1	**276-7478**	1	BUSHING	
M	1B	1	**323-9312**	2	BOLT (M10X1X50-MM)	
J	2	1	*450-5996*	6	PISTON GP	
AB		1	**391-3732**		PISTON GP (0.5-MM OS)	
AB		1	**391-3735**		PISTON GP (1-MM OS)	
P	3	1	*317-5482*	6	BEARING	
P	4	1	*470-8038*	6	BEARING (LOWER)	
J	5	1	**124-3536**	12	RING-RETAINING	
					AVAILABLE REPAIR KIT(S):	
BC			**276-7476**	1	KIT-PISTON RING (STANDARD)	
					(INCLUDES RINGS)	
AB			**380-2065**		KIT-PISTON RING (0.5-MM OS)	
					(INCLUDES RINGS)	
AB			**466-4849**		KIT-PISTON RING (1-MM OS)	
					(INCLUDES RINGS)	
P			**436-7781**	1	KIT-BEARING (CONNECTING ROD) (STANDARD)	
					(INCLUDES BEARINGS)	
AB			**480-4489**		KIT-BEARING (0.254-MM US)	
					(INCLUDES BEARINGS)	
AB			**480-4490**		KIT-BEARING (0.51-MM US)	
					(INCLUDES BEARINGS)	
AB			**480-4491**		KIT-BEARING (0.762-MM US)	
					(INCLUDES BEARINGS)	
J			**444-2190**	1	KIT-PISTON	
					(INCLUDES PIN, PISTON RINGS, RETAINING RINGS & PISTON)	

A - NOT PART OF THIS GROUP
B - USE AS REQUIRED
C - CHANGE FROM PREVIOUS TYPE
J - KIT MARKED J SERVICES PART(S) MARKED J
M - METRIC PART
P - KIT MARKED P SERVICES PART(S) MARKED P

374-6301 **PISTON & ROD GP (**contd.**)** **i07577090**

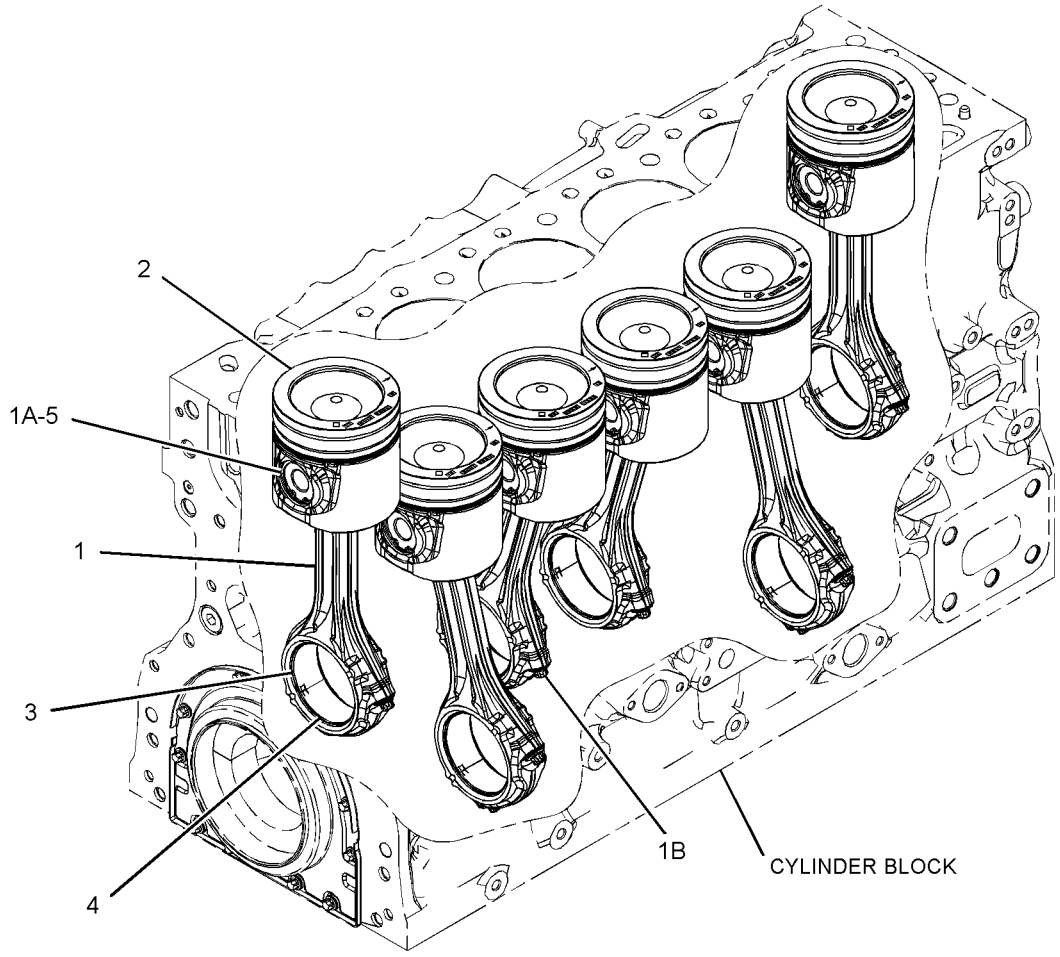

GRAPHIC #1 <END> g06158534

504-2903 PISTON GP

S/N: E7A1-UP

PART OF 369-7304 PISTON & ROD GP

SMCS-1214, 1215 **i07157653**

NOTE	REF NO	GRAPHIC REF	PART NUMBER	QTY	PART NAME 1 2 3 4 5 6 (PRODUCT LEVEL)	SEE PAGE
PQT	1	1	**317-6214**	1	PIN	
P	2	1	*369-3188*	1	PISTON	
JP	3	1	*454-9560*	1	RING-PISTON	
JP	4	1	*454-9569*	1	RING-PISTON	
JP	5	1	*454-9573*	1	RING-OIL	
					AVAILABLE REPAIR KIT(S):	
J			**276-7476**	1	KIT-PISTON RING (STANDARD)	
					(INCLUDES RINGS)	
AB			**380-2065**		KIT-PISTON RING (0.5-MM OS)	
					(INCLUDES RINGS)	
AB			**466-4849**		KIT-PISTON RING (1-MM OS)	
					(INCLUDES RINGS)	
P			**443-9475**	1	KIT-PISTON (STANDARD)	
					(INCLUDES PIN, PISTON RINGS, RETAINING RINGS & PISTON)	
ABQ			**443-9898**		KIT-PISTON (0.5-MM OS)	
					(INCLUDES PIN, PISTON RINGS, RETAINING RINGS & PISTON)	
ABT			**443-9919**		KIT-PISTON (1-MM OS)	
					(INCLUDES PIN, PISTON RINGS, RETAINING RINGS & PISTON)	

A - NOT PART OF THIS GROUP
B - USE AS REQUIRED
J - KIT MARKED J SERVICES PART(S) MARKED J
P - KIT MARKED P SERVICES PART(S) MARKED P
Q - KIT MARKED Q SERVICES PART(S) MARKED Q
T - KIT MARKED T SERVICES PART(S) MARKED T

504-2903 **PISTON GP (**contd.**)** **i07157653**

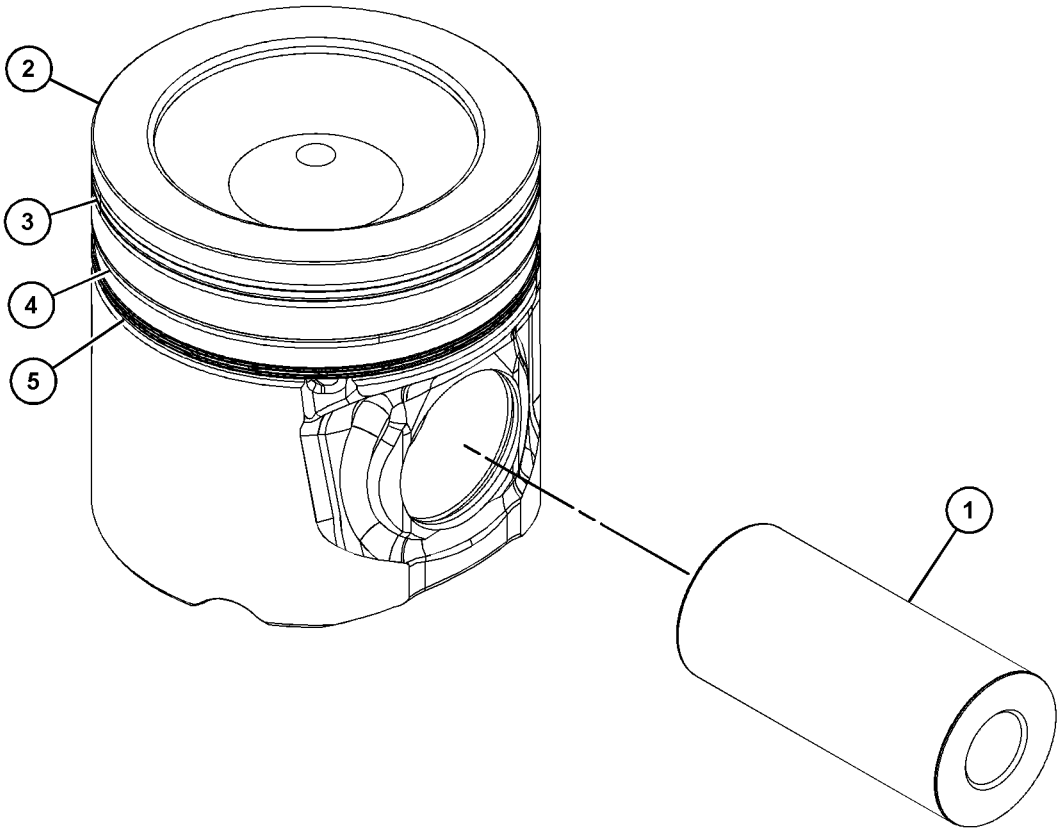

GRAPHIC #1 <END> g06238431

374-9295 PLUG GP-CYLINDER BLOCK

S/N: E7A1-UP

PART OF 533-1826 ENGINE AR-PRIMARY

SMCS-1201 **i07577092**

NOTE	REF NO	GRAPHIC REF	PART NUMBER	QTY	PART NAME 1 2 3 4 5 6 (PRODUCT LEVEL)	SEE PAGE
	1	1	**277-4223**	1	PLUG	

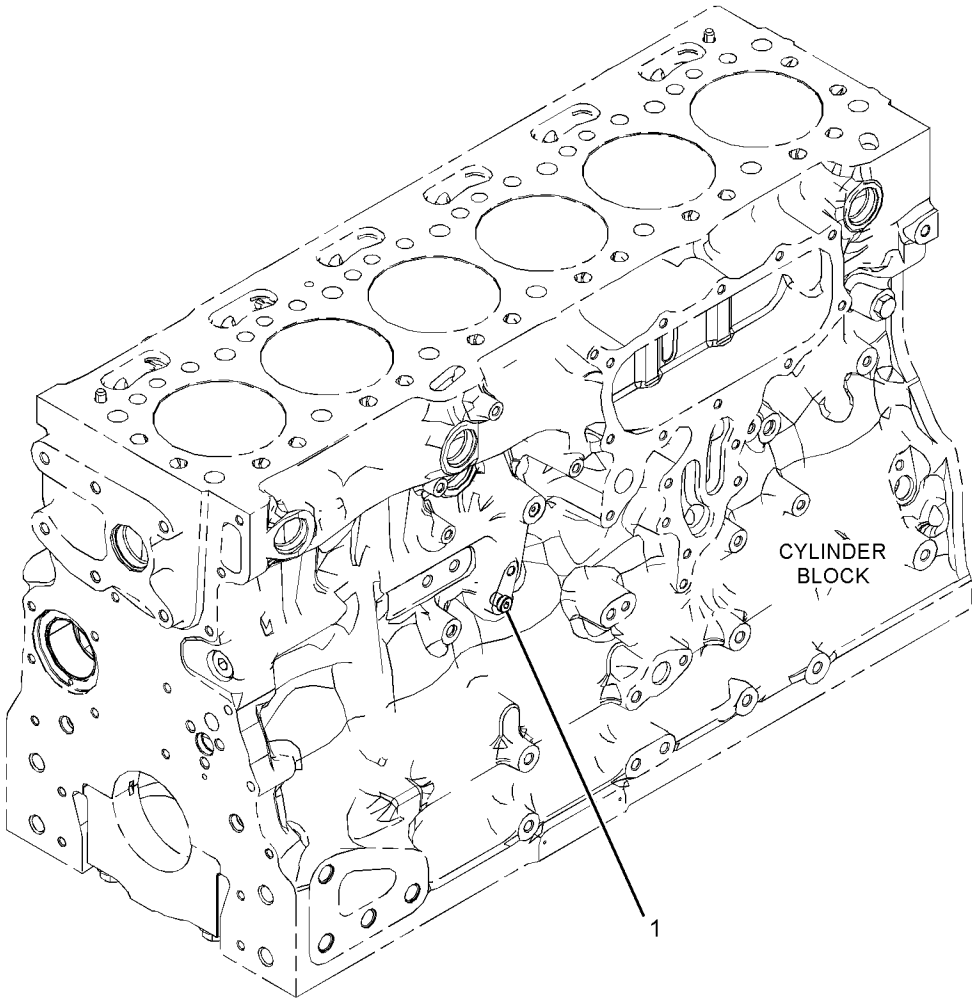

GRAPHIC #1 <END> g03483538

346-2908 PLUG GP-ENGINE

S/N: E7A1-UP

PART OF 533-1826 ENGINE AR-PRIMARY

SMCS-1000, 1201

i07577093

NOTE	REF NO	GRAPHIC REF	PART NUMBER	QTY	PART NAME 1 2 3 4 5 6 (PRODUCT LEVEL)	SEE PAGE
	1	1	**067-6823**	3	PLUG	

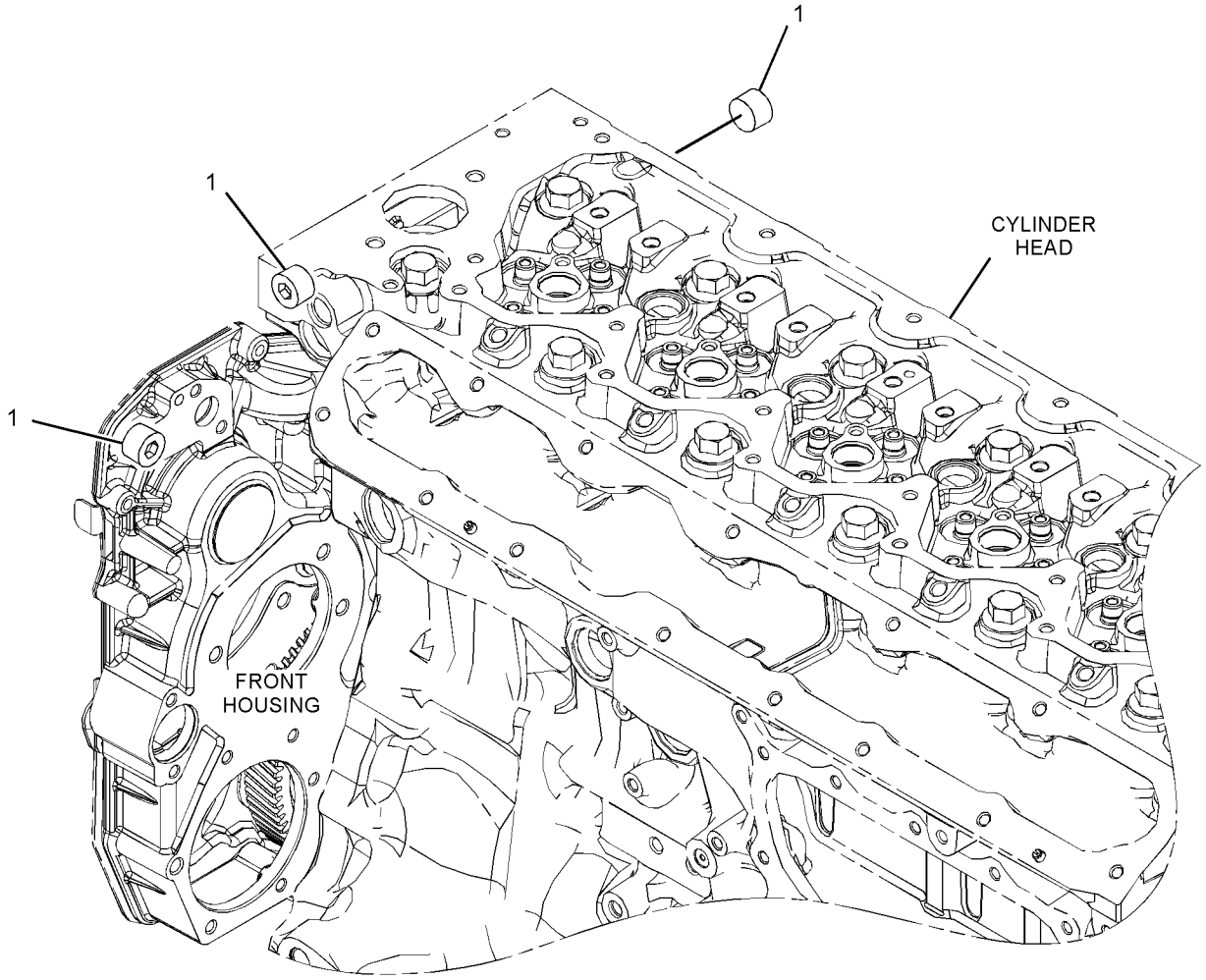

GRAPHIC #1

<END>

g03380722

371-2555 PULLEY GP-CRANKSHAFT

S/N: E7A1-UP
200MM. 8 RIB AXPTO
PART OF 533-1826, 533-1840 ENGINE AR-PRIMARY

SMCS-1205 **i07577095**

NOTE	REF NO	GRAPHIC REF	PART NUMBER	QTY	PART NAME 1 2 3 4 5 6 (PRODUCT LEVEL)	SEE PAGE
	1	1	**274-1931**	1	PULLEY (8-GROOVE)	
	2	1	**342-6502**	1	ADAPTER	
	3	1	**342-6507**	1	SHIM (0.1-MM THK)	
M	4	1	**342-6510**	3	BOLT-TORX (M14X1.5X70-MM)	
	5	1	**351-1724**	1	DAMPER	

M - METRIC PART

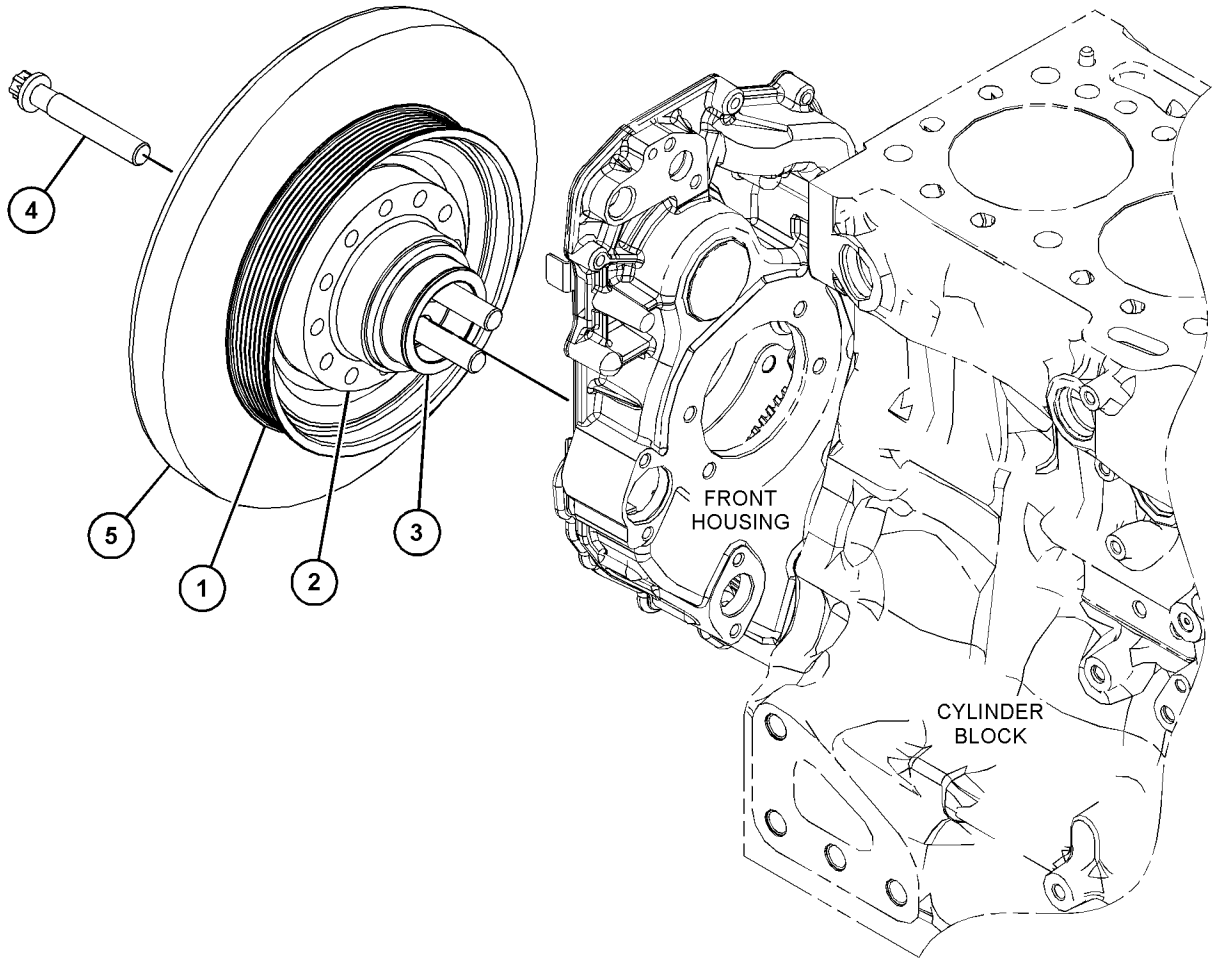

GRAPHIC #1 <END> g03651022

280-1911 ROCKER ARM GP

S/N: E7A1-UP

PART OF 371-2480 ROCKER ARM GP

SMCS-1102, 1123

i05571942

NOTE	REF NO	GRAPHIC REF	PART NUMBER	QTY	PART NAME 1 2 3 4 5 6 (PRODUCT LEVEL)	SEE PAGE
	1	1	**276-9201**	1	CLIP	
	2	1	**276-9206**	5	SPRING-SHAFT	
	3	1	**276-9207**	1	SPRING-SHAFT	
	4	1	**277-5307**	1	SHAFT AS-ROCKER ARM	
	4A	1	**276-9200**	1	PLUG-SHAFT END	
	5	1	**278-5111**	6	ROCKER ARM AS	
					(EACH INCLUDES)	
	5A	1	**276-9230**	1	NUT	
	5B	1	**278-5113**	1	SCREW-ADJUSTING (TORX)	
	6	1	**278-5112**	6	ROCKER ARM AS	
					(EACH INCLUDES)	
	6A	1	**276-9230**	1	NUT	
	6B	1	**278-5113**	1	SCREW-ADJUSTING (TORX)	
	7	1	**280-1912**	6	BRACKET	
	8	1	**280-1913**	6	RETAINER	
	9	1	**280-1914**	12	BOLT (M8X1.25X55-MM)	

280-1911 **ROCKER ARM GP** (contd.) **i05571942**

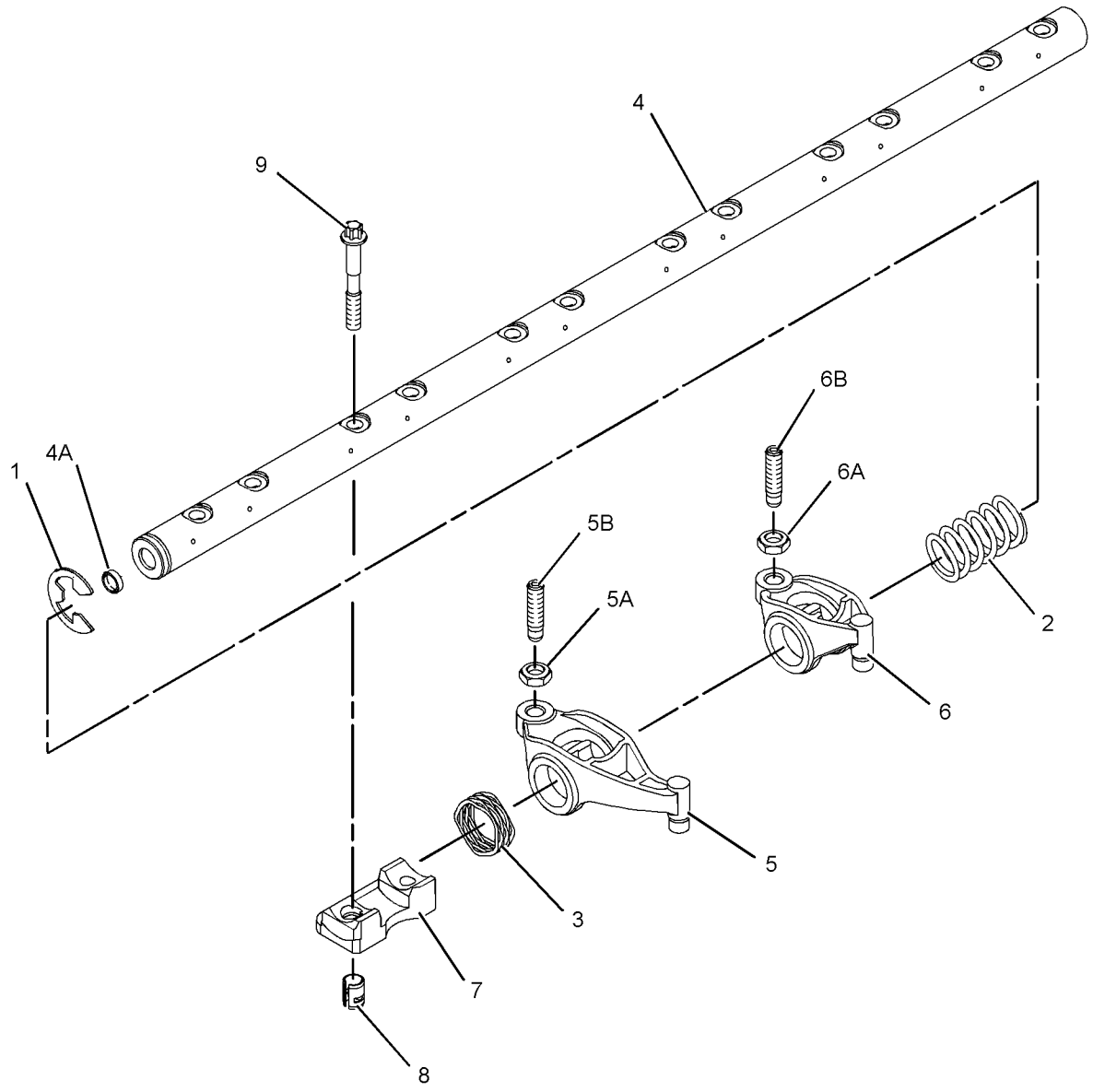

GRAPHIC #1 <END> g01235750

371-2480 ROCKER ARM GP

S/N: E7A1-UP

PART OF 533-1826, 533-1840 ENGINE AR-PRIMARY

SMCS-1102, 1123

i05773125

NOTE	REF NO	GRAPHIC REF	PART NUMBER	QTY	PART NAME 1 2 3 4 5 6 (PRODUCT LEVEL)	SEE PAGE
	1	1	**436-0521**	24	SPRING-VALVE	
	2	1	**346-4709**	12	BRIDGE GP-VALVE	
	3	1	**276-8123**	48	COTTER-CAP	
	4	1	**276-8133**	24	CAP-VALVE	
Y	5	1	**280-1911**	1	ROCKER ARM GP	57
	6	1	**299-5511**	24	SEAL-VALVE STEM	
	7	1	**309-6678**	12	VALVE-INLET	
	8	1	**339-9637**	12	VALVE-EXHAUST	

Y - SEPARATE ILLUSTRATION

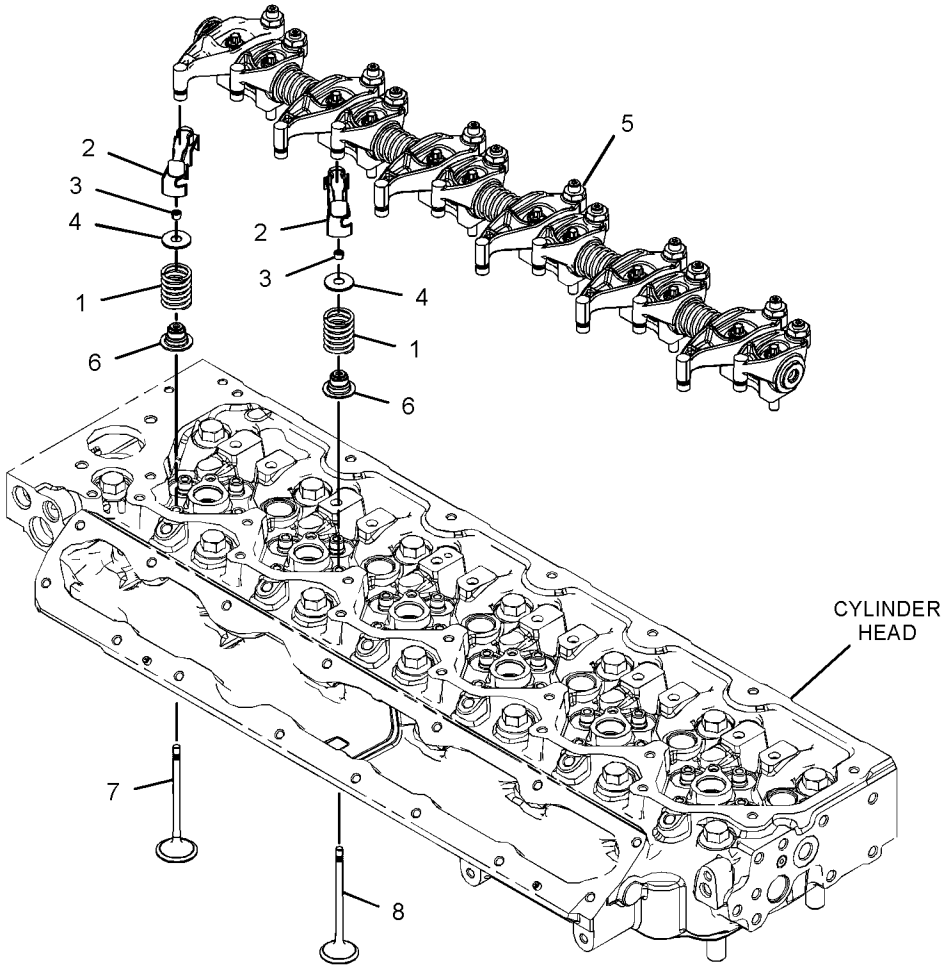

GRAPHIC #1 <END> g03103178

452-6585 ROCKER ARM GP

S/N: E7A1-UP

PART OF 452-6584 CYLINDER HEAD GP

SMCS-1102, 1123

i07577446

NOTE	REF NO	GRAPHIC REF	PART NUMBER	QTY	PART NAME 1 2 3 4 5 6 (PRODUCT LEVEL)	SEE PAGE
	1	1	**436-0521**	24	SPRING-VALVE	
	2	1	**276-8133**	24	CAP-VALVE	
	3	1	**276-8123**	48	COTTER-CAP	
	4	1	**299-5511**	24	SEAL-VALVE STEM	
	5	1	**309-6678**	12	VALVE-INLET	
	6	1	**339-9637**	12	VALVE-EXHAUST	

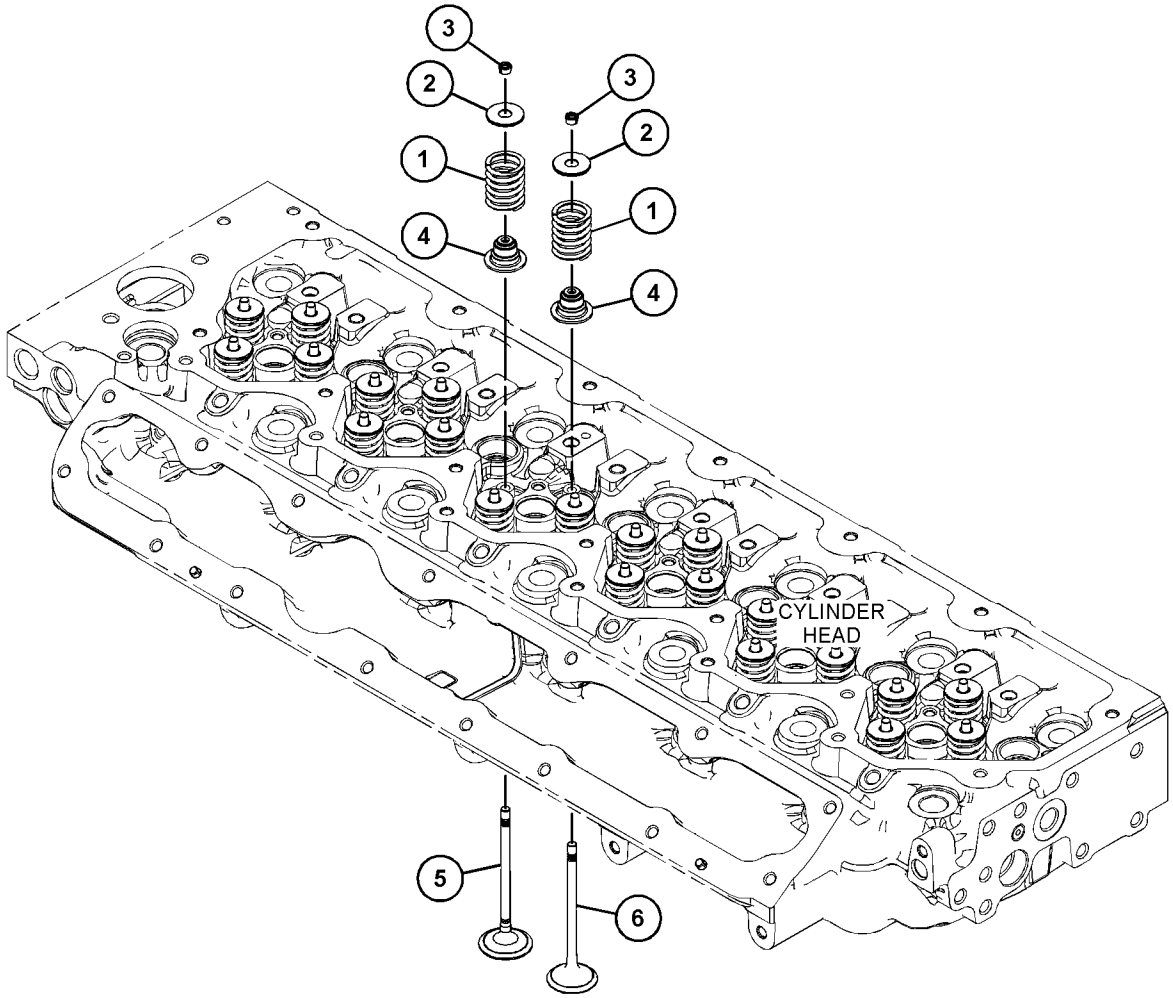

GRAPHIC #1

<END>

g03674542

346-0009 FILLER GP-ENGINE OIL

S/N: E7A1-UP

PART OF 533-1826 ENGINE AR-PRIMARY

SMCS-1316, 7513

i07577076

NOTE	REF NO	GRAPHIC REF	PART NUMBER	QTY	PART NAME 1 2 3 4 5 6 (PRODUCT LEVEL)	SEE PAGE
	1	1	**225-6524**	1	PLUG-CUP	
	2	1	**321-2383**	1	FILLER AS	
		1	**130-9888**	1	CAP AS-OIL FILLER (ENGINE)	
		1	**113-1504**	1	SEAL-O-RING	
		1	**306-2337**	1	SEAL-O-RING	
	3	1	**277-1974**	1	PLATE AS	
	3A	1	**277-1975**	1	SEAL-O-RING	
M	4	1	**6I-0217**	2	BOLT (M8X1.25X20-MM)	
M	5	1	**6I-0254**	1	BOLT (M8X1.25X30-MM)	
M	6	1	**6I-4374**	1	BOLT (M8X1.25X60-MM)	

M - METRIC PART

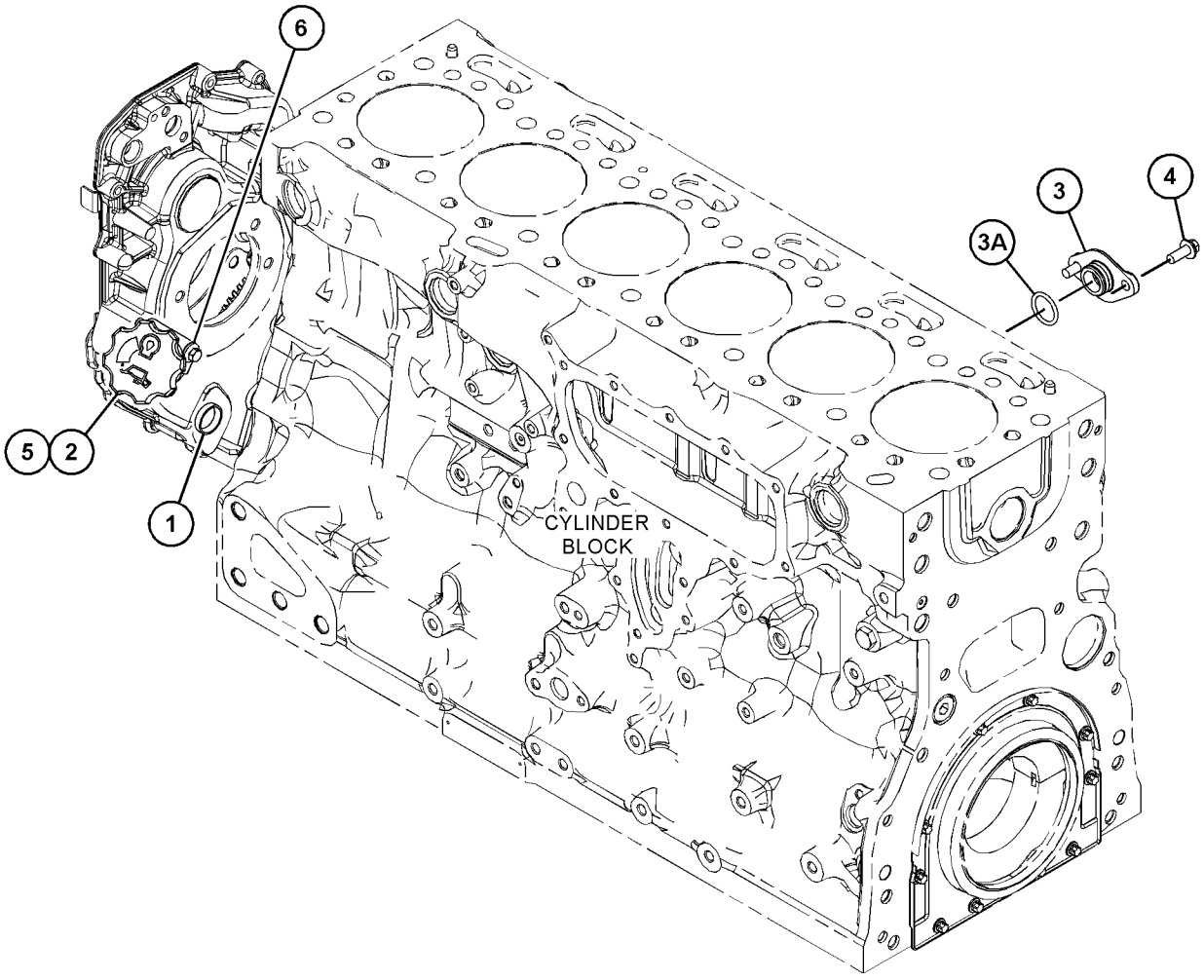

GRAPHIC #1

<END>

g03706917

503-8929 FILLER GP-ENGINE OIL

S/N: E7A1-UP

PART OF 533-1840 ENGINE AR-PRIMARY

SMCS-1316, 7513

i07577477

NOTE	REF NO	GRAPHIC REF	PART NUMBER	QTY	PART NAME 1 2 3 4 5 6 (PRODUCT LEVEL)	SEE PAGE
M	1	1	**6I-4374**	1	BOLT (M8X1.25X60-MM)	
	2	1	**280-1430**	1	GASKET	
	3	1	**317-3775**	1	FILLER GP-ENGINE OIL	
	3A	1	**306-2337**	1	SEAL-O-RING	
M	4	1	**6I-0217**	2	BOLT (M8X1.25X20-MM)	
M	5	1	**6I-0254**	1	BOLT (M8X1.25X30-MM)	
M	6	1	**6I-0260**	2	BOLT (M8X1.25X25-MM)	
	7	1	**277-1974**	1	PLATE AS	
	7A	1	**277-1975**	1	SEAL-O-RING	
	8	1	**305-2527**	1	FILLER AS-OIL	
	8A	1	**130-9888**	1	CAP AS-OIL FILLER (ENGINE)	
	8B	1	**113-1504**	1	SEAL-O-RING	

M - METRIC PART

503-8929 **FILLER GP-ENGINE OIL (**contd.**)** **i07577477**

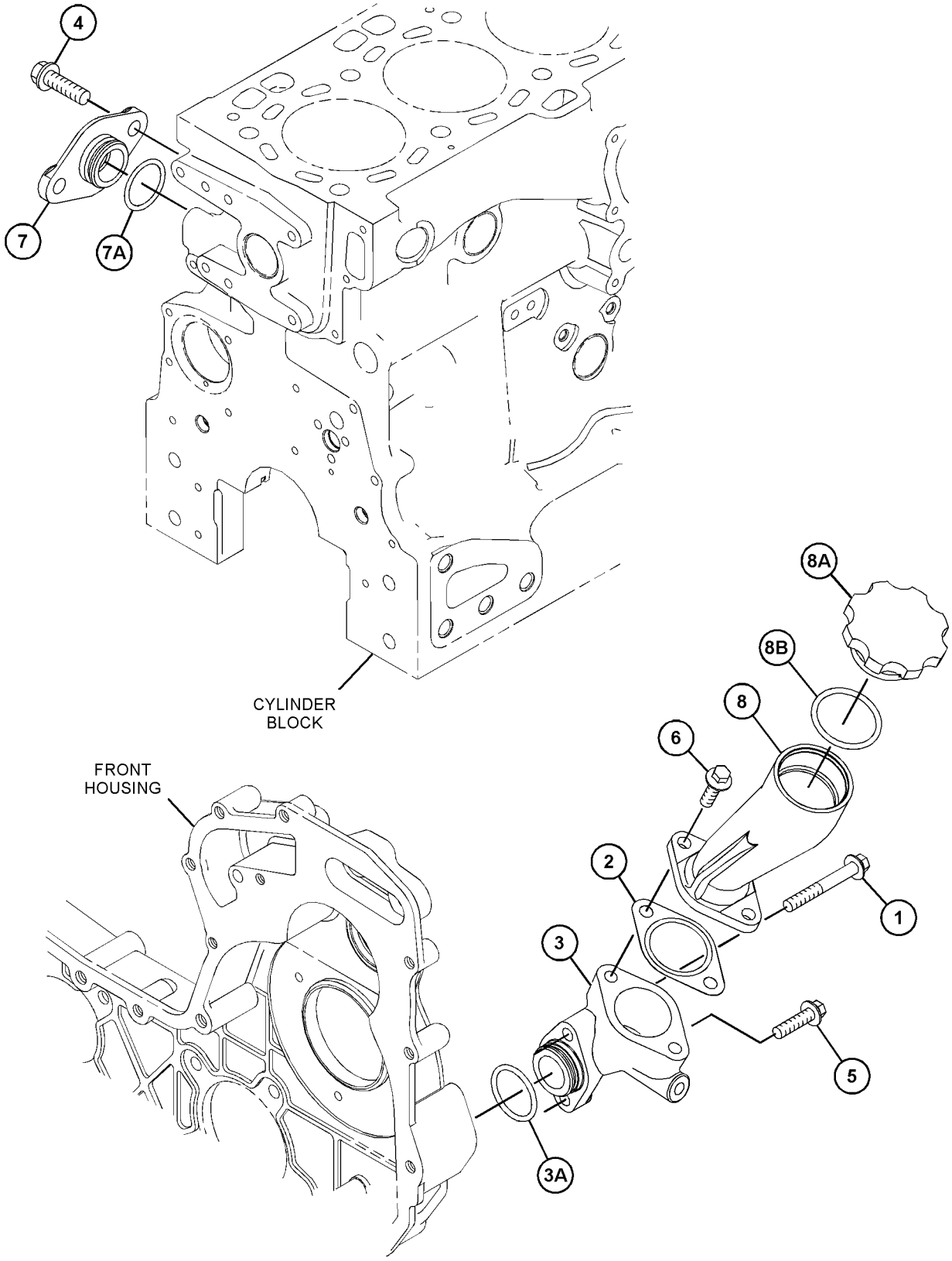

GRAPHIC #1 <END> g06365578

346-0220 FILTER GP-ENGINE OIL

S/N: E7A1-UP

PART OF 533-1826, 533-1840 ENGINE AR-PRIMARY

SMCS-1306, 1308 **i05882513**

NOTE	REF NO	GRAPHIC REF	PART NUMBER	QTY	PART NAME 1 2 3 4 5 6 (PRODUCT LEVEL)	SEE PAGE
	1	1	**462-1171**	1	FILTER-ENGINE OIL	

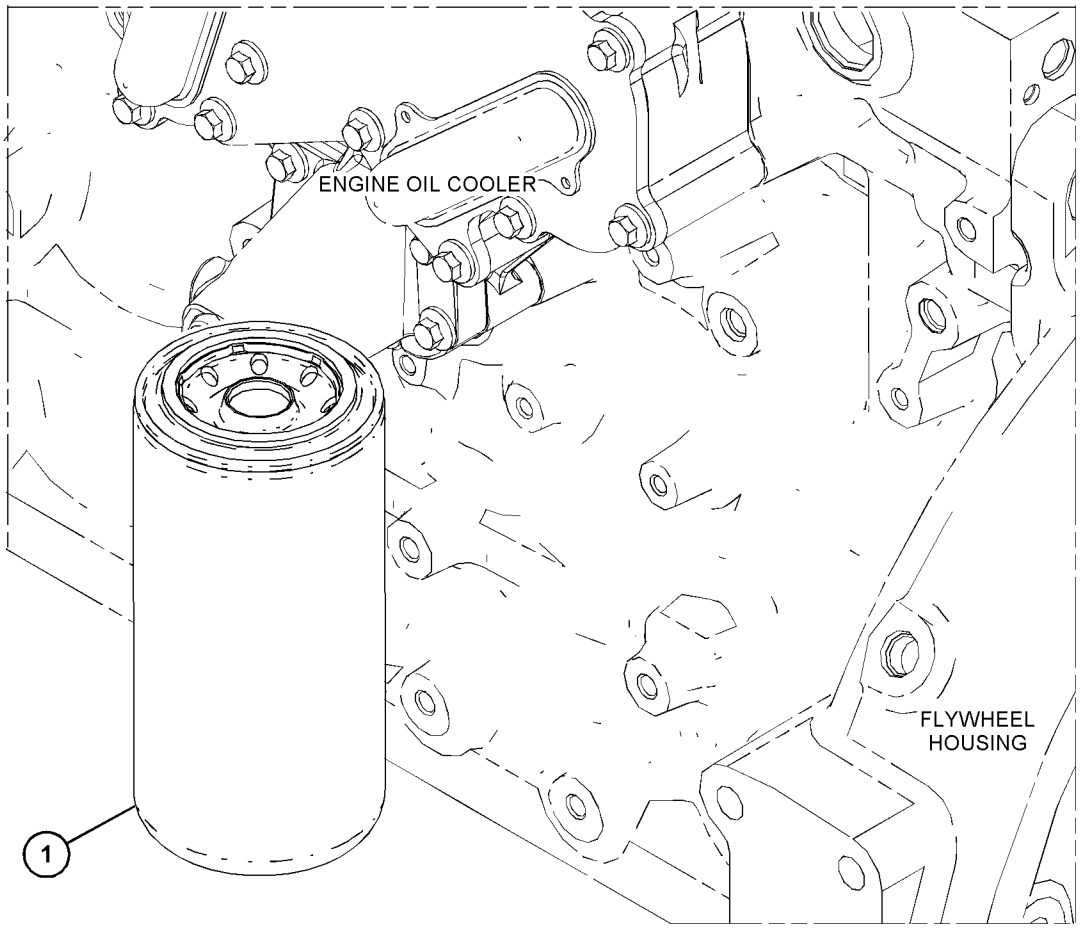

GRAPHIC #1 <END> g03710180

505-5248 GAUGE GP-OIL LEVEL (DIPSTICK)

S/N: E7A1-UP

PART OF 533-1826, 533-1840 ENGINE AR-PRIMARY

SMCS-1326 **i07580207**

NOTE	REF NO	GRAPHIC REF	PART NUMBER	QTY	PART NAME 1 2 3 4 5 6 (PRODUCT LEVEL)	SEE PAGE
	1	1	**500-1272**	1	BRACKET	
	2	1	**6I-1497**	1	SEAL	
M	3	1	**100-4458**	1	BOLT (M8X1.25X14-MM)	
	4	1	*343-6020*	1	GAUGE GP-OIL LEVEL (DIPSTICK)	
		1	*343-6021*	1	GAUGE AS-OIL LEVEL (DIPSTICK)	
	4A	1	**275-9891**	2	SEAL-O-RING	
		1	*343-6023*	1	GAUGE AS-OIL LEVEL (DIPSTICK)	
	4B	1	**123-2933**	1	CLIP	
	4C	1	**228-7089**	1	SEAL-O-RING	
	5	1	**6I-0289**	1	PLUG (M16X1.5-THD)	
M	6	1	**6I-0217**	1	BOLT (M8X1.25X20-MM)	
	7	1	**3E-4352**	1	WASHER-HARD (8.8X20.5X2.5-MM THK)	

M - METRIC PART

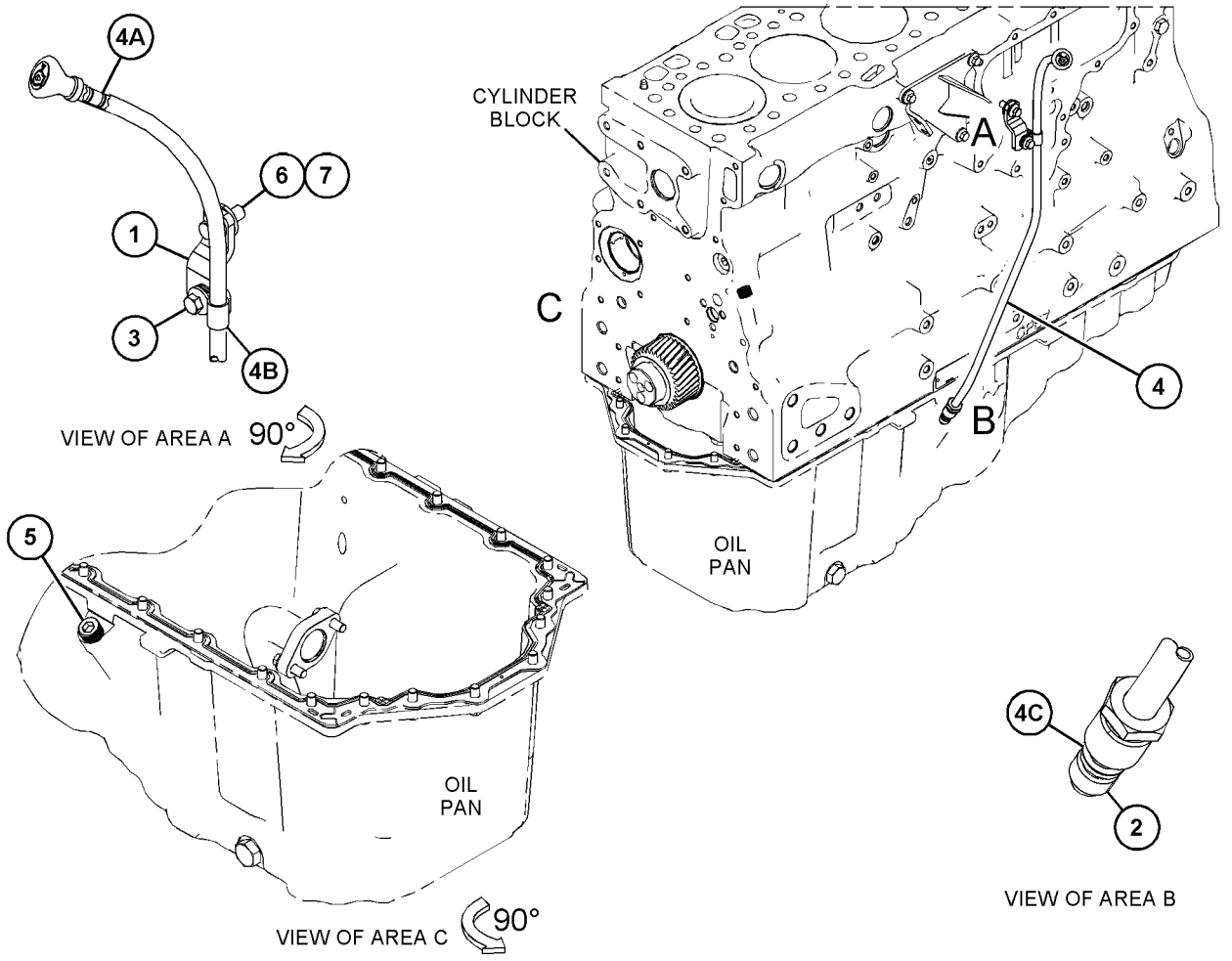

GRAPHIC #1 <END> g06369124

527-9472 LINES GP-ENGINE OIL DRAIN

S/N: W921-UP

PART OF 527-9462, 527-9463, 527-9464 INSTALLATION AR-ENGINE

SMCS-1307 **i07581872**

NOTE	REF NO	GRAPHIC REF	PART NUMBER	QTY	PART NAME 1 2 3 4 5 6 (PRODUCT LEVEL)	SEE PAGE
	1	1	**520-2593**	1	BOLT (M10X1.5X80-MM)	
	2	1	**129-7679**	1	FILM-INSTRUCTION (ENGINE OIL DRAIN)	
	3	1	*165-2273*	1	VALVE AS-SHUTOFF (ENGINE OIL DRAIN)	
		1	**3K-0360**	1	SEAL-O-RING	
		1	**6V-7238**	1	VALVE-SHUTOFF	
M	4	1	**518-2309**	3	BOLT (M10X1.5X20-MM)	
	5	1	**518-4417**	4	WASHER	
	6	1	**519-0144**	1	SLEEVE	
I	7	1	**527-9499**	1	HOSE AS	
	8	1	**527-9500**	1	BRACKET	
	9	1	**539-1076**	1	BRACKET AS	
	10	1	*551-4710*	1	CLAMP-PIPE	
	11	1	*552-6189*	1	STRAP-CABLE	
	12	1	**106-5074**	1	ADAPTER	
	13	1	*148-8340*	1	CONNECTOR AS	
		1	**3K-0360**	1	SEAL-O-RING	
		1	**6V-8398**	1	SEAL-O-RING	
		1	**6V-8639**	1	CONNECTOR	
	14	1	**2H-3926**	1	LOCKWASHER	
	15	1	**2P-1293**	1	LOCKNUT (1-3/16-12-THD)	
	16	1	**6D-4244**	1	CLIP (LOOP)	
	17	1	**6V-9746**	1	SEAL-O-RING	
G	18	1	**423-1984**		HOSE (6-IN)	

G - ORDER BY THE INCH
I - REFER TO HYDRAULIC INFORMATION SYSTEM
M - METRIC PART

527-9472 **LINES GP-ENGINE OIL DRAIN (**contd.**)** **i07581872**

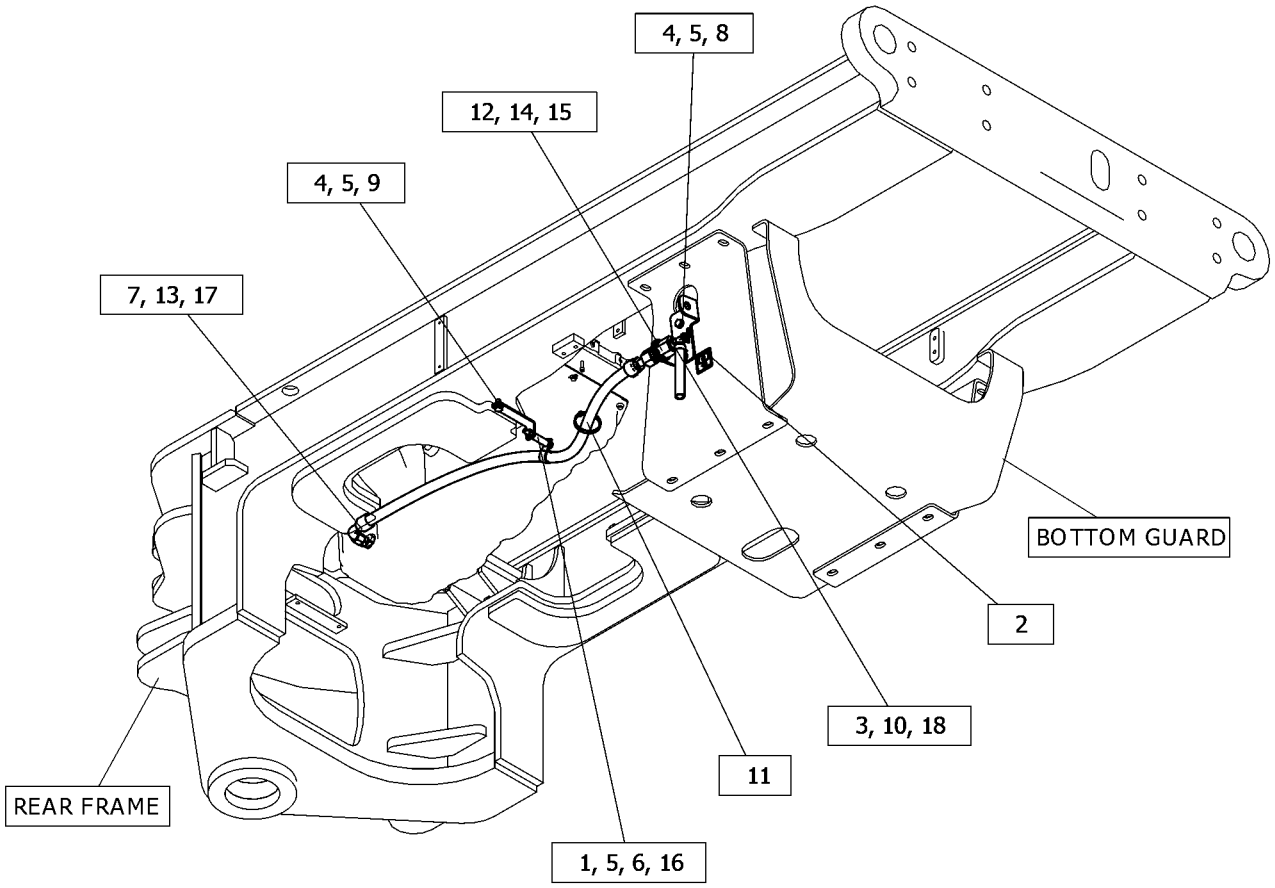

GRAPHIC #1 <END> g06376182

462-6685 PUMP GP-ENGINE OIL

S/N: E7A1-UP

PART OF 533-1826, 533-1840 ENGINE AR-PRIMARY

SMCS-1304, 1315

i07025319

NOTE	REF NO	GRAPHIC REF	PART NUMBER	QTY	PART NAME 1 2 3 4 5 6 (PRODUCT LEVEL)	SEE PAGE
	1	1	**420-0454**	1	PUMP AS-OIL	
M	2	1	**6I-1090**	4	BOLT (M8X1.25X40-MM)	

M - METRIC PART

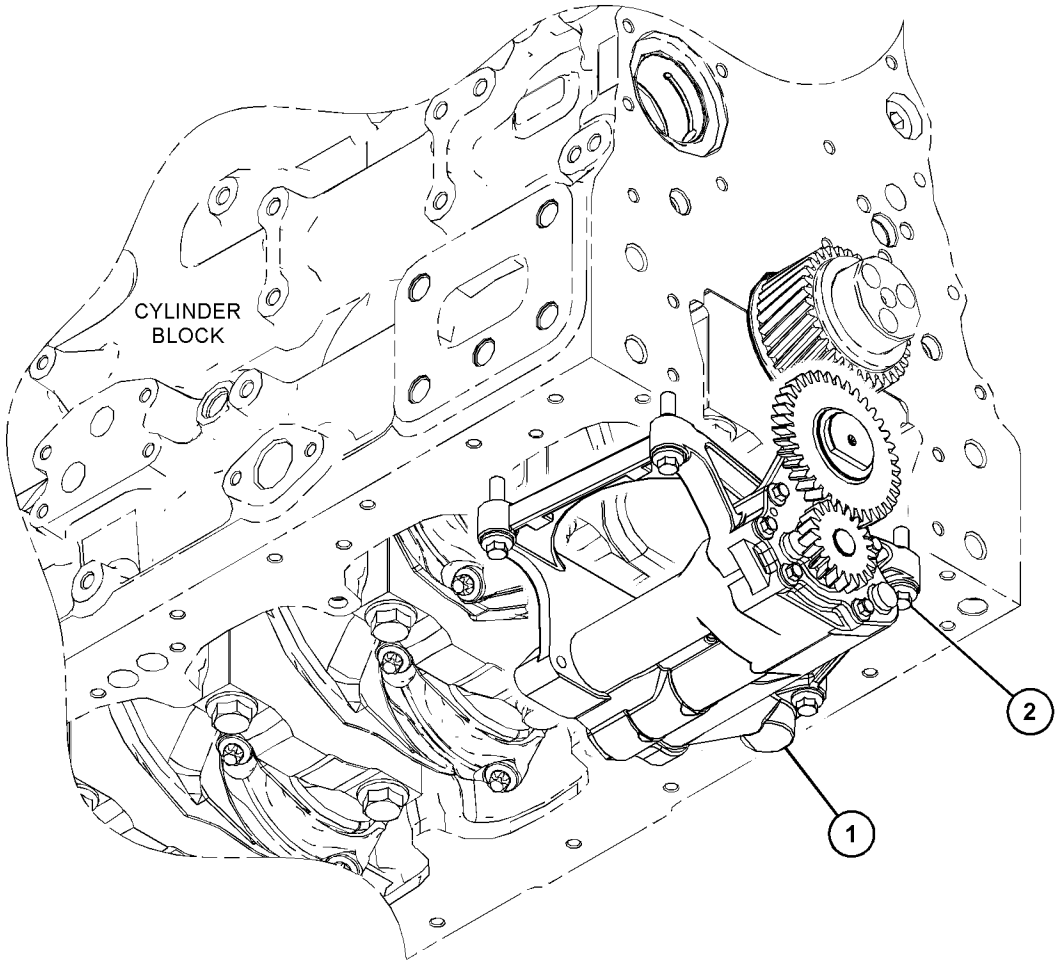

GRAPHIC #1 <END> g03797853

371-2745 VALVE GP-FLUID SAMPLING

S/N: E7A1-UP

PART OF 533-1826, 533-1840 ENGINE AR-PRIMARY

SMCS-1318, 7542

i05472971

NOTE	REF NO	GRAPHIC REF	PART NUMBER	QTY	PART NAME 1 2 3 4 5 6 (PRODUCT LEVEL)	SEE PAGE
	1	1	**216-9633**	1	VALVE AS-FLUID SAMPLING	
	2	1	**8C-3445**	1	CAP-DUST	

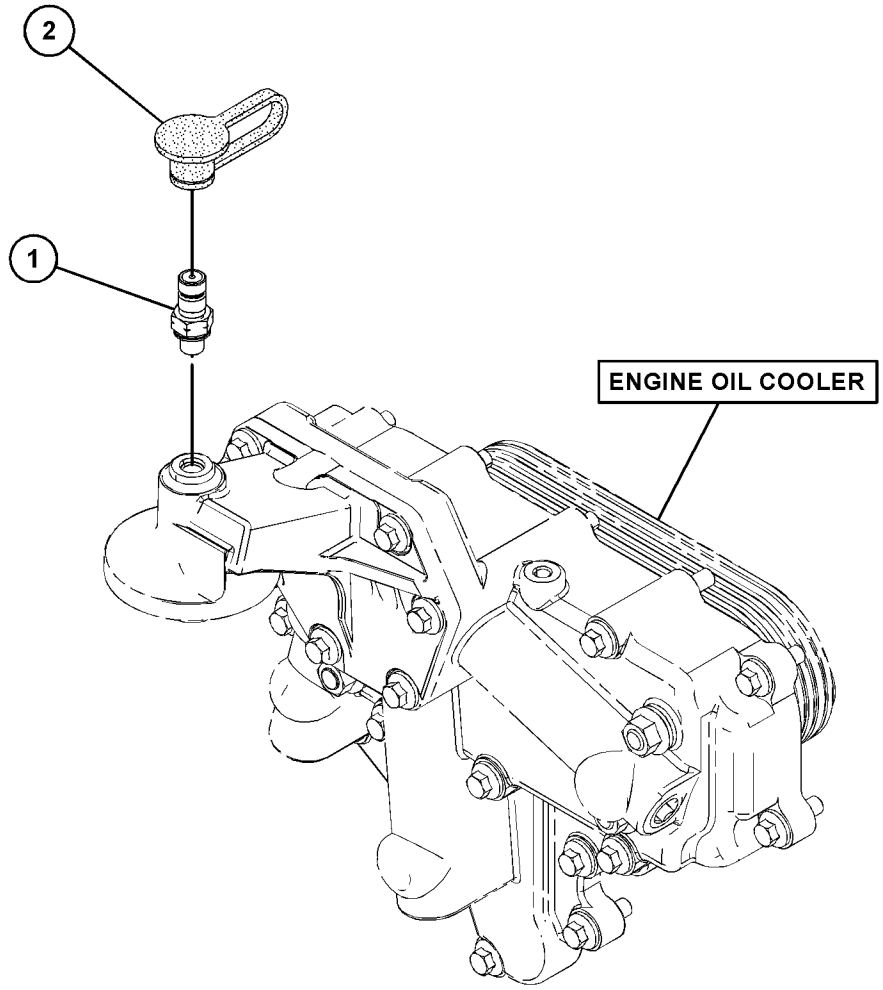

GRAPHIC #1

<END>

g03178016

346-0099 BASE GP-OIL COOLER & FILTER

S/N: E7A1-UP

PART OF 533-1826, 533-1840 ENGINE AR-PRIMARY

SMCS-1306, 1378 **i07577061**

NOTE	REF NO	GRAPHIC REF	PART NUMBER	QTY	PART NAME 1 2 3 4 5 6 (PRODUCT LEVEL)	SEE PAGE
M	1	1	**100-3751**	5	BOLT (M8X1.25X65-MM)	
	2	1	**225-7944**	1	GASKET	
	3	1	**232-3751**	1	PLATE	
	4	1	**277-2525**	1	HEAD AS-OIL FILTER	
	5	1	**277-2526**	1	GASKET-FILTER (ENGINE OIL)	
	6	1	**277-2537**	1	PLATE	
Y	8	1	**295-8610**	1	COOLER GP-ENGINE OIL	72
M	9	1	**6I-0217**	6	BOLT (M8X1.25X20-MM)	
M	10	1	**6I-0260**	8	BOLT (M8X1.25X25-MM)	
M	11	1	**6I-4709**	3	BOLT (M8X1.25X100-MM)	

M - METRIC PART
Y - SEPARATE ILLUSTRATION

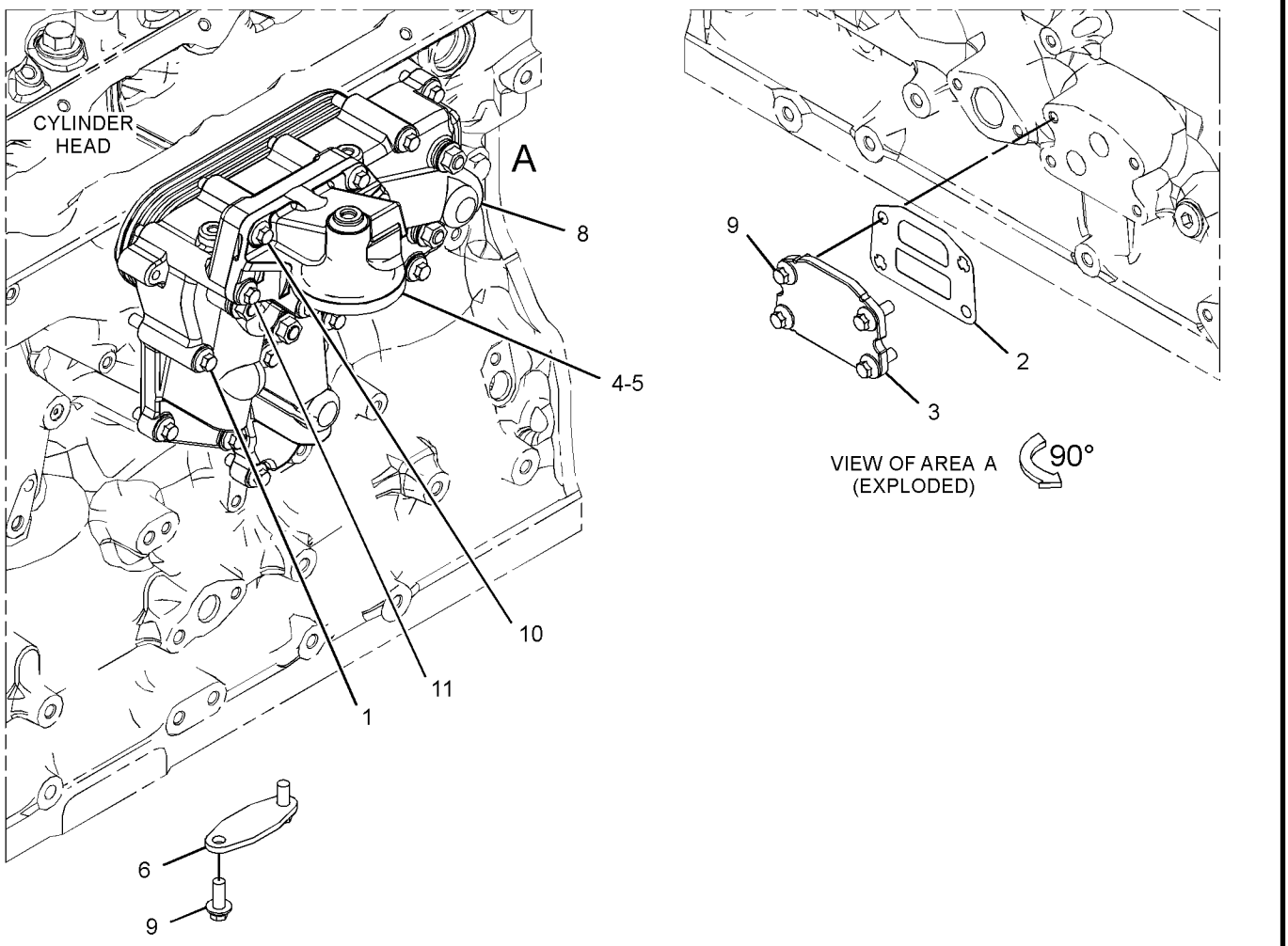

GRAPHIC #1 <END> g06161854

373-3607 CONNECTION GP-WATER

S/N: E7A1-UP

PART OF 533-1826, 533-1840 ENGINE AR-PRIMARY

SMCS-1380 **i05469082**

NOTE	REF NO	GRAPHIC REF	PART NUMBER	QTY	PART NAME 1 2 3 4 5 6 (PRODUCT LEVEL)	SEE PAGE
M	1	1	**123-2899**	2	BOLT (M10X1.5X40-MM)	
	2	1	**417-7782**	1	REGULATOR AS-WATER TEMPERATURE (INCLUDES CONNECTOR)	
	3	1	**281-8744**	1	GASKET-WATER REGULATOR (TEMPERATURE)	

M - METRIC PART

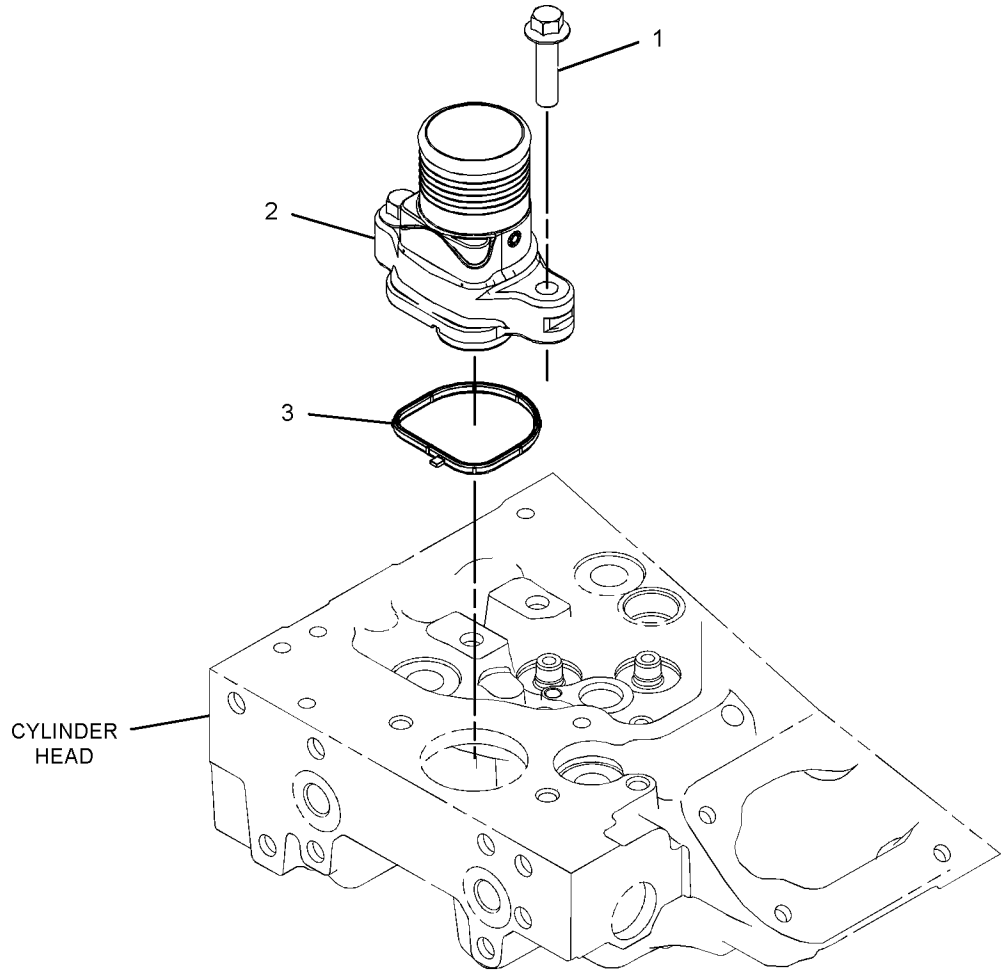

GRAPHIC #1 <END> g03341487

295-8610 COOLER GP-ENGINE OIL

S/N: E7A1-UP

PART OF 346-0099 BASE GP-OIL COOLER & FILTER

SMCS-1378 **i07578842**

NOTE	REF NO	GRAPHIC REF	PART NUMBER	QTY	PART NAME 1 2 3 4 5 6 (PRODUCT LEVEL)	SEE PAGE
M	1	1	**6I-0260**	3	BOLT (M8X1.25X25-MM)	
M	2	1	**6I-0594**	4	NUT (M10X1.5-THD)	
	3	1	**101-3917**	4	WASHER (10.5X21X2-MM THK)	
	4	1	**101-7547**	4	LOCKWASHER	
	5	1	**231-1455**	2	STUD	
	6	1	**277-2500**	1	GASKET	
	7	1	**277-2502**	2	STUD	
	8	1	**277-2503**	3	PLUG	
	9	1	**295-8613**	1	COOLER-OIL (ENGINE)	
	10	1	**295-8615**	2	GASKET	
					PARTS SHOWN IN GRAPHIC(S) WITHOUT A REFERENCE NUMBER ARE NOT SERVICED SEPARATELY	

M - METRIC PART

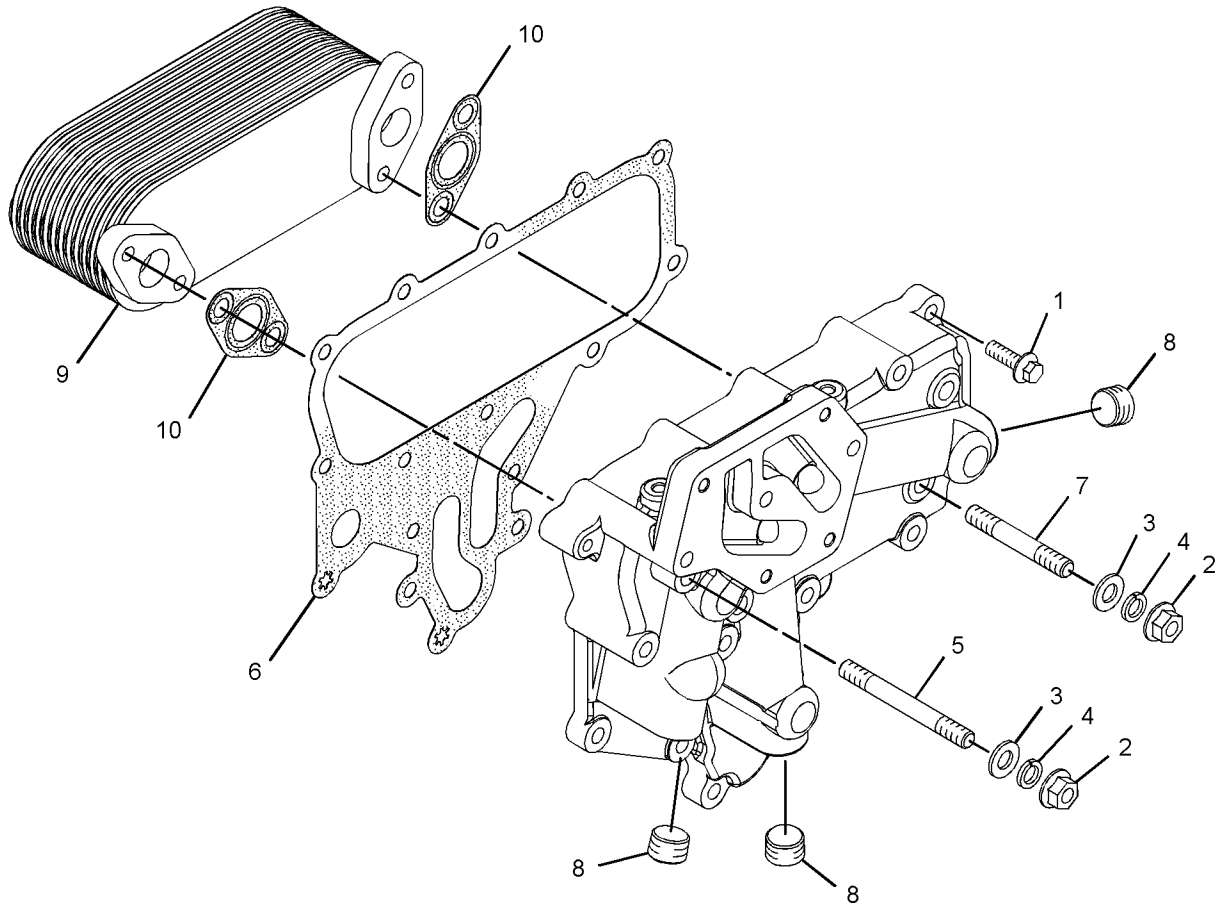

GRAPHIC #1 <END> g03105899

533-4440 COOLING AR

S/N: W921-UP

PART OF 525-9809 COMMON AR

SMCS-1350 **i07544025**

NOTE	REF NO	GRAPHIC REF	PART NUMBER	QTY	PART NAME 1 2 3 4 5 6 (PRODUCT LEVEL)	SEE PAGE
Y	1	1	*533-4446*	1	LINES GP-WATER	76
Y	2	1	*533-4466*	1	LINES GP-AIR (ATAAC)	91
Y	3	1	*533-4484*	1	TANK GP-COOLANT	83
Y	4	1	*533-4491*	1	FAN GP-SUCTION	74
Y	5	1	*533-4518*	1	RADIATOR & MOUNTING GP	79

Y - SEPARATE ILLUSTRATION

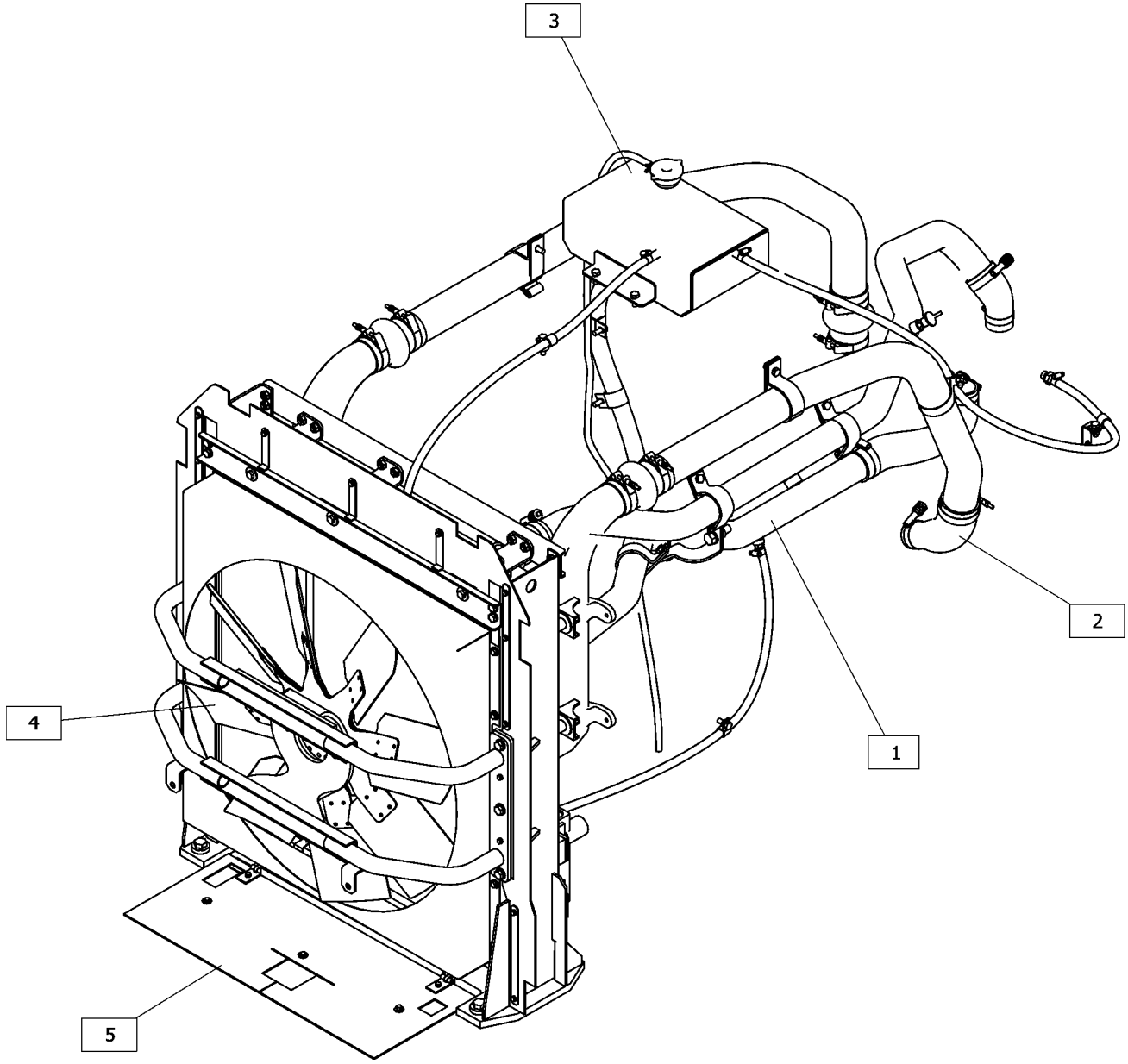

GRAPHIC #1 <END> g06359402

533-4491 FAN GP-SUCTION

S/N: W921-UP

PART OF 533-4440 COOLING AR

SMCS-1356 **i07544494**

NOTE	REF NO	GRAPHIC REF	PART NUMBER	QTY	PART NAME 1 2 3 4 5 6 (PRODUCT LEVEL)	SEE PAGE
	1	1	**241-8534**	1	SPIDER AS (8-BLADE)	
	2	1	**387-6094**	1	ADAPTER	
	3	1	**7X-0515**	1	WASHER-HARD (17X35X5-MM THK)	
	4	1	**8T-4121**	6	WASHER-HARD (11X21X2.5-MM THK)	
M	5	1	**8T-4132**	1	NUT (M16X2-THD)	
M	6	1	**8T-4136**	6	BOLT (M10X1.5X25-MM)	

M - METRIC PART

533-4491 **FAN GP-SUCTION (**contd.**)** **i07544494**

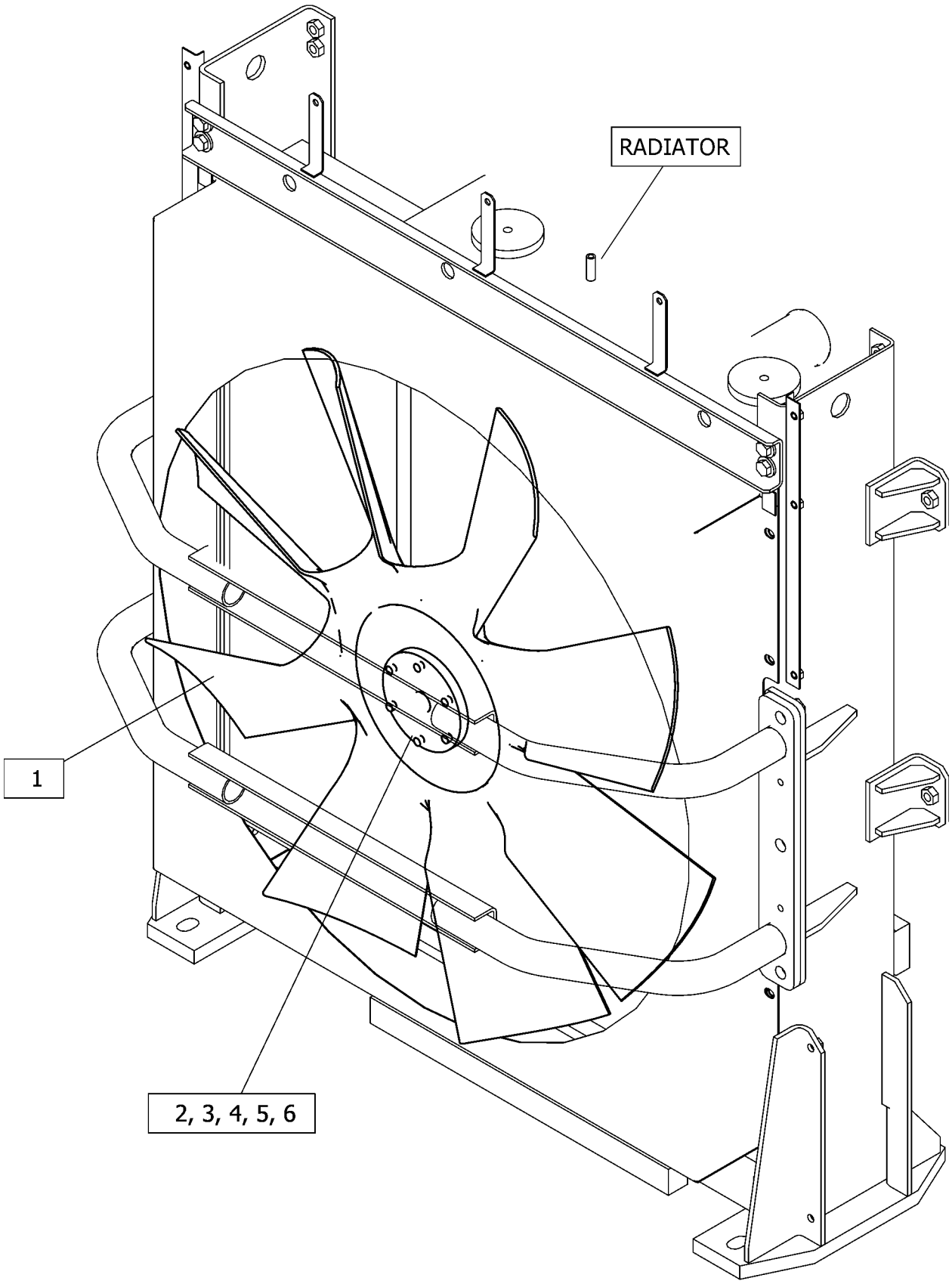

GRAPHIC #1 <END> g06357702

533-4446 LINES GP-WATER

S/N: W921-UP

PART OF 533-4440 COOLING AR

SMCS-1380 **i07544115**

NOTE	REF NO	GRAPHIC REF	PART NUMBER	QTY	PART NAME 1 2 3 4 5 6 (PRODUCT LEVEL)	SEE PAGE
M	1	1	**518-2314**	1	BOLT (M10X1.5X50-MM)	
M	2	1	**518-2318**	2	BOLT (M12X1.75X25-MM)	
	3	1	**518-4417**	4	WASHER	
	4	1	**518-4418**	2	WASHER (13X24X2.5-MM THK)	
	5	1	**133-6934**	1	SPACER (11X20X25-MM THK)	
	6	1	*150-3024*	1	ELBOW AS	
		1	**3J-1907**	1	SEAL-O-RING	
		1	**5P-4924**	1	ELBOW	
	7	1	*150-3030*	1	ELBOW AS	
		1	**3J-1907**	1	SEAL-O-RING	
		1	**7X-1448**	1	ELBOW	
	8	1	**154-9025**	1	VALVE-SAMPLING (COOLANT)	
	9	1	**157-0670**	1	CAP-DUST	
	10	1	*164-5562*	2	CONNECTOR AS	
					(EACH INCLUDES)	
		1	**3J-1907**	1	SEAL-O-RING	
		1	**5P-1046**	1	CONNECTOR	
	11	1	*165-2273*	1	VALVE AS-SHUTOFF (COOLANT DRAIN)	
		1	**3K-0360**	1	SEAL-O-RING	
		1	**6V-7238**	1	VALVE-SHUTOFF	
	12	1	*184-2420*	1	ADAPTER AS	
		1	**3E-7401**	1	ADAPTER	
		1	**6V-8397**	1	SEAL-O-RING	
	13	1	**220-3634**	1	FILM-IDENTIFICATION (DRAIN, ENGINE COOLANT)	
	14	1	**263-6914**	1	HOSE	
	15	1	**265-5007**	2	HOSE	
M	16	1	**521-2260**	3	BOLT (M10X1.5X30-MM)	
	17	1	**533-4973**	1	HOSE	
	18	1	**533-4991**	1	TUBE AS	
	19	1	**565-2608**	1	BRACKET AS	
M		1	**8T-3490**	1	NUT-WELD (M10X1.5-THD)	
	20	1	**565-4653**	1	TUBE AS	
	21	1	**5D-1026**	1	CLAMP-BAND	
	22	1	**5I-4376**	1	FITTING	
	23	1	**5P-4961**	4	CLAMP-HOSE	
	25	1	**6V-1582**	3	CLIP (TAB)	
	26	1	**6V-8367**	1	LOCKWASHER	
	27	1	**6V-9168**	1	NUT (11/16-16-THD)	
	28	1	**7K-1181**	1	STRAP-CABLE	
	29	1	**8M-2773**	2	CLIP (LOOP)	
	30	1	**8T-4984**	8	CLAMP-HOSE	
E	31	1	**6V-8523**		HOSE (64-CM)	
E	31A	1	**6V-8523**		HOSE (135-CM)	
E	32	1	**5P-0743**		HOSE (15-CM)	

E - ORDER BY THE CENTIMETER
M - METRIC PART

533-4446 **LINES GP-WATER** (contd.) **i07544115**

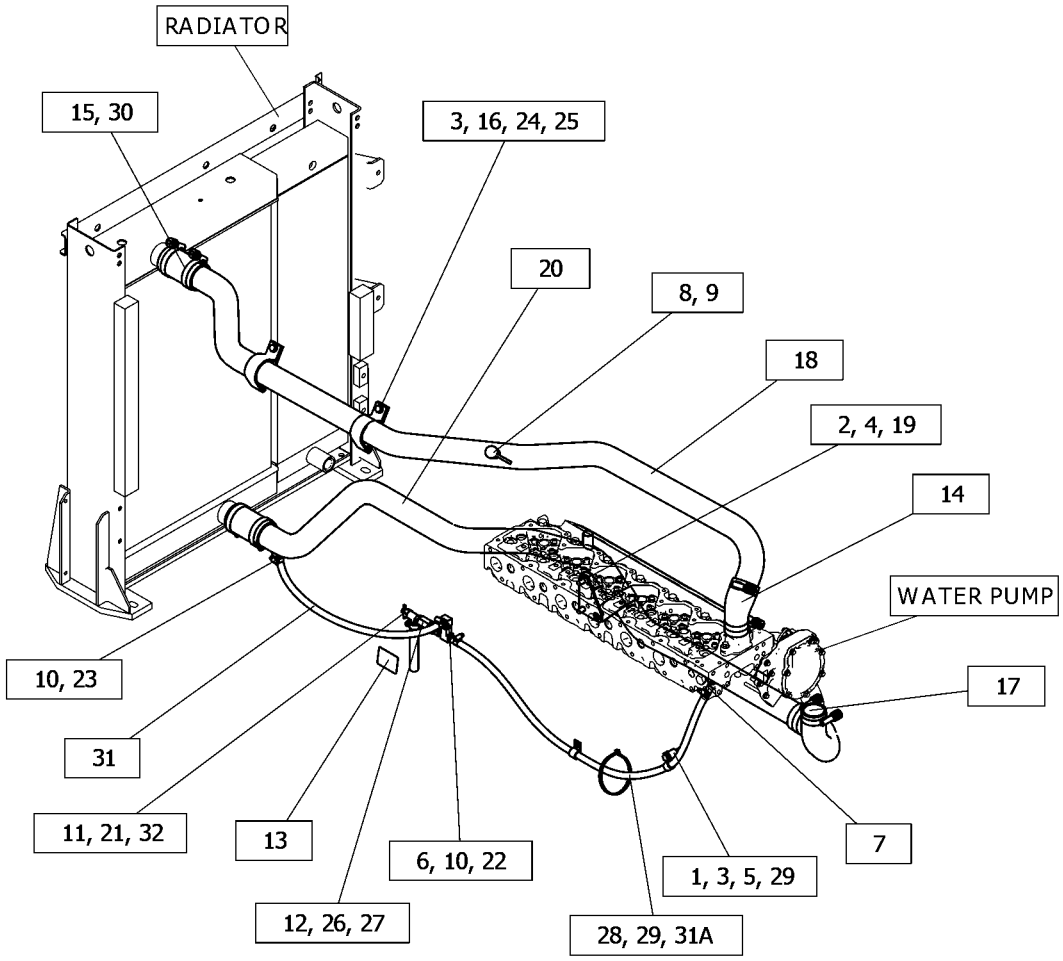

GRAPHIC #1 <END> g06366732

372-2297 PUMP GP-WATER

S/N: E7A1-UP

PART OF 533-1826, 533-1840 ENGINE AR-PRIMARY

SMCS-1361 **i06830089**

NOTE	REF NO	GRAPHIC REF	PART NUMBER	QTY	PART NAME 1 2 3 4 5 6 (PRODUCT LEVEL)	SEE PAGE
M	1	1	**6I-0217**	2	BOLT (M8X1.25X20-MM)	
J	2	1	*485-4894*	1	PUMP GP-WATER	
	2A	1	**278-3242**	3	BOLT-FLANGE HEAD (M8X1.25X18-MM)	
	2B	1	**374-4419**	1	GASKET	
M	3	1	**113-8129**	2	BOLT (M8X1.25X75-MM)	
	4	1	**225-8019**	1	GASKET	
	5	1	**277-2925**	1	CONNECTION AS	
	5A	1	**225-7738**	1	SEAL-O-RING	
	5B	1	**277-2923**	1	GASKET	
M	6	1	**6I-0254**	2	BOLT (M8X1.25X30-MM)	
M	7	1	**6I-0839**	5	BOLT (M8X1.25X70-MM)	
					AVAILABLE REPAIR KIT(S):	
J			**485-4895**	1	PUMP GP-WATER	
					(INCLUDES PUMP GASKET & PUMP GP-WATER)	

J - KIT MARKED J SERVICES PART(S) MARKED J
M - METRIC PART

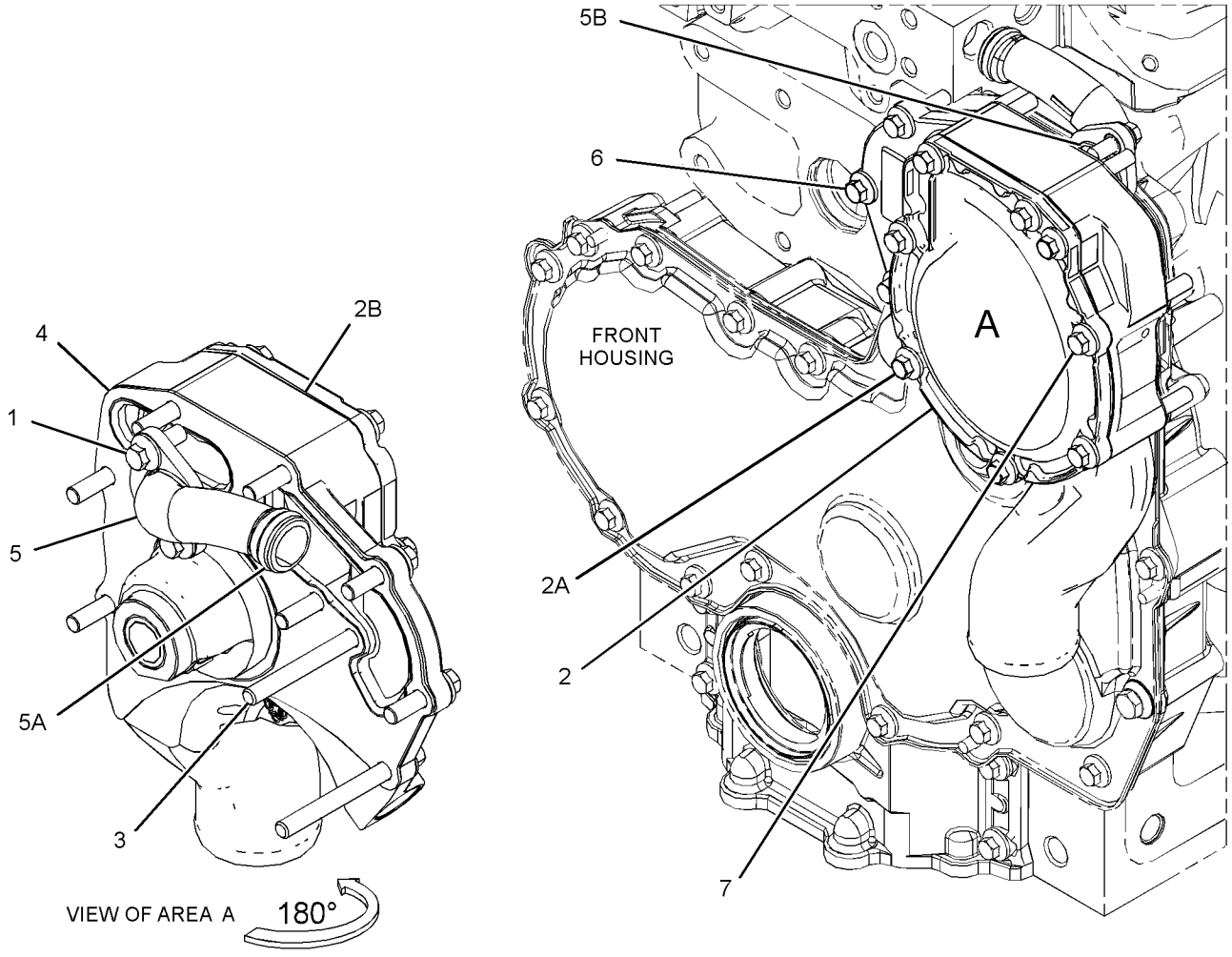

GRAPHIC #1 <END> g06129592

533-4518 RADIATOR & MOUNTING GP

S/N: W921-UP

PART OF 533-4440 COOLING AR

SMCS-1353 **i07548956**

NOTE	REF NO	GRAPHIC REF	PART NUMBER	QTY	PART NAME 1 2 3 4 5 6 (PRODUCT LEVEL)	SEE PAGE
	1	1	**415-7713**	4	BUSHING	
Y	2	1	**521-1050**	1	RADIATOR & OIL COOLER GP	81
M	3	1	**8T-4193**	4	BOLT (M16X2X50-MM)	

M - METRIC PART
Y - SEPARATE ILLUSTRATION

533-4518 **RADIATOR & MOUNTING GP (**contd.**)** **i07548956**

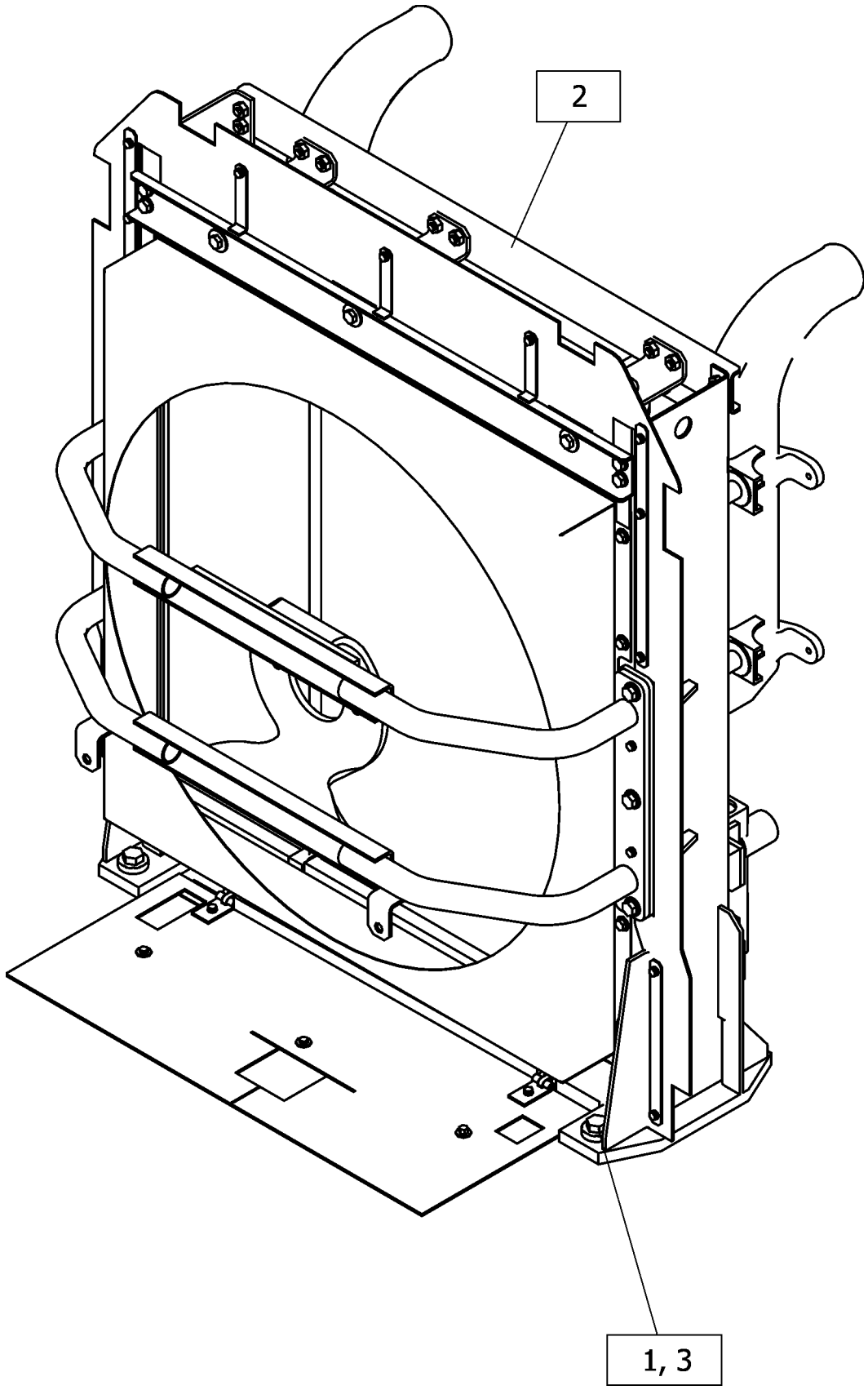

GRAPHIC #1 <END> g06358109

521-1050 RADIATOR & OIL COOLER GP

S/N: W921-UP

PART OF 533-4518 RADIATOR & MOUNTING GP

SMCS-1351 **i07549046**

NOTE	REF NO	GRAPHIC REF	PART NUMBER	QTY	PART NAME 1 2 3 4 5 6 (PRODUCT LEVEL)	SEE PAGE
	1	1	**313-3762**	2	CUSHION-RUBBER	
	2	1	**387-6057**	5	MOUNT AS	
	3	1	**387-6065**	1	NUT-FLANGE	
	4	1	**450-3478**	5	WASHER-PLATED (11X50X3-MM THK)	
	5	1	**450-3479**	5	SLEEVE	
	6	1	**521-1043**	1	SHROUD AS	
	7	1	**521-1044**	1	CORE AS-AFTERCOOLER	
	8	1	**521-1045**	1	CORE AS-OIL COOLER	
	9	1	**521-1046**	1	CORE AS-RADIATOR	
	10	1	**521-1047**	1	CORE AS-OIL COOLER	
	11	1	**521-1048**	1	FRAME (TOP)	
	12	1	**521-1049**	3	BRACKET AS	
Y	13	1	*521-1057*	1	SUPPORT GP-RADIATOR	333
	14	1	**521-1058**	1	SUPPORT AS	
	15	1	**521-1059**	1	BAFFLE GP-RADIATOR	
	16	1	**521-1060**	1	BRACKET AS	
	17	1	**260-6685**	4	WASHER (9X25X1.6-MM THK)	
M	18	1	**5C-9553**	2	BOLT (M6X1X16-MM)	
	19	1	**5P-4116**	8	WASHER-HARD (8.8X20.5X2-MM THK)	
	20	1	**7X-0578**	5	WASHER-HARD (10.2X32X2.5-MM THK)	
	21	1	**7X-7729**	10	WASHER (11X25X3-MM THK)	
M	22	1	**8T-4136**	13	BOLT (M10X1.5X25-MM)	
M	23	1	**8T-4185**	5	BOLT (M10X1.5X50-MM)	
M	24	1	**8T-4189**	8	BOLT (M8X1.25X20-MM)	
M	25	1	**8T-4195**	4	BOLT (M10X1.5X30-MM)	
	26	1	**8T-4223**	6	WASHER-HARD (13.5X25.5X3-MM THK)	
	27	1	**8T-4224**	2	WASHER-HARD (8.8X16X2-MM THK)	
M	28	1	**8T-4908**	4	BOLT (M8X1.25X25-MM)	
M	29	1	**8T-4956**	6	BOLT (M12X1.75X35-MM)	
H	30	1	**521-1061**		SEAL-BULK (2.9-DM EACH)	
H	31	1	**521-1064**		SEAL-BULK (10-DM)	
H	32	1	**521-1062**		SEAL-BULK (6.2-DM EACH)	
H	33	1	**521-1063**		SEAL-BULK (9.5-DM EACH)	
E	34	1	**201-1601**		SEAL (23-CM)	
E	35	1	**233-6832**		SEAL (75-CM)	

E - ORDER BY THE CENTIMETER
H - ORDER BY THE DECIMETER
M - METRIC PART
Y - SEPARATE ILLUSTRATION

521-1050 **RADIATOR & OIL COOLER GP (**contd.**)** **i07549046**

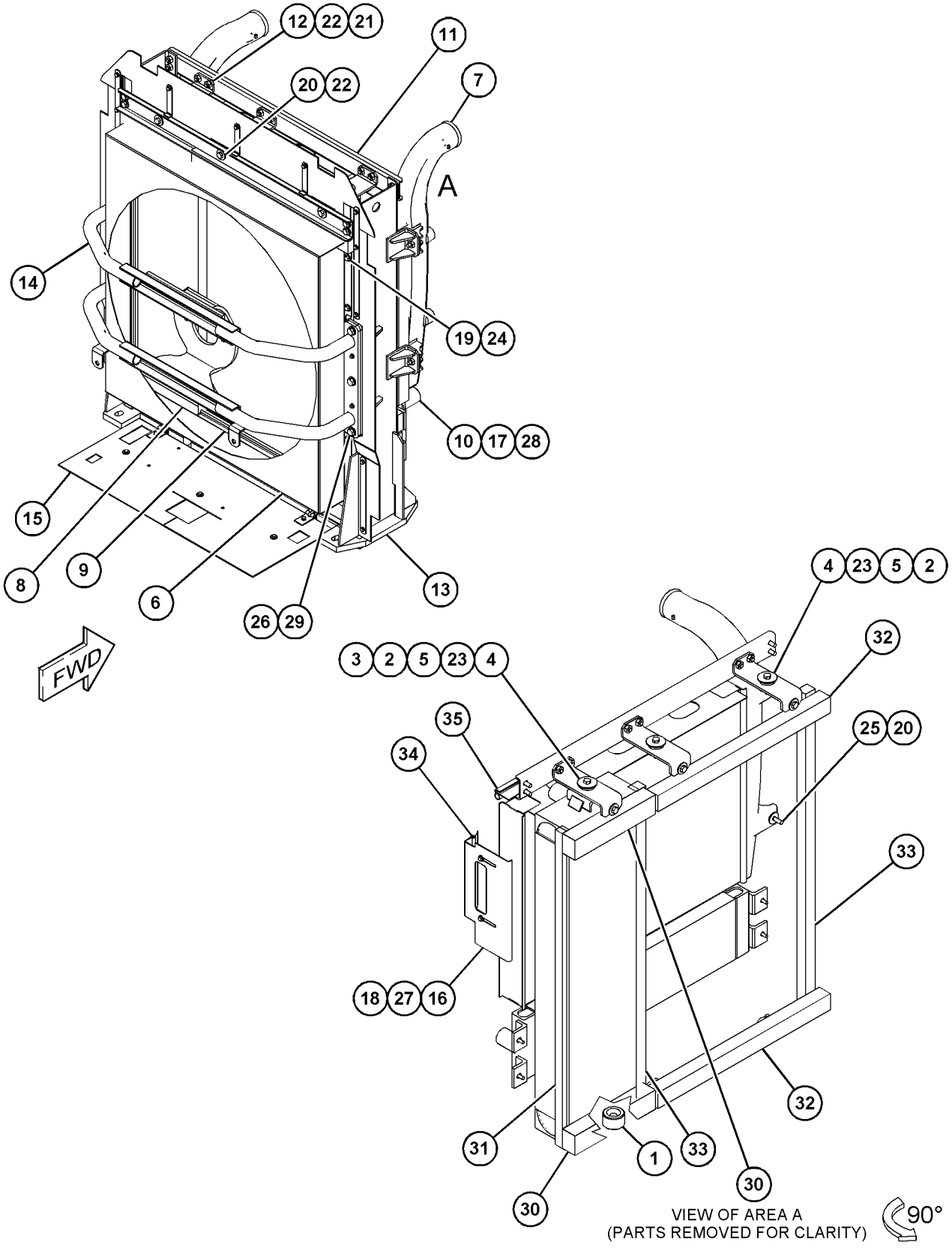

GRAPHIC #1 <END> g06366260

533-4484 TANK GP-COOLANT

S/N: W921-UP

PART OF 533-4440 COOLING AR

SMCS-1354, 1377 **i07544134**

NOTE	REF NO	GRAPHIC REF	PART NUMBER	QTY	PART NAME 1 2 3 4 5 6 (PRODUCT LEVEL)	SEE PAGE
	1	1	**312-1143**	1	SLEEVE	
	2	1	**3S-2093**	7	STRAP-CABLE	
	3	1	**7K-1181**	2	STRAP-CABLE	
	4	1	**192-5017**	1	BRACKET AS	
	5	1	**200-6345**	3	SADDLE-MOUNTING (DUAL SWIVEL)	
M	6	1	**518-2310**	7	BOLT (M10X1.5X25-MM)	
M	7	1	**518-2313**	1	BOLT-HEAD (M10X1.5X40-MM)	
Y	8	1	*521-1051*	1	TANK GP-EXPANSION (COOLANT)	85
	9	1	*529-7520*	1	ADAPTER AS	
		1	**8T-7524**	1	SEAL-O-RING	
		1	**529-7519**	1	ADAPTER	
	10	1	**091-9035**	1	SPACER (11X25X20-MM THK)	
	11	1	**204-2281**	2	STRAP-CABLE	
	12	1	**4D-7388**	2	CLIP (LOOP)	
	13	1	**518-4417**	4	WASHER	
	14	1	**518-9737**	4	WASHER (10.5X30X2.5-MM THK)	
	15	1	**5P-4961**	4	CLAMP-HOSE	
	16	1	**8M-2773**	2	CLIP (LOOP)	
	17	1	**8T-1117**	2	CLAMP-HOSE	
E	18	1	**371-8094**		HOSE (85-CM)	
E	19	1	**6V-8523**		HOSE (104-CM)	
E	19A	1	**6V-8523**		HOSE (170-CM)	

E - ORDER BY THE CENTIMETER
M - METRIC PART
Y - SEPARATE ILLUSTRATION

533-4484 **TANK GP-COOLANT** (contd.) **i07544134**

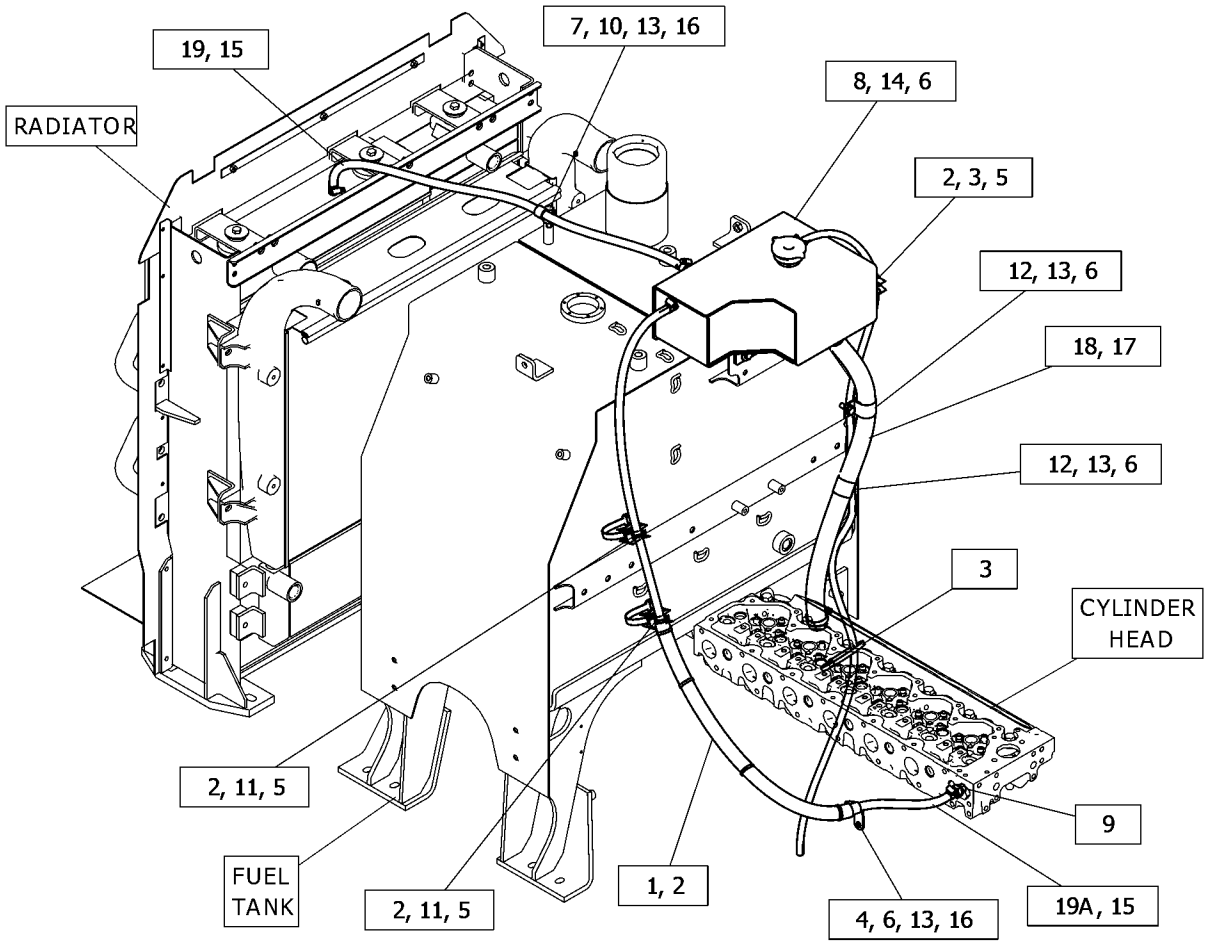

GRAPHIC #1 <END> g06368763

521-1051 TANK GP-EXPANSION–COOLANT

S/N: W921-UP

PART OF 533-4484 TANK GP-COOLANT

SMCS-1354 **i07548923**

NOTE	REF NO	GRAPHIC REF	PART NUMBER	QTY	PART NAME 1 2 3 4 5 6 (PRODUCT LEVEL)	SEE PAGE
	1	1	**096-4035**	1	CLIP	
	2	1	**332-4175**	1	CAP AS-RADIATOR	
	3	1	**491-9723**	1	BODY AS-GAUGE	
	4	1	**521-1052**	1	TANK AS-COOLANT	
G	5	1	**423-1981**		HOSE (137-IN)	

G - ORDER BY THE INCH

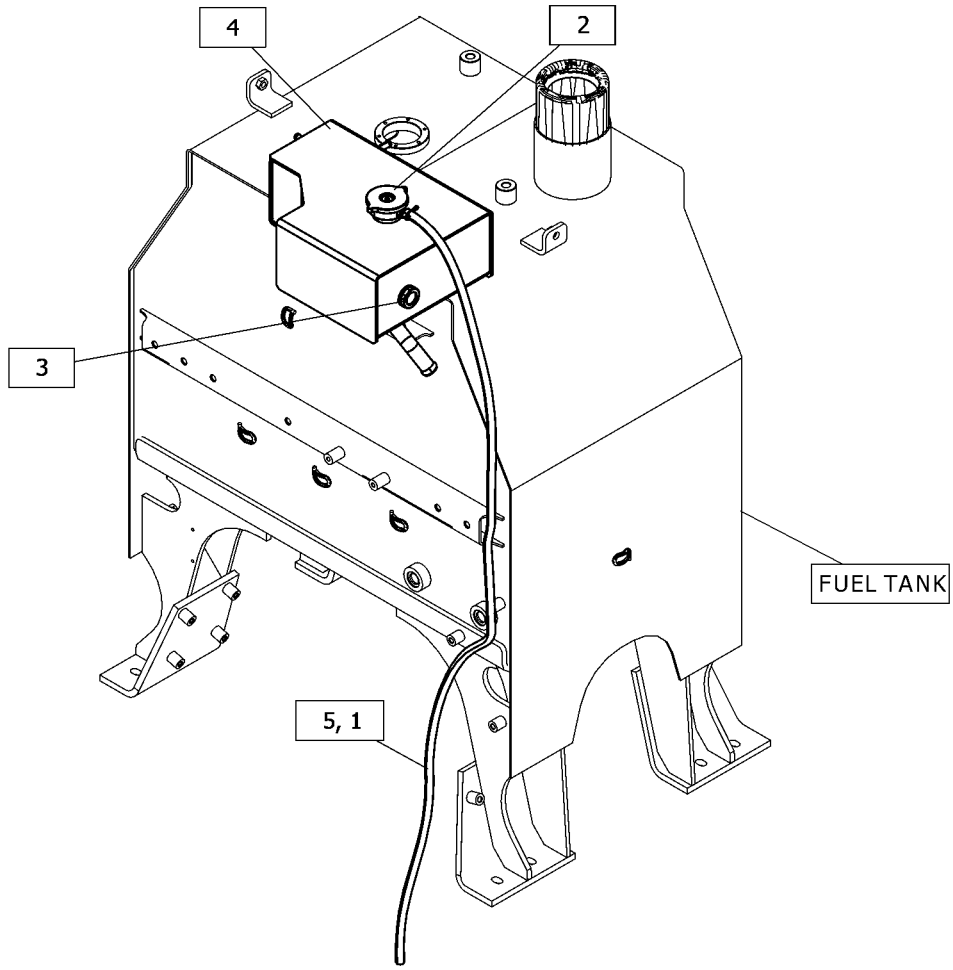

GRAPHIC #1 <END> g06367287

264-3762 AIR CLEANER GP

S/N: W921-UP

PART OF 527-9471 AIR CLEANER GP

SMCS-1051, 1054 **i07581863**

NOTE	REF NO	GRAPHIC REF	PART NUMBER	QTY	PART NAME 1 2 3 4 5 6 (PRODUCT LEVEL)	SEE PAGE
	1	1	**212-5081**	1	COVER AS	
	2	1	**245-6375**	1	FILTER ELEMENT-AIR (PRIMARY)	
	3	1	**245-6376**	1	FILTER ELEMENT AS-AIR (SECONDARY)	
	4	1	**246-4615**	2	BRACKET AS	
	5	1	**247-9730**	1	VALVE AS-CHECK	

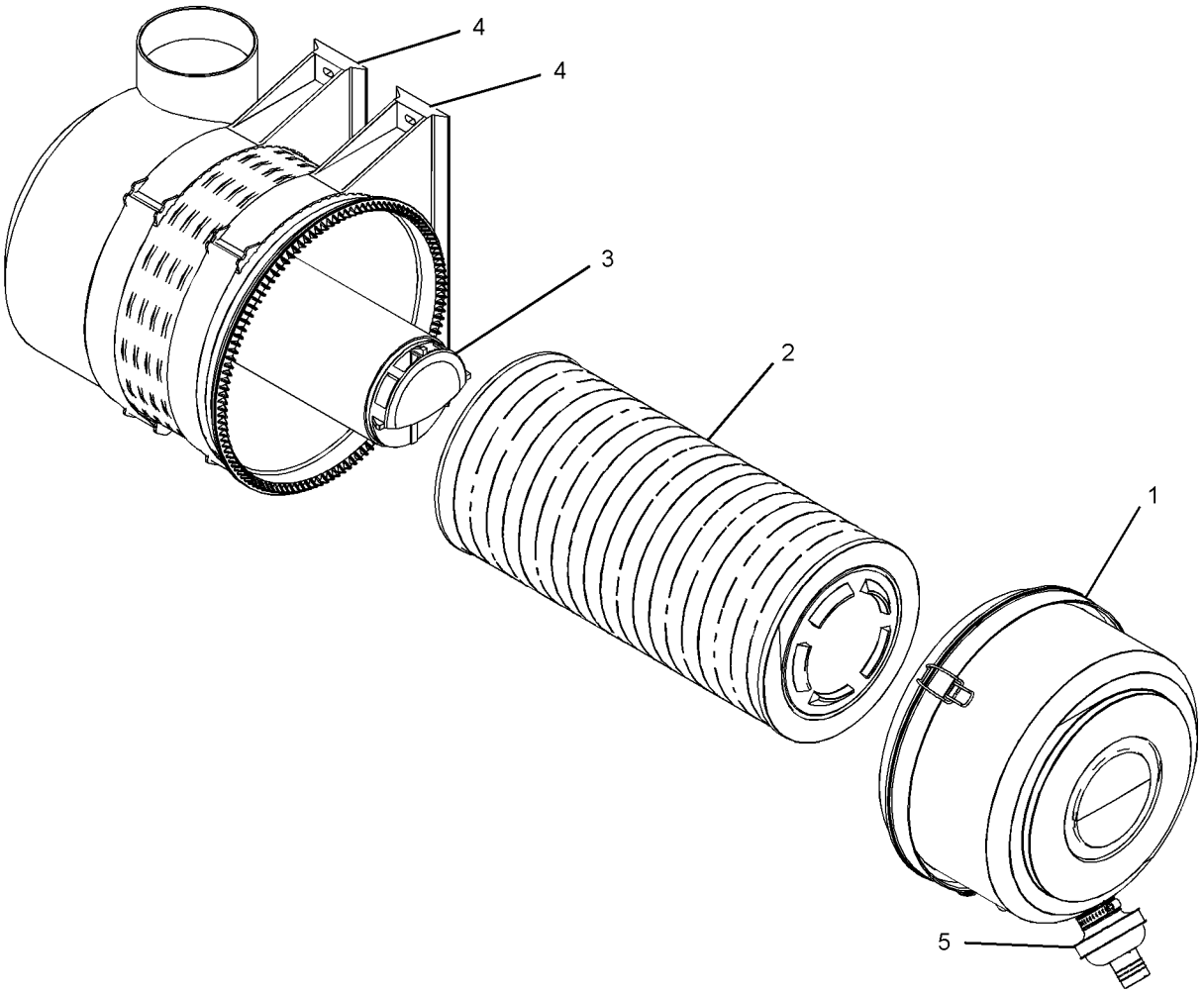

GRAPHIC #1 <END> g01691874

527-9467 AIR CLEANER GP

S/N: W921-UP

PART OF 527-9463 INSTALLATION AR-ENGINE

SMCS-1051, 1054

i07621309

NOTE	REF NO	GRAPHIC REF	PART NUMBER	QTY	PART NAME 1 2 3 4 5 6 (PRODUCT LEVEL)	SEE PAGE
	1	1	**204-2281**	2	STRAP-CABLE	
M	2	1	**518-6585**	1	NUT-HEX (M10X1.5-THD)	
M	3	1	**521-2260**	1	BOLT (M10X1.5X30-MM)	
	4	1	**200-6345**	1	SADDLE-MOUNTING (DUAL SWIVEL)	
	6	1	*474-2633*	1	ADAPTER AS	
		1	**161-3189**	1	ADAPTER	
		1	**228-7093**	1	SEAL-O-RING	
		1	**451-2764**	1	SEAL	
	7	1	**501-3956**	1	HOSE	
	8	1	**518-4417**	3	WASHER	
	9	1	**520-1146**	1	CLAMP	
	10	1	**521-2261**	1	BOLT-HEAD (M10X1.5X35-MM)	
	11	1	**527-9489**	1	TUBE AS	
I	12	1	**527-9494**	1	HOSE AS	
	13	1	**539-1097**	1	CLAMP	
	14	1	**551-3697**	1	CLAMP	
	15	1	*153-6237*	1	ELBOW AS	
		1	**3D-2824**	1	SEAL-O-RING	
		1	**6V-9004**	1	ELBOW	
		1	**6V-9746**	1	SEAL-O-RING	
	16	1	**198-4777**	1	WASHER-HARD (11X25X10-MM THK)	
	17	1	**6V-1889**	2	CLIP (LOOP)	
	18	1	**9X-8250**	1	CLIP (LOOP)	
	19	1	**346-4791**	1	CLAMP-BAND	

I - REFER TO HYDRAULIC INFORMATION SYSTEM
M - METRIC PART

527-9467 **AIR CLEANER GP (**contd.**)** **i07621309**

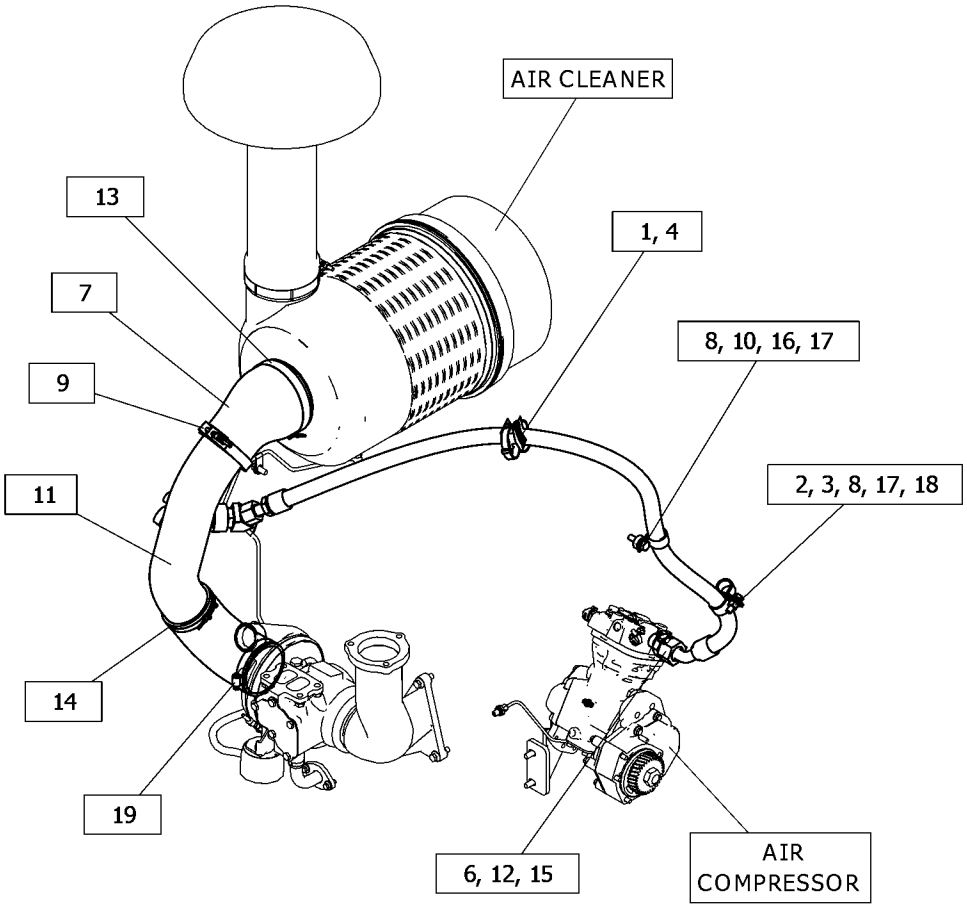

GRAPHIC #1 <END> g06375983

527-9471 AIR CLEANER GP

S/N: W921-UP

PART OF 527-9462, 527-9463, 527-9464 INSTALLATION AR-ENGINE

SMCS-1051, 1054 **i07581862**

NOTE	REF NO	GRAPHIC REF	PART NUMBER	QTY	PART NAME 1 2 3 4 5 6 (PRODUCT LEVEL)	SEE PAGE
	1	1	**204-2281**	2	STRAP-CABLE	
	2	1	**518-9736**	4	WASHER (8.8X20.5X2-MM THK)	
	3	1	**200-6345**	1	SADDLE-MOUNTING (DUAL SWIVEL)	
	4	1	**246-4611**	1	CAP AS-AIR CLEANER	
Y	5	1	**264-3762**	1	AIR CLEANER GP	86
	6	1	**525-4161**	2	CLAMP-HOSE	
	7	1	**527-9498**	1	HOSE	
	8	1	**539-1090**	1	PIPE-EXTENSION	
M	9	1	**099-3649**	4	BOLT (M8X1.25X40-MM)	
	10	1	**222-2277**	1	CLAMP	

M - METRIC PART
Y - SEPARATE ILLUSTRATION

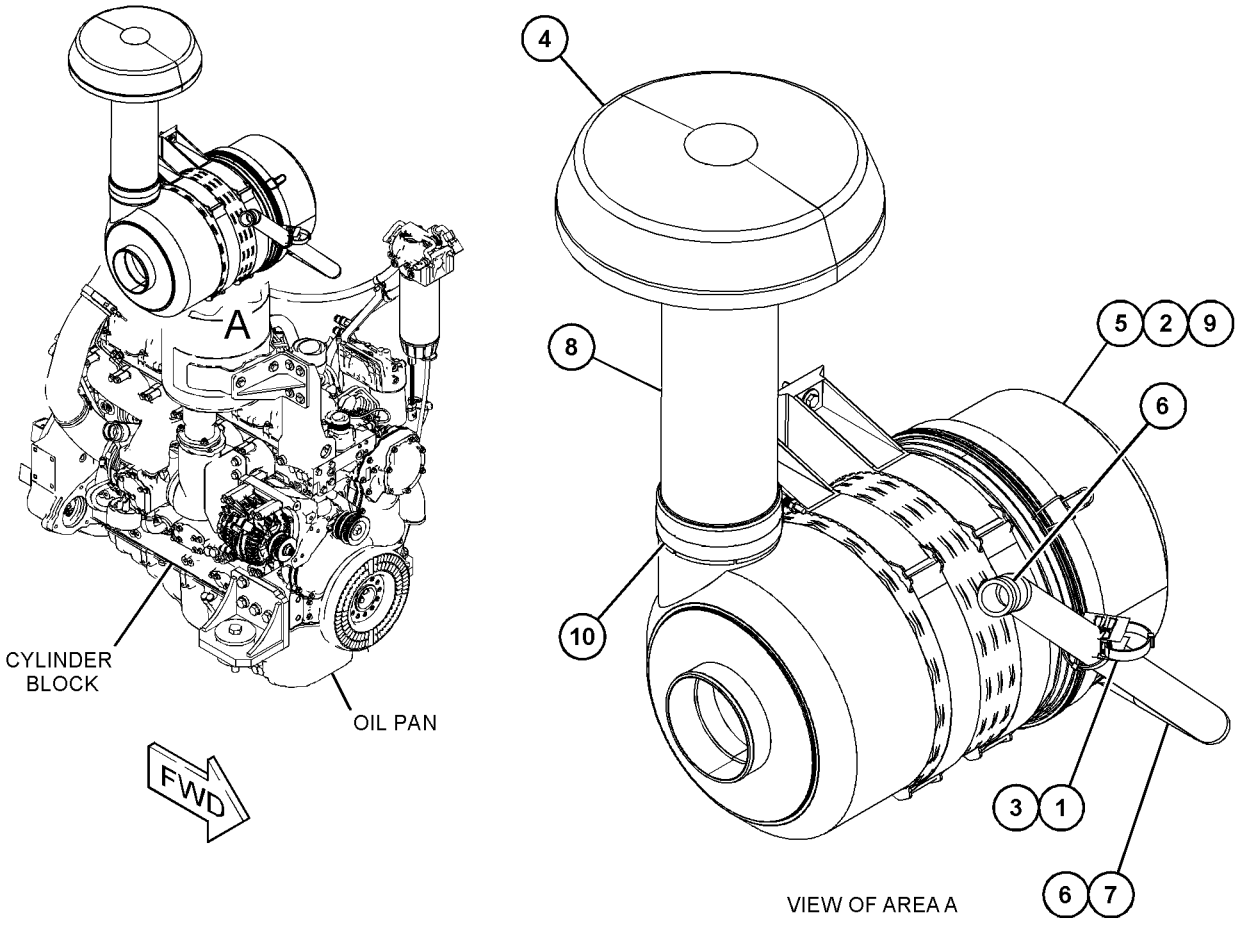

GRAPHIC #1 <END> g06373245

527-9477 AIR CLEANER GP

S/N: W921-UP

PART OF 527-9462, 527-9464 INSTALLATION AR-ENGINE

SMCS-1051, 1054 **i07581900**

NOTE	REF NO	GRAPHIC REF	PART NUMBER	QTY	PART NAME 1 2 3 4 5 6 (PRODUCT LEVEL)	SEE PAGE
	1	1	**346-4791**	1	CLAMP-BAND	
	2	1	**551-3697**	1	CLAMP	
	3	1	**501-3956**	1	HOSE	
	4	1	**520-1146**	1	CLAMP	
	5	1	**527-9481**	1	TUBE AS	
	6	1	**539-1097**	1	CLAMP	

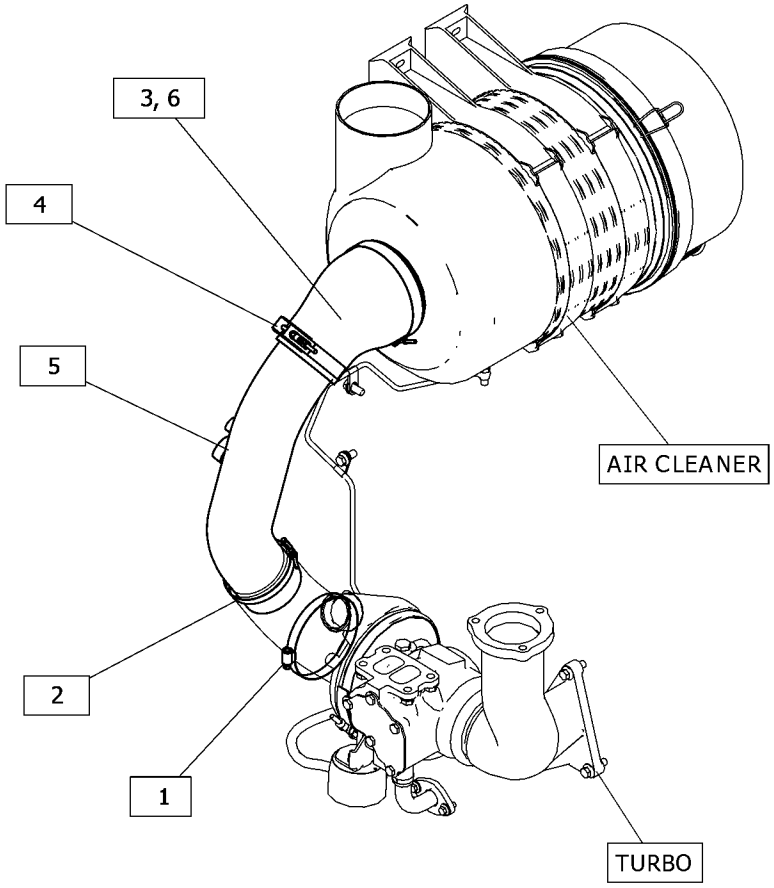

GRAPHIC #1 <END> g06376450

533-4466 LINES GP-AIR–ATAAC

S/N: W921-UP

PART OF 533-4440 COOLING AR

SMCS-1071 **i07544122**

NOTE	REF NO	GRAPHIC REF	PART NUMBER	QTY	PART NAME 1 2 3 4 5 6 (PRODUCT LEVEL)	SEE PAGE
	1	1	**177-0581**	3	HOSE	
M	2	1	**521-2260**	4	BOLT (M10X1.5X30-MM)	
	3	1	**533-4987**	1	TUBE	
	4	1	**533-4988**	1	TUBE	
	5	1	**535-9444**	1	HOSE	
	6	1	**209-4578**	6	CLAMP-T BOLT	
	7	1	**209-4580**	1	CLAMP-T BOLT	
	8	1	**518-4417**	4	WASHER	
	9	1	**8T-4984**	1	CLAMP-HOSE	
	10	1	**9X-2646**	4	CLIP (SLOT)	
	11	1	**9X-2647**	4	CLIP (TAB)	

M - METRIC PART

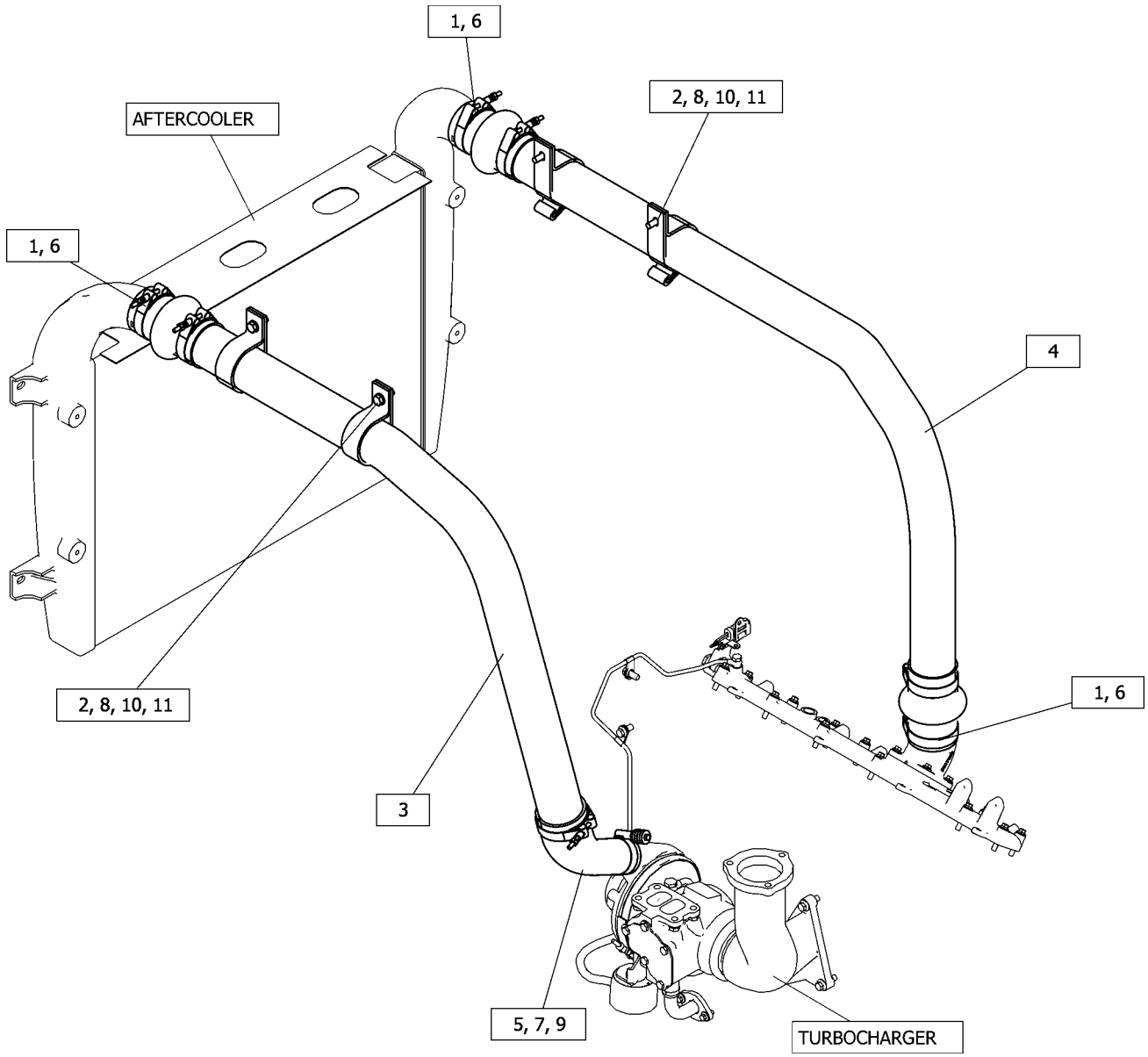

GRAPHIC #1 <END> g06360728

396-9532 LINES GP-TURBOCHARGER AIR

S/N: E7A1-UP

PART OF 448-9771 TURBOCHARGER GP

SMCS-1052, 1071

i05574332

NOTE	REF NO	GRAPHIC REF	PART NUMBER	QTY	PART NAME 1 2 3 4 5 6 (PRODUCT LEVEL)	SEE PAGE
	1	1	**225-8526**	2	WASHER (10.4X13.75X1.37-MM THK)	
	2	1	**133-9469**	1	CLIP	
	3	1	**225-8524**	1	BOLT-SPECIAL	
	4	1	**335-8611**	1	CLIP	
	5	1	**396-9529**	1	TUBE AS-TURBOCHARGER	
	6	1	**107-2348**	2	CLIP	

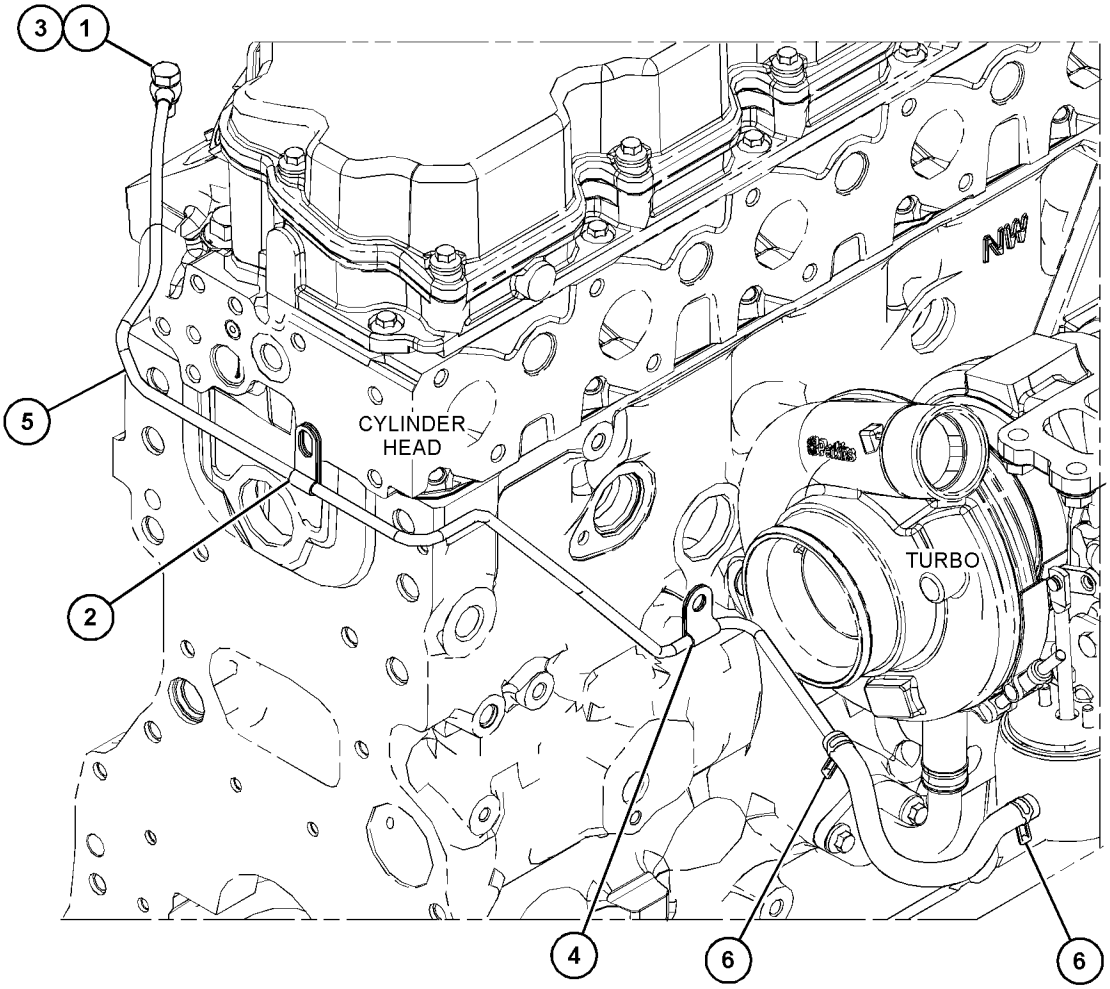

GRAPHIC #1 <END> g03557599

416-7808 MANIFOLD GP-EXHAUST

S/N: E7A1-UP

PART OF 533-1826, 533-1840 ENGINE AR-PRIMARY

SMCS-1059 **i06060823**

NOTE	REF NO	GRAPHIC REF	PART NUMBER	QTY	PART NAME 1 2 3 4 5 6 (PRODUCT LEVEL)	SEE PAGE
	1	1	**238-8292**	12	BOLT-FLANGE HEAD	
	2	1	**286-7851**	12	SPACER	
	3	1	**396-8052**	1	MANIFOLD-EXHAUST	
	4	1	**367-3340**	4	STUD	
	5	1	**416-7727**	2	GASKET	

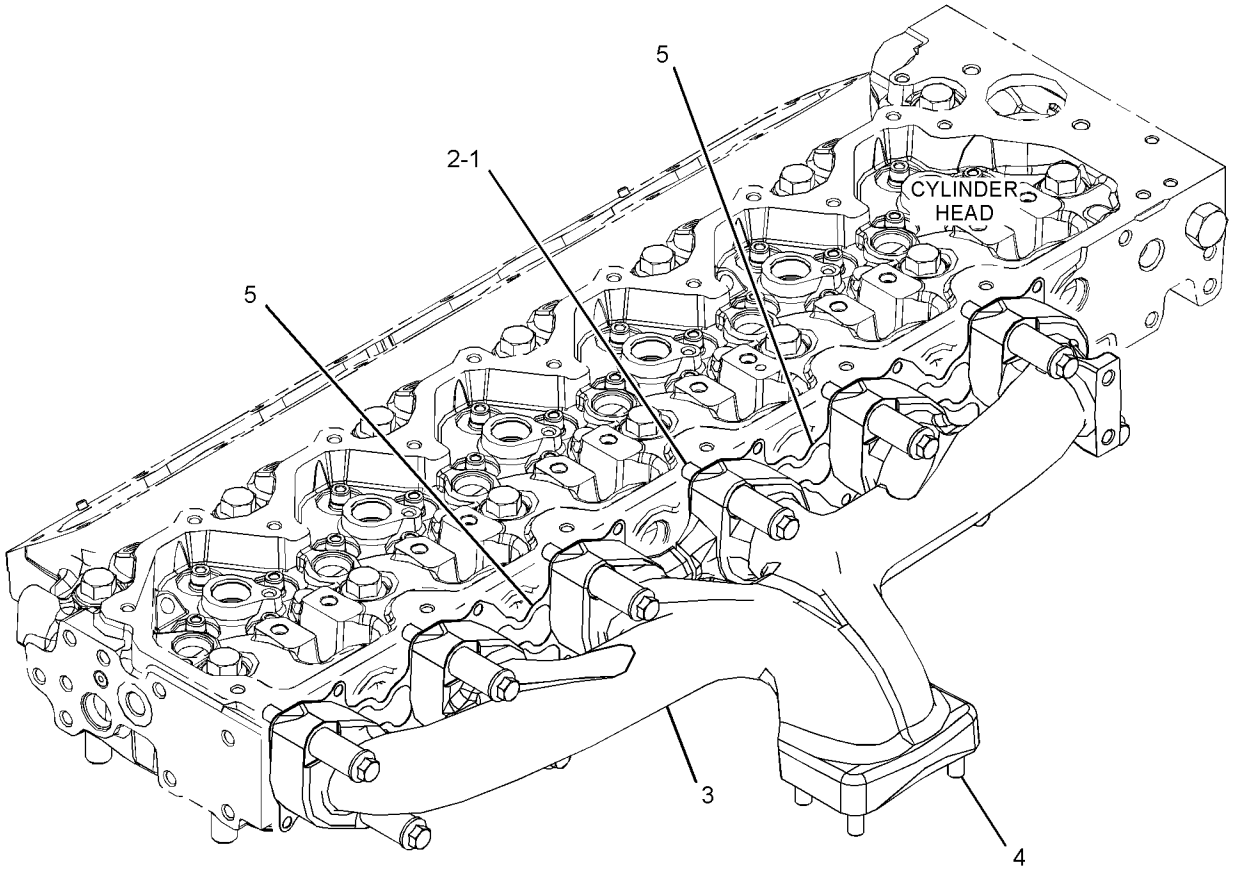

GRAPHIC #1 <END> g03535858

391-5523 MANIFOLD GP-INLET

S/N: E7A1-UP

PART OF 533-1826, 533-1840 ENGINE AR-PRIMARY

SMCS-1058 **i05832946**

NOTE	REF NO	GRAPHIC REF	PART NUMBER	QTY	PART NAME 1 2 3 4 5 6 (PRODUCT LEVEL)	SEE PAGE
M	1	1	**6I-0917**	2	BOLT (M6X1X25-MM)	
M	2	1	**105-2740**	12	BOLT (M8X1.25X40-MM)	
	3	1	**369-1658**	1	SOLENOID	
	4	1	**452-9704**	1	COVER (CYLINDER HEAD)	
M	5	1	**6I-0260**	4	BOLT (M8X1.25X25-MM)	
	6	1	**390-7626**	1	CONNECTION GP-AIR	
		1	**238-8288**	1	GASKET-INLET	
		1	**292-3462**	1	PLUG-PIPE	

M - METRIC PART

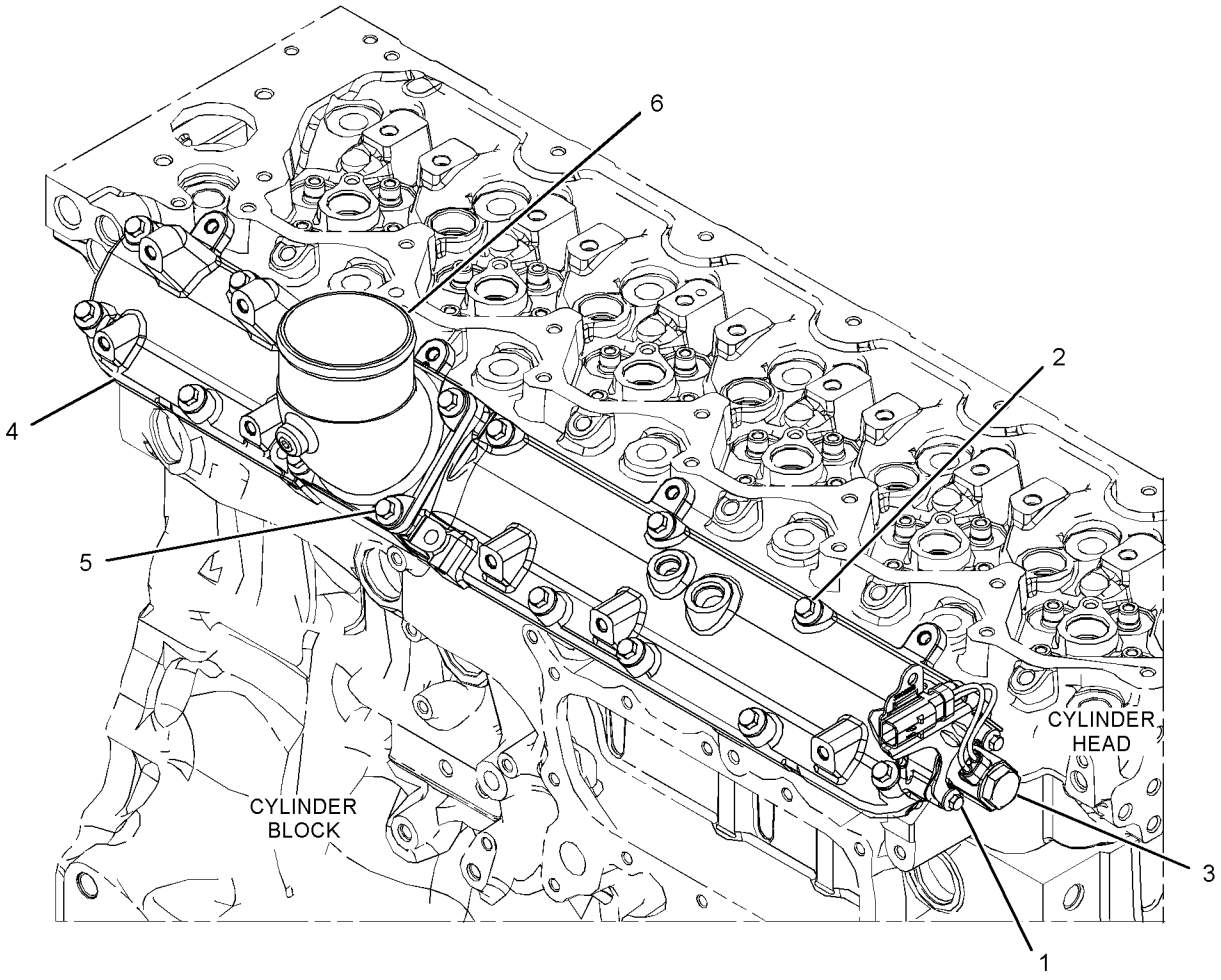

GRAPHIC #1 <END> g03476304

521-1264 PLUG GP

S/N: W921-UP

PART OF 527-9464 INSTALLATION AR-ENGINE

SMCS-108F **i07581850**

NOTE	REF NO	GRAPHIC REF	PART NUMBER	QTY	PART NAME 1 2 3 4 5 6 (PRODUCT LEVEL)	SEE PAGE
	1	1	*259-9094*	1	PLUG AS	
		1	**2M-9780**	1	SEAL-O-RING	
		1	**9S-4190**	1	PLUG-O-RING (7/8-14-THD)	

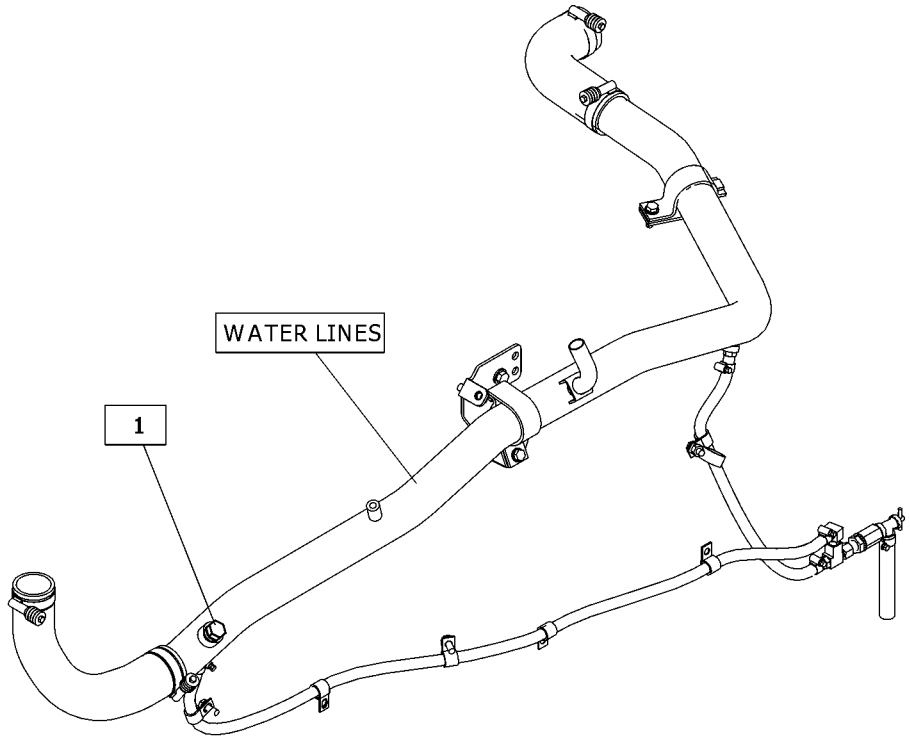

GRAPHIC #1 <END> g06361410

448-9771 TURBOCHARGER GP

S/N: E7A1-UP

PART OF 533-1826, 533-1840 ENGINE AR-PRIMARY

SMCS-1052, 1053 **i07577096**

NOTE	REF NO	GRAPHIC REF	PART NUMBER	QTY	PART NAME 1 2 3 4 5 6 (PRODUCT LEVEL)	SEE PAGE
M	1	1	**6I-0217**	1	BOLT (M8X1.25X20-MM)	
M	2	1	**6I-0563**	4	NUT (M10X1.5-THD)	
M	3	1	**6I-0593**	3	BOLT (M10X1.5X30-MM)	
M	4	1	**100-4830**	1	BOLT (M10X1.5X20-MM)	
M	5	1	**124-3815**	5	BOLT (M8X1.25X16-MM)	
	6	1	**278-0017**	1	GASKET	
	7	1	**280-2424**	1	ADAPTER	
	8	1	**282-2830**	1	ELBOW	
C	9	1	**458-8357**	1	TURBOCHARGER AS	
		1	**560-7640**	1	ACTUATOR AS	
	10	1	**368-8557**	1	TUBE AS-TURBOCHARGER	
	10A	1	**277-9938**	1	BOLT-SPECIAL (BANJO)	
	10B	1	**277-9940**	1	SEAL-O-RING	
	10C	1	**365-5823**	1	WASHER	
Y	11	1	**396-9532**	1	LINES GP-TURBOCHARGER AIR	92
	12	1	**420-2372**	1	LINE AS	
	13	1	**437-4170**	1	GASKET	

C - CHANGE FROM PREVIOUS TYPE
M - METRIC PART
Y - SEPARATE ILLUSTRATION

448-9771 **TURBOCHARGER GP (**contd.**)** **i07577096**

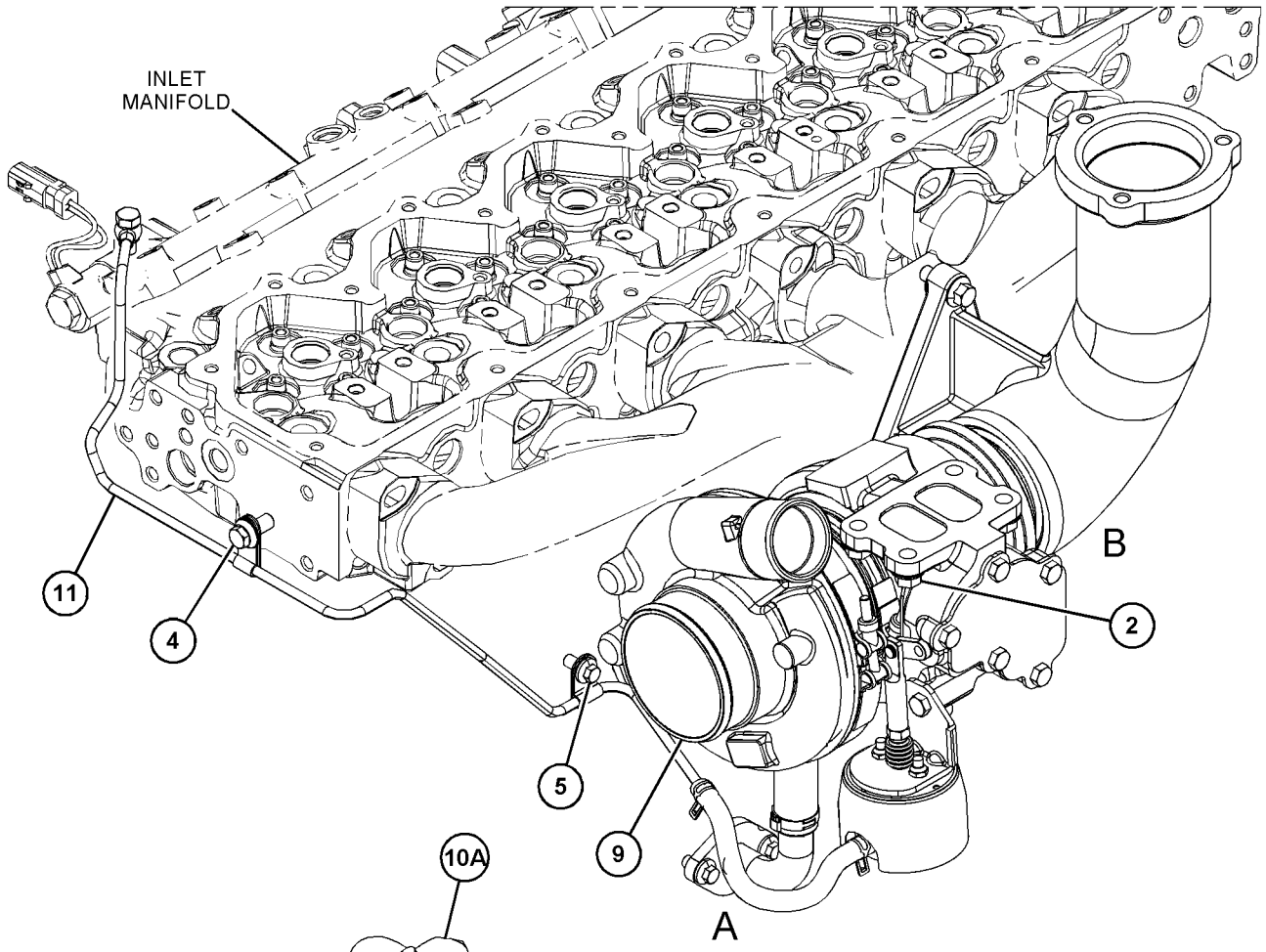

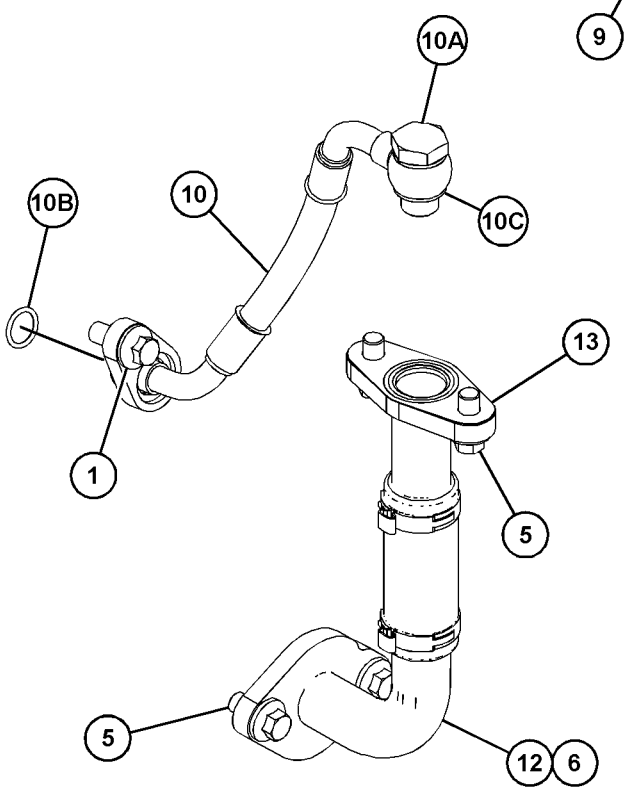

VIEW OF AREA A
(PARTS REMOVED FOR CLARITY)

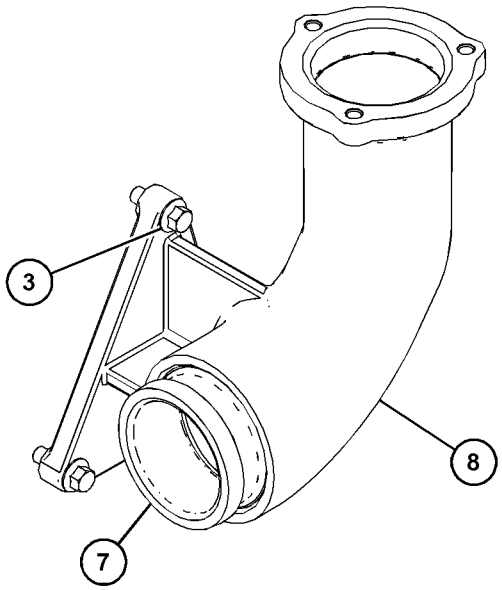

VIEW OF AREA B
(PARTS REMOVED FOR CLARITY)

GRAPHIC #1 <END> g06327838

526-2237 CONTROL GP-GOVERNOR

S/N: W921-UP

PART OF 526-2236 CAB AR

SMCS-1265, 1276 **i07540365**

NOTE	REF NO	GRAPHIC REF	PART NUMBER	QTY	PART NAME 1 2 3 4 5 6 (PRODUCT LEVEL)	SEE PAGE
	1	1	**009-0008**	1	SETSCREW-SOCKET (3/8-16X0.5-IN)	
	2	1	**116-5710**	1	GROMMET	
	3	1	**129-3173**	1	BOLT-12 POINT HEAD (3/8-16X1.25-IN)	
	4	1	**130-5300**	1	CLIP	
	5	1	**141-6343**	1	SPRING	
M	6	1	**142-0485**	2	NUT (M10X1.5-THD)	
	7	1	**161-7062**	1	HOUSING	
	8	1	**162-8218**	1	GASKET	
	9	1	**162-8219**	1	COVER	
	10	1	**168-8683**	1	SHAFT	
	11	1	**169-0921**	1	ROD END (3/8-24 LH-THD)	
	12	1	**172-4211**	2	SPACER (10.5X22X50.8-MM THK)	
	13	1	**1B-0676**	1	PIN	
	14	1	**1B-8704**	3	KEY-WOODRUFF	
	15	1	**206-3599**	1	LEVER	
	16	1	**206-3600**	1	LEVER	
Y	17	1	**266-1467**	1	SENSOR GP-POSITION (ROTARY)	203
M	18	1	**272-3089**	2	BOLT (M10X1.5X90-MM)	
B	19	1	**2N-9421**	5	SPRING-DISC	
	20	1	**362-2789**	1	ROD	
	21	1	**4D-4064**	1	ROD END (3/8-24-THD)	
	22	1	**5P-1076**	1	WASHER-HARD (13.5X30X4-MM THK)	
	23	1	**5P-9209**	2	BEARING AS-NEEDLE	
	24	1	**512-5912**	1	PEDAL-GOVERNOR CONTROL	
	25	1	**526-2239**	1	SHAFT	
M	26	1	**6V-2313**	2	BOLT (M5X0.8X30-MM)	
	27	1	**6V-8183**	1	NUT-FULL (3/8-24-THD)	
	28	1	**6V-8801**	4	NUT (3/8-16-THD)	
	29	1	**7V-0446**	1	CLIP	
	30	1	**8T-0328**	2	WASHER-HARD (5.5X10X1-MM THK)	
	31	1	**7F-0192**	2	BOLT (3/8-16X2-IN)	
	32	1	**8T-4121**	5	WASHER-HARD (11X21X2.5-MM THK)	
M	33	1	**8T-4133**	2	NUT (M10X1.5-THD)	
M	34	1	**8T-4136**	3	BOLT (M10X1.5X25-MM)	
M	35	1	**8T-4182**	2	BOLT (M10X1.5X45-MM)	
M	36	1	**8T-4196**	2	BOLT (M10X1.5X35-MM)	
	37	1	**8T-4226**	2	WASHER-PLATED (10.5X45X3-MM THK)	
	38	1	**8X-3261**	1	LEVER	

B - USE AS REQUIRED
M - METRIC PART
Y - SEPARATE ILLUSTRATION

526-2237 **CONTROL GP-GOVERNOR (**contd.**)** **i07540365**

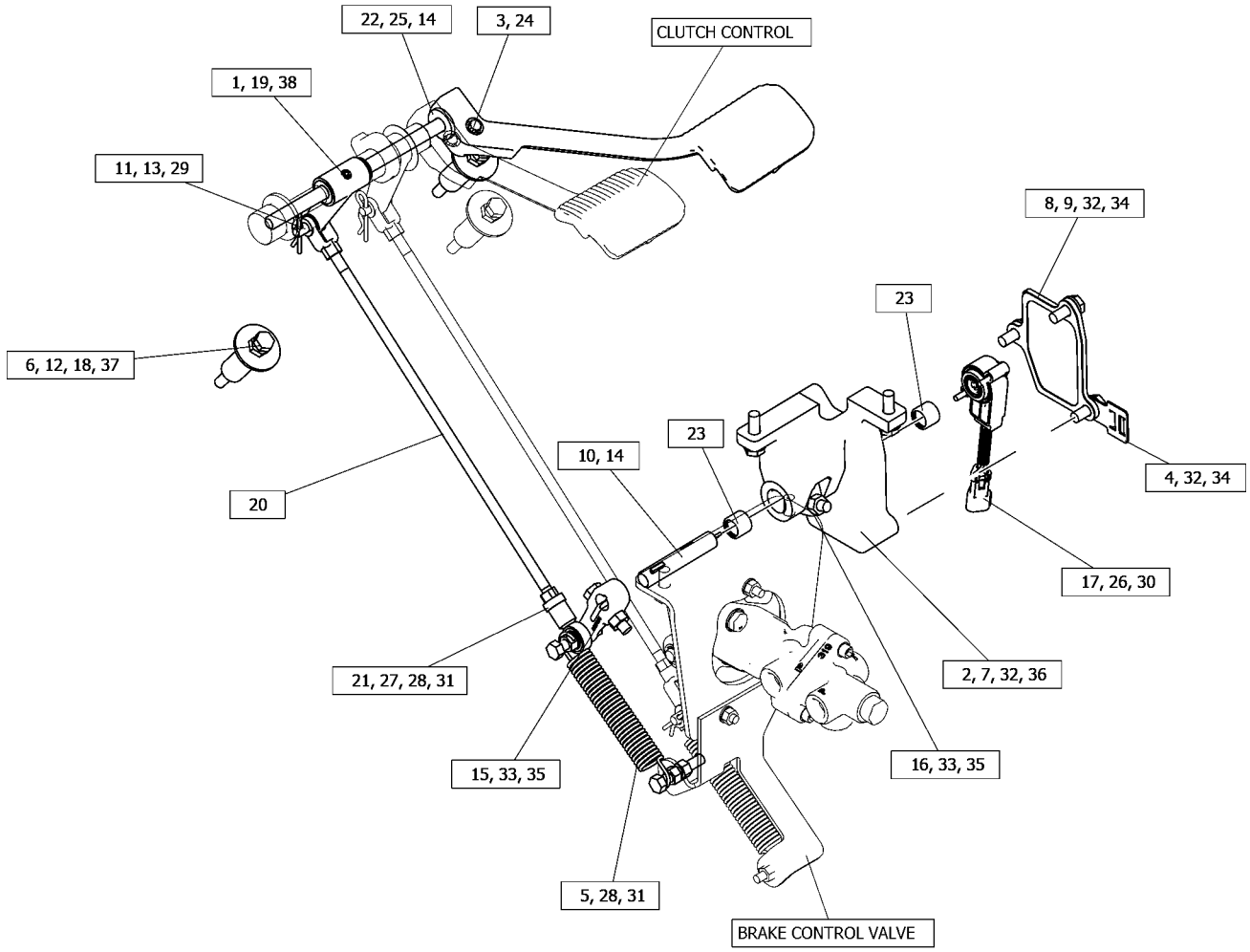

GRAPHIC #1 <END> g06358157

360-8958 FILTER GP-FUEL

S/N: E7A1-UP

PART OF 452-8547 FILTER GP-FUEL

SMCS-1261 **i05571889**

NOTE	REF NO	GRAPHIC REF	PART NUMBER	QTY	PART NAME 1 2 3 4 5 6 (PRODUCT LEVEL)	SEE PAGE
	1	1	**360-8960**	1	FILTER ELEMENT-FUEL	
					AVAILABLE REPAIR KIT(S):	
			362-5412	1	KIT-DRAIN (FUEL FILTER)	
					(INCLUDES DRAIN, KNOB, & SEALS)	

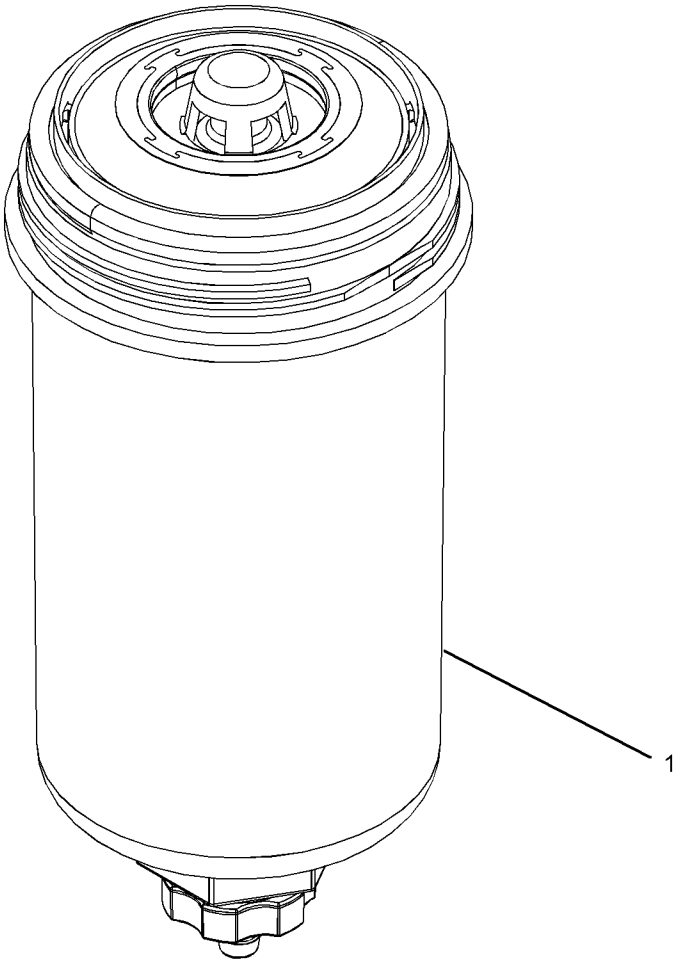

GRAPHIC #1 <END> g03173178

452-8547 FILTER GP-FUEL

S/N: E7A1-UP

PART OF 453-7163 FILTER GP-FUEL

SMCS-1261 **i05905637**

NOTE	REF NO	GRAPHIC REF	PART NUMBER	QTY	PART NAME 1 2 3 4 5 6 (PRODUCT LEVEL)	SEE PAGE
Y	1	1	**360-8958**	2	FILTER GP-FUEL	100
	2	1	**362-9689**	2	SCREW-SPECIAL	
					AVAILABLE REPAIR KIT(S):	
			362-5412	2	KIT-DRAIN	
					(EACH KIT INCLUDES DRAIN, KNOB & SEAL)	

Y - SEPARATE ILLUSTRATION

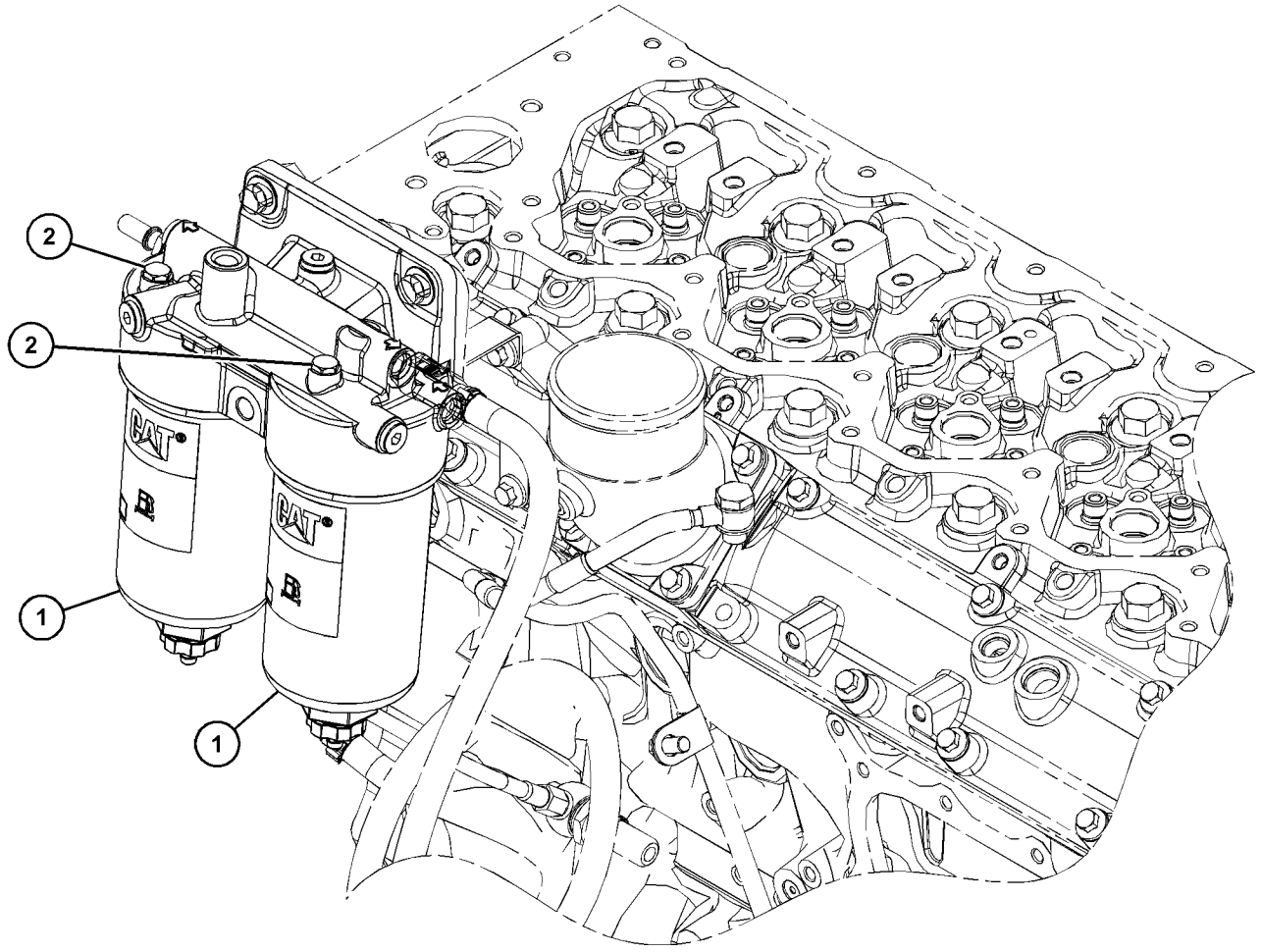

GRAPHIC #1 <END> g03701881

453-7163 FILTER GP-FUEL

S/N: E7A1-UP

PART OF 533-1826, 533-1840 ENGINE AR-PRIMARY

SMCS-1261 **i05905582**

NOTE	REF NO	GRAPHIC REF	PART NUMBER	QTY	PART NAME 1 2 3 4 5 6 (PRODUCT LEVEL)	SEE PAGE
Y	1	1	**452-8547**	1	FILTER GP-FUEL	101

Y - SEPARATE ILLUSTRATION

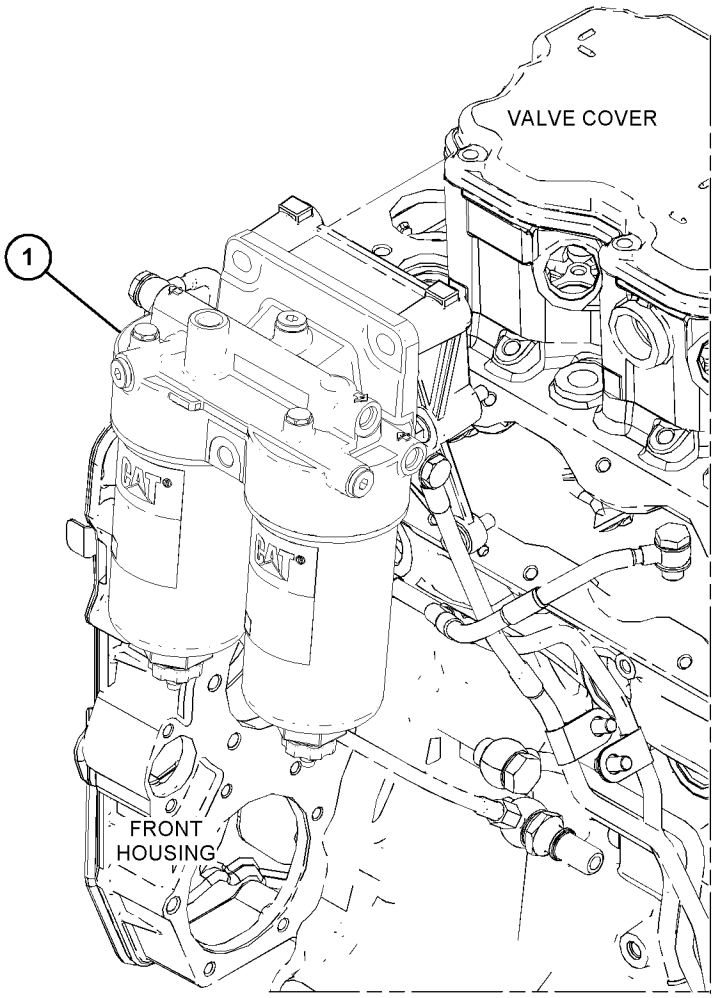

GRAPHIC #1 <END> g03695817

444-5022 FILTER GP-WATER SEP & FUEL

S/N: W921-UP

PART OF 527-9466, 527-9475 LINES GP-FUEL

SMCS-1261, 1263

i07581883

NOTE	REF NO	GRAPHIC REF	PART NUMBER	QTY	PART NAME 1 2 3 4 5 6 (PRODUCT LEVEL)	SEE PAGE
	1	1	**192-9207**	2	PLUG AS	
					(EACH INCLUDES)	
	1A	1	**126-9093**	1	SEAL	
	2	1	**439-5037**	1	FILTER AS-WATER SEP & FUEL	
	3	1	**439-5039**	1	SENSOR GP-LIQUID LEVEL	
	4	1	**439-5040**	1	BOWL AS	
	5	1	**446-0105**	1	MODULE AS	
	6	1	**445-5511**	1	VALVE AS	

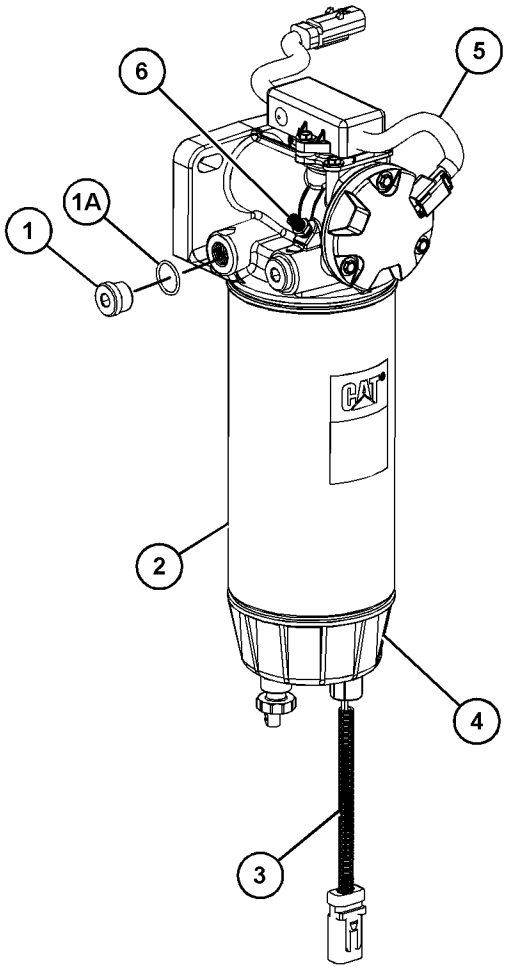

GRAPHIC #1 <END> g03651397

371-2483 INJECTOR GP-FUEL

S/N: E7A1-UP

PART OF 533-1826, 533-1840 ENGINE AR-PRIMARY

SMCS-1251, 1254, 1290, 1713 **i07577088**

NOTE	REF NO	GRAPHIC REF	PART NUMBER	QTY	PART NAME 1 2 3 4 5 6 (PRODUCT LEVEL)	SEE PAGE
	1	1	**278-5170**	6	BOLT	
	2	1	**369-7799**	6	CLAMP-INJECTOR	
YR	3	1	**371-3974**	6	INJECTOR GP-FUEL	105
	4	1	**277-5067**	6	SLEEVE	

R - REMANUFACTURED PART MAY BE AVAILABLE
Y - SEPARATE ILLUSTRATION

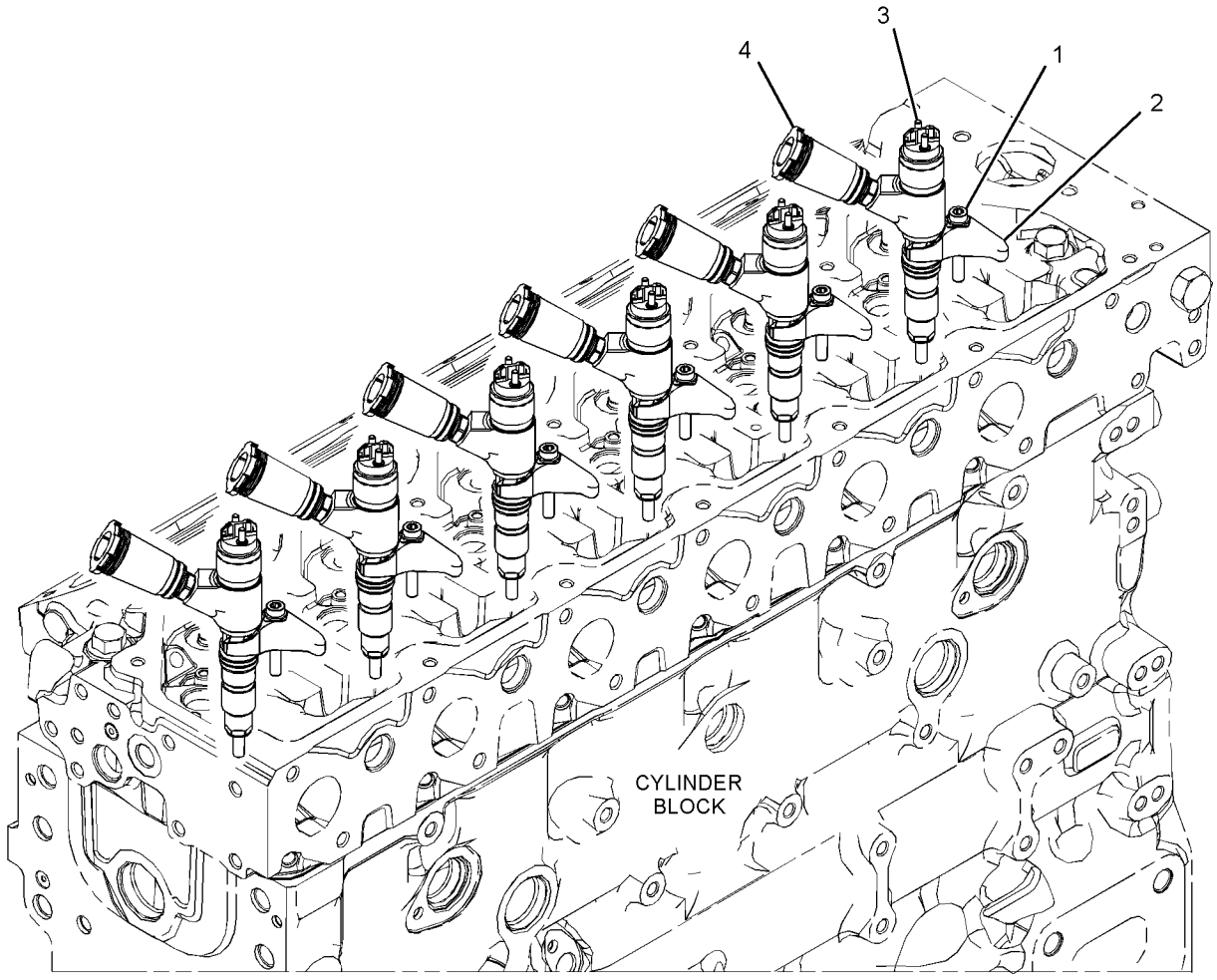

GRAPHIC #1 <END> g03169579

371-3974 INJECTOR GP-FUEL*R

S/N: E7A1-UP

PART OF 371-2483 INJECTOR GP-FUEL

SMCS-1251, 1254, 1290, 1713

i07578837

NOTE	REF NO	GRAPHIC REF	PART NUMBER	QTY	PART NAME 1 2 3 4 5 6 (PRODUCT LEVEL)	SEE PAGE
	1	1	**376-6403**	1	WASHER-SEALING	
	2	1	**376-6405**	1	SEAL-O-RING	

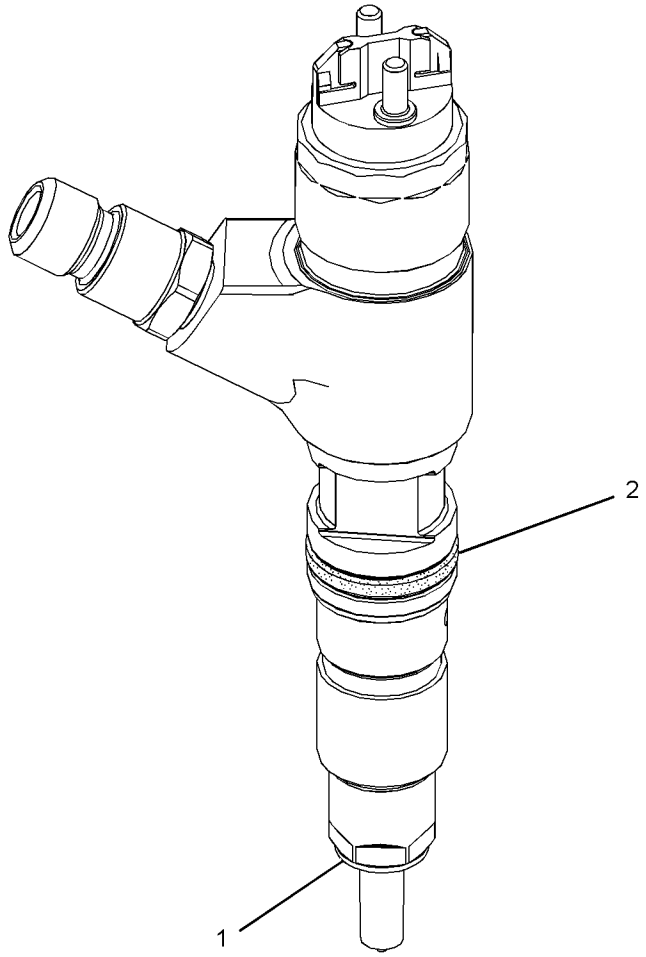

GRAPHIC #1 <END> g03110876

433-1316 LINES GP-FUEL

S/N: E7A1-UP

PART OF 426-3312, 487-0123 LINES GP-FUEL FILTER

SMCS-1274 **i07174954**

NOTE	REF NO	GRAPHIC REF	PART NUMBER	QTY	PART NAME 1 2 3 4 5 6 (PRODUCT LEVEL)	SEE PAGE
	1	1	**246-4361**	2	WASHER (10.5X14X1.5-MM THK)	
	2	1	**385-1398**	1	CONNECTION-FUEL	
	3	1	**386-1864**	1	BOLT-BANJO	
	4	1	**247-4928**	2	WASHER (16.5X20.5X1.6-MM THK)	
	5	1	**433-0190**	1	LINE AS-FUEL	

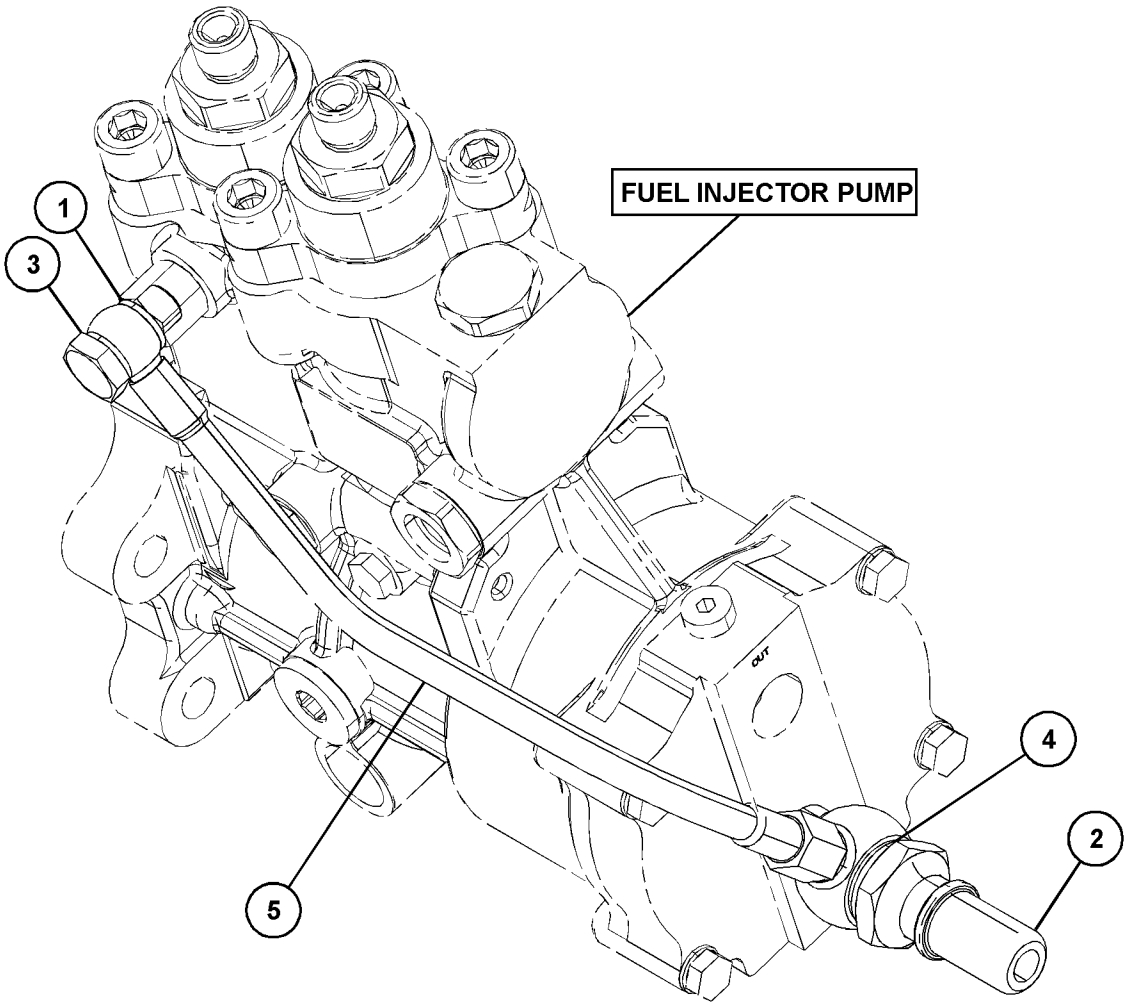

GRAPHIC #1 <END> g06240340

442-8465 LINES GP-FUEL

S/N: E7A1-UP

PART OF 426-3312 LINES GP-FUEL FILTER

SMCS-1274 **i07244815**

NOTE	REF NO	GRAPHIC REF	PART NUMBER	QTY	PART NAME 1 2 3 4 5 6 (PRODUCT LEVEL)	SEE PAGE
	1	1	**277-9938**	1	BOLT-SPECIAL (BANJO)	
	2	1	**286-2890**	2	WASHER	
	3	1	**295-4670**	1	BOLT-SPECIAL (BANJO)	
	4	1	**348-0495**	2	WASHER	

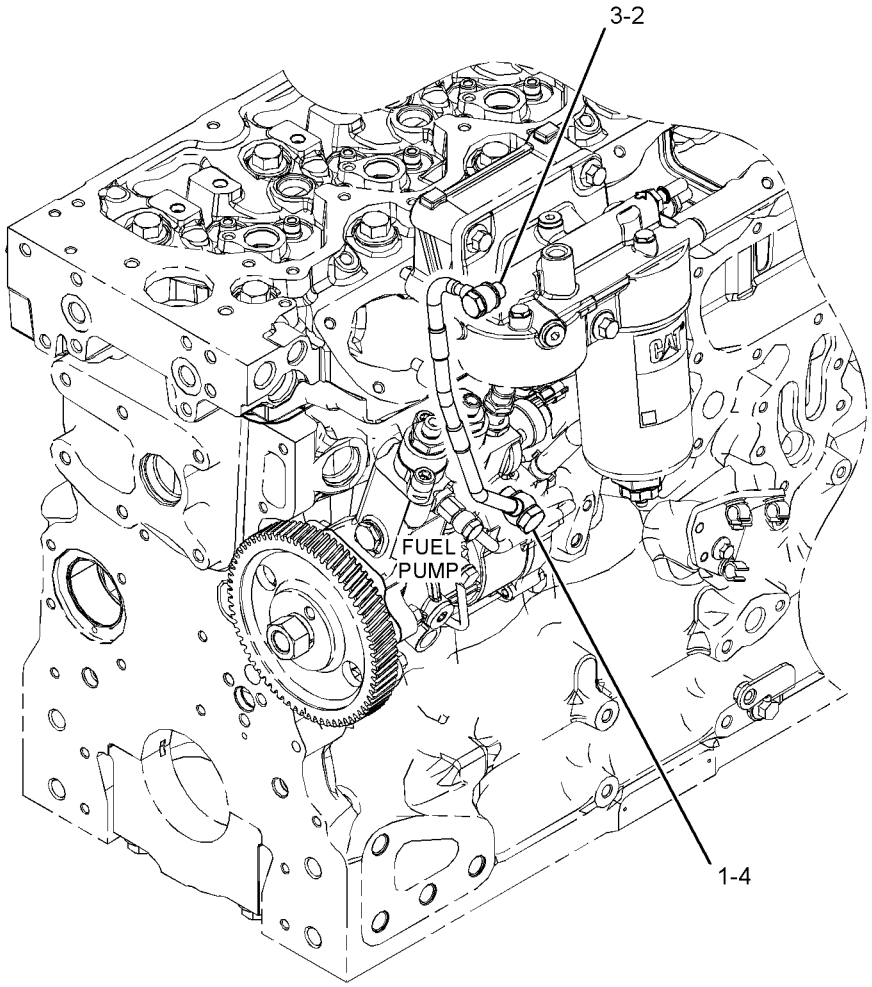

GRAPHIC #1 <END> g06263421

464-7899 LINES GP-FUEL

S/N: E7A1-UP

PART OF 426-3312, 487-0123 LINES GP-FUEL FILTER

SMCS-1274 **i06022313**

NOTE	REF NO	GRAPHIC REF	PART NUMBER	QTY	PART NAME 1 2 3 4 5 6 (PRODUCT LEVEL)	SEE PAGE
	1	1	**349-6847**	2	CLIP	
	2	1	**377-5988**	1	BOLT	
	3	1	**286-2890**	2	WASHER	
M	4	1	**161-7614**	1	NUT (M16X1.5-THD)	
	5	1	**277-4993**	1	SEAL-O-RING	

M - METRIC PART

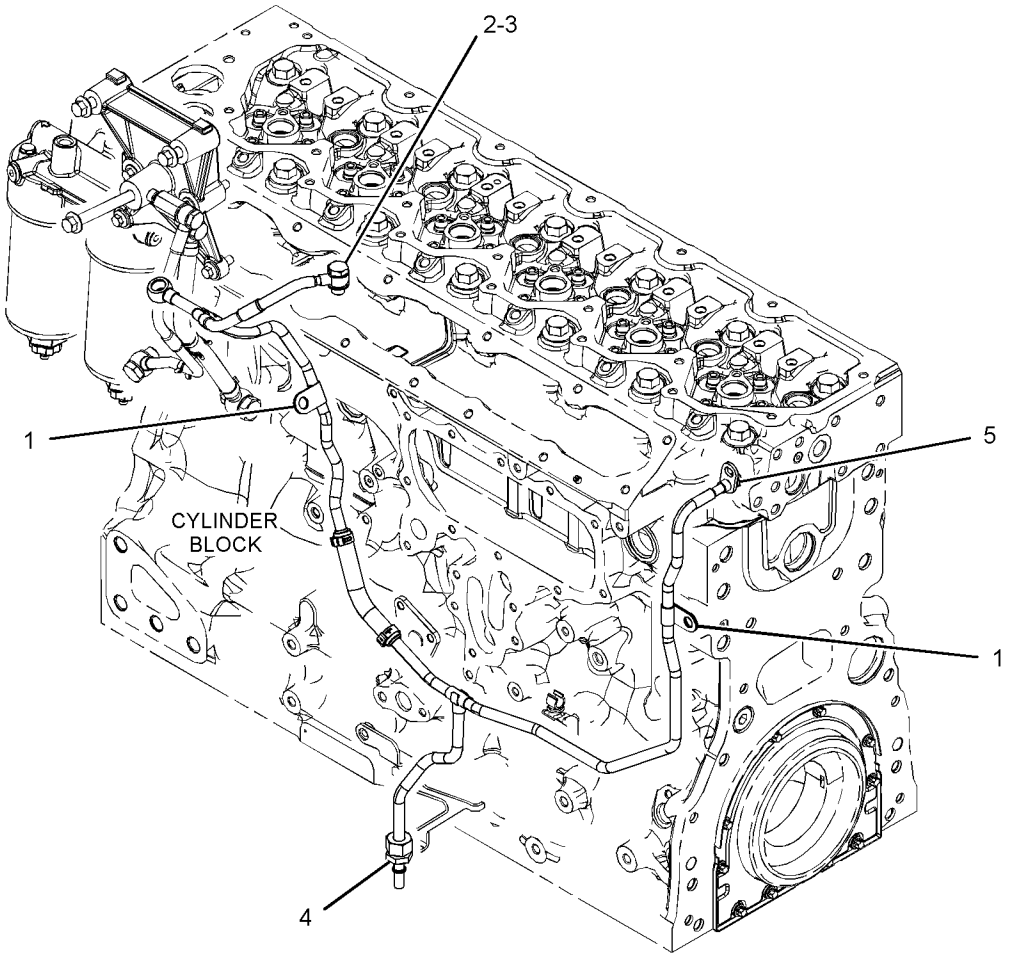

GRAPHIC #1 <END> g03384683

484-7200 LINES GP-FUEL

S/N: E7A1-UP

PART OF 426-3312 LINES GP-FUEL FILTER

SMCS-1274 **i07418503**

NOTE	REF NO	GRAPHIC REF	PART NUMBER	QTY	PART NAME 1 2 3 4 5 6 (PRODUCT LEVEL)	SEE PAGE
	1	1	**247-4928**	2	WASHER (16.5X20.5X1.6-MM THK)	
	2	1	**286-2890**	2	WASHER	
	3	1	**295-4670**	1	BOLT-SPECIAL (BANJO)	
M	4	1	**386-2737**	1	BOLT-BANJO (M16X1.5X27-MM)	
	5	1	*396-2102*	1	LINE AS-FUEL	
E		1	**347-8645**		HOSE (28-CM)	

E - ORDER BY THE CENTIMETER
M - METRIC PART

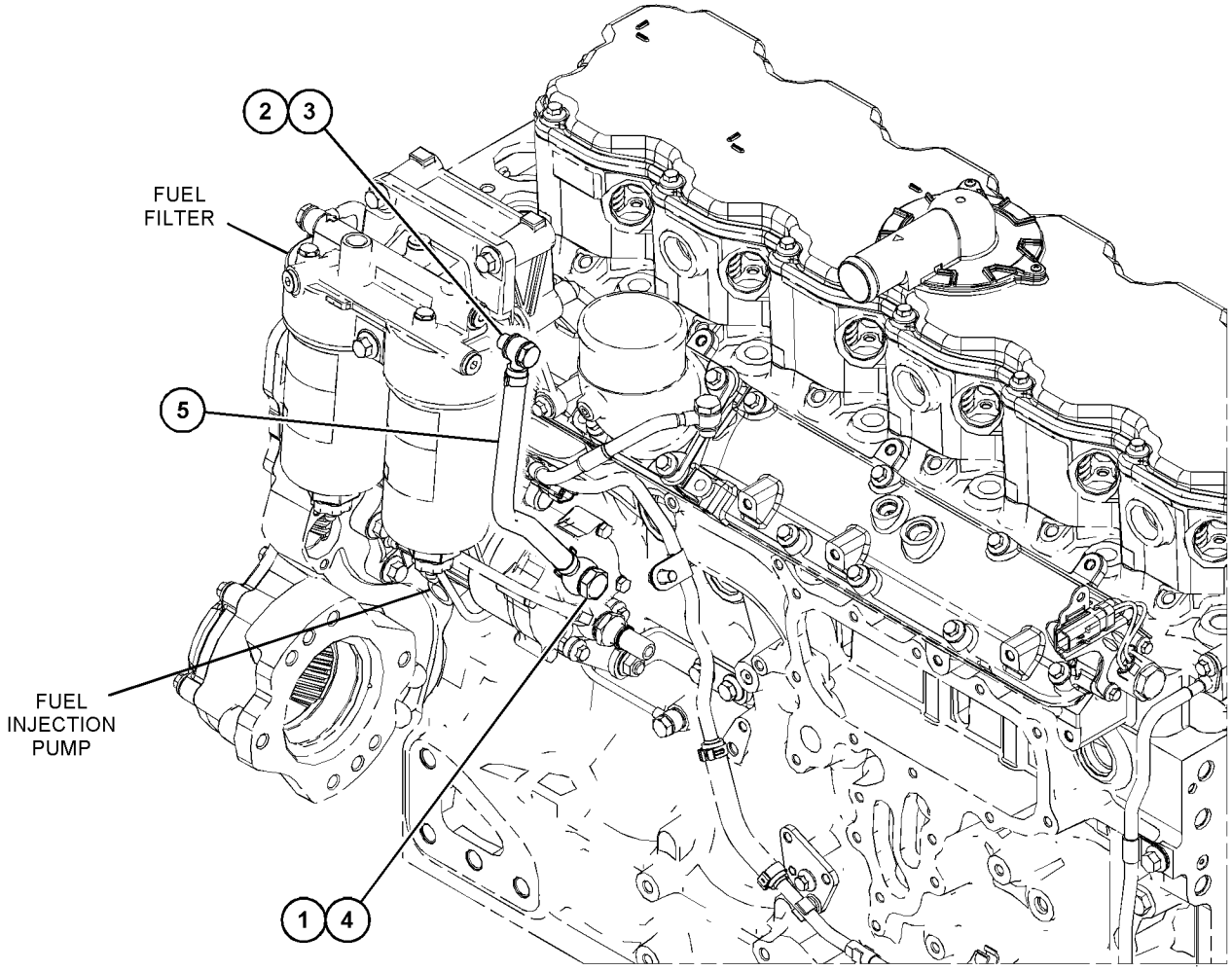

GRAPHIC #1 <END> g03875694

527-9466 LINES GP-FUEL

S/N: W921-UP

PART OF 527-9463 INSTALLATION AR-ENGINE

SMCS-1274 **i07593106**

NOTE	REF NO	GRAPHIC REF	PART NUMBER	QTY	PART NAME 1 2 3 4 5 6 (PRODUCT LEVEL)	SEE PAGE
	1	1	**204-2281**	2	STRAP-CABLE	
	2	1	**518-4416**	1	WASHER (8.4X16X1.6-MM THK)	
	3	1	**518-9592**	1	BOLT (M10X1.5X90-MM)	
M	4	1	**521-2260**	3	BOLT (M10X1.5X30-MM)	
M	5	1	**524-3271**	5	BOLT (M10X1.5X25-MM)	
	6	1	**178-3620**	7	STRAP-DUAL CLAMP	
	7	1	*192-9207*	2	PLUG AS	
					(EACH INCLUDES)	
		1	**126-9093**	1	SEAL	
		1	**439-1841**	1	PLUG	
	8	1	**198-4777**	1	WASHER-HARD (11X25X10-MM THK)	
	9	1	**1S-0994**	1	CLIP (LOOP)	
	10	1	**200-6345**	1	SADDLE-MOUNTING (DUAL SWIVEL)	
M	11	1	**208-9287**	2	BOLT-FLANGE HEAD (M8X1.25X50-MM)	
	12	1	**264-3518**	2	CONNECTOR-RECEPTACLE	
	13	1	*330-9723*	1	PLUG AS	
		1	**228-7100**	1	SEAL-O-RING	
		1	**241-6157**	1	PLUG	
M	14	1	**342-9922**	2	BOLT-FLANGE HEAD (M8X1.25X25-MM)	
	15	1	**355-0632**	2	CONNECTOR-SPECIAL	
	16	1	**356-3986**	1	CONNECTOR AS	
		1	**277-4993**	1	SEAL-O-RING	
	17	1	**389-5784**	1	BRACKET-FILTER	
	18	1	**399-0933**	2	CLAMP	
	19	1	**3S-2093**	3	STRAP-CABLE	
	20	1	**434-6673**	1	CLAMP	
	21	1	**441-0996**	1	HOSE	
	22	1	*441-1002*	1	BRACKET AS	
M		1	**8T-3490**	3	NUT-WELD (M10X1.5-THD)	
M		1	**090-8247**	3	BLOCK (M10X1.5-MM)	
	23	1	*442-1579*	1	FITTING AS	
		1	**126-9093**	1	SEAL	
		1	**439-1840**	1	FITTING	
Y	24	1	**444-5022**	1	FILTER GP-WATER SEP & FUEL	103
	25	1	**4S-4455**	2	CLIP	
	26	1	**518-4417**	11	WASHER	
	27	1	**521-2261**	2	BOLT-HEAD (M10X1.5X35-MM)	
	28	1	**525-4161**	1	CLAMP-HOSE	
	29	1	**539-1087**	1	BRACKET AS	
		1	**518-9724**	1	NUT-WELD	
	30	1	**552-6189**	3	STRAP-CABLE	
	31	1	**6D-4244**	1	CLIP (LOOP)	
M	32	1	**6V-5217**	1	BOLT (M8X1.25X20-MM)	
E	33	1	**8C-6959**		HOSE (116-CM)	
E	33A	1	**8C-6959**		HOSE (104-CM)	
E	33B	1	**8C-6959**		HOSE (114-CM)	
G	34	1	**423-1984**		HOSE (34.3-IN)	
E	35	1	**347-8645**		HOSE (39-CM)	

527-9466 **LINES GP-FUEL (**contd.**)** **i07593106**

NOTE	REF NO	GRAPHIC REF	PART NUMBER	QTY	PART NAME 1 2 3 4 5 6 (PRODUCT LEVEL)	SEE PAGE

E - ORDER BY THE CENTIMETER
G - ORDER BY THE INCH
M - METRIC PART
Y - SEPARATE ILLUSTRATION

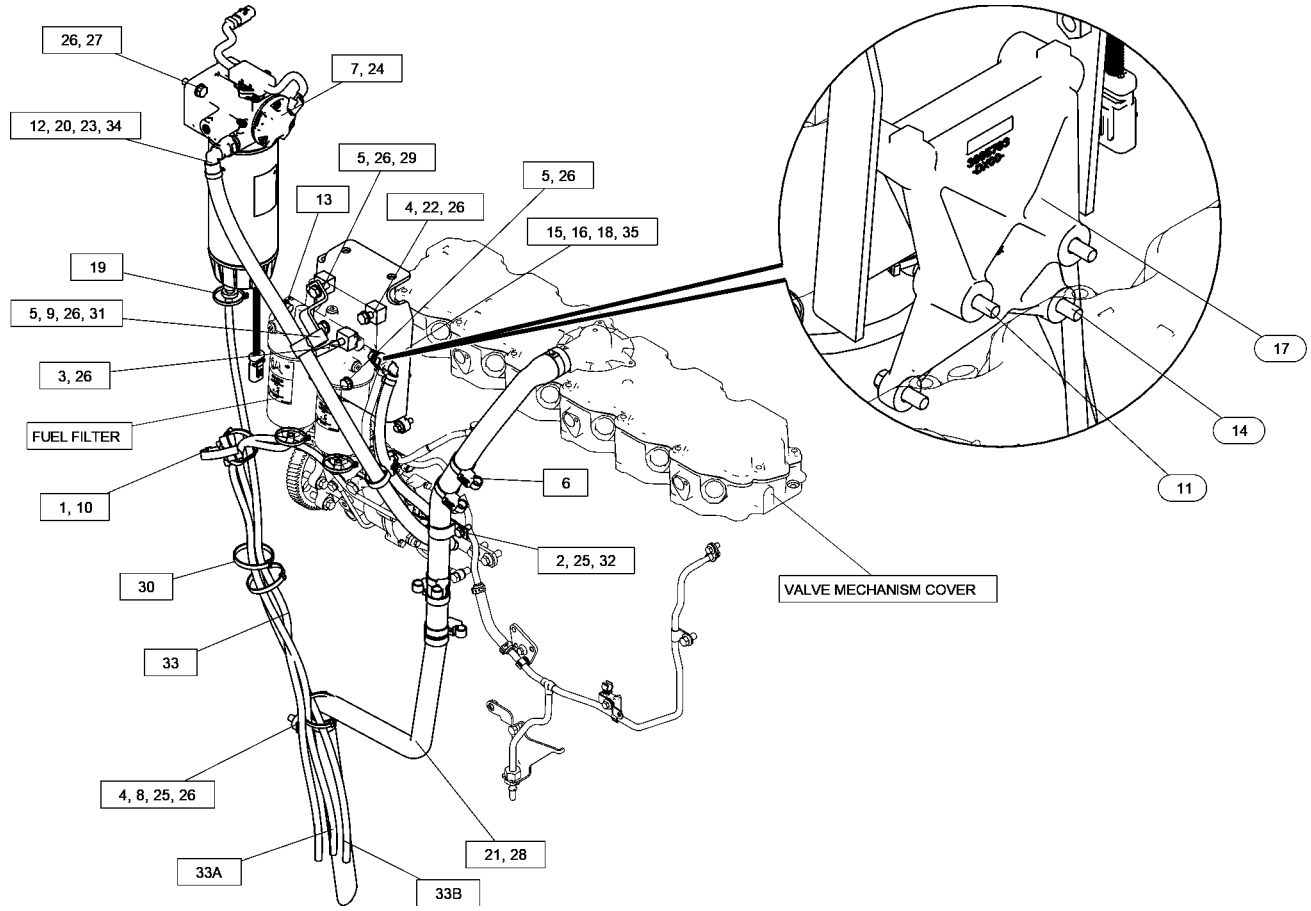

GRAPHIC #1 <END> g06376239

527-9469 LINES GP-FUEL

S/N: W921-UP

PART OF 527-9462, 527-9463, 527-9464 INSTALLATION AR-ENGINE

SMCS-1274 **i07581852**

NOTE	REF NO	GRAPHIC REF	PART NUMBER	QTY	PART NAME 1 2 3 4 5 6 (PRODUCT LEVEL)	SEE PAGE
	1	1	*194-2903*	1	ELBOW AS	
		1	**3K-0360**	1	SEAL-O-RING	
		1	**8T-0119**	1	ELBOW	
M	2	1	**518-2313**	1	BOLT-HEAD (M10X1.5X40-MM)	
M	3	1	**518-6585**	1	NUT-HEX (M10X1.5-THD)	
	4	1	*148-8364*	1	ELBOW AS	
		1	**3K-0360**	1	SEAL-O-RING	
		1	**6V-8398**	1	SEAL-O-RING	
		1	**6V-8625**	1	ELBOW	
M	5	1	**519-0992**	1	BOLT (M10X1.5X60-MM)	
	6	1	**365-0162**	1	CONNECTOR-SPECIAL	
	7	1	**459-0656**	1	ADAPTER	
	8	1	**518-4417**	3	WASHER	
	9	1	**518-4428**	1	WASHER	
I	10	1	**539-1073**	1	HOSE AS	
I	11	1	**539-1074**	1	HOSE AS	
	12	1	*148-8340*	2	CONNECTOR AS	
					(EACH INCLUDES)	
		1	**3K-0360**	1	SEAL-O-RING	
		1	**6V-8398**	1	SEAL-O-RING	
		1	**6V-8639**	1	CONNECTOR	
	13	1	**297-1546**	2	CLIP	
	14	1	**2B-0941**	1	SPACER (10.5X19X19-MM THK)	
	15	1	**5P-4961**	1	CLAMP-HOSE	
	16	1	**136-4992**	1	SPACER (11X20X40-MM THK)	

I - REFER TO HYDRAULIC INFORMATION SYSTEM
M - METRIC PART

527-9469 **LINES GP-FUEL (**contd.**)** **i07581852**

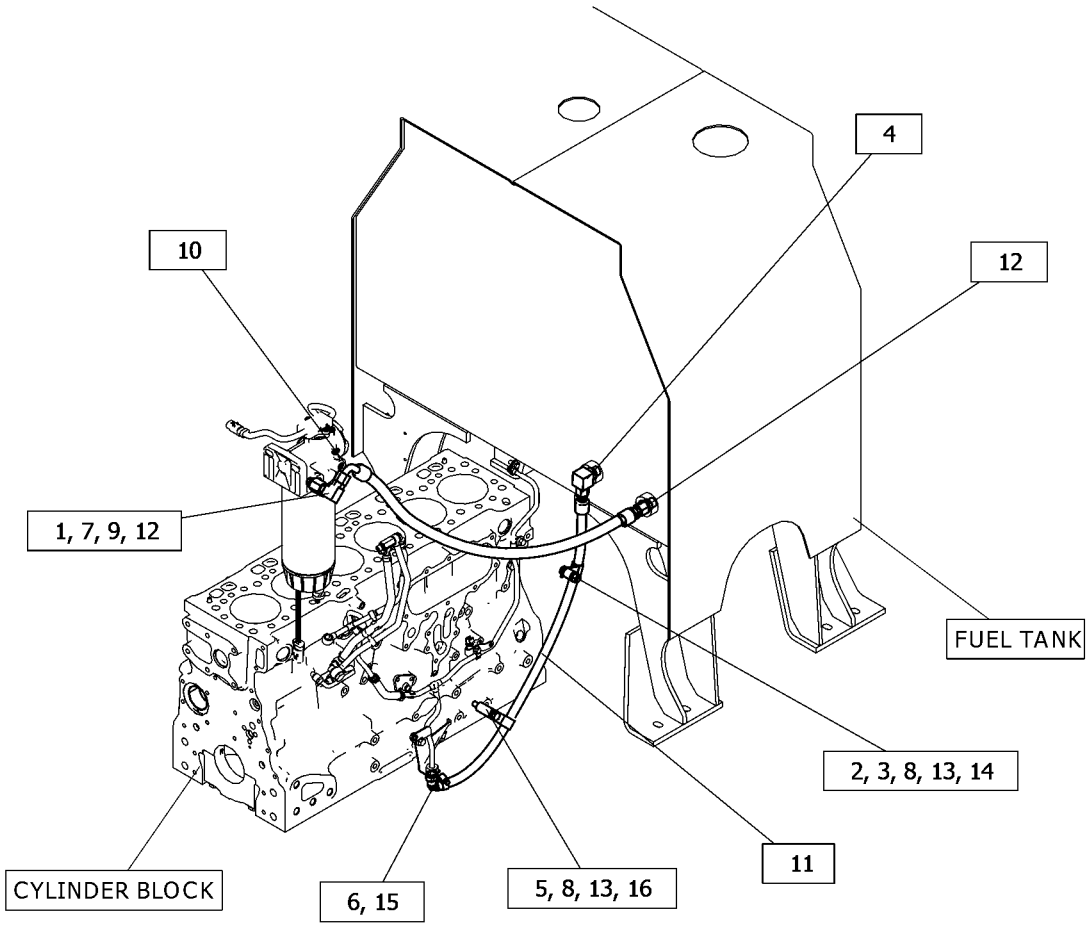

GRAPHIC #1 <END> g06374406

527-9475 LINES GP-FUEL

S/N: W921-UP

PART OF 527-9462, 527-9464 INSTALLATION AR-ENGINE

SMCS-1274 **i07581877**

NOTE	REF NO	GRAPHIC REF	PART NUMBER	QTY	PART NAME 1 2 3 4 5 6 (PRODUCT LEVEL)	SEE PAGE
	1	1	**178-3620**	2	STRAP-DUAL CLAMP	
	2	1	**518-4416**	1	WASHER (8.4X16X1.6-MM THK)	
	3	1	**6D-4244**	1	CLIP (LOOP)	
M	4	1	**521-2260**	1	BOLT (M10X1.5X30-MM)	
M	5	1	**524-3271**	1	BOLT (M10X1.5X25-MM)	
	6	1	**3S-2093**	3	STRAP-CABLE	
	7	1	*192-9207*	2	PLUG AS	
					(EACH INCLUDES)	
		1	**126-9093**	1	SEAL	
		1	**439-1841**	1	PLUG	
	8	1	**264-3518**	2	CONNECTOR-RECEPTACLE	
	9	1	**441-0996**	1	HOSE	
	10	1	*442-1579*	1	FITTING AS	
		1	**126-9093**	1	SEAL	
		1	**439-1840**	1	FITTING	
Y	11	1	**444-5022**	1	FILTER GP-WATER SEP & FUEL	103
	12	1	**518-4417**	4	WASHER	
	13	1	**518-8389**	1	BOLT (M8X1.25X30-MM)	
	14	1	**521-2261**	2	BOLT-HEAD (M10X1.5X35-MM)	
	15	1	**525-4161**	1	CLAMP-HOSE	
	16	1	**527-9479**	1	BRACKET AS	
	17	1	**551-4710**	2	CLAMP-PIPE	
	18	1	**552-6189**	3	STRAP-CABLE	
	19	1	**198-4777**	1	WASHER-HARD (11X25X10-MM THK)	
	20	1	**1S-0994**	1	CLIP (LOOP)	
	21	1	**4S-4455**	2	CLIP (LADDER)	
E	22	1	**8C-6959**		HOSE (96-CM)	
E	22A	1	**8C-6959**		HOSE (116-CM)	
E	22B	1	**8C-6959**		HOSE (115-CM)	
G	23	1	**423-1984**		HOSE (35.1-IN)	

E - ORDER BY THE CENTIMETER
G - ORDER BY THE INCH
M - METRIC PART
Y - SEPARATE ILLUSTRATION

527-9475 **LINES GP-FUEL (**contd.**)** **i07581877**

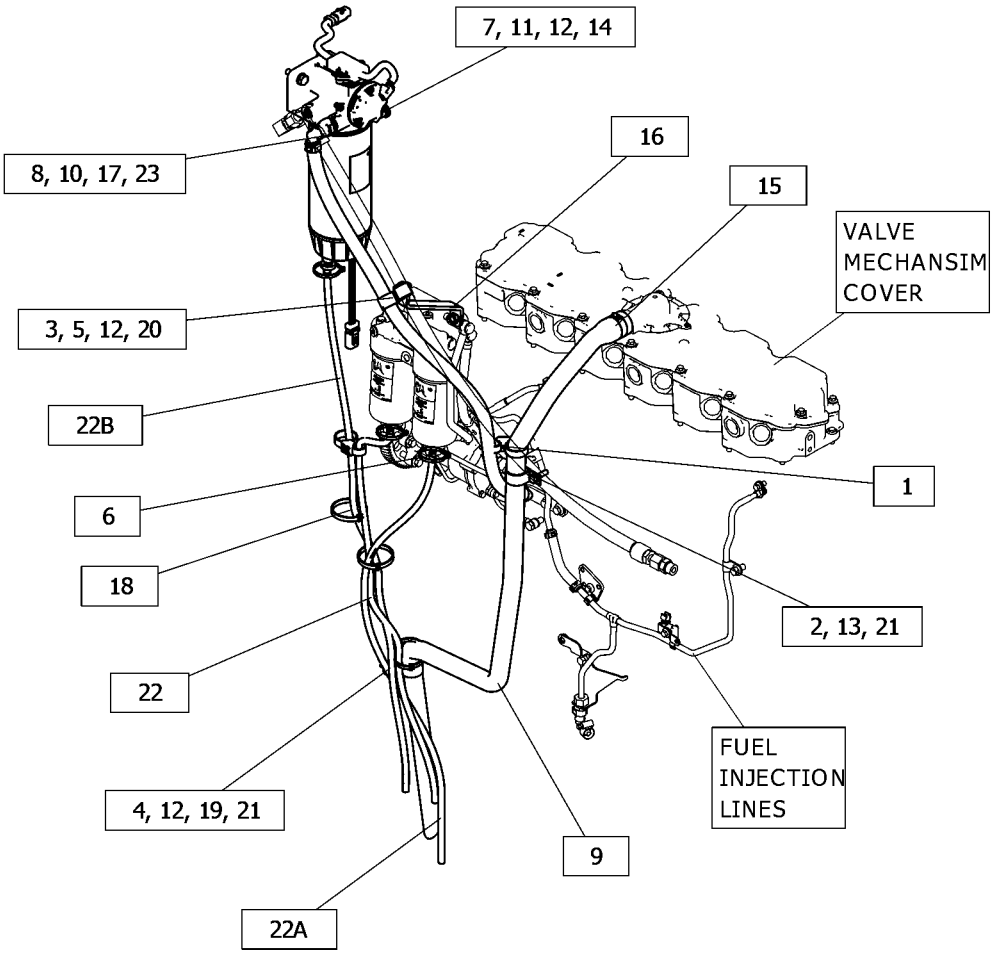

GRAPHIC #1 <END> g06376208

426-3312 LINES GP-FUEL FILTER

S/N: E7A1-UP

PART OF 533-1826 ENGINE AR-PRIMARY

SMCS-1261, 1274 **i07176735**

NOTE	REF NO	GRAPHIC REF	PART NUMBER	QTY	PART NAME 1 2 3 4 5 6 (PRODUCT LEVEL)	SEE PAGE
M	1	1	**6I-0593**	2	BOLT (M10X1.5X30-MM)	
M	2	1	**6I-4200**	2	BOLT (M10X1.5X16-MM)	
M	3	1	**100-4458**	1	BOLT (M8X1.25X14-MM)	
M	4	1	**164-7468**	1	BOLT (M10X1.5X95-MM)	
	5	1	**442-8569**	1	CLIP-PIPE	
M	6	1	**208-9287**	2	BOLT-FLANGE HEAD (M8X1.25X50-MM)	
Y	7	1	**442-8465**	1	LINES GP-FUEL	107
	8	1	**389-5775**	1	BRACKET	
	9	1	**389-5784**	1	BRACKET-FILTER	
	10	1	**390-0755**	1	BRACKET AS	
	11	1	**390-8738**	1	SUPPORT GP-LINES	
	12	1	**391-1817**	1	SUPPORT GP-LINES	
Y	13	1	**484-7200**	1	LINES GP-FUEL	109
CY	14	1	**464-7899**	1	LINES GP-FUEL	108
Y	15	1	**433-1316**	1	LINES GP-FUEL	106
M	16	1	**6I-0217**	1	BOLT (M8X1.25X20-MM)	
M	17	1	**6I-0260**	3	BOLT (M8X1.25X25-MM)	
	18	1	*330-9723*	2	PLUG AS	
					(EACH INCLUDES)	
		1	**228-7100**	1	SEAL-O-RING	
		1	**241-6157**	1	PLUG	
M	19	1	**124-3815**	1	BOLT (M8X1.25X16-MM)	

C - CHANGE FROM PREVIOUS TYPE
M - METRIC PART
Y - SEPARATE ILLUSTRATION

426-3312 **LINES GP-FUEL FILTER (**contd.**)** **i07176735**

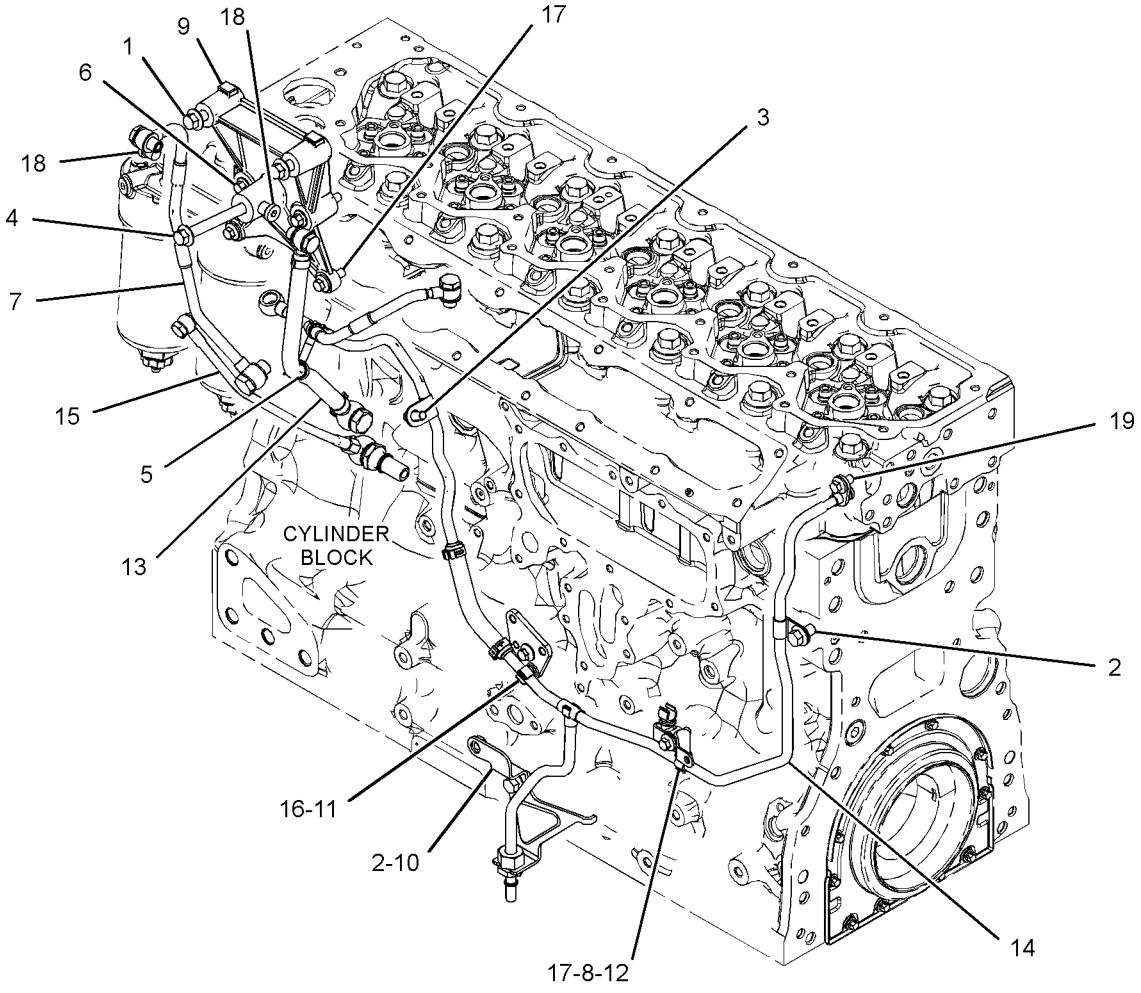

GRAPHIC #1 <END> g06242857

487-0123 LINES GP-FUEL FILTER

S/N: E7A1-UP

PART OF 533-1840 ENGINE AR-PRIMARY

SMCS-1261, 1274 **i07577476**

NOTE	REF NO	GRAPHIC REF	PART NUMBER	QTY	PART NAME 1 2 3 4 5 6 (PRODUCT LEVEL)	SEE PAGE
M	1	1	**6I-0654**	2	BOLT (M10X1.5X25-MM)	
M	2	1	**6I-4200**	2	BOLT (M10X1.5X16-MM)	
M	3	1	**100-4458**	4	BOLT (M8X1.25X14-MM)	
M	4	1	**124-3815**	1	BOLT (M8X1.25X16-MM)	
	5	1	**247-4928**	1	WASHER (16.5X20.5X1.6-MM THK)	
	6	1	*330-9723*	2	PLUG AS (INTERNAL)	
					(EACH INCLUDES)	
		1	**228-7100**	1	SEAL-O-RING	
		1	**241-6157**	1	PLUG	
	7	1	**348-0495**	1	WASHER	
	8	1	**356-3986**	2	CONNECTOR AS	
					(EACH INCLUDES)	
		1	**277-4993**	1	SEAL-O-RING	
	9	1	**376-9967**	1	CONNECTION-FUEL	
	10	1	**389-5775**	1	BRACKET	
	11	1	**390-0755**	1	BRACKET AS	
	12	1	**390-8738**	1	SUPPORT GP-LINES	
	13	1	**391-1817**	1	SUPPORT GP-LINES	
	14	1	**391-2493**	1	CONNECTION-FUEL	
Y	15	1	**433-1316**	1	LINES GP-FUEL	106
	16	1	**443-2487**	1	LINE AS-FUEL	
E		1	**347-8645**		HOSE (100-CM)	
		1	**355-0632**	1	CONNECTOR-SPECIAL	
		1	**359-7115**	1	CONNECTOR-FUEL	
	17	1	*448-2191*	1	BRACKET AS	
M		1	**159-9541**	2	NUT-WELD (M10X1.5-THD)	
Y	18	1	**464-7899**	1	LINES GP-FUEL	108
M	19	1	**6I-0217**	1	BOLT (M8X1.25X20-MM)	
M	20	1	**6I-0260**	1	BOLT (M8X1.25X25-MM)	
	21	1	**311-2732**	1	TIE-CABLE	

E - ORDER BY THE CENTIMETER
M - METRIC PART
Y - SEPARATE ILLUSTRATION

487-0123 **LINES GP-FUEL FILTER (**contd.**)** **i07577476**

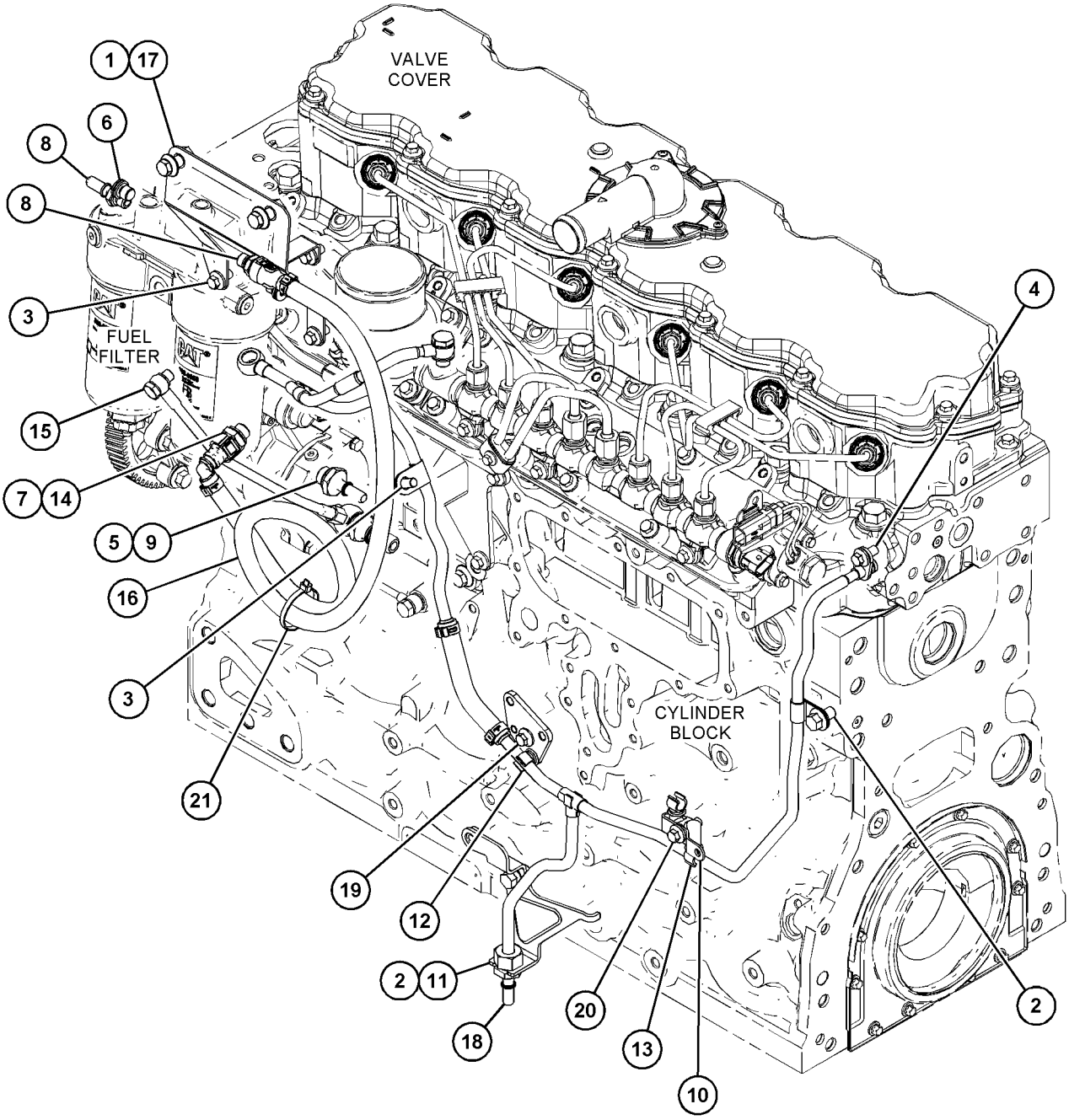

GRAPHIC #1 <END> g06365927

370-5520 LINES GP-FUEL INJECTION

S/N: E7A1-UP

PART OF 394-9639 RAIL GP-FUEL

SMCS-1252, 1254 **i07175163**

NOTE	REF NO	GRAPHIC REF	PART NUMBER	QTY	PART NAME 1 2 3 4 5 6 (PRODUCT LEVEL)	SEE PAGE
	1	1	**395-1633**	1	BRACKET AS	
M		1	**6I-0631**	1	BOLT (M6X1X12-MM)	
	2	1	**370-5516**	1	LINE AS-FUEL INJECTION	
	3	1	**370-5517**	1	LINE AS-FUEL INJECTION	
	4	1	**370-5518**	1	LINE AS-FUEL INJECTION	

M - METRIC PART

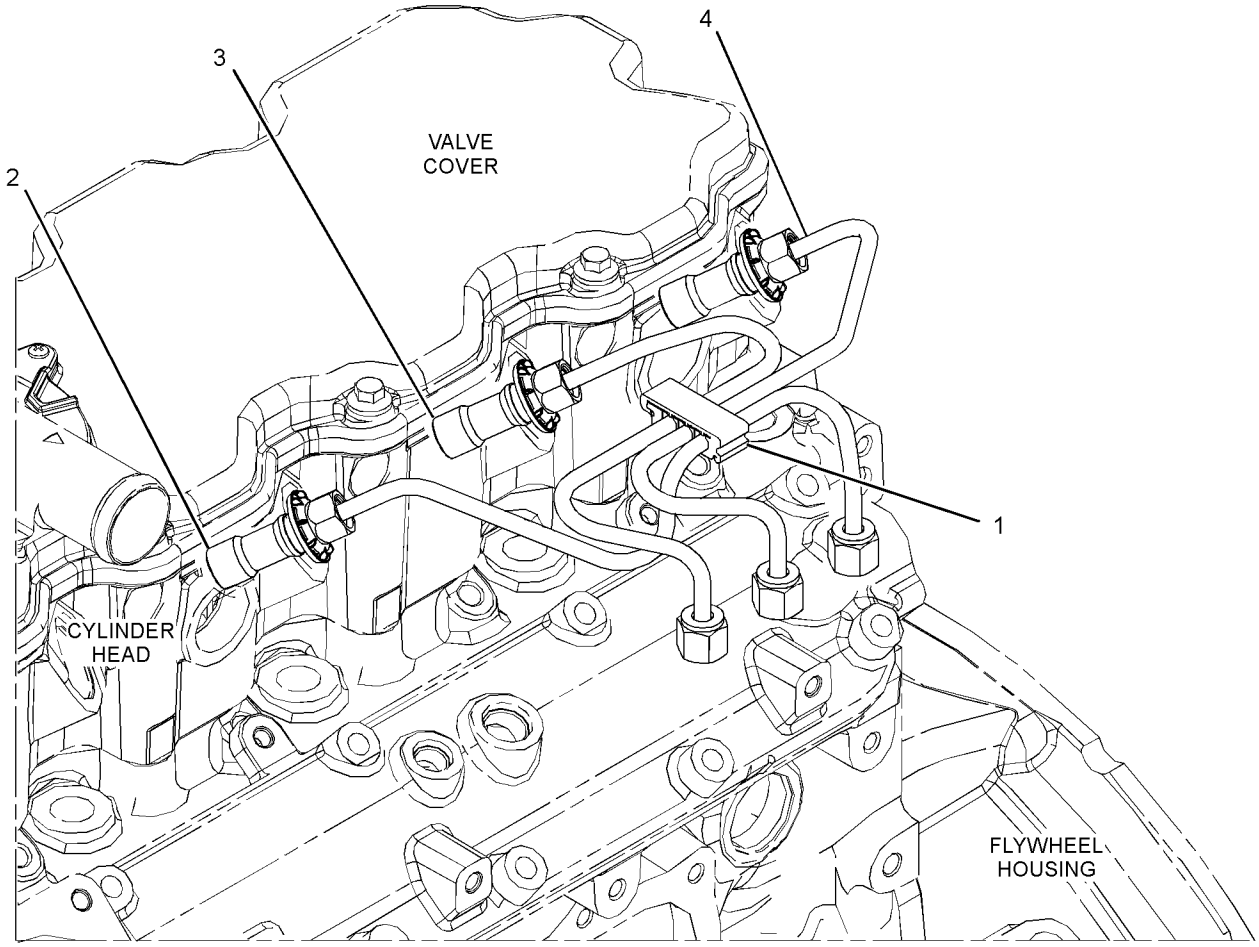

GRAPHIC #1 <END> g03380791

394-0525 LINES GP-FUEL INJECTION

S/N: E7A1-UP

PART OF 394-9639 RAIL GP-FUEL

SMCS-1252, 1254

i07076163

NOTE	REF NO	GRAPHIC REF	PART NUMBER	QTY	PART NAME 1 2 3 4 5 6 (PRODUCT LEVEL)	SEE PAGE
	1	1	**395-1633**	1	BRACKET AS	
M	1A	1	**6I-0631**	1	BOLT (M6X1X12-MM)	
	2	1	**370-5513**	1	LINE AS-FUEL	
	3	1	**393-5467**	1	LINE AS-FUEL	
	4	1	**393-5468**	1	LINE AS-FUEL	

M - METRIC PART

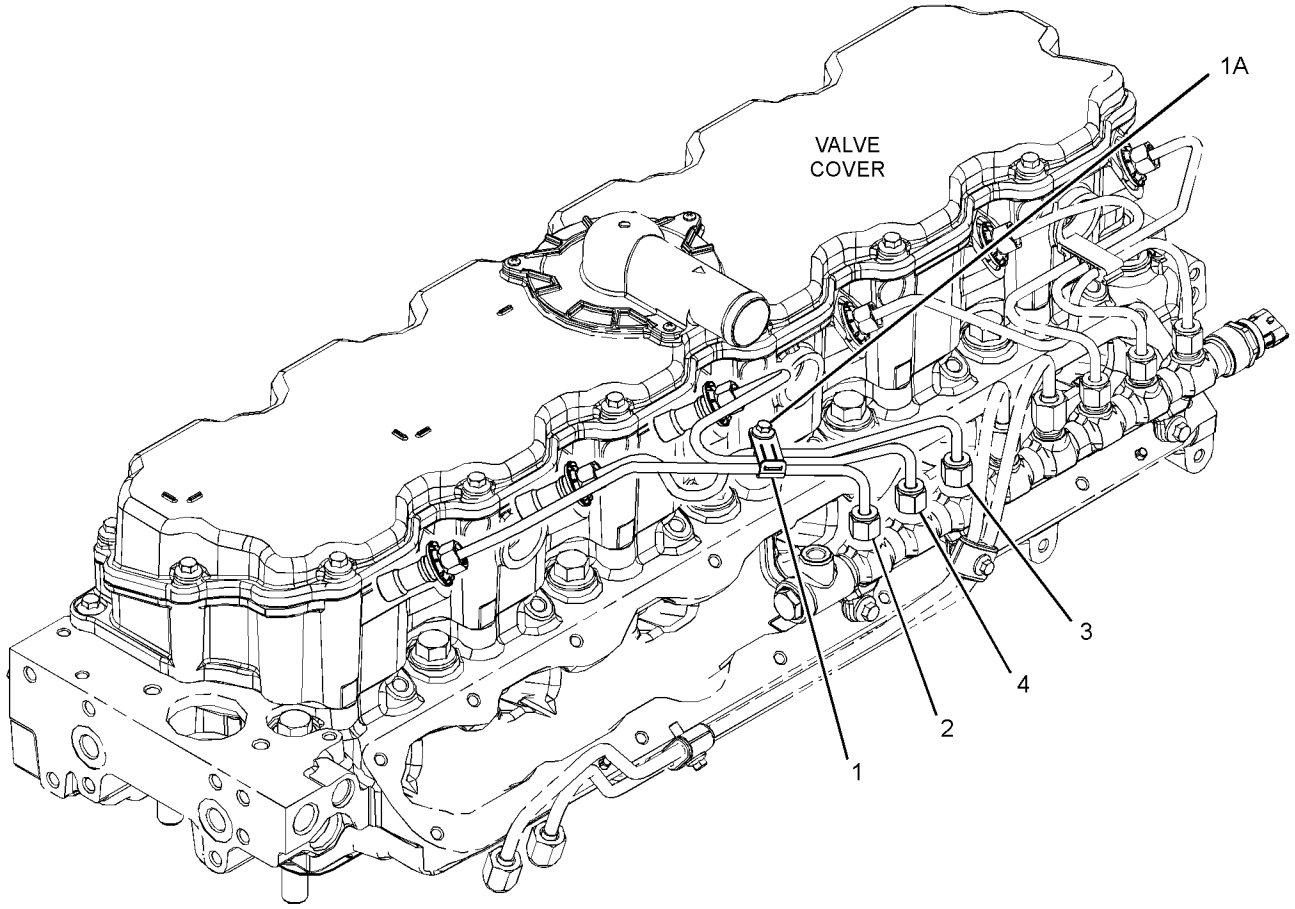

GRAPHIC #1 <END> g03479680

375-2647 PUMP GP-FUEL INJECTION*R

S/N: E7A1-UP

PART OF 391-4811 PUMP GP-FUEL INJECTION

SMCS-1251, 1290 **i07351523**

NOTE	REF NO	GRAPHIC REF	PART NUMBER	QTY	PART NAME 1 2 3 4 5 6 (PRODUCT LEVEL)	SEE PAGE
	1	1	**386-3819**	1	KEY-SHAFT	
	2	1	**375-8254**	1	VALVE	
	3	1	**376-6409**	1	SEAL	
	4	1	**376-6410**	1	RETAINER-WASHER	
	5	1	**376-6411**	1	NUT-SHAFT	
	6	1	**386-2971**	2	WASHER	
	7	1	**386-2976**	2	WASHER	
	8	1	**453-0790**	3	BOLT	
	9	1	**454-5109**	1	BOLT-BANJO	

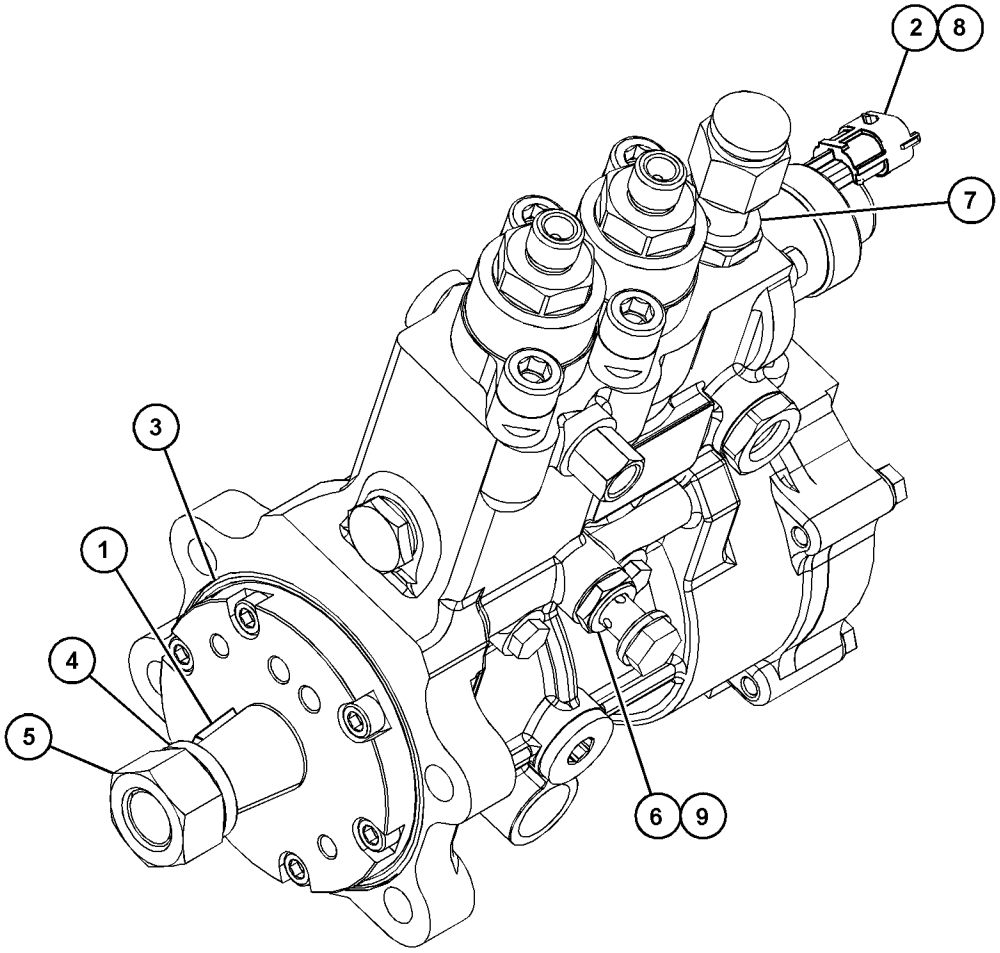

GRAPHIC #1 <END> g06182840

391-4811 PUMP GP-FUEL INJECTION

S/N: E7A1-UP

PART OF 533-1826, 533-1840 ENGINE AR-PRIMARY

SMCS-1251, 1290 **i07377550**

NOTE	REF NO	GRAPHIC REF	PART NUMBER	QTY	PART NAME 1 2 3 4 5 6 (PRODUCT LEVEL)	SEE PAGE
M	1	1	**286-0123**	4	BOLT (M10X1.5X35-MM THK)	
M	2	1	**6I-0654**	3	BOLT (M10X1.5X25-MM)	
	3	1	**371-2684**	1	BRACKET	
	4	1	**371-2691**	1	BRACKET	
	5	1	**371-7263**	1	LINE AS-FUEL	
YR	6	1	**375-2647**	1	PUMP GP-FUEL INJECTION	122
	7	1	**476-2947**	1	GEAR-FUEL PUMP (68-TEETH)	
M	8	1	**6I-0217**	2	BOLT (M8X1.25X20-MM)	
	9	1	**346-0006**	1	BOLT-SPECIAL	
	10	1	**346-0007**	2	WASHER	
M	11	1	**6I-0594**	1	NUT (M10X1.5-THD)	

M - METRIC PART
R - REMANUFACTURED PART MAY BE AVAILABLE
Y - SEPARATE ILLUSTRATION

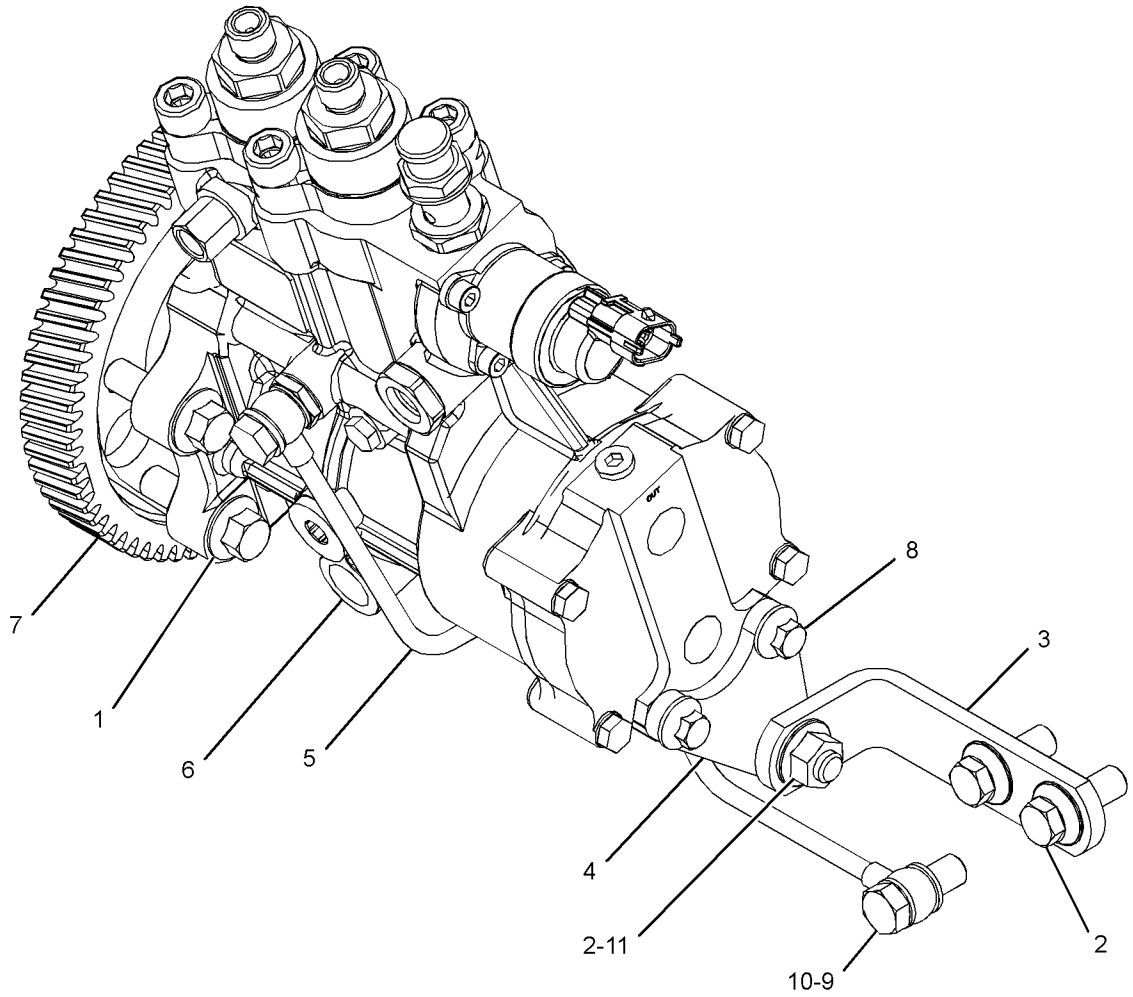

GRAPHIC #1 <END> g03378913

394-9639 RAIL GP-FUEL

S/N: E7A1-UP

PART OF 533-1826, 533-1840 ENGINE AR-PRIMARY

SMCS-1288 **i05489960**

NOTE	REF NO	GRAPHIC REF	PART NUMBER	QTY	PART NAME 1 2 3 4 5 6 (PRODUCT LEVEL)	SEE PAGE
M	1	1	**6I-0260**	3	BOLT (M8X1.25X25-MM)	
M	2	1	**099-6418**	1	NUT (M6X1-THD)	
	3	1	**206-1826**	2	BOLT	
Y	4	1	*370-5520*	1	LINES GP-FUEL INJECTION	120
	5	1	**375-0482**	4	CLAMP-PIPE	
	6	1	**375-0483**	2	INSERT-CLAMP	
	7	1	**375-2649**	1	RAIL GP-FUEL	
		1	**375-6988**	1	SENSOR (FUEL RAIL PRESSURE)	
		1	**398-6226**	1	VALVE (FUEL RAIL PRESSURE)	
	8	1	**393-2034**	1	LINE AS-FUEL	
	9	1	**393-2035**	1	LINE AS-FUEL	
Y	10	1	**394-0525**	1	LINES GP-FUEL INJECTION	121

M - METRIC PART
Y - SEPARATE ILLUSTRATION

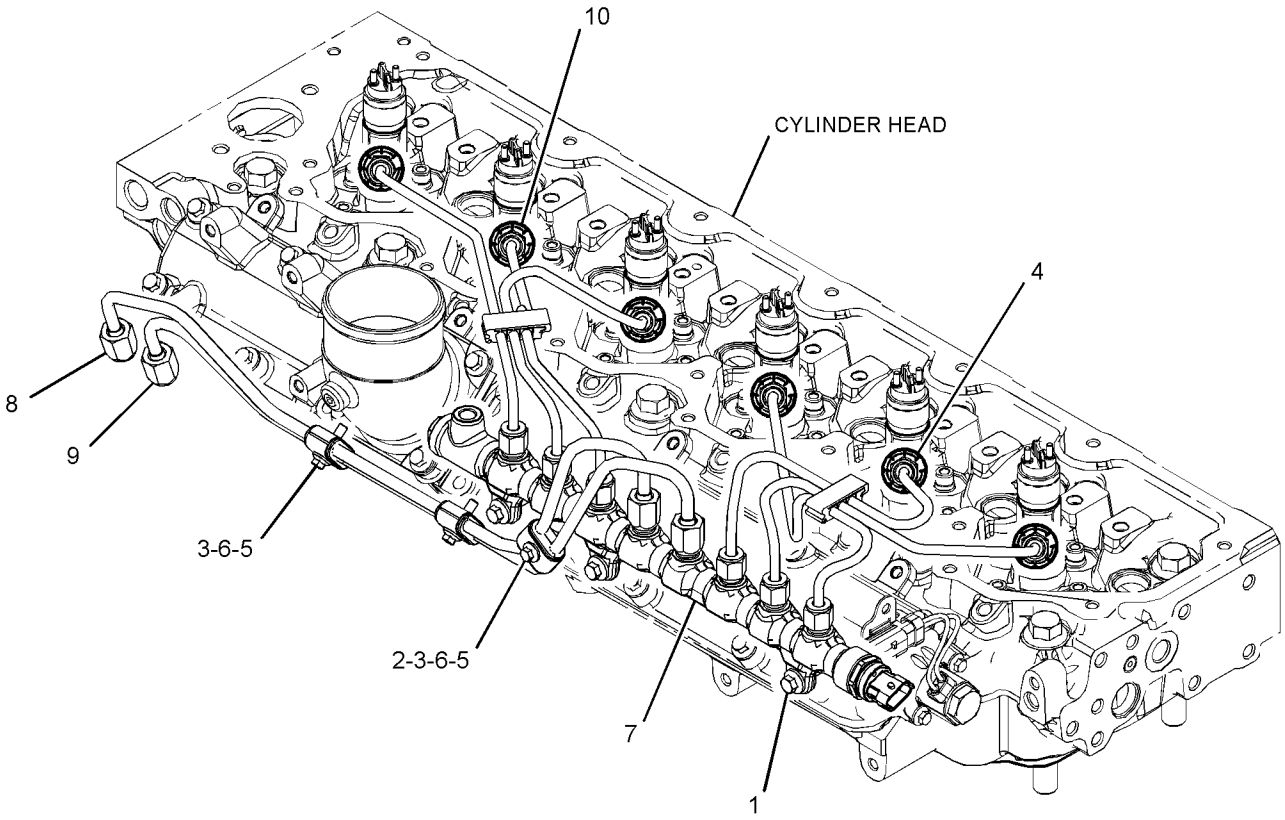

GRAPHIC #1 <END> g03380177

536-7800 TANK & MTG GP-FUEL

S/N: W921-UP

PART OF 537-1860 CHASSIS AR

SMCS-1273 **i07591579**

NOTE	REF NO	GRAPHIC REF	PART NUMBER	QTY	PART NAME 1 2 3 4 5 6 (PRODUCT LEVEL)	SEE PAGE
	1	1	**246-2641**	1	PADLOCK GP	
		1	**5P-8500**	1	KEY	
	2	1	**198-4778**	8	WASHER-HARD (13.5X30X12-MM THK)	
	3	1	**518-1815**	8	BOLT (M12X1.75X45-MM)	
Y	4	1	*536-7799*	1	TANK GP-FUEL	126

Y - SEPARATE ILLUSTRATION

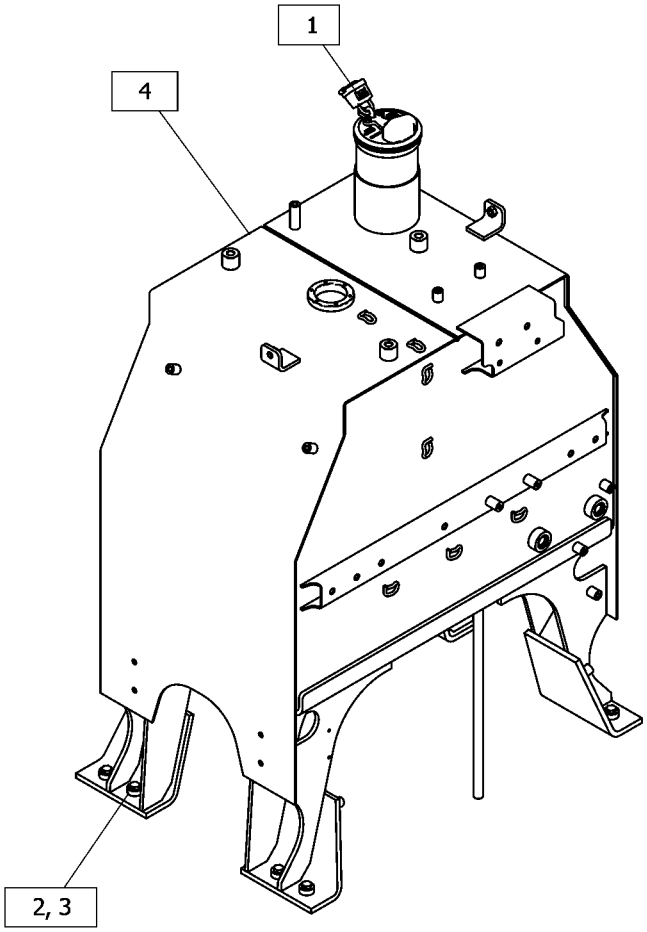

GRAPHIC #1 <END> g06373842

536-7799 TANK GP-FUEL

S/N: W921-UP

PART OF 536-7800 TANK & MTG GP-FUEL

SMCS-1273 **i07591810**

NOTE	REF NO	GRAPHIC REF	PART NUMBER	QTY	PART NAME 1 2 3 4 5 6 (PRODUCT LEVEL)	SEE PAGE
	1	1	**518-4416**	6	WASHER (8.4X16X1.6-MM THK)	
M	2	1	**518-8387**	6	BOLT (M8X1.25X20-MM)	
	3	1	**9P-7121**	1	STRAINER-FUEL (FUEL TANK)	
J	4	1	**357-7399**	1	CAP GP-FUEL FILLER (DEBRIS BOOT)	
J		1	**349-7059**	1	CAP AS-FUEL (LOCKABLE, VENTED)	
		1	**364-1995**	1	BOOT-FUEL CAP	
	5	1	**1H-8306**	1	SCREW-PURGE (1/2-20X1.625-IN)	
	6	1	**536-7771**	1	FLANGE AS	
	7	1	**536-7798**	1	TANK AS-FUEL	
	8	1	**5D-1026**	1	CLAMP-BAND	
	9	1	**6V-3319**	1	SEAL-O-RING	
E	10	1	**371-1253**		HOSE (60-CM)	
					AVAILABLE REPAIR KIT(S):	
J			**349-7059**	1	CAP AS-FUEL (LOCKABLE, VENTED)	
					(INCLUDES BREATHER, GASKET, SCREWS & WASHERS)	

E - ORDER BY THE CENTIMETER
J - KIT MARKED J SERVICES PART(S) MARKED J
M - METRIC PART

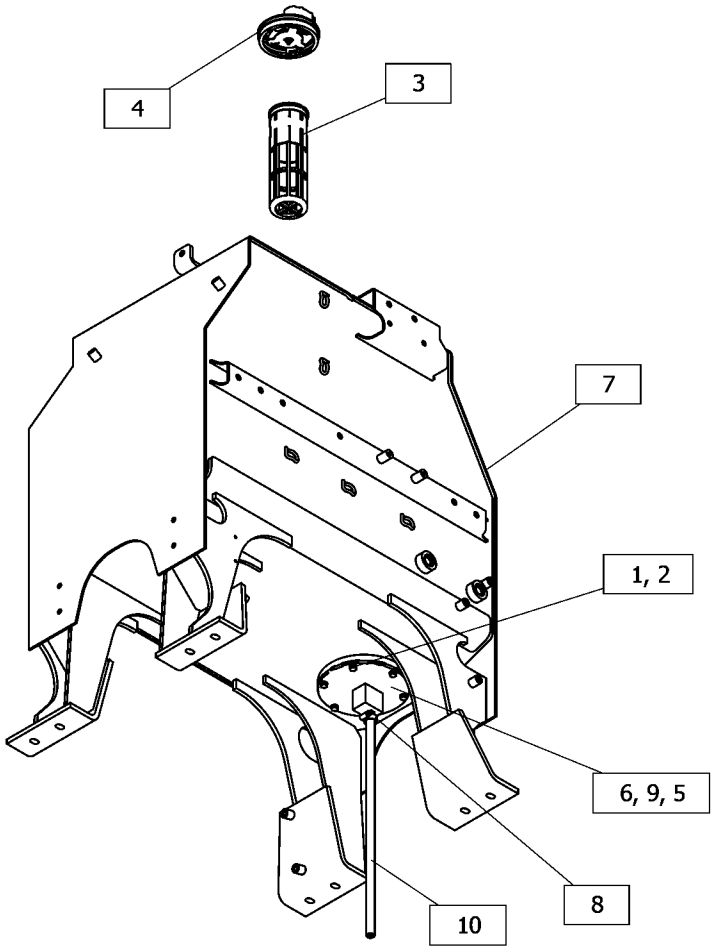

GRAPHIC #1 <END> g06373846

539-1580 ADAPTER GP-SENSOR

S/N: W921-UP

PART OF 533-4647 TRANSMISSION AR

SMCS-1900 **i07592571**

NOTE	REF NO	GRAPHIC REF	PART NUMBER	QTY	PART NAME 1 2 3 4 5 6 (PRODUCT LEVEL)	SEE PAGE
	1	1	**3J-1907**	1	SEAL-O-RING	
	2	1	**539-1581**	1	ADAPTER	

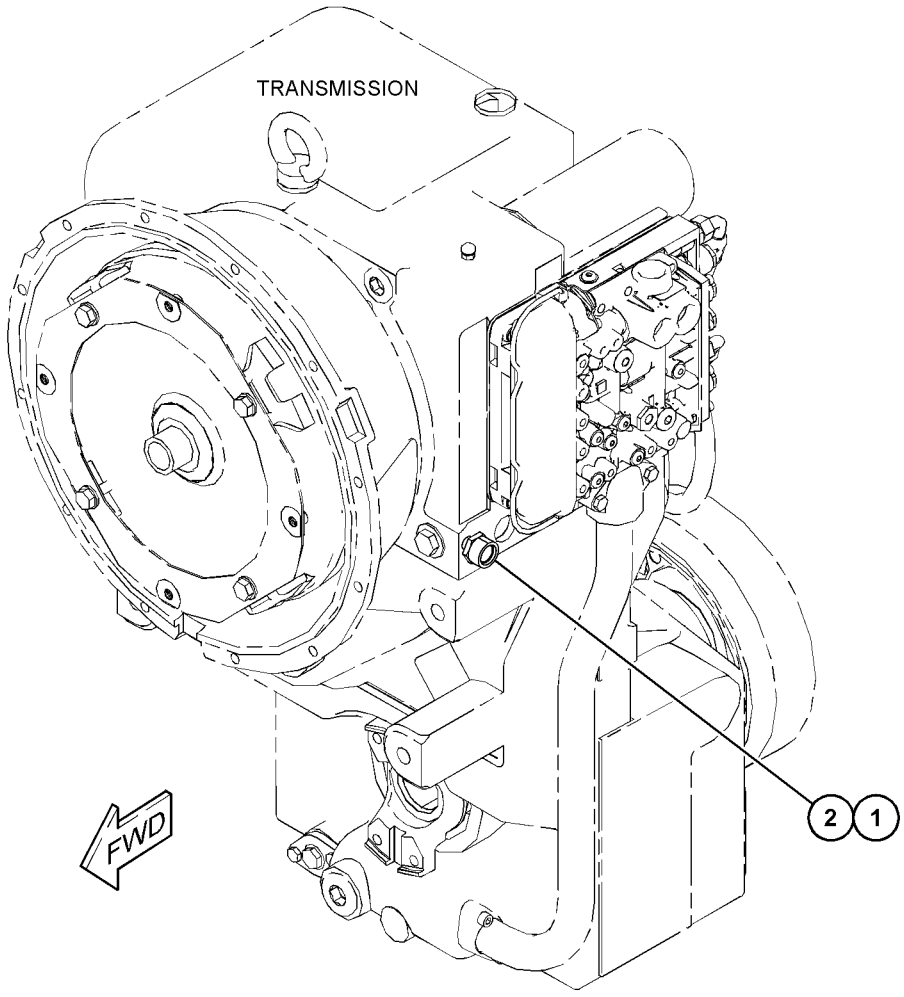

GRAPHIC #1 <END> g06375524

3E-6328 ALARM GP

S/N: W921-UP
24-VOLT
PART OF 533-6204 WIRING GP-CONSOLE

SMCS-7400, 7402, 7407 **i07284267**

NOTE	REF NO	GRAPHIC REF	PART NUMBER	QTY	PART NAME 1 2 3 4 5 6 (PRODUCT LEVEL)	SEE PAGE
	1	1	**102-8802**	1	KIT-RECEPTACLE (2-PIN)	
					(INCLUDES RECEPTACLE AS & WEDGE)	
	2	1	**8T-8729**	2	PIN-CONNECTOR (16-GA TO 18-GA)	

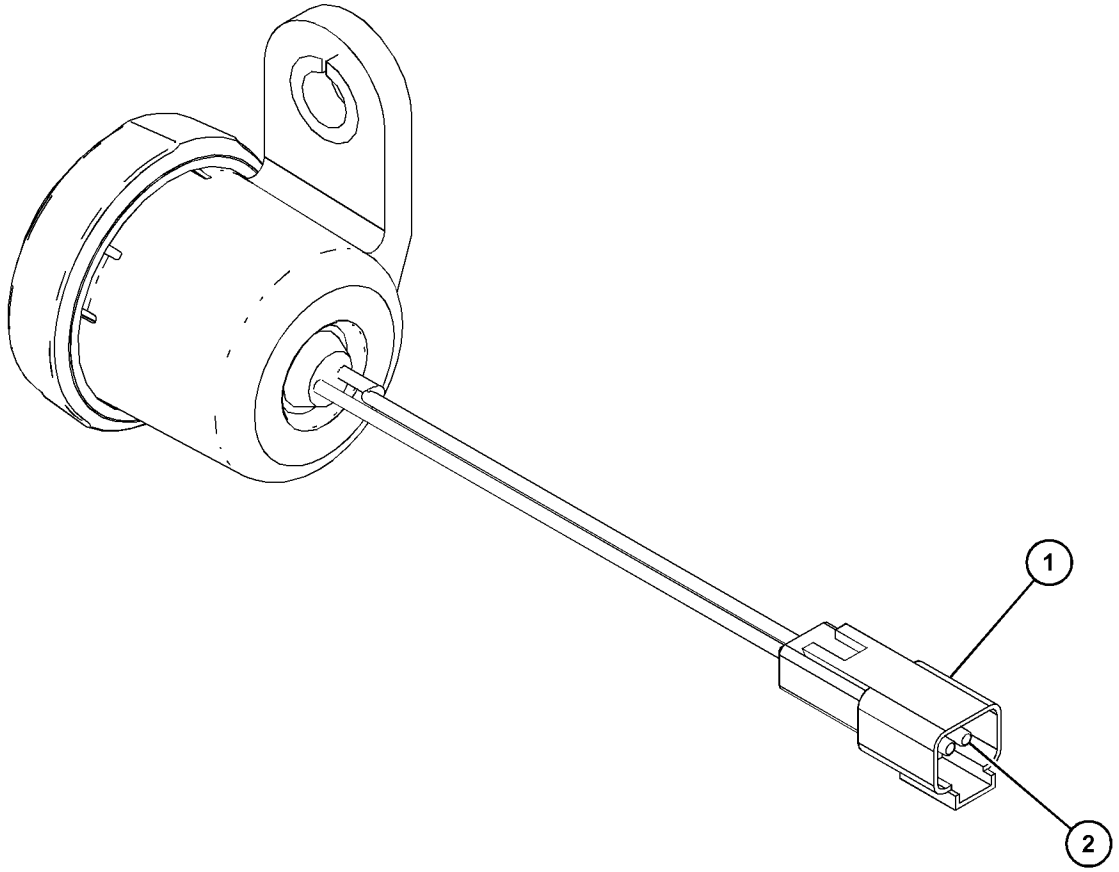

GRAPHIC #1 <END> g03798741

385-8001 ALTERNATOR GP-CHARGING

S/N: E7A1-UP
24-VOLTS, 115-AMPERES
PART OF 533-1826, 533-1840 ENGINE AR-PRIMARY

SMCS-1405 **i05468997**

NOTE	REF NO	GRAPHIC REF	PART NUMBER	QTY	PART NAME 1 2 3 4 5 6 (PRODUCT LEVEL)	SEE PAGE
M	1	1	**111-0859**	4	BOLT (M10X1.5X35-MM)	
M	2	1	**164-7468**	4	BOLT (M10X1.5X95-MM)	
R	3	1	**344-5081**	1	ALTERNATOR GP-CHARGING (24-VOLT, 115-AMPERE)	
	4	1	**394-4451**	1	BRACKET AS	
		1	**161-9820**	2	PIN	

M - METRIC PART
R - REMANUFACTURED PART MAY BE AVAILABLE

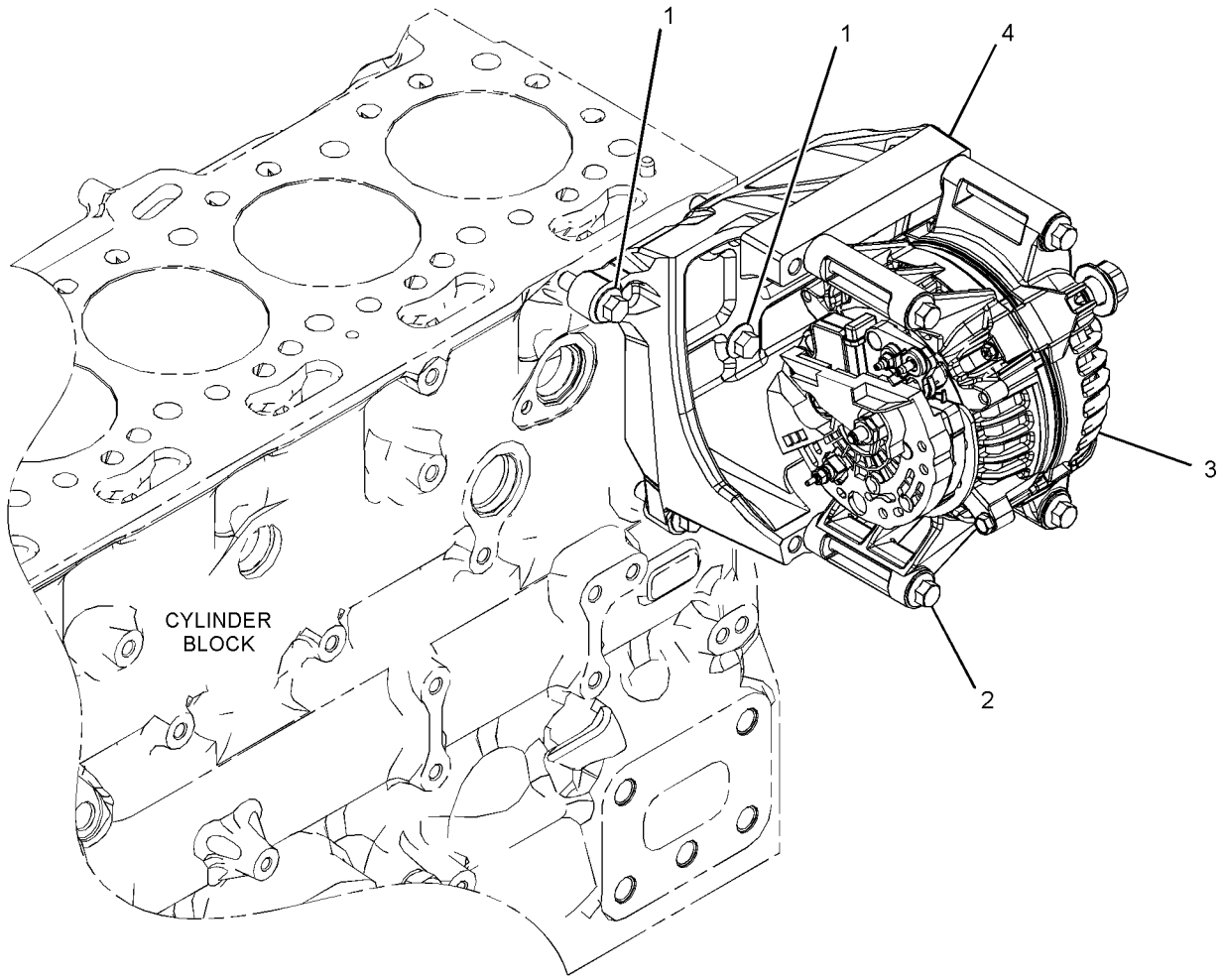

GRAPHIC #1 <END> g03380061

533-6221 BATTERY & WIRING GP

S/N: W921-UP

PART OF 537-5645 COLD WEATHER AR

SMCS-1401, 1402, 1408 **i07579066**

NOTE	REF NO	GRAPHIC REF	PART NUMBER	QTY	PART NAME 1 2 3 4 5 6 (PRODUCT LEVEL)	SEE PAGE
M	1	1	**518-2310**	3	BOLT (M10X1.5X25-MM)	
M	2	1	**518-2311**	1	BOLT (M10X1.5X30-MM)	
M	3	1	**518-6585**	2	NUT-HEX (M10X1.5-THD)	
M	4	1	**518-2309**	7	BOLT (M10X1.5X20-MM)	
	5	1	**3S-2093**	2	STRAP-CABLE	
	6	1	**7K-1181**	1	STRAP-CABLE	
	7	1	**9G-2758**	1	LOCKOUT-SWITCH	
	8	1	**518-4417**	12	WASHER	
	9	1	**2V-1771**	6	GROMMET	
	10	1	**300-6152**	1	CABLE AS	
		1	**8C-5917**	1	TERMINAL AS-BATTERY (POSITIVE)	
		1	**1M-6119**	1	BOLT (5/16-18X1.375-IN)	
		1	**1M-6120**	1	NUT (5/16-18-THD)	
		1	**8T-9757**	1	TERMINAL AS-BATTERY (NEGATIVE)	
		1	**1M-6119**	1	BOLT (5/16-18X1.375-IN)	
		1	**1M-6120**	1	NUT (5/16-18-THD)	
		1	**3S-2093**	2	STRAP-CABLE	
		1	**9G-0003**	1	COVER AS-TERMINAL (BLACK)	
		1	**9G-0004**	1	COVER AS-TERMINAL (RED)	
					(EACH COVER AS INCLUDES)	
		1	**8L-8413**	1	STRAP-CABLE (WHITE)	
E		1	**159-8049**		CABLE (00-GA, RED) (9-CM)	
	11	1	**353-7957**	4	GROMMET	
	12	1	**415-4214**	1	PLATE AS	
M		1	**8T-3490**	1	NUT-WELD (M10X1.5-THD)	
	13	1	**4D-7735**	1	CLIP	
	14	1	**4P-7428**	1	CLIP (LADDER)	
M	15	1	**518-2317**	1	BOLT (M12X1.75X20-MM)	
	16	1	**518-4418**	1	WASHER (13X24X2.5-MM THK)	
	17	1	**533-6236**	1	CABLE AS	
		1	**7N-5274**	1	COVER AS-TERMINAL (BLACK)	
		1	**8L-8413**	1	STRAP-CABLE (WHITE)	
		1	**3S-6050**	1	TERMINAL AS-BATTERY (NEGATIVE)	
		1	**1M-6119**	1	BOLT (5/16-18X1.375-IN)	
		1	**1M-6120**	1	NUT (5/16-18-THD)	
		1	**276-7278**	1	TERMINAL-RING	
E		1	**159-8050**		CABLE (00-GA, BLACK) (141-CM)	
E		1	**351-9309**		TUBE-HEAT SHRINK (32-MM DIA) (3-CM)	
	18	1	**536-0439**	1	SUPPORT GP-BATTERY	
M		1	**108-2949**	2	STUD (M10X1.5X270-MM)	
		1	**518-4417**	4	WASHER	
M		1	**518-6585**	6	NUT-HEX (M10X1.5-THD)	
	19	1	**536-5564**	1	CABLE AS	
		1	**3L-6513**	1	TERMINAL-RING (1-GA TO 2-GA, 1/2-IN SCREW)	
		1	*261-0747*	1	TERMINAL AS	
E		1	**125-7876**		TUBE-HEAT SHRINK (17.78-MM DIA) (4-CM)	
		1	**316-5240**	1	COVER-TERMINAL	

533-6221 **BATTERY & WIRING GP (**contd.**)** **i07579066**

NOTE	REF NO	GRAPHIC REF	PART NUMBER	QTY	PART NAME 1 2 3 4 5 6 (PRODUCT LEVEL)	SEE PAGE
E		1	**8C-3056**		CABLE (2-GA, RED) (85-CM)	
	20	1	**536-5569**	1	STRAP AS-GROUND	
	21	1	**536-5579**	2	SUPPORT	
	22	1	**566-4204**	1	CABLE AS	
		1	**308-8161**	1	COVER-TERMINAL	
		1	**316-5240**	1	COVER-TERMINAL	
		1	**267-8338**	1	TERMINAL-RING	
		1	**6T-5598**	1	TERMINAL-RING (1-GA TO 2-GA, 5/16-IN SCREW)	
E		1	**8C-3056**		CABLE (2-GA, RED) (66-CM)	
E		1	**125-7876**		TUBE-HEAT SHRINK (17.78-MM DIA) (1-CM)	
	23	1	**566-4209**	1	CABLE AS	
		1	**8N-1725**	1	COVER AS-TERMINAL (RED)	
		1	**8L-8413**	1	STRAP-CABLE (WHITE)	
		1	**3S-6049**	1	TERMINAL AS-BATTERY (POSITIVE)	
		1	**1M-6119**	1	BOLT (5/16-18X1.375-IN)	
		1	**1M-6120**	1	NUT (5/16-18-THD)	
		1	*311-6112*	1	TERMINAL AS-BATTERY	
		1	**1S-7251**	1	TERMINAL-CABLE (OO-GA, 1/2-IN SCREW)	
E		1	**351-9309**		TUBE-HEAT SHRINK (32-MM DIA) (4-CM)	
E		1	**159-8049**		CABLE (OO-GA, RED) (65-CM)	
	24	1	**5P-4295**	2	CLIP	
	25	1	**6D-4246**	6	CLIP (LOOP)	
	26	1	**9X-3404**	2	BATTERY GP (12-VOLT, MAINTENANCE FREE, WET)	
					(EACH INCLUDES)	
		1	**461-5232**	6	CAP AS-FILLER	
Y	27	1	**7N-0718**	1	SWITCH GP-DISCONNECT (BATTERY)	210

E - ORDER BY THE CENTIMETER
M - METRIC PART
Y - SEPARATE ILLUSTRATION

533-6221 **BATTERY & WIRING GP** (contd.) **i07579066**

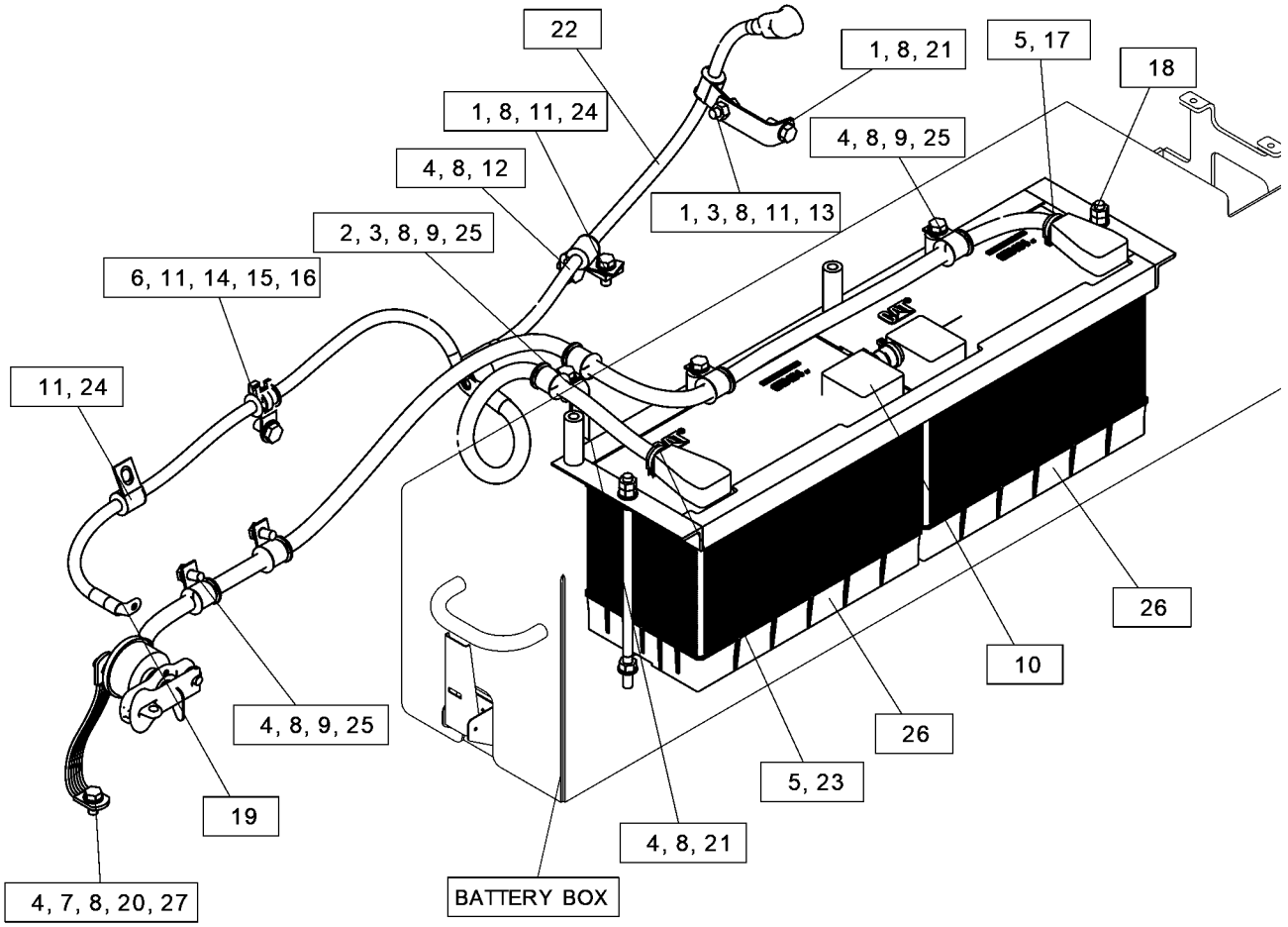

GRAPHIC #1 <END> g06376154

533-6222 BATTERY & WIRING GP–HEAVY DUTY

S/N: W921-UP

PART OF 537-5646, 537-5647 COLD WEATHER AR

SMCS-1401, 1402, 1408 **i07579080**

NOTE	REF NO	GRAPHIC REF	PART NUMBER	QTY	PART NAME 1 2 3 4 5 6 (PRODUCT LEVEL)	SEE PAGE
M	1	1	**518-2309**	8	BOLT (M10X1.5X20-MM)	
M	2	1	**518-2311**	1	BOLT (M10X1.5X30-MM)	
M	3	1	**518-6585**	1	NUT-HEX (M10X1.5-THD)	
	4	1	**518-2319**	2	BOLT (M12X1.75X30-MM)	
	5	1	**3S-2093**	2	STRAP-CABLE	
	6	1	**9G-2758**	1	LOCKOUT-SWITCH	
	7	1	**153-5710**	2	BATTERY GP (12-VOLT, MAINTENANCE FREE, WET)	
					(EACH INCLUDES)	
		1	**123-1373**	6	CAP AS-FILLER (7/8-9-THD)	
		1	**461-5232**	6	CAP AS-FILLER	
	8	1	**518-4417**	10	WASHER	
	9	1	**536-5579**	1	SUPPORT	
	10	1	**2V-1771**	7	GROMMET	
	11	1	**300-6496**	1	CABLE AS	
		1	**3S-2093**	2	STRAP-CABLE	
		1	**9G-0003**	1	COVER AS-TERMINAL (BLACK)	
		1	**9G-0004**	1	COVER AS-TERMINAL (RED)	
					(EACH COVER AS INCLUDES)	
		1	**8L-8413**	1	STRAP-CABLE (WHITE)	
		1	**8C-5917**	1	TERMINAL AS-BATTERY (POSITIVE)	
		1	**8T-9757**	1	TERMINAL AS-BATTERY (NEGATIVE)	
					(EACH TERMINAL AS INCLUDES)	
		1	**1M-6119**	1	BOLT (5/16-18X1.375-IN)	
		1	**1M-6120**	1	NUT (5/16-18-THD)	
E		1	**159-8049**		CABLE (00-GA, RED) (12-CM)	
Y	12	1	**322-3305**	1	BLOCK GP-JUNCTION (BATTERY)	136
	13	1	**353-7957**	4	GROMMET	
	14	1	**477-3252**	1	BRACKET AS	
	15	1	**518-4418**	2	WASHER (13X24X2.5-MM THK)	
	16	1	**533-6237**	1	CABLE AS	
		1	**7N-5274**	1	COVER AS-TERMINAL (BLACK)	
		1	**8L-8413**	1	STRAP-CABLE (WHITE)	
E		1	**159-8050**		CABLE (00-GA, BLACK) (177-CM)	
		1	**276-7278**	1	TERMINAL-RING	
E		1	**351-9309**		TUBE-HEAT SHRINK (32-MM DIA) (3-CM)	
		1	**3S-6050**	1	TERMINAL AS-BATTERY (NEGATIVE)	
		1	**1M-6119**	1	BOLT (5/16-18X1.375-IN)	
		1	**1M-6120**	1	NUT (5/16-18-THD)	
Y	17	1	**536-0438**	1	SUPPORT GP-BATTERY	332
	18	1	**536-5569**	1	STRAP AS-GROUND	
	19	1	**565-7555**	1	CABLE AS	
E		1	**8C-3056**		CABLE (2-GA, RED) (73-CM)	
E		1	**125-7876**		TUBE-HEAT SHRINK (17.78-MM DIA) (1-CM)	
		1	**267-8338**	1	TERMINAL-RING	
		1	**316-5240**	2	COVER-TERMINAL	
E		1	**125-7876**		TUBE-HEAT SHRINK (17.78-MM DIA) (4-CM)	
	20	1	**565-7556**	1	CABLE AS	
E		1	**8C-3056**		CABLE (2-GA, RED) (87-CM)	

533-6222 **BATTERY & WIRING GP (**contd.**)** **i07579080**

NOTE	REF NO	GRAPHIC REF	PART NUMBER	QTY	PART NAME 1 2 3 4 5 6 (PRODUCT LEVEL)	SEE PAGE
		1	**6T-5598**	1	TERMINAL-RING (1-GA TO 2-GA, 5/16-IN SCREW)	
E		1	**125-7876**		TUBE-HEAT SHRINK (17.78-MM DIA) (3-CM)	
		1	**308-8161**	2	COVER-TERMINAL	
		1	**3L-6513**	1	TERMINAL-RING (1-GA TO 2-GA, 1/2-IN SCREW)	
	21	1	**566-4207**	1	CABLE AS	
		1	**8N-1725**	1	COVER AS-TERMINAL (RED)	
E		1	**159-8049**		CABLE (00-GA, RED) (88-CM)	
		1	*311-6112*	1	TERMINAL AS-BATTERY	
		1	**1S-7251**	1	TERMINAL-CABLE (00-GA, 1/2-IN SCREW)	
E		1	**351-9309**		TUBE-HEAT SHRINK (32-MM DIA) (4-CM)	
		1	**3S-6049**	1	TERMINAL AS-BATTERY (POSITIVE)	
		1	**1M-6119**	1	BOLT (5/16-18X1.375-IN)	
		1	**1M-6120**	1	NUT (5/16-18-THD)	
	22	1	**566-4208**	1	CABLE AS	
		1	**8N-0869**	2	COVER-TERMINAL (RED)	
E		1	**159-8049**		CABLE (00-GA, RED) (39-CM)	
		1	*311-6112*	2	TERMINAL AS-BATTERY	
					(EACH INCLUDES)	
		1	**1S-7251**	1	TERMINAL-CABLE (00-GA, 1/2-IN SCREW)	
E		1	**351-9309**		TUBE-HEAT SHRINK (32-MM DIA) (4-CM)	
	23	1	**567-3410**	1	BRACKET AS	
	24	1	**5P-4295**	4	CLIP	
	25	1	**6D-4246**	7	CLIP (LOOP)	
Y	26	1	**7N-0718**	1	SWITCH GP-DISCONNECT (BATTERY)	210

E - ORDER BY THE CENTIMETER
M - METRIC PART
Y - SEPARATE ILLUSTRATION

533-6222 **BATTERY & WIRING GP** (contd.) **i07579080**

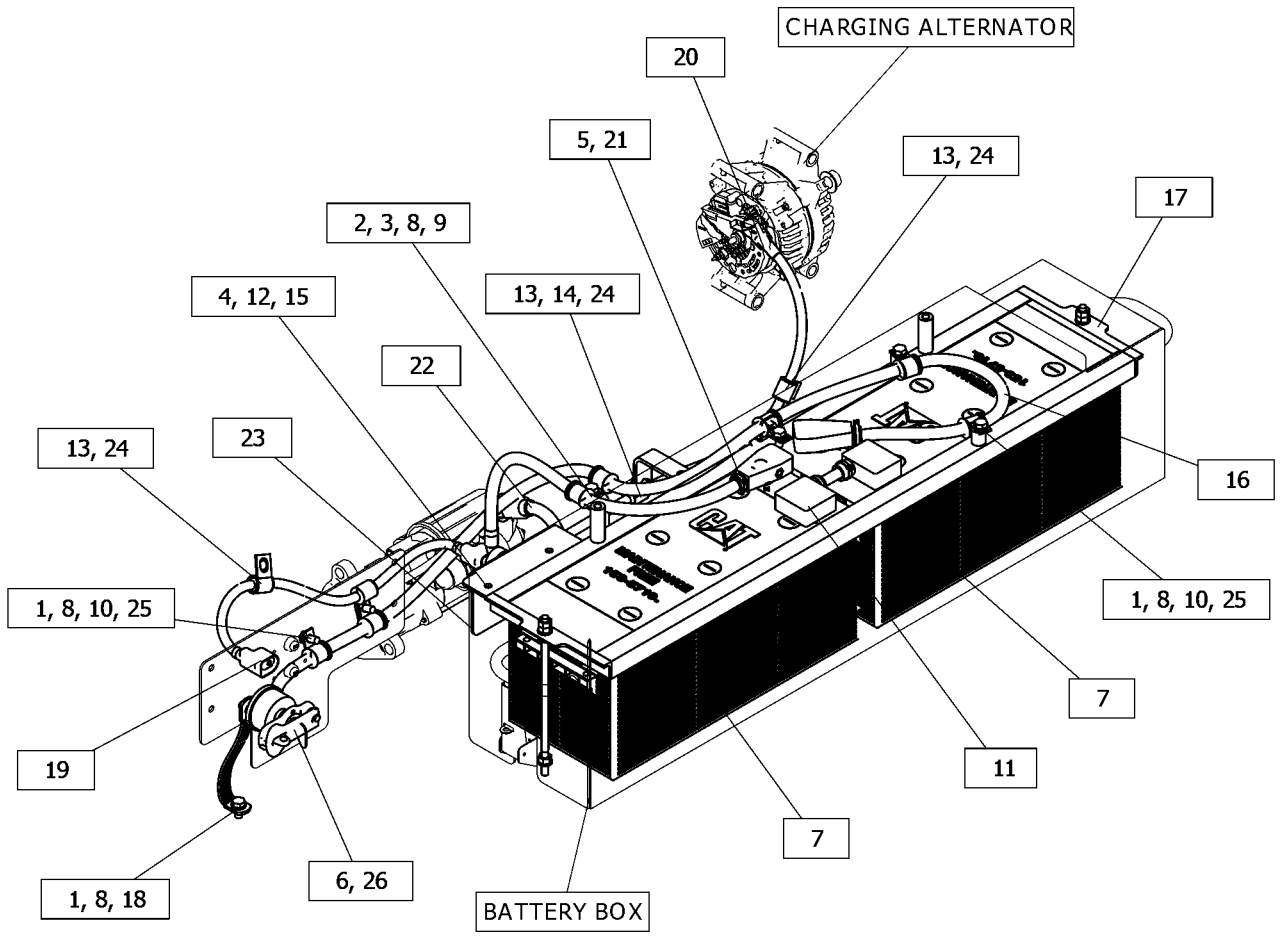

GRAPHIC #1 <END> g06375614

322-3305 BLOCK GP-JUNCTION–BATTERY

S/N: W921-UP

PART OF 533-6222 BATTERY & WIRING GP

SMCS-1408, 7426

i07053588

NOTE	REF NO	GRAPHIC REF	PART NUMBER	QTY	PART NAME 1 2 3 4 5 6 (PRODUCT LEVEL)	SEE PAGE
	1	1	**5G-6505**	3	WASHER (25X38X14-MM THK)	
	2	1	**8C-6358**	1	BLOCK AS-JUNCTION (BATTERY)	
	3	1	**7F-0560**	6	WASHER (0.516X0.938X0.101-IN THK)	
	4	1	**8T-3518**	6	NUT-FULL (1/2-13-THD)	

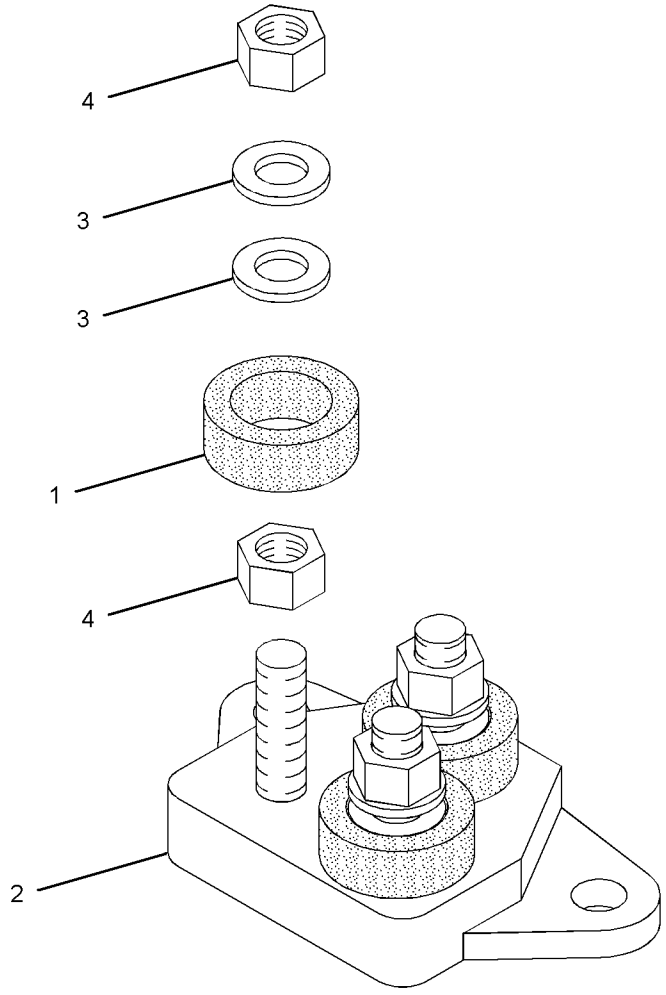

GRAPHIC #1

<END>

g06211591

372-1866 BRACKET GP-MOUNTING

S/N: W921-UP

PART OF 568-0739 LIGHTING GP-WARNING BEACON

SMCS-0635, 7010 **i07569150**

NOTE	REF NO	GRAPHIC REF	PART NUMBER	QTY	PART NAME 1 2 3 4 5 6 (PRODUCT LEVEL)	SEE PAGE
	1	1	**372-1867**	1	MOUNT AS	
		1	**6T-5532**	1	PIN	
	2	1	**377-5645**	1	BRACKET AS	
M		1	**159-9539**	2	NUT-WELD (M6X1-THD)	
	3	1	**377-5647**	1	SPRING	
	4	1	**5P-1076**	1	WASHER-HARD (13.5X30X4-MM THK)	
	5	1	**6C-9038**	1	WASHER (12.2X25X1-MM THK)	
M	6	1	**8C-8992**	1	BOLT-LOCKING (M12X1.75X30-MM)	
	7	1	**8T-4122**	1	WASHER-HARD (17X32X3.5-MM THK)	

M - METRIC PART

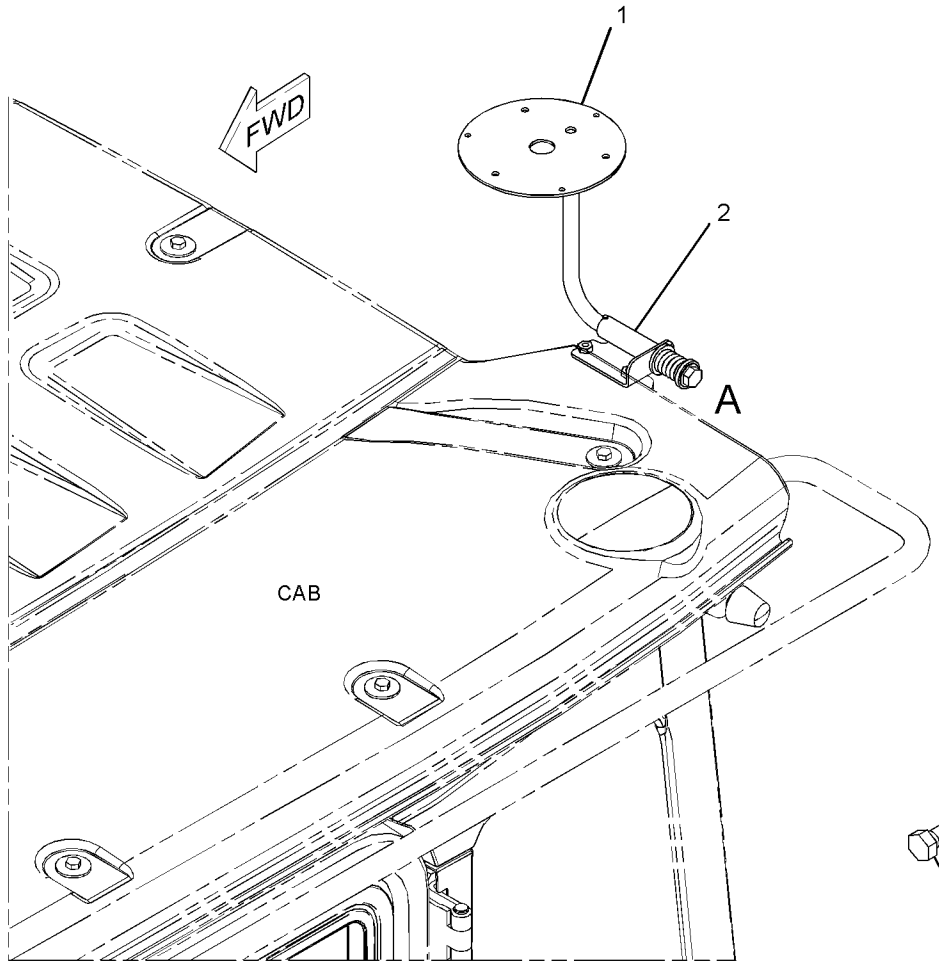

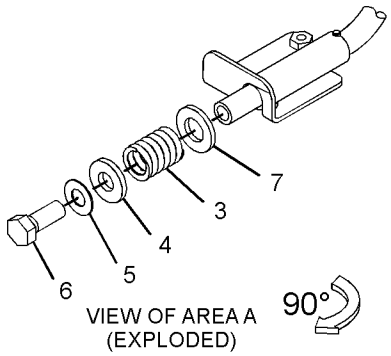

GRAPHIC #1 <END> g03449098

549-0877 BRACKET GP-MOUNTING

S/N: W921-UP

PART OF 549-4735 LIGHTING GP-FLOOD & SIGNAL, 533-6220 WIRING GP-FRONT LIGHTING

SMCS-0635, 7010

i07573656

NOTE	REF NO	GRAPHIC REF	PART NUMBER	QTY	PART NAME 1 2 3 4 5 6 (PRODUCT LEVEL)	SEE PAGE
	1	1	**518-6584**	2	NUT-HEX (M8X1.25-THD)	
	2	1	**518-9738**	3	WASHER (13.5X25.5X3-MM THK)	
	3	1	**178-2593**	2	BUMPER	
	4	1	**524-3220**	1	PIN	
	5	1	**524-6908**	1	BOLT (M12X1.75X90-MM) (M12X1.75X90-MM)	
	6	1	**549-0878**	1	BRACKET AS (RH)	
M		1	**8T-3597**	1	NUT-WELD (M12X1.75-THD)	
M		1	**8T-3612**	1	NUT-WELD (M8X1.25-THD)	
	7	1	**549-0879**	1	BRACKET AS (REAR)	
		1	**7T-1099**	1	LINK	
M		1	**8T-3612**	1	NUT-WELD (M8X1.25-THD)	
	8	1	**549-0880**	1	SLEEVE	
	9	1	**549-0881**	1	ROD	
	10	1	**9S-1316**	1	SPRING	

M - METRIC PART

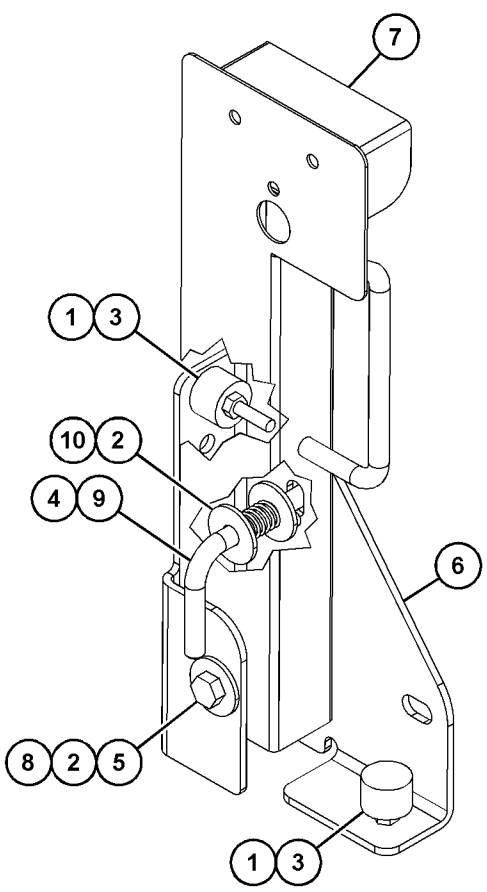

VIEW OF AREA A

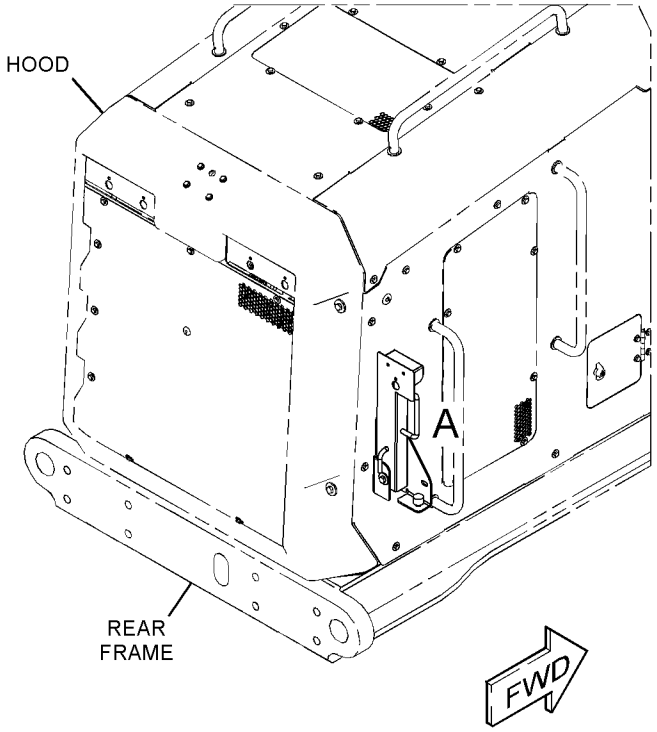

GRAPHIC #1 <END> g06372382

549-0888 BRACKET GP-MOUNTING

S/N: W921-UP

PART OF 549-4735 LIGHTING GP-FLOOD & SIGNAL, 533-6220 WIRING GP-FRONT LIGHTING

SMCS-0635, 7010

i07573840

NOTE	REF NO	GRAPHIC REF	PART NUMBER	QTY	PART NAME 1 2 3 4 5 6 (PRODUCT LEVEL)	SEE PAGE
	1	1	**518-6584**	2	NUT-HEX (M8X1.25-THD)	
	2	1	**518-9738**	3	WASHER (13.5X25.5X3-MM THK)	
	3	1	**178-2593**	2	BUMPER	
	4	1	**524-3220**	1	PIN	
	5	1	**524-6908**	1	BOLT (M12X1.75X90-MM)	
	6	1	**549-0880**	1	SLEEVE	
	7	1	**549-0881**	1	ROD	
	8	1	**549-0889**	1	BRACKET AS (LH)	
M		1	**8T-3597**	1	NUT-WELD (M12X1.75-THD)	
M		1	**8T-3612**	1	NUT-WELD (M8X1.25-THD)	
	9	1	**549-0890**	1	BRACKET AS (REAR)	
		1	**7T-1099**	1	LINK	
M		1	**8T-3612**	1	NUT-WELD (M8X1.25-THD)	
	10	1	**9S-1316**	1	SPRING	

M - METRIC PART

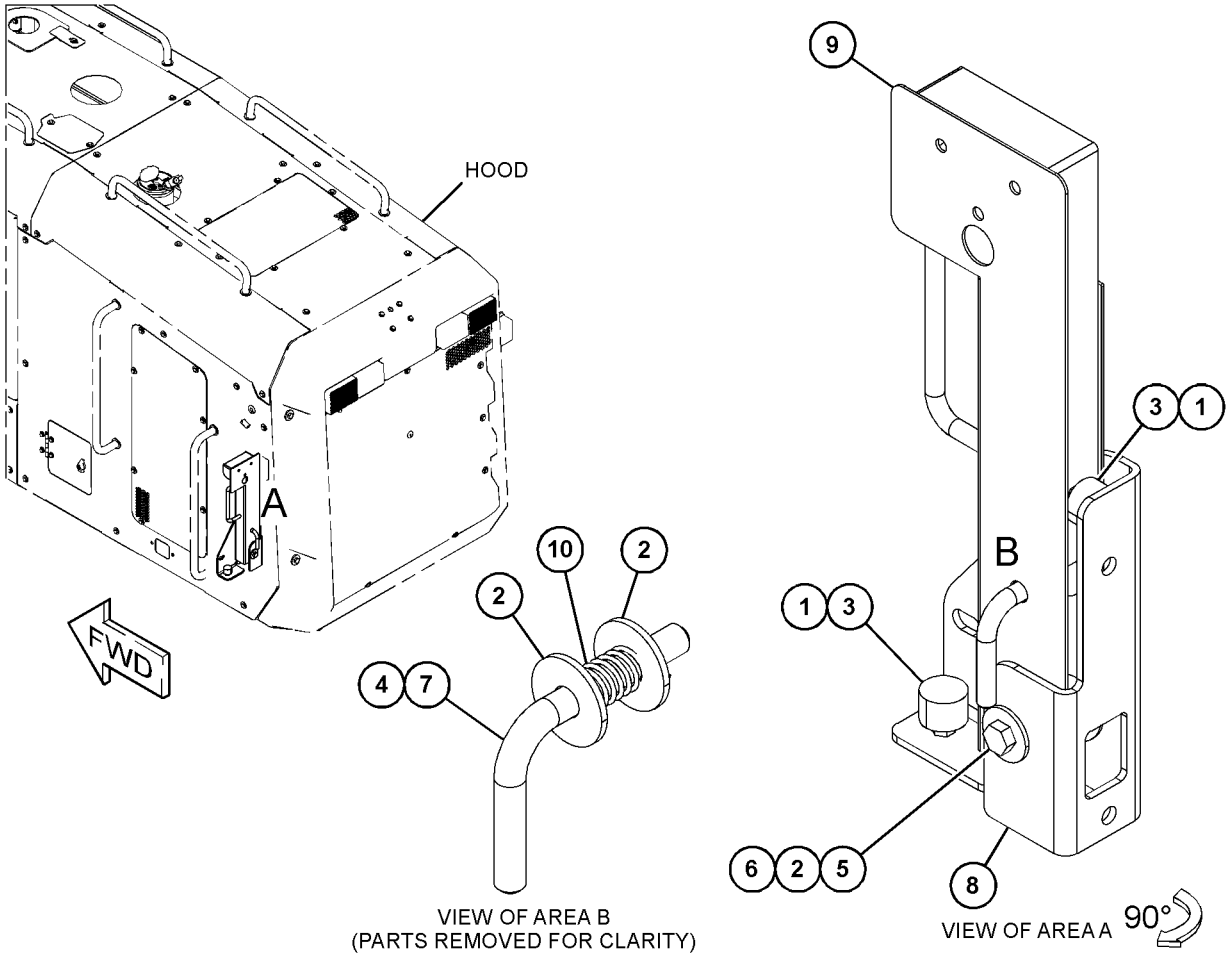

GRAPHIC #1

<END>

g06372142

533-6223 CAMERA AR

S/N: W921-UP

SMCS-7348 **i07560806**

NOTE	PART NUMBER	QTY	PART NAME 1 2 3 4 5 6 (PRODUCT LEVEL)	SEE PAGE
Y	*518-3015*	1	DISPLAY GP-CAMERA (WORK AREA VISUAL SYSTEM)	522
Y	*533-6231*	1	WIRING GP-CAMERA	219

Y - SEPARATE ILLUSTRATION

<END>

495-3105 CONTROL & MTG GP-ELECTRONIC

S/N: E7A1-UP

PART OF 533-1826, 533-1840 ENGINE AR-PRIMARY

SMCS-1901, 3168, 7490, 7610 **i07577068**

NOTE	REF NO	GRAPHIC REF	PART NUMBER	QTY	PART NAME 1 2 3 4 5 6 (PRODUCT LEVEL)	SEE PAGE
	1	1	**155-0576**	8	MOUNT-ISOLATION	
	2	1	**495-1742**	1	CONTROL GP-UNPROGRAMMED	
	3	1	**7W-2632**	1	WASHER (8.5X16.8X1.6-MM THK)	
	4	1	**217-0099**	4	SPACER (8.2X25X2-MM THK)	
	5	1	**278-5203**	4	SPACER	
M	6	1	**6I-0456**	4	BOLT (M8X1.25X45-MM)	

M - METRIC PART

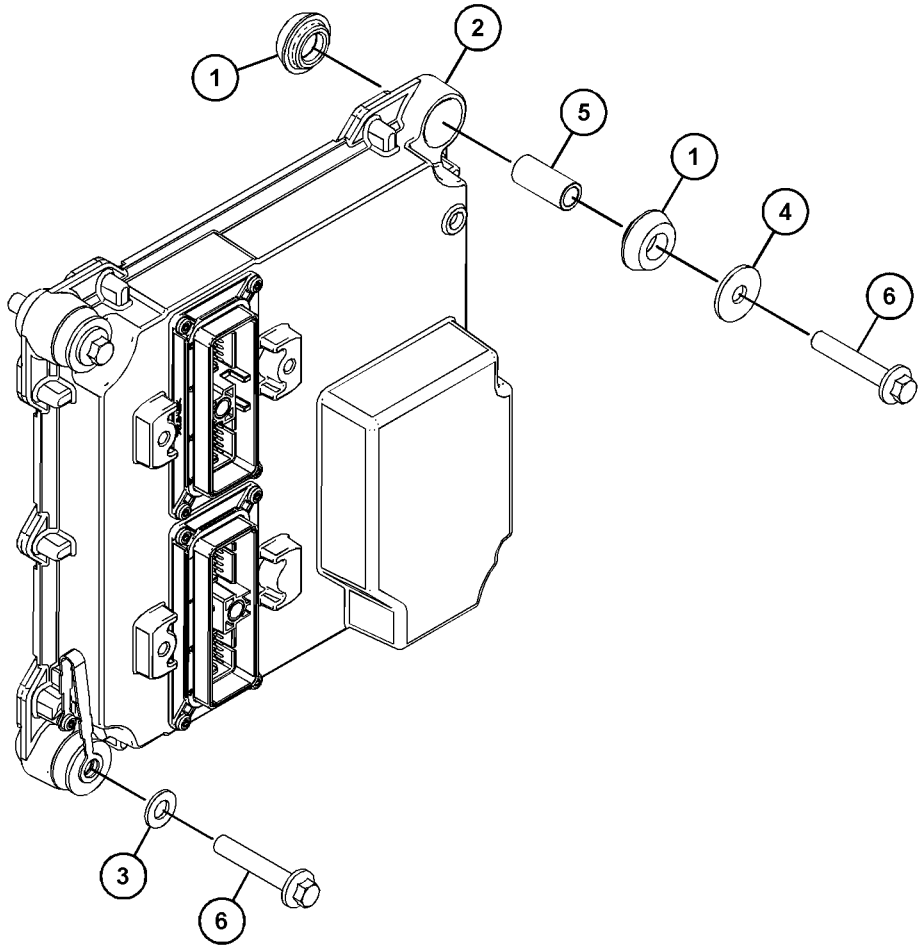

GRAPHIC #1 <END> g06366973

553-7497 CONTROL GP-COMMUNICATION—PRODUCT LINK 631 SATELLITE

S/N: W921-UP

SMCS-7602, 7606, 7610, 7620 **i07552434**

NOTE	REF NO	GRAPHIC REF	PART NUMBER	QTY	PART NAME 1 2 3 4 5 6 (PRODUCT LEVEL)	SEE PAGE
M	1	1	**518-2309**	3	BOLT (M10X1.5X20-MM)	
M	2	1	**518-2310**	1	BOLT (M10X1.5X25-MM)	
	3	1	**518-4415**	8	WASHER (6.4X12X1.6-MM THK)	
M	4	1	**518-6585**	1	NUT-HEX (M10X1.5-THD)	
M	5	1	**518-8248**	4	BOLT (M6X1X25-MM)	
	6	1	**536-5594**	1	BRACKET	
M	7	1	**129-3178**	4	LOCKNUT (M6X1-THD)	
	8	1	**155-2265**	1	KIT-CONNECTING PLUG (8-PIN)	
					(INCLUDES PLUG AS, WEDGE, & INTERFACE SEAL)	
	9	1	**353-8773**	1	CABLE AS-COMMUNICATION (ANTENNA)	
YR	10	1	**442-7199**	1	CONTROL GP-UNPROGRAMMED (PRODUCT LINK ELITE 631 SATELLITE)	150
	11	1	**443-8462**	1	ANTENNA AS (CELLULAR)	
		1	**361-1045**	1	NUT-SPECIAL (5/8-18-THD)	
		1	**385-8201**	1	CAP AS-CONNECTOR	
	12	1	**4P-7581**	1	CLIP (LADDER)	
	13	1	**518-4417**	5	WASHER	
Y	14	1	**545-8810**	1	HARNESS AS-CONTROL (PRODUCT LINK)	158
	15	1	**7K-1181**	19	STRAP-CABLE	
	16	1	**8T-8737**	8	PLUG-SEAL	
	17	1	**9G-1307**	1	GROMMET	

M - METRIC PART
R - REMANUFACTURED PART MAY BE AVAILABLE
Y - SEPARATE ILLUSTRATION

553-7497 **CONTROL GP-COMMUNICATION (**contd.**)** **i07552434**

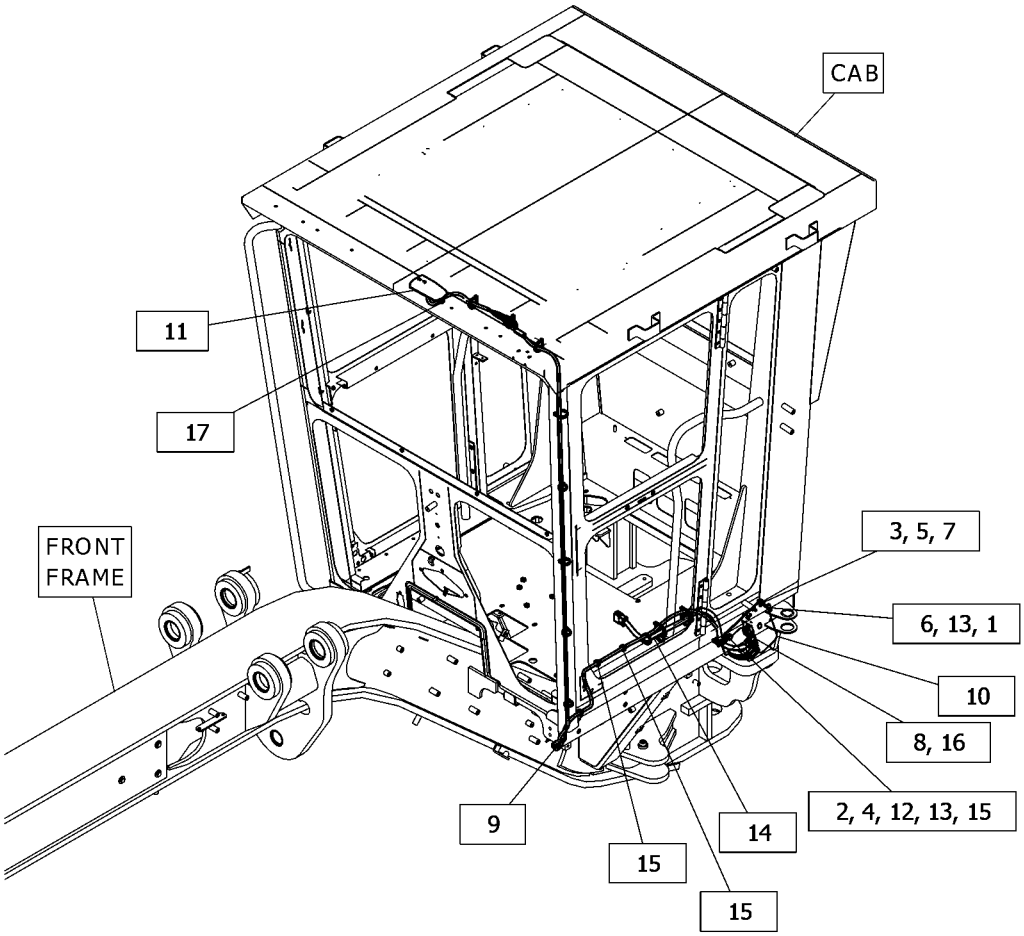

GRAPHIC #1 <END> g06367466

553-7498 CONTROL GP-COMMUNICATION—PRODUCT LINK 641 CELLULAR

S/N: W921-UP

SMCS-7602, 7606, 7610, 7620 **i07552419**

NOTE	REF NO	GRAPHIC REF	PART NUMBER	QTY	PART NAME 1 2 3 4 5 6 (PRODUCT LEVEL)	SEE PAGE
M	1	1	**518-2309**	3	BOLT (M10X1.5X20-MM)	
M	2	1	**518-2310**	1	BOLT (M10X1.5X25-MM)	
	3	1	**518-4415**	8	WASHER (6.4X12X1.6-MM THK)	
M	4	1	**518-6585**	1	NUT-HEX (M10X1.5-THD)	
M	5	1	**518-8248**	4	BOLT (M6X1X25-MM)	
	6	1	**536-5594**	1	BRACKET	
	7	1	**7K-1181**	19	STRAP-CABLE	
	8	1	**8T-8737**	8	PLUG-SEAL	
	9	1	**443-8462**	1	ANTENNA AS (CELLULAR)	
		1	**361-1045**	1	NUT-SPECIAL (5/8-18-THD)	
		1	**385-8201**	1	CAP AS-CONNECTOR	
	10	1	**518-4417**	5	WASHER	
M	11	1	**129-3178**	4	LOCKNUT (M6X1-THD)	
	12	1	**155-2265**	1	KIT-CONNECTING PLUG (8-PIN)	
					(INCLUDES PLUG AS, WEDGE, & INTERFACE SEAL)	
	13	1	**353-8773**	1	CABLE AS-COMMUNICATION (ANTENNA)	
YR	14	1	**440-2105**	1	CONTROL GP-UNPROGRAMMED (PRODUCT LINK ELITE 641 CELLULAR)	149
	15	1	**4P-7581**	1	CLIP (LADDER)	
Y	16	1	**545-8810**	1	HARNESS AS-CONTROL (PRODUCT LINK)	158
	17	1	**9G-1307**	1	GROMMET	

M - METRIC PART
R - REMANUFACTURED PART MAY BE AVAILABLE
Y - SEPARATE ILLUSTRATION

553-7498 **CONTROL GP-COMMUNICATION (**contd.**)** **i07552419**

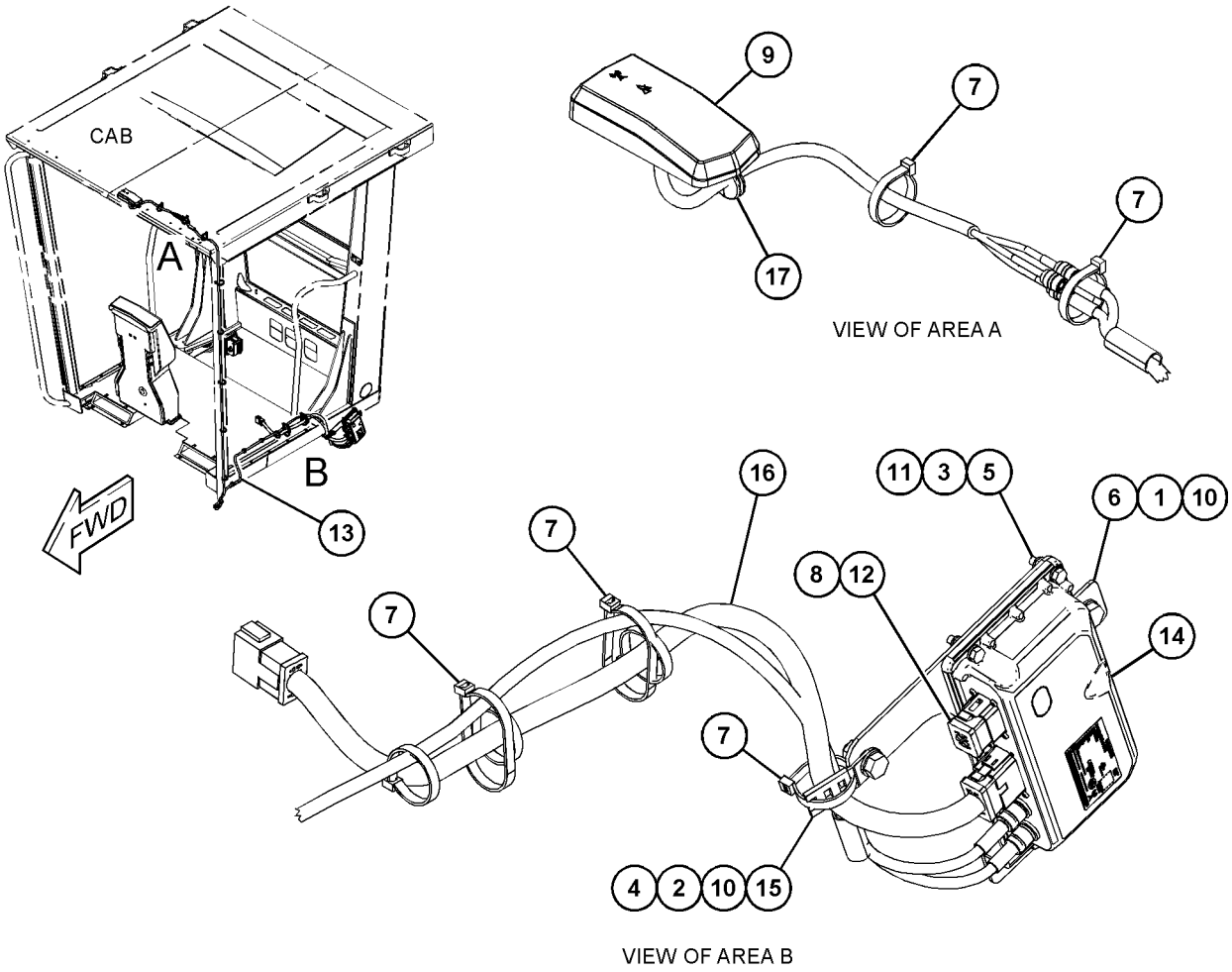

GRAPHIC #1 <END> g06369563

553-7506 CONTROL GP-COMMUNICATION—PRODUCT LINK 641

S/N: W921-UP
CHINA

SMCS-7602, 7606, 7610, 7620 **i07569162**

NOTE	REF NO	GRAPHIC REF	PART NUMBER	QTY	PART NAME 1 2 3 4 5 6 (PRODUCT LEVEL)	SEE PAGE
M	1	1	**518-2309**	3	BOLT (M10X1.5X20-MM)	
M	2	1	**518-2310**	1	BOLT (M10X1.5X25-MM)	
	3	1	**518-4415**	8	WASHER (6.4X12X1.6-MM THK)	
M	4	1	**518-6585**	1	NUT-HEX (M10X1.5-THD)	
M	5	1	**518-8248**	4	BOLT (M6X1X25-MM)	
	6	1	**536-5594**	1	BRACKET	
M	7	1	**129-3178**	4	LOCKNUT (M6X1-THD)	
	8	1	**155-2265**	1	KIT-CONNECTING PLUG (8-PIN)	
					(INCLUDES PLUG AS, WEDGE, & INTERFACE SEAL)	
	9	1	**353-8773**	1	CABLE AS-COMMUNICATION (ANTENNA)	
	10	1	**443-8462**	1	ANTENNA AS (CELLULAR)	
		1	**361-1045**	1	NUT-SPECIAL (5/8-18-THD)	
		1	**385-8201**	1	CAP AS-CONNECTOR	
YR	11	1	**480-3535**	1	CONTROL GP-ELECTRONIC (PRODUCT LINK ELITE 641 CELLULAR)	148
	12	1	**4P-7581**	1	CLIP (LADDER)	
	13	1	**518-4417**	5	WASHER	
Y	14	1	**545-8810**	1	HARNESS AS-CONTROL (PRODUCT LINK)	158
	15	1	**7K-1181**	19	STRAP-CABLE	
	16	1	**8T-8737**	8	PLUG-SEAL	
	17	1	**9G-1307**	1	GROMMET	

M - METRIC PART
R - REMANUFACTURED PART MAY BE AVAILABLE
Y - SEPARATE ILLUSTRATION

553-7506 **CONTROL GP-COMMUNICATION (**contd.**)** **i07569162**

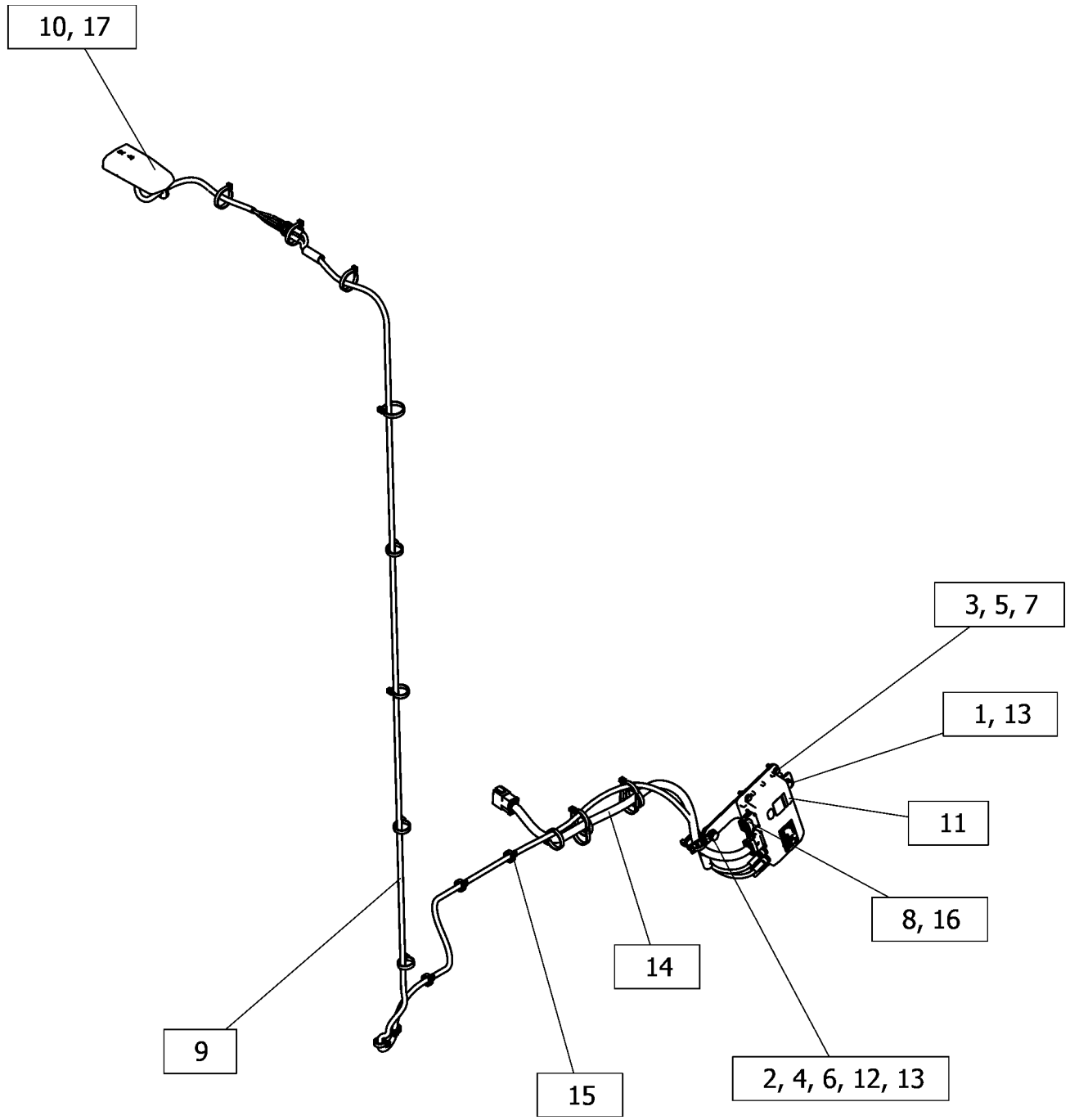

GRAPHIC #1 <END> g06368260

480-3535 CONTROL GP-ELECTRONIC—PRODUCT LINK ELITE 641 CELLULAR*R

S/N: W921-UP

CHINA

PART OF 553-7506 CONTROL GP-COMMUNICATION

SMCS-1917, 1924 **i07621312**

NOTE	REF NO	GRAPHIC REF	PART NUMBER	QTY	PART NAME 1 2 3 4 5 6 (PRODUCT LEVEL)	SEE PAGE
YR	1	1	**440-2105**	1	CONTROL GP-UNPROGRAMMED (PRODUCT LINK ELITE 641 CELLULAR)	149
	2	1	**483-3530**	1	FILM-IDENTIFICATION (LABEL)	

R - REMANUFACTURED PART MAY BE AVAILABLE
Y - SEPARATE ILLUSTRATION

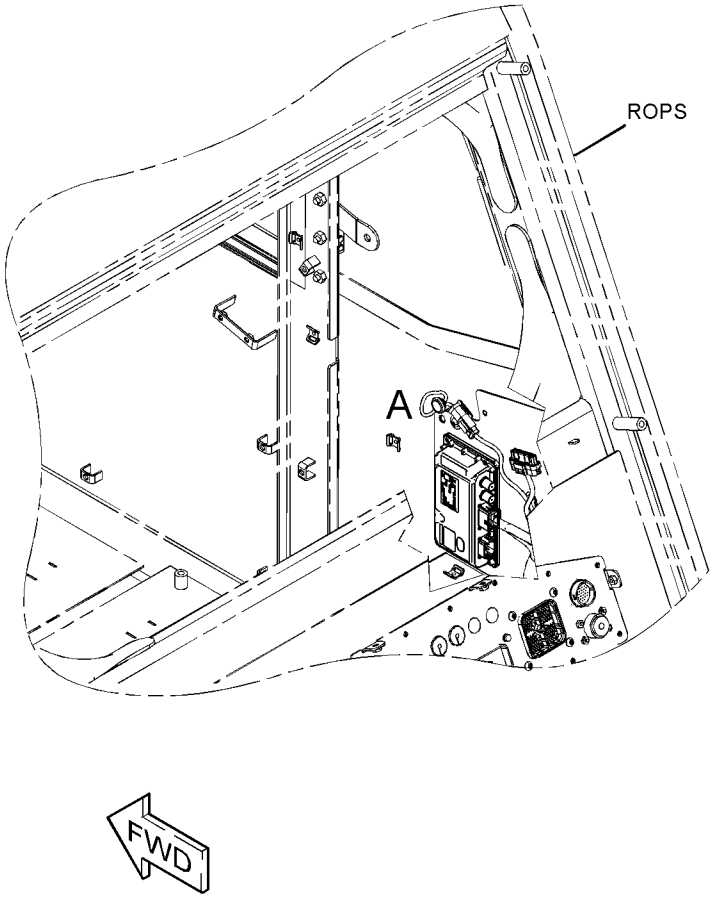

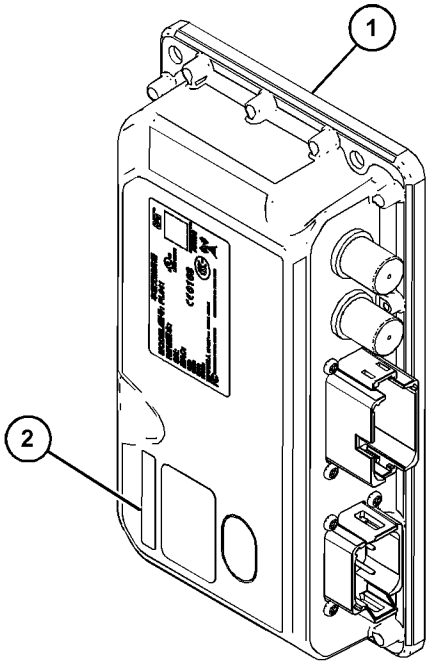

VIEW OF AREA A

GRAPHIC #1 <END> g06032419

440-2105 CONTROL GP-UNPROGRAMMED–PRODUCT LINK ELITE 641 CELLULAR*R

S/N: W921-UP

PART OF 553-7498 CONTROL GP-COMMUNICATION, 480-3535 CONTROL GP-ELECTRONIC

SMCS-7610 **i07621314**

NOTE	REF NO	GRAPHIC REF	PART NUMBER	QTY	PART NAME 1 2 3 4 5 6 (PRODUCT LEVEL)	SEE PAGE
	1	1	**449-7301**	1	FILM-INFORMATION (PRODUCT LINK 641 CELLULAR)	
	2	1	**467-2514**	1	FILM-CERTIFICATION (PL641 CELLULAR)	
F			**482-8138**	1	SOFTWARE GP-MONITOR (CELLULAR)	

F - NOT SHOWN

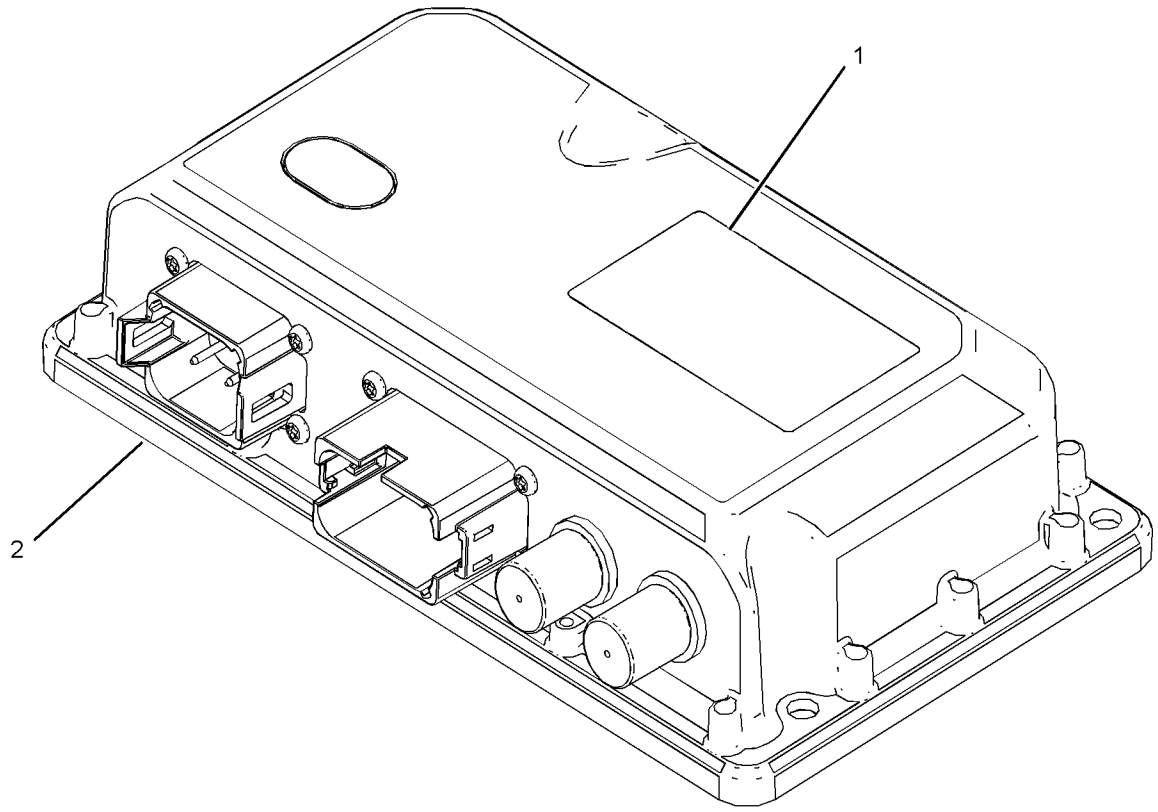

GRAPHIC #1 <END> g03806573

442-7199 CONTROL GP-UNPROGRAMMED–PRODUCT LINK ELITE 631

SATELLITE*R

S/N: W921-UP

PART OF 553-7497 CONTROL GP-COMMUNICATION

SMCS-7610 **i07621316**

NOTE	REF NO	GRAPHIC REF	PART NUMBER	QTY	PART NAME 1 2 3 4 5 6 (PRODUCT LEVEL)	SEE PAGE
F			**544-1117**	1	SOFTWARE GP-MONITOR (SATELLITE RADIO)	

F - NOT SHOWN

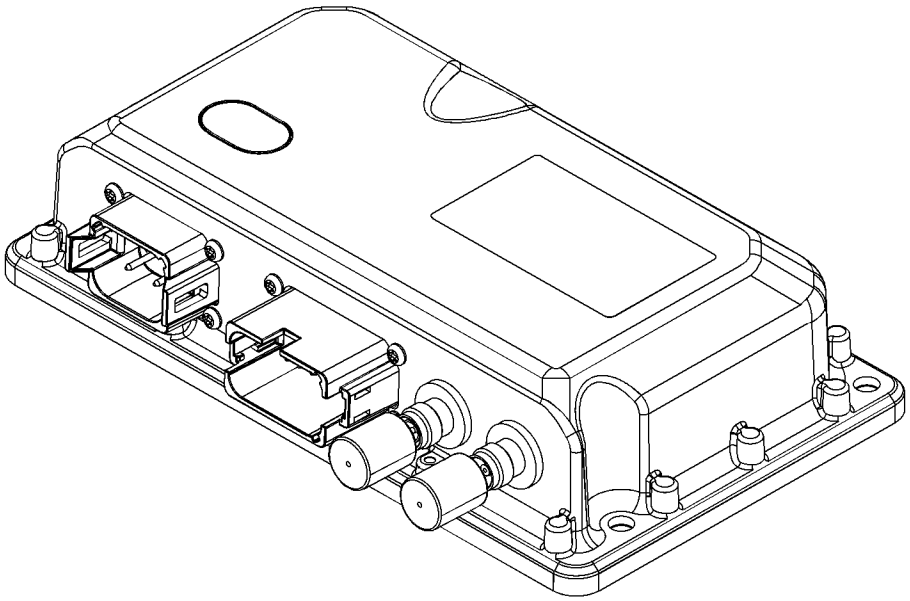

GRAPHIC #1 <END> g06131298

533-6227 CONVERTER GP-ELECTRICAL

S/N: W921-UP
12-VOLT, 10-AMPERE
PART OF 537-5611, 537-5612, 537-5613, 537-5614 CAB AR

SMCS-1421 **i07621320**

NOTE	REF NO	GRAPHIC REF	PART NUMBER	QTY	PART NAME 1 2 3 4 5 6 (PRODUCT LEVEL)	SEE PAGE
	1	1	**340-7161**	1	CONVERTER-POWER (24-VOLT TO 12-VOLT)	
	2	1	**518-8242**	2	BOLT (M5X0.8X16-MM)	
	3	1	**518-9742**	6	WASHER (5.5X13X1.2-MM THK)	
	4	1	**536-5587**	1	BRACKET	
	5	1	**518-6582**	2	NUT	
	6	1	**518-8243**	2	BOLT (M6X1X14-MM)	

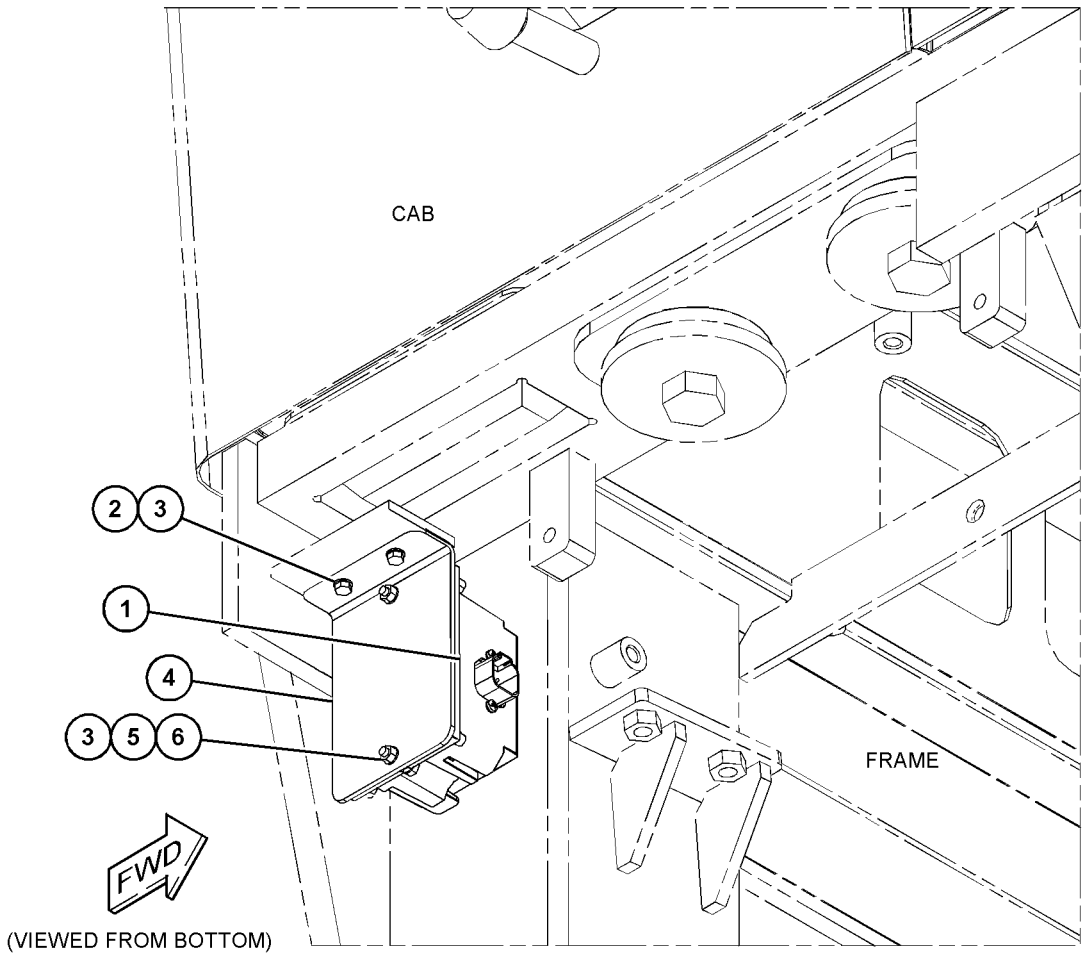

GRAPHIC #1 <END> g06374374

533-6228 CONVERTER GP-ELECTRICAL

S/N: W921-UP
12-VOLT, 10-AMPERE
PART OF 537-5610 CAB AR

SMCS-1421 **i07574405**

NOTE	REF NO	GRAPHIC REF	PART NUMBER	QTY	PART NAME 1 2 3 4 5 6 (PRODUCT LEVEL)	SEE PAGE
	1	1	**340-7160**	1	CONVERTER-POWER (24-VOLT TO 12-VOLT)	
	2	1	**518-8242**	2	BOLT (M5X0.8X16-MM)	
	3	1	**518-9742**	6	WASHER (5.5X13X1.2-MM THK)	
	4	1	**536-5587**	1	BRACKET	
	5	1	**518-6582**	2	NUT	
	6	1	**518-8243**	2	BOLT (M6X1X14-MM)	

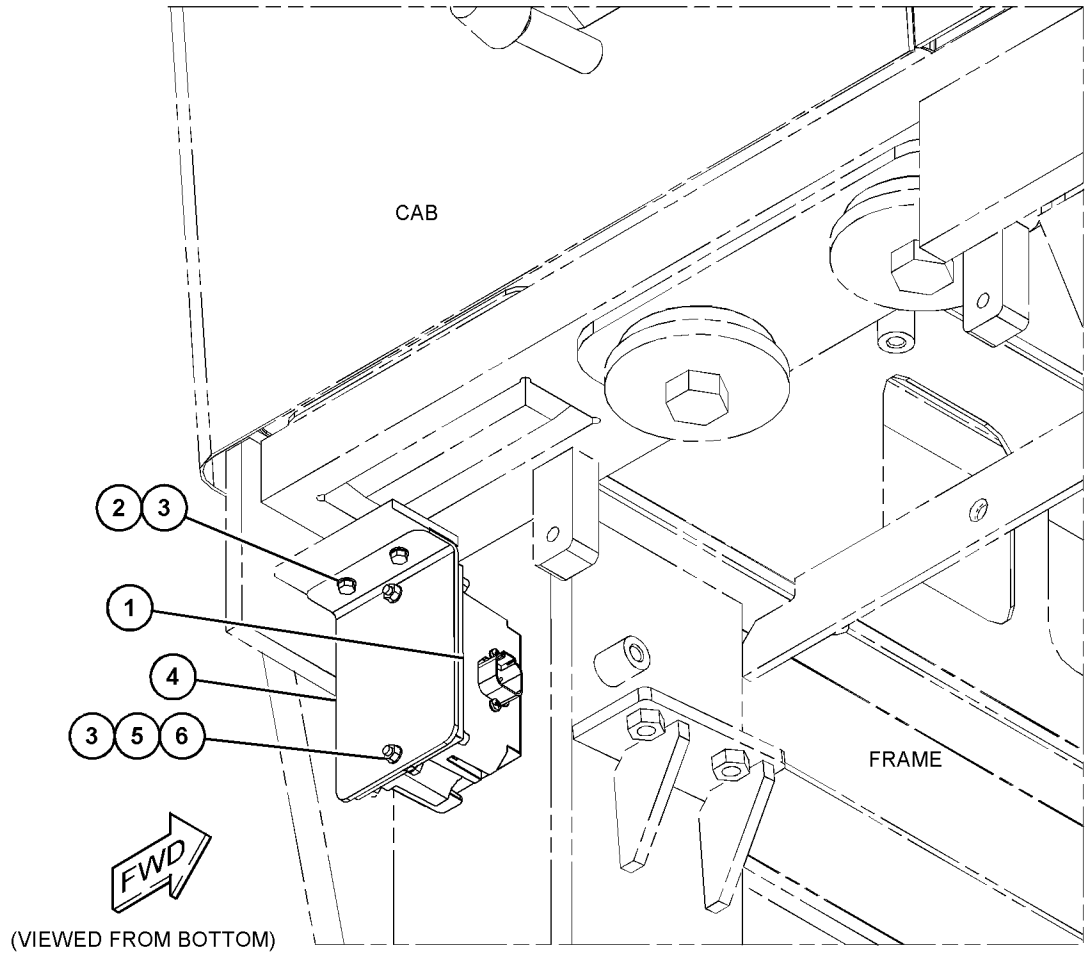

GRAPHIC #1 <END> g06374363

533-6200 ELECTRICAL AR

S/N: W921-UP

PART OF 525-9809 COMMON AR

SMCS-1400, 1401, 1408, 1429, 1453, 1454, 1465, 7402, 7406

i07544651

NOTE	PART NUMBER	QTY	PART NAME 1 2 3 4 5 6 (PRODUCT LEVEL)	SEE PAGE
Y	*533-6202*	1	DISPLAY GP-MONITOR	523
Y	*533-6201*	1	WIRING GP-CHASSIS	221
Y	*533-6203*	1	WIRING GP-CONSOLE (STEERING)	222
Y	*533-6204*	1	WIRING GP-CONSOLE (CONSOLE)	226
Y	*533-6205*	1	WIRING GP-REAR	232
Y	*533-6206*	1	WIRING GP-SENSOR	240
Y	*533-6208*	1	WIRING GP-SENSOR	242

Y - SEPARATE ILLUSTRATION

<END>

568-0929 ELECTRONICS AR-MACHINE–SOFTWARE

S/N: W921-UP

PART OF 525-9809 COMMON AR

SMCS-1400, 1401, 1408, 1418, 7000, 7610, 7620

i07591110

NOTE	PART NUMBER	QTY	PART NAME 1 2 3 4 5 6 (PRODUCT LEVEL)	SEE PAGE
Y	*564-8938*	1	ELECTRONICS GP-MONITOR	153
Y	*564-8941*	1	ELECTRONICS GP-MONITOR	153
Y	*564-8942*	1	ELECTRONICS GP-MONITOR	154
Y	*564-8943*	1	ELECTRONICS GP-MONITOR	154
Y	*564-8939*	1	ELECTRONICS GP-POWER TRAIN	154

Y - SEPARATE ILLUSTRATION

<END>

564-8938 ELECTRONICS GP-MONITOR

S/N: W921-UP

PART OF 568-0929 ELECTRONICS AR-MACHINE

SMCS-7490, 7610, 7620

i07592154

NOTE	PART NUMBER	QTY	PART NAME 1 2 3 4 5 6 (PRODUCT LEVEL)	SEE PAGE
	552-3605	1	SOFTWARE GP-MONITOR (INSTRUMENT PANEL)	

<END>

564-8941 ELECTRONICS GP-MONITOR

S/N: W921-UP

PART OF 568-0929 ELECTRONICS AR-MACHINE

SMCS-7490, 7610, 7620

i07592174

NOTE	PART NUMBER	QTY	PART NAME 1 2 3 4 5 6 (PRODUCT LEVEL)	SEE PAGE
	544-1118	1	SOFTWARE GP-MONITOR	

<END>

564-8942 ELECTRONICS GP-MONITOR

S/N: W921-UP

PART OF 568-0929 ELECTRONICS AR-MACHINE

SMCS-7490, 7610, 7620 **i07592177**

NOTE	PART NUMBER	QTY	PART NAME 1 2 3 4 5 6 (PRODUCT LEVEL)	SEE PAGE
	544-1117	1	SOFTWARE GP-MONITOR (SATELLITE RADIO)	

<END>

564-8943 ELECTRONICS GP-MONITOR

S/N: W921-UP

PART OF 568-0929 ELECTRONICS AR-MACHINE

SMCS-7490, 7610, 7620 **i07592178**

NOTE	PART NUMBER	QTY	PART NAME 1 2 3 4 5 6 (PRODUCT LEVEL)	SEE PAGE
	544-1146	1	SOFTWARE GP-MONITOR	

<END>

564-8939 ELECTRONICS GP-POWER TRAIN

S/N: W921-UP

PART OF 568-0929 ELECTRONICS AR-MACHINE

SMCS-4800, 4808, 7610, 7620 **i07592172**

NOTE	PART NUMBER	QTY	PART NAME 1 2 3 4 5 6 (PRODUCT LEVEL)	SEE PAGE
	541-9916	1	SOFTWARE GP-POWER TRAIN	

<END>

566-9225 HARNESS AS-CAB

S/N: W921-UP

PART OF 533-6225 WIRING GP-CAB

SMCS-1408 **i07576424**

NOTE	PART NUMBER	QTY	PART NAME 1 2 3 4 5 6 (PRODUCT LEVEL)	SEE PAGE
	274-3774	7	CAP-CONNECTOR	
	123-7615	1	CONNECTOR (1-PIN)	
	155-2255	1	KIT-CONNECTING PLUG (12-PIN)	
	155-2265	4	KIT-CONNECTING PLUG (8-PIN)	
	155-2270	11	KIT-CONNECTING PLUG (2-PIN)	
	155-2274	2	KIT-CONNECTING PLUG (6-PIN)	
			(EACH PLUG KIT INCLUDES PLUG AS, WEDGE, & INTERFACE SEAL)	
	155-2260	1	KIT-CONNECTING PLUG (3-PIN)	
			(INCLUDES PLUG AS, WEDGES, & INTERFACE SEAL)	
	245-7434	4	KIT-CONNECTING PLUG (10-PIN)	
			(EACH INCLUDES PLUG-CONNECTOR, WIRE AS, & PLUG)	
	102-8801	1	KIT-RECEPTACLE (12-PIN)	
			(INCLUDES RECEPTACLE AS & WEDGE)	
	8T-8729	10	PIN-CONNECTOR (16-GA TO 18-GA)	
	9W-0852	1	PIN-CONNECTOR (14-GA TO 16-GA)	
	202-5397	8	PLUG	
	8T-8737	9	PLUG-SEAL	
	185-1861	32	SEAL-WIRE	
	8T-8730	66	SOCKET-CONNECTOR (16-GA TO 18-GA)	
	9W-0844	7	SOCKET-CONNECTOR (14-GA TO 16-GA)	
	189-3158	1	SUPPRESSOR-ARC	
B	**1P-0810**		TAPE-ELECTRICAL	
	204-1297	14	TERMINAL AS-BLADE (18-GA TO 20-GA)	
			(EACH INCLUDES)	
	235-4123	1	TERMINAL (18-GA TO 20-GA)	
	6V-0491	2	TERMINAL-BLADE (14-GA TO 18-GA)	
	5P-4571	6	TERMINAL-BLADE (14-GA TO 16-GA)	
	5P-2957	2	TERMINAL-BLADE (14-GA TO 16-GA)	
			—OR—	
	5P-5602	2	TERMINAL-BLADE (18-GA TO 22-GA)	
	223-4779	18	TERMINAL-BLADE (14-GA TO 16-GA)	
	2L-8052	1	TERMINAL-RING (6-GA, 3/8-IN SCREW)	
			—OR—	
	2L-8060	1	TERMINAL-RING (8-GA, 3/8-IN SCREW)	
	2L-8069	1	TERMINAL-RING (2-GA TO 10-GA, 3/8-IN SCREW)	
	2L-8079	1	TERMINAL-RING (14-GA TO 16-GA, 3/8-IN SCREW)	
E	**119-3662**		TUBE-HEAT SHRINK (10.85-MM DIA) (7-CM)	
E	**125-7874**		TUBE-HEAT SHRINK (5.72-MM DIA) (90-CM)	
E	**125-7875**		TUBE-HEAT SHRINK (7.44-MM DIA) (20-CM)	

B - USE AS REQUIRED
E - ORDER BY THE CENTIMETER

<END>

566-4210 HARNESS AS-CONSOLE

S/N: W921-UP

PART OF 533-6204 WIRING GP-CONSOLE

SMCS-1408, 7451 **i07588077**

NOTE	PART NUMBER	QTY	PART NAME 1 2 3 4 5 6 (PRODUCT LEVEL)	SEE PAGE
	455-9568	1	CAP AS	
	374-7463	1	CAP-SEAL	
	374-7466	1	CAP-SEAL	
	123-7615	1	CONNECTOR (1-PIN)	
	155-2255	1	KIT-CONNECTING PLUG (12-PIN)	
	155-2270	3	KIT-CONNECTING PLUG (2-PIN)	
	155-2271	1	KIT-CONNECTING PLUG (4-PIN)	
	155-2274	1	KIT-CONNECTING PLUG (6-PIN)	
			(EACH PLUG KIT INCLUDES PLUG AS, WEDGE, & INTERFACE SEAL)	
	245-7434	4	KIT-CONNECTING PLUG (10-PIN)	
			(EACH INCLUDES PLUG CONNECTOR, WIRE ASSEMBLIES & PLUGS)	
	102-8806	1	KIT-RECEPTACLE (8-PIN)	
	102-8801	1	KIT-RECEPTACLE (12-PIN)	
			(EACH RECEPTACLE KIT INCLUDES RECEPTACLE AS & WEDGE)	
	270-2679	1	LOCKWASHER	
	203-9007	1	NUT (1-1/2-18-THD)	
	8T-8729	13	PIN-CONNECTOR (16-GA TO 18-GA)	
	9W-0852	1	PIN-CONNECTOR (14-GA TO 16-GA)	
	9X-3401	14	PIN-CONNECTOR (16-GA TO 18-GA)	
	202-5397	21	PLUG	
	8T-8737	10	PLUG-SEAL	
	451-8019	1	RECEPTACLE AS-CONNECTOR (14-PIN)	
	185-1860	19	SEAL-WIRE	
	8T-8730	14	SOCKET-CONNECTOR (16-GA TO 18-GA)	
	9W-0844	6	SOCKET-CONNECTOR (14-GA TO 16-GA)	
	9X-3402	4	SOCKET-CONNECTOR (16-GA TO 18-GA)	
	204-1297	15	TERMINAL AS-BLADE (18-GA TO 20-GA)	
			(EACH INCLUDES)	
	235-4123	1	TERMINAL (18-GA TO 20-GA)	
	6V-0491	2	TERMINAL-BLADE (14-GA TO 18-GA)	
	223-4779	4	TERMINAL-BLADE (14-GA TO 16-GA)	
E	**125-7874**		TUBE-HEAT SHRINK (5.72-MM DIA) (50-CM)	
E	**125-7875**		TUBE-HEAT SHRINK (7.44-MM DIA) (10-CM)	
	155-2258	1	WEDGE-PLUG LOCK (12-PIN)	
	3E-3389	1	WEDGE-RECEPTACLE LOCK (8-PIN)	

E - ORDER BY THE CENTIMETER

<END>

566-9224 HARNESS AS-CONSOLE

S/N: W921-UP

PART OF 533-6204 WIRING GP-CONSOLE

SMCS-1408, 7451

i07588759

NOTE	PART NUMBER	QTY	PART NAME 1 2 3 4 5 6 (PRODUCT LEVEL)	SEE PAGE
	3T-3278	1	BOOT	
	6D-4161	1	CONTACT	
	155-2265	1	KIT-CONNECTING PLUG (8-PIN)	
			(INCLUDES PLUG AS, WEDGE, & INTERFACE SEAL)	
	245-7434	2	KIT-CONNECTING PLUG (10-PIN)	
			(EACH INCLUDES CONNECTOR PLUG, WIRE ASSEMBLIES & PLUGS)	
	102-8801	1	KIT-RECEPTACLE (12-PIN)	
	102-8802	1	KIT-RECEPTACLE (2-PIN)	
	102-8805	1	KIT-RECEPTACLE (6-PIN)	
			(EACH RECEPTACLE KIT INCLUDES RECEPTACLE AS & WEDGE)	
	8T-8729	14	PIN-CONNECTOR (16-GA TO 18-GA)	
	202-5397	1	PLUG	
	8T-8737	9	PLUG-SEAL	
	185-1860	19	SEAL-WIRE	
	8T-8730	5	SOCKET-CONNECTOR (16-GA TO 18-GA)	
	3T-3158	1	SOCKET-LAMP	
	3T-3159	1	SPRING	
B	**1P-0810**		TAPE-ELECTRICAL	
	204-1297	19	TERMINAL AS-BLADE (18-GA TO 20-GA)	
			(EACH INCLUDES)	
	235-4123	1	TERMINAL (18-GA TO 20-GA)	
	3T-3157	1	TERMINAL-BLADE (16-GA TO 20-GA)	
E	**119-3662**		TUBE-HEAT SHRINK (10.85-MM DIA) (13-CM)	
E	**125-7874**		TUBE-HEAT SHRINK (5.72-MM DIA) (5-CM)	
E	**125-7875**		TUBE-HEAT SHRINK (7.44-MM DIA) (5-CM)	
	155-2259	1	WEDGE-PLUG LOCK (8-PIN)	
	3E-3383	1	WEDGE-RECEPTACLE LOCK (6-PIN)	

B - USE AS REQUIRED
E - ORDER BY THE CENTIMETER

<END>

545-8810 HARNESS AS-CONTROL–PRODUCT LINK

S/N: W921-UP

PART OF 553-7497, 553-7498, 553-7506 CONTROL GP-COMMUNICATION

SMCS-1408 **i07569183**

NOTE	PART NUMBER	QTY	PART NAME 1 2 3 4 5 6 (PRODUCT LEVEL)	SEE PAGE
E	**196-8876**		BRAID (BLACK, ONE GOLD STRAND) (77-CM)	
	155-2256	1	KIT-CONNECTING PLUG (12-PIN)	
			(INCLUDES PLUG AS, WEDGE, & INTERFACE SEAL)	
	102-8801	1	KIT-RECEPTACLE (12-PIN)	
			(INCLUDES RECEPTACLE AS & WEDGE)	
	8T-8729	3	PIN-CONNECTOR (16-GA TO 18-GA)	
	9X-3401	6	PIN-CONNECTOR (16-GA TO 18-GA)	
	8T-8737	6	PLUG-SEAL	
	8T-8730	3	SOCKET-CONNECTOR (16-GA TO 18-GA)	
	9X-3402	6	SOCKET-CONNECTOR (16-GA TO 18-GA)	
	155-2258	1	WEDGE-PLUG LOCK (12-PIN)	

E - ORDER BY THE CENTIMETER

<END>

385-5997 HARNESS AS-ENGINE

S/N: E7A1-UP

PART OF 395-0113 WIRING GP-ENGINE

SMCS-1408 **i07383501**

NOTE	PART NUMBER	QTY	PART NAME 1 2 3 4 5 6 (PRODUCT LEVEL)	SEE PAGE
	377-6932	1	COVER	
E	**292-2896**		CONDUIT (45-CM)	
	155-2271	3	KIT-CONNECTING PLUG (4-PIN)	
			(EACH INCLUDES PLUG AS, WEDGE, & INTERFACE SEAL)	
	245-1044	2	LOCK-CONNECTOR	
	316-9351	7	MOUNTING-CABLE TIE	
	230-4011	2	PLUG AS-CONNECTOR (2-PIN)	
			(EACH INCLUDES)	
	264-7029	1	SEAL-CONNECTOR	
	238-8245	1	PLUG AS-CONNECTOR (2-PIN)	
	455-0704	1	SEAL-CONNECTOR	
	238-8247	2	PLUG AS-CONNECTOR (2-PIN)	
			(EACH INCLUDES)	
	455-0704	1	SEAL-CONNECTOR	
	245-1043	1	PLUG GP-CONNECTOR (64-PIN)	
	267-7208	1	RING-RETAINING	
	274-4990	1	SEAL	
M	**267-7207**	1	BOLT-SPECIAL (M6X1-THD)	
	281-8804	2	PLUG AS-CONNECTOR (3-PIN)	
			(EACH INCLUDES)	
	455-0705	1	SEAL-CONNECTOR	
	536-7946	1	PLUG AS	
	444-7604	2	SOCKET-CONNECTOR	
	536-7945	1	HARNESS AS-WIRING	
	444-7604	3	SOCKET-CONNECTOR	
	245-1048	33	PLUG-CONNECTOR (1-PIN)	
	185-1860	5	SEAL-WIRE	
	267-9572	31	SOCKET-CONNECTION (18-GA)	
	9X-3402	16	SOCKET-CONNECTOR (16-GA TO 18-GA)	
			—OR—	
	126-1768	16	SOCKET-CONNECTOR (14-GA TO 16-GA)	
	217-9039	6	STRAP-CABLE	
	356-1219	1	STRAP-CABLE	
	206-1345	14	STRAP-CABLE	
E	**125-7874**		TUBE-HEAT SHRINK (5.72-MM DIA) (10-CM)	
	194-5226	12	WIRE AS (16-GA)	
			—OR—	
	194-5227	12	WIRE AS (14-GA)	

E - ORDER BY THE CENTIMETER
M - METRIC PART

<END>

565-8382 HARNESS AS-FRONT

S/N: W921-UP

PART OF 533-6201 WIRING GP-CHASSIS

SMCS-1408 **i07549437**

NOTE	PART NUMBER	QTY	PART NAME 1 2 3 4 5 6 (PRODUCT LEVEL)	SEE PAGE
	274-3774	4	CAP-CONNECTOR	
	155-2260	1	KIT-CONNECTING PLUG (3-PIN)	
			(INCLUDES PLUG AS, WEDGES, & INTERFACE SEAL)	
	155-2270	4	KIT-CONNECTING PLUG (2-PIN)	
			(EACH INCLUDES PLUG AS, WEDGE, & INTERFACE SEAL)	
	8T-8730	10	SOCKET-CONNECTOR (16-GA TO 18-GA)	
	9W-0844	1	SOCKET-CONNECTOR (14-GA TO 16-GA)	
E	**119-3662**		TUBE-HEAT SHRINK (10.85-MM DIA) (7-CM)	
E	**125-7874**		TUBE-HEAT SHRINK (5.72-MM DIA) (10-CM)	

E - ORDER BY THE CENTIMETER

<END>

417-6161 HARNESS AS-HEATER & AIR COND

S/N: W921-UP

PART OF 533-2323 AIR CONDITIONER GP, 518-3686 HEATER GP-CAB

SMCS-1408 **i07571057**

NOTE	PART NUMBER	QTY	PART NAME 1 2 3 4 5 6 (PRODUCT LEVEL)	SEE PAGE
	3T-3278	1	BOOT	
	6D-4161	1	CONTACT	
	6T-6505	5	HOUSING-RECEPTACLE (BLADE, POSITIVE LOCK)	
	155-2270	1	KIT-CONNECTING PLUG (2-PIN)	
			(INCLUDES PLUG AS, WEDGE, & INTERFACE SEAL)	
	102-8805	1	KIT-RECEPTACLE (6-PIN)	
			(INCLUDES RECEPTACLE AS & WEDGE)	
	8T-8729	2	PIN-CONNECTOR (16-GA TO 18-GA)	
	9W-0852	3	PIN-CONNECTOR (14-GA TO 16-GA)	
	8T-8737	1	PLUG-SEAL	
	9W-0844	2	SOCKET-CONNECTOR (14-GA TO 16-GA)	
	3T-3158	1	SOCKET-LAMP	
	3T-3159	1	SPRING	
	3T-3157	1	TERMINAL-BLADE (16-GA TO 20-GA)	
	6T-6506	4	TERMINAL-BLADE (14-GA TO 18-GA)	
	8T-9850	1	TERMINAL-BLADE (10-GA TO 12-GA)	
	5P-1475	5	TERMINAL-FORK (14-GA TO 16-GA, NO. 8 SCREW)	
E	**119-3662**		TUBE-HEAT SHRINK (10.85-MM DIA) (7-CM)	

E - ORDER BY THE CENTIMETER

<END>

565-7554 HARNESS AS-HEATER & AIR COND

S/N: W921-UP

PART OF 533-6226 WIRING GP-AIR CONDITIONER

SMCS-1408 **i07572559**

NOTE	PART NUMBER	QTY	PART NAME 1 2 3 4 5 6 (PRODUCT LEVEL)	SEE PAGE
	155-2270	5	KIT-CONNECTING PLUG (2-PIN)	
	155-2274	1	KIT-CONNECTING PLUG (6-PIN)	
			(EACH PLUG KIT INCLUDES PLUG AS, WEDGE, & INTERFACE SEAL)	
	8T-8737	1	PLUG-SEAL	
	238-9397	1	RESISTOR AS	
	8T-8729	2	PIN-CONNECTOR (16-GA TO 18-GA)	
	102-8802	1	KIT-RECEPTACLE (2-PIN)	
			(INCLUDES RECEPTACLE AS & WEDGE)	
	8T-8730	13	SOCKET-CONNECTOR (16-GA TO 18-GA)	
	9X-3402	2	SOCKET-CONNECTOR (16-GA TO 18-GA)	
	189-3158	1	SUPPRESSOR-ARC	
E	**125-7874**		TUBE-HEAT SHRINK (5.72-MM DIA) (15-CM)	

E - ORDER BY THE CENTIMETER

<END>

533-6243 HARNESS AS-LIGHTING

S/N: W921-UP

PART OF 533-6218, 536-5572 LIGHTING GP-FLOOD & SIGNAL, 550-8853 LIGHTING GP-ROADING

SMCS-1408 **i07574195**

NOTE	PART NUMBER	QTY	PART NAME 1 2 3 4 5 6 (PRODUCT LEVEL)	SEE PAGE
	155-2265	1	KIT-CONNECTING PLUG (8-PIN)	
			(INCLUDES PLUG AS, WEDGE, & INTERFACE SEAL)	
	102-8806	1	KIT-RECEPTACLE (8-PIN)	
			(INCLUDES RECEPTACLE AS & WEDGE)	
	8T-8729	2	PIN-CONNECTOR (16-GA TO 18-GA)	
	9W-0852	5	PIN-CONNECTOR (14-GA TO 16-GA)	
	8T-8737	2	PLUG-SEAL	
	8T-8730	2	SOCKET-CONNECTOR (16-GA TO 18-GA)	
	9W-0844	5	SOCKET-CONNECTOR (14-GA TO 16-GA)	
	155-2259	1	WEDGE-PLUG LOCK (8-PIN)	

<END>

546-6080 HARNESS AS-LIGHTING—BEACON

S/N: W921-UP

PART OF 568-0739 LIGHTING GP-WARNING BEACON

SMCS-1408 **i07569154**

NOTE	PART NUMBER	QTY	PART NAME 1 2 3 4 5 6 (PRODUCT LEVEL)	SEE PAGE
	274-3774	1	CAP-CONNECTOR	
	155-2270	1	KIT-CONNECTING PLUG (2-PIN)	
			(INCLUDES PLUG AS, WEDGE, & INTERFACE SEAL)	
	102-8802	1	KIT-RECEPTACLE (2-PIN)	
			(INCLUDES RECEPTACLE AS & WEDGE)	
	8T-8729	2	PIN-CONNECTOR (16-GA TO 18-GA)	
	8T-8730	2	SOCKET-CONNECTOR (16-GA TO 18-GA)	

<END>

566-9226 HARNESS AS-LIGHTING—LOW LIGHT BAR

S/N: W921-UP

PART OF 536-5572 LIGHTING GP-FLOOD & SIGNAL, 550-8853 LIGHTING GP-ROADING

SMCS-1408 **i07578034**

NOTE	PART NUMBER	QTY	PART NAME 1 2 3 4 5 6 (PRODUCT LEVEL)	SEE PAGE
	155-2274	2	KIT-CONNECTING PLUG (6-PIN)	
			(EACH INCLUDES PLUG AS, WEDGE, & INTERFACE SEAL)	
	102-8806	1	KIT-RECEPTACLE (8-PIN)	
			(INCLUDES RECEPTACLE AS & WEDGE)	
	8T-8729	2	PIN-CONNECTOR (16-GA TO 18-GA)	
	9W-0852	5	PIN-CONNECTOR (14-GA TO 16-GA)	
	8T-8737	3	PLUG-SEAL	
	8T-8730	2	SOCKET-CONNECTOR (16-GA TO 18-GA)	
	9W-0844	8	SOCKET-CONNECTOR (14-GA TO 16-GA)	
E	**125-7875**		TUBE-HEAT SHRINK (7.44-MM DIA) (15-CM)	
	3E-3389	1	WEDGE-RECEPTACLE LOCK (8-PIN)	

E - ORDER BY THE CENTIMETER

<END>

566-9227 HARNESS AS-LIGHTING—HEADLIGHTS

S/N: W921-UP

PART OF 533-6218 LIGHTING GP-FLOOD & SIGNAL

SMCS-1408 **i07577239**

NOTE	PART NUMBER	QTY	PART NAME 1 2 3 4 5 6 (PRODUCT LEVEL)	SEE PAGE
	155-2274	2	KIT-CONNECTING PLUG (6-PIN)	
			(EACH INCLUDES PLUG AS, WEDGE, & INTERFACE SEAL)	
	102-8806	1	KIT-RECEPTACLE (8-PIN)	
			(INCLUDES RECEPTACLE AS & WEDGE)	
	8T-8729	2	PIN-CONNECTOR (16-GA TO 18-GA)	
	9W-0852	5	PIN-CONNECTOR (14-GA TO 16-GA)	
	8T-8737	3	PLUG-SEAL	
	8T-8730	2	SOCKET-CONNECTOR (16-GA TO 18-GA)	
	9W-0844	8	SOCKET-CONNECTOR (14-GA TO 16-GA)	
E	**125-7875**		TUBE-HEAT SHRINK (7.44-MM DIA) (15-CM)	
	3E-3389	1	WEDGE-RECEPTACLE LOCK (8-PIN)	

E - ORDER BY THE CENTIMETER

<END>

566-9228 HARNESS AS-LIGHTING

S/N: W921-UP

PART OF 533-6220 WIRING GP-FRONT LIGHTING

SMCS-1408 **i07577943**

NOTE	PART NUMBER	QTY	PART NAME 1 2 3 4 5 6 (PRODUCT LEVEL)	SEE PAGE
	155-2271	1	KIT-CONNECTING PLUG (4-PIN)	
			(INCLUDES PLUG AS, WEDGE, & INTERFACE SEAL)	
	102-8804	1	KIT-RECEPTACLE (4-PIN)	
			(INCLUDES RECEPTACLE AS & WEDGE)	
	8T-8729	4	PIN-CONNECTOR (16-GA TO 18-GA)	
	8T-8730	4	SOCKET-CONNECTOR (16-GA TO 18-GA)	
	3E-3377	1	WEDGE-RECEPTACLE LOCK (4-PIN)	

<END>

533-6235 HARNESS AS-MONITOR

S/N: W921-UP

PART OF 533-6231 WIRING GP-CAMERA

SMCS-1408, 7490 **i07581684**

NOTE	PART NUMBER	QTY	PART NAME 1 2 3 4 5 6 (PRODUCT LEVEL)	SEE PAGE
	155-2274	1	KIT-CONNECTING PLUG (6-PIN)	
			(INCLUDES PLUG AS, WEDGE, & INTERFACE SEAL)	
	102-8802	1	KIT-RECEPTACLE (2-PIN)	
			(INCLUDES RECEPTACLE AS & WEDGE)	
	8T-8729	2	PIN-CONNECTOR (16-GA TO 18-GA)	
	8T-8737	4	PLUG-SEAL	
	8T-8730	2	SOCKET-CONNECTOR (16-GA TO 18-GA)	

<END>

565-8383 HARNESS AS-MONITOR—MESSAGE DISPLAY

S/N: W921-UP

PART OF 533-6202 DISPLAY GP-MONITOR

SMCS-1408, 7490 **i07585658**

NOTE	PART NUMBER	QTY	PART NAME 1 2 3 4 5 6 (PRODUCT LEVEL)	SEE PAGE
	155-2255	1	KIT-CONNECTING PLUG (12-PIN)	
	155-2256	1	KIT-CONNECTING PLUG (12-PIN)	
			(EACH PLUG KIT INCLUDES PLUG AS, WEDGE, & INTERFACE SEAL)	
	102-8801	1	KIT-RECEPTACLE (12-PIN)	
			(INCLUDES RECEPTACLE AS & WEDGE)	
	8T-8729	8	PIN-CONNECTOR (16-GA TO 18-GA)	
	9X-3401	2	PIN-CONNECTOR (16-GA TO 18-GA)	
	8T-8737	14	PLUG-SEAL	
	8T-8730	10	SOCKET-CONNECTOR (16-GA TO 18-GA)	
	9X-3402	2	SOCKET-CONNECTOR (16-GA TO 18-GA)	
	155-2258	2	WEDGE-PLUG LOCK (12-PIN)	

<END>

200-5728 HARNESS AS-RADIO

S/N: W921-UP
4-FLANGE
PART OF 518-3026 RADIO GP

SMCS-1408 **i07168791**

NOTE	PART NUMBER	QTY	PART NAME 1 2 3 4 5 6 (PRODUCT LEVEL)	SEE PAGE
	172-8037	1	CONNECTOR (RADIO)	
	160-3518	1	KIT-RECEPTACLE (8-PIN)	
			(INCLUDES RECEPTACLE AS & WEDGE)	
	8T-8729	7	PIN-CONNECTOR (16-GA TO 18-GA)	
	8T-8737	1	PLUG-SEAL	
	172-8039	11	TERMINAL (RADIO)	

<END>

565-8381 HARNESS AS-REAR

S/N: W921-UP

PART OF 533-6206 WIRING GP-SENSOR

SMCS-1408 **i07588812**

NOTE	PART NUMBER	QTY	PART NAME 1 2 3 4 5 6 (PRODUCT LEVEL)	SEE PAGE
J	**467-2859**		CABLE (12-DM)	
	274-3774	2	CAP-CONNECTOR	
	274-3781	1	CAP-SEAL	
	374-7466	1	CAP-SEAL	
	123-7615	3	CONNECTOR (1-PIN)	
	126-1774	2	COVER-CONNECTOR	
	155-2255	2	KIT-CONNECTING PLUG (12-PIN)	
	155-2265	2	KIT-CONNECTING PLUG (8-PIN)	
	155-2270	4	KIT-CONNECTING PLUG (2-PIN)	
	155-2271	1	KIT-CONNECTING PLUG (4-PIN)	
	155-2274	3	KIT-CONNECTING PLUG (6-PIN)	
			(EACH PLUG KIT INCLUDES PLUG AS, WEDGE, & INTERFACE SEAL)	
	155-2260	2	KIT-CONNECTING PLUG (3-PIN)	
			(EACH INCLUDES PLUG AS, WEDGES, & INTERFACE SEAL)	
	102-8804	1	KIT-RECEPTACLE (4-PIN)	
	102-8805	1	KIT-RECEPTACLE (6-PIN)	
	102-8806	1	KIT-RECEPTACLE (8-PIN)	
	102-8801	1	KIT-RECEPTACLE (12-PIN)	
			(EACH RECEPTACLE KIT INCLUDES RECEPTACLE AS & WEDGE)	
	310-0674	3	LOCKWASHER	
	211-0052	3	NUT (1-11/16-18-THD)	
	8N-1548	1	PIN-CONNECTOR (4-GA)	
	8T-8729	79	PIN-CONNECTOR (16-GA TO 18-GA)	
	9W-0852	15	PIN-CONNECTOR (14-GA TO 16-GA)	
	9X-3401	13	PIN-CONNECTOR (16-GA TO 18-GA)	
	127-5483	1	PLUG AS-CONNECTOR (1-PIN)	
	147-1446	1	PLUG AS-CONNECTOR (70-PIN)	
	147-1445	1	PLUG AS-CONNECTOR (70-PIN)	
			(EACH PLUG AS INCLUDES)	
	159-9322	1	SEAL-O-RING	
	230-4013	1	PLUG AS-CONNECTOR (3-PIN)	
	455-0705	1	SEAL-CONNECTOR	
	8T-8737	119	PLUG-SEAL	
	127-5484	1	RECEPTACLE AS-CONNECTOR (1-PIN)	
	134-2540	1	RECEPTACLE AS-CONNECTOR (3-PIN)	
	167-3692	3	RECEPTACLE AS-CONNECTOR (31-PIN)	
	8N-1549	1	SOCKET-CONNECTOR (4-GA)	
	8T-8730	36	SOCKET-CONNECTOR (16-GA TO 18-GA)	
	9W-0844	1	SOCKET-CONNECTOR (14-GA TO 16-GA)	
	9X-3402	27	SOCKET-CONNECTOR (16-GA TO 18-GA)	
	9X-3402	52	SOCKET-CONNECTOR (16-GA TO 18-GA)	
			—OR—	
	126-1768	52	SOCKET-CONNECTOR (14-GA TO 16-GA)	
	3S-2093	2	STRAP-CABLE	
	9X-6772	2	STRAP-CABLE	
	6V-0491	6	TERMINAL-BLADE (14-GA TO 18-GA)	
	2L-8069	3	TERMINAL-RING (2-GA TO 10-GA, 3/8-IN SCREW)	

565-8381 **HARNESS AS-REAR (**contd.**)** **i07588812**

NOTE	PART NUMBER	QTY	PART NAME 1 2 3 4 5 6 (PRODUCT LEVEL)	SEE PAGE
	2L-8079	3	TERMINAL-RING (14-GA TO 16-GA, 3/8-IN SCREW)	
E	**119-3662**		TUBE-HEAT SHRINK (10.85-MM DIA) (26-CM)	
E	**125-7874**		TUBE-HEAT SHRINK (5.72-MM DIA) (65-CM)	
E	**125-7875**		TUBE-HEAT SHRINK (7.44-MM DIA) (30-CM)	

E - ORDER BY THE CENTIMETER
J - ORDER BY THE DECIMETER

<END>

565-8385 HARNESS AS-REAR

S/N: W921-UP

PART OF 533-6205 WIRING GP-REAR

SMCS-1408 **i07588796**

NOTE	PART NUMBER	QTY	PART NAME 1 2 3 4 5 6 (PRODUCT LEVEL)	SEE PAGE
	374-7463	1	CAP-SEAL	
E	**235-2765**		CONDUIT-FLEXIBLE (27.6-MM ID) (70-CM)	
	245-1045	1	COVER	
	155-2255	1	KIT-CONNECTING PLUG (12-PIN)	
	155-2270	7	KIT-CONNECTING PLUG (2-PIN)	
	155-2274	1	KIT-CONNECTING PLUG (6-PIN)	
			(EACH PLUG KIT INCLUDES PLUG AS, WEDGE, & INTERFACE SEAL)	
	155-2260	4	KIT-CONNECTING PLUG (3-PIN)	
			(EACH INCLUDES PLUG AS, WEDGES, & INTERFACE SEAL)	
	102-8805	1	KIT-RECEPTACLE (6-PIN)	
	102-8806	1	KIT-RECEPTACLE (8-PIN)	
			(EACH RECEPTACLE KIT INCLUDES RECEPTACLE AS & WEDGE)	
	245-1044	2	LOCK-CONNECTOR	
	8T-8729	6	PIN-CONNECTOR (16-GA TO 18-GA)	
	9W-0852	2	PIN-CONNECTOR (14-GA TO 16-GA)	
	9X-3401	6	PIN-CONNECTOR (16-GA TO 18-GA)	
	167-3693	1	PLUG AS-CONNECTOR (31-PIN)	
	237-0227	1	PLUG AS-CONNECTOR (3-PIN)	
	455-0705	1	SEAL-CONNECTOR	
	245-1042	1	PLUG AS-CONNECTOR (64-PIN)	
M	**267-7207**	1	BOLT-SPECIAL (M6X1-THD)	
	267-7208	1	RING-RETAINING	
	274-4990	1	SEAL	
	245-1048	30	PLUG-CONNECTOR (1-PIN)	
	8T-8737	6	PLUG-SEAL	
	134-2540	2	RECEPTACLE AS-CONNECTOR (3-PIN)	
	267-9572	34	SOCKET-CONNECTION (18-GA)	
	8T-8730	50	SOCKET-CONNECTOR (16-GA TO 18-GA)	
	9W-0844	5	SOCKET-CONNECTOR (14-GA TO 16-GA)	
	9X-3402	17	SOCKET-CONNECTOR (16-GA TO 18-GA)	
	3S-2093	1	STRAP-CABLE	
	2L-8069	1	TERMINAL-RING (2-GA TO 10-GA, 3/8-IN SCREW)	
	2L-8079	1	TERMINAL-RING (14-GA TO 16-GA, 3/8-IN SCREW)	
E	**119-3662**		TUBE-HEAT SHRINK (10.85-MM DIA) (7-CM)	
E	**125-7874**		TUBE-HEAT SHRINK (5.72-MM DIA) (45-CM)	
E	**125-7875**		TUBE-HEAT SHRINK (7.44-MM DIA) (10-CM)	
E	**311-4859**		TUBE-HEAT SHRINK (48-MM DIA) (20-CM)	
	3E-3383	1	WEDGE-RECEPTACLE LOCK (6-PIN)	
	3E-3389	1	WEDGE-RECEPTACLE LOCK (8-PIN)	
	155-2258	1	WEDGE-PLUG LOCK (12-PIN)	

E - ORDER BY THE CENTIMETER
M - METRIC PART

<END>

566-9229 HARNESS AS-REAR

S/N: W921-UP

PART OF 549-4735 LIGHTING GP-FLOOD & SIGNAL

SMCS-1408 **i07574120**

NOTE	PART NUMBER	QTY	PART NAME 1 2 3 4 5 6 (PRODUCT LEVEL)	SEE PAGE
	274-3774	3	CAP-CONNECTOR	
	155-2265	1	KIT-CONNECTING PLUG (8-PIN)	
	155-2270	7	KIT-CONNECTING PLUG (2-PIN)	
			(EACH PLUG KIT INCLUDES PLUG AS, WEDGE, & INTERFACE SEAL)	
	155-2260	2	KIT-CONNECTING PLUG (3-PIN)	
			(EACH INCLUDES PLUG AS, WEDGES & INTERFACE SEAL)	
	8T-8730	22	SOCKET-CONNECTOR (16-GA TO 18-GA)	
	9W-0844	6	SOCKET-CONNECTOR (14-GA TO 16-GA)	
E	**119-3662**		TUBE-HEAT SHRINK (10.85-MM DIA) (7-CM)	
E	**125-7874**		TUBE-HEAT SHRINK (5.72-MM DIA) (25-CM)	
	155-2259	1	WEDGE-PLUG LOCK (8-PIN)	

E - ORDER BY THE CENTIMETER

<END>

536-5582 HARNESS AS-REAR LIGHTING

S/N: W921-UP

PART OF 533-6220, 536-5571 WIRING GP-FRONT LIGHTING, 533-6217 WIRING GP-REAR LIGHTING

SMCS-1408 **i07570115**

NOTE	PART NUMBER	QTY	PART NAME 1 2 3 4 5 6 (PRODUCT LEVEL)	SEE PAGE
	274-3774	2	CAP-CONNECTOR	
	374-7463	1	CAP-SEAL	
	155-2265	1	KIT-CONNECTING PLUG (8-PIN)	
	155-2270	5	KIT-CONNECTING PLUG (2-PIN)	
	155-2271	2	KIT-CONNECTING PLUG (4-PIN)	
			(EACH PLUG KIT INCLUDES PLUG AS, WEDGE, & INTERFACE SEAL)	
	8T-8730	20	SOCKET-CONNECTOR (16-GA TO 18-GA)	
	9W-0844	6	SOCKET-CONNECTOR (14-GA TO 16-GA)	
E	**125-7874**		TUBE-HEAT SHRINK (5.72-MM DIA) (20-CM)	
E	**125-7875**		TUBE-HEAT SHRINK (7.44-MM DIA) (10-CM)	
	155-2259	1	WEDGE-PLUG LOCK (8-PIN)	

E - ORDER BY THE CENTIMETER

<END>

536-5562 HARNESS AS-SENSOR

S/N: W921-UP

PART OF 536-5595 WIRING GP-SECONDARY STEERING

SMCS-1408 **i07578992**

NOTE	PART NUMBER	QTY	PART NAME 1 2 3 4 5 6 (PRODUCT LEVEL)	SEE PAGE
	102-8805	1	KIT-RECEPTACLE (6-PIN)	
			(INCLUDES RECEPTACLE AS & WEDGE)	
	9X-3401	5	PIN-CONNECTOR (16-GA TO 18-GA)	
	230-4013	2	PLUG AS-CONNECTOR (3-PIN)	
	237-0227	1	PLUG AS-CONNECTOR (3-PIN)	
			(EACH PLUG AS INCLUDES)	
	455-0705	1	SEAL-CONNECTOR	
	8T-8737	1	PLUG-SEAL	
	8T-8730	6	SOCKET-CONNECTOR (16-GA TO 18-GA)	
	9X-3402	3	SOCKET-CONNECTOR (16-GA TO 18-GA)	
E	**125-7874**		TUBE-HEAT SHRINK (5.72-MM DIA) (10-CM)	
	3E-3383	1	WEDGE-RECEPTACLE LOCK (6-PIN)	

E - ORDER BY THE CENTIMETER

<END>

565-8384 HARNESS AS-SENSOR

S/N: W921-UP

PART OF 533-6205 WIRING GP-REAR

SMCS-1408 **i07588794**

NOTE	PART NUMBER	QTY	PART NAME 1 2 3 4 5 6 (PRODUCT LEVEL)	SEE PAGE
	102-8805	1	KIT-RECEPTACLE (6-PIN)	
			(INCLUDES RECEPTACLE AS & WEDGE)	
	8T-8729	4	PIN-CONNECTOR (16-GA TO 18-GA)	
	9W-0852	2	PIN-CONNECTOR (14-GA TO 16-GA)	
	9X-1054	1	PLUG AS-CONNECTOR (4-PIN)	
	230-4011	1	PLUG AS-CONNECTOR (2-PIN)	
	455-0704	1	SEAL-CONNECTOR	
	230-4013	1	PLUG AS-CONNECTOR (3-PIN)	
	455-0705	1	SEAL-CONNECTOR	
	8T-8730	3	SOCKET-CONNECTOR (16-GA TO 18-GA)	
	9W-0844	2	SOCKET-CONNECTOR (14-GA TO 16-GA)	
	9X-1056	4	TERMINAL-RECEPTACLE (14-GA TO 16-GA)	
E	**125-7874**		TUBE-HEAT SHRINK (5.72-MM DIA) (5-CM)	
	3E-3383	1	WEDGE-RECEPTACLE LOCK (6-PIN)	

E - ORDER BY THE CENTIMETER

<END>

566-4202 HARNESS AS-SENSOR

S/N: W921-UP

PART OF 533-6205 WIRING GP-REAR

SMCS-1408 **i07588802**

NOTE	PART NUMBER	QTY	PART NAME 1 2 3 4 5 6 (PRODUCT LEVEL)	SEE PAGE
E	**5P-1506**		HOSE (67-CM)	
	155-2274	2	KIT-CONNECTING PLUG (6-PIN)	
			(EACH INCLUDES PLUG AS, WEDGE, & INTERFACE SEAL)	
	102-8802	1	KIT-RECEPTACLE (2-PIN)	
	102-8805	1	KIT-RECEPTACLE (6-PIN)	
			(INCLUDES RECEPTACLE AS & WEDGE)	
	8T-8729	6	PIN-CONNECTOR (16-GA TO 18-GA)	
	9X-3401	1	PIN-CONNECTOR (16-GA TO 18-GA)	
	127-5483	1	PLUG AS-CONNECTOR (1-PIN)	
	230-4011	1	PLUG AS-CONNECTOR (2-PIN)	
	455-0704	1	SEAL-CONNECTOR	
	361-2944	1	PLUG AS-CONNECTOR	
	7G-7920	1	PLUG-SEAL	
	8T-8737	9	PLUG-SEAL	
	8N-1549	1	SOCKET-CONNECTOR (4-GA)	
	8T-8730	8	SOCKET-CONNECTOR (16-GA TO 18-GA)	
	9W-0844	2	SOCKET-CONNECTOR (14-GA TO 16-GA)	
	5P-3454	1	TERMINAL-RING (4-GA, 5/16-IN SCREW)	
	2L-8079	1	TERMINAL-RING (14-GA TO 16-GA, 3/8-IN SCREW)	
E	**125-7874**		TUBE-HEAT SHRINK (5.72-MM DIA) (5-CM)	
E	**311-4859**		TUBE-HEAT SHRINK (48-MM DIA) (16-CM)	

E - ORDER BY THE CENTIMETER

<END>

566-4206 HARNESS AS-SENSOR

S/N: W921-UP

PART OF 533-6208 WIRING GP-SENSOR

SMCS-1408 **i07588823**

NOTE	PART NUMBER	QTY	PART NAME 1 2 3 4 5 6 (PRODUCT LEVEL)	SEE PAGE
	155-2270	1	KIT-CONNECTING PLUG (2-PIN)	
	155-2274	2	KIT-CONNECTING PLUG (6-PIN)	
			(EACH PLUG KIT INCLUDES PLUG AS, WEDGE, & INTERFACE SEAL)	
	230-4011	1	PLUG AS-CONNECTOR (2-PIN)	
	455-0704	1	SEAL-CONNECTOR	
	281-8803	1	PLUG AS-CONNECTOR (3-PIN)	
	455-0705	1	SEAL-CONNECTOR	
E	**284-1491**		SLEEVE (41-CM)	
	8T-8730	2	SOCKET-CONNECTOR (16-GA TO 18-GA)	
	9X-3402	11	SOCKET-CONNECTOR (16-GA TO 18-GA)	
E	**125-7874**		TUBE-HEAT SHRINK (5.72-MM DIA) (5-CM)	
	155-2259	1	WEDGE-PLUG LOCK (8-PIN)	

E - ORDER BY THE CENTIMETER

<END>

567-3408 HARNESS AS-SENSOR—BLADE SLOPE

S/N: W921-UP

PART OF 533-6224 WIRING GP-GRADE CONTROL

SMCS-1408 **i07570077**

NOTE	PART NUMBER	QTY	PART NAME 1 2 3 4 5 6 (PRODUCT LEVEL)	SEE PAGE
E	**5P-1424**		HOSE (193-CM)	
	155-2265	1	KIT-CONNECTING PLUG (8-PIN)	
			(INCLUDES PLUG AS, WEDGE, & INTERFACE SEAL)	
	230-5010	1	PLUG AS-CONNECTOR (6-PIN)	
	455-0707	1	SEAL-CONNECTOR	
	8T-8730	8	SOCKET-CONNECTOR (16-GA TO 18-GA)	
	9X-3402	6	SOCKET-CONNECTOR (16-GA TO 18-GA)	
E	**125-7874**		TUBE-HEAT SHRINK (5.72-MM DIA) (10-CM)	
E	**210-8958**		TUBE-HEAT SHRINK (24-MM DIA) (14-CM)	
	155-2259	1	WEDGE-PLUG LOCK (8-PIN)	

E - ORDER BY THE CENTIMETER

<END>

375-8407 HARNESS AS-WIRING

S/N: E7A1-UP

PART OF 395-0113 WIRING GP-ENGINE

SMCS-1408 **i05571950**

NOTE	PART NUMBER	QTY	PART NAME 1 2 3 4 5 6 (PRODUCT LEVEL)	SEE PAGE
	102-8804	1	KIT-RECEPTACLE (4-PIN)	
			(INCLUDES RECEPTACLE AS & WEDGE)	
	113-4630	1	RECEPTACLE AS-CONNECTOR (4-PIN)	
	9X-3401	4	PIN-CONNECTOR (16-GA TO 18-GA)	
			—OR—	
	126-1767	4	PIN-CONNECTOR (14-GA TO 16-GA)	
	332-7865	1	TIE-CABLE	

<END>

267-0339 HEATER GP-JACKET WATER

S/N: W921-UP

PART OF 537-5647 COLD WEATHER AR

SMCS-1383 **i05767962**

NOTE	REF NO	GRAPHIC REF	PART NUMBER	QTY	PART NAME 1 2 3 4 5 6 (PRODUCT LEVEL)	SEE PAGE
	1	1	**6N-1604**	1	CAP AS-DUST	
	2	1	**7K-1181**	1	STRAP-CABLE	
	3	1	**260-1556**	1	ELEMENT AS-JACKET WATER HEATER (240-VOLT, 1000-WATT)	
		1	**4D-9986**	1	SEAL-O-RING	
	4	1	**260-1569**	1	CORD AS-HEATER	
M	5	1	**8T-4200**	1	BOLT (M8X1.25X16-MM)	
	6	1	**8T-4224**	1	WASHER-HARD (8.8X16X2-MM THK)	

M - METRIC PART

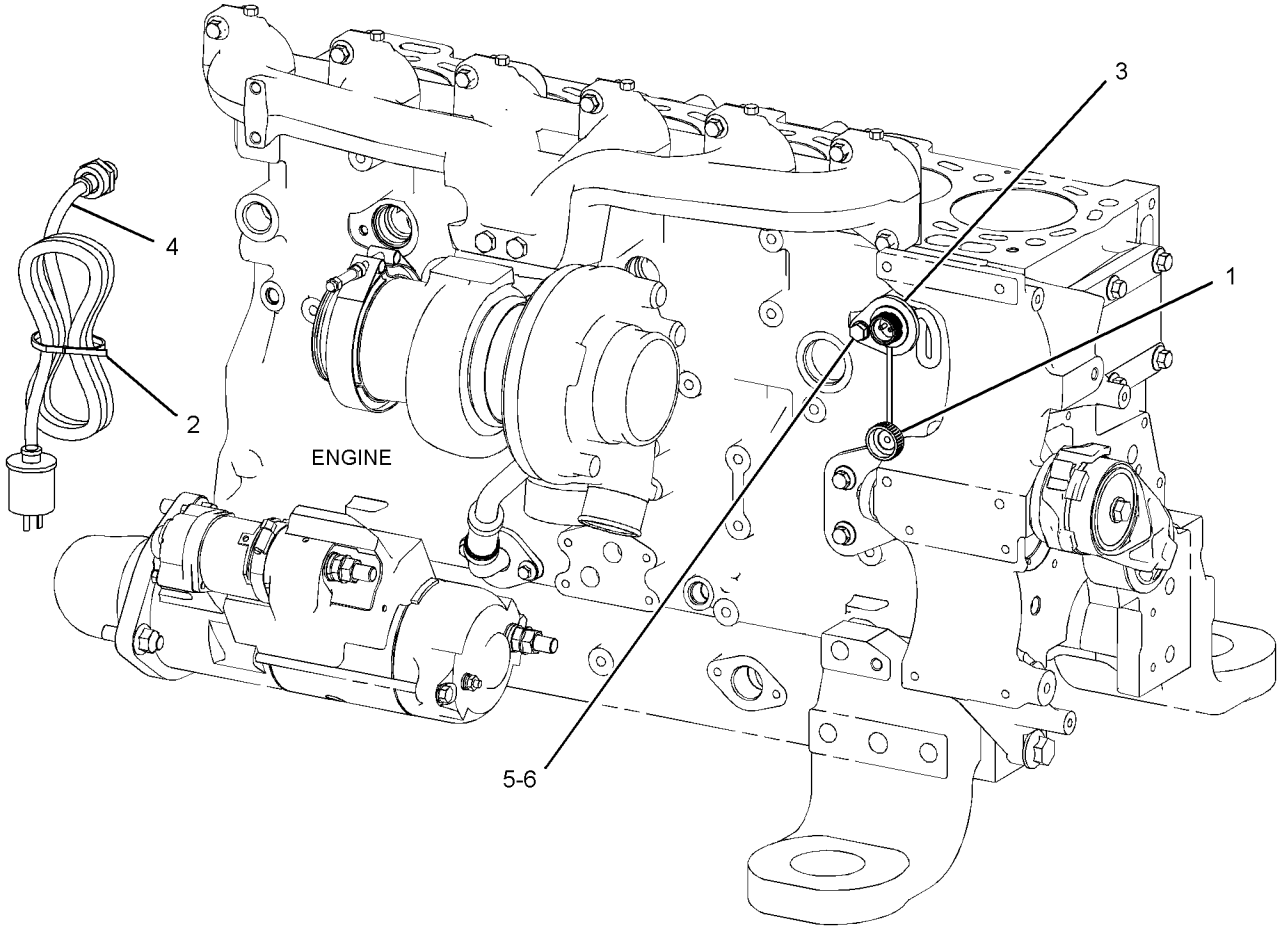

GRAPHIC #1 <END> g01426588

261-1502 LAMP GP

S/N: W921-UP
24 VOLT
PART OF 549-4735 LIGHTING GP-FLOOD & SIGNAL

SMCS-1429 **i07573646**

NOTE	REF NO	GRAPHIC REF	PART NUMBER	QTY	PART NAME 1 2 3 4 5 6 (PRODUCT LEVEL)	SEE PAGE
	1	1	**264-5346**	1	LENS	
	2	1	**8U-2622**	1	LAMP (24-VOLT, 21-WATT)	
	3	1	**8T-8729**	2	PIN-CONNECTOR (16-GA TO 18-GA)	
	4	1	**102-8802**	1	KIT-RECEPTACLE (2-PIN)	
					(INCLUDES RECEPTACLE AS & WEDGE)	
FM		1	**5C-2890**	3	NUT (M6X1-THD)	
F		1	**8T-4205**	3	WASHER-HARD (7.2X14.5X2-MM THK)	

F - NOT SHOWN
M - METRIC PART

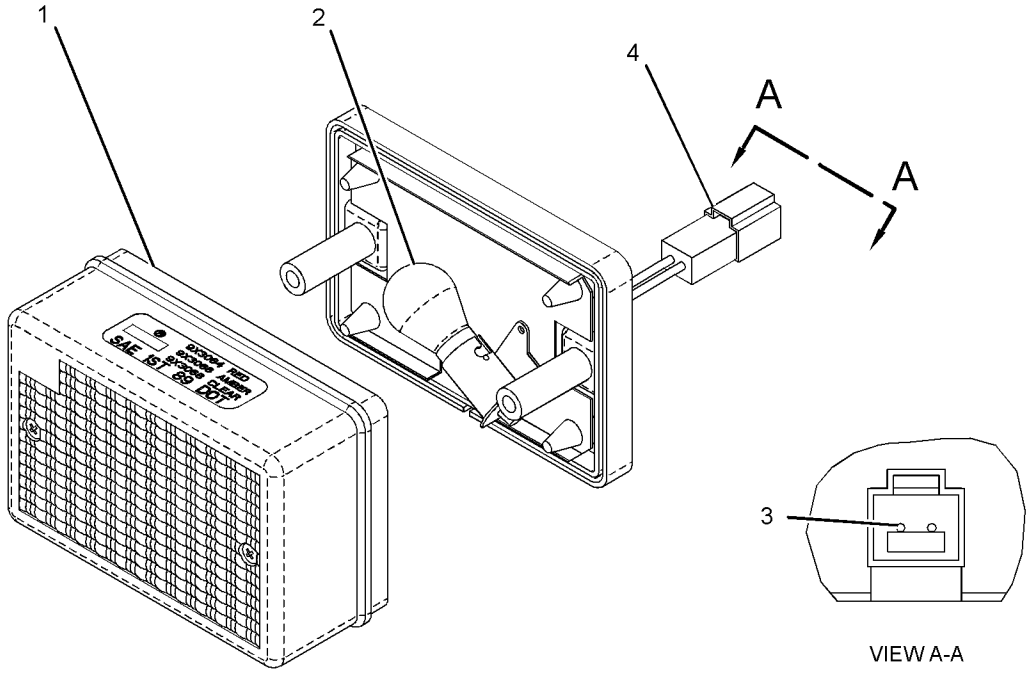

VIEW A-A

GRAPHIC #1 <END> g01279825

375-1478 LAMP GP-DOME–LED

S/N: W921-UP
24-VOLT. WITH SWITCH
FIELD REPLACEMENT FOR 3E-6389–PAGE: 175

SMCS-1433 **i07592245**

NOTE	REF NO	GRAPHIC REF	PART NUMBER	QTY	PART NAME 1 2 3 4 5 6 (PRODUCT LEVEL)	SEE PAGE
	1	1	**102-8803**	1	KIT-RECEPTACLE (3-PIN)	
					(INCLUDES RECEPTACLE AS & WEDGE)	
	2	1	**8T-8729**	3	PIN-CONNECTOR (16-GA TO 18-GA)	
	3	1	**7T-0020**	1	LENS-DOME LAMP	

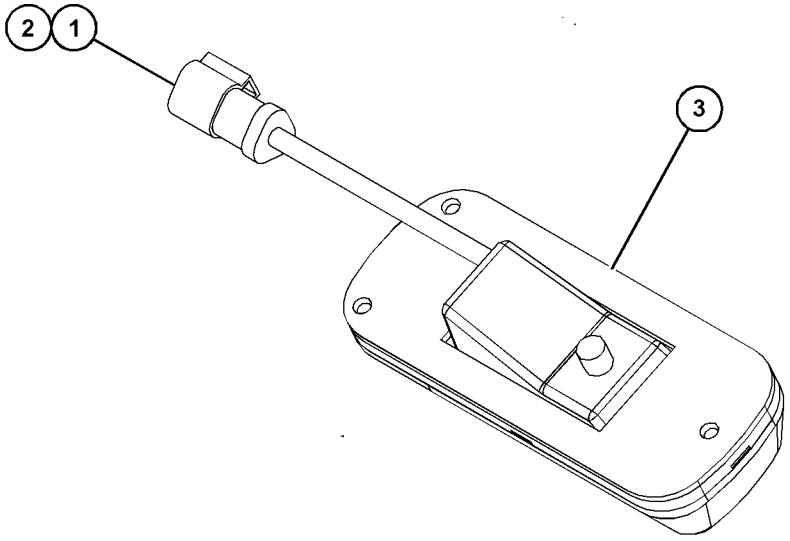

GRAPHIC #1 <END> g06250251

3E-6389 LAMP GP-DOME

S/N: W921-UP
24-VOLT, WITH SWITCH
FIELD REPLACEMENT ORDER 375-1478—PAGE: 174
PART OF 533-6225 WIRING GP-CAB

SMCS-1433 **i07576398**

NOTE	REF NO	GRAPHIC REF	PART NUMBER	QTY	PART NAME 1 2 3 4 5 6 (PRODUCT LEVEL)	SEE PAGE
	1	1	**7N-9943**	1	LAMP (24-VOLT) (DOME LIGHT)	
	2	1	**102-8803**	1	KIT-RECEPTACLE (3-PIN)	
					(INCLUDES RECEPTACLE AS & WEDGE)	
	3	1	**8T-8729**	3	PIN-CONNECTOR (16-GA TO 18-GA)	
	4	1	**7T-0020**	1	LENS-DOME LAMP	

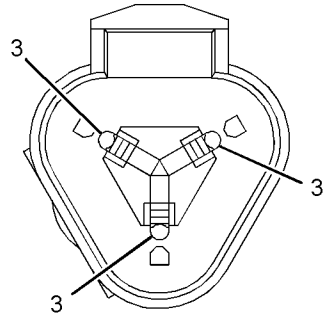

VIEW A-A

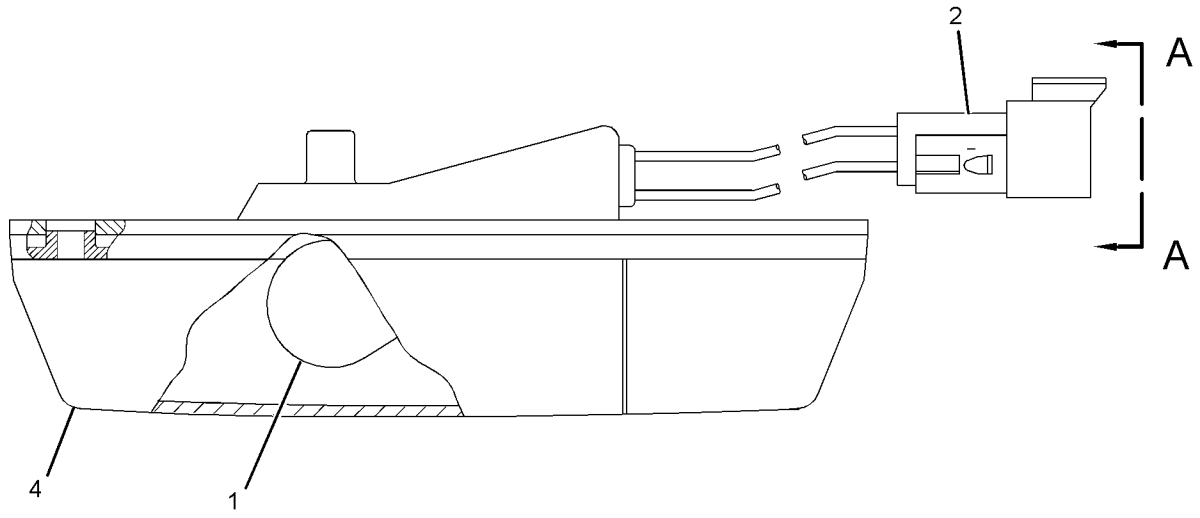

GRAPHIC #1 <END> g02646562

219-6485 LAMP GP-FLOOD

S/N: W921-UP
24-VOLT, 70-WATT
PART OF 533-6229, 533-6230 LIGHTING GP-FLOOD

SMCS-1434 **i07590998**

NOTE	REF NO	GRAPHIC REF	PART NUMBER	QTY	PART NAME 1 2 3 4 5 6 (PRODUCT LEVEL)	SEE PAGE
	1	1	**351-9918**	1	LAMP-HALOGEN (24-VOLT, 70-WATT)	
M	2	1	**9X-4244**	2	SCREW-SPECIAL (M4X1.79X25-MM)	
	3	1	**175-4291**	1	BRACKET AS	
	4	1	**202-6614**	1	LENS AS (FLOODLIGHT)	
	5	1	**8T-4224**	2	WASHER-HARD (8.8X16X2-MM THK)	
	6	1	**164-7556**	1	BRACKET (LAMP RETAINING)	
	7	1	**247-4285**	1	BOLT (M8X1.25X50-MM)	
M	8	1	**6V-9189**	1	LOCKNUT (M8X1.25-THD)	

M - METRIC PART

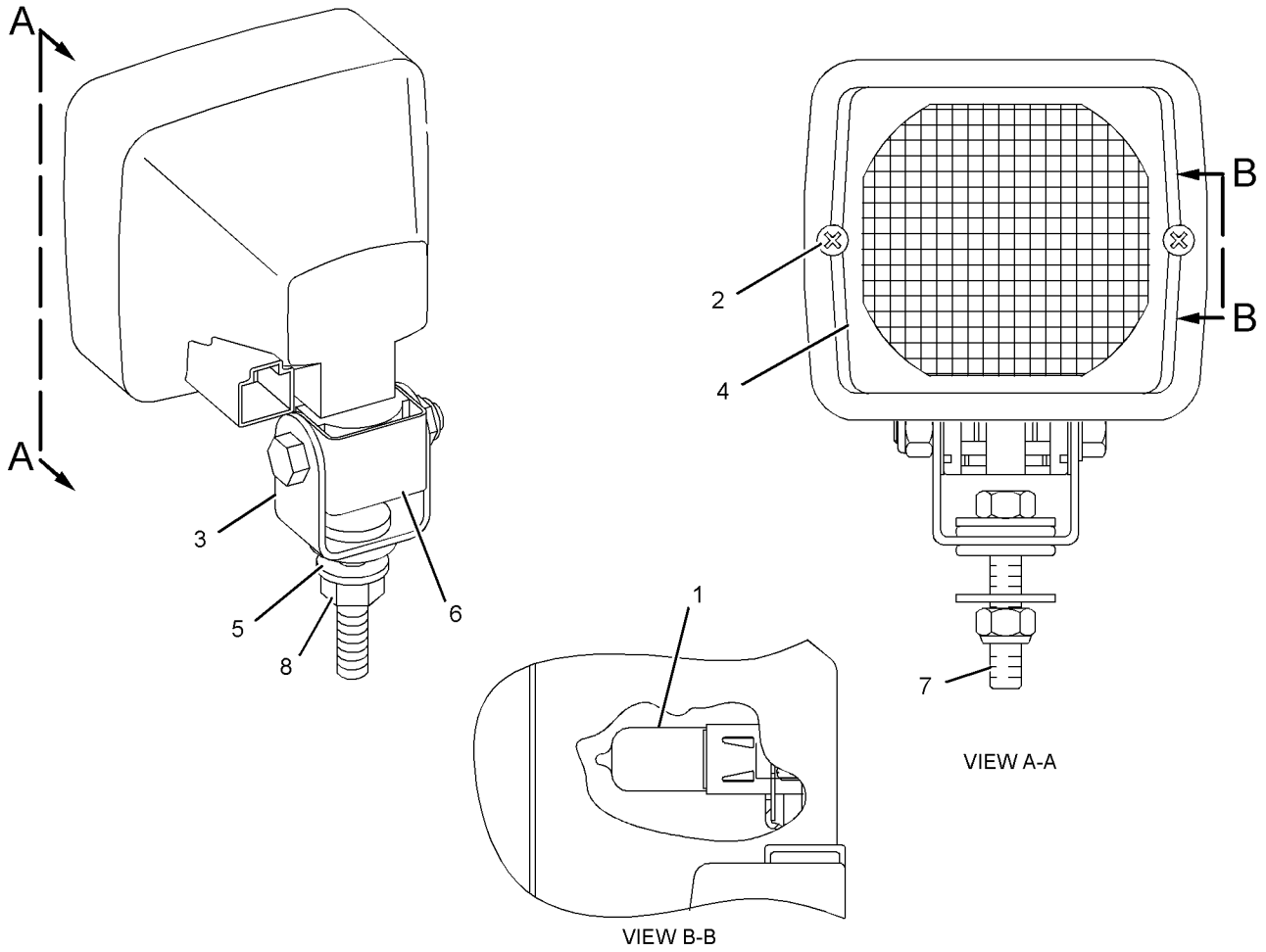

VIEW A-A

VIEW B-B

GRAPHIC #1 <END> g06325307

219-6487 LAMP GP-FLOOD

S/N: W921-UP
24-VOLT, 70-WATT
PART OF 533-6229, 533-6230, 533-6232 LIGHTING GP-FLOOD

SMCS-1434 **i05406522**

NOTE	REF NO	GRAPHIC REF	PART NUMBER	QTY	PART NAME 1 2 3 4 5 6 (PRODUCT LEVEL)	SEE PAGE
	1	1	**351-9918**	1	LAMP-HALOGEN (24-VOLT, 70-WATT)	
M	2	1	**8T-6912**	1	BOLT (M8X1.25X50-MM)	
M	3	1	**6V-9189**	1	LOCKNUT (M8X1.25-THD)	
	4	1	**8T-4224**	2	WASHER-HARD (8.8X16X2-MM THK)	
M	5	1	**9X-4244**	2	SCREW-SPECIAL (M4X1.79X25-MM)	
	6	1	**175-4291**	1	BRACKET AS	
	7	1	**202-6614**	1	LENS AS (FLOODLIGHT)	
	8	1	**175-4292**	1	BODY AS	
	9	1	**164-7556**	1	BRACKET (LAMP RETAINING)	

M - METRIC PART

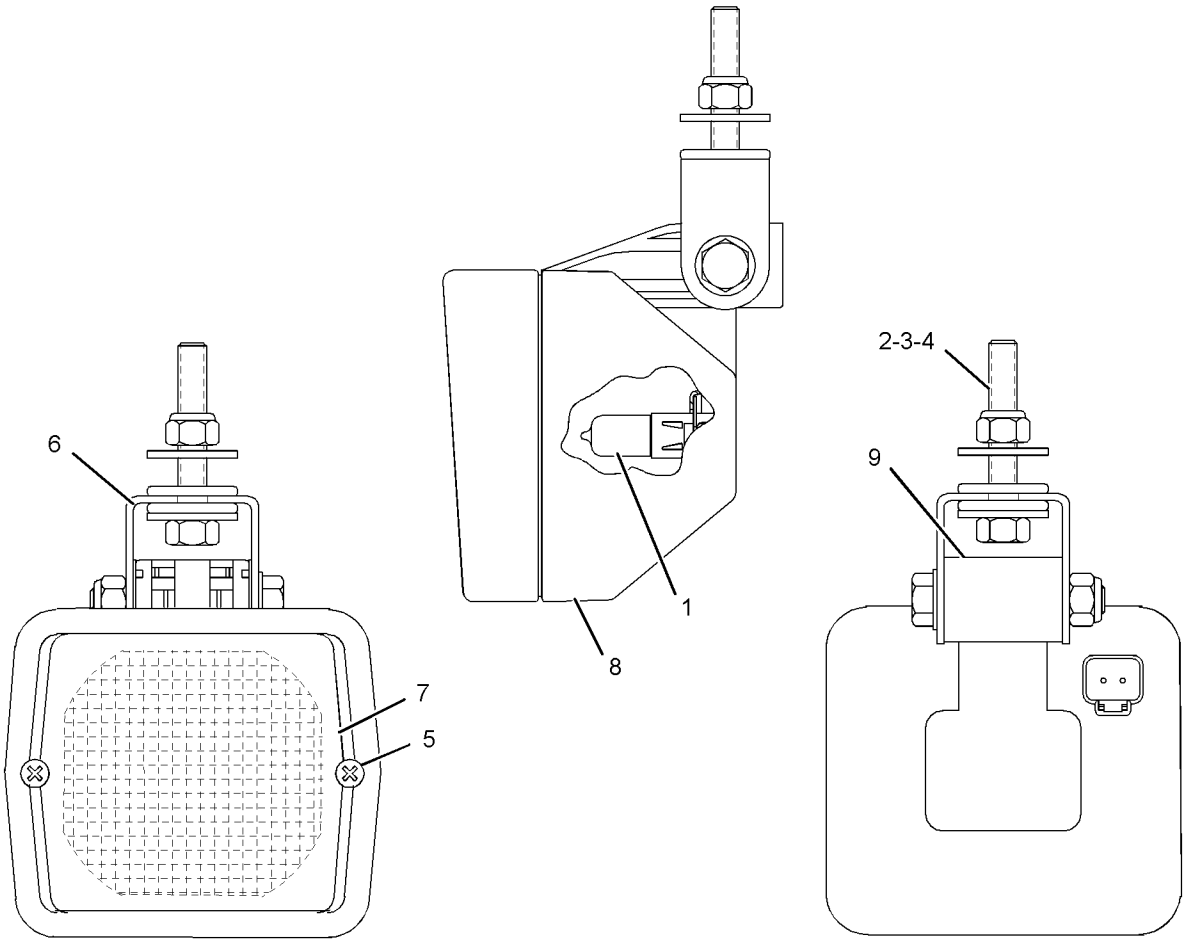

GRAPHIC #1 <END> g02167882

219-6488 LAMP GP-FLOOD

S/N: W921-UP
24-VOLT
PART OF 533-6232 LIGHTING GP-FLOOD

SMCS-1434 **i07592158**

NOTE	REF NO	GRAPHIC REF	PART NUMBER	QTY	PART NAME 1 2 3 4 5 6 (PRODUCT LEVEL)	SEE PAGE
	1	1	**351-9918**	1	LAMP-HALOGEN (24-VOLT, 70-WATT)	
M	2	1	**8T-6912**	1	BOLT (M8X1.25X50-MM)	
M	3	1	**6V-9189**	1	LOCKNUT (M8X1.25-THD)	
	4	1	**8T-4224**	2	WASHER-HARD (8.8X16X2-MM THK)	
M	5	1	**9X-4244**	2	SCREW-SPECIAL (M4X1.79X25-MM)	
	7	1	**202-6611**	1	LENS AS	
	8	1	**175-4292**	1	BODY AS	
	9	1	**164-7556**	1	BRACKET (LAMP RETAINING)	
	10	1	**175-4291**	1	BRACKET AS	

M - METRIC PART

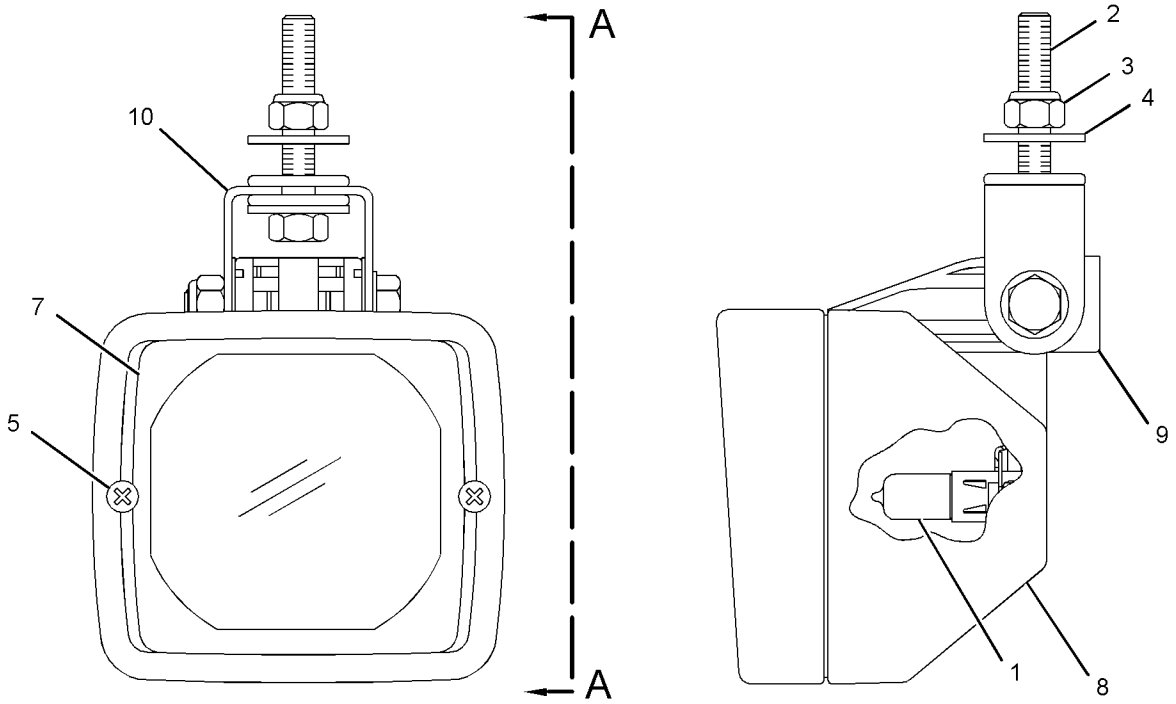

VIEW A-A

GRAPHIC #1 <END> g01475061

344-3455 LAMP GP-HEAD & SIGNAL–RH

S/N: W921-UP
24- VOLT
PART OF 533-6218, 536-5572 LIGHTING GP-FLOOD & SIGNAL

SMCS-1429, 1430 **i06052832**

NOTE	REF NO	GRAPHIC REF	PART NUMBER	QTY	PART NAME 1 2 3 4 5 6 (PRODUCT LEVEL)	SEE PAGE
	1	1	**8T-8737**	1	PLUG-SEAL	
	2	1	**228-6054**	1	BEZEL	
	3	1	**444-6523**	1	LENS AS (HEADLIGHT)	
	4	1	**228-6052**	1	LENS AS (TURN SIGNAL)	
	5	1	**228-6056**	6	SCREW (4-32X1.26-IN)	
	6	1	**9X-3465**	1	LAMP (24-VOLT, 75/70-WATT) (HIGH, LOW BEAM)	
	7	1	**130-3515**	1	LAMP (24-VOLT, 5-WATT) (FLOODLIGHT)	
	8	1	**242-0588**	1	LAMP-TURN SIGNAL (24-VOLT, 21-WATT) (TURN SIGNAL)	
M	9	1	**8T-0389**	1	LOCKNUT (M10X1.5-THD)	
	10	1	**100-3253**	1	SPACER (SPHERICAL)	
	11	1	**100-3254**	1	SPACER (SPHERICAL)	
	12	1	**100-3255**	2	WASHER (SPHERICAL)	
	13	1	**102-8805**	1	KIT-RECEPTACLE (6-PIN)	
					(INCLUDES RECEPTACLE AS & WEDGE)	
	14	1	**8T-8729**	5	PIN-CONNECTOR (16-GA TO 18-GA)	

M - METRIC PART

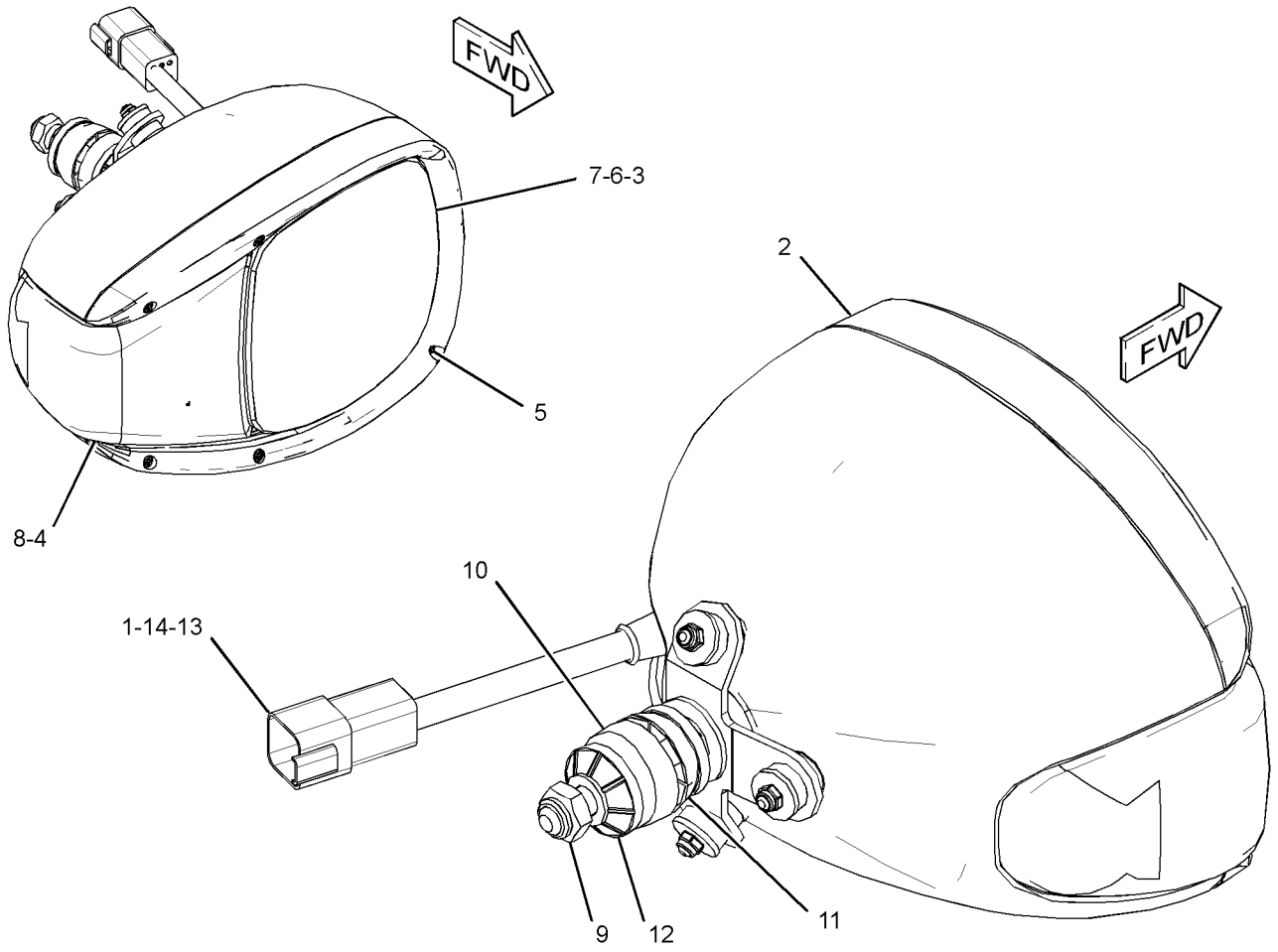

GRAPHIC #1 <END> g03439879

344-3456 LAMP GP-HEAD & SIGNAL

S/N: W921-UP
24-VOLT. LH
PART OF 533-6218, 536-5572 LIGHTING GP-FLOOD & SIGNAL

SMCS-1429, 1430 **i06052830**

NOTE	REF NO	GRAPHIC REF	PART NUMBER	QTY	PART NAME 1 2 3 4 5 6 (PRODUCT LEVEL)	SEE PAGE
	1	1	**8T-8737**	1	PLUG-SEAL	
	2	1	**228-6054**	1	BEZEL	
	3	1	**444-6523**	1	LENS AS (HEADLIGHT)	
	4	1	**228-6052**	1	LENS AS (TURN SIGNAL)	
	5	1	**228-6056**	6	SCREW (4-32X1.26-IN)	
	6	1	**9X-3465**	1	LAMP (24-VOLT, 75/70-WATT) (HIGH, LOW BEAM)	
	7	1	**130-3515**	1	LAMP (24-VOLT, 5-WATT) (FLOODLIGHT)	
	8	1	**242-0588**	1	LAMP-TURN SIGNAL (24-VOLT, 21-WATT) (TURN SIGNAL)	
M	9	1	**8T-0389**	1	LOCKNUT (M10X1.5-THD)	
	10	1	**100-3253**	1	SPACER (SPHERICAL)	
	11	1	**100-3254**	1	SPACER (SPHERICAL)	
	12	1	**100-3255**	2	WASHER (SPHERICAL)	
	13	1	**102-8805**	1	KIT-RECEPTACLE (6-PIN)	
					(INCLUDES RECEPTACLE AS & WEDGE)	
	14	1	**8T-8729**	5	PIN-CONNECTOR (16-GA TO 18-GA)	

M - METRIC PART

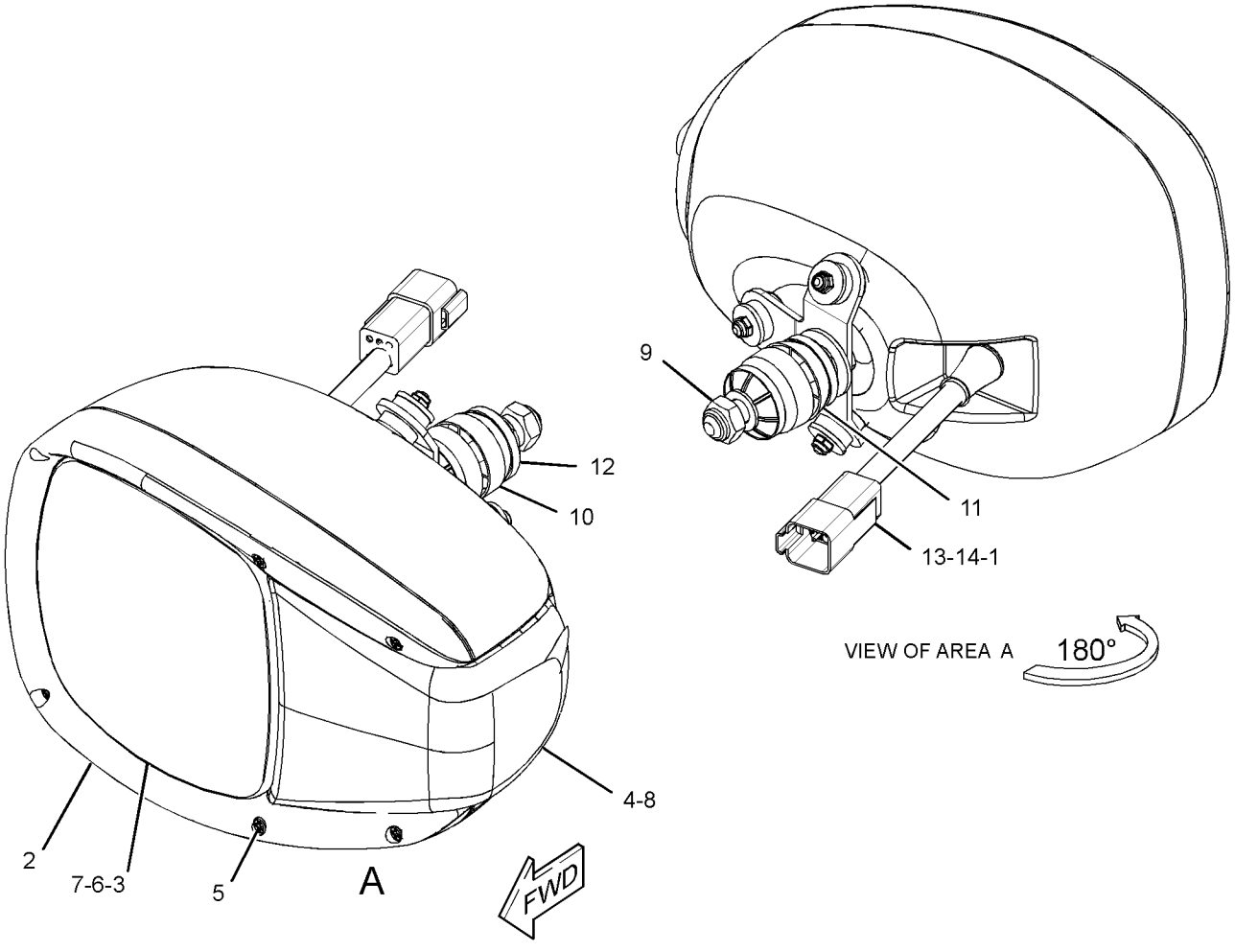

GRAPHIC #1 <END> g03439877

486-4542 LAMP GP-HEAD & SIGNAL

S/N: W921-UP
24 VOLT
PART OF 550-8853 LIGHTING GP-ROADING

SMCS-1429, 1430

i07574164

NOTE	REF NO	GRAPHIC REF	PART NUMBER	QTY	PART NAME 1 2 3 4 5 6 (PRODUCT LEVEL)	SEE PAGE
	1	1	**8T-8729**	5	PIN-CONNECTOR (16-GA TO 18-GA)	
	2	1	**8T-8737**	1	PLUG-SEAL	
	3	1	**100-3245**	1	LAMP (24-VOLT, 0.17-AMPERE)	
	4	1	**9X-3465**	1	LAMP (24-VOLT, 75/70-WATT)	
	5	1	**102-8805**	1	KIT-RECEPTACLE (6-PIN)	
					(INCLUDES RECEPTACLE AS & WEDGE)	
	6	1	**8U-2622**	1	LAMP (24-VOLT, 21-WATT)	

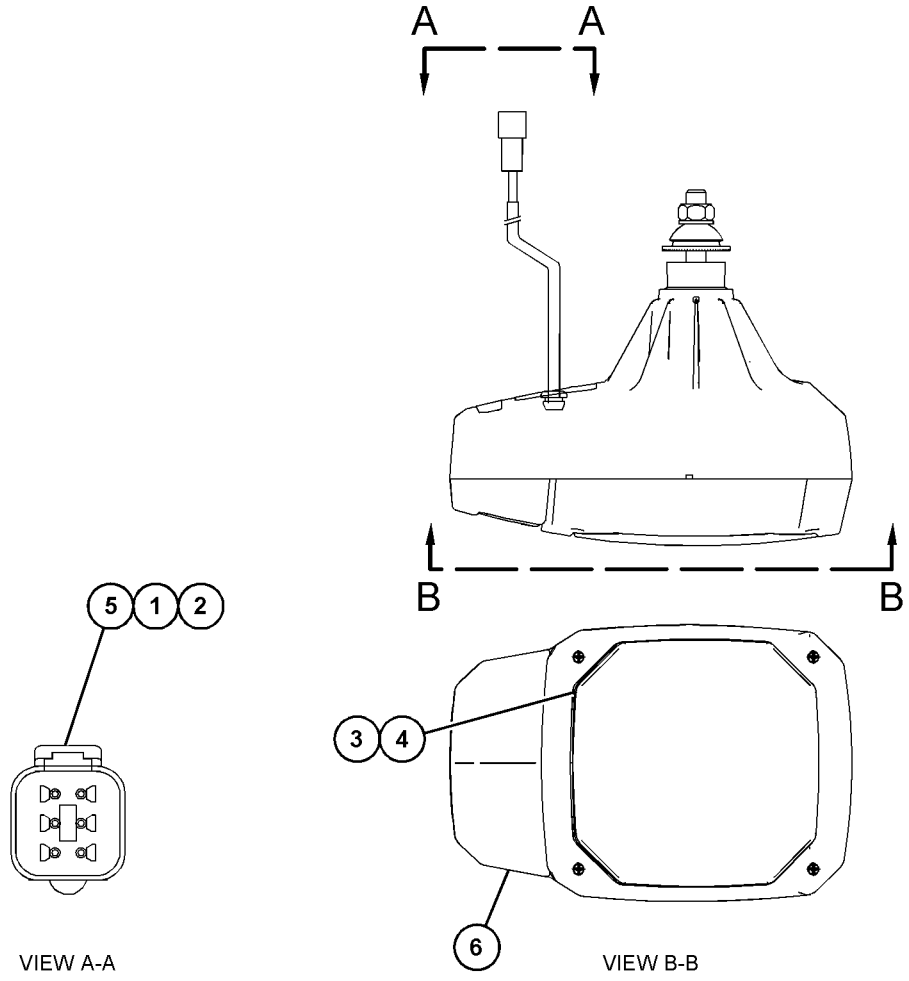

VIEW A-A

VIEW B-B

GRAPHIC #1

<END>

g06175264

491-0637 LAMP GP-HEAD & SIGNAL

S/N: W921-UP
24-VOLT
PART OF 550-8853 LIGHTING GP-ROADING

SMCS-1429, 1430

i07574193

NOTE	REF NO	GRAPHIC REF	PART NUMBER	QTY	PART NAME 1 2 3 4 5 6 (PRODUCT LEVEL)	SEE PAGE
	1	1	**8T-8729**	5	PIN-CONNECTOR (16-GA TO 18-GA)	
	2	1	**8T-8737**	1	PLUG-SEAL	
	3	1	**100-3245**	1	LAMP (24-VOLT, 0.17-AMPERE)	
	4	1	**9X-3465**	1	LAMP (24-VOLT, 75/70-WATT)	
	5	1	**102-8805**	1	KIT-RECEPTACLE (6-PIN)	
					(INCLUDES RECEPTACLE AS & WEDGE)	
	6	1	**8U-2622**	1	LAMP (24-VOLT, 21-WATT)	

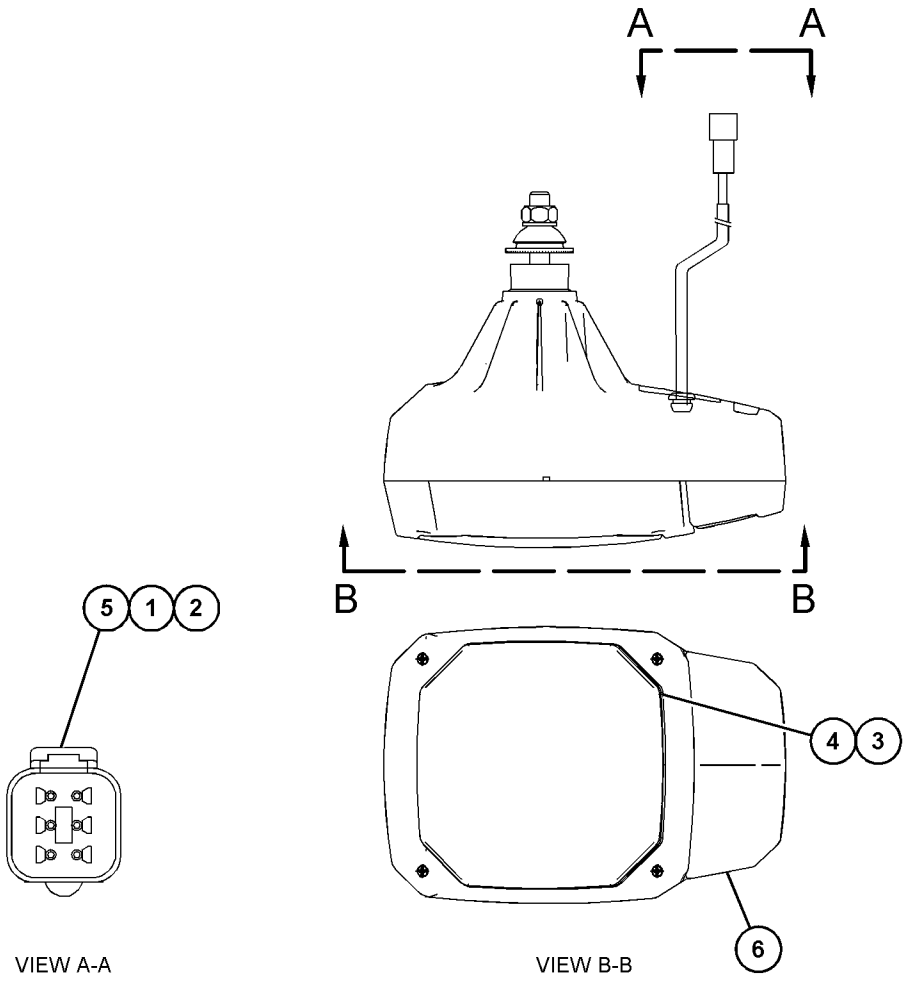

VIEW A-A VIEW B-B

GRAPHIC #1 <END> g06175291

334-8049 LAMP GP-SIGNAL–STOP, TAIL

S/N: W921-UP
24-VOLT, LED
PART OF 549-4735 LIGHTING GP-FLOOD & SIGNAL

SMCS-1430, 1432

i07573622

NOTE	REF NO	GRAPHIC REF	PART NUMBER	QTY	PART NAME 1 2 3 4 5 6 (PRODUCT LEVEL)	SEE PAGE
	1	1	**102-8803**	1	KIT-RECEPTACLE (3-PIN)	
					(INCLUDES RECEPTACLE AS & WEDGE)	
	2	1	**8T-8729**	3	PIN-CONNECTOR (16-GA TO 18-GA)	

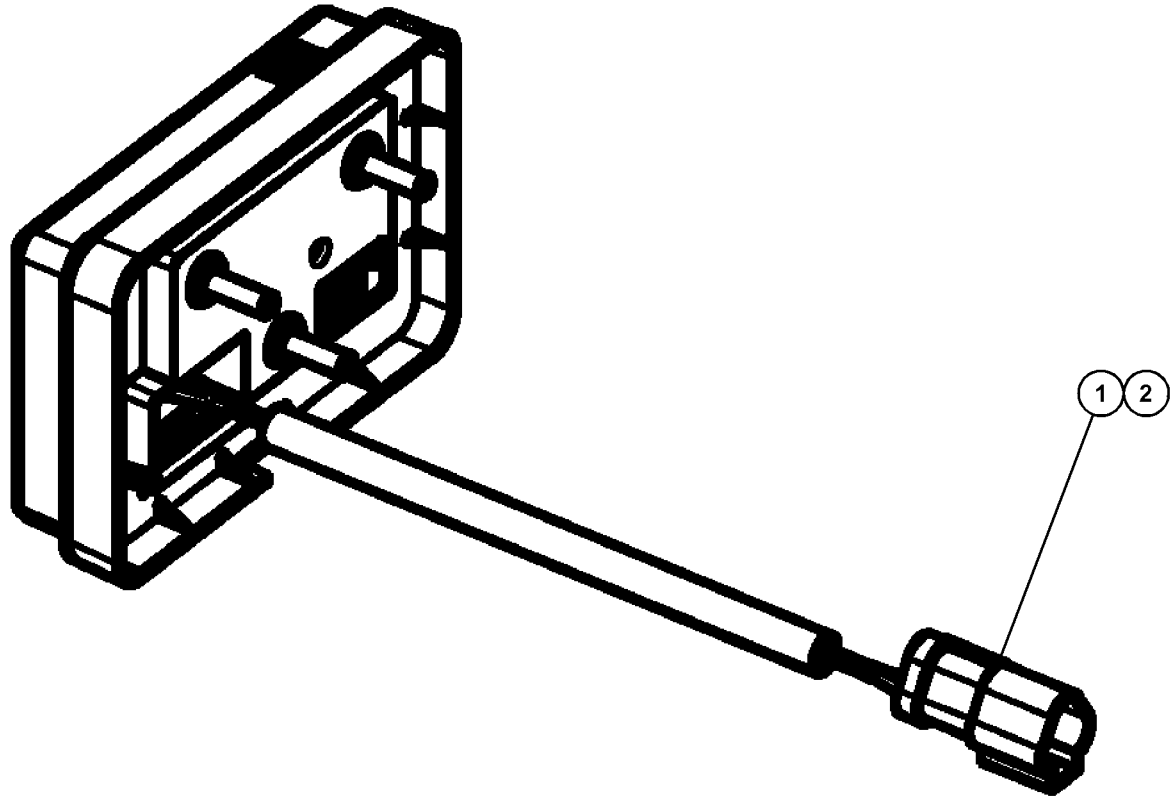

GRAPHIC #1

<END>

g06342860

379-3416 LAMP GP-SIGNAL–LED

S/N: W921-UP
9-32-VOLT. REVERSE
PART OF 533-6220, 536-5571 WIRING GP-FRONT LIGHTING, 533-6217 WIRING GP-REAR LIGHTING

SMCS-1430, 1432 **i07577358**

NOTE	REF NO	GRAPHIC REF	PART NUMBER	QTY	PART NAME 1 2 3 4 5 6 (PRODUCT LEVEL)	SEE PAGE
	1	1	**102-8802**	1	KIT-RECEPTACLE (2-PIN)	
					(INCLUDES RECEPTACLE AS & WEDGE)	
	2	1	**8T-8729**	2	PIN-CONNECTOR (16-GA TO 18-GA)	

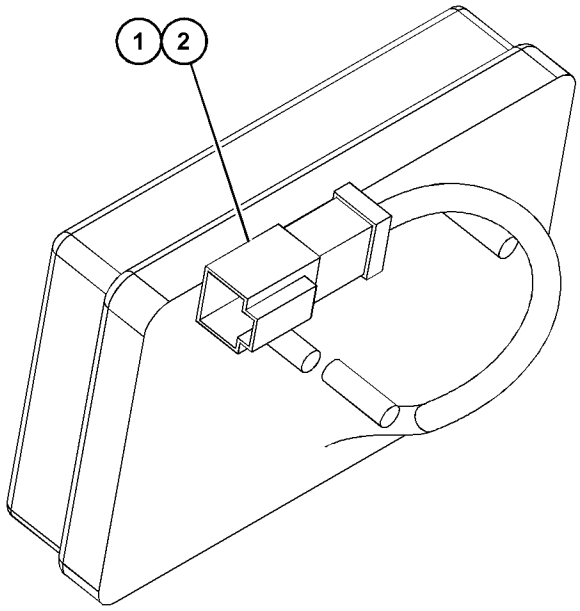

GRAPHIC #1 <END> g03879752

395-2113 LAMP GP-SIGNAL–LED

S/N: W921-UP
24-VOLT. STOP, TAIL, TURN
PART OF 533-6220, 536-5571 WIRING GP-FRONT LIGHTING

SMCS-1430, 1432 **i07598110**

NOTE	REF NO	GRAPHIC REF	PART NUMBER	QTY	PART NAME 1 2 3 4 5 6 (PRODUCT LEVEL)	SEE PAGE
	1	1	**102-8804**	1	KIT-RECEPTACLE (4-PIN)	
					(INCLUDES RECEPTACLE AS & WEDGE)	
	2	1	**8T-8729**	4	PIN-CONNECTOR (16-GA TO 18-GA)	

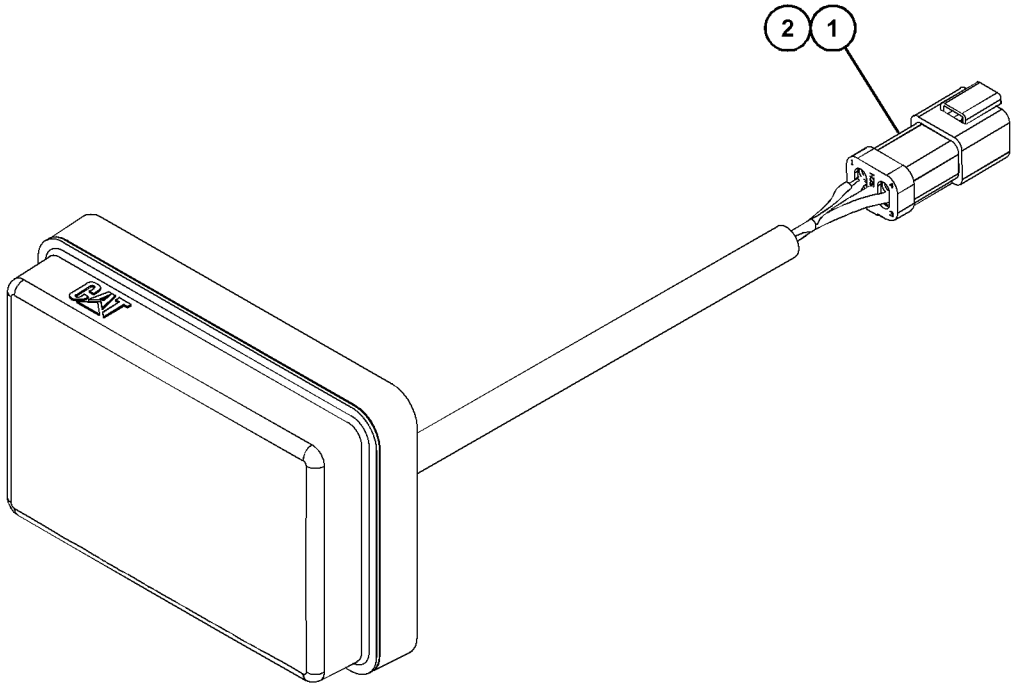

GRAPHIC #1 <END> g06334607

3E-6466 LAMP GP-SIGNAL

S/N: W921-UP
24-VOLT
PART OF 549-4735 LIGHTING GP-FLOOD & SIGNAL

SMCS-1430, 1432 **i07573643**

NOTE	REF NO	GRAPHIC REF	PART NUMBER	QTY	PART NAME 1 2 3 4 5 6 (PRODUCT LEVEL)	SEE PAGE
	1	1	**9X-3066**	1	LENS-AMBER	
	2	1	**9X-4493**	1	LAMP (24-VOLT, 21-WATT) (SIGNAL)	
	3	1	**102-8802**	1	KIT-RECEPTACLE (2-PIN)	
					(INCLUDES RECEPTACLE AS & WEDGE)	
	4	1	**8T-8729**	2	PIN-CONNECTOR (16-GA TO 18-GA)	
FM			**5C-2890**	3	NUT (M6X1-THD)	
F			**8T-4205**	3	WASHER-HARD (7.2X14.5X2-MM THK)	

F - NOT SHOWN
M - METRIC PART

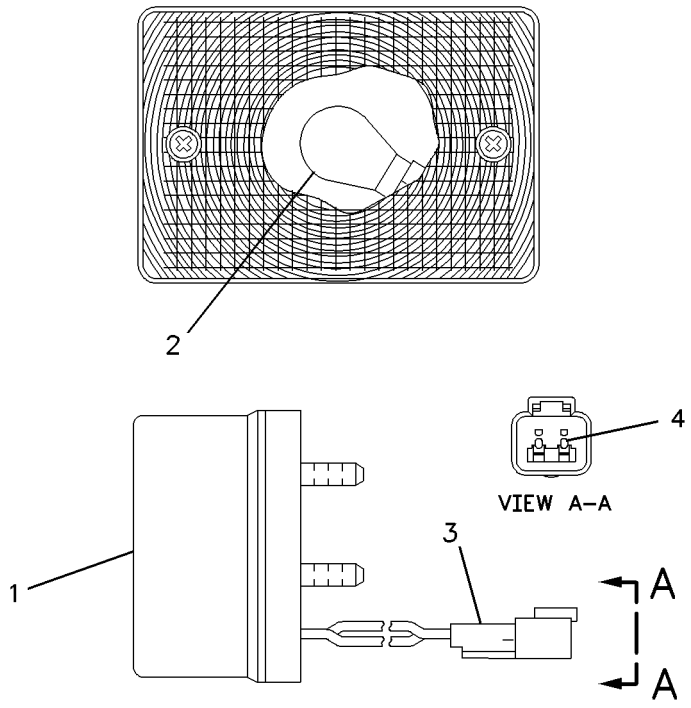

GRAPHIC #1 <END> g00868818

338-1132 LAMP GP-WARNING BEACON

S/N: W921-UP

12/24-VOLT. AMBER, STROBE, LED

PART OF 568-0739 LIGHTING GP-WARNING BEACON

SMCS-1431 **i07569141**

NOTE	REF NO	GRAPHIC REF	PART NUMBER	QTY	PART NAME 1 2 3 4 5 6 (PRODUCT LEVEL)	SEE PAGE
	1	1	**102-8802**	1	KIT-RECEPTACLE (2-PIN)	
					(INCLUDES RECEPTACLE AS & WEDGE)	
	2	1	**8T-8729**	2	PIN-CONNECTOR (16-GA TO 18-GA)	
	3	1	**356-7515**	1	LENS (AMBER)	
					–OR–	
		1	**421-5583**	1	LENS (RED)	
					–OR–	
		1	**421-5584**	1	LENS (CLEAR)	
					–OR–	
		1	**421-5585**	1	LENS (GREEN)	
E	4	1	**9X-1386**		SLEEVE (44-CM)	

E - ORDER BY THE CENTIMETER

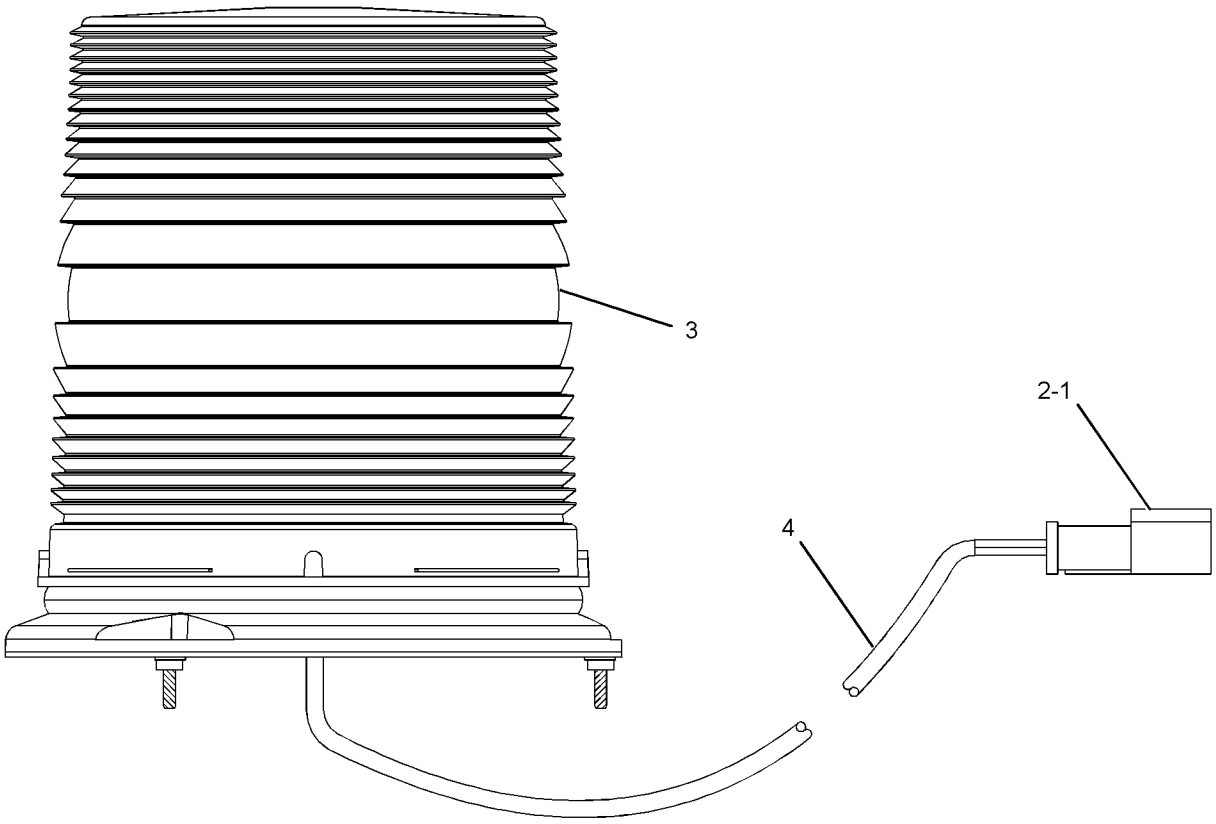

GRAPHIC #1 <END> g02193876

537-5631 LIGHTING AR-FLOOD & SIGNAL—HIGH BAR

S/N: W921-UP
COMBINATED

SMCS-1430, 1434 **i07552922**

NOTE	PART NUMBER	QTY	PART NAME 1 2 3 4 5 6 (PRODUCT LEVEL)	SEE PAGE
Y	*533-6218*	1	LIGHTING GP-FLOOD & SIGNAL (HIGH BAR)	192
Y	*536-5571*	1	WIRING GP-FRONT LIGHTING	230

Y - SEPARATE ILLUSTRATION

<END>

537-5632 LIGHTING AR-FLOOD & SIGNAL—LOW BAR

S/N: W921-UP
ECE

SMCS-1430, 1434 **i07552915**

NOTE	PART NUMBER	QTY	PART NAME 1 2 3 4 5 6 (PRODUCT LEVEL)	SEE PAGE
Y	*536-5572*	1	LIGHTING GP-FLOOD & SIGNAL (LOW BAR)	194
Y	*533-6220*	1	WIRING GP-FRONT LIGHTING	229

Y - SEPARATE ILLUSTRATION

<END>

537-5633 LIGHTING AR-FLOOD & SIGNAL—LOW BAR

S/N: W921-UP
COMBINATED

SMCS-1430, 1434 **i07552901**

NOTE	PART NUMBER	QTY	PART NAME 1 2 3 4 5 6 (PRODUCT LEVEL)	SEE PAGE
Y	*536-5572*	1	LIGHTING GP-FLOOD & SIGNAL (LOW BAR)	194
Y	*536-5571*	1	WIRING GP-FRONT LIGHTING	230

Y - SEPARATE ILLUSTRATION

<END>

537-5609 LIGHTING AR-ROADING—LOW BAR

S/N: W921-UP
INDIA

SMCS-1408, 1429 **i07558750**

NOTE	PART NUMBER	QTY	PART NAME 1 2 3 4 5 6 (PRODUCT LEVEL)	SEE PAGE
Y	*549-4735*	1	LIGHTING GP-FLOOD & SIGNAL (INDIA)	196
Y	*550-8853*	1	LIGHTING GP-ROADING (LOW BAR)	197

Y - SEPARATE ILLUSTRATION

<END>

533-6229 LIGHTING GP-FLOOD—HEEL, TOE

S/N: W921-UP

SMCS-1434 **i07560780**

NOTE	REF NO	GRAPHIC REF	PART NUMBER	QTY	PART NAME 1 2 3 4 5 6 (PRODUCT LEVEL)	SEE PAGE
M	1	1	**518-2309**	2	BOLT (M10X1.5X20-MM)	
	2	1	**7K-1181**	7	STRAP-CABLE	
	3	1	**248-2841**	1	RELAY AS (24-VOLT) (WORK LIGHTS)	
	4	1	**536-5596**	4	BRACKET	
Y	5	1	**219-6487**	2	LAMP GP-FLOOD (24-VOLT, 70-WATT) (WORK LIGHTS, FRONT)	177
Y	6	1	**219-6485**	2	LAMP GP-FLOOD (24-VOLT) (CAB, FRONT)	176
	7	1	**367-5210**	1	SWITCH AS-ROCKER (24-VOLT) (FLOODLIGHT)	
	8	1	**4P-7581**	7	CLIP (LADDER)	
	9	1	**518-4417**	2	WASHER	

M - METRIC PART
Y - SEPARATE ILLUSTRATION

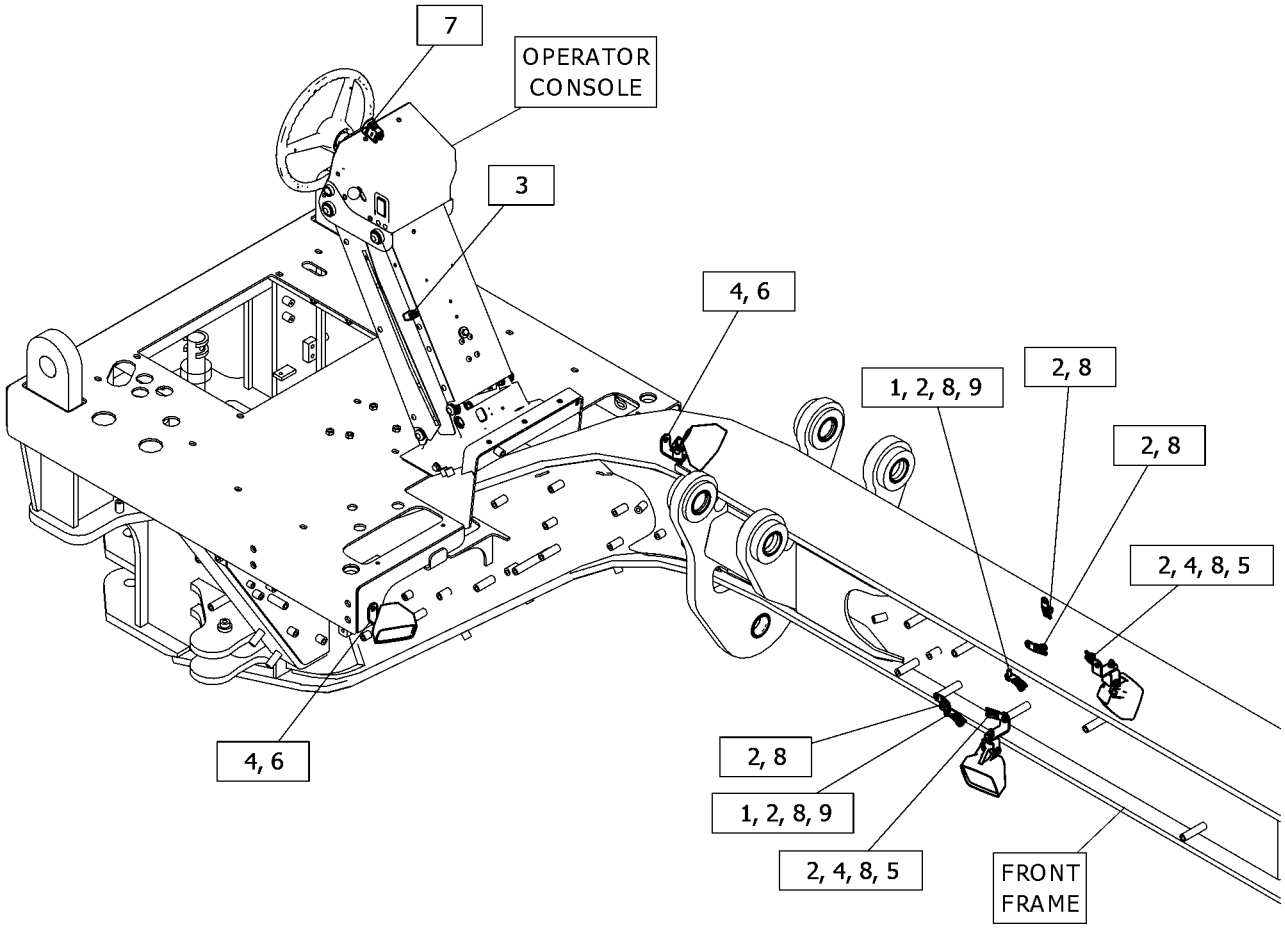

GRAPHIC #1 <END> g06373767

533-6230 LIGHTING GP-FLOOD

S/N: W921-UP

SMCS-1434 **i07560326**

NOTE	REF NO	GRAPHIC REF	PART NUMBER	QTY	PART NAME 1 2 3 4 5 6 (PRODUCT LEVEL)	SEE PAGE
M	1	1	**518-2309**	2	BOLT (M10X1.5X20-MM)	
	2	1	**7K-1181**	7	STRAP-CABLE	
	3	1	**248-2841**	1	RELAY AS (24-VOLT) (WORK LIGHTS)	
	3A	1	**248-2841**	1	RELAY AS (24-VOLT) (FLOODLIGHTS, RIPPER)	
	4	1	**536-5596**	6	BRACKET	
Y	5	1	**219-6487**	2	LAMP GP-FLOOD (24-VOLT, 70-WATT) (WORK LIGHTS, FRONT)	177
Y	5A	1	**219-6487**	2	LAMP GP-FLOOD (24-VOLT, 70-WATT) (FLOODLIGHTS, RIPPER)	177
	6	1	**518-4417**	2	WASHER	
Y	7	1	**219-6485**	2	LAMP GP-FLOOD (24-VOLT) (CAB, FRONT)	176
	8	1	**367-5210**	1	SWITCH AS-ROCKER (24-VOLT) (FLOODLIGHT)	
	9	1	**4P-7581**	7	CLIP (LADDER)	

M - METRIC PART
Y - SEPARATE ILLUSTRATION

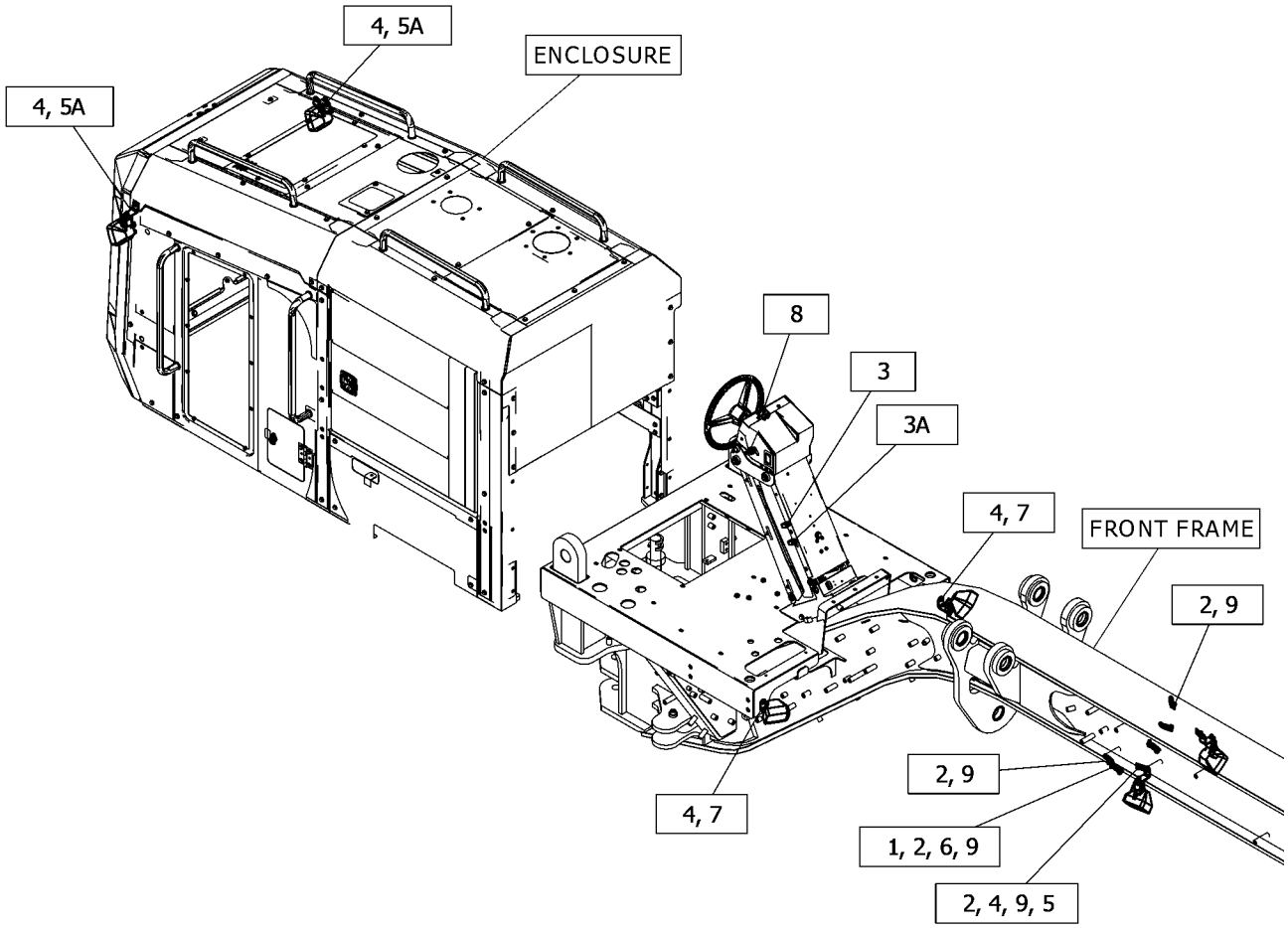

GRAPHIC #1 <END> g06373450

533-6232 LIGHTING GP-FLOOD—CAB WORK LIGHTS

S/N: W921-UP

SMCS-1434 **i07560313**

NOTE	REF NO	GRAPHIC REF	PART NUMBER	QTY	PART NAME 1 2 3 4 5 6 (PRODUCT LEVEL)	SEE PAGE
	1	1	**248-2841**	1	RELAY AS (24-VOLT) (WORK LIGHTS, FRONT)	
	1A	1	**248-2841**	1	RELAY AS (24-VOLT) (FLOODLIGHTS, RIPPER)	
Y	2	1	**219-6487**	2	LAMP GP-FLOOD (24-VOLT, 70-WATT) (FLOODLIGHT, FRONT)	177
Y	3	1	**219-6488**	2	LAMP GP-FLOOD (24-VOLT) (WORK LIGHTS, FRONT)	178
Y	3A	1	**219-6488**	2	LAMP GP-FLOOD (24-VOLT) (FLOODLIGHTS, RIPPER)	178
	4	1	**367-5210**	1	SWITCH AS-ROCKER (24-VOLT) (FLOODLIGHT)	
M	5	1	**518-2309**	4	BOLT (M10X1.5X20-MM)	
	6	1	**518-4417**	4	WASHER	
	7	1	**536-5581**	2	BRACKET	
	8	1	**9G-1307**	2	GROMMET	

M - METRIC PART
Y - SEPARATE ILLUSTRATION

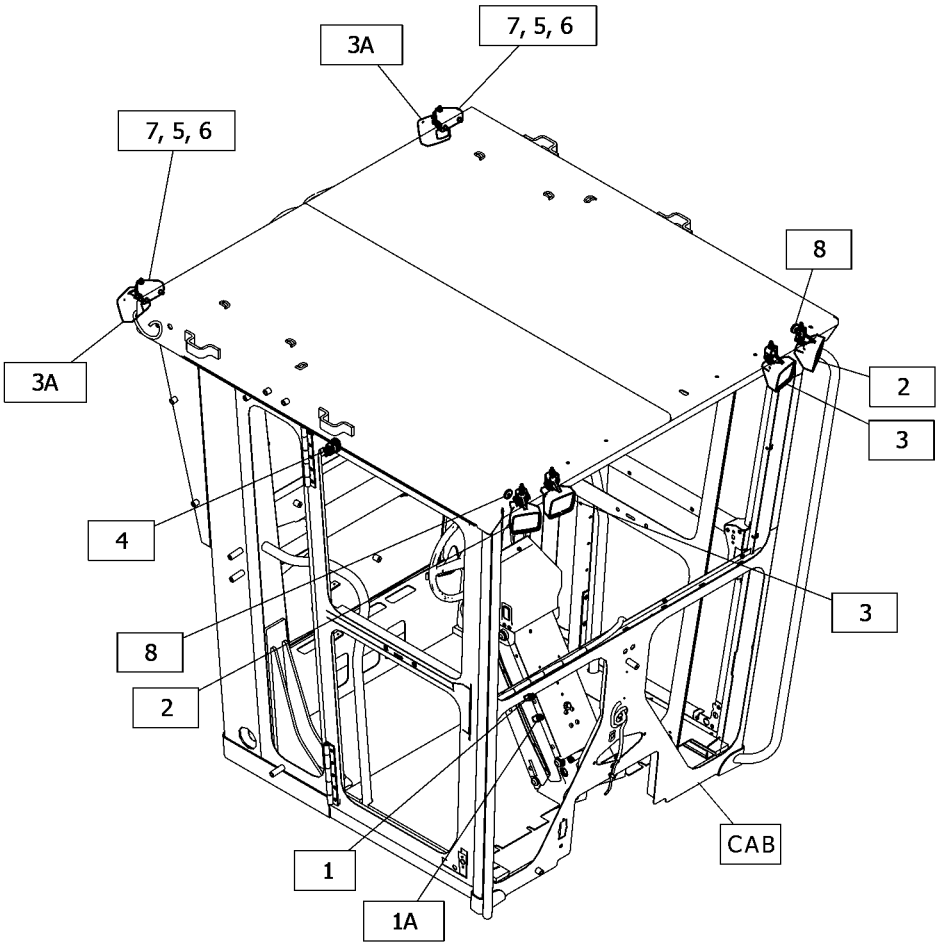

GRAPHIC #1 <END> g06373443

533-6218 LIGHTING GP-FLOOD & SIGNAL—HIGH BAR

S/N: W921-UP

PART OF 537-5631 LIGHTING AR-FLOOD & SIGNAL

SMCS-1429, 1430, 1432, 1434 **i07577100**

NOTE	REF NO	GRAPHIC REF	PART NUMBER	QTY	PART NAME 1 2 3 4 5 6 (PRODUCT LEVEL)	SEE PAGE
	1	1	**7K-1181**	12	STRAP-CABLE	
	2	1	**8X-5154**	1	FILM-FACE (HEADLIGHTS HIGH, LOW BEAM)	
	3	1	**103-5678**	1	SWITCH AS-ROTARY (HIGH, LOW BEAM)	
		1	**5L-7200**	1	SCREW (8-32X0.375-IN)	
		1	**9B-7233**	1	LOCKWASHER	
	4	1	**134-9569**	1	SWITCH AS-TURN SIGNAL	
		1	**5L-7200**	1	SCREW (8-32X0.375-IN)	
		1	**9B-7233**	1	LOCKWASHER	
	5	1	**201-5555**	1	PLATE-INSTRUCTION (TURN SIGNAL)	
	6	1	**236-4616**	1	SWITCH AS-ROCKER (24-VOLT) (HAZARD WARNING LIGHTS)	
	7	1	**248-2841**	1	RELAY AS (24-VOLT) (SUPPRESSION)	
	8	1	**367-5209**	1	SWITCH AS-ROCKER (24-VOLT) (HEADLIGHTS, TAIL LIGHTS)	
	9	1	**431-8735**	1	FLASHER AS (12/24-VOLT)	
Y	10	1	**533-6243**	1	HARNESS AS-LIGHTING (LOW BAR)	161
	11	1	**130-5300**	2	CLIP	
Y	12	1	**344-3455**	1	LAMP GP-HEAD & SIGNAL (24-VOLT) (RH)	179
Y	13	1	**344-3456**	1	LAMP GP-HEAD & SIGNAL (24-VOLT) (LH)	180
	14	1	**3K-9520**	3	GROMMET	
	15	1	**4P-7581**	2	CLIP (LADDER)	
	16	1	**518-3666**	3	SCREW	
	17	1	**518-9741**	3	WASHER	
Y	18	1	*536-0410*	1	SUPPORT GP-LIGHT	208
Y	19	1	**566-9227**	1	HARNESS AS-LIGHTING (HEADLIGHTS)	162
	20	1	**8X-6296**	2	LEVER	
E	21	1	**235-4765**		SEAL (8-CM)	

E - ORDER BY THE CENTIMETER
Y - SEPARATE ILLUSTRATION

533-6218 **LIGHTING GP-FLOOD & SIGNAL (**contd.**)** **i07577100**

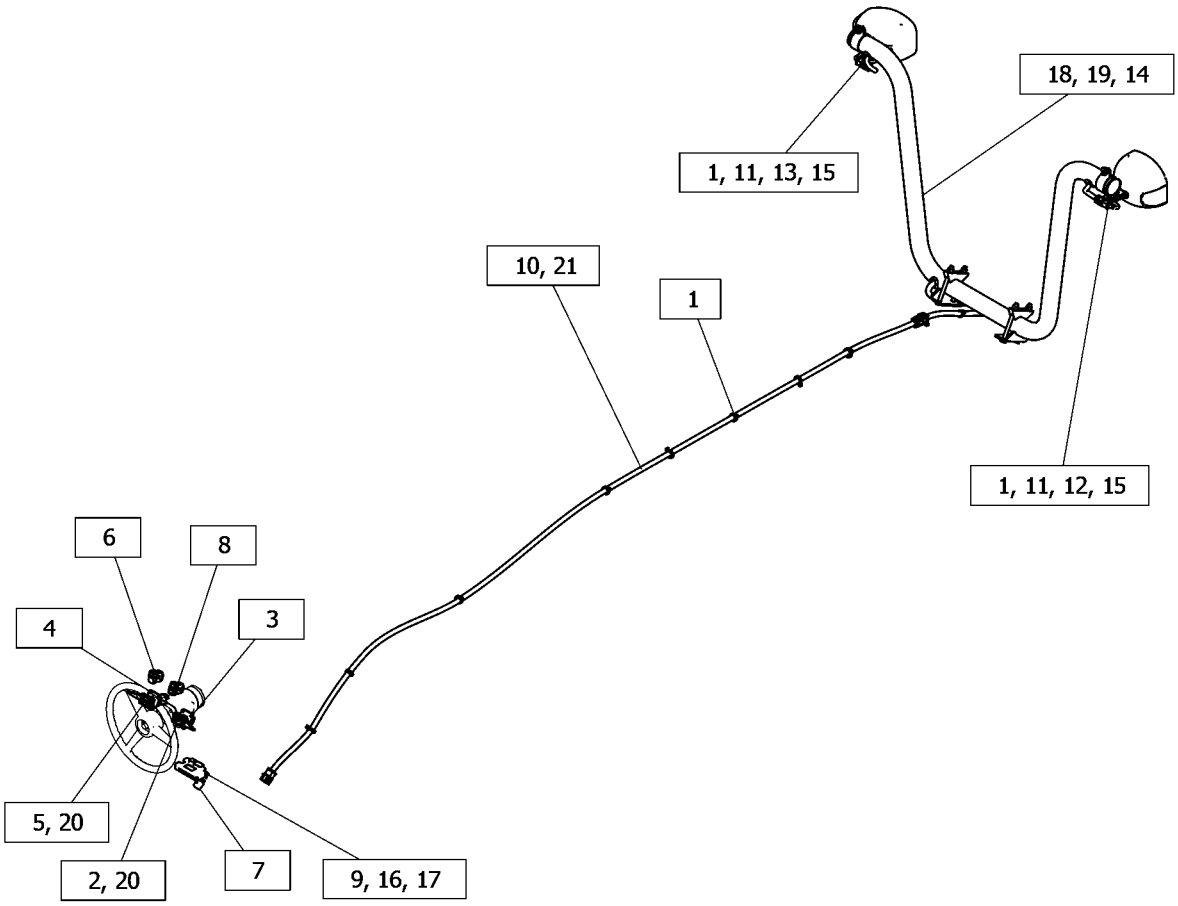

GRAPHIC #1 <END> g06373386

536-5572 LIGHTING GP-FLOOD & SIGNAL—LOW BAR

S/N: W921-UP

PART OF 537-5632, 537-5633 LIGHTING AR-FLOOD & SIGNAL

SMCS-1429, 1430, 1432, 1434 **i07578021**

NOTE	REF NO	GRAPHIC REF	PART NUMBER	QTY	PART NAME 1 2 3 4 5 6 (PRODUCT LEVEL)	SEE PAGE
	1	1	**7K-1181**	12	STRAP-CABLE	
	2	1	**8X-5154**	1	FILM-FACE (HEADLIGHTS HIGH, LOW BEAM)	
	3	1	**103-5678**	1	SWITCH AS-ROTARY (HIGH, LOW BEAM)	
		1	**5L-7200**	1	SCREW (8-32X0.375-IN)	
		1	**9B-7233**	1	LOCKWASHER	
	4	1	**134-9569**	1	SWITCH AS-TURN SIGNAL	
		1	**5L-7200**	1	SCREW (8-32X0.375-IN)	
		1	**9B-7233**	1	LOCKWASHER	
	5	1	**201-5555**	1	PLATE-INSTRUCTION (TURN SIGNAL)	
	6	1	**236-4616**	1	SWITCH AS-ROCKER (24-VOLT) (HAZARD WARNING LIGHTS)	
	7	1	**248-2841**	1	RELAY AS (24-VOLT) (SUPPRESSION)	
	8	1	**367-5209**	1	SWITCH AS-ROCKER (24-VOLT) (HEADLIGHTS, TAIL LIGHTS)	
	9	1	**431-8735**	1	FLASHER AS (12/24-VOLT)	
Y	10	1	**533-6243**	1	HARNESS AS-LIGHTING (LOW BAR)	161
	11	1	**130-5300**	2	CLIP	
Y	12	1	**344-3455**	1	LAMP GP-HEAD & SIGNAL (24-VOLT) (RH)	179
Y	13	1	**344-3456**	1	LAMP GP-HEAD & SIGNAL (24-VOLT) (LH)	180
	14	1	**3K-9520**	3	GROMMET	
	15	1	**4P-7581**	2	CLIP (LADDER)	
	16	1	**518-9741**	3	WASHER	
Y	17	1	*536-0433*	1	SUPPORT GP-LIGHT	209
Y	18	1	**566-9226**	1	HARNESS AS-LIGHTING (HEADLIGHTS)	162
M	19	1	**6V-9491**	3	SCREW-MACHINE (M4X0.7X20-MM)	
	20	1	**8X-6296**	2	LEVER	
E	21	1	**235-4765**		SEAL (8-CM)	

E - ORDER BY THE CENTIMETER
M - METRIC PART
Y - SEPARATE ILLUSTRATION

536-5572 **LIGHTING GP-FLOOD & SIGNAL** (contd.) **i07578021**

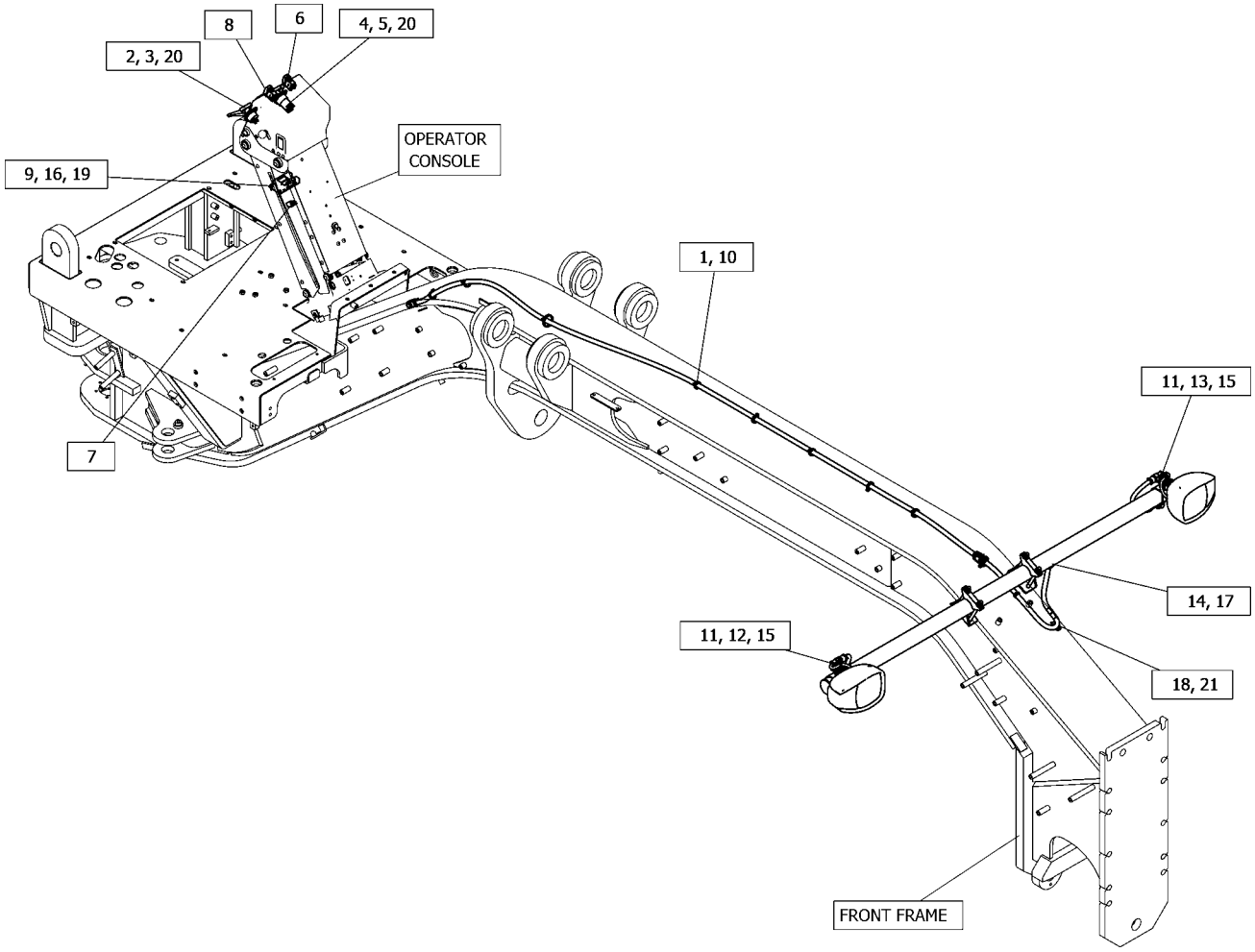

GRAPHIC #1 <END> g06372960

549-4735 LIGHTING GP-FLOOD & SIGNAL

S/N: W921-UP
INDIA
PART OF 537-5609 LIGHTING AR-ROADING

SMCS-1429, 1430, 1432, 1434 **i07573572**

NOTE	REF NO	GRAPHIC REF	PART NUMBER	QTY	PART NAME 1 2 3 4 5 6 (PRODUCT LEVEL)	SEE PAGE
M	1	1	**518-2309**	6	BOLT (M10X1.5X20-MM)	
	2	1	**518-4415**	18	WASHER (6.4X12X1.6-MM THK)	
	3	1	**518-4417**	6	WASHER	
M	4	1	**518-6583**	18	NUT-HEX (M6X1-THD)	
Y	5	1	**334-8049**	2	LAMP GP-SIGNAL (24-VOLT, STOP, TAIL)	183
Y	6	1	**3E-6466**	2	LAMP GP-SIGNAL (24-VOLT) (REAR TURN)	186
Y	7	1	**261-1502**	2	LAMP GP (24-VOLT) (BACKUP)	173
	8	1	**4P-7581**	6	CLIP (LADDER)	
Y	9	1	*549-0877*	1	BRACKET GP-MOUNTING (RH)	138
Y	10	1	*549-0888*	1	BRACKET GP-MOUNTING (LH)	139
Y	11	1	**566-9229**	1	HARNESS AS-REAR (LIGHTING)	168
	12	1	**7G-7053**	2	GROMMET	
	13	1	**7K-1181**	26	STRAP-CABLE	

M - METRIC PART
Y - SEPARATE ILLUSTRATION

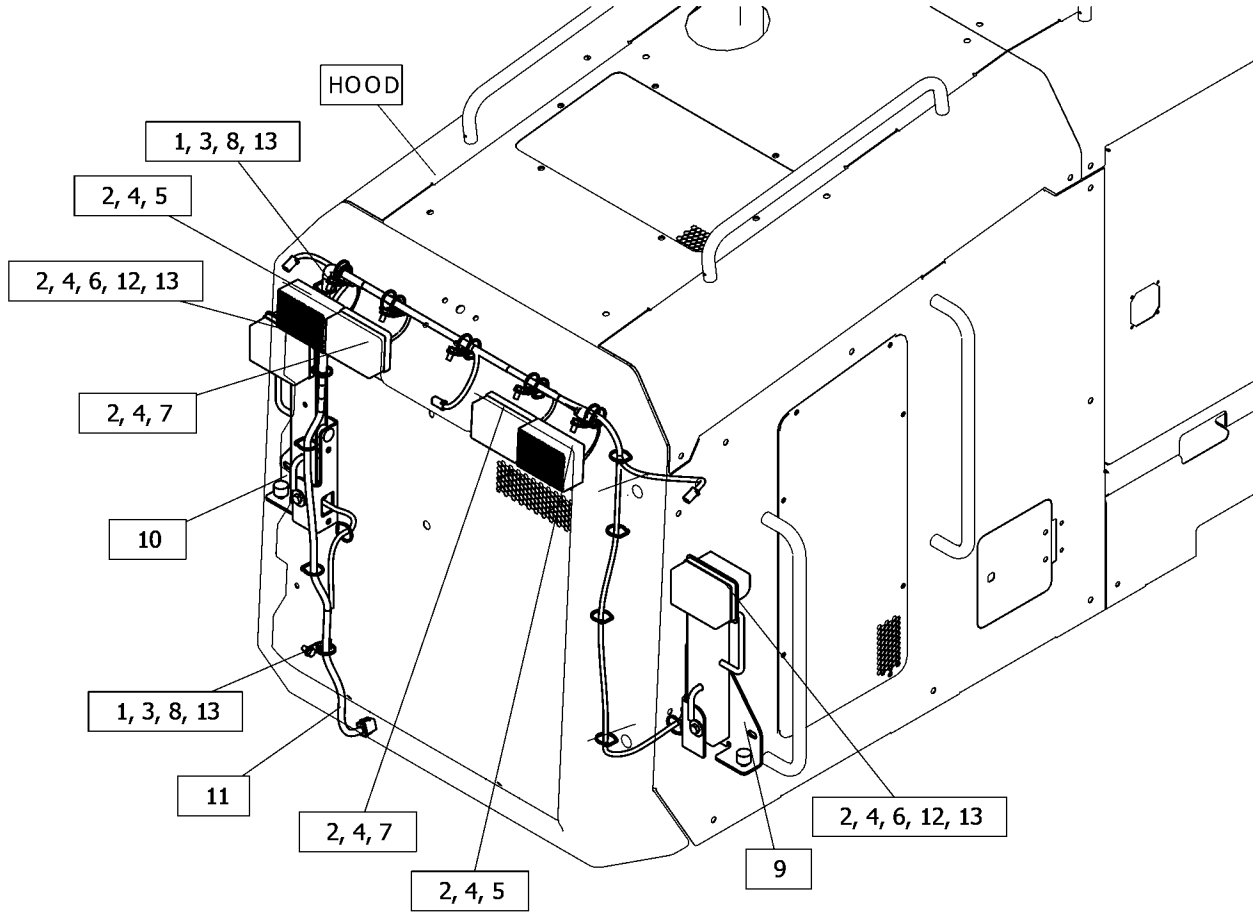

GRAPHIC #1 <END> g06371329

550-8853 LIGHTING GP-ROADING—LOW BAR

S/N: W921-UP
INDIA
PART OF 537-5609 LIGHTING AR-ROADING

SMCS-1429 **i07574160**

NOTE	REF NO	GRAPHIC REF	PART NUMBER	QTY	PART NAME 1 2 3 4 5 6 (PRODUCT LEVEL)	SEE PAGE
	1	1	**7K-1181**	12	STRAP-CABLE	
	2	1	**8X-5154**	1	FILM-FACE (HEADLIGHTS HIGH, LOW BEAM)	
	3	1	**103-5678**	1	SWITCH AS-ROTARY (HIGH, LOW BEAM)	
		1	**5L-7200**	1	SCREW (8-32X0.375-IN)	
		1	**9B-7233**	1	LOCKWASHER	
	4	1	**134-9569**	1	SWITCH AS-TURN SIGNAL	
		1	**5L-7200**	1	SCREW (8-32X0.375-IN)	
		1	**9B-7233**	1	LOCKWASHER	
	5	1	**201-5555**	1	PLATE-INSTRUCTION (TURN SIGNAL)	
	6	1	**236-4616**	1	SWITCH AS-ROCKER (24-VOLT) (HAZARD WARNING LIGHTS)	
	7	1	**248-2841**	1	RELAY AS (24-VOLT) (SUPPRESSION)	
	8	1	**367-5209**	1	SWITCH AS-ROCKER (24-VOLT) (HEADLIGHTS, TAIL LIGHTS)	
	9	1	**431-8735**	1	FLASHER AS (12/24-VOLT)	
Y	10	1	**486-4542**	1	LAMP GP-HEAD & SIGNAL (24-VOLT) (RH)	181
Y	11	1	**491-0637**	1	LAMP GP-HEAD & SIGNAL (24-VOLT) (LH)	182
Y	12	1	**533-6243**	1	HARNESS AS-LIGHTING (LOW BAR)	161
	13	1	**130-5300**	2	CLIP	
	14	1	**3K-9520**	3	GROMMET	
	15	1	**4P-7581**	2	CLIP (LADDER)	
	16	1	**518-9741**	3	WASHER	
Y	17	1	*536-0433*	1	SUPPORT GP-LIGHT	209
Y	18	1	**566-9226**	1	HARNESS AS-LIGHTING (HEADLIGHTS)	162
M	19	1	**6V-9491**	3	SCREW-MACHINE (M4X0.7X20-MM)	
	20	1	**8X-6296**	2	LEVER	
E	21	1	**235-4765**		SEAL (8-CM)	

E - ORDER BY THE CENTIMETER
M - METRIC PART
Y - SEPARATE ILLUSTRATION

550-8853 **LIGHTING GP-ROADING (**contd.**)** **i07574160**

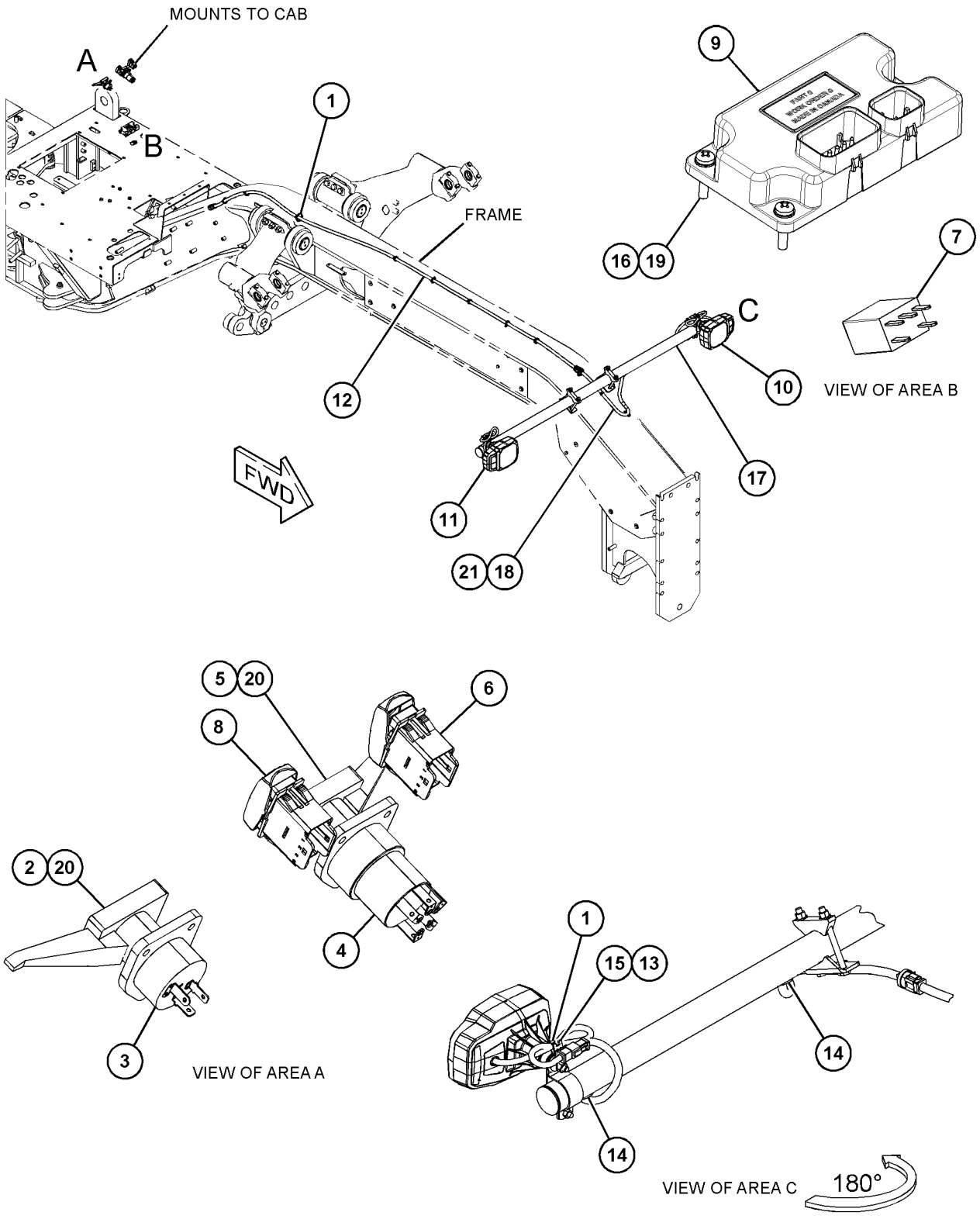

GRAPHIC #1 <END> g06371890

568-0739 LIGHTING GP-WARNING BEACON

S/N: W921-UP

SMCS-1431 **i07549474**

NOTE	REF NO	GRAPHIC REF	PART NUMBER	QTY	PART NAME 1 2 3 4 5 6 (PRODUCT LEVEL)	SEE PAGE
	1	1	**3S-2093**	6	STRAP-CABLE	
	2	1	**7K-1181**	7	STRAP-CABLE	
	3	1	**8T-4224**	6	WASHER-HARD (8.8X16X2-MM THK)	
	4	1	**237-9736**	1	SWITCH AS-ROCKER (WARNING BEACON)	
M	5	1	**225-3109**	3	SCREW-TRUSS HEAD (M4X0.7X14-MM)	
Y	6	1	**338-1132**	1	LAMP GP-WARNING BEACON (12/24-VOLT, LED STROBE)	187
M	7	1	**344-5674**	2	NUT (M8X1.25-THD)	
Y	8	1	*372-1866*	1	BRACKET GP-MOUNTING (WARNING BEACON)	137
	9	1	**518-3027**	1	BRACKET AS	
M		1	**8T-3612**	2	NUT-WELD (M8X1.25-THD)	
Y	10	1	**546-6080**	1	HARNESS AS-LIGHTING (BEACON)	161
M	11	1	**5C-9553**	2	BOLT (M6X1X16-MM)	
M	12	1	**8T-4189**	4	BOLT (M8X1.25X20-MM)	
	13	1	**9G-1307**	1	GROMMET	
	14	1	**9X-8256**	2	WASHER (6.6X12X2-MM THK)	

M - METRIC PART
Y - SEPARATE ILLUSTRATION

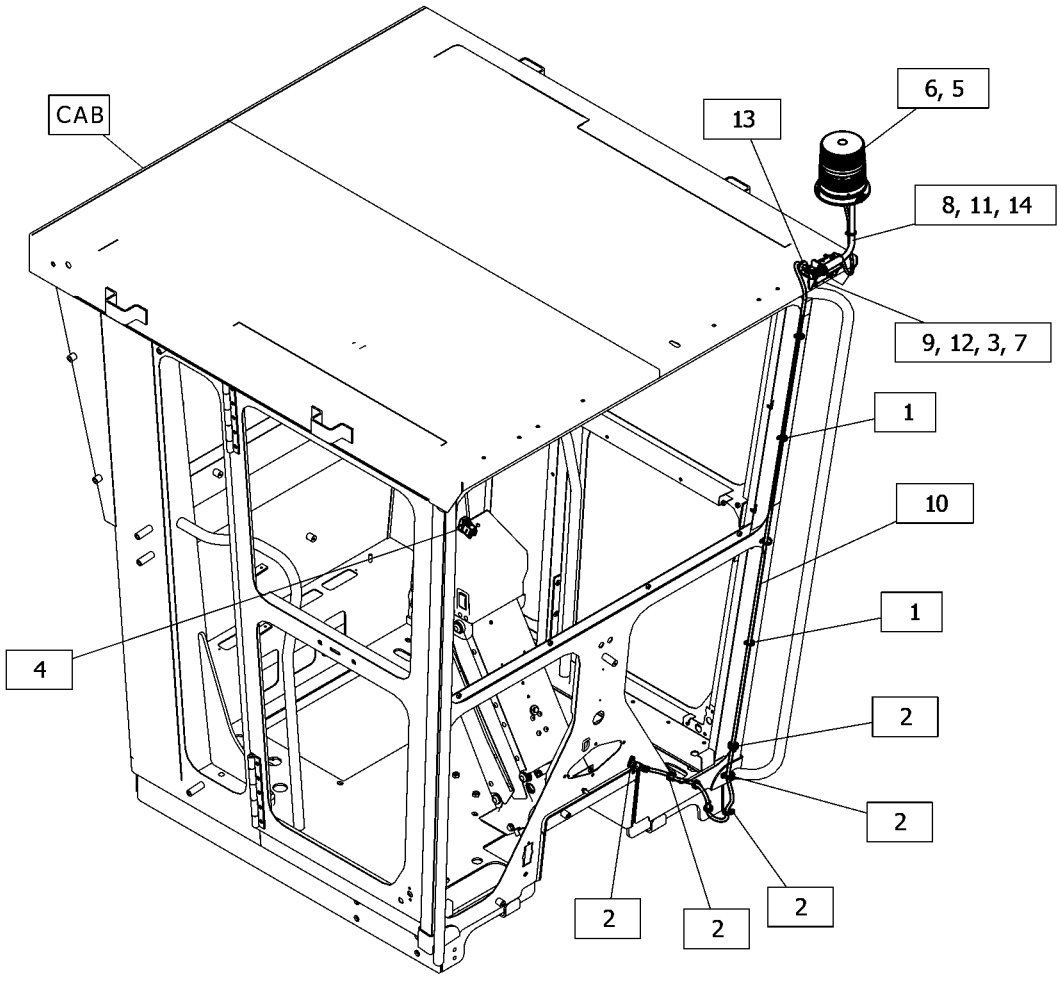

GRAPHIC #1 <END> g06367185

436-9180 MOTOR GP-ELECTRIC—CIRCULATING FAN

S/N: W921-UP
27-VOLT, COUNTER CLOCKWISE LEAD END
PART OF 170-5334 FAN GP-CIRCULATING

SMCS-5927 **i07576944**

NOTE	REF NO	GRAPHIC REF	PART NUMBER	QTY	PART NAME 1 2 3 4 5 6 (PRODUCT LEVEL)	SEE PAGE
	1	1	**102-8802**	1	KIT-RECEPTACLE (2-PIN)	
					(INCLUDES RECEPTACLE AS & WEDGE)	
	2	1	**9W-0852**	2	PIN-CONNECTOR (14-GA TO 16-GA)	

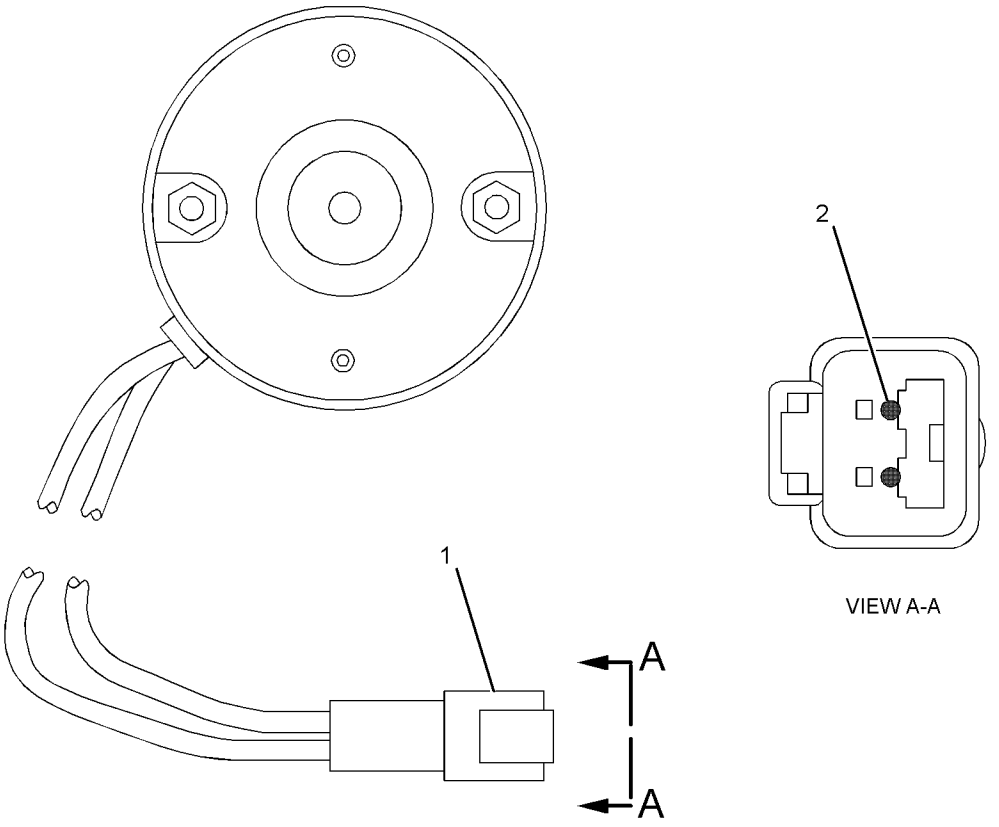

GRAPHIC #1 <END> g01224350

395-0112 MOUNTING GP-ELECTRONIC CONTROL

S/N: E7A1-UP

PART OF 533-1826, 533-1840 ENGINE AR-PRIMARY

SMCS-1901, 7610

i06554273

NOTE	REF NO	GRAPHIC REF	PART NUMBER	QTY	PART NAME 1 2 3 4 5 6 (PRODUCT LEVEL)	SEE PAGE
	1	1	**446-1268**	1	BRACKET AS	
M	2	1	**6I-0292**	2	BOLT (M8X1.25X140-MM)	
M	3	1	**6I-0293**	2	BOLT (M8X1.25X80-MM)	

M - METRIC PART

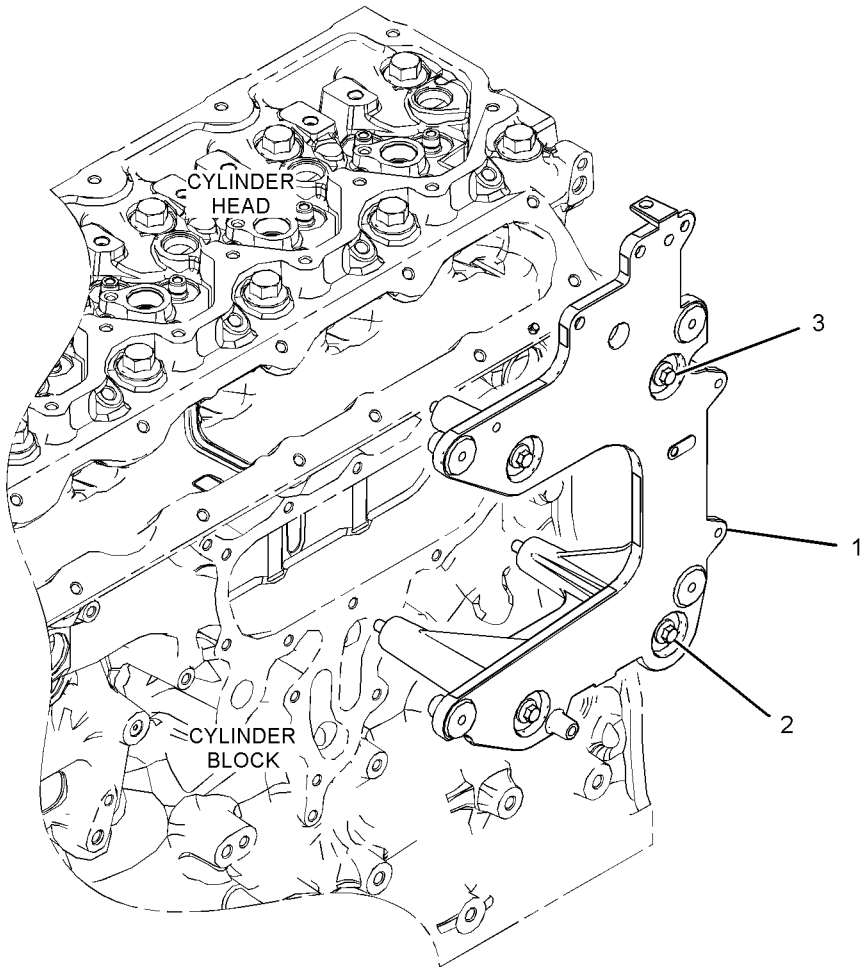

GRAPHIC #1

<END>

g06032947

395-0110 SENSOR GP-ENGINE

S/N: E7A1-UP

PART OF 533-1826, 533-1840 ENGINE AR-PRIMARY

SMCS-1439, 1906, 1917, 1923, 1924, 1925 **i06251969**

NOTE	REF NO	GRAPHIC REF	PART NUMBER	QTY	PART NAME 1 2 3 4 5 6 (PRODUCT LEVEL)	SEE PAGE
M	1	1	**124-3815**	2	BOLT (M8X1.25X16-MM)	
	2	1	**199-9252**	1	SEAL-O-RING	
	3	1	**199-9267**	1	SEAL-O-RING	
	4	1	**199-9751**	1	SEAL-O-RING	
	5	1	**384-3888**	2	SENSOR GP-SPEED (ENGINE)	
	6	1	**256-6454**	1	SENSOR-TEMPERATURE (2-PIN) (AIR INLET MANIFOLD)	
	6A	1	**256-6454**	1	SENSOR-TEMPERATURE (2-PIN) (COOLANT)	
	7	1	**276-5603**	1	SEAL-O-RING	
	8	1	**320-3060**	1	SENSOR GP-PRESSURE (ENGINE OIL)	
	9	1	**320-3062**	1	SENSOR GP-PRESSURE (INLET MANIFOLD AIR)	
	10	1	**228-4947**	2	SEAL-O-RING	

M - METRIC PART

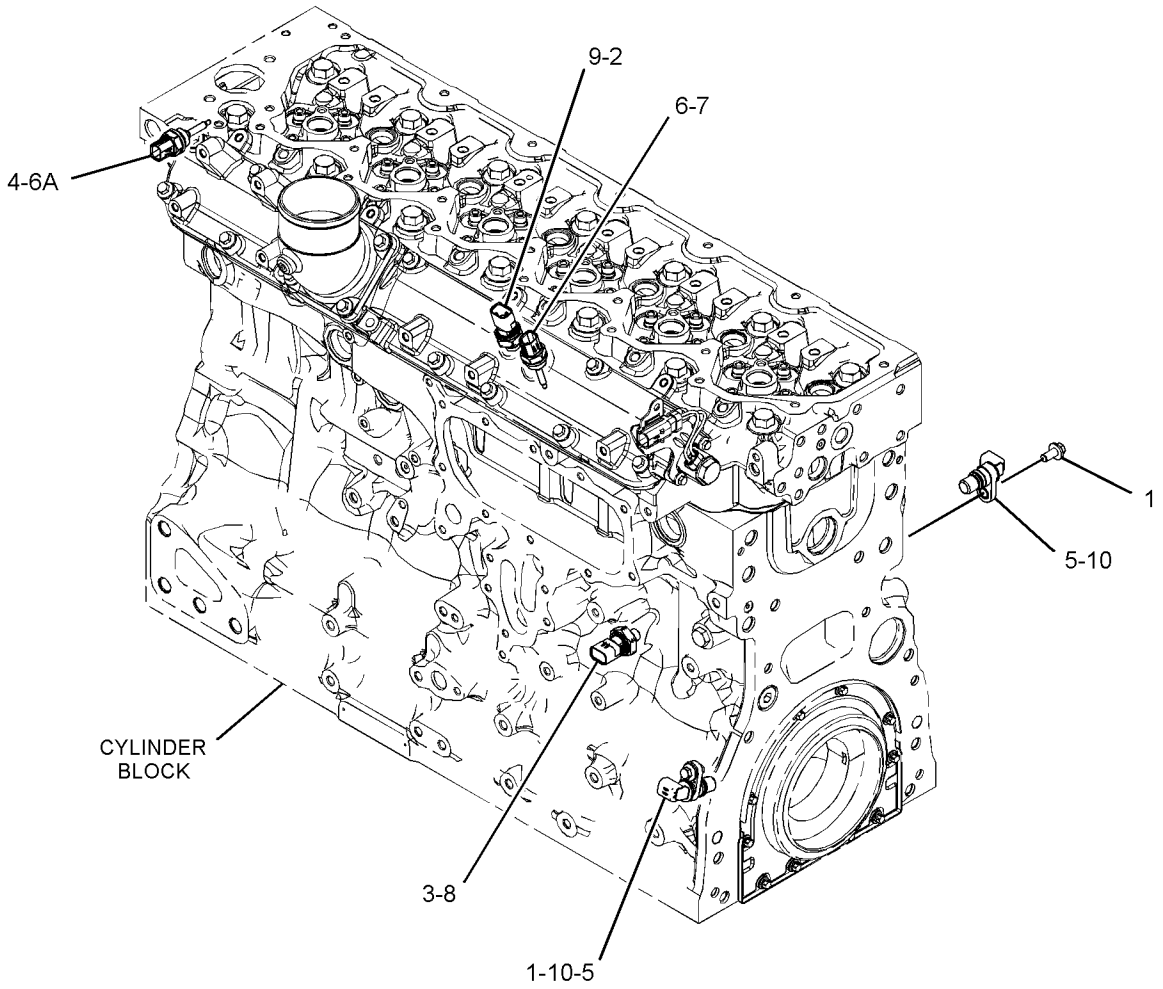

GRAPHIC #1 <END> g03380662

266-1467 SENSOR GP-POSITION

S/N: W921-UP

PART OF 526-2237 CONTROL GP-GOVERNOR, 533-6205 WIRING GP-REAR

SMCS-1408, 3168, 3175, 4269, 430S, 4809 **i07541108**

NOTE	REF NO	GRAPHIC REF	PART NUMBER	QTY	PART NAME 1 2 3 4 5 6 (PRODUCT LEVEL)	SEE PAGE
	1	1	**9X-3401**	3	PIN-CONNECTOR (16-GA TO 18-GA)	
					–OR–	
		1	**126-1767**	3	PIN-CONNECTOR (14-GA TO 16-GA)	
	2	1	**102-8803**	1	KIT-RECEPTACLE (3-PIN)	
					(INCLUDES RECEPTACLE AS & WEDGE)	
E	3	1	**3E-9375**		CONDUIT (13-CM)	

E - ORDER BY THE CENTIMETER

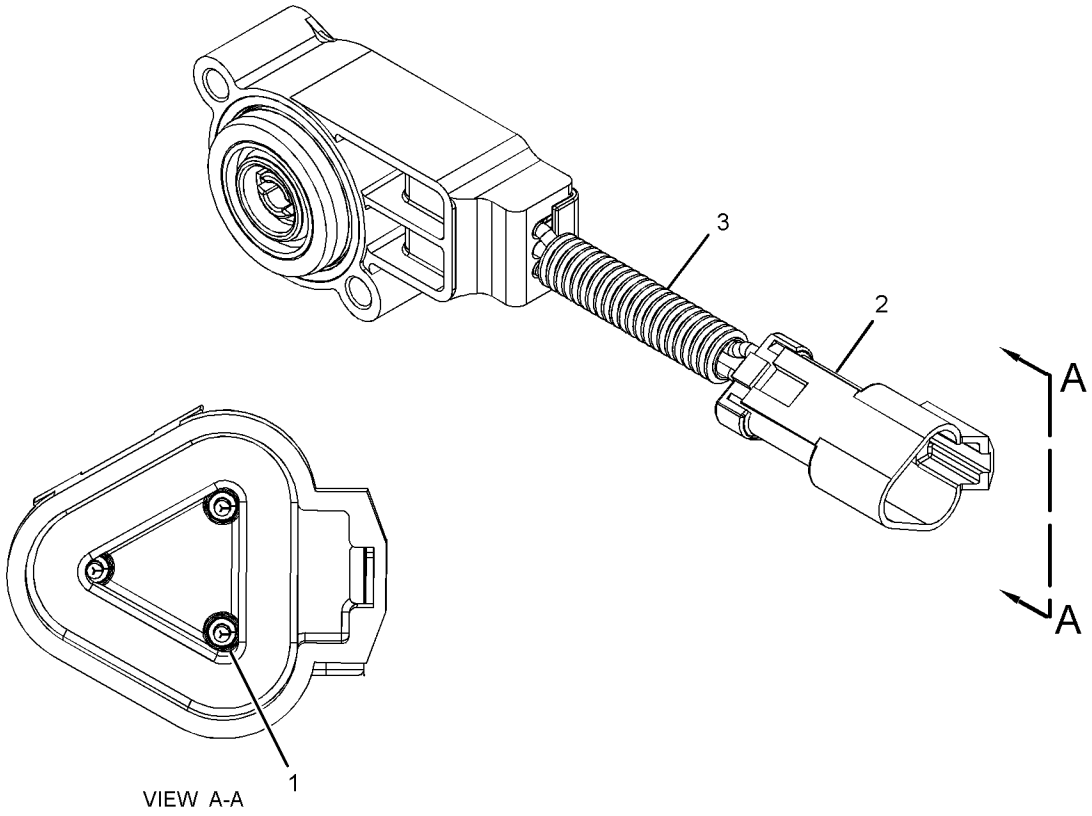

VIEW A-A

GRAPHIC #1 <END> g03547699

395-0114 STARTING AID GP

S/N: E7A1-UP

PART OF 533-1826, 533-1840 ENGINE AR-PRIMARY

SMCS-1090 **i07383436**

NOTE	REF NO	GRAPHIC REF	PART NUMBER	QTY	PART NAME 1 2 3 4 5 6 (PRODUCT LEVEL)	SEE PAGE
M	1	1	**112-7704**	1	BOLT (M6X1X30-MM)	
M	2	1	**5C-2890**	2	NUT (M6X1-THD)	
	3	1	**217-9039**	1	STRAP-CABLE	
	4	1	**462-2235**	6	GLOW PLUG (24-VOLT)	
	5	1	**368-3145**	1	BUS BAR AS	
	6	1	**384-7567**	1	HARNESS AS-STARTING AID	
E		1	**292-2893**		CONDUIT (10.1-MM ID) (4-CM)	
		1	**2L-8050**	2	TERMINAL-RING (6-GA, 1/4-IN SCREW)	
					—OR—	
		1	**2L-8058**	2	TERMINAL-RING (8-GA, 1/4-IN SCREW)	
		1	**427-9771**	1	TIE	
M	7	1	**208-8469**	1	LOCKNUT (M6X1-THD)	
	8	1	**275-2428**	1	INSULATOR	
	9	1	**277-4409**	1	CAP	
	10	1	**067-6070**	1	WASHER	
	11	1	**275-2431**	1	WASHER	

E - ORDER BY THE CENTIMETER
M - METRIC PART

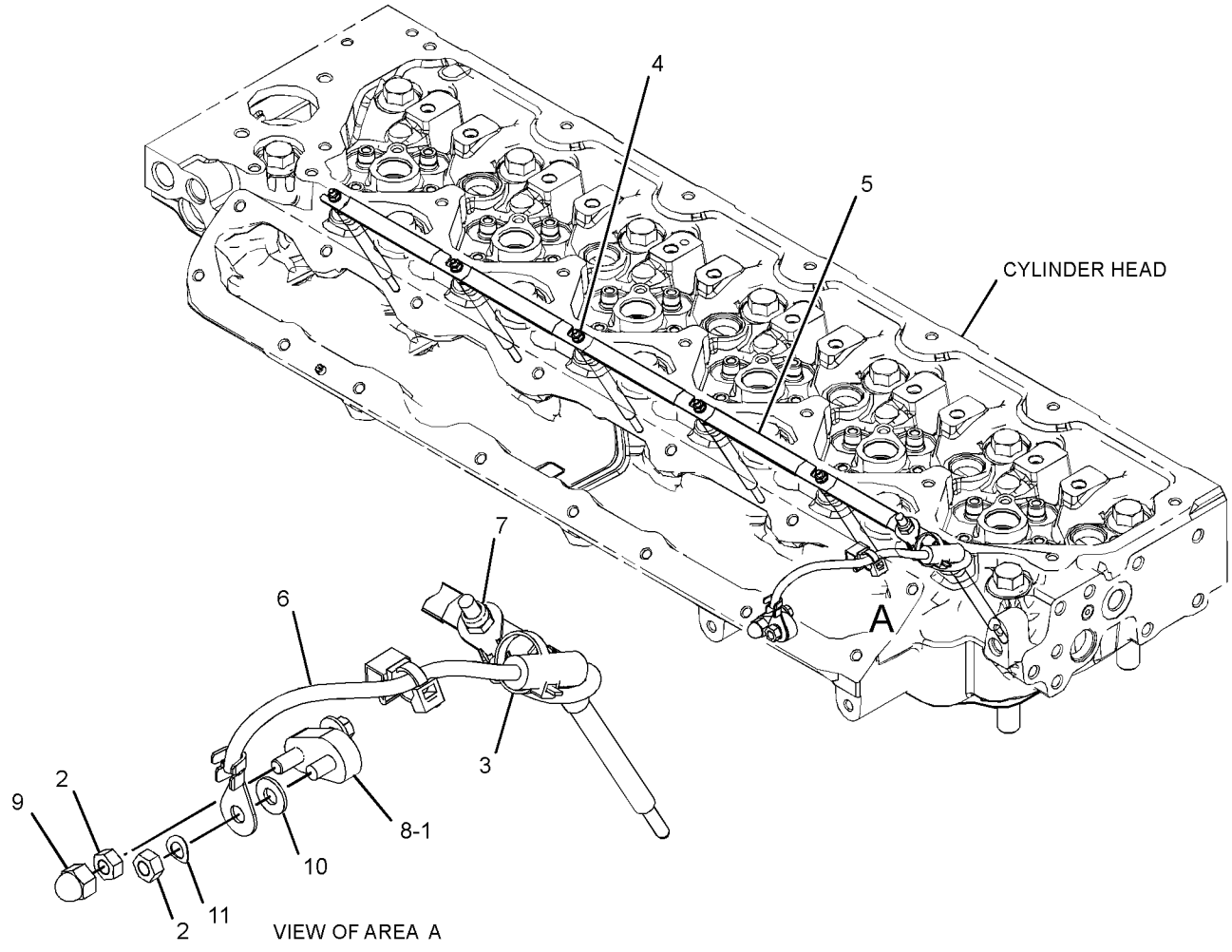

GRAPHIC #1 <END> g06032380

527-9474 STARTING AID GP-ETHER

S/N: W921-UP

PART OF 537-5646, 537-5647 COLD WEATHER AR

SMCS-1456 **i07621301**

NOTE	REF NO	GRAPHIC REF	PART NUMBER	QTY	PART NAME 1 2 3 4 5 6 (PRODUCT LEVEL)	SEE PAGE
M	1	1	**518-1810**	4	BOLT (M10X1.5X20-MM)	
	2	1	**518-4416**	4	WASHER (8.4X16X1.6-MM THK)	
	3	1	**3S-2093**	1	STRAP-CABLE	
	4	1	**7N-2059**	1	CLAMP AS (CYLINDER)	
	5	1	**125-8534**	1	PLATE AS	
	6	1	**160-8763**	1	FITTING AS	
		1	**160-8761**	1	FILTER (ETHER)	
	7	1	**472-7056**	1	NOZZLE AS-ETHER	
	8	1	**474-0558**	1	VALVE AS (ETHER START)	
		1	**8T-8729**	2	PIN-CONNECTOR (16-GA TO 18-GA)	
		1	**102-8802**	1	KIT-RECEPTACLE (2-PIN)	
					(INCLUDES RECEPTACLE AS & WEDGE)	
	9	1	**518-4417**	4	WASHER	
	10	1	**539-1078**	2	BRACKET AS	
	11	1	**6V-2686**	3	CLIP (LOOP)	
M	12	1	**6V-5217**	4	BOLT (M8X1.25X20-MM)	
D	13	1	**5P-5630**		TUBE (1.5-M)	
AF			**7N-0296**	1	CYLINDER AS-ETHER	
					(MUST BE PROCURED LOCALLY FROM YOUR CAT DEALER)	

A - NOT PART OF THIS GROUP
D - ORDER BY THE METER
F - NOT SHOWN
M - METRIC PART

527-9474 **STARTING AID GP-ETHER (**contd.**)** **i07621301**

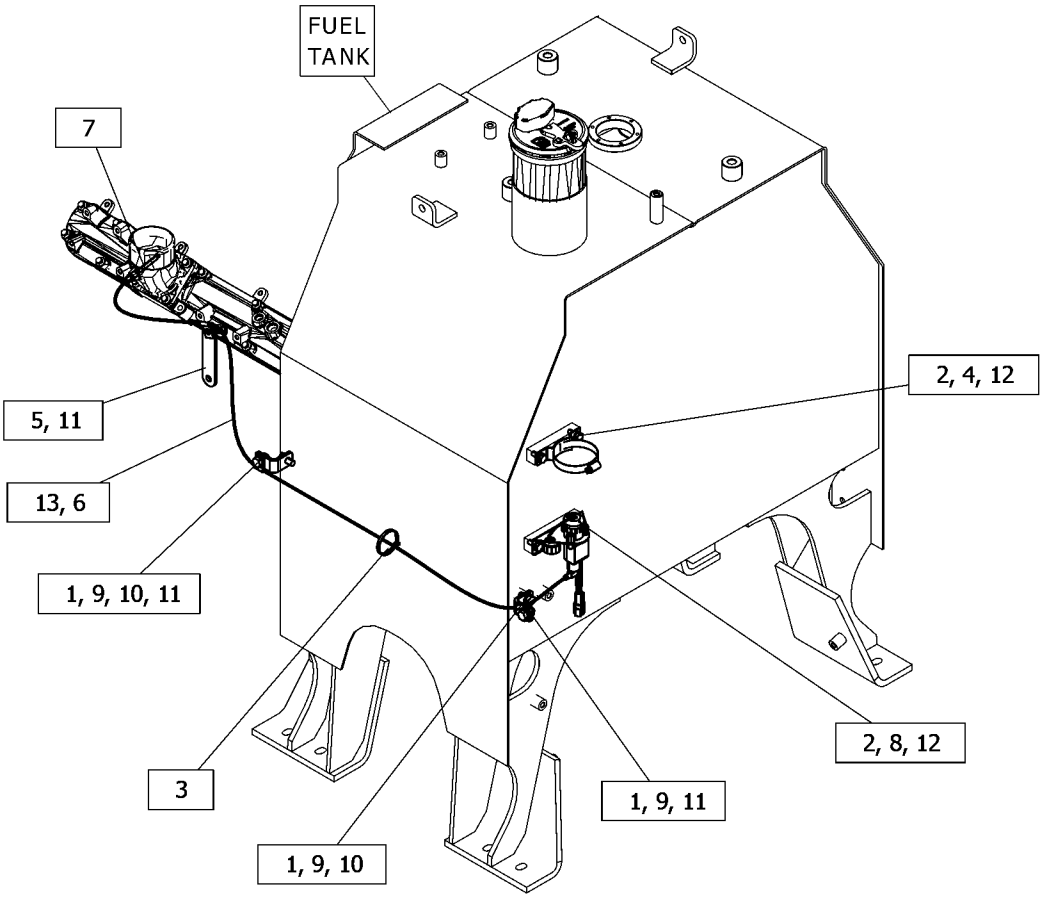

GRAPHIC #1 <END> g06373693

536-5598 STARTING MOTOR GP-ELECTRIC

S/N: W921-UP

SMCS-1453 **i07560132**

NOTE	REF NO	GRAPHIC REF	PART NUMBER	QTY	PART NAME 1 2 3 4 5 6 (PRODUCT LEVEL)	SEE PAGE
M	1	1	**518-2309**	2	BOLT (M10X1.5X20-MM)	
	2	1	**3S-2093**	1	STRAP-CABLE	
	3	1	**7K-1181**	1	STRAP-CABLE	
	4	1	**392-8399**	1	STRAP AS	
	5	1	**424-6652**	1	STARTING MOTOR GP-ELECTRIC	
M	6	1	**518-2321**	3	BOLT (M12X1.75X40-MM)	
	7	1	**536-5584**	1	STRAP AS	
	8	1	**4P-7428**	1	CLIP (LADDER)	
M	9	1	**518-2317**	1	BOLT (M12X1.75X20-MM)	
	10	1	**518-4417**	2	WASHER	
	11	1	**518-4418**	4	WASHER (13X24X2.5-MM THK)	

M - METRIC PART

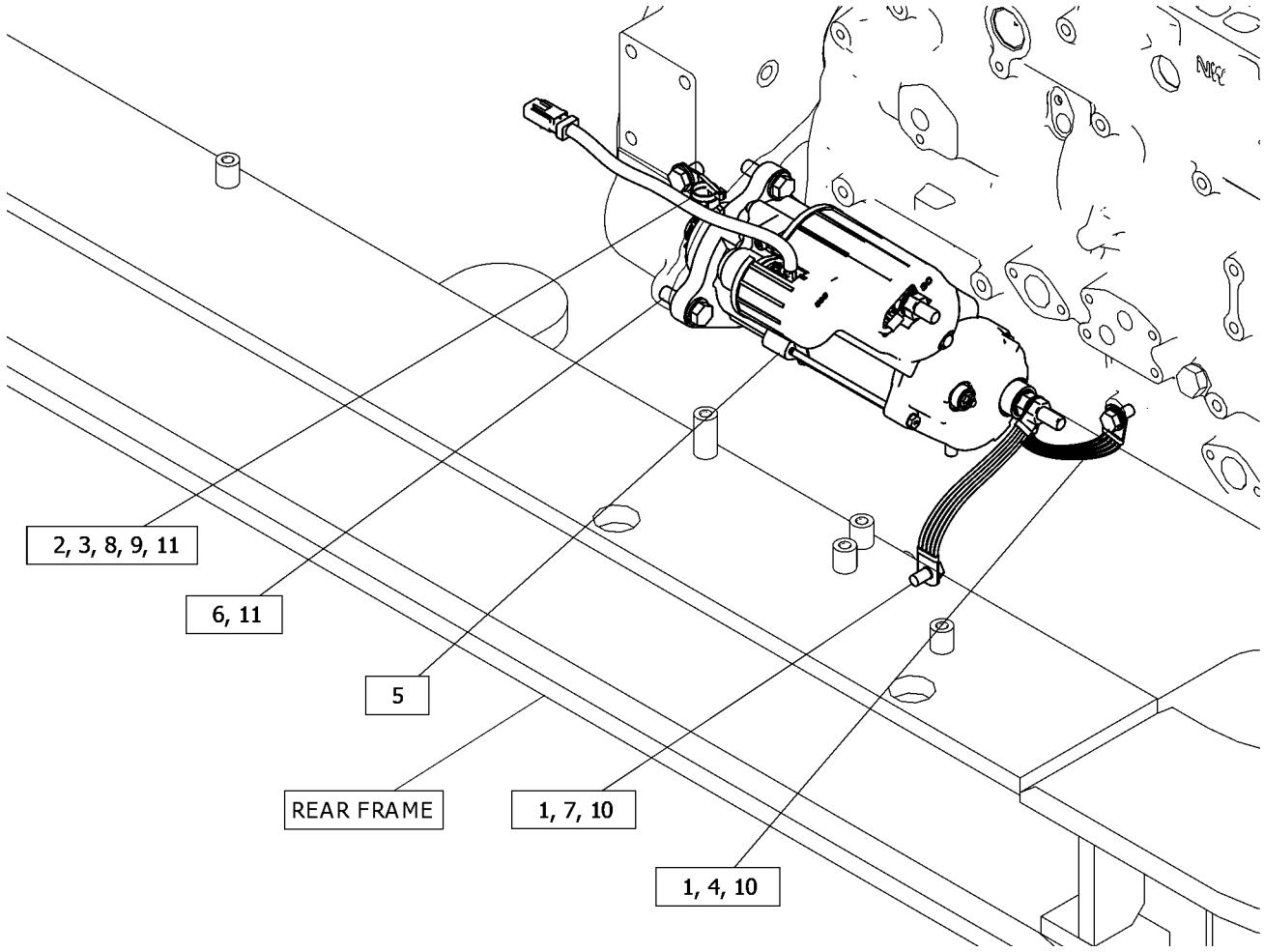

GRAPHIC #1 <END> g06367294

536-0410 SUPPORT GP-LIGHT

S/N: W921-UP

PART OF 533-6218 LIGHTING GP-FLOOD & SIGNAL

SMCS-1429, 1434 **i07577267**

NOTE	REF NO	GRAPHIC REF	PART NUMBER	QTY	PART NAME 1 2 3 4 5 6 (PRODUCT LEVEL)	SEE PAGE
	1	1	**518-4418**	4	WASHER (13X24X2.5-MM THK)	
M	2	1	**518-6585**	2	NUT-HEX (M10X1.5-THD)	
M	3	1	**518-6586**	4	NUT (M12X1.75-THD)	
	4	1	**2G-0617**	2	CLAMP	
	5	1	**2G-0659**	2	BRACKET	
	6	1	**137-9410**	2	CLAMP	
	7	1	**179-1550**	2	CLAMP	
	8	1	**518-4417**	2	WASHER	
	9	1	**536-0411**	1	TUBE AS	
M	10	1	**524-3271**	2	BOLT (M10X1.5X25-MM)	
	11	1	**528-9878**	4	BOLT (M12X1.75X140-MM)	

M - METRIC PART

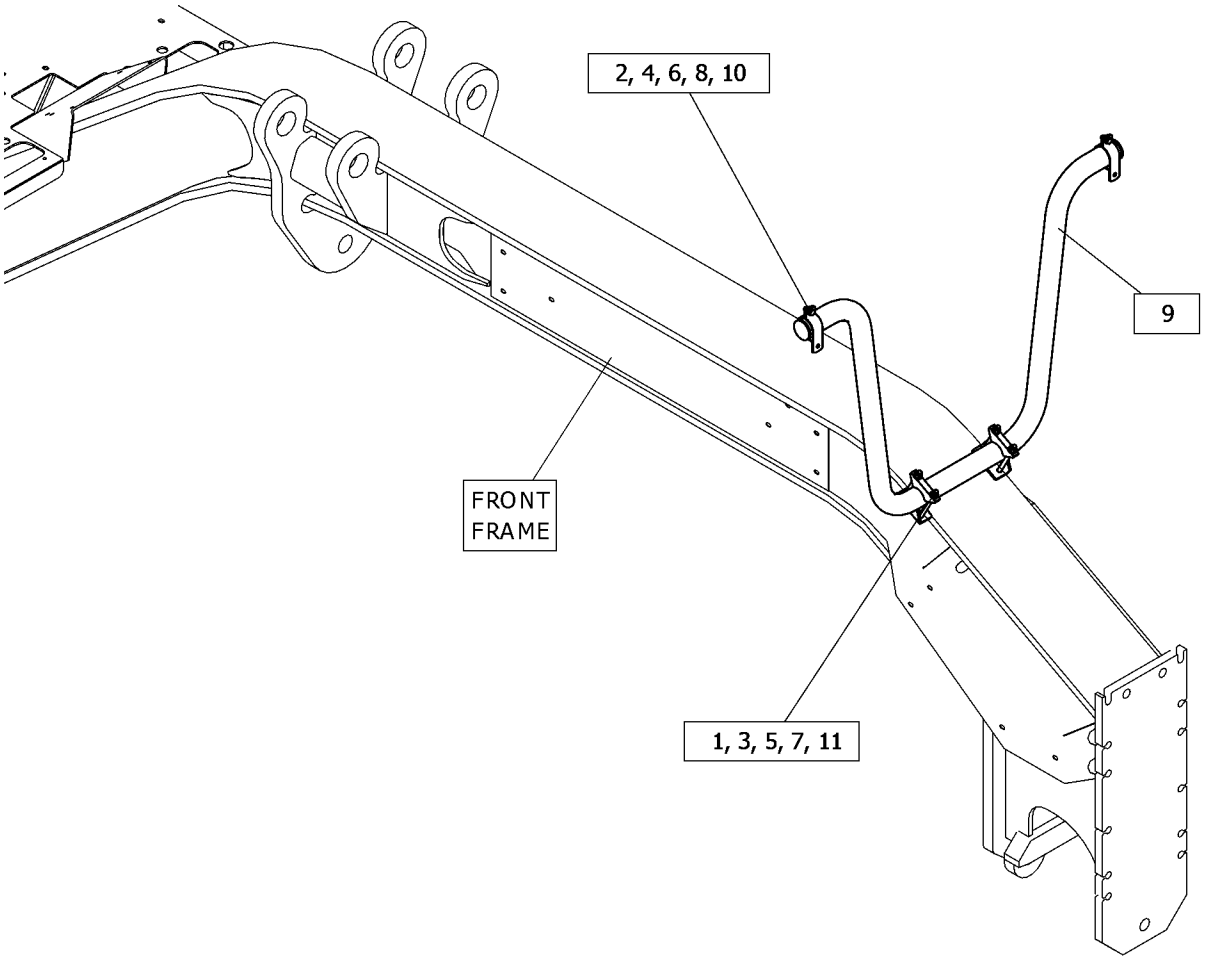

GRAPHIC #1 <END> g06375200

536-0433 SUPPORT GP-LIGHT

S/N: W921-UP

PART OF 536-5572 LIGHTING GP-FLOOD & SIGNAL, 550-8853 LIGHTING GP-ROADING

SMCS-1429, 1434 **i07621299**

NOTE	REF NO	GRAPHIC REF	PART NUMBER	QTY	PART NAME 1 2 3 4 5 6 (PRODUCT LEVEL)	SEE PAGE
	1	1	**518-4418**	4	WASHER (13X24X2.5-MM THK)	
M	2	1	**518-6585**	2	NUT-HEX (M10X1.5-THD)	
M	3	1	**518-6586**	4	NUT (M12X1.75-THD)	
	4	1	**2G-0617**	2	CLAMP	
	5	1	**2G-0659**	2	BRACKET	
	6	1	**137-9410**	2	CLAMP	
	7	1	**179-1550**	2	CLAMP	
	8	1	**518-4417**	2	WASHER	
	9	1	**536-0417**	1	TUBE AS	
M	10	1	**524-3271**	2	BOLT (M10X1.5X25-MM)	
	11	1	**528-9878**	4	BOLT (M12X1.75X140-MM)	

M - METRIC PART

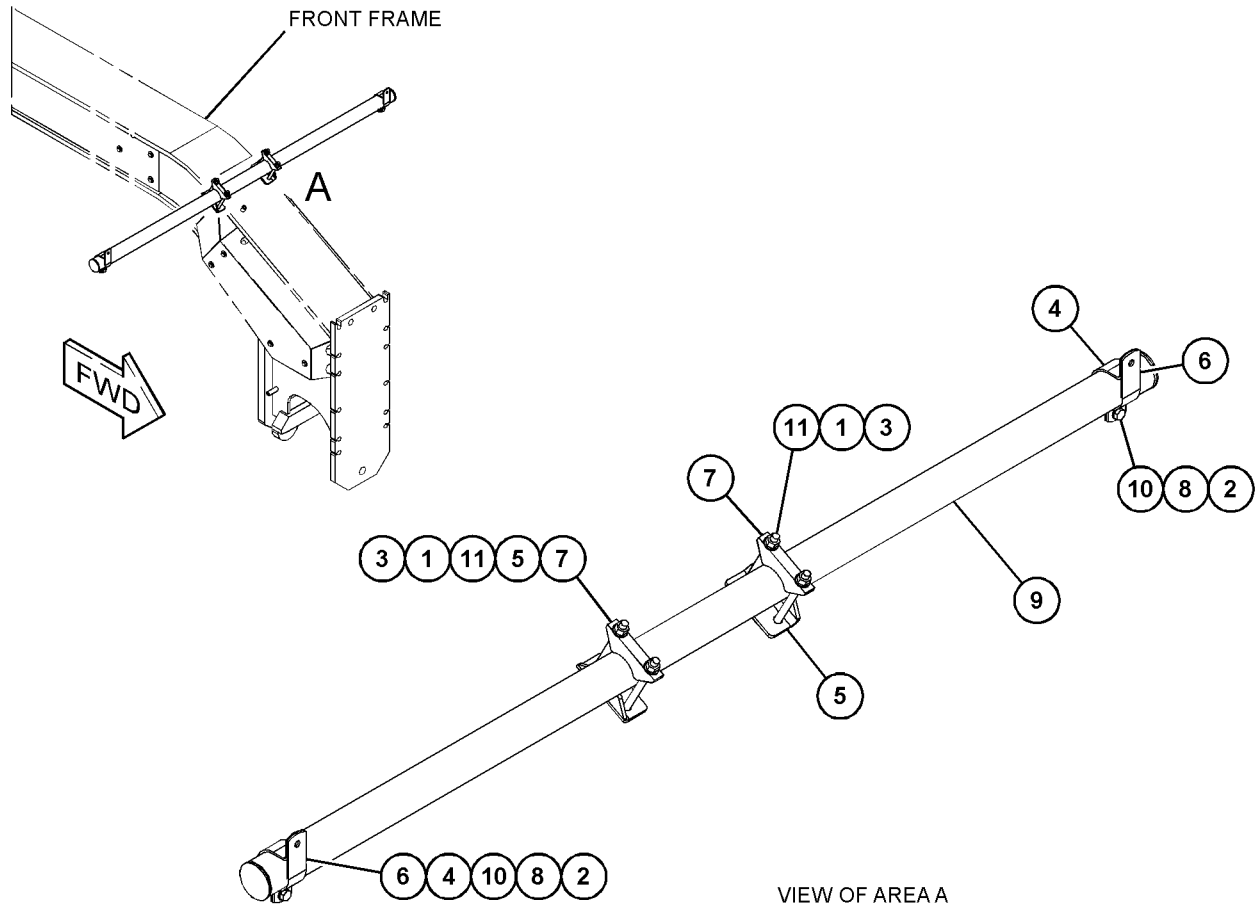

GRAPHIC #1 <END> g06369561

7N-0718 SWITCH GP-DISCONNECT–BATTERY

S/N: W921-UP

PART OF 533-6221, 533-6222 BATTERY & WIRING GP

SMCS-1411 **i05425265**

NOTE	REF NO	GRAPHIC REF	PART NUMBER	QTY	PART NAME 1 2 3 4 5 6 (PRODUCT LEVEL)	SEE PAGE
	1	1	**8H-5306**	1	KEY (BATTERY DISCONNECT)	
	2	1	**8H-5303**	1	NUT (3/4-16-THD)	
	3	1	**2H-3922**	2	LOCKWASHER	
	4	1	**9F-5644**	2	LOCKWASHER	
	5	1	**6F-7045**	2	NUT-FULL (3/8-24-THD)	

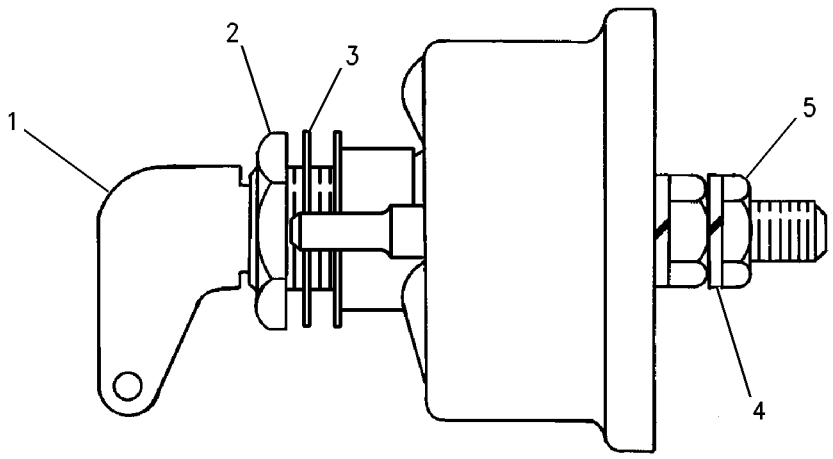

GRAPHIC #1 <END> g00715584

549-4734 SWITCH GP-ROCKER

S/N: W921-UP

PART OF 537-5636, 537-5637 LOCK AR-CENTERSHIFT

SMCS-7332 **i07573029**

NOTE	REF NO	GRAPHIC REF	PART NUMBER	QTY	PART NAME 1 2 3 4 5 6 (PRODUCT LEVEL)	SEE PAGE
M	1	1	**518-2309**	7	BOLT (M10X1.5X20-MM)	
	2	1	**7K-1181**	4	STRAP-CABLE	
	3	1	**130-5300**	2	CLIP	
	4	1	**132-5789**	2	CLIP (LADDER)	
	5	1	**280-4244**	1	SWITCH AS-ROCKER (24-VOLT) (PIN PULLER)	
	6	1	**3E-3636**	1	SWITCH AS-BALL (CENTERSHIFT INDICATOR)	
		1	**8T-8729**	4	PIN-CONNECTOR (16-GA TO 18-GA)	
		1	**102-8804**	1	KIT-RECEPTACLE (4-PIN)	
					(INCLUDES RECEPTACLE AS & WEDGE)	
	7	1	**4D-7794**	3	CLIP	
	8	1	**4P-7581**	2	CLIP (LADDER)	
	9	1	**518-4417**	7	WASHER	
	10	1	**549-4736**	1	HARNESS AS-WIRING	
		1	**8T-8730**	8	SOCKET-CONNECTOR (16-GA TO 18-GA)	
		1	**8T-8737**	2	PLUG-SEAL	
		1	**155-2270**	1	KIT-CONNECTING PLUG (2-PIN)	
		1	**155-2271**	2	KIT-CONNECTING PLUG (4-PIN)	
					(EACH PLUG KIT INCLUDES PLUG AS, WEDGE, & INTERFACE SEAL)	
B	11	1	**8F-1974**	10	SHIM (0.13-MM THK)	

B - USE AS REQUIRED
M - METRIC PART

549-4734 **SWITCH GP-ROCKER (**contd.**)** **i07573029**

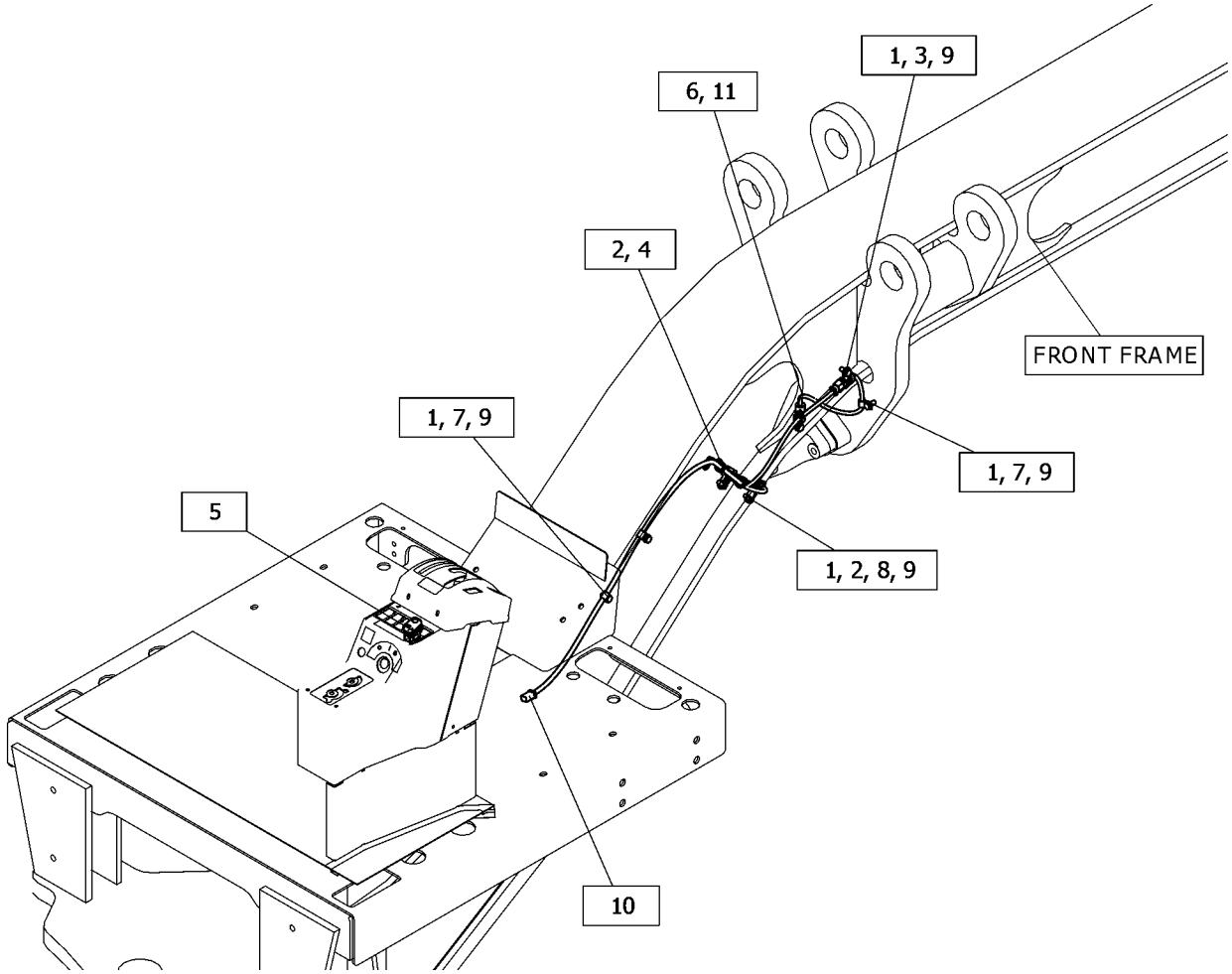

GRAPHIC #1 <END> g06373640

275-7741 SWITCH GP-WIPER—CAB

S/N: W921-UP

24-VOLT, INTERMITTENT

PART OF 275-7764 SWITCH GP-WIPER, 434-8049 WIPER GP-WINDOW

SMCS-7305, 7332 **i07523599**

NOTE	REF NO	GRAPHIC REF	PART NUMBER	QTY	PART NAME 1 2 3 4 5 6 (PRODUCT LEVEL)	SEE PAGE
	1	1	**6V-8369**	1	NUT (7/16-28-THD)	
	2	1	**2H-3920**	1	LOCKWASHER	
	3	1	**8T-8737**	2	PLUG-SEAL	
	4	1	**186-3735**	6	PIN-CONNECTOR (16-GA TO 18-GA)	
	5	1	**102-8806**	1	KIT-RECEPTACLE (8-PIN)	
					(INCLUDES RECEPTACLE AS & WEDGE)	

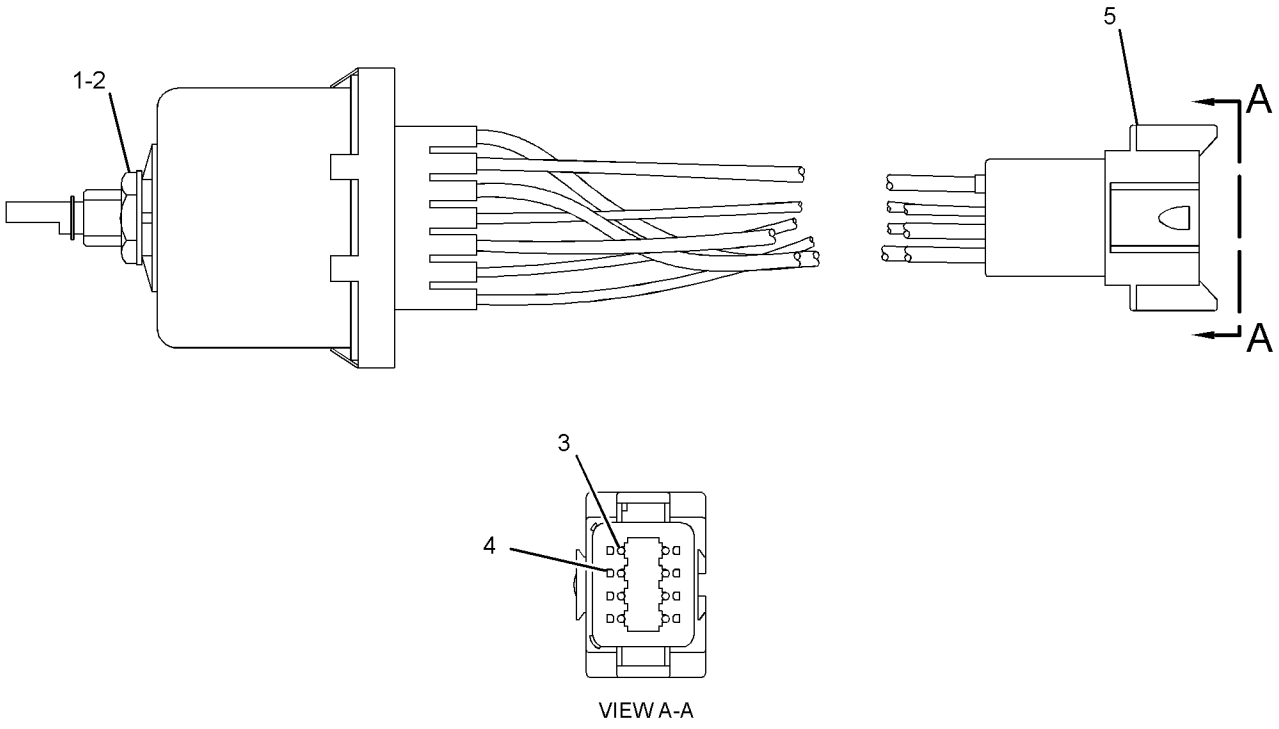

GRAPHIC #1 <END> g01445891

275-7764 SWITCH GP-WIPER

S/N: W921-UP

24-VOLT, INTERMITTENT

PART OF 548-6725 COVER GP-CAB, 286-4825 WIPER GP-WINDOW

SMCS-7305, 7332 **i07576470**

NOTE	REF NO	GRAPHIC REF	PART NUMBER	QTY	PART NAME 1 2 3 4 5 6 (PRODUCT LEVEL)	SEE PAGE
Y	1	1	**275-7741**	1	SWITCH GP-WIPER (24-VOLT)	213
	2	1	**7T-9302**	1	KNOB AS-WIPER SWITCH (WASHER)	
		1	**014-0816**	1	SETSCREW (8-32X0.5-IN)	

Y - SEPARATE ILLUSTRATION

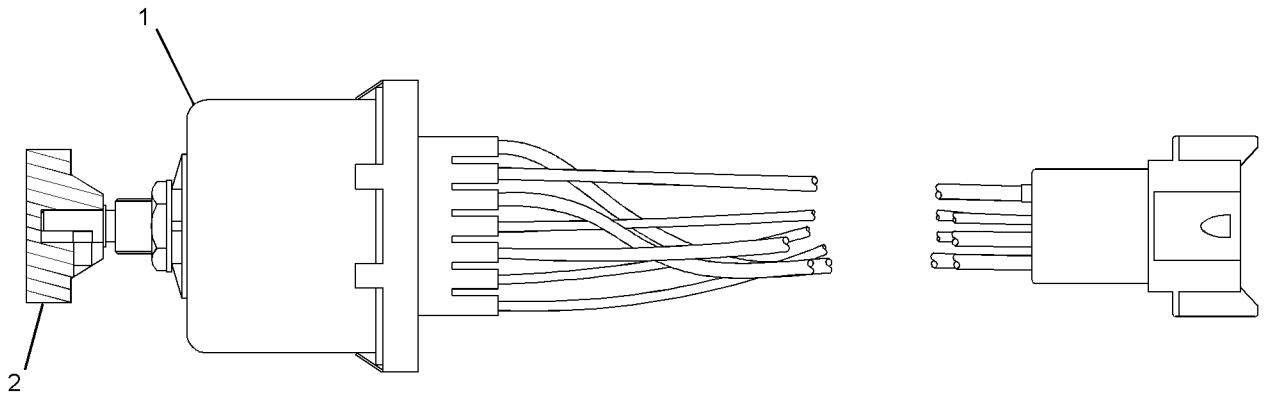

GRAPHIC #1 <END> g01516002

533-6226 WIRING GP-AIR CONDITIONER

S/N: W921-UP

PART OF 533-5729, 533-5733 AIR CONDITIONER AR

SMCS-1408 **i07571544**

NOTE	REF NO	GRAPHIC REF	PART NUMBER	QTY	PART NAME 1 2 3 4 5 6 (PRODUCT LEVEL)	SEE PAGE
M	1	1	**518-2309**	1	BOLT (M10X1.5X20-MM)	
	2	1	**7K-1181**	10	STRAP-CABLE	
	3	1	**132-5789**	4	CLIP (LADDER)	
	4	1	**518-4417**	1	WASHER	
Y	5	1	**565-7554**	1	HARNESS AS-HEATER & AIR COND	161

M - METRIC PART
Y - SEPARATE ILLUSTRATION

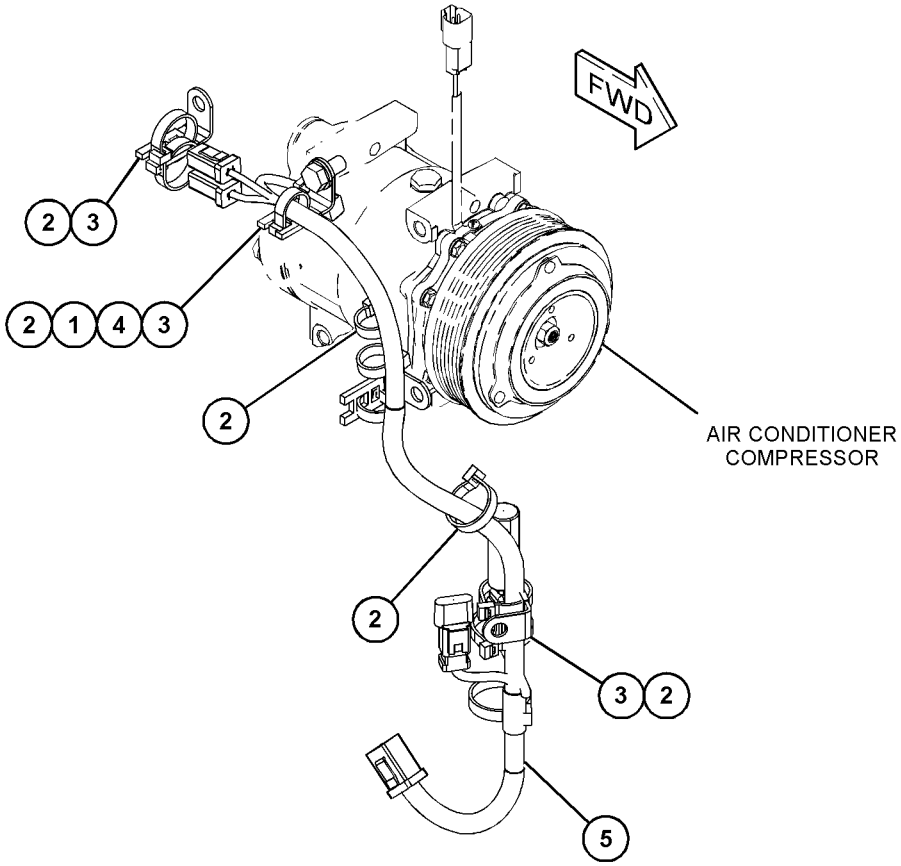

GRAPHIC #1 <END> g06369726

551-0457 WIRING GP-BLADE CUSHION

S/N: W921-UP

PART OF 537-5642 ACCUMULATOR AR-BLADE CUSHION

SMCS-1408 **i07579037**

NOTE	REF NO	GRAPHIC REF	PART NUMBER	QTY	PART NAME 1 2 3 4 5 6 (PRODUCT LEVEL)	SEE PAGE
M	1	1	**518-6585**	2	NUT-HEX (M10X1.5-THD)	
	2	1	**7K-1181**	1	STRAP-CABLE	
	3	1	**130-5300**	2	CLIP	
	4	1	**518-4417**	4	WASHER	
	5	1	**132-5789**	1	CLIP (LADDER)	
	6	1	**249-5487**	1	SWITCH AS-ROCKER (24-VOLT) (BLADE CUSHION)	
	7	1	**552-8845**	2	BOLT-HEAD (M10X1.5X80-MM)	

M - METRIC PART

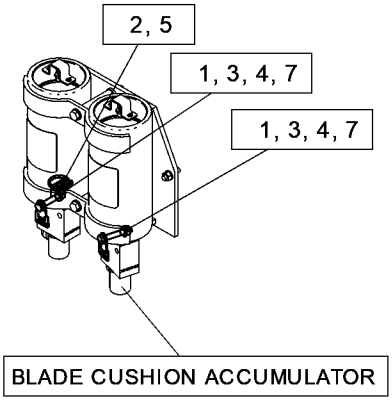

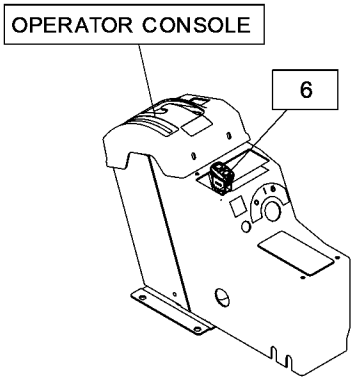

GRAPHIC #1 <END> g06376237

533-6225 WIRING GP-CAB

S/N: W921-UP

PART OF 537-5611, 537-5612, 537-5613, 537-5614 CAB AR

SMCS-1408 **i07576393**

NOTE	REF NO	GRAPHIC REF	PART NUMBER	QTY	PART NAME 1 2 3 4 5 6 (PRODUCT LEVEL)	SEE PAGE
M	1	1	**518-2309**	1	BOLT (M10X1.5X20-MM)	
M	2	1	**518-6585**	1	NUT-HEX (M10X1.5-THD)	
	3	1	**3S-2093**	37	STRAP-CABLE	
	4	1	**7K-1181**	4	STRAP-CABLE	
	5	1	**117-2311**	1	SOCKET-AUXILIARY POWER (12-VOLT)	
	6	1	**160-6382**	1	GROMMET	
	7	1	**096-6166**	3	WASHER-HARD (4.5X9X1-MM THK)	
	8	1	**169-8938**	1	PLATE AS	
Y	9	1	*3E-6389*	1	LAMP GP-DOME (24-VOLT) (LED)	175
	10	1	**518-4417**	2	WASHER	
Y	11	1	**566-9225**	1	HARNESS AS-CAB (CAB WORK LIGHTS)	155
M	12	1	**5C-8312**	3	NUT (M4X0.7-THD)	
	13	1	**9G-1307**	3	GROMMET	
	14	1	**9M-5733**	2	RIVET-POP	
M	15	1	**9X-1046**	3	SCREW (M4X0.7X18-MM)	
E	16	1	**7X-7877**		STRIP-EDGE (27.5-CM)	
	16A	1	**7X-7877**		STRIP-EDGE (12-CM)	
	16B	1	**7X-7877**		STRIP-EDGE (10-CM)	
	16C	1	**7X-7877**		STRIP-EDGE (18-CM)	
	16D	1	**7X-7877**		STRIP-EDGE (15-CM)	
	16E	1	**7X-7877**		STRIP-EDGE (20-CM)	
B	17	1	**1P-0810**		TAPE-ELECTRICAL	

B - USE AS REQUIRED
E - ORDER BY THE CENTIMETER
M - METRIC PART
Y - SEPARATE ILLUSTRATION

533-6225 **WIRING GP-CAB (**contd.**)** **i07576393**

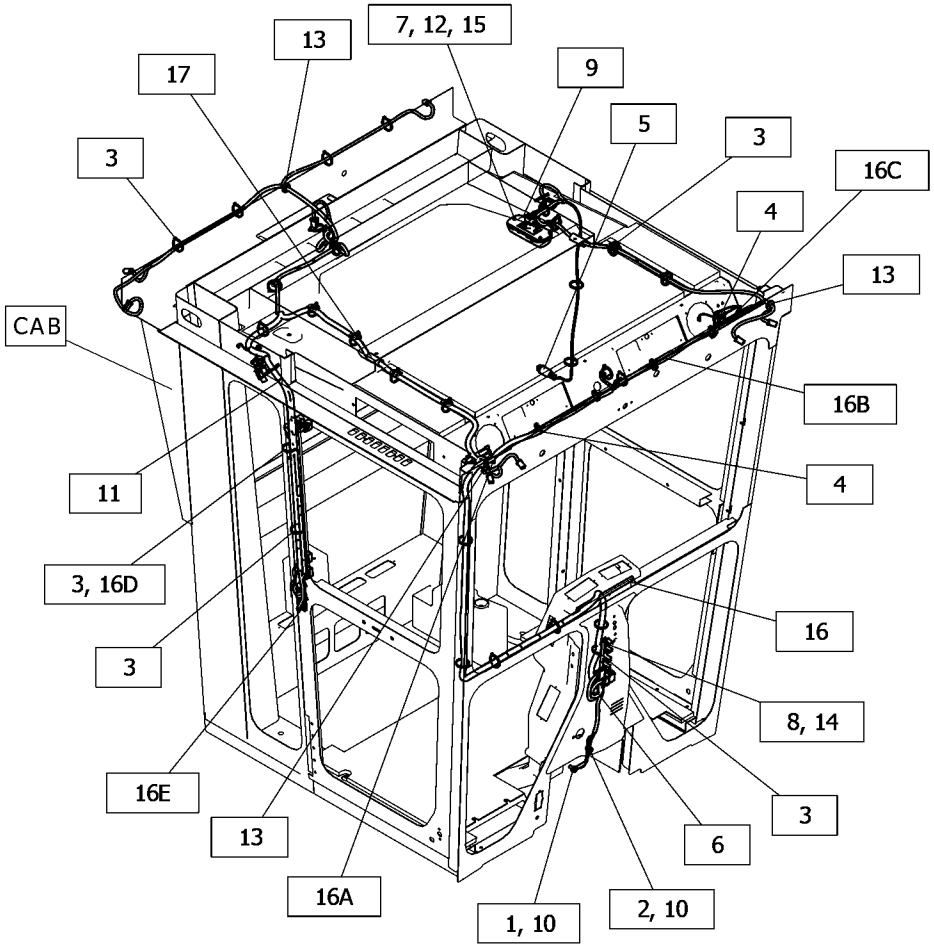

GRAPHIC #1 <END> g06369999

533-6231 WIRING GP-CAMERA

S/N: W921-UP

PART OF 533-6223 CAMERA AR

SMCS-1408, 7348 **i07581675**

NOTE	REF NO	GRAPHIC REF	PART NUMBER	QTY	PART NAME 1 2 3 4 5 6 (PRODUCT LEVEL)	SEE PAGE
	1	1	**518-4416**	4	WASHER (8.4X16X1.6-MM THK)	
M	2	1	**518-8387**	4	BOLT (M8X1.25X20-MM)	
Y	3	1	**533-6235**	1	HARNESS AS-MONITOR	163
	4	1	**251-8248**	2	CABLE AS-COMMUNICATION	
	5	1	**258-7485**	1	BRACKET	
	6	1	**283-0657**	1	CABLE AS (VIDEO, 3-M)	
J	7	1	**347-1668**	1	CAMERA AS (115-DEG, COLOR)	
	8	1	**4P-7581**	1	CLIP (LADDER)	
	9	1	**7K-1181**	6	STRAP-CABLE	
					AVAILABLE REPAIR KIT(S):	
J			**251-4162**	1	KIT-BRACKET (CAMERA)	
					(INCLUDES BRACKETS, BOLTS, LOCK NUTS, GASKETS, WASHERS & WRENCH)	

J - KIT MARKED J SERVICES PART(S) MARKED J
M - METRIC PART
Y - SEPARATE ILLUSTRATION

533-6231 **WIRING GP-CAMERA (**contd.**)** **i07581675**

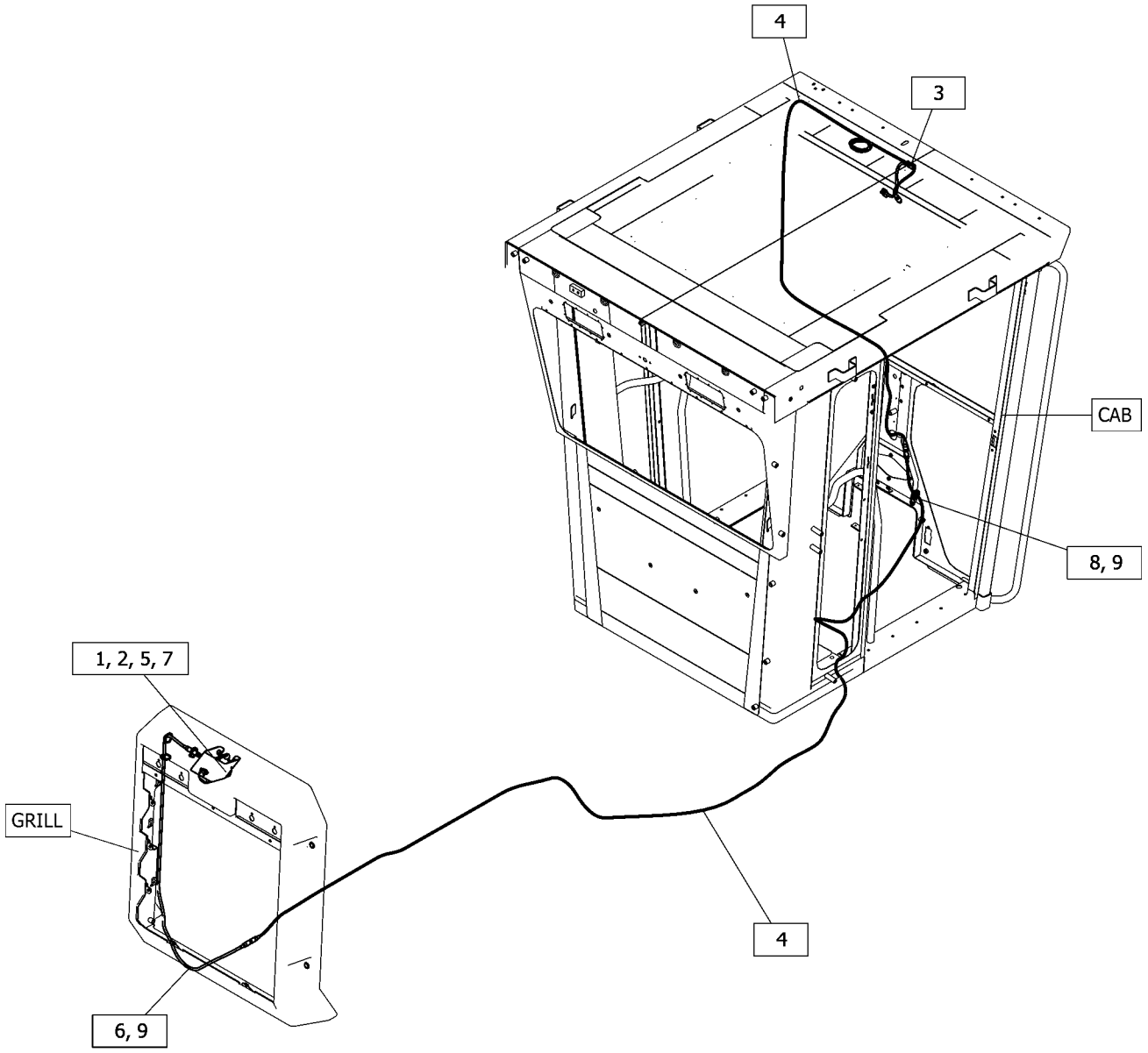

GRAPHIC #1 <END> g06373557

533-6201 WIRING GP-CHASSIS

S/N: W921-UP

PART OF 533-6200 ELECTRICAL AR

SMCS-1408, 7051 **i07544661**

NOTE	REF NO	GRAPHIC REF	PART NUMBER	QTY	PART NAME 1 2 3 4 5 6 (PRODUCT LEVEL)	SEE PAGE
	1	1	**7K-1181**	5	STRAP-CABLE	
Y	2	1	**565-8382**	1	HARNESS AS-FRONT	160

Y - SEPARATE ILLUSTRATION

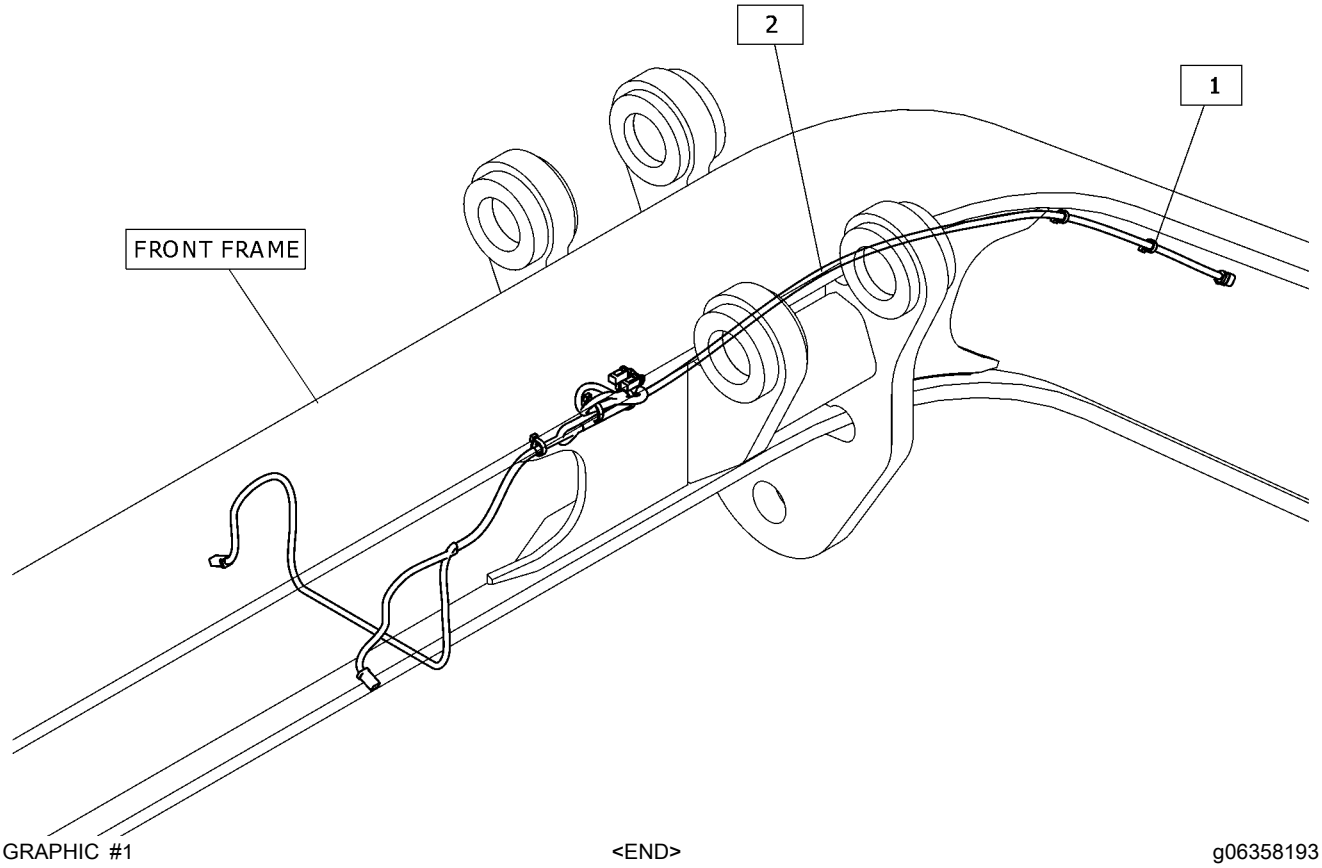

GRAPHIC #1 <END> g06358193

533-6203 WIRING GP-CONSOLE–STEERING

S/N: W921-UP

PART OF 533-6200 ELECTRICAL AR

SMCS-1408 **i07544698**

NOTE	REF NO	GRAPHIC REF	PART NUMBER	QTY	PART NAME 1 2 3 4 5 6 (PRODUCT LEVEL)	SEE PAGE
M	1	1	**518-2309**	5	BOLT (M10X1.5X20-MM)	
	2	1	**518-4416**	2	WASHER (8.4X16X1.6-MM THK)	
M	3	1	**518-8386**	2	BOLT (M8X1.25X16-MM)	
	4	1	**3G-1701**	1	SPRING	
	5	1	**3S-2093**	2	STRAP-CABLE	
	6	1	**5T-4030**	1	BRACKET	
	7	1	**7I-4698**	1	RING	
	8	1	**7I-4699**	1	INSULATOR	
	9	1	**7K-1181**	18	STRAP-CABLE	
	10	1	**009-4184**	4	SPRING-HORN	
	11	1	**009-4185**	4	BRUSH-HORN	
	12	1	**091-9071**	1	SEAL-HORN BUTTON	
	13	1	**098-7467**	1	BUTTON	
	14	1	**169-3145**	1	WIRE AS	
	15	1	**179-4814**	3	PIN	
	16	1	**228-6089**	4	PLUG (ROCKER SWITCH)	
	17	1	**236-4631**	5	BEZEL	
	18	1	**518-3664**	2	SCREW-MACHINE	
	19	1	**518-3667**	4	SCREW	
	20	1	**518-4417**	5	WASHER	
	21	1	**518-6581**	2	NUT-HEX	
	22	1	**518-9741**	2	WASHER	
	23	1	**536-5577**	1	BRACKET	
	24	1	**130-5300**	2	CLIP	
	25	1	**132-5789**	4	CLIP (LADDER)	
	26	1	**191-3587**	1	SWITCH AS-LIMIT (BRAKE PEDAL)	
		1	**8T-8729**	3	PIN-CONNECTOR (16-GA TO 18-GA)	
		1	**9G-3695**	1	PLUG-SEAL	
		1	**102-8804**	1	KIT-RECEPTACLE (4-PIN)	
					(INCLUDES RECEPTACLE AS & WEDGE)	
	27	1	**344-7391**	1	SENSOR-PRESSURE (EJECTOR)	
	28	1	**3J-1907**	1	SEAL-O-RING	
	29	1	**4P-7581**	2	CLIP (LADDER)	
	30	1	**4S-1962**	2	CLIP (LOOP)	
	31	1	**518-3666**	2	SCREW	
M	32	1	**518-6583**	1	NUT-HEX (M6X1-THD)	
	33	1	**518-9735**	1	WASHER (6.4X18X1.6-MM THK)	
	34	1	**563-6633**	1	BRACKET	
	35	1	**565-8380**	1	HARNESS AS-CONSOLE	
	35A	1	**248-2841**	1	RELAY AS (24-VOLT) (POSITION LAMP, LH)	
	35B	1	**248-2841**	1	RELAY AS (24-VOLT) (POSITION LAMP, RH)	
	35C	1	**248-2841**	1	RELAY AS (24-VOLT) (FORWARD HORN)	
	35D	1	**248-2841**	1	RELAY AS (24-VOLT) (BACKUP ALARM)	
	35E	1	**113-8490**	22	FUSE (10-AMPERE)	
	35F	1	**113-8491**	6	FUSE (15-AMPERE)	
	35G	1	**113-8492**	3	FUSE (20-AMPERE)	
	35H	1	**141-2760**	3	FUSE (7.5-AMPERE)	
		1	**124-3548**	2	FUSE (30-AMPERE)	

533-6203 **WIRING GP-CONSOLE (**contd.**)** **i07544698**

NOTE	REF NO	GRAPHIC REF	PART NUMBER	QTY	PART NAME 1 2 3 4 5 6 (PRODUCT LEVEL)	SEE PAGE
		1	**347-4716**	1	BLOCK AS-FUSE	
		1	**330-3341**	1	COVER-FUSE HOLDER	
		1	**486-7435**	1	SEAL-COVER	
		1	**374-7463**	1	CAP-SEAL	
		1	**374-7466**	1	CAP-SEAL	
		1	**274-3782**	1	CAP-SEAL	
		1	**274-3785**	1	CAP-SEAL	
		1	**280-2709**	4	CIRCUIT BREAKER AS (15-AMPERE, MANUAL RESET)	
		1	**155-2255**	2	KIT-CONNECTING PLUG (12-PIN)	
		1	**155-2265**	1	KIT-CONNECTING PLUG (8-PIN)	
		1	**155-2270**	3	KIT-CONNECTING PLUG (2-PIN)	
		1	**155-2271**	1	KIT-CONNECTING PLUG (4-PIN)	
		1	**155-2274**	1	KIT-CONNECTING PLUG (6-PIN)	
					(EACH PLUG KIT INCLUDES PLUG AS, WEDGE, & INTERFACE SEAL)	
		1	**245-7434**	6	KIT-CONNECTING PLUG (10-PIN)	
					(EACH INCLUDES CONNECTOR PLUG, WIRE ASSEMBLIES & PLUGS)	
		1	**102-8803**	1	KIT-RECEPTACLE (3-PIN)	
		1	**102-8805**	1	KIT-RECEPTACLE (6-PIN)	
		1	**102-8801**	1	KIT-RECEPTACLE (12-PIN)	
					(EACH RECEPTACLE KIT INCLUDES RECEPTACLE AS & WEDGE)	
		1	**310-0674**	1	LOCKWASHER	
		1	**211-0052**	1	NUT (1-11/16-18-THD)	
		1	**8N-1548**	1	PIN-CONNECTOR (4-GA)	
		1	**8T-8729**	18	PIN-CONNECTOR (16-GA TO 18-GA)	
		1	**9W-0852**	5	PIN-CONNECTOR (14-GA TO 16-GA)	
		1	**202-5397**	25	PLUG	
		1	**127-5483**	1	PLUG AS-CONNECTOR (1-PIN)	
		1	**129-7163**	1	PLUG AS-CONNECTOR (1-PIN)	
		1	**167-3693**	2	PLUG AS-CONNECTOR (31-PIN)	
		1	**230-4009**	1	PLUG AS-CONNECTOR (12-PIN)	
		1	**455-0709**	1	SEAL-CONNECTOR	
		1	**230-4013**	1	PLUG AS-CONNECTOR (3-PIN)	
		1	**455-0705**	1	SEAL-CONNECTOR	
		1	**230-5008**	1	PLUG AS-CONNECTOR (4-PIN)	
		1	**455-0706**	1	SEAL-CONNECTOR	
		1	**7R-2751**	20	PLUG-CONNECTOR (1-PIN)	
		1	**8T-8737**	26	PLUG-SEAL	
		1	**7G-7918**	1	PLUG-SEAL	
		1	**7G-7920**	1	PLUG-SEAL	
		1	**242-1555**	1	PULLER-FUSE	
		1	**127-5484**	1	RECEPTACLE AS-CONNECTOR (1-PIN)	
		1	**129-7164**	1	RECEPTACLE AS-CONNECTOR (1-PIN)	
		1	**361-2945**	1	RECEPTACLE AS	
		1	**7R-2750**	47	SEAL-CONNECTOR	
		1	**128-5016**	23	SEAL-CABLE	
		1	**185-1860**	27	SEAL-WIRE	
		1	**185-1861**	8	SEAL-WIRE	
		1	**8N-1541**	1	SOCKET-CONNECTOR (12-GA TO 14-GA)	
		1	**8N-1549**	1	SOCKET-CONNECTOR (4-GA)	

533-6203 **WIRING GP-CONSOLE (**contd.**)** **i07544698**

NOTE	REF NO	GRAPHIC REF	PART NUMBER	QTY	PART NAME 1 2 3 4 5 6 (PRODUCT LEVEL)	SEE PAGE
		1	**8T-8730**	83	SOCKET-CONNECTOR (16-GA TO 18-GA)	
		1	**9W-0844**	15	SOCKET-CONNECTOR (14-GA TO 16-GA)	
		1	**9X-3402**	7	SOCKET-CONNECTOR (16-GA TO 18-GA)	
		1	**3S-2093**	4	STRAP-CABLE	
		1	**189-3158**	1	SUPPRESSOR-ARC	
B		1	**329-3734**		TAPE-ELECTRICAL	
		1	**196-2412**	48	TERMINAL AS (16-GA)	
		1	**196-2413**	22	TERMINAL AS (12-GA)	
		1	**5P-4571**	6	TERMINAL-BLADE (14-GA TO 16-GA)	
		1	**204-1297**	27	TERMINAL AS-BLADE (18-GA TO 20-GA)	
					(EACH INCLUDES)	
		1	**235-4123**	1	TERMINAL (18-GA TO 20-GA)	
		1	**283-6447**	2	TERMINAL-RING	
		1	**223-4779**	8	TERMINAL-BLADE (14-GA TO 16-GA)	
E		1	**119-3662**		TUBE-HEAT SHRINK (10.85-MM DIA) (20-CM)	
E		1	**125-7874**		TUBE-HEAT SHRINK (5.72-MM DIA) (70-CM)	
E		1	**125-7875**		TUBE-HEAT SHRINK (7.44-MM DIA) (25-CM)	
		1	**155-2258**	2	WEDGE-PLUG LOCK (12-PIN)	
		1	**155-2259**	1	WEDGE-PLUG LOCK (8-PIN)	
		1	**3E-3371**	1	WEDGE-RECEPTACLE LOCK (3-PIN)	
		1	**3E-3383**	1	WEDGE-RECEPTACLE LOCK (6-PIN)	
	36	1	**5P-9297**	1	CLIP (LOOP)	
	37	1	**6D-4244**	1	CLIP (LOOP)	
	38	1	**7I-4696**	1	RETAINER	
M	39	1	**9X-6155**	1	BOLT-SOCKET HEAD (M6X1X16.7-MM)	

B - USE AS REQUIRED
E - ORDER BY THE CENTIMETER
M - METRIC PART

533-6203 **WIRING GP-CONSOLE (**contd.**)** **i07544698**

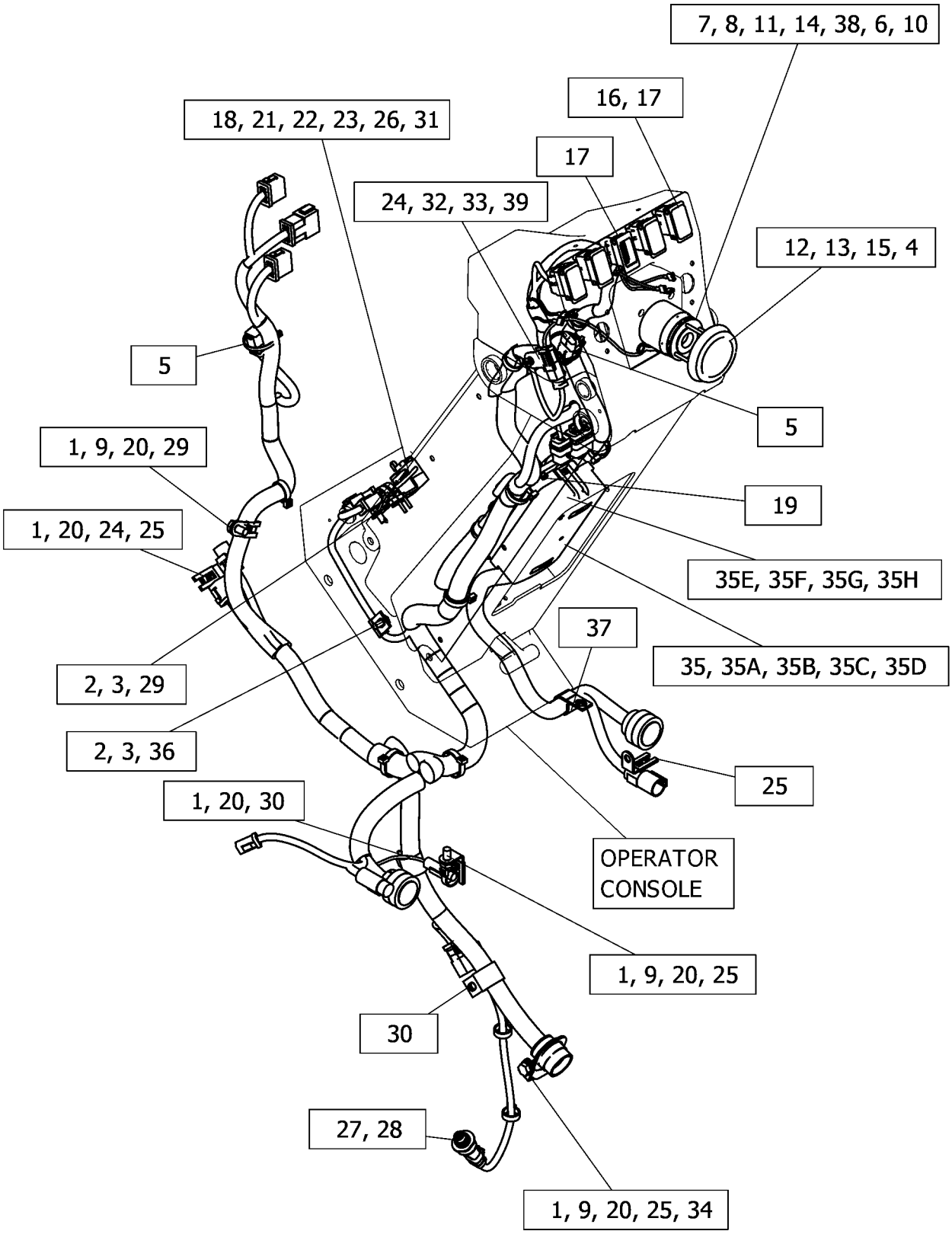

GRAPHIC #1 <END> g06375418

533-6204 WIRING GP-CONSOLE–SHIFT

S/N: W921-UP

PART OF 533-6200 ELECTRICAL AR

SMCS-1408 **i07544709**

NOTE	REF NO	GRAPHIC REF	PART NUMBER	QTY	PART NAME 1 2 3 4 5 6 (PRODUCT LEVEL)	SEE PAGE
M	1	1	**518-2310**	3	BOLT (M10X1.5X25-MM)	
M	2	1	**518-6585**	3	NUT-HEX (M10X1.5-THD)	
M	3	1	**518-2309**	5	BOLT (M10X1.5X20-MM)	
	4	1	**3S-2093**	2	STRAP-CABLE	
	5	1	**7K-1181**	6	STRAP-CABLE	
	6	1	**228-6089**	1	PLUG (ROCKER SWITCH) (CENTERSHIFT)	
	6A	1	**228-6089**	1	PLUG (ROCKER SWITCH) (BLADE CUSHION)	
	6B	1	**228-6089**	1	PLUG (ROCKER SWITCH) (AWD MODE)	
	7	1	**236-4631**	7	BEZEL	
	8	1	**360-1767**	1	SWITCH AS-ROCKER (24-VOLT) (THROTTLE LOCK)	
	9	1	**367-5213**	1	SWITCH AS-ROCKER (24-VOLT) (PARKING BRAKE)	
	10	1	**487-6473**	1	SWITCH AS-ROCKER (24-VOLT) (ECONOMY MODE)	
	11	1	**518-4417**	11	WASHER	
	12	1	**100-3245**	1	LAMP (24-VOLT, 0.17-AMPERE) (INDICATOR)	
	13	1	**130-5300**	4	CLIP	
	14	1	**169-5414**	1	CLIP	
	15	1	**249-5481**	1	SWITCH AS-ROCKER (24-VOLT) (SPEED CONTROL)	
	16	1	**2V-8259**	1	GROMMET	
	17	1	**325-9407**	1	FILM-IDENTIFICATION (WRITE DATA)	
	18	1	**335-5365**	1	SOCKET-AUXILIARY POWER (12-VOLT)	
Y	19	1	**3E-6328**	1	ALARM GP (24-VOLT) (ACTION)	128
	20	1	**467-8535**	1	SWITCH AS-START (KEY)	
		1	**7T-6799**	1	NUT-MOUNTING (1-32-THD)	
		1	**8T-8729**	4	PIN-CONNECTOR (16-GA TO 18-GA)	
		1	**102-8804**	1	KIT-RECEPTACLE (4-PIN)	
					(INCLUDES RECEPTACLE AS & WEDGE)	
	21	1	**4P-7581**	5	CLIP (LADDER)	
	22	1	**536-5579**	1	SUPPORT	
	23	1	**536-5580**	1	BRACKET	
Y	24	1	**566-4210**	1	HARNESS AS-CONSOLE (ROCKER SWITCH)	156
Y	25	1	**566-9224**	1	HARNESS AS-CONSOLE (THROTTLE LOCK)	157
	26	1	**7G-7053**	1	GROMMET	
	27	1	**7X-4736**	1	GROMMET	
	28	1	**7X-4743**	2	GROMMET	
	29	1	**9R-2620**	1	PLUG	

M - METRIC PART
Y - SEPARATE ILLUSTRATION

533-6204 **WIRING GP-CONSOLE (**contd.**)** **i07544709**

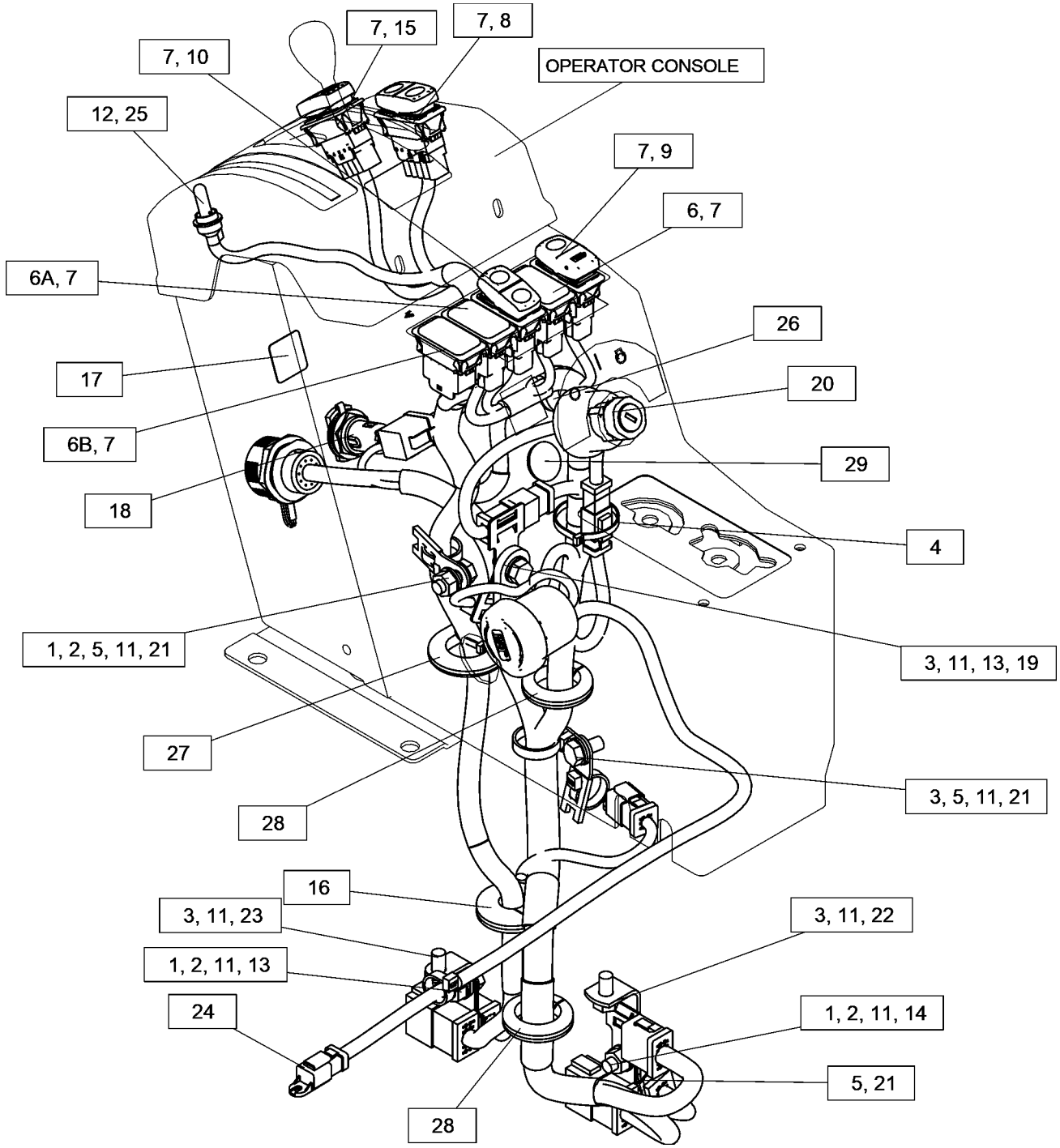

GRAPHIC #1 <END> g06374842

395-0113 WIRING GP-ENGINE

S/N: E7A1-UP

PART OF 533-1826, 533-1840 ENGINE AR-PRIMARY

SMCS-1408 **i06997752**

NOTE	REF NO	GRAPHIC REF	PART NUMBER	QTY	PART NAME 1 2 3 4 5 6 (PRODUCT LEVEL)	SEE PAGE
C	1	1	**033-6034**	3	SEAL-O-RING	
C	2	1	**277-5065**	3	CLIP	
M	3	1	**124-3815**	4	BOLT (M8X1.25X16-MM)	
	4	1	**217-9039**	1	STRAP-CABLE	
	5	1	**348-4637**	1	BOLT	
CY	6	1	**375-8407**	3	HARNESS AS-WIRING (INJECTOR)	171
	7	1	**377-1293**	1	BRACKET	
Y	8	1	**385-5997**	1	HARNESS AS-ENGINE	159
	9	1	**389-3863**	1	BRACKET	
	10	1	**392-2780**	1	BRACKET	
	11	1	**132-5789**	1	CLIP (LADDER)	
M	12	1	**232-1693**	1	BOLT-FLANGE HEAD (M6X1X35-MM)	

C - CHANGE FROM PREVIOUS TYPE
M - METRIC PART
Y - SEPARATE ILLUSTRATION

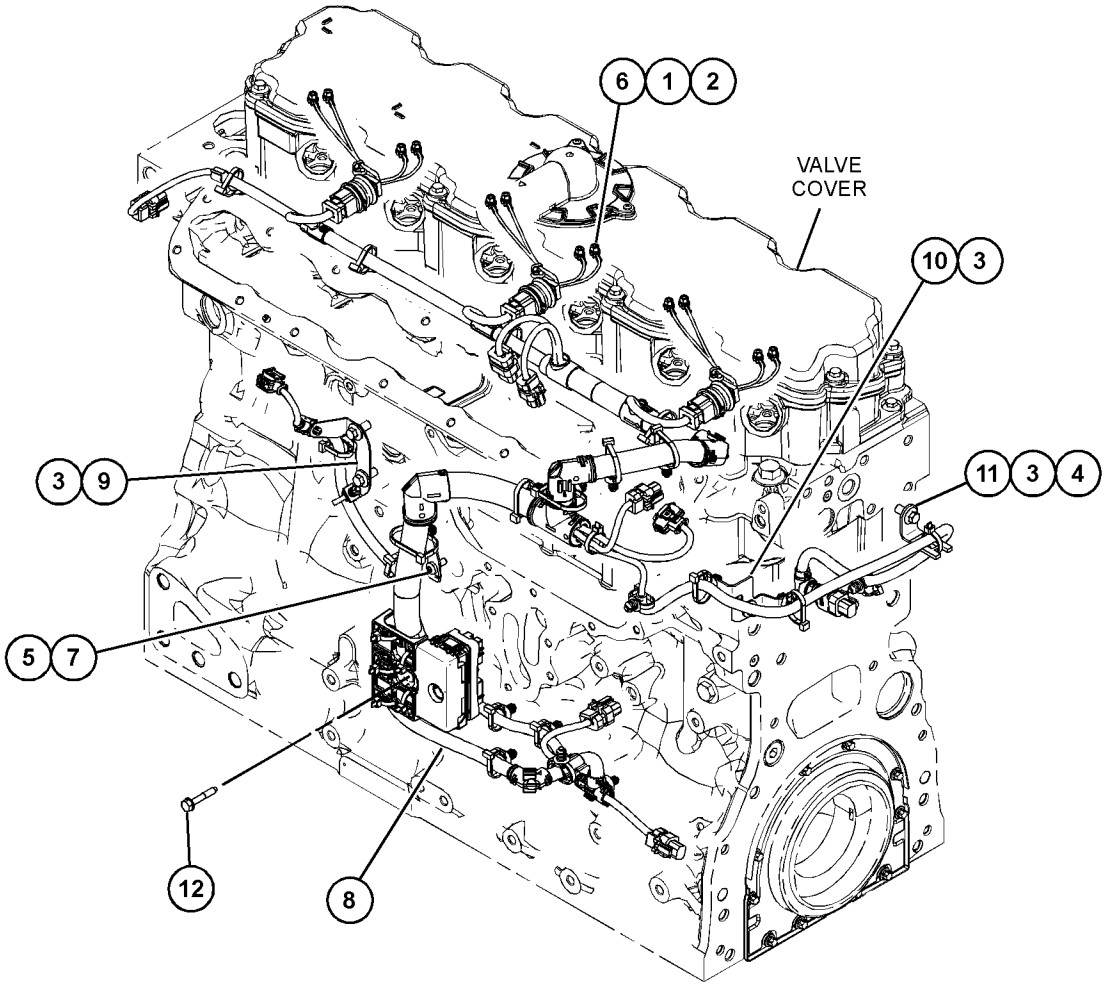

GRAPHIC #1 <END> g06177895

533-6220 WIRING GP-FRONT LIGHTING

S/N: W921-UP

PART OF 537-5632 LIGHTING AR-FLOOD & SIGNAL

SMCS-1408 **i07577485**

NOTE	REF NO	GRAPHIC REF	PART NUMBER	QTY	PART NAME 1 2 3 4 5 6 (PRODUCT LEVEL)	SEE PAGE
M	1	1	**518-2309**	6	BOLT (M10X1.5X20-MM)	
	2	1	**518-4415**	18	WASHER (6.4X12X1.6-MM THK)	
	3	1	**518-8246**	6	BOLT (M6X1X16-MM)	
	4	1	**7K-1181**	26	STRAP-CABLE	
Y	5	1	**379-3416**	2	LAMP GP-SIGNAL (24-VOLT) (REVERSE)	184
M	6	1	**518-6583**	12	NUT-HEX (M6X1-THD)	
Y	7	1	**536-5582**	1	HARNESS AS-REAR LIGHTING	168
Y	8	1	**395-2113**	2	LAMP GP-SIGNAL (24-VOLT, LED) (STOP, TAIL, TURN)	185
	9	1	**4P-7581**	6	CLIP (LADDER)	
	10	1	**518-4417**	6	WASHER	
Y	11	1	*549-0877*	1	BRACKET GP-MOUNTING (RH)	138
Y	12	1	*549-0888*	1	BRACKET GP-MOUNTING (LH)	139
	13	1	**560-4458**	1	BRACKET AS (RH)	
	14	1	**560-4459**	1	BRACKET AS (LH)	
Y	15	1	**566-9228**	2	HARNESS AS-LIGHTING (STOP, TAIL LIGHTS)	163
	16	1	**7G-7053**	2	GROMMET	

M - METRIC PART
Y - SEPARATE ILLUSTRATION

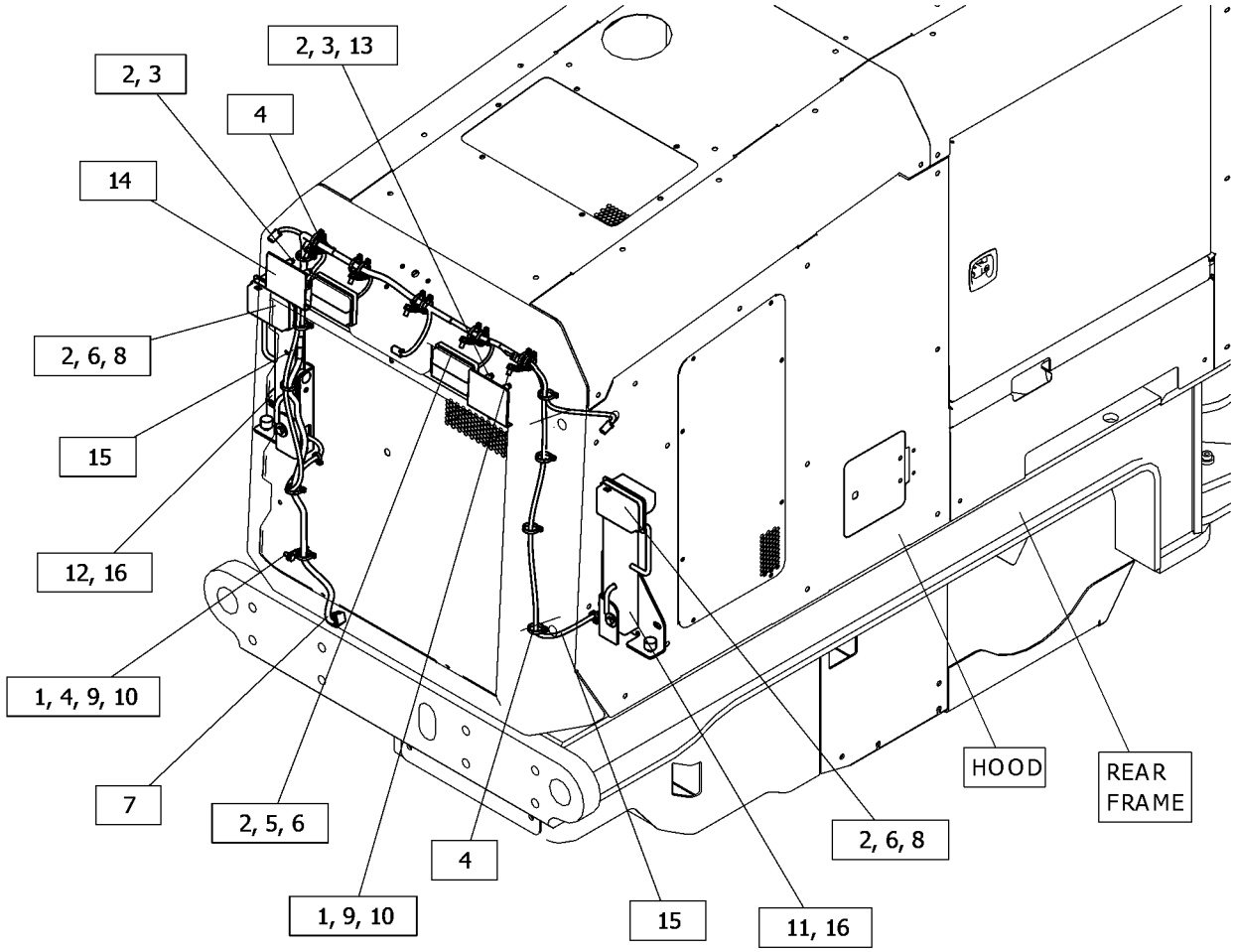

GRAPHIC #1 <END> g06370830

536-5571 WIRING GP-FRONT LIGHTING

S/N: W921-UP

PART OF 537-5631, 537-5633 LIGHTING AR-FLOOD & SIGNAL

SMCS-1408 **i07577313**

NOTE	REF NO	GRAPHIC REF	PART NUMBER	QTY	PART NAME 1 2 3 4 5 6 (PRODUCT LEVEL)	SEE PAGE
M	1	1	**518-2309**	6	BOLT (M10X1.5X20-MM)	
	2	1	**518-4415**	12	WASHER (6.4X12X1.6-MM THK)	
	3	1	**7K-1181**	17	STRAP-CABLE	
Y	4	1	**379-3416**	2	LAMP GP-SIGNAL (24-VOLT) (REVERSE)	184
M	5	1	**518-6583**	12	NUT-HEX (M6X1-THD)	
Y	6	1	**536-5582**	1	HARNESS AS-REAR LIGHTING	168
Y	7	1	**395-2113**	2	LAMP GP-SIGNAL (24-VOLT, LED) (STOP, TAIL, TURN)	185
	8	1	**4P-7581**	6	CLIP (LADDER)	
	9	1	**518-4417**	6	WASHER	

M - METRIC PART
Y - SEPARATE ILLUSTRATION

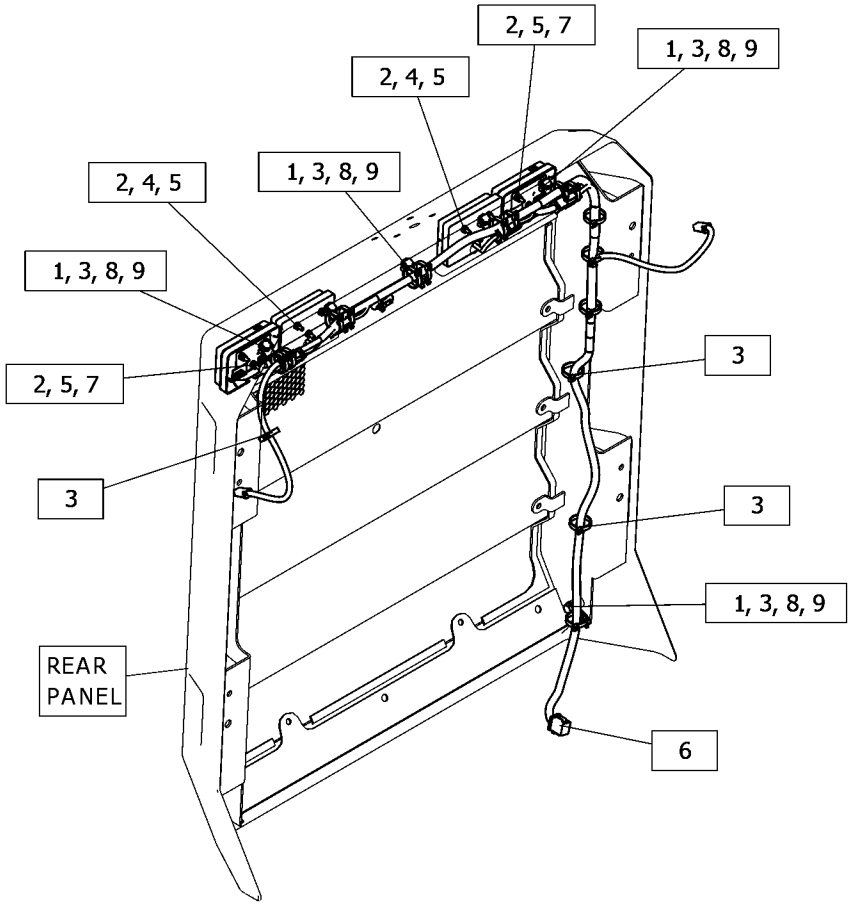

GRAPHIC #1 <END> g06373860

533-6224 WIRING GP-GRADE CONTROL–BLADE SLOPE

S/N: W921-UP

SMCS-1408 **i07560795**

NOTE	REF NO	GRAPHIC REF	PART NUMBER	QTY	PART NAME 1 2 3 4 5 6 (PRODUCT LEVEL)	SEE PAGE
	1	1	**518-8390**	3	BOLT-HEAD	
M	2	1	**518-2309**	5	BOLT (M10X1.5X20-MM)	
	3	1	**518-4416**	3	WASHER (8.4X16X1.6-MM THK)	
	4	1	**7K-1181**	12	STRAP-CABLE	
	5	1	**150-5785**	2	DOWEL	
	6	1	**528-2408**	1	SWITCH AS-ROCKER (24-VOLT)	
	7	1	**132-5789**	1	CLIP (LADDER)	
	8	1	**4P-7581**	2	CLIP (LADDER)	
	9	1	**518-4417**	5	WASHER	
	10	1	**536-5585**	1	PLATE	
	11	1	**563-0598**	1	SENSOR AS-POSITION (INERTIAL MEASUREMENT UNIT) (BLADE ANGLE)	
Y	12	1	**567-3408**	1	HARNESS AS-SENSOR (BLADE SLOPE)	171
	13	1	**6D-4246**	3	CLIP (LOOP)	

M - METRIC PART
Y - SEPARATE ILLUSTRATION

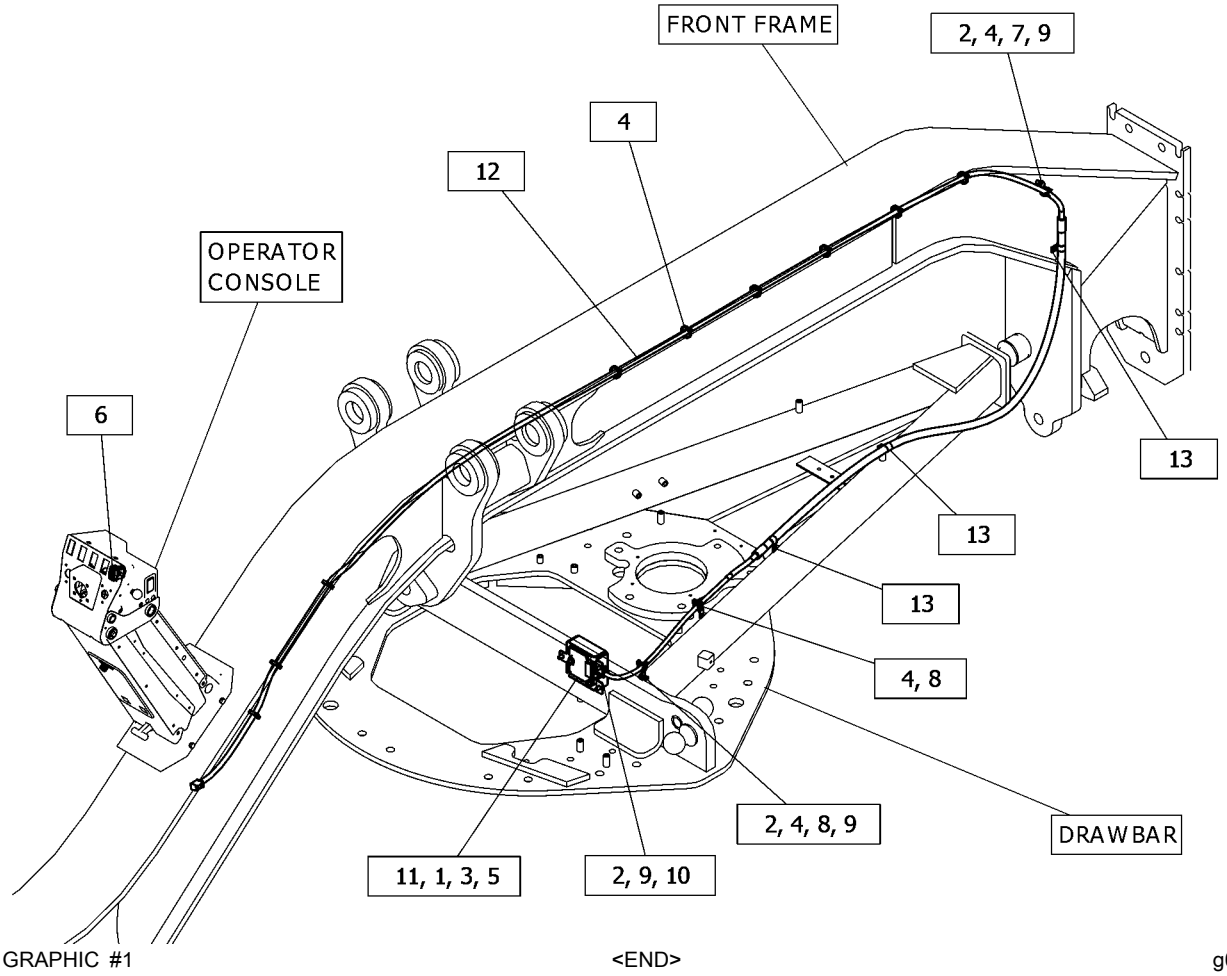

GRAPHIC #1 <END> g06366774

533-6205 WIRING GP-REAR

S/N: W921-UP

PART OF 533-6200 ELECTRICAL AR

SMCS-1408 **i07544721**

NOTE	REF NO	GRAPHIC REF	PART NUMBER	QTY	PART NAME 1 2 3 4 5 6 (PRODUCT LEVEL)	SEE PAGE
	1	1	**518-2312**	1	BOLT (M10X1.5X35-MM)	
M	2	1,2	**518-2309**	49	BOLT (M10X1.5X20-MM)	
M	3	1,2	**518-2310**	12	BOLT (M10X1.5X25-MM)	
	4	1,2	**518-4415**	5	WASHER (6.4X12X1.6-MM THK)	
	5	2	**518-4416**	4	WASHER (8.4X16X1.6-MM THK)	
	6	1	**518-6584**	2	NUT-HEX (M8X1.25-THD)	
M	7	1	**518-6585**	2	NUT-HEX (M10X1.5-THD)	
M	8	1	**518-8387**	2	BOLT (M8X1.25X20-MM)	
	9	1	**518-9736**	4	WASHER (8.8X20.5X2-MM THK)	
	10	1	**3E-5239**	1	RELAY AS (24-VOLT)	
	11	1	**3S-2093**	1	STRAP-CABLE	
	12	1,2	**7K-1181**	65	STRAP-CABLE	
	13	1	**320-3065**	1	SENSOR GP-PRESSURE	
M	14	2	**518-6583**	1	NUT-HEX (M6X1-THD)	
	15	2	**536-5558**	1	BRACKET AS	
	16	2	**536-5590**	1	BRACKET	
	17	1	**091-9035**	1	SPACER (11X25X20-MM THK)	
	18	1,2	**130-5300**	6	CLIP	
	19	1,2	**132-5789**	13	CLIP (LADDER)	
	20	2	**132-7551**	1	SPACER (11X19X6-MM THK)	
	21	2	**166-0690**	1	BLOCK AS-MOUNTING	
	22	2	**171-2210**	2	CIRCUIT BREAKER AS (80-AMPERE)	
					(EACH INCLUDES)	
		2	**1H-3244**	2	LOCKWASHER	
		2	**4E-5724**	2	WASHER (7X12X1-MM THK)	
		2	**8T-0122**	2	NUT-FULL (1/4-28-THD)	
	23	1	**184-6636**	1	PLATE-INFORMATION (ENGINE SHUTOFF)	
	24	2	**186-3223**	1	PLATE AS	
	25	1	**213-9100**	1	ALARM AS (BACKUP)	
		1	**102-8802**	1	KIT-RECEPTACLE (2-PIN)	
					(INCLUDES RECEPTACLE AS & WEDGE)	
		1	**8T-8729**	2	PIN-CONNECTOR (16-GA TO 18-GA)	
E		1	**9X-1813**		SLEEVE (29-CM)	
H		1	**6A-3361**		WIRE-ELECTRICAL (16-GA) (4-DM)	
	26	2	**241-8368**	1	SWITCH GP-MAGNETIC (24-VOLT)	
		2	**4F-2294**	2	NUT-JAM (5/16-24-THD)	
		2	**8T-8730**	2	SOCKET-CONNECTOR (16-GA TO 18-GA)	
		2	**155-2270**	1	KIT-CONNECTING PLUG (2-PIN)	
					(INCLUDES PLUG AS, WEDGE, & INTERFACE SEAL)	
	27	1	**264-4297**	3	SENSOR AS-TEMPERATURE (2-PIN)	
					(EACH INCLUDES)	
		1	**137-6645**	1	PAD-CONNECTOR	
Y	28	2	**266-1467**	1	SENSOR GP-POSITION (ROTARY)	203
	29	2	**2F-7888**	2	SCREW-MACHINE (10-32X1.25-IN)	
	30	1	**352-3964**	3	CLIP (LADDER)	
	31	1	**353-4515**	1	SWITCH GP-TOGGLE	
		1	**102-8803**	1	KIT-RECEPTACLE (3-PIN)	

533-6205 **WIRING GP-REAR (**contd.**)** **i07544721**

NOTE	REF NO	GRAPHIC REF	PART NUMBER	QTY	PART NAME 1 2 3 4 5 6 (PRODUCT LEVEL)	SEE PAGE
					(INCLUDES RECEPTACLE AS & WEDGE)	
		1	**3E-3390**	3	PIN-CONNECTOR	
	32	1,2	**353-7957**	8	GROMMET	
	33	1	**357-3053**	1	SENSOR GP-SPEED	
		1	**102-8802**	1	KIT-RECEPTACLE (2-PIN)	
					(INCLUDES RECEPTACLE AS & WEDGE)	
		1	**8T-8729**	2	PIN-CONNECTOR (16-GA TO 18-GA)	
E		1	**9X-1813**		SLEEVE (14-CM)	
		1	**171-5349**	1	STRAP-MARKER	
	34	2	**3B-4618**	1	PIN-COTTER	
	35	1	**3E-5169**	1	GUARD-SWITCH	
	36	1	**3J-1907**	1	SEAL-O-RING	
	37	1	**3K-0360**	3	SEAL-O-RING	
	38	1,2	**415-4214**	2	PLATE AS	
					(EACH INCLUDES)	
M		1,2	**8T-3490**	1	NUT-WELD (M10X1.5-THD)	
	39	2	**477-3252**	2	BRACKET AS	
	40	2	**4B-4274**	2	WASHER (5.5X13X1.2-MM THK)	
	41	2	**4M-5281**	2	BOLT (1/4-20X0.75-IN)	
	42	1,2	**4P-7581**	26	CLIP (LADDER)	
	43	1,2	**518-4417**	64	WASHER	
	44	2	**518-6580**	1	NUT-HEX	
	45	1,2	**518-8247**	4	BOLT	
	46	2	**518-8388**	4	BOLT	
	47	2	**518-9742**	4	WASHER (5.5X13X1.2-MM THK)	
	48	2	**533-6246**	1	CABLE AS	
D		2	**6V-2369**		CABLE (4-GA, BLACK) (0.5-M)	
		2	**5P-3454**	1	TERMINAL-RING (4-GA, 5/16-IN SCREW)	
E		2	**125-7876**		TUBE-HEAT SHRINK (17.78-MM DIA) (4-CM)	
		2	**316-5240**	1	COVER-TERMINAL	
	49	1	**536-5569**	1	STRAP AS-GROUND	
	50	1	**536-5570**	1	CABLE AS	
E		1	**8C-0596**		CABLE (2-GA) (64-CM)	
		1	**030-1712**	1	TERMINAL-RING (2-GA, 1/4-IN SCREW)	
E		1	**125-7876**		TUBE-HEAT SHRINK (17.78-MM DIA) (3-CM)	
E		1	**125-7876**		TUBE-HEAT SHRINK (17.78-MM DIA) (4-CM)	
		1	**311-6184**	1	TERMINAL-RING (2-GA, 3/8-IN SCREW)	
	51	1	**536-5589**	1	BRACKET	
	52	2	**549-4733**	2	BRACKET AS	
	53	2	**561-0697**	1	LINKAGE	
	54	2	**561-0698**	1	ROD END	
	55	2	**561-0699**	1	ROD END	
	56	2	**561-0700**	1	BAR	
	57	1	**565-3449**	1	BRACKET	
	58	2	**565-8379**	1	PLATE	
Y	59	1	**565-8384**	1	HARNESS AS-SENSOR	169
Y	60	1	**565-8385**	1	HARNESS AS-REAR	167
Y	61	2	**566-4202**	1	HARNESS AS-SENSOR	170
	62	1	**566-4203**	1	BRACKET AS	
	63	2	**566-4205**	1	HARNESS AS-WIRING	
		2	**8N-1548**	1	PIN-CONNECTOR (4-GA)	

533-6205 **WIRING GP-REAR (**contd.**)** **i07544721**

NOTE	REF NO	GRAPHIC REF	PART NUMBER	QTY	PART NAME 1 2 3 4 5 6 (PRODUCT LEVEL)	SEE PAGE
		2	**127-5484**	1	RECEPTACLE AS-CONNECTOR (1-PIN)	
		2	**9G-4343**	1	TERMINAL-RING (4-GA, 1/4-IN SCREW)	
	64	1	**567-3409**	1	BRACKET	
	65	1,2	**5P-4295**	3	CLIP	
	66	2	**6V-0894**	1	SEAL-O-RING	
	67	2	**7U-4891**	4	SCREW (10-32X1-IN)	
	68	2	**8T-4205**	2	WASHER-HARD (7.2X14.5X2-MM THK)	

D - ORDER BY THE METER
E - ORDER BY THE CENTIMETER
H - ORDER BY THE DECIMETER
M - METRIC PART
Y - SEPARATE ILLUSTRATION

533-6205 **WIRING GP-REAR (**contd.**)** **i07544721**

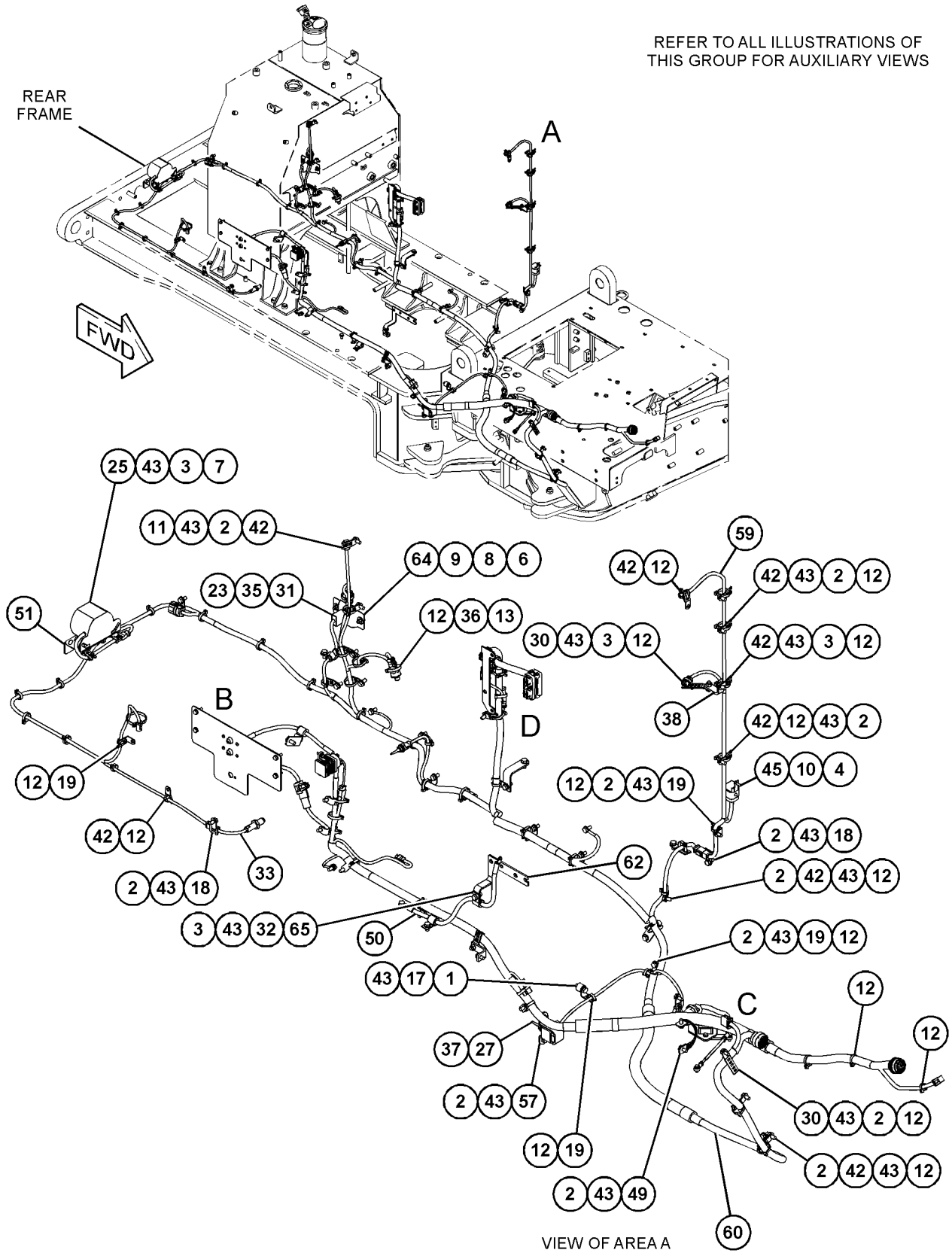

GRAPHIC #1 g06378199

533-6205 **WIRING GP-REAR (**contd.**)** **i07544721**

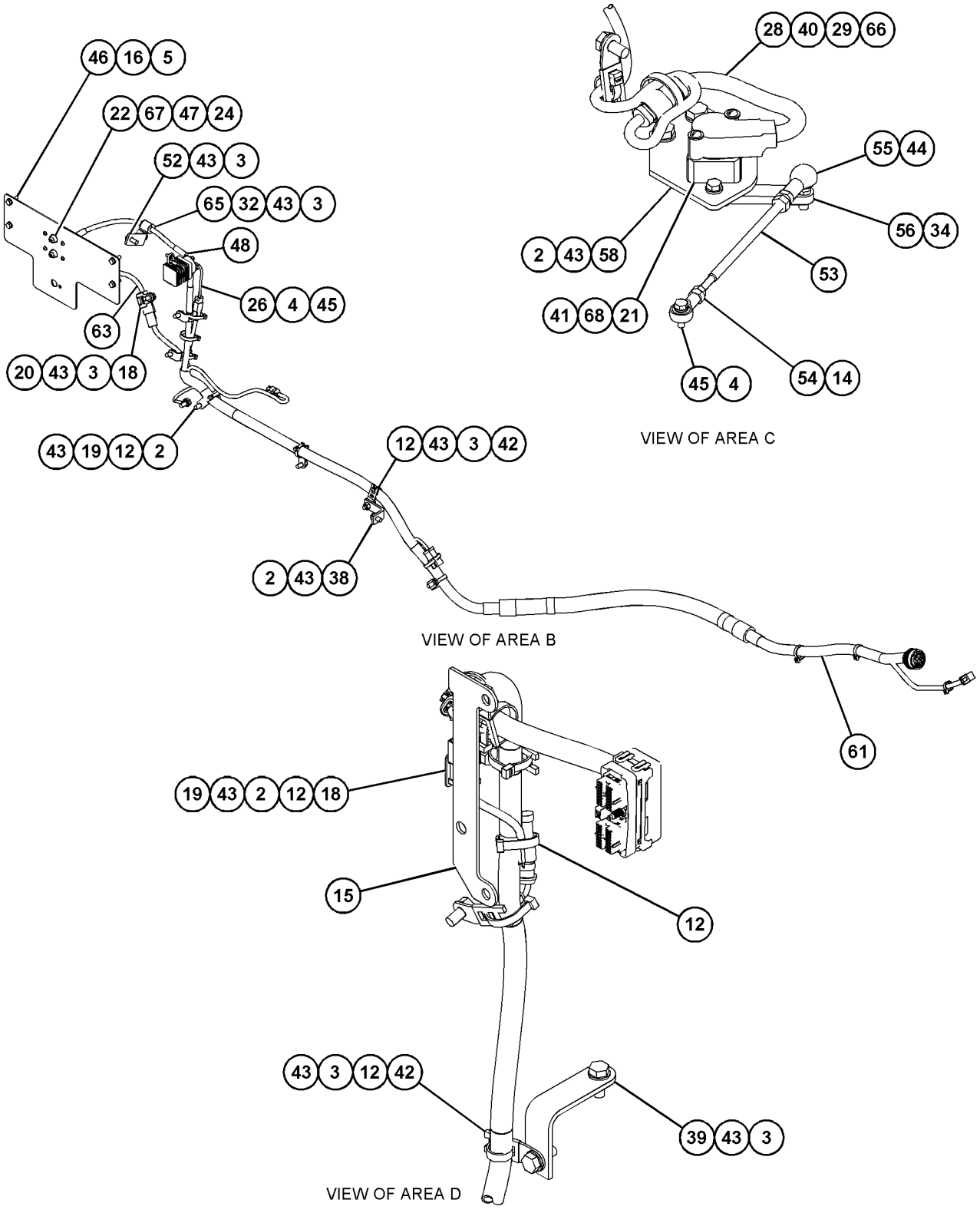

GRAPHIC #2 <END> g06378200

533-6217 WIRING GP-REAR LIGHTING

S/N: W921-UP

SMCS-1408, 1429 **i07560852**

NOTE	REF NO	GRAPHIC REF	PART NUMBER	QTY	PART NAME 1 2 3 4 5 6 (PRODUCT LEVEL)	SEE PAGE
M	1	1	**518-2309**	6	BOLT (M10X1.5X20-MM)	
	2	1	**518-4415**	12	WASHER (6.4X12X1.6-MM THK)	
	3	1	**7K-1181**	17	STRAP-CABLE	
	4	1	**368-4542**	1	SWITCH AS-ROCKER (24-VOLT)	
	5	1	**259-8450**	2	LAMP GP-SIGNAL (24-VOLT) (STOP, TAIL LIGHTS)	
					(EACH INCLUDES)	
		1	**102-8804**	1	KIT-RECEPTACLE (4-PIN)	
					(INCLUDES RECEPTACLE AS & WEDGE)	
		1	**8T-8729**	3	PIN-CONNECTOR (16-GA TO 18-GA)	
		1	**8T-8737**	1	PLUG-SEAL	
Y	6	1	**379-3416**	2	LAMP GP-SIGNAL (24-VOLT) (REVERSE)	184
	7	1	**4P-7581**	6	CLIP (LADDER)	
	8	1	**518-4417**	6	WASHER	
M	9	1	**518-6583**	12	NUT-HEX (M6X1-THD)	
Y	10	1	**536-5582**	1	HARNESS AS-REAR LIGHTING	168
	11	1	**536-5583**	2	PLATE	

M - METRIC PART
Y - SEPARATE ILLUSTRATION

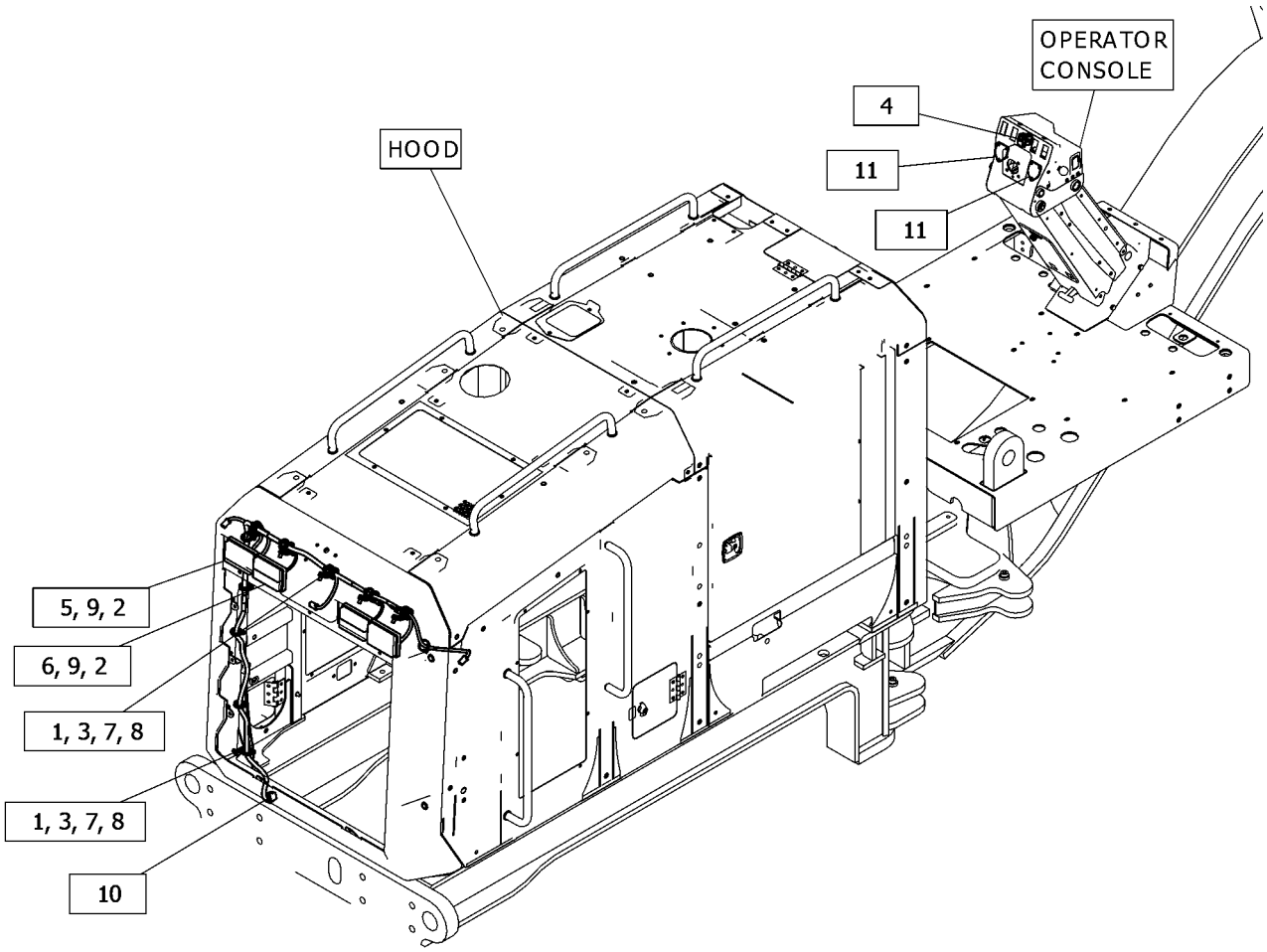

GRAPHIC #1 <END> g06366801

536-5595 WIRING GP-SECONDARY STEERING

S/N: W921-UP

PART OF 537-5630 STEERING AR-SECONDARY

SMCS-1408, 4334 **i07578983**

NOTE	REF NO	GRAPHIC REF	PART NUMBER	QTY	PART NAME 1 2 3 4 5 6 (PRODUCT LEVEL)	SEE PAGE
M	1	1	**518-2309**	1	BOLT (M10X1.5X20-MM)	
	2	1	**7K-1181**	6	STRAP-CABLE	
	3	1	**352-3964**	1	CLIP (LADDER)	
	4	1	**518-4417**	1	WASHER	
	5	1	**344-7391**	1	SENSOR-PRESSURE (EJECTOR) (BRAKE PUMP)	
	5A	1	**344-7391**	1	SENSOR-PRESSURE (EJECTOR) (STEERING ACCUMULATOR)	
	6	1	**3J-1907**	2	SEAL-O-RING	
	7	1	**4P-7581**	3	CLIP (LADDER)	
Y	8	1	**536-5562**	1	HARNESS AS-SENSOR	169

M - METRIC PART
Y - SEPARATE ILLUSTRATION

536-5595 **WIRING GP-SECONDARY STEERING (**contd.**)** **i07578983**

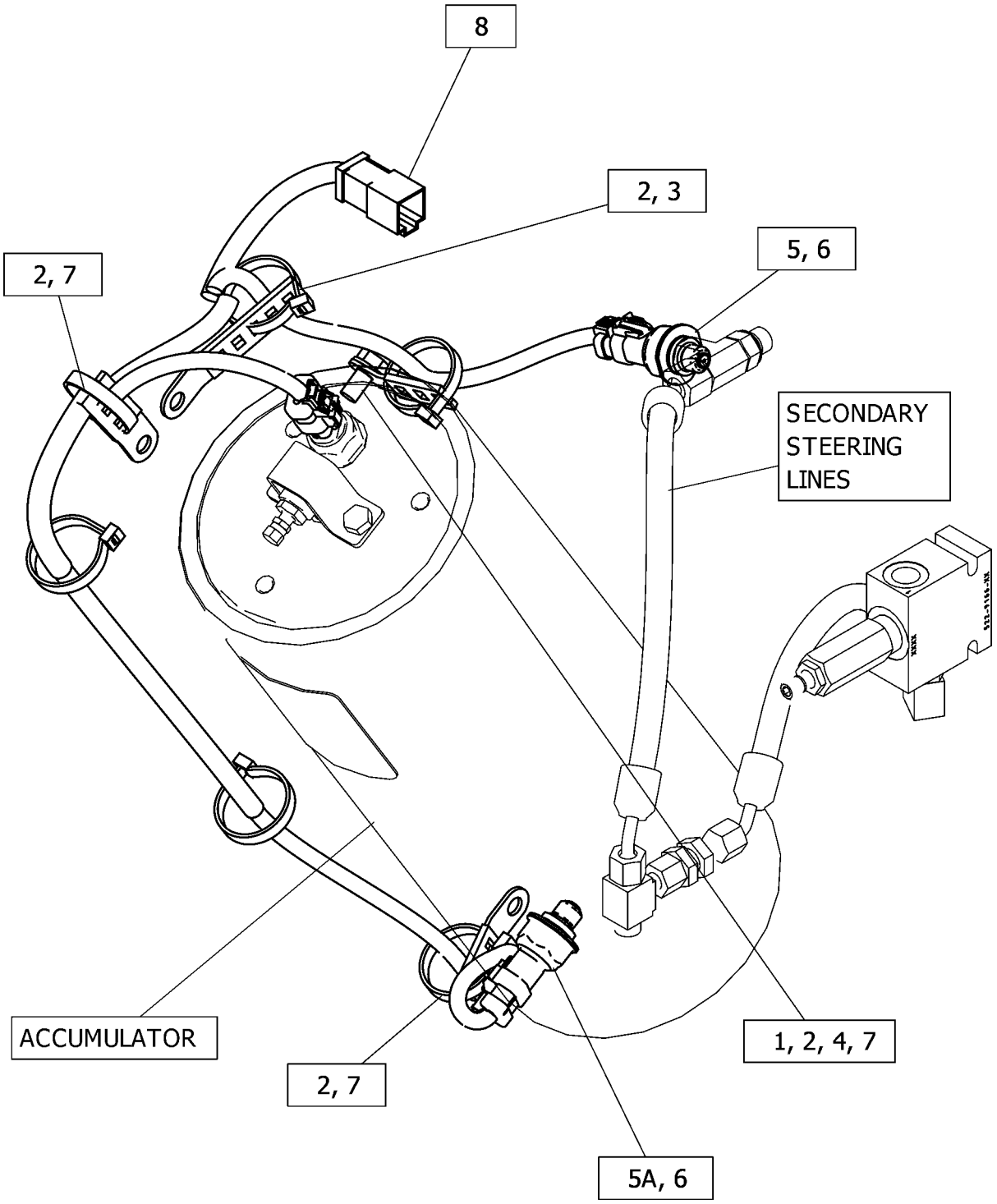

GRAPHIC #1 <END> g06374526

533-6206 WIRING GP-SENSOR

S/N: W921-UP

PART OF 533-6200 ELECTRICAL AR

SMCS-1408 **i07544730**

NOTE	REF NO	GRAPHIC REF	PART NUMBER	QTY	PART NAME 1 2 3 4 5 6 (PRODUCT LEVEL)	SEE PAGE
M	1	1	**518-2313**	2	BOLT-HEAD (M10X1.5X40-MM)	
R	2	1	**455-9580**	1	CONTROL GP-UNPROGRAMMED (ELECTRONIC)	
M	3	1	**518-2309**	12	BOLT (M10X1.5X20-MM)	
M	4	1	**518-6585**	2	NUT-HEX (M10X1.5-THD)	
	5	1	**518-9736**	4	WASHER (8.8X20.5X2-MM THK)	
	6	1	**6I-1418**	4	SPACER (8.2X12.7X28.7-MM THK)	
	7	1	**7K-1181**	28	STRAP-CABLE	
	8	1	**174-7875**	1	HORN AS (24-VOLT, HIGH TONE)	
	9	1	**536-5588**	3	BRACKET	
	10	1	**130-5300**	1	CLIP	
	11	1	**132-5789**	4	CLIP (LADDER)	
	12	1	**155-0576**	8	MOUNT-ISOLATION	
	13	1	**344-7391**	1	SENSOR-PRESSURE (EJECTOR)	
	14	1	**352-3968**	1	CLIP (LADDER)	
	15	1	**3J-1907**	1	SEAL-O-RING	
	16	1	**4P-7581**	7	CLIP (LADDER)	
	17	1	**518-4417**	16	WASHER	
	18	1	**518-8391**	4	BOLT (M8X1.25X40-MM)	
Y	19	1	**565-8381**	1	HARNESS AS-REAR	165
	20	1	**6V-3265**	2	CLIP	

M - METRIC PART
R - REMANUFACTURED PART MAY BE AVAILABLE
Y - SEPARATE ILLUSTRATION

533-6206 **WIRING GP-SENSOR (**contd.**)** **i07544730**

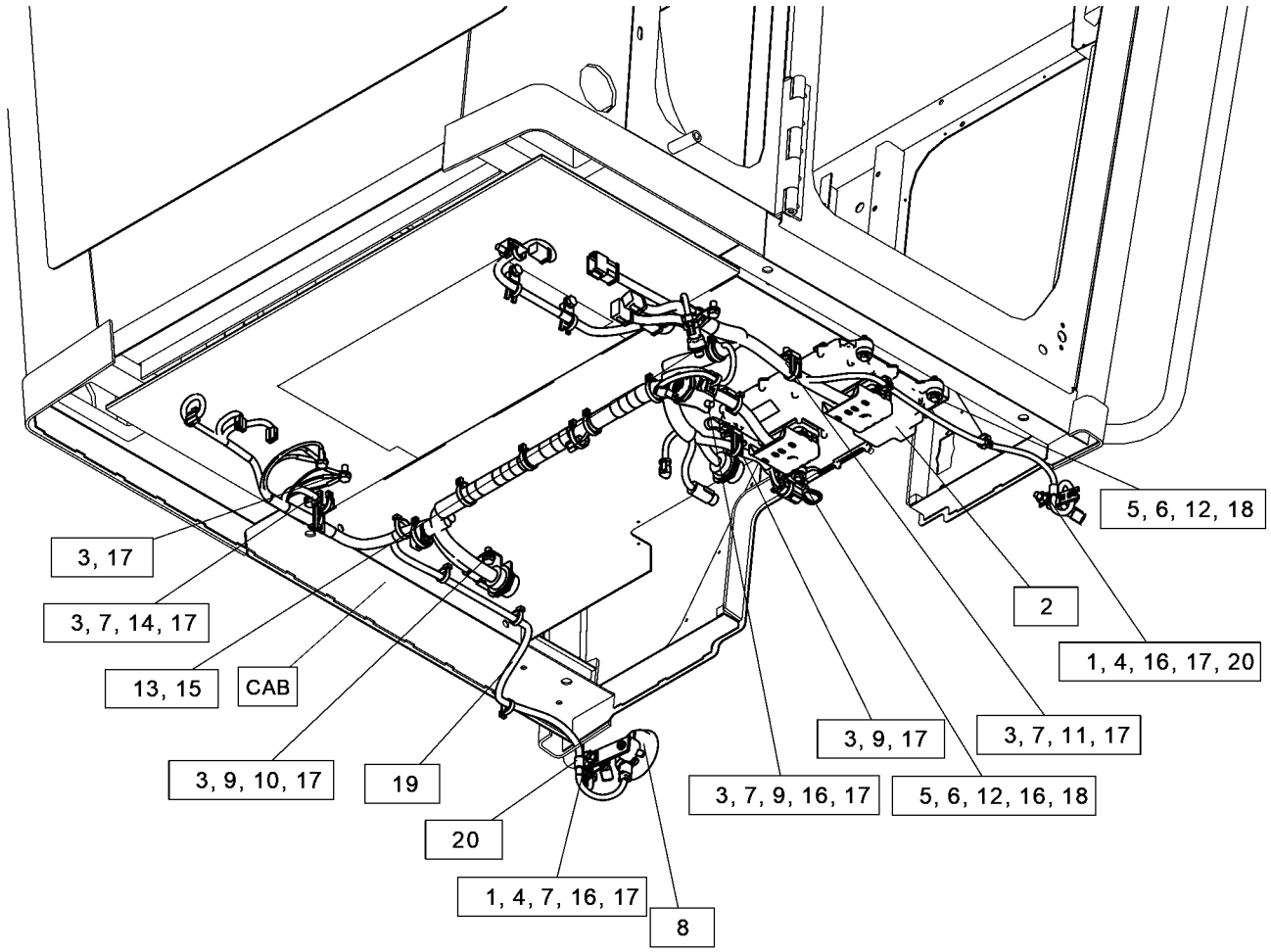

GRAPHIC #1 <END> g06374911

533-6208 WIRING GP-SENSOR

S/N: W921-UP

PART OF 533-6200 ELECTRICAL AR

SMCS-1408 **i07544738**

NOTE	REF NO	GRAPHIC REF	PART NUMBER	QTY	PART NAME 1 2 3 4 5 6 (PRODUCT LEVEL)	SEE PAGE
M	1	1	**518-2309**	3	BOLT (M10X1.5X20-MM)	
M	2	1	**518-2310**	1	BOLT (M10X1.5X25-MM)	
	3	1	**518-4415**	6	WASHER (6.4X12X1.6-MM THK)	
	4	1	**518-8246**	6	BOLT (M6X1X16-MM)	
	5	1	**7K-1181**	17	STRAP-CABLE	
	6	1	**256-6453**	1	SENSOR-TEMPERATURE (2-PIN) (FUEL)	
	7	1	**320-3063**	1	SENSOR GP-PRESSURE (FUEL)	
	8	1	**363-4122**	1	GASKET	
	9	1	**416-4773**	1	SENDER AS-FUEL LEVEL	
		1	**9X-3401**	2	PIN-CONNECTOR (16-GA TO 18-GA)	
		1	**102-8802**	1	KIT-RECEPTACLE (2-PIN)	
					(INCLUDES RECEPTACLE AS & WEDGE)	
	10	1	**228-7100**	2	SEAL-O-RING	
	11	1	**238-5080**	1	SEAL-O-RING	
	12	1	**415-4214**	1	PLATE AS	
M		1	**8T-3490**	1	NUT-WELD (M10X1.5-THD)	
	13	1	**4P-7581**	3	CLIP (LADDER)	
	14	1	**518-4417**	4	WASHER	
	15	1	**558-6136**	1	ADAPTER	
Y	16	1	**566-4206**	1	HARNESS AS-SENSOR (FUEL TANK)	170

M - METRIC PART
Y - SEPARATE ILLUSTRATION

533-6208 **WIRING GP-SENSOR (**contd.**)** **i07544738**

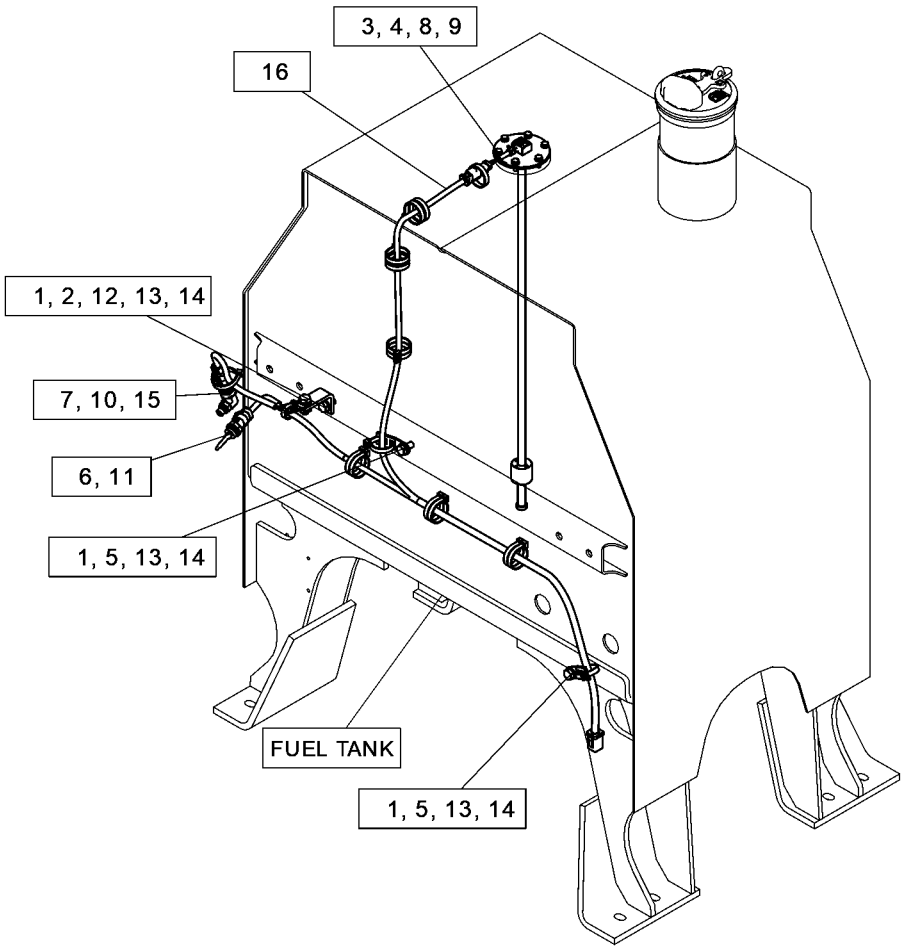

GRAPHIC #1 <END> g06374920

532-6677 AXLE AR-REAR

S/N: W921-UP

PART OF 534-6698 POWER TRAIN AR

SMCS-3013 **i07545967**

NOTE	REF NO	GRAPHIC REF	PART NUMBER	QTY	PART NAME 1 2 3 4 5 6 (PRODUCT LEVEL)	SEE PAGE
Y	1	1	*532-6678*	1	WHEEL AR	286
Y	2	1	*532-6685*	1	TANDEM & COVER GP	278
Y	3	1	*543-9602*	1	AXLE GP-REAR	250
Y	4	1	*544-1299*	1	CHAIN GP-DRIVE	252
Y	5	1	*563-6700*	1	STEP GP	331

Y - SEPARATE ILLUSTRATION

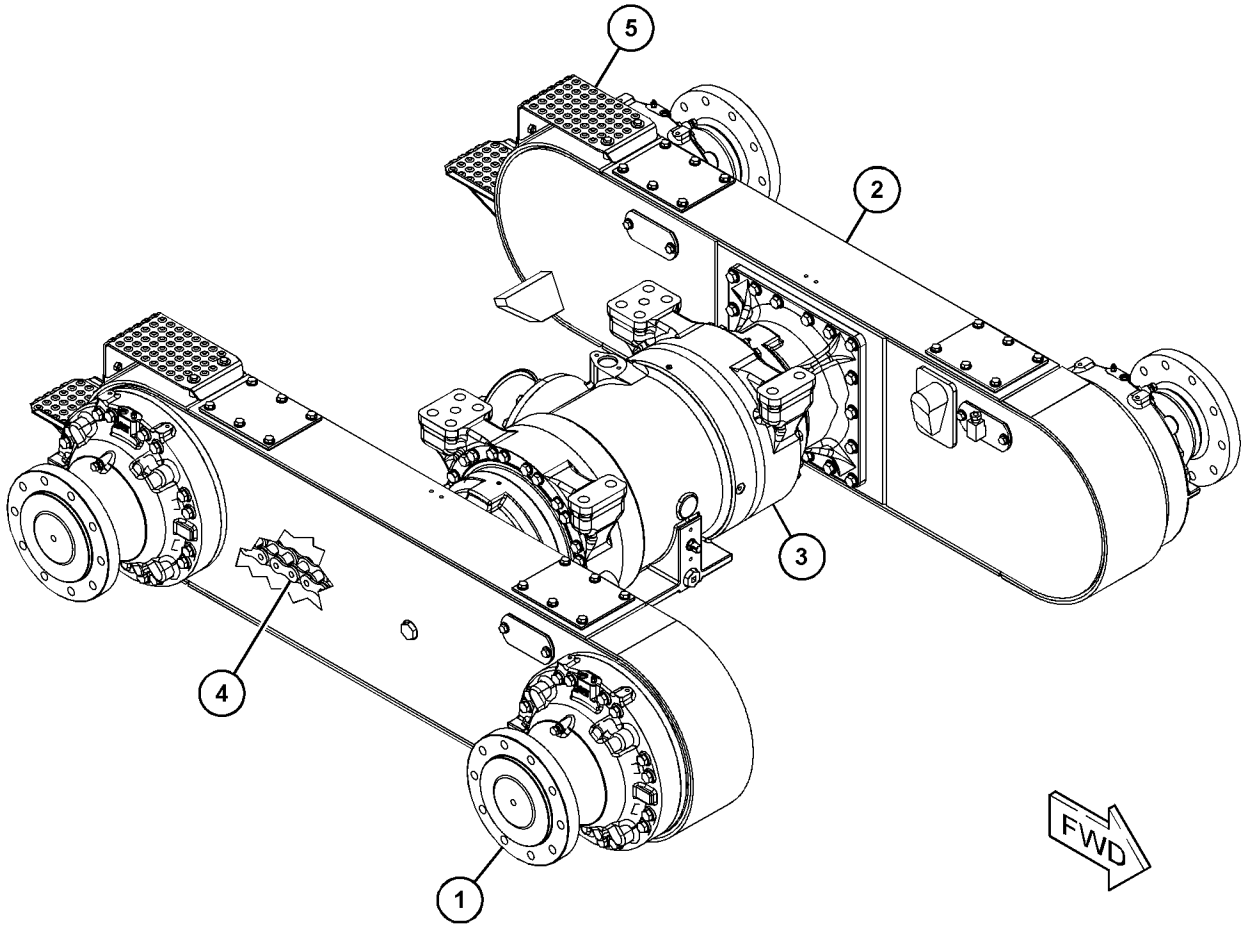

GRAPHIC #1 <END> g06372846

563-7617 AXLE AR-REAR

S/N: W921-UP

SMCS-3013 **i07621146**

NOTE	REF NO	GRAPHIC REF	PART NUMBER	QTY	PART NAME 1 2 3 4 5 6 (PRODUCT LEVEL)	SEE PAGE
Y	1	1	*532-6678*	1	WHEEL AR	286
Y	2	1	*543-9602*	1	AXLE GP-REAR	250
Y	3	1	*544-1299*	1	CHAIN GP-DRIVE	252
Y	4	1	*563-6710*	1	WALKWAY GP	334
Y	5	1	*564-0285*	1	TANDEM & COVER GP	279

Y - SEPARATE ILLUSTRATION

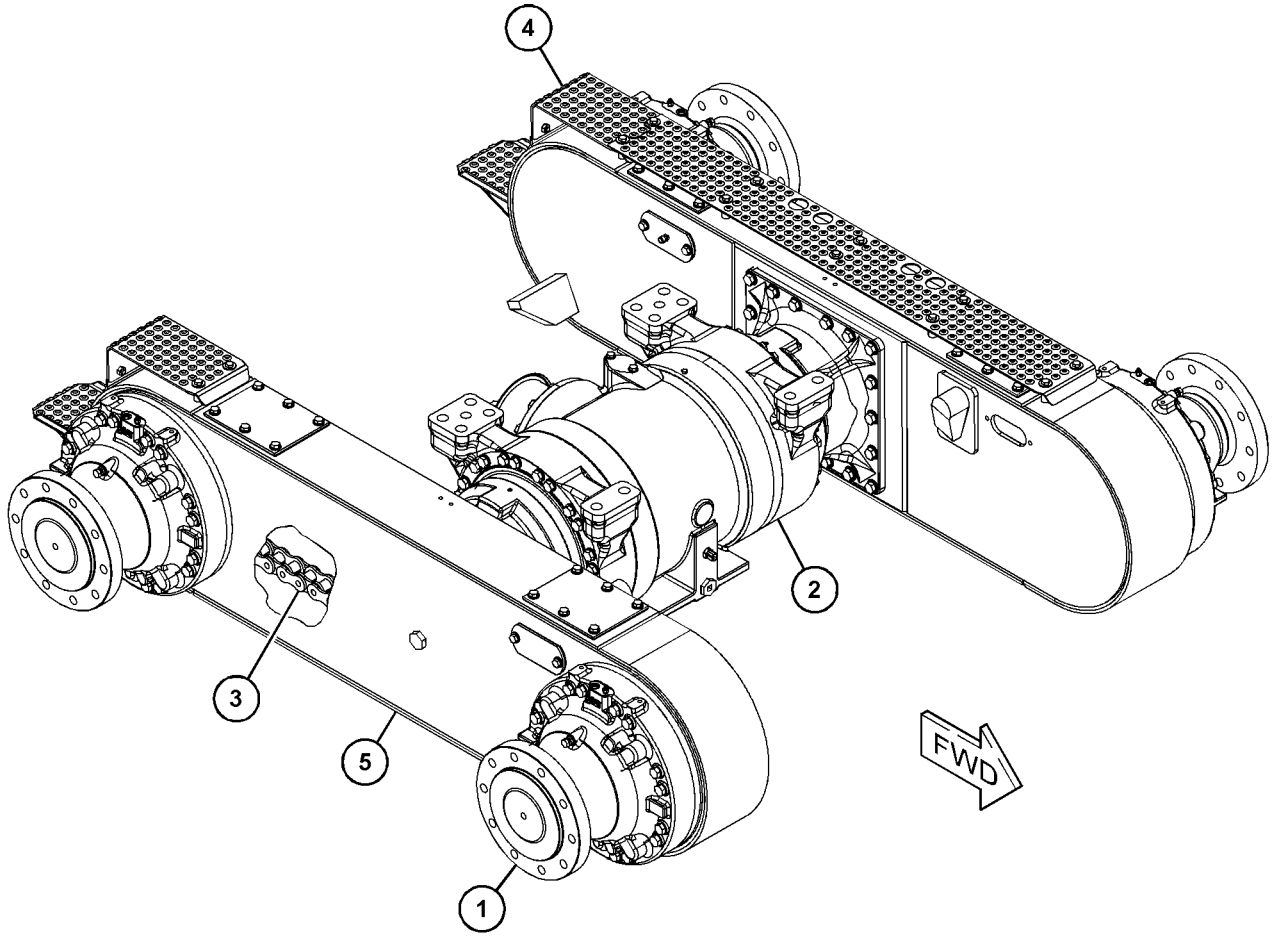

GRAPHIC #1 <END> g06380331

563-7618 AXLE AR-REAR

S/N: W921-UP

SMCS-3013 **i07621128**

NOTE	REF NO	GRAPHIC REF	PART NUMBER	QTY	PART NAME 1 2 3 4 5 6 (PRODUCT LEVEL)	SEE PAGE
Y	1	1	*532-6678*	1	WHEEL AR	286
Y	2	1	*537-1830*	1	FENDER GP-REAR	309
Y	3	1	*543-9602*	1	AXLE GP-REAR	250
Y	4	1	*544-1299*	1	CHAIN GP-DRIVE	252
Y	5	1	*563-6710*	1	WALKWAY GP	334
Y	6	1	*564-0290*	1	TANDEM & COVER GP	280

Y - SEPARATE ILLUSTRATION

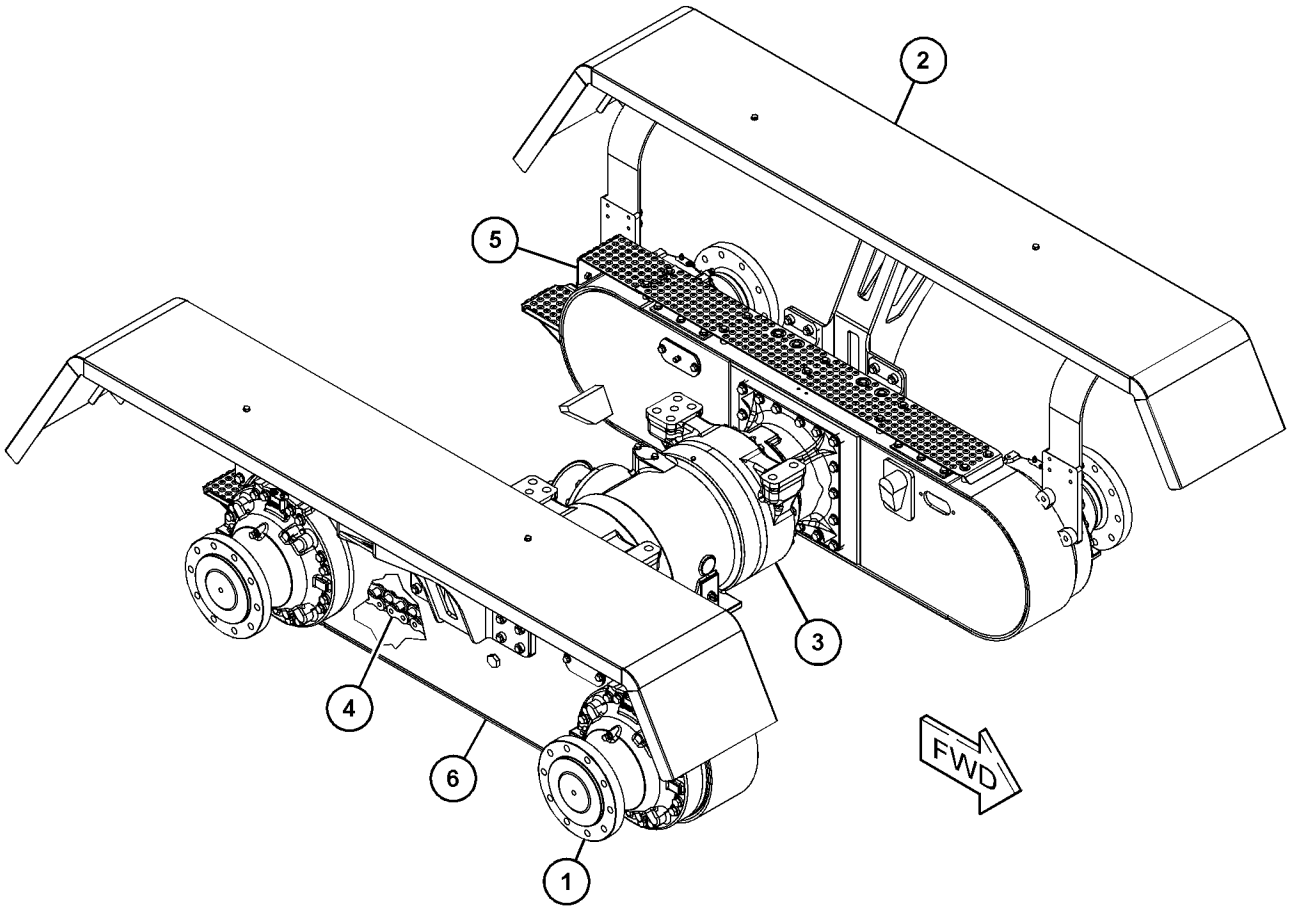

GRAPHIC #1 <END> g06380330

134-1080 AXLE GP-FRONT

S/N: W921-UP

PART OF 534-6698 POWER TRAIN AR

SMCS-3020, 3282, 4303, 4305, 5225 **i07545159**

NOTE	REF NO	GRAPHIC REF	PART NUMBER	QTY	PART NAME 1 2 3 4 5 6 (PRODUCT LEVEL)	SEE PAGE
R	1	1	**5K-5288**	2	SEAL GP-DUO-CONE	
					(EACH INCLUDES)	
		1	**5K-5129**	2	RING-SEALING	
	2	1	**2G-8626**	2	WASHER-THRUST (2.02X3.63X0.16-IN THK)	
	3	1	**3B-8489**	12	FITTING-GREASE (1/8-27 PTF)	
	4	1	**4D-3704**	2	WASHER-HARD (17X30X5-MM THK)	
	5	1	**2G-8615**	4	WASHER-THRUST (2.015X3.625X0.11-IN THK)	
	6	1	**2G-8742**	2	WASHER-HARD (20X65X5-MM THK)	
	7	1	**2H-3740**	4	BOLT (3/4-16X1.25-IN)	
	8	1	**2G-8741**	4	RING-METAL SEAL	
	9	1	**2G-8777**	4	SEAL	
	10	1	**9M-2092**	4	SEAL-O-RING	
	11	1	**8W-5293**	4	PIN	
	12	1	**8W-4652**	1	HOUSING-SPINDLE	
	13	1	**8W-4653**	1	HOUSING-SPINDLE	
	14	1	**8D-2811**	2	WASHER (1.25X1.94X0.032-IN THK)	
	15	1	**2G-8633**	2	PIN	
	16	1	**6C-3210**	2	BOLT (7/8-9X3-IN)	
	17	1	**2J-3505**	2	NUT-FULL (7/8-9-THD)	
	18	1	**7X-7731**	2	PLUG-PIPE (3/4-14-THD)	
	19	1	**433-7105**	8	SEAL-PIN	
	20	1	**9D-3523**	1	WASHER (2.062X4X0.188-IN)	
	21	1	**5P-1075**	4	WASHER-HARD (10.2X22.5X3-MM THK)	
	22	1	**5S-7379**	4	BOLT (3/8-16X0.875-IN)	
	23	1	**2G-8768**	4	WASHER (10.5X53.8X3-MM THK)	
	24	1	**103-9125**	1	BAR AS	
	24A	1	**2G-8624**	2	BUSHING	
	25	1	**5P-8890**	2	SEAL-LIP TYPE	
	26	1	**030-0060**	2	CUP-BEARING	
	27	1	**030-0061**	2	CONE-BEARING	
	28	1	**7D-8637**	2	CUP-BEARING	
	29	1	**7D-8636**	2	CONE-BEARING	
	30	1	**3B-4618**	2	PIN-COTTER	
	31	1	**7D-8643**	2	RETAINER	
B	32	1	**2G-3865**	6	SHIM (0.127-MM THK)	
	33	1	**0V-0375**	6	BOLT (1/2-13X3.25-IN)	
	34	1	**9D-9797**	2	LOCK	
	35	1	**5T-0906**	2	COVER	
	36	1	**2J-8163**	2	SEAL-O-RING	
	37	1	**5D-0353**	4	BOLT-LOCKING (3/8-16X1-IN)	
	38	1	**6C-3241**	1	BOLT (1/2-13X1.5-IN)	
	39	1	**5P-1076**	1	WASHER-HARD (13.5X30X4-MM THK)	
	40	1	**5P-8843**	2	SEAL-LIP TYPE	
B	41	1	**2G-5673**	2	WASHER (2.031X4X0.06-IN THK)	
	42	1	**9G-5211**	1	SPACER (12.95X19.05X9-MM THK)	
	43	1	**130-3595**	1	PIN AS	
	44	1	**147-3400**	2	SPINDLE	

134-1080 **AXLE GP-FRONT (**contd.**)** **i07545159**

NOTE	REF NO	GRAPHIC REF	PART NUMBER	QTY	PART NAME 1 2 3 4 5 6 (PRODUCT LEVEL)	SEE PAGE
	45	1	**0S-1592**	2	BOLT (5/8-11X1.25-IN)	
	46	1	**2G-5667**	2	RETAINER	
Y	47	1	*131-3740*	1	LINK GP-STEERING	329
	48	1	**134-1081**	1	AXLE AS-FRONT	
	49	1	**2G-8631**	4	BUSHING	
	50	1	**131-4428**	2	BUSHING	
	51	1	**8X-3434**	1	ARM AS-LEANING (LH)	
	52	1	**146-1842**	1	BUSHING	
	53	1	**146-1843**	1	BUSHING	
	54	1	**8W-6476**	1	PIN	
	56	1	**8X-3435**	1	ARM AS-LEANING (RH)	
	57	1	**146-1842**	1	BUSHING	
	58	1	**146-1843**	1	BUSHING	
	59	1	**8W-6497**	1	PIN	

B - USE AS REQUIRED
R - REMANUFACTURED PART MAY BE AVAILABLE
Y - SEPARATE ILLUSTRATION

134-1080 **AXLE GP-FRONT** (contd.) **i07545159**

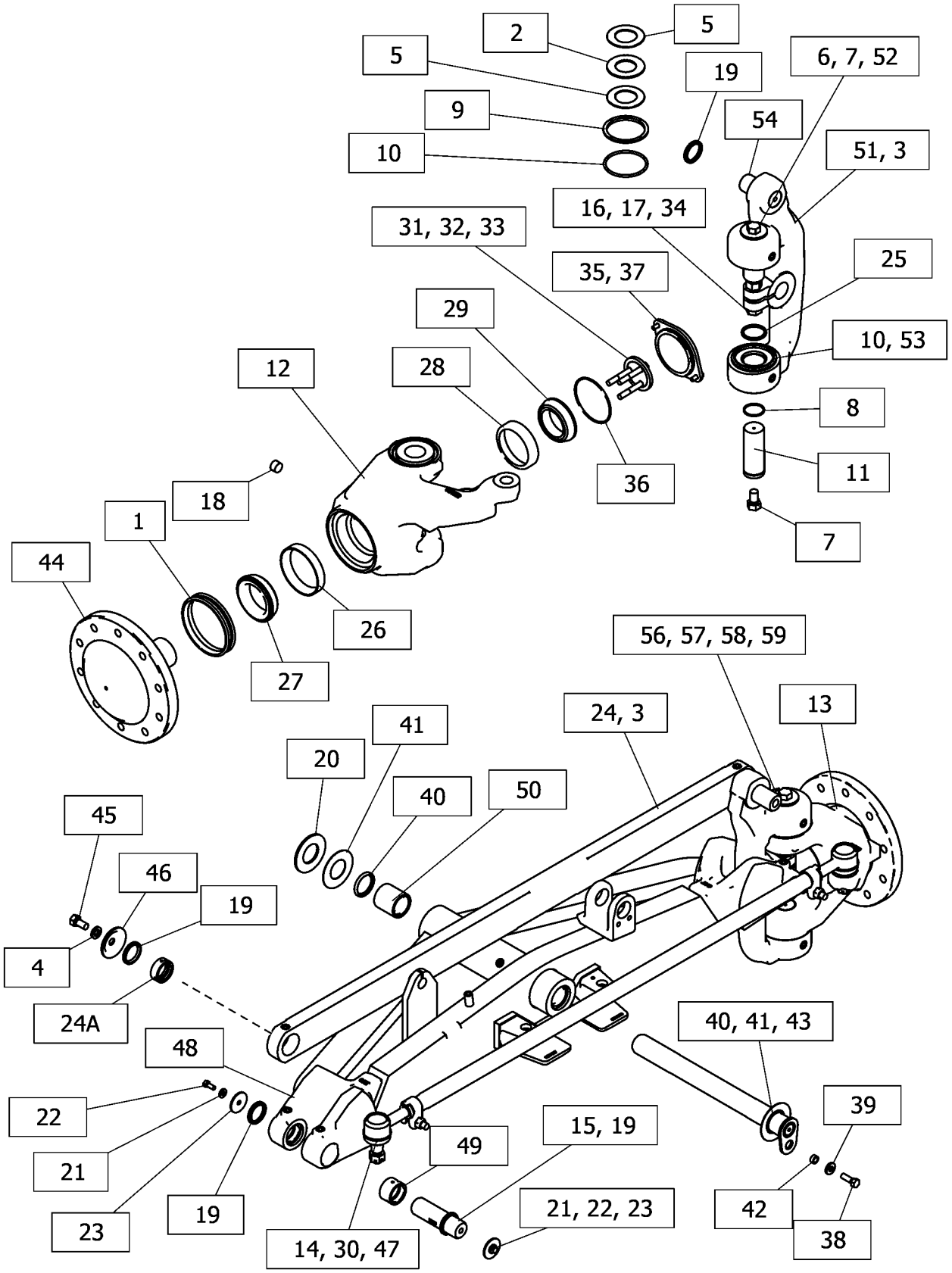

GRAPHIC #1 <END> g06318925

543-9602 AXLE GP-REAR

S/N: W921-UP

PART OF 532-6677, 563-7617, 563-7618 AXLE AR-REAR

SMCS-3278, 3282, 4068 **i07582990**

NOTE	REF NO	GRAPHIC REF	PART NUMBER	QTY	PART NAME 1 2 3 4 5 6 (PRODUCT LEVEL)	SEE PAGE
	1	1	**105-2793**	1	PLATE-SERIAL NUMBER (REAR WHEEL)	
	2	1	**543-9603**	3	DOWEL	
	3	1	**543-9618**	3	DOWEL	
Y	4	1	*543-9651*	1	DIFFERENTIAL & BEVEL GEAR GP	254
Y	5	1	*544-0665*	1	DRIVE GP-FINAL (LH)	262
Y	6	1	*544-0744*	1	DRIVE GP-FINAL (RH)	264
M	7	1	**6V-8154**	24	BOLT (M16X2X150-MM)	
M	8	1	**8T-5002**	24	BOLT (M16X2X180-MM)	
	9	1	**9X-8268**	48	WASHER (17.5X30X3.5-MM THK)	

M - METRIC PART
Y - SEPARATE ILLUSTRATION

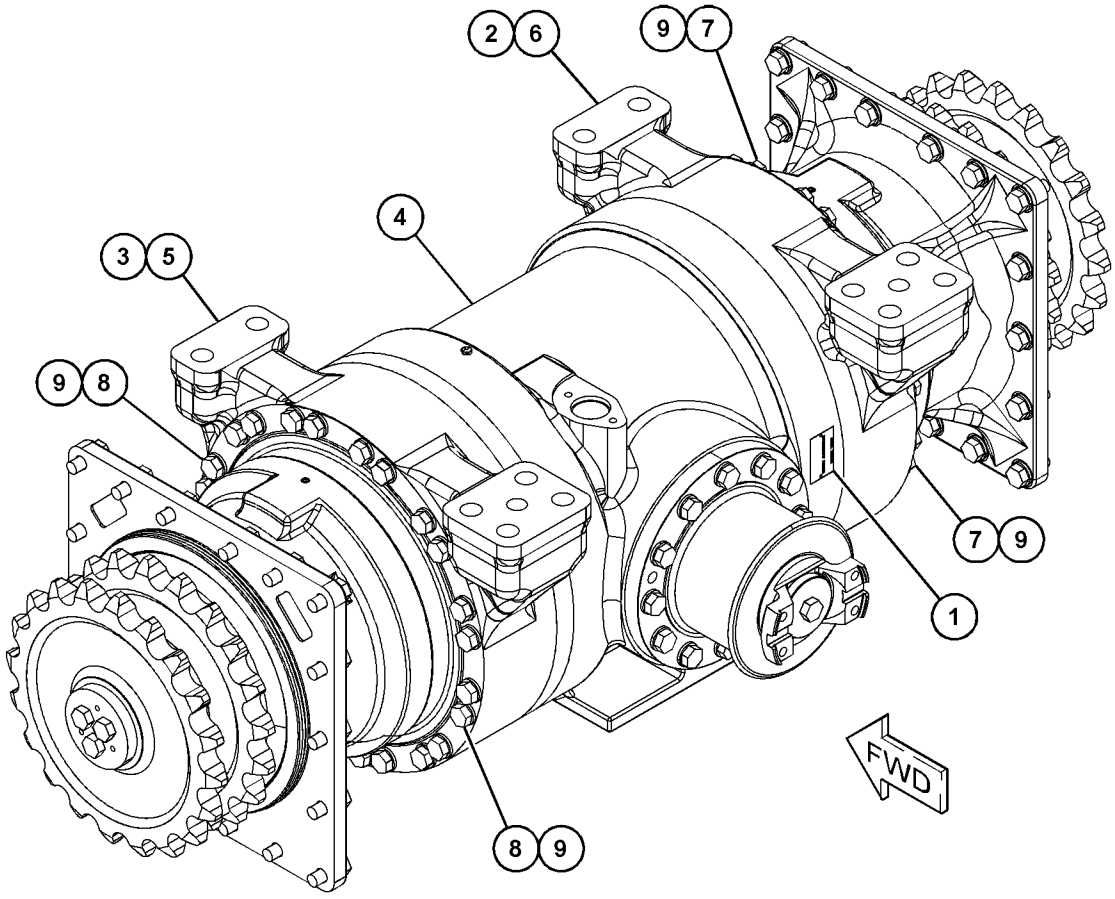

GRAPHIC #1 <END> g06375071

544-0670 CARRIER GP-FINAL DRIVE

S/N: W921-UP

PART OF 544-0665, 544-0744 DRIVE GP-FINAL

SMCS-4050 **i07583768**

NOTE	REF NO	GRAPHIC REF	PART NUMBER	QTY	PART NAME 1 2 3 4 5 6 (PRODUCT LEVEL)	SEE PAGE
	1	1	**138-1645**	4	PIN-SPRING	
	2	1	**522-4371**	4	SPACER (50X61X3-MM THK)	
	3	1	**522-4373**	8	WASHER (50.5X76X3-MM THK)	
	4	1	**522-8166**	232	NEEDLE	
	5	1	**541-8727**	4	GEAR-PLANETARY (24-TEETH)	
	6	1	**544-0671**	1	CARRIER-PLANETARY	
	7	1	**544-0673**	4	SHAFT	
	8	1	**8T-2925**	4	PIN-SPRING	

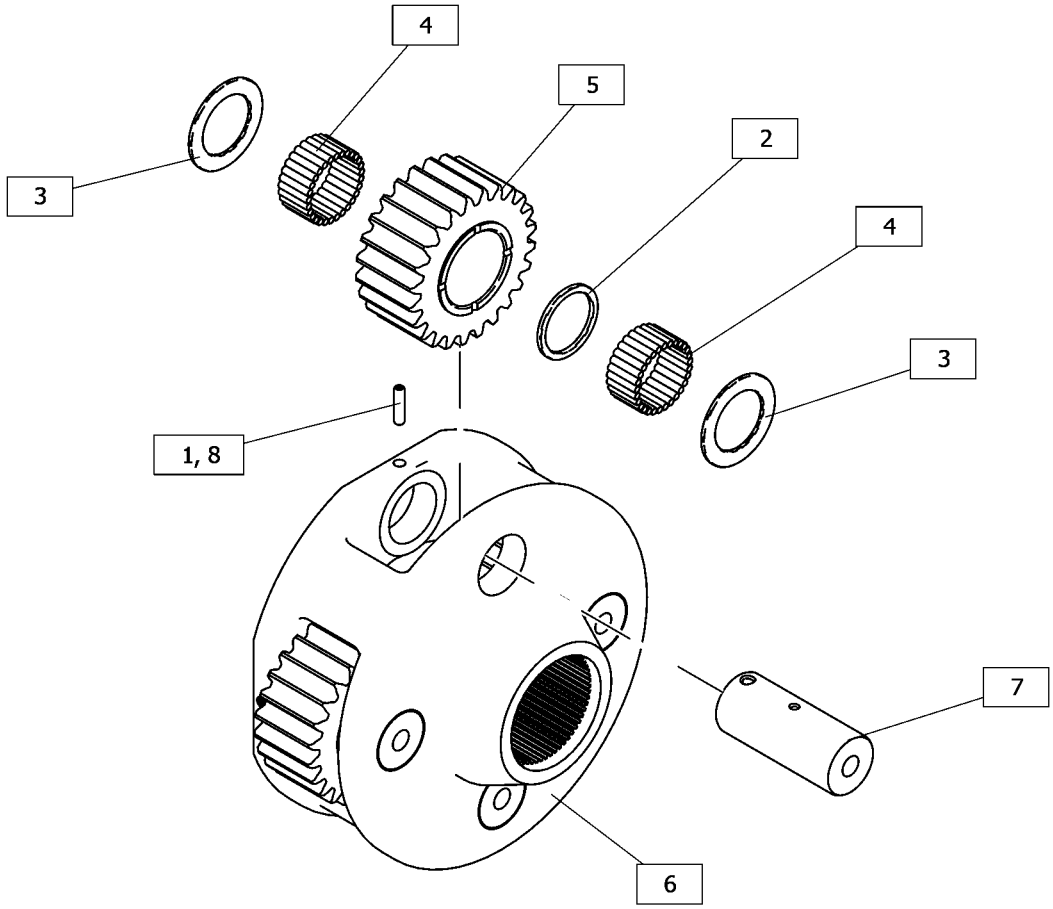

GRAPHIC #1 <END> g06374315

544-1299 CHAIN GP-DRIVE

S/N: W921-UP

PART OF 532-6677, 563-7617, 563-7618 AXLE AR-REAR

SMCS-3261, 4063 **i07584424**

NOTE	REF NO	GRAPHIC REF	PART NUMBER	QTY	PART NAME 1 2 3 4 5 6 (PRODUCT LEVEL)	SEE PAGE
	1	1	**544-1301**	4	CHAIN GP-DRIVE	
					(EACH INCLUDES)	
		1	**544-1302**	1	LINK AS	
		1	**544-1303**	1	PIN	

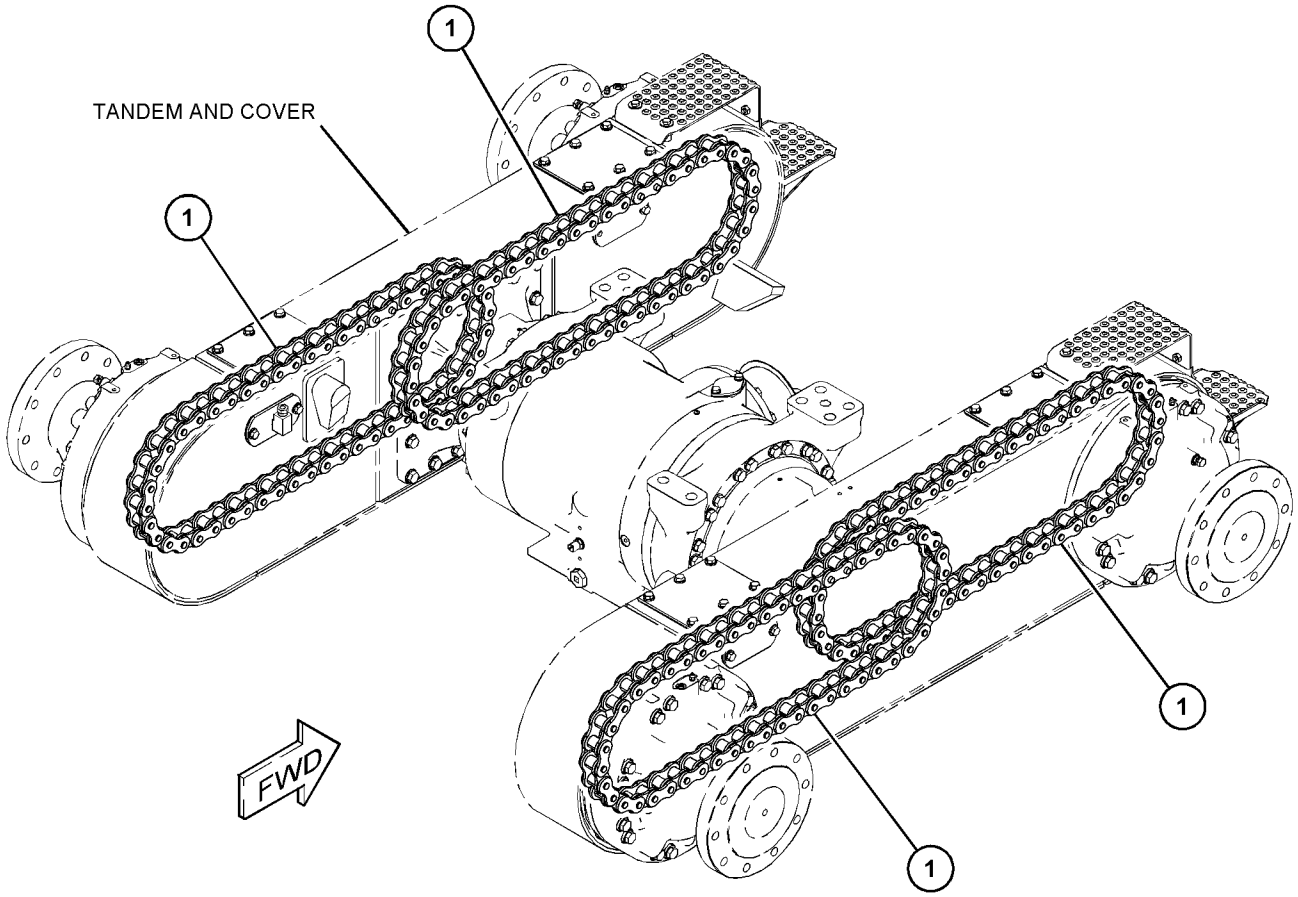

GRAPHIC #1 <END> g06375321

556-1448 CONTROL GP-TRANSMISSION HYD

S/N: W921-UP

PART OF 533-4648 TRANSMISSION GP

SMCS-3073, 3167

i07622828

NOTE	REF NO	GRAPHIC REF	PART NUMBER	QTY	PART NAME 1 2 3 4 5 6 (PRODUCT LEVEL)	SEE PAGE
Y	1	1	**556-1449**	1	PARTS GP-MISCELLANEOUS	620
	2	1	**556-1450**	1	CONTROL AS	
	3	1	**556-1451**	1	HARNESS AS (POWER SUPPLY)	
	4	1	**556-1452**	1	HARNESS AS (SPEED SENSOR)	
	5	1	**556-1453**	1	HARNESS AS (TRANSMISSION)	

Y - SEPARATE ILLUSTRATION

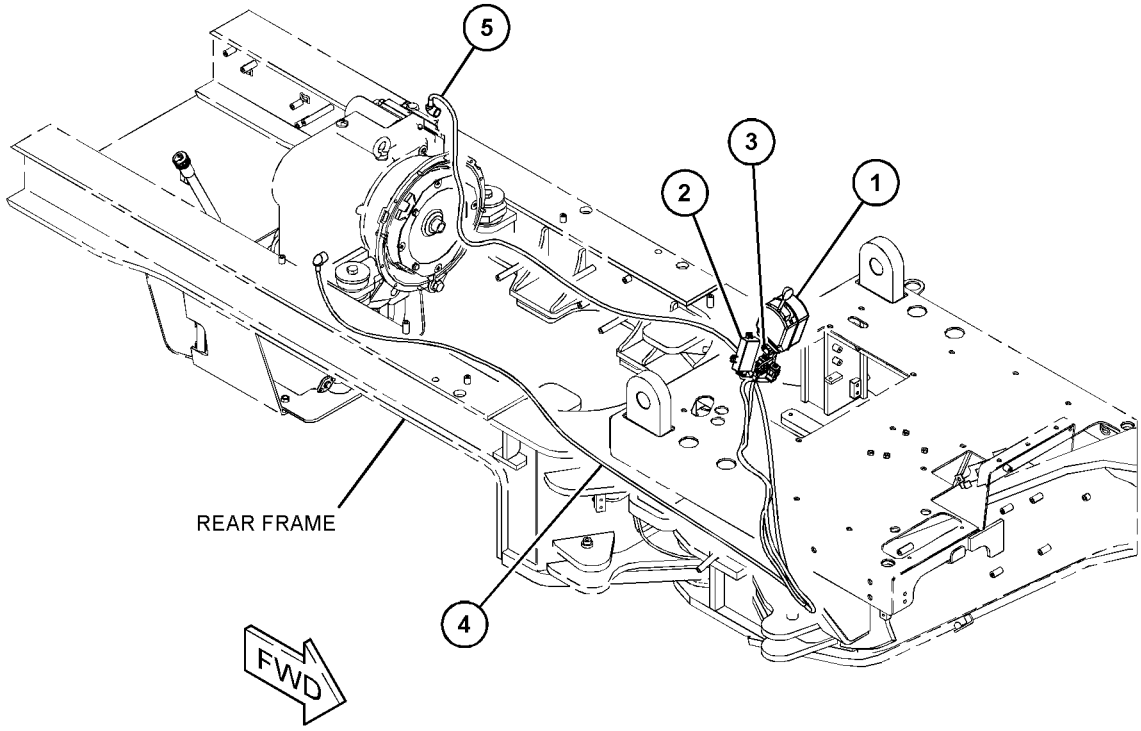

GRAPHIC #1 <END> g06382813

543-9651 DIFFERENTIAL & BEVEL GEAR GP

S/N: W921-UP

PART OF 543-9602 AXLE GP-REAR

SMCS-3256, 3258 **i07583001**

NOTE	REF NO	GRAPHIC REF	PART NUMBER	QTY	PART NAME 1 2 3 4 5 6 (PRODUCT LEVEL)	SEE PAGE
	1	1	**1J-2860**	1	CUP-BEARING	
	2	1	**1J-4757**	1	CONE-BEARING	
	3	1	**2D-9454**	1	CUP-BEARING	
	4	1	**2D-9455**	1	CONE-BEARING	
	5	2	**6Y-2539**	1	CONE-BEARING	
	6	2	**6Y-2540**	1	CUP-BEARING	
	7	2	**6G-4703**	1	NUT (5 1/4-12-THD)	
	8	1	**226-2684**	1	SHIM PACK (INCLUDES 11-SHIMS)	
	9	2	**030-0060**	1	CUP-BEARING	
	10	2	**030-0061**	1	CONE-BEARING	
	11	1	**264-4297**	1	SENSOR AS-TEMPERATURE (2-PIN) (TRANSMISSION OIL)	
		1	**137-6645**	1	PAD-CONNECTOR	
	12	1	**271-8528**	1	SHIM PACK (INCLUDES 18-SHIMS)	
	13	2	**297-3211**	2	LOCK-BEARING	
	14	2	**477-2772**	1	NUT	
	15	1	**544-0648**	1	HOUSING-PINION	
	16	1	**156-4575**	1	SEAL-LIP TYPE	
M	17	1	**235-9631**	1	BOLT (M16X2X120-MM)	
M	18	2	**259-2627**	24	BOLT (M12X1.75X40-MM)	
	19	1	**2H-3088**	1	SEAL-O-RING	
	20	1	**3K-0360**	1	SEAL-O-RING	
	21	1	**4H-6520**	1	SEAL-O-RING	
M	22	2	**524-3269**	2	BOLT (M10X1.25X16-MM)	
	23	2	**541-7840**	1	GEAR SET-BEVEL	
Y	24	2	**543-9654**	1	DIFFERENTIAL GP	257
	25	1	**544-0649**	1	YOKE AS	
	26	1	**544-0657**	1	RETAINER	
	27	1	**564-0284**	1	HOUSING AS	
	28	1	**5P-4484**	1	PLUG-MAGNETIC (DIFFERENTIAL)	
	29	2	**5P-8245**	24	WASHER-HARD (13.5X25.5X3-MM THK)	
M	30	1	**6V-5686**	12	BOLT (M16X2X50-MM)	
	31	1	**7M-8485**	1	SEAL-O-RING	
	32	1	**8T-0336**	1	FITTING-PRESSURE RELIEF	
	33	1	**9X-8268**	12	WASHER (17.5X30X3.5-MM THK)	

M - METRIC PART
Y - SEPARATE ILLUSTRATION

543-9651 **DIFFERENTIAL & BEVEL GEAR GP (**contd.**)** **i07583001**

REFER TO ALL ILLUSTRATIONS OF
THIS GROUP FOR AUXILIARY VIEWS

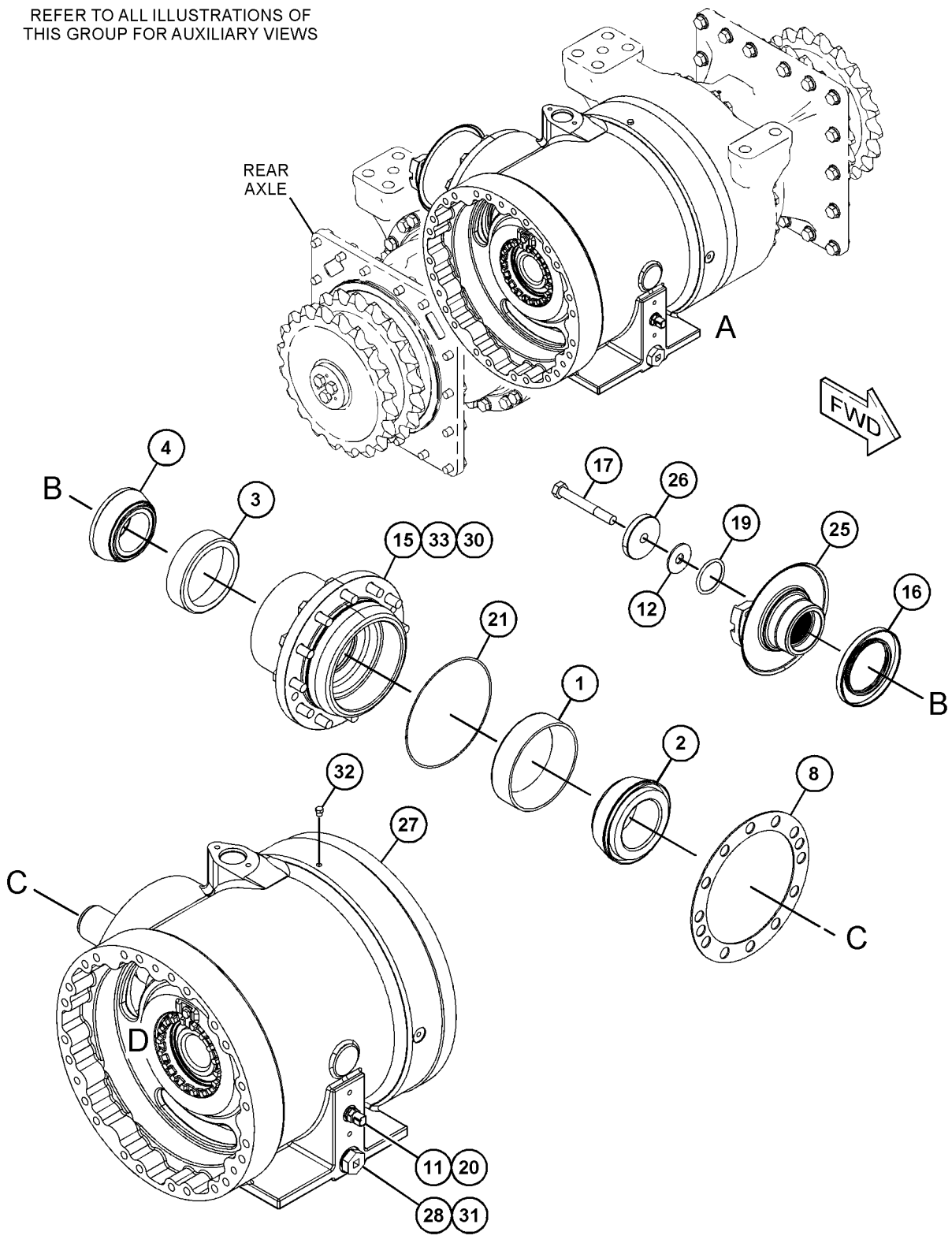

VIEW OF AREA A

GRAPHIC #1 g06376013

543-9651 **DIFFERENTIAL & BEVEL GEAR GP (**contd.**)** **i07583001**

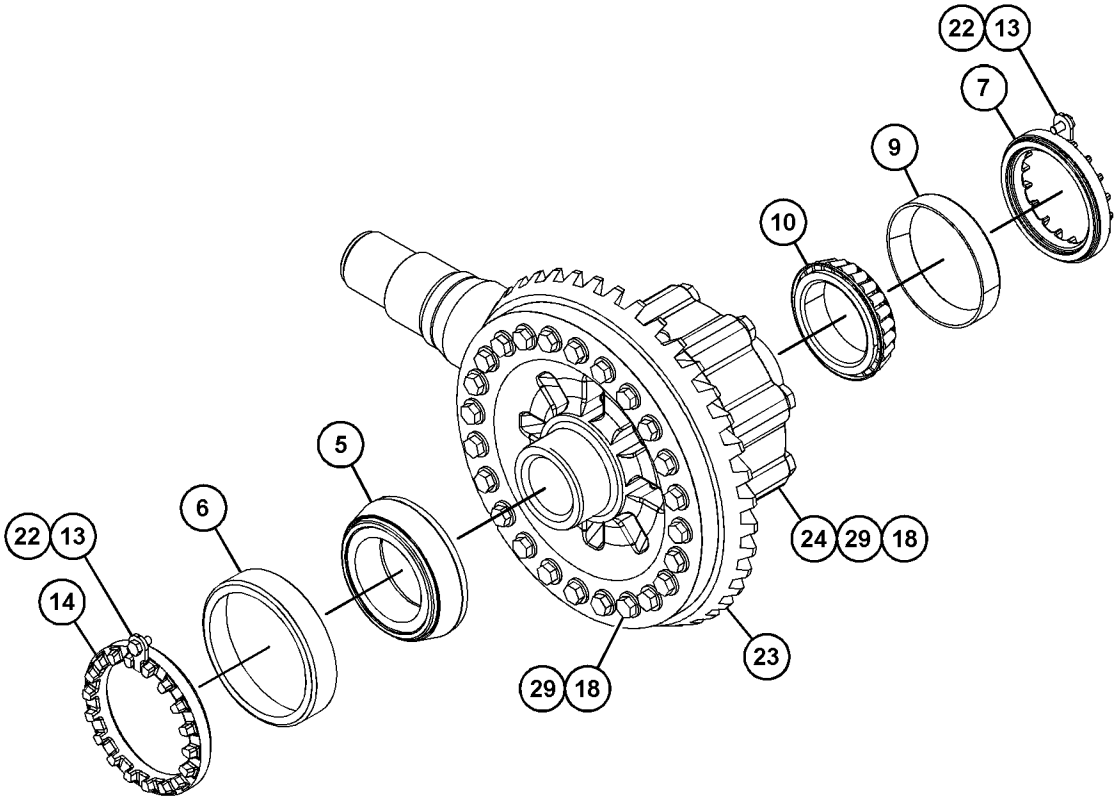

VIEW OF AREA D
(PARTS REMOVED FOR CLARITY)

GRAPHIC #2 <END> g06376014

543-9654 DIFFERENTIAL GP

S/N: W921-UP

PART OF 543-9651 DIFFERENTIAL & BEVEL GEAR GP

SMCS-3258 **i07583200**

NOTE	REF NO	GRAPHIC REF	PART NUMBER	QTY	PART NAME 1 2 3 4 5 6 (PRODUCT LEVEL)	SEE PAGE
	1	1	*544-0641*	1	CASE AS	
		1	**544-0644**	1	CASE-DIFFERENTIAL	
		1	**544-0645**	1	CASE-DIFFERENTIAL	
Y	2	1	**544-0642**	1	DIFFERENTIAL GP	258
M	3	1	**8T-0207**	8	BOLT (M16X2X100-MM)	
	4	1	**9X-8268**	8	WASHER (17.5X30X3.5-MM THK)	

M - METRIC PART
Y - SEPARATE ILLUSTRATION

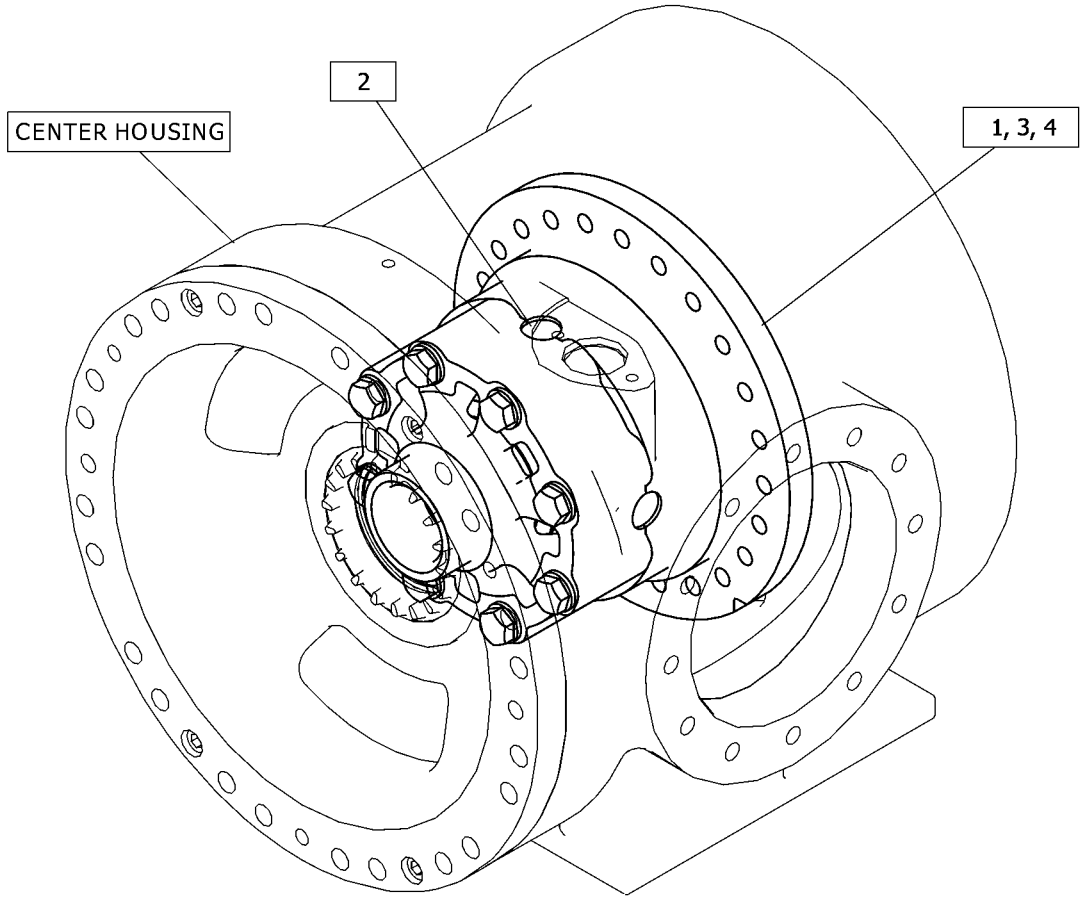

GRAPHIC #1 <END> g06373467

544-0642 DIFFERENTIAL GP

S/N: W921-UP

PART OF 543-9654 DIFFERENTIAL GP

SMCS-3258 **i07591835**

NOTE	REF NO	GRAPHIC REF	PART NUMBER	QTY	PART NAME 1 2 3 4 5 6 (PRODUCT LEVEL)	SEE PAGE

(NO BREAKDOWN OF SERVICEABLE PARTS AVAILABLE AT TIME OF PUBLICATION)

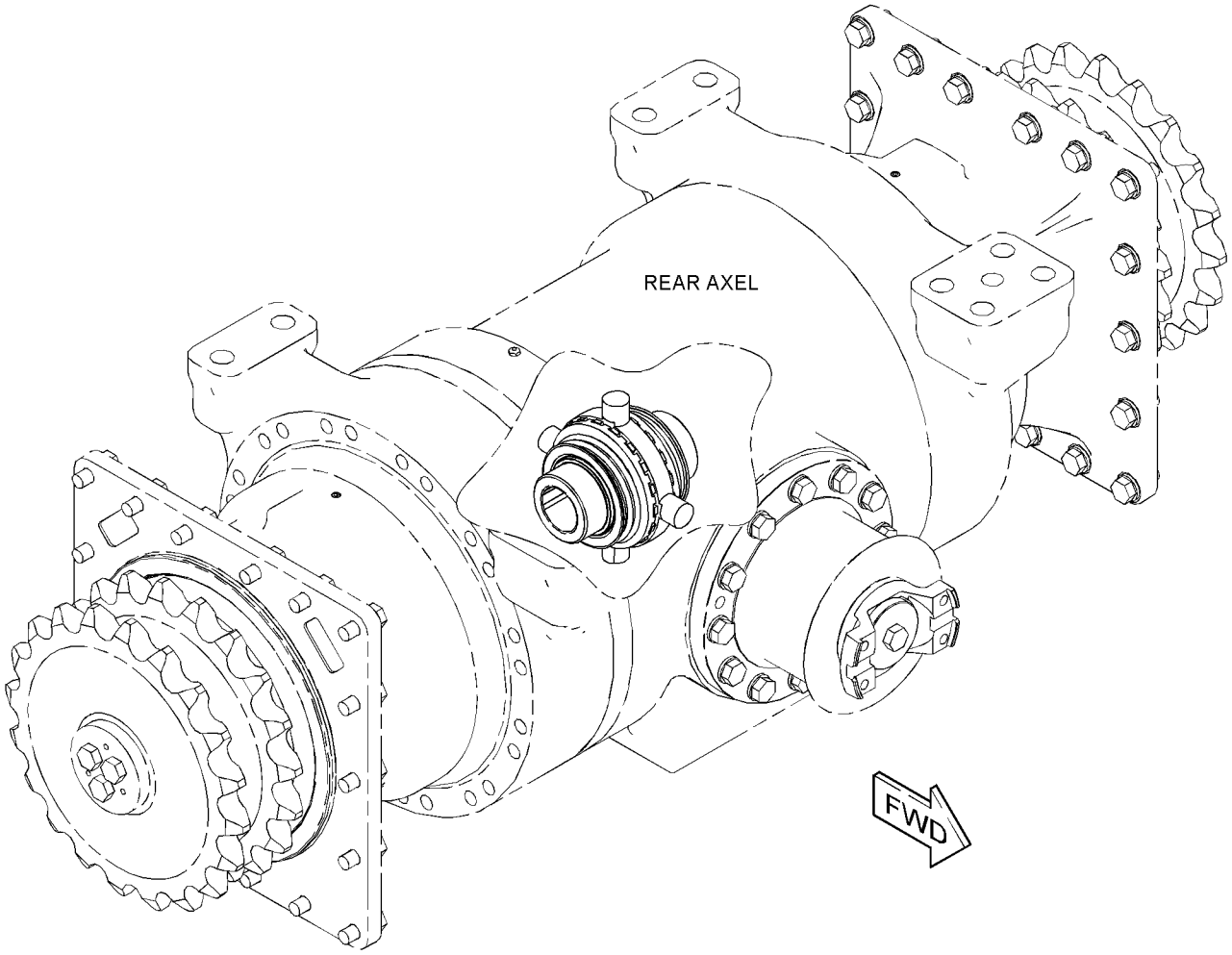

GRAPHIC #1 <END> g06375959

539-1566 FILLER GP-POWER TRAIN OIL

S/N: W921-UP

PART OF 533-4647 TRANSMISSION AR

SMCS-3005, 3081, 7513 **i07592502**

NOTE	REF NO	GRAPHIC REF	PART NUMBER	QTY	PART NAME 1 2 3 4 5 6 (PRODUCT LEVEL)	SEE PAGE
M	1	1	**518-1810**	2	BOLT (M10X1.5X20-MM)	
	2	1	**518-4416**	2	WASHER (8.4X16X1.6-MM THK)	
	3	1	**518-4417**	2	WASHER	
	4	1	**518-8391**	2	BOLT (M8X1.25X40-MM)	
	5	1	**9G-5127**	1	BREATHER (ATMOSPHERIC) (POWER TRAIN OIL)	
	6	1	**520-1138**	3	PIPE	
	7	1	**521-6774**	1	SEAL	
	8	1	**522-7924**	1	PLATE-RUBBER	
	9	1	**523-1050**	1	CAP AS	
	10	1	**539-1567**	1	TUBE AS	
	11	1	**539-1570**	1	TUBE AS	
	12	1	**539-1574**	1	PIPE	
	13	1	**539-1583**	1	GAUGE-OIL	
	14	1	**7J-8611**	1	ELBOW-PIPE	

M - METRIC PART

539-1566 **FILLER GP-POWER TRAIN OIL (**contd.**)** **i07592502**

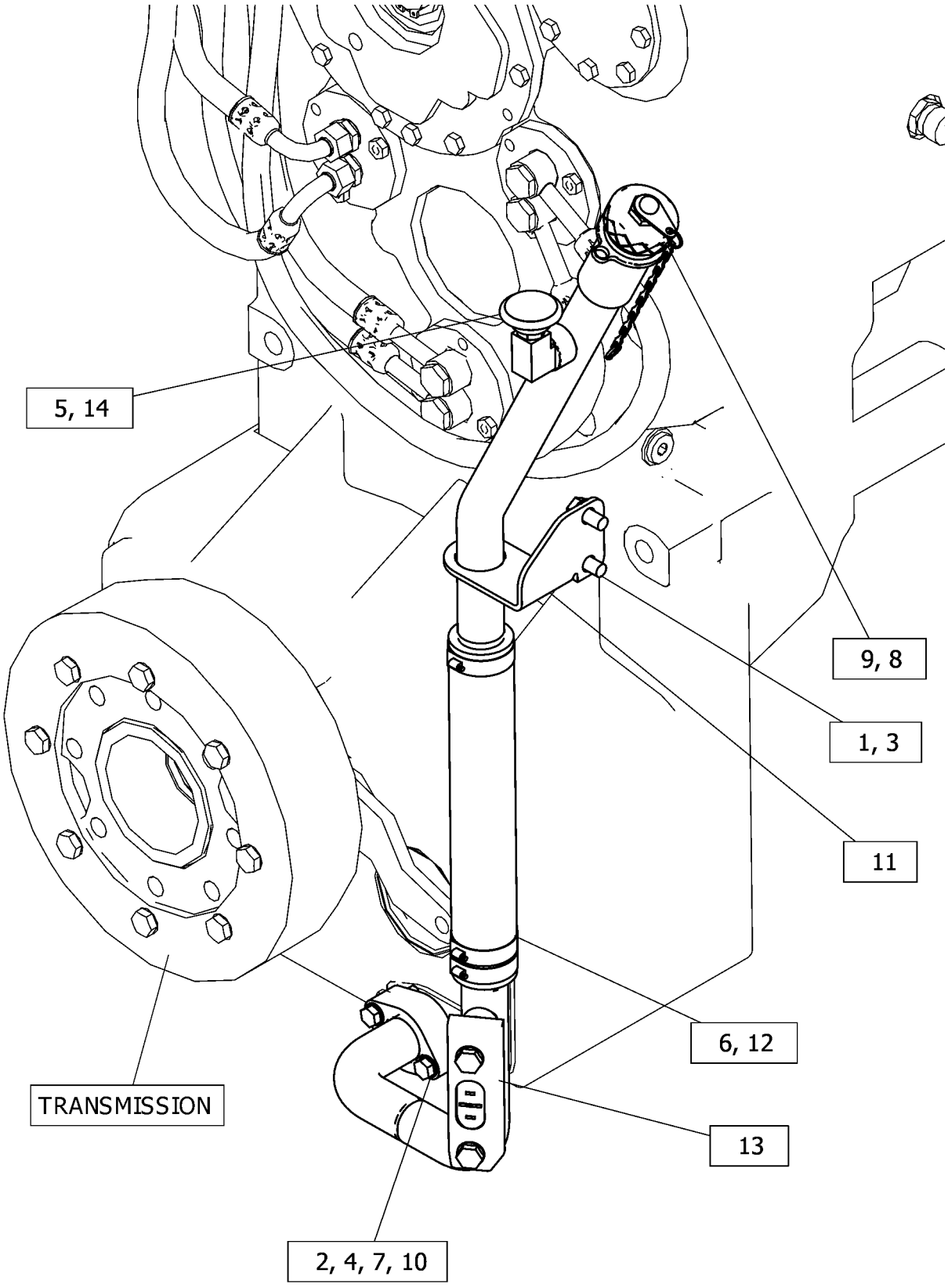

GRAPHIC #1 <END> g06375395

542-9712 FILLER GP-POWER TRAIN OIL

S/N: W921-UP

PART OF 534-6698 POWER TRAIN AR

SMCS-3005, 3081, 7513 **i07584510**

NOTE	REF NO	GRAPHIC REF	PART NUMBER	QTY	PART NAME 1 2 3 4 5 6 (PRODUCT LEVEL)	SEE PAGE
	1	1	**542-9693**	1	TUBE AS	
	2	1	**564-6272**	1	GAUGE AS-OIL LEVEL (DIPSTICK)	
	3	1	**8B-1615**	1	GASKET	
	4	1	**8T-4121**	2	WASHER-HARD (11X21X2.5-MM THK)	
M	5	1	**8T-4195**	2	BOLT (M10X1.5X30-MM)	

M - METRIC PART

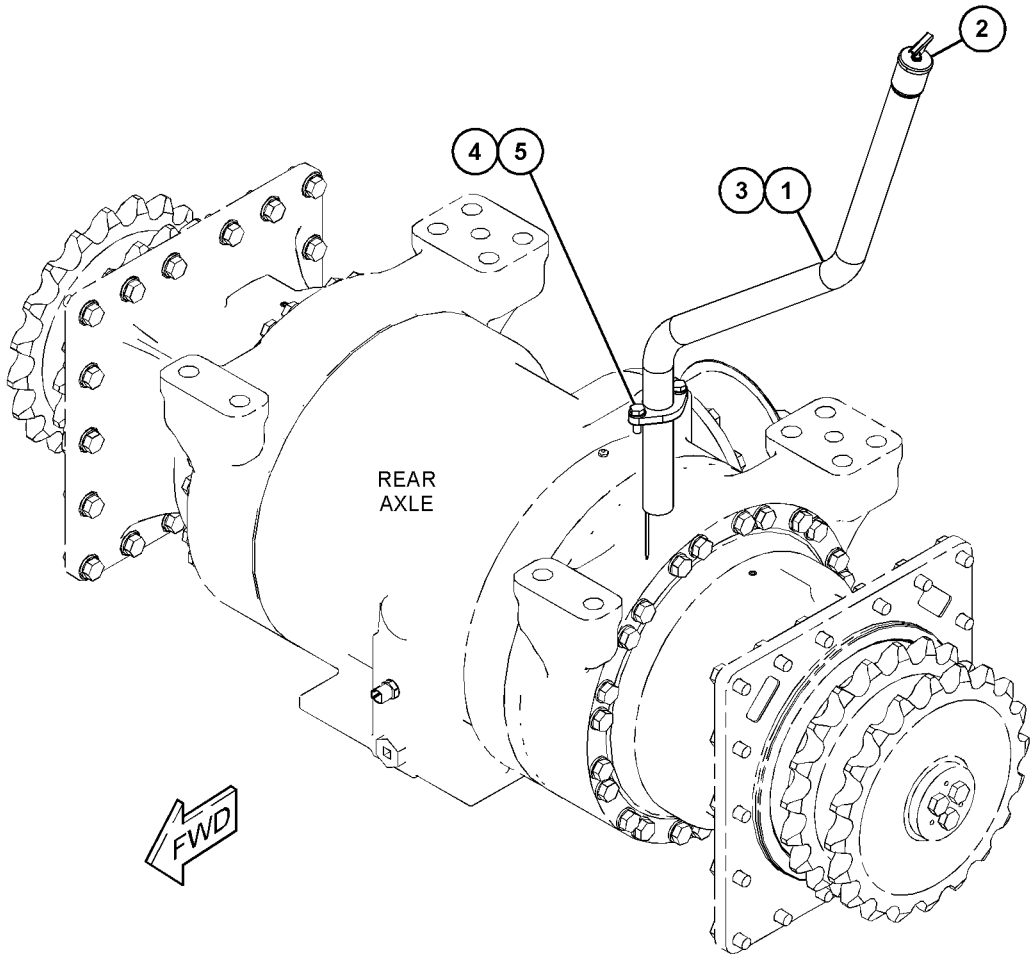

GRAPHIC #1 <END> g06372810

544-0665 DRIVE GP-FINAL

S/N: W921-UP

PART OF 543-9602 AXLE GP-REAR

SMCS-4050 **i07583243**

NOTE	REF NO	GRAPHIC REF	PART NUMBER	QTY	PART NAME 1 2 3 4 5 6 (PRODUCT LEVEL)	SEE PAGE
	1	1	**1P-4694**	1	CONE-BEARING	
	2	1	**5P-3490**	1	CONE-BEARING	
B	3	1	**7D-8439**	5	SHIM (0.007-IN THK)	
BF			**7D-8441**	5	SHIM (0.005-IN THK)	
BF			**9D-7047**	4	SHIM (0.02-MM THK)	
	6	1	**1P-4693**	2	CUP-BEARING	
	7	1	**218-4406**	2	RING-WEAR	
	8	1	**328-9669**	1	WASHER-THRUST (261.8X303X7-MM THK)	
	9	1	**329-0411**	1	SEAL-LIP TYPE	
	10	1	**4D-6695**	1	SEAL-O-RING	
	11	1	**541-8722**	1	GEAR-SUN (17-TEETH)	
	12	1	**541-8728**	1	GEAR-RING (67-TEETH)	
Y	13	1	*544-0670*	1	CARRIER GP-FINAL DRIVE	251
	14	1	**544-0676**	1	HOUSING	
	15	1	**544-0677**	3	DOWEL	
	16	1	**544-0678**	1	SHAFT-DRIVE	
	17	1	**544-0695**	2	SPROCKET (20-TEETH)	
	18	1	**544-0737**	1	RETAINER	
	19	1	**544-0738**	1	HOUSING	
	20	1	**544-0739**	1	RETAINER	
	21	1	**6G-3206**	1	WASHER-THRUST (261.8X309X7-MM THK)	
B	22	1	**6G-3212**	1	SHIM PACK (INCLUDES 10-SHIMS)	
M	23	1	**7X-2553**	18	BOLT (M16X2X40-MM)	
	24	1	**8D-3902**	1	SEAL-LIP TYPE	
	25	1	**8T-3727**	1	RING-RETAINING	
M	26	1	**8T-4140**	19	BOLT (M16X2X60-MM)	
	27	1	**9F-2247**	1	PLUG-PIPE	
	28	1	**9X-8268**	34	WASHER (17.5X30X3.5-MM THK)	

B - USE AS REQUIRED
F - NOT SHOWN
M - METRIC PART
Y - SEPARATE ILLUSTRATION

544-0665 **DRIVE GP-FINAL (**contd.**)** **i07583243**

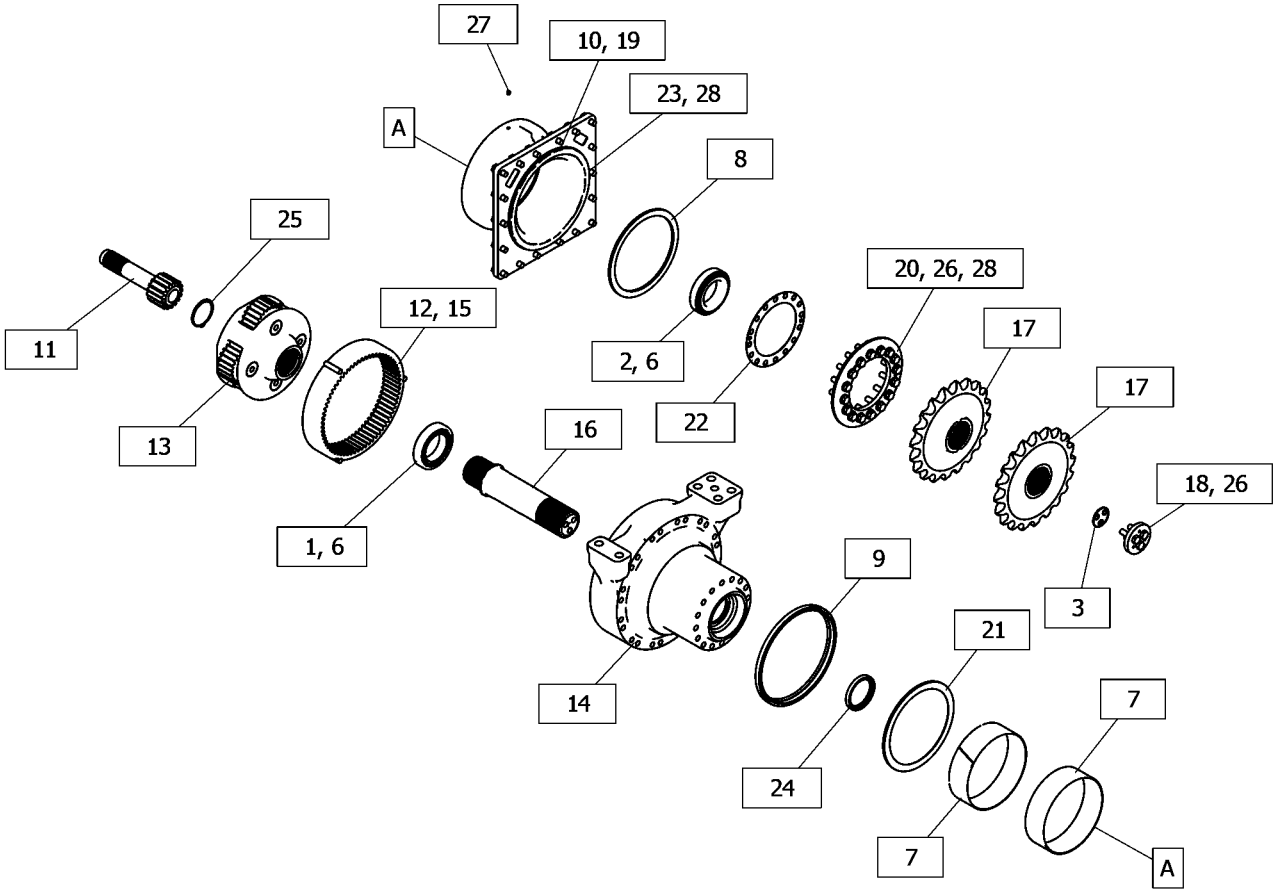

GRAPHIC #1 <END> g06374105

544-0744 DRIVE GP-FINAL

S/N: W921-UP

PART OF 543-9602 AXLE GP-REAR

SMCS-4050 **i07584219**

NOTE	REF NO	GRAPHIC REF	PART NUMBER	QTY	PART NAME 1 2 3 4 5 6 (PRODUCT LEVEL)	SEE PAGE
	1	1	**1P-4694**	1	CONE-BEARING	
	2	1	**5P-3490**	1	CONE-BEARING	
B	3	1	**7D-8439**	5	SHIM (0.007-IN THK)	
	6	1	**1P-4693**	2	CUP-BEARING	
	7	1	**218-4406**	2	RING-WEAR	
	8	1	**328-9669**	1	WASHER-THRUST (261.8X303X7-MM THK)	
	9	1	**329-0411**	1	SEAL-LIP TYPE	
	10	1	**4D-6695**	1	SEAL-O-RING	
	11	1	**541-8722**	1	GEAR-SUN (17-TEETH)	
	12	1	**541-8728**	1	GEAR-RING (67-TEETH)	
Y	13	1	*544-0670*	1	CARRIER GP-FINAL DRIVE	251
	14	1	**544-0677**	3	DOWEL	
	15	1	**544-0678**	1	SHAFT-DRIVE	
	16	1	**544-0695**	2	SPROCKET (20-TEETH)	
	17	1	**544-0737**	1	RETAINER	
	18	1	**544-0738**	1	HOUSING	
	19	1	**544-0739**	1	RETAINER	
	20	1	**544-0769**	1	HOUSING	
	21	1	**6G-3206**	1	WASHER-THRUST (261.8X309X7-MM THK)	
B	22	1	**6G-3212**	1	SHIM PACK (INCLUDES 10-SHIMS)	
M	23	1	**6V-3303**	16	BOLT (M16X2X60-MM)	
	24	1	**8D-3902**	1	SEAL-LIP TYPE	
M	25	1	**8T-0375**	21	BOLT (M16X2X45-MM)	
	26	1	**8T-3727**	1	RING-RETAINING	
	27	1	**9F-2247**	1	PLUG-PIPE	
	28	1	**9X-8268**	34	WASHER (17.5X30X3.5-MM THK)	
B	29	1	**7D-8441**	5	SHIM (0.005-IN THK)	
B	30	1	**9D-7047**	4	SHIM (0.02-MM THK)	

B - USE AS REQUIRED
M - METRIC PART
Y - SEPARATE ILLUSTRATION

544-0744 **DRIVE GP-FINAL (**contd.**)** **i07584219**

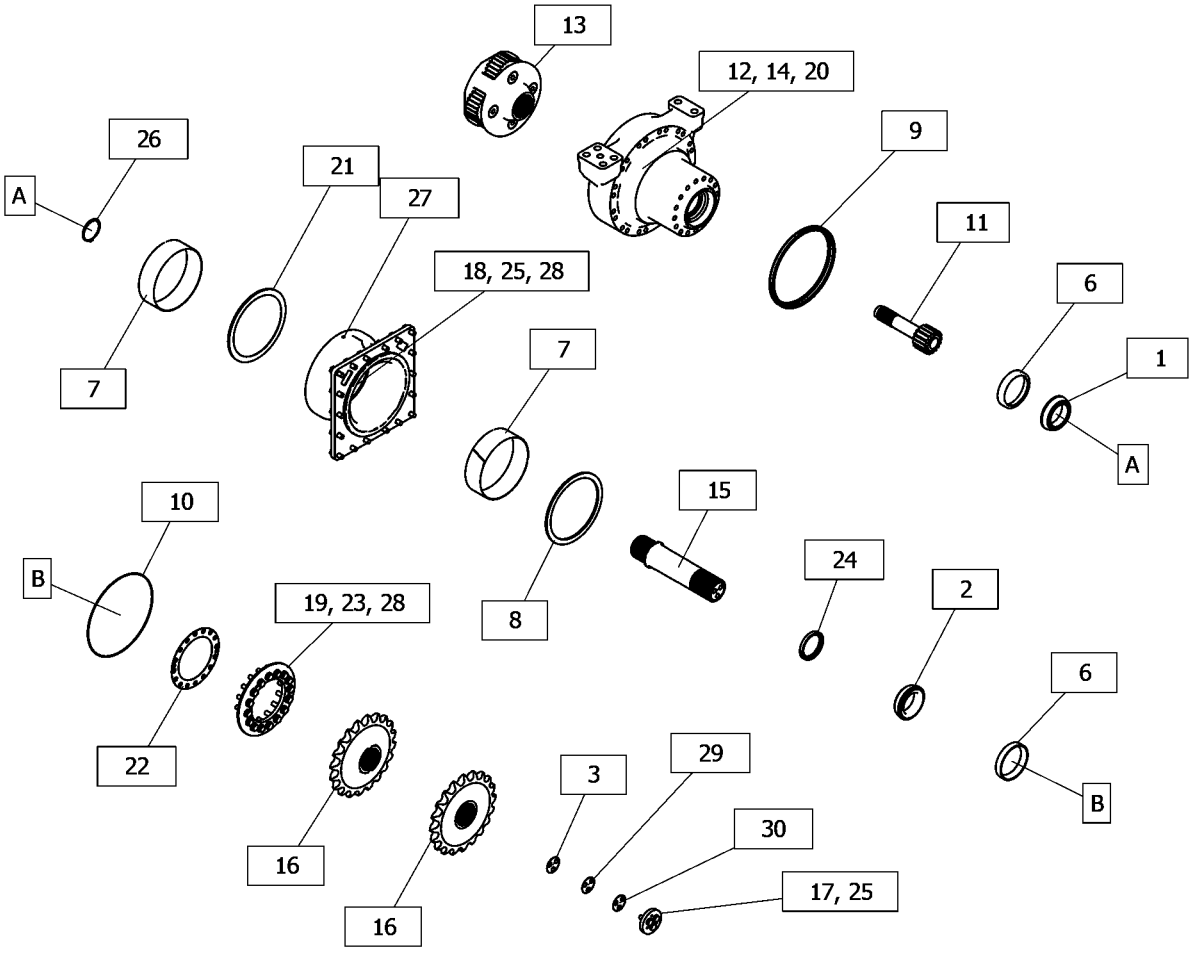

GRAPHIC #1 <END> g06374405

535-7181 LINES GP-TRANSMISSION OIL

S/N: W921-UP

PART OF 535-7200 HYDRAULIC AR

SMCS-3154 **i07591074**

NOTE	REF NO	GRAPHIC REF	PART NUMBER	QTY	PART NAME 1 2 3 4 5 6 (PRODUCT LEVEL)	SEE PAGE
M	1	1	**518-2309**	1	BOLT (M10X1.5X20-MM)	
M	2	1	**518-6585**	1	NUT-HEX (M10X1.5-THD)	
M	3	1	**524-6918**	2	BOLT (M10X1.5X45-MM)	
	4	1	*164-5590*	1	VALVE AS-FLUID SAMPLING (TRANSMISSION OIL)	
		1	**3J-7354**	1	SEAL-O-RING	
		1	**8C-3446**	1	VALVE-SAMPLING	
	5	1	**133-6934**	1	SPACER (11X20X25-MM THK)	
	6	1	*148-8305*	1	ADAPTER AS	
		1	**3J-1907**	1	SEAL-O-RING	
		1	**5P-9617**	1	ADAPTER	
	7	1	*148-8335*	1	CONNECTOR AS	
		1	**5K-9090**	1	SEAL-O-RING	
		1	**6V-8635**	1	CONNECTOR	
		1	**7M-8485**	1	SEAL-O-RING	
	8	1	*297-7959*	1	TEE AS	
		1	**5K-9090**	1	SEAL-O-RING	
		1	**107-0496**	1	TEE-O-RING	
	9	1	**302-3908**	1	SPACER (11X20X30-MM THK)	
	10	1	*315-9839*	1	TEE AS	
		1	**8T-1674**	1	TEE	
		1	**228-7093**	1	SEAL-O-RING	
		1	**238-5084**	1	SEAL-O-RING	
	11	1	**4D-7388**	4	CLIP (LOOP)	
	12	1	**518-4417**	4	WASHER	
	13	1	**532-9506**	2	ADAPTER AS	
I	14	1	**535-7205**	1	HOSE AS	
I	15	1	**558-2631**	1	HOSE AS	
	16	1	**8C-3447**	1	CAP-DUST	

I - REFER TO HYDRAULIC INFORMATION SYSTEM
M - METRIC PART

535-7181 **LINES GP-TRANSMISSION OIL (**contd.**)** **i07591074**

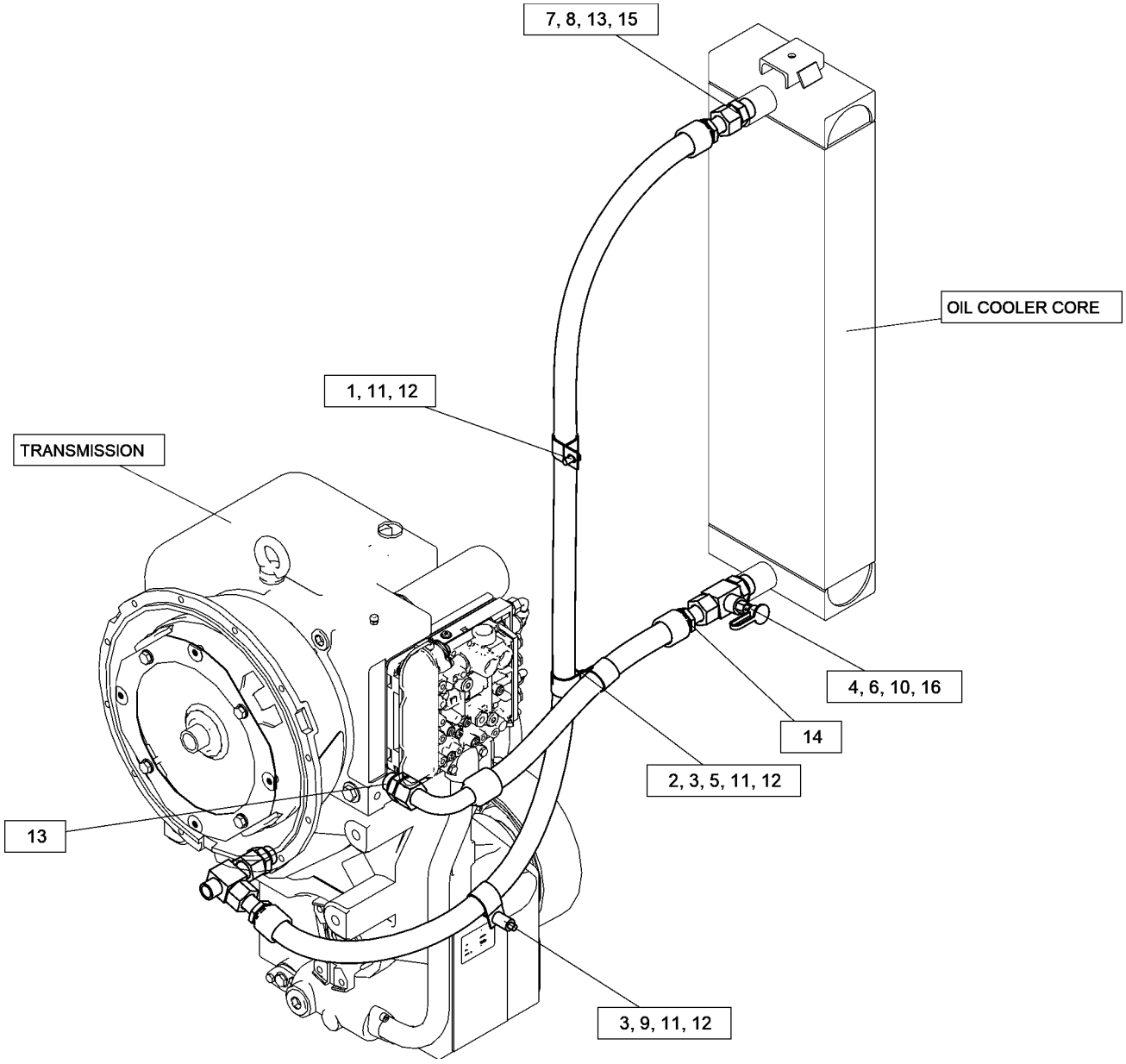

GRAPHIC #1 <END> g06375284

534-6698 POWER TRAIN AR

S/N: W921-UP

PART OF 525-9809 COMMON AR

SMCS-3000, 4000

i07545137

NOTE	PART NUMBER	QTY	PART NAME 1 2 3 4 5 6 (PRODUCT LEVEL)	SEE PAGE
Y	*532-6677*	1	AXLE AR-REAR	244
Y	*134-1080*	1	AXLE GP-FRONT	247
Y	*542-9712*	1	FILLER GP-POWER TRAIN OIL	261
Y	*534-6713*	1	GUARD GP	315
Y	*538-6096*	1	HARDWARE GP-MOUNTING	535
Y	*538-6101*	1	SHAFT GP-DRIVE (ENGINE, PUMP)	272
Y	*538-6106*	1	SHAFT GP-DRIVE (TRANSMISSION)	274

Y - SEPARATE ILLUSTRATION

<END>

540-6848 RIM GP-DEMOUNTABLE

S/N: W921-UP

(10X24)

PART OF 540-3755 WHEEL GP

SMCS-4209 **i07567784**

NOTE	REF NO	GRAPHIC REF	PART NUMBER	QTY	PART NAME 1 2 3 4 5 6 (PRODUCT LEVEL)	SEE PAGE
	1	1	**540-6849**	1	RING-LOCK	
	2	1	**540-6850**	1	FLANGE AS	
	3	1	**540-6851**	1	RIM AS	

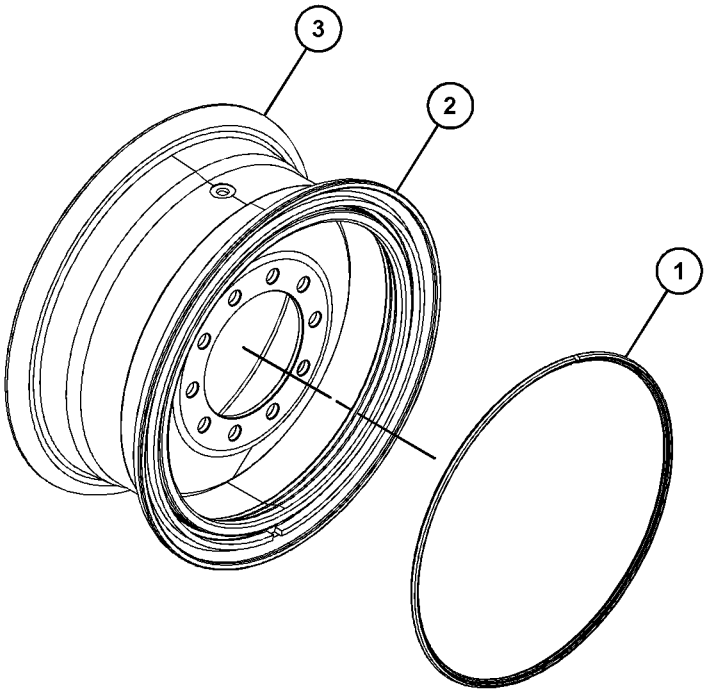

GRAPHIC #1 <END> g06308929

540-6852 RIM GP-DEMOUNTABLE

S/N: W921-UP

(14X25)

PART OF 540-3236 WHEEL GP

SMCS-4209 **i07568363**

NOTE	REF NO	GRAPHIC REF	PART NUMBER	QTY	PART NAME 1 2 3 4 5 6 (PRODUCT LEVEL)	SEE PAGE
	1	1	**540-6853**	1	RING-LOCK	
	2	1	**540-6854**	1	FLANGE AS	
	3	1	**540-6855**	1	RIM AS	

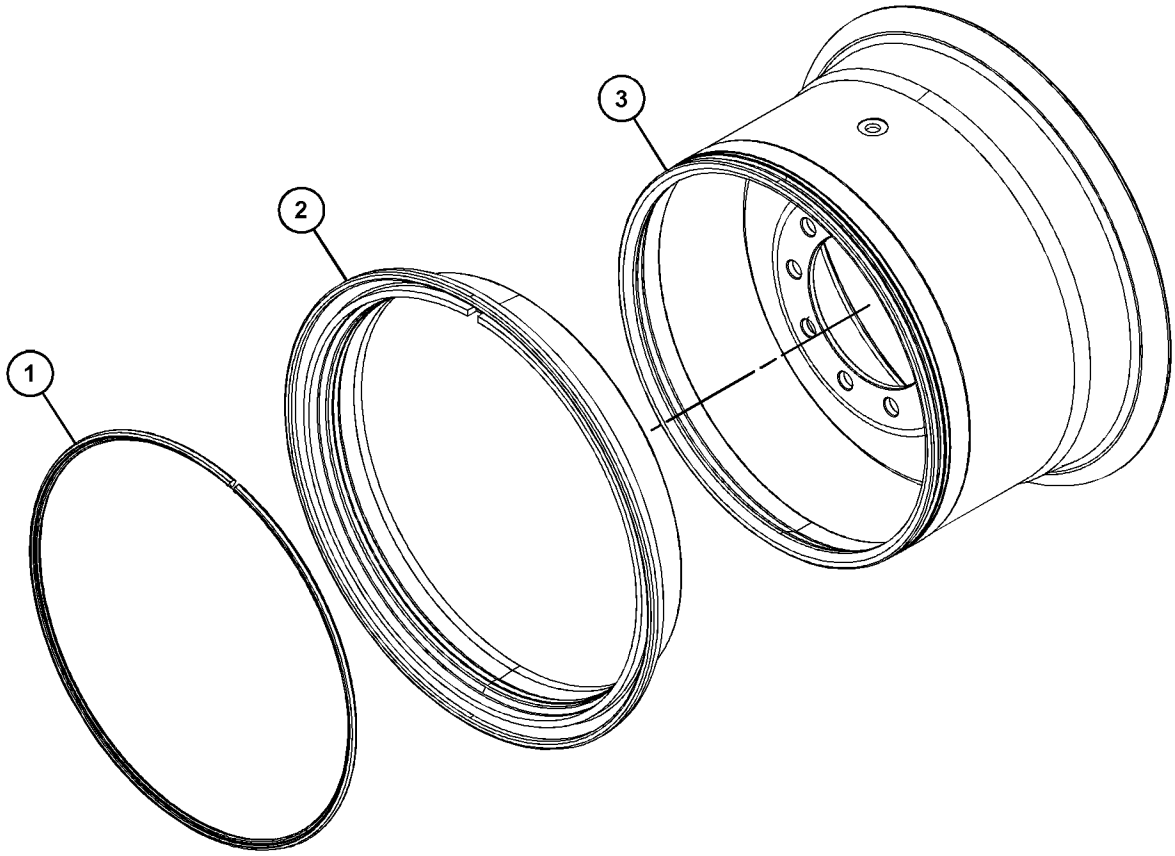

GRAPHIC #1 <END> g06291217

570-3848 RIM GP-DEMOUNTABLE

S/N: W921-UP

(14X24)

SMCS-4209 **i07621124**

NOTE	REF NO	GRAPHIC REF	PART NUMBER	QTY	PART NAME 1 2 3 4 5 6 (PRODUCT LEVEL)	SEE PAGE
	1	1	**2D-2654**	1	RING-LOCK	
	2	1	**570-3853**	1	RIM AS	
	3	1	**8W-9566**	1	FLANGE AS	

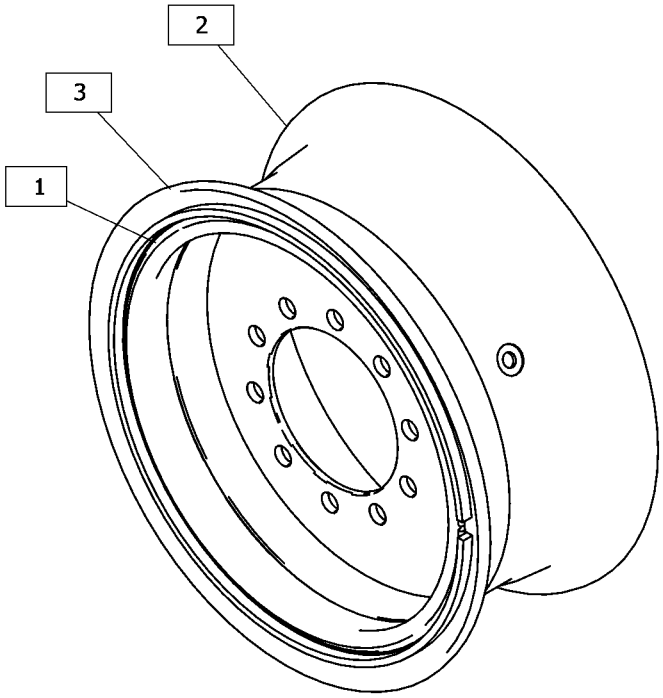

GRAPHIC #1 <END> g06382696

538-6101 SHAFT GP-DRIVE

S/N: W921-UP

PART OF 534-6698 POWER TRAIN AR

SMCS-3253 **i07545991**

NOTE	REF NO	GRAPHIC REF	PART NUMBER	QTY	PART NAME 1 2 3 4 5 6 (PRODUCT LEVEL)	SEE PAGE
	1	1	**0S-1579**	8	BOLT (1/2-20X2-IN)	
	2	1	**378-3243**	1	NUT-HEX (1-12-THD)	
	3	1	**538-6109**	1	YOKE	
	4	1	**552-8896**	1	SHIM (2-MM THK)	
	5	1	**568-3440**	1	YOKE	
	6	1	**568-3441**	1	YOKE	
Y	7	1	*572-7750*	1	SLIP JOINT GP	277
M	8	1	**6V-7687**	12	LOCKNUT (M12X1.75-THD)	
M	9	1	**8T-4184**	24	BOLT (M12X1.75X45-MM)	
	10	1	**8T-4223**	24	WASHER-HARD (13.5X25.5X3-MM THK)	

M - METRIC PART
Y - SEPARATE ILLUSTRATION

538-6101 **SHAFT GP-DRIVE (**contd.**)** **i07545991**

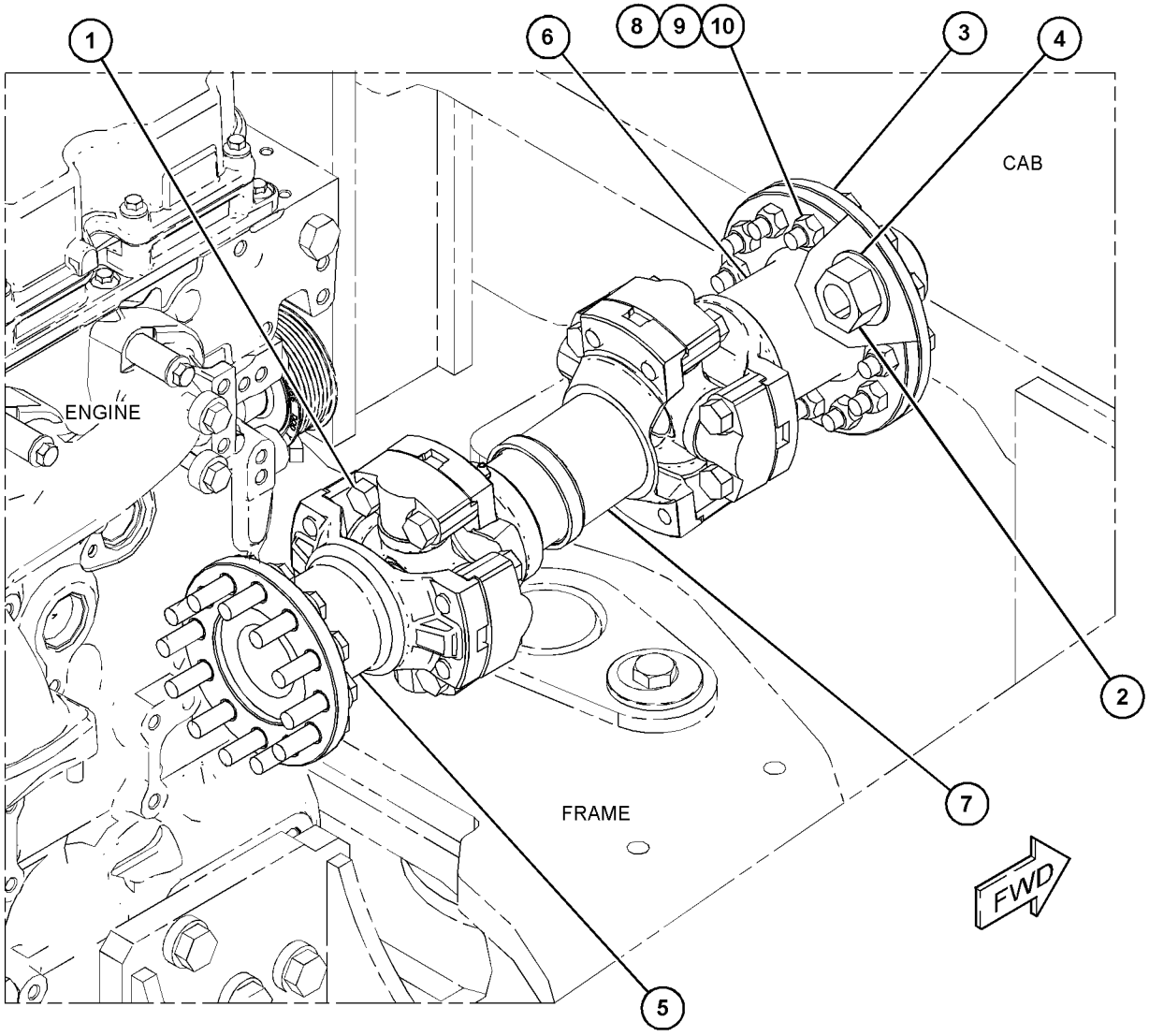

GRAPHIC #1 <END> g06374462

538-6106 SHAFT GP-DRIVE

S/N: W921-UP

PART OF 534-6698 POWER TRAIN AR

SMCS-3253 **i07582816**

NOTE	REF NO	GRAPHIC REF	PART NUMBER	QTY	PART NAME 1 2 3 4 5 6 (PRODUCT LEVEL)	SEE PAGE
	1	1	**0S-1579**	8	BOLT (1/2-20X2-IN)	
Y	2	1	*572-7749*	1	SLIP JOINT GP	276

Y - SEPARATE ILLUSTRATION

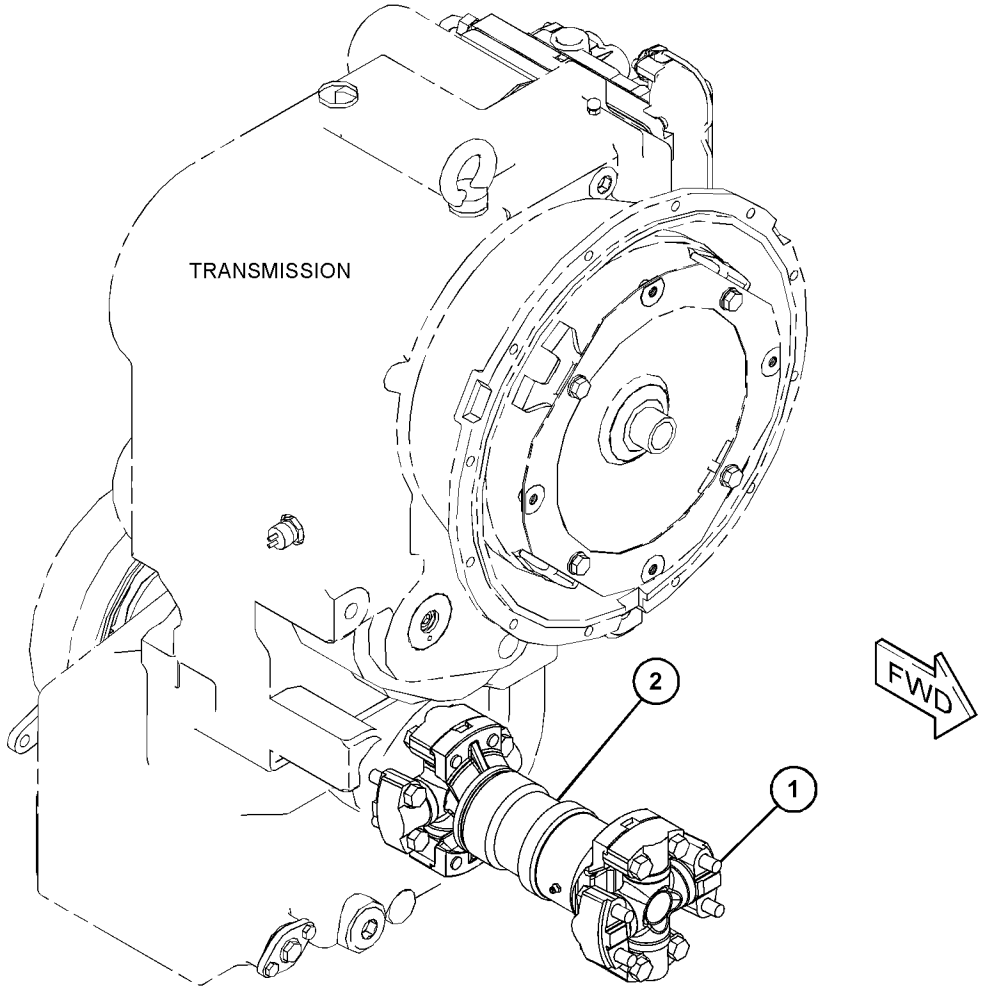

GRAPHIC #1 <END> g06374681

538-1179 SHIM GP

S/N: W921-UP

PART OF 533-4647 TRANSMISSION AR

SMCS-3030 **i07592382**

NOTE	REF NO	GRAPHIC REF	PART NUMBER	QTY	PART NAME 1 2 3 4 5 6 (PRODUCT LEVEL)	SEE PAGE
	1	1	**538-1180**	1	SHIM (0.5-MM THK)	
	2	1	**538-1181**	1	SHIM (1-MM THK)	

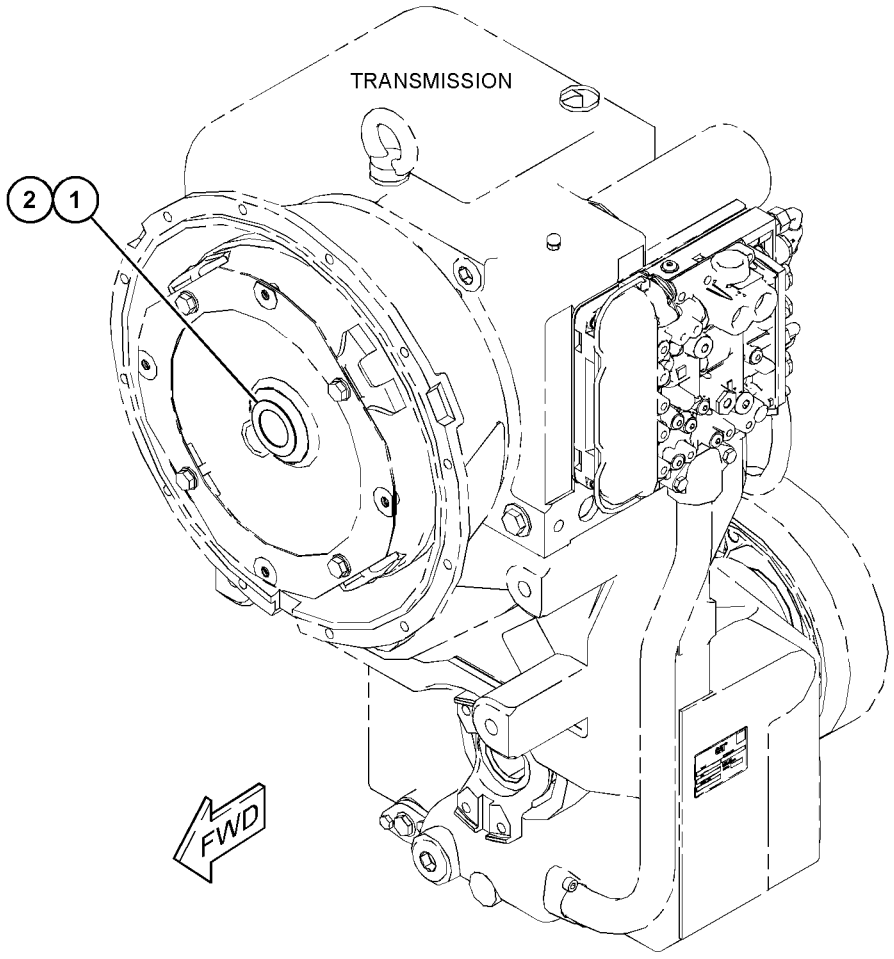

GRAPHIC #1 <END> g06375555

572-7749 SLIP JOINT GP

S/N: W921-UP

PART OF 538-6106 SHAFT GP-DRIVE

SMCS-3251, 3253 **i07582828**

NOTE	REF NO	GRAPHIC REF	PART NUMBER	QTY	PART NAME 1 2 3 4 5 6 (PRODUCT LEVEL)	SEE PAGE
	1	1	**0S-1579**	8	BOLT (1/2-20X2-IN)	
	2	1	**536-4801**	1	SLIP JOINT GP	
	3	1	**9P-0356**	2	SPIDER & BEARING AS	

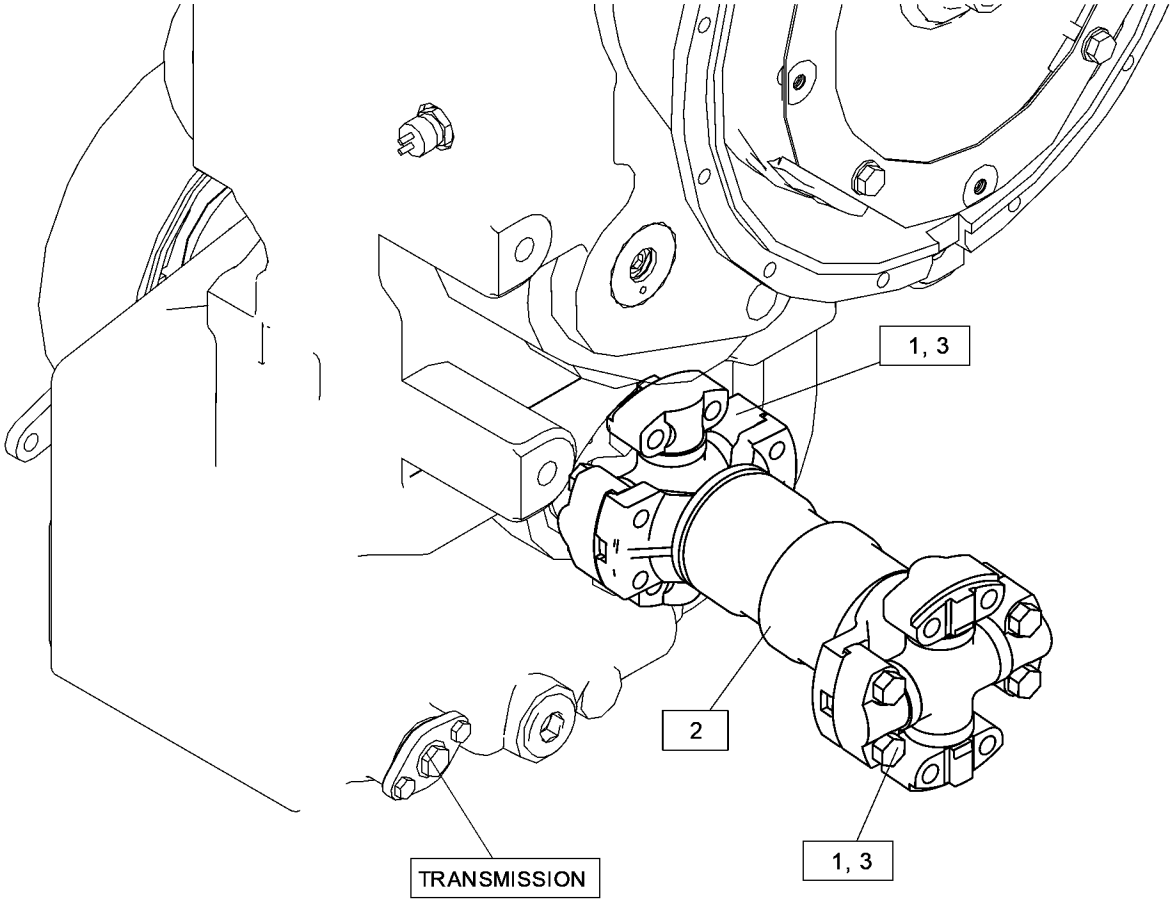

GRAPHIC #1 <END> g06374992

572-7750 SLIP JOINT GP

S/N: W921-UP

PART OF 538-6101 SHAFT GP-DRIVE

SMCS-3251, 3253

i07585640

NOTE	REF NO	GRAPHIC REF	PART NUMBER	QTY	PART NAME 1 2 3 4 5 6 (PRODUCT LEVEL)	SEE PAGE
	1	1	**0S-1579**	8	BOLT (1/2-20X2-IN)	
	2	1	**536-4800**	1	SLIP JOINT GP	
	3	1	**9P-0356**	2	SPIDER & BEARING AS	

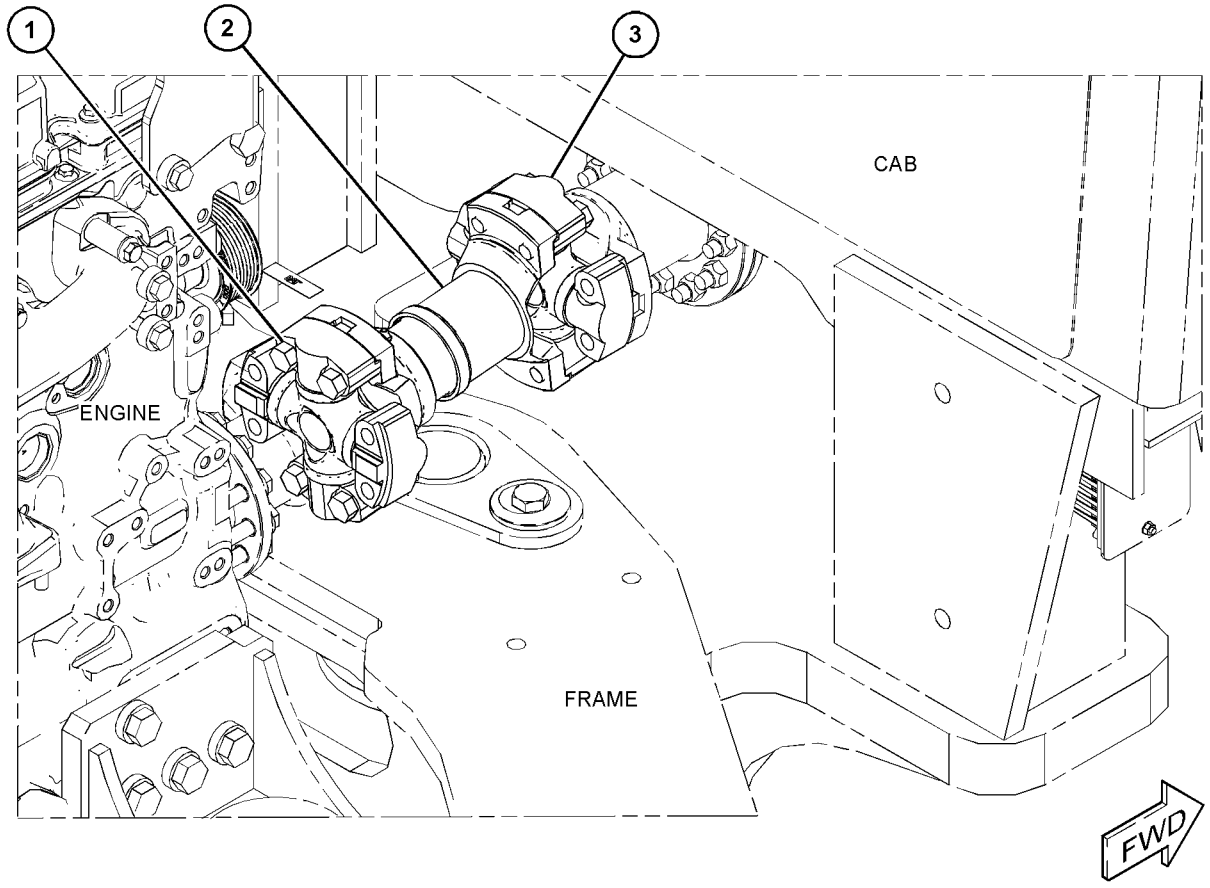

GRAPHIC #1 <END> g06374145

532-6685 TANDEM & COVER GP

S/N: W921-UP

PART OF 532-6677 AXLE AR-REAR

SMCS-4062, 4064 **i07582976**

NOTE	REF NO	GRAPHIC REF	PART NUMBER	QTY	PART NAME 1 2 3 4 5 6 (PRODUCT LEVEL)	SEE PAGE
	1	1	**2B-3147**	4	GASKET	
	2	1	**2B-3148**	2	COVER	
	3	1	**3D-2981**	4	GASKET	
	4	1	**522-1860**	2	BREATHER AS (TANDEM)	
	5	1	**532-6686**	1	HOUSING AS-TANDEM DRIVE (RH)	
	6	1	**532-6689**	1	HOUSING AS-TANDEM DRIVE (LH)	
	7	1	**544-1296**	2	COVER (RH)	
	8	1	**544-1297**	4	COVER (LH)	
	9	1	**5P-4484**	2	PLUG-MAGNETIC (DRAIN, HYDRAULIC OIL)	
	10	1	**5P-8245**	32	WASHER-HARD (13.5X25.5X3-MM THK)	
M	11	1	**6A-5591**	32	BOLT (M12X1.75X25-MM)	
	12	1	**7M-8485**	4	SEAL-O-RING	
	13	1	**9S-4181**	2	PLUG (1-5/16-12-THD)	

M - METRIC PART

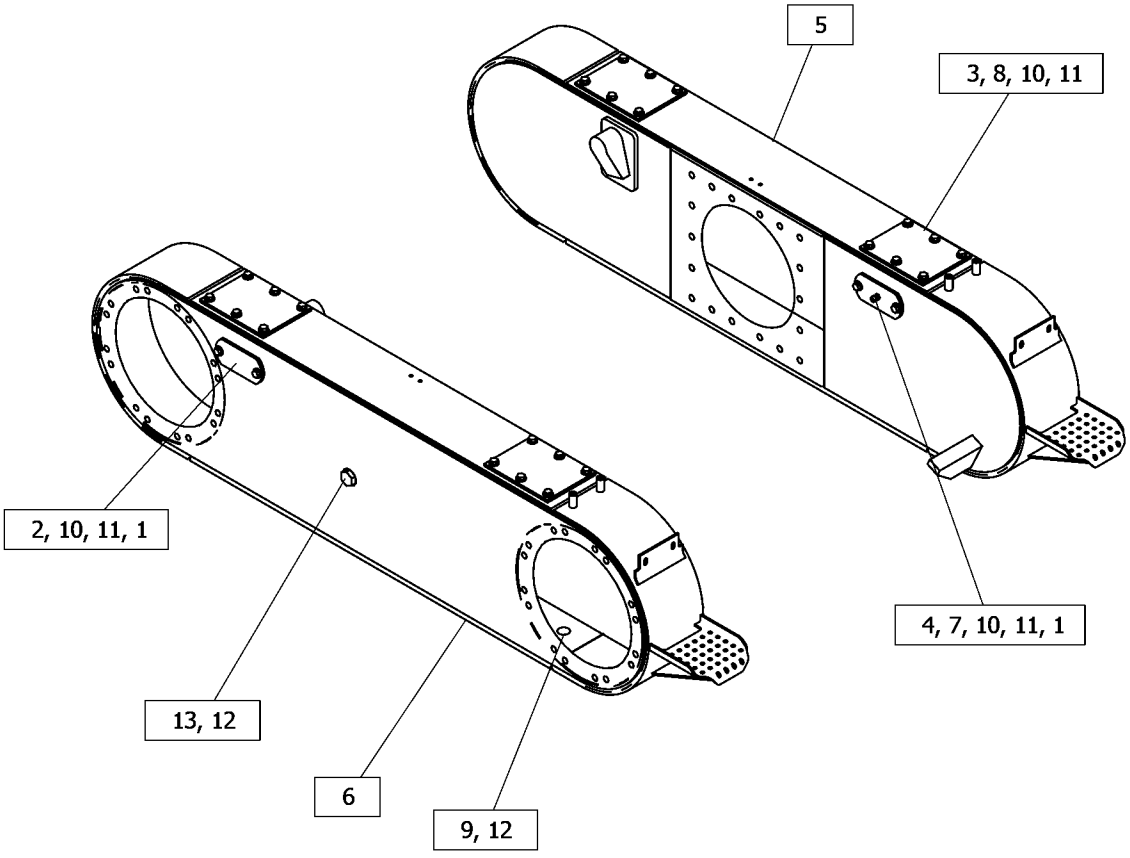

GRAPHIC #1 <END> g06376484

564-0285 TANDEM & COVER GP

S/N: W921-UP

PART OF 563-7617 AXLE AR-REAR

SMCS-4062, 4064 **i07621151**

NOTE	REF NO	GRAPHIC REF	PART NUMBER	QTY	PART NAME 1 2 3 4 5 6 (PRODUCT LEVEL)	SEE PAGE
	1	1	**248-1377**	2	COVER AS (TANDEM)	
					(EACH INCLUDES)	
		1	**4H-6112**	1	BREATHER (TANDEM)	
		1	**6B-5072**	1	ADAPTER	
		1	**002-6453**	1	ELBOW	
	2	1	**2B-3147**	6	GASKET	
	3	1	**2B-3148**	4	COVER	
	4	1	**3D-2981**	4	GASKET	
	5	1	**532-6686**	1	HOUSING AS-TANDEM DRIVE (RH)	
	6	1	**544-1297**	4	COVER	
	7	1	**564-0287**	1	HOUSING AS-TANDEM DRIVE (LH)	
	8	1	**5P-4484**	2	PLUG-MAGNETIC (OIL DRAIN)	
	9	1	**5P-8245**	36	WASHER-HARD (13.5X25.5X3-MM THK)	
M	10	1	**6A-5591**	36	BOLT (M12X1.75X25-MM)	
	11	1	**7M-8485**	4	SEAL-O-RING	
	12	1	**9S-4181**	2	PLUG (1-5/16-12-THD)	

M - METRIC PART

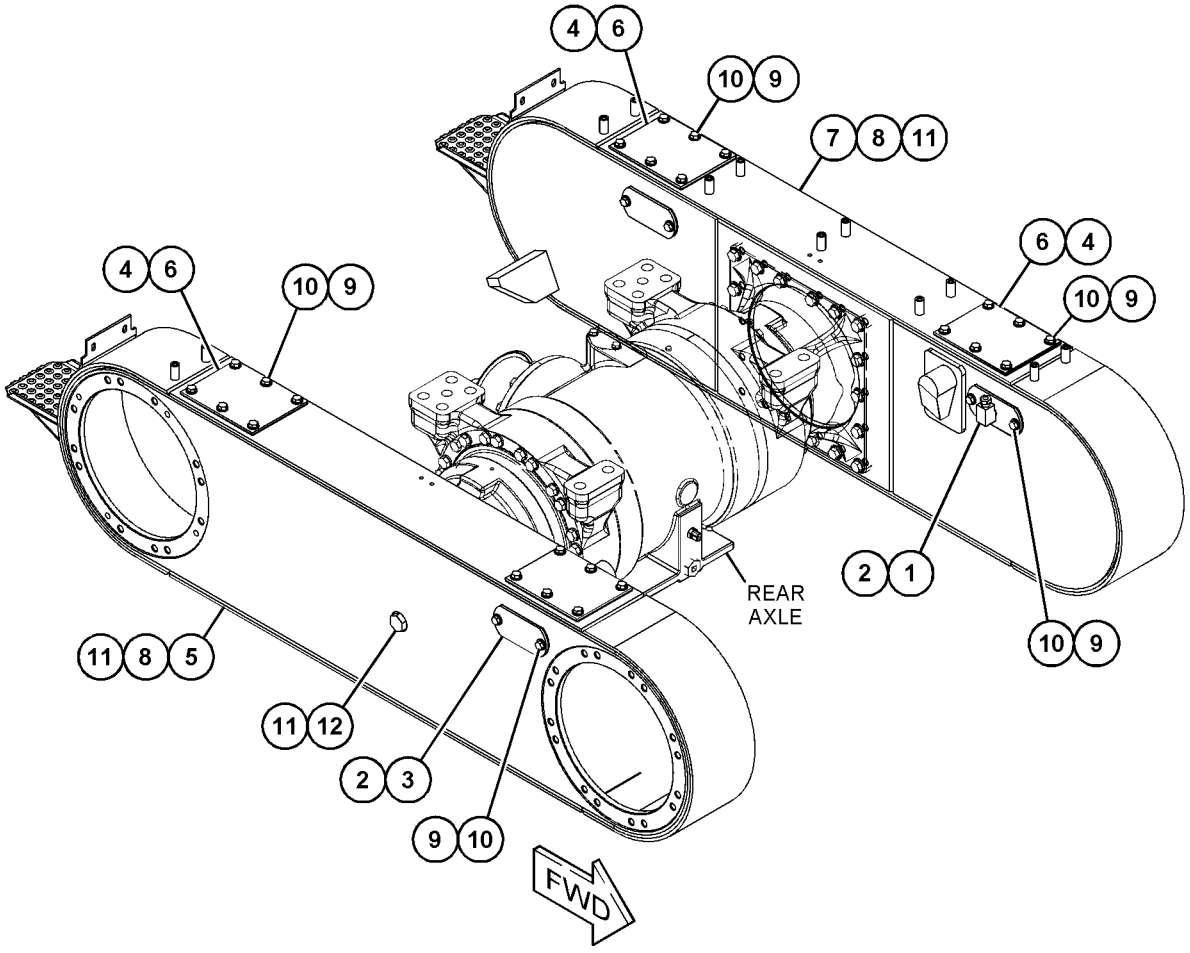

GRAPHIC #1 <END> g06381128

564-0290 TANDEM & COVER GP

S/N: W921-UP

PART OF 563-7618 AXLE AR-REAR

SMCS-4062, 4064 **i07621136**

NOTE	REF NO	GRAPHIC REF	PART NUMBER	QTY	PART NAME 1 2 3 4 5 6 (PRODUCT LEVEL)	SEE PAGE
	1	1	**248-1377**	2	COVER AS (TANDEM)	
					(EACH INCLUDES)	
		1	**4H-6112**	1	BREATHER (TANDEM)	
		1	**6B-5072**	1	ADAPTER	
		1	**002-6453**	1	ELBOW	
	2	1	**2B-3147**	6	GASKET	
	3	1	**2B-3148**	4	COVER	
	4	1	**3D-2981**	4	GASKET	
	5	1	**544-1297**	4	COVER	
	6	1	**564-0293**	1	HOUSING AS-TANDEM DRIVE (RH)	
	7	1	**564-0296**	1	HOUSING AS-TANDEM DRIVE (LH)	
	8	1	**5P-4484**	2	PLUG-MAGNETIC (OIL DRAIN)	
	9	1	**5P-8245**	36	WASHER-HARD (13.5X25.5X3-MM THK)	
M	10	1	**6A-5591**	36	BOLT (M12X1.75X25-MM)	
	11	1	**7M-8485**	4	SEAL-O-RING	
	12	1	**9S-4181**	2	PLUG (1-5/16-12-THD)	

M - METRIC PART

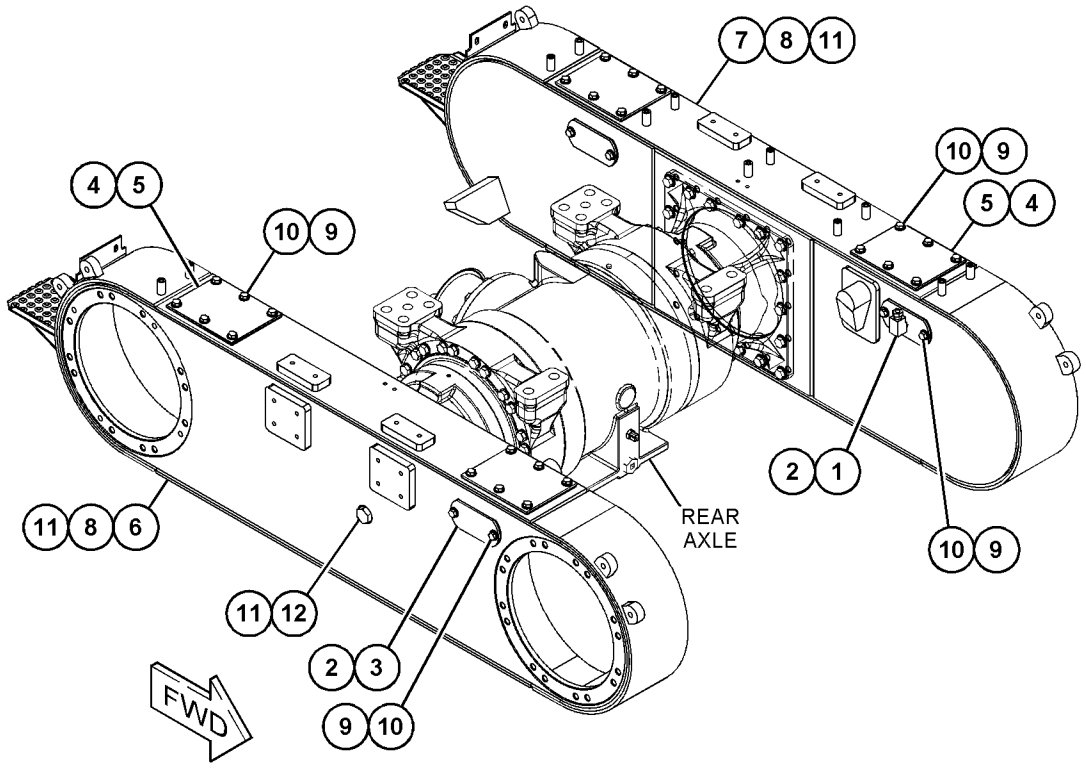

GRAPHIC #1 <END> g06381098

533-4647 TRANSMISSION AR

S/N: W921-UP

PART OF 525-9809 COMMON AR

SMCS-3030 **i07622842**

NOTE	REF NO	GRAPHIC REF	PART NUMBER	QTY	PART NAME 1 2 3 4 5 6 (PRODUCT LEVEL)	SEE PAGE
Y	1	1	*533-4648*	1	TRANSMISSION GP	282
Y	2	1	*538-1170*	1	BRACKET GP-MOUNTING	495
Y	3	1	*538-1175*	1	BRACKET GP-MOUNTING	496
Y	4	1	*538-1179*	1	SHIM GP	275
Y	5	1	*539-1566*	1	FILLER GP-POWER TRAIN OIL	259
Y	6	1	*539-1575*	1	BRACKET GP-MOUNTING	497
Y	7	1	*539-1580*	1	ADAPTER GP-SENSOR	127
Y	8	1	*539-1582*	1	HARDWARE GP-MOUNTING	536
Y	9	1	*568-8110*	1	COVER GP-ACCESS	305

Y - SEPARATE ILLUSTRATION

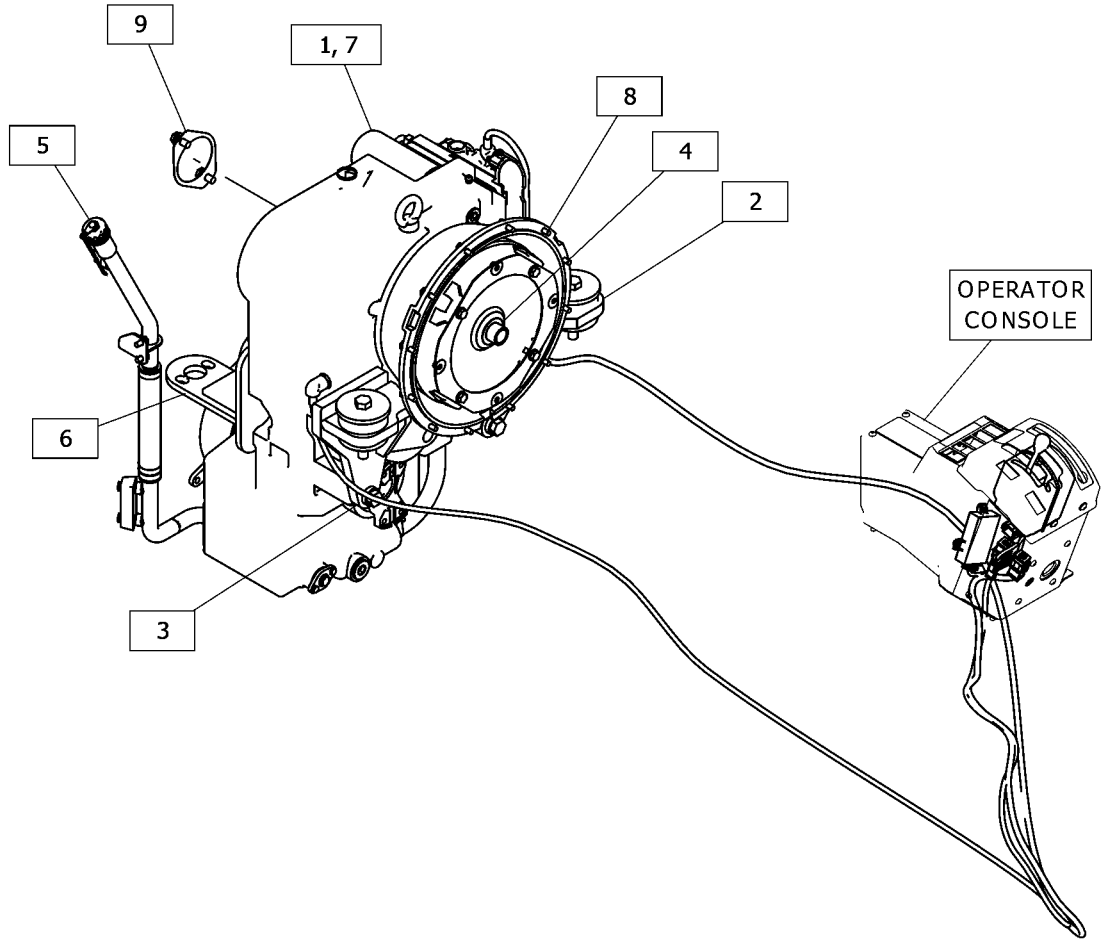

GRAPHIC #1 <END> g06375058

533-4648 TRANSMISSION GP

S/N: W921-UP

PART OF 533-4647 TRANSMISSION AR

SMCS-3030 **i07592737**

NOTE	PART NUMBER	QTY	PART NAME 1 2 3 4 5 6 (PRODUCT LEVEL)	SEE PAGE
Y	**556-1448**	1	CONTROL GP-TRANSMISSION HYD	253
Y	**556-1449**	1	PARTS GP-MISCELLANEOUS	620
	556-7539	1	BEARING	
	556-7541	4	BOLT	
	556-7546	1	BRAKE AS	
	556-9736	1	CONNECTOR AS	
	556-1450	1	CONTROL AS	
	556-7538	1	CONVERTER AS	
	556-9731	1	COVER	
	556-9732	1	COVER	
	556-7553	1	DRUM	
	554-4809	1	FILTER AS	
	556-7555	1	GASKET	
	556-7556	1	GASKET	
	556-7557	1	GASKET	
	556-7558	1	GASKET	
	556-7561	2	GASKET	
	556-9730	1	GASKET	
	556-1451	1	HARNESS AS	
	556-1452	1	HARNESS AS	
	556-1453	1	HARNESS AS	
	556-9734	1	HARNESS AS	
	556-9735	1	HARNESS AS	
	556-7562	1	HOSE AS	
	556-7563	1	HOSE AS	
	556-7564	1	HOSE AS	
	556-9729	1	HOSE AS	
	562-6233	1	KIT-SEAL (TRANSMISSION)	
	556-7536	1	MEMBRANE AS	
	556-7537	1	PLATE AS	
	556-7551	1	RING-RETAINING	
	556-7540	1	SEAL-LIP TYPE	
	556-7544	2	SEAL-LIP TYPE	
	556-7543	2	SEAL-O-RING	
	556-7559	1	SEAL-O-RING	
	556-7560	1	SENSOR-INDUCTIVE	
	556-7548	1	SHAFT	
	556-7549	1	SHAFT	
	556-9733	5	SOLENOID AS	
	556-7547	1	SPRING	
	556-7550	1	WASHER	
	556-7552	1	WASHER	
	556-7542	2	WASHER-LOCK	
	556-7545	1	YOKE	
	556-7554	1	YOKE	

Y - SEPARATE ILLUSTRATION

<END>

340-2640 WHEEL & TIRE AR

S/N: W921-UP

SMCS-4200 **i07568377**

NOTE	PART NUMBER	QTY	PART NAME 1 2 3 4 5 6 (PRODUCT LEVEL)	SEE PAGE
Y	*340-2632*	6	WHEEL & TIRE GP	284

Y - SEPARATE ILLUSTRATION

<END>

340-2642 WHEEL & TIRE AR

S/N: W921-UP

SMCS-4200 **i07568129**

NOTE	PART NUMBER	QTY	PART NAME 1 2 3 4 5 6 (PRODUCT LEVEL)	SEE PAGE
Y	*340-2634*	6	WHEEL & TIRE GP	284

Y - SEPARATE ILLUSTRATION

<END>

368-9750 WHEEL & TIRE AR

S/N: W921-UP

PART OF 368-9751 WHEEL & TIRE AR

SMCS-4200 **i07567630**

NOTE	PART NUMBER	QTY	PART NAME 1 2 3 4 5 6 (PRODUCT LEVEL)	SEE PAGE
Y	*252-0108*	1	WHEEL GP	290
	317-6017	1	TIRE (14-24)	

Y - SEPARATE ILLUSTRATION

<END>

368-9751 WHEEL & TIRE AR

S/N: W921-UP

SMCS-4200 **i07567620**

NOTE	PART NUMBER	QTY	PART NAME 1 2 3 4 5 6 (PRODUCT LEVEL)	SEE PAGE
Y	*368-9750*	6	WHEEL & TIRE AR	283

Y - SEPARATE ILLUSTRATION

<END>

382-1741 WHEEL & TIRE AR

S/N: W921-UP

SMCS-4200 **i07567429**

NOTE	PART NUMBER	QTY	PART NAME 1 2 3 4 5 6 (PRODUCT LEVEL)	SEE PAGE
Y	*382-1740*	6	WHEEL & TIRE GP	284

Y - SEPARATE ILLUSTRATION

<END>

538-6009 WHEEL & TIRE AR

S/N: W921-UP

SMCS-4200 **i07552440**

NOTE	PART NUMBER	QTY	PART NAME 1 2 3 4 5 6 (PRODUCT LEVEL)	SEE PAGE
Y	*538-6010*	6	WHEEL & TIRE GP	285
Y - SEPARATE ILLUSTRATION				

<END>

340-2632 WHEEL & TIRE GP

S/N: W921-UP

PART OF 340-2640 WHEEL & TIRE AR

SMCS-4200 **i07568655**

NOTE	PART NUMBER	QTY	PART NAME 1 2 3 4 5 6 (PRODUCT LEVEL)	SEE PAGE
Y	*252-0106*	1	WHEEL GP	289
	317-6017	1	TIRE (14-24)	
Y - SEPARATE ILLUSTRATION				

<END>

340-2634 WHEEL & TIRE GP

S/N: W921-UP

PART OF 340-2642 WHEEL & TIRE AR

SMCS-4200 **i07568164**

NOTE	PART NUMBER	QTY	PART NAME 1 2 3 4 5 6 (PRODUCT LEVEL)	SEE PAGE
Y	*252-0112*	1	WHEEL GP	291
	326-0712	1	TIRE (17.5-25)	
Y - SEPARATE ILLUSTRATION				

<END>

382-1740 WHEEL & TIRE GP

S/N: W921-UP

PART OF 382-1741 WHEEL & TIRE AR

SMCS-4200 **i07641435**

NOTE	PART NUMBER	QTY	PART NAME 1 2 3 4 5 6 (PRODUCT LEVEL)	SEE PAGE
Y	*252-0104*	1	WHEEL GP	288
			–OR–	
Y	*252-0112*	1	WHEEL GP	291
	381-8233	1	TIRE (17.5-R25)	
Y - SEPARATE ILLUSTRATION				

<END>

538-6010 WHEEL & TIRE GP

S/N: W921-UP

PART OF 538-6009 WHEEL & TIRE AR

SMCS-4200 **i07569331**

NOTE	PART NUMBER	QTY	PART NAME 1 2 3 4 5 6 (PRODUCT LEVEL)	SEE PAGE
Y	*252-0112*	1	WHEEL GP	291
	555-5953	1	TIRE (17.5-25)	

Y - SEPARATE ILLUSTRATION

<END>

252-0115 WHEEL AR

S/N: W921-UP

CANNOT BE USED WITH ANY OTHER WHEEL AR

SMCS-4208 **i07568804**

NOTE	PART NUMBER	QTY	PART NAME 1 2 3 4 5 6 (PRODUCT LEVEL)	SEE PAGE
Y	*252-0108*	6	WHEEL GP	290

Y - SEPARATE ILLUSTRATION

<END>

252-0118 WHEEL AR

S/N: W921-UP

SMCS-4208 **i07568680**

NOTE	PART NUMBER	QTY	PART NAME 1 2 3 4 5 6 (PRODUCT LEVEL)	SEE PAGE
Y	*252-0112*	6	WHEEL GP	291

Y - SEPARATE ILLUSTRATION

<END>

532-6678 WHEEL AR

S/N: W921-UP

PART OF 532-6677, 563-7617, 563-7618 AXLE AR-REAR

SMCS-4208 **i07582918**

NOTE	REF NO	GRAPHIC REF	PART NUMBER	QTY	PART NAME 1 2 3 4 5 6 (PRODUCT LEVEL)	SEE PAGE
Y	1	1	*532-6681*	2	WHEEL GP (REAR TANDEM)	292
Y	2	1	*532-6682*	2	WHEEL GP (FRONT TANDEM)	294

Y - SEPARATE ILLUSTRATION

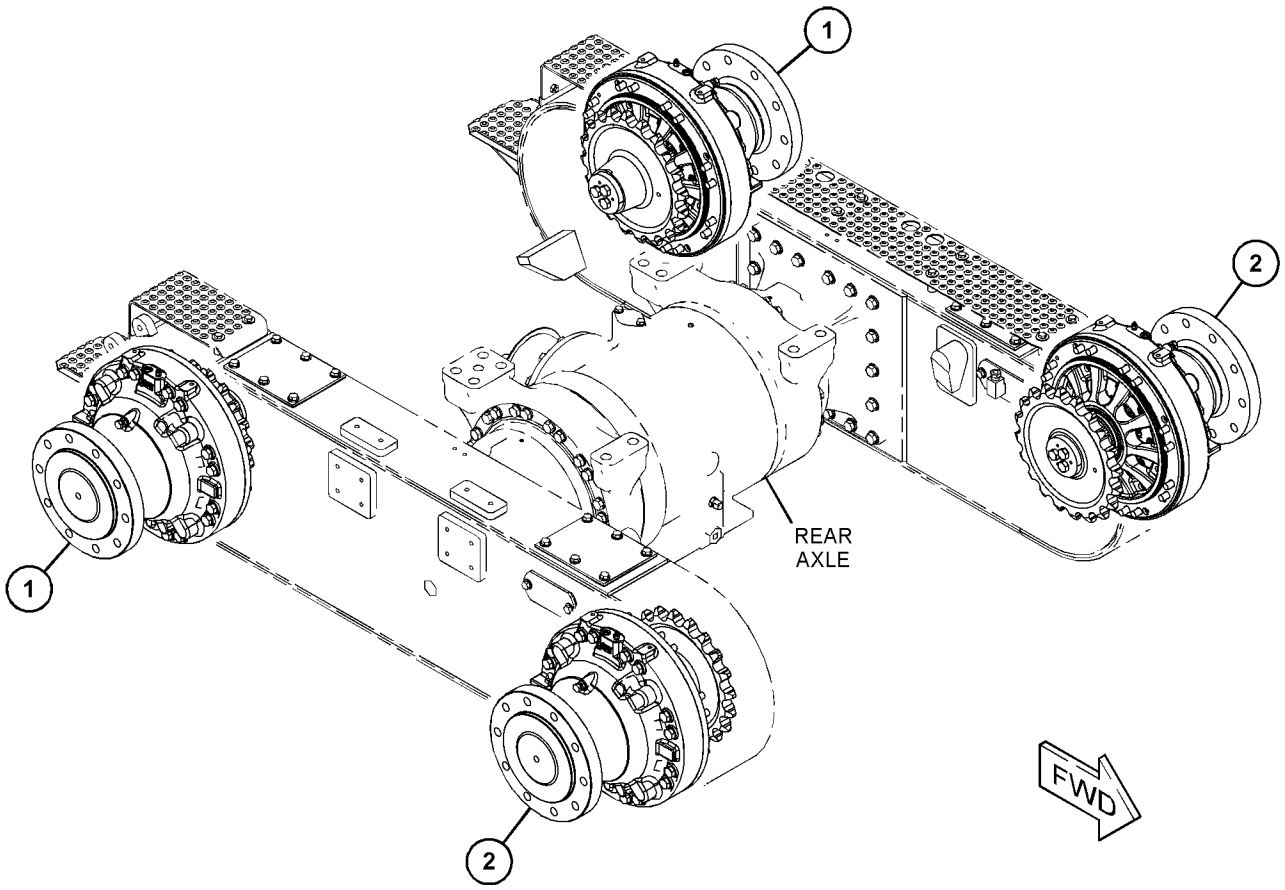

GRAPHIC #1 <END> g06372816

252-0102 WHEEL GP

S/N: W921-UP
(10X24)
PART OF 540-3755 WHEEL GP

SMCS-4006, 4201, 4208

i07567645

NOTE	REF NO	GRAPHIC REF	PART NUMBER	QTY	PART NAME 1 2 3 4 5 6 (PRODUCT LEVEL)	SEE PAGE
	1	1	**2D-2654**	1	RING-LOCK	
	2	1	**8W-9566**	1	FLANGE AS	
	3	1	**290-1505**	1	RIM AS	

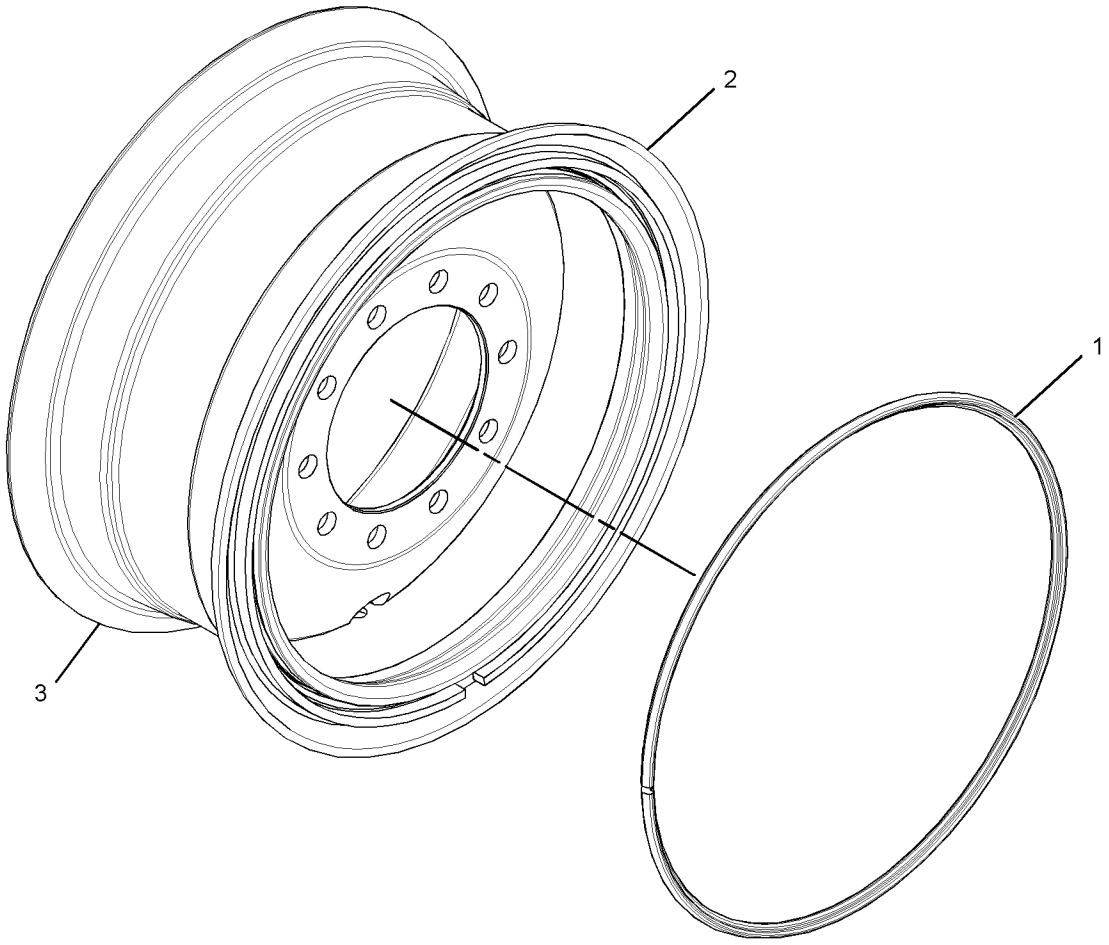

GRAPHIC #1 <END> g01393131

252-0104 WHEEL GP

S/N: W921-UP
(14X25)
PART OF 540-3236 WHEEL GP

SMCS-4006, 4201, 4208

i07567592

NOTE	REF NO	GRAPHIC REF	PART NUMBER	QTY	PART NAME 1 2 3 4 5 6 (PRODUCT LEVEL)	SEE PAGE
	1	1	**4K-4881**	1	RING-LOCK	
	2	1	**8W-9594**	1	FLANGE AS	
	3	1	**289-9726**	1	RIM AS	

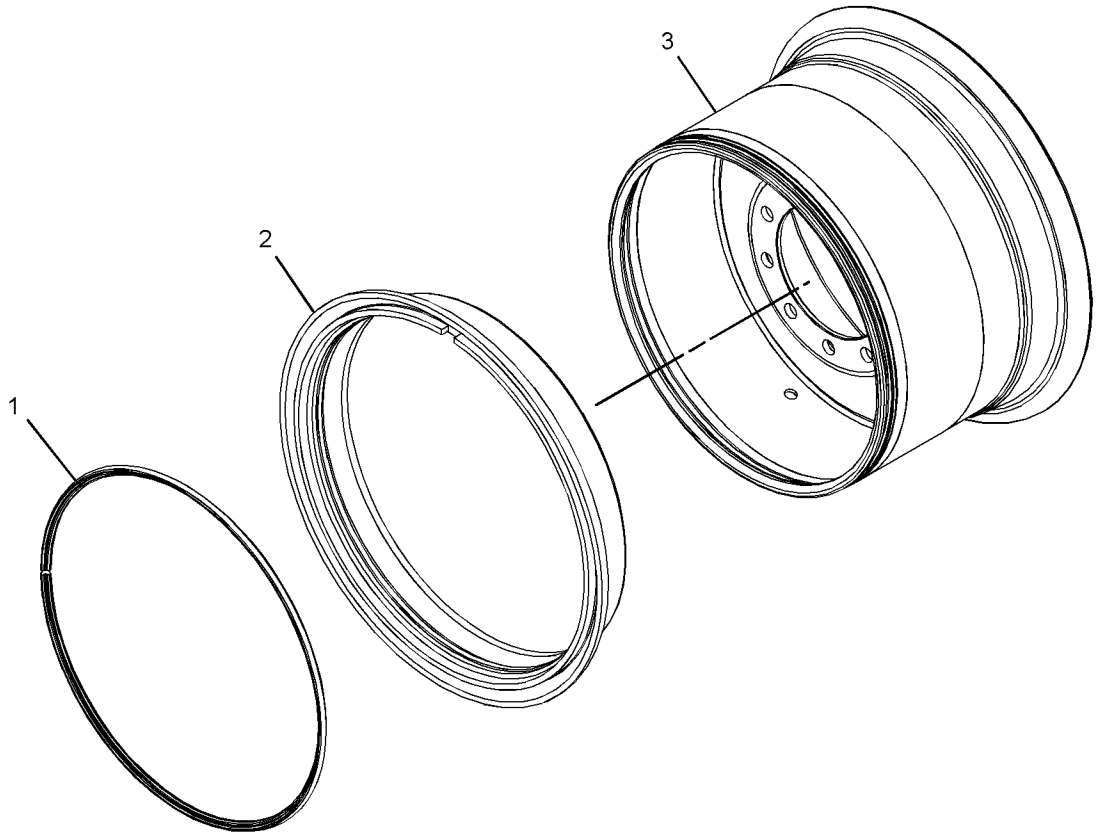

GRAPHIC #1 <END> g01392485

252-0106 WHEEL GP

S/N: W921-UP
(9X24)
PART OF 340-2632 WHEEL & TIRE GP

SMCS-4006, 4201, 4208

i07568663

NOTE	PART NUMBER	QTY	PART NAME 1 2 3 4 5 6 (PRODUCT LEVEL)	SEE PAGE
	252-0098	1	RIM AS	
	2D-2511	1	VALVE GP-TIRE (BASIC)	
	3D-2239	1	VALVE AS-TIRE (TIRE INFLATION)	
	6F-3930	1	CORE-VALVE	
	9K-7951	1	CAP-VALVE	
	7D-5252	1	SPUD AS	
	2D-2507	1	SPUD	
	2D-2508	1	GROMMET	
	2D-2509	1	LOCKNUT (11/16-16-THD)	
			<END>	

252-0108 WHEEL GP

S/N: W921-UP

PART OF 368-9750 WHEEL & TIRE AR, 252-0115 WHEEL AR

SMCS-4006, 4201, 4208 **i07567636**

NOTE	REF NO	GRAPHIC REF	PART NUMBER	QTY	PART NAME 1 2 3 4 5 6 (PRODUCT LEVEL)	SEE PAGE
	1	1	**110-4213**	1	VALVE GP-TIRE	
		1	**7D-5252**	1	SPUD AS	
		1	**2D-2507**	1	SPUD	
		1	**2D-2508**	1	GROMMET	
		1	**2D-2509**	1	LOCKNUT (11/16-16-THD)	
		1	**110-4214**	1	STEM AS	
		1	**6F-3930**	1	CORE-VALVE	
		1	**9K-7951**	1	CAP-VALVE	
Y	2	1	**540-3755**	1	WHEEL GP	298
	3	1	**2D-2565**	1	SEAL-O-RING	

Y - SEPARATE ILLUSTRATION

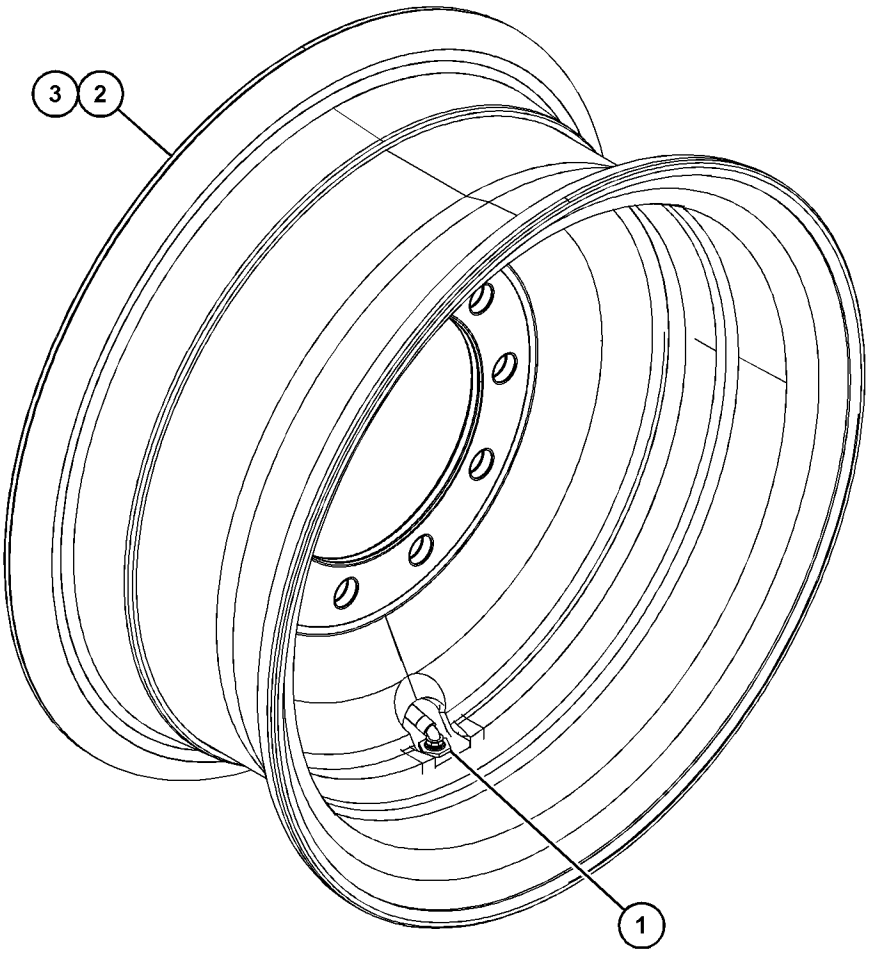

GRAPHIC #1 <END> g06307137

252-0112 WHEEL GP

S/N: W921-UP

PART OF 340-2634, 382-1740, 538-6010 WHEEL & TIRE GP, 252-0118 WHEEL AR

SMCS-4006, 4201, 4208

i07568199

NOTE	PART NUMBER	QTY	PART NAME 1 2 3 4 5 6 (PRODUCT LEVEL)	SEE PAGE
Y	**540-3236**	1	WHEEL GP	296
	4K-4879	1	SEAL-O-RING	
	2G-6595	1	VALVE GP-TIRE	
	6F-3930	1	CORE-VALVE	
	9K-7951	1	CAP-VALVE	
	7D-5252	1	SPUD AS	
	2D-2507	1	SPUD	
	2D-2508	1	GROMMET	
	2D-2509	1	LOCKNUT (11/16-16-THD)	

Y - SEPARATE ILLUSTRATION

<END>

532-6681 WHEEL GP–TANDEM

S/N: W921-UP
REAR
PART OF 532-6678 WHEEL AR

SMCS-4006, 4201, 4208 **i07582928**

NOTE	REF NO	GRAPHIC REF	PART NUMBER	QTY	PART NAME 1 2 3 4 5 6 (PRODUCT LEVEL)	SEE PAGE
	1	1	**5H-3701**	1	SCREW-PURGE	
B	2	1	**7D-8439**	4	SHIM (0.007-IN THK)	
BF			**7D-8441**	1	SHIM (0.005-IN THK)	
BF			**9D-7047**	4	SHIM (0.02-MM THK)	
	4	1	**8F-9538**	1	SEAL-O-RING	
M	5	1	**8T-1159**	4	BOLT-SOCKET HEAD (M10X1.5X25-MM)	
	7	1	**110-7149**	1	RING-RETAINING	
	8	1	**220-4335**	1	SEAL-BRAKE	
	9	1	**220-4336**	1	SEAL-BRAKE	
	10	1	**257-1702**	1	PISTON	
	11	1	**262-5610**	1	HUB-BRAKE	
	12	1	**284-5022**	1	HOUSING	
	13	1	**284-8959**	1	WASHER (13X22X2-MM THK)	
	14	1	**284-9552**	1	COMPENSATOR (SERVICE BRAKE)	
	15	1	**284-9553**	4	SPRING	
	16	1	**284-9554**	4	DOWEL	
	17	1	**284-9555**	4	DOWEL	
	18	1	**284-9557**	7	PLATE	
	19	1	**351-0925**	6	DISC-FRICTION	
	20	1	**364-2075**	1	COVER	
	21	1	**198-4768**	16	WASHER-HARD (17.5X32X8-MM THK)	
M	22	1	**235-9631**	16	BOLT (M16X2X120-MM)	
	23	1	**284-8960**	2	WASHER (13X22X0.5-MM THK)	
	24	1	**284-9556**	4	SPACER-SPECIAL	
	25	1	**4B-7270**	1	CONE-BEARING	
M	26	1	**4I-0755**	1	NUT (M12X1.25-THD)	
	27	1	**4S-5879**	1	SEAL-O-RING	
	28	1	**527-7764**	1	SPACER (86X114X6.2-MM THK)	
	29	1	**528-2583**	1	SPROCKET (52-TEETH)	
	30	1	**544-0737**	1	RETAINER	
	31	1	**555-3109**	1	SPINDLE-WHEEL	
R	32	1	**5K-5288**	1	SEAL GP-DUO-CONE	
		1	**5K-5129**	2	RING-SEALING	
	33	1	**6B-3223**	2	CUP-BEARING	
M	34	1	**6V-3303**	3	BOLT (M16X2X60-MM)	
	35	1	**7D-8437**	1	CONE-BEARING	

B - USE AS REQUIRED
F - NOT SHOWN
M - METRIC PART
R - REMANUFACTURED PART MAY BE AVAILABLE

532-6681 **WHEEL GP (**contd.**)** **i07582928**

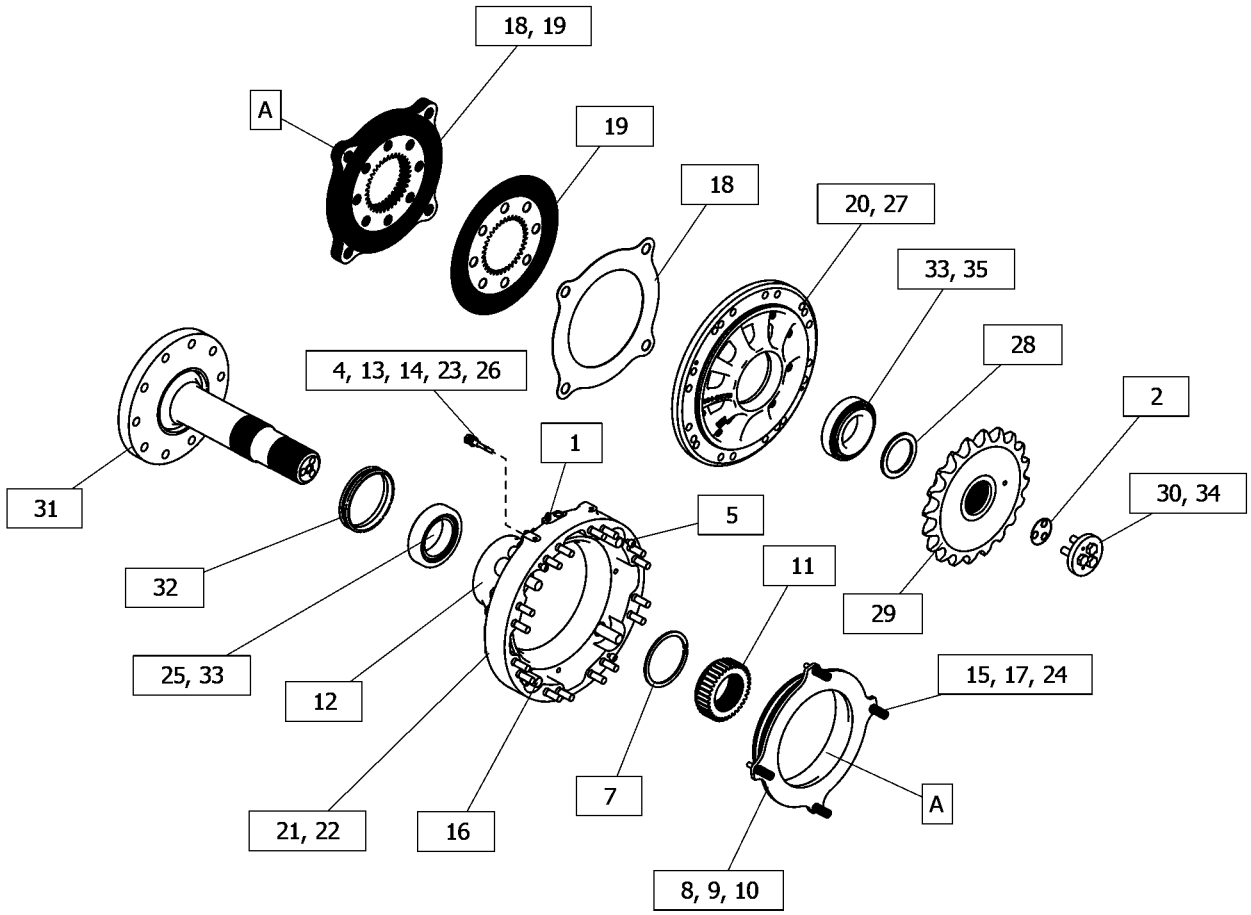

GRAPHIC #1 <END> g06374136

532-6682 WHEEL GP–TANDEM

S/N: W921-UP
FRONT
PART OF 532-6678 WHEEL AR

SMCS-4006, 4201, 4208 **i07582942**

NOTE	REF NO	GRAPHIC REF	PART NUMBER	QTY	PART NAME 1 2 3 4 5 6 (PRODUCT LEVEL)	SEE PAGE
	1	1	**5H-3701**	1	SCREW-PURGE	
B	2	1	**7D-8439**	4	SHIM (0.007-IN THK)	
BF			**7D-8441**	1	SHIM (0.005-IN THK)	
BF			**9D-7047**	4	SHIM (0.02-MM THK)	
	4	1	**8F-9538**	1	SEAL-O-RING	
M	5	1	**8T-1159**	4	BOLT-SOCKET HEAD (M10X1.5X25-MM)	
	7	1	**110-7149**	1	RING-RETAINING	
	8	1	**257-1702**	1	PISTON	
	9	1	**262-5610**	1	HUB-BRAKE	
	10	1	**284-5022**	1	HOUSING	
	11	1	**284-8959**	1	WASHER (13X22X2-MM THK)	
	12	1	**284-9552**	1	COMPENSATOR (SERVICE BRAKE)	
	13	1	**284-9553**	4	SPRING	
	14	1	**284-9554**	4	DOWEL	
	15	1	**284-9555**	4	DOWEL	
	16	1	**284-9557**	7	PLATE	
	17	1	**351-0925**	6	DISC-FRICTION	
	18	1	**364-2075**	1	COVER	
	19	1	**198-4768**	16	WASHER-HARD (17.5X32X8-MM THK)	
	20	1	**220-4335**	1	SEAL-BRAKE	
	21	1	**220-4336**	1	SEAL-BRAKE	
M	22	1	**235-9631**	16	BOLT (M16X2X120-MM)	
	23	1	**284-8960**	2	WASHER (13X22X0.5-MM THK)	
	24	1	**284-9556**	4	SPACER-SPECIAL	
	25	1	**4B-7270**	1	CONE-BEARING	
M	26	1	**4I-0755**	1	NUT (M12X1.25-THD)	
	27	1	**4S-5879**	1	SEAL-O-RING	
	28	1	**527-7764**	1	SPACER (86X114X6.2-MM THK)	
	29	1	**528-2583**	1	SPROCKET (52-TEETH)	
	30	1	**544-0737**	1	RETAINER	
	31	1	**555-3109**	1	SPINDLE-WHEEL	
R	32	1	**5K-5288**	1	SEAL GP-DUO-CONE	
		1	**5K-5129**	2	RING-SEALING	
	33	1	**6B-3223**	2	CUP-BEARING	
M	34	1	**6V-3303**	3	BOLT (M16X2X60-MM)	
	35	1	**7D-8437**	1	CONE-BEARING	

B - USE AS REQUIRED
F - NOT SHOWN
M - METRIC PART
R - REMANUFACTURED PART MAY BE AVAILABLE

532-6682 **WHEEL GP** (contd.) **i07582942**

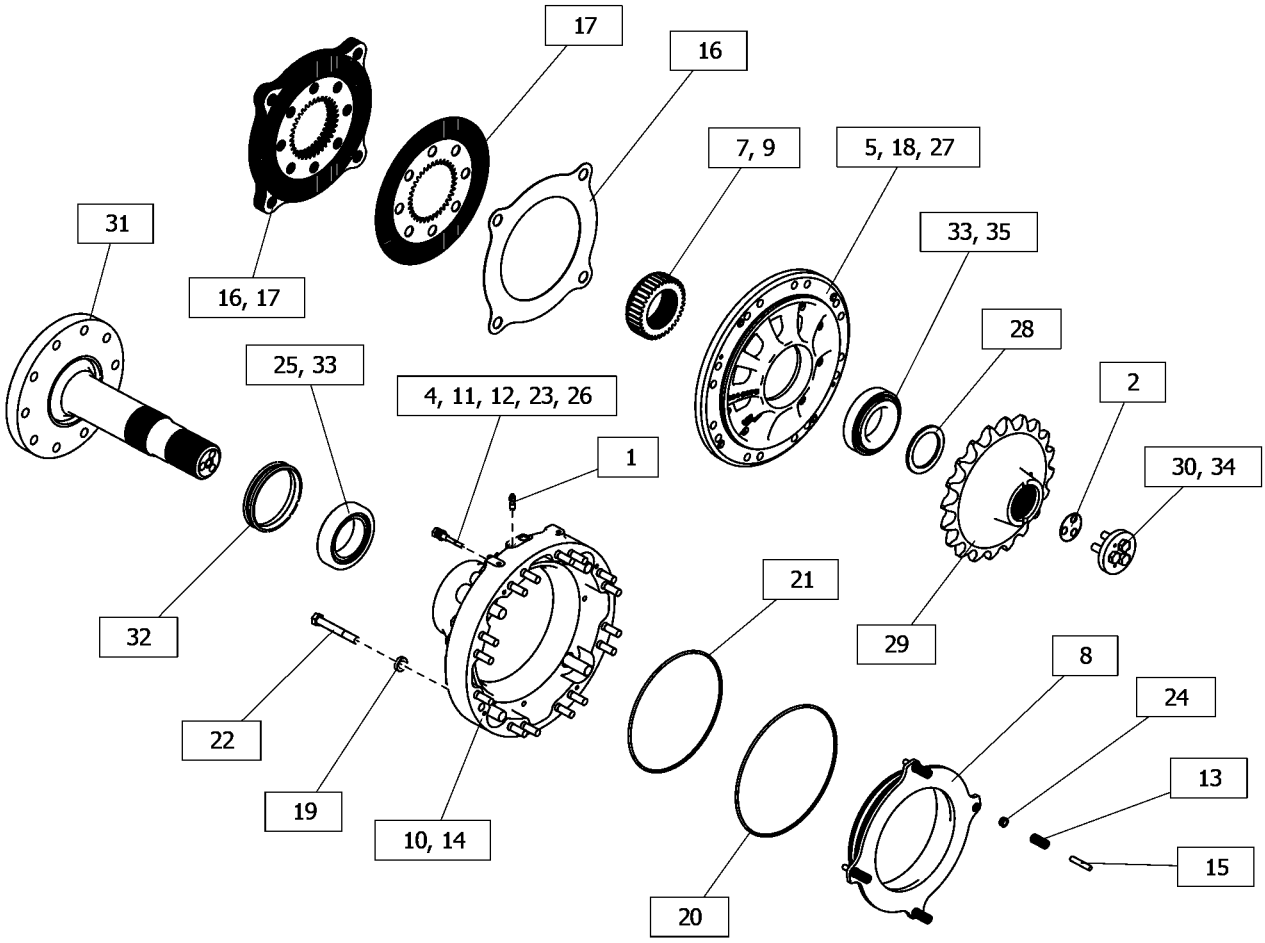

GRAPHIC #1 <END> g06374995

540-3236 WHEEL GP

S/N: W921-UP

(14X25)

PART OF 252-0112 WHEEL GP

SMCS-4006, 4201, 4208

i07568261

NOTE	PART NUMBER	QTY	PART NAME 1 2 3 4 5 6 (PRODUCT LEVEL)	SEE PAGE
Y	*252-0104*	1	WHEEL GP	288
			—OR—	
Y	*540-3237*	1	WHEEL GP	297
			—OR—	
Y	*540-6852*	1	RIM GP-DEMOUNTABLE	270

Y - SEPARATE ILLUSTRATION

<END>

540-3237 WHEEL GP

S/N: W921-UP
(14X25)
PART OF 540-3236 WHEEL GP

SMCS-4006, 4201, 4208

i07568297

NOTE	REF NO	GRAPHIC REF	PART NUMBER	QTY	PART NAME 1 2 3 4 5 6 (PRODUCT LEVEL)	SEE PAGE
	1	1	**540-3238**	1	RING-LOCK	
	2	1	**540-3243**	1	FLANGE AS	
	3	1	**540-3254**	1	RIM AS	

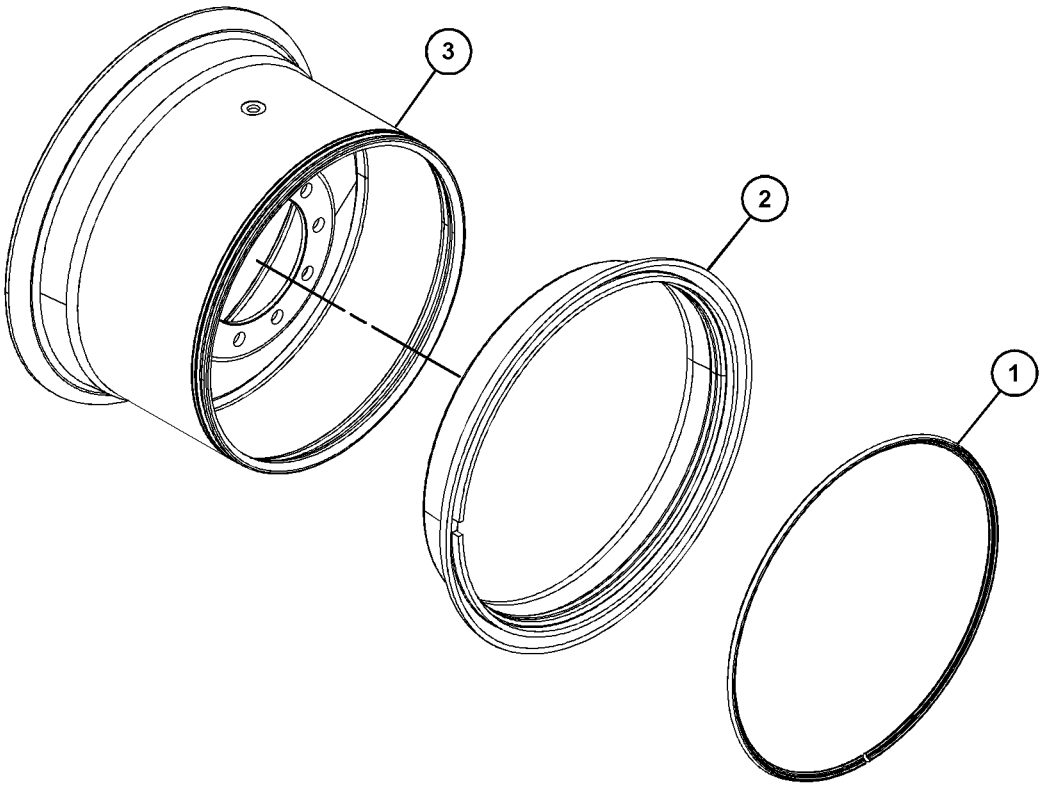

GRAPHIC #1 <END> g06291203

540-3755 WHEEL GP

S/N: W921-UP
(10X24)
PART OF 252-0108 WHEEL GP

SMCS-4006, 4201, 4208

i07567642

NOTE	PART NUMBER	QTY	PART NAME 1 2 3 4 5 6 (PRODUCT LEVEL)	SEE PAGE
Y	*252-0102*	1	WHEEL GP	287
			—OR—	
Y	*540-3756*	1	WHEEL GP	299
			—OR—	
Y	*540-6848*	1	RIM GP-DEMOUNTABLE	269

Y - SEPARATE ILLUSTRATION

<END>

540-3756 WHEEL GP

S/N: W921-UP

(10X24)

PART OF 540-3755 WHEEL GP

SMCS-4006, 4201, 4208

i07567774

NOTE	REF NO	GRAPHIC REF	PART NUMBER	QTY	PART NAME 1 2 3 4 5 6 (PRODUCT LEVEL)	SEE PAGE
	1	1	**540-3757**	1	RING-LOCK	
	2	1	**540-3758**	1	FLANGE AS	
	3	1	**540-3759**	1	RIM AS	

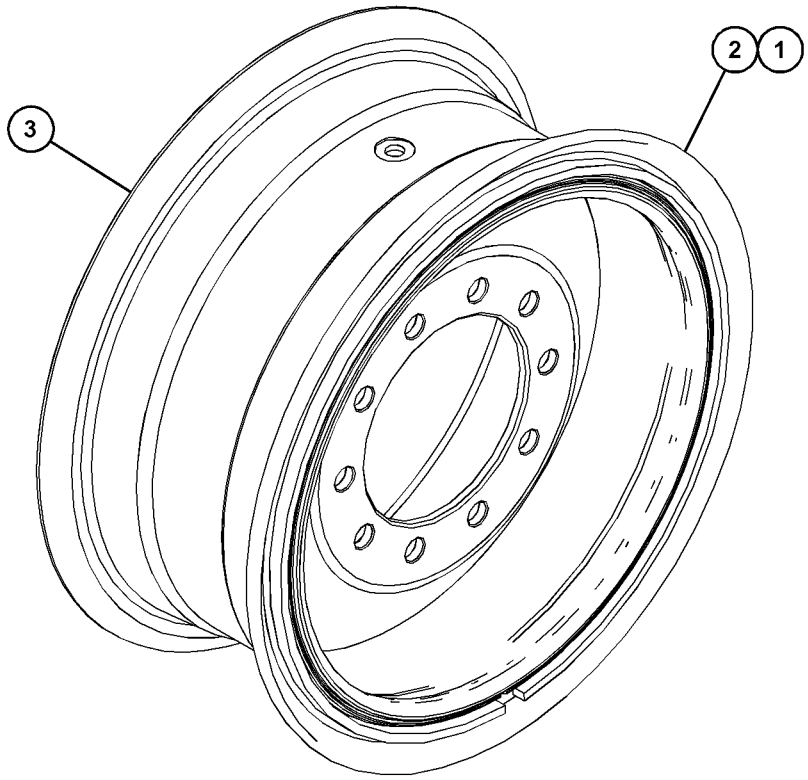

GRAPHIC #1 <END> g06307171

536-0440 BOX GP-BATTERY

S/N: W921-UP

PART OF 537-1860 CHASSIS AR

SMCS-7257 **i07591568**

NOTE	REF NO	GRAPHIC REF	PART NUMBER	QTY	PART NAME 1 2 3 4 5 6 (PRODUCT LEVEL)	SEE PAGE
	1	1	**553-3551**	4	BOLT	
	2	1	**518-4418**	4	WASHER (13X24X2.5-MM THK)	
	3	1	**246-2641**	2	PADLOCK GP	
					(EACH INCLUDES)	
		1	**5P-8500**	1	KEY	
Y	4	1	*536-0441*	1	BOX GP-BATTERY	301

Y - SEPARATE ILLUSTRATION

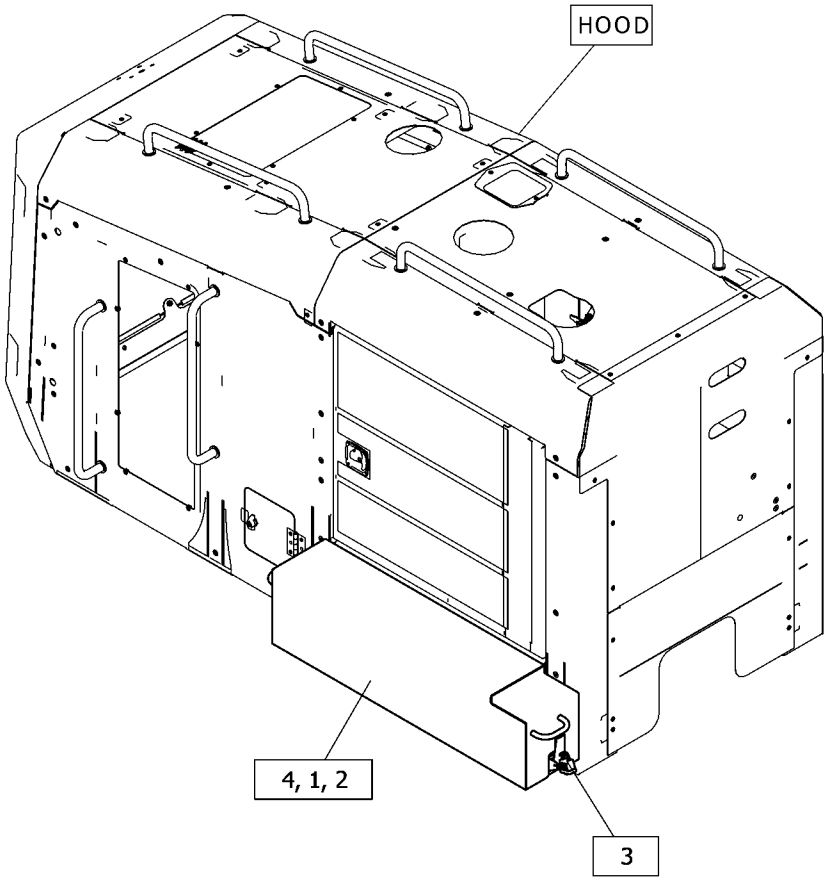

GRAPHIC #1 <END> g06374280

536-0441 BOX GP-BATTERY

S/N: W921-UP

PART OF 536-0440 BOX GP-BATTERY

SMCS-7257 **i07591570**

NOTE	REF NO	GRAPHIC REF	PART NUMBER	QTY	PART NAME 1 2 3 4 5 6 (PRODUCT LEVEL)	SEE PAGE
	1	1	**034-7044**	6	RIVET	
	2	1	**143-4792**	4	BUMPER	
	3	1	**161-4423**	2	LATCH AS	
	4	1	**563-6696**	1	SUPPORT AS	
	5	1	**563-6697**	1	COVER AS	

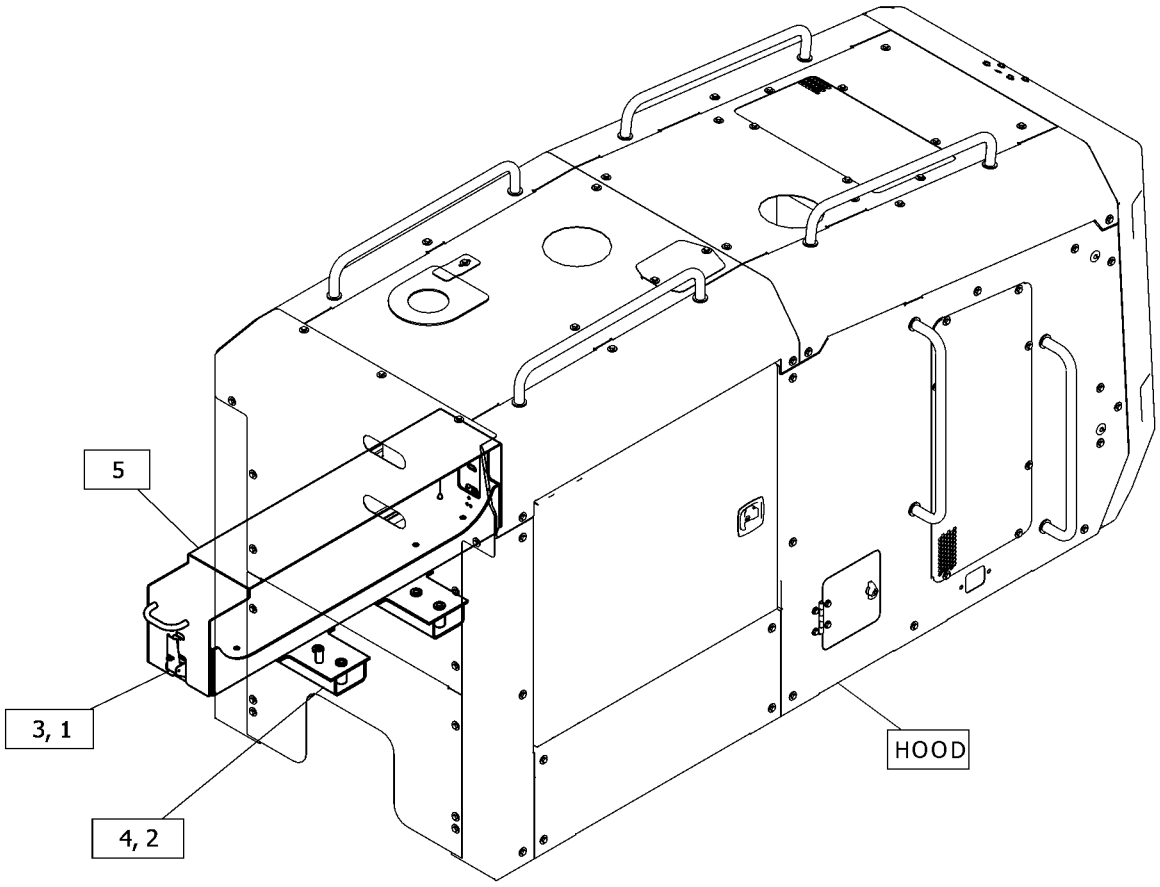

GRAPHIC #1 <END> g06375048

536-0450 COUNTERWEIGHT GP-FRONT

S/N: W921-UP
1020-KG (2249-LB)

SMCS-7056 **i07560261**

NOTE	REF NO	GRAPHIC REF	PART NUMBER	QTY	PART NAME 1 2 3 4 5 6 (PRODUCT LEVEL)	SEE PAGE
	1	1	**8T-4122**	2	WASHER-HARD (17X32X3.5-MM THK)	
	2	1	**8T-4123**	8	WASHER (22X35X3.5-MM THK)	
M	3	1	**7X-2563**	8	BOLT (M20X2.5X60-MM)	
M	4	1	**8T-4190**	2	BOLT (M16X2X25-MM)	
	5	1	**536-0451**	1	COUNTERWEIGHT AS	

M - METRIC PART

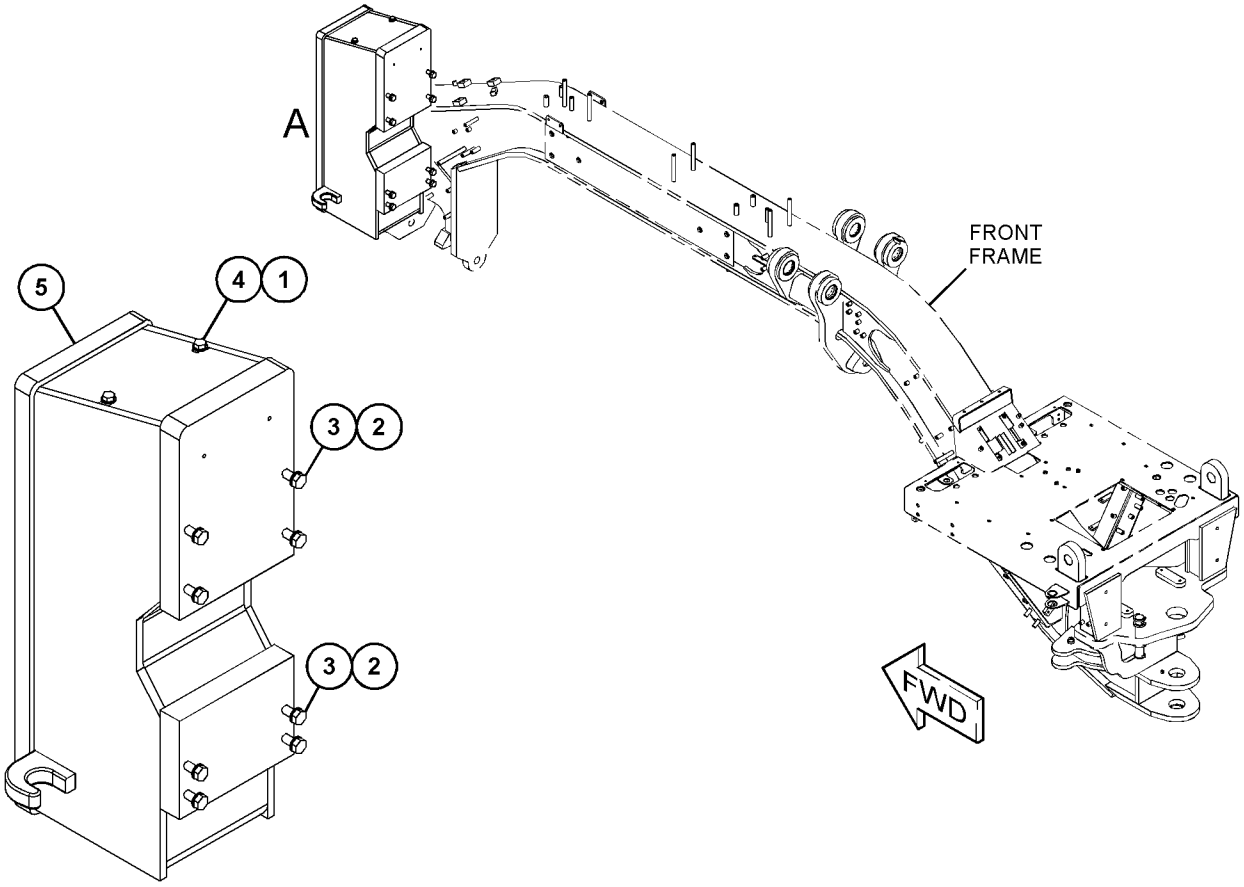

VIEW OF AREA A

GRAPHIC #1 <END> g06375077

434-6744 COVER GP-ACCESS

S/N: W921-UP

PART OF 537-5611, 537-5612, 537-5613, 537-5614 CAB AR

SMCS-726A **i07574919**

NOTE	REF NO	GRAPHIC REF	PART NUMBER	QTY	PART NAME 1 2 3 4 5 6 (PRODUCT LEVEL)	SEE PAGE
	1	1	**8T-5401**	4	PLUG-BUTTON	

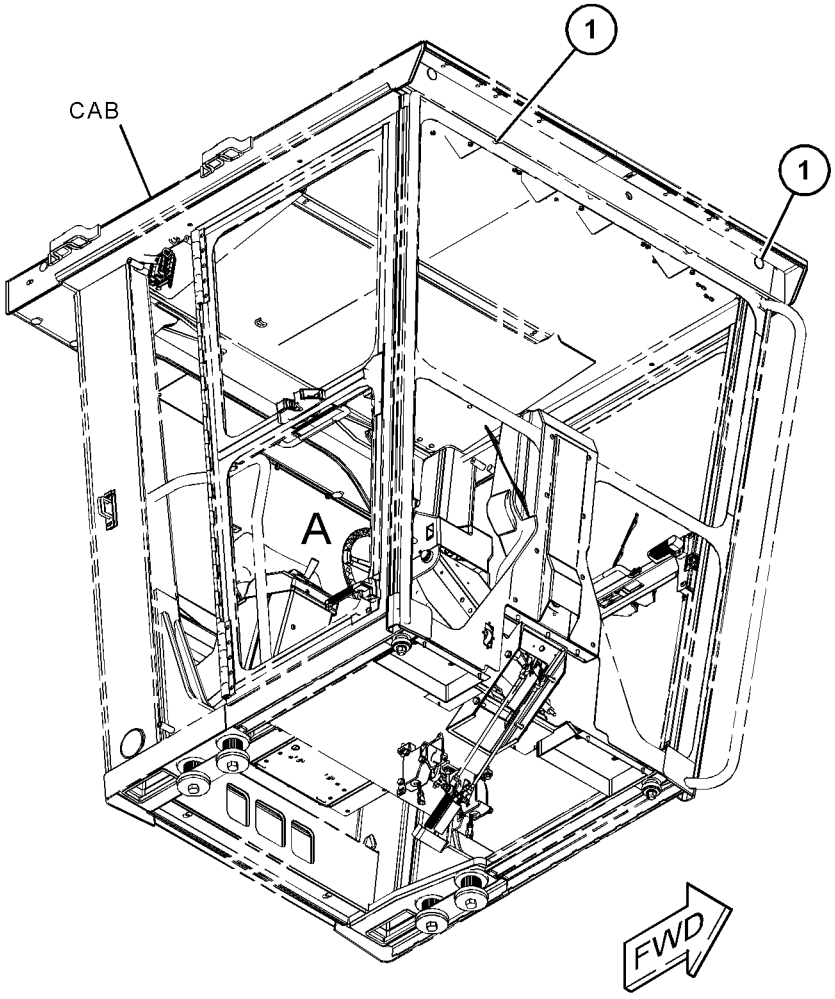

GRAPHIC #1 <END> g06014662

437-0690 COVER GP-ACCESS

S/N: W921-UP

SMCS-726A **i07562892**

NOTE	REF NO	GRAPHIC REF	PART NUMBER	QTY	PART NAME 1 2 3 4 5 6 (PRODUCT LEVEL)	SEE PAGE
	1	1	**512-9018**	2	PLATE AS	
M	2	1	**9X-2043**	4	SCREW-TRUSS HEAD (M6X1X14-MM)	

M - METRIC PART

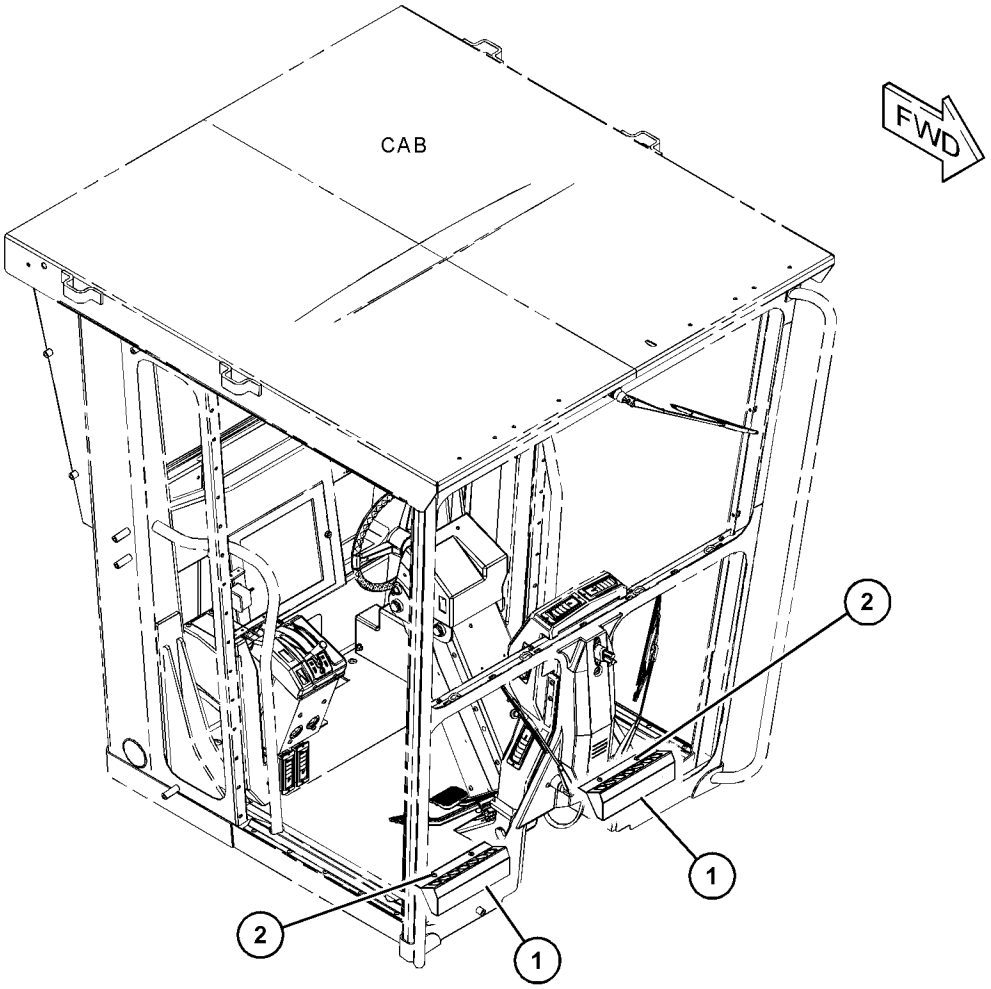

GRAPHIC #1 <END> g03698549

568-8110 COVER GP-ACCESS

S/N: W921-UP

PART OF 533-4647 TRANSMISSION AR

SMCS-726A **i07592366**

NOTE	REF NO	GRAPHIC REF	PART NUMBER	QTY	PART NAME 1 2 3 4 5 6 (PRODUCT LEVEL)	SEE PAGE
	1	1	**518-4410**	2	WASHER	
M	2	1	**538-3124**	2	BOLT (M14X1.5X30-MM)	
	3	1	**538-6757**	1	COVER	
	4	1	**556-7850**	1	WASHER	

M - METRIC PART

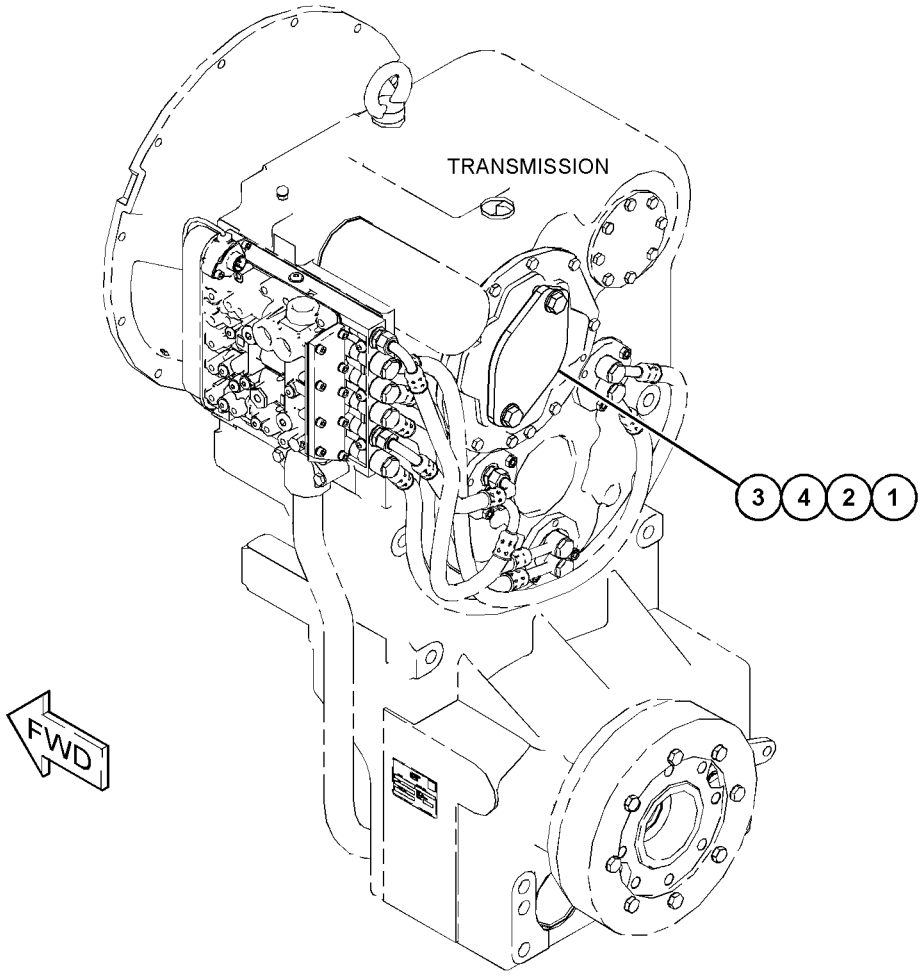

GRAPHIC #1 <END> g06375590

536-0430 COVER GP-CONTROL VALVE

S/N: W921-UP

SMCS-7150 **i07560275**

NOTE	REF NO	GRAPHIC REF	PART NUMBER	QTY	PART NAME 1 2 3 4 5 6 (PRODUCT LEVEL)	SEE PAGE
M	1	1	**518-2309**	2	BOLT (M10X1.5X20-MM)	
M	2	1	**518-2314**	6	BOLT (M10X1.5X50-MM)	
	3	1	**518-9737**	8	WASHER (10.5X30X2.5-MM THK)	
	4	1	**536-0431**	1	COVER	
	5	1	**536-0432**	1	PLATE	
	6	1	**536-4897**	2	WASHER (12X25X23-MM THK)	
	7	1	**536-4896**	4	WASHER (12X25X13-MM THK)	

M - METRIC PART

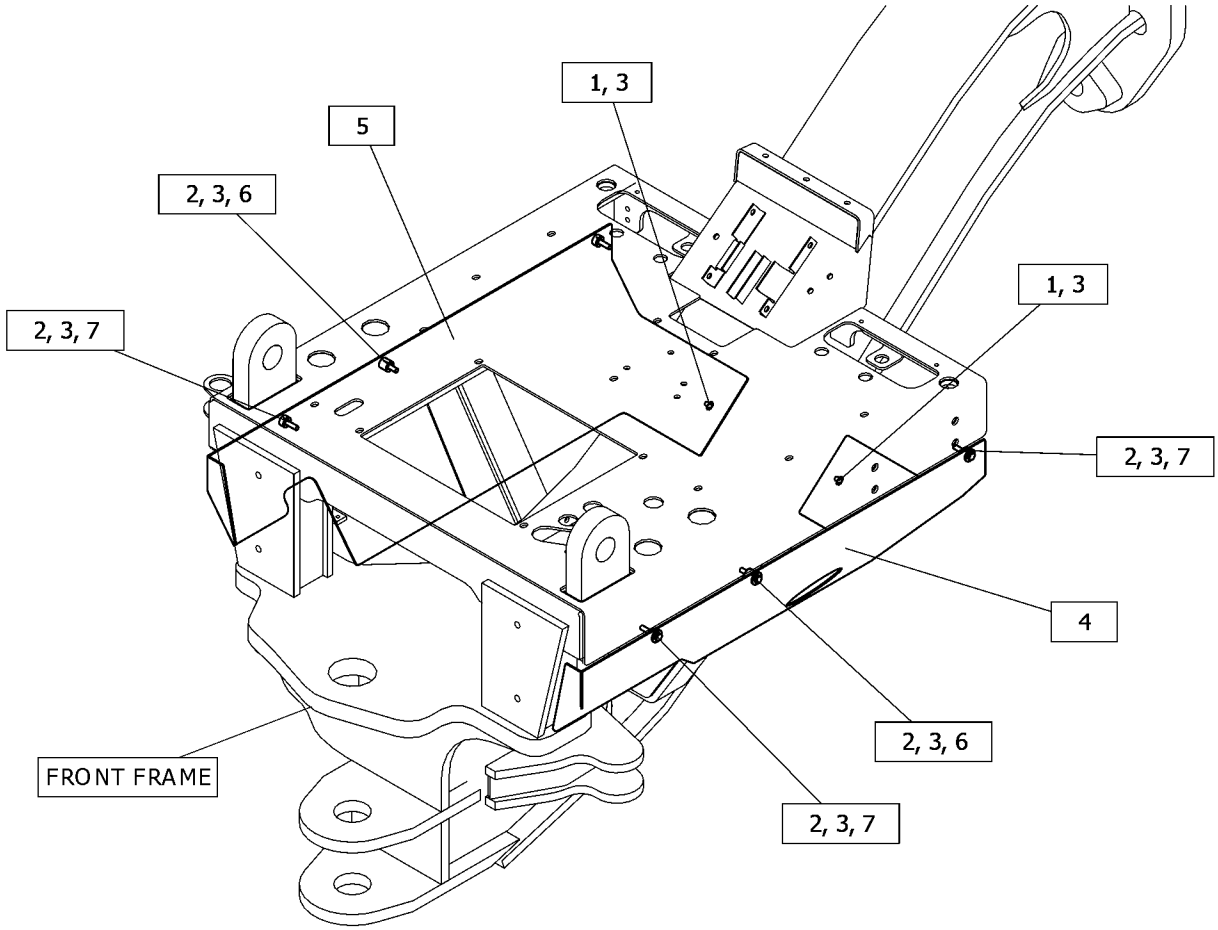

GRAPHIC #1 <END> g06366776

537-1831 FENDER GP–RIGHT

S/N: W921-UP

PART OF 537-1830 FENDER GP-REAR

SMCS-7252 **i07576488**

NOTE	REF NO	GRAPHIC REF	PART NUMBER	QTY	PART NAME 1 2 3 4 5 6 (PRODUCT LEVEL)	SEE PAGE
	1	1	**518-9595**	4	BOLT (M12X1.75X50-MM)	
	2	1	**198-4778**	12	WASHER-HARD (13.5X30X12-MM THK)	
	3	1	**518-1813**	8	BOLT (M12X1.75X35-MM) (M12X1.75-MM)	
	4	1	**521-2261**	16	BOLT-HEAD (M10X1.5X35-MM) (M10X1.5-MM)	
	5	1	**537-1833**	1	FENDER AS (RH)	
	6	1	**537-1840**	2	BRACKET AS	
	7	1	**537-1843**	1	BRACKET AS	
	8	1	**537-1848**	2	PLATE	
	9	1	**537-1849**	2	PLATE	
	10	1	**554-6321**	16	WASHER	

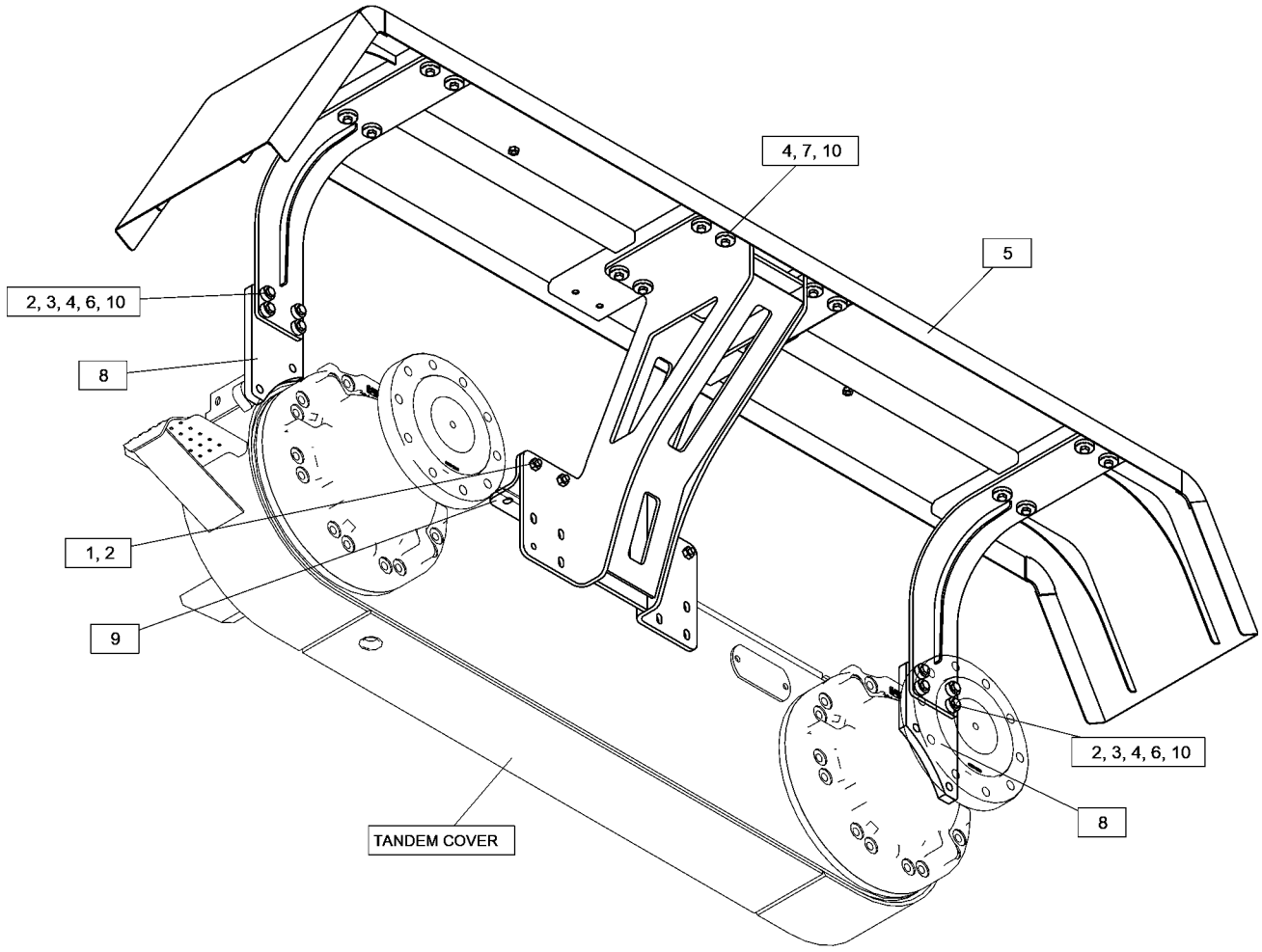

GRAPHIC #1 <END> g06376866

537-1832 FENDER GP–LEFT

S/N: W921-UP

PART OF 537-1830 FENDER GP-REAR

SMCS-7252 **i07576564**

NOTE	REF NO	GRAPHIC REF	PART NUMBER	QTY	PART NAME 1 2 3 4 5 6 (PRODUCT LEVEL)	SEE PAGE
	1	1	**518-9595**	4	BOLT (M12X1.75X50-MM)	
	2	1	**198-4778**	12	WASHER-HARD (13.5X30X12-MM THK)	
	3	1	**518-1813**	8	BOLT (M12X1.75X35-MM)	
	4	1	**521-2261**	16	BOLT-HEAD (M10X1.5X35-MM)	
	5	1	**537-1833**	1	FENDER AS (RH)	
	6	1	**537-1840**	2	BRACKET AS	
	7	1	**537-1843**	1	BRACKET AS	
	8	1	**537-1848**	2	PLATE	
	9	1	**537-1849**	2	PLATE	
	10	1	**554-6321**	16	WASHER	

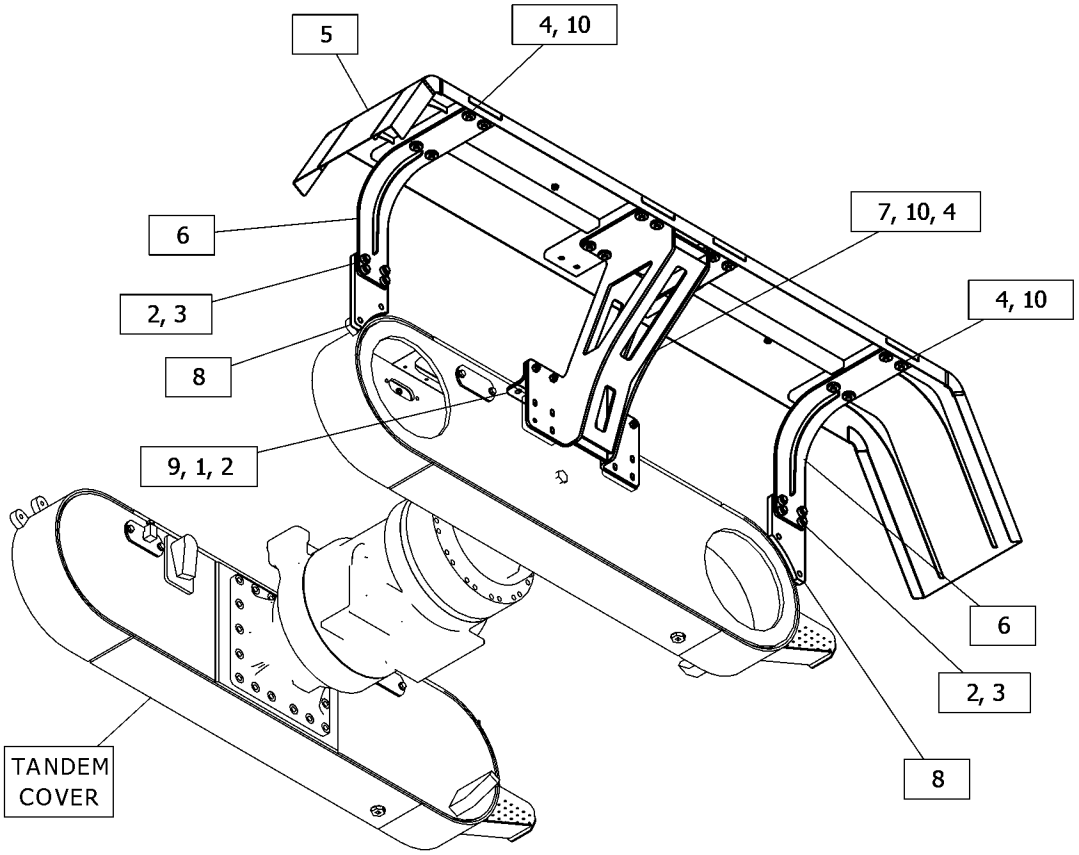

GRAPHIC #1 <END> g06375078

537-1830 FENDER GP-REAR

S/N: W921-UP

PART OF 563-7618 AXLE AR-REAR

SMCS-7252 **i07559801**

NOTE	REF NO	GRAPHIC REF	PART NUMBER	QTY	PART NAME 1 2 3 4 5 6 (PRODUCT LEVEL)	SEE PAGE
M	1	1	**518-1810**	4	BOLT (M10X1.5X20-MM)	
	2	1	**198-4778**	24	WASHER-HARD (13.5X30X12-MM THK)	
	3	1	**518-1813**	24	BOLT (M12X1.75X35-MM)	
	4	1	**518-4417**	4	WASHER	
Y	5	1	**537-1831**	1	FENDER GP (RH)	307
Y	6	1	**537-1832**	1	FENDER GP (LH)	308
	7	1	**8T-4122**	8	WASHER-HARD (17X32X3.5-MM THK)	
M	8	1	**8T-4193**	8	BOLT (M16X2X50-MM)	

M - METRIC PART
Y - SEPARATE ILLUSTRATION

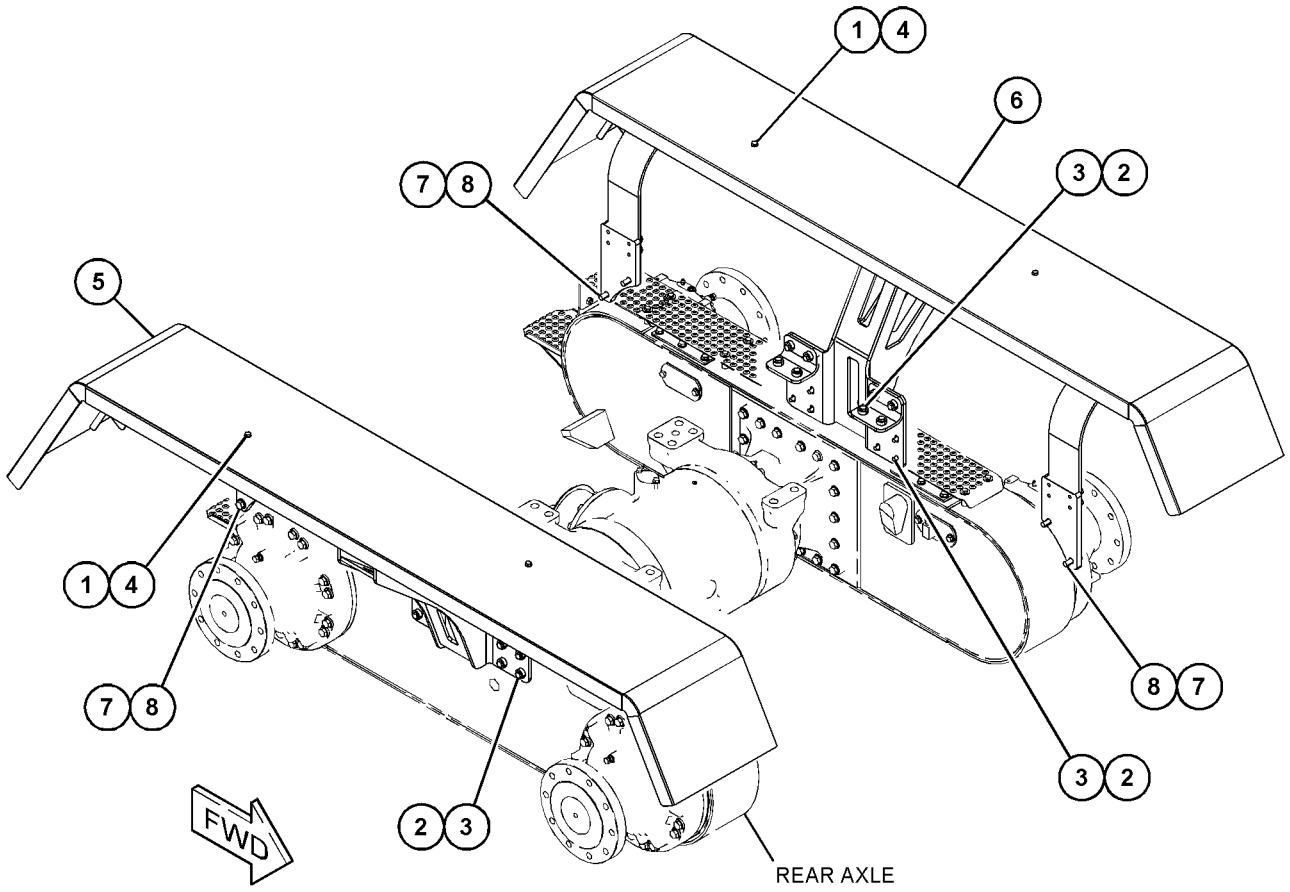

GRAPHIC #1 <END> g06375542

529-7999 FRAME AR

S/N: W921-UP

PART OF 525-9809 COMMON AR

SMCS-7050, 7051

i07542109

NOTE	PART NUMBER	QTY	PART NAME 1 2 3 4 5 6 (PRODUCT LEVEL)	SEE PAGE
Y	*529-8010*	1	FRAME GP-FRONT	311
Y	*536-5713*	1	GUARD GP-BOTTOM	316
Y	*538-3416*	1	HITCH GP-ARTICULATING	321
Y	*529-0953*	1	LIFT GP-BLADE	609
	536-5695	1	FRAME AS-REAR	
	7T-1099	13	LINK	

Y - SEPARATE ILLUSTRATION

<END>

529-8010 FRAME GP-FRONT

S/N: W921-UP

PART OF 529-7999 FRAME AR

SMCS-7050, 7051

i07546643

NOTE	REF NO	GRAPHIC REF	PART NUMBER	QTY	PART NAME 1 2 3 4 5 6 (PRODUCT LEVEL)	SEE PAGE
	1	1	**389-7495**	1	PIN AS	
M	2	1	**518-2309**	20	BOLT (M10X1.5X20-MM)	
	3	1	**518-9737**	20	WASHER (10.5X30X2.5-MM THK)	
	4	1	**103-5796**	1	PIN-KEEPER	
	5	1	**529-8036**	1	PLATE	
	6	1	**529-8037**	2	PLATE	
	7	1	**529-8038**	1	PLATE	
Y	8	1	*545-7400*	1	FRAME GP-FRONT	313

M - METRIC PART
Y - SEPARATE ILLUSTRATION

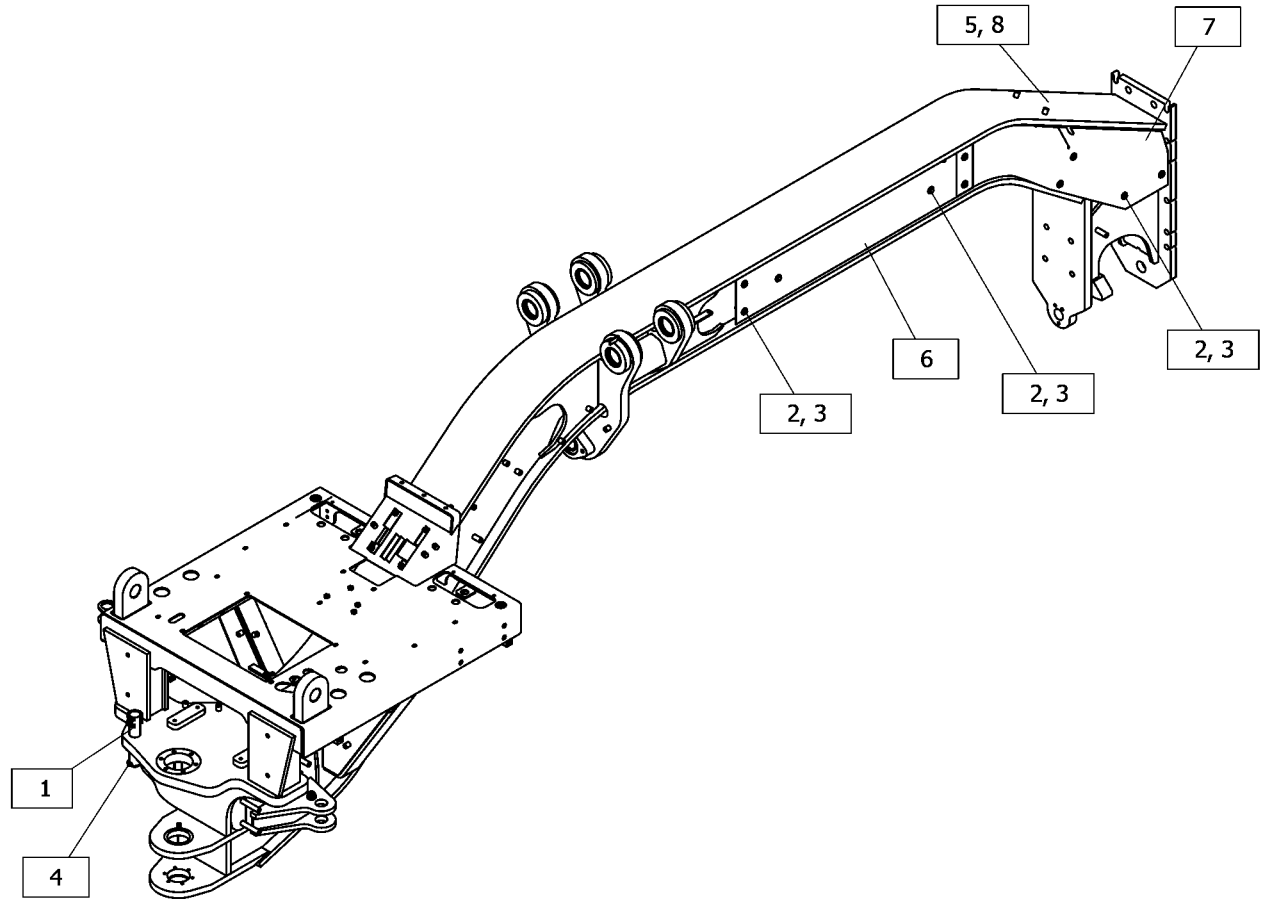

GRAPHIC #1 <END> g06367072

533-1077 FRAME GP-FRONT

S/N: W921-UP

PART OF 526-2236 CAB AR

SMCS-7050, 7051 **i07546629**

NOTE	REF NO	GRAPHIC REF	PART NUMBER	QTY	PART NAME 1 2 3 4 5 6 (PRODUCT LEVEL)	SEE PAGE
	1	1	**144-2161**	1	PLATE	
	2	1	**191-5293**	1	INSULATION	
	3	1	**533-1078**	1	PLATE AS	
	4	1	**5P-1075**	7	WASHER-HARD (10.2X22.5X3-MM THK)	
M	5	1	**9X-2125**	7	BOLT-LOCKING (M10X1.5X25-MM)	
D	6	1	**5P-5969**		SEAL (1-M)	
D	6A	1	**5P-5969**		SEAL (0.04-M EACH)	
B	7	1	**144-7620**		TAPE	

B - USE AS REQUIRED
D - ORDER BY THE METER
M - METRIC PART

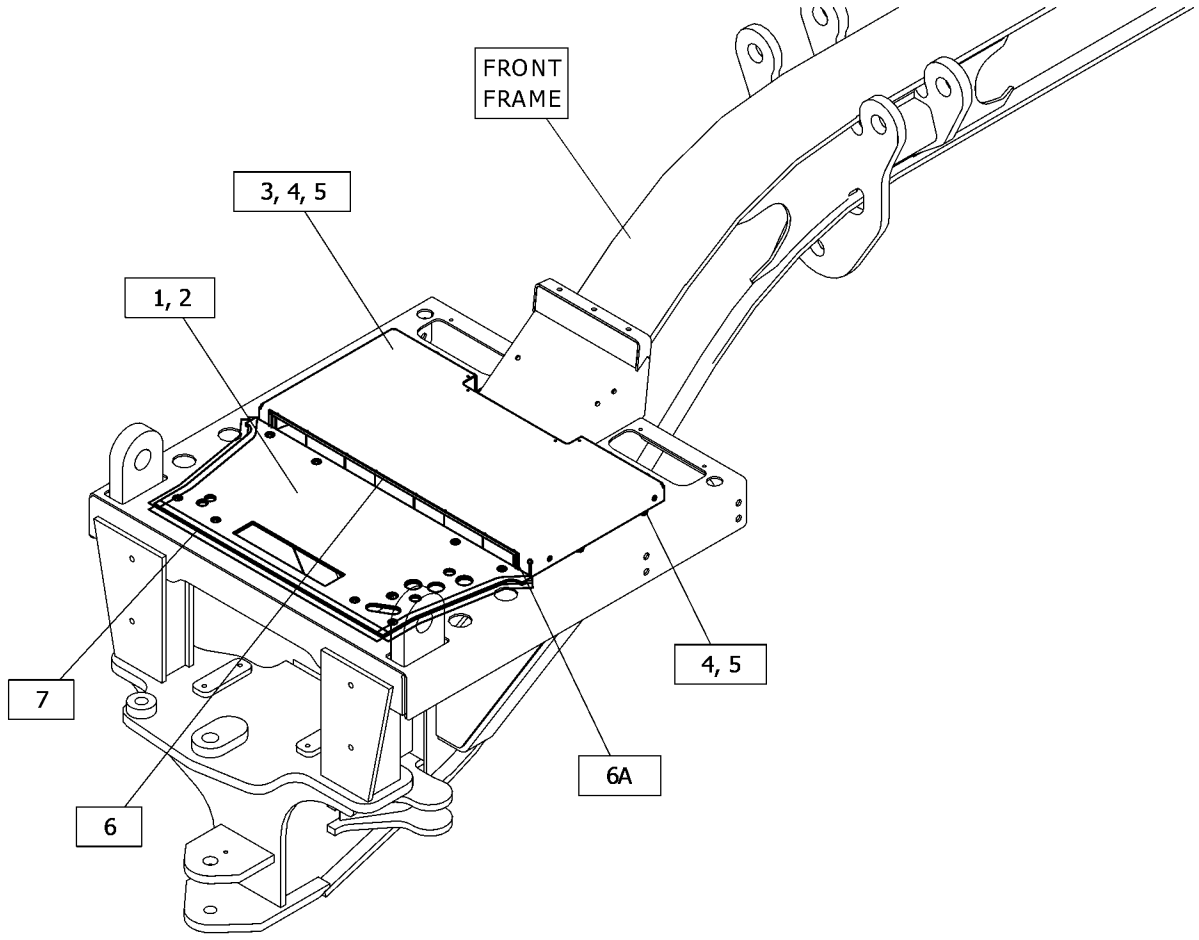

GRAPHIC #1 <END> g06367132

545-7400 FRAME GP-FRONT

S/N: W921-UP

PART OF 529-8010 FRAME GP-FRONT

SMCS-7050, 7051

i07570338

NOTE	REF NO	GRAPHIC REF	PART NUMBER	QTY	PART NAME 1 2 3 4 5 6 (PRODUCT LEVEL)	SEE PAGE
	1	1	**545-7402**	4	BEARING-SLEEVE	
	2	1	**529-8011**	1	FRAME AS-FRONT	
	3	1	**545-7401**	8	SEAL	
	4	1	**9D-3311**	1	BUSHING	
	5	1	**7K-9204**	1	SEAL-LIP TYPE	

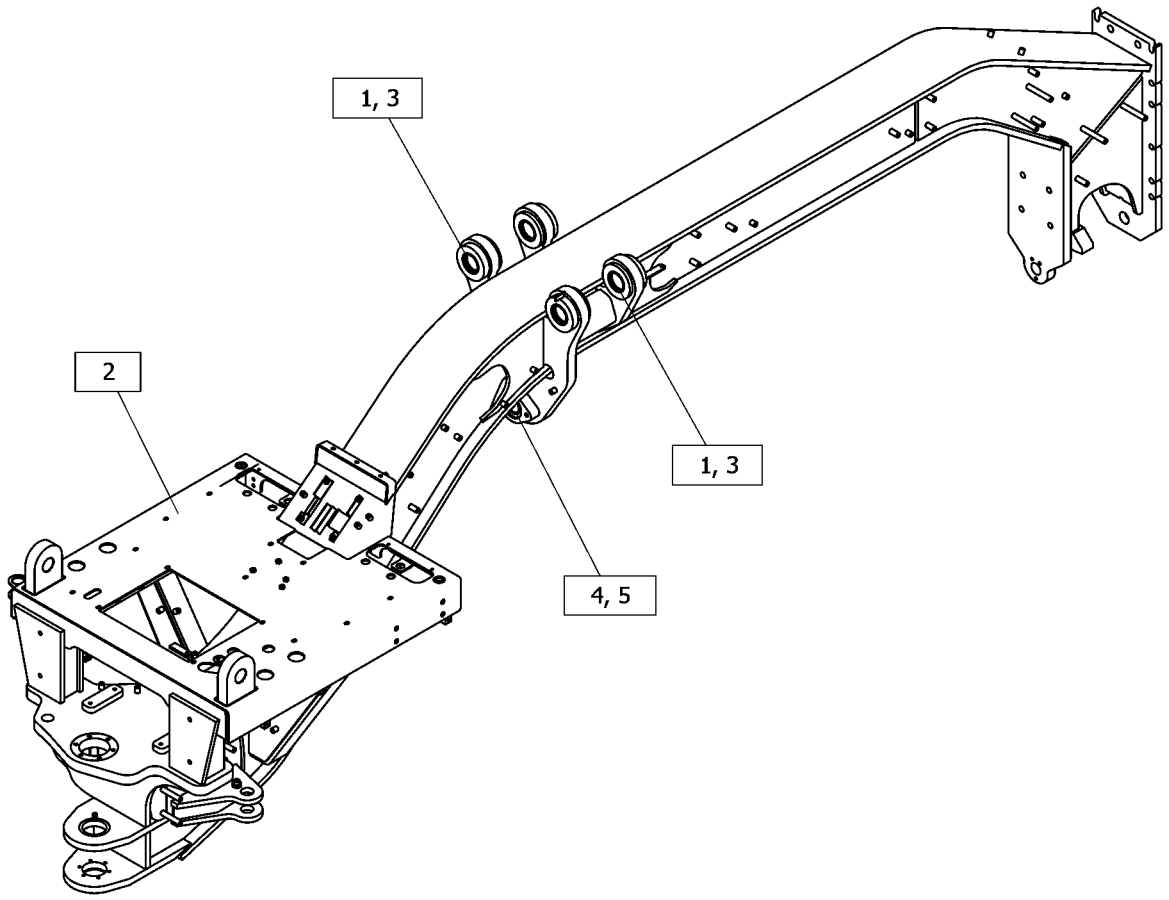

GRAPHIC #1

<END>

g06366744

539-5003 GRILL GP-RADIATOR–REAR

S/N: W921-UP

PART OF 539-5001 HOOD GP

SMCS-7170 **i07592135**

NOTE	REF NO	GRAPHIC REF	PART NUMBER	QTY	PART NAME 1 2 3 4 5 6 (PRODUCT LEVEL)	SEE PAGE
	1	1	**5P-4116**	4	WASHER-HARD (8.8X20.5X2-MM THK)	
M	2	1	**518-8386**	2	BOLT (M8X1.25X16-MM)	
M	3	1	**8T-4189**	13	BOLT (M8X1.25X20-MM)	
	4	1	**7X-0579**	11	WASHER-HARD (8.8X25.5X2-MM THK)	
	5	1	**539-4993**	1	PLATE	
	6	1	**539-4994**	1	FRAME AS-REAR	
		1	**7T-1099**	9	LINK	
M		1	**8T-3490**	6	NUT-WELD (M10X1.5-THD)	
M		1	**8T-3612**	11	NUT-WELD (M8X1.25-THD)	
	7	1	**539-5167**	1	PANEL AS-REAR	

M - METRIC PART

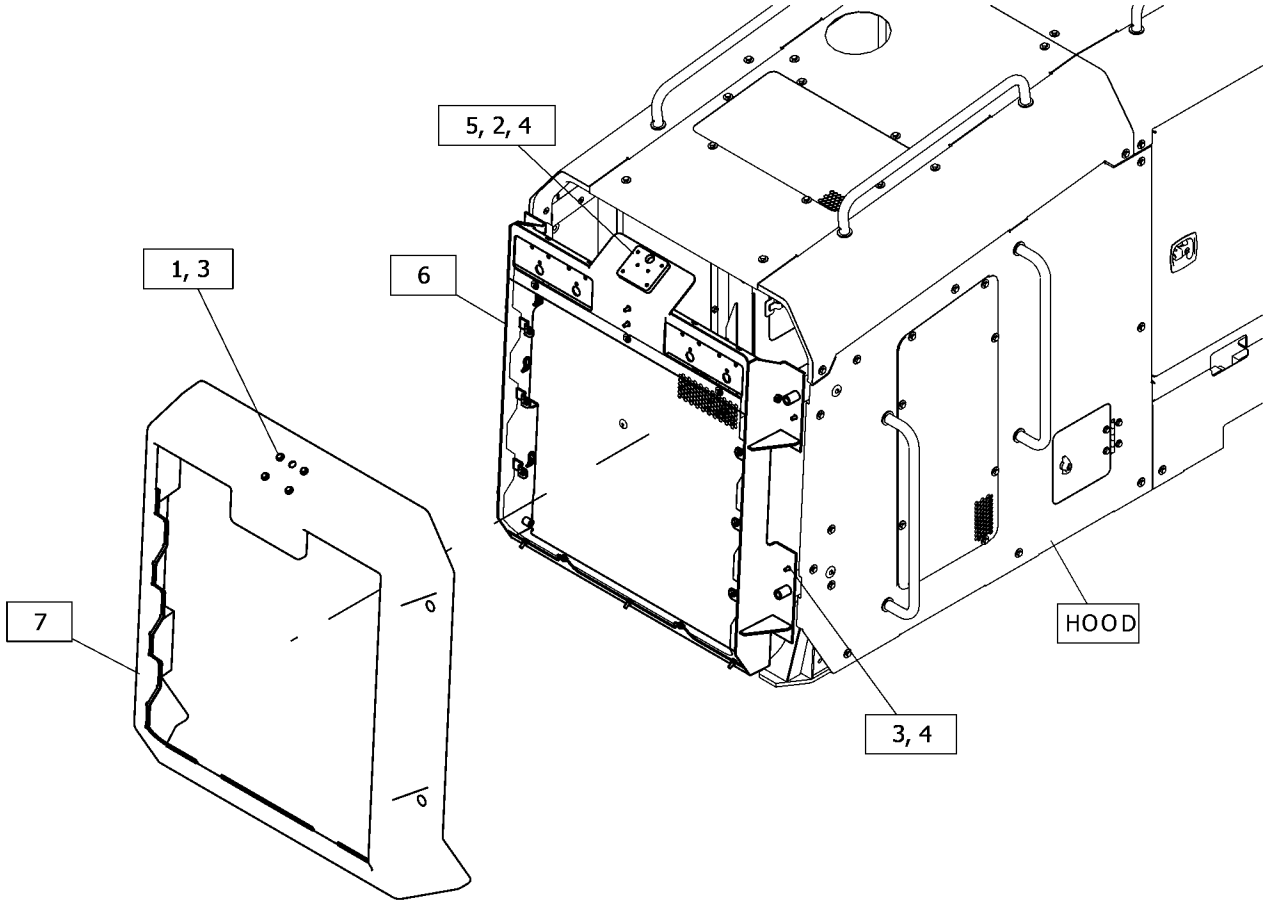

GRAPHIC #1 <END> g06375054

534-6713 GUARD GP

S/N: W921-UP

PART OF 534-6698 POWER TRAIN AR

SMCS-7150 **i07545973**

NOTE	REF NO	GRAPHIC REF	PART NUMBER	QTY	PART NAME 1 2 3 4 5 6 (PRODUCT LEVEL)	SEE PAGE
	1	1	**518-4409**	2	WASHER	
	2	1	**518-4420**	4	WASHER (17.5X30X3.5-MM THK)	
M	3	1	**8T-4192**	2	BOLT (M12X1.75X25-MM)	
	4	1	**524-3266**	4	BOLT (M16X2X30-MM)	
	5	1	**534-6725**	1	GUARD AS	
	6	1	**534-6730**	1	GUARD	

M - METRIC PART

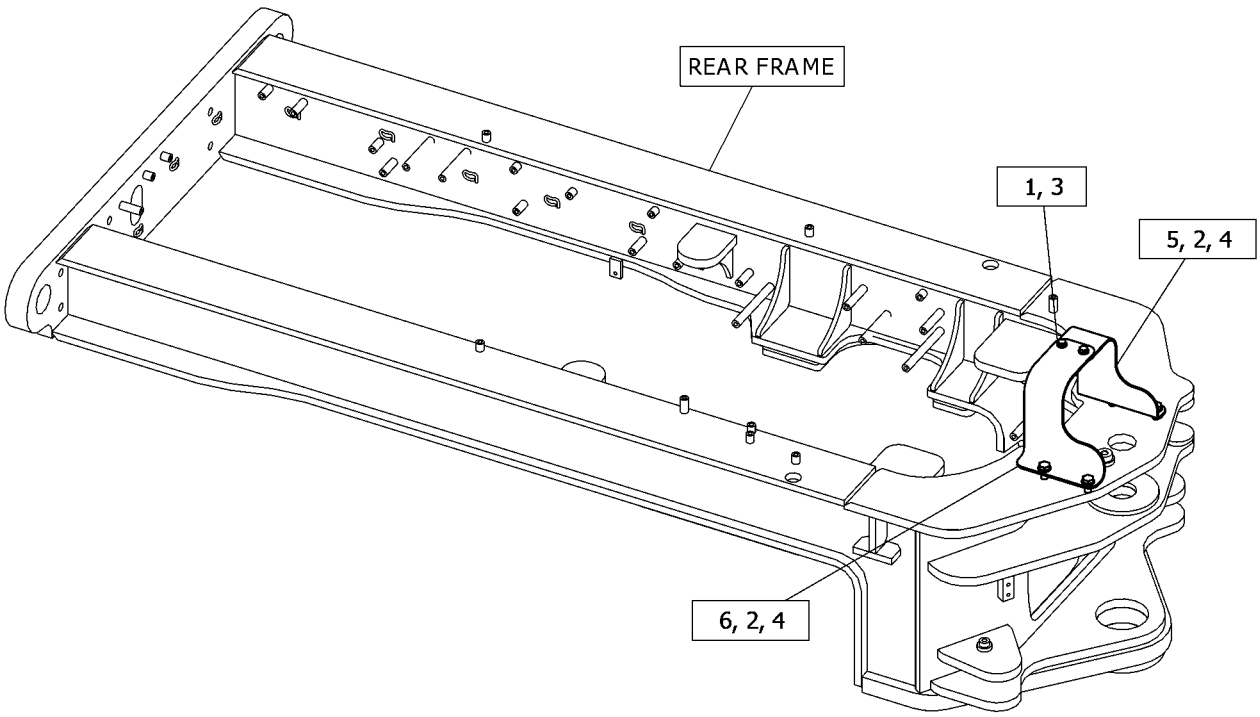

GRAPHIC #1 <END> g06373859

536-5713 GUARD GP-BOTTOM

S/N: W921-UP

PART OF 529-7999 FRAME AR

SMCS-7153 **i07544014**

NOTE	REF NO	GRAPHIC REF	PART NUMBER	QTY	PART NAME 1 2 3 4 5 6 (PRODUCT LEVEL)	SEE PAGE
	1	1	**536-5714**	1	PLATE AS	
		1	**518-9726**	6	NUT-WELD	
	2	1	**536-5887**	1	PLATE	
	3	1	**536-5888**	1	PLATE	
M	4	1	**8T-4779**	14	BOLT (M16X2X35-MM)	
	5	1	**9X-8257**	14	WASHER (17.5X30X3.5-MM THK)	

M - METRIC PART

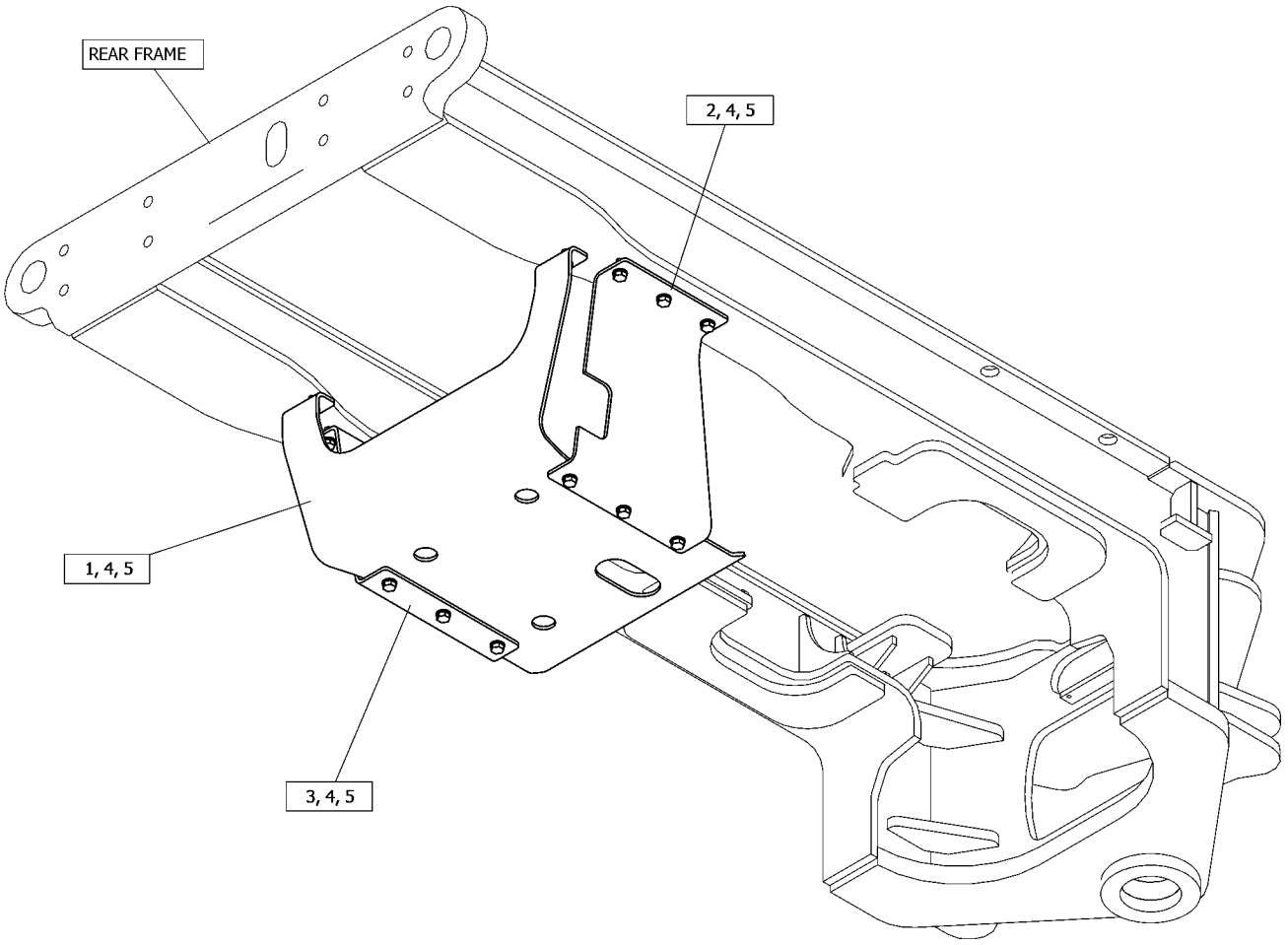

GRAPHIC #1 <END> g06359809

533-5736 GUARD GP-PLATFORM

S/N: W921-UP

PART OF 548-6724 ROPS AR

SMCS-7150, 7253 **i07574773**

NOTE	REF NO	GRAPHIC REF	PART NUMBER	QTY	PART NAME 1 2 3 4 5 6 (PRODUCT LEVEL)	SEE PAGE
	1	1	**160-6382**	1	GROMMET	
	2	1	**512-5988**	1	FLOOR MAT	
	3	1	**516-7914**	2	COVER AS	
					(EACH INCLUDES)	
M		1	**6V-9632**	2	NUT-WELD (M6X1-THD)	
	4	1	**516-7915**	2	PLATE	
	5	1	**533-0971**	1	PANEL AS	
		1	**7T-1099**	2	LINK	
M		1	**8Y-4489**	1	BOSS (M10X1.5-THD)	
M		1	**6V-9632**	6	NUT-WELD (M6X1-THD)	
	6	1	**533-0977**	2	PLATE	
	7	1	**533-5738**	1	PLATE	
	8	1	**533-5753**	1	DUCT AS	
M	9	1	**111-4627**	6	SCREW-MACHINE (M6X1X30-MM)	
M	10	1	**3E-4313**	6	SCREW-BUTTON HEAD (M4X0.7X8-MM)	
	11	1	**5P-1075**	3	WASHER-HARD (10.2X22.5X3-MM THK)	
	12	1	**5P-4115**	4	WASHER-HARD (7.2X19X2-MM THK)	
	13	1	**5P-4116**	4	WASHER-HARD (8.8X20.5X2-MM THK)	
	14	1	**6V-2687**	4	SCREW-PAN HEAD (10-24X1-IN)	
M	15	1	**6V-8214**	4	BOLT (M6X1X20-MM)	
M	16	1	**9X-2043**	10	SCREW-TRUSS HEAD (M6X1X14-MM)	
M	17	1	**9X-2125**	3	BOLT-LOCKING (M10X1.5X25-MM)	

M - METRIC PART

533-5736 **GUARD GP-PLATFORM (**contd.**)** **i07574773**

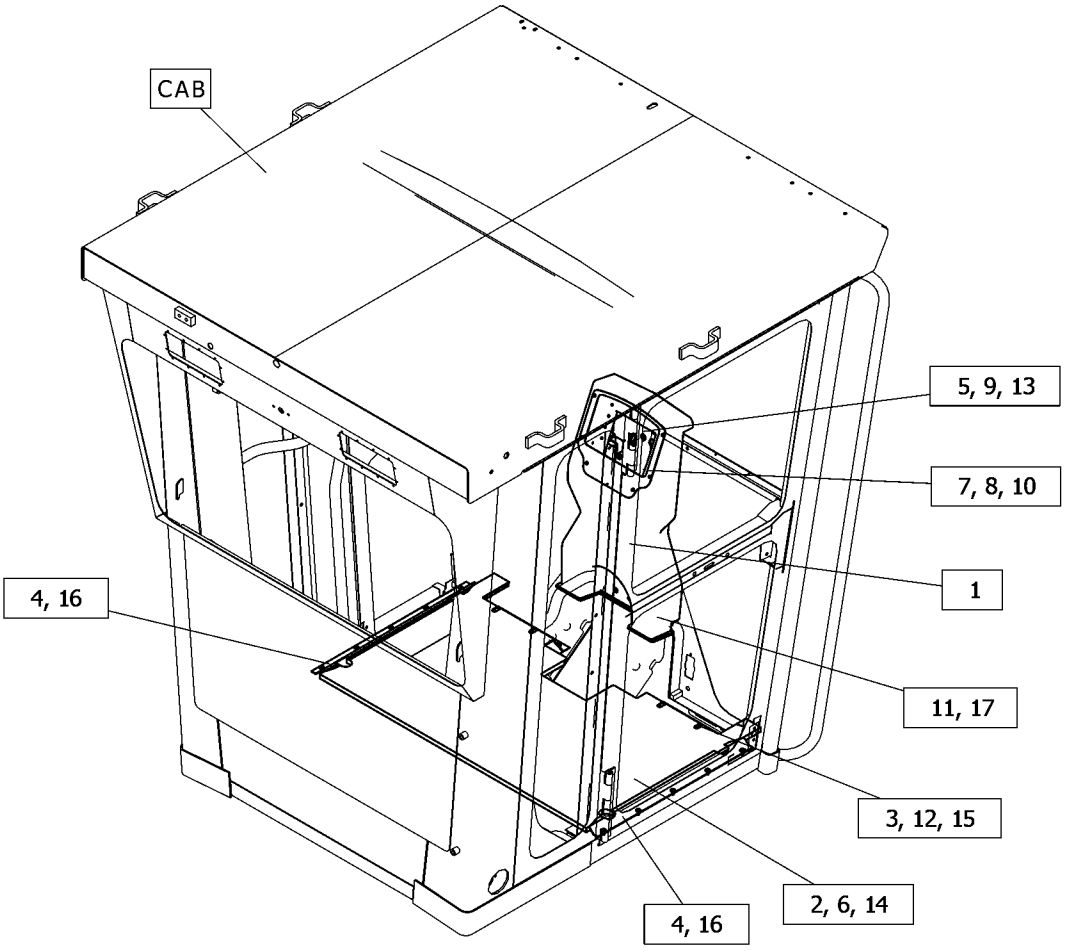

GRAPHIC #1 <END> g06374384

529-8012 HITCH GP-ARTICULATING

S/N: W921-UP

PART OF 538-3416 HITCH GP-ARTICULATING

SMCS-7057, 7100

i07546979

NOTE	REF NO	GRAPHIC REF	PART NUMBER	QTY	PART NAME 1 2 3 4 5 6 (PRODUCT LEVEL)	SEE PAGE
	1	1	**538-3413**	1	PIN AS	
	2	1	**545-7403**	1	WASHER (16.5X60X5-MM THK)	
	3	1	**545-7404**	1	COVER	
B	4	1	**545-7405**	1	SHIM (0.3-MM THK)	
B		1	**545-7406**	1	SHIM (0.5-MM THK)	
B		1	**545-7407**	1	SHIM (0.7-MM THK)	
	7	1	**545-7408**	1	COVER	
	8	1	**545-7409**	1	PIN	
	9	1	**545-7410**	1	COVER	
	10	1	**545-7411**	1	SPACER	
	11	1	**545-7412**	2	SEAL	
	12	1	**545-7413**	2	BEARING	
	13	1	**545-7415**	1	COVER	
	14	1	**545-7416**	1	SPACER	
	15	1	**545-7417**	1	PLATE	
	16	1	**545-7418**	2	SHIM (0.5-MM THK)	
	17	1	**545-7419**	10	SHIM (0.2-MM THK)	
	18	1	**545-7420**	6	SHIM (0.5-MM THK)	
	19	1	**520-1134**	2	SLEEVE	
	20	1	**533-3478**	1	BOLT	
	21	1	**557-4598**	1	COVER-OIL PUMP	
M	22	1	**7X-2555**	4	BOLT (M16X2X80-MM)	
M	23	1	**8T-4194**	6	BOLT (M12X1.75X50-MM)	
	24	1	**8T-4223**	20	WASHER-HARD (13.5X25.5X3-MM THK)	
M	25	1	**8T-5412**	8	BOLT (M12X1.75X140-MM)	
M	26	1	**8T-6868**	6	BOLT (M12X1.75X80-MM)	
	27	1	**9X-8257**	4	WASHER (17.5X30X3.5-MM THK)	

B - USE AS REQUIRED
M - METRIC PART

529-8012 **HITCH GP-ARTICULATING (**contd.**)** **i07546979**

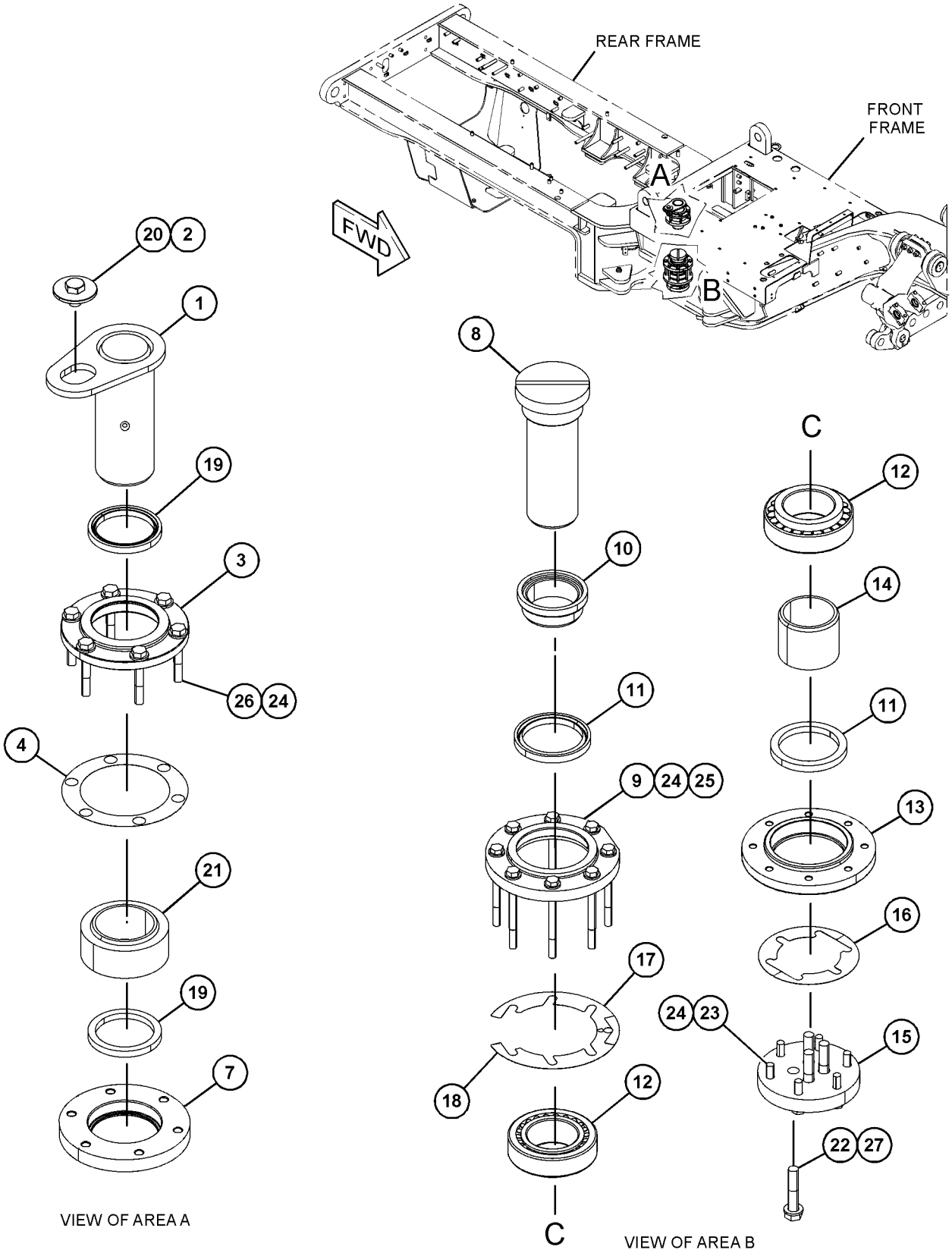

GRAPHIC #1

<END>

g06373697

538-3416 HITCH GP-ARTICULATING

S/N: W921-UP

PART OF 529-7999 FRAME AR

SMCS-7057, 7100 **i07544015**

NOTE	REF NO	GRAPHIC REF	PART NUMBER	QTY	PART NAME 1 2 3 4 5 6 (PRODUCT LEVEL)	SEE PAGE
M	1	1	**518-1824**	4	BOLT (M10X1X25-MM)	
	2	1	**518-4426**	8	WASHER (10.4X16X2.7-MM THK)	
	3	1	**431-4613**	2	ADAPTER	
	4	1	**545-7421**	1	PIPE AS	
	5	1	**545-7422**	1	PIPE AS	
Y	6	1	*529-8012*	1	HITCH GP-ARTICULATING	319

M - METRIC PART
Y - SEPARATE ILLUSTRATION

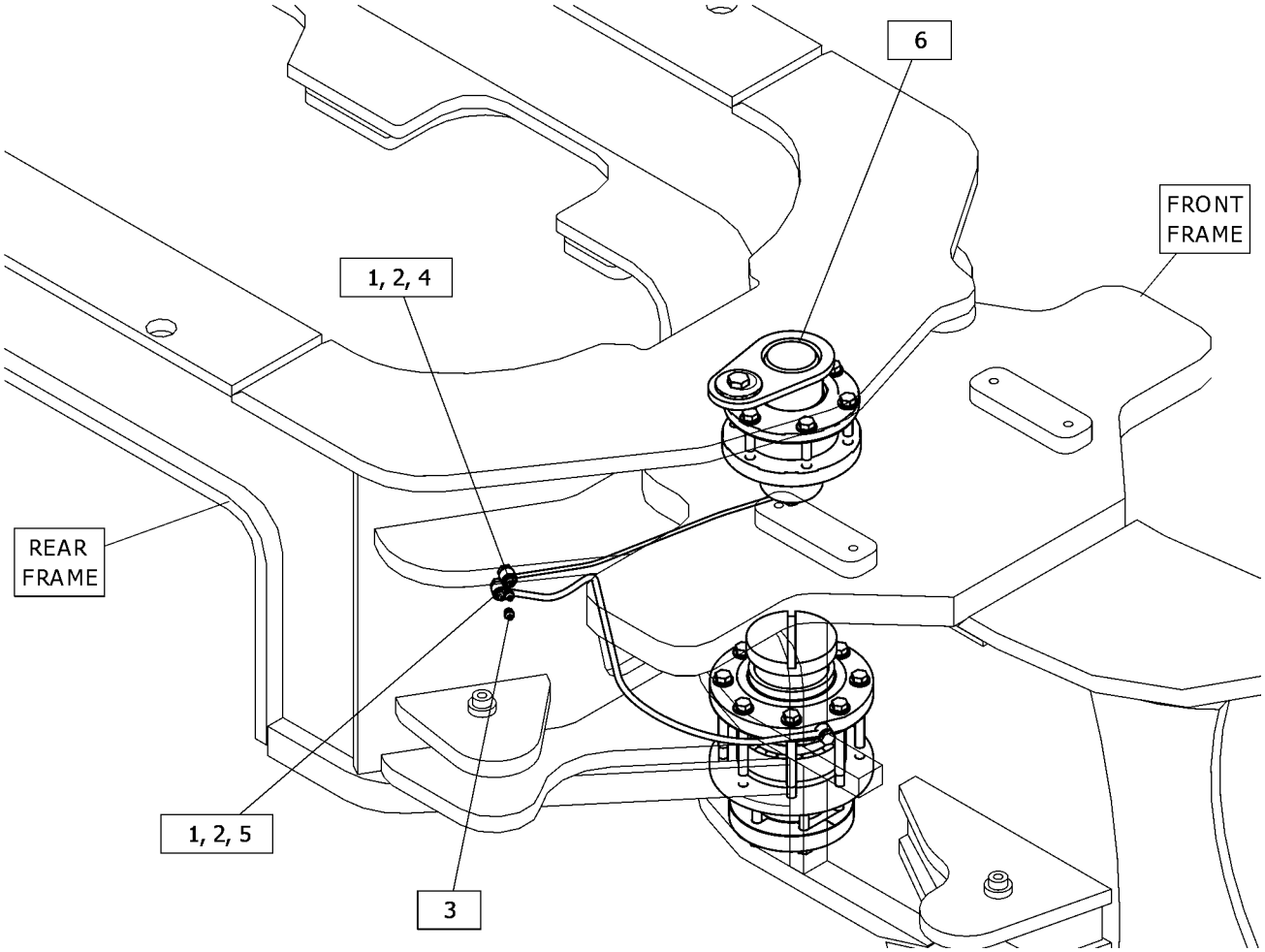

GRAPHIC #1 <END> g06359005

539-5000 HOOD GP

S/N: W921-UP

PART OF 537-1860 CHASSIS AR

SMCS-7251 **i07591886**

NOTE	REF NO	GRAPHIC REF	PART NUMBER	QTY	PART NAME 1 2 3 4 5 6 (PRODUCT LEVEL)	SEE PAGE
	1	1	**524-6912**	8	BOLT-HEAD (M12X1.75X50-MM)	
	2	1	**198-4778**	8	WASHER-HARD (13.5X30X12-MM THK)	
	3	1	**538-9168**	2	PLATE AS	
	4	1	**538-9169**	2	GRILL-SIDE	
Y	5	1	*539-5001*	1	HOOD GP (TANK)	323
	6	1	**539-5005**	1	GRILL (REAR)	
	7	1	**560-4453**	1	PLATE	
	8	1	**5P-8525**	1	GROMMET	
	9	1	**7G-7053**	4	GROMMET	
	10	1	**7X-0579**	27	WASHER-HARD (8.8X25.5X2-MM THK)	
M	11	1	**8T-4136**	8	BOLT (M10X1.5X25-MM)	
M	12	1	**8T-4189**	27	BOLT (M8X1.25X20-MM)	
	13	1	**8T-4222**	8	WASHER-PLATED (11X32X2.5-MM THK)	

M - METRIC PART
Y - SEPARATE ILLUSTRATION

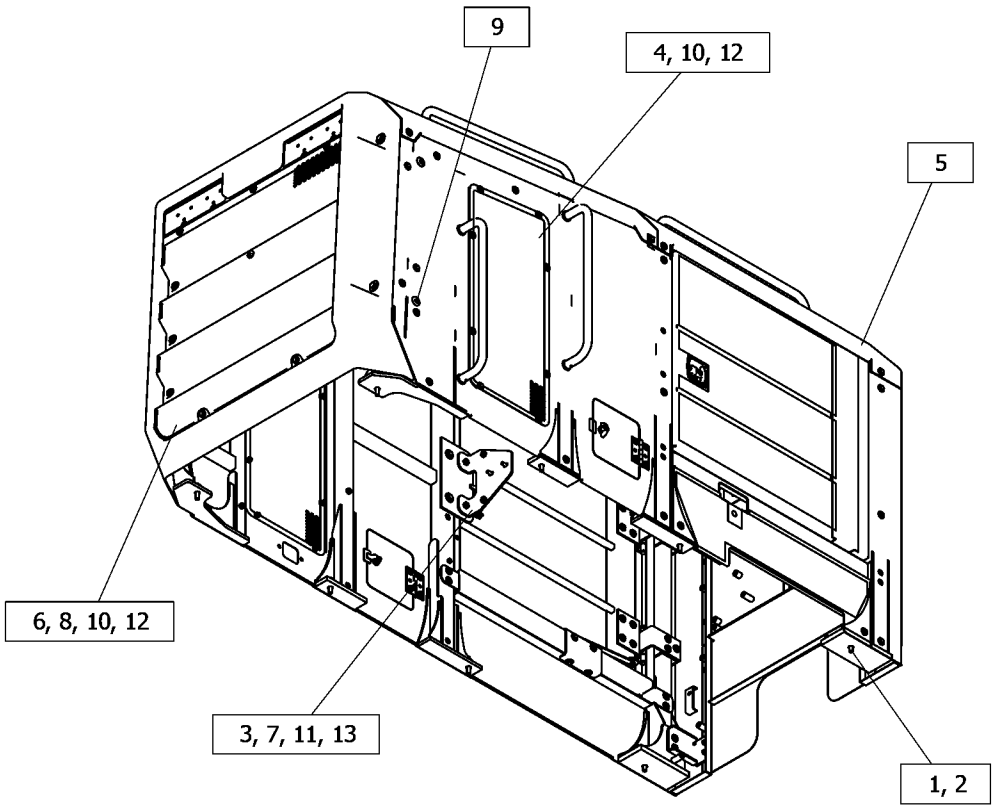

GRAPHIC #1 <END> g06375070

539-5001 HOOD GP

S/N: W921-UP

PART OF 539-5000 HOOD GP

SMCS-7251 **i07592100**

NOTE	REF NO	GRAPHIC REF	PART NUMBER	QTY	PART NAME 1 2 3 4 5 6 (PRODUCT LEVEL)	SEE PAGE
	1	2	**518-6584**	8	NUT-HEX (M8X1.25-THD)	
M	2	2	**518-6585**	16	NUT-HEX (M10X1.5-THD)	
	3	3	**518-9736**	2	WASHER (8.8X20.5X2-MM THK)	
	4	2	**275-0571**	2	CAM-LATCH	
J	5	2	**275-0572**	2	LATCH AS	
	6	2	**305-3159**	2	PAWL	
	7	2	**326-0610**	2	LATCH AS	
					(EACH INCLUDES)	
		2	**1H-3244**	4	LOCKWASHER	
M		2	**096-6331**	2	NUT (M12X1.75-THD)	
		2	**326-0612**	2	WASHER-TAB	
M		2	**344-5673**	4	NUT (M6X1-THD)	
	8	2,3	**332-3604**	4	BUMPER	
M	9	2	**518-9597**	4	BOLT (M12X1.75X70-MM)	
	10	3	**524-3220**	2	PIN	
	11	2	**518-9740**	4	WASHER	
	12	2	**539-4946**	1	COVER-TOP	
	13	2	**539-4947**	1	COVER-TOP	
	14	2	**539-4948**	1	COVER-SIDE	
	15	2	**539-4949**	1	COVER-SIDE	
	16	2	**539-4950**	4	HANDRAIL AS	
	17	3	**539-4953**	2	PLATE-LOCK	
	18	2	**539-4954**	1	PLATE	
	19	3	**539-4955**	1	PLATE AS	
	20	3	**539-4957**	1	PLATE-GUIDE	
	21	3	**539-4958**	1	PLATE-GUIDE	
	22	3	**539-4960**	4	HINGE AS	
	23	3	**539-4969**	1	PLATE AS-FRONT	
	24	3	**539-4971**	1	DOOR AS-HOOD (RH)	
	25	2	**539-4976**	1	DOOR AS-HOOD (LH)	
	26	2	**539-4979**	2	HANDRAIL AS	
	27	2	**539-4982**	1	PLATE AS-FRONT	
	28	3	**539-4984**	1	COVER AS-FRONT	
	29	3	**539-4987**	1	PLATE AS-SIDE (RH)	
	30	2	**539-4991**	1	PLATE AS-SIDE (LH)	
	31	2	**539-5002**	1	STRUCTURE AS	
Y	32	2	*539-5003*	1	GRILL GP-RADIATOR	314
	33	2	**539-5012**	2	HANDLE AS	
	34	3	**539-5013**	2	PLATE AS	
	35	2	**539-5017**	1	PLATE-TOP	
	36	2	**539-5018**	1	GRILL AS-TOP	
	37	2	**539-5020**	2	PLATE-SIDE	
	38	2	**539-5021**	1	COVER AS-TOP	
	39	3	**539-5023**	1	COVER AS-FRONT	
	40	3	**539-5026**	2	BRACKET	
	41	3	**539-5027**	1	BEAM AS	
	42	3	**539-5030**	1	PLATE	
	43	2	**539-5162**	1	PLATE	

539-5001 **HOOD GP (**contd.**)** **i07592100**

NOTE	REF NO	GRAPHIC REF	PART NUMBER	QTY	PART NAME 1 2 3 4 5 6 (PRODUCT LEVEL)	SEE PAGE
	44	3	**539-5164**	2	PLATE AS	
	45	3	**549-0895**	1	BEAM AS	
	46	3	**549-0897**	1	BEAM AS	
	47	3	**556-8779**	2	HINGE AS	
					(EACH INCLUDES)	
	47A	3	**565-0344**	1	HINGE	
	47B	3	**565-0345**	1	HINGE	
		3	**565-0346**	1	PIN-HINGE	
	48	3	**558-6081**	1	FOAM	
	49	3	**558-6082**	1	FOAM	
	50	3	**558-6083**	1	FOAM	
	51	3	**558-6084**	1	FOAM	
	52	2	**5P-4116**	16	WASHER-HARD (8.8X20.5X2-MM THK)	
	53	2,3	**7X-0579**	139	WASHER-HARD (8.8X25.5X2-MM THK)	
M	54	3	**8T-4136**	4	BOLT (M10X1.5X25-MM)	
M	55	2,3	**8T-4189**	117	BOLT (M8X1.25X20-MM)	
	56	3	**8T-4222**	4	WASHER-PLATED (11X32X2.5-MM THK)	
M	57	3	**8T-4908**	30	BOLT (M8X1.25X25-MM)	

J - REQUIRES CORPORATE KEY
M - METRIC PART
Y - SEPARATE ILLUSTRATION

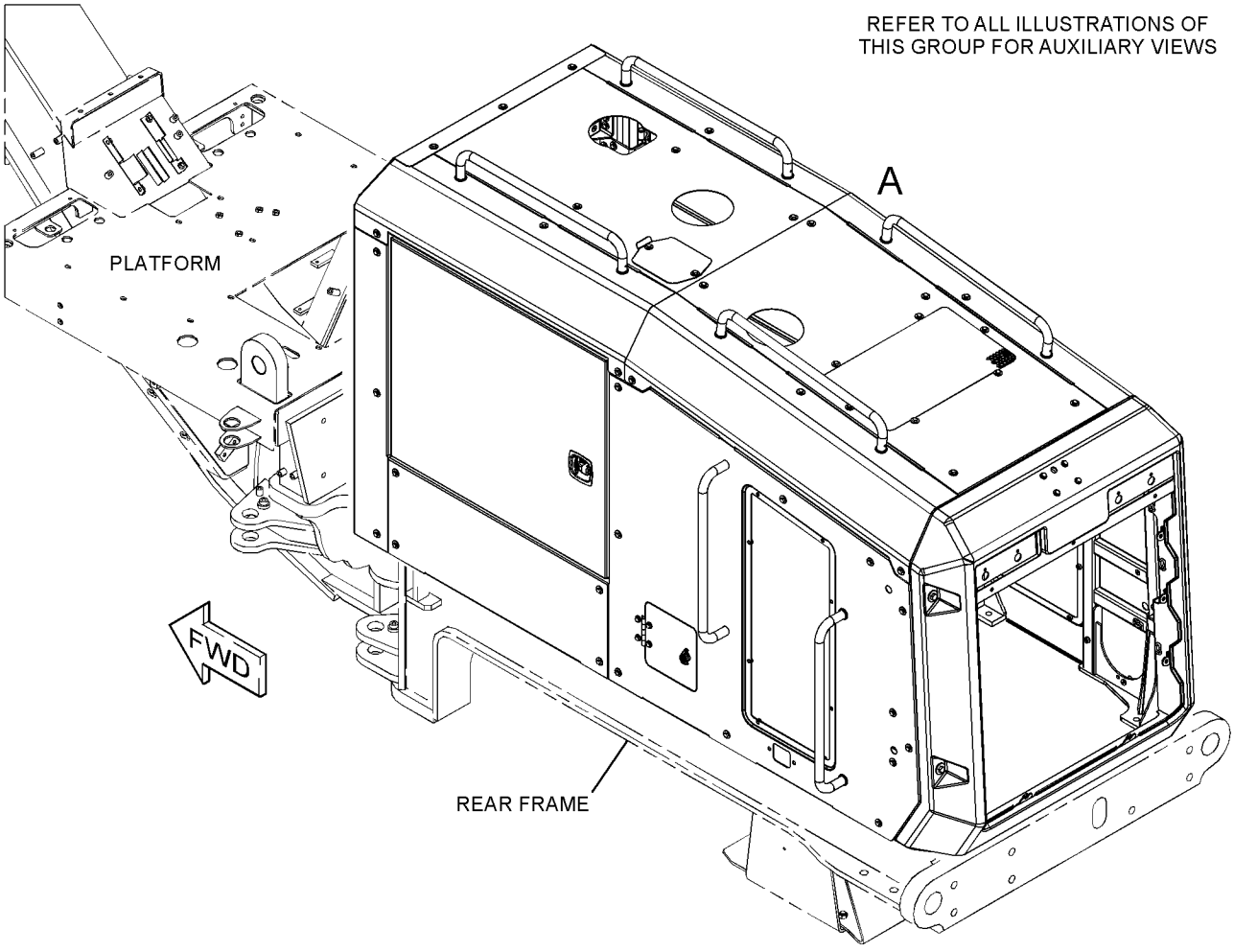

GRAPHIC #1 g06377179

539-5001 **HOOD GP** (contd.) **i07592100**

REFER TO ALL ILLUSTRATIONS OF
THIS GROUP FOR AUXILIARY VIEWS

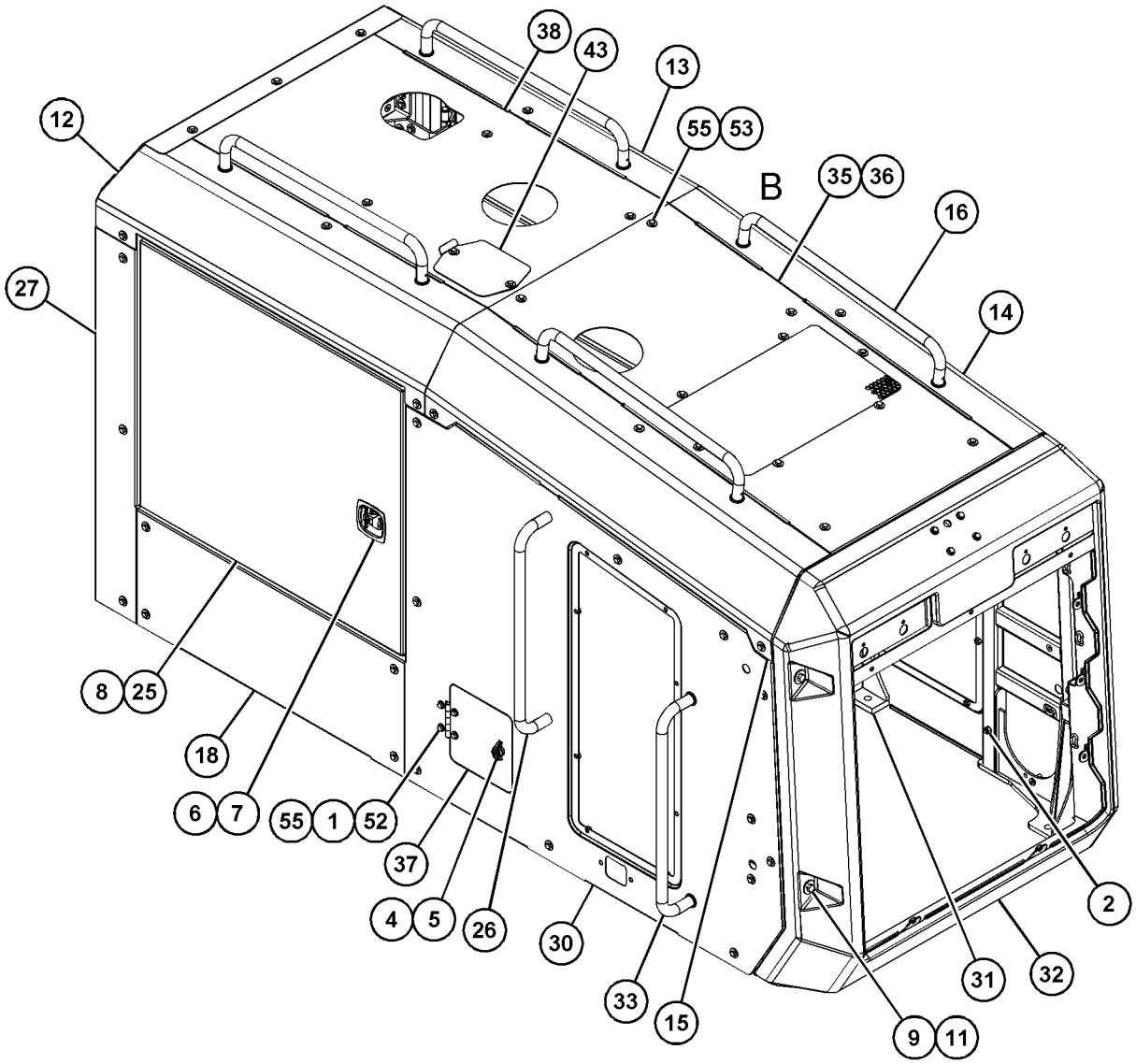

VIEW OF AREA A

GRAPHIC #2

g06377180

539-5001 **HOOD GP** (contd.) **i07592100**

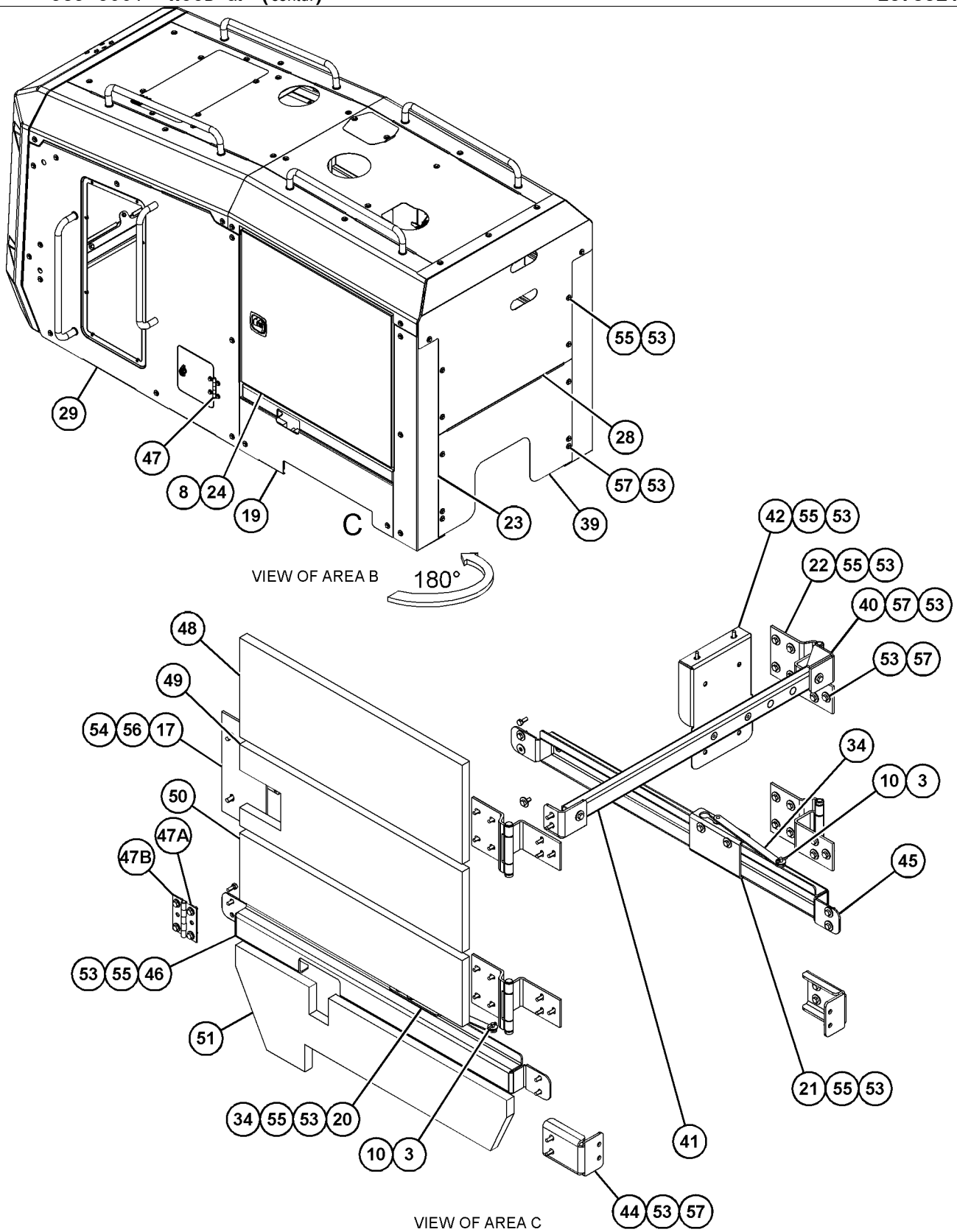

GRAPHIC #3

<END>

g06377181

537-1820 LADDER GP

S/N: W921-UP

PART OF 537-1860 CHASSIS AR

SMCS-7254 **i07591842**

NOTE	REF NO	GRAPHIC REF	PART NUMBER	QTY	PART NAME 1 2 3 4 5 6 (PRODUCT LEVEL)	SEE PAGE
	1	1	**518-4417**	8	WASHER	
Y	2	1	*537-1821*	2	STEP GP	330
	3	1	**521-2261**	8	BOLT-HEAD (M10X1.5X35-MM)	

Y - SEPARATE ILLUSTRATION

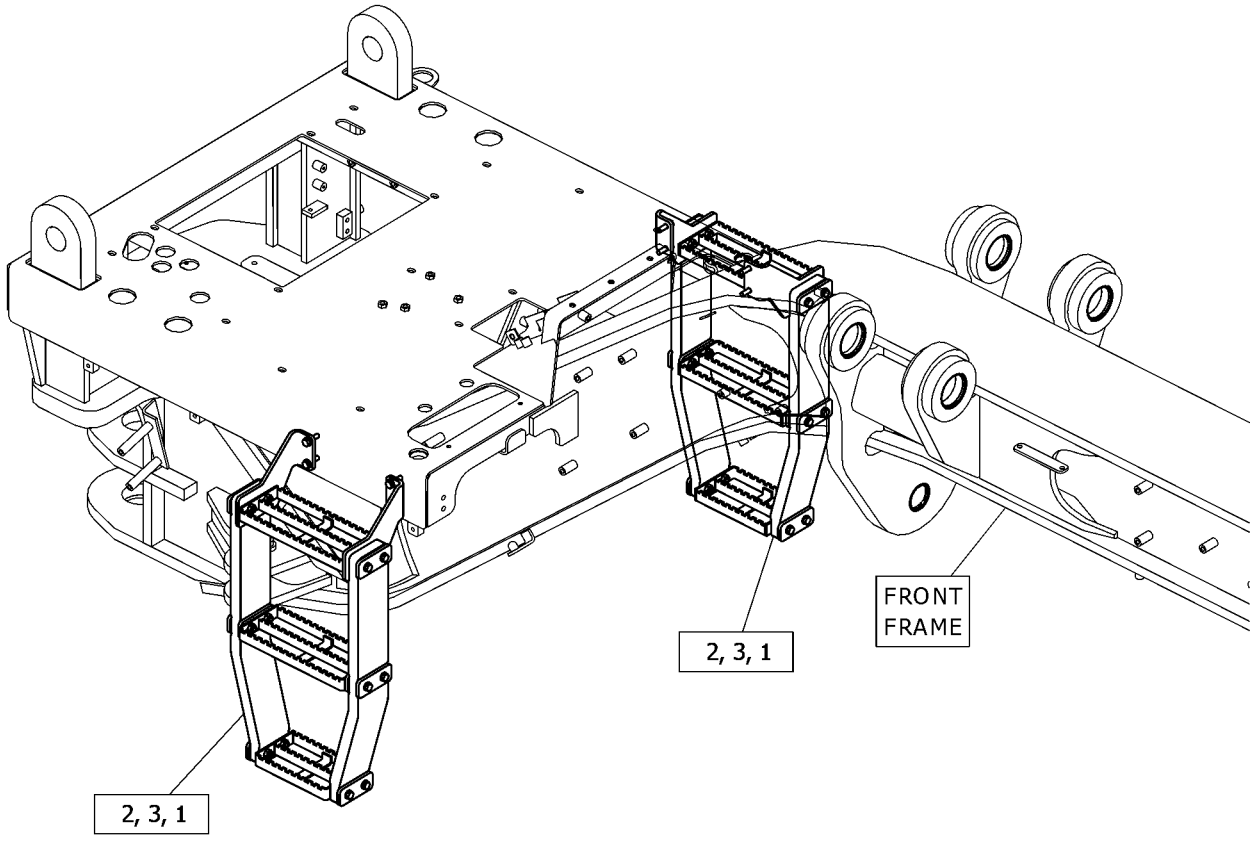

GRAPHIC #1 <END> g06375062

531-3390 LINES GP-GREASE

S/N: W921-UP

SMCS-7510, 7517 **i07560888**

NOTE	REF NO	GRAPHIC REF	PART NUMBER	QTY	PART NAME 1 2 3 4 5 6 (PRODUCT LEVEL)	SEE PAGE
	1	1	**431-4613**	1	ADAPTER	
M	2	1	**518-2310**	2	BOLT (M10X1.5X25-MM)	
M	3	1	**524-6918**	3	BOLT (M10X1.5X45-MM)	
	4	1	**424-2860**	1	BRACKET	
	5	1	**518-5841**	2	CONNECTOR-MALE	
M	6	1	**518-6585**	1	NUT-HEX (M10X1.5-THD)	
	7	1	**518-9745**	6	WASHER (10.5X20X2-MM THK)	
	8	1	**521-9926**	1	HOSE AS	
	9	1	**531-3392**	1	BRACKET AS	
	10	1	**5P-9085**	1	CLIP (LOOP)	

M - METRIC PART

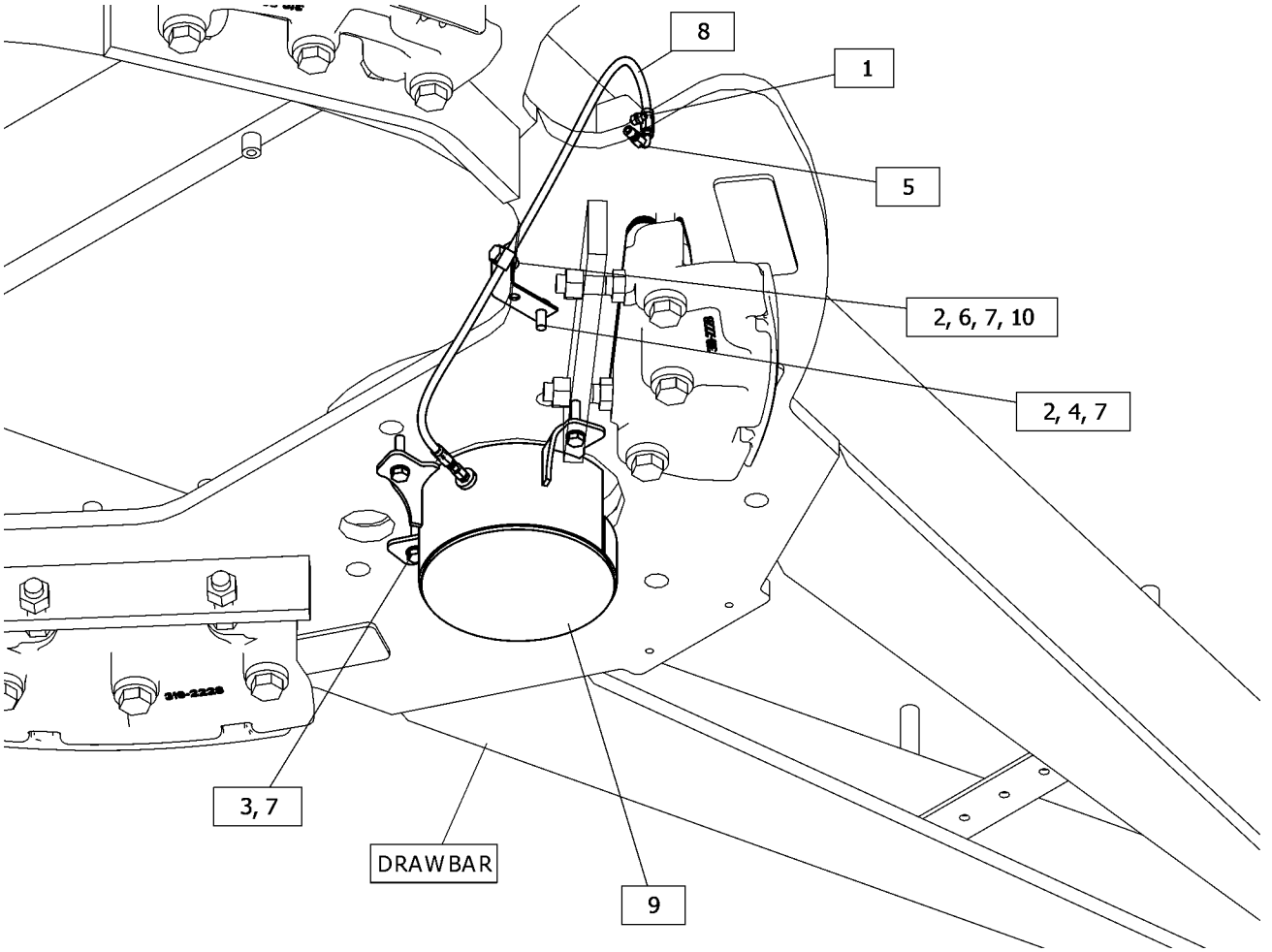

GRAPHIC #1 <END> g06366715

131-3740 LINK GP-STEERING

S/N: W921-UP

PART OF 134-1080 AXLE GP-FRONT

SMCS-4305 **i07545202**

NOTE	REF NO	GRAPHIC REF	PART NUMBER	QTY	PART NAME 1 2 3 4 5 6 (PRODUCT LEVEL)	SEE PAGE
	1	1	**131-3739**	1	TIE ROD	
	2	1	**131-3738**	1	TIE ROD GP (LH THREAD, RH)	
		1	**2F-8057**	1	NUT-SLOTTED	
		1	**132-1143**	1	SEAL-BOOT	
	3	1	**131-3737**	1	TIE ROD GP (RH THREAD, LH)	
		1	**2F-8057**	1	NUT-SLOTTED	
		1	**132-1143**	1	SEAL-BOOT	
	4	1	**132-1144**	2	CLAMP	
	5	1	**1B-4367**	2	BOLT (5/8-11X3-IN)	
	6	1	**3K-2889**	2	LOCKNUT (5/8-11-THD)	

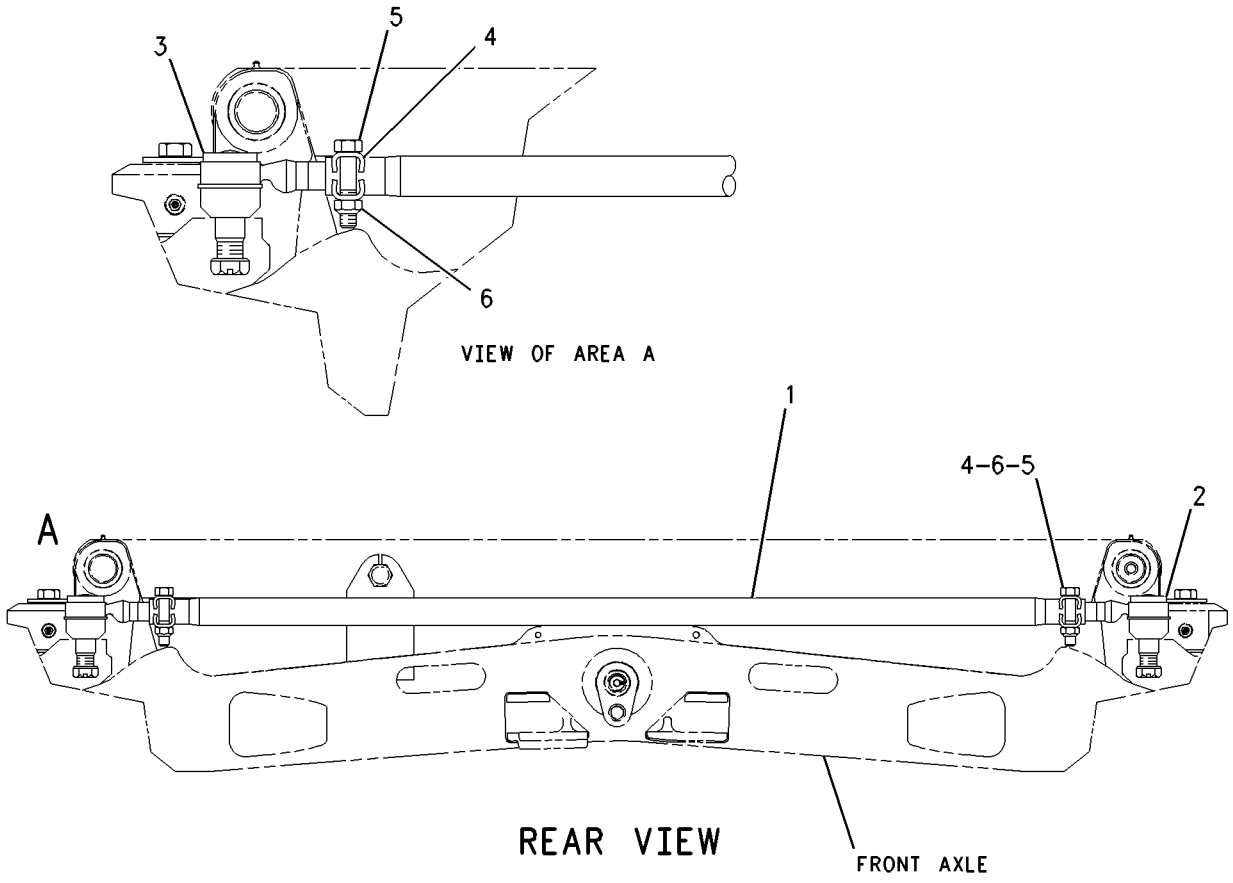

GRAPHIC #1 <END> g00989759

537-1821 STEP GP

S/N: W921-UP

PART OF 537-1820 LADDER GP

SMCS-7254 **i07591866**

NOTE	REF NO	GRAPHIC REF	PART NUMBER	QTY	PART NAME 1 2 3 4 5 6 (PRODUCT LEVEL)	SEE PAGE
M	1	1	**519-0992**	8	BOLT (M10X1.5X60-MM)	
	2	1	**518-4417**	12	WASHER	
	3	1	**536-0452**	12	SLEEVE	
	4	1	**537-1822**	2	STEP AS	
	5	1	**537-1823**	2	BELT	
	6	1	**537-1824**	1	STEP AS	
	7	1	**537-1825**	1	PLATE	
	8	1	**537-1826**	1	PLATE	
	9	1	**537-1827**	8	PLATE	
M	10	1	**553-3529**	4	BOLT (M10X1.5X50-MM)	

M - METRIC PART

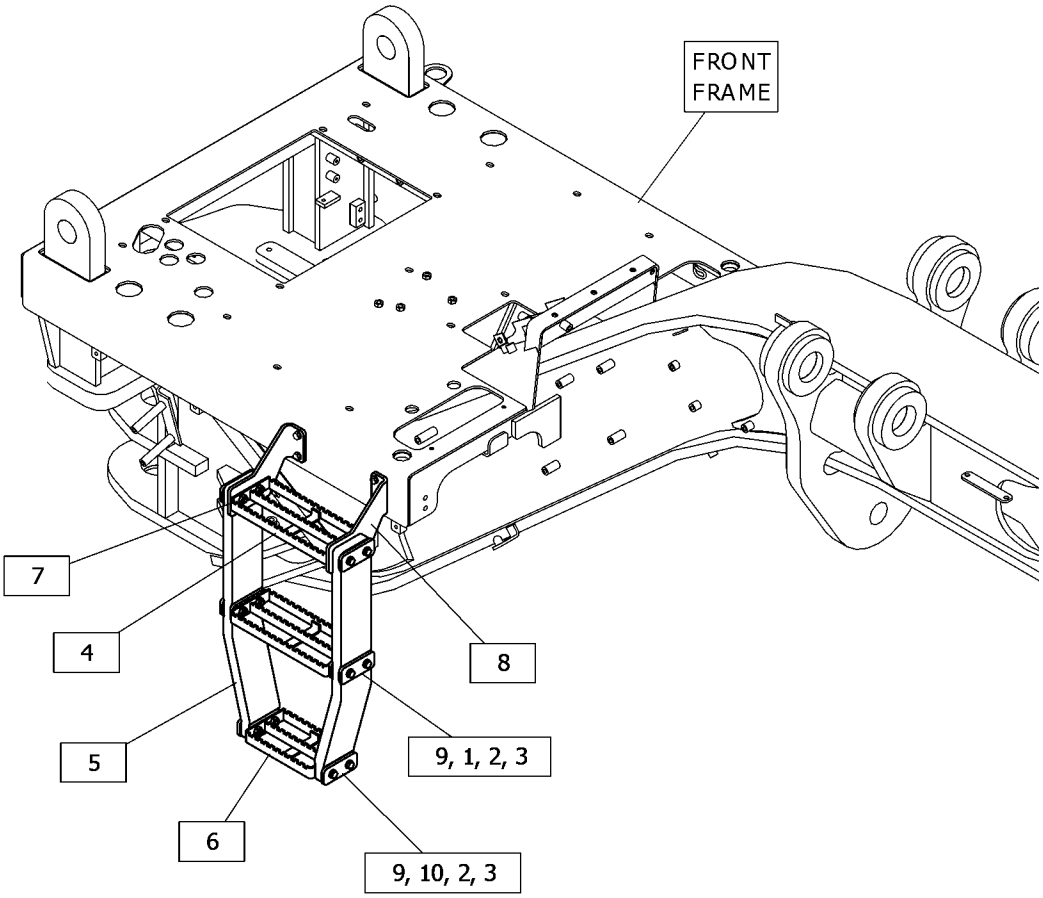

GRAPHIC #1 <END> g06373814

563-6700 STEP GP

S/N: W921-UP

PART OF 532-6677 AXLE AR-REAR

SMCS-7254 **i07584489**

NOTE	REF NO	GRAPHIC REF	PART NUMBER	QTY	PART NAME 1 2 3 4 5 6 (PRODUCT LEVEL)	SEE PAGE
	1	1	**518-9737**	8	WASHER (10.5X30X2.5-MM THK)	
M	2	1	**524-3271**	8	BOLT (M10X1.5X25-MM)	
	3	1	**563-6701**	2	STEP AS	

M - METRIC PART

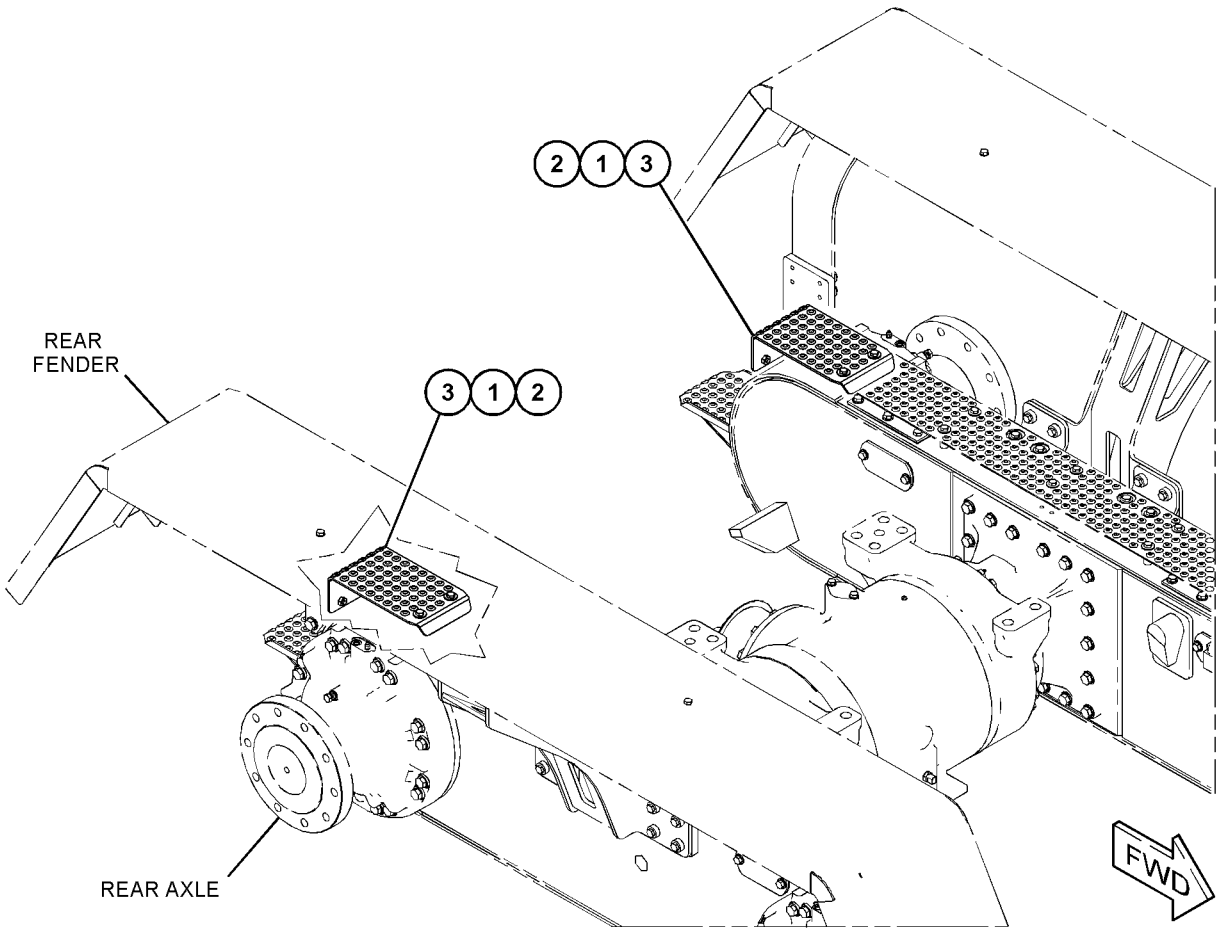

GRAPHIC #1 <END> g06373261

536-0438 SUPPORT GP-BATTERY

S/N: W921-UP

PART OF 533-6222 BATTERY & WIRING GP

SMCS-7257 **i07579827**

NOTE	REF NO	GRAPHIC REF	PART NUMBER	QTY	PART NAME 1 2 3 4 5 6 (PRODUCT LEVEL)	SEE PAGE
M	1	1	**518-6585**	6	NUT-HEX (M10X1.5-THD)	
	2	1	**518-4417**	4	WASHER	
M	3	1	**108-2949**	2	STUD (M10X1.5X270-MM)	
	4	1	**536-0454**	1	HOLD-DOWN AS (BATTERY)	
M		1	**8T-3490**	1	NUT-WELD (M10X1.5-THD)	
M		1	**416-8393**	2	BOSS-WELD (M10X1.5X56-MM)	

M - METRIC PART

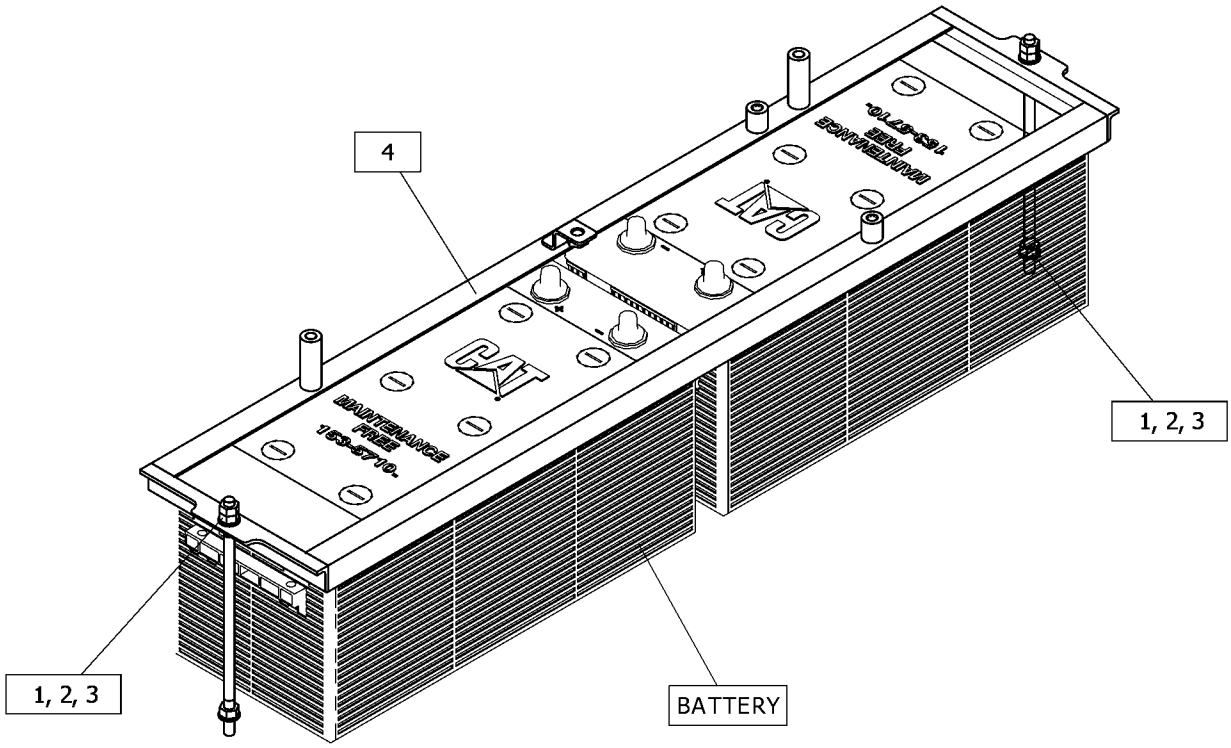

GRAPHIC #1 <END> g06375094

521-1057 SUPPORT GP-RADIATOR

S/N: W921-UP

PART OF 521-1050 RADIATOR & OIL COOLER GP

SMCS-1353 **i07549356**

NOTE	REF NO	GRAPHIC REF	PART NUMBER	QTY	PART NAME 1 2 3 4 5 6 (PRODUCT LEVEL)	SEE PAGE
	1	1	**521-1053**	1	FRAME (RH)	
	2	1	**521-1054**	1	FRAME (LH)	
	3	1	**521-1055**	1	FRAME	
	4	1	**521-1056**	1	FRAME-BOTTOM	
	5	1	**7X-7729**	6	WASHER (11X25X3-MM THK)	
M	6	1	**8T-4136**	6	BOLT (M10X1.5X25-MM)	
M	7	1	**8T-4192**	4	BOLT (M12X1.75X25-MM)	
	8	1	**8T-4223**	4	WASHER-HARD (13.5X25.5X3-MM THK)	

M - METRIC PART

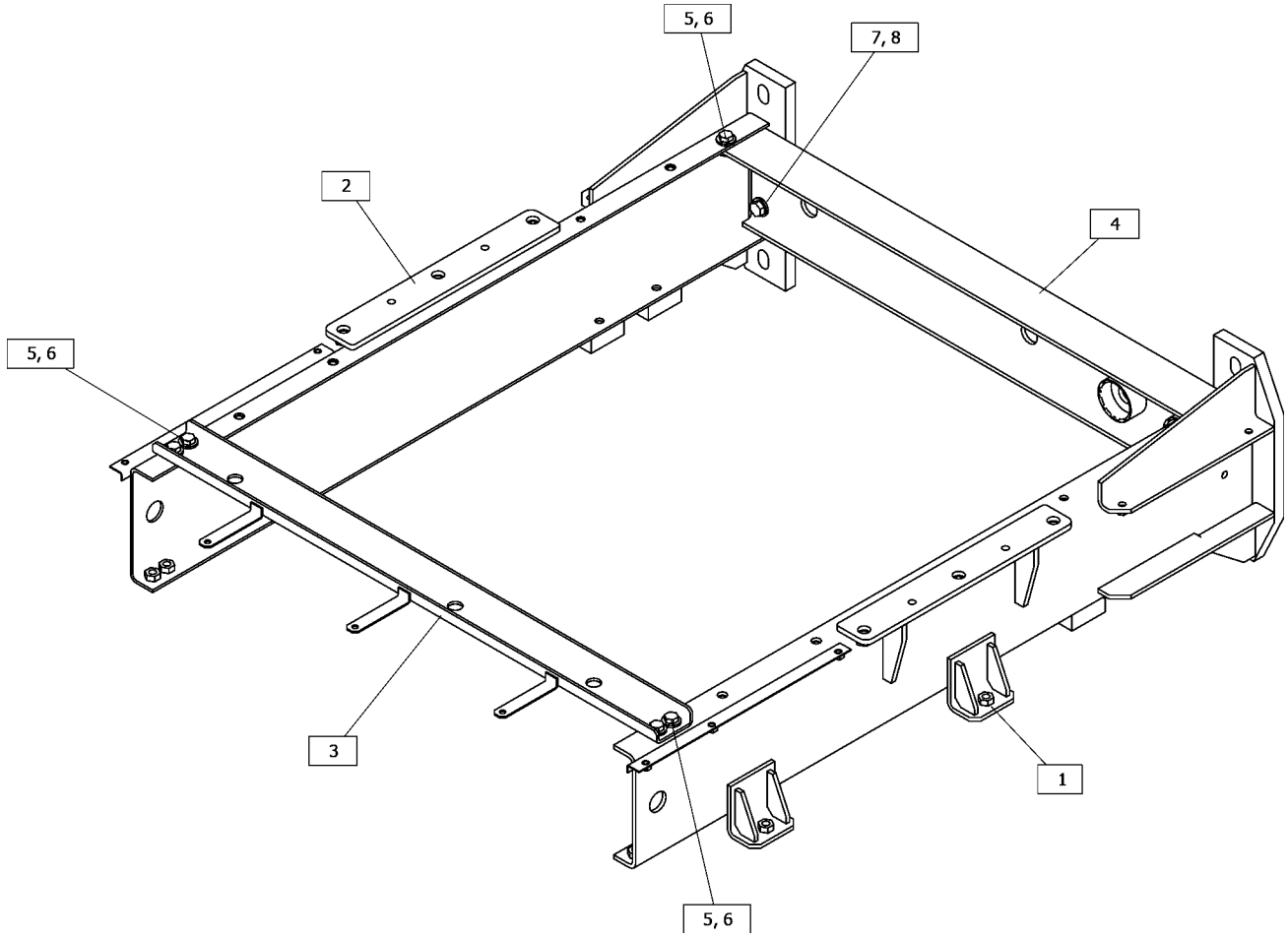

GRAPHIC #1 <END> g06360684

563-6710 WALKWAY GP

S/N: W921-UP

PART OF 563-7617, 563-7618 AXLE AR-REAR

SMCS-7255 **i07621133**

NOTE	REF NO	GRAPHIC REF	PART NUMBER	QTY	PART NAME 1 2 3 4 5 6 (PRODUCT LEVEL)	SEE PAGE
	1	1	**518-9737**	16	WASHER (10.5X30X2.5-MM THK)	
M	2	1	**524-3271**	16	BOLT (M10X1.5X25-MM)	
	3	1	**563-6701**	2	STEP AS	
	4	1	**563-6711**	1	PLATE	

M - METRIC PART

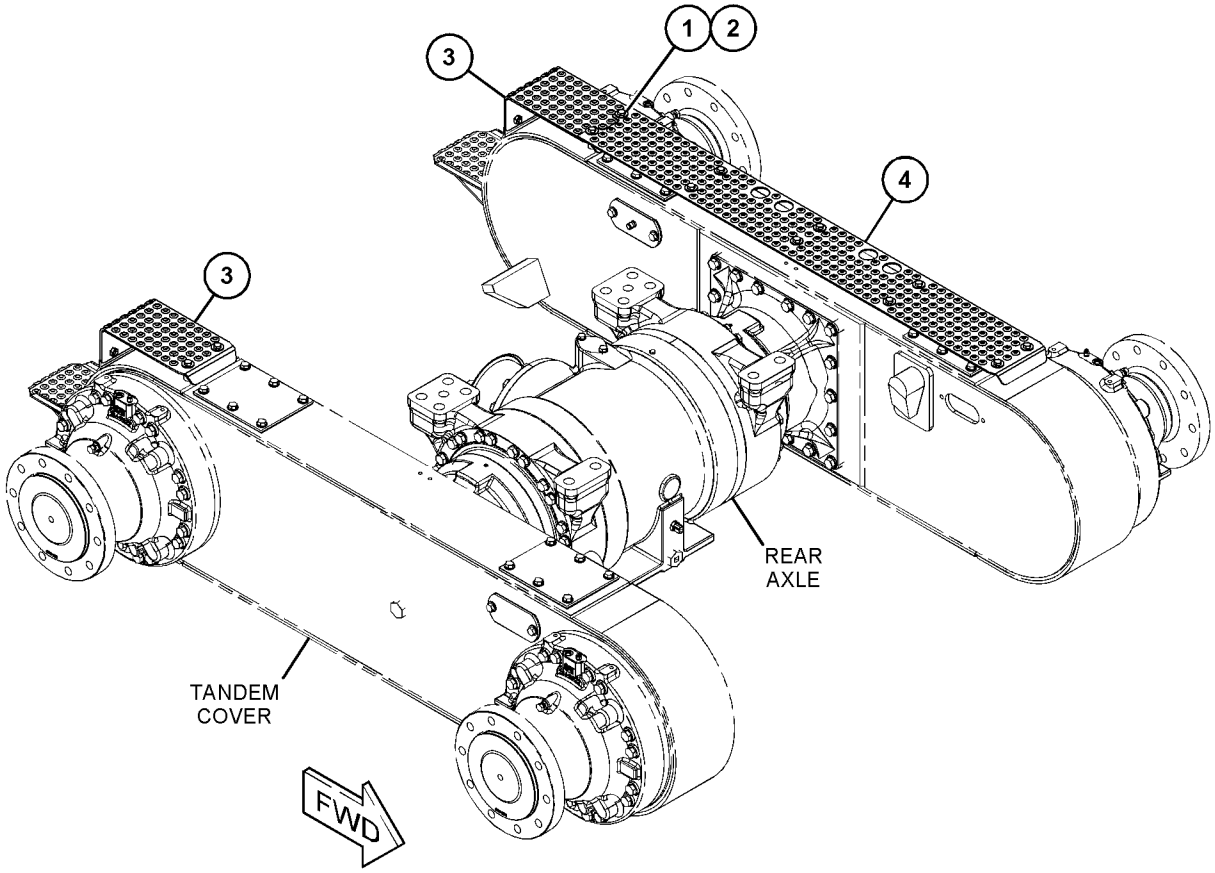

GRAPHIC #1 <END> g06381103

348-9255 ACCUMULATOR GP-BRAKE—CHARGED

S/N: W921-UP

FIELD REPLACEMENT ORDER 348-9257—PAGE: 336

PART OF 557-9590 ACCUMULATOR & MTG GP-HYDRAULIC

SMCS-4263, 4264

i07588837

NOTE	REF NO	GRAPHIC REF	PART NUMBER	QTY	PART NAME 1 2 3 4 5 6 (PRODUCT LEVEL)	SEE PAGE
	1	1	**158-2336**	1	VALVE-GAS	
	2	1	**111-9110**	1	PROTECTOR-GAS VALVE	
	3	1	**1J-9671**	1	SEAL-O-RING	
	4	1	**5M-3062**	2	BOLT (3/8-16X0.75-IN)	
	5	1	**241-0037**	1	FILM-INFORMATION (HYDRAULIC ACCUMULATOR)	
					AVAILABLE REPAIR KIT(S):	
			203-1558	1	KIT-SEAL (HYDRAULIC ACCUMULATOR) (BRAKE ACCUMULATOR)	

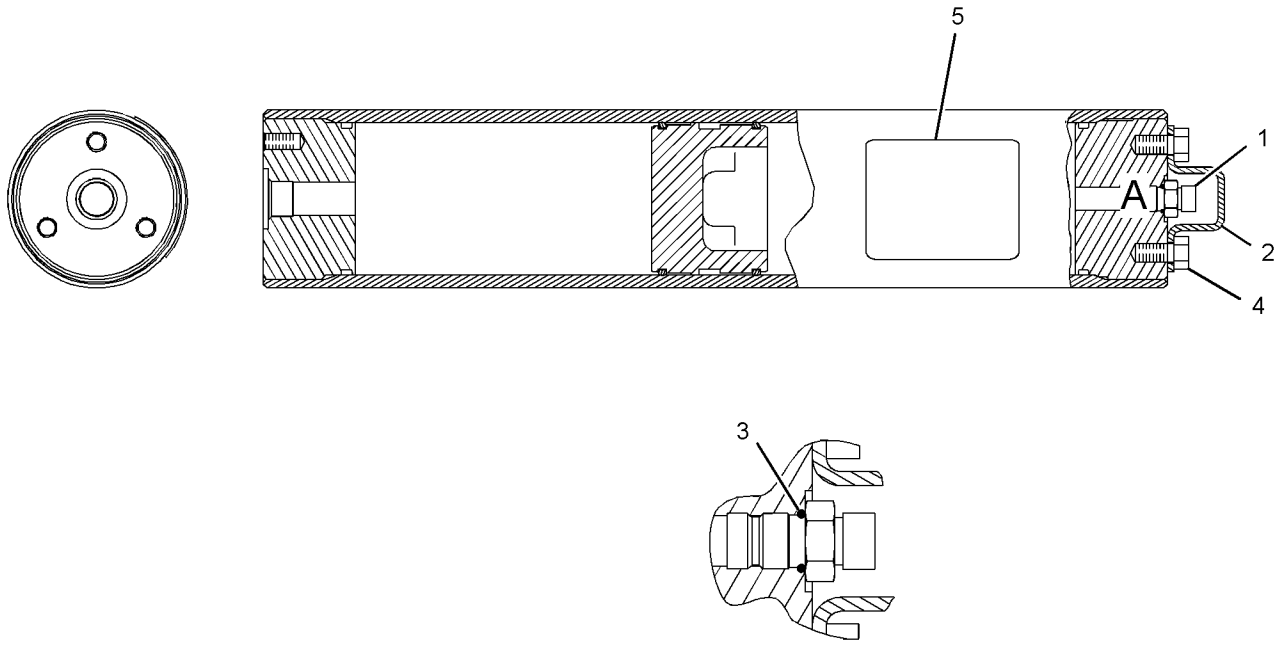

VIEW OF AREA A

GRAPHIC #1

<END>

g02163451

348-9257 ACCUMULATOR GP-BRAKE—UNCHARGED

S/N: W921-UP

FIELD REPLACEMENT FOR 348-9255—PAGE: 335

SMCS-4263, 4264 **i07588840**

NOTE	REF NO	GRAPHIC REF	PART NUMBER	QTY	PART NAME 1 2 3 4 5 6 (PRODUCT LEVEL)	SEE PAGE
	1	1	**158-2336**	1	VALVE-GAS	
	2	1	**111-9110**	1	PROTECTOR-GAS VALVE	
	3	1	**1J-9671**	1	SEAL-O-RING	
	4	1	**5M-3062**	2	BOLT (3/8-16X0.75-IN)	
	5	1	**241-0037**	1	FILM-INFORMATION (HYDRAULIC ACCUMULATOR)	
					AVAILABLE REPAIR KIT(S):	
			203-1558	1	KIT-SEAL (HYDRAULIC ACCUMULATOR)	

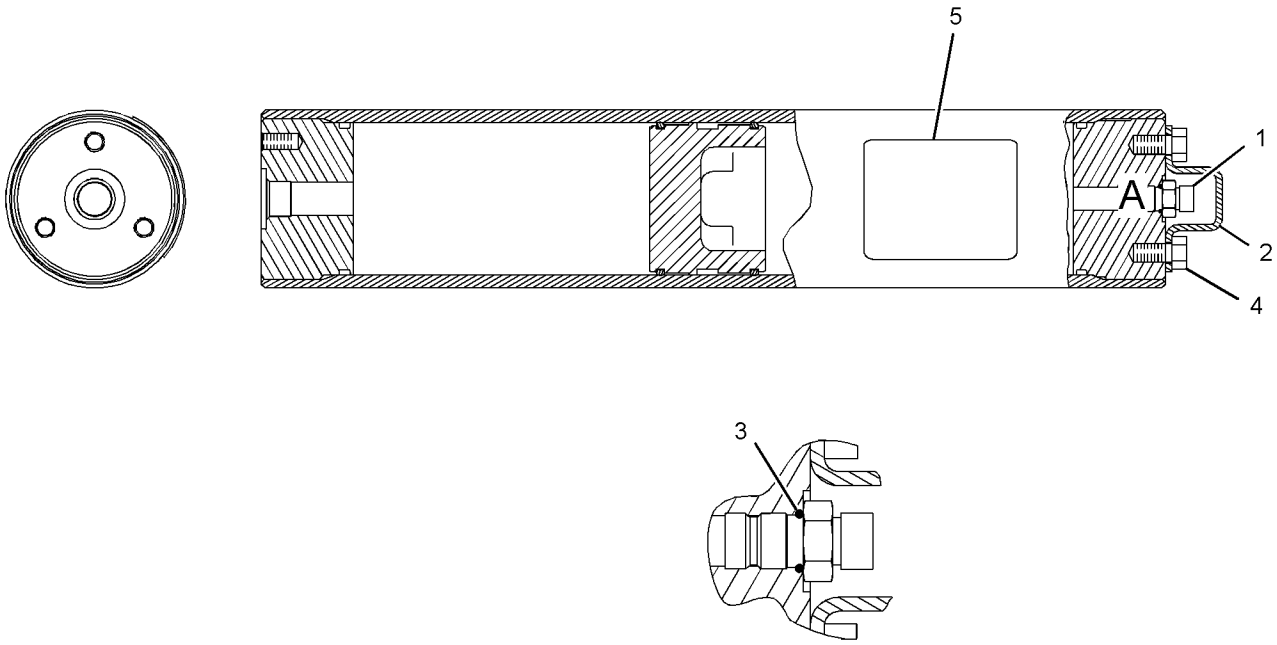

VIEW OF AREA A

GRAPHIC #1 <END> g02163451

535-7145 CONTROL GP-SERVICE BRAKE

S/N: W921-UP

PART OF 535-7143 HYDRAULIC AR

SMCS-4251, 4265, 4269 **i07589127**

NOTE	REF NO	GRAPHIC REF	PART NUMBER	QTY	PART NAME 1 2 3 4 5 6 (PRODUCT LEVEL)	SEE PAGE
M	1	1	**518-2310**	2	BOLT (M10X1.5X25-MM)	
	2	1	**518-4416**	6	WASHER (8.4X16X1.6-MM THK)	
	3	1	**518-6584**	3	NUT-HEX (M8X1.25-THD)	
	4	1	**518-8390**	3	BOLT-HEAD	
	5	1	**490-1119**	1	CONTROL GP-SERVICE BRAKE	
		1	**380-2371**	1	VALVE GP-BRAKE CONTROL	
	6	1	**518-4417**	2	WASHER	
	7	1	**526-2238**	1	BRACKET	
	8	1	**535-7149**	1	BRACKET AS	

M - METRIC PART

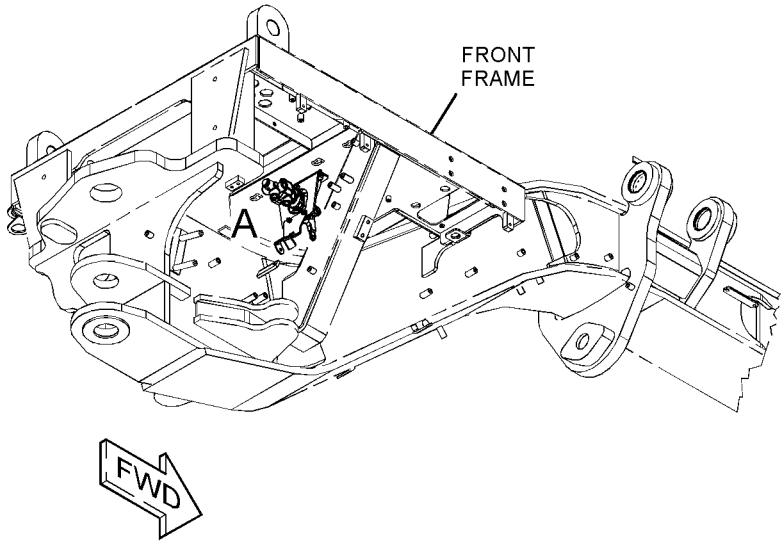

(VIEWED FROM BOTTOM)

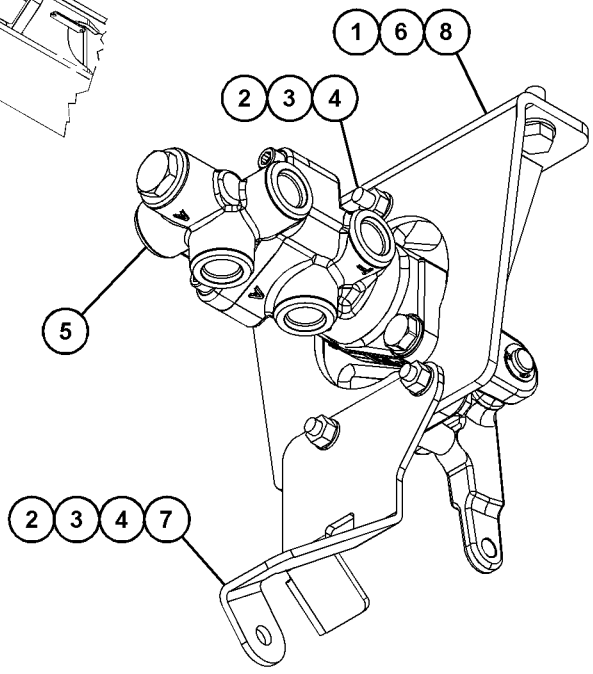

VIEW OF AREA A

GRAPHIC #1 <END> g06374301

535-7147 LINES GP-AIR TANK

S/N: W921-UP

PART OF 527-9463 INSTALLATION AR-ENGINE

SMCS-4272 **i07593168**

NOTE	REF NO	GRAPHIC REF	PART NUMBER	QTY	PART NAME 1 2 3 4 5 6 (PRODUCT LEVEL)	SEE PAGE
M	1	1	**518-2310**	6	BOLT (M10X1.5X25-MM)	
M	2	1	**518-2311**	1	BOLT (M10X1.5X30-MM)	
M	3	1	**518-6585**	1	NUT-HEX (M10X1.5-THD)	
M	4	1	**518-8387**	4	BOLT (M8X1.25X20-MM)	
	5	1	**518-9736**	4	WASHER (8.8X20.5X2-MM THK)	
	6	1	*148-8310*	1	ADAPTER AS	
		1	**8T-0151**	1	ADAPTER	
		1	**3J-1907**	1	SEAL-O-RING	
	7	1	*164-5567*	1	COUPLER AS-QUICK DISCONNECT (MALE)	
		1	**6V-3965**	1	FITTING (QUICK DISCONNECT)	
		1	**214-7568**	1	SEAL-O-RING	
	8	1	*165-4931*	1	ELBOW AS	
		1	**6V-8077**	1	ELBOW	
		1	**3J-1907**	1	SEAL-O-RING	
	9	1	*169-5863*	1	ADAPTER AS	
		1	**7X-7945**	1	ADAPTER (9/16-18-THD)	
		1	**4J-5477**	1	SEAL-O-RING	
	10	1	**171-8728**	1	CONNECTOR	
	11	1	**202-5371**	1	SEAL	
	12	1	**187-8001**	1	SEAL	
	13	1	**1S-0994**	1	CLIP (LOOP)	
J	14	1	**205-7187**	1	GOVERNOR AS (AIR COMPRESSOR)	
		1	**2S-2923**	1	COVER AS	
		1	**2K-8198**	1	SEAL-O-RING	
	15	1	**228-7088**	3	SEAL-O-RING	
	16	1	**228-7090**	1	SEAL-O-RING	
	17	1	**246-6651**	1	TANK-AIR	
	18	1	**253-1383**	1	ELBOW AS	
	19	1	**258-8589**	1	ADAPTER	
	20	1	**2G-1034**	1	VALVE-AIR RELIEF	
	21	1	**2P-1279**	1	LOCKNUT (9/16-18-THD)	
	22	1	*352-6493*	1	ELBOW AS	
		1	**2T-2396**	1	ELBOW	
		1	**228-7090**	1	SEAL-O-RING	
	23	1	**377-9563**	1	ADAPTER-ELBOW	
	24	1	**377-9577**	1	ADAPTER-ELBOW	
	25	1	*463-4869*	1	BRACKET AS	
M		1	**8T-3490**	1	NUT-WELD (M10X1.5-THD)	
	26	1	**463-4870**	1	BRACKET	
	27	1	**518-4417**	8	WASHER	
I	28	1	**536-3151**	1	HOSE AS	
I	29	1	**536-3152**	1	HOSE AS	
I	30	1	**536-3153**	1	HOSE AS	
	31	1	**551-1797**	1	HOSE	
	32	1	**5D-1026**	1	CLAMP-BAND	
	33	1	**5F-5434**	1	VALVE AS-VENT	
	34	1	**5M-6213**	1	PLUG-PIPE (1/4-18-THD)	

535-7147 **LINES GP-AIR TANK (**contd.**)** **i07593168**

NOTE	REF NO	GRAPHIC REF	PART NUMBER	QTY	PART NAME 1 2 3 4 5 6 (PRODUCT LEVEL)	SEE PAGE
	35	1	**5P-8998**	1	FITTING	
	36	1	**5P-9297**	2	CLIP (LOOP)	
	37	1	**6K-1019**	1	NIPPLE-PIPE	
	38	1	**6V-0852**	1	CAP-DUST	
	39	1	**8T-6757**	4	PLUG-PIPE	
	40	1	**9D-6663**	1	VALVE-DRAIN	
	41	1	**9M-8406**	1	CLIP (LOOP)	
					AVAILABLE REPAIR KIT(S):	
J			**9M-0402**	1	KIT-GOVERNOR OVERHAUL (AIR COMPRESSOR)	
					(INCLUDES GROMMETS, FILTERS, SPRING, VALVE, COVER, RING, & GASKET)	

I - REFER TO HYDRAULIC INFORMATION SYSTEM
J - KIT MARKED J SERVICES PART(S) MARKED J
M - METRIC PART

535-7147 **LINES GP-AIR TANK (**contd.**)** **i07593168**

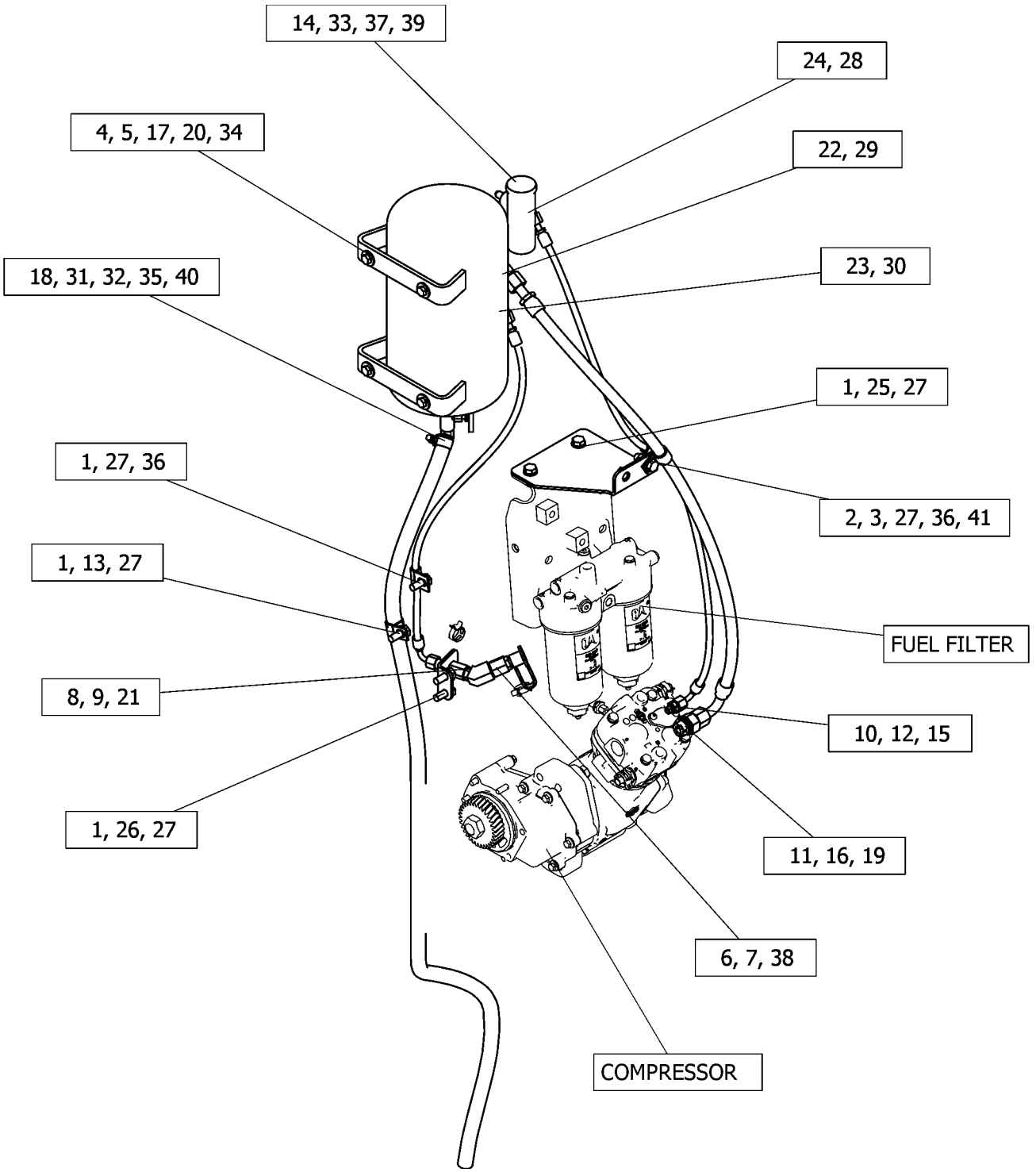

GRAPHIC #1 <END> g06375232

535-7146 LINES GP-SERVICE BRAKE

S/N: W921-UP

PART OF 535-7143 HYDRAULIC AR

SMCS-4257 **i07589170**

NOTE	REF NO	GRAPHIC REF	PART NUMBER	QTY	PART NAME 1 2 3 4 5 6 (PRODUCT LEVEL)	SEE PAGE
	1	1,2	*148-8428*	2	TEE AS	
					(EACH INCLUDES)	
		1,2	**3K-0360**	1	SEAL-O-RING	
		1,2	**6V-8398**	2	SEAL-O-RING	
		1,2	**6V-8782**	1	TEE	
	2	1	*148-8434*	1	TEE AS	
		1	**6V-8397**	2	SEAL-O-RING	
		1	**6V-9843**	1	TEE	
	3	1	*148-8444*	1	TEE AS-SWIVEL	
		1	**6V-8398**	2	SEAL-O-RING	
		1	**6V-9837**	1	TEE-SWIVEL	
	4	2	*150-4037*	1	TEE AS	
		2	**6V-8398**	2	SEAL-O-RING	
		2	**6V-9844**	1	TEE-SWIVEL	
M	5	1,2	**518-2309**	6	BOLT (M10X1.5X20-MM)	
M	6	2	**518-2310**	1	BOLT (M10X1.5X25-MM)	
M	7	1	**518-2311**	8	BOLT (M10X1.5X30-MM)	
M	8	1	**518-2313**	4	BOLT-HEAD (M10X1.5X40-MM)	
M	9	2	**518-2314**	1	BOLT (M10X1.5X50-MM)	
M	10	1,2	**518-6585**	8	NUT-HEX (M10X1.5-THD)	
M	11	2	**519-0992**	2	BOLT (M10X1.5X60-MM)	
	12	1	**129-8090**	1	ACTUATOR AS-PARKING BRAKE	
	13	1,2	**132-2453**	2	UNION	
	14	2	**132-7551**	1	SPACER (11X19X6-MM THK)	
	15	2	*148-8353*	1	ELBOW AS	
		2	**3J-1907**	1	SEAL-O-RING	
		2	**6V-8397**	1	SEAL-O-RING	
		2	**6V-9001**	1	ELBOW	
	16	1	*148-8354*	2	ELBOW AS	
					(EACH INCLUDES)	
		1	**3K-0360**	1	SEAL-O-RING	
		1	**6V-8398**	1	SEAL-O-RING	
		1	**6V-9002**	1	ELBOW	
	17	2	*148-8364*	3	ELBOW AS	
					(EACH INCLUDES)	
		2	**3K-0360**	1	SEAL-O-RING	
		2	**6V-8398**	1	SEAL-O-RING	
		2	**6V-8625**	1	ELBOW	
	18	1	*148-8365*	5	ELBOW AS	
					(EACH INCLUDES)	
		1	**3J-1907**	1	SEAL-O-RING	
		1	**6V-8398**	1	SEAL-O-RING	
		1	**8T-6876**	1	ELBOW	
	19	2	*148-8370*	1	ELBOW AS	
		2	**6V-8398**	1	SEAL-O-RING	
		2	**6V-9851**	1	ELBOW	
	20	1	*148-8407*	2	PLUG AS	
					(EACH INCLUDES)	

535-7146 **LINES GP-SERVICE BRAKE (**contd.**)** **i07589170**

NOTE	REF NO	GRAPHIC REF	PART NUMBER	QTY	PART NAME 1 2 3 4 5 6 (PRODUCT LEVEL)	SEE PAGE
		1	**3J-1907**	1	SEAL-O-RING	
		1	**9S-4191**	1	PLUG (9/16-18-THD)	
	21	1,2	*150-4043*	8	CONNECTOR AS	
					(EACH INCLUDES)	
		1,2	**3J-1907**	1	SEAL-O-RING	
		1,2	**6V-8398**	1	SEAL-O-RING	
		1,2	**6V-9873**	1	CONNECTOR	
	22	1	*164-5544*	1	ELBOW AS	
		1	**3E-2333**	1	ELBOW	
		1	**6V-8398**	1	SEAL-O-RING	
	23	1,2	*164-5567*	5	COUPLER AS-QUICK DISCONNECT (MALE)	
					(EACH INCLUDES)	
		1,2	**6V-3965**	1	FITTING (QUICK DISCONNECT)	
		1,2	**214-7568**	1	SEAL-O-RING	
M	24	1	**180-3998**	1	STUD (M10X1.5X55-MM)	
	25	1	*185-6645*	1	UNION AS	
		1	**6V-8398**	2	SEAL-O-RING	
		1	**185-6644**	1	UNION	
	26	1	*211-4039*	2	TEE AS	
					(EACH INCLUDES)	
		1	**2M-9780**	1	SEAL-O-RING	
		1	**6V-8398**	1	SEAL-O-RING	
		1	**171-0714**	1	TEE	
M	27	2	**259-7140**	1	STUD-TAPERLOCK (M10X1.5X80-MM)	
	28	2	**302-3908**	2	SPACER (11X20X30-MM THK)	
	29	1	**302-5740**	1	END-YOKE ROD	
	30	1	**309-6887**	4	GUARD	
	31	1	**310-6179**	2	PLATE	
	32	2	**313-9198**	1	CLIP (LOOP)	
	33	1	**318-9105**	1	TUBE AS	
	34	1	**318-9128**	1	TUBE AS	
M	35	1	**329-3356**	2	NUT (M12X1.75-THD)	
Y	36	2	**357-0377**	1	MANIFOLD GP-CONTROL (24-VDC) (BRAKE)	414
	37	1	**372-2526**	2	BLOCK	
	38	1	**3B-4617**	1	PIN-COTTER	
I	39	2	**436-1801**	1	HOSE AS	
I	40	2	**440-1281**	1	HOSE AS	
	41	1	*451-0484*	1	ELBOW AS	
		1	**6V-8398**	2	SEAL-O-RING	
		1	**184-6892**	1	ELBOW	
	43	2	*459-0593*	1	TEE AS	
		2	**3K-0360**	1	SEAL-O-RING	
		2	**6V-8398**	2	SEAL-O-RING	
		2	**313-3438**	1	ELBOW	
	44	1	**4K-1540**	1	PIN-CLEVIS	
	45	1,2	**518-4417**	27	WASHER	
I	46	2	**535-7156**	1	HOSE AS	
I	47	2	**535-7157**	1	HOSE AS	
	48	1	**535-7162**	1	TUBE AS	
	49	1	**536-2668**	1	TUBE AS	
I	50	1	**548-9123**	1	HOSE AS	
M	51	1	**549-1055**	1	STUD (M10X1.5X192-MM)	

535-7146 **LINES GP-SERVICE BRAKE** (contd.) **i07589170**

NOTE	REF NO	GRAPHIC REF	PART NUMBER	QTY	PART NAME 1 2 3 4 5 6 (PRODUCT LEVEL)	SEE PAGE
	52	1,2	**552-6766**	5	CLIP (LOOP)	
	53	1	**552-6767**	1	CLIP (LOOP)	
I	54	1	**556-4934**	2	HOSE AS	
I	55	2	**558-5980**	1	HOSE AS	
I	56	2	**558-6072**	1	HOSE AS	
I	57	1	**565-1993**	1	HOSE AS	
I	58	1	**565-1994**	1	HOSE AS	
I	59	1	**565-1995**	1	HOSE AS	
	60	1	**5K-3294**	8	CLIP	
	61	1	**5P-1076**	2	WASHER-HARD (13.5X30X4-MM THK)	
	62	1,2	**6V-0852**	5	CAP-DUST	
	63	1	**6V-8397**	1	SEAL-O-RING	
	64	1	**6V-9169**	2	NUT (13/16-16-THD)	
	65	1,2	**8M-2773**	8	CLIP (LOOP)	
	66	1	**8T-4223**	1	WASHER-HARD (13.5X25.5X3-MM THK)	

I - REFER TO HYDRAULIC INFORMATION SYSTEM
M - METRIC PART
Y - SEPARATE ILLUSTRATION

535-7146 **LINES GP-SERVICE BRAKE (**contd.**)** **i07589170**

REFER TO ALL ILLUSTRATIONS OF
THIS GROUP FOR AUXILIARY VIEWS

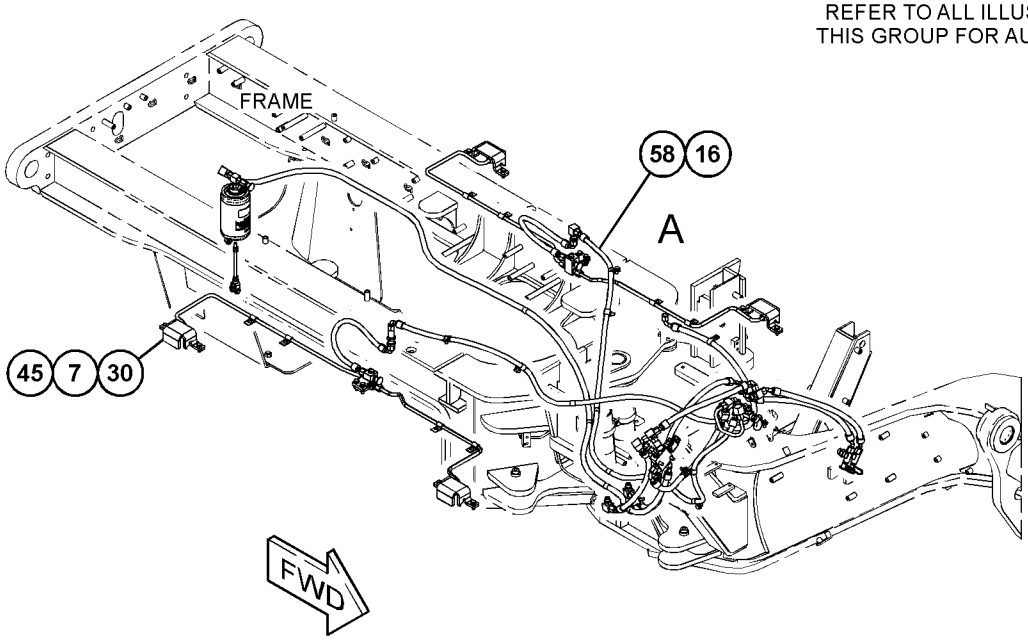

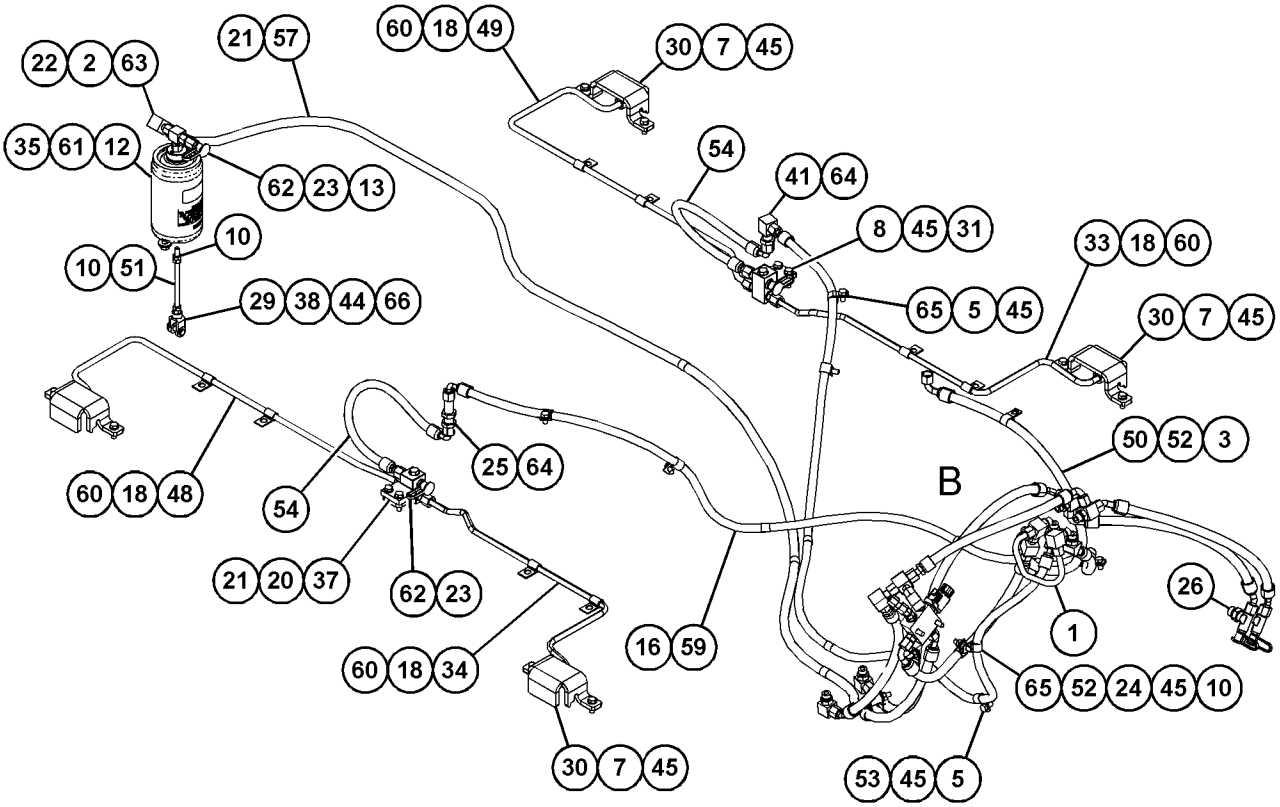

VIEW OF AREA A

GRAPHIC #1 g06380183

535-7146 **LINES GP-SERVICE BRAKE (**contd.**)** **i07589170**

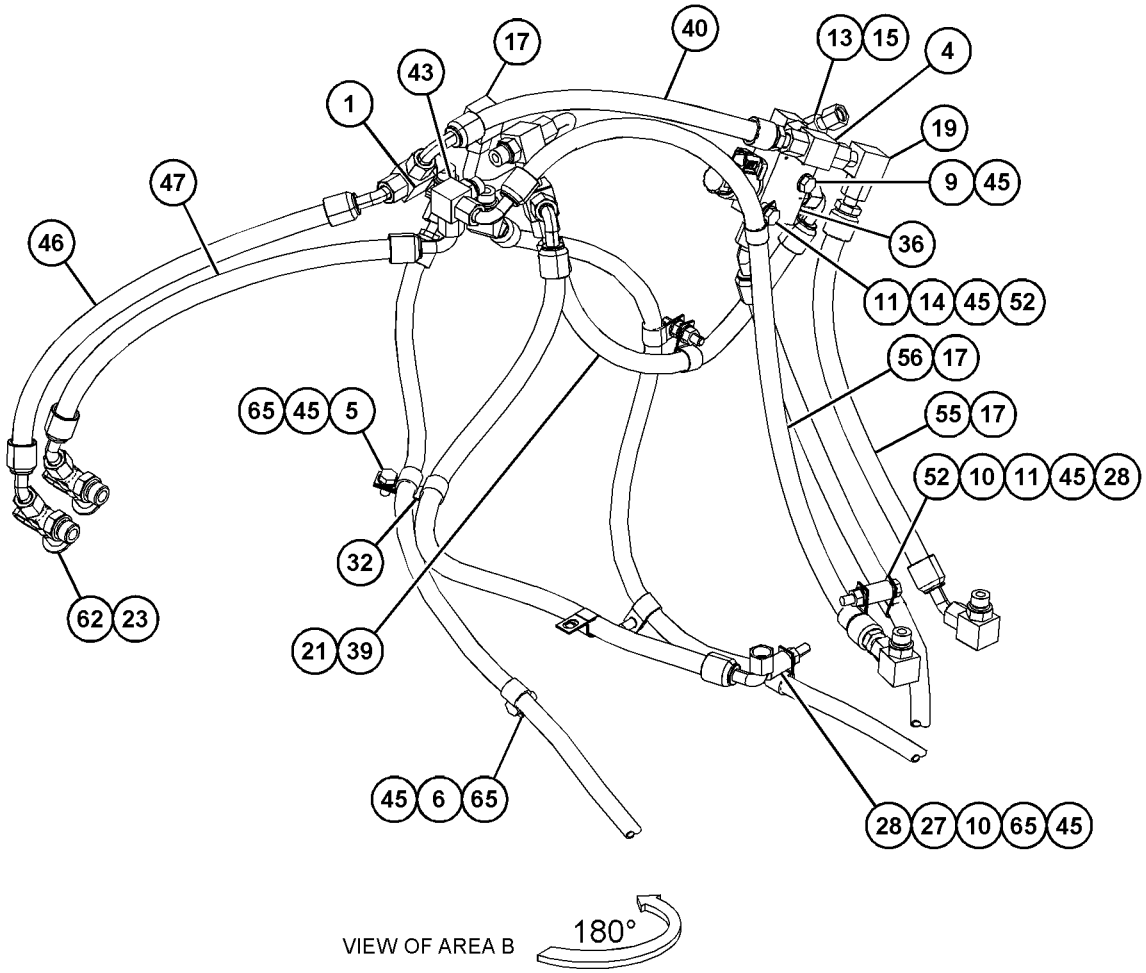

GRAPHIC #2 <END> g06377744

535-7190 ACCUMULATOR & MTG GP-HYDRAULIC

S/N: W921-UP

PART OF 537-5630 STEERING AR-SECONDARY

SMCS-5077 **i07578880**

NOTE	REF NO	GRAPHIC REF	PART NUMBER	QTY	PART NAME 1 2 3 4 5 6 (PRODUCT LEVEL)	SEE PAGE
	1	1	**518-4418**	2	WASHER (13X24X2.5-MM THK)	
M	2	1	**518-6586**	1	NUT (M12X1.75-THD)	
	3	1	**518-9737**	2	WASHER (10.5X30X2.5-MM THK)	
M	4	1	**521-2260**	2	BOLT (M10X1.5X30-MM)	
M	5	1	**524-3271**	5	BOLT (M10X1.5X25-MM)	
	6	1	**518-2320**	1	BOLT (M12X1.75X35-MM)	
	7	1	**518-4417**	5	WASHER	
Y	8	1	*519-8071*	1	ACCUMULATOR GP-HYDRAULIC	351
	9	1	**537-1612**	1	BRACKET	
	10	1	**548-9939**	1	BRACKET AS	

M - METRIC PART
Y - SEPARATE ILLUSTRATION

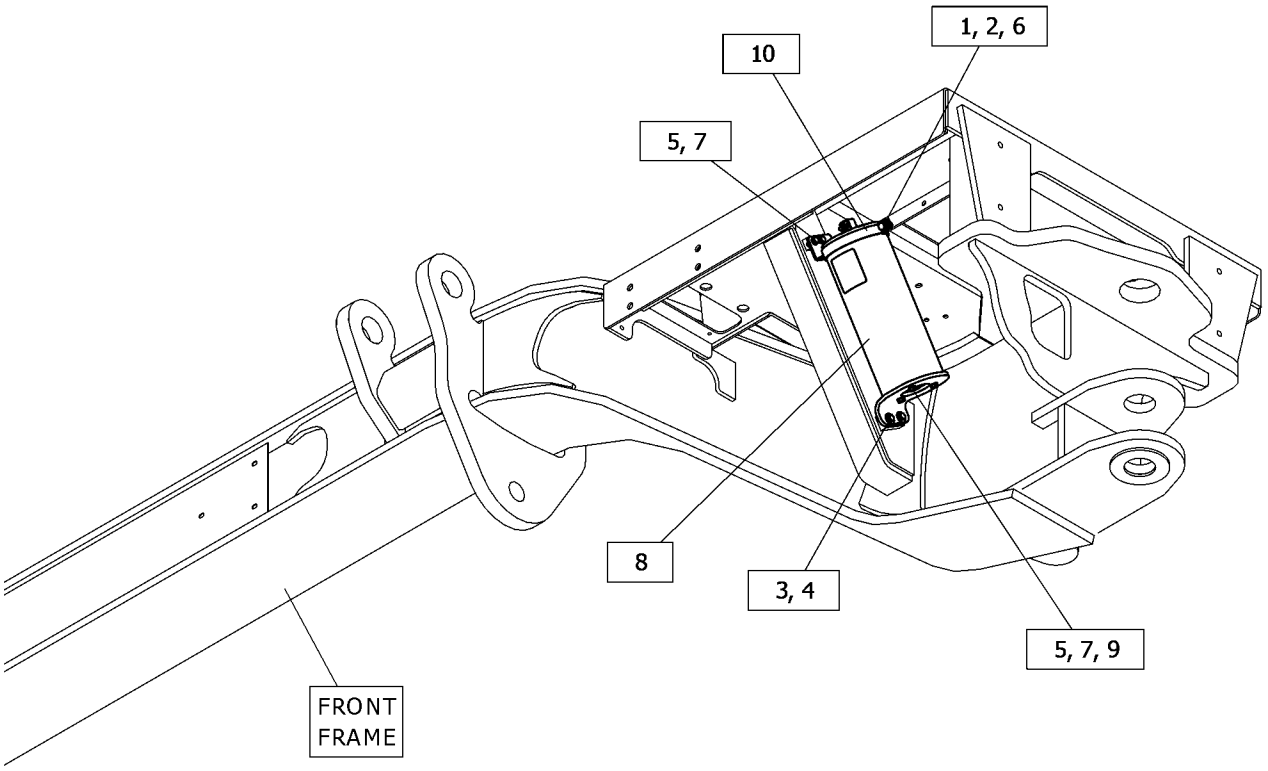

GRAPHIC #1 <END> g06374192

535-7194 ACCUMULATOR & MTG GP-HYDRAULIC

S/N: W921-UP

PART OF 537-5642 ACCUMULATOR AR-BLADE CUSHION

SMCS-5077 **i07579035**

NOTE	REF NO	GRAPHIC REF	PART NUMBER	QTY	PART NAME 1 2 3 4 5 6 (PRODUCT LEVEL)	SEE PAGE
	1	1	**8T-7971**	2	WASHER-HARD (13.5X25.5X5-MM THK)	
M	2	1	**518-6585**	3	NUT-HEX (M10X1.5-THD)	
	3	1	**162-7449**	2	CLAMP	
Y	4	1	*162-7450*	2	ACCUMULATOR GP-HYDRAULIC (CHARGED)	350
	5	1	**418-9782**	2	SPACER (13.5X22X81-MM THK)	
	6	1	**518-4417**	3	WASHER	
	7	1	**518-4418**	2	WASHER (13X24X2.5-MM THK)	
	8	1	**538-4732**	1	PLATE AS	
M		1	**8T-3597**	2	NUT-WELD (M12X1.75-THD)	
M	9	1	**8T-5001**	2	BOLT (M12X1.75X130-MM)	

M - METRIC PART
Y - SEPARATE ILLUSTRATION

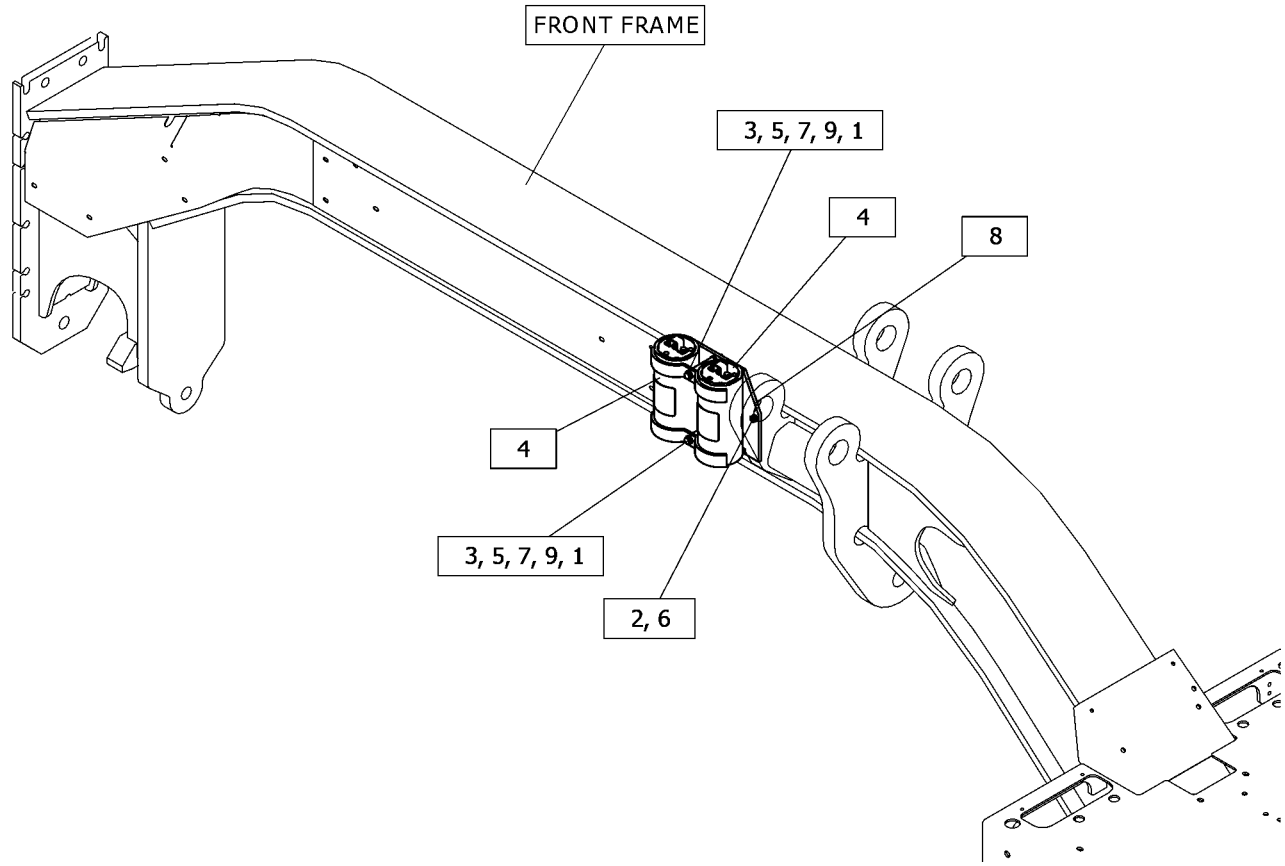

GRAPHIC #1 <END> g06374207

557-9590 ACCUMULATOR & MTG GP-HYDRAULIC–BRAKE

S/N: W921-UP

PART OF 535-7143 HYDRAULIC AR

SMCS-5077 **i07588836**

NOTE	REF NO	GRAPHIC REF	PART NUMBER	QTY	PART NAME 1 2 3 4 5 6 (PRODUCT LEVEL)	SEE PAGE
M	1	1	**518-2309**	2	BOLT (M10X1.5X20-MM)	
M	2	1	**518-2311**	1	BOLT (M10X1.5X30-MM)	
	3	1	**518-2312**	4	BOLT (M10X1.5X35-MM)	
	4	1	**518-9737**	3	WASHER (10.5X30X2.5-MM THK)	
	5	1	**273-2940**	2	CLAMP	
Y	6	1	*348-9255*	2	ACCUMULATOR GP-BRAKE (CHARGED)	335
	7	1	**518-4417**	6	WASHER	
	8	1	**535-7150**	1	BRACKET AS	
	9	1	**561-4539**	1	BRACKET AS	

M - METRIC PART
Y - SEPARATE ILLUSTRATION

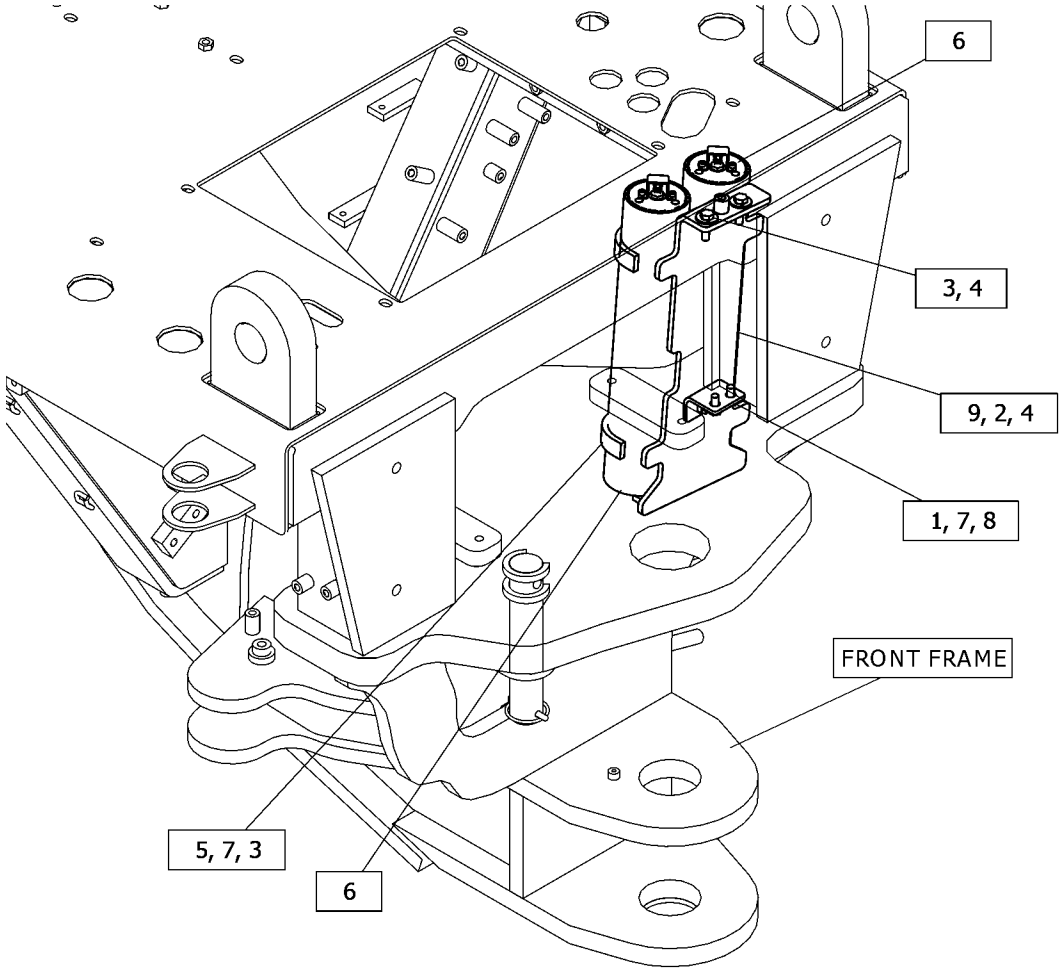

GRAPHIC #1 <END> g06374015

537-5642 ACCUMULATOR AR-BLADE CUSHION

S/N: W921-UP

SMCS-5077, 5081

i07552492

NOTE	PART NUMBER	QTY	PART NAME 1 2 3 4 5 6 (PRODUCT LEVEL)	SEE PAGE
Y	*535-7194*	1	ACCUMULATOR & MTG GP-HYDRAULIC	347
Y	*535-7185*	1	LINES GP-ACCUMULATOR	375
Y	*551-0457*	1	WIRING GP-BLADE CUSHION	216

Y - SEPARATE ILLUSTRATION

<END>

162-7450 ACCUMULATOR GP-HYDRAULIC—CHARGED

S/N: W921-UP

PART OF 535-7194 ACCUMULATOR & MTG GP-HYDRAULIC

SMCS-5077 **i07579036**

NOTE	REF NO	GRAPHIC REF	PART NUMBER	QTY	PART NAME 1 2 3 4 5 6 (PRODUCT LEVEL)	SEE PAGE
	1	1	**157-5537**	1	PISTON	
	2	1	**170-0493**	1	KIT-SEAL (HYDRAULIC ACCUMULATOR)	
					(INCLUDES SEAL, O-RINGS & WASHERS)	
	3	1	**222-2367**	1	VALVE GP-ACCUMULATOR CHARGING (HYDRAULIC ACCUMULATOR)	
		1	**190-3850**	1	CORE	
	4	1	**111-9110**	1	PROTECTOR-GAS VALVE	
	5	1	**1J-9671**	1	SEAL-O-RING	
	6	1	**5M-3062**	2	BOLT (3/8-16X0.75-IN)	
	7	1	**241-0037**	1	FILM-INFORMATION (HYDRAULIC ACCUMULATOR)	

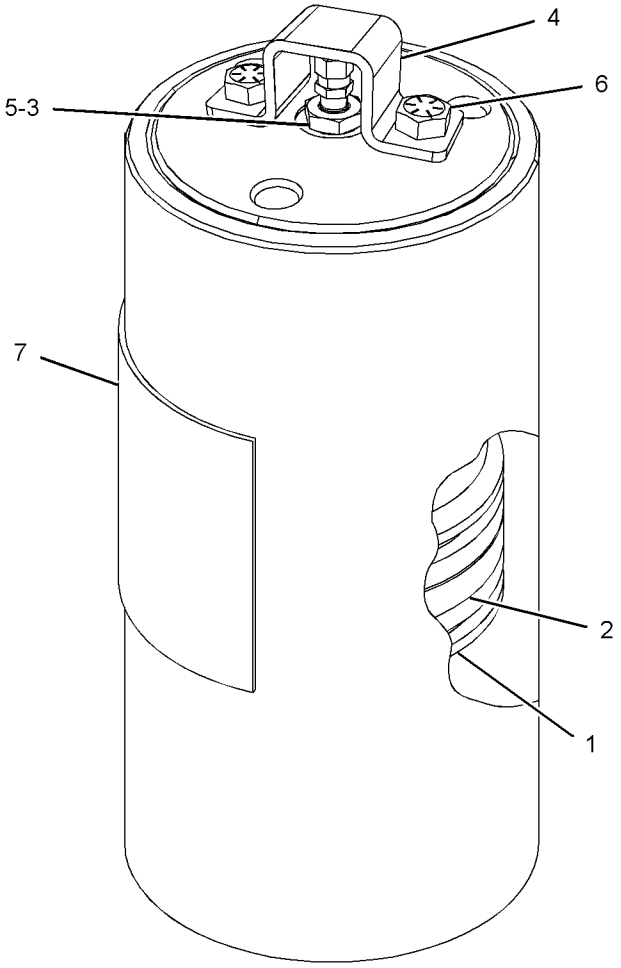

GRAPHIC #1 <END> g03381898

519-8071 ACCUMULATOR GP-HYDRAULIC—CHARGED

S/N: W921-UP

FIELD REPLACEMENT ORDER 519-8072—PAGE: 352

PART OF 535-7190 ACCUMULATOR & MTG GP-HYDRAULIC

SMCS-5077 **i07578889**

NOTE	REF NO	GRAPHIC REF	PART NUMBER	QTY	PART NAME 1 2 3 4 5 6 (PRODUCT LEVEL)	SEE PAGE
	1	1	**222-2367**	1	VALVE GP-ACCUMULATOR CHARGING	
		1	**190-3850**	1	CORE	
	2	1	**241-0037**	1	FILM-INFORMATION (HYDRAULIC ACCUMULATOR)	
	3	1	**310-6493**	1	PLATE	
	4	1	**5M-3062**	2	BOLT (3/8-16X0.75-IN)	
	5	1	**451-2625**	1	SENSOR GP-PRESSURE (HYDRAULIC) (ACCUMULATOR)	
	6	1	**3J-1907**	1	SEAL-O-RING	
					AVAILABLE REPAIR KIT(S):	
			170-0494	1	KIT-SEAL (RIDE CONTROL ACCUMULATOR) (HYDRAULIC ACCUMULATOR)	
					(INCLUDES RINGS & SEALS)	

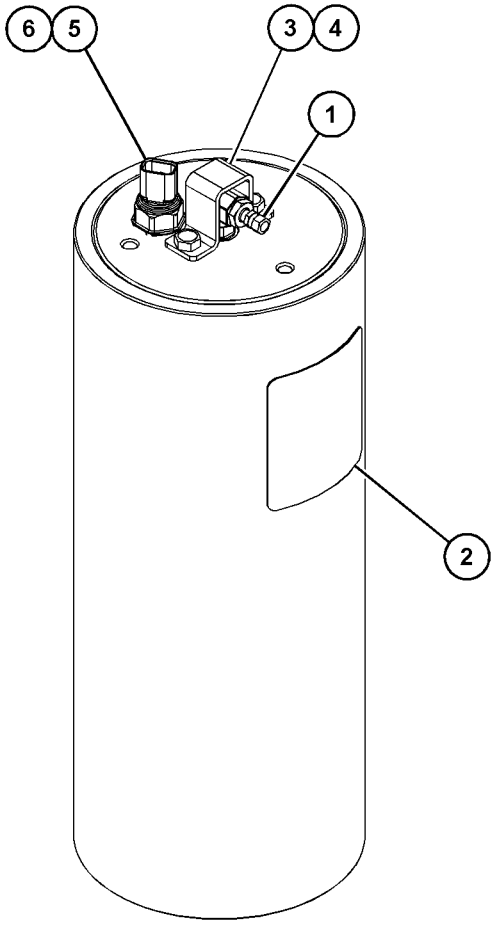

GRAPHIC #1 <END> g06166017

519-8072 ACCUMULATOR GP-HYDRAULIC—UNCHARGED

S/N: W921-UP

FIELD REPLACEMENT FOR 519-8071

SMCS-5077 **i07578902**

NOTE	REF NO	GRAPHIC REF	PART NUMBER	QTY	PART NAME 1 2 3 4 5 6 (PRODUCT LEVEL)	SEE PAGE
	1	1	**3J-1907**	1	SEAL-O-RING	
	2	1	**222-2367**	1	VALVE GP-ACCUMULATOR CHARGING	
		1	**190-3850**	1	CORE	
	3	1	**241-0037**	1	FILM-INFORMATION (HYDRAULIC ACCUMULATOR)	
	4	1	**310-6493**	1	PLATE	
	5	1	**5M-3062**	2	BOLT (3/8-16X0.75-IN)	
	6	1	**451-2625**	1	SENSOR GP-PRESSURE (HYDRAULIC)	
					AVAILABLE REPAIR KIT(S):	
			170-0494	1	KIT-SEAL (RIDE CONTROL ACCUMULATOR)	
					(INCLUDES O-RINGS, BACKUP WASHERS, WEAR RINGS, O-RING SEALS, BACKUP SEALS, O-RING VALVE, BAG KIT & LABEL KIT)	

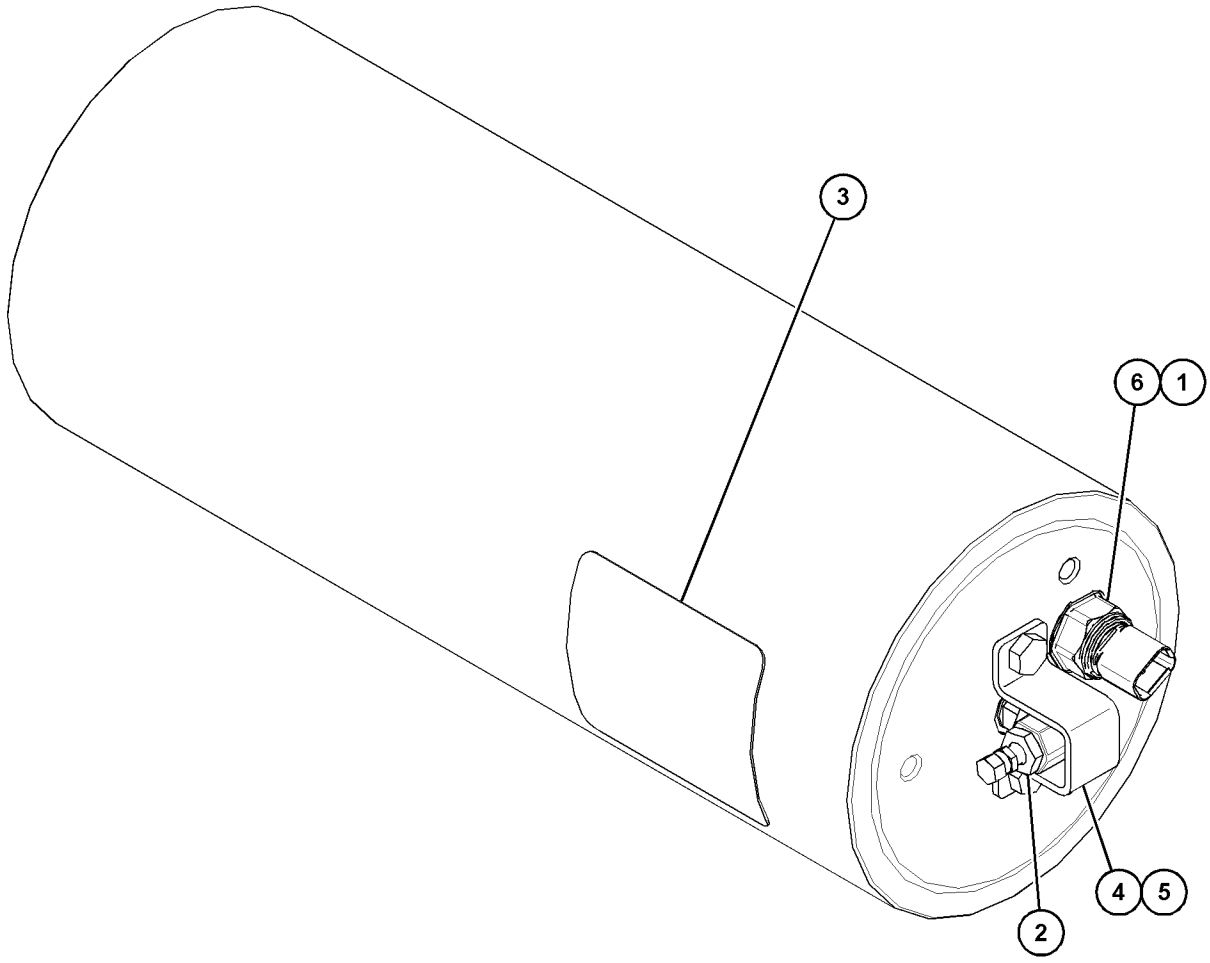

GRAPHIC #1 <END> g06195158

537-5601 CONTROL AR-HYDRAULIC

S/N: W921-UP

SMCS-5050 **i07559126**

NOTE	PART NUMBER	QTY	PART NAME 1 2 3 4 5 6 (PRODUCT LEVEL)	SEE PAGE
Y	*535-6617*	1	VALVE & LINKAGE GP (RIPPER)	425
Y	*538-4744*	1	VALVE GP-CONTROL	446

Y - SEPARATE ILLUSTRATION

<END>

537-5602 CONTROL AR-HYDRAULIC

S/N: W921-UP
FOR USE WITH RIPPER
CANNOT BE USED WITH FRONT BLADE

SMCS-5050 **i07558856**

NOTE	PART NUMBER	QTY	PART NAME 1 2 3 4 5 6 (PRODUCT LEVEL)	SEE PAGE
Y	*535-7192*	1	LINES GP-HYDRAULIC	386
Y	*526-2235*	1	VALVE & LINKAGE GP (RIPPER)	423
Y	*538-4741*	1	VALVE GP-CONTROL (RIPPER)	442

Y - SEPARATE ILLUSTRATION

<END>

537-5605 CONTROL AR-HYDRAULIC

S/N: W921-UP
FOR USE WITH RIPPER AND FRONT BLADE

SMCS-5050 **i07558798**

NOTE	PART NUMBER	QTY	PART NAME 1 2 3 4 5 6 (PRODUCT LEVEL)	SEE PAGE
Y	*535-7192*	1	LINES GP-HYDRAULIC	386
Y	*535-7193*	1	LINES GP-HYDRAULIC	388
Y	*536-8936*	1	VALVE & LINKAGE GP (PLOW DOZER, RIPPER)	427
Y	*538-4742*	1	VALVE GP-CONTROL (PLOW DOZER, RIPPER)	444

Y - SEPARATE ILLUSTRATION

<END>

535-7169 CYLINDER & MTG GP-ARTICULATION

S/N: W921-UP

PART OF 535-7200 HYDRAULIC AR

SMCS-5265 **i07622826**

NOTE	REF NO	GRAPHIC REF	PART NUMBER	QTY	PART NAME 1 2 3 4 5 6 (PRODUCT LEVEL)	SEE PAGE
	1	1	**431-4613**	4	ADAPTER	
M	2	1	**518-2318**	4	BOLT (M12X1.75X25-MM)	
	3	1	**517-7867**	4	SPACER (13X45X6-MM THK)	
	4	1	**522-8262**	4	SHIM	
	5	1	**529-8033**	4	PIN AS	
Y	6	1	**532-9472**	2	CYLINDER GP-ARTICULATION	361

M - METRIC PART
Y - SEPARATE ILLUSTRATION

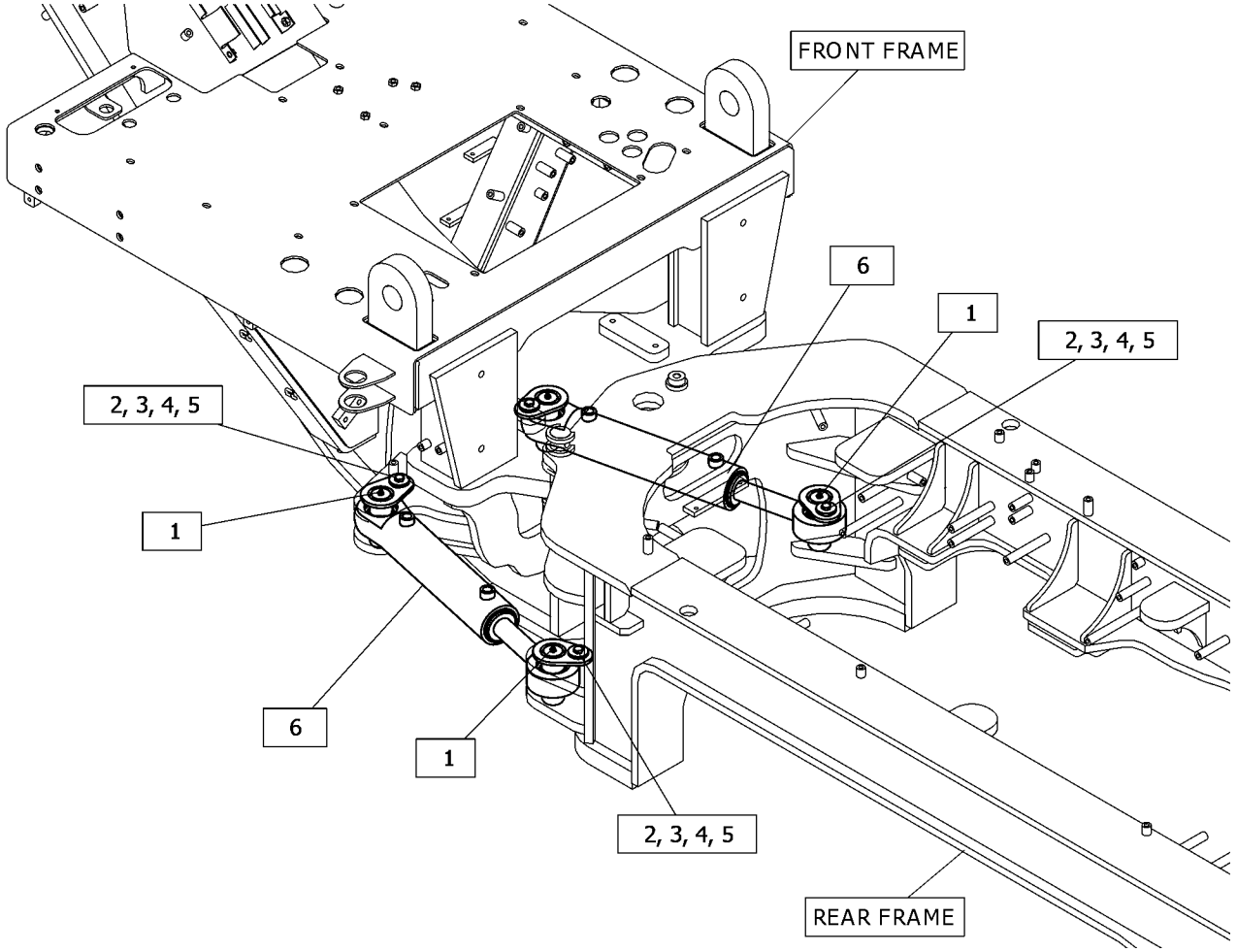

GRAPHIC #1 <END> g06373985

535-7168 CYLINDER & MTG GP-BLADE LIFT

S/N: W921-UP

PART OF 535-7200 HYDRAULIC AR

SMCS-5102 **i07622838**

NOTE	REF NO	GRAPHIC REF	PART NUMBER	QTY	PART NAME 1 2 3 4 5 6 (PRODUCT LEVEL)	SEE PAGE
	1	1	**431-4613**	4	ADAPTER	
B	2	1	**2G-9103**	8	SHIM (0.5-MM THK)	
	3	1	**8T-4123**	4	WASHER (22X35X3.5-MM THK)	
	4	1	**279-5267**	4	INSERT	
	5	1	**3B-8485**	2	ELBOW	
Y	6	1	**532-9473**	2	CYLINDER GP-HYDRAULIC	363
M	7	1	**7X-2565**	4	BOLT (M20X2.5X100-MM)	
M	8	1	**8T-4131**	4	NUT (M20X2.5-THD)	

B - USE AS REQUIRED
M - METRIC PART
Y - SEPARATE ILLUSTRATION

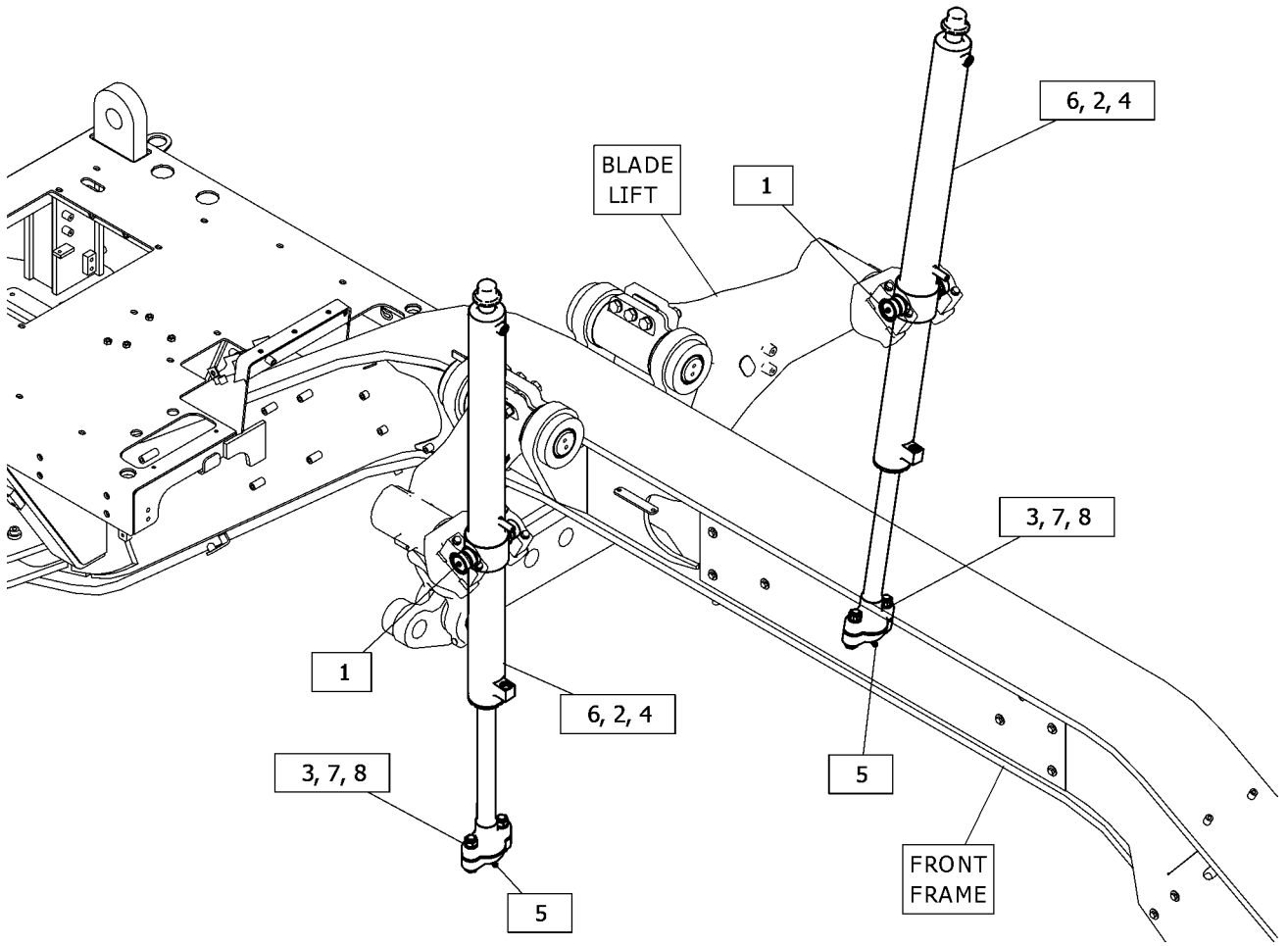

GRAPHIC #1 <END> g06373886

535-7167 CYLINDER & MTG GP-BLADE TIP

S/N: W921-UP

PART OF 537-5628, 537-5629 DRAWBAR AR

SMCS-5106 **i07572793**

NOTE	REF NO	GRAPHIC REF	PART NUMBER	QTY	PART NAME 1 2 3 4 5 6 (PRODUCT LEVEL)	SEE PAGE
	1	1	**431-4613**	2	ADAPTER	
	2	1	**518-9739**	2	WASHER (17.5X30X3.5-MM THK)	
	3	1	**524-3266**	2	BOLT (M16X2X30-MM)	
	4	1	**531-3364**	1	PIN AS	
	5	1	**531-3365**	1	PIN AS	
	6	1	**531-3381**	4	SHIM (0.5-MM THK)	
	7	1	**531-3382**	4	SHIM (1-MM THK)	
	8	1	**531-3383**	4	SHIM (2-MM THK)	
Y	9	1	**532-9476**	1	CYLINDER GP-HYDRAULIC	364

Y - SEPARATE ILLUSTRATION

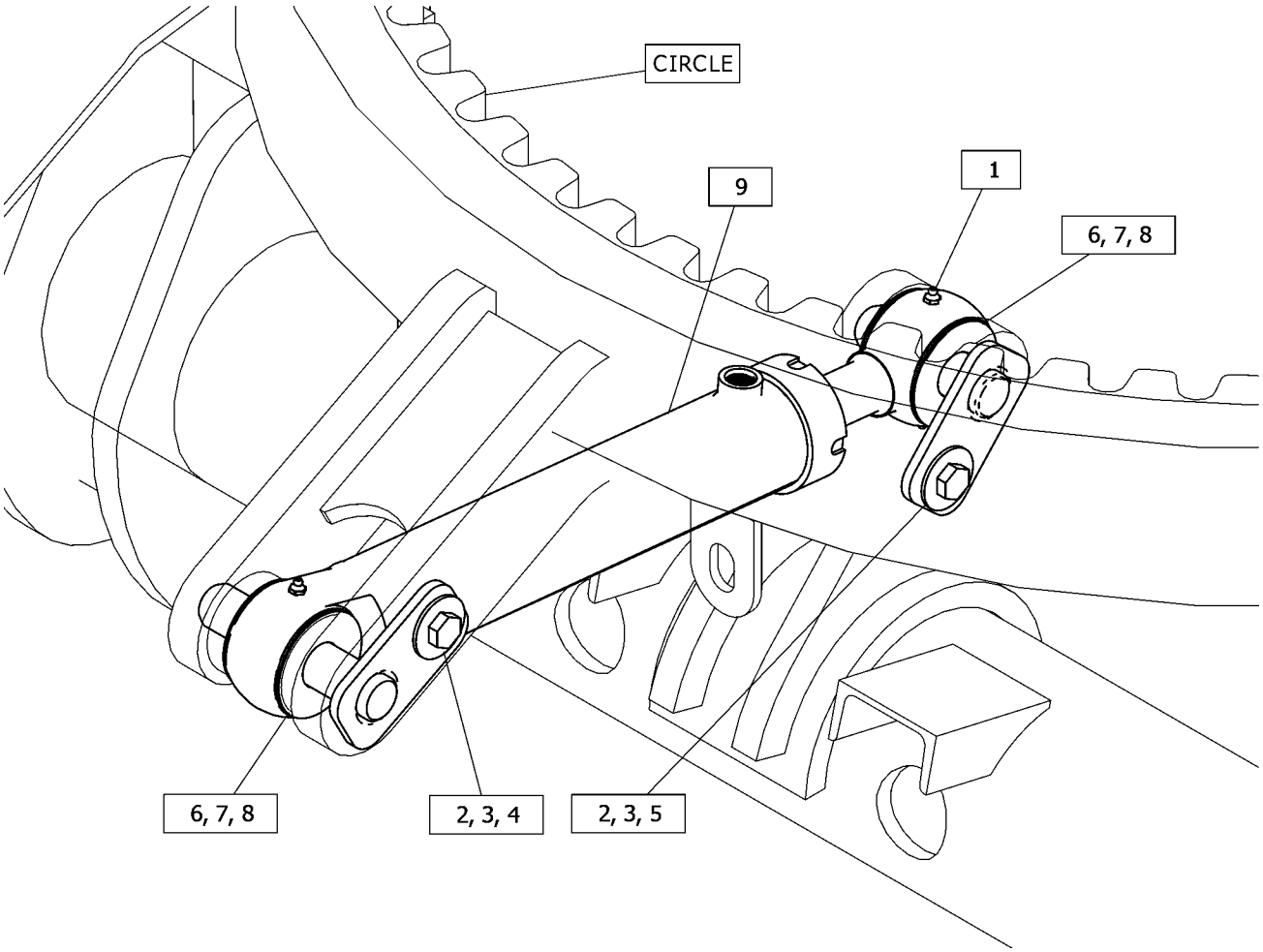

GRAPHIC #1 <END> g06375369

535-7170 CYLINDER & MTG GP-CENTERSHIFT

S/N: W921-UP

PART OF 535-7200 HYDRAULIC AR

SMCS-5223 **i07589282**

NOTE	REF NO	GRAPHIC REF	PART NUMBER	QTY	PART NAME 1 2 3 4 5 6 (PRODUCT LEVEL)	SEE PAGE
B	1	1	**2G-9103**	8	SHIM (0.5-MM THK)	
	2	1	**8T-4123**	4	WASHER (22X35X3.5-MM THK)	
	3	1	**279-5267**	4	INSERT	
	4	1	**3B-8489**	2	FITTING-GREASE (1/8-27 PTF)	
Y	5	1	**532-9474**	1	CYLINDER GP-CENTERSHIFT	362
M	6	1	**7X-2565**	4	BOLT (M20X2.5X100-MM)	
M	7	1	**8T-4131**	4	NUT (M20X2.5-THD)	

B - USE AS REQUIRED
M - METRIC PART
Y - SEPARATE ILLUSTRATION

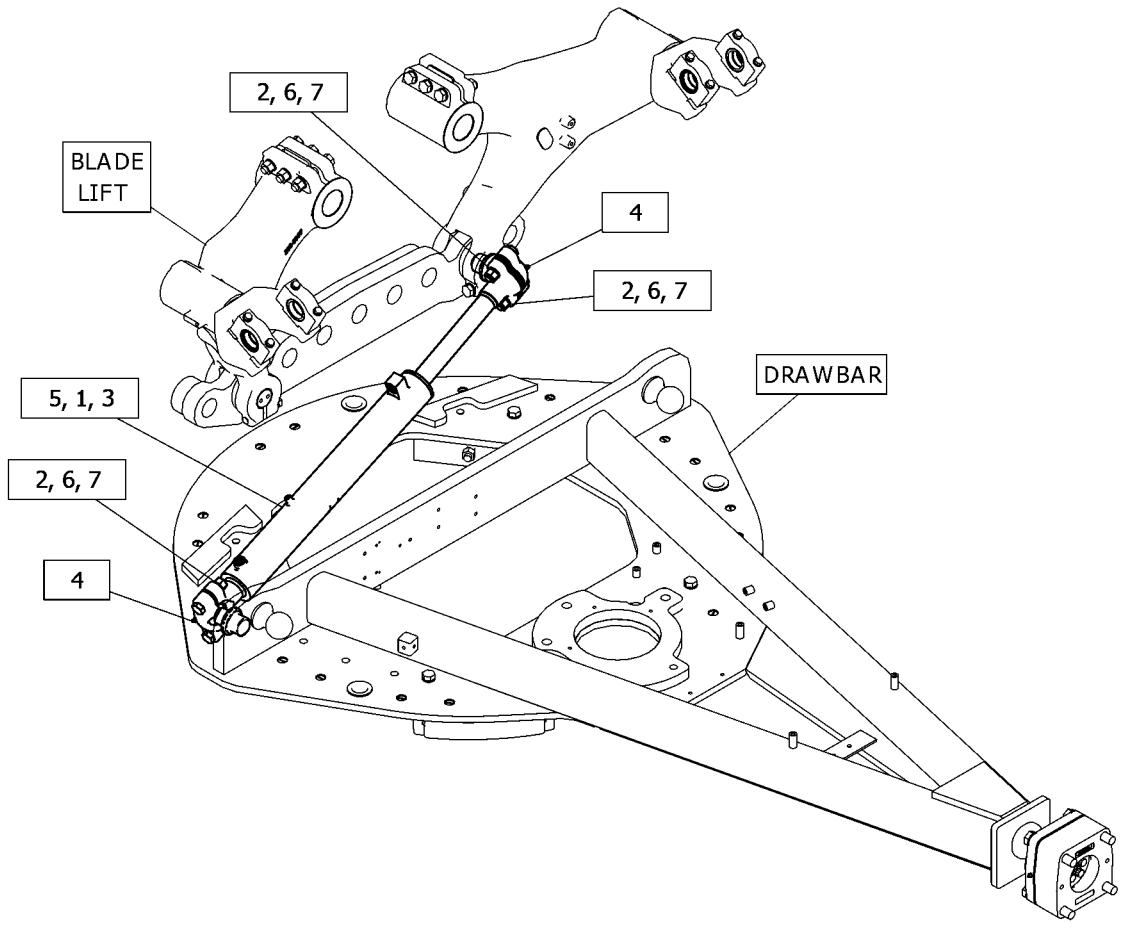

GRAPHIC #1 <END> g06373916

535-7166 CYLINDER & MTG GP-SIDESHIFT

S/N: W921-UP

PART OF 537-5628, 537-5629 DRAWBAR AR

SMCS-5229 **i07572774**

NOTE	REF NO	GRAPHIC REF	PART NUMBER	QTY	PART NAME 1 2 3 4 5 6 (PRODUCT LEVEL)	SEE PAGE
	1	1	**518-8176**	2	PIN	
	2	1	**527-0881**	1	BRACKET AS	
	3	1	**535-9378**	2	PIN (CYLINDER)	
	4	1	**540-4610**	4	WASHER	
Y	5	1	**569-4907**	1	CYLINDER GP-HYDRAULIC (SIDE SHIFT CYLINDER)	367
M	6	1	**7X-2563**	4	BOLT (M20X2.5X60-MM)	
	7	1	**8T-4123**	4	WASHER (22X35X3.5-MM THK)	

M - METRIC PART
Y - SEPARATE ILLUSTRATION

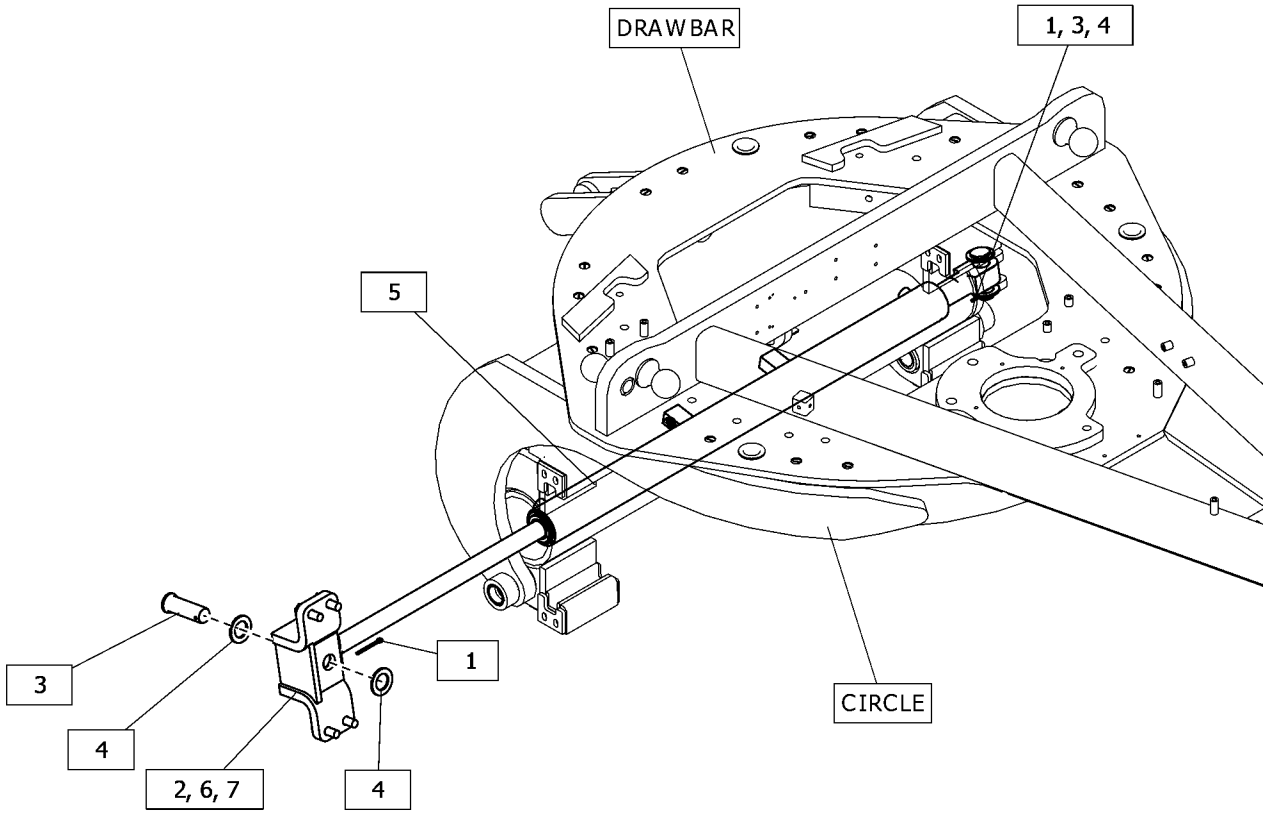

GRAPHIC #1 <END> g06376128

535-7172 CYLINDER & MTG GP-STEERING

S/N: W921-UP

PART OF 535-7200 HYDRAULIC AR

SMCS-4303 **i07589322**

NOTE	REF NO	GRAPHIC REF	PART NUMBER	QTY	PART NAME 1 2 3 4 5 6 (PRODUCT LEVEL)	SEE PAGE
	1	1	**431-4613**	2	ADAPTER	
	2	1	**8D-2429**	2	PIN AS	
	3	1	**8D-2638**	4	SPACER (1.016X1.25X0.39-IN THK)	
	4	1	**131-3736**	2	TIE ROD GP	
					(EACH INCLUDES)	
		1	**2F-8057**	1	NUT-SLOTTED	
		1	**132-1143**	1	SEAL-BOOT	
Y	5	1	**532-9477**	1	CYLINDER GP-STEERING (LH)	368
Y	6	1	**532-9478**	1	CYLINDER GP-STEERING (RH)	369
	7	1	**2H-3786**	2	NUT-JAM (1-14-THD)	
	8	1	**3B-4618**	2	PIN-COTTER	
	9	1	**5S-7379**	2	BOLT (3/8-16X0.875-IN)	
	10	1	**8D-2811**	2	WASHER (1.25X1.94X0.032-IN THK)	
	11	1	**8T-4896**	2	WASHER-HARD (10.2X18.5X2.5-MM THK)	

Y - SEPARATE ILLUSTRATION

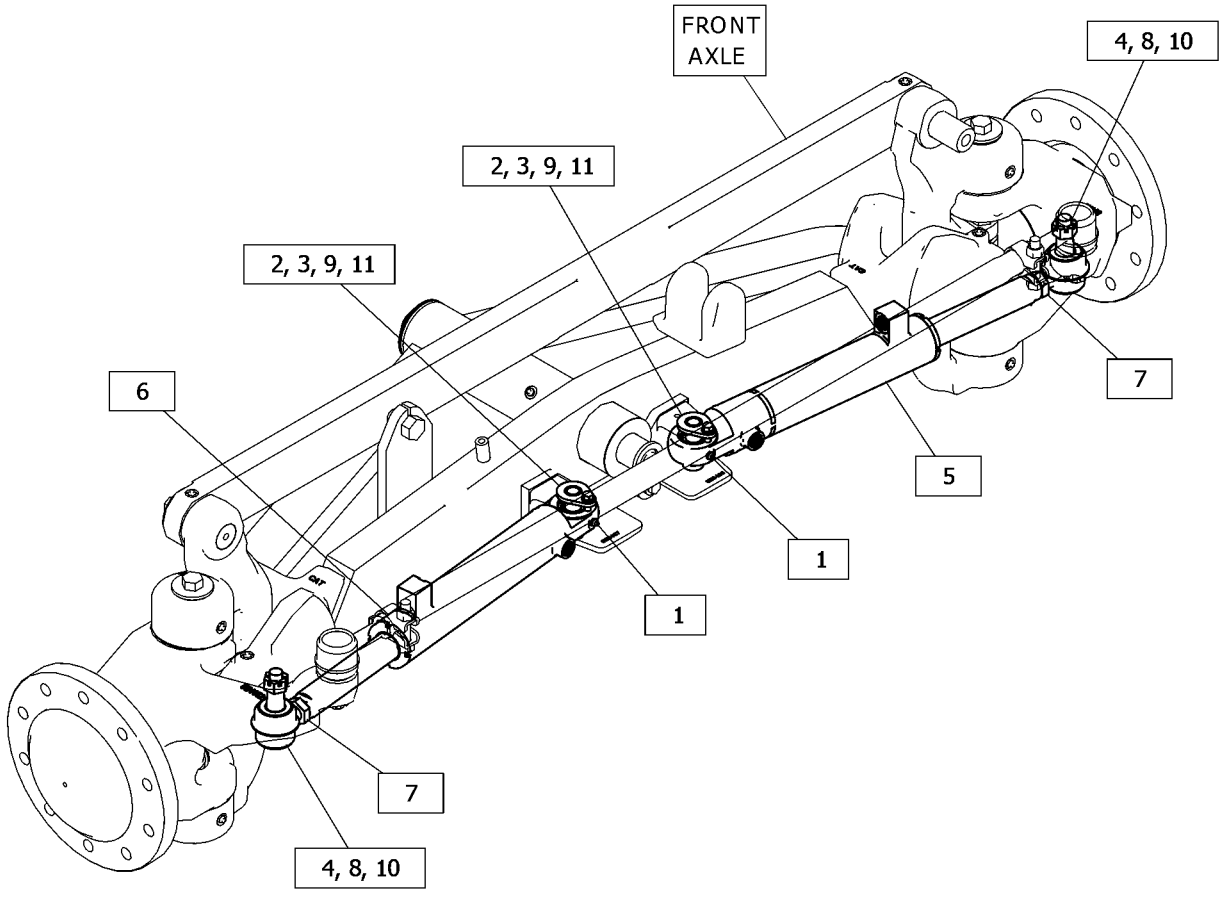

GRAPHIC #1 <END> g06374218

535-7171 CYLINDER & MTG GP-WHEEL LEAN

S/N: W921-UP

PART OF 535-7200 HYDRAULIC AR

SMCS-5211 **i07589313**

NOTE	REF NO	GRAPHIC REF	PART NUMBER	QTY	PART NAME 1 2 3 4 5 6 (PRODUCT LEVEL)	SEE PAGE
	1	1	**431-4613**	2	ADAPTER	
	2	1	**2G-5667**	1	RETAINER	
	3	1	**2G-8609**	1	PIN	
	4	1	**6G-7187**	1	LOCK	
	5	1	**433-7105**	4	SEAL-PIN	
Y	6	1	**532-9479**	1	CYLINDER GP-WHEEL LEAN	370
	7	1	**0S-1592**	1	BOLT (5/8-11X1.25-IN)	
	8	1	**4D-3704**	1	WASHER-HARD (17X30X5-MM THK)	
	9	1	**5P-8245**	2	WASHER-HARD (13.5X25.5X3-MM THK)	
	10	1	**6H-1717**	2	BOLT (1/2-13X1.125-IN)	

Y - SEPARATE ILLUSTRATION

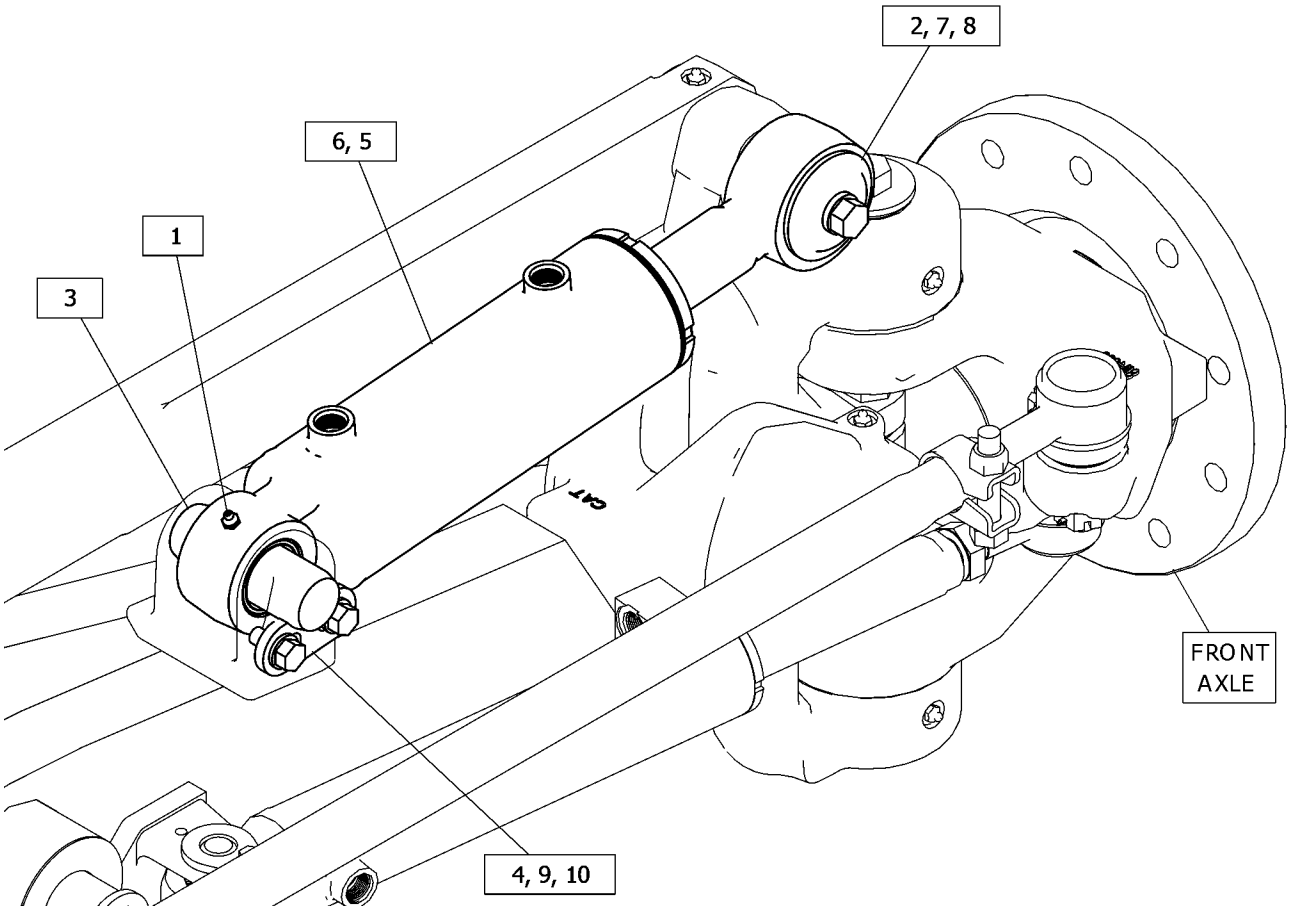

GRAPHIC #1 <END> g06374190

532-9472 CYLINDER GP-ARTICULATION

S/N: W921-UP

PART OF 535-7169 CYLINDER & MTG GP-ARTICULATION

SMCS-5265 **i07589263**

NOTE	REF NO	GRAPHIC REF	PART NUMBER	QTY	PART NAME 1 2 3 4 5 6 (PRODUCT LEVEL)	SEE PAGE
	1	1	**543-9660**	1	CYLINDER AS-HYDRAULIC	
	2	1	**543-9714**	1	PISTON	
	3	1	**543-9661**	1	ROD AS	
	4	1	**543-9715**	1	HEAD	
					AVAILABLE REPAIR KIT(S):	
			543-9716	1	KIT-SEAL	
					(INCLUDES PARTS MARKED "J" IN THE GRAPHICS)	

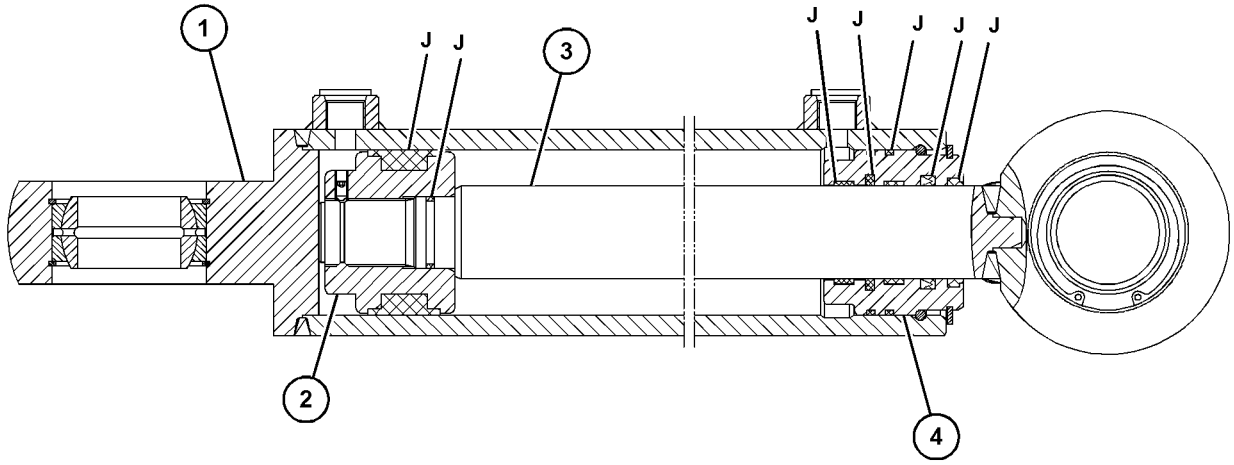

GRAPHIC #1 <END> g06374277

532-9474 CYLINDER GP-CENTERSHIFT

S/N: W921-UP

PART OF 535-7170 CYLINDER & MTG GP-CENTERSHIFT

SMCS-5223 **i07589305**

NOTE	REF NO	GRAPHIC REF	PART NUMBER	QTY	PART NAME 1 2 3 4 5 6 (PRODUCT LEVEL)	SEE PAGE
	1	1	**543-9675**	1	PISTON	
	2	1	**543-9671**	1	ROD AS	
	3	1	**543-9672**	1	CYLINDER AS-HYDRAULIC	
	4	1	**543-9664**	1	HEAD	
					AVAILABLE REPAIR KIT(S):	
			543-9712	1	KIT-SEAL	
					(INCLUDES PARTS MARKED "J" IN THE GRAPHICS)	

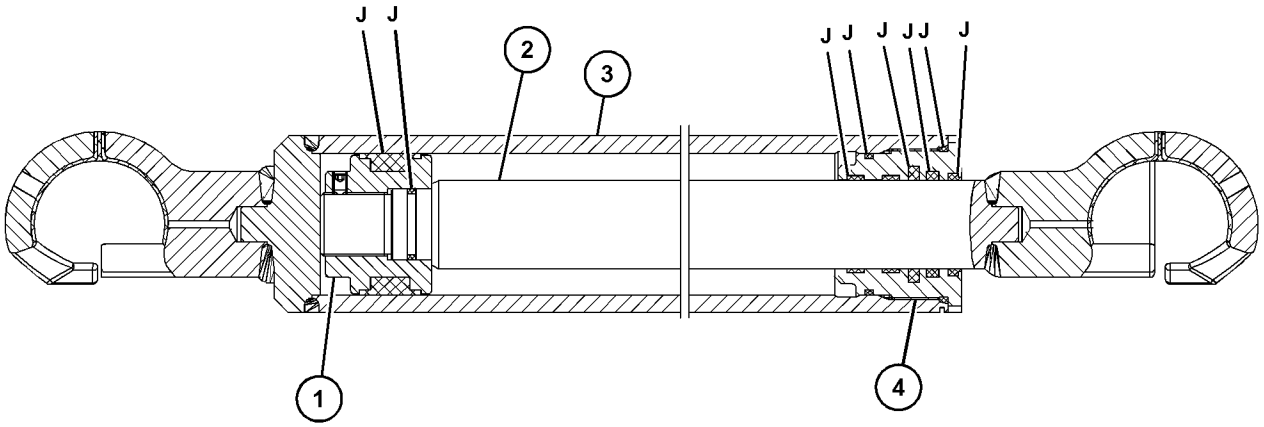

GRAPHIC #1 <END> g06375658

532-9473 CYLINDER GP-HYDRAULIC

S/N: W921-UP

PART OF 535-7168 CYLINDER & MTG GP-BLADE LIFT

SMCS-7562 **i07589244**

NOTE	REF NO	GRAPHIC REF	PART NUMBER	QTY	PART NAME 1 2 3 4 5 6 (PRODUCT LEVEL)	SEE PAGE
	1	1	**543-9675**	1	PISTON	
	2	1	**543-9663**	1	ROD AS	
	3	1	**543-9662**	1	CYLINDER AS-HYDRAULIC	
	4	1	**543-9664**	1	HEAD	
					AVAILABLE REPAIR KIT(S):	
			543-9692	1	KIT-SEAL	
					(INCLUDES PARTS MARKED "J" IN THE GRAPHICS)	

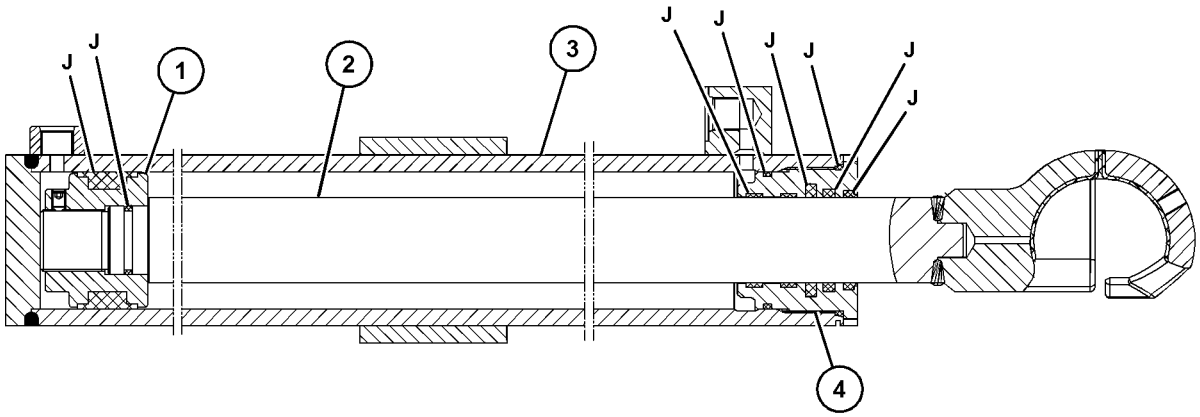

GRAPHIC #1 <END> g06374705

532-9476 CYLINDER GP-HYDRAULIC

S/N: W921-UP

PART OF 535-7167 CYLINDER & MTG GP-BLADE TIP

SMCS-7562 **i07578828**

NOTE	REF NO	GRAPHIC REF	PART NUMBER	QTY	PART NAME 1 2 3 4 5 6 (PRODUCT LEVEL)	SEE PAGE
	1	1	**543-9681**	1	CYLINDER AS	
	2	1	**543-9684**	1	PISTON	
	3	1	**543-9682**	1	ROD AS	
	4	1	**543-9683**	1	HEAD	
					AVAILABLE REPAIR KIT(S):	
			543-9710	1	KIT-SEAL	
					(INCLUDES PARTS MARKED "J" IN THE GRAPHICS)	

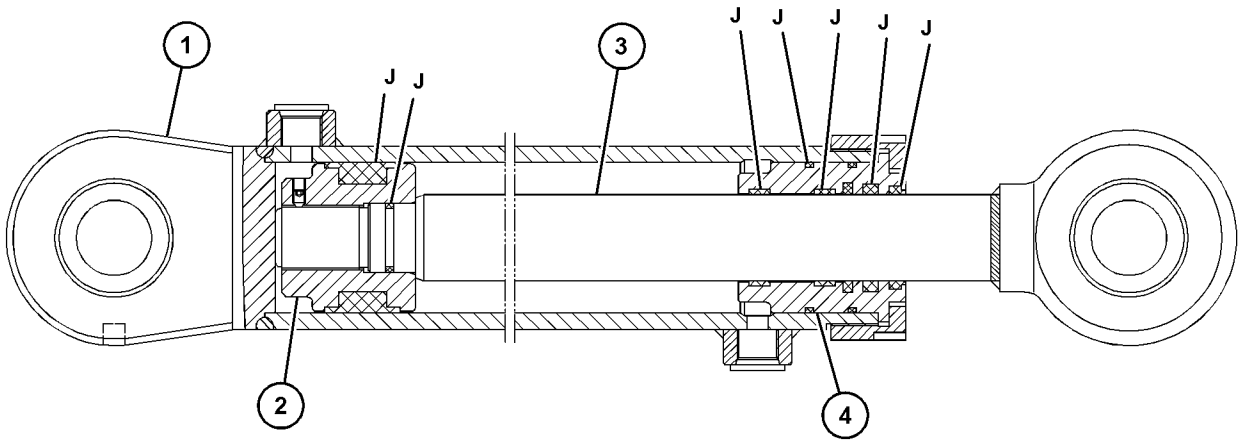

GRAPHIC #1 <END> g06375147

532-9480 CYLINDER GP-HYDRAULIC

S/N: W921-UP

PART OF 535-7195 LINES GP-RIPPER

SMCS-7562 **i07573186**

NOTE	REF NO	GRAPHIC REF	PART NUMBER	QTY	PART NAME 1 2 3 4 5 6 (PRODUCT LEVEL)	SEE PAGE
	1	1	**543-9677**	1	CYLINDER AS	
	2	1	**543-9678**	1	ROD AS	
	3	1	**543-9691**	1	HEAD	
	4	1	**543-9693**	1	PISTON	
					AVAILABLE REPAIR KIT(S):	
			543-9706	1	KIT-SEAL (CYLINDER)	
					(INCLUDE PARTS MARKED J IN GRAPHICS)	

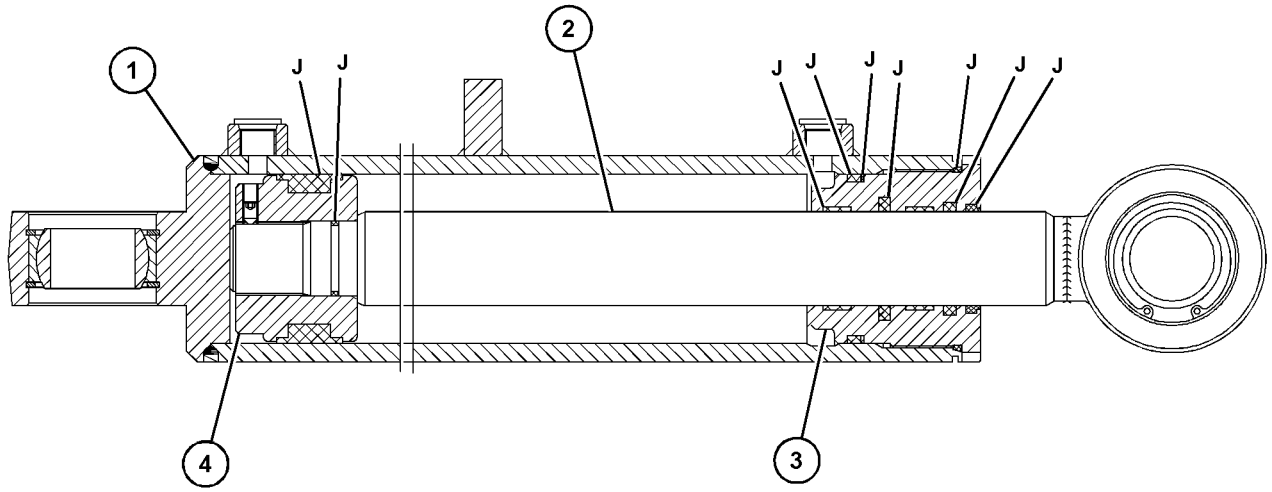

GRAPHIC #1 <END> g06376686

532-9481 CYLINDER GP-HYDRAULIC

S/N: W921-UP

PART OF 535-7196 LINES GP-HYDRAULIC

SMCS-7562 **i07573407**

NOTE	REF NO	GRAPHIC REF	PART NUMBER	QTY	PART NAME 1 2 3 4 5 6 (PRODUCT LEVEL)	SEE PAGE
	1	1	**543-9679**	1	CYLINDER AS	
	2	1	**543-9680**	1	ROD AS	
	3	1	**543-9691**	1	HEAD	
	4	1	**543-9693**	1	PISTON	
					AVAILABLE REPAIR KIT(S):	
			543-9705	1	KIT-SEAL (CYLINDER)	
					(INCLUDES PARTS MARKED J IN GRAPHICS)	

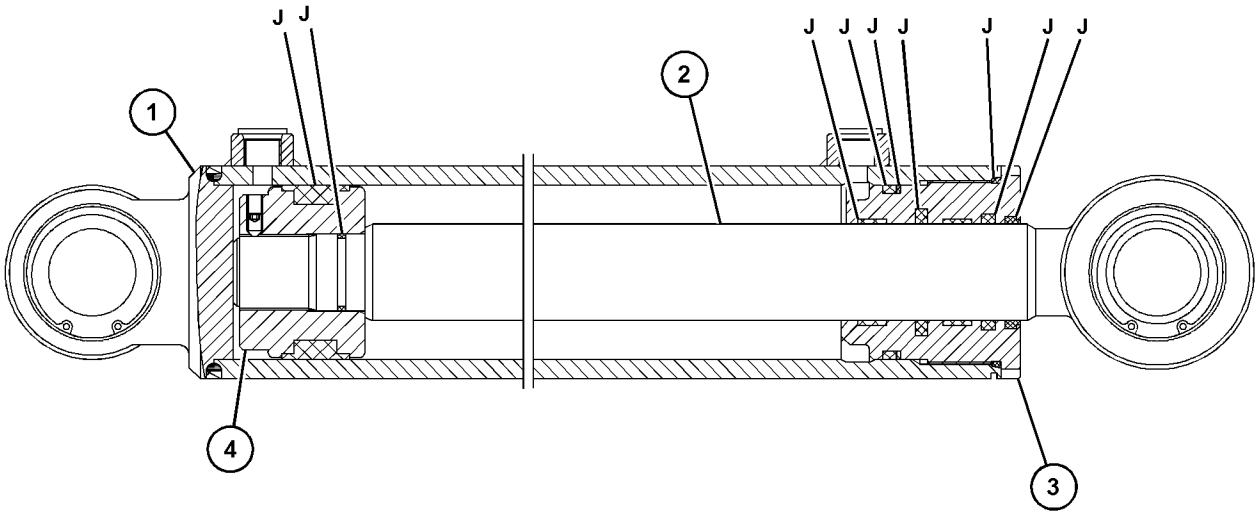

GRAPHIC #1 <END> g06375563

569-4907 CYLINDER GP-HYDRAULIC

S/N: W921-UP

PART OF 535-7166 CYLINDER & MTG GP-SIDESHIFT

SMCS-7562 **i07592756**

NOTE	REF NO	GRAPHIC REF	PART NUMBER	QTY	PART NAME 1 2 3 4 5 6 (PRODUCT LEVEL)	SEE PAGE
	1	1	**543-9674**	1	ROD AS	
	2	1	**543-9714**	1	PISTON	
	3	1	**543-9715**	1	HEAD	
	4	1	**574-9907**	1	CYLINDER AS	
					AVAILABLE REPAIR KIT(S):	
			543-9711	1	KIT-SEAL	
					(INCLUDES PARTS MARKED "J"IN THE GRAPHIC)	

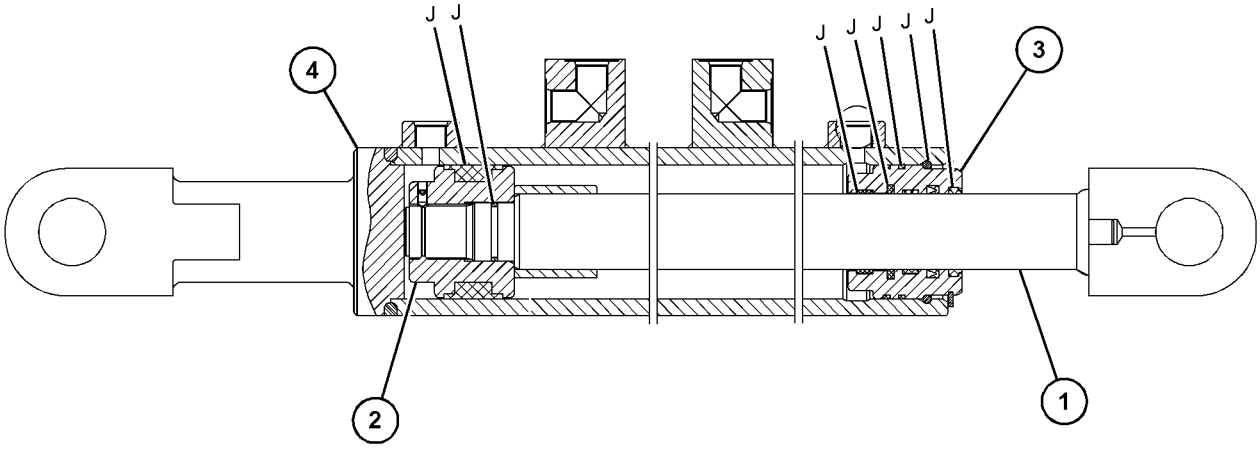

GRAPHIC #1 <END> g06375541

532-9477 CYLINDER GP-STEERING

S/N: W921-UP

PART OF 535-7172 CYLINDER & MTG GP-STEERING

SMCS-4303 **i07589493**

NOTE	REF NO	GRAPHIC REF	PART NUMBER	QTY	PART NAME 1 2 3 4 5 6 (PRODUCT LEVEL)	SEE PAGE
	1	1	**543-9688**	1	PISTON	
	2	1	**543-9676**	1	CYLINDER AS	
	3	1	**543-9685**	1	ROD AS	
	4	1	**543-9687**	1	HEAD	
					AVAILABLE REPAIR KIT(S):	
			543-9709	1	KIT-SEAL	
					(INCLUDES PARTS MARKED "J" IN THE GRAPHICS)	

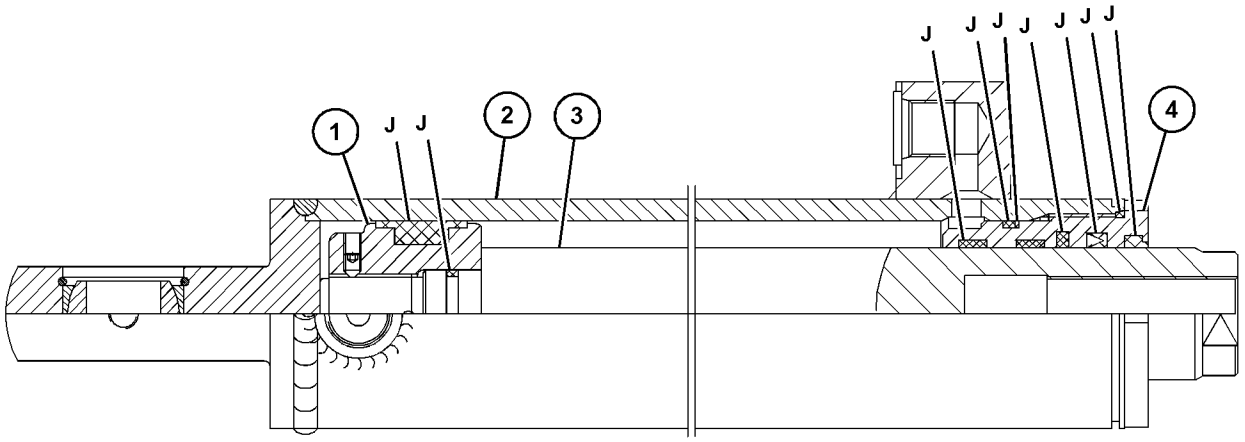

GRAPHIC #1 <END> g06375233

532-9478 CYLINDER GP-STEERING

S/N: W921-UP

PART OF 535-7172 CYLINDER & MTG GP-STEERING

SMCS-4303 **i07589510**

NOTE	REF NO	GRAPHIC REF	PART NUMBER	QTY	PART NAME 1 2 3 4 5 6 (PRODUCT LEVEL)	SEE PAGE
	1	1	**543-9688**	1	PISTON	
	2	1	**543-9686**	1	CYLINDER AS	
	3	1	**543-9685**	1	ROD AS	
	4	1	**543-9687**	1	HEAD	
					AVAILABLE REPAIR KIT(S):	
			543-9708	1	KIT-SEAL	
					(INCLUDES PARTS MARKED "J" IN THE GRAPHICS)	

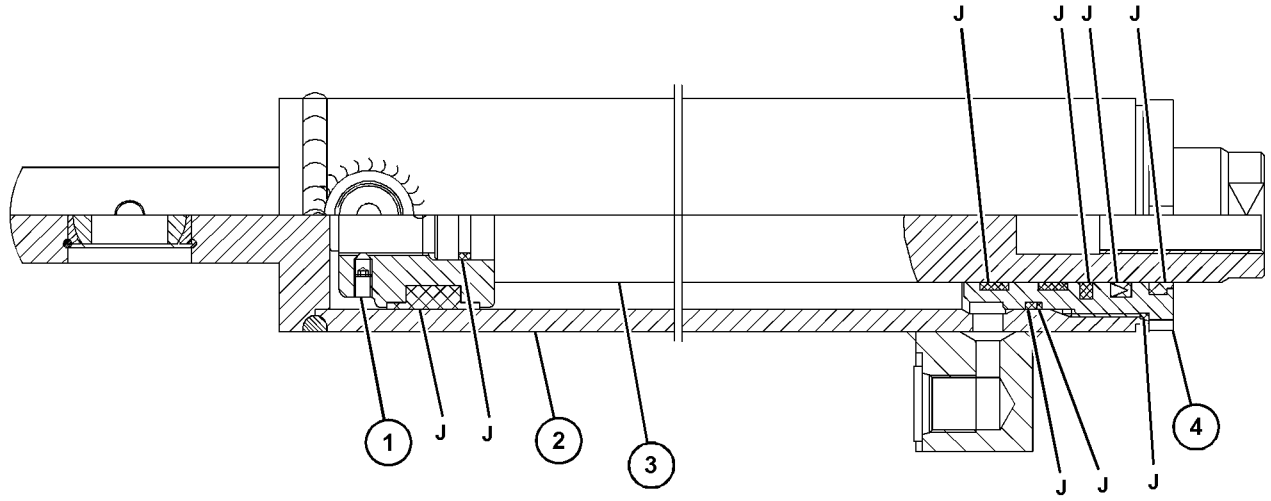

GRAPHIC #1 <END> g06375627

532-9479 CYLINDER GP-WHEEL LEAN

S/N: W921-UP

PART OF 535-7171 CYLINDER & MTG GP-WHEEL LEAN

SMCS-5211 **i07589318**

NOTE	REF NO	GRAPHIC REF	PART NUMBER	QTY	PART NAME 1 2 3 4 5 6 (PRODUCT LEVEL)	SEE PAGE
	1	1	**543-9691**	1	HEAD	
	2	1	**543-9689**	1	CYLINDER AS-HYDRAULIC	
	3	1	**543-9693**	1	PISTON	
	4	1	**543-9690**	1	ROD AS	
					AVAILABLE REPAIR KIT(S):	
			543-9707	1	KIT-SEAL	
					(INCLUDES PARTS MARKED "J" IN THE GRAPHICS)	

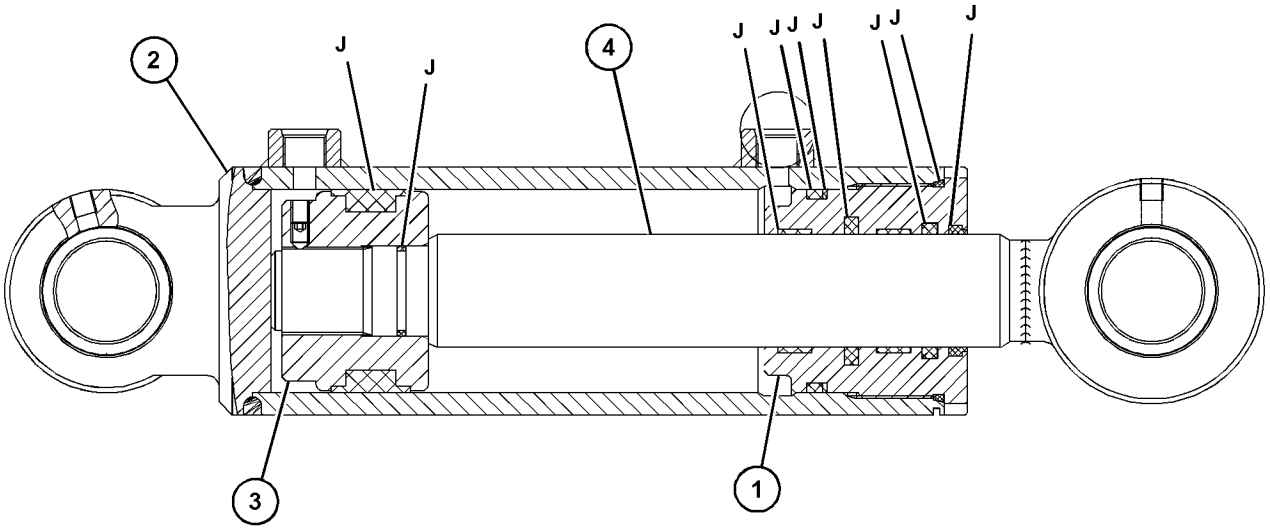

GRAPHIC #1 <END> g06375978

108-4916 DETENT GP-CONTROL VALVE

S/N: W921-UP

PART OF 107-0547, 6E-3031, 6E-3037 VALVE GP-CONTROL

SMCS-5051 **i07580561**

NOTE	REF NO	GRAPHIC REF	PART NUMBER	QTY	PART NAME 1 2 3 4 5 6 (PRODUCT LEVEL)	SEE PAGE
	1	1	**101-1974**	1	RETAINER	
	2	1	**101-1975**	1	RETAINER	
	3	1	**102-7423**	1	SPRING	
	4	1	**5B-9318**	6	BALL	

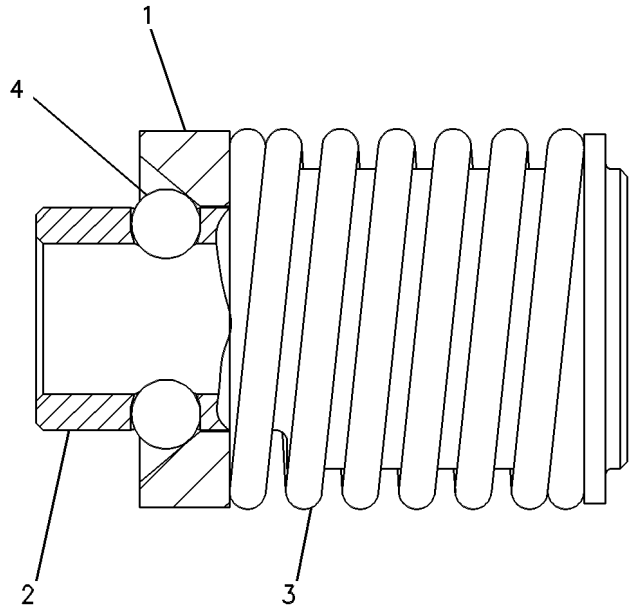

GRAPHIC #1 <END> g00108519

539-1586 DRIVE GP-CIRCLE

S/N: W921-UP

PART OF 537-5628 DRAWBAR AR

SMCS-5207 **i07578130**

NOTE	REF NO	GRAPHIC REF	PART NUMBER	QTY	PART NAME 1 2 3 4 5 6 (PRODUCT LEVEL)	SEE PAGE
M	1	1	**114-6099**	3	BOLT (M24X3X80-MM)	
	2	1	**533-4650**	1	DRIVE GP-CIRCLE	
M	3	1	**8T-4001**	2	NUT (M24X3-THD)	
	4	1	**8T-4167**	7	WASHER-HARD (26X44X4-MM THK)	
M	5	1	**8T-6380**	2	BOLT (M24X3X130-MM)	

M - METRIC PART

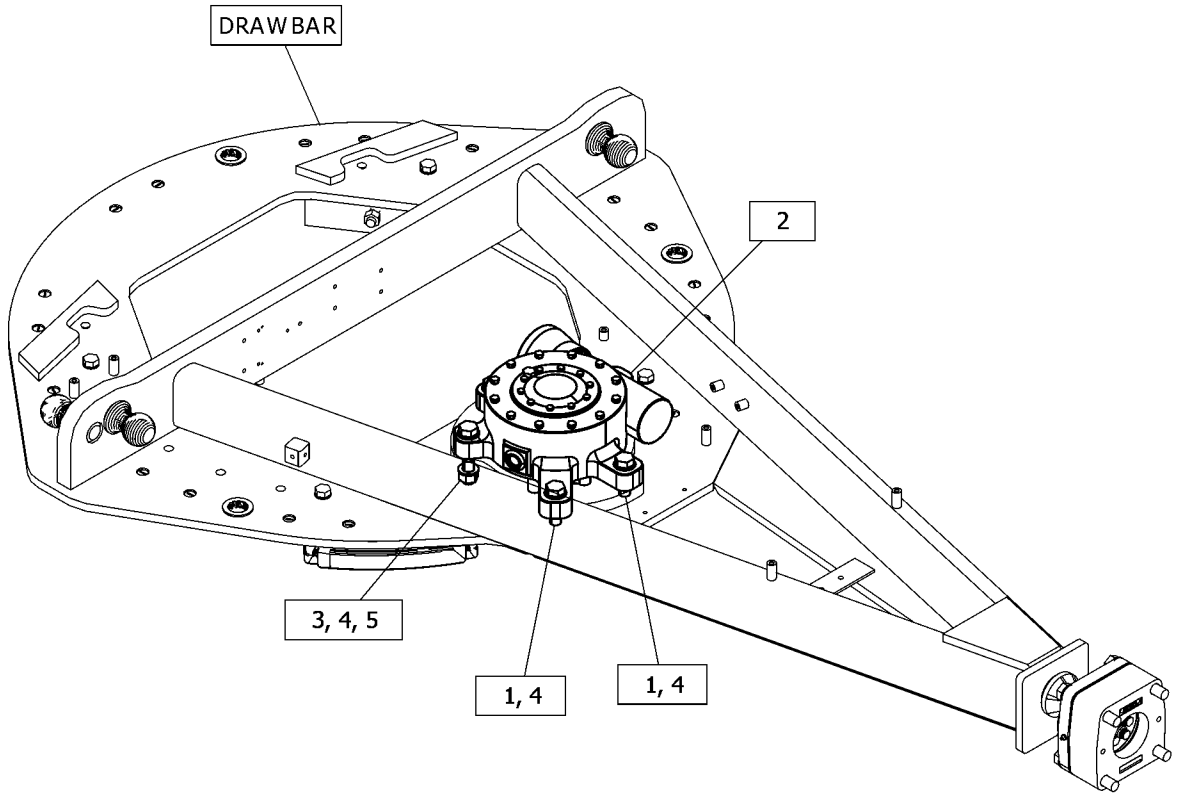

GRAPHIC #1 <END> g06374185

539-1587 DRIVE GP-CIRCLE

S/N: W921-UP

PART OF 537-5629 DRAWBAR AR

SMCS-5207 **i07578854**

NOTE	REF NO	GRAPHIC REF	PART NUMBER	QTY	PART NAME 1 2 3 4 5 6 (PRODUCT LEVEL)	SEE PAGE
M	1	1	**114-6099**	3	BOLT (M24X3X80-MM)	
	2	1	**533-4651**	1	DRIVE GP-CIRCLE	
M	3	1	**8T-4001**	2	NUT (M24X3-THD)	
	4	1	**8T-4167**	7	WASHER-HARD (26X44X4-MM THK)	
M	5	1	**8T-6380**	2	BOLT (M24X3X130-MM)	

M - METRIC PART

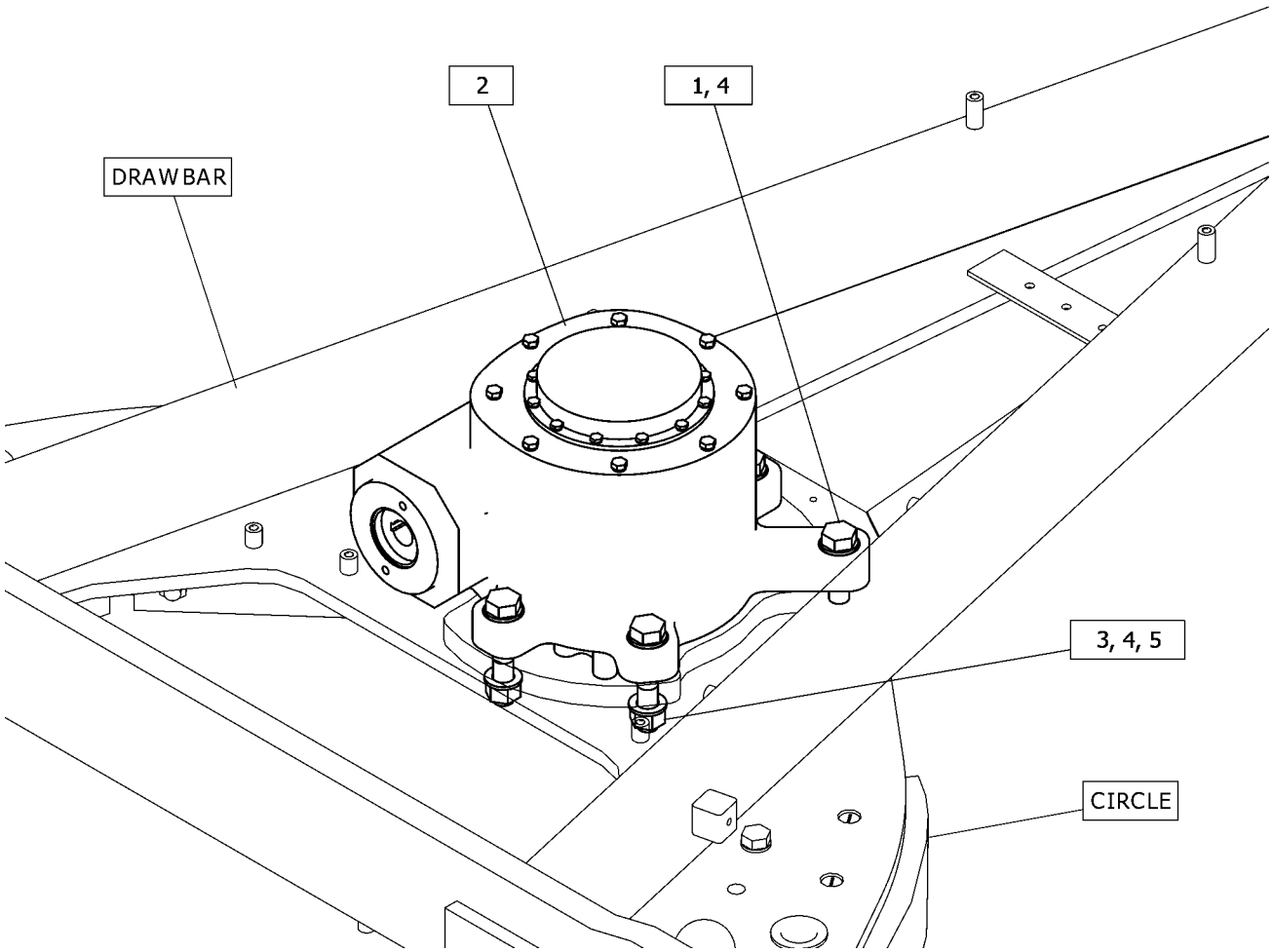

GRAPHIC #1 <END> g06375625

535-7143 HYDRAULIC AR

S/N: W921-UP

PART OF 525-9809 COMMON AR

SMCS-5050 **i07588826**

NOTE	PART NUMBER	QTY	PART NAME 1 2 3 4 5 6 (PRODUCT LEVEL)	SEE PAGE
Y	*557-9590*	1	ACCUMULATOR & MTG GP-HYDRAULIC (BRAKE)	348
Y	*535-7146*	1	LINES GP-SERVICE BRAKE	341
Y	*535-7145*	1	CONTROL GP-SERVICE BRAKE	337

Y - SEPARATE ILLUSTRATION

<END>

535-7200 HYDRAULIC AR

S/N: W921-UP

PART OF 525-9809 COMMON AR

SMCS-5050 **i07589191**

NOTE	PART NUMBER	QTY	PART NAME 1 2 3 4 5 6 (PRODUCT LEVEL)	SEE PAGE
Y	*535-7169*	1	CYLINDER & MTG GP-ARTICULATION	354
Y	*535-7168*	1	CYLINDER & MTG GP-BLADE LIFT	355
Y	*535-7170*	1	CYLINDER & MTG GP-CENTERSHIFT	357
Y	*535-7172*	1	CYLINDER & MTG GP-STEERING	359
Y	*535-7171*	1	CYLINDER & MTG GP-WHEEL LEAN	360
Y	*535-7179*	1	LINES GP-HYDRAULIC	377
Y	*535-7176*	1	LINES GP-HYDRAULIC FAN	391
Y	*535-7177*	1	LINES GP-HYDRAULIC FAN	393
Y	*535-7174*	1	LINES GP-PUMP	398
Y	*535-7178*	1	LINES GP-STEERING	407
Y	*535-7181*	1	LINES GP-TRANSMISSION OIL	266
Y	*535-7175*	1	VALVE & MOUNTING GP	429
Y	*535-7173*	1	PUMP & MTG GP-STEERING	416

Y - SEPARATE ILLUSTRATION

<END>

535-7185 LINES GP-ACCUMULATOR

S/N: W921-UP

PART OF 537-5642 ACCUMULATOR AR-BLADE CUSHION

SMCS-5057, 5077 **i07579005**

NOTE	REF NO	GRAPHIC REF	PART NUMBER	QTY	PART NAME 1 2 3 4 5 6 (PRODUCT LEVEL)	SEE PAGE
	1	1	*148-8444*	2	TEE AS-SWIVEL	
					(EACH INCLUDES)	
		1	**6V-8398**	2	SEAL-O-RING	
		1	**6V-9837**	1	TEE-SWIVEL	
M	2	1	**518-2309**	2	BOLT (M10X1.5X20-MM)	
M	3	1	**518-2311**	2	BOLT (M10X1.5X30-MM)	
M	4	1	**518-2314**	1	BOLT (M10X1.5X50-MM)	
M	5	1	**518-6585**	2	NUT-HEX (M10X1.5-THD)	
	6	1	**8M-2773**	4	CLIP (LOOP)	
Y	7	1	**112-2240**	2	MANIFOLD GP-CONTROL (BLADE CUSHION)	413
	8	1	*164-5563*	2	UNION AS	
					(EACH INCLUDES)	
		1	**3D-2824**	2	SEAL-O-RING	
		1	**5P-9560**	1	UNION	
	9	1	**249-5487**	1	SWITCH AS-ROCKER (24-VOLT) (BLADE CUSHION)	
I	10	1	**536-7258**	1	HOSE AS	
I	11	1	**536-7260**	1	HOSE AS	
I	12	1	**536-7317**	1	HOSE AS	
I	13	1	**536-7318**	1	HOSE AS	
	14	1	*148-8318*	2	CONNECTOR AS	
					(EACH INCLUDES)	
		1	**3K-0360**	1	SEAL-O-RING	
		1	**6V-8397**	1	SEAL-O-RING	
		1	**6V-8634**	1	CONNECTOR	
	15	1	*148-8328*	2	CONNECTOR AS	
					(EACH INCLUDES)	
		1	**3D-2824**	1	SEAL-O-RING	
		1	**6V-8398**	1	SEAL-O-RING	
		1	**6V-8633**	1	CONNECTOR	
	16	1	*148-8363*	2	ELBOW AS	
					(EACH INCLUDES)	
		1	**3K-0360**	1	SEAL-O-RING	
		1	**6V-8397**	1	SEAL-O-RING	
		1	**6V-9876**	1	ELBOW	
	17	1	*148-8364*	2	ELBOW AS	
					(EACH INCLUDES)	
		1	**3K-0360**	1	SEAL-O-RING	
		1	**6V-8398**	1	SEAL-O-RING	
		1	**6V-8625**	1	ELBOW	
	18	1	*148-8370*	1	ELBOW AS	
		1	**6V-8398**	1	SEAL-O-RING	
		1	**6V-9851**	1	ELBOW	
	19	1	*164-5608*	2	CONNECTOR AS	
					(EACH INCLUDES)	
		1	**3K-0360**	1	SEAL-O-RING	
		1	**6V-8398**	1	SEAL-O-RING	
		1	**8T-1687**	1	CONNECTOR	
I	20	1	**482-7293**	1	HOSE AS	

535-7185 **LINES GP-ACCUMULATOR (**contd.**)** **i07579005**

NOTE	REF NO	GRAPHIC REF	PART NUMBER	QTY	PART NAME 1 2 3 4 5 6 (PRODUCT LEVEL)	SEE PAGE
	21	1	**518-4417**	7	WASHER	
I	22	1	**536-7261**	1	HOSE AS	
	23	1	**540-4618**	1	SPACER (10.5X20X22-MM THK)	
	24	1	**541-6637**	5	CLIP (LOOP)	

I - REFER TO HYDRAULIC INFORMATION SYSTEM
M - METRIC PART
Y - SEPARATE ILLUSTRATION

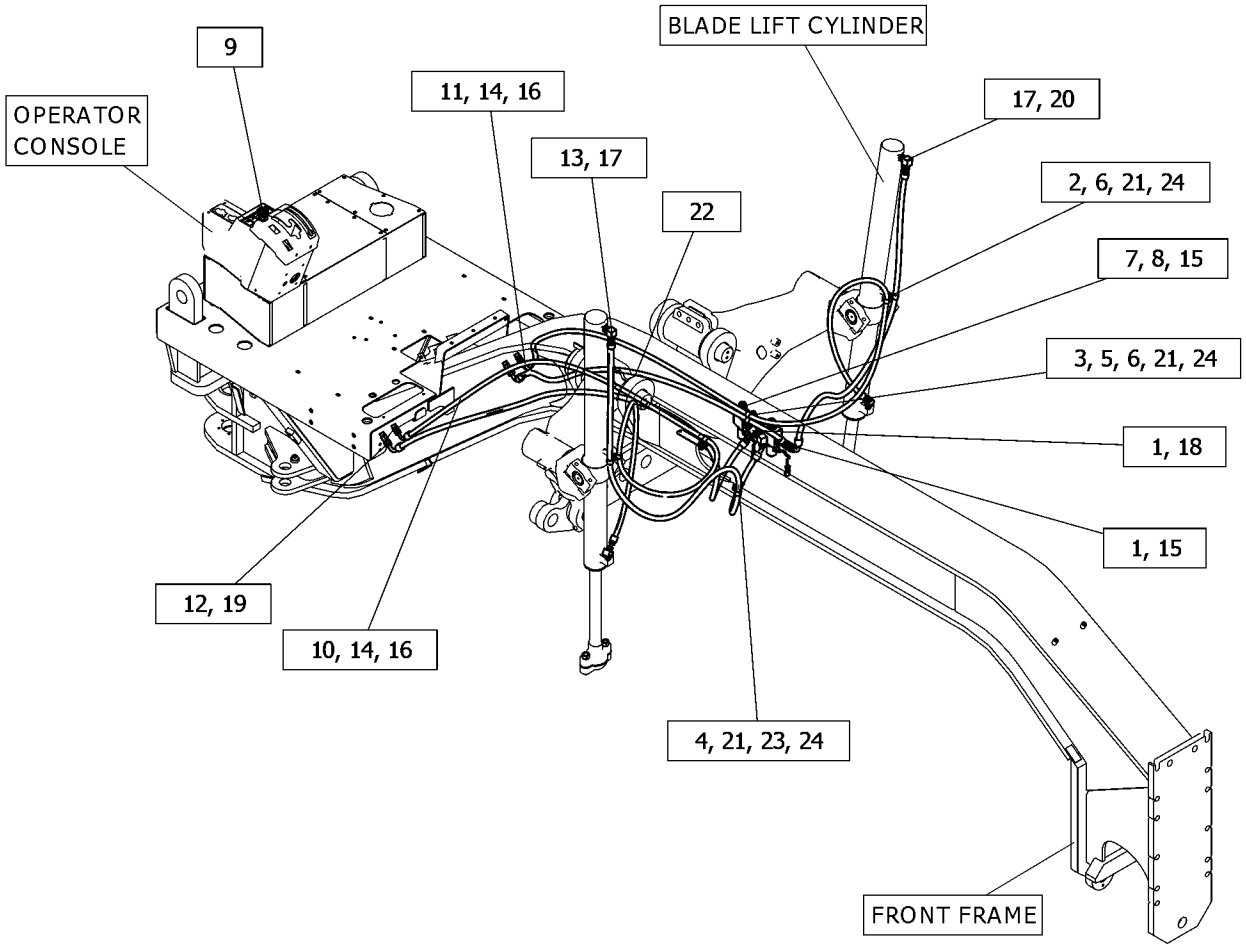

GRAPHIC #1 <END> g06375404

535-7179 LINES GP-HYDRAULIC

S/N: W921-UP

PART OF 535-7200 HYDRAULIC AR

SMCS-5057 **i07590962**

NOTE	REF NO	GRAPHIC REF	PART NUMBER	QTY	PART NAME 1 2 3 4 5 6 (PRODUCT LEVEL)	SEE PAGE
	1	1	**8M-2773**	17	CLIP (LOOP)	
M	2	1	**518-2309**	8	BOLT (M10X1.5X20-MM)	
M	3	1	**518-2310**	8	BOLT (M10X1.5X25-MM)	
M	4	1	**518-6585**	2	NUT-HEX (M10X1.5-THD)	
M	5	1	**524-6918**	2	BOLT (M10X1.5X45-MM)	
	6	1	*148-8433*	2	TEE AS	
					(EACH INCLUDES)	
		1	**6V-8397**	2	SEAL-O-RING	
		1	**6V-9836**	1	TEE-SWIVEL	
	7	1	**135-0453**	1	PLATE	
	8	1	**518-4417**	20	WASHER	
I	9	1	**536-7229**	1	HOSE AS	
I	10	1	**536-7230**	1	HOSE AS	
I	11	1	**536-7232**	1	HOSE AS	
I	12	1	**536-7233**	1	HOSE AS	
I	13	1	**536-7234**	1	HOSE AS	
	14	1	**536-7235**	1	HOSE AS	
I	15	1	**536-7236**	1	HOSE AS	
	16	1	**540-4616**	2	PLATE	
	17	1	**540-4617**	1	SPACER (10.5X20X19-MM THK)	
	18	1	**540-4618**	1	SPACER (10.5X20X22-MM THK)	
	19	1	**540-4622**	4	ENVELOPE	
	20	1	*148-8318*	4	CONNECTOR AS	
					(EACH INCLUDES)	
		1	**3K-0360**	1	SEAL-O-RING	
		1	**6V-8397**	1	SEAL-O-RING	
		1	**6V-8634**	1	CONNECTOR	
	21	1	*148-8374*	7	ELBOW AS	
					(EACH INCLUDES)	
		1	**3K-0360**	1	SEAL-O-RING	
		1	**6V-8397**	1	SEAL-O-RING	
		1	**6V-8723**	1	ELBOW	
	22	1	*148-8383*	2	ELBOW AS	
					(EACH INCLUDES)	
		1	**3K-0360**	1	SEAL-O-RING	
		1	**6V-8397**	1	SEAL-O-RING	
		1	**8T-1683**	1	ELBOW	
	23	1	*164-5605*	1	CONNECTOR AS	
		1	**3K-0360**	1	SEAL-O-RING	
		1	**6V-8397**	1	SEAL-O-RING	
		1	**8T-0076**	1	CONNECTOR	
	24	1	**4D-7733**	5	CLIP (LOOP)	
	25	1	**540-4611**	2	PLATE	
I	26	1	**566-4828**	1	HOSE AS	

I - REFER TO HYDRAULIC INFORMATION SYSTEM
M - METRIC PART

535-7179 **LINES GP-HYDRAULIC** (contd.) **i07590962**

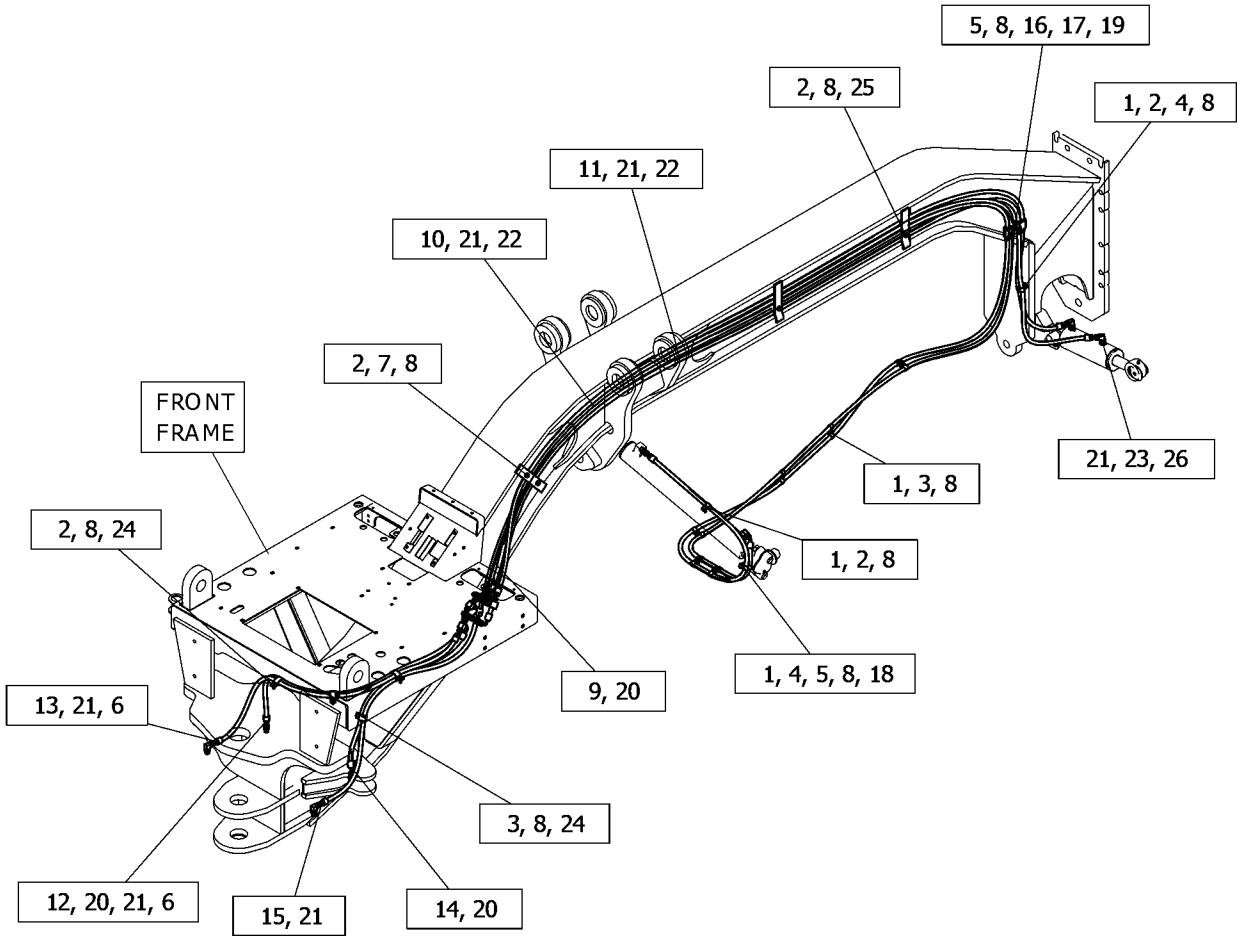

GRAPHIC #1 <END> g06376252

535-7180 LINES GP-HYDRAULIC–3 CIRCUITS

S/N: W921-UP

PART OF 537-5628, 537-5629 DRAWBAR AR

SMCS-5057 **i07578810**

NOTE	REF NO	GRAPHIC REF	PART NUMBER	QTY	PART NAME 1 2 3 4 5 6 (PRODUCT LEVEL)	SEE PAGE
	1	1	**397-9876**	1	SEAL	
M	2	1	**518-2309**	6	BOLT (M10X1.5X20-MM)	
M	3	1	**518-2310**	7	BOLT (M10X1.5X25-MM)	
M	4	1	**518-2311**	4	BOLT (M10X1.5X30-MM)	
M	5	1	**518-2313**	4	BOLT-HEAD (M10X1.5X40-MM)	
M	6	1	**518-6585**	8	NUT-HEX (M10X1.5-THD)	
M	7	1	**518-9591**	2	BOLT (M10X1.5X70-MM)	
	8	1	**8M-2773**	15	CLIP (LOOP)	
M	9	1	**101-7404**	2	BOLT-SOCKET HEAD (M10X1.5X30-MM)	
	10	1	**135-0451**	1	PLATE	
	11	1	**135-0452**	2	PLATE	
	12	1	*148-8318*	11	CONNECTOR AS	
					(EACH INCLUDES)	
		1	**3K-0360**	1	SEAL-O-RING	
		1	**6V-8397**	1	SEAL-O-RING	
		1	**6V-8634**	1	CONNECTOR	
	13	1	*148-8340*	1	CONNECTOR AS	
		1	**3K-0360**	1	SEAL-O-RING	
		1	**6V-8398**	1	SEAL-O-RING	
		1	**6V-8639**	1	CONNECTOR	
	14	1	*148-8345*	2	CONNECTOR AS	
					(EACH INCLUDES)	
		1	**2M-9780**	1	SEAL-O-RING	
		1	**6V-8398**	1	SEAL-O-RING	
		1	**6V-8638**	1	CONNECTOR	
	15	1	*148-8364*	1	ELBOW AS	
		1	**3K-0360**	1	SEAL-O-RING	
		1	**6V-8398**	1	SEAL-O-RING	
		1	**6V-8625**	1	ELBOW	
	16	1	*148-8367*	2	ELBOW AS	
					(EACH INCLUDES)	
		1	**6V-8397**	1	SEAL-O-RING	
		1	**6V-9850**	1	ELBOW	
	17	1	*148-8370*	2	ELBOW AS	
					(EACH INCLUDES)	
		1	**6V-8398**	1	SEAL-O-RING	
		1	**6V-9851**	1	ELBOW	
	18	1	*148-8374*	5	ELBOW AS	
					(EACH INCLUDES)	
		1	**3K-0360**	1	SEAL-O-RING	
		1	**6V-8397**	1	SEAL-O-RING	
		1	**6V-8723**	1	ELBOW	
	19	1	*164-5605*	3	CONNECTOR AS	
					(EACH INCLUDES)	
		1	**3K-0360**	1	SEAL-O-RING	
		1	**6V-8397**	1	SEAL-O-RING	
		1	**8T-0076**	1	CONNECTOR	
	20	1	*164-5608*	1	CONNECTOR AS	

535-7180 **LINES GP-HYDRAULIC (**contd.**)** **i07578810**

NOTE	REF NO	GRAPHIC REF	PART NUMBER	QTY	PART NAME 1 2 3 4 5 6 (PRODUCT LEVEL)	SEE PAGE
		1	**3K-0360**	1	SEAL-O-RING	
		1	**6V-8398**	1	SEAL-O-RING	
		1	**8T-1687**	1	CONNECTOR	
I	21	1	**307-2743**	1	HOSE AS	
	22	1	**383-4261**	1	SWIVEL GP	
	23	1	**4D-7735**	2	CLIP	
	24	1	**518-4417**	34	WASHER	
I	25	1	**520-6163**	1	HOSE AS	
	26	1	**533-1131**	1	MOTOR-HYDRAULIC	
I	27	1	**536-7237**	2	HOSE AS	
I	28	1	**536-7238**	1	HOSE AS	
I	29	1	**536-7240**	1	HOSE AS	
I	30	1	**536-7241**	1	HOSE AS	
I	31	1	**536-7245**	2	HOSE AS	
I	32	1	**536-7247**	1	HOSE AS	
I	33	1	**536-7248**	1	HOSE AS	
I	34	1	**537-1610**	1	HOSE AS	
	35	1	**537-1614**	1	GUIDE AS	
	36	1	**540-4616**	4	PLATE	
	37	1	**540-4617**	4	SPACER (10.5X20X19-MM THK)	
	38	1	**540-4622**	8	ENVELOPE	
	39	1	**541-6637**	2	CLIP (LOOP)	
	40	1	**549-8671**	1	BRACKET	
	41	1	**5D-2645**	2	CLAMP	
M	42	1	**7X-2558**	1	BOLT (M16X2X150-MM)	
M	43	1	**8T-4778**	1	LOCKNUT (M16X2-THD)	
	44	1	**9X-8257**	2	WASHER (17.5X30X3.5-MM THK)	

I - REFER TO HYDRAULIC INFORMATION SYSTEM
M - METRIC PART

535-7180 **LINES GP-HYDRAULIC** (contd.) **i07578810**

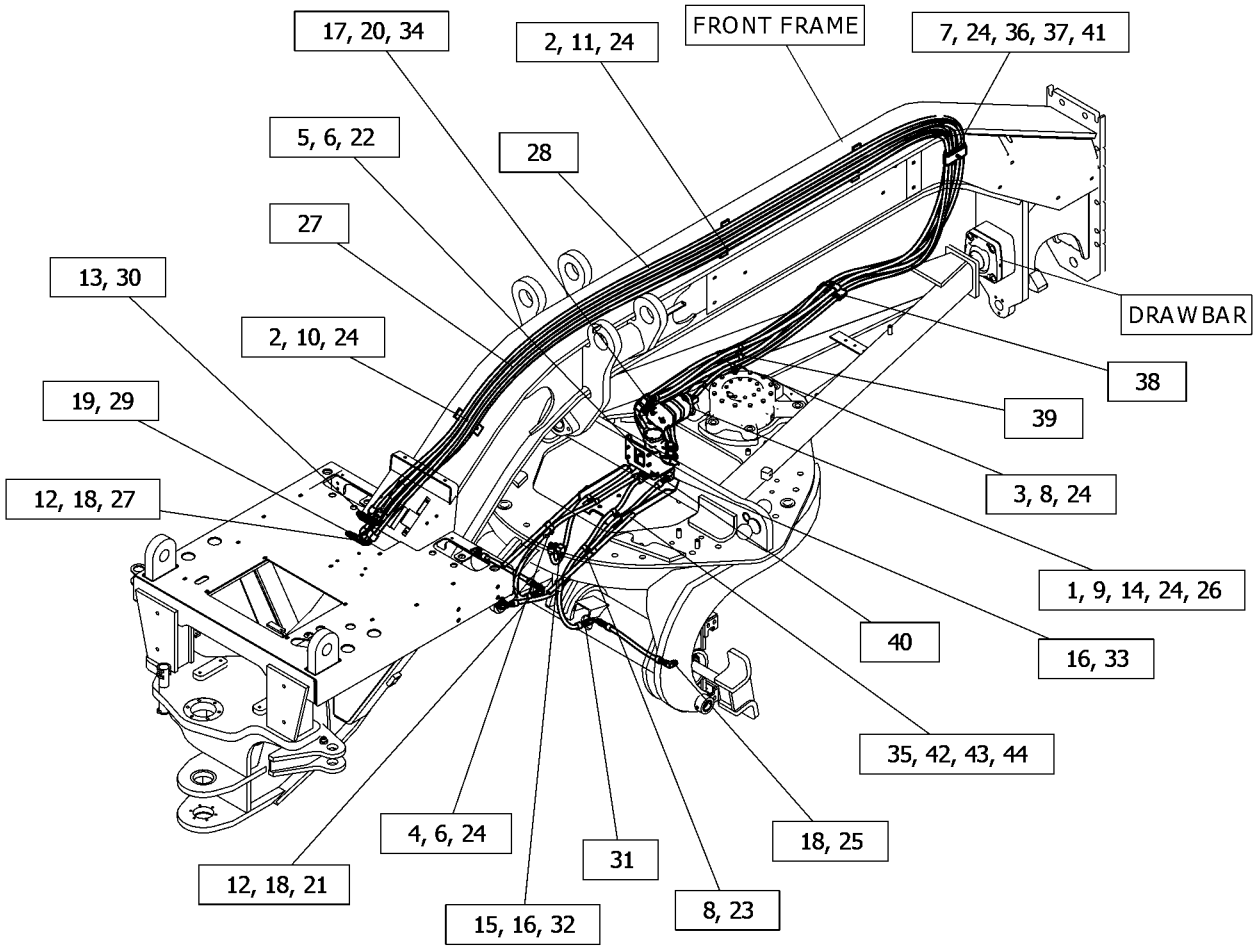

GRAPHIC #1 <END> g06374467

535-7182 LINES GP-HYDRAULIC

S/N: W921-UP

PART OF 537-5637 LOCK AR-CENTERSHIFT

SMCS-5057 **i07573094**

NOTE	REF NO	GRAPHIC REF	PART NUMBER	QTY	PART NAME 1 2 3 4 5 6 (PRODUCT LEVEL)	SEE PAGE
	1	1	*148-8421*	1	TEE AS	
		1	**3D-2824**	1	SEAL-O-RING	
		1	**6V-8397**	1	SEAL-O-RING	
		1	**6V-9746**	1	SEAL-O-RING	
		1	**8T-2883**	1	TEE	
	2	1	*148-8435*	1	TEE AS	
		1	**3J-1907**	1	SEAL-O-RING	
		1	**6V-8397**	2	SEAL-O-RING	
		1	**6V-8781**	1	TEE	
	3	1	*150-4037*	1	TEE AS	
		1	**6V-8398**	2	SEAL-O-RING	
		1	**6V-9844**	1	TEE-SWIVEL	
M	4	1	**518-2309**	1	BOLT (M10X1.5X20-MM)	
M	5	1	**518-2313**	1	BOLT-HEAD (M10X1.5X40-MM)	
	6	1	**518-4415**	2	WASHER (6.4X12X1.6-MM THK)	
	7	1	**520-2590**	2	BOLT (M6X1X50-MM)	
Y	8	1	*535-7198*	1	LOCK GP-CENTERSHIFT	410
	9	1	**119-6407**	1	CONNECTOR	
I	10	1	**148-7027**	1	HOSE AS	
	11	1	*148-8328*	1	CONNECTOR AS	
		1	**3D-2824**	1	SEAL-O-RING	
		1	**6V-8398**	1	SEAL-O-RING	
		1	**6V-8633**	1	CONNECTOR	
	12	1	*148-8336*	4	CONNECTOR AS	
					(EACH INCLUDES)	
		1	**3J-1907**	1	SEAL-O-RING	
		1	**6V-8397**	1	SEAL-O-RING	
		1	**6V-8636**	1	CONNECTOR	
	13	1	*148-8378*	2	ELBOW AS	
					(EACH INCLUDES)	
		1	**3J-1907**	1	SEAL-O-RING	
		1	**6V-8397**	1	SEAL-O-RING	
		1	**6V-8724**	1	ELBOW	
	14	1	*164-5567*	1	COUPLER AS-QUICK DISCONNECT (MALE)	
		1	**6V-3965**	1	FITTING (QUICK DISCONNECT)	
		1	**214-7568**	1	SEAL-O-RING	
	15	1	**367-8969**	1	VALVE GP-PRESSURE REDUCING	
	16	1	**397-9301**	1	WASHER-HARD (11.5X20X15-MM THK)	
	17	1	*480-3046*	1	TEE AS	
		1	**6V-8397**	1	SEAL-O-RING	
		1	**123-2169**	1	FITTING-ORFS	
	18	1	**4D-7733**	1	CLIP (LOOP)	
	19	1	**518-4417**	2	WASHER	
I	20	1	**536-7249**	1	HOSE AS	
I	21	1	**536-7250**	1	HOSE AS	
	22	1	**536-7251**	1	HOSE AS	
I	23	1	**536-7252**	1	HOSE AS	
	24	1	**541-8725**	1	PLUG	

535-7182 **LINES GP-HYDRAULIC (**contd.**)** **i07573094**

NOTE	REF NO	GRAPHIC REF	PART NUMBER	QTY	PART NAME 1 2 3 4 5 6 (PRODUCT LEVEL)	SEE PAGE
	25	1	**6V-0852**	1	CAP-DUST	
	26	1	**6V-8397**	2	SEAL-O-RING	
	27	1	**6V-9829**	1	CAP (ORFS)	
	28	1	**8M-2773**	2	CLIP (LOOP)	
	29	1	**8T-7876**	1	SEAL-O-RING	
	30	1	**8T-8902**	1	ADAPTER-TEE	

I - REFER TO HYDRAULIC INFORMATION SYSTEM
M - METRIC PART
Y - SEPARATE ILLUSTRATION

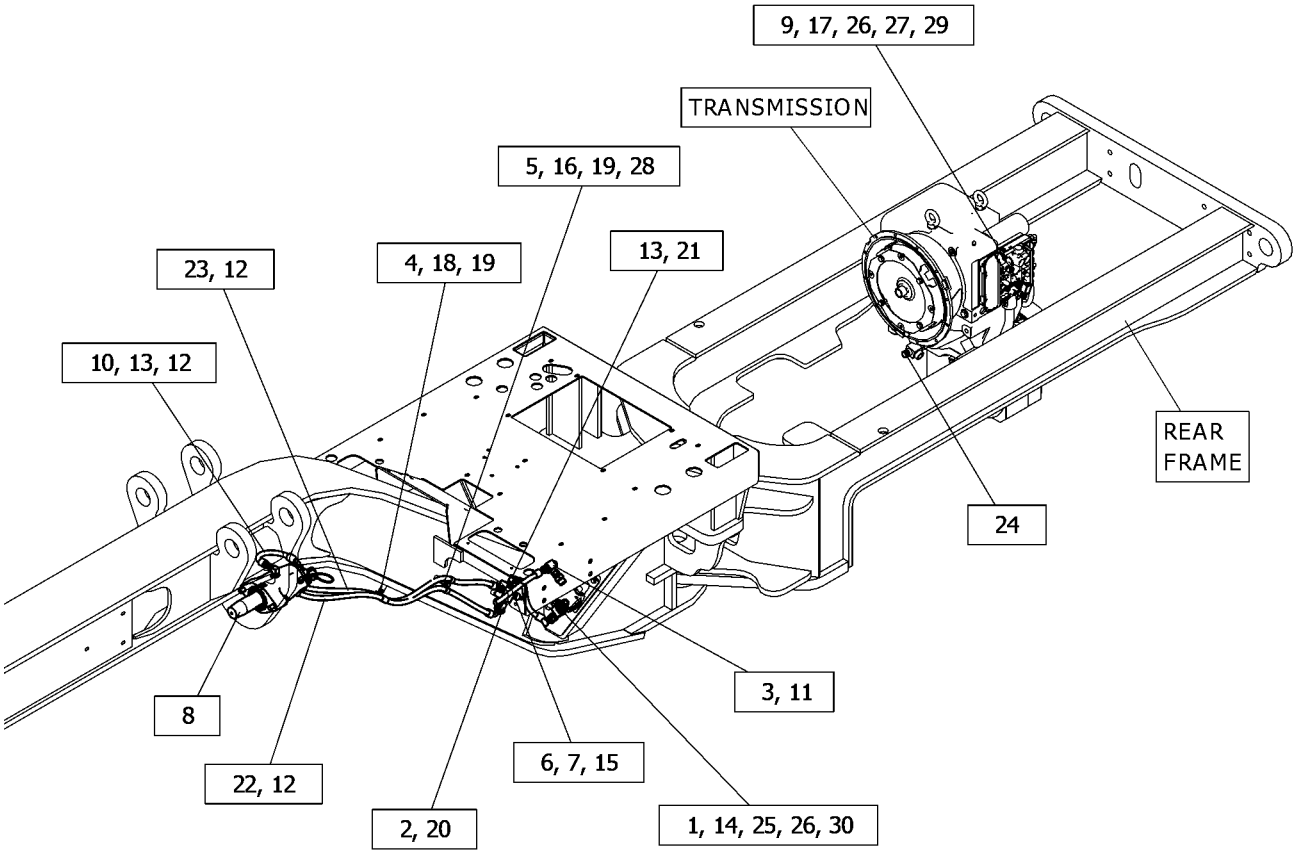

GRAPHIC #1 <END> g06369584

535-7183 LINES GP-HYDRAULIC

S/N: W921-UP

PART OF 537-5636 LOCK AR-CENTERSHIFT

SMCS-5057 **i07573008**

NOTE	REF NO	GRAPHIC REF	PART NUMBER	QTY	PART NAME 1 2 3 4 5 6 (PRODUCT LEVEL)	SEE PAGE
M	1	1	**518-2309**	4	BOLT (M10X1.5X20-MM)	
M	2	1	**518-2313**	1	BOLT-HEAD (M10X1.5X40-MM)	
M	3	1	**518-2314**	1	BOLT (M10X1.5X50-MM)	
	4	1	**119-6407**	1	CONNECTOR	
	5	1	**133-6934**	1	SPACER (11X20X25-MM THK)	
I	6	1	**148-7027**	1	HOSE AS	
	7	1	*148-8318*	1	CONNECTOR AS	
		1	**3K-0360**	1	SEAL-O-RING	
		1	**6V-8397**	1	SEAL-O-RING	
		1	**6V-8634**	1	CONNECTOR	
	8	1	*148-8328*	1	CONNECTOR AS	
		1	**3D-2824**	1	SEAL-O-RING	
		1	**6V-8398**	1	SEAL-O-RING	
		1	**6V-8633**	1	CONNECTOR	
	9	1	*148-8336*	3	CONNECTOR AS	
					(EACH INCLUDES)	
		1	**3J-1907**	1	SEAL-O-RING	
		1	**6V-8397**	1	SEAL-O-RING	
		1	**6V-8636**	1	CONNECTOR	
	10	1	*148-8370*	1	ELBOW AS	
		1	**6V-8398**	1	SEAL-O-RING	
		1	**6V-9851**	1	ELBOW	
	11	1	*148-8378*	1	ELBOW AS	
		1	**3J-1907**	1	SEAL-O-RING	
		1	**6V-8397**	1	SEAL-O-RING	
		1	**6V-8724**	1	ELBOW	
	12	1	*164-5567*	1	COUPLER AS-QUICK DISCONNECT (MALE)	
		1	**6V-3965**	1	FITTING (QUICK DISCONNECT)	
		1	**214-7568**	1	SEAL-O-RING	
	13	1	*180-9286*	1	TEE AS	
		1	**3D-2824**	1	SEAL-O-RING	
		1	**3E-2345**	1	ADAPTER-TEE	
		1	**6V-9746**	1	SEAL-O-RING	
	14	1	**2B-0941**	1	SPACER (10.5X19X19-MM THK)	
	15	1	**397-9301**	1	WASHER-HARD (11.5X20X15-MM THK)	
	16	1	*480-3046*	1	TEE AS	
		1	**6V-8397**	1	SEAL-O-RING	
		1	**123-2169**	1	FITTING-ORFS	
	17	1	**4D-7733**	7	CLIP (LOOP)	
	18	1	**518-4417**	7	WASHER	
	19	1	**521-2261**	1	BOLT-HEAD (M10X1.5X35-MM)	
Y	20	1	*535-7198*	1	LOCK GP-CENTERSHIFT	410
I	21	1	**565-1999**	1	HOSE AS	
I	22	1	**565-2000**	1	HOSE AS	
	23	1	**6V-0852**	1	CAP-DUST	
	24	1	**6V-8397**	1	SEAL-O-RING	
	25	1	**8M-2773**	2	CLIP (LOOP)	
	26	1	**8T-7876**	1	SEAL-O-RING	

535-7183 **LINES GP-HYDRAULIC (**contd.**)** **i07573008**

NOTE	REF NO	GRAPHIC REF	PART NUMBER	QTY	PART NAME 1 2 3 4 5 6 (PRODUCT LEVEL)	SEE PAGE

I - REFER TO HYDRAULIC INFORMATION SYSTEM
M - METRIC PART
Y - SEPARATE ILLUSTRATION

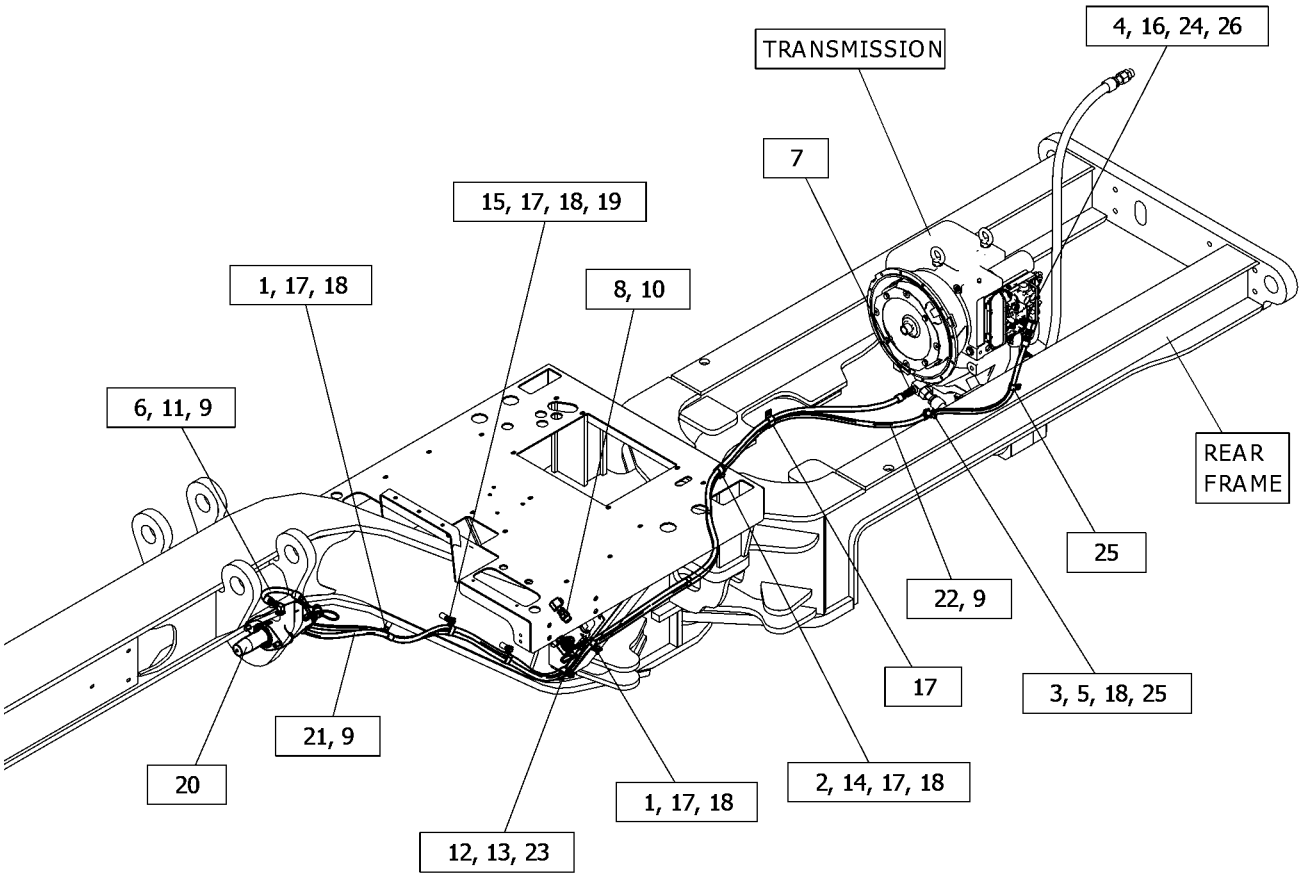

GRAPHIC #1 <END> g06369523

535-7192 LINES GP-HYDRAULIC

S/N: W921-UP

PART OF 537-5602, 537-5605 CONTROL AR-HYDRAULIC

SMCS-5057 **i07580118**

NOTE	REF NO	GRAPHIC REF	PART NUMBER	QTY	PART NAME 1 2 3 4 5 6 (PRODUCT LEVEL)	SEE PAGE
M	1	1	**518-2309**	3	BOLT (M10X1.5X20-MM)	
	2	1	**518-2312**	1	BOLT (M10X1.5X35-MM)	
M	3	1	**518-2313**	1	BOLT-HEAD (M10X1.5X40-MM)	
M	4	1	**518-6585**	1	NUT-HEX (M10X1.5-THD)	
	5	1	*148-8318*	1	CONNECTOR AS	
		1	**3K-0360**	1	SEAL-O-RING	
		1	**6V-8397**	1	SEAL-O-RING	
		1	**6V-8634**	1	CONNECTOR	
	6	1	*164-5605*	1	CONNECTOR AS	
		1	**3K-0360**	1	SEAL-O-RING	
		1	**6V-8397**	1	SEAL-O-RING	
		1	**8T-0076**	1	CONNECTOR	
	7	1	**2B-0941**	1	SPACER (10.5X19X19-MM THK)	
	8	1	**4D-7733**	7	CLIP (LOOP)	
	9	1	**518-4417**	6	WASHER	
	10	1	**552-6767**	2	CLIP (LOOP)	
I	11	1	**565-1996**	1	HOSE AS	
I	12	1	**565-1998**	1	HOSE AS	

I - REFER TO HYDRAULIC INFORMATION SYSTEM
M - METRIC PART

535-7192 **LINES GP-HYDRAULIC (**contd.**)** **i07580118**

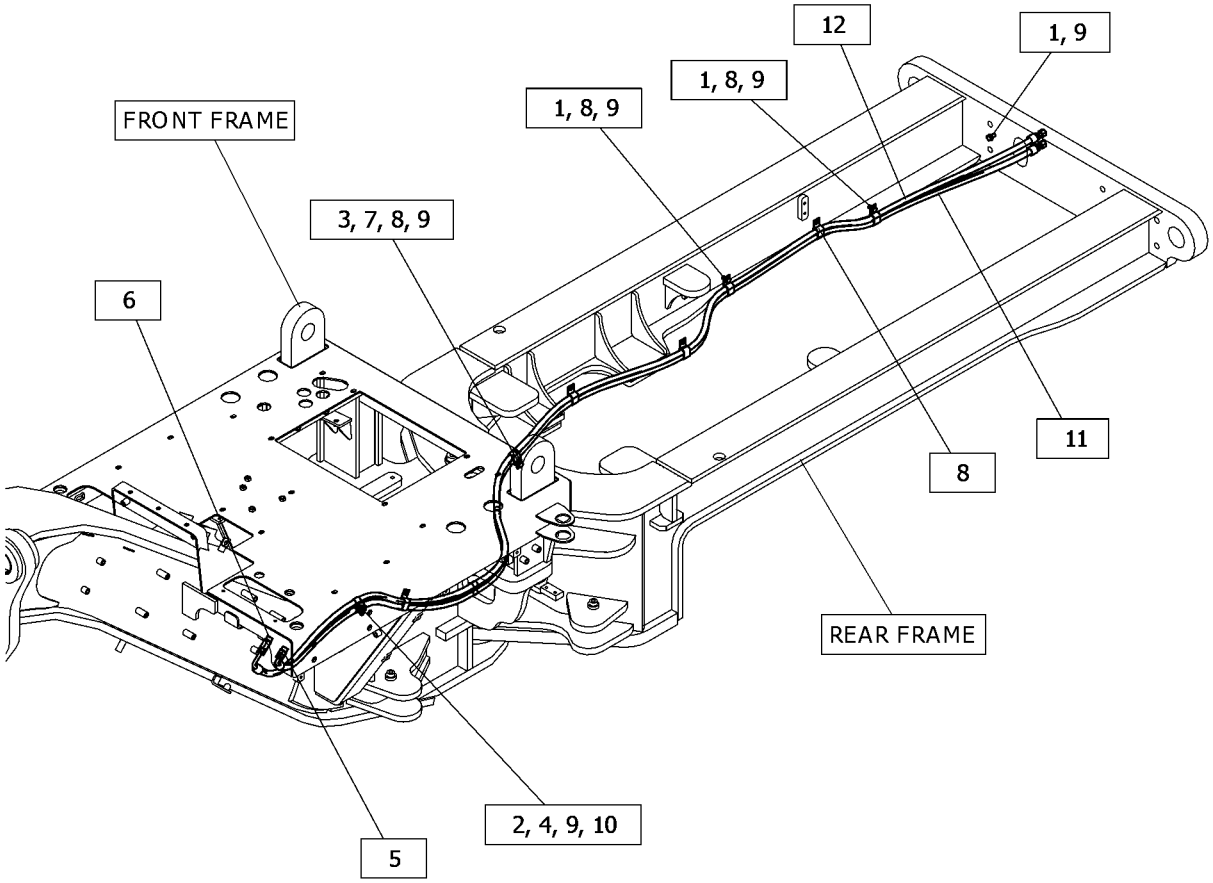

GRAPHIC #1 <END> g06374332

535-7193 LINES GP-HYDRAULIC

S/N: W921-UP

PART OF 537-5605 CONTROL AR-HYDRAULIC

SMCS-5057 **i07580127**

NOTE	REF NO	GRAPHIC REF	PART NUMBER	QTY	PART NAME 1 2 3 4 5 6 (PRODUCT LEVEL)	SEE PAGE
	1	1	**8M-2773**	2	CLIP (LOOP)	
M	2	1	**518-2309**	1	BOLT (M10X1.5X20-MM)	
M	3	1	**518-6585**	1	NUT-HEX (M10X1.5-THD)	
	4	1	**518-4417**	3	WASHER	
I	5	1	**536-7253**	1	HOSE AS	
I	6	1	**536-7254**	1	HOSE AS	
	7	1	**540-4615**	1	CLAMP	
	8	1	**540-4617**	1	SPACER (10.5X20X19-MM THK)	
	9	1	**540-4622**	2	ENVELOPE	
	10	1	*148-8318*	1	CONNECTOR AS	
		1	**3K-0360**	1	SEAL-O-RING	
		1	**6V-8397**	1	SEAL-O-RING	
		1	**6V-8634**	1	CONNECTOR	
	11	1	*164-5605*	1	CONNECTOR AS	
		1	**3K-0360**	1	SEAL-O-RING	
		1	**6V-8397**	1	SEAL-O-RING	
		1	**8T-0076**	1	CONNECTOR	
M	12	1	**6V-4249**	1	BOLT (M10X1.5X50-MM)	

I - REFER TO HYDRAULIC INFORMATION SYSTEM
M - METRIC PART

535-7193 **LINES GP-HYDRAULIC (**contd.**)** **i07580127**

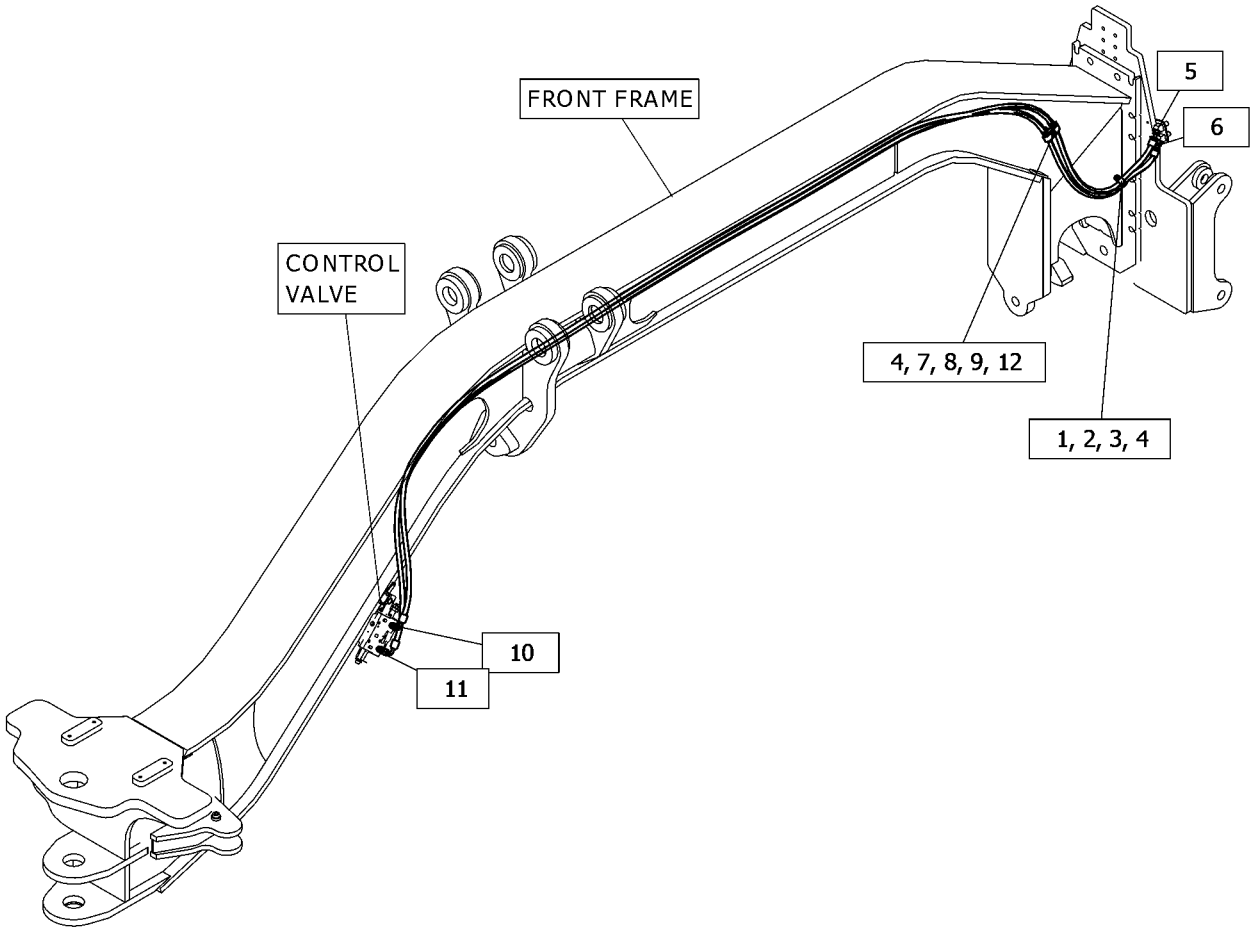

GRAPHIC #1 <END> g06374573

535-7196 LINES GP-HYDRAULIC

S/N: W921-UP

PART OF 537-5608 OPTION AR-WORK TOOL

SMCS-5057 **i07573389**

NOTE	REF NO	GRAPHIC REF	PART NUMBER	QTY	PART NAME 1 2 3 4 5 6 (PRODUCT LEVEL)	SEE PAGE
	1	1	**431-4613**	2	ADAPTER	
M	2	1	**518-2309**	2	BOLT (M10X1.5X20-MM)	
	3	1	**518-4417**	2	WASHER	
Y	4	1	**532-9481**	1	CYLINDER GP-HYDRAULIC	366
I	5	1	**536-7255**	2	HOSE AS	
	6	1	**538-4740**	1	PLATE	
	7	1	*148-8366*	2	ELBOW AS	
					(EACH INCLUDES)	
		1	**6V-8397**	2	SEAL-O-RING	
		1	**6V-8987**	1	ELBOW	
	8	1	*148-8374*	2	ELBOW AS	
					(EACH INCLUDES)	
		1	**3K-0360**	1	SEAL-O-RING	
		1	**6V-8397**	1	SEAL-O-RING	
		1	**6V-8723**	1	ELBOW	
	9	1	**6V-9168**	2	NUT (11/16-16-THD)	

I - REFER TO HYDRAULIC INFORMATION SYSTEM
M - METRIC PART
Y - SEPARATE ILLUSTRATION

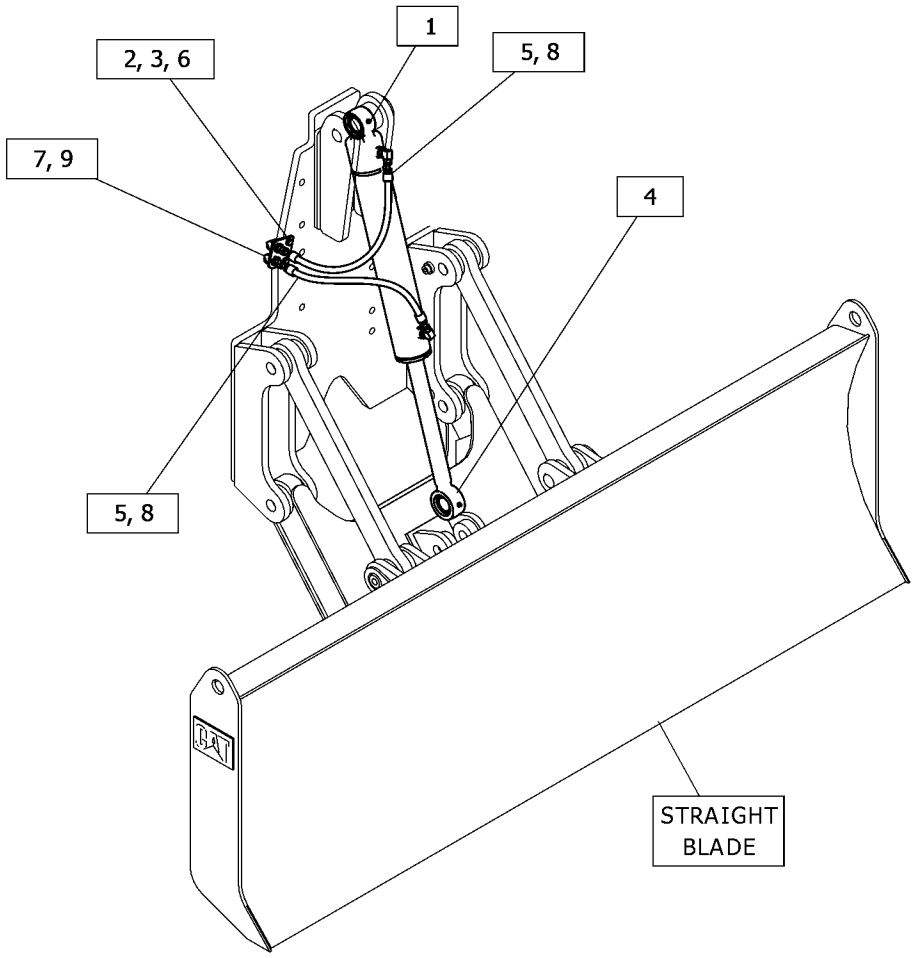

GRAPHIC #1 <END> g06373312

535-7176 LINES GP-HYDRAULIC FAN

S/N: W921-UP

PART OF 535-7200 HYDRAULIC AR

SMCS-1386, 1387, 5057 **i07590890**

NOTE	REF NO	GRAPHIC REF	PART NUMBER	QTY	PART NAME 1 2 3 4 5 6 (PRODUCT LEVEL)	SEE PAGE
	1	1	*148-8444*	2	TEE AS-SWIVEL	
					(EACH INCLUDES)	
		1	**6V-8398**	2	SEAL-O-RING	
		1	**6V-9837**	1	TEE-SWIVEL	
M	2	1	**518-2309**	10	BOLT (M10X1.5X20-MM)	
M	3	1	**518-2310**	8	BOLT (M10X1.5X25-MM)	
M	4	1	**518-2311**	2	BOLT (M10X1.5X30-MM)	
M	5	1	**518-2314**	1	BOLT (M10X1.5X50-MM)	
M	6	1	**518-6585**	7	NUT-HEX (M10X1.5-THD)	
	7	1	**091-0081**	1	SPACER (10.5X20X10-MM THK)	
	8	1	**100-4336**	4	CLIP (LOOP)	
	9	1	**133-6934**	1	SPACER (11X20X25-MM THK)	
M	10	1	**133-7810**	5	STUD-TAPERLOCK (M10X1.5X45-MM)	
	11	1	*148-8328*	1	CONNECTOR AS	
		1	**3D-2824**	1	SEAL-O-RING	
		1	**6V-8398**	1	SEAL-O-RING	
		1	**6V-8633**	1	CONNECTOR	
	12	1	*148-8365*	1	ELBOW AS	
		1	**3J-1907**	1	SEAL-O-RING	
		1	**6V-8398**	1	SEAL-O-RING	
		1	**8T-6876**	1	ELBOW	
	13	1	*171-6723*	1	ELBOW AS	
		1	**6V-9746**	1	SEAL-O-RING	
		1	**8T-8899**	1	ELBOW	
	14	1	**177-2215**	1	STRAP-DUAL CLAMP	
	15	1	**192-5017**	1	BRACKET AS	
	16	1	**233-1507**	1	BRACKET AS	
M	17	1	**268-4779**	1	STUD-TAPERLOCK (M10X1.5X95-MM)	
	18	1	**2B-0941**	1	SPACER (10.5X19X19-MM THK)	
	19	1	**3E-4321**	1	CLIP (LOOP)	
	20	1	**518-4417**	28	WASHER	
I	21	1	**535-7216**	1	HOSE AS	
	22	1	**537-1615**	1	BRACKET AS	
	23	1	**537-1616**	1	BLOCK	
	24	1	**537-1617**	1	BLOCK	
	25	1	**537-1618**	1	BLOCK	
	26	1	**537-1619**	1	BLOCK	
	27	1	**537-1620**	2	BLOCK	
	28	1	**537-1621**	2	BLOCK	
	29	1	**537-1622**	2	BLOCK	
	30	1	**537-1623**	2	BLOCK	
	31	1	**537-1624**	3	PLATE	
	32	1	**541-6637**	6	CLIP (LOOP)	
	33	1	**557-1671**	1	BLOCK	
	34	1	**557-1672**	1	BLOCK	
	35	1	**557-1673**	1	BLOCK	
	36	1	**557-1674**	1	BLOCK	

535-7176 **LINES GP-HYDRAULIC FAN (**contd.**)** **i07590890**

NOTE	REF NO	GRAPHIC REF	PART NUMBER	QTY	PART NAME 1 2 3 4 5 6 (PRODUCT LEVEL)	SEE PAGE
	37	1	**557-1675**	1	PLATE	
I	38	1	**565-1966**	1	HOSE AS	
I	39	1	**565-1987**	1	HOSE AS	
I	40	1	**565-1992**	1	HOSE AS	
	41	1	**566-3673**	1	BRACKET AS	
M		1	**272-3757**	2	BOSS (M10X1.5X100-MM)	
	42	1	**6D-4244**	3	CLIP (LOOP)	
	43	1	**6D-4247**	4	CLIP	
	44	1	**6V-9830**	1	CAP (ORFS)	

I - REFER TO HYDRAULIC INFORMATION SYSTEM
M - METRIC PART

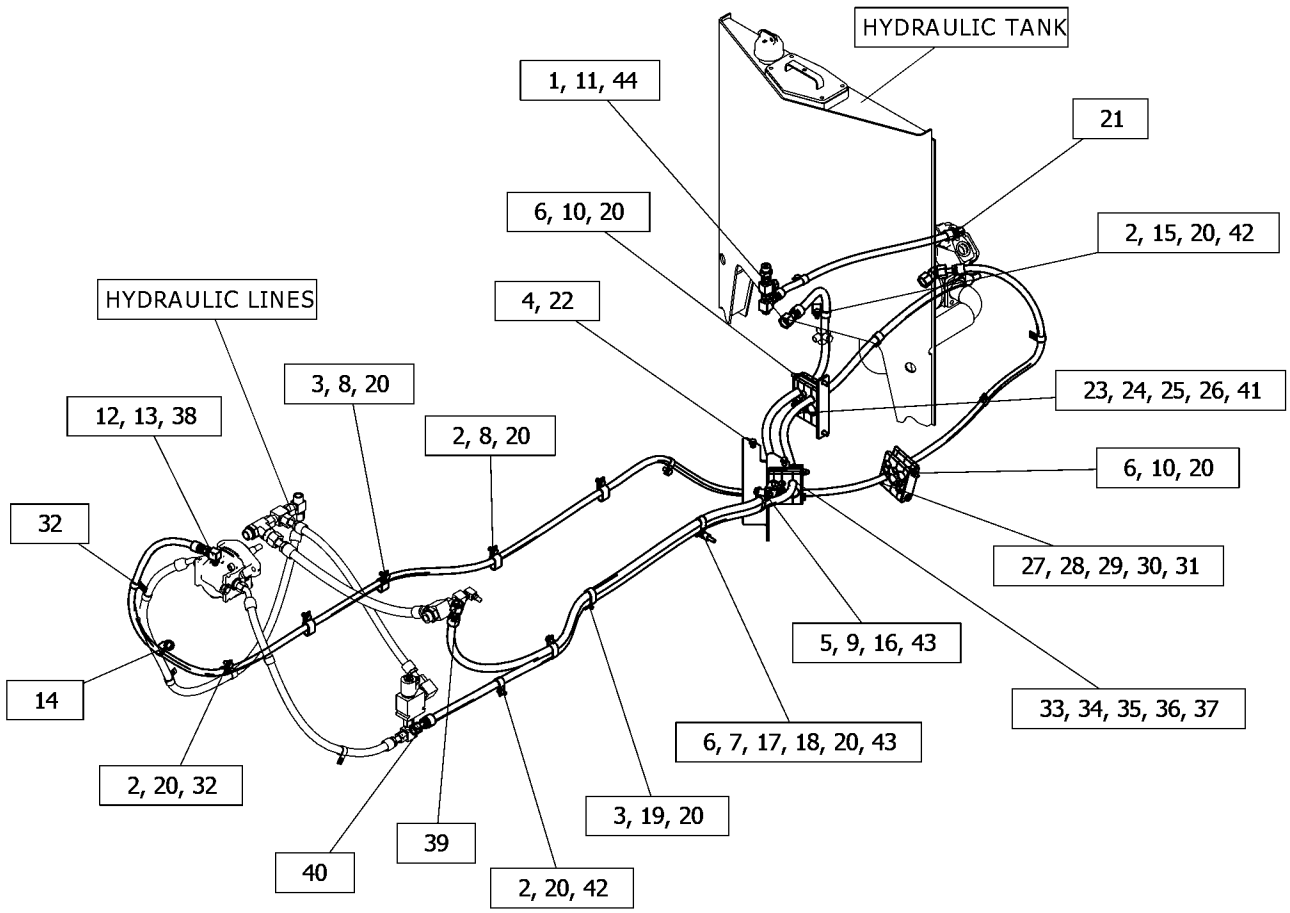

GRAPHIC #1 <END> g06375823

535-7177 LINES GP-HYDRAULIC FAN

S/N: W921-UP

PART OF 535-7200 HYDRAULIC AR

SMCS-1386, 1387, 5057 **i07590906**

NOTE	REF NO	GRAPHIC REF	PART NUMBER	QTY	PART NAME 1 2 3 4 5 6 (PRODUCT LEVEL)	SEE PAGE
	1	1	*148-8442*	1	TEE AS	
		1	**6V-9746**	2	SEAL-O-RING	
		1	**7M-8485**	1	SEAL-O-RING	
		1	**8T-1685**	1	TEE	
M	2	1	**518-2309**	4	BOLT (M10X1.5X20-MM)	
	3	1	**518-2322**	2	BOLT (M12X1.75X45-MM)	
	4	1	**518-4416**	2	WASHER (8.4X16X1.6-MM THK)	
	5	1	**518-4418**	2	WASHER (13X24X2.5-MM THK)	
	6	1	*148-8449*	1	TEE AS-SWIVEL	
		1	**6V-9746**	2	SEAL-O-RING	
		1	**6V-9839**	1	TEE-SWIVEL	
	7	1	*150-4031*	1	TEE AS	
		1	**6V-9845**	1	TEE-SWIVEL	
		1	**7J-9108**	2	SEAL-O-RING	
	8	1	**117-7734**	1	TEE-O-RING	
	9	1	*164-5590*	1	VALVE AS-FLUID SAMPLING	
		1	**3J-7354**	1	SEAL-O-RING	
		1	**8C-3446**	1	VALVE-SAMPLING	
	10	1	**199-1807**	1	TEE	
	11	1	**228-7092**	1	SEAL-O-RING	
	12	1	**238-5084**	1	SEAL-O-RING	
	13	1	**266-1595**	1	VALVE GP-CHECK	
		1	**5K-9090**	1	SEAL-O-RING	
		1	**7M-8485**	1	SEAL-O-RING	
	14	1	*348-2302*	1	VALVE GP-SOLENOID (HYDRAULIC FAN MOTOR)	
		1	**376-1384**	1	MANIFOLD	
		1	**279-6530**	1	VALVE GP-SOLENOID (HYDRAULIC FAN)	
		1	**261-6728**	1	COIL AS (10-VOLT)	
Y	15	1	**491-9530**	1	MOTOR GP-GEAR	415
	16	1	**518-4417**	4	WASHER	
	17	1	**519-0990**	2	BOLT (M8X1.25X70-MM)	
I	18	1	**535-7201**	1	HOSE AS	
I	19	1	**535-7202**	1	HOSE AS	
I	20	1	**535-7203**	1	HOSE AS	
I	21	1	**535-7204**	1	HOSE AS	
	22	1	*148-8341*	3	CONNECTOR AS	
					(EACH INCLUDES)	
		1	**3D-2824**	1	SEAL-O-RING	
		1	**6V-8713**	1	CONNECTOR	
		1	**7J-9108**	1	SEAL-O-RING	
	23	1	*148-8347*	1	ELBOW AS	
		1	**3D-2824**	1	SEAL-O-RING	
		1	**6V-9007**	1	ELBOW	
		1	**6V-9746**	1	SEAL-O-RING	
	24	1	*162-6802*	1	ELBOW AS	
		1	**3J-7354**	1	SEAL-O-RING	
		1	**151-5145**	1	ELBOW	

535-7177 **LINES GP-HYDRAULIC FAN (**contd.**)** **i07590906**

NOTE	REF NO	GRAPHIC REF	PART NUMBER	QTY	PART NAME 1 2 3 4 5 6 (PRODUCT LEVEL)	SEE PAGE
	25	1	*304-8026*	1	TEE AS	
		1	**6V-9746**	1	SEAL-O-RING	
		1	**304-8025**	1	TEE	
	26	1	**6D-4244**	4	CLIP (LOOP)	
	27	1	**6V-9746**	1	SEAL-O-RING	
	28	1	**8C-3451**	1	CAP-DUST (HYDRAULIC OIL)	

I - REFER TO HYDRAULIC INFORMATION SYSTEM
M - METRIC PART
Y - SEPARATE ILLUSTRATION

535-7177 **LINES GP-HYDRAULIC FAN (**contd.**)** **i07590906**

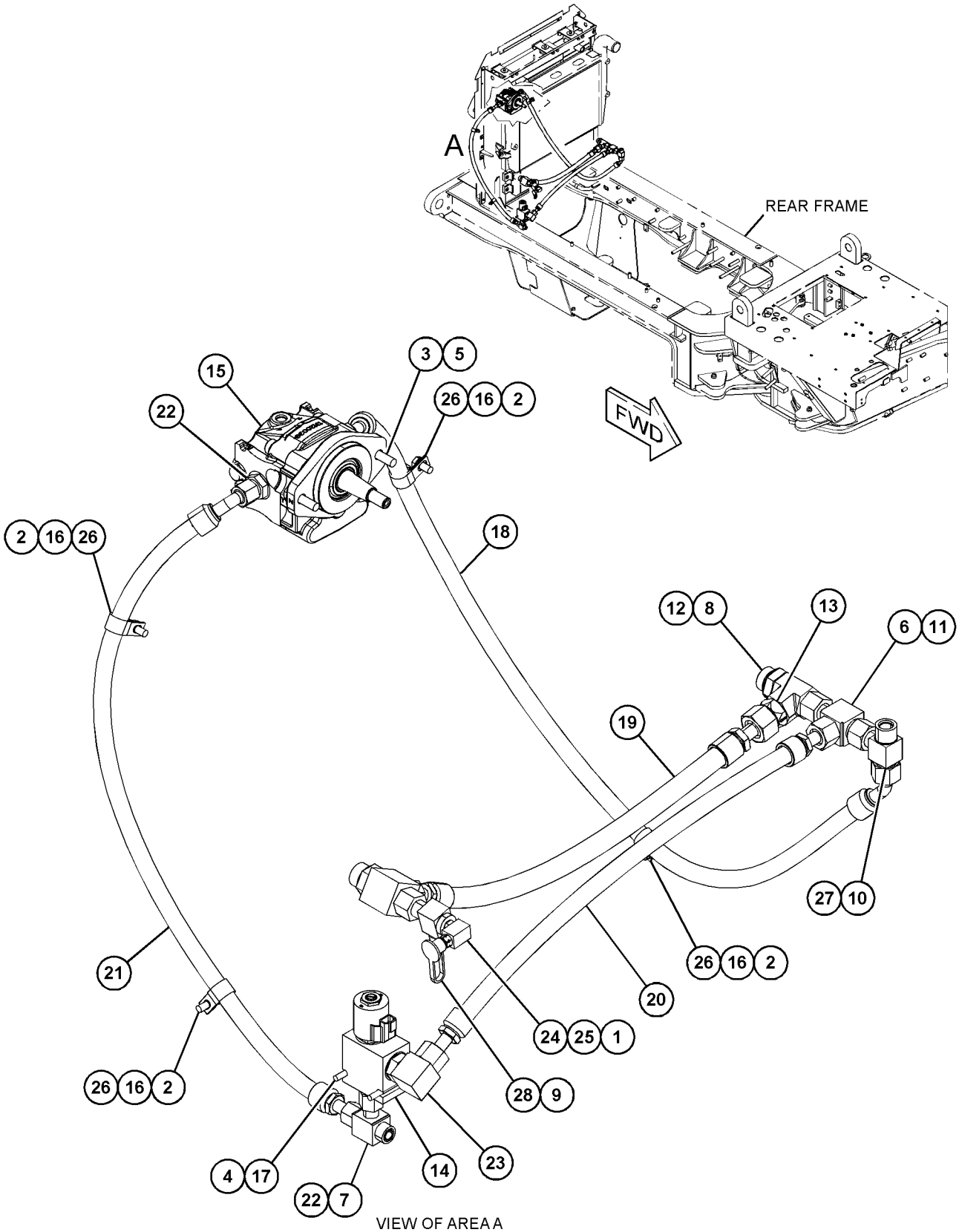

VIEW OF AREA A

GRAPHIC #1 <END> g06375599

535-7184 LINES GP-IMPLEMENT

S/N: W921-UP

SMCS-5057 **i07560310**

NOTE	REF NO	GRAPHIC REF	PART NUMBER	QTY	PART NAME 1 2 3 4 5 6 (PRODUCT LEVEL)	SEE PAGE
M	1	1	**518-2309**	2	BOLT (M10X1.5X20-MM)	
M	2	1	**518-2311**	2	BOLT (M10X1.5X30-MM)	
M	3	1	**518-6585**	2	NUT-HEX (M10X1.5-THD)	
	4	1	**8M-2773**	4	CLIP (LOOP)	
	5	1	*148-8318*	2	CONNECTOR AS	
					(EACH INCLUDES)	
		1	**3K-0360**	1	SEAL-O-RING	
		1	**6V-8397**	1	SEAL-O-RING	
		1	**6V-8634**	1	CONNECTOR	
	6	1	*148-8363*	2	ELBOW AS	
					(EACH INCLUDES)	
		1	**3K-0360**	1	SEAL-O-RING	
		1	**6V-8397**	1	SEAL-O-RING	
		1	**6V-9876**	1	ELBOW	
	7	1	*148-8364*	2	ELBOW AS	
					(EACH INCLUDES)	
		1	**3K-0360**	1	SEAL-O-RING	
		1	**6V-8398**	1	SEAL-O-RING	
		1	**6V-8625**	1	ELBOW	
	8	1	*164-5608*	2	CONNECTOR AS	
					(EACH INCLUDES)	
		1	**3K-0360**	1	SEAL-O-RING	
		1	**6V-8398**	1	SEAL-O-RING	
		1	**8T-1687**	1	CONNECTOR	
	9	1	**518-4417**	6	WASHER	
I	10	1	**536-7257**	1	HOSE AS	
I	11	1	**536-7258**	1	HOSE AS	
I	12	1	**536-7259**	1	HOSE AS	
I	13	1	**536-7260**	1	HOSE AS	
	14	1	**541-6637**	4	CLIP (LOOP)	

I - REFER TO HYDRAULIC INFORMATION SYSTEM
M - METRIC PART

535-7184 **LINES GP-IMPLEMENT (**contd.**)** **i07560310**

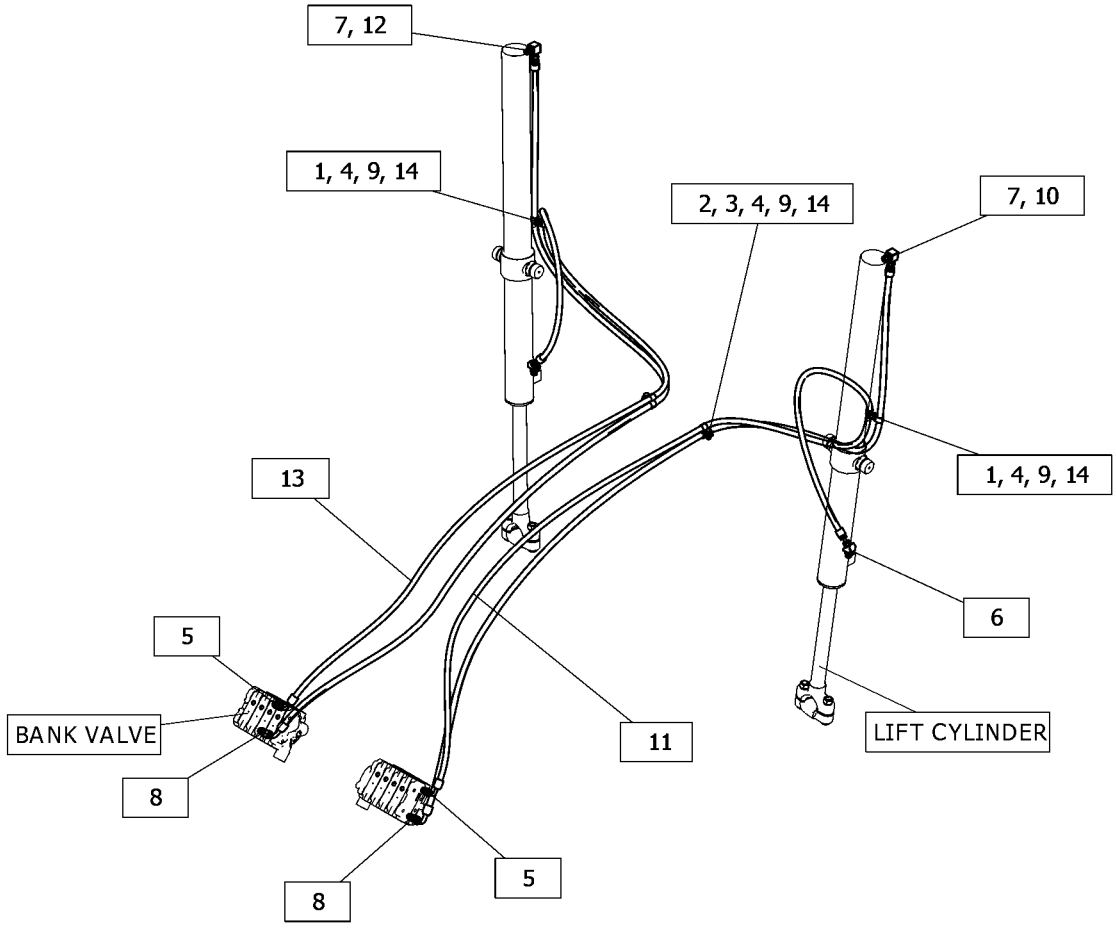

GRAPHIC #1 <END> g06366810

535-7174 LINES GP-PUMP

S/N: W921-UP

PART OF 535-7200 HYDRAULIC AR

SMCS-5057 **i07589744**

NOTE	REF NO	GRAPHIC REF	PART NUMBER	QTY	PART NAME 1 2 3 4 5 6 (PRODUCT LEVEL)	SEE PAGE
	1	1	*148-8429*	1	TEE AS	
		1	**5K-9090**	2	SEAL-O-RING	
		1	**6V-9840**	1	TEE-SWIVEL	
	2	1	*148-8448*	1	TEE AS	
		1	**4J-5477**	2	SEAL-O-RING	
		1	**6V-9842**	1	TEE-SWIVEL	
	3	2	*150-4033*	1	TEE AS	
		2	**6V-9746**	2	SEAL-O-RING	
		2	**6V-9846**	1	TEE	
	4	1	*150-5968*	1	TEE AS	
		1	**4J-5477**	2	SEAL-O-RING	
		1	**6V-9835**	1	TEE	
M	5	1,2	**518-2310**	3	BOLT (M10X1.5X25-MM)	
	6	1	**518-2312**	1	BOLT (M10X1.5X35-MM)	
M	7	2	**518-2433**	4	BOLT (M10X1.5X30-MM)	
M	8	1	**518-6585**	1	NUT-HEX (M10X1.5-THD)	
	9	1	**519-0422**	1	CLIP	
	10	2	**520-1140**	4	PIPE	
	11	1	**537-1608**	1	BRACKET	
	12	2	**113-9533**	1	HOSE	
	13	2	*148-8308*	1	ADAPTER AS	
		2	**2S-4078**	1	SEAL-O-RING	
		2	**7X-2470**	1	ADAPTER	
	14	1	*148-8316*	4	CONNECTOR AS	
					(EACH INCLUDES)	
		1	**3J-7354**	1	SEAL-O-RING	
		1	**4J-5477**	1	SEAL-O-RING	
		1	**6V-8647**	1	CONNECTOR	
	15	1	*148-8323*	1	CONNECTOR AS	
		1	**2S-4078**	1	SEAL-O-RING	
		1	**5K-9090**	1	SEAL-O-RING	
		1	**6V-9875**	1	CONNECTOR	
	16	2	*148-8327*	1	CONNECTOR AS	
		2	**3D-2824**	1	SEAL-O-RING	
		2	**6V-8637**	1	CONNECTOR	
		2	**6V-9746**	1	SEAL-O-RING	
	17	1	*148-8347*	5	ELBOW AS	
					(EACH INCLUDES)	
		1	**3D-2824**	1	SEAL-O-RING	
		1	**6V-9007**	1	ELBOW	
		1	**6V-9746**	1	SEAL-O-RING	
	18	1	*148-8351*	1	ELBOW AS	
		1	**4J-5477**	1	SEAL-O-RING	
		1	**6V-9849**	1	ELBOW	
	19	1	*148-8352*	1	ELBOW AS	
		1	**5K-9090**	1	SEAL-O-RING	
		1	**6V-9854**	1	ELBOW (SWIVEL)	
	20	2	*148-8360*	1	ELBOW AS	

535-7174 **LINES GP-PUMP (**contd.**)** **i07589744**

NOTE	REF NO	GRAPHIC REF	PART NUMBER	QTY	PART NAME 1 2 3 4 5 6 (PRODUCT LEVEL)	SEE PAGE
		2	**6V-9182**	1	ELBOW	
		2	**6V-9746**	1	SEAL-O-RING	
		2	**7M-8485**	1	SEAL-O-RING	
	21	1	*148-8368*	2	ELBOW AS	
					(EACH INCLUDES)	
		1	**3J-1907**	1	SEAL-O-RING	
		1	**4J-5477**	1	SEAL-O-RING	
		1	**6V-8627**	1	ELBOW	
	22	1	*148-8392*	1	ELBOW AS	
		1	**6V-9746**	1	SEAL-O-RING	
		1	**6V-9853**	1	ELBOW	
	23	1	*150-4052*	1	UNION AS	
		1	**4J-5477**	2	SEAL-O-RING	
		1	**6V-8993**	1	UNION	
	24	1	*153-6237*	2	ELBOW AS	
					(EACH INCLUDES)	
		1	**3D-2824**	1	SEAL-O-RING	
		1	**6V-9004**	1	ELBOW	
		1	**6V-9746**	1	SEAL-O-RING	
	25	1	*171-6723*	1	ELBOW AS	
		1	**6V-9746**	1	SEAL-O-RING	
		1	**8T-8899**	1	ELBOW	
	26	1	*187-2120*	1	ELBOW AS	
		1	**4J-5477**	1	SEAL-O-RING	
		1	**8C-8408**	1	ELBOW	
	27	2	**1P-4578**	2	FLANGE-HALF	
	28	1	**213-3745**	1	ELBOW	
	29	1	**353-5101**	1	NUT-BULKHEAD	
	30	2	*377-9540*	1	ELBOW AS	
		2	**2M-9780**	1	SEAL-O-RING	
		2	**371-7242**	1	ADAPTER-ELBOW	
	31	1	**3E-6909**	1	CLIP (LOOP)	
	32	1	**3J-1907**	1	SEAL-O-RING	
	33	2	**490-8762**	1	SEAL-O-RING	
	34	2	**4J-0520**	1	SEAL-O-RING	
	35	2	**4J-0522**	1	SEAL-O-RING	
I	36	1	**507-1073**	1	HOSE AS	
	37	2	**518-2319**	4	BOLT (M12X1.75X30-MM)	
	38	1,2	**518-4417**	9	WASHER	
	39	1,2	**518-4418**	8	WASHER (13X24X2.5-MM THK)	
	40	2	**518-9731**	4	WASHER	
	41	1,2	**519-4966**	2	CLIP	
	42	2	**520-1132**	1	SEAL	
	43	2	**521-2261**	8	BOLT-HEAD (M10X1.5X35-MM)	
	44	2	**521-6775**	1	SEAL	
	45	1	**524-6908**	4	BOLT (M12X1.75X90-MM)	
	46	1	*526-7269*	1	TEE AS	
		1	**228-7092**	1	SEAL-O-RING	
		1	**228-7093**	1	SEAL-O-RING	
		1	**298-0890**	1	ADAPTER-TEE	
Y	47	1	**535-8582**	1	VALVE GP-COMBINATION	434
I	48	1	**536-7325**	1	HOSE AS	

535-7174 **LINES GP-PUMP (**contd.**)** **i07589744**

NOTE	REF NO	GRAPHIC REF	PART NUMBER	QTY	PART NAME 1 2 3 4 5 6 (PRODUCT LEVEL)	SEE PAGE
I	49	1	**536-7326**	1	HOSE AS	
I	50	2	**536-7327**	1	HOSE AS	
I	51	1	**536-7328**	1	HOSE AS	
I	52	1	**536-7329**	1	HOSE AS	
I	53	1	**536-7330**	1	HOSE AS	
I	54	1	**536-7331**	1	HOSE AS	
	55	1	**536-7333**	1	HOSE AS	
I	56	1	**536-7334**	1	HOSE AS	
I	57	1	**536-7335**	1	HOSE AS	
	58	2	**536-7336**	1	TUBE AS	
	59	2	**537-1607**	1	HOSE	
	60	2	**540-4620**	1	TUBE AS	
	61	2	**540-4621**	1	BLOCK	
	62	1	**540-4623**	2	SLEEVE	
	63	2	**549-6200**	1	TUBE	
	64	1	**5P-7466**	1	CLIP (SLOT)	
	65	1	**5P-7467**	1	CLIP (TAB)	
	66	1	**5P-8112**	1	GROMMET	
	67	1	**6V-0852**	1	CAP-DUST	
	68	1	**6V-3965**	1	FITTING (QUICK DISCONNECT)	
	69	2	**8C-3206**	2	FLANGE-HALF	
	70	2	**5P-1291**	1	HOSE	
	71	2	**9M-0164**	4	CLAMP-HOSE	
	72	2	**9X-6458**	4	WASHER-HARD (10.2X22.5X3-MM THK)	

I - REFER TO HYDRAULIC INFORMATION SYSTEM
M - METRIC PART
Y - SEPARATE ILLUSTRATION

535-7174 **LINES GP-PUMP (**contd.**)** **i07589744**

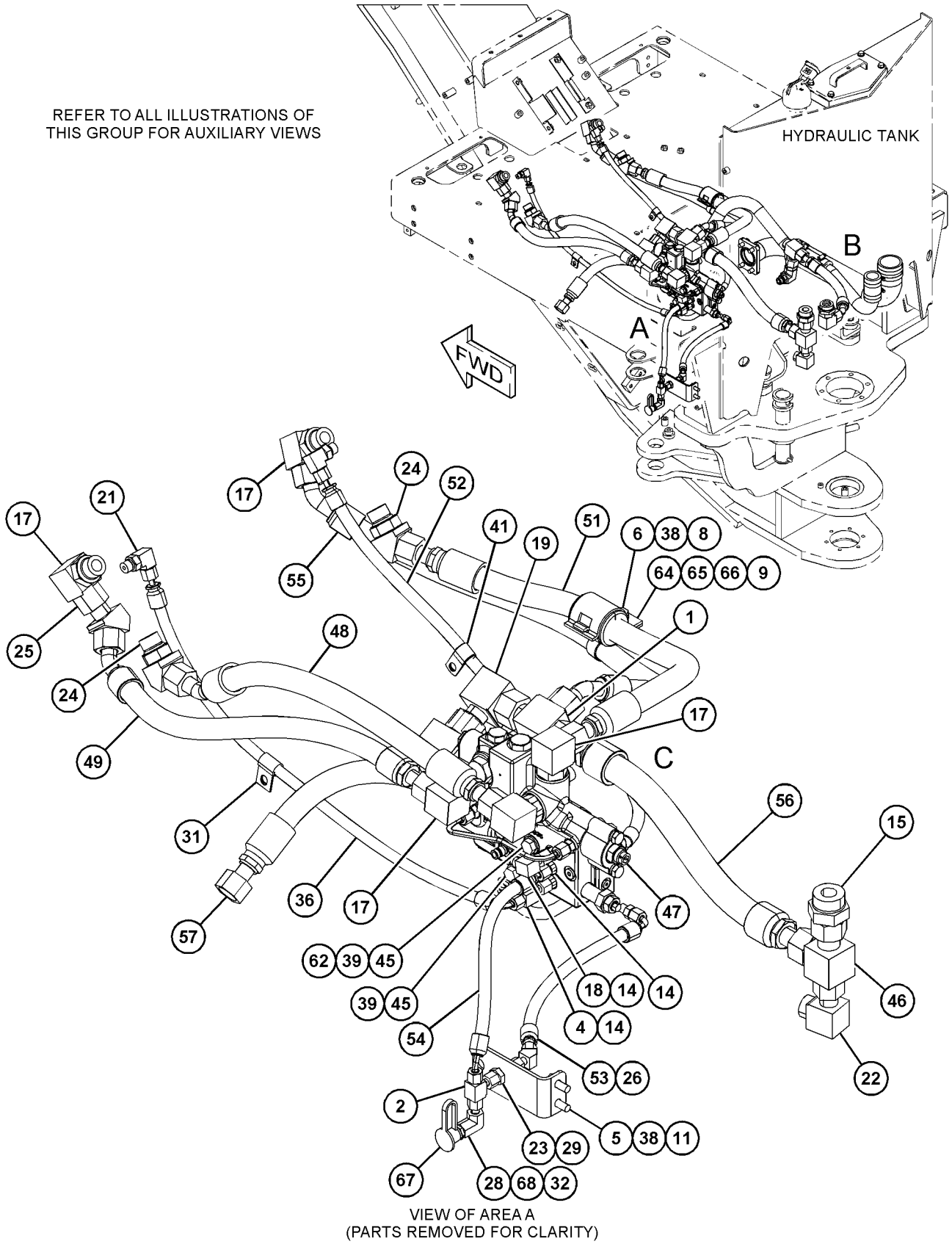

VIEW OF AREA A
(PARTS REMOVED FOR CLARITY)

GRAPHIC #1 g06376305

535-7174 **LINES GP-PUMP (**contd.**)** **i07589744**

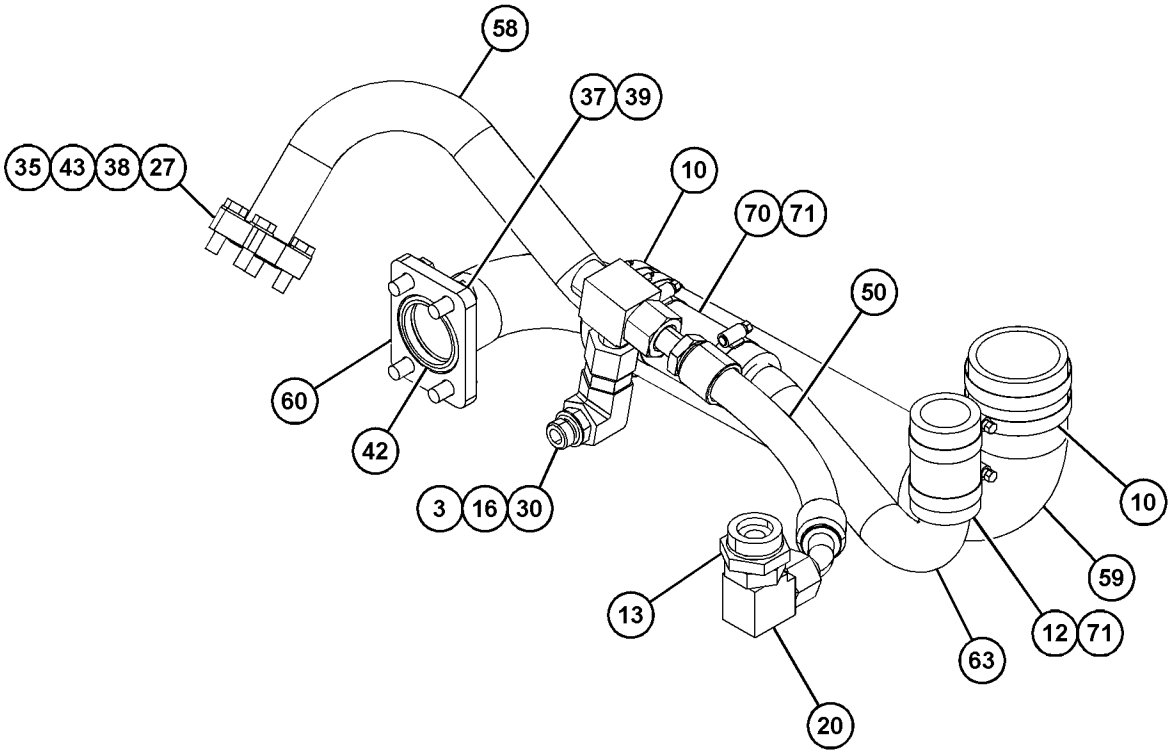

VIEW OF AREA B
(PARTS REMOVED FOR CLARITY)

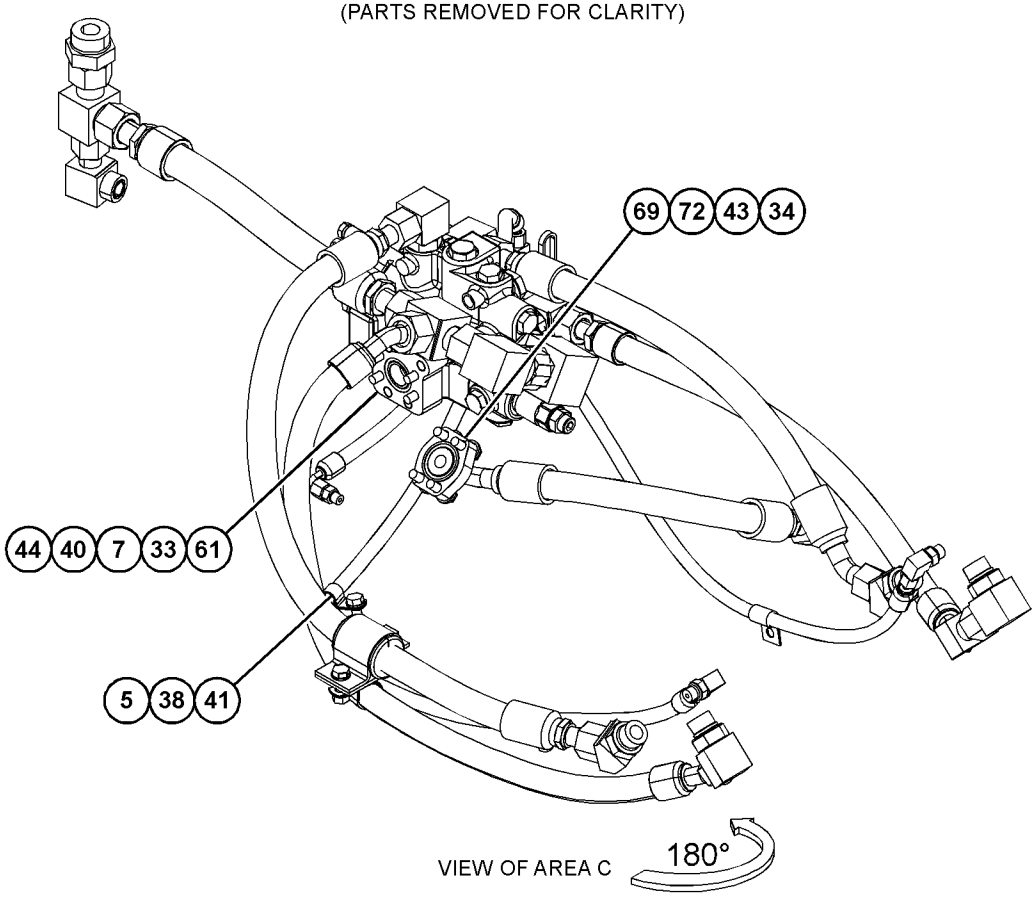

VIEW OF AREA C

GRAPHIC #2 <END> g06376306

535-7195 LINES GP-RIPPER

S/N: W921-UP

PART OF 537-5607 RIPPER AR

SMCS-5057 **i07573182**

NOTE	REF NO	GRAPHIC REF	PART NUMBER	QTY	PART NAME 1 2 3 4 5 6 (PRODUCT LEVEL)	SEE PAGE
	1	1	**431-4613**	2	ADAPTER	
M	2	1	**518-2309**	2	BOLT (M10X1.5X20-MM)	
	3	1	**518-4416**	2	WASHER (8.4X16X1.6-MM THK)	
M	4	1	**518-8386**	2	BOLT (M8X1.25X16-MM)	
	5	1	**518-4417**	2	WASHER	
Y	6	1	**532-9480**	1	CYLINDER GP-HYDRAULIC	365
I	7	1	**535-7214**	1	HOSE AS	
I	8	1	**535-7215**	1	HOSE AS	
	9	1	**538-4736**	1	TUBE AS	
	10	1	**538-4737**	1	CLIP	
	11	1	**538-4738**	1	BRACKET AS	
	12	1	*148-8340*	1	CONNECTOR AS	
		1	**3K-0360**	1	SEAL-O-RING	
		1	**6V-8398**	1	SEAL-O-RING	
		1	**6V-8639**	1	CONNECTOR	
	13	1	*148-8367*	2	ELBOW AS	
					(EACH INCLUDES)	
		1	**6V-8397**	1	SEAL-O-RING	
		1	**6V-9850**	1	ELBOW	
	14	1	*148-8377*	2	ELBOW AS	
					(EACH INCLUDES)	
		1	**6V-8397**	2	SEAL-O-RING	
		1	**6V-8980**	1	ELBOW	
	15	1	*150-4048*	1	ELBOW AS	
		1	**3K-0360**	1	SEAL-O-RING	
		1	**6V-8722**	1	ELBOW	
		1	**7J-9108**	1	SEAL-O-RING	
	16	1	**6V-8398**	1	SEAL-O-RING	
	17	1	**6V-9168**	2	NUT (11/16-16-THD)	

I - REFER TO HYDRAULIC INFORMATION SYSTEM
M - METRIC PART
Y - SEPARATE ILLUSTRATION

535-7195 **LINES GP-RIPPER (**contd.**)** **i07573182**

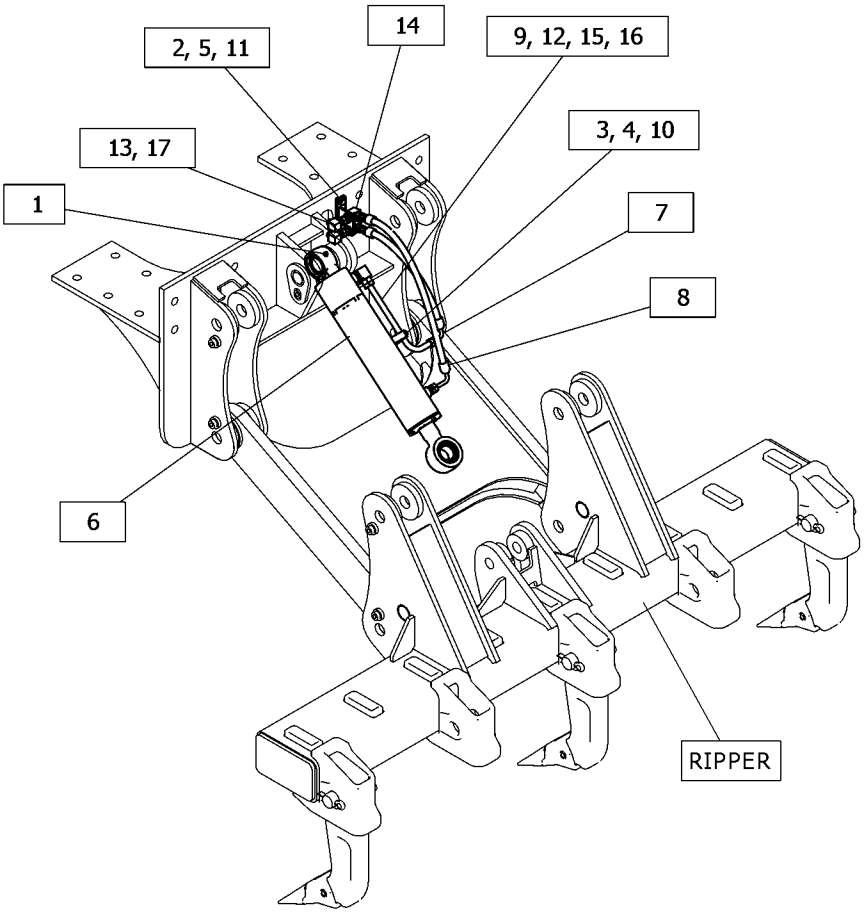

GRAPHIC #1 <END> g06373319

535-7191 LINES GP-SECONDARY STEERING

S/N: W921-UP

PART OF 537-5630 STEERING AR-SECONDARY

SMCS-4304 **i07578922**

NOTE	REF NO	GRAPHIC REF	PART NUMBER	QTY	PART NAME 1 2 3 4 5 6 (PRODUCT LEVEL)	SEE PAGE
	1	1	*148-8448*	1	TEE AS	
		1	**4J-5477**	2	SEAL-O-RING	
		1	**6V-9842**	1	TEE-SWIVEL	
	2	1	*172-5761*	1	TEE AS	
		1	**3K-0360**	1	SEAL-O-RING	
		1	**6V-8398**	1	SEAL-O-RING	
		1	**8T-6338**	1	TEE-O-RING PORT	
M	3	1	**518-2309**	1	BOLT (M10X1.5X20-MM)	
	4	1	**518-4415**	2	WASHER (6.4X12X1.6-MM THK)	
	5	1	**520-2590**	2	BOLT (M6X1X50-MM)	
	6	1	*148-8368*	1	ELBOW AS	
		1	**3J-1907**	1	SEAL-O-RING	
		1	**4J-5477**	1	SEAL-O-RING	
		1	**6V-8627**	1	ELBOW	
	7	1	*148-8378*	1	ELBOW AS	
		1	**3J-1907**	1	SEAL-O-RING	
		1	**6V-8397**	1	SEAL-O-RING	
		1	**6V-8724**	1	ELBOW	
	8	1	*150-4027*	1	TEE AS	
		1	**3E-2310**	1	TEE	
		1	**3J-1907**	1	SEAL-O-RING	
		1	**6V-8397**	1	SEAL-O-RING	
	9	1	*150-4052*	1	UNION AS	
		1	**4J-5477**	2	SEAL-O-RING	
		1	**6V-8993**	1	UNION	
	10	1	**152-4700**	2	VALVE-CHECK	
	11	1	*194-2903*	1	ELBOW AS	
		1	**3K-0360**	1	SEAL-O-RING	
		1	**8T-0119**	1	ELBOW	
	12	1	**213-3745**	1	ELBOW	
	13	1	**223-2459**	1	VALVE GP-CHECK	
		1	**3K-0360**	1	SEAL-O-RING	
		1	**6V-8398**	1	SEAL-O-RING	
	14	1	*241-6215*	1	ELBOW AS	
		1	**3J-1907**	1	SEAL-O-RING	
		1	**6V-8076**	1	ELBOW	
	15	1	*260-9223*	1	ADAPTER AS	
		1	**3J-7354**	1	SEAL-O-RING	
		1	**7X-3162**	1	ADAPTER-SWIVEL	
	16	1	*313-3472*	1	TEE AS	
		1	**3J-1907**	1	SEAL-O-RING	
		1	**313-3471**	1	TEE	
	17	1	**353-5101**	1	NUT-BULKHEAD	
	18	1	*357-4564*	1	UNION AS-CROSS	
		1	**4J-5477**	4	SEAL-O-RING	
		1	**250-1427**	1	ADAPTER-CROSS	
	19	1	**3J-1907**	1	SEAL-O-RING	

535-7191 **LINES GP-SECONDARY STEERING** (contd.) **i07578922**

NOTE	REF NO	GRAPHIC REF	PART NUMBER	QTY	PART NAME 1 2 3 4 5 6 (PRODUCT LEVEL)	SEE PAGE
	20	1	*439-1830*	1	TEE AS	
		1	**6V-5063**	1	SEAL-O-RING	
		1	**439-1829**	1	TEE	
	21	1	*448-9017*	1	ADAPTER AS	
		1	**214-7568**	1	SEAL-O-RING	
		1	**228-7089**	1	SEAL-O-RING	
		1	**448-9016**	1	ADAPTER	
	22	1	**518-4417**	1	WASHER	
Y	23	1	**522-9166**	1	VALVE GP-PRESSURE REDUCING (STEERING OIL)	464
I	24	1	**536-7319**	1	HOSE AS	
I	25	1	**536-7320**	1	HOSE AS	
	26	1	**536-7321**	1	HOSE AS	
I	27	1	**536-7322**	1	HOSE AS	
I	28	1	**536-7324**	1	HOSE AS	
	29	1	**548-9938**	1	HOSE AS	
	30	1	**552-6766**	1	CLIP (LOOP)	
	31	1	**6V-0852**	1	CAP-DUST	
	32	1	**6V-3965**	1	FITTING (QUICK DISCONNECT)	
	33	1	**6V-8397**	2	SEAL-O-RING	

I - REFER TO HYDRAULIC INFORMATION SYSTEM
M - METRIC PART
Y - SEPARATE ILLUSTRATION

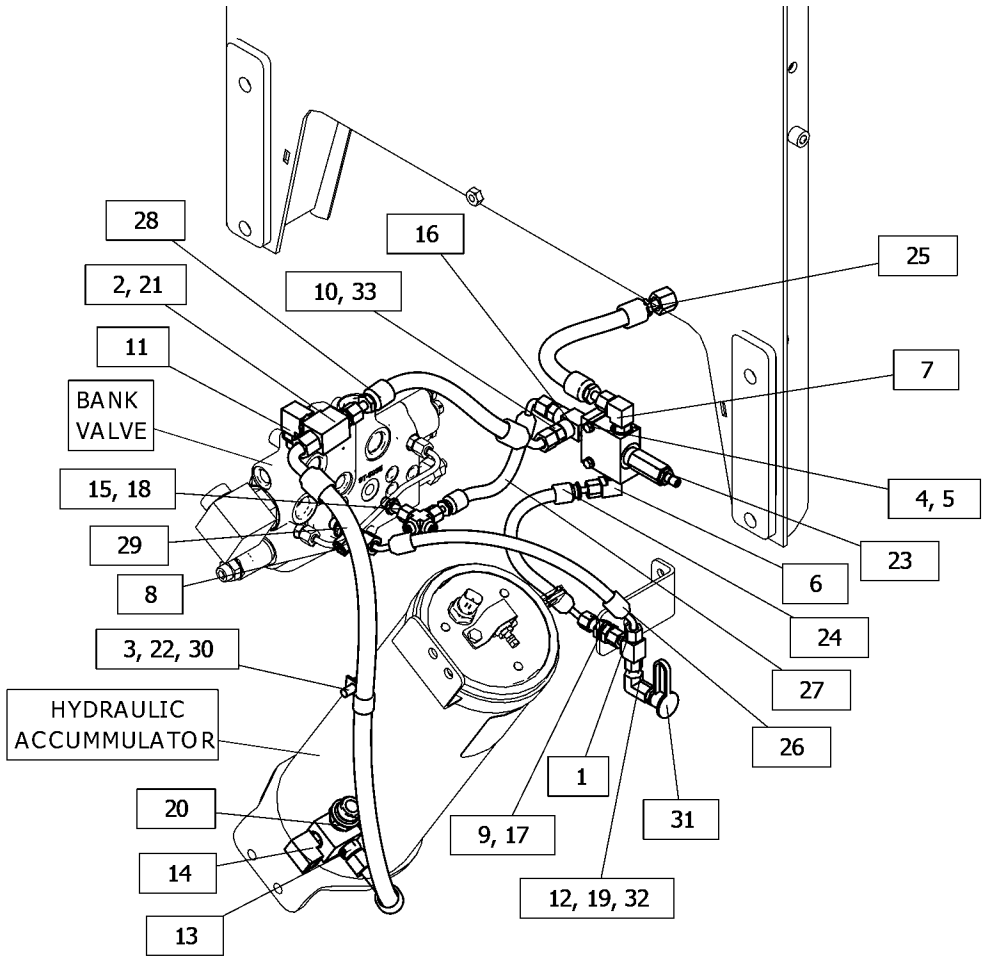

GRAPHIC #1 <END> g06373777

535-7178 LINES GP-STEERING

S/N: W921-UP

PART OF 535-7200 HYDRAULIC AR

SMCS-4304 **i07590945**

NOTE	REF NO	GRAPHIC REF	PART NUMBER	QTY	PART NAME 1 2 3 4 5 6 (PRODUCT LEVEL)	SEE PAGE
	1	1	*148-8444*	2	TEE AS-SWIVEL	
					(EACH INCLUDES)	
		1	**6V-8398**	2	SEAL-O-RING	
		1	**6V-9837**	1	TEE-SWIVEL	
M	2	1	**518-2309**	13	BOLT (M10X1.5X20-MM)	
M	3	1	**518-2313**	2	BOLT-HEAD (M10X1.5X40-MM)	
M	4	1	**518-6585**	3	NUT-HEX (M10X1.5-THD)	
	5	1	**519-0421**	6	CLIP	
	6	1	**6V-1889**	2	CLIP (LOOP)	
	7	1	**091-9035**	2	SPACER (11X25X20-MM THK)	
	8	1	**136-6330**	2	SEAL	
	9	1	**136-6331**	2	SEAL	
	10	1	*148-8316*	1	CONNECTOR AS	
		1	**3J-7354**	1	SEAL-O-RING	
		1	**4J-5477**	1	SEAL-O-RING	
		1	**6V-8647**	1	CONNECTOR	
	11	1	*148-8340*	7	CONNECTOR AS	
					(EACH INCLUDES)	
		1	**3K-0360**	1	SEAL-O-RING	
		1	**6V-8398**	1	SEAL-O-RING	
		1	**6V-8639**	1	CONNECTOR	
	12	1	*148-8354*	2	ELBOW AS	
					(EACH INCLUDES)	
		1	**3K-0360**	1	SEAL-O-RING	
		1	**6V-8398**	1	SEAL-O-RING	
		1	**6V-9002**	1	ELBOW	
	13	1	*148-8364*	1	ELBOW AS	
		1	**3K-0360**	1	SEAL-O-RING	
		1	**6V-8398**	1	SEAL-O-RING	
		1	**6V-8625**	1	ELBOW	
	14	1	*148-8370*	1	ELBOW AS	
		1	**6V-8398**	1	SEAL-O-RING	
		1	**6V-9851**	1	ELBOW	
	15	1	*171-6467*	4	UNION AS	
					(EACH INCLUDES)	
		1	**6V-8398**	1	SEAL-O-RING	
		1	**6V-9846**	1	TEE	
		1	**8T-5082**	1	UNION	
	16	1	**200-6345**	1	SADDLE-MOUNTING (DUAL SWIVEL)	
	17	1	**204-2281**	2	STRAP-CABLE	
	18	1	**4L-6454**	1	BOLT (3/8-16X1-IN)	
	19	1	**518-4417**	19	WASHER	
	20	1	**518-9849**	5	SLEEVE	
	21	1	**522-7790**	1	CLIP	
I	22	1	**535-7220**	2	HOSE AS	
I	23	1	**535-7221**	1	HOSE AS	
I	24	1	**535-7222**	1	HOSE AS	
I	25	1	**536-7222**	1	HOSE AS	
I	26	1	**536-7223**	1	HOSE AS	

535-7178 **LINES GP-STEERING** (contd.) **i07590945**

NOTE	REF NO	GRAPHIC REF	PART NUMBER	QTY	PART NAME 1 2 3 4 5 6 (PRODUCT LEVEL)	SEE PAGE
I	27	1	**536-7224**	1	HOSE AS	
I	28	1	**536-7225**	1	HOSE AS	
I	29	1	**536-7226**	1	HOSE AS	
I	30	1	**536-7227**	1	HOSE AS	
I	31	1	**536-7228**	1	HOSE AS	
	32	1	**540-4616**	2	PLATE	
	33	1	**541-6637**	15	CLIP (LOOP)	
	34	1	**7K-1181**	4	STRAP-CABLE	

I - REFER TO HYDRAULIC INFORMATION SYSTEM
M - METRIC PART

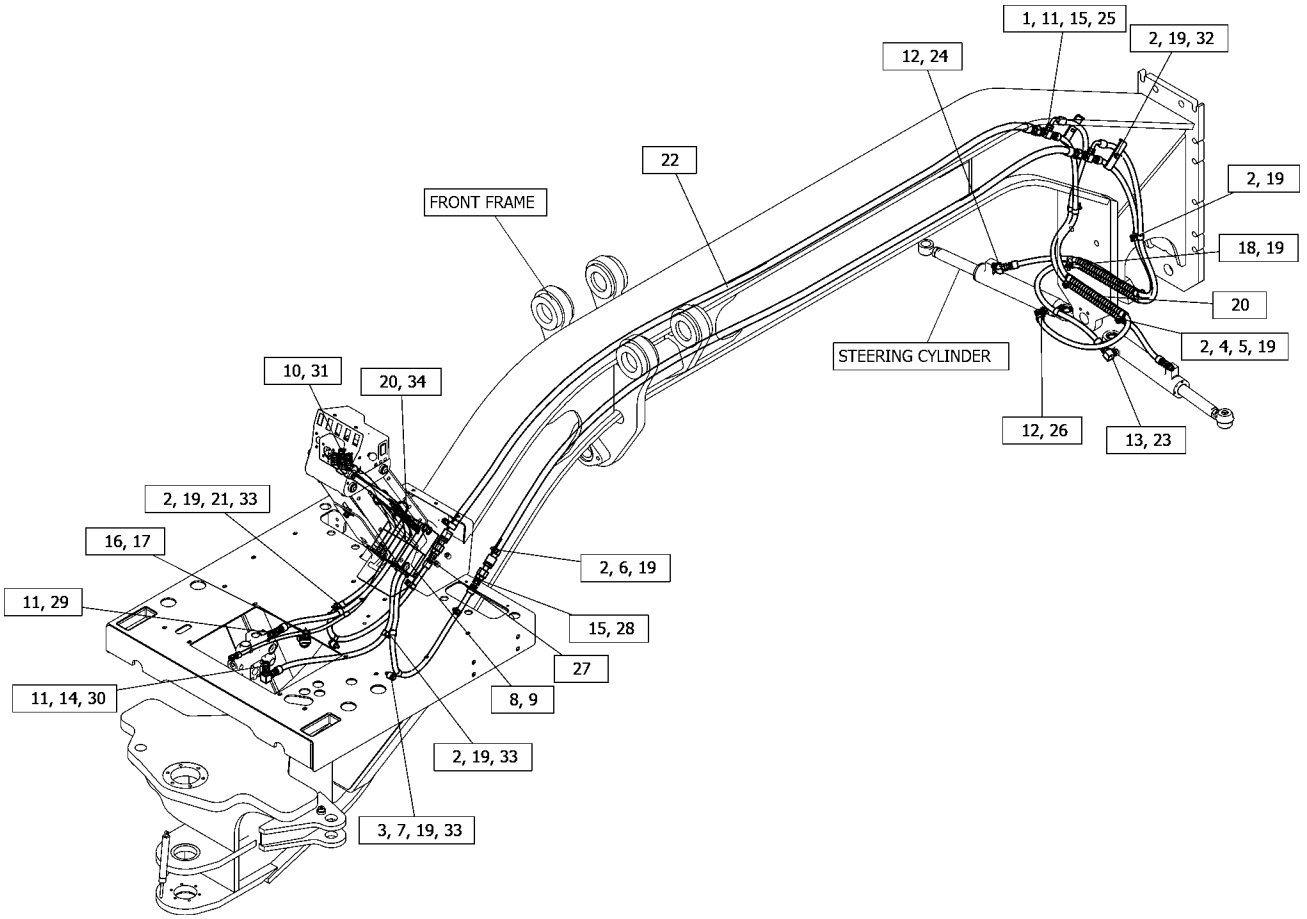

GRAPHIC #1 <END> g06375460

537-5636 LOCK AR-CENTERSHIFT—PTO OIL

S/N: W921-UP

SMCS-5221 **i07552768**

NOTE	PART NUMBER	QTY	PART NAME 1 2 3 4 5 6 (PRODUCT LEVEL)	SEE PAGE
Y	*535-7183*	1	LINES GP-HYDRAULIC	384
Y	*549-4734*	1	SWITCH GP-ROCKER	211

Y - SEPARATE ILLUSTRATION

<END>

537-5637 LOCK AR-CENTERSHIFT—HYDRAULIC FAN OIL

S/N: W921-UP

SMCS-5221 **i07552763**

NOTE	PART NUMBER	QTY	PART NAME 1 2 3 4 5 6 (PRODUCT LEVEL)	SEE PAGE
Y	*535-7182*	1	LINES GP-HYDRAULIC	382
Y	*549-4734*	1	SWITCH GP-ROCKER	211

Y - SEPARATE ILLUSTRATION

<END>

535-7198 LOCK GP-CENTERSHIFT

S/N: W921-UP

PART OF 535-7182, 535-7183 LINES GP-HYDRAULIC

SMCS-5221 **i07573021**

NOTE	REF NO	GRAPHIC REF	PART NUMBER	QTY	PART NAME 1 2 3 4 5 6 (PRODUCT LEVEL)	SEE PAGE
	1	1	**518-4420**	2	WASHER (17.5X30X3.5-MM THK)	
	2	1	**2H-3931**	1	SEAL-O-RING	
	3	1	**4T-8054**	1	SEAL AS	
	4	1	**380-6949**	1	CAP GP-PROTECTION	
		1	**384-3892**	1	VALVE GP-SOLENOID (CENTERSHIFT LOCK)	
		1	**384-3893**	1	COIL AS	
	5	1	**384-7727**	1	SPACER (63.5X80X5-MM THK)	
	6	1	**390-2799**	1	PIN	
	7	1	**421-4024**	1	SEAL-U-CUP	
	8	1	**431-8801**	1	CYLINDER	
	9	1	**512-9912**	1	PISTON	
	10	1	**520-2594**	2	BOLT	
	11	1	**7X-0346**	1	BOLT (5/8-11X2-IN)	
	12	1	**8T-4122**	1	WASHER-HARD (17X32X3.5-MM THK)	
	13	1	**8T-4223**	2	WASHER-HARD (13.5X25.5X3-MM THK)	
	14	1	**8T-8917**	2	BOLT (1/2-13X1.25-IN)	
	15	1	**7K-9204**	1	SEAL-LIP TYPE	

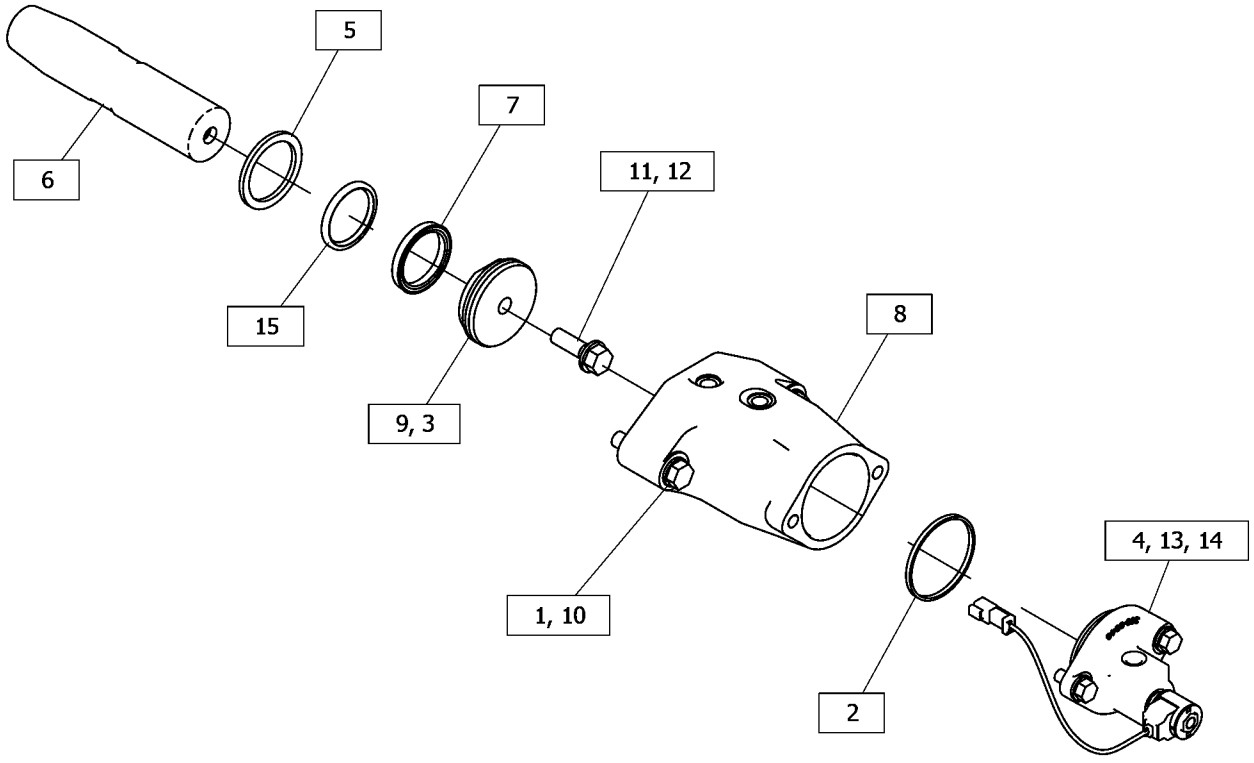

GRAPHIC #1 <END> g06367188

537-5635 LOCK GP-CENTERSHIFT

S/N: W921-UP

SMCS-5221 **i07552790**

NOTE	REF NO	GRAPHIC REF	PART NUMBER	QTY	PART NAME 1 2 3 4 5 6 (PRODUCT LEVEL)	SEE PAGE
	1	1	**119-6407**	1	CONNECTOR	
	2	1	**228-6089**	1	PLUG (ROCKER SWITCH)	
	3	1	*480-3046*	1	TEE AS	
		1	**6V-8397**	1	SEAL-O-RING	
		1	**123-2169**	1	FITTING-ORFS	
	4	1	*148-8328*	1	CONNECTOR AS	
		1	**3D-2824**	1	SEAL-O-RING	
		1	**6V-8398**	1	SEAL-O-RING	
		1	**6V-8633**	1	CONNECTOR	
	5	1	*148-8370*	1	ELBOW AS	
		1	**6V-8398**	1	SEAL-O-RING	
		1	**6V-9851**	1	ELBOW	
	6	1	*164-5567*	1	COUPLER AS-QUICK DISCONNECT (MALE)	
		1	**6V-3965**	1	FITTING (QUICK DISCONNECT)	
		1	**214-7568**	1	SEAL-O-RING	
	7	1	*180-9286*	1	TEE AS	
		1	**3D-2824**	1	SEAL-O-RING	
		1	**3E-2345**	1	ADAPTER-TEE	
		1	**6V-9746**	1	SEAL-O-RING	
	8	1	**531-3387**	1	PIN AS	
	9	1	**531-3391**	1	SPACER	
B	10	1	**531-3393**	5	SHIM	
	11	1	**6V-0852**	1	CAP-DUST	
	12	1	**6V-8397**	1	SEAL-O-RING	
	13	1	**6V-9829**	1	CAP (ORFS)	
M	14	1	**8T-4140**	2	BOLT (M16X2X60-MM)	
	15	1	**8T-7876**	1	SEAL-O-RING	
	16	1	**9X-8257**	2	WASHER (17.5X30X3.5-MM THK)	

B - USE AS REQUIRED
M - METRIC PART

537-5635 **LOCK GP-CENTERSHIFT (**contd.**)** **i07552790**

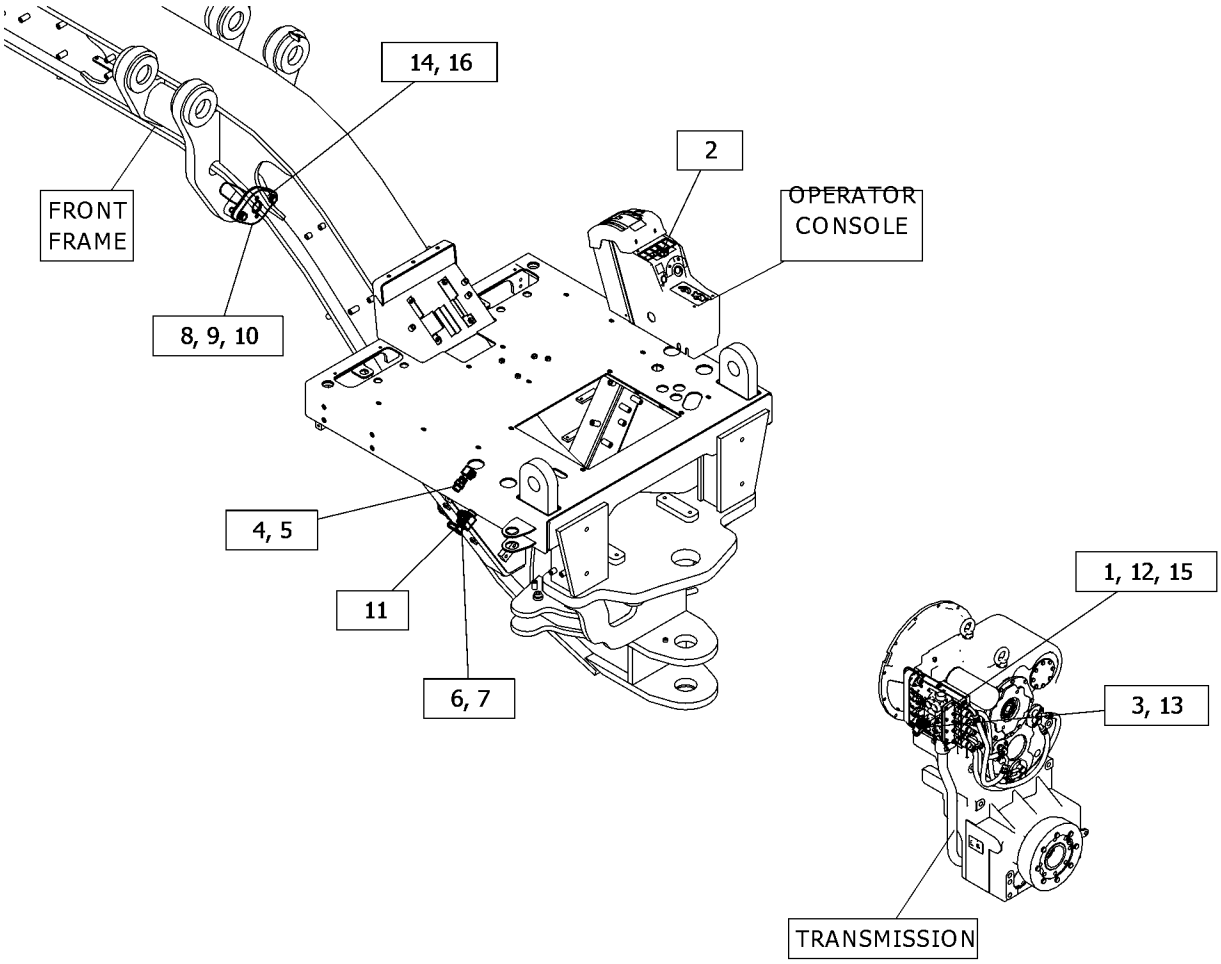

GRAPHIC #1 <END> g06367191

112-2240 MANIFOLD GP-CONTROL

S/N: W921-UP

PART OF 535-7185 LINES GP-ACCUMULATOR

SMCS-5051, 5069, 5264, 5467, 5479 **i07579007**

NOTE	REF NO	GRAPHIC REF	PART NUMBER	QTY	PART NAME 1 2 3 4 5 6 (PRODUCT LEVEL)	SEE PAGE
Y	1	1	**279-6528**	1	VALVE GP-SOLENOID (24-VOLT) (BLADE CUSHION)	476
	2	1	**8C-6162**	1	MANIFOLD	

Y - SEPARATE ILLUSTRATION

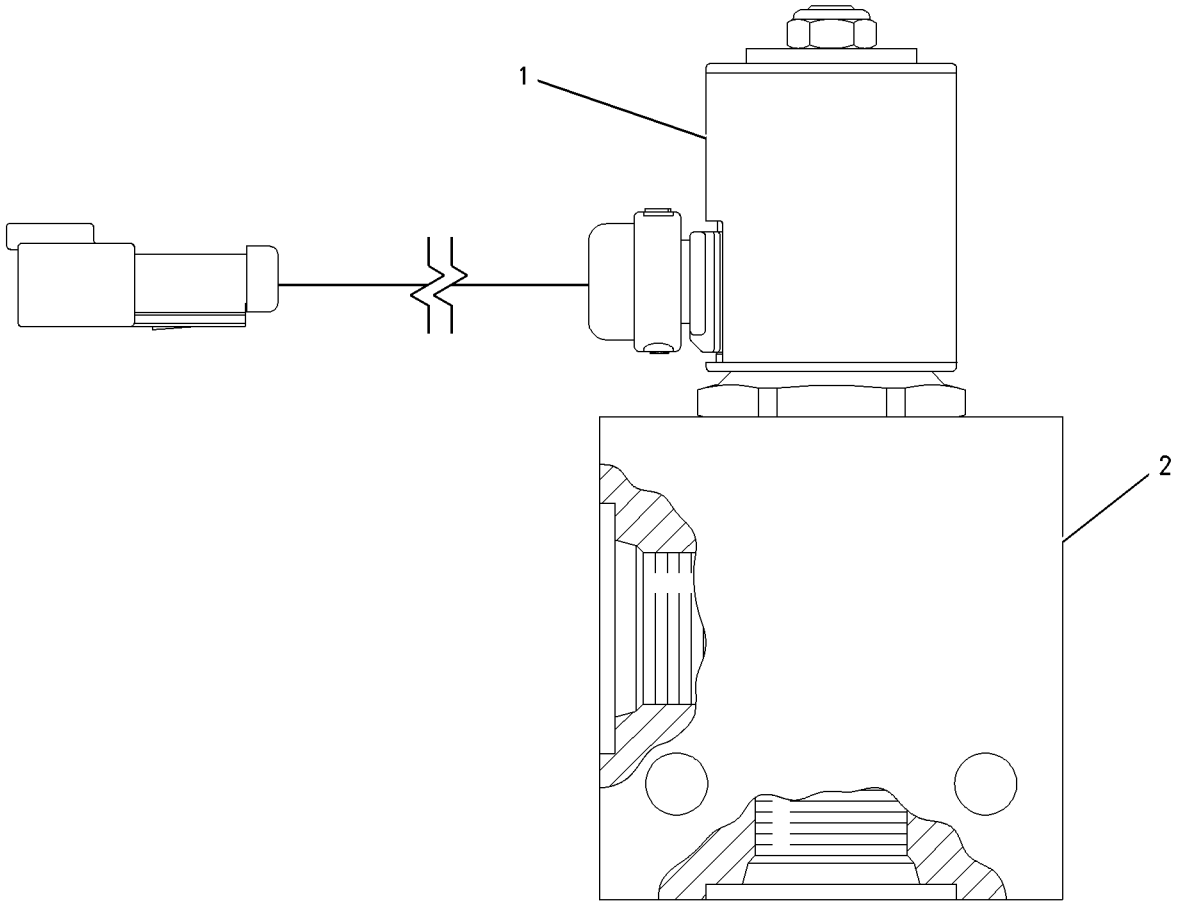

GRAPHIC #1 <END> g00995443

357-0377 MANIFOLD GP-CONTROL

S/N: W921-UP

PART OF 535-7146 LINES GP-SERVICE BRAKE

SMCS-5051, 5069, 5264, 5467, 5479 **i07589179**

NOTE	REF NO	GRAPHIC REF	PART NUMBER	QTY	PART NAME 1 2 3 4 5 6 (PRODUCT LEVEL)	SEE PAGE
Y	1	1	**448-4307**	1	VALVE GP-SOLENOID (24-VOLT) (PARKING BRAKE)	477

Y - SEPARATE ILLUSTRATION

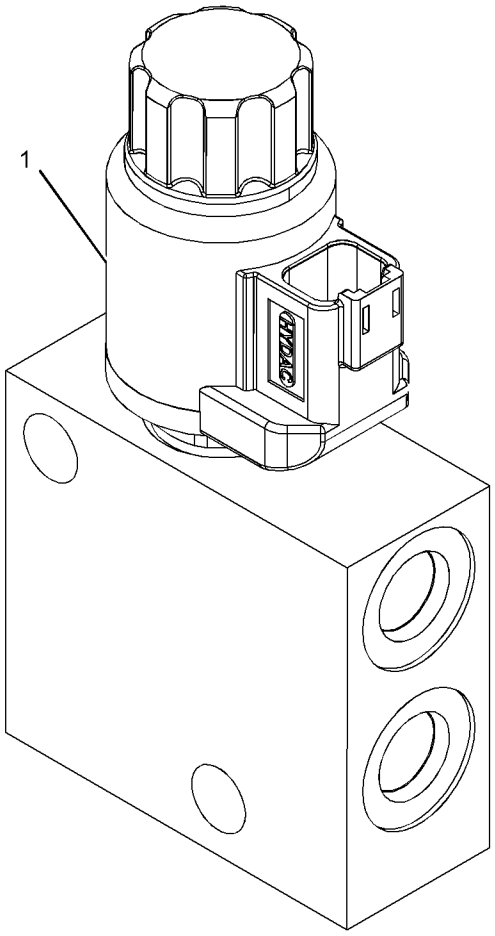

GRAPHIC #1 <END> g03724816

491-9530 MOTOR GP-GEAR

S/N: W921-UP

PART OF 535-7177 LINES GP-HYDRAULIC FAN

SMCS-1386, 5061 **i06832610**

NOTE	REF NO	GRAPHIC REF	PART NUMBER	QTY	PART NAME 1 2 3 4 5 6 (PRODUCT LEVEL)	SEE PAGE
	1	1	**350-9190**	1	VALVE	
J	2	1	**350-9186**	1	SEAL-DUST	
J	3	1	**350-9189**	1	SEAL-DUST	
	4	1	**271-2360**	4	WASHER-HARD (15X22X2.5-MM THK)	
M	5	1	**313-5646**	4	BOLT (M14X2X60-MM)	
					AVAILABLE REPAIR KIT(S):	
J			**500-0703**	1	KIT-SEAL	
					(INCLUDES SEALS & RINGS)	

J - KIT MARKED J SERVICES PART(S) MARKED J
M - METRIC PART

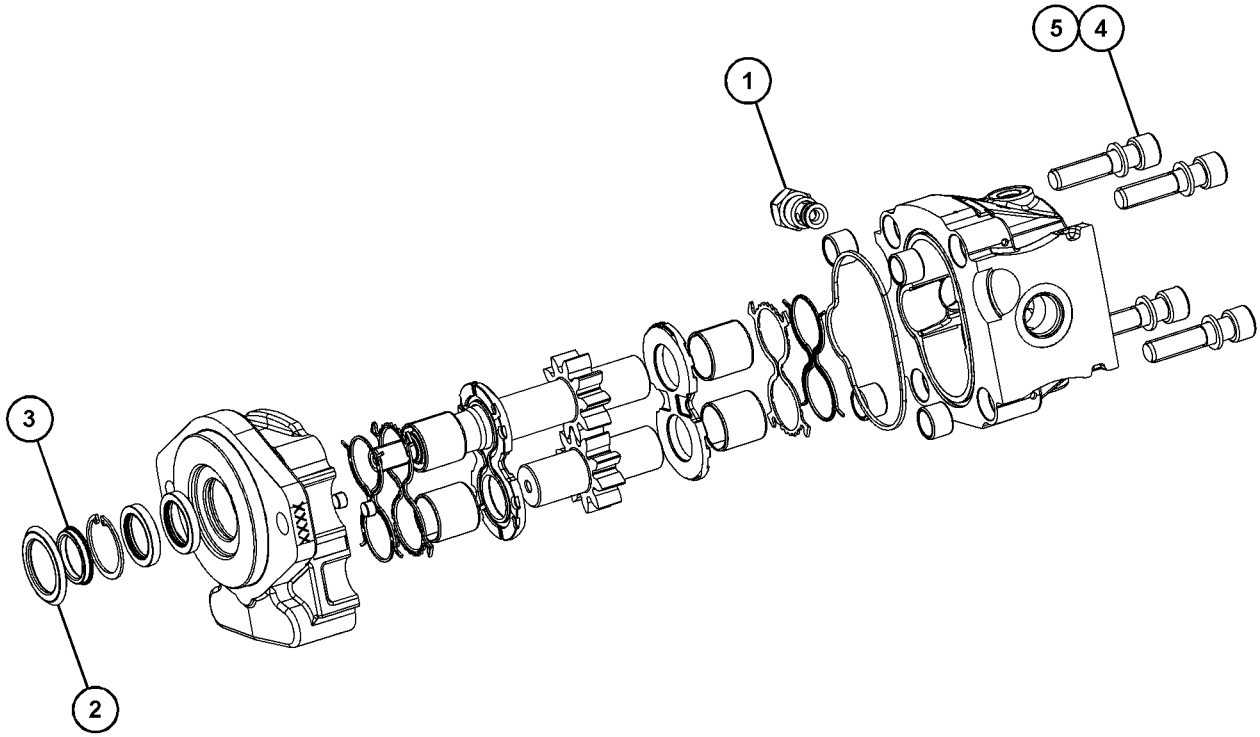

GRAPHIC #1 <END> g06121762

535-7173 PUMP & MTG GP-STEERING

S/N: W921-UP

PART OF 535-7200 HYDRAULIC AR

SMCS-4306, 4344 **i07589656**

NOTE	REF NO	GRAPHIC REF	PART NUMBER	QTY	PART NAME 1 2 3 4 5 6 (PRODUCT LEVEL)	SEE PAGE
	1	1	**518-4420**	4	WASHER (17.5X30X3.5-MM THK)	
	2	1	**518-6588**	2	NUT (M16X2-THD)	
	3	1	**518-4418**	4	WASHER (13X24X2.5-MM THK)	
M	4	1	**518-9597**	4	BOLT (M12X1.75X70-MM)	
	5	1	**518-9600**	2	BOLT (M16X2X60-MM)	
	6	1	**519-0398**	4	MOUNTING AS	
	7	1	**521-2261**	2	BOLT-HEAD (M10X1.5X35-MM)	
Y	8	1	**533-1132**	1	PUMP GP-PISTON (PISTON)	417
J	9	1	**533-3646**	1	PUMP GP-GEAR	
	10	1	**540-4619**	1	PLATE AS	
	11	1	**540-4627**	4	WASHER	
	12	1	**8T-7934**	2	WASHER-HARD (11X21X5-MM THK)	
					AVAILABLE REPAIR KIT(S):	
J			**462-2093**	2	KIT-SEAL	
					(INCLUDES SHAFT SEALS,BACKUP RINGS,PRESSURE SEALS,SQUARE SEALS & RETAINER RING)	

J - KIT MARKED J SERVICES PART(S) MARKED J
M - METRIC PART
Y - SEPARATE ILLUSTRATION

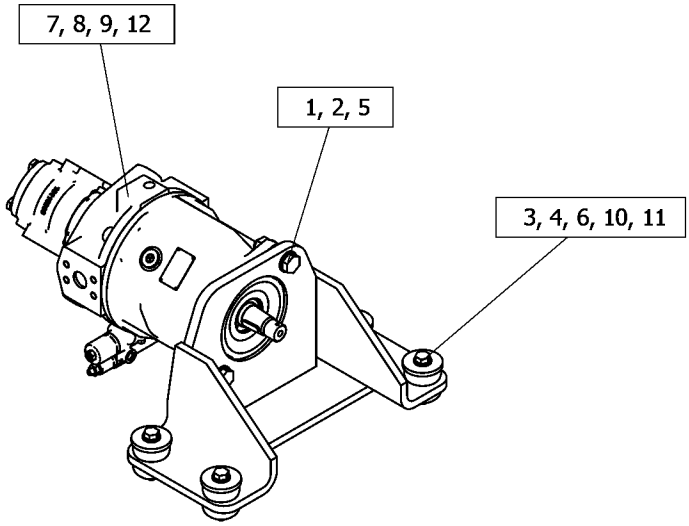

GRAPHIC #1 <END> g06375454

533-1132 PUMP GP-PISTON

S/N: W921-UP

PART OF 535-7173 PUMP & MTG GP-STEERING

SMCS-5070 **i07589669**

NOTE	REF NO	GRAPHIC REF	PART NUMBER	QTY	PART NAME 1 2 3 4 5 6 (PRODUCT LEVEL)	SEE PAGE
	1	1	**551-4101**	1	VALVE GP-CONTROL (PUMP)	
	2	1	**9S-8002**	1	PLUG (7/16-20-THD)	
	3	1	**3J-7354**	1	SEAL-O-RING	
M	4	1	**8T-8442**	4	BOLT-SOCKET HEAD (M6X1X30-MM)	
M	5	1	**095-9805**	4	BOLT-SOCKET HEAD (M14X2X40-MM)	
	6	1	**551-4618**	1	SHAFT	
	7	1	**208-9669**	1	RING-RETAINING	
	8	1	**139-2840**	1	SEAL-SHAFT	
	9	1	**436-3985**	1	BEARING	
	10	1	**436-3999**	9	PISTON AS-PUMP	
	11	1	**436-3992**	1	PISTON-CONTROL	
	12	1	**436-3993**	1	GUIDE-CONTROL	
	13	1	**228-7088**	3	SEAL-O-RING	
	14	1	**551-4619**	1	COUPLING	
	15	1	**177-0344**	1	SEAL-O-RING	
	16	1	**436-3986**	1	SPACER (25.45X35X2.8-MM THK)	
	17	1	**433-8202**	1	PLATE	
	18	1	**9X-4575**	1	SEAL-O-RING	
	19	1	**436-3987**	1	CYLINDER-CONTROL	
	20	1	**436-3984**	1	BARREL AS	
		1	**436-3996**	3	PIN	
		1	**436-3997**	1	SPACER (32.2X43.2X2.5-MM THK)	
		1	**436-3998**	1	SPRING	
		1	**436-6327**	1	RING-RETAINING	
	21	1	**436-3988**	1	SPRING	
	22	1	**436-3989**	1	PLUNGER	
	23	1	**436-3991**	1	SWASHPLATE AS	

M - METRIC PART

533-1132 **PUMP GP-PISTON (**contd.**)** **i07589669**

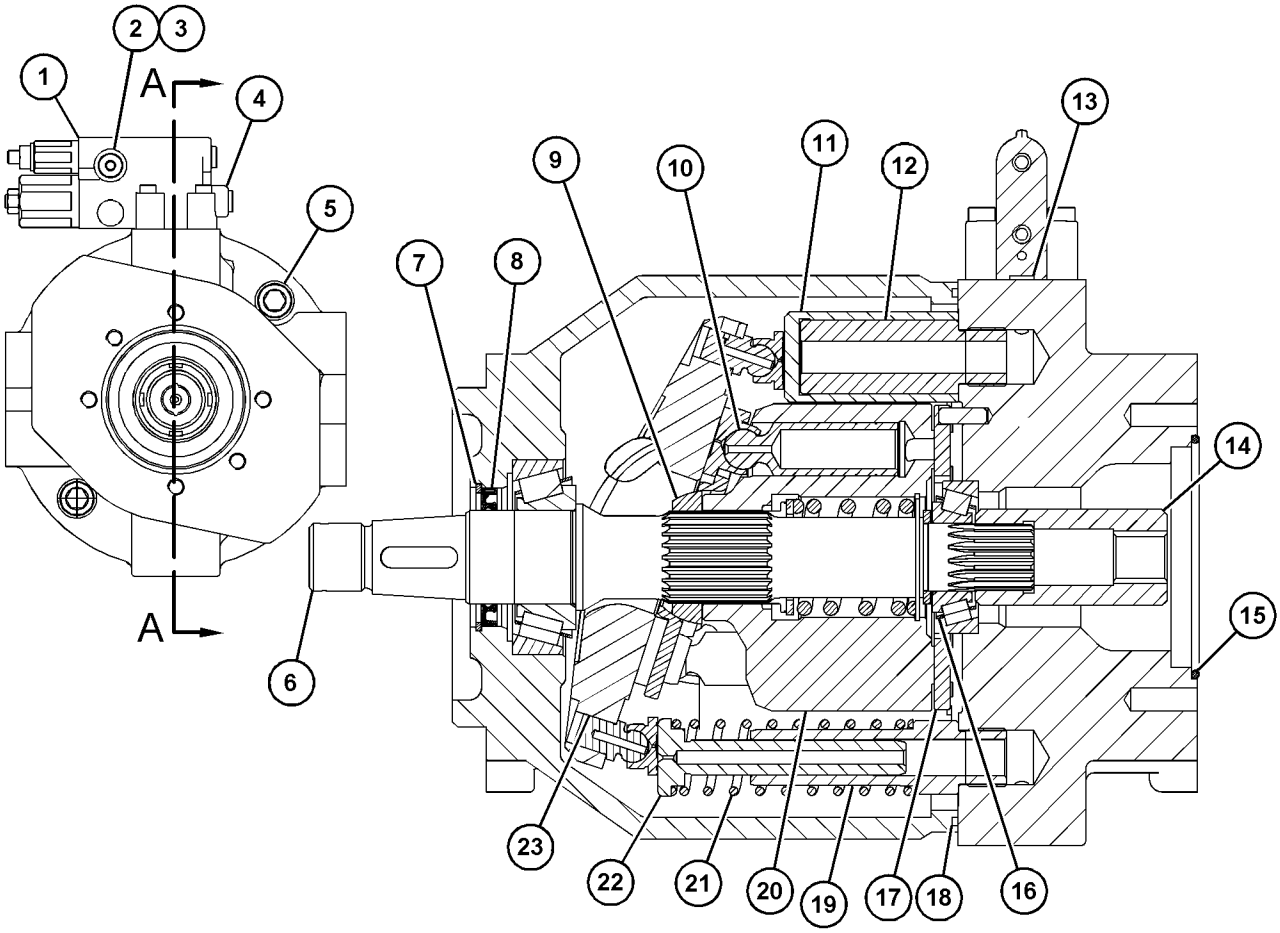

SECTION A

GRAPHIC #1 <END> g06376798

537-5630 STEERING AR-SECONDARY

S/N: W921-UP

SMCS-4300 **i07552946**

NOTE	PART NUMBER	QTY	PART NAME 1 2 3 4 5 6 (PRODUCT LEVEL)	SEE PAGE
Y	*535-7190*	1	ACCUMULATOR & MTG GP-HYDRAULIC	346
Y	*535-7191*	1	LINES GP-SECONDARY STEERING	405
Y	*536-5595*	1	WIRING GP-SECONDARY STEERING	238

Y - SEPARATE ILLUSTRATION

<END>

519-6940 TANK GP-HYDRAULIC

S/N: W921-UP

FILTER

PART OF 536-7743 TANK GP-HYDRAULIC

SMCS-4332, 5056, 5068

i07591576

NOTE	REF NO	GRAPHIC REF	PART NUMBER	QTY	PART NAME 1 2 3 4 5 6 (PRODUCT LEVEL)	SEE PAGE
M	1	1	**8T-4195**	4	BOLT (M10X1.5X30-MM)	
	2	1	**1L-5072**	1	DOWEL	
	3	1	**1R-0774**	1	FILTER ELEMENT AS-OIL (ADVANCED EFFICIENCY)	
	4	1	**2D-4202**	1	PLATE	
	5	1	**2J-7761**	1	RING-RETAINING	
	6	1	**3F-1547**	1	SEAL-O-RING	
	7	1	**3G-0361**	1	GASKET	
	8	1	**4M-6921**	1	WASHER-SPRING	
	9	1	**5D-1911**	1	COVER-HYDRAULIC CAP	
	10	1	**7D-1195**	1	SEAL-O-RING	
	11	1	**7H-1447**	1	CAP-FILLER (HYDRAULIC TANK FILL)	
M	12	1	**8T-0389**	1	LOCKNUT (M10X1.5-THD)	
	13	1	**8T-2275**	1	BALL	
	14	1	**9H-6454**	1	GASKET (HYDRAULIC TANK)	
	15	1	**9J-1979**	1	RETAINER AS	
	16	1	**9J-3047**	1	STRAINER	
	17	1	**9M-7394**	1	LEVER (FILL CAP)	
	18	1	**086-0507**	1	PIN	
	19	1	**141-9661**	1	SPACER (20X128X6-MM THK)	
	20	1	**217-2661**	1	GAUGE-SIGHT	
		1	**114-4231**	2	BOLT-MOUNTING	
	21	1	**226-2870**	1	CAP AS (HYDRAULIC TANK)	
	22	1	**3B-4611**	1	PIN-COTTER	
	23	1	**4B-2913**	1	PIN-CLEVIS	
	24	1	**519-6939**	1	TANK AS-HYDRAULIC	
		1	**6B-6684**	2	NUT-FULL (1/2-20-THD)	
M		1	**9R-2821**	3	BOSS (M10X1.5X15-MM)	
	25	1	**8T-4121**	4	WASHER-HARD (11X21X2.5-MM THK)	

M - METRIC PART

519-6940 **TANK GP-HYDRAULIC (**contd.**)** **i07591576**

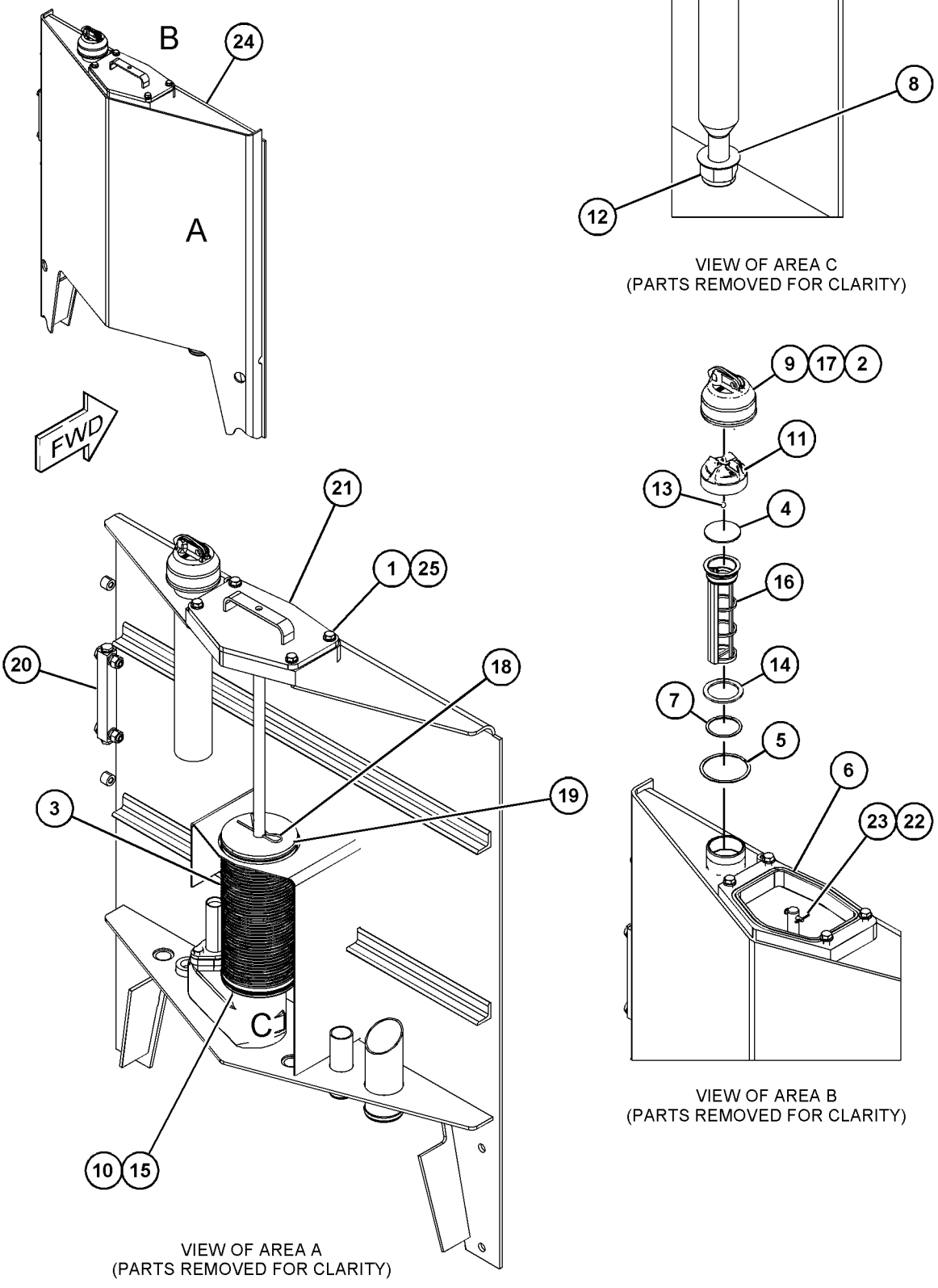

VIEW OF AREA C
(PARTS REMOVED FOR CLARITY)

VIEW OF AREA B
(PARTS REMOVED FOR CLARITY)

VIEW OF AREA A
(PARTS REMOVED FOR CLARITY)

GRAPHIC #1 <END> g06335853

536-7743 TANK GP-HYDRAULIC

S/N: W921-UP

PART OF 537-1860 CHASSIS AR

SMCS-4332, 5056, 5068 **i07591575**

NOTE	REF NO	GRAPHIC REF	PART NUMBER	QTY	PART NAME 1 2 3 4 5 6 (PRODUCT LEVEL)	SEE PAGE
	1	1	**2S-5100**	1	VALVE-MANUAL (HYDRAULIC TANK DRAIN)	
	2	1	**246-2641**	1	PADLOCK GP	
		1	**5P-8500**	1	KEY	
	3	1	**3J-5389**	1	PLUG (EXTERNAL)	
Y	4	1	**519-6940**	1	TANK GP-HYDRAULIC	420
	5	1	**535-8563**	4	BOLT-HEAD	
	6	1	**536-5532**	1	ADAPTER AS	
	7	1	**8T-4223**	4	WASHER-HARD (13.5X25.5X3-MM THK)	

Y - SEPARATE ILLUSTRATION

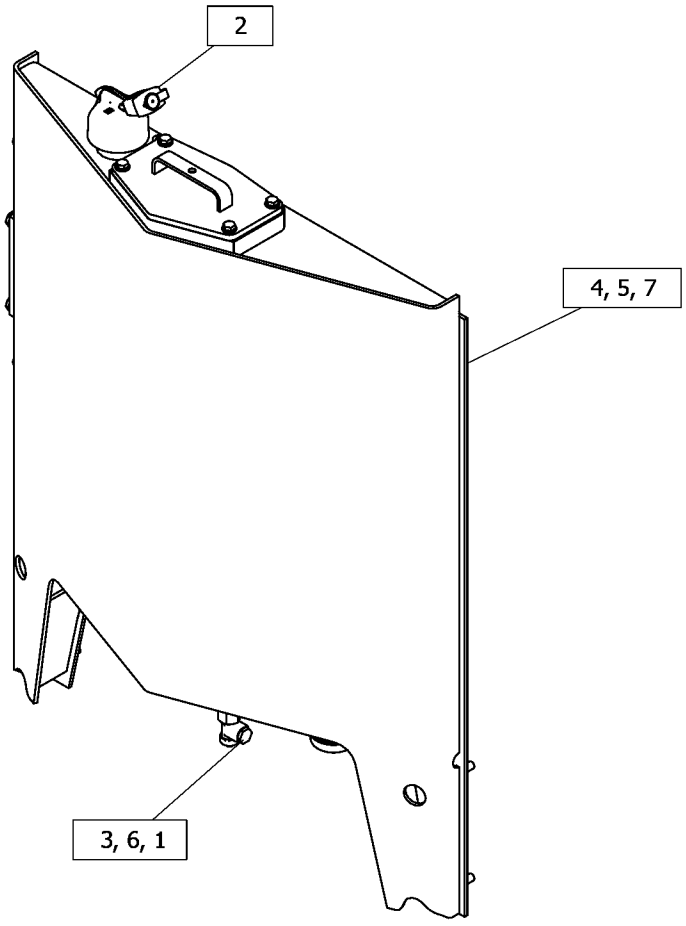

GRAPHIC #1 <END> g06375080

526-2235 VALVE & LINKAGE GP–RIPPER

S/N: W921-UP

PART OF 537-5602 CONTROL AR-HYDRAULIC

SMCS-5051, 5063

i07581297

NOTE	REF NO	GRAPHIC REF	PART NUMBER	QTY	PART NAME 1 2 3 4 5 6 (PRODUCT LEVEL)	SEE PAGE
	1	1	**2G-6740**	1	KNOB-RIPPER	
	2	1	**2G-6747**	1	KNOB-BLADE TIP	
	3	1	**2G-6748**	1	KNOB-BLADE LIFT	
	4	1	**2G-6749**	1	KNOB-SIDESHIFT	
	5	1	**2G-6751**	1	KNOB-CIRCLE DRIVE	
	6	1	**2G-6752**	1	KNOB-ARTICULATION	
	7	1	**2G-6755**	1	KNOB-CENTERSHIFT	
	8	1	**2G-6756**	1	KNOB-WHEEL LEAN	
	9	1	**2G-6757**	1	KNOB-BLADE LIFT	
	10	1	**6L-1962**	9	NUT-JAM (3/8-24-THD)	
	11	1	**8D-5636**	10	SHIM (0.254-MM THK)	
	12	1	**8D-5637**	10	SHIM (0.762-MM THK)	
	13	1	**8D-5640**	11	BEARING	
	14	1	**112-9164**	1	BOOT	
	15	1	**490-1103**	1	LEVER (RIPPER)	
	15A	1	**490-1103**	1	LEVER (ARTICULATION)	
	16	1	**490-1104**	1	LEVER (BLADE LIFT, LH)	
	16A	1	**490-1104**	1	LEVER (CENTERSHIFT)	
	17	1	**490-1105**	1	LEVER (SIDESHIFT)	
	17A	1	**490-1105**	1	LEVER (WHEEL LEAN)	
	18	1	**490-1106**	1	LEVER (CIRCLE DRIVE)	
	18A	1	**490-1106**	1	LEVER (BLADE LIFT)	
	19	1	**490-1107**	1	LEVER (BLADE TIP)	
	20	1	**490-1108**	2	RETAINER	
	21	1	**512-5977**	2	SPACER	
	22	1	**550-8801**	9	ROD AS	
	23	1	**137-4516**	1	SHAFT	
	24	1	**3F-9556**	18	LOCKWASHER	
	25	1	**5P-1075**	2	WASHER-HARD (10.2X22.5X3-MM THK)	
	26	1	**8D-5641**	9	BEARING	
	27	1	**8T-9043**	18	BOLT (5/16-18X0.875-IN)	
	28	1	**9B-7237**	2	BOLT (3/8-16X1.25-IN)	

526-2235 **VALVE & LINKAGE GP (**contd.**)** **i07581297**

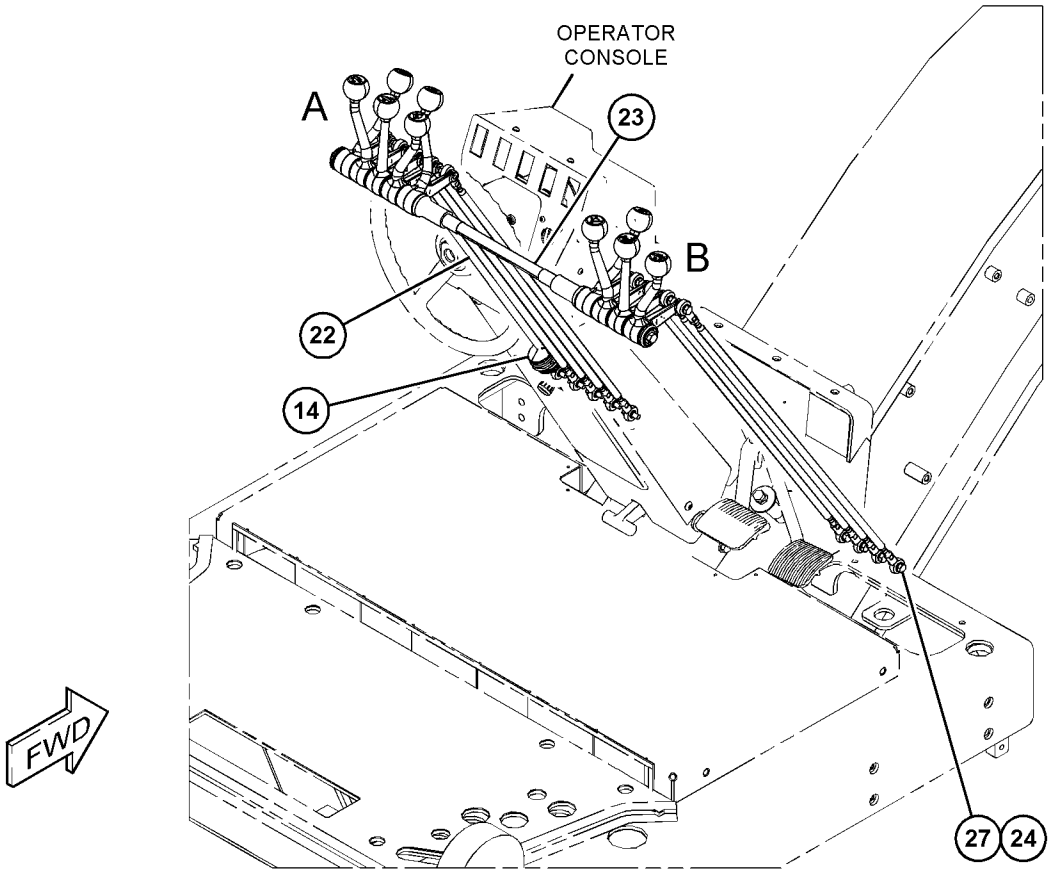

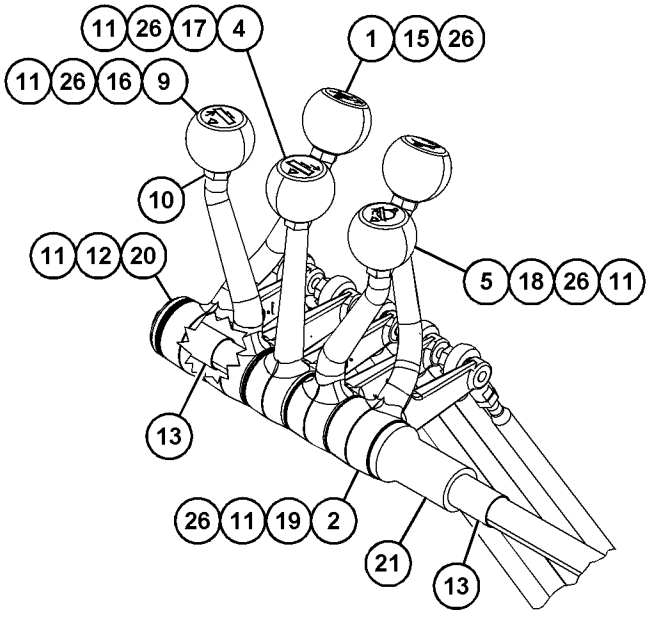

VIEW OF AREA A

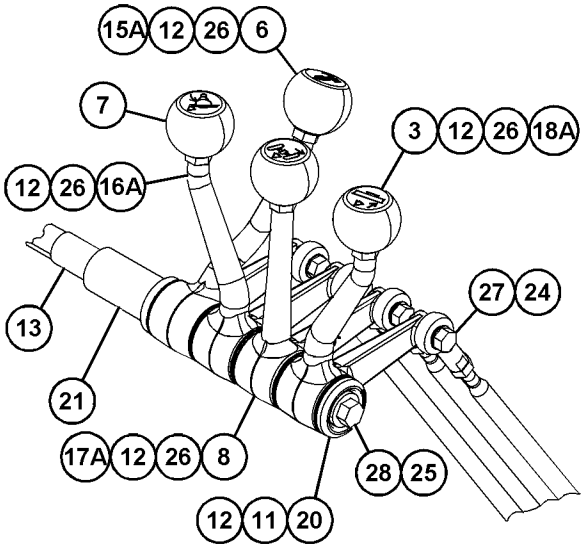

VIEW OF AREA B

GRAPHIC #1 <END> g06376429

535-6617 VALVE & LINKAGE GP–RIPPER

S/N: W921-UP

PART OF 537-5601 CONTROL AR-HYDRAULIC

SMCS-5051, 5063

i07581620

NOTE	REF NO	GRAPHIC REF	PART NUMBER	QTY	PART NAME 1 2 3 4 5 6 (PRODUCT LEVEL)	SEE PAGE
	1	1	**2G-6747**	1	KNOB-BLADE TIP	
	2	1	**2G-6748**	1	KNOB-BLADE LIFT (RH)	
	3	1	**2G-6749**	1	KNOB-SIDESHIFT	
	4	1	**2G-6751**	1	KNOB-CIRCLE DRIVE	
	5	1	**2G-6752**	1	KNOB-ARTICULATION	
	6	1	**2G-6755**	1	KNOB-CENTERSHIFT	
	7	1	**2G-6756**	1	KNOB-WHEEL LEAN	
	8	1	**2G-6757**	1	KNOB-BLADE LIFT (LH)	
	9	1	**6L-1962**	8	NUT-JAM (3/8-24-THD)	
	10	1	**8D-5636**	4	SHIM (0.254-MM THK)	
	11	1	**8D-5637**	3	SHIM (0.762-MM THK)	
	12	1	**8D-5640**	11	BEARING	
	13	1	**137-4516**	1	SHAFT	
	14	1	**3F-9556**	16	LOCKWASHER	
	15	1	**490-1103**	1	LEVER (ARTICULATION)	
	16	1	**490-1104**	1	LEVER (BLADE LIFT, LH)	
	16A	1	**490-1104**	1	LEVER (CENTERSHIFT)	
	17	1	**490-1105**	1	LEVER (SIDESHIFT)	
	17A	1	**490-1105**	1	LEVER (WHEEL LEAN)	
	18	1	**490-1106**	1	LEVER (CIRCLE DRIVE)	
	18A	1	**490-1106**	1	LEVER (BLADE LIFT, RH)	
	19	1	**490-1108**	2	RETAINER	
	20	1	**512-5917**	1	SPACER (19.8X38.1X34.1-MM THK)	
	21	1	**512-5977**	2	SPACER	
	22	1	**550-8801**	8	ROD AS	
	23	1	**5P-1075**	2	WASHER-HARD (10.2X22.5X3-MM THK)	
	24	1	**8D-5641**	9	BEARING	
	25	1	**8T-9043**	16	BOLT (5/16-18X0.875-IN)	
	26	1	**9B-7237**	2	BOLT (3/8-16X1.25-IN)	
	27	1	**490-1107**	1	LEVER (BLADE TIP)	

535-6617 **VALVE & LINKAGE GP (**contd.**)** **i07581620**

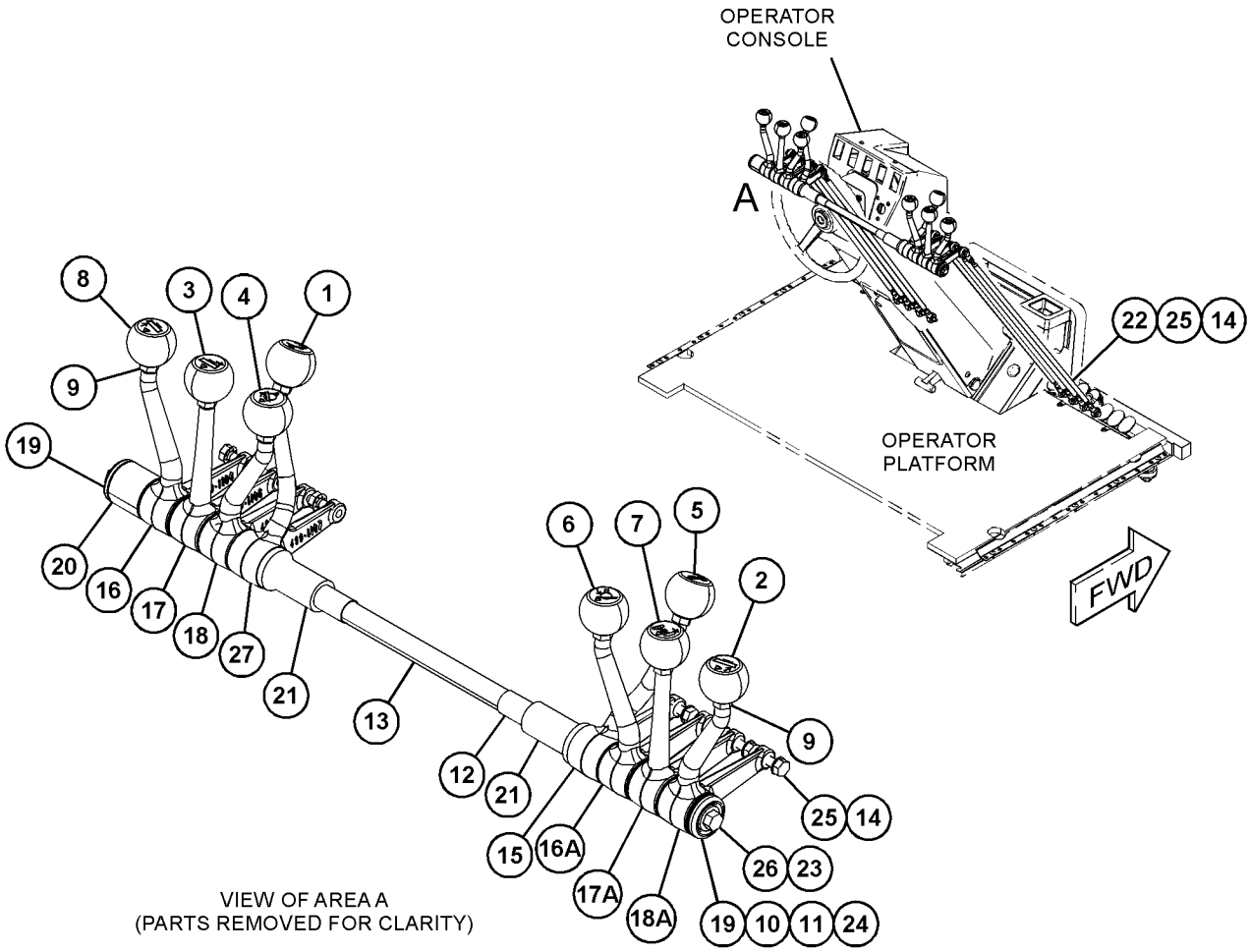

GRAPHIC #1 <END> g06375922

536-8936 VALVE & LINKAGE GP—DOZER, PLOW, RIPPER

S/N: W921-UP

PART OF 537-5605 CONTROL AR-HYDRAULIC

SMCS-5051, 5063 **i07580131**

NOTE	REF NO	GRAPHIC REF	PART NUMBER	QTY	PART NAME 1 2 3 4 5 6 (PRODUCT LEVEL)	SEE PAGE
	1	1	**2G-6740**	1	KNOB-RIPPER	
	2	1	**2G-6747**	1	KNOB-BLADE TIP	
	3	1	**2G-6748**	1	KNOB-BLADE LIFT (RH)	
	4	1	**2G-6749**	1	KNOB-SIDESHIFT	
	5	1	**2G-6751**	1	KNOB-CIRCLE DRIVE	
	6	1	**2G-6752**	1	KNOB-ARTICULATION	
	7	1	**2G-6754**	1	KNOB (BULLDOZER LIFT, PLOW)	
	8	1	**2G-6755**	1	KNOB-CENTERSHIFT	
	9	1	**2G-6756**	1	KNOB-WHEEL LEAN	
	10	1	**2G-6757**	1	KNOB-BLADE LIFT (LH)	
	11	1	**6L-1962**	10	NUT-JAM (3/8-24-THD)	
B	12	1	**8D-5636**	10	SHIM (0.254-MM THK)	
BF			**8D-5637**	10	SHIM (0.762-MM THK)	
	14	1	**8D-5640**	12	BEARING	
	15	1	**8W-0456**	1	SHAFT	
	16	1	**112-9164**	2	BOOT	
	17	1	**490-1103**	1	LEVER (RIPPER)	
	17A	1	**490-1103**	1	LEVER (ARTICULATION)	
	18	1	**490-1104**	1	LEVER (BLADE LIFT, LH)	
	18A	1	**490-1104**	1	LEVER (CENTERSHIFT)	
	19	1	**490-1105**	1	LEVER (SIDESHIFT)	
	19A	1	**490-1105**	1	LEVER (WHEEL LEAN)	
	20	1	**490-1106**	1	LEVER (CIRCLE DRIVE)	
	20A	1	**490-1106**	1	LEVER (BLADE LIFT, RH)	
	21	1	**490-1107**	1	LEVER (BLADE TIP)	
	21A	1	**490-1107**	1	LEVER (BULLDOZER, PLOW)	
	22	1	**490-1108**	2	RETAINER	
	23	1	**512-5977**	2	SPACER	
	24	1	**550-8801**	10	ROD AS	
	25	1	**137-4516**	1	SHAFT	
	26	1	**3F-9556**	20	LOCKWASHER	
	27	1	**4L-6459**	1	BOLT (3/8-16X2.5-IN)	
	28	1	**5P-1075**	2	WASHER-HARD (10.2X22.5X3-MM THK)	
	29	1	**8D-5641**	10	BEARING	
	30	1	**8T-9043**	20	BOLT (5/16-18X0.875-IN)	
	31	1	**9B-7237**	1	BOLT (3/8-16X1.25-IN)	

B - USE AS REQUIRED
F - NOT SHOWN

536-8936 **VALVE & LINKAGE GP** (contd.) **i07580131**

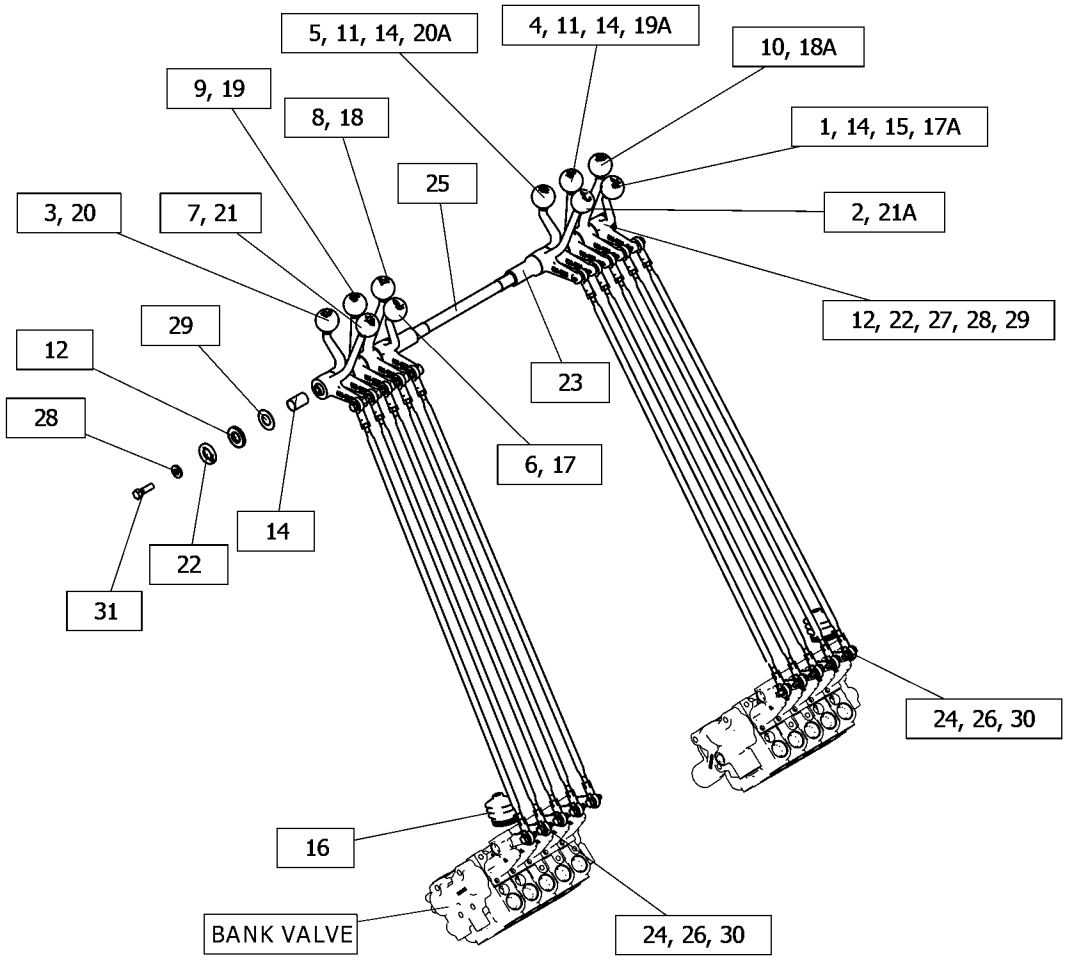

GRAPHIC #1 <END> g06374530

535-7175 VALVE & MOUNTING GP

S/N: W921-UP

PART OF 535-7200 HYDRAULIC AR

SMCS-5051, 5306, 5640 **i07590828**

NOTE	REF NO	GRAPHIC REF	PART NUMBER	QTY	PART NAME 1 2 3 4 5 6 (PRODUCT LEVEL)	SEE PAGE
M	1	1	**518-2309**	2	BOLT (M10X1.5X20-MM)	
M	2	1	**518-2310**	3	BOLT (M10X1.5X25-MM)	
	3	1	*148-8347*	1	ELBOW AS	
		1	**3D-2824**	1	SEAL-O-RING	
		1	**6V-9007**	1	ELBOW	
		1	**6V-9746**	1	SEAL-O-RING	
	4	1	**518-4417**	5	WASHER	
	5	1	**533-1130**	1	VALVE GP-CHARGING	
		1	**551-4925**	1	VALVE AS-RELIEF	
		1	**8J-2413**	1	SEAL-O-RING	
	6	1	**537-1609**	1	BRACKET	
	7	1	*148-8310*	1	ADAPTER AS	
		1	**3J-1907**	1	SEAL-O-RING	
		1	**8T-0151**	1	ADAPTER	

M - METRIC PART

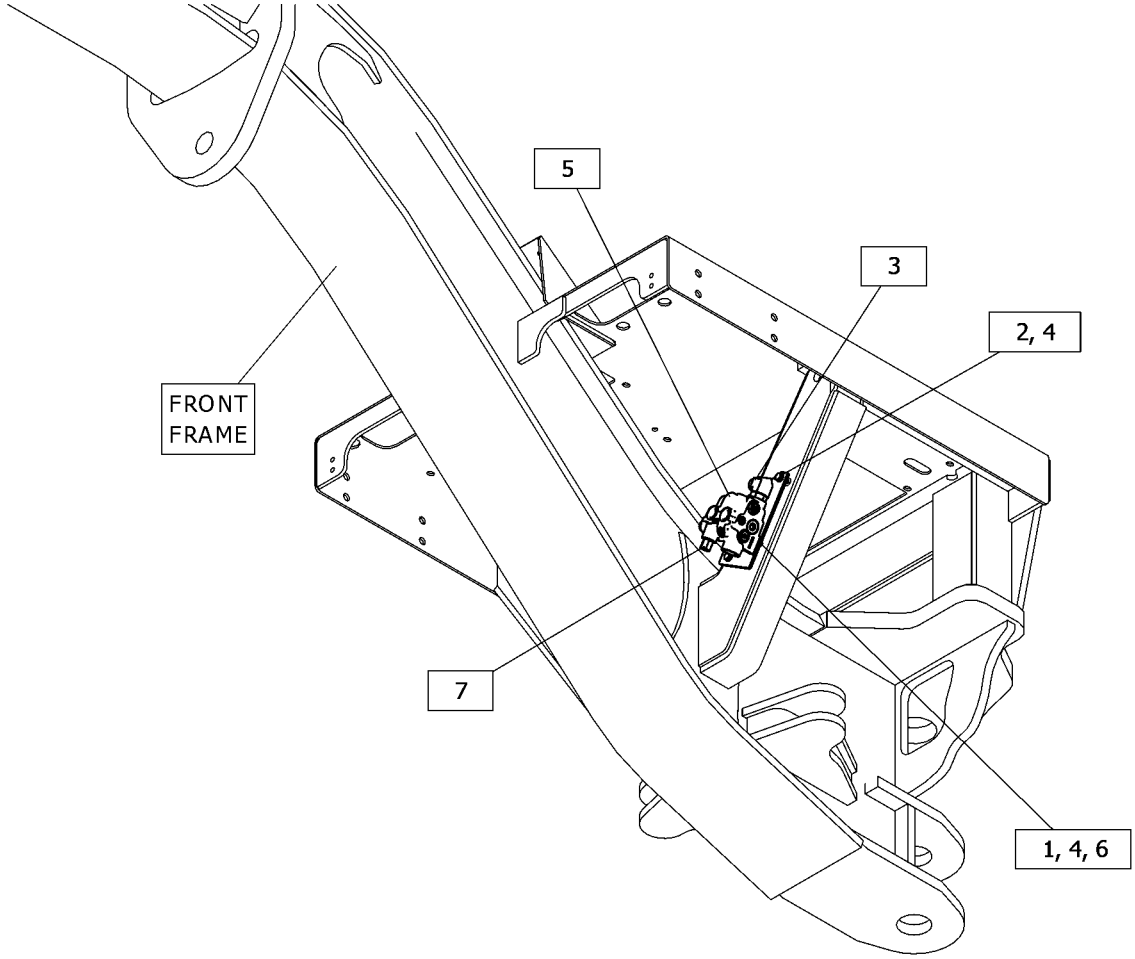

GRAPHIC #1 <END> g06374223

6E-3032 VALVE GP-BANK 4–RH

S/N: W921-UP

PART OF 538-4741, 538-4744 VALVE GP-CONTROL

SMCS-5051 **i07581528**

NOTE	REF NO	GRAPHIC REF	PART NUMBER	QTY	PART NAME 1 2 3 4 5 6 (PRODUCT LEVEL)	SEE PAGE
M	1	1	**7X-2546**	2	BOLT (M10X1.5X180-MM)	
M	2	1	**8T-6408**	1	BOLT (M10X1.5X160-MM)	
	3	1	**102-6238**	1	MANIFOLD	
	4	1	**101-0509**	5	SEAL-INTEGRAL	
Y	5	1	**6E-3028**	1	VALVE GP-CONTROL (ARTICULATION)	448
Y	6	1	**6E-3029**	1	VALVE GP-CONTROL (CENTERSHIFT)	450
Y	7	1	**6E-3030**	1	VALVE GP-CONTROL (WHEEL LEAN)	452
Y	8	1	**6E-3031**	1	VALVE GP-CONTROL (BLADE LIFT)	454
	9	1	**101-9346**	1	COVER	
M	10	1	**8T-4186**	3	BOLT (M10X1.5X40-MM)	
	11	1	**8T-4896**	1	WASHER-HARD (10.2X18.5X2.5-MM THK)	
	12	1	*366-4696*	1	PLUG AS	
		1	**360-3688**	1	PLUG (5/16-24-THD)	
		1	**4J-7533**	1	SEAL-O-RING	

M - METRIC PART
Y - SEPARATE ILLUSTRATION

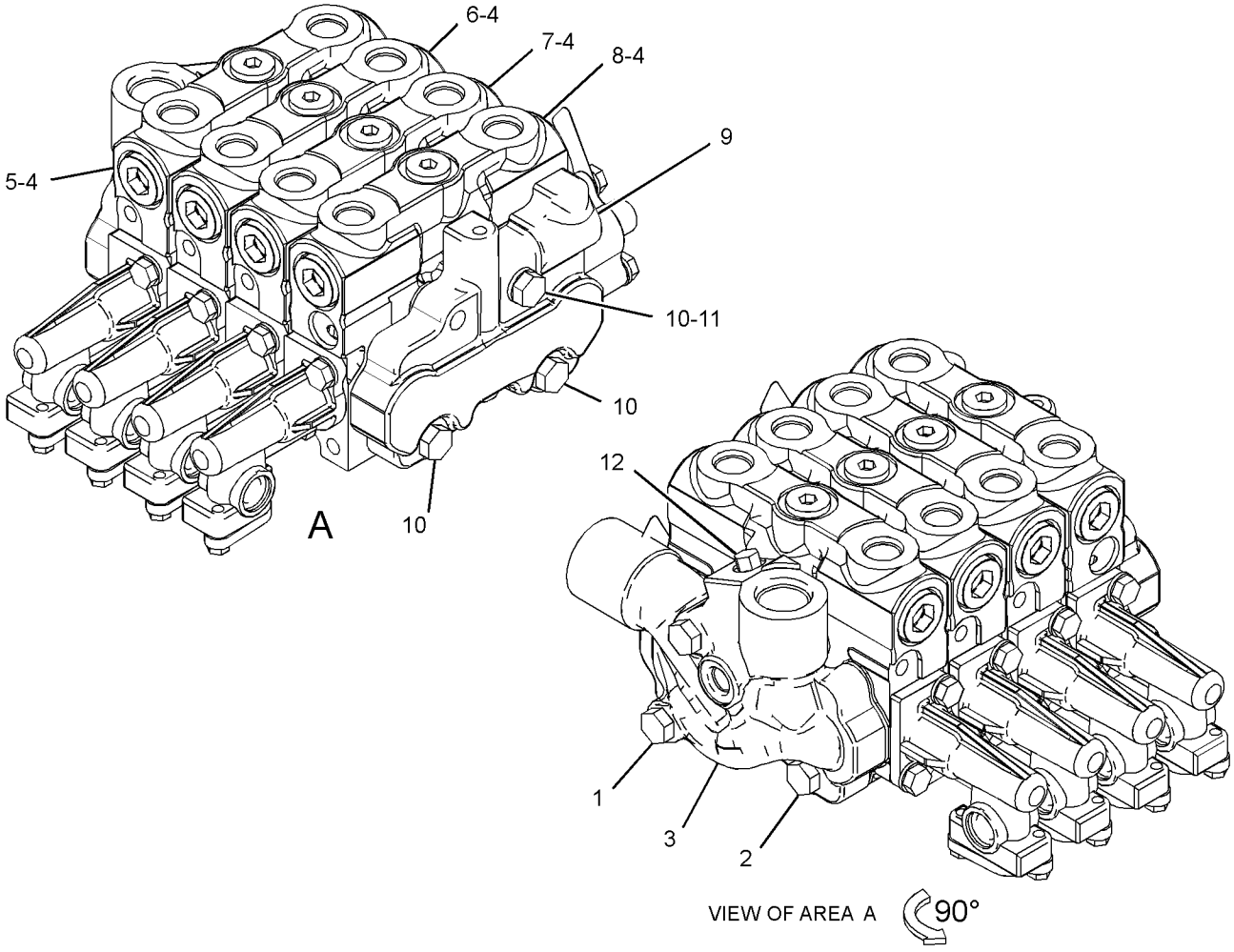

GRAPHIC #1 <END> g02023176

6E-3038 VALVE GP-BANK 4–LH

S/N: W921-UP

PART OF 538-4744 VALVE GP-CONTROL

SMCS-5051 **i07581637**

NOTE	REF NO	GRAPHIC REF	PART NUMBER	QTY	PART NAME 1 2 3 4 5 6 (PRODUCT LEVEL)	SEE PAGE
M	1	1	**7X-2546**	2	BOLT (M10X1.5X180-MM)	
M	2	1	**137-6720**	1	BOLT (M10X1.5X160-MM)	
	3	1	**102-8385**	1	MANIFOLD	
	4	1	**101-0509**	5	SEAL-INTEGRAL	
Y	5	1	**6E-3037**	1	VALVE GP-CONTROL (BLADE LIFT)	462
Y	6	1	**6E-3036**	1	VALVE GP-CONTROL (SIDESHIFT)	460
Y	7	1	**6E-3035**	1	VALVE GP-CONTROL (CIRCLE DRIVE)	458
Y	8	1	**6E-3034**	1	VALVE GP-CONTROL (BLADE TIP)	456
	9	1	**101-9346**	1	COVER	
M	10	1	**8T-4186**	3	BOLT (M10X1.5X40-MM)	
	11	1	**4J-7533**	1	SEAL-O-RING	
	12	1	**9S-4180**	1	PLUG	

M - METRIC PART
Y - SEPARATE ILLUSTRATION

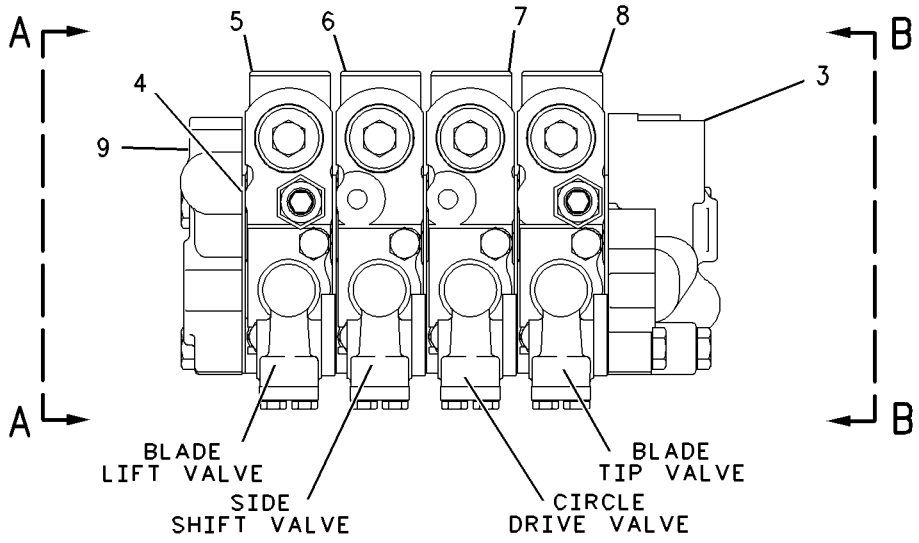

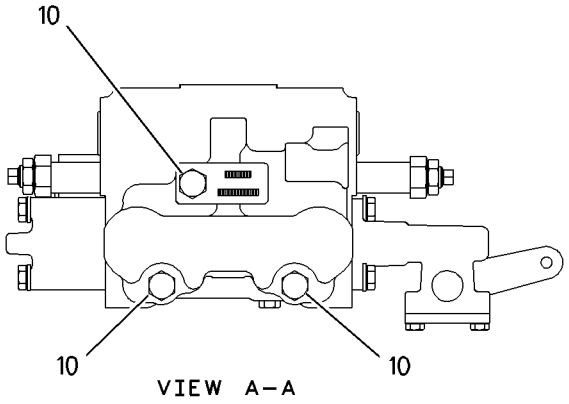

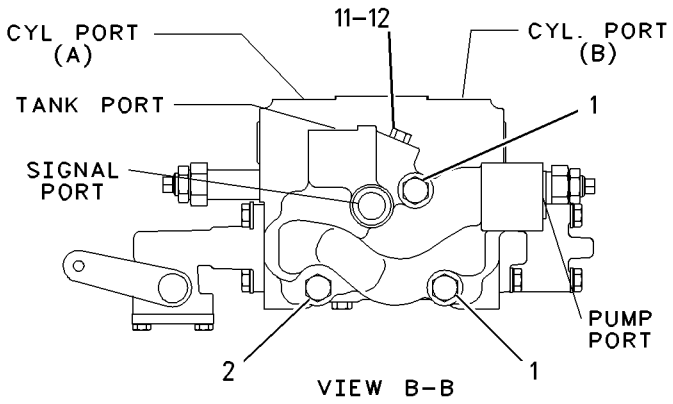

GRAPHIC #1 <END> g00898688

104-8645 VALVE GP-BANK 5–LH

S/N: W921-UP

PART OF 538-4741, 538-4742 VALVE GP-CONTROL

SMCS-5051 **i07622833**

NOTE	REF NO	GRAPHIC REF	PART NUMBER	QTY	PART NAME 1 2 3 4 5 6 (PRODUCT LEVEL)	SEE PAGE
M	1	1	**7X-2546**	2	BOLT (M10X1.5X180-MM)	
M	2	1	**8T-6408**	1	BOLT (M10X1.5X160-MM)	
	3	1	**102-8385**	1	MANIFOLD	
	4	1	**101-0509**	6	SEAL-INTEGRAL	
Y	5	1	**6E-3034**	1	VALVE GP-CONTROL (BLADE TIP)	456
Y	6	1	**6E-3035**	1	VALVE GP-CONTROL (CIRCLE DRIVE)	458
Y	7	1	**6E-3036**	1	VALVE GP-CONTROL (SIDESHIFT)	460
Y	8	1	**6E-3037**	1	VALVE GP-CONTROL (BLADE LIFT)	462
Y	9	1	**107-0545**	1	VALVE GP-CONTROL (RIPPER, LH)	438
	10	1	**101-9346**	1	COVER	
	11	1	**8T-4896**	1	WASHER-HARD (10.2X18.5X2.5-MM THK)	
M	12	1	**8T-4172**	3	BOLT (M10X1.5X80-MM)	
	13	1	*366-4696*	1	PLUG AS	
		1	**4J-7533**	1	SEAL-O-RING	
		1	**360-3688**	1	PLUG (5/16-24-THD)	

M - METRIC PART
Y - SEPARATE ILLUSTRATION

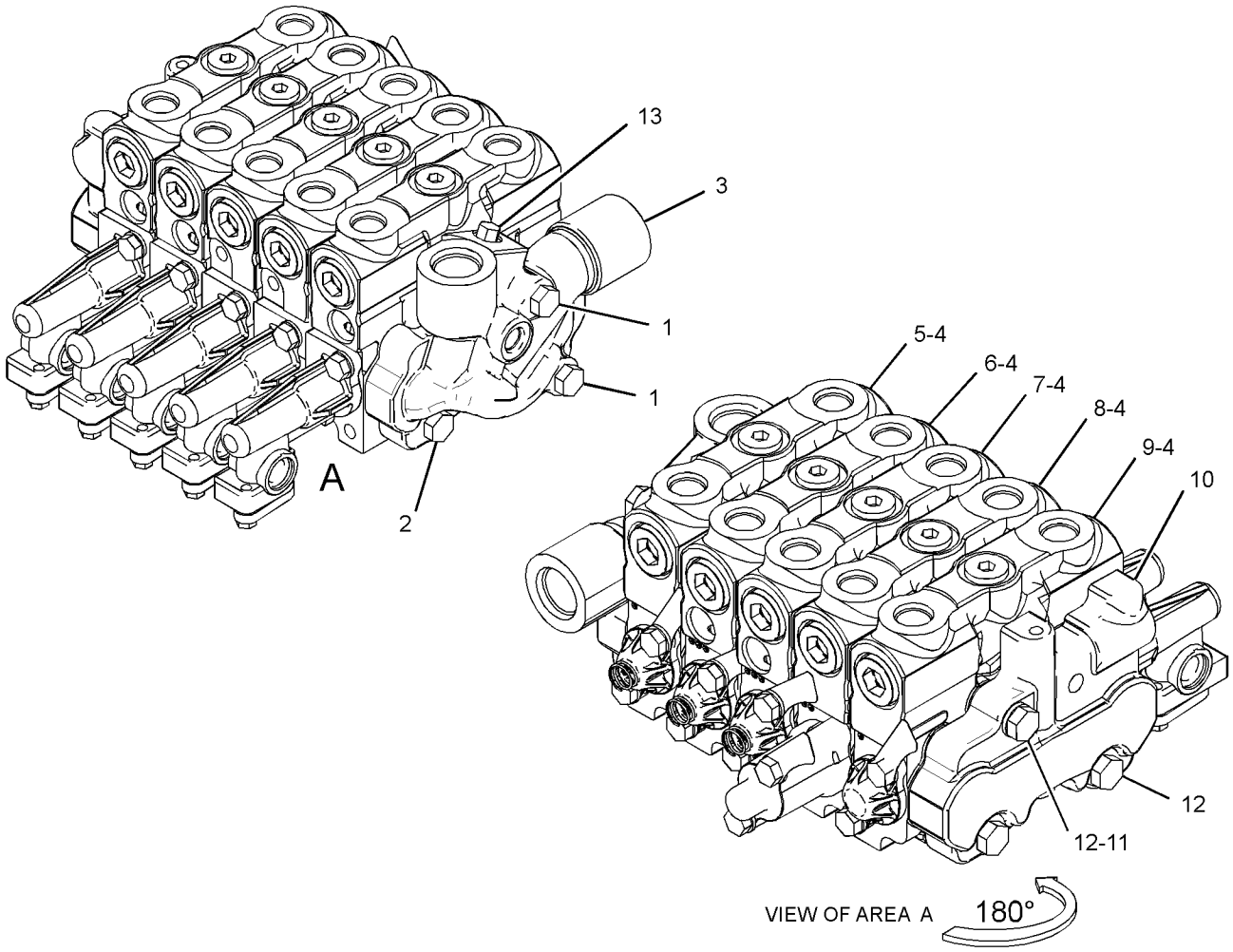

GRAPHIC #1 <END> g02023055

104-8671 VALVE GP-BANK 5–RH

S/N: W921-UP

PART OF 538-4742 VALVE GP-CONTROL

SMCS-5051 **i07581222**

NOTE	REF NO	GRAPHIC REF	PART NUMBER	QTY	PART NAME 1 2 3 4 5 6 (PRODUCT LEVEL)	SEE PAGE
M	1	1	**7X-2546**	2	BOLT (M10X1.5X180-MM)	
M	2	1	**137-6720**	1	BOLT (M10X1.5X160-MM)	
	3	1	**101-0509**	6	SEAL-INTEGRAL	
	4	1	**102-6238**	1	MANIFOLD	
Y	5	1	**6E-3028**	1	VALVE GP-CONTROL (ARTICULATION)	448
Y	6	1	**6E-3029**	1	VALVE GP-CONTROL (CENTERSHIFT)	450
Y	7	1	**6E-3030**	1	VALVE GP-CONTROL (WHEEL LEAN)	452
Y	8	1	**6E-3031**	1	VALVE GP-CONTROL (BLADE LIFT)	454
Y	9	1	**107-0547**	1	VALVE GP-CONTROL (BULLDOZER LIFT, PLOW)	440
	10	1	**101-9346**	1	COVER	
M	11	1	**137-6719**	3	BOLT (M10X1.5X80-MM)	
	12	1	**8T-4896**	1	WASHER-HARD (10.2X18.5X2.5-MM THK)	
	13	1	*222-4737*	1	PLUG AS	
		1	**4J-7533**	1	SEAL-O-RING	
		1	**9S-4180**	1	PLUG	

M - METRIC PART
Y - SEPARATE ILLUSTRATION

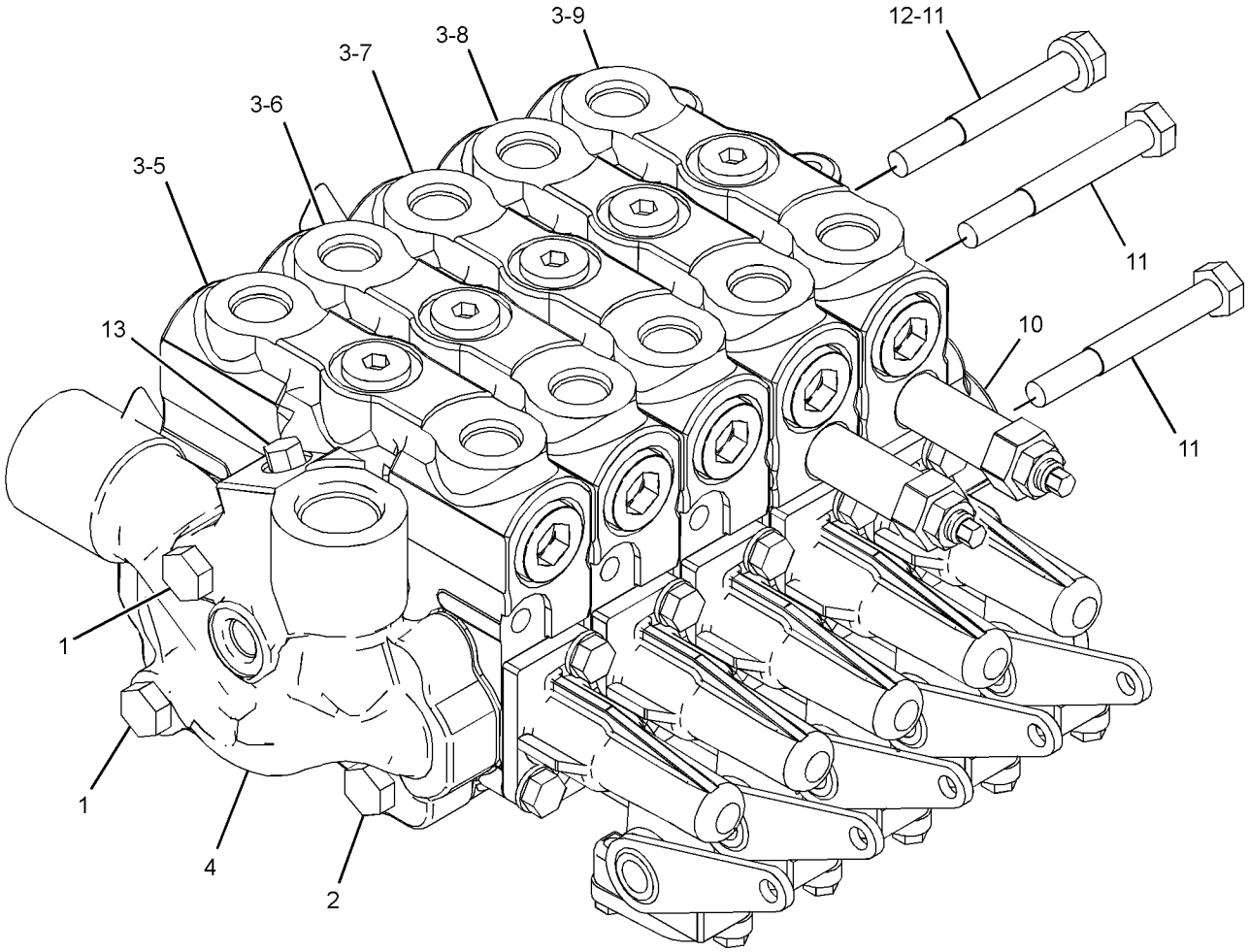

GRAPHIC #1 <END> g02057354

535-8582 VALVE GP-COMBINATION

S/N: W921-UP

PART OF 535-7174 LINES GP-PUMP

SMCS-5064 **i07589762**

NOTE	REF NO	GRAPHIC REF	PART NUMBER	QTY	PART NAME 1 2 3 4 5 6 (PRODUCT LEVEL)	SEE PAGE
	1	2	**1H-0337**	1	VALVE	
	2	2	**2M-9780**	1	SEAL-O-RING	
	3	2	**2S-4078**	1	SEAL-O-RING	
	4	1	**3J-1907**	1	SEAL-O-RING	
	5	2	*3J-3679*	1	PLUG AS	
		2	**1J-9671**	1	SEAL-O-RING	
		2	**9S-8003**	1	PLUG (1/2-20-THD)	
	6	1	**3J-7354**	2	SEAL-O-RING	
	7	2	**3P-9498**	1	PLUG-ORIFICE	
	8	2	*3R-2437*	1	PLUG AS	
		2	**4K-1388**	1	SEAL-O-RING	
		2	**9S-8009**	1	PLUG-O-RING	
	9	2	**3T-8236**	1	SPRING	
	10	1	**4J-5477**	2	SEAL-O-RING	
Y	11	1	**4T-1860**	1	VALVE GP-SHUTTLE (BALL RESOLVER) (IMPLEMENT, STEERING)	475
Y	12	2	**4T-4935**	1	VALVE GP-RELIEF (COMBINATION)	473
	13	2	**5M-2057**	1	SEAL-O-RING	
	14	1	**6E-1923**	1	TUBE AS	
	15	2	**6E-1924**	1	SPRING	
	16	2	**6E-1925**	1	SPRING	
	17	1	**6V-3965**	1	FITTING (QUICK DISCONNECT)	
M	18	2	**6V-5230**	2	BOLT (M10X1.5X60-MM)	
	19	2	**6V-8398**	1	SEAL-O-RING	
	20	1	**6V-8647**	2	CONNECTOR	
	21	2	**8J-6815**	2	PLUG-ORIFICE	
	22	2	**8M-3175**	2	WASHER-HARD (10.2X16X3-MM THK)	
	23	2	**8T-8987**	1	ELBOW	
	24	2	**9F-6705**	1	SPRING	
	25	2	**9T-5934**	1	VALVE	
	26	1	**9T-5935**	1	BODY	
	27	2	**100-7000**	2	RING-BACKUP	
Y	28	2	**131-8350**	1	VALVE GP-PURGE (COMBINATION)	466
Y	29	1	**330-7743**	1	VALVE GP-RELIEF (DIRECT OPERATED)	469
	30	1	*148-8408*	3	PLUG AS	
					(EACH INCLUDES)	
		1	**3D-2824**	1	SEAL-O-RING	
		1	**9S-4183**	1	PLUG (1-1/16-12-THD)	
	31	1,2	*148-8411*	5	PLUG AS	
					(EACH INCLUDES)	
		1,2	**3K-0360**	1	SEAL-O-RING	
		1,2	**9S-4185**	1	PLUG (3/4-16-THD)	
	32	1	*155-3624*	3	PLUG AS	
					(EACH INCLUDES)	
		1	**3J-7354**	1	SEAL-O-RING	
		1	**9S-4182**	1	PLUG (7/16-20-THD)	
	33	1,2	*173-3993*	2	PLUG AS	
					(EACH INCLUDES)	

535-8582 **VALVE GP-COMBINATION** (contd.) **i07589762**

NOTE	REF NO	GRAPHIC REF	PART NUMBER	QTY	PART NAME 1 2 3 4 5 6 (PRODUCT LEVEL)	SEE PAGE
		1,2	**4J-7533**	1	SEAL-O-RING	
		1,2	**9S-8001**	1	PLUG	
	34	1	*183-7263*	1	PLUG AS	
		1	**3J-7354**	1	SEAL-O-RING	
		1	**9S-8002**	1	PLUG (7/16-20-THD)	
	35	2	**3K-0360**	1	SEAL-O-RING	
Y	37	2	**535-8581**	1	VALVE GP-RELIEF (STEERING)	474
	39	1	**6V-0852**	1	CAP-DUST	
	40	2	**9S-4189**	1	PLUG	

M - METRIC PART
Y - SEPARATE ILLUSTRATION

535-8582 **VALVE GP-COMBINATION (**contd.**)** **i07589762**

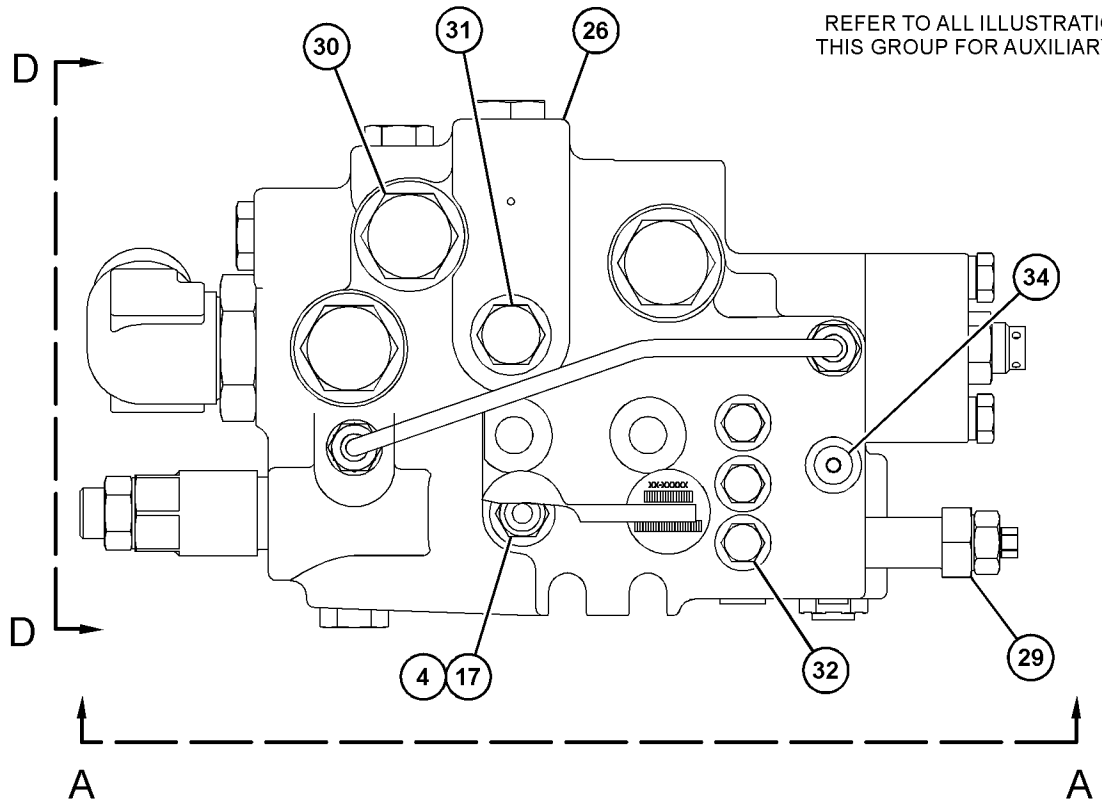

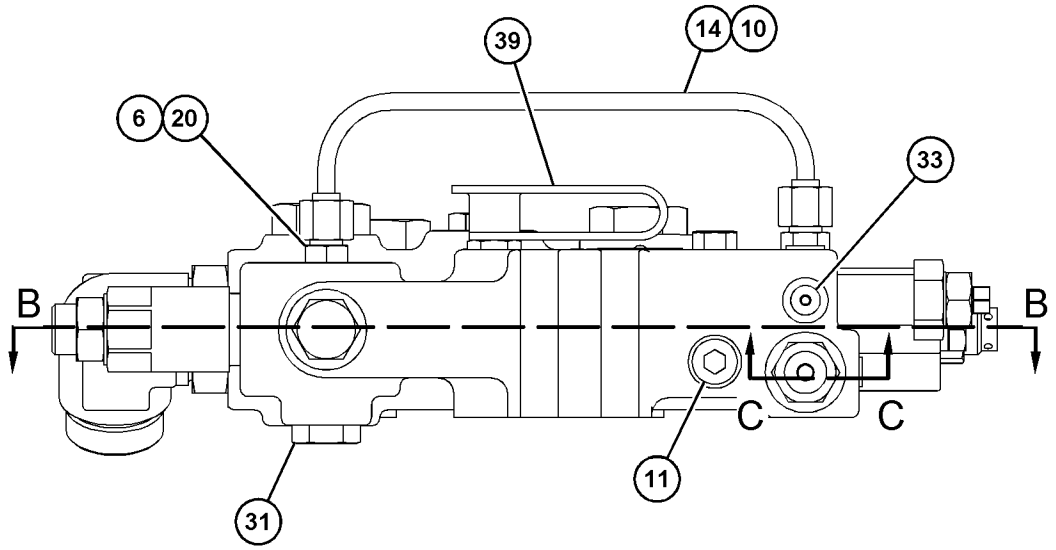

VIEW A-A

GRAPHIC #1 g06376026

535-8582 **VALVE GP-COMBINATION (**contd.**)** **i07589762**

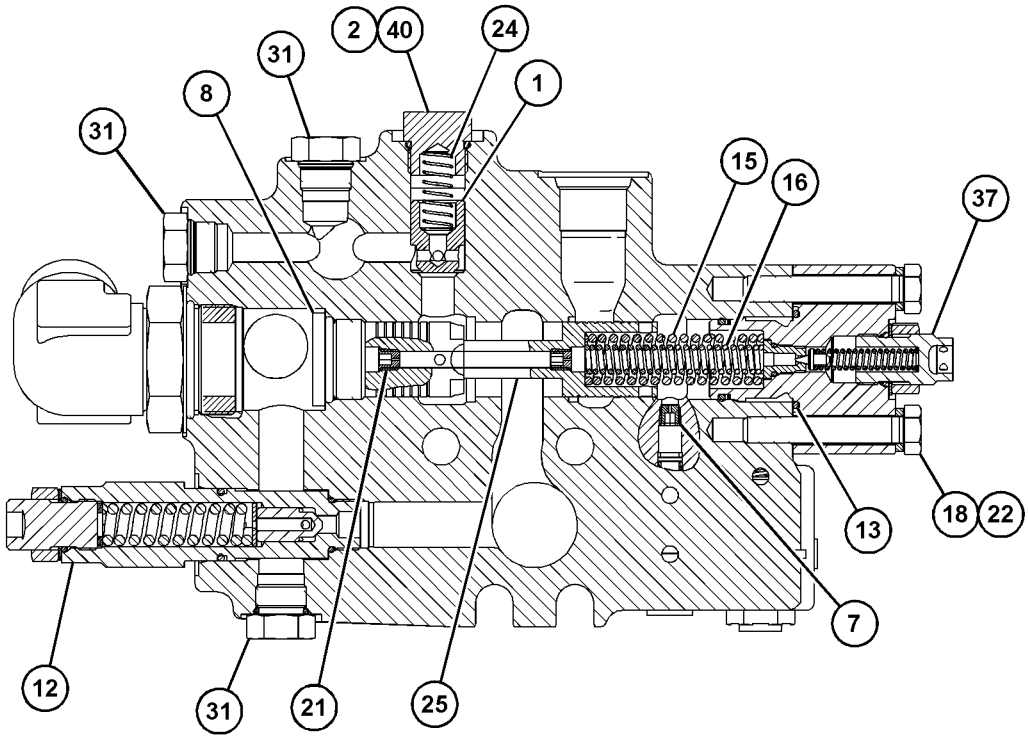

SECTION B-B

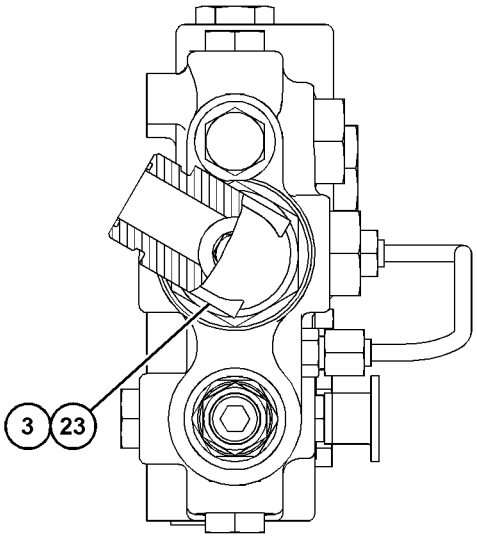

VIEW D-D

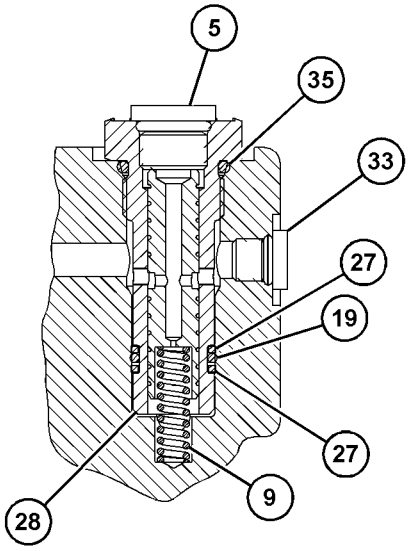

SECTION C-C

GRAPHIC #2 <END> g06376028

107-0545 VALVE GP-CONTROL

S/N: W921-UP

PART OF 104-8645 VALVE GP-BANK 5

SMCS-5051 **i07580585**

NOTE	REF NO	GRAPHIC REF	PART NUMBER	QTY	PART NAME 1 2 3 4 5 6 (PRODUCT LEVEL)	SEE PAGE
	1	1	**6E-4599**	1	BODY	
	2	1	**101-1148**	1	STEM	
	3	1	**101-1978**	1	COVER	
	4	1	**2K-8199**	2	SEAL-O-RING	
M	5	1	**8T-4189**	4	BOLT (M8X1.25X20-MM)	
	6	1	**8T-4224**	4	WASHER-HARD (8.8X16X2-MM THK)	
	7	1	**101-1984**	1	BODY	
	8	1	**354-9444**	2	VALVE GP-CHECK	
					(EACH INCLUDES)	
		1	**6E-3013**	1	SEAT	
Y	9	1	**139-8472**	1	VALVE GP-RELIEF (RIPPER)	467
	11	1	**102-7412**	1	SPRING	
	12	1	**101-1973**	4	RETAINER	
	13	1	**101-1971**	1	LEVER	
	14	1	**340-5472**	1	LEVER AS (LH)	
	15	1	**8M-4437**	2	SEAL-O-RING	
	17	1	**4D-9986**	1	SEAL-O-RING	
	18	1	**101-2480**	1	COVER	
M	19	1	**8T-4138**	2	BOLT (M6X1X20-MM)	
	20	1	**5B-9318**	1	BALL	
	21	1	**6E-3007**	1	SPRING	
	22	1	**6E-4502**	1	PLUG	
	23	1	**4J-7533**	1	SEAL-O-RING	
	24	1	**6E-3019**	1	VALVE	
	25	1	**6E-5153**	1	SPRING	
	26	1	**108-2187**	1	PLUG-PIPE	
	29	1	*148-8395*	1	PLUG AS	
		1	**3K-0360**	1	SEAL-O-RING	
		1	**9S-8005**	1	PLUG (3/4-16-THD)	
	31	1	**106-3659**	1	PISTON	
	34	1	**111-8233**	1	SPRING	
	35	1	**3K-0360**	2	SEAL-O-RING	
	36	1	**9J-0403**	2	SPRING	
	37	1	**9J-0404**	2	PLUG	
	38	1	**361-3549**	2	SEAL-O-RING	

M - METRIC PART
Y - SEPARATE ILLUSTRATION

107-0545 **VALVE GP-CONTROL (**contd.**)** **i07580585**

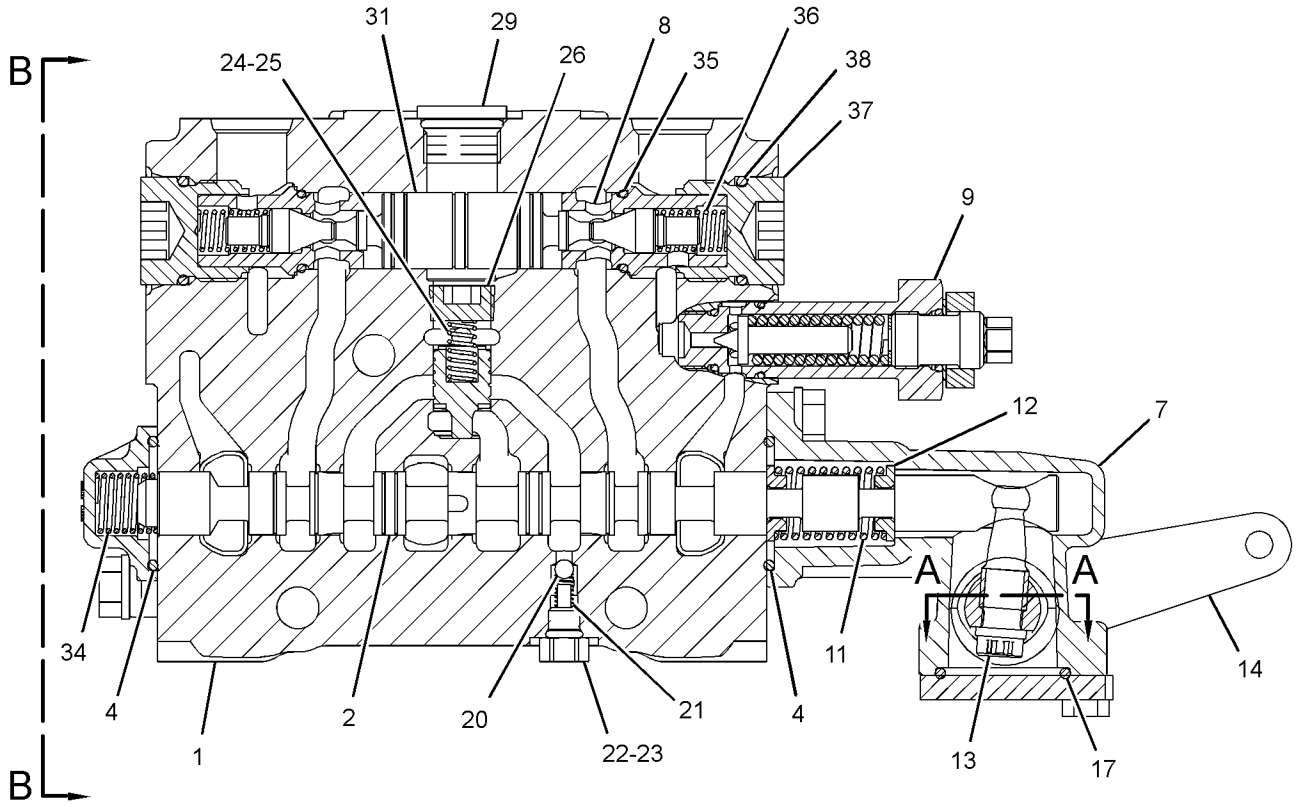

SECTION C-C

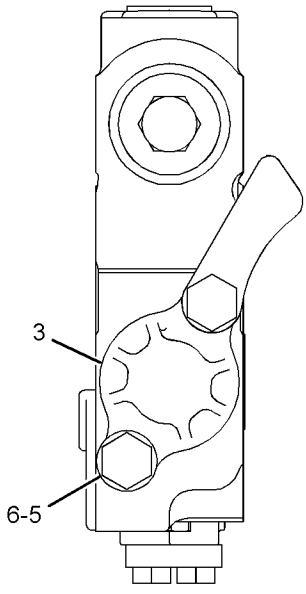

VIEW B-B

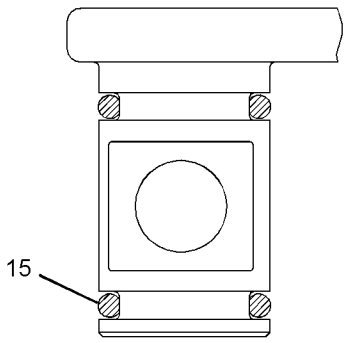

SECTION A-A

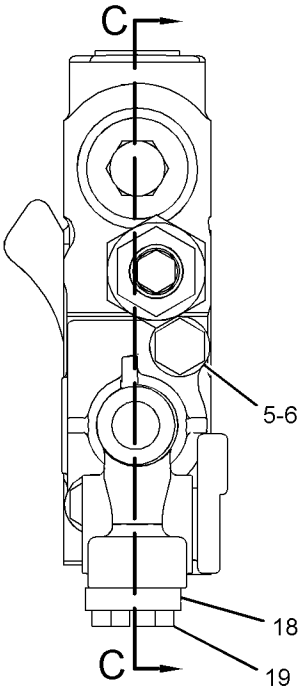

GRAPHIC #1 <END> g03148019

107-0547 VALVE GP-CONTROL—BULLDOZER LIFT, PLOW

S/N: W921-UP

PART OF 104-8671 VALVE GP-BANK 5

SMCS-5051 **i07581246**

NOTE	REF NO	GRAPHIC REF	PART NUMBER	QTY	PART NAME 1 2 3 4 5 6 (PRODUCT LEVEL)	SEE PAGE
	1	1	**6E-3059**	1	BODY	
	2	1	**221-3678**	1	STEM	
	3	1	**101-1980**	1	HOUSING	
Y	4	1	**108-4916**	1	DETENT GP-CONTROL VALVE (BULLDOZER LIFT, PLOW)	371
	5	1	**5B-9318**	1	BALL	
M	6	1	**8T-6869**	2	BOLT (M8X1.25X60-MM)	
	7	1	**2K-8199**	2	SEAL-O-RING	
M	8	1	**8T-4189**	2	BOLT (M8X1.25X20-MM)	
	9	1	**8T-4224**	4	WASHER-HARD (8.8X16X2-MM THK)	
	10	1	**101-1984**	1	BODY	
	11	1	**102-7412**	1	SPRING	
	12	1	**101-1973**	4	RETAINER	
	13	1	**101-1971**	1	LEVER	
	14	1	**340-5470**	1	LEVER AS (RH)	
	15	1	**8M-4437**	2	SEAL-O-RING	
	17	1	**4D-9986**	1	SEAL-O-RING	
	18	1	**101-2480**	1	COVER	
M	19	1	**8T-4138**	2	BOLT (M6X1X20-MM)	
	20	1	**6E-3007**	1	SPRING	
	21	1	**6E-4502**	1	PLUG	
	22	1	**4J-7533**	1	SEAL-O-RING	
	23	1	**6E-3019**	1	VALVE	
	24	1	**6E-5153**	1	SPRING	
	25	1	**108-2187**	1	PLUG-PIPE	
	26	1	*148-8395*	1	PLUG AS	
		1	**9S-8005**	1	PLUG (3/4-16-THD)	
		1	**3K-0360**	1	SEAL-O-RING	
	27	1	**106-3660**	2	PISTON	
Y	28	1	**222-7774**	1	VALVE GP-RELIEF (BULLDOZER LIFT, PLOW)	468
	30	1	**111-8234**	1	SPRING	
	31	1	**325-6423**	2	VALVE GP-CHECK	
					(EACH INCLUDES)	
		1	**3K-0360**	1	SEAL-O-RING	
		1	**7J-9933**	1	SEAL-O-RING	
	32	1	**3K-0360**	2	SEAL-O-RING	
	33	1	**9J-0403**	2	SPRING	
	34	1	**9J-0404**	2	PLUG	
	35	1	**361-3549**	2	SEAL-O-RING	

M - METRIC PART
Y - SEPARATE ILLUSTRATION

107-0547 **VALVE GP-CONTROL (**contd.**)** **i07581246**

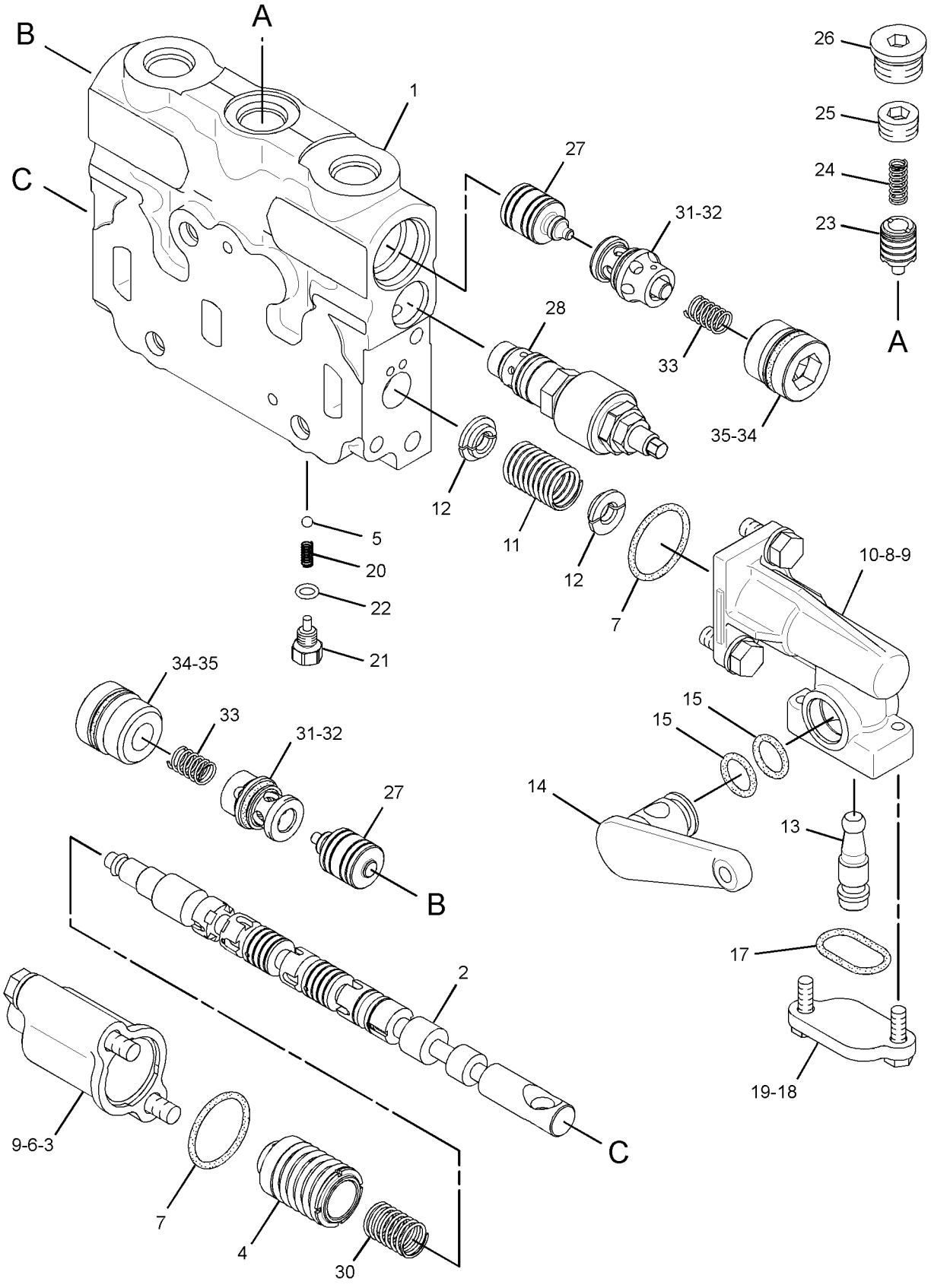

GRAPHIC #1 <END> g03185117

538-4741 VALVE GP-CONTROL–RIPPER

S/N: W921-UP

PART OF 537-5602 CONTROL AR-HYDRAULIC

SMCS-5051 **i07581344**

NOTE	REF NO	GRAPHIC REF	PART NUMBER	QTY	PART NAME 1 2 3 4 5 6 (PRODUCT LEVEL)	SEE PAGE
M	1	1	**518-2309**	4	BOLT (M10X1.5X20-MM)	
M	2	1	**518-2310**	4	BOLT (M10X1.5X25-MM)	
	3	1	**518-4418**	6	WASHER (13X24X2.5-MM THK)	
M	4	1	**518-6586**	2	NUT (M12X1.75-THD)	
	5	1	**518-9738**	2	WASHER (13.5X25.5X3-MM THK)	
Y	6	1	**6E-3032**	1	VALVE GP-BANK 4 (RH)	430
Y	7	1	**104-8645**	1	VALVE GP-BANK 5 (LH)	432
	8	1	**518-4417**	8	WASHER	
	9	1	**540-4624**	1	PLATE AS	
M		1	**518-6586**	2	NUT (M12X1.75-THD)	
	10	1	**540-4625**	2	PLATE	
	11	1	**540-4626**	1	PLATE AS	
M		1	**518-6586**	2	NUT (M12X1.75-THD)	
	12	1	**540-4627**	6	WASHER	
	13	1	**540-4628**	4	SLEEVE	
	14	1	**540-4631**	6	MOUNTING	
M	15	1	**096-9986**	6	BOLT (M12X1.75X55-MM)	

M - METRIC PART
Y - SEPARATE ILLUSTRATION

538-4741 **VALVE GP-CONTROL (**contd.**)** **i07581344**

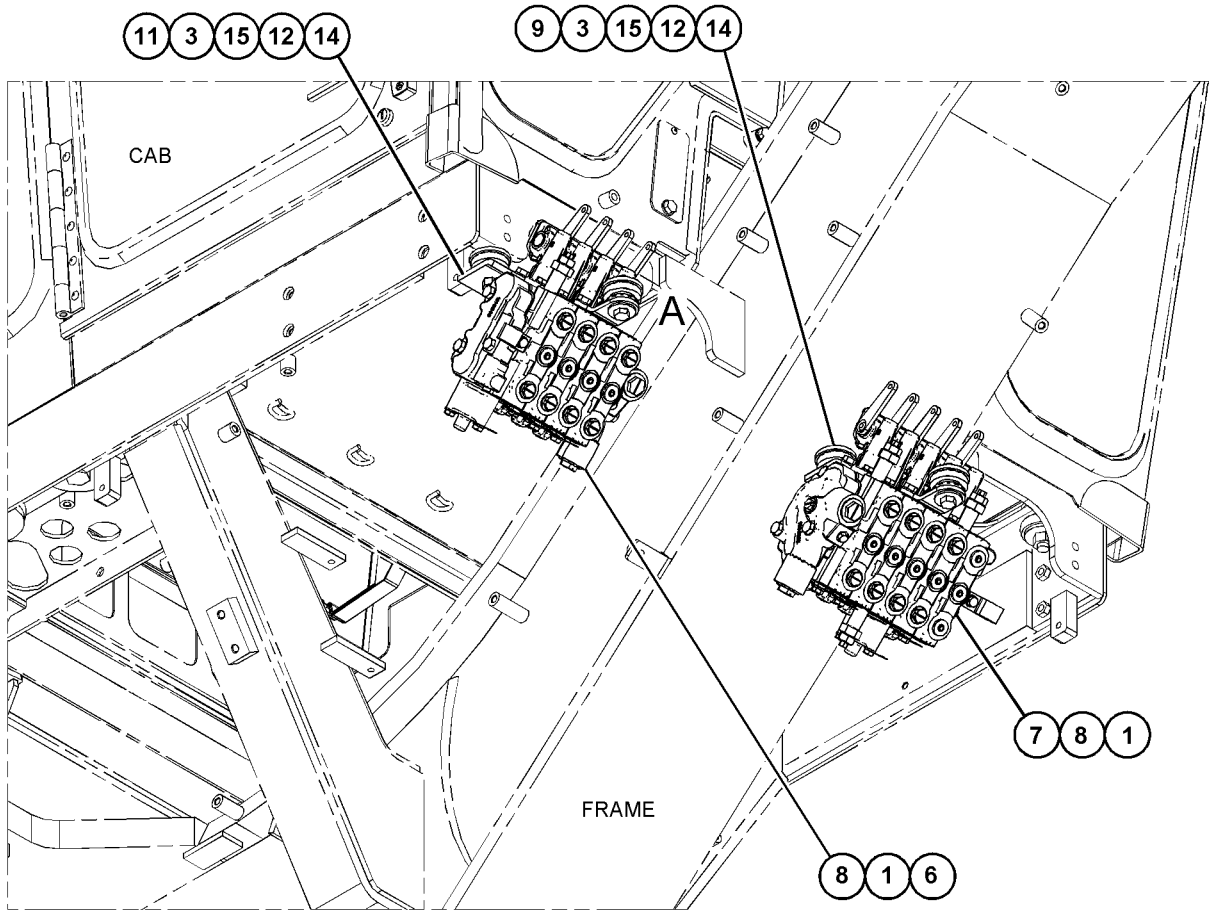



(VIEWED FROM BOTTOM)

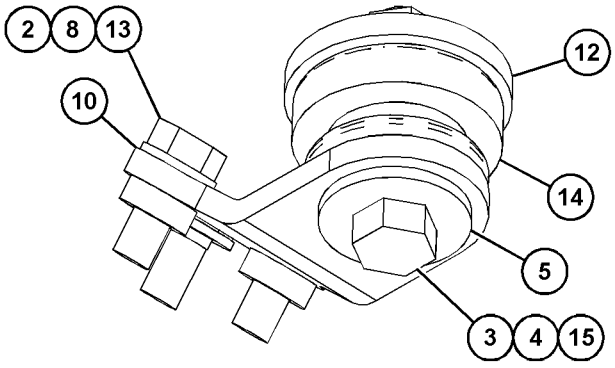

VIEW OF AREA A

GRAPHIC #1 <END> g06374076

538-4742 VALVE GP-CONTROL—DOZER, PLOW, RIPPER

S/N: W921-UP

PART OF 537-5605 CONTROL AR-HYDRAULIC

SMCS-5051 **i07580136**

NOTE	REF NO	GRAPHIC REF	PART NUMBER	QTY	PART NAME 1 2 3 4 5 6 (PRODUCT LEVEL)	SEE PAGE
M	1	1	**518-2309**	4	BOLT (M10X1.5X20-MM)	
M	2	1	**518-2310**	4	BOLT (M10X1.5X25-MM)	
	3	1	**518-4418**	6	WASHER (13X24X2.5-MM THK)	
M	4	1	**518-6586**	2	NUT (M12X1.75-THD)	
	5	1	**518-9738**	2	WASHER (13.5X25.5X3-MM THK)	
Y	6	1	**104-8645**	1	VALVE GP-BANK 5 (LH)	432
Y	7	1	**104-8671**	1	VALVE GP-BANK 5 (RH)	433
	8	1	**518-4417**	8	WASHER	
	9	1	**540-4624**	1	PLATE AS	
M		1	**518-6586**	2	NUT (M12X1.75-THD)	
	10	1	**540-4625**	2	PLATE	
	11	1	**540-4626**	1	PLATE AS	
M		1	**518-6586**	2	NUT (M12X1.75-THD)	
	12	1	**540-4627**	6	WASHER	
	13	1	**540-4628**	4	SLEEVE	
	14	1	**540-4631**	6	MOUNTING	
M	15	1	**096-9986**	6	BOLT (M12X1.75X55-MM)	

M - METRIC PART
Y - SEPARATE ILLUSTRATION

538-4742 **VALVE GP-CONTROL (**contd.**)** **i07580136**

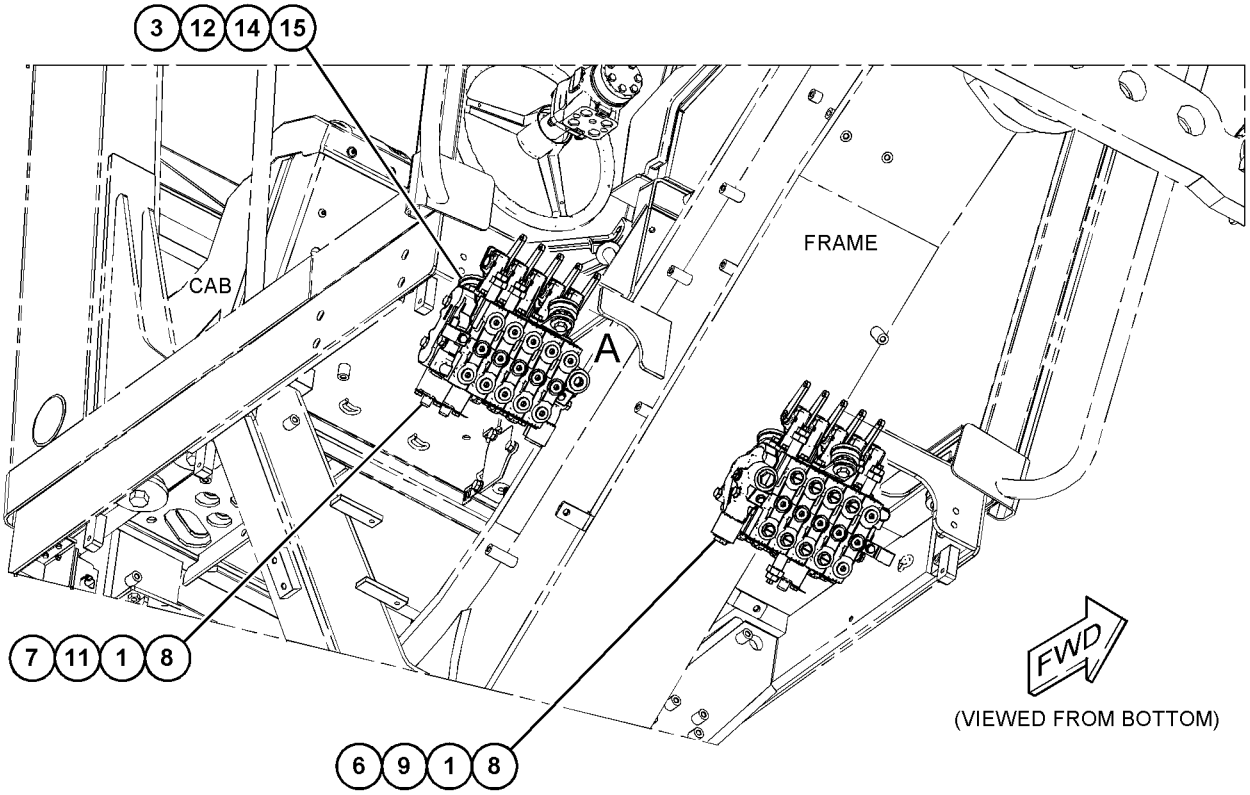

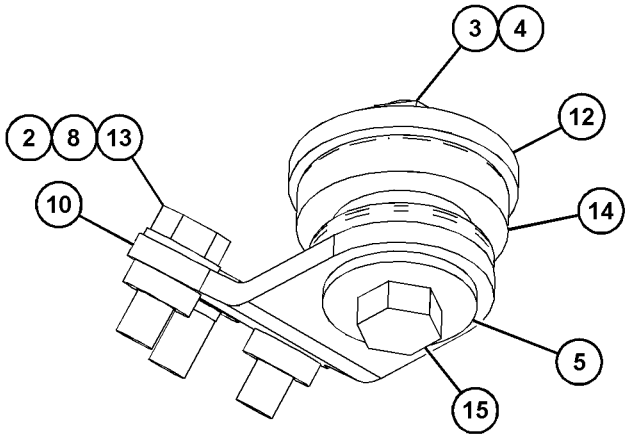

VIEW OF AREA A
(PARTS REMOVED FOR CLARITY)

GRAPHIC #1 <END> g06374053

538-4744 VALVE GP-CONTROL

S/N: W921-UP

PART OF 537-5601 CONTROL AR-HYDRAULIC

SMCS-5051 **i07581634**

NOTE	REF NO	GRAPHIC REF	PART NUMBER	QTY	PART NAME 1 2 3 4 5 6 (PRODUCT LEVEL)	SEE PAGE
M	1	1	**518-2309**	4	BOLT (M10X1.5X20-MM)	
M	2	1	**518-2310**	4	BOLT (M10X1.5X25-MM)	
	3	1	**518-4418**	6	WASHER (13X24X2.5-MM THK)	
M	4	1	**518-6586**	2	NUT (M12X1.75-THD)	
	5	1	**518-9738**	2	WASHER (13.5X25.5X3-MM THK)	
Y	6	1	**6E-3032**	1	VALVE GP-BANK 4 (RH)	430
Y	7	1	**6E-3038**	1	VALVE GP-BANK 4 (LH)	431
	8	1	**518-4417**	8	WASHER	
	9	1	**540-4624**	1	PLATE AS	
M		1	**518-6586**	2	NUT (M12X1.75-THD)	
	10	1	**540-4625**	2	PLATE	
	11	1	**540-4626**	1	PLATE AS	
M		1	**518-6586**	2	NUT (M12X1.75-THD)	
	12	1	**540-4627**	6	WASHER	
	13	1	**540-4628**	4	SLEEVE	
	14	1	**540-4631**	6	MOUNTING	
M	15	1	**096-9986**	6	BOLT (M12X1.75X55-MM)	

M - METRIC PART
Y - SEPARATE ILLUSTRATION

538-4744 **VALVE GP-CONTROL (**contd.**)** **i07581634**

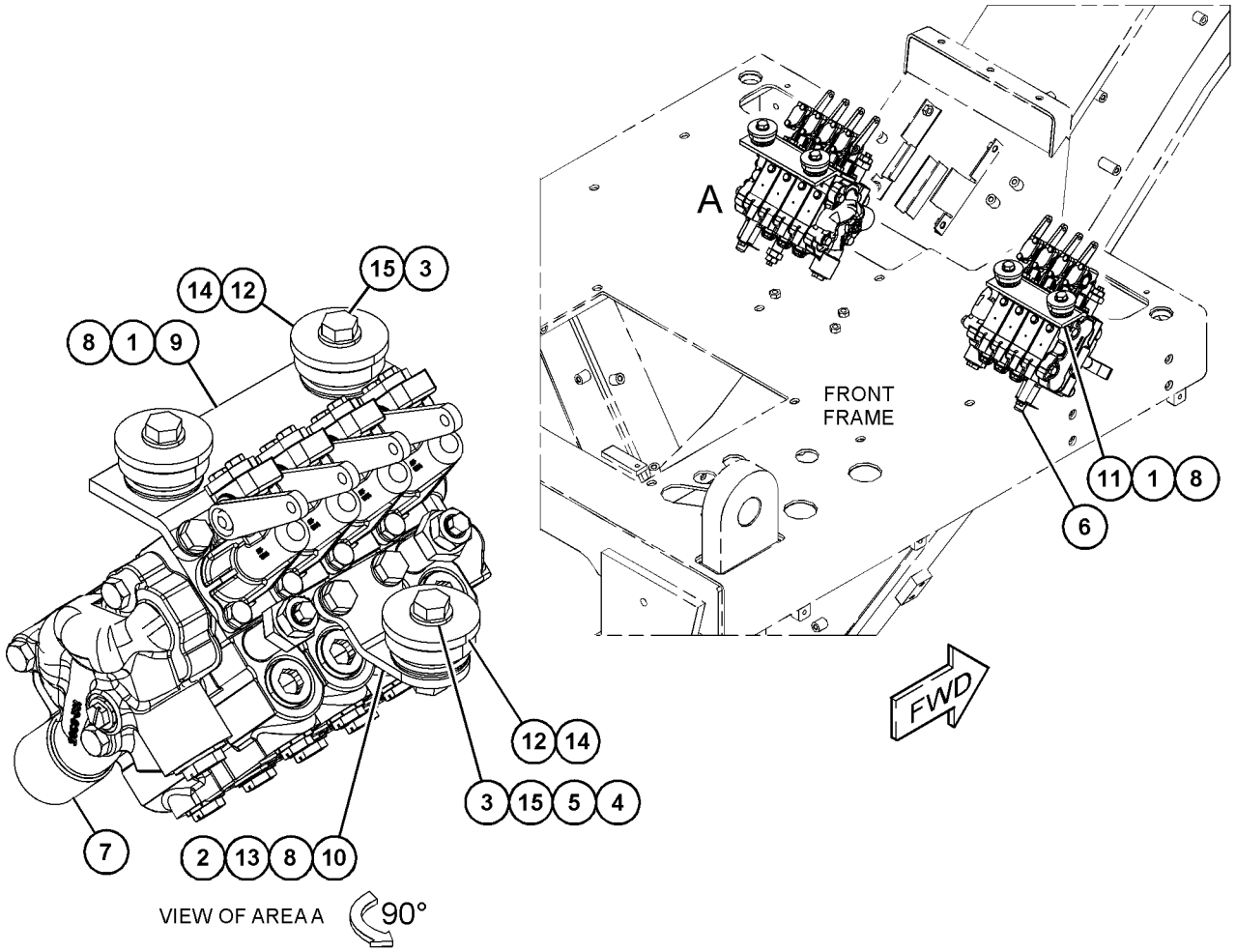

GRAPHIC #1 <END> g06374435

6E-3028 VALVE GP-CONTROL–ARTICULATION

S/N: W921-UP

PART OF 6E-3032 VALVE GP-BANK 4, 104-8671 VALVE GP-BANK 5

SMCS-5051 **i07581230**

NOTE	REF NO	GRAPHIC REF	PART NUMBER	QTY	PART NAME 1 2 3 4 5 6 (PRODUCT LEVEL)	SEE PAGE
	1	1	**6E-3044**	1	BODY	
	2	1	**101-1148**	1	STEM	
	3	1	**101-1978**	1	COVER	
	4	1	**2K-8199**	2	SEAL-O-RING	
M	5	1	**8T-4189**	4	BOLT (M8X1.25X20-MM)	
	6	1	**8T-4224**	4	WASHER-HARD (8.8X16X2-MM THK)	
	7	1	**101-1984**	1	BODY	
	8	1	**102-7412**	1	SPRING	
	9	1	**101-1973**	4	RETAINER	
	10	1	**101-1971**	1	LEVER	
	11	1	**340-5470**	1	LEVER AS (RH)	
	12	1	**9J-0404**	2	PLUG	
	14	1	**101-2480**	1	COVER	
	15	1	**4D-9986**	1	SEAL-O-RING	
M	16	1	**8T-4138**	2	BOLT (M6X1X20-MM)	
	17	1	**5B-9318**	1	BALL	
	18	1	**6E-3007**	1	SPRING	
	19	1	**6E-4502**	1	PLUG	
	20	1	**4J-7533**	1	SEAL-O-RING	
	21	1	**6E-3019**	1	VALVE	
	22	1	**6E-5153**	1	SPRING	
	23	1	**108-2187**	1	PLUG-PIPE	
	24	1	**106-3659**	1	PISTON	
	26	1	**111-8233**	1	SPRING	
	27	1	*148-8395*	1	PLUG AS	
		1	**9S-8005**	1	PLUG (3/4-16-THD)	
		1	**3K-0360**	1	SEAL-O-RING	
	28	1	**8M-4437**	2	SEAL-O-RING	
	29	1	**361-3549**	2	SEAL-O-RING	
	30	1	**354-9444**	2	VALVE GP-CHECK	
					(EACH INCLUDES)	
		1	**6E-3013**	1	SEAT	
	31	1	**9J-0403**	2	SPRING	
	32	1	**3K-0360**	2	SEAL-O-RING	

M - METRIC PART

6E-3028 **VALVE GP-CONTROL (**contd.**)** **i07581230**

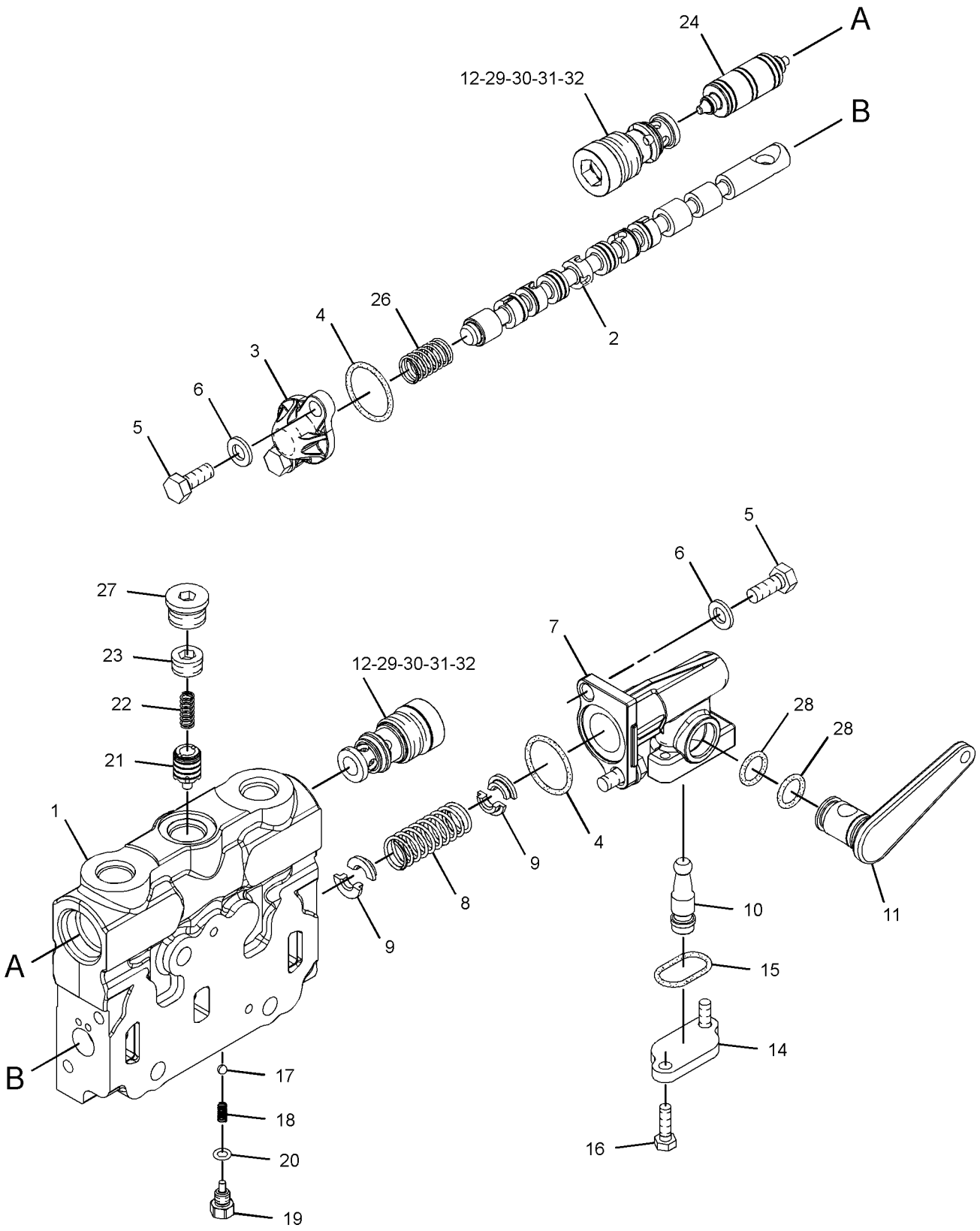

GRAPHIC #1 <END> g03154636

6E-3029 VALVE GP-CONTROL—CENTERSHIFT

S/N: W921-UP

PART OF 6E-3032 VALVE GP-BANK 4, 104-8671 VALVE GP-BANK 5

SMCS-5051 **i07581232**

NOTE	REF NO	GRAPHIC REF	PART NUMBER	QTY	PART NAME 1 2 3 4 5 6 (PRODUCT LEVEL)	SEE PAGE
	1	1	**4D-9986**	1	SEAL-O-RING	
	2	1	**6E-3007**	1	SPRING	
	3	1	**6E-3019**	1	VALVE (COMPENSATOR)	
	4	1	**6E-3044**	1	BODY	
	5	1	**6E-4502**	1	PLUG	
	6	1	**6E-5153**	1	SPRING	
	7	1	**340-5470**	1	LEVER AS (RH)	
	8	1	**101-1971**	1	LEVER	
	9	1	**101-1973**	4	RETAINER	
	10	1	**101-1978**	1	COVER	
	11	1	**101-1984**	1	BODY	
	12	1	**101-2480**	1	COVER	
	13	1	**102-7412**	1	SPRING	
	14	1	**106-3659**	1	PISTON	
	15	1	**101-1149**	1	STEM	
	17	1	**111-8233**	1	SPRING	
	18	1	**9J-0404**	2	PLUG	
	20	1	**108-2187**	1	PLUG-PIPE	
	21	1	*148-8395*	1	PLUG AS	
		1	**9S-8005**	1	PLUG (3/4-16-THD)	
		1	**3K-0360**	1	SEAL-O-RING	
	22	1	**2K-8199**	2	SEAL-O-RING	
	23	1	**4J-7533**	1	SEAL-O-RING	
	24	1	**5B-9318**	1	BALL	
	25	1	**8M-4437**	2	SEAL-O-RING	
M	26	1	**8T-4138**	2	BOLT (M6X1X20-MM)	
M	27	1	**8T-4189**	4	BOLT (M8X1.25X20-MM)	
	28	1	**8T-4224**	4	WASHER-HARD (8.8X16X2-MM THK)	
	29	1	**361-3549**	2	SEAL-O-RING	
	30	1	**354-9444**	2	VALVE GP-CHECK	
					(EACH INCLUDES)	
		1	**6E-3013**	1	SEAT	
	31	1	**9J-0403**	2	SPRING	
	32	1	**3K-0360**	2	SEAL-O-RING	

M - METRIC PART

6E-3029 **VALVE GP-CONTROL (**contd.**)** **i07581232**

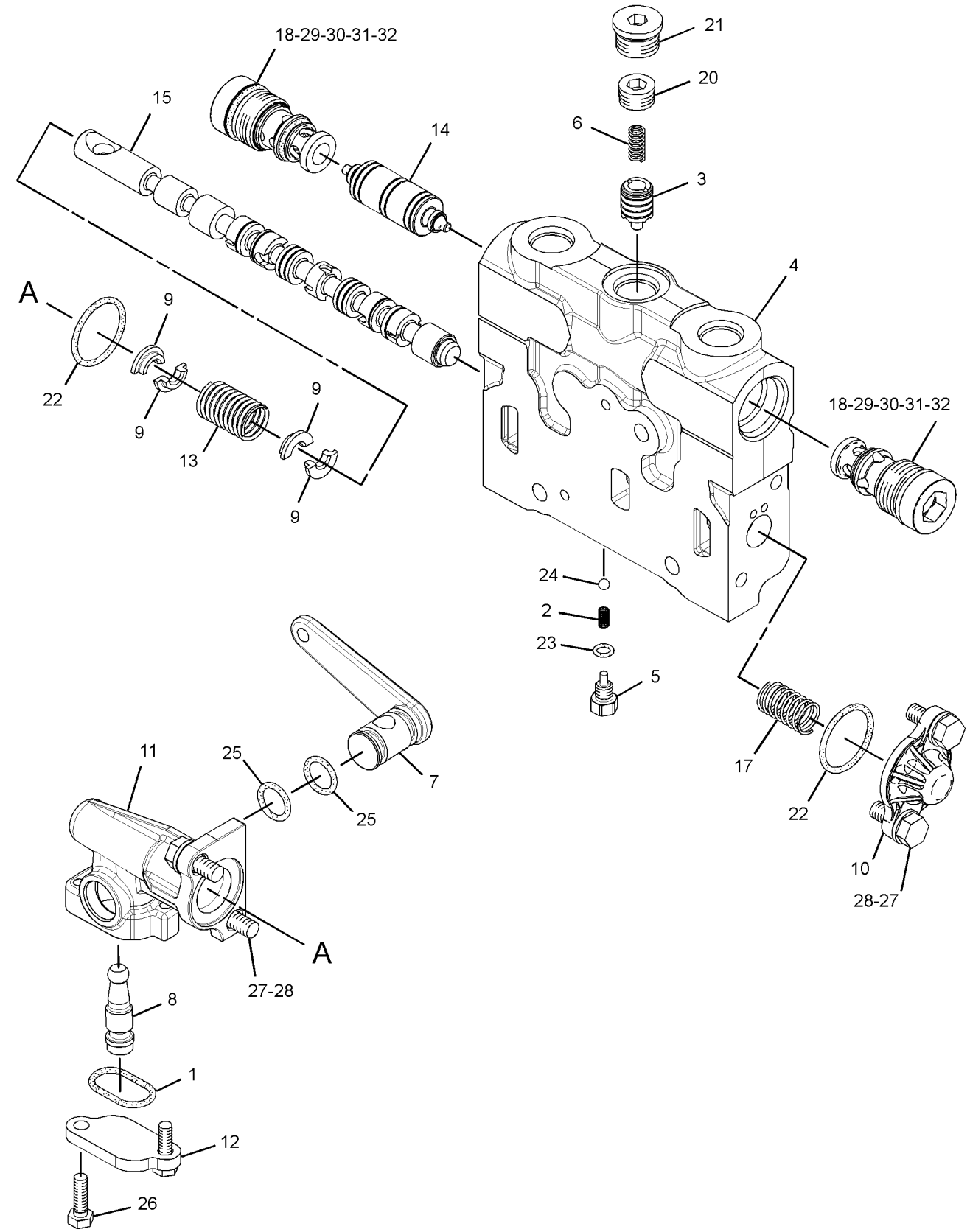

GRAPHIC #1 <END> g03154718

6E-3030 VALVE GP-CONTROL—WHEEL LEAN

S/N: W921-UP

PART OF 6E-3032 VALVE GP-BANK 4, 104-8671 VALVE GP-BANK 5

SMCS-5051 **i07581235**

NOTE	REF NO	GRAPHIC REF	PART NUMBER	QTY	PART NAME 1 2 3 4 5 6 (PRODUCT LEVEL)	SEE PAGE
	1	1	**4D-9986**	1	SEAL-O-RING	
	2	1	**6E-3007**	1	SPRING	
	3	1	**6E-3019**	1	VALVE	
	4	1	**6E-3044**	1	BODY	
	5	1	**6E-4502**	1	PLUG	
	6	1	**6E-5153**	1	SPRING	
	7	1	**101-1154**	1	STEM	
	8	1	**340-5470**	1	LEVER AS (RH)	
	9	1	**101-1971**	1	LEVER	
	10	1	**101-1973**	4	RETAINER	
	11	1	**101-1978**	1	COVER	
	12	1	**101-1984**	1	BODY	
	13	1	**101-2480**	1	COVER	
	14	1	**102-7412**	1	SPRING	
	15	1	**106-3659**	1	PISTON	
	17	1	**111-8233**	1	SPRING	
	18	1	**9J-0404**	2	PLUG	
	20	1	**108-2187**	1	PLUG-PIPE	
	21	1	*148-8395*	1	PLUG AS	
		1	**9S-8005**	1	PLUG (3/4-16-THD)	
	22	1	**8M-4437**	2	SEAL-O-RING	
		1	**3K-0360**	1	SEAL-O-RING	
	23	1	**2K-8199**	2	SEAL-O-RING	
	24	1	**4J-7533**	1	SEAL-O-RING	
	25	1	**5B-9318**	1	BALL	
M	26	1	**8T-4138**	2	BOLT (M6X1X20-MM)	
M	27	1	**8T-4189**	4	BOLT (M8X1.25X20-MM)	
	28	1	**8T-4224**	4	WASHER-HARD (8.8X16X2-MM THK)	
	29	1	**361-3549**	2	SEAL-O-RING	
	30	1	**354-9444**	2	VALVE GP-CHECK	
					(EACH INCLUDES)	
		1	**6E-3013**	1	SEAT	
	31	1	**9J-0403**	2	SPRING	
	32	1	**3K-0360**	2	SEAL-O-RING	

M - METRIC PART

6E-3030 **VALVE GP-CONTROL (**contd.**)** **i07581235**

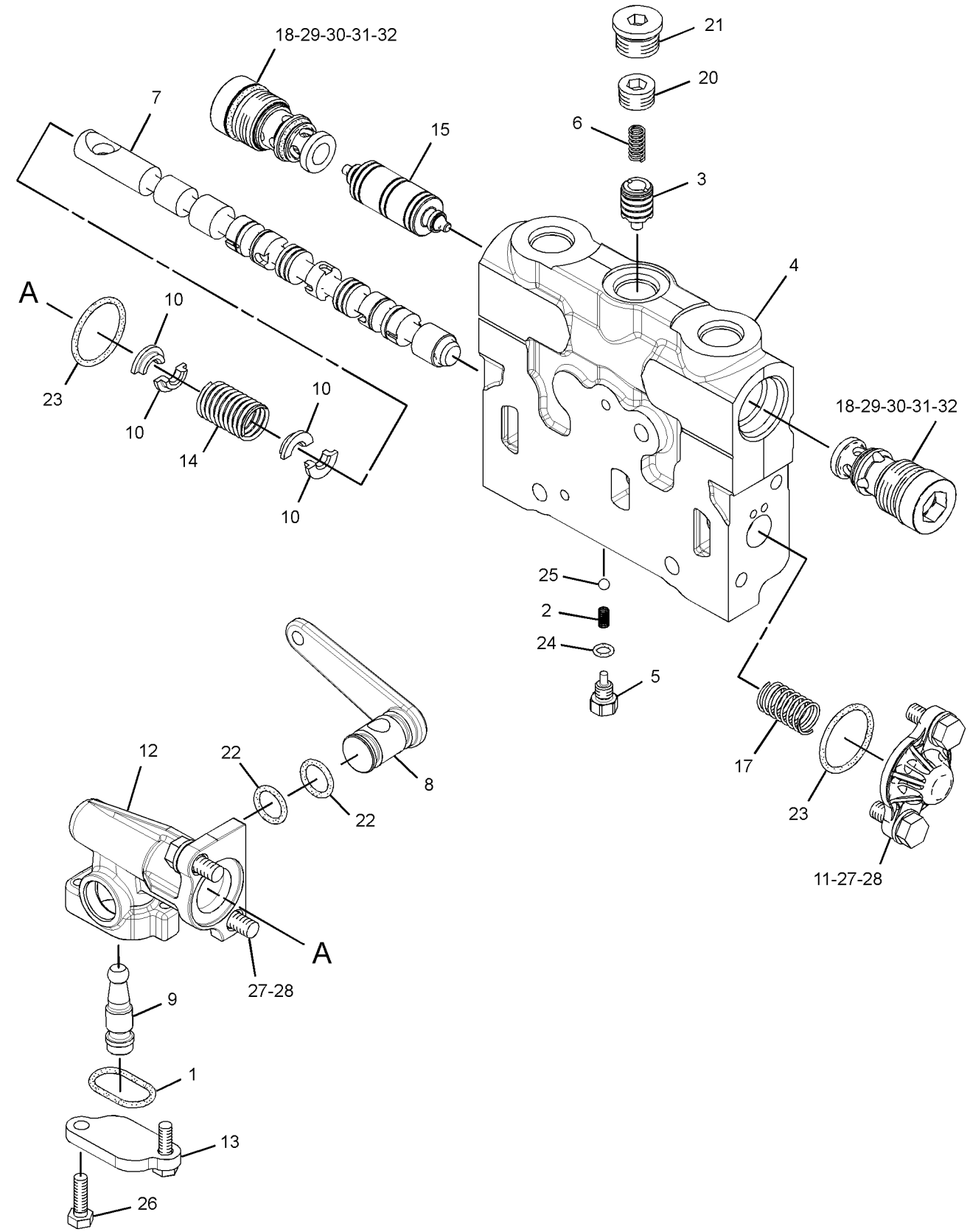

GRAPHIC #1 <END> g03154778

6E-3031 VALVE GP-CONTROL—BLADE LIFT

S/N: W921-UP

PART OF 6E-3032 VALVE GP-BANK 4, 104-8671 VALVE GP-BANK 5

SMCS-5051 **i07581244**

NOTE	REF NO	GRAPHIC REF	PART NUMBER	QTY	PART NAME 1 2 3 4 5 6 (PRODUCT LEVEL)	SEE PAGE
	1	1	**6E-3043**	1	BODY	
	2	1	**221-3676**	1	STEM	
	3	1	**101-1980**	1	HOUSING	
Y	4	1	**108-4916**	1	DETENT GP-CONTROL VALVE (BLADE LIFT)	371
	5	1	**5B-9318**	1	BALL	
M	6	1	**8T-6869**	2	BOLT (M8X1.25X60-MM)	
	7	1	**2K-8199**	2	SEAL-O-RING	
M	8	1	**8T-4189**	2	BOLT (M8X1.25X20-MM)	
	9	1	**8T-4224**	4	WASHER-HARD (8.8X16X2-MM THK)	
	10	1	**101-1984**	1	BODY	
	11	1	**102-7412**	1	SPRING	
	12	1	**101-1973**	4	RETAINER	
	13	1	**101-1971**	1	LEVER	
	14	1	**340-5470**	1	LEVER AS (RH)	
	15	1	**354-9444**	2	VALVE GP-CHECK	
					(EACH INCLUDES)	
		1	**6E-3013**	1	SEAT	
		1	**106-3658**	1	VALVE	
	17	1	**4D-9986**	1	SEAL-O-RING	
	18	1	**101-2480**	1	COVER	
M	19	1	**8T-4138**	2	BOLT (M6X1X20-MM)	
	20	1	**6E-3007**	1	SPRING	
	21	1	**6E-4502**	1	PLUG	
	22	1	**4J-7533**	1	SEAL-O-RING	
	23	1	**6E-3019**	1	VALVE	
	24	1	**6E-5153**	1	SPRING	
	25	1	**108-2187**	1	PLUG-PIPE	
	26	1	**106-3660**	2	PISTON	
Y	27	1	**222-7774**	1	VALVE GP-RELIEF (BLADE LIFT)	468
	29	1	**111-8234**	1	SPRING	
					(SPRING MUST HAVE LIGHT BLUE STRIPE)	
	30	1	*148-8395*	1	PLUG AS	
		1	**3K-0360**	1	SEAL-O-RING	
		1	**9S-8005**	1	PLUG (3/4-16-THD)	
	31	1	**8M-4437**	2	SEAL-O-RING	
	32	1	**3K-0360**	2	SEAL-O-RING	
	33	1	**9J-0403**	2	SPRING	
	34	1	**9J-0404**	2	PLUG	
	35	1	**361-3549**	2	SEAL-O-RING	

M - METRIC PART
Y - SEPARATE ILLUSTRATION

6E-3031 **VALVE GP-CONTROL (**contd.**)** **i07581244**

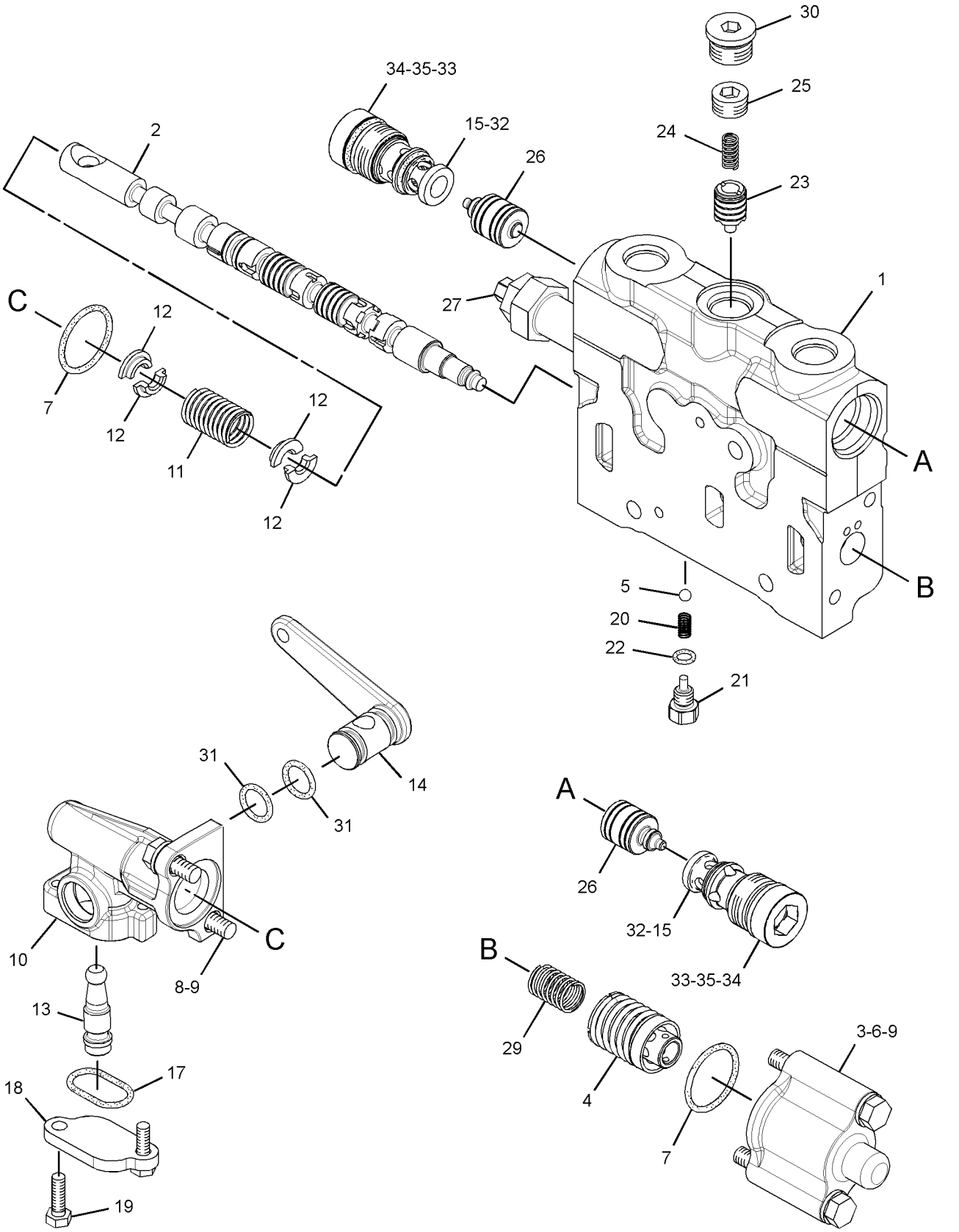

GRAPHIC #1 <END> g03146443

6E-3034 VALVE GP-CONTROL—BLADE TIP

S/N: W921-UP

PART OF 6E-3038 VALVE GP-BANK 4, 104-8645 VALVE GP-BANK 5

SMCS-5051 **i07580142**

NOTE	REF NO	GRAPHIC REF	PART NUMBER	QTY	PART NAME 1 2 3 4 5 6 (PRODUCT LEVEL)	SEE PAGE
	1	1	**6E-4599**	1	BODY	
	2	1	**101-1155**	1	STEM	
	3	1	**101-1978**	1	COVER	
	4	1	**2K-8199**	2	SEAL-O-RING	
M	5	1	**8T-4189**	4	BOLT (M8X1.25X20-MM)	
	6	1	**8T-4224**	4	WASHER-HARD (8.8X16X2-MM THK)	
	7	1	**101-1984**	1	BODY	
Y	8	1	**139-8472**	1	VALVE GP-RELIEF (BLADE TIP)	467
	10	1	**102-7412**	1	SPRING	
	11	1	**101-1973**	4	RETAINER	
	12	1	**101-1971**	1	LEVER	
	13	1	**340-5472**	1	LEVER AS (LH)	
	14	1	**8M-4437**	2	SEAL-O-RING	
	16	1	**4D-9986**	1	SEAL-O-RING	
	17	1	**101-2480**	1	COVER	
M	18	1	**8T-4138**	2	BOLT (M6X1X20-MM)	
	19	1	**5B-9318**	1	BALL	
	20	1	**6E-3007**	1	SPRING	
	21	1	**6E-4502**	1	PLUG	
	22	1	**4J-7533**	1	SEAL-O-RING	
	23	1	**6E-3019**	1	VALVE	
	24	1	**6E-5153**	1	SPRING	
	25	1	**108-2187**	1	PLUG-PIPE	
	26	1	*148-8395*	1	PLUG AS	
		1	**9S-8005**	1	PLUG (3/4-16-THD)	
		1	**3K-0360**	1	SEAL-O-RING	
	27	1	**106-3659**	1	PISTON	
	28	1	**111-8233**	1	SPRING	
	29	1	**354-9444**	2	VALVE GP-CHECK	
					(EACH INCLUDES)	
		1	**6E-3013**	1	SEAT	
	30	1	**3K-0360**	2	SEAL-O-RING	
	31	1	**9J-0403**	2	SPRING	
	32	1	**9J-0404**	2	PLUG	
	33	1	**361-3549**	2	SEAL-O-RING	

M - METRIC PART
Y - SEPARATE ILLUSTRATION

6E-3034 **VALVE GP-CONTROL (**contd.**)** **i07580142**

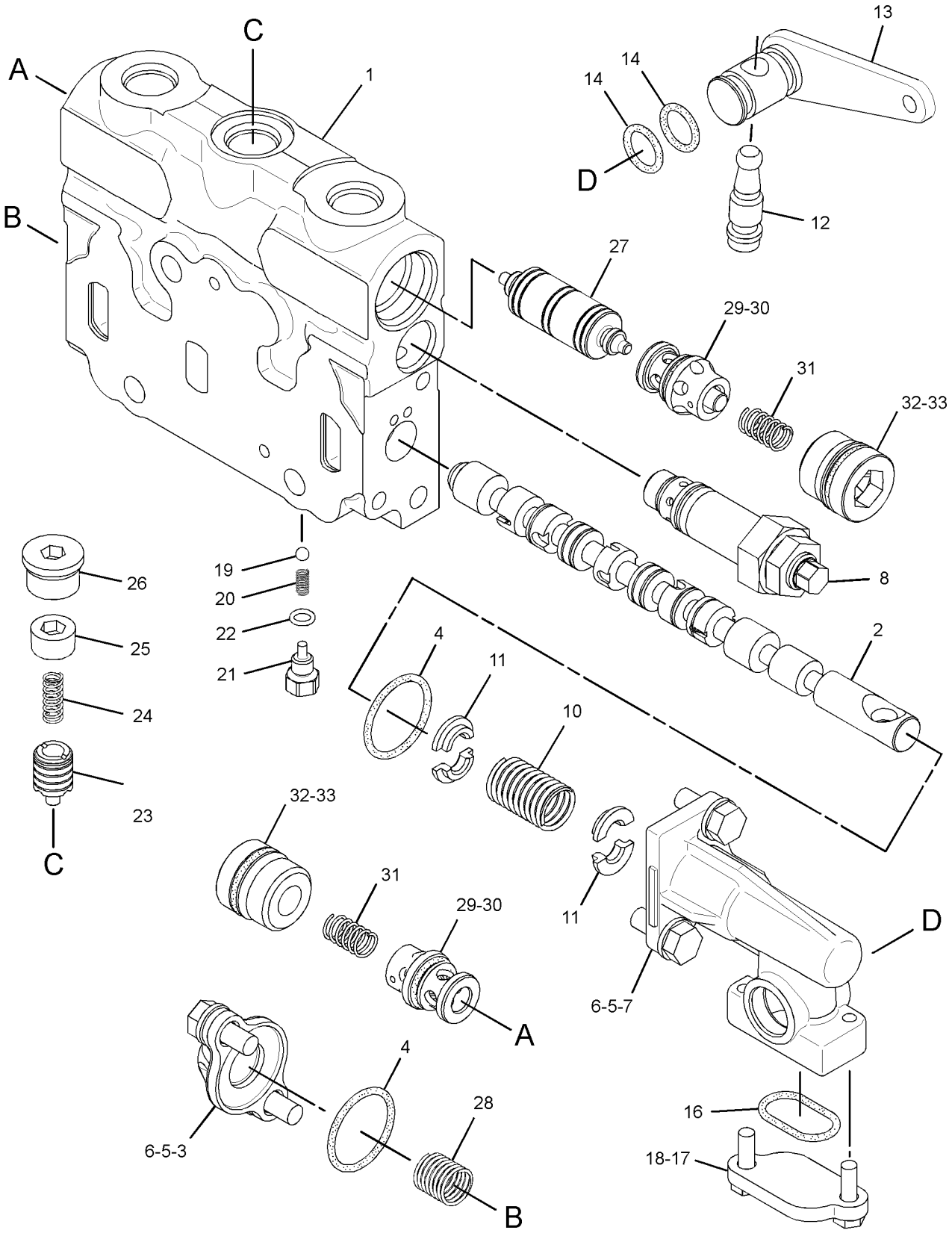

GRAPHIC #1 <END> g03148860

6E-3035 VALVE GP-CONTROL—CIRCLE DRIVE

S/N: W921-UP

PART OF 6E-3038 VALVE GP-BANK 4, 104-8645 VALVE GP-BANK 5

SMCS-5051 **i07580161**

NOTE	REF NO	GRAPHIC REF	PART NUMBER	QTY	PART NAME 1 2 3 4 5 6 (PRODUCT LEVEL)	SEE PAGE
	1	1	**6E-3044**	1	BODY	
	2	1	**148-7906**	1	STEM	
	3	1	**101-1978**	1	COVER	
	4	1	**2K-8199**	2	SEAL-O-RING	
M	5	1	**8T-4189**	4	BOLT (M8X1.25X20-MM)	
	6	1	**8T-4224**	4	WASHER-HARD (8.8X16X2-MM THK)	
	7	1	**101-1984**	1	BODY	
	8	1	**102-7412**	1	SPRING	
	9	1	**101-1973**	4	RETAINER	
	10	1	**101-1971**	1	LEVER	
	11	1	**340-5472**	1	LEVER AS (LH)	
	12	1	**8M-4437**	2	SEAL-O-RING	
	14	1	**4D-9986**	1	SEAL-O-RING	
	15	1	**101-2480**	1	COVER	
M	16	1	**8T-4138**	2	BOLT (M6X1X20-MM)	
	17	1	**5B-9318**	1	BALL	
	18	1	**6E-3007**	1	SPRING	
	19	1	**6E-4502**	1	PLUG	
	20	1	**4J-7533**	1	SEAL-O-RING	
	21	1	**6E-3019**	1	VALVE	
	22	1	**6E-5153**	1	SPRING	
	23	1	**108-2187**	1	PLUG-PIPE	
	24	1	*148-8395*	1	PLUG AS	
		1	**9S-8005**	1	PLUG (3/4-16-THD)	
		1	**3K-0360**	1	SEAL-O-RING	
	25	1	**106-3659**	1	PISTON	
	27	1	**111-8233**	1	SPRING	
	29	1	**3K-0360**	2	SEAL-O-RING	
	30	1	**6E-3013**	2	SEAT	
	31	1	**9J-0404**	2	PLUG	
	32	1	**361-3549**	2	SEAL-O-RING	

M - METRIC PART

6E-3035 **VALVE GP-CONTROL (**contd.**)** **i07580161**

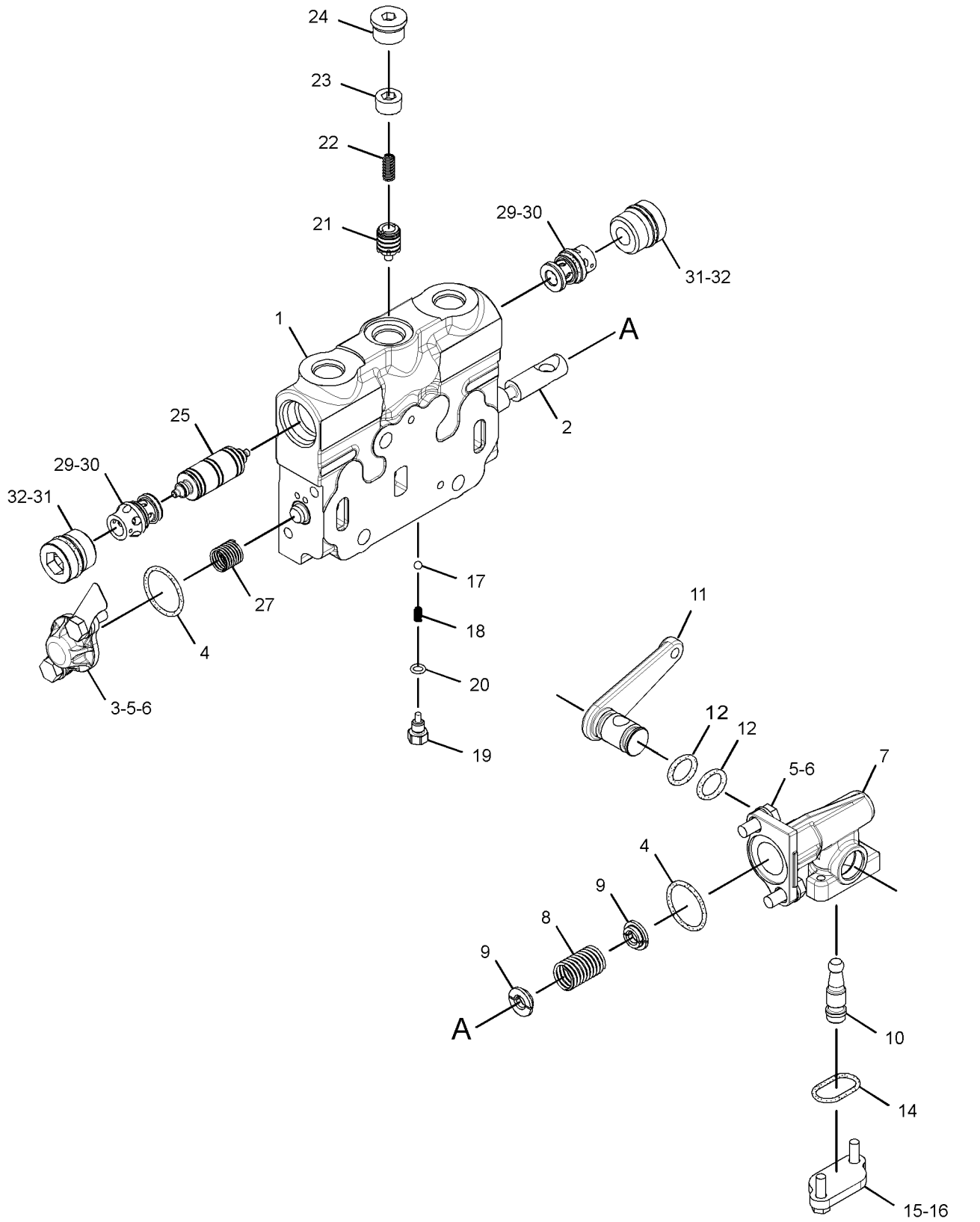

GRAPHIC #1 <END> g03149038

6E-3036 VALVE GP-CONTROL—SIDESHIFT

S/N: W921-UP

PART OF 6E-3038 VALVE GP-BANK 4, 104-8645 VALVE GP-BANK 5

SMCS-5051 **i07580551**

NOTE	REF NO	GRAPHIC REF	PART NUMBER	QTY	PART NAME 1 2 3 4 5 6 (PRODUCT LEVEL)	SEE PAGE
	1	1	**4D-9986**	1	SEAL-O-RING	
	2	1	**6E-3007**	1	SPRING	
	3	1	**6E-3019**	1	VALVE	
	4	1	**6E-3058**	1	BODY	
	5	1	**6E-4502**	1	PLUG	
	6	1	**6E-5153**	1	SPRING	
	7	1	**101-1971**	1	LEVER	
	8	1	**101-1973**	4	RETAINER	
	9	1	**101-1978**	1	COVER	
	10	1	**340-5472**	1	LEVER AS (LH)	
	11	1	**101-1984**	1	BODY	
	12	1	**101-2480**	1	COVER	
	13	1	**102-4577**	1	STEM	
	14	1	**102-7412**	1	SPRING	
	15	1	**106-3659**	1	PISTON	
	17	1	**111-8233**	1	SPRING	
Y	18	1	**139-8472**	1	VALVE GP-RELIEF (SIDESHIFT)	467
	19	1	**354-9444**	2	VALVE GP-CHECK	
					(EACH INCLUDES)	
		1	**6E-3013**	1	SEAT	
	21	1	**108-2187**	1	PLUG-PIPE	
	22	1	*148-8395*	1	PLUG AS	
		1	**9S-8005**	1	PLUG (3/4-16-THD)	
		1	**3K-0360**	1	SEAL-O-RING	
	23	1	**2K-8199**	2	SEAL-O-RING	
	24	1	**4J-7533**	1	SEAL-O-RING	
	25	1	**5B-9318**	1	BALL	
	26	1	**8M-4437**	2	SEAL-O-RING	
M	27	1	**8T-4138**	2	BOLT (M6X1X20-MM)	
M	28	1	**8T-4189**	4	BOLT (M8X1.25X20-MM)	
	29	1	**8T-4224**	4	WASHER-HARD (8.8X16X2-MM THK)	
	30	1	**3K-0360**	2	SEAL-O-RING	
	31	1	**9J-0403**	2	SPRING	
	32	1	**9J-0404**	2	PLUG	
	33	1	**361-3549**	2	SEAL-O-RING	

M - METRIC PART
Y - SEPARATE ILLUSTRATION

6E-3036 **VALVE GP-CONTROL (**contd.**)** **i07580551**

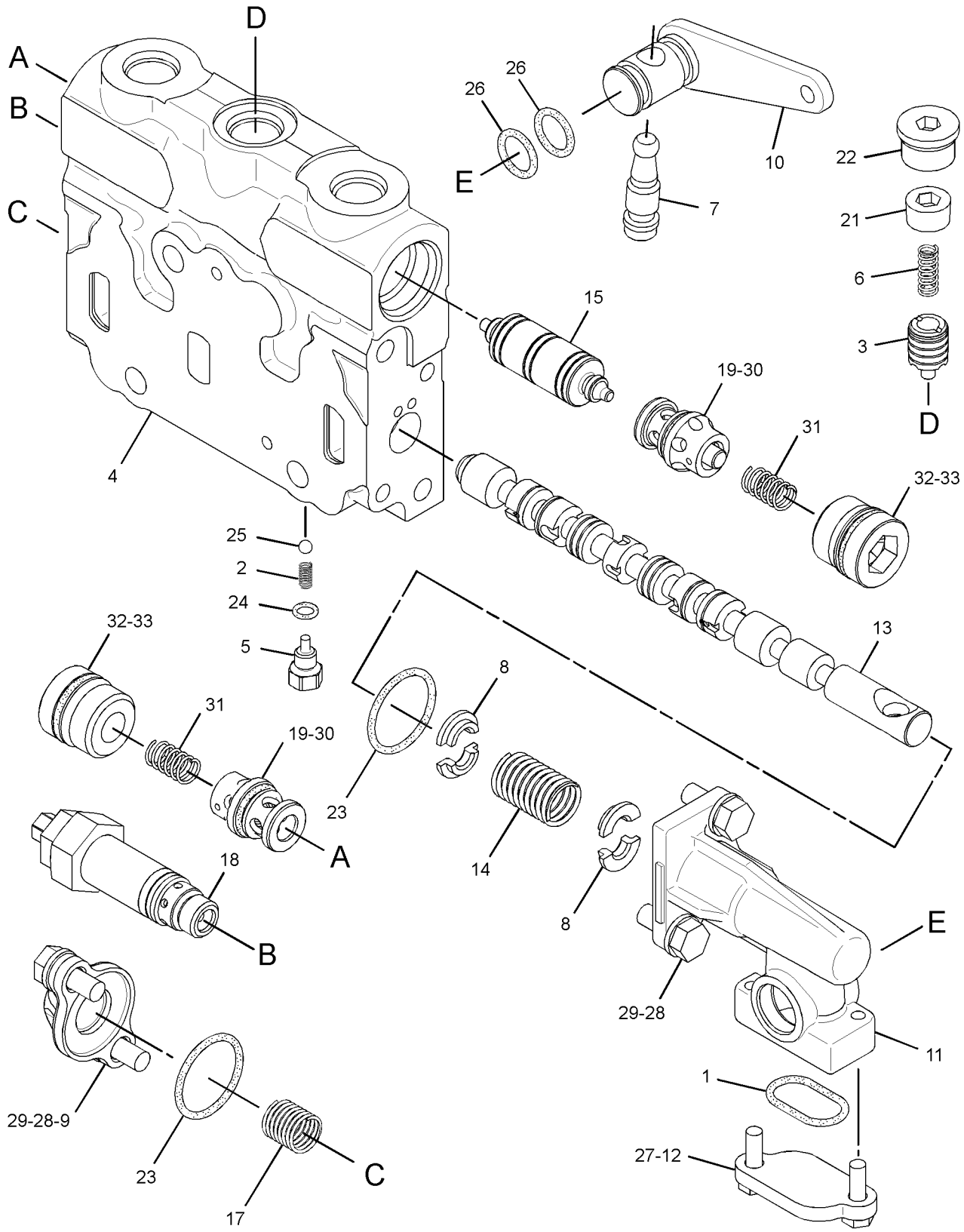

GRAPHIC #1 <END> g03149139

6E-3037 VALVE GP-CONTROL—BLADE LIFT

S/N: W921-UP

PART OF 6E-3038 VALVE GP-BANK 4, 104-8645 VALVE GP-BANK 5

SMCS-5051 **i07580554**

NOTE	REF NO	GRAPHIC REF	PART NUMBER	QTY	PART NAME 1 2 3 4 5 6 (PRODUCT LEVEL)	SEE PAGE
	1	1	**6E-3043**	1	BODY	
	2	1	**221-3676**	1	STEM	
	3	1	**101-1980**	1	HOUSING	
Y	4	1	**108-4916**	1	DETENT GP-CONTROL VALVE (BLADE LIFT)	371
	5	1	**5B-9318**	1	BALL	
M	6	1	**8T-6869**	2	BOLT (M8X1.25X60-MM)	
	7	1	**2K-8199**	2	SEAL-O-RING	
M	8	1	**8T-4189**	2	BOLT (M8X1.25X20-MM)	
	9	1	**8T-4224**	4	WASHER-HARD (8.8X16X2-MM THK)	
	10	1	**101-1984**	1	BODY	
	11	1	**102-7412**	1	SPRING	
	12	1	**101-1973**	4	RETAINER	
	13	1	**101-1971**	1	LEVER	
	14	1	**340-5472**	1	LEVER AS (LH)	
	15	1	**8M-4437**	2	SEAL-O-RING	
	17	1	**4D-9986**	1	SEAL-O-RING	
	18	1	**101-2480**	1	COVER	
M	19	1	**8T-4138**	2	BOLT (M6X1X20-MM)	
	20	1	**6E-3007**	1	SPRING	
	21	1	**6E-4502**	1	PLUG	
	22	1	**4J-7533**	1	SEAL-O-RING	
	23	1	**6E-3019**	1	VALVE	
	24	1	**6E-5153**	1	SPRING	
	25	1	**108-2187**	1	PLUG-PIPE	
	26	1	*148-8395*	1	PLUG AS	
		1	**3K-0360**	1	SEAL-O-RING	
		1	**9S-8005**	1	PLUG (3/4-16-THD)	
	27	1	**106-3660**	2	PISTON	
Y	28	1	**222-7774**	1	VALVE GP-RELIEF (BLADE LIFT)	468
	30	1	**111-8234**	1	SPRING	
	31	1	**354-9444**	2	VALVE GP-CHECK	
					(EACH INCLUDES)	
		1	**6E-3013**	1	SEAT	
	32	1	**3K-0360**	2	SEAL-O-RING	
	33	1	**9J-0403**	2	SPRING	
	34	1	**9J-0404**	2	PLUG	
	35	1	**361-3549**	2	SEAL-O-RING	

M - METRIC PART
Y - SEPARATE ILLUSTRATION

6E-3037 **VALVE GP-CONTROL (**contd.**)** **i07580554**

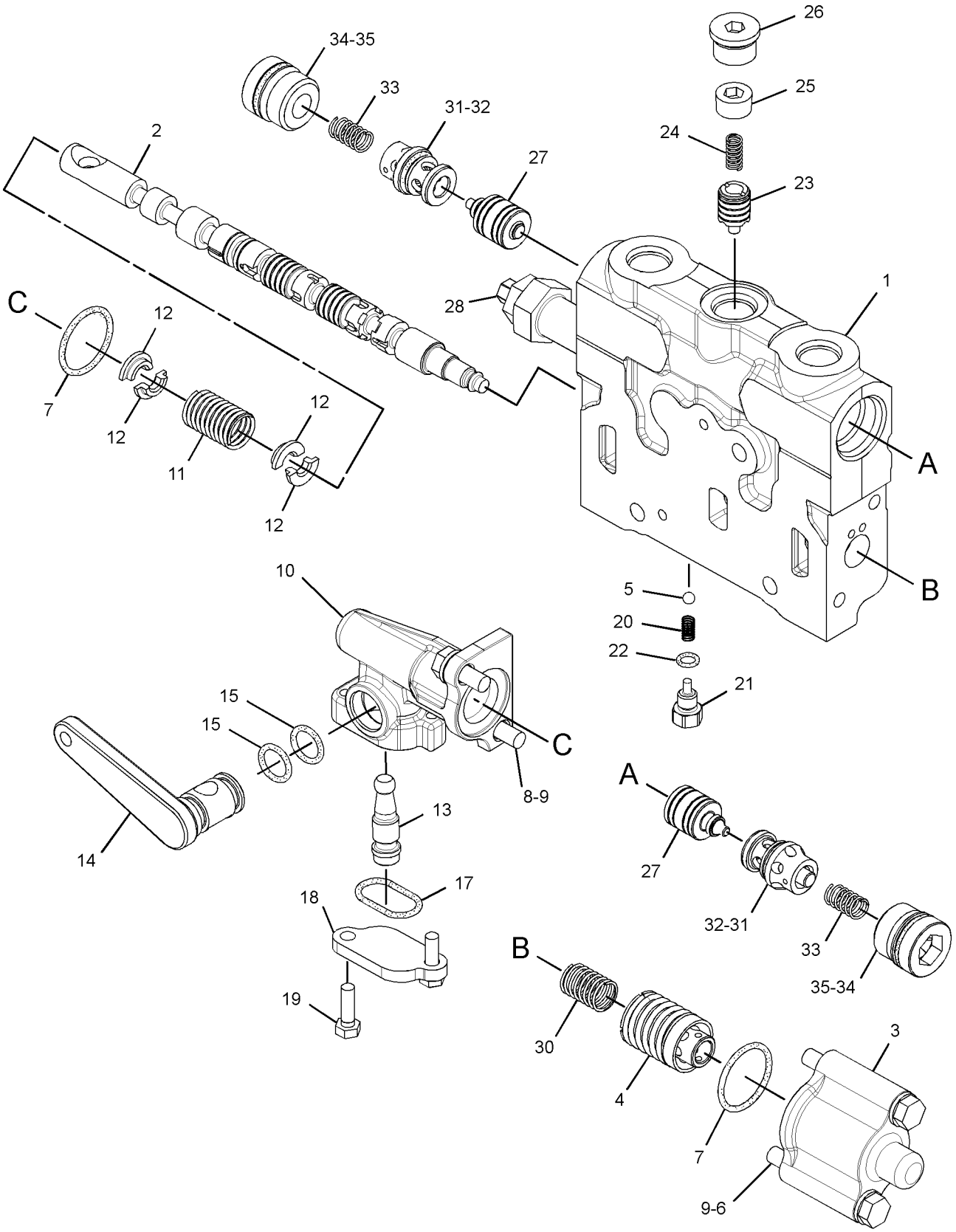

GRAPHIC #1 <END> g03147976

522-9166 VALVE GP-PRESSURE REDUCING

S/N: W921-UP

PART OF 535-7191 LINES GP-SECONDARY STEERING

SMCS-5117, 5467 **i07589201**

NOTE	REF NO	GRAPHIC REF	PART NUMBER	QTY	PART NAME 1 2 3 4 5 6 (PRODUCT LEVEL)	SEE PAGE
Y	1	1	**524-0884**	1	VALVE GP-PRESSURE REDUCING	465

Y - SEPARATE ILLUSTRATION

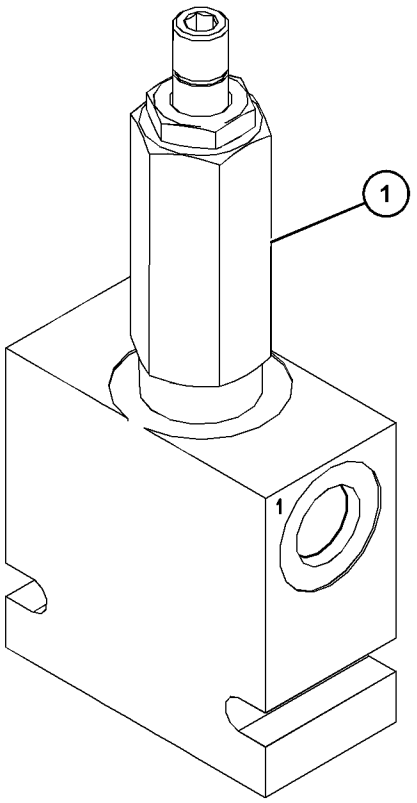

GRAPHIC #1 <END> g06193598

524-0884 VALVE GP-PRESSURE REDUCING

S/N: W921-UP

PART OF 522-9166 VALVE GP-PRESSURE REDUCING

SMCS-5117, 5467

i07589204

NOTE	REF NO	GRAPHIC REF	PART NUMBER	QTY	PART NAME 1 2 3 4 5 6 (PRODUCT LEVEL)	SEE PAGE
	1	1	**238-5080**	1	SEAL-O-RING	
	2	1	**6V-5758**	1	SEAL-O-RING	
	3	1	**3E-6780**	1	SEAL-O-RING	
	4	1	**161-6161**	2	RING-BACKUP	
	5	1	**187-0541**	2	RING-BACKUP	

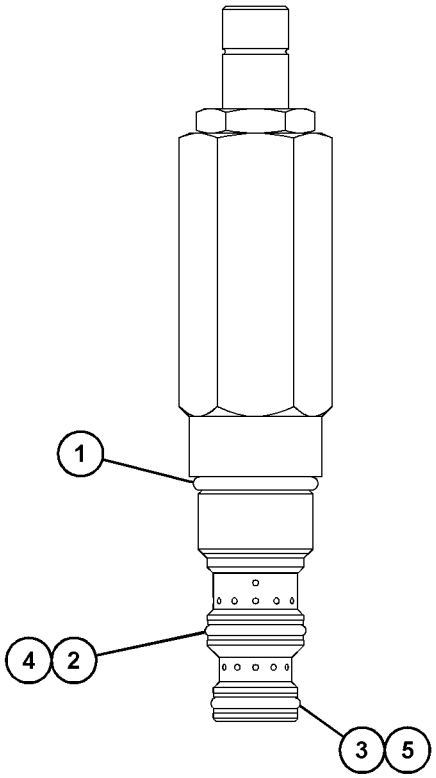

GRAPHIC #1

<END>

g06167657

131-8350 VALVE GP-PURGE

S/N: W921-UP

PART OF 535-8582 VALVE GP-COMBINATION

SMCS-4293 **i07589923**

NOTE	REF NO	GRAPHIC REF	PART NUMBER	QTY	PART NAME 1 2 3 4 5 6 (PRODUCT LEVEL)	SEE PAGE
	1	1	**109-1144**	1	VALVE	
	2	1	**130-5770**	1	SLEEVE	

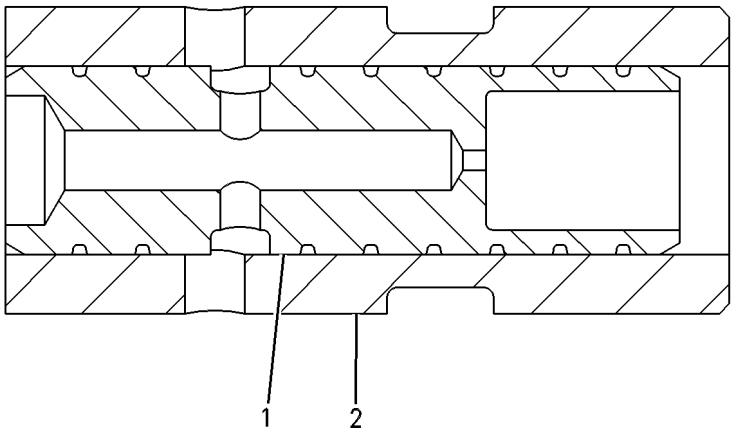

GRAPHIC #1 <END> g00087876

139-8472 VALVE GP-RELIEF

S/N: W921-UP

PART OF 107-0545, 6E-3034, 6E-3036 VALVE GP-CONTROL

SMCS-4322, 5069, 5072, 5117 **i07580150**

NOTE	REF NO	GRAPHIC REF	PART NUMBER	QTY	PART NAME 1 2 3 4 5 6 (PRODUCT LEVEL)	SEE PAGE
Y	1	1	**346-3799**	1	VALVE GP-RELIEF	471
	2	1	**3J-1907**	2	SEAL-O-RING	
	3	1	**4D-2297**	1	SEAL-O-RING	

Y - SEPARATE ILLUSTRATION

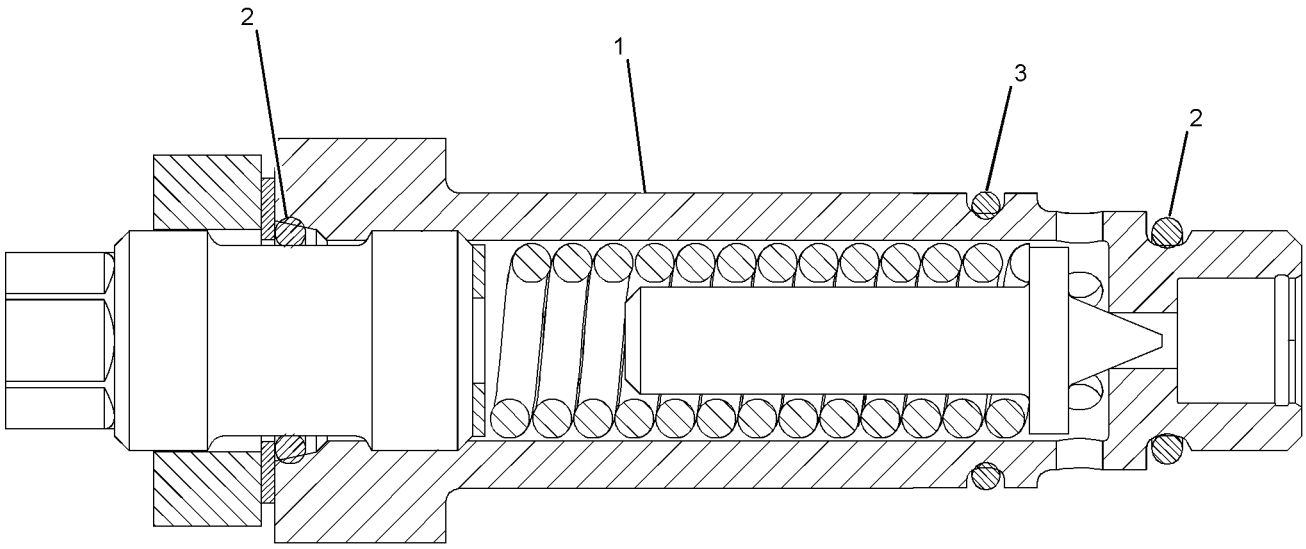

GRAPHIC #1 <END> g02140443

222-7774 VALVE GP-RELIEF

S/N: W921-UP
DIRECT OPERATED
PART OF 107-0547, 6E-3031, 6E-3037 VALVE GP-CONTROL

SMCS-4322, 5069, 5072, 5117 **i07580566**

NOTE	REF NO	GRAPHIC REF	PART NUMBER	QTY	PART NAME 1 2 3 4 5 6 (PRODUCT LEVEL)	SEE PAGE
Y	1	1	**346-3799**	1	VALVE GP-RELIEF	471
	2	1	**3J-1907**	2	SEAL-O-RING	
	3	1	**4D-2297**	1	SEAL-O-RING	

Y - SEPARATE ILLUSTRATION

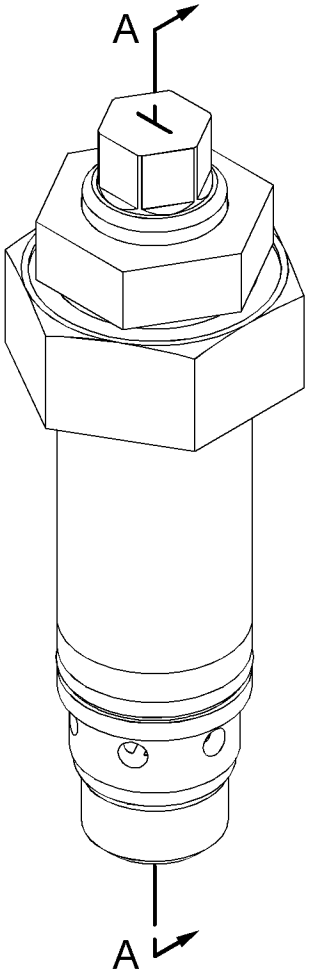

GRAPHIC #1

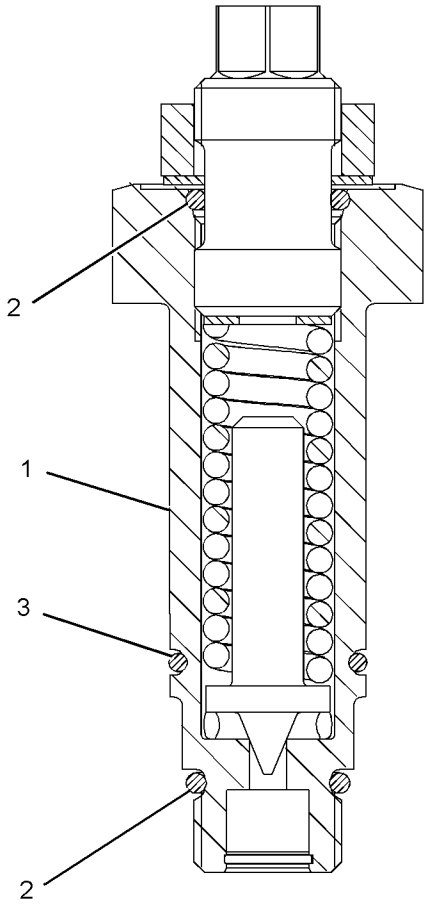

SECTION A-A

<END>

g02152471

330-7743 VALVE GP-RELIEF

S/N: W921-UP
DIRECT OPERATED
PART OF 535-8582 VALVE GP-COMBINATION

SMCS-4322, 5069, 5072, 5117

i07589940

NOTE	REF NO	GRAPHIC REF	PART NUMBER	QTY	PART NAME 1 2 3 4 5 6 (PRODUCT LEVEL)	SEE PAGE
Y	1	1	**346-3799**	1	VALVE GP-RELIEF	471
	2	1	**3J-1907**	2	SEAL-O-RING	
	3	1	**4D-2297**	1	SEAL-O-RING	

Y - SEPARATE ILLUSTRATION

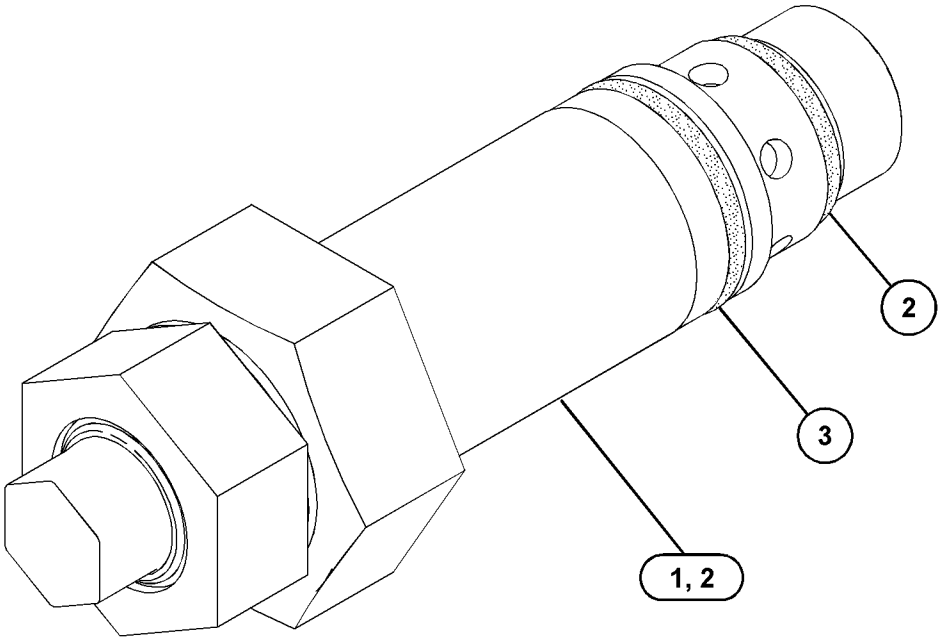

GRAPHIC #1 <END> g03108716

346-3797 VALVE GP-RELIEF

S/N: W921-UP

PART OF 4T-4935 VALVE GP-RELIEF

SMCS-4322, 5069, 5072, 5117 **i07589884**

NOTE	REF NO	GRAPHIC REF	PART NUMBER	QTY	PART NAME 1 2 3 4 5 6 (PRODUCT LEVEL)	SEE PAGE
	1	1	**4T-4942**	1	SPRING	
	2	1	**6E-1835**	1	RETAINER AS	
	3	1	**6J-6439**	1	VALVE-POPPET	
	4	1	**9X-6395**	1	NUT (3/4-16-THD)	
	5	1	**3K-0360**	2	SEAL-O-RING	
	6	1	**4T-7571**	1	PLATE	
	7	1	**7J-9933**	1	SEAL-O-RING	
B	8	1	**8T-4224**	1	WASHER-HARD (8.8X16X2-MM THK)	

B - USE AS REQUIRED

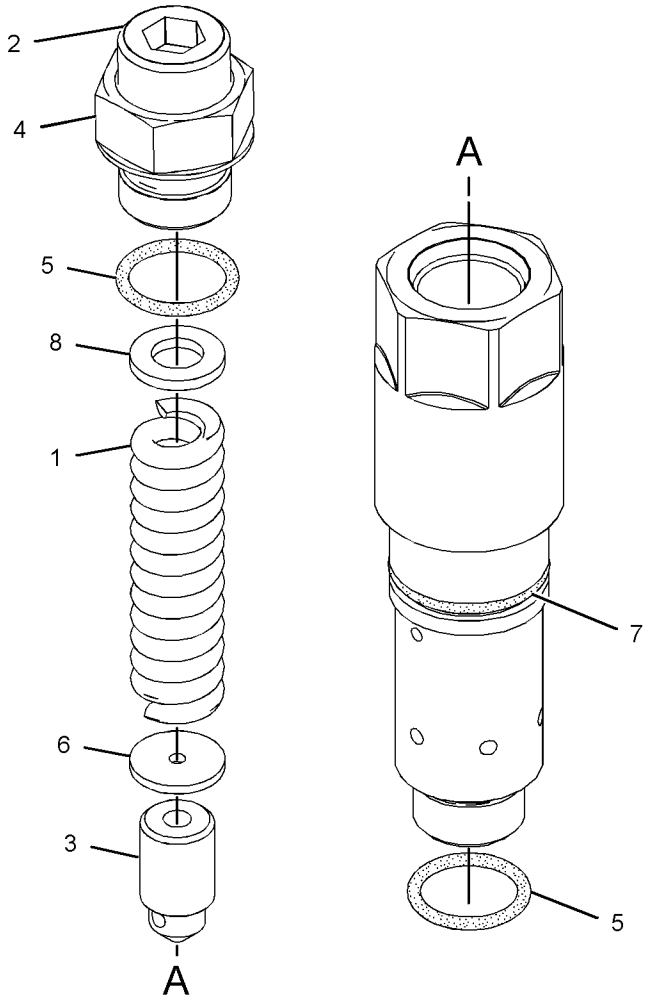

GRAPHIC #1 <END> g02356876

346-3799 VALVE GP-RELIEF

S/N: W921-UP
DIRECT OPERATED
PART OF 139-8472, 222-7774, 330-7743 VALVE GP-RELIEF

SMCS-4322, 5069, 5072, 5117 **i07580154**

NOTE	REF NO	GRAPHIC REF	PART NUMBER	QTY	PART NAME 1 2 3 4 5 6 (PRODUCT LEVEL)	SEE PAGE
	1	1	**2J-6089**	1	SPRING	
	2	1	**114-6635**	1	RETAINER AS	
	3	1	**131-8777**	1	VALVE-RELIEF	
	4	1	**4D-2297**	1	SEAL-O-RING	
B	5	1	**2A-3211**	1	WASHER (5.5X12.3X0.8-MM THK)	
	6	1	**363-6601**	1	NUT-HEX JAM (9/16-18-THD)	
	7	1	**3J-1907**	2	SEAL-O-RING	
					PARTS SHOWN IN GRAPHIC(S) WITHOUT A REFERENCE NUMBER ARE NOT SERVICED SEPARATELY	

B - USE AS REQUIRED

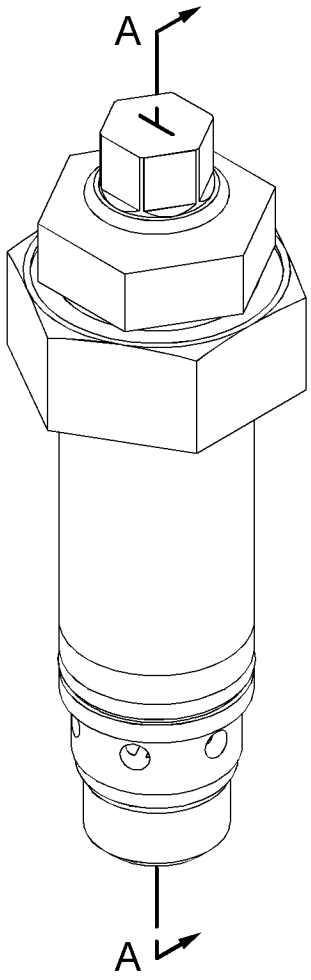

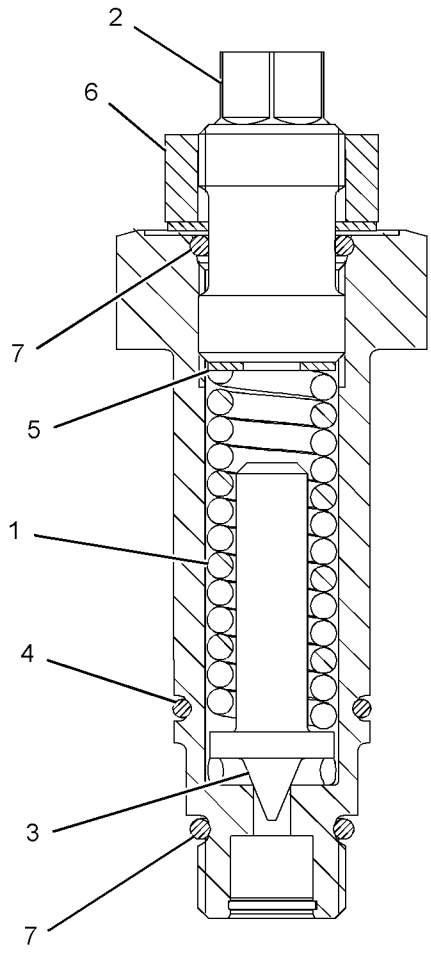

SECTION A-A

GRAPHIC #1 <END> g02460330

346-3800 VALVE GP-RELIEF

S/N: W921-UP

PART OF 535-8581 VALVE GP-RELIEF

SMCS-4322, 5069, 5072, 5117 **i05549929**

NOTE	REF NO	GRAPHIC REF	PART NUMBER	QTY	PART NAME 1 2 3 4 5 6 (PRODUCT LEVEL)	SEE PAGE
	1	1	**4T-4509**	1	SEAT	
	2	1	**6E-5200**	1	RETAINER AS	
	3	1	**9X-6395**	1	NUT (3/4-16-THD)	
	4	1	**108-5157**	1	VALVE	
	5	1	**6V-5556**	1	SEAL-O-RING	
	6	1	**125-1393**	1	SPRING	
					—OR—	
			4T-1700	1	SPRING	
	7	1	**366-4972**	2	RING-BACKUP	
B	8	1	**096-6166**	1	WASHER-HARD (4.5X9X1-MM THK)	
	9	1	**3J-7354**	1	SEAL-O-RING	
	10	1	**3K-0360**	1	SEAL-O-RING	

B - USE AS REQUIRED

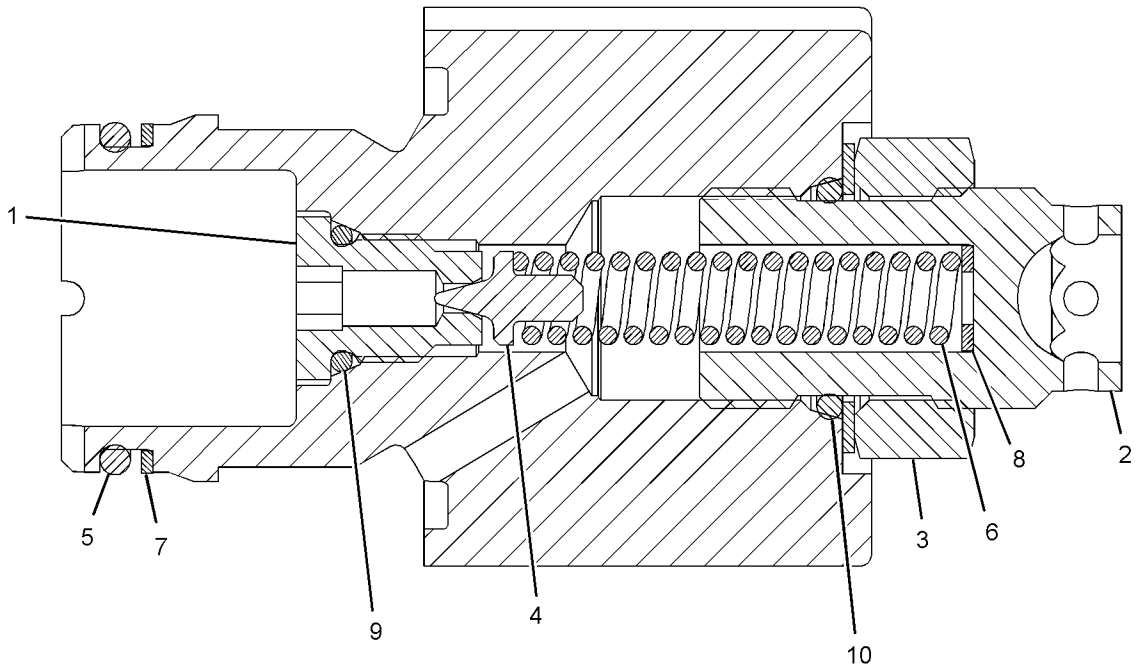

GRAPHIC #1 <END> g03325059

4T-4935 VALVE GP-RELIEF

S/N: W921-UP

PART OF 535-8582 VALVE GP-COMBINATION

SMCS-4322, 5069, 5072, 5117 **i07589875**

NOTE	REF NO	GRAPHIC REF	PART NUMBER	QTY	PART NAME 1 2 3 4 5 6 (PRODUCT LEVEL)	SEE PAGE
Y	1	1	*346-3797*	1	VALVE GP-RELIEF	470
	2	1	**3K-0360**	2	SEAL-O-RING	
	3	1	**7J-9933**	1	SEAL-O-RING	

Y - SEPARATE ILLUSTRATION

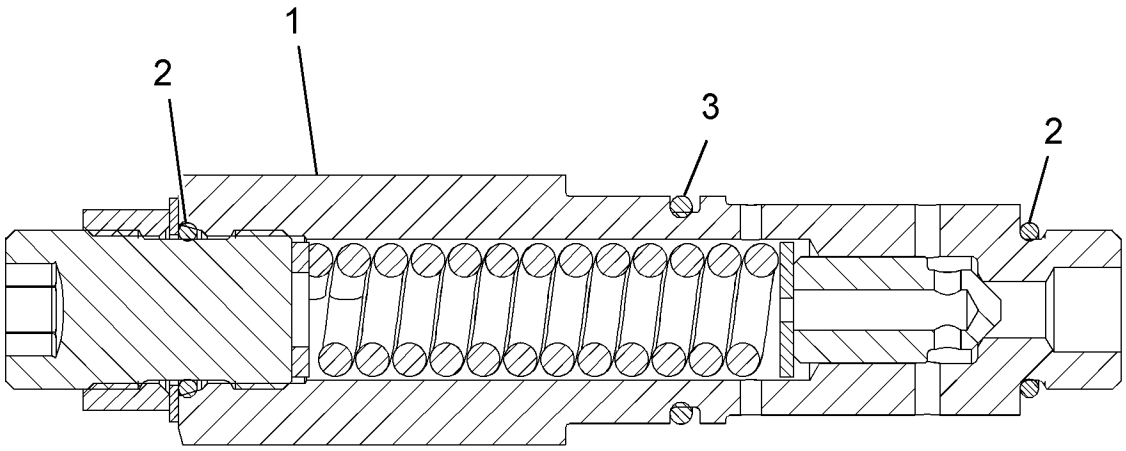

FRONT VIEW

GRAPHIC #1 <END> g02407078

535-8581 VALVE GP-RELIEF

S/N: W921-UP

PART OF 535-8582 VALVE GP-COMBINATION

SMCS-4322, 5069, 5072, 5117 **i07589958**

NOTE	REF NO	GRAPHIC REF	PART NUMBER	QTY	PART NAME 1 2 3 4 5 6 (PRODUCT LEVEL)	SEE PAGE
Y	1	1	*346-3800*	1	VALVE GP-RELIEF (COMBINATION)	472
	2	1	**3J-7354**	1	SEAL-O-RING	
	3	1	**3K-0360**	1	SEAL-O-RING	
	4	1	**366-4972**	1	RING-BACKUP	
	5	1	**6V-5556**	1	SEAL-O-RING	

Y - SEPARATE ILLUSTRATION

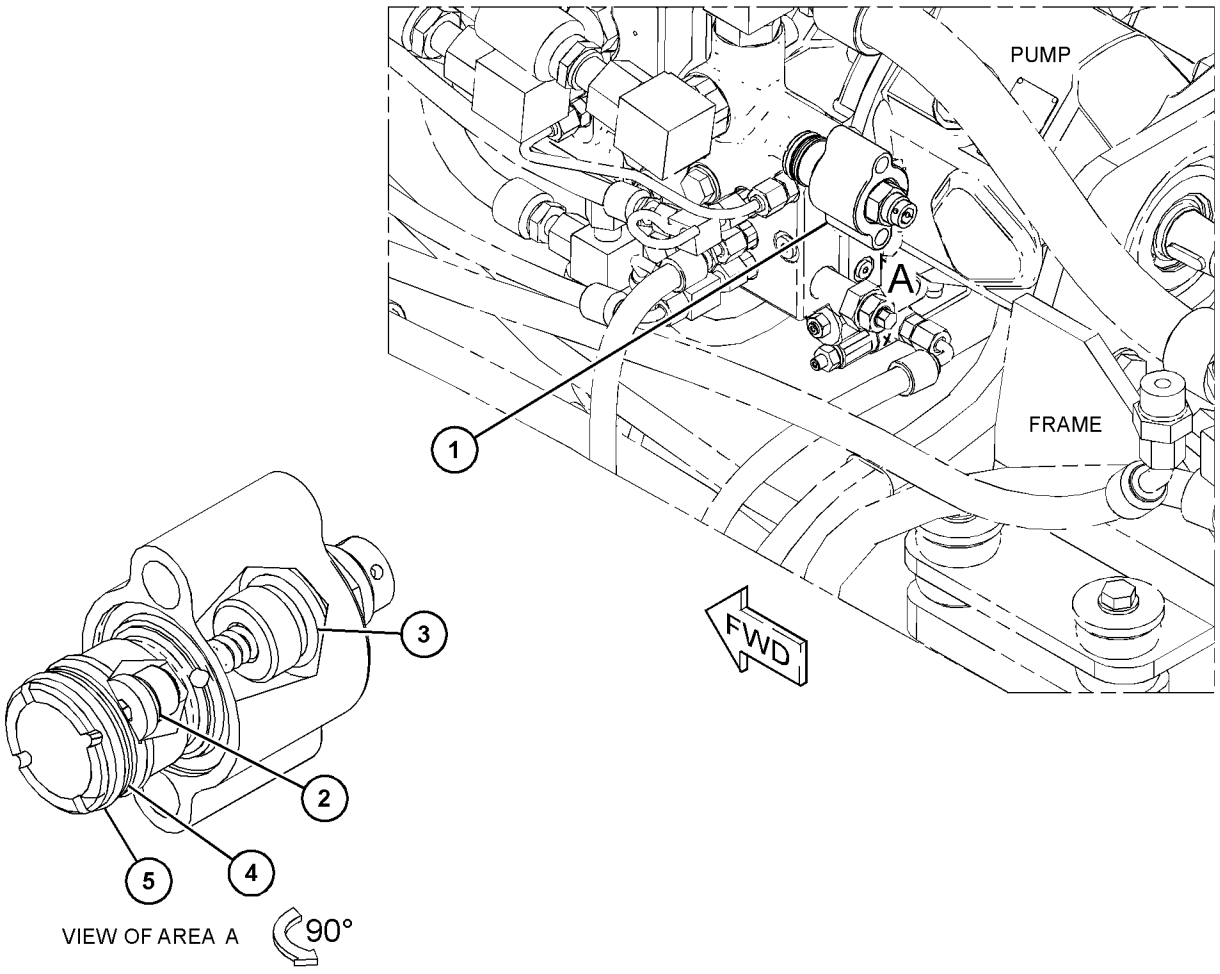

GRAPHIC #1 <END> g06374115

4T-1860 VALVE GP-SHUTTLE

S/N: W921-UP

PART OF 535-8582 VALVE GP-COMBINATION

SMCS-5079 **i07589872**

NOTE	REF NO	GRAPHIC REF	PART NUMBER	QTY	PART NAME 1 2 3 4 5 6 (PRODUCT LEVEL)	SEE PAGE
	1	1	**6V-5324**	1	SEAL-O-RING	
	2	1	**4T-0928**	1	VALVE	
	3	1	**147-6603**	1	SEAL-O-RING	
	4	1	**147-6604**	2	RING-BACKUP	
	5	1	**147-6605**	2	RING-BACKUP	
	6	1	**1M-6718**	1	BALL	
	7	1	**3J-1907**	1	SEAL-O-RING	

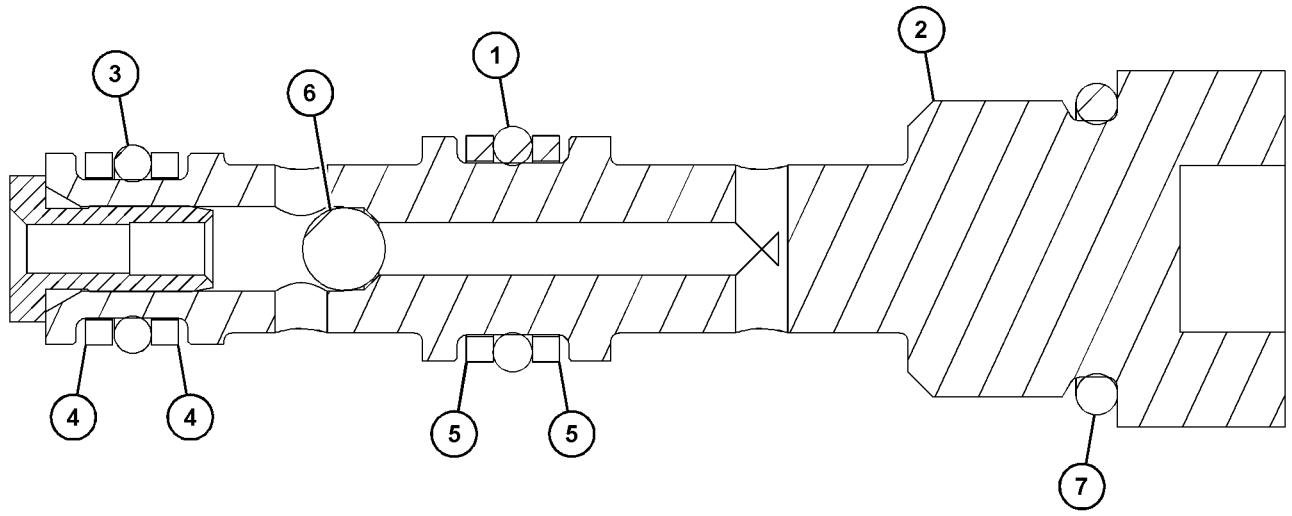

GRAPHIC #1 <END> g06040735

279-6528 VALVE GP-SOLENOID

S/N: W921-UP
24-VOLT
PART OF 112-2240 MANIFOLD GP-CONTROL

SMCS-5479 **i07579010**

NOTE	REF NO	GRAPHIC REF	PART NUMBER	QTY	PART NAME 1 2 3 4 5 6 (PRODUCT LEVEL)	SEE PAGE
	1	1	**355-1470**	1	CARTRIDGE AS	
	2	1	**218-9894**	1	COIL AS (24-VOLT)	
	3	1	**3G-8175**	1	KIT-SEAL	
					(INCLUDES SEAL-O-RINGS & BACK UP RING)	

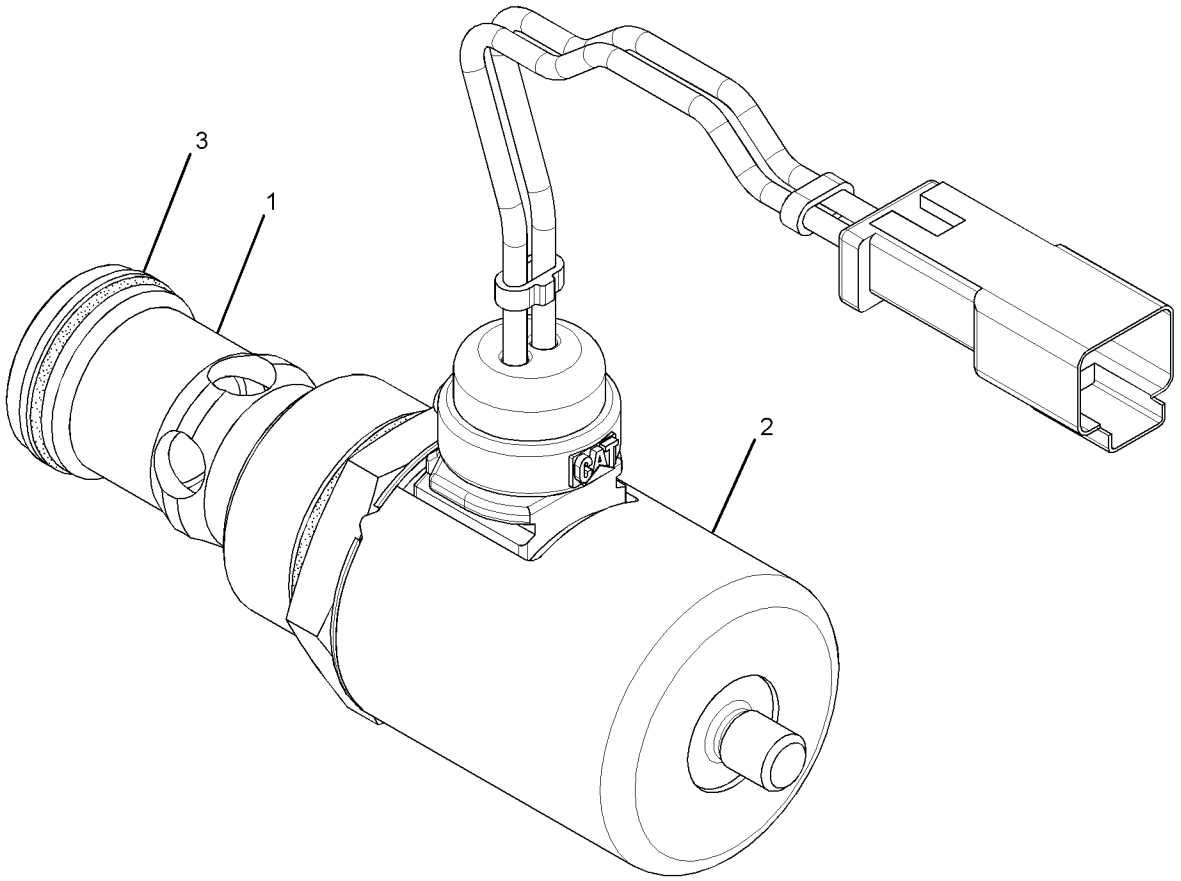

GRAPHIC #1 <END> g02146135

448-4307 VALVE GP-SOLENOID

S/N: W921-UP

PART OF 357-0377 MANIFOLD GP-CONTROL

SMCS-5479 **i07589183**

NOTE	REF NO	GRAPHIC REF	PART NUMBER	QTY	PART NAME 1 2 3 4 5 6 (PRODUCT LEVEL)	SEE PAGE
	1	1	**367-8532**	1	COIL AS (24-VOLT) (SOLENOID VALVE)	
	2	1	**422-8921**	1	NUT-SPECIAL	
					AVAILABLE REPAIR KIT(S):	
			426-4823	1	KIT-SEAL (SOLENOID VALVE)	
					(INCLUDES O-RINGS & BACKUP RINGS)	

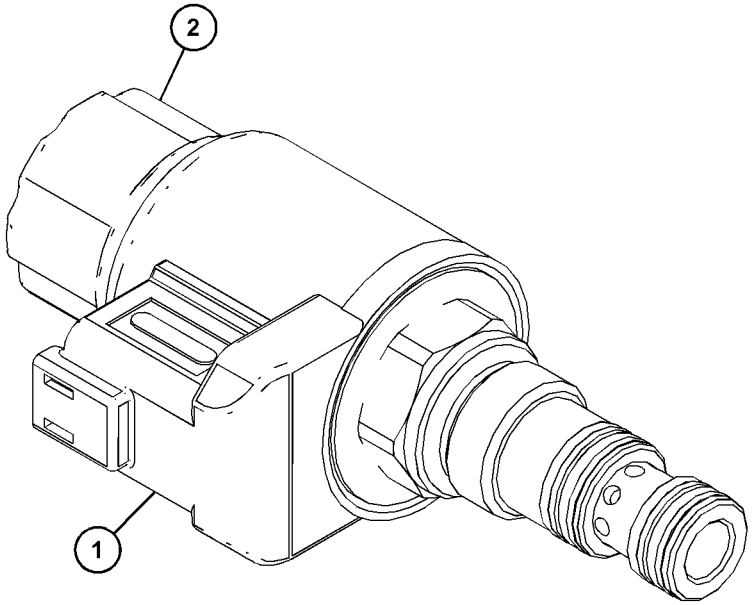

GRAPHIC #1 <END> g06286817

531-3380 CIRCLE GP

S/N: W921-UP

PART OF 537-5628, 537-5629 DRAWBAR AR

SMCS-6152, 6154, 6155

i07572580

NOTE	REF NO	GRAPHIC REF	PART NUMBER	QTY	PART NAME 1 2 3 4 5 6 (PRODUCT LEVEL)	SEE PAGE
	1	1	**518-9738**	16	WASHER (13.5X25.5X3-MM THK)	
	2	1	**431-4613**	6	ADAPTER	
	3	1	**446-1526**	4	STRIP-WEAR	
	4	1	**518-2320**	16	BOLT (M12X1.75X35-MM)	
	5	1	**524-3217**	2	PIN	
	6	1	**531-3363**	8	LID	
	7	1	**535-8192**	2	PIN	
B	8	1	**535-8194**	4	SHIM	
B	9	1	**535-8195**	4	SHIM	
B	10	1	**535-8196**	4	SHIM	
	11	1	**544-3686**	1	CIRCLE AS	
	12	1	*544-3687*	1	BRACKET AS	
	12A	1	**535-8193**	8	BUSHING	
	13	1	**544-3696**	2	NUT (M36X4)	
	14	1	**545-8083**	2	SHIM	
	15	1	**545-8084**	2	SHIM	
B	16	1	**545-8085**	2	SHIM	
B	17	1	**545-8086**	2	SHIM	
B	18	1	**545-8087**	2	SHIM	

B - USE AS REQUIRED

531-3380 **CIRCLE GP (**contd.**)** **i07572580**

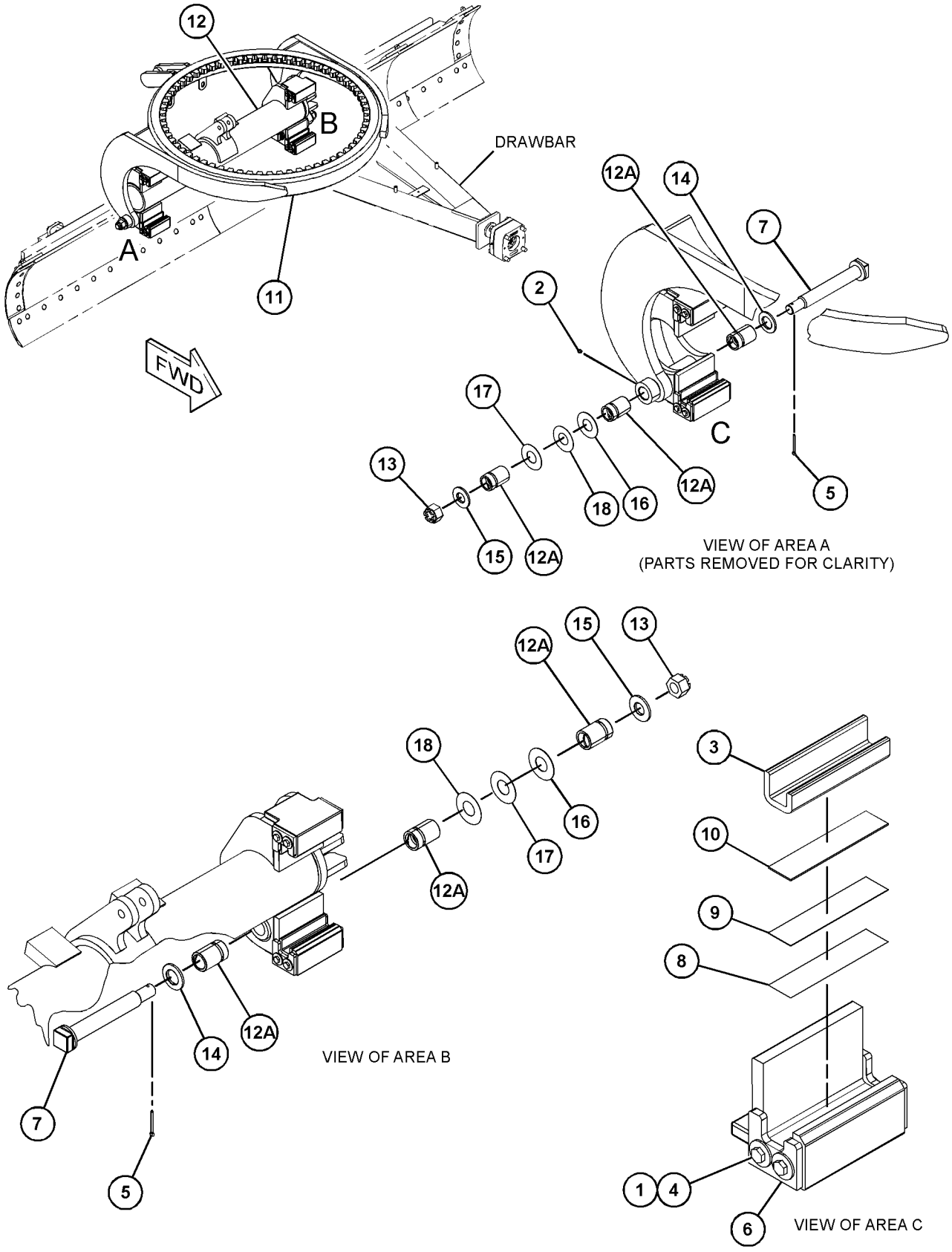

GRAPHIC #1 <END> g06371428

537-5628 DRAWBAR AR—WITHOUT SLIP CLUTCH

S/N: W921-UP

SMCS-6153 **i07552973**

NOTE	PART NUMBER	QTY	PART NAME 1 2 3 4 5 6 (PRODUCT LEVEL)	SEE PAGE
Y	*531-3380*	1	CIRCLE GP	478
Y	*535-7167*	1	CYLINDER & MTG GP-BLADE TIP	356
Y	*535-7166*	1	CYLINDER & MTG GP-SIDESHIFT	358
Y	*529-0947*	1	DRAWBAR GP	481
Y	*539-1586*	1	DRIVE GP-CIRCLE	372
Y	*535-7180*	1	LINES GP-HYDRAULIC (3 CIRCUITS)	379

Y - SEPARATE ILLUSTRATION

<END>

537-5629 DRAWBAR AR—WITH SLIP CLUTCH

S/N: W921-UP

SMCS-6153 **i07552969**

NOTE	PART NUMBER	QTY	PART NAME 1 2 3 4 5 6 (PRODUCT LEVEL)	SEE PAGE
Y	*531-3380*	1	CIRCLE GP	478
Y	*535-7167*	1	CYLINDER & MTG GP-BLADE TIP	356
Y	*535-7166*	1	CYLINDER & MTG GP-SIDESHIFT	358
Y	*529-0947*	1	DRAWBAR GP	481
Y	*539-1587*	1	DRIVE GP-CIRCLE	373
Y	*535-7180*	1	LINES GP-HYDRAULIC (3 CIRCUITS)	379

Y - SEPARATE ILLUSTRATION

<END>

529-0947 DRAWBAR GP

S/N: W921-UP

PART OF 537-5628, 537-5629 DRAWBAR AR

SMCS-6153 **i07572368**

NOTE	REF NO	GRAPHIC REF	PART NUMBER	QTY	PART NAME 1 2 3 4 5 6 (PRODUCT LEVEL)	SEE PAGE
	1	1	**128-9654**	11	STRIP-WEAR	
M	2	1	**106-4175**	8	BOLT (M20X2.5X60-MM)	
M	3	1	**147-5112**	4	BOLT (M24X3X150-MM)	
	4	1	**261-4672**	1	CAP (DRAWBAR)	
	5	1	**261-4673**	1	ADAPTER	
	6	1	**319-2228**	4	SHOE-CIRCLE GUIDE	
	7	1	**333-0960**	4	STRIP-WEAR	
	8	1	**3B-8489**	1	FITTING-GREASE (1/8-27 PTF)	
	9	1	**517-7297**	12	WASHER	
	10	1	**531-3373**	1	DRAWBAR AS	
	10A	1	**517-7418**	9	BOSS	
	10B	1	**518-5446**	5	BOSS	
	10C	1	**554-0254**	3	JOINT	
	10D	1	**531-3376**	1	SHAFT AS	
	10E	1	**518-6593**	2	NUT-HEX	
B	11	1	**535-8197**	36	SHIM	
B	12	1	**535-8200**	36	SHIM	
B	13	1	**545-8079**	5	SHIM	
B	14	1	**545-8080**	3	SHIM	
B	15	1	**545-8081**	5	SHIM	
	16	1	**545-8082**	3	BOOT	
	17	1	**5P-8291**	5	BOLT (3/4-16X2-IN)	
	18	1	**6G-5442**	1	BALL	
M	19	1	**6V-8653**	2	BOLT-SOCKET HEAD (M6X1X40-MM)	
	20	1	**8T-4123**	10	WASHER (22X35X3.5-MM THK)	
M	21	1	**8T-4131**	18	NUT (M20X2.5-THD)	
	22	1	**8T-4167**	4	WASHER-HARD (26X44X4-MM THK)	
M	23	1	**8T-4170**	12	BOLT (M20X2.5X150-MM)	

B - USE AS REQUIRED
M - METRIC PART

529-0947 **DRAWBAR GP (**contd.**)** **i07572368**

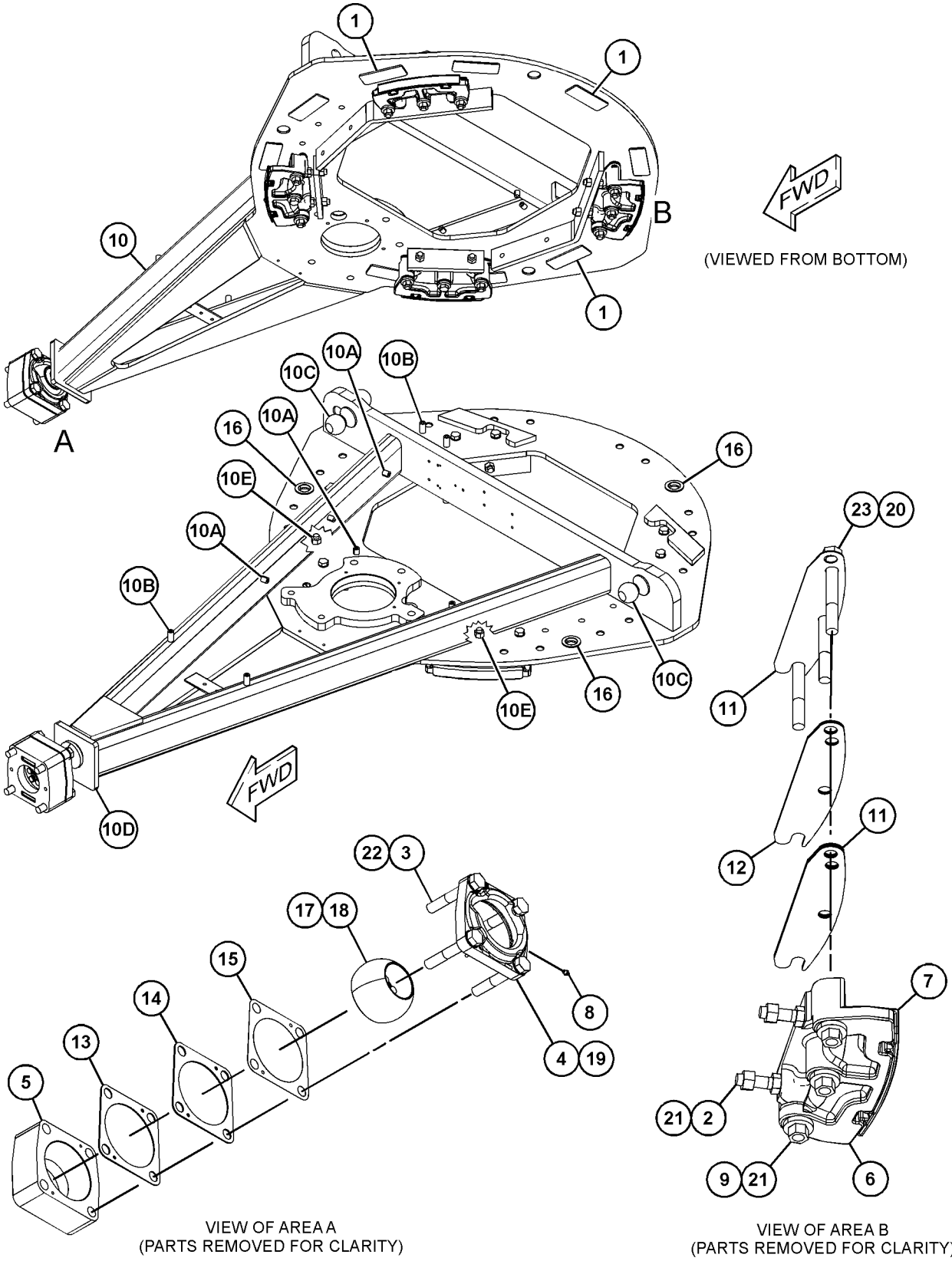

GRAPHIC #1 <END> g06376794

116-2779 ADJUSTER GP-SEAT

S/N: W921-UP

PART OF 8Y-6852 SEAT GP-STATIC

SMCS-7321 **i07563154**

NOTE	REF NO	GRAPHIC REF	PART NUMBER	QTY	PART NAME 1 2 3 4 5 6 (PRODUCT LEVEL)	SEE PAGE
	1	1	**9C-5347**	4	BOLT (1/2-13X0.75-IN)	
	2	1	**9V-7943**	2	SPRING	
	3	1	**116-2327**	1	SUPPORT AS	
	4	1	**9C-2177**	1	CAP	
	5	1	**6W-0590**	1	LEVER (SEAT ADJUST)	
	6	1	**3J-5696**	1	PIPE	
	7	1	**4V-7890**	1	SPRING	
	8	1	**6W-0111**	2	LINK	
	9	1	**2L-5893**	1	PIN-SPRING	
	10	1	**4V-7891**	1	LATCH AS	
	11	1	**5B-6172**	8	WASHER (9.7X19X0.8-MM THK)	
	12	1	**2K-4973**	8	LOCKNUT (3/8-16-THD)	
	13	1	**9V-3043**	1	LINK AS	
	14	1	**6W-0108**	1	LINK AS	
	15	1	**116-2016**	1	ANGLE AS (LH)	
	16	1	**116-2015**	1	ANGLE AS (RH)	
	17	1	**6W-1885**	1	CHANNEL AS	
		1	**9V-7440**	4	NUT-WELD	
	18	1	**5M-3062**	4	BOLT (3/8-16X0.75-IN)	

116-2779 **ADJUSTER GP-SEAT** (contd.) **i07563154**

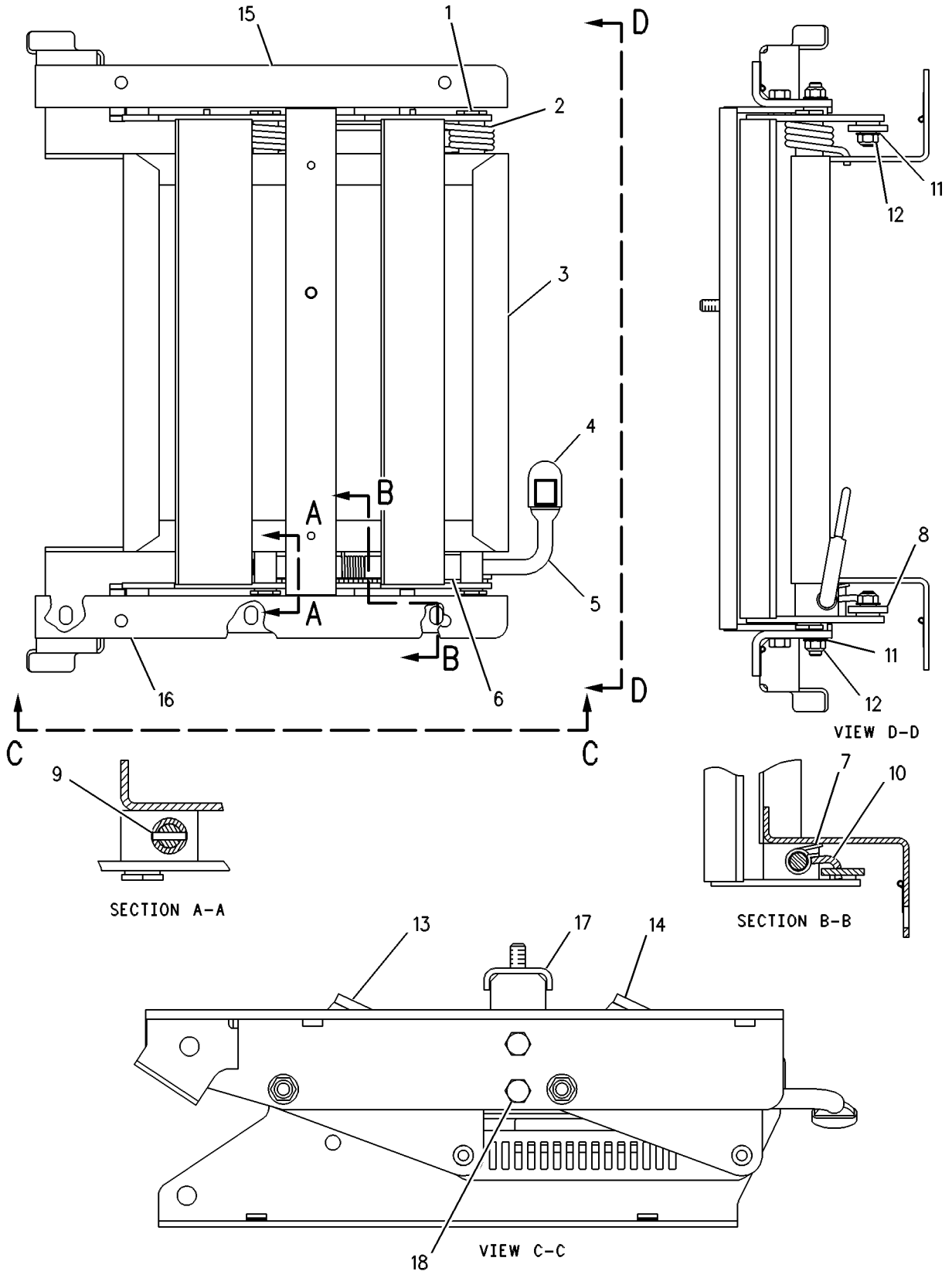

GRAPHIC #1 <END> g00108773

125-9854 ADJUSTER GP-SEAT

S/N: W921-UP

PART OF 125-9856 SEAT GP-STATIC

SMCS-7321 **i07568852**

NOTE	REF NO	GRAPHIC REF	PART NUMBER	QTY	PART NAME 1 2 3 4 5 6 (PRODUCT LEVEL)	SEE PAGE
	1	1	**125-9853**	1	BASE AS	
	2	1	**6W-1497**	1	SUPPORT AS	
	3	1	**6W-1496**	1	SUPPORT AS	
	4	1	**6W-1888**	1	SHEET	
	5	1	**6W-2371**	1	PLATE AS	
	6	1	**6W-3628**	2	CABLE	
	7	1	**8T-9381**	2	BOLT (7/16-20X1-IN)	
	8	1	**8S-4790**	4	SPACER (0.459X0.625X0.25-IN THK)	
	9	1	**4B-5272**	4	WASHER (12.7X31.7X2-MM THK)	
	10	1	**8R-4519**	4	LOCKNUT (7/16-20-THD)	
	11	1	**5V-5262**	2	BOLT-SPECIAL	
	12	1	**4L-6454**	4	BOLT (3/8-16X1-IN)	
	13	1	**5M-2894**	4	WASHER-HARD (10.2X18.5X2.5-MM THK)	

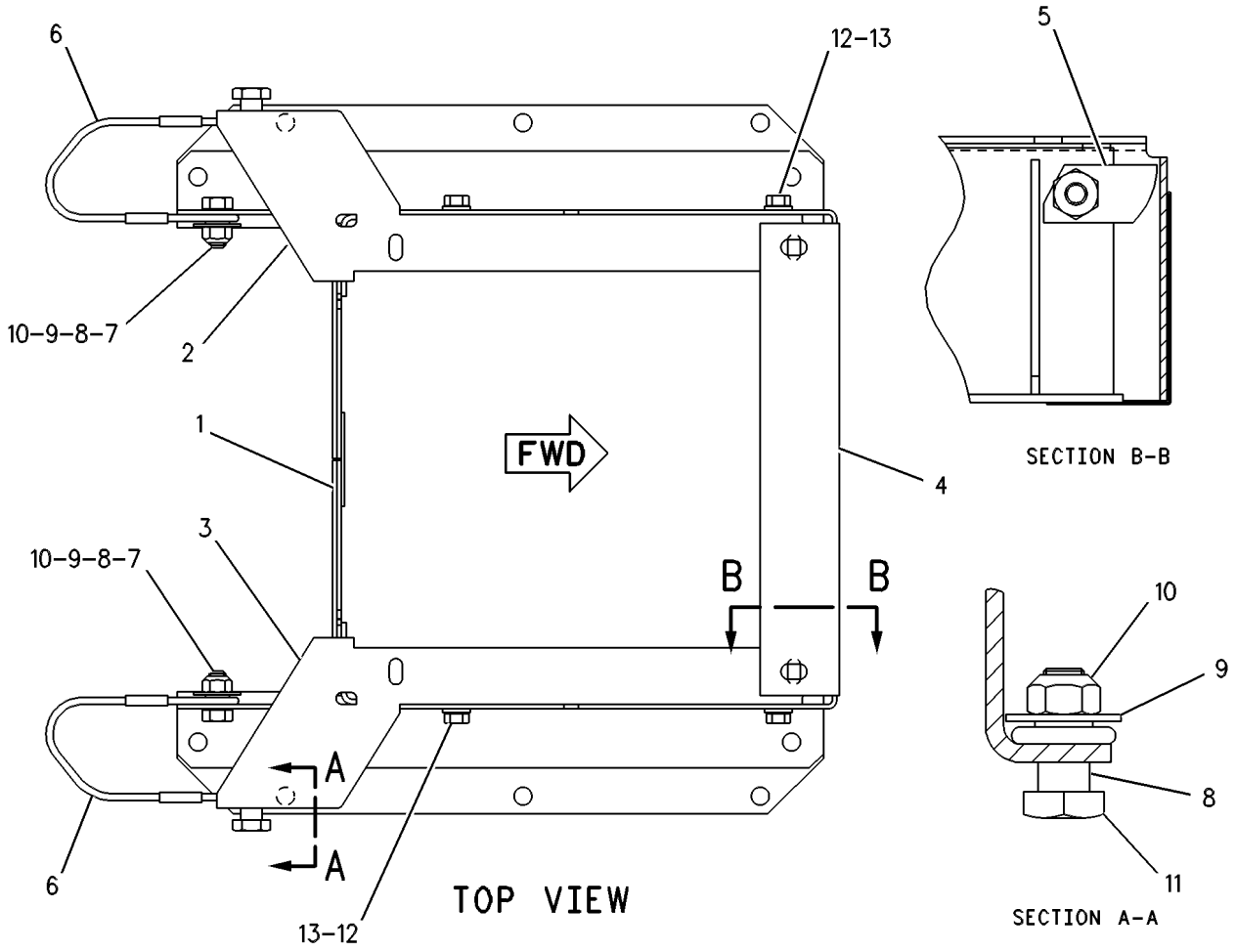

GRAPHIC #1 <END> g00109161

533-5739 AIR CONDITIONER & MOUNTING GP

S/N: W921-UP

PART OF 533-5729, 533-5733 AIR CONDITIONER AR

SMCS-7320 **i07571963**

NOTE	REF NO	GRAPHIC REF	PART NUMBER	QTY	PART NAME 1 2 3 4 5 6 (PRODUCT LEVEL)	SEE PAGE
	1	1	**7K-1181**	6	STRAP-CABLE	
	2	1	**123-0872**	1	PAD	
	3	1	**177-2215**	4	STRAP-DUAL CLAMP	
	4	1	**191-5236**	1	PAD	
	5	1	**200-6345**	3	SADDLE-MOUNTING (DUAL SWIVEL)	
Y	6	1	*533-2323*	1	AIR CONDITIONER GP	491

Y - SEPARATE ILLUSTRATION

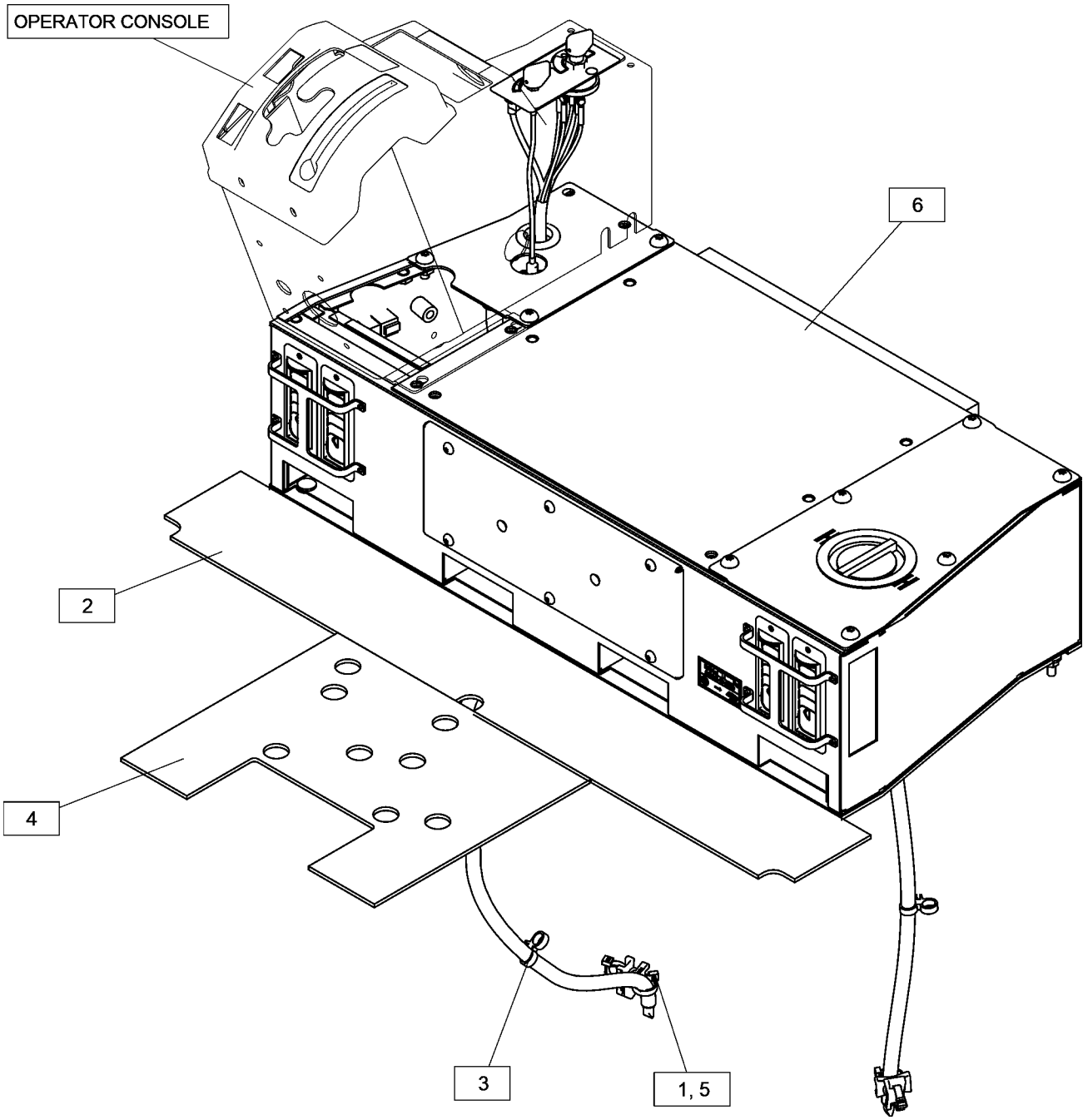

GRAPHIC #1 <END> g06375011

533-5729 AIR CONDITIONER AR

S/N: W921-UP

PART OF 537-5618 AIR CONDITIONER AR

SMCS-7320 **i07571187**

NOTE	REF NO	GRAPHIC REF	PART NUMBER	QTY	PART NAME 1 2 3 4 5 6 (PRODUCT LEVEL)	SEE PAGE
Y	1	1	*376-6729*	1	CONDENSER & MTG GP-REFRIGERANT	509
Y	2	1	*512-5955*	1	DUCT GP-CAB AIR	528
Y	3	1	*512-5982*	1	DUCT & CONTROL GP (HEATER, AIR CONDITIONER)	527
	4	1	**512-9031**	2	COVER	
	5	1	**104-2091**	12	SCREW-FLAT HEAD (6-20X0.5-IN)	
Y	6	1	*518-3689*	1	FILTER GP-CAB AIR	534
Y	7	1	*533-2325*	1	LINES GP-AIR CONDITIONER	552
Y	8	1	*533-2329*	1	LINES GP-HEATER	554
Y	9	1	*533-5739*	1	AIR CONDITIONER & MOUNTING GP	486
Y	10	1	*533-6226*	1	WIRING GP-AIR CONDITIONER	215

Y - SEPARATE ILLUSTRATION

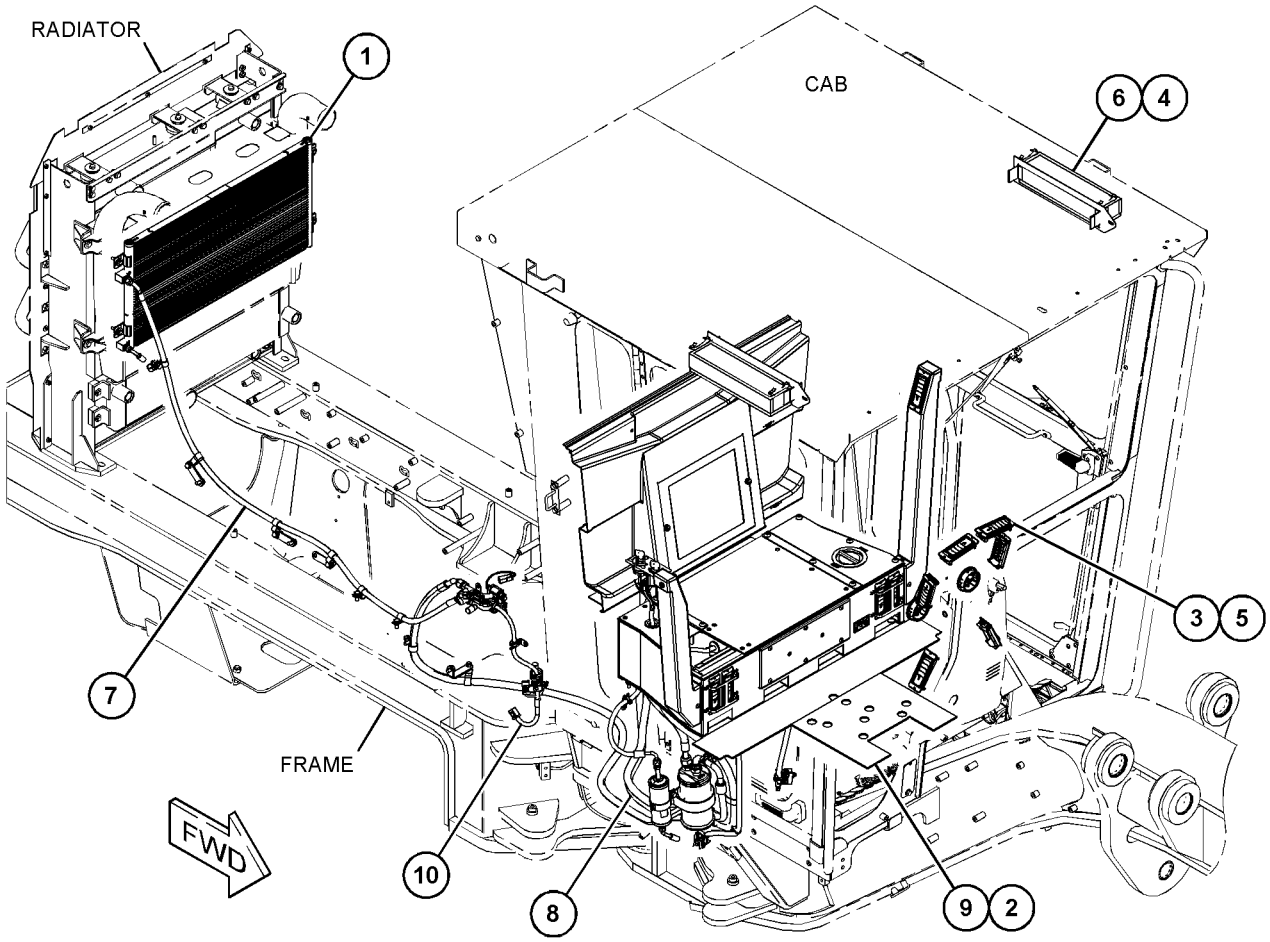

GRAPHIC #1 <END> g06376027

533-5733 AIR CONDITIONER AR

S/N: W921-UP

PART OF 537-5620 AIR CONDITIONER AR

SMCS-7320 **i07572327**

NOTE	REF NO	GRAPHIC REF	PART NUMBER	QTY	PART NAME 1 2 3 4 5 6 (PRODUCT LEVEL)	SEE PAGE
Y	1	1	*376-6729*	1	CONDENSER & MTG GP-REFRIGERANT	509
Y	2	1	*512-5955*	1	DUCT GP-CAB AIR	528
Y	3	1	*512-5982*	1	DUCT & CONTROL GP (HEATER, AIR CONDITIONER)	527
	4	1	**512-9031**	2	COVER	
	5	1	**104-2091**	12	SCREW-FLAT HEAD (6-20X0.5-IN)	
Y	6	1	*518-3689*	1	FILTER GP-CAB AIR	534
Y	7	1	*533-2325*	1	LINES GP-AIR CONDITIONER	552
Y	8	1	*533-2330*	1	LINES GP-HEATER	555
Y	9	1	*533-5739*	1	AIR CONDITIONER & MOUNTING GP	486
Y	10	1	*533-6226*	1	WIRING GP-AIR CONDITIONER	215

Y - SEPARATE ILLUSTRATION

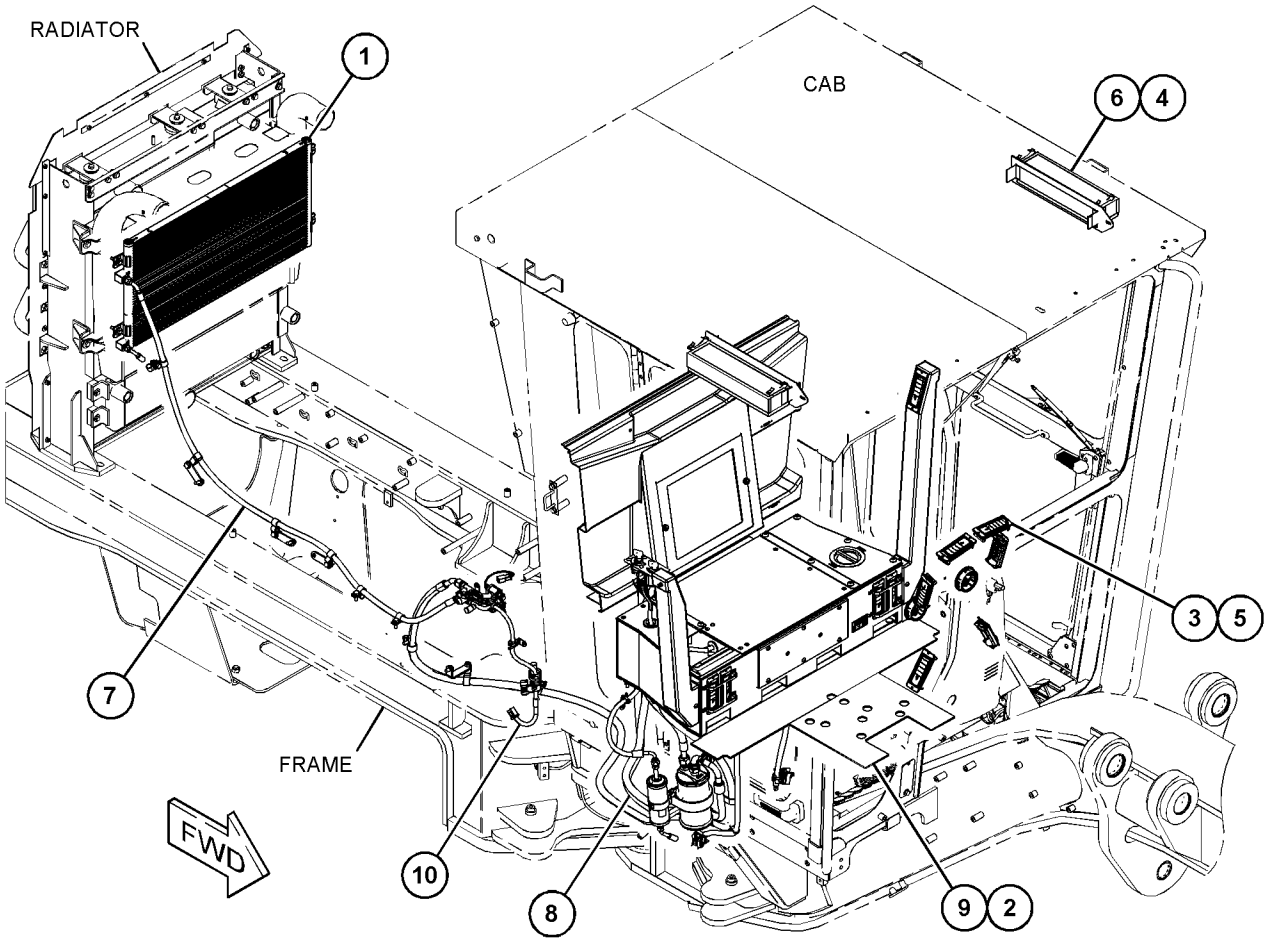

GRAPHIC #1 <END> g06374373

537-5615 AIR CONDITIONER AR—NON-HVAC

S/N: W921-UP
CANOPY

SMCS-7320 **i07556144**

NOTE	PART NUMBER	QTY	PART NAME 1 2 3 4 5 6 (PRODUCT LEVEL)	SEE PAGE
Y	*527-9483*	1	BELT TENSIONER GP	12
Y	*516-7924*	1	SUPPORT GP-SEAT	587

Y - SEPARATE ILLUSTRATION

<END>

537-5616 AIR CONDITIONER AR—NON-HVAC

S/N: W921-UP
CAB

SMCS-7320 **i07556117**

NOTE	PART NUMBER	QTY	PART NAME 1 2 3 4 5 6 (PRODUCT LEVEL)	SEE PAGE
Y	*527-9483*	1	BELT TENSIONER GP	12
Y	*516-7928*	1	SUPPORT GP-SEAT	588

Y - SEPARATE ILLUSTRATION

<END>

537-5617 AIR CONDITIONER AR—HEATER

S/N: W921-UP
W/O AIR COMPRESSOR

SMCS-7320 **i07556107**

NOTE	PART NUMBER	QTY	PART NAME 1 2 3 4 5 6 (PRODUCT LEVEL)	SEE PAGE
Y	*527-9483*	1	BELT TENSIONER GP	12
Y	*533-5730*	1	HEATER GP-CAB	541

Y - SEPARATE ILLUSTRATION

<END>

537-5618 AIR CONDITIONER AR—WITHOUT AIR COMPRESSOR

S/N: W921-UP

SMCS-7320 **i07553224**

NOTE	PART NUMBER	QTY	PART NAME 1 2 3 4 5 6 (PRODUCT LEVEL)	SEE PAGE
Y	*533-5729*	1	AIR CONDITIONER AR	487
Y	*527-9473*	1	COMPRESSOR & MTG GP-REFRIG	507

Y - SEPARATE ILLUSTRATION

<END>

537-5619 AIR CONDITIONER AR—HEATER

S/N: W921-UP
WITH AIR COMPRESSOR

SMCS-7320 **i07553209**

NOTE	PART NUMBER	QTY	PART NAME 1 2 3 4 5 6 (PRODUCT LEVEL)	SEE PAGE
Y	*527-9483*	1	BELT TENSIONER GP	12
Y	*533-5734*	1	HEATER GP-CAB	542

Y - SEPARATE ILLUSTRATION

<END>

537-5620 AIR CONDITIONER AR—WITH AIR COMPRESSOR

S/N: W921-UP

SMCS-7320 **i07553196**

NOTE	PART NUMBER	QTY	PART NAME 1 2 3 4 5 6 (PRODUCT LEVEL)	SEE PAGE
Y	*533-5733*	1	AIR CONDITIONER AR	488
Y	*527-9473*	1	COMPRESSOR & MTG GP-REFRIG	507

Y - SEPARATE ILLUSTRATION

<END>

533-2323 AIR CONDITIONER GP

S/N: W921-UP

PART OF 533-5739 AIR CONDITIONER & MOUNTING GP

SMCS-7320 **i07571974**

NOTE	REF NO	GRAPHIC REF	PART NUMBER	QTY	PART NAME 1 2 3 4 5 6 (PRODUCT LEVEL)	SEE PAGE
	1	1	**3S-2093**	4	STRAP-CABLE	
	2	2	**096-6166**	2	WASHER-HARD (4.5X9X1-MM THK)	
	3	1	**104-2091**	8	SCREW-FLAT HEAD (6-20X0.5-IN)	
	4	1	**110-6393**	1	PLATE-INSTRUCTION (AIR CONDITIONER)	
	5	2	**119-9631**	1	SWITCH-TEMPERATURE	
	6	1	**123-4618**	1	COVER	
	7	1	**123-4701**	1	SEAL	
	8	2	**124-1431**	1	BRACKET	
	9	2	**124-1432**	1	HOUSING AS	
	10	2	**124-3137**	1	BRACKET	
	11	2	**124-3138**	1	SEAL	
	12	1	**124-9006**	1	SHAFT	
	13	1	**125-0438**	1	GASKET	
M	14	2	**129-3178**	4	LOCKNUT (M6X1-THD)	
	15	1	**129-4935**	1	SEAL	
	16	2	**130-5300**	1	CLIP	
M	17	2	**7X-0490**	1	BOLT (M6X1X200-MM)	
	18	2	**142-4940**	1	PLATE AS	
	19	1	**191-0027**	1	PAD	
	20	2	**204-4376**	1	CAP-PROTECTIVE	
	21	2	**238-0415**	1	VALVE AS-WATER	
	22	2	**238-0417**	1	CORE AS-HEATER	
	23	2	**248-6772**	4	SCREW-MACHINE (8-16X7.75-IN)	
	24	1	**2P-4339**	1	NUT-JAM (7/16-28-THD)	
	25	1	**2V-0099**	2	KNOB-CONTROL	
	26	2	**385-0244**	1	MOTOR AS-BLOWER (27-VOLT, A/C, HEATER)	
		2	**9W-0852**	2	PIN-CONNECTOR (14-GA TO 16-GA)	
		2	**102-8802**	1	KIT-RECEPTACLE (2-PIN)	
					(INCLUDES RECEPTACLE AS & WEDGE)	
	27	2	**3E-0400**	2	WHEEL AS-BLOWER	
					(EACH INCLUDES)	
		2	**037-4838**	1	CLAMP	
	28	1	**3E-3890**	1	FILM-IDENTIFICATION (FAN SPEED, TEMPERATURE)	
	29	1	**3H-2900**	1	GROMMET	
	30	1	**3S-9557**	8	SCREW-PAN HEAD (4-40X0.5-IN)	
	31	2	**3T-3197**	1	GROMMET	
I	32	1	**313-6224**	1	HOSE AS	
	33	2	**3T-3198**	1	GROMMET	
Y	34	1	**417-6161**	1	HARNESS AS-HEATER & AIR COND	160
	35	1	**422-2152**	4	LOUVER AS-VENT	
	36	1	**423-6697**	1	SHAFT AS	
		1	**4L-5966**	2	SETSCREW (10-32X0.25-IN)	
	37	2	**4M-6582**	1	SEAL-O-RING	
	38	1	**518-9609**	1	SUPPORT AS	
	39	1	**518-9611**	1	COVER	
	40	1	**518-9612**	2	PLATE	
	41	1	**518-9613**	1	COVER	
	42	1	**518-9614**	1	COVER	

533-2323 **AIR CONDITIONER GP (**contd.**)** **i07571974**

NOTE	REF NO	GRAPHIC REF	PART NUMBER	QTY	PART NAME 1 2 3 4 5 6 (PRODUCT LEVEL)	SEE PAGE
I	43	1	**533-2324**	1	HOSE AS	
	44	1	**518-9615**	1	COVER AS	
M		1	**8T-3490**	4	NUT-WELD (M10X1.5-THD)	
M	45	2	**5C-2890**	7	NUT (M6X1-THD)	
M	46	2	**5C-8312**	2	NUT (M4X0.7-THD)	
	47	1	**5P-1075**	13	WASHER-HARD (10.2X22.5X3-MM THK)	
	48	1	**5P-7803**	2	PLUG-BUTTON	
	49	2	**5P-9135**	1	GROMMET	
	50	1	**6P-3236**	1	SWITCH AS-ROTARY (FAN SPEED)	
		1	**6V-8362**	5	SCREW-MACHINE (8-32X0.31-IN)	
		1	**9B-7233**	5	LOCKWASHER	
	51	1	**6T-5345**	1	BUSHING-TERMINAL	
	52	2	**6T-6708**	2	WASHER (7X28.6X4.1-MM THK)	
	53	2	**6V-1668**	2	WASHER (6.5X29.1X3-MM THK)	
M	54	2	**6V-7728**	1	BOLT (M6X1X45-MM)	
	55	1	**6V-8801**	13	NUT (3/8-16-THD)	
	56	1	**7T-9793**	2	VALVE-CHECK (EVAPORATOR DRAIN)	
	57	2	**8C-4586**	2	CLAMP	
	58	1	**100-3245**	1	LAMP (24-VOLT, 0.17-AMPERE)	
	59	2	**8P-5141**	2	PLATE-ORIFICE	
M	60	2	**8T-0337**	2	SCREW-MACHINE (M4X0.7X12-MM)	
M	61	2	**8T-4171**	2	BOLT (M6X1X12-MM)	
	62	2	**8T-4205**	15	WASHER-HARD (7.2X14.5X2-MM THK)	
	63	2	**9G-1950**	1	RESISTOR	
	64	2	**9M-8406**	1	CLIP (LOOP)	
M	65	1	**9X-2040**	9	SCREW-TRUSS HEAD (M10X1.5X25-MM)	
M	66	1	**9X-2045**	6	SCREW-TRUSS HEAD (M6X1X20-MM)	
	67	2	**9X-2185**	4	SCREW (8-15X0.44-IN)	
	68	2	**9X-2488**	4	CLAMP-HOSE	
	69	1	**9X-7381**	1	SEAL-O-RING	
	70	1	**9X-7382**	1	SEAL-O-RING	
	71	2	**9X-9653**	1	COIL AS-EVAPORATOR	
E	72	2	**136-1953**		HOSE (17-CM EACH)	
D	73	2	**5P-5908**		SEAL (0.2-M)	
J	74	1	**267-8575**		TUBE (10.6-DM)	
J	74A	1	**267-8575**		TUBE (7-DM)	
D	75	1	**5P-5637**		SEAL (0.2-M)	
D	75A	1	**5P-5637**		SEAL (1-M)	
D	75B	1	**5P-5637**		SEAL (0.4-M EACH)	
D	75C	1	**5P-5637**		SEAL (0.1-M)	
D	75D	1	**5P-5637**		SEAL (0.3-M)	
D	75E	1	**5P-5637**		SEAL (0.9-M)	
E	76	2	**9X-2126**		SEAL (20.5-CM EACH)	
E	76A	2	**9X-2126**		SEAL (32.7-CM EACH)	

D - ORDER BY THE METER
E - ORDER BY THE CENTIMETER
I - REFER TO HYDRAULIC INFORMATION SYSTEM
J - ORDER BY THE DECIMETER
M - METRIC PART
Y - SEPARATE ILLUSTRATION

533-2323 **AIR CONDITIONER GP (**contd.**)** **i07571974**

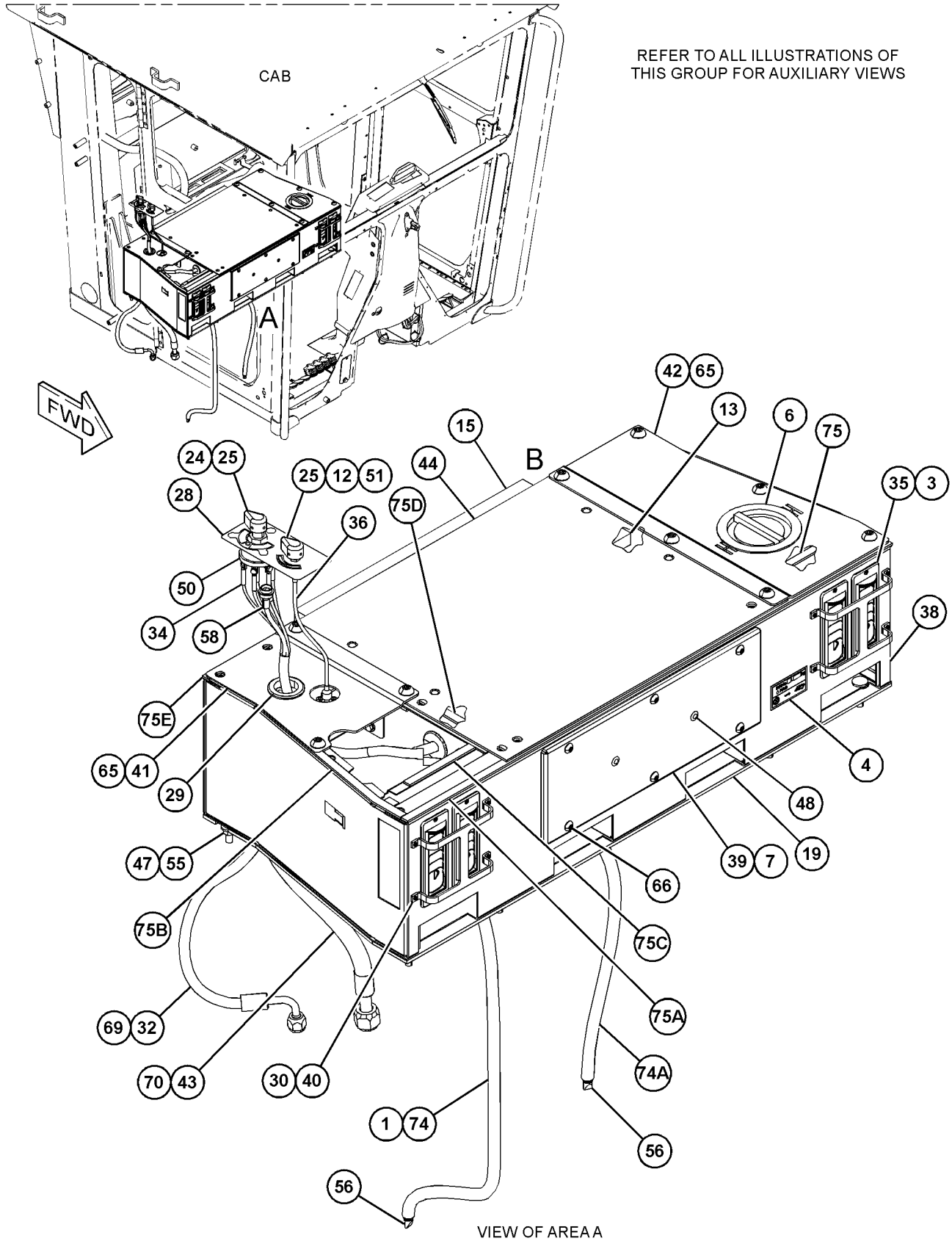

GRAPHIC #1 g06375930

533-2323 **AIR CONDITIONER GP (**contd.**)** **i07571974**

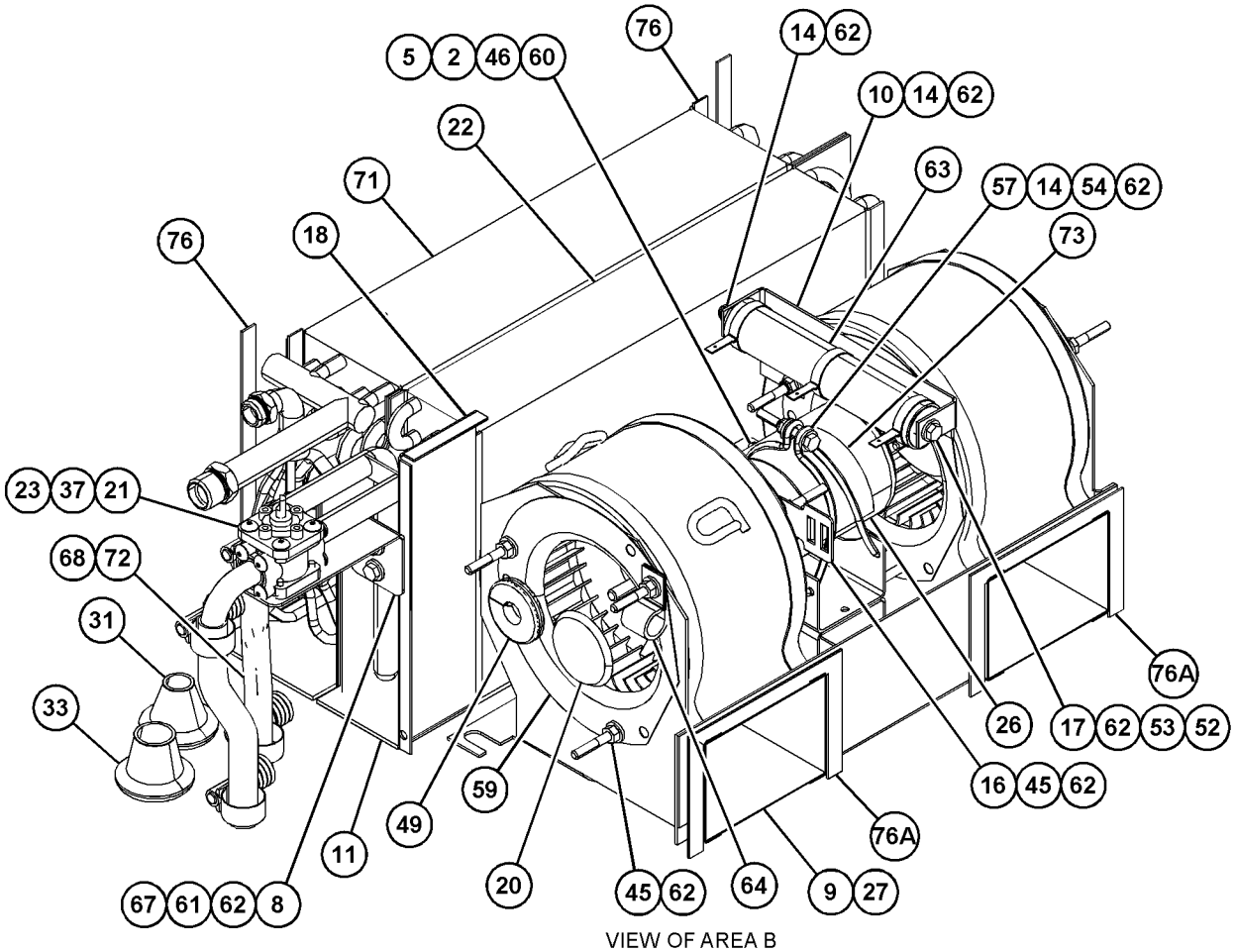

VIEW OF AREA B
(PARTS REMOVED FOR CLARITY)

GRAPHIC #2 <END> g06375932

538-1170 BRACKET GP-MOUNTING

S/N: W921-UP

PART OF 533-4647 TRANSMISSION AR

SMCS-7301 **i07592377**

NOTE	REF NO	GRAPHIC REF	PART NUMBER	QTY	PART NAME 1 2 3 4 5 6 (PRODUCT LEVEL)	SEE PAGE
M	1	1	**106-4175**	2	BOLT (M20X2.5X60-MM)	
	2	1	**198-4781**	2	WASHER-HARD (22X40X10-MM THK)	
	3	1	**518-8351**	1	BOLT (M20X2.5X130-MM)	
	4	1	**521-9811**	1	MOUNT AS	
	5	1	**521-9812**	1	WASHER	
	6	1	**538-1171**	1	BRACKET AS	

M - METRIC PART

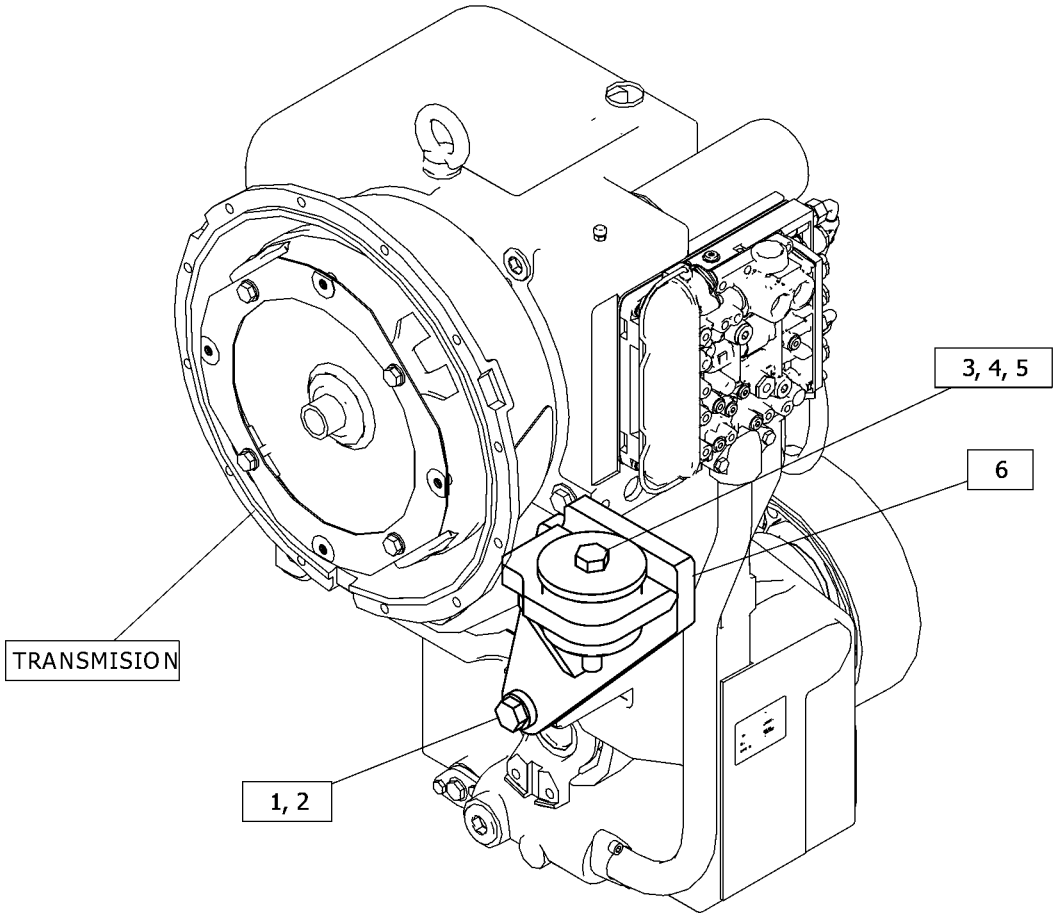

GRAPHIC #1 <END> g06375353

538-1175 BRACKET GP-MOUNTING

S/N: W921-UP

PART OF 533-4647 TRANSMISSION AR

SMCS-7301 **i07592381**

NOTE	REF NO	GRAPHIC REF	PART NUMBER	QTY	PART NAME 1 2 3 4 5 6 (PRODUCT LEVEL)	SEE PAGE
M	1	1	**106-4175**	2	BOLT (M20X2.5X60-MM)	
	2	1	**198-4781**	2	WASHER-HARD (22X40X10-MM THK)	
	3	1	**518-8351**	1	BOLT (M20X2.5X130-MM)	
	4	1	**521-9811**	1	MOUNT AS	
	5	1	**521-9812**	1	WASHER	
	6	1	**538-1176**	1	BRACKET AS	

M - METRIC PART

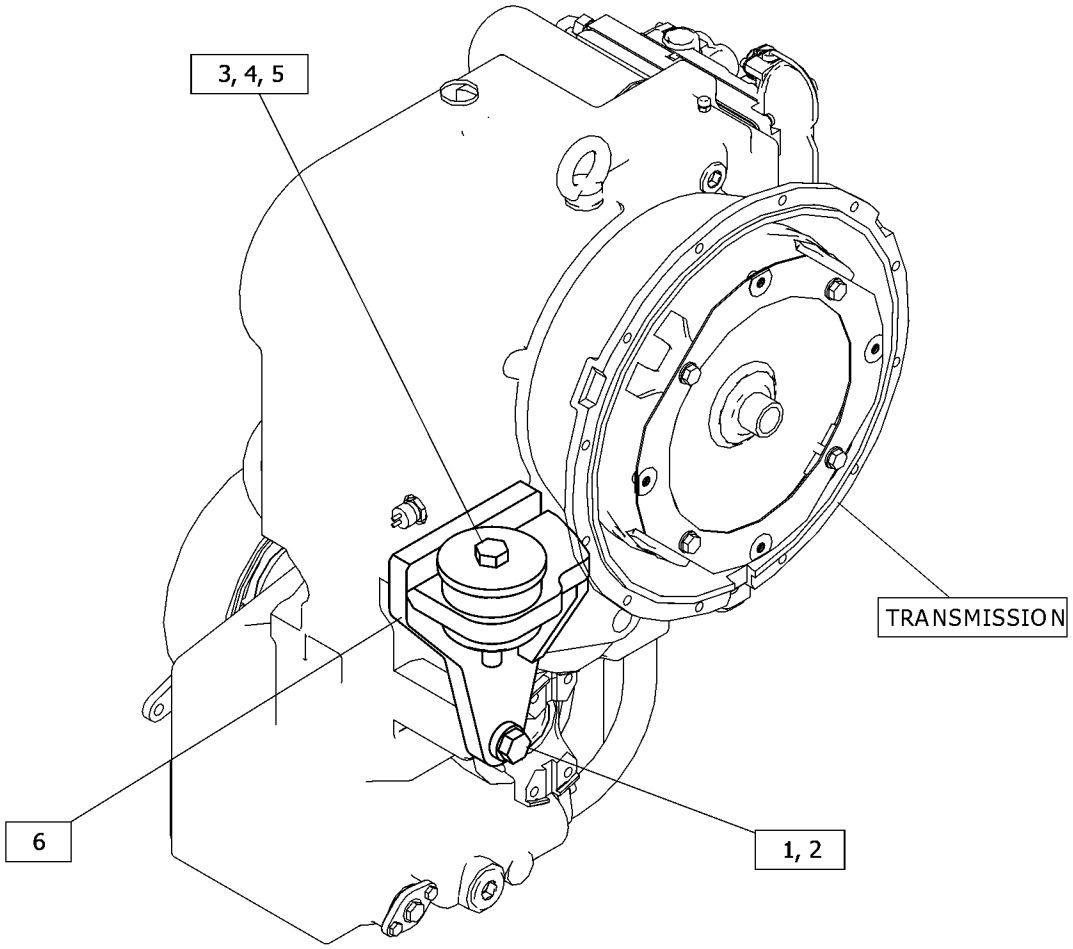

GRAPHIC #1 <END> g06375387

539-1575 BRACKET GP-MOUNTING

S/N: W921-UP

PART OF 533-4647 TRANSMISSION AR

SMCS-7301 **i07592561**

NOTE	REF NO	GRAPHIC REF	PART NUMBER	QTY	PART NAME 1 2 3 4 5 6 (PRODUCT LEVEL)	SEE PAGE
	1	1	**198-4781**	2	WASHER-HARD (22X40X10-MM THK)	
M	2	1	**536-7828**	2	BOLT (M20X2.5X50-MM)	
	3	1	**539-1576**	1	BRACKET AS	

M - METRIC PART

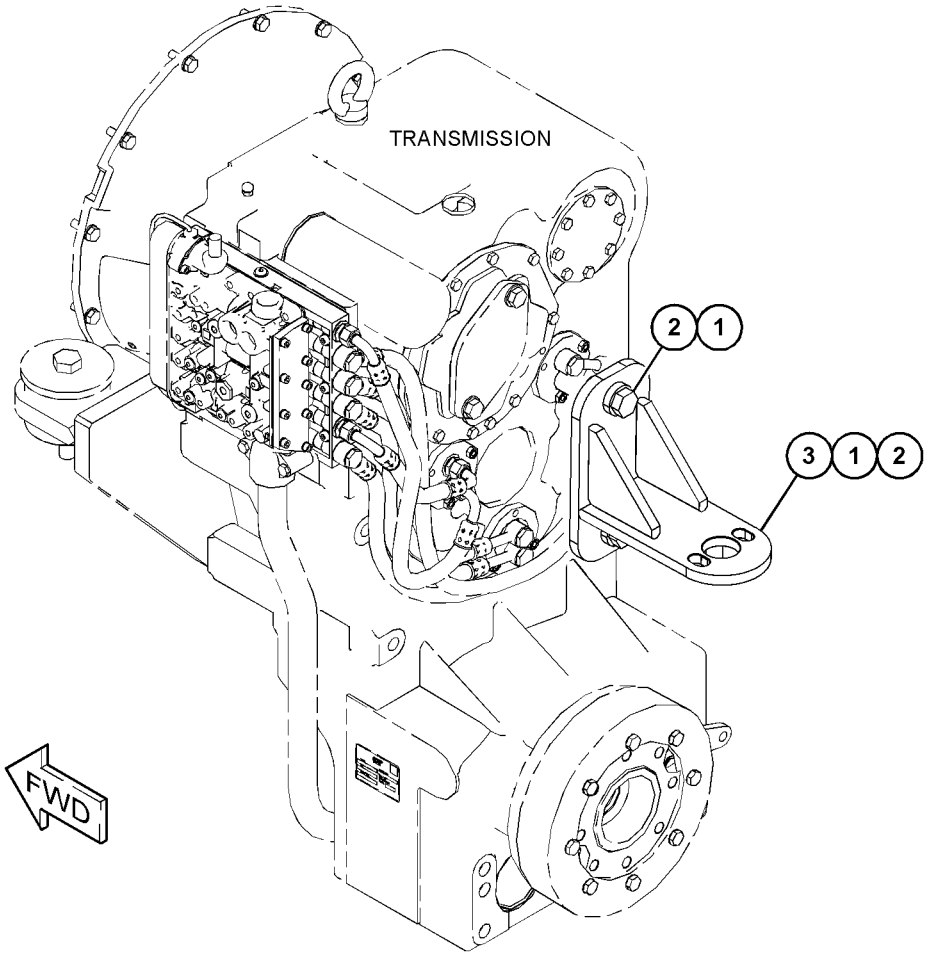

GRAPHIC #1 <END> g06374651

526-2236 CAB AR

S/N: W921-UP

PART OF 525-9809 COMMON AR

SMCS-7301 **i07540332**

NOTE	PART NUMBER	QTY	PART NAME 1 2 3 4 5 6 (PRODUCT LEVEL)	SEE PAGE
Y	*490-1170*	1	CONSOLE GP-OPERATOR	510
Y	*526-2243*	1	CONSOLE GP-OPERATOR	514
Y	*526-2240*	1	CONTROL GP-CLUTCH	516
Y	*526-2237*	1	CONTROL GP-GOVERNOR	98
Y	*7I-4718*	1	CONTROL GP-STEERING	519
Y	*533-1077*	1	FRAME GP-FRONT	312

Y - SEPARATE ILLUSTRATION

<END>

533-0981 CAB AR

S/N: W921-UP

PART OF 537-5611, 537-5613 CAB AR

SMCS-7301 **i07574965**

NOTE	REF NO	GRAPHIC REF	PART NUMBER	QTY	PART NAME 1 2 3 4 5 6 (PRODUCT LEVEL)	SEE PAGE
Y	1	1	*211-4913*	1	WIPER GP-WINDOW (HIGH PROFILE, FRONT)	599
Y	2	1	*315-5327*	1	INDICATOR GP-LEVEL	543
Y	3	1	*460-4996*	1	LINER GP-CAB	548
Y	4	1	*533-1014*	1	INSTALLATION GP-CAB	544
Y	5	1	*533-0982*	1	CAB GP	503
Y	6	1	*533-1013*	1	MOUNTING GP-CAB (ENCLOSED, NON-ROPS)	566

Y - SEPARATE ILLUSTRATION

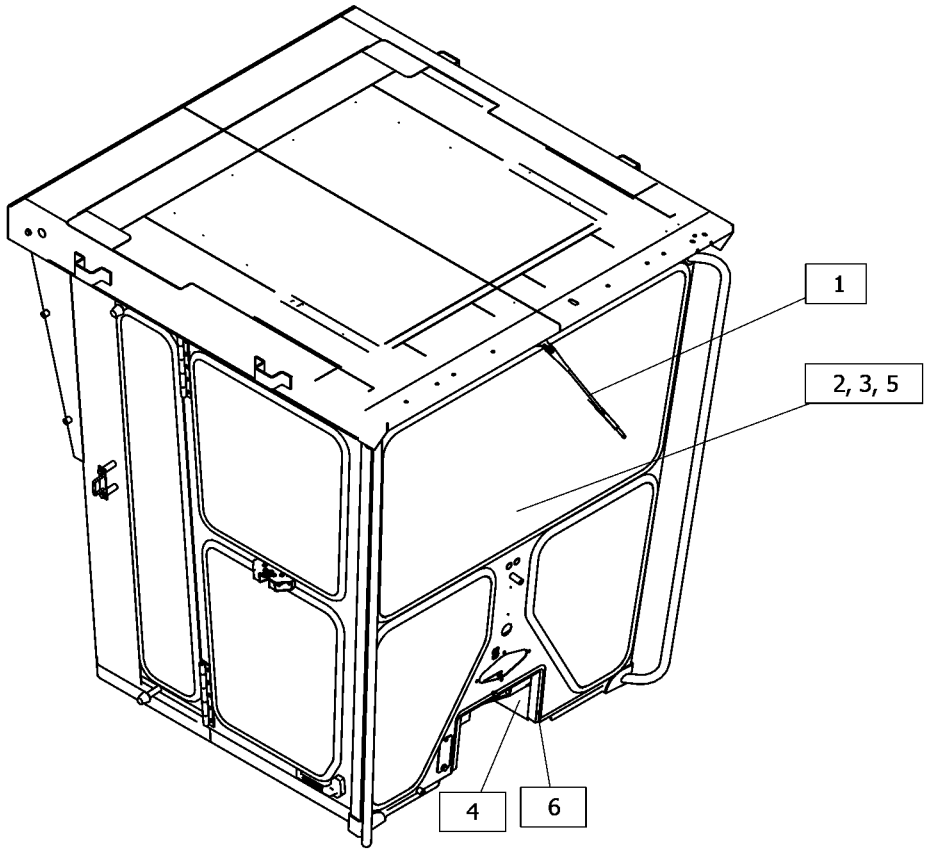

GRAPHIC #1 <END> g06371109

533-1080 CAB AR–ROPS

S/N: W921-UP

PART OF 537-5612, 537-5614 CAB AR

SMCS-7301 **i07576849**

NOTE	REF NO	GRAPHIC REF	PART NUMBER	QTY	PART NAME 1 2 3 4 5 6 (PRODUCT LEVEL)	SEE PAGE
Y	1	1	*533-5728*	1	CAB GP	505
Y	2	1	*211-4913*	1	WIPER GP-WINDOW (HIGH PROFILE, FRONT)	599
Y	3	1	*2A-6985*	1	MOUNTING GP-ROPS	567
Y	4	1	*315-5327*	1	INDICATOR GP-LEVEL	543
Y	5	1	*460-4996*	1	LINER GP-CAB	548
Y	6	1	*533-1014*	1	INSTALLATION GP-CAB	544

Y - SEPARATE ILLUSTRATION

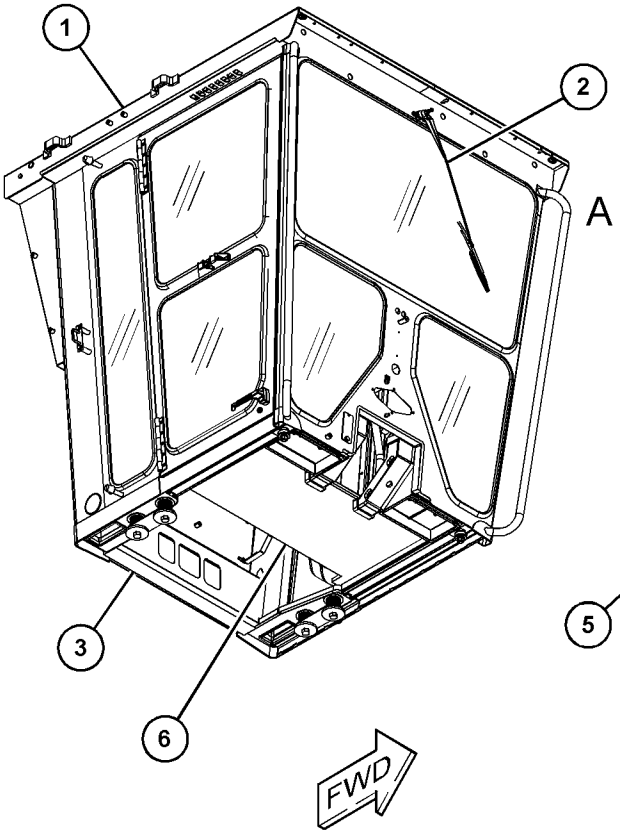

(VIEWED FROM BOTTOM)

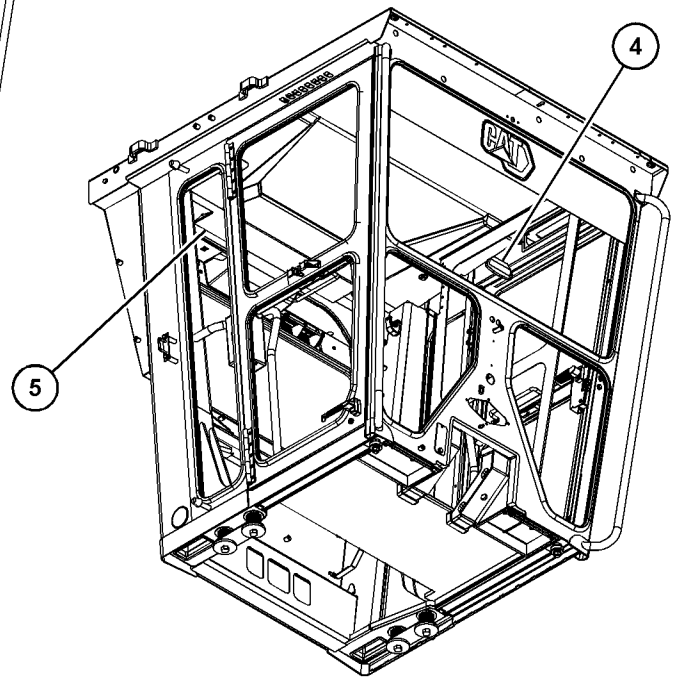

VIEW OF AREA A
(PARTS REMOVED FOR CLARITY)

GRAPHIC #1 <END> g06372424

537-5610 CAB AR—CANOPY, ROPS

S/N: W921-UP

SMCS-7301 **i07556497**

NOTE	PART NUMBER	QTY	PART NAME 1 2 3 4 5 6 (PRODUCT LEVEL)	SEE PAGE
Y	*533-6228*	1	CONVERTER GP-ELECTRICAL (12-VOLT, 10-AMPERE)	152
Y	*567-7088*	1	FILM GP (ROPS, FOPS)	619
Y	*548-6724*	1	ROPS AR	570

Y - SEPARATE ILLUSTRATION

<END>

537-5611 CAB AR—NON ROPS

S/N: W921-UP

SMCS-7301 **i07556276**

NOTE	PART NUMBER	QTY	PART NAME 1 2 3 4 5 6 (PRODUCT LEVEL)	SEE PAGE
Y	*533-0981*	1	CAB AR	499
Y	*533-6227*	1	CONVERTER GP-ELECTRICAL (12-VOLT, 10-AMPERE)	151
Y	*434-6744*	1	COVER GP-ACCESS	303
Y	*548-6725*	1	COVER GP-CAB	521
Y	*518-6855*	1	INSTALLATION GP-RADIO	547
Y	*533-1011*	1	WASHER GP-WINDOW (FRONT)	592
Y	*533-6225*	1	WIRING GP-CAB	217

Y - SEPARATE ILLUSTRATION

<END>

537-5612 CAB AR—ROPS

S/N: W921-UP

SMCS-7301 **i07556192**

NOTE	PART NUMBER	QTY	PART NAME 1 2 3 4 5 6 (PRODUCT LEVEL)	SEE PAGE
Y	*533-1080*	1	CAB AR (ROPS)	500
Y	*533-6227*	1	CONVERTER GP-ELECTRICAL (12-VOLT, 10-AMPERE)	151
Y	*434-6744*	1	COVER GP-ACCESS	303
Y	*548-6725*	1	COVER GP-CAB	521
Y	*567-7088*	1	FILM GP (ROPS, FOPS)	619
Y	*518-6855*	1	INSTALLATION GP-RADIO	547
Y	*533-1011*	1	WASHER GP-WINDOW (FRONT)	592
Y	*533-6225*	1	WIRING GP-CAB	217

Y - SEPARATE ILLUSTRATION

<END>

537-5613 CAB AR—NON ROPS

S/N: W921-UP

SMCS-7301 **i07556172**

NOTE	PART NUMBER	QTY	PART NAME 1 2 3 4 5 6 (PRODUCT LEVEL)	SEE PAGE
Y	*533-0981*	1	CAB AR	499
Y	*533-6227*	1	CONVERTER GP-ELECTRICAL (12-VOLT, 10-AMPERE)	151
Y	*434-6744*	1	COVER GP-ACCESS	303
Y	*501-4741*	1	FAN GP-CIRCULATING (FRONT DEFROSTER)	532
Y	*501-4742*	1	FAN GP-CIRCULATING (DEFROSTER, REAR)	533
Y	*518-3025*	1	INSTALLATION GP-RADIO (CITIZEN BAND)	546
Y	*518-6855*	1	INSTALLATION GP-RADIO	547
Y	*139-4612*	1	SCREEN GP-SUN (REAR)	573
Y	*8X-9675*	1	WASHER GP-WINDOW (FRONT)	594
Y	*523-9209*	1	WIPER & WASHER GP-WINDOW	598
Y	*286-4825*	1	WIPER GP-WINDOW (FRONT)	600
Y	*533-6225*	1	WIRING GP-CAB	217

Y - SEPARATE ILLUSTRATION

<END>

537-5614 CAB AR—ROPS

S/N: W921-UP

SMCS-7301 **i07556167**

NOTE	PART NUMBER	QTY	PART NAME 1 2 3 4 5 6 (PRODUCT LEVEL)	SEE PAGE
Y	*533-1080*	1	CAB AR (ROPS)	500
Y	*533-6227*	1	CONVERTER GP-ELECTRICAL (12-VOLT, 10-AMPERE)	151
Y	*434-6744*	1	COVER GP-ACCESS	303
Y	*501-4741*	1	FAN GP-CIRCULATING (FRONT DEFROSTER)	532
Y	*501-4742*	1	FAN GP-CIRCULATING (DEFROSTER, REAR)	533
Y	*567-7088*	1	FILM GP (ROPS, FOPS)	619
Y	*518-3025*	1	INSTALLATION GP-RADIO (CITIZEN BAND)	546
Y	*518-6855*	1	INSTALLATION GP-RADIO	547
Y	*139-4612*	1	SCREEN GP-SUN (REAR)	573
Y	*8X-9675*	1	WASHER GP-WINDOW (FRONT)	594
Y	*523-9209*	1	WIPER & WASHER GP-WINDOW	598
Y	*286-4825*	1	WIPER GP-WINDOW (FRONT)	600
Y	*533-6225*	1	WIRING GP-CAB	217

Y - SEPARATE ILLUSTRATION

<END>

533-0982 CAB GP

S/N: W921-UP

PART OF 533-0981 CAB AR

SMCS-7301 **i07576185**

NOTE	REF NO	GRAPHIC REF	PART NUMBER	QTY	PART NAME 1 2 3 4 5 6 (PRODUCT LEVEL)	SEE PAGE
Y	1	1	*490-3850*	1	WINDOW GP-CAB	597
Y	2	1	*514-7754*	1	DOOR GP-CAB	524
Y	3	1	*533-0983*	1	CAB GP	504

Y - SEPARATE ILLUSTRATION

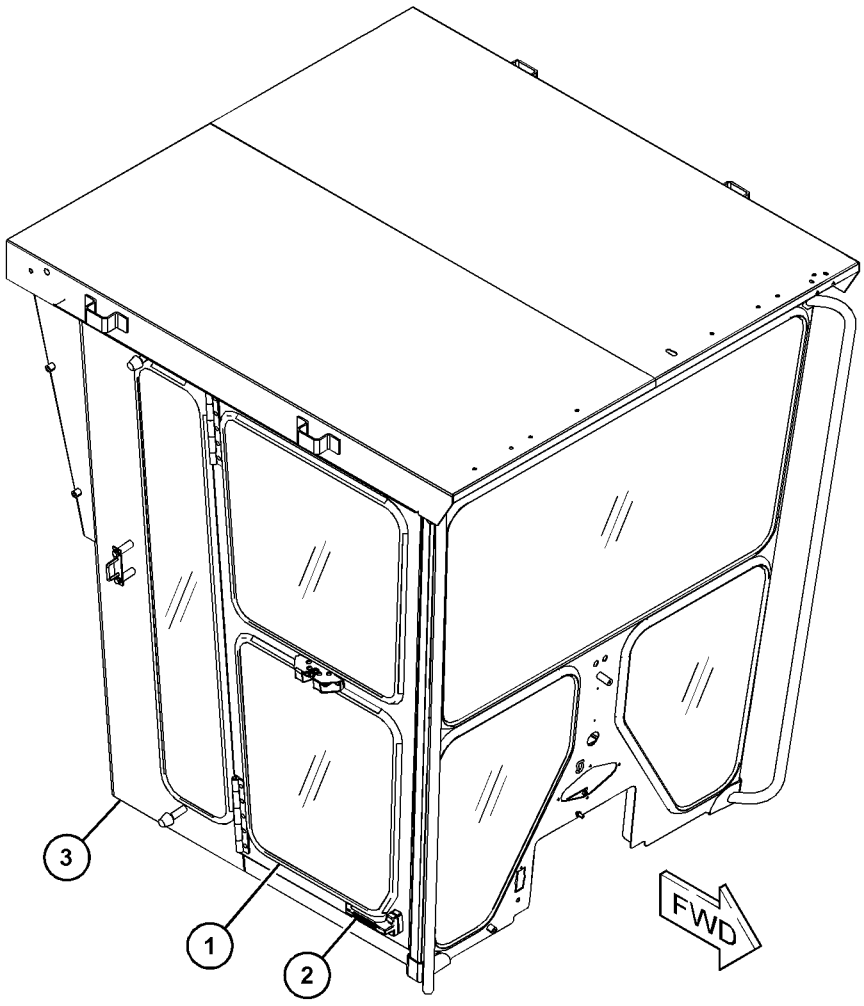

GRAPHIC #1 <END> g06374308

533-0983 CAB GP

S/N: W921-UP

PART OF 533-0982 CAB GP

SMCS-7301 **i07576346**

NOTE	REF NO	GRAPHIC REF	PART NUMBER	QTY	PART NAME 1 2 3 4 5 6 (PRODUCT LEVEL)	SEE PAGE
M	1	1	**114-3350**	2	SCREW-FLAT HEAD (M8X1.25X60-MM)	
M	2	1	**129-3178**	3	LOCKNUT (M6X1-THD)	
M	3	1	**138-4054**	3	SCREW-FLAT HEAD (M6X1X45-MM)	
	4	1	**174-5807**	20	RIVET-POP	
M	5	1	**189-2864**	10	SCREW-FLAT HEAD (M8X1.25X30-MM)	
	6	1	**381-3244**	4	HINGE	
M	7	1	**3T-0852**	12	LOCKNUT (M8X1.25-THD)	
	8	1	**533-0984**	1	CAB AS	
	9	1	**533-1065**	1	DOOR AS (LH)	
	10	1	**533-1068**	1	DOOR AS (LH)	
	11	1	**5P-4116**	12	WASHER-HARD (8.8X20.5X2-MM THK)	
	12	1	**9X-8256**	3	WASHER (6.6X12X2-MM THK)	
D	13	1	**5P-5969**		SEAL (0.56-M EACH)	

D - ORDER BY THE METER
M - METRIC PART

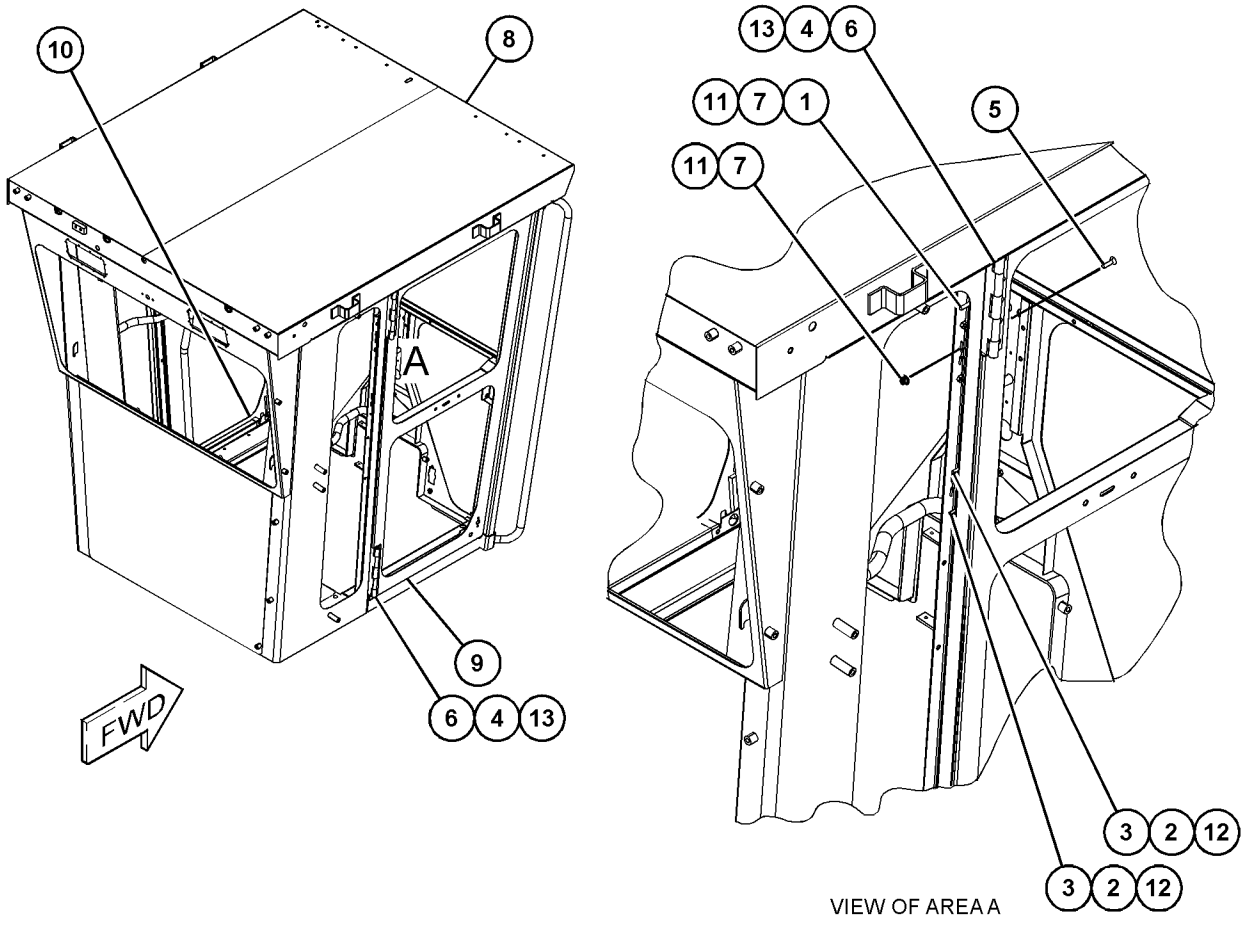

GRAPHIC #1 <END> g06370991

533-5728 CAB GP

S/N: W921-UP

PART OF 533-1080 CAB AR

SMCS-7301 **i07576865**

NOTE	REF NO	GRAPHIC REF	PART NUMBER	QTY	PART NAME 1 2 3 4 5 6 (PRODUCT LEVEL)	SEE PAGE
Y	1	1	*490-3850*	1	WINDOW GP-CAB	597
Y	2	1	*514-7754*	1	DOOR GP-CAB	524
Y	3	1	*533-5737*	1	CAB GP	506

Y - SEPARATE ILLUSTRATION

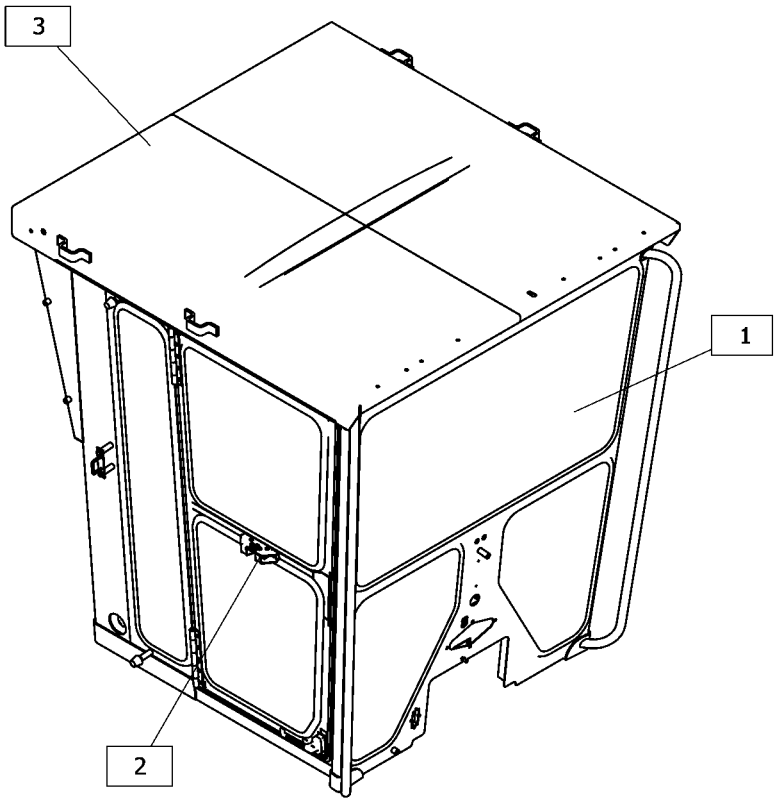

GRAPHIC #1 <END> g06371139

533-5737 CAB GP

S/N: W921-UP

PART OF 533-5728 CAB GP

SMCS-7301 **i07576881**

NOTE	REF NO	GRAPHIC REF	PART NUMBER	QTY	PART NAME 1 2 3 4 5 6 (PRODUCT LEVEL)	SEE PAGE
	1	1	**381-3244**	4	HINGE	
	2	1	**509-1980**	1	ROPS AS	
	3	1	**514-7748**	1	DOOR AS-CAB (RH)	
	4	1	**514-7749**	1	DOOR AS-CAB (LH)	
M	5	1	**114-3350**	2	SCREW-FLAT HEAD (M8X1.25X60-MM)	
M	6	1	**129-3178**	3	LOCKNUT (M6X1-THD)	
M	7	1	**138-4054**	3	SCREW-FLAT HEAD (M6X1X45-MM)	
	8	1	**174-5807**	20	RIVET-POP	
M	9	1	**189-2864**	10	SCREW-FLAT HEAD (M8X1.25X30-MM)	
M	10	1	**3T-0852**	12	LOCKNUT (M8X1.25-THD)	
	11	1	**5P-4116**	12	WASHER-HARD (8.8X20.5X2-MM THK)	
	12	1	**9X-8256**	3	WASHER (6.6X12X2-MM THK)	
D	13	1	**5P-5969**		SEAL (0.55-M EACH)	

D - ORDER BY THE METER
M - METRIC PART

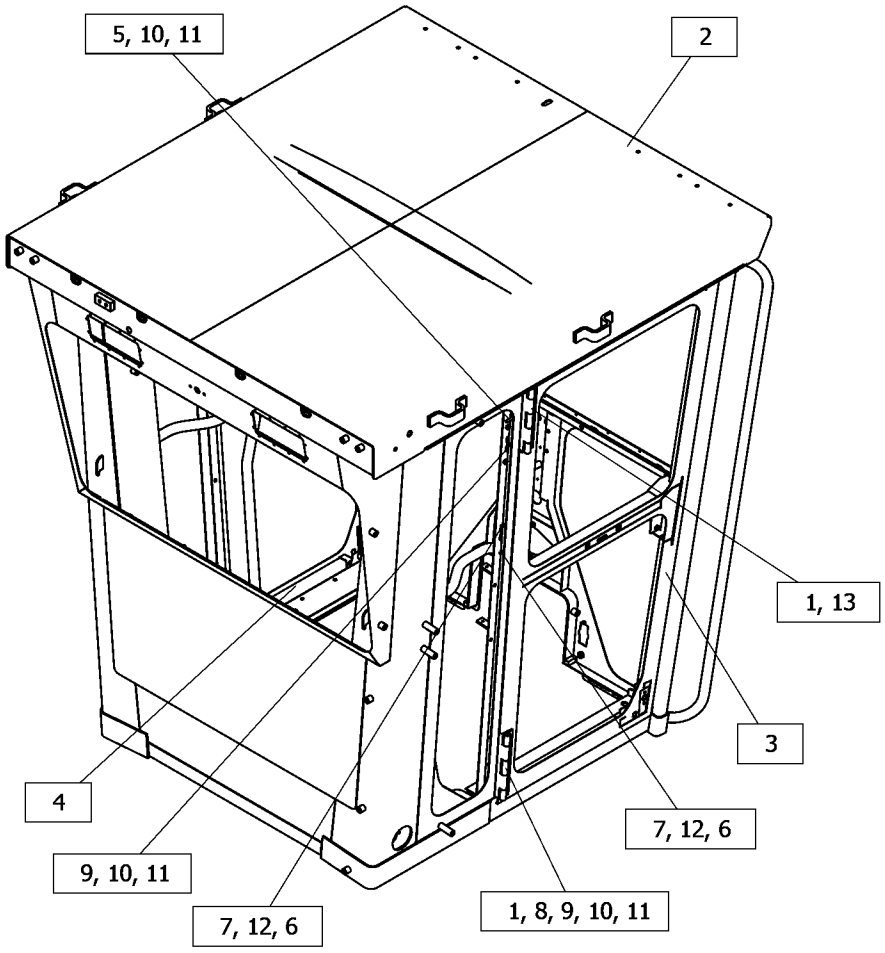

GRAPHIC #1 <END> g06370529

527-9473 COMPRESSOR & MTG GP-REFRIG

S/N: W921-UP

PART OF 537-5618, 537-5620 AIR CONDITIONER AR

SMCS-1802 **i07571167**

NOTE	REF NO	GRAPHIC REF	PART NUMBER	QTY	PART NAME 1 2 3 4 5 6 (PRODUCT LEVEL)	SEE PAGE
	1	1	**518-4416**	4	WASHER (8.4X16X1.6-MM THK)	
	2	1	**330-1725**	1	BRACKET AS	
		1	**161-9820**	2	PIN	
	3	1	**350-8742**	1	BELT-SERPENTINE	
	4	1	**363-8055**	1	FILM-INFORMATION (BELT ROUTING)	
	5	1	**369-1255**	1	TENSIONER	
	6	1	**441-0984**	1	BRACKET	
Y	7	1	**464-9988**	1	COMPRESSOR GP-REFRIGERANT	508
	8	1	**518-4417**	2	WASHER	
M	9	1	**101-7178**	3	BOLT (M10X1.5X55-MM)	
	10	1	**198-4777**	2	WASHER-HARD (11X25X10-MM THK)	
M	11	1	**6V-5223**	4	BOLT (M8X1.25X100-MM)	
M	12	1	**8T-4198**	2	BOLT (M10X1.5X100-MM)	
M	13	1	**8T-6685**	2	BOLT (M10X1.5X110-MM)	

M - METRIC PART
Y - SEPARATE ILLUSTRATION

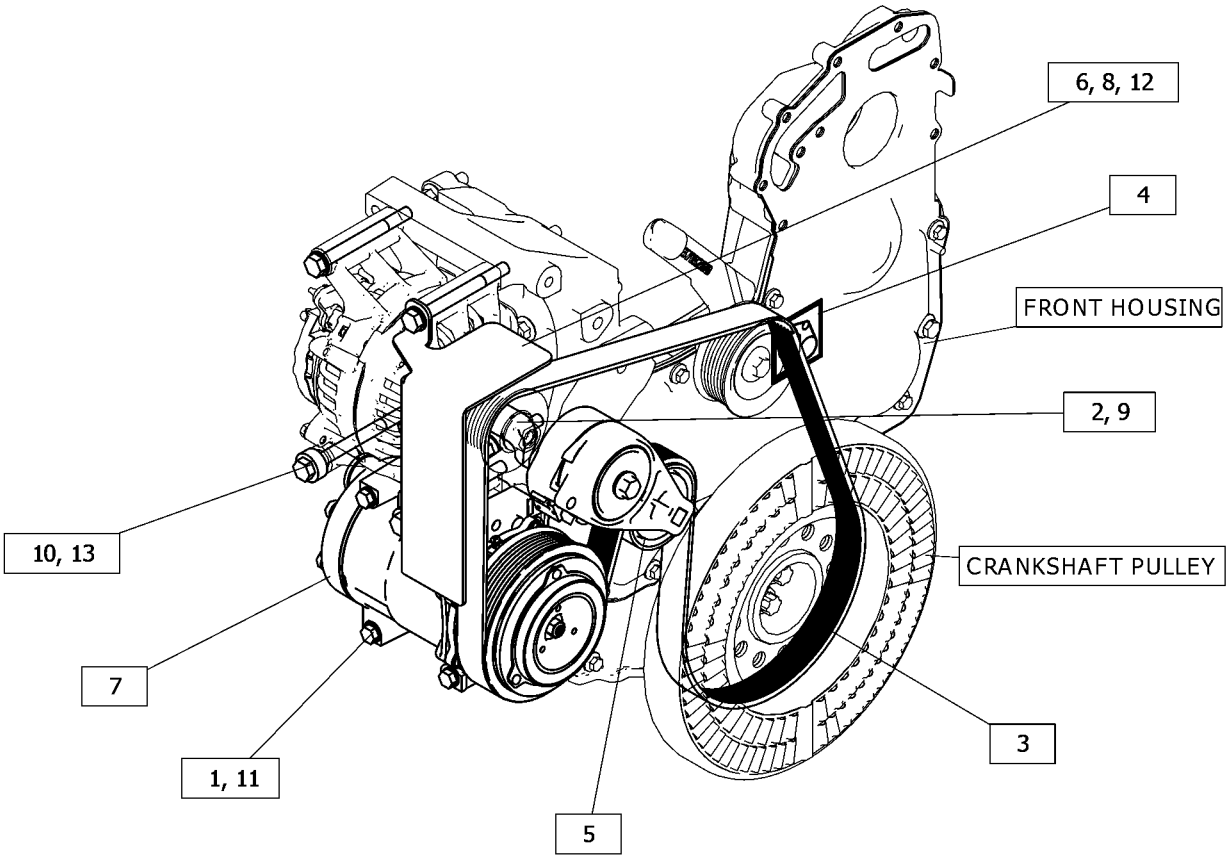

GRAPHIC #1 <END> g06367237

464-9988 COMPRESSOR GP-REFRIGERANT

S/N: W921-UP

PART OF 527-9473 COMPRESSOR & MTG GP-REFRIG

SMCS-1802 **i07189759**

NOTE	REF NO	GRAPHIC REF	PART NUMBER	QTY	PART NAME 1 2 3 4 5 6 (PRODUCT LEVEL)	SEE PAGE
	1	1	**9X-7385**	2	SEAL-O-RING	
	2	1	**102-8802**	1	KIT-RECEPTACLE (2-PIN)	
					(INCLUDES RECEPTACLE AS & WEDGE)	
	3	1	**314-4018**	1	VALVE AS-PRESSURE RELIEF	
	4	1	**7T-4532**	1	PLUG AS	

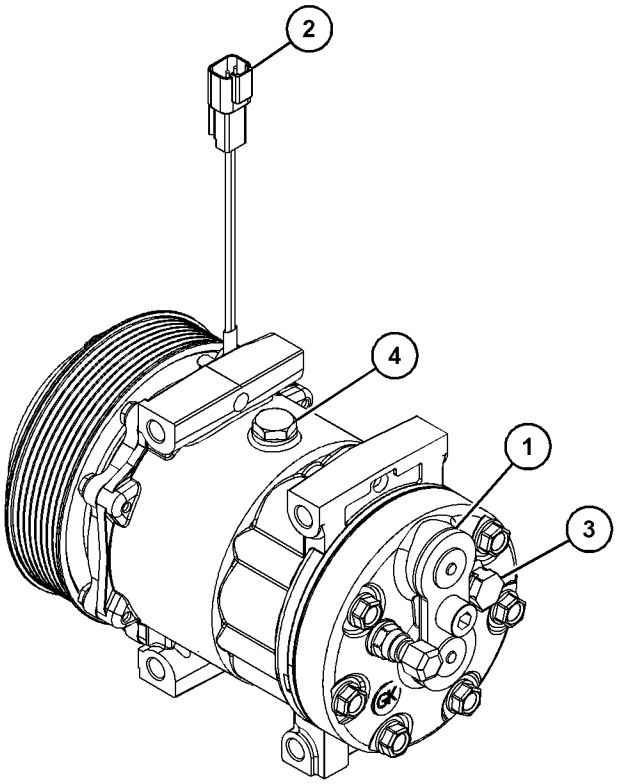

GRAPHIC #1 <END> g06056039

376-6729 CONDENSER & MTG GP-REFRIGERANT

S/N: W921-UP

PART OF 533-5729, 533-5733 AIR CONDITIONER AR

SMCS-1805 **i07571196**

NOTE	REF NO	GRAPHIC REF	PART NUMBER	QTY	PART NAME 1 2 3 4 5 6 (PRODUCT LEVEL)	SEE PAGE
	1	1	**364-0676**	1	CORE AS-CONDENSER (AIR CONDITIONER)	
		1	**317-8141**	4	MOUNT	
M	2	1	**5C-7261**	4	NUT (M8X1.25-THD)	
	3	1	**5P-4116**	4	WASHER-HARD (8.8X20.5X2-MM THK)	
M	4	1	**7X-2537**	4	BOLT (M8X1.25X35-MM)	
	5	1	**8C-9987**	4	WASHER (8.3X28X2.5-MM THK)	

M - METRIC PART

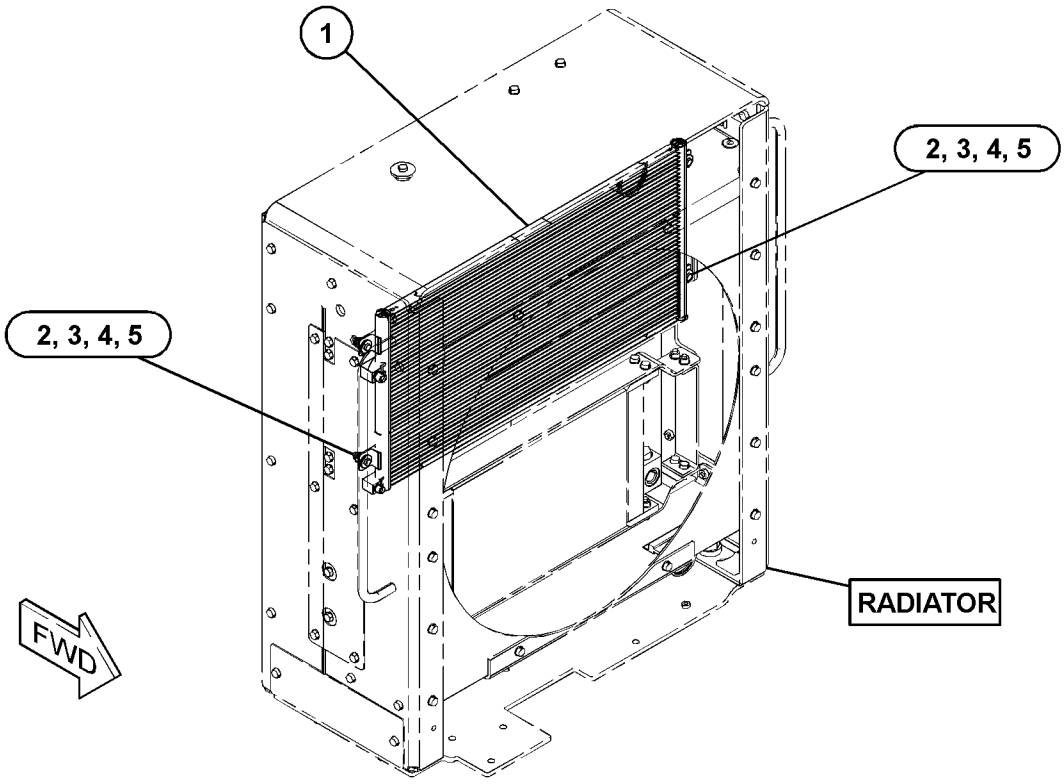

GRAPHIC #1 <END> g03141900

490-1170 CONSOLE GP-OPERATOR

S/N: W921-UP

PART OF 526-2236 CAB AR

SMCS-5258 **i07540367**

NOTE	REF NO	GRAPHIC REF	PART NUMBER	QTY	PART NAME 1 2 3 4 5 6 (PRODUCT LEVEL)	SEE PAGE
	1	1,2	**2G-8572**	8	WASHER-SPECIAL	
	2	1,2	**2G-8573**	8	CAP	
	3	1	**6G-2914**	1	LATCH	
	4	2	**6G-8814**	2	BRACKET	
	5	1	**8C-3442**	1	SPRING-COIL	
	6	2	**8X-1904**	1	SPACER (20X35X26-MM THK)	
	7	1,2	**8X-1913**	6	SPACER (10.5X32X19.5-MM THK)	
	8	1	**8X-1914**	1	SHAFT	
	9	2	**8X-2160**	1	LEVER	
M	10	1	**8X-2893**	10	NUT (M4X0.7-THD)	
	11	1	**8X-3951**	1	PANEL	
	12	2	**8X-3965**	1	RATCHET	
	13	1	**8X-5123**	1	RETAINER	
	14	1	**102-9383**	1	PLATE	
	15	1	**110-6241**	1	BRACKET	
	16	1	**206-4097**	8	FASTENER	
	17	1	**228-6089**	1	PLUG (ROCKER SWITCH)	
	18	1	**236-0737**	1	CYLINDER	
	19	1	**236-4631**	1	BEZEL	
	20	1	**461-3568**	1	BRACKET AS	
M		1	**6V-9632**	2	NUT-WELD (M6X1-THD)	
	21	1	**466-4376**	1	PANEL	
	22	1	**466-4377**	1	PANEL	
	23	1	**490-1097**	2	PLATE	
	24	1	**504-9576**	1	BRACKET AS	
M		1	**6V-9632**	2	NUT-WELD (M6X1-THD)	
	25	1	**512-5899**	1	PLATE AS	
	26	1	**565-6248**	1	BASE	
	27	1	**512-5904**	1	CHANNEL AS	
	28	1	**512-5907**	2	PLATE	
	29	1	**512-5919**	1	LEVER	
	30	1	**512-5945**	1	PANEL	
	31	1	**512-5946**	1	HOOD	
	32	1	**519-4909**	1	CHANNEL AS	
M		1	**6V-9632**	6	NUT-WELD (M6X1-THD)	
		1	**7T-1099**	1	LINK	
M		1	**9X-2032**	3	NUT-WELD (M4X0.7-THD)	
	33	1	**030-8535**	1	BOLT-LOCKING (3/8-16X0.875-IN)	
	34	2	**031-2666**	1	ROD	
	35	1	**034-1994**	1	PIN	
	36	1	**096-6166**	6	WASHER-HARD (4.5X9X1-MM THK)	
M	37	1	**160-8503**	1	NUT (M10X1.5-THD)	
M	38	1	**174-8131**	8	SCREW-TRUSS HEAD (M4X0.7X12-MM)	
	39	1	**2K-5830**	1	BEARING AS-NEEDLE	
	40	1,2	**2K-7979**	13	BUSHING	
M	41	1	**344-5673**	2	NUT (M6X1-THD)	
	42	1	**3B-4607**	2	PIN-COTTER	

490-1170 **CONSOLE GP-OPERATOR (**contd.**)** **i07540367**

NOTE	REF NO	GRAPHIC REF	PART NUMBER	QTY	PART NAME 1 2 3 4 5 6 (PRODUCT LEVEL)	SEE PAGE
	43	2	**3E-9865**	1	LOCKNUT (1/4-20-THD)	
	44	2	**3F-7514**	4	PIN	
	45	1,2	**3K-6060**	6	LOCKNUT (3/8-16-THD)	
	46	2	**3Y-2806**	1	SPRING	
	47	2	**4B-4314**	1	RIVET	
M	48	1	**5C-8312**	6	NUT (M4X0.7-THD)	
	49	2	**5M-8500**	1	KNOB	
	50	1	**5P-1075**	8	WASHER-HARD (10.2X22.5X3-MM THK)	
	51	2	**5P-8167**	2	BOLT (3/8-16X0.625-IN)	
	52	1,2	**5S-7383**	6	BOLT (3/8-16X1.75-IN)	
	53	1	**6J-0488**	4	SCREW-BUTTON HEAD (3/8-16X0.875-IN)	
	54	2	**6L-1962**	1	NUT-JAM (3/8-24-THD)	
	55	2	**6V-8183**	1	NUT-FULL (3/8-24-THD)	
B	56	1,2	**8D-5641**	20	BEARING	
	57	1	**8L-7905**	2	RIVET-POP	
	58	1	**8T-1174**	2	SEAL-LIP TYPE	
	59	1,2	**8T-2561**	11	WASHER-HARD (10.5X28.5X5-MM THK)	
M	60	1	**8T-4133**	1	NUT (M10X1.5-THD)	
M	61	1	**8T-4136**	4	BOLT (M10X1.5X25-MM)	
M	62	2	**8T-9006**	2	BOLT-SOCKET HEAD (M3X0.5X20-MM)	
	63	2	**8X-1907**	1	SHAFT	
	64	1	**9M-5590**	1	BALL	
M	65	1	**9X-1046**	8	SCREW (M4X0.7X18-MM)	
M	66	1	**9X-2042**	10	SCREW-TRUSS HEAD (M6X1X12-MM)	
M	67	1	**9X-2044**	4	SCREW-TRUSS HEAD (M6X1X16-MM)	
M	68	1	**9X-6155**	2	BOLT-SOCKET HEAD (M6X1X16.7-MM)	
	69	1	**9X-8256**	2	WASHER (6.6X12X2-MM THK)	
D	70	1	**5P-5639**		SEAL (0.4-M)	
D	71	1	**5P-5637**		SEAL (0.5-M EACH)	
D	71A	1	**5P-5637**		SEAL (0.1-M EACH)	

B - USE AS REQUIRED
D - ORDER BY THE METER
M - METRIC PART

490-1170 **CONSOLE GP-OPERATOR (**contd.**)** **i07540367**

REFER TO ALL ILLUSTRATIONS OF
THIS GROUP FOR AUXILIARY VIEWS

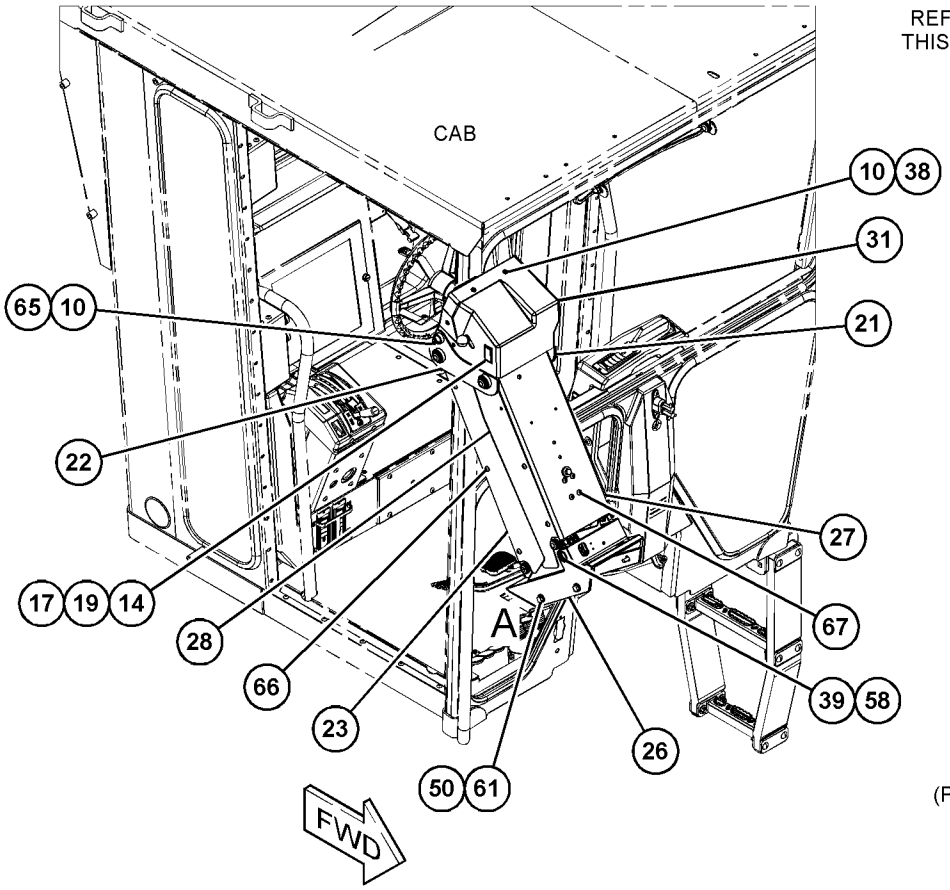

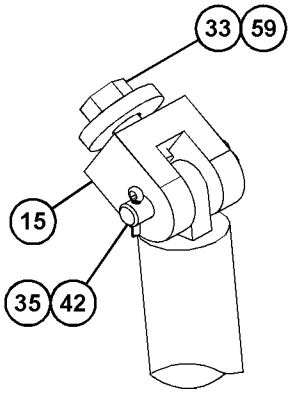

VIEW OF AREA C
(PARTS REMOVED FOR CLARITY)

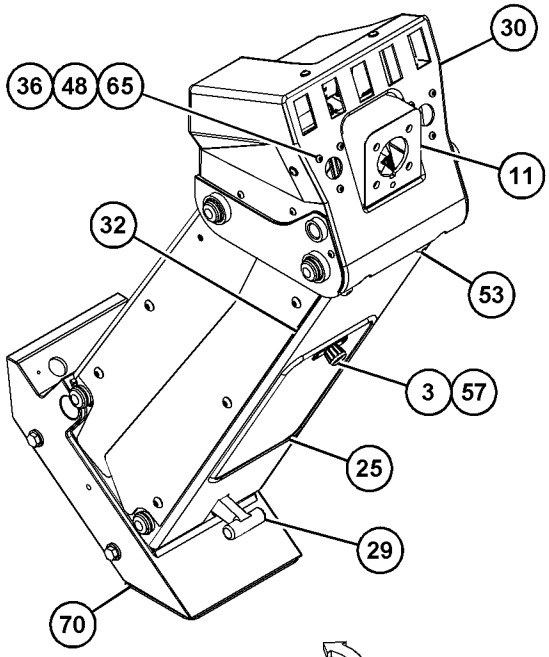

VIEW OF AREA A 180°

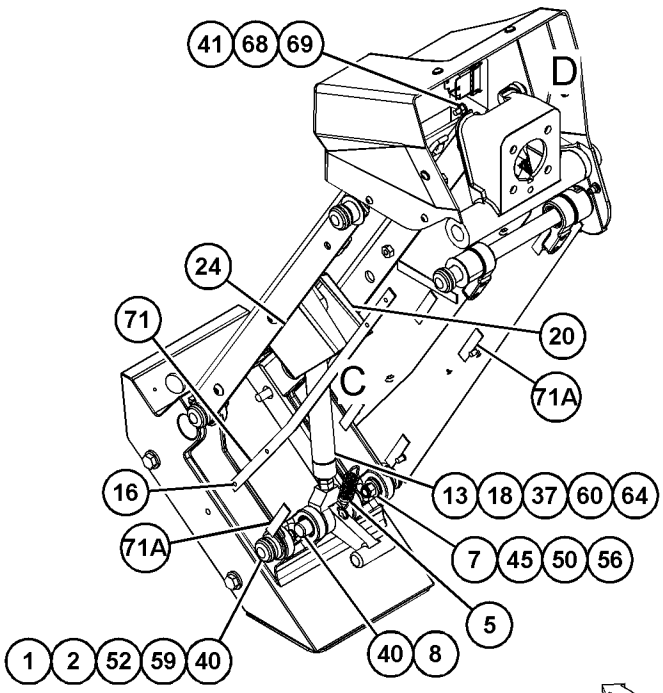

VIEW OF AREA A
(PARTS REMOVED FOR CLARITY) 180°

GRAPHIC #1 g06370419

490-1170 **CONSOLE GP-OPERATOR (**contd.**)** **i07540367**

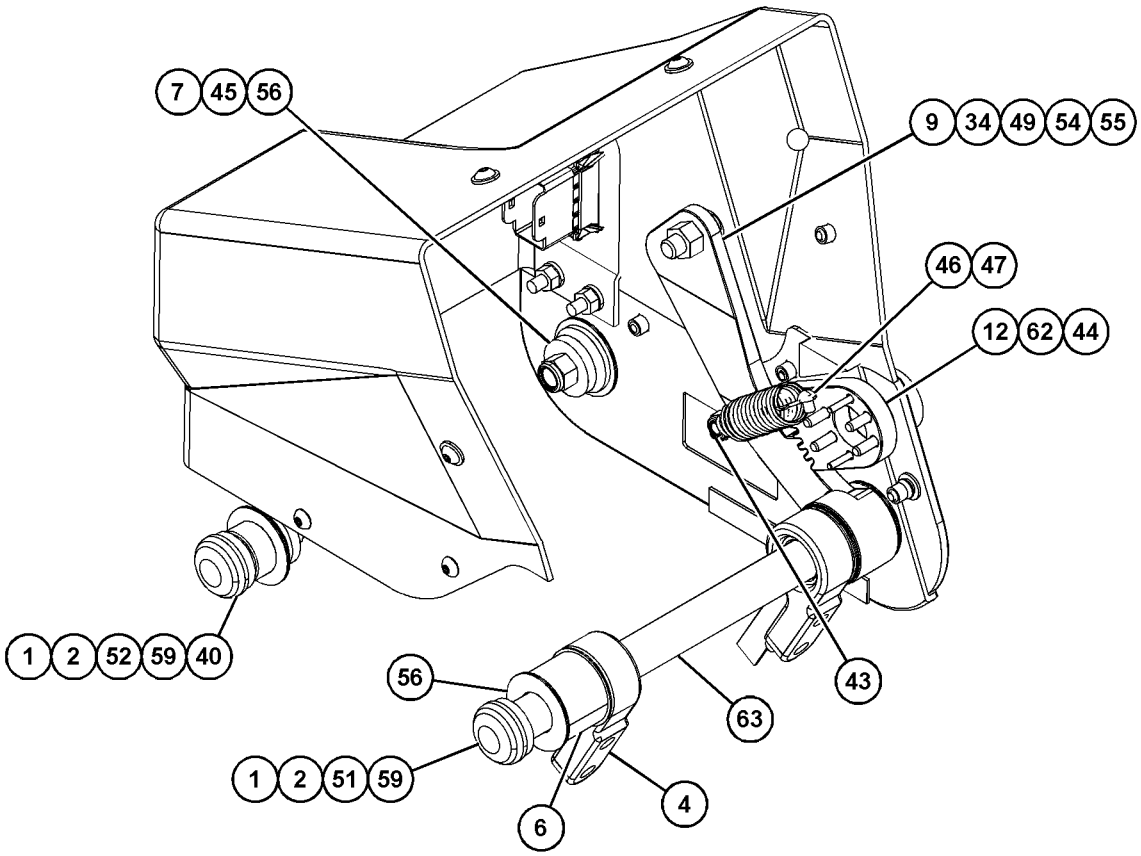

VIEW OF AREA D
(PARTS REMOVED FOR CLARITY)

GRAPHIC #2 <END> g06370420

526-2243 CONSOLE GP-OPERATOR

S/N: W921-UP

PART OF 526-2236 CAB AR

SMCS-5258 **i07546615**

NOTE	REF NO	GRAPHIC REF	PART NUMBER	QTY	PART NAME 1 2 3 4 5 6 (PRODUCT LEVEL)	SEE PAGE
	1	1	**8X-4879**	2	BRACKET AS	
					(EACH INCLUDES)	
M		1	**6V-9632**	1	NUT-WELD (M6X1-THD)	
	2	1	**8X-8096**	1	FILM-COVER (OPERATOR CONSOLE)	
	3	1	**460-4997**	1	COVER	
	4	1	**520-9588**	1	COVER	
	5	1	**526-2249**	1	PLATE AS	
	6	1	**549-8774**	1	GATE AS	
	7	1	**526-2244**	1	PLATE AS	
M	8	1	**9X-2041**	6	SCREW-TRUSS HEAD (M10X1.5X20-MM)	
M	9	1	**9X-2042**	2	SCREW-TRUSS HEAD (M6X1X12-MM)	
M	10	1	**9X-2043**	10	SCREW-TRUSS HEAD (M6X1X14-MM)	
M	11	1	**9X-2045**	4	SCREW-TRUSS HEAD (M6X1X20-MM)	
	12	1	**9X-2038**	4	WASHER (7X19X2-MM THK)	

M - METRIC PART

526-2243 **CONSOLE GP-OPERATOR (**contd.**)** **i07546615**

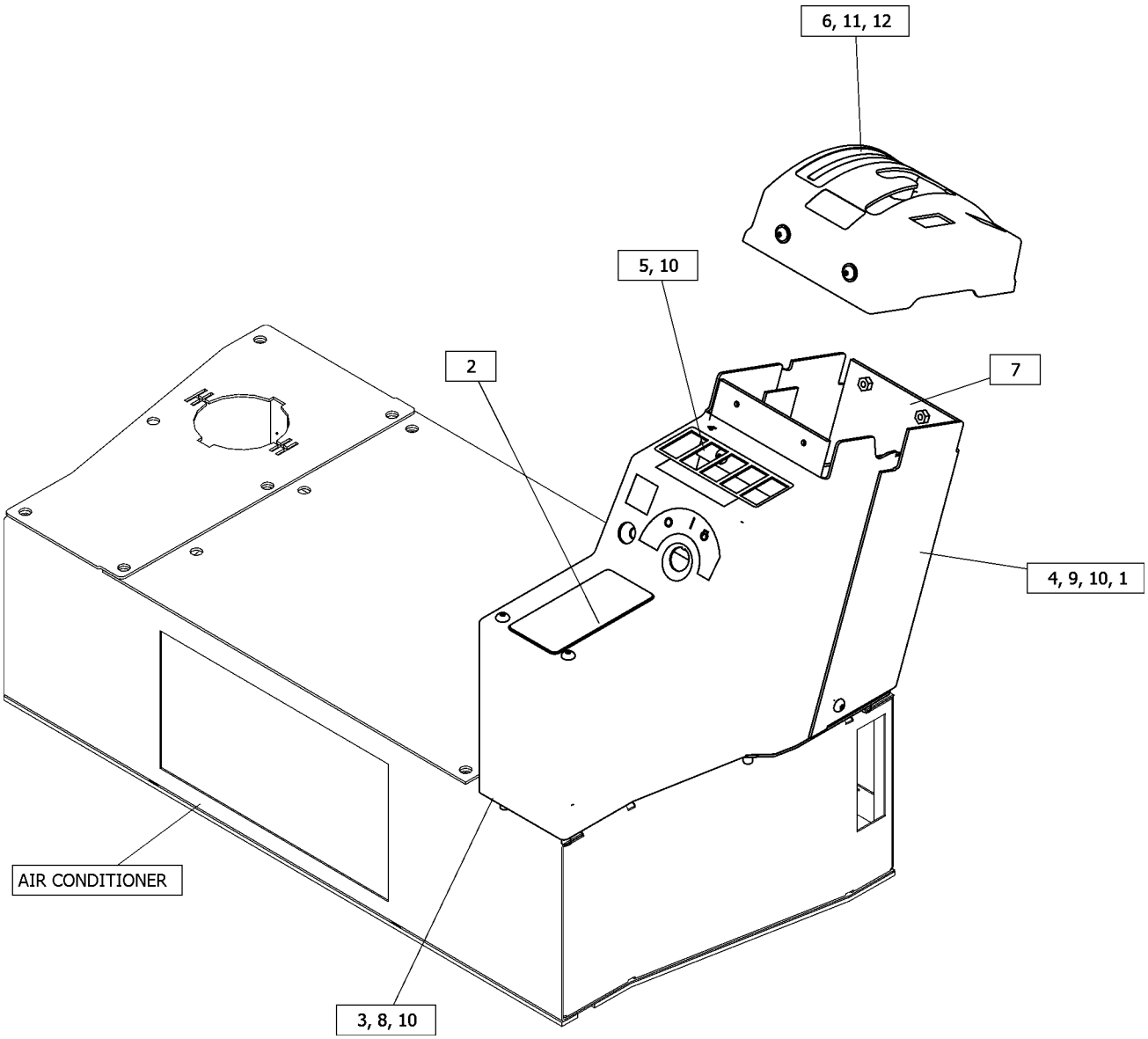

GRAPHIC #1 <END> g06358187

526-2240 CONTROL GP-CLUTCH

S/N: W921-UP

PART OF 526-2236 CAB AR

SMCS-5157 **i07540368**

NOTE	REF NO	GRAPHIC REF	PART NUMBER	QTY	PART NAME 1 2 3 4 5 6 (PRODUCT LEVEL)	SEE PAGE
	1	1	**4B-4278**	1	WASHER (10.2X20.5X1.6-MM THK)	
	2	1	**7V-0446**	2	CLIP	
	3	1	**180-4027**	1	CAM	
	4	1	**180-7147**	1	LEVER	
	5	1	**526-2241**	1	SLEEVE	
	6	1	**526-2242**	1	SOCKET	
M	7	1	**099-3649**	1	BOLT (M8X1.25X40-MM)	
	8	1	**129-3173**	1	BOLT-12 POINT HEAD (3/8-16X1.25-IN)	
	9	1	**141-6343**	1	SPRING	
M	10	1	**142-0485**	1	NUT (M10X1.5-THD)	
	11	1	**169-0921**	1	ROD END (3/8-24 LH-THD)	
	12	1	**172-4211**	1	SPACER (10.5X22X50.8-MM THK)	
	13	1	**177-1713**	1	ROD	
	14	1	**1B-0676**	1	PIN	
	15	1	**1F-4622**	3	BEARING AS-NEEDLE	
	16	1	**1F-5403**	1	ROD END	
M	17	1	**272-3089**	1	BOLT (M10X1.5X90-MM)	
	18	1	**3H-8538**	1	PIN	
	19	1	**4B-6060**	1	SETSCREW-SOCKET (1/4-20X0.375-IN)	
	20	1	**512-5938**	1	PEDAL-CLUTCH	
M	21	1	**5P-7970**	2	NUT (M8X1.25-THD)	
	22	1	**6V-8183**	1	NUT-FULL (3/8-24-THD)	
	23	1	**8T-4226**	1	WASHER-PLATED (10.5X45X3-MM THK)	
	24	1	**9J-8783**	1	SHIM (0.508-MM THK)	

M - METRIC PART

526-2240 **CONTROL GP-CLUTCH (**contd.**)** **i07540368**

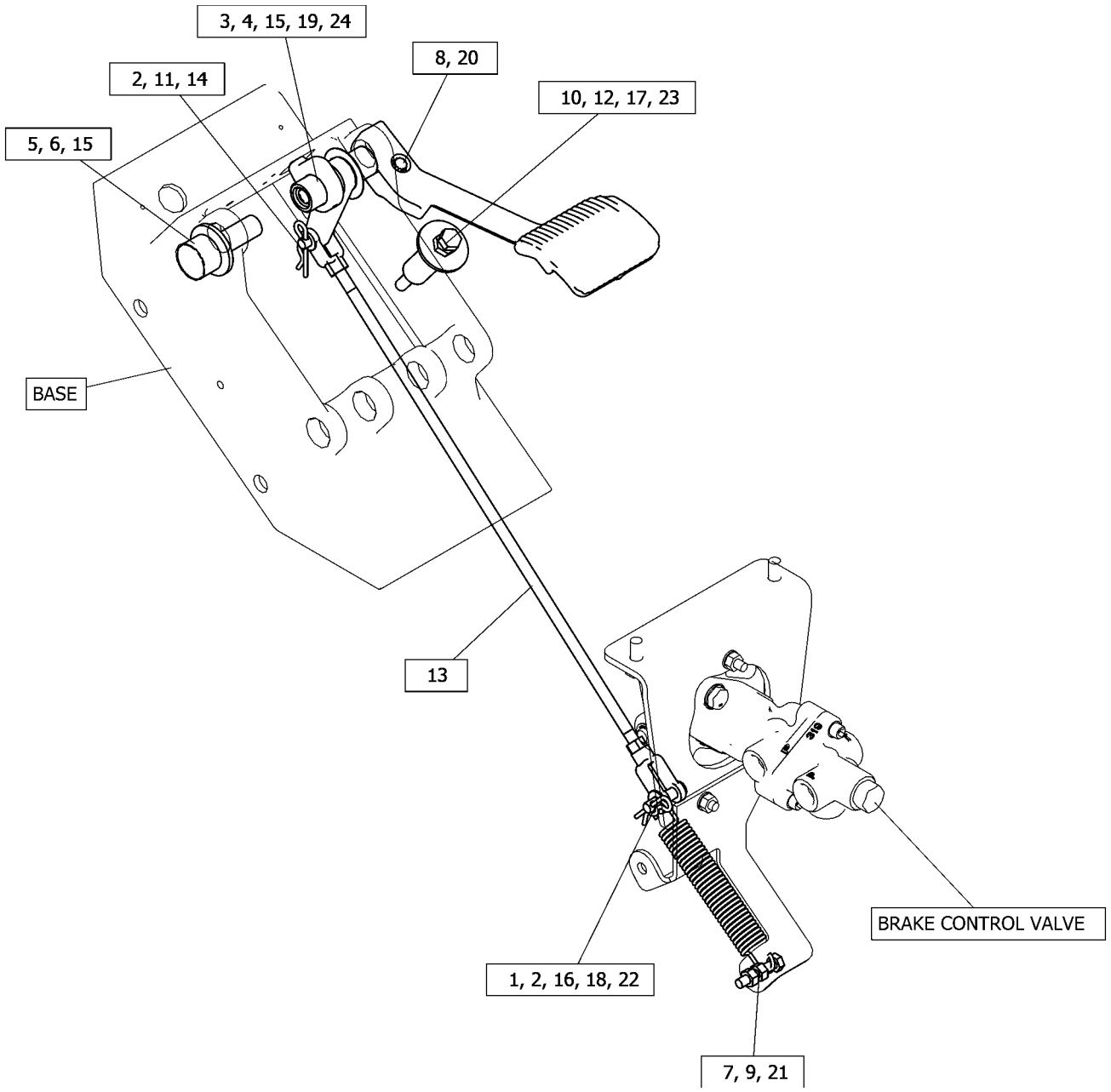

GRAPHIC #1 <END> g06357703

453-2908 CONTROL GP-HYDRAULIC LOCKOUT

S/N: W921-UP

SMCS-5001 **i07561539**

NOTE	REF NO	GRAPHIC REF	PART NUMBER	QTY	PART NAME 1 2 3 4 5 6 (PRODUCT LEVEL)	SEE PAGE
	1	1	**107-5014**	4	KNOB	
	2	1	**152-5430**	4	BLOCK	
	3	1	**152-5431**	12	COLLAR	
	4	1	**512-5914**	2	PLATE AS	
					(EACH INCLUDES)	
		1	**4F-6123**	2	SPRING	
BM	5	1	**095-1260**	12	SETSCREW-SOCKET (M6X1X6-MM)	
M	6	1	**9X-2043**	4	SCREW-TRUSS HEAD (M6X1X14-MM)	

B - USE AS REQUIRED
M - METRIC PART

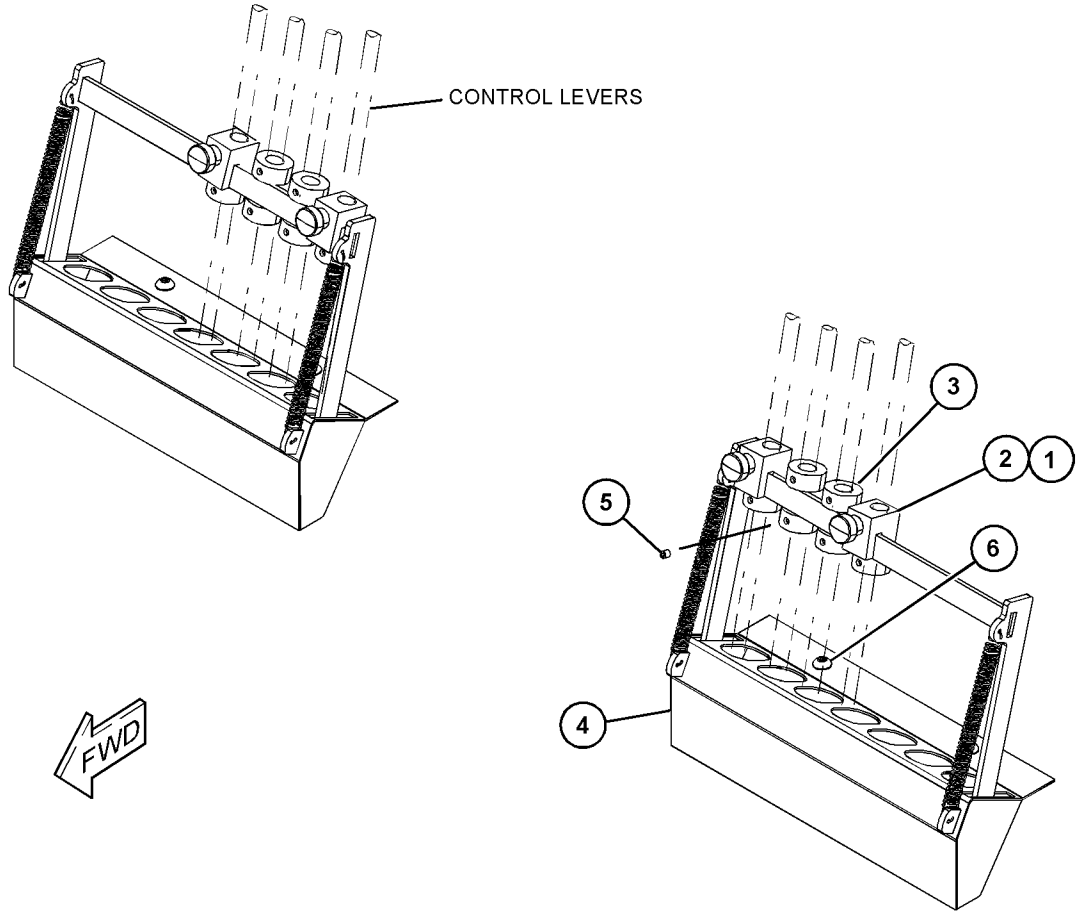

GRAPHIC #1 <END> g03734146

7I-4718 CONTROL GP-STEERING

S/N: W921-UP

PART OF 526-2236 CAB AR

SMCS-4309, 4310, 4338, 4343 **i07622922**

NOTE	REF NO	GRAPHIC REF	PART NUMBER	QTY	PART NAME 1 2 3 4 5 6 (PRODUCT LEVEL)	SEE PAGE
J	1	1	**222-3769**	1	PUMP GP-METERING (HMU)	
	2	1	**384-5820**	1	WHEEL AS	
	3	1	**144-6695**	1	NUT (13/16-20-THD)	
M	4	1	**118-9573**	4	BOLT-12 POINT HEAD (M10X1.5X35-MM)	
					AVAILABLE REPAIR KIT(S):	
J			**227-4709**	1	KIT-SEAL (HMU)	
					(INCLUDES SEALS)	

J - KIT MARKED J AVAILABLE FOR PART MARKED J
M - METRIC PART

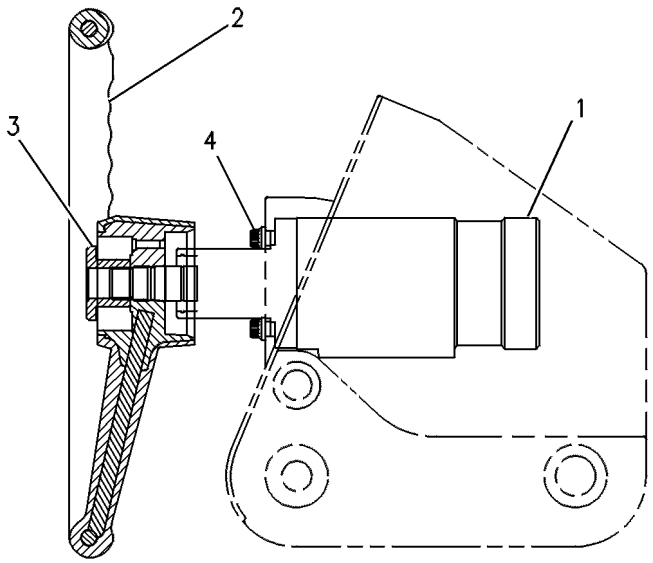

GRAPHIC #1 <END> g00108618

437-0691 COVER AS

S/N: W921-UP

SMCS-7301 **i07561544**

NOTE	REF NO	GRAPHIC REF	PART NUMBER	QTY	PART NAME 1 2 3 4 5 6 (PRODUCT LEVEL)	SEE PAGE
	1	1	**512-9019**	2	PLATE	
M	2	1	**9X-2043**	4	SCREW-TRUSS HEAD (M6X1X14-MM)	

M - METRIC PART

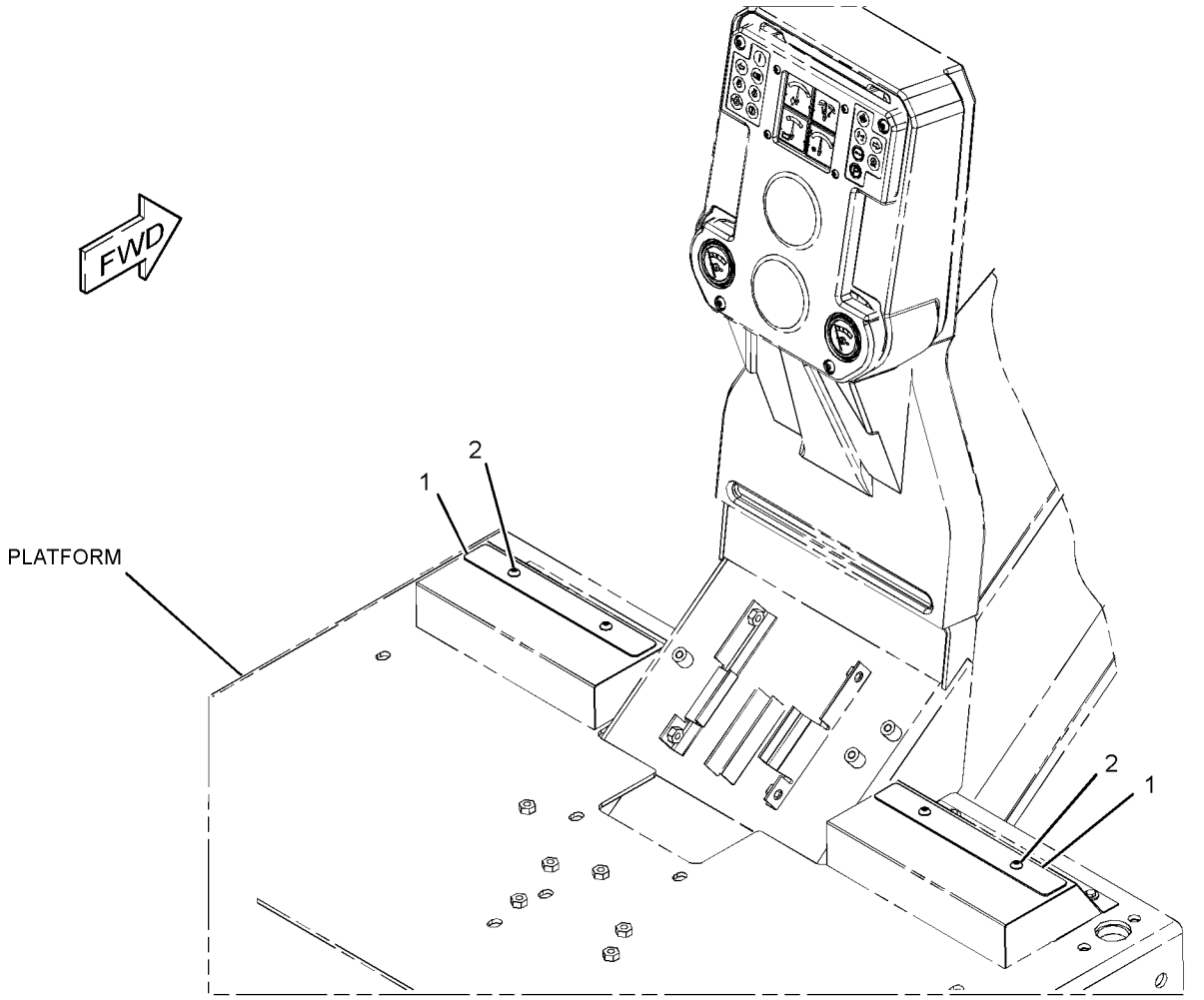

GRAPHIC #1 <END> g03733920

548-6725 COVER GP-CAB

S/N: W921-UP

PART OF 537-5611, 537-5612 CAB AR

SMCS-7301 **i07576468**

NOTE	REF NO	GRAPHIC REF	PART NUMBER	QTY	PART NAME 1 2 3 4 5 6 (PRODUCT LEVEL)	SEE PAGE
	1	1	**5P-7803**	2	PLUG-BUTTON	
	2	1	**131-5171**	2	CLIP	
	3	1	**228-6089**	2	PLUG (ROCKER SWITCH)	
Y	4	1	*275-7764*	1	SWITCH GP-WIPER (24-VOLT, INTERMITTENT) (CAB)	214
	5	1	**533-1072**	1	PLATE	
	6	1	**6V-0292**	1	PLUG	
	7	1	**6V-3928**	2	PLUG-BUTTON	
M	8	1	**8T-4138**	2	BOLT (M6X1X20-MM)	
	9	1	**8X-2663**	1	GASKET	
M	10	1	**9X-2043**	4	SCREW-TRUSS HEAD (M6X1X14-MM)	

M - METRIC PART
Y - SEPARATE ILLUSTRATION

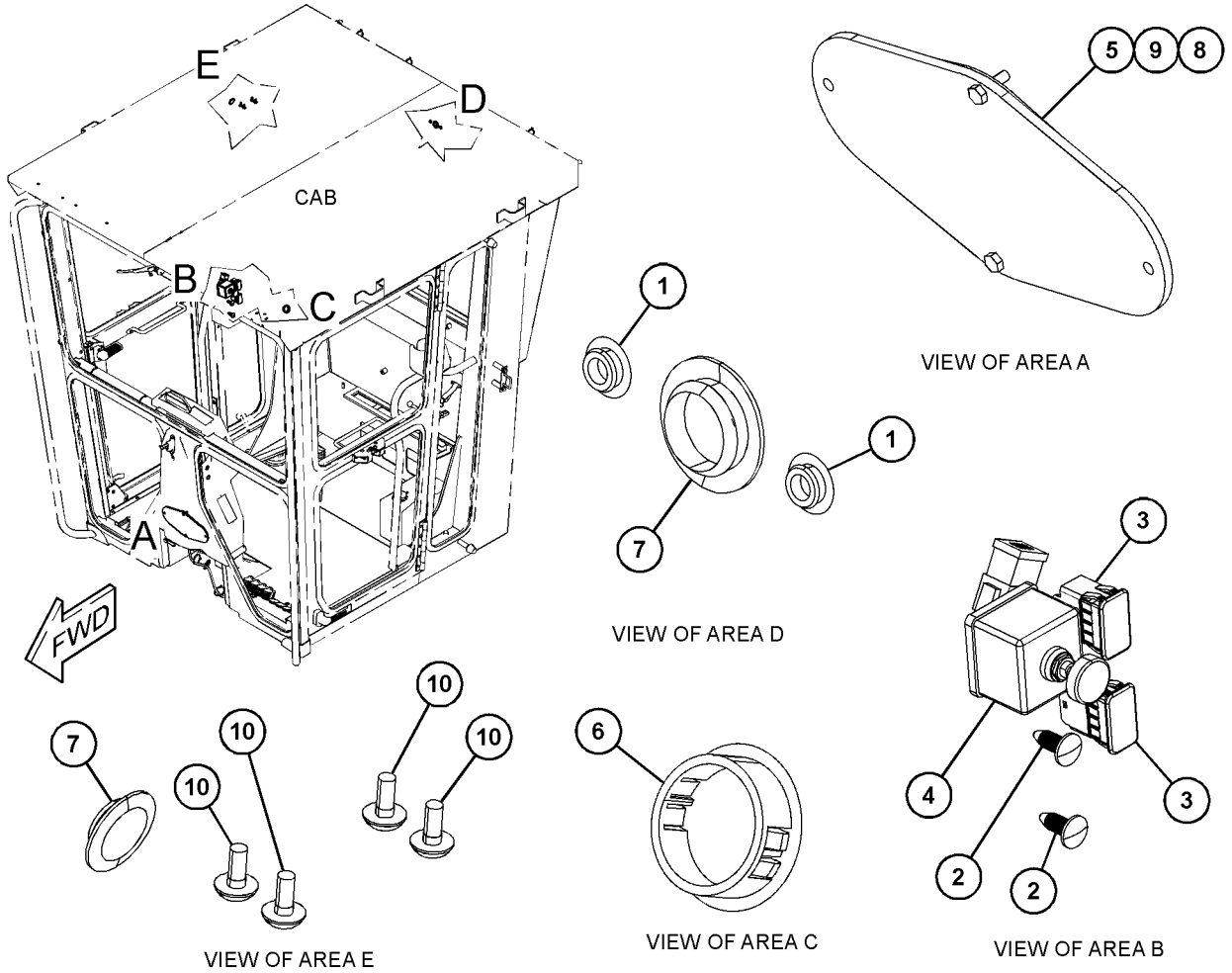

GRAPHIC #1 <END> g06372944

518-3015 DISPLAY GP-CAMERA—WORK AREA VISUAL SYSTEM

S/N: W921-UP

PART OF 533-6223 CAMERA AR

SMCS-7347 **i07581656**

NOTE	REF NO	GRAPHIC REF	PART NUMBER	QTY	PART NAME 1 2 3 4 5 6 (PRODUCT LEVEL)	SEE PAGE
Y	1	1	**464-6047**	1	MODULE GP-DISPLAY (WORK AREA VISUAL SYSTEM)	564
	2	1	**518-3014**	1	BRACKET	
	3	1	**351-2625**	1	WASHER-HARD (6.6X16X10-MM THK)	
M	4	1	**3E-8020**	1	SCREW-TRUSS HEAD (M6X1X25-MM)	
	5	1	**7K-1181**	2	STRAP-CABLE	
M	6	1	**8T-2226**	4	SCREW-MACHINE (M5X0.8X10-MM)	
	7	1	**9X-8256**	4	WASHER (6.6X12X2-MM THK)	

M - METRIC PART
Y - SEPARATE ILLUSTRATION

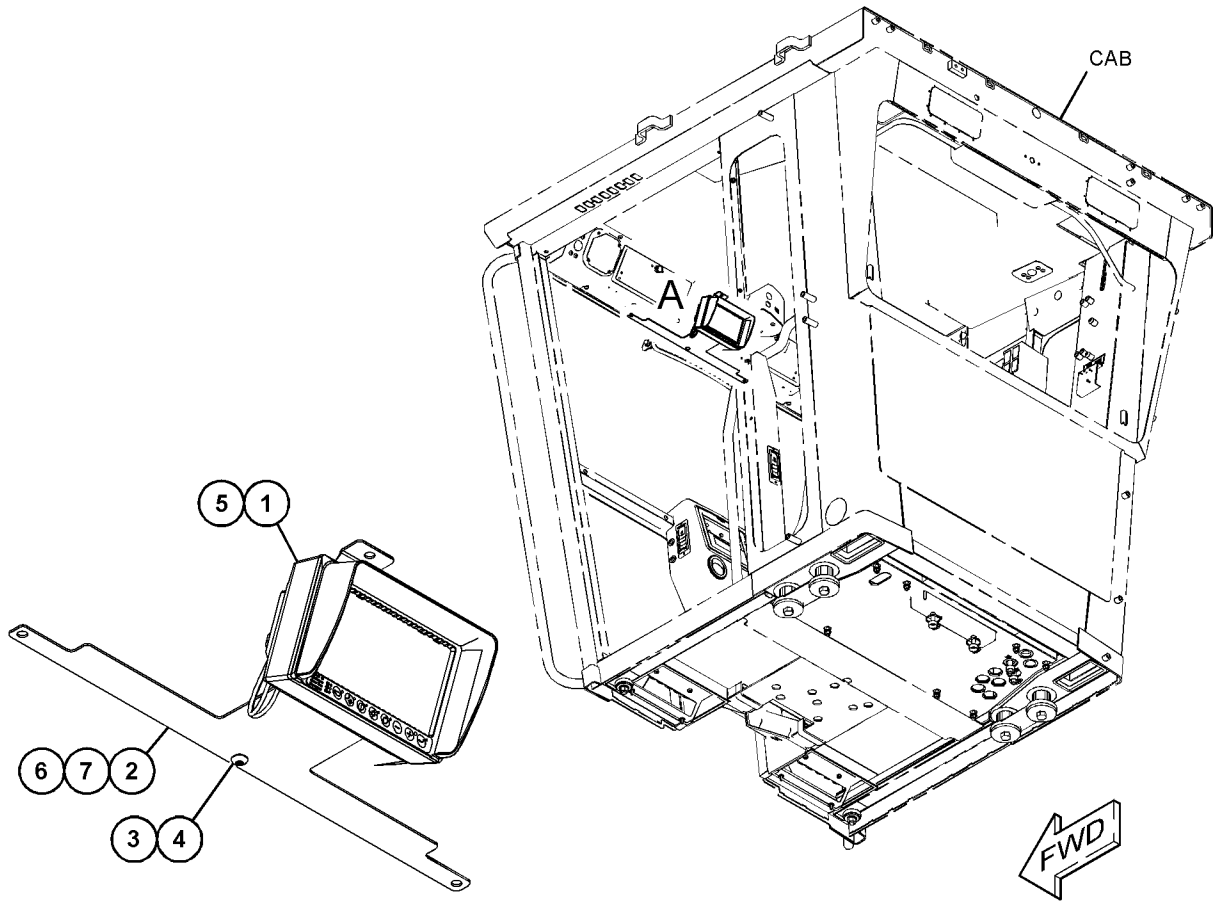

VIEW OF AREA A

(VIEWED FROM BOTTOM)

GRAPHIC #1 <END> g06336391

533-6202 DISPLAY GP-MONITOR

S/N: W921-UP

PART OF 533-6200 ELECTRICAL AR

SMCS-7490 **i07544671**

NOTE	REF NO	GRAPHIC REF	PART NUMBER	QTY	PART NAME 1 2 3 4 5 6 (PRODUCT LEVEL)	SEE PAGE
	1	1	**554-7384**	8	BOLT	
	2	1	**518-9742**	8	WASHER (5.5X13X1.2-MM THK)	
	3	1	**543-1463**	1	DISPLAY GP-MONITOR (INDICATION DISPLAY)	
	3A	1	**364-8277**	1	FILM-IDENTIFICATION (CAT)	
F			**552-3605**	1	SOFTWARE GP-MONITOR (INSTRUMENT PANEL)	
Y	4	1	**565-8383**	1	HARNESS AS-MONITOR (MESSAGE DISPLAY)	163

F - NOT SHOWN
Y - SEPARATE ILLUSTRATION

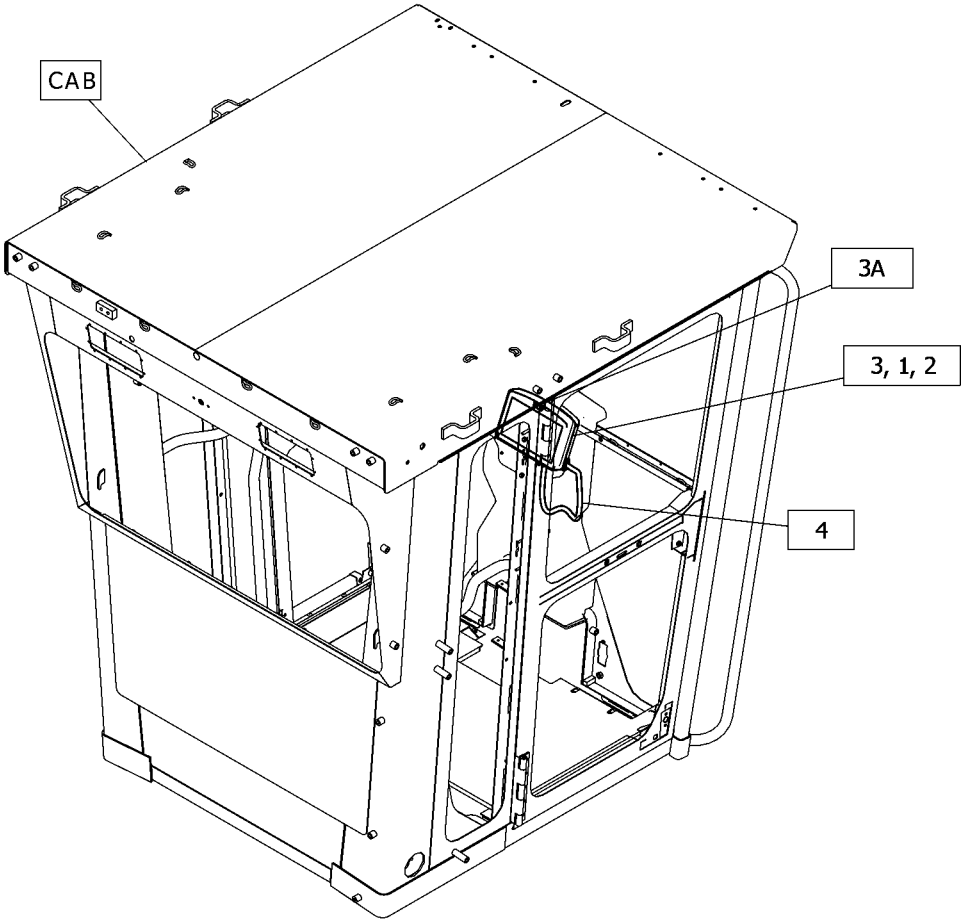

GRAPHIC #1 <END> g06373738

514-7754 DOOR GP-CAB

S/N: W921-UP

PART OF 533-0982, 533-5728 CAB GP

SMCS-7308 **i07576193**

NOTE	REF NO	GRAPHIC REF	PART NUMBER	QTY	PART NAME 1 2 3 4 5 6 (PRODUCT LEVEL)	SEE PAGE
	1	1	**6V-2773**	4	PLUG	
	2	1	**6V-5158**	2	STRIKER AS-BODY	
					(EACH INCLUDES)	
		1	**6V-5165**	1	WASHER-CONICAL	
	3	1	**6V-7636**	8	PIN AS-SPRING	
	4	1	**8Y-4398**	2	LINK-CONNECTING	
	5	1	**8Y-4399**	1	LATCH AS-DOOR	
	6	1	**8Y-4400**	1	LATCH AS-DOOR	
	7	1	**8Y-4401**	2	HANDLE AS (INSIDE)	
	8	1	**8Y-4619**	2	HANDLE AS (OUTSIDE)	
	9	1	**8Y-4620**	2	LINK-CONNECTING	
	10	1	*8Y-4801*	2	LOCK AS-CYLINDER	
					(EACH INCLUDES)	
J		1	**226-0295**	1	LOCK AS	
		1	**226-0342**	1	CAM	
	11	1	**106-6553**	4	BUMPER-CONICAL	
	12	1	**107-6813**	2	PLATE AS	
	13	1	**107-9641**	2	PLATE AS	
	14	1	**108-5949**	1	LATCH AS (LH)	
	15	1	**108-5950**	1	LATCH AS	
	16	1	**108-5951**	1	LINK (LH)	
	17	1	**108-5952**	1	LINK (RH)	
	18	1	**114-9190**	2	SEAL	
	19	1	**124-8843**	2	PLATE AS	
	20	1	**126-4966**	2	PLATE	
	21	1	**128-0037**	2	KNOB-BALL	
	22	1	**566-7104**	2	LINK (RELEASE)	
	23	1	**199-2712**	2	HANDLE	
	28	1	**1H-3338**	2	LOCKWASHER	
M	29	1	**344-5675**	4	NUT (M10X1.5-THD)	
M	30	1	**3T-0849**	8	BOLT-SOCKET HEAD (M6X1X25-MM)	
	31	1	**5M-3062**	4	BOLT (3/8-16X0.75-IN)	
	32	1	**5P-1075**	4	WASHER-HARD (10.2X22.5X3-MM THK)	
	33	1	**5T-7486**	2	RETAINER-SPRING	
	34	1	**7X-0605**	6	WASHER-HARD (13X28X1.6-MM THK)	
	35	1	**8T-4121**	8	WASHER-HARD (11X21X2.5-MM THK)	
M	36	1	**8T-4136**	4	BOLT (M10X1.5X25-MM)	
M	37	1	**8T-4137**	4	BOLT (M10X1.5X20-MM)	
M	38	1	**8T-4181**	12	BOLT (M6X1X20-MM)	
M	39	1	**8X-4245**	2	BOSS (M6X1X18-MM)	
M	40	1	**9X-2042**	14	SCREW-TRUSS HEAD (M6X1X12-MM)	
M	41	1	**9X-2045**	12	SCREW-TRUSS HEAD (M6X1X20-MM)	
	42	1	**5P-4115**	4	WASHER-HARD (7.2X19X2-MM THK)	
	43	1	**9X-8256**	4	WASHER (6.6X12X2-MM THK)	
E	44	1	**381-3246**		SEAL (120-CM EACH)	
E	45	1	**178-8894**		SEAL (335-CM EACH)	
E	46	1	**381-3245**		SEAL (172-CM EACH)	

514-7754 **DOOR GP-CAB (**contd.**)** **i07576193**

NOTE	REF NO	GRAPHIC REF	PART NUMBER	QTY	PART NAME 1 2 3 4 5 6 (PRODUCT LEVEL)	SEE PAGE

E - ORDER BY THE CENTIMETER
J - REQUIRES CORPORATE KEY
M - METRIC PART

514-7754 **DOOR GP-CAB** (contd.) **i07576193**

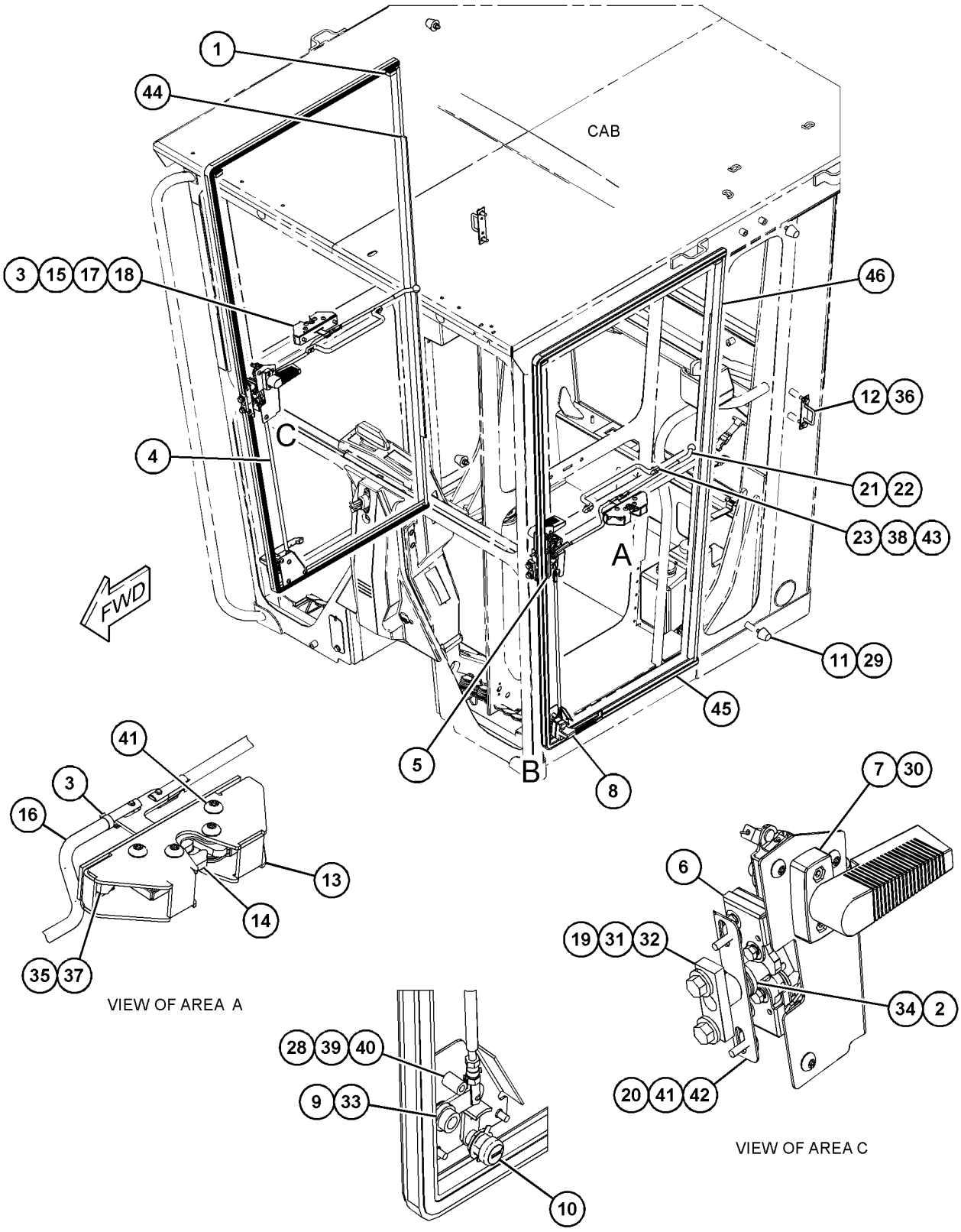

GRAPHIC #1 <END> g06375360

512-5982 DUCT & CONTROL GP–HEATER, AIR CONDITIONER

S/N: W921-UP

PART OF 533-5729, 533-5733 AIR CONDITIONER AR

SMCS-7337, 734D

i07571202

NOTE	REF NO	GRAPHIC REF	PART NUMBER	QTY	PART NAME 1 2 3 4 5 6 (PRODUCT LEVEL)	SEE PAGE
	1	1	**396-2352**	2	LOUVER AS	
	2	1	**422-2152**	6	LOUVER AS-VENT	
	3	1	**512-5983**	1	PANEL AS	
		1	**7K-4201**	2	NUT-SPEED	
		1	**8S-7566**	4	RIVET-POP	
M	4	1	**9X-2043**	2	SCREW-TRUSS HEAD (M6X1X14-MM)	

M - METRIC PART

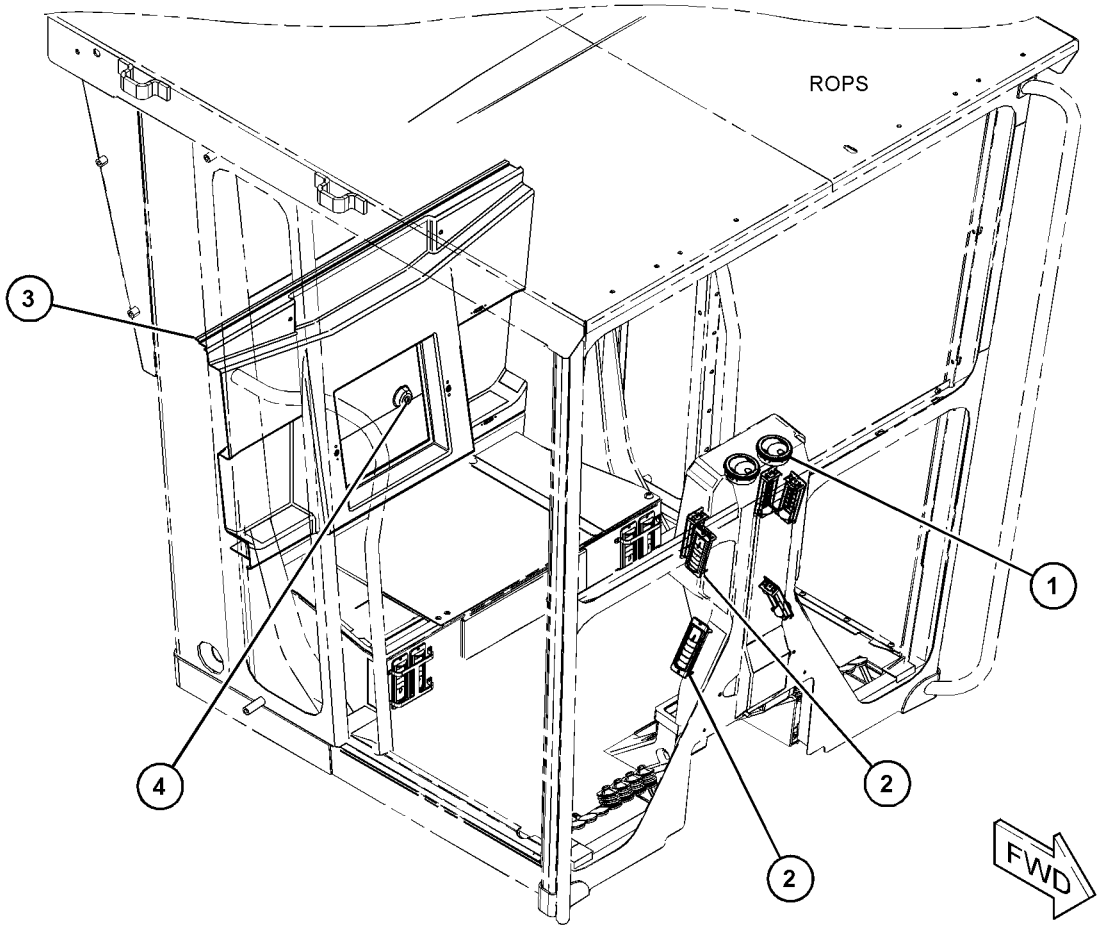

GRAPHIC #1

<END>

g06165516

512-5955 DUCT GP-CAB AIR

S/N: W921-UP

PART OF 533-5729, 533-5733 AIR CONDITIONER AR

SMCS-734D **i07571199**

NOTE	REF NO	GRAPHIC REF	PART NUMBER	QTY	PART NAME 1 2 3 4 5 6 (PRODUCT LEVEL)	SEE PAGE
	1	1	**8X-5102**	2	SEAL	
	2	1	**106-4496**	6	BRACKET AS	
					(EACH INCLUDES)	
M		1	**6V-9632**	1	NUT-WELD (M6X1-THD)	
	3	1	**422-2152**	4	LOUVER AS-VENT	
	4	1	**512-5956**	1	DUCT	
	5	1	**512-5957**	1	DUCT	
	6	1	**104-2091**	8	SCREW-FLAT HEAD (6-20X0.5-IN)	
M	7	1	**5C-2890**	2	NUT (M6X1-THD)	
	8	1	**5P-4115**	4	WASHER-HARD (7.2X19X2-MM THK)	
M	9	1	**9X-2043**	6	SCREW-TRUSS HEAD (M6X1X14-MM)	
M	10	1	**9X-2045**	2	SCREW-TRUSS HEAD (M6X1X20-MM)	

M - METRIC PART

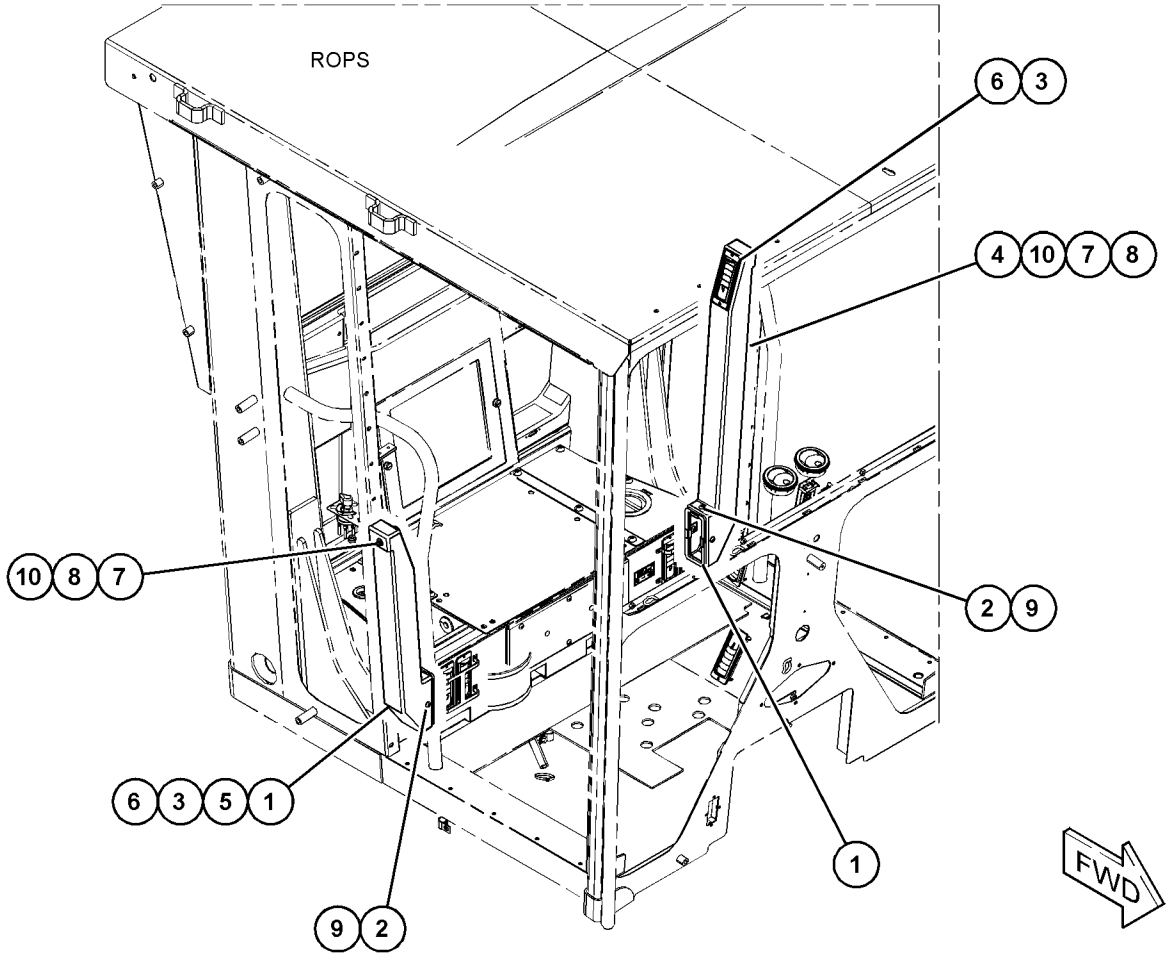

GRAPHIC #1 <END> g06165050

170-4820 FAN GP-CIRCULATING—DEFROSTER, REAR

S/N: W921-UP
24-VOLT
PART OF 501-4742 FAN GP-CIRCULATING

SMCS-7316 **i07576962**

NOTE	REF NO	GRAPHIC REF	PART NUMBER	QTY	PART NAME 1 2 3 4 5 6 (PRODUCT LEVEL)	SEE PAGE
					(NO SERVICED PARTS)	

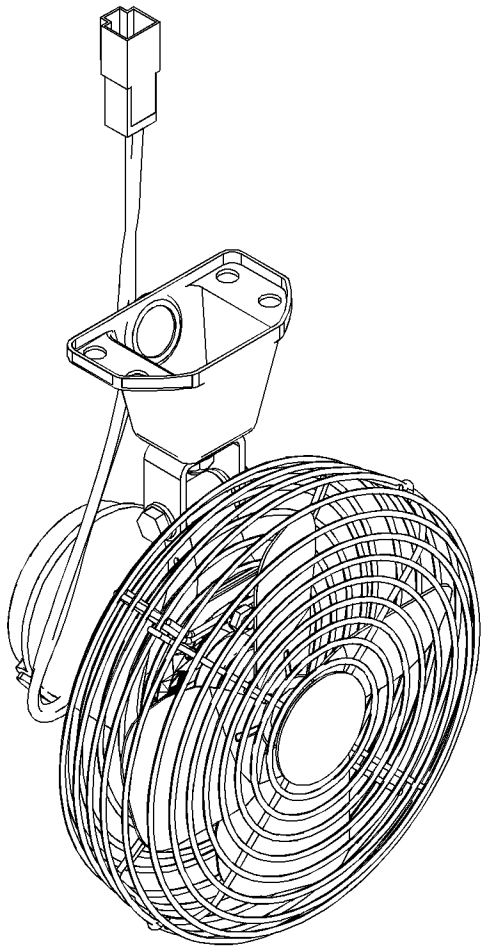

GRAPHIC #1 <END> g03746532

170-5334 FAN GP-CIRCULATING—FRONT DEFROSTER

S/N: W921-UP
24-VOLT
PART OF 501-4741 FAN GP-CIRCULATING

SMCS-7316 **i07576942**

NOTE	REF NO	GRAPHIC REF	PART NUMBER	QTY	PART NAME 1 2 3 4 5 6 (PRODUCT LEVEL)	SEE PAGE
	1	1	**1B-2713**	1	BOLT (1/4-20X1.75-IN)	
	2	1	**3D-8747**	1	BRACKET	
	3	1	**383-7644**	1	FAN AS (4-BLADE)	
	4	1	**3D-8749**	1	GUARD	
	5	1	**3T-6774**	1	GROMMET	
	6	1	**9X-9689**	1	BASE-FAN	
	7	1	**135-1979**	1	BRACKET	
Y	8	1	**436-9180**	1	MOTOR GP-ELECTRIC (CIRCULATING FAN)	200
	9	1	**031-4155**	1	LOCKNUT (5/16-18-THD)	
	10	1	**1M-1230**	2	NUT-LOCKING (10-32-THD)	
	11	1	**2D-6235**	1	LOCKNUT (1/4-20-THD)	
	12	1	**3D-8752**	1	LOCKNUT (5/16-24-THD)	
	13	1	**4M-0061**	1	BOLT (5/16-18X0.75-IN)	
	14	1	**5P-0537**	4	WASHER-HARD (7.2X14.5X2-MM THK)	
	15	1	**6G-5987**	1	BRACKET	
	16	1	**7L-8316**	1	SETSCREW-SOCKET (10-32X2.54-IN)	
	17	1	**7T-0582**	1	BOLT	
	18	1	**9M-1974**	3	WASHER-HARD (8.8X16X2-MM THK)	
	19	1	**9T-5241**	2	WASHER (9.53X18X1-MM THK)	

Y - SEPARATE ILLUSTRATION

170-5334 **FAN GP-CIRCULATING (**contd.**)** **i07576942**

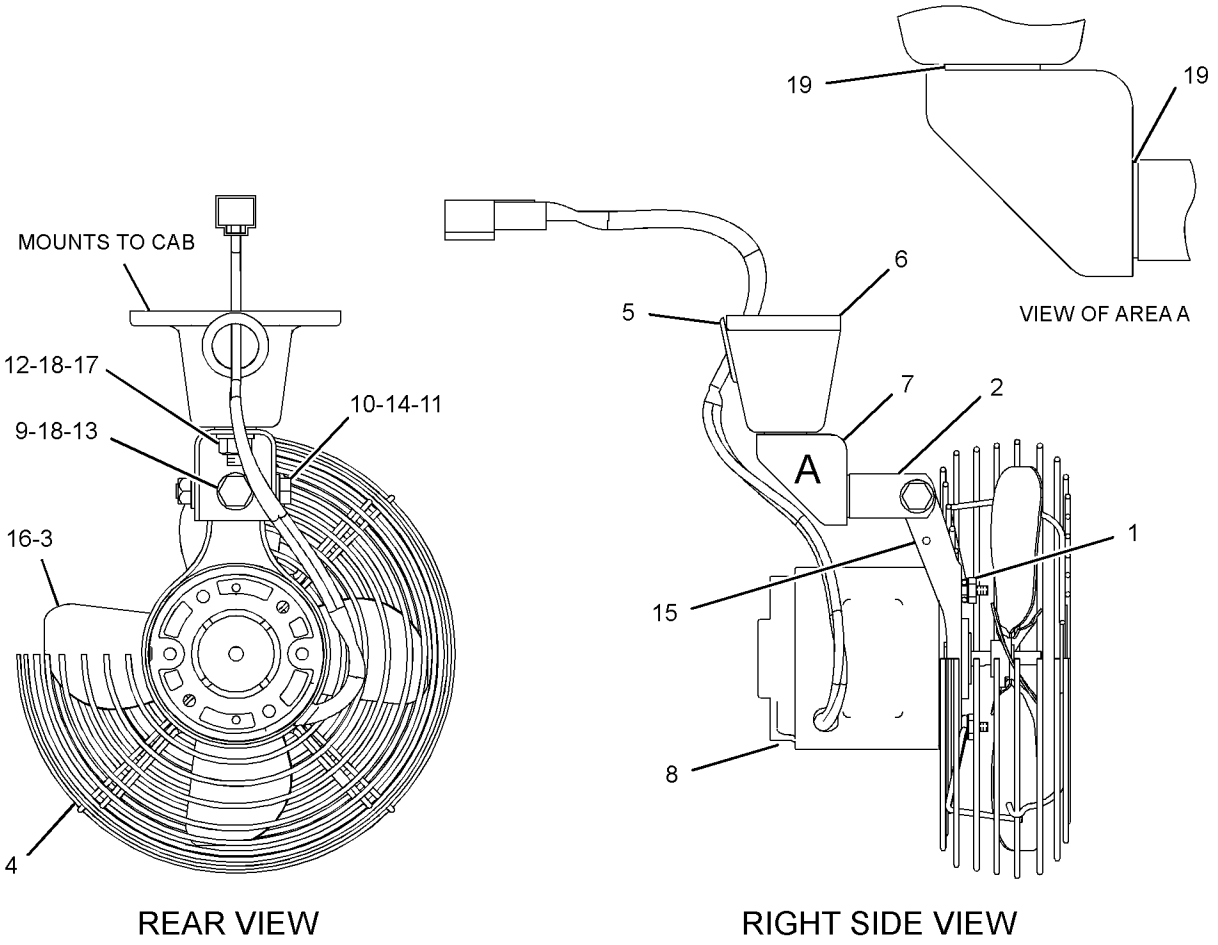

GRAPHIC #1 <END> g03634976

501-4741 FAN GP-CIRCULATING–DEFROSTER, FRONT

S/N: W921-UP

PART OF 537-5613, 537-5614 CAB AR

SMCS-7316 **i07576935**

NOTE	REF NO	GRAPHIC REF	PART NUMBER	QTY	PART NAME 1 2 3 4 5 6 (PRODUCT LEVEL)	SEE PAGE
	1	1	**7T-4003**	1	RESISTOR	
Y	2	1	**170-5334**	1	FAN GP-CIRCULATING (FRONT DEFROSTER)	530
	3	1	**367-5211**	1	SWITCH AS-ROCKER (24-VOLT) (CIRCULATING FAN)	
M	4	1	**9X-1046**	2	SCREW (M4X0.7X18-MM)	

M - METRIC PART
Y - SEPARATE ILLUSTRATION

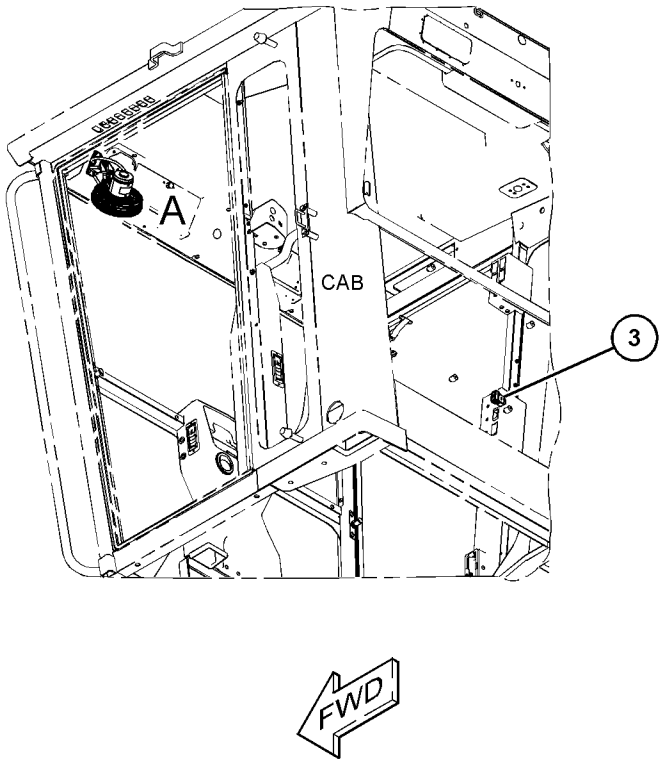

(VIEWED FROM BOTTOM)

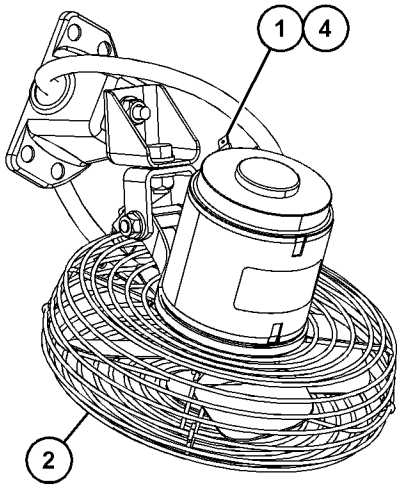

VIEW OF AREA A

GRAPHIC #1 <END> g06336023

501-4742 FAN GP-CIRCULATING—DEFROSTER, REAR

S/N: W921-UP

PART OF 537-5613, 537-5614 CAB AR

SMCS-7316 **i07576959**

NOTE	REF NO	GRAPHIC REF	PART NUMBER	QTY	PART NAME 1 2 3 4 5 6 (PRODUCT LEVEL)	SEE PAGE
	1	1	**7T-4003**	1	RESISTOR	
Y	2	1	*170-4820*	1	FAN GP-CIRCULATING (24-VOLT) (DEFROSTER, REAR)	529
	3	1	**367-5211**	1	SWITCH AS-ROCKER (24-VOLT) (CIRCULATING FAN)	
	4	1	**5P-8525**	1	GROMMET	
M	5	1	**9X-1046**	2	SCREW (M4X0.7X18-MM)	
M	6	1	**9X-2045**	4	SCREW-TRUSS HEAD (M6X1X20-MM)	

M - METRIC PART
Y - SEPARATE ILLUSTRATION

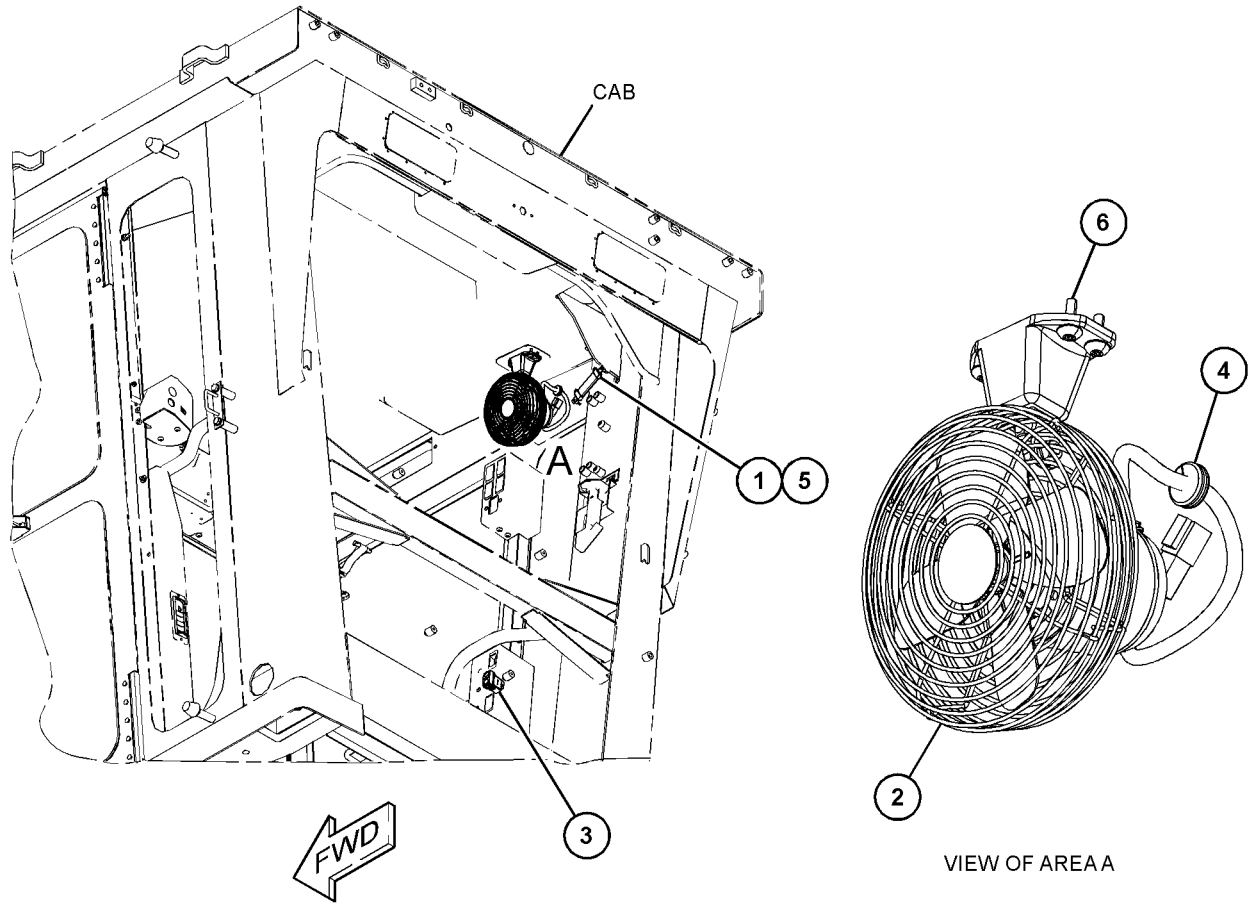

(VIEWED FROM BOTTOM)

VIEW OF AREA A

GRAPHIC #1 <END> g06336083

518-3689 FILTER GP-CAB AIR

S/N: W921-UP

PART OF 533-5729, 533-5733 AIR CONDITIONER AR

SMCS-7342 **i07571245**

NOTE	REF NO	GRAPHIC REF	PART NUMBER	QTY	PART NAME 1 2 3 4 5 6 (PRODUCT LEVEL)	SEE PAGE
	1	1	**7T-7358**	1	FILTER ELEMENT AS-CAB AIR	
	2	1	**112-9555**	4	SPRING-FILTER	
	3	1	*231-4487*	2	FILTER ELEMENT AS-CAB AIR	
					(EACH INCLUDES)	
		1	**231-4486**	1	FILTER ELEMENT AS-CAB AIR	
		1	**232-1732**	1	FILTER ELEMENT AS-CAB AIR	
	4	1	**518-3690**	1	PLATE AS	
		1	**7K-4199**	2	SCREW-THUMB	
		1	**131-5492**	2	RETAINER-CAPTIVE	
		1	**512-9032**	1	COVER	

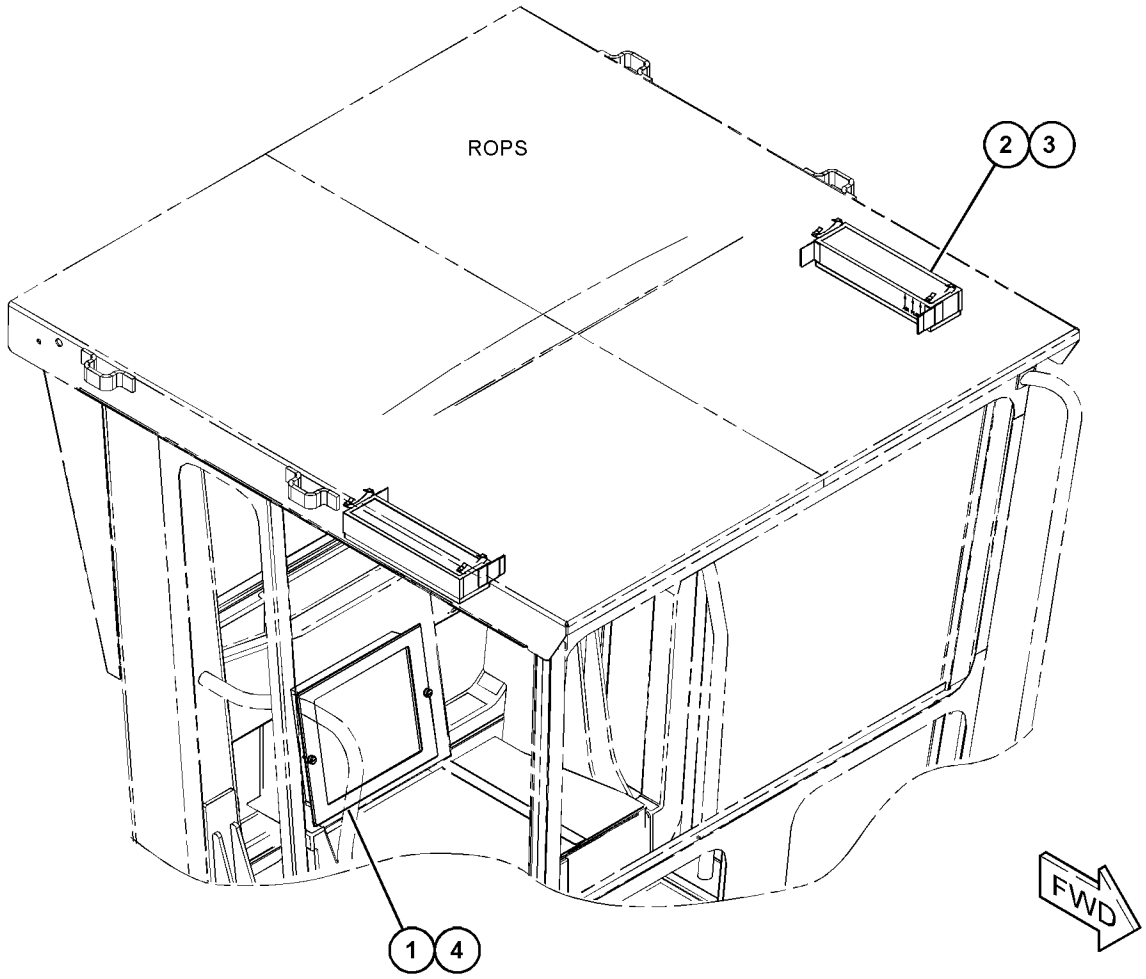

GRAPHIC #1 <END> g06168837

538-6096 HARDWARE GP-MOUNTING

S/N: W921-UP

PART OF 534-6698 POWER TRAIN AR

SMCS-7553 **i07545983**

NOTE	REF NO	GRAPHIC REF	PART NUMBER	QTY	PART NAME 1 2 3 4 5 6 (PRODUCT LEVEL)	SEE PAGE
M	1	1	**147-5112**	12	BOLT (M24X3X150-MM)	
	2	1	**267-3507**	60	WASHER-HARD (26X47X12-MM THK)	
	3	1	**552-8898**	2	BLOCK	
	4	1	**552-8899**	4	BLOCK	
	5	1	**552-8901**	2	BOSS	
M	6	1	**7X-2575**	60	BOLT (M24X3X60-MM)	

M - METRIC PART

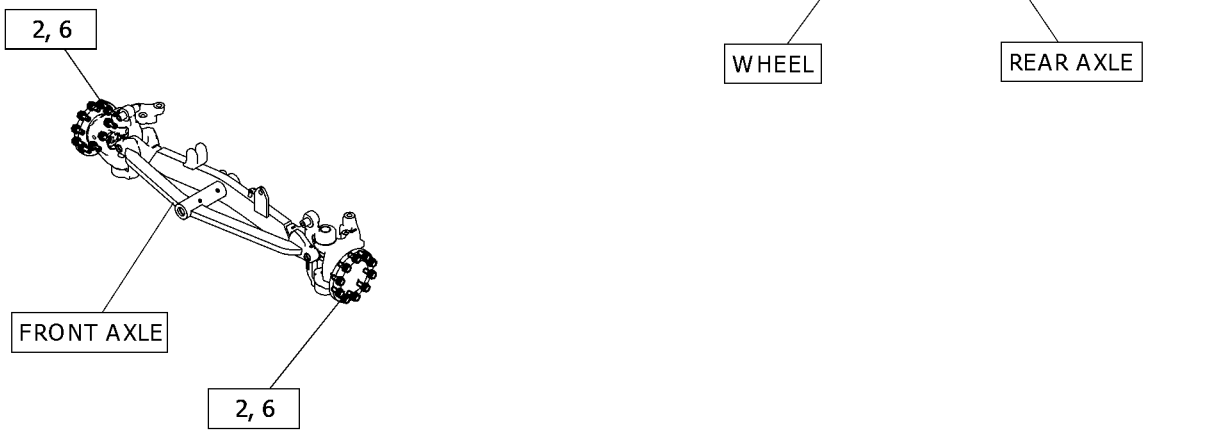

GRAPHIC #1 <END> g06376359

539-1582 HARDWARE GP-MOUNTING

S/N: W921-UP

PART OF 533-4647 TRANSMISSION AR

SMCS-7553 **i07592574**

NOTE	REF NO	GRAPHIC REF	PART NUMBER	QTY	PART NAME 1 2 3 4 5 6 (PRODUCT LEVEL)	SEE PAGE
	1	1	**518-4417**	12	WASHER	
M	2	1	**521-2260**	12	BOLT (M10X1.5X30-MM)	

M - METRIC PART

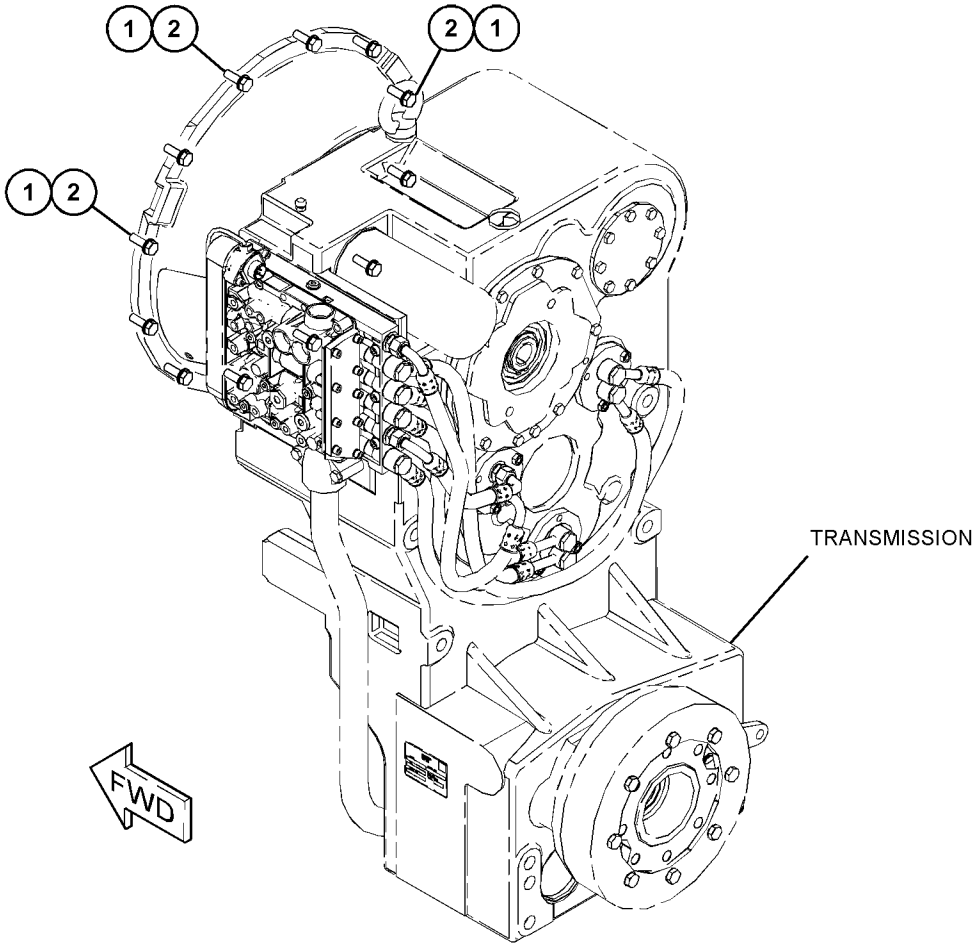

GRAPHIC #1 <END> g06375114

518-3686 HEATER GP-CAB

S/N: W921-UP

PART OF 533-5730, 533-5734 HEATER GP-CAB

SMCS-7304 **i07571052**

NOTE	REF NO	GRAPHIC REF	PART NUMBER	QTY	PART NAME 1 2 3 4 5 6 (PRODUCT LEVEL)	SEE PAGE
	1	1	**2V-0099**	1	KNOB-CONTROL (FAN SPEED)	
	1A	1	**2V-0099**	1	KNOB-CONTROL (TEMPERATURE)	
	2	2	**3E-0400**	2	WHEEL AS-BLOWER	
					(EACH INCLUDES)	
		2	**037-4838**	1	CLAMP	
	3	1	**3E-3890**	1	FILM-IDENTIFICATION (FAN SPEED, TEMPERATURE)	
	4	2	**3S-2093**	1	STRAP-CABLE	
	5	1	**5P-7803**	2	PLUG-BUTTON	
	6	1	**6T-5345**	1	BUSHING-TERMINAL	
	7	2	**6T-6708**	2	WASHER (7X28.6X4.1-MM THK)	
	8	1	**8C-3756**	1	FILM-IDENTIFICATION (AIR CONDITIONER)	
	9	2	**8C-4586**	2	CLAMP	
	10	1	**100-3245**	1	LAMP (24-VOLT, 0.17-AMPERE)	
	11	2	**8P-5141**	2	PLATE-ORIFICE	
	12	2	**9G-1950**	1	RESISTOR	
	13	1	**123-4618**	1	COVER	
	14	1	**123-4701**	1	SEAL	
	15	2	**124-1431**	1	BRACKET	
	16	1	**124-1432**	1	HOUSING AS	
		1	**7T-1099**	1	LINK	
		1	**8P-5141**	2	PLATE-ORIFICE	
	17	2	**124-3137**	1	BRACKET	
	18	2	**124-3138**	1	SEAL	
	19	1	**124-9006**	1	SHAFT	
	20	1	**125-0439**	1	GASKET	
	21	2	**125-0442**	1	PLATE	
	22	1	**129-4935**	1	SEAL	
	23	2	**142-4940**	1	PLATE AS	
	24	1	**191-0027**	1	PAD	
	25	2	**204-4376**	1	CAP-PROTECTIVE	
	26	2	**238-0415**	1	VALVE AS-WATER	
	27	2	**238-0417**	1	CORE AS-HEATER	
	28	2	**385-0244**	1	MOTOR AS-BLOWER (27-VOLT, A/C, HEATER)	
		2	**9W-0852**	2	PIN-CONNECTOR (14-GA TO 16-GA)	
		2	**102-8802**	1	KIT-RECEPTACLE (2-PIN)	
					(INCLUDES RECEPTACLE AS & WEDGE)	
Y	29	1	**417-6161**	1	HARNESS AS-HEATER & AIR COND	160
	30	1	**423-6697**	1	SHAFT AS	
		1	**4L-5966**	2	SETSCREW (10-32X0.25-IN)	
	31	1	**518-9610**	1	SUPPORT AS	
	32	1	**518-9611**	1	COVER	
	33	1	**518-9613**	1	COVER	
	34	1	**518-9614**	1	COVER	
	35	1	**518-9616**	1	COVER AS	
M	36	2	**129-3178**	4	LOCKNUT (M6X1-THD)	
	37	2	**130-5300**	1	CLIP	
	38	2	**248-6772**	8	SCREW-MACHINE (8-16X7.75-IN)	
	39	1	**2P-4339**	1	NUT-JAM (7/16-28-THD)	

518-3686 **HEATER GP-CAB (**contd.**)** **i07571052**

NOTE	REF NO	GRAPHIC REF	PART NUMBER	QTY	PART NAME 1 2 3 4 5 6 (PRODUCT LEVEL)	SEE PAGE
	40	1	**3H-2900**	1	GROMMET	
	41	2	**4M-6582**	1	SEAL-O-RING	
M	42	2	**5C-2890**	7	NUT (M6X1-THD)	
	43	1,2	**5P-1075**	13	WASHER-HARD (10.2X22.5X3-MM THK)	
	44	1	**5P-9135**	1	GROMMET	
	45	1	**6P-3236**	1	SWITCH AS-ROTARY (FAN SPEED)	
		1	**6V-8362**	5	SCREW-MACHINE (8-32X0.31-IN)	
		1	**9B-7233**	5	LOCKWASHER	
	46	2	**6V-1668**	2	WASHER (6.5X29.1X3-MM THK)	
M	47	2	**6V-7728**	1	BOLT (M6X1X45-MM)	
	48	1,2	**6V-8801**	13	NUT (3/8-16-THD)	
M	49	2	**7X-0490**	1	BOLT (M6X1X200-MM)	
M	50	2	**8T-4171**	2	BOLT (M6X1X12-MM)	
	51	2	**8T-4205**	15	WASHER-HARD (7.2X14.5X2-MM THK)	
	52	2	**9M-8406**	1	CLIP (LOOP)	
M	53	1	**9X-2040**	4	SCREW-TRUSS HEAD (M10X1.5X25-MM)	
M	54	1	**9X-2041**	5	SCREW-TRUSS HEAD (M10X1.5X20-MM)	
M	55	1	**9X-2045**	6	SCREW-TRUSS HEAD (M6X1X20-MM)	
	56	2	**9X-2488**	4	CLAMP-HOSE	
E	57	2	**136-1953**		HOSE (17-CM EACH)	
D	58	2	**5P-5908**		SEAL (0.2-M)	
D	59	1	**5P-5637**		SEAL (0.9-M)	
D	59A	1	**5P-5637**		SEAL (0.5-M EACH)	
D	59B	1	**5P-5637**		SEAL (0.3-M)	
D	59C	1	**5P-5637**		SEAL (1-M)	
E	60	2	**9X-2126**		SEAL (27.1-CM EACH)	
E	60A	1	**9X-2126**		SEAL (31.3-CM)	

D - ORDER BY THE METER
E - ORDER BY THE CENTIMETER
M - METRIC PART
Y - SEPARATE ILLUSTRATION

518-3686 **HEATER GP-CAB** (contd.) **i07571052**

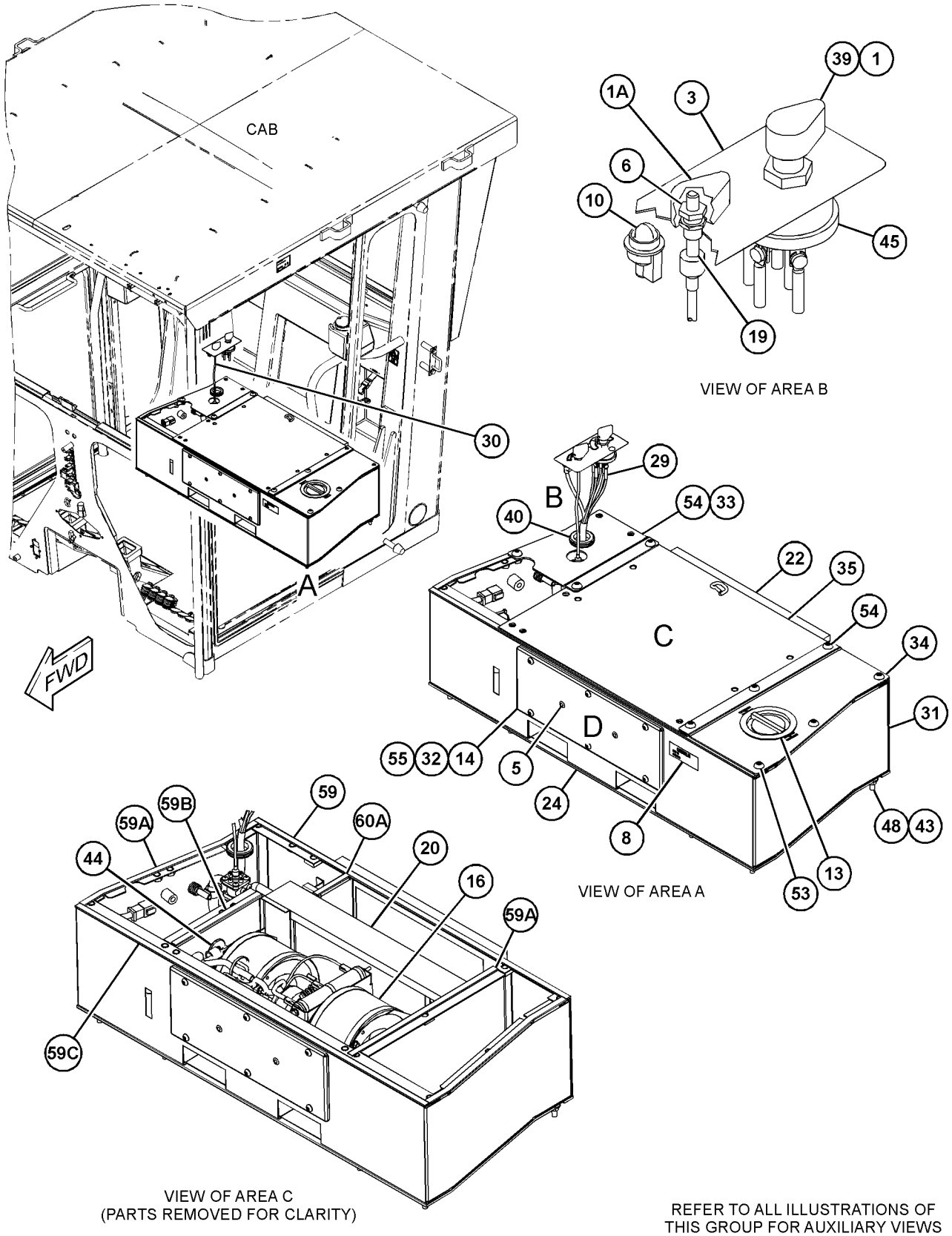

REFER TO ALL ILLUSTRATIONS OF THIS GROUP FOR AUXILIARY VIEWS

GRAPHIC #1

g06169909

518-3686 **HEATER GP-CAB (**contd.**)** **i07571052**

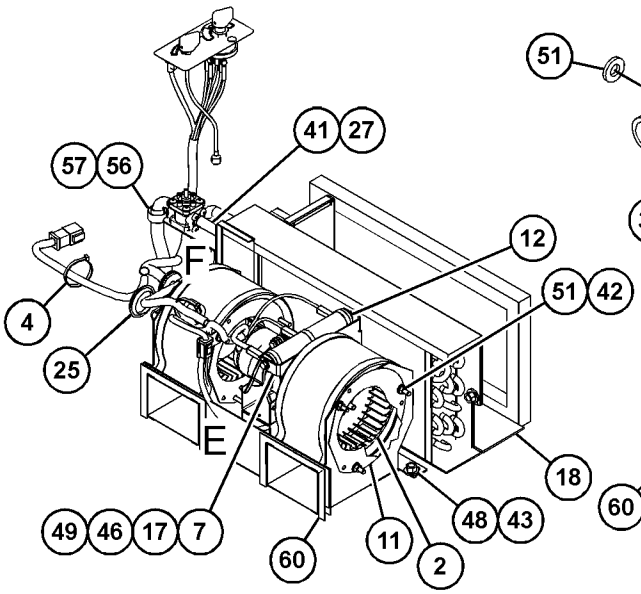

VIEW OF AREA D
(PARTS REMOVED FOR CLARITY)

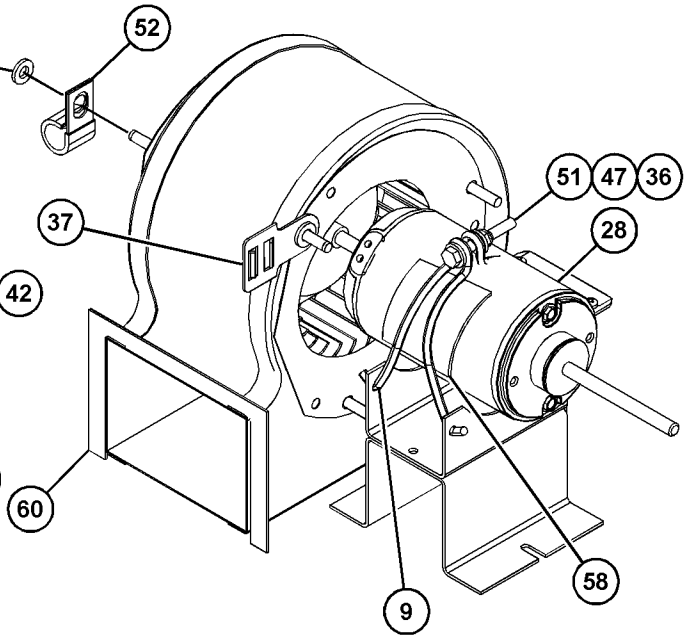

VIEW OF AREA E
(PARTS REMOVED FOR CLARITY)

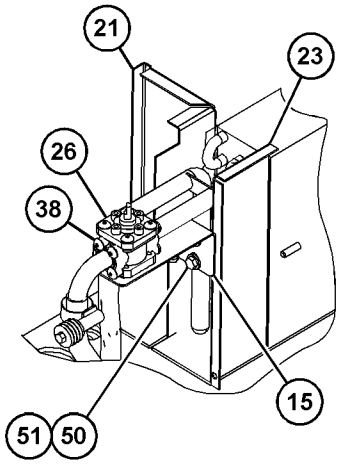

VIEW OF AREA F
(PARTS REMOVED FOR CLARITY) 90°

GRAPHIC #2 <END> g06169127

533-5730 HEATER GP-CAB

S/N: W921-UP

PART OF 537-5617 AIR CONDITIONER AR

SMCS-7304 **i07571047**

NOTE	REF NO	GRAPHIC REF	PART NUMBER	QTY	PART NAME 1 2 3 4 5 6 (PRODUCT LEVEL)	SEE PAGE
	1	1	**9W-1441**	1	FUSE (15-AMPERE) (HEATER)	
	2	1	**512-5954**	1	PANEL	
Y	3	1	*518-3686*	1	HEATER GP-CAB	537
Y	4	1	*518-3687*	1	LOUVER GP-CAB	556
Y	5	1	*533-2329*	1	LINES GP-HEATER	554
	6	1	**104-2091**	12	SCREW-FLAT HEAD (6-20X0.5-IN)	

Y - SEPARATE ILLUSTRATION

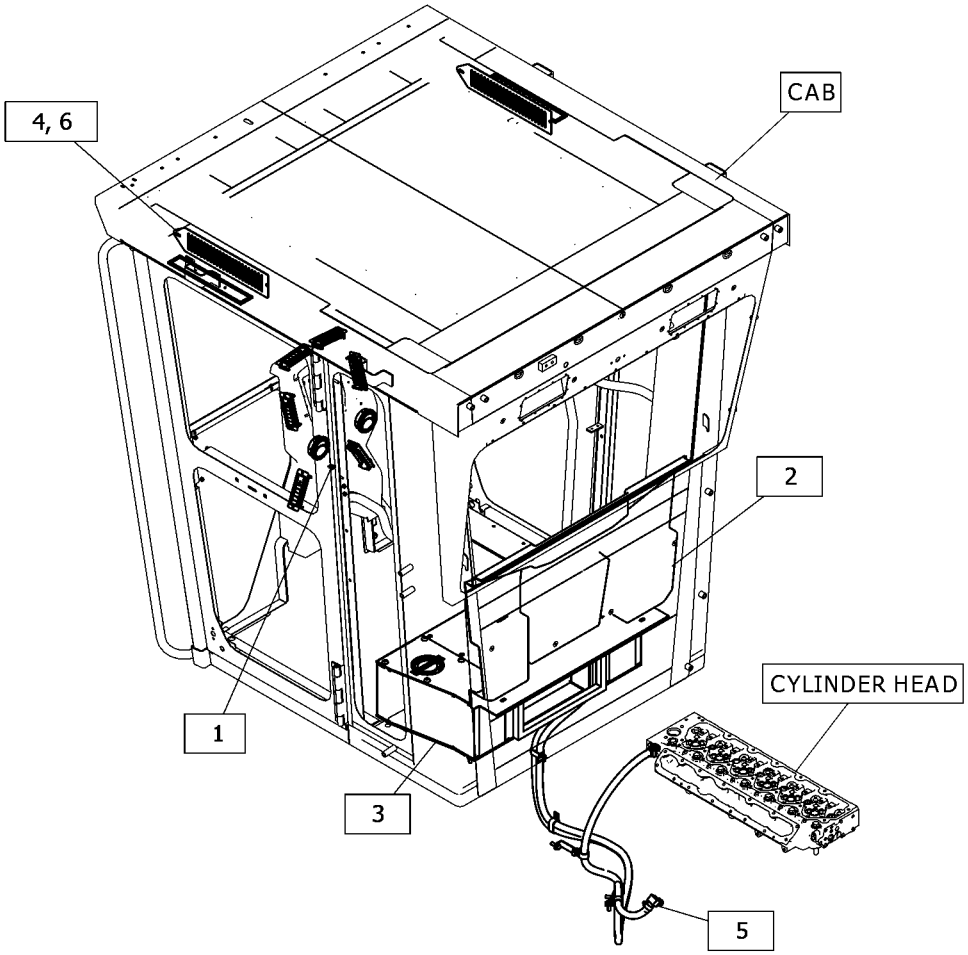

GRAPHIC #1 <END> g06367516

533-5734 HEATER GP-CAB

S/N: W921-UP

PART OF 537-5619 AIR CONDITIONER AR

SMCS-7304 **i07572163**

NOTE	REF NO	GRAPHIC REF	PART NUMBER	QTY	PART NAME 1 2 3 4 5 6 (PRODUCT LEVEL)	SEE PAGE
	1	1	**9W-1441**	1	FUSE (15-AMPERE) (HEATER)	
	2	1	**512-5954**	1	PANEL	
Y	3	1	*518-3686*	1	HEATER GP-CAB	537
Y	4	1	*518-3687*	1	LOUVER GP-CAB	556
Y	5	1	*533-2330*	1	LINES GP-HEATER	555
	6	1	**104-2091**	12	SCREW-FLAT HEAD (6-20X0.5-IN)	

Y - SEPARATE ILLUSTRATION

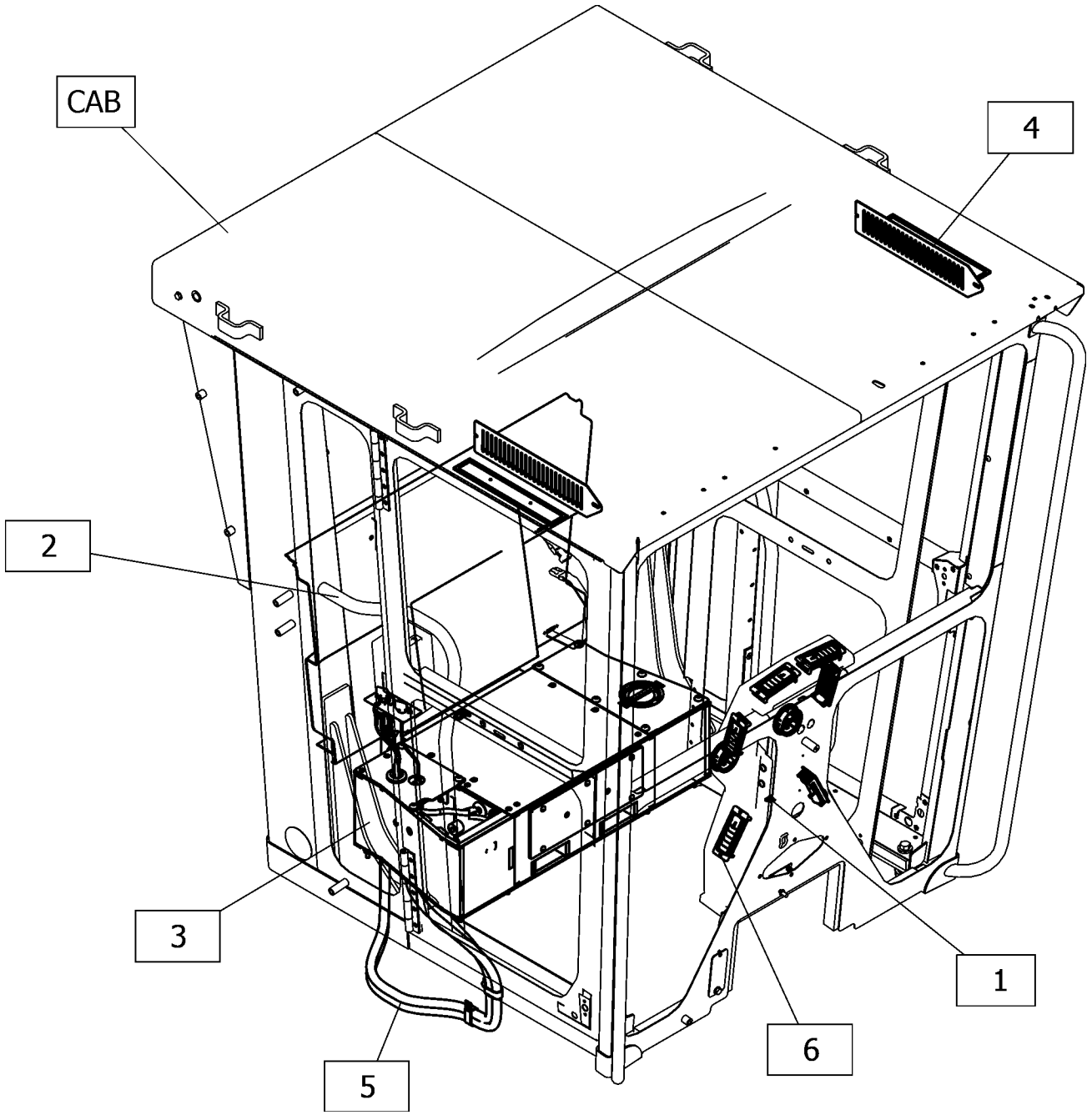

GRAPHIC #1 <END> g06366580

315-5327 INDICATOR GP-LEVEL

S/N: W921-UP

PART OF 533-0981, 533-1080 CAB AR

SMCS-7857 **i07575019**

NOTE	REF NO	GRAPHIC REF	PART NUMBER	QTY	PART NAME 1 2 3 4 5 6 (PRODUCT LEVEL)	SEE PAGE
	1	1	**547-4492**	1	INDICATOR-LEVEL (MACHINE)	

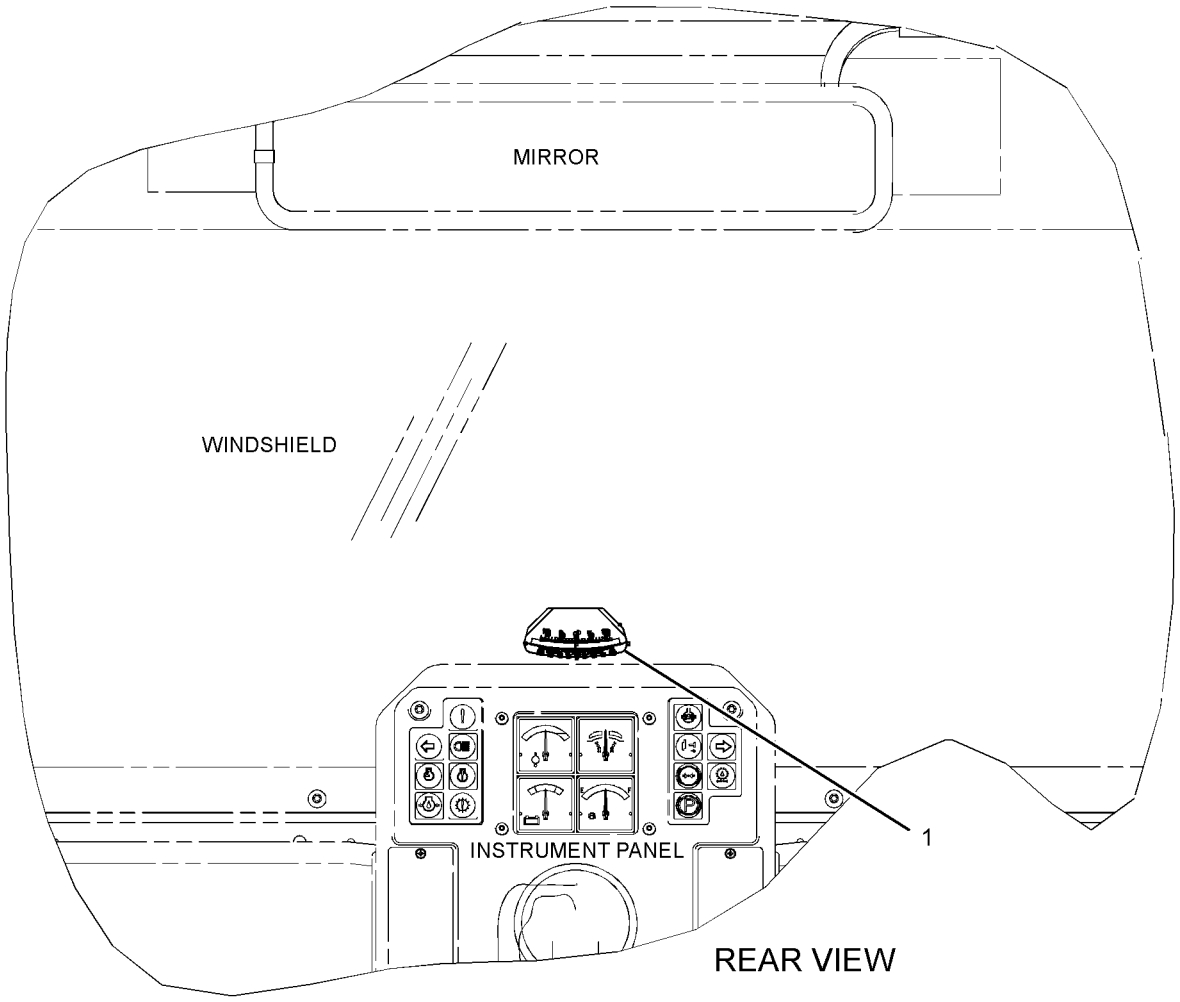

GRAPHIC #1 <END> g06325192

533-1014 INSTALLATION GP-CAB

S/N: W921-UP

PART OF 533-0981, 533-1080 CAB AR

SMCS-1265, 4284, 7301 **i07576183**

NOTE	REF NO	GRAPHIC REF	PART NUMBER	QTY	PART NAME 1 2 3 4 5 6 (PRODUCT LEVEL)	SEE PAGE
	1	1	**112-9164**	8	BOOT	
	2	1	**178-4190**	2	SEAL	
	3	1	**179-2138**	2	SEAL	
	4	1	**179-2139**	1	FOAM (RH)	
	5	1	**179-2140**	1	FOAM (LH)	
	6	1	**512-5973**	2	DUCT	
	7	1	**512-5974**	1	FLOOR MAT	
	8	1	**516-7914**	2	COVER AS	
					(EACH INCLUDES)	
M		1	**6V-9632**	2	NUT-WELD (M6X1-THD)	
	9	1	**516-7915**	2	PLATE	
	10	1	**5P-4115**	4	WASHER-HARD (7.2X19X2-MM THK)	
M	11	1	**8T-4138**	4	BOLT (M6X1X20-MM)	
	12	1	**8X-8055**	6	PLUG	
M	13	1	**9X-2043**	10	SCREW-TRUSS HEAD (M6X1X14-MM)	
D	14	1	**5P-6882**		SEAL (0.4-M EACH)	
D	15	1	**5P-5969**		SEAL (1-M EACH)	
D	15A	1	**5P-5969**		SEAL (0.9-M)	

D - ORDER BY THE METER
M - METRIC PART

533-1014 **INSTALLATION GP-CAB (**contd.**)** **i07576183**

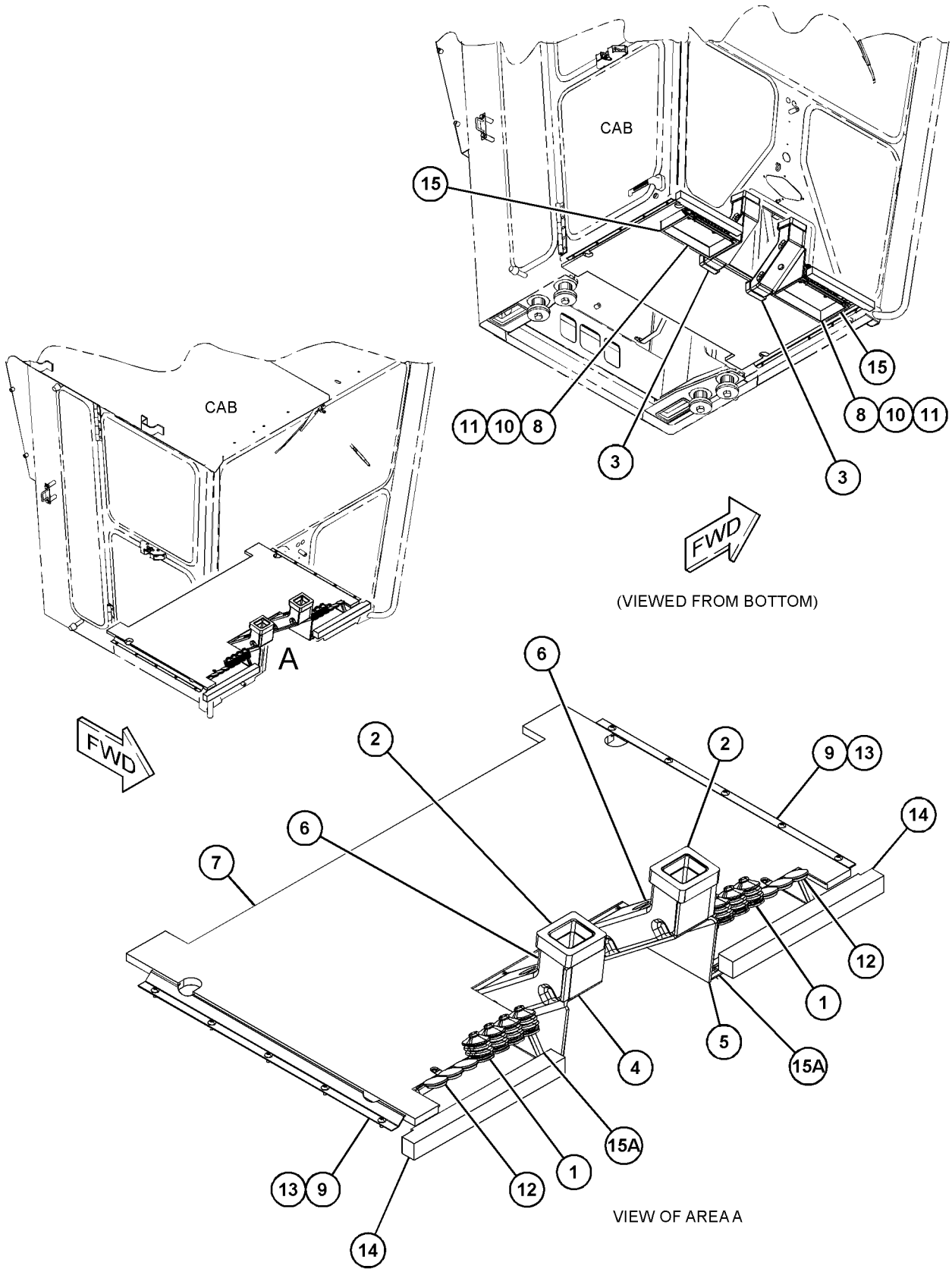

GRAPHIC #1 <END> g06369551

518-3025 INSTALLATION GP-RADIO—CITIZEN BAND

S/N: W921-UP

PART OF 537-5613, 537-5614 CAB AR

SMCS-7338 **i07577056**

NOTE	REF NO	GRAPHIC REF	PART NUMBER	QTY	PART NAME 1 2 3 4 5 6 (PRODUCT LEVEL)	SEE PAGE
	1	1	**208-3778**	1	BRACKET	
	2	1	**114-6658**	4	WASHER (6.5X17X1-MM THK)	
M	3	1	**9X-2045**	4	SCREW-TRUSS HEAD (M6X1X20-MM)	

M - METRIC PART

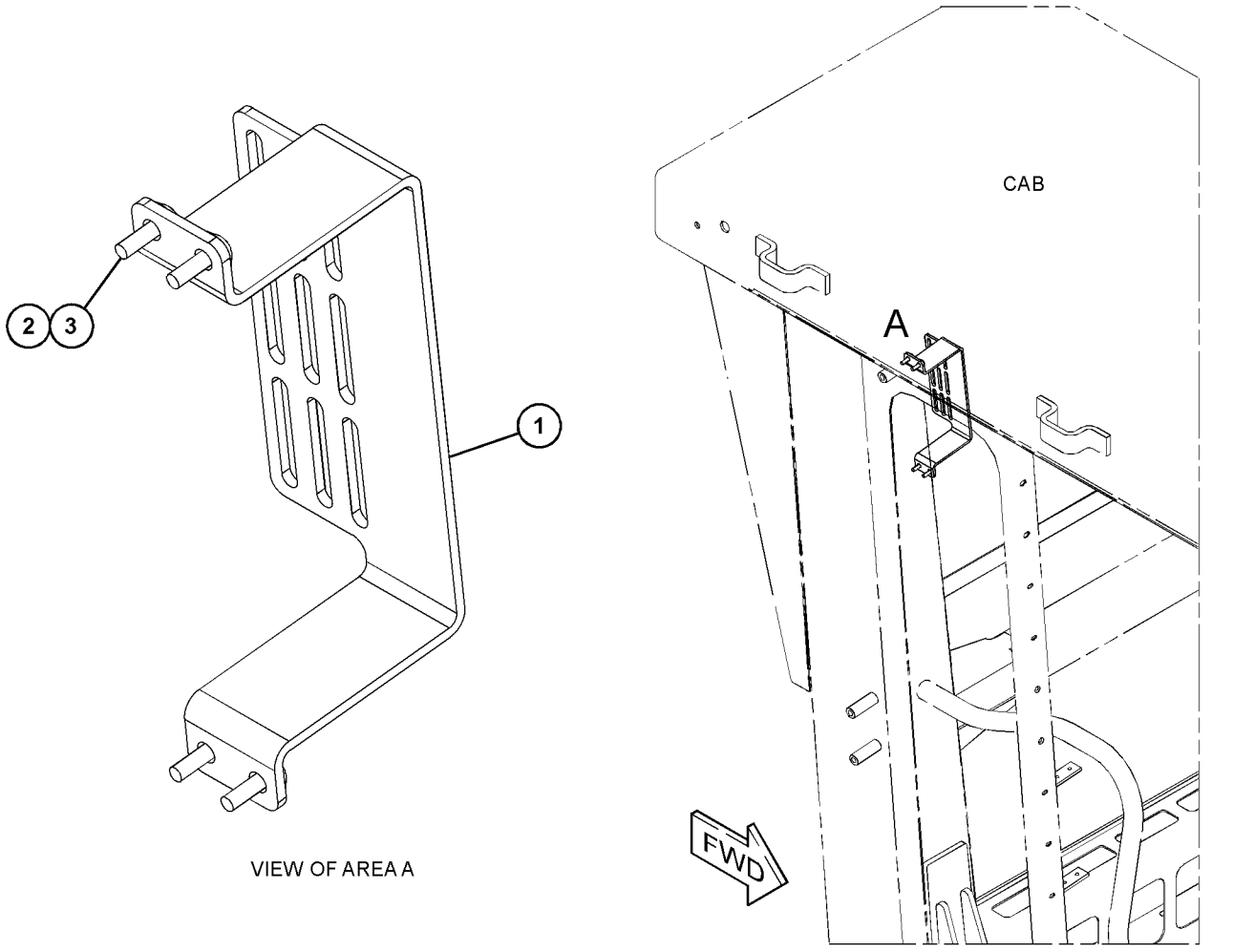

VIEW OF AREA A

GRAPHIC #1 <END> g06336625

518-6855 INSTALLATION GP-RADIO

S/N: W921-UP

PART OF 537-5611, 537-5612, 537-5613, 537-5614 CAB AR

SMCS-7338 **i07574925**

NOTE	REF NO	GRAPHIC REF	PART NUMBER	QTY	PART NAME 1 2 3 4 5 6 (PRODUCT LEVEL)	SEE PAGE
	1	1	**2A-6684**	1	BRACKET	
	2	1	**3S-2093**	1	STRAP-CABLE	
	3	1	**6T-7695**	2	SPEAKER AS-RADIO	
	4	1	**9U-8263**	1	COVER	
	5	1	**9W-3072**	1	ANTENNA AS	
	6	1	**293-7533**	1	CABLE AS	
	7	1	**512-9035**	1	BRACKET AS	
	8	1	**110-2028**	3	SCREW-PAN HEAD (10-14X0.75-IN)	
	9	1	**2G-8767**	1	WASHER (10.5X60X3-MM THK)	
	10	1	**5P-8525**	1	GROMMET	
	11	1	**8T-4121**	2	WASHER-HARD (11X21X2.5-MM THK)	
M	12	1	**8T-4137**	2	BOLT (M10X1.5X20-MM)	

M - METRIC PART

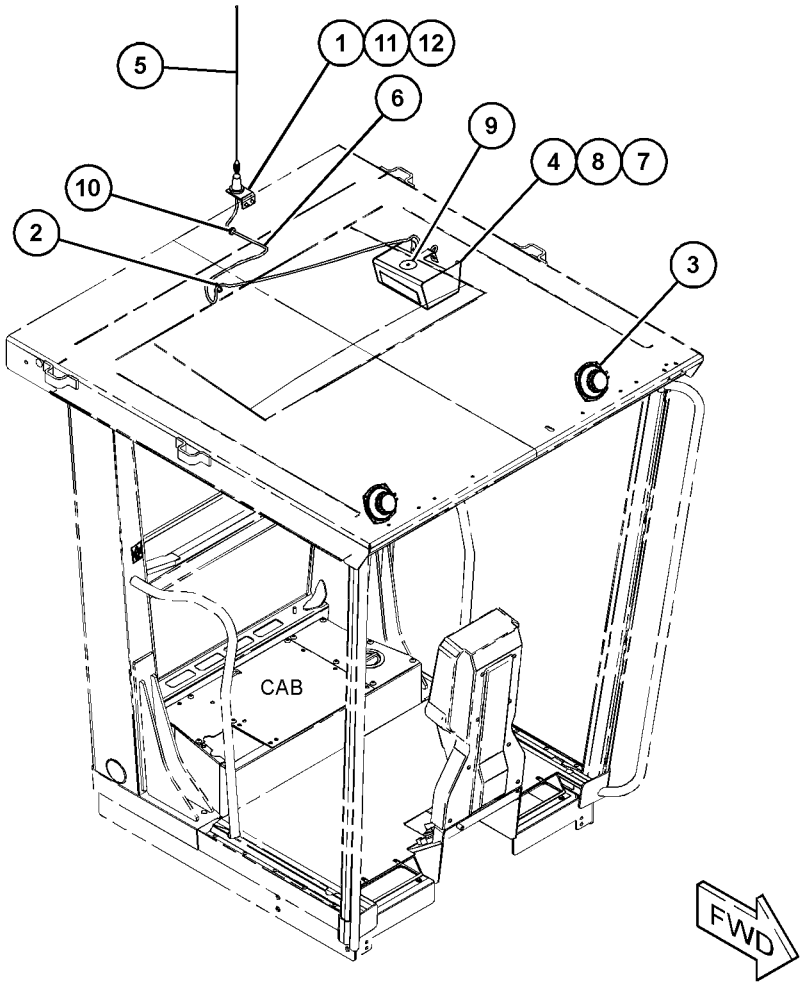

GRAPHIC #1 <END> g06167875

460-4996 LINER GP-CAB—COMPARTMENT

S/N: W921-UP

PART OF 533-0981, 533-1080 CAB AR

SMCS-7329 **i07575924**

NOTE	REF NO	GRAPHIC REF	PART NUMBER	QTY	PART NAME 1 2 3 4 5 6 (PRODUCT LEVEL)	SEE PAGE
	1	1	**169-2876**	1	FILM-IDENTIFICATION (POWER RECEPTACLE, 12-VOLT)	
	2	2	**2G-8573**	1	CAP	
	3	1	**6G-2395**	2	DOOR GP (AIR VENTED)	
					(EACH INCLUDES)	
		1	**6G-7222**	2	ROLLER	
	4	1	**6G-2396**	2	GASKET	
	5	2	**6G-2751**	4	HINGE	
	6	2	**6G-2914**	2	LATCH	
	7	2	**2G-8572**	1	WASHER-SPECIAL	
	8	1	**6V-8928**	1	HOOK-COAT	
	9	2	**7G-4824**	1	STRAP	
	10	2	**8E-7791**	1	STRAP	
	11	2	**8X-5414**	1	PLATE	
	12	2	**101-3055**	2	COVER-SPEAKER	
	13	1,2	**107-5014**	4	KNOB	
	14	1	**228-6089**	1	PLUG (ROCKER SWITCH)	
	15	1	**236-4631**	3	BEZEL	
	17	1	**512-5959**	1	HEADLINER	
	18	2	**512-5961**	2	DOOR	
	19	2	**512-5962**	1	PANEL	
	20	1	**512-5964**	1	PANEL	
	21	2	**512-5965**	1	COVER (RH)	
	22	2	**512-5966**	1	COVER (LH)	
	23	2	**512-5967**	1	COVER (RH)	
	24	2	**512-5968**	1	COVER (LH)	
	26	1	**512-5976**	1	PANEL	
	27	2	**512-5979**	1	COVER (RH)	
	28	2	**512-9033**	1	PLATE	
	29	1	**512-9034**	1	PLATE	
	30	2	**512-9047**	1	PLATE	
	31	1	**516-7916**	1	PLATE	
	32	1	**172-8641**	1	PLATE	
	33	2	**562-2697**	1	PLATE	
	34	2	**529-9205**	1	DUCT AS	
	35	2	**533-0967**	1	BRACKET AS	
M		2	**6V-9632**	2	NUT-WELD (M6X1-THD)	
	36	2	**533-0968**	1	BRACKET AS	
M		2	**6V-9632**	2	NUT-WELD (M6X1-THD)	
	37	2	**533-5738**	1	PLATE	
	38	2	**103-9425**	8	SCREW-MACHINE (8-32X1-IN)	
M	39	2	**111-4627**	6	SCREW-MACHINE (M6X1X30-MM)	
	40	1	**126-5211**	2	SPACER (3X15X17-MM THK)	
M	41	2	**129-3178**	3	LOCKNUT (M6X1-THD)	
	42	2	**131-6009**	2	PIN	
	43	2	**200-8623**	8	NUT-RETAINER	
M	44	2	**225-3109**	1	SCREW-TRUSS HEAD (M4X0.7X14-MM)	
	45	1	**2V-3726**	1	BUMPER	

460-4996 **LINER GP-CAB (**contd.**)** **i07575924**

NOTE	REF NO	GRAPHIC REF	PART NUMBER	QTY	PART NAME 1 2 3 4 5 6 (PRODUCT LEVEL)	SEE PAGE
M	46	2	**3E-4313**	6	SCREW-BUTTON HEAD (M4X0.7X8-MM)	
	47	1	**3G-3265**	24	RIVET	
M	48	1	**3T-0852**	2	LOCKNUT (M8X1.25-THD)	
	49	2	**5P-4116**	4	WASHER-HARD (8.8X20.5X2-MM THK)	
	50	2	**6K-3273**	4	RIVET-POP	
	51	2	**6P-0205**	3	SPACER (0.269X0.405X0.656-IN THK)	
	52	2	**6V-0292**	1	PLUG	
	53	1	**6V-3928**	1	PLUG-BUTTON	
	54	2	**8F-0492**	1	SPACER (0.531X1.125X0.625-IN THK)	
	55	2	**8T-4121**	2	WASHER-HARD (11X21X2.5-MM THK)	
M	56	2	**8T-4182**	2	BOLT (M10X1.5X45-MM)	
M	57	2	**8T-4191**	1	BOLT (M10X1.5X16-MM)	
M	58	2	**8T-4195**	1	BOLT (M10X1.5X30-MM)	
	59	1	**8T-4224**	2	WASHER-HARD (8.8X16X2-MM THK)	
	60	2	**8T-4896**	1	WASHER-HARD (10.2X18.5X2.5-MM THK)	
	61	2	**9N-1995**	20	RIVET-POP	
	62	2	**9R-5616**	2	PLUG	
M	63	1,2	**9X-2041**	4	SCREW-TRUSS HEAD (M10X1.5X20-MM)	
M	64	1,2	**9X-2042**	8	SCREW-TRUSS HEAD (M6X1X12-MM)	
M	65	1,2	**9X-2043**	23	SCREW-TRUSS HEAD (M6X1X14-MM)	
M	66	1	**9X-2045**	10	SCREW-TRUSS HEAD (M6X1X20-MM)	
M	67	1	**9X-2046**	4	SCREW-TRUSS HEAD (M6X1X35-MM)	
	68	2	**9X-8256**	7	WASHER (6.6X12X2-MM THK)	
D	69	2	**8T-3426**		CHANNEL-TRIM (1.5-M)	
D	70	1	**5P-5969**		SEAL (1.1-M EACH)	
D	71	1	**6V-5163**		SEAL (1.4-M)	
	71A	1	**6V-5163**		SEAL (1.3-M)	
E	72	1,2	**7X-7877**		STRIP-EDGE (3.5-CM EACH)	

D - ORDER BY THE METER
E - ORDER BY THE CENTIMETER
M - METRIC PART

460-4996 **LINER GP-CAB (**contd.**)** **i07575924**

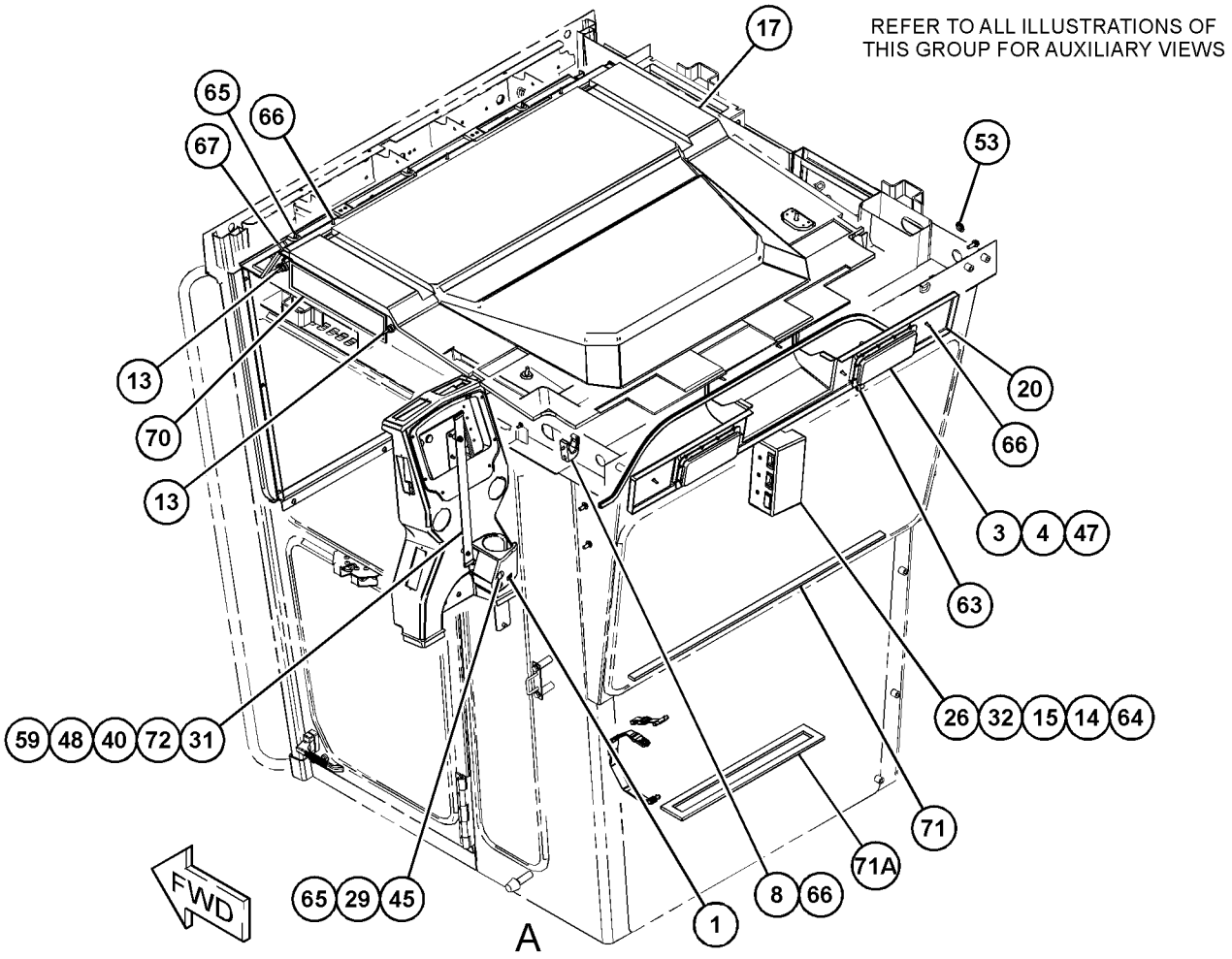

GRAPHIC #1 g06380662

460-4996 **LINER GP-CAB (**contd.**)** **i07575924**

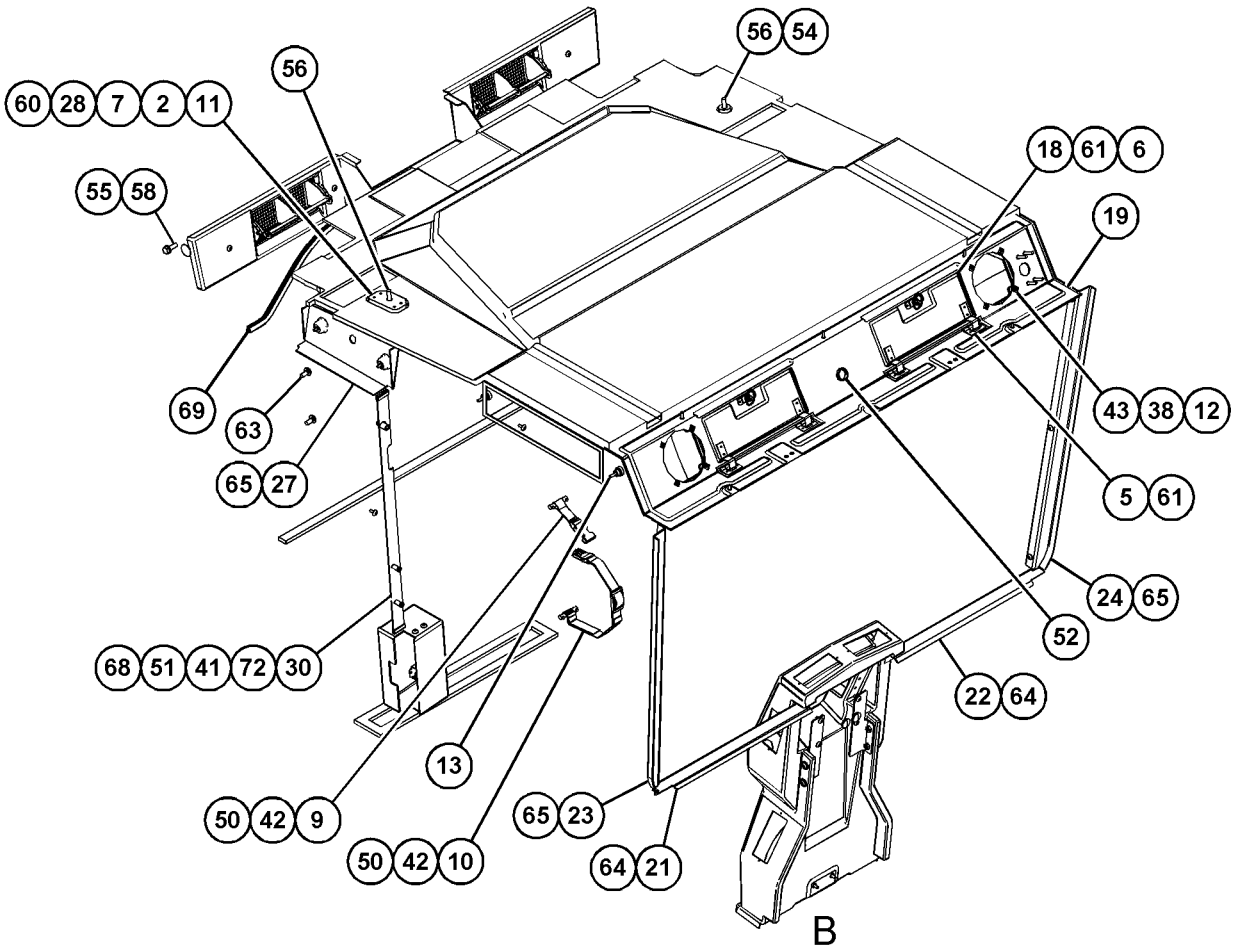

VIEW OF AREA B
(PARTS REMOVED FOR CLARITY)

GRAPHIC #2 <END> g06380664

533-2325 LINES GP-AIR CONDITIONER

S/N: W921-UP

PART OF 533-5729, 533-5733 AIR CONDITIONER AR

SMCS-1808 **i07571712**

NOTE	REF NO	GRAPHIC REF	PART NUMBER	QTY	PART NAME 1 2 3 4 5 6 (PRODUCT LEVEL)	SEE PAGE
	1	1	**1P-6356**	1	PLATE	
	2	1	**7K-1181**	5	STRAP-CABLE	
	3	1	**200-6345**	2	SADDLE-MOUNTING (DUAL SWIVEL)	
	4	1	**149-6371**	1	SWITCH AS-PRESSURE (A/C COMPRESSOR CLUTCH) (REFRIGERANT, LOW SIDE)	
		1	**102-8802**	1	KIT-RECEPTACLE (2-PIN)	
					(INCLUDES RECEPTACLE AS & WEDGE)	
		1	**8T-8729**	2	PIN-CONNECTOR (16-GA TO 18-GA)	
	5	1	**187-8661**	1	FITTING AS-AIR CONDITIONER (LOW SIDE)	
		1	**3E-4051**	1	CAP-SEAL (LOW SIDE CHARGE PORT)	
		1	**3E-4057**	1	VALVE AS (REFRIGERANT, LOW SIDE)	
		1	**172-4880**	1	CAP-SEAL	
		1	**180-7180**	1	CORE-VALVE	
	6	1	**217-7742**	1	GROMMET	
	7	1	**257-3226**	1	DRYER AS-REFRIGERANT (IN-LINE)	
		1	**7X-2049**	1	ORIFICE AS-AIR CONDITIONER	
	8	1	**274-5909**	1	ACCUMULATOR-REFRIGERANT	
I	9	1	**533-2326**	1	HOSE AS	
I	11	1	**533-2328**	1	HOSE AS	
	12	1	**2B-0941**	1	SPACER (10.5X19X19-MM THK)	
M	13	1	**085-8091**	1	BOLT (M10X1.5X55-MM)	
	14	1	**132-7551**	1	SPACER (11X19X6-MM THK)	
	15	1	**4P-7581**	1	CLIP (LADDER)	
	16	1	**297-1546**	3	CLIP	
	17	1	**355-3148**	1	SWITCH AS-PRESSURE (HIGH, LOW) (REFRIGERANT)	
		1	**102-8802**	1	KIT-RECEPTACLE (2-PIN)	
					(INCLUDES RECEPTACLE AS & WEDGE)	
		1	**8T-8729**	2	PIN-CONNECTOR (16-GA TO 18-GA)	
	18	1	**3E-4066**	1	FITTING AS-AIR CONDITIONER (HIGH SIDE)	
		1	**3E-4052**	1	CAP-SEAL (HIGH SIDE CHARGE PORT)	
		1	**3E-4058**	1	VALVE AS (REFRIGERANT, HIGH SIDE)	
	19	1	**4K-8864**	8	CLIP (LOOP)	
	20	1	**5P-1075**	1	WASHER-HARD (10.2X22.5X3-MM THK)	
I	21	1	**533-2327**	1	HOSE AS	
	22	1	**7X-7910**	1	CLIP (SLOT)	
	23	1	**7X-7911**	1	CLIP (TAB)	
	24	1	**8M-2773**	3	CLIP (LOOP)	
	25	1	**8S-6109**	1	CLIP (SLOT)	
	26	1	**8S-6110**	1	CLIP (TAB)	
	27	1	**8T-4121**	18	WASHER-HARD (11X21X2.5-MM THK)	
M	28	1	**8T-4133**	5	NUT (M10X1.5-THD)	
M	29	1	**8T-4136**	6	BOLT (M10X1.5X25-MM)	
M	30	1	**8T-4137**	1	BOLT (M10X1.5X20-MM)	
M	31	1	**8T-4195**	6	BOLT (M10X1.5X30-MM)	
M	32	1	**8T-4182**	1	BOLT (M10X1.5X45-MM)	
	33	1	**9X-7378**	2	SEAL-O-RING	
	34	1	**9X-7380**	2	SEAL-O-RING	
	35	1	**9X-7381**	3	SEAL-O-RING	

533-2325 **LINES GP-AIR CONDITIONER** (contd.) **i07571712**

NOTE	REF NO	GRAPHIC REF	PART NUMBER	QTY	PART NAME 1 2 3 4 5 6 (PRODUCT LEVEL)	SEE PAGE
	36	1	**9X-7382**	1	SEAL-O-RING	
	37	1	**9X-7383**	2	SEAL-O-RING	
	38	1	**9X-7385**	2	SEAL-O-RING	
	39	1	**566-4265**	3	PLATE	
	40	1	**566-4264**	1	PLATE	
	41	1	**9X-8250**	3	CLIP	

I - REFER TO HYDRAULIC INFORMATION SYSTEM
M - METRIC PART

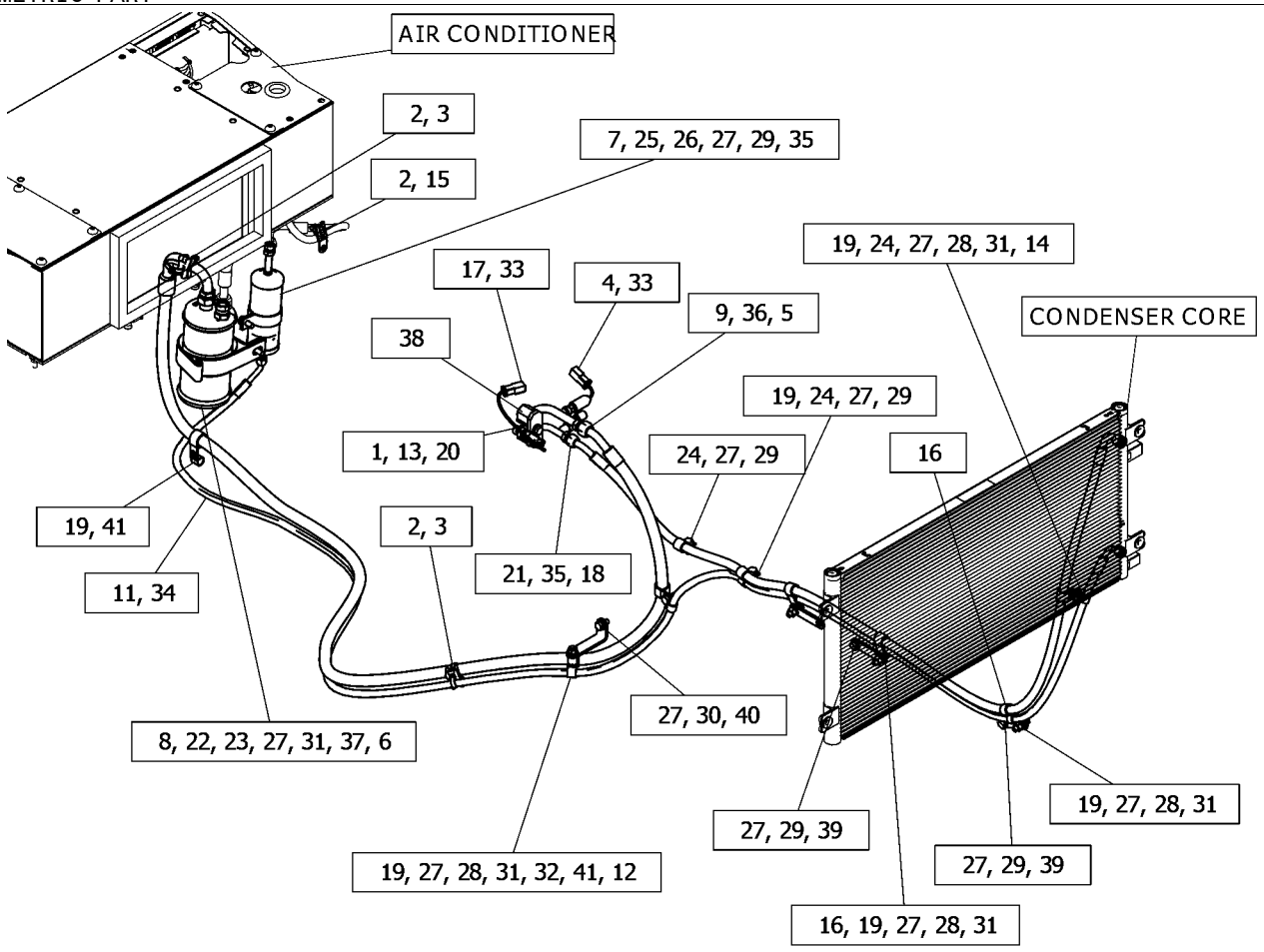

GRAPHIC #1 <END> g06373463

533-2329 LINES GP-HEATER

S/N: W921-UP

PART OF 533-5729 AIR CONDITIONER AR, 533-5730 HEATER GP-CAB

SMCS-1812, 7304 **i07571107**

NOTE	REF NO	GRAPHIC REF	PART NUMBER	QTY	PART NAME 1 2 3 4 5 6 (PRODUCT LEVEL)	SEE PAGE
	1	1	*351-0289*	1	ELBOW AS	
		1	**2M-9780**	1	SEAL-O-RING	
		1	**6V-9208**	1	ELBOW	
	2	1	**116-4491**	1	BRACKET AS	
	3	1	**2V-9121**	1	FITTING	
	4	1	**3E-4321**	3	CLIP (LOOP)	
	5	1	**8T-4121**	3	WASHER-HARD (11X21X2.5-MM THK)	
M	6	1	**8T-4195**	1	BOLT (M10X1.5X30-MM)	
	7	1	**9X-2488**	4	CLAMP-HOSE	
	8	1	**9X-8250**	2	CLIP	
	9	1	**177-2215**	3	STRAP-DUAL CLAMP	
M	10	1	**8T-4136**	1	BOLT (M10X1.5X25-MM)	
M	11	1	**8T-4137**	1	BOLT (M10X1.5X20-MM)	
E	12	1	**5P-0767**		HOSE (269.5-CM)	
E	12A	1	**5P-0767**		HOSE (239-CM)	

E - ORDER BY THE CENTIMETER
M - METRIC PART

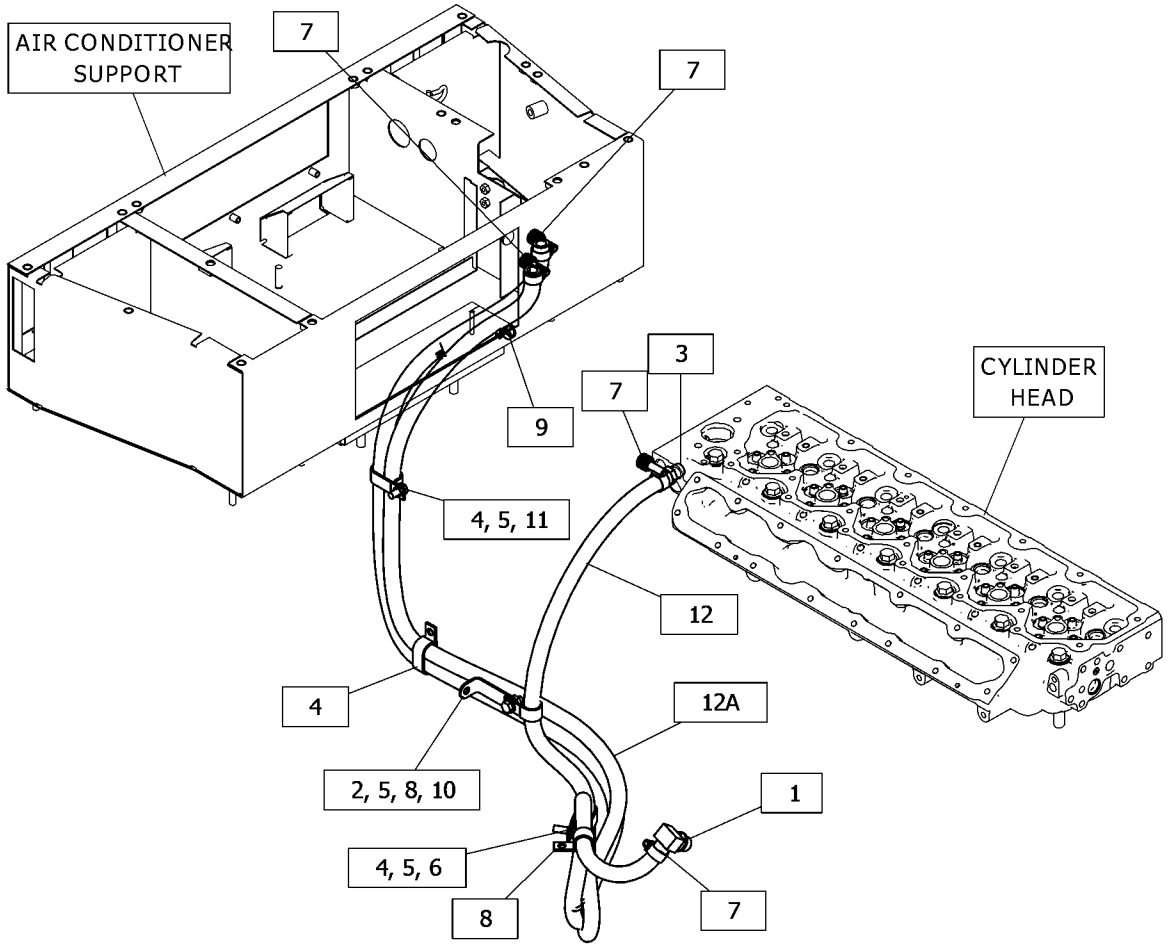

GRAPHIC #1 <END> g06366729

533-2330 LINES GP-HEATER–AUXILIARY HEATER

S/N: W921-UP

PART OF 533-5733 AIR CONDITIONER AR, 533-5734 HEATER GP-CAB

SMCS-1812, 7304 **i07572214**

NOTE	REF NO	GRAPHIC REF	PART NUMBER	QTY	PART NAME 1 2 3 4 5 6 (PRODUCT LEVEL)	SEE PAGE
	1	1	*439-1974*	1	TEE AS	
		1	**2M-9780**	1	SEAL-O-RING	
		1	**136-5025**	1	TEE	
	2	1	**116-4491**	1	BRACKET AS	
M		1	**8T-3490**	1	NUT-WELD (M10X1.5-THD)	
	3	1	**3E-4321**	3	CLIP (LOOP)	
	4	1	**8T-4121**	3	WASHER-HARD (11X21X2.5-MM THK)	
M	5	1	**8T-4195**	1	BOLT (M10X1.5X30-MM)	
	6	1	**9X-2488**	4	CLAMP-HOSE	
	7	1	**9X-8250**	2	CLIP	
	8	1	**177-2215**	3	STRAP-DUAL CLAMP	
M	9	1	**8T-4136**	1	BOLT (M10X1.5X25-MM)	
M	10	1	**8T-4137**	1	BOLT (M10X1.5X20-MM)	
E	11	1	**5P-0767**		HOSE (239-CM)	
E	11A	1	**5P-0767**		HOSE (269-CM)	

E - ORDER BY THE CENTIMETER
M - METRIC PART

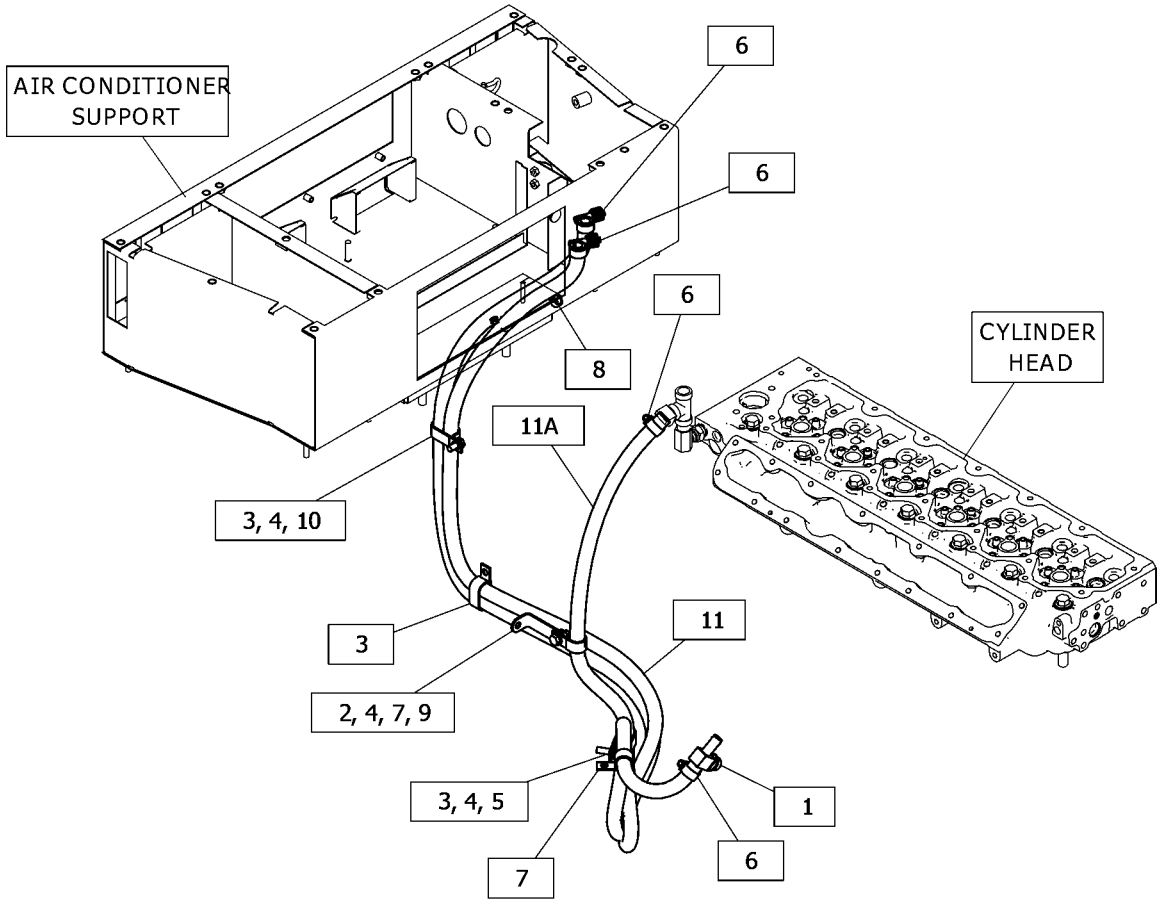

GRAPHIC #1 <END> g06367127

518-3687 LOUVER GP-CAB

S/N: W921-UP

PART OF 533-5730, 533-5734 HEATER GP-CAB

SMCS-7301 **i07571090**

NOTE	REF NO	GRAPHIC REF	PART NUMBER	QTY	PART NAME 1 2 3 4 5 6 (PRODUCT LEVEL)	SEE PAGE
	1	1	**396-2352**	2	LOUVER AS	
	2	1	**422-2152**	6	LOUVER AS-VENT	
	3	1	**518-3688**	2	PLATE	
	4	1	**126-1136**	2	PLATE	
	5	1	**6V-2687**	4	SCREW-PAN HEAD (10-24X1-IN)	
D	6	1	**5P-5969**		SEAL (0.9-M EACH)	

D - ORDER BY THE METER

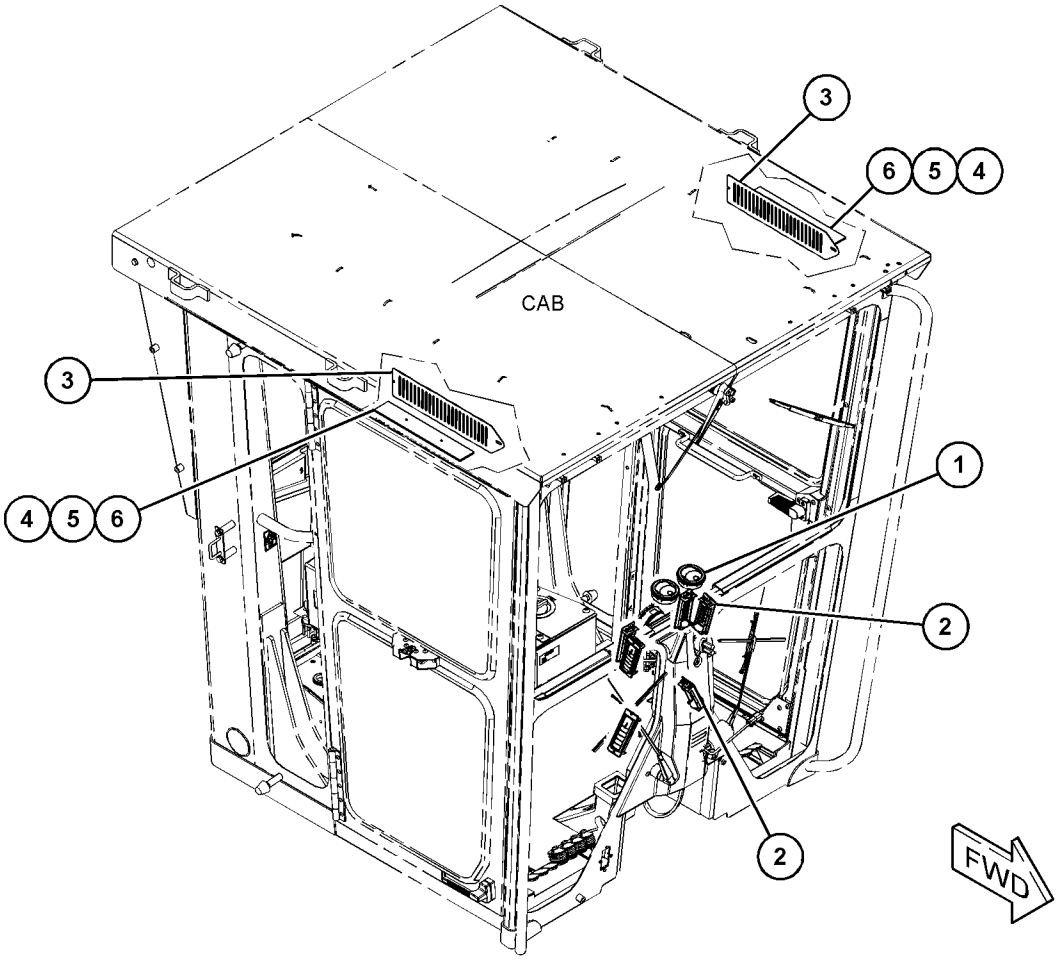

GRAPHIC #1 <END> g06169161

381-3250 MIRROR GP-REAR VIEW

S/N: W921-UP

PART OF 437-0685 MIRROR GP-REAR VIEW

SMCS-7319 **i07562927**

NOTE	REF NO	GRAPHIC REF	PART NUMBER	QTY	PART NAME 1 2 3 4 5 6 (PRODUCT LEVEL)	SEE PAGE
	1	1	**9C-5928**	8	SPACER (10X19X5.15-MM THK)	
	2	1	**113-8218**	2	ARM	
	3	1	**518-3378**	4	BRACKET	
	4	1	**197-2055**	2	MIRROR AS	
					(EACH INCLUDES)	
		1	**214-0647**	1	MIRROR AS	
	5	1	**358-9192**	4	BLOCK	
	6	1	**123-4586**	4	BLOCK	
	7	1	**6G-8831**	4	CLAMP	
M	8	1	**6V-7744**	4	LOCKNUT (M10X1.5-THD)	
	9	1	**8T-4121**	24	WASHER-HARD (11X21X2.5-MM THK)	
M	10	1	**344-5675**	8	NUT (M10X1.5-THD)	
M	11	1	**8T-4137**	8	BOLT (M10X1.5X20-MM)	
M	12	1	**8T-4185**	8	BOLT (M10X1.5X50-MM)	
M	13	1	**8T-4186**	4	BOLT (M10X1.5X40-MM)	

M - METRIC PART

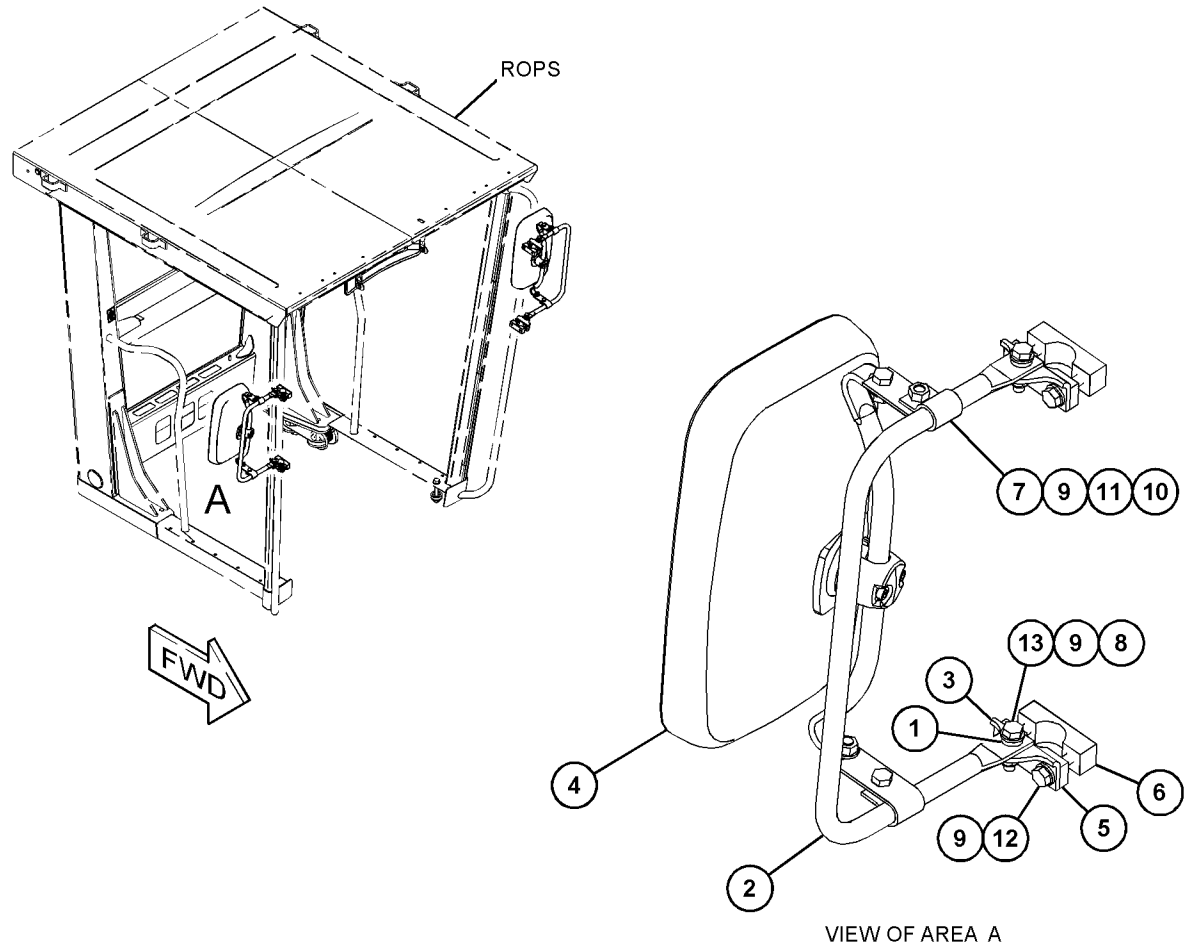

VIEW OF AREA A

GRAPHIC #1 <END> g03430658

387-2851 MIRROR GP-REAR VIEW

S/N: W921-UP

SMCS-7319 **i07567391**

NOTE	PART NUMBER	QTY	PART NAME 1 2 3 4 5 6 (PRODUCT LEVEL)	SEE PAGE
Y	*391-4245*	1	MIRROR GP-REAR VIEW (EXTERIOR, RH)	559
Y	*391-4246*	1	MIRROR GP-REAR VIEW (EXTERIOR, LH)	560

Y - SEPARATE ILLUSTRATION

<END>

391-4245 MIRROR GP-REAR VIEW—EXTERIOR, RH

S/N: W921-UP

PART OF 387-2851 MIRROR GP-REAR VIEW

SMCS-7319 **i07567406**

NOTE	REF NO	GRAPHIC REF	PART NUMBER	QTY	PART NAME 1 2 3 4 5 6 (PRODUCT LEVEL)	SEE PAGE
	1	1	**123-4586**	2	BLOCK	
	2	1	**259-4758**	1	MIRROR AS	
	3	1	**358-9192**	2	BLOCK	
	4	1	**391-4247**	1	BRACKET AS	
		1	**8R-0126**	1	WASHER (12.2X50X3-MM THK)	
	5	1	**8T-4121**	4	WASHER-HARD (11X21X2.5-MM THK)	
M	6	1	**8T-4185**	4	BOLT (M10X1.5X50-MM)	

M - METRIC PART

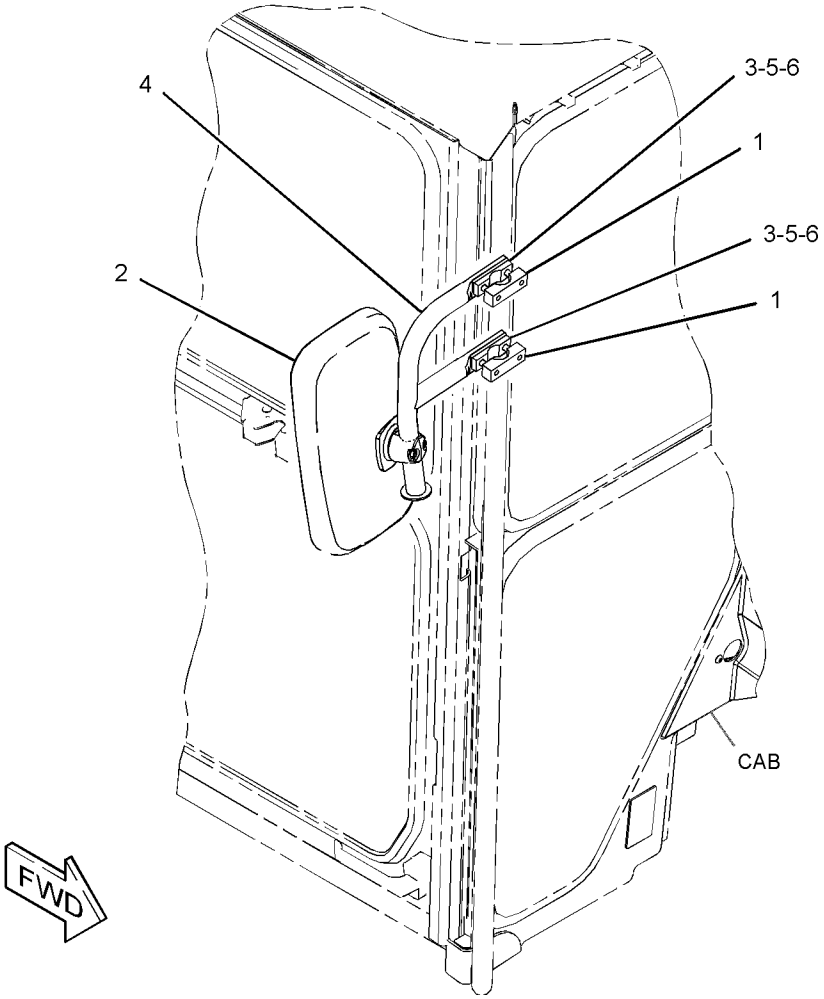

GRAPHIC #1 <END> g03359596

391-4246 MIRROR GP-REAR VIEW—EXTERIOR, LH

S/N: W921-UP

PART OF 387-2851 MIRROR GP-REAR VIEW

SMCS-7319 **i07567411**

NOTE	REF NO	GRAPHIC REF	PART NUMBER	QTY	PART NAME 1 2 3 4 5 6 (PRODUCT LEVEL)	SEE PAGE
	1	1	**123-4586**	2	BLOCK	
	2	1	**259-4758**	1	MIRROR AS	
	3	1	**358-9192**	2	BLOCK	
	4	1	**391-4248**	1	BRACKET AS	
		1	**8R-0126**	1	WASHER (12.2X50X3-MM THK)	
	5	1	**8T-4121**	4	WASHER-HARD (11X21X2.5-MM THK)	
M	6	1	**8T-4185**	4	BOLT (M10X1.5X50-MM)	

M - METRIC PART

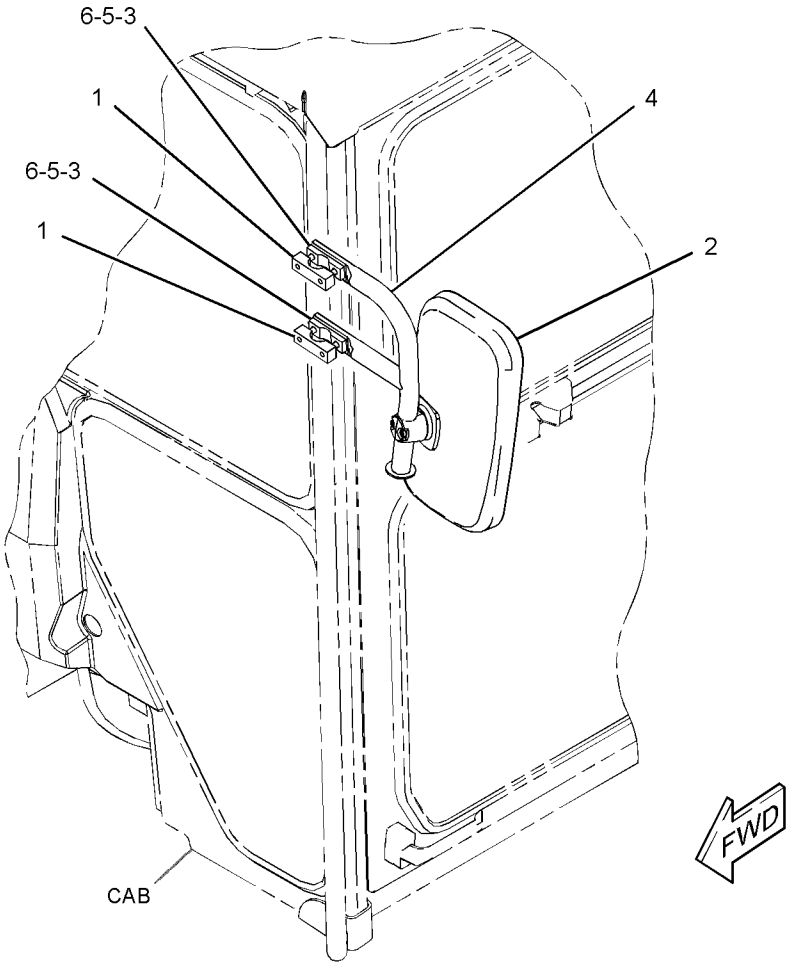

GRAPHIC #1 <END> g03359469

437-0673 MIRROR GP-REAR VIEW—DUAL INSIDE

S/N: W921-UP

EUROPEAN MARKET

SMCS-7319 **i07563064**

NOTE	REF NO	GRAPHIC REF	PART NUMBER	QTY	PART NAME 1 2 3 4 5 6 (PRODUCT LEVEL)	SEE PAGE
	1	1	**8X-1853**	2	SPACER (13.1X15.9X30.4-MM THK)	
	2	1	**9W-1442**	2	FUSE (10-AMPERE)	
	3	1	**208-7782**	1	PLATE AS	
	4	1	**340-7160**	2	CONVERTER-POWER (24-VOLT TO 12-VOLT)	
	5	1	**096-6166**	4	WASHER-HARD (4.5X9X1-MM THK)	
	6	1	**8T-2501**	2	BOLT (3/8-16X2-IN)	
M	7	1	**8T-4647**	4	SCREW-MACHINE (M4X0.7X20-MM)	
	8	1	**8T-4896**	2	WASHER-HARD (10.2X18.5X2.5-MM THK)	

M - METRIC PART

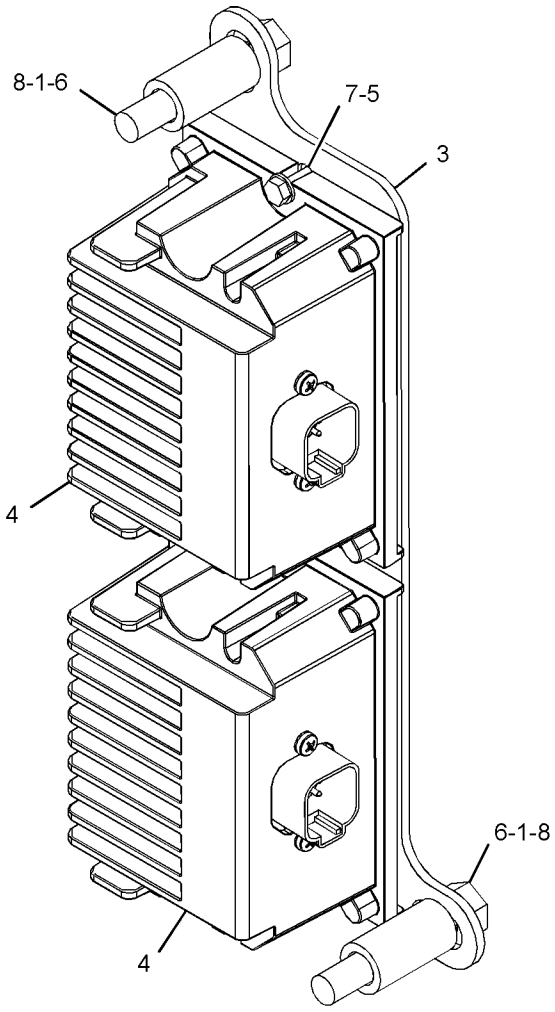

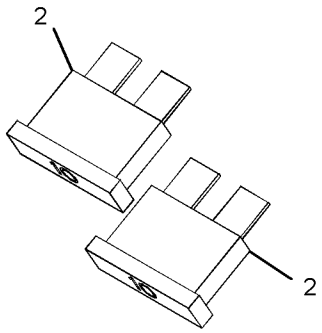

LOCATED IN FUSE BOX
(NOT TO SCALE)

GRAPHIC #1 <END> g03323514

437-0685 MIRROR GP-REAR VIEW

S/N: W921-UP

SMCS-7319 **i07562918**

NOTE	REF NO	GRAPHIC REF	PART NUMBER	QTY	PART NAME 1 2 3 4 5 6 (PRODUCT LEVEL)	SEE PAGE
	1	1	**123-4586**	4	BLOCK	
	2	1	**339-6543**	2	MIRROR AS	
	3	1	**340-7076**	2	MIRROR AS	
	4	1	**358-9192**	4	BLOCK	
	5	1	**518-3384**	2	TUBE	
	6	1	**518-3385**	2	TUBE	
Y	7	1	*381-3250*	1	MIRROR GP-REAR VIEW	557
	8	1	**2K-4973**	2	LOCKNUT (3/8-16-THD)	
	9	1	**8T-4121**	8	WASHER-HARD (11X21X2.5-MM THK)	
M	10	1	**8T-4185**	8	BOLT (M10X1.5X50-MM)	
	11	1	**9X-2027**	2	WASHER (11X18X2-MM THK)	

M - METRIC PART
Y - SEPARATE ILLUSTRATION

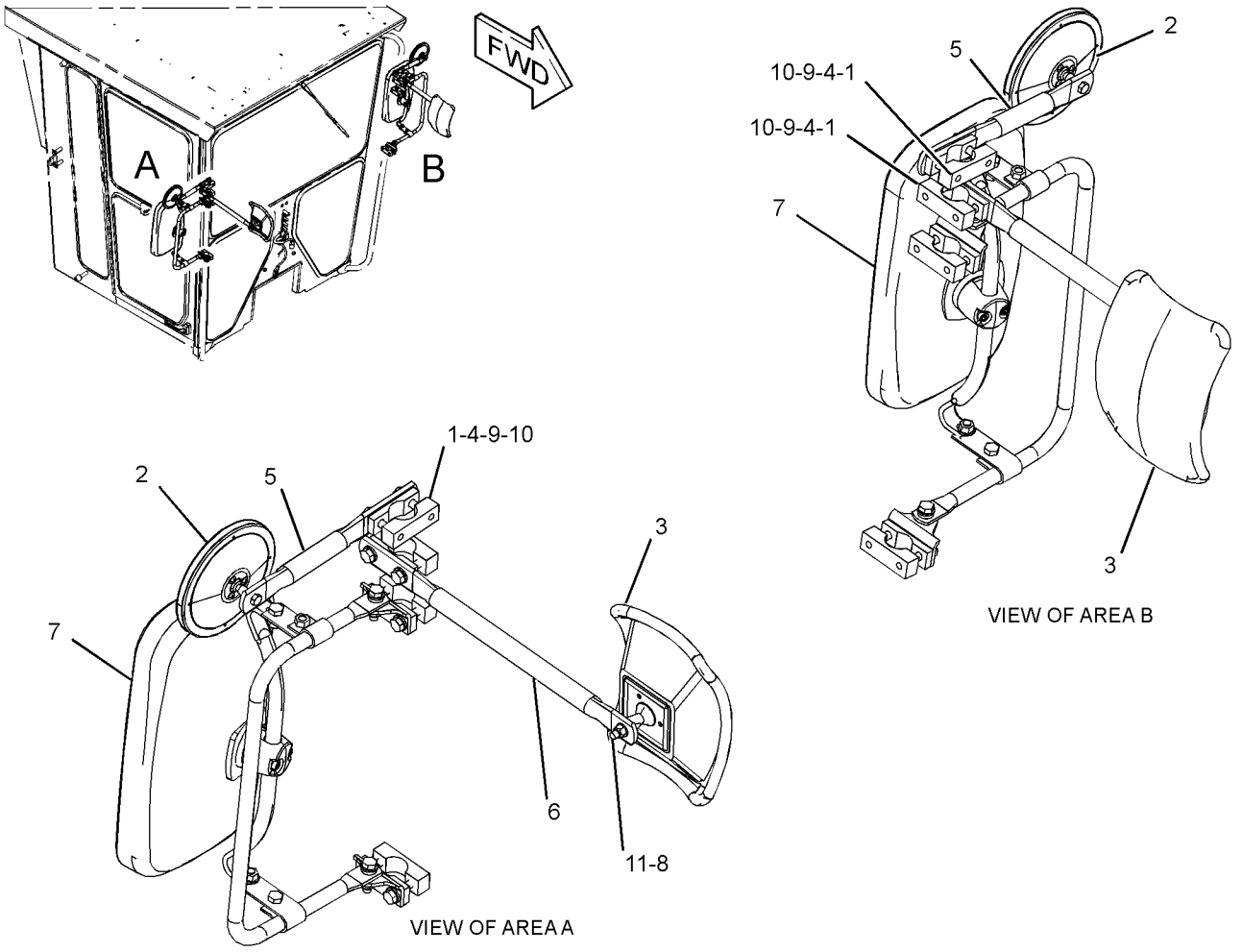

GRAPHIC #1 <END> g03733943

8X-2795 MIRROR GP-REAR VIEW—DUAL, INTERIOR

S/N: W921-UP

SMCS-7319 **i07568915**

NOTE	REF NO	GRAPHIC REF	PART NUMBER	QTY	PART NAME 1 2 3 4 5 6 (PRODUCT LEVEL)	SEE PAGE
	1	1	**462-3542**	1	MIRROR AS	
	2	1	**2G-8241**	2	CLAMP	
M	3	1	**9X-2046**	4	SCREW-TRUSS HEAD (M6X1X35-MM)	
	4	1	**2G-8572**	2	WASHER-SPECIAL	
	5	1	**2G-8573**	2	CAP	
	6	1	**2G-8242**	2	ARM	
	7	1	**5P-1075**	2	WASHER-HARD (10.2X22.5X3-MM THK)	
	8	1	**8H-1728**	2	NUT-ACORN (3/8-16-THD)	
	9	1	**5S-7379**	2	BOLT (3/8-16X0.875-IN)	
	10	1	**1P-2378**	2	CAP-DUST	

M - METRIC PART

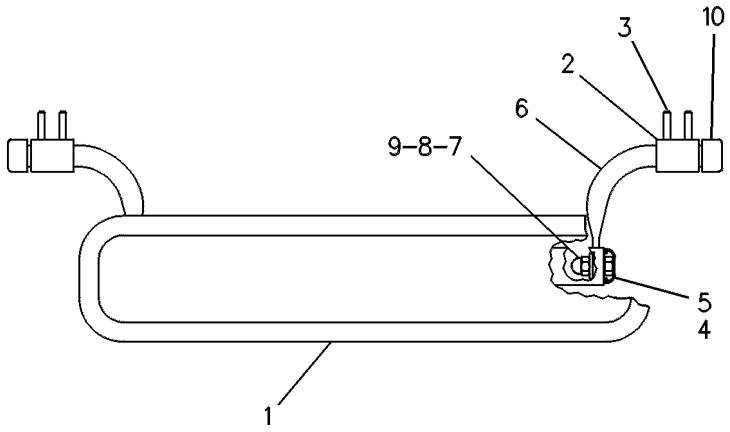

GRAPHIC #1 <END> g00084778

464-6047 MODULE GP-DISPLAY–CAMERA, REAR

S/N: W921-UP
24-VOLT
PART OF 518-3015 DISPLAY GP-CAMERA

SMCS-7347, 7450, 7451, 7490 **i06809011**

NOTE	REF NO	GRAPHIC REF	PART NUMBER	QTY	PART NAME 1 2 3 4 5 6 (PRODUCT LEVEL)	SEE PAGE
	1	1	**102-8805**	1	KIT-RECEPTACLE (6-PIN)	
					(INCLUDES RECEPTACLE AS & WEDGE)	
	2	1	**8T-8729**	5	PIN-CONNECTOR (16-GA TO 18-GA)	
	3	1	**8T-8737**	1	PLUG-SEAL	
	4	1	**344-3847**	1	CABLE AS (DISPLAY)	

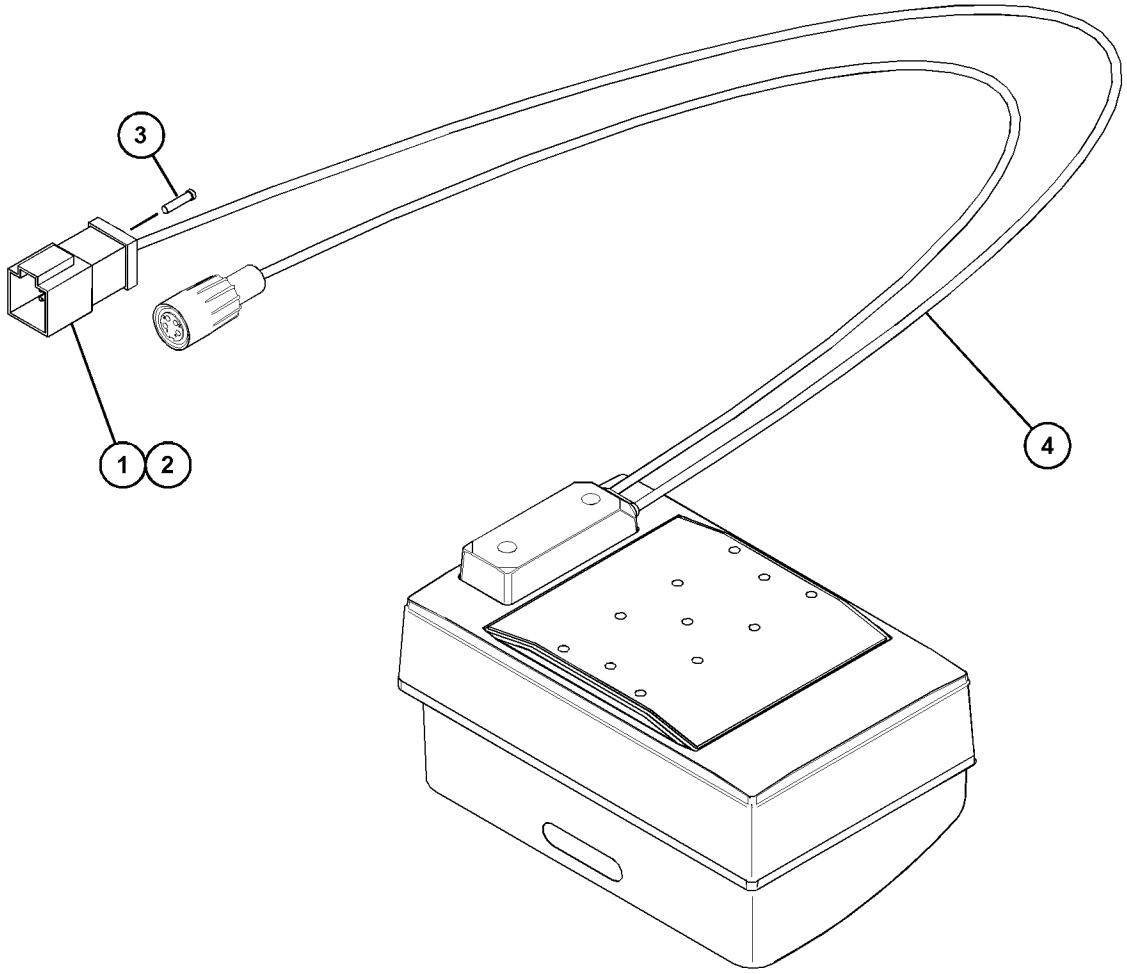

GRAPHIC #1 <END> g06118128

511-2371 MOTOR GP-WINDOW WIPER

S/N: W921-UP
24-VOLT
PART OF 535-7121 WIPER GP-WINDOW

SMCS-7305 **i07592808**

NOTE	REF NO	GRAPHIC REF	PART NUMBER	QTY	PART NAME 1 2 3 4 5 6 (PRODUCT LEVEL)	SEE PAGE
	1	1	**102-8805**	1	KIT-RECEPTACLE (6-PIN)	
					(INCLUDES RECEPTACLE AS & WEDGE)	
	2	1	**8T-8737**	1	PLUG-SEAL	
	3	1	**8T-8729**	5	PIN-CONNECTOR (16-GA TO 18-GA)	

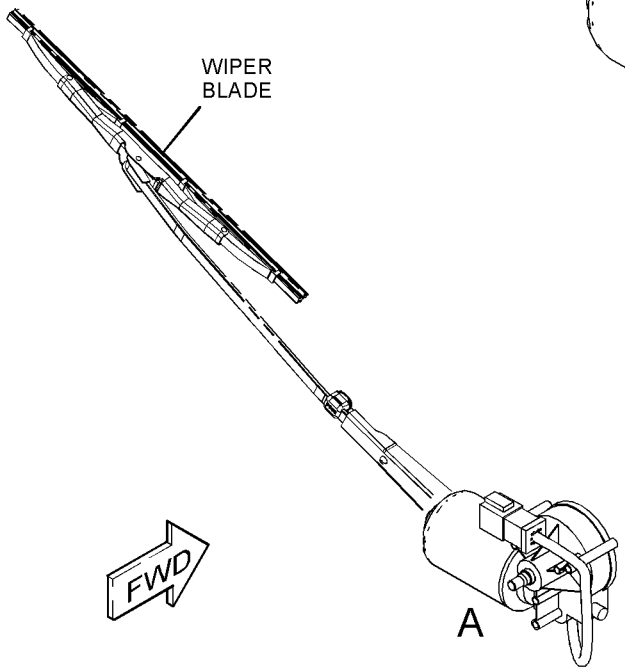

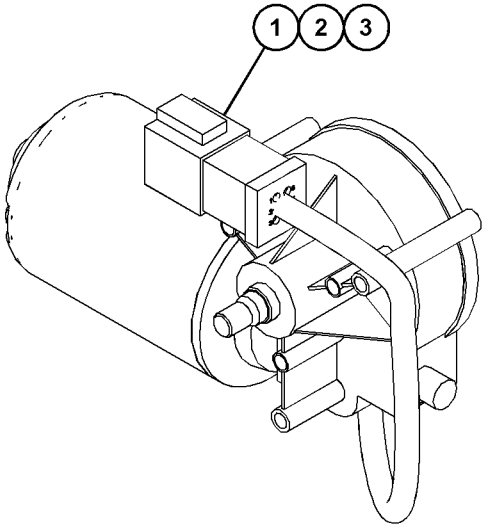

VIEW OF AREA A

GRAPHIC #1 <END> g06349820

533-1013 MOUNTING GP-CAB—ENCLOSED, NON-ROPS

S/N: W921-UP

PART OF 533-0981 CAB AR

SMCS-7266, 7301 **i07575002**

NOTE	REF NO	GRAPHIC REF	PART NUMBER	QTY	PART NAME 1 2 3 4 5 6 (PRODUCT LEVEL)	SEE PAGE
	1	1	**519-0986**	4	BOLT	
	2	1	**2G-7097**	1	PAD	
	3	1	**2G-7098**	2	PAD	
	4	1	**8X-6131**	2	SEAL	
	5	1	**9D-1589**	2	MOUNTING	
	6	1	**103-4953**	4	MOUNTING	
	7	1	**103-5515**	1	PAD (RH)	
	8	1	**103-5516**	1	PAD (LH)	
	9	1	**164-2465**	2	PAD	
	10	1	**3E-9411**	2	WASHER-HARD (17.5X38X6-MM THK)	
	11	1	**3V-9244**	2	WASHER (16.5X50X5-MM THK)	
	12	1	**4K-0367**	2	NUT-FULL (5/8-11-THD)	
	13	1	**7X-0354**	2	BOLT (5/8-11X4.5-IN)	
	14	1	**8X-0674**	4	WASHER (22X100X10-MM THK)	
E	15	1	**123-6806**		SEAL (87-CM)	

E - ORDER BY THE CENTIMETER

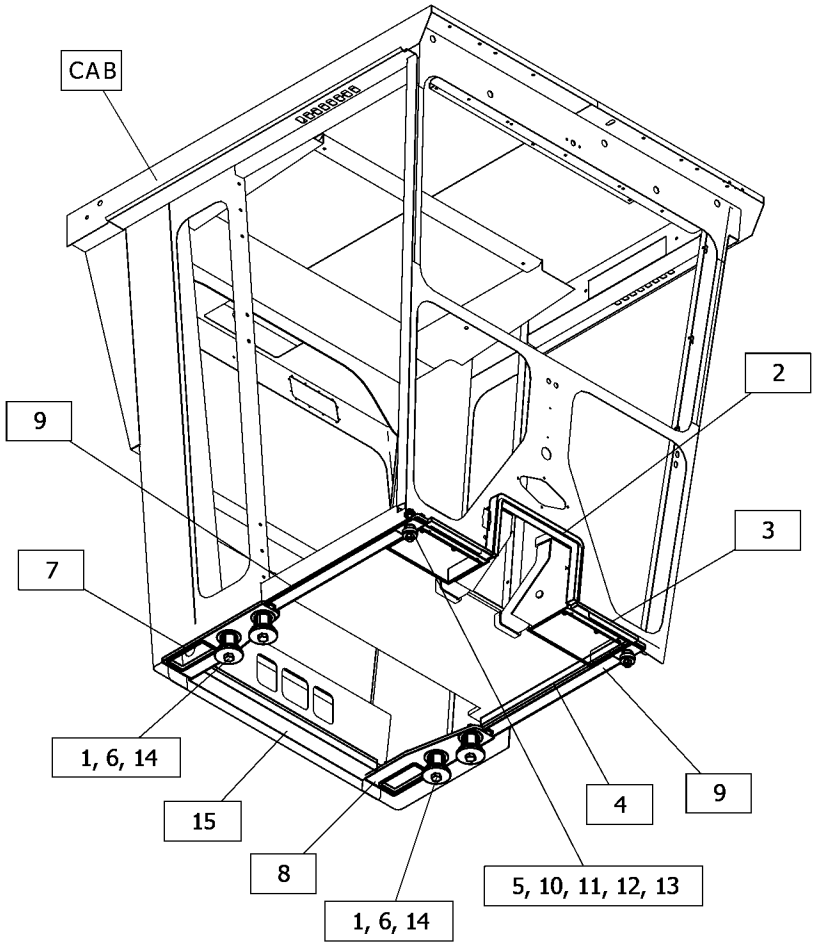

GRAPHIC #1 <END> g06369279

2A-6985 MOUNTING GP-ROPS

S/N: W921-UP

PART OF 533-1080 CAB AR

SMCS-7266 **i07576852**

NOTE	REF NO	GRAPHIC REF	PART NUMBER	QTY	PART NAME 1 2 3 4 5 6 (PRODUCT LEVEL)	SEE PAGE
	1	1	**3E-4048**	2	CAP-PLUG	
	2	1	**103-5515**	1	PAD (RH)	
	3	1	**103-5516**	1	PAD (LH)	
	4	1	**103-4953**	4	MOUNTING	
	5	1	**7X-0375**	4	BOLT (3/4-10X5-IN)	
	6	1	**8X-0674**	4	WASHER (22X100X10-MM THK)	
	7	1	**3V-9244**	2	WASHER (16.5X50X5-MM THK)	
	8	1	**4K-0367**	2	NUT-FULL (5/8-11-THD)	
	9	1	**7X-0354**	2	BOLT (5/8-11X4.5-IN)	
	10	1	**8T-4122**	2	WASHER-HARD (17X32X3.5-MM THK)	
	11	1	**8X-6131**	2	SEAL	
	12	1	**164-2465**	2	PAD	
	13	1	**9D-1589**	2	MOUNTING	
	14	1	**2G-7098**	2	PAD	
	15	1	**2G-7097**	1	PAD	
	16	1	**103-4771**	2	PIN AS	
	17	1	**030-8535**	2	BOLT-LOCKING (3/8-16X0.875-IN)	
	18	1	**8T-4896**	2	WASHER-HARD (10.2X18.5X2.5-MM THK)	
B	19	1	**166-1999**	2	SHIM (2.28-MM THK)	
E	20	1	**123-6806**		SEAL (87-CM)	
B	21	1	**166-1997**	2	SHIM (1.2-MM THK)	
	22	1	**3E-9411**	2	WASHER-HARD (17.5X38X6-MM THK)	

B - USE AS REQUIRED
E - ORDER BY THE CENTIMETER

2A-6985 **MOUNTING GP-ROPS (**contd.**)** **i07576852**

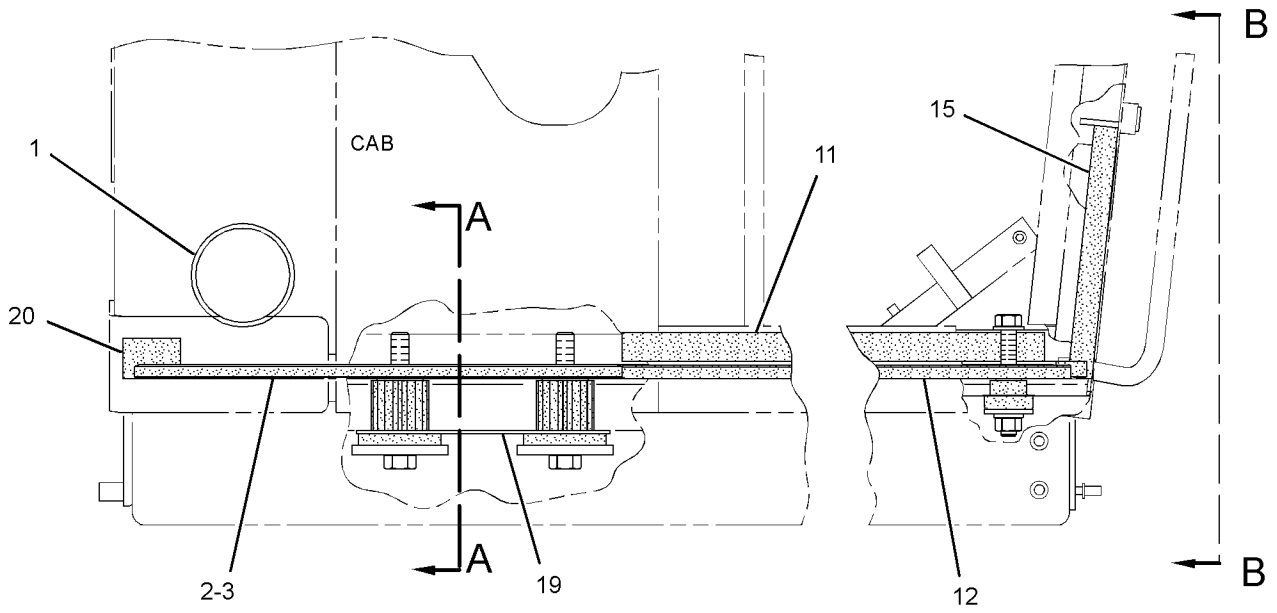

RIGHT SIDE VIEW

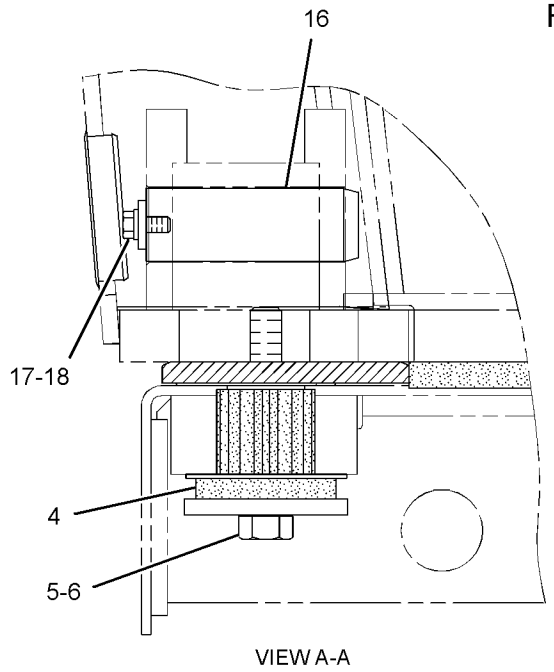

VIEW A-A

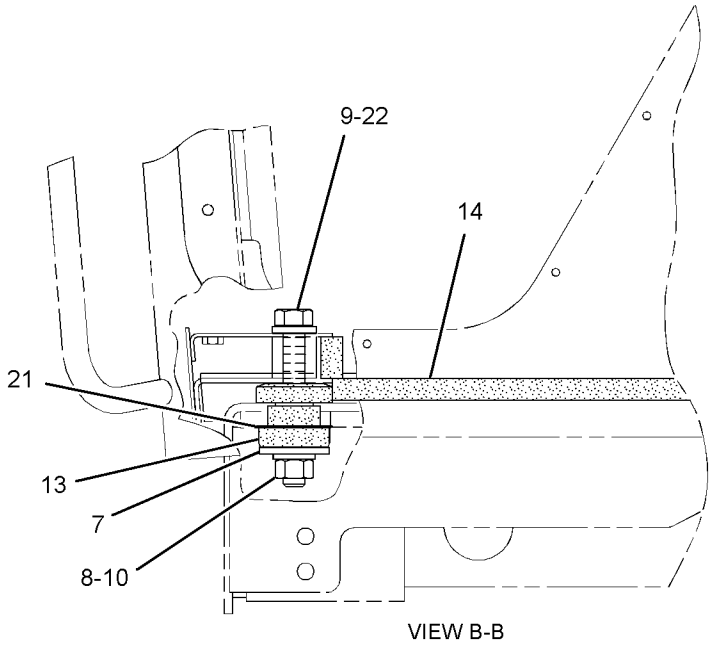

VIEW B-B

GRAPHIC #1 <END> g06171179

518-3026 RADIO GP–AUX/USB/BLUETOOTH

S/N: W921-UP

SMCS-7338 **i07561538**

NOTE	REF NO	GRAPHIC REF	PART NUMBER	QTY	PART NAME 1 2 3 4 5 6 (PRODUCT LEVEL)	SEE PAGE
	1	1	**136-5490**	1	BUSHING (RADIO MOUNT)	
Y	2	1	**200-5728**	1	HARNESS AS-RADIO (FLANGE)	164
	3	1	**344-5594**	1	HARNESS AS-RADIO (AUXILIARY)	
	4	1	**349-8642**	1	MICROPHONE (BLUETOOTH)	
	5	1	**353-1634**	1	HARNESS AS-RADIO (BLUETOOTH)	
	6	1	**462-9619**	1	RADIO GP (AM/FM/USB/BLUETOOTH)	

Y - SEPARATE ILLUSTRATION

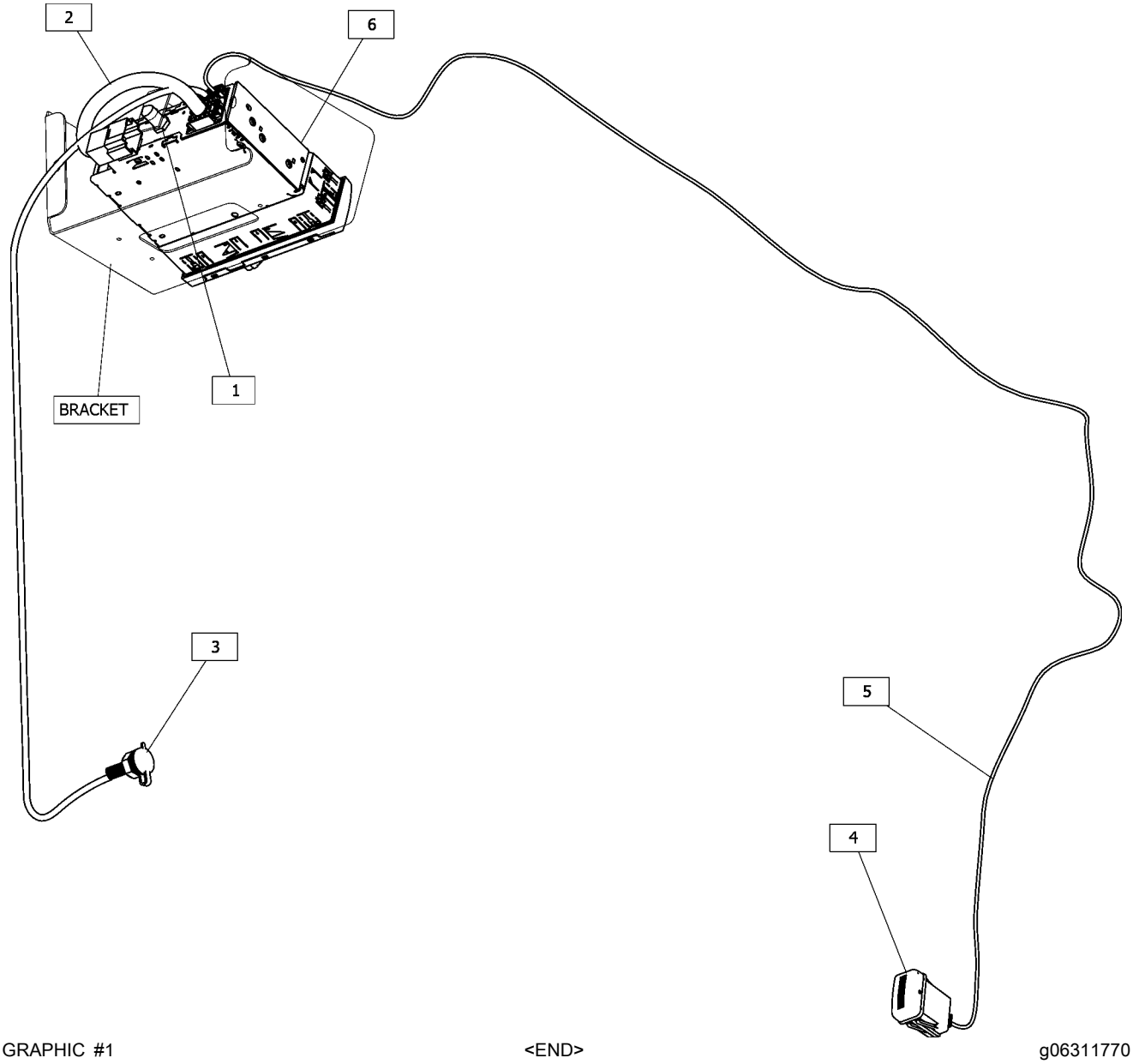

GRAPHIC #1 <END> g06311770

548-6724 ROPS AR

S/N: W921-UP

PART OF 537-5610 CAB AR

SMCS-7177, 7323 **i07574631**

NOTE	REF NO	GRAPHIC REF	PART NUMBER	QTY	PART NAME 1 2 3 4 5 6 (PRODUCT LEVEL)	SEE PAGE
Y	1	1	*533-5736*	1	GUARD GP-PLATFORM	317
Y	2	1	*546-5640*	1	ROPS GP	571

Y - SEPARATE ILLUSTRATION

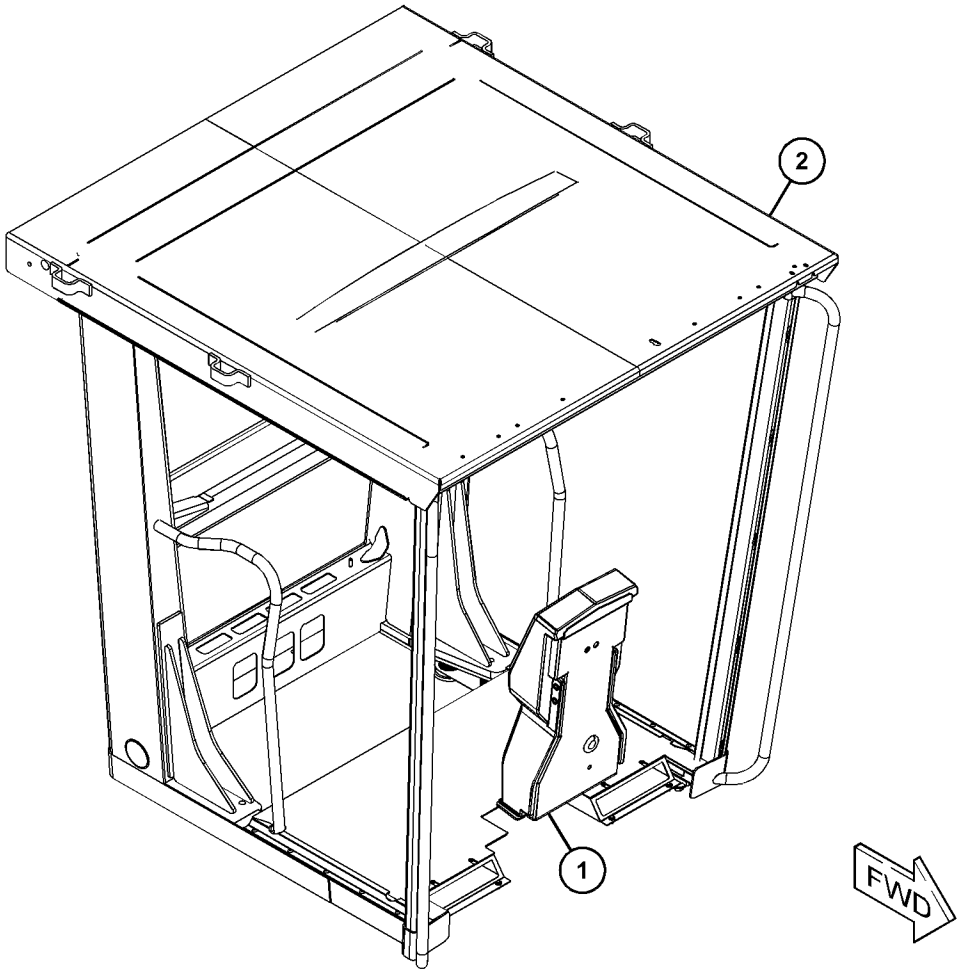

GRAPHIC #1 <END> g06372755

546-5640 ROPS GP

S/N: W921-UP

PART OF 548-6724 ROPS AR

SMCS-7177, 7323 **i07574783**

NOTE	REF NO	GRAPHIC REF	PART NUMBER	QTY	PART NAME 1 2 3 4 5 6 (PRODUCT LEVEL)	SEE PAGE
	1	1	**3E-4048**	2	CAP-PLUG	
	2	1	**6V-3928**	5	PLUG-BUTTON	
	3	1	**9D-1589**	2	MOUNTING	
	4	1	**103-4771**	2	PIN AS	
	5	1	**103-4953**	4	MOUNTING	
	6	1	**103-5515**	1	PAD (RH)	
	7	1	**103-5516**	1	PAD (LH)	
	8	1	**144-4107**	1	FASTENER	
	9	1	**164-2465**	2	PAD	
	10	1	**166-1997**	2	SHIM (1.2-MM THK)	
	11	1	**166-1999**	2	SHIM (2.28-MM THK)	
	12	1	**499-9254**	1	ROPS AS-ENCLOSED	
	13	1	**512-9021**	1	PLATE	
	14	1	**030-8535**	2	BOLT-LOCKING (3/8-16X0.875-IN)	
	15	1	**3E-9411**	2	WASHER-HARD (17.5X38X6-MM THK)	
	16	1	**3V-9244**	2	WASHER (16.5X50X5-MM THK)	
	17	1	**4K-0367**	2	NUT-FULL (5/8-11-THD)	
	18	1	**7X-0354**	2	BOLT (5/8-11X4.5-IN)	
	19	1	**7X-0375**	4	BOLT (3/4-10X5-IN)	
	20	1	**8T-4122**	2	WASHER-HARD (17X32X3.5-MM THK)	
	21	1	**8T-4896**	2	WASHER-HARD (10.2X18.5X2.5-MM THK)	
	22	1	**8X-0674**	4	WASHER (22X100X10-MM THK)	
M	23	1	**9X-2043**	4	SCREW-TRUSS HEAD (M6X1X14-MM)	

M - METRIC PART

546-5640 **ROPS GP** (contd.) **i07574783**

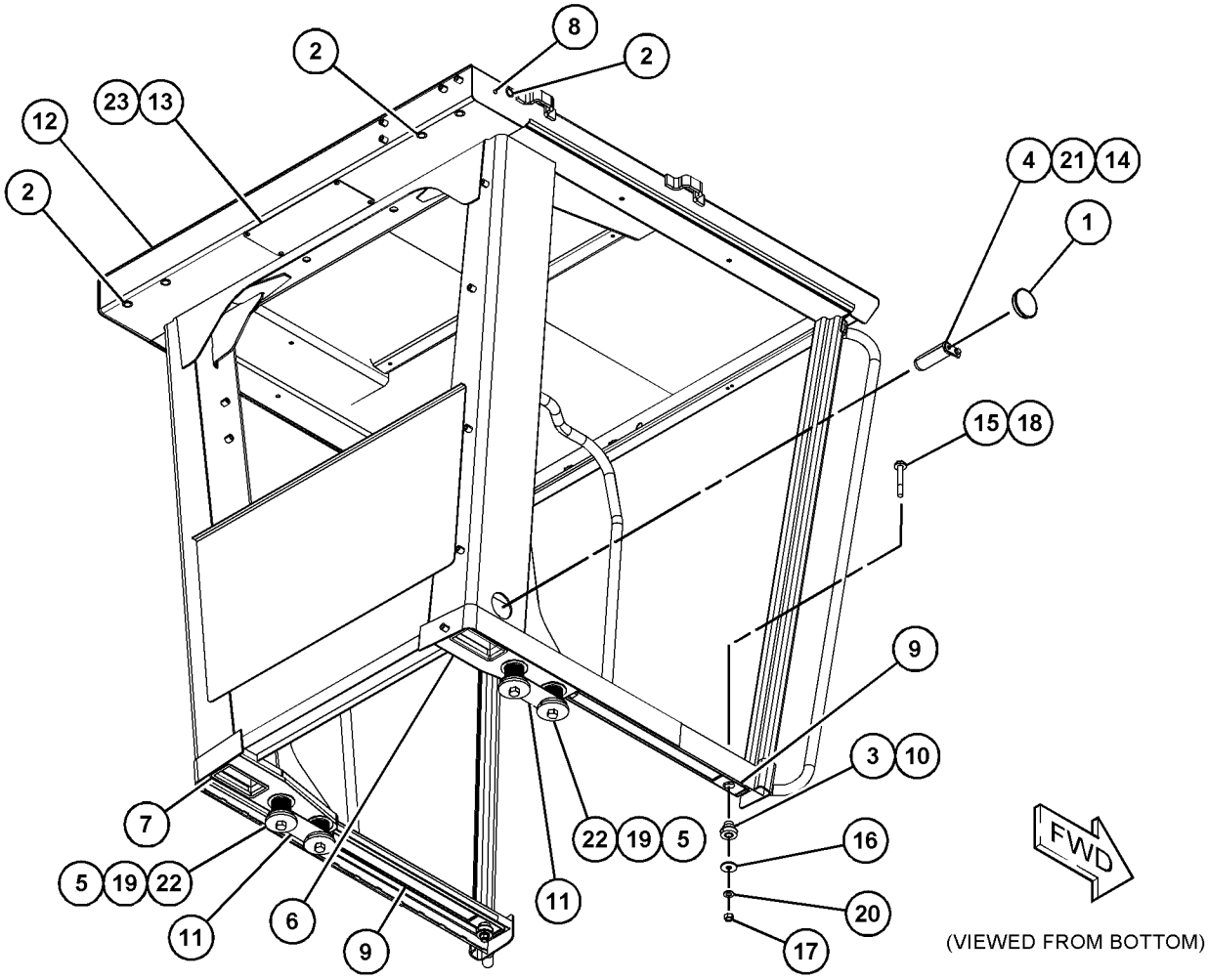

GRAPHIC #1 <END> g06371299

139-4612 SCREEN GP-SUN–REAR

S/N: W921-UP

PART OF 537-5613, 537-5614 CAB AR

SMCS-7165 **i07576921**

NOTE	REF NO	GRAPHIC REF	PART NUMBER	QTY	PART NAME 1 2 3 4 5 6 (PRODUCT LEVEL)	SEE PAGE
D	1	1	**6V-5163**		SEAL (0.1-M EACH)	
	2	1	**466-1003**	1	SCREEN AS	
	3	1	**139-4605**	1	PLATE AS	
M	4	1	**5C-9553**	4	BOLT (M6X1X16-MM)	
	5	1	**9X-8256**	4	WASHER (6.6X12X2-MM THK)	

D - ORDER BY THE METER
M - METRIC PART

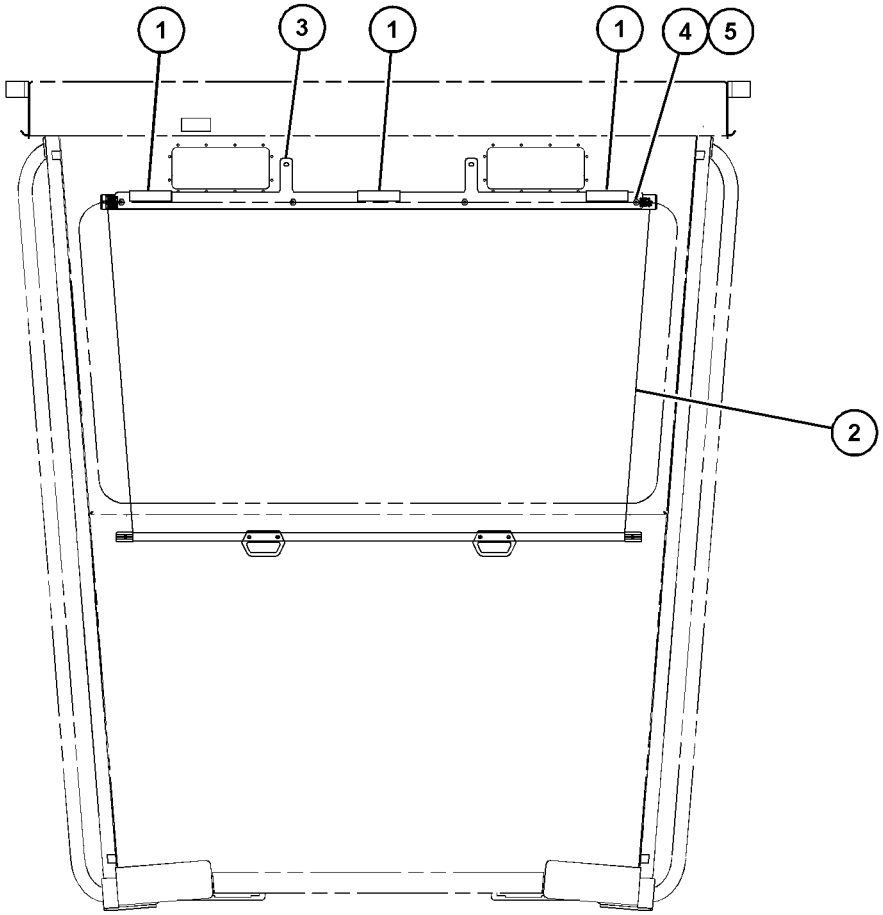

REAR VIEW

GRAPHIC #1 <END> g06105428

116-1965 SEAT BELT GP–RETRACTABLE

S/N: W921-UP

PART OF 437-0671 SEAT GP-STATIC, 437-0684 SEAT GP-SUSPENSION

SMCS-7327 **i07562948**

NOTE	REF NO	GRAPHIC REF	PART NUMBER	QTY	PART NAME 1 2 3 4 5 6 (PRODUCT LEVEL)	SEE PAGE
	1	1	**1A-4350**	1	BOLT (7/16-20X1.75-IN)	
	2	1	**4D-6432**	1	LOCKNUT (7/16-20-THD)	
	3	1	**8S-0934**	2	LOCKNUT-FLANGE (7/16-20-THD)	
	4	1	**8T-9381**	1	BOLT (7/16-20X1-IN)	

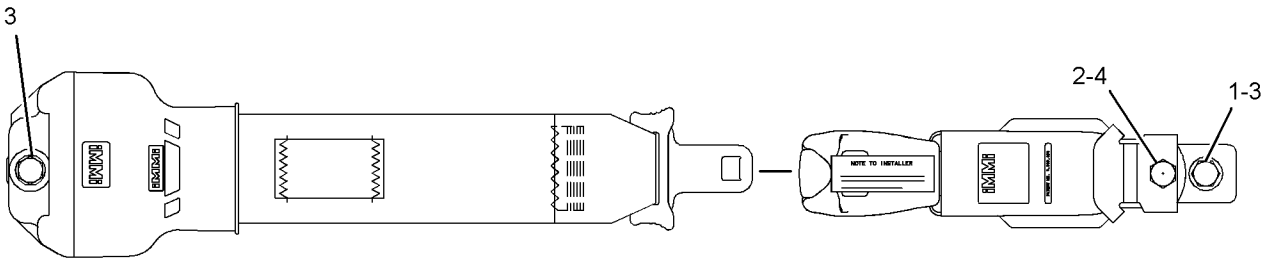

GRAPHIC #1 <END> g01286454

113-4254 SEAT GP—VINYL

S/N: W921-UP

SMCS-7312 **i07568835**

NOTE	PART NUMBER	QTY	PART NAME 1 2 3 4 5 6 (PRODUCT LEVEL)	SEE PAGE
Y	*125-9856*	1	SEAT GP-STATIC	579
	246-2641	1	PADLOCK GP	
	5P-8500	1	KEY	
M	**9X-2041**	6	SCREW-TRUSS HEAD (M10X1.5X20-MM)	
	8Y-4030	1	SEAT BELT GP (ADJUSTABLE, 3-IN)	

M - METRIC PART
Y - SEPARATE ILLUSTRATION

<END>

125-9855 SEAT GP

S/N: W921-UP

PART OF 125-9856 SEAT GP-STATIC

SMCS-7312 **i07568846**

NOTE	REF NO	GRAPHIC REF	PART NUMBER	QTY	PART NAME 1 2 3 4 5 6 (PRODUCT LEVEL)	SEE PAGE
	1	1	**6W-5757**	1	CLIP	
	2	1	**1F-1599**	2	RIVET-HEAD	
	3	1	**9V-8788**	1	ROD	
	4	1	**8V-3208**	1	LEVER	
	5	1	**8R-2054**	1	CUSHION AS-BACK	
	6	1	**8R-2057**	1	CUSHION AS-SEAT	
	7	1	**033-4121**	4	BOLT (5/16-18X0.625-IN)	
	8	1	**9V-7437**	1	SHELL AS	
		1	**9V-7440**	4	NUT-WELD	
BE	9	1	**7X-7877**		STRIP-EDGE	
	10	1	**9S-2544**	4	SCREW-HEX HEAD (8-32X11.13-MM)	
	11	1	**6W-3309**	1	HOLDER	
	12	1	**8T-7565**	7	RIVET-POP	
	13	1	**5P-7957**	1	LANYARD	
	14	1	**9V-8789**	2	ADJUSTER AS	

B - USE AS REQUIRED
E - ORDER BY THE CENTIMETER

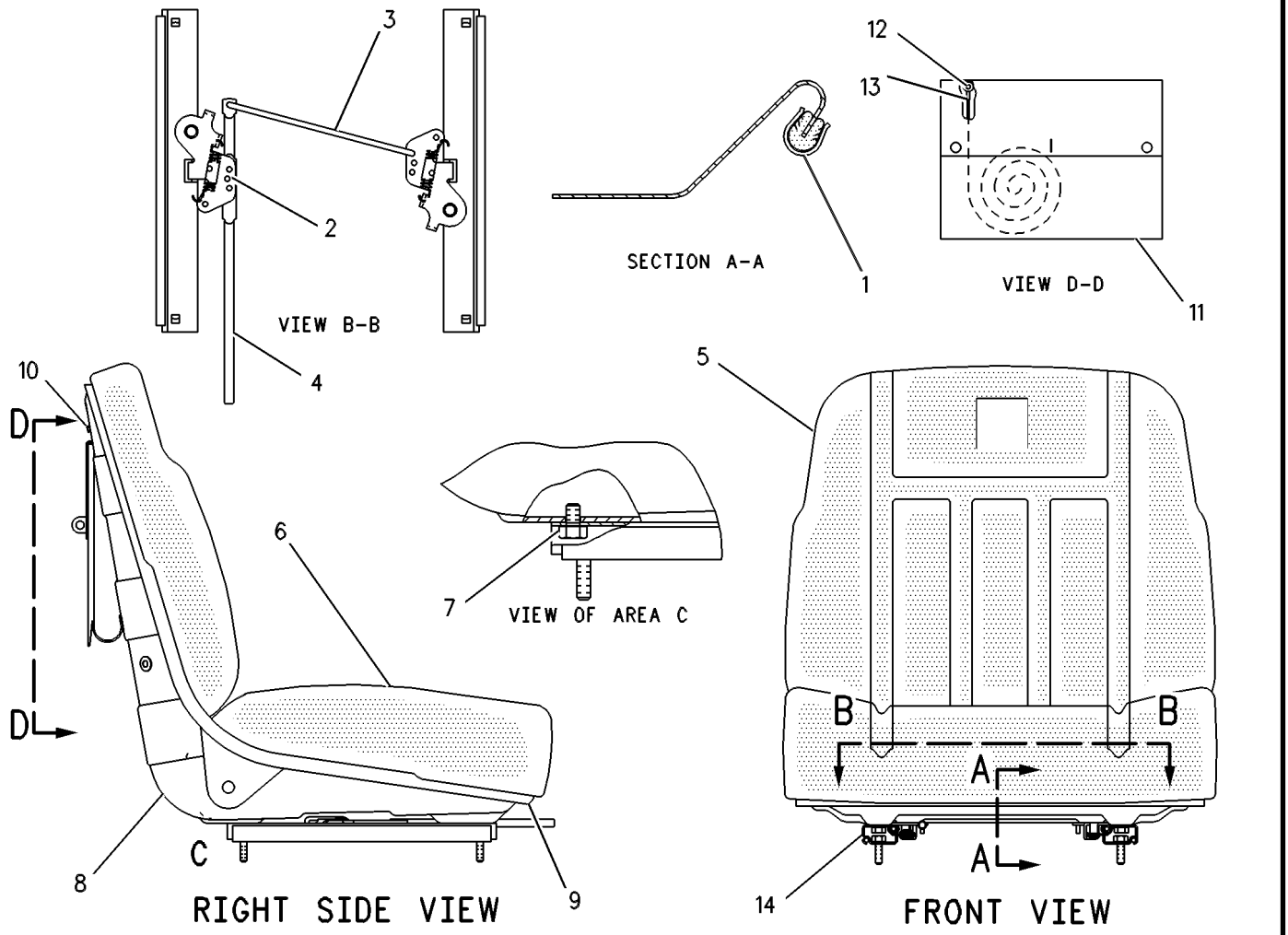

GRAPHIC #1 <END> g00109164

8Y-4005 SEAT GP–VINYL

S/N: W921-UP

PART OF 8Y-6852 SEAT GP-STATIC

SMCS-7312 **i07563183**

NOTE	REF NO	GRAPHIC REF	PART NUMBER	QTY	PART NAME 1 2 3 4 5 6 (PRODUCT LEVEL)	SEE PAGE
E	1	1	**7X-7877**		STRIP-EDGE (250-CM)	
	2	1	**8R-2057**	1	CUSHION AS-SEAT	
	3	1	**8R-2054**	1	CUSHION AS-BACK	
	4	1	**6W-1895**	1	BAR	
	5	1	**6W-1890**	1	BAR AS	
	6	1	**9C-1587**	1	LEVER	
	7	1	**8T-9043**	4	BOLT (5/16-18X0.875-IN)	
	8	1	**033-4843**	4	NUT (5/16-18-THD)	
	9	1	**6W-9693**	2	ADJUSTER AS	
	10	1	**6W-2373**	1	SPRING	
	11	1	**119-0036**	4	SCREW-FLAT HEAD (5/16-18X0.875-IN)	
	12	1	**9V-7437**	1	SHELL AS	
	13	1	**9S-2544**	4	SCREW-HEX HEAD (8-32X11.13-MM)	
	14	1	**6W-5757**	1	CLIP	
	15	1	**6W-3309**	1	HOLDER	
	16	1	**8T-7565**	7	RIVET-POP	
	17	1	**5P-7957**	1	LANYARD	
	18	1	**6W-5740**	1	CAP	
	19	1	**5B-6172**	4	WASHER (9.7X19X0.8-MM THK)	
	20	1	**7X-7739**	4	WASHER (9.7X25.4 X4-MM THK)	

E - ORDER BY THE CENTIMETER

8Y-4005 **SEAT GP** (contd.) **i07563183**

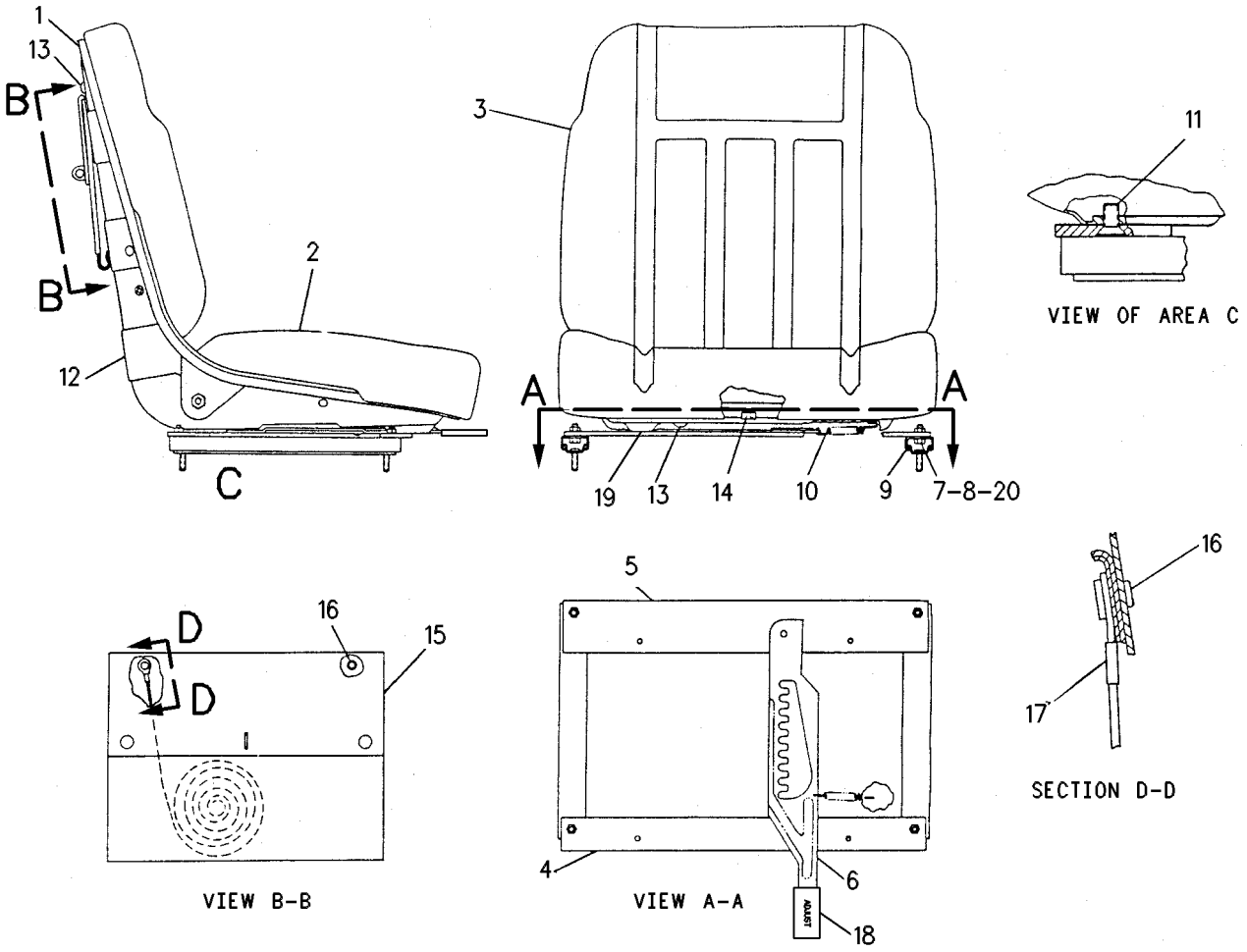

GRAPHIC #1 <END> g00109668

125-9856 SEAT GP-STATIC

S/N: W921-UP

PART OF 113-4254 SEAT GP

SMCS-7312 **i07568841**

NOTE	REF NO	GRAPHIC REF	PART NUMBER	QTY	PART NAME 1 2 3 4 5 6 (PRODUCT LEVEL)	SEE PAGE
Y	1	1	**125-9855**	1	SEAT GP	576
Y	2	1	**125-9854**	1	ADJUSTER GP-SEAT	485
	3	1	**031-4155**	4	LOCKNUT (5/16-18-THD)	
	4	1	**8T-4224**	4	WASHER-HARD (8.8X16X2-MM THK)	

Y - SEPARATE ILLUSTRATION

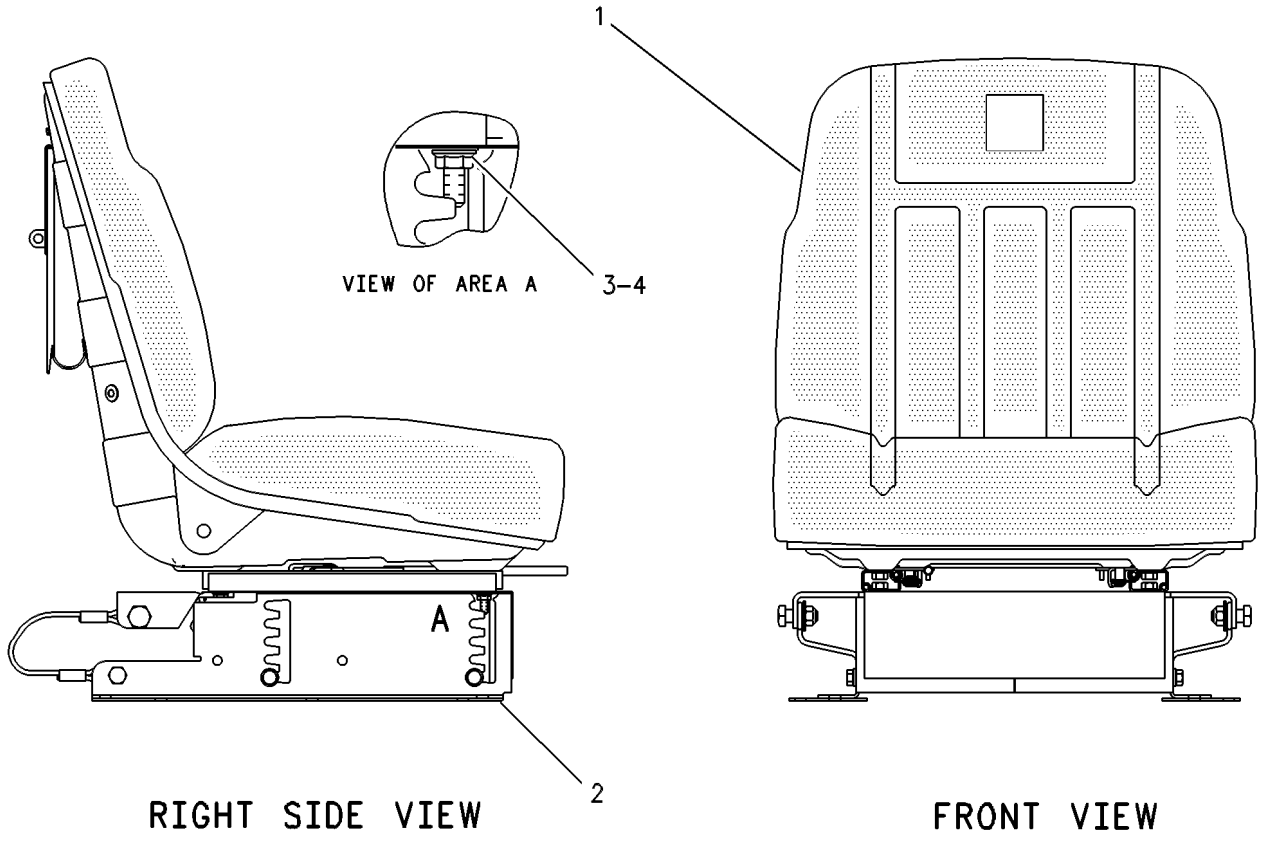

GRAPHIC #1 <END> g00109154

437-0671 SEAT GP-STATIC

S/N: W921-UP

ADJUSTABLE, VINYL

SMCS-7312 **i07563098**

NOTE	REF NO	GRAPHIC REF	PART NUMBER	QTY	PART NAME 1 2 3 4 5 6 (PRODUCT LEVEL)	SEE PAGE
Y	1	1	**116-1965**	1	SEAT BELT GP (RETRACTABLE)	574
	2	1	**246-2641**	1	PADLOCK GP	
		1	**5P-8500**	1	KEY	
Y	3	1	**8Y-6852**	1	SEAT GP-STATIC (VINYL)	581
M	4	1	**9X-2041**	6	SCREW-TRUSS HEAD (M10X1.5X20-MM)	

M - METRIC PART
Y - SEPARATE ILLUSTRATION

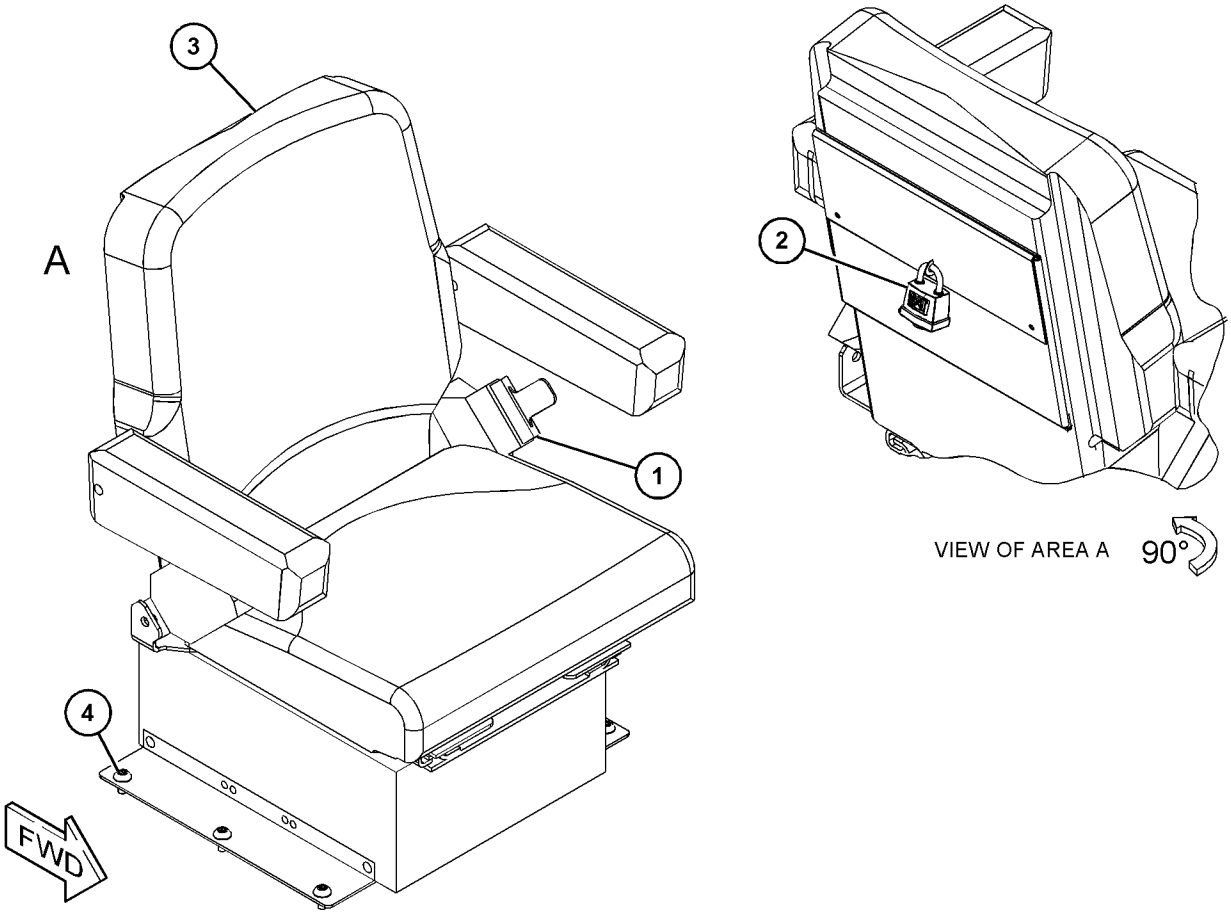

GRAPHIC #1 <END> g03734199

8Y-6852 SEAT GP-STATIC

S/N: W921-UP
VINYL, ADJUSTABLE
PART OF 437-0671 SEAT GP-STATIC

SMCS-7312 **i07563100**

NOTE	REF NO	GRAPHIC REF	PART NUMBER	QTY	PART NAME 1 2 3 4 5 6 (PRODUCT LEVEL)	SEE PAGE
Y	1	1	**116-2779**	1	ADJUSTER GP-SEAT	483
Y	2	1	**8Y-4005**	1	SEAT GP (VINYL)	577
	3	1	**9L-9814**	4	LOCKNUT	
	4	1	**8S-4790**	2	SPACER (0.459X0.625X0.25-IN THK)	
	5	1	**119-6194**	1	BOOT AS	
	6	1	**089-7968**	2	WASHER (13X27.5X2.5-MM THK)	
	7	1	**8R-4519**	2	LOCKNUT (7/16-20-THD)	
	8	1	**6W-3628**	2	CABLE	
	9	1	**5M-2894**	4	WASHER-HARD (10.2X18.5X2.5-MM THK)	
	10	1	**9V-7446**	1	ARMREST AS (RH)	
		1	**2K-4973**	1	LOCKNUT (3/8-16-THD)	
		1	**2K-6061**	1	SCREW-MACHINE (3/8-16X1.5-IN)	
		1	**5S-7383**	1	BOLT (3/8-16X1.75-IN)	
		1	**8Y-6277**	2	SPACER (10.5X28.6X10-MM THK)	
		1	**9V-7447**	1	PAD AS	
		1	**1F-0750**	1	NUT-WELD (3/8-16-THD)	
		1	**9V-7453**	1	BRACKET (RH)	
	11	1	**9V-7454**	1	ARMREST AS (LH)	
		1	**2K-4973**	1	LOCKNUT (3/8-16-THD)	
		1	**2K-6061**	1	SCREW-MACHINE (3/8-16X1.5-IN)	
		1	**5S-7383**	1	BOLT (3/8-16X1.75-IN)	
		1	**8Y-6277**	2	SPACER (10.5X28.6X10-MM THK)	
		1	**9V-7447**	1	PAD AS	
		1	**1F-0750**	1	NUT-WELD (3/8-16-THD)	
		1	**9V-7458**	1	BRACKET (LH)	
	12	1	**8T-9381**	2	BOLT (7/16-20X1-IN)	
M	13	1	**9X-8276**	4	BOLT (3/8-16X0.75-IN)	

M - METRIC PART
Y - SEPARATE ILLUSTRATION

8Y-6852 **SEAT GP-STATIC (**contd.**)** **i07563100**

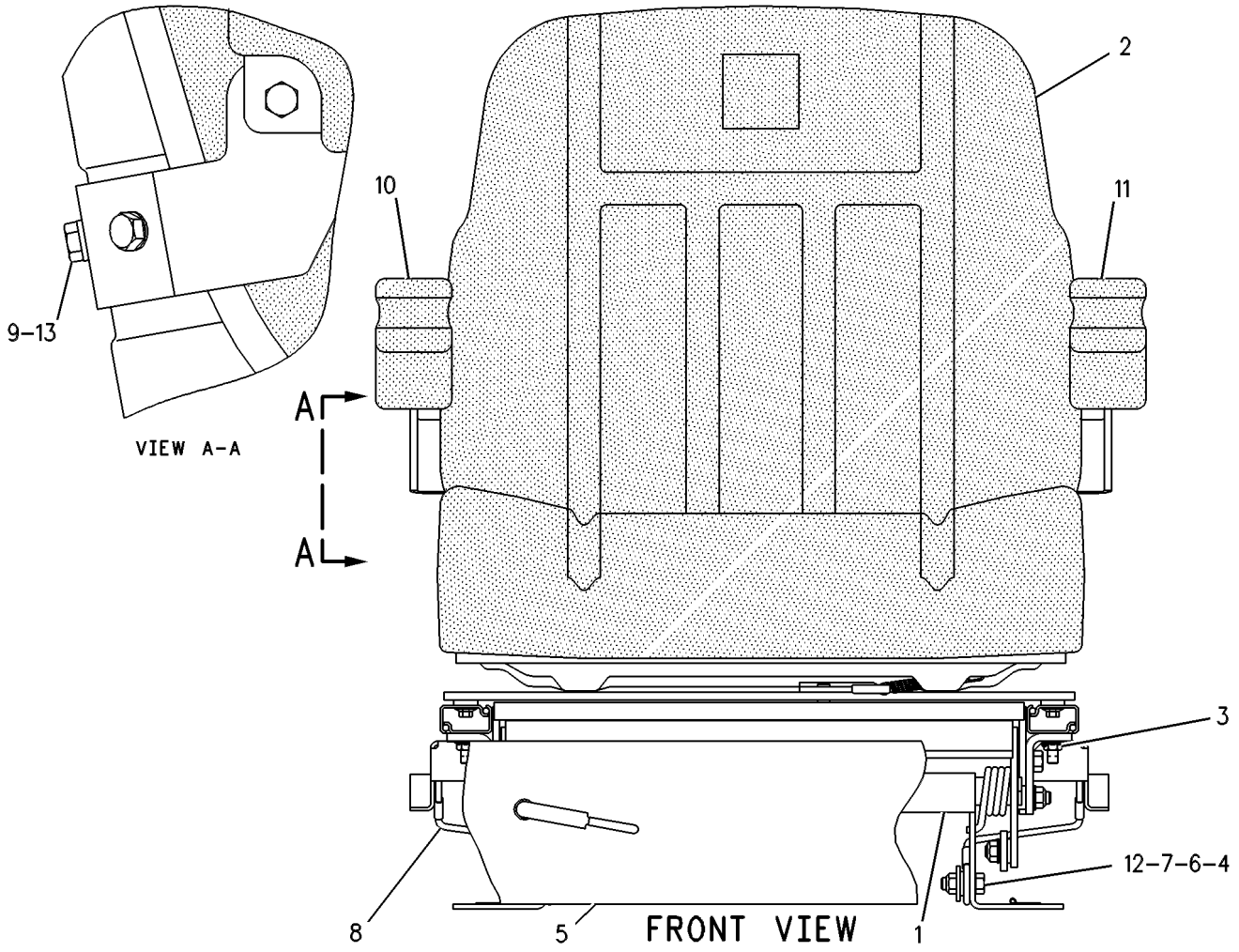

GRAPHIC #1 <END> g00109321

437-0684 SEAT GP-SUSPENSION

S/N: W921-UP

VINYL

SMCS-7312 **i07562942**

NOTE	REF NO	GRAPHIC REF	PART NUMBER	QTY	PART NAME 1 2 3 4 5 6 (PRODUCT LEVEL)	SEE PAGE
Y	1	1	**116-1965**	1	SEAT BELT GP (RETRACTABLE)	574
	2	1	**393-0314**	1	SEAT GP-SUSPENSION (VINYL)	
	3	1	**246-2641**	1	PADLOCK GP	
		1	**5P-8500**	1	KEY	
M	4	1	**9X-2041**	6	SCREW-TRUSS HEAD (M10X1.5X20-MM)	

M - METRIC PART
Y - SEPARATE ILLUSTRATION

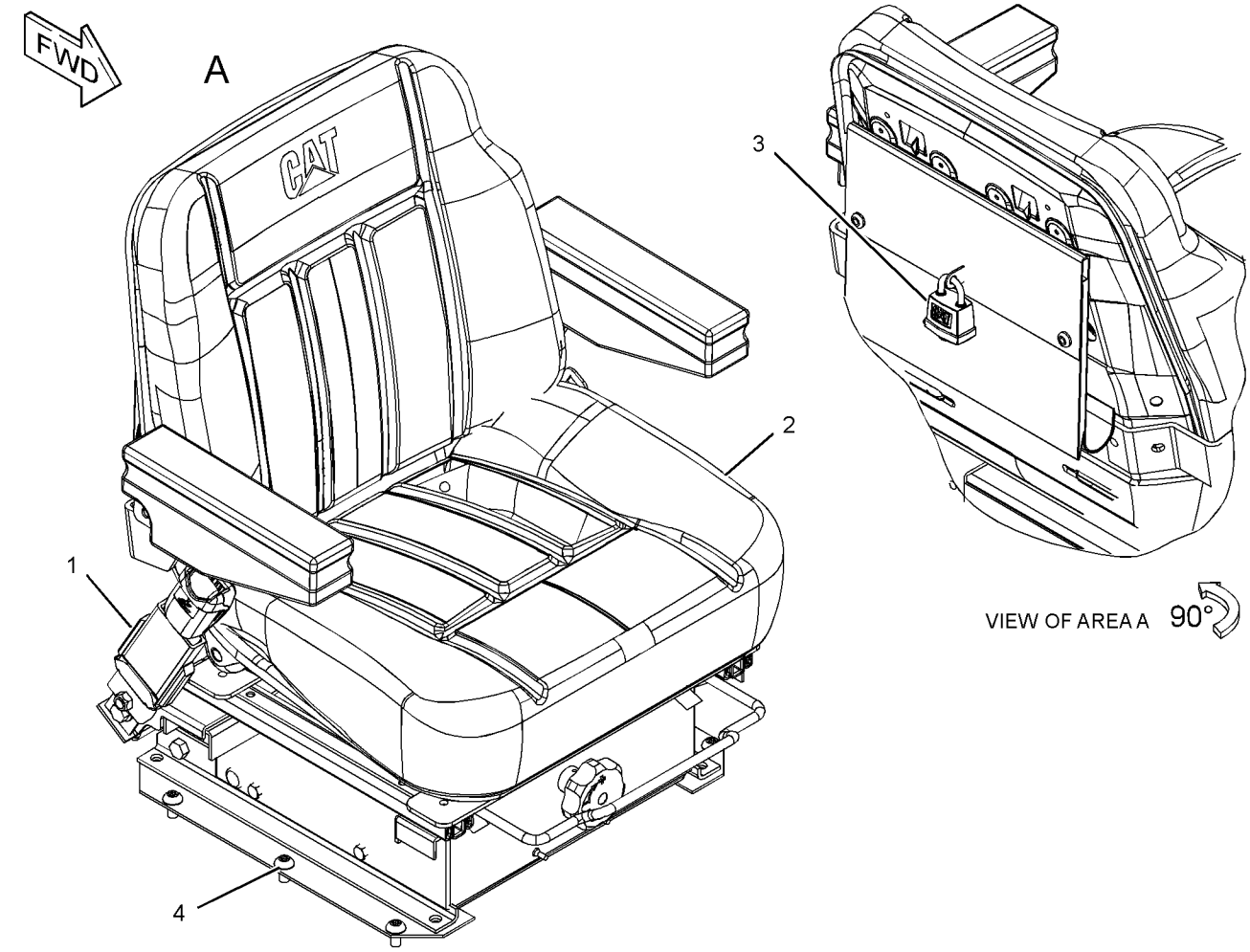

GRAPHIC #1 <END> g03887277

513-3693 SEAT GP-SUSPENSION—CLOTH

S/N: W921-UP

24-VOLT

PART OF 518-3382 SEAT GP-SUSPENSION

SMCS-7312 **i07561496**

NOTE	REF NO	GRAPHIC REF	PART NUMBER	QTY	PART NAME 1 2 3 4 5 6 (PRODUCT LEVEL)	SEE PAGE
Y	1	1	**515-4598**	1	SEAT GP-SUSPENSION	585
	2	1	**515-4604**	1	KIT-SLIDE RAIL	
					(INCLUDES UPPER & LOWER SLIDE ASSEMBLY)	
Y	3	1	**515-4607**	1	SUSPENSION GP-SEAT (ADJUSTABLE)	589

Y - SEPARATE ILLUSTRATION

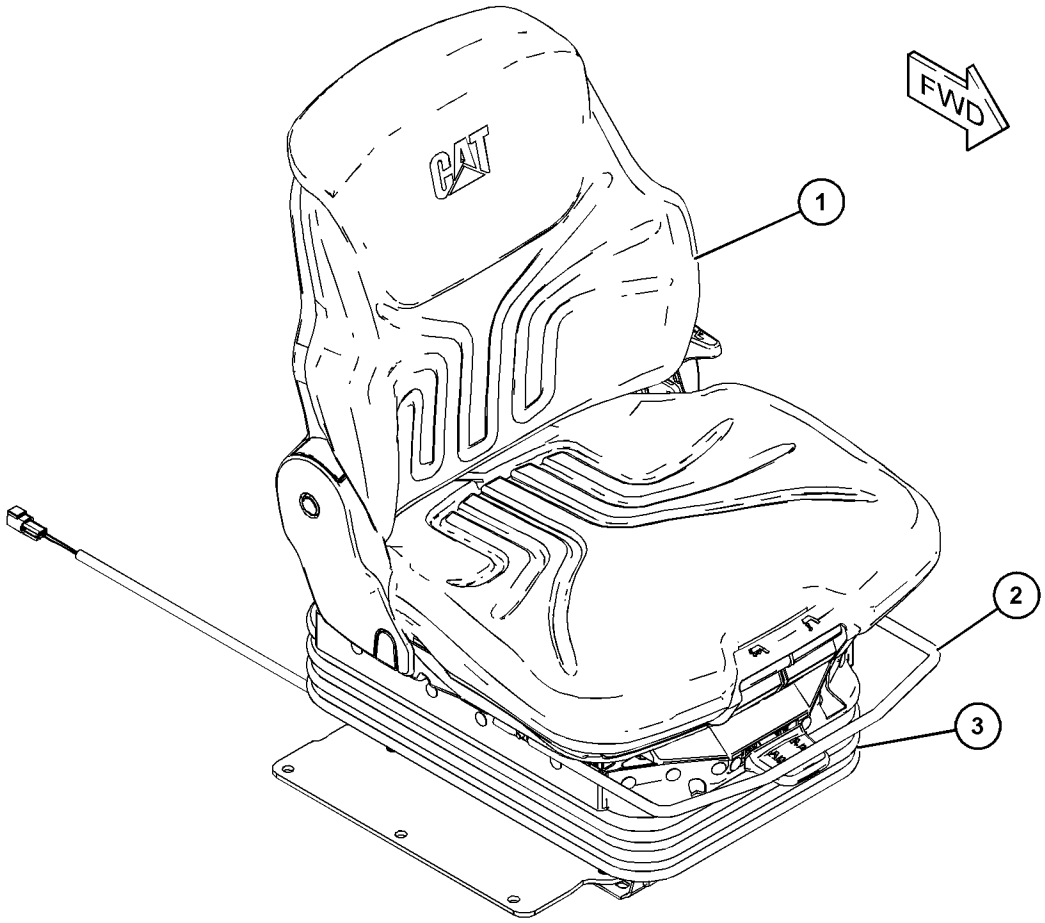

GRAPHIC #1 <END> g06324638

515-4598 SEAT GP-SUSPENSION

S/N: W921-UP

PART OF 513-3693 SEAT GP-SUSPENSION

SMCS-7312 **i07561523**

NOTE	REF NO	GRAPHIC REF	PART NUMBER	QTY	PART NAME 1 2 3 4 5 6 (PRODUCT LEVEL)	SEE PAGE
	1	1	**208-0231**	1	COVER (RH)	
	2	1	**208-0232**	1	HANDLE	
	3	1	**208-1133**	1	KIT-SUPPORT	
					(INCLUDES BOLT, GEAR, RIVETS, BRAKE SPRING, HANDLE,CARRIER, ROD & PLATE)	
	4	1	**208-1134**	1	KIT-HANDLE	
					(INCLUDES BOLT & HANDLE)	
	5	1	**452-9663**	1	COVER (LH)	
	6	1	**515-4599**	1	KIT-CUSHION	
					(INCLUDES BACK CUSHION AS & SEAT CUSHION AS)	
	7	1	**515-4603**	1	KIT-HEADREST	
					(INCLUDES HEADREST, CAT LOGO, PLATE, RIVETS, ROD & SCREWS)	

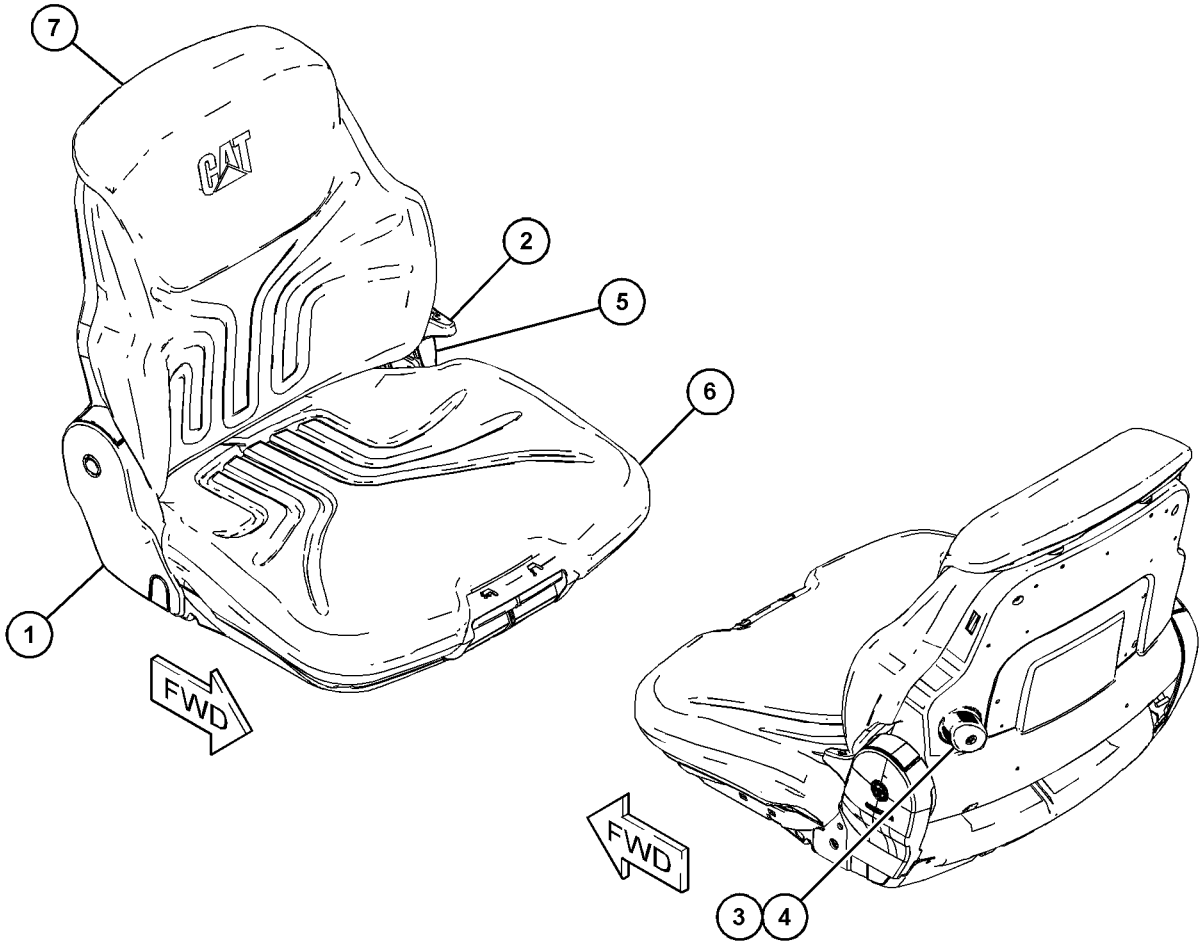

GRAPHIC #1 <END> g06321734

518-3382 SEAT GP-SUSPENSION

S/N: W921-UP

SMCS-7312 **i07561432**

NOTE	REF NO	GRAPHIC REF	PART NUMBER	QTY	PART NAME 1 2 3 4 5 6 (PRODUCT LEVEL)	SEE PAGE
	1	1	**5P-7957**	1	LANYARD	
	2	1	**173-2052**	1	RETAINER	
	3	1	**178-7907**	1	HOLDER (LITERATURE)	
	4	1	**513-0286**	1	SEAT BELT GP	
Y	5	1	**513-3693**	1	SEAT GP-SUSPENSION (CLOTH)	584
	6	1	**515-4605**	1	ARMREST GP (LH)	
	7	1	**515-4606**	1	ARMREST GP (RH)	
	8	1	**4B-4863**	4	WASHER (4.7X11X1.2-MM THK)	
	9	1	**9M-5732**	4	RIVET-POP	
M	10	1	**9X-2041**	6	SCREW-TRUSS HEAD (M10X1.5X20-MM)	

M - METRIC PART
Y - SEPARATE ILLUSTRATION

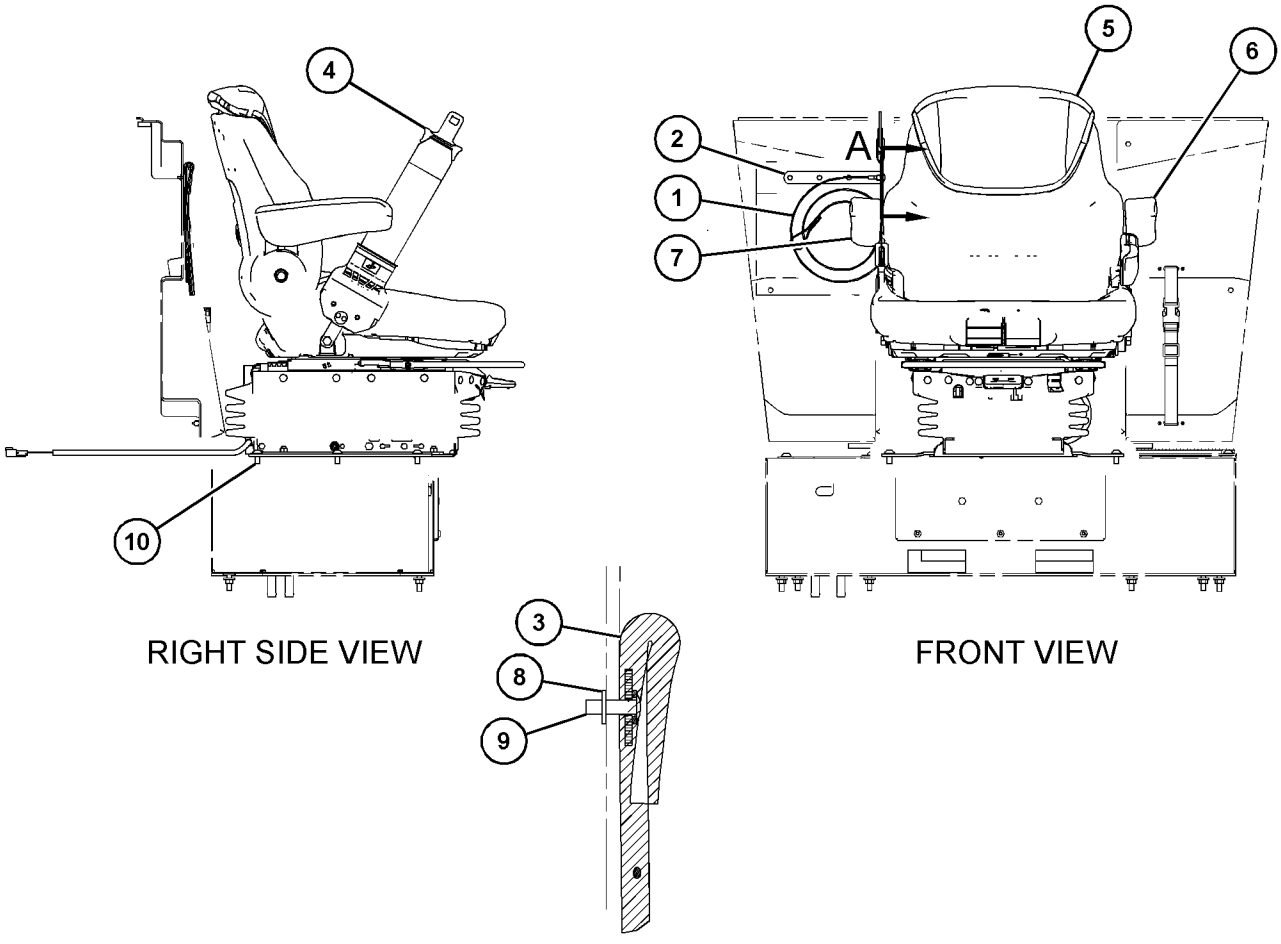

GRAPHIC #1

<END>

g06167920

516-7924 SUPPORT GP-SEAT

S/N: W921-UP

PART OF 537-5615 AIR CONDITIONER AR, 516-7928 SUPPORT GP-SEAT

SMCS-7321 **i07570880**

NOTE	REF NO	GRAPHIC REF	PART NUMBER	QTY	PART NAME 1 2 3 4 5 6 (PRODUCT LEVEL)	SEE PAGE
	1	1	**123-4618**	1	COVER	
	2	1	**191-0027**	1	PAD	
	3	1	**512-9022**	1	SUPPORT AS	
	4	1	**512-9023**	1	COVER	
	5	1	**512-9024**	1	COVER AS	
	6	1	**5P-1075**	8	WASHER-HARD (10.2X22.5X3-MM THK)	
	7	1	**6V-8801**	8	NUT (3/8-16-THD)	
M	8	1	**9X-2041**	10	SCREW-TRUSS HEAD (M10X1.5X20-MM)	

M - METRIC PART

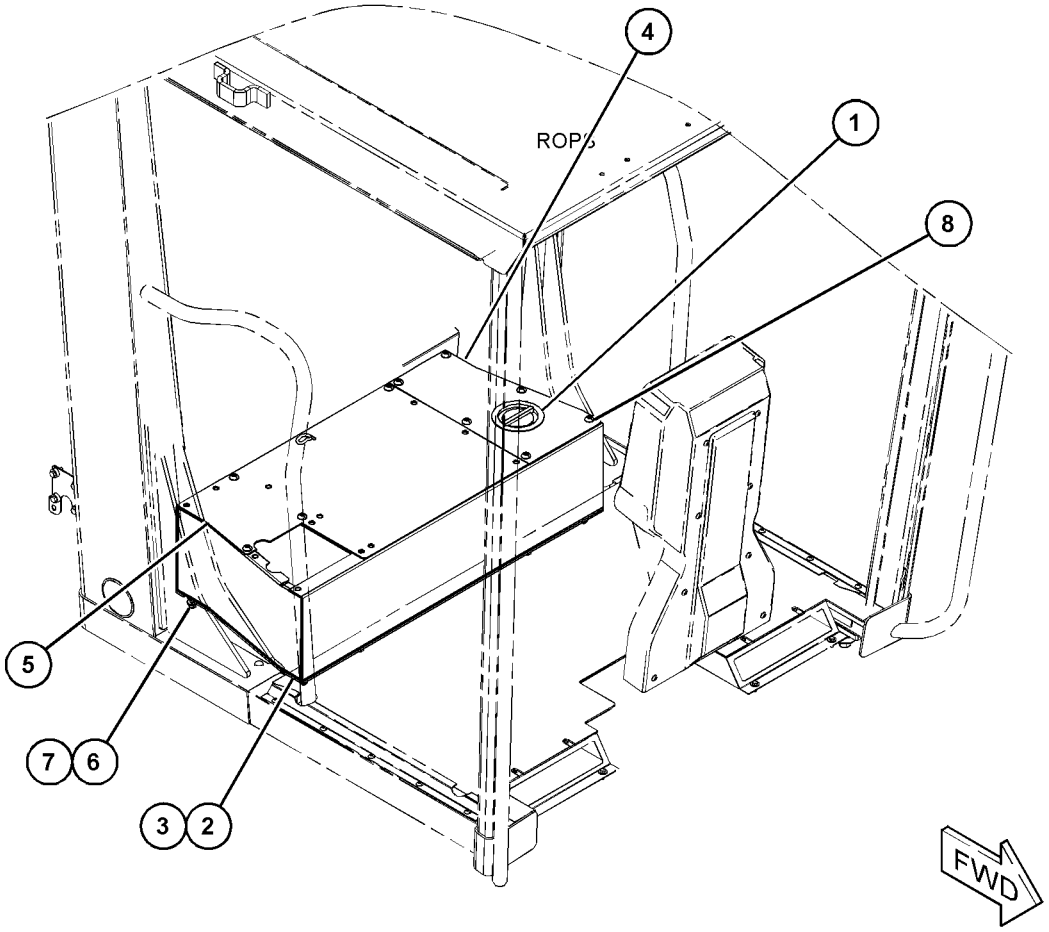

GRAPHIC #1 <END> g06165519

516-7928 SUPPORT GP-SEAT

S/N: W921-UP

PART OF 537-5616 AIR CONDITIONER AR

SMCS-7321 **i07570964**

NOTE	REF NO	GRAPHIC REF	PART NUMBER	QTY	PART NAME 1 2 3 4 5 6 (PRODUCT LEVEL)	SEE PAGE
	1	1	**117-9966**	2	PLUG	
	2	1	**122-7045**	6	COVER	
	3	1	**512-5954**	1	PANEL	
	4	1	**512-9031**	2	COVER	
Y	5	1	*516-7924*	1	SUPPORT GP-SEAT	587

Y - SEPARATE ILLUSTRATION

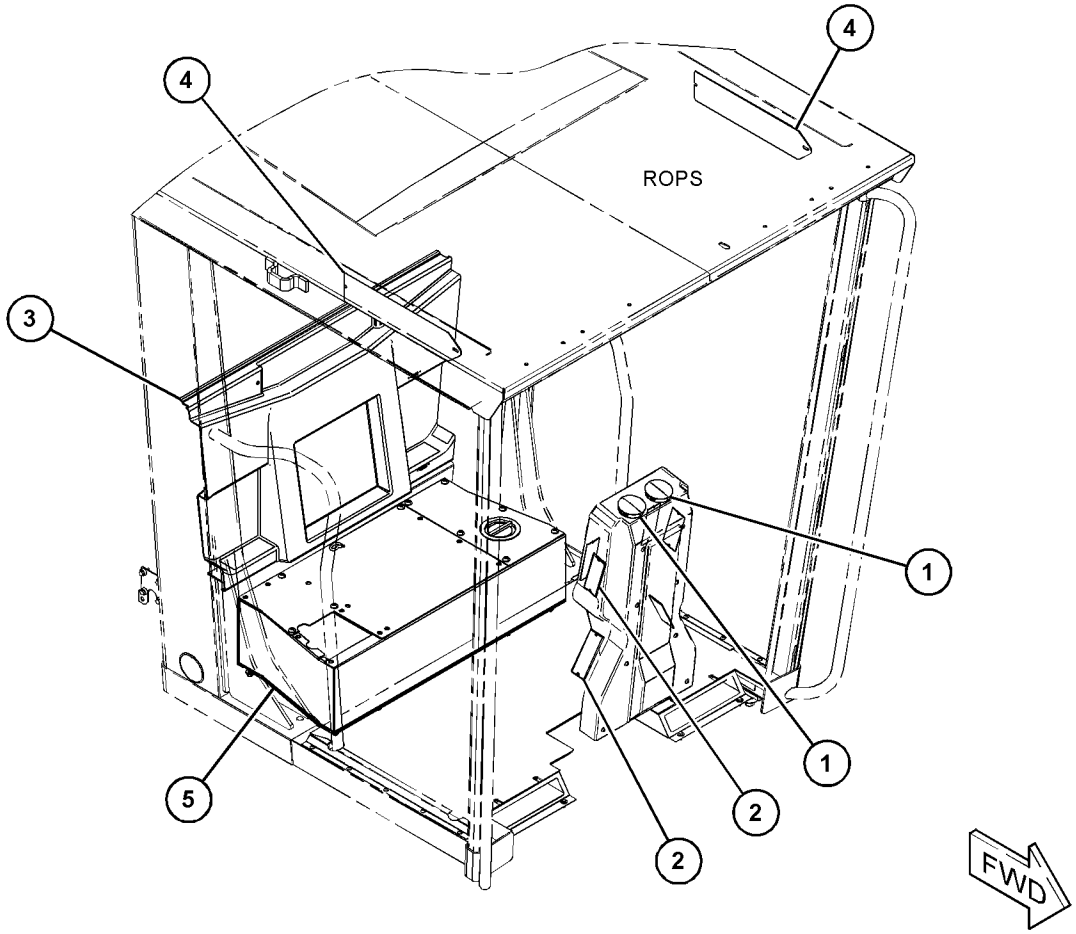

GRAPHIC #1 <END> g06165518

515-4607 SUSPENSION GP-SEAT—ADJUSTABLE

S/N: W921-UP
24-VOLT. AIR
PART OF 513-3693 SEAT GP-SUSPENSION

SMCS-7324 **i07561527**

NOTE	REF NO	GRAPHIC REF	PART NUMBER	QTY	PART NAME 1 2 3 4 5 6 (PRODUCT LEVEL)	SEE PAGE
	1	1	**304-5418**	1	KIT-GAS SPRING (SUSPENSION SEAT)	
					(INCLUDES SPRING-GAS, SCREW & PLUGS)	
	2	1	**513-9148**	1	KIT-COMPRESSOR	
					(INCLUDES STRAP-CABLES, CLIP-HOSE, COMPRESSOR, HOSE AS & PAD)	
	3	1	**513-9150**	1	KIT-SWITCH	
					(INCLUDES BEARING BLOCK, HANDLE, KNOB, MICRO-SWITCH, PIN, RIVET, SCREW, SPRING & VALVE)	
	4	1	**513-9154**	1	KIT-DAMPER	
					(INCLUDES BEARING, BUSHING, CABLE, CLIPS, CYLINDER, FIXING, FORK, INDICATOR AS, KNOB, PI, PISTON AS, SCREW & SPRING)	
	5	1	**513-9156**	1	KIT-TETHER	
					(INCLUDES BOLT, BRACKET, BRACKET AS, CLAMP, NUT & STRAP-TETHER)	
	6	1	**513-9159**	1	KIT-SEAT WIRING	
					(INCLUDES STRAP-CABLES & HARNESS AS-WIRING)	
	7	1	**513-9160**	1	KIT-BEARING	
					(INCLUDES NUTS, BLOCK, BOLT, BUMPERS, BUSHING, ROLLER, SCREWS, STOPPER AS & WASHER)	
	8	1	**513-9161**	1	KIT-KNOB	
					(INCLUDES CLAMP, CABLE, SCREW, KNOBS & SUSPENSION GROUPS)	
	9	1	**513-9164**	1	KIT-BOOT	
					(INCLUDES BOOT & BUTTONS)	
					PARTS SHOWN IN GRAPHIC(S) WITHOUT A REFERENCE NUMBER ARE NOT SERVICED SEPARATELY	

515-4607 **SUSPENSION GP-SEAT** (contd.) **i07561527**

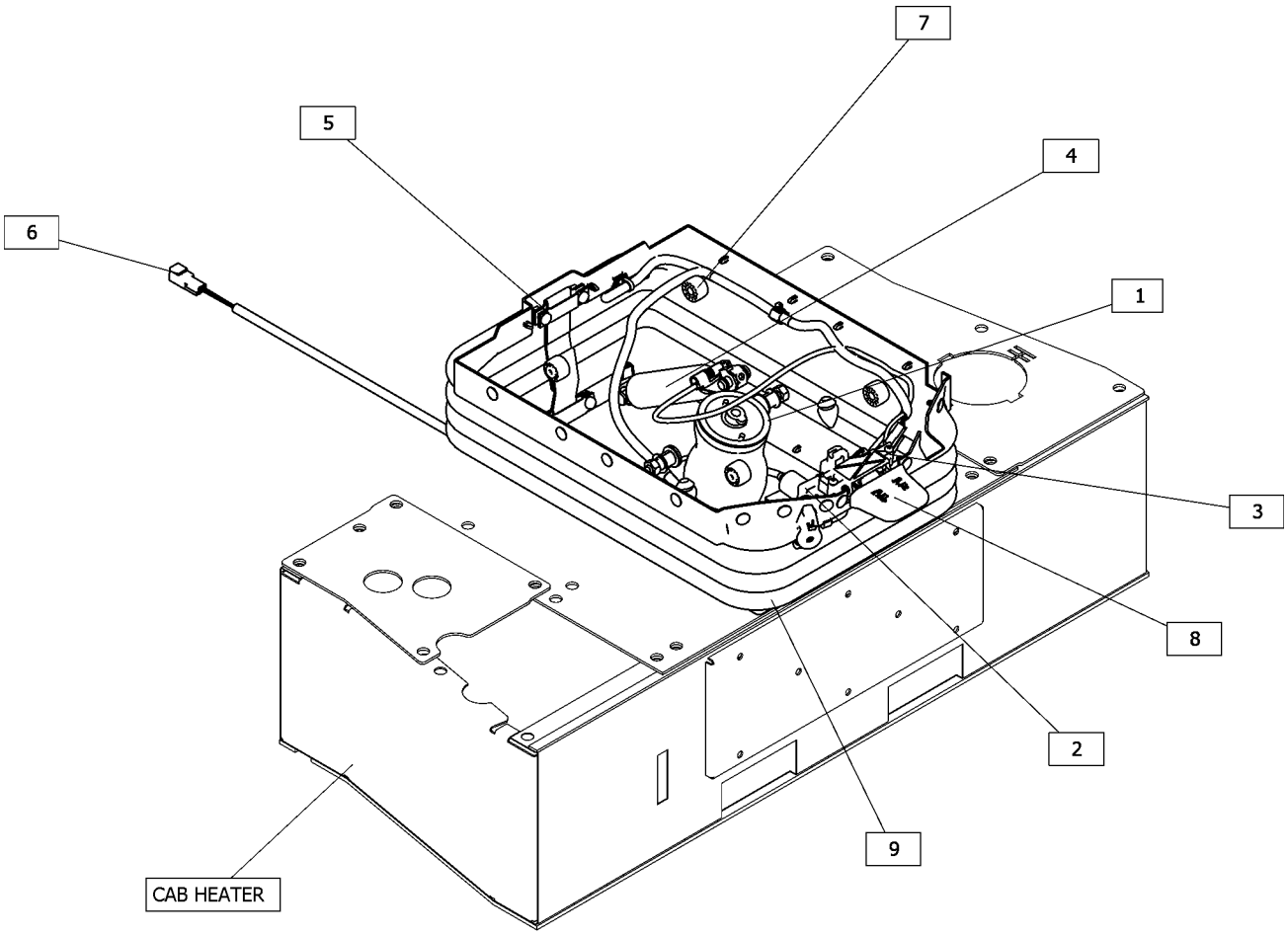

GRAPHIC #1 <END> g06328898

8X-9405 TANK GP-WINDOW WASHER

S/N: W921-UP

PART OF 533-1011, 8X-9675 WASHER GP-WINDOW

SMCS-7306 **i07574915**

NOTE	REF NO	GRAPHIC REF	PART NUMBER	QTY	PART NAME 1 2 3 4 5 6 (PRODUCT LEVEL)	SEE PAGE
	1	1	**6W-5698**	2	GROMMET	
	2	1	**7T-1961**	1	CAP	
	3	1	**8X-1135**	1	GASKET	
	4	1	**8X-9349**	1	PAD	
	5	1	**261-3345**	2	CONNECTOR	

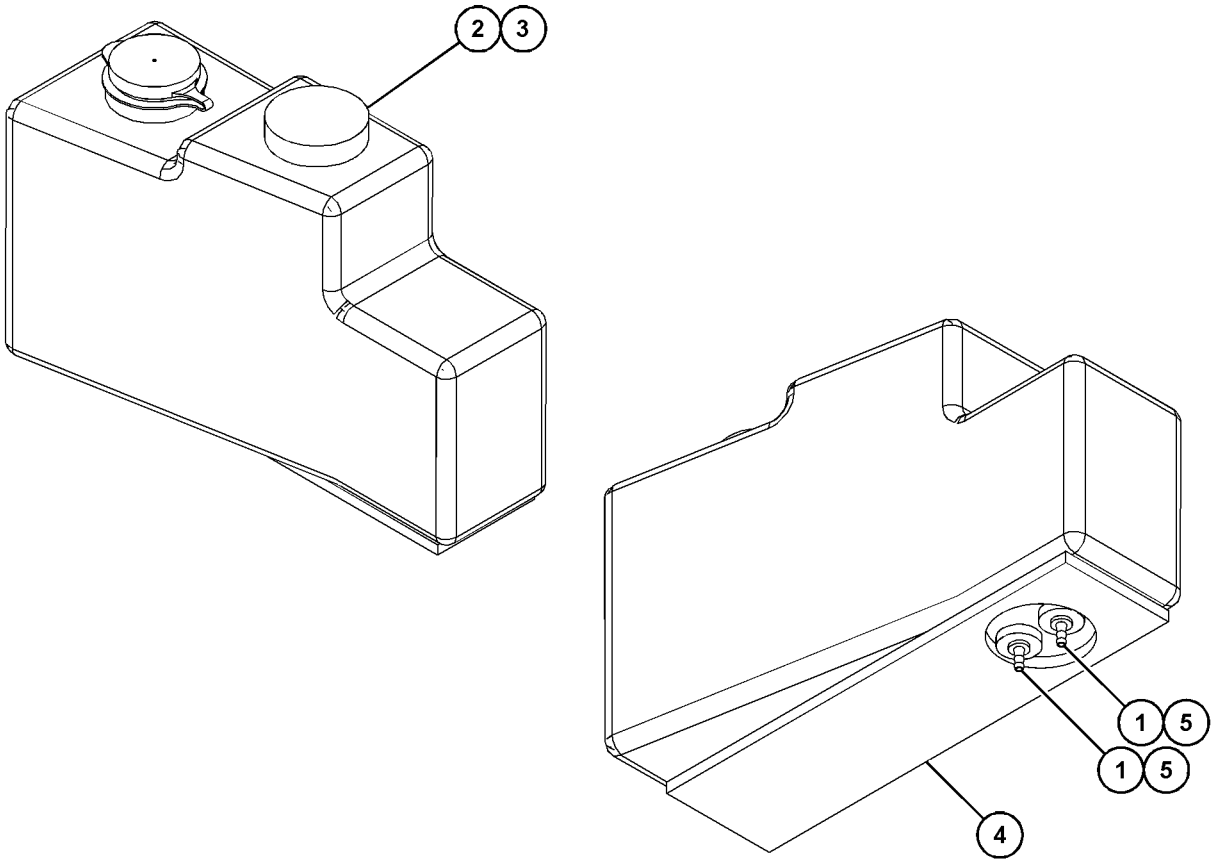

(VIEWED FROM BOTTOM)

GRAPHIC #1 <END> g06371784

533-1011 WASHER GP-WINDOW—FRONT

S/N: W921-UP

PART OF 537-5611, 537-5612 CAB AR

SMCS-7306 **i07574846**

NOTE	REF NO	GRAPHIC REF	PART NUMBER	QTY	PART NAME 1 2 3 4 5 6 (PRODUCT LEVEL)	SEE PAGE
	1	1	**3S-2093**	9	STRAP-CABLE	
	2	1	**6K-9632**	1	TEE	
	3	1	**7T-8891**	1	PUMP AS-WASHER (24-VOLT)	
	4	1	**8E-8293**	1	GROMMET	
	5	1	**8W-0934**	1	BRACKET	
	6	1	**8W-0935**	1	GASKET	
Y	7	1	**8X-9405**	1	TANK GP-WINDOW WASHER	591
	8	1	**9P-2369**	1	JET AS-WASHER	
		1	**8Y-4408**	1	NOZZLE AS-JET	
	9	1	**102-3645**	1	COVER	
	10	1	**523-9207**	1	BRACKET	
M	11	1	**5C-2890**	2	NUT (M6X1-THD)	
	12	1	**5P-4115**	2	WASHER-HARD (7.2X19X2-MM THK)	
M	13	1	**8T-4136**	1	BOLT (M10X1.5X25-MM)	
	14	1	**8T-4896**	1	WASHER-HARD (10.2X18.5X2.5-MM THK)	
M	15	1	**9X-2042**	2	SCREW-TRUSS HEAD (M6X1X12-MM)	
M	16	1	**9X-2045**	3	SCREW-TRUSS HEAD (M6X1X20-MM)	
E	17	1	**144-0195**		HOSE (217-CM)	
E	17A	1	**144-0195**		HOSE (16.1-CM)	
E	17B	1	**144-0195**		HOSE (10.6-CM)	
E	17C	1	**144-0195**		HOSE (10.5-CM)	

E - ORDER BY THE CENTIMETER
M - METRIC PART
Y - SEPARATE ILLUSTRATION

533-1011 **WASHER GP-WINDOW (**contd.**)** **i07574846**

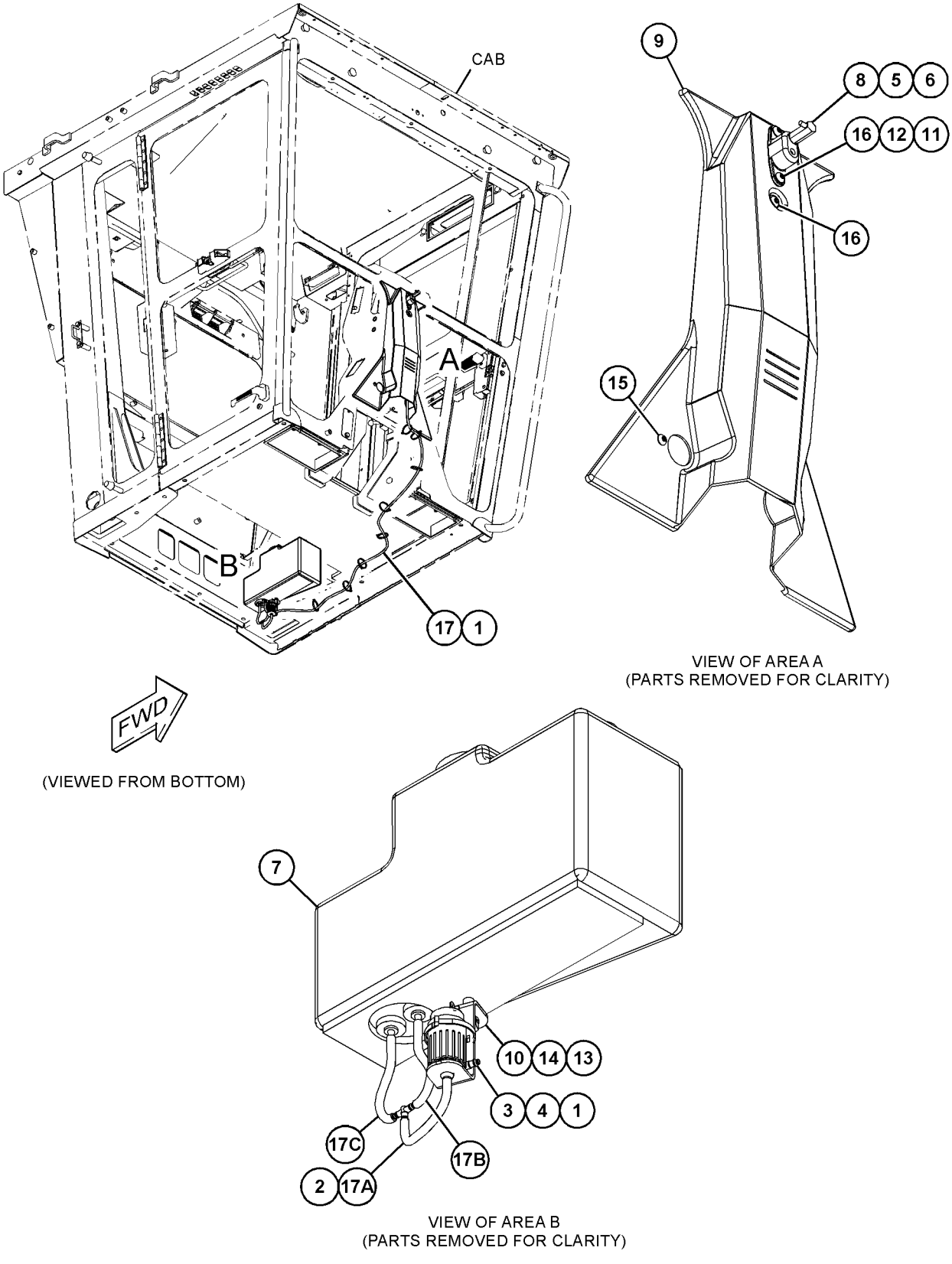

GRAPHIC #1 <END> g06371008

8X-9675 WASHER GP-WINDOW–FRONT

S/N: W921-UP

PART OF 537-5613, 537-5614 CAB AR

SMCS-7306 **i07576913**

NOTE	REF NO	GRAPHIC REF	PART NUMBER	QTY	PART NAME 1 2 3 4 5 6 (PRODUCT LEVEL)	SEE PAGE
	1	1	**102-3645**	1	COVER	
	2	1	**326-4512**	1	MOUNTING-CABLE TIE	
	3	1	**3S-2093**	5	STRAP-CABLE	
	4	1	**523-9207**	2	BRACKET	
M	5	1	**5C-2890**	2	NUT (M6X1-THD)	
	6	1	**5P-4115**	2	WASHER-HARD (7.2X19X2-MM THK)	
	7	1	**7T-8891**	2	PUMP AS-WASHER (24-VOLT)	
	8	1	**8E-8293**	2	GROMMET	
	9	1	**8T-2901**	1	NOZZLE AS	
		1	**8Y-4409**	2	NOZZLE AS-JET	
M	10	1	**8T-4136**	1	BOLT (M10X1.5X25-MM)	
	11	1	**8T-4896**	1	WASHER-HARD (10.2X18.5X2.5-MM THK)	
	12	1	**8W-0934**	1	BRACKET	
	13	1	**8W-0935**	1	GASKET	
Y	14	1	**8X-9405**	1	TANK GP-WINDOW WASHER	591
	15	1	**9P-2369**	1	JET AS-WASHER	
		1	**8Y-4408**	1	NOZZLE AS-JET	
M	16	1	**9X-2045**	5	SCREW-TRUSS HEAD (M6X1X20-MM)	
E	17	1	**144-0195**		HOSE (29.5-CM)	
E	17A	1	**144-0195**		HOSE (19-CM)	
	17B	1	**144-0195**		HOSE (202-CM)	
	17C	1	**144-0195**		HOSE (207-CM)	

E - ORDER BY THE CENTIMETER
M - METRIC PART
Y - SEPARATE ILLUSTRATION

8X-9675 **WASHER GP-WINDOW (**contd.**)** **i07576913**

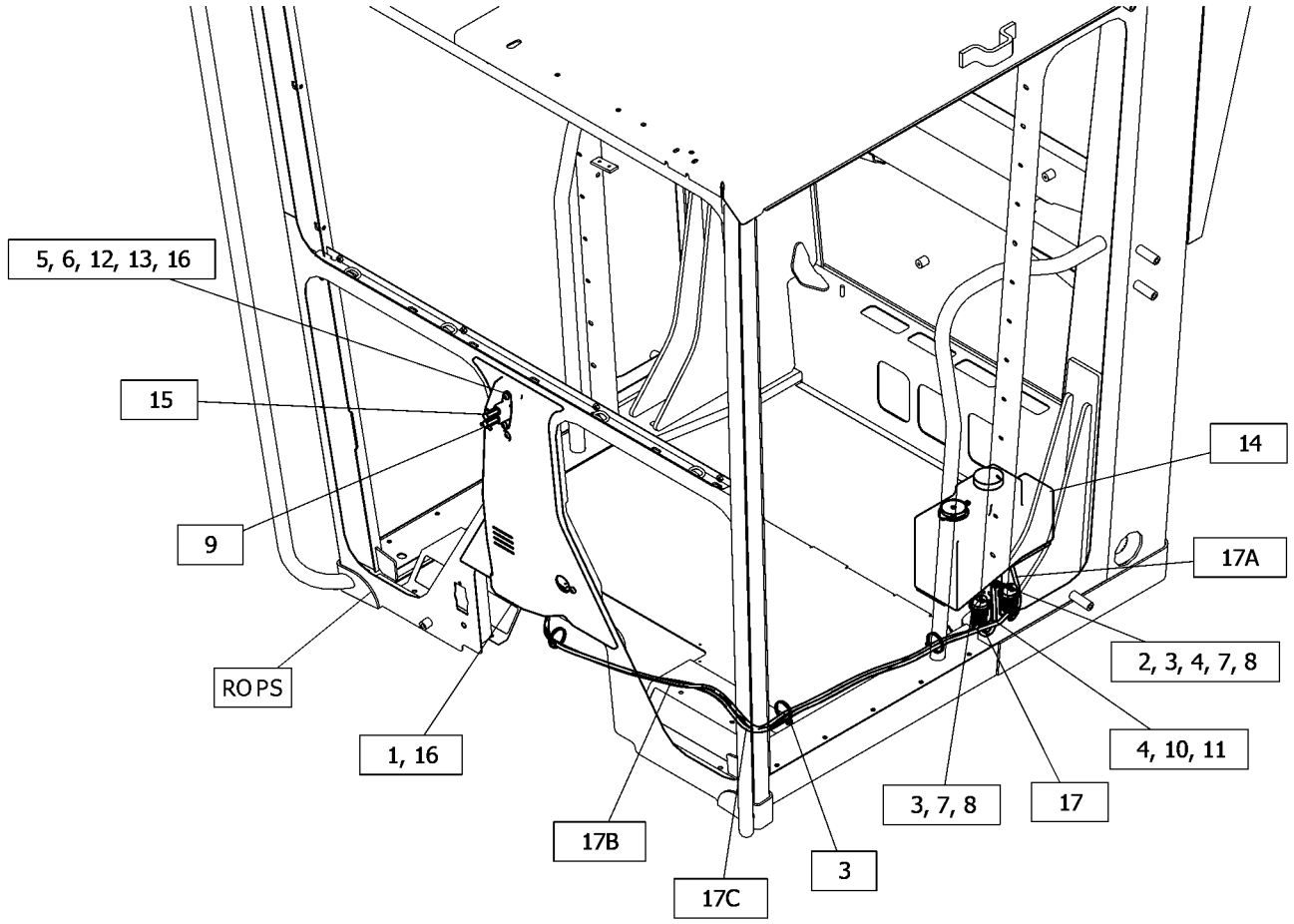

GRAPHIC #1 <END> g06379471

8X-9680 WASHER GP-WINDOW—REAR

S/N: W921-UP

PART OF 523-9209 WIPER & WASHER GP-WINDOW

SMCS-7306 **i07577065**

NOTE	REF NO	GRAPHIC REF	PART NUMBER	QTY	PART NAME 1 2 3 4 5 6 (PRODUCT LEVEL)	SEE PAGE
	1	1	**3S-2093**	1	STRAP-CABLE	
	2	1	**3V-3816**	1	NOZZLE AS	
		1	**8Y-4408**	1	NOZZLE AS-JET	
	3	1	**6K-9632**	1	TEE	
	4	1	**7T-8891**	1	PUMP AS-WASHER (24-VOLT)	
	5	1	**8E-8293**	1	GROMMET	
	6	1	**523-9208**	1	BRACKET	
	7	1	**4D-7794**	4	CLIP	
	8	1	**8T-4121**	3	WASHER-HARD (11X21X2.5-MM THK)	
M	9	1	**8T-4136**	1	BOLT (M10X1.5X25-MM)	
M	10	1	**8T-4191**	4	BOLT (M10X1.5X16-MM)	
	11	1	**8T-4896**	2	WASHER-HARD (10.2X18.5X2.5-MM THK)	
E	12	1	**144-0195**		HOSE (164-CM)	
E	12A	1	**144-0195**		HOSE (30-CM)	
E	12B	1	**144-0195**		HOSE (33-CM)	

E - ORDER BY THE CENTIMETER
M - METRIC PART

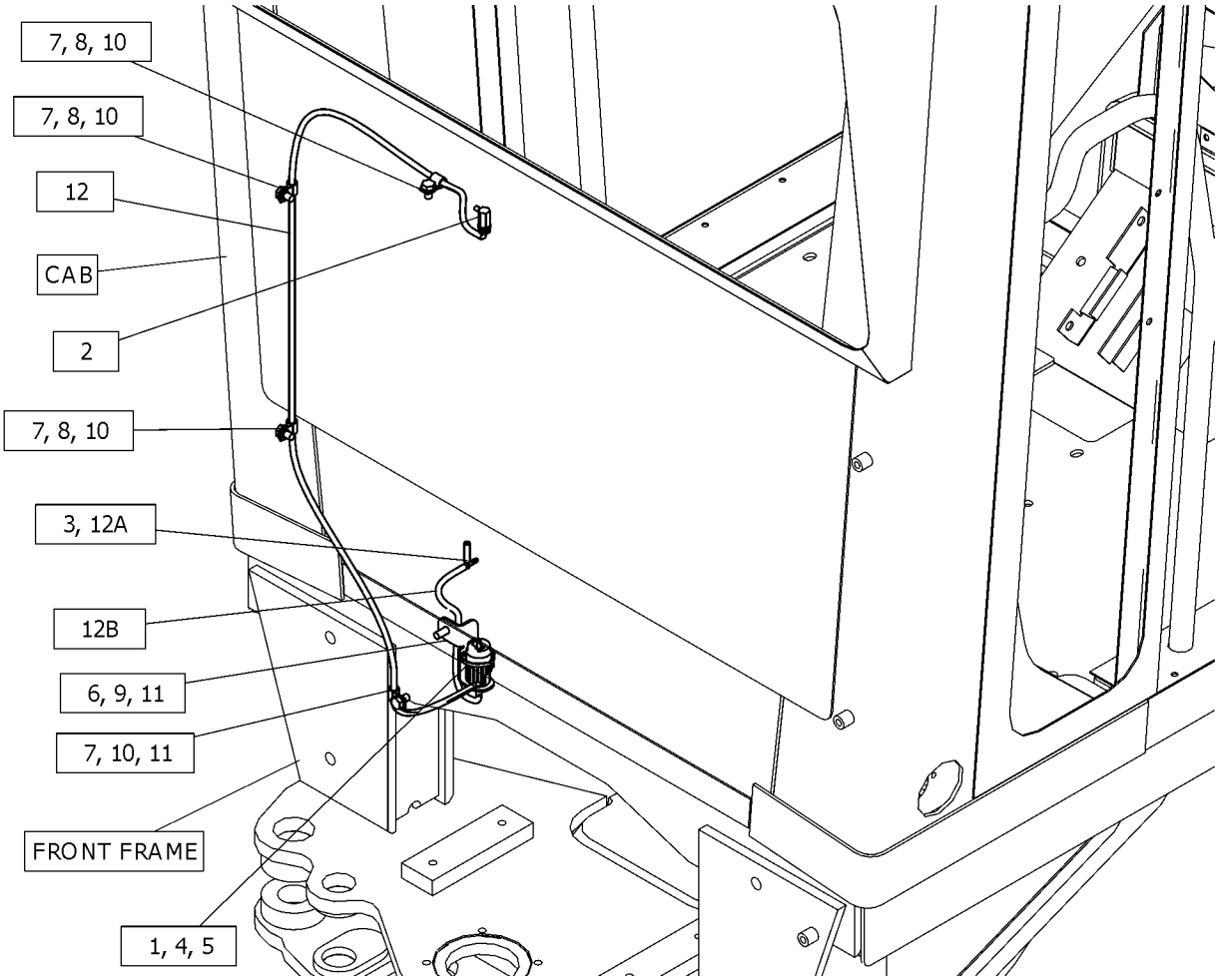

GRAPHIC #1 <END> g06321823

490-3850 WINDOW GP-CAB

S/N: W921-UP

PART OF 533-0982, 533-5728 CAB GP

SMCS-7310 **i07576190**

NOTE	REF NO	GRAPHIC REF	PART NUMBER	QTY	PART NAME 1 2 3 4 5 6 (PRODUCT LEVEL)	SEE PAGE
	1	1	**8X-2228**	1	GLASS-FRONT	
	2	1	**8X-3938**	2	GLASS (UPPER DOOR)	
	3	1	**8X-4448**	2	GLASS (LOWER DOOR)	
	4	1	**102-9372**	1	GLASS (REAR)	
	5	1	**115-6806**	2	GLASS (SIDE VIEW)	
	6	1	**149-3409**	2	GLASS (LOWER FRONT)	
	7	1	**166-2830**	1	FILM (SUN VISOR)	
E	8	1	**3E-9413**		SEAL (455-CM)	
E	8A	1	**3E-9413**		SEAL (256-CM EACH)	
D	9	1	**5P-5768**		SEAL (2.8-M EACH)	
D	9A	1	**5P-5768**		SEAL (2.9-M EACH)	
D	9B	1	**5P-5768**		SEAL (3.8-M EACH)	
D	9C	1	**5P-5768**		SEAL (4.3-M)	

D - ORDER BY THE METER
E - ORDER BY THE CENTIMETER

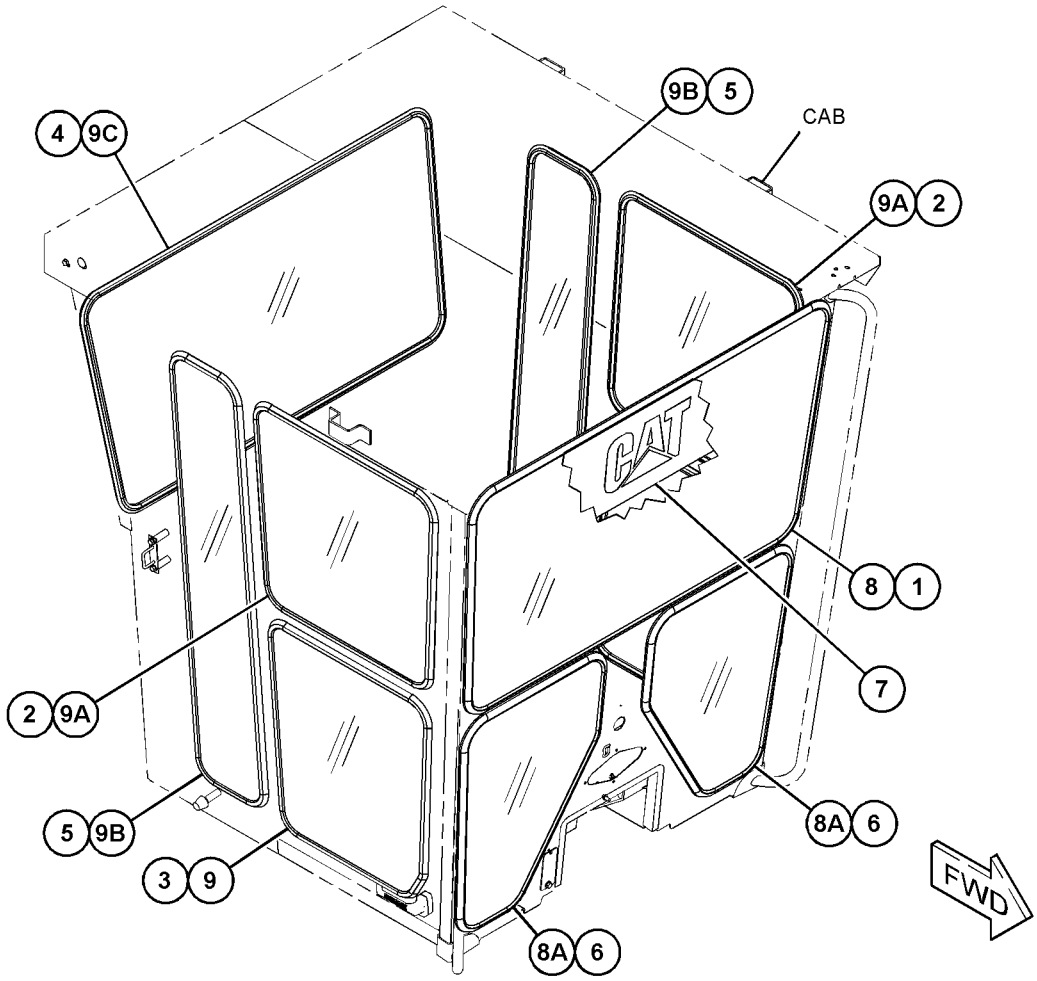

GRAPHIC #1 <END> g06370536

523-9209 WIPER & WASHER GP-WINDOW

S/N: W921-UP

PART OF 537-5613, 537-5614 CAB AR

SMCS-7305, 7306 **i07577063**

NOTE	REF NO	GRAPHIC REF	PART NUMBER	QTY	PART NAME 1 2 3 4 5 6 (PRODUCT LEVEL)	SEE PAGE
Y	1	1	*8X-9680*	1	WASHER GP-WINDOW (REAR)	596
Y	2	1	*434-8049*	1	WIPER GP-WINDOW (REAR)	601
Y	3	1	*535-7121*	1	WIPER GP-WINDOW	602

Y - SEPARATE ILLUSTRATION

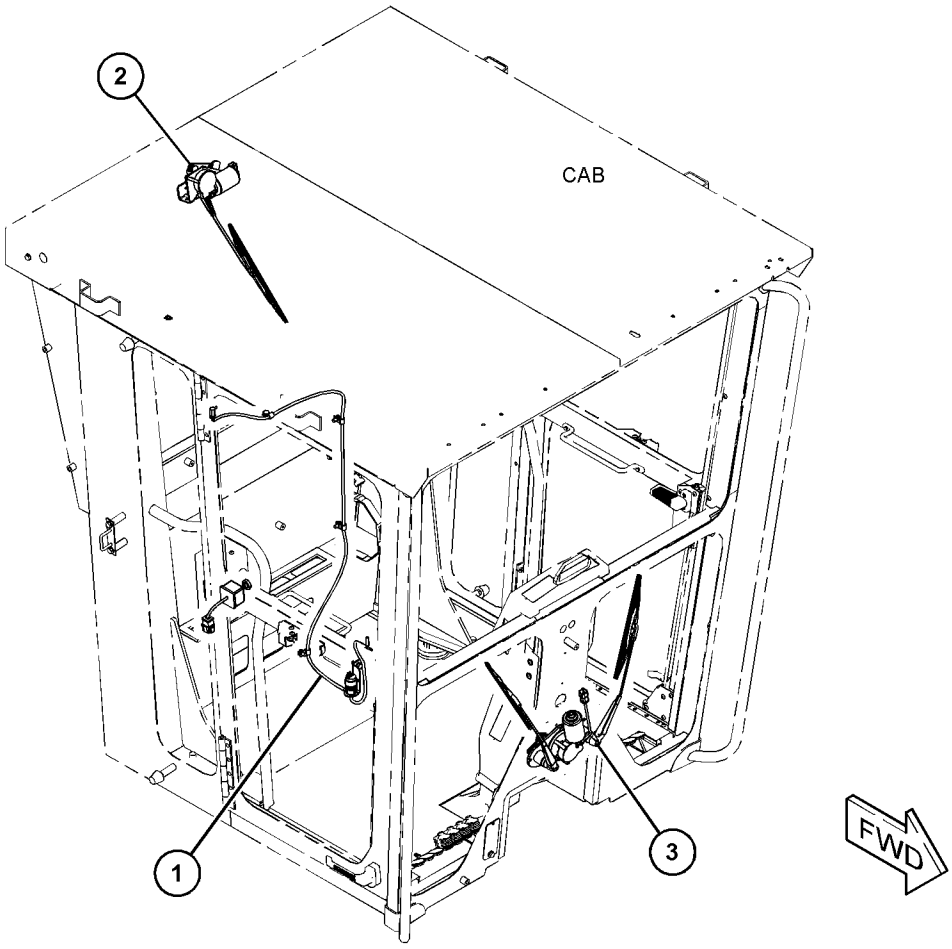

GRAPHIC #1 <END> g06371057

211-4913 WIPER GP-WINDOW—FRONT—HIGH PROFILE

S/N: W921-UP

PART OF 533-0981, 533-1080 CAB AR

SMCS-7305 **i07575013**

NOTE	REF NO	GRAPHIC REF	PART NUMBER	QTY	PART NAME 1 2 3 4 5 6 (PRODUCT LEVEL)	SEE PAGE
	1	1	**203-1124**	1	MOTOR GP-WINDOW WIPER (24-VOLT) (FRONT)	
		1	**3F-9556**	1	LOCKWASHER	
M		1	**5C-7261**	1	NUT (M8X1.25-THD)	
		1	**135-0611**	1	MOTOR GP-WINDOW WIPER (24-VOLT, 2-SPEED)	
		1	**8T-8737**	1	PLUG-SEAL	
		1	**186-3735**	5	PIN-CONNECTOR (16-GA TO 18-GA)	
		1	**102-8805**	1	KIT-RECEPTACLE (6-PIN)	
					(INCLUDES RECEPTACLE AS & WEDGE)	
		1	**206-5823**	1	CAP (WIPER MOTOR)	
M	2	1	**8T-4171**	2	BOLT (M6X1X12-MM)	
	3	1	**5P-4115**	2	WASHER-HARD (7.2X19X2-MM THK)	
	4	1	**6V-8259**	1	ARM AS-WIPER (FRONT)	
	5	1	**6V-5853**	1	BLADE AS-WIPER (450-MM) (FRONT)	
	6	1	**4B-4283**	2	WASHER (20.6X37.5X3.5-MM THK)	

M - METRIC PART

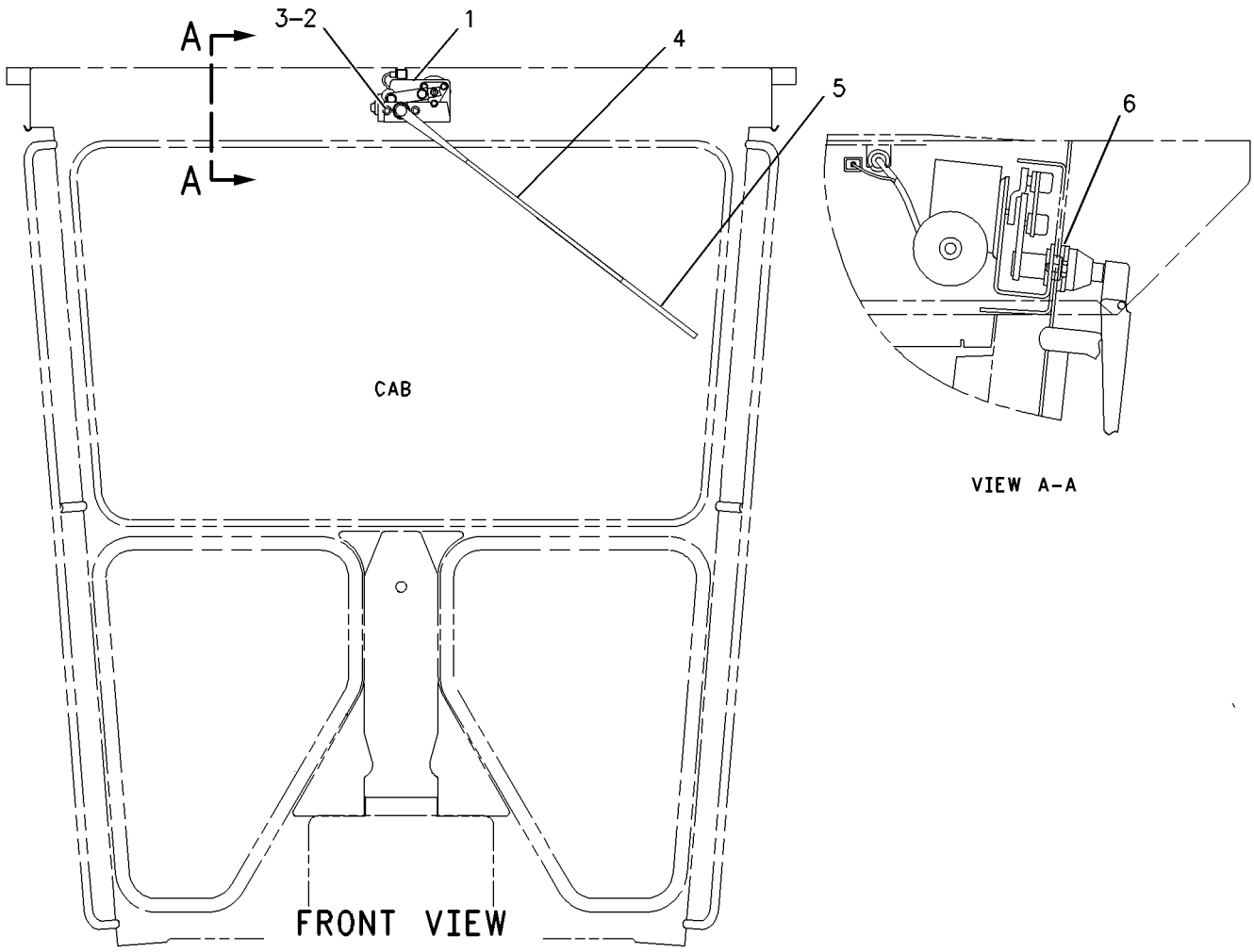

GRAPHIC #1 <END> g00949975

286-4825 WIPER GP-WINDOW–FRONT

S/N: W921-UP
UPPER & LOWER, INTERMITTENT
PART OF 537-5613, 537-5614 CAB AR

SMCS-7305 **i07576926**

NOTE	REF NO	GRAPHIC REF	PART NUMBER	QTY	PART NAME 1 2 3 4 5 6 (PRODUCT LEVEL)	SEE PAGE
Y	1	1	**275-7764**	2	SWITCH GP-WIPER (24-VOLT, INTERMITTENT)	214

Y - SEPARATE ILLUSTRATION

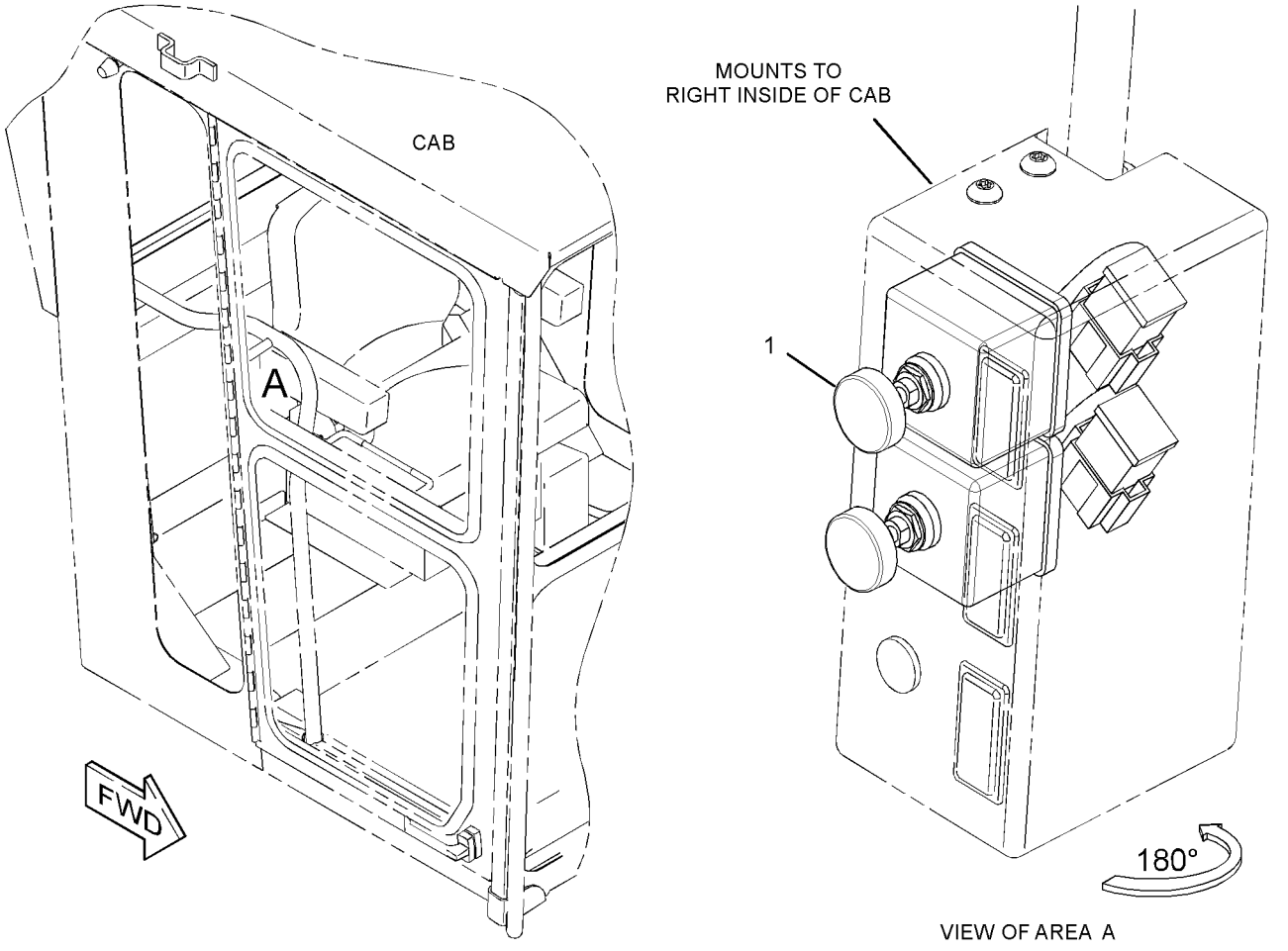

VIEW OF AREA A

GRAPHIC #1 <END> g01681013

434-8049 WIPER GP-WINDOW–REAR

S/N: W921-UP

PART OF 523-9209 WIPER & WASHER GP-WINDOW

SMCS-7305 **i07577070**

NOTE	REF NO	GRAPHIC REF	PART NUMBER	QTY	PART NAME 1 2 3 4 5 6 (PRODUCT LEVEL)	SEE PAGE
B	1	1	**4B-4283**	2	WASHER (20.6X37.5X3.5-MM THK)	
	2	1	**6V-5853**	1	BLADE AS-WIPER (450-MM)	
	3	1	**6V-8258**	1	ARM AS-WIPER	
	4	1	**9W-1442**	1	FUSE (10-AMPERE)	
	5	1	**110-7885**	1	KNOB AS-WIPER SWITCH	
		1	**014-0816**	1	SETSCREW (8-32X0.5-IN)	
	6	1	**500-6327**	1	MOTOR GP-WINDOW WIPER (24-VOLT) (REAR)	
		1	**511-2371**	1	MOTOR GP-WINDOW WIPER (24-VOLT, 2-SPEED)	
		1	**524-3097**	1	HARDWARE GP-MOUNTING	
Y	7	1	**275-7741**	1	SWITCH GP-WIPER (24-VOLT) (REAR)	213
	8	1	**5P-4115**	2	WASHER-HARD (7.2X19X2-MM THK)	
M	9	1	**8T-4171**	2	BOLT (M6X1X12-MM)	

B - USE AS REQUIRED
M - METRIC PART
Y - SEPARATE ILLUSTRATION

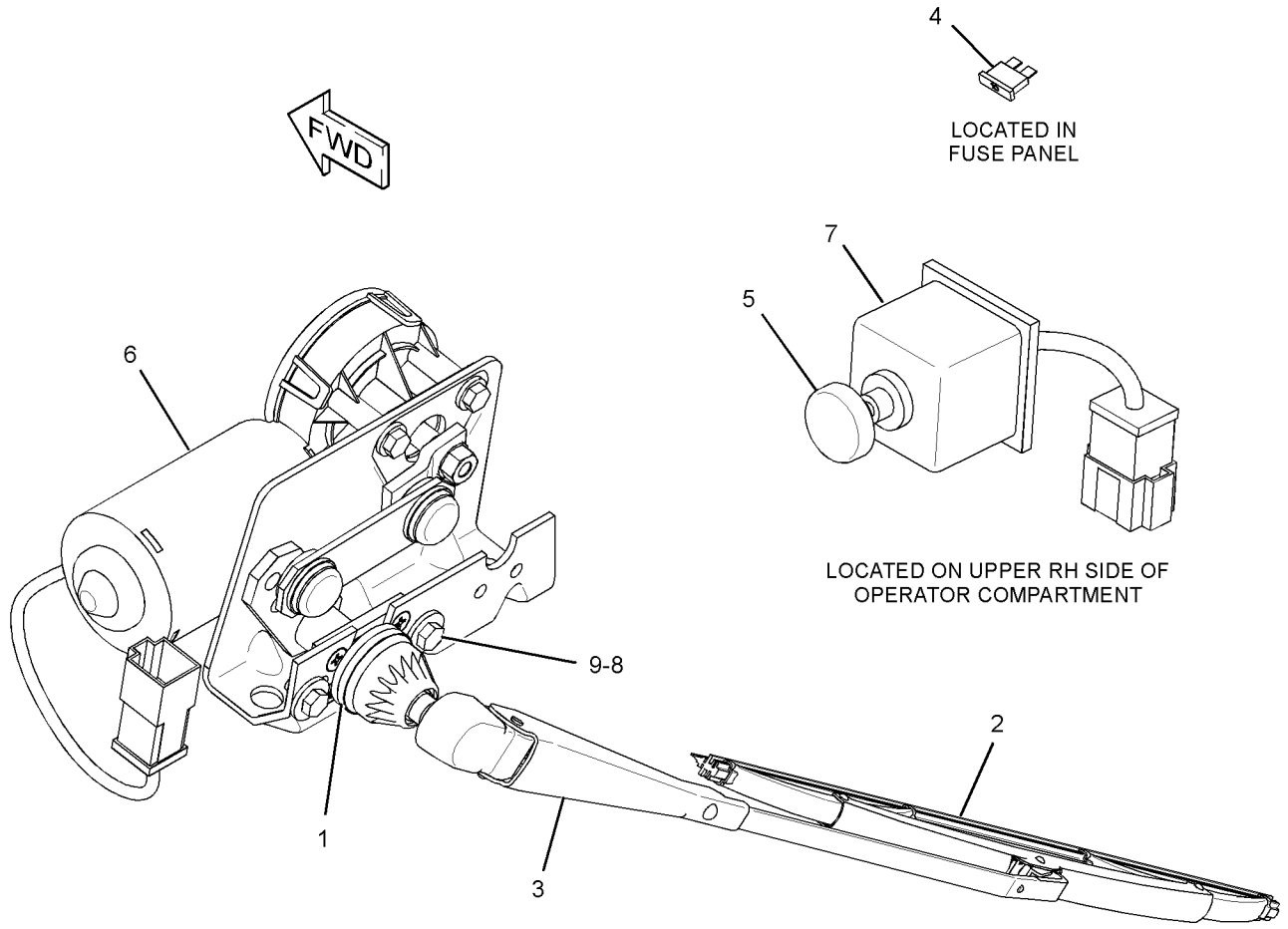

GRAPHIC #1 <END> g01694314

535-7121 WIPER GP-WINDOW

S/N: W921-UP

PART OF 523-9209 WIPER & WASHER GP-WINDOW

SMCS-7305 **i07577083**

NOTE	REF NO	GRAPHIC REF	PART NUMBER	QTY	PART NAME 1 2 3 4 5 6 (PRODUCT LEVEL)	SEE PAGE
	1	1	**2A-6926**	1	LEVER AS	
	2	1	**2A-6928**	1	LINK	
	3	1	**2A-6929**	1	LINK	
	4	1	**6V-6888**	1	WASHER-SPRING (8.31X15.54X1.07-MM THK)	
	5	1	**8X-2556**	1	FLANGE	
	6	1	**8X-2663**	1	GASKET	
	7	1	**123-4354**	2	ARM-WINDOW WIPER (FRONT, LOWER)	
	8	1	**123-4355**	2	BLADE AS-WIPER (335-MM) (FRONT, LOWER)	
	9	1	**125-7003**	1	SHAFT AS (LOWER, RH)	
		1	**3F-9556**	1	LOCKWASHER	
M		1	**5C-7261**	1	NUT (M8X1.25-THD)	
		1	**206-5823**	1	CAP (WIPER MOTOR)	
	10	1	**125-7004**	1	SHAFT AS (LOWER, LH)	
		1	**3F-9556**	1	LOCKWASHER	
M		1	**5C-7261**	1	NUT (M8X1.25-THD)	
		1	**206-5823**	1	CAP (WIPER MOTOR)	
Y	11	1	**511-2371**	1	MOTOR GP-WINDOW WIPER (24-VOLT, 2-SPEED) (FRONT, LOWER)	565
M	12	1	**344-5674**	1	NUT (M8X1.25-THD)	
M	13	1	**5C-7423**	3	SCREW (M6X1X16-MM)	
M	14	1	**8T-4138**	2	BOLT (M6X1X20-MM)	

M - METRIC PART
Y - SEPARATE ILLUSTRATION

535-7121 **WIPER GP-WINDOW (**contd.**)** **i07577083**

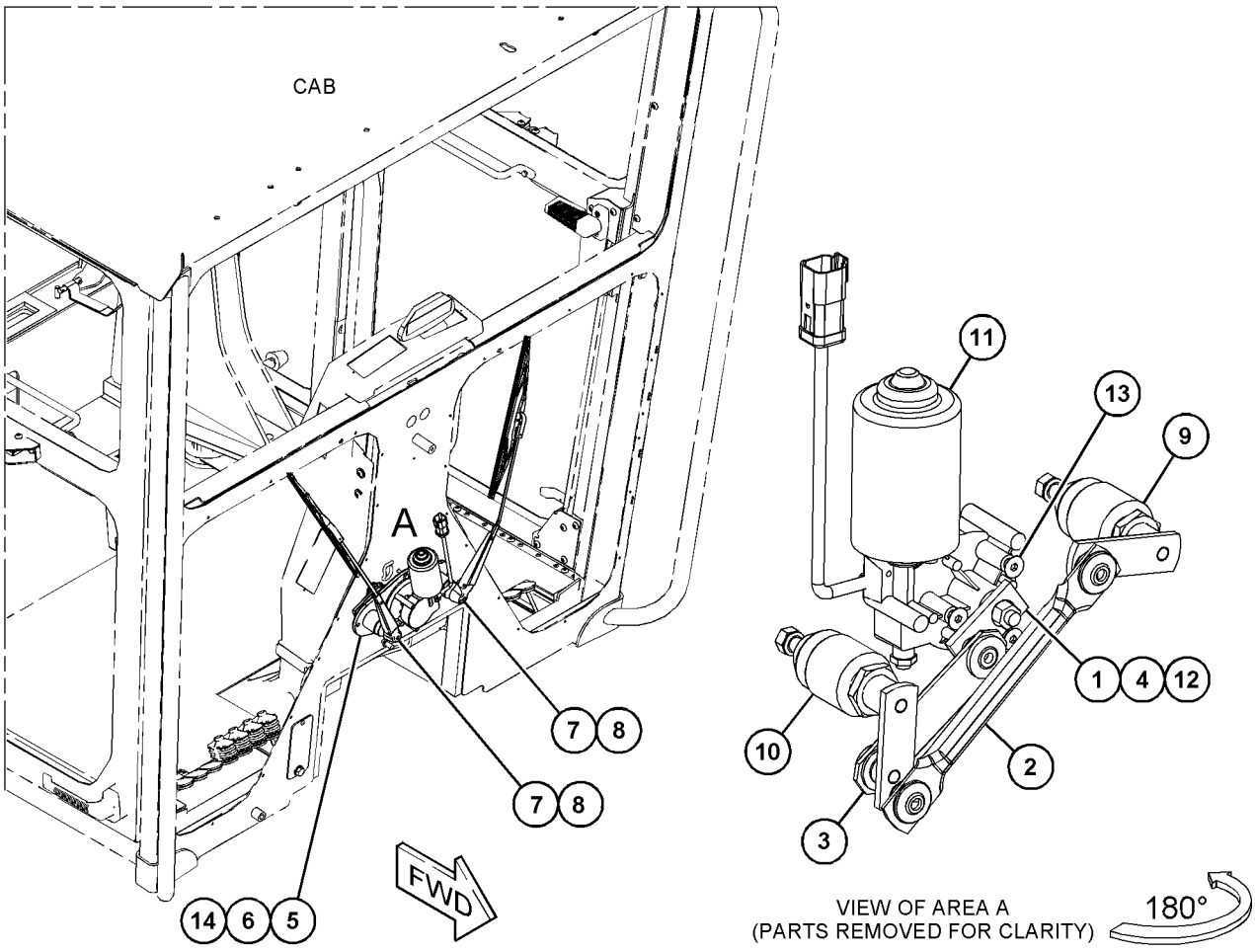

GRAPHIC #1 <END> g06370023

527-0144 BLADE GP

S/N: W921-UP

SMCS-6151 **i07561043**

NOTE	REF NO	GRAPHIC REF	PART NUMBER	QTY	PART NAME 1 2 3 4 5 6 (PRODUCT LEVEL)	SEE PAGE
	1	1	**9J-3657**	2	EDGE-CUTTING	
	2	1	**526-8012**	2	BIT-END (MOLDBOARD)	
	3	1	**2J-3506**	36	NUT-FULL (3/4-10-THD)	
	4	1	**527-0085**	1	MOLDBOARD AS	
	5	1	**5J-4773**	36	BOLT-PLOW (3/4-10X2.5-IN)	

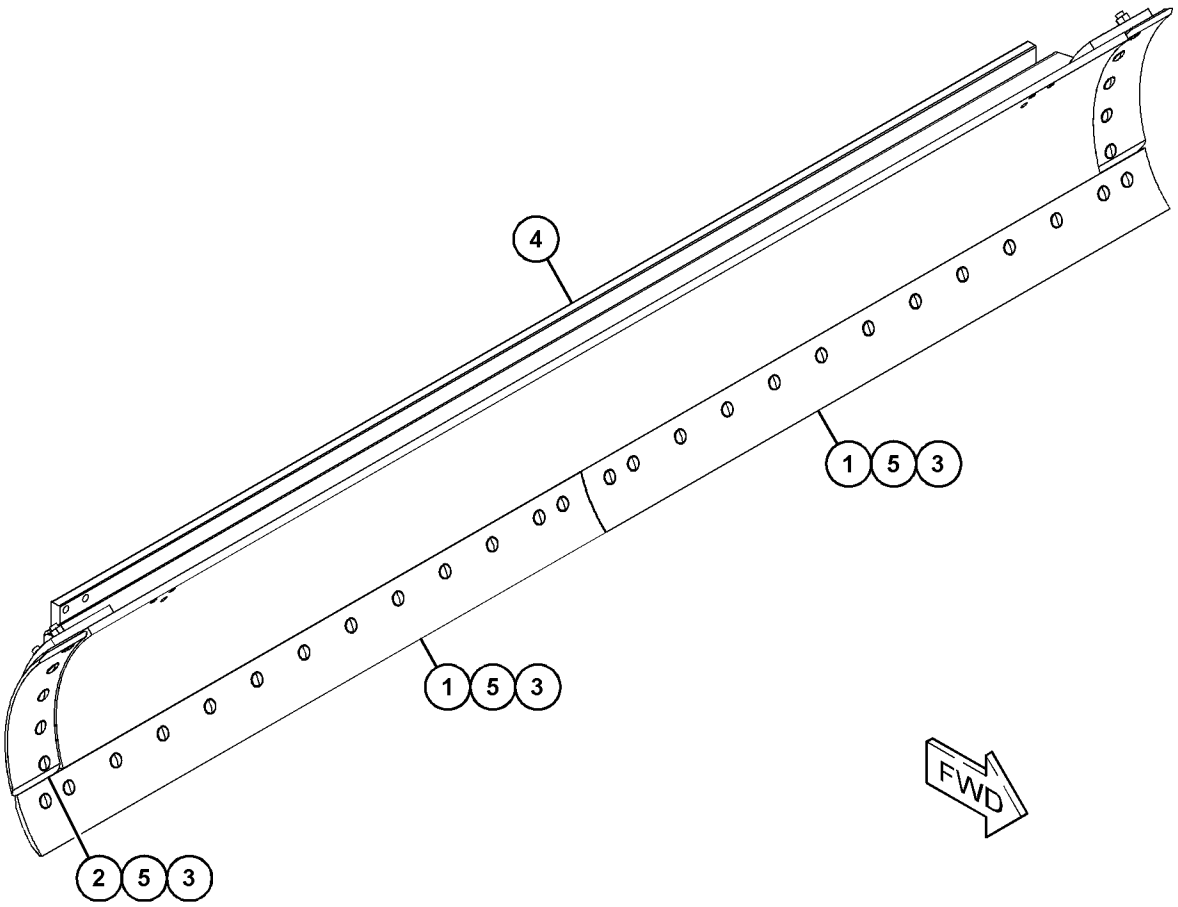

GRAPHIC #1 <END> g06372405

527-0145 BLADE GP

S/N: W921-UP

SMCS-6151 **i07561037**

NOTE	REF NO	GRAPHIC REF	PART NUMBER	QTY	PART NAME 1 2 3 4 5 6 (PRODUCT LEVEL)	SEE PAGE
	1	1	**2J-3506**	36	NUT-FULL (3/4-10-THD)	
	2	1	**526-8012**	2	BIT-END (MOLDBOARD)	
	3	1	**527-0085**	1	MOLDBOARD AS	
	4	1	**5J-4773**	36	BOLT-PLOW (3/4-10X2.5-IN)	
	5	1	**7D-1576**	2	EDGE-CUTTING	

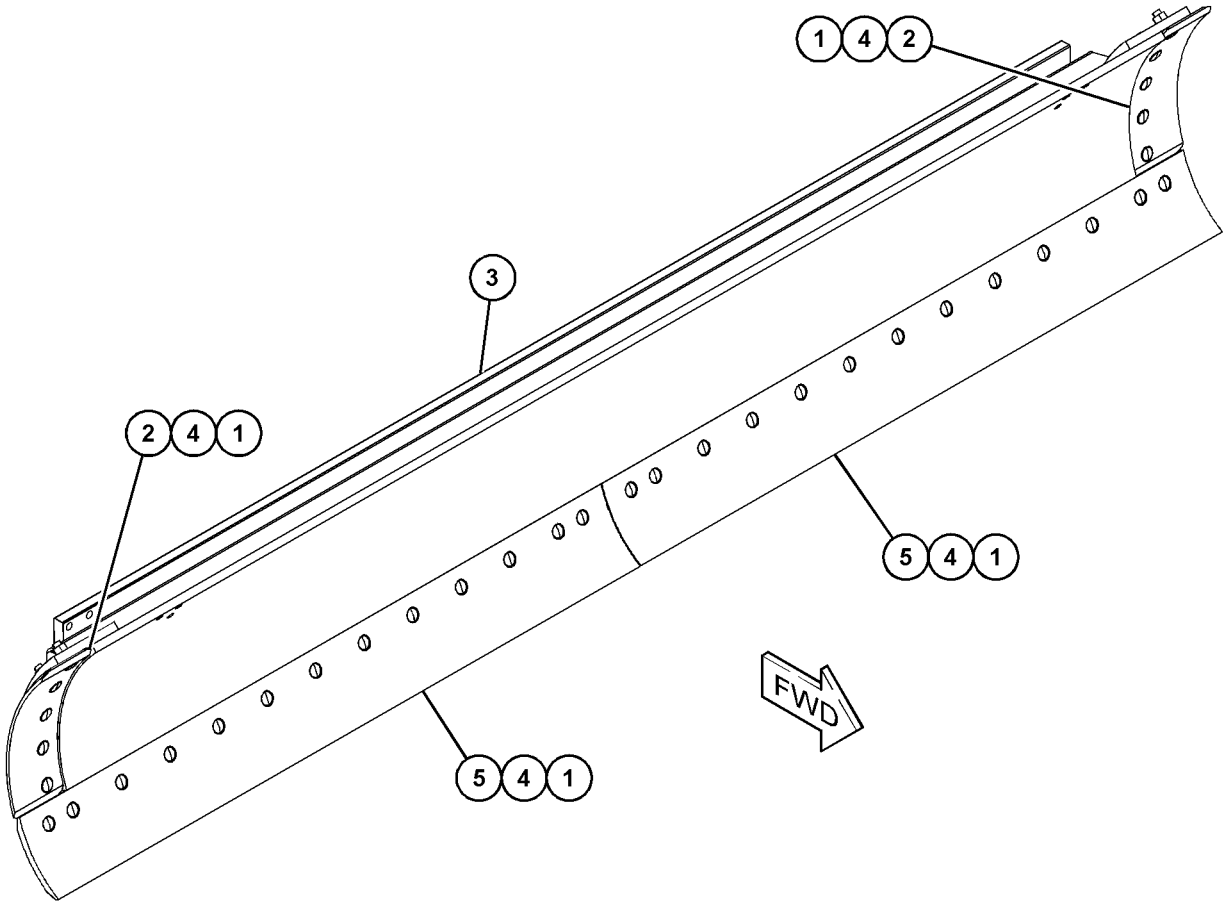

GRAPHIC #1 <END> g06372469

527-0162 BLADE GP

S/N: W921-UP

SMCS-6151 **i07561032**

NOTE	REF NO	GRAPHIC REF	PART NUMBER	QTY	PART NAME 1 2 3 4 5 6 (PRODUCT LEVEL)	SEE PAGE
	1	1	**7D-1577**	2	EDGE-CUTTING	
	2	1	**2J-3506**	40	NUT-FULL (3/4-10-THD)	
	3	1	**526-8012**	2	BIT-END (MOLDBOARD)	
	4	1	**527-0163**	1	MOLDBOARD AS	
	5	1	**5J-4773**	40	BOLT-PLOW (3/4-10X2.5-IN)	

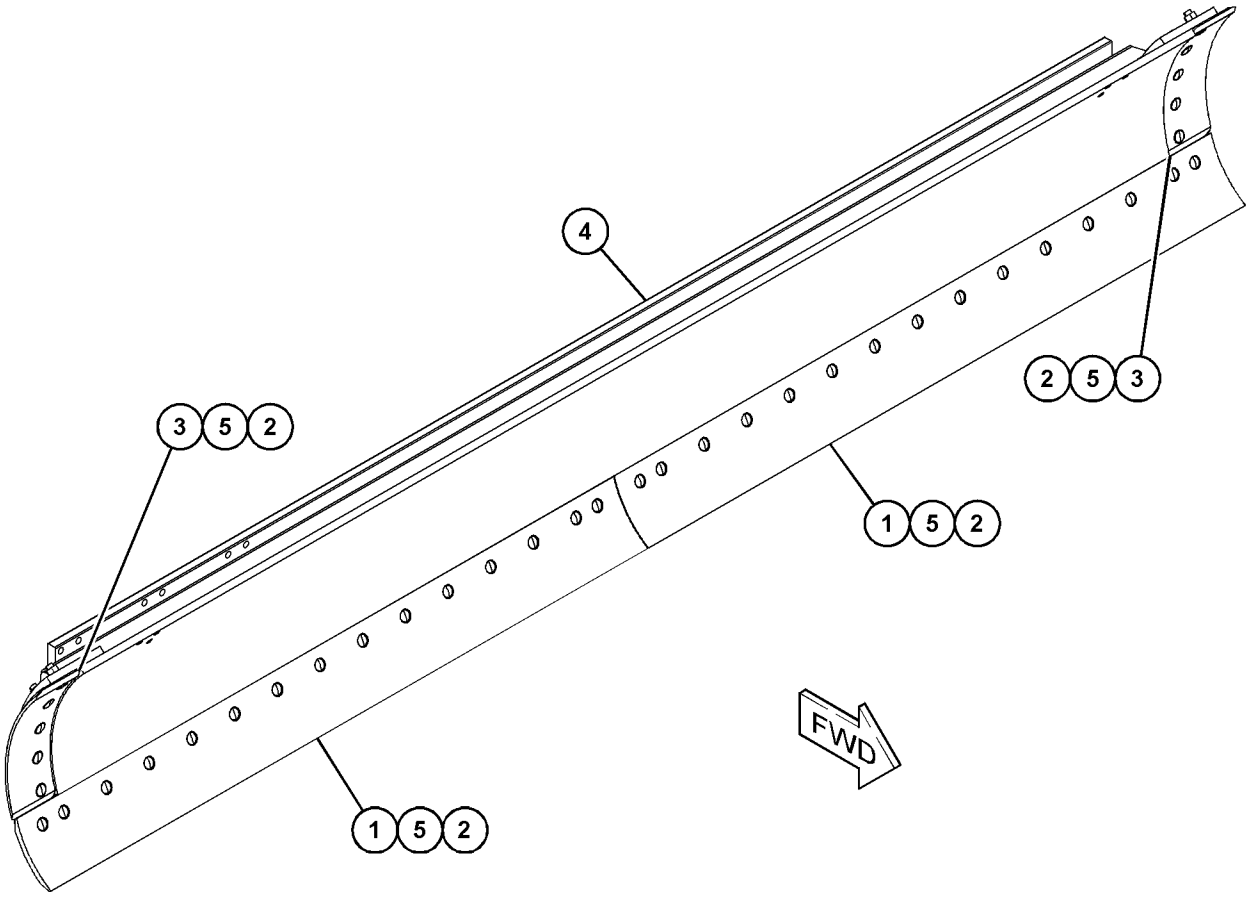

GRAPHIC #1 <END> g06372768

527-0177 BLADE GP-STRAIGHT

S/N: W921-UP

PART OF 537-5608 OPTION AR-WORK TOOL

SMCS-6051, 6060 **i07573372**

NOTE	REF NO	GRAPHIC REF	PART NUMBER	QTY	PART NAME 1 2 3 4 5 6 (PRODUCT LEVEL)	SEE PAGE
	1	1	**518-4420**	8	WASHER (17.5X30X3.5-MM THK)	
	2	1	**521-1347**	8	BOLT (M16X2X35-MM)	
	3	1	**169-4089**	1	EDGE-CUTTING (CENTER)	
	4	1	**2J-3506**	17	NUT-FULL (3/4-10-THD)	
	5	1	**431-4613**	8	ADAPTER	
	6	1	**4F-7827**	17	BOLT-PLOW (3/4-10X2.25-IN)	
	7	1	**4T-3010**	2	EDGE-CUTTING (END)	
	8	1	**517-7867**	10	SPACER (13X45X6-MM THK)	
	9	1	**518-1811**	10	BOLT (M12X1.75X25-MM)	
	10	1	**527-0202**	1	RETAINER AS	
	11	1	**527-0203**	1	LINKAGE GP-IMPLEMENT	
	12	1	**527-0839**	1	BLADE AS-STRAIGHT	
	13	1	**527-0841**	1	FIXTURE AS (UPPER)	
	14	1	**527-0845**	8	PIN AS	
	15	1	**527-0846**	2	PIN AS	
	16	1	**533-0956**	2	LINK	
	17	1	**535-6285**	4	BUSHING	
	18	1	**545-7474**	32	SHIM	
	19	1	**545-7475**	8	SHIM	
	20	1	**545-7477**	8	SEAL	
	21	1	**545-7478**	4	BUSHING	
	22	1	**545-7479**	8	SHIM	
	23	1	**545-7480**	4	SHIM	
	24	1	**6C-9149**	24	WASHER (22X50X10-MM THK)	
M	25	1	**7X-2565**	12	BOLT (M20X2.5X100-MM)	
M	26	1	**8T-4131**	12	NUT (M20X2.5-THD)	

M - METRIC PART

527-0177 **BLADE GP-STRAIGHT (**contd.**)** **i07573372**

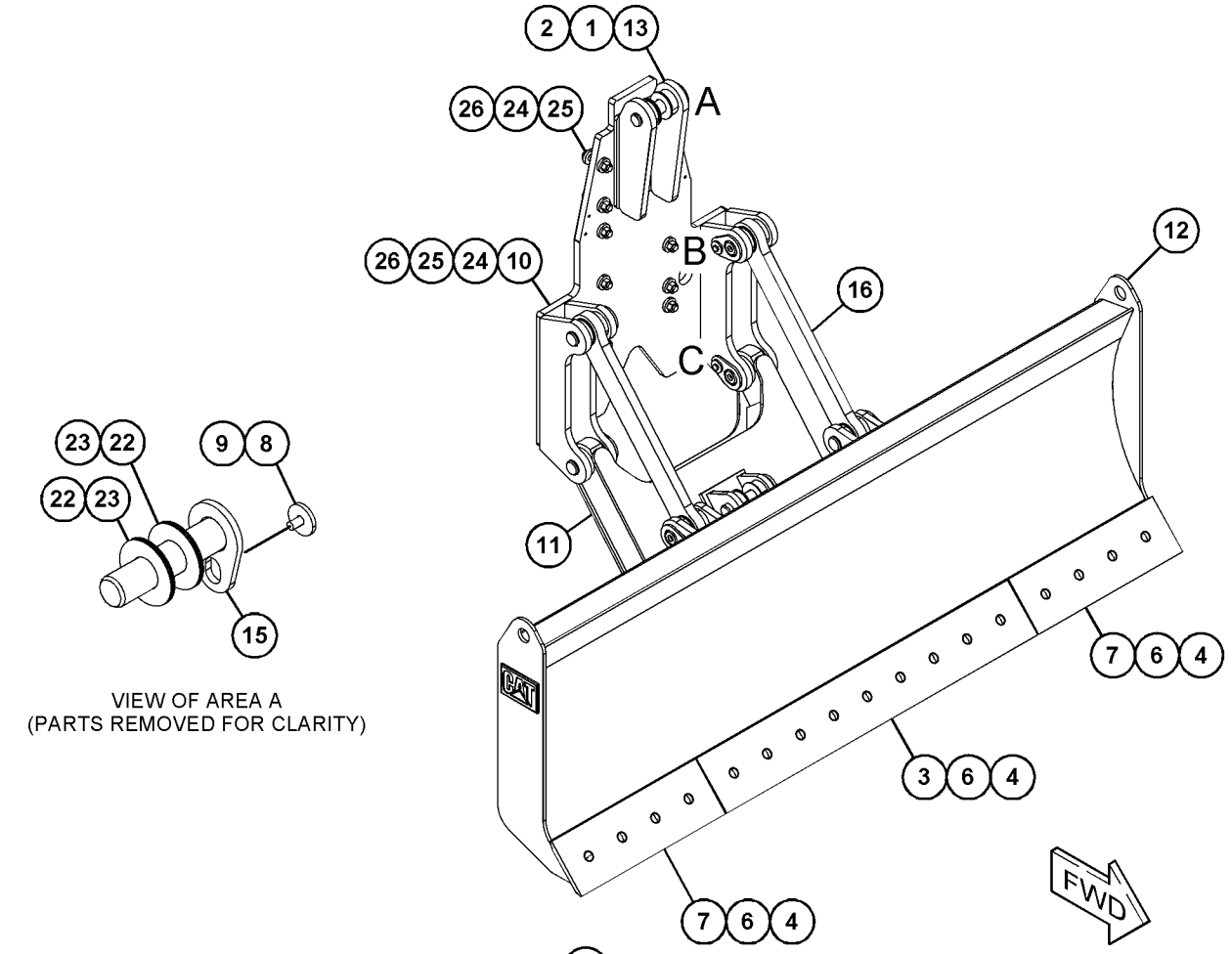

VIEW OF AREA A
(PARTS REMOVED FOR CLARITY)

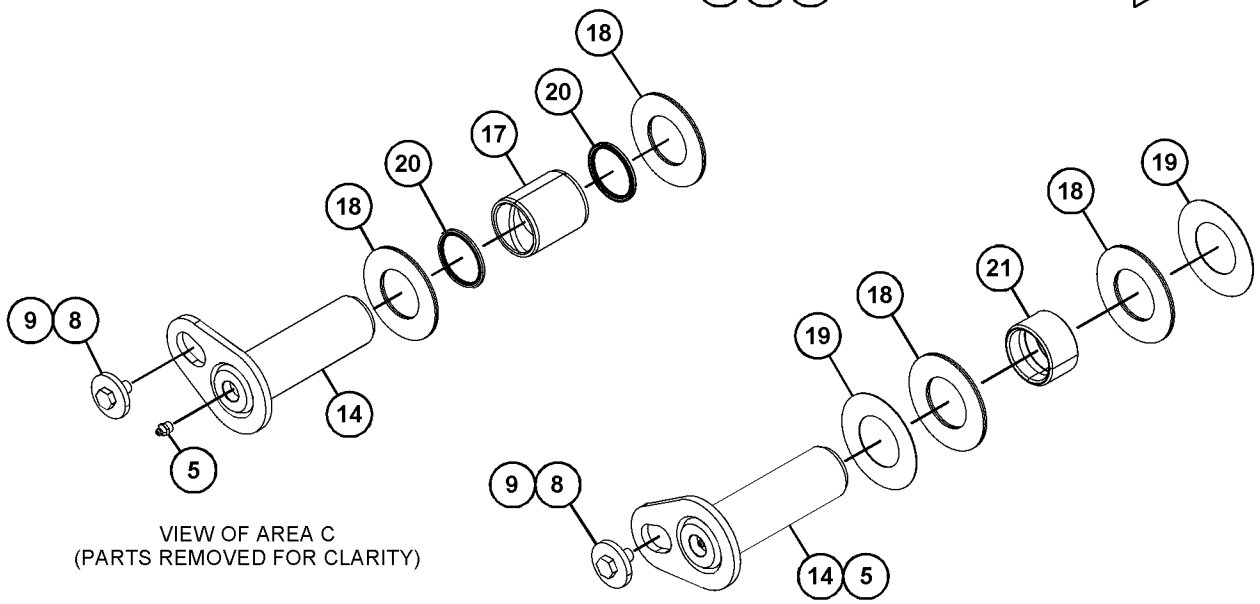

VIEW OF AREA C
(PARTS REMOVED FOR CLARITY)

VIEW OF AREA B
(PARTS REMOVED FOR CLARITY)

GRAPHIC #1 <END> g06371971

529-0953 LIFT GP-BLADE

S/N: W921-UP

PART OF 529-7999 FRAME AR

SMCS-6151 **i07542144**

NOTE	REF NO	GRAPHIC REF	PART NUMBER	QTY	PART NAME 1 2 3 4 5 6 (PRODUCT LEVEL)	SEE PAGE
	1	1	**518-4409**	5	WASHER	
M	2	1	**518-2321**	4	BOLT (M12X1.75X40-MM)	
	3	1	**531-3366**	1	PLATE	
	4	1	**545-8088**	4	SHIM	
	5	1	**545-8089**	2	SHIM	
	6	1	**545-8090**	4	SHIM	
	7	1	**545-8091**	2	SHIM	
B	8	1	**545-8092**	8	WASHER	
B	9	1	**545-8093**	6	WASHER	
B	10	1	**545-8094**	4	WASHER	
	11	1	**545-8095**	2	PLATE	
	12	1	**545-8097**	2	PIN	
	13	1	**545-8098**	2	PLATE	
B	14	1	**545-8099**	2	SHIM	
B	15	1	**545-8100**	2	SHIM	
	16	1	**545-8101**	2	RING	
	17	1	**545-8102**	2	RING	
M	18	1	**112-3926**	4	BOLT (M20X2.5X110-MM)	
	19	1	**296-3004**	1	ARM AS-LIFT (LH)	
	19A	1	**7D-8889**	1	BEARING (76.35-MM ID)	
	19B	1	**8D-8168**	1	BEARING (63.65-MM ID)	
	20	1	**296-3005**	1	ARM AS-LIFT (RH)	
	20A	1	**7D-8889**	1	BEARING (76.35-MM ID)	
	20B	1	**8D-8168**	1	BEARING (63.65-MM ID)	
M	21	1	**339-1911**	6	BOLT (M20X2.5X125-MM)	
	22	1	**3P-1461**	4	SEAL-LIP TYPE	
	23	1	**518-9596**	1	BOLT (M12X1.75X60-MM)	
	24	1	**531-3353**	1	BAR AS-LINK	
	24A	1	**8X-5108**	2	BUSHING	
	24B	1	**382-4604**	7	BUSHING	
	25	1	**531-3355**	4	BRACKET GP-MOUNTING	
					(EACH INCLUDES)	
		1	**518-4409**	2	WASHER	
		1	**538-3113**	2	BOLT (M12X1.75X100-MM)	
		1	**538-6707**	1	SEAL	
	26	1	**531-3357**	2	YOKE AS	
					(EACH INCLUDES)	
		1	**545-8103**	1	RING	
	27	1	**535-8207**	1	PIN	
	28	1	**535-8208**	1	PIN	
	29	1	**544-3697**	2	SEAL-O-RING	
	30	1	**544-3698**	2	SEAL-O-RING	
	31	1	**545-8096**	2	PLATE	
	32	1	**8T-4123**	16	WASHER (22X35X3.5-MM THK)	
M	33	1	**8T-4131**	6	NUT (M20X2.5-THD)	

B - USE AS REQUIRED
M - METRIC PART

529-0953 **LIFT GP-BLADE (**contd.**)** **i07542144**

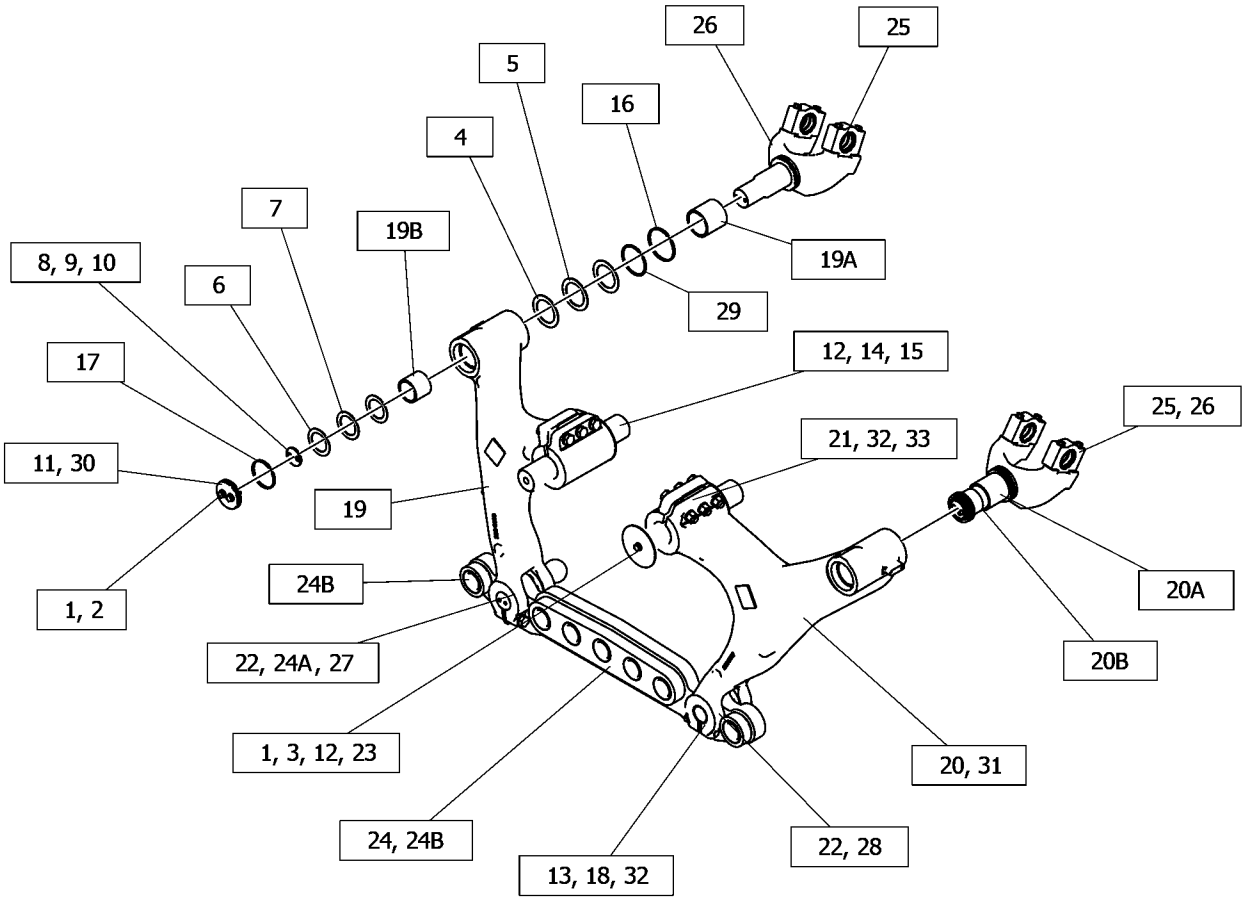

GRAPHIC #1 <END> g06374153

537-5607 RIPPER AR

S/N: W921-UP

SMCS-6325 **i07558786**

NOTE	PART NUMBER	QTY	PART NAME 1 2 3 4 5 6 (PRODUCT LEVEL)	SEE PAGE
Y	*535-7195*	1	LINES GP-RIPPER	403
Y	*527-0847*	1	RIPPER GP	612

Y - SEPARATE ILLUSTRATION

<END>

527-0847 RIPPER GP

S/N: W921-UP

PART OF 537-5607 RIPPER AR

SMCS-6325 **i07573170**

NOTE	REF NO	GRAPHIC REF	PART NUMBER	QTY	PART NAME 1 2 3 4 5 6 (PRODUCT LEVEL)	SEE PAGE
Y	1	1	*8J-1434*	3	TOOTH GP-RIPPER (STRAIGHT)	614
	2	1	**190-5386**	2	FILM-IDENTIFICATION (ROUND RED REFLECTIVE)	
	3	1	**431-4613**	8	ADAPTER	
	4	1	**517-7867**	10	SPACER (13X45X6-MM THK)	
	5	1	**518-1811**	10	BOLT (M12X1.75X25-MM)	
	6	1	**527-0845**	8	PIN AS	
	7	1	**527-0846**	2	PIN AS	
	8	1	**527-0848**	1	SUPPORT AS-FRONT	
	9	1	**527-0853**	1	CARRIAGE (REAR)	
	10	1	**527-0869**	1	LINKAGE (LOWER)	
	11	1	**527-0870**	2	LINKAGE AS (UPPER)	
	12	1	**535-6292**	8	BUSHING	
	13	1	**536-2611**	32	SHIM	
	14	1	**536-2612**	16	SHIM	
	15	1	**542-0422**	8	WASHER	
	16	1	**545-7477**	16	SEAL	
	17	1	**545-7479**	4	SHIM	
	18	1	**545-7480**	4	SHIM	
	19	1	**545-7484**	4	SHIM	
M	20	1	**7X-2454**	8	BOLT (M24X3X110-MM)	
M	21	1	**8T-4001**	12	NUT (M24X3-THD)	
	22	1	**8T-4167**	24	WASHER-HARD (26X44X4-MM THK)	
M	23	1	**8T-5878**	12	BOLT (M24X3X80-MM)	

M - METRIC PART
Y - SEPARATE ILLUSTRATION

527-0847 **RIPPER GP (**contd.**)** **i07573170**

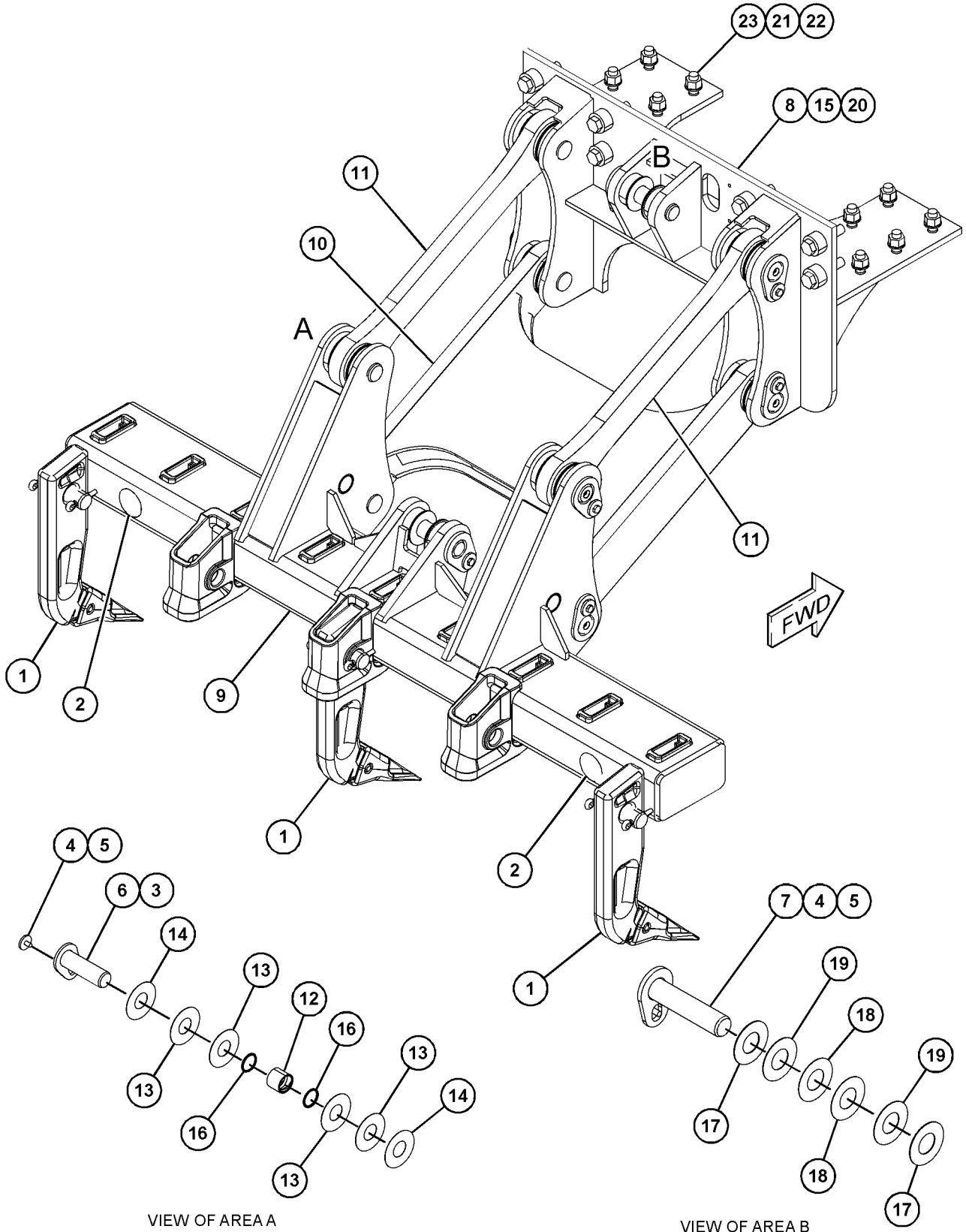

VIEW OF AREA A
(PARTS REMOVED FOR CLARITY)

VIEW OF AREA B
(PARTS REMOVED FOR CLARITY)

GRAPHIC #1 <END> g06372849

8J-1434 TOOTH GP-RIPPER–STRAIGHT

S/N: W921-UP

PART OF 527-0847 RIPPER GP

SMCS-6808 **i07568928**

NOTE	REF NO	GRAPHIC REF	PART NUMBER	QTY	PART NAME 1 2 3 4 5 6 (PRODUCT LEVEL)	SEE PAGE
	1	1	**3B-5325**	2	PIN-COTTER	
	2	1	**2K-6413**	1	PIN	
	3	1	**9J-6586**	1	SHANK	
	4	1	**136-8308**	1	PIN	
	5	1	**6Y-0309**	1	TIP-RIPPER (PENETRATION)	
	6	1	**114-0359**	1	RETAINER AS	

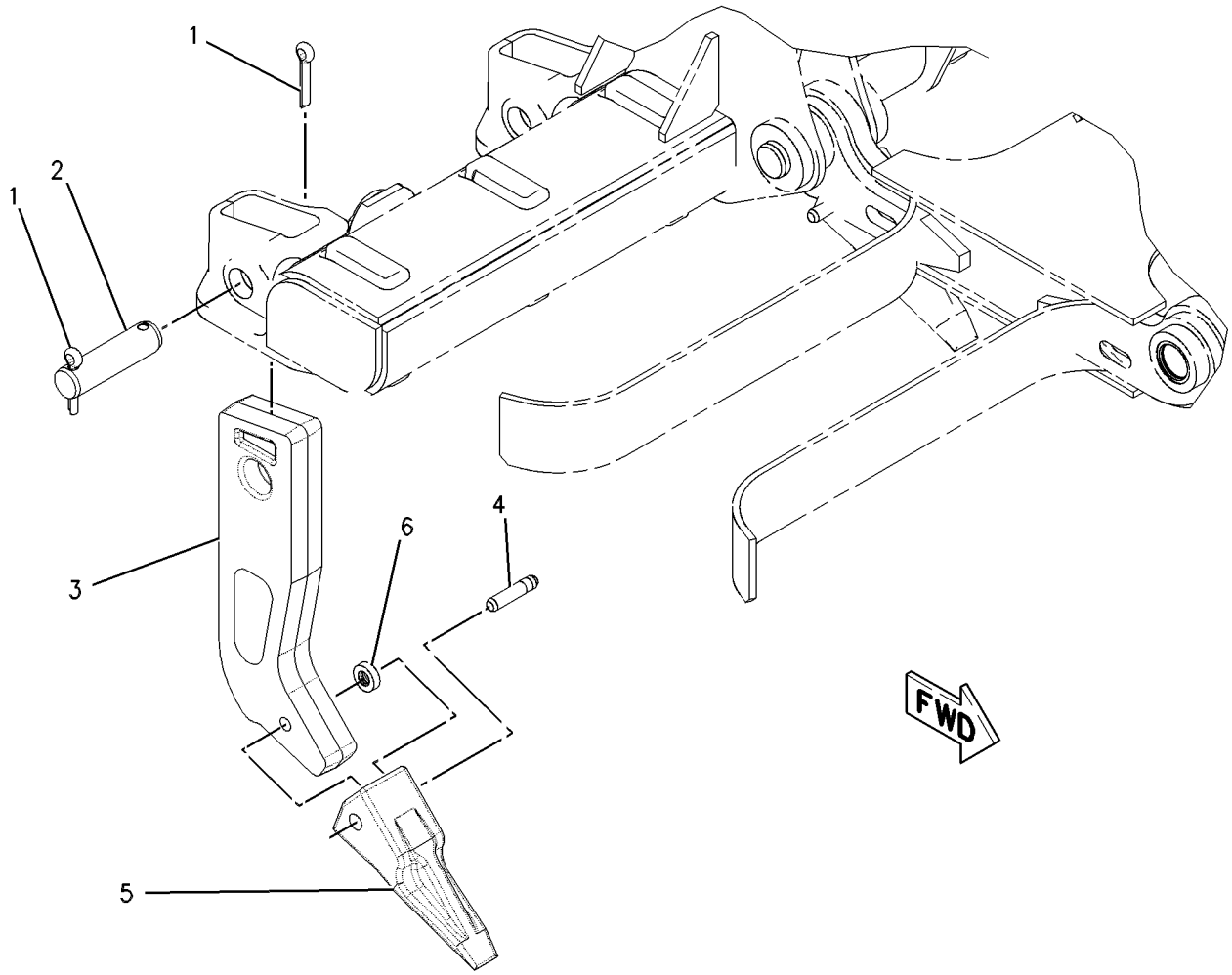

GRAPHIC #1 <END> g00632727

4K-3330 TOOTH GP-SCARIFIER

S/N: W921-UP
9 TEETH

SMCS-6807 **i07568930**

NOTE	REF NO	GRAPHIC REF	PART NUMBER	QTY	PART NAME 1 2 3 4 5 6 (PRODUCT LEVEL)	SEE PAGE
	1	1	**5K-1459**	9	LOCK PIN	
	2	1	**5K-1458**	9	GROMMET	
	3	1	**195-7218**	9	SHANK	
	4	1	**6Y-5230**	9	TOOTH-SCARIFIER	
F			**6B-3260**	1	TOOL	

F - NOT SHOWN

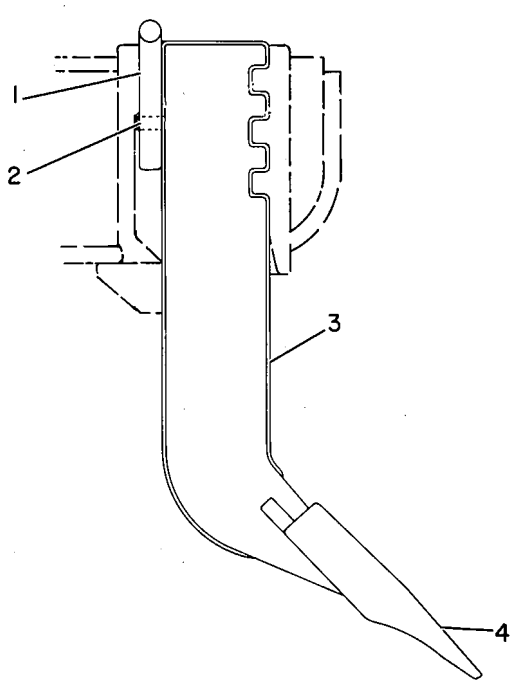

GRAPHIC #1 <END> g00108148

536-0420 BOX GP-TOOL

S/N: W921-UP

SMCS-7259 **i07560301**

NOTE	REF NO	GRAPHIC REF	PART NUMBER	QTY	PART NAME 1 2 3 4 5 6 (PRODUCT LEVEL)	SEE PAGE
M	1	1	**518-2310**	4	BOLT (M10X1.5X25-MM)	
M	2	1	**518-6585**	2	NUT-HEX (M10X1.5-THD)	
	3	1	**518-9737**	6	WASHER (10.5X30X2.5-MM THK)	
	4	1	**246-2641**	1	PADLOCK GP	
		1	**5P-8500**	1	KEY	
	5	1	**517-6229**	2	SHIM (6-MM THK)	
	6	1	**536-0421**	1	BOX AS-TOOL	
		1	**332-3604**	3	BUMPER	

M - METRIC PART

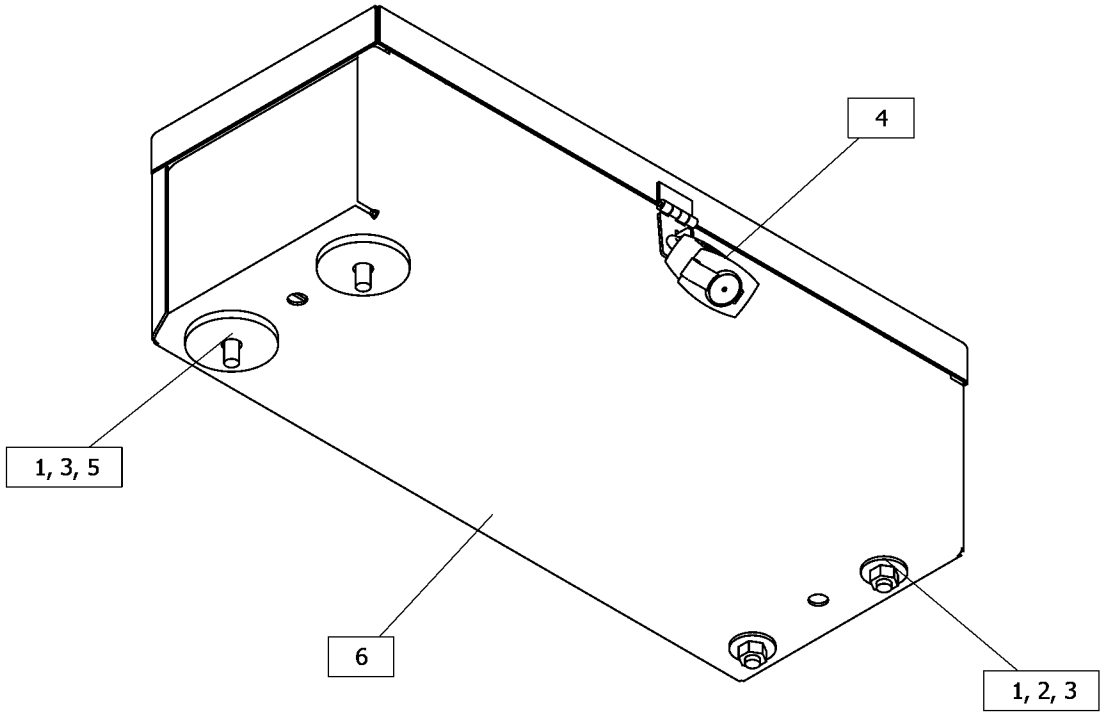

GRAPHIC #1 <END> g06366719

415-5625 FILM GP

S/N: E7A1-UP

PART OF 533-1826, 533-1840 ENGINE AR-PRIMARY

SMCS-0375, 7000, 7405, 7557 **i06041153**

NOTE	REF NO	GRAPHIC REF	PART NUMBER	QTY	PART NAME 1 2 3 4 5 6 (PRODUCT LEVEL)	SEE PAGE
	1	1	**451-7225**	1	FILM-IDENTIFICATION (CAT)	

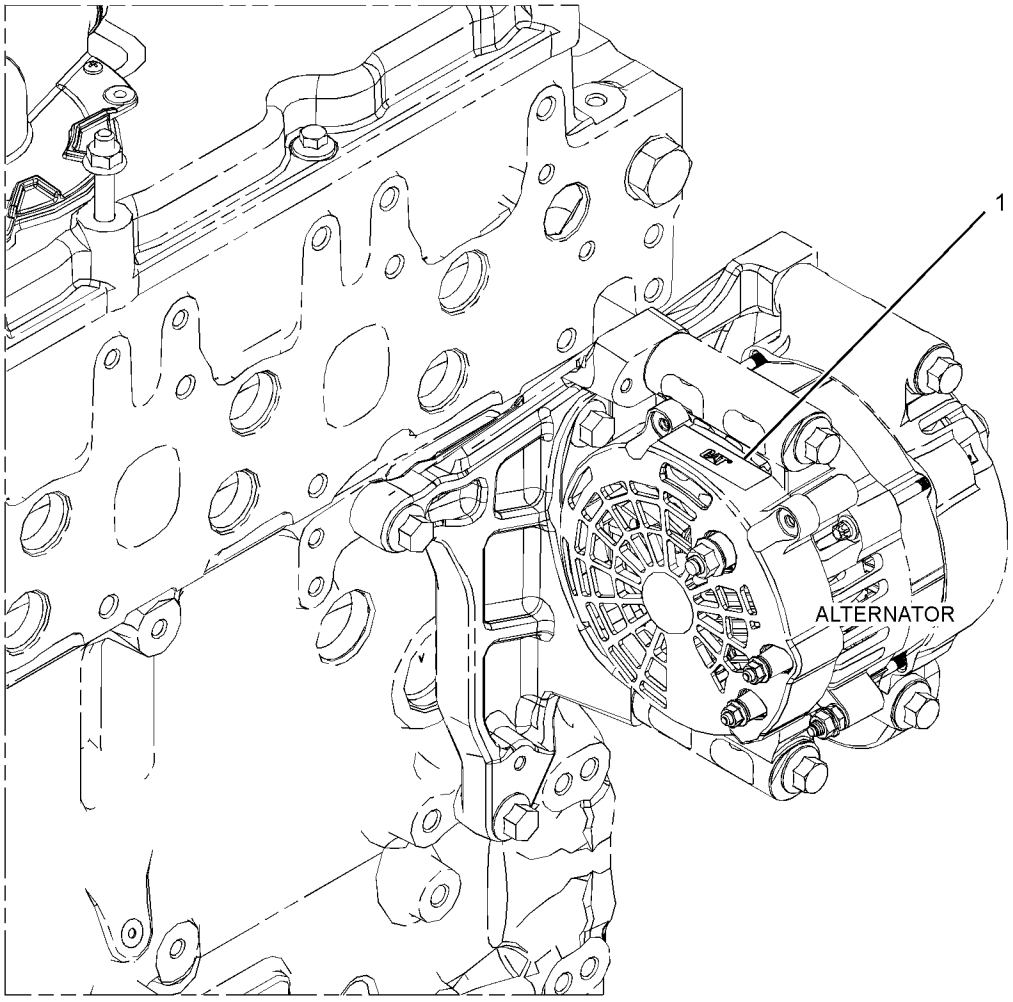

GRAPHIC #1 <END> g02675436

525-9812 FILM GP

S/N: W921-UP

PART OF 525-9809 COMMON AR

SMCS-0375, 7000, 7405, 7557 **i07538803**

NOTE	REF NO	GRAPHIC REF	PART NUMBER	QTY	PART NAME 1 2 3 4 5 6 (PRODUCT LEVEL)	SEE PAGE
	1	1	**362-8685**	1	FILM-IDENTIFICATION (CAT) (REAR)	
	2	1	**532-7085**	1	FILM-IDENTIFICATION (CAT) (LH)	
	3	1	**532-7086**	1	FILM-IDENTIFICATION (CAT) (RH)	
	4	1	**537-5639**	2	FILM-IDENTIFICATION (140GC)	

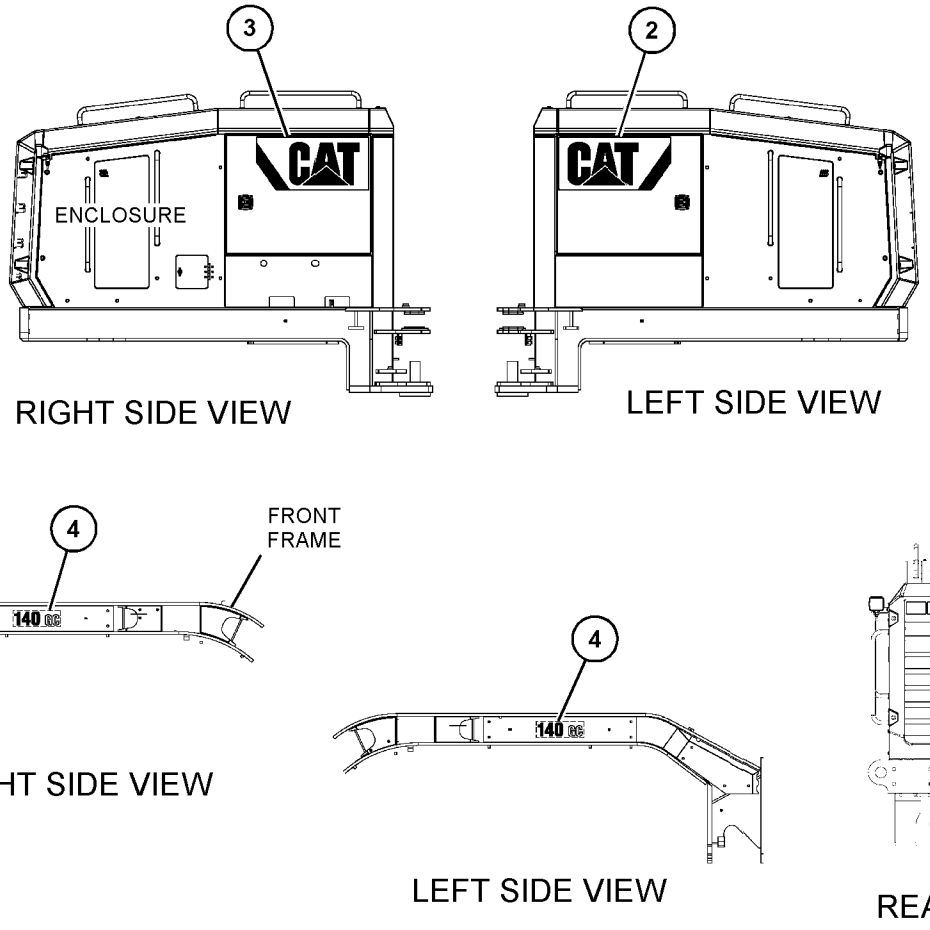

GRAPHIC #1 <END> g06369670

567-7088 FILM GP–ROPS, FOPS

S/N: W921-UP

PART OF 537-5610, 537-5612, 537-5614 CAB AR

SMCS-0375, 7000, 7405, 7557 **i07574828**

NOTE	REF NO	GRAPHIC REF	PART NUMBER	QTY	PART NAME 1 2 3 4 5 6 (PRODUCT LEVEL)	SEE PAGE
	1	1	**562-1352**	1	FILM-ROPS	

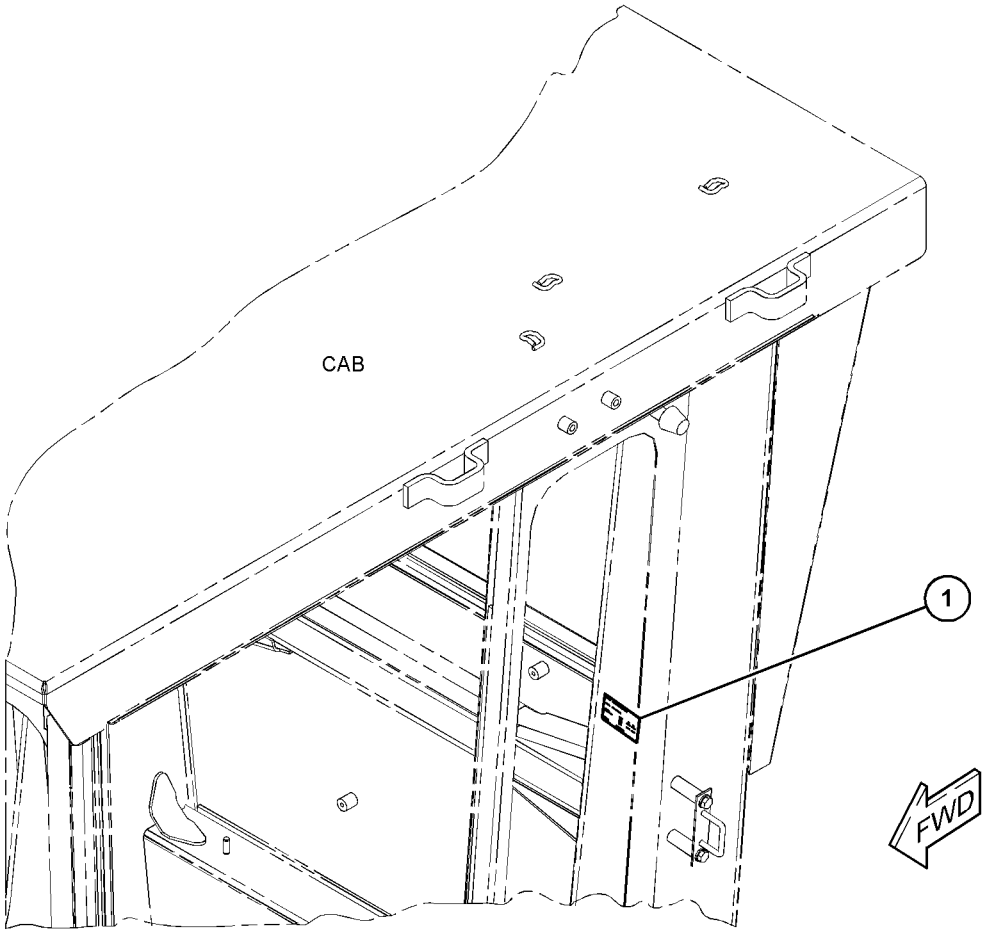

GRAPHIC #1 <END> g06369603

556-1449 PARTS GP-MISCELLANEOUS

S/N: W921-UP

PART OF 556-1448 CONTROL GP-TRANSMISSION HYD, 533-4648 TRANSMISSION GP

SMCS-1000, 7000, 7950

i07592659

NOTE	REF NO	GRAPHIC REF	PART NUMBER	QTY	PART NAME 1 2 3 4 5 6 (PRODUCT LEVEL)	SEE PAGE
					(NO BREAKDOWN OF SERVICEABLE PARTS AVAILABLE AT TIME OF PUBLICATION)	

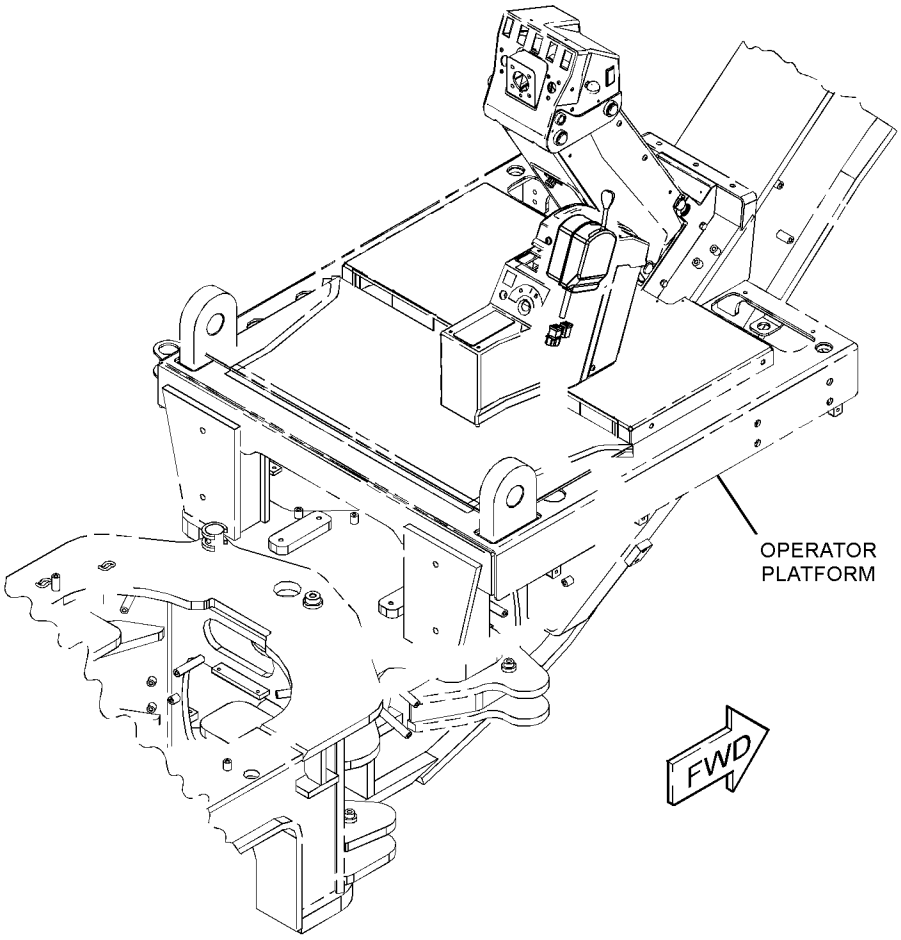

GRAPHIC #1 <END> g06375607

378-8167 PLATE & FILM GP

S/N: E7A1-UP

PART OF 533-1826, 533-1840 ENGINE AR-PRIMARY

SMCS-7405, 7557

i06731218

NOTE	REF NO	GRAPHIC REF	PART NUMBER	QTY	PART NAME 1 2 3 4 5 6 (PRODUCT LEVEL)	SEE PAGE
	1	1	**450-9772**	1	PLATE-IDENTIFICATION (CAT)	
	2	1	**326-9053**	1	FILM-WARNING (DO NOT SPRAY, READ OMM)	
	3	1	**346-8219**	2	FILM-WARNING (UNIVERSAL WARNING)	
	4	1	**355-3486**	1	STRIP-ADHESIVE	

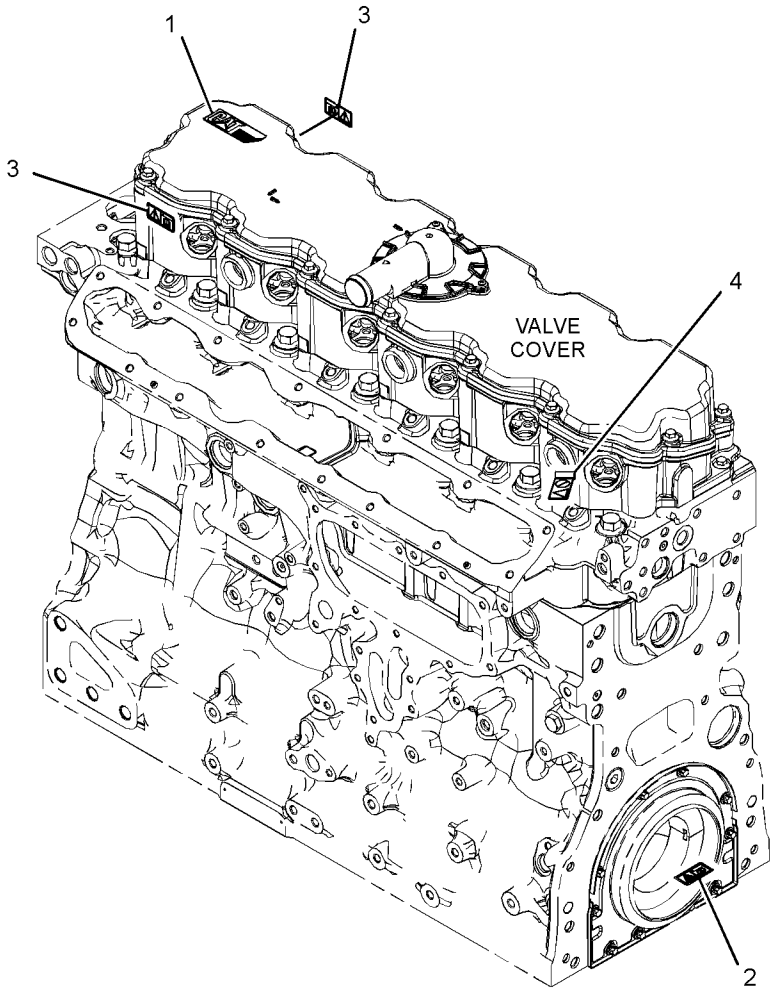

GRAPHIC #1

<END>

g03378858

537-5621 PLATE & FILM GP–U.S.

S/N: W921-UP

SMCS-7405, 7557 **i07552983**

NOTE	REF NO	GRAPHIC REF	PART NUMBER	QTY	PART NAME 1 2 3 4 5 6 (PRODUCT LEVEL)	SEE PAGE
	1	1	**129-7680**	1	FILM-INSTRUCTION (HYDRAULIC TANK OIL DRAIN)	
	2	2	**134-7258**	1	FILM-INFORMATION (EXTENDED LIFE COOLANT)	
	3	2	**146-6747**	1	FILM-INFORMATION (24-VOLT)	
	4	1	**156-5762**	2	FILM-INFORMATION (TIE-DOWN LOCATION)	
	5	2	**159-3590**	1	FILM-IDENTIFICATION (WATER SEPARATOR)	
	6	1	**219-0302**	2	FILM-WARNING (NO WELD, NO DRILL, READ OMM)	
	7	3	**224-7717**	1	FILM-WARNING (SEAT BELT, U.S.)	
	8	2	**224-8945**	1	FILM-WARNING (DO NOT USE ETHER, U.S.)	
	9	2	**225-0313**	1	FILM-WARNING (JUMP START, READ OMM, U.S.)	
	10	3	**225-4150**	1	PLATE-SERVICE INFORMATION (MACHINE)	
	11	1	**226-1242**	2	FILM-WARNING (CRUSH HAZARD, STAY BACK, U.S.)	
	12	1	**226-1275**	2	FILM-WARNING (CRUSH HAZARD, READ OMM, U.S.)	
	13	3	**228-3369**	1	FILM-WARNING (DO NOT OPERATE, READ OMM)	
	14	1	**230-1340**	1	FILM-WARNING (PRODUCT LINK RADIO, U.S.)	
E	15	1	**117-9978**		FILM-STRIPE (RED) (11-CM EACH)	
	16	1	**9X-8355**	1	FILM-IDENTIFICATION (BLADE CENTERSHIFT)	
	17	2	**8C-5897**	1	FILM-IDENTIFICATION (SIGHT GAUGE)	
	18	1	**243-5289**	2	FILM-IDENTIFICATION (LIFT POINT)	
	19	2	**248-5245**	2	FILM-INFORMATION (LIFT EYE, TIE-DOWN LOCATION)	
	20	1	**563-6783**		FILM-IDENTIFICATION (ARTICULATION LOCK)	
	21	1	**249-8575**	1	FILM-WARNING (NO DRILL, WELD, READ OMM)	
	22	2	**263-6901**	1	FILM-WARNING (HOT FLUID)	
	23	1	**275-3292**	1	FILM-IDENTIFICATION (GREASE POINT)	
	24	1	**307-0047**	1	FILM-INFORMATION (PRODUCT LINK, READ OMM)	
	25	2	**311-3928**	1	FILM-WARNING (FALLING HAZARD, READ OMM)	
	26	3	**313-5271**	2	REFLECTOR-RED	
	27	1	**329-5707**	1	FILM-IDENTIFICATION (OIL GRADE, READ OMM)	
	28	1	**331-5818**	2	FILM-WARNING (HYDRAULIC STEERING)	
	29	2	**385-7290**	2	FILM-WARNING (ROTATING SHAFT, READ OMM)	
	30	1	**3S-2093**	1	STRAP-CABLE	
	31	1	**452-0064**	1	FILM-IDENTIFICATION (LIFT POINT)	
	32	2	**455-1084**	1	FILM-IDENTIFICATION (CAT)	
	33	1	**501-2194**	2	FILM-WARNING (HIGH PRESSURE CYLINDER)	
	34	3	**515-7907**	1	PLATE-PIN	
	35	2	**527-8772**	1	FILM-IDENTIFICATION (CIRCUIT BREAKER)	
	36	1	**537-5640**	1	FILM-IDENTIFICATION (PANEL)	
	37	3	**552-3774**	1	FILM-IDENTIFICATION (FUSE/RELAY PANEL)	
	38	1	**555-8447**	1	TAG-WARNING (PROPOSITION 65)	
	39	2	**561-7673**	1	FILM-NOTICE (SHIPPING, LIFTING, TIE-DOWN)	
	40	2	**563-6775**	1	FILM-INFORMATION (LUBRICATION CHART)	

E - ORDER BY THE CENTIMETER

537-5621 **PLATE & FILM GP (**contd.**)** **i07552983**

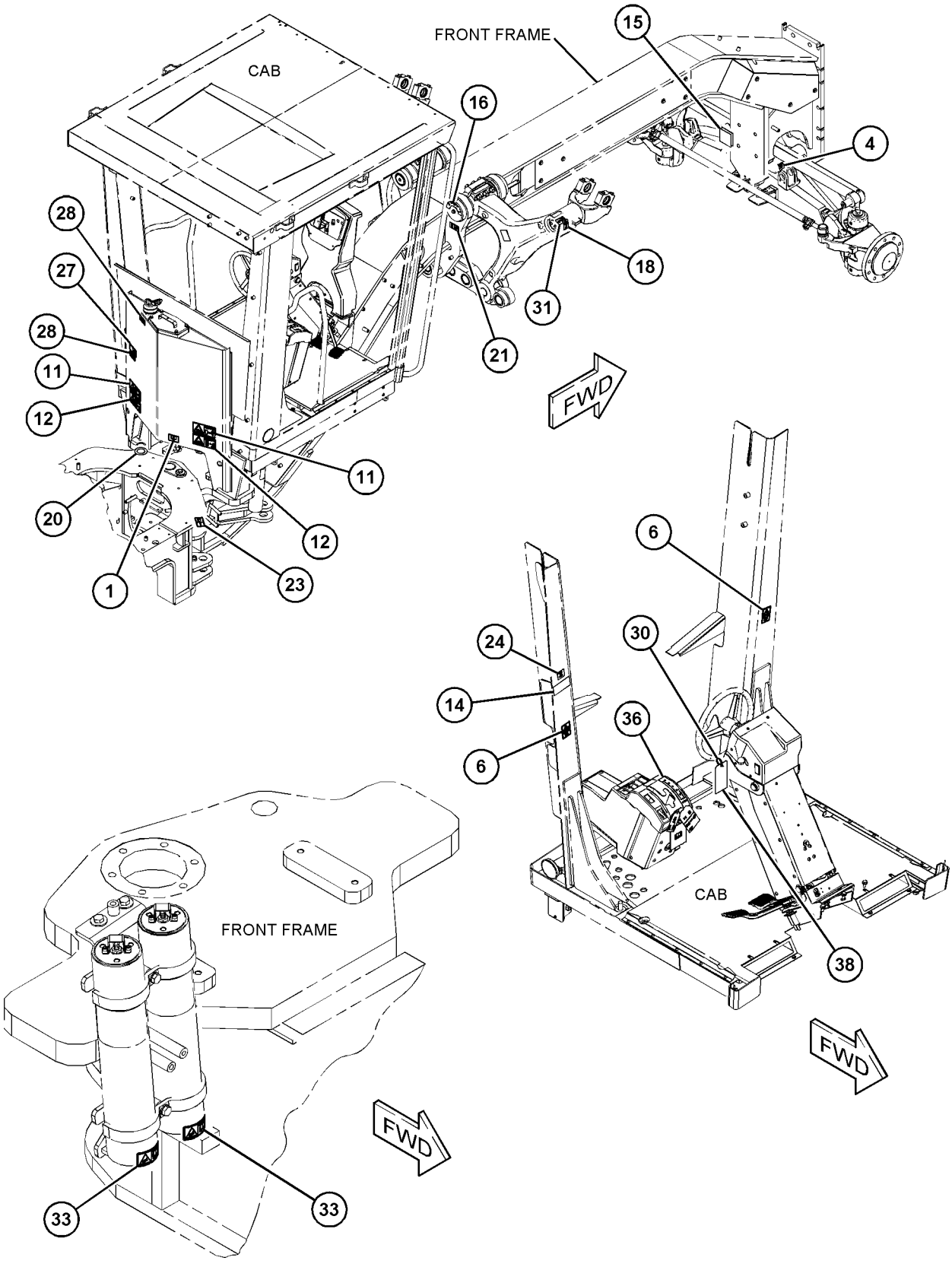

GRAPHIC #1 g06369655

537-5621 **PLATE & FILM GP (**contd.**)** **i07552983**

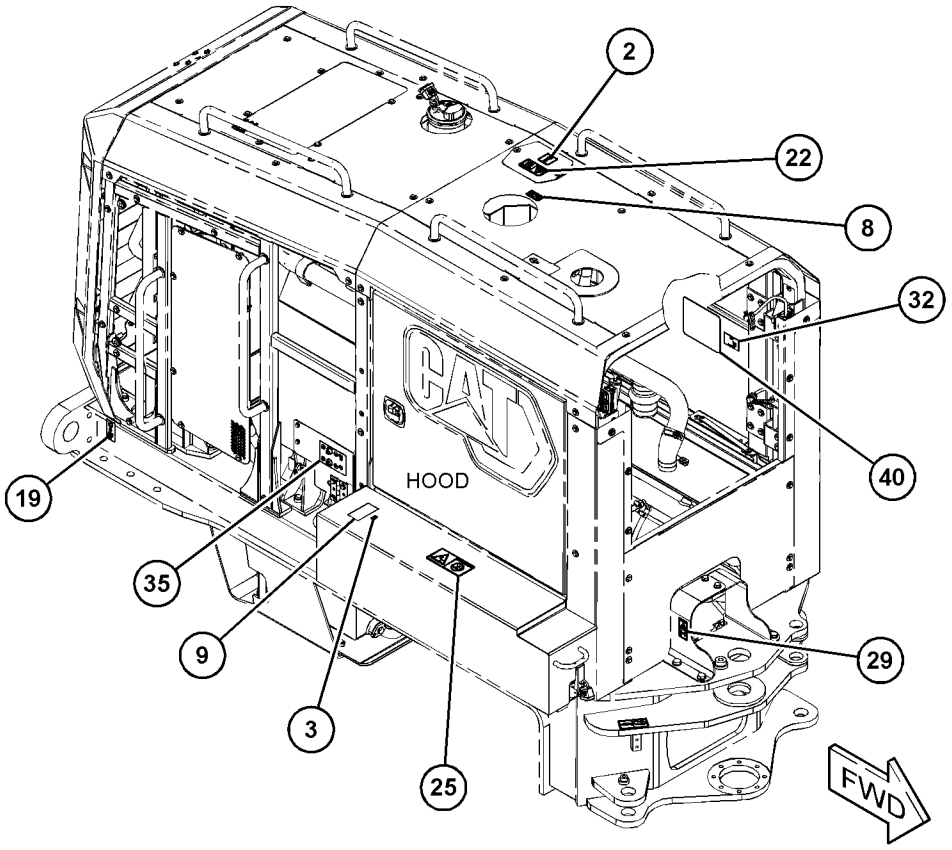

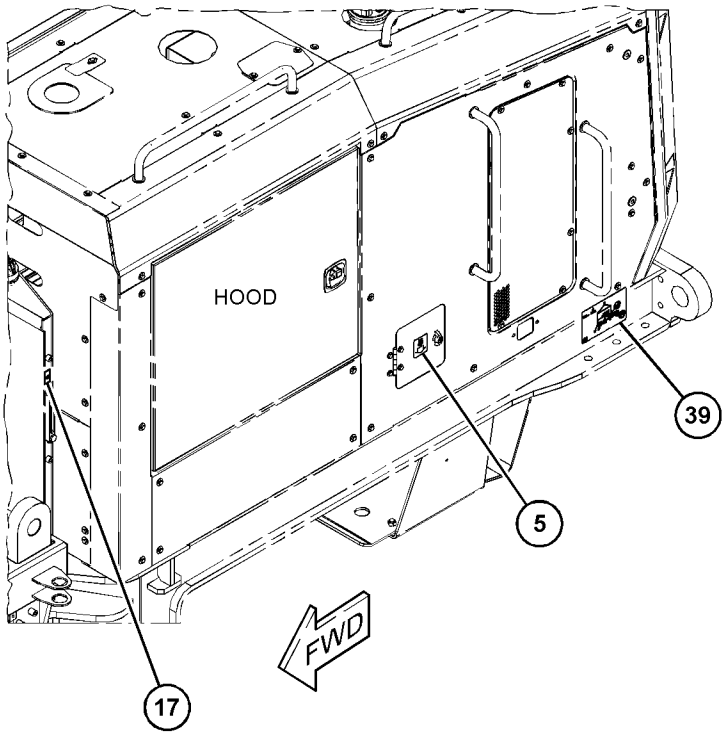

GRAPHIC #2 g06370086

537-5621 **PLATE & FILM GP (**contd.**)** **i07552983**

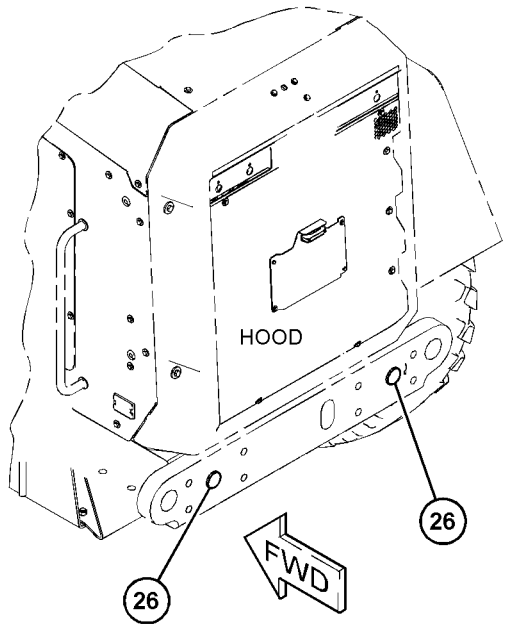

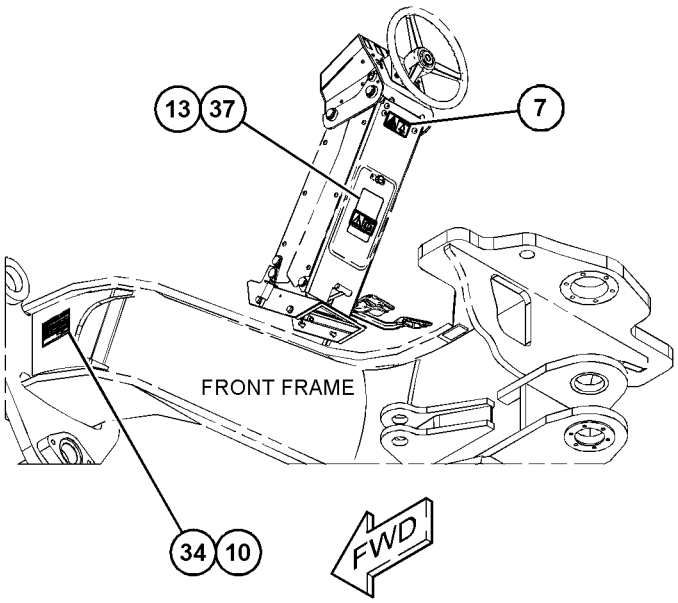

(VIEWED FROM BOTTOM)

GRAPHIC #3 <END> g06370087

537-5622 PLATE & FILM GP–INTERNATIONAL

S/N: W921-UP

SMCS-7405, 7557 **i07552978**

NOTE	REF NO	GRAPHIC REF	PART NUMBER	QTY	PART NAME 1 2 3 4 5 6 (PRODUCT LEVEL)	SEE PAGE
	1	1	**129-7680**	1	FILM-INSTRUCTION (HYDRAULIC TANK OIL DRAIN)	
	2	1	**134-7258**	1	FILM-INFORMATION (EXTENDED LIFE COOLANT)	
	3	1	**146-6747**	1	FILM-INFORMATION (24-VOLT)	
	4	1	**156-5762**	2	FILM-INFORMATION (TIE-DOWN LOCATION)	
	5	1	**159-3590**	1	FILM-IDENTIFICATION (WATER SEPARATOR)	
	6	1	**219-0302**	2	FILM-WARNING (NO WELD, NO DRILL, READ OMM)	
	7	1	**221-8045**	1	FILM-WARNING (SEAT BELT, INTERNATIONAL)	
	8	1	**224-0554**	1	FILM-WARNING (UNIVERSAL, READ OMM)	
	9	1	**224-8946**	1	FILM-WARNING (NO ETHER SPRAY/AIR INTK, INTL)	
	10	1	**225-0312**	1	FILM-WARNING (JUMP START, READ OMM, INTL)	
	11	1	**225-4150**	1	PLATE-SERVICE INFORMATION (MACHINE)	
	12	1	**226-1240**	2	FILM-WARNING (CRUSH HAZARD, STAY BACK, INTL)	
	13	1	**226-1274**	2	FILM-WARNING (CRUSH HAZARD, READ OMM, INTL)	
	14	1	**230-1341**	1	FILM-WARNING (PRODUCT LINK RADIO, INTL)	
	15	1	**230-4477**	1	FILM-WARNING (NO STEP)	
E	16	1	**117-9978**		FILM-STRIPE (RED) (11-CM EACH)	
	17	1	**9X-8355**	1	FILM-IDENTIFICATION (BLADE CENTERSHIFT)	
	18	1	**8C-5897**	1	FILM-IDENTIFICATION (SIGHT GAUGE)	
	19	1	**243-5289**	2	FILM-IDENTIFICATION (LIFT POINT)	
	20	1	**248-5245**	2	FILM-INFORMATION (LIFT EYE, TIE-DOWN LOCATION)	
	21	1	**563-6783**	1	FILM-IDENTIFICATION (ARTICULATION LOCK)	
	22	1	**249-8575**	1	FILM-WARNING (NO DRILL, WELD, READ OMM)	
	23	1	**263-6902**	1	FILM-WARNING (HOT FLUID)	
	24	1	**275-3292**	1	FILM-IDENTIFICATION (GREASE POINT)	
	25	1	**307-0047**	1	FILM-INFORMATION (PRODUCT LINK, READ OMM)	
	26	1	**313-5271**	2	REFLECTOR-RED	
	27	1	**329-5707**	1	FILM-IDENTIFICATION (OIL GRADE, READ OMM)	
	28	1	**334-6758**	2	FILM-WARNING (COLD START, READ OMM)	
	29	1	**385-7291**	2	FILM-WARNING (ROTATING SHAFT, READ OMM)	
	30	1	**452-0064**	1	FILM-IDENTIFICATION (LIFT POINT)	
	31	1	**455-1084**	1	FILM-IDENTIFICATION (CAT)	
	32	1	**501-2195**	2	FILM-WARNING (HIGH PRESSURE CYLINDER)	
	33	1	**515-7907**	1	PLATE-PIN	
	34	1	**527-8772**	1	FILM-IDENTIFICATION (CIRCUIT BREAKER)	
	35	1	**537-5640**	1	FILM-IDENTIFICATION (PANEL)	
	36	1	**552-3774**	1	FILM-IDENTIFICATION (FUSE/RELAY PANEL)	
	37	1	**561-7673**	1	FILM-NOTICE (SHIPPING, LIFTING, TIE-DOWN)	
	38	1	**563-6775**	1	FILM-INFORMATION (LUBRICATION CHART)	

E - ORDER BY THE CENTIMETER

537-5622 **PLATE & FILM GP** (contd.) **i07552978**

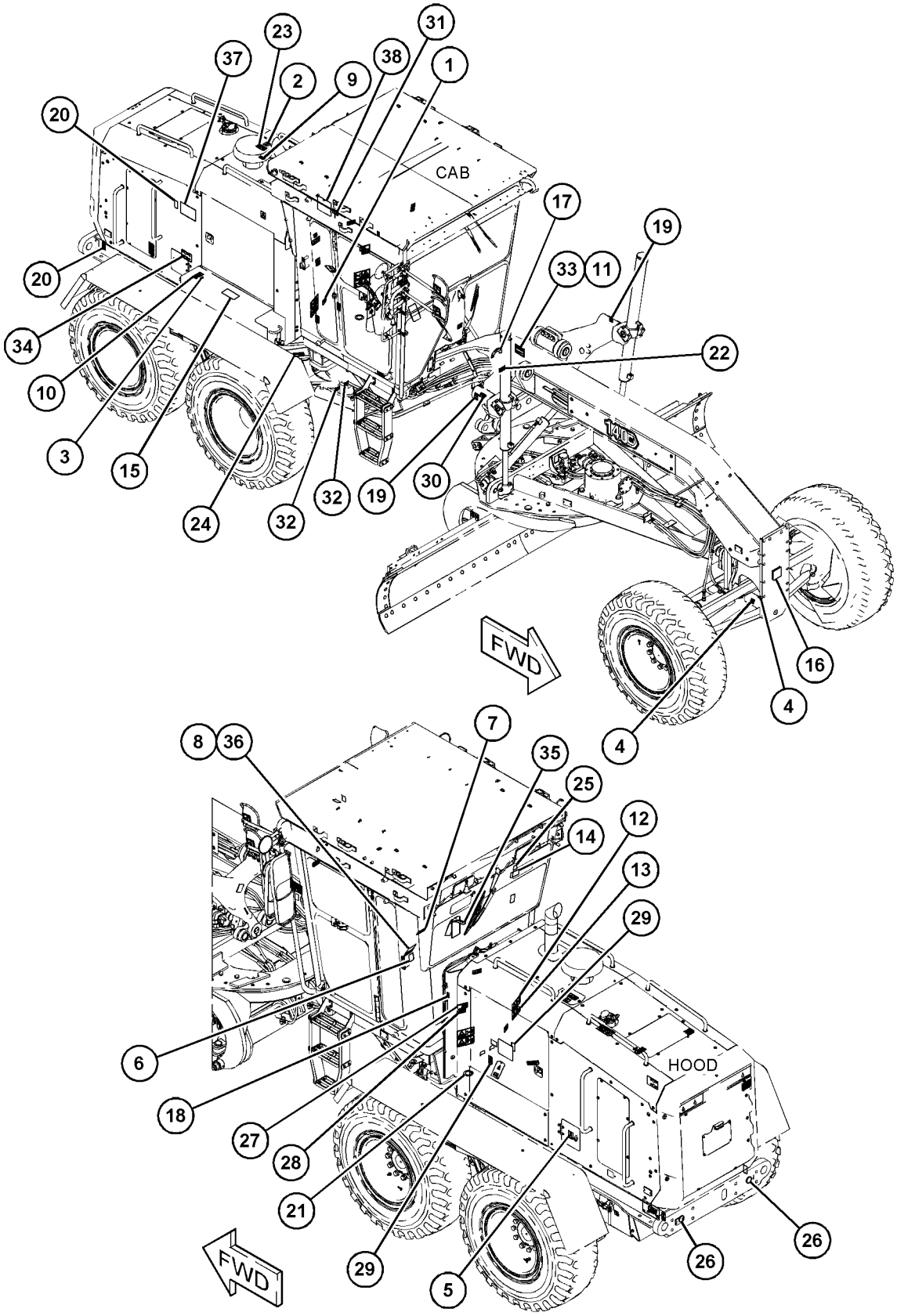

GRAPHIC #1 <END> g06369954

PART NUMBER INDEX

Part	Page
0	
0S-1579	272
	274
	276
	277
0S-1592	248
	360
0V-0375	247
1	
1A-4350	574
1B-0676	98
	516
1B-2713	530
1B-4367	329
1B-8704	98
1F-0750	581
1F-1599	576
1F-4622	516
1F-5403	516
1H-0337	434
1H-3244	232
	323
1H-3338	524
1H-8306	126
1J-2860	254
1J-4757	254
1J-9671	335
	336
	350
	434
1L-5072	420
1M-1230	530
1M-6119	130
	131
	133
	134
1M-6120	130
	131
	133
	134
1M-6718	475
1P-0810	155
	157
	217
1P-2378	563
1P-4578	399
1P-4693	262
	264
1P-4694	262
	264
1P-6356	552
1R-0774	420
1S-0994	110
	114
	338
1S-7251	131
	134
1Y-0413	42
2	
2A-3211	471
2A-6684	547
2A-6926	602
2A-6928	602
2A-6929	602
2A-6985	500
	►567
2B-0941	112
	384
	386
	391
	552
2B-3147	278
	279
	280
2B-3148	278
	279
	280
2D-2507	289
	290
	291
2D-2508	289
	290
	291
2D-2509	289
	290
	291
2D-2511	289
2D-2565	290
2D-2654	271
	287
2D-4202	420
2D-6235	530
2D-9454	254
2D-9455	254
2F-7888	232
2F-8057	329
	359
2G-0617	208
	209
2G-0659	208
	209
2G-1034	338
2G-3865	247
2G-5667	248
	360
2G-5673	247
2G-6595	291
2G-6740	423
	427
2G-6747	423
	425
	427
2G-6748	423
	425
	427
2G-6749	423
	425
	427
2G-6751	423
	425
	427
2G-6752	423
	425
	427
2G-6754	427
2G-6755	423
	425
	427
2G-6756	423
	425
	427
2G-6757	423
	425
	427
2G-7097	566
	567
2G-7098	566
	567
2G-8241	563
2G-8242	563
2G-8572	510
	548
	563
2G-8573	510
	548
	563
2G-8609	360
2G-8615	247
2G-8624	247
2G-8626	247
2G-8631	248
2G-8633	247
2G-8741	247
2G-8742	247
2G-8767	547
2G-8768	247
2G-8777	247
2G-9103	355
	357
2H-3088	254
2H-3740	247
2H-3786	359
2H-3920	213
2H-3922	210
2H-3926	66
2H-3931	410
2H-3940	42
2J-3505	247
2J-3506	604
	605
	606
	607
2J-6089	471
2J-7761	420
2J-8163	247
2K-4973	483
	562
	581
2K-5830	510
2K-6061	581
2K-6413	614
2K-7979	510
2K-8198	338
2K-8199	438
	440
	448
	450
	452
	454
	456
	458
	460
	462
2L-5893	483
2L-8050	204
2L-8052	155
2L-8058	204
2L-8060	155
2L-8069	155
	165
	167
2L-8079	155
	166
	167
	170
2M-9780	95
	342
	379
	399
	434
	554
	555
2N-9421	98
2P-1279	338
2P-1293	66
2P-4339	491
	537
2S-2923	338
2S-4078	398
	434
2S-5100	422
2T-2396	338
2V-0099	491
	537
2V-1771	130
	133
2V-3726	548
2V-8259	226
2V-9121	554
3	
3B-4607	510
3B-4611	420
3B-4617	342
3B-4618	233
	247
	359
3B-5325	614
3B-8485	355
3B-8489	247
	357
	481
3D-2239	289
3D-2824	87
	375
	382
	384
	391
	393
	398
	399
	411
	429
	434
3D-2981	278
	279
	280
3D-8747	530
3D-8749	530
3D-8752	530
3E-0400	491
	537
3E-2310	405
3E-2333	342
3E-2345	384
	411
3E-3371	224
3E-3377	163
3E-3383	157
	167
	169
	224
3E-3389	156
	162
	167
3E-3390	233
3E-3636	211
3E-3890	491
	537
3E-4048	567
	571
3E-4051	552
3E-4052	552
3E-4057	552

► PRIMARY REFERENCE

PART NUMBER INDEX

Part	Page
3E-4058	552
3E-4066	552
3E-4313	317
	549
3E-4321	391
	554
	555
3E-4352	65
3E-5169	233
3E-5239	232
3E-6328	▶128
	226
3E-6389	▶175
	217
3E-6466	▶186
	196
3E-6780	465
3E-6909	399
3E-7401	76
3E-8020	522
3E-9375	203
3E-9411	566
	567
	571
3E-9413	597
3E-9865	511
3F-1547	420
3F-7514	511
3F-9556	423
	425
	427
	599
	602
3G-0361	420
3G-1701	222
3G-3265	549
3G-8175	476
3H-2900	491
	538
3H-8538	516
3J-1907	76
	127
	222
	233
	238
	240
	266
	338
	341
	342
	351
	352
	382
	384
	391
	399
	405
	429
	434
	467
	468
	469
	471
	475
3J-3679	434
3J-5389	42
	422
3J-5696	483
3J-7354	266
	393
	398
	405
	407
	417
	434
	435
	472
	474
3K-0360	42
	66
	76
	112
	233
	254
	341
	342
	375
	377
	379
	380
	384
	386
	388
	390
	396
	403
	405
	407
	434
	435
	438
	440
	448
	450
	452
	454
	456
	458
	460
	462
	470
	472
	473
	474
3K-2889	329
3K-6060	511
3K-9520	192
	194
	197
3L-6513	130
	134
3P-1461	609
3P-9498	434
3R-2437	434
3S-2093	83
	110
	114
	130
	133
	165
	167
	199
	205
	207
	217
	222
	224
	226
	232
	491
	537
	547
	592
	594
	596
	622
3S-6049	131
	134
3S-6050	130
	133
3S-9557	491
3T-0849	524
3T-0852	504
	506
	549
3T-3157	157
	160
3T-3158	157
	160
3T-3159	157
	160
3T-3197	491
3T-3198	491
3T-3278	157
	160
3T-6774	530
3T-8236	434
3V-3816	596
3V-9244	566
	567
	571
3Y-2806	511
4	
4B-2913	420
4B-4274	233
4B-4278	516
4B-4283	599
	601
4B-4314	511
4B-4863	586
4B-5272	485
4B-6060	516
4B-7270	292
	294
4D-2297	467
	468
	469
	471
4D-3704	247
	360
4D-4064	98
4D-6432	574
4D-6695	262
	264
4D-7388	83
	266
4D-7733	377
	382
	384
	386
4D-7735	130
	380
4D-7794	211
	596
4D-9986	172
	438
	440
	448
	450
	452
	454
	456
	458
	460
	462
4E-5724	232
4F-2294	232
4F-6123	518
4F-7827	607
4H-6112	279
	280
4H-6520	254
4I-0755	292
	294
4J-0520	399
4J-0522	399
4J-5477	338
	398
	399
	405
	407
	434
4J-7533	430
	431
	432
	433
	435
	438
	440
	448
	450
	452
	454
	456
	458
	460
	462
4K-0367	566
	567
	571
4K-1388	434
4K-1540	342
4K-3330	▶615
4K-4879	291
4K-4881	288
4K-8864	552
4L-5966	491
	537
4L-6454	407
	485
4L-6459	427
4M-0061	530
4M-5281	233
4M-6582	491
	538
4M-6921	420
4P-7428	130
	207
4P-7581	142
	144
	146
	189
	190
	192
	194
	196
	197
	211
	219
	222
	226
	229
	230
	231
	233
	237
	238
	240
	242
	552
4S-1962	222
4S-4455	110

▶ PRIMARY REFERENCE

PART NUMBER INDEX

Part	Page
	114
4S-5879	292
	294
4T-0928	475
4T-1700	472
4T-1860	434
	►475
4T-3010	607
4T-4509	472
4T-4935	434
	►473
4T-4942	470
4T-7571	470
4T-8054	410
4V-7890	483
4V-7891	483

5

5B-6172	483
	577
5B-9318	371
	438
	440
	448
	450
	452
	454
	456
	458
	460
	462
5C-2890	173
	186
	204
	492
	528
	538
	592
	594
5C-7261	509
	599
	602
5C-7423	602
5C-8312	217
	492
	511
5C-9553	81
	199
	573
5D-0353	247
5D-1026	76
	126
	338
5D-1911	420
5D-2645	380
5F-5434	338
5G-6505	136
5H-3701	292
	294
5I-4376	76
5J-4773	604
	605
	606
5K-1458	615
5K-1459	615
5K-3294	343
5K-5129	247
	292
	294
5K-5288	247
	292
	294
5K-9090	266
	393
	398
5L-7200	192
	194
	197
5M-2057	434
5M-2894	485
	581
5M-3062	335
	336
	350
	351
	352
	483
	524
5M-6213	338
5M-8500	511
5P-0537	530
5P-0743	76
5P-0767	42
	554
	555
5P-1046	76
5P-1075	247
	312
	317
	423
	425
	427
	492
	511
	524
	538
	552
	563
	587
5P-1076	98
	137
	247
	343
5P-1291	400
5P-1424	171
5P-1475	160
5P-1506	170
5P-2957	155
5P-3454	170
	233
5P-3490	262
	264
5P-4115	317
	524
	528
	544
	592
	594
	599
	601
5P-4116	81
	314
	317
	324
	504
	506
	509
	549
5P-4295	131
	134
	234
5P-4484	254
	278
	279
	280
5P-4571	155
	224
5P-4906	42
5P-4924	76
5P-4961	76
	83
	112
5P-5602	155
5P-5630	205
5P-5637	492
	511
	538
5P-5639	511
5P-5768	597
5P-5908	492
	538
5P-5969	312
	504
	506
	544
	549
	556
5P-6882	544
5P-7466	400
5P-7467	400
5P-7803	492
	521
	537
5P-7957	576
	577
	586
5P-7970	516
5P-8112	400
5P-8167	511
5P-8245	254
	278
	279
	280
	360
5P-8291	481
5P-8500	125
	300
	422
	575
	580
	583
	616
5P-8525	322
	533
	547
5P-8843	247
5P-8890	247
5P-8998	339
5P-9085	328
5P-9135	492
	538
5P-9209	98
5P-9297	224
	339
5P-9560	375
5P-9615	42
5P-9617	266
5S-7379	247
	359
	563
5S-7383	511
	581
5T-0906	247
5T-4030	222
5T-7486	524
5V-5262	485

6

6A-3361	232
6A-5591	278
	279
	280
6B-3223	292
	294
6B-3260	615
6B-5072	279
	280
6B-6684	420
6C-3210	247
6C-3241	247
6C-9038	137
6C-9149	607
6D-0044	10
6D-4161	157
	160
6D-4244	66
	110
	114
	224
	392
	394
6D-4246	131
	134
	231
6D-4247	392
6E-1835	470
6E-1923	434
6E-1924	434
6E-1925	434
6E-3007	438
	440
	448
	450
	452
	454
	456
	458
	460
	462
6E-3013	438
	448
	450
	452
	454
	456
	458
	460
	462
6E-3019	438
	440
	448
	450
	452
	454
	456
	458
	460
	462
6E-3028	430
	433
	►448
6E-3029	430
	433
	►450
6E-3030	430
	433
	►452
6E-3031	430
	433
	►454

PART NUMBER INDEX

Part	Page
6E-3032	►430
	442
	446
6E-3034	431
	432
	►456
6E-3035	431
	432
	►458
6E-3036	431
	432
	►460
6E-3037	431
	432
	►462
6E-3038	►431
	446
6E-3043	454
	462
6E-3044	448
	450
	452
	458
6E-3058	460
6E-3059	440
6E-4502	438
	440
	448
	450
	452
	454
	456
	458
	460
	462
6E-4599	438
	456
6E-5153	438
	440
	448
	450
	452
	454
	456
	458
	460
	462
6E-5200	472
6F-3930	289
	290
	291
6F-7045	210
6G-2395	548
6G-2396	548
6G-2751	548
6G-2914	510
	548
6G-3206	262
	264
6G-3212	262
	264
6G-4703	254
6G-5442	481
6G-5987	530
6G-7187	360
6G-7222	548
6G-8814	510
6G-8831	557
6H-1717	360
6I-0217	16
	34
	36
	38
	45
	61
	62
	65
	70
	78
	96
	116
	118
	123
6I-0254	10
	61
	62
	78
6I-0260	45
	62
	70
	72
	94
	116
	118
	124
6I-0289	65
6I-0292	201
6I-0293	201
6I-0302	38
6I-0364	9
6I-0456	141
6I-0563	96
6I-0572	45
6I-0593	96
	116
6I-0594	72
	123
6I-0631	120
	121
6I-0645	34
	36
6I-0650	34
	36
6I-0654	38
	41
	118
	123
6I-0839	78
6I-0917	94
6I-1090	68
6I-1418	240
6I-1497	65
6I-4200	116
	118
6I-4374	61
	62
6I-4681	45
6I-4709	70
6J-0488	511
6J-6439	470
6K-1019	339
6K-3273	549
6K-9632	592
	596
6L-1962	423
	425
	427
	511
6N-1604	172
6P-0205	549
6P-3236	492
	538
6T-5345	492
	537
6T-5532	137
6T-5598	131
	134
6T-6505	160
6T-6506	160
6T-6708	492
	537
6T-7695	547
6V-0292	521
	549
6V-0491	155
	156
	165
6V-0852	339
	343
	383
	384
	400
	406
	411
	435
6V-0894	234
6V-1582	76
6V-1668	492
	538
6V-1889	87
	407
6V-2313	98
6V-2369	233
6V-2686	205
6V-2687	317
	556
6V-2773	524
6V-3265	240
6V-3303	264
	292
	294
6V-3319	126
6V-3928	521
	549
	571
6V-3965	338
	342
	382
	384
	400
	406
	411
	434
6V-4249	388
6V-5063	406
6V-5158	524
6V-5163	549
	573
6V-5165	524
6V-5217	110
	205
6V-5223	507
6V-5230	434
6V-5324	475
6V-5556	472
	474
6V-5686	254
6V-5758	465
6V-5853	599
	601
6V-6888	602
6V-7238	66
	76
6V-7636	524
6V-7687	272
6V-7728	492
	538
6V-7744	557
6V-8076	405
6V-8077	338
6V-8154	250
6V-8183	98
	511
	516
6V-8214	317
6V-8258	601
6V-8259	599
6V-8362	492
	538
6V-8367	76
6V-8369	213
6V-8397	76
	341
	343
	375
	377
	379
	382
	383
	384
	386
	388
	390
	396
	403
	405
	406
	411
6V-8398	66
	112
	341
	342
	375
	379
	380
	382
	384
	391
	396
	403
	405
	407
	411
	434
6V-8523	76
	83
6V-8625	112
	341
	375
	379
	396
	407
6V-8627	399
	405
6V-8633	375
	382
	384
	391
	411
6V-8634	375
	377
	379
	384
	386
	388
	396
6V-8635	266
6V-8636	382
	384
6V-8637	398
6V-8638	379
6V-8639	66
	112
	379
	403
	407

► PRIMARY REFERENCE

PART NUMBER INDEX

Part	Page
6V-8647	398
	407
	434
6V-8653	481
6V-8713	393
6V-8722	403
6V-8723	377
	379
	390
6V-8724	382
	384
	405
6V-8781	382
6V-8782	341
6V-8801	98
	492
	538
	587
6V-8928	548
6V-8980	403
6V-8987	390
6V-8993	399
	405
6V-9001	341
6V-9002	341
	407
6V-9004	87
	399
6V-9007	393
	398
	429
6V-9168	76
	390
	403
6V-9169	343
6V-9182	399
6V-9189	176
	177
	178
6V-9208	554
6V-9491	194
	197
6V-9632	317
	510
	514
	528
	544
	548
6V-9746	66
	87
	382
	384
	391
	393
	394
	398
	399
	411
	429
6V-9829	383
	411
6V-9830	392
6V-9835	398
6V-9836	377
6V-9837	341
	375
	391
	407
6V-9839	393
6V-9840	398
6V-9842	398
	405
6V-9843	341
6V-9844	341
	382
6V-9845	393
6V-9846	398
	407
6V-9849	398
6V-9850	379
	403
6V-9851	341
	375
	379
	384
	407
	411
6V-9853	399
6V-9854	398
6V-9873	342
6V-9875	398
6V-9876	375
	396
6W-0108	483
6W-0111	483
6W-0590	483
6W-1496	485
6W-1497	485
6W-1885	483
6W-1888	485
6W-1890	577
6W-1895	577
6W-2371	485
6W-2373	577
6W-3309	576
	577
6W-3628	485
	581
6W-5698	591
6W-5740	577
6W-5757	576
	577
6W-9693	577
6Y-0309	614
6Y-2539	254
6Y-2540	254
6Y-5230	615

7

Part	Page
7C-1243	9
7C-4616	34
	36
7D-1195	420
7D-1576	605
7D-1577	606
7D-5252	289
	290
	291
7D-8437	292
	294
7D-8439	262
	264
	292
	294
7D-8441	262
	264
	292
	294
7D-8636	247
7D-8637	247
7D-8643	247
7D-8889	609
7F-0192	98
7F-0560	136
7G-4824	548
7G-7053	196
	226
	229
	322
7G-7918	223
7G-7920	170
	223
7H-1447	420
7I-4696	224
7I-4698	222
7I-4699	222
7I-4718	498
	►519
7J-8611	259
7J-9108	393
	403
7J-9933	440
	470
	473
7K-1181	76
	83
	130
	142
	144
	146
	172
	189
	190
	192
	194
	196
	197
	199
	207
	211
	215
	216
	217
	219
	221
	222
	226
	229
	230
	231
	232
	237
	238
	240
	242
	408
	486
	522
	552
7K-4199	534
7K-4201	527
7K-9204	313
	410
7L-8316	530
7M-8485	254
	266
	278
	279
	280
	393
	399
7N-0296	205
7N-0718	131
	134
	►210
7N-2059	205
7N-5274	130
	133
7N-9943	175
7R-2750	223
7R-2751	223
7T-0020	174
	175
7T-0582	530
7T-1099	138
	139
	310
	314
	317
	510
	537
7T-1961	591
7T-4003	532
	533
7T-4532	508
7T-6799	226
7T-7358	534
7T-8891	592
	594
	596
7T-9302	214
7T-9793	492
7U-4891	234
7V-0446	98
	516
7W-2562	10
7W-2632	141
7X-0346	410
7X-0354	566
	567
	571
7X-0375	567
	571
7X-0490	491
	538
7X-0515	74
7X-0578	81
7X-0579	314
	322
	324
7X-0605	524
7X-1448	76
7X-2049	552
7X-2454	612
7X-2470	398
7X-2537	509
7X-2546	430
	431
	432
	433
7X-2553	262
7X-2555	319
7X-2558	380
7X-2563	302
	358
7X-2565	355
	357
	607
7X-2575	535
7X-3162	405
7X-4736	226
7X-4743	226
7X-7729	81
	333
7X-7731	247
7X-7739	577
7X-7877	217
	549
	576
	577
7X-7910	552
7X-7911	552
7X-7945	338

► PRIMARY REFERENCE

PART NUMBER INDEX

Part	Page
8	
8B-1615	261
8C-0596	233
8C-3056	131
	133
8C-3206	400
8C-3442	510
8C-3445	69
8C-3446	266
	393
8C-3447	266
8C-3451	394
8C-3756	537
8C-4586	492
	537
8C-5897	622
	626
8C-5917	130
	133
8C-6162	413
8C-6358	136
8C-6959	110
	114
8C-8408	399
8C-8992	137
8C-9987	509
8D-2429	359
8D-2638	359
8D-2811	247
	359
8D-3902	262
	264
8D-5636	423
	425
	427
8D-5637	423
	425
	427
8D-5640	423
	425
	427
8D-5641	423
	425
	427
	511
8D-8168	609
8E-7791	548
8E-8293	592
	594
	596
8F-0492	549
8F-1974	211
8F-9538	292
	294
8H-1728	563
8H-5303	210
8H-5306	210
8J-1434	612
	►614
8J-2413	429
8J-6815	434
8L-2786	45
8L-7905	511
8L-8413	130
	131
	133
8M-2773	76
	83
	343
	375
	377
	379
	383
	384
	388
	396
	552
8M-3175	434
8M-4437	438
	440
	448
	450
	452
	454
	456
	458
	460
	462
8N-0869	134
8N-1541	223
8N-1548	165
	223
	233
8N-1549	165
	170
	223
8N-1725	131
	134
8P-5141	492
	537
8R-0126	559
	560
8R-2054	576
	577
8R-2057	576
	577
8R-4519	485
	581
8S-0934	574
8S-4790	485
	581
8S-6109	552
8S-6110	552
8S-7566	527
8T-0076	377
	379
	386
	388
8T-0119	112
	405
8T-0122	232
8T-0151	338
	429
8T-0207	257
8T-0269	23
	45
8T-0328	98
8T-0336	254
8T-0337	492
8T-0375	264
8T-0389	179
	180
	420
8T-1117	83
8T-1159	292
	294
8T-1174	511
8T-1674	266
8T-1683	377
8T-1685	393
8T-1687	375
	380
	396
8T-2226	522
8T-2275	420
8T-2501	561
8T-2561	511
8T-2883	382
8T-2901	594
8T-2925	251
8T-3426	549
8T-3490	9
	76
	110
	130
	233
	242
	314
	332
	338
	492
	555
8T-3518	136
8T-3597	138
	139
	347
8T-3612	138
	139
	199
	314
8T-3727	262
	264
8T-4001	372
	373
	612
8T-4121	74
	98
	261
	420
	524
	547
	549
	552
	554
	555
	557
	559
	560
	562
	596
8T-4122	137
	302
	309
	410
	567
	571
8T-4123	302
	355
	357
	358
	481
	609
8T-4131	355
	357
	481
	607
	609
8T-4132	74
8T-4133	98
	511
	552
8T-4136	74
	81
	98
	322
	324
	333
	511
	524
	552
	554
	555
	592
	594
	596
8T-4137	524
	547
	552
	554
	555
	557
8T-4138	438
	440
	448
	450
	452
	454
	456
	458
	460
	462
	521
	544
	602
8T-4140	262
	411
8T-4167	372
	373
	481
	612
8T-4170	481
8T-4171	492
	538
	599
	601
8T-4172	432
8T-4181	524
8T-4182	98
	549
	552
8T-4184	272
8T-4185	81
	557
	559
	560
	562
	563
8T-4186	430
	431
	557
8T-4189	81
	199
	314
	322
	324
	438
	440
	448
	450
	452
	454
	456
	458
	460
	462
8T-4190	302
8T-4191	549
	596
8T-4192	315
	333
8T-4193	79
	309
8T-4194	319
8T-4195	81
	261
	420

► PRIMARY REFERENCE

PART NUMBER INDEX

Part	Page
	549
	552
	554
	555
8T-4196	98
8T-4198	12
	507
8T-4200	172
8T-4205	173
	186
	234
	492
	538
8T-4222	322
	324
8T-4223	81
	272
	319
	333
	343
	410
	422
8T-4224	81
	172
	176
	177
	178
	199
	438
	440
	448
	450
	452
	454
	456
	458
	460
	462
	470
	549
	579
8T-4226	98
	516
8T-4647	561
8T-4778	380
8T-4779	316
8T-4896	359
	430
	432
	433
	549
	561
	567
	571
	592
	594
	596
8T-4908	81
	324
8T-4956	81
8T-4984	76
	91
8T-5001	347
8T-5002	250
8T-5082	407
8T-5401	303
8T-5412	319
8T-5878	612
8T-6338	405
8T-6380	372
	373
8T-6408	430
	432
8T-6466	44
8T-6685	12
	507
8T-6757	339
8T-6868	319
8T-6869	440
	454
	462
8T-6876	341
	391
8T-6912	177
	178
8T-7524	83
8T-7565	576
	577
8T-7862	42
8T-7876	383
	384
	411
8T-7934	416
8T-7971	347
8T-8442	417
8T-8729	128
	155
	156
	157
	158
	160
	161
	162
	163
	164
	165
	167
	169
	170
	173
	174
	175
	179
	180
	181
	182
	183
	184
	185
	186
	187
	205
	211
	222
	223
	226
	232
	233
	237
	552
	564
	565
8T-8730	155
	156
	157
	158
	160
	161
	162
	163
	165
	167
	168
	169
	170
	171
	211
	224
	232
8T-8737	142
	144
	146
	155
	156
	157
	158
	160
	161
	162
	163
	164
	165
	167
	169
	170
	179
	180
	181
	182
	211
	213
	223
	237
	564
	565
	599
8T-8899	391
	399
8T-8902	383
8T-8917	410
8T-8987	434
8T-9006	511
8T-9043	423
	425
	427
	577
8T-9381	485
	574
	581
8T-9757	130
	133
8T-9850	160
8U-2622	173
	181
	182
8V-3208	576
8W-0456	427
8W-0934	592
	594
8W-0935	592
	594
8W-4652	247
8W-4653	247
8W-5293	247
8W-6476	248
8W-6497	248
8W-9566	271
	287
8W-9594	288
8X-0674	566
	567
	571
8X-1135	591
8X-1853	561
8X-1904	510
8X-1907	511
8X-1913	510
8X-1914	510
8X-2160	510
8X-2228	597
8X-2556	602
8X-2663	521
	602
8X-2795	►563
8X-2893	510
8X-3261	98
8X-3434	248
8X-3435	248
8X-3938	597
8X-3951	510
8X-3965	510
8X-4245	524
8X-4448	597
8X-4879	514
8X-5102	528
8X-5108	609
8X-5123	510
8X-5154	192
	194
	197
8X-5414	548
8X-6131	566
	567
8X-6296	192
	194
	197
8X-8055	544
8X-8096	514
8X-9349	591
8X-9405	►591
	592
	594
8X-9675	502
	►594
8X-9680	►596
	598
8Y-4005	►577
	581
8Y-4030	575
8Y-4398	524
8Y-4399	524
8Y-4400	524
8Y-4401	524
8Y-4408	592
	594
	596
8Y-4409	594
8Y-4489	317
8Y-4619	524
8Y-4620	524
8Y-4801	524
8Y-6277	581
8Y-6852	580
	►581
9	
9B-7233	192
	194
	197
	492
	538
9B-7237	423
	425
	427
9C-1587	577
9C-2177	483
9C-5347	483
9C-5928	557
9D-1589	566
	567
	571
9D-3311	313
9D-3523	247

► PRIMARY REFERENCE

PART NUMBER INDEX

Part	Page
9D-6663	339
9D-7047	262
	264
	292
	294
9D-9797	247
9F-2247	262
	264
9F-5644	210
9F-6705	434
9G-0003	130
	133
9G-0004	130
	133
9G-1307	142
	144
	146
	191
	199
	217
9G-1950	492
	537
9G-2758	130
	133
9G-3695	222
9G-4343	234
9G-5127	259
9G-5211	247
9H-6454	420
9J-0403	438
	440
	448
	450
	452
	454
	456
	460
	462
9J-0404	438
	440
	448
	450
	452
	454
	456
	458
	460
	462
9J-1979	420
9J-3047	420
9J-3657	604
9J-6586	614
9J-8783	516
9K-7951	289
	290
	291
9L-9814	581
9M-0164	400
9M-0402	339
9M-1974	530
9M-2092	247
9M-5590	511
9M-5732	586
9M-5733	217
9M-7394	420
9M-8406	339
	492
	538
9N-1995	549
9P-0356	276
	277
9P-2369	592
	594
9P-7121	126
9R-2620	226
9R-2821	420
9R-5616	549
9S-1316	138
	139
9S-2544	576
	577
9S-4180	431
	433
9S-4181	278
	279
	280
9S-4182	434
9S-4183	434
9S-4185	45
	434
9S-4189	435
9S-4190	95
9S-4191	342
9S-8001	435
9S-8002	417
	435
9S-8003	434
9S-8005	438
	440
	448
	450
	462
9S-8009	434
9T-5241	530
9T-5934	434
9T-5935	434
9U-8263	547
9V-3043	483
9V-7437	576
	577
9V-7440	483
	576
9V-7446	581
9V-7447	581
9V-7453	581
9V-7454	581
9V-7458	581
9V-7943	483
9V-8788	576
9V-8789	576
9W-0844	155
	156
	160
	161
	162
	165
	167
	168
	169
	170
	224
9W-0852	155
	156
	160
	161
	162
	165
	167
	169
	200
	223
	491
	537
9W-1441	541
	542
9W-1442	561
	601
9W-3072	547
9X-1046	217
	511
	532
	533
9X-1054	169
9X-1056	169
9X-1386	187
9X-1813	232
	233
9X-2027	562
9X-2032	510
9X-2038	514
9X-2040	492
	538
9X-2041	514
	538
	549
	575
	580
	583
	586
	587
9X-2042	511
	514
	524
	549
	592
9X-2043	304
	317
	514
	518
	520
	521
	527
	528
	544
	549
	571
9X-2044	511
9X-2045	492
	514
	524
	528
	533
	538
	546
	549
	592
	594
9X-2046	549
	563
9X-2125	312
	317
9X-2126	492
	538
9X-2185	492
9X-2488	42
	492
	538
	554
	555
9X-2646	91
9X-2647	91
9X-3066	186
9X-3401	156
	158
	163
	165
	167
	169
	170
	171
	203
	242
9X-3402	156
	158
	159
	161
	163
	165
	167
	169
	170
	171
	224
9X-3404	131
9X-3465	179
	180
	181
	182
9X-4244	176
	177
	178
9X-4493	186
9X-4575	417
9X-6155	224
	511
9X-6395	470
	472
9X-6458	400
9X-6772	165
9X-7378	552
9X-7380	552
9X-7381	492
	552
9X-7382	492
	553
9X-7383	553
9X-7385	508
	553
9X-8250	87
	553
	554
	555
9X-8256	199
	504
	506
	511
	522
	524
	549
	573
9X-8257	316
	319
	380
	411
9X-8268	250
	254
	257
	262
	264
9X-8276	581
9X-8355	622
	626
9X-9653	492
9X-9689	530

0

Part	Page
002-6453	279
	280

► PRIMARY REFERENCE

PART NUMBER INDEX

Part	Page
002-6454	42
009-0008	98
009-4184	222
009-4185	222
014-0816	214
	601
030-0060	247
	254
030-0061	247
	254
030-1712	233
030-8535	510
	567
	571
031-2666	510
031-4155	530
	579
032-3631	42
033-3168	42
033-4121	576
033-4843	577
033-6034	228
034-1994	510
034-7044	301
035-8017	38
037-4838	491
	537
067-6043	21
067-6070	204
067-6135	14
	17
	19
067-6179	34
	36
067-6344	10
067-6823	21
	43
	55
085-8091	552
086-0507	420
089-7968	581
090-8247	110
091-0081	391
091-9035	83
	232
	407
091-9071	222
095-1260	518
095-9805	417
096-4035	85
096-6166	217
	472
	491
	510
	561
096-6331	323
096-9986	442
	444
	446
098-7467	222
099-3649	89
	516
099-6418	124

1

Part	Page
100-3245	181
	182
	226
	492
	537
100-3253	179
	180
100-3254	179
	180
100-3255	179
	180
100-3751	34
	36
	70
100-4336	391
100-4458	65
	116
	118
100-4830	96
100-4841	40
100-7000	434
101-0509	430
	431
	432
	433
101-1148	438
	448
101-1149	450
101-1154	452
101-1155	456
101-1971	438
	440
	448
	450
	452
	454
	456
	458
	460
	462
101-1973	438
	440
	448
	450
	452
	454
	456
	458
	460
	462
101-1974	371
101-1975	371
101-1978	438
	448
	450
	452
	456
	458
	460
101-1980	440
	454
	462
101-1984	438
	440
	448
	450
	452
	454
	456
	458
	460
	462
101-2480	438
	440
	448
	450
	452
	454
	456
	458
	460
	462
101-3055	548
101-3895	16
	34
	36
101-3917	72
101-7178	507
101-7404	379
101-7547	72
101-9346	430
	431
	432
	433
102-2073	38
102-3645	592
	594
102-4577	460
102-6238	430
	433
102-7412	438
	440
	448
	450
	452
	454
	456
	458
	460
	462
102-7423	371
102-8385	431
	432
102-8801	155
	156
	157
	158
	163
	165
	223
102-8802	128
	157
	161
	163
	170
	173
	184
	186
	187
	200
	205
	232
	233
	242
	491
	508
	537
	552
102-8803	174
	175
	183
	203
	223
	232
102-8804	163
	165
	171
	185
	211
	222
	226
	237
102-8805	157
	160
	165
	167
	169
	170
	179
	180
	181
	182
	223
	564
	565
	599
102-8806	156
	161
	162
	165
	167
	213
102-9372	597
102-9383	510
103-4771	567
	571
103-4953	566
	567
	571
103-5515	566
	567
	571
103-5516	566
	567
	571
103-5678	192
	194
	197
103-5705	16
103-5796	311
103-9125	247
103-9425	548
104-2091	487
	488
	491
	528
	541
	542
104-8645	▶432
	442
	444
104-8671	▶433
	444
105-2740	13
	94
105-2793	250
106-3658	454
106-3659	438
	448
	450
	452
	456
	458
	460
106-3660	440
	454
	462
106-4175	481
	495
	496
106-4496	528
106-5074	66
106-6553	524
107-0496	266
107-0545	432
	▶438
107-0547	433
	▶440

PART NUMBER INDEX

Part	Page
107-2348	92
107-5014	518
	548
107-6813	524
107-9641	524
108-2187	438
	440
	448
	450
	452
	454
	456
	458
	460
	462
108-2949	130
	332
108-4916	▶371
	440
	454
	462
108-5157	472
108-5949	524
108-5950	524
108-5951	524
108-5952	524
109-1144	466
110-2028	547
110-4213	290
110-4214	290
110-6241	510
110-6393	491
110-7149	292
	294
110-7885	601
111-0859	30
	129
111-4627	317
	548
111-8233	438
	448
	450
	452
	456
	458
	460
111-8234	440
	454
	462
111-9110	335
	336
	350
112-2240	375
	▶413
112-3926	609
112-7704	204
112-9164	423
	427
	544
112-9555	534
113-1504	61
	62
113-4254	▶575
113-4598	10
113-4604	10
113-4616	43
113-4630	171
113-8076	38
113-8129	78
113-8218	557
113-8490	222
113-8491	222
113-8492	222
113-9533	398
114-0359	614
114-3350	504
	506
114-4231	420
114-6099	372
	373
114-6635	471
114-6658	546
114-9190	524
115-6806	597
116-1965	▶574
	580
	583
116-2015	483
116-2016	483
116-2327	483
116-2779	▶483
	581
116-4491	554
	555
116-5710	98
117-2311	217
117-7734	393
117-9966	588
117-9978	622
	626
118-9573	519
118-9901	9
119-0036	577
119-3662	155
	157
	160
	166
	167
	168
	224
119-6194	581
119-6407	382
	384
	411
119-9631	491
122-7045	588
123-0872	486
123-1373	133
123-2169	382
	384
	411
123-2899	41
	71
123-2933	65
123-4354	602
123-4355	602
123-4586	557
	559
	560
	562
123-4618	491
	537
	587
123-4701	491
	537
123-6806	566
	567
123-7615	155
	156
	165
124-1431	491
	537
124-1432	491
	537
124-3137	491
	537
124-3138	491
	537
124-3536	46
	48
	50
124-3548	222
124-3815	13
	34
	36
	96
	116
	118
	202
	228
124-8843	524
124-9006	491
	537
125-0438	491
125-0439	537
125-0442	537
125-1393	472
125-7003	602
125-7004	602
125-7874	155
	156
	157
	159
	160
	161
	166
	167
	168
	169
	170
	171
	224
125-7875	155
	156
	157
	162
	166
	167
	168
	224
125-7876	130
	131
	133
	134
	233
125-8534	205
125-9853	485
125-9854	▶485
	579
125-9855	▶576
	579
125-9856	575
	▶579
126-1136	556
126-1767	171
	203
126-1768	159
	165
126-1774	165
126-3216	10
126-3219	38
126-4966	524
126-5211	548
126-9093	103
	110
	114
127-5483	165
	170
	223
127-5484	165
	223
	234
128-0037	524
128-5016	223
128-9654	481
129-3173	98
	516
129-3178	142
	144
	146
	491
	504
	506
	537
	548
129-4935	491
	537
129-7163	223
129-7164	223
129-7679	66
129-7680	622
	626
129-8090	341
130-3515	179
	180
130-3595	247
130-5300	98
	192
	194
	197
	211
	216
	222
	226
	232
	240
	491
	537
130-5770	466
130-9888	61
	62
131-3736	359
131-3737	329
131-3738	329
131-3739	329
131-3740	248
	▶329
131-4428	248
131-5171	521
131-5492	534
131-6009	548
131-8350	434
	▶466
131-8777	471
132-1143	329
	359
132-1144	329
132-2453	341
132-5789	211
	215
	216
	222
	228
	231
	232
	240
132-7551	232
	341
	552
133-1011	34
	36
133-6934	76
	266
	384
	391
133-7810	391

▶ PRIMARY REFERENCE

PART NUMBER INDEX

Part	Page
133-9469	92
134-1080	▶247
	268
134-1081	248
134-2540	165
	167
134-7258	622
	626
134-9569	192
	194
	197
135-0451	379
135-0452	379
135-0453	377
135-0611	599
135-1979	530
136-1953	492
	538
136-4992	112
136-5025	555
136-5490	569
136-6330	407
136-6331	407
136-8308	614
137-4516	423
	425
	427
137-6645	232
	254
137-6719	433
137-6720	431
	433
137-9410	208
	209
138-1645	251
138-4054	504
	506
139-2840	417
139-4605	573
139-4612	502
	▶573
139-8472	438
	456
	460
	▶467
141-2760	222
141-6343	98
	516
141-9661	420
142-0485	98
	516
142-4940	491
	537
143-4792	301
144-0195	592
	594
	596
144-2161	312
144-4107	571
144-6695	519
144-7620	312
145-4911	32
146-1842	248
146-1843	248
146-6747	622
	626
147-1445	165
147-1446	165
147-3400	247
147-5112	481
	535
147-6603	475
147-6604	475
147-6605	475
148-7027	382
	384
148-7906	458
148-8305	266
148-8308	398
148-8310	338
	429
148-8316	398
	407
148-8318	375
	377
	379
	384
	386
	388
	396
148-8323	398
148-8327	398
148-8328	375
	382
	384
	391
	411
148-8335	266
148-8336	382
	384
148-8340	66
	112
	379
	403
	407
148-8341	393
148-8345	379
148-8347	393
	398
	429
148-8351	398
148-8352	398
148-8353	341
148-8354	341
	407
148-8360	398
148-8363	375
	396
148-8364	112
	341
	375
	379
	396
	407
148-8365	341
	391
148-8366	390
148-8367	379
	403
148-8368	399
	405
148-8370	341
	375
	379
	384
	407
	411
148-8374	377
	379
	390
148-8377	403
148-8378	382
	384
	405
148-8383	377
148-8392	399
148-8395	438
	440
	448
	450
	452
	454
	456
	458
	460
	462
148-8407	341
148-8408	434
148-8411	434
148-8421	382
148-8428	341
148-8429	398
148-8433	377
148-8434	341
148-8435	382
148-8442	393
148-8444	341
	375
	391
	407
148-8448	398
	405
148-8449	393
149-3409	597
149-6371	552
150-3024	76
150-3030	76
150-4027	405
150-4031	393
150-4033	398
150-4037	341
	382
150-4043	342
150-4048	403
150-4052	399
	405
150-5785	231
150-5968	398
151-5145	393
152-4700	405
152-5430	518
152-5431	518
153-5710	133
153-6237	87
	399
154-9025	76
155-0576	141
	240
155-2255	155
	156
	163
	165
	167
	223
155-2256	158
	163
155-2258	156
	158
	163
	167
	224
155-2259	157
	161
	168
	170
	171
	224
155-2260	155
	160
	165
	167
	168
155-2265	142
	144
	146
	155
	157
	161
	165
	168
	171
	223
155-2270	155
	156
	160
	161
	165
	167
	168
	170
	211
	223
	232
155-2271	156
	159
	163
	165
	168
	211
	223
155-2274	155
	156
	161
	162
	163
	165
	167
	170
	223
155-3624	434
156-4575	254
156-5762	622
	626
157-0670	76
157-5537	350
158-2336	335
	336
159-3590	622
	626
159-8049	130
	131
	133
	134
159-8050	130
	133
159-9322	165
159-9539	137
159-9541	118
160-3518	164
160-6382	217
	317
160-8503	510
160-8761	205
160-8763	205
161-3189	87
161-4423	301
161-6161	465
161-7062	98
161-7614	108
161-9820	129
	507
162-6802	393
162-7449	347
162-7450	347
	▶350
162-8218	98

▶ PRIMARY REFERENCE

PART NUMBER INDEX

Part	Page
162-8219	98
164-2465	566
	567
	571
164-5544	342
164-5562	76
164-5563	375
164-5567	338
	342
	382
	384
	411
164-5590	266
	393
164-5605	377
	379
	386
	388
164-5608	375
	379
	396
164-7468	116
	129
164-7556	176
	177
	178
165-2273	66
	76
165-4931	338
166-0690	232
166-1997	567
	571
166-1999	567
	571
166-2830	597
167-3692	165
167-3693	167
	223
168-8683	98
169-0921	98
	516
169-2876	548
169-3145	222
169-4089	607
169-5414	226
169-5863	338
169-8938	217
170-0493	350
170-0494	351
	352
170-0967	42
170-4820	▶529
	533
170-5334	▶530
	532
171-0714	342
171-2210	232
171-5349	233
171-6467	407
171-6723	391
	399
171-8728	338
172-4211	98
	516
172-4880	552
172-5761	405
172-8037	164
172-8039	164
172-8641	548
173-2052	586
173-3993	434
174-5807	504
	506
174-7875	240
174-8131	510
175-4291	176
	177
	178
175-4292	177
	178
177-0344	417
177-0581	91
177-1713	516
177-2215	391
	486
	554
	555
178-2593	138
	139
178-3620	110
	114
178-4190	544
178-7907	586
178-8894	524
179-1550	208
	209
179-2138	544
179-2139	544
179-2140	544
179-4814	222
180-3998	342
180-4027	516
180-7147	516
180-7180	552
180-9286	384
	411
183-7263	435
184-0983	38
184-2420	76
184-6636	232
184-6892	342
185-0884	21
185-1860	156
	157
	159
	223
185-1861	155
	223
185-6644	342
185-6645	342
186-3223	232
186-3735	213
	599
187-0541	465
187-2120	399
187-8001	338
187-8661	552
189-2864	504
	506
189-3158	155
	161
	224
190-3850	350
	351
	352
190-5386	612
191-0027	491
	537
	587
191-3587	222
191-5236	486
191-5293	312
192-5017	83
	391
192-9207	103
	110
	114
194-2903	112
	405
194-5226	159
194-5227	159
195-7218	615
195-9245	16
196-2412	224
196-2413	224
196-8876	158
197-2055	557
198-4768	292
	294
198-4777	9
	12
	87
	110
	114
	507
198-4778	125
	307
	308
	309
	322
198-4780	44
198-4781	495
	496
	497
199-1807	393
199-2712	524
199-3109	33
199-9252	202
199-9267	202
199-9751	26
	29
	202

2

Part	Page
200-5728	▶164
	569
200-6345	83
	87
	89
	110
	407
	486
	552
200-8623	548
201-1601	81
201-5555	192
	194
	197
202-5371	338
202-5397	155
	156
	157
	223
202-6611	178
202-6614	176
	177
203-1124	599
203-1558	335
	336
203-9007	156
204-1297	155
	156
	157
	224
204-2281	83
	87
	89
	110
	407
204-4376	491
	537
205-7187	338
206-1345	159
206-1826	124
206-3599	98
206-3600	98
206-4097	510
206-5823	599
	602
208-0231	585
208-0232	585
208-1133	585
208-1134	585
208-3778	546
208-7782	561
208-8469	204
208-9287	110
	116
208-9669	417
209-4578	91
209-4580	91
209-6825	38
209-9219	22
210-8958	171
211-0052	165
	223
211-4039	342
211-4913	499
	500
	▶599
212-5081	86
213-3745	399
	405
213-9100	232
214-0647	557
214-3203	38
214-7568	338
	342
	382
	384
	406
	411
216-9633	69
217-0099	141
217-2661	420
217-7742	552
217-9039	159
	204
	228
218-4406	262
	264
218-9894	476
219-0302	622
	626
219-6485	▶176
	189
	190
219-6487	▶177
	189
	190
	191
219-6488	▶178
	191
220-3634	76
220-4335	292
	294
220-4336	292
	294
221-3676	454
	462
221-3678	440
221-8045	626
222-2277	89

PART NUMBER INDEX

Part	Page
222-2367	350
	351
	352
222-3769	519
222-4737	433
222-7774	440
	454
	462
	▶468
223-2459	405
223-4779	155
	156
	224
224-0554	626
224-6635	10
224-7717	622
224-8945	622
224-8946	626
225-0312	626
225-0313	622
225-3109	199
	548
225-4150	622
	626
225-6524	61
225-7738	78
225-7944	70
225-8019	78
225-8287	34
225-8524	92
225-8526	92
225-8858	21
226-0295	524
226-0342	524
226-1240	626
226-1242	622
226-1274	626
226-1275	622
226-2684	254
226-2870	420
226-8766	36
226-8767	36
227-4709	519
228-3369	622
228-4947	202
228-6052	179
	180
228-6054	179
	180
228-6056	179
	180
228-6089	222
	226
	411
	510
	521
	548
228-7088	338
	417
228-7089	65
	406
228-7090	338
228-7092	393
	399
228-7093	87
	266
	399
228-7100	110
	116
	118
	242
228-7102	42
230-1340	622
230-1341	626
230-4009	223
230-4011	159
	169
	170
230-4013	165
	169
	223
230-4477	626
230-5008	223
230-5010	171
230-8094	23
	45
231-1455	72
231-4486	534
231-4487	534
232-1322	22
	26
	29
232-1693	228
232-1732	534
232-3657	34
232-3666	34
	36
232-3751	70
232-7449	22
232-7596	21
232-7597	21
232-7599	21
233-1507	391
233-6832	81
235-2765	167
235-4123	155
	156
	157
	224
235-4765	192
	194
	197
235-9631	254
	292
	294
236-0737	510
236-4616	192
	194
	197
236-4631	222
	226
	510
	548
237-0227	167
	169
237-9736	199
238-0415	491
	537
238-0417	491
	537
238-5080	242
	465
238-5084	266
	393
238-8245	159
238-8247	159
238-8288	94
238-8292	93
238-9397	161
241-0037	335
	336
	350
	351
	352
241-6157	110
	116
	118
241-6215	405
241-8368	232
241-8534	74
242-0588	179
	180
242-1555	223
243-5289	622
	626
245-1042	167
245-1043	159
245-1044	159
	167
245-1045	167
245-1048	159
	167
245-6375	86
245-6376	86
245-7434	155
	156
	157
	223
246-2641	125
	300
	422
	575
	580
	583
	616
246-4361	106
246-4611	89
246-4615	86
246-6651	338
247-4285	176
247-4928	38
	106
	109
	118
247-9730	86
248-1377	279
	280
248-2841	189
	190
	191
	192
	194
	197
	222
248-5245	622
	626
248-6772	491
	537
249-5481	226
249-5487	216
	375
249-8575	622
	626
250-1427	405
250-1482	42
251-4162	219
251-4336	36
251-8248	219
252-0098	289
252-0102	▶287
	298
252-0104	284
	▶288
	296
252-0106	284
	▶289
252-0108	283
	285
	▶290
252-0112	284
	285
	▶291
252-0115	▶285
252-0118	▶285
253-1383	338
256-6453	242
256-6454	202
257-1702	292
	294
257-3226	552
258-7485	219
258-8589	338
259-2623	38
259-2627	254
259-4758	559
	560
259-7140	342
259-8450	237
259-9094	95
260-1556	172
260-1569	172
260-6685	81
260-9223	405
261-0747	130
261-1502	▶173
	196
261-3345	591
261-4672	481
261-4673	481
261-6728	393
262-5610	292
	294
263-6901	622
263-6902	626
263-6914	76
264-3518	110
	114
264-3762	▶86
	89
264-4297	232
	254
264-5346	173
264-7029	159
265-5007	76
266-1467	98
	▶203
	232
266-1595	393
267-0339	1
	▶172
267-3507	535
267-7207	159
	167
267-7208	159
	167
267-8338	131
	133
267-8575	492
267-9572	159
	167
268-4779	391
270-2679	156
271-2360	415
271-8528	254
272-3089	98
	516
272-3757	392
273-2940	348
273-3690	36
273-3691	38
274-1931	56
274-1935	31
274-3774	155
	160
	161
	165

▶ PRIMARY REFERENCE

PART NUMBER INDEX

Part	Page
	168
274-3781	165
274-3782	223
274-3785	223
274-4990	159
	167
274-5909	552
275-0571	323
275-0572	323
275-2428	204
275-2431	204
275-3292	622
	626
275-7741	▶213
	214
	601
275-7764	▶214
	521
	600
275-9891	65
276-5600	21
276-5602	21
276-5603	22
	202
276-7278	130
	133
276-7391	17
	19
276-7394	17
	19
276-7476	46
	48
	50
	52
276-7478	15
	50
276-8116	25
276-8117	25
276-8123	59
	60
276-8133	59
	60
276-8134	26
276-9200	57
276-9201	57
276-9206	57
276-9207	57
276-9230	57
277-1974	61
	62
277-1975	61
	62
277-2500	72
277-2502	72
277-2503	72
277-2525	70
277-2526	70
277-2537	70
277-2923	78
277-2925	78
277-3012	34
	36
277-3013	34
	36
277-4223	54
277-4302	26
	29
277-4409	204
277-4993	108
	110
	118
277-5065	228
277-5067	104
277-5307	57
277-9938	96
	107
277-9940	96
278-0017	96
278-3242	78
278-5111	57
278-5112	57
278-5113	57
278-5125	14
278-5170	104
278-5203	141
279-5267	355
	357
279-6528	413
	▶476
279-6530	393
279-9254	32
279-9651	41
280-1430	62
280-1911	▶57
	59
280-1912	57
280-1913	57
280-1914	57
280-2424	96
280-2709	223
280-4244	211
281-8744	71
281-8803	170
281-8804	159
282-2830	96
283-0657	219
283-1171	12
283-4662	33
283-6447	224
284-1491	170
284-5022	292
	294
284-8959	292
	294
284-8960	292
	294
284-9552	292
	294
284-9553	292
	294
284-9554	292
	294
284-9555	292
	294
284-9556	292
	294
284-9557	292
	294
286-0123	123
286-2890	107
	108
	109
286-4825	502
	▶600
286-7851	93
287-8597	33
288-6974	33
288-6975	33
289-9726	288
290-1505	287
292-2893	204
292-2896	159
292-3462	94
293-1876	38
293-1877	▶10
	38
293-1878	38
293-1881	43
293-7533	547
295-4670	107
	109
295-6661	26
	29
295-8610	70
	▶72
295-8613	72
295-8615	72
296-3004	609
296-3005	609
297-1546	112
	552
297-3211	254
297-7959	266
298-0890	399
299-5511	59
	60
	133
	233
316-9351	159
317-3775	62
317-5482	46
	48
	50
317-6017	283
	284
317-6214	52
317-8141	509
318-9105	342
318-9128	342
319-2228	481
319-8426	14
320-3060	202
320-3062	202
320-3063	242
320-3065	232
321-2383	61
321-6120	38
322-3305	133
	▶136
323-9312	15
	50
324-0444	34
	36
325-6423	440
325-9407	226
326-0610	323
326-0612	323
326-0712	284
326-4512	594
326-7289	16
326-9053	621
328-9669	262
	264
329-0411	262
	264
329-3356	342
329-3734	224
329-3796	40
329-5707	622
	626
330-1725	507
330-3341	223
330-7743	434
	▶469
330-9723	110
	116
	118
331-0290	▶15
	46
	48
	50
331-5818	622
331-6835	21
332-3604	323
	616
332-4175	85
332-7865	171
333-0960	481
334-6758	626
334-8049	▶183
	196
335-5365	226
335-8611	92
337-6324	11
338-1132	▶187
	199
339-1911	609
339-6543	562
339-8780	17
	19
300-6152	130
300-6496	133
302-3908	266
	342
302-4332	10
302-5740	342
304-5062	41
304-5418	589
304-8025	394
304-8026	394
305-2527	62
305-3159	323
306-2337	61
	62
307-0047	622
	626
307-2743	380
308-8161	131
	134
309-6678	59
	60
309-6887	342
310-0674	165
	223
310-6179	342
310-6493	351
	352
311-2732	118
311-3928	622
311-4859	167
	170
311-6112	131
	134
311-6184	233
312-1143	83
313-3438	342
313-3471	405
313-3472	405
313-3762	81
313-5271	622
	626
313-5646	415
313-6224	491
313-9198	342
314-4018	508
315-5327	499
	500
	▶543
315-9839	266
316-5240	130
	131

3

► PRIMARY REFERENCE

PART NUMBER INDEX

Part	Page
339-9637	59
	60
340-2632	283
	▶284
340-2634	283
	▶284
340-2640	▶283
340-2642	▶283
340-5470	440
	448
	450
	452
	454
340-5472	438
	456
	458
	460
	462
340-7076	562
340-7160	152
	561
340-7161	151
342-6502	56
342-6507	56
342-6508	17
342-6510	56
342-9922	110
343-6020	65
343-6021	65
343-6023	65
344-3455	▶179
	192
	194
344-3456	▶180
	192
	194
344-3847	564
344-5081	129
344-5594	569
344-5673	323
	510
344-5674	199
	602
344-5675	524
	557
344-7391	222
	238
	240
346-0006	123
346-0007	123
346-0009	4
	▶61
346-0099	4
	6
	▶70
346-0220	4
	6
	▶64
346-0407	34
346-0408	34
	36
346-2908	4
	▶55
346-3797	▶470
	473
346-3799	467
	468
	469
	▶471
346-3800	▶472
	474
346-4709	59
346-4791	87
	90
346-8219	621
347-1668	219
347-4716	223
347-8645	109
	110
	118
348-0495	107
	118
348-2302	393
348-4637	228
348-8607	45
348-9255	▶335
	348
348-9257	▶336
349-6847	108
349-7059	126
349-8642	569
350-8742	507
350-9186	415
350-9189	415
350-9190	415
351-0289	554
351-0925	292
	294
351-1724	56
351-2625	522
351-4749	45
351-9309	130
	131
	133
	134
351-9918	176
	177
	178
352-3964	232
	238
352-3968	240
352-6493	338
353-1634	569
353-4515	232
353-5101	399
	405
353-7957	130
	133
	233
353-8773	142
	144
	146
354-8322	33
354-9444	438
	448
	450
	452
	454
	456
	460
	462
355-0447	9
355-0632	110
	118
355-1470	476
355-3148	552
355-3486	621
356-1219	159
356-3986	110
	118
356-7515	187
357-0377	342
	▶414
357-3053	233
357-4564	405
357-7399	126
358-9192	557
	559
	560
	562
359-7115	118
360-1767	226
360-1978	17
360-3688	430
	432
360-8958	▶100
	101
360-8960	100
361-1045	142
	144
	146
361-2944	170
361-2945	223
361-3549	438
	440
	448
	450
	452
	454
	456
	458
	460
	462
362-2789	98
362-5412	100
	101
362-8685	618
362-9689	101
363-0559	17
	19
363-4122	242
363-6601	471
363-8055	507
364-0676	509
364-1995	126
364-2075	292
	294
364-5145	17
	19
364-8277	523
365-0162	112
365-5317	38
365-5823	96
366-4696	430
	432
366-4972	472
	474
367-3340	93
367-5209	192
	194
	197
367-5210	189
	190
	191
367-5211	532
	533
367-5213	226
367-8532	477
367-8969	382
368-3145	204
368-4542	237
368-8557	96
368-9750	▶283
368-9751	▶283
369-1255	507
369-1658	94
369-3186	48
369-3188	52
369-3866	38
369-7304	23
	▶46
	▶48
369-7799	104
370-5513	121
370-5516	120
370-5517	120
370-5518	120
370-5520	▶120
	124
370-6545	21
371-1253	126
371-2477	4
	6
	▶17
371-2478	4
	6
	23
	▶40
371-2480	4
	6
	▶59
371-2483	4
	6
	▶104
371-2555	4
	6
	▶56
371-2684	123
371-2691	123
371-2716	4
	▶34
371-2740	4
	6
	▶41
371-2745	4
	6
	▶69
371-3974	104
	▶105
371-7242	399
371-7263	123
371-8094	83
371-8298	30
372-1866	▶137
	199
372-1867	137
372-2297	4
	6
	▶78
372-2526	342
373-3607	4
	6
	▶71
374-4419	78
374-6300	▶19
	23
374-6301	4
	6
	▶50
374-7463	156
	167
	168
	223
374-7466	156
	165
	223
374-9295	4
	▶54
375-0098	4
	6
	▶31
375-0482	124
375-0483	124
375-1478	▶174
375-2647	▶122

▶ PRIMARY REFERENCE

PART NUMBER INDEX

Part	Page
	123
375-2649	124
375-6988	124
375-8254	122
375-8407	▶171
	228
376-1384	393
376-4074	17
	19
376-4078	17
	19
376-6403	105
376-6405	105
376-6409	122
376-6410	122
376-6411	122
376-6464	4
	6
376-6729	487
	488
	▶509
376-9967	118
377-0399	25
377-0400	25
377-1293	228
377-5645	137
377-5647	137
377-5988	108
377-6932	159
377-9082	12
377-9255	30
377-9540	399
377-9563	338
377-9577	338
378-0595	4
	6
	▶45
378-3243	272
378-8167	4
	6
	▶621
379-0965	4
	6
	▶30
379-3416	▶184
	229
	230
	237
380-2065	46
	50
	52
380-2371	337
380-6949	410
380-9615	16
381-3244	504
	506
381-3245	524
381-3246	524
381-3250	▶557
	562
381-8233	284
382-1740	283
	▶284
382-1741	▶283
382-4604	609
383-1388	16
383-3581	▶21
	22
383-4261	380
383-7644	530
384-1176	4
	6
	▶32
384-3888	202
384-3892	410
384-3893	410
384-5313	▶25
	26
	29
384-5820	519
384-7567	204
384-7727	410
385-0244	491
	537
385-1398	106
385-2572	4
	6
	▶26
385-5997	▶159
	228
385-7290	622
385-7291	626
385-8001	4
	6
	▶129
385-8201	142
	144
	146
386-1864	106
386-2112	34
386-2737	109
386-2971	122
386-2976	122
386-3819	122
387-2851	▶558
387-6057	81
387-6065	81
387-6094	74
388-4707	26
388-7012	9
389-1995	13
389-3346	4
	6
	▶16
389-3863	228
389-5775	116
	118
389-5784	110
	116
389-7495	311
390-0755	116
	118
390-0854	4
	6
	▶22
	23
390-2799	410
390-7626	94
390-8738	116
	118
391-1817	116
	118
391-2493	118
391-3732	50
391-3735	50
391-4245	558
	▶559
391-4246	558
	▶560
391-4247	559
391-4248	560
391-4811	4
	6
	▶123
391-5523	4
	6
	▶94
391-9609	4
	6
	▶11
392-0634	4
	6
	▶13
392-2780	228
392-8399	207
393-0314	583
393-2034	124
393-2035	124
393-4006	33
393-5467	121
393-5468	121
394-0525	▶121
	124
394-4451	129
394-9639	4
	6
	▶124
395-0110	4
	6
	▶202
395-0112	4
	6
	▶201
395-0113	4
	6
	▶228
395-0114	4
	6
	▶204
395-1633	120
	121
395-2113	▶185
	229
	230
396-2102	109
396-2352	527
	556
396-2615	4
	6
	▶14
396-8052	93
396-8795	14
396-9529	92
396-9532	▶92
	96
397-9301	382
	384
397-9876	379
398-6226	124
399-0933	110

4

Part	Page
415-1604	41
415-4214	130
	233
	242
415-5625	4
	6
	▶617
415-7713	79
416-1868	4
	6
	▶33
416-4773	242
416-7151	42
416-7727	93
416-7808	4
	6
	▶93
416-8393	332
417-6161	▶160
	491
	537
417-7782	71
418-9782	347
420-0454	68
420-2372	96
421-4024	410
421-5583	187
421-5584	187
421-5585	187
422-2152	491
	527
	528
	556
422-8921	477
423-1981	85
423-1984	66
	110
	114
423-6697	491
	537
423-7576	30
424-2860	328
424-6652	207
425-7103	34
	36
426-3312	4
	▶116
426-4823	477
427-9771	204
431-4613	321
	328
	354
	355
	356
	359
	360
	390
	403
	478
	607
	612
431-8735	192
	194
	197
431-8801	410
433-0190	106
433-1316	▶106
	116
	118
433-7105	247
	360
433-8202	417
434-6673	110
434-6744	▶303
	501
	502
434-8049	598
	▶601
436-0521	59
	60
436-1801	342
436-3984	417
436-3985	417
436-3986	417
436-3987	417
436-3988	417
436-3989	417
436-3991	417
436-3992	417
436-3993	417
436-3996	417

PART NUMBER INDEX

Part	Page
436-3997	417
436-3998	417
436-3999	417
436-6327	417
436-7781	46
	48
	50
436-9180	▶200
	530
437-0671	▶580
437-0673	▶561
437-0684	▶583
437-0685	▶562
437-0690	▶304
437-0691	▶520
437-4170	96
438-1119	12
439-1829	406
439-1830	406
439-1840	110
	114
439-1841	110
	114
439-1974	555
439-5037	103
439-5039	103
439-5040	103
440-1281	342
440-2105	144
	148
	▶149
441-0984	12
	507
441-0996	110
	114
441-1002	110
442-1579	110
	114
442-7199	142
	▶150
442-8465	▶107
	116
442-8569	116
443-2487	118
443-8462	142
	144
	146
443-9076	36
443-9475	46
	48
	52
443-9898	46
	48
	52
443-9919	46
	48
	52
444-2190	50
444-5022	▶103
	110
	114
444-6523	179
	180
444-7604	159
445-5511	103
446-0105	103
446-1268	201
446-1526	478
446-6982	9
448-2191	118
448-4217	19
448-4218	19
448-4220	19
448-4222	19
448-4227	17
	19
448-4307	414
	▶477
448-9016	406
448-9017	406
448-9710	6
	▶43
448-9719	6
	▶36
448-9771	4
	6
	▶96
449-7301	149
450-3478	81
450-3479	81
450-5996	50
450-9772	621
451-0484	342
451-1179	38
451-1222	▶23
	24
451-2625	351
	352
451-2764	87
451-7225	617
451-8019	156
451-8317	23
451-8385	3
	▶24
452-0064	622
	626
452-6582	3
	▶27
452-6584	27
	▶28
452-6585	28
	▶60
452-6586	28
	▶29
452-8547	▶101
	102
452-9663	585
452-9704	94
453-0790	122
453-2908	▶518
453-7163	4
	6
	▶102
454-3745	17
454-3931	17
454-3935	17
454-5109	122
454-9560	52
454-9569	52
454-9573	52
455-0704	159
	169
	170
455-0705	159
	165
	167
	169
	170
	223
455-0706	223
455-0707	171
455-0709	223
455-1084	622
	626
455-9568	156
455-9580	240
458-7918	48
458-7939	48
458-7940	48
458-8357	96
459-0593	342
459-0656	112
460-4996	499
	500
	▶548
460-4997	514
461-3568	510
461-5232	131
	133
462-1171	64
462-2093	416
462-2235	204
462-3542	563
462-6685	4
	6
	▶68
462-9619	569
463-4869	338
463-4870	338
464-2945	9
464-6047	522
	▶564
464-7899	▶108
	116
	118
464-9988	507
	▶508
466-1003	573
466-4376	510
466-4377	510
466-4849	46
	48
	50
	52
467-2514	149
467-2859	165
467-8535	226
470-8038	46
	48
	50
470-8101	17
	19
470-8171	17
	19
472-7056	205
474-0558	205
474-2633	87
476-2947	123
477-2772	254
477-3252	133
	233
480-3046	382
	384
	411
480-3535	146
	▶148
480-4489	46
	50
480-4490	46
	50
480-4491	46
	50
482-7293	375
482-8138	149
483-3530	148
484-7200	▶109
	116
485-4894	78
485-4895	78
486-4542	▶181
	197
486-7435	223
487-0123	6
	▶118
487-6473	226
489-5884	33
490-1097	510
490-1103	423
	425
	427
490-1104	423
	425
	427
490-1105	423
	425
	427
490-1106	423
	425
	427
490-1107	423
	425
	427
490-1108	423
	425
	427
490-1119	337
490-1170	498
	▶510
490-3850	503
	505
	▶597
490-8762	399
491-0637	▶182
	197
491-9530	393
	▶415
491-9723	85
495-1742	141
495-3105	4
	6
	▶141
499-9254	571

5

Part	Page
500-0703	415
500-1272	65
500-6327	601
501-2194	622
501-2195	626
501-3956	87
	90
501-4741	502
	▶532
501-4742	502
	▶533
503-8929	6
	▶62
503-8948	6
	▶38
504-2903	46
	▶52
504-9576	510
505-5248	4
	6
	▶65
507-1073	399
509-1980	506
511-2371	▶565
	601
	602
512-5899	510
512-5904	510
512-5907	510

PART NUMBER INDEX

Part	Page
512-5912	98
512-5914	518
512-5917	425
512-5919	510
512-5938	516
512-5945	510
512-5946	510
512-5954	541
	542
	588
512-5955	487
	488
	▶528
512-5956	528
512-5957	528
512-5959	548
512-5961	548
512-5962	548
512-5964	548
512-5965	548
512-5966	548
512-5967	548
512-5968	548
512-5973	544
512-5974	544
512-5976	548
512-5977	423
	425
	427
512-5979	548
512-5982	487
	488
	▶527
512-5983	527
512-5988	317
512-9018	304
512-9019	520
512-9021	571
512-9022	587
512-9023	587
512-9024	587
512-9031	487
	488
	588
512-9032	534
512-9033	548
512-9034	548
512-9035	547
512-9047	548
512-9912	410
513-0286	586
513-3693	▶584
	586
513-9148	589
513-9150	589
513-9154	589
513-9156	589
513-9159	589
513-9160	589
513-9161	589
513-9164	589
514-7748	506
514-7749	506
514-7754	503
	505
	▶524
515-4598	584
	▶585
515-4599	585
515-4603	585
515-4604	584
515-4605	586
515-4606	586
515-4607	584
	▶589
515-7907	622
	626
516-7914	317
	544
516-7915	317
	544
516-7916	548
516-7924	489
	▶587
	588
516-7928	489
	▶588
517-6229	616
517-7297	481
517-7418	481
517-7867	354
	607
	612
518-1810	205
	259
	309
518-1811	607
	612
518-1813	307
	308
	309
518-1815	125
518-1818	44
518-1824	321
518-2309	66
	130
	133
	142
	144
	146
	189
	190
	191
	196
	207
	211
	215
	217
	222
	226
	229
	230
	231
	232
	237
	238
	240
	242
	266
	306
	311
	341
	348
	375
	377
	379
	382
	384
	386
	388
	390
	391
	393
	396
	403
	405
	407
	429
	442
	444
	446
518-2310	83
	130
	142
	144
	146
	226
	232
	242
	328
	337
	338
	341
	377
	379
	391
	398
	429
	442
	444
	446
	616
518-2311	130
	133
	338
	341
	348
	375
	379
	391
	396
518-2312	232
	348
	386
	398
518-2313	83
	112
	240
	341
	379
	382
	384
	386
	407
518-2314	76
	306
	341
	375
	384
	391
518-2317	130
	207
518-2318	76
	354
518-2319	133
	399
518-2320	346
	478
518-2321	207
	609
518-2322	393
518-2433	398
518-3014	522
518-3015	140
	▶522
518-3025	502
	▶546
518-3026	▶569
518-3027	199
518-3378	557
518-3382	▶586
518-3384	562
518-3385	562
518-3664	222
518-3666	192
	222
518-3667	222
518-3686	▶537
	541
	542
518-3687	541
	542
	▶556
518-3688	556
518-3689	487
	488
	▶534
518-3690	534
518-4409	315
	609
518-4410	305
518-4415	142
	144
	146
	196
	229
	230
	232
	237
	242
	382
	405
518-4416	110
	114
	126
	205
	219
	222
	231
	232
	259
	337
	393
	403
	507
518-4417	9
	12
	44
	66
	76
	83
	87
	91
	110
	112
	114
	130
	133
	142
	144
	146
	189
	190
	191
	196
	205
	207
	209
	211
	215
	216
	217
	222
	226
	229

▶ PRIMARY REFERENCE

PART NUMBER INDEX

Part	Page
	230
	231
	233
	237
	238
	240
	242
	259
	266
	309
	327
	330
	332
	337
	338
	342
	346
	347
	348
	376
	377
	380
	382
	384
	386
	388
	390
	391
	393
	396
	399
	403
	406
	407
	429
	442
	444
	446
	507
	536
518-4418	76
	130
	133
	207
	208
	209
	300
	346
	347
	393
	399
	416
	442
	444
	446
518-4420	315
	410
	416
	607
518-4426	321
518-4428	112
518-5446	481
518-5841	328
518-6580	233
518-6581	222
518-6582	151
	152
518-6583	196
	222
	229
	230
	232
	237
518-6584	138
	139
	232
	323
	337
518-6585	87
	112
	130
	133
	142
	144
	146
	208
	209
	216
	217
	226
	232
	240
	266
	323
	328
	332
	338
	341
	347
	375
	377
	379
	386
	388
	391
	396
	398
	407
	616
518-6586	208
	209
	346
	442
	444
	446
518-6588	416
518-6593	481
518-6855	501
	502
	▶547
518-8176	358
518-8242	151
	152
518-8243	151
	152
518-8246	229
	242
518-8247	233
518-8248	142
	144
	146
518-8351	44
	495
	496
518-8386	222
	314
	403
518-8387	126
	219
	232
	338
518-8388	233
518-8389	114
518-8390	231
	337
518-8391	240
	259
518-9591	379
518-9592	110
518-9595	307
	308
518-9596	609
518-9597	323
	416
518-9600	416
518-9609	491
518-9610	537
518-9611	491
	537
518-9612	491
518-9613	491
	537
518-9614	491
	537
518-9615	492
518-9616	537
518-9724	110
518-9726	316
518-9731	399
518-9735	222
518-9736	89
	232
	240
	323
	338
518-9737	83
	306
	311
	331
	334
	346
	348
	616
518-9738	138
	139
	442
	444
	446
	478
518-9739	356
518-9740	323
518-9741	192
	194
	197
	222
518-9742	151
	152
	233
	523
518-9745	328
518-9849	407
519-0144	66
519-0398	416
519-0421	407
519-0422	398
519-0986	566
519-0990	393
519-0992	112
	330
	341
519-4909	510
519-4966	399
519-6939	420
519-6940	▶420
	422
519-8071	346
	▶351
519-8072	▶352
520-1132	399
520-1134	319
520-1138	259
520-1140	398
520-1146	87
	90
520-2590	382
	405
520-2593	66
520-2594	410
520-6163	380
520-6290	9
520-9588	514
521-1043	81
521-1044	81
521-1045	81
521-1046	81
521-1047	81
521-1048	81
521-1049	81
521-1050	79
	▶81
521-1051	83
	▶85
521-1052	85
521-1053	333
521-1054	333
521-1055	333
521-1056	333
521-1057	81
	▶333
521-1058	81
521-1059	81
521-1060	81
521-1061	81
521-1062	81
521-1063	81
521-1064	81
521-1264	8
	▶95
521-1347	607
521-1363	9
521-2260	9
	76
	87
	91
	110
	114
	346
	536
521-2261	9
	87
	110
	114
	307
	308
	327
	384
	399
	416
521-6774	259
521-6775	399
521-9811	44
	495
	496
521-9812	44
	495
	496
521-9926	328
522-1860	278
522-4371	251
522-4373	251
522-7790	407
522-7924	259
522-8166	251
522-8262	354
522-9166	406
	▶464

▶ PRIMARY REFERENCE

PART NUMBER INDEX

Part	Page
523-1050	259
523-9207	592
	594
523-9208	596
523-9209	502
	▶598
524-0884	464
	▶465
524-3097	601
524-3217	478
524-3220	138
	139
	323
524-3266	315
	356
524-3269	254
524-3271	9
	110
	114
	208
	209
	331
	334
	346
524-6908	138
	139
	399
524-6912	322
524-6918	266
	328
	377
525-4161	89
	110
	114
525-9809	▶2
525-9812	2
	▶618
526-2235	353
	▶423
526-2236	2
	▶498
526-2237	▶98
	498
526-2238	337
526-2239	98
526-2240	498
	▶516
526-2241	516
526-2242	516
526-2243	498
	▶514
526-2244	514
526-2249	514
526-7269	399
526-8012	604
	605
	606
527-0085	604
	605
527-0144	▶604
527-0145	▶605
527-0162	▶606
527-0163	606
527-0177	2
	▶607
527-0202	607
527-0203	607
527-0839	607
527-0841	607
527-0845	607
	612
527-0846	607
	612
527-0847	611
	▶612
527-0848	612
527-0853	612
527-0869	612
527-0870	612
527-0881	358
527-1637	16
527-1641	16
527-7764	292
	294
527-8772	622
	626
527-9462	▶7
527-9463	▶7
527-9464	▶8
527-9466	7
	▶110
527-9467	7
	▶87
527-9468	7
	▶42
527-9469	7
	8
	▶112
527-9470	7
	8
	▶9
527-9471	7
	8
	▶89
527-9472	7
	8
	▶66
527-9473	489
	490
	▶507
527-9474	1
	▶205
527-9475	7
	8
	▶114
527-9477	7
	8
	▶90
527-9479	114
527-9481	90
527-9483	▶12
	489
	490
527-9488	7
	8
	▶44
527-9489	87
527-9494	87
527-9498	89
527-9499	66
527-9500	66
528-2408	231
528-2583	292
	294
528-9878	208
	209
529-0947	480
	▶481
529-0953	310
	▶609
529-7519	83
529-7520	83
529-7999	2
	▶310
529-8010	310
	▶311
529-8011	313
529-8012	▶319
	321
529-8033	354
529-8036	311
529-8037	311
529-8038	311
529-9205	548
531-3353	609
531-3355	609
531-3357	609
531-3363	478
531-3364	356
531-3365	356
531-3366	609
531-3373	481
531-3376	481
531-3380	▶478
	480
531-3381	356
531-3382	356
531-3383	356
531-3387	411
531-3390	▶328
531-3391	411
531-3392	328
531-3393	411
532-6677	▶244
	268
532-6678	244
	245
	246
	▶286
532-6681	286
	▶292
532-6682	286
	▶294
532-6685	244
	▶278
532-6686	278
	279
532-6689	278
532-7085	618
532-7086	618
532-9472	354
	▶361
532-9473	355
	▶363
532-9474	357
	▶362
532-9476	356
	▶364
532-9477	359
	▶368
532-9478	359
	▶369
532-9479	360
	▶370
532-9480	▶365
	403
532-9481	▶366
	390
532-9506	266
533-0956	607
533-0967	548
533-0968	548
533-0971	317
533-0977	317
533-0981	▶499
	501
	502
533-0982	499
	▶503
533-0983	503
	▶504
533-0984	504
533-1011	501
	▶592
533-1013	499
	▶566
533-1014	499
	500
	▶544
533-1065	504
533-1068	504
533-1072	521
533-1077	▶312
	498
533-1078	312
533-1080	▶500
	501
	502
533-1130	429
533-1131	380
533-1132	416
	▶417
533-1319	4
	6
533-1826	3
	▶4
533-1840	3
	▶6
533-2323	486
	▶491
533-2324	492
533-2325	487
	488
	▶552
533-2326	552
533-2327	552
533-2328	552
533-2329	487
	541
	▶554
533-2330	488
	542
	▶555
533-3478	319
533-3646	416
533-4440	2
	▶73
533-4446	73
	▶76
533-4466	73
	▶91
533-4484	73
	▶83
533-4491	73
	▶74
533-4518	73
	▶79
533-4647	2
	▶281
533-4648	281
	▶282
533-4650	372
533-4651	373
533-4973	76
533-4987	91
533-4988	91
533-4991	76
533-5728	500
	▶505
533-5729	▶487
	489
533-5730	489
	▶541
533-5733	▶488
	490
533-5734	490

▶ PRIMARY REFERENCE

PART NUMBER INDEX

Part	Page
	▶542
533-5736	▶317
	570
533-5737	505
	▶506
533-5738	317
	548
533-5739	▶486
	487
	488
533-5753	317
533-6200	2
	▶153
533-6201	153
	▶221
533-6202	153
	▶523
533-6203	153
	▶222
533-6204	153
	▶226
533-6205	153
	▶232
533-6206	153
	▶240
533-6208	153
	▶242
533-6217	▶237
533-6218	188
	▶192
533-6220	188
	▶229
533-6221	1
	▶130
533-6222	1
	▶133
533-6223	▶140
533-6224	▶231
533-6225	▶217
	501
	502
533-6226	▶215
	487
	488
533-6227	▶151
	501
	502
533-6228	▶152
	501
533-6229	▶189
533-6230	▶190
533-6231	140
	▶219
533-6232	▶191
533-6235	▶163
	219
533-6236	130
533-6237	133
533-6243	▶161
	192
	194
	197
533-6246	233
534-6698	2
	▶268
534-6713	268
	▶315
534-6725	315
534-6730	315
535-6285	607
535-6292	612
535-6617	353
	▶425
535-7121	598
	▶602
535-7143	2
	▶374
535-7145	▶337
	374
535-7146	▶341
	374
535-7147	7
	▶338
535-7149	337
535-7150	348
535-7156	342
535-7157	342
535-7162	342
535-7166	▶358
	480
535-7167	▶356
	480
535-7168	▶355
	374
535-7169	▶354
	374
535-7170	▶357
	374
535-7171	▶360
	374
535-7172	▶359
	374
535-7173	374
	▶416
535-7174	374
	▶398
535-7175	374
	▶429
535-7176	374
	▶391
535-7177	374
	▶393
535-7178	374
	▶407
535-7179	374
	▶377
535-7180	▶379
	480
535-7181	▶266
	374
535-7182	▶382
	409
535-7183	▶384
	409
535-7184	▶396
535-7185	349
	▶375
535-7190	▶346
	419
535-7191	▶405
	419
535-7192	353
	▶386
535-7193	353
	▶388
535-7194	▶347
	349
535-7195	▶403
	611
535-7196	2
	▶390
535-7198	382
	384
	▶410
535-7200	2
	▶374
535-7201	393
535-7202	393
535-7203	393
535-7204	393
535-7205	266
535-7214	403
535-7215	403
535-7216	391
535-7220	407
535-7221	407
535-7222	407
535-8192	478
535-8193	478
535-8194	478
535-8195	478
535-8196	478
535-8197	481
535-8200	481
535-8207	609
535-8208	609
535-8563	422
535-8581	435
	▶474
535-8582	399
	▶434
535-9378	358
535-9444	91
536-0410	192
	▶208
536-0411	208
536-0417	209
536-0420	▶616
536-0421	616
536-0430	▶306
536-0431	306
536-0432	306
536-0433	194
	197
	▶209
536-0438	133
	▶332
536-0439	130
536-0440	1
	▶300
536-0441	300
	▶301
536-0450	▶302
536-0451	302
536-0452	330
536-0454	332
536-2611	612
536-2612	612
536-2668	342
536-3151	338
536-3152	338
536-3153	338
536-4800	277
536-4801	276
536-4896	306
536-4897	306
536-5532	422
536-5558	232
536-5562	▶169
	238
536-5564	130
536-5569	131
	133
	233
536-5570	233
536-5571	188
	▶230
536-5572	188
	▶194
536-5577	222
536-5579	131
	133
	226
536-5580	226
536-5581	191
536-5582	▶168
	229
	230
	237
536-5583	237
536-5584	207
536-5585	231
536-5587	151
	152
536-5588	240
536-5589	233
536-5590	232
536-5594	142
	144
	146
536-5595	▶238
	419
536-5596	189
	190
536-5598	▶207
536-5695	310
536-5713	310
	▶316
536-5714	316
536-5887	316
536-5888	316
536-7222	407
536-7223	407
536-7224	408
536-7225	408
536-7226	408
536-7227	408
536-7228	408
536-7229	377
536-7230	377
536-7232	377
536-7233	377
536-7234	377
536-7235	377
536-7236	377
536-7237	380
536-7238	380
536-7240	380
536-7241	380
536-7245	380
536-7247	380
536-7248	380
536-7249	382
536-7250	382
536-7251	382
536-7252	382
536-7253	388
536-7254	388
536-7255	390
536-7257	396
536-7258	375
	396
536-7259	396
536-7260	375
	396
536-7261	376
536-7317	375
536-7318	375
536-7319	406
536-7320	406
536-7321	406
536-7322	406
536-7324	406
536-7325	399
536-7326	400
536-7327	400

▶ PRIMARY REFERENCE

PART NUMBER INDEX

Part	Page
536-7328	400
536-7329	400
536-7330	400
536-7331	400
536-7333	400
536-7334	400
536-7335	400
536-7336	400
536-7743	1
	▶422
536-7771	126
536-7798	126
536-7799	125
	▶126
536-7800	1
	▶125
536-7828	497
536-7945	159
536-7946	159
536-8936	353
	▶427
537-1607	400
537-1608	398
537-1609	429
537-1610	380
537-1612	346
537-1614	380
537-1615	391
537-1616	391
537-1617	391
537-1618	391
537-1619	391
537-1620	391
537-1621	391
537-1622	391
537-1623	391
537-1624	391
537-1820	1
	▶327
537-1821	327
	▶330
537-1822	330
537-1823	330
537-1824	330
537-1825	330
537-1826	330
537-1827	330
537-1830	246
	▶309
537-1831	▶307
	309
537-1832	▶308
	309
537-1833	307
	308
537-1840	307
	308
537-1843	307
	308
537-1848	307
	308
537-1849	307
	308
537-1860	▶1
	2
537-5601	▶353
537-5602	▶353
537-5605	▶353
537-5607	▶611
537-5608	▶2
537-5609	▶188
537-5610	▶501
537-5611	▶501
537-5612	▶501
537-5613	▶502
537-5614	▶502
537-5615	▶489
537-5616	▶489
537-5617	▶489
537-5618	▶489
537-5619	▶490
537-5620	▶490
537-5621	▶622
537-5622	▶626
537-5628	▶480
537-5629	▶480
537-5630	▶419
537-5631	▶188
537-5632	▶188
537-5633	▶188
537-5635	▶411
537-5636	▶409
537-5637	▶409
537-5639	618
537-5640	622
	626
537-5642	▶349
537-5645	▶1
537-5646	▶1
537-5647	▶1
538-1170	281
	▶495
538-1171	495
538-1175	281
	▶496
538-1176	496
538-1179	▶275
	281
538-1180	275
538-1181	275
538-3113	609
538-3124	305
538-3413	319
538-3416	310
	▶321
538-4732	347
538-4736	403
538-4737	403
538-4738	403
538-4740	390
538-4741	353
	▶442
538-4742	353
	▶444
538-4744	353
	▶446
538-6009	▶284
538-6010	284
	▶285
538-6096	268
	▶535
538-6101	268
	▶272
538-6106	268
	▶274
538-6109	272
538-6707	609
538-6757	305
538-9168	322
538-9169	322
539-1073	112
539-1074	112
539-1076	66
539-1078	205
539-1082	44
539-1086	44
539-1087	110
539-1089	9
539-1090	89
539-1096	9
539-1097	87
	90
539-1566	▶259
	281
539-1567	259
539-1570	259
539-1574	259
539-1575	281
	▶497
539-1576	497
539-1580	▶127
	281
539-1581	127
539-1582	281
	▶536
539-1583	259
539-1586	▶372
	480
539-1587	▶373
	480
539-4946	323
539-4947	323
539-4948	323
539-4949	323
539-4950	323
539-4953	323
539-4954	323
539-4955	323
539-4957	323
539-4958	323
539-4960	323
539-4969	323
539-4971	323
539-4976	323
539-4979	323
539-4982	323
539-4984	323
539-4987	323
539-4991	323
539-4993	314
539-4994	314
539-5000	1
	▶322
539-5001	322
	▶323
539-5002	323
539-5003	▶314
	323
539-5005	322
539-5012	323
539-5013	323
539-5017	323
539-5018	323
539-5020	323
539-5021	323
539-5023	323
539-5026	323
539-5027	323
539-5030	323
539-5162	323
539-5164	324
539-5167	314
539-8166	▶3
	7
	8
539-8217	▶3
	7
539-8912	45
540-3236	291
	▶296
540-3237	296
	▶297
540-3238	297
540-3243	297
540-3254	297
540-3755	290
	▶298
540-3756	298
	▶299
540-3757	299
540-3758	299
540-3759	299
540-4610	358
540-4611	377
540-4615	388
540-4616	377
	380
	408
540-4617	377
	380
	388
540-4618	376
	377
540-4619	416
540-4620	400
540-4621	400
540-4622	377
	380
	388
540-4623	400
540-4624	442
	444
	446
540-4625	442
	444
	446
540-4626	442
	444
	446
540-4627	416
	442
	444
	446
540-4628	442
	444
	446
540-4631	442
	444
	446
540-6848	▶269
	298
540-6849	269
540-6850	269
540-6851	269
540-6852	▶270
	296
540-6853	270
540-6854	270
540-6855	270
541-6637	376
	380
	391
	396
	408
541-7840	254
541-8722	262
	264
541-8725	382
541-8727	251
541-8728	262
	264
541-9916	154
542-0422	612
542-9693	261
542-9712	▶261
	268

▶ PRIMARY REFERENCE

PART NUMBER INDEX

Part	Page
543-1463	523
543-9602	244
	245
	246
	▶250
543-9603	250
543-9618	250
543-9651	250
	▶254
543-9654	254
	▶257
543-9660	361
543-9661	361
543-9662	363
543-9663	363
543-9664	362
	363
543-9671	362
543-9672	362
543-9674	367
543-9675	362
	363
543-9676	368
543-9677	365
543-9678	365
543-9679	366
543-9680	366
543-9681	364
543-9682	364
543-9683	364
543-9684	364
543-9685	368
	369
543-9686	369
543-9687	368
	369
543-9688	368
	369
543-9689	370
543-9690	370
543-9691	365
	366
	370
543-9692	363
543-9693	365
	366
	370
543-9705	366
543-9706	365
543-9707	370
543-9708	369
543-9709	368
543-9710	364
543-9711	367
543-9712	362
543-9714	361
	367
543-9715	361
	367
543-9716	361
544-0641	257
544-0642	257
	▶258
544-0644	257
544-0645	257
544-0648	254
544-0649	254
544-0657	254
544-0665	250
	▶262
544-0670	▶251
	262
	264
544-0671	251
544-0673	251
544-0676	262
544-0677	262
	264
544-0678	262
	264
544-0695	262
	264
544-0737	262
	264
	292
	294
544-0738	262
	264
544-0739	262
	264
544-0744	250
	▶264
544-0769	264
544-1117	150
	154
544-1118	153
544-1146	154
544-1296	278
544-1297	278
	279
	280
544-1299	244
	245
	246
	▶252
544-1301	252
544-1302	252
544-1303	252
544-3686	478
544-3687	478
544-3696	478
544-3697	609
544-3698	609
545-7400	311
	▶313
545-7401	313
545-7402	313
545-7403	319
545-7404	319
545-7405	319
545-7406	319
545-7407	319
545-7408	319
545-7409	319
545-7410	319
545-7411	319
545-7412	319
545-7413	319
545-7415	319
545-7416	319
545-7417	319
545-7418	319
545-7419	319
545-7420	319
545-7421	321
545-7422	321
545-7474	607
545-7475	607
545-7477	607
	612
545-7478	607
545-7479	607
	612
545-7480	607
	612
545-7484	612
545-8079	481
545-8080	481
545-8081	481
545-8082	481
545-8083	478
545-8084	478
545-8085	478
545-8086	478
545-8087	478
545-8088	609
545-8089	609
545-8090	609
545-8091	609
545-8092	609
545-8093	609
545-8094	609
545-8095	609
545-8096	609
545-8097	609
545-8098	609
545-8099	609
545-8100	609
545-8101	609
545-8102	609
545-8103	609
545-8810	142
	144
	146
	▶158
546-5640	570
	▶571
546-6080	▶161
	199
547-4492	543
548-6724	501
	▶570
548-6725	501
	▶521
548-9123	342
548-9938	406
548-9939	346
549-0877	▶138
	196
	229
549-0878	138
549-0879	138
549-0880	138
	139
549-0881	138
	139
549-0888	▶139
	196
	229
549-0889	139
549-0890	139
549-0895	324
549-0897	324
549-1055	342
549-4733	233
549-4734	▶211
	409
549-4735	188
	▶196
549-4736	211
549-6200	400
549-8671	380
549-8774	514
550-8801	423
	425
	427
550-8853	188
	▶197
551-0457	▶216
	349
551-1797	338
551-3697	87
	90
551-4101	417
551-4618	417
551-4619	417
551-4710	66
	114
551-4925	429
552-3605	153
	523
552-3774	622
	626
552-6189	66
	110
	114
552-6766	343
	406
552-6767	343
	386
552-8845	216
552-8896	272
552-8898	535
552-8899	535
552-8901	535
553-3529	330
553-3551	300
553-7497	▶142
553-7498	▶144
553-7506	▶146
554-0254	481
554-4809	282
554-6321	307
	308
554-7384	523
555-3109	292
	294
555-5953	285
555-8447	622
556-1448	▶253
	282
556-1449	253
	282
	▶620
556-1450	253
	282
556-1451	253
	282
556-1452	253
	282
556-1453	253
	282
556-4934	343
556-7536	282
556-7537	282
556-7538	282
556-7539	282
556-7540	282
556-7541	282
556-7542	282
556-7543	282
556-7544	282
556-7545	282
556-7546	282
556-7547	282
556-7548	282
556-7549	282
556-7550	282
556-7551	282
556-7552	282
556-7553	282
556-7554	282
556-7555	282
556-7556	282
556-7557	282
556-7558	282

▶ PRIMARY REFERENCE

PART NUMBER INDEX

Part	Page
556-7559	282
556-7560	282
556-7561	282
556-7562	282
556-7563	282
556-7564	282
556-7850	305
556-8779	324
556-9729	282
556-9730	282
556-9731	282
556-9732	282
556-9733	282
556-9734	282
556-9735	282
556-9736	282
557-1671	391
557-1672	391
557-1673	391
557-1674	391
557-1675	392
557-4598	319
557-9590	▶348
	374
558-2631	266
558-5980	343
558-6072	343
558-6081	324
558-6082	324
558-6083	324
558-6084	324
558-6136	242
560-4453	322
560-4458	229
560-4459	229
560-7640	96
561-0697	233
561-0698	233
561-0699	233
561-0700	233
561-4539	348
561-4970	32
561-7673	622
	626
562-1352	619
562-2697	548
562-6233	282
563-0598	231
563-6633	222
563-6696	301
563-6697	301
563-6700	244
	▶331
563-6701	331
	334
563-6710	245
	246
	▶334
563-6711	334
563-6775	622
	626
563-6783	622
	626
563-7617	▶245
563-7618	▶246
564-0284	254
564-0285	245
	▶279
564-0287	279
564-0290	246
	▶280
564-0293	280
564-0296	280
564-6272	261
564-8938	▶153
564-8939	153
	▶154
564-8941	▶153
564-8942	153
	▶154
564-8943	153
	▶154
565-0344	324
565-0345	324
565-0346	324
565-1966	392
565-1987	392
565-1992	392
565-1993	343
565-1994	343
565-1995	343
565-1996	386
565-1998	386
565-1999	384
565-2000	384
565-2608	76
565-3449	233
565-4653	76
565-6248	510
565-7554	▶161
	215
565-7555	133
565-7556	133
565-8379	233
565-8380	222
565-8381	▶165
	240
565-8382	▶160
	221
565-8383	▶163
	523
565-8384	▶169
	233
565-8385	▶167
	233
566-3673	392
566-4202	▶170
	233
566-4203	233
566-4204	131
566-4205	233
566-4206	▶170
	242
566-4207	134
566-4208	134
566-4209	131
566-4210	▶156
	226
566-4264	553
566-4265	553
566-4828	377
566-7104	524
566-7931	16
566-9224	▶157
	226
566-9225	▶155
	217
566-9226	▶162
	194
	197
566-9227	▶162
	192
566-9228	▶163
	229
566-9229	▶168
	196
567-3408	▶171
	231
567-3409	234
567-3410	134
567-7088	501
	502
	▶619
568-0739	▶199
568-0929	2
	▶153
568-3440	272
568-3441	272
568-8110	281
	▶305
569-4907	358
	▶367
570-3848	▶271
570-3853	271
572-7749	274
	▶276
572-7750	272
	▶277
574-9907	367

▶ PRIMARY REFERENCE

MEMORANDA



©2019 Caterpillar
All Rights Reserved

CAT, CATERPILLAR, their respective logos, “Caterpillar Yellow”, and the POWER EDGE trade dress as well as corporate and product identity used herein, are trademarks of Caterpillar and may not be used without permission.