CATERPILLAR®

SEBP3684-29
July 2006

VOLUME I
Pages 1-604

RUTHZIL TRATOR COMERCIAL DE PEÇAS LTDA 11 97083-6812 ROLANDO

# Parts Manual

SIS

See “General Information” for New Parts Manual Features.

## 140H Motor Grader

**CCA1-Up (Machine)**
**3PD1-Up (Engine)**
**BJN1-Up (Transmission)**
**EDB1-Up (Transmission)**

**Powered By 3176C Engine**
**This Parts Manual is also Available in .PDF Format on Compact Disc (CD-ROM) - Caterpillar Form No. SERP3684**

# Product and Dealer Information

Note: For product identification plate locations, see the section “Product Identification Information” in the Operation and Maintenance Manual.

**Delivery Date:** _____

## Product Information

Model: _____

Product Identification Number: _____

Engine Serial Number: _____

Transmission Serial Number: _____

Generator Serial Number: _____

Attachment Serial Numbers: _____

Attachment Information: _____

Customer Equipment Number: _____

Dealer Equipment Number: _____

## Dealer Information

Name: _____ Branch: _____

Address: _____

_____

_____

| | Dealer Contact | Phone Number | Hours |
|---|---|---|---|
| Sales: | _____ | _____ | _____ |
| Parts: | _____ | _____ | _____ |
| Service: | _____ | _____ | _____ |

# Informations produit et concessionnaire

Nota: Voir l'emplacement de la plaque signalétique du produit au chapitre "Informations produit" du guide d'utilisation et d'entretien.

**Date de livraison:** _____

## Informations produit

Modèle: _____

Numéro d'identification produit: _____

Numéro de série du moteur: _____

Numéro de série de la boîte de vitesses: _____

Numéro de série de l'alternateur: _____

Numéros de série d'équipement: _____

Informations sur l'équipement: _____

Numéro matériel client: _____

Numéro matériel concessionnaire: _____

## Informations concessionnaire

Nom: _____ Agence: _____

Adresse: _____

_____

_____

| | Contact concessionnaire | Numéro de téléphone | Heures |
|---|---|---|---|
| Ventes: | | | |
| Pièces: | | | |
| Service: | | | |

# Información del Producto/Distribuidor

Nota: Para saber la ubicación de las placas de identificación del producto, ver la sección “Información sobre identificación del producto” en el Manual de Operación y Mantenimiento.

**Fecha de entrega:** _____

## Información del producto

Modelo: _____

Número de identificación del producto: _____

Número de serie del motor: _____

Número de serie de la transmisión: _____

Número de serie del generador: _____

Números de serie de los accesorios: _____

Información sobre los accesorios: _____

Número del equipo del cliente: _____

Número del equipo del distribuidor: _____

## Información del distribuidor

Nombre: _____ Sucursal: _____

Dirección: _____

_____

_____

| Comunicación con el distribuidor | Número de teléfono | Horas |
|---|---|---|
| Ventas: _____ | _____ | _____ |
| Piezas: _____ | _____ | _____ |
| Servicio: _____ | _____ | _____ |

# Informações Sobre Produto e Revendedor

Nota: Para localizações da placa de identificação do produto, consulte a seção, “Informações Sobre Identificação do Produto” no Manual de Operação e Manutenção.

**Data de Entrega:** _____

## Informações Sobre o Produto

Modelo: _____

Número de Identificação do Produto: _____

Número de Série do Motor: _____

Número de Série da Transmissão: _____

Número de Série do Gerador: _____

Números de Série de Acessórios: _____

Informações Sobre Acessórios: _____

Número do Equipamento do Cliente: _____

Número do Equipamento do Revendedor: _____

## Informações Sobre o Revendedor

Nome: _____ Filial: _____

Endereço: _____

_____

_____

| | Contato do Revendedor | Telefone | Horas |
|---|---|---|---|
| Vendas: | _____ | _____ | _____ |
| Peças: | _____ | _____ | _____ |
| Serviço: | _____ | _____ | _____ |

# Produkt- und Händlerinformation

Anmerkung: Für die Lage der Produkt-Identnummer und Seriennummern siehe Abschnitt “Produkt-Identinformation” im Betriebs- und Wartungshandbuch.

**Lieferdatum:** _____

## Produkt-Identinformation

Modell: _____

Produkt-Identnummer: _____

Seriennummer des Motors: _____

Seriennummer des Getriebes: _____

Seriennummer des Generators: _____

Seriennummern der Arbeitsgeräte: _____

Arbeitsgeräteinformation: _____

Kundennummer: _____

Händlernummer: _____

## Händlerinformation

Name: _____ Niederlassung: _____

Adresse: _____

_____

_____

| | Kontaktperson beim Händler | Telefon | Dienststunden |
|---|---|---|---|
| Verkauf: | _____ | _____ | _____ |
| Ersatzteile: | _____ | _____ | _____ |
| Service: | _____ | _____ | _____ |

# MEMORANDA

# TABLE OF CONTENTS


| Name | Page |
|---|---|
| **GENERAL INFORMATION** | A24 |
| **REPAIR ALTERNATIVES** | A43 |
| **SUPPLEMENTAL COOLANT ADDITIVES** | A48 |
| **ENGLISH-PORTUGUESE PARTS NOMENCLATURE** | A53 |
| **MAINTENANCE PARTS** | A61 |
| **INDEX** | A105 |
| **MACHINE ARRANGEMENT** | 1 |
| CONVERSION AR-CERTIFICATION | 1 |
| CONVERSION AR-MACHINE | 3 |
| GENERAL AR | 3 |
| ROADING AR | 5 |
| SNOW AR-MOTOR GRADER | 6 |
| **ENGINE ARRANGEMENT** | 7 |
| ENGINE AR | 7 |
| **BASIC ENGINE** | 12 |
| AIR COMPRESSOR GP | 12 |
| BELT TENSIONER GP | 18 |
| CAMSHAFT GP | 22 |
| COVER GP-CYLINDER BLOCK | 23 |
| CRANKSHAFT GP | 25 |
| CYLINDER BLOCK AS | 27 |
| CYLINDER BLOCK GP | 29 |
| CYLINDER HEAD AS | 31 |
| CYLINDER HEAD GP | 33 |
| DRIVE GP-ACCESSORY | 35 |
| FASTENER GP-CYLINDER HEAD | 36 |
| FLYWHEEL GP | 37 |
| GEAR GP-FRONT | 38 |
| HOUSING GP-FLYWHEEL | 39 |
| HOUSING GP-FRONT | 41 |
| LIFTER GP-VALVE | 43 |
| LIFTING GP-ENGINE | 44 |
| MOUNTING GP-ENGINE & TMSN | 45 |
| MOUNTING GP-VALVE MECHANISM | 46 |
| PAN GP-OIL | 47 |
| PANEL GP-SOUND SUPPRESSION | 50 |
| PISTON & ROD GP | 51 |
| PLUG GP-CYLINDER BLOCK | 52 |
| PLUG GP-ENGINE | 53 |
| ROCKER ARM GP | 55 |
| SEAL GP-CRANKSHAFT | 57 |
| SUPPORT GP-ENGINE | 58 |
| SUPPRESSION GP-SOUND | 59 |
| VALVE MECHANISM GP | 60 |
| **LUBRICATION SYSTEM** | 62 |
| BASE GP-OIL FILTER | 62 |
| FILLER GP-ENGINE OIL | 65 |
| FILTER GP-ENGINE OIL | 66 |
| GAUGE GP-OIL LEVEL (DIPSTICK) | 68 |
| LINES GP-ENGINE OIL DRAIN | 69 |
| LINES GP-TURBOCHARGER OIL | 70 |
| PUMP GP-ENGINE OIL | 71 |
| **COOLING SYSTEM** | 73 |
| COOLING AR | 73 |
| FAN & MOTOR GP | 76 |
| FASTENER GP-RADIATOR | 78 |
| HOUSING & REGULATOR GP | 79 |
| LINES GP-WATER | 81 |
| PLATE GP-RADIATOR | 90 |
| PUMP GP-WATER | 91 |
| RADIATOR GP | 93 |
| **AIR INLET AND EXHAUST SYSTEM** | 95 |
| AFTERCOOLER & MOUNTING GP | 95 |
| AIR CLEANER GP | 96 |
| LINES GP-AIR | 99 |
| MANIFOLD GP-EXHAUST | 101 |
| MANIFOLD GP-INLET | 102 |
| MUFFLER GP | 103 |
| PRECLEANER GP | 105 |
| PRESCREENER AS | 106 |
| TURBOCHARGER GP | 107 |
| **FUEL SYSTEM** | 109 |
| CONTROL GP-GOVERNOR | 109 |
| FASTENER GP-FUEL TANK | 111 |
| FILTER GP-FUEL | 113 |
| FILTER GP-WATER SEP & FUEL | 114 |
| LINES GP-FUEL | 115 |
| LINES GP-FUEL FILTER | 118 |
| LINES GP-FUEL INJECTION | 121 |
| PUMP & MTG GP-FUEL TRANSFER | 123 |
| PUMP GP-FUEL INJECTION | 124 |
| PUMP GP-FUEL PRIMING | 125 |
| TANK GP-FUEL | 127 |
| VALVE GP-CHECK | 136 |
| **ELECTRICAL AND STARTING SYSTEM** | 139 |
| ALARM GP | 139 |
| ALTERNATOR GP-CHARGING | 141 |
| BATTERY GP | 147 |
| BLOCK GP-JUNCTION | 151 |
| CIRCUIT BREAKER GP | 152 |
| CONTROL & MTG GP-ENGINE ELEK | 155 |
| CONTROL GP-ENGINE ELECTRONIC | 157 |
| CONTROL GP-SECONDARY STEERING | 161 |
| CONTROL GP-UNPROGRAMMED | 162 |

# TABLE OF CONTENTS


| Name | Page |
|---|---|
| CONVERTER AR-ELECTRICAL | 163 |
| CONVERTER GP-ELECTRICAL | 164 |
| ELECTRONICS GP-MONITOR | 169 |
| ELECTRONICS GP-POWER TRAIN | 169 |
| GRADE CONTROL AR | 170 |
| HEATER GP-JACKET WATER | 172 |
| INSTALLATION GP-WARNING BEACON | 175 |
| LAMP GP-DOME | 177 |
| LAMP GP-FLOOD | 178 |
| LAMP GP-HEAD | 184 |
| LAMP GP-HEAD & SIGNAL | 190 |
| LAMP GP-MARKER | 194 |
| LAMP GP-REGISTRATION PLATE | 195 |
| LAMP GP-SIGNAL | 196 |
| LAMP GP-WARNING BEACON | 199 |
| LIGHTING AR-FLOOD | 201 |
| LIGHTING AR-FLOOD & SIGNAL | 203 |
| LIGHTING GP-BACKUP | 204 |
| LIGHTING GP-CAB | 208 |
| LIGHTING GP-FLOOD | 210 |
| LIGHTING GP-ROADING | 259 |
| LIGHTING GP-SIGNAL | 263 |
| LIGHTING GP-WARNING | 265 |
| LIGHTING GP-WARNING BEACON | 273 |
| MOTOR GP-ELECTRIC | 275 |
| SENSOR GP-POSITION | 277 |
| SENSOR GP-PRESSURE | 279 |
| SENSOR GP-SPEED | 284 |
| SENSOR GP-TEMPERATURE | 287 |
| STARTING AID GP-ETHER | 290 |
| STARTING MOTOR GP-ELECTRIC | 294 |
| SWITCH GP-BYPASS | 297 |
| SWITCH GP-DISCONNECT | 298 |
| SWITCH GP-LIGHT | 299 |
| SWITCH GP-MAGNETIC | 301 |
| SWITCH GP-WIPER | 303 |
| WIRING GP-BLADE CUSHION | 304 |
| WIRING GP-CAB | 306 |
| WIRING GP-ENGINE | 317 |
| WIRING GP-FRONT | 321 |
| WIRING GP-GRADE CONTROL | 338 |
| WIRING GP-REAR | 339 |
| WIRING GP-REAR LIGHTING | 378 |
| WIRING GP-SECONDARY STEERING | 385 |
| WIRING GP-SHIFT CONSOLE | 387 |
| WIRING GP-STEERING CONSOLE | 399 |
| WIRING GP-TRANSMISSION | 406 |
| WIRING GP-UNIT INJECTOR | 407 |
| **POWER TRAIN** | 408 |
| APPLICATION GP-POWER TRAIN | 408 |
| AUTOSHIFT AR | 408 |
| CASE & PARTS GP-TRANSMISSION | 409 |
| CHAIN GP-DRIVE | 417 |
| CLUTCH GP-TRANSMISSION | 418 |
| CONTROL GP-DIFFERENTIAL LOCK | 428 |
| CONTROL GP-TRANSMISSION HYD | 430 |
| COOLER GP-TRANSMISSION OIL | 432 |
| COUPLING GP-TORSIONAL | 437 |
| DIFFERENTIAL & BEVEL GEAR GP | 438 |
| DIFFERENTIAL GP | 440 |
| FILLER GP-POWER TRAIN OIL | 442 |
| FILTER & MTG GP-OIL | 443 |
| FILTER GP-OIL | 447 |
| FINAL DRIVE GP | 450 |
| LINES GP-TRANSMISSION OIL | 452 |
| MOUNTING GP-WHEEL | 464 |
| PUMP GP-GEAR | 465 |
| SCREEN GP-MAGNETIC | 467 |
| SHAFT GP-DRIVE | 468 |
| SHAFT GP-INPUT | 469 |
| TANDEM & COVER GP | 470 |
| TRANSMISSION AR | 472 |
| UNIVERSAL JOINT GP | 476 |
| VALVE & MTG GP-DIFF LOCK | 477 |
| VALVE GP-SELECTOR & PRESS CONT | 478 |
| VALVE GP-SOLENOID | 487 |
| VALVE GP-TIRE | 489 |
| VALVE GP-TRANSMISSION CONTROL | 490 |
| WHEEL & TIRE AR | 494 |
| WHEEL & TIRE GP | 508 |
| WHEEL AR | 537 |
| WHEEL GP | 539 |
| **FRAME AND BODY** | 543 |
| AXLE GP-FRONT | 543 |
| BRACKET GP-BLADE | 549 |
| BRACKET GP-MOUNTING | 549 |
| CASE & FRAME GP | 551 |
| COVER GP-ACCESS | 553 |
| ENCLOSURE GP-ENGINE | 556 |
| FASTENER GP | 561 |
| FENDER & SUPPORT GP | 562 |
| FRAME GP | 564 |
| FRAME GP-FRONT | 565 |
| GUARD & SUPPORT GP-RADIATOR | 567 |
| GUARD GP-BOTTOM | 570 |
| GUARD GP-BRAKE LINES | 572 |
| GUARD GP-FUEL TANK | 573 |
| GUARD GP-LIGHTING | 574 |
| GUARD GP-PLATFORM | 575 |
| HITCH GP-ARTICULATING | 586 |
| HITCH GP-TOWING | 588 |
| LINES GP-LUBRICATION | 590 |
| LINK GP-STEERING | 591 |
| MOUNTING GP-REGISTRATION | 593 |
| SHIELD GP-DRIVE SHAFT | 595 |

# TABLE OF CONTENTS


| Name | Page |
|---|---|
| STEP GP | 596 |
| SUPPORT AR-REAR CHASSIS | 597 |
| SUPPORT GP-FUEL TANK | 600 |
| SUPPORT GP-PLATFORM | 603 |
| **BRAKING SYSTEM** | 605 |
| AIR DRYER GP | 605 |
| BRAKE GP-PARKING | 609 |
| BRAKE GP-SERVICE | 611 |
| CONTROL GP-PARKING BRAKE | 613 |
| CONTROL GP-SERVICE BRAKE | 615 |
| KIT-AIR INFLATION | 619 |
| TANK GP-AIR | 620 |
| VALVE GP-AIR CONTROL | 624 |
| VALVE GP-SOLENOID | 626 |
| **HYDRAULIC SYSTEM** | 628 |
| ACCUMULATOR & MTG GP-HYDRAULIC | 628 |
| ACCUMULATOR AR-BLADE CUSHION | 629 |
| ACCUMULATOR GP | 629 |
| ACCUMULATOR GP-HYDRAULIC | 631 |
| ACCUMULATOR GP-STEERING | 634 |
| CONTROL AR-HYDRAULIC | 635 |
| CONTROL GP-HYDRAULIC LOCKOUT | 642 |
| CYLINDER & MTG GP-ARTICULATION | 643 |
| CYLINDER & MTG GP-BLADE LIFT | 644 |
| CYLINDER & MTG GP-BLADE TIP | 645 |
| CYLINDER & MTG GP-CENTERSHIFT | 646 |
| CYLINDER & MTG GP-SCARIFIER | 647 |
| CYLINDER & MTG GP-SIDESHIFT | 648 |
| CYLINDER & MTG GP-STEERING | 650 |
| CYLINDER & MTG GP-WHEEL LEAN | 651 |
| CYLINDER GP-ARTICULATION | 652 |
| CYLINDER GP-BLADE TIP | 653 |
| CYLINDER GP-CENTERSHIFT | 654 |
| CYLINDER GP-LIFT | 656 |
| CYLINDER GP-RIPPER | 657 |
| CYLINDER GP-SCARIFIER | 658 |
| CYLINDER GP-SIDESHIFT | 659 |
| CYLINDER GP-STEERING | 660 |
| CYLINDER GP-WHEEL LEAN | 663 |
| DETENT GP-CONTROL VALVE | 664 |
| DRIVE GP-CIRCLE | 667 |
| HYDRAULIC AR | 671 |
| LINES GP-ACCUMULATOR | 672 |
| LINES GP-HYDRAULIC | 674 |
| LINES GP-HYDRAULIC FAN | 690 |
| LINES GP-PUMP | 694 |
| LINES GP-RIPPER | 703 |
| LINES GP-SECONDARY STEERING | 708 |
| LINES GP-STEERING | 710 |
| LOCK GP-CENTERSHIFT | 713 |
| MANIFOLD GP-CONTROL | 714 |
| MOTOR GP-GEAR | 719 |
| MOTOR GP-GEROTOR | 720 |
| PUMP & MOTOR GP-SEC STEERING | 722 |
| PUMP & MTG GP-PISTON | 723 |
| PUMP & MTG GP-SECONDARY STEER | 724 |
| PUMP GP-PISTON | 725 |
| ROTATING GP-PUMP | 729 |
| SHAFT GP-PUMP DRIVE | 731 |
| STEERING AR-SECONDARY | 732 |
| SWASHPLATE GP | 733 |
| SWIVEL GP | 734 |
| TANK & FILTER GP-HYDRAULIC | 737 |
| TANK & MTG GP-HYDRAULIC | 739 |
| VALVE & LINKAGE GP | 740 |
| VALVE GP-BANK 4 | 907 |
| VALVE GP-BANK 5 | 918 |
| VALVE GP-BANK 6 | 934 |
| VALVE GP-BANK 7 | 952 |
| VALVE GP-COMBINATION | 970 |
| VALVE GP-CONTROL | 974 |
| VALVE GP-PUMP CONTROL | 1022 |
| VALVE GP-PURGE | 1026 |
| VALVE GP-RELIEF | 1028 |
| VALVE GP-SHUTTLE | 1043 |
| VALVE GP-SOLENOID | 1045 |
| **IMPLEMENTS** | 1047 |
| CIRCLE GP | 1047 |
| DRAWBAR GP | 1051 |
| MOUNTING GP-GRADE CONTROL | 1053 |
| PLATE GP-PUSH | 1054 |
| **WORK TOOLS** | 1057 |
| BIT GP | 1057 |
| BIT GP-END | 1061 |
| BLADE GP | 1062 |
| BRACKET GP-SCARIFIER | 1066 |
| EDGE GP-CUTTING | 1067 |
| EXTENSION GP-BLADE | 1069 |
| LIFT GP-BLADE | 1075 |
| MOUNTING GP-GRADE CONTROL | 1077 |
| MOUNTING GP-RIPPER | 1078 |
| MOUNTING GP-SNOW WING | 1079 |
| RIPPER AR | 1080 |
| RIPPER GP | 1081 |
| SCARIFIER AR | 1083 |
| SCARIFIER GP | 1084 |
| TOOTH GP-RIPPER | 1091 |
| TOOTH GP-SCARIFIER | 1092 |
| **OPERATOR STATION** | 1093 |
| ACCESSORY GP-CAB | 1093 |

# TABLE OF CONTENTS


| Name | Page |
|---|---|
| AIR CONDITIONER & MOUNTING GP | 1095 |
| AIR CONDITIONER AR | 1095 |
| AIR CONDITIONER GP | 1096 |
| ARMREST GP | 1100 |
| CAB AR | 1102 |
| CAB AR-NON-ROPS | 1102 |
| CAB GP | 1102 |
| COMPRESSOR & MTG GP-REFRIG | 1104 |
| COMPRESSOR GP-REFRIGERANT | 1105 |
| CONDENSER & MTG GP-REFRIGERANT | 1106 |
| CONSOLE GP-OPERATOR | 1107 |
| CONTROL GP-CLUTCH | 1111 |
| CONTROL GP-STEERING | 1113 |
| CONTROL GP-TRANSMISSION | 1114 |
| CONTROL GP-UNPRGMED MONITOR | 1118 |
| CONVERSION AR-NON-ROPS | 1119 |
| DOOR GP-CAB | 1120 |
| DUCT & CONTROL GP | 1133 |
| DUCT GP | 1134 |
| EXTENSION GP-BACKREST | 1135 |
| FAN GP-CIRCULATING | 1137 |
| FAN GP-DEFROSTER | 1139 |
| FILTER GP-CAB AIR | 1142 |
| HAMMER & MOUNTING GP | 1143 |
| HEATER & MTG GP-CAB | 1145 |
| HEATER AR-CAB | 1145 |
| HEATER GP-CAB | 1147 |
| HORN GP-AIR | 1155 |
| HOUSING GP-SEAT SUSPENSION | 1160 |
| INSTALLATION AR-RADIO | 1163 |
| INSTALLATION GP-RADIO | 1164 |
| INSULATION GP-WEATHER | 1166 |
| LINER GP-CAB | 1168 |
| LINES GP-AIR CONDITIONER | 1183 |
| LINES GP-HEATER | 1185 |
| LITERATURE GP | 1189 |
| LOUVER GP-CAB | 1190 |
| MIRROR GP-REAR VIEW | 1191 |
| MODULE GP-QUAD GAUGE | 1204 |
| MODULE GP-SPEEDOMETER & TACH | 1205 |
| MOUNTING GP-CAB | 1206 |
| MOUNTING GP-ROPS | 1207 |
| PAN GP-BACKREST | 1210 |
| PAN GP-SEAT | 1211 |
| PANEL GP-CAB | 1213 |
| PANEL GP-INSTRUMENT | 1217 |
| RADIO GP | 1224 |
| ROPS AR-ENCLOSED | 1224 |
| ROPS AR-OPEN | 1226 |
| ROPS GP-ENCLOSED | 1227 |
| ROPS GP-OPEN | 1230 |
| SCREEN GP-SUN | 1231 |
| SEAT BELT GP | 1232 |
| SEAT GP | 1234 |
| SEAT GP-SUSPENSION | 1238 |
| SUPPORT GP-SEAT | 1246 |
| SUSPENSION GP-SEAT | 1248 |
| WASHER GP-WINDOW | 1252 |
| WINDOW GP | 1257 |
| WINDOW GP-CAB | 1261 |
| WIPER AR-WINDOW | 1266 |
| WIPER GP-WINDOW | 1267 |
| **SERVICE EQUIPMENT AND SUPPLIES** | 1288 |
| BOX GP-TOOL | 1288 |
| FILM GP | 1289 |
| JACK-HYDRAULIC | 1290 |
| PLATE & FILM GP | 1291 |
| **PART NUMBER INDEX** | B1 |

# TABLE DES MATIÈRES


| Désignation | Page |
|---|---|
| **GÉNÉRALITÉS** | A27 |
| **OPTIONS DE RÉPARATION** | A44 |
| **ADDITIFS POUR LIQUIDE DE REFROIDISSEMENT** | A49 |
| **PIÈCES DE RECHANGE** | A68 |
| **INDEX** | A124 |
| **VERSION DE MACHINE** | 1 |
| VERSION DE TRANSFORMATION - HOMOLOGATION | 1 |
| VERSION DE TRANSFORMATION MACHINE | 3 |
| VUE DU MODÈLE | 3 |
| ÉQUIPEMENT POUR DÉPLACEMENT ROUTIER (VERSION) | 5 |
| VERSION NEIGE - NIVELEUSE | 6 |
| **MOTEUR COMPLET** | 7 |
| MOTEUR (VERSION) | 7 |
| **MOTEUR STANDARD** | 12 |
| COMPRESSEUR D'AIR (ASS) | 12 |
| TENDEUR DE COURROIE (ASS) | 18 |
| ARBRE A CAMES (ASS) | 22 |
| BLOC-CYLINDRES - COUVERCLE (ASS) | 23 |
| VILEBREQUIN (ASS) | 25 |
| BLOC-CYLINDRES (ENS) | 27 |
| BLOC-CYLINDRES (ASS) | 29 |
| CULASSE (ENS) | 31 |
| CULASSE (ASS) | 33 |
| ENTRAÎNEMENT AUXILIAIRE (ASS) | 35 |
| BOULONNERIE DE LA CULASSE (ASS) | 36 |
| VOLANT MOTEUR (ASS) | 37 |
| PIGNONNERIE AV (ASS) | 38 |
| CARTER DE VOLANT (ASS) | 39 |
| CARTER AV (ASS) | 41 |
| POUSSOIR DE SOUPAPE (ASS) | 43 |
| OEILLETONS DE LEVAGE MOTEUR (ASS) | 44 |
| MONTAGE DE MOTEUR ET BOÎTE (ASS) | 45 |
| MONTAGE DE CULBUTERIE (ASS) | 46 |
| HUILE MOTEUR - CARTER (ASS) | 47 |
| PANNEAU D'INSONORISATION (ASS) | 50 |
| PISTON ET BIELLE (ASS) | 51 |
| BOUCHON DE BLOC-CYLINDRES (ASS) | 52 |
| BOUCHON DE MOTEUR (ASS) | 53 |
| AXE DE CULBUTEUR (ASS) | 55 |
| JOINT DE VILEBREQUIN (ASS) | 57 |
| SUPPORT DE MOTEUR (ASS) | 58 |
| INSONORISATION (ASS) | 59 |
| CULBUTERIE (ASS) | 60 |
| **CIRCUIT DE GRAISSAGE** | 62 |
| SUPPORT DE FILTRE À HUILE (ASS) | 62 |
| BOUCHON DE REMPLISSAGE D'HUILE MOTEUR (ASS) | 65 |
| FILTRE À HUILE MOTEUR (ASS) | 66 |
| JAUGE D'HUILE MOTEUR (BAIONNETTE) (ASS) | 68 |
| CANALISATIONS-VIDANGE D'HUILE DE MOTEUR (ASS) | 69 |
| CANALISATIONS D'HUILE DE TURBOCOMPRESSEUR (ASS) | 70 |
| POMPE A HUILE MOTEUR (ASS) | 71 |
| **CIRCUIT DE REFROIDISSEMENT** | 73 |
| REFROIDISSEMENT (VERSION) | 73 |
| MOTEUR ET VENTILATEUR (ASS) | 76 |
| BOULONNERIE DU RADIATEUR (ASS) | 78 |
| THERMOSTAT ET BOITIER (ASS) | 79 |
| CANALISATIONS D'EAU (ASS) | 81 |
| PLAQUE DE RADIATEUR (ASS) | 90 |
| POMPE A EAU (ASS) | 91 |
| RADIATEUR (ASS) | 93 |
| **CIRCUIT D'ADMISSION D'AIR ET D'ÉCHAPPEMENT** | 95 |
| REFROIDISSEUR D'ADMISSION ET MONTAGE (ASS) | 95 |
| FILTRE A AIR (ASS) | 96 |
| CANALISATIONS D'AIR (ASS) | 99 |
| COLLECTEUR D'ÉCHAPPEMENT (ASS) | 101 |
| COLLECTEUR D'ADMISSION (ASS) | 102 |
| SILENCIEUX (ASS) | 103 |
| PREFILTRE (ASS) | 105 |
| ÉPURATEUR (ENS) | 106 |
| TURBOCOMPRESSEUR (ASS) | 107 |
| **CIRCUIT DE CARBURANT** | 109 |
| COMMANDE DE RÉGULATEUR (ASS) | 109 |
| RÉSERVOIR DE CARBURANT - BOULONNERIE (ASS) | 111 |
| FILTRE A CARBURANT (ASS) | 113 |
| FILTRE DE SÉPARATEUR D'EAU ET DE CARBURANT (ASS) | 114 |


* TRADUCTION NON DISPONIBLE AU MOMENT DE LA PUBLICATION

# TABLE DES MATIÈRES


| Désignation | Page |
|---|---|
| CANALISATIONS DE CARBURANT (ASS) | 115 |
| CANALISATIONS DU FILTRE A CARBURANT (ASS) | 118 |
| CANALISATIONS D'INJECTION DE CARBURANT (ASS) | 121 |
| POMPE D'ALIMENTATION ET MONTAGE (ASS) | 123 |
| POMPE D'INJECTION DE CARBURANT (ASS) | 124 |
| POMPE D'AMORÇAGE DE CARBURANT (ASS) | 125 |
| RÉSERVOIR DE CARBURANT (ASS) | 127 |
| CLAPET DE RETENUE (ENS) | 136 |
| **CIRCUIT ÉLECTRIQUE ET DE DÉMARRAGE** | 139 |
| AVERTISSEUR (ASS) | 139 |
| ALTERNATEUR DE CHARGE (ASS) | 141 |
| BATTERIE (ASS) | 147 |
| BLOC DE BRANCHEMENT (ASS) | 151 |
| DISJONCTEUR (ASS) | 152 |
| COMMANDE ET MONTAGE - MOTEUR | 155 |
| COMMANDE ELECTRONIQUE DE MOTEUR (ASS) | 157 |
| COMMANDE DE DIRECTION SECONDAIRE (ASS) | 161 |
| COMMANDE NON PROGRAMMEE (ASS) | 162 |
| TRANSFORMATION ÉLECTRIQUE (VERSION) | 163 |
| TRANSFORMATION ELECTRIQUE (ASS) | 164 |
| ÉLECTRONIQUE-MONITEUR (ASS) | 169 |
| ÉLECTRONIQUE DE TRANSMISSION (ASS) | 169 |
| VERSION DE COMMANDE DE PROFIL LONGITUDINAL | 170 |
| EAU DES CHEMISES - RECHAUFFEUR (ASS) | 172 |
| MONTAGE - GYROPHARE (ASS) | 175 |
| PLAFONNIER (ASS) | 177 |
| LAMPE - PHARE (ASS) | 178 |
| PHARE AV (ASS) | 184 |
| LAMPE - PHARE ET CLIGNOTANT | 190 |
| REPÈRE DE LAMPE (ASS) | 194 |
| LAMPE-PLAQUE D'IMMATRICULATION (ASS) | 195 |
| LAMPE - CLIGNOTANT DE DIRECTION (ASS) | 196 |
| LAMPE - GYROPHARE (ASS) | 199 |
| ÉCLAIRAGE-PROJECTEURS (VERSION) | 201 |
| ÉCLAIRAGE (VERSION)-PROJECTEUR & SIGNAL | 203 |
| ECLAIRAGE AR (ASS) | 204 |
| ÉCLAIRAGE DE CABINE (ASS) | 208 |
| ÉCLAIRAGE - PROJECTEURS (ASS) | 210 |
| ÉCLAIRAGE - FEUX DE ROUTE (ASS) | 259 |
| ÉCLAIRAGE CLIGNOTANT | 263 |
| ÉCLAIRAGE - AVERTISSEUR (ASS) | 265 |
| ÉCLAIRAGE - GYROPHARE (ASS) | 273 |
| MOTEUR ELECTRIQUE (ASS) | 275 |
| SONDE - CIRCUIT DE CARBURANT | 277 |
| CAPTEUR DE PRESSION (ASS) | 279 |
| CAPTEUR DE VITESSE (ASS) | 284 |
| CAPTEUR DE TEMPERATURE (ASS) | 287 |
| AUXILIAIRE DE DÉMARRAGE À L'ÉTHER | 290 |
| DÉMARREUR ÉLECTRIQUE (ASS) | 294 |
| INTERRUPTEUR - DÉRIVATION (ASS) | 297 |
| ROBINET DE BATTERIE (ASS) | 298 |
| INTERRUPTEUR D'ÉCLAIRAGE (ASS) | 299 |
| CONTACTEUR MAGNETIQUE (ASS) | 301 |
| INTERRUPTEUR D'ESSUIE-GLACE (ASS) | 303 |
| CÂBLE D'AMORTISSEUR DE LAME (ASS) | 304 |
| CABLAGE DE CABINE (ASS) | 306 |
| CABLAGE DE MOTEUR (ASS) | 317 |
| CABLAGE AV (ASS) | 321 |
| AVERTISSEMENT DE PROFIL LONGITUDINAL (ASS) | 338 |
| CABLAGE AR (ASS) | 339 |
| CABLAGE D'ECLAIRAGE ARRIERE (ASS) | 378 |
| CABLAGE DE DIRECTION AUXILIAIRE (ASS) | 385 |
| CABLAGE DE LA CONSOLE DE CHANGEMENTS DE VITESSE | 387 |
| CABLAGE DE LA CONSOLE DE DIRECTION | 399 |
| CABLAGE DE BOITE (ASS) | 406 |
| CABLAGE D'INJECTEUR | 407 |
| **TRANSMISSION** | 408 |
| APPLICATION DE TRANSMISSION (ASS) | 408 |
| CHANGEMENT DE VITESSES AUTOMATIQUE (VERSION) | 408 |
| CARTER ET PIECES DE BOITE (ASS) | 409 |
| ENTRAÎNEMENT DE CHAÎNE (ASS) | 417 |


* TRADUCTION NON DISPONIBLE AU MOMENT DE LA PUBLICATION

# TABLE DES MATIÈRES


| Désignation | Page |
|---|---|
| EMBRAYAGE DE BOÎTE DE VITESSES (ASS) | 418 |
| COMMANDE DE DIFFÉRENTIEL - VERROUILLAGE (ASS) | 428 |
| COMMANDE HYDRAULIQUE DE BOÎTE (ASS) | 430 |
| REFROIDISSEUR D'HUILE DE BOÎTE (ASS) | 432 |
| ACCOUPLEMENT DE TORSION (ASS) | 437 |
| COURONNE ET DIFFERENTIEL (ASS) | 438 |
| DIFFERENTIEL (ASS) | 440 |
| GOULOTTE DE REMPLISSAGE D'HUILE DE TRANSMISSION | 442 |
| FILTRE À HUILE ET MONTAGE (ASS) | 443 |
| FILTRE A HUILE (ASS) | 447 |
| RÉDUCTEURS (ASS) | 450 |
| CANALISATIONS D'HUILE DE BOÎTE (ASS) | 452 |
| ROUE - GROUPE DE MONTAGE | 464 |
| POMPE A ENGRENAGES (ASS) | 465 |
| ÉCRAN MAGNÉTIQUE (ASS) | 467 |
| ARBRE D'ENTRAÎNEMENT (ASS) | 468 |
| ARBRE D'ENTRÉE (ASS) | 469 |
| TANDEM ET CARTER (ASS) | 470 |
| BOÎTE DE VITESSES (VERSION) | 472 |
| JOINT UNIVERSEL (ASS) | 476 |
| SOUPAPE ET MONTAGE DE VERROUILLAGE DE DIF. (ASS) | 477 |
| SOUPAPE SELECTRICE ET REGULATRICE DE PRESSION | 478 |
| SOUPAPE - SOLÉNOÏDE (ASS) | 487 |
| PNEU - GROUPE DE VALVE | 489 |
| DISTRIBUTEUR DE BOITE (ASS) | 490 |
| ROUE ET PNEU (VERSION) | 494 |
| ROUE ET PNEU (ASS) | 508 |
| ROUE (VERSION) | 537 |
| JANTE (ASS) | 539 |
| **CHÂSSIS ET BENNE** | 543 |
| ESSIEU AV (ASS) | 543 |
| SUPPORT DE LAME (ASS) | 549 |
| SUPPORT - MONTAGE (ASS) | 549 |
| CHÂSSIS ET CARTER (ASS) | 551 |
| COUVERCLE DE VISITE (ASS) | 553 |
| CARENAGE DE MOTEUR (ASS) | 556 |
| BOULONNERIE (ASS) | 561 |
| GARDE-BOUE ET SUPPORT (ASS) | 562 |
| BÂTI (ASS) | 564 |
| CHÂSSIS AV (ASS) | 565 |
| PROTÈGE-RADIATEUR ET SUPPORT (ASS) | 567 |
| BLINDAGE INFÉRIEUR (ASS) | 570 |
| BLINDAGE DES CANALISATIONS DES FREINS | 572 |
| PROTECTION DU RÉSERVOIR DE CARBURANT (ASS) | 573 |
| PROTECTION - ÉCLAIRAGE (ASS) | 574 |
| PROTECTION DE PLATE-FORME (ASS) | 575 |
| ATTELAGE D'ARTICULATION (ASS) | 586 |
| ATTELAGE-REMORQUAGE (ASS) | 588 |
| CANALISATIONS DE GRAISSAGE (ASS) | 590 |
| ARTICULATION DE DIRECTION (ASS) | 591 |
| MONTAGE - IMMATRICULATION (ASS) | 593 |
| ÉCRAN D'ARBRE MOTEUR (ASS) | 595 |
| MARCHEPIED (ASS) | 596 |
| VERSION DE SUPPORT DE CHÂSSIS ARRIÈRE | 597 |
| SUPPORT DU RESERVOIR DE CARBURANT (ASS) | 600 |
| PLATE-FORME - SUPPORT (ASS) | 603 |
| **CIRCUIT DE FREINAGE** | 605 |
| DESHYDRATEUR (ASS) | 605 |
| FREIN DE STATIONNEMENT (ASS) | 609 |
| FREIN DE MANOEUVRE (ASS) | 611 |
| COMMANDE DE FREIN DE STATIONNEMENT (ASS) | 613 |
| FREIN DE MANOEUVRE - COMMANDE (ASS) | 615 |
| KIT DE GONFLAGE | 619 |
| RÉSERVOIR PNEUMATIQUE (ASS) | 620 |
| DISTRIBUTEUR D'AIR (ASS) | 624 |
| SOUPAPE - SOLÉNOÏDE (ASS) | 626 |
| **CIRCUIT HYDRAULIQUE** | 628 |
| ACCUMULATEUR ET MONTAGE - HYDRAULIQUE (ASS) | 628 |
| ACCUMULATEUR - AMORTISSEUR DE LAME (VERSION) | 629 |
| ACCUMULATEUR (ASS) | 629 |
| ACCUMULATEUR HYDRAULIQUE (ASS) | 631 |
| ACCUMULATEUR - DIRECTION (ASS) | 634 |
| COMMANDE HYDRAULIQUE (VERSION) | 635 |
| *CONTROL GP-HYDRAULIC LOCKOUT | 642 |
| VÉRIN D'ARTICULATION ET MONTAGE (ASS) | 643 |
| VÉRIN DE RELEVAGE DE LAME ET MONTAGE (ASS) | 644 |


* TRADUCTION NON DISPONIBLE AU MOMENT DE LA PUBLICATION

# TABLE DES MATIÈRES


| Désignation | Page |
|---|---|
| VÉRIN D'INCLINAISON DE LAME ET MONTAGE (ASS) | 645 |
| VÉRIN DE DÉPORT DE CERCLE ET MONTAGE (ASS) | 646 |
| VÉRIN DE SCARIFICATEUR ET MONTAGE (ASS) | 647 |
| VÉRIN DE DÉPORT DE LAME (ASS) | 648 |
| VERIN DE DIRECTION ET MONTAGE (ASS) | 650 |
| VÉRIN D'INCLINAISON DE ROUE ET MONTAGE (ASS) | 651 |
| VÉRIN D'ARTICULATION (ASS) | 652 |
| VÉRIN D'INCIDENCE DE LAME (ASS) | 653 |
| VÉRIN DE DÉPORT DE CERCLE (ASS) | 654 |
| VÉRIN DE LEVAGE (ASS) | 656 |
| VERIN DE RIPPER (ASS) | 657 |
| VÉRIN DE SCARIFICATEUR (ASS) | 658 |
| VÉRIN DE DÉPORT DE LAME (ASS) | 659 |
| VERIN DE DIRECTION (ASS) | 660 |
| VÉRIN D'INCLINAISON DE ROUE (ASS) | 663 |
| DISPOSITIF D'ARRÊT DE DISTRIBUTEUR (ASS) | 664 |
| ENTRAÎNEMENT DE CERCLE (ASS) | 667 |
| VERSION HYDRAULIQUE | 671 |
| CANALISATIONS D'ACCUMULATEUR (ASS) | 672 |
| CANALISATIONS HYDRAULIQUES (ASS) | 674 |
| CANALISATIONS HYDRAULIQUES DE VENTILATEUR (ASS) | 690 |
| CANALISATIONS DE POMPE (ASS) | 694 |
| CANALISATIONS DU RIPPER (ASS) | 703 |
| CANALISATION DE DIRECTION AUXILIAIRE | 708 |
| CANALISATIONS DE DIRECTION (ASS) | 710 |
| VERROUILLAGE DE DÉPORT DE CERCLE (ASS) | 713 |
| COLLECTEUR - COMMANDE (ASS) | 714 |
| MOTEUR À ENGRENAGES (ASS) | 719 |
| MOTEUR HYDRAULIQUE (ASS) | 720 |
| POMPE DE DIRECTION AUXILIAIRE ET MONTAGE (ASS) | 722 |
| POMPE ET MONTAGE - PISTON (ASS) | 723 |
| POMPE DE DIRECTION AUXILIAIRE ET MONTAGE (ASS) | 724 |
| POMPE A PISTONS (ASS) | 725 |
| GROUPE DE ROTATION DE POMPE | 729 |
| ARBRE D'ENTRAÎNEMENT DE POMPE (ASS) | 731 |
| DIRECTION AUXILIAIRE (VERSION) | 732 |
| PLATEAU OSCILLANT (ASS) | 733 |
| GROUPE D'ORIENTATION | 734 |
| RÉSERVOIR HYDRAULIQUE ET FILTRE (ASS) | 737 |
| RÉSERVOIR HYDRAULIQUE ET MONTAGE (ASS) | 739 |
| SOUPAPE ET TIMONERIE (ASS) | 740 |
| DISTRIBUTEUR 4 ÉLÉMENTS (ASS) | 907 |
| DISTRIBUTEUR 5 ÉLÉMENTS (ASS) | 918 |
| DISTRIBUTEUR 6 ÉLÉMENTS (ASS) | 934 |
| DISTRIBUTEUR 7 ÉLÉMENTS (ASS) | 952 |
| SOUPAPE DE COMBINAISON (ASS) | 970 |
| DISTRIBUTEUR (ASS) | 974 |
| DISTRIBUTEUR DE POMPE (ASS) | 1022 |
| SOUPAPE DE PURGE (ASS) | 1026 |
| CLAPET DE DECHARGE (ASS) | 1028 |
| VANNE PILOTE (ASS) | 1043 |
| SOUPAPE - SOLÉNOÏDE (ASS) | 1045 |
| **ÉQUIPEMENTS** | 1047 |
| CERCLE (ASS) | 1047 |
| BARRE D'ATTELAGE (ASS) | 1051 |
| MONTAGE DE COMMANDE DE PENTE (ASS) | 1053 |
| PLAQUE DE POUSSÉE (ASS) | 1054 |
| **OUTILS DE TRAVAIL** | 1057 |
| EMBOUT (ASS) | 1057 |
| EMBOUT D'EXTRÉMITÉ (ASS) | 1061 |
| LAME (ASS) | 1062 |
| SUPPORT DE SCARIFICATEUR (ASS) | 1066 |
| LAME DE COUPE (ASS) | 1067 |
| RALLONGE DE LAME (ASS) | 1069 |
| LEVAGE - LAME (ASS) | 1075 |
| MONTAGE DE COMMANDE DE PENTE (ASS) | 1077 |
| MONTAGE DE RIPPER (ASS) | 1078 |
| MONTAGE D'AILERON CHASSE-NEIGE (ASS) | 1079 |
| RIPPER (VERSION) | 1080 |
| RIPPER (ASS) | 1081 |
| SCARIFICATEUR (VERSION) | 1083 |
| SCARIFICATEUR (ASS) | 1084 |
| DENT DE RIPPER (ASS) | 1091 |
| DENT DE SCARIFICATEUR (ASS) | 1092 |
| **POSTE DE CONDUITE** | 1093 |
| VISIÈRE - GROUPE AUXILIAIRE | 1093 |
| CLIMATISEUR ET MONTAGE (ASS) | 1095 |
| CLIMATISEUR (VERSION) | 1095 |
| CLIMATISEUR (ASS) | 1096 |
| ACCOUDOIR (ASS) | 1100 |


* TRADUCTION NON DISPONIBLE AU MOMENT DE LA PUBLICATION

# TABLE DES MATIÈRES


| Désignation | Page |
|---|---|
| CABINE (VERSION) | 1102 |
| CABINE SANS ROPS (VERSION) | 1102 |
| CABINE (ASS) | 1102 |
| COMPRESSEUR ET MONTAGE - RÉFRIGÉRANT (ASS) | 1104 |
| COMPRESSEUR DE REFRIGERANT (ASS) | 1105 |
| CONDENSATEUR ET MONTAGE (RÉFRIGÉRANT) | 1106 |
| CONSOLE DE CONDUITE (ASS) | 1107 |
| COMMANDE D'EMBRAYAGE (ASS) | 1111 |
| COMMANDE DE DIRECTION (ASS) | 1113 |
| COMMANDE DE BOITE DE VITESSES (ASS) | 1114 |
| COMMANDE DE MONITEUR NON PROGRAMMÉE (ASS) | 1118 |
| VERSION DE TRANSFORMATION - SANS ROPS | 1119 |
| PORTIÈRE DE CABINE (ASS) | 1120 |
| CONDUIT ET COMMANDE (ASS) | 1133 |
| CONDUIT (ASS) | 1134 |
| RALLONGE DU DOSSIER DE SIEGE | 1135 |
| VENTILATEUR DE CABINE (ASS) | 1137 |
| VENTILATEUR DÉGIVREUR (ASS) | 1139 |
| FILTRE À AIR DE CABINE (ASS) | 1142 |
| MARTEAU ET MONTAGE (ASS) | 1143 |
| CHAUFFAGE ET MONTAGE - CABINE (ASS) | 1145 |
| CHAUFFAGE DE CABINE (VERSION) | 1145 |
| CHAUFFAGE DE CABINE (ASS) | 1147 |
| KLAXON PNEUMATIQUE (ASS) | 1155 |
| SUSPENSION DE SIEGE - CARTER (ASS) | 1160 |
| MONTAGE DE RADIO (VERSION) | 1163 |
| MONTAGE DE RADIO (ASS) | 1164 |
| ISOLATION DE CABINE (ASS) | 1166 |
| CABINE - REVÊTEMENT (ASS) | 1168 |
| CANALISATIONS DE CLIMATISEUR (ASS) | 1183 |
| CANALISATIONS DE CHAUFFAGE (ASS) | 1185 |
| LITTÉRATURE (ASS) | 1189 |
| VOLET - CABINE (ASS) | 1190 |
| RÉTROVISEUR (ASS) | 1191 |
| MODULE - QUATRE INSTRUMENTS (ASS) | 1204 |
| MODULE D'INDICATEUR DE VITESSE ET COMPTE-TOURS (ASS) | 1205 |
| MONTAGE DE CABINE (ASS) | 1206 |
| MONTAGE DU TOIT ROPS (ASS) | 1207 |
| COUVERCLE INFÉRIEUR-DOSSIER (ASS) | 1210 |
| SIEGE - COUVERCLE INFERIEUR (ASS) | 1211 |
| TABLEAU DE BORD (ASS) | 1213 |
| RADIO (ASS) | 1224 |
| TOIT ROPS FERME (VERSION) | 1224 |
| ROPS OUVERTE (VERSION) | 1226 |
| CABINE ROPS FERMÉE (ASS) | 1227 |
| TOIT ROPS - OUVERT (ASS) | 1230 |
| PARE-SOLEIL (ASS) | 1231 |
| CEINTURE DE SECURITE (ASS) | 1232 |
| SIÈGE (ASS) | 1234 |
| SIÈGE AVEC SUSPENSION (ASS) | 1238 |
| SUPPORT DE SIÈGE (ASS) | 1246 |
| SIÈGE AVEC SUSPENSION (ASS) | 1248 |
| LAVE-GLACE - VITRE (ASS) | 1252 |
| VITRE (ASS) | 1257 |
| VITRE DE CABINE (ASS) | 1261 |
| ESSUIE-GLACE (VERSION) | 1266 |
| ESSUIE-GLACE (ASS) | 1267 |
| **MATÉRIEL ET FOURNITURES D'ENTRETIEN** | 1288 |
| COFFRE A OUTILS (ASS) | 1288 |
| PLAQUE SIGNALÉTIQUE (ASS) | 1289 |
| CRIC - HYDRAULIQUE | 1290 |
| PLAQUES SIGNALETIQUES ET AUTOCOLLANTS (ASS) | 1291 |
| **INDEX DE NUMÉROS DE PIÈCES** | B1 |


* TRADUCTION NON DISPONIBLE AU MOMENT DE LA PUBLICATION

# CONTENIDO


| Nombre | Página |
|---|---|
| **INFORMACIÓN GENERAL** | A31 |
| **ALTERNATIVAS DE REPARACIÓN** | A45 |
| **ADITIVOS DE REFRIGERANTE SUPLEMENTARIOS** | A50 |
| **PIEZAS DE MANTENIMIENTO** | A77 |
| **INDICE** | A145 |
| **CONFIGURACIÓN DE MÁQUINA** | 1 |
| CONFIGURACIÓN DE TRANSFORMACIÓN PARA CERTIFICACIÓN | 1 |
| *CONVERSION AR-MACHINE | 3 |
| CONFIGURACIÓN GENERAL | 3 |
| CONFIGURACIÓN PARA CARRETERA | 5 |
| MOTONIVELADORA PARA LA NIEVE (CONFIG) | 6 |
| **CONFIGURACIÓN DE MOTOR** | 7 |
| CONFIGURACIÓN DE MOTORES | 7 |
| **MOTOR BÁSICO** | 12 |
| COMPRESOR DE AIRE (GR) | 12 |
| TENSOR DE CORREA (GR) | 18 |
| ÁRBOL DE LEVAS (GR) | 22 |
| TAPA DEL BLOQUE MOTOR (GR) | 23 |
| CIGÜEÑAL (GR) | 25 |
| BLOQUE MOTOR (CONJ) | 27 |
| BLOQUE MOTOR (GR) | 29 |
| CULATA DE CILINDROS (CONJ) | 31 |
| CULATA DE CILINDROS (GR) | 33 |
| ACCESORIOS - IMPULSOR DE (GR) | 35 |
| CULATA DE CILINDROS - TORNILLERÍA DE LA (GR) | 36 |
| VOLANTE (GR) | 37 |
| ENGRANAJE DELANTERO (GR) | 38 |
| VOLANTE - CAJA DE (GR) | 39 |
| CAJA DELANTERA (GR) | 41 |
| VÁLVULA DE LEVANTAMIENTO (GR) | 43 |
| CÁNCAMOS DE LEVANTAMIENTO DEL MOTOR (GR) | 44 |
| MONTAJE DEL MOTOR Y LA TRANSMISIÓN (GR) | 45 |
| MECANISMO DE LA VÁLVULA - MONTAJE DEL (GR) | 46 |
| CÁRTER - COLECTOR DEL (GR) | 47 |
| PANEL DE INSONORIZACIÓN (GR) | 50 |
| PISTÓN Y BIELA (GR) | 51 |
| TAPÓN DEL BLOQUE MOTOR (GR) | 52 |
| TAPÓN DEL MOTOR (GR) | 53 |
| BALANCÍN (GR) | 55 |
| SELLO DE CIGÜEÑAL (GR) | 57 |
| MOTOR - SOPORTE DEL (GR) | 58 |
| INSONORIZADOR (GR) | 59 |
| MECANISMO DE VÁLVULAS (GR) | 60 |
| **SISTEMA DE LUBRICACIÓN** | 62 |
| FILTRO DE ACEITE - BASE DEL (GR) | 62 |
| TUBO DE LLENADO DE ACEITE (GR) | 65 |
| FILTRO DE ACEITE DEL MOTOR (GR) | 66 |
| INDICADOR DEL NIVEL DE ACEITE (VARILLA) (GR) | 68 |
| TUBERIAS DE DRENAJE DE ACEITE DE MOTOR (GR) | 69 |
| TURBOCOMPRESOR - TUBERÍAS DE ACEITE DEL (GR) | 70 |
| BOMBA DE ACEITE DEL MOTOR (GR) | 71 |
| **SISTEMA DE ENFRIAMIENTO** | 73 |
| CONFIGURACIÓN DE ENFRIAMIENTO | 73 |
| MOTOR Y VENTILADOR (GR) | 76 |
| TORNILLERIA DEL RADIADOR | 78 |
| REGULADOR Y CAJA (GR) | 79 |
| TUBERÍAS DEL AGUA (GR) | 81 |
| *PLATE GP-RADIATOR | 90 |
| BOMBA DE AGUA (GR) | 91 |
| RADIADOR (GR) | 93 |
| **SISTEMA DE ADMISIÓN Y ESCAPE DE AIRE** | 95 |
| GRUPO DE POSTENFRIAMIENTO Y MONTAJE | 95 |
| FILTRO DE AIRE (GR) | 96 |
| AIRE - TUBERÍAS DE (GR) | 99 |
| MÚLTIPLE DE ESCAPE (GR) | 101 |
| MÚLTIPLE DE ADMISIÓN (GR) | 102 |
| SILENCIADOR (GR) | 103 |
| ANTEFILTRO (GR) | 105 |
| ANTEFILTRO (CONJ) | 106 |
| TURBOCOMPRESOR (GR) | 107 |
| **SISTEMA DE COMBUSTIBLE** | 109 |
| CONTROL DE REGULADOR (GR) | 109 |
| TORNILLERÍA DEL TANQUE DE COMBUSTIBLE | 111 |
| FILTRO DE COMBUSTIBLE (GR) | 113 |
| FILTRO DE COMBUSTIBLE Y SEPARADOR DE AGUA (GR) | 114 |
| TUBERÍAS DE COMBUSTIBLE (GR) | 115 |
| TUBERÍAS DEL FILTRO DE COMBUSTIBLE | 118 |


* NO HAY TRADUCCION DISPONIBLE EN EL MOMENTO DE LA IMPRESION

# CONTENIDO


| Nombre | Página |
|---|---|
| TUBERÍAS DE INYECCIÓN DE COMBUSTIBLE (GR) | 121 |
| BOMBA DE TRANSFERENCIA DE COMBUSTIBLE Y MONTAJE (GR) | 123 |
| BOMBA DE INYECCIÓN DE COMBUSTIBLE (GR) | 124 |
| BOMBA DE CEBADO DE COMBUSTIBLE (GR) | 125 |
| COMBUSTIBLE - TANQUE DE (GR) | 127 |
| VÁLVULA DE RETENCIÓN (GR) | 136 |
| **SISTEMA ELÉCTRICO Y DE ARRANQUE** | 139 |
| ALARMA (GR) | 139 |
| CARGA - ALTERNADOR DE (GR) | 141 |
| BATERÍA (GR) | 147 |
| BLOQUE DE EMPALME (GR) | 151 |
| DISYUNTOR DE CIRCUITO (GR) | 152 |
| CONTROL ELECTRÓNICO DEL MOTOR Y MONTAJE | 155 |
| CONTROL ELECTRÓNICO DEL MOTOR (GR) | 157 |
| CONTROL DE LA DIRECCION SECUNDARIA (GR) | 161 |
| CONTROL NO PROGRAMADO (GR) | 162 |
| CONVERTIDOR ELÉCTRICO (CONFIG) | 163 |
| CONVERTIDOR ELÉCTRICO (GR) | 164 |
| ELECTRONICA DE MONITOR (GR) | 169 |
| TREN DE FUERZA-GRUPO ELECTRÓNICO | 169 |
| CONTROL DE GRADO, CONFIGURACIÓN | 170 |
| AGUA DE LAS CAMISAS - CALENTADOR DEL (GR) | 172 |
| BALIZA DE ADVERTENCIA (GR) - INSTALACIÓN | 175 |
| LÁMPARA DEL TECHO (GR) | 177 |
| REFLECTOR (GR) | 178 |
| LÁMPARA DE FARO DELANTERO (GR) | 184 |
| LÁMPARA DE LUZ DELANTERA Y DE SEÑAL (GR) | 190 |
| LAMPARA MARCADORA (GR) | 194 |
| LAMPARA DE PLACA DE REGISTRO (GR) | 195 |
| LUZ DE SEÑAL DE GIRO (GR) | 196 |
| LÁMPARA DE BALIZA DE ADVERTENCIA (GR) | 199 |
| REFLECTORES (CONFIG) | 201 |
| LUCES DE REFLECTOR Y SEÑAL (CONFIG) | 203 |
| LUCES DE RETROCESO (GR) | 204 |
| LUCES DE LA CABINA (GR) | 208 |
| LUCES DE REFLECTOR (GR) | 210 |
| LUCES DE DESPLAZAMIENTO (GR) | 259 |
| LUCES DE GIRO (GR) | 263 |
| LUCES DE ADVERTENCIA (GR) | 265 |
| LUZ DE BALIZA (GR) | 273 |
| MOTOR ELÉCTRICO (GR) | 275 |
| DETECTOR DE POSICIÓN (SISTEMA DE COMBUST.) (GR) | 277 |
| SENSOR DE PRESIÓN (GR) | 279 |
| SENSOR DE VELOCIDAD (GR) | 284 |
| SENSOR DE TEMPERATURA (GR) | 287 |
| AUXILIAR DE ARRANQUE CON ÉTER (GR) | 290 |
| MOTOR DE ARRANQUE ELÉCTRICO (GR) | 294 |
| INTERRUPTOR DE DERIVACIÓN | 297 |
| DISYUNTOR (GR) | 298 |
| INTERRUPTOR DE LUZ (GR) | 299 |
| INTERRUPTOR MAGNÉTICO (GR) | 301 |
| INTERRUPTOR DEL LIMPIADOR (GR) | 303 |
| GRUPO DE CABLES, HOJA AMORTIGUADORA | 304 |
| CABLES DE LA CABINA (GR) | 306 |
| CABLES DEL MOTOR (GR) | 317 |
| CABLES DELANTEROS (GR) | 321 |
| CABLE GR-GRADO DE CONTROL | 338 |
| CABLES POSTERIORES (GR) | 339 |
| ALAMBRADO DE LUCES TRASERAS (GR) | 378 |
| CABLES DE LA DIRECCIÓN SECUNDARIA | 385 |
| CABLES DE LA CONSOLA DE CAMBIOS (GR) | 387 |
| CABLES DE LA CONSOLA DE DIRECCIÓN (GR) | 399 |
| *WIRING GP-TRANSMISSION | 406 |
| CABLES DE INYECTOR (GR) | 407 |
| **TREN DE FUERZA** | 408 |
| GRUPO DE APLICACIÓN, TREN DE FUERZA | 408 |
| CAMBIO AUTOMÁTICO DE VELOCIDADES (CONFIG) | 408 |
| CAJA Y PIEZAS DE LA TRANSMISIÓN (GR) | 409 |
| CADENA DE IMPULSIÓN (GR) | 417 |
| EMBRAGUE DE LA TRANSMISIÓN (GR) | 418 |
| CONTROL DE TRABA DEL DIFERENCIAL (GR) | 428 |
| CONTROL HIDRÁULICO DE LA TRANSMISIÓN (GR) | 430 |


* NO HAY TRADUCCION DISPONIBLE EN EL MOMENTO DE LA IMPRESION

# CONTENIDO


| Nombre | Página |
|---|---|
| ENFRIADOR DE ACEITE DE LA TRANSMISIÓN (GR) | 432 |
| ACOPLAMIENTO TORSIONAL (GR) | 437 |
| DIFERENCIAL Y CORONA (GR) | 438 |
| DIFERENCIAL (GR) | 440 |
| TUBO DE LLENADO DE ACEITE DE LA TRANSMISIÓN (GR) | 442 |
| FILTRO DE ACEITE Y MONTAJE (GR) | 443 |
| FILTRO DE ACEITE (GR) | 447 |
| MANDO FINAL (GR) | 450 |
| TUBERÍAS DE ACEITE DE LA TRANSMISIÓN (GR) | 452 |
| MONTAJE DE RUEDA (GR) | 464 |
| BOMBA DE ENGRANAJES (GR) | 465 |
| REJILLA MAGNÉTICA (GR) | 467 |
| EJE DE MANDO (GR) | 468 |
| EJE DE ENTRADA (GR) | 469 |
| TÁNDEM Y CUBIERTA (GR) | 470 |
| TRANSMISION (CONFIG) | 472 |
| JUNTA UNIVERSAL (GR) | 476 |
| VÁLVULA DE LA TRABA DEL DIFERENCIAL Y MONTAJE (GR) | 477 |
| VÁLVULA SELECTORA Y DE CONTROL DE PRESIÓN (GR) | 478 |
| VÁLVULA DE SOLENOIDE (GR) | 487 |
| VÁLVULA DEL NEUMÁTICO (GR) | 489 |
| VÁLVULA DE CONTROL DE LA TRANSMISIÓN (GR) | 490 |
| RUEDA Y LLANTA (CONFIG) | 494 |
| RUEDA Y NEUMÁTICO (GR) | 508 |
| RUEDA (CONFIG) | 537 |
| RUEDA (GR) | 539 |
| **BASTIDOR Y CAJA** | 543 |
| EJE DELANTERO (GR) | 543 |
| SOPORTE DE LA HOJA (GR) | 549 |
| SOPORTE DE MONTAJE (GR) | 549 |
| CAJA Y BASTIDOR (GR) | 551 |
| GRUPO DE TAPA, ACCESO | 553 |
| COMPARTIMIENTO DEL MOTOR (GR) | 556 |
| TORNILLERÍA (GR) | 561 |
| GUARDABARROS Y SOPORTE (GR) | 562 |
| BASTIDOR (GR) | 564 |
| BASTIDOR DELANTERO (GR) | 565 |
| PROTECTOR Y SOPORTE DEL RADIADOR (GR) | 567 |
| PROTECTOR INFERIOR (GR) | 570 |
| PROTECTOR DE LAS TUBERÍAS DE LOS FRENOS (GR) | 572 |
| PROTECTOR DEL TANQUE DE COMBUSTIBLE (GR) | 573 |
| PROTECTOR DE LAS LUCES (GR) | 574 |
| PROTECTOR DE LA PLATAFORMA (GR) | 575 |
| ENGANCHE ARTICULADO (GR) | 586 |
| ENGANCHE DE REMOLQUE (GR) | 588 |
| TUBERÍAS DE LUBRICACIÓN (GR) | 590 |
| TIRANTE DE DIRECCIÓN (GR) | 591 |
| MONTAJE-REGISTRO (GR) | 593 |
| PROTECTOR TÉRMICO DEL EJE DE MANDO (GR) | 595 |
| ESTRIBO DEL OPERADOR (GR) | 596 |
| CONFIGURACIÓN DE SOPORTE DE CHASIS TRASERO | 597 |
| SOPORTE DEL TANQUE DE COMBUSTIBLE (GR) | 600 |
| SOPORTE DE PLATAFORMA (GR) | 603 |
| **SISTEMA DE FRENOS** | 605 |
| DESHIDRATADOR (GR) | 605 |
| FRENO DE ESTACIONAMIENTO (GR) | 609 |
| FRENO DE SERVICIO (GR) | 611 |
| CONTROL DEL FRENO DE ESTACIONAMIENTO | 613 |
| FRENO DE SERVICIO - CONTROL (GR) | 615 |
| JUEGO DE INFLADO DE AIRE | 619 |
| TANQUE DE AIRE (GR) | 620 |
| CONTROL DE AIRE-VÁLVULA | 624 |
| VÁLVULA DE SOLENOIDE (GR) | 626 |
| **SISTEMA HIDRÁULICO** | 628 |
| ACUMULADOR HIDRAULICO Y MONTAJE (GR) | 628 |
| ACUMULADOR DE AMORTIGUACIÓN DE LA HOJA (CONFIG) | 629 |
| ACUMULADOR (GR) | 629 |
| ACUMULADOR HIDRAULICO (GR) | 631 |
| ACUMULADOR DE LA DIRECCIÓN (GR) | 634 |
| CONTROL HIDRÁULICO (CONFIG) | 635 |
| *CONTROL GP-HYDRAULIC LOCKOUT | 642 |
| CILINDRO DE ARTICULACIÓN Y MONTAJE (GR) | 643 |
| CILINDRO DE LEVANTAMIENTO DE HOJA Y MONTAJE (GR) | 644 |
| CILINDRO DE LA PUNTA DE LA HOJA Y MONTAJE (GR) | 645 |
| CILINDRO DE DESPLAZAMIENTO DEL CÍRCULO Y MONTAJE (GR) | 646 |
| CILINDRO DE ESCARIFICADOR Y MONTAJE (GR) | 647 |
| CILINDRO DE DESPLAZAMIENTO LATERAL Y MONTAJE (GR) | 648 |


* NO HAY TRADUCCION DISPONIBLE EN EL MOMENTO DE LA IMPRESION

# CONTENIDO


| Nombre | Página |
|---|---|
| CILINDRO DE DIRECCIÓN Y MONTAJE (GR) | 650 |
| CILINDRO DE INCLINACIÓN DE RUEDA Y MONTAJE (GR) | 651 |
| ARTICULACIÓN DE CILINDRO (GR) | 652 |
| CILINDRO DE INCLINACIÓN DE LA HOJA (GR) | 653 |
| CILINDRO DE DESPLAZAMIENTO DEL CÍRCULO (GR) | 654 |
| CILINDRO DE LEVANTAMIENTO (GR) | 656 |
| CILINDRO DE DESGARRADOR (GR) | 657 |
| CILINDRO DE ESCARIFICADOR (GR) | 658 |
| CILINDRO DE DESPLAZAMIENTO LATERAL (GR) | 659 |
| CILINDRO DE DIRECCIÓN (GR) | 660 |
| CILINDRO DE INCLINACIÓN DE LAS RUEDAS (GR) | 663 |
| TOPE DE VÁLVULA DE CONTROL (GR) | 664 |
| MANDO DEL CIRCULO (GR) | 667 |
| HIDRÁULICA (CONFIG) | 671 |
| TUBERÍAS DEL ACUMULADOR (GR) | 672 |
| TUBERÍAS HIDRÁULICAS (GR) | 674 |
| TUBERÍAS HIDRÁULICAS DEL VENTILADOR (GR) | 690 |
| BOMBA - TUBERÍAS DE (GR) | 694 |
| TUBERÍAS DEL DESGARRADOR (GR) | 703 |
| TUBERÍAS DE LA DIRECCIÓN SECUNDARIA (GR) | 708 |
| TUBERÍAS DE DIRECCIÓN (GR) | 710 |
| TRABA DE DESPLAZAMIENTO DEL CIRCULO (GR) | 713 |
| CONTROL DEL MULTIPLE (GR) | 714 |
| MOTOR DE ENGRANAJES (GR) | 719 |
| MOTOR HIDRÁULICO DE ENGRANAJES (GR) | 720 |
| BOMBA Y MOTOR DE DIRECCION SECUNDARIA (GR) | 722 |
| BOMBA Y MONTAJE DEL PISTÓN (GR) | 723 |
| BOMBA Y MONTAJE DE LA DIRECCIÓN SECUNDARIA (GR) | 724 |
| BOMBA DE PISTONES (GR) | 725 |
| GRUPO GIRATORIO DE BOMBA | 729 |
| EJE DE MANDO DE LA BOMBA (GR) | 731 |
| DIRECCIÓN SECUNDARIA (CONFIG) | 732 |
| PLATO OSCILANTE (GR) | 733 |
| UNIÓN GIRATORIA (GR) | 734 |
| TANQUE Y FILTRO HIDRÁULICOS (GR) | 737 |
| TANQUE HIDRÁULICO Y MONTAJE (GR) | 739 |
| VÁLVULA Y VARILLAJE (GR) | 740 |
| GRUPO DE 4 VÁLVULAS HIDRÁULICAS | 907 |
| BANCADA 5 (GR) | 918 |
| VÁLVULAS HIDRÁULICAS - GRUPO DE 6 | 934 |
| VÁLVULAS HIDRÁULICAS - GRUPO DE 7 | 952 |
| VÁLVULA DE COMBINACIÓN (GR) | 970 |
| VÁLVULA DE CONTROL (GR) | 974 |
| VALVULA DE CONTROL DE LA BOMBA (GR) | 1022 |
| VALVULA DE PURGA (GR) | 1026 |
| VÁLVULA DE ALIVIO (GR) | 1028 |
| VÁLVULA DE LANZADERA (GR) | 1043 |
| VÁLVULA DE SOLENOIDE (GR) | 1045 |
| **IMPLEMENTOS** | 1047 |
| CÍRCULO (GR) | 1047 |
| BARRA DE TIRO (GR) | 1051 |
| *MOUNTING GP-GRADE CONTROL | 1053 |
| PLANCHA DE EMPUJE (GR) | 1054 |
| **HERRAMIENTAS** | 1057 |
| CANTONERA (GR) | 1057 |
| CANTONERA DE EXTREMO (GR) | 1061 |
| HOJA (GR) | 1062 |
| SOPORTE DEL ESCARIFICADOR (GR) | 1066 |
| CUCHILLA (GR) | 1067 |
| EXTENSIÓN DE LA HOJA (GR) | 1069 |
| LEVANTAMIENTO - HOJA DE (GR) | 1075 |
| *MOUNTING GP-GRADE CONTROL | 1077 |
| MONTAJE DEL DESGARRADOR (GR) | 1078 |
| GRUPO DE MONTAJE DE ALA PARA NIEVE | 1079 |
| DESGARRADOR (CONFIG) | 1080 |
| DESGARRADOR (GR) | 1081 |
| ESCARIFICADOR (CONFIG) | 1083 |
| GRUPO ESCARIFICADOR | 1084 |
| DIENTE DE DESGARRADOR (GR) | 1091 |
| DIENTE DE ESCARIFICADOR (GR) | 1092 |
| **PUESTO DEL OPERADOR** | 1093 |
| ACCESORIOS DE LA CABINA (GR) | 1093 |
| ACONDICIONADOR DE AIRE Y MONTAJE (GR) | 1095 |
| ACONDICIONADOR DE AIRE (CONFIG) | 1095 |
| ACONDICIONADOR DE AIRE (GR) | 1096 |
| POSABRAZOS (GR) | 1100 |
| CABINA (CONFIG) | 1102 |
| CABINA SIN ROPS (CONFIG) | 1102 |


* NO HAY TRADUCCION DISPONIBLE EN EL MOMENTO DE LA IMPRESION

# CONTENIDO


| Nombre | Página |
|---|---|
| CABINA (GR) | 1102 |
| COMPRESOR DE REFRIGERANTE Y GRUPO DE MONTAJE | 1104 |
| COMPRESOR DE REFRIGERANTE (GR) | 1105 |
| CONDENSADOR DEL REFRIGERANTE Y MONTAJE (GR) | 1106 |
| CONSOLA DEL OPERADOR (GR) | 1107 |
| CONTROL DEL EMBRAGUE (GR) | 1111 |
| CONTROL DE DIRECCIÓN (GR) | 1113 |
| CONTROL DE LA TRANSMISIÓN (GR) | 1114 |
| GRUPO DE CONTROL-MONITOR NO PROGRAMADO | 1118 |
| CONJUNTO DE MODIFICACIÓN (SIN ROPS) | 1119 |
| PUERTA DE CABINA | 1120 |
| CONDUCTO Y CONTROL (GR) | 1133 |
| CONDUCTO (GR) | 1134 |
| EXTENSIÓN DEL RESPALDO (GR) | 1135 |
| VENTILADOR DE CIRCULACION | 1137 |
| VENTILADOR DESCONGELADOR (GR) | 1139 |
| FILTRO DE AIRE DE LA CABINA (GR) | 1142 |
| MARTILLO Y MONTAJE (GR) | 1143 |
| CALEFACCIÓN Y MONTAJE DE LA CABINA (GR) | 1145 |
| CALEFACCIÓN DE LA CABINA (CONFIG) | 1145 |
| CALEFACCIÓN DE LA CABINA (GR) | 1147 |
| BOCINA DE AIRE (GR) | 1155 |
| CAJA DE LA SUSPENSIÓN DEL ASIENTO (GR) | 1160 |
| INSTALACIÓN DE RADIO (CONFIG) | 1163 |
| INSTALACIÓN DE RADIO (GR) | 1164 |
| GRUPO DE AISLAMIENTO DE LA CABINA | 1166 |
| REVESTIMIENTO DE LA CABINA (GR) | 1168 |
| TUBERÍAS DE ACONDICIONADOR DE AIRE (GR) | 1183 |
| TUBERÍAS DE LA CALEFACCIÓN (GR) | 1185 |
| PUBLICACIONES (GR) | 1189 |
| PERSIANAS DE LA CABINA (GR) | 1190 |
| RETROVISOR (GR) | 1191 |
| MODULO ELECTRÓNICO DE CUATRO INDICADORES (GR) | 1204 |
| MÓDULO DEL TACÓMETRO Y DEL VELOCÍMETRO (GR) | 1205 |
| GRUPO DE MONTAJE DE LA CABINA | 1206 |
| MONTAJE DE LA ESTRUCTURA ROPS (GR) | 1207 |
| GRUPO DE SOPORTE DEL RESPALDO | 1210 |
| CUBIERTA INFERIOR DEL ASIENTO DEL OPERADOR (GR) | 1211 |
| PANEL DE LA CABINA (GR) | 1213 |
| TABLERO DE INSTRUMENTOS (GR) | 1217 |
| RADIO (GR) | 1224 |
| INCLUYE ROPS (CONFIG) | 1224 |
| ESTRUCTURA ROPS ABIERTA | 1226 |
| CABINA ROPS CERRADA (GR) | 1227 |
| ESTRUCTURA ROPS ABIERTA (GR) | 1230 |
| PERSIANA PARA EL SOL (GR) | 1231 |
| CINTURÓN DE SEGURIDAD (GR) | 1232 |
| ASIENTO (GR) | 1234 |
| SUSPENSIÓN - ASIENTO CON (GR) | 1238 |
| SOPORTE DEL ASIENTO (GR) | 1246 |
| ASIENTO CON SUSPENSIÓN (GR) | 1248 |
| LAVAPARABRISAS DE LA VENTANA (GR) | 1252 |
| VENTANA (GR) | 1257 |
| VENTANA DE LA CABINA (GR) | 1261 |
| LIMPIAPARABRISAS (CONFIG) | 1266 |
| LIMPIAPARABRISAS DE LA VENTANA (GR) | 1267 |
| **EQUIPO Y SUMINISTRO DE SERVICIOS** | 1288 |
| CAJA DE HERRAMIENTAS (GR) | 1288 |
| ETIQUETA DE ADVERTENCIA (GR) | 1289 |
| GATO HIDRÁULICO | 1290 |
| CALCOMANÍAS Y PLACAS DE IDENTIFICACIÓN (GR) | 1291 |
| **INDICE DE NUMEROS DE PIEZA** | B1 |


* NO HAY TRADUCCION DISPONIBLE EN EL MOMENTO DE LA IMPRESION

# ÍNDICE


| Designação | Página |
|---|---|
| **INFORMAÇÃO GERAL** | A35 |
| **ALTERNATIVAS DE REPARO** | A46 |
| **ADITIVOS SUPLEMENTARES DO LÍQUIDO ARREFECEDOR** | A51 |
| **NOMENCLATURA DE PEÇAS INGLÊS-PORTUGUÊS** | A53 |
| **PEÇAS DE MANUTENÇÃO** | A87 |
| **ÍNDICE** | A166 |
| **MÁQUINA - ARRANJO** | 1 |
| GR. DE CONVERSÃO - CERTIFICADO | 1 |
| MÁQUINA - CONVERSÃO | 3 |
| ARRANJO GERAL | 3 |
| ARRANJO RODOVIÁRIO | 5 |
| AR. PARA NEVE - MOTONIVELADORA | 6 |
| **MOTOR - ARRANJO** | 7 |
| MOTOR | 7 |
| **MOTOR BÁSICO** | 12 |
| COMPRESSOR DE AR | 12 |
| TENSOR DA CORREIA | 18 |
| EIXO-COMANDO DE VÁLVULA | 22 |
| TAMPA - BLOCO DO MOTOR | 23 |
| VIRABREQUIM | 25 |
| BLOCO DO MOTOR | 27 |
| CABEÇOTE DO MOTOR | 31 |
| COMANDO DE ACESSÓRIOS | 35 |
| FIXADORES - CABEÇOTE DO MOTOR | 36 |
| VOLANTE DO MOTOR | 37 |
| ENGRENAGENS DE DISTRIBUIÇÃO | 38 |
| CAIXA DO VOLANTE DO MOTOR | 39 |
| CAIXA DIANTEIRA | 41 |
| TUCHO DA VÁLVULA | 43 |
| LEVANTAMENTO DO MOTOR | 44 |
| MONTAGEM - MOTOR E TRANSMISSÃO | 45 |
| MONTAGEM - MECANISMO DAS VÁLVULAS | 46 |
| CÁRTER DO ÓLEO DO MOTOR | 47 |
| PAINEL- REDUÇÃO DE RUÍDO | 50 |
| PISTÃO E BIELA | 51 |
| BUJÃO DO BLOCO DO CILINDRO | 52 |
| BUJÃO DO MOTOR | 53 |
| BALANCIM | 55 |
| RETENTOR DO VIRABREQUIM | 57 |
| SUPORTE DO MOTOR | 58 |
| REDUÇÃO DE RUÍDO | 59 |
| MECANISMO DAS VÁLVULAS | 60 |
| **SISTEMA DE LUBRIFICAÇÃO** | 62 |
| BASE DO FILTRO DE ÓLEO | 62 |
| BOCAL DE ENCHIMENTO DE ÓLEO DO MOTOR | 65 |
| FILTRO - ÓLEO DO MOTOR | 66 |
| INDICADOR - NÍVEL DO ÓLEO (VARETA) | 68 |
| TUBULAÇÕES - DRENAGEM DE ÓLEO DO MOTOR | 69 |
| TUBOS - ÓLEO DO TURBOALIMENTADOR | 70 |
| BOMBA DE ÓLEO - MOTOR | 71 |
| **SISTEMA DE ARREFECIMENTO** | 73 |
| ARREFECIMENTO | 73 |
| MOTOR E VENTILADOR | 76 |
| FIXADORES - RADIADOR | 78 |
| TERMOSTATO / REGULADOR DE TEMPERATURA | 79 |
| TUBOS - ÁGUA | 81 |
| PLACA-RADIADOR | 90 |
| BOMBA DE ÁGUA | 91 |
| RADIADOR | 93 |
| **SISTEMA DE ADMISSÃO DE AR E DE ESCAPE** | 95 |
| PÓS-ARREFECEDOR E MONTAGEM | 95 |
| PURIFICADOR DE AR | 96 |
| TUBOS - AR | 99 |
| COLETOR DE ESCAPE | 101 |
| COLETOR DE ADMISSÃO | 102 |
| SILENCIADOR | 103 |
| PRÉ-PURIFICADOR | 105 |
| PRÉ-PURIFICADOR COM TELA | 106 |
| TURBOALIMENTADOR | 107 |
| **SISTEMA DE COMBUSTÍVEL** | 109 |
| CONTROLE DO GOVERNADOR | 109 |
| FIXADORES - TANQUE DE COMBUSTÍVEL | 111 |
| FILTRO - COMBUSTÍVEL | 113 |
| FILTRO DE COMBUSTÍVEL E SEPARADOR DE ÁGUA | 114 |
| TUBOS - COMBUSTÍVEL | 115 |
| TUBOS - FILTRO DO COMBUSTÍVEL | 118 |
| TUBOS - INJEÇÃO DO COMBUSTÍVEL | 121 |
| BOMBA E MONTAGEM - TRANSFERÊNCIA DE COMBUSTÍVEL | 123 |


* TRADUÇÃO NÃO DISPONÍVEL NO MOMENTO DA IMPRESSÃO

# ÍNDICE


| Designação | Página |
|---|---|
| BOMBA DE INJEÇÃO DO COMBUSTÍVEL | 124 |
| BOMBA DE ESCORVA DO COMBUSTÍVEL | 125 |
| TANQUE DE COMBUSTÍVEL | 127 |
| VÁLVULA DE RETENÇÃO | 136 |
| **SISTEMA ELÉTRICO E DE PARTIDA** | 139 |
| ALARME | 139 |
| ALTERNADOR DE CORRENTE | 141 |
| BATERIA | 147 |
| BLOCO DE JUNÇÃO | 151 |
| INTERRUPTOR - CIRCUITO | 152 |
| CONTROLE ELETRÔNICO E MONTAGEM - MOTOR | 155 |
| CONTROLE ELETRÔNICO - MOTOR | 157 |
| CONTROLE DA DIREÇÃO SECUNDÁRIA | 161 |
| CONTROLE - NÃO PROGRAMADO | 162 |
| CONVERSOR ELÉTRICO | 163 |
| SISTEMA ELETRÔNICO - MONITOR | 169 |
| SISTEMA ELETRÔNICO - TREM DE FORÇA | 169 |
| CONTROLE DO GRAU | 170 |
| AQUECEDOR DA ÁGUA DO MOTOR | 172 |
| INSTALAÇÃO DO PISCA-PISCA DE ADVERTÊNCIA | 175 |
| LÂMPADA - TETO | 177 |
| LÂMPADA - FAROL | 178 |
| FAROL DIANTEIRO | 184 |
| LÂMPADA DIANTEIRA E DE SINAL | 190 |
| LÀMPADA - MARCADORA | 194 |
| LAMPADA-PLACA DE REGISTRO | 195 |
| LÂMPADA - SINALIZAÇÃO | 196 |
| LUZ GIRATÓRIA DE ALARME | 199 |
| SISTEMA DE ILUMINAÇÃO - FARÓIS | 201 |
| ILUMINAÇÃO - FAROL E SINALIZAÇÃO | 203 |
| ILUMINAÇÃO - MARCHA A RÉ | 204 |
| ILUMINAÇÃO - CABINE | 208 |
| SISTEMA DE ILUMINAÇÃO - FARÓIS | 210 |
| ILUMINAÇÃO - RODOVIÁRIA | 259 |
| ILUMINAÇÃO - SINALIZAÇÃO | 263 |
| SISTEMA DE ILUMINAÇÃO - ADVERTÊNCIA | 265 |
| SIST. DE ILUMINAÇÃO - PISCA-PISCA GIRATÓRIO DE ADVERTÊNCIA | 273 |
| MOTOR ELÉTRICO | 275 |
| EMISSOR - POSIÇÃO | 277 |
| SENSOR - PRESSÃO | 279 |
| SENSOR DE VELOCIDADE | 284 |
| SENSOR - TEMPERATURA | 287 |
| AUXILIAR DE PARTIDA A ÉTER | 290 |
| MOTOR ELÉTRICO DE PARTIDA | 294 |
| INTERRUPTOR DE DERIVAÇÃO | 297 |
| CHAVE GERAL | 298 |
| INTERRUPTOR - LUZES | 299 |
| INTERRUPTOR - MAGNÉTICO | 301 |
| INTERRUPTOR - LIMPADOR DO PÁRA-BRISA | 303 |
| FIAÇÃO - AMORTECEDOR DA LÂMINA | 304 |
| CABOS/FIOS ELÉTRICOS - CABINE | 306 |
| CABOS/FIOS ELÉTRICOS - MOTOR | 317 |
| CABOS/FIOS ELÉTRICOS - DIANTEIROS | 321 |
| FIACAO - CONTROLE DO NIVEL | 338 |
| CABOS/FIOS ELÉTRICOS - TRASEIROS | 339 |
| CABOS E FIOS ELÉTRICOS-LUZES TRASEIRAS | 378 |
| CABOS/FIOS ELÉTRICOS - DIREÇÃO SECUNDÁRIA | 385 |
| CABOS/FIOS ELÉTRICOS - CONSOLE DA TRANSMISSÃO | 387 |
| CABOS/FIOS ELÉTRICOS - CONSOLE DA DIREÇÃO | 399 |
| CABOS/FIOS ELÉTRICOS - TRANSMISSÃO | 406 |
| CABOS/FIOS ELÉTRICOS - INJETOR | 407 |
| **TREM DE FORÇA** | 408 |
| APLICAÇÃO - TREM DE FORÇA | 408 |
| CONTROLE ELÉTRICO DAS MARCHAS | 408 |
| CAIXA E COMPONENTES - TRANSMISSÃO | 409 |
| CORRENTE - COMANDO | 417 |
| EMBREAGEM DA TRANSMISSÃO | 418 |
| CONTROLE DA TRAVA DO DIFERENCIAL | 428 |
| CONTROLE HIDRÁULICO DA TRANSMISSÃO | 430 |
| ARREFECEDOR DE ÓLEO DA TRANSMISSÃO | 432 |
| ACOPLAMENTO TORSIONAL | 437 |
| DIFERENCIAL E COROA | 438 |
| DIFERENCIAL | 440 |
| BOCAL DE ENCHIMENTO DE ÓLEO DO TREM DE FORÇA | 442 |
| FILTRO DO ÓLEO E MONTAGEM | 443 |
| FILTRO - ÓLEO | 447 |
| COMANDO FINAL | 450 |
| TUBOS - ÓLEO DA TRANSMISSÃO | 452 |
| MONTAGEM - RODA | 464 |
| BOMBA DE ENGRENAGENS | 465 |


* TRADUÇÃO NÃO DISPONÍVEL NO MOMENTO DA IMPRESSÃO

# ÍNDICE


| Designação | Página |
|---|---|
| FILTRO - MAGNÉTICO | 467 |
| EIXO DE TRANSMISSÃO | 468 |
| EIXO DE ENTRADA | 469 |
| TANDEM E TAMPA | 470 |
| TRANSMISSÃO | 472 |
| JUNTA UNIVERSAL | 476 |
| VÁLVULA E MONTAGEM - TRAVA DO DIFERENCIAL | 477 |
| VÁLVULA SELETORA E CONTROLE DE PRESSÃO | 478 |
| VÁLVULA SOLENÓIDE | 487 |
| VÁLVULA DE PNEU | 489 |
| VÁLVULA DE CONTROLE - TRANSMISSÃO | 490 |
| RODA E PNEU | 494 |
| RODA | 537 |
| **CHASSI E CARROCERIA** | 543 |
| EIXO DIANTEIRO | 543 |
| TIRANTE DA LÂMINA | 549 |
| SUPORTE - MONTAGEM | 549 |
| CAIXA E CHASSI | 551 |
| TAMPA - ACESSO | 553 |
| COBERTURA DO MOTOR | 556 |
| FIXADORES | 561 |
| PÁRA-LAMA E SUPORTE | 562 |
| CHASSI | 564 |
| CHASSI DIANTEIRO | 565 |
| PROTETOR E SUPORTE DO RADIADOR | 567 |
| PROTETOR INFERIOR | 570 |
| PROTETOR - TUBOS DO FREIO | 572 |
| PROTETOR - TANQUE DE COMBUSTÍVEL | 573 |
| PROTETOR - ILUMINAÇÃO | 574 |
| PROTETOR - PLATAFORMA | 575 |
| ENGATE - ARTICULAÇÃO | 586 |
| ENGATE DO REBOQUE | 588 |
| TUBOS - LUBRIFICAÇÃO | 590 |
| ELO - DIREÇÃO | 591 |
| MONTAGEM DA PLACA DE REGISTRO | 593 |
| BLINDAGEM DO EIXO DA TRANSMISSÃO | 595 |
| DEGRAU | 596 |
| SUPORTE - CHASSI TRASEIRO | 597 |
| SUPORTE DO TANQUE DE COMBUSTÍVEL | 600 |
| SUPORTE - PLATAFORMA | 603 |
| **SISTEMA DE FREIO** | 605 |
| SECADOR DE AR | 605 |
| FREIO DE ESTACIONAMENTO | 609 |
| FREIO DE SERVIÇO | 611 |
| CONTROLE DO FREIO DE ESTACIONAMENTO | 613 |
| CONTROLE DO FREIO DE SERVIÇO | 615 |
| JOGO - ENCHIMENTO A AR | 619 |
| TANQUE DE AR | 620 |
| VÁLVULA DE CONTROLE DO AR | 624 |
| VÁLVULA SOLENÓIDE | 626 |
| **SISTEMA HIDRÁULICO** | 628 |
| ACUMULADOR HIDRÁULICO E MONTAGEM | 628 |
| ACUMULADOR DO AMORTECEDOR DA LÂMINA | 629 |
| ACUMULADOR | 629 |
| ACUMULADOR HIDRÁULICO | 631 |
| ACUMULADOR - DIREÇÃO | 634 |
| CONTROLE HIDRÁULICO | 635 |
| *CONTROL GP-HYDRAULIC LOCKOUT | 642 |
| CILINDRO E MONTAGEM - ARTICULAÇÃO | 643 |
| CILINDRO E MONTAGEM - LEVANTAMENTO DA LÂMINA | 644 |
| CILINDRO E MONTAGEM - TOMBAMENTO DA LÂMINA | 645 |
| CILINDRO E MONTAGEM - DESLOCAMENTO DO CÍRCULO | 646 |
| CILINDRO E MONTAGEM - ESCARIFICADOR | 647 |
| CILINDRO E MONTAGEM - DESLOCAMENTO DA LÂMINA | 648 |
| CILINDRO DE DIREÇÃO E MONTAGEM | 650 |
| CILINDRO E MONTAGEM - INCLINAÇÃO DAS RODAS | 651 |
| CILINDRO DE ARTICULAÇÃO | 652 |
| CILINDRO DE TOMBAMENTO DA LÂMINA | 653 |
| CILINDRO DE DESLOCAMENTO LATERAL | 654 |
| CILINDRO DE LEVANTAMENTO | 656 |
| CILINDRO DO RÍPER | 657 |
| CILINDRO DO ESCARIFICADOR | 658 |
| CILINDRO DE DESLIZAMENTO LONGITUDINAL | 659 |
| CILINDRO DA DIREÇÃO | 660 |
| CILINDRO DE INCLINAÇÃO LATERAL DAS RODAS | 663 |
| RETEM DA VÁLVULA DE CONTROLE | 664 |
| MOTOR DE REVERSÃO DO CÍRCULO | 667 |
| COMANDO HIDRÁULICO | 671 |
| TUBOS - ACUMULADOR | 672 |


* TRADUÇÃO NÃO DISPONÍVEL NO MOMENTO DA IMPRESSÃO

# ÍNDICE


| Designação | Página |
|---|---|
| TUBOS - ÓLEO HIDRÁULICO | 674 |
| TUBOS - VENTILADOR HIDRÁULICOS | 690 |
| TUBOS - BOMBA | 694 |
| TUBOS - RIPER | 703 |
| TUBOS - DIREÇÃO SECUNDÁRIA | 708 |
| TUBOS - DIREÇÃO | 710 |
| TRAVA - DESLOCAMENTO LATERAL | 713 |
| COLETOR - CONTROLE | 714 |
| MOTOR - ENGRENAGENS | 719 |
| MOTOR HIDRÁULICO DO GEROTOR | 720 |
| BOMBA DE DIREÇÃO SECUNDÁRIA E MOTOR | 722 |
| BOMBA E MONTAGEM - PISTÃO | 723 |
| BOMBA DA DIREÇÃO SECUNDÁRIA E MONTAGEM | 724 |
| BOMBA DE PISTÃO | 725 |
| GRUPO ROTATIVO DA BOMBA | 729 |
| EIXO DE COMANDO DA BOMBA | 731 |
| DIREÇÃO SECUNDÁRIA | 732 |
| PLACA BASCULANTE | 733 |
| ARTICULAÇÃO GIRATÓRIA | 734 |
| TANQUE HIDRÁULICO E FILTRO | 737 |
| TANQUE DE ÓLEO HIDRÁULICO E MONTAGEM | 739 |
| VÁLVULA E ARTICULAÇÕES | 740 |
| GRUPO DE VÁLVULAS DE CONTROLE - QUÁDRUPLO | 907 |
| GRUPO DE VÁLVULAS DE CONTROLE - CINCO | 918 |
| GRUPO DE VÁLVULAS DE CONTROLE - SEIS | 934 |
| GRUPO DE VÁLVULAS DE CONTROLE - SETE | 952 |
| VÁLVULA COMBINADA | 970 |
| VÁLVULA DE CONTROLE | 974 |
| VÁLVULA DE CONTROLE DA BOMBA | 1022 |
| VÁLVULA DE PURIFICAÇÃO | 1026 |
| VÁLVULA DE ALÍVIO | 1028 |
| VÁLVULA DE SEPARAÇÃO | 1043 |
| VÁLVULA SOLENÓIDE | 1045 |
| **ACESSÓRIOS** | 1047 |
| CÍRCULO | 1047 |
| BARRA DE TRAÇÃO | 1051 |
| MONTAGEM-CONTROLE DO DECLIVE | 1053 |
| CHAPA DE EMPUXO | 1054 |
| **FERRAMENTAS DE TRABALHO** | 1057 |
| CANTO DE LÂMINA | 1057 |
| LÂMINA | 1062 |
| SUPORTE DO ESCARIFICADOR | 1066 |
| BORDA CORTANTE | 1067 |
| EXTENSÃO DA LÂMINA | 1069 |
| LEVANTAMENTO DA LÂMINA | 1075 |
| MONTAGEM-CONTROLE DO DECLIVE | 1077 |
| MONTAGEM - RIPER | 1078 |
| MONTAGEM - REMOVEDOR DE NEVE | 1079 |
| RIPER | 1080 |
| ESCARIFICADOR | 1083 |
| DENTE DO RÍPER | 1091 |
| DENTE DO ESCARIFICADOR | 1092 |
| **ESTAÇÃO DO OPERADOR** | 1093 |
| ACESSÓRIO - CABINE | 1093 |
| CONDICIONADOR DE AR E MONTAGEM | 1095 |
| CONDICIONADOR DE AR | 1095 |
| BRAÇO DO ASSENTO | 1100 |
| CABINE | 1102 |
| CABINE OPERADOR - SEM ROPS | 1102 |
| CABINE | 1102 |
| COMPRESSOR DE REFRIGERANTE E MONTAGEM | 1104 |
| COMPRESSOR DE REFRIGERANTE | 1105 |
| CONDENSADOR DO REFRIGERANTE E MONTAGEM | 1106 |
| CONSOLE DO OPERADOR | 1107 |
| CONTROLE DA EMBREAGEM | 1111 |
| CONTROLE DE DIREÇÃO | 1113 |
| CONTROLE DA TRANSMISSÃO | 1114 |
| CONTROLE-MONITOR NÃO PROGRAMADO | 1118 |
| CONVERSÃO PARA ESTRUTURA NÃO ROPS | 1119 |
| PORTA DA CABINE | 1120 |
| DUCTO E CONTROLE | 1133 |
| DUCTO | 1134 |
| EXTENSÃO - ENCOSTO | 1135 |
| VENTILADOR DE CIRCULAÇÃO DE AR DA CABINE | 1137 |
| DESCONGELADOR | 1139 |
| FILTRO - AR DA CABINE | 1142 |
| MARTELO E MONTAGEM | 1143 |
| AQUECEDOR DA CABINE E MONTAGEM | 1145 |
| AQUECEDOR DA CABINE | 1145 |
| BUZINA DE AR | 1155 |
| CAIXA - SUSPENSÃO DO ASSENTO | 1160 |
| INSTALAÇÃO DO RÁDIO - ARRANJO | 1163 |
| INSTALAÇÃO DO RÁDIO | 1164 |
| ISOLADOR - TEMPO | 1166 |
| REVESTIMENTO DA CABINE | 1168 |


* TRADUÇÃO NÃO DISPONÍVEL NO MOMENTO DA IMPRESSÃO

# ÍNDICE


| Designação | Página |
|---|---|
| TUBOS - AR CONDICIONADO | 1183 |
| TUBOS - AQUECEDOR | 1185 |
| PUBLICAÇÃO | 1189 |
| PERSIANA | 1190 |
| ESPELHO RETROVISOR | 1191 |
| MÓDULO ELETRÔNICO DE QUATRO INDICADORES | 1204 |
| MÓDULO - VELOCÍMETRO E TACÔMETRO | 1205 |
| MONTAGEM - CABINE | 1206 |
| MONTAGEM - ESTRUTURA ROPS | 1207 |
| FUNDO - ENCOSTO | 1210 |
| ASSENTO - FUNDO | 1211 |
| PAINEL - CABINE | 1213 |
| PAINEL DE INSTRUMENTOS | 1217 |
| RÁDIO | 1224 |
| ESTRUTURA ROPS FECHADA | 1224 |
| ESTRUTURA ROPS ABERTA | 1226 |
| ROPS FECHADA | 1227 |
| ROPS ABERTA | 1230 |
| TELA PÁRA-SOL | 1231 |
| CINTO DE SEGURANÇA | 1232 |
| ASSENTO | 1234 |
| ASSENTO COM SUSPENSÃO | 1238 |
| SUPORTE - ASSENTO | 1246 |
| SUSPENSÃO - ASSENTO | 1248 |
| LAVADOR DO VIDRO | 1252 |
| VIDRO | 1257 |
| JANELA DA CABINE | 1261 |
| LIMPADOR DO VIDRO | 1266 |
| **EQUIPAMENTOS DE SERVIÇO E SUPRIMENTOS** | 1288 |
| CAIXA DE FERRAMENTAS | 1288 |
| DECALQUE | 1289 |
| CILINDRO HIDRÁULICO - MACACO | 1290 |
| PLACA E DECALQUE | 1291 |
| **ÍNDICE DE NÚMERO DE PEÇA** | B1 |


* TRADUÇÃO NÃO DISPONÍVEL NO MOMENTO DA IMPRESSÃO

# INHALTSVERZEICHNIS


| Bezeichnung | Seite |
|---|---|
| **ALLGEMEINE HINWEISE** | A39 |
| **REPARATURALTERNATIVEN** | A47 |
| **KÜHLMITTELZUSATZ** | A52 |
| **WARTUNGSTEILE** | A96 |
| **STICHWORTVERZEICHNIS** | A186 |
| **MASCHINE** | 1 |
| UMBAUSATZ - ZULASSUNG | 1 |
| MASCHINEN-UMBAUSATZ | 3 |
| GRUNDAUSFÜHRUNG | 3 |
| AUSRÜSTUNG FÜR STRASSEN-FAHRT | 5 |
| SCHNEERÄUMVORRICHTUNG | 6 |
| **MOTOR** | 7 |
| MOTORAUSFÜHRUNG | 7 |
| **MOTOR - GRUNDAUSFÜHRUNG** | 12 |
| LUFTKOMPRESSOR | 12 |
| RIEMENSPANNER | 18 |
| NOCKENWELLE | 22 |
| MOTORBLOCKDECKEL | 23 |
| KURBELWELLE | 25 |
| MOTORBLOCK | 27 |
| ZYLINDERKOPF | 31 |
| NEBENANTRIEB | 35 |
| ZYLINDERKOPF-HALTETEILE | 36 |
| SCHWUNGRAD | 37 |
| STIRNRAD | 38 |
| SCHWUNGRADGEHÄUSE | 39 |
| STIRNRADGEHÄUSE | 41 |
| HUBVENTIL | 43 |
| MOTORHUBÖSE | 44 |
| MOTOR- UND GETRIEBEAUFLAGER | 45 |
| VENTILMECHANISMUSAUFHÄN-GUNG | 46 |
| ÖLWANNE | 47 |
| SCHALLDÄMPFUNG | 50 |
| PLEUELSTANGE UND KOLBEN | 51 |
| ZYLINDERBLOCKSCHRAUBE | 52 |
| MOTORSTOPFEN | 53 |
| VENTILKIPPHEBEL | 55 |
| KURBELWELLENDICHTUNG | 57 |
| MOTORAUFHÄNGUNG | 58 |
| SCHALLDÄMPFUNG | 59 |
| VENTILSTEUERUNG | 60 |
| **SCHMIERSYSTEM** | 62 |
| ÖLFILTERSOCKEL | 62 |
| MOTORÖLEINFÜLLSTUTZEN | 65 |
| ÖLFILTER | 66 |
| ÖLMESSSTAB | 68 |
| MOTORÖLABLASSLEITUNGEN | 69 |
| TURBOLADERÖLLEITUNGEN | 70 |
| SCHMIERPUMPE | 71 |
| **KÜHLSYSTEM** | 73 |
| KÜHLSYSTEM | 73 |
| MOTOR UND LÜFTER | 76 |
| KUEHLER-HALTETEILE | 78 |
| KÜHLWASSER-TEMPERATURREGLER UND GEHÄUSE | 79 |
| KÜHLWASSERLEITUNGEN | 81 |
| KÜHLERPLATTE | 90 |
| KÜHLWASSERPUMPE | 91 |
| KÜHLER | 93 |
| **LUFTANSAUG- UND ABGASSYSTEM** | 95 |
| LADELUFTKÜHLER U. BEFESTI-GUNG | 95 |
| LUFTREINIGER | 96 |
| DRUCKLUFTLEITUNGEN | 99 |
| AUSPUFFKRÜMMER | 101 |
| ANSAUGKRÜMMER | 102 |
| SCHALLDÄMPFER | 103 |
| VORREINIGER | 105 |
| VORABSCHEIDER | 106 |
| TURBOLADER | 107 |
| **KRAFTSTOFFSYSTEM** | 109 |
| REGLERSTEUERUNG | 109 |
| KRAFTSTOFFTANK-HALTETEILE | 111 |
| KRAFTSTOFFILTER | 113 |
| WASSERABSCHEIDER- U. KRAFTSTOFFIL-TER | 114 |
| KRAFTSTOFFLEITUNGEN | 115 |
| KRAFTSTOFFILTERLEITUNGEN | 118 |
| KRAFTSTOFFEINSPRITZLEITUN-GEN | 121 |
| KRAFTSTOFFÖRDERPUMPE UND BEFESTIGUNGSTEILE | 123 |
| KRAFTSTOFFEINSPRITZPUMPE | 124 |
| KRAFTSTOFF-ENTLÜFTUNGSPUM-PE | 125 |
| KRAFTSTOFFTANK | 127 |
| SPERRVENTIL | 136 |
| **ELEKTRISCHE ANLAGE UND STARTSYSTEM** | 139 |
| WARNVORRICHTUNG | 139 |
| DREHSTROMGENERATOR | 141 |
| BATTERIE | 147 |


* ÜBERSETZUNG ZUM ZEITPUNKT DER DRUCKLEGUNG NICHT VORHANDEN

# INHALTSVERZEICHNIS


| Bezeichnung | Seite |
|---|---|
| KLEMMLEISTE | 151 |
| UNTERBRECHER | 152 |
| STEUERUNGSEINHEIT, ELEKTRON. FÜR MOTOR UND BEFEST. | 155 |
| MOTORSTEUERUNG, ELEKTRON. | 157 |
| NOTLENKUNGSSTEUERUNG | 161 |
| STEUERUNG - NICHT PROGRAMMIERT | 162 |
| UMFORMER, ELEKTR. | 163 |
| ELEKTR. UMFORMER | 164 |
| ELEKTRONIK - MONITOR | 169 |
| KRAFTÜBERTRAGUNGSELEKTRONIK | 169 |
| PLANIERSTEUERUNG | 170 |
| UMLAUFKÜHLWASSERHEIZUNG | 172 |
| RUNDUMWARNLEUCHTE - EINBAUSATZ | 175 |
| FAHRERHAUSBELEUCHTUNG | 177 |
| ARBEITSLEUCHTEN | 178 |
| FRONTSCHEINWERFER | 184 |
| SCHEINWERFER U. RICHTUNGSLEUCHTE | 190 |
| MARKIERUNGSLEUCHTE | 194 |
| ZULASSUNGSSCHILDLEUCHTE | 195 |
| BLINKLEUCHTE | 196 |
| RUNDUM-KENNLEUCHTE | 199 |
| ARBEITSLEUCHTEN | 201 |
| ARBEITS- U. SIGNALBELEUCHTUNG | 203 |
| SCHEINWERFER, HINTEN | 204 |
| FAHRERHAUSVERKLEIDUNG | 208 |
| ARBEITSLEUCHTEN | 210 |
| BELEUCHTUNGSANLAGE (STRASSENAUSRÜSTUNG) | 259 |
| BLINKERLEUCHTEN | 263 |
| WARNLEUCHTEN | 265 |
| RUNDUM-KENNLEUCHTE | 273 |
| MOTOR, ELEKTR. | 275 |
| STELLUNGSSENSOR | 277 |
| DRUCKSENSOR | 279 |
| DREHZAHLSENSOR | 284 |
| TEMPERATURSENSOR | 287 |
| ÄTHERSTARTHILFE | 290 |
| STARTERMOTOR | 294 |
| UMGEHUNGSSCHALTER | 297 |
| TRENNSCHALTER | 298 |
| LICHTSCHALTER | 299 |
| MAGNETSCHALTER | 301 |
| SCHEIBENWISCHERSCHALTER | 303 |
| VERDRAHTUNG - SCHARDÄMPFUNG | 304 |
| FAHRERHAUSVERDRAHTUNG | 306 |
| MOTORVERDRAHTUNG | 317 |
| VERDRAHTUNG, VORNE | 321 |
| NIEGUNGSSTEUER VERDRAHTUNG | 338 |
| VERDRAHTUNG, HINTEN | 339 |
| HECKBELEUCHTUNGSVERDRAHTUNG | 378 |
| NOTLENKUNGSVERDRAHTUNG | 385 |
| SCHALTKONSOLENVERDRAHTUNG | 387 |
| LENKKONSOLENVERDRAHTUNG | 399 |
| GETRIEBEVERDRAHTUNG | 406 |
| VERDRAHTUNG (EINSPRITZEINHEIT) | 407 |
| **KRAFTÜBERTRAGUNG** | 408 |
| ZUSATZAUSRÜSTUNG - KRAFTSÜBERTRAGUNG | 408 |
| SCHALTAUTOMATIK | 408 |
| GETRIEBEGEHÄUSE UND TEILE | 409 |
| ANTRIEBSKETTE | 417 |
| GETRIEBEKUPPLUNG | 418 |
| DIFFERENTIALSPERRENGESTÄNGE | 428 |
| GETRIEBEHYDRAULIK | 430 |
| GETRIEBEÖLKÜHLER | 432 |
| TORSIONSKUPPLUNG | 437 |
| DIFFERENTIAL UND TELLERRAD | 438 |
| DIFFERENTIAL | 440 |
| GETRIEBEÖLFÜLLSTUTZEN | 442 |
| ÖLFILTER U. BEFESTIGUNGSTEILE | 443 |
| ÖLFILTER | 447 |
| SEITENANTRIEB | 450 |
| GETRIEBEÖLLEITUNGEN | 452 |
| RADAUFHAENGUNG | 464 |
| ZAHNRADPUMPE | 465 |
| MAGNETSIEB | 467 |
| ANTRIEBSWELLE | 468 |
| TANDEMGEHÄUSE UND DECKEL | 470 |
| GETRIEBE | 472 |
| KREUZGELENK | 476 |
| DIFFERENTIALSPERRE - VENTIL UND BEFESTIGUNGSTEILE | 477 |
| VENTIL - SCHALT- UND DRUCKSTEUERUNG | 478 |
| MAGNETVENTIL | 487 |
| REIFENVENTIL | 489 |
| GETRIEBESTEUERVENTIL | 490 |
| RAD UND REIFEN | 494 |
| RADSATZ | 537 |
| **RAHMEN UND AUFBAU** | 543 |
| VORDERACHSE | 543 |
| SCHARAUFHÄNGUNG | 549 |
| BEFESTIGUNGSHALTERUNG | 549 |
| RAHMEN UND GEHÄUSE | 551 |
| ZUGANGSKLAPPE | 553 |


* ÜBERSETZUNG ZUM ZEITPUNKT DER DRUCKLEGUNG NICHT VORHANDEN

# INHALTSVERZEICHNIS


| Bezeichnung | Seite |
|---|---|
| MOTORVERKLEIDUNG | 556 |
| HALTETEILE | 561 |
| SCHUTZBLECHE UND AUFHÄNGUNG | 562 |
| VORDERRAHMEN | 564 |
| VERKLEIDUNG UND BEFESTIGUNG - KÜHLER | 567 |
| PANZERWANNE | 570 |
| BREMSLEITUNGSVERKLEIDUNG | 572 |
| KRAFTSTOFFTANKVERKLEIDUNG | 573 |
| BLITZSCHUTZ | 574 |
| FAHRERPLATTFORMVERKLEIDUNG | 575 |
| KNICKGELENK-ANHÄNGUNG | 586 |
| ANHÄNGEVORRICHTUNG | 588 |
| SCHMIERLEITUNGEN | 590 |
| LENKGESTÄNGE | 591 |
| TYPENSCHILDBEFESTIGUNG | 593 |
| ANTRIEBSWELLENSCHUTZ | 595 |
| STEIGLEITER | 596 |
| AUFHÄNGUNG - HINTERES FAHRWERK | 597 |
| KRAFTSTOFFTANKABSTÜTZUNG | 600 |
| PLATTFORMUNTERBAU | 603 |
| **BREMSSYSTEM** | 605 |
| LUFTTROCKNER | 605 |
| FESTSTELLBREMSE | 609 |
| BETRIEBSBREMSE | 611 |
| FESTSTELLBREMSGESTÄNGE | 613 |
| BREMSGESTÄNGE | 615 |
| REIFENFÜLLVORRICHTUNGS-EINBAUSATZ | 619 |
| DRUCKLUFTBEHÄLTER | 620 |
| DRUCKLUFT-STEUERVENTIL | 624 |
| MAGNETVENTIL | 626 |
| **HYDRAULIKSYSTEM** | 628 |
| HYDRAULIKDRUCKSPEICHER U. BEFESTIGUNG | 628 |
| SCHARDRUCKSPEICHER | 629 |
| DRUCKSPEICHER | 629 |
| HYDRAULIKDRUCKSPEICHER | 631 |
| LENKDRUCKSPEICHER | 634 |
| HYDRAULIKSTEUERUNG | 635 |
| *CONTROL GP-HYDRAULIC LOCKOUT | 642 |
| GELENKZYLINDER UND BEFESTIGUNGSTEILE | 643 |
| SCHARHUBZYLINDER UND BEFESTIGUNGSTEILE | 644 |
| SCHARKIPPZYLINDER UND BEFESTIGUNGSTEILE | 645 |
| SEITENSCHUBZYLINDER UND BEFESTIGUNGSTEILE | 646 |
| AUFREISSERZYLINDER UND BEFESTIGUNGSTEILE | 647 |
| SEITENSCHIEBERZYLINDER UND BEFESTIGUNGSTEILE | 648 |
| LENKZYLINDER UND AUFHÄNGUNG | 650 |
| RADSTURZZYLINDER UND BEFESTIGUNGSTEILE | 651 |
| KNICKLENKZYLINDER | 652 |
| SCHARNEIGEZYLINDER | 653 |
| SEITENSCHUBZYLINDER | 654 |
| HUBZYLINDER | 656 |
| AUFREISSERZYLINDER | 657 |
| FRONTAUFREISSERZYLINDER | 658 |
| SEITENSCHUBZYLINDER | 659 |
| LENKZYLINDER | 660 |
| RADSTURZZYLINDER | 663 |
| STEUERVENTILSPERRE | 664 |
| SCHARDREHWERK | 667 |
| HYDRAULIKSYSTEM | 671 |
| DRUCKSPEICHERLEITUNGEN | 672 |
| HYDRAULIKLEITUNGEN | 674 |
| HYDRAULIKLÜFTERLEITUNGEN | 690 |
| HYDRAULIKPUMPE UND LEITUNGEN | 694 |
| AUFREISSERLEITUNGEN | 703 |
| NOTLENKUNGSLEITUNGEN | 708 |
| LENKÖLLEITUNGEN | 710 |
| SEITENSCHUBSPERRE | 713 |
| STEUERKRÜMMER | 714 |
| MOTORANTRIEB | 719 |
| ZAHNRADANTRIEB | 720 |
| NOTLENKUNGSPUMPE UND -MOTOR | 722 |
| KOLBENPUMPE UND BEFESTIGUNG | 723 |
| NOTLENKUNGSPUMPE UND BEFESTIGUNGSTEILE | 724 |
| KOLBENPUMPE | 725 |
| KOLBENPUMPENUMLAUFSATZ | 729 |
| PUMPENANTRIEBSWELLE | 731 |
| NOTLENKUNG | 732 |
| SCHWENKSCHEIBE | 733 |
| SCHWENKBLOCK | 734 |
| HYDRAULIKTANK UND SCHMIERFILTER | 737 |
| HYDRAULIKTANK UND BEFESTIGUNGSTEILE | 739 |
| VENTIL UND GESTÄNGE | 740 |
| VENTILSATZ (4-VENTIL) | 907 |
| VENTILSATZ (5-VENTIL) | 918 |
| VENTILSATZ (6-VENTIL) | 934 |
| VENTILSATZ (7-VENTIL) | 952 |


* ÜBERSETZUNG ZUM ZEITPUNKT DER DRUCKLEGUNG NICHT VORHANDEN

# INHALTSVERZEICHNIS


| Bezeichnung | Seite |
|---|---|
| SAMMELVENTIL | 970 |
| STEUERVENTIL | 974 |
| PUMPENSTEUERVENTIL | 1022 |
| ENTLEERVENTIL | 1026 |
| ÜBERDRUCKVENTIL | 1028 |
| PENDELVENTIL | 1043 |
| MAGNETVENTIL | 1045 |
| **ARBEITSGERÄTE** | 1047 |
| SCHARDREHWERK | 1047 |
| ZUGHAKEN | 1051 |
| *MOUNTING GP-GRADE CONTROL | 1053 |
| SCHUBPLATTE | 1054 |
| **ARBEITSGERÄTE** | 1057 |
| ECKMESSER | 1057 |
| ENDMESSER | 1061 |
| SCHAR | 1062 |
| AUFREISSERTRÄGER | 1066 |
| SCHNEIDMESSER | 1067 |
| SCHARVERLÄNGERUNG | 1069 |
| SCHILDHUB | 1075 |
| *MOUNTING GP-GRADE CONTROL | 1077 |
| AUFREISSERBEFESTIGUNG | 1078 |
| SCHNEEFLÜGEL-BEFESTIGUNG | 1079 |
| AUFREISSER | 1080 |
| FRONTAUFREISSER | 1083 |
| AUFREISSERZAHN | 1091 |
| FRONTAUFREISSERZAHN | 1092 |
| **FAHRERHAUS** | 1093 |
| FAHRERHAUSZUBEHÖR | 1093 |
| KLIMAANLAGE UND AUFHÄNGUNG | 1095 |
| KLIMAANLAGE | 1095 |
| ARMLEHNE | 1100 |
| FAHRERHAUS | 1102 |
| FAHRERHAUS (OHNE ÜBERROLL-SCHUTZ) | 1102 |
| FAHRERHAUS | 1102 |
| KÄLTEMITTELKOMPRESSOR U. BEFESTIGUNG | 1104 |
| KÄLTEMITTELKOMPRESSOR | 1105 |
| KÄLTEMITTELKONDENSATOR U. BEFESTIGUNGSTEILE | 1106 |
| STEUERKONSOLE | 1107 |
| *CONTROL GP-CLUTCH | 1111 |
| LENKBETÄTIGUNG | 1113 |
| GETRIEBESTEUERUNG | 1114 |
| STEUERUNG, NICHT PROGRAMMIERTER MONITOR | 1118 |
| UMBAUSATZ - OHNE ÜBERROLL-SCHUTZ | 1119 |
| FAHRERHAUSTÜR | 1120 |
| LUFTKANAL UND REGULIERUNG | 1133 |
| LUFTKANAL | 1134 |
| RÜCKLEHNENVERLÄNGERUNG | 1135 |
| UMLAUFLÜFTER | 1137 |
| ENTFROSTERGEBLÄSE | 1139 |
| FAHRERHAUSLUFTFILTER | 1142 |
| HAMMER UND BEFESTIGUNG | 1143 |
| FAHRERHAUSHEIZUNG U. BEFESTI-GUNGSTEILE | 1145 |
| FAHRERHAUSHEIZUNG | 1145 |
| DRUCKLUFTHUPE | 1155 |
| FAHRERSITZFEDERUNGSGEHÄUSE | 1160 |
| RADIOEINBAUSATZ | 1163 |
| WÄRMEISOLIERUNG | 1166 |
| FAHRERHAUSAUSKLEIDUNG | 1168 |
| KLIMAANLAGENLEITUNGEN | 1183 |
| HEIZUNGSLEITUNGEN | 1185 |
| DOKUMENTATION | 1189 |
| FAHRERHAUSLUFTSCHLITZE | 1190 |
| RÜCKSPIEGEL | 1191 |
| MODUL - VIER ELEKTRON. ANZEIGEN | 1204 |
| GESCHWINDIGKEITS- U. DREHZAHLMES-SERMODUL | 1205 |
| FAHRERHAUSANBAUSATZ | 1206 |
| ÜBERROLLSCHUTZAUFLAGER | 1207 |
| SCHALE - RÜCKENLEHNE | 1210 |
| FAHRERSITZVERKLEIDUNG | 1211 |
| VERKLEIDUNG - FAHRERHAUS | 1213 |
| INSTRUMENTENTAFEL | 1217 |
| RADIO | 1224 |
| ÜBERROLLSCHUTZKABINE | 1224 |
| ÜBERROLLSCHUTZDACH | 1226 |
| ÜBERROLL-SCHUTZKABINE | 1227 |
| ÜBERROLL-SCHUTZDACH | 1230 |
| SONNENBLENDE | 1231 |
| SICHERHEITSGURT | 1232 |
| FAHRERSITZ | 1234 |
| SCHWINGSITZ | 1238 |
| SITZUNTERBAU | 1246 |
| FAHRERSITZFEDERUNG | 1248 |
| SCHEIBENWASCHANLAGE | 1252 |
| FAHRERHAUSFENSTER | 1257 |
| SCHEIBENWISCHER | 1266 |
| **WARTUNGSAUSRÜSTUNG** | 1288 |
| WERKZEUGKASTEN | 1288 |
| AUFKLEBER | 1289 |
| WAGENHEBER, HYDRAULISCH | 1290 |
| SCHILD UND AUFKLEBER | 1291 |
| **ERSATZTEILNUMMERNINDEX** | B1 |


* ÜBERSETZUNG ZUM ZEITPUNKT DER DRUCKLEGUNG NICHT VORHANDEN

# GENERAL INFORMATION

## 1. MACHINE IDENTIFICATION

Caterpillar machines are identified by Product Identification Numbers (PIN). Some components included in a machine may be identified by Serial Numbers (S/N). Typical components that will be serialized include engines, transmissions, bulldozers, and rippers. The machine and engine are further identified by arrangement numbers and in some cases modification numbers. These numbers are shown on the product identification plate(s) and on the master plate in the operator's compartment.

Caterpillar dealers need all of these numbers to determine accurate parts identification.

SIS ***New Feature***

Effective First Quarter 2001 the Caterpillar Product Identification Number (PIN) changed from 8 to 17 characters. In an effort to provide uniform equipment identification, Caterpillar and other construction equipment manufacturers are moving to comply with the latest version of the product identification numbering standard. Non-road machine PINs are defined by ISO 10261. The new PIN format will apply to all Caterpillar machines and generator sets. The PIN plates and frame marking will display the 17 character PIN. The new format will look like the following:

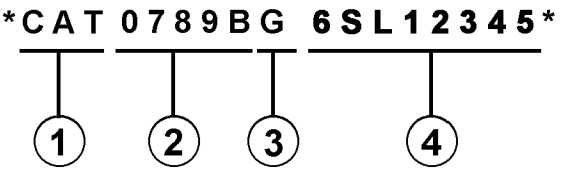


Where:

1. Caterpillar's World Manufacturing Code (characters 1-3)

2. Machine Descriptor (characters 4-8)

3. Check Character (character 9)

4. Machine Indicator Section (MIS) or Product Sequence Number (characters 10-17). These were previously referred to as the Serial Number.

Machines and generator sets produced before First Quarter 2001 will maintain their 8 character PIN format.

Components such as engines, transmissions, axles, etc. and work tools will continue to use an 8 character Serial Number (S/N).

## 2. ORDERING PARTS

**⚠ WARNING**

**When replacement parts are required for this product Caterpillar recommends using Caterpillar replacement parts or parts with equivalent specifications including, but not limited to, physical dimensions, type, strength and material.**

**Failure to heed this warning can lead to premature failures, product damage, personal injury or death.**

Quality Caterpillar replacement parts are available from Caterpillar dealers throughout the world. Their parts inventories are up to date and include all parts normally required to protect your investment in Caterpillar machines. Dealers may offer repair kits or remanufactured parts to allow selection of the most effective repair alternative for a particular situation. When ordering parts, your order should specify the quantity, part number, part name, and the serial number/product identification number of the machine for which the parts are needed.

## 3. PARTS MANUAL ORGANIZATION

Product information in this manual is presented as "information elements" that represent all of the components for the specific model. Engine Arrangement and Seat Group are examples of information elements. The information elements are organized alphabetically by part name and secondarily by part number within each major section of the manual.

## 4. TABLE OF CONTENTS

A table of contents (TOC) is found at the beginning of the manual. The TOC lists each section of the manual with a complete list of all information elements organized as they appear in the manual. Page numbers are provided for quick reference to detailed parts identification illustrations and serviceable consist lists.

## 5. MAINTENANCE PARTS INDEX

The Maintenance Parts Index, located near the beginning of the manual, references most frequently used maintenance part numbers, providing description, quantity, usage and page number. This information is organized alphabetically by part description.

**6. INDEX**

The index located near the front of the manual is an alphabetical listing of all information elements included in the manual. Page numbers are provided for quick reference to detailed parts identification illustrations and serviceable consist lists.

**7. PART NUMBER INDEX**

A numerical index listing all part numbers and the corresponding page number(s) appears at the back of the manual.

**8. CAPTIONS**

Captions located at the beginning of each information element identify the part number and part name along with additional descriptive information. PIN and S/N information found in each caption should be used to select correct information for a specific machine. Field replacement options, identification of optional attachment components, and where used ("part of") information is also provided.

The first line of a caption is shown in larger type font to indicate the beginning of an information element. Captions for additional pages that may be required to illustrate an information element will be shown in standard type font and will include the term *(contd.)* .

**9. NON-SERVICED PARTS**

In some instances it is necessary to display non-serviced parts that are a link to a lower level serviceable consist lists. These non-serviced part numbers are shown in *italic* type indicating that they are not available.

**10. PARTS LIST REFERENCE NUMBERS**

Numbers shown in the Ref No column correspond to numbers used in the associated graphic(s). An alphabetic suffix may be added to a reference number to identify lower level consist items. Numbers shown in the Graphic Ref column refer to the graphic number identifier displayed in the lower left corner of each illustration. The Graphic Ref number may be used in combination with the item Ref No to determine the correct part number. There may be intentional omission of a Ref No in a consist list as information is updated to reflect the latest serviceable part numbers.

**11. INDENTED PART NAMES**

When a part name is indented in a parts list, it is part of (included in) the group or assembly under which it is indented.

**12. ILLUSTRATION REFERENCE LETTERS**

When necessary, illustrations contain reference letters (A, B, C etc.) that are intended to track lines and harnesses from one point to another. They are also used to show where to reconnect illustrations that have been separated.

**13. ABBREVIATIONS AND SYMBOLS**

**O.D.** – Outside Diameter
**I.D.** – Inside Diameter
**A** – Not Part Of This Group
**B** – Use As Required
**C** – Change From Previous Type
**D** – Order By The Meter
**E** – Order By The Centimeter
**F** – Not Shown
**G** – Order By The Inch
**I** – Refer To Hydraulic Information System
**M** – Metric Part
**R** – Remfg Part May Be Available
**Y** – Separate Illustration
**Z** – Not Serviced Separately

SIS *New Feature*

**14. DESCRIPTION OF TYPE CHANGES**

Type - A type is defined as any configuration change that requires an additional Information Element for an Arrangement, Group, or Assembly. If serial number breaks for types are not available, a type # ( Type 1, Type 2, etc.) will be displayed in the caption. These "type" changes are identified with a "C" note (change from previous type) in the Parts List. Only the "types" that apply to this Parts Manual will be included. Additional types may exist causing "C" notes to appear on an Information Element when no other types are shown.

**15.<END>**

This symbol indicates the end of an information element.

**NOTE:**

**Continuing improvement and advancement of product design may cause changes to your machine which may not be included in this publication. Whenever a question arises regarding your caterpillar product or this publication, please consult your caterpillar dealer for the latest available information.**

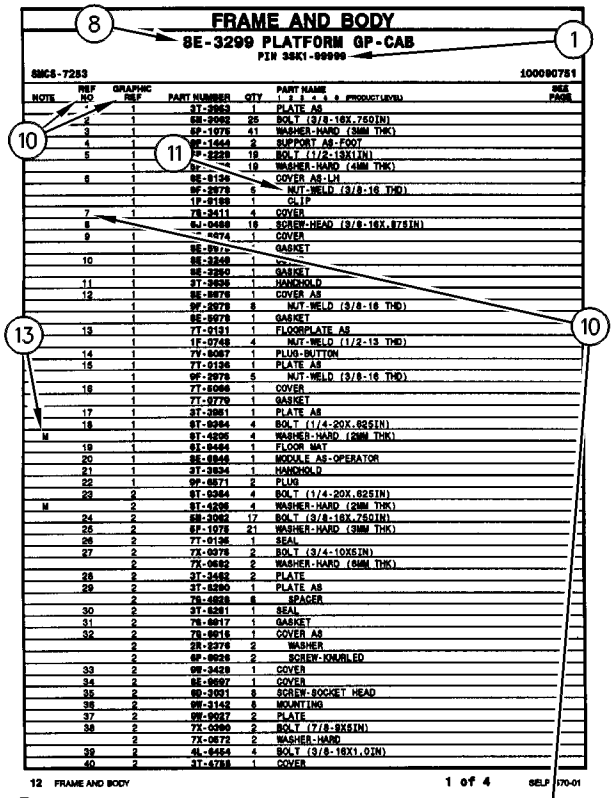
FRAME AND BODY
8E-3299 PLATFORM GP-CAB
PIN 3SK1-99999
SMCS-7283
100090751
NOTE | REF NO | GRAPHIC REF | PART NUMBER | QTY | PART NAME (1 2 3 4 5 6 PRODUCT LEVEL) | SEE PAGE
1 | 3T-3963 | PLATE AS
2 | 5M-2062 | BOLT (3/8-16X.750IN)
3 | 6P-1075 | WASHER-HARD (9MM THK)
4 | 9E-1443 | SUPPORT AS-FOOT
5 | 9P-2229 | BOLT (1/2-13X1IN)
WASHER-HARD (4MM THK)
6 | 9E-9136 | COVER AS-LH
9F-2979 | NUT-WELD (3/8-16 THD)
1P-8189 | CLIP
7 | 7E-3411 | COVER
6J-0468 | SCREW-HEAD (3/8-16X.87SIN)
9 | COVER
GASKET
10 | 9E-3249 | GASKET
9E-3250 | GASKET
11 | 3T-3636 | HANDHOLD
12 | 9E-9076 | COVER AS
9F-2979 | NUT-WELD (3/8-16 THD)
9E-9078 | GASKET
13 | 7T-9131 | FLOORPLATE AS
1F-0748 | NUT-WELD (1/2-13 THD)
14 | 7V-8067 | PLUG-BUTTON
15 | 7T-9136 | PLATE AS
9F-2979 | NUT-WELD (3/8-16 THD)
16 | 7T-5066 | COVER
7T-9779 | GASKET
17 | 3T-3951 | PLATE AS
18 | 9T-0264 | BOLT (1/4-20X.62SIN)
M | 9T-4295 | WASHER-HARD (2MM THK)
19 | 6I-8454 | FLOOR MAT
20 | 9E-6948 | MODULE AS-OPERATOR
21 | 3T-3934 | HANDHOLD
22 | 9P-8571 | PLUG
23 | 9T-0264 | BOLT (1/4-20X.62SIN)
M | 9T-4295 | WASHER-HARD (2MM THK)
24 | 5M-2062 | BOLT (3/8-16X.750IN)
25 | 6P-1075 | WASHER-HARD (9MM THK)
26 | 7T-9136 | SEAL
27 | 7X-0078 | BOLT (3/4-10X5IN)
7X-0682 | WASHER-HARD (6MM THK)
28 | 3T-3482 | PLATE
29 | 3T-5290 | PLATE AS
7E-4828 | SPACER
30 | 3T-5291 | SEAL
31 | 7E-8817 | GASKET
32 | 7E-8816 | COVER AS
5R-2276 | WASHER
9P-9028 | SCREW-KNURLED
33 | 9W-3429 | COVER
34 | 8E-9697 | COVER
35 | 9D-3031 | SCREW-SOCKET HEAD
36 | 9W-3142 | MOUNTING
37 | 9W-9027 | PLATE
38 | 7X-0360 | BOLT (7/8-9X5IN)
7X-0672 | WASHER-HARD
39 | 4L-6454 | BOLT (3/8-16X1.0IN)
40 | 3T-4788 | COVER
12 FRAME AND BODY
1 of 4
SELP4570-01

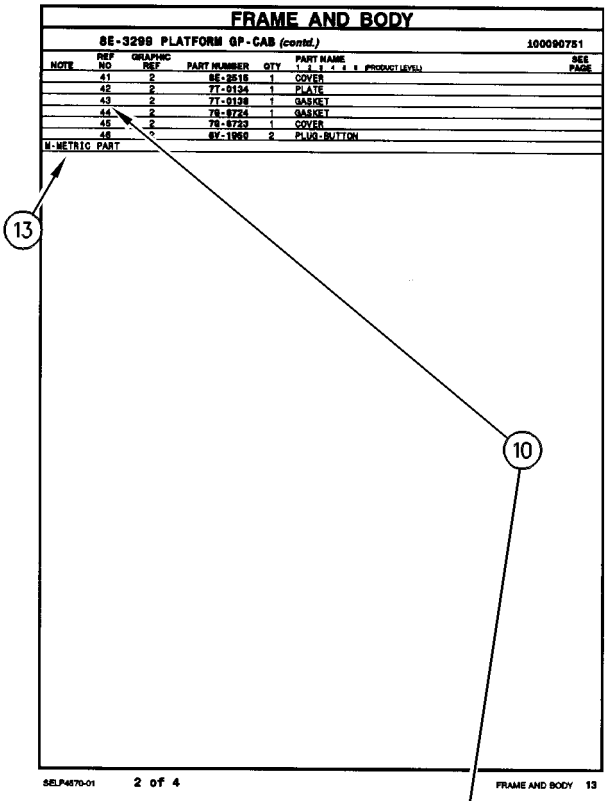
FRAME AND BODY
8E-3299 PLATFORM GP-CAB (contd.)
100090751
NOTE | REF NO | GRAPHIC REF | PART NUMBER | QTY | PART NAME (1 2 3 4 5 6 PRODUCT LEVEL) | SEE PAGE
41 | 2 | 8E-2515 | 1 | COVER
42 | 2 | 7T-9134 | 1 | PLATE
43 | 2 | 7T-9138 | 1 | GASKET
44 | 2 | 7E-8724 | 1 | GASKET
45 | 2 | 7E-8723 | 1 | COVER
46 | 8Y-1952 | 2 | PLUG-BUTTON
M-METRIC PART
2 of 4
SELP4570-01
FRAME AND BODY 13

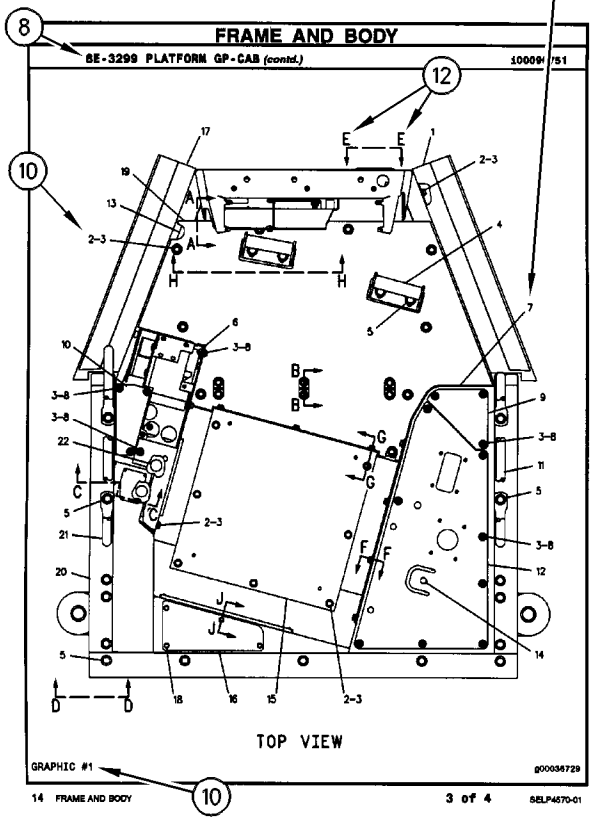
FRAME AND BODY
8E-3299 PLATFORM GP-CAB (contd.)
100090751
TOP VIEW
GRAPHIC #1
g00036729
14 FRAME AND BODY
3 of 4
SELP4570-01

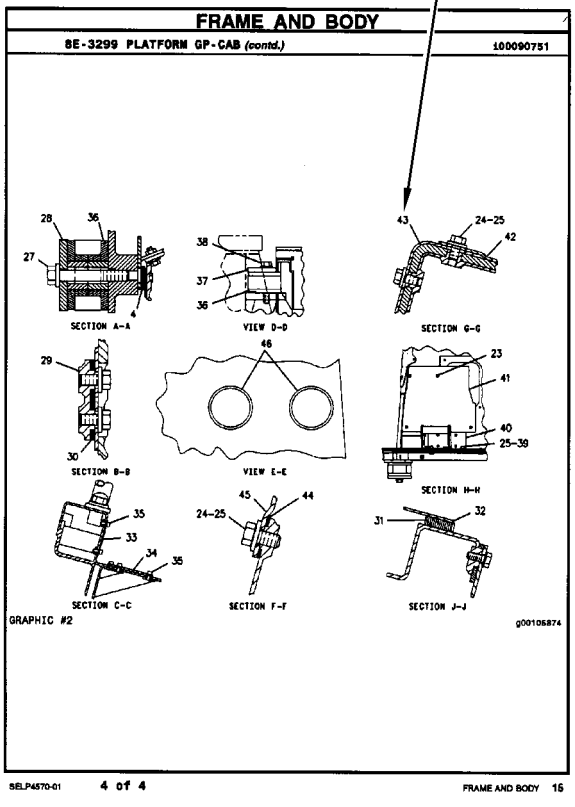
FRAME AND BODY
8E-3299 PLATFORM GP-CAB (contd.)
100090751
SECTION A-A
VIEW D-D
SECTION G-G
SECTION B-B
VIEW E-E
SECTION H-H
SECTION C-C
SECTION F-F
SECTION J-J
GRAPHIC #2
g00105874
SELP4570-01
4 of 4
FRAME AND BODY 15

## 1. IDENTIFICATION DE LA MACHINE

Toutes les machines Caterpillar portent un numéro d'identification (PIN). Certains composants des machines peuvent porter des numéros de série (S/N). En général, parmi les composants qui portent des numéros de série il y a les moteurs, les transmissions, les bulldozers et les rippers. En plus, la machine et le moteur peuvent recevoir des numéros de version, et dans certains cas, de modification. Ces numéros figurent sur les plaques de numéro de série et sur la plaque signalétique principale qui se trouve dans le poste de conduite.

Les concessionnaires Caterpillar doivent connaître tous ces numéros pour identifier correctement les pièces.

SIS *Nouvelle Caractéristique*

À partir du premier trimestre 2001, le numéro d'identification produit (PIN) Caterpillar passe de 8 à 17 caractères. Afin de permettre une identification uniforme des matériels, Caterpillar et d'autres constructeurs de machines de travaux publics s'efforcent de se conformer à la norme la plus récente portant sur les numéros d'identification des produits. Les numéros d'identification (PIN) de machines de chantier sont définis par la norme ISO 10261. Le nouveau format du numéro d'identification est valable pour toutes les machines et tous les groupes électrogènes Caterpillar. Le numéro d'identification produit (PIN) figurant sur la plaque et sur le châssis se composera de 17 caractères. Le nouveau format ressemblera à ceci:

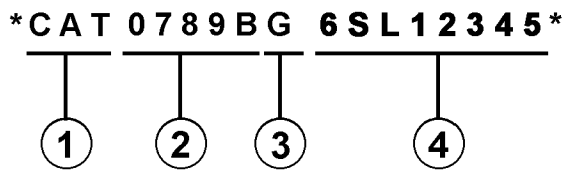


Il se décomposera de la façon suivante:

1. Code international de fabrication de Caterpillar (caractères 1 à 3)

2. Descriptif de la machine (caractères 4 à 8)

3. Contrôle (caractère 9)

4. Indicateur machine (MIS) ou numéro de séquence produit (caractères 10 à 17). Ceux-ci étaient auparavant désignés sous le terme de numéro de série.

Les machines et les groupes électrogènes construits avant le premier trimestre 2001 garderont le format à 8 caractères du numéro d'identification produit (PIN).

Les organes tels que les moteurs, les boîtes de vitesses, les essieux, etc., continueront d'être désignés par un numéro de série (S/N) à 8 caractères.

## 2. COMMANDE DE PIÈCES

**⚠ DANGER**

**Lorsqu'il faut remplacer des pièces de rechange pour ce produit Caterpillar recommande d'utiliser les pièces de rechange Caterpillar ou les pièces qui ont des spécifications équivalentes dont les dimensions physiques, le type, la force et le matériau. Ces équivalences ne se limitent pas à l'énoncé précédent.**

**L'inobservation de cette mise en garde peut entraîner des défaillances prématurées, des dommages au produit, des blessures ou même la mort.**

Les concessionnaires Caterpillar fournissent dans le monde entier des pièces de rechange de qualité Caterpillar. Leurs stocks de pièces sont constamment réapprovisionnés et comptent toutes les pièces nécessaires pour assurer la bonne marche de vos machines Caterpillar. Certains concessionnaires proposent également des kits de réparation ou des pièces rénovées, ce qui permet de choisir la solution la plus économique dans une situation donnée. Lors des commandes de pièces, mentionner la quantité, le numéro et la désignation des pièces ainsi que le numéro de série ou le numéro d'identification (PIN) de la machine pour laquelle ces pièces sont requises.

## 3. ORGANISATION DU CATALOGUE DE PIÈCES

Les renseignements sur les produits sont présentés sous forme de "Information element" (élément d'information) représentant tous les composants d'un modèle donné. "Engine Arrangement" (version de moteur) et "Seat Group" (assemblage de siège)" sont des exemples d'éléments d'information. Les éléments d'information sont classés par ordre alphabétique par la désignation standard des pièces et par numéros de pièces dans chaque partie importante du manuel.

### 4. TABLE DES MATIÈRES

SIS *Nouvelle Caractéristique*

La table des matières se trouve au début du manuel. La table des matières fournit la liste de tous les chapitres du manuel avec une liste complète de tous les éléments d'information classés par ordre d'apparition dans le manuel. Les numéros de page sont fournis afin que l'utilisateur puisse trouver rapidement les illustrations détaillées concernant l'identification des pièces et les listes des pièces d'entretien.

### 5. INDEX DES PIÈCES D'ENTRETIEN

La rubrique "Index des pièces d'entretien" qui se trouve au début du manuel renvoie aux pièces d'entretien les plus fréquemment utilisées en précisant la désignation, la quantité, là où la pièce est utilisée et le numéro de page. Ces pièces sont classés par ordre alphabétique.

### 6. INDEX

L'index qui se trouve vers le début du manuel est une liste alphabétique de tous les éléments d'information du manuel. Les numéros de page sont fournis afin que l'utilisateur puisse trouver rapidement les illustrations détaillées concernant l'identification des pièces et les listes des pièces d'entretien.

### 7. INDEX DES NUMÉROS DE PIÈCES

Une liste numérique de tous les numéros de pièces et des pages correspondantes se trouve à la fin du manuel.

### 8. LÉGENDES

Les légendes qui se trouvent en haut de chaque page de chaque élément d'information fournissent le numéro de pièce, la désignation ainsi que des renseignements supplémentaires sur les pièces. Les renseignements concernant les numéros de série (S/N) qui se trouvent dans chaque légende doivent être utilisés pour sélectionner les informations correctes pour un moteur donné. Les informations concernant les options de remplacement sur le chantier, l'identification des composants des équipements offerts en option et les lieux d'application sont aussi fournies.

SIS *Nouvelle Caractéristique*

Les lettres de la première ligne d'une légende sont présentées en police plus grande afin d'indiquer le début d'une unité d'information. Les légendes qui pourraient être requises pour des pages supplémentaires afin d'illustrer une unité d'information seront présentées en police standard et comprendront le terme (à suivre).

### 9. PIÈCES NON FOURNIES

SIS *Nouvelle Caractéristique*

Dans certains cas, il est nécessaire d'indiquer les pièces non fournies qui sont en aval de la liste des pièces d'entretien. Les numéros des pièces non fournies dans la liste des pièces et les légendes seront en italique pour signaler qu'ils ne sont pas disponibles.

### 10. NUMÉROS DE RÉFÉRENCE DE LA LISTE DES PIÈCES

SIS *Nouvelle Caractéristique*

Les numéros indiqués dans la colonne des numéros de références correspondent aux numéros utilisés dans les illustrations auxquelles ils sont associés. Un suffixe alphabétique peut être ajouté à un numéro de référence pour identifier la liste des articles en aval. Les numéros indiqués dans la colonne de référence de l'illustration renvoient à l'identification du numéro affiché dans le coin inférieur gauche de chaque illustration. Le numéro de référence de l'illustration pourrait être utilisé avec le numéro de référence de l'article pour déterminer le numéro de pièce correct. Il peut y avoir une omission intentionnelle d'un numéro de référence dans une liste de pièces suite à la mise à jour des informations en vue de refléter les numéros de pièces les plus récentes.

### 11. DÉSIGNATIONS DE PIÈCES EN RETRAIT

Lorsqu'une désignation de pièce est en retrait, cela veut dire que l'article en regard fait partie de l'ensemble sous lequel il figure.

### 12. LETTRES DE RÉFÉRENCE DES ILLUSTRATIONS

Quand cela est nécessaire, les illustrations comportent des lettres de référence (A, B, C, etc.) pour montrer le trajet des canalisations et faisceaux de câbles d'un point à l'autre. Elles sont utilisées également pour indiquer où relier les illustrations séparées auparavant.

### 13. ABRÉVIATIONS ET SYMBOLES

**O.D.** – Diamètre extérieur
**I.D.** – Diamètre intérieur
**A** – Ne fait pas partie de ce groupe
**B** – Utiliser selon besoin
**C** – Modification
**D** – Commander par mètre
**E** – Commander par centimètre
**F** – Non représenté
**G** – Commander par pouce
**I** – Voir "Hydraulic Information System"
**M** – Pièce métrique
**R** – Pièce rénovée éventuellement disponible
**Y** – Illustration séparée
**Z** – Non fourni séparément

**NOTA:**

En raison du progrès technique et des améliorations continuelles apportées au matériel, votre machine comporte peut-être des modifications qui n'apparaissent pas dans la présente publication. En cas de doute sur un détail de votre machine Caterpillar ou sur le texte de la présente publication, adressez-vous à votre concessionnaire Caterpillar.

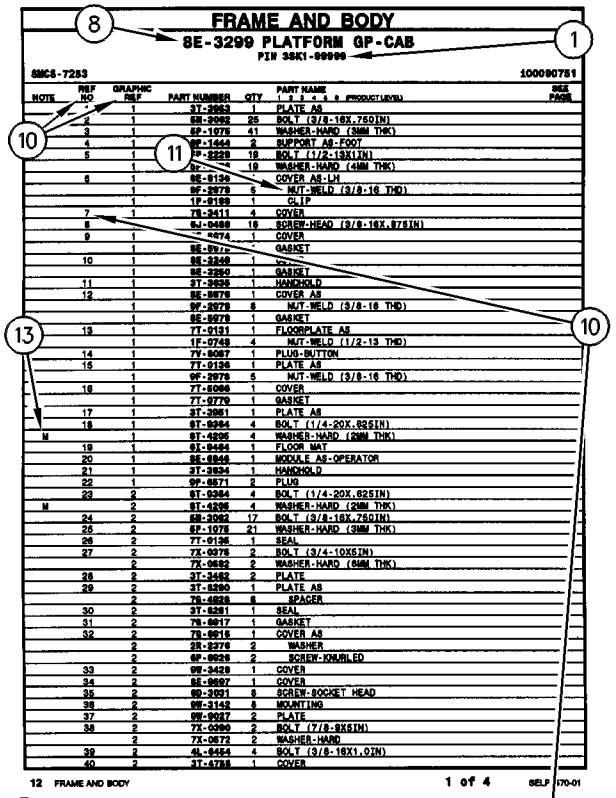
FRAME AND BODY
8E-3299 PLATFORM GP-CAB
PIN 3SK1-99999
SMCS-7283
100090751
NOTE REF NO GRAPHIC REF PART NUMBER QTY PART NAME SEE PAGE
1 1 3T-3963 1 PLATE AS
2 1 5M-2062 25 BOLT (3/8-16X.750IN)
3 1 6P-1075 41 WASHER-HARD (3MM THK)
4 1 9E-1443 2 SUPPORT AS-FOOT
5 1 9P-2229 19 BOLT (1/2-13X1IN)
1 19 WASHER-HARD (4MM THK)
6 1 6E-9139 1 COVER AS-LH
1 6P-2979 6 NUT-WELD (3/8-16 THD)
1 1P-6189 1 CLIP
7 1 7S-3411 4 COVER
8 1 6J-0468 18 SCREW-HEAD (3/8-16X.87SIN)
9 1 1 COVER
1 GASKET
10 1 1
1 2
11 1 3T-3836 1 HANDHOLD
12 1 8E-9878 1 COVER AS
1 9P-2979 8 NUT-WELD (3/8-16 THD)
1 8E-9879 1 GASKET
13 1 7T-9131 1 FLOORPLATE AS
1 1F-0748 4 NUT-WELD (1/2-13 THD)
14 1 7V-8067 1 PLUG-BUTTON
15 1 7T-9136 1 PLATE AS
1 9P-2979 5 NUT-WELD (3/8-16 THD)
16 1 7T-5066 1 COVER
1 7T-9779 1 GASKET
17 1 3T-3951 1 PLATE AS
18 1 9T-0264 4 BOLT (1/4-20X.62SIN)
M 1 3T-4295 4 WASHER-HARD (2MM THK)
19 1 6I-9454 1 FLOOR MAT
20 1 8E-6848 1 MODULE AS-OPERATOR
21 1 3T-3934 1 HANDHOLD
22 1 9P-0571 2 PLUG
23 2 9T-0264 4 BOLT (1/4-20X.62SIN)
M 2 3T-4295 4 WASHER-HARD (2MM THK)
24 2 5M-2062 17 BOLT (3/8-16X.750IN)
25 2 6P-1075 21 WASHER-HARD (3MM THK)
26 2 7T-9136 1 SEAL
27 2 7X-0075 2 BOLT (3/4-10X5IN)
2 7X-0682 2 WASHER-HARD (6MM THK)
28 2 3T-3482 2 PLATE
29 2 3T-5290 1 PLATE AS
2 7S-4828 6 SPACER
30 2 3T-5291 1 SEAL
31 2 7S-8817 1 GASKET
32 2 7S-8816 1 COVER AS
2 5R-2276 2 WASHER
2 9P-9928 2 SCREW-KNURLED
33 2 9W-3429 1 COVER
34 2 8E-9897 1 COVER
35 2 9D-3091 8 SCREW-SOCKET HEAD
36 2 9W-3142 8 MOUNTING
37 2 9W-9937 2 PLATE
38 2 7X-0960 2 BOLT (7/8-9X5IN)
2 7X-0672 2 WASHER-HARD
39 2 4L-6454 4 BOLT (3/8-16X1.0IN)
40 2 3T-4788 1 COVER
12 FRAME AND BODY
1 of 4
SELP4570-01

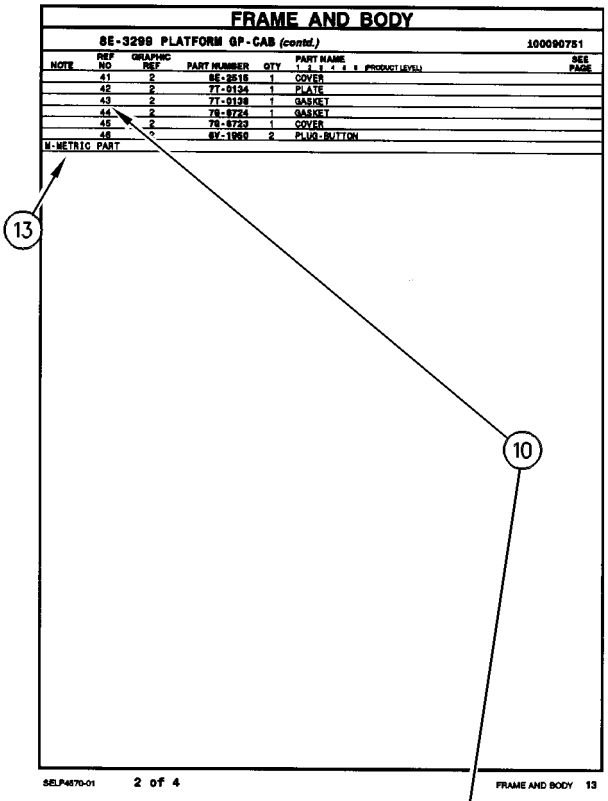
FRAME AND BODY
8E-3299 PLATFORM GP-CAB (contd.)
100090751
NOTE REF NO GRAPHIC REF PART NUMBER QTY PART NAME SEE PAGE
41 2 8E-2515 1 COVER
42 2 7T-9134 1 PLATE
43 2 7T-9138 1 GASKET
44 2 7S-8724 1 GASKET
45 2 7S-8723 1 COVER
46 * 8V-1950 2 PLUG-BUTTON
M-METRIC PART
SELP4570-01
2 of 4
FRAME AND BODY 13

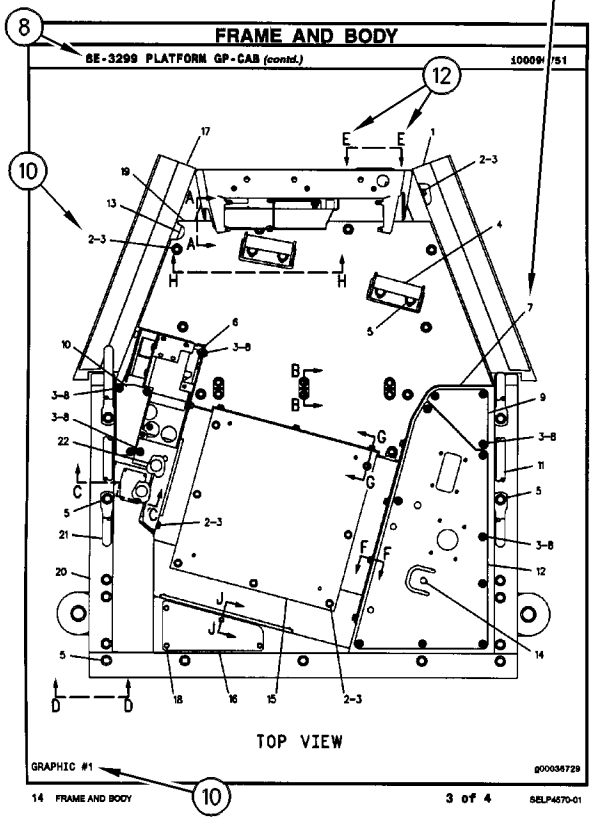
FRAME AND BODY
8E-3299 PLATFORM GP-CAB (contd.)
100090751
TOP VIEW
GRAPHIC #1
g00036729
14 FRAME AND BODY
3 of 4
SELP4570-01

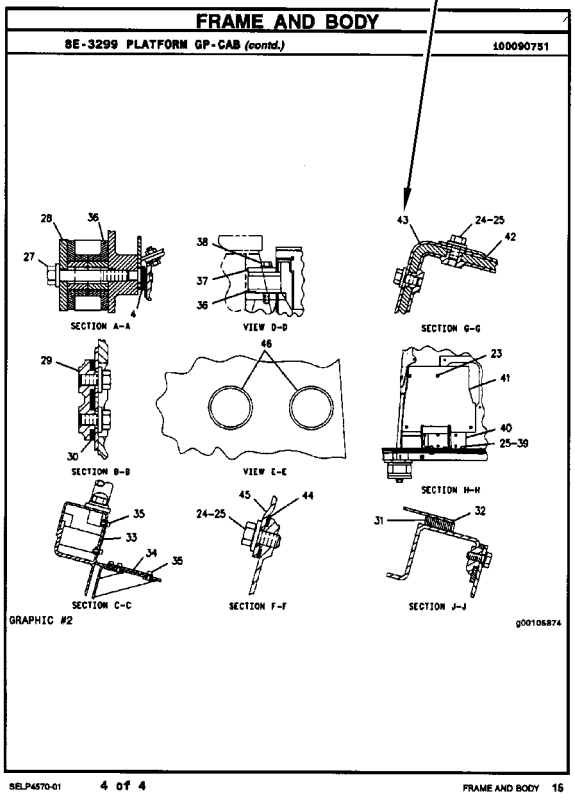
FRAME AND BODY
8E-3299 PLATFORM GP-CAB (contd.)
100090751
SECTION A-A
VIEW D-D
SECTION G-G
SECTION B-B
VIEW E-E
SECTION H-H
SECTION C-C
SECTION F-F
SECTION J-J
GRAPHIC #2
g00105874
SELP4570-01
4 of 4
FRAME AND BODY 15

# INFORMACIÓN GENERAL

## 1. MÁQUINAS

Las máquinas Caterpillar se identifican con Números de Identificación del Producto (PIN). Algunos componentes incluídos en la máquina pueden estar identificados con Números de Serie (N/S). Los componentes que tienen típicamente esta identificación incluyen motores, transmisiones, hojas topadoras y desgarradores. La máquina y el motor se identifican además con Números de Configuración y en algunos casos, Números de Modificación. Estos números están en las placas de identificación del producto o en la placa principal en la cabina del operador.

Los distribuidores Caterpillar necesitan estos números para identificar con exactitud los números de piezas de repuesto.

SIS *Nueva Característica*

A partir del primer trimestre del 2001, el Número de Identificación de Producto (PIN) de Caterpillar cambió de 8 a 17 caracteres. Para hacer más uniforme el método de identificación de equipos, Caterpillar y otros fabricantes de equipo de construcción han tomado medidas para cumplir con la versión más reciente de la norma de numeración de identificación de productos. Los Números de Identificación de Producto para máquinas que no se operan en carreteras son definidos por la norma ISO 10261. El nuevo formato PIN corresponderá a todas las máquinas y grupos electrógenos Caterpillar. Las placas y los caracteres PIN estampados en el bastidor mostrarán el PIN de 17 caracteres. El nuevo formato tendrá la apariencia siguiente:

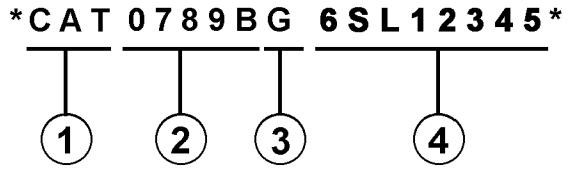


Significado de los caracteres:

1. Código de Fabricación Mundial de Caterpillar (caracteres 1-3)

2. Sección Descriptor de la Máquina (caracteres 4-8)

3. Carácter de Verificación (carácter 9)

4. Sección Indicador de la Máquina (MIS) o Número de Secuencia de Producto (caracteres 10-17). Anteriormente, estos caracteres constituían el Número de Serie.

Las máquinas y grupos electrógenos producidos antes del primer semestre del 2001 mantendrán su formato PIN de 8 caracteres.

Los componentes como motores, transmisiones, ejes, herramientas de trabajo, etc., continuarán usando un Número de Serie (S/N) de 8 caracteres.

## 2. COMO PEDIR REPUESTOS

**⚠ ADVERTENCIA**

**Cuando se necesiten piezas de repuesto para este producto, Caterpillar recomienda usar piezas de repuesto Caterpillar o piezas que tengan especificaciones equivalentes incluyendo, pero sin estar limitadas a, dimensiones físicas, tipo, fortaleza y material.**

**El no hacer caso de esta advertencia puede llevar a fallas prematuras, daños al producto y lesiones graves o mortales.**

Las piezas de repuesto Caterpillar de calidad están a la disposición de los distribuidores Caterpillar en todo el mundo. Sus existencias actualizadas incluyen todas las piezas normalmente requeridas para proteger su inversión en máquinas Caterpillar. Los distribuidores pueden tener juegos de reparación o piezas remanufacturadas para permitir la selección de la mejor alternativa de reparación en un caso en particular. Al pedir piezas de repuesto, especifique en su pedido la cantidad, el número de pieza, el nombre de la pieza y el número de serie/número de identificación del producto, de la máquina para la cual se necesitan estas piezas.

## 3. ORGANIZACION DEL MANUAL DE PIEZAS

La información sobre el producto, se presenta en este manual, como "elementos de información" que representan todos los componentes de un modelo específico. Las configuraciones de motores y los grupos de asientos son ejemplos de elementos de información. Los elementos de información están organizados primeramente por nombres de piezas en orden alfabético y en segundo lugar, por el número de pieza dentro de cada sección principal del manual.

**4. CONTENIDO**

La página de Contenido se encuentra al principio del manual. El Contenido indica cada sección del manual con una lista completa de todos los elementos de información organizados en el orden que aparecen en el manual. Los números de página proporcionan una referencia rápida a las ilustraciones detalladas de identificación de piezas y a las listas de componentes de repuesto de dichas piezas.

**5. ÍNDICE DE PIEZAS DE MANTENIMIENTO**

Al principio de este catálogo se encuentra un índice de los números de piezas utilizadas más frecuentemente para el mantenimiento, que incluye descripción, cantidad necesaria, lugar de utilización y número de página. Esta información está organizada alfabéticamente, por descripción de la pieza.

**6. ÍNDICE**

El Índice, ubicado cerca del principio del manual, es una lista en orden alfabético de todos los elementos de información incluídos en el manual. Los números de página proporcionan una referencia rápida a las ilustraciones detalladas de identificación de piezas y a las listas de componentes de repuesto de dichas piezas.

**7. INDICE NUMÉRICO DE PIEZAS**

Un índice numérico de piezas con el correspondiente número de página aparece al final de este catálogo.

**8. TÍTULOS**

Los títulos ubicados al principio de cada elemento de información identifican el número y el nombre de la pieza junto con información descriptiva. Se debe usar información sobre los Números de Identificación de Pieza (PIN) y los números de serie (S/N) para seleccionar la información que corresponda a una máquina en particular. También se suministra información sobre las opciones de reparación en el campo, la identificación de componentes de accesorios optativos y el lugar de ubicación de la pieza ("es parte de").

La primera línea del título se muestra con un tipo de letra más grande para indicar el comienzo de un elemento de información. Si se requieren páginas adicionales para ilustrar un elemento de información, los títulos se muestran con un tipo de letra normal y la continuación se indica entre paréntesis.

**9. PIEZAS QUE NO SE SUMINISTRAN COMO REPUESTO**

En algunos casos es necesario indicar piezas que no se suministran como repuesto pero que pueden estar conectadas a listas de componentes de otras piezas de repuesto. En tal caso, dichas piezas se muestran en cursiva para indicar que no son piezas disponibles.

**10. NÚMEROS DE REFERENCIA**

Los números en la columna de No. de Referencia corresponden a los números indicados en la ilustración que pertenece a ese número de pieza. Los números que tienen un sufijo alfabético identifican artículos de las listas de componentes de piezas. Los números en la columna de Referencia de la ilustración se identifican en la esquina inferior izquierda de cada ilustración. Para determinar el número de pieza correcto se puede utilizar tanto el No. de Referencia de la ilustración como el No. de Referencia del artículo. A medida que se actualiza la información para indicar los más recientes números de piezas de repuesto, puede omitirse intencionalmente un No. de Referencia en una lista de componentes de piezas.

**11. NOMBRES DE PIEZA SANGRADOS**

Cuando el nombre de una pieza está sangrado en una lista, significa que esta pieza forma parte del grupo o conjunto del renglón inmediatamente superior.

**12. LETRAS DE REFERENCIA DE ILUSTRACIONES**

Las ilustraciones contienen algunas veces letras de referencia (A, B, C etc.) cuyo propósito es seguir el trayecto de líneas y mazos de cables de un punto a otro. También se utilizan para mostrar dónde volver a unir ilustraciones que se habían separado.

### 13. ABREVIATURAS Y SIMBOLOS

**O.D.** – Diámetro exterior
**I.D.** – Diámetro interior
**A** – No es pieza de este grupo
**B** – Utilizado según la demanda
**C** – Indica cambio
**D** – Se pide por metro
**E** – Se pide por centímetro
**F** – No se muestra
**G** – Se pide por pulgada
**I** – Consulte el sistema de información hidráulica
**M** – Pieza métrica
**R** – Puede estar disponible como pieza remanufacturada
**Y** – Ilustración separada
**Z** – No se suministra por separado

SIS *Nueva Característica*

### 14. DESCRIPCIÓN DE LOS CAMBIOS DE TIPO

Tipo – Un tipo se define como cualquier cambio de configuración que requiere un Elemento de información adicional de una Configuración, Grupo o Conjunto. Si el número de serie se clasifica por tipos que no están disponibles, se mostrará un número de tipo (Tipo 1,Tipo 2,etc.) en el comentario de la fotografía. Estos cambios de "tipo" se identifican con una nota "C" (cambio con respecto al tipo anterior) en la Lista de Piezas. Se incluirían sólo los "tipos" que aplican a este Manual de Piezas. Es posible que haya tipos adicionales que causen la aparición de notas "C" en el Elemento de Información cuando no se muestran otros tipos."

### 15.<END>

Este símbolo indica el final de un elemento de información.

**NOTA:**

**Las contínuas mejoras y adelantos en diseño podrían originar cambios a su máquina que no se incluyen en esta publicación. Cuando tenga alguna pregunta acerca de su producto Caterpillar o de esta publicación, consulte al distribuidor Caterpillar para obtener la información más reciente.**

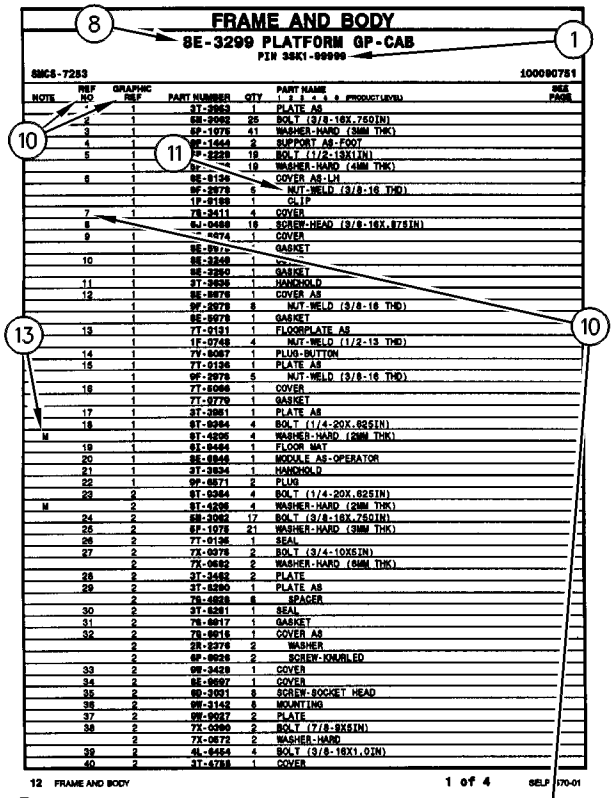

FRAME AND BODY

8E-3299 PLATFORM GP-CAB

PIN 3SK1-99999

SMCS-7283 100090751

| NOTE | REF NO | GRAPHIC REF | PART NUMBER | QTY | PART NAME (1 2 3 4 5 6 PRODUCT LEVEL) | SEE PAGE |
|---|---|---|---|---|---|---|
| | * | 1 | 3T-3963 | 1 | PLATE AS | |
| | 2 | 1 | 5M-2062 | 25 | BOLT (3/8-16X.750IN) | |
| | 3 | 1 | 6P-1075 | 41 | WASHER-HARD (3MM THK) | |
| | 4 | 1 | 9E-1444 | 2 | SUPPORT AS-FOOT | |
| | 5 | 1 | 9P-2229 | 19 | BOLT (1/2-13X1IN) | |
| | | 1 | 9P-[illegible] | 19 | WASHER-HARD (4MM THK) | |
| | 6 | 1 | 9E-9136 | * | COVER AS-LH | |
| | | 1 | 9F-2979 | 6 | NUT-WELD (3/8-16 THD) | |
| | | 1 | 1P-0189 | 1 | CLIP | |
| | 7 | 1 | 7S-2411 | 4 | COVER | |
| | 8 | 1 | 6J-0468 | 18 | SCREW-HEAD (3/8-16X.87SIN) | |
| | 9 | 1 | [illegible]-0274 | 1 | COVER | |
| | | 1 | 9E-9976 | * | GASKET | |
| | 10 | 1 | 9E-3248 | 1 | [illegible] | |
| | | 1 | 9E-2950 | 1 | GASKET | |
| | 11 | 1 | 3T-3936 | 1 | HANDHOLD | |
| | 12 | 1 | 9E-9976 | 1 | COVER AS | |
| | | 1 | 9F-2979 | 8 | NUT-WELD (3/8-16 THD) | |
| | | 1 | 9E-9978 | 1 | GASKET | |
| | 13 | 1 | 7T-9131 | 1 | FLOORPLATE AS | |
| | | 1 | 1F-0748 | 4 | NUT-WELD (1/2-13 THD) | |
| | 14 | 1 | 7V-8067 | 1 | PLUG-BUTTON | |
| | 15 | 1 | 7T-9136 | 1 | PLATE AS | |
| | | 1 | 9F-2979 | 5 | NUT-WELD (3/8-16 THD) | |
| | 16 | 1 | 7T-8066 | 1 | COVER | |
| | | 1 | 7T-9779 | 1 | GASKET | |
| | 17 | 1 | 3T-3951 | 1 | PLATE AS | |
| | 18 | 1 | 9T-0264 | 4 | BOLT (1/4-20X.62SIN) | |
| M | | 1 | 9T-4296 | 4 | WASHER-HARD (2MM THK) | |
| | 19 | 1 | 9I-9464 | 1 | FLOOR MAT | |
| | 20 | 1 | 9E-6946 | 1 | MODULE AS-OPERATOR | |
| | 21 | 1 | 3T-3934 | 1 | HANDHOLD | |
| | 22 | 1 | 9P-0671 | 2 | PLUG | |
| | 23 | 2 | 9T-0264 | 4 | BOLT (1/4-20X.62SIN) | |
| M | | 2 | 9T-4296 | 4 | WASHER-HARD (2MM THK) | |
| | 24 | 2 | 5M-2062 | 17 | BOLT (3/8-16X.75QIN) | |
| | 25 | 2 | 6P-1075 | 21 | WASHER-HARD (3MM THK) | |
| | 26 | 2 | 7T-9136 | 1 | SEAL | |
| | 27 | 2 | 7X-0078 | 2 | BOLT (3/4-10X5IN) | |
| | | 2 | 7X-0682 | 2 | WASHER-HARD (6MM THK) | |
| | 28 | 2 | 3T-3482 | 2 | PLATE | |
| | 29 | 2 | 3T-5290 | 1 | PLATE AS | |
| | | 2 | 7S-4828 | 6 | SPACER | |
| | 30 | 2 | 3T-5291 | 1 | SEAL | |
| | 31 | 2 | 7S-8817 | 1 | GASKET | |
| | 32 | 2 | 7S-8816 | 1 | COVER AS | |
| | | 2 | 5R-2276 | 2 | WASHER | |
| | | 2 | 9F-9026 | 2 | SCREW-KNURLED | |
| | 33 | 2 | 9W-3429 | 1 | COVER | |
| | 34 | 2 | 8E-9697 | 1 | COVER | |
| | 35 | 2 | 9D-3031 | 8 | SCREW-SOCKET HEAD | |
| | 36 | 2 | 9W-3143 | 8 | MOUNTING | |
| | 37 | 2 | 9W-9027 | 2 | PLATE | |
| | 38 | 2 | 7X-0360 | 2 | BOLT (7/8-9X5IN) | |
| | | 2 | 7X-0672 | 2 | WASHER-HARD | |
| | 39 | 2 | 4L-6454 | 4 | BOLT (3/8-16X1.0IN) | |
| | 40 | 2 | 3T-4788 | 1 | COVER | |

12 FRAME AND BODY 1 of 4 SELP4570-01

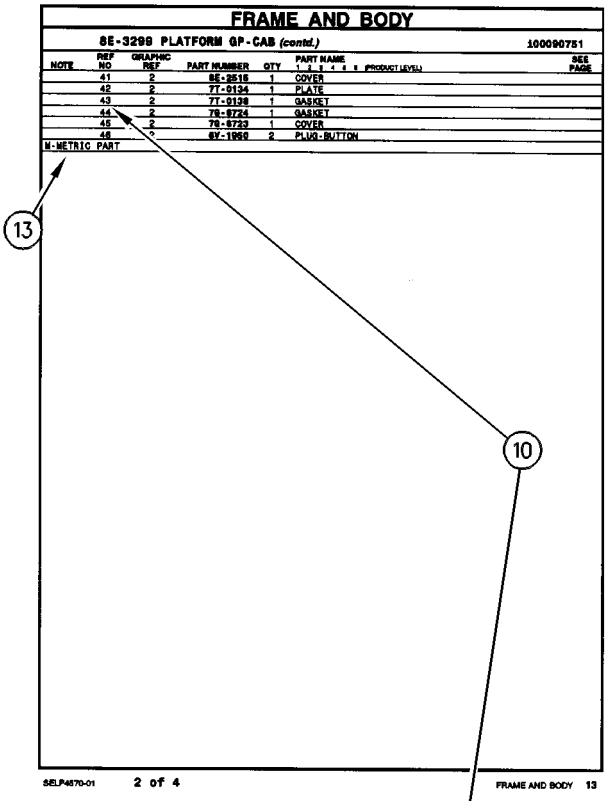

FRAME AND BODY

8E-3299 PLATFORM GP-CAB (contd.) 100090751

| NOTE | REF NO | GRAPHIC REF | PART NUMBER | QTY | PART NAME (1 2 3 4 5 6 PRODUCT LEVEL) | SEE PAGE |
|---|---|---|---|---|---|---|
| | 41 | 2 | 8E-2515 | 1 | COVER | |
| | 42 | 2 | 7T-9134 | 1 | PLATE | |
| | 43 | 2 | 7T-9138 | 1 | GASKET | |
| | 44 | 2 | 7S-8724 | 1 | GASKET | |
| | 45 | 2 | 7S-8723 | 1 | COVER | |
| | 46 | * | 8Y-1950 | 2 | PLUG-BUTTON | |

M-METRIC PART

SELP4570-01 2 of 4 FRAME AND BODY 13

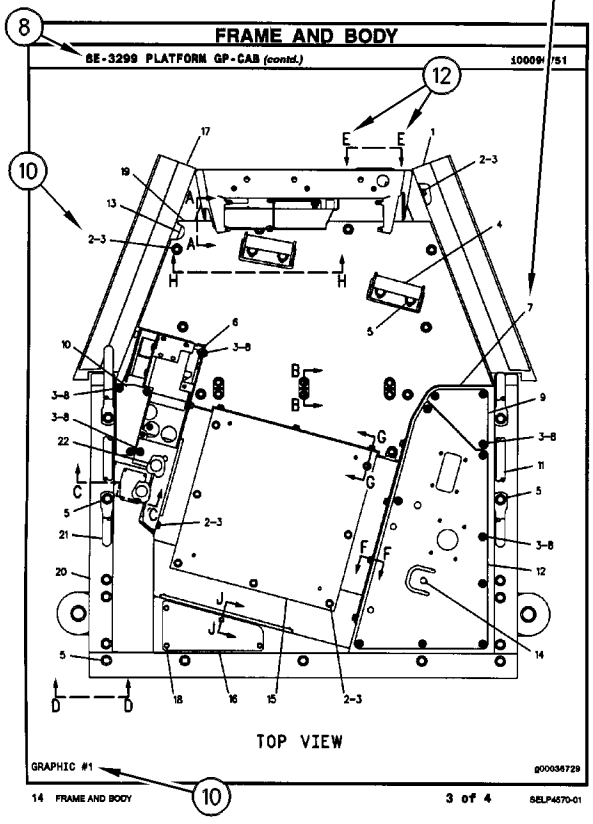

FRAME AND BODY

8E-3299 PLATFORM GP-CAB (contd.) 100090751

TOP VIEW

GRAPHIC #1 g00036729

14 FRAME AND BODY 3 of 4 SELP4570-01

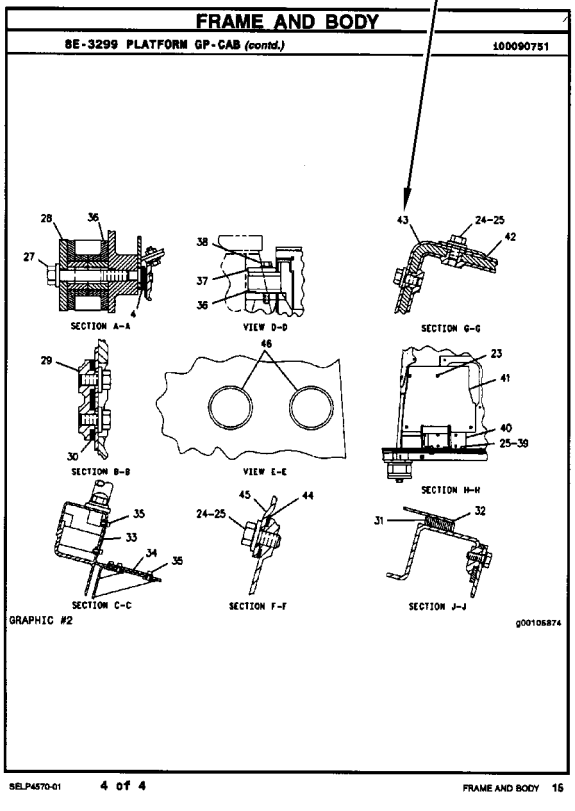

FRAME AND BODY

8E-3299 PLATFORM GP-CAB (contd.) 100090751

SECTION A-A VIEW D-D SECTION G-G

SECTION B-B VIEW E-E SECTION H-H

SECTION C-C SECTION F-F SECTION J-J

GRAPHIC #2 g00105874

SELP4570-01 4 of 4 FRAME AND BODY 15

# INFORMAÇÃO GERAL

## 1. IDENTIFICAÇÃO DA MÁQUINA

As máquinas Caterpillar são identificadas pelos Números de Informação do Produto (PIN). Alguns componentes incluídos numa máquina podem ser identificados por Números de Série (S/N). Componentes típicos que serão enumerados com números de série incluem motores, transmissões, lâminas e ríperes. Além do número de série, a máquina e o motor são ainda identificados por números de arranjo e, em alguns casos, números de modificações. Tais números encontram-se na(s) placa(s) de identificação do produto e na placa mestre no compartimento do operador.

SIS *Novidades*

A partir do primeiro trimestre de 2001 o Número de Identificação de Produto da Caterpillar (PIN) precisa ser mudado de 8 para 17 caracteres. Esforçando-se para fornecer uma identificação uniforme de equipamentos, a Caterpillar e outros fabricantes de equipamento de construção estão mudando para atender a versão mais atualizada do padrão de identificação de produtos. Os números de PIN para produtos de aplicações não rodoviárias são definidos pela ISO 10261. O novo formato de número PIN será adotado em todas as máquinas e grupos geradores Caterpillar. As placas e as marcações do chassi mostrarão os 17 dígitos de PIN. O novo formato terá a seguinte disposição:

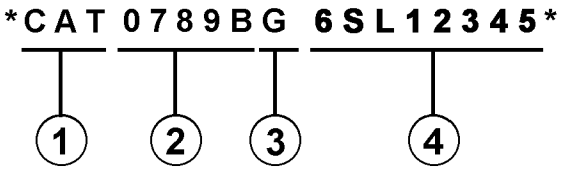


Onde:

1. Código de Fabricação Mundial da Caterpillar (dígitos 1-3)

2. Descrição da Máquina (dígitos 4-8)

3. Dígito de Verificação (dígito 9)

4. Seção de Indicador da Máquina (MIS) ou Número de Seqüência de Produto (dígitos 10-17). Estes eram anteriormente chamados de Número de Série.

Máquinas e grupos geradores produzidos antes do primeiro trimestre de 2001 manterão o formato de 8 caracteres de PIN.

Componentes como motores, transmissões, eixos, ferramentas de trabalho, etc. continuarão a usar Número de Série (S/N) com oito caracteres.

## 2. COMO OBTER PEÇAS

**⚠ CUIDADO**

**Quando peças de substituição são exigidas para este produto, a Caterpillar recomenda a utilização de peças de substituição Caterpillar ou peças com as especificações equivalentes incluindo, mas não limitadas, à dimensões físicas, tipos, resistência e materiais.**

**A inobservância desta advertência poderá resultar em falhas prematuras, danos ao produto, ferimentos ou morte.**

As Peças de Reposição de Qualidade Caterpillar encontram-se disponíveis nos revendedores Caterpillar no mundo inteiro. Seus estoques de peças são atualizados e incluem todas as peças normalmente necessárias para proteger seu investimento em máquinas Caterpillar. Alguns revendedores podem oferecer jogos de reparo ou peças de troca/remanufaturadas disponíveis como uma opção da alternativa de reparo mais eficaz para uma situação específica. Ao encomendar peças, seu pedido deve especificar a quantidade, o número e o nome da peça e o número de série/número de identificação do produto referentes à máquina para a qual as peças se destinam.

## 3. ORGANIZAÇÃO DO MANUAL DE PEÇAS

A informação do produto neste manual é apresentada em forma de "elementos de informação" que representam todos os componentes para o modelo específico. Arranjo de Motor e Grupo de Assento são exemplos de elementos de informação. Os elementos de informação são organizados em ordem alfabética por nome de peça ou secundariamente, por número de peça incluído em cada seção principal do manual.

## 4. LISTA DE CONTEÚDOS

A Lista de Conteúdos (TOC) se encontra no princípio do manual. A Lista de Conteúdos (TOC) relaciona em cada seção do manual uma lista completa com todos os elementos de informação organizados conforme aparecem no manual. Números de página são fornecidos para que se tenha referência rápida de ilustrações de peças detalhadas e listas de conteúdos que podem receber serviço de manutenção.

### 5. ÍNDICE DE PEÇAS DE MANUTENÇÃO

O Índice de Peças de Manutenção, localizado perto do princípio do manual, faz referência aos números de peça de manutenção usados com maior frequência, fornecendo uma descrição, a quantidade, o uso e o número de página. Esta informação é organizada com a descrição da peça em ordem alfabética.

### 6. ÍNDICE

O Índice localizado perto do princípio do manual, consiste de uma lista em ordem alfabética de todos os elementos de informação incluídos no manual. Números de página são fornecidos para que se tenha referência rápida de ilustrações de peças detalhadas e listas de conteúdos que podem receber serviço de manutenção.

### 7. ÍNDICE DE NÚMERO DE PEÇA

Um índice numérico relacionando todos os números de peça e a(s) página(s) correspondentes, aparece no final do manual.

### 8. LEGENDAS

As legendas localizadas no início de cada elemento de informação identificam o número e o nome de peça, juntamente com informação descritiva adicional. Informações sobre o Número de Informação do Produto (PIN) e o Número de Série (S/N) encontradas em cada legenda devem ser usadas para selecionar a informação correta sobre uma máquina específica. Opções de substituição no campo, identificação de componentes de acessórios opcionais e informações sobre onde são utilizados ("parte de") são também fornecidas.

A primeira linha de uma legenda é indicada em tipo maior para indicar o princípio de um elemento de informação. Legendas para páginas adicionais que podem ser necessárias para ilustrar um elemento de informação serão apresentadas em tipo padrão e incluirão o termo *(continua)* .

### 9. NÃO DISPONÍVEL SEPARADAMENTE

Em alguns casos, é necessário mostrar peças não disponíveis separadamente que têm uma ligação com listas de conteúdos de nível inferior que podem receber serviço de manutenção. Os números de peça destes componentes não disponíveis aparecerão em *itálico* , a fim de indicar que não estão disponíveis.

### 10. NÙMEROS DE REFERÊNCIA À LISTA DE PEÇAS

Os números indicados na coluna Ref No (No. de Referência) correspondem-se aos números usados no(s) gráfico(s) correspondente(s). Um sufixo com letras pode ser acrescentado a um número de referência para identificar itens de conteúdo de nível inferior. Os números indicados na coluna Graphic Ref (Referência de Gráfico) referem-se ao identificador de número de gráfico presente no canto esquerdo inferior de cada ilustração. O número de Referência de Gráfico pode ser usado em combinação com o item Ref No para determinar-se o número de peça correto. Poderá haver omissão intencional de um número de referência (Ref No) de uma lista de conteúdos uma vez que as informações são atualizadas para refletir os números de peça mais recentes que podem receber serviço de manutenção.

### 11. NOMES DE PEÇAS DESALINHADOS

Quando um nome de peça encontra-se desalinhado numa lista de peças, significa que tal item faz parte do (está incluído no) grupo ou conjunto sob o qual está relacionado.

### 12. LETRAS DE REFERÊNCIA NAS ILUSTRAÇÕES

Quando necessário, as ilustrações contêm letras de referência (A, B, C, etc.) que são utilizadas para seguir tubulações e cabos elétricos de um ponto a outro. Também foram utilizadas para indicar onde se pode reconectar as ilustrações que foram separadas.

### 13. ABREVIAÇÕES E SÍMBOLOS

**O.D.** – "Outside Diameter" (Diâmetro Externo)
**I.D.** – "Inside Diameter" (Diâmetro Interno)
**A** – Não faz parte deste grupo
**B** – Use conforme necessário
**C** – Indica modificação
**D** – Vendido por metro
**E** – Vendido por centímetro
**F** – Não ilustrado
**G** – Vendido por polegada
**I** – Consultar o Sistema de Informações Hidráulicas
**M** – Peça métrica
**R** – Peça remanufaturada pode estar disponível; consulte o seu revendedor Cat
**Y** – Ilustração separada
**Z** – Não disponível separadamente

SIS *Novidades*

### 14. <END>

Este símbolo indica o final de um elemento de informação.

**NOTA:**

**Os contínuos aperfeiçoamentos e avanços no projeto do produto podem ocasionar modificações em sua máquina que talvez ainda não estejam incluídas nesta publicação. Sempre que surgirem dúvidas quanto a um produto Caterpillar ou quanto à presente publicação, consulte o seu revendedor Caterpillar para obter as informações mais recentes disponíveis**.

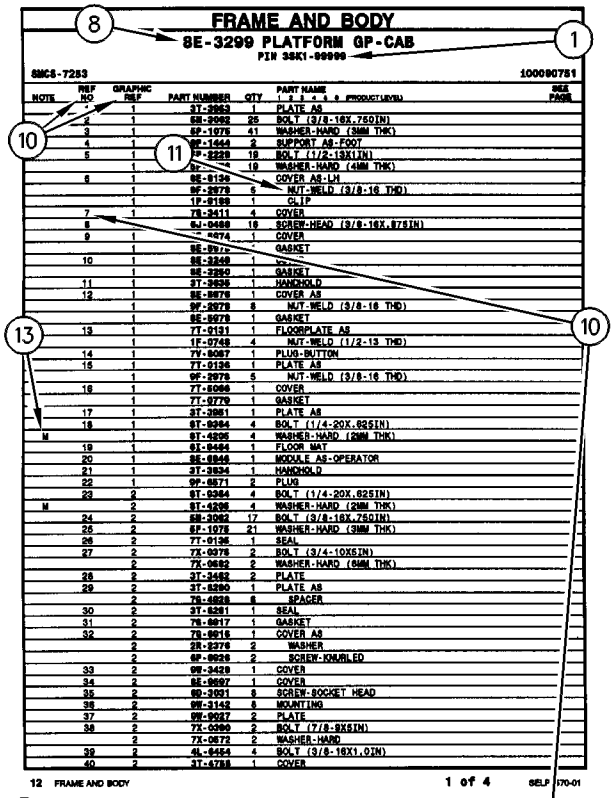

FRAME AND BODY

8E-3299 PLATFORM GP-CAB

PIN 3SK1-99999

SMCS-7283 100090751

| NOTE | REF NO | GRAPHIC REF | PART NUMBER | QTY | PART NAME 1 2 3 4 5 6 (PRODUCT LEVEL) | SEE PAGE |
|---|---|---|---|---|---|---|
| | * | 1 | 3T-3963 | 1 | PLATE AS | |
| | 2 | 1 | 5M-2062 | 25 | BOLT (3/8-16X.750IN) | |
| | 3 | 1 | 6P-1075 | 41 | WASHER-HARD (3MM THK) | |
| | 4 | 1 | 9E-1443 | 2 | SUPPORT AS-FOOT | |
| | 5 | 1 | 9P-2229 | 19 | BOLT (1/2-13X1IN) | |
| | | 1 | 6P-[illegible] | 19 | WASHER-HARD (4MM THK) | |
| | 6 | 1 | 9E-9136 | * | COVER AS-LH | |
| | | 1 | 9F-2979 | 6 | NUT-WELD (3/8-16 THD) | |
| | | 1 | 1P-0189 | 1 | CLIP | |
| | 7 | 1 | 7X-3411 | 4 | COVER | |
| | 8 | 1 | 6J-0468 | 18 | SCREW-HEAD (3/8-16X.87SIN) | |
| | 9 | 1 | [illegible]-0274 | 1 | COVER | |
| | | 1 | 9E-9[illegible] | * | GASKET | |
| | 10 | 1 | 9E-3248 | 1 | [illegible] | |
| | | 1 | 9E-3250 | 1 | GASKET | |
| | 11 | 1 | 3T-3636 | 1 | HANDHOLD | |
| | 12 | 1 | 9E-9076 | 1 | COVER AS | |
| | | 1 | 9F-2979 | 8 | NUT-WELD (3/8-16 THD) | |
| | | 1 | 9E-9078 | 1 | GASKET | |
| | 13 | 1 | 7T-9131 | 1 | FLOORPLATE AS | |
| | | 1 | 1F-0748 | 4 | NUT-WELD (1/2-13 THD) | |
| | 14 | 1 | 7V-8067 | 1 | PLUG-BUTTON | |
| | 15 | 1 | 7T-9136 | 1 | PLATE AS | |
| | | 1 | 9F-2979 | 5 | NUT-WELD (3/8-16 THD) | |
| | 16 | 1 | 7T-5066 | 1 | COVER | |
| | | 1 | 7T-9779 | 1 | GASKET | |
| | 17 | 1 | 3T-3951 | 1 | PLATE AS | |
| | 18 | 1 | 9T-0264 | 4 | BOLT (1/4-20X.62SIN) | |
| M | | 1 | 9T-4296 | 4 | WASHER-HARD (2MM THK) | |
| | 19 | 1 | 9I-9454 | 1 | FLOOR MAT | |
| | 20 | 1 | 9E-6946 | 1 | MODULE AS-OPERATOR | |
| | 21 | 1 | 3T-3934 | 1 | HANDHOLD | |
| | 22 | 1 | 9P-0671 | 2 | PLUG | |
| | 23 | 2 | 9T-0264 | 4 | BOLT (1/4-20X.62SIN) | |
| M | | 2 | 9T-4296 | 4 | WASHER-HARD (2MM THK) | |
| | 24 | 2 | 5M-2062 | 17 | BOLT (3/8-16X.750IN) | |
| | 26 | 2 | 6P-1075 | 21 | WASHER-HARD (3MM THK) | |
| | 26 | 2 | 7T-9136 | 1 | SEAL | |
| | 27 | 2 | 7X-0078 | 2 | BOLT (3/4-10X5IN) | |
| | | 2 | 7X-0682 | 2 | WASHER-HARD (6MM THK) | |
| | 28 | 2 | 3T-3482 | 2 | PLATE | |
| | 29 | 2 | 3T-5290 | 1 | PLATE AS | |
| | | 2 | 7S-4828 | 6 | SPACER | |
| | 30 | 2 | 3T-5291 | 1 | SEAL | |
| | 31 | 2 | 7S-8817 | 1 | GASKET | |
| | 32 | 2 | 7S-8818 | 1 | COVER AS | |
| | | 2 | 5R-2276 | 2 | WASHER | |
| | | 2 | 9F-9026 | 2 | SCREW-KNURLED | |
| | 33 | 2 | 9W-3429 | 1 | COVER | |
| | 34 | 2 | 8E-9697 | 1 | COVER | |
| | 35 | 2 | 9D-3031 | 8 | SCREW-SOCKET HEAD | |
| | 36 | 2 | 9W-3143 | 8 | MOUNTING | |
| | 37 | 2 | 9W-9037 | 2 | PLATE | |
| | 38 | 2 | 7X-0360 | 2 | BOLT (7/8-9X5IN) | |
| | | 2 | 7X-0672 | 2 | WASHER-HARD | |
| | 39 | 2 | 4L-9454 | 4 | BOLT (3/8-16X1.0IN) | |
| | 40 | 2 | 3T-4788 | 1 | COVER | |

12 FRAME AND BODY 1 of 4 SELP4570-01

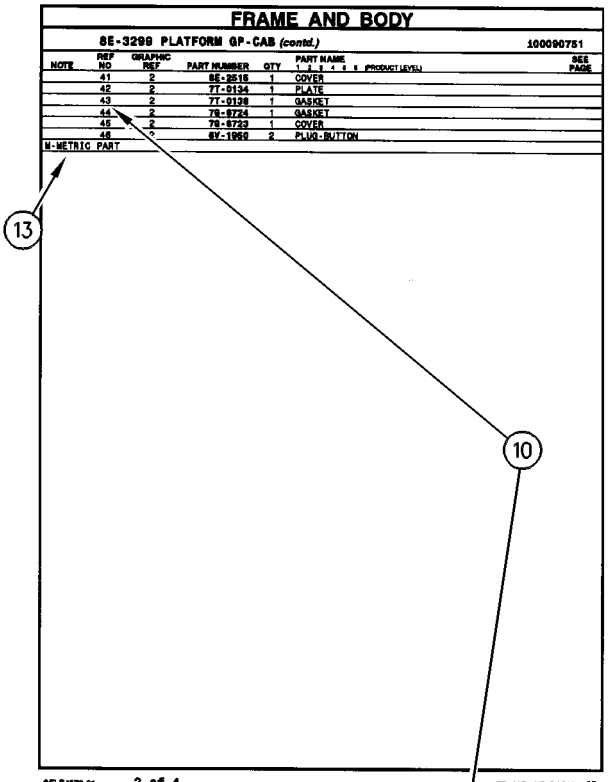

FRAME AND BODY

8E-3299 PLATFORM GP-CAB (contd.) 100090751

| NOTE | REF NO | GRAPHIC REF | PART NUMBER | QTY | PART NAME 1 2 3 4 5 6 (PRODUCT LEVEL) | SEE PAGE |
|---|---|---|---|---|---|---|
| | 41 | 2 | 8E-2515 | 1 | COVER | |
| | 42 | 2 | 7T-9134 | 1 | PLATE | |
| | 43 | 2 | 7T-9138 | 1 | GASKET | |
| | 44 | 2 | 7S-8724 | 1 | GASKET | |
| | 45 | 2 | 7S-8723 | 1 | COVER | |
| | 46 | * | 8Y-1950 | 2 | PLUG-BUTTON | |

M-METRIC PART

SELP4570-01 2 of 4 FRAME AND BODY 13

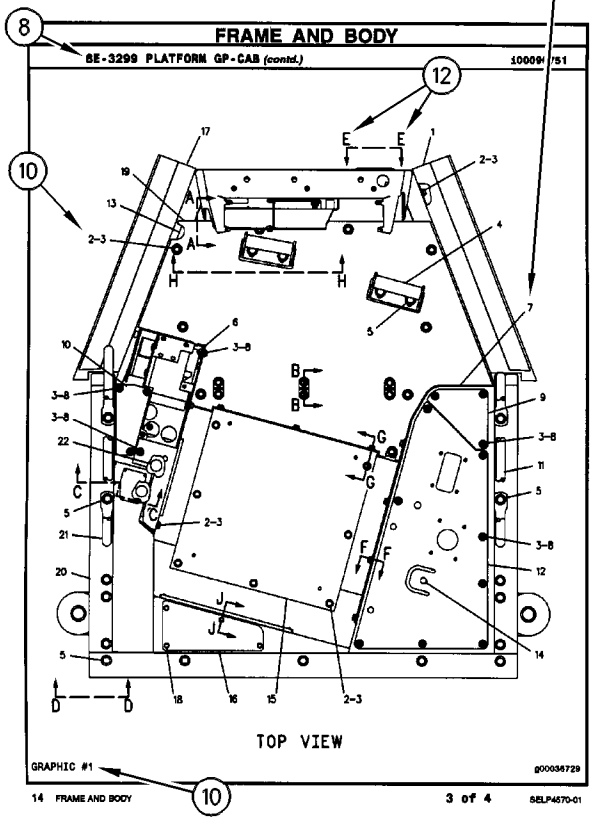

FRAME AND BODY

8E-3299 PLATFORM GP-CAB (contd.) 100090751

TOP VIEW

GRAPHIC #1 g00036729

14 FRAME AND BODY 3 of 4 SELP4570-01

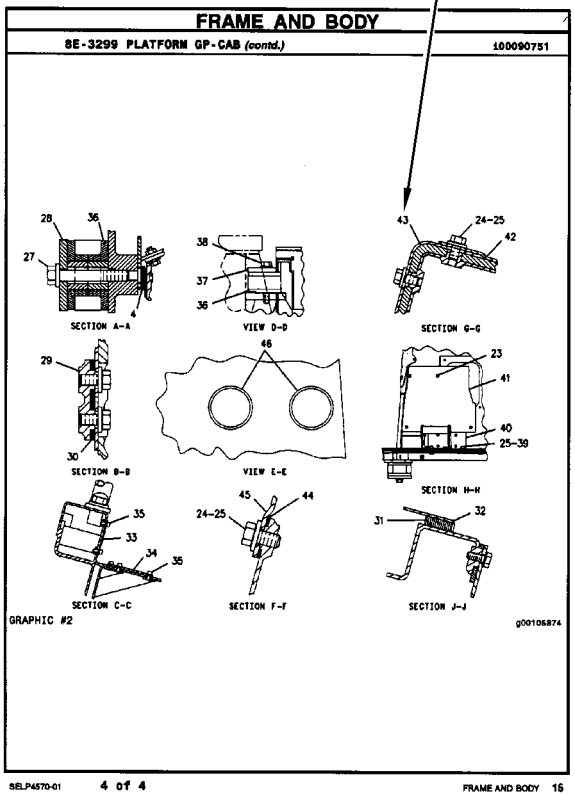

FRAME AND BODY

8E-3299 PLATFORM GP-CAB (contd.) 100090751

SECTION A-A

VIEW D-D

SECTION G-G

SECTION B-B

VIEW E-E

SECTION H-H

SECTION C-C

SECTION F-F

SECTION J-J

GRAPHIC #2 g00105874

SELP4570-01 4 of 4 FRAME AND BODY 15

# ALLGEMEINE HINWEISE

## 1. MASCHINENKENNZEICHNUNG

Caterpillar-Maschinen sind mit PRODUCT IDENTIFICATION NUMBERS (PIN) (Produkt-Identnummern) gekennzeichnet. Einige Baugruppen, z.B. Motoren, Getriebe, Planierschilde und Aufreißer, sind mit SERIAL NUMBERS (S/N) (Seriennummern) gekennzeichnet. An der Maschine und am Motor befinden sich außerdem ARRANGEMENT NUMBERS (Ausrüstungsnummern) sowie in einigen Fällen MODIFICATION NUMBERS (Änderungsnummern). Sie befinden sich auf den PIN-Schildern und auf dem Typenschild im Fahrerhaus.

Bei Ersatzteilbestellungen müssen dem Händler alle diese Nummern zur Verfügung gestellt werden.

SIS *Neu im Parts Manual*

Vom ersten Quartal 2001 ab wurde die Caterpillar Produkt-Identnummer (PIN) von 8 auf 17 Zeichen geändert. Um zur Standardisierung der Produkt-Identnummer beizutragen, sind Caterpillar und andere Baumaschinenhersteller bestrebt, die aktuellste Norm zur Produkt-Identnummerierung einzuführen. Produkt-Identnummern für Baumaschinen sind durch ISO 10261 definiert. Das neue Format der Produkt-Identnummern gilt für alle Caterpillar-Maschinen und -Stromaggregate. Die Produkt-Identschilder und -Identrahmenmarkierung enthalten die aus 17 Zeichen bestehende Identnummer. Das neue Format hat folgende Abschnitte:

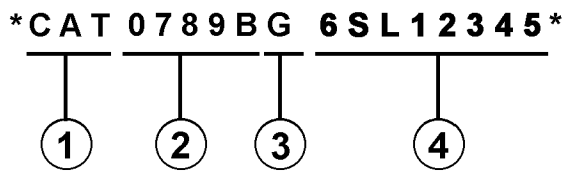


Abschnitte:

1. Caterpillars weltweiter Herstellungscode (Zeichen 1-3)

2. Modell (Zeichen 4-8)

3. Kontrollzeichen (Zeichen 9)

4. Maschinenspezifische Kennung (MIS) oder Produktsequenznummer (Zeichen 10-17). Diese wurde früher als Seriennummer bezeichnet.

Für vor dem ersten Quartal 2001 hergestellte Maschinen und Stromaggregate wird das aus 8 Zeichen bestehende PIN-Format beibehalten.

Bauteile wie z.B. Motoren, Getriebe, Achsen sowie Arbeitsgeräte werden weiterhin eine aus 8 Zeichen bestehende Seriennummer (S/N) aufweisen.

## 2. BESTELLEN VON ERSATZTEILEN

**⚠ WARNUNG**

**Wenn für diese Maschine Ersatzteile benötigt werden, empfiehlt Caterpillar, ausschließlich Caterpillar-Ersatzteile oder solche zu verwenden, die die gleichen technischen Merkmale hinsichtlich Typ, Festigkeit, Werkzeugeigenschaften und die gleichen Maße aufweisen.**

**Bei Nichtbeachtung dieser Warnung besteht Verletzungs- oder sogar Lebensgefahr! Ferner kann Nichtbeachtung vorzeitige Ausfälle der Teile und Beschädigung der Maschine zur Folge haben.**

Original Caterpillar-Ersatzteile können weltweit bei jedem Caterpillar-Händlern bestellt werden. Die umfangreichen Händlerlager enthalten normalerweise alle Teile, die Sie für Ihre Caterpillar-Maschine benötigen. Einige Händler bieten Reparatursätze, Austausch- oder werküberholte Teile an, so daß Sie eine Auswahl unter verschiedenen Reparaturmöglichkeiten treffen können. Ihre Bestellung muß folgende Angaben enthalten: Anzahl der benötigten Teile, Bestellnummer, Bezeichnung des Teils, Serien-Nr./Produkt-Ident-Nr., Ausrüstungs-Nr. und Änderungs-Nr. der Maschine, für die diese Teile benötigt werden.

## 3. AUFBAU DES PARTS MANUAL

Die Produktinformationen für alle Komponenten eines bestimmten Modells sind in INFORMATION ELEMENTS (Informationseinheiten) gegliedert. ENGINE ARRANGEMENT (Motorausführung) und SEAT GROUP (Fahrersitz) sind Beispiele für solche Informationseinheiten. Sie sind innerhalb jeder Gruppe alphabetisch, entsprechend der Ersatzteilbezeichnung, und zusätzlich numerisch, entsprechend der Ersatzteilnummer, geordnet.

## 4. INHALTSVERZEICHNIS

Das Inhaltsverzeichnis befindet sich am Anfang des Buches. Im Inhaltsverzeichnis werden die einzelnen Abschnitte des Buches aufgeführt. Die Abschnitte enthalten eine vollständige Aufstellung aller Informationseinheiten. Diese sind entsprechend ihrem Erscheinen im Buch geordnet. Das Inhaltsverzeichnis enthält Seitenangaben für Schnellverweise auf detaillierte Abbildungen und Teillisten.

# ALLGEMEINE HINWEISE

### 5. INDEX FÜR WARTUNGSTEILE

Der Index für Wartungsteile vorn im Buch enthält die Bestellnummern, Seitenangaben, Mengenangaben und Informationen über den Einsatzbereich für die am häufigsten benötigten Ersatzteile. Die Angaben sind alphabetisch entsprechend der Teilebezeichnung geordnet.

### 6. INDEX

Der Index vorn im Buch enthält eine alphabetische Liste aller Informationseinheiten. Er enthält Seitenangaben für Schnellverweise auf detaillierte Abbildungen und Teillisten.

### 7. INDEX FÜR BESTELLNUMMERN

Hinten im Buch befindet sich ein numerischer Index, mit allen Bestellnummern und dem Hinweis auf die Seite, auf der sich die betreffende Abbildung befindet.

### 8. ÜBERSCHRIFTEN

Die Überschriften, die sich am Anfang jeder der Informationseinheiten befinden, enthalten Bestellnummern, Ersatzteilbezeichnungen und zusätzliche beschreibende Informationen. Produkt-Ident- und Seriennummern in den Überschriften sollten zur Auswahl der richtigen Informationen für die betreffende Maschine verwendet werden. Die Überschriften enthalten außerdem Informationen über möglichen Außendienstersatz, mögliche Baugerätekomponenten und die Baugruppe, zu der das Teil gehört.

Die erste Zeile einer Überschrift erscheint in einer größeren Schriftart, um den Anfang einer Informationseinheit zu kennzeichnen. Überschriften für zusätzliche Seiten, die zur Erläuterung einer Informationseinheit notwendig sind, erscheinen in normaler Schriftart und enthalten den Begriff "(contd.)".

### 9. NICHT EINZELN LIEFERBARE TEILE

In einigen Fällen ist es notwendig nicht lieferbare Teile, die selbst mit einer eigenen Teilliste im Buch vertreten sind, aufzuführen. Die Bestellnummern dieser nicht einzeln lieferbaren Teile erscheinen kursiv, wodurch angezeigt wird, daß sie nur in Verbindung mit anderen Teilen lieferbar sind.

### 10. REFERENZNUMMER FÜR ERSATZTEILE

Die Zahlen, die in der Spalte "Ref No" aufgeführt sind, stimmen mit den Zahlen in den beigefügten Abbildungen überein. Ein Buchstaben-Suffix kann zu einer Referenznummer hinzugefügt werden, um zu kennzeichnen, daß das Teil mit einer eigenen Teilliste im Buch aufgeführt ist. Die in der Spalte "Graphic Ref" angeführten Zahlen verweisen auf die Identifikationsnummer der Abbildung, die sich in der linken unteren Ecke der Abbildung befindet. Diese Nummer kann zusammen mit der Referenznummer des Teils angegeben werden, um die richtige Ersatzteilnummer zu ermitteln. Referenznummern können absichtlich weggelassen werden, da die Nummern der lieferbaren Ersatzteile ständig aktualisiert werden.

### 11. EINGERÜCKTE BEZEICHNUNGEN

Wenn eine Bezeichnung eingerückt ist, wird dadurch angezeigt, daß das Teil zu einer Baugruppe gehört, unter deren Bezeichnung es eingerückt ist.

### 12. REFERENZBUCHSTABEN

Falls erforderlich sind in den Abbildungen Referenzbuchstaben enthalten (z.B. A, B, C, usw.), die Leitungen und Kabelbäume von einem Punkt zum anderen verfolgen. Außerdem geben sie die Stelle an, an der getrennte Abbildungen fortgesetzt werden.

### 13. ABKÜRZUNGEN UND SYMBOLE

**O.D.** – Außendurchmesser
**I.D.** – Innendurchmesser
**A** – kein Teil dieser Gruppe
**B** – nach Bedarf verwenden
**C** – Hinweis auf eine Änderung
**D** – in Meter-Länge bestellen
**E** – in Zentimeter-Länge bestellen
**F** – nicht gezeigt
**G** – in Zoll-Länge bestellen
**I** – siehe Hydraulikinformationssystem
**M** – metrisches Teil
**R** – werküberholtes Teil unter Umständen lieferbar
**Y** – separate Abbildung
**Z** – nicht einzeln lieferbar

*Neu im Parts Manual*

**14. BESCHREIBUNG DER TYPENÄNDERUNGEN**

Typ-A bezieht sich auf alle Konfigurationsänderungen, die ein zusätzliches Informationselement für Ausführung, Gruppe oder Einheit benötigen. Wenn kein Seriennummernumbruch für Typen erhältlich ist, wird in der Überschrift eine Typennummer (Typ 1, Typ 2, etc.) angegeben. Diese "Typenänderungen" sind in der Teileliste mit der Anmerkung "C" (Änderung des vorherigen Typs) versehen. Es werden nur die für dieses Ersatzteilhandbuch relevanten "Typen" angegeben. Es können zusätzliche Typen vorhanden sein, was zu "C" Anmerkungen zu einem Informationselement führen kann, wenn keine anderen Typen angegeben werden.

**15. <END>**

Dieses Symbol zeigt das Ende eines Informationselements an.

**ANMERKUNG:**

**Ständig vorgenommene Verbesserungen und Weiterentwicklungen an Ihrer Maschine können Änderungen verursachen, die in der vorliegenden Ausgabe noch nicht berücksichtigt sind. Fragen zu Ihrer Caterpillar-Maschine oder diesem Ersatzteilbuch beantwortet Ihr Caterpillar-Händler.**

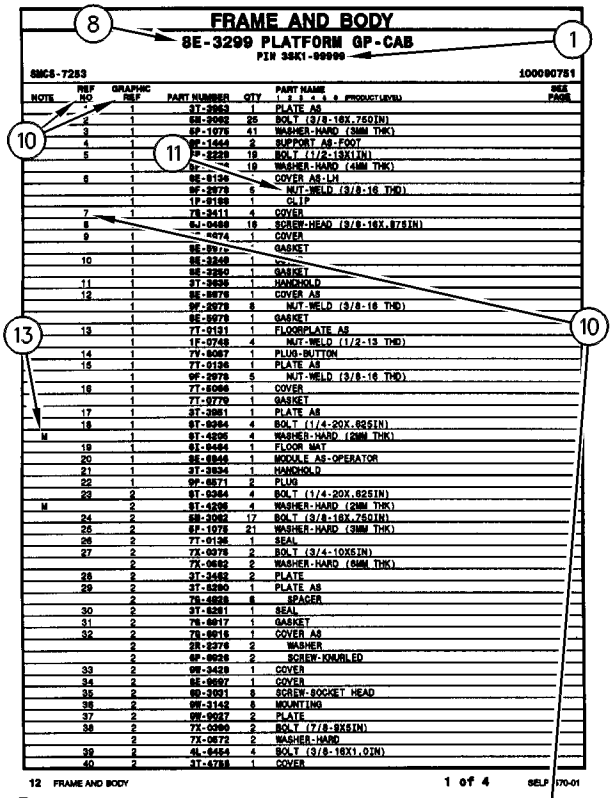

FRAME AND BODY

8E-3299 PLATFORM GP-CAB

PIN 3SK1-99999

SMCS-7283 100090751

| NOTE | REF NO | GRAPHIC REF | PART NUMBER | QTY | PART NAME 1 2 3 4 5 6 (PRODUCT LEVEL) | SEE PAGE |
|---|---|---|---|---|---|---|
| | * | 1 | 3T-3963 | 1 | PLATE AS | |
| | 2 | 1 | 5M-2062 | 25 | BOLT (3/8-16X.750IN) | |
| | 3 | 1 | 6P-1075 | 41 | WASHER-HARD (3MM THK) | |
| | 4 | 1 | 8E-1443 | 2 | SUPPORT AS-FOOT | |
| | 5 | 1 | 9P-2229 | 19 | BOLT (1/2-13X1IN) | |
| | | 1 | 9P-[illegible] | 19 | WASHER-HARD (4MM THK) | |
| | 6 | 1 | 8E-9136 | * | COVER AS-LH | |
| | | 1 | 9F-2979 | 6 | NUT-WELD (3/8-16 THD) | |
| | | 1 | 1F-0189 | 1 | CLIP | |
| | 7 | 1 | 7X-3411 | 4 | COVER | |
| | 8 | 1 | 6J-0468 | 18 | SCREW-HEAD (3/8-16X.87SIN) | |
| | 9 | 1 | [illegible]-0274 | 1 | COVER | |
| | | 1 | 8E-9[illegible] | * | GASKET | |
| | 10 | 1 | 8E-3248 | 1 | [illegible] | |
| | | 1 | 8E-3250 | 1 | GASKET | |
| | 11 | 1 | 3T-3636 | 1 | HANDHOLD | |
| | 12 | 1 | 8E-9076 | 1 | COVER AS | |
| | | 1 | 9F-2979 | 8 | NUT-WELD (3/8-16 THD) | |
| | | 1 | 8E-9078 | 1 | GASKET | |
| | 13 | 1 | 7T-9131 | 1 | FLOORPLATE AS | |
| | | 1 | 1F-0748 | 4 | NUT-WELD (1/2-13 THD) | |
| | 14 | 1 | 7V-8067 | 1 | PLUG-BUTTON | |
| | 15 | 1 | 7T-9136 | 1 | PLATE AS | |
| | | 1 | 9F-2979 | 5 | NUT-WELD (3/8-16 THD) | |
| | 16 | 1 | 7T-5066 | 1 | COVER | |
| | | 1 | 7T-9779 | 1 | GASKET | |
| | 17 | 1 | 3T-3951 | 1 | PLATE AS | |
| | 18 | 1 | 9T-0264 | 4 | BOLT (1/4-20X.62SIN) | |
| M | | 1 | 9T-4295 | 4 | WASHER-HARD (2MM THK) | |
| | 19 | 1 | 9I-9454 | 1 | FLOOR MAT | |
| | 20 | 1 | 8E-6848 | 1 | MODULE AS-OPERATOR | |
| | 21 | 1 | 3T-3934 | 1 | HANDHOLD | |
| | 22 | 1 | 9P-0571 | 2 | PLUG | |
| | 23 | 2 | 9T-0264 | 4 | BOLT (1/4-20X.62SIN) | |
| M | | 2 | 9T-4295 | 4 | WASHER-HARD (2MM THK) | |
| | 24 | 2 | 5M-2062 | 17 | BOLT (3/8-16X.75QIN) | |
| | 25 | 2 | 6P-1075 | 21 | WASHER-HARD (3MM THK) | |
| | 26 | 2 | 7T-9136 | 1 | SEAL | |
| | 27 | 2 | 7X-0078 | 2 | BOLT (3/4-10X5IN) | |
| | | 2 | 7X-0682 | 2 | WASHER-HARD (6MM THK) | |
| | 28 | 2 | 3T-3482 | 2 | PLATE | |
| | 29 | 2 | 3T-5290 | 1 | PLATE AS | |
| | | 2 | 7S-4828 | 6 | SPACER | |
| | 30 | 2 | 3T-5291 | 1 | SEAL | |
| | 31 | 2 | 7S-8817 | 1 | GASKET | |
| | 32 | 2 | 7S-8816 | 1 | COVER AS | |
| | | 2 | 5R-2276 | 2 | WASHER | |
| | | 2 | 9F-9026 | 2 | SCREW-KNURLED | |
| | 33 | 2 | 9W-3429 | 1 | COVER | |
| | 34 | 2 | 8E-9697 | 1 | COVER | |
| | 35 | 2 | 9D-3031 | 8 | SCREW-SOCKET HEAD | |
| | 36 | 2 | 9W-3143 | 8 | MOUNTING | |
| | 37 | 2 | 9W-9037 | 2 | PLATE | |
| | 38 | 2 | 7X-0360 | 2 | BOLT (7/8-9X5IN) | |
| | | 2 | 7X-0672 | 2 | WASHER-HARD | |
| | 39 | 2 | 4L-9454 | 4 | BOLT (3/8-16X1.0IN) | |
| | 40 | 2 | 3T-4788 | 1 | COVER | |

12 FRAME AND BODY 1 of 4 SELP4570-01

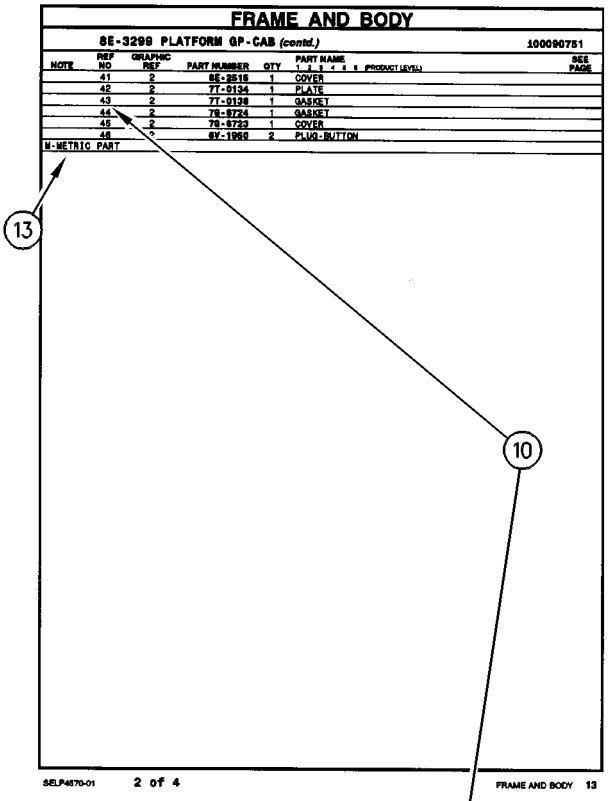

FRAME AND BODY

8E-3299 PLATFORM GP-CAB (contd.) 100090751

| NOTE | REF NO | GRAPHIC REF | PART NUMBER | QTY | PART NAME 1 2 3 4 5 6 (PRODUCT LEVEL) | SEE PAGE |
|---|---|---|---|---|---|---|
| | 41 | 2 | 8E-2515 | 1 | COVER | |
| | 42 | 2 | 7T-9134 | 1 | PLATE | |
| | 43 | 2 | 7T-9138 | 1 | GASKET | |
| | 44 | 2 | 7S-8724 | 1 | GASKET | |
| | 45 | 2 | 7S-8723 | 1 | COVER | |
| | 46 | * | 8Y-1950 | 2 | PLUG-BUTTON | |

M-METRIC PART

SELP4570-01 2 of 4 FRAME AND BODY 13

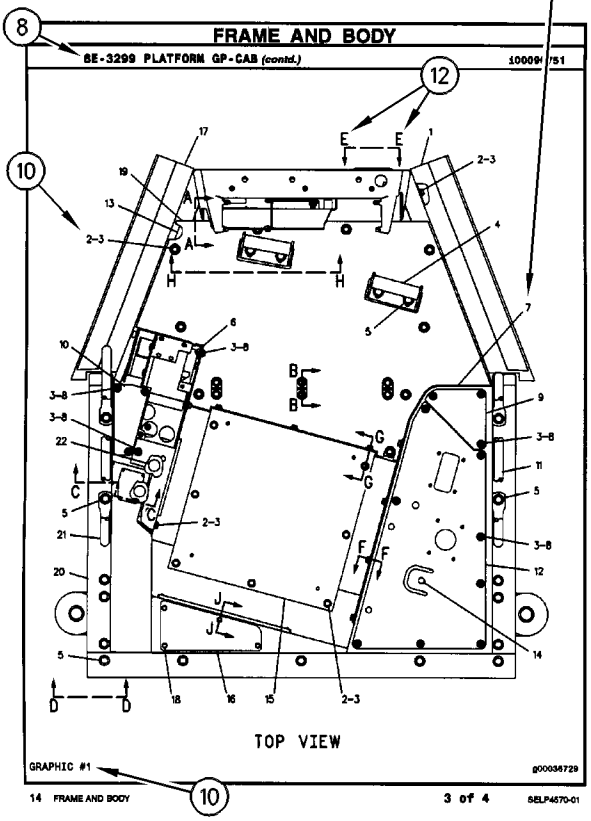

FRAME AND BODY

8E-3299 PLATFORM GP-CAB (contd.) 100090751

TOP VIEW

GRAPHIC #1 g00036729

14 FRAME AND BODY 3 of 4 SELP4570-01

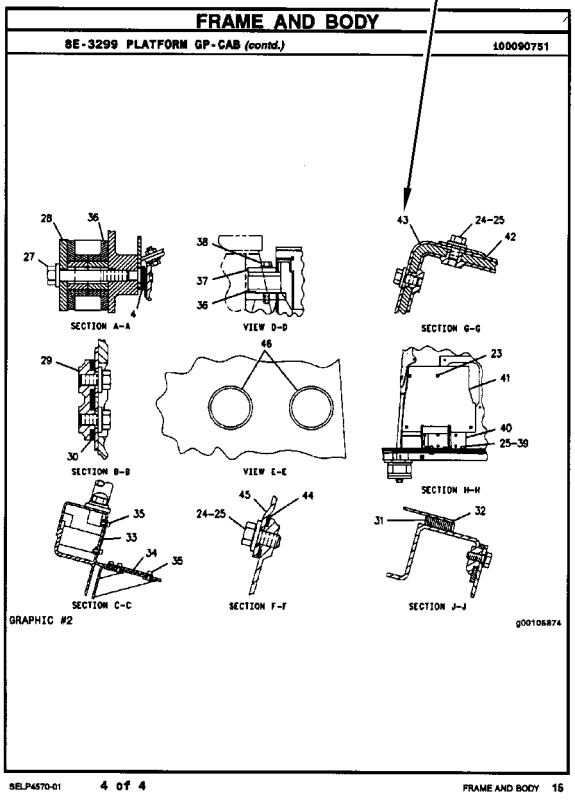

FRAME AND BODY

8E-3299 PLATFORM GP-CAB (contd.) 100090751

SECTION A-A VIEW D-D SECTION G-G

SECTION B-B VIEW E-E SECTION H-H

SECTION C-C SECTION F-F SECTION J-J

GRAPHIC #2 g00105874

SELP4570-01 4 of 4 FRAME AND BODY 15

**REMANUFACTURED COMPONENTS**

As an option when making repairs consider Caterpillar Remanufactured Components. Components that are available through the Caterpillar Remanufactured Program are identified three ways in the parts book:

- with the letter R in the note field of the parts list
- with an R* at the beginning of the first line of the caption
- with an *R at the end of the first line of the caption

Typical components included in the Remanufacturing Program include:

ALTERNATORS
CONNECTING RODS
CRANKSHAFTS - UNDERSIZE
CRANKSHAFTS - UPGRADE TO NEW
CYLINDER HEADS
ELECTRONIC CONTROL MODULES (ECM)
ELECTRONIC SENSORS
FUEL INJECTORS
FUEL NOZZLES
FUEL PUMPS
GOVERNORS
OIL PUMPS
PISTONS
SHORT BLOCKS
STARTERS
TURBOCHARGERS - COMPLETE
TURBOCHARGER CARTRIDGES
WATER PUMPS

Caterpillar Remanufactured engines for many engine arrangements are also available.

# OPTIONS DE RÉPARATION

**COMPOSANTS RÉNOVÉS**

Comme option de réparation, considérer les composants rénovés Caterpillar. Les composants disponibles dans le cadre du programme Caterpillar de composants rénovés sont identifiés de trois façons dans le catalogue de pièces:

- avec la lettre "R" dans l'espace note de la liste des pièces
- avec R* au début de la première ligne des légendes
- avec *R à la fin de la première ligne des légendes

Les composants suivants figurent parmi les composants typiques du programme de rénovation:

ALTERNATEURS
BIELLES
VILEBREQUINS - SOUS-DIMENSIONNÉS
VILEBREQUINS - REMIS À NEUF
CULASSES
MODULES DE COMMANDE ÉLECTRONIQUE (ECM)
CAPTEURS ÉLECTRONIQUES
INJECTEURS
TÊTES D'INJECTEURS
POMPES À CARBURANT
RÉGULATEURS
POMPES À HUILE
PISTONS
BLOCS EMBIELLÉS
DÉMARREURS
TURBOCOMPRESSEURS - COMPLETS
CARTOUCHES DE TURBOCOMPRESSEUR
POMPES À EAU

Des moteurs rénovés sont aussi disponibles pour plusieurs versions de moteur.

# ALTERNATIVAS DE REPARACIÓN

**COMPONENTES REMANUFACTURADOS**

Al hacer reparaciones, tenga en cuenta la opción de Componentes Remanufacturados Caterpillar. Los componentes que están disponibles por medio del programa de Productos Remanufacturados Caterpillar se identifican de tres maneras en el manual de piezas:

- con la letra R en el espacio de Nota de la lista de piezas
- con una R* al comienzo de la primera línea de la leyenda
- con una *R al final de la primera línea de la leyenda

Los componentes que se incluyen típicamente en el Programa de Productos Remanufacturados son:

ALTERNADORES
BIELAS
CIGÜEÑALES - BAJOMEDIDA
CIGÜEÑALES - REMANUFACTURADOS A NUEVO
CULATAS
MÓDULOS DE CONTROL ELECTRÓNICO (ECM)
SENSORES ELECTRONICOS
INYECTORES
BOQUILLAS
BOMBAS DE COMBUSTIBLE
REGULADORES
BOMBAS DE ACEITE
PISTONES
MONOBLOQUES
MOTORES DE ARRANQUE
TURBOCOMPRESORES - COMPLETOS
NÚCLEOS DE TURBOCOMPRESOR
BOMBAS DE AGUA

También hay disponibles motores Remanufacturados Caterpillar para muchas de las configuraciones de motores.

# ALTERNATIVAS DE REPARO

**COMPONENTES REMANUFATURADOS**

Considere o uso de Componentes Remanufaturados Caterpillar ao efetuar reparos. Os componentes disponíveis através do Programa de Remanufatura Caterpillar são identificados de três formas no manual de peças:

- com um R na área da nota da lista de peças
- com um R* no princípio da primeira linha da legenda
- com um *R no final da primeira linha da legenda

Os componentes típicos que constam no Programa de Remanufatura incluem:

ALTERNADORES
BIELAS
VIRABREQUINS - SUBMEDIDAS
VIRABREQUINS - ATUALIZAÇÃO
CABEÇOTES
MÓDULOS DE CONTROLE ELETRÔNICO (ECM)
SENSORES ELETRÔNICOS
INJETORES DE COMBUSTÍVEL
BICOS DE ABASTECIMENTO DE COMBUSTÍVEL
BOMBAS DE COMBUSTÍVEL
GOVERNADORES
BOMBAS DE ÓLEO
PISTÕES
BLOCOS BÁSICOS DO MOTOR
MOTORES DE PARTIDA
TURBOALIMENTADORES - COMPLETOS
CARTUCHOS DE TURBOALIMENTADORES
BOMBAS D'ÁGUA

Motores Remanufaturados Caterpillar também encontram-se disponíveis para diversos arranjos de motor.

**WERKÜBERHOLTE AT-PRODUKTE**

Bei Reparaturen sollten werküberholte AT-Produkte von Caterpillar in Betracht gezogen werden. Die durch das AT-Programm von Caterpillar erhältlichen Teile sind im Parts Book auf drei verschiedene Arten gekennzeichnet:

- mit dem Buchstaben R in der Spalte NOTE der Ersatzteilliste
- mit einem R* am Anfang der ersten Zeile der Überschrift
- mit einem *R am Ende der ersten Zeile der Überschrift

Das AT-Programm umfaßt u.a. folgende Produkte:

DREHSTROMGENERATOREN
PLEUELSTANGEN
KURBELWELLEN - MIT UNTERMASS
KURBELWELLEN - MIT ORIGINALMASS
ZYLINDERKÖPFE
ELEKTRONISCHE STEUEREINHEITEN (EMC)
ELEKTRONISCHE SENSOREN
PUMPENDÜSEN
EINSPRITZDÜSEN
KRAFTSTOFFPUMPEN
DREHZAHLREGLER
ÖLPUMPEN
KOLBEN
TEILMOTOREN
ANLASSER
TURBOLADER - KOMPLETT
TURBOLADERLAUFZEUGE
KÜHLWASSERPUMPEN

Viele Motoren können durch werküberholte AT-Motoren von Caterpillar ersetzt werden.

# SUPPLEMENTAL COOLANT ADDITIVES

**CUSTOMER BENEFITS:**

Protects against cavitation, foam, erosion, corrosion, and scale buildup in cooling systems.

- Provides measured coolant conditioner.

**DESCRIPTION:**

Additives deplete from the coolant with normal operation. For this reason, Supplemental Coolant Additives (SCA) must be added to all heavy duty coolants at regular intervals. In addition, when not using a fully formulated, pre-charged antifreeze, like Caterpillar's DEAC, an initial charge of SCA must be added to the cooling system. The amount of SCA added to the system is dependent on the capacity of the system.

The SCA for initial fill is provided as a liquid. SCA's for maintenance intervals are available in liquid form and as a spin-on element. (No Spin-on available for 3600 Family of Engines)

**NOTE:**

The amount of SCA added at initial fill is not the same as the amount added at maintenance intervals.

The coolant additive elements can be used with any ethylene or propylene glycol type antifreeze which meets ASTM D4985 or ASTM D5345 Specifications.

**NOTE:**

For use with standard heavy duty coolant only, not for use with Extended Life Coolant.

**PARTS NEEDED:**

| Cooling System Capacity | | Liquid SCA at Initial Fill | Liquid SCA at Maintenance* | Spin-on SCA Maintenance Element* |
|---|---|---|---|---|
| Liters | Gallons | | | |
| 22-30 | (6-8) | 3P-2044 (1) | 6V-3542 (1) | 111-2370 (1) |
| 30-38 | (8-10) | 3P-2044 (1)<br>6V-3542 (1) | 111-2372 (1) | 111-2369 (1) |
| 38-49 | (10-13) | 3P-2044 (1)<br>8T-1589 (1) | 111-2372 (1) | 111-2369 (1) |
| 49-64 | (13-17) | 3P-2044 (2) | 8T-1589 (1) | 9N-3368 (1) |
| 64-83 | (17-22) | 3P-2044 (2)<br>8T-1589 (1) | 111-2372 (1)<br>6V-3542 (1) | 111-2371 (1) |
| 83-114 | (22-30) | 3P-2044 (3)<br>8T-1589 (1) | 3P-2044 (1) | 9N-3718 (1) |
| 114-163 | (30-43) | 3P-2044 (5) | 3P-2044 (1)<br>6V-3542 (1) | 111-2371 (2) |
| 163-242 | (43-64) | 3P-2044 (8) | 3P-2044 (2) | 9N-3718 (2) |

** Normal maintenance period is 250 hrs. See your Operation and Maintenance Manual for complete coolant maintenance instructions.*

( ) Indicates quantity required.

# ADDITIFS POUR LIQUIDE DE REFROIDISSEMENT

**AVANTAGES POUR LE CLIENT**

L'additif protège contre la cavitation, la mousse, l'érosion, la corrosion et l'accumulation de dépôts dans le circuit de refroidissement.

- L'additif complémentaire fournit une quantité mesurée d'additif.

**DESCRIPTION:**

Les additifs s'épuisent pendant l'utilisation du moteur. C'est pourquoi l'on doit ajouter de l'additif au liquide de refroidissement/antigel pour moteurs diesel à intervalles réguliers. En plus, si l'on n'utilise pas de l'antigel entièrement formulé et pré-chargé comme le liquide de refroidissement/antigel Caterpillar pour moteurs diesel, une quantité initiale d'additif doit être ajoutée au circuit de refroidissement. La quantité d'additif à ajouter au circuit dépend de la contenance du circuit.

L'additif pour le remplissage initial est fourni sous forme liquide. L'additif pour l'entretien ultérieur est disponible sous forme liquide et sous forme d'élément à visser. (Il n'y a pas d'élément à visser pour les moteurs de la famille 3600).

**NOTA:**

La quantité d'additif à ajouter au remplissage initial diffère de la quantité à ajouter aux intervalles d'entretien.

Les éléments d'additif peuvent être utilisés avec tout antigel de type éthylène ou propylène-glycol conforme à la norme ASTM D4985 ou ASTM D5345.

**NOTA:**

A utiliser uniquement avec du liquide de refroidissement pour moteurs diesel et non avec le liquide de refroidissement longue durée.

**PIÈCES NÉCESSAIRES:**

| Contenance du circuit de refroidissement | | Additif liquide au remplissage initial | Additif liquide aux intervalles d'entretien* | Elément d'additif à visser aux intervalles d'entretien* |
|---|---|---|---|---|
| Litres | Gallons U.S. | | | |
| 22-30 | (6-8) | 3P-2044 (1) | 6V-3542 (1) | 111-2370 (1) |
| 30-38 | (8-10) | 3P-2044 (1)<br>6V-3542 (1) | 111-2372 (1) | 111-2369 (1) |
| 38-49 | (10-13) | 3P-2044 (1)<br>8T-1589 (1) | 111-2372 (1) | 111-2369 (1) |
| 49-64 | (13-17) | 3P-2044 (2) | 8T-1589 (1) | 9N-3368 (1) |
| 64-83 | (17-22) | 3P-2044 (2)<br>8T-1589 (1) | 111-2372 (1)<br>6V-3542 (1) | 111-2371 (1) |
| 83-114 | (22-30) | 3P-2044 (3)<br>8T-1589 (1) | 3P-2044 (1) | 9N-3718 (1) |
| 114-163 | (30-43) | 3P-2044 (5) | 3P-2044 (1)<br>6V-3542 (1) | 111-2371 (2) |
| 163-242 | (43-64) | 3P-2044 (8) | 3P-2044 (2) | 9N-3718 (2) |

** L'intervalle d'entretien normal est de 250 heures-service. Voir le Guide d'utilisation et d'entretien pour de plus amples renseignements concernant l'entretien du circuit de refroidissement.*

( ) Indique la quantité exigée.

# ADITIVOS DE REFRIGERANTE SUPLEMENTARIOS

**VENTAJAS PARA EL USUARIO:**

Protegen contra la cavitación, la formación de espuma, la corrosión y la acumulación de escamas en los sistemas de enfriamiento.

- Suministra un acondicionador dosificado de refrigerante.

**DESCRIPCIÓN:**

Los aditivos en el refrigerante se agotan con la operación normal. Por esta razón, se debe agregar Aditivo de refrigerante suplementario (SCA) a todos los refrigerantes para servicio pesado, a intervalos regulares. Además, cuando no se usa un anticongelante de precarga completo, tal como el DEAC de Caterpillar, es necesario agregar una cantidad de aditivo de refrigerante suplementario inicial al sistema de enfriamiento. La cantidad de aditivo que se debe agregar depende de la capacidad del sistema.

El SCA de llenado inicial es líquido. El que se usa para el mantenimiento está disponible tanto en líquido como en un elemento enroscable. (No hay elemento enroscable disponible para la Familia de Motores 3600).

**NOTA:**

La cantidad de aditivo de llenado inicial no es la misma que se agrega en los intervalos de mantenimiento.

Los elementos de aditivo de refrigerante se pueden usar con cualquier anticongelante de tipo glicol etilénico o propílico que esté de acuerdo con las especificaciones de las normas ASTM D4985 o ASTM D5345.

**NOTA:**

Se debe utilizar únicamente con refrigerante estándar para servicio pesado; no se debe usar con Refrigerante de Larga Duración.

**PIEZAS NECESARIAS:**

| Capacidad del Sistema de Enfriamiento | | SCA líquido de llenado inicial | SCA líquido de mantenimiento* | Elemento de mantenimiento enroscable* |
|---|---|---|---|---|
| litros | gal EE.UU. | | | |
| 22-30 | 6-8 | 3P-2044 (1) | 6V-3542 (1) | 111-2370 (1) |
| 30-38 | 8-10 | 3P-2044 (1)<br>6V-3542 (1) | 111-2372 (1) | 111-2369 (1) |
| 38-49 | 10-13 | 3P-2044 (1)<br>8T-1589 (1) | 111-2372 (1) | 111-2369 (1) |
| 49-64 | 13-17 | 3P-2044 (2) | 8T-1589 (1) | 9N-3368 (1) |
| 64-83 | 17-22 | 3P-2044 (2)<br>8T-1589 (1) | 111-2372 (1)<br>6V-3542 (1) | 111-2371 (1) |
| 83-114 | 22-30 | 3P-2044 (3)<br>8T-1589 (1) | 3P-2044 (1) | 9N-3718 (1) |
| 114-163 | 30-43 | 3P-2044 (5) | 3P-2044 (1)<br>6V-3542 (1) | 111-2371 (2) |
| 163-242 | 43-64 | 3P-2044 (8) | 3P-2044 (2) | 9N-3718 (2) |

** El período normal de mantenimiento es de 250 horas. Para ver las instrucciones completas sobre el mantenimiento del refrigerante, consulte el Manual de Operación y Mantenimiento.*

( ) Indica la cantidad necesaria.

# ADITIVOS SUPLEMENTARES DO LÍQUIDO ARREFECEDOR

**BENEFÍCIOS PARA O CLIENTE:**

Protege contra cavitação, espuma, erosão, corrosão e acúmulo de crostas nos sistemas de arrefecimento.

- Fornece uma quantidade pré-determinada de condicionador de arrefecimento.

**DESCRIÇÃO:**

Com a operação normal, os aditivos se esgotam do líquido arrefecedor. Por isso, Aditivos Suplementares do Líquido Arrefecedor (SCA) devem ser acrescentados a todos os líquidos arrefecedores para serviço pesado em intervalos regulares. Além disso, quando um anticongelante pré-carregado, totalmente formulado não for usado, como o DEAC Caterpillar, uma carga inicial de SCA deve ser acrescentada ao sistema de arrefecimento. A quantidade de SCA acrescentada ao sistema depende da capacidade do sistema.

O SCA para abastecimento inicial é fornecido em forma de líquido. Os aditivos suplementares (SCA) para intervalos de manutenção estão à disposição em forma líquida e como um elemento com roscas. (Exceto os Motores da Família 3600)

**NOTA:**

A quantidade de SCA adicionada no abastecimento inicial não é a mesma que a acrescentada nos intervalos de manutenção.

Os elementos do aditivo do líquido arrefecedor podem ser usados com qualquer tipo de anticongelante etileno ou propileno que satisfaz as Especificações ASTM D4985 ou ASTM D5345.

**NOTA:**

Para uso apenas com líquido arrefecedor para serviço pesado padrão, não deve ser usado com Líquido Arrefecedor de Vida Longa.

**PEÇAS NECESSÁRIAS:**

| Capacidade do Sistema de Arrefecimento | | Líquido SCA Durante Abastecimento Inicial | Líquido SCA Durante Manutenção* | Elemento de Manutenção de SCA com Roscas* |
|---|---|---|---|---|
| Litros | Galões | | | |
| 22-30 | 6-8 | 3P-2044 (1) | 6V-3542 (1) | 111-2370 (1) |
| 30-38 | 8-10 | 3P-2044 (1)<br>6V-3542 (1) | 111-2372 (1) | 111-2369 (1) |
| 38-49 | 10-13 | 3P-2044 (1)<br>8T-1589 (1) | 111-2372 (1) | 111-2369 (1) |
| 49-64 | 13-17 | 3P-2044 (2) | 8T-1589 (1) | 9N-3368 (1) |
| 64-83 | 17-22 | 3P-2044 (2)<br>8T-1589 (1) | 111-2372 (1)<br>6V-3542 (1) | 111-2371 (1) |
| 83-114 | 22-30 | 3P-2044 (3)<br>8T-1589 (1) | 3P-2044 (1) | 9N-3718 (1) |
| 114-163 | 30-43 | 3P-2044 (5) | 3P-2044 (1)<br>6V-3542 (1) | 111-2371 (2) |
| 163-242 | 43-64 | 3P-2044 (8) | 3P-2044 (2) | 9N-3718 (2) |

** O período normal de manutenção é de 250 horas. Consulte o Manual de Operação e Manutenção para obter instruções completas quanto à manutenção do líquido arrefecedor.*

( ) Indica a quantidade exigida.

# KÜHLMITTELZUSATZ

**VORTEILE FÜR DEN KUNDEN:**

Schutz gegen Kavitation, Schaumbildung, Erosion, Korrosion und Kesselsteinbildung in Kühlsystemen.

- Richtig dosierter Kühlmittelzusatz

**BESCHREIBUNG:**

Additive erschöpfen sich während des Motorbetriebs. Deshalb muß allen HD-Kühlmitteln regelmäßig Kühlmittelzusatz beigefügt werden. Wenn bei Erstfüllung kein vollwertiges Fertigkühlmittel, wie das Frostschutz- und Kühlmittel für Dieselmotoren von Caterpiller (DEAC), verwendet wird, muß bei Erstfüllung Kühlmittelzusatz beigefügt werden. Wieviel Kühlmittelzusatz beigefügt werden muß, hängt vom Inhalt des Kühlsystems ab.

Für Erstfüllung ist Kühlmittelzusatz nur in flüssiger Form erhältlich. Für Wartungsintervalle ist Kühlmittelzusatz in flüssiger Form und als Zusatzelement erhältlich. (Für die Motorbaureihe 3600 sind keine Zusatzelemente erhältlich.)

**ANMERKUNG:**

Die Kühlmittelmenge bei Erstfüllung ist nicht die gleiche Menge, die bei Wartungsintervallen beigefügt werden muß.

Die Kühlmittelzusatzelemente können mit allen Frostschutzmitteln auf Ethylen- oder Propylenglykolbasis verwendet werden, die den Standards nach ASTM D4985 oder ASTM D5345 entsprechen.

**ANMERKUNG:**

Den Kühlmittelzusatz nicht mit Langzeitkühlmittel (ELC) von Caterpillar verwenden. Der Kühlmittelzusatz ist nur für HD-Kühlmittel bestimmt.

**TEILEBEZEICHNUNG:**

| Kühlsysteminhalt | | Kühlmittelzusatz bei Erstfüllung | Flüssiger Kühlmittelzusatz bei Wartung* | Kühlmittelzusatzelement bei Wartung* |
|---|---|---|---|---|
| Liter | US-Gall. | | | |
| 22-30 | (6-8) | 3P-2044 (1) | 6V-3542 (1) | 111-2370 (1) |
| 30-38 | (8-10) | 3P-2044 (1)<br>6V-3542 (1) | 111-2372 (1) | 111-2369 (1) |
| 38-49 | (10-13) | 3P-2044 (1)<br>8T-1589 (1) | 111-2372 (1) | 111-2369 (1) |
| 49-64 | (13-17) | 3P-2044 (2) | 8T-1589 (1) | 9N-3368 (1) |
| 64-83 | (17-22) | 3P-2044 (2)<br>8T-1589 (1) | 111-2372 (1)<br>6V-3542 (1) | 111-2371 (1) |
| 83-114 | (22-30) | 3P-2044 (3)<br>8T-1589 (1) | 3P-2044 (1) | 9N-3718 (1) |
| 114-163 | (30-43) | 3P-2044 (5) | 3P-2044 (1)<br>6V-3542 (1) | 111-2371 (2) |
| 163-242 | (43-64) | 3P-2044 (8) | 3P-2044 (2) | 9N-3718 (2) |

** Der normale Wartungsintervall beträgt 250 Betriebsstunden. Für vollständige Anweisungen zur Wartung des Kühlsystems, siehe Betriebs- und Wartungshandbuch.*

( ) Erforderliche Anzahl

# NOMENCLATURA DE PEÇAS INGLÊS-PORTUGUÊS

| INGLÊS | PORTUGUÊS |
|---|---|
| ABOVE | Acima |
| ABSORBER | Amortecedor |
| ACCESSORY | Acessório |
| ACTUATOR | Acionador |
| ADAPTER | Adaptador |
| ADHESIVE | Adesivo |
| ADJUSTER | Adjustador |
| AFTERCOOLER | Pós-resfriador |
| AIR | Ar |
| AIR CLEANER | Purificador de ar |
| AIR SYSTEM | Sistema de ar |
| ALARM | Alarme |
| ALTERNATOR | Alternador |
| AMMETER | Amperímetro |
| ANCHOR | Âncora, fixador |
| ANGLE | Ângulo, canto |
| ANVIL A. | Bigorna conj. |
| ARBOR | Mandril, eixo |
| ARM | Braço |
| ARMATURE | Armadura, Induzida |
| ARM REST | Apoio para braço |
| ARRESTER | Detentor |
| ASSEM. = ASSEMBLY | Conjunto |
| ATTACHMENT | Acessório |
| AVAILABLE | Disponível |
| AXLE | Eixo |
| AXLE SHAFT | Semi-eixo, ponta |
| BACK-UP ALARM | Alarme de marcha à ré |
| BACK-UP LIGHT | Luz da marcha à ré |
| BACK-UP SWITCH | Interruptor de marcha à ré |
| BACKBOARD | Prancha traseira |
| BACK CUSHION | Encosto |
| BACKHOE | Retroescavadeira |
| BAFFLE | Defletor |
| BAG | Saco, sacola |
| BAIL | Alça |
| BALANCER | Balanceador |
| BALL | Esfera |
| BALLCHECK ASSEMBLY | Conjunto de (válvula) de esfera de retenção |
| BALL JOINT | Junta esférica |
| BALLSTUD | Munhão esférica |
| BAND | Banda, cinta, tira |
| BAND & LINING | Banda e revestimento |
| BAR | Barra |
| BARREL | Cilindro |
| BARRIER | Barreira |
| BASE | Base |
| BASIN | Bacia, coletor |
| BATTERY | Bateria |
| BEAM | Barra, viga, trave |
| BEARING | Mancal, rolamento |
| BEARING BALL | Rolamento de esferas |
| BEARING-SLEEVE | Mancal tipo luva |
| BEARING-NEEDLE | Rolamento de agulha |
| BEARING-ROLLER | Rolamento tipo roletes |
| BELL | Campânula |
| BELLCRANK | Alavanca angular |
| BELLOWS | Fole |
| BELOW | Abaixo |
| BELT | Correia, cinto |
| BELT TIGHTENER | Ajustador de correia |
| BEVEL GEAR | Coroa |
| BIT-CUTTER | Broca, fresa |
| BLACK | Preto |
| BLADE | Lâmina |
| BLEEDER | Sangrador |
| BLOCK | Bloco, calço |
| BLOWER | Ventilador |
| BLUE | Azul |
| BOARD | Prancha, tábua |
| BODY | Corpo |
| BOLT | Parafuso |
| BONNET | Tampa |
| BOOM | Lança |
| BOOSTER | Reforçador |
| BOOT | Protetor contra poeira |
| BORE | Furo |
| BOSS | Ressalto |
| BOTH | Ambos (as) |
| BOTTOM | Fundo |
| BOWL | Caçamba |
| BOX | Caixa |
| BRACE | Tirante |
| BRACKET | Suporte |
| BRAKE | Freio |
| BREAKER | Interruptor |
| BREATHER | Respiro |
| BRIDGE | Braço |
| BROWN | Marrom |
| BRUSH | Escova |
| BUCKET | Caçamba |
| BULB | Bulbo |
| BULLDOZER | Bulldozer |
| BUMPER | Pára-choque |
| BUSHING | Bucha |
| BUTTON | Botão |
| BUZZER WARNING | Alarme sonoro |
| C = CHANGE | Alteração |
| CAB | Cabina |
| CABINET | Gabinete |
| CABLE | Cabo |
| CAGE | Alojamento |
| CALIPER | Calibrador |
| CAM | Excêntrico, ressalto |
| CAMSHAFT | Eixo-comando-de-válvulas |
| CANOPY | Coberta, toldo |

# NOMENCLATURA DE PEÇAS INGLÊS-PORTUGUÊS

| INGLÊS | PORTUGUÊS |
|---|---|
| CAP | Tampa |
| CAPACITOR | Capacitor, condensador |
| CARBURETOR | Caburador |
| CARCASS | Carcaça |
| CARRIER | Suporte |
| CARTON | Caixa de papelão |
| CARTRIDGE | Cartucho |
| CASE | Caixa, alojamento |
| CASING | Invólucro, revestimento |
| CASTER | Rolete, roldana |
| CAST IRON | Ferro fundido |
| CATWALK | Passadiço |
| CENTER | Centro |
| CHAIN | Corrente |
| CHAMBER | Câmara |
| CHANGEOVER | Modificação |
| CHANNEL | Canal |
| CHASSIS | Chassi, armação |
| CHECK-VALVE | Válvula de retenção |
| CIRCUIT | Circuito |
| CIRCUIT BREAKER | Interruptor de circuito |
| CLAMP | Braçadeira |
| CLASP | Fecho, grampo |
| CLEANER | Purificador |
| CLEVIS | Forquilha, garfo |
| CLIP | Clipe, presilha, grampo |
| CLOSURE | Fecho |
| CLUTCH | Embreagem |
| COARSE | Grosso, áspero |
| COATING | Capa, revestimento |
| COCK | Torneira |
| COIL | Bobina, serpentina |
| COLLAR | Colar |
| COLLECTOR | Coletor |
| COLLET | Mandril |
| COLUMN | Coluna |
| COMPACTOR | Compactador |
| COMPARTMENT | Compartimento |
| COMPLETE | Completo |
| COMPOUND | Composto |
| COMPRESSOR | Compressor |
| CONCAVE | Côncavo |
| CONDITIONER | Condicionador |
| CONDUIT | Conduite, eletroduto |
| CONE | Cone |
| CONNECTING | Ligação |
| CONNECTED ROD | Biela |
| CONNECTION | Conexão |
| CONNECTOR | Conetor |
| CONSISTS OF | Consiste de |
| CONSOLE | Consolo |
| CONTACT | Contato, platinado |
| CONTACTOR | Contactador |
| CONTINUED FROM | Continuação de |
| CONTROL | Controle |
| CONVERSION | Conversão |
| CONVERTER | Conversor |
| COOLER | Arrefecedor |
| COOLING | Arrefecimento |
| CORK | Cortiça |
| CORE | Núcleo |
| CORNER | Canto |
| COTTER PIN | Contrapino |
| COUNTER | Contador, tacômetro |
| COUNTERWEIGHT | Contrapeso |
| COUPLER | Acoplador, engate |
| COUPLING | Acoplamento, conexão |
| COVER | Tampa |
| COWL | Capota |
| COWLING | Capota |
| CRADLE | Armação, suporte |
| CRANK | Manivela |
| CRANKCASE | Cárter |
| CRANKSHAFT | Virabrequim |
| CROSS UNION | Junta transversal |
| CROSSBAR | Barra transversal |
| CUP | Capa, anel externa |
| CURTAIN | Cortina |
| CUSHION | Almofada, amortecedor |
| CUTTER | Fresa, cortador |
| CUTTING EDGE | Borda cortante |
| CYLINDER | Cilindro |
| CYLINDER BLOCK | Bloco do motor |
| CYLINDER HEAD | Cabeçote |
| DAMPER | Amortecedor |
| DARK GREEN | Verde escuro |
| DASH | Painel |
| DASH PANEL | Painel de Instrumento |
| DECELERATOR | Desacelerador |
| DEFLECTOR | Defletor |
| DETENT | Retém, pino de trava |
| DIAGRAM-WIRING | Diagrama dos circuitos elétricos |
| DIAL | Medidor de dial |
| DIAPHRAGM | Diafragma |
| DIESEL ENGINE COMPLETE | Motor diesel completo |
| DIFFERENTIAL | Diferencial |
| DIFFUSER | Difusor |
| DIMMER | Redutor de luminosidade |
| DIODE | Diodo |
| DIRECTOR | Diretor |
| DISC | Disco |
| DISCONNECT | Desligar |
| DISPOSABLE | Disponível, substituível |
| DISSIPATOR | Dissipador de calor |
| DISTRIBUTOR | Distribuidor |
| DM = DECIMETER | dm = decímetro |

# NOMENCLATURA DE PEÇAS INGLÊS-PORTUGUÊS

| INGLÊS | PORTUGUÊS |
|---|---|
| DOME LIGHT | Lâmpada do teto |
| DOOR | Porta |
| DOWEL | Pino-guia, cavilha |
| DOWNSHIFT | Mudança para marcha mais baixa |
| DOZER | Bulldozer (lâmina) |
| DRAIN | Dreno |
| DRAWBAR | Barra de tração |
| DRILL | Broca |
| DRILLED | Broqueado, perturado |
| DRIVE | Comando, acionamento, propulsão |
| DRIVER | Acionador, mecanismo propulsor |
| DRIVESHAFT | Eixo acionador, eixo de transmissão |
| DRUM | Tambor |
| DUCT | Conduto, canal |
| EACH | Cada |
| EDGE | Borda, canto |
| EFFECTIVE WITH | Efetivo a partir de |
| EJECTOR | Ejetor |
| ELBOW | Cotovelo |
| ELEMENT | Elemento |
| ENCLOSURE | Cobertura |
| END | Extremidade |
| END BIT | Canto de lâmina |
| END VIEW | Vista traseira |
| ENGINE | Motor |
| ENGINE ARRANGEMENT | Arranjo do motor |
| EXCEPT | Exceto |
| EXHAUST | Escape |
| EXHAUST PIPE | Cano de escape |
| EXPANDER | Expansor |
| EXPANSION PLUG | Bujão de expansão |
| EXTENSION | Extensão |
| EXTINGUISHER | Extintor |
| EXTRACTOR | Extrator |
| EYE | Olhal |
| EYEBOLT | Parafuso de olhal |
| FABRIC | Tecido, tela textura |
| FACING | Revestimento, forro |
| FAN | Ventilador |
| FASTENED | Fixo, preso |
| FASTENER | Fixador, prendedor |
| FENDER | Pára-lamas |
| FERRULE | Virola |
| FIELD COIL | Bobina indutora, ou de campo |
| FIELD REPLACEMENT | Reposicão ou substituicão no campo |
| FILLER | Bocal de enchimento |
| FILM | Película |
| FILTER | Filtro |
| FINAL DRIVE | Comando final |
| FINGER | Dedo |
| FIREWALL | Parede contra fogo |
| FITTING | Graxeira, conexão |
| FIXTURE | Dispositivo, Aparelho |
| FLANGE | Flange |
| FLASHER | Luz intermitente |
| FLOAT | Flutuar, livre |
| FLOOD-LAMP | Farol |
| FLOOR | Piso |
| FLOORMAT | Tapete |
| FLOORPLATE | Chapa do piso |
| FLYWEIGHT | Peso volante |
| FLYWHEEL | Volante |
| FOLLOWER | Seguidor |
| FOOT | Pé |
| FORK | Garfo |
| FOR USE WITH | Para usar com |
| FOUNDATION | Assentamento, alicerce |
| FRAME | Armacão, chassi |
| FRONT | Frente, dianteiro |
| FT = FOOT | Pé |
| FUEL INJECTION | Injecão de combustível |
| FUEL PUMP | Bomba de combustível |
| FUEL RATIO | Limitador de combustível |
| FUEL SYSTEM | Sistema do combustível |
| FUEL TANK | Tanque do combustível |
| FUMES DISPOSAL | Eliminação de vapores do cárter |
| FUSE | Fusível |
| G = GROUP | Grupo |
| GAGE | Indicador, manômetro |
| GAP | Folga, lacuna, intervalo |
| GASKET | Junta |
| GASKET KIT | Jogo de junta |
| GATE | Entrada, trava |
| GAUGE | Indicador, manômetro |
| GEAR | Engrenagem, marcha |
| GEAR BOX | Caixa de engrenagem |
| GEAR PUMP | Bomba de engrenagem |
| GENERATOR | Gerador |
| GLAND | Junta, gaxeta, vedacão sobreposta |
| GLASS | Vidro |
| GLOW PLUG | Vela incandescente |
| GOVERNOR | Governador |
| GRAB IRON | Balaústre corrimão |
| GRATE | Grade, grelha |
| GRAY | Cinza |
| GRID | Grade, grelha |
| GRILL | Grade, grelha |
| GRIP | Pega, garra, cabo |

# NOMENCLATURA DE PEÇAS INGLÊS-PORTUGUÊS

| INGLÊS | PORTUGUÊS |
|---|---|
| GROMMET | Ilhós |
| GROUND BRUSH | Escova-terra |
| GROUND (ELECTRIC) | Terra (eletricidade) |
| GROUSER | Garra (de sapata) |
| GUARD | Protetor |
| GUIDE | Guia |
| GUSSET | Cantoneira |
| HACKSAW | Serra para metais |
| HALF | Metade, meio (a) |
| HALF LINK | Semi-elo |
| HAMMER | Martelo |
| HAND CONTROL | Controle manual |
| HANDLE | Cabo, alça |
| HANDRAIL | Corrimão, balaústre |
| HANGER | Suporte, dispositivo de suspensão |
| HARDWARE | Ferragem |
| HARDWARE KIT | Jogo de ferragem |
| HARNESS | Chicote |
| HEAD = HD | Cabeça |
| HEADER | Coletor |
| HEADLAMP | Farol dianteiro |
| HEADLIGHT | Farol dianteiro |
| HEAT SINK | Difusor de calor |
| HEATER | Aquecedor |
| HIGH-IDLE | Marcha acelerada em vazio |
| HINGE | Dobradiça, articulacão |
| HITCH | Engate |
| HOIST | Guincho, talha |
| HOLD | Suporte, fixador |
| HOLD DOWN | Fixar, reter, manter abaixado |
| HOLDER | Fixador, suporte |
| HOLE | Furo, buraco |
| HOOD | Capô |
| HOOD & DASH | Capô e painel |
| HOOK | Gancho |
| HORN | Buzina |
| HOSE | Mangueira |
| HOUSING | Alojamento |
| HUB | Cubo |
| HYDRAULIC | Hidráulico |
| ID = INSIDE DIAMETER | Diâmetro interno |
| IDLER | Roda-guia |
| IDLER & SHAFT | Roda-guia e eixo |
| IDLER GEAR | Engrenagem intermediária |
| IDLER PULLEY | Polia intermediária |
| IMPELLER | Impulsor, rotor |
| IN = INCH | Polegada |
| INCLUDES | Inclui |
| INDICATE | Indicam |
| INDICATOR | Indicador |
| INLAY | Incrustação |
| INLET | Admissão, entrada |
| INPUT | Entrada |
| INSERT | Inserção |
| INSTALLATION | Instalação |
| INSTALLED ON MODEL | Instalação no modelo |
| INSTRUCTION | Instrução |
| INSTRUMENT | Instrumento |
| INSULATED BRUSH | Escova isolada |
| INSULATION | Isolação, isolamento |
| INSULATOR | Isolante, isolador |
| INTAKE | Admissão |
| INTERLOCK | Trava interna |
| INTERMEDIATE | Intermediário |
| INTERNAL | Interno |
| INVERTER | Inversor |
| IRON | Ferro |
| JACK | Macaco |
| JAW | Mandíbula, garra |
| JET | Jato, vaporizador |
| JOINT | Junta, articulação |
| JUNCTION | Junção |
| KEY | Chaveta |
| KINGBOLT | Pino de engate |
| KNIFE | Faca, lâmina |
| KNOB | Maçaneta, botão |
| LADDER | Escada |
| LAMP | Lâmpada |
| LARGE | Grande |
| LATCH | Trinco, lingüeta |
| LEAD | Condutor, cabo |
| LEG | Perna |
| LENS | Lente |
| LEVEL | Nível |
| LEVER | Alavanca |
| L.H. = LEFT HAND | Lado esquerdo |
| LID | Placa, tampa |
| LIFT | Levantar |
| LIFT CYLINDER | Cilindro de levantamento |
| LIFTER | Tucho |
| LIFTING EYE | Olhal de levantamento |
| LIGHT GREEN | Verde claro |
| LIGHTING | Sistema de iluminação |
| LINE | Tubulação |
| LINER | Camisa |
| LINES & PUMP | Tubulação e bomba |
| LINES & VALVE | Tubulação e válvula |
| LINING | Revestimento, lona |
| LINK | Elo |
| LINKAGE | Articulação |
| LIP | Lábio, borda |
| LISTED | Relacionamento |
| LITERATURE | Literatura |
| LOCATED | Localizado |

# NOMENCLATURA DE PEÇAS INGLÊS-PORTUGUÊS

| INGLÊS | PORTUGUÊS |
|---|---|
| LOCATOR | Localizador |
| LOCK | Trava |
| LOCKNUT | Contraporca |
| LOCKWASHER | Arruela de pressão |
| LOCKWIRE | Arame de trava |
| LONG | Longo |
| LOOM | Tubo isolador |
| LOW IDLE | Marcha lenta |
| LOUVER | Persiana |
| LOWER | Abaixar, inferior |
| LUBRICANT | Lubrificante |
| LUG | Ressalto, orelha |
| MACHINE SCREW | Parafuso de fenda |
| MAGNET | Imã magneto |
| MAIN | Principal |
| MAINTENANCE | Manutenção |
| MANIFOLD | Coletor |
| MARKED | Marcado (a) |
| MARKER | Marcador |
| MASTER PIN | Pino mestre |
| MAT | Capacho, esteira |
| METER | Medidor, contador |
| MINOR | Menor |
| MIRROR | Espelho |
| MISCELLANEOUS | Miscelânea |
| MODIFICATION | Modificação |
| MOLDBOARD | Armação da lâmina |
| MOTOR | Motor |
| MOULDING | Moldura |
| MOUNT | Montar |
| MOUNTED | Montado (a) |
| MOUNTING | Montagem |
| MUFFLER | Silenciador |
| NAMEPLATE | Plaqueta de identificação |
| N.C. (THREAD) | Rosca grossa |
| NEEDLE | Agulha |
| N.F. (THREAD) | Rosca fina |
| NIB | Ponta, bico |
| NIPPLE | Conexão |
| NONE | Nenhum (a) |
| NORMALIZING | Normalização |
| NOT PART OF | Não faz parte de |
| NOZZLE | Bocal, bico injetor |
| N/S = NOT SERVICED | Não vendável |
| NUMBER (No) | Número (No) |
| NUT | Porca |
| NUT-WING | Porca borboleta |
| NUT-CASTLE | Porca acastelada |
| NUT-WELD | Porca-soldada |
| NUT-CAP | Porca cega |
| NUT-HEX | Porca sextavada |
| NUT-LOCK | Contraporca |
| NUT-IMPERIAL | Porca imperial |
| NUT-JAM | Porca de trava, contraporca |
| NUT-LOW CROWN | Porca de meia coroa |
| NUT-RETAINING | Porca de retenção |
| NUT-SELF LOCK | Porca de autotravamento |
| NUT-SLOTTED | Porca fendada |
| NUT-SPANNER | Porca para chaves |
| O.D. = OUTSIDE DIAMETER | Diâmetro externo |
| O-RING | Anel "O" |
| OIL | Óleo |
| OILPAN | Cárter |
| OIL PUMP | Bomba de óleo |
| OIL SYSTEM | Sistema de lubrificação |
| OILER | Almotolia, lubrificador |
| ORANGE | Laranja |
| TO ORDER | Para pedir |
| ORIFICE | Orifício |
| OUTER | Externo |
| OUTER RACE | Anel externo |
| OUTPUT | Saída |
| OVERALL | Geral, total |
| OVERHAUL | Revisão |
| OVER SIZE | Sobremedida |
| PACKING | Embalagem, gaxeta |
| PAD | Coxim, calço |
| PADLOCK | Cadeado |
| PAINT | Pintura |
| PAN | Cárter |
| PANEL | Painel |
| PARKING BRAKE | Freio de estacionamento |
| PARTITION | Separacão |
| PARTS G | Grupo de peças |
| PARTS OF | Peça de |
| PARTS OF ALL ENGINE ARRANGEMENTS | Peças de todos os arranjos do motor exceto |
| PAWL | Garra |
| PEDAL | Pedal |
| PEDESTAL | Pedestal |
| PERFORMANCE | Desempenho |
| PILOT | Piloto |
| PIN | Pino |
| PIN & BUSHING | Pino e bucha |
| PIN-COTTER | Contrapino |
| PINCH BAR | Pé de cabra |
| PINION | Pinhão |
| PIPE | Tubo |
| PISTON | Pistão |
| PIVOT | Articulação, pivô |
| PLANETARY | Planetário |
| PLATE | Placa |
| PLATFORM | Plataforma |
| PLUG | Bujão |
| PLUNGER | Pistão, êmbolo |

# NOMENCLATURA DE PEÇAS INGLÊS-PORTUGUÊS

| INGLÊS | PORTUGUÊS |
|---|---|
| POINT | Ponta, ponto |
| POINTER | Ponteiro |
| POLE & COIL | Polo e bobina |
| POLE | Polo, lança, vara |
| POPPET | Gatilho |
| POST | Poste, coluna |
| POTENTIOMETER | Potenciômetro |
| POWER TAKE OFF | Tomada de força |
| POWER TRAIN | Trem de força |
| PRE-SCREENER | Tela protetora |
| PRECHAMBER | Câmara de pré-combustão |
| PRECLEANER | Pré-purificador |
| PRECOMBUSTION | Pré-combustão |
| PRESS | Prensa |
| PRESS = PRESSURE | Pressão |
| PREVIOUS | Prévio, anterior |
| PRIMARY | Primário, principal |
| PROBE | Prova |
| PROJECTOR | Projeter |
| PROTECTION | Proteção |
| PROTECTOR | Proteter |
| PULLER | Extrator, sacador |
| PULLEY | Polia |
| PUMP | Bomba |
| PURPLE | Roxo |
| PUSHROD | Haste de empuxo |
| QTY = QUANTITY | Quantidade |
| RACE | Pista |
| RACE & ROLLER | Pista e rolete |
| RACK | Cremalheira |
| RADIATOR | Radiador |
| RAIL | Trilho, guia |
| RANGE TRANSM | Transmissão manual |
| RATCHET | Catraca |
| REAR | Traseiro (a) |
| REBORED | Escareado, alargado |
| REBUILD KIT | Jogo de recondicionamento |
| RECEPTACLE | Recipiente |
| RECTIFIER | Retificador |
| RED | Vermelho |
| REDUCER | Redutor |
| REFER | Referir |
| REGULATOR | Regulador |
| RELATED REPAIR ITEMS | Itens de reparos relacionados |
| RELAY | Relé |
| RELIEF VALVE | Válvula de alívio |
| REPAIR G | Grupo de reparo |
| REPAIR KIT | Jogo de reparo |
| REPAIR ITEMS | Itens de reparo |
| REPLACEMENT | Reposição, substituição |
| REQUIRED | Necessário |
| RESERVOIR A | Reservatôrio |
| RESIN | Resina |
| RESISTOR | Resistência |
| RETAINER | Fixador |
| RETARDER | Retardador |
| REVERSIBLE | Reversível |
| R.H. = RIGHT HAND | Lado direito |
| RIM | Aro |
| RIM & TIRE | Aro e pneu |
| RING | Anel |
| RIVET | Rebite |
| ROCKET | Balancim |
| ROD | Haste |
| ROD END | Extremidade da haste |
| ROLLER | Rolete |
| ROPE-STARTING | Partida à corda |
| ROTATOR | Girador |
| ROTOCHAMBER | Càmara pneumática |
| ROTOCOIL | Girador de válvula |
| ROTOR | Rotor |
| RUST INHIBITOR | Antioxidante |
| SADDLE | Sela, assento |
| SAFETY | Segurança |
| SAFETY TREAD | Tiras antiderrapante |
| SCRAPER | Tampa |
| SCREEN | Tela |
| SCREW | Parafuso |
| SCREW-HEX HD | Parafuso de cabeça hexagonal |
| SCREW-KIT | Jogos de parafuso |
| SCREW-MACHINE | Parafuso de fenda |
| SCREW-ROUND HD | Parafuso de cabeça redonda |
| SCREW-FLANGED | Parafuso com flange |
| SCREW-LOCKING | Parafuso de trava |
| SCREW-THUMB | Parafuso de orelhas |
| SCREWDRIVER | Chave de fenda |
| SEAL | Retentor |
| SEALED UNIT | Unidade vedada |
| SEALER | Vedador isolante |
| SEAT | Assento |
| SECONDARY | Secundário |
| SECTION | Seção |
| SEGMENT | Segmento |
| SENDER | Emissor |
| SENSOR | Sensor |
| SEPARATE | Separar, separado |
| SEPARATOR | Separador |
| SERIAL NUMBER PLATE | Placa de número de série |
| SERVICE | Serviço, manutenção |
| SERVICE KIT | Jogo de manutenção |
| SERVICE METER | Horômetro |
| SETSCREW | Parafuso de fixação |
| SHACKLE | Grilheto, anel, manilha |
| SHAFT | Eixo |

# NOMENCLATURA DE PEÇAS INGLÊS-PORTUGUÊS

| INGLÊS | PORTUGUÊS |
|---|---|
| SHANK | Porta-ponta do escarificador |
| SHEAVE | Polia, roldana |
| SHEET | Folha, lâmina |
| SHELL | Invólucro, cápsula, casquilho |
| SHIELD | Blindagem, protetor |
| SHIFT | Mudança |
| SHIM | Calço |
| SHIPPING | Embarque |
| SHOCK ABSORBER | Amortecedor de choques |
| SHOCKMOUNT | Montagem a prova de choques |
| SHOE | Sapata |
| SHORT | Curto |
| SHOWN | Ilustrado, mostrado |
| SHROUD | Tampa de proteção |
| SHUNT | Derivação |
| SHUT OFF | Desligar, parada |
| SHUTTLE | Pistão de vaivém |
| SIDE | Lateral |
| SIDE VIEW | Vista lateral |
| SILICONE | Silicone |
| SINK | Absorvente de calor |
| SKIVING | Desbaste |
| SLACK ADJUSTER | Adjustador de folga |
| SLEEVE | Luva, manga, camisa |
| SLIDER | Cursor, deslizador |
| SLIDE RAIL | Trilho deslizante |
| SLING | Cabos, amarras, linga |
| SLINGER | Defletor |
| SLUG | Pistão de reação, pistãozinho |
| SMALL | Pequeno |
| SNAP RING | Anel de retenção, anel de pressão |
| SNUBBER | Amortecedor |
| SOCKET | Soquete, tomada |
| SOLENOID | Solenóide |
| SPACER | Espaçador |
| SPARE | Sobressalente |
| SPARK PLUG | Vela de ignição |
| SPECIAL | Especial |
| SPEEDOMETER | Velocimetro |
| SPIDER | Cruzeta |
| SPINDLE | Ponta de eixo |
| SPLINE | Estria |
| SPOOL | Carretel |
| SPOUT | Calha, tubo |
| SPRING | Mola |
| SPROCKET | Roda motriz, roda dentada |
| STABILIZER | Estabilizador |
| STACK | Chaminé, cano de escapamento |
| STAND | Suporte, cavalete |
| STANDPIPE | Suporte vertical de sucção |
| STAPLE | Grampo |
| STARTER | Arranque motor de partida |
| STATOR | Estator |
| STEERING | Direção |
| STEM | Haste |
| STEP | Degrau |
| STICK | Vareta |
| STOP | Parar |
| STORAGE | Armazenagem |
| STRAINER | Tela filtrante |
| STRAP | Tira, cinta, suporte de fixação |
| STREET ELL | Conexão cotovelo |
| STRIP | Tira, fita, listra |
| STROKE | Curso do pistão |
| STUD | Prisioneiro |
| SUMP | Tanque, reservatório |
| SUPPLY VALVE | Válvula de suprimento |
| SUPPORT | Suporte |
| SUSPENSION | Suspensão |
| SWITCH | Interruptor |
| SWIVEL | Articulação giratória |
| TAB | Tira, aba, lingüeta |
| TABLE | Mesa |
| TACHOGRAPH | Tacógrafo |
| TACHOMETER | Tacômetro |
| TAG | Etiqueta |
| TAIL LAMP | Farol traseiro |
| TAN | Castanho |
| TANG | Lingüeta |
| TANK | Tanque |
| TAP | Macho |
| TAPE | Fita |
| TAPPET | Tucho |
| TEE | Conexão em "T" |
| TEMP. = TEMPERATURE | Temperatura |
| TERMINAL | Terminal |
| TEST UNIT | Unidade de teste |
| TESTER | Aparelho de teste |
| THERMISTOR | Termistor |
| THERMOCOUPLE | Termopar |
| THERMOMETER | Termômetro |
| THERMOSTAT | Termostato |
| THERMOSWITCH | Interruptor térmico |
| THICK | Grosso (a) espesso (a) |
| TIE | Ligação, tirante |
| THREAD (OF NUT) | Rosca (de porca) |
| THROTTLE | Acelerador de |
| THROWER | Defletor |
| THRU = THROUGH | Através de |
| TIGHTENER | Tensor |
| TILT CYLINDER | Cilindro de inclinação |
| TIMING | Sincronização, Distribuição |

# NOMENCLATURA DE PEÇAS INGLÊS-PORTUGUÊS

| INGLÊS | PORTUGUÊS |
|---|---|
| TIP | Ponta |
| TIRE | Pneu |
| TIRE & RIM | Pneu e aro |
| TONGUE | Língua, lingueta |
| TOOL | Ferramenta |
| TOOLCABINET | Armário para ferramenta |
| TOOTH/TEETH | Dente/dentes |
| TOP | Topo, parte superior |
| TORQUE | Torque |
| TORQ. CONV. | Conversor de torque |
| TORQ. DIVIDER | Divisor de torque |
| TOWER | Torre |
| TRACK | Esteira |
| TRACK PIN | Pino de esteira |
| TRACTOR | Trator |
| TRAILING UNIT | Unidade rebocada |
| TRANSFER | Decalcomania |
| TRANSFORMER | Transformador |
| TRANSISTOR | Transistor |
| TRANSMISSION | Transmissão |
| TRANSMISSION OVERHAUL | Revisão da transmissão |
| TREAD | Piso, banda de rodagem |
| TREADLE | Pedal |
| TROLLY | Carrinho |
| TRUCK | Caminhão |
| TRUNNION | Munhão |
| TUBE | Tubo, cano |
| TUBING | Tubulagem canalização |
| TURBINE | Turbina |
| TURBOCHARGER | Turboalimentador |
| U-BOLT | Parafuso em "U" |
| U-JOINT | Junta universal |
| UNDERSIZE | Submedida |
| UNION | União |
| UPPER | Superior |
| USE AS REQUIRED | Usar conforme necessitar |
| VALUE | Valor |
| VALVE | Válvula |
| VALVE GRINDING | Retificação das válvulas |
| VEE BELT | Correia "V" |
| VEE BELT SET | Jogo de correia em "V" |
| VENT | Respiro |
| VIEW | Vista |
| VISE | Morsa, torno |
| VISOR | Pára-sol |
| WALKWAY | Passadiço, corredor |
| WARNING G. | Grupo de alarma |
| WASHER | Arruela |
| WATER PUMP | Bomba d'água |
| WEARPLATE | Placa de desgaste |
| WEDGE | Cunha |
| WEIGHT | Peso |
| WELD | Solda |
| WELDNUT | Porca soldada |
| WHEEL | Roda |
| WHITE | Branco |
| WICK | Mecha, pavio |
| WINCH | Guincho |
| WINDOW | Janela |
| WINDSHIELD | Pára-brisa |
| WIPER | Limpador |
| WIRE | Fio |
| WIRING | Sistema elétrico |
| WIRING DIAGRAM | Diagrama do sistema elétrico |
| WITH | Com |
| WRAPPER | Invólucro, envoltório |
| WRENCH | Chave |
| YELLOW | Amarelo |
| YOKE | Garfo |

# MAINTENANCE PARTS

| DESCRIPTION | PART NUMBER | QTY | WHERE USED | PAGE |
|---|---|---|---|---|
| **AIR INLET AND EXHAUST SYSTEM** | | | | |
| AIR CLEANER GP | 227-4676 | 1 | AIR CLEANER GP | 98 |
| ELEMENT AS-PRIMARY | 6I-0273 | 1 | AIR CLEANER GP | 98 |
| ELEMENT AS-SECONDARY | 6I-0274 | 1 | AIR CLEANER GP | 98 |
| **BASIC ENGINE** | | | | |
| BREATHER AS | 9Y-4357 | 1 | VALVE MECHANISM GP | 60 |
| GASKET | 9Y-1758 | 1 | VALVE MECHANISM GP | 60 |
| HOSE-FUMES DISPOSAL | 126-0146 | 1 | AIR COMPRESSOR GP | 14 |
| | | 1 | AIR COMPRESSOR GP | 16 |
| **BRAKING SYSTEM** | | | | |
| CARTRIDGE AS-DESICCANT (AIR DRYER) | 203-2389 | 1 | AIR DRYER GP | 608 |
| ELEMENT-HEATING (AIR DRYER) | 203-2423 | 1 | AIR DRYER GP | 608 |
| FUSE (10-AMPERE) (AIR DRYER) | 9W-1442 | 1 | AIR DRYER GP | 605 |
| **COOLING SYSTEM** | | | | |
| CAP-PRESSURE (7-PSI) | 6L-8617 | 1 | RADIATOR GP | 93 |
| | | 1 | RADIATOR GP | 94 |
| GASKET | 7E-7912 | 1 | HOUSING & REGULATOR GP | 79 |
| GASKET (TEMPERATURE REGULATOR HOUSING) | 7E-7912 | 1 | HOUSING & REGULATOR GP | 80 |
| REGULATOR-WATER TEMPERATURE (98-DEG C) | 7C-3095 | 1 | HOUSING & REGULATOR GP | 79 |
| | 247-7133 | 1 | HOUSING & REGULATOR GP | 80 |
| **ELECTRICAL AND STARTING SYSTEM** | | | | |
| BATTERY GP (12-VOLT, MAINTENANCE FREE) | 153-5700 | 2 | BATTERY GP | 149 |
| BATTERY GP (12-VOLT, MAINTENANCE FREE) (1100 AMPS) | 153-5700 | 2 | BATTERY GP | 147 |
| BATTERY (12-VOLT, MAINTENANCE FREE) | 3T-5760 | 2 | BATTERY GP | 150 |
| BATTERY (12-VOLT, MAINTENANCE FREE) (WET) | 153-5710 | 2 | BATTERY GP | 148 |
| BELT-DRIVE | 9X-8139 | 1 | LAMP GP-WARNING BEACON | 199 |
| | | 1 | LAMP GP-WARNING BEACON | 200 |
| BELT-SERPENTINE (ALTERNATOR WITHOUT A/C) | 178-8481 | 1 | ALTERNATOR GP-CHARGING | 145 |
| CIRCUIT BREAKER AS (105-AMPERE) (ALTERNATOR) | 171-2212 | 1 | CIRCUIT BREAKER GP | 154 |
| CIRCUIT BREAKER AS (15-AMPERE) (HEADLAMPS) | 3T-2662 | 1 | CIRCUIT BREAKER GP | 152 |
| | | 1 | CIRCUIT BREAKER GP | 153 |
| CIRCUIT BREAKER AS (15-AMPERE) (LIGHTBAR WORKLAMPS) | 3T-2662 | 1 | CIRCUIT BREAKER GP | 152 |
| CIRCUIT BREAKER AS (80-AMPERE) (ALTERNATOR) | 171-2210 | 1 | WIRING GP-REAR | 349 |
| | | 1 | WIRING GP-REAR | 354 |
| | | 1 | WIRING GP-REAR | 359 |

# MAINTENANCE PARTS

| DESCRIPTION | PART NUMBER | QTY | WHERE USED | PAGE |
|---|---|---|---|---|
| CIRCUIT BREAKER AS (80-AMPERE) (MAIN) | 171-2210 | 1 | WIRING GP-REAR | 349 |
| | | 1 | WIRING GP-REAR | 354 |
| | | 1 | WIRING GP-REAR | 359 |
| CIRCUIT BREAKER GP (15-AMPERE) (ENGINE CONTROL) | 6T-3643 | 1 | WIRING GP-REAR | 355 |
| | | 1 | WIRING GP-REAR | 360 |
| CIRCUIT BREAKER GP (20-AMPERE) (GRADE CONTROL) | 6T-3644 | 1 | WIRING GP-REAR | 376 |
| ELEMENT AS-HEATER (240-VOLT, 1250-WATT) | 154-2881 | 1 | HEATER GP-JACKET WATER | 173 |
| ELEMENT AS-JACKET WATER HEATER (120-VOLT, 1250-WATT) | 131-8627 | 1 | HEATER GP-JACKET WATER | 172 |
| | 239-7342 | 1 | HEATER GP-JACKET WATER | 174 |
| FLASHER AS (24-VOLT) (TURN SIGNAL, HAZARD) | 108-0358 | 1 | LIGHTING GP-FLOOD | 226 |
| | | 1 | LIGHTING GP-FLOOD | 229 |
| | | 1 | LIGHTING GP-FLOOD | 232 |
| | | 1 | LIGHTING GP-FLOOD | 239 |
| | | 1 | LIGHTING GP-FLOOD | 242 |
| | | 1 | LIGHTING GP-FLOOD | 223 |
| | | 1 | SWITCH GP-LIGHT | 299 |
| FLASHER AS (24-VOLT) (TURN SIGNAL/HAZARD LAMPS) | 108-0358 | 1 | LIGHTING GP-ROADING | 259 |
| FUSE (10-AMPERE) | 9W-1442 | 1 | LIGHTING GP-FLOOD | 232 |
| | | 1 | LIGHTING GP-FLOOD | 235 |
| | | 1 | LIGHTING GP-FLOOD | 237 |
| | | 1 | LIGHTING GP-FLOOD | 239 |
| | | 1 | LIGHTING GP-FLOOD | 242 |
| | | 1 | LIGHTING GP-FLOOD | 252 |
| | | 1 | LIGHTING GP-FLOOD | 254 |
| | | 1 | LIGHTING GP-ROADING | 259 |
| | | 1 | LIGHTING GP-WARNING | 265 |
| | | 1 | SWITCH GP-LIGHT | 299 |
| | | 2 | WIRING GP-SECONDARY STEERING | 385 |
| | | 11 | WIRING GP-STEERING CONSOLE | 399 |
| | | 12 | WIRING GP-STEERING CONSOLE | 402 |
| | 3K-8782 | 1 | WIRING GP-CAB | 315 |
| | 9W-1442 | 1 | LIGHTING GP-CAB | 208 |
| | | 1 | LIGHTING GP-FLOOD | 223 |
| | | 1 | LIGHTING GP-FLOOD | 229 |
| | | 1 | WIRING GP-CAB | 311 |
| | | 1 | WIRING GP-CAB | 313 |
| FUSE (10-AMPERE) (AUXILIARY BACK-UP ALARM) | 9W-1442 | 1 | LIGHTING GP-BACKUP | 206 |
| FUSE (10-AMPERE) (BACKUP ALARM) | 9W-1442 | 1 | LIGHTING GP-WARNING | 270 |
| FUSE (10-AMPERE) (BACKUP LAMP) | 9W-1442 | 1 | LIGHTING GP-BACKUP | 204 |
| FUSE (10-AMPERE) (BLADE LAMP) | 9W-1442 | 2 | LIGHTING GP-FLOOD | 218 |
| FUSE (10-AMPERE) (BLADE/FRONT FLOODLAMP) | 9W-1442 | 2 | LIGHTING GP-FLOOD | 217 |
| FUSE (10-AMPERE) (CONVERTER) | 9W-1442 | 1 | CONVERTER GP-ELECTRICAL | 164 |
| FUSE (10-AMPERE) (POWER CONVERTER) | 9W-1442 | 1 | CONVERTER GP-ELECTRICAL | 166 |

# MAINTENANCE PARTS

| DESCRIPTION | PART NUMBER | QTY | WHERE USED | PAGE |
|---|---|---|---|---|
| FUSE (10-AMPERE) (TURN SIGNAL, HAZARD) | 9W-1442 | 1 | LIGHTING GP-FLOOD | 226 |
| FUSE (10-AMPERE) (WARNING BEACON) | 9W-1442 | 1 | LIGHTING GP-WARNING | 266 |
| | | 1 | WIRING GP-CAB | 308 |
| FUSE (10-AMPERE) (WORK LIGHTS) | 9W-1442 | 2 | LIGHTING GP-FLOOD | 220 |
| | | 2 | LIGHTING GP-FLOOD | 222 |
| FUSE (15-AMPERE) | 9W-1441 | 1 | WIRING GP-STEERING CONSOLE | 399 |
| | | 1 | WIRING GP-STEERING CONSOLE | 402 |
| | | 1 | WIRING GP-CAB | 306 |
| | | 1 | WIRING GP-CAB | 309 |
| FUSE (15-AMPERE) (CAB FLOOD LIGHTS) | 9W-1441 | 1 | LIGHTING GP-FLOOD | 220 |
| | | 1 | LIGHTING GP-FLOOD | 222 |
| FUSE (15-AMPERE) (CONVERTER-POWER) | 9W-1441 | 1 | CONVERTER GP-ELECTRICAL | 165 |
| FUSE (30-AMPERE) | 8T-9636 | 2 | CONVERTER GP-ELECTRICAL | 167 |
| KEY (BATTERY DISCONNECT) | 8H-5306 | 1 | SWITCH GP-DISCONNECT | 298 |
| LAMP AS | 6C-0109 | 1 | WIRING GP-REAR LIGHTING | 378 |
| | | 1 | WIRING GP-REAR LIGHTING | 381 |
| | 6C-0110 | 1 | WIRING GP-REAR LIGHTING | 378 |
| | | 1 | WIRING GP-REAR LIGHTING | 381 |
| LAMP GP (STOP, TURN, TAIL, RH) | 5C-9930 | 1 | WIRING GP-REAR LIGHTING | 378 |
| | | 1 | WIRING GP-REAR LIGHTING | 381 |
| LAMP-HALOGEN (24-VOLT, 65-WATT) | 9X-3463 | 1 | LAMP GP-FLOOD | 178 |
| | | 1 | LAMP GP-FLOOD | 181 |
| | | 1 | LAMP GP-FLOOD | 183 |
| LAMP-HALOGEN (24-VOLT, 65-WATT) (FLOOD) | 9X-3463 | 1 | LAMP GP-FLOOD | 179 |
| LAMP-HALOGEN (24-VOLT, 65-WATT) (FLOODLIGHT) | 9X-3463 | 1 | LAMP GP-FLOOD | 180 |
| | | 1 | LAMP GP-FLOOD | 182 |
| LAMP-HALOGEN (24-VOLT, 65-WATT) (HIGH BEAM) | 9X-3463 | 1 | LAMP GP-HEAD | 185 |
| | | 1 | LIGHTING GP-FLOOD | 212 |
| LAMP-HALOGEN (24-VOLT, 65-WATT) (LOW BEAM) | 9X-3463 | 1 | LIGHTING GP-FLOOD | 212 |
| | | 1 | LAMP GP-HEAD | 184 |
| LAMP-LED | 165-5674 | 1 | LIGHTING GP-WARNING | 268 |
| | | 1 | LIGHTING GP-WARNING | 269 |
| LAMP (24-VOLT) | 3E-8825 | 1 | INSTALLATION GP-WARNING BEACON | 175 |
| | | 1 | LIGHTING GP-CAB | 208 |
| | | 2 | LIGHTING GP-FLOOD | 223 |
| | | 1 | LIGHTING GP-FLOOD | 229 |
| | | 1 | LIGHTING GP-FLOOD | 232 |
| | | 1 | LIGHTING GP-FLOOD | 235 |
| | | 1 | LIGHTING GP-FLOOD | 237 |
| | | 1 | LIGHTING GP-FLOOD | 239 |
| | | 1 | LIGHTING GP-FLOOD | 240 |
| | | 1 | LIGHTING GP-FLOOD | 242 |
| | | 1 | LIGHTING GP-FLOOD | 252 |
| | | 1 | LIGHTING GP-FLOOD | 254 |
| | | 2 | LIGHTING GP-ROADING | 259 |

# MAINTENANCE PARTS

| DESCRIPTION | PART NUMBER | QTY | WHERE USED | PAGE |
|---|---|---|---|---|
| | | 1 | LIGHTING GP-WARNING | 268 |
| | | 1 | LIGHTING GP-WARNING | 269 |
| | | 1 | LIGHTING GP-WARNING | 270 |
| | | 1 | LIGHTING GP-WARNING BEACON | 273 |
| | | 2 | SWITCH GP-LIGHT | 299 |
| | | 1 | WIRING GP-CAB | 311 |
| | | 1 | WIRING GP-CAB | 313 |
| | | 2 | WIRING GP-SECONDARY STEERING | 385 |
| | | 2 | WIRING GP-SHIFT CONSOLE | 387 |
| | | 1 | WIRING GP-SHIFT CONSOLE | 389 |
| | | 2 | WIRING GP-SHIFT CONSOLE | 392 |
| | | 2 | WIRING GP-SHIFT CONSOLE | 393 |
| | | 2 | WIRING GP-SHIFT CONSOLE | 396 |
| | | 1 | WIRING GP-SHIFT CONSOLE | 397 |
| | | 1 | WIRING GP-STEERING CONSOLE | 399 |
| | | 1 | WIRING GP-STEERING CONSOLE | 402 |
| | 7N-5876 | 1 | WIRING GP-SHIFT CONSOLE | 387 |
| | | 1 | WIRING GP-SHIFT CONSOLE | 389 |
| | | 1 | WIRING GP-SHIFT CONSOLE | 392 |
| | | 1 | WIRING GP-SHIFT CONSOLE | 396 |
| | 7N-9943 | 1 | LAMP GP-DOME | 177 |
| | 100-3245 | 2 | LAMP GP-HEAD & SIGNAL | 190 |
| LAMP (24-VOLT) (AUXILIARY BACK-UP ALARM) | 3E-8825 | 1 | LIGHTING GP-BACKUP | 206 |
| LAMP (24-VOLT) (AUXILIARY BACKUP LAMP) | 3E-8825 | 2 | LIGHTING GP-BACKUP | 204 |
| LAMP (24-VOLT) (BLADE CUSHION SWITCH) | 3E-8825 | 1 | WIRING GP-BLADE CUSHION | 304 |
| LAMP (24-VOLT) (BLADE FLOOD) | 3E-8825 | 2 | LIGHTING GP-FLOOD | 220 |
| | | 2 | LIGHTING GP-FLOOD | 222 |
| LAMP (24-VOLT) (BLADE LAMP) | 3E-8825 | 2 | LIGHTING GP-FLOOD | 218 |
| LAMP (24-VOLT) (BLADE)(FRONT FLOODLAMP) | 3E-8825 | 2 | LIGHTING GP-FLOOD | 217 |
| LAMP (24-VOLT) (CAB POSITION) | 9X-4494 | 1 | LAMP GP-MARKER | 194 |
| LAMP (24-VOLT) (ETHER STARTING AID) | 3E-8825 | 1 | STARTING AID GP-ETHER | 293 |
| LAMP (24-VOLT) (HEADLIGHTS, TAIL LIGHTS) | 3E-8825 | 2 | LIGHTING GP-FLOOD | 226 |
| LAMP (24-VOLT) (POSITION) | 100-3245 | 1 | LAMP GP-HEAD | 186 |
| | | 1 | LAMP GP-HEAD | 188 |
| LAMP (24-VOLT) (REGISTRATION PLATE) | 5C-9583 | 1 | LAMP GP-REGISTRATION PLATE | 195 |
| LAMP (24-VOLT) (SIGNAL) | 100-3245 | 2 | LAMP GP-HEAD & SIGNAL | 192 |
| LAMP (24-VOLT) (TURN) | 100-3245 | 1 | LAMP GP-HEAD | 186 |
| | | 1 | LAMP GP-HEAD | 188 |
| LAMP (24-VOLT, 21-WATT) | 5C-9584 | 2 | WIRING GP-REAR LIGHTING | 378 |
| | | 2 | WIRING GP-REAR LIGHTING | 381 |
| LAMP (24-VOLT, 21-WATT) (SIGNAL) | 9X-4493 | 1 | LAMP GP-HEAD & SIGNAL | 190 |
| | | 1 | LAMP GP-HEAD & SIGNAL | 192 |
| LAMP (24-VOLT, 21-WATT) (TURN) | 9X-4493 | 1 | LAMP GP-HEAD | 186 |
| | | 1 | LAMP GP-HEAD | 188 |
| LAMP (24-VOLT, 3-WATT) | 115-1748 | 1 | WIRING GP-GRADE CONTROL | 338 |
| LAMP (24-VOLT, 5-WATT) | 4V-8116 | 1 | WIRING GP-REAR LIGHTING | 378 |
| | | 1 | WIRING GP-REAR LIGHTING | 381 |

# MAINTENANCE PARTS

| DESCRIPTION | PART NUMBER | QTY | WHERE USED | PAGE |
|---|---|---|---|---|
| | | 1 | WIRING GP-REAR LIGHTING | 378 |
| | | 1 | WIRING GP-REAR LIGHTING | 381 |
| LAMP (24-VOLT, 70-WATT) | 9X-7849 | 1 | LAMP GP-WARNING BEACON | 200 |
| LAMP (24-VOLT, 70-WATT) (WARNING BEACON) | 9X-7849 | 1 | LAMP GP-WARNING BEACON | 199 |
| LAMP (24-VOLT, 75/70-WATT) | 9X-3465 | 1 | LAMP GP-HEAD & SIGNAL | 190 |
| LAMP (24-VOLT, 75/70-WATT) (HEAD) | 9X-3465 | 1 | LAMP GP-HEAD & SIGNAL | 192 |
| LAMP (24-VOLT, 75/70-WATT) (HIGH/LOW BEAM) | 9X-3465 | 1 | LAMP GP-HEAD | 186 |
| | | 1 | LAMP GP-HEAD | 188 |
| LENS (AMBER) (SIGNAL) | 100-3250 | 1 | LAMP GP-HEAD & SIGNAL | 190 |
| | | 1 | LAMP GP-HEAD & SIGNAL | 192 |
| LENS (AMBER) (TURN) | 100-3250 | 1 | LAMP GP-HEAD | 186 |
| | | 1 | LAMP GP-HEAD | 188 |
| LENS (AMBER, WARNING BEACON) | 272-9800 | 1 | LAMP GP-WARNING BEACON | 200 |
| LENS AS (AMBER) (SIGNAL) | 136-3848 | 1 | LAMP GP-HEAD & SIGNAL | 190 |
| | | 1 | LAMP GP-HEAD & SIGNAL | 192 |
| LENS AS (AMBER) (TURN) | 136-3848 | 1 | LAMP GP-HEAD | 186 |
| | | 1 | LAMP GP-HEAD | 188 |
| LENS AS (HEAD) | 100-3249 | 1 | LAMP GP-HEAD | 186 |
| | | 1 | LAMP GP-HEAD | 188 |
| LENS AS (HEADLAMP)(LOW BEAM) | 162-2077 | 1 | LAMP GP-HEAD | 184 |
| LENS AS (HEADLIGHT) | 100-3248 | 1 | LAMP GP-HEAD & SIGNAL | 190 |
| | | 1 | LAMP GP-HEAD & SIGNAL | 192 |
| LENS AS (LOW BEAM) | 162-2077 | 1 | LIGHTING GP-FLOOD | 212 |
| LENS (REGISTRATION PLATE) | 134-6751 | 1 | LAMP GP-REGISTRATION PLATE | 195 |
| RELAY (24-VOLT) (GRADE CONTROL) | 111-4871 | 1 | WIRING GP-FRONT | 330 |
| RELAY (24-VOLT) (IMPLEMENT) | 111-4871 | 1 | WIRING GP-FRONT | 330 |
| SWITCH AS (AUXILIARY BACKUP) | 161-1418 | 1 | LIGHTING GP-BACKUP | 204 |
| **FRAME AND BODY** | | | | |
| BELT | 8X-1032 | 4 | STEP GP | 596 |
| PLUG-MAGNETIC (CASE DRAIN) | 8M-3837 | 1 | CASE & FRAME GP | 551 |
| | | 1 | CASE & FRAME GP | 552 |
| **FUEL SYSTEM** | | | | |
| CAP GP-FUEL FILLER (EXTREME SERVICE, LOCKABLE) | 164-4858 | 1 | TANK GP-FUEL | 130 |
| | | 1 | TANK GP-FUEL | 132 |
| ELEMENT-FILTER (FUEL, WATER SEPARATOR) (PRIMARY) | 133-5673 | 1 | FILTER GP-WATER SEP & FUEL | 114 |
| FILTER AS-FUEL | 1R-0762 | 1 | FILTER GP-FUEL | 113 |
| GASKET | 9R-7240 | 1 | TANK GP-FUEL | 128 |
| | | 1 | TANK GP-FUEL | 129 |
| GASKET (FUEL PRIMING PUMP) | 1P-0436 | 2 | PUMP GP-FUEL PRIMING | 125 |
| GASKET (FUEL PRIMING PUMP) (COVER) | 1P-0436 | 2 | PUMP GP-FUEL PRIMING | 126 |
| STRAINER-FUEL | 199-9907 | 1 | TANK GP-FUEL | 127 |
| | | 1 | TANK GP-FUEL | 130 |
| | | 1 | TANK GP-FUEL | 132 |

# MAINTENANCE PARTS

| DESCRIPTION | PART NUMBER | QTY | WHERE USED | PAGE |
|---|---|---|---|---|
| **HYDRAULIC SYSTEM** | | | | |
| CAP-FILLER (HYDRAULIC OIL TANK) | 7H-1447 | 1 | TANK & FILTER GP-HYDRAULIC | 737 |
| FILTER ELEMENT AS-OIL (STANDARD EFFICIENCY) | 1R-0774 | 1 | TANK & FILTER GP-HYDRAULIC | 737 |
| FITTING-GREASE (CENTERSHIFT CYLINDER SOCKET) | 3B-8485 | 2 | CYLINDER & MTG GP-CENTERSHIFT | 646 |
| PLUG-PIPE | 2B-7410 | 1 | DRIVE GP-CIRCLE | 667 |
| STRAINER (HYDRAULIC TANK FILL) (HYDRAULIC OIL TANK) | 9J-3047 | 1 | TANK & FILTER GP-HYDRAULIC | 737 |
| **LUBRICATION SYSTEM** | | | | |
| CAP AS-FILLER | 5L-2952 | 1 | FILLER GP-ENGINE OIL | 65 |
| FILTER AS-ENGINE OIL | 1R-0716 | 1 | FILTER GP-ENGINE OIL | 66 |
| **OPERATOR STATION** | | | | |
| ACCUMULATOR GP-REFRIGERANT | 197-6218 | 1 | LINES GP-AIR CONDITIONER | 1183 |
| BELT-SERPENTINE (ALTERNATOR AND AIR CONDITIONER) | 174-9690 | 1 | AIR CONDITIONER AR | 1095 |
| BLADE AS-WIPER | 6V-5853 | 1 | WIPER GP-WINDOW | 1285 |
| | 6V-8255 | 2 | WINDOW GP | 1257 |
| BLADE AS-WIPER (FRONT) | 6V-5853 | 1 | WIPER GP-WINDOW | 1274 |
| | | 1 | WIPER GP-WINDOW | 1286 |
| | | 1 | WIPER GP-WINDOW | 1287 |
| BLADE AS-WIPER (FRONT LOWER) | 123-4355 | 2 | WIPER GP-WINDOW | 1268 |
| | | 2 | WIPER GP-WINDOW | 1270 |
| BLADE AS-WIPER (FRONT, LOWER) | 123-4355 | 2 | WIPER GP-WINDOW | 1274 |
| BLADE AS-WIPER (FRONT UPPER) | 6V-5853 | 1 | WIPER GP-WINDOW | 1270 |
| BLADE AS-WIPER (HIGH PROFILE FRONT LOWER) | 123-4355 | 2 | WIPER GP-WINDOW | 1272 |
| BLADE AS-WIPER (HIGH PROFILE FRONT UPPER) | 6V-5853 | 1 | WIPER GP-WINDOW | 1272 |
| BLADE AS-WIPER (LOW PROFILE FRONT UPPER) | 6V-5853 | 1 | WIPER GP-WINDOW | 1268 |
| BLADE AS-WIPER (REAR) | 6V-5849 | 1 | WIPER GP-WINDOW | 1276 |
| | 6V-5853 | 1 | WIPER GP-WINDOW | 1280 |
| | | 1 | WIPER GP-WINDOW | 1282 |
| | 6V-5849 | 1 | WIPER GP-WINDOW | 1278 |
| FILTER-AIR (CAB) | 7T-7358 | 1 | FILTER GP-CAB AIR | 1142 |
| | 231-4486 | 1 | FILTER GP-CAB AIR | 1142 |
| | 232-1732 | 1 | FILTER GP-CAB AIR | 1142 |
| FUSE (10-AMPERE) | 9W-1442 | 1 | MIRROR GP-REAR VIEW | 1198 |
| | | 1 | MIRROR GP-REAR VIEW | 1202 |
| | | 1 | WIPER GP-WINDOW | 1276 |
| FUSE (10-AMPERE) (FRONT DEFROSTER) | 9W-1442 | 1 | FAN GP-CIRCULATING | 1137 |
| FUSE (10-AMPERE) (REAR DEFROSTER) | 9W-1442 | 1 | FAN GP-CIRCULATING | 1138 |
| FUSE (10-AMPERE) (WIPER) | 9W-1442 | 1 | WIPER GP-WINDOW | 1278 |
| | | 1 | WIPER GP-WINDOW | 1280 |
| | | 1 | WIPER GP-WINDOW | 1282 |
| FUSE (15-AMPERE) (AIR CONDITIONER) | 9W-1441 | 1 | AIR CONDITIONER & MOUNTING GP | 1095 |
| FUSE (15-AMPERE) (HEATER) | 9W-1441 | 1 | HEATER & MTG GP-CAB | 1145 |
| LAMP (24-VOLT) | 3E-8825 | 1 | MIRROR GP-REAR VIEW | 1198 |

| DESCRIPTION | PART NUMBER | QTY | WHERE USED | PAGE |
|---|---|---|---|---|
| | | 1 | MIRROR GP-REAR VIEW | 1202 |
| | 7N-5876 | 2 | MODULE GP-SPEEDOMETER & TACH | 1205 |
| | | 4 | PANEL GP-INSTRUMENT | 1219 |
| | | 6 | PANEL GP-INSTRUMENT | 1221 |
| | 8D-1429 | 1 | AIR CONDITIONER GP | 1096 |
| | | 1 | HEATER GP-CAB | 1147 |
| | | 1 | HEATER GP-CAB | 1151 |
| | 107-1983 | 1 | PANEL GP-INSTRUMENT | 1219 |
| | | 1 | PANEL GP-INSTRUMENT | 1221 |
| | 110-2079 | 1 | PANEL GP-INSTRUMENT | 1219 |
| | | 1 | PANEL GP-INSTRUMENT | 1222 |
| LAMP (24-VOLT) (AIR PRESSURE GAUGE) | 7N-5876 | 2 | PANEL GP-INSTRUMENT | 1217 |
| LAMP (24-VOLT) (DIFFERENTIAL LOCK) | 110-2079 | 1 | PANEL GP-INSTRUMENT | 1217 |
| LAMP (24-VOLT) (EMS MASTER ACTION INDICATOR) | 107-1983 | 1 | PANEL GP-INSTRUMENT | 1217 |
| LAMP (24-VOLT) (FRONT DEFROSTER) | 3E-8825 | 1 | FAN GP-CIRCULATING | 1137 |
| LAMP (24-VOLT) (QUAD GAUGE MODULE) | 7N-5876 | 2 | PANEL GP-INSTRUMENT | 1217 |
| LAMP (24-VOLT) (REAR DEFROSTER) | 3E-8825 | 1 | FAN GP-CIRCULATING | 1138 |
| LAMP (24-VOLT, 3-WATT) | 115-1748 | 9 | PANEL GP-INSTRUMENT | 1219 |
| | | 10 | PANEL GP-INSTRUMENT | 1221 |
| LAMP (24-VOLT, 3-WATT) (INSTRUMENT PANEL) | 115-1748 | 9 | PANEL GP-INSTRUMENT | 1217 |
| **POWER TRAIN** | | | | |
| BREATHER AS (POWER TRAIN OIL FILLER) | 9G-5127 | 1 | FILLER GP-POWER TRAIN OIL | 442 |
| BREATHER AS (TANDEM) | 1F-8488 | 2 | TANDEM & COVER GP | 470 |
| BREATHER (TANDEM) | 4H-6112 | 1 | TANDEM & COVER GP | 471 |
| FILTER ELEMENT AS-OIL | 132-8875 | 2 | LINES GP-TRANSMISSION OIL | 457 |
| FILTER ELEMENT AS-OIL (TRANSMISSION) | 132-8875 | 1 | FILTER GP-OIL | 447 |
| | | 1 | LINES GP-TRANSMISSION OIL | 452 |
| FILTER ELEMENT AS-OIL (ULTRA HIGH EFFICIENCY) | 1R-1809 | 1 | FILTER GP-OIL | 449 |
| | | 1 | LINES GP-TRANSMISSION OIL | 461 |
| FILTER GP-OIL (BYPASS) | 235-5812 | 1 | FILTER & MTG GP-OIL | 445 |
| FILTER-MAGNETIC (TRANSMISSION) | 8S-9129 | 1 | CASE & PARTS GP-TRANSMISSION | 413 |
| | | 1 | SCREEN GP-MAGNETIC | 467 |
| | | 1 | CASE & PARTS GP-TRANSMISSION | 409 |
| LAMP (24-VOLT) (AUTOSHIFT) | 3E-8825 | 1 | AUTOSHIFT AR | 408 |
| PLUG | 6E-5047 | 2 | TANDEM & COVER GP | 470 |
| | | 2 | TANDEM & COVER GP | 471 |
| SCREEN-SUCTION (TRANSMISSION) | 8S-9130 | 1 | SCREEN GP-MAGNETIC | 467 |
| SCREEN-SUCTION (TRANSMISSION CASE) | 8S-9130 | 1 | CASE & PARTS GP-TRANSMISSION | 409 |
| | | 1 | CASE & PARTS GP-TRANSMISSION | 413 |
| SCREEN (TRANSMISSION CONTROL VALVE) | 6I-9395 | 1 | VALVE GP-TRANSMISSION CONTROL | 490 |
| | | 1 | VALVE GP-TRANSMISSION CONTROL | 492 |

# PIÈCES DE RECHANGE

| DESCRIPTION | NUMÉRO DE PIECÈS | QTÉ | DOMAINE D'APPLICATION | PAGE |
|---|---|---|---|---|
| **CHÂSSIS ET BENNE** | | | | |
| BOUCHON AIMANTÉ (RETOUR AU CARTER) | 8M-3837 | 1 | CHÂSSIS ET CARTER (ASS) | 551 |
| | | 1 | CHÂSSIS ET CARTER (ASS) | 552 |
| COURROIE | 8X-1032 | 4 | MARCHEPIED (ASS) | 596 |
| **CIRCUIT D'ADMISSION D'AIR ET D'ÉCHAPPEMENT** | | | | |
| ÉLÉMENT PRINCIPAL (ENS) | 6I-0273 | 1 | FILTRE A AIR (ASS) | 98 |
| ÉLÉMENT SECONDAIRE (ENS) | 6I-0274 | 1 | FILTRE A AIR (ASS) | 98 |
| FILTRE A AIR (ASS) | 227-4676 | 1 | FILTRE A AIR (ASS) | 98 |
| **CIRCUIT DE CARBURANT** | | | | |
| BOUCHON DE GOULOTTE DE CARBURANT (ASS) (SERVICE INTENSIF, VERROUILLABLE) | 164-4858 | 1 | RÉSERVOIR DE CARBURANT (ASS) | 130 |
| | | 1 | RÉSERVOIR DE CARBURANT (ASS) | 132 |
| ÉLÉMENT DE FILTRE (SÉPARATEUR D'EAU) (PRINCIPAL) | 133-5673 | 1 | FILTRE DE SÉPARATEUR D'EAU ET DE CARBURANT (ASS) | 114 |
| FILTRE À CARBURANT | 199-9907 | 1 | RÉSERVOIR DE CARBURANT (ASS) | 127 |
| | | 1 | RÉSERVOIR DE CARBURANT (ASS) | 130 |
| | | 1 | RÉSERVOIR DE CARBURANT (ASS) | 132 |
| FILTRE A CARBURANT (ENS) | 1R-0762 | 1 | FILTRE A CARBURANT (ASS) | 113 |
| JOINT PLAT | 9R-7240 | 1 | RÉSERVOIR DE CARBURANT (ASS) | 128 |
| | | 1 | RÉSERVOIR DE CARBURANT (ASS) | 129 |
| JOINT PLAT (POMPE D'AMORÇAGE DE CARBURANT) | 1P-0436 | 2 | POMPE D'AMORÇAGE DE CARBURANT (ASS) | 125 |
| JOINT PLAT (POMPE D'AMORÇAGE DE CARBURANT) (COUVERCLE) | 1P-0436 | 2 | POMPE D'AMORÇAGE DE CARBURANT (ASS) | 126 |
| **CIRCUIT DE FREINAGE** | | | | |
| CARTOUCHE SICCATIVE (ENS) (DÉSHYDRATEUR) | 203-2389 | 1 | DESHYDRATEUR (ASS) | 608 |
| ÉLÉMENT DE CHAUFFAGE (DÉSHYDRATEUR) | 203-2423 | 1 | DESHYDRATEUR (ASS) | 608 |
| FUSIBLE (10A) (DÉSHYDRATEUR) | 9W-1442 | 1 | DESHYDRATEUR (ASS) | 605 |
| **CIRCUIT DE GRAISSAGE** | | | | |
| BOUCHON DE GOULOTTE DE REMPLISSAGE (ENS) | 5L-2952 | 1 | BOUCHON DE REMPLISSAGE D'HUILE MOTEUR (ASS) | 65 |
| FILTRE A HUILE MOTEUR (ENS) | 1R-0716 | 1 | FILTRE À HUILE MOTEUR (ASS) | 66 |
| **CIRCUIT DE REFROIDISSEMENT** | | | | |
| COUVERCLE DE PRESSION (7-PSI) | 6L-8617 | 1 | RADIATEUR (ASS) | 93 |
| | | 1 | RADIATEUR (ASS) | 94 |
| JOINT PLAT | 7E-7912 | 1 | THERMOSTAT ET BOITIER (ASS) | 79 |
| JOINT PLAT (BOÎTIER DE RÉGULATEUR DE TEMPÉRATURE) | 7E-7912 | 1 | THERMOSTAT ET BOITIER (ASS) | 80 |
| THERMOSTAT-TEMPÉRATURE D'EAU (98 DEG C) | 247-7133 | 1 | THERMOSTAT ET BOITIER (ASS) | 80 |
| | 7C-3095 | 1 | THERMOSTAT ET BOITIER (ASS) | 79 |
| **CIRCUIT ÉLECTRIQUE ET DE DÉMARRAGE** | | | | |

* TRADUCTION NON DISPONIBLE AU MOMENT DE LA PUBLICATION

# PIÈCES DE RECHANGE

| DESCRIPTION | NUMÉRO DE PIECÈS | QTÉ | DOMAINE D'APPLICATION | PAGE |
|---|---|---|---|---|
| AMPOULE (24 VOLTS) | 3E-8825 | 1 | CABLAGE DE CABINE (ASS) | 311 |
| | | 1 | CABLAGE DE CABINE (ASS) | 313 |
| | | 1 | ÉCLAIRAGE - AVERTISSEUR (ASS) | 268 |
| | | 1 | ÉCLAIRAGE - AVERTISSEUR (ASS) | 269 |
| | | 1 | ÉCLAIRAGE - AVERTISSEUR (ASS) | 270 |
| | | 1 | ÉCLAIRAGE - GYROPHARE (ASS) | 273 |
| | | 1 | ÉCLAIRAGE DE CABINE (ASS) | 208 |
| | | 1 | MONTAGE - GYROPHARE (ASS) | 175 |
| | 7N-9943 | 1 | PLAFONNIER (ASS) | 177 |
| | 3E-8825 | 2 | ÉCLAIRAGE - FEUX DE ROUTE (ASS) | 259 |
| | | 2 | ÉCLAIRAGE - PROJECTEURS (ASS) | 223 |
| | | 1 | ÉCLAIRAGE - PROJECTEURS (ASS) | 229 |
| | | 1 | ÉCLAIRAGE - PROJECTEURS (ASS) | 232 |
| | | 1 | ÉCLAIRAGE - PROJECTEURS (ASS) | 235 |
| | | 1 | ÉCLAIRAGE - PROJECTEURS (ASS) | 237 |
| | | 1 | ÉCLAIRAGE - PROJECTEURS (ASS) | 239 |
| | | 1 | ÉCLAIRAGE - PROJECTEURS (ASS) | 240 |
| | | 1 | ÉCLAIRAGE - PROJECTEURS (ASS) | 242 |
| | | 1 | ÉCLAIRAGE - PROJECTEURS (ASS) | 252 |
| | | 1 | ÉCLAIRAGE - PROJECTEURS (ASS) | 254 |
| | | 2 | INTERRUPTEUR D'ÉCLAIRAGE (ASS) | 299 |
| | | 2 | CABLAGE DE DIRECTION AUXILIAIRE (ASS) | 385 |
| | | 2 | CABLAGE DE LA CONSOLE DE CHANGEMENTS DE VITESSE | 387 |
| | | 1 | CABLAGE DE LA CONSOLE DE CHANGEMENTS DE VITESSE | 389 |
| | | 2 | CABLAGE DE LA CONSOLE DE CHANGEMENTS DE VITESSE | 392 |
| | | 1 | CABLAGE DE LA CONSOLE DE CHANGEMENTS DE VITESSE | 393 |
| | | 2 | CABLAGE DE LA CONSOLE DE CHANGEMENTS DE VITESSE | 396 |
| | | 1 | CABLAGE DE LA CONSOLE DE CHANGEMENTS DE VITESSE | 397 |
| | | 1 | CABLAGE DE LA CONSOLE DE DIRECTION | 399 |
| | | 1 | CABLAGE DE LA CONSOLE DE DIRECTION | 402 |
| | 7N-5876 | 1 | CABLAGE DE LA CONSOLE DE CHANGEMENTS DE VITESSE | 387 |
| | | 1 | CABLAGE DE LA CONSOLE DE CHANGEMENTS DE VITESSE | 389 |
| | | 1 | CABLAGE DE LA CONSOLE DE CHANGEMENTS DE VITESSE | 392 |
| | | 1 | CABLAGE DE LA CONSOLE DE CHANGEMENTS DE VITESSE | 396 |
| | 100-3245 | 2 | LAMPE - PHARE ET CLIGNOTANT | 190 |
| AMPOULE (24 VOLTS) (AVERTISSEUR DE RECUL AUXILIAIRE) | 3E-8825 | 1 | ECLAIRAGE AR (ASS) | 206 |
| AMPOULE (24 VOLTS) (CLIGNOTANT) | 100-3245 | 1 | PHARE AV (ASS) | 186 |
| | | 1 | PHARE AV (ASS) | 188 |

* TRADUCTION NON DISPONIBLE AU MOMENT DE LA PUBLICATION

# PIÈCES DE RECHANGE

| DESCRIPTION | NUMÉRO DE PIECÈS | QTÉ | DOMAINE D'APPLICATION | PAGE |
|---|---|---|---|---|
| AMPOULE (24 VOLTS) (CONTACTEUR D'AMORTISSEUR DE LAME) | 3E-8825 | 1 | CÂBLE D'AMORTISSEUR DE LAME (ASS) | 304 |
| AMPOULE (24 VOLTS) (DÉMARRAGE À L'ÉTHER) | 3E-8825 | 1 | AUXILIAIRE DE DÉMARRAGE À L'ÉTHER | 293 |
| AMPOULE (24 VOLTS) (LAME)(PROJECTEUR AVANT) | 3E-8825 | 2 | ÉCLAIRAGE - PROJECTEURS (ASS) | 217 |
| AMPOULE (24 VOLTS) (LAMPE D'APPOINT AUXILIAIRE) | 3E-8825 | 2 | ECLAIRAGE AR (ASS) | 204 |
| AMPOULE (24 VOLTS) (PHARES AVANT, FEUX ARRIÈRE) | 3E-8825 | 2 | ÉCLAIRAGE - PROJECTEURS (ASS) | 226 |
| AMPOULE (24 VOLTS) (PLAQUE D'IMMATRICULATION) | 5C-9583 | 1 | LAMPE-PLAQUE D'IMMATRICULATION (ASS) | 195 |
| AMPOULE (24 VOLTS) (POSITION) | 100-3245 | 1 | PHARE AV (ASS) | 186 |
| | | 1 | PHARE AV (ASS) | 188 |
| AMPOULE (24 VOLTS) (POSITION DE CABINE) | 9X-4494 | 1 | REPÈRE DE LAMPE (ASS) | 194 |
| AMPOULE (24 VOLTS) (PROJECTEUR DE LAME) | 3E-8825 | 2 | ÉCLAIRAGE - PROJECTEURS (ASS) | 218 |
| AMPOULE (24 VOLTS) (PROJECTEUR SUR LAME) | 3E-8825 | 2 | ÉCLAIRAGE - PROJECTEURS (ASS) | 220 |
| | | 2 | ÉCLAIRAGE - PROJECTEURS (ASS) | 222 |
| AMPOULE (24 VOLTS) (SIGNAL) | 100-3245 | 2 | LAMPE - PHARE ET CLIGNOTANT | 192 |
| AMPOULE (24V, 21W) | 5C-9584 | 2 | CABLAGE D'ECLAIRAGE ARRIERE (ASS) | 378 |
| | | 2 | CABLAGE D'ECLAIRAGE ARRIERE (ASS) | 381 |
| AMPOULE (24V, 21W) (CLIGNOTANT) | 9X-4493 | 1 | PHARE AV (ASS) | 186 |
| | | 1 | PHARE AV (ASS) | 188 |
| AMPOULE (24V, 21W) (SIGNAL) | 9X-4493 | 1 | LAMPE - PHARE ET CLIGNOTANT | 190 |
| | | 1 | LAMPE - PHARE ET CLIGNOTANT | 192 |
| AMPOULE (24V, 3W) | 115-1748 | 1 | AVERTISSEMENT DE PROFIL LONGITUDINAL (ASS) | 338 |
| AMPOULE (24V, 5W) | 4V-8116 | 1 | CABLAGE D'ECLAIRAGE ARRIERE (ASS) | 378 |
| | | 1 | CABLAGE D'ECLAIRAGE ARRIERE (ASS) | 381 |
| | | 1 | CABLAGE D'ECLAIRAGE ARRIERE (ASS) | 378 |
| | | 1 | CABLAGE D'ECLAIRAGE ARRIERE (ASS) | 381 |
| AMPOULE (24V, 70W) | 9X-7849 | 1 | LAMPE - GYROPHARE (ASS) | 200 |
| AMPOULE (24V, 70W) (GYROPHARE) | 9X-7849 | 1 | LAMPE - GYROPHARE (ASS) | 199 |
| AMPOULE (24V, 75/70W) | 9X-3465 | 1 | LAMPE - PHARE ET CLIGNOTANT | 190 |
| AMPOULE (24V, 75/70W) (FEUX DE ROUTE/FEUX DE CROISEMENT) | 9X-3465 | 1 | PHARE AV (ASS) | 186 |
| | | 1 | PHARE AV (ASS) | 188 |
| AMPOULE (24V, 75/70W) (TÊTE) | 9X-3465 | 1 | LAMPE - PHARE ET CLIGNOTANT | 192 |
| BATTERIE (ASS) (12V, SANS ENTRETIEN) | 153-5700 | 2 | BATTERIE (ASS) | 149 |
| BATTERIE (ASS) (12V, SANS ENTRETIEN) (1100A) | 153-5700 | 2 | BATTERIE (ASS) | 147 |
| BATTERIE (12V, SANS ENTRETIEN) | 3T-5760 | 2 | BATTERIE (ASS) | 150 |

* TRADUCTION NON DISPONIBLE AU MOMENT DE LA PUBLICATION

# PIÈCES DE RECHANGE

| DESCRIPTION | NUMÉRO DE PIECÈS | QTÉ | DOMAINE D'APPLICATION | PAGE |
|---|---|---|---|---|
| BATTERIE (12V, SANS ENTRETIEN) (HUMIDE) | 153-5710 | 2 | BATTERIE (ASS) | 148 |
| CLÉ (COUPE-BATTERIE) | 8H-5306 | 1 | ROBINET DE BATTERIE (ASS) | 298 |
| CLIGNOTANT (ENS) (24 VOLTS) (CLIGNOTANT, FEUX DE DÉTRESSE) | 108-0358 | 1 | ÉCLAIRAGE - PROJECTEURS (ASS) | 223 |
| | | 1 | ÉCLAIRAGE - PROJECTEURS (ASS) | 226 |
| | | 1 | ÉCLAIRAGE - PROJECTEURS (ASS) | 229 |
| | | 1 | ÉCLAIRAGE - PROJECTEURS (ASS) | 232 |
| | | 1 | ÉCLAIRAGE - PROJECTEURS (ASS) | 239 |
| | | 1 | ÉCLAIRAGE - PROJECTEURS (ASS) | 242 |
| | | 1 | INTERRUPTEUR D'ÉCLAIRAGE (ASS) | 299 |
| CLIGNOTANT (ENS) (24 VOLTS) (CLIGNOTANT/FEUX DE DÉTRESSE) | 108-0358 | 1 | ÉCLAIRAGE - FEUX DE ROUTE (ASS) | 259 |
| CONTACTEUR (ENS) (AVERTISSEUR DE RECUL AUXILIAIRE) | 161-1418 | 1 | ECLAIRAGE AR (ASS) | 204 |
| COURROIE MULTIPLE (ALTERNATEUR SANS CLIMATISEUR) | 178-8481 | 1 | ALTERNATEUR DE CHARGE (ASS) | 145 |
| DIODE | 165-5674 | 1 | ÉCLAIRAGE - AVERTISSEUR (ASS) | 268 |
| | | 1 | ÉCLAIRAGE - AVERTISSEUR (ASS) | 269 |
| DISJONCTEUR (ASS) (15A) (COMMANDE DU MOTEUR) | 6T-3643 | 1 | CABLAGE AR (ASS) | 355 |
| | | 1 | CABLAGE AR (ASS) | 360 |
| DISJONCTEUR (ASS) (20A) (COMMANDE DE PROFIL LONGITUDINAL) | 6T-3644 | 1 | CABLAGE AR (ASS) | 376 |
| DISJONCTEUR (ENS) (105A) (ALTERNATEUR) | 171-2212 | 1 | DISJONCTEUR (ASS) | 154 |
| DISJONCTEUR (ENS) (15A) (PHARES AVANT) | 3T-2662 | 1 | DISJONCTEUR (ASS) | 152 |
| | | 1 | DISJONCTEUR (ASS) | 153 |
| DISJONCTEUR (ENS) (15A) (PROJECTEURS DE TRAVAIL AVEC BARRE LUMINEUSE) | 3T-2662 | 1 | DISJONCTEUR (ASS) | 152 |
| DISJONCTEUR (ENS) (80A) (ALTERNATEUR) | 171-2210 | 1 | CABLAGE AR (ASS) | 349 |
| | | 1 | CABLAGE AR (ASS) | 354 |
| | | 1 | CABLAGE AR (ASS) | 359 |
| DISJONCTEUR (ENS) (80A) (PRINCIPAL) | 171-2210 | 1 | CABLAGE AR (ASS) | 349 |
| | | 1 | CABLAGE AR (ASS) | 354 |
| | | 1 | CABLAGE AR (ASS) | 359 |
| ÉLÉMENT DE RÉCHAUFFEUR (ENS) (240V, 1250W) | 154-2881 | 1 | EAU DES CHEMISES - RECHAUFFEUR (ASS) | 173 |
| ÉLÉMENT DU RÉCHAUFFEUR D'EAU DES CHEMISES (ENS) (120V, 1250W) | 239-7342 | 1 | EAU DES CHEMISES - RECHAUFFEUR (ASS) | 174 |
| | 131-8627 | 1 | EAU DES CHEMISES - RECHAUFFEUR (ASS) | 172 |
| ENTRAÎNEMENT POUR COURROIE | 9X-8139 | 1 | LAMPE - GYROPHARE (ASS) | 199 |
| | | 1 | LAMPE - GYROPHARE (ASS) | 200 |
| FUSIBLE (10A) | 3K-8782 | 1 | CABLAGE DE CABINE (ASS) | 315 |
| | 9W-1442 | 1 | CABLAGE DE CABINE (ASS) | 311 |
| | | 1 | CABLAGE DE CABINE (ASS) | 313 |

* TRADUCTION NON DISPONIBLE AU MOMENT DE LA PUBLICATION

# PIÈCES DE RECHANGE

| DESCRIPTION | NUMÉRO DE PIECÈS | QTÉ | DOMAINE D'APPLICATION | PAGE |
|---|---|---|---|---|
| | | 2 | CABLAGE DE DIRECTION AUXILIAIRE (ASS) | 385 |
| | | 11 | CABLAGE DE LA CONSOLE DE DIRECTION | 399 |
| | | 12 | CABLAGE DE LA CONSOLE DE DIRECTION | 402 |
| | | 1 | ÉCLAIRAGE - AVERTISSEUR (ASS) | 265 |
| | | 1 | ÉCLAIRAGE - FEUX DE ROUTE (ASS) | 259 |
| | | 1 | ÉCLAIRAGE - PROJECTEURS (ASS) | 223 |
| | | 1 | ÉCLAIRAGE - PROJECTEURS (ASS) | 229 |
| | | 1 | ÉCLAIRAGE - PROJECTEURS (ASS) | 232 |
| | | 1 | ÉCLAIRAGE - PROJECTEURS (ASS) | 235 |
| | | 1 | ÉCLAIRAGE - PROJECTEURS (ASS) | 237 |
| | | 1 | ÉCLAIRAGE - PROJECTEURS (ASS) | 239 |
| | | 1 | ÉCLAIRAGE - PROJECTEURS (ASS) | 242 |
| | | 1 | ÉCLAIRAGE - PROJECTEURS (ASS) | 252 |
| | | 1 | ÉCLAIRAGE - PROJECTEURS (ASS) | 254 |
| | | 1 | ÉCLAIRAGE DE CABINE (ASS) | 208 |
| | | 1 | INTERRUPTEUR D'ÉCLAIRAGE (ASS) | 299 |
| FUSIBLE (10A) (AVERTISSEUR DE RECUL) | 9W-1442 | 1 | ÉCLAIRAGE - AVERTISSEUR (ASS) | 270 |
| FUSIBLE (10A) (AVERTISSEUR DE RECUL AUXILIAIRE) | 9W-1442 | 1 | ECLAIRAGE AR (ASS) | 206 |
| FUSIBLE (10A) (CLIGNOTANT, FEUX DE DÉTRESSE) | 9W-1442 | 1 | ÉCLAIRAGE - PROJECTEURS (ASS) | 226 |
| FUSIBLE (10A) (CONVERTISSEUR) | 9W-1442 | 1 | TRANSFORMATION ELECTRIQUE (ASS) | 164 |
| FUSIBLE (10A) (DÉVOLTEUR POUR COURANT) | 9W-1442 | 1 | TRANSFORMATION ELECTRIQUE (ASS) | 166 |
| FUSIBLE (10A) (GYROPHARE) | 9W-1442 | 1 | CABLAGE DE CABINE (ASS) | 308 |
| | | 1 | ÉCLAIRAGE - AVERTISSEUR (ASS) | 266 |
| FUSIBLE (10A) (LAME/ PROJECTEUR AVANT) | 9W-1442 | 2 | ÉCLAIRAGE - PROJECTEURS (ASS) | 217 |
| FUSIBLE (10A) (LAMPE D'APPOINT) | 9W-1442 | 1 | ECLAIRAGE AR (ASS) | 204 |
| FUSIBLE (10A) (PROJECTEUR DE LAME) | 9W-1442 | 2 | ÉCLAIRAGE - PROJECTEURS (ASS) | 218 |
| FUSIBLE (10A) (PROJECTEURS) | 9W-1442 | 2 | ÉCLAIRAGE - PROJECTEURS (ASS) | 220 |
| | | 2 | ÉCLAIRAGE - PROJECTEURS (ASS) | 222 |
| FUSIBLE (15A) | 9W-1441 | 1 | CABLAGE DE CABINE (ASS) | 306 |
| | | 1 | CABLAGE DE CABINE (ASS) | 309 |
| | | 1 | CABLAGE DE LA CONSOLE DE DIRECTION | 399 |
| | | 1 | CABLAGE DE LA CONSOLE DE DIRECTION | 402 |
| FUSIBLE (15A) (CONVERTISSEUR DE PUISSANCE) | 9W-1441 | 1 | TRANSFORMATION ELECTRIQUE (ASS) | 165 |
| FUSIBLE (15A) (PROJECTEURS DE CABINE) | 9W-1441 | 1 | ÉCLAIRAGE - PROJECTEURS (ASS) | 220 |
| | | 1 | ÉCLAIRAGE - PROJECTEURS (ASS) | 222 |
| FUSIBLE (30A) | 8T-9636 | 2 | TRANSFORMATION ELECTRIQUE (ASS) | 167 |

* TRADUCTION NON DISPONIBLE AU MOMENT DE LA PUBLICATION

# PIÈCES DE RECHANGE

| DESCRIPTION | NUMÉRO DE PIECÈS | QTÉ | DOMAINE D'APPLICATION | PAGE |
|---|---|---|---|---|
| LAMPE (ENS) | 6C-0109 | 1 | CABLAGE D'ECLAIRAGE ARRIERE (ASS) | 378 |
| | | 1 | CABLAGE D'ECLAIRAGE ARRIERE (ASS) | 381 |
| | 6C-0110 | 1 | CABLAGE D'ECLAIRAGE ARRIERE (ASS) | 378 |
| | | 1 | CABLAGE D'ECLAIRAGE ARRIERE (ASS) | 381 |
| LAMPE HALOGÈNE (24V, 65W) | 9X-3463 | 1 | LAMPE - PHARE (ASS) | 178 |
| | | 1 | LAMPE - PHARE (ASS) | 181 |
| | | 1 | LAMPE - PHARE (ASS) | 183 |
| LAMPE HALOGÈNE (24V, 65W) (FEUX DE CROISEMENT) | 9X-3463 | 1 | ÉCLAIRAGE - PROJECTEURS (ASS) | 212 |
| | | 1 | PHARE AV (ASS) | 184 |
| LAMPE HALOGÈNE (24V, 65W) (FEUX DE ROUTE) | 9X-3463 | 1 | PHARE AV (ASS) | 185 |
| | | 1 | ÉCLAIRAGE - PROJECTEURS (ASS) | 212 |
| LAMPE HALOGÈNE (24V, 65W) (PROJECTEUR) | 9X-3463 | 1 | LAMPE - PHARE (ASS) | 179 |
| | | 1 | LAMPE - PHARE (ASS) | 180 |
| | | 1 | LAMPE - PHARE (ASS) | 182 |
| LENTILLE (ENS) (FEUX DE CROISEMENT) | 162-2077 | 1 | ÉCLAIRAGE - PROJECTEURS (ASS) | 212 |
| LENTILLE (ENS) (JAUNE) (CLIGNOTANT) | 136-3848 | 1 | PHARE AV (ASS) | 186 |
| | | 1 | PHARE AV (ASS) | 188 |
| LENTILLE (ENS) (JAUNE) (SIGNAL) | 136-3848 | 1 | LAMPE - PHARE ET CLIGNOTANT | 190 |
| | | 1 | LAMPE - PHARE ET CLIGNOTANT | 192 |
| LENTILLE (ENS) (PHARE AVANT) | 100-3248 | 1 | LAMPE - PHARE ET CLIGNOTANT | 192 |
| | | 1 | LAMPE - PHARE ET CLIGNOTANT | 190 |
| LENTILLE (ENS) (PHARE AVANT)(FEUX DE CROISEMENT) | 162-2077 | 1 | PHARE AV (ASS) | 184 |
| LENTILLE (ENS) (TÊTE) | 100-3249 | 1 | PHARE AV (ASS) | 188 |
| | | 1 | PHARE AV (ASS) | 186 |
| LENTILLE (GYROPHARE JAUNE) | 272-9800 | 1 | LAMPE - GYROPHARE (ASS) | 200 |
| LENTILLE (JAUNE) (CLIGNOTANT) | 100-3250 | 1 | PHARE AV (ASS) | 186 |
| | | 1 | PHARE AV (ASS) | 188 |
| LENTILLE (JAUNE) (SIGNAL) | 100-3250 | 1 | LAMPE - PHARE ET CLIGNOTANT | 190 |
| | | 1 | LAMPE - PHARE ET CLIGNOTANT | 192 |
| LENTILLE (PLAQUE D'IMMATRICULATION) | 134-6751 | 1 | LAMPE-PLAQUE D'IMMATRICULATION (ASS) | 195 |
| RELAIS (24 VOLTS) (COMMANDE DE PROFIL LONGITUDINAL) | 111-4871 | 1 | CABLAGE AV (ASS) | 330 |
| RELAIS (24 VOLTS) (ÉQUIPEMENT) | 111-4871 | 1 | CABLAGE AV (ASS) | 330 |
| TEMOINS (ASS) (STOP, CLIGNOTANT, ARRIÈRE, DROIT) | 5C-9930 | 1 | CABLAGE D'ECLAIRAGE ARRIERE (ASS) | 381 |
| | | 1 | CABLAGE D'ECLAIRAGE ARRIERE (ASS) | 378 |

* TRADUCTION NON DISPONIBLE AU MOMENT DE LA PUBLICATION

# PIÈCES DE RECHANGE

| DESCRIPTION | NUMÉRO DE PIECÈS | QTÉ | DOMAINE D'APPLICATION | PAGE |
|---|---|---|---|---|
| **CIRCUIT HYDRAULIQUE** | | | | |
| BOUCHON DE GOULOTTE DE REMPLISSAGE (RÉSERVOIR D'HUILE HYDRAULIQUE) | 7H-1447 | 1 | RÉSERVOIR HYDRAULIQUE ET FILTRE (ASS) | 737 |
| BOUCHON FILETÉ | 2B-7410 | 1 | ENTRAÎNEMENT DE CERCLE (ASS) | 667 |
| CREPINE (REMPLISSAGE DU RÉSERVOIR HYDRAULIQUE) (RÉSERVOIR D'HUILE HYDRAULIQUE) | 9J-3047 | 1 | RÉSERVOIR HYDRAULIQUE ET FILTRE (ASS) | 737 |
| ÉLÉMENT DE FILTRE À HUILE (ENS) (EFFICACITÉ NORMALE) | 1R-0774 | 1 | RÉSERVOIR HYDRAULIQUE ET FILTRE (ASS) | 737 |
| GRAISSEUR (CHAPE D'ANCRAGE DU VÉRIN DE DÉPORT DE CERCLE) | 3B-8485 | 2 | VÉRIN DE DÉPORT DE CERCLE ET MONTAGE (ASS) | 646 |
| **MOTEUR STANDARD** | | | | |
| FLEXIBLE D'ÉVACUATION DES VAPEURS | 126-0146 | 1 | COMPRESSEUR D'AIR (ASS) | 14 |
| | | 1 | COMPRESSEUR D'AIR (ASS) | 16 |
| JOINT PLAT | 9Y-1758 | 1 | CULBUTERIE (ASS) | 60 |
| RENIFLARD (ENS) | 9Y-4357 | 1 | CULBUTERIE (ASS) | 60 |
| **POSTE DE CONDUITE** | | | | |
| ACCUMULATEUR - CLIMATISEUR (ASS) | 197-6218 | 1 | CANALISATIONS DE CLIMATISEUR (ASS) | 1183 |
| AMPOULE (24 VOLTS) | 3E-8825 | 1 | RÉTROVISEUR (ASS) | 1198 |
| | | 1 | RÉTROVISEUR (ASS) | 1202 |
| | 7N-5876 | 2 | MODULE D'INDICATEUR DE VITESSE ET COMPTE-TOURS (ASS) | 1205 |
| | | 4 | TABLEAU DE BORD (ASS) | 1219 |
| | | 6 | TABLEAU DE BORD (ASS) | 1221 |
| | 8D-1429 | 1 | CHAUFFAGE DE CABINE (ASS) | 1147 |
| | | 1 | CHAUFFAGE DE CABINE (ASS) | 1151 |
| | | 1 | CLIMATISEUR (ASS) | 1096 |
| | 107-1983 | 1 | TABLEAU DE BORD (ASS) | 1219 |
| | | 1 | TABLEAU DE BORD (ASS) | 1221 |
| | 110-2079 | 1 | TABLEAU DE BORD (ASS) | 1219 |
| | | 1 | TABLEAU DE BORD (ASS) | 1222 |
| AMPOULE (24 VOLTS) (DÉGIVREUR ARRIÈRE) | 3E-8825 | 1 | VENTILATEUR DE CABINE (ASS) | 1138 |
| AMPOULE (24 VOLTS) (DÉGIVREUR AVANT) | 3E-8825 | 1 | VENTILATEUR DE CABINE (ASS) | 1137 |
| AMPOULE (24 VOLTS) (MANOMÈTRE) | 7N-5876 | 2 | TABLEAU DE BORD (ASS) | 1217 |
| AMPOULE (24 VOLTS) (MODULE QUATRE INSTRUMENTS) | 7N-5876 | 2 | TABLEAU DE BORD (ASS) | 1217 |
| AMPOULE (24 VOLTS) (TÉMOIN PRINCIPAL DE MISE EN GARDE EMS) | 107-1983 | 1 | TABLEAU DE BORD (ASS) | 1217 |
| AMPOULE (24 VOLTS) (VERROUILLAGE DE DIFFÉRENTIEL) | 110-2079 | 1 | TABLEAU DE BORD (ASS) | 1217 |
| AMPOULE (24V, 3W) | 115-1748 | 9 | TABLEAU DE BORD (ASS) | 1219 |
| | | 10 | TABLEAU DE BORD (ASS) | 1221 |
| AMPOULE (24V, 3W) (TABLEAU DE BORD) | 115-1748 | 9 | TABLEAU DE BORD (ASS) | 1217 |
| BALAI D'ESSUIE-GLACE (ENS) | 6V-5853 | 1 | ESSUIE-GLACE (ASS) | 1285 |

* TRADUCTION NON DISPONIBLE AU MOMENT DE LA PUBLICATION

# PIÈCES DE RECHANGE

| DESCRIPTION | NUMÉRO DE PIECÈS | QTÉ | DOMAINE D'APPLICATION | PAGE |
|---|---|---|---|---|
| | 6V-8255 | 2 | VITRE (ASS) | 1257 |
| BALAI D'ESSUIE-GLACE (ENS) (ARRIÈRE) | 6V-5849 | 1 | ESSUIE-GLACE (ASS) | 1276 |
| | | 1 | ESSUIE-GLACE (ASS) | 1278 |
| | 6V-5853 | 1 | ESSUIE-GLACE (ASS) | 1280 |
| | | 1 | ESSUIE-GLACE (ASS) | 1282 |
| BALAI D'ESSUIE-GLACE (ENS) (AVANT) | 6V-5853 | 1 | ESSUIE-GLACE (ASS) | 1274 |
| | | 1 | ESSUIE-GLACE (ASS) | 1286 |
| | | 1 | ESSUIE-GLACE (ASS) | 1287 |
| BALAI D'ESSUIE-GLACE (ENS) (INFÉRIEUR AVANT) | 123-4355 | 2 | ESSUIE-GLACE (ASS) | 1268 |
| | | 2 | ESSUIE-GLACE (ASS) | 1270 |
| | | 2 | ESSUIE-GLACE (ASS) | 1274 |
| BALAI D'ESSUIE-GLACE (ENS) (PROFIL ÉLEVÉ AVANT INFÉRIEUR) | 123-4355 | 2 | ESSUIE-GLACE (ASS) | 1272 |
| BALAI D'ESSUIE-GLACE (ENS) (PROFIL ÉLEVÉ SUPÉRIEUR AVANT) | 6V-5853 | 1 | ESSUIE-GLACE (ASS) | 1272 |
| BALAI D'ESSUIE-GLACE (ENS) (SUPÉRIEUR AVANT) | 6V-5853 | 1 | ESSUIE-GLACE (ASS) | 1270 |
| BALAI D'ESSUIE-GLACE (ENS) (SURBAISSÉ, AVANT SUPÉRIEUR) | 6V-5853 | 1 | ESSUIE-GLACE (ASS) | 1268 |
| COURROIE MULTIPLE (ALTERNATEUR ET CLIMATISEUR) | 174-9690 | 1 | CLIMATISEUR (VERSION) | 1095 |
| FILTRE À AIR (CABINE) | 7T-7358 | 1 | FILTRE À AIR DE CABINE (ASS) | 1142 |
| | 231-4486 | 1 | FILTRE À AIR DE CABINE (ASS) | 1142 |
| | 232-1732 | 1 | FILTRE À AIR DE CABINE (ASS) | 1142 |
| FUSIBLE (10A) | 9W-1442 | 1 | ESSUIE-GLACE (ASS) | 1276 |
| | | 1 | RÉTROVISEUR (ASS) | 1198 |
| | | 1 | RÉTROVISEUR (ASS) | 1202 |
| FUSIBLE (10A) (DÉGIVREUR ARRIÈRE) | 9W-1442 | 1 | VENTILATEUR DE CABINE (ASS) | 1138 |
| FUSIBLE (10A) (DÉGIVREUR AVANT) | 9W-1442 | 1 | VENTILATEUR DE CABINE (ASS) | 1137 |
| FUSIBLE (10A) (ESSUIE-GLACE) | 9W-1442 | 1 | ESSUIE-GLACE (ASS) | 1278 |
| | | 1 | ESSUIE-GLACE (ASS) | 1280 |
| | | 1 | ESSUIE-GLACE (ASS) | 1282 |
| FUSIBLE (15A) (CLIMATISEUR) | 9W-1441 | 1 | CLIMATISEUR ET MONTAGE (ASS) | 1095 |
| FUSIBLE (15A) (RÉCHAUFFEUR) | 9W-1441 | 1 | CHAUFFAGE ET MONTAGE - CABINE (ASS) | 1145 |

* TRADUCTION NON DISPONIBLE AU MOMENT DE LA PUBLICATION

# PIÈCES DE RECHANGE

| DESCRIPTION | NUMÉRO DE PIECÈS | QTÉ | DOMAINE D'APPLICATION | PAGE |
|---|---|---|---|---|
| **TRANSMISSION** | | | | |
| AMPOULE (*24-VOLT) (CHANG. AUTOMATIQUE VITESSE) | 3E-8825 | 1 | CHANGEMENT DE VITESSES AUTOMATIQUE (VERSION) | 408 |
| BOUCHON FILETÉ | 6E-5047 | 2 | TANDEM ET CARTER (ASS) | 470 |
| | | 2 | TANDEM ET CARTER (ASS) | 471 |
| ÉCRAN (DISTRIBUTEUR DE BOÎTE DE VITESSES) | 6I-9395 | 1 | DISTRIBUTEUR DE BOITE (ASS) | 490 |
| | | 1 | DISTRIBUTEUR DE BOITE (ASS) | 492 |
| ÉCRAN MAGNÉTIQUE (BOîTE DE VITESSES) | 8S-9129 | 1 | CARTER ET PIECES DE BOITE (ASS) | 413 |
| | | 1 | ÉCRAN MAGNÉTIQUE (ASS) | 467 |
| | | 1 | CARTER ET PIECES DE BOITE (ASS) | 409 |
| ÉLÉMENT DE FILTRE À HUILE (ENS) | 132-8875 | 2 | CANALISATIONS D'HUILE DE BOÎTE (ASS) | 457 |
| ÉLÉMENT DE FILTRE À HUILE (ENS) (BOîTE DE VITESSES) | 132-8875 | 1 | CANALISATIONS D'HUILE DE BOÎTE (ASS) | 452 |
| | | 1 | FILTRE A HUILE (ASS) | 447 |
| ÉLÉMENT DE FILTRE À HUILE (ENS) (ULTRA-GRANDE EFFICACITÉ) | 1R-1809 | 1 | CANALISATIONS D'HUILE DE BOÎTE (ASS) | 461 |
| | | 1 | FILTRE A HUILE (ASS) | 449 |
| FILTRE A HUILE (ASS) (DÉRIVATION) | 235-5812 | 1 | FILTRE À HUILE ET MONTAGE (ASS) | 445 |
| RENIFLARD (ENS) (REMPLISSAGE D'HUILE DE TRANSMISSION) | 9G-5127 | 1 | GOULOTTE DE REMPLISSAGE D'HUILE DE TRANSMISSION | 442 |
| RENIFLARD (ENS) (TANDEM) | 1F-8488 | 2 | TANDEM ET CARTER (ASS) | 470 |
| RENIFLARD (TANDEM) | 4H-6112 | 1 | TANDEM ET CARTER (ASS) | 471 |
| TAMIS D'ASPIRATION (BOîTE DE VITESSES) | 8S-9130 | 1 | ÉCRAN MAGNÉTIQUE (ASS) | 467 |
| TAMIS D'ASPIRATION (CARTER DE BOITE DE VITESSES) | 8S-9130 | 1 | CARTER ET PIECES DE BOITE (ASS) | 409 |
| | | 1 | CARTER ET PIECES DE BOITE (ASS) | 413 |

* TRADUCTION NON DISPONIBLE AU MOMENT DE LA PUBLICATION

# PIEZAS DE MANTENIMIENTO

| DESCRIPCION | NUMERO DE PIEZA | CANT | SE UTILIZA EN | PAGINA |
|---|---|---|---|---|
| **BASTIDOR Y CAJA** | | | | |
| *BELT | 8X-1032 | 4 | ESTRIBO DEL OPERADOR (GR) | 596 |
| TAPÓN MAGNÉTICO (DRENAJE DE LA CAJA) | 8M-3837 | 1 | CAJA Y BASTIDOR (GR) | 551 |
| | | 1 | CAJA Y BASTIDOR (GR) | 552 |
| **MOTOR BÁSICO** | | | | |
| EMPAQUETADURA | 9Y-1758 | 1 | MECANISMO DE VÁLVULAS (GR) | 60 |
| MANGUERA DE ESCAPE DE GASES | 126-0146 | 1 | COMPRESOR DE AIRE (GR) | 14 |
| | | 1 | COMPRESOR DE AIRE (GR) | 16 |
| RESPIRADERO (CONJ) | 9Y-4357 | 1 | MECANISMO DE VÁLVULAS (GR) | 60 |
| **PUESTO DEL OPERADOR** | | | | |
| ACUMULADOR DEL ACONDICIONADOR DE AIRE (GR) | 197-6218 | 1 | TUBERÍAS DE ACONDICIONADOR DE AIRE (GR) | 1183 |
| CORREA-SERPENTIN (*ALTERNATOR AND AIR CONDITIONER) | 174-9690 | 1 | ACONDICIONADOR DE AIRE (CONFIG) | 1095 |
| FILTRO DE AIRE (CABINA) | 7T-7358 | 1 | FILTRO DE AIRE DE LA CABINA (GR) | 1142 |
| | 231-4486 | 1 | FILTRO DE AIRE DE LA CABINA (GR) | 1142 |
| | 232-1732 | 1 | FILTRO DE AIRE DE LA CABINA (GR) | 1142 |
| FUSIBLE (10-AMPERIOS) | 9W-1442 | 1 | LIMPIAPARABRISAS DE LA VENTANA (GR) | 1276 |
| | | 1 | RETROVISOR (GR) | 1198 |
| | | 1 | RETROVISOR (GR) | 1202 |
| FUSIBLE (10-AMPERIOS) (DESCONGELADOR DELANTERO) | 9W-1442 | 1 | VENTILADOR DE CIRCULACION | 1137 |
| FUSIBLE (10-AMPERIOS) (DESCONGELADOR TRASERO) | 9W-1442 | 1 | VENTILADOR DE CIRCULACION | 1138 |
| FUSIBLE (10-AMPERIOS) (LIMPIADOR) | 9W-1442 | 1 | LIMPIAPARABRISAS DE LA VENTANA (GR) | 1278 |
| | | 1 | LIMPIAPARABRISAS DE LA VENTANA (GR) | 1280 |
| | | 1 | LIMPIAPARABRISAS DE LA VENTANA (GR) | 1282 |
| FUSIBLE (15 AMPERIOS) (AIRE ACONDICIONADO) | 9W-1441 | 1 | ACONDICIONADOR DE AIRE Y MONTAJE (GR) | 1095 |
| FUSIBLE (15 AMPERIOS) (CALEFACTOR) | 9W-1441 | 1 | CALEFACCIÓN Y MONTAJE DE LA CABINA (GR) | 1145 |
| HOJA DE LIMPIAPARABRISAS (CONJ) | 6V-5853 | 1 | LIMPIAPARABRISAS DE LA VENTANA (GR) | 1285 |
| | 6V-8255 | 2 | VENTANA (GR) | 1257 |
| HOJA DE LIMPIAPARABRISAS (CONJ) (DELANTERO) | 6V-5853 | 1 | LIMPIAPARABRISAS DE LA VENTANA (GR) | 1274 |
| | | 1 | LIMPIAPARABRISAS DE LA VENTANA (GR) | 1286 |
| | | 1 | LIMPIAPARABRISAS DE LA VENTANA (GR) | 1287 |
| HOJA DE LIMPIAPARABRISAS (CONJ) (DELANTERO DE ALTO PERFIL) | 123-4355 | 2 | LIMPIAPARABRISAS DE LA VENTANA (GR) | 1272 |
| HOJA DE LIMPIAPARABRISAS (CONJ) (DELANTERO SUPERIOR DE ALTO PERFIL) | 6V-5853 | 1 | LIMPIAPARABRISAS DE LA VENTANA (GR) | 1272 |

* NO HAY TRADUCCION DISPONIBLE EN EL MOMENTO DE LA IMPRESION

# PIEZAS DE MANTENIMIENTO

| DESCRIPCION | NUMERO DE PIEZA | CANT | SE UTILIZA EN | PAGINA |
|---|---|---|---|---|
| HOJA DE LIMPIAPARABRISAS (CONJ) (*FRONT LOWER) | 123-4355 | 2 | LIMPIAPARABRISAS DE LA VENTANA (GR) | 1268 |
| | | 2 | LIMPIAPARABRISAS DE LA VENTANA (GR) | 1270 |
| HOJA DE LIMPIAPARABRISAS (CONJ) (*FRONT, LOWER) | 123-4355 | 2 | LIMPIAPARABRISAS DE LA VENTANA (GR) | 1274 |
| HOJA DE LIMPIAPARABRISAS (CONJ) (PARTE TRASERA) | 6V-5849 | 1 | LIMPIAPARABRISAS DE LA VENTANA (GR) | 1276 |
| | | 1 | LIMPIAPARABRISAS DE LA VENTANA (GR) | 1278 |
| | 6V-5853 | 1 | LIMPIAPARABRISAS DE LA VENTANA (GR) | 1280 |
| | | 1 | LIMPIAPARABRISAS DE LA VENTANA (GR) | 1282 |
| HOJA DE LIMPIAPARABRISAS (CONJ) (POSICION DELANTERA / SUPERIOR) | 6V-5853 | 1 | LIMPIAPARABRISAS DE LA VENTANA (GR) | 1270 |
| HOJA DE LIMPIAPARABRISAS (CONJ) (SUPERIOR DELANTERO DE BAJO PERFIL) | 6V-5853 | 1 | LIMPIAPARABRISAS DE LA VENTANA (GR) | 1268 |
| LÁMPARA (24 VOLTIOS) | 8D-1429 | 1 | ACONDICIONADOR DE AIRE (GR) | 1096 |
| | 3E-8825 | 1 | RETROVISOR (GR) | 1198 |
| | | 1 | RETROVISOR (GR) | 1202 |
| | 7N-5876 | 2 | MÓDULO DEL TACÓMETRO Y DEL VELOCÍMETRO (GR) | 1205 |
| | | 4 | TABLERO DE INSTRUMENTOS (GR) | 1219 |
| | | 6 | TABLERO DE INSTRUMENTOS (GR) | 1221 |
| | 8D-1429 | 1 | CALEFACCIÓN DE LA CABINA (GR) | 1147 |
| | | 1 | CALEFACCIÓN DE LA CABINA (GR) | 1151 |
| | 107-1983 | 1 | TABLERO DE INSTRUMENTOS (GR) | 1219 |
| | | 1 | TABLERO DE INSTRUMENTOS (GR) | 1221 |
| | 110-2079 | 1 | TABLERO DE INSTRUMENTOS (GR) | 1219 |
| | | 1 | TABLERO DE INSTRUMENTOS (GR) | 1222 |
| LÁMPARA (24 VOLTIOS) (DESCONGELADOR DELANTERO) | 3E-8825 | 1 | VENTILADOR DE CIRCULACION | 1137 |
| LÁMPARA (24 VOLTIOS) (DESCONGELADOR TRASERO) | 3E-8825 | 1 | VENTILADOR DE CIRCULACION | 1138 |
| LÁMPARA (24 VOLTIOS) (LUZ INDIC. DE ACCION MAESTRA DE EMS) | 107-1983 | 1 | TABLERO DE INSTRUMENTOS (GR) | 1217 |
| LÁMPARA (24 VOLTIOS) (MANÓMETRO DE AIRE) | 7N-5876 | 2 | TABLERO DE INSTRUMENTOS (GR) | 1217 |
| LÁMPARA (24 VOLTIOS) (MÓDULO DE CUATRO MEDIDORES) | 7N-5876 | 2 | TABLERO DE INSTRUMENTOS (GR) | 1217 |
| LÁMPARA (24 VOLTIOS) (TRABA DE DIFERENCIAL) | 110-2079 | 1 | TABLERO DE INSTRUMENTOS (GR) | 1217 |
| LÁMPARA (24-VOLTIOS, 3-VATIOS) | 115-1748 | 9 | TABLERO DE INSTRUMENTOS (GR) | 1219 |
| | | 10 | TABLERO DE INSTRUMENTOS (GR) | 1221 |
| LÁMPARA (24-VOLTIOS, 3-VATIOS) (TABLERO DE INSTRUMENTOS) | 115-1748 | 9 | TABLERO DE INSTRUMENTOS (GR) | 1217 |

* NO HAY TRADUCCION DISPONIBLE EN EL MOMENTO DE LA IMPRESION

# PIEZAS DE MANTENIMIENTO

| DESCRIPCION | NUMERO DE PIEZA | CANT | SE UTILIZA EN | PAGINA |
|---|---|---|---|---|
| **SISTEMA DE ADMISIÓN Y ESCAPE DE AIRE** | | | | |
| ELEMENTO PRIMARIO (CONJ) | 6I-0273 | 1 | FILTRO DE AIRE (GR) | 98 |
| ELEMENTO SECUNDARIO (CONJ) | 6I-0274 | 1 | FILTRO DE AIRE (GR) | 98 |
| FILTRO DE AIRE (GR) | 227-4676 | 1 | FILTRO DE AIRE (GR) | 98 |
| **SISTEMA DE COMBUSTIBLE** | | | | |
| COLADOR DE COMBUSTIBLE | 199-9907 | 1 | COMBUSTIBLE - TANQUE DE (GR) | 127 |
| | | 1 | COMBUSTIBLE - TANQUE DE (GR) | 130 |
| | | 1 | COMBUSTIBLE - TANQUE DE (GR) | 132 |
| ELEMENTO DE FILTRO (SEPARADOR DE COMBUSTIBLE, AGUA) (PRIMARIO) | 133-5673 | 1 | FILTRO DE COMBUSTIBLE Y SEPARADOR DE AGUA (GR) | 114 |
| EMPAQUETADURA | 9R-7240 | 1 | COMBUSTIBLE - TANQUE DE (GR) | 128 |
| | | 1 | COMBUSTIBLE - TANQUE DE (GR) | 129 |
| EMPAQUETADURA (BOMBA DE CEBADO DE COMBUSTIBLE) | 1P-0436 | 2 | BOMBA DE CEBADO DE COMBUSTIBLE (GR) | 125 |
| EMPAQUETADURA (BOMBA DE CEBADO DE COMBUSTIBLE) (TAPA) | 1P-0436 | 2 | BOMBA DE CEBADO DE COMBUSTIBLE (GR) | 126 |
| FILTRO DE COMBUSTIBLE (CONJ) | 1R-0762 | 1 | FILTRO DE COMBUSTIBLE (GR) | 113 |
| TAPA DEL TUBO DE LLENADO DE COMBUSTIBLE (GR) (SERVICIO PESADO, TRABABLE) | 164-4858 | 1 | COMBUSTIBLE - TANQUE DE (GR) | 130 |
| | | 1 | COMBUSTIBLE - TANQUE DE (GR) | 132 |
| **SISTEMA DE ENFRIAMIENTO** | | | | |
| EMPAQUETADURA | 7E-7912 | 1 | REGULADOR Y CAJA (GR) | 79 |
| EMPAQUETADURA (CAJA DEL REGULADOR DE TEMPERATURA) | 7E-7912 | 1 | REGULADOR Y CAJA (GR) | 80 |
| REGULADOR DE TEMPERATURA DEL AGUA (98 GRADOS C) | 7C-3095 | 1 | REGULADOR Y CAJA (GR) | 79 |
| | 247-7133 | 1 | REGULADOR Y CAJA (GR) | 80 |
| TAPA DE PRESION (7 LB/PULG2) | 6L-8617 | 1 | RADIADOR (GR) | 93 |
| | | 1 | RADIADOR (GR) | 94 |
| **SISTEMA DE FRENOS** | | | | |
| *CARTRIDGE AS-DESICCANT (SECADOR DE AIRE) | 203-2389 | 1 | DESHIDRATADOR (GR) | 608 |
| ELEMENTO DE CALEFACCION (SECADOR DE AIRE) | 203-2423 | 1 | DESHIDRATADOR (GR) | 608 |
| FUSIBLE (10-AMPERIOS) (SECADOR DE AIRE) | 9W-1442 | 1 | DESHIDRATADOR (GR) | 605 |
| **SISTEMA DE LUBRICACIÓN** | | | | |
| FILTRO DE ACEITE DEL MOTOR (CONJ) | 1R-0716 | 1 | FILTRO DE ACEITE DEL MOTOR (GR) | 66 |
| TAPA DE LLENADO (CONJ) | 5L-2952 | 1 | TUBO DE LLENADO DE ACEITE (GR) | 65 |
| **SISTEMA ELÉCTRICO Y DE ARRANQUE** | | | | |
| BATERÍA (GR) (12-VOLTIOS, LIBRE DE MANTENIMIENTO) | 153-5700 | 2 | BATERÍA (GR) | 149 |
| BATERÍA (GR) (12-VOLTIOS, LIBRE DE MANTENIMIENTO) (*1100 AMPS) | 153-5700 | 2 | BATERÍA (GR) | 147 |

* NO HAY TRADUCCION DISPONIBLE EN EL MOMENTO DE LA IMPRESION

# PIEZAS DE MANTENIMIENTO

| DESCRIPCION | NUMERO DE PIEZA | CANT | SE UTILIZA EN | PAGINA |
|---|---|---|---|---|
| BATERÍA (12-VOLTIOS, LIBRE DE MANTENIMIENTO) | 3T-5760 | 2 | BATERÍA (GR) | 150 |
| BATERÍA (12-VOLTIOS, LIBRE DE MANTENIMIENTO) (HUMEDO) | 153-5710 | 2 | BATERÍA (GR) | 148 |
| CONJUNTO DE DESTELLADOR (24 VOLTIOS) (LUCES DE GIRO/PELIGRO) | 108-0358 | 1 | LUCES DE DESPLAZAMIENTO (GR) | 259 |
| CONJUNTO DE DESTELLADOR (24 VOLTIOS) (SEÑAL DE GIRO Y ADVERTENCIA DE PELIGRO) | 108-0358 | 1 | INTERRUPTOR DE LUZ (GR) | 299 |
| | | 1 | LUCES DE REFLECTOR (GR) | 223 |
| | | 1 | LUCES DE REFLECTOR (GR) | 226 |
| | | 1 | LUCES DE REFLECTOR (GR) | 229 |
| | | 1 | LUCES DE REFLECTOR (GR) | 232 |
| | | 1 | LUCES DE REFLECTOR (GR) | 239 |
| | | 1 | LUCES DE REFLECTOR (GR) | 242 |
| CONJUNTO DE ELEMENTO DE CALEFACCION (240 VOLTIOS, 1250 VATIOS) | 154-2881 | 1 | AGUA DE LAS CAMISAS - CALENTADOR DEL (GR) | 173 |
| CORREA-SERPENTIN (*ALTERNATOR WITHOUT A/C) | 178-8481 | 1 | CARGA - ALTERNADOR DE (GR) | 145 |
| CRISTAL (AMBAR, BALIZA DE ADVERTENCIA) | 272-9800 | 1 | LÁMPARA DE BALIZA DE ADVERTENCIA (GR) | 200 |
| CRISTAL (AMBAR) (DE GIRO) | 100-3250 | 1 | LÁMPARA DE FARO DELANTERO (GR) | 186 |
| | | 1 | LÁMPARA DE FARO DELANTERO (GR) | 188 |
| CRISTAL (AMBAR) (SEÑAL) | 100-3250 | 1 | LÁMPARA DE LUZ DELANTERA Y DE SEÑAL (GR) | 190 |
| | | 1 | LÁMPARA DE LUZ DELANTERA Y DE SEÑAL (GR) | 192 |
| CRISTAL (PLACA DE REGISTRACIÓN) | 134-6751 | 1 | LAMPARA DE PLACA DE REGISTRO (GR) | 195 |
| DISYUNTOR (CONJ) (105 AMPERIOS) (ALTERNADOR) | 171-2212 | 1 | DISYUNTOR DE CIRCUITO (GR) | 154 |
| DISYUNTOR (CONJ) (15 AMPERIOS) (BARRA DE LUCES DE TRABAJO) | 3T-2662 | 1 | DISYUNTOR DE CIRCUITO (GR) | 152 |
| DISYUNTOR (CONJ) (15 AMPERIOS) (FAROS) | 3T-2662 | 1 | DISYUNTOR DE CIRCUITO (GR) | 152 |
| | | 1 | DISYUNTOR DE CIRCUITO (GR) | 153 |
| DISYUNTOR (CONJ) (80 AMPERIOS) (ALTERNADOR) | 171-2210 | 1 | CABLES POSTERIORES (GR) | 359 |
| | | 1 | CABLES POSTERIORES (GR) | 349 |
| | | 1 | CABLES POSTERIORES (GR) | 354 |
| DISYUNTOR (CONJ) (80 AMPERIOS) (PRINCIPAL) | 171-2210 | 1 | CABLES POSTERIORES (GR) | 359 |
| | | 1 | CABLES POSTERIORES (GR) | 349 |
| | | 1 | CABLES POSTERIORES (GR) | 354 |
| DISYUNTOR DE CIRCUITO (GR) (15 AMPERIOS) (CONTROL DEL MOTOR) | 6T-3643 | 1 | CABLES POSTERIORES (GR) | 355 |
| | | 1 | CABLES POSTERIORES (GR) | 360 |
| DISYUNTOR DE CIRCUITO (GR) (20-AMPERIOS) (GRADO CONTROL) | 6T-3644 | 1 | CABLES POSTERIORES (GR) | 376 |

* NO HAY TRADUCCION DISPONIBLE EN EL MOMENTO DE LA IMPRESION

# PIEZAS DE MANTENIMIENTO

| DESCRIPCION | NUMERO DE PIEZA | CANT | SE UTILIZA EN | PAGINA |
|---|---|---|---|---|
| ELEMENTO DEL CALENTADOR DEL AGUA DE LAS CAMISAS (120-VOLTIOS, 1250-VATIOS) | 131-8627 | 1 | AGUA DE LAS CAMISAS - CALENTADOR DEL (GR) | 172 |
| | 239-7342 | 1 | AGUA DE LAS CAMISAS - CALENTADOR DEL (GR) | 174 |
| FUSIBLE (10-AMPERIOS) | 3K-8782 | 1 | CABLES DE LA CABINA (GR) | 315 |
| | 9W-1442 | 1 | CABLES DE LA CABINA (GR) | 311 |
| | | 1 | CABLES DE LA CABINA (GR) | 313 |
| | | 1 | INTERRUPTOR DE LUZ (GR) | 299 |
| | | 1 | LUCES DE ADVERTENCIA (GR) | 265 |
| | | 1 | LUCES DE DESPLAZAMIENTO (GR) | 259 |
| | | 1 | LUCES DE LA CABINA (GR) | 208 |
| | | 1 | LUCES DE REFLECTOR (GR) | 223 |
| | | 1 | LUCES DE REFLECTOR (GR) | 229 |
| | | 1 | LUCES DE REFLECTOR (GR) | 232 |
| | | 1 | LUCES DE REFLECTOR (GR) | 235 |
| | | 1 | LUCES DE REFLECTOR (GR) | 237 |
| | | 1 | LUCES DE REFLECTOR (GR) | 239 |
| | | 1 | LUCES DE REFLECTOR (GR) | 242 |
| | | 1 | LUCES DE REFLECTOR (GR) | 252 |
| | | 1 | LUCES DE REFLECTOR (GR) | 254 |
| | | 11 | CABLES DE LA CONSOLA DE DIRECCIÓN (GR) | 399 |
| | | 12 | CABLES DE LA CONSOLA DE DIRECCIÓN (GR) | 402 |
| | | 2 | CABLES DE LA DIRECCIÓN SECUNDARIA | 385 |
| FUSIBLE (10-AMPERIOS) (ALARMA DE RETROCESO) | 9W-1442 | 1 | LUCES DE ADVERTENCIA (GR) | 270 |
| FUSIBLE (10-AMPERIOS) (*AUXILIARY BACK-UP ALARM) | 9W-1442 | 1 | LUCES DE RETROCESO (GR) | 206 |
| FUSIBLE (10-AMPERIOS) (BALIZA GIRATORIA DE ADVERTENCIA) | 9W-1442 | 1 | CABLES DE LA CABINA (GR) | 308 |
| | | 1 | LUCES DE ADVERTENCIA (GR) | 266 |
| FUSIBLE (10-AMPERIOS) (CONVERTIDOR) | 9W-1442 | 1 | CONVERTIDOR ELÉCTRICO (GR) | 164 |
| FUSIBLE (10-AMPERIOS) (HOJA/FARO DELANTERO) | 9W-1442 | 2 | LUCES DE REFLECTOR (GR) | 217 |
| FUSIBLE (10-AMPERIOS) (LAMPARA DE RETROCESO) | 9W-1442 | 1 | LUCES DE RETROCESO (GR) | 204 |
| FUSIBLE (10-AMPERIOS) (LUCES DE TRABAJO) | 9W-1442 | 2 | LUCES DE REFLECTOR (GR) | 220 |
| | | 2 | LUCES DE REFLECTOR (GR) | 222 |
| FUSIBLE (10-AMPERIOS) (LUZ DE LA HOJA) | 9W-1442 | 2 | LUCES DE REFLECTOR (GR) | 218 |
| FUSIBLE (10-AMPERIOS) (SEÑAL DE GIRO Y ADVERTENCIA DE PELIGRO) | 9W-1442 | 1 | LUCES DE REFLECTOR (GR) | 226 |
| FUSIBLE (10-AMPERIOS) (TRANSFORMADOR DE CORRIENTE) | 9W-1442 | 1 | CONVERTIDOR ELÉCTRICO (GR) | 166 |
| FUSIBLE (15 AMPERIOS) | 9W-1441 | 1 | CABLES DE LA CABINA (GR) | 306 |
| | | 1 | CABLES DE LA CABINA (GR) | 309 |

* NO HAY TRADUCCION DISPONIBLE EN EL MOMENTO DE LA IMPRESION

# PIEZAS DE MANTENIMIENTO

| DESCRIPCION | NUMERO DE PIEZA | CANT | SE UTILIZA EN | PAGINA |
|---|---|---|---|---|
| | | 1 | CABLES DE LA CONSOLA DE DIRECCIÓN (GR) | 399 |
| | | 1 | CABLES DE LA CONSOLA DE DIRECCIÓN (GR) | 402 |
| FUSIBLE (15 AMPERIOS) (*CAB FLOOD LIGHTS) | 9W-1441 | 1 | LUCES DE REFLECTOR (GR) | 220 |
| | | 1 | LUCES DE REFLECTOR (GR) | 222 |
| FUSIBLE (15 AMPERIOS) (TRANSFORMADOR DE CORRIENTE) | 9W-1441 | 1 | CONVERTIDOR ELÉCTRICO (GR) | 165 |
| FUSIBLE (30-AMPERIOS) | 8T-9636 | 2 | CONVERTIDOR ELÉCTRICO (GR) | 167 |
| INTERRUPTOR (CONJ) (*AUXILIARY BACKUP) | 161-1418 | 1 | LUCES DE RETROCESO (GR) | 204 |
| LÁMPARA (CONJ) | 6C-0109 | 1 | ALAMBRADO DE LUCES TRASERAS (GR) | 378 |
| | | 1 | ALAMBRADO DE LUCES TRASERAS (GR) | 381 |
| | 6C-0110 | 1 | ALAMBRADO DE LUCES TRASERAS (GR) | 378 |
| | | 1 | ALAMBRADO DE LUCES TRASERAS (GR) | 381 |
| LAMPARA-LED | 165-5674 | 1 | LUCES DE ADVERTENCIA (GR) | 268 |
| | | 1 | LUCES DE ADVERTENCIA (GR) | 269 |
| LÁMPARA (24 VOLTIOS) | 3E-8825 | 1 | BALIZA DE ADVERTENCIA (GR) - INSTALACIÓN | 175 |
| | | 2 | INTERRUPTOR DE LUZ (GR) | 299 |
| | | 2 | LUCES DE REFLECTOR (GR) | 223 |
| | | 1 | LUCES DE REFLECTOR (GR) | 229 |
| | | 1 | LUCES DE REFLECTOR (GR) | 232 |
| | | 1 | LUCES DE REFLECTOR (GR) | 239 |
| | | 1 | LUCES DE REFLECTOR (GR) | 240 |
| | | 1 | LUCES DE REFLECTOR (GR) | 242 |
| | 7N-9943 | 1 | LÁMPARA DEL TECHO (GR) | 177 |
| | 100-3245 | 2 | LÁMPARA DE LUZ DELANTERA Y DE SEÑAL (GR) | 190 |
| | 3E-8825 | 1 | CABLES DE LA CABINA (GR) | 311 |
| | | 1 | CABLES DE LA CABINA (GR) | 313 |
| | | 1 | LUCES DE ADVERTENCIA (GR) | 268 |
| | | 1 | LUCES DE ADVERTENCIA (GR) | 269 |
| | | 1 | LUCES DE ADVERTENCIA (GR) | 270 |
| | | 2 | LUCES DE DESPLAZAMIENTO (GR) | 259 |
| | | 1 | LUCES DE LA CABINA (GR) | 208 |
| | | 1 | LUCES DE REFLECTOR (GR) | 235 |
| | | 1 | LUCES DE REFLECTOR (GR) | 237 |
| | | 1 | LUCES DE REFLECTOR (GR) | 252 |
| | | 1 | LUCES DE REFLECTOR (GR) | 254 |
| | | 1 | LUZ DE BALIZA (GR) | 273 |
| | | 2 | CABLES DE LA CONSOLA DE CAMBIOS (GR) | 387 |
| | | 1 | CABLES DE LA CONSOLA DE CAMBIOS (GR) | 389 |
| | | 2 | CABLES DE LA CONSOLA DE CAMBIOS (GR) | 392 |

* NO HAY TRADUCCION DISPONIBLE EN EL MOMENTO DE LA IMPRESION

# PIEZAS DE MANTENIMIENTO

| DESCRIPCION | NUMERO DE PIEZA | CANT | SE UTILIZA EN | PAGINA |
|---|---|---|---|---|
| | | 1 | CABLES DE LA CONSOLA DE CAMBIOS (GR) | 393 |
| | | 2 | CABLES DE LA CONSOLA DE CAMBIOS (GR) | 396 |
| | | 2 | CABLES DE LA CONSOLA DE CAMBIOS (GR) | 397 |
| | | 1 | CABLES DE LA CONSOLA DE DIRECCIÓN (GR) | 399 |
| | | 1 | CABLES DE LA CONSOLA DE DIRECCIÓN (GR) | 402 |
| | | 2 | CABLES DE LA DIRECCIÓN SECUNDARIA | 385 |
| | 7N-5876 | 1 | CABLES DE LA CONSOLA DE CAMBIOS (GR) | 387 |
| | | 1 | CABLES DE LA CONSOLA DE CAMBIOS (GR) | 389 |
| | | 1 | CABLES DE LA CONSOLA DE CAMBIOS (GR) | 392 |
| | | 1 | CABLES DE LA CONSOLA DE CAMBIOS (GR) | 396 |
| LÁMPARA (24 VOLTIOS) (AUXILIAR DE ARRANQUE CON ÉTER) | 3E-8825 | 1 | AUXILIAR DE ARRANQUE CON ÉTER (GR) | 293 |
| LÁMPARA (24 VOLTIOS) (*AUXILIARY BACK-UP ALARM) | 3E-8825 | 1 | LUCES DE RETROCESO (GR) | 206 |
| LÁMPARA (24 VOLTIOS) (DE GIRO) | 100-3245 | 1 | LÁMPARA DE FARO DELANTERO (GR) | 186 |
| | | 1 | LÁMPARA DE FARO DELANTERO (GR) | 188 |
| LÁMPARA (24 VOLTIOS) (FAROS DELANTEROS, LUCES DE COLA) | 3E-8825 | 2 | LUCES DE REFLECTOR (GR) | 226 |
| LÁMPARA (24 VOLTIOS) (HOJA)(FARO DELANTERO) | 3E-8825 | 2 | LUCES DE REFLECTOR (GR) | 217 |
| LÁMPARA (24 VOLTIOS) (INTERRUPTOR DEL AMORTIGUADOR DE LA HOJA) | 3E-8825 | 1 | GRUPO DE CABLES, HOJA AMORTIGUADORA | 304 |
| LÁMPARA (24 VOLTIOS) (LUZ AUXILIAR DE RETROCESO) | 3E-8825 | 2 | LUCES DE RETROCESO (GR) | 204 |
| LÁMPARA (24 VOLTIOS) (LUZ DE LA HOJA) | 3E-8825 | 2 | LUCES DE REFLECTOR (GR) | 218 |
| LÁMPARA (24 VOLTIOS) (PLACA DE REGISTRACIÓN) | 5C-9583 | 1 | LAMPARA DE PLACA DE REGISTRO (GR) | 195 |
| LÁMPARA (24 VOLTIOS) (POSICION) | 100-3245 | 1 | LÁMPARA DE FARO DELANTERO (GR) | 186 |
| | | 1 | LÁMPARA DE FARO DELANTERO (GR) | 188 |
| LÁMPARA (24 VOLTIOS) (POSICIÓN DE LA CABINA) | 9X-4494 | 1 | LAMPARA MARCADORA (GR) | 194 |
| LÁMPARA (24 VOLTIOS) (REFLECTOR DE LA HOJA) | 3E-8825 | 2 | LUCES DE REFLECTOR (GR) | 220 |
| | | 2 | LUCES DE REFLECTOR (GR) | 222 |
| LÁMPARA (24 VOLTIOS) (SEÑAL) | 100-3245 | 2 | LÁMPARA DE LUZ DELANTERA Y DE SEÑAL (GR) | 192 |
| LÁMPARA (24-VOLTIOS, 21 VATIOS) | 5C-9584 | 2 | ALAMBRADO DE LUCES TRASERAS (GR) | 378 |
| | | 2 | ALAMBRADO DE LUCES TRASERAS (GR) | 381 |

* NO HAY TRADUCCION DISPONIBLE EN EL MOMENTO DE LA IMPRESION

# PIEZAS DE MANTENIMIENTO

| DESCRIPCION | NUMERO DE PIEZA | CANT | SE UTILIZA EN | PAGINA |
|---|---|---|---|---|
| LÁMPARA (24-VOLTIOS, 21 VATIOS) (DE GIRO) | 9X-4493 | 1 | LÁMPARA DE FARO DELANTERO (GR) | 186 |
| | | 1 | LÁMPARA DE FARO DELANTERO (GR) | 188 |
| LÁMPARA (24-VOLTIOS, 21 VATIOS) (SEÑAL) | 9X-4493 | 1 | LÁMPARA DE LUZ DELANTERA Y DE SEÑAL (GR) | 190 |
| | | 1 | LÁMPARA DE LUZ DELANTERA Y DE SEÑAL (GR) | 192 |
| LÁMPARA (24-VOLTIOS, 3-VATIOS) | 115-1748 | 1 | CABLE GR-GRADO DE CONTROL | 338 |
| LÁMPARA (24 VOLTIOS, 5 VATIOS) | 4V-8116 | 1 | ALAMBRADO DE LUCES TRASERAS (GR) | 378 |
| | | 1 | ALAMBRADO DE LUCES TRASERAS (GR) | 381 |
| | | 1 | ALAMBRADO DE LUCES TRASERAS (GR) | 378 |
| | | 1 | ALAMBRADO DE LUCES TRASERAS (GR) | 381 |
| LÁMPARA (24-VOLTIOS, 70-VATIOS) | 9X-7849 | 1 | LÁMPARA DE BALIZA DE ADVERTENCIA (GR) | 200 |
| LÁMPARA (24-VOLTIOS, 70-VATIOS) (BALIZA GIRATORIA DE ADVERTENCIA) | 9X-7849 | 1 | LÁMPARA DE BALIZA DE ADVERTENCIA (GR) | 199 |
| LÁMPARA (24 VOLTIOS, 75/70 VATIOS) | 9X-3465 | 1 | LÁMPARA DE LUZ DELANTERA Y DE SEÑAL (GR) | 190 |
| LÁMPARA (24 VOLTIOS, 75/70 VATIOS) (DELANTERA) | 9X-3465 | 1 | LÁMPARA DE LUZ DELANTERA Y DE SEÑAL (GR) | 192 |
| LÁMPARA (24 VOLTIOS, 75/70 VATIOS) (LUZ ALTA/BAJA) | 9X-3465 | 1 | LÁMPARA DE FARO DELANTERO (GR) | 186 |
| | | 1 | LÁMPARA DE FARO DELANTERO (GR) | 188 |
| LÁMPARAS (GR) (PARADA, DE GIRO, COLA, DER.) | 5C-9930 | 1 | ALAMBRADO DE LUCES TRASERAS (GR) | 378 |
| | | 1 | ALAMBRADO DE LUCES TRASERAS (GR) | 381 |
| LLAVE (INTERRUPTOR GENERAL) | 8H-5306 | 1 | DISYUNTOR (GR) | 298 |
| LUCES DE ALÓGENO (24 VOLTIOS, 65 VATIOS) | 9X-3463 | 1 | REFLECTOR (GR) | 178 |
| | | 1 | REFLECTOR (GR) | 181 |
| | | 1 | REFLECTOR (GR) | 183 |
| LUCES DE ALÓGENO (24 VOLTIOS, 65 VATIOS) (LUZ BAJA) | 9X-3463 | 1 | LÁMPARA DE FARO DELANTERO (GR) | 184 |
| | | 1 | LUCES DE REFLECTOR (GR) | 212 |
| LUCES DE ALÓGENO (24 VOLTIOS, 65 VATIOS) (REFLECTOR) | 9X-3463 | 1 | REFLECTOR (GR) | 179 |
| | | 1 | REFLECTOR (GR) | 180 |
| | | 1 | REFLECTOR (GR) | 182 |
| LUCES DE ALÓGENO (24 VOLTIOS, 65 VATIOS) (VIGA ALTA) | 9X-3463 | 1 | LÁMPARA DE FARO DELANTERO (GR) | 185 |
| | | 1 | LUCES DE REFLECTOR (GR) | 212 |
| MANDO DE CORREA | 9X-8139 | 1 | LÁMPARA DE BALIZA DE ADVERTENCIA (GR) | 199 |
| | | 1 | LÁMPARA DE BALIZA DE ADVERTENCIA (GR) | 200 |

* NO HAY TRADUCCION DISPONIBLE EN EL MOMENTO DE LA IMPRESION

# PIEZAS DE MANTENIMIENTO

| DESCRIPCION | NUMERO DE PIEZA | CANT | SE UTILIZA EN | PAGINA |
|---|---|---|---|---|
| RELE (24 VOLTIOS) (GRADO CONTROL) | 111-4871 | 1 | CABLES DELANTEROS (GR) | 330 |
| RELE (24 VOLTIOS) (IMPLEMENTO) | 111-4871 | 1 | CABLES DELANTEROS (GR) | 330 |
| VIDRIO (CONJ) (AMBAR) (DE GIRO) | 136-3848 | 1 | LÁMPARA DE FARO DELANTERO (GR) | 186 |
| | | 1 | LÁMPARA DE FARO DELANTERO (GR) | 188 |
| VIDRIO (CONJ) (AMBAR) (SEÑAL) | 136-3848 | 1 | LÁMPARA DE LUZ DELANTERA Y DE SEÑAL (GR) | 190 |
| | | 1 | LÁMPARA DE LUZ DELANTERA Y DE SEÑAL (GR) | 192 |
| VIDRIO (CONJ) (DELANTERA) | 100-3249 | 1 | LÁMPARA DE FARO DELANTERO (GR) | 186 |
| | | 1 | LÁMPARA DE FARO DELANTERO (GR) | 188 |
| VIDRIO (CONJ) (FARO DELANTERO) | 100-3248 | 1 | LÁMPARA DE LUZ DELANTERA Y DE SEÑAL (GR) | 190 |
| | | 1 | LÁMPARA DE LUZ DELANTERA Y DE SEÑAL (GR) | 192 |
| VIDRIO (CONJ) (LAMPARA-LUZ BAJA) | 162-2077 | 1 | LÁMPARA DE FARO DELANTERO (GR) | 184 |
| VIDRIO (CONJ) (LUZ BAJA) | 162-2077 | 1 | LUCES DE REFLECTOR (GR) | 212 |
| **SISTEMA HIDRÁULICO** | | | | |
| COLADOR (*HYDRAULIC TANK FILL) (TANQUE DE ACEITE HIDRÁULICO) | 9J-3047 | 1 | TANQUE Y FILTRO HIDRÁULICOS (GR) | 737 |
| CONEXIÓN DE ENGRASE (RECEPTACULO DE CILINDRO DE DESPLAZADOR CENTRAL) | 3B-8485 | 2 | CILINDRO DE DESPLAZAMIENTO DEL CÍRCULO Y MONTAJE (GR) | 646 |
| ELEMENTO DE FILTRO DE ACEITE (CONJ) (EFICIENCIA ESTANDAR) | 1R-0774 | 1 | TANQUE Y FILTRO HIDRÁULICOS (GR) | 737 |
| TAPA DEL TUBO DE LLENADO (TANQUE DE ACEITE HIDRÁULICO) | 7H-1447 | 1 | TANQUE Y FILTRO HIDRÁULICOS (GR) | 737 |
| TAPON DE TUBO | 2B-7410 | 1 | MANDO DEL CIRCULO (GR) | 667 |

* NO HAY TRADUCCION DISPONIBLE EN EL MOMENTO DE LA IMPRESION

# PIEZAS DE MANTENIMIENTO

| DESCRIPCION | NUMERO DE PIEZA | CANT | SE UTILIZA EN | PAGINA |
|---|---|---|---|---|
| **TREN DE FUERZA** | | | | |
| ELEMENTO DE FILTRO DE ACEITE (CONJ) | 132-8875 | 2 | TUBERÍAS DE ACEITE DE LA TRANSMISIÓN (GR) | 457 |
| ELEMENTO DE FILTRO DE ACEITE (CONJ) (EFICIENCIA ULTRA ALTA) | 1R-1809 | 1 | FILTRO DE ACEITE (GR) | 449 |
| | | 1 | TUBERÍAS DE ACEITE DE LA TRANSMISIÓN (GR) | 461 |
| ELEMENTO DE FILTRO DE ACEITE (CONJ) (TRANSMISION) | 132-8875 | 1 | FILTRO DE ACEITE (GR) | 447 |
| | | 1 | TUBERÍAS DE ACEITE DE LA TRANSMISIÓN (GR) | 452 |
| FILTRO DE ACEITE (GR) (DERIVADOR) | 235-5812 | 1 | FILTRO DE ACEITE Y MONTAJE (GR) | 445 |
| FILTRO MAGNÉTICO (TRANSMISION) | 8S-9129 | 1 | CAJA Y PIEZAS DE LA TRANSMISIÓN (GR) | 409 |
| | | 1 | CAJA Y PIEZAS DE LA TRANSMISIÓN (GR) | 413 |
| | | 1 | REJILLA MAGNÉTICA (GR) | 467 |
| LÁMPARA (*24-VOLT) (CAMBIO AUTOMÁTICO) | 3E-8825 | 1 | CAMBIO AUTOMÁTICO DE VELOCIDADES (CONFIG) | 408 |
| REJILLA DE SUCCIÓN (CAJA DE TRANSMISION) | 8S-9130 | 1 | CAJA Y PIEZAS DE LA TRANSMISIÓN (GR) | 409 |
| | | 1 | CAJA Y PIEZAS DE LA TRANSMISIÓN (GR) | 413 |
| REJILLA DE SUCCIÓN (TRANSMISION) | 8S-9130 | 1 | REJILLA MAGNÉTICA (GR) | 467 |
| REJILLA (VALVULA DE CONTROL DE TRANSMISION) | 6I-9395 | 1 | VÁLVULA DE CONTROL DE LA TRANSMISIÓN (GR) | 490 |
| | | 1 | VÁLVULA DE CONTROL DE LA TRANSMISIÓN (GR) | 492 |
| RESPIRADERO (CONJ) (TANDEM) | 1F-8488 | 2 | TÁNDEM Y CUBIERTA (GR) | 470 |
| RESPIRADERO (CONJ) (TUBO DE LLENADO DE TREN DE FUERZA) | 9G-5127 | 1 | TUBO DE LLENADO DE ACEITE DE LA TRANSMISIÓN (GR) | 442 |
| RESPIRADERO (TANDEM) | 4H-6112 | 1 | TÁNDEM Y CUBIERTA (GR) | 471 |
| TAPÓN | 6E-5047 | 2 | TÁNDEM Y CUBIERTA (GR) | 470 |
| | | 2 | TÁNDEM Y CUBIERTA (GR) | 471 |

* NO HAY TRADUCCION DISPONIBLE EN EL MOMENTO DE LA IMPRESION

# PEÇAS DE MANUTENÇÃO

| DESCRIÇÃO | NÚMERO DE PEÇA | QUANT | UTILIZADA EM | PÁGINA |
|---|---|---|---|---|
| **CHASSI E CARROCERIA** | | | | |
| BUJÃO MAGNÉTICO (CAIXA DE DRENAGEM) | 8M-3837 | 1 | CAIXA E CHASSI | 551 |
| | | 1 | CAIXA E CHASSI | 552 |
| CORREIA | 8X-1032 | 4 | DEGRAU | 596 |
| **ESTAÇÃO DO OPERADOR** | | | | |
| ACUMULADOR - AR CONDICIONADO | 197-6218 | 1 | TUBOS - AR CONDICIONADO | 1183 |
| CORREIA- SERPENTINA (ALTERNADOR E CONDICIONADOR DE AR) | 174-9690 | 1 | CONDICIONADOR DE AR | 1095 |
| FILTRO - AR (CABINE) | 7T-7358 | 1 | FILTRO - AR DA CABINE | 1142 |
| | 231-4486 | 1 | FILTRO - AR DA CABINE | 1142 |
| | 232-1732 | 1 | FILTRO - AR DA CABINE | 1142 |
| FUSÍVEL (10 AMPERES) | 9W-1442 | 1 | ESPELHO RETROVISOR | 1198 |
| | | 1 | ESPELHO RETROVISOR | 1202 |
| | | 1 | LIMPADOR DO VIDRO | 1276 |
| FUSÍVEL (10 AMPERES) (DESCONGELADOR DIANTEIRO) | 9W-1442 | 1 | VENTILADOR DE CIRCULAÇÃO DE AR DA CABINE | 1137 |
| FUSÍVEL (10 AMPERES) (DESCONGELADOR TRASEIRO) | 9W-1442 | 1 | VENTILADOR DE CIRCULAÇÃO DE AR DA CABINE | 1138 |
| FUSÍVEL (10 AMPERES) (LIMPADOR) | 9W-1442 | 1 | LIMPADOR DO VIDRO | 1278 |
| | | 1 | LIMPADOR DO VIDRO | 1280 |
| | | 1 | LIMPADOR DO VIDRO | 1282 |
| FUSÍVEL (15 AMPERES) (AQUECEDOR) | 9W-1441 | 1 | AQUECEDOR DA CABINE E MONTAGEM | 1145 |
| FUSÍVEL (15 AMPERES) (AR CONDICIONADO) | 9W-1441 | 1 | CONDICIONADOR DE AR E MONTAGEM | 1095 |
| LÂMINA DO LIMPADOR DE PÁRA-BRISA | 6V-5853 | 1 | LIMPADOR DO VIDRO | 1285 |
| | 6V-8255 | 2 | VIDRO | 1257 |
| LÂMINA DO LIMPADOR DE PÁRA-BRISA (ALTO PERFIL DIANTEIRO SUPERIOR) | 6V-5853 | 1 | LIMPADOR DO VIDRO | 1272 |
| LÂMINA DO LIMPADOR DE PÁRA-BRISA (DIANTEIRO) | 6V-5853 | 1 | LIMPADOR DO VIDRO | 1274 |
| | | 1 | LIMPADOR DO VIDRO | 1286 |
| | | 1 | LIMPADOR DO VIDRO | 1287 |
| LÂMINA DO LIMPADOR DE PÁRA-BRISA (DIANTEIRO, INFERIOR) | 123-4355 | 2 | LIMPADOR DO VIDRO | 1274 |
| LÂMINA DO LIMPADOR DE PÁRA-BRISA (DIANTEIRO SUPERIOR) | 6V-5853 | 1 | LIMPADOR DO VIDRO | 1270 |
| LÂMINA DO LIMPADOR DE PÁRA-BRISA (INFERIOR DIANTEIRO) | 123-4355 | 2 | LIMPADOR DO VIDRO | 1268 |
| | | 2 | LIMPADOR DO VIDRO | 1270 |
| LÂMINA DO LIMPADOR DE PÁRA-BRISA (PERFIL ALTO - INFERIOR DIANTEIRO) | 123-4355 | 2 | LIMPADOR DO VIDRO | 1272 |
| LÂMINA DO LIMPADOR DE PÁRA-BRISA (PERFIL BAIXO - DIANTEIRO SUPERIOR) | 6V-5853 | 1 | LIMPADOR DO VIDRO | 1268 |
| LÂMINA DO LIMPADOR DE PÁRA-BRISA (TRASEIRO) | 6V-5849 | 1 | LIMPADOR DO VIDRO | 1276 |
| | | 1 | LIMPADOR DO VIDRO | 1278 |

* TRADUÇÃO NÃO DISPONÍVEL NO MOMENTO DA IMPRESSÃO

# PEÇAS DE MANUTENÇÃO

| DESCRIÇÃO | NÚMERO DE PEÇA | QUANT | UTILIZADA EM | PÁGINA |
|---|---|---|---|---|
| | 6V-5853 | 1 | LIMPADOR DO VIDRO | 1280 |
| | | 1 | LIMPADOR DO VIDRO | 1282 |
| LÂMPADA (24 VOLTS) | 3E-8825 | 1 | ESPELHO RETROVISOR | 1198 |
| | | 1 | ESPELHO RETROVISOR | 1202 |
| | 7N-5876 | 2 | MÓDULO - VELOCÍMETRO E TACÔMETRO | 1205 |
| | | 4 | PAINEL DE INSTRUMENTOS | 1219 |
| | | 6 | PAINEL DE INSTRUMENTOS | 1221 |
| | 8D-1429 | 1 | AQUECEDOR DA CABINE | 1147 |
| | | 1 | AQUECEDOR DA CABINE | 1151 |
| | | 1 | CONDICIONADOR DE AR | 1096 |
| | 107-1983 | 1 | PAINEL DE INSTRUMENTOS | 1219 |
| | | 1 | PAINEL DE INSTRUMENTOS | 1221 |
| | 110-2079 | 1 | PAINEL DE INSTRUMENTOS | 1219 |
| | | 1 | PAINEL DE INSTRUMENTOS | 1222 |
| LÂMPADA (24 VOLTS) (DESCONGELADOR DIANTEIRO) | 3E-8825 | 1 | VENTILADOR DE CIRCULAÇÃO DE AR DA CABINE | 1137 |
| LÂMPADA (24 VOLTS) (DESCONGELADOR TRASEIRO) | 3E-8825 | 1 | VENTILADOR DE CIRCULAÇÃO DE AR DA CABINE | 1138 |
| LÂMPADA (24 VOLTS) (INDICADOR DA AÇÃO PRINCIPAL DO EMS) | 107-1983 | 1 | PAINEL DE INSTRUMENTOS | 1217 |
| LÂMPADA (24 VOLTS) (INDICDOR DA PRESSÃO DO AR) | 7N-5876 | 2 | PAINEL DE INSTRUMENTOS | 1217 |
| LÂMPADA (24 VOLTS) (MÓDULO DE QUATRO MEDIDORES) | 7N-5876 | 2 | PAINEL DE INSTRUMENTOS | 1217 |
| LÂMPADA (24 VOLTS) (TRAVA DO DIFERENCIAL) | 110-2079 | 1 | PAINEL DE INSTRUMENTOS | 1217 |
| LÂMPADA (24 VOLTS, 3 WATTS) | 115-1748 | 9 | PAINEL DE INSTRUMENTOS | 1219 |
| | | 10 | PAINEL DE INSTRUMENTOS | 1221 |
| LÂMPADA (24 VOLTS, 3 WATTS) (PAINEL DE INSTRUMENTOS) | 115-1748 | 9 | PAINEL DE INSTRUMENTOS | 1217 |
| **MOTOR BÁSICO** | | | | |
| JUNTA | 9Y-1758 | 1 | MECANISMO DAS VÁLVULAS | 60 |
| MANGUEIRA - ELIMINAÇÃO DE VAPORES | 126-0146 | 1 | COMPRESSOR DE AR | 14 |
| | | 1 | COMPRESSOR DE AR | 16 |
| RESPIRO | 9Y-4357 | 1 | MECANISMO DAS VÁLVULAS | 60 |
| **SISTEMA DE ADMISSÃO DE AR E DE ESCAPE** | | | | |
| ELEMENTO - PRIMÁRIO | 6I-0273 | 1 | PURIFICADOR DE AR | 98 |
| ELEMENTO - SECUNDÁRIO | 6I-0274 | 1 | PURIFICADOR DE AR | 98 |
| PURIFICADOR DE AR | 227-4676 | 1 | PURIFICADOR DE AR | 98 |

* TRADUÇÃO NÃO DISPONÍVEL NO MOMENTO DA IMPRESSÃO

# PEÇAS DE MANUTENÇÃO

| DESCRIÇÃO | NÚMERO DE PEÇA | QUANT | UTILIZADA EM | PÁGINA |
|---|---|---|---|---|
| **SISTEMA DE ARREFECIMENTO** | | | | |
| JUNTA | 7E-7912 | 1 | TERMOSTATO / REGULADOR DE TEMPERATURA | 79 |
| JUNTA (ALOJAMENTO DO REGULADOR DE TEMPERATURA) | 7E-7912 | 1 | TERMOSTATO / REGULADOR DE TEMPERATURA | 80 |
| REGULADOR DE TEMPERATURA DA ÁGUA (98 GRAUS C) | 247-7133 | 1 | TERMOSTATO / REGULADOR DE TEMPERATURA | 80 |
| | 7C-3095 | 1 | TERMOSTATO / REGULADOR DE TEMPERATURA | 79 |
| TAMPA DE PRESSÃO (7 PSI) | 6L-8617 | 1 | RADIADOR | 93 |
| | | 1 | RADIADOR | 94 |
| **SISTEMA DE COMBUSTÍVEL** | | | | |
| ELEMENTO - FILTRANTE (SEPARADOR DE ÁGUA E COMBUSTÍVEL) (PRIMÁRIO) | 133-5673 | 1 | FILTRO DE COMBUSTÍVEL E SEPARADOR DE ÁGUA | 114 |
| FILTRO - COMBUSTÍVEL | 1R-0762 | 1 | FILTRO - COMBUSTÍVEL | 113 |
| | 199-9907 | 1 | TANQUE DE COMBUSTÍVEL | 127 |
| | | 1 | TANQUE DE COMBUSTÍVEL | 130 |
| | | 1 | TANQUE DE COMBUSTÍVEL | 132 |
| JUNTA | 9R-7240 | 1 | TANQUE DE COMBUSTÍVEL | 128 |
| | | 1 | TANQUE DE COMBUSTÍVEL | 129 |
| JUNTA (BOMBA DE ESCORVA DE COMBUSTÍVEL) | 1P-0436 | 2 | BOMBA DE ESCORVA DO COMBUSTÍVEL | 125 |
| JUNTA (BOMBA DE ESCORVA DE COMBUSTÍVEL) (TAMPA) | 1P-0436 | 2 | BOMBA DE ESCORVA DO COMBUSTÍVEL | 126 |
| TAMPA - BOCAL DE ENCHIMENTO DE COMBUSTÍVEL (SERVIÇO PESADO, TRAVÁVEL) | 164-4858 | 1 | TANQUE DE COMBUSTÍVEL | 130 |
| | | 1 | TANQUE DE COMBUSTÍVEL | 132 |
| **SISTEMA DE FREIO** | | | | |
| CARTUCHO-DESSECANTE (SECADOR A AR) | 203-2389 | 1 | SECADOR DE AR | 608 |
| ELEMENTO-AQUECEDOR (SECADOR A AR) | 203-2423 | 1 | SECADOR DE AR | 608 |
| FUSÍVEL (10 AMPERES) (SECADOR A AR) | 9W-1442 | 1 | SECADOR DE AR | 605 |
| **SISTEMA DE LUBRIFICAÇÃO** | | | | |
| FILTRO - ÓLEO DO MOTOR | 1R-0716 | 1 | FILTRO - ÓLEO DO MOTOR | 66 |
| TAMPA - BOCAL DE ENCHIMENTO | 5L-2952 | 1 | BOCAL DE ENCHIMENTO DE ÓLEO DO MOTOR | 65 |
| **SISTEMA ELÉTRICO E DE PARTIDA** | | | | |
| BATERIA (12 VOLTS, ISENTO DE MANUTENÇÃO) | 3T-5760 | 2 | BATERIA | 150 |
| | 153-5700 | 2 | BATERIA | 149 |
| BATERIA (12 VOLTS, ISENTO DE MANUTENÇÃO) (MOLHADO) | 153-5710 | 2 | BATERIA | 148 |
| BATERIA (12 VOLTS, ISENTO DE MANUTENÇÃO) (1.100 AMPS) | 153-5700 | 2 | BATERIA | 147 |

* TRADUÇÃO NÃO DISPONÍVEL NO MOMENTO DA IMPRESSÃO

# PEÇAS DE MANUTENÇÃO

| DESCRIÇÃO | NÚMERO DE PEÇA | QUANT | UTILIZADA EM | PÁGINA |
|---|---|---|---|---|
| CHAVE (DESCONEXÃO DA BATERIA) | 8H-5306 | 1 | CHAVE GERAL | 298 |
| CORREIA- SERPENTINA (ALTERNADOR SEM CONDICIONADOR DE AR) | 178-8481 | 1 | ALTERNADOR DE CORRENTE | 145 |
| CORREIA DE COMANDO | 9X-8139 | 1 | LUZ GIRATÓRIA DE ALARME | 199 |
| | | 1 | LUZ GIRATÓRIA DE ALARME | 200 |
| DISJUNTOR AUTOMÁTICO DE CIRCUITO (105 AMPERES) (ALTERNADOR) | 171-2212 | 1 | INTERRUPTOR - CIRCUITO | 154 |
| DISJUNTOR AUTOMÁTICO DE CIRCUITO (15 AMPERES) (FARÓIS) | 3T-2662 | 1 | INTERRUPTOR - CIRCUITO | 152 |
| | | 1 | INTERRUPTOR - CIRCUITO | 153 |
| DISJUNTOR AUTOMÁTICO DE CIRCUITO (15 AMPERES) (LÂMPADAS DE TRABALHO - BARRA) | 3T-2662 | 1 | INTERRUPTOR - CIRCUITO | 152 |
| DISJUNTOR AUTOMÁTICO DE CIRCUITO (80 AMPERES) (ALTERNADOR) | 171-2210 | 1 | CABOS/FIOS ELÉTRICOS - TRASEIROS | 349 |
| | | 1 | CABOS/FIOS ELÉTRICOS - TRASEIROS | 354 |
| | | 1 | CABOS/FIOS ELÉTRICOS - TRASEIROS | 359 |
| DISJUNTOR AUTOMÁTICO DE CIRCUITO (80 AMPERES) (PRINCIPAL) | 171-2210 | 1 | CABOS/FIOS ELÉTRICOS - TRASEIROS | 349 |
| | | 1 | CABOS/FIOS ELÉTRICOS - TRASEIROS | 354 |
| | | 1 | CABOS/FIOS ELÉTRICOS - TRASEIROS | 359 |
| ELEMENTO - AQUECEDOR DE ÁGUA DA CAMISA (120 VOLTS, 1.250 WATTS) | 131-8627 | 1 | AQUECEDOR DA ÁGUA DO MOTOR | 172 |
| | 239-7342 | 1 | AQUECEDOR DA ÁGUA DO MOTOR | 174 |
| ELEMENTO - AQUECEDOR (240 VOLTS, 1250 WATTS) | 154-2881 | 1 | AQUECEDOR DA ÁGUA DO MOTOR | 173 |
| FUSÍVEL (10 AMPERES) | 9W-1442 | 11 | CABOS/FIOS ELÉTRICOS - CONSOLE DA DIREÇÃO | 399 |
| | | 12 | CABOS/FIOS ELÉTRICOS - CONSOLE DA DIREÇÃO | 402 |
| | | 2 | CABOS/FIOS ELÉTRICOS - DIREÇÃO SECUNDÁRIA | 385 |
| | | 1 | ILUMINAÇÃO - RODOVIÁRIA | 259 |
| | | 1 | INTERRUPTOR - LUZES | 299 |
| | | 1 | SISTEMA DE ILUMINAÇÃO - ADVERTÊNCIA | 265 |
| | | 1 | SISTEMA DE ILUMINAÇÃO - FARÓIS | 232 |
| | | 1 | SISTEMA DE ILUMINAÇÃO - FARÓIS | 235 |
| | | 1 | SISTEMA DE ILUMINAÇÃO - FARÓIS | 237 |
| | | 1 | SISTEMA DE ILUMINAÇÃO - FARÓIS | 239 |
| | | 1 | SISTEMA DE ILUMINAÇÃO - FARÓIS | 242 |
| | | 1 | SISTEMA DE ILUMINAÇÃO - FARÓIS | 252 |
| | | 1 | SISTEMA DE ILUMINAÇÃO - FARÓIS | 254 |
| | 3K-8782 | 1 | CABOS/FIOS ELÉTRICOS - CABINE | 315 |
| | 9W-1442 | 1 | CABOS/FIOS ELÉTRICOS - CABINE | 311 |

* TRADUÇÃO NÃO DISPONÍVEL NO MOMENTO DA IMPRESSÃO

# PEÇAS DE MANUTENÇÃO

| DESCRIÇÃO | NÚMERO DE PEÇA | QUANT | UTILIZADA EM | PÁGINA |
|---|---|---|---|---|
| | | 1 | CABOS/FIOS ELÉTRICOS - CABINE | 313 |
| | | 1 | ILUMINAÇÃO - CABINE | 208 |
| | | 1 | SISTEMA DE ILUMINAÇÃO - FARÓIS | 223 |
| | | 1 | SISTEMA DE ILUMINAÇÃO - FARÓIS | 229 |
| FUSÍVEL (10 AMPERES) (ALARME DE MARCHA-À-RÉ) | 9W-1442 | 1 | SISTEMA DE ILUMINAÇÃO - ADVERTÊNCIA | 270 |
| FUSÍVEL (10 AMPERES) (ALARME DE MARCHA À RÉ AUXILIAR) | 9W-1442 | 1 | ILUMINAÇÃO - MARCHA A RÉ | 206 |
| FUSÍVEL (10 AMPERES) (CONVERSOR) | 9W-1442 | 1 | CONVERSOR ELÉTRICO | 164 |
| FUSÍVEL (10 AMPERES) (CONVERSOR DE ENERGIA) | 9W-1442 | 1 | CONVERSOR ELÉTRICO | 166 |
| FUSÍVEL (10 AMPERES) (FAROL DA LÂMINA - DIANTEIRO) | 9W-1442 | 2 | SISTEMA DE ILUMINAÇÃO - FARÓIS | 217 |
| FUSÍVEL (10 AMPERES) (LÂMPADA DA LÂMINA) | 9W-1442 | 2 | SISTEMA DE ILUMINAÇÃO - FARÓIS | 218 |
| FUSÍVEL (10 AMPERES) (LUZ DE MARCHA À RÉ) | 9W-1442 | 1 | ILUMINAÇÃO - MARCHA A RÉ | 204 |
| FUSÍVEL (10 AMPERES) (LUZES DE TRABALHO) | 9W-1442 | 2 | SISTEMA DE ILUMINAÇÃO - FARÓIS | 220 |
| | | 2 | SISTEMA DE ILUMINAÇÃO - FARÓIS | 222 |
| FUSÍVEL (10 AMPERES) (PISCA-PISCA DE ADVERTÊNCIA) | 9W-1442 | 1 | SISTEMA DE ILUMINAÇÃO - ADVERTÊNCIA | 266 |
| | | 1 | CABOS/FIOS ELÉTRICOS - CABINE | 308 |
| FUSÍVEL (10 AMPERES) (PISCA-PISCA, PISCA-ALERTA) | 9W-1442 | 1 | SISTEMA DE ILUMINAÇÃO - FARÓIS | 226 |
| FUSÍVEL (15 AMPERES) | 9W-1441 | 1 | CABOS/FIOS ELÉTRICOS - CONSOLE DA DIREÇÃO | 399 |
| | | 1 | CABOS/FIOS ELÉTRICOS - CONSOLE DA DIREÇÃO | 402 |
| | | 1 | CABOS/FIOS ELÉTRICOS - CABINE | 306 |
| | | 1 | CABOS/FIOS ELÉTRICOS - CABINE | 309 |
| FUSÍVEL (15 AMPERES) (CONVERSOR - FORÇA) | 9W-1441 | 1 | CONVERSOR ELÉTRICO | 165 |
| FUSÍVEL (15 AMPERES) (HOLOFOTES - CABINE) | 9W-1441 | 1 | SISTEMA DE ILUMINAÇÃO - FARÓIS | 220 |
| | | 1 | SISTEMA DE ILUMINAÇÃO - FARÓIS | 222 |
| FUSÍVEL (30 AMPERES) | 8T-9636 | 2 | CONVERSOR ELÉTRICO | 167 |
| INTERRUPTOR - CIRCUITO (15 AMPERES) (CONTROLE DO MOTOR) | 6T-3643 | 1 | CABOS/FIOS ELÉTRICOS - TRASEIROS | 355 |
| | | 1 | CABOS/FIOS ELÉTRICOS - TRASEIROS | 360 |
| INTERRUPTOR - CIRCUITO (20-AMPERES) (CONTROLE DE RAMPA) | 6T-3644 | 1 | CABOS/FIOS ELÉTRICOS - TRASEIROS | 376 |
| INTERRUPTOR (MARCHA À RÉ AUXILIAR) | 161-1418 | 1 | ILUMINAÇÃO - MARCHA A RÉ | 204 |
| LÂMPADA | 6C-0109 | 1 | CABOS E FIOS ELÉTRICOS-LUZES TRASEIRAS | 378 |
| | | 1 | CABOS E FIOS ELÉTRICOS-LUZES TRASEIRAS | 381 |

* TRADUÇÃO NÃO DISPONÍVEL NO MOMENTO DA IMPRESSÃO

# PEÇAS DE MANUTENÇÃO

| DESCRIÇÃO | NÚMERO DE PEÇA | QUANT | UTILIZADA EM | PÁGINA |
|---|---|---|---|---|
| | 6C-0110 | 1 | CABOS E FIOS ELÉTRICOS-LUZES TRASEIRAS | 378 |
| | | 1 | CABOS E FIOS ELÉTRICOS-LUZES TRASEIRAS | 381 |
| LÂMPADA - HALOGÊNEO (24 VOLTS, 65 WATTS) | 9X-3463 | 1 | LÂMPADA - FAROL | 178 |
| | | 1 | LÂMPADA - FAROL | 181 |
| | | 1 | LÂMPADA - FAROL | 183 |
| LÂMPADA - HALOGÊNEO (24 VOLTS, 65 WATTS) (FAROL) | 9X-3463 | 1 | LÂMPADA - FAROL | 179 |
| | | 1 | LÂMPADA - FAROL | 180 |
| | | 1 | LÂMPADA - FAROL | 182 |
| LÂMPADA - HALOGÊNEO (24 VOLTS, 65 WATTS) (FAROL BAIXO) | 9X-3463 | 1 | FAROL DIANTEIRO | 184 |
| | | 1 | SISTEMA DE ILUMINAÇÃO - FARÓIS | 212 |
| LÂMPADA - HALOGÊNEO (24 VOLTS, 65 WATTS) (LUZ ALTA) | 9X-3463 | 1 | FAROL DIANTEIRO | 185 |
| | | 1 | SISTEMA DE ILUMINAÇÃO - FARÓIS | 212 |
| LÂMPADA - LED | 165-5674 | 1 | SISTEMA DE ILUMINAÇÃO - ADVERTÊNCIA | 268 |
| | | 1 | SISTEMA DE ILUMINAÇÃO - ADVERTÊNCIA | 269 |
| LÂMPADA (FREIO, CURVA, TRASEIRA, LADO DIREITO) | 5C-9930 | 1 | CABOS E FIOS ELÉTRICOS-LUZES TRASEIRAS | 378 |
| | | 1 | CABOS E FIOS ELÉTRICOS-LUZES TRASEIRAS | 381 |
| LÂMPADA (24 VOLTS) | 3E-8825 | 1 | CABOS/FIOS ELÉTRICOS - CABINE | 311 |
| | | 1 | CABOS/FIOS ELÉTRICOS - CABINE | 313 |
| | | 2 | CABOS/FIOS ELÉTRICOS - CONSOLE DA DIREÇÃO | 399 |
| | | 1 | CABOS/FIOS ELÉTRICOS - CONSOLE DA DIREÇÃO | 402 |
| | | 2 | CABOS/FIOS ELÉTRICOS - CONSOLE DA TRANSMISSÃO | 387 |
| | | 2 | CABOS/FIOS ELÉTRICOS - CONSOLE DA TRANSMISSÃO | 389 |
| | | 2 | CABOS/FIOS ELÉTRICOS - CONSOLE DA TRANSMISSÃO | 392 |
| | | 1 | CABOS/FIOS ELÉTRICOS - CONSOLE DA TRANSMISSÃO | 393 |
| | | 2 | CABOS/FIOS ELÉTRICOS - CONSOLE DA TRANSMISSÃO | 396 |
| | | 1 | CABOS/FIOS ELÉTRICOS - CONSOLE DA TRANSMISSÃO | 397 |
| | | 2 | CABOS/FIOS ELÉTRICOS - DIREÇÃO SECUNDÁRIA | 385 |
| | | 1 | ILUMINAÇÃO - CABINE | 208 |
| | | 2 | ILUMINAÇÃO - RODOVIÁRIA | 259 |
| | | 1 | INSTALAÇÃO DO PISCA-PISCA DE ADVERTÊNCIA | 175 |
| | | 2 | INTERRUPTOR - LUZES | 299 |

* TRADUÇÃO NÃO DISPONÍVEL NO MOMENTO DA IMPRESSÃO

# PEÇAS DE MANUTENÇÃO

| DESCRIÇÃO | NÚMERO DE PEÇA | QUANT | UTILIZADA EM | PÁGINA |
|---|---|---|---|---|
| | | 1 | SIST. DE ILUMINAÇÃO - PISCA-PISCA GIRATÓRIO DE ADVERTÊNCIA | 273 |
| | | 1 | SISTEMA DE ILUMINAÇÃO - ADVERTÊNCIA | 268 |
| | | 1 | SISTEMA DE ILUMINAÇÃO - ADVERTÊNCIA | 269 |
| | | 1 | SISTEMA DE ILUMINAÇÃO - ADVERTÊNCIA | 270 |
| | | 2 | SISTEMA DE ILUMINAÇÃO - FARÓIS | 223 |
| | | 2 | SISTEMA DE ILUMINAÇÃO - FARÓIS | 229 |
| | | 1 | SISTEMA DE ILUMINAÇÃO - FARÓIS | 232 |
| | | 1 | SISTEMA DE ILUMINAÇÃO - FARÓIS | 235 |
| | | 1 | SISTEMA DE ILUMINAÇÃO - FARÓIS | 237 |
| | | 1 | SISTEMA DE ILUMINAÇÃO - FARÓIS | 239 |
| | | 1 | SISTEMA DE ILUMINAÇÃO - FARÓIS | 240 |
| | | 1 | SISTEMA DE ILUMINAÇÃO - FARÓIS | 242 |
| | | 1 | SISTEMA DE ILUMINAÇÃO - FARÓIS | 252 |
| | | 1 | SISTEMA DE ILUMINAÇÃO - FARÓIS | 254 |
| | 7N-5876 | 1 | CABOS/FIOS ELÉTRICOS - CONSOLE DA TRANSMISSÃO | 387 |
| | | 1 | CABOS/FIOS ELÉTRICOS - CONSOLE DA TRANSMISSÃO | 389 |
| | | 1 | CABOS/FIOS ELÉTRICOS - CONSOLE DA TRANSMISSÃO | 392 |
| | | 1 | CABOS/FIOS ELÉTRICOS - CONSOLE DA TRANSMISSÃO | 396 |
| | 7N-9943 | 1 | LÂMPADA - TETO | 177 |
| | 100-3245 | 2 | LÂMPADA DIANTEIRA E DE SINAL | 190 |
| LÂMPADA (24 VOLTS) (ALARME DE MARCHA À RÉ AUXILIAR) | 3E-8825 | 1 | ILUMINAÇÃO - MARCHA A RÉ | 206 |
| LÂMPADA (24 VOLTS) (AUXILIAR DE PARTIDA A ÉTER) | 3E-8825 | 1 | AUXILIAR DE PARTIDA A ÉTER | 293 |
| LÂMPADA (24 VOLTS) (FARÓIS DIANTEIROS, LUZES TRASEIRAS) | 3E-8825 | 2 | SISTEMA DE ILUMINAÇÃO - FARÓIS | 226 |
| LÂMPADA (24 VOLTS) (FAROL DA LÂMINA) | 3E-8825 | 2 | SISTEMA DE ILUMINAÇÃO - FARÓIS | 220 |
| | | 2 | SISTEMA DE ILUMINAÇÃO - FARÓIS | 222 |
| LÂMPADA (24 VOLTS) (INTERRUPTOR DO AMORTECEDOR DA LÂMINA) | 3E-8825 | 1 | FIAÇÃO - AMORTECEDOR DA LÂMINA | 304 |
| LÂMPADA (24 VOLTS) (LÂMINA)(LÂMPADA DIANTEIRA) | 3E-8825 | 2 | SISTEMA DE ILUMINAÇÃO - FARÓIS | 217 |
| LÂMPADA (24 VOLTS) (LÂMPADA DA LÂMINA) | 3E-8825 | 2 | SISTEMA DE ILUMINAÇÃO - FARÓIS | 218 |
| LÂMPADA (24 VOLTS) (LÂMPADA DE MARCHA À RÉ AUXILIAR) | 3E-8825 | 2 | ILUMINAÇÃO - MARCHA A RÉ | 204 |
| LÂMPADA (24 VOLTS) (PLACA DE REGISTRO) | 5C-9583 | 1 | LAMPADA-PLACA DE REGISTRO | 195 |
| LÂMPADA (24 VOLTS) (POSIÇÃO) | 100-3245 | 1 | FAROL DIANTEIRO | 186 |
| | | 1 | FAROL DIANTEIRO | 188 |
| LÂMPADA (24 VOLTS) (POSIÇÃO DA CABINE) | 9X-4494 | 1 | LÀMPADA - MARCADORA | 194 |
| LÂMPADA (24 VOLTS) (SINAL) | 100-3245 | 2 | LÂMPADA DIANTEIRA E DE SINAL | 192 |

* TRADUÇÃO NÃO DISPONÍVEL NO MOMENTO DA IMPRESSÃO

# PEÇAS DE MANUTENÇÃO

| DESCRIÇÃO | NÚMERO DE PEÇA | QUANT | UTILIZADA EM | PÁGINA |
|---|---|---|---|---|
| LÂMPADA (24 VOLTS) (VIRADA) | 100-3245 | 1 | FAROL DIANTEIRO | 186 |
| | | 1 | FAROL DIANTEIRO | 188 |
| LÂMPADA (24 VOLTS, 21 WATTS) | 5C-9584 | 2 | CABOS E FIOS ELÉTRICOS-LUZES TRASEIRAS | 378 |
| | | 2 | CABOS E FIOS ELÉTRICOS-LUZES TRASEIRAS | 381 |
| LÂMPADA (24 VOLTS, 21 WATTS) (SINAL) | 9X-4493 | 1 | LÂMPADA DIANTEIRA E DE SINAL | 192 |
| | | 1 | LÂMPADA DIANTEIRA E DE SINAL | 190 |
| LÂMPADA (24 VOLTS, 21 WATTS) (VIRADA) | 9X-4493 | 1 | FAROL DIANTEIRO | 186 |
| | | 1 | FAROL DIANTEIRO | 188 |
| LÂMPADA (24 VOLTS, 3 WATTS) | 115-1748 | 1 | FIACAO - CONTROLE DO NIVEL | 338 |
| LÂMPADA (24 VOLTS, 5 WATTS) | 4V-8116 | 1 | CABOS E FIOS ELÉTRICOS-LUZES TRASEIRAS | 378 |
| | | 1 | CABOS E FIOS ELÉTRICOS-LUZES TRASEIRAS | 381 |
| | | 1 | CABOS E FIOS ELÉTRICOS-LUZES TRASEIRAS | 378 |
| | | 1 | CABOS E FIOS ELÉTRICOS-LUZES TRASEIRAS | 381 |
| LÂMPADA (24 VOLTS, 70 WATTS) | 9X-7849 | 1 | LUZ GIRATÓRIA DE ALARME | 200 |
| LÂMPADA (24 VOLTS, 70 WATTS) (PISCA-PISCA DE ADVERTÊNCIA) | 9X-7849 | 1 | LUZ GIRATÓRIA DE ALARME | 199 |
| LÂMPADA (24 VOLTS, 75-70 WATTS) | 9X-3465 | 1 | LÂMPADA DIANTEIRA E DE SINAL | 190 |
| LÂMPADA (24 VOLTS, 75-70 WATTS) (CABEÇA) | 9X-3465 | 1 | LÂMPADA DIANTEIRA E DE SINAL | 192 |
| LÂMPADA (24 VOLTS, 75-70 WATTS) (LUZ ALTA/BAIXA) | 9X-3465 | 1 | FAROL DIANTEIRO | 186 |
| | | 1 | FAROL DIANTEIRO | 188 |
| LENTE (ÂMBAR, PISCA-ALERTA) | 272-9800 | 1 | LUZ GIRATÓRIA DE ALARME | 200 |
| LENTE (ÂMBER) (SINAL) | 100-3250 | 1 | LÂMPADA DIANTEIRA E DE SINAL | 190 |
| | | 1 | LÂMPADA DIANTEIRA E DE SINAL | 192 |
| | 136-3848 | 1 | LÂMPADA DIANTEIRA E DE SINAL | 190 |
| | | 1 | LÂMPADA DIANTEIRA E DE SINAL | 192 |
| LENTE (ÂMBER) (VIRADA) | 100-3250 | 1 | FAROL DIANTEIRO | 186 |
| | | 1 | FAROL DIANTEIRO | 188 |
| | 136-3848 | 1 | FAROL DIANTEIRO | 186 |
| | | 1 | FAROL DIANTEIRO | 188 |
| LENTE (CABEÇA) | 100-3249 | 1 | FAROL DIANTEIRO | 186 |
| | | 1 | FAROL DIANTEIRO | 188 |
| LENTE (FAROL BAIXO) | 162-2077 | 1 | SISTEMA DE ILUMINAÇÃO - FARÓIS | 212 |
| LENTE (FAROL) (FAIXA BAIXA) | 162-2077 | 1 | FAROL DIANTEIRO | 184 |
| LENTE (LUZES DIANTEIRAS) | 100-3248 | 1 | LÂMPADA DIANTEIRA E DE SINAL | 190 |
| | | 1 | LÂMPADA DIANTEIRA E DE SINAL | 192 |
| LENTE (PLACA DE REGISTRO) | 134-6751 | 1 | LAMPADA-PLACA DE REGISTRO | 195 |
| LUZ INTERMITENTE (24 VOLTS) (PISCA-PISCA, PISCA-ALERTA) | 108-0358 | 1 | INTERRUPTOR - LUZES | 299 |
| | | 1 | SISTEMA DE ILUMINAÇÃO - FARÓIS | 223 |
| | | 1 | SISTEMA DE ILUMINAÇÃO - FARÓIS | 226 |
| | | 1 | SISTEMA DE ILUMINAÇÃO - FARÓIS | 229 |
| | | 1 | SISTEMA DE ILUMINAÇÃO - FARÓIS | 232 |

* TRADUÇÃO NÃO DISPONÍVEL NO MOMENTO DA IMPRESSÃO

# PEÇAS DE MANUTENÇÃO

| DESCRIÇÃO | NÚMERO DE PEÇA | QUANT | UTILIZADA EM | PÁGINA |
|---|---|---|---|---|
| | | 1 | SISTEMA DE ILUMINAÇÃO - FARÓIS | 239 |
| | | 1 | SISTEMA DE ILUMINAÇÃO - FARÓIS | 242 |
| LUZ INTERMITENTE (24 VOLTS) (SETA DE DIREÇÃO - PISCA-PISCA) | 108-0358 | 1 | ILUMINAÇÃO - RODOVIÁRIA | 259 |
| RELÉ (24 VOLTS) (CONTROLE DE RAMPA) | 111-4871 | 1 | CABOS/FIOS ELÉTRICOS - DIANTEIROS | 330 |
| RELÉ (24 VOLTS) (IMPLEMENTO) | 111-4871 | 1 | CABOS/FIOS ELÉTRICOS - DIANTEIROS | 330 |
| **SISTEMA HIDRÁULICO** | | | | |
| BUJÃO - CANO/TUBO | 2B-7410 | 1 | MOTOR DE REVERSÃO DO CÍRCULO | 667 |
| ELEMENTO FILTRANTE - ÓLEO (EFICIÊNCIA PADRÃO) | 1R-0774 | 1 | TANQUE HIDRÁULICO E FILTRO | 737 |
| GRAXEIRA (SOQUETE DO CILINDRO DE DESLOCAMENTO LATERAL) | 3B-8485 | 2 | CILINDRO E MONTAGEM - DESLOCAMENTO DO CÍRCULO | 646 |
| TAMPA - BOCAL DE ENCHIMENTO (TANQUE DE ÓLEO HIDRÁULICO) | 7H-1447 | 1 | TANQUE HIDRÁULICO E FILTRO | 737 |
| TELA FILTRANTE (ENCHIMENTO DO TANQUE HIDRÁULICO) (TANQUE DE ÓLEO HIDRÁULICO) | 9J-3047 | 1 | TANQUE HIDRÁULICO E FILTRO | 737 |
| **TREM DE FORÇA** | | | | |
| ELEMENTO FILTRANTE - ÓLEO | 132-8875 | 2 | TUBOS - ÓLEO DA TRANSMISSÃO | 457 |
| ELEMENTO FILTRANTE - ÓLEO (EXTREMA EFICIÊNCIA) | 1R-1809 | 1 | FILTRO - ÓLEO | 449 |
| | | 1 | TUBOS - ÓLEO DA TRANSMISSÃO | 461 |
| ELEMENTO FILTRANTE - ÓLEO (TRANSMISSÃO) | 132-8875 | 1 | FILTRO - ÓLEO | 447 |
| | | 1 | TUBOS - ÓLEO DA TRANSMISSÃO | 452 |
| FILTRO - MAGNÉTICO (TRANSMISSÃO) | 8S-9129 | 1 | CAIXA E COMPONENTES - TRANSMISSÃO | 413 |
| | | 1 | FILTRO - MAGNÉTICO | 467 |
| | | 1 | CAIXA E COMPONENTES - TRANSMISSÃO | 409 |
| FILTRO - ÓLEO (DERIVAÇÃO) | 235-5812 | 1 | FILTRO DO ÓLEO E MONTAGEM | 445 |
| LÂMPADA (*24-VOLT) (MUDANÇA AUTOMÁTICA) | 3E-8825 | 1 | CONTROLE ELÉTRICO DAS MARCHAS | 408 |
| RESPIRO (BOCAL DE ENCHIMENTO DE ÓLEO DE TREM DE FORÇA) | 9G-5127 | 1 | BOCAL DE ENCHIMENTO DE ÓLEO DO TREM DE FORÇA | 442 |
| RESPIRO (TANDEM) | 1F-8488 | 2 | TANDEM E TAMPA | 470 |
| | 4H-6112 | 1 | TANDEM E TAMPA | 471 |
| TAMPÃO | 6E-5047 | 2 | TANDEM E TAMPA | 470 |
| | | 2 | TANDEM E TAMPA | 471 |
| TELA DE SUCÇÃO (CAIXA DE TRANSMISSÃO) | 8S-9130 | 1 | CAIXA E COMPONENTES - TRANSMISSÃO | 409 |
| | | 1 | CAIXA E COMPONENTES - TRANSMISSÃO | 413 |
| TELA DE SUCÇÃO (TRANSMISSÃO) | 8S-9130 | 1 | FILTRO - MAGNÉTICO | 467 |
| TELA FILTRANTE (VÁLVULA DE CONTROLE DE TRANSMISSÃO) | 6I-9395 | 1 | VÁLVULA DE CONTROLE - TRANSMISSÃO | 490 |
| | | 1 | VÁLVULA DE CONTROLE - TRANSMISSÃO | 492 |

* TRADUÇÃO NÃO DISPONÍVEL NO MOMENTO DA IMPRESSÃO

# WARTUNGSTEILE

| BESCHREIBUNG | ERSATZTEIL-NUMMER | MENGE | VERWENDET IN | SEITE |
|---|---|---|---|---|
| **BREMSSYSTEM** | | | | |
| *CARTRIDGE AS-DESICCANT (LUFTTROCKNER) | 203-2389 | 1 | LUFTTROCKNER | 608 |
| HEIZELEMENT (LUFTTROCKNER) | 203-2423 | 1 | LUFTTROCKNER | 608 |
| SICHERUNG (10 A) (LUFTTROCKNER) | 9W-1442 | 1 | LUFTTROCKNER | 605 |
| **ELEKTRISCHE ANLAGE UND STARTSYSTEM** | | | | |
| ABDECKGLAS (ABBLENDLICHT) | 162-2077 | 1 | ARBEITSLEUCHTEN | 212 |
| ABDECKGLAS (FRONTSCHEINWERFER) | 100-3249 | 1 | FRONTSCHEINWERFER | 186 |
| | 100-3248 | 1 | SCHEINWERFER U. RICHTUNGSLEUCHTE | 190 |
| | | 1 | SCHEINWERFER U. RICHTUNGSLEUCHTE | 192 |
| | 100-3249 | 1 | FRONTSCHEINWERFER | 188 |
| ABDECKGLAS (FRONTSCHEINWERFER)(ABBLENDLICHT) | 162-2077 | 1 | FRONTSCHEINWERFER | 184 |
| ABDECKGLAS (GELB) (RECHTS- U. LINKSWENDUNG) | 100-3250 | 1 | FRONTSCHEINWERFER | 186 |
| | | 1 | FRONTSCHEINWERFER | 188 |
| | 136-3848 | 1 | FRONTSCHEINWERFER | 186 |
| | | 1 | FRONTSCHEINWERFER | 188 |
| ABDECKGLAS (GELB, RUNDUM-KENNLEUCHTE) | 272-9800 | 1 | RUNDUM-KENNLEUCHTE | 200 |
| ABDECKGLAS (GELB) (SIGNAL) | 100-3250 | 1 | SCHEINWERFER U. RICHTUNGSLEUCHTE | 190 |
| | | 1 | SCHEINWERFER U. RICHTUNGSLEUCHTE | 192 |
| | 136-3848 | 1 | SCHEINWERFER U. RICHTUNGSLEUCHTE | 190 |
| | | 1 | SCHEINWERFER U. RICHTUNGSLEUCHTE | 192 |
| ABDECKGLAS (KENNZEICHEN) | 134-6751 | 1 | ZULASSUNGSSCHILDLEUCHTE | 195 |
| BATTERIE (12 V, WARTUNGSFREI) | 3T-5760 | 2 | BATTERIE | 150 |
| | 153-5700 | 2 | BATTERIE | 149 |
| BATTERIE (12 V, WARTUNGSFREI) (NASS) | 153-5710 | 2 | BATTERIE | 148 |
| BATTERIE (12 V, WARTUNGSFREI) (1100 A) | 153-5700 | 2 | BATTERIE | 147 |
| BELEUCHTUNGSANLAGE | 6C-0109 | 1 | HECKBELEUCHTUNGSVERDRAHTUNG | 378 |
| | | 1 | HECKBELEUCHTUNGSVERDRAHTUNG | 381 |
| | 6C-0110 | 1 | HECKBELEUCHTUNGSVERDRAHTUNG | 378 |
| | | 1 | HECKBELEUCHTUNGSVERDRAHTUNG | 381 |
| BLINKER (24 V) (RICHTUNGSBLINKER, WARNLEUCHTE) | 108-0358 | 1 | ARBEITSLEUCHTEN | 223 |
| | | 1 | ARBEITSLEUCHTEN | 226 |
| | | 1 | ARBEITSLEUCHTEN | 229 |
| | | 1 | ARBEITSLEUCHTEN | 232 |

* ÜBERSETZUNG ZUM ZEITPUNKT DER DRUCKLEGUNG NICHT VORHANDEN

# WARTUNGSTEILE

| BESCHREIBUNG | ERSATZTEIL-NUMMER | MENGE | VERWENDET IN | SEITE |
|---|---|---|---|---|
| | | 1 | ARBEITSLEUCHTEN | 239 |
| | | 1 | ARBEITSLEUCHTEN | 242 |
| | | 1 | LICHTSCHALTER | 299 |
| BLINKER (24 V) (RICHTUNGSBLINKER/ WARNLEUCHTEN) | 108-0358 | 1 | BELEUCHTUNGSANLAGE (STRASSENAUSRÜSTUNG) | 259 |
| HALOGENSCHINWERFER (24V)(65W) | 9X-3463 | 1 | ARBEITSLEUCHTEN | 178 |
| | | 1 | ARBEITSLEUCHTEN | 181 |
| | | 1 | ARBEITSLEUCHTEN | 183 |
| HALOGENSCHINWERFER (24V)(65W) (ABBLENDLICHT) | 9X-3463 | 1 | FRONTSCHEINWERFER | 184 |
| | | 1 | ARBEITSLEUCHTEN | 212 |
| HALOGENSCHINWERFER (24V)(65W) (ARBEITSSCHEINWERFER) | 9X-3463 | 1 | ARBEITSLEUCHTEN | 179 |
| | | 1 | ARBEITSLEUCHTEN | 180 |
| | | 1 | ARBEITSLEUCHTEN | 182 |
| HALOGENSCHINWERFER (24V)(65W) (FERNLICHT) | 9X-3463 | 1 | FRONTSCHEINWERFER | 185 |
| | | 1 | ARBEITSLEUCHTEN | 212 |
| HEIZUNGSELEMENT (240 V, 1250 W) | 154-2881 | 1 | UMLAUFKÜHLWASSERHEIZUNG | 173 |
| LAUFBAND UND ANTRIEB | 9X-8139 | 1 | RUNDUM-KENNLEUCHTE | 199 |
| | | 1 | RUNDUM-KENNLEUCHTE | 200 |
| LEUCHTE (BREMSLEUCHTE, RICHTUNGSBLINKER, HECKLEUCHTE, RECHTS) | 5C-9930 | 1 | HECKBELEUCHTUNGSVERDRAHTUNG | 378 |
| | | 1 | HECKBELEUCHTUNGSVERDRAHTUNG | 381 |
| LEUCHTE, ROT | 165-5674 | 1 | WARNLEUCHTEN | 268 |
| | | 1 | WARNLEUCHTEN | 269 |
| LEUCHTE (24 V) | 3E-8825 | 2 | ARBEITSLEUCHTEN | 223 |
| | | 2 | ARBEITSLEUCHTEN | 229 |
| | | 2 | ARBEITSLEUCHTEN | 232 |
| | | 1 | ARBEITSLEUCHTEN | 235 |
| | | 1 | ARBEITSLEUCHTEN | 237 |
| | | 1 | ARBEITSLEUCHTEN | 239 |
| | | 1 | ARBEITSLEUCHTEN | 240 |
| | | 1 | ARBEITSLEUCHTEN | 242 |
| | | 1 | ARBEITSLEUCHTEN | 252 |
| | | 1 | ARBEITSLEUCHTEN | 254 |
| | | 2 | BELEUCHTUNGSANLAGE (STRASSENAUSRÜSTUNG) | 259 |
| | | 1 | FAHRERHAUSVERDRAHTUNG | 311 |
| | | 1 | FAHRERHAUSVERDRAHTUNG | 313 |
| | | 1 | FAHRERHAUSVERKLEIDUNG | 208 |
| | | 1 | LENKKONSOLENVERDRAHTUNG | 399 |
| | | 1 | LENKKONSOLENVERDRAHTUNG | 402 |
| | | 2 | LICHTSCHALTER | 299 |
| | | 2 | NOTLENKUNGSVERDRAHTUNG | 385 |
| | | 1 | RUNDUM-KENNLEUCHTE | 273 |
| | | 1 | RUNDUMWARNLEUCHTE - EINBAUSATZ | 175 |
| | | 1 | SCHALTKONSOLENVERDRAHTUNG | 387 |
| | | 2 | SCHALTKONSOLENVERDRAHTUNG | 389 |

* ÜBERSETZUNG ZUM ZEITPUNKT DER DRUCKLEGUNG NICHT VORHANDEN

# WARTUNGSTEILE

| BESCHREIBUNG | ERSATZTEIL-NUMMER | MENGE | VERWENDET IN | SEITE |
|---|---|---|---|---|
| | | 2 | SCHALTKONSOLENVERDRAHTUNG | 392 |
| | | 1 | SCHALTKONSOLENVERDRAHTUNG | 393 |
| | | 2 | SCHALTKONSOLENVERDRAHTUNG | 396 |
| | | 2 | SCHALTKONSOLENVERDRAHTUNG | 397 |
| | | 1 | WARNLEUCHTEN | 268 |
| | | 1 | WARNLEUCHTEN | 269 |
| | | 1 | WARNLEUCHTEN | 270 |
| | 7N-5876 | 1 | SCHALTKONSOLENVERDRAHTUNG | 387 |
| | | 1 | SCHALTKONSOLENVERDRAHTUNG | 389 |
| | | 1 | SCHALTKONSOLENVERDRAHTUNG | 392 |
| | | 1 | SCHALTKONSOLENVERDRAHTUNG | 396 |
| | 7N-9943 | 1 | FAHRERHAUSBELEUCHTUNG | 177 |
| | 100-3245 | 2 | SCHEINWERFER U. RICHTUNGSLEUCHTE | 190 |
| LEUCHTE (24 V) (ÄTHERSTARTHILFE) | 3E-8825 | 1 | ÄTHERSTARTHILFE | 293 |
| LEUCHTE (24 V) (AUSFALLSCHUTZ-RÜCKFAHRLEUCHTE) | 3E-8825 | 2 | SCHEINWERFER, HINTEN | 204 |
| LEUCHTE (24 V) (FAHRERHAUSSTELLUNG) | 9X-4494 | 1 | MARKIERUNGSLEUCHTE | 194 |
| LEUCHTE (24 V) (FAHRSCHEINWERFER, HECKLEUCHTEN) | 3E-8825 | 2 | ARBEITSLEUCHTEN | 226 |
| LEUCHTE (24 V) (KENNZEICHEN) | 5C-9583 | 1 | ZULASSUNGSSCHILDLEUCHTE | 195 |
| LEUCHTE (24 V) (RECHTS- U. LINKSWENDUNG) | 100-3245 | 1 | FRONTSCHEINWERFER | 186 |
| | | 1 | FRONTSCHEINWERFER | 188 |
| LEUCHTE (24 V) (RÜCKFAHRALARM) | 3E-8825 | 1 | SCHEINWERFER, HINTEN | 206 |
| LEUCHTE (24 V) (SCHAR-ARBEITSSCHEINWERFER) | 3E-8825 | 2 | ARBEITSLEUCHTEN | 220 |
| | | 2 | ARBEITSLEUCHTEN | 222 |
| LEUCHTE (24 V) (SCHARDÄMPFUNGSCHALTER) | 3E-8825 | 1 | VERDRAHTUNG - SCHARDÄMPFUNG | 304 |
| LEUCHTE (24 V) (SCHARLEUCHTE) | 3E-8825 | 2 | ARBEITSLEUCHTEN | 218 |
| LEUCHTE (24 V) (SCHAR)(VORDERER ARBEITSSCHEINWERFER) | 3E-8825 | 2 | ARBEITSLEUCHTEN | 217 |
| LEUCHTE (24 V) (SIGNAL) | 100-3245 | 2 | SCHEINWERFER U. RICHTUNGSLEUCHTE | 192 |
| LEUCHTE (24 V) (STELLUNG) | 100-3245 | 1 | FRONTSCHEINWERFER | 186 |
| | | 1 | FRONTSCHEINWERFER | 188 |
| LEUCHTE (24 V, 3 W) | 115-1748 | 1 | NIEGUNGSSTEUER VERDRAHTUNG | 338 |
| LEUCHTE (24 V, 5 W) | 4V-8116 | 1 | HECKBELEUCHTUNGSVERDRAH-TUNG | 378 |
| | | 1 | HECKBELEUCHTUNGSVERDRAH-TUNG | 381 |
| LEUCHTE (24 V, 70 W) | 9X-7849 | 1 | RUNDUM-KENNLEUCHTE | 200 |
| LEUCHTE (24 V, 70 W) (RUNDUM-KENNLEUCHTE) | 9X-7849 | 1 | RUNDUM-KENNLEUCHTE | 199 |
| LEUCHTE (24 V, 75/70 W) | 9X-3465 | 1 | SCHEINWERFER U. RICHTUNGSLEUCHTE | 190 |
| LEUCHTE (24 V, 75/70 W) (FERNLICHT/ABBLENDLICHT) | 9X-3465 | 1 | FRONTSCHEINWERFER | 186 |
| | | 1 | FRONTSCHEINWERFER | 188 |

* ÜBERSETZUNG ZUM ZEITPUNKT DER DRUCKLEGUNG NICHT VORHANDEN

# WARTUNGSTEILE

| BESCHREIBUNG | ERSATZTEIL-NUMMER | MENGE | VERWENDET IN | SEITE |
|---|---|---|---|---|
| LEUCHTE (24 V, 75/70 W) (FRONTSCHEINWERFER) | 9X-3465 | 1 | SCHEINWERFER U. RICHTUNGSLEUCHTE | 192 |
| LEUCHTE (24V, 21W) | 5C-9584 | 2 | HECKBELEUCHTUNGSVERDRAHTUNG | 378 |
| | | 2 | HECKBELEUCHTUNGSVERDRAHTUNG | 381 |
| LEUCHTE (24V, 21W) (RECHTS- U. LINKSWENDUNG) | 9X-4493 | 1 | FRONTSCHEINWERFER | 186 |
| | | 1 | FRONTSCHEINWERFER | 188 |
| LEUCHTE (24V, 21W) (SIGNAL) | 9X-4493 | 1 | SCHEINWERFER U. RICHTUNGSLEUCHTE | 192 |
| | | 1 | SCHEINWERFER U. RICHTUNGSLEUCHTE | 190 |
| RELAIS (24 V) (ARBEITSGERÄT) | 111-4871 | 1 | VERDRAHTUNG, VORNE | 330 |
| RELAIS (24 V) (NEIGUNGSSTEUERUNG) | 111-4871 | 1 | VERDRAHTUNG, VORNE | 330 |
| SCHALTER (AUSFALLSCHUTZ) | 161-1418 | 1 | SCHEINWERFER, HINTEN | 204 |
| SCHLÜSSEL (ELEKTRISCHER HAUPTSCHALTER) | 8H-5306 | 1 | TRENNSCHALTER | 298 |
| SERPENTINENFÖRMIGER RIEMEN (DREHSTROMGENERATOR OHNE A/C) | 178-8481 | 1 | DREHSTROMGENERATOR | 145 |
| SICHERUNG (10 A) | 9W-1442 | 11 | LENKKONSOLENVERDRAHTUNG | 399 |
| | | 12 | LENKKONSOLENVERDRAHTUNG | 402 |
| | | 1 | LICHTSCHALTER | 299 |
| | | 2 | NOTLENKUNGSVERDRAHTUNG | 385 |
| | 3K-8782 | 1 | FAHRERHAUSVERDRAHTUNG | 315 |
| | 9W-1442 | 1 | ARBEITSLEUCHTEN | 223 |
| | | 1 | ARBEITSLEUCHTEN | 229 |
| | | 1 | ARBEITSLEUCHTEN | 232 |
| | | 1 | ARBEITSLEUCHTEN | 235 |
| | | 1 | ARBEITSLEUCHTEN | 237 |
| | | 1 | ARBEITSLEUCHTEN | 239 |
| | | 1 | ARBEITSLEUCHTEN | 242 |
| | | 1 | ARBEITSLEUCHTEN | 252 |
| | | 1 | ARBEITSLEUCHTEN | 254 |
| | | 1 | BELEUCHTUNGSANLAGE (STRASSENAUSRÜSTUNG) | 259 |
| | | 1 | FAHRERHAUSVERDRAHTUNG | 311 |
| | | 1 | FAHRERHAUSVERDRAHTUNG | 313 |
| | | 1 | FAHRERHAUSVERKLEIDUNG | 208 |
| | | 1 | WARNLEUCHTEN | 265 |
| SICHERUNG (10 A) (ARBEITSSCHEINWERFER) | 9W-1442 | 2 | ARBEITSLEUCHTEN | 220 |
| | | 2 | ARBEITSLEUCHTEN | 222 |
| SICHERUNG (10 A) (RICHTUNGSBLINKER, WARNLEUCHTE) | 9W-1442 | 1 | ARBEITSLEUCHTEN | 226 |
| SICHERUNG (10 A) (RÜCKFAHRALARM) | 9W-1442 | 1 | SCHEINWERFER, HINTEN | 206 |
| | | 1 | WARNLEUCHTEN | 270 |
| SICHERUNG (10 A) (RÜCKFAHRLEUCHTE) | 9W-1442 | 1 | SCHEINWERFER, HINTEN | 204 |

* ÜBERSETZUNG ZUM ZEITPUNKT DER DRUCKLEGUNG NICHT VORHANDEN

# WARTUNGSTEILE

| BESCHREIBUNG | ERSATZTEIL-NUMMER | MENGE | VERWENDET IN | SEITE |
|---|---|---|---|---|
| SICHERUNG (10 A) (RUNDUM-KENNLEUCHTE) | 9W-1442 | 1 | WARNLEUCHTEN | 266 |
| | | 1 | FAHRERHAUSVERDRAHTUNG | 308 |
| SICHERUNG (10 A) (SCHARLEUCHTE) | 9W-1442 | 2 | ARBEITSLEUCHTEN | 218 |
| SICHERUNG (10 A) (SCHAR/VORDER ARBEITSSCHEINWERFER) | 9W-1442 | 2 | ARBEITSLEUCHTEN | 217 |
| SICHERUNG (10 A) (UMFORMER) | 9W-1442 | 1 | ELEKTR. UMFORMER | 166 |
| SICHERUNG (10 A) (WANDLER) | 9W-1442 | 1 | ELEKTR. UMFORMER | 164 |
| SICHERUNG (15 A) | 9W-1441 | 1 | LENKKONSOLENVERDRAHTUNG | 399 |
| | | 1 | LENKKONSOLENVERDRAHTUNG | 402 |
| | | 1 | FAHRERHAUSVERDRAHTUNG | 306 |
| | | 1 | FAHRERHAUSVERDRAHTUNG | 309 |
| SICHERUNG (15 A) (FAHRERHAUS - ARBEITSSCHEINWERFER) | 9W-1441 | 1 | ARBEITSLEUCHTEN | 220 |
| | | 1 | ARBEITSLEUCHTEN | 222 |
| SICHERUNG (15 A) (UMFORMER) | 9W-1441 | 1 | ELEKTR. UMFORMER | 165 |
| SICHERUNG (30 A) | 8T-9636 | 2 | ELEKTR. UMFORMER | 167 |
| UMLAUFKÜHLWASSERHEIZUNGS-ELEMENT (120 V, 1250 W) | 131-8627 | 1 | UMLAUFKÜHLWASSERHEIZUNG | 172 |
| | 239-7342 | 1 | UMLAUFKÜHLWASSERHEIZUNG | 174 |
| UNTERBRECHER (105 A) (DREHSTROMGENERATOR) | 171-2212 | 1 | UNTERBRECHER | 154 |
| UNTERBRECHER (15 A) (FRONTSCHEINWERFER) | 3T-2662 | 1 | UNTERBRECHER | 152 |
| | | 1 | UNTERBRECHER | 153 |
| UNTERBRECHER (15 A) (LICHTBALKEN - ARBEITSCHEINWERFER) | 3T-2662 | 1 | UNTERBRECHER | 152 |
| UNTERBRECHER (15 A) (MOTORSTEUERUNG) | 6T-3643 | 1 | VERDRAHTUNG, HINTEN | 355 |
| | | 1 | VERDRAHTUNG, HINTEN | 360 |
| UNTERBRECHER (20 A) (NEIGUNGSSTEUERUNG) | 6T-3644 | 1 | VERDRAHTUNG, HINTEN | 376 |
| UNTERBRECHER (80 A) (DREHSTROMGENERATOR) | 171-2210 | 1 | VERDRAHTUNG, HINTEN | 349 |
| | | 1 | VERDRAHTUNG, HINTEN | 354 |
| | | 1 | VERDRAHTUNG, HINTEN | 359 |
| UNTERBRECHER (80 A) (HAUPTUNTERBRECHER) | 171-2210 | 1 | VERDRAHTUNG, HINTEN | 349 |
| | | 1 | VERDRAHTUNG, HINTEN | 354 |
| | | 1 | VERDRAHTUNG, HINTEN | 359 |
| **FAHRERHAUS** | | | | |
| KLIMAANLAGENDRUCKSPEICHER | 197-6218 | 1 | KLIMAANLAGENLEITUNGEN | 1183 |
| LEUCHTE (24 V) | 3E-8825 | 1 | RÜCKSPIEGEL | 1198 |
| | | 1 | RÜCKSPIEGEL | 1202 |
| | 7N-5876 | 2 | GESCHWINDIGKEITS- U. DREHZAHLMESSERMODUL | 1205 |
| | | 4 | INSTRUMENTENTAFEL | 1219 |
| | | 6 | INSTRUMENTENTAFEL | 1221 |
| | 8D-1429 | 1 | FAHRERHAUSHEIZUNG | 1147 |
| | | 1 | FAHRERHAUSHEIZUNG | 1151 |
| | | 1 | KLIMAANLAGE | 1096 |

* ÜBERSETZUNG ZUM ZEITPUNKT DER DRUCKLEGUNG NICHT VORHANDEN

# WARTUNGSTEILE

| BESCHREIBUNG | ERSATZTEIL-NUMMER | MENGE | VERWENDET IN | SEITE |
|---|---|---|---|---|
| | 107-1983 | 1 | INSTRUMENTENTAFEL | 1219 |
| | | 1 | INSTRUMENTENTAFEL | 1221 |
| | 110-2079 | 1 | INSTRUMENTENTAFEL | 1219 |
| | | 1 | INSTRUMENTENTAFEL | 1222 |
| LEUCHTE (24 V) (DIFFERENTIALSPERRE) | 110-2079 | 1 | INSTRUMENTENTAFEL | 1217 |
| LEUCHTE (24 V) (ENTFROSTER, HINTEN) | 3E-8825 | 1 | UMLAUFLÜFTER | 1138 |
| LEUCHTE (24 V) (HAUPTFUNKTIONSLEUCHTE DES ELEKTRON. ÜBERWACHUNGSSYSTEMS) | 107-1983 | 1 | INSTRUMENTENTAFEL | 1217 |
| LEUCHTE (24 V) (LUFTDRUCKANZEIGE) | 7N-5876 | 2 | INSTRUMENTENTAFEL | 1217 |
| LEUCHTE (24 V) (VIERFACHANZEIGENMODUL) | 7N-5876 | 2 | INSTRUMENTENTAFEL | 1217 |
| LEUCHTE (24 V) (VORDERER ENTFROSTER) | 3E-8825 | 1 | UMLAUFLÜFTER | 1137 |
| LEUCHTE (24 V, 3 W) | 115-1748 | 9 | INSTRUMENTENTAFEL | 1219 |
| | | 10 | INSTRUMENTENTAFEL | 1221 |
| LEUCHTE (24 V, 3 W) (INSTRUMENTENTAFEL) | 115-1748 | 9 | INSTRUMENTENTAFEL | 1217 |
| LUFTFILTER (FAHRERHAUS) | 7T-7358 | 1 | FAHRERHAUSLUFTFILTER | 1142 |
| | 231-4486 | 1 | FAHRERHAUSLUFTFILTER | 1142 |
| | 232-1732 | 1 | FAHRERHAUSLUFTFILTER | 1142 |
| SCHEIBENWISCHERBLATT | 6V-5853 | 1 | SCHEIBENWISCHER | 1285 |
| | 6V-8255 | 2 | FAHRERHAUSFENSTER | 1257 |
| SCHEIBENWISCHERBLATT (*FRONT, LOWER) | 123-4355 | 2 | SCHEIBENWISCHER | 1274 |
| SCHEIBENWISCHERBLATT (HINTEN) | 6V-5849 | 1 | SCHEIBENWISCHER | 1276 |
| | | 1 | SCHEIBENWISCHER | 1278 |
| | 6V-5853 | 1 | SCHEIBENWISCHER | 1280 |
| | | 1 | SCHEIBENWISCHER | 1282 |
| SCHEIBENWISCHERBLATT (HOCHPROFIL VORNE OBEN) | 6V-5853 | 1 | SCHEIBENWISCHER | 1272 |
| SCHEIBENWISCHERBLATT (HOHES PROFIL, VORNE, UNTEN) | 123-4355 | 2 | SCHEIBENWISCHER | 1272 |
| SCHEIBENWISCHERBLATT (UNTERES PROFIL VORN OBEN) | 6V-5853 | 1 | SCHEIBENWISCHER | 1268 |
| SCHEIBENWISCHERBLATT (VORNE) | 6V-5853 | 1 | SCHEIBENWISCHER | 1274 |
| | | 1 | SCHEIBENWISCHER | 1286 |
| | | 1 | SCHEIBENWISCHER | 1287 |
| SCHEIBENWISCHERBLATT (VORNE OBEN) | 6V-5853 | 1 | SCHEIBENWISCHER | 1270 |
| SCHEIBENWISCHERBLATT (VORNE UNTEN) | 123-4355 | 2 | SCHEIBENWISCHER | 1268 |
| | | 2 | SCHEIBENWISCHER | 1270 |
| SERPENTINENFÖRMIGER RIEMEN (DREHSTROMGENERATOR U. KLIMAANLAGE) | 174-9690 | 1 | KLIMAANLAGE | 1095 |
| SICHERUNG (10 A) | 9W-1442 | 1 | RÜCKSPIEGEL | 1198 |
| | | 1 | RÜCKSPIEGEL | 1202 |

* ÜBERSETZUNG ZUM ZEITPUNKT DER DRUCKLEGUNG NICHT VORHANDEN

# WARTUNGSTEILE

| BESCHREIBUNG | ERSATZTEIL-NUMMER | MENGE | VERWENDET IN | SEITE |
|---|---|---|---|---|
| | | 1 | SCHEIBENWISCHER | 1276 |
| SICHERUNG (10 A) (ENTFROSTER, HINTEN) | 9W-1442 | 1 | UMLAUFLÜFTER | 1138 |
| SICHERUNG (10 A) (SCHEIBENWISCHER) | 9W-1442 | 1 | SCHEIBENWISCHER | 1278 |
| | | 1 | SCHEIBENWISCHER | 1280 |
| | | 1 | SCHEIBENWISCHER | 1282 |
| SICHERUNG (10 A) (VORDERER ENTFROSTER) | 9W-1442 | 1 | UMLAUFLÜFTER | 1137 |
| SICHERUNG (15 A) (HEIZUNG) | 9W-1441 | 1 | FAHRERHAUSHEIZUNG U. BEFESTIGUNGSTEILE | 1145 |
| SICHERUNG (15 A) (KLIMAANLAGE) | 9W-1441 | 1 | KLIMAANLAGE UND AUFHÄNGUNG | 1095 |
| **HYDRAULIKSYSTEM** | | | | |
| EINFÜLLSTUTZENKAPPE (HYDRAULIKÖLTANK) | 7H-1447 | 1 | HYDRAULIKTANK UND SCHMIERFILTER | 737 |
| ÖLFILTERELEMENT (STANDARD EFFIZIENZ) | 1R-0774 | 1 | HYDRAULIKTANK UND SCHMIERFILTER | 737 |
| ROHRSTOPFEN | 2B-7410 | 1 | SCHARDREHWERK | 667 |
| SCHMIERNIPPEL (SCHARSCHWENKWERK - ZYLINDERANSCHLUSS) | 3B-8485 | 2 | SEITENSCHUBZYLINDER UND BEFESTIGUNGSTEILE | 646 |
| SIEB (*HYDRAULIC TANK FILL) (HYDRAULIKÖLTANK) | 9J-3047 | 1 | HYDRAULIKTANK UND SCHMIERFILTER | 737 |
| **KRAFTSTOFFSYSTEM** | | | | |
| DICHTUNG | 9R-7240 | 1 | KRAFTSTOFFTANK | 128 |
| | | 1 | KRAFTSTOFFTANK | 129 |
| DICHTUNG (KRAFTSTOFFENTLÜFTUNGSPUMPE) | 1P-0436 | 2 | KRAFTSTOFF-ENTLÜFTUNGSPUMPE | 125 |
| DICHTUNG (KRAFTSTOFFENTLÜFTUNGSPUMPE) (ABDECKUNG) | 1P-0436 | 2 | KRAFTSTOFF-ENTLÜFTUNGSPUMPE | 126 |
| FILTER (KRAFTSTOFF, WASSERABSCHEIDER) (HAUPTELEMENT) | 133-5673 | 1 | WASSERABSCHEIDER- U. KRAFTSTOFFILTER | 114 |
| KRAFTSTOFFFILTERKAPPE (SCHWEREINSATZ, SPERRBAR) | 164-4858 | 1 | KRAFTSTOFFTANK | 130 |
| | | 1 | KRAFTSTOFFTANK | 132 |
| KRAFTSTOFFILTER | 1R-0762 | 1 | KRAFTSTOFFILTER | 113 |
| KRAFTSTOFFSIEB | 199-9907 | 1 | KRAFTSTOFFTANK | 127 |
| | | 1 | KRAFTSTOFFTANK | 130 |
| | | 1 | KRAFTSTOFFTANK | 132 |

* ÜBERSETZUNG ZUM ZEITPUNKT DER DRUCKLEGUNG NICHT VORHANDEN

# WARTUNGSTEILE

| BESCHREIBUNG | ERSATZTEIL-NUMMER | MENGE | VERWENDET IN | SEITE |
|---|---|---|---|---|
| **KRAFTÜBERTRAGUNG** | | | | |
| ANSAUGSIEB (GETRIEBE) | 8S-9130 | 1 | MAGNETSIEB | 467 |
| ANSAUGSIEB (GETRIEBEGEHÄUSE) | 8S-9130 | 1 | GETRIEBEGEHÄUSE UND TEILE | 409 |
| | | 1 | GETRIEBEGEHÄUSE UND TEILE | 413 |
| ENTLÜFTER (KRAFTSÜBERTRAGUNG - ÖLEINFÜLLUNG) | 9G-5127 | 1 | GETRIEBEÖLFÜLLSTUTZEN | 442 |
| ENTLÜFTER (TANDEM) | 1F-8488 | 2 | TANDEMGEHÄUSE UND DECKEL | 470 |
| | 4H-6112 | 1 | TANDEMGEHÄUSE UND DECKEL | 471 |
| LEUCHTE (*24-VOLT) (AUTOMATIKSCHALTUNG) | 3E-8825 | 1 | SCHALTAUTOMATIK | 408 |
| MAGNETFILTER (GETRIEBE) | 8S-9129 | 1 | GETRIEBEGEHÄUSE UND TEILE | 409 |
| | | 1 | GETRIEBEGEHÄUSE UND TEILE | 413 |
| | | 1 | MAGNETSIEB | 467 |
| ÖLFILTER (UMGEHUNG) | 235-5812 | 1 | ÖLFILTER U. BEFESTIGUNGSTEILE | 445 |
| ÖLFILTERELEMENT | 132-8875 | 2 | GETRIEBEÖLLEITUNGEN | 457 |
| ÖLFILTERELEMENT (FEINSTFILTER) | 1R-1809 | 1 | GETRIEBEÖLLEITUNGEN | 461 |
| | | 1 | ÖLFILTER | 449 |
| ÖLFILTERELEMENT (GETRIEBE) | 132-8875 | 1 | GETRIEBEÖLLEITUNGEN | 452 |
| | | 1 | ÖLFILTER | 447 |
| SCHRAUBE | 6E-5047 | 2 | TANDEMGEHÄUSE UND DECKEL | 470 |
| | | 2 | TANDEMGEHÄUSE UND DECKEL | 471 |
| SCREEN (GETRIEBESTEUERVENTIL) | 6I-9395 | 1 | GETRIEBESTEUERVENTIL | 490 |
| | | 1 | GETRIEBESTEUERVENTIL | 492 |
| **KÜHLSYSTEM** | | | | |
| DICHTUNG | 7E-7912 | 1 | KÜHLWASSER-TEMPERATURREGLER UND GEHÄUSE | 79 |
| DICHTUNG (TEMPERATURREGELGEHÄUSE) | 7E-7912 | 1 | KÜHLWASSER-TEMPERATURREGLER UND GEHÄUSE | 80 |
| DRUCKKAPPE (7 PSI) | 6L-8617 | 1 | KÜHLER | 93 |
| | | 1 | KÜHLER | 94 |
| WASSERTEMPERATURREGLER (98 GRAD C) | 7C-3095 | 1 | KÜHLWASSER-TEMPERATURREGLER UND GEHÄUSE | 79 |
| | 247-7133 | 1 | KÜHLWASSER-TEMPERATURREGLER UND GEHÄUSE | 80 |
| **LUFTANSAUG- UND ABGASSYSTEM** | | | | |
| HAUPTFILTER | 6I-0273 | 1 | LUFTREINIGER | 98 |
| LUFTREINIGER | 227-4676 | 1 | LUFTREINIGER | 98 |
| SICHERHEITSFILTER | 6I-0274 | 1 | LUFTREINIGER | 98 |
| **MOTOR - GRUNDAUSFÜHRUNG** | | | | |
| DICHTUNG | 9Y-1758 | 1 | VENTILSTEUERUNG | 60 |
| ENTDUNSTERSCHLAUCH | 126-0146 | 1 | LUFTKOMPRESSOR | 14 |
| | | 1 | LUFTKOMPRESSOR | 16 |
| ENTLÜFTER | 9Y-4357 | 1 | VENTILSTEUERUNG | 60 |

* ÜBERSETZUNG ZUM ZEITPUNKT DER DRUCKLEGUNG NICHT VORHANDEN

# WARTUNGSTEILE

| BESCHREIBUNG | ERSATZTEIL-NUMMER | MENGE | VERWENDET IN | SEITE |
|---|---|---|---|---|
| **RAHMEN UND AUFBAU** | | | | |
| KEILRIEMEN | 8X-1032 | 4 | STEIGLEITER | 596 |
| MAGNETSTOPFEN (GEHÄUSEABLASS) | 8M-3837 | 1 | RAHMEN UND GEHÄUSE | 551 |
| | | 1 | RAHMEN UND GEHÄUSE | 552 |
| **SCHMIERSYSTEM** | | | | |
| EINFÜLLKAPPE | 5L-2952 | 1 | MOTORÖLEINFÜLLSTUTZEN | 65 |
| ÖLFILTER | 1R-0716 | 1 | ÖLFILTER | 66 |

* ÜBERSETZUNG ZUM ZEITPUNKT DER DRUCKLEGUNG NICHT VORHANDEN

# INDEX


| Name | Page |
|---|---|
| **A** | |
| ACCESSORY GP-CAB–HIGH PROFILE | 1094 |
| ACCESSORY GP-CAB–LOW PROFILE | 1093 |
| ACCUMULATOR & MTG GP-HYDRAULIC–BLADE CUSHION | 628 |
| ACCUMULATOR AR-BLADE CUSHION | 629 |
| ACCUMULATOR GP–BLADE CUSHION | 629 |
| | 630 |
| ACCUMULATOR GP (BLADE CUSHION) | 633 |
| ACCUMULATOR GP-HYDRAULIC–BLADE CUSHION | 631 |
| | 632 |
| | 633 |
| ACCUMULATOR GP-REFRIGERANT | 1183 |
| ACCUMULATOR GP-STEERING | 634 |
| ADAPTER GP | 428 |
| | 690 |
| ADAPTER GP-AIR CLEANER | 105 |
| AFTERCOOLER & MOUNTING GP | 95 |
| AIR CLEANER GP | 96 |
| | 98 |
| AIR COMPRESSOR GP | 12 |
| | 14 |
| | 16 |
| AIR CONDITIONER & MOUNTING GP | 1095 |
| AIR CONDITIONER AR | 1095 |
| AIR CONDITIONER GP | 1096 |
| AIR DRYER GP–SNOW | 605 |
| | 606 |
| | 608 |
| ALARM GP–ACTION | 139 |
| ALARM GP–BACKUP | 140 |
| ALARM GP (BACKUP) | 378 |
| ALTERNATOR GP-CHARGING | 141 |
| | 143 |
| | 144 |
| | 145 |
| | 146 |
| APPLICATION GP-POWER TRAIN | 408 |
| ARMREST GP–LH | 1100 |
| ARMREST GP–RH | 1101 |
| ASHTRAY | 1170 |
| | 1174 |
| AUTOSHIFT AR–TRANSMISSION | 408 |
| AXLE GP-FRONT | 543 |
| | 546 |
| **B** | |
| BASE GP-OIL FILTER | 64 |
| | 66 |
| BASE GP-OIL FILTER–ENGINE | 62 |
| BATTERY GP–EU | 149 |
| BATTERY GP–HEAVY DUTY | 147 |
| | 148 |
| BATTERY GP–MAINTENANCE FREE | 150 |
| BATTERY GP (12-VOLT, MAINTENANCE FREE) | 149 |
| BATTERY GP (12-VOLT, MAINTENANCE FREE) (1100 AMPS) | 147 |
| BATTERY (12-VOLT, MAINTENANCE FREE) | 150 |
| BATTERY (12-VOLT, MAINTENANCE FREE) (WET) | 148 |
| BEARING GP-MAIN (CRANKSHAFT) | 25 |
| BELT | 596 |
| BELT-DRIVE | 199 |
| | 200 |
| BELT-SERPENTINE (ALTERNATOR AND AIR CONDITIONER) | 1095 |
| BELT-SERPENTINE (ALTERNATOR WITHOUT A/C) | 145 |
| BELT TENSIONER GP | 18 |
| | 20 |
| BIT GP | 1057 |
| | 1058 |
| | 1059 |
| | 1060 |
| BIT GP-END | 1061 |
| BLADE AS-WIPER | 1257 |
| | 1285 |
| BLADE AS-WIPER (FRONT) | 1274 |
| | 1286 |
| | 1287 |
| BLADE AS-WIPER (FRONT LOWER) | 1268 |
| | 1270 |
| BLADE AS-WIPER (FRONT, LOWER) | 1274 |
| BLADE AS-WIPER (FRONT UPPER) | 1270 |
| BLADE AS-WIPER (HIGH PROFILE FRONT LOWER) | 1272 |
| BLADE AS-WIPER (HIGH PROFILE FRONT UPPER) | 1272 |
| BLADE AS-WIPER (LOW PROFILE FRONT UPPER) | 1268 |
| BLADE AS-WIPER (REAR) | 1276 |
| | 1278 |
| | 1280 |
| | 1282 |
| BLADE GP–12 FT | 1062 |
| BLADE GP–14 FT | 1063 |
| | 1064 |
| | 1065 |
| BLOCK GP-JUNCTION | 151 |
| BOX GP-TOOL | 1288 |
| BRACKET GP-BLADE | 549 |
| BRACKET GP-MOUNTING | 549 |
| | 550 |
| BRACKET GP-SCARIFIER | 1066 |
| BRAKE GP-PARKING | 609 |
| BRAKE GP-SERVICE | 611 |

# INDEX


| Name | Page |
|---|---|
| BREATHER AS | 60 |
| BREATHER AS (POWER TRAIN OIL FILLER) | 442 |
| BREATHER AS (TANDEM) | 470 |
| BREATHER (TANDEM) | 471 |

## C

| | |
|---|---|
| CAB AR–HIGH PROFILE | 1102 |
| CAB AR-NON-ROPS | 1102 |
| CAB GP–HIGH PROFILE | 1102 |
| | 1103 |
| CAMSHAFT GP | 22 |
| CAP AS-FILLER | 65 |
| CAP-FILLER (HYDRAULIC OIL TANK) | 737 |
| CAP GP-FUEL FILLER (EXTREME SERVICE, LOCKABLE) | 130 |
| | 132 |
| CAP-PRESSURE (7-PSI) | 93 |
| | 94 |
| CARTRIDGE AS-DESICCANT (AIR DRYER) | 608 |
| CARTRIDGE GP-TURBOCHARGER | 108 |
| CASE & FRAME GP | 551 |
| | 552 |
| CASE & PARTS GP-TRANSMISSION | 409 |
| | 413 |
| CHAIN GP | 417 |
| CHAIN GP-DRIVE | 417 |
| CIRCLE GP | 1047 |
| | 1049 |
| CIRCUIT BREAKER AS (105-AMPERE) (ALTERNATOR) | 154 |
| CIRCUIT BREAKER AS (15-AMPERE) (HEADLAMPS) | 152 |
| | 153 |
| CIRCUIT BREAKER AS (15-AMPERE) (LIGHTBAR WORKLAMPS) | 152 |
| CIRCUIT BREAKER AS (80-AMPERE) (ALTERNATOR) | 349 |
| | 354 |
| CIRCUIT BREAKER AS (80-AMPERE) (ALTERNATOR) | 359 |
| CIRCUIT BREAKER AS (80-AMPERE) (MAIN) | 349 |
| | 354 |
| | 359 |
| CIRCUIT BREAKER GP–ALTERNATOR | 154 |
| CIRCUIT BREAKER GP–DUAL | 152 |
| CIRCUIT BREAKER GP–SINGLE | 153 |
| CIRCUIT BREAKER GP (15-AMPERE) (ENGINE CONTROL) | 350 |
| | 355 |
| | 360 |
| CIRCUIT BREAKER GP (20-AMPERE) (GRADE CONTROL) | 376 |
| CLUTCH GP-TRANSMISSION–FORWARD | 424 |
| CLUTCH GP-TRANSMISSION–HI & LO | 421 |
| CLUTCH GP-TRANSMISSION–REVERSE & 2ND | 426 |
| CLUTCH GP-TRANSMISSION–1ST & 3RD | 418 |
| COMPRESSOR & MTG GP-REFRIG | 1104 |
| COMPRESSOR GP-REFRIGERANT | 1105 |
| CONDENSER & MTG GP-REFRIGERANT | 1106 |
| CONNECTOR GP | 694 |
| | 697 |
| | 700 |
| CONSOLE GP-OPERATOR | 1107 |
| CONTROL & MTG GP-ENGINE ELEK | 155 |
| | 156 |
| CONTROL AR-HYDRAULIC | 635 |
| | 636 |
| | 637 |
| | 638 |
| | 639 |
| | 640 |
| | 641 |
| CONTROL AR-HYDRAULIC–EU | 636 |
| CONTROL GP-CLUTCH | 1111 |
| CONTROL GP-DIFFERENTIAL LOCK | 428 |
| CONTROL GP-ENGINE ELECTRONIC | 157 |
| | 158 |
| | 159 |
| | 160 |
| CONTROL GP-GOVERNOR | 109 |
| CONTROL GP-HYDRAULIC LOCKOUT | 642 |
| CONTROL GP-PARKING BRAKE | 613 |
| CONTROL GP-SECONDARY STEERING | 161 |
| CONTROL GP-SERVICE BRAKE | 615 |
| CONTROL GP-STEERING | 1113 |
| CONTROL GP-TRANSMISSION | 1114 |
| | 1116 |
| CONTROL GP-TRANSMISSION HYD | 430 |
| | 431 |
| CONTROL GP-UNPRGMED MONITOR | 1118 |
| CONTROL GP-UNPRGMED MONITOR (CATERPILLAR MONITORING SYSTEM) | 1217 |
| | 1219 |
| | 1221 |
| CONTROL GP-UNPROGRAMMED–POWER TRAIN | 162 |
| CONTROL GP-UNPROGRAMMED (CATERPILLAR MONITORING SYSTEM) | 169 |
| CONTROL GP-UNPROGRAMMED (POWER TRAIN) | 408 |
| CONVERSION AR-CERTIFICATION | 2 |
| CONVERSION AR-CERTIFICATION–EU | 1 |
| CONVERSION AR-MACHINE | 3 |
| CONVERSION AR-NON-ROPS–OPEN | 1119 |
| CONVERTER AR-ELECTRICAL–POWER PORT-LOW | 163 |
| CONVERTER AR-ELECTRICAL–12V POWER PORT–HIGH | 163 |

# INDEX


| Name | Page |
|---|---|
| CONVERTER GP-ELECTRICAL | 164, 165, 167 |
| CONVERTER GP-ELECTRICAL–POWER PORT | 166 |
| CONVERTER GP-ELECTRICAL (24-VOLT TO 12-VOLT) | 164, 166 |
| COOLANT HEATER LINES | 1185, 1187 |
| COOLER GP-TRANSMISSION OIL | 432, 434 |
| COOLING AR | 73, 74, 75 |
| CORE AS | 432 |
| CORE AS-CONDENSER (AIR CONDITIONER) | 1106 |
| CORE AS-ENGINE OIL COOLER | 432, 434 |
| CORE AS-HEATER | 1097, 1148, 1152 |
| CORE AS (TRANSMISSION OIL COOLER) | 434 |
| COUPLING GP-TORSIONAL | 437 |
| COVER GP-ACCESS | 553, 555 |
| COVER GP-CYLINDER BLOCK | 23 |
| CRANKSHAFT GP | 25 |
| CYLINDER & MTG GP-ARTICULATION | 643 |
| CYLINDER & MTG GP-BLADE LIFT | 644 |
| CYLINDER & MTG GP-BLADE TIP | 645 |
| CYLINDER & MTG GP-CENTERSHIFT | 646 |
| CYLINDER & MTG GP-SCARIFIER | 647 |
| CYLINDER & MTG GP-SIDESHIFT | 648 |
| CYLINDER & MTG GP-STEERING | 650 |
| CYLINDER & MTG GP-WHEEL LEAN | 651 |
| CYLINDER BLOCK AS | 27, 28 |
| CYLINDER BLOCK GP | 29 |
| CYLINDER GP-ARTICULATION | 652 |
| CYLINDER GP-BLADE TIP | 653 |
| CYLINDER GP-CENTERSHIFT | 654 |
| CYLINDER GP-LIFT | 656 |
| CYLINDER GP-RIPPER | 657 |
| CYLINDER GP-SCARIFIER | 658 |
| CYLINDER GP-SIDESHIFT | 659 |
| CYLINDER GP-STEERING–LH | 660 |
| CYLINDER GP-STEERING–RH | 661 |
| CYLINDER GP-WHEEL LEAN | 663 |
| CYLINDER HEAD AS | 31 |
| CYLINDER HEAD GP | 33, 34 |
| DETENT GP-CONTROL VALVE | 665 |
| DETENT GP-CONTROL VALVE–PLOW, BULLDOZER LIFT | 664 |
| DIFFERENTIAL & BEVEL GEAR GP | 438 |
| DIFFERENTIAL GP | 440 |
| DOOR GP (AIR VENTED) | 1170, 1174, 1179, 1181 |
| DOOR GP-CAB–HIGH PROFILE | 1125 |
| DOOR GP-CAB–HIGH PROFILE–LH | 1123 |
| DOOR GP-CAB–HIGH PROFILE–RH | 1120 |
| DOOR GP-CAB–LH | 1129 |
| DOOR GP-CAB–LOW PROFILE | 1131 |
| DOOR GP-CAB–RH | 1127 |
| DRAWBAR GP | 1051 |
| DRIVE GP-ACCESSORY | 35 |
| DRIVE GP-CIRCLE | 667 |
| DUCT & CONTROL GP–HEATER–AIR CONDITIONER | 1133 |
| DUCT GP | 1134 |
| EDGE GP-CUTTING–6 FT | 1067 |
| EDGE GP-CUTTING–7 FT | 1067, 1068 |
| ELECTRONICS GP-MONITOR | 169 |
| ELECTRONICS GP-POWER TRAIN–LIMITED ROAD SPEED–MOTOR GRADER | 169 |
| ELECTRONICS GP-POWER TRAIN–MOTOR GRADER | 169 |
| ELEMENT AS-HEATER (240-VOLT, 1250-WATT) | 173 |
| ELEMENT AS-JACKET WATER HEATER (120-VOLT, 1250-WATT) | 172, 174 |
| ELEMENT AS-PRIMARY | 98 |
| ELEMENT AS-SECONDARY | 98 |
| ELEMENT-FILTER (FUEL, WATER SEPARATOR) (PRIMARY) | 114 |
| ELEMENT-HEATING (AIR DRYER) | 608 |
| ENCLOSURE GP-ENGINE | 556, 559 |
| ENGINE AR | 7, 10 |
| EXTENSION GP-BACKREST–CLOTH | 1135 |
| EXTENSION GP-BACKREST–VINYL | 1136 |
| EXTENSION GP-BLADE–LH–2 FT | 1070, 1072 |
| EXTENSION GP-BLADE–RH–2 FT | 1069, 1071 |

# INDEX


| Name | Page |
|---|---|
| EXTENSION GP-BLADE– 2 FT WITH 5/8 IN BOLT–RH | 1074 |
| EXTENSION GP-BLADE– 2 FT WITH 5/8 INCH BOLT– LH | 1073 |
| **F** | |
| FAN & MOTOR GP | 76 |
| FAN GP-CIRCULATING– FRONT DEFROSTER | 1137 |
| FAN GP-CIRCULATING–REAR DEFROSTER | 1138 |
| FAN GP-DEFROSTER–FRONT | 1140 |
| FAN GP-DEFROSTER–REAR | 1139 |
| FASTENER GP– CENTRAL LUBRICATION MOUNTING | 561 |
| FASTENER GP-CYLINDER HEAD | 36 |
| FASTENER GP-FUEL TANK | 111 112 |
| FASTENER GP-RADIATOR | 78 |
| FENDER & SUPPORT GP | 562 |
| FILLER GP-ENGINE OIL | 65 |
| FILLER GP-POWER TRAIN OIL | 442 |
| FILM-CONTROL (FAN SPEED, TEMPERATURE) | 1147 1151 |
| FILM-CONTROL (HEATER & A/C) | 1096 |
| FILM-COVER (BLACK BACKGROUND) (COVER BLACK) | 1114 1116 |
| FILM-FACE (HEADLIGHTS HIGH, LOW BEAM) | 223 226 229 232 239 242 259 299 402 |
| FILM-FACE (TURN SIGNAL, HAZARD) | 223 226 229 232 239 242 259 402 |
| FILM-FACE (TURN SIGNAL, HAZARD) | 299 |
| FILM-FUSE | 309 |
| FILM-FUSE (LH) | 399 |
| FILM-FUSE (LH) | 402 |
| FILM-FUSE (LIGHTS, WASHER, WIPER, DEFROST) | 306 |
| FILM-FUSE (RH) | 399 |
| FILM GP | 1289 |
| FILM GP–VHP | 1290 |
| FILM GP–VHP PLUS | 1290 |
| FILM-IDENTIFICATION (BIODEGRADABLE HYDRAULIC OIL) | 671 |
| FILM-IDENTIFICATION (GROUP NUMBER) | 1147 |
| FILM-IDENTIFICATION (GROUP NUMBER) (AIR CONDITIONER) | 1096 |
| FILM-IDENTIFICATION (ROUND RED REFLECTIVE) | 1295 |
| FILM-INFORMATION (AIR CLEANER) | 98 |
| FILM-INFORMATION (ENGINE, HIGH IDLE, HOLD) | 1114 |
| FILM-INFORMATION (ENGINE, HIGH IDLE, HOLD) | 1116 |
| FILM-INFORMATION (ENGINE, LOW IDLE, HOLD) | 1114 |
| FILM-INFORMATION (ENGINE, LOW IDLE, HOLD) | 1116 |
| FILM-INFORMATION (LAMINATE) (ENGINE) | 1291 |
| FILM-INFORMATION (LIFT EYE LOCATION) | 1292 |
| FILM-INFORMATION (SILVER ULTRAPLATE) (ENGINE) | 1291 |
| FILM-INSTRUCTION (ENGINE OIL DRAIN) | 1292 |
| FILM-INSTRUCTION (ENGINE SHUTDOWN) | 340 345 367 372 |
| FILM-INSTRUCTION (SEAT ADJUSTMENT) | 1250 |
| FILM-INSTRUCTION (WASHER FILL) | 1292 |
| FILM-MONITOR (CATERPILLAR MONITORING SYSTEM) | 1217 |
| FILM-MONITOR (QUAD GAUGE MODULE) | 1219 |
| FILM-MONITOR (QUAD GAUGE MODULE) | 1221 |
| FILM (NO-STEP) | 128 130 |
| FILM-PANEL (INDICATOR PANEL, LH) | 1219 |
| FILM-PANEL (INDICATOR PANEL, LH) | 1221 |
| FILM-PANEL (INDICATOR PANEL, RH) | 1219 1222 |
| FILM-PANEL (LH ACTION INDICATORS) | 1217 |
| FILM-PANEL (RH ACTION INDICATORS) | 1217 |
| FILM-PANEL (SPEED CONTROL) | 1116 |
| FILM-PANEL (SPEED SELECT) | 1114 |
| FILM-PANEL (TRANSMISSION INDICATOR PANEL) | 1114 |
| FILM-PANEL (TRANSMISSION, PARKING BRAKE) | 1116 |
| FILM-REFLECTOR (YELLOW) | 562 1295 |
| FILM (SUNSHADE-CATERPILLAR) | 1213 1214 |
| FILM (VHP PLUS) | 1290 |

# INDEX


| Name | Page |
|---|---|
| FILM-WARNING (ACCUM, HIGH PRESS, READ OMM) (ACCUMULATOR) | 631 |
| FILM-WARNING (NO STEP) | 134 |
| | 135 |
| FILM-WARNING (NO-STEP) | 130 |
| FILM (WINDOW WASHER) | 315 |
| FILTER & MTG GP-OIL–TRANSMISSION | 443 |
| | 445 |
| FILTER-AIR (CAB) | 1142 |
| FILTER AS-ENGINE OIL | 66 |
| FILTER AS-FUEL | 113 |
| FILTER ELEMENT AS-OIL | 457 |
| FILTER ELEMENT AS-OIL (STANDARD EFFICIENCY) | 737 |
| FILTER ELEMENT AS-OIL (TRANSMISSION) | 447 |
| | 452 |
| FILTER ELEMENT AS-OIL (ULTRA HIGH EFFICIENCY) | 449 |
| | 461 |
| FILTER GP-CAB AIR | 1142 |
| FILTER GP-ENGINE OIL | 66 |
| FILTER GP-FUEL | 113 |
| FILTER GP-OIL–BYPASS | 449 |
| FILTER GP-OIL–TRANSMISSION | 447 |
| FILTER GP-OIL (BYPASS) | 445 |
| FILTER GP-WATER SEP & FUEL | 114 |
| FILTER-MAGNETIC (TRANSMISSION) | 409 |
| | 413 |
| | 467 |
| FINAL DRIVE GP | 450 |
| FITTING GP-TEE | 694 |
| | 700 |
| FITTING-GREASE (CENTERSHIFT CYLINDER SOCKET) | 646 |
| FLASHER AS (24 VOLT) | 402 |
| FLASHER AS (24-VOLT) (TURN SIGNAL, HAZARD) | 299 |
| FLASHER AS (24-VOLT) (TURN SIGNAL, HAZARD) | 223 |
| | 226 |
| | 229 |
| | 232 |
| | 239 |
| | 242 |
| FLASHER AS (24-VOLT) (TURN SIGNAL/HAZARD LAMPS) | 259 |
| FLOOR MAT | 584 |
| FLOOR MAT (CAB) | 1166 |
| FLYWHEEL GP | 37 |
| FRAME AS-ALTERNATOR | 144 |
| FRAME GP | 564 |
| FRAME GP-FRONT | 565 |
| FUSE (10-AMPERE) | 208 |
| | 223 |
| | 229 |
| | 232 |
| | 235 |
| | 237 |
| | 239 |
| | 242 |
| | 252 |
| | 254 |
| | 259 |
| | 265 |
| | 299 |
| | 311 |
| | 313 |
| | 315 |
| | 385 |
| | 399 |
| | 402 |
| | 1198 |
| | 1202 |
| | 1276 |
| FUSE (10-AMPERE) (AIR DRYER) | 605 |
| FUSE (10-AMPERE) (AUXILIARY BACK-UP ALARM) | 206 |
| FUSE (10-AMPERE) (BACKUP ALARM) | 270 |
| FUSE (10-AMPERE) (BACKUP LAMP) | 204 |
| FUSE (10-AMPERE) (BLADE LAMP) | 218 |
| FUSE (10-AMPERE) (BLADE/FRONT FLOODLAMP) | 217 |
| FUSE (10-AMPERE) (CONVERTER) | 164 |
| FUSE (10-AMPERE) (FRONT DEFROSTER) | 1137 |
| FUSE (10-AMPERE) (POWER CONVERTER) | 166 |
| FUSE (10-AMPERE) (REAR DEFROSTER) | 1138 |
| FUSE (10-AMPERE) (TURN SIGNAL, HAZARD) | 226 |
| FUSE (10-AMPERE) (WARNING BEACON) | 266 |
| | 308 |
| FUSE (10-AMPERE) (WIPER) | 1278 |
| | 1280 |
| | 1282 |
| FUSE (10-AMPERE) (WORK LIGHTS) | 220 |
| | 222 |
| FUSE (15-AMPERE) | 309 |
| | 399 |
| | 402 |
| FUSE (15-AMPERE) | 306 |
| FUSE (15-AMPERE) (AIR CONDITIONER) | 1095 |
| FUSE (15-AMPERE) (CAB FLOOD LIGHTS) | 220 |
| | 222 |
| FUSE (15-AMPERE) (CONVERTER-POWER) | 165 |
| FUSE (15-AMPERE) (HEATER) | 1145 |
| FUSE (30-AMPERE) | 167 |


## G


| | |
|---|---|
| GASKET | 60 |

# INDEX


| Name | Page |
|---|---|
| | 79 |
| | 128 |
| | 129 |
| GASKET (FUEL PRIMING PUMP) | 125 |
| GASKET (FUEL PRIMING PUMP) (COVER) | 126 |
| GASKET (TEMPERATURE REGULATOR HOUSING) | 80 |
| GAUGE AS-OIL LEVEL (DIPSTICK) (TRANSMISSION) | 442 |
| GAUGE GP-AIR PRESSURE (LEFT AIR TANK) | 1221 |
| GAUGE GP-AIR PRESSURE (LH) | 1217 |
| | 1219 |
| GAUGE GP-AIR PRESSURE (RH) | 1217 |
| | 1219 |
| GAUGE GP-AIR PRESSURE (RIGHT AIR TANK) | 1221 |
| GAUGE GP-OIL LEVEL (DIPSTICK) | 68 |
| GAUGE-SIGHT | 93 |
| GAUGE-SIGHT (COOLANT LEVEL) | 94 |
| GAUGE-SIGHT (HYDRAULIC OIL) | 737 |
| GEAR GP-FRONT | 38 |
| GENERAL AR | 3 |
| GRADE CONTROL AR | 170 |
| GUARD & SUPPORT GP-RADIATOR | 567 |
| GUARD GP-BOTTOM | 570 |
| | 571 |
| GUARD GP-BRAKE LINES | 572 |
| GUARD GP-FUEL TANK | 573 |
| GUARD GP-LIGHTING | 574 |
| GUARD GP-PLATFORM–ACCUGRADE | 575 |
| | 576 |
| | 579 |
| GUARD GP-PLATFORM–NON-ROPS | 584 |
| GUARD GP-PLATFORM–OPEN–HIGH PROFILE | 582 |


## H


| Name | Page |
|---|---|
| HAMMER & MOUNTING GP–HIGH PROFILE | 1144 |
| HAMMER & MOUNTING GP–LOW PROFILE | 1143 |
| HARNESS AS-ALARM | 204 |
| | 206 |
| | 208 |
| HARNESS AS-CAB | 206 |
| | 208 |
| | 252 |
| | 254 |
| | 313 |
| | 1198 |
| HARNESS AS-CAB (FRONT) | 309 |
| HARNESS AS-CAB (REAR) | 306 |
| HARNESS AS-CAB (REAR) | 309 |
| HARNESS AS-CAB (SWITCH PANEL) | 306 |
| HARNESS AS-CAB (SWITCH PANEL) | 309 |
| HARNESS AS-CHASSIS | 249 |
| | 304 |
| HARNESS AS-CHASSIS (MOLDBOARD) | 250 |
| HARNESS AS (CONSOLE) | 402 |
| HARNESS AS-CONSOLE | 387 |
| | 389 |
| | 392 |
| | 396 |
| HARNESS AS-CONSOLE (STEERING) | 399 |
| HARNESS AS-DASH (PANEL BACKLIGHTS) | 1221 |
| HARNESS AS (ENGINE ELECTRONIC) | 317 |
| | 319 |
| HARNESS AS-FRONT CHASSIS | 223 |
| | 226 |
| | 229 |
| | 232 |
| | 259 |
| | 325 |
| HARNESS AS-FRONT CHASSIS (BOLSTER LIGHT BAR) | 239 |
| HARNESS AS-FRONT CHASSIS (WORK LIGHTS, FRONT) | 242 |
| HARNESS AS-FRONT (CIRCLE) | 330 |
| HARNESS AS-FRONT LIGHTING | 235 |
| | 237 |
| | 252 |
| | 254 |
| | 259 |
| | 273 |
| | 326 |
| HARNESS AS-FRONT LIGHTING (ELEVATED LIGHT BAR) | 239 |
| HARNESS AS-FRONT LIGHTING (WORK LIGHTS) | 242 |
| HARNESS AS-HEATER & AIR COND | 1097 |
| | 1147 |
| | 1151 |
| | 1183 |
| HARNESS AS-LIGHTING | 229 |
| | 232 |
| HARNESS AS-OPERATOR CONTROLS | 387 |
| | 389 |
| | 392 |
| | 396 |
| HARNESS AS-PANEL | 204 |
| | 208 |
| | 235 |
| | 237 |
| | 311 |
| | 1217 |
| | 1219 |
| HARNESS AS-PANEL (SWITCH) | 1202 |
| HARNESS AS-PLATFORM | 321 |
| | 325 |
| | 330 |

# INDEX


| Name | Page |
|---|---|
| HARNESS AS-RADIO | 167 |
| | 1224 |
| HARNESS AS-REAR CHASSIS | 339 |
| | 344 |
| | 345 |
| | 367 |
| | 372 |
| HARNESS AS-REAR LIGHTING | 245 |
| | 247 |
| | 258 |
| | 330 |
| | 364 |
| | 367 |
| | 372 |
| | 378 |
| | 381 |
| HARNESS AS-REAR LIGHTING (LH) | 379 |
| | 381 |
| HARNESS AS-REAR LIGHTING (RH) | 379 |
| | 381 |
| HARNESS AS-REAR (SERVICE CENTER, LH) | 349 |
| | 359 |
| HARNESS AS-REAR (SERVICE CENTER, LH) | 354 |
| HARNESS AS-REAR (SERVICE CENTER, RH) | 349 |
| | 359 |
| HARNESS AS-REAR (SERVICE CENTER, RH) | 354 |
| HARNESS AS-SENSOR | 413 |
| HARNESS AS-SENSOR (TRANSMISSION) | 409 |
| HARNESS AS-STARTING AID | 290 |
| HARNESS AS-TRANSMISSION | 339 |
| | 344 |
| | 366 |
| | 371 |
| | 406 |
| | 430 |
| HARNESS AS-WINDOW WIPER (CONTROL) | 315 |
| HARNESS AS-WINDOW WIPER (FUSE BOX) | 315 |
| HARNESS AS-WIRING (REGISTRATION) | 594 |
| HARNESS AS-WIRING (UNIT INJECTOR) | 407 |
| HEATER & MTG GP-CAB | 1145 |
| HEATER AR-CAB | 1145 |
| | 1146 |
| HEATER GP-CAB–BASIC | 1147 |
| HEATER GP-CAB–LIGHT DUTY | 1151 |
| HEATER GP-FUEL (WATER SEPARATOR, 12-VOLT) | 114 |
| HEATER GP-JACKET WATER | 172 |
| | 173 |
| | 174 |
| HITCH GP-ARTICULATING | 586 |
| HITCH GP-TOWING | 588 |
| | 589 |
| HORN GP-AIR | 1155 |
| | 1156 |
| | 1158 |
| HOSE-FUMES DISPOSAL | 14 |
| | 16 |
| HOUSING & REGULATOR GP | 79 |
| | 80 |
| HOUSING GP-FLYWHEEL | 39 |
| HOUSING GP-FRONT | 41 |
| HOUSING GP-SEAT SUSPENSION | 1160 |
| HYDRAULIC AR | 671 |

## I

| | |
|---|---|
| INDICATOR GP-AIR FILTER CHANGE | 96 |
| INJECTOR GP-FUEL | 124 |
| INSTALLATION AR-RADIO | 1163 |
| INSTALLATION GP-RADIO | 1164 |
| INSTALLATION GP-WARNING BEACON | 175 |
| INSULATION GP-WEATHER | 1166 |

## J

| | |
|---|---|
| JACK-HYDRAULIC | 1290 |

## K

| | |
|---|---|
| KEY (BATTERY DISCONNECT) | 298 |
| KIT-ADJUSTER | 1211 |
| KIT-AIR CLEANER CLAMP | 98 |
| KIT-AIR CONTROL VALVE | 624 |
| KIT-AIR INFLATION | 619 |
| KIT-ALTERNATOR TERMINAL | 141 |
| KIT-BACK TILT | 1211 |
| KIT-BEARING | 141 |
| | 1161 |
| KIT-BEARING (ALTERNATOR) | 144 |
| KIT-BELT TETHER | 1248 |
| KIT-BIAS PISTON | 725 |
| KIT-BRUSH (STARTING MOTOR) | 294 |
| KIT-BUMPER (WEIGHT ADJUSTMENT) | 1161 |
| KIT-BUSHING (STARTING MOTOR) | 294 |
| KIT-CONNECTING PLUG (12-PIN) | 232 |
| | 242 |
| | 582 |
| | 1219 |
| KIT-CONNECTING PLUG (2-PIN) | 167 |
| KIT-CONNECTING PLUG (6-PIN) | 1219 |
| KIT-CONTROL PISTON | 725 |
| KIT-CRANKSHAFT BEARING (AIR COMPRESSOR) | 12 |
| KIT-CUSHION | 1135 |
| | 1136 |
| KIT-CYLINDER HEAD (AIR COMPRESSOR) | 12 |

# INDEX


| Name | Page |
|---|---|
| KIT-DIAL SENSOR (FUEL LEVEL) | 130 |
| | 132 |
| KIT-DIAPHRAGM | 1155 |
| KIT-FASTENER (SEAT) | 1250 |
| KIT-FOLLOWER | 1160 |
| | 1161 |
| KIT-FUEL FILTER & WATER SEP | 114 |
| KIT-GOVERNOR OVERHAUL (AIR COMPRESSOR) | 620 |
| | 622 |
| KIT-HAMMER | 1143 |
| | 1144 |
| KIT-HARDWARE | 141 |
| KIT-HARDWARE (ALTERNATOR) | 144 |
| KIT-IDLER HOUSING-LH (WINDOW) | 1264 |
| KIT-IDLER HOUSING-RH (WINDOW) | 1262 |
| KIT-INDICATOR (SEAT) | 1250 |
| KIT-INDICATOR (WEIGHT ADJUSTMENT) | 1161 |
| KIT-INSULATOR (STARTING MOTOR) | 294 |
| KIT-LEVER (STARTING MOTOR) | 294 |
| KIT-RECEPTACLE (12-PIN) | 161 |
| | 226 |
| | 232 |
| | 242 |
| | 344 |
| | 366 |
| | 371 |
| | 406 |
| | 430 |
| | 582 |
| | 1217 |
| | 1219 |
| KIT-RECEPTACLE (3-PIN) | 196 |
| | 197 |
| | 277 |
| | 278 |
| | 385 |
| KIT-RECEPTACLE (6-PIN) | 582 |
| | 1097 |
| | 1219 |
| KIT-RECTIFIER | 141 |
| KIT-RETAINING BOLT (CONTROL GP) | 162 |
| KIT-ROD | 1211 |
| KIT-ROLLER (SEAT) | 1250 |
| KIT-SEAL | 630 |
| | 632 |
| | 653 |
| | 658 |
| | 715 |
| | 716 |
| | 718 |
| | 1045 |
| | 1046 |
| KIT-SEAL (BLADE CUSHION ACCUMULATOR) | 631 |
| KIT-SEAL (DIFFERENTIAL LOCK) | 477 |
| KIT-SEAL (DIFFERENTIAL LOCK VALVE) | 487 |
| KIT-SEAL (METERING PUMP, STEERING) | 1113 |
| KIT-SEAL (TRANSMISSION SOLENOID) | 488 |
| KIT-SEAT CUSHION | 1234 |
| KIT-SEAT CUSHION (VINYL) | 1236 |
| KIT-SEAT TILT | 1211 |
| KIT-SHIM (INCLUDES 17-SHIMS) | 725 |
| KIT-SLIDER BLOCK (SEAT) | 1242 |
| KIT-SLIDER BLOCK (SUSPENSION SEAT) | 1240 |
| | 1241 |
| KIT-SPRING | 1161 |
| KIT-SPRING (HEIGHT ADJUSTMENT) | 1161 |
| KIT-STANDARD RING (AIR COMPRESSOR) | 12 |
| KIT-SUSPENSION BOOT | 1248 |
| KIT-SUSPENSION ROLLER | 1248 |
| KIT-TERMINAL (ALTERNATOR) | 144 |
| KIT-TETHER (SEAT) | 1250 |
| KIT-TILT PAN | 1234 |
| | 1236 |
| KIT-UNLOADER (AIR COMPRESSOR) | 12 |
| KIT-WIPER BLADE (REAR) | 1276 |
| | 1278 |


## L


| Name | Page |
|---|---|
| LAMP AS | 378 |
| | 381 |
| LAMP GP-DOME | 177 |
| LAMP GP-FLOOD | 179 |
| LAMP GP-FLOOD–HIGH BEAM | 181 |
| LAMP GP-FLOOD–LOW BEAM | 180 |
| LAMP GP-FLOOD–SUSPENDED | 183 |
| LAMP GP-FLOOD–SUSPENDED MOUNT | 182 |
| LAMP GP-FLOOD–VERTICAL MOUNT | 178 |
| LAMP GP-HEAD–HIGH BEAM | 185 |
| LAMP GP-HEAD–LH–EU | 186 |
| LAMP GP-HEAD–LOW BEAM | 184 |
| LAMP GP-HEAD–RH–EU | 188 |
| LAMP GP-HEAD & SIGNAL–LH | 190 |
| LAMP GP-HEAD & SIGNAL–RH | 192 |
| LAMP GP-MARKER | 194 |
| LAMP GP-REGISTRATION PLATE–EU | 195 |
| LAMP GP-SIGNAL–STOP/TAIL | 196 |
| LAMP GP-SIGNAL–TURN/PARK | 197 |
| LAMP GP-SIGNAL–24-VOLT, TURN | 198 |
| LAMP GP (STOP, TAIL, TURN, LH) | 378 |
| | 381 |
| LAMP GP (STOP, TURN, TAIL, RH) | 378 |
| | 381 |
| LAMP GP-WARNING BEACON–AMBER | 199 |
| | 200 |
| LAMP-HALOGEN (24-VOLT, 65-WATT) | 178 |
| | 181 |
| | 183 |

# INDEX


| Name | Page |
|---|---|
| LAMP-HALOGEN (24-VOLT, 65-WATT) (FLOOD) | 179 |
| LAMP-HALOGEN (24-VOLT, 65-WATT) (FLOODLIGHT) | 180 |
| | 182 |
| LAMP-HALOGEN (24-VOLT, 65-WATT) (HIGH BEAM) | 185 |
| LAMP-HALOGEN (24-VOLT, 65-WATT) (HIGH BEAM) | 212 |
| LAMP-HALOGEN (24-VOLT, 65-WATT) (LOW BEAM) | 184 |
| LAMP-HALOGEN (24-VOLT, 65-WATT) (LOW BEAM) | 212 |
| LAMP-LED | 268 |
| | 269 |
| LAMP (24-VOLT) | 175 |
| | 177 |
| | 208 |
| | 223 |
| | 229 |
| | 232 |
| | 235 |
| | 237 |
| | 239 |
| | 240 |
| | 242 |
| | 252 |
| | 254 |
| | 259 |
| | 268 |
| | 269 |
| | 270 |
| | 273 |
| | 299 |
| | 311 |
| | 313 |
| | 385 |
| | 387 |
| | 389 |
| | 392 |
| | 393 |
| | 396 |
| | 397 |
| | 399 |
| | 402 |
| | 1096 |
| | 1147 |
| | 1151 |
| | 1198 |
| | 1202 |
| | 1205 |
| | 1219 |
| | 1221 |
| | 1222 |
| LAMP (24-VOLT) | 190 |
| LAMP (24-VOLT) (AIR PRESSURE GAUGE) | 1217 |
| LAMP (24-VOLT) (AUTOSHIFT) | 408 |
| LAMP (24-VOLT) (AUXILIARY BACK-UP ALARM) | 206 |
| LAMP (24-VOLT) (AUXILIARY BACKUP LAMP) | 204 |
| LAMP (24-VOLT) (BLADE CUSHION SWITCH) | 304 |
| LAMP (24-VOLT) (BLADE FLOOD) | 220 |
| | 222 |
| LAMP (24-VOLT) (BLADE LAMP) | 218 |
| LAMP (24-VOLT) (BLADE)(FRONT FLOODLAMP) | 217 |
| LAMP (24-VOLT) (CAB POSITION) | 194 |
| LAMP (24-VOLT) (DIFFERENTIAL LOCK) | 1217 |
| LAMP (24-VOLT) (EMS MASTER ACTION INDICATOR) | 1217 |
| LAMP (24-VOLT) (ETHER STARTING AID) | 293 |
| LAMP (24-VOLT) (FRONT DEFROSTER) | 1137 |
| LAMP (24-VOLT) (HEADLIGHTS, TAIL LIGHTS) | 226 |
| LAMP (24-VOLT) (POSITION) | 186 |
| | 188 |
| LAMP (24-VOLT) (QUAD GAUGE MODULE) | 1217 |
| LAMP (24-VOLT) (REAR DEFROSTER) | 1138 |
| LAMP (24-VOLT) (REGISTRATION PLATE) | 195 |
| LAMP (24-VOLT) (SIGNAL) | 192 |
| LAMP (24-VOLT) (TURN) | 186 |
| | 188 |
| LAMP (24-VOLT, 21-WATT) | 378 |
| | 381 |
| LAMP (24-VOLT, 21-WATT) (SIGNAL) | 190 |
| LAMP (24-VOLT, 21-WATT) (SIGNAL) | 192 |
| LAMP (24-VOLT, 21-WATT) (TURN) | 186 |
| | 188 |
| LAMP (24-VOLT, 3-WATT) | 338 |
| | 1219 |
| | 1221 |
| LAMP (24-VOLT, 3-WATT) (INSTRUMENT PANEL) | 1217 |
| LAMP (24-VOLT, 5-WATT) | 378 |
| | 381 |
| LAMP (24-VOLT, 70-WATT) | 200 |
| LAMP (24-VOLT, 70-WATT) (WARNING BEACON) | 199 |
| LAMP (24-VOLT, 75/70-WATT) | 190 |
| LAMP (24-VOLT, 75/70-WATT) (HEAD) | 192 |
| LAMP (24-VOLT, 75/70-WATT) (HIGH/LOW BEAM) | 188 |
| LAMP (24-VOLT, 75/70-WATT) (HIGH/LOW BEAM) | 186 |
| LENS (AMBER) (SIGNAL) | 190 |
| | 192 |
| LENS (AMBER) (TURN) | 186 |
| | 188 |

# INDEX


| Name | Page |
|---|---|
| LENS (AMBER, WARNING BEACON) | 200 |
| LENS AS (AMBER) (SIGNAL) | 190 |
| | 192 |
| LENS AS (AMBER) (TURN) | 186 |
| | 188 |
| LENS AS (HEAD) | 186 |
| | 188 |
| LENS AS (HEADLAMP)(LOW BEAM) | 184 |
| LENS AS (HEADLIGHT) | 190 |
| | 192 |
| LENS AS (LOW BEAM) | 212 |
| LENS (REGISTRATION PLATE) | 195 |
| LIFT GP-BLADE | 1075 |
| LIFTER GP-VALVE | 43 |
| LIFTING GP-ENGINE | 44 |
| LIGHTER AS (CIGAR, 24-VOLT) | 392 |
| | 397 |
| LIGHTING AR-FLOOD | 201 |
| LIGHTING AR-FLOOD–BOLSTER–TURN | 201 |
| LIGHTING AR-FLOOD–FRONT & REAR | 201 |
| LIGHTING AR-FLOOD–MOLDBOARD | 201 |
| LIGHTING AR-FLOOD–MOLDBOARD–EU | 202 |
| LIGHTING AR-FLOOD & SIGNAL–EXTENDED BOLSTER | 203 |
| LIGHTING AR-FLOOD & SIGNAL–HEAD–TURN | 203 |
| LIGHTING AR-FLOOD & SIGNAL–HEAD–TURN–BOLSTER | 203 |
| LIGHTING GP-BACKUP | 204 |
| LIGHTING GP-BACKUP–EU | 206 |
| LIGHTING GP-CAB | 208 |
| LIGHTING GP-FLOOD | 258 |
| LIGHTING GP-FLOOD–BLADE | 217 |
| | 218 |
| | 220 |
| | 222 |
| LIGHTING GP-FLOOD–BOLSTER | 229 |
| | 232 |
| | 256 |
| LIGHTING GP-FLOOD–BOLSTER–DOUBLE WORKLAMPS | 223 |
| | 226 |
| LIGHTING GP-FLOOD–CAB | 210 |
| | 211 |
| | 257 |
| LIGHTING GP-FLOOD–CAB–SNOW–RH | 235 |
| | 237 |
| | 252 |
| | 254 |
| LIGHTING GP-FLOOD–CAB, FRONT | 212 |
| | 214 |
| LIGHTING GP-FLOOD–EXTENDED BOLSTER | 239 |
| | 242 |
| LIGHTING GP-FLOOD–MOLDBOARD | 249 |
| | 250 |
| LIGHTING GP-FLOOD–SNOW–REAR | 245 |
| | 247 |
| LIGHTING GP-ROADING | 259 |
| LIGHTING GP-ROADING–CAB POSITION LAMP–EU | 262 |
| LIGHTING GP-SIGNAL–REAR TURN LAMPS | 263 |
| | 264 |
| LIGHTING GP-WARNING | 268 |
| | 269 |
| | 270 |
| LIGHTING GP-WARNING–AMBER | 272 |
| LIGHTING GP-WARNING–ROTATING | 265 |
| | 266 |
| LIGHTING GP-WARNING BEACON–AMBER | 273 |
| LINER GP-CAB–ENCLOSED – HIGH PROFILE | 1174 |
| LINER GP-CAB–ENCLOSED–HIGH PROFILE | 1181 |
| LINER GP-CAB–HIGH PROFILE | 1168 |
| LINER GP-CAB–LOW PROFILE | 1170 |
| LINER GP-CAB–OPEN–HIGH PROFILE | 1179 |
| LINES GP-ACCUMULATOR | 672 |
| LINES GP-AIR–AFTERCOOLER | 99 |
| LINES GP-AIR–TANK | 100 |
| LINES GP-AIR CONDITIONER | 1183 |
| LINES GP-ENGINE OIL DRAIN | 69 |
| LINES GP-FUEL | 116 |
| LINES GP-FUEL–REAR CROSSOVER | 115 |
| LINES GP-FUEL FILTER | 118 |
| LINES GP-FUEL INJECTION | 121 |
| LINES GP-HEATER | 1185 |
| | 1187 |
| LINES GP-HYDRAULIC–CENTERSHIFT LOCK | 678 |
| LINES GP-HYDRAULIC–DOZER LIFT, PLOW | 676 |
| LINES GP-HYDRAULIC–LH BANK | 680 |
| | 683 |
| LINES GP-HYDRAULIC–LIFT, LH | 677 |
| LINES GP-HYDRAULIC–PLOW/DOZER ANGLE–RH | 689 |
| LINES GP-HYDRAULIC–RH BANK | 686 |
| LINES GP-HYDRAULIC–SCARIFIER | 674 |
| LINES GP-HYDRAULIC FAN | 690 |
| LINES GP-HYDRAULIC FAN–RADIATOR | 692 |
| LINES GP-LUBRICATION | 590 |
| LINES GP-PUMP | 694 |
| | 697 |
| | 700 |
| LINES GP-RIPPER | 703 |
| | 705 |
| | 707 |
| LINES GP-SECONDARY STEERING | 708 |
| LINES GP-STEERING | 710 |
| LINES GP-TRANSMISSION OIL | 452 |

# INDEX


| Name | Page |
|---|---|
| | 456 |
| | 460 |
| LINES GP-TURBOCHARGER OIL | 70 |
| LINES GP-WATER | 81 |
| | 82 |
| | 83 |
| | 85 |
| | 87 |
| | 88 |
| | 89 |
| LINK GP-STEERING | 591 |
| | 592 |
| LITERATURE GP | 1189 |
| LOCK GP-CENTERSHIFT | 713 |
| LOUVER GP-CAB | 1190 |

## M

| | |
|---|---|
| MANIFOLD GP-CONTROL–BLADE CUSHION | 714 |
| MANIFOLD GP-CONTROL–FAN SPEED | 715 |
| MANIFOLD GP-CONTROL–LH | 716 |
| MANIFOLD GP-CONTROL–RH | 718 |
| MANIFOLD GP-CONTROL (LH) | 911 |
| | 915 |
| | 924 |
| | 929 |
| | 931 |
| | 933 |
| | 944 |
| | 960 |
| | 967 |
| | 968 |
| | 969 |
| MANIFOLD GP-EXHAUST | 101 |
| MANIFOLD GP-INLET | 102 |
| MIRROR GP-REAR VIEW | 1192 |
| | 1193 |
| MIRROR GP-REAR VIEW–CLOSED | 1200 |
| MIRROR GP-REAR VIEW–DUAL INSIDE | 1194 |
| | 1195 |
| | 1197 |
| MIRROR GP-REAR VIEW–HEATED, OUTSIDE | 1196 |
| MIRROR GP-REAR VIEW–INSIDE | 1191 |
| MIRROR GP-REAR VIEW–INSIDE–DUAL–EU | 1201 |
| MIRROR GP-REAR VIEW–OUTSIDE–HEATED | 1202 |
| MIRROR GP-REAR VIEW–OUTSIDE–HEATED–EU | 1198 |
| MODULE GP-QUAD GAUGE | 1204 |
| MODULE GP-SPEEDOMETER & TACH | 1205 |
| MODULE GP-SPEEDOMETER & TACH–SNOW | 1205 |
| MOTOR GP-ELECTRIC | 275 |
| MOTOR GP-ELECTRIC–CIRCULATING FAN | 276 |
| MOTOR GP-GEAR–HYDRAULIC FAN | 719 |
| MOTOR GP-GEROTOR–CIRCLE DRIVE | 720 |
| MOTOR GP-WINDOW WIPER (FRONT) | 1286 |
| MOTOR GP-WINDOW WIPER (FRONT UPPER) | 1270 |
| | 1274 |
| MOTOR GP-WINDOW WIPER (FRONT, UPPER) | 1287 |
| MOTOR GP-WINDOW WIPER (REAR) | 1278 |
| | 1282 |
| MOTOR GP-WINDOW WIPER (24-VOLT, 2-SPEED) | 1270 |
| | 1274 |
| | 1286 |
| | 1287 |
| MOTOR GP-WINDOW WIPER (24-VOLT, 2-SPEED) | 1267 |
| MOTOR GP-WINDOW WIPER (24-VOLT, 2-SPEED) (FRONT LOWER) | 1270 |
| MOTOR GP-WINDOW WIPER (24-VOLT, 2-SPEED) (FRONT, LOWER) | 1274 |
| MOUNTING GP-ALTERNATOR | 144 |
| MOUNTING GP-CAB–NON-ROPS, ENCLOSED | 1206 |
| MOUNTING GP-ENGINE & TMSN | 45 |
| MOUNTING GP-GRADE CONTROL | 1053 |
| | 1077 |
| MOUNTING GP-REGISTRATION | 594 |
| MOUNTING GP-REGISTRATION–EU | 593 |
| MOUNTING GP-RIPPER | 1078 |
| MOUNTING GP-ROPS | 1207 |
| MOUNTING GP-ROPS–OPEN–HIGH PROFILE | 1209 |
| MOUNTING GP-SNOW WING | 1079 |
| MOUNTING GP-VALVE MECHANISM | 46 |
| MOUNTING GP-WHEEL | 464 |
| MUFFLER GP | 103 |

## P

| | |
|---|---|
| PADLOCK GP | 739 |
| | 1102 |
| PADLOCK GP (LITERATURE COMPARTMENT) | 5 |
| PADLOCK GP (LITERATURE COMPARTMENT) | 1119 |
| PADLOCK GP (ROPS) | 1226 |
| PADLOCK GP (TOOL BOX) | 1288 |
| PAN GP-BACKREST–LUMBAR | 1210 |
| PAN GP-OIL | 47 |
| PAN GP-OIL–ENGINE | 49 |
| PAN GP-SEAT | 1211 |
| PANEL GP-CAB–HIGH PROFILE | 1214 |

# INDEX


| Name | Page |
|---|---|
| | 1215 |
| PANEL GP-CAB–LOW PROFILE | 1213 |
| PANEL GP-INSTRUMENT | 1217 |
| PANEL GP-INSTRUMENT–EU | 1221 |
| PANEL GP-INSTRUMENT–HIGH PROFILE | 1219 |
| PANEL GP-SOUND SUPPRESSION | 50 |
| PISTON & ROD GP | 51 |
| PLATE & FILM GP | 2 |
| | 1291 |
| | 1292 |
| | 1298 |
| PLATE & FILM GP–FRENCH | 1296 |
| PLATE & FILM GP–GERMAN | 1297 |
| PLATE & FILM GP–PORTUGUESE | 1297 |
| | 1298 |
| PLATE & FILM GP–REFLECTOR–EU | 1295 |
| PLATE & FILM GP–SPANISH | 1296 |
| PLATE & FILM GP (REFLECTOR) | 1 |
| PLATE GP-PUSH | 1054 |
| | 1055 |
| PLATE GP-RADIATOR | 90 |
| PLATE-IDENTIFICATION (ALTERNATOR) | 354 |
| | 359 |
| PLATE-IDENTIFICATION (ALTERNATOR) | 349 |
| PLATE-IDENTIFICATION (MAXIMUM WEIGHT) | 5 |
| PLATE-INFORMATION (AIR COMPRESSOR) | 12 |
| PLATE-INFORMATION (ENGINE) | 354 |
| | 376 |
| PLATE-INFORMATION (ENGINE) | 349 |
| | 359 |
| PLATE-INSTRUCTION (AIR CONDITIONER) | 1096 |
| PLATE-INSTRUCTION (BATTERY) | 349 |
| | 354 |
| | 359 |
| PLATE-SERIAL NUMBER (TRANSMISSION) | 409 |
| | 413 |
| PLUG | 470 |
| | 471 |
| PLUG GP-CYLINDER BLOCK | 52 |
| PLUG GP-ENGINE | 53 |
| PLUG-MAGNETIC (CASE DRAIN) | 551 |
| | 552 |
| PLUG-PIPE | 667 |
| PRECLEANER GP | 105 |
| PRESCREENER AS | 106 |
| PUMP & MOTOR GP-SEC STEERING | 722 |
| PUMP & MTG GP-FUEL TRANSFER | 123 |
| PUMP & MTG GP-PISTON | 723 |
| PUMP & MTG GP-SECONDARY STEER | 724 |
| PUMP GP-ENGINE OIL | 71 |
| | 72 |
| PUMP GP-FUEL INJECTION | 124 |
| PUMP GP-FUEL PRIMING | 125 |
| | 126 |
| PUMP GP-FUEL TRANSFER | 123 |
| PUMP GP-GEAR–TRANSMISSION | 465 |
| | 466 |
| PUMP GP-METERING (HMU) | 1113 |
| PUMP GP-PISTON–HYDRAULIC FAN | 727 |
| PUMP GP-PISTON–STEERING | 725 |
| PUMP GP-WATER | 91 |
| | 92 |


## R


| | |
|---|---|
| RADIATOR GP | 93 |
| | 94 |
| RADIO GP | 1224 |
| RADIO GP (AM/FM CASSETTE) | 1224 |
| RECEIVER-DRYER (REFRIGERANT) | 1183 |
| REGULATOR AS-VOLTAGE (24-VOLT) | 141 |
| REGULATOR AS-VOLTAGE (24-VOLT) (ALTERNATOR) | 144 |
| REGULATOR-WATER TEMPERATURE (98-DEG C) | 80 |
| REGULATOR-WATER TEMPERATURE (98-DEG C) | 79 |
| RELAY AS (24-VOLT) | 206 |
| RELAY AS (24-VOLT) (AUXILIARY BACKUP LAMP) | 204 |
| RELAY AS (24-VOLT) (BACKUP ALARM) | 208 |
| RELAY AS (24-VOLT) (ETHER STARTING AID) | 290 |
| RELAY AS (24-VOLT) (TAIL, PANEL LAMPS) | 399 |
| RELAY AS (24-VOLT) (TAIL,PANEL LAMPS) | 402 |
| RELAY AS (24-VOLT) (WORK LIGHTS) | 220 |
| RELAY AS (24-VOLT) (WORK LIGHTS) | 222 |
| RELAY (24-VOLT) (GRADE CONTROL) | 330 |
| RELAY (24-VOLT) (IMPLEMENT) | 330 |
| RESISTOR AS | 366 |
| | 371 |
| RESISTOR AS (SECONDARY STEERING INDICATOR) | 385 |
| RIPPER AR | 1080 |
| RIPPER GP | 1081 |
| ROADING AR | 5 |
| ROCKER ARM GP | 55 |
| ROPS AR-ENCLOSED–HIGH PROFILE | 1224 |
| ROPS AR-ENCLOSED–HIGH PROFILE–EU | 1225 |
| ROPS AR-ENCLOSED–LOW PROFILE | 1224 |
| ROPS AR-OPEN–HIGH PROFILE | 1226 |
| ROPS GP-ENCLOSED | 1228 |
| ROPS GP-ENCLOSED–HIGH PROFILE | 1227 |
| | 1228 |
| | 1229 |
| ROPS GP-ENCLOSED–HIGH PROFILE–EU | 1228 |
| ROPS GP-ENCLOSED–LOW PROFILE | 1227 |
| | 1229 |
| ROPS GP-OPEN–HIGH PROFILE | 1230 |

# INDEX


| Name | Page |
|---|---|
| ROTATING GP-PUMP–HYDRAULIC FAN | 730 |
| ROTATING GP-PUMP–STEERING | 729 |
| **S** | |
| SCARIFIER AR–STRAIGHT | 1083 |
| SCARIFIER AR–VEE TYPE | 1083 |
| SCARIFIER GP–STRAIGHT | 1088 |
| SCARIFIER GP–VEE TYPE | 1084 |
| SCREEN GP-MAGNETIC–TRANSMISSION | 467 |
| SCREEN GP-SUN | 1231 |
| SCREEN-SUCTION (TRANSMISSION) | 467 |
| SCREEN-SUCTION (TRANSMISSION CASE) | 409, 413 |
| SCREEN (TRANSMISSION CONTROL VALVE) | 490, 492 |
| SEAL GP-CRANKSHAFT | 41, 57 |
| SEAT BELT GP | 1233 |
| SEAT BELT GP–RETRACTABLE | 1232 |
| SEAT GP–CLOTH, LUMBAR | 1234 |
| SEAT GP–VINYL, LUMBAR | 1236 |
| SEAT GP-SUSPENSION | 1238 |
| SEAT GP-SUSPENSION–CLOTH | 1240, 1242 |
| SEAT GP-SUSPENSION–CLOTH, LUMBAR | 1243, 1244 |
| SEAT GP-SUSPENSION–VINYL | 1239, 1241 |
| SEGMENT-CIRCLE | 1049 |
| SENDER AS-FUEL LEVEL | 130, 132 |
| SENDER AS-POSITION (ARTICULATION) | 340, 345 |
| SENDER AS-POSITION (ARTICULATION) | 367, 372 |
| SENSOR GP-POSITION–ROTARY–CLUTCH | 278 |
| SENSOR GP-POSITION–THROTTLE CONTROL | 277 |
| SENSOR GP-PRESSURE | 281, 283 |
| SENSOR GP-PRESSURE–ATMOSPHERIC AIR | 281 |
| SENSOR GP-PRESSURE–FUEL | 282 |
| SENSOR GP-PRESSURE–HYDRAULIC FAN | 279 |
| SENSOR GP-PRESSURE–INLET MANIFOLD | 280, 283 |
| SENSOR GP-SPEED | 285, 286 |
| SENSOR GP-SPEED–TIMING, CAMSHAFT | 286 |
| SENSOR GP-SPEED–TIMING, CRANKSHAFT | 285 |
| SENSOR GP-SPEED–TRANSMISSION INPUT, OUTPUT | 284 |
| SENSOR GP-SPEED (TRANSMISSION INPUT) | 414 |
| SENSOR GP-TEMPERATURE–COOLANT | 289 |
| SENSOR GP-TEMPERATURE–FUEL–INLET MANIFOLD | 288 |
| SENSOR GP-TEMPERATURE–TRANSMISSION OIL | 287 |
| SENSOR GP-TEMPERATURE (TRANSMISSION OIL) | 410, 414 |
| SERVICE GP-MONITOR (CATERPILLAR MONITORING SYSTEM) | 169 |
| SHAFT GP-DRIVE | 468 |
| SHAFT GP-INPUT | 469 |
| SHAFT GP-PUMP DRIVE | 731 |
| SHIELD GP-DRIVE SHAFT | 595 |
| SNOW AR-MOTOR GRADER | 6 |
| SOFTWARE GP-ENGINE (VARIABLE HORSEPOWER) | 1290 |
| SOFTWARE GP-MONITOR (CATERPILLAR MONITORING SYSTEM) | 169 |
| SOLENOID AS (24-VOLT) | 294 |
| STARTING AID GP-ETHER | 292 |
| STARTING AID GP-ETHER–ENGINE | 293 |
| STARTING AID GP-ETHER–SERVICE | 290 |
| STARTING MOTOR GP-ELECTRIC | 294, 296 |
| STEERING AR-SECONDARY | 732 |
| STEP GP | 596 |
| STRAINER-FUEL | 127, 130, 132 |
| STRAINER (HYDRAULIC TANK FILL) (HYDRAULIC OIL TANK) | 737 |
| SUPPORT AR-REAR CHASSIS | 599 |
| SUPPORT AR-REAR CHASSIS–EU | 597, 598 |
| SUPPORT GP-ENGINE | 58 |
| SUPPORT GP-FUEL TANK | 600, 601 |
| SUPPORT GP-PLATFORM–REAR | 603 |
| SUPPORT GP-SEAT | 1246 |
| SUPPRESSION GP-SOUND–ENGINE ENCLOSURE | 59 |
| SUPPRESSOR AS-ARC | 220 |
| SUSPENSION GP-SEAT | 1248 |
| SUSPENSION GP-SEAT–AIR | 1250 |
| SWASHPLATE GP–VARIABLE | 733 |
| SWITCH AS (AUTOSHIFT TRANSMISSION) | 408 |
| SWITCH AS (AUXILIARY BACKUP) | 204 |
| SWITCH AS-BALL (CENTERSHIFT INDICATOR) | 321, 325 |
| SWITCH AS (BLADE CUSHION) | 304 |
| SWITCH AS (CENTERSHIFT PIN) | 389 |

# INDEX


| Name | Page |
|---|---|
| SWITCH AS (CENTERSHIFT PIN PULLER) | 387, 393, 397 |
| SWITCH AS (DIFFERENTIAL LOCK) | 399, 402 |
| SWITCH AS (FRONT DEFROSTER) | 1137 |
| SWITCH AS-LIMIT (BRAKE PEDAL) | 403 |
| SWITCH AS-LIMIT (INCHING PEDAL) | 399, 402 |
| SWITCH AS (PANEL BACKLIGHTS) | 402 |
| SWITCH AS (PANEL LAMP DIMMER) | 399 |
| SWITCH AS-PRESSURE (A/C HIGH/LOW) | 1183 |
| SWITCH AS-PRESSURE (AIR BRAKE) | 325 |
| SWITCH AS-PRESSURE (AIR BRAKES) | 321 |
| SWITCH AS-PRESSURE (PARKING BRAKE) | 322, 325 |
| SWITCH AS-PRESSURE (PRIMARY STEERING) | 325 |
| SWITCH AS-PRESSURE (SECONDARY STEERING) | 385 |
| SWITCH AS-PRESSURE (STOP LAMP) | 321, 325 |
| SWITCH AS-PUSH BUTTON (DISPLAY MODES) | 1219, 1221 |
| SWITCH AS-PUSH BUTTON (OPERATOR MODE) | 1217 |
| SWITCH AS (REAR DEFROSTER) | 1138 |
| SWITCH AS-ROCKER (BLADE FLOOD LAMP) | 220, 222 |
| SWITCH AS-ROCKER (BLADE LAMP) | 218 |
| SWITCH AS-ROCKER (BLADE)(FRONT FLOODLAMP) | 217 |
| SWITCH AS-ROCKER (HEAD LAMP/TAIL) | 259 |
| SWITCH AS-ROCKER (HEADLIGHTS, TAIL LIGHTS) | 239, 242, 402 |
| SWITCH AS-ROCKER (HEADLIGHTS, TAIL LIGHTS) | 223, 226, 229, 232, 299 |
| SWITCH AS-ROCKER (LIGHTBAR LOW BEAM) | 229, 232, 240 |
| SWITCH AS-ROCKER (SECONDARY STEERING) | 393 |
| SWITCH AS-ROCKER (THROTTLE LOCK SET, RESET) | 389, 392 |
| SWITCH AS-ROCKER (THROTTLE LOCK SET, RESET) | 396 |
| SWITCH AS-ROCKER (WARNING BEACON) | 175, 270 |
| SWITCH AS-ROCKER (WORK LIGHTS, FRONT) | 242 |
| SWITCH AS-ROTARY (FAN SPEED) | 1096, 1147, 1151 |
| SWITCH AS-ROTARY (HEADLIGHT DIMMER) | 226, 229, 232, 239, 242, 402 |
| SWITCH AS-ROTARY (HIGH, LOW BEAM) | 223 |
| SWITCH AS-ROTARY (HIGH/LOW BEAM) | 259 |
| SWITCH AS-ROTARY (TURN SIGNAL) | 299 |
| SWITCH AS-ROTARY (24-VOLT) (FRONT WIPER) | 315 |
| SWITCH AS-ROTARY (24-VOLT) (FRONT WIPER CONTROL) | 306 |
| SWITCH AS (TAIL LAMP) | 399 |
| SWITCH AS-TEMPERATURE (HYDRAULIC OIL) | 321, 325 |
| SWITCH AS-TEMPERATURE (REFRIGERANT) | 1096 |
| SWITCH AS (THROTTLE HOLD MODE) | 387, 389, 396 |
| SWITCH AS (THROTTLE LOCK ENABLE) | 392 |
| SWITCH AS (THROTTLE SPEED SET) | 387 |
| SWITCH AS-TOGGLE (ENGINE SHUTDOWN) | 366, 371 |
| SWITCH AS-TOGGLE (GROUND LEVEL ENGINE SHUTDOWN) | 339, 344 |
| SWITCH AS (WARNING BEACON) | 175, 268, 269, 270, 273 |
| SWITCH AS-WIPER (24-VOLT) (REAR) | 1276 |
| SWITCH AS-WIPER (24-VOLT) (REAR) | 1278, 1280, 1282 |
| SWITCH AS (24-VOLT) (AUXILIARY BACK-UP ALARM) | 206 |
| SWITCH AS (24-VOLT) (AUXILIARY BACKUP LIGHTS) | 208 |
| SWITCH AS (24-VOLT) (CAB-RH FLOOD) | 252, 254 |

# INDEX


| Name | Page |
|---|---|
| SWITCH AS (24-VOLT) (ETHER STARTING AID) | 293 |
| SWITCH AS (24-VOLT) (FLOODLAMP RH) | 235, 237 |
| SWITCH AS (24-VOLT) (HEATED MIRRORS) | 1198, 1202 |
| SWITCH AS (24-VOLT) (MOLDBOARD) | 311, 313 |
| SWITCH AS (24-VOLT) (SECONDARY STEERING) | 385 |
| SWITCH AS (24-VOLT) (SECONDARY STEERING TEST) | 397 |
| SWITCH GP-BYPASS–TRANSMISSION OIL FILTER | 297 |
| SWITCH GP-BYPASS (HYDRAULIC OIL FILTER) | 447 |
| SWITCH GP-DISCONNECT–BATTERY | 298 |
| SWITCH GP-LIGHT–TURN | 299 |
| SWITCH GP-MAGNETIC–MAIN RELAY | 302 |
| SWITCH GP-MAGNETIC–SECONDARY STEERING RELAY | 301 |
| SWITCH GP-MAGNETIC (24-VOLT) (CRANKING RELAY) | 349 |
| SWITCH GP-MAGNETIC (24-VOLT) (STARTER RELAY) | 359 |
| SWITCH GP-ROTARY (TURN SIGNAL, HAZARD) | 223, 226, 229, 232, 239, 242, 259, 299 |
| SWITCH GP-ROTARY (TURN SIGNAL, HAZARD) | 402 |
| SWITCH GP-START (KEY) | 387, 389, 392, 396 |
| SWITCH GP-WIPER–INTERMITTENT | 303 |
| SWIVEL GP | 734, 735 |


## T


| Name | Page |
|---|---|
| TANDEM & COVER GP | 470, 471 |
| TANK & FILTER GP-HYDRAULIC | 737 |
| TANK & MTG GP-HYDRAULIC | 739 |
| TANK GP-AIR | 620, 622 |
| TANK GP-FUEL | 127 |
| TANK GP-FUEL–LH | 130, 132, 134 |
| TANK GP-FUEL–RH | 128, 129, 135 |
| TIE ROD GP (STEERING) | 650 |
| TOOTH GP-RIPPER | 1091 |
| TOOTH GP-SCARIFIER | 1092 |
| TRANSMISSION AR | 472, 474 |
| TURBOCHARGER GP | 107, 108 |


## U


| Name | Page |
|---|---|
| UNIVERSAL JOINT GP | 476 |


## V


| Name | Page |
|---|---|
| VALVE & LINKAGE GP | 799, 803, 841, 857, 860, 880, 884, 888, 892, 896 |
| VALVE & LINKAGE GP–BANK 4-LH – BANK 5-RH | 784 |
| VALVE & LINKAGE GP–BANK 4-LH–BANK 5-RH | 782 |
| VALVE & LINKAGE GP–BANK 4-LH,RH | 748, 761 |
| VALVE & LINKAGE GP–BANK 4-RH–BANK 5-LH | 742, 746, 771 |
| VALVE & LINKAGE GP–BANK 4-RH–BANK 7-LH | 786 |
| VALVE & LINKAGE GP–BANK 5-LH–BANK 6-RH | 790 |
| VALVE & LINKAGE GP–BANK 5 LH-RH | 740, 765 |
| VALVE & LINKAGE GP–BANK 5-LH,RH | 755, 775 |
| VALVE & LINKAGE GP–BANK 5-RH–BANK 6-LH | 744, 769 |
| VALVE & LINKAGE GP–BANK 5-RH–BANK 7-LH | 750, 752, 763, 792 |

# INDEX


| Name | Page |
|---|---|
| VALVE & LINKAGE GP– BANK 5-RH, BANK 7-LH | 773 |
| VALVE & LINKAGE GP–BANK 6-LH,RH | 757 |
| | 777 |
| | 794 |
| VALVE & LINKAGE GP–BANK 6-RH– BANK 7-LH | 759 |
| | 796 |
| VALVE & LINKAGE GP– BANK 6-RH, BANK 7-LH | 779 |
| VALVE & LINKAGE GP–BANK 7-LH,RH | 788 |
| VALVE & LINKAGE GP– 4-BANK, RH; 5-BANK, LH | 767 |
| | 807 |
| | 811 |
| | 822 |
| VALVE & LINKAGE GP–4-BANK, 5-BANK | 815 |
| | 819 |
| VALVE & LINKAGE GP–5-BANK, RH, LH | 825 |
| | 833 |
| | 837 |
| VALVE & LINKAGE GP– 5-BANK, RH; 6-BANK, LH | 845 |
| VALVE & LINKAGE GP– 5-BANK, RH; 7-BANK, LH | 864 |
| | 867 |
| | 900 |
| VALVE & LINKAGE GP–6-BANK, RH, LH | 853 |
| | 870 |
| VALVE & LINKAGE GP– 6-BANK, RH; 4-BANK, LH | 829 |
| VALVE & LINKAGE GP– 6-BANK, RH; 5-BANK, LH | 849 |
| VALVE & LINKAGE GP– 6-BANK, RH; 7-BANK, LH | 874 |
| | 877 |
| | 904 |
| VALVE & MTG GP-DIFF LOCK | 477 |
| VALVE AS-TIRE | 533 |
| VALVE-DRAIN (AIR TANK) | 620 |
| | 622 |
| VALVE-DRAIN (FUEL SUMP) | 551 |
| VALVE GP-AIR CONTROL–SERVICE BRAKE | 624 |
| VALVE GP-BANK 4–LH | 908 |
| | 910 |
| | 911 |
| | 915 |
| VALVE GP-BANK 4–RH | 907 |
| | 909 |
| | 913 |
| | 917 |
| VALVE GP-BANK 5–LH | 918 |
| | 921 |
| | 922 |
| | 924 |
| | 929 |
| | 931 |
| | 933 |
| VALVE GP-BANK 5–RH | 919 |
| | 920 |
| | 923 |
| | 926 |
| | 927 |
| VALVE GP-BANK 6–LH | 934 |
| | 936 |
| | 938 |
| | 944 |
| | 946 |
| | 948 |
| VALVE GP-BANK 6–RH | 935 |
| | 937 |
| | 939 |
| | 940 |
| | 942 |
| | 950 |
| VALVE GP-BANK 7 | 968 |
| VALVE GP-BANK 7–LH | 953 |
| | 955 |
| | 956 |
| | 957 |
| | 958 |
| | 959 |
| | 960 |
| | 962 |
| | 964 |
| | 967 |
| | 969 |
| VALVE GP-BANK 7–RH | 952 |
| | 966 |
| VALVE GP-CHECK | 136 |
| VALVE GP-CHECK–FUEL | 137 |
| | 138 |
| VALVE GP-COMBINATION | 970 |
| | 972 |
| VALVE GP-CONTROL | 996 |
| VALVE GP-CONTROL–ARTICULATION | 974 |
| VALVE GP-CONTROL–BLADE LIFT | 980 |
| | 988 |
| | 1002 |
| | 1004 |
| VALVE GP-CONTROL–BLADE TIP | 982 |
| VALVE GP-CONTROL–CENTERSHIFT | 976 |
| VALVE GP-CONTROL–CIRCLE DRIVE | 984 |
| VALVE GP-CONTROL–DOZER LIFT, PLOW | 994 |
| | 1006 |
| | 1018 |
| VALVE GP-CONTROL–PLOW ANGLE | 1020 |
| VALVE GP-CONTROL–RIPPER | 992 |
| | 1000 |
| VALVE GP-CONTROL–SCARIFIER | 990 |

# INDEX


| Name | Page |
|---|---|
| | 998 |
| VALVE GP-CONTROL–SIDESHIFT | 986 |
| VALVE GP-CONTROL–WHEEL LEAN | 978 |
| VALVE GP-CONTROL–WING LIFT | 1010 |
| | 1012 |
| | 1014 |
| VALVE GP-CONTROL–WING TILT | 1008 |
| | 1016 |
| VALVE GP-CONTROL (AIR) | 624 |
| VALVE GP-ETHER STARTING (24-VOLT) | 290 |
| VALVE GP-PUMP CONTROL– HYDRAULIC FAN | 1024 |
| VALVE GP-PUMP CONTROL– HYDRAULIC STEERING | 1022 |
| VALVE GP-PURGE | 1026 |
| VALVE GP-PURGE–IMPLEMENT SIGNAL | 1027 |
| VALVE GP-PURGE (AIR DRYER) | 608 |
| VALVE GP-RELIEF | 708 |
| VALVE GP-RELIEF–BLADE LIFT– DOZER LIFT, PLOW | 1029 |
| VALVE GP-RELIEF–BLADE TIP–SIDESHIFT | 1032 |
| VALVE GP-RELIEF–HYDRAULIC | 1033 |
| | 1034 |
| | 1035 |
| | 1036 |
| VALVE GP-RELIEF–IMPLEMENT SIGNAL | 1030 |
| VALVE GP-RELIEF–LIFT | 1040 |
| VALVE GP-RELIEF–MAIN | 1028 |
| VALVE GP-RELIEF–PLOW ANGLE– PLOW, BULLDOZER ANGLE–RIPPER– WING LIFT–WING TILT | 1038 |
| VALVE GP-RELIEF–PLOW, DOZER LIFT | 1042 |
| VALVE GP-RELIEF–RIPPER | 1037 |
| VALVE GP-RELIEF–SCARIFIER | 1039 |
| VALVE GP-RELIEF–SCARIFIER–WING LIFT | 1041 |
| VALVE GP-RELIEF–STEERING | 1031 |
| VALVE GP-RELIEF (REFRIGERANT COMPRESSOR) | 1105 |
| VALVE GP-SELECTOR & PRESS CONT– DIRECTION, RANGE, TRANSMISSION | 478 |
| VALVE GP-SELECTOR & PRESS CONT– SPEED, RANGE, TRANSMISSION | 484 |
| VALVE GP-SELECTOR & PRESS CONT– TRANSMISSION SPEED | 481 |
| VALVE GP-SHUTTLE | 716 |
| | 718 |
| | 1044 |
| VALVE GP-SHUTTLE–SIGNAL | 1043 |
| VALVE GP-SOLENOID–AIR | 627 |
| VALVE GP-SOLENOID–AIR HORN | 626 |
| VALVE GP-SOLENOID–BLADE CUSHION | 1045 |
| VALVE GP-SOLENOID– CENTERSHIFT LOCK | 1046 |
| VALVE GP-SOLENOID– DIFFERENTIAL LOCK | 487 |
| VALVE GP-SOLENOID– SPEED, RANGE, TRANSMISSION– TMSN DIRECTION, SPEED, RANGE | 488 |
| VALVE GP-SOLENOID (24-VOLT DC) (SELECTOR & PRESSURE RANGE) | 478 |
| | 481 |
| VALVE GP-SOLENOID (24-VOLT DC) (SPEED, RANGE, TRANSMISSION) | 484 |
| VALVE GP-TIRE | 489 |
| | 508 |
| | 509 |
| | 510 |
| | 511 |
| | 512 |
| | 513 |
| | 514 |
| | 515 |
| | 516 |
| | 517 |
| | 518 |
| | 519 |
| | 520 |
| | 521 |
| | 525 |
| | 526 |
| | 527 |
| | 528 |
| | 529 |
| | 530 |
| | 531 |
| | 532 |
| | 533 |
| | 534 |
| | 535 |
| | 536 |
| | 539 |
| | 540 |
| | 541 |
| | 542 |
| VALVE GP-TIRE (TIRE INFLATION) | 518 |
| | 519 |
| | 520 |
| | 521 |
| | 522 |
| | 523 |
| | 524 |
| | 528 |
| | 531 |
| | 532 |
| | 536 |
| | 541 |
| VALVE GP-TRANSMISSION CONTROL | 490 |
| | 492 |
| VALVE MECHANISM GP | 60 |

# INDEX


| Name | Page |
|---|---|
| **W** | |
| WASHER GP-WINDOW–FRONT | 1252, 1255 |
| WASHER GP-WINDOW–REAR | 1254 |
| WHEEL & TIRE AR | 494, 495, 496, 497, 498, 499, 500, 501, 502, 503, 504, 505, 506, 507, 508 |
| WHEEL & TIRE GP | 508, 509, 510, 511, 512, 513, 514, 515, 516, 517, 518, 519, 520, 521, 522, 523, 524, 525, 526, 527, 528, 529, 530, 531, 532, 533, 534, 535, 536 |
| WHEEL AR | 537, 538 |
| WHEEL GP | 539, 540, 541, 542 |
| WHEEL GP–BAREFOOT | 539, 540, 541 |
| WINDOW GP–SIDE SLIDING–HIGH PROFILE | 1258 |
| WINDOW GP–SIDE SLIDING–LOW PROFILE | 1259 |
| WINDOW GP–SIDE SLIDING HIGH PROFILE | 1260 |
| WINDOW GP–VENT–CAB | 1257 |
| WINDOW GP-CAB–LH | 1264 |
| WINDOW GP-CAB–RH | 1262 |
| WINDOW GP-CAB–SIDE SLIDING–LOW PROFILE | 1261 |
| WIPER AR-WINDOW–REAR–HIGH PROFILE | 1266 |
| WIPER AR-WINDOW–REAR–LOW PROFILE | 1266 |
| WIPER GP-WINDOW–FRONT | 1284 |
| WIPER GP-WINDOW–FRONT–HIGH PROFILE | 1272, 1274, 1285, 1286 |
| WIPER GP-WINDOW–FRONT–LOW PROFILE | 1268, 1270 |
| WIPER GP-WINDOW–FRONT, UPPER | 1267 |
| WIPER GP-WINDOW–HIGH PROFILE | 1287 |
| WIPER GP-WINDOW–REAR–HIGH PROFILE | 1280, 1282 |
| WIPER GP-WINDOW–REAR–LOW PROFILE | 1276, 1278 |
| WIRING AS | 338 |
| WIRING GP-BLADE CUSHION | 304 |
| WIRING GP-CAB | 306, 315 |
| WIRING GP-CAB–EU | 309 |
| WIRING GP-CAB–MOLDBOARD | 311, 313 |
| WIRING GP-CAB–WARNING BEACON | 308 |
| WIRING GP-ENGINE | 317, 319 |
| WIRING GP-FRONT | 321, 330 |
| WIRING GP-FRONT–EU | 325 |
| WIRING GP-GRADE CONTROL | 338 |
| WIRING GP-REAR | 339, 344, 376 |
| WIRING GP-REAR–BACKUP ALARM, LIGHTS | 364 |
| WIRING GP-REAR–PLATFORM | 366, 371 |
| WIRING GP-REAR–SERVICE CENTER | 349, 354, 359 |
| WIRING GP-REAR LIGHTING–BACKUP ALARM, LIGHTS, EU | 378 |

# INDEX


| Name | Page | Name | Page |
|---|---|---|---|
| | 381 | | |
| WIRING GP-SECONDARY STEERING | 385 | | |
| WIRING GP-SHIFT CONSOLE | 387 | | |
| | 389 | | |
| | 392 | | |
| | 396 | | |
| WIRING GP-STEERING CONSOLE | 399 | | |
| WIRING GP-STEERING CONSOLE–EU | 402 | | |
| WIRING GP-TRANSMISSION | 406 | | |
| WIRING GP-UNIT INJECTOR | 407 | | |

# INDEX


| Désignation | Page |
|---|---|
| **A** | |
| ACCOUDOIR (ASS) | 1100 |
| | 1101 |
| ACCOUPLEMENT DE TORSION (ASS) | 437 |
| ACCUMULATEUR - AMORTISSEUR DE LAME (VERSION) | 629 |
| ACCUMULATEUR - CLIMATISEUR (ASS) | 1183 |
| ACCUMULATEUR - DIRECTION (ASS) | 634 |
| ACCUMULATEUR (ASS) | 629 |
| | 630 |
| ACCUMULATEUR (ASS) (AMORTISSEUR DE LAME) | 633 |
| ACCUMULATEUR ET MONTAGE - HYDRAULIQUE (ASS) | 628 |
| ACCUMULATEUR HYDRAULIQUE (ASS) | 631 |
| | 632 |
| | 633 |
| ADAPTATEUR (ASS) | 428 |
| | 690 |
| ADAPTATEUR DE FILTRE A AIR (ASS) | 105 |
| ALLUME-CIGARE (ENS) (CIGARE, 24V) | 392 |
| ALLUME-CIGARE (ENS) (CIGARE, 24V) | 397 |
| ALTERNATEUR DE CHARGE (ASS) | 143 |
| | 144 |
| | 145 |
| | 146 |
| ALTERNATEUR DE CHARGE (ASS) | 141 |
| AMPOULE (*24-VOLT) (CHANG. AUTOMATIQUE VITESSE) | 408 |
| AMPOULE (24 VOLTS) | 175 |
| | 223 |
| | 229 |
| | 232 |
| | 239 |
| | 240 |
| | 242 |
| | 259 |
| | 299 |
| | 387 |
| | 389 |
| | 392 |
| | 393 |
| | 396 |
| | 402 |
| | 1096 |
| | 1147 |
| | 1151 |
| | 1205 |
| | 1219 |
| | 1221 |
| | 1222 |
| AMPOULE (24 VOLTS) | 177 |
| | 208 |
| | 235 |
| | 237 |
| | 252 |
| | 254 |
| | 268 |
| | 269 |
| | 270 |
| | 273 |
| | 311 |
| | 313 |
| | 385 |
| | 387 |
| | 389 |
| | 392 |
| | 393 |
| | 396 |
| | 397 |
| | 399 |
| | 402 |
| | 1198 |
| | 1202 |
| AMPOULE (24 VOLTS) | 190 |
| AMPOULE (24 VOLTS) (AVERTISSEUR DE RECUL AUXILIAIRE) | 206 |
| AMPOULE (24 VOLTS) (CLIGNOTANT) | 186 |
| | 188 |
| AMPOULE (24 VOLTS) (CONTACTEUR D'AMORTISSEUR DE LAME) | 304 |
| AMPOULE (24 VOLTS) (DÉGIVREUR ARRIÈRE) | 1138 |
| AMPOULE (24 VOLTS) (DÉGIVREUR AVANT) | 1137 |
| AMPOULE (24 VOLTS) (DÉMARRAGE À L'ÉTHER) | 293 |
| AMPOULE (24 VOLTS) (LAME)(PROJECTEUR AVANT) | 217 |
| AMPOULE (24 VOLTS) (LAMPE D'APPOINT AUXILIAIRE) | 204 |
| AMPOULE (24 VOLTS) (MANOMÈTRE) | 1217 |
| AMPOULE (24 VOLTS) (MODULE QUATRE INSTRUMENTS) | 1217 |
| AMPOULE (24 VOLTS) (PHARES AVANT, FEUX ARRIÈRE) | 226 |
| AMPOULE (24 VOLTS) (PLAQUE D'IMMATRICULATION) | 195 |
| AMPOULE (24 VOLTS) (POSITION) | 186 |
| | 188 |
| AMPOULE (24 VOLTS) (POSITION DE CABINE) | 194 |
| AMPOULE (24 VOLTS) (PROJECTEUR DE LAME) | 218 |
| AMPOULE (24 VOLTS) (PROJECTEUR SUR LAME) | 220 |
| | 222 |


* TRADUCTION NON DISPONIBLE AU MOMENT DE LA PUBLICATION

# INDEX


| Désignation | Page |
|---|---|
| AMPOULE (24 VOLTS) (SIGNAL) | 192 |
| AMPOULE (24 VOLTS) (TÉMOIN PRINCIPAL DE MISE EN GARDE EMS) | 1217 |
| AMPOULE (24 VOLTS) (VERROUILLAGE DE DIFFÉRENTIEL) | 1217 |
| AMPOULE (24V, 21W) | 378<br>381 |
| AMPOULE (24V, 21W) | 378<br>381 |
| AMPOULE (24V, 21W) (CLIGNOTANT) | 186<br>188 |
| AMPOULE (24V, 21W) (SIGNAL) | 190<br>192 |
| AMPOULE (24V, 3W) | 338<br>1219<br>1221 |
| AMPOULE (24V, 3W) (TABLEAU DE BORD) | 1217 |
| AMPOULE (24V, 5W) | 378<br>381 |
| AMPOULE (24V, 5W) | 378<br>381 |
| AMPOULE (24V, 70W) | 200 |
| AMPOULE (24V, 70W) (GYROPHARE) | 199 |
| AMPOULE (24V, 75/70W) | 190 |
| AMPOULE (24V, 75/70W) (FEUX DE ROUTE/FEUX DE CROISEMENT) | 186<br>188 |
| AMPOULE (24V, 75/70W) (TÊTE) | 192 |
| APPLICATION DE TRANSMISSION (ASS) | 408 |
| ARBRE A CAMES (ASS) | 22 |
| ARBRE D'ENTRAÎNEMENT (ASS) | 468 |
| ARBRE D'ENTRAÎNEMENT DE POMPE (ASS) | 731 |
| ARBRE D'ENTRÉE (ASS) | 469 |
| ARTICULATION DE DIRECTION (ASS) | 591<br>592 |
| ATTELAGE D'ARTICULATION (ASS) | 586 |
| ATTELAGE-REMORQUAGE (ASS) | 588<br>589 |
| AUTOCOLLANT - FUSIBLE | 309 |
| AUTOCOLLANT - FUSIBLE (DROITE) | 399 |
| AUTOCOLLANT - FUSIBLE (GAUCHE) | 399<br>402 |
| AUTOCOLLANT - FUSIBLE (TÉMOINS, LAVE-GLACE, ESSUIE-GLACE, DÉGIVREUR) | 306 |
| AUTOCOLLANT-COMMANDE (CHAUFFAGE ET CLIMATISATION) | 1096 |
| AUTOCOLLANT-COMMANDE (TEMPÉRATURE, VITESSE DE VENTILATEUR) | 1151 |
| AUTOCOLLANT-COMMANDE (TEMPÉRATURE, VITESSE DE VENTILATEUR) | 1147 |
| AUTOCOLLANT-COUVERCLE (FOND NOIR) (COUVERCLE NOIR) | 1114 |
| AUTOCOLLANT-COUVERCLE (FOND NOIR) (COUVERCLE NOIR) | 1116 |
| AUTOCOLLANT DE MISE EN GARDE (ACCUM, HAUTE PRESSION, LIRE LE GUIDE D'UTILISATION ET D'ENTRETIEN) (ACCUMULATEUR) | 631 |
| AUTOCOLLANT DE MISE EN GARDE (N. D'ÉTAPE) | 134<br>135 |
| AUTOCOLLANT DE MISE EN GARDE (PAS DE MARCHEPIED) | 130 |
| AUTOCOLLANT D'IDENTIFICATION (HUILE HYDRAULIQUE BIODÉGRADABLE) | 671 |
| AUTOCOLLANT D'IDENTIFICATION (NUMÉRO D'ASSEMBLAGE) | 1147 |
| AUTOCOLLANT D'IDENTIFICATION (NUMÉRO D'ASSEMBLAGE) (CLIMATISEUR) | 1096 |
| AUTOCOLLANT D'IDENTIFICATION (RÉFLECTEUR ROND ROUGE) | 1295 |
| AUTOCOLLANT DU PANNEAU (COMMANDE DE VITESSE) | 1116 |
| AUTOCOLLANT DU PANNEAU (FREIN DE STATIONNEMENT, TRANSMISSION) | 1116 |
| AUTOCOLLANT DU PANNEAU (PANNEAU DE TÉMOIN DE TRANSMISSION) | 1114 |
| AUTOCOLLANT DU PANNEAU (PANNEAU DE TÉMOINS, DROITE) | 1222 |
| AUTOCOLLANT DU PANNEAU (PANNEAU DE TÉMOINS, DROITE) | 1219 |
| AUTOCOLLANT DU PANNEAU (PANNEAU DE TÉMOINS, GAUCHE) | 1219<br>1221 |
| AUTOCOLLANT DU PANNEAU (SÉLECTEUR DE VITESSE) | 1114 |
| AUTOCOLLANT DU PANNEAU (TÉMOINS PRINCIPAUX DE DROITE) | 1217 |
| AUTOCOLLANT DU PANNEAU (TÉMOINS PRINCIPAUX DE GAUCHE) | 1217 |
| AUTOCOLLANT-INFORMATION (AUTOCOLLANT ARGENT) (MOTEUR) | 1291 |
| AUTOCOLLANT-INFORMATION (EMPLACEMENT D'OEILLETON DE LEVAGE) | 1292 |
| AUTOCOLLANT-INFORMATION (FILTRE À AIR) | 98 |
| AUTOCOLLANT-INFORMATION (LAMINÉ) (MOTEUR) | 1291 |
| AUTOCOLLANT-INFORMATION (MOTEUR, RALENTI, BLOCAGE) | 1114<br>1116 |


* TRADUCTION NON DISPONIBLE AU MOMENT DE LA PUBLICATION

# INDEX


| Désignation | Page |
|---|---|
| AUTOCOLLANT-INFORMATION (MOTEUR, RÉGIME MAXI À VIDE, BLOCAGE) | 1114, 1116 |
| AUTOCOLLANT (LAVE-VITRE) | 315 |
| AUTOCOLLANT (PAS DE MARCHEPIED) | 128, 130 |
| AUTOCOLLANT (PUISSANCE VARIABLE PLUS) | 1290 |
| AUTOCOLLANT-RÉFLECTEUR (JAUNE) | 562, 1295 |
| AUTOCOLLANT (VISIÈRE CATERPILLAR) | 1213, 1214 |
| AUXILIAIRE DE DÉMARRAGE À L'ÉTHER | 292, 293 |
| AUXILIAIRE DE DÉMARRAGE À L'ÉTHER | 290 |
| AVERTISSEMENT DE PROFIL LONGITUDINAL (ASS) | 338 |
| AVERTISSEUR (ASS) | 139, 140 |
| AVERTISSEUR (ASS) (RECUL) | 378 |
| AXE DE CULBUTEUR (ASS) | 55 |


## B


| Désignation | Page |
|---|---|
| BALAI D'ESSUIE-GLACE (ENS) | 1257 |
| BALAI D'ESSUIE-GLACE (ENS) | 1285 |
| BALAI D'ESSUIE-GLACE (ENS) (ARRIÈRE) | 1278 |
| BALAI D'ESSUIE-GLACE (ENS) (ARRIÈRE) | 1282 |
| BALAI D'ESSUIE-GLACE (ENS) (ARRIÈRE) | 1276 |
| BALAI D'ESSUIE-GLACE (ENS) (ARRIÈRE) | 1280 |
| BALAI D'ESSUIE-GLACE (ENS) (AVANT) | 1287 |
| BALAI D'ESSUIE-GLACE (ENS) (AVANT) | 1274, 1286 |
| BALAI D'ESSUIE-GLACE (ENS) (INFÉRIEUR AVANT) | 1268, 1270 |
| BALAI D'ESSUIE-GLACE (ENS) (INFÉRIEUR AVANT) | 1274 |
| BALAI D'ESSUIE-GLACE (ENS) (PROFIL ÉLEVÉ AVANT INFÉRIEUR) | 1272 |
| BALAI D'ESSUIE-GLACE (ENS) (PROFIL ÉLEVÉ SUPÉRIEUR AVANT) | 1272 |
| BALAI D'ESSUIE-GLACE (ENS) (SUPÉRIEUR AVANT) | 1270 |
| BALAI D'ESSUIE-GLACE (ENS) (SURBAISSÉ, AVANT SUPÉRIEUR) | 1268 |
| BARRE D'ACCOUPLEMENT (ASS) (DIRECTION) | 650 |
| BARRE D'ATTELAGE (ASS) | 1051 |
| BÂTI (ASS) | 564 |
| BÂTI D'ALTERNATEUR (ENS) | 144 |
| BATTERIE (ASS) | 147, 148, 149, 150 |
| BATTERIE (ASS) (12V, SANS ENTRETIEN) | 149 |
| BATTERIE (ASS) (12V, SANS ENTRETIEN) (1100A) | 147 |
| BATTERIE (12V, SANS ENTRETIEN) | 150 |
| BATTERIE (12V, SANS ENTRETIEN) (HUMIDE) | 148 |
| BLINDAGE DES CANALISATIONS DES FREINS | 572 |
| BLINDAGE INFÉRIEUR (ASS) | 570, 571 |
| BLOC-CYLINDRES - COUVERCLE (ASS) | 23 |
| BLOC-CYLINDRES (ASS) | 29 |
| BLOC-CYLINDRES (ENS) | 27, 28 |
| BLOC DE BRANCHEMENT (ASS) | 151 |
| BOÎTE DE VITESSES (VERSION) | 472, 474 |
| BOUCHON AIMANTÉ (RETOUR AU CARTER) | 551, 552 |
| BOUCHON DE BLOC-CYLINDRES (ASS) | 52 |
| BOUCHON DE GOULOTTE DE CARBURANT (ASS) (SERVICE INTENSIF, VERROUILLABLE) | 130, 132 |
| BOUCHON DE GOULOTTE DE REMPLISSAGE (ENS) | 65 |
| BOUCHON DE GOULOTTE DE REMPLISSAGE (RÉSERVOIR D'HUILE HYDRAULIQUE) | 737 |
| BOUCHON DE MOTEUR (ASS) | 53 |
| BOUCHON DE REMPLISSAGE D'HUILE MOTEUR (ASS) | 65 |
| BOUCHON FILETÉ | 470, 471, 667 |
| BOULONNERIE (ASS) | 561 |
| BOULONNERIE DE LA CULASSE (ASS) | 36 |
| BOULONNERIE DU RADIATEUR (ASS) | 78 |


## C


| Désignation | Page |
|---|---|
| CABINE - REVÊTEMENT (ASS) | 1168, 1170, 1174, 1179, 1181 |
| CABINE (ASS) | 1102, 1103 |
| CABINE-FAISCEAU DE CÂBLES (ENS) | 206, 208, 252 |


* TRADUCTION NON DISPONIBLE AU MOMENT DE LA PUBLICATION

# INDEX


| Désignation | Page |
|---|---|
| | 254 |
| | 1198 |
| CABINE-FAISCEAU DE CÂBLES (ENS) | 313 |
| CABINE-FAISCEAU DE CÂBLES (ENS) (ARRIÈRE) | 306 |
| CABINE-FAISCEAU DE CÂBLES (ENS) (ARRIÈRE) | 309 |
| CABINE-FAISCEAU DE CÂBLES (ENS) (AVANT) | 309 |
| CABINE-FAISCEAU DE CÂBLES (ENS) (PANNEAU D'INTERRUPTEURS) | 306 |
| CABINE-FAISCEAU DE CÂBLES (ENS) (PANNEAU D'INTERRUPTEURS) | 309 |
| CABINE ROPS FERMÉE (ASS) | 1227 |
| | 1228 |
| | 1229 |
| CABINE SANS ROPS (VERSION) | 1102 |
| CABINE (VERSION) | 1102 |
| CABLAGE AR (ASS) | 339 |
| | 344 |
| | 349 |
| | 366 |
| | 371 |
| | 376 |
| CABLAGE AR (ASS) | 354 |
| | 359 |
| | 364 |
| CABLAGE AV (ASS) | 321 |
| | 330 |
| CABLAGE AV (ASS) | 325 |
| CABLAGE DE BOITE (ASS) | 406 |
| CABLAGE DE CABINE (ASS) | 308 |
| | 309 |
| | 311 |
| CABLAGE DE CABINE (ASS) | 306 |
| | 313 |
| | 315 |
| CABLAGE DE DIRECTION AUXILIAIRE (ASS) | 385 |
| CABLAGE DE LA CONSOLE DE CHANGEMENTS DE VITESSE | 387 |
| | 389 |
| | 392 |
| | 396 |
| CABLAGE DE LA CONSOLE DE DIRECTION | 399 |
| | 402 |
| CABLAGE DE MOTEUR (ASS) | 317 |
| CABLAGE DE MOTEUR (ASS) | 319 |
| CABLAGE D'ECLAIRAGE ARRIERE (ASS) | 378 |
| CABLAGE D'ECLAIRAGE ARRIERE (ASS) | 381 |
| CABLAGE D'INJECTEUR | 407 |
| CÂBLE D'AMORTISSEUR DE LAME (ASS) | 304 |
| CADENAS (ASS) | 739 |
| | 1102 |
| CADENAS (ASS) (BOÎTE À OUTILS) | 1288 |
| CADENAS (ASS) (COMPARTIMENT POUR LA DOCUMENTATION) | 5 |
| CADENAS (ASS) (COMPARTIMENT POUR LA DOCUMENTATION) | 1119 |
| CADENAS (ASS) (ROPS) | 1226 |
| CANALISATION DE DIRECTION AUXILIAIRE | 708 |
| CANALISATIONS D'ACCUMULATEUR (ASS) | 672 |
| CANALISATIONS D'AIR (ASS) | 99 |
| | 100 |
| CANALISATIONS DE CARBURANT (ASS) | 115 |
| | 116 |
| CANALISATIONS DE CHAUFFAGE (ASS) | 1185 |
| | 1187 |
| CANALISATIONS DE CLIMATISEUR (ASS) | 1183 |
| CANALISATIONS DE DIRECTION (ASS) | 710 |
| CANALISATIONS DE GRAISSAGE (ASS) | 590 |
| CANALISATIONS DE POMPE (ASS) | 694 |
| | 697 |
| | 700 |
| CANALISATIONS DE RÉCHAUFFEUR DE LIQUIDE DE REFROIDISSEMENT | 1185 |
| | 1187 |
| CANALISATIONS D'EAU (ASS) | 81 |
| | 82 |
| | 83 |
| | 85 |
| | 87 |
| | 88 |
| | 89 |
| CANALISATIONS D'HUILE DE BOÎTE (ASS) | 456 |
| | 460 |
| CANALISATIONS D'HUILE DE BOÎTE (ASS) | 452 |
| CANALISATIONS D'HUILE DE TURBOCOMPRESSEUR (ASS) | 70 |
| CANALISATIONS D'INJECTION DE CARBURANT (ASS) | 121 |
| CANALISATIONS DU FILTRE A CARBURANT (ASS) | 118 |
| CANALISATIONS DU RIPPER (ASS) | 703 |
| | 705 |
| | 707 |
| CANALISATIONS HYDRAULIQUES (ASS) | 674 |
| | 676 |
| | 677 |
| | 678 |
| | 680 |
| | 683 |
| | 686 |
| | 689 |
| CANALISATIONS HYDRAULIQUES DE VENTILATEUR (ASS) | 690 |


* TRADUCTION NON DISPONIBLE AU MOMENT DE LA PUBLICATION

# INDEX


| Désignation | Page |
|---|---|
| | 692 |
| CANALISATIONS-VIDANGE D'HUILE DE MOTEUR (ASS) | 69 |
| CAPTEUR DE PRESSION (ASS) | 279 |
| | 280 |
| | 281 |
| | 282 |
| | 283 |
| CAPTEUR DE TEMPERATURE (ASS) | 287 |
| | 288 |
| | 289 |
| CAPTEUR DE TEMPERATURE (ASS) (HUILE DE BOÎTE) | 410 |
| | 414 |
| CAPTEUR DE VITESSE (ASS) | 284 |
| | 285 |
| | 286 |
| CAPTEUR DE VITESSE (ASS) (DONNÉES DE BOÎTE) | 414 |
| CARENAGE DE MOTEUR (ASS) | 556 |
| | 559 |
| CARTER AV (ASS) | 41 |
| CARTER DE VOLANT (ASS) | 39 |
| CARTER ET PIECES DE BOITE (ASS) | 413 |
| CARTER ET PIECES DE BOITE (ASS) | 409 |
| CARTOUCHE SICCATIVE (ENS) (DÉSHYDRATEUR) | 608 |
| CEINTURE DE SECURITE (ASS) | 1232 |
| | 1233 |
| CENDRIER | 1170 |
| | 1174 |
| CERCLE (ASS) | 1047 |
| | 1049 |
| CHAINES (ASS) | 417 |
| CHANGEMENT DE VITESSES AUTOMATIQUE (VERSION) | 408 |
| CHÂSSIS AV (ASS) | 565 |
| CHÂSSIS ET CARTER (ASS) | 551 |
| CHÂSSIS ET CARTER (ASS) | 552 |
| CHAUFFAGE DE CABINE (ASS) | 1147 |
| | 1151 |
| CHAUFFAGE DE CABINE (VERSION) | 1145 |
| | 1146 |
| CHAUFFAGE ET MONTAGE - CABINE (ASS) | 1145 |
| CLAPET DE DECHARGE (ASS) | 708 |
| | 1028 |
| | 1029 |
| | 1030 |
| | 1031 |
| | 1032 |
| | 1033 |
| | 1034 |
| | 1035 |
| | 1036 |
| | 1037 |
| | 1038 |
| | 1039 |
| | 1040 |
| | 1041 |
| | 1042 |
| CLAPET DE DECHARGE (ASS) (COMPRESSEUR DE RÉFRIGÉRANT) | 1105 |
| CLAPET DE RETENUE (ENS) | 136 |
| | 137 |
| | 138 |
| CLÉ (COUPE-BATTERIE) | 298 |
| CLIGNOTANT (ENS) (24 VOLTS) | 402 |
| CLIGNOTANT (ENS) (24 VOLTS) (CLIGNOTANT, FEUX DE DÉTRESSE) | 223 |
| | 226 |
| | 229 |
| | 232 |
| | 239 |
| | 242 |
| CLIGNOTANT (ENS) (24 VOLTS) (CLIGNOTANT, FEUX DE DÉTRESSE) | 299 |
| CLIGNOTANT (ENS) (24 VOLTS) (CLIGNOTANT/FEUX DE DÉTRESSE) | 259 |
| CLIMATISEUR (ASS) | 1096 |
| CLIMATISEUR ET MONTAGE (ASS) | 1095 |
| CLIMATISEUR (VERSION) | 1095 |
| COFFRE A OUTILS (ASS) | 1288 |
| COLLECTEUR - COMMANDE (ASS) | 714 |
| | 715 |
| | 716 |
| | 718 |
| COLLECTEUR - COMMANDE (ASS) (GAUCHE) | 911 |
| | 915 |
| | 924 |
| | 929 |
| | 931 |
| | 933 |
| | 944 |
| | 960 |
| | 967 |
| | 968 |
| | 969 |
| COLLECTEUR D'ADMISSION (ASS) | 102 |
| COLLECTEUR D'ÉCHAPPEMENT (ASS) | 101 |
| COMMANDE AUTOMATIQUE DE RALENTISSEUR - AMORTISSEUR (ENS) | 220 |
| COMMANDE DE BOITE DE VITESSES (ASS) | 1114 |
| | 1116 |
| COMMANDE DE BOITE DE VITESSES (ASS) | 1114 |


* TRADUCTION NON DISPONIBLE AU MOMENT DE LA PUBLICATION

# INDEX


| Désignation | Page |
|---|---|
| | 1116 |
| COMMANDE DE DIFFÉRENTIEL - VERROUILLAGE (ASS) | 428 |
| COMMANDE DE DIRECTION (ASS) | 1113 |
| COMMANDE DE DIRECTION SECONDAIRE (ASS) | 161 |
| COMMANDE DE FREIN DE STATIONNEMENT (ASS) | 613 |
| COMMANDE DE MONITEUR NON PROGRAMMÉE (ASS) | 1118 |
| COMMANDE DE MONITEUR NON PROGRAMMÉE (ASS) (SYSTÈME DE SURVEILLANCE CATERPILLAR) | 1217 |
| | 1219 |
| | 1221 |
| COMMANDE DE RÉGULATEUR (ASS) | 109 |
| COMMANDE D'EMBRAYAGE (ASS) | 1111 |
| COMMANDE ELECTRONIQUE DE MOTEUR (ASS) | 157 |
| | 158 |
| | 159 |
| | 160 |
| COMMANDE ET MONTAGE - MOTEUR | 155 |
| | 156 |
| COMMANDE HYDRAULIQUE DE BOÎTE (ASS) | 430 |
| | 431 |
| COMMANDE HYDRAULIQUE (VERSION) | 635 |
| | 636 |
| | 637 |
| | 638 |
| | 639 |
| | 640 |
| | 641 |
| COMMANDE NON PROGRAMMEE (ASS) | 162 |
| COMMANDE NON PROGRAMMEE (ASS) (ÉLECTROMODULE DE SURVEILLANCE CATERPILLAR) | 169 |
| COMMANDE NON PROGRAMMEE (ASS) (TRANSMISSION) | 408 |
| COMPRESSEUR D'AIR (ASS) | 12 |
| | 14 |
| | 16 |
| COMPRESSEUR DE REFRIGERANT (ASS) | 1105 |
| COMPRESSEUR ET MONTAGE - RÉFRIGÉRANT (ASS) | 1104 |
| CONDENSATEUR ET MONTAGE (RÉFRIGÉRANT) | 1106 |
| CONDUIT (ASS) | 1134 |
| CONDUIT ET COMMANDE (ASS) | 1133 |
| CONNEXION (ASS) | 694 |
| | 697 |
| | 700 |
| CONSOLE DE CONDUITE (ASS) | 1107 |
| CONSOLE DE FAISCEAU (ENS) | 387 |
| | 389 |
| | 392 |
| | 396 |
| CONSOLE DE FAISCEAU (ENS) (DIRECTION) | 399 |
| CONTACTEUR (ENS) (ACTIVATION DU VERROUILLAGE DU PAPILLON DES GAZ) | 392 |
| CONTACTEUR (ENS) (AMORTISSEUR DE LAME) | 304 |
| CONTACTEUR (ENS) (AVERTISSEUR DE RECUL AUXILIAIRE) | 204 |
| CONTACTEUR (ENS) (AXE DE DÉPORT) | 389 |
| CONTACTEUR (ENS) (BOÎTE AVEC PASSAGE AUTOMATIQUE DES VITESSES) | 408 |
| CONTACTEUR (ENS) (DÉGIVREUR ARRIÈRE) | 1138 |
| CONTACTEUR (ENS) (DÉGIVREUR AVANT) | 1137 |
| CONTACTEUR (ENS) (EXTRACTEUR DE BROCHE DE DÉPORT DE CERCLE) | 393 |
| CONTACTEUR (ENS) (EXTRACTEUR DE BROCHE DE DÉPORT DE CERCLE) | 387 |
| | 397 |
| CONTACTEUR (ENS) (FEU ARRIÈRE) | 399 |
| CONTACTEUR (ENS) (GYROPHARE) | 273 |
| CONTACTEUR (ENS) (GYROPHARE) | 175 |
| | 270 |
| CONTACTEUR (ENS) (GYROPHARE) | 268 |
| | 269 |
| CONTACTEUR (ENS) (INVERSEUR D'ÉCLAIRAGE DU PANNEAU) | 399 |
| CONTACTEUR (ENS) (MODE BLOCAGE DU PAPILLON DES GAZ) | 389 |
| | 396 |
| CONTACTEUR (ENS) (MODE BLOCAGE DU PAPILLON DES GAZ) | 387 |
| CONTACTEUR (ENS) (RÉGLAGE DE VITESSE DU PAPILLON DES GAZ) | 387 |
| CONTACTEUR (ENS) (RÉTROÉCLAIRAGE DE PANNEAU) | 402 |
| CONTACTEUR (ENS) (VERROUILLAGE DE DIFFÉRENTIEL) | 399 |
| | 402 |
| CONTACTEUR (ENS) (24 VOLTS) (AVERTISSEUR DE RECUL AUXILIAIRE) | 206 |
| CONTACTEUR (ENS) (24 VOLTS) (BOUCLIER) | 313 |
| CONTACTEUR (ENS) (24 VOLTS) (BOUCLIER) | 311 |
| CONTACTEUR (ENS) (24 VOLTS) (CABINE-PROJECTEUR DROIT) | 252 |
| | 254 |


* TRADUCTION NON DISPONIBLE AU MOMENT DE LA PUBLICATION

# INDEX


| Désignation | Page |
|---|---|
| CONTACTEUR (ENS) (24 VOLTS) (DÉMARRAGE À L'ÉTHER) | 293 |
| CONTACTEUR (ENS) (24 VOLTS) (DIRECTION AUXILIAIRE) | 385 |
| CONTACTEUR (ENS) (24 VOLTS) (ESSAI DE DIRECTION SECONDAIRE) | 397 |
| CONTACTEUR (ENS) (24 VOLTS) (FEUX DE RECUL AUXILIAIRES) | 208 |
| CONTACTEUR (ENS) (24 VOLTS) (PROJECTEUR DROIT) | 235<br>237 |
| CONTACTEUR (ENS) (24 VOLTS) (RÉTROVISEURS À CHAUFFAGE INTÉGRÉ) | 1198 |
| CONTACTEUR (ENS) (24 VOLTS) (RÉTROVISEURS À CHAUFFAGE INTÉGRÉ) | 1202 |
| CONTACTEUR MAGNETIQUE (ASS) | 301<br>302 |
| CONTACTEUR MAGNETIQUE (ASS) (24 VOLTS) (RELAIS DE DÉMARRAGE) | 349 |
| CONTACTEUR MAGNETIQUE (ASS) (24 VOLTS) (RELAIS DE DÉMARREUR) | 359 |
| CONTACTEUR ROTATIF (ASS) (CLIGNOTANTS, FEUX DE DÉTRESSE) | 223<br>226<br>229<br>232<br>239<br>242<br>259<br>299<br>402 |
| *CONTROL GP-HYDRAULIC LOCKOUT | 642 |
| COURONNE ET DIFFERENTIEL (ASS) | 438 |
| COURROIE | 596 |
| COURROIE MULTIPLE (ALTERNATEUR ET CLIMATISEUR) | 1095 |
| COURROIE MULTIPLE (ALTERNATEUR SANS CLIMATISEUR) | 145 |
| COUVERCLE DE PRESSION (7-PSI) | 93<br>94 |
| COUVERCLE DE VISITE (ASS) | 553<br>555 |
| COUVERCLE INFÉRIEUR-DOSSIER (ASS) | 1210 |
| CREPINE (REMPLISSAGE DU RÉSERVOIR HYDRAULIQUE) (RÉSERVOIR D'HUILE HYDRAULIQUE) | 737 |
| CRIC - HYDRAULIQUE | 1290 |
| CULASSE (ASS) | 33<br>34 |
| CULASSE (ENS) | 31 |
| CULBUTERIE (ASS) | 60 |

## D

| Désignation | Page |
|---|---|
| DÉMARREUR ÉLECTRIQUE (ASS) | 294<br>296 |
| DENT DE RIPPER (ASS) | 1091 |
| DENT DE SCARIFICATEUR (ASS) | 1092 |
| DESHYDRATEUR (ASS) | 605<br>606<br>608 |
| DIFFERENTIEL (ASS) | 440 |
| DIODE | 268<br>269 |
| DIRECTION AUXILIAIRE (VERSION) | 732 |
| DISJONCTEUR (ASS) | 152<br>153<br>154 |
| DISJONCTEUR (ASS) (15A) (COMMANDE DU MOTEUR) | 350<br>355<br>360 |
| DISJONCTEUR (ASS) (20A) (COMMANDE DE PROFIL LONGITUDINAL) | 376 |
| DISJONCTEUR DE SECURITE (ENS) (PÉDALE D'APPROCHE LENTE) | 402 |
| DISJONCTEUR DE SECURITE (ENS) (PÉDALE D'APPROCHE LENTE) | 399 |
| DISJONCTEUR DE SECURITE (ENS) (PÉDALE DE FREIN) | 403 |
| DISJONCTEUR (ENS) (105A) (ALTERNATEUR) | 154 |
| DISJONCTEUR (ENS) (15A) (PHARES AVANT) | 152<br>153 |
| DISJONCTEUR (ENS) (15A) (PROJECTEURS DE TRAVAIL AVEC BARRE LUMINEUSE) | 152 |
| DISJONCTEUR (ENS) (80A) (ALTERNATEUR) | 349<br>354<br>359 |
| DISJONCTEUR (ENS) (80A) (PRINCIPAL) | 349<br>354<br>359 |
| DISPOSITIF D'ARRÊT DE DISTRIBUTEUR (ASS) | 664<br>665 |
| DISTRIBUTEUR (ASS) | 974<br>976<br>978<br>980<br>982<br>984<br>986<br>988<br>990 |


* TRADUCTION NON DISPONIBLE AU MOMENT DE LA PUBLICATION

# INDEX


| Désignation | Page |
|---|---|
| | 992 |
| | 994 |
| | 996 |
| | 998 |
| | 1000 |
| | 1002 |
| | 1004 |
| | 1006 |
| | 1008 |
| | 1010 |
| | 1012 |
| | 1014 |
| | 1016 |
| | 1018 |
| | 1020 |
| DISTRIBUTEUR (ASS) (AIR) | 624 |
| DISTRIBUTEUR D'AIR (ASS) | 624 |
| DISTRIBUTEUR DE BOITE (ASS) | 490 |
| | 492 |
| DISTRIBUTEUR DE POMPE (ASS) | 1022 |
| | 1024 |
| DISTRIBUTEUR 4 ÉLÉMENTS (ASS) | 907 |
| | 908 |
| | 909 |
| | 910 |
| | 911 |
| DISTRIBUTEUR 4 ÉLÉMENTS (ASS) | 913 |
| | 915 |
| | 917 |
| DISTRIBUTEUR 5 ÉLÉMENTS (ASS) | 918 |
| | 919 |
| | 920 |
| | 921 |
| | 922 |
| | 923 |
| | 924 |
| | 926 |
| | 927 |
| | 929 |
| | 931 |
| | 933 |
| DISTRIBUTEUR 6 ÉLÉMENTS (ASS) | 934 |
| | 935 |
| | 936 |
| | 937 |
| | 938 |
| | 939 |
| | 940 |
| | 942 |
| | 944 |
| | 946 |
| | 948 |
| | 950 |
| DISTRIBUTEUR 7 ÉLÉMENTS (ASS) | 952 |
| | 953 |
| | 955 |
| | 956 |
| | 957 |
| | 958 |
| | 959 |
| | 960 |
| | 962 |
| | 964 |
| | 966 |
| | 967 |
| | 968 |
| | 969 |

## E

| | |
|---|---|
| EAU DES CHEMISES - RECHAUFFEUR (ASS) | 172 |
| | 173 |
| EAU DES CHEMISES - RECHAUFFEUR (ASS) | 174 |
| ÉCLAIRAGE - AVERTISSEUR (ASS) | 265 |
| | 266 |
| | 268 |
| ÉCLAIRAGE - AVERTISSEUR (ASS) | 269 |
| | 270 |
| | 272 |
| ÉCLAIRAGE - FEUX DE ROUTE (ASS) | 259 |
| ÉCLAIRAGE - FEUX DE ROUTE (ASS) | 262 |
| ÉCLAIRAGE - GYROPHARE (ASS) | 273 |
| ÉCLAIRAGE - PROJECTEURS (ASS) | 210 |
| | 211 |
| | 212 |
| | 214 |
| | 217 |
| | 218 |
| | 220 |
| | 222 |
| | 223 |
| | 226 |
| | 229 |
| | 232 |
| | 235 |
| | 237 |
| | 239 |
| | 242 |
| | 245 |
| | 254 |
| | 256 |
| | 257 |
| | 258 |
| ÉCLAIRAGE - PROJECTEURS (ASS) | 247 |


* TRADUCTION NON DISPONIBLE AU MOMENT DE LA PUBLICATION

# INDEX


| Désignation | Page |
|---|---|
| | 249 |
| ÉCLAIRAGE - PROJECTEURS (ASS) | 252 |
| ÉCLAIRAGE - PROJECTEURS (ASS) | 250 |
| ECLAIRAGE AR (ASS) | 206 |
| ECLAIRAGE AR (ASS) | 204 |
| ÉCLAIRAGE CLIGNOTANT | 263 |
| | 264 |
| ÉCLAIRAGE DE CABINE (ASS) | 208 |
| ÉCLAIRAGE-PROJECTEURS (VERSION) | 201 |
| | 202 |
| ÉCLAIRAGE (VERSION)-PROJECTEUR & SIGNAL | 203 |
| ÉCRAN D'ARBRE MOTEUR (ASS) | 595 |
| ÉCRAN (DISTRIBUTEUR DE BOÎTE DE VITESSES) | 490 |
| | 492 |
| ÉCRAN MAGNÉTIQUE (ASS) | 467 |
| ÉCRAN MAGNÉTIQUE (BOÎTE DE VITESSES) | 409 |
| | 413 |
| | 467 |
| ÉLECTRONIQUE DE TRANSMISSION (ASS) | 169 |
| ÉLECTRONIQUE-MONITEUR (ASS) | 169 |
| ÉLÉMENT DE CHAUFFAGE (DÉSHYDRATEUR) | 608 |
| ÉLÉMENT DE FILTRE À HUILE (ENS) | 457 |
| ÉLÉMENT DE FILTRE À HUILE (ENS) (BOÎTE DE VITESSES) | 447 |
| ÉLÉMENT DE FILTRE À HUILE (ENS) (BOÎTE DE VITESSES) | 452 |
| ÉLÉMENT DE FILTRE À HUILE (ENS) (EFFICACITÉ NORMALE) | 737 |
| ÉLÉMENT DE FILTRE À HUILE (ENS) (ULTRA-GRANDE EFFICACITÉ) | 449 |
| ÉLÉMENT DE FILTRE À HUILE (ENS) (ULTRA-GRANDE EFFICACITÉ) | 461 |
| ÉLÉMENT DE FILTRE (SÉPARATEUR D'EAU) (PRINCIPAL) | 114 |
| ÉLÉMENT DE RÉCHAUFFEUR (ENS) (240V, 1250W) | 173 |
| ÉLÉMENT DU RÉCHAUFFEUR D'EAU DES CHEMISES (ENS) (120V, 1250W) | 172 |
| | 174 |
| ÉLÉMENT PRINCIPAL (ENS) | 98 |
| ÉLÉMENT SECONDAIRE (ENS) | 98 |
| EMBOUT (ASS) | 1057 |
| | 1058 |
| | 1059 |
| | 1060 |
| EMBOUT D'EXTRÉMITÉ (ASS) | 1061 |
| EMBRAYAGE DE BOÎTE DE VITESSES (ASS) | 418 |
| | 421 |
| | 424 |
| | 426 |
| ENTRAÎNEMENT AUXILIAIRE (ASS) | 35 |
| ENTRAÎNEMENT DE CERCLE (ASS) | 667 |
| ENTRAÎNEMENT DE CHAÎNE (ASS) | 417 |
| ENTRAÎNEMENT POUR COURROIE | 199 |
| | 200 |
| ENTRETIEN DU MONITEUR (ASS) (ÉLECTROMODULE DE SURVEILLANCE CATERPILLAR) | 169 |
| ÉPURATEUR (ENS) | 106 |
| ÉQUIPEMENT POUR DÉPLACEMENT ROUTIER (VERSION) | 5 |
| ESSIEU AV (ASS) | 543 |
| | 546 |
| ESSUIE-GLACE (ASS) | 1267 |
| | 1268 |
| | 1270 |
| | 1272 |
| | 1274 |
| | 1276 |
| | 1280 |
| | 1284 |
| | 1285 |
| | 1286 |
| | 1287 |
| ESSUIE-GLACE (ASS) | 1278 |
| | 1282 |
| ESSUIE-GLACE (VERSION) | 1266 |


## F


| | |
|---|---|
| FAISCEAU ARRIÈRE (ENS) (CENTRE D,ENTRETIEN, CÔTÉ DROIT) | 349 |
| | 359 |
| FAISCEAU ARRIÈRE (ENS) (CENTRE D,ENTRETIEN, CÔTÉ DROIT) | 354 |
| FAISCEAU ARRIÈRE (ENS) (CENTRE D'ENTRETIEN, CÔTÉ GAUCHE) | 349 |
| | 354 |
| | 359 |
| FAISCEAU-BOÎTE DE TRANSMISSION | 339 |
| | 344 |
| | 366 |
| | 371 |
| | 406 |
| | 430 |
| FAISCEAU D'AIDE AU DÉMARRAGE (ENS) | 290 |
| FAISCEAU DE CABLES - AVERTISSEUR (ENS) | 206 |
| | 208 |
| FAISCEAU DE CABLES - AVERTISSEUR (ENS) | 204 |


* TRADUCTION NON DISPONIBLE AU MOMENT DE LA PUBLICATION

# INDEX


| Désignation | Page |
|---|---|
| FAISCEAU DE CABLES - CAPTEUR (ENS) | 413 |
| FAISCEAU DE CABLES - CAPTEUR (ENS) (BOÎTE DE VITESSES) | 409 |
| FAISCEAU DE CÂBLES AVANT (ENS) (*CIRCLE) | 330 |
| FAISCEAU DE CABLES DE LA PLATE-FORME | 321 |
| | 325 |
| | 330 |
| FAISCEAU DE CABLES DU TABLEAU DE BORD (ENS) (RÉTROÉCLAIRAGE DE PANNEAU) | 1221 |
| FAISCEAU DE CABLES (ENS) (CONSOLE) | 402 |
| FAISCEAU DE CABLES (ENS) (ÉLECTRONIQUE DE MOTEUR) | 317 |
| | 319 |
| FAISCEAU DE CABLES (ENS) (INJECTEUR D'UNITÉ) | 407 |
| FAISCEAU DE CABLES (ENS) (*REGISTRATION) | 594 |
| FAISCEAU DE CHÂSSIS ARRIÈRE | 339 |
| | 344 |
| | 345 |
| | 367 |
| | 372 |
| FAISCEAU DE CHÂSSIS AVANT (ENS) | 325 |
| FAISCEAU DE CHÂSSIS AVANT (ENS) | 223 |
| | 226 |
| | 229 |
| | 232 |
| | 259 |
| FAISCEAU DE CHÂSSIS AVANT (ENS) (BARRE LUMINEUSE DU NEZ) | 239 |
| FAISCEAU DE CHÂSSIS AVANT (ENS) (PROJECTEURS AVANT) | 242 |
| FAISCEAU DE CHÂSSIS (ENS) | 249 |
| | 304 |
| FAISCEAU DE CHÂSSIS (ENS) (BOUCLIER) | 250 |
| FAISCEAU DE CHAUFFAGE ET CLIMATISATION | 1097 |
| | 1147 |
| | 1151 |
| | 1183 |
| FAISCEAU DE COMMANDES (ENS) | 387 |
| | 389 |
| | 392 |
| | 396 |
| FAISCEAU DE CONDENSEUR (ENS) (CLIMATISEUR) | 1106 |
| FAISCEAU DE RADIO (ENS) | 167 |
| | 1224 |
| FAISCEAU DE RÉCHAUFFEUR (ENS) | 1097 |
| | 1148 |
| | 1152 |
| FAISCEAU DE REFROIDISSEUR D'HUILE MOTEUR (ENS) | 432 |
| | 434 |
| FAISCEAU D'ÉCLAIRAGE ARRIÈRE (ENS) | 258 |
| FAISCEAU D'ÉCLAIRAGE ARRIÈRE (ENS) | 245 |
| | 247 |
| FAISCEAU D'ÉCLAIRAGE ARRIÈRE (ENS) | 330 |
| | 364 |
| FAISCEAU D'ÉCLAIRAGE ARRIÈRE (ENS) | 367 |
| | 372 |
| | 378 |
| | 381 |
| FAISCEAU D'ÉCLAIRAGE ARRIÈRE (ENS) (DROITE) | 379 |
| FAISCEAU D'ÉCLAIRAGE ARRIÈRE (ENS) (DROITE) | 381 |
| FAISCEAU D'ÉCLAIRAGE ARRIÈRE (ENS) (GAUCHE) | 379 |
| FAISCEAU D'ÉCLAIRAGE ARRIÈRE (ENS) (GAUCHE) | 381 |
| FAISCEAU D'ÉCLAIRAGE AVANT (ENS) | 259 |
| | 326 |
| FAISCEAU D'ÉCLAIRAGE AVANT (ENS) | 235 |
| | 237 |
| | 252 |
| | 254 |
| | 273 |
| FAISCEAU D'ÉCLAIRAGE AVANT (ENS) (BARRE LUMINEUSE SURÉLEVÉE) | 239 |
| FAISCEAU D'ÉCLAIRAGE AVANT (ENS) (PROJECTEURS) | 242 |
| FAISCEAU D'ÉCLAIRAGE (ENS) | 229 |
| | 232 |
| FAISCEAU D'ESSUIE-GLACE (ENS) (BOÎTIER À FUSIBLES) | 315 |
| FAISCEAU D'ESSUIE-GLACE (ENS) (COMMANDE) | 315 |
| FAISCEAU (ENS) | 432 |
| FAISCEAU (ENS) (REFROIDISSEUR D'HUILE DE BOÎTE) | 434 |
| FILTRE A AIR (ASS) | 96 |
| | 98 |
| FILTRE À AIR (CABINE) | 1142 |
| FILTRE À AIR DE CABINE (ASS) | 1142 |
| FILTRE À CARBURANT | 127 |
| | 130 |
| | 132 |
| FILTRE A CARBURANT (ASS) | 113 |
| FILTRE A CARBURANT (ENS) | 113 |
| FILTRE A HUILE (ASS) | 447 |
| | 449 |
| FILTRE A HUILE (ASS) (DÉRIVATION) | 445 |
| FILTRE À HUILE ET MONTAGE (ASS) | 443 |


* TRADUCTION NON DISPONIBLE AU MOMENT DE LA PUBLICATION

# INDEX


| Désignation | Page |
|---|---|
| | 445 |
| FILTRE À HUILE MOTEUR (ASS) | 66 |
| FILTRE A HUILE MOTEUR (ENS) | 66 |
| FILTRE DE SÉPARATEUR D'EAU ET DE CARBURANT (ASS) | 114 |
| FLEXIBLE D'ÉVACUATION DES VAPEURS | 14 |
| | 16 |
| FREIN DE MANOEUVRE - COMMANDE (ASS) | 615 |
| FREIN DE MANOEUVRE (ASS) | 611 |
| FREIN DE STATIONNEMENT (ASS) | 609 |
| FUSIBLE (10A) | 208 |
| | 223 |
| | 229 |
| | 232 |
| | 235 |
| | 237 |
| | 239 |
| | 242 |
| | 252 |
| | 254 |
| | 259 |
| | 265 |
| | 299 |
| | 311 |
| | 313 |
| | 315 |
| | 385 |
| | 399 |
| | 402 |
| | 1198 |
| | 1202 |
| FUSIBLE (10A) | 1276 |
| FUSIBLE (10A) (AVERTISSEUR DE RECUL) | 270 |
| FUSIBLE (10A) (AVERTISSEUR DE RECUL AUXILIAIRE) | 206 |
| FUSIBLE (10A) (CLIGNOTANT, FEUX DE DÉTRESSE) | 226 |
| FUSIBLE (10A) (CONVERTISSEUR) | 164 |
| FUSIBLE (10A) (DÉGIVREUR ARRIÈRE) | 1138 |
| FUSIBLE (10A) (DÉGIVREUR AVANT) | 1137 |
| FUSIBLE (10A) (DÉSHYDRATEUR) | 605 |
| FUSIBLE (10A) (DÉVOLTEUR POUR COURANT) | 166 |
| FUSIBLE (10A) (ESSUIE-GLACE) | 1282 |
| FUSIBLE (10A) (ESSUIE-GLACE) | 1280 |
| FUSIBLE (10A) (ESSUIE-GLACE) | 1278 |
| FUSIBLE (10A) (GYROPHARE) | 266 |
| | 308 |
| FUSIBLE (10A) (LAME/ PROJECTEUR AVANT) | 217 |
| FUSIBLE (10A) (LAMPE D'APPOINT) | 204 |
| FUSIBLE (10A) (PROJECTEUR DE LAME) | 218 |
| FUSIBLE (10A) (PROJECTEURS) | 220 |
| | 222 |
| FUSIBLE (15A) | 306 |
| | 309 |
| | 399 |
| | 402 |
| FUSIBLE (15A) (CLIMATISEUR) | 1095 |
| FUSIBLE (15A) (CONVERTISSEUR DE PUISSANCE) | 165 |
| FUSIBLE (15A) (PROJECTEURS DE CABINE) | 220 |
| | 222 |
| FUSIBLE (15A) (RÉCHAUFFEUR) | 1145 |
| FUSIBLE (30A) | 167 |


## G


| Désignation | Page |
|---|---|
| GARDE-BOUE ET SUPPORT (ASS) | 562 |
| GOULOTTE DE REMPLISSAGE D'HUILE DE TRANSMISSION | 442 |
| GRAISSEUR (CHAPE D'ANCRAGE DU VÉRIN DE DÉPORT DE CERCLE) | 646 |
| GROUPE DE ROTATION DE POMPE | 729 |
| | 730 |
| GROUPE D'ORIENTATION | 734 |
| | 735 |


## H


| Désignation | Page |
|---|---|
| HUILE MOTEUR - CARTER (ASS) | 47 |
| | 49 |


## I


| Désignation | Page |
|---|---|
| INDICATEUR DE COLMATAGE DE FILTRE À AIR (ASS) | 96 |
| INJECTEUR DE CARBURANT (ASS) | 124 |
| INSONORISATION (ASS) | 59 |
| INTERRUPTEUR - BOUTON-POUSSOIR (ENS) (MODE DU CONDUCTEUR) | 1217 |
| INTERRUPTEUR - BOUTON-POUSSOIR (ENS) (MODES D'AFFICHAGE) | 1219 |
| | 1221 |
| INTERRUPTEUR - DÉRIVATION (ASS) | 297 |
| INTERRUPTEUR - DÉRIVATION (ASS) (FILTRE À HUILE HYDRAULIQUE) | 447 |
| INTERRUPTEUR À BASCULE (ENS) (ARRÊT DE MOTEUR À HAUTEUR D'HOMME) | 339 |
| | 344 |
| INTERRUPTEUR À BASCULE (ENS) (ARRÊT DU MOTEUR) | 366 |
| | 371 |


* TRADUCTION NON DISPONIBLE AU MOMENT DE LA PUBLICATION

# INDEX


| Désignation | Page |
|---|---|
| INTERRUPTEUR BALANCIER (ENS) (DIRECTION AUXILIAIRE) | 393 |
| INTERRUPTEUR BALANCIER (ENS) (ENSEMBLE DE VERROUILLAGE DU PAPILLON DES GAZ, RÉARMEMENT) | 389<br>392<br>396 |
| INTERRUPTEUR BALANCIER (ENS) (GYROPHARE) | 270 |
| INTERRUPTEUR BALANCIER (ENS) (GYROPHARE) | 175 |
| INTERRUPTEUR BALANCIER (ENS) (INTERRUPTEUR D'ÉCLAIRAGE - POTENCE) | 229<br>232<br>240 |
| INTERRUPTEUR BALANCIER (ENS) (LAME)(PROJECTEUR AVANT) | 217 |
| INTERRUPTEUR BALANCIER (ENS) (PHARE AVANT/ ARRIÈRE) | 259 |
| INTERRUPTEUR BALANCIER (ENS) (PHARES AVANT, FEUX ARRIÈRE) | 223<br>226<br>229<br>232<br>239<br>242<br>402 |
| INTERRUPTEUR BALANCIER (ENS) (PHARES AVANT, FEUX ARRIÈRE) | 299 |
| INTERRUPTEUR BALANCIER (ENS) (PROJECTEUR DE LAME) | 218<br>220 |
| INTERRUPTEUR BALANCIER (ENS) (PROJECTEUR DE LAME) | 222 |
| INTERRUPTEUR BALANCIER (ENS) (PROJECTEURS AVANT) | 242 |
| INTERRUPTEUR DE DÉMARRAGE (ASS) (CLAVETTE) | 387<br>389<br>392<br>396 |
| INTERRUPTEUR D'ÉCLAIRAGE (ASS) | 299 |
| INTERRUPTEUR D'ESSUIE-GLACE (ASS) | 303 |
| INTERRUPTEUR D'ESSUIE-GLACE (24 VOLTS) (ARRIÈRE) | 1276 |
| INTERRUPTEUR D'ESSUIE-GLACE (24 VOLTS) (ARRIÈRE) | 1278 |
| INTERRUPTEUR D'ESSUIE-GLACE (24 VOLTS) (ARRIÈRE) | 1280<br>1282 |
| INTERRUPTEUR ROTATIF (ENS) (CLIGNOTANT DE DIRECTION) | 299 |
| INTERRUPTEUR ROTATIF (ENS) (FEUX DE ROUTE, FEUX DE CROISEMENT) | 223 |
| INTERRUPTEUR ROTATIF (ENS) (FEUX DE ROUTE/FEUX DE CROISEMENT) | 259 |
| INTERRUPTEUR ROTATIF (ENS) (INVERSEUR D'INTENSITÉ DE PHARES AVANT) | 226<br>229<br>232<br>239<br>242 |
| INTERRUPTEUR ROTATIF (ENS) (INVERSEUR D'INTENSITÉ DE PHARES AVANT) | 402 |
| INTERRUPTEUR ROTATIF (ENS) (VITESSE DU VENTILATEUR) | 1147<br>1151 |
| INTERRUPTEUR ROTATIF (ENS) (VITESSE DU VENTILATEUR) | 1096 |
| INTERRUPTEUR ROTATIF (ENS) (24 VOLTS) (COMMANDE D'ESSUIE-GLACE AVANT) | 306 |
| INTERRUPTEUR ROTATIF (ENS) (24 VOLTS) (ESSUIE-GLACE AVANT) | 315 |
| INTERRUPTEUR SPHÉRIQUE (ENS) (INDICATEUR DE DÉPORT DE CERCLE) | 321<br>325 |
| ISOLATION DE CABINE (ASS) | 1166 |


## J


| Désignation | Page |
|---|---|
| JANTE (ASS) | 539<br>540<br>541<br>542 |
| JAUGE D'HUILE MOTEUR (BAIONNETTE) (ASS) | 68 |
| JAUGE D'HUILE MOTEUR (BAÏONNETTE) (ENS) (BOITE DE VITESSE) | 442 |
| JOINT DE VILEBREQUIN (ASS) | 41 |
| JOINT DE VILEBREQUIN (ASS) | 57 |
| JOINT PLAT | 60<br>79<br>128<br>129 |
| JOINT PLAT (BOÎTIER DE RÉGULATEUR DE TEMPÉRATURE) | 80 |
| JOINT PLAT (POMPE D'AMORÇAGE DE CARBURANT) | 125 |
| JOINT PLAT (POMPE D'AMORÇAGE DE CARBURANT) (COUVERCLE) | 126 |
| JOINT UNIVERSEL (ASS) | 476 |


* TRADUCTION NON DISPONIBLE AU MOMENT DE LA PUBLICATION

# INDEX


| Désignation | Page |
|---|---|

## K

KIT - COUSSIN . . . . . 1135
1136
KIT - DÉCHARGE (COMPRESSEUR D'AIR) (COMPRESSEUR D'AIR) . . . . . 12
KIT D'ATTACHE DE CEINTURE DE SECURITE . . . . . 1248
KIT D'ATTACHE (SIÈGE) . . . . . 1250
KIT DE BAGUE (DÉMARREUR) . . . . . 294
KIT DE BALAI D'ESSUIE-GLACE (ARRIÈRE) . . . 1276
1278
KIT DE BALAIS (DÉMARREUR) . . . . . 294
KIT DE BLOC COULISSANT (SIÈGE) . . . . . 1242
KIT DE BLOC COULISSANT (SIÈGE À SUSPENSION) . . . . . 1240
1241
KIT DE BORNE (ALTERNATEUR) . . . . . 144
KIT DE BORNE D'ALTERNATEUR . . . . . 141
KIT DE BOUGIE (12 BROCHES) . . . . . 582
1219
KIT DE BOUGIE (12 BROCHES) . . . . . 232
242
KIT DE BOUGIE (2 BROCHES) . . . . . 167
KIT DE BOUGIE (6 BROCHES) . . . . . 1219
KIT DE BOULONNERIE . . . . . 141
KIT DE BOULONNERIE (ALTERNATEUR) . . . . . 144
KIT DE BOULONNERIE (SIÈGE) . . . . . 1250
KIT DE BRIDE DE FIXATION DE FILTRE A AIR . . . . . 98
KIT DE CALES (COMPREND 17 CALES) . . . . . 725
KIT DE CAPTEUR À CADRAN (NIVEAU DE CARBURANT) . . . . . 130
132
KIT DE CARTER DE ROUE LIBRE- CÔTÉ DROIT (GLACE) . . . . . 1262
KIT DE CARTER DE ROUE LIBRE- CÔTÉ GAUCHE (GLACE) . . . . . 1264
KIT DE COUSSIN DE SIEGE . . . . . 1234
KIT DE COUSSIN DE SIEGE (VINYLE) . . . . . 1236
KIT DE COUSSINET . . . . . 141
1161
KIT DE COUSSINET (ALTERNATEUR) . . . . . 144
KIT DE COUSSINET DE VILEBREQUIN (COMPRESSEUR D'AIR) . . . . . 12
KIT DE CULASSE (COMPRESSEUR D'AIR) . . . . 12
KIT DE DIAPHRAGME . . . . . 1155
KIT DE FILTRE DE SÉPARATEUR D'EAU ET DE CARBURANT . . . . . 114
KIT DE GAINE . . . . . 1248
KIT DE GONFLAGE . . . . . 619
KIT DE JOINTS . . . . . 630
632
653
658
715
716
718
1045
1046
KIT DE JOINTS (ACCUMULATEUR D'AMORTISSEUR DE LAME) . . . . . 631
KIT DE JOINTS (POMPE RÉGULATRICE, DIRECTION) . . . . . 1113
KIT DE JOINTS (SOLÉNOÏDE DE BOÎTE DE VITESSES) . . . . . 488
KIT DE JOINTS (SOUPAPE DE VERROUILLAGE DE DIFFÉRENTIEL) . . . . . 487
KIT DE JOINTS (VERROUILLAGE DE DIFFÉRENTIEL) . . . . . 477
KIT DE LEVIER (DÉMARREUR) . . . . . 294
KIT DE MARTEAU HYDRAULIQUE . . . . . 1143
1144
KIT DE PANNEAU DU DOSSIER DU SIEGE . . . . 1234
1236
KIT DE PARE-CHOCS (RÉGLAGE DU POIDS) . . . 1161
KIT DE PISTON DE COMMANDE . . . . . 725
KIT DE PISTON EXCENTRIQUE . . . . . 725
KIT DE POUSSOIR . . . . . 1160
1161
KIT DE PRISE FEMELLE (12 BROCHES) . . . . . 161
226
232
344
366
371
406
430
582
1217
1219
KIT DE PRISE FEMELLE (12 BROCHES) . . . . . 242
KIT DE PRISE FEMELLE (12 BROCHES) . . . . . 232
KIT DE PRISE FEMELLE (3 BROCHES) . . . . . 196
197
385
KIT DE PRISE FEMELLE (3 BROCHES) . . . . . 277
278
KIT DE PRISE FEMELLE (6 BROCHES) . . . . . 582
1097
1219
KIT DE REDRESSEMENT . . . . . 1211
KIT DE REDRESSEUR . . . . . 141
KIT DE REGLAGE . . . . . 1211
KIT DE REGLAGE DE SIEGE - INCLINAISON . . . 1211
KIT DE RESSORTS . . . . . 1161


* TRADUCTION NON DISPONIBLE AU MOMENT DE LA PUBLICATION

# INDEX


| Désignation | Page |
|---|---|
| KIT DE RESSORTS (REGLAGE DE HAUTEUR) | 1161 |
| KIT DE ROULEAU | 1248 |
| KIT DE ROULEAU (SIÈGE) | 1250 |
| KIT DE SEGMENT STANDARD (COMPRESSEUR D'AIR) | 12 |
| KIT DE SOUPAPE DE COMMANDE D'AIR | 624 |
| KIT DE TIGE | 1211 |
| KIT DE VERIFICATION DU REGULATEUR (COMPRESSEUR D'AIR) | 620 622 |
| KIT DE VIS DE RETENUE (COMMANDE (ASS)) | 162 |
| KIT D'INDICATEUR (RÉGLAGE DU POIDS) | 1161 |
| KIT D'INDICATEUR (SIÈGE) | 1250 |
| KIT D'ISOLANT (DÉMARREUR) | 294 |
| KLAXON PNEUMATIQUE (ASS) | 1155 1156 1158 |

## L

| | |
|---|---|
| LAME (ASS) | 1062 1063 1064 1065 |
| LAME DE COUPE (ASS) | 1067 1068 |
| LAMPE - CLIGNOTANT DE DIRECTION (ASS) | 196 197 198 |
| LAMPE - GYROPHARE (ASS) | 199 200 |
| LAMPE - PHARE (ASS) | 178 |
| LAMPE - PHARE (ASS) | 179 180 181 182 183 |
| LAMPE - PHARE ET CLIGNOTANT | 190 192 |
| LAMPE (ENS) | 378 381 |
| LAMPE HALOGÈNE (24V, 65W) | 178 181 183 |
| LAMPE HALOGÈNE (24V, 65W) (FEUX DE CROISEMENT) | 212 |
| LAMPE HALOGÈNE (24V, 65W) (FEUX DE CROISEMENT) | 184 |
| LAMPE HALOGÈNE (24V, 65W) (FEUX DE ROUTE) | 212 |
| LAMPE HALOGÈNE (24V, 65W) (FEUX DE ROUTE) | 185 |
| LAMPE HALOGÈNE (24V, 65W) (PROJECTEUR) | 179 180 182 |
| LAMPE-PLAQUE D'IMMATRICULATION (ASS) | 195 |
| LAVE-GLACE - VITRE (ASS) | 1252 1254 1255 |
| LENTILLE (ENS) (FEUX DE CROISEMENT) | 212 |
| LENTILLE (ENS) (JAUNE) (CLIGNOTANT) | 186 188 |
| LENTILLE (ENS) (JAUNE) (SIGNAL) | 190 192 |
| LENTILLE (ENS) (PHARE AVANT) | 192 |
| LENTILLE (ENS) (PHARE AVANT) | 190 |
| LENTILLE (ENS) (PHARE AVANT)(FEUX DE CROISEMENT) | 184 |
| LENTILLE (ENS) (TÊTE) | 188 |
| LENTILLE (ENS) (TÊTE) | 186 |
| LENTILLE (GYROPHARE JAUNE) | 200 |
| LENTILLE (JAUNE) (CLIGNOTANT) | 186 188 |
| LENTILLE (JAUNE) (SIGNAL) | 190 192 |
| LENTILLE (PLAQUE D'IMMATRICULATION) | 195 |
| LEVAGE - LAME (ASS) | 1075 |
| LITTÉRATURE (ASS) | 1189 |
| LOGICIEL - ÉLECTROMODULE (ASS) (ÉLECTROMODULE DE SURVEILLANCE CATERPILLAR) | 169 |
| LOGICIEL - ÉLECTROMODULE (ASS) (ÉLECTROMODULE DE SURVEILLANCE CATERPILLAR) | 169 |
| LOGICIEL MOTEUR (ASS) (PUISSANCE VARIABLE) | 1290 |
| LOGICIEL MOTEUR (ASS) (PUISSANCE VARIABLE) | 1290 |

## M

| | |
|---|---|
| MANOCONTACT (ENS) (AIR DE FREIN) | 325 |
| MANOCONTACT (ENS) (CLIMATISEUR - ÉLEVÉE/FAIBLE) | 1183 |
| MANOCONTACT (ENS) (DIRECTION AUXILIAIRE) | 385 |
| MANOCONTACT (ENS) (DIRECTION PRINCIPALE) | 325 |
| MANOCONTACT (ENS) (FEU D'ARRÊT) | 321 325 |


* TRADUCTION NON DISPONIBLE AU MOMENT DE LA PUBLICATION

# INDEX


| Désignation | Page |
|---|---|
| MANOCONTACT (ENS) (FREIN DE STATIONNEMENT) | 322, 325 |
| MANOCONTACT (ENS) (FREINS PNEUMATIQUES) | 321 |
| MANOMETRE D'AIR (ASS) (DROITE) | 1217, 1219 |
| MANOMETRE D'AIR (ASS) (GAUCHE) | 1217, 1219 |
| MANOMETRE D'AIR (ASS) (RÉSERVOIR D'AIR DE DROITE) | 1221 |
| MANOMETRE D'AIR (ASS) (RÉSERVOIR D'AIR DE GAUCHE) | 1221 |
| MARCHEPIED (ASS) | 596 |
| MARTEAU ET MONTAGE (ASS) | 1143, 1144 |
| MODULE - QUATRE INSTRUMENTS (ASS) | 1204 |
| MODULE D'INDICATEUR DE VITESSE ET COMPTE-TOURS (ASS) | 1205 |
| MONTAGE - GYROPHARE (ASS) | 175 |
| MONTAGE - IMMATRICULATION (ASS) | 593, 594 |
| MONTAGE D'AILERON CHASSE-NEIGE (ASS) | 1079 |
| MONTAGE D'ALTERNATEUR (ASS) | 144 |
| MONTAGE DE CABINE (ASS) | 1206 |
| MONTAGE DE COMMANDE DE PENTE (ASS) | 1053 |
| MONTAGE DE COMMANDE DE PENTE (ASS) | 1077 |
| MONTAGE DE CULBUTERIE (ASS) | 46 |
| MONTAGE DE MOTEUR ET BOÎTE (ASS) | 45 |
| MONTAGE DE RADIO (ASS) | 1164 |
| MONTAGE DE RADIO (VERSION) | 1163 |
| MONTAGE DE RIPPER (ASS) | 1078 |
| MONTAGE DU TOIT ROPS (ASS) | 1207, 1209 |
| MOTEUR À ENGRENAGES (ASS) | 719 |
| MOTEUR D'ESSUIE-GLACE (ASS) (ARRIÈRE) | 1278, 1282 |
| MOTEUR D'ESSUIE-GLACE (ASS) (AVANT) | 1286 |
| MOTEUR D'ESSUIE-GLACE (ASS) (SUPÉRIEUR AVANT) | 1270, 1274, 1287 |
| MOTEUR D'ESSUIE-GLACE (ASS) (24V, 2 VITESSES) | 1267, 1270, 1274, 1287 |
| MOTEUR D'ESSUIE-GLACE (ASS) (24V, 2 VITESSES) | 1286 |
| MOTEUR D'ESSUIE-GLACE (ASS) (24V, 2 VITESSES) (INFÉRIEUR AVANT) | 1270, 1274 |
| MOTEUR ELECTRIQUE (ASS) | 275, 276 |
| MOTEUR ET VENTILATEUR (ASS) | 76 |
| MOTEUR HYDRAULIQUE (ASS) | 720 |
| MOTEUR (VERSION) | 7, 10 |


## O


| Désignation | Page |
|---|---|
| OEILLETONS DE LEVAGE MOTEUR (ASS) | 44 |


## P


| Désignation | Page |
|---|---|
| PALIER PRINCIPAL (ASS) (VILEBREQUIN) | 25 |
| PANNEAU DE FAISCEAU (ENS) | 204, 208, 235, 237, 1219 |
| PANNEAU DE FAISCEAU (ENS) | 311 |
| PANNEAU DE FAISCEAU (ENS) | 1217 |
| PANNEAU DE FAISCEAU (ENS) (CONTACTEUR) | 1202 |
| PANNEAU D'INSONORISATION (ASS) | 50 |
| PARE-SOLEIL (ASS) | 1231 |
| PHARE AV (ASS) | 188 |
| PHARE AV (ASS) | 184, 185, 186 |
| PIGNONNERIE AV (ASS) | 38 |
| PISTON ET BIELLE (ASS) | 51 |
| PLAFONNIER (ASS) | 177 |
| PLAQUE DE NUMÉRO DE SÉRIE (BOITE DE VITESSE) | 409, 413 |
| PLAQUE DE POUSSÉE (ASS) | 1054, 1055 |
| PLAQUE DE RADIATEUR (ASS) | 90 |
| PLAQUE D'INSTRUCTIONS (BATTERIE) | 349, 354, 359 |
| PLAQUE D'INSTRUCTIONS (CLIMATISEUR) | 1096 |
| PLAQUE (IDENTIFICATION) (ALTERNATEUR) | 349, 354, 359 |
| PLAQUE SIGNALÉTIQUE (ASS) | 1289, 1290 |
| PLAQUE SIGNALÉTIQUE (ASS) | 1290 |


* TRADUCTION NON DISPONIBLE AU MOMENT DE LA PUBLICATION

# INDEX


| Désignation | Page |
|---|---|
| PLAQUE SIGNALETIQUE (CLIGNOTANTS, FEUX DE DÉTRESSE) | 223 |
| | 226 |
| | 229 |
| | 232 |
| | 239 |
| | 242 |
| | 259 |
| | 299 |
| | 402 |
| PLAQUE SIGNALÉTIQUE (COMPRESSEUR D'AIR) | 12 |
| PLAQUE SIGNALÉTIQUE DE CONTROLEUR (ÉLECTROMODULE DE SURVEILLANCE CATERPILLAR) | 1217 |
| PLAQUE SIGNALÉTIQUE DE CONTROLEUR (MODULE QUATRE INSTRUMENTS) | 1219 |
| | 1221 |
| PLAQUE SIGNALETIQUE (FEUX DE ROUTE, FEUX DE CROISEMENT) | 226 |
| | 229 |
| | 232 |
| | 239 |
| | 242 |
| | 259 |
| | 299 |
| | 402 |
| PLAQUE SIGNALETIQUE (FEUX DE ROUTE, FEUX DE CROISEMENT) | 223 |
| PLAQUE SIGNALÉTIQUE (MOTEUR) | 349 |
| | 354 |
| | 359 |
| | 376 |
| PLAQUES SIGNALETIQUES ET AUTOCOLLANTS (ASS) | 2 |
| | 1295 |
| | 1296 |
| | 1297 |
| | 1298 |
| PLAQUES SIGNALETIQUES ET AUTOCOLLANTS (ASS) | 1291 |
| | 1292 |
| PLAQUES SIGNALETIQUES ET AUTOCOLLANTS (ASS) (RÉFLECTEUR) | 1 |
| PLATE-FORME - SUPPORT (ASS) | 603 |
| *PLATE-IDENTIFICATION (*MAXIMUM WEIGHT) | 5 |
| PLATEAU OSCILLANT (ASS) | 733 |
| PNEU - GROUPE DE VALVE | 489 |
| | 508 |
| | 509 |
| | 510 |
| | 511 |
| | 512 |
| | 513 |
| | 514 |
| | 515 |
| | 516 |
| | 517 |
| | 518 |
| | 519 |
| | 520 |
| | 521 |
| | 525 |
| | 526 |
| | 527 |
| | 528 |
| | 529 |
| | 530 |
| | 531 |
| | 532 |
| | 533 |
| | 534 |
| | 535 |
| | 536 |
| | 539 |
| | 540 |
| | 541 |
| | 542 |
| PNEU - GROUPE DE VALVE (GONFLAGE DES PNEUS) | 518 |
| | 519 |
| | 520 |
| | 521 |
| | 522 |
| | 523 |
| | 524 |
| | 528 |
| | 531 |
| | 532 |
| | 536 |
| | 541 |
| POMPE A EAU (ASS) | 91 |
| | 92 |
| POMPE A ENGRENAGES (ASS) | 465 |
| | 466 |
| POMPE A HUILE MOTEUR (ASS) | 71 |
| | 72 |
| POMPE A PISTONS (ASS) | 725 |
| | 727 |
| POMPE D'ALIMENTATION EN CARBURANT (ASS) | 123 |
| POMPE D'ALIMENTATION ET MONTAGE (ASS) | 123 |
| POMPE D'AMORÇAGE DE CARBURANT (ASS) | 126 |


* TRADUCTION NON DISPONIBLE AU MOMENT DE LA PUBLICATION

# INDEX


| Désignation | Page |
|---|---|
| POMPE D'AMORÇAGE DE CARBURANT (ASS) | 125 |
| POMPE DE DIRECTION AUXILIAIRE ET MONTAGE (ASS) | 722, 724 |
| POMPE DE REGULARISATION DE DEBIT (ASS) (MODULE DE RÉGULATION) | 1113 |
| POMPE D'INJECTION DE CARBURANT (ASS) | 124 |
| POMPE ET MONTAGE - PISTON (ASS) | 723 |
| PORTE (ASS) (AÉRÉ) | 1170, 1174, 1179, 1181 |
| PORTIÈRE DE CABINE (ASS) | 1120, 1123, 1125, 1127, 1129, 1131 |
| POUSSOIR DE SOUPAPE (ASS) | 43 |
| PREFILTRE (ASS) | 105 |
| PROTECTION - ÉCLAIRAGE (ASS) | 574 |
| PROTECTION DE PLATE-FORME (ASS) | 575, 576, 579, 582, 584 |
| PROTECTION DU RÉSERVOIR DE CARBURANT (ASS) | 573 |
| PROTÈGE-RADIATEUR ET SUPPORT (ASS) | 567 |


## R


| Désignation | Page |
|---|---|
| RACCORD EN T (ASS) | 694, 700 |
| RADIATEUR (ASS) | 93, 94 |
| RADIO (ASS) | 1224 |
| RADIO (ASS) (CASSETTE AM/FM) | 1224 |
| RALLONGE DE LAME (ASS) | 1069, 1070, 1071, 1072, 1073, 1074 |
| RALLONGE DU DOSSIER DE SIEGE | 1135, 1136 |
| RECHAUFFEUR DE CARBURANT (ASS) (SÉPARATEUR D'EAU, 12V) | 114 |
| RÉDUCTEURS (ASS) | 450 |
| REFROIDISSEMENT (VERSION) | 73, 74, 75 |
| REFROIDISSEUR D'ADMISSION ET MONTAGE (ASS) | 95 |
| REFROIDISSEUR D'HUILE DE BOÎTE (ASS) | 432, 434 |
| REGARD DE NIVEAU | 93 |
| REGARD DE NIVEAU (HUILE HYDRAULIQUE) | 737 |
| REGARD DE NIVEAU (NIVEAU DE LIQUIDE DE REFROIDISSEMENT) | 94 |
| REGULATEUR DE LA TENSION (ENS) (24 VOLTS) | 141 |
| REGULATEUR DE LA TENSION (ENS) (24 VOLTS) (ALTERNATEUR) | 144 |
| RELAIS (ENS) (24 VOLTS) | 206 |
| RELAIS (ENS) (24 VOLTS) (AVERTISSEUR DE RECUL) | 208 |
| RELAIS (ENS) (24 VOLTS) (DÉMARRAGE À L'ÉTHER) | 290 |
| RELAIS (ENS) (24 VOLTS) (LAMPE D'APPOINT AUXILIAIRE) | 204 |
| RELAIS (ENS) (24 VOLTS) (PROJECTEURS) | 220 |
| RELAIS (ENS) (24 VOLTS) (PROJECTEURS) | 222 |
| RELAIS (ENS) (24 VOLTS) (TÉMOINS ARRIÈRE, DE TABLEAU) | 399 |
| RELAIS (ENS) (24 VOLTS) (TÉMOINS DE PANNEAU, ARRIÈRE) | 402 |
| RELAIS (24 VOLTS) (COMMANDE DE PROFIL LONGITUDINAL) | 330 |
| RELAIS (24 VOLTS) (ÉQUIPEMENT) | 330 |
| RENIFLARD (ENS) | 60 |
| RENIFLARD (ENS) (REMPLISSAGE D'HUILE DE TRANSMISSION) | 442 |
| RENIFLARD (ENS) (TANDEM) | 470 |
| RENIFLARD (TANDEM) | 471 |
| REPÈRE DE LAMPE (ASS) | 194 |
| RÉSERVOIR DE CARBURANT - BOULONNERIE (ASS) | 111, 112 |
| RÉSERVOIR DE CARBURANT (ASS) | 127, 128, 129, 130 |
| RÉSERVOIR DE CARBURANT (ASS) | 135 |
| RÉSERVOIR DE CARBURANT (ASS) | 132, 134 |
| RÉSERVOIR DÉSHYDRATEUR (RÉFRIGÉRANT) | 1183 |
| RÉSERVOIR HYDRAULIQUE ET FILTRE (ASS) | 737 |
| RÉSERVOIR HYDRAULIQUE ET MONTAGE (ASS) | 739 |
| RÉSERVOIR PNEUMATIQUE (ASS) | 620 |


* TRADUCTION NON DISPONIBLE AU MOMENT DE LA PUBLICATION

# INDEX


| Désignation | Page |
|---|---|
| | 622 |
| RESISTANCE (ENS) | 366 |
| | 371 |
| RESISTANCE (ENS) (TÉMOIN DE DIRECTION AUXILIAIRE) | 385 |
| RÉTROVISEUR (ASS) | 1191 |
| | 1192 |
| | 1193 |
| | 1194 |
| | 1195 |
| | 1196 |
| | 1197 |
| | 1198 |
| RÉTROVISEUR (ASS) | 1200 |
| | 1201 |
| | 1202 |
| RIPPER (ASS) | 1081 |
| RIPPER (VERSION) | 1080 |
| ROBINET DE BATTERIE (ASS) | 298 |
| ROPS OUVERTE (VERSION) | 1226 |
| ROTATION DE LA ROUE DU VENTILATEUR SOUFFLANT (ARRÊT MOTEUR) | 340 |
| | 345 |
| ROTATION DE LA ROUE DU VENTILATEUR SOUFFLANT (ARRÊT MOTEUR) | 367 |
| | 372 |
| ROTATION DE LA ROUE DU VENTILATEUR SOUFFLANT (RÉGLAGE DU SIÈGE) | 1250 |
| ROTATION DE LA ROUE DU VENTILATEUR SOUFFLANT (REMPLISSAGE DU RÉSERVOIR DE LAVE-GLACE) | 1292 |
| ROTATION DE LA ROUE DU VENTILATEUR SOUFFLANT (ROBINET DE VIDANGE D'HUILE MOTEUR) | 1292 |
| ROUE - GROUPE DE MONTAGE | 464 |
| ROUE ET PNEU (ASS) | 508 |
| | 509 |
| | 510 |
| | 511 |
| | 512 |
| | 513 |
| | 514 |
| | 515 |
| | 516 |
| | 517 |
| | 518 |
| | 519 |
| | 520 |
| | 521 |
| | 522 |
| | 523 |
| | 524 |
| | 525 |
| | 526 |
| | 527 |
| | 528 |
| | 529 |
| | 530 |
| | 531 |
| | 532 |
| | 533 |
| | 534 |
| | 535 |
| | 536 |
| ROUE ET PNEU (ASS) | 534 |
| ROUE ET PNEU (VERSION) | 494 |
| | 495 |
| | 496 |
| | 497 |
| | 498 |
| | 499 |
| | 500 |
| | 501 |
| | 502 |
| | 503 |
| | 504 |
| | 505 |
| | 506 |
| | 507 |
| | 508 |
| ROUE (VERSION) | 537 |
| | 538 |


## S


| Désignation | Page |
|---|---|
| SCARIFICATEUR (ASS) | 1084 |
| | 1088 |
| SCARIFICATEUR (VERSION) | 1083 |
| SEGMENT-CERCLE | 1049 |
| SIEGE - COUVERCLE INFERIEUR (ASS) | 1211 |
| SIÈGE (ASS) | 1234 |
| | 1236 |
| SIÈGE AVEC SUSPENSION (ASS) | 1238 |
| | 1239 |
| | 1240 |
| | 1250 |
| SIÈGE AVEC SUSPENSION (ASS) | 1241 |
| | 1242 |
| | 1243 |
| | 1244 |
| | 1248 |
| SILENCIEUX (ASS) | 103 |
| SOLÉNOÏDE (ENS) (24 VOLTS) | 294 |
| SONDE - CIRCUIT DE CARBURANT | 277 |
| | 278 |
| SONDE - NIVEAU DE CARBURANT (ENS) | 130 |


* TRADUCTION NON DISPONIBLE AU MOMENT DE LA PUBLICATION

# INDEX


| Désignation | Page |
|---|---|
| | 132 |
| SONDE (ENS)-POSITION (ARTICULATION) | 340 |
| | 345 |
| | 367 |
| | 372 |
| SOUPAPE - SOLÉNOÏDE (ASS) | 487 |
| | 488 |
| | 626 |
| | 627 |
| | 1045 |
| | 1046 |
| SOUPAPE - SOLÉNOÏDE (ASS) (24 V CC) (SÉLECTEUR ET PLAGE DE PRESSION) | 478 |
| | 481 |
| SOUPAPE - SOLÉNOÏDE (ASS) (24 V CC) (VITESSE, PLAGE, TRANSMISSION) | 484 |
| SOUPAPE DE COMBINAISON (ASS) | 970 |
| | 972 |
| SOUPAPE DE DÉMARRAGE À L'ÉTHER (ASS) (24 VOLTS) | 290 |
| SOUPAPE DE PURGE (ASS) | 1026 |
| | 1027 |
| SOUPAPE DE PURGE (ASS) (DÉSHYDRATEUR) | 608 |
| SOUPAPE DE VIDANGE (CARTER DE CARBURANT) | 551 |
| SOUPAPE DE VIDANGE (RÉSERVOIR PNEUMATIQUE) | 622 |
| SOUPAPE DE VIDANGE (RÉSERVOIR PNEUMATIQUE) | 620 |
| SOUPAPE ET MONTAGE DE VERROUILLAGE DE DIF. (ASS) | 477 |
| SOUPAPE ET TIMONERIE (ASS) | 740 |
| | 742 |
| | 744 |
| | 746 |
| | 748 |
| | 750 |
| | 752 |
| | 755 |
| | 757 |
| | 759 |
| | 761 |
| | 763 |
| | 765 |
| | 767 |
| | 769 |
| | 771 |
| | 773 |
| | 775 |
| | 777 |
| | 779 |
| | 782 |
| | 784 |
| | 786 |
| | 788 |
| | 790 |
| | 792 |
| | 794 |
| | 796 |
| | 799 |
| | 803 |
| | 807 |
| | 811 |
| | 815 |
| | 819 |
| | 822 |
| | 825 |
| | 829 |
| | 833 |
| | 837 |
| | 841 |
| | 845 |
| | 849 |
| | 853 |
| | 857 |
| | 860 |
| | 864 |
| | 867 |
| | 870 |
| | 874 |
| | 877 |
| | 880 |
| | 884 |
| | 888 |
| | 892 |
| | 896 |
| | 900 |
| | 904 |
| SOUPAPE SELECTRICE ET REGULATRICE DE PRESSION | 478 |
| | 481 |
| | 484 |
| SUPPORT - MONTAGE (ASS) | 549 |
| | 550 |
| SUPPORT DE FILTRE À HUILE (ASS) | 66 |
| SUPPORT DE FILTRE À HUILE (ASS) | 62 |
| | 64 |
| SUPPORT DE LAME (ASS) | 549 |
| SUPPORT DE MOTEUR (ASS) | 58 |
| SUPPORT DE SCARIFICATEUR (ASS) | 1066 |
| SUPPORT DE SIÈGE (ASS) | 1246 |
| SUPPORT DU RESERVOIR DE CARBURANT (ASS) | 600 |
| | 601 |
| SUSPENSION DE SIEGE - CARTER (ASS) | 1160 |


* TRADUCTION NON DISPONIBLE AU MOMENT DE LA PUBLICATION

# INDEX


| Désignation | Page |
|---|---|

## T

TABLEAU DE BORD (ASS) . . . . . 1213
1214
1215
1217
1219
1221
TAMIS D'ASPIRATION (BOÎTE DE VITESSES) . . . . . 467
TAMIS D'ASPIRATION (CARTER DE BOITE DE VITESSES) . . . . . 409
413
TANDEM ET CARTER (ASS) . . . . . 470
TANDEM ET CARTER (ASS) . . . . . 471
TAPIS DE PLANCHER . . . . . 584
TAPIS DE PLANCHER (CABINE) . . . . . 1166
TEMOINS (ASS) (STOP, ARRIÈRE, CLIGNOTANT, GAUCHE) . . . . . 378
TEMOINS (ASS) (STOP, ARRIÈRE, CLIGNOTANT, GAUCHE) . . . . . 381
TEMOINS (ASS) (STOP, CLIGNOTANT, ARRIÈRE, DROIT) . . . . 378
TEMOINS (ASS) (STOP, CLIGNOTANT, ARRIÈRE, DROIT) . . . . 381
TENDEUR DE COURROIE (ASS) . . . . . 18
20
THERMOCONTACT (ENS) (HUILE HYDRAULIQUE) . . . . . 321
325
THERMOCONTACT (ENS) (RÉFRIGÉRANT) . . . 1096
THERMOSTAT ET BOITIER (ASS) . . . . . 79
80
THERMOSTAT-TEMPÉRATURE D'EAU (98 DEG C) . . . . . 79
80
TOIT ROPS - OUVERT (ASS) . . . . . 1230
TOIT ROPS FERME (VERSION) . . . . . 1224
1225
TRANSFORMATION ELECTRIQUE (ASS) . . . . . 164
165
166
167
TRANSFORMATION ELECTRIQUE (ASS) (24-VOLTS À 12-VOLTS) . . . . . 166
TRANSFORMATION ELECTRIQUE (ASS) (24-VOLTS À 12-VOLTS) . . . . . 164
TRANSFORMATION ÉLECTRIQUE (VERSION) . . . . . 163
TURBOCOMPRESSEUR - CARTOUCHE (ASS) . . . . . 108
TURBOCOMPRESSEUR (ASS) . . . . . 107
108

## V

VALVE DE PNEU (ENS) . . . . . 533
VANNE PILOTE (ASS) . . . . . 716
718
VANNE PILOTE (ASS) . . . . . 1043
1044
VENTILATEUR DE CABINE (ASS) . . . . . 1137
1138
VENTILATEUR DÉGIVREUR (ASS) . . . . . 1139
1140
VÉRIN D'ARTICULATION (ASS) . . . . . 652
VÉRIN D'ARTICULATION ET MONTAGE (ASS) . . . . . 643
VÉRIN DE DÉPORT DE CERCLE (ASS) . . . . . 654
VÉRIN DE DÉPORT DE CERCLE ET MONTAGE (ASS) . . . . . 646
VÉRIN DE DÉPORT DE LAME (ASS) . . . . . 648
659
VERIN DE DIRECTION (ASS) . . . . . 660
661
VERIN DE DIRECTION ET MONTAGE (ASS) . . . 650
VÉRIN DE LEVAGE (ASS) . . . . . 656
VÉRIN DE RELEVAGE DE LAME ET MONTAGE (ASS) . . . . . 644
VERIN DE RIPPER (ASS) . . . . . 657
VÉRIN DE SCARIFICATEUR (ASS) . . . . . 658
VÉRIN DE SCARIFICATEUR ET MONTAGE (ASS) . . . . . 647
VÉRIN D'INCIDENCE DE LAME (ASS) . . . . . 653
VÉRIN D'INCLINAISON DE LAME ET MONTAGE (ASS) . . . . . 645
VÉRIN D'INCLINAISON DE ROUE (ASS) . . . . . 663
VÉRIN D'INCLINAISON DE ROUE ET MONTAGE (ASS) . . . . . 651
VERROUILLAGE DE DÉPORT DE CERCLE (ASS) . . . . . 713
VERSION DE COMMANDE DE PROFIL LONGITUDINAL . . . . . 170
VERSION DE SUPPORT DE CHÂSSIS ARRIÈRE . . . . . 597
598
599
VERSION DE TRANSFORMATION - HOMOLOGATION . . . . . 1
2
VERSION DE TRANSFORMATION - SANS ROPS . . . . . 1119
VERSION DE TRANSFORMATION MACHINE . . . 3
VERSION HYDRAULIQUE . . . . . 671
VERSION NEIGE - NIVELEUSE . . . . . 6
VILEBREQUIN (ASS) . . . . . 25
VISIÈRE - GROUPE AUXILIAIRE . . . . . 1093
1094


* TRADUCTION NON DISPONIBLE AU MOMENT DE LA PUBLICATION

# INDEX


| Désignation | Page | Désignation | Page |
|---|---|---|---|
| VITRE (ASS) | 1257 | | |
| VITRE (ASS) | 1258 | | |
| | 1259 | | |
| | 1260 | | |
| VITRE DE CABINE (ASS) | 1264 | | |
| VITRE DE CABINE (ASS) | 1261 | | |
| | 1262 | | |
| VOLANT MOTEUR (ASS) | 37 | | |
| VOLET - CABINE (ASS) | 1190 | | |
| VUE DU MODÈLE | 3 | | |


## W


*WIRING AS . . . . . 338


* TRADUCTION NON DISPONIBLE AU MOMENT DE LA PUBLICATION

# INDICE


| Nombre | Página |
|---|---|
| **A** | |
| ACCESORIOS - IMPULSOR DE (GR) | 35 |
| ACCESORIOS DE LA CABINA (GR) | 1093 |
| | 1094 |
| ACONDICIONADOR DE AIRE (CONFIG) | 1095 |
| ACONDICIONADOR DE AIRE (GR) | 1096 |
| ACONDICIONADOR DE AIRE Y MONTAJE (GR) | 1095 |
| ACOPLAMIENTO TORSIONAL (GR) | 437 |
| ACUMULADOR DE AMORTIGUACIÓN DE LA HOJA (CONFIG) | 629 |
| ACUMULADOR DE LA DIRECCIÓN (GR) | 634 |
| ACUMULADOR DEL ACONDICIONADOR DE AIRE (GR) | 1183 |
| ACUMULADOR (GR) | 629 |
| | 630 |
| ACUMULADOR (GR) (AMORTIGUADOR DE LA HOJA) | 633 |
| ACUMULADOR HIDRAULICO (GR) | 631 |
| | 632 |
| | 633 |
| ACUMULADOR HIDRAULICO Y MONTAJE (GR) | 628 |
| ADAPTADOR DEL FILTRO DE AIRE (GR) | 105 |
| ADAPTADOR (GR) | 428 |
| | 690 |
| AGUA DE LAS CAMISAS - CALENTADOR DEL (GR) | 172 |
| | 173 |
| | 174 |
| AIRE - TUBERÍAS DE (GR) | 99 |
| | 100 |
| ALAMBRADO DE LUCES TRASERAS (GR) | 381 |
| ALAMBRADO DE LUCES TRASERAS (GR) | 378 |
| ALARMA (GR) | 139 |
| | 140 |
| ALARMA (GR) (RESPALDO) | 378 |
| ALFOMBRILLA DEL PISO | 584 |
| ALFOMBRILLA DEL PISO (CABINA) | 1166 |
| ANTEFILTRO (CONJ) | 106 |
| ANTEFILTRO (GR) | 105 |
| ÁRBOL DE LEVAS (GR) | 22 |
| ARRANQUE - INTERRUPTOR DE (GR) (LLAVE) | 387 |
| | 389 |
| | 392 |
| | 396 |
| ARTICULACIÓN DE CILINDRO (GR) | 652 |
| ASIENTO CON SUSPENSIÓN (GR) | 1250 |
| ASIENTO CON SUSPENSIÓN (GR) | 1248 |
| ASIENTO (GR) | 1234 |
| | 1236 |
| AUXILIAR DE ARRANQUE CON ÉTER (GR) | 290 |
| | 292 |
| | 293 |
| **B** | |
| BALANCÍN (GR) | 55 |
| BALIZA DE ADVERTENCIA (GR) - INSTALACIÓN | 175 |
| BANCADA 5 (GR) | 918 |
| | 919 |
| | 920 |
| | 921 |
| | 922 |
| | 923 |
| | 924 |
| | 926 |
| | 927 |
| | 929 |
| | 931 |
| | 933 |
| BARRA DE TIRO (GR) | 1051 |
| BASTIDOR DELANTERO (GR) | 565 |
| BASTIDOR (GR) | 564 |
| BATERÍA (GR) | 147 |
| | 148 |
| | 149 |
| | 150 |
| BATERÍA (GR) (12-VOLTIOS, LIBRE DE MANTENIMIENTO) | 149 |
| BATERÍA (GR) (12-VOLTIOS, LIBRE DE MANTENIMIENTO) (*1100 AMPS) | 147 |
| BATERÍA (12-VOLTIOS, LIBRE DE MANTENIMIENTO) | 150 |
| BATERÍA (12-VOLTIOS, LIBRE DE MANTENIMIENTO) (HUMEDO) | 148 |
| *BELT | 596 |
| BLOQUE DE EMPALME (GR) | 151 |
| BLOQUE DESLIZANTE-JUEGO (ASIENTO) | 1242 |
| BLOQUE DESLIZANTE-JUEGO (ASIENTO DE SUSPENSIÓN) | 1240 |
| | 1241 |
| BLOQUE MOTOR (CONJ) | 27 |
| | 28 |
| BLOQUE MOTOR (GR) | 29 |
| BOCINA DE AIRE (GR) | 1155 |
| | 1156 |
| | 1158 |
| BOMBA - TUBERÍAS DE (GR) | 694 |
| | 697 |
| | 700 |
| BOMBA DE ACEITE DEL MOTOR (GR) | 71 |


* NO HAY TRADUCCION DISPONIBLE EN EL MOMENTO DE LA IMPRESION

# INDICE


| Nombre | Página |
|---|---|
| | 72 |
| BOMBA DE AGUA (GR) | 91 |
| | 92 |
| BOMBA DE CEBADO DE COMBUSTIBLE (GR) | 125 |
| | 126 |
| BOMBA DE ENGRANAJES (GR) | 465 |
| | 466 |
| BOMBA DE INYECCIÓN DE COMBUSTIBLE (GR) | 124 |
| BOMBA DE PISTONES (GR) | 725 |
| | 727 |
| BOMBA DE TRANSFERENCIA DE COMBUSTIBLE (GR) | 123 |
| BOMBA DE TRANSFERENCIA DE COMBUSTIBLE Y MONTAJE (GR) | 123 |
| BOMBA Y MONTAJE DE LA DIRECCIÓN SECUNDARIA (GR) | 724 |
| BOMBA Y MONTAJE DEL PISTÓN (GR) | 723 |
| BOMBA Y MOTOR DE DIRECCION SECUNDARIA (GR) | 722 |

## C

| | |
|---|---|
| CABINA - MAZO DE CABLES DE LA | 206 |
| | 208 |
| | 252 |
| | 254 |
| | 313 |
| | 1198 |
| CABINA - MAZO DE CABLES DE LA (DELANTERO) | 309 |
| CABINA - MAZO DE CABLES DE LA (PARTE TRASERA) | 306 |
| | 309 |
| CABINA - MAZO DE CABLES DE LA (TABLERO DE INTERRUPTOR) | 306 |
| | 309 |
| CABINA (CONFIG) | 1102 |
| CABINA (GR) | 1102 |
| | 1103 |
| CABINA ROPS CERRADA (GR) | 1227 |
| | 1228 |
| | 1229 |
| CABINA SIN ROPS (CONFIG) | 1102 |
| CABLE GR-GRADO DE CONTROL | 338 |
| CABLES CONJ. -LIMPIADOR DE VENTANAS (CAJA DE FUSIBLES) | 315 |
| CABLES CONJ. -LIMPIADOR DE VENTANAS (CONTROL) | 315 |
| CABLES DE INYECTOR (GR) | 407 |
| CABLES DE LA CABINA (GR) | 308 |
| | 311 |
| CABLES DE LA CABINA (GR) | 306 |
| | 313 |
| | 315 |
| CABLES DE LA CABINA (GR) | 309 |
| CABLES DE LA CONSOLA DE CAMBIOS (GR) | 389 |
| | 392 |
| | 396 |
| CABLES DE LA CONSOLA DE CAMBIOS (GR) | 387 |
| CABLES DE LA CONSOLA DE DIRECCIÓN (GR) | 399 |
| | 402 |
| CABLES DE LA DIRECCIÓN SECUNDARIA | 385 |
| CABLES DEL MOTOR (GR) | 317 |
| | 319 |
| CABLES DELANTEROS (GR) | 321 |
| | 330 |
| CABLES DELANTEROS (GR) | 325 |
| CABLES POSTERIORES (GR) | 344 |
| | 349 |
| | 354 |
| | 359 |
| | 364 |
| | 366 |
| | 371 |
| | 376 |
| CABLES POSTERIORES (GR) | 339 |
| CADENA DE IMPULSIÓN (GR) | 417 |
| CADENAS (GR) | 417 |
| CAJA DE HERRAMIENTAS (GR) | 1288 |
| CAJA DE LA SUSPENSIÓN DEL ASIENTO (GR) | 1160 |
| CAJA DELANTERA (GR) | 41 |
| CAJA Y BASTIDOR (GR) | 551 |
| | 552 |
| CAJA Y PIEZAS DE LA TRANSMISIÓN (GR) | 409 |
| | 413 |
| CALCOMANÍA DE ADVERTENCIA (*ACCUM, HIGH PRESS, READ OMM) (ACUMULADOR) | 631 |
| CALCOMANÍA DE ADVERTENCIA (ASIENTO AJUSTABLE) | 1250 |
| CALCOMANÍA DE ADVERTENCIA (DRENAJE DE ACEITE DE MOTOR) | 1292 |
| CALCOMANÍA DE ADVERTENCIA (LLENADO DEL DEPÓSITO DEL LAVAPARABRISAS) | 1292 |
| CALCOMANÍA DE ADVERTENCIA (NO PISAR) | 134 |
| | 135 |
| CALCOMANÍA DE ADVERTENCIA (NO USAR COMO ESCALON) | 130 |


* NO HAY TRADUCCION DISPONIBLE EN EL MOMENTO DE LA IMPRESION

# INDICE


| Nombre | Página |
|---|---|
| CALCOMANÍA DE ADVERTENCIA (PARADA DE MOTOR) | 340, 345, 367, 372 |
| CALCOMANIA DE FUSIBLE | 309 |
| CALCOMANIA DE FUSIBLE (LADO DERECHO) | 399 |
| CALCOMANIA DE FUSIBLE (LADO IZQUIERDO) | 399, 402 |
| CALCOMANIA DE FUSIBLE (LUCES, ARANDELA, LIMPIAPARABRISAS, DESCONGELADOR) | 306 |
| CALCOMANÍA DE IDENTIFICACIÓN (ACEITE HIDRÁULICO BIODEGRADABLE) | 671 |
| CALCOMANÍA DE IDENTIFICACIÓN (NOMBRE DE GRUPO) | 1147 |
| CALCOMANÍA DE IDENTIFICACIÓN (NOMBRE DE GRUPO) (AIRE ACONDICIONADO) | 1096 |
| CALCOMANÍA DE IDENTIFICACIÓN (RODEADO DE ROJO REFLECTIVO) | 1295 |
| CALCOMANIA DEL TABLERO DE INSTRUMENTOS (FAROS DELANTEROS ALTOS, LUZ BAJA) | 226, 229, 232, 239, 259, 299 |
| CALCOMANIA DEL TABLERO DE INSTRUMENTOS (FAROS DELANTEROS ALTOS, LUZ BAJA) | 223, 242, 402 |
| CALCOMANIA DEL TABLERO DE INSTRUMENTOS (LUZ DE GIRO, PELIGRO) | 223, 226, 229, 232, 239, 242, 299 |
| CALCOMANIA DEL TABLERO DE INSTRUMENTOS (LUZ DE GIRO, PELIGRO) | 402 |
| CALCOMANIA DEL TABLERO DE INSTRUMENTOS (LUZ DE GIRO, PELIGRO) | 259 |
| CALCOMANÍA (LAVAPARABRISAS) | 315 |
| CALCOMANÍA (NO USAR COMO ESCALON) | 128 |
| CALCOMANÍA | 130 |
| CALCOMANÍA (*VHP PLUS) | 1290 |
| CALCOMANÍA (VISERA CATERPILLAR) | 1213, 1214 |
| CALCOMANÍAS Y PLACAS DE IDENTIFICACIÓN (GR) | 2, 1291, 1292, 1295, 1296, 1297, 1298 |
| CALCOMANÍAS Y PLACAS DE IDENTIFICACIÓN (GR) (REFLECTOR) | 1 |
| CALEFACCIÓN DE LA CABINA (CONFIG) | 1145, 1146 |
| CALEFACCIÓN DE LA CABINA (GR) | 1147, 1151 |
| CALEFACCIÓN Y MONTAJE DE LA CABINA (GR) | 1145 |
| CALEFACCIÓN Y MONTAJE DE LA CABINA (GR) | 1145 |
| CALENTADOR DEL COMBUSTIBLE (GR) (SEPARADOR DE AGUA, 12-VOLTIOS) | 114 |
| CAMBIO AUTOMÁTICO DE VELOCIDADES (CONFIG) | 408 |
| CÁNCAMOS DE LEVANTAMIENTO DEL MOTOR (GR) | 44 |
| CANDADO (GR) | 739, 1102 |
| CANDADO (GR) (CAJA DE HERRAMIENTAS) | 1288 |
| CANDADO (GR) (COMPARTIMENTO PARA LA LITERATURA) | 5, 1119 |
| CANDADO (GR) (ROPS) | 1226 |
| CANTONERA DE EXTREMO (GR) | 1061 |
| CANTONERA (GR) | 1057, 1058, 1059, 1060 |
| CARGA - ALTERNADOR DE (GR) | 141, 143, 144, 145, 146 |
| CÁRTER - COLECTOR DEL (GR) | 47, 49 |
| *CARTRIDGE AS-DESICCANT (SECADOR DE AIRE) | 608 |
| CENICERO | 1170, 1174 |
| CIGÜEÑAL (GR) | 25 |


* NO HAY TRADUCCION DISPONIBLE EN EL MOMENTO DE LA IMPRESION

# INDICE


| Nombre | Página |
|---|---|
| CILINDRO DE ARTICULACIÓN Y MONTAJE (GR) | 643 |
| CILINDRO DE DESGARRADOR (GR) | 657 |
| CILINDRO DE DESPLAZAMIENTO DEL CÍRCULO (GR) | 654 |
| CILINDRO DE DESPLAZAMIENTO DEL CÍRCULO Y MONTAJE (GR) | 646 |
| CILINDRO DE DESPLAZAMIENTO LATERAL (GR) | 659 |
| CILINDRO DE DESPLAZAMIENTO LATERAL Y MONTAJE (GR) | 648 |
| CILINDRO DE DIRECCIÓN (GR) | 660 |
| | 661 |
| CILINDRO DE DIRECCIÓN Y MONTAJE (GR) | 650 |
| CILINDRO DE ESCARIFICADOR (GR) | 658 |
| CILINDRO DE ESCARIFICADOR Y MONTAJE (GR) | 647 |
| CILINDRO DE INCLINACIÓN DE LA HOJA (GR) | 653 |
| CILINDRO DE INCLINACIÓN DE LAS RUEDAS (GR) | 663 |
| CILINDRO DE INCLINACIÓN DE RUEDA Y MONTAJE (GR) | 651 |
| CILINDRO DE LA PUNTA DE LA HOJA Y MONTAJE (GR) | 645 |
| CILINDRO DE LEVANTAMIENTO DE HOJA Y MONTAJE (GR) | 644 |
| CILINDRO DE LEVANTAMIENTO (GR) | 656 |
| CINTURÓN DE SEGURIDAD (GR) | 1232 |
| | 1233 |
| CÍRCULO (GR) | 1047 |
| | 1049 |
| COLADOR DE COMBUSTIBLE | 127 |
| | 130 |
| | 132 |
| COLADOR (*HYDRAULIC TANK FILL) (TANQUE DE ACEITE HIDRÁULICO) | 737 |
| COMBUSTIBLE - TANQUE DE (GR) | 127 |
| | 128 |
| | 129 |
| | 130 |
| | 132 |
| | 134 |
| | 135 |
| COMPARTIMIENTO DEL MOTOR (GR) | 556 |
| | 559 |
| COMPRESOR DE AIRE (GR) | 12 |
| | 14 |
| | 16 |
| COMPRESOR DE REFRIGERANTE (GR) | 1105 |
| COMPRESOR DE REFRIGERANTE Y GRUPO DE MONTAJE | 1104 |
| CONDENSADOR DEL REFRIGERANTE Y MONTAJE (GR) | 1106 |
| CONDUCTO (GR) | 1134 |
| CONDUCTO Y CONTROL (GR) | 1133 |
| CONEXIÓN DE ENGRASE (RECEPTACULO DE CILINDRO DE DESPLAZADOR CENTRAL) | 646 |
| (CONFIG) CABLERIA, CHASIS DELANTERO | 223 |
| | 226 |
| | 229 |
| | 232 |
| | 259 |
| | 325 |
| (CONFIG) CABLERIA, CHASIS DELANTERO (BARRA DE ILUMINACIÓN DE REFUERZO) | 239 |
| (CONFIG) CABLERIA, CHASIS DELANTERO (LUCES DE TRABAJO, DELANTERAS) | 242 |
| CONFIGURACIÓN DE CABLERIA, CALENTADOR Y ACONDICIONADOR DE AIRE | 1097 |
| | 1147 |
| | 1151 |
| | 1183 |
| CONFIGURACIÓN DE ENFRIAMIENTO | 73 |
| | 74 |
| | 75 |
| CONFIGURACIÓN DE MOTORES | 7 |
| | 10 |
| CONFIGURACIÓN DE SOPORTE DE CHASIS TRASERO | 597 |
| | 598 |
| | 599 |
| CONFIGURACIÓN DE TRANSFORMACIÓN PARA CERTIFICACIÓN | 1 |
| | 2 |
| CONFIGURACIÓN GENERAL | 3 |
| CONFIGURACIÓN PARA CARRETERA | 5 |
| CONJ. NÚCLEO-CALENTADOR | 1097 |
| | 1148 |
| | 1152 |
| CONJUNTO DE CABLERIA, ARRANQUE ASISTIDO | 290 |
| CONJUNTO DE CABLERIA, CHASIS TRASERO | 339 |
| CONJUNTO DE CABLERIA, CHASIS TRASERO | 344 |
| | 345 |
| | 367 |
| | 372 |
| CONJUNTO DE CABLERIA, RADIO | 1224 |
| CONJUNTO DE CABLERIA, RADIO | 167 |
| CONJUNTO DE DESTELLADOR (24 VOLTIOS) | 402 |


* NO HAY TRADUCCION DISPONIBLE EN EL MOMENTO DE LA IMPRESION

# INDICE


| Nombre | Página |
|---|---|
| CONJUNTO DE DESTELLADOR (24 VOLTIOS) (LUCES DE GIRO/PELIGRO) | 259 |
| CONJUNTO DE DESTELLADOR (24 VOLTIOS) (SEÑAL DE GIRO Y ADVERTENCIA DE PELIGRO) | 226<br>229<br>232<br>239<br>242<br>299 |
| CONJUNTO DE DESTELLADOR (24 VOLTIOS) (SEÑAL DE GIRO Y ADVERTENCIA DE PELIGRO) | 223 |
| CONJUNTO DE ELEMENTO DE CALEFACCION (240 VOLTIOS, 1250 VATIOS) | 173 |
| CONJUNTO DE MAZO DE CABLES DE LA CONSOLA | 387<br>389<br>392<br>396 |
| CONJUNTO DE MAZO DE CABLES DE LA CONSOLA (DIRECCIÓN) | 399 |
| CONJUNTO DE MODIFICACIÓN (SIN ROPS) | 1119 |
| CONJUNTO DE NÚCLEO | 432 |
| CONJUNTO DE NÚCLEO-CONDENSADOR (AIRE ACONDICIONADO) | 1106 |
| CONJUNTO DE NÚCLEO (REFRIGERANTE DE ACEITE DE TRANSMISIÓN) | 434 |
| CONJUNTO DE RESISTOR | 366<br>371 |
| CONJUNTO DE RESISTOR (INDICADOR SECUNDARIO DE DIRECCION) | 385 |
| CONJUNTO DE VÁLVULA DE NEUMÁTICO | 533 |
| CONJUNTO MAZO DE CABLES-CONTROLES DEL OPERADOR | 387<br>389<br>392<br>396 |
| CONJUNTO, MAZO DE CABLES, LUCES DELANTERAS | 235<br>237<br>254<br>259<br>273<br>326 |
| CONJUNTO, MAZO DE CABLES, LUCES DELANTERAS | 252 |
| CONJUNTO, MAZO DE CABLES, LUCES DELANTERAS (BARRA DE ILUMINACIÓN ELEVADA) | 239 |
| CONJUNTO, MAZO DE CABLES, LUCES DELANTERAS (LUCES DE TRABAJO) | 242 |
| CONSOLA DEL OPERADOR (GR) | 1107 |
| CONTROL DE AIRE-VÁLVULA | 624 |
| CONTROL DE DIRECCIÓN (GR) | 1113 |
| CONTROL DE GRADO, CONFIGURACIÓN | 170 |
| CONTROL DE LA DIRECCION SECUNDARIA (GR) | 161 |
| CONTROL DE LA TRANSMISIÓN (GR) | 1114<br>1116 |
| CONTROL DE REGULADOR (GR) | 109 |
| CONTROL DE TRABA DEL DIFERENCIAL (GR) | 428 |
| CONTROL DEL EMBRAGUE (GR) | 1111 |
| CONTROL DEL FRENO DE ESTACIONAMIENTO | 613 |
| CONTROL DEL MULTIPLE (GR) | 714<br>715<br>716<br>718 |
| CONTROL DEL MULTIPLE (GR) (IZQUIERDO) | 911<br>915<br>924<br>929<br>931<br>933<br>944<br>960<br>967<br>968<br>969 |
| CONTROL ELECTRÓNICO DEL MOTOR (GR) | 157<br>158<br>159<br>160 |
| CONTROL ELECTRÓNICO DEL MOTOR Y MONTAJE | 155<br>156 |
| *CONTROL GP-HYDRAULIC LOCKOUT | 642 |
| CONTROL HIDRÁULICO (CONFIG) | 635<br>636<br>637<br>638<br>639<br>640<br>641 |
| CONTROL HIDRÁULICO DE LA TRANSMISIÓN (GR) | 430<br>431 |
| CONTROL NO PROGRAMADO (GR) | 162 |
| CONTROL NO PROGRAMADO (GR) (SISTEMA MONITOR CATERPILLAR) | 169 |
| CONTROL NO PROGRAMADO (GR) (TREN DE FUERZA) | 408 |


* NO HAY TRADUCCION DISPONIBLE EN EL MOMENTO DE LA IMPRESION

# INDICE


| Nombre | Página |
|---|---|
| *CONVERSION AR-MACHINE | 3 |
| CONVERTIDOR ELÉCTRICO (CONFIG) | 163 |
| CONVERTIDOR ELÉCTRICO (GR) | 164 |
| | 165 |
| | 166 |
| | 167 |
| CONVERTIDOR ELÉCTRICO (GR) (24 VOLTIOS A 12 VOLTIOS) | 164 |
| | 166 |
| CORREA-SERPENTIN (*ALTERNATOR AND AIR CONDITIONER) | 1095 |
| CORREA-SERPENTIN (*ALTERNATOR WITHOUT A/C) | 145 |
| CRISTAL (AMBAR, BALIZA DE ADVERTENCIA) | 200 |
| CRISTAL (AMBAR) (DE GIRO) | 186 |
| | 188 |
| CRISTAL (AMBAR) (SEÑAL) | 190 |
| | 192 |
| CRISTAL (PLACA DE REGISTRACIÓN) | 195 |
| CUBIERTA INFERIOR DEL ASIENTO DEL OPERADOR (GR) | 1211 |
| CUCHILLA (GR) | 1067 |
| | 1068 |
| CULATA DE CILINDROS - TORNILLERÍA DE LA (GR) | 36 |
| CULATA DE CILINDROS (CONJ) | 31 |
| CULATA DE CILINDROS (GR) | 33 |
| | 34 |


## D


| | |
|---|---|
| DESGARRADOR (CONFIG) | 1080 |
| DESGARRADOR (GR) | 1081 |
| DESHIDRATADOR (GR) | 605 |
| | 606 |
| | 608 |
| DETECTOR DE NIVEL DEL COMBUSTIBLE | 130 |
| | 132 |
| DETECTOR DE POSICIÓN (SISTEMA DE COMBUST.) (GR) | 277 |
| | 278 |
| DIENTE DE DESGARRADOR (GR) | 1091 |
| DIENTE DE ESCARIFICADOR (GR) | 1092 |
| DIFERENCIAL (GR) | 440 |
| DIFERENCIAL Y CORONA (GR) | 438 |
| DIRECCIÓN SECUNDARIA (CONFIG) | 732 |
| DISYUNTOR (CONJ) (105 AMPERIOS) (ALTERNADOR) | 154 |
| DISYUNTOR (CONJ) (15 AMPERIOS) (BARRA DE LUCES DE TRABAJO) | 152 |
| DISYUNTOR (CONJ) (15 AMPERIOS) (FAROS) | 152 |
| | 153 |
| DISYUNTOR (CONJ) (80 AMPERIOS) (ALTERNADOR) | 349 |
| | 354 |
| | 359 |
| DISYUNTOR (CONJ) (80 AMPERIOS) (PRINCIPAL) | 349 |
| | 354 |
| | 359 |
| DISYUNTOR DE CIRCUITO (GR) | 152 |
| | 153 |
| | 154 |
| DISYUNTOR DE CIRCUITO (GR) (15 AMPERIOS) (CONTROL DEL MOTOR) | 350 |
| | 355 |
| | 360 |
| DISYUNTOR DE CIRCUITO (GR) (20-AMPERIOS) (GRADO CONTROL) | 376 |
| DISYUNTOR (GR) | 298 |
| DOSIFICACIÓN - BOMBA DE (GR) (HMU) | 1113 |


## E


| | |
|---|---|
| EJE DE ENTRADA (GR) | 469 |
| EJE DE MANDO DE LA BOMBA (GR) | 731 |
| EJE DE MANDO (GR) | 468 |
| EJE DELANTERO (GR) | 543 |
| | 546 |
| ELECTRONICA DE MONITOR (GR) | 169 |
| ELEMENTO DE CALEFACCION (SECADOR DE AIRE) | 608 |
| ELEMENTO DE FILTRO DE ACEITE (CONJ) | 457 |
| ELEMENTO DE FILTRO DE ACEITE (CONJ) (EFICIENCIA ESTANDAR) | 737 |
| ELEMENTO DE FILTRO DE ACEITE (CONJ) (EFICIENCIA ULTRA ALTA) | 449 |
| | 461 |
| ELEMENTO DE FILTRO DE ACEITE (CONJ) (TRANSMISION) | 447 |
| | 452 |
| ELEMENTO DE FILTRO (SEPARADOR DE COMBUSTIBLE, AGUA) (PRIMARIO) | 114 |
| ELEMENTO DEL CALENTADOR DEL AGUA DE LAS CAMISAS (120-VOLTIOS, 1250-VATIOS) | 172 |
| ELEMENTO DEL CALENTADOR DEL AGUA DE LAS CAMISAS (120-VOLTIOS, 1250-VATIOS) | 174 |
| ELEMENTO PRIMARIO (CONJ) | 98 |
| ELEMENTO SECUNDARIO (CONJ) | 98 |
| EMBRAGUE DE LA TRANSMISIÓN (GR) | 418 |
| | 421 |


* NO HAY TRADUCCION DISPONIBLE EN EL MOMENTO DE LA IMPRESION

# INDICE


| Nombre | Página |
|---|---|
| | 424 |
| | 426 |
| EMISOR DE POSICION (CONJ) (ARTICULACIÓN) | 340 |
| | 345 |
| | 367 |
| | 372 |
| EMPAQUETADURA | 60 |
| | 79 |
| | 128 |
| | 129 |
| EMPAQUETADURA (BOMBA DE CEBADO DE COMBUSTIBLE) | 125 |
| EMPAQUETADURA (BOMBA DE CEBADO DE COMBUSTIBLE) (TAPA) | 126 |
| EMPAQUETADURA (CAJA DEL REGULADOR DE TEMPERATURA) | 80 |
| ENCENDEDOR (CONJ) (ENCENDEDOR, 24 VOLTIOS) | 397 |
| ENCENDEDOR (CONJ) (ENCENDEDOR, 24 VOLTIOS) | 392 |
| ENFRIADOR DE ACEITE DE LA TRANSMISIÓN (GR) | 432 |
| ENFRIADOR DE ACEITE DE LA TRANSMISIÓN (GR) | 434 |
| ENGANCHE ARTICULADO (GR) | 586 |
| ENGANCHE DE REMOLQUE (GR) | 588 |
| | 589 |
| ENGRANAJE DELANTERO (GR) | 38 |
| ESCARIFICADOR (CONFIG) | 1083 |
| ESTRIBO DEL OPERADOR (GR) | 596 |
| ESTRUCTURA ROPS ABIERTA | 1226 |
| ESTRUCTURA ROPS ABIERTA (GR) | 1230 |
| ETIQUETA DE ADVERTENCIA (GR) | 1289 |
| | 1290 |
| ETIQUETA REFLECTORA (AMARILLO) | 562 |
| | 1295 |
| EXTENSIÓN DE LA HOJA (GR) | 1069 |
| | 1070 |
| | 1071 |
| | 1072 |
| | 1073 |
| | 1074 |
| EXTENSIÓN DEL RESPALDO (GR) | 1135 |
| | 1136 |


## F


| Nombre | Página |
|---|---|
| *FILM-COVER (*BLACK BACKGROUND) (CUBIERTA NEGRA) | 1114 |
| | 1116 |
| FILTRO DE ACEITE - BASE DEL (GR) | 62 |
| | 64 |
| FILTRO DE ACEITE - BASE DEL (GR) | 66 |
| FILTRO DE ACEITE DEL MOTOR (CONJ) | 66 |
| FILTRO DE ACEITE DEL MOTOR (GR) | 66 |
| FILTRO DE ACEITE (GR) | 447 |
| | 449 |
| FILTRO DE ACEITE (GR) (DERIVADOR) | 445 |
| FILTRO DE ACEITE Y MONTAJE (GR) | 443 |
| | 445 |
| FILTRO DE AIRE (CABINA) | 1142 |
| FILTRO DE AIRE DE LA CABINA (GR) | 1142 |
| FILTRO DE AIRE (GR) | 96 |
| | 98 |
| FILTRO DE COMBUSTIBLE (CONJ) | 113 |
| FILTRO DE COMBUSTIBLE (GR) | 113 |
| FILTRO DE COMBUSTIBLE Y SEPARADOR DE AGUA (GR) | 114 |
| FILTRO MAGNÉTICO (TRANSMISION) | 409 |
| | 413 |
| | 467 |
| *FRAME AS-ALTERNATOR | 144 |
| FRENO DE ESTACIONAMIENTO (GR) | 609 |
| FRENO DE SERVICIO - CONTROL (GR) | 615 |
| FRENO DE SERVICIO (GR) | 611 |
| FUSIBLE (10-AMPERIOS) | 208 |
| | 223 |
| | 229 |
| | 232 |
| | 235 |
| | 237 |
| | 239 |
| | 242 |
| | 252 |
| | 254 |
| | 259 |
| | 265 |
| | 299 |
| | 311 |
| | 313 |
| | 315 |
| | 385 |
| | 399 |
| | 402 |
| | 1198 |
| | 1202 |
| | 1276 |
| FUSIBLE (10-AMPERIOS) (ALARMA DE RETROCESO) | 270 |
| FUSIBLE (10-AMPERIOS) (*AUXILIARY BACK-UP ALARM) | 206 |
| FUSIBLE (10-AMPERIOS) (BALIZA GIRATORIA DE ADVERTENCIA) | 308 |


* NO HAY TRADUCCION DISPONIBLE EN EL MOMENTO DE LA IMPRESION

# INDICE


| Nombre | Página |
|---|---|
| FUSIBLE (10-AMPERIOS) (BALIZA GIRATORIA DE ADVERTENCIA) | 266 |
| FUSIBLE (10-AMPERIOS) (CONVERTIDOR) | 164 |
| FUSIBLE (10-AMPERIOS) (DESCONGELADOR DELANTERO) | 1137 |
| FUSIBLE (10-AMPERIOS) (DESCONGELADOR TRASERO) | 1138 |
| FUSIBLE (10-AMPERIOS) (HOJA/FARO DELANTERO) | 217 |
| FUSIBLE (10-AMPERIOS) (LAMPARA DE RETROCESO) | 204 |
| FUSIBLE (10-AMPERIOS) (LIMPIADOR) | 1278 |
| FUSIBLE (10-AMPERIOS) (LIMPIADOR) | 1280 |
| | 1282 |
| FUSIBLE (10-AMPERIOS) (LUCES DE TRABAJO) | 220 |
| | 222 |
| FUSIBLE (10-AMPERIOS) (LUZ DE LA HOJA) | 218 |
| FUSIBLE (10-AMPERIOS) (SECADOR DE AIRE) | 605 |
| FUSIBLE (10-AMPERIOS) (SEÑAL DE GIRO Y ADVERTENCIA DE PELIGRO) | 226 |
| FUSIBLE (10-AMPERIOS) (TRANSFORMADOR DE CORRIENTE) | 166 |
| FUSIBLE (15 AMPERIOS) | 306 |
| | 309 |
| | 399 |
| | 402 |
| FUSIBLE (15 AMPERIOS) (AIRE ACONDICIONADO) | 1095 |
| FUSIBLE (15 AMPERIOS) (*CAB FLOOD LIGHTS) | 220 |
| | 222 |
| FUSIBLE (15 AMPERIOS) (CALEFACTOR) | 1145 |
| FUSIBLE (15 AMPERIOS) (TRANSFORMADOR DE CORRIENTE) | 165 |
| FUSIBLE (30-AMPERIOS) | 167 |


## G


| | |
|---|---|
| GATO HIDRÁULICO | 1290 |
| GRUPO DE AISLAMIENTO DE LA CABINA | 1166 |
| GRUPO DE APLICACIÓN, TREN DE FUERZA | 408 |
| GRUPO DE CABLES, HOJA AMORTIGUADORA | 304 |
| GRUPO DE COJINETES DE BANCADA (CIGÜEÑAL) | 25 |
| GRUPO DE CONEXIÓN | 694 |
| | 697 |
| | 700 |
| GRUPO DE CONEXIÓN EN TE | 694 |
| | 700 |
| GRUPO DE CONTROL-MONITOR NO PROGRAMADO | 1118 |
| GRUPO DE CONTROL-MONITOR NO PROGRAMADO (SISTEMA MONITOR CATERPILLAR) | 1217 |
| | 1219 |
| | 1221 |
| GRUPO DE INTERRUPTOR ROTATORIO (LUZ DE GIRO, PELIGRO) | 223 |
| | 226 |
| | 229 |
| | 232 |
| | 239 |
| | 242 |
| | 259 |
| | 299 |
| | 402 |
| GRUPO DE MONTAJE DE ALA PARA NIEVE | 1079 |
| GRUPO DE MONTAJE DE LA CABINA | 1206 |
| GRUPO DE POSTENFRIAMIENTO Y MONTAJE | 95 |
| GRUPO DE SOFTWARE DE MOTOR (POTENCIA VARIABLE) | 1290 |
| GRUPO DE SOPORTE DEL RESPALDO | 1210 |
| GRUPO DE TAPA, ACCESO | 553 |
| | 555 |
| GRUPO DE VÁLVULA-ARRANQUE CON ÉTER (24 VOLTIOS) | 290 |
| GRUPO DE 4 VÁLVULAS HIDRÁULICAS | 907 |
| | 908 |
| | 909 |
| | 910 |
| | 911 |
| | 913 |
| | 915 |
| | 917 |
| GRUPO ESCARIFICADOR | 1084 |
| | 1088 |
| GRUPO GIRATORIO DE BOMBA | 729 |
| | 730 |
| GUARDABARROS Y SOPORTE (GR) | 562 |


## H


| | |
|---|---|
| HIDRÁULICA (CONFIG) | 671 |
| HOJA DE LIMPIAPARABRISAS (CONJ) | 1257 |
| | 1285 |
| HOJA DE LIMPIAPARABRISAS (CONJ) (DELANTERO) | 1274 |
| | 1286 |
| HOJA DE LIMPIAPARABRISAS (CONJ) (DELANTERO) | 1287 |


* NO HAY TRADUCCION DISPONIBLE EN EL MOMENTO DE LA IMPRESION

# INDICE


| Nombre | Página |
|---|---|
| HOJA DE LIMPIAPARABRISAS (CONJ) (DELANTERO DE ALTO PERFIL) | 1272 |
| HOJA DE LIMPIAPARABRISAS (CONJ) (DELANTERO SUPERIOR DE ALTO PERFIL) | 1272 |
| HOJA DE LIMPIAPARABRISAS (CONJ) (*FRONT, LOWER) | 1274 |
| HOJA DE LIMPIAPARABRISAS (CONJ) (*FRONT LOWER) | 1268<br>1270 |
| HOJA DE LIMPIAPARABRISAS (CONJ) (PARTE TRASERA) | 1276<br>1278<br>1280<br>1282 |
| HOJA DE LIMPIAPARABRISAS (CONJ) (POSICION DELANTERA / SUPERIOR) | 1270 |
| HOJA DE LIMPIAPARABRISAS (CONJ) (SUPERIOR DELANTERO DE BAJO PERFIL) | 1268 |
| HOJA (GR) | 1062<br>1063<br>1064<br>1065 |

## I

| | |
|---|---|
| INCLUYE ROPS (CONFIG) | 1224<br>1225 |
| INDICADOR DE CAMBIO DE FILTRO DE ACEITE (GR) | 96 |
| INDICADOR DE PRESION DE AIRE (GR) (LADO DERECHO) | 1217<br>1219 |
| INDICADOR DE PRESION DE AIRE (GR) (LADO IZQUIERDO) | 1217<br>1219 |
| INDICADOR DE PRESION DE AIRE (GR) (*LEFT AIR TANK) | 1221 |
| INDICADOR DE PRESION DE AIRE (GR) (*RIGHT AIR TANK) | 1221 |
| INDICADOR DEL NIVEL DE ACEITE (VARILLA) (GR) | 68 |
| INDICADOR DEL NIVEL DEL ACEITE (VARILLA) (CONJ) (TRANSMISION) | 442 |
| INSONORIZADOR (GR) | 59 |
| INSTALACIÓN DE RADIO (CONFIG) | 1163 |
| INSTALACIÓN DE RADIO (GR) | 1164 |
| INTERRUPTOR (CONJ) (AMORTIGUADOR DE LA HOJA) | 304 |
| INTERRUPTOR (CONJ) (*AUXILIARY BACKUP) | 204 |
| INTERRUPTOR (CONJ) (BALIZA GIRATORIA DE ADVERTENCIA) | 175<br>268<br>269<br>270<br>273 |
| INTERRUPTOR (CONJ) (DESCONGELADOR DELANTERO) | 1137 |
| INTERRUPTOR (CONJ) (DESCONGELADOR TRASERO) | 1138 |
| INTERRUPTOR (CONJ) (EXTRACTOR DE PASADOR DE DESPLAZADOR DEL CÍRCULO) | 387<br>393<br>397 |
| INTERRUPTOR (CONJ) (JUEGO DE ACELERACIÓN, VELOCIDAD) | 387 |
| INTERRUPTOR (CONJ) (LUZ DE COLA) | 399 |
| INTERRUPTOR (CONJ) (MÓDULO DE ACELERACIÓN) | 387<br>389<br>396 |
| INTERRUPTOR (CONJ) (PASADOR DE CAMBIO CENTRAL) | 389 |
| INTERRUPTOR (CONJ) (REDUCTOR DE LUCES DEL TABLERO) | 399 |
| INTERRUPTOR (CONJ) (TABLERO DE LUCES TRASERAS) | 402 |
| INTERRUPTOR (CONJ) (TRABA DE ACTIVACION DEL ACELERADOR) | 392 |
| INTERRUPTOR (CONJ) (TRABA DE DIFERENCIAL) | 402 |
| INTERRUPTOR (CONJ) (TRABA DE DIFERENCIAL) | 399 |
| INTERRUPTOR (CONJ) (TRANSMISIÓN AUTOMÁTICA) | 408 |
| INTERRUPTOR (CONJ) (24 VOLTIOS) (AUXILIAR DE ARRANQUE CON ÉTER) | 293 |
| INTERRUPTOR (CONJ) (24 VOLTIOS) (*AUXILIARY BACK-UP ALARM) | 206 |
| INTERRUPTOR (CONJ) (24 VOLTIOS) (*AUXILIARY BACKUP LIGHTS) | 208 |
| INTERRUPTOR (CONJ) (24 VOLTIOS) (DIRECCIÓN SECUNDARIA) | 385 |
| INTERRUPTOR (CONJ) (24 VOLTIOS) (ESPEJO CON CALENTAMIENTO) | 1198<br>1202 |
| INTERRUPTOR (CONJ) (24 VOLTIOS) (PRUEBA SECUNDARIA DE DIRECCIÓN) | 397 |
| INTERRUPTOR (CONJ) (24 VOLTIOS) (REFLECTOR LADO DERECHO, CABINA) | 252<br>254 |


* NO HAY TRADUCCION DISPONIBLE EN EL MOMENTO DE LA IMPRESION

# INDICE


| Nombre | Página |
|---|---|
| INTERRUPTOR (CONJ) (24 VOLTIOS) (REFLECTORES DEL LADO DERECHO) | 235 237 |
| INTERRUPTOR (CONJ) (24 VOLTIOS) (VERTEDERA) | 311 313 |
| INTERRUPTOR DE BOLA (CONJ) (INDICADOR DEL DESPLAZADOR DEL CÍRCULO) | 321 325 |
| INTERRUPTOR DE DERIVACIÓN | 297 |
| INTERRUPTOR DE DERIVACIÓN (FILTRO DE ACEITE HIDRAULICO) | 447 |
| INTERRUPTOR DE LÍMITE (CONJ) (PEDAL DE FRENO) | 403 |
| INTERRUPTOR DE LÍMITE (CONJ) (PEDAL DE MOVIMIENTO ULTRALENTO) | 402 |
| INTERRUPTOR DE LÍMITE (CONJ) (PEDAL DE MOVIMIENTO ULTRALENTO) | 399 |
| INTERRUPTOR DE LUZ (GR) | 299 |
| INTERRUPTOR DE PRESIÓN (CONJ) (ACONDICIONADOR DE AIRE ALTO/BAJO) | 1183 |
| INTERRUPTOR DE PRESIÓN (CONJ) (*AIR BRAKES) | 321 |
| INTERRUPTOR DE PRESIÓN (CONJ) (DIRECCION PRINCIPAL) | 325 |
| INTERRUPTOR DE PRESIÓN (CONJ) (DIRECCIÓN SECUNDARIA) | 385 |
| INTERRUPTOR DE PRESIÓN (CONJ) (FRENO DE AIRE) | 325 |
| INTERRUPTOR DE PRESIÓN (CONJ) (FRENO DE ESTACIONAMIENTO) | 325 |
| INTERRUPTOR DE PRESIÓN (CONJ) (FRENO DE ESTACIONAMIENTO) | 322 |
| INTERRUPTOR DE PRESIÓN (CONJ) (LUZ DE PARADA) | 321 |
| INTERRUPTOR DE PRESIÓN (CONJ) (LUZ DE PARADA) | 325 |
| INTERRUPTOR DE TEMPERATURA (CONJ) (ACEITE HIDRÁULICO) | 321 325 |
| INTERRUPTOR DE TEMPERATURA (CONJ) (REFRIGERANTE) | 1096 |
| INTERRUPTOR DE VOLQUETE (CONJ) (BALIZA GIRATORIA DE ADVERTENCIA) | 175 |
| INTERRUPTOR DE VOLQUETE (CONJ) (BALIZA GIRATORIA DE ADVERTENCIA) | 270 |
| INTERRUPTOR DE VOLQUETE (CONJ) (DIRECCIÓN SECUNDARIA) | 393 |
| INTERRUPTOR DE VOLQUETE (CONJ) (FAROS DELANTEROS, LUCES DE COLA) | 223 229 402 |
| INTERRUPTOR DE VOLQUETE (CONJ) (FAROS DELANTEROS, LUCES DE COLA) | 226 232 |
| INTERRUPTOR DE VOLQUETE (CONJ) (FAROS DELANTEROS, LUCES DE COLA) | 242 |
| INTERRUPTOR DE VOLQUETE (CONJ) (FAROS DELANTEROS, LUCES DE COLA) | 299 |
| INTERRUPTOR DE VOLQUETE (CONJ) (FAROS DELANTEROS, LUCES DE COLA) | 239 |
| INTERRUPTOR DE VOLQUETE (CONJ) (HOJA)(FARO DELANTERO) | 217 |
| INTERRUPTOR DE VOLQUETE (CONJ) (LUCES DE TRABAJO, DELANTERAS) | 242 |
| INTERRUPTOR DE VOLQUETE (CONJ) (LUZ BAJA DE BARRA DE LUCES) | 229 |
| INTERRUPTOR DE VOLQUETE (CONJ) (LUZ BAJA DE BARRA DE LUCES) | 232 |
| INTERRUPTOR DE VOLQUETE (CONJ) (LUZ BAJA DE BARRA DE LUCES) | 240 |
| INTERRUPTOR DE VOLQUETE (CONJ) (LUZ DE LA HOJA) | 218 |
| INTERRUPTOR DE VOLQUETE (CONJ) (LUZ DELANTERA/TRASERA) | 259 |
| INTERRUPTOR DE VOLQUETE (CONJ) (PARADA DEL MOTOR) | 366 371 |
| INTERRUPTOR DE VOLQUETE (CONJ) (PARADA DEL MOTOR AL NIVEL DE PISO) | 344 |
| INTERRUPTOR DE VOLQUETE (CONJ) (PARADA DEL MOTOR AL NIVEL DE PISO) | 339 |
| INTERRUPTOR DE VOLQUETE (CONJ) (REFLECTOR DE LA HOJA) | 220 222 |
| INTERRUPTOR DE VOLQUETE (CONJ) (*THROTTLE LOCK SET, RESET) | 389 392 396 |
| INTERRUPTOR DEL LIMPIADOR (GR) | 303 |
| INTERRUPTOR DEL LIMPIAPARABRISAS (CONJ) (24 VOLTIOS) (PARTE TRASERA) | 1278 1280 1282 |
| INTERRUPTOR DEL LIMPIAPARABRISAS (CONJ) (24 VOLTIOS) (PARTE TRASERA) | 1276 |
| INTERRUPTOR MAGNÉTICO (GR) | 301 302 |
| INTERRUPTOR MAGNÉTICO (GR) (24 VOLTIOS) (RELE DE ARRANQUE) | 359 |
| INTERRUPTOR MAGNÉTICO (GR) (24 VOLTIOS) (RELE DE MOTOR DE ARRANQUE) | 349 |
| INTERRUPTOR PULSADOR (CONJ) (*DISPLAY MODES) | 1219 |


* NO HAY TRADUCCION DISPONIBLE EN EL MOMENTO DE LA IMPRESION

# INDICE


| Nombre | Página |
|---|---|
| | 1221 |
| INTERRUPTOR PULSADOR (CONJ) (MODALIDAD DE OPERADOR) | 1217 |
| INTERRUPTOR ROTATIVO (CONJ) (INTERRUPTOR DE CAMBIO DE LUCES) | 226 |
| INTERRUPTOR ROTATIVO (CONJ) (INTERRUPTOR DE CAMBIO DE LUCES) | 402 |
| INTERRUPTOR ROTATIVO (CONJ) (INTERRUPTOR DE CAMBIO DE LUCES) | 229 |
| | 232 |
| | 239 |
| | 242 |
| INTERRUPTOR ROTATIVO (CONJ) (LUZ ALTA/BAJA) | 259 |
| INTERRUPTOR ROTATIVO (CONJ) (SEÑAL DE VIRAJE) | 299 |
| INTERRUPTOR ROTATIVO (CONJ) (SUPERIOR, LUZ BAJA) | 223 |
| INTERRUPTOR ROTATIVO (CONJ) (VELOCIDAD DEL VENTILADOR) | 1096 |
| INTERRUPTOR ROTATIVO (CONJ) (VELOCIDAD DEL VENTILADOR) | 1147 |
| | 1151 |
| INTERRUPTOR ROTATIVO (CONJ) (24 VOLTIOS) (*FRONT WIPER CONTROL) | 306 |
| INTERRUPTOR ROTATIVO (CONJ) (24 VOLTIOS) (LIMPIAPARABRISAS DELANTERO) | 315 |
| INYECTOR DE COMBUSTIBLE (GR) | 124 |


## J


| Nombre | Página |
|---|---|
| JUEGO (AISLADOR) (MOTOR DE ARRANQUE) | 294 |
| JUEGO-CAJA DE RUEDA GUÍA-DER. (VENTANA) | 1262 |
| JUEGO-CAJA DE RUEDA GUÍA-IZQ. (VENTANA) | 1264 |
| JUEGO DE ABRAZADERA DEL FILTRO DE AIRE | 98 |
| JUEGO DE AJUSTE DEL ASIENTO | 1211 |
| JUEGO DE AMORTIGUADOR | 1135 |
| | 1136 |
| JUEGO DE ANILLO ESTANDAR (COMPRESOR DE AIRE) | 12 |
| JUEGO DE ATADURA (ASIENTO) | 1250 |
| JUEGO DE BUJES (MOTOR DE ARRANQUE) | 294 |
| JUEGO DE CALCES (*INCLUDES 17-SHIMS) | 725 |
| JUEGO DE COJÍN DEL ASIENTO | 1234 |
| JUEGO DE COJÍN DEL ASIENTO (VINILO) | 1236 |
| JUEGO DE COJINETES | 141 |
| | 1161 |
| JUEGO DE COJINETES (ALTERNADOR) | 144 |
| JUEGO DE COJINETES DE BANCADA (COMPRESOR DE AIRE) | 12 |
| JUEGO DE CONTROL DE PISTÓN | 725 |
| JUEGO DE DESCARGADOR (COMPRESOR DE AIRE) (COMPRESOR DE AIRE) | 12 |
| JUEGO DE DIAFRAGMA | 1155 |
| JUEGO DE ENCHUFE (12-CLAVIJAS) | 232 |
| | 242 |
| | 1219 |
| JUEGO DE ENCHUFE (12-CLAVIJAS) | 582 |
| JUEGO DE ENCHUFE (2 CLAVIJAS) | 167 |
| JUEGO DE ENCHUFE (6-CLAVIJAS) | 1219 |
| JUEGO DE ESCOBILLAS (MOTOR DE ARRANQUE) | 294 |
| JUEGO DE FILTRO DE COMBUSTIBLE Y SEPARADOR DE AGUA | 114 |
| JUEGO DE FUNDA DE LA SUSPENSIÓN DEL ASIENTO | 1248 |
| JUEGO DE HOJA DE LIMPIAPARABRISAS (PARTE TRASERA) | 1276 |
| | 1278 |
| JUEGO DE INCLINACIÓN DE ASIENTO | 1211 |
| JUEGO DE INCLINACIÓN TRASERA | 1211 |
| JUEGO DE INDICADOR (AJUSTE DE PESO) | 1161 |
| JUEGO DE INDICADOR (ASIENTO) | 1250 |
| JUEGO DE INFLADO DE AIRE | 619 |
| JUEGO DE LA CULATA DE CILINDROS (COMPRESOR DE AIRE) | 12 |
| JUEGO DE MARTILLO | 1143 |
| | 1144 |
| JUEGO DE PALANCA (MOTOR DE ARRANQUE) | 294 |
| JUEGO DE PANEL DEL RESPALDO DEL ASIENTO | 1234 |
| | 1236 |
| JUEGO DE PARAGOLPES (AJUSTE DE PESO) | 1161 |
| JUEGO DE PERNO RETENEDOR (GRUPO DE CONTROL) | 162 |
| JUEGO DE PISTÓN | 725 |
| JUEGO DE REACONDICIONAMIENTO DEL REGULADOR (COMPRESOR DE AIRE) | 620 |
| | 622 |
| JUEGO DE RECEPTÁCULO (12-CLAVIJAS) | 226 |
| | 232 |
| | 242 |
| | 344 |
| | 366 |
| | 371 |
| | 406 |
| | 430 |
| | 582 |


* NO HAY TRADUCCION DISPONIBLE EN EL MOMENTO DE LA IMPRESION

# INDICE


| Nombre | Página |
|---|---|
| | 1217 |
| | 1219 |
| JUEGO DE RECEPTÁCULO (12-CLAVIJAS) | 161 |
| JUEGO DE RECEPTÁCULO (3-CLAVIJAS) | 196 |
| | 197 |
| | 277 |
| | 278 |
| | 385 |
| JUEGO DE RECEPTÁCULO (6-CLAVIJAS) | 582 |
| | 1097 |
| | 1219 |
| JUEGO DE RESORTES | 1161 |
| JUEGO DE RESORTES (AJUSTE DE ALTURA) | 1161 |
| JUEGO DE RESTRICCIÓN DEL CINTURÓN | 1248 |
| JUEGO DE RODILLO | 1248 |
| JUEGO DE RODILLO (ASIENTO) | 1250 |
| JUEGO DE SEGUIDOR | 1160 |
| | 1161 |
| JUEGO DE SELLOS | 630 |
| | 632 |
| | 653 |
| | 658 |
| | 715 |
| | 716 |
| | 718 |
| | 1045 |
| | 1046 |
| JUEGO DE SELLOS (ACUMULADOR DE AMORTIGUADOR DE LA HOJA) | 631 |
| JUEGO DE SELLOS (BOMBA DOSIFICADORA, DIRECCIÓN) | 1113 |
| JUEGO DE SELLOS (SOLENOIDE DE TRANSMISION) | 488 |
| JUEGO DE SELLOS (TRABA DE DIFERENCIAL) | 477 |
| JUEGO DE SELLOS (VÁLVULA DE TRABA DEL DIFERENCIAL) | 487 |
| JUEGO DE SENSOR DE DIAL (NIVEL DE COMB) | 130 |
| | 132 |
| JUEGO DE TERMINAL (ALTERNADOR) | 144 |
| JUEGO DE TERMINAL DE ALTERNADOR | 141 |
| JUEGO DE TORNILLERÍA | 141 |
| JUEGO DE TORNILLERÍA (ALTERNADOR) | 144 |
| JUEGO DE TORNILLERÍA (ASIENTO) | 1250 |
| JUEGO DE VARILLA | 1211 |
| JUEGO-RECTIFICADOR | 141 |
| JUEGO-VÁLVULA DE CONTROL DE AIRE | 624 |
| JUNTA UNIVERSAL (GR) | 476 |

## L

| Nombre | Página |
|---|---|
| LÁMPARA (CONJ) | 378 |
| | 381 |
| LÁMPARA DE BALIZA DE ADVERTENCIA (GR) | 199 |
| | 200 |
| LÁMPARA DE FARO DELANTERO (GR) | 184 |
| | 185 |
| | 186 |
| LÁMPARA DE FARO DELANTERO (GR) | 188 |
| LÁMPARA DE LUZ DELANTERA Y DE SEÑAL (GR) | 190 |
| | 192 |
| LAMPARA DE PLACA DE REGISTRO (GR) | 195 |
| LÁMPARA DEL TECHO (GR) | 177 |
| LAMPARA-LED | 268 |
| | 269 |
| LAMPARA MARCADORA (GR) | 194 |
| LÁMPARA (*24-VOLT) (CAMBIO AUTOMÁTICO) | 408 |
| LÁMPARA (24 VOLTIOS) | 175 |
| | 177 |
| | 190 |
| | 223 |
| | 229 |
| | 232 |
| | 239 |
| | 240 |
| | 242 |
| | 259 |
| | 299 |
| | 387 |
| | 389 |
| | 392 |
| | 393 |
| | 396 |
| | 402 |
| | 1096 |
| | 1147 |
| | 1205 |
| | 1219 |
| | 1221 |
| | 1222 |
| LÁMPARA (24 VOLTIOS) | 208 |
| | 235 |
| | 237 |
| | 252 |
| | 254 |
| | 268 |
| | 269 |
| | 270 |
| | 273 |
| | 311 |


* NO HAY TRADUCCION DISPONIBLE EN EL MOMENTO DE LA IMPRESION

# INDICE


| Nombre | Página |
|---|---|
| | 313 |
| | 385 |
| | 387 |
| | 389 |
| | 392 |
| | 393 |
| | 396 |
| | 397 |
| | 399 |
| | 402 |
| | 1151 |
| | 1198 |
| | 1202 |
| | 1219 |
| | 1221 |
| LÁMPARA (24 VOLTIOS) (AUXILIAR DE ARRANQUE CON ÉTER) | 293 |
| LÁMPARA (24 VOLTIOS) (*AUXILIARY BACK-UP ALARM) | 206 |
| LÁMPARA (24 VOLTIOS) (DE GIRO) | 186 |
| | 188 |
| LÁMPARA (24 VOLTIOS) (DESCONGELADOR DELANTERO) | 1137 |
| LÁMPARA (24 VOLTIOS) (DESCONGELADOR TRASERO) | 1138 |
| LÁMPARA (24 VOLTIOS) (FAROS DELANTEROS, LUCES DE COLA) | 226 |
| LÁMPARA (24 VOLTIOS) (HOJA)(FARO DELANTERO) | 217 |
| LÁMPARA (24 VOLTIOS) (INTERRUPTOR DEL AMORTIGUADOR DE LA HOJA) | 304 |
| LÁMPARA (24 VOLTIOS) (LUZ AUXILIAR DE RETROCESO) | 204 |
| LÁMPARA (24 VOLTIOS) (LUZ DE LA HOJA) | 218 |
| LÁMPARA (24 VOLTIOS) (LUZ INDIC. DE ACCION MAESTRA DE EMS) | 1217 |
| LÁMPARA (24 VOLTIOS) (MANÓMETRO DE AIRE) | 1217 |
| LÁMPARA (24 VOLTIOS) (MÓDULO DE CUATRO MEDIDORES) | 1217 |
| LÁMPARA (24 VOLTIOS) (PLACA DE REGISTRACIÓN) | 195 |
| LÁMPARA (24 VOLTIOS) (POSICION) | 186 |
| | 188 |
| LÁMPARA (24 VOLTIOS) (POSICIÓN DE LA CABINA) | 194 |
| LÁMPARA (24 VOLTIOS) (REFLECTOR DE LA HOJA) | 220 |
| | 222 |
| LÁMPARA (24 VOLTIOS) (SEÑAL) | 192 |
| LÁMPARA (24 VOLTIOS) (TRABA DE DIFERENCIAL) | 1217 |
| LÁMPARA (24-VOLTIOS, 21 VATIOS) | 378 |
| | 381 |
| LÁMPARA (24-VOLTIOS, 21 VATIOS) (DE GIRO) | 186 |
| | 188 |
| LÁMPARA (24-VOLTIOS, 21 VATIOS) (SEÑAL) | 190 |
| | 192 |
| LÁMPARA (24-VOLTIOS, 3-VATIOS) | 338 |
| LÁMPARA (24-VOLTIOS, 3-VATIOS) | 1219 |
| | 1221 |
| LÁMPARA (24-VOLTIOS, 3-VATIOS) (TABLERO DE INSTRUMENTOS) | 1217 |
| LÁMPARA (24 VOLTIOS, 5 VATIOS) | 378 |
| | 381 |
| LÁMPARA (24 VOLTIOS, 5 VATIOS) | 378 |
| | 381 |
| LÁMPARA (24-VOLTIOS, 70-VATIOS) | 200 |
| LÁMPARA (24-VOLTIOS, 70-VATIOS) (BALIZA GIRATORIA DE ADVERTENCIA) | 199 |
| LÁMPARA (24 VOLTIOS, 75/70 VATIOS) | 190 |
| LÁMPARA (24 VOLTIOS, 75/70 VATIOS) (DELANTERA) | 192 |
| LÁMPARA (24 VOLTIOS, 75/70 VATIOS) (LUZ ALTA/BAJA) | 186 |
| | 188 |
| LÁMPARAS (GR) (PARADA, COLA, DE GIRO, IZQ.) | 381 |
| LÁMPARAS (GR) (PARADA, COLA, DE GIRO, IZQ.) | 378 |
| LÁMPARAS (GR) (PARADA, DE GIRO, COLA, DER.) | 381 |
| LÁMPARAS (GR) (PARADA, DE GIRO, COLA, DER.) | 378 |
| LAVAPARABRISAS DE LA VENTANA (GR) | 1252 |
| | 1254 |
| | 1255 |
| LEVANTAMIENTO - HOJA DE (GR) | 1075 |
| LIMPIAPARABRISAS (CONFIG) | 1266 |
| LIMPIAPARABRISAS DE LA VENTANA (GR) | 1267 |
| | 1268 |
| | 1270 |
| | 1272 |
| | 1274 |
| | 1276 |
| | 1278 |
| | 1280 |
| | 1282 |
| | 1284 |
| | 1285 |
| | 1286 |
| | 1287 |
| LLAVE (INTERRUPTOR GENERAL) | 298 |
| LUCES DE ADVERTENCIA (GR) | 265 |


* NO HAY TRADUCCION DISPONIBLE EN EL MOMENTO DE LA IMPRESION

# INDICE


| Nombre | Página |
|---|---|
| | 266 |
| | 268 |
| | 269 |
| | 270 |
| | 272 |
| LUCES DE ALÓGENO (24 VOLTIOS, 65 VATIOS) | 178 |
| | 181 |
| | 183 |
| LUCES DE ALÓGENO (24 VOLTIOS, 65 VATIOS) (LUZ BAJA) | 212 |
| LUCES DE ALÓGENO (24 VOLTIOS, 65 VATIOS) (LUZ BAJA) | 184 |
| LUCES DE ALÓGENO (24 VOLTIOS, 65 VATIOS) (REFLECTOR) | 179 |
| | 180 |
| | 182 |
| LUCES DE ALÓGENO (24 VOLTIOS, 65 VATIOS) (VIGA ALTA) | 212 |
| LUCES DE ALÓGENO (24 VOLTIOS, 65 VATIOS) (VIGA ALTA) | 185 |
| LUCES DE DESPLAZAMIENTO (GR) | 259 |
| | 262 |
| LUCES DE GIRO (GR) | 263 |
| | 264 |
| LUCES DE LA CABINA (GR) | 208 |
| LUCES DE REFLECTOR (GR) | 214 |
| | 217 |
| | 247 |
| | 249 |
| | 250 |
| | 252 |
| LUCES DE REFLECTOR (GR) | 210 |
| | 211 |
| | 212 |
| | 237 |
| | 239 |
| | 254 |
| | 256 |
| | 257 |
| | 258 |
| LUCES DE REFLECTOR (GR) | 218 |
| | 220 |
| | 222 |
| | 223 |
| | 226 |
| | 229 |
| | 232 |
| | 235 |
| | 242 |
| | 245 |
| LUCES DE REFLECTOR Y SEÑAL (CONFIG) | 203 |
| LUCES DE RETROCESO (GR) | 204 |
| LUCES DE RETROCESO (GR) | 206 |
| LUZ DE BALIZA (GR) | 273 |
| LUZ DE SEÑAL DE GIRO (GR) | 196 |
| | 197 |
| | 198 |


## M


| Nombre | Página |
|---|---|
| MANDO DE CORREA | 199 |
| | 200 |
| MANDO DEL CIRCULO (GR) | 667 |
| MANDO FINAL (GR) | 450 |
| MANGUERA DE ESCAPE DE GASES | 14 |
| | 16 |
| MARTILLO Y MONTAJE (GR) | 1143 |
| | 1144 |
| MAZO DE CABLES (CONJ) (BOMBA INYECTORA INDIVIDUAL) | 407 |
| MAZO DE CABLES (CONJ) (*REGISTRATION) | 594 |
| MAZO DE CABLES (CONSOLA) | 402 |
| MAZO DE CABLES DE ALARMA (CONJ) | 204 |
| | 206 |
| | 208 |
| MAZO DE CABLES DE LA PLATAFORMA (CONJ) | 325 |
| MAZO DE CABLES DE LA PLATAFORMA (CONJ) | 330 |
| MAZO DE CABLES DE LA PLATAFORMA (CONJ) | 321 |
| MAZO DE CABLES DE LA TRANSMISION | 339 |
| | 344 |
| | 366 |
| | 371 |
| | 406 |
| | 430 |
| MAZO DE CABLES DE LUCES TRASERAS (CONJ) | 258 |
| | 330 |
| | 364 |
| | 367 |
| | 372 |
| | 378 |
| | 381 |
| MAZO DE CABLES DE LUCES TRASERAS (CONJ) | 245 |
| | 247 |
| MAZO DE CABLES DE LUCES TRASERAS (CONJ) (LADO DERECHO) | 379 |
| | 381 |
| MAZO DE CABLES DE LUCES TRASERAS (CONJ) (LADO IZQUIERDO) | 379 |
| | 381 |


* NO HAY TRADUCCION DISPONIBLE EN EL MOMENTO DE LA IMPRESION

# INDICE


| Nombre | Página |
|---|---|
| MAZO DE CABLES DE SENSOR (CONJ) | 413 |
| MAZO DE CABLES DE SENSOR (CONJ) (TRANSMISION) | 409 |
| MAZO DE CABLES DEL CHASIS (CONJ) | 304 |
| MAZO DE CABLES DEL CHASIS (CONJ) | 249 |
| MAZO DE CABLES DEL CHASIS (CONJ) (VERTEDERA) | 250 |
| MAZO DE CABLES DEL TABLERO (CONJ) | 204 |
| | 208 |
| | 237 |
| | 311 |
| | 1219 |
| MAZO DE CABLES DEL TABLERO (CONJ) | 1217 |
| MAZO DE CABLES DEL TABLERO (CONJ) | 235 |
| MAZO DE CABLES DEL TABLERO (CONJ) (INTERRUPTOR) | 1202 |
| MAZO DE CABLES DEL TABLERO (CONJ) (TABLERO DE LUCES TRASERAS) | 1221 |
| MAZO DE CABLES DELANTERO (CONJ) (*CIRCLE) | 330 |
| MAZO DE CABLES (ELECTRONICA DE MOTOR) | 317 |
| | 319 |
| MAZO DE CABLES, LUCES | 229 |
| | 232 |
| MAZO DE CABLES TRASERO (CONJ) (*SERVICE CENTER, LH) | 349 |
| | 354 |
| | 359 |
| MAZO DE CABLES TRASERO (CONJ) (*SERVICE CENTER, RH) | 349 |
| | 354 |
| | 359 |
| MECANISMO DE LA VÁLVULA - MONTAJE DEL (GR) | 46 |
| MECANISMO DE VÁLVULAS (GR) | 60 |
| MIRILLA | 93 |
| MIRILLA (ACEITE HIDRÁULICO) | 737 |
| MIRILLA (NIVEL DE REFRIGERANTE) | 94 |
| MÓDULO DEL TACÓMETRO Y DEL VELOCÍMETRO (GR) | 1205 |
| MODULO ELECTRÓNICO DE CUATRO INDICADORES (GR) | 1204 |
| MONTAJE DE LA ESTRUCTURA ROPS (GR) | 1207 |
| | 1209 |
| MONTAJE DE RUEDA (GR) | 464 |
| MONTAJE DEL ALTERNADOR (GR) | 144 |
| MONTAJE DEL DESGARRADOR (GR) | 1078 |
| MONTAJE DEL MOTOR Y LA TRANSMISIÓN (GR) | 45 |
| MONTAJE-REGISTRO (GR) | 593 |
| | 594 |
| MOTONIVELADORA PARA LA NIEVE (CONFIG) | 6 |
| MOTOR - SOPORTE DEL (GR) | 58 |
| MOTOR DE ARRANQUE ELÉCTRICO (GR) | 294 |
| | 296 |
| MOTOR DE ENGRANAJES (GR) | 719 |
| MOTOR ELÉCTRICO (GR) | 275 |
| | 276 |
| MOTOR HIDRÁULICO DE ENGRANAJES (GR) | 720 |
| MOTOR-LIMPIAPARABRISAS (GR) (DELANTERO) | 1286 |
| MOTOR-LIMPIAPARABRISAS (GR) (*FRONT, UPPER) | 1287 |
| MOTOR-LIMPIAPARABRISAS (GR) (PARTE TRASERA) | 1278 |
| | 1282 |
| MOTOR-LIMPIAPARABRISAS (GR) (POSICION DELANTERA / SUPERIOR) | 1270 |
| | 1274 |
| MOTOR-LIMPIAPARABRISAS (GR) (24 VOLTIOS, 2 VELOCIDADES) | 1267 |
| | 1286 |
| MOTOR-LIMPIAPARABRISAS (GR) (24 VOLTIOS, 2 VELOCIDADES) | 1270 |
| | 1274 |
| | 1287 |
| MOTOR-LIMPIAPARABRISAS (GR) (24 VOLTIOS, 2 VELOCIDADES) (*FRONT, LOWER) | 1274 |
| MOTOR-LIMPIAPARABRISAS (GR) (24 VOLTIOS, 2 VELOCIDADES) (*FRONT LOWER) | 1270 |
| MOTOR Y VENTILADOR (GR) | 76 |
| *MOUNTING GP-GRADE CONTROL | 1053 |
| | 1077 |
| MÚLTIPLE DE ADMISIÓN (GR) | 102 |
| MÚLTIPLE DE ESCAPE (GR) | 101 |


## N


| | |
|---|---|
| NUCLEO DE ENFRIADOR DE ACEITE DE MOTOR (CONJ) | 432 |
| | 434 |
| NÚCLEO DE TURBOCOMPRESOR (GR) | 108 |


## P


| | |
|---|---|
| PANEL DE INSONORIZACIÓN (GR) | 50 |
| PANEL DE LA CABINA (GR) | 1213 |
| | 1214 |
| | 1215 |
| PERSIANA PARA EL SOL (GR) | 1231 |


* NO HAY TRADUCCION DISPONIBLE EN EL MOMENTO DE LA IMPRESION

# INDICE


| Nombre | Página |
|---|---|
| PERSIANAS DE LA CABINA (GR) | 1190 |
| PISTÓN Y BIELA (GR) | 51 |
| PLACA DE CONTROL (CALENTADOR Y ACOND. DE AIRE) | 1096 |
| PLACA DE CONTROL (MÓDULO DE CUATRO MEDIDORES) | 1219, 1221 |
| PLACA DE CONTROL (SISTEMA MONITOR CATERPILLAR) | 1217 |
| PLACA DE CONTROL (VELOCIDAD DEL VENTILADOR, TEMPERATURA) | 1147, 1151 |
| PLACA DE IDENTIFICACION (ALTERNADOR) | 349, 354, 359 |
| PLACA DE INFORMACION (COMPRESOR DE AIRE) | 12 |
| PLACA DE INFORMACION (*ENGINE, HIGH IDLE, HOLD) | 1116 |
| PLACA DE INFORMACION (*ENGINE, HIGH IDLE, HOLD) | 1114 |
| PLACA DE INFORMACION (*ENGINE, LOW IDLE, HOLD) | 1114, 1116 |
| PLACA DE INFORMACION (FILTRO DE AIRE) | 98 |
| PLACA DE INFORMACION (LAMINADO) (MOTOR) | 1291 |
| PLACA DE INFORMACION (MOTOR) | 354, 376 |
| PLACA DE INFORMACION (MOTOR) | 349, 359 |
| PLACA DE INFORMACION (PLACA PLATEADA) (MOTOR) | 1291 |
| PLACA DE INFORMACION (UBICACIÓN DEL CONECTOR DE LEVANTAMIENTO) | 1292 |
| PLACA DE INSTRUCCIONES (ACONDICIONADOR DE AIRE) | 1096 |
| PLACA DE INSTRUCCIONES (BATERÍA) | 349, 354, 359 |
| PLACA DEL NÚMERO DE SERIE (TRANSMISION) | 409 |
| PLACA DEL NÚMERO DE SERIE (TRANSMISION) | 413 |
| PLACA DEL TABLERO (CONTROL DE VELOCIDAD) | 1116 |
| PLACA DEL TABLERO (SELECCIÓN DE VELOCIDAD) | 1114 |
| PLACA DEL TABLERO (SEÑALES DE ACCIÓN, PARTE DERECHA) | 1217 |
| PLACA DEL TABLERO (SEÑALES DE ACCIÓN, PARTE IZQUIERDA) | 1217 |
| PLACA DEL TABLERO (TABLERO INDICADOR, IZQUIERDO) | 1219, 1221, 1222 |
| PLACA DEL TABLERO (*TRANSMISSION INDICATOR PANEL) | 1114 |
| PLACA DEL TABLERO (*TRANSMISSION, PARKING BRAKE) | 1116 |
| PLANCHA DE EMPUJE (GR) | 1054, 1055 |
| *PLATE GP-RADIATOR | 90 |
| *PLATE-IDENTIFICATION (*MAXIMUM WEIGHT) | 5 |
| PLATO OSCILANTE (GR) | 733 |
| POSABRAZOS (GR) | 1100, 1101 |
| PROTECTOR DE LA PLATAFORMA (GR) | 575, 576, 579, 582, 584 |
| PROTECTOR DE LAS LUCES (GR) | 574 |
| PROTECTOR DE LAS TUBERÍAS DE LOS FRENOS (GR) | 572 |
| PROTECTOR DEL TANQUE DE COMBUSTIBLE (GR) | 573 |
| PROTECTOR INFERIOR (GR) | 570, 571 |
| PROTECTOR TÉRMICO DEL EJE DE MANDO (GR) | 595 |
| PROTECTOR Y SOPORTE DEL RADIADOR (GR) | 567 |
| PUBLICACIONES (GR) | 1189 |
| PUERTA DE CABINA | 1120, 1123, 1125, 1127, 1129, 1131 |
| PUERTA (GR) (*AIR VENTED) | 1170, 1174, 1179, 1181 |


## R


| | |
|---|---|
| RADIADOR (GR) | 94 |
| RADIADOR (GR) | 93 |
| RADIO (GR) | 1224 |
| RADIO (GR) (AM/FM CON CASSETTE) | 1224 |
| RECEPTOR-SECADOR (REFRIGERANTE) | 1183 |


* NO HAY TRADUCCION DISPONIBLE EN EL MOMENTO DE LA IMPRESION

# INDICE


| Nombre | Página |
|---|---|
| REFLECTOR (GR) | 178 |
| | 179 |
| | 180 |
| | 181 |
| | 182 |
| | 183 |
| REFLECTORES (CONFIG) | 201 |
| | 202 |
| REGULADOR DE TEMPERATURA DEL AGUA (98 GRADOS C) | 79 |
| | 80 |
| REGULADOR DE VOLTAJE (24 VOLTIOS) | 141 |
| REGULADOR DE VOLTAJE (24 VOLTIOS) (ALTERNADOR) | 144 |
| REGULADOR Y CAJA (GR) | 79 |
| | 80 |
| REJILLA DE SUCCIÓN (CAJA DE TRANSMISION) | 409 |
| | 413 |
| REJILLA DE SUCCIÓN (TRANSMISION) | 467 |
| REJILLA MAGNÉTICA (GR) | 467 |
| REJILLA (VALVULA DE CONTROL DE TRANSMISION) | 490 |
| | 492 |
| RELÉ (CONJ) (24 VOLTIOS) | 206 |
| RELÉ (CONJ) (24 VOLTIOS) (ALARMA DE RETROCESO) | 208 |
| RELÉ (CONJ) (24 VOLTIOS) (AUXILIAR DE ARRANQUE CON ÉTER) | 290 |
| RELÉ (CONJ) (24 VOLTIOS) (LUCES DE TABLERO, COLA) | 402 |
| RELÉ (CONJ) (24 VOLTIOS) (LUCES DE TRABAJO) | 220 |
| | 222 |
| RELÉ (CONJ) (24 VOLTIOS) (LUZ AUXILIAR DE RETROCESO) | 204 |
| RELÉ (CONJ) (24 VOLTIOS) (*TAIL, PANEL LAMPS) | 399 |
| RELE (24 VOLTIOS) (GRADO CONTROL) | 330 |
| RELE (24 VOLTIOS) (IMPLEMENTO) | 330 |
| RESPIRADERO (CONJ) | 60 |
| RESPIRADERO (CONJ) (TANDEM) | 470 |
| RESPIRADERO (CONJ) (TUBO DE LLENADO DE TREN DE FUERZA) | 442 |
| RESPIRADERO (TANDEM) | 471 |
| RETROVISOR (GR) | 1191 |
| | 1192 |
| | 1193 |
| | 1194 |
| | 1195 |
| | 1196 |
| | 1197 |
| | 1198 |
| | 1200 |
| | 1201 |
| | 1202 |
| REVESTIMIENTO DE LA CABINA (GR) | 1168 |
| | 1170 |
| | 1174 |
| | 1179 |
| | 1181 |
| RUEDA (CONFIG) | 537 |
| | 538 |
| RUEDA (GR) | 539 |
| | 540 |
| | 541 |
| | 542 |
| RUEDA Y LLANTA (CONFIG) | 494 |
| | 495 |
| | 496 |
| | 497 |
| | 498 |
| | 499 |
| | 500 |
| | 501 |
| | 502 |
| | 503 |
| | 504 |
| | 505 |
| | 506 |
| | 507 |
| | 508 |
| RUEDA Y NEUMÁTICO (GR) | 534 |
| | 535 |
| | 536 |
| RUEDA Y NEUMÁTICO (GR) | 508 |
| | 509 |
| | 510 |
| | 511 |
| | 512 |
| | 513 |
| | 514 |
| | 515 |
| | 516 |
| | 517 |
| | 518 |
| | 519 |
| | 520 |
| | 521 |
| | 522 |
| | 523 |
| | 524 |
| | 525 |
| | 526 |
| | 527 |
| | 528 |


* NO HAY TRADUCCION DISPONIBLE EN EL MOMENTO DE LA IMPRESION

# INDICE


| Nombre | Página |
|---|---|
| | 529 |
| | 530 |
| | 531 |
| | 532 |
| | 533 |

## S

| | |
|---|---|
| SEGMENTO DE CIRCULO | 1049 |
| SELLO DE CIGÜEÑAL (GR) | 57 |
| SELLO DE CIGÜEÑAL (GR) | 41 |
| SENSOR DE PRESIÓN (GR) | 279 |
| | 280 |
| | 281 |
| | 282 |
| | 283 |
| SENSOR DE TEMPERATURA (GR) | 287 |
| | 288 |
| | 289 |
| SENSOR DE TEMPERATURA (GR) (ACEITE DE LA TRANSMISIÓN) | 410 |
| | 414 |
| SENSOR DE VELOCIDAD (GR) | 284 |
| | 285 |
| | 286 |
| SENSOR DE VELOCIDAD (GR) (ENTRADA DE TRANSMISIÓN) | 414 |
| SERVICIO DE MONITOR (GR) (SISTEMA MONITOR CATERPILLAR) | 169 |
| SILENCIADOR (GR) | 103 |
| SOFTWARE DEL MONITOR (GR) (SISTEMA MONITOR CATERPILLAR) | 169 |
| SOFTWARE DEL MONITOR (GR) (SISTEMA MONITOR CATERPILLAR) | 169 |
| SOLENOIDE (CONJ) (24 VOLTIOS) | 294 |
| SOPORTE DE LA HOJA (GR) | 549 |
| SOPORTE DE MONTAJE (GR) | 549 |
| | 550 |
| SOPORTE DE PLATAFORMA (GR) | 603 |
| SOPORTE DEL ASIENTO (GR) | 1246 |
| SOPORTE DEL ESCARIFICADOR (GR) | 1066 |
| SOPORTE DEL TANQUE DE COMBUSTIBLE (GR) | 600 |
| | 601 |
| SUPRESOR DEL CONTROL AUTOMATICO DEL RETARDADOR (CONJ) | 220 |
| SUSPENSIÓN - ASIENTO CON (GR) | 1238 |
| | 1239 |
| | 1240 |
| | 1241 |
| | 1242 |
| | 1243 |
| | 1244 |

## T

| | |
|---|---|
| TABLERO DE INSTRUMENTOS (GR) | 1217 |
| | 1219 |
| | 1221 |
| TÁNDEM Y CUBIERTA (GR) | 470 |
| | 471 |
| TANQUE DE AIRE (GR) | 620 |
| | 622 |
| TANQUE HIDRÁULICO Y MONTAJE (GR) | 739 |
| TANQUE Y FILTRO HIDRÁULICOS (GR) | 737 |
| TAPA DE LLENADO (CONJ) | 65 |
| TAPA DE PRESION (7 LB/PULG2) | 93 |
| | 94 |
| TAPA DEL BLOQUE MOTOR (GR) | 23 |
| TAPA DEL TUBO DE LLENADO DE COMBUSTIBLE (GR) (SERVICIO PESADO, TRABABLE) | 130 |
| | 132 |
| TAPA DEL TUBO DE LLENADO (TANQUE DE ACEITE HIDRÁULICO) | 737 |
| TAPÓN | 470 |
| | 471 |
| TAPON DE TUBO | 667 |
| TAPÓN DEL BLOQUE MOTOR (GR) | 52 |
| TAPÓN DEL MOTOR (GR) | 53 |
| TAPÓN MAGNÉTICO (DRENAJE DE LA CAJA) | 551 |
| | 552 |
| TENSOR DE CORREA (GR) | 18 |
| | 20 |
| TIRANTE DE DIRECCIÓN (GR) | 591 |
| | 592 |
| TIRANTE (GR) (DIRECCIÓN) | 650 |
| TOPE DE VÁLVULA DE CONTROL (GR) | 664 |
| | 665 |
| TORNILLERIA DEL RADIADOR | 78 |
| TORNILLERÍA DEL TANQUE DE COMBUSTIBLE | 111 |
| | 112 |
| TORNILLERÍA (GR) | 561 |
| TRABA DE DESPLAZAMIENTO DEL CIRCULO (GR) | 713 |
| TRANSMISION (CONFIG) | 472 |
| | 474 |
| TREN DE FUERZA-GRUPO ELECTRÓNICO | 169 |
| TUBERÍAS DE ACEITE DE LA TRANSMISIÓN (GR) | 452 |
| | 456 |
| | 460 |
| TUBERÍAS DE ACONDICIONADOR DE AIRE (GR) | 1183 |
| TUBERIAS DE CALEFACCION | 1185 |
| | 1187 |


* NO HAY TRADUCCION DISPONIBLE EN EL MOMENTO DE LA IMPRESION

# INDICE


| Nombre | Página |
|---|---|
| TUBERÍAS DE COMBUSTIBLE (GR) | 115 |
| | 116 |
| TUBERÍAS DE DIRECCIÓN (GR) | 710 |
| TUBERIAS DE DRENAJE DE ACEITE DE MOTOR (GR) | 69 |
| TUBERÍAS DE INYECCIÓN DE COMBUSTIBLE (GR) | 121 |
| TUBERÍAS DE LA CALEFACCIÓN (GR) | 1185 |
| | 1187 |
| TUBERÍAS DE LA DIRECCIÓN SECUNDARIA (GR) | 708 |
| TUBERÍAS DE LUBRICACIÓN (GR) | 590 |
| TUBERÍAS DEL ACUMULADOR (GR) | 672 |
| TUBERÍAS DEL AGUA (GR) | 81 |
| | 82 |
| | 83 |
| | 85 |
| | 87 |
| | 88 |
| | 89 |
| TUBERÍAS DEL DESGARRADOR (GR) | 703 |
| | 705 |
| | 707 |
| TUBERÍAS DEL FILTRO DE COMBUSTIBLE | 118 |
| TUBERÍAS HIDRÁULICAS DEL VENTILADOR (GR) | 690 |
| | 692 |
| TUBERÍAS HIDRÁULICAS (GR) | 674 |
| | 676 |
| | 677 |
| | 678 |
| | 680 |
| | 683 |
| | 686 |
| | 689 |
| TUBO DE LLENADO DE ACEITE DE LA TRANSMISIÓN (GR) | 442 |
| TUBO DE LLENADO DE ACEITE (GR) | 65 |
| TURBOCOMPRESOR - TUBERÍAS DE ACEITE DEL (GR) | 70 |
| TURBOCOMPRESOR (GR) | 107 |
| | 108 |

## U

| | |
|---|---|
| UNIÓN GIRATORIA (GR) | 734 |
| | 735 |

## V

| | |
|---|---|
| VÁLVULA DE ALIVIO (GR) | 708 |
| | 1028 |
| | 1029 |
| | 1030 |
| | 1031 |
| | 1032 |
| | 1033 |
| | 1034 |
| | 1035 |
| | 1036 |
| | 1037 |
| | 1038 |
| | 1039 |
| | 1040 |
| | 1041 |
| | 1042 |
| VÁLVULA DE ALIVIO (GR) (COMPRESOR DEL REFRIGERANTE) | 1105 |
| VÁLVULA DE COMBINACIÓN (GR) | 970 |
| | 972 |
| VALVULA DE CONTROL DE LA BOMBA (GR) | 1022 |
| | 1024 |
| VÁLVULA DE CONTROL DE LA TRANSMISIÓN (GR) | 492 |
| VÁLVULA DE CONTROL DE LA TRANSMISIÓN (GR) | 490 |
| VÁLVULA DE CONTROL (GR) | 974 |
| | 976 |
| | 978 |
| | 980 |
| | 982 |
| | 984 |
| | 986 |
| | 988 |
| | 990 |
| | 992 |
| | 994 |
| | 996 |
| | 998 |
| | 1000 |
| | 1002 |
| | 1004 |
| | 1006 |
| | 1008 |
| | 1010 |
| | 1012 |
| | 1014 |
| | 1016 |
| | 1018 |
| | 1020 |
| VÁLVULA DE CONTROL (GR) (AIRE) | 624 |
| VÁLVULA DE DRENAJE (*FUEL SUMP) | 551 |
| VÁLVULA DE DRENAJE (TANQUE DE AIRE) | 620 |
| | 622 |
| VÁLVULA DE LA TRABA DEL DIFERENCIAL Y MONTAJE (GR) | 477 |


* NO HAY TRADUCCION DISPONIBLE EN EL MOMENTO DE LA IMPRESION

# INDICE


| Nombre | Página |
|---|---|
| VÁLVULA DE LANZADERA (GR) | 716 |
| | 718 |
| VÁLVULA DE LANZADERA (GR) | 1043 |
| | 1044 |
| VÁLVULA DE LEVANTAMIENTO (GR) | 43 |
| VALVULA DE PURGA (GR) | 1026 |
| | 1027 |
| VALVULA DE PURGA (GR) (SECADOR DE AIRE) | 608 |
| VÁLVULA DE RETENCIÓN (GR) | 136 |
| | 137 |
| | 138 |
| VÁLVULA DE SOLENOIDE (GR) | 487 |
| | 488 |
| | 626 |
| | 627 |
| VÁLVULA DE SOLENOIDE (GR) | 1045 |
| | 1046 |
| VÁLVULA DE SOLENOIDE (GR) (24 VOLTIOS CC) (*SELECTOR & PRESSURE RANGE) | 478 |
| | 481 |
| VÁLVULA DE SOLENOIDE (GR) (24 VOLTIOS CC) (*SPEED, RANGE, TRANSMISSION) | 484 |
| VÁLVULA DEL NEUMÁTICO (GR) | 489 |
| | 534 |
| | 535 |
| | 536 |
| | 539 |
| | 540 |
| | 541 |
| | 542 |
| VÁLVULA DEL NEUMÁTICO (GR) | 508 |
| | 509 |
| | 510 |
| | 511 |
| | 512 |
| | 513 |
| | 514 |
| | 515 |
| | 516 |
| | 517 |
| | 518 |
| | 519 |
| | 520 |
| | 521 |
| | 525 |
| | 526 |
| | 527 |
| | 528 |
| | 529 |
| | 530 |
| | 531 |
| | 532 |
| | 533 |
| VÁLVULA DEL NEUMÁTICO (GR) (INFLADO DE NEUMÁTICOS) | 536 |
| | 541 |
| VÁLVULA DEL NEUMÁTICO (GR) (INFLADO DE NEUMÁTICOS) | 518 |
| | 519 |
| | 520 |
| | 521 |
| | 522 |
| | 523 |
| | 524 |
| | 528 |
| | 531 |
| | 532 |
| VÁLVULA SELECTORA Y DE CONTROL DE PRESIÓN (GR) | 478 |
| VÁLVULA SELECTORA Y DE CONTROL DE PRESIÓN (GR) | 481 |
| | 484 |
| VÁLVULA Y VARILLAJE (GR) | 740 |
| | 742 |
| | 744 |
| | 746 |
| | 748 |
| | 750 |
| | 752 |
| | 755 |
| | 757 |
| | 759 |
| | 761 |
| | 763 |
| | 765 |
| | 767 |
| | 769 |
| | 771 |
| | 773 |
| | 775 |
| | 777 |
| | 779 |
| | 782 |
| | 784 |
| | 786 |
| | 788 |
| | 790 |
| | 792 |
| | 794 |
| | 796 |
| | 799 |
| | 803 |
| | 807 |


* NO HAY TRADUCCION DISPONIBLE EN EL MOMENTO DE LA IMPRESION

# INDICE


| Nombre | Página |
|---|---|
| | 811 |
| | 815 |
| | 819 |
| | 822 |
| | 825 |
| | 829 |
| | 833 |
| | 837 |
| | 841 |
| | 845 |
| | 849 |
| | 853 |
| | 857 |
| | 860 |
| | 864 |
| | 867 |
| | 870 |
| | 874 |
| | 877 |
| | 880 |
| | 884 |
| | 888 |
| | 892 |
| | 896 |
| | 900 |
| | 904 |
| VÁLVULAS HIDRÁULICAS - GRUPO DE 6 | 934 |
| | 935 |
| | 936 |
| | 937 |
| | 938 |
| | 939 |
| | 940 |
| | 942 |
| | 944 |
| | 946 |
| | 948 |
| | 950 |
| VÁLVULAS HIDRÁULICAS - GRUPO DE 7 | 952 |
| | 953 |
| | 955 |
| | 956 |
| | 957 |
| | 958 |
| | 959 |
| | 960 |
| | 962 |
| | 964 |
| | 966 |
| | 967 |
| | 968 |
| | 969 |
| VENTANA DE LA CABINA (GR) | 1261 |
| | 1262 |
| | 1264 |
| VENTANA (GR) | 1257 |
| | 1258 |
| | 1259 |
| | 1260 |
| VENTILADOR DE CIRCULACION | 1137 |
| | 1138 |
| VENTILADOR DESCONGELADOR (GR) | 1139 |
| | 1140 |
| VIDRIO (CONJ) (AMBAR) (DE GIRO) | 186 |
| | 188 |
| VIDRIO (CONJ) (AMBAR) (SEÑAL) | 190 |
| | 192 |
| VIDRIO (CONJ) (DELANTERA) | 186 |
| | 188 |
| VIDRIO (CONJ) (FARO DELANTERO) | 190 |
| | 192 |
| VIDRIO (CONJ) (LAMPARA-LUZ BAJA) | 184 |
| VIDRIO (CONJ) (LUZ BAJA) | 212 |
| VOLANTE - CAJA DE (GR) | 39 |
| VOLANTE (GR) | 37 |


## W


| | |
|---|---|
| *WIRING AS | 338 |
| *WIRING GP-TRANSMISSION | 406 |


* NO HAY TRADUCCION DISPONIBLE EN EL MOMENTO DE LA IMPRESION

# ÍNDICE


| Designação | Página |
|---|---|

## A

ACENDEDOR (CIGARROS, 24 VOLTS) . . . . . 392
397
ACESSÓRIO - CABINE . . . . . 1093
1094
ACOPLAMENTO TORSIONAL . . . . . 437
ACUMULADOR . . . . . 629
630
ACUMULADOR - AR CONDICIONADO . . . . . 1183
ACUMULADOR - DIREÇÃO . . . . . 634
ACUMULADOR
(AMORTECEDOR DA LÂMINA) . . . . . 633
ACUMULADOR DO AMORTECEDOR DA
LÂMINA . . . . . 629
ACUMULADOR HIDRÁULICO . . . . . 631
632
633
ACUMULADOR HIDRÁULICO E MONTAGEM . . . 628
ADAPTADOR . . . . . 428
690
ADAPTADOR DO PURIFICADOR DE AR . . . . . 105
ADESIVO-TAMPA (FUNDO PRETO)
(TAMPA - PRETA) . . . . . 1116
ADESIVO-TAMPA (FUNDO PRETO)
(TAMPA - PRETA) . . . . . 1114
ALARME . . . . . 139
140
ALARME (MARCHA-À-RÉ) . . . . . 378
ALTERNADOR DE CORRENTE . . . . . 141
143
144
145
146
APLICAÇÃO - TREM DE FORÇA . . . . . 408
AQUECEDOR DA ÁGUA DO MOTOR . . . . . 172
173
174
AQUECEDOR DA CABINE . . . . . 1145
1146
1147
1151
AQUECEDOR DA CABINE E MONTAGEM . . . . . 1145
AQUECEDOR DO COMBUSTÍVEL
(SEPARADOR DE ÁGUA, 12 VOLTS) . . . . . 114
AR. PARA NEVE - MOTONIVELADORA . . . . . 6
ARMAÇÃO-ALTERNADOR . . . . . 144
ARRANJO GERAL . . . . . 3
ARRANJO RODOVIÁRIO . . . . . 5
ARREFECEDOR DE ÓLEO DA
TRANSMISSÃO . . . . . 432
434
ARREFECIMENTO . . . . . 73
74
75
ARTICULAÇÃO GIRATÓRIA . . . . . 734
735
ARTICULAÇÃO-T . . . . . 694
700
ASSENTO . . . . . 1234
1236
ASSENTO - FUNDO . . . . . 1211
ASSENTO COM SUSPENSÃO . . . . . 1238
1239
1240
1241
1242
1243
1244
AUXILIAR DE PARTIDA A ÉTER . . . . . 290
292
293

## B

BALANCIM . . . . . 55
BARRA DE DIREÇÃO (DIREÇÃO) . . . . . 650
BARRA DE TRAÇÃO . . . . . 1051
BASE DO FILTRO DE ÓLEO . . . . . 62
64
66
BATERIA . . . . . 147
148
149
150
BATERIA
(12 VOLTS, ISENTO DE MANUTENÇÃO) . . . . 149
150
BATERIA
(12 VOLTS, ISENTO DE MANUTENÇÃO)
(MOLHADO) . . . . . 148
BATERIA
(12 VOLTS, ISENTO DE MANUTENÇÃO)
(1.100 AMPS) . . . . . 147
BLINDAGEM DO EIXO DA TRANSMISSÃO . . . . . 595
BLOCO DE JUNÇÃO . . . . . 151
BLOCO DO MOTOR . . . . . 27
28
29
BOCAL DE ENCHIMENTO DE ÓLEO DO
MOTOR . . . . . 65
BOCAL DE ENCHIMENTO DE ÓLEO DO TREM
DE FORÇA . . . . . 442
BOMBA DA DIREÇÃO SECUNDÁRIA E
MONTAGEM . . . . . 724
BOMBA DE ÁGUA . . . . . 91
92


* TRADUÇÃO NÃO DISPONÍVEL NO MOMENTO DA IMPRESSÃO

# ÍNDICE


| Designação | Página |
|---|---|
| BOMBA DE DIREÇÃO SECUNDÁRIA E MOTOR | 722 |
| BOMBA DE ENGRENAGENS | 465 |
| | 466 |
| BOMBA DE ESCORVA DO COMBUSTÍVEL | 125 |
| | 126 |
| BOMBA DE INJEÇÃO DO COMBUSTÍVEL | 124 |
| BOMBA DE ÓLEO - MOTOR | 71 |
| | 72 |
| BOMBA DE PISTÃO | 725 |
| | 727 |
| BOMBA DE TRANSFERÊNCIA DO COMBUSTÍVEL | 123 |
| BOMBA E MONTAGEM - PISTÃO | 723 |
| BOMBA E MONTAGEM - TRANSFERÊNCIA DE COMBUSTÍVEL | 123 |
| BOMBA REGULADORA (HMU) | 1113 |
| BORDA CORTANTE | 1067 |
| | 1068 |
| BRAÇO DO ASSENTO | 1100 |
| | 1101 |
| BUJÃO - CANO/TUBO | 667 |
| BUJÃO DO BLOCO DO CILINDRO | 52 |
| BUJÃO DO MOTOR | 53 |
| BUJÃO MAGNÉTICO (CAIXA DE DRENAGEM) | 551 |
| | 552 |
| BUZINA DE AR | 1155 |
| | 1156 |
| | 1158 |

## C

| | |
|---|---|
| CABEÇOTE DO MOTOR | 31 |
| | 33 |
| | 34 |
| CABINE | 1102 |
| | 1103 |
| CABINE OPERADOR - SEM ROPS | 1102 |
| CABOS E FIOS ELÉTRICOS-LUZES TRASEIRAS | 378 |
| | 381 |
| CABOS/FIOS ELÉTRICOS - CABINE | 306 |
| | 308 |
| | 309 |
| | 311 |
| | 313 |
| | 315 |
| CABOS/FIOS ELÉTRICOS - CONSOLE DA DIREÇÃO | 399 |
| | 402 |
| CABOS/FIOS ELÉTRICOS - CONSOLE DA TRANSMISSÃO | 387 |
| | 389 |
| | 392 |
| | 396 |
| CABOS/FIOS ELÉTRICOS - DIANTEIROS | 321 |
| | 325 |
| | 330 |
| CABOS/FIOS ELÉTRICOS - DIREÇÃO SECUNDÁRIA | 385 |
| CABOS/FIOS ELÉTRICOS - INJETOR | 407 |
| CABOS/FIOS ELÉTRICOS - MOTOR | 317 |
| | 319 |
| CABOS/FIOS ELÉTRICOS - TRANSMISSÃO | 406 |
| CABOS/FIOS ELÉTRICOS - TRASEIROS | 339 |
| | 344 |
| | 349 |
| | 354 |
| | 359 |
| | 364 |
| | 366 |
| | 371 |
| | 376 |
| CADEADO | 739 |
| | 1102 |
| CADEADO (CAIXA DE FERRAMENTAS) | 1288 |
| CADEADO (COMPARTIMENTO PARA PUBLICAÇÕES) | 5 |
| | 1119 |
| CADEADO (ROPS) | 1226 |
| CAIXA - SUSPENSÃO DO ASSENTO | 1160 |
| CAIXA DE FERRAMENTAS | 1288 |
| CAIXA DIANTEIRA | 41 |
| CAIXA DO VOLANTE DO MOTOR | 39 |
| CAIXA E CHASSI | 551 |
| | 552 |
| CAIXA E COMPONENTES - TRANSMISSÃO | 409 |
| | 413 |
| CANTO DE LÂMINA | 1057 |
| | 1058 |
| | 1059 |
| | 1060 |
| | 1061 |
| CÁRTER DO ÓLEO DO MOTOR | 47 |
| | 49 |
| CARTUCHO-DESSECANTE (SECADOR A AR) | 608 |
| CARTUCHO DO TURBOALIMENTADOR | 108 |
| CHAPA DE EMPUXO | 1054 |
| | 1055 |
| CHASSI | 564 |
| CHASSI DIANTEIRO | 565 |
| CHAVE (DESCONEXÃO DA BATERIA) | 298 |
| CHAVE GERAL | 298 |
| CHICOTE - CABINE | 206 |


* TRADUÇÃO NÃO DISPONÍVEL NO MOMENTO DA IMPRESSÃO

# ÍNDICE


| Designação | Página |
|---|---|
| | 208 |
| | 252 |
| | 254 |
| | 313 |
| | 1198 |
| CHICOTE - CABINE (DIANTEIRO) | 309 |
| CHICOTE - CABINE (PAINEL DE INSTRUMENTOS) | 306 |
| | 309 |
| CHICOTE - CABINE (TRASEIRO) | 306 |
| CHICOTE - CABINE (TRASEIRO) | 309 |
| CHICOTE - CABOS ELÉTRICOS (REGISTRO) | 594 |
| CHICOTE - CABOS ELÉTRICOS (UNIDADE INJETORA) | 407 |
| CHICOTE - CHASSI | 249 |
| | 304 |
| CHICOTE - CHASSI (ARMAÇÃO DA LÂMINA) | 250 |
| CHICOTE - CONSOLE | 387 |
| | 389 |
| | 392 |
| | 396 |
| CHICOTE - CONSOLE (DIREÇÃO) | 399 |
| CHICOTE - DIANTEIRO (CÍRCULO) | 330 |
| CHICOTE - ILUMINAÇÃO | 229 |
| | 232 |
| CHICOTE - PAINEL DE INSTRUMENTOS (LUZES TRASEIRAS DO PAINEL) | 1221 |
| CHICOTE - PLATAFORMA | 321 |
| | 325 |
| | 330 |
| CHICOTE - SENSOR | 413 |
| CHICOTE - SENSOR (TRANSMISSÃO) | 409 |
| CHICOTE - TRANSMISSÃO | 339 |
| | 344 |
| | 366 |
| | 371 |
| | 406 |
| | 430 |
| CHICOTE - TRASEIRO (CENTRO DE SERVIÇO, DIREITO) | 349 |
| | 354 |
| | 359 |
| CHICOTE - TRASEIRO (CENTRO DE SERVIÇO, ESQUERDO) | 349 |
| | 354 |
| | 359 |
| CHICOTE-CHASSI DIANTEIRO | 223 |
| | 226 |
| | 229 |
| | 232 |
| | 259 |
| | 325 |
| CHICOTE-CHASSI DIANTEIRO (BARRA DA LUZ DE REFORÇO) | 239 |
| CHICOTE-CHASSI DIANTEIRO (LUZES DE TRABALHO, DIANTEIRO) | 242 |
| CHICOTE-CHASSI TRASEIRO | 339 |
| | 344 |
| | 345 |
| | 367 |
| | 372 |
| CHICOTE (CONSOLE) | 402 |
| CHICOTE (SISTEMA ELETRÔNICO DO MOTOR) | 317 |
| | 319 |
| CILINDRO DA DIREÇÃO | 660 |
| | 661 |
| CILINDRO DE ARTICULAÇÃO | 652 |
| CILINDRO DE DESLIZAMENTO LONGITUDINAL | 659 |
| CILINDRO DE DESLOCAMENTO LATERAL | 654 |
| CILINDRO DE DIREÇÃO E MONTAGEM | 650 |
| CILINDRO DE INCLINAÇÃO LATERAL DAS RODAS | 663 |
| CILINDRO DE LEVANTAMENTO | 656 |
| CILINDRO DE TOMBAMENTO DA LÂMINA | 653 |
| CILINDRO DO ESCARIFICADOR | 658 |
| CILINDRO DO RÍPER | 657 |
| CILINDRO E MONTAGEM - ARTICULAÇÃO | 643 |
| CILINDRO E MONTAGEM - DESLOCAMENTO DA LÂMINA | 648 |
| CILINDRO E MONTAGEM - DESLOCAMENTO DO CÍRCULO | 646 |
| CILINDRO E MONTAGEM - ESCARIFICADOR | 647 |
| CILINDRO E MONTAGEM - INCLINAÇÃO DAS RODAS | 651 |
| CILINDRO E MONTAGEM - LEVANTAMENTO DA LÂMINA | 644 |
| CILINDRO E MONTAGEM - TOMBAMENTO DA LÂMINA | 645 |
| CILINDRO HIDRÁULICO - MACACO | 1290 |
| CINTO DE SEGURANÇA | 1232 |
| | 1233 |
| CINZEIRO | 1170 |
| | 1174 |
| CÍRCULO | 1047 |
| | 1049 |
| COBERTURA DO MOTOR | 556 |
| | 559 |
| COLETOR - CONTROLE | 714 |
| | 715 |
| | 716 |
| | 718 |
| COLETOR - CONTROLE (LADO ESQUERDO) | 911 |
| | 915 |


* TRADUÇÃO NÃO DISPONÍVEL NO MOMENTO DA IMPRESSÃO

# ÍNDICE


| Designação | Página |
|---|---|
| | 924 |
| | 929 |
| | 931 |
| | 933 |
| | 944 |
| | 960 |
| | 967 |
| | 968 |
| | 969 |
| COLETOR DE ADMISSÃO | 102 |
| COLETOR DE ESCAPE | 101 |
| COLMÉIA | 432 |
| COLMÉIA-AQUECEDOR | 1097 |
| | 1148 |
| | 1152 |
| COLMÉIA-ARREFECEDOR DE ÓLEO DO MOTOR | 432 |
| | 434 |
| COLMÉIA (ARREFECEDOR DO ÓLEO DA TRANSMISSÃO) | 434 |
| COLMEIA DO CONDENSADOR (AR CONDICIONADO) | 1106 |
| COMANDO DE ACESSÓRIOS | 35 |
| COMANDO FINAL | 450 |
| COMANDO HIDRÁULICO | 671 |
| COMPRESSOR DE AR | 12 |
| | 14 |
| | 16 |
| COMPRESSOR DE REFRIGERANTE | 1105 |
| COMPRESSOR DE REFRIGERANTE E MONTAGEM | 1104 |
| CONDENSADOR DO REFRIGERANTE E MONTAGEM | 1106 |
| CONDICIONADOR DE AR | 1095 |
| | 1096 |
| CONDICIONADOR DE AR E MONTAGEM | 1095 |
| CONECTOR | 694 |
| | 697 |
| | 700 |
| CONSOLE DO OPERADOR | 1107 |
| *CONTROL GP-HYDRAULIC LOCKOUT | 642 |
| CONTROLE - NÃO PROGRAMADO | 162 |
| CONTROLE - NÃO PROGRAMADO (SISTEMA DE MONITORIZAÇÃO CATERPILLAR) | 169 |
| CONTROLE - NÃO PROGRAMADO (TREM DE FORÇA) | 408 |
| CONTROLE DA DIREÇÃO SECUNDÁRIA | 161 |
| CONTROLE DA EMBREAGEM | 1111 |
| CONTROLE DA TRANSMISSÃO | 1114 |
| | 1116 |
| CONTROLE DA TRAVA DO DIFERENCIAL | 428 |
| CONTROLE DE DIREÇÃO | 1113 |
| CONTROLE DO FREIO DE ESTACIONAMENTO | 613 |
| CONTROLE DO FREIO DE SERVIÇO | 615 |
| CONTROLE DO GOVERNADOR | 109 |
| CONTROLE DO GRAU | 170 |
| CONTROLE ELÉTRICO DAS MARCHAS | 408 |
| CONTROLE ELETRÔNICO - MOTOR | 157 |
| | 158 |
| | 159 |
| | 160 |
| CONTROLE ELETRÔNICO E MONTAGEM - MOTOR | 155 |
| | 156 |
| CONTROLE HIDRÁULICO | 635 |
| | 636 |
| | 637 |
| | 638 |
| | 639 |
| | 640 |
| | 641 |
| CONTROLE HIDRÁULICO DA TRANSMISSÃO | 430 |
| | 431 |
| CONTROLE-MONITOR NÃO PROGRAMADO | 1118 |
| CONTROLE-MONITOR NÃO PROGRAMADO (SISTEMA DE MONITORIZAÇÃO CATERPILLAR) | 1217 |
| | 1219 |
| | 1221 |
| CONVERSÃO PARA ESTRUTURA NÃO ROPS | 1119 |
| CONVERSOR ELÉTRICO | 163 |
| | 164 |
| | 165 |
| | 166 |
| | 167 |
| CONVERSOR ELÉTRICO (24-VOLTS A 12-VOLTS) | 164 |
| | 166 |
| CORREIA | 596 |
| CORREIA- SERPENTINA (ALTERNADOR E CONDICIONADOR DE AR) | 1095 |
| CORREIA- SERPENTINA (ALTERNADOR SEM CONDICIONADOR DE AR) | 145 |
| CORREIA DE COMANDO | 199 |
| | 200 |
| CORRENTE | 417 |
| CORRENTE - COMANDO | 417 |


## D


| | |
|---|---|
| DECALCOMANIA - FACIAL (FARÓIS, FACHO ALTO E BAIXO) | 226 |


* TRADUÇÃO NÃO DISPONÍVEL NO MOMENTO DA IMPRESSÃO

# ÍNDICE


| Designação | Página |
|---|---|
| | 229 |
| | 232 |
| | 239 |
| | 242 |
| | 259 |
| | 299 |
| | 402 |
| DECALCOMANIA - FACIAL (FARÓIS, FACHO ALTO E BAIXO) | 223 |
| DECALCOMANIA - FACIAL (PISCA-PISCA, PISCA-ALERTA) | 223 |
| | 226 |
| | 229 |
| | 232 |
| | 239 |
| | 242 |
| | 299 |
| | 402 |
| DECALCOMANIA - FACIAL (PISCA-PISCA, PISCA-ALERTA) | 259 |
| DECALQUE | 1289 |
| | 1290 |
| DECALQUE - ADVERTÊNCIA (ACUMULADOR, ALTA PRESS:AO, CONSULTAR OMM) (ACUMULADOR) | 631 |
| DECALQUE - ADVERTÊNCIA (NÃO É DEGRAU) | 130 |
| DECALQUE - ADVERTÊNCIA (SEM DEGRAUS) | 134 |
| | 135 |
| DECALQUE - CONTROLE (AQUECEDOR & AR CONDITIONADO) | 1096 |
| DECALQUE - CONTROLE (VELOCIDADE DO VENTILADOR, TEMPERATURA) | 1151 |
| DECALQUE - CONTROLE (VELOCIDADE DO VENTILADOR, TEMPERATURA) | 1147 |
| DECALQUE - FUSÍVEL | 309 |
| DECALQUE - FUSÍVEL (DIREITO) | 399 |
| DECALQUE - FUSÍVEL (ESQUERDO) | 399 |
| | 402 |
| DECALQUE - FUSÍVEL (LUZES, LAVADOR, LIMPADOR, DESCONGELADOR) | 306 |
| DECALQUE - IDENTIFICAÇÃO (NÚMERO DE GRUPO) | 1147 |
| DECALQUE - IDENTIFICAÇÃO (NÚMERO DE GRUPO) (AR CONDICIONADO) | 1096 |
| DECALQUE - IDENTIFICAÇÃO (ÓLEO HIDRÁULICO BIODEGRADÁVEL) | 671 |
| DECALQUE - IDENTIFICAÇÃO (*ROUND RED REFLECTIVE) | 1295 |
| DECALQUE - INFORMAÇÕES (LAMINADO) (MOTOR) | 1291 |
| DECALQUE - INFORMAÇÕES (LOCAL DO OLHAL DE LEVANTAMENTO) | 1292 |
| DECALQUE - INFORMAÇÕES (MOTOR, MARCHA ACELERADA EM VAZIO, RETER) | 1114 |
| | 1116 |
| DECALQUE - INFORMAÇÕES (MOTOR, MARCHA LENTA, RETER) | 1114 |
| | 1116 |
| DECALQUE - INFORMAÇÕES (PURIFICADOR DE AR) | 98 |
| DECALQUE - INFORMAÇÕES (ULTRAPLACA DE PRATA) (MOTOR) | 1291 |
| DECALQUE - INSTRUÇÃO (AJUSTE DO ASSENTO) | 1250 |
| DECALQUE - INSTRUÇÃO (DRENO DO ÓLEO DO MOTOR) | 1292 |
| DECALQUE - INSTRUÇÃO (ENCHIMENTO DO LAVADOR DE PÁRA-BRISA) | 1292 |
| DECALQUE - INSTRUÇÃO (PARADA DO MOTOR) | 340 |
| | 345 |
| | 367 |
| | 372 |
| DECALQUE - PAINEL (CONTROLE DE VELOCIDADE) | 1116 |
| DECALQUE - PAINEL (INDICADORES DE AÇÃO DO LADO DIREITO) | 1217 |
| DECALQUE - PAINEL (INDICADORES DE AÇÃO DO LADO ESQUERDO) | 1217 |
| DECALQUE - PAINEL (PAINEL DE INDICADORES DA TRANSMISSÃO) | 1114 |
| DECALQUE - PAINEL (PAINEL DE INDICADORES, DIREITO) | 1219 |
| | 1222 |
| DECALQUE - PAINEL (PAINEL DE INDICADORES, ESQUERDO) | 1219 |
| | 1221 |
| DECALQUE - PAINEL (SELECIONAR VELOCIDADE) | 1114 |
| DECALQUE - PAINEL (TRANSMISSÃO, FREIO DE ESTACIONAMENTO) | 1116 |
| DECALQUE (LAVADOR DE VIDROS) | 315 |
| DECALQUE MONITOR (MÓDULO DE QUATRO MEDIDORES) | 1219 |
| DECALQUE MONITOR (MÓDULO DE QUATRO MEDIDORES) | 1221 |
| DECALQUE MONITOR (SISTEMA DE MONITORIZAÇÃO CATERPILLAR) | 1217 |
| DECALQUE (NÃO É DEGRAU) | 128 |
| | 130 |
| DECALQUE (PÁRA-SOL - CATERPILLAR) | 1213 |
| | 1214 |


* TRADUÇÃO NÃO DISPONÍVEL NO MOMENTO DA IMPRESSÃO

# ÍNDICE


| Designação | Página |
|---|---|
| DECALQUE-REFLETOR (AMARELO) | 562, 1295 |
| DECALQUE (VHP PLUS) | 1290 |
| DEGRAU | 596 |
| DENTE DO ESCARIFICADOR | 1092 |
| DENTE DO RÍPER | 1091 |
| DESCONGELADOR | 1139, 1140 |
| DIFERENCIAL | 440 |
| DIFERENCIAL E COROA | 438 |
| DIREÇÃO SECUNDÁRIA | 732 |
| DISJUNTOR AUTOMÁTICO DE CIRCUITO (105 AMPERES) (ALTERNADOR) | 154 |
| DISJUNTOR AUTOMÁTICO DE CIRCUITO (15 AMPERES) (FARÓIS) | 152, 153 |
| DISJUNTOR AUTOMÁTICO DE CIRCUITO (15 AMPERES) (LÂMPADAS DE TRABALHO - BARRA) | 152 |
| DISJUNTOR AUTOMÁTICO DE CIRCUITO (80 AMPERES) (ALTERNADOR) | 349, 354, 359 |
| DISJUNTOR AUTOMÁTICO DE CIRCUITO (80 AMPERES) (PRINCIPAL) | 349, 359 |
| DISJUNTOR AUTOMÁTICO DE CIRCUITO (80 AMPERES) (PRINCIPAL) | 354 |
| DUCTO | 1134 |
| DUCTO E CONTROLE | 1133 |


## E


| | |
|---|---|
| EIXO-COMANDO DE VÁLVULA | 22 |
| EIXO DE COMANDO DA BOMBA | 731 |
| EIXO DE ENTRADA | 469 |
| EIXO DE TRANSMISSÃO | 468 |
| EIXO DIANTEIRO | 543, 546 |
| ELEMENTO - AQUECEDOR DE ÁGUA DA CAMISA (120 VOLTS, 1.250 WATTS) | 172, 174 |
| ELEMENTO - AQUECEDOR (240 VOLTS, 1250 WATTS) | 173 |
| ELEMENTO - FILTRANTE (SEPARADOR DE ÁGUA E COMBUSTÍVEL) (PRIMÁRIO) | 114 |
| ELEMENTO - PRIMÁRIO | 98 |
| ELEMENTO - SECUNDÁRIO | 98 |
| ELEMENTO-AQUECEDOR (SECADOR A AR) | 608 |
| ELEMENTO FILTRANTE - ÓLEO | 457 |
| ELEMENTO FILTRANTE - ÓLEO (EFICIÊNCIA PADRÃO) | 737 |
| ELEMENTO FILTRANTE - ÓLEO (EXTREMA EFICIÊNCIA) | 449, 461 |
| ELEMENTO FILTRANTE - ÓLEO (TRANSMISSÃO) | 447, 452 |
| ELO - DIREÇÃO | 591, 592 |
| EMBREAGEM DA TRANSMISSÃO | 418, 421, 424, 426 |
| EMISSOR - NÍVEL DO COMBUSTÍVEL | 130, 132 |
| EMISSOR - POSIÇÃO | 277, 278 |
| EMISSOR - POSIÇÃO (ARTICULAÇÃO) | 340, 345, 367, 372 |
| ENGATE - ARTICULAÇÃO | 586 |
| ENGATE DO REBOQUE | 588, 589 |
| ENGRENAGENS DE DISTRIBUIÇÃO | 38 |
| ESCARIFICADOR | 1083, 1084, 1088 |
| ESPELHO RETROVISOR | 1191, 1192, 1193, 1194, 1195, 1196, 1197, 1198, 1200, 1201, 1202 |
| ESTRUTURA ROPS ABERTA | 1226 |
| ESTRUTURA ROPS FECHADA | 1224, 1225 |
| EXTENSÃO - ENCOSTO | 1135, 1136 |
| EXTENSÃO DA LÂMINA | 1069, 1070, 1071, 1072, 1073, 1074 |


## F


| | |
|---|---|
| FAROL DIANTEIRO | 184 |


* TRADUÇÃO NÃO DISPONÍVEL NO MOMENTO DA IMPRESSÃO

# ÍNDICE


| Designação | Página |
|---|---|
| | 185 |
| | 186 |
| | 188 |
| FIAÇÃO - ALARME | 204 |
| | 206 |
| | 208 |
| FIAÇÃO - AMORTECEDOR DA LÂMINA | 304 |
| FIAÇÃO - AQUECEDOR E AR CONDICIONADO | 1097 |
| | 1147 |
| | 1151 |
| | 1183 |
| FIAÇÃO - AUXILIAR DE PARTIDA | 290 |
| FIACAO - CONTROLE DO NIVEL | 338 |
| FIAÇAO - CONTROLES DO OPERADOR | 387 |
| | 389 |
| | 392 |
| | 396 |
| FIAÇÃO - LUZES TRASEIRAS | 245 |
| | 247 |
| | 258 |
| | 330 |
| | 364 |
| | 367 |
| | 372 |
| | 378 |
| | 381 |
| FIAÇÃO - LUZES TRASEIRAS (DIREITO) | 379 |
| | 381 |
| FIAÇÃO - LUZES TRASEIRAS (ESQUERDO) | 379 |
| | 381 |
| FIAÇÃO - PAINEL | 204 |
| | 208 |
| | 235 |
| | 237 |
| | 311 |
| | 1217 |
| | 1219 |
| FIAÇÃO - PAINEL (INTERRUPTOR) | 1202 |
| FIAÇÃO -LUZES DIANTEIRAS | 235 |
| | 237 |
| | 252 |
| | 254 |
| | 259 |
| | 273 |
| | 326 |
| FIAÇÃO -LUZES DIANTEIRAS (BARRA DA LUZ ELEVADA) | 239 |
| FIAÇÃO -LUZES DIANTEIRAS (LUZES DE TRABALHO) | 242 |
| FIAÇÃO-LIMPADOR DE VIDROS (CAIXA DE FUSÍVEIS) | 315 |
| FIAÇÃO-LIMPADOR DE VIDROS (CONTROLE) | 315 |
| FIAÇÃO-RÁDIO | 167 |
| | 1224 |
| FILTRO - AR (CABINE) | 1142 |
| FILTRO - AR DA CABINE | 1142 |
| FILTRO - COMBUSTÍVEL | 113 |
| | 127 |
| | 130 |
| | 132 |
| FILTRO - MAGNÉTICO | 467 |
| FILTRO - MAGNÉTICO (TRANSMISSÃO) | 409 |
| | 413 |
| | 467 |
| FILTRO - ÓLEO | 447 |
| | 449 |
| FILTRO - ÓLEO (DERIVAÇÃO) | 445 |
| FILTRO - ÓLEO DO MOTOR | 66 |
| FILTRO DE COMBUSTÍVEL E SEPARADOR DE ÁGUA | 114 |
| FILTRO DO ÓLEO E MONTAGEM | 443 |
| | 445 |
| FIXADORES | 561 |
| FIXADORES - CABEÇOTE DO MOTOR | 36 |
| FIXADORES - RADIADOR | 78 |
| FIXADORES - TANQUE DE COMBUSTÍVEL | 111 |
| | 112 |
| FREIO DE ESTACIONAMENTO | 609 |
| FREIO DE SERVIÇO | 611 |
| FUNDO - ENCOSTO | 1210 |
| FUSÍVEL (10 AMPERES) | 208 |
| | 223 |
| | 229 |
| | 232 |
| | 235 |
| | 237 |
| | 239 |
| | 242 |
| | 252 |
| | 254 |
| | 259 |
| | 265 |
| | 299 |
| | 311 |
| | 313 |
| | 315 |
| | 399 |
| | 402 |
| | 1198 |
| | 1202 |
| | 1276 |
| FUSÍVEL (10 AMPERES) | 385 |


* TRADUÇÃO NÃO DISPONÍVEL NO MOMENTO DA IMPRESSÃO

# ÍNDICE


| Designação | Página |
|---|---|
| FUSÍVEL (10 AMPERES) (ALARME DE MARCHA-À-RÉ) | 270 |
| FUSÍVEL (10 AMPERES) (ALARME DE MARCHA À RÉ AUXILIAR) | 206 |
| FUSÍVEL (10 AMPERES) (CONVERSOR) | 164 |
| FUSÍVEL (10 AMPERES) (CONVERSOR DE ENERGIA) | 166 |
| FUSÍVEL (10 AMPERES) (DESCONGELADOR DIANTEIRO) | 1137 |
| FUSÍVEL (10 AMPERES) (DESCONGELADOR TRASEIRO) | 1138 |
| FUSÍVEL (10 AMPERES) (FAROL DA LÂMINA - DIANTEIRO) | 217 |
| FUSÍVEL (10 AMPERES) (LÂMPADA DA LÂMINA) | 218 |
| FUSÍVEL (10 AMPERES) (LIMPADOR) | 1278 |
| | 1280 |
| | 1282 |
| FUSÍVEL (10 AMPERES) (LUZ DE MARCHA À RÉ) | 204 |
| FUSÍVEL (10 AMPERES) (LUZES DE TRABALHO) | 220 |
| | 222 |
| FUSÍVEL (10 AMPERES) (PISCA-PISCA DE ADVERTÊNCIA) | 266 |
| | 308 |
| FUSÍVEL (10 AMPERES) (PISCA-PISCA, PISCA-ALERTA) | 226 |
| FUSÍVEL (10 AMPERES) (SECADOR A AR) | 605 |
| FUSÍVEL (15 AMPERES) | 306 |
| | 309 |
| | 399 |
| | 402 |
| FUSÍVEL (15 AMPERES) (AQUECEDOR) | 1145 |
| FUSÍVEL (15 AMPERES) (AR CONDICIONADO) | 1095 |
| FUSÍVEL (15 AMPERES) (CONVERSOR - FORÇA) | 165 |
| FUSÍVEL (15 AMPERES) (HOLOFOTES - CABINE) | 220 |
| | 222 |
| FUSÍVEL (30 AMPERES) | 167 |


## G


| | |
|---|---|
| GR. DE CONVERSÃO - CERTIFICADO | 1 |
| | 2 |
| GRAXEIRA (SOQUETE DO CILINDRO DE DESLOCAMENTO LATERAL) | 646 |
| GRUPO DE VÁLVULAS DE CONTROLE - CINCO | 918 |
| | 919 |
| | 920 |
| | 921 |
| | 922 |
| | 923 |
| | 924 |
| | 926 |
| | 927 |
| | 929 |
| | 931 |
| | 933 |
| GRUPO DE VÁLVULAS DE CONTROLE - QUÁDRUPLO | 907 |
| | 908 |
| | 909 |
| | 910 |
| | 911 |
| | 913 |
| | 915 |
| | 917 |
| GRUPO DE VÁLVULAS DE CONTROLE - SEIS | 934 |
| | 935 |
| | 936 |
| | 937 |
| | 938 |
| | 939 |
| | 940 |
| | 942 |
| | 944 |
| | 946 |
| | 948 |
| | 950 |
| GRUPO DE VÁLVULAS DE CONTROLE - SETE | 952 |
| | 953 |
| | 955 |
| | 956 |
| | 957 |
| | 958 |
| | 959 |
| | 960 |
| | 962 |
| | 964 |
| | 966 |
| | 967 |
| | 968 |
| | 969 |
| GRUPO ROTATIVO DA BOMBA | 729 |
| | 730 |


## I


| | |
|---|---|
| ILUMINAÇÃO - CABINE | 208 |
| ILUMINAÇÃO - FAROL E SINALIZAÇÃO | 203 |


* TRADUÇÃO NÃO DISPONÍVEL NO MOMENTO DA IMPRESSÃO

# ÍNDICE


| Designação | Página |
|---|---|
| ILUMINAÇÃO - MARCHA A RÉ | 204<br>206 |
| ILUMINAÇÃO - RODOVIÁRIA | 259<br>262 |
| ILUMINAÇÃO - SINALIZAÇÃO | 263<br>264 |
| INDICADOR - NÍVEL DO ÓLEO (VARETA) | 68 |
| INDICADOR - PRESSÃO DO AR (DIREITO) | 1219 |
| INDICADOR - PRESSÃO DO AR (DIREITO) | 1217 |
| INDICADOR - PRESSÃO DO AR (ESQUERDO) | 1217<br>1219 |
| INDICADOR - PRESSÃO DO AR (TANQUE DE AR DIREITO) | 1221 |
| INDICADOR - PRESSÃO DO AR (TANQUE DE AR ESQUERDO) | 1221 |
| INDICADOR - TROCA DO FILTRO DE AR | 96 |
| INDICADOR - VARETA DO NÍVEL DE ÓLEO (TRANSMISSÃO) | 442 |
| INJETOR DE COMBUSTÍVEL | 124 |
| INSTALAÇÃO DO PISCA-PISCA DE ADVERTÊNCIA | 175 |
| INSTALAÇÃO DO RÁDIO | 1164 |
| INSTALAÇÃO DO RÁDIO - ARRANJO | 1163 |
| INSTALACAO ELETRICA | 338 |
| INTERRUPTOR - BALANCIM (AJUSTE, REAJUSTE DA TRAVA DO ACELERADOR) | 389<br>392<br>396 |
| INTERRUPTOR - BALANCIM (BARRA DE LUZ BAIXA) | 229<br>232<br>240 |
| INTERRUPTOR - BALANCIM (DIREÇÃO SECUNDÁRIA) | 393 |
| INTERRUPTOR - BALANCIM (FARÓIS DA LÂMINA) | 220 |
| INTERRUPTOR - BALANCIM (FARÓIS DA LÂMINA) | 222 |
| INTERRUPTOR - BALANCIM (FARÓIS DIANTEIROS, LUZES TRASEIRAS) | 223<br>226<br>229<br>232<br>239<br>242<br>402 |
| INTERRUPTOR - BALANCIM (FARÓIS DIANTEIROS, LUZES TRASEIRAS) | 299 |
| INTERRUPTOR - BALANCIM (FAROL DIANTEIRO E TRASEIRO) | 259 |
| INTERRUPTOR - BALANCIM (LÂMINA)(LÂMPADA DIANTEIRA) | 217 |
| INTERRUPTOR - BALANCIM (LÂMPADA DA LÂMINA) | 218 |
| INTERRUPTOR - BALANCIM (LUZES DE TRABALHO, DIANTEIRO) | 242 |
| INTERRUPTOR - BALANCIM (PARADA DO MOTOR) | 366<br>371 |
| INTERRUPTOR - BALANCIM (PARADA DO MOTOR AO NÍVEL DO SOLO) | 339<br>344 |
| INTERRUPTOR - BALANCIM (PISCA-PISCA DE ADVERTÊNCIA) | 175<br>270 |
| INTERRUPTOR - BOTÃO (MODALIDADES DE VISUALIZAÇÃO) | 1219<br>1221 |
| INTERRUPTOR - BOTÃO (MODO DO OPERADOR) | 1217 |
| INTERRUPTOR - CIRCUITO | 152<br>153<br>154 |
| INTERRUPTOR - CIRCUITO (15 AMPERES) (CONTROLE DO MOTOR) | 350<br>355<br>360 |
| INTERRUPTOR - CIRCUITO (20-AMPERES) (CONTROLE DE RAMPA) | 376 |
| INTERRUPTOR - ESFERA (INDICADOR DE DESLOCAMENTO LATERAL) | 321<br>325 |
| INTERRUPTOR - LIMITADOR (PEDAL - MOVIMENTO GRADUAL) | 399<br>402 |
| INTERRUPTOR - LIMITADOR (PEDAL DO FREIO) | 403 |
| INTERRUPTOR - LIMPADOR DO PÁRA-BRISA | 303 |
| INTERRUPTOR - LIMPADOR (24 VOLTS) (TRASEIRO) | 1276<br>1278<br>1280<br>1282 |
| INTERRUPTOR - LUZES | 299 |
| INTERRUPTOR - MAGNÉTICO | 301<br>302 |
| INTERRUPTOR - MAGNÉTICO (24 VOLTS) (RELÉ DE ARRANQUE) | 349 |
| INTERRUPTOR - MAGNÉTICO (24 VOLTS) (RELÉ DO MOTOR DE PARTIDA) | 359 |
| INTERRUPTOR - PARTIDA (CHAVE) | 387<br>389<br>392<br>396 |


* TRADUÇÃO NÃO DISPONÍVEL NO MOMENTO DA IMPRESSÃO

# ÍNDICE


| Designação | Página |
|---|---|
| INTERRUPTOR - PRESSÃO (AR CONDICIONADO - ALTO/BAIXO) | 1183 |
| INTERRUPTOR - PRESSÃO (DIREÇÃO PRIMÁRIA) | 325 |
| INTERRUPTOR - PRESSÃO (DIREÇÃO SECUNDÁRIA) | 385 |
| INTERRUPTOR - PRESSÃO (FREIO A AR) | 325 |
| INTERRUPTOR - PRESSÃO (FREIO DE ESTACIONAMENTO) | 322 |
| | 325 |
| INTERRUPTOR - PRESSÃO (FREIOS A AR) | 321 |
| INTERRUPTOR - PRESSÃO (LUZ DO FREIO) | 325 |
| INTERRUPTOR - PRESSÃO (LUZ DO FREIO) | 321 |
| INTERRUPTOR - ROTATIVO (FACHO ALTO, BAIXO) | 223 |
| INTERRUPTOR - ROTATIVO (LUZ ALTA/BAIXA) | 259 |
| INTERRUPTOR - ROTATIVO (REDUTOR DE LUMINOSIDADE - FAROL) | 226 |
| | 229 |
| | 232 |
| | 239 |
| | 242 |
| | 402 |
| INTERRUPTOR - ROTATIVO (SETA DE DIREÇÃO) | 299 |
| INTERRUPTOR - ROTATIVO (VELOCIDADE DO VENTILADOR) | 1096 |
| | 1147 |
| | 1151 |
| INTERRUPTOR - ROTATIVO (24 VOLTS) (CONTROLE DO LIMPADOR DE PÁRA-BRISA DIANTEIRO) | 306 |
| INTERRUPTOR - ROTATIVO (24 VOLTS) (LIMPADOR DIANTEIRO) | 315 |
| INTERRUPTOR - TEMPERATURA (ÓLEO HIDRÁULICO) | 321 |
| | 325 |
| INTERRUPTOR - TEMPERATURA (REFRIGERANTE) | 1096 |
| INTERRUPTOR (ACIONADOR DE TRAVA DO ACELERADOR) | 392 |
| INTERRUPTOR (AJUSTE DE VELOCIDADE DO ACELERADOR) | 387 |
| INTERRUPTOR (AMORTECEDOR DA LÂMINA) | 304 |
| INTERRUPTOR DE DERIVAÇÃO | 297 |
| INTERRUPTOR DE DERIVAÇÃO (FILTRO DE ÓLEO HIDRÁULICO) | 447 |
| INTERRUPTOR (DESCONGELADOR DIANTEIRO) | 1137 |
| INTERRUPTOR (DESCONGELADOR TRASEIRO) | 1138 |
| INTERRUPTOR GIRATÓRIO (PISCA-PISCA, PISCA-ALERTA) | 223 |
| | 226 |
| | 229 |
| | 232 |
| | 239 |
| | 242 |
| | 299 |
| INTERRUPTOR GIRATÓRIO (PISCA-PISCA, PISCA-ALERTA) | 402 |
| INTERRUPTOR GIRATÓRIO (PISCA-PISCA, PISCA-ALERTA) | 259 |
| INTERRUPTOR (LUZ TRASEIRA) | 399 |
| INTERRUPTOR (LUZES TRASEIRAS DO PAINEL) | 402 |
| INTERRUPTOR (MARCHA À RÉ AUXILIAR) | 204 |
| INTERRUPTOR (MODO DE RETENÇÃO DO ACLERADOR) | 387 |
| | 389 |
| | 396 |
| INTERRUPTOR (MUDANÇA AUTOMÁTICA DE MARCHA) | 408 |
| INTERRUPTOR (PINO DE DESLOCAMENTO LATERAL) | 389 |
| INTERRUPTOR (PISCA-PISCA DE ADVERTÊNCIA) | 175 |
| | 268 |
| | 269 |
| | 270 |
| | 273 |
| INTERRUPTOR (REDUTOR DE LUMINOSIDADE DO PAINEL) | 399 |
| INTERRUPTOR (SACA-PINO DE DESLOCAMENTO LATERAL) | 393 |
| | 397 |
| INTERRUPTOR (SACA-PINO DE DESLOCAMENTO LATERAL) | 387 |
| INTERRUPTOR (TRAVA DO DIFERENCIAL) | 399 |
| | 402 |
| INTERRUPTOR (24 VOLTS) (ALARME DE MARCHA À RÉ AUXILIAR) | 206 |
| INTERRUPTOR (24 VOLTS) (AQUECIMENTO DOS ESPELHOS) | 1198 |
| | 1202 |
| INTERRUPTOR (24 VOLTS) (ARMAÇÃO DA LÂMINA) | 311 |
| | 313 |
| INTERRUPTOR (24 VOLTS) (AUXILIAR DE PARTIDA A ÉTER) | 293 |
| INTERRUPTOR (24 VOLTS) (CABINE - FAROL DO LADO DIREITO) | 252 |
| | 254 |


* TRADUÇÃO NÃO DISPONÍVEL NO MOMENTO DA IMPRESSÃO

# ÍNDICE


| Designação | Página |
|---|---|
| INTERRUPTOR (24 VOLTS) (DIREÇÃO SECUNDÁRIA) | 385 |
| INTERRUPTOR (24 VOLTS) (FAROL DO LADO DIREITO) | 235 237 |
| INTERRUPTOR (24 VOLTS) (LUZES DE MARCHA À RÉ AUXILIARES) | 208 |
| INTERRUPTOR (24 VOLTS) (TESTE DA DIREÇÃO SECUNDÁRIA) | 397 |
| ISOLADOR - TEMPO | 1166 |
| **J** | |
| JANELA DA CABINE | 1261 1262 1264 |
| JOGO - ENCHIMENTO A AR | 619 |
| JOGO-ALOJAMENTO DA RODA-GUIA DAS ESTEIRAS-DIREITO (JANELA) | 1262 |
| JOGO-ALOJAMENTO DA RODA-GUIA DAS ESTEIRAS-ESQUERDO (JANELA) | 1264 |
| JOGO DE ABRAÇADEIRA DO PURIFICADOR DE AR | 98 |
| JOGO DE AJUSTADOR | 1211 |
| JOGO DE ALAVANCA (MOTOR DE PARTIDA) | 294 |
| JOGO DE ALMOFADA | 1135 1136 |
| JOGO DE ALMOFADA DO ASSENTO | 1234 |
| JOGO DE ALMOFADA DO ASSENTO (VINIL) | 1236 |
| JOGO DE ANEL PADRÃO (COMPRESSOR DE AR) | 12 |
| JOGO DE BLOCO DESLIZADOR (ASSENTO) | 1242 |
| JOGO DE BLOCO DESLIZADOR (ASSENTO DE SUSPENSÃO) | 1240 1241 |
| JOGO DE BUCHA (MOTOR DE PARTIDA) | 294 |
| JOGO DE CABEÇOTE (COMPRESSOR DE AR) | 12 |
| JOGO DE CALÇOS (INCLUI 17 CALÇOS) | 725 |
| JOGO DE CÁRTER DE INCLINAÇÃO | 1234 1236 |
| JOGO DE COIFA DE SUSPENSÃO | 1248 |
| JOGO DE CORDÃO (ASSENTO) | 1250 |
| JOGO DE DESCARREGADOR (COMPRESSOR DE AR) | 12 |
| JOGO DE DIAFRAGMA | 1155 |
| JOGO DE ESCOVA (MOTOR DE PARTIDA) | 294 |
| JOGO DE FILTRO DE COMBUSTÍVEL E SEPARADOR DE ÁGUA | 114 |
| JOGO DE FIXADOR DE CORREIA | 1248 |
| JOGO DE FIXADORES | 141 |
| JOGO DE FIXADORES (ALTERNADOR) | 144 |
| JOGO DE FIXADORES (ASSENTO) | 1250 |
| JOGO DE INCLINAÇÃO DO ASSENTO | 1211 |
| JOGO DE INCLINAÇÃO TRASEIRA | 1211 |
| JOGO DE INDICADOR (AJUSTAGEM DO PESO) | 1161 |
| JOGO DE INDICADOR (ASSENTO) | 1250 |
| JOGO DE ISOLADOR (MOTOR DE PARTIDA) | 294 |
| JOGO DE LÂMINA DO LIMPADOR DE PÁRA-BRISA (TRASEIRO) | 1276 1278 |
| JOGO DE MANCAL | 141 1161 |
| JOGO DE MANCAL (ALTERNADOR) | 144 |
| JOGO DE MANCAL PRINCIPAL DO MOTOR (COMPRESSOR DE AR) | 12 |
| JOGO DE MARTELO | 1143 1144 |
| JOGO DE MOLA | 1161 |
| JOGO DE MOLA (AJUSTE DE ALTURA) | 1161 |
| JOGO DE PÁRA-CHOQUE (AJUSTAGEM DO PESO) | 1161 |
| JOGO DE PARAFUSO DE RETENÇÃO (CONTROLE) | 162 |
| JOGO DE PISTÃO | 725 |
| JOGO DE PISTÃO DE CONTROLE | 725 |
| JOGO DE RECEPTÁCULO (12 PINOS) | 161 226 232 242 344 366 371 406 430 582 1219 |
| JOGO DE RECEPTÁCULO (12 PINOS) | 1217 |
| JOGO DE RECEPTÁCULO (3 PINOS) | 196 197 277 278 385 |
| JOGO DE RECEPTÁCULO (6 PINOS) | 582 1097 1219 |
| JOGO DE RETENTOR | 630 632 653 658 715 716 718 1045 1046 |


* TRADUÇÃO NÃO DISPONÍVEL NO MOMENTO DA IMPRESSÃO

# ÍNDICE


| Designação | Página |
|---|---|
| JOGO DE RETENTOR (ACUMULADOR DA LÂMINA AMORTECEDORA) | 631 |
| JOGO DE RETENTOR (BOMBA DE MEDIÇÃO, DIREÇÃO) | 1113 |
| JOGO DE RETENTOR (SOLENÓIDE DE TRANSMISSÃO) | 488 |
| JOGO DE RETENTOR (TRAVA DO DIFERENCIAL) | 477 |
| JOGO DE RETENTOR (VÁLVULA DE TRAVA DO DIFERENCIAL) | 487 |
| JOGO DE REVISÃO - GOVERNADOR (COMPRESSOR DE AR) | 620 |
| | 622 |
| JOGO DE ROLETE DE SUSPENSÃO | 1248 |
| JOGO DE ROLO (ASSENTO) | 1250 |
| JOGO DE SEGUIDOR | 1160 |
| | 1161 |
| JOGO DE SENSOR DE DIAL (NÍVEL DE COMBUSTÍVEL) | 130 |
| | 132 |
| JOGO DE TERMINAL ALTERNADOR | 141 |
| JOGO DE TERMINAL (ALTERNADOR) | 144 |
| JOGO DE TOMADA DE CONEXÃO (12 PINOS) | 232 |
| | 242 |
| | 582 |
| | 1219 |
| JOGO DE TOMADA DE CONEXÃO (2 PINOS) | 167 |
| JOGO DE TOMADA DE CONEXÃO (6 PINOS) | 1219 |
| JOGO-HASTE | 1211 |
| JOGO-RETIFICADOR | 141 |
| JOGO-VÁLVULA DE CONTROLE DO AR | 624 |
| JUNTA | 60 |
| | 79 |
| | 128 |
| | 129 |
| JUNTA (ALOJAMENTO DO REGULADOR DE TEMPERATURA) | 80 |
| JUNTA (BOMBA DE ESCORVA DE COMBUSTÍVEL) | 125 |
| JUNTA (BOMBA DE ESCORVA DE COMBUSTÍVEL) (TAMPA) | 126 |
| JUNTA UNIVERSAL | 476 |


## L


| Designação | Página |
|---|---|
| LÂMINA | 1062 |
| | 1063 |
| | 1064 |
| | 1065 |
| LÂMINA DO LIMPADOR DE PÁRA-BRISA | 1257 |
| | 1285 |
| LÂMINA DO LIMPADOR DE PÁRA-BRISA (ALTO PERFIL DIANTEIRO SUPERIOR) | 1272 |
| LÂMINA DO LIMPADOR DE PÁRA-BRISA (DIANTEIRO) | 1274 |
| | 1286 |
| | 1287 |
| LÂMINA DO LIMPADOR DE PÁRA-BRISA (DIANTEIRO, INFERIOR) | 1274 |
| LÂMINA DO LIMPADOR DE PÁRA-BRISA (DIANTEIRO SUPERIOR) | 1270 |
| LÂMINA DO LIMPADOR DE PÁRA-BRISA (INFERIOR DIANTEIRO) | 1268 |
| | 1270 |
| LÂMINA DO LIMPADOR DE PÁRA-BRISA (PERFIL ALTO - INFERIOR DIANTEIRO) | 1272 |
| LÂMINA DO LIMPADOR DE PÁRA-BRISA (PERFIL BAIXO - DIANTEIRO SUPERIOR) | 1268 |
| LÂMINA DO LIMPADOR DE PÁRA-BRISA (TRASEIRO) | 1278 |
| | 1280 |
| | 1282 |
| LÂMINA DO LIMPADOR DE PÁRA-BRISA (TRASEIRO) | 1276 |
| LÂMPADA | 378 |
| | 381 |
| LÂMPADA - FAROL | 178 |
| | 179 |
| | 180 |
| | 181 |
| | 182 |
| | 183 |
| LÂMPADA - HALOGÊNEO (24 VOLTS, 65 WATTS) | 178 |
| | 181 |
| | 183 |
| LÂMPADA - HALOGÊNEO (24 VOLTS, 65 WATTS) (FAROL) | 179 |
| | 180 |
| | 182 |
| LÂMPADA - HALOGÊNEO (24 VOLTS, 65 WATTS) (FAROL BAIXO) | 184 |
| LÂMPADA - HALOGÊNEO (24 VOLTS, 65 WATTS) (FAROL BAIXO) | 212 |
| LÂMPADA - HALOGÊNEO (24 VOLTS, 65 WATTS) (LUZ ALTA) | 185 |
| | 212 |
| LÂMPADA - LED | 268 |
| | 269 |
| LÀMPADA - MARCADORA | 194 |
| LÂMPADA - SINALIZAÇÃO | 196 |
| | 197 |
| | 198 |
| LÂMPADA - TETO | 177 |


* TRADUÇÃO NÃO DISPONÍVEL NO MOMENTO DA IMPRESSÃO

# ÍNDICE


| Designação | Página |
|---|---|
| LÂMPADA DIANTEIRA E DE SINAL | 190 |
| | 192 |
| LÂMPADA (FREIO, CURVA, TRASEIRA, LADO DIREITO) | 378 |
| LÂMPADA (FREIO, CURVA, TRASEIRA, LADO DIREITO) | 381 |
| LÂMPADA (FREIO, TRASEIRA, CURVA, LADO ESQUERDO) | 378 |
| | 381 |
| LAMPADA-PLACA DE REGISTRO | 195 |
| LÂMPADA (*24-VOLT) (MUDANÇA AUTOMÁTICA) | 408 |
| LÂMPADA (24 VOLTS) | 175 |
| | 177 |
| | 190 |
| | 208 |
| | 223 |
| | 229 |
| | 232 |
| | 235 |
| | 237 |
| | 239 |
| | 240 |
| | 242 |
| | 252 |
| | 254 |
| | 259 |
| | 268 |
| | 269 |
| | 270 |
| | 273 |
| | 299 |
| | 311 |
| | 313 |
| | 385 |
| | 387 |
| | 389 |
| | 392 |
| | 393 |
| | 396 |
| | 397 |
| | 399 |
| | 402 |
| | 1096 |
| | 1147 |
| | 1151 |
| | 1198 |
| | 1202 |
| | 1205 |
| | 1219 |
| | 1221 |
| | 1222 |
| LÂMPADA (24 VOLTS) (ALARME DE MARCHA À RÉ AUXILIAR) | 206 |
| LÂMPADA (24 VOLTS) (AUXILIAR DE PARTIDA A ÉTER) | 293 |
| LÂMPADA (24 VOLTS) (DESCONGELADOR DIANTEIRO) | 1137 |
| LÂMPADA (24 VOLTS) (DESCONGELADOR TRASEIRO) | 1138 |
| LÂMPADA (24 VOLTS) (FARÓIS DIANTEIROS, LUZES TRASEIRAS) | 226 |
| LÂMPADA (24 VOLTS) (FAROL DA LÂMINA) | 220 |
| | 222 |
| LÂMPADA (24 VOLTS) (INDICADOR DA AÇÃO PRINCIPAL DO EMS) | 1217 |
| LÂMPADA (24 VOLTS) (INDICDOR DA PRESSÃO DO AR) | 1217 |
| LÂMPADA (24 VOLTS) (INTERRUPTOR DO AMORTECEDOR DA LÂMINA) | 304 |
| LÂMPADA (24 VOLTS) (LÂMINA)(LÂMPADA DIANTEIRA) | 217 |
| LÂMPADA (24 VOLTS) (LÂMPADA DA LÂMINA) | 218 |
| LÂMPADA (24 VOLTS) (LÂMPADA DE MARCHA À RÉ AUXILIAR) | 204 |
| LÂMPADA (24 VOLTS) (MÓDULO DE QUATRO MEDIDORES) | 1217 |
| LÂMPADA (24 VOLTS) (PLACA DE REGISTRO) | 195 |
| LÂMPADA (24 VOLTS) (POSIÇÃO) | 186 |
| | 188 |
| LÂMPADA (24 VOLTS) (POSIÇÃO DA CABINE) | 194 |
| LÂMPADA (24 VOLTS) (SINAL) | 192 |
| LÂMPADA (24 VOLTS) (TRAVA DO DIFERENCIAL) | 1217 |
| LÂMPADA (24 VOLTS) (VIRADA) | 186 |
| | 188 |
| LÂMPADA (24 VOLTS, 21 WATTS) | 378 |
| | 381 |
| LÂMPADA (24 VOLTS, 21 WATTS) (SINAL) | 192 |
| LÂMPADA (24 VOLTS, 21 WATTS) (SINAL) | 190 |
| LÂMPADA (24 VOLTS, 21 WATTS) (VIRADA) | 186 |
| | 188 |
| LÂMPADA (24 VOLTS, 3 WATTS) | 1219 |
| | 1221 |
| LÂMPADA (24 VOLTS, 3 WATTS) | 338 |
| LÂMPADA (24 VOLTS, 3 WATTS) (PAINEL DE INSTRUMENTOS) | 1217 |
| LÂMPADA (24 VOLTS, 5 WATTS) | 378 |
| | 381 |
| LÂMPADA (24 VOLTS, 70 WATTS) | 200 |
| LÂMPADA (24 VOLTS, 70 WATTS) (PISCA-PISCA DE ADVERTÊNCIA) | 199 |


* TRADUÇÃO NÃO DISPONÍVEL NO MOMENTO DA IMPRESSÃO

# ÍNDICE


| Designação | Página |
|---|---|
| LÂMPADA (24 VOLTS, 75-70 WATTS) | 190 |
| LÂMPADA (24 VOLTS, 75-70 WATTS) (CABEÇA) | 192 |
| LÂMPADA (24 VOLTS, 75-70 WATTS) (LUZ ALTA/BAIXA) | 186<br>188 |
| LAVADOR DO VIDRO | 1252<br>1254<br>1255 |
| LENTE (ÂMBAR, PISCA-ALERTA) | 200 |
| LENTE (ÂMBER) (SINAL) | 190<br>192 |
| LENTE (ÂMBER) (VIRADA) | 186<br>188 |
| LENTE (CABEÇA) | 186<br>188 |
| LENTE (FAROL BAIXO) | 212 |
| LENTE (FAROL) (FAIXA BAIXA) | 184 |
| LENTE (LUZES DIANTEIRAS) | 190<br>192 |
| LENTE (PLACA DE REGISTRO) | 195 |
| LEVANTAMENTO DA LÂMINA | 1075 |
| LEVANTAMENTO DO MOTOR | 44 |
| LIMPADOR DO VIDRO | 1266<br>1267<br>1268<br>1270<br>1272<br>1274<br>1276<br>1278<br>1280<br>1282<br>1284<br>1285<br>1286<br>1287 |
| LUZ GIRATÓRIA DE ALARME | 199<br>200 |
| LUZ INTERMITENTE (24 VOLT) | 402 |
| LUZ INTERMITENTE (24 VOLTS) (PISCA-PISCA, PISCA-ALERTA) | 223<br>226<br>229<br>232<br>239<br>242<br>299 |
| LUZ INTERMITENTE (24 VOLTS) (SETA DE DIREÇÃO - PISCA-PISCA) | 259 |

## M

| Designação | Página |
|---|---|
| MANCAL - PRINCIPAL (VIRABREQUIM) | 25 |
| MANGUEIRA - ELIMINAÇÃO DE VAPORES | 14<br>16 |
| MÁQUINA - CONVERSÃO | 3 |
| MARTELO E MONTAGEM | 1143<br>1144 |
| MECANISMO DAS VÁLVULAS | 60 |
| MÓDULO - VELOCÍMETRO E TACÔMETRO | 1205 |
| MÓDULO ELETRÔNICO DE QUATRO INDICADORES | 1204 |
| MONITOR DE SERVIÇO (SISTEMA DE MONITORIZAÇÃO CATERPILLAR) | 169 |
| MONTAGEM - ALTERNADOR | 144 |
| MONTAGEM - CABINE | 1206 |
| MONTAGEM - ESTRUTURA ROPS | 1207<br>1209 |
| MONTAGEM - MECANISMO DAS VÁLVULAS | 46 |
| MONTAGEM - MOTOR E TRANSMISSÃO | 45 |
| MONTAGEM - REMOVEDOR DE NEVE | 1079 |
| MONTAGEM - RIPER | 1078 |
| MONTAGEM - RODA | 464 |
| MONTAGEM-CONTROLE DO DECLIVE | 1053<br>1077 |
| MONTAGEM DA PLACA DE REGISTRO | 593<br>594 |
| MOTOR | 7<br>10 |
| MOTOR - ENGRENAGENS | 719 |
| MOTOR - LIMPADOR DO VIDRO (DIANTEIRO) | 1286 |
| MOTOR - LIMPADOR DO VIDRO (DIANTEIRO SUPERIOR) | 1270<br>1274 |
| MOTOR - LIMPADOR DO VIDRO (DIANTEIRO, SUPERIOR) | 1287 |
| MOTOR - LIMPADOR DO VIDRO (TRASEIRO) | 1278<br>1282 |
| MOTOR - LIMPADOR DO VIDRO (24 VOLTS, 2 VELOCIDADES) | 1267<br>1274 |
| MOTOR - LIMPADOR DO VIDRO (24 VOLTS, 2 VELOCIDADES) | 1270 |
| MOTOR - LIMPADOR DO VIDRO (24 VOLTS, 2 VELOCIDADES) | 1286 |
| MOTOR - LIMPADOR DO VIDRO (24 VOLTS, 2 VELOCIDADES) | 1287 |
| MOTOR - LIMPADOR DO VIDRO (24 VOLTS, 2 VELOCIDADES) (DIANTEIRO, INFERIOR) | 1274 |
| MOTOR - LIMPADOR DO VIDRO (24 VOLTS, 2 VELOCIDADES) (INFERIOR DIANTEIRO) | 1270 |


* TRADUÇÃO NÃO DISPONÍVEL NO MOMENTO DA IMPRESSÃO

# ÍNDICE


| Designação | Página |
|---|---|
| MOTOR DE REVERSÃO DO CÍRCULO | 667 |
| MOTOR E VENTILADOR | 76 |
| MOTOR ELÉTRICO | 275 |
| | 276 |
| MOTOR ELÉTRICO DE PARTIDA | 294 |
| | 296 |
| MOTOR HIDRÁULICO DO GEROTOR | 720 |

## P

| | |
|---|---|
| PAINEL - CABINE | 1213 |
| | 1214 |
| | 1215 |
| PAINEL- REDUÇÃO DE RUÍDO | 50 |
| PAINEL DE INSTRUMENTOS | 1217 |
| | 1219 |
| | 1221 |
| PÁRA-LAMA E SUPORTE | 562 |
| PERSIANA | 1190 |
| PISTÃO E BIELA | 51 |
| PLACA - NÚMERO DE SÉRIE (TRANSMISSÃO) | 409 |
| | 413 |
| PLACA BASCULANTE | 733 |
| PLACA DE IDENTIFICAÇÃO (ALTERNADOR) | 349 |
| | 354 |
| | 359 |
| PLACA DE INFORMAÇÃO (COMPRESSOR DE AR) | 12 |
| PLACA DE INFORMAÇÃO (MOTOR) | 349 |
| | 354 |
| | 359 |
| | 376 |
| PLACA DE INSTRUÇÃO (BATERIA) | 349 |
| | 354 |
| | 359 |
| PLACA DE INSTRUÇÃO (CONDICIONADOR DE AR) | 1096 |
| PLACA E DECALQUE | 2 |
| | 1291 |
| | 1292 |
| | 1295 |
| | 1296 |
| | 1297 |
| | 1298 |
| PLACA E DECALQUE (REFLECTOR) | 1 |
| PLACA-RADIADOR | 90 |
| *PLATE-IDENTIFICATION (*MAXIMUM WEIGHT) | 5 |
| PORTA DA CABINE | 1120 |
| | 1123 |
| | 1125 |
| | 1127 |
| | 1129 |
| | 1131 |
| PORTA (RESPIRO DO AR) | 1170 |
| | 1174 |
| | 1179 |
| | 1181 |
| PÓS-ARREFECEDOR E MONTAGEM | 95 |
| PRÉ-PURIFICADOR | 105 |
| PRÉ-PURIFICADOR COM TELA | 106 |
| PROTETOR - ILUMINAÇÃO | 574 |
| PROTETOR - PLATAFORMA | 575 |
| | 576 |
| | 579 |
| | 582 |
| | 584 |
| PROTETOR - TANQUE DE COMBUSTÍVEL | 573 |
| PROTETOR - TUBOS DO FREIO | 572 |
| PROTETOR E SUPORTE DO RADIADOR | 567 |
| PROTETOR INFERIOR | 570 |
| | 571 |
| PUBLICAÇÃO | 1189 |
| PURIFICADOR DE AR | 96 |
| | 98 |

## R

| | |
|---|---|
| RADIADOR | 93 |
| | 94 |
| RÁDIO | 1224 |
| RÁDIO (RÁDIO AM-FM TOCA-FITAS) | 1224 |
| RECEPTOR-SECADOR (REFRIGERANTE) | 1183 |
| REDUÇÃO DE RUÍDO | 59 |
| REGULADOR DE TEMPERATURA DA ÁGUA (98 GRAUS C) | 79 |
| REGULADOR DE TEMPERATURA DA ÁGUA (98 GRAUS C) | 80 |
| REGULADOR DE VOLTAGEM (24 VOLTS) | 141 |
| REGULADOR DE VOLTAGEM (24 VOLTS) (ALTERNADOR) | 144 |
| RELÉ (CONJ) (24 VOLTS) | 206 |
| RELÉ (CONJ) (24 VOLTS) (ALARME DE MARCHA-À-RÉ) | 208 |
| RELÉ (CONJ) (24 VOLTS) (AUXILIAR DE PARTIDA A ÉTER) | 290 |
| RELÉ (CONJ) (24 VOLTS) (LÂMPADA DE MARCHA À RÉ AUXILIAR) | 204 |
| RELÉ (CONJ) (24 VOLTS) (LUZES DE TRABALHO) | 220 |
| | 222 |
| RELÉ (CONJ) (24 VOLTS) (TRASEIRAS, LÂMPADAS DO PAINEL) | 399 |
| RELÉ (CONJ) (24 VOLTS) (TRASEIROS, LÂMPADAS DO PAINEL) | 402 |


* TRADUÇÃO NÃO DISPONÍVEL NO MOMENTO DA IMPRESSÃO

# ÍNDICE


| Designação | Página |
|---|---|
| RELÉ (24 VOLTS) (CONTROLE DE RAMPA) | 330 |
| RELÉ (24 VOLTS) (IMPLEMENTO) | 330 |
| RESISTOR | 366 |
| | 371 |
| RESISTOR (INDICADOR DA DIREÇÃO SECUNDÁRIA) | 385 |
| RESPIRO | 60 |
| RESPIRO (BOCAL DE ENCHIMENTO DE ÓLEO DE TREM DE FORÇA) | 442 |
| RESPIRO (TANDEM) | 470 |
| | 471 |
| RETEM DA VÁLVULA DE CONTROLE | 664 |
| | 665 |
| RETENTOR DO VIRABREQUIM | 41 |
| | 57 |
| REVESTIMENTO DA CABINE | 1168 |
| | 1170 |
| | 1174 |
| | 1179 |
| | 1181 |
| RIPER | 1080 |
| | 1081 |
| RODA | 537 |
| | 538 |
| | 539 |
| | 540 |
| | 541 |
| | 542 |
| RODA E PNEU | 494 |
| | 495 |
| | 496 |
| | 497 |
| | 498 |
| | 499 |
| | 500 |
| | 501 |
| | 502 |
| | 503 |
| | 504 |
| | 505 |
| | 506 |
| | 507 |
| | 508 |
| | 509 |
| | 510 |
| | 511 |
| | 512 |
| | 513 |
| | 514 |
| | 515 |
| | 516 |
| | 517 |
| | 518 |
| | 519 |
| | 520 |
| | 521 |
| | 522 |
| | 523 |
| | 524 |
| | 525 |
| | 526 |
| | 527 |
| | 528 |
| | 529 |
| | 530 |
| | 531 |
| | 532 |
| | 533 |
| | 534 |
| | 535 |
| | 536 |
| ROPS ABERTA | 1230 |
| ROPS FECHADA | 1227 |
| | 1228 |
| | 1229 |


## S


| | |
|---|---|
| SECADOR DE AR | 605 |
| | 606 |
| | 608 |
| SEGMENTO DO CÍRCULO | 1049 |
| SENSOR - PRESSÃO | 279 |
| | 280 |
| | 281 |
| | 282 |
| | 283 |
| SENSOR - TEMPERATURA | 287 |
| | 288 |
| | 289 |
| SENSOR - TEMPERATURA (ÓLEO DA TRANSMISSÃO) | 410 |
| | 414 |
| SENSOR DE VELOCIDADE | 284 |
| | 285 |
| | 286 |
| SENSOR DE VELOCIDADE (ENTRADA DA TRANSMISSÃO) | 414 |
| SILENCIADOR | 103 |
| SIST. DE ILUMINAÇÃO - PISCA-PISCA GIRATÓRIO DE ADVERTÊNCIA | 273 |
| SISTEMA DE ILUMINAÇÃO - ADVERTÊNCIA | 265 |
| | 266 |
| | 268 |
| | 269 |
| | 270 |


* TRADUÇÃO NÃO DISPONÍVEL NO MOMENTO DA IMPRESSÃO

# ÍNDICE


| Designação | Página |
|---|---|
| | 272 |
| SISTEMA DE ILUMINAÇÃO - FARÓIS | 201 |
| | 202 |
| | 210 |
| | 211 |
| | 212 |
| | 214 |
| | 217 |
| | 218 |
| | 220 |
| | 222 |
| | 223 |
| | 226 |
| | 229 |
| | 232 |
| | 235 |
| | 237 |
| | 239 |
| | 242 |
| | 245 |
| | 247 |
| | 249 |
| | 250 |
| | 252 |
| | 254 |
| | 256 |
| | 257 |
| | 258 |
| SISTEMA ELETRÔNICO - MONITOR | 169 |
| SISTEMA ELETRÔNICO - TREM DE FORÇA | 169 |
| SOFTWARE - MONITOR (SISTEMA DE MONITORIZAÇÃO CATERPILLAR) | 169 |
| SOFTWARE-MOTOR (POTÊNCIA HP VARIÁVEL) | 1290 |
| SOLENÓIDE (24 VOLTS) | 294 |
| SUPORTE - ASSENTO | 1246 |
| SUPORTE - CHASSI TRASEIRO | 597 |
| | 598 |
| | 599 |
| SUPORTE - MONTAGEM | 549 |
| | 550 |
| SUPORTE - PLATAFORMA | 603 |
| SUPORTE DO ESCARIFICADOR | 1066 |
| SUPORTE DO MOTOR | 58 |
| SUPORTE DO TANQUE DE COMBUSTÍVEL | 600 |
| | 601 |
| SUPRESSOR DO CONTROLE AUTOMÁTICO DO RETARDADOR - ARC | 220 |
| SUSPENSÃO - ASSENTO | 1248 |
| | 1250 |

## T

| | |
|---|---|
| TAMPA - ACESSO | 553 |
| | 555 |
| TAMPA - BLOCO DO MOTOR | 23 |
| TAMPA - BOCAL DE ENCHIMENTO | 65 |
| TAMPA - BOCAL DE ENCHIMENTO DE COMBUSTÍVEL (SERVIÇO PESADO, TRAVÁVEL) | 130 |
| | 132 |
| TAMPA - BOCAL DE ENCHIMENTO (TANQUE DE ÓLEO HIDRÁULICO) | 737 |
| TAMPA DE PRESSÃO (7 PSI) | 93 |
| | 94 |
| TAMPÃO | 470 |
| | 471 |
| TANDEM E TAMPA | 470 |
| | 471 |
| TANQUE DE AR | 620 |
| | 622 |
| TANQUE DE COMBUSTÍVEL | 127 |
| | 128 |
| | 129 |
| | 130 |
| | 132 |
| | 134 |
| | 135 |
| TANQUE DE ÓLEO HIDRÁULICO E MONTAGEM | 739 |
| TANQUE HIDRÁULICO E FILTRO | 737 |
| TAPETE | 584 |
| TAPETE (CABINE) | 1166 |
| TELA DE SUCÇÃO (CAIXA DE TRANSMISSÃO) | 409 |
| | 413 |
| TELA DE SUCÇÃO (TRANSMISSÃO) | 467 |
| TELA FILTRANTE (ENCHIMENTO DO TANQUE HIDRÁULICO) (TANQUE DE ÓLEO HIDRÁULICO) | 737 |
| TELA FILTRANTE (VÁLVULA DE CONTROLE DE TRANSMISSÃO) | 490 |
| | 492 |
| TELA PÁRA-SOL | 1231 |
| TENSOR DA CORREIA | 18 |
| | 20 |
| TERMOSTATO / REGULADOR DE TEMPERATURA | 79 |
| | 80 |
| TIRANTE DA LÂMINA | 549 |
| TRANSMISSÃO | 472 |
| | 474 |
| TRAVA - DESLOCAMENTO LATERAL | 713 |
| TUBOS - ACUMULADOR | 672 |
| TUBOS - ÁGUA | 81 |


* TRADUÇÃO NÃO DISPONÍVEL NO MOMENTO DA IMPRESSÃO

# ÍNDICE


| Designação | Página |
|---|---|
| | 82 |
| | 83 |
| | 85 |
| | 87 |
| | 88 |
| | 89 |
| TUBOS - AQUECEDOR | 1185 |
| | 1187 |
| TUBOS - AR | 99 |
| | 100 |
| TUBOS - AR CONDICIONADO | 1183 |
| TUBOS - BOMBA | 694 |
| | 697 |
| | 700 |
| TUBOS - COMBUSTÍVEL | 115 |
| | 116 |
| TUBOS - DIREÇÃO | 710 |
| TUBOS - DIREÇÃO SECUNDÁRIA | 708 |
| TUBOS - FILTRO DO COMBUSTÍVEL | 118 |
| TUBOS - INJEÇÃO DO COMBUSTÍVEL | 121 |
| TUBOS - LUBRIFICAÇÃO | 590 |
| TUBOS - ÓLEO DA TRANSMISSÃO | 452 |
| | 456 |
| | 460 |
| TUBOS - ÓLEO DO TURBOALIMENTADOR | 70 |
| TUBOS - ÓLEO HIDRÁULICO | 674 |
| | 676 |
| | 677 |
| | 678 |
| | 680 |
| | 683 |
| | 686 |
| | 689 |
| TUBOS - RIPER | 703 |
| | 705 |
| | 707 |
| TUBOS - VENTILADOR HIDRÁULICOS | 690 |
| | 692 |
| TUBOS DO AQUECEDOR | 1185 |
| | 1187 |
| TUBULAÇÕES - DRENAGEM DE ÓLEO DO MOTOR | 69 |
| TUCHO DA VÁLVULA | 43 |
| TURBOALIMENTADOR | 107 |
| | 108 |

## V

| | |
|---|---|
| *VALVE AS-TIRE | 533 |
| VALVULA - PARTIDA A ETER (24 VOLTS) | 290 |
| VÁLVULA COMBINADA | 970 |
| | 972 |
| VÁLVULA DE ALÍVIO | 708 |
| | 1028 |
| | 1029 |
| | 1030 |
| | 1031 |
| | 1032 |
| | 1033 |
| | 1034 |
| | 1035 |
| | 1036 |
| | 1037 |
| | 1038 |
| | 1039 |
| | 1040 |
| | 1041 |
| | 1042 |
| VÁLVULA DE ALÍVIO (COMPRESSOR DO REFRIGERANTE) | 1105 |
| VÁLVULA DE CONTROLE | 974 |
| | 976 |
| | 978 |
| | 980 |
| | 982 |
| | 984 |
| | 986 |
| | 988 |
| | 990 |
| | 992 |
| | 994 |
| | 996 |
| | 998 |
| | 1000 |
| | 1002 |
| | 1004 |
| | 1006 |
| | 1008 |
| | 1010 |
| | 1012 |
| | 1014 |
| | 1016 |
| | 1018 |
| | 1020 |
| VÁLVULA DE CONTROLE - TRANSMISSÃO | 490 |
| | 492 |
| VÁLVULA DE CONTROLE (AR) | 624 |
| VÁLVULA DE CONTROLE DA BOMBA | 1022 |
| | 1024 |
| VÁLVULA DE CONTROLE DO AR | 624 |
| VÁLVULA DE DRENAGEM (TANQUE DE AR) | 620 |
| | 622 |
| VÁLVULA DE DRENAGEM (TANQUE DE COMBUSTÍVEL) | 551 |
| VÁLVULA DE PNEU | 489 |
| | 508 |


* TRADUÇÃO NÃO DISPONÍVEL NO MOMENTO DA IMPRESSÃO

# ÍNDICE


| Designação | Página | Designação | Página |
|---|---|---|---|
| | 509 | | 742 |
| | 510 | | 744 |
| | 511 | | 746 |
| | 512 | | 748 |
| | 513 | | 750 |
| | 514 | | 752 |
| | 515 | | 755 |
| | 516 | | 757 |
| | 517 | | 759 |
| | 518 | | 761 |
| | 519 | | 763 |
| | 520 | | 765 |
| | 521 | | 767 |
| | 525 | | 769 |
| | 526 | | 771 |
| | 527 | | 773 |
| | 528 | | 775 |
| | 529 | | 777 |
| | 530 | | 779 |
| | 531 | | 782 |
| | 532 | | 784 |
| | 533 | | 786 |
| | 534 | | 788 |
| | 535 | | 790 |
| | 536 | | 792 |
| | 539 | | 794 |
| | 540 | | 796 |
| | 541 | | 799 |
| | 542 | | 803 |
| VÁLVULA DE PNEU (INFLAÇÃO DO PNEU) . . . . | 518 | | 807 |
| | 519 | | 811 |
| | 520 | | 815 |
| | 521 | | 819 |
| | 522 | | 822 |
| | 523 | | 825 |
| | 524 | | 829 |
| | 528 | | 833 |
| | 531 | | 837 |
| | 532 | | 841 |
| | 536 | | 845 |
| | 541 | | 849 |
| VÁLVULA DE PURIFICAÇÃO . . . . . | 1026 | | 853 |
| | 1027 | | 857 |
| VÁLVULA DE PURIFICAÇÃO | | | 860 |
| (SECADOR A AR) . . . . . | 608 | | 864 |
| VÁLVULA DE RETENÇÃO . . . . . | 136 | | 867 |
| | 137 | | 870 |
| | 138 | | 874 |
| VÁLVULA DE SEPARAÇÃO . . . . . | 716 | | 877 |
| | 718 | | 880 |
| | 1043 | | 884 |
| | 1044 | | 888 |
| VÁLVULA E ARTICULAÇÕES . . . . . | 740 | | 892 |


* TRADUÇÃO NÃO DISPONÍVEL NO MOMENTO DA IMPRESSÃO

# ÍNDICE


| Designação | Página |
|---|---|
| | 896 |
| | 900 |
| | 904 |
| VÁLVULA E MONTAGEM - TRAVA DO DIFERENCIAL | 477 |
| VÁLVULA SELETORA E CONTROLE DE PRESSÃO | 478 |
| | 481 |
| | 484 |
| VÁLVULA SOLENÓIDE | 487 |
| | 488 |
| | 626 |
| | 627 |
| | 1045 |
| | 1046 |
| VÁLVULA SOLENÓIDE (24 VOLTS CC) (FAIXA DO SELETOR E PRESSÃO) | 478 |
| | 481 |
| VÁLVULA SOLENÓIDE (24 VOLTS CC) (VELOCIDADE, FAIXA, TRANSMISSÃO) | 484 |
| VENTILADOR DE CIRCULAÇÃO DE AR DA CABINE | 1137 |
| | 1138 |
| VIDRO | 1257 |
| | 1258 |
| | 1259 |
| | 1260 |
| VIGIA | 93 |
| VIGIA (NÍVEL DO LÍQUIDO ARREFECEDOR) | 94 |
| VIGIA (ÓLEO HIDRÁULICO) | 737 |
| VIRABREQUIM | 25 |
| VOLANTE DO MOTOR | 37 |


* TRADUÇÃO NÃO DISPONÍVEL NO MOMENTO DA IMPRESSÃO

# STICHWORTVERZEICHNIS


| Bezeichnung | Seite |
|---|---|
| **A** | |
| ABDECKGLAS (ABBLENDLICHT) | 212 |
| ABDECKGLAS (FRONTSCHEINWERFER) | 190 |
| | 192 |
| ABDECKGLAS (FRONTSCHEINWERFER) | 186 |
| ABDECKGLAS (FRONTSCHEINWERFER) | 188 |
| ABDECKGLAS (FRONTSCHEINWERFER) (ABBLENDLICHT) | 184 |
| ABDECKGLAS (GELB) (RECHTS- U. LINKSWENDUNG) | 186 |
| | 188 |
| ABDECKGLAS (GELB, RUNDUM-KENNLEUCHTE) | 200 |
| ABDECKGLAS (GELB) (SIGNAL) | 190 |
| | 192 |
| ABDECKGLAS (KENNZEICHEN) | 195 |
| ABLASSVENTIL (DRUCKLUFTTANK) | 620 |
| | 622 |
| ABLASSVENTIL (*FUEL SUMP) | 551 |
| ALARMKABELSTRANG | 204 |
| | 206 |
| | 208 |
| ANHÄNGEVORRICHTUNG | 588 |
| | 589 |
| ANSAUGKRÜMMER | 102 |
| ANSAUGSIEB (GETRIEBE) | 467 |
| ANSAUGSIEB (GETRIEBEGEHÄUSE) | 409 |
| ANSAUGSIEB (GETRIEBEGEHÄUSE) | 413 |
| ANSCHLUSS | 428 |
| | 690 |
| ANSCHLUSSKLEMMENSATZ (DREHSTROM-GENERATOR) | 144 |
| ANTRIEBSKETTE | 417 |
| ANTRIEBSWELLE | 468 |
| | 469 |
| ANTRIEBSWELLENSCHUTZ | 595 |
| ANZEIGEN-EINBAUSATZ (GEWICHTSEINSTEL-LUNG) | 1161 |
| ANZEIGEN-EINBAUSATZ (SITZ) | 1250 |
| ANZUGSLEINE (SITZ) | 1250 |
| ARBEITS- U. SIGNALBELEUCHTUNG | 203 |
| ARBEITSLEUCHTEN | 178 |
| | 179 |
| | 180 |
| | 181 |
| | 182 |
| | 183 |
| | 201 |
| | 202 |
| | 210 |
| | 211 |
| | 212 |
| | 214 |
| | 217 |
| | 218 |
| | 220 |
| | 222 |
| | 223 |
| | 226 |
| | 229 |
| | 232 |
| | 235 |
| | 237 |
| | 239 |
| | 242 |
| | 245 |
| | 247 |
| | 249 |
| | 250 |
| | 252 |
| | 254 |
| | 256 |
| | 257 |
| | 258 |
| ARMLEHNE | 1100 |
| | 1101 |
| ASCHENBECHER | 1170 |
| | 1174 |
| ÄTHERSTARTHILFE | 290 |
| | 292 |
| | 293 |
| ÄTHERSTARTVENTIL (24 V) | 290 |
| AUFHÄNGUNG - HINTERES FAHRWERK | 597 |
| | 598 |
| | 599 |
| AUFKLEBER | 1289 |
| | 1290 |
| AUFKLEBER - INFORMATION (HUBÖSE) | 1292 |
| AUFKLEBER - INFORMATION (LAMINIEREN) (MOTOR) | 1291 |
| AUFKLEBER - INFORMATION (LUFTREINI-GER) | 98 |
| AUFKLEBER - INFORMATION (MOTOR, OBERE LEERLAUF, HALTEN) | 1114 |
| | 1116 |
| AUFKLEBER - INFORMATION (MOTOR, UNTERER LEERLAUF, HALTEN) | 1114 |
| | 1116 |
| AUFKLEBER - INFORMATION (SILBER - ULTRAPLATTE) (MOTOR) | 1291 |
| AUFKLEBER - MONITOR (CATERPILLAR ÜBERWACHUNGSSYSTEM) | 1217 |
| AUFKLEBER - MONITOR (VIERFACHANZEI-GENMODUL) | 1219 |
| | 1221 |
| AUFKLEBER - SICHERUNG | 309 |


* ÜBERSETZUNG ZUM ZEITPUNKT DER DRUCKLEGUNG NICHT VORHANDEN

# STICHWORTVERZEICHNIS


| Bezeichnung | Seite |
|---|---|
| AUFKLEBER - SICHERUNG (BELEUCHTUNG, WASCHER, WISCHER, ENTFROSTER) | 306 |
| AUFKLEBER - SICHERUNG (LINKS) | 402 |
| AUFKLEBER - SICHERUNG (LINKS) | 399 |
| AUFKLEBER - SICHERUNG (RECHTS) | 399 |
| AUFKLEBER (FAHRSCHEINWERFER, FERNLICHT, ABBLENDLICHT) | 259 |
| | 299 |
| AUFKLEBER (FAHRSCHEINWERFER, FERNLICHT, ABBLENDLICHT) | 223 |
| | 226 |
| | 229 |
| | 232 |
| | 239 |
| | 242 |
| AUFKLEBER (FAHRSCHEINWERFER, FERNLICHT, ABBLENDLICHT) | 402 |
| AUFKLEBER (KEINE STUFE) | 128 |
| | 130 |
| AUFKLEBER (KONTROLLE) (HEIZUNG U. KLIMAANLAGE) | 1096 |
| AUFKLEBER (KONTROLLE) (LÜFTERDREHZAHL, TEMPERATUR) | 1147 |
| | 1151 |
| AUFKLEBER (RICHTUNGSBLINKER, WARNLEUCHTE) | 223 |
| | 226 |
| | 229 |
| | 232 |
| | 239 |
| | 242 |
| | 259 |
| | 299 |
| AUFKLEBER (RICHTUNGSBLINKER, WARNLEUCHTE) | 402 |
| AUFKLEBER (SCHEIBENWASCHER) | 315 |
| AUFKLEBER (SONNENSCHUTZ - CATERPILLAR) | 1213 |
| | 1214 |
| AUFKLEBER (*VHP PLUS) | 1290 |
| AUFREISSER | 1080 |
| | 1081 |
| AUFREISSERBEFESTIGUNG | 1078 |
| AUFREISSERLEITUNGEN | 703 |
| | 705 |
| | 707 |
| AUFREISSERTRÄGER | 1066 |
| AUFREISSERZAHN | 1091 |
| AUFREISSERZYLINDER | 657 |
| AUFREISSERZYLINDER UND BEFESTIGUNGSTEILE | 647 |
| AUSPUFFKRÜMMER | 101 |
| AUSRÜSTUNG FÜR STRASSENFAHRT | 5 |

## B

| Bezeichnung | Seite |
|---|---|
| BATTERIE | 147 |
| | 148 |
| | 149 |
| | 150 |
| BATTERIE (12 V, WARTUNGSFREI) | 149 |
| | 150 |
| BATTERIE (12 V, WARTUNGSFREI) (NASS) | 148 |
| BATTERIE (12 V, WARTUNGSFREI) (1100 A) | 147 |
| BEDIENUNGSELEMENTE - KABELSTRANG | 387 |
| | 389 |
| | 392 |
| | 396 |
| BEFESTIGUNGSHALTERUNG | 549 |
| | 550 |
| BEFESTIGUNGSSCHRAUBENSATZ (STEUERUNG) | 162 |
| BEFESTIGUNGSTEILE | 141 |
| BEFESTIGUNGSTEILE (DREHSTROMGENERATOR) | 144 |
| BELEUCHTUNGSANLAGE | 378 |
| | 381 |
| BELEUCHTUNGSANLAGE (STRASSENAUSRÜSTUNG) | 259 |
| | 262 |
| BELEUCHTUNGSKABELSTRANG | 229 |
| | 232 |
| BETRIEBSBREMSE | 611 |
| BLINKER (24 V) | 402 |
| BLINKER (24 V) (RICHTUNGSBLINKER, WARNLEUCHTE) | 223 |
| | 299 |
| BLINKER (24 V) (RICHTUNGSBLINKER, WARNLEUCHTE) | 226 |
| | 229 |
| | 232 |
| | 239 |
| | 242 |
| BLINKER (24 V) (RICHTUNGSBLINKER/ WARNLEUCHTEN) | 259 |
| BLINKERLEUCHTEN | 263 |
| | 264 |
| BLINKLEUCHTE | 196 |
| | 197 |
| | 198 |
| BLITZSCHUTZ | 574 |
| BLOCK | 432 |
| BLOCK (GETRIEBESÖLKÜHLER) | 434 |
| BREMSGESTÄNGE | 615 |
| BREMSLEITUNGSVERKLEIDUNG | 572 |
| BUCHSEN-EINBAUSATZ (STARTERMOTOR) | 294 |
| BÜRSTEN-EINBAUSATZ (STARTERMOTOR) | 294 |


* ÜBERSETZUNG ZUM ZEITPUNKT DER DRUCKLEGUNG NICHT VORHANDEN

# STICHWORTVERZEICHNIS


| Bezeichnung | Seite |
|---|---|
| **C** | |
| *CARTRIDGE AS-DESICCANT (LUFTTROCKNER) | 608 |
| *CONTROL GP-CLUTCH | 1111 |
| *CONTROL GP-HYDRAULIC LOCKOUT | 642 |
| **D** | |
| DICHTUNG | 60, 79, 128, 129 |
| DICHTUNG (KRAFTSTOFFENTLÜFTUNGSPUMPE) | 125 |
| DICHTUNG (KRAFTSTOFFENTLÜFTUNGSPUMPE) (ABDECKUNG) | 126 |
| DICHTUNG (TEMPERATURREGELGEHÄUSE) | 80 |
| DICHTUNGSSATZ | 630, 632, 653, 658, 715, 716, 718, 1045, 1046 |
| DICHTUNGSSATZ (DIFFERENTIALSPERRE) | 477 |
| DICHTUNGSSATZ (DIFFERENZIALSPERRVENTIL) | 487 |
| DICHTUNGSSATZ (GETRIEBESOLENOID) | 488 |
| DICHTUNGSSATZ (*METERING PUMP, STEERING) | 1113 |
| DICHTUNGSSATZ (SCHARDÄMPFUNGSDRUCKSPEICHER) | 631 |
| DIFFERENTIAL | 440 |
| DIFFERENTIAL UND TELLERRAD | 438 |
| DIFFERENTIALSPERRE - VENTIL UND BEFESTIGUNGSTEILE | 477 |
| DIFFERENTIALSPERRENGESTÄNGE | 428 |
| DOKUMENTATION | 1189 |
| DREHKNOPFSCHALTER (FAHRSCHEINWERFER, DIMMER) | 229, 232, 239, 242, 402 |
| DREHKNOPFSCHALTER (FAHRSCHEINWERFER, DIMMER) | 226 |
| DREHKNOPFSCHALTER (FAHRTRICHTUNGSANZEIGER) | 299 |
| DREHKNOPFSCHALTER (FERNLICHT, ABBLENDLICHT) | 223 |
| DREHKNOPFSCHALTER (FERNLICHT/ ABBLENDLICHT) | 259 |
| DREHKNOPFSCHALTER (GEBLÄSEGESCHWINDIGKEIT) | 1147, 1151 |
| DREHKNOPFSCHALTER (GEBLÄSEGESCHWINDIGKEIT) | 1096 |
| DREHKNOPFSCHALTER (24 V) (VORDERE WISCHERSTEUERUNG) | 306 |
| DREHKNOPFSCHALTER (24 V) (VORDERER SCHEIBENWISCHER) | 315 |
| DREHSCHALTER (RICHTUNGSBLINKER, WARNLEUCHTE) | 226, 229, 232, 259, 402 |
| DREHSCHALTER (RICHTUNGSBLINKER, WARNLEUCHTE) | 223, 239, 242, 299 |
| DREHSCHALTER (SEITENSCHUBANZEIGE) | 321, 325 |
| DREHSTROMGENERATOR | 141, 143, 144, 145, 146 |
| DREHSTROMGENERATOR - ANSCHLUSSKLEMMENSATZ | 141 |
| DREHSTROMGENERATOR - BEFESTIGUNG | 144 |
| DREHZAHLSENSOR | 284, 285, 286 |
| DREHZAHLSENSOR (GETRIEBEEINGABE) | 414 |
| DRUCKKAPPE (7 PSI) | 93, 94 |
| DRUCKKNOPFSCHALTER (ANZEIGEMODI) | 1219, 1221 |
| DRUCKKNOPFSCHALTER (FAHREREINSTELLUNGSMODUS) | 1217 |
| DRUCKLUFT-STEUERVENTIL | 624 |
| DRUCKLUFTBEHÄLTER | 620, 622 |
| DRUCKLUFTHUPE | 1155, 1156, 1158 |
| DRUCKLUFTLEITUNGEN | 99, 100 |
| DRUCKSCHALTER (BREMSLEUCHTE) | 321, 325 |
| DRUCKSCHALTER (FESTSTELLBREMSE) | 325 |


* ÜBERSETZUNG ZUM ZEITPUNKT DER DRUCKLEGUNG NICHT VORHANDEN

# STICHWORTVERZEICHNIS


| Bezeichnung | Seite |
|---|---|
| DRUCKSCHALTER (FESTSTELLBREMSE) | 322 |
| DRUCKSCHALTER (HAUPTLENKUNG) | 325 |
| DRUCKSCHALTER (HAUPTSCHALTER - ELEKTR.) | 325 |
| DRUCKSCHALTER (KLIMAANLAGE HOCH/NIEDRIG) | 1183 |
| DRUCKSCHALTER (LUFTBREMSEN) | 321 |
| DRUCKSCHALTER (NOTLENKUNG) | 385 |
| DRUCKSENSOR | 279 |
| | 280 |
| | 281 |
| | 282 |
| | 283 |
| DRUCKSPEICHER | 629 |
| | 630 |
| DRUCKSPEICHER (SCHARDÄMPFUNG) | 633 |
| DRUCKSPEICHERLEITUNGEN | 672 |

## E

| | |
|---|---|
| ECKMESSER | 1057 |
| | 1058 |
| | 1059 |
| | 1060 |
| EINBAUSATZ - KRAFTSTOFFILTER UND WASSERABSCHEIDER | 114 |
| EINFÜLLKAPPE | 65 |
| EINFÜLLSTUTZENKAPPE (HYDRAULIKÖL-TANK) | 737 |
| EINSTELLER-EINBAUSATZ | 1211 |
| ELEKTR. UMFORMER | 164 |
| | 165 |
| | 166 |
| | 167 |
| ELEKTR. UMFORMER (24V - 24V) | 164 |
| | 166 |
| ELEKTRONIK - MONITOR | 169 |
| ENDMESSER | 1061 |
| ENDSCHALTER (BREMSPEDAL) | 403 |
| ENDSCHALTER (KRIECHGANGPEDAL) | 402 |
| ENDSCHALTER (KRIECHGANGPEDAL) | 399 |
| ENTDUNSTERSCHLAUCH | 14 |
| | 16 |
| ENTFROSTERGEBLÄSE | 1139 |
| | 1140 |
| ENTLASTUNGSVENTIL (LUFTKOMPRES-SOR) | 12 |
| ENTLEERVENTIL | 1026 |
| | 1027 |
| ENTLEERVENTIL (LUFTTROCKNER) | 608 |
| ENTLÜFTER | 60 |
| ENTLÜFTER (KRAFTSÜBERTRAGUNG - ÖLEINFÜLLUNG) | 442 |
| ENTLÜFTER (TANDEM) | 470 |
| | 471 |

## F

| | |
|---|---|
| FAHRERHAUS | 1102 |
| | 1103 |
| FAHRERHAUS-KABELBAUM | 206 |
| | 208 |
| | 252 |
| | 254 |
| | 313 |
| | 1198 |
| FAHRERHAUS-KABELBAUM (HINTEN) | 306 |
| | 309 |
| FAHRERHAUS-KABELBAUM (SCHLTTAFEL) | 306 |
| | 309 |
| FAHRERHAUS-KABELBAUM (VORNE) | 309 |
| FAHRERHAUS (OHNE ÜBERROLLSCHUTZ) | 1102 |
| FAHRERHAUSANBAUSATZ | 1206 |
| FAHRERHAUSAUSKLEIDUNG | 1168 |
| | 1170 |
| | 1174 |
| | 1179 |
| | 1181 |
| FAHRERHAUSBELEUCHTUNG | 177 |
| FAHRERHAUSFENSTER | 1257 |
| | 1258 |
| | 1259 |
| | 1260 |
| | 1261 |
| | 1262 |
| | 1264 |
| FAHRERHAUSHEIZUNG | 1145 |
| | 1146 |
| | 1147 |
| | 1151 |
| FAHRERHAUSHEIZUNG U. BEFESTIGUNGS-TEILE | 1145 |
| FAHRERHAUSLUFTFILTER | 1142 |
| FAHRERHAUSLUFTSCHLITZE | 1190 |
| FAHRERHAUSTÜR | 1120 |
| | 1123 |
| | 1125 |
| | 1127 |
| | 1129 |
| | 1131 |
| FAHRERHAUSTÜR (*AIR VENTED) | 1170 |
| | 1174 |
| | 1179 |
| | 1181 |
| FAHRERHAUSVERDRAHTUNG | 306 |
| | 308 |


* ÜBERSETZUNG ZUM ZEITPUNKT DER DRUCKLEGUNG NICHT VORHANDEN

# STICHWORTVERZEICHNIS


| Bezeichnung | Seite |
|---|---|
| | 309 |
| | 311 |
| | 313 |
| | 315 |
| FAHRERHAUSVERKLEIDUNG | 208 |
| FAHRERHAUSZUBEHÖR | 1093 |
| | 1094 |
| FAHRERPLATTFORM-KABELSTRANG | 321 |
| | 325 |
| | 330 |
| FAHRERPLATTFORMVERKLEIDUNG | 575 |
| | 576 |
| | 579 |
| | 582 |
| | 584 |
| FAHRERSITZ | 1234 |
| | 1236 |
| FAHRERSITZ, KIPPVORRICHTUNG | 1211 |
| FAHRERSITZFEDERUNG | 1248 |
| | 1250 |
| FAHRERSITZFEDERUNGSGEHÄUSE | 1160 |
| FAHRERSITZVERKLEIDUNG | 1211 |
| FAHRWERK-KABELBAUM | 249 |
| | 304 |
| FAHRWERK-KABELBAUM (ABSTREIFSCHILD) | 250 |
| FEDER-EINBAUSATZ | 1161 |
| FEDER-EINBAUSATZ (HÖHENEINSTELLUNG) | 1161 |
| FEDERUNGS-EINBAUSATZ (MANSCHETTE) | 1248 |
| FEDERUNGS-EINBAUSATZ (ROLLE) | 1248 |
| FESTSTELLBREMSE | 609 |
| FESTSTELLBREMSGESTÄNGE | 613 |
| *FILM-COVER (*BLACK BACKGROUND) (ABDECKUNG - SCHWARZ) | 1116 |
| *FILM-COVER (*BLACK BACKGROUND) (ABDECKUNG - SCHWARZ) | 1114 |
| FILTER (KRAFTSTOFF, WASSERABSCHEIDER) (HAUPTELEMENT) | 114 |
| *FRAME AS-ALTERNATOR | 144 |
| FRONTAUFREISSER | 1083 |
| | 1084 |
| | 1088 |
| FRONTAUFREISSERZAHN | 1092 |
| FRONTAUFREISSERZYLINDER | 658 |
| FRONTSCHEINWERFER | 184 |
| | 185 |
| | 186 |
| | 188 |
| FUSSMATTE | 584 |
| FUSSMATTE (FAHRERHAUS) | 1166 |


## G


| Bezeichnung | Seite |
|---|---|
| GELENKZYLINDER UND BEFESTIGUNGSTEILE | 643 |
| GESCHWINDIGKEITS- U. DREHZAHLMESSER-MODUL | 1205 |
| GETRIEBE | 472 |
| | 474 |
| GETRIEBE-KABELBAUM | 339 |
| | 344 |
| | 366 |
| | 371 |
| | 406 |
| | 430 |
| GETRIEBEGEHÄUSE UND TEILE | 409 |
| | 413 |
| GETRIEBEHYDRAULIK | 430 |
| | 431 |
| GETRIEBEKUPPLUNG | 418 |
| | 421 |
| | 424 |
| | 426 |
| GETRIEBEÖLFÜLLSTUTZEN | 442 |
| GETRIEBEÖLKÜHLER | 432 |
| | 434 |
| GETRIEBEÖLLEITUNGEN | 452 |
| | 456 |
| | 460 |
| GETRIEBESTEUERUNG | 1114 |
| | 1116 |
| GETRIEBESTEUERVENTIL | 490 |
| | 492 |
| GETRIEBEVERDRAHTUNG | 406 |
| GLEICHRICHTER | 141 |
| GLEITSCHIENENBLOCK-EINBAUSATZ (SCHWINGSITZ) | 1240 |
| | 1241 |
| GLEITSCHIENENBLOCK-EINBAUSATZ (SITZ) | 1242 |
| GRUNDAUSFÜHRUNG | 3 |


## H


| Bezeichnung | Seite |
|---|---|
| HALOGENSCHINWERFER (24V)(65W) | 178 |
| | 181 |
| | 183 |
| HALOGENSCHINWERFER (24V)(65W) (ABBLENDLICHT) | 184 |
| HALOGENSCHINWERFER (24V)(65W) (ABBLENDLICHT) | 212 |
| HALOGENSCHINWERFER (24V)(65W) (ARBEITSSCHEINWERFER) | 179 |
| | 180 |
| | 182 |


* ÜBERSETZUNG ZUM ZEITPUNKT DER DRUCKLEGUNG NICHT VORHANDEN

# STICHWORTVERZEICHNIS


| Bezeichnung | Seite |
|---|---|
| HALOGENSCHINWERFER (24V)(65W) (FERNLICHT) | 212 |
| HALOGENSCHINWERFER (24V)(65W) (FERNLICHT) | 185 |
| HALTETEILE | 561 |
| HALTETEILESATZ (SITZ) | 1250 |
| HAMMER UND BEFESTIGUNG | 1143 |
| | 1144 |
| HAUPTFILTER | 98 |
| HAUPTLAGER (KURBELWELLE) | 25 |
| HEBEL-EINBAUSATZ (STARTERMOTOR) | 294 |
| HECKBELEUCHTUNGSVERDRAHTUNG | 378 |
| | 381 |
| HEIZELEMENT (LUFTTROCKNER) | 608 |
| HEIZUNGSBLOCK | 1097 |
| | 1148 |
| | 1152 |
| HEIZUNGSELEMENT (240 V, 1250 W) | 173 |
| HEIZUNGSLEITUNGEN | 1185 |
| | 1187 |
| HINTERER KABELSTRANG (*SERVICE CENTER, LH) | 349 |
| | 354 |
| | 359 |
| HINTERER KABELSTRANG (*SERVICE CENTER, RH) | 349 |
| | 354 |
| | 359 |
| HUBVENTIL | 43 |
| HUBZYLINDER | 656 |
| HYDRAULIKDRUCKSPEICHER | 631 |
| | 632 |
| | 633 |
| HYDRAULIKDRUCKSPEICHER U. BEFESTIGUNG | 628 |
| HYDRAULIKHAMMER-EINBAUSATZ | 1143 |
| | 1144 |
| HYDRAULIKLEITUNGEN | 674 |
| | 676 |
| | 677 |
| | 678 |
| | 680 |
| | 683 |
| | 686 |
| | 689 |
| HYDRAULIKLÜFTERLEITUNGEN | 690 |
| | 692 |
| HYDRAULIKPUMPE UND LEITUNGEN | 694 |
| | 697 |
| | 700 |
| HYDRAULIKSTEUERUNG | 635 |
| | 636 |
| | 637 |
| | 638 |
| | 639 |
| | 640 |
| | 641 |
| HYDRAULIKSYSTEM | 671 |
| HYDRAULIKTANK UND BEFESTIGUNGSTEILE | 739 |
| HYDRAULIKTANK UND SCHMIERFILTER | 737 |


## I


| Bezeichnung | Seite |
|---|---|
| IDENTIFIKATIONSSCHILD (DREHSTROMGENERATOR) | 349 |
| | 354 |
| | 359 |
| IDENTIFIZIERUNGS-AUFKLEBER (BIOLOGISCH ABBAUBARES HYDRAULIKÖL) | 671 |
| IDENTIFIZIERUNGS-AUFKLEBER (GRUPPENNUMMER) | 1147 |
| IDENTIFIZIERUNGS-AUFKLEBER (GRUPPENNUMMER) (KLIMAANLAGE) | 1096 |
| IDENTIFIZIERUNGS-AUFKLEBER (RUND, ROT REFEKTIEREND) | 1295 |
| INFORMATIONSSCHILD (LUFTKOMPRESSOR) | 12 |
| INFORMATIONSSCHILD (MOTOR) | 349 |
| | 354 |
| | 359 |
| | 376 |
| INSTRUKTIONS-AUFKLEBER (*ENGINE OIL DRAIN) | 1292 |
| INSTRUKTIONS-AUFKLEBER (FÜR SITZVERSTELLUNG) | 1250 |
| INSTRUKTIONS-AUFKLEBER (MOTORABSTELLUNG) | 340 |
| | 345 |
| | 367 |
| | 372 |
| INSTRUKTIONS-AUFKLEBER (SCHEIBENWASCHMITTEL) | 1292 |
| INSTRUKTONSSCHILD (BATTERIE) | 349 |
| | 354 |
| | 359 |
| INSTRUKTONSSCHILD (KLIMAANLAGE) | 1096 |
| INSTRUMENTENBRETT-AUFKLEBER (ANZEIGETAFEL, LINKS) | 1221 |
| INSTRUMENTENBRETT-AUFKLEBER (ANZEIGETAFEL, LINKS) | 1219 |
| INSTRUMENTENBRETT-AUFKLEBER (ANZEIGETAFEL, RECHTS) | 1219 |
| | 1222 |


* ÜBERSETZUNG ZUM ZEITPUNKT DER DRUCKLEGUNG NICHT VORHANDEN

# STICHWORTVERZEICHNIS


| Bezeichnung | Seite |
|---|---|
| INSTRUMENTENBRETT-AUFKLEBER (DREHZAHLREGELUNG) | 1116 |
| INSTRUMENTENBRETT-AUFKLEBER (GANGWAHL) | 1114 |
| INSTRUMENTENBRETT-AUFKLEBER (GETRIEBEANZEIGETAFEL) | 1114 |
| INSTRUMENTENBRETT-AUFKLEBER (LINKE KONTROLLLEUCHTEN) | 1217 |
| INSTRUMENTENBRETT-AUFKLEBER (RECHTE KONTROLLLEUCHTEN) | 1217 |
| INSTRUMENTENBRETT-AUFKLEBER (*TRANSMISSION, PARKING BRAKE) | 1116 |
| INSTRUMENTENTAFEL | 1217<br>1219<br>1221 |
| INSTRUMENTENTAFEL-KABELSTRANG | 204<br>208<br>235<br>237<br>311<br>1217<br>1219 |
| INSTRUMENTENTAFEL-KABELSTRANG (SCHALTER) | 1202 |
| INTRUMENTENBRETTVERKABELSTRANG (TAFEL HINTERGRUNDBELEUCHTUNG) | 1221 |
| ISOLATOR-EINBAUSATZ (STARTERMOTOR) | 294 |

## K

| | |
|---|---|
| KABELBAUM, VORNE (*CIRCLE) | 330 |
| KABELSTRANG - HECKBELEUCHTUNG | 245<br>247<br>258<br>330<br>364<br>367<br>372<br>378<br>381 |
| KABELSTRANG - HECKBELEUCHTUNG (LINKS) | 379<br>381 |
| KABELSTRANG - HECKBELEUCHTUNG (RECHTS) | 379<br>381 |
| KABELSTRANG - HEIZUNG U. KLIMAANLAGE | 1097<br>1147<br>1151<br>1183 |
| KABELSTRANG - HINTERES FAHRWERK | 339<br>344<br>345<br>367<br>372 |
| KABELSTRANG - VORDERE BELEUCHTUNG | 235<br>237<br>252<br>254<br>259<br>273<br>326 |
| KABELSTRANG - VORDERE BELEUCHTUNG (ARBEITSSCHEINWERFER) | 242 |
| KABELSTRANG - VORDERE BELEUCHTUNG (ERHÖHTER LICHTBALKEN) | 239 |
| KABELSTRANG - VORDERES FAHRWERK | 223<br>226<br>229<br>232<br>259<br>325 |
| KABELSTRANG - VORDERES FAHRWERK (ACHSSCHEMELBALKENLEUCHTE) | 239 |
| KABELSTRANG - VORDERES FAHRWERK (ARBEITSSCHEINWERFER, VORN) | 242 |
| KABELSTRANG (KONSOLE) | 402 |
| KABELSTRANG (MOTOR ELEKTRON.) | 317<br>319 |
| KABELSTRANG U. STARTHILFE | 290 |
| KÄLTEMITTELKOMPRESSOR | 1105 |
| KÄLTEMITTELKOMPRESSOR U. BEFESTIGUNG | 1104 |
| KÄLTEMITTELKONDENSATOR U. BEFESTIGUNGSTEILE | 1106 |
| KÄLTEMITTELTROCKNER (KÜHLMITTEL) | 1183 |
| KEILRIEMEN | 596 |
| KETTE | 417 |
| KIPPSCHALTER (ABBLENDSCHEINWERFER) | 229<br>232<br>240 |
| KIPPSCHALTER (ARBEITSSCHEINWERFER, VORN) | 242 |
| KIPPSCHALTER (FAHRSCHEINWERFER, HECKLEUCHTEN) | 223<br>226<br>229<br>232<br>239<br>242 |
| KIPPSCHALTER (FAHRSCHEINWERFER, HECKLEUCHTEN) | 299 |


* ÜBERSETZUNG ZUM ZEITPUNKT DER DRUCKLEGUNG NICHT VORHANDEN

# STICHWORTVERZEICHNIS


| Bezeichnung | Seite |
|---|---|
| | 402 |
| KIPPSCHALTER (FRONTSCHEINWERFER/ HECKLEUCHTE) | 259 |
| KIPPSCHALTER (GETRIEBESPERRE EINSTELLEN, RÜCKSTELLEN) | 389 |
| | 392 |
| | 396 |
| KIPPSCHALTER (MOTORABSTELLUNG) | 366 |
| | 371 |
| KIPPSCHALTER (MOTORABSTELLUNG (STANDEBENE)) | 339 |
| | 344 |
| KIPPSCHALTER (NOTLENKUNG) | 393 |
| KIPPSCHALTER (RUNDUM-KENNLEUCHTE) | 175 |
| KIPPSCHALTER (RUNDUM-KENNLEUCHTE) | 270 |
| KIPPSCHALTER (SCHARARBEITSLEUCHTE) | 220 |
| | 222 |
| KIPPSCHALTER (SCHARLEUCHTE) | 218 |
| KIPPSCHALTER (SCHAR)(VORDERER ARBEITSSCHEINWERFER) | 217 |
| KIPPVORRICHTUNG NACH HINTEN, REPARATURSATZ | 1211 |
| KIPPWANNENSATZ | 1234 |
| | 1236 |
| *KIT-IDLER HOUSING-LH (FENSTER) | 1264 |
| *KIT-IDLER HOUSING-RH (FENSTER) | 1262 |
| KLEMMLEISTE | 151 |
| KLIMAANLAGE | 1095 |
| | 1096 |
| KLIMAANLAGE UND AUFHÄNGUNG | 1095 |
| KLIMAANLAGENDRUCKSPEICHER | 1183 |
| KLIMAANLAGENLEITUNGEN | 1183 |
| KNICKGELENK-ANHÄNGUNG | 586 |
| KNICKLENKZYLINDER | 652 |
| KOLBENPUMPE | 725 |
| | 727 |
| KOLBENPUMPE UND BEFESTIGUNG | 723 |
| KOLBENPUMPENUMLAUFSATZ | 729 |
| | 730 |
| KONDENSATORBLOCK (KLIMAANLAGE) | 1106 |
| KONSOLEN-VERDRAHTUNG | 387 |
| | 389 |
| | 392 |
| | 396 |
| KONSOLEN-VERDRAHTUNG (LENKUNG) | 399 |
| KRAFTSTOFF-ENTLÜFTUNGSPUMPE | 125 |
| | 126 |
| KRAFTSTOFFEINSPRITZDÜSE | 124 |
| KRAFTSTOFFEINSPRITZLEITUNGEN | 121 |
| KRAFTSTOFFEINSPRITZPUMPE | 124 |
| KRAFTSTOFFFILTERKAPPE (SCHWEREINSATZ, SPERRBAR) | 132 |
| KRAFTSTOFFFILTERKAPPE (SCHWEREINSATZ, SPERRBAR) | 130 |
| KRAFTSTOFFHEIZUNG (WASSERABSCHEIDER, 12 V) | 114 |
| KRAFTSTOFFILTER | 113 |
| KRAFTSTOFFILTERLEITUNGEN | 118 |
| KRAFTSTOFFLEITUNGEN | 115 |
| | 116 |
| KRAFTSTOFFÖRDERPUMPE | 123 |
| KRAFTSTOFFÖRDERPUMPE UND BEFESTIGUNGSTEILE | 123 |
| KRAFTSTOFFSIEB | 127 |
| | 130 |
| | 132 |
| KRAFTSTOFFSTANDGEBER | 130 |
| | 132 |
| KRAFTSTOFFTANK | 127 |
| | 128 |
| | 129 |
| | 130 |
| | 132 |
| | 134 |
| | 135 |
| KRAFTSTOFFTANK-HALTETEILE | 111 |
| | 112 |
| KRAFTSTOFFTANKABSTÜTZUNG | 600 |
| | 601 |
| KRAFTSTOFFTANKVERKLEIDUNG | 573 |
| KRAFTÜBERTRAGUNGSELEKTRONIK | 169 |
| KREISSEGMENT | 1049 |
| KREUZGELENK | 476 |
| KUEHLER-HALTETEILE | 78 |
| KÜHLER | 93 |
| | 94 |
| KÜHLERPLATTE | 90 |
| KÜHLSYSTEM | 73 |
| | 74 |
| | 75 |
| KÜHLWASSER-TEMPERATURREGLER UND GEHÄUSE | 79 |
| | 80 |
| KÜHLWASSERLEITUNGEN | 81 |
| | 82 |
| | 83 |
| | 85 |
| | 87 |
| | 88 |
| | 89 |
| KÜHLWASSERPUMPE | 91 |
| | 92 |


* ÜBERSETZUNG ZUM ZEITPUNKT DER DRUCKLEGUNG NICHT VORHANDEN

# STICHWORTVERZEICHNIS


| Bezeichnung | Seite |
|---|---|
| KURBELLAGER-EINBAUSATZ (LUFTKOMPRESSOR) | 12 |
| KURBELWELLE | 25 |
| KURBELWELLENDICHTUNG | 41 |
| | 57 |

## L

| | |
|---|---|
| LADELUFTKÜHLER U. BEFESTIGUNG | 95 |
| LAGERSATZ | 141 |
| | 1161 |
| LAGERSATZ (DREHSTROMGENERATOR) | 144 |
| LAUFBAND UND ANTRIEB | 199 |
| | 200 |
| LENKBETÄTIGUNG | 1113 |
| LENKDRUCKSPEICHER | 634 |
| LENKGESTÄNGE | 591 |
| | 592 |
| LENKKONSOLENVERDRAHTUNG | 399 |
| | 402 |
| LENKÖLLEITUNGEN | 710 |
| LENKZYLINDER | 660 |
| | 661 |
| LENKZYLINDER UND AUFHÄNGUNG | 650 |
| LEUCHTE (BREMSLEUCHTE, HECKLEUCHTE, RICHTUNGSBLINKER, LINKS) | 378 |
| | 381 |
| LEUCHTE (BREMSLEUCHTE, RICHTUNGSBLINKER, HECKLEUCHTE, RECHTS) | 381 |
| LEUCHTE (BREMSLEUCHTE, RICHTUNGSBLINKER, HECKLEUCHTE, RECHTS) | 378 |
| LEUCHTE, ROT | 268 |
| | 269 |
| LEUCHTE (24 V) | 175 |
| | 177 |
| | 190 |
| | 223 |
| | 229 |
| | 232 |
| | 239 |
| | 240 |
| | 242 |
| | 259 |
| | 299 |
| | 387 |
| | 389 |
| | 392 |
| | 393 |
| | 396 |
| | 402 |
| | 1096 |
| | 1147 |
| | 1151 |
| | 1205 |
| | 1219 |
| | 1221 |
| | 1222 |
| LEUCHTE (24 V) | 268 |
| | 269 |
| | 270 |
| | 273 |
| | 387 |
| | 389 |
| | 392 |
| | 393 |
| | 396 |
| | 397 |
| | 399 |
| | 402 |
| LEUCHTE (24 V) | 208 |
| | 235 |
| | 237 |
| | 252 |
| | 254 |
| | 311 |
| | 313 |
| | 385 |
| | 397 |
| | 1198 |
| | 1202 |
| LEUCHTE (24 V) (ÄTHERSTARTHILFE) | 293 |
| LEUCHTE (24 V) (AUSFALLSCHUTZ-RÜCKFAHRLEUCHTE) | 204 |
| LEUCHTE (24 V) (DIFFERENTIALSPERRE) | 1217 |
| LEUCHTE (24 V) (ENTFROSTER, HINTEN) | 1138 |
| LEUCHTE (24 V) (FAHRERHAUSSTELLUNG) | 194 |
| LEUCHTE (24 V) (FAHRSCHEINWERFER, HECKLEUCHTEN) | 226 |
| LEUCHTE (24 V) (HAUPTFUNKTIONSLEUCHTE DES ELEKTRON. ÜBERWACHUNGSSYSTEMS) | 1217 |
| LEUCHTE (24 V) (KENNZEICHEN) | 195 |
| LEUCHTE (24 V) (LUFTDRUCKANZEIGE) | 1217 |
| LEUCHTE (24 V) (RECHTS- U. LINKSWENDUNG) | 186 |
| | 188 |
| LEUCHTE (24 V) (RÜCKFAHRALARM) | 206 |
| LEUCHTE (24 V) (SCHAR-ARBEITSSCHEINWERFER) | 220 |
| | 222 |
| LEUCHTE (24 V) (SCHARDÄMPFUNGSCHALTER) | 304 |
| LEUCHTE (24 V) (SCHARLEUCHTE) | 218 |
| LEUCHTE (24 V) (SCHAR)(VORDERER ARBEITSSCHEINWERFER) | 217 |
| LEUCHTE (24 V) (SIGNAL) | 192 |


* ÜBERSETZUNG ZUM ZEITPUNKT DER DRUCKLEGUNG NICHT VORHANDEN

# STICHWORTVERZEICHNIS


| Bezeichnung | Seite |
|---|---|
| LEUCHTE (24 V) (STELLUNG) | 186, 188 |
| LEUCHTE (24 V) (VIERFACHANZEIGENMODUL) | 1217 |
| LEUCHTE (24 V) (VORDERER ENTFROSTER) | 1137 |
| LEUCHTE (24 V, 3 W) | 338, 1219, 1221 |
| LEUCHTE (24 V, 3 W) (INSTRUMENTENTAFEL) | 1217 |
| LEUCHTE (24 V, 5 W) | 378, 381 |
| LEUCHTE (24 V, 70 W) | 200 |
| LEUCHTE (24 V, 70 W) (RUNDUMKENNLEUCHTE) | 199 |
| LEUCHTE (24 V, 75/70 W) | 190 |
| LEUCHTE (24 V, 75/70 W) (FERNLICHT/ABBLENDLICHT) | 186, 188 |
| LEUCHTE (24 V, 75/70 W) (FRONTSCHEINWERFER) | 192 |
| LEUCHTE (*24-VOLT) (AUTOMATIKSCHALTUNG) | 408 |
| LEUCHTE (24V, 21W) | 378, 381 |
| LEUCHTE (24V, 21W) (RECHTS- U. LINKSWENDUNG) | 186, 188 |
| LEUCHTE (24V, 21W) (SIGNAL) | 192 |
| LEUCHTE (24V, 21W) (SIGNAL) | 190 |
| LICHTSCHALTER | 299 |
| LUFTDRUCKANZEIGE (*LEFT AIR TANK) | 1221 |
| LUFTDRUCKANZEIGE (LINKS) | 1217 |
| LUFTDRUCKANZEIGE (LINKS) | 1219 |
| LUFTDRUCKANZEIGE (RECHTS) | 1217, 1219 |
| LUFTDRUCKANZEIGE (*RIGHT AIR TANK) | 1221 |
| LUFTFILTER (FAHRERHAUS) | 1142 |
| LUFTFILTERWARTUNGSANZEIGE | 96 |
| LUFTKANAL | 1134 |
| LUFTKANAL UND REGULIERUNG | 1133 |
| LUFTKOMPRESSOR | 12, 14, 16 |
| LUFTREINIGER | 96, 98 |
| LUFTREINIGERANSCHLUSS | 105 |
| LUFTREINIGERKLEMMEN-EINBAUSATZ | 98 |
| LUFTSTEUERVENTIL | 624 |
| LUFTTROCKNER | 605, 606, 608 |


## M


| Bezeichnung | Seite |
|---|---|
| MAGNETFILTER (GETRIEBE) | 409, 413, 467 |
| MAGNETSCHALTER | 301, 302 |
| MAGNETSCHALTER (24 V) (DURCHDREHRELAIS) | 349 |
| MAGNETSCHALTER (24 V) (STARTERRELAIS) | 359 |
| MAGNETSIEB | 467 |
| MAGNETSPULE (24 V) | 294 |
| MAGNETSTOPFEN (GEHÄUSEABLASS) | 551, 552 |
| MAGNETVENTIL | 487, 488, 626, 627, 1045, 1046 |
| MAGNETVENTIL (*24-VOLT DC) (*SELECTOR & PRESSURE RANGE) | 478, 481 |
| MAGNETVENTIL (*24-VOLT DC) (*SPEED, RANGE, TRANSMISSION) | 484 |
| MARKIERUNGSLEUCHTE | 194 |
| MASCHINEN-UMBAUSATZ | 3 |
| MEMBRANESATZ | 1155 |
| MODUL - VIER ELEKTRON. ANZEIGEN | 1204 |
| MONITOR - SERVICE (CATERPILLAR ÜBERWACHUNGSSYSTEM) | 169 |
| MONITOR - SOFTWARE (CATERPILLAR ÜBERWACHUNGSSYSTEM) | 169 |
| MONITOR - SOFTWARE (CATERPILLAR ÜBERWACHUNGSSYSTEM) | 169 |
| MOTOR- UND GETRIEBEAUFLAGER | 45 |
| MOTOR, ELEKTR. | 275, 276 |
| MOTOR UND LÜFTER | 76 |
| MOTORANTRIEB | 719 |
| MOTORAUFHÄNGUNG | 58 |
| MOTORAUSFÜHRUNG | 7, 10 |
| MOTORBLOCK | 27, 28, 29 |
| MOTORBLOCKDECKEL | 23 |
| MOTORHUBÖSE | 44 |
| MOTORÖLABLASSLEITUNGEN | 69 |
| MOTORÖLEINFÜLLSTUTZEN | 65 |
| MOTORÖLKÜHLERBLOCK | 432, 434 |
| MOTORSTEUERUNG, ELEKTRON. | 157 |


* ÜBERSETZUNG ZUM ZEITPUNKT DER DRUCKLEGUNG NICHT VORHANDEN

# STICHWORTVERZEICHNIS


| Bezeichnung | Seite |
|---|---|
| | 158 |
| | 159 |
| | 160 |
| MOTORSTOPFEN | 53 |
| MOTORVERDRAHTUNG | 317 |
| | 319 |
| MOTORVERKLEIDUNG | 556 |
| | 559 |
| *MOUNTING GP-GRADE CONTROL | 1053 |
| | 1077 |

## N

| | |
|---|---|
| NEBENANTRIEB | 35 |
| NIEGUNGSSTEUER VERDRAHTUNG | 338 |
| NOCKENWELLE | 22 |
| NOTLENKUNG | 732 |
| NOTLENKUNGSLEITUNGEN | 708 |
| NOTLENKUNGSPUMPE UND -MOTOR | 722 |
| NOTLENKUNGSPUMPE UND BEFESTIGUNGS-TEILE | 724 |
| NOTLENKUNGSSTEUERUNG | 161 |
| NOTLENKUNGSVERDRAHTUNG | 385 |

## O

| | |
|---|---|
| ÖLFILTER | 66 |
| | 447 |
| | 449 |
| ÖLFILTER U. BEFESTIGUNGSTEILE | 443 |
| | 445 |
| ÖLFILTER (UMGEHUNG) | 445 |
| ÖLFILTERELEMENT | 457 |
| ÖLFILTERELEMENT (FEINSTFILTER) | 449 |
| | 461 |
| ÖLFILTERELEMENT (GETRIEBE) | 447 |
| | 452 |
| ÖLFILTERELEMENT (STANDARD EFFIZIENZ) | 737 |
| ÖLFILTERSOCKEL | 62 |
| | 64 |
| | 66 |
| ÖLMESSSTAB | 68 |
| ÖLMESSSTAB (GETRIEBE) | 442 |
| ÖLWANNE | 47 |
| | 49 |

## P

| | |
|---|---|
| PANZERWANNE | 570 |
| | 571 |
| PENDELVENTIL | 716 |
| | 718 |
| | 1043 |
| | 1044 |
| PLANIERSTEUERUNG | 170 |
| *PLATE-IDENTIFICATION (*MAXIMUM WEIGHT) | 5 |
| PLATTFORMUNTERBAU | 603 |
| PLEUELSTANGE UND KOLBEN | 51 |
| POLSTEREINBAUSATZ | 1135 |
| | 1136 |
| PUMPENANTRIEBSWELLE | 731 |
| PUMPENSTEUERVENTIL | 1022 |
| | 1024 |

## R

| | |
|---|---|
| RAD UND REIFEN | 494 |
| | 495 |
| | 496 |
| | 497 |
| | 498 |
| | 499 |
| | 500 |
| | 501 |
| | 502 |
| | 503 |
| | 504 |
| | 505 |
| | 506 |
| | 507 |
| | 508 |
| | 509 |
| | 510 |
| | 511 |
| | 512 |
| | 513 |
| | 514 |
| | 515 |
| | 516 |
| | 517 |
| | 518 |
| | 519 |
| | 520 |
| | 521 |
| | 522 |
| | 523 |
| | 524 |
| | 525 |
| | 526 |
| | 527 |
| | 528 |
| | 529 |
| | 530 |
| | 531 |


* ÜBERSETZUNG ZUM ZEITPUNKT DER DRUCKLEGUNG NICHT VORHANDEN

# STICHWORTVERZEICHNIS


| Bezeichnung | Seite |
|---|---|
| | 532 |
| | 533 |
| | 534 |
| | 535 |
| | 536 |
| RADAUFHAENGUNG | 464 |
| RADIO | 1224 |
| RADIO - KABELSTRANG | 167 |
| | 1224 |
| RADIO (AM/FM KASSETTENSPIELER) | 1224 |
| RADIOEINBAUSATZ | 1163 |
| | 1164 |
| RADSATZ | 537 |
| | 538 |
| | 539 |
| | 540 |
| | 541 |
| | 542 |
| RADSTURZZYLINDER | 663 |
| RADSTURZZYLINDER UND BEFESTIGUNGS-TEILE | 651 |
| RAHMEN UND GEHÄUSE | 551 |
| | 552 |
| REFLEKTORAUFKLEBER (GELB) | 562 |
| | 1295 |
| REGLEREINBAUSATZ (LUFTKOMPRESSOR) | 620 |
| | 622 |
| REGLERSTEUERUNG | 109 |
| REIFENFÜLLVORRICHTUNGS-EINBAU-SATZ | 619 |
| REIFENVENTIL | 489 |
| | 508 |
| | 509 |
| | 510 |
| | 511 |
| | 512 |
| | 513 |
| | 514 |
| | 515 |
| | 516 |
| | 517 |
| | 518 |
| | 519 |
| | 520 |
| | 521 |
| | 525 |
| | 526 |
| | 527 |
| | 528 |
| | 529 |
| | 530 |
| | 531 |
| | 532 |
| | 533 |
| | 534 |
| | 535 |
| | 536 |
| | 539 |
| | 540 |
| | 541 |
| | 542 |
| REIFENVENTIL (REIFENFÜLLUNG) | 518 |
| | 519 |
| | 520 |
| | 521 |
| | 522 |
| | 523 |
| | 524 |
| | 528 |
| | 531 |
| | 532 |
| | 536 |
| | 541 |
| RELAIS (24 V) | 206 |
| RELAIS (24 V) (ARBEITSGERÄT) | 330 |
| RELAIS (24 V) (ARBEITSSCHEINWERFER) | 220 |
| | 222 |
| RELAIS (24 V) (ÄTHERSTARTHILFE) | 290 |
| RELAIS (24 V) (AUSFALLSCHUTZ-RÜCKFAHRLEUCHTE) | 204 |
| RELAIS (24 V) (HECKLEUCHTEN, INSTRUMENTENLEUCHTEN) | 399 |
| RELAIS (24 V) (HECLEUCHTEN, INSTRUMENTENTAFELLEUCHTEN) | 402 |
| RELAIS (24 V) (NEIGUNGSSTEUERUNG) | 330 |
| RELAIS (24 V) (RÜCKFAHRALARM) | 208 |
| RIEMENSPANNER | 18 |
| | 20 |
| ROHRSTOPFEN | 667 |
| ROLLENSATZ (SITZ) | 1250 |
| RÜCKLEHNENVERLÄNGERUNG | 1135 |
| | 1136 |
| RÜCKSPIEGEL | 1191 |
| | 1192 |
| | 1193 |
| | 1194 |
| | 1195 |
| | 1196 |
| | 1197 |
| | 1198 |
| | 1200 |
| | 1201 |
| | 1202 |
| RUNDUM-KENNLEUCHTE | 199 |
| | 200 |


* ÜBERSETZUNG ZUM ZEITPUNKT DER DRUCKLEGUNG NICHT VORHANDEN

# STICHWORTVERZEICHNIS


| Bezeichnung | Seite |
|---|---|
| | 273 |
| RUNDUMWARNLEUCHTE - EINBAUSATZ | 175 |
| **S** | |
| SAMMELVENTIL | 970 |
| | 972 |
| SCHALE - RÜCKENLEHNE | 1210 |
| SCHALLDÄMPFER | 103 |
| SCHALLDÄMPFUNG | 50 |
| | 59 |
| SCHALTAUTOMATIK | 408 |
| SCHALTER (AUSFALLSCHUTZ) | 204 |
| SCHALTER (AUTOM. SCHALTUNG AUTOSHIFT - GETRIEBE) | 408 |
| SCHALTER (*CENTERSHIFT PIN) | 389 |
| SCHALTER (DIFFERENTIALSPERRE) | 402 |
| SCHALTER (DIFFERENTIALSPERRE) | 399 |
| SCHALTER (ENTFROSTER, HINTEN) | 1138 |
| SCHALTER (GASREGELSPERRE) | 392 |
| SCHALTER (GASREGELUNG - DREHZAHLEINSTELLUNG) | 387 |
| SCHALTER (GASREGELUNG - HALTEMODUS) | 387 |
| | 389 |
| | 396 |
| SCHALTER (HECKLEUCHTE) | 399 |
| SCHALTER (RUNDUM-KENNLEUCHTE) | 175 |
| | 268 |
| | 269 |
| | 270 |
| | 273 |
| SCHALTER (SCHALTTAFEL-LICHTREGLER) | 399 |
| SCHALTER (SCHARDÄMPFUNG) | 304 |
| SCHALTER (SEITENSCHUB-BOLZENZIEHER) | 387 |
| | 393 |
| | 397 |
| SCHALTER (TAFEL HINTERGRUNDBELEUCHTUNG) | 402 |
| SCHALTER (VORDERER ENTFROSTER) | 1137 |
| SCHALTER (24 V) (ABSTREIFSCHILD) | 311 |
| | 313 |
| SCHALTER (24 V) (ARBEITSSCHEINWERFER, RECHTS) | 235 |
| | 237 |
| SCHALTER (24 V) (ÄTHERSTARTHILFE) | 293 |
| SCHALTER (24 V) (*AUXILIARY BACKUP LIGHTS) | 208 |
| SCHALTER (24 V) (BEHEIZTE SPIEGEL) | 1198 |
| | 1202 |
| SCHALTER (24 V) (FAHRERHAUS - RECHTER ARBEITSSCHEINWERFER) | 252 |
| | 254 |
| SCHALTER (24 V) (NOTLENKUNG) | 385 |
| SCHALTER (24 V) (NOTLENKUNGSPRÜFUNG) | 397 |
| SCHALTER (24 V) (RÜCKFAHRALARM) | 206 |
| SCHALTKONSOLENVERDRAHTUNG | 387 |
| | 389 |
| | 392 |
| | 396 |
| SCHAR | 1062 |
| | 1063 |
| | 1064 |
| | 1065 |
| SCHARAUFHÄNGUNG | 549 |
| SCHARDREHWERK | 667 |
| | 1047 |
| | 1049 |
| SCHARDRUCKSPEICHER | 629 |
| SCHARHUBZYLINDER UND BEFESTIGUNGSTEILE | 644 |
| SCHARKIPPZYLINDER UND BEFESTIGUNGSTEILE | 645 |
| SCHARNEIGEZYLINDER | 653 |
| SCHARVERLÄNGERUNG | 1069 |
| | 1070 |
| | 1071 |
| | 1072 |
| | 1073 |
| | 1074 |
| SCHAUGLAS | 93 |
| SCHAUGLAS (HYDRAULIKÖL) | 737 |
| SCHAUGLAS (KÜHLMITTELSTAND) | 94 |
| SCHEIBENWASCHANLAGE | 1252 |
| | 1254 |
| | 1255 |
| SCHEIBENWISCHER | 1266 |
| | 1267 |
| | 1268 |
| | 1270 |
| | 1272 |
| | 1274 |
| | 1276 |
| | 1278 |
| | 1280 |
| | 1282 |
| | 1284 |
| | 1285 |
| | 1286 |
| | 1287 |
| SCHEIBENWISCHERBLATT | 1257 |
| | 1285 |
| SCHEIBENWISCHERBLATT (*FRONT, LOWER) | 1274 |


* ÜBERSETZUNG ZUM ZEITPUNKT DER DRUCKLEGUNG NICHT VORHANDEN

# STICHWORTVERZEICHNIS


| Bezeichnung | Seite |
|---|---|
| SCHEIBENWISCHERBLATT (HINTEN) | 1276 |
| SCHEIBENWISCHERBLATT (HINTEN) | 1278 |
| | 1280 |
| | 1282 |
| SCHEIBENWISCHERBLATT (HOCHPROFIL VORNE OBEN) | 1272 |
| SCHEIBENWISCHERBLATT (HOHES PROFIL, VORNE, UNTEN) | 1272 |
| SCHEIBENWISCHERBLATT (UNTERES PROFIL VORN OBEN) | 1268 |
| SCHEIBENWISCHERBLATT (VORNE) | 1274 |
| | 1286 |
| | 1287 |
| SCHEIBENWISCHERBLATT (VORNE OBEN) | 1270 |
| SCHEIBENWISCHERBLATT (VORNE UNTEN) | 1268 |
| | 1270 |
| SCHEIBENWISCHERBLATTSATZ (HINTEN) | 1276 |
| | 1278 |
| SCHEIBENWISCHERKABELSTRANG (FÜR STEUERUNG) | 315 |
| SCHEIBENWISCHERKABELSTRANG (SICHERUNGSKASTEN) | 315 |
| SCHEIBENWISCHERMOTOR (*FRONT, UPPER) | 1287 |
| SCHEIBENWISCHERMOTOR (HINTEN) | 1278 |
| | 1282 |
| SCHEIBENWISCHERMOTOR (VORNE) | 1286 |
| SCHEIBENWISCHERMOTOR (VORNE OBEN) | 1270 |
| | 1274 |
| SCHEIBENWISCHERMOTOR (24V, 2 GESCHWINDIGKEITEN) | 1267 |
| | 1270 |
| | 1274 |
| | 1286 |
| | 1287 |
| SCHEIBENWISCHERMOTOR (24V, 2 GESCHWINDIGKEITEN) (*FRONT, LOWER) | 1274 |
| SCHEIBENWISCHERMOTOR (24V, 2 GESCHWINDIGKEITEN) (VORNE UNTEN) | 1270 |
| SCHEIBENWISCHERSCHALTER | 303 |
| SCHEIBENWISCHERSCHALTER (24 V) (HINTEN) | 1278 |
| | 1280 |
| | 1282 |
| SCHEIBENWISCHERSCHALTER (24 V) (HINTEN) | 1276 |
| SCHEINWERFER, HINTEN | 204 |
| | 206 |
| SCHEINWERFER U. RICHTUNGSLEUCHTE | 190 |
| | 192 |
| SCHILD UND AUFKLEBER | 2 |
| | 1291 |
| | 1292 |
| | 1295 |
| | 1296 |
| | 1297 |
| | 1298 |
| SCHILD UND AUFKLEBER (REFLEKTOR) | 1 |
| SCHILDHUB | 1075 |
| SCHLÜSSEL (ELEKTRISCHER HAUPTSCHALTER) | 298 |
| SCHMIERLEITUNGEN | 590 |
| SCHMIERNIPPEL (SCHARSCHWENKWERK - ZYLINDERANSCHLUSS) | 646 |
| SCHMIERPUMPE | 71 |
| | 72 |
| SCHNEEFLÜGEL-BEFESTIGUNG | 1079 |
| SCHNEERÄUMVORRICHTUNG | 6 |
| SCHNEIDMESSER | 1067 |
| | 1068 |
| SCHRÄGKOLBEN-EINBAUSATZ | 725 |
| SCHRAUBE | 470 |
| | 471 |
| SCHUBPLATTE | 1054 |
| | 1055 |
| SCHUTZBLECHE UND AUFHÄNGUNG | 562 |
| SCHWENKBLOCK | 734 |
| | 735 |
| SCHWENKSCHEIBE | 733 |
| SCHWINGSITZ | 1238 |
| | 1239 |
| | 1240 |
| | 1241 |
| | 1242 |
| | 1243 |
| | 1244 |
| SCHWUNGRAD | 37 |
| SCHWUNGRADGEHÄUSE | 39 |
| SCREEN (GETRIEBESTEUERVENTIL) | 490 |
| | 492 |
| SEITENANTRIEB | 450 |
| SEITENSCHIEBERZYLINDER UND BEFESTIGUNGSTEILE | 648 |
| SEITENSCHUBSPERRE | 713 |
| SEITENSCHUBZYLINDER | 654 |
| | 659 |
| SEITENSCHUBZYLINDER UND BEFESTIGUNGSTEILE | 646 |
| SENSOR, KABELSTRANG | 413 |
| SENSOR, KABELSTRANG (GETRIEBE) | 409 |
| SENSORANSCHLUSSSATZ (12 STIFTE) | 232 |
| | 582 |
| SENSORANSCHLUSSSATZ (12 STIFTE) | 242 |


* ÜBERSETZUNG ZUM ZEITPUNKT DER DRUCKLEGUNG NICHT VORHANDEN

# STICHWORTVERZEICHNIS


| Bezeichnung | Seite |
|---|---|
| SENSORANSCHLUSSSATZ (12 STIFTE) | 1219 |
| SENSORANSCHLUSSSATZ (2POLIG) | 167 |
| SENSORANSCHLUSSSATZ (6 STIFTE) | 1219 |
| SERIENNUMMERNSCHILD (GETRIEBE) | 413 |
| SERIENNUMMERNSCHILD (GETRIEBE) | 409 |
| SERPENTINENFÖRMIGER RIEMEN (DREHSTROMGENERATOR OHNE A/C) | 145 |
| SERPENTINENFÖRMIGER RIEMEN (DREHSTROMGENERATOR U. KLIMAANLAGE) | 1095 |
| SICHERHEITSFILTER | 98 |
| SICHERHEITSGURT | 1232 |
| | 1233 |
| SICHERUNG (10 A) | 208 |
| | 223 |
| | 229 |
| | 232 |
| | 235 |
| | 237 |
| | 239 |
| | 242 |
| | 252 |
| | 254 |
| | 265 |
| | 299 |
| | 311 |
| | 313 |
| | 315 |
| | 399 |
| | 402 |
| | 1198 |
| | 1202 |
| | 1276 |
| SICHERUNG (10 A) | 259 |
| SICHERUNG (10 A) | 385 |
| SICHERUNG (10 A) (ARBEITSSCHEINWERFER) | 220 |
| | 222 |
| SICHERUNG (10 A) (ENTFROSTER, HINTEN) | 1138 |
| SICHERUNG (10 A) (LUFTTROCKNER) | 605 |
| SICHERUNG (10 A) (RICHTUNGSBLINKER, WARNLEUCHTE) | 226 |
| SICHERUNG (10 A) (RÜCKFAHRALARM) | 206 |
| | 270 |
| SICHERUNG (10 A) (RÜCKFAHRLEUCHTE) | 204 |
| SICHERUNG (10 A) (RUNDUM-KENNLEUCHTE) | 266 |
| | 308 |
| SICHERUNG (10 A) (SCHARLEUCHTE) | 218 |
| SICHERUNG (10 A) (SCHAR/VORDER ARBEITSSCHEINWERFER) | 217 |
| SICHERUNG (10 A) (SCHEIBENWISCHER) | 1278 |
| | 1280 |
| | 1282 |
| SICHERUNG (10 A) (UMFORMER) | 166 |
| SICHERUNG (10 A) (VORDERER ENTFROSTER) | 1137 |
| SICHERUNG (10 A) (WANDLER) | 164 |
| SICHERUNG (15 A) | 306 |
| | 309 |
| | 399 |
| | 402 |
| SICHERUNG (15 A) (FAHRERHAUS - ARBEITSSCHEINWERFER) | 220 |
| | 222 |
| SICHERUNG (15 A) (HEIZUNG) | 1145 |
| SICHERUNG (15 A) (KLIMAANLAGE) | 1095 |
| SICHERUNG (15 A) (UMFORMER) | 165 |
| SICHERUNG (30 A) | 167 |
| SIEB (*HYDRAULIC TANK FILL) (HYDRAULIKÖLTANK) | 737 |
| SITZGURT-HALTESEIL | 1248 |
| SITZKISSENEINBAUSATZ | 1234 |
| SITZKISSENEINBAUSATZ (PVC) | 1236 |
| SITZUNTERBAU | 1246 |
| SOFTWARE - MOTOR (VARIABLE MOTORLEISTUNG) | 1290 |
| SONNENBLENDE | 1231 |
| SPANNUNGSREGLER (24 V) | 141 |
| SPANNUNGSREGLER (24 V) (DREHSTROMGE-NERATOR) | 144 |
| SPERRVENTIL | 136 |
| | 137 |
| | 138 |
| SPURSTANGE (LENKUNG) | 650 |
| STANDARDRINGSATZ (LUFTKOMPRES-SOR) | 12 |
| STANGENSATZ | 1211 |
| STARTERMOTOR | 294 |
| | 296 |
| STARTSCHALTER (TASTE) | 387 |
| | 389 |
| | 392 |
| | 396 |
| STECKDOSEN - EINBAUSATZ (12 STIFTE) | 226 |
| | 232 |
| | 242 |
| | 344 |
| | 366 |
| | 371 |
| | 406 |
| | 430 |
| | 582 |
| | 1217 |
| | 1219 |


* ÜBERSETZUNG ZUM ZEITPUNKT DER DRUCKLEGUNG NICHT VORHANDEN

# STICHWORTVERZEICHNIS


| Bezeichnung | Seite |
|---|---|
| STECKDOSEN - EINBAUSATZ (12 STIFTE) | 226 |
| | 232 |
| STECKDOSEN - EINBAUSATZ (12 STIFTE) | 161 |
| STECKDOSEN - EINBAUSATZ (3 STIFTE) | 196 |
| | 197 |
| | 277 |
| | 278 |
| | 385 |
| STECKDOSEN - EINBAUSATZ (6 STIFTE) | 582 |
| | 1097 |
| | 1219 |
| STEIGLEITER | 596 |
| STELLUNGSGEBER (KNICKGELENK) | 340 |
| | 345 |
| | 367 |
| | 372 |
| STELLUNGSSENSOR | 277 |
| | 278 |
| STEUERKOLBENSATZ | 725 |
| STEUERKONSOLE | 1107 |
| STEUERKRÜMMER | 714 |
| | 715 |
| | 716 |
| | 718 |
| STEUERKRÜMMER (LINKS) | 911 |
| | 915 |
| | 924 |
| | 929 |
| | 931 |
| | 933 |
| | 944 |
| | 960 |
| | 967 |
| | 968 |
| | 969 |
| STEUERUNG - NICHT PROGRAMMIERT | 162 |
| STEUERUNG - NICHT PROGRAMMIERT (CATERPILLAR ÜBERWACHUNGSSYSTEM) | 169 |
| STEUERUNG - NICHT PROGRAMMIERT (KRAFTÜBERTRAGUNG) | 408 |
| STEUERUNG, NICHT PROGRAMMIERTER MONITOR | 1118 |
| STEUERUNG, NICHT PROGRAMMIERTER MONITOR (CATERPILLAR ÜBERWACHUNGSSYSTEM) | 1217 |
| STEUERUNG, NICHT PROGRAMMIERTER MONITOR (CATERPILLAR ÜBERWACHUNGSSYSTEM) | 1219 |
| | 1221 |
| STEUERUNGSEINHEIT, ELEKTRON. FÜR MOTOR UND BEFEST. | 155 |
| | 156 |
| STEUERVENTIL | 974 |
| | 976 |
| | 978 |
| | 980 |
| | 982 |
| | 984 |
| | 986 |
| | 988 |
| | 990 |
| | 992 |
| | 994 |
| | 996 |
| | 998 |
| | 1000 |
| | 1002 |
| | 1004 |
| | 1006 |
| | 1008 |
| | 1010 |
| | 1012 |
| | 1014 |
| | 1016 |
| | 1018 |
| | 1020 |
| STEUERVENTIL (DRUCKLUFT) | 624 |
| STEUERVENTILSPERRE | 664 |
| | 665 |
| STIRNRAD | 38 |
| STIRNRADGEHÄUSE | 41 |
| STOSSSTANGEN-EINBAUSATZ (GEWICHTSEINSTELLUNG) | 1161 |


## T


| | |
|---|---|
| T-STÜCK | 694 |
| | 700 |
| TANDEMGEHÄUSE UND DECKEL | 470 |
| | 471 |
| TEMPERATURSCHALTER (HYDRAULIKÖL) | 325 |
| TEMPERATURSCHALTER (HYDRAULIKÖL) | 321 |
| TEMPERATURSCHALTER (KÜHLMITTEL) | 1096 |
| TEMPERATURSENSOR | 287 |
| | 288 |
| | 289 |
| TEMPERATURSENSOR (GETRIEBEÖL) | 410 |
| | 414 |
| TORSIONSKUPPLUNG | 437 |
| TRENNSCHALTER | 298 |
| TURBOLADER | 107 |
| | 108 |
| TURBOLADEREINSATZ | 108 |
| TURBOLADERÖLLEITUNGEN | 70 |
| TYPENSCHILDBEFESTIGUNG | 593 |


* ÜBERSETZUNG ZUM ZEITPUNKT DER DRUCKLEGUNG NICHT VORHANDEN

# STICHWORTVERZEICHNIS


| Bezeichnung | Seite |
|---|---|
| | 594 |

## U

| | |
|---|---|
| ÜBERDRUCKVENTIL | 708 |
| | 1028 |
| | 1029 |
| | 1030 |
| | 1031 |
| | 1032 |
| | 1033 |
| | 1034 |
| | 1035 |
| | 1036 |
| | 1037 |
| | 1038 |
| | 1039 |
| | 1040 |
| | 1041 |
| | 1042 |
| ÜBERDRUCKVENTIL (KÄLTEMITTELKOMPRESSOR) | 1105 |
| ÜBERROLL-SCHUTZDACH | 1230 |
| ÜBERROLL-SCHUTZKABINE | 1227 |
| | 1228 |
| | 1229 |
| ÜBERROLLSCHUTZAUFLAGER | 1207 |
| | 1209 |
| ÜBERROLLSCHUTZDACH | 1226 |
| ÜBERROLLSCHUTZKABINE | 1224 |
| | 1225 |
| UMBAUSATZ - OHNE ÜBERROLLSCHUTZ | 1119 |
| UMBAUSATZ - ZULASSUNG | 1 |
| | 2 |
| UMFORMER, ELEKTR. | 163 |
| UMGEHUNGSSCHALTER | 297 |
| UMGEHUNGSSCHALTER (HYDRAULIKÖLFILTER) | 447 |
| UMLAUFKÜHLWASSERHEIZUNG | 172 |
| | 173 |
| | 174 |
| UMLAUFKÜHLWASSERHEIZUNGS-ELEMENT (120 V, 1250 W) | 172 |
| | 174 |
| UMLAUFLÜFTER | 1137 |
| | 1138 |
| UNTERBRECHER | 152 |
| | 153 |
| | 154 |
| UNTERBRECHER (105 A) (DREHSTROMGENERATOR) | 154 |
| UNTERBRECHER (15 A) (FRONTSCHEINWERFER) | 152 |
| | 153 |
| UNTERBRECHER (15 A) (LICHTBALKEN - ARBEITSCHEINWERFER) | 152 |
| UNTERBRECHER (15 A) (MOTORSTEUERUNG) | 350 |
| | 355 |
| | 360 |
| UNTERBRECHER (20 A) (NEIGUNGSSTEUERUNG) | 376 |
| UNTERBRECHER (80 A) (DREHSTROMGENERATOR) | 349 |
| | 354 |
| | 359 |
| UNTERBRECHER (80 A) (HAUPTUNTERBRECHER) | 349 |
| | 354 |
| | 359 |
| UNTERDRÜCKUNG - AUTOM. RETARDER-STEUERUNG | 220 |
| UNTERLEGSCHEIBE (EINSCHL. 17 BEILAGSCHEIBEN) | 725 |

## V

| | |
|---|---|
| *VALVE AS-TIRE | 533 |
| VENTIL - SCHALT- UND DRUCKSTEUERUNG | 478 |
| | 481 |
| | 484 |
| VENTIL UND GESTÄNGE | 740 |
| | 742 |
| | 744 |
| | 746 |
| | 748 |
| | 750 |
| | 752 |
| | 755 |
| | 757 |
| | 759 |
| | 761 |
| | 763 |
| | 765 |
| | 767 |
| | 769 |
| | 771 |
| | 773 |
| | 775 |
| | 777 |
| | 779 |
| | 782 |
| | 784 |
| | 786 |
| | 788 |


* ÜBERSETZUNG ZUM ZEITPUNKT DER DRUCKLEGUNG NICHT VORHANDEN

# STICHWORTVERZEICHNIS


| Bezeichnung | Seite |
|---|---|
| | 790 |
| | 792 |
| | 794 |
| | 796 |
| | 799 |
| | 803 |
| | 807 |
| | 811 |
| | 815 |
| | 819 |
| | 822 |
| | 825 |
| | 829 |
| | 833 |
| | 837 |
| | 841 |
| | 845 |
| | 849 |
| | 853 |
| | 857 |
| | 860 |
| | 864 |
| | 867 |
| | 870 |
| | 874 |
| | 877 |
| | 880 |
| | 884 |
| | 888 |
| | 892 |
| | 896 |
| | 900 |
| | 904 |
| VENTILKIPPHEBEL | 55 |
| VENTILMECHANISMUSAUFHÄNGUNG | 46 |
| VENTILSATZ (4-VENTIL) | 907 |
| | 908 |
| | 909 |
| | 910 |
| | 911 |
| | 913 |
| | 915 |
| | 917 |
| VENTILSATZ (5-VENTIL) | 918 |
| | 919 |
| | 920 |
| | 921 |
| | 922 |
| | 923 |
| | 924 |
| | 926 |
| | 927 |
| | 929 |
| | 931 |
| | 933 |
| VENTILSATZ (6-VENTIL) | 934 |
| | 935 |
| | 936 |
| | 937 |
| | 938 |
| | 939 |
| | 940 |
| | 942 |
| | 944 |
| | 946 |
| | 948 |
| | 950 |
| VENTILSATZ (7-VENTIL) | 952 |
| | 953 |
| | 955 |
| | 956 |
| | 957 |
| | 958 |
| | 959 |
| | 960 |
| | 962 |
| | 964 |
| | 966 |
| | 967 |
| | 968 |
| | 969 |
| VENTILSTEUERUNG | 60 |
| VENTILSTÖSSELSATZ | 1160 |
| | 1161 |
| VERBINDER | 694 |
| | 697 |
| | 700 |
| VERDRAHTUNG - SCHARDÄMPFUNG | 304 |
| VERDRAHTUNG (EINSPRITZEINHEIT) | 407 |
| VERDRAHTUNG, HINTEN | 339 |
| | 344 |
| | 349 |
| | 354 |
| | 359 |
| | 364 |
| | 366 |
| | 371 |
| | 376 |
| VERDRAHTUNG, VORNE | 325 |
| | 330 |
| VERDRAHTUNG, VORNE | 321 |
| VERDRAHTUNGSKABELBAUM (PUMPENDÜSE) | 407 |
| VERDRAHTUNGSKABELBAUM (*REGISTRATION) | 594 |
| VERKLEIDUNG - FAHRERHAUS | 1213 |


* ÜBERSETZUNG ZUM ZEITPUNKT DER DRUCKLEGUNG NICHT VORHANDEN

# STICHWORTVERZEICHNIS


| Bezeichnung | Seite |
|---|---|
| | 1214 |
| | 1215 |
| VERKLEIDUNG UND BEFESTIGUNG - KÜHLER | 567 |
| VORABSCHEIDER | 106 |
| VORDERACHSE | 543 |
| | 546 |
| VORDERRAHMEN | 564 |
| | 565 |
| VORHÄNGESCHLOSS | 739 |
| | 1102 |
| VORHÄNGESCHLOSS (LTERATURFACH) | 5 |
| | 1119 |
| VORHÄNGESCHLOSS (ÜBERROLL-SCHUTZ) | 1226 |
| VORHÄNGESCHLOSS (WERKZEUGKA-STEN) | 1288 |
| VORREINIGER | 105 |

## W

| | |
|---|---|
| WAGENHEBER, HYDRAULISCH | 1290 |
| WÄHLSENSOR (KRAFTSTOFFSTAND) | 130 |
| | 132 |
| WÄRMEISOLIERUNG | 1166 |
| WARNAUFKLEBER (DRUCKSAMMLER, HOCHDRUCK, HANDBUCH LESEN) (DRUCKSPEICHER) | 631 |
| WARNAUFKLEBER (KEINE STUFE) | 130 |
| WARNAUFKLEBER (NICHT BETRETEN) | 134 |
| | 135 |
| WARNLEUCHTEN | 265 |
| | 266 |
| | 268 |
| | 269 |
| | 270 |
| | 272 |
| WARNVORRICHTUNG | 139 |
| | 140 |
| WARNVORRICHTUNG (SICHERHEITSSCHAL-TER) | 378 |
| WASSERABSCHEIDER- U. KRAFTSTOFFIL-TER | 114 |
| WASSERTEMPERATURREGLER (98 GRAD C) | 79 |
| | 80 |
| WERKZEUGKASTEN | 1288 |
| WIDERSTAND | 366 |
| | 371 |
| WIDERSTAND (ANZEIGE FÜR NOTLEN-KUNG) | 385 |
| *WIRING AS | 338 |

## Z

| | |
|---|---|
| ZAHNRADANTRIEB | 720 |
| ZAHNRADPUMPE | 465 |
| | 466 |
| ZIGARETTENANZÜNDER (ZIGARETENANZÜN-DER, 24 V) | 392 |
| | 397 |
| ZUGANGSKLAPPE | 553 |
| | 555 |
| ZUGHAKEN | 1051 |
| ZULASSUNGSSCHILDLEUCHTE | 195 |
| ZUMESSPUMPE (HMU) | 1113 |
| ZUSATZAUSRÜSTUNG - KRAFTSÜBERTRA-GUNG | 408 |
| ZYLINDERBLOCKSCHRAUBE | 52 |
| ZYLINDERKOPF | 31 |
| | 33 |
| | 34 |
| ZYLINDERKOPF-EINBAUSATZ (LUFTKOM-PRESSOR) | 12 |
| ZYLINDERKOPF-HALTETEILE | 36 |


* ÜBERSETZUNG ZUM ZEITPUNKT DER DRUCKLEGUNG NICHT VORHANDEN

# MACHINE ARRANGEMENT

## *207-4453* CONVERSION AR-CERTIFICATION–EU

**S/N: CCA1-99999**

**AN ATTACHMENT**

**SMCS-7000** **i02267847**

| NOTE | PART NUMBER | QTY | PART NAME 1 2 3 4 5 6 (PRODUCT LEVEL) | SEE PAGE |
|---|---|---|---|---|
| Y | *161-0764* | 1 | AUTOSHIFT AR | 408 |
| Y | *191-9260* | 1 | COOLING AR | 75 |
| Y | *126-6933* | 1 | GUARD GP-PLATFORM (ACCUGRADE) | 575 |
| Y | *203-2260* | 1 | GUARD GP-BOTTOM | 570 |
| Y | *167-8390* | 1 | HEATER AR-CAB | 1145 |
| Y | *171-6458* | 1 | LINES GP-SECONDARY STEERING | 708 |
| Y | *152-7903* | 1 | CONTROL GP-HYDRAULIC LOCKOUT | 642 |
| Y | **197-2066** | 1 | MIRROR GP-REAR VIEW (INSIDE DUAL) | 1201 |
| Y | *196-4909* | 1 | PANEL GP-INSTRUMENT | 1221 |
| Y | *192-1434* | 1 | PLATE & FILM GP (REFLECTOR) | 1295 |
| Y | *8X-9751* | 1 | PUMP & MTG GP-SECONDARY STEER | 724 |
| Y | *171-6700* | 1 | SUPPORT AR-REAR CHASSIS | 597 |
| Y | *178-9527* | 1 | SUPPRESSION GP-SOUND | 59 |
| Y | *121-4083* | 1 | VALVE & LINKAGE GP (4-BANK, RH, LH) | 761 |
| Y | *193-7359* | 1 | WIRING GP-CAB (HIGH PROFILE) | 309 |
| Y | *159-5865* | 1 | WIRING GP-FRONT | 325 |
| Y | *194-3200* | 1 | WIRING GP-REAR | 366 |
| Y | *193-8253* | 1 | WIRING GP-REAR LIGHTING | 378 |
| Y | *159-5841* | 1 | WIRING GP-SHIFT CONSOLE | 392 |
| Y | *159-5853* | 1 | WIRING GP-STEERING CONSOLE | 402 |

Y-SEPARATE ILLUSTRATION

**<END>**

# MACHINE ARRANGEMENT

## *210-2044* CONVERSION AR-CERTIFICATION

**S/N: CCA1-99999**

**EU**

**AN ATTACHMENT**

**SMCS-7000** **i02267859**

| NOTE | PART NUMBER | QTY | PART NAME 1 2 3 4 5 6 (PRODUCT LEVEL) | SEE PAGE |
|---|---|---|---|---|
| Y | *167-8067* | 1 | AIR CONDITIONER AR | 1095 |
| Y | *161-0764* | 1 | AUTOSHIFT AR (TRANS) | 408 |
| Y | *152-7903* | 1 | CONTROL GP-HYDRAULIC LOCKOUT | 642 |
| Y | *126-6933* | 1 | GUARD GP-PLATFORM (ACCUGRADE) | 575 |
| Y | *203-2260* | 1 | GUARD GP-BOTTOM | 570 |
| Y | *171-6458* | 1 | LINES GP-SECONDARY STEERING | 708 |
| Y | **197-2066** | 1 | MIRROR GP-REAR VIEW (DUEL INSIDE) | 1201 |
| Y | *196-4909* | 1 | PANEL GP-INSTRUMENT | 1221 |
| Y | *192-1434* | 1 | PLATE & FILM GP | 1295 |
| Y | *8X-9751* | 1 | PUMP & MTG GP-SECONDARY STEER | 724 |
| Y | *171-6700* | 1 | SUPPORT AR-REAR CHASSIS | 597 |
| Y | *178-9527* | 1 | SUPPRESSION GP-SOUND (ENGINE) | 59 |
| Y | *121-4083* | 1 | VALVE & LINKAGE GP (4-BANK, RH, LH) | 761 |
| Y | *193-7359* | 1 | WIRING GP-CAB (HIGH PROFILE) | 309 |
| Y | *159-5865* | 1 | WIRING GP-FRONT | 325 |
| Y | *194-3200* | 1 | WIRING GP-REAR | 366 |
| Y | *193-8253* | 1 | WIRING GP-REAR LIGHTING (EU)(RADIATOR) | 378 |
| Y | *159-5841* | 1 | WIRING GP-SHIFT CONSOLE | 392 |
| Y | *159-5853* | 1 | WIRING GP-STEERING CONSOLE | 402 |

Y-SEPARATE ILLUSTRATION

**<END>**

# MACHINE ARRANGEMENT

## *259-5738* CONVERSION AR-MACHINE

**S/N: CCA1-UP**

**AN ATTACHMENT**

**SMCS-7000** **i02328213**

| NOTE | PART NUMBER | QTY | PART NAME 1 2 3 4 5 6 (PRODUCT LEVEL) | SEE PAGE |
|---|---|---|---|---|
| Y | *167-8067* | 1 | AIR CONDITIONER AR | 1095 |
| Y | *161-0764* | 1 | AUTOSHIFT AR | 408 |
| Y | *107-3395* | 1 | BIT GP-END | 1061 |
| Y | *151-5969* | 1 | BLADE GP | 1065 |
| Y | *201-1038* | 1 | CIRCUIT BREAKER GP | 153 |
| Y | *167-8382* | 1 | CONVERTER GP-ELECTRICAL | 165 |
| Y | *145-1300* | 1 | INSTALLATION AR-RADIO | 1163 |
| Y | *207-9269* | 1 | KIT-AIR INFLATION | 619 |
| Y | *246-4964* | 1 | LIGHTING GP-FLOOD | 258 |
| | | | S/N: CCA1-1474 | |
| Y | *207-9193* | 1 | LIGHTING GP-ROADING | 259 |
| Y | *261-8101* | 1 | LIGHTING GP-WARNING | 270 |
| Y | **2C-8478** | 1 | MIRROR GP-REAR VIEW | 1191 |
| Y | *177-9741* | 1 | MODULE GP-SPEEDOMETER & TACH | 1205 |
| Y | *261-9261* | 1 | MOUNTING GP-REGISTRATION | 594 |
| Y | *261-0852* | 1 | PLATE GP-PUSH | 1055 |
| Y | *260-1745* | 1 | ROPS GP-ENCLOSED | 1228 |
| Y | *177-8830* | 1 | WIPER AR-WINDOW | 1266 |
| | | | | |
| | **7X-7644** | 4 | FILM-INFORMATION (TIE-DOWN) | |
| | **273-5573** | 1 | FRAME AS | |
| | | | S/N: CCA1475-UP | |

Y-SEPARATE ILLUSTRATION

**<END>**

## *159-4615* GENERAL AR

**S/N: CCA1-UP**

**SMCS-7000** **i02459098**

| NOTE | PART NUMBER | QTY | PART NAME 1 2 3 4 5 6 (PRODUCT LEVEL) | SEE PAGE |
|---|---|---|---|---|
| Y | *159-7364* | 1 | AIR CLEANER GP | 96 |
| Y | *233-0712* | 1 | ALTERNATOR GP-CHARGING | 145 |
| Y | *134-1080* | 1 | AXLE GP-FRONT | 543 |
| Y | *8X-8011* | 1 | BLADE GP (12-FT) | 1062 |
| Y | *111-1719* | 1 | BOX GP-TOOL | 1288 |
| Y | *7D-8440* | 1 | BRAKE GP-SERVICE | 611 |
| Y | *159-3928* | 1 | CASE & FRAME GP | 551 |
| Y | *6G-1755* | 1 | CHAIN GP-DRIVE | 417 |
| Y | *112-7486* | 1 | CIRCLE GP | 1047 |
| Y | *167-8053* | 1 | CONSOLE GP-OPERATOR | 1107 |
| Y | *159-5933* | 1 | CONTROL GP-CLUTCH | 1111 |
| Y | *160-7756* | 1 | CONTROL GP-DIFFERENTIAL LOCK | 428 |
| Y | *159-5935* | 1 | CONTROL GP-GOVERNOR | 109 |
| Y | *160-7753* | 1 | CONTROL GP-PARKING BRAKE | 613 |
| Y | *160-7754* | 1 | CONTROL GP-SERVICE BRAKE | 615 |
| Y | *7I-4718* | 1 | CONTROL GP-STEERING | 1113 |
| Y | *167-9002* | 1 | CONTROL GP-TRANSMISSION | 1114 |
| Y | *185-1542* | 1 | COOLING AR | 73 |
| Y | *8E-3366* | 1 | COUPLING GP-TORSIONAL | 437 |
| Y | *160-9177* | 1 | CYLINDER & MTG GP-ARTICULATION | 643 |
| Y | *8X-1947* | 1 | CYLINDER & MTG GP-BLADE LIFT | 644 |
| Y | *8X-1943* | 1 | CYLINDER & MTG GP-BLADE TIP | 645 |
| Y | *8X-1944* | 1 | CYLINDER & MTG GP-CENTERSHIFT | 646 |
| Y | *112-7463* | 1 | CYLINDER & MTG GP-SIDESHIFT | 648 |

# MACHINE ARRANGEMENT

*159-4615* **GENERAL AR** *(contd.)* **i02459098**

| NOTE | PART NUMBER | QTY | PART NAME 1 2 3 4 5 6 (PRODUCT LEVEL) | SEE PAGE |
|---|---|---|---|---|
| Y | *8W-2290* | 1 | CYLINDER & MTG GP-STEERING | 650 |
| Y | *8W-2737* | 1 | CYLINDER & MTG GP-WHEEL LEAN | 651 |
| Y | *8W-5430* | 1 | DIFFERENTIAL & BEVEL GEAR GP | 438 |
| Y | *8X-1960* | 1 | DRAWBAR GP | 1051 |
| Y | **5T-0570** | 1 | DRIVE GP-CIRCLE | 667 |
| Y | *178-9582* | 1 | SHAFT GP-PUMP DRIVE | 731 |
| Y | *159-3923* | 1 | ENCLOSURE GP-ENGINE | 556 |
| Y | **160-5101** | 1 | ENGINE AR | 7 |
| Y | *230-7570* | 1 | FASTENER GP (CENTRAL LUBRICATION MOUNTING) | 561 |
| Y | *230-4617* | 1 | FASTENER GP-FUEL TANK | 111 |
| | | | S/N: CCA1-1207 | |
| Y | *249-2460* | 1 | FASTENER GP-FUEL TANK | 112 |
| | | | S/N: CCA1208-UP | |
| Y | *230-5839* | 1 | FASTENER GP-RADIATOR | 78 |
| Y | *159-6173* | 1 | FILLER GP-POWER TRAIN OIL | 442 |
| | *203-6061* | 1 | FILM GP (NON-VARIABLE HORSEPOWER) | |
| Y | *169-3651* | 1 | FILTER & MTG GP-OIL (TRANSMISSION) (HYDRAULIC RETURN) | 443 |
| | | | S/N: CCA1-1866 | |
| Y | *250-0471* | 1 | FILTER & MTG GP-OIL (TRANSMISSION) (HYDRAULIC RETURN) | 445 |
| | | | S/N: CCA1867-UP | |
| Y | *8W-4368* | 1 | FINAL DRIVE GP | 450 |
| Y | *160-7681* | 1 | FRAME GP-FRONT | 565 |
| Y | *106-4884* | 1 | HITCH GP-ARTICULATING | 586 |
| Y | *228-7559* | 1 | HITCH GP-TOWING | 589 |
| Y | *160-7758* | 1 | HORN GP-AIR | 1156 |
| Y | *8X-1935* | 1 | LIFT GP-BLADE | 1075 |
| Y | *165-6762* | 1 | LINES GP-AIR | 99 |
| Y | *209-7827* | 1 | LINES GP-AIR | 100 |
| Y | *183-5504* | 1 | LINES GP-ENGINE OIL DRAIN | 69 |
| Y | *220-0768* | 1 | LINES GP-FUEL (REAR CROSSOVER) | 115 |
| Y | *160-7759* | 1 | LINES GP-FUEL FILTER | 118 |
| Y | *7I-4610* | 1 | LINES GP-LUBRICATION | 590 |
| Y | *159-4729* | 1 | LINES GP-HYDRAULIC (CENTERSHIFT LOCK) | 678 |
| Y | *159-4730* | 1 | LINES GP-HYDRAULIC (LH) | 680 |
| Y | *159-4731* | 1 | LINES GP-HYDRAULIC (RH) | 686 |
| Y | *175-6978* | 1 | LINES GP-HYDRAULIC FAN | 690 |
| Y | *160-9178* | 1 | LINES GP-PUMP | 694 |
| Y | *160-9179* | 1 | LINES GP-STEERING | 710 |
| Y | *159-6174* | 1 | LINES GP-TRANSMISSION OIL | 452 |
| Y | *159-5439* | 1 | LINES GP-WATER | 83 |
| Y | *164-8462* | 1 | LOCK GP-CENTERSHIFT | 713 |
| Y | **8X-2795** | 1 | MIRROR GP-REAR VIEW (INSIDE) | 1195 |
| Y | *159-5436* | 1 | MOUNTING GP-ENGINE & TMSN | 45 |
| Y | *142-6203* | 1 | MOUNTING GP-WHEEL | 464 |
| Y | *159-7368* | 1 | MUFFLER GP | 103 |
| Y | *159-5812* | 1 | PANEL GP-INSTRUMENT | 1217 |
| Y | *171-5831* | 1 | PLATE & FILM GP | 1292 |
| Y | *160-9180* | 1 | PUMP & MTG GP-PISTON | 723 |
| Y | *179-3581* | 1 | ROPS AR-ENCLOSED (LOW PROFILE) | 1224 |
| Y | *8Y-4194* | 1 | SEAT GP-SUSPENSION | 1238 |
| Y | *8W-5394* | 1 | SHAFT GP-DRIVE | 468 |
| Y | *8W-5870* | 1 | SHIELD GP-DRIVE SHAFT | 595 |
| Y | *8X-1030* | 1 | STEP GP | 596 |
| Y | *185-3143* | 1 | SUPPORT AR-REAR CHASSIS | 599 |
| Y | *193-8257* | 1 | SUPPORT GP-FUEL TANK | 600 |
| | | | S/N: CCA1-1207 | |
| Y | *236-7757* | 1 | SUPPORT GP-FUEL TANK | 601 |
| | | | S/N: CCA1208-UP | |

*159-4615* **GENERAL AR** ***(contd.)*** **i02459098**

| NOTE | PART NUMBER | QTY | PART NAME 1 2 3 4 5 6 (PRODUCT LEVEL) | SEE PAGE |
|---|---|---|---|---|
| Y | *174-4546* | 1 | SUPPORT GP-SEAT | 1246 |
| Y | *190-1688* | 1 | TANDEM & COVER GP | 470 |
| Y | *207-2409* | 1 | TANK & MTG GP-HYDRAULIC | 739 |
| Y | *159-3931* | 1 | TANK GP-FUEL | 127 |
| Y | **160-2196** | 1 | TRANSMISSION AR | 472 |
| Y | *8X-1949* | 1 | VALVE & LINKAGE GP (4-BANK, RH, LH) | 748 |
| Y | *159-5878* | 1 | WIRING GP-CAB | 306 |
| Y | *159-5856* | 1 | WIRING GP-FRONT | 321 |
| Y | *159-5877* | 1 | WIRING GP-REAR | 339 |
| Y | *184-1299* | 1 | WIRING GP-REAR | 364 |
| Y | *159-5839* | 1 | WIRING GP-SHIFT CONSOLE | 387 |
| Y | *159-5845* | 1 | WIRING GP-STEERING CONSOLE | 399 |
| | | | | |
| | *6V-1970* | 1 | LITERATURE GP (MACHINE) | |
| | **246-2641** | 1 | PADLOCK GP (LITERATURE COMPARTMENT) | |
| | **5P-8500** | 2 | KEY | |

Y-SEPARATE ILLUSTRATION

**<END>**

## *197-5572* ROADING AR

**S/N: CCA1-UP**

**AN ATTACHMENT**

**SMCS-7000** **i01719342**

| NOTE | PART NUMBER | QTY | PART NAME 1 2 3 4 5 6 (PRODUCT LEVEL) | SEE PAGE |
|---|---|---|---|---|
| Z | | 1 | ELECTRONICS GP-POWER TRAIN (MOTOR GRADER) (ROAD SPEED LIMITING) | |
| Y | *211-1520* | 1 | LIGHTING GP-ROADING (CAB POSITION) (EU) | 262 |
| Y | **197-2064** | 1 | MIRROR GP-REAR VIEW (CLOSED ROPS OUTSIDE) | 1200 |
| Y | *211-1519* | 1 | MOUNTING GP-REGISTRATION | 593 |
| | **159-7342** | 1 | PLATE-IDENTIFICATION (MAXIMUM WEIGHT) | |

Y-SEPARATE ILLUSTRATION
Z-NOT SERVICED SEPARATELY

**<END>**

# MACHINE ARRANGEMENT

## *197-5955* SNOW AR-MOTOR GRADER

**S/N: CCA1-UP**

**AN ATTACHMENT**

**SMCS-7000** **i02507530**

| NOTE | PART NUMBER | QTY | PART NAME 1 2 3 4 5 6 (PRODUCT LEVEL) | SEE PAGE |
|---|---|---|---|---|
| Y | *167-8067* | 1 | AIR CONDITIONER AR | 1095 |
| Y | *160-7760* | 1 | AIR DRYER GP | 605 |
| Y | *161-0764* | 1 | AUTOSHIFT AR | 408 |
| Y | *177-9549* | 1 | BATTERY GP | 148 |
| Y | *172-6834* | 1 | FAN GP-CIRCULATING (FRONT DEFROSTER) | 1137 |
| Y | *172-6835* | 1 | FAN GP-CIRCULATING (REAR DEFROSTER) | 1138 |
| Y | *197-6437* | 1 | FILM GP | 1290 |
| Y | *131-8126* | 1 | HEATER GP-JACKET WATER | 172 |
| | | | S/N: CCA1-1597 | |
| Y | *249-5516* | 1 | HEATER GP-JACKET WATER | 174 |
| | | | S/N: CCA1598-UP | |
| Y | *188-9321* | 1 | LIGHTING AR-FLOOD (FRONT, REAR) | 201 |
| Y | *161-1021* | 1 | LIGHTING GP-FLOOD (CAB, RH) | 235 |
| Y | *231-6524* | 1 | MIRROR GP-REAR VIEW | 1202 |
| Y | *177-9741* | 1 | MODULE GP-SPEEDOMETER & TACH | 1205 |
| Y | *197-0579* | 1 | STARTING AID GP-ETHER | 292 |
| Y | *177-8784* | 1 | WIPER GP-WINDOW (INTERMITTENT, FRONT) | 1284 |
| Y | *161-1921* | 1 | WIRING GP-CAB (WARNING BEACON) | 308 |

Y-SEPARATE ILLUSTRATION

**<END>**

## *236-3948* SNOW AR-MOTOR GRADER

**S/N: CCA1-UP**

**AN ATTACHMENT**

**SMCS-7000** **i02419026**

| NOTE | PART NUMBER | QTY | PART NAME 1 2 3 4 5 6 (PRODUCT LEVEL) | SEE PAGE |
|---|---|---|---|---|
| Y | *167-8067* | 1 | AIR CONDITIONER AR | 1095 |
| Y | *160-7760* | 1 | AIR DRYER GP | 605 |
| Y | *161-0764* | 1 | AUTOSHIFT AR | 408 |
| Y | *172-6834* | 1 | FAN GP-CIRCULATING (FRONT) | 1137 |
| Y | *172-6835* | 1 | FAN GP-CIRCULATING (REAR) | 1138 |
| Y | *131-8126* | 1 | HEATER GP-JACKET WATER | 172 |
| | | | S/N: CCA1-1637 | |
| Y | *249-5516* | 1 | HEATER GP-JACKET WATER | 174 |
| | | | S/N: CCA1638-UP | |
| Y | *188-9321* | 1 | LIGHTING AR-FLOOD (FRONT, REAR) | 201 |
| Y | *161-1021* | 1 | LIGHTING GP-FLOOD (WING, RH) | 235 |
| Y | *231-6524* | 1 | MIRROR GP-REAR VIEW (HEATED, OUTSIDE) | 1202 |
| Y | *177-9741* | 1 | MODULE GP-SPEEDOMETER & TACH | 1205 |
| Y | *197-0579* | 1 | STARTING AID GP-ETHER | 292 |
| Y | *177-8784* | 1 | WIPER GP-WINDOW | 1284 |
| Y | *161-1921* | 1 | WIRING GP-CAB (WARNING BEACON) | 308 |

Y-SEPARATE ILLUSTRATION

**<END>**

# ENGINE ARRANGEMENT

## *160-5101* ENGINE AR

**S/N: 3PD1-4380**

**PART OF 159-4615 GENERAL AR**

**SMCS-1000** **i01855142**

| NOTE | REF NO | GRAPHIC REF | PART NUMBER | QTY | PART NAME 1 2 3 4 5 6 (PRODUCT LEVEL) | SEE PAGE |
|---|---|---|---|---|---|---|
| Y | 1 | 2 | *116-1085* | 1 | CYLINDER HEAD GP | 33 |
| Y | 2 | 1 | *116-5405* | 1 | MANIFOLD GP-INLET | 102 |
| Y | 3 | 2 | *116-5408* | 1 | MOUNTING GP-VALVE MECHANISM | 46 |
| Y | 4 | 1 | *116-5428* | 1 | PUMP & MTG GP-FUEL TRANSFER | 123 |
| Y | 5 | 2 | *116-5436* | 1 | FILTER GP-FUEL | 113 |
| Y | 6 | 1 | *116-5438* | 1 | PUMP GP-FUEL PRIMING | 125 |
| Y | 7 | 2 | *116-5460* | 1 | LINES GP-WATER | 81 |
| Y | 8 | 1 | *117-2674* | 1 | PUMP GP-WATER | 91 |
| Y | 9 | 1 | *117-2746* | 1 | PUMP GP-ENGINE OIL | 71 |
| Y | 10 | 2 | *117-2748* | 1 | LIFTING GP-ENGINE | 44 |
| Y | 11 | 2 | *117-2749* | 1 | VALVE MECHANISM GP | 60 |
| Y | 12 | 1 | *117-2750* | 1 | GEAR GP-FRONT | 38 |
| Y | 13 | 2 | *117-2760* | 1 | WIRING GP-UNIT INJECTOR | 407 |
| Y | 15 | 2 | *132-3203* | 6 | PISTON & ROD GP | 51 |
| Y | 16 | 2 | *132-3210* | 1 | CRANKSHAFT GP | 25 |
| Y | 17 | 2 | *133-7031* | 1 | AIR COMPRESSOR GP | 14 |
| Y | 18 | 2 | *138-2028* | 1 | PLUG GP-CYLINDER BLOCK | 52 |
| Y | 19 | 1 | *156-3680* | 1 | MANIFOLD GP-EXHAUST | 101 |
| Y | 20 | 1 | *163-9322* | 1 | COOLER GP-TRANSMISSION OIL | 432 |
| Y | 21 | 1 | *164-2490* | 1 | FILTER GP-ENGINE OIL | 66 |
| Y | 22 | 1 | *167-0017* | 1 | BELT TENSIONER GP | 18 |
| Y | 23 | 2 | *168-4490* | 1 | CONTROL & MTG GP-ENGINE ELEK | 155 |
| Y | 25 | 2 | *171-1103* | 1 | WIRING GP-ENGINE | 317 |
| Y | 26 | 1 | *174-0620* | 1 | STARTING MOTOR GP-ELECTRIC | 296 |
| Y | 27 | 1 | *174-1574* | 1 | PAN GP-OIL | 47 |
| Y | 28 | 2 | *174-1576* | 1 | GAUGE GP-OIL LEVEL (DIPSTICK) | 68 |
| Y | 29 | 2 | *174-1579* | 1 | FILLER GP-ENGINE OIL | 65 |
| Y | 30 | 2 | *174-1581* | 1 | FLYWHEEL GP | 37 |
| Y | 31 | 2 | *174-1584* | 1 | HOUSING GP-FLYWHEEL | 39 |
| Y | 32 | 1 | *174-1591* | 1 | DRIVE GP-ACCESSORY | 35 |
| Y | 33 | 1 | *174-1604* | 1 | TURBOCHARGER GP | 107 |
| Y | 34 | 1 | *174-1627* | 1 | SUPPORT GP-ENGINE | 58 |
| Y | 35 | 1 | *174-1760* | 1 | PLUG GP-ENGINE | 53 |
| Y | 36 | 2 | *174-1762* | 1 | COVER GP-CYLINDER BLOCK | 23 |
| Y | 38 | 1 | *179-9565* | 1 | LINES GP-TURBOCHARGER OIL | 70 |
| Y | 39 | 2 | *180-6662* | 1 | CYLINDER BLOCK GP | 29 |
| Y | 40 | 2 | *190-6017* | 6 | PUMP GP-FUEL INJECTION | 124 |
| Y | 41 | 2 | *204-0638* | 1 | LINES GP-FUEL INJECTION | 121 |
| Y | 42 | 1 | *212-0615* | 1 | ALTERNATOR GP-CHARGING | 143 |
| Y | 43 | 2 | *215-2063* | 1 | LINES GP-WATER | 87 |
| Y | 44 | 2 | *116-1091* | 1 | SEAL GP-CRANKSHAFT | 57 |
| Y | 45 | 1 | *118-2808* | 1 | LINES GP-WATER | 82 |
| Y | 46 | 1 | *133-7075* | 1 | HOUSING GP-FRONT | 41 |
| Y | 47 | 2 | *171-3062* | 1 | CAMSHAFT GP | 22 |
| | 48 | 2 | *174-1541* | 1 | ELECTRONICS GP | |
| | | | | | | |
| | | | | | GASKET KITS WILL BE PROVIDED WHEN AVAILABLE | |

Y-SEPARATE ILLUSTRATION

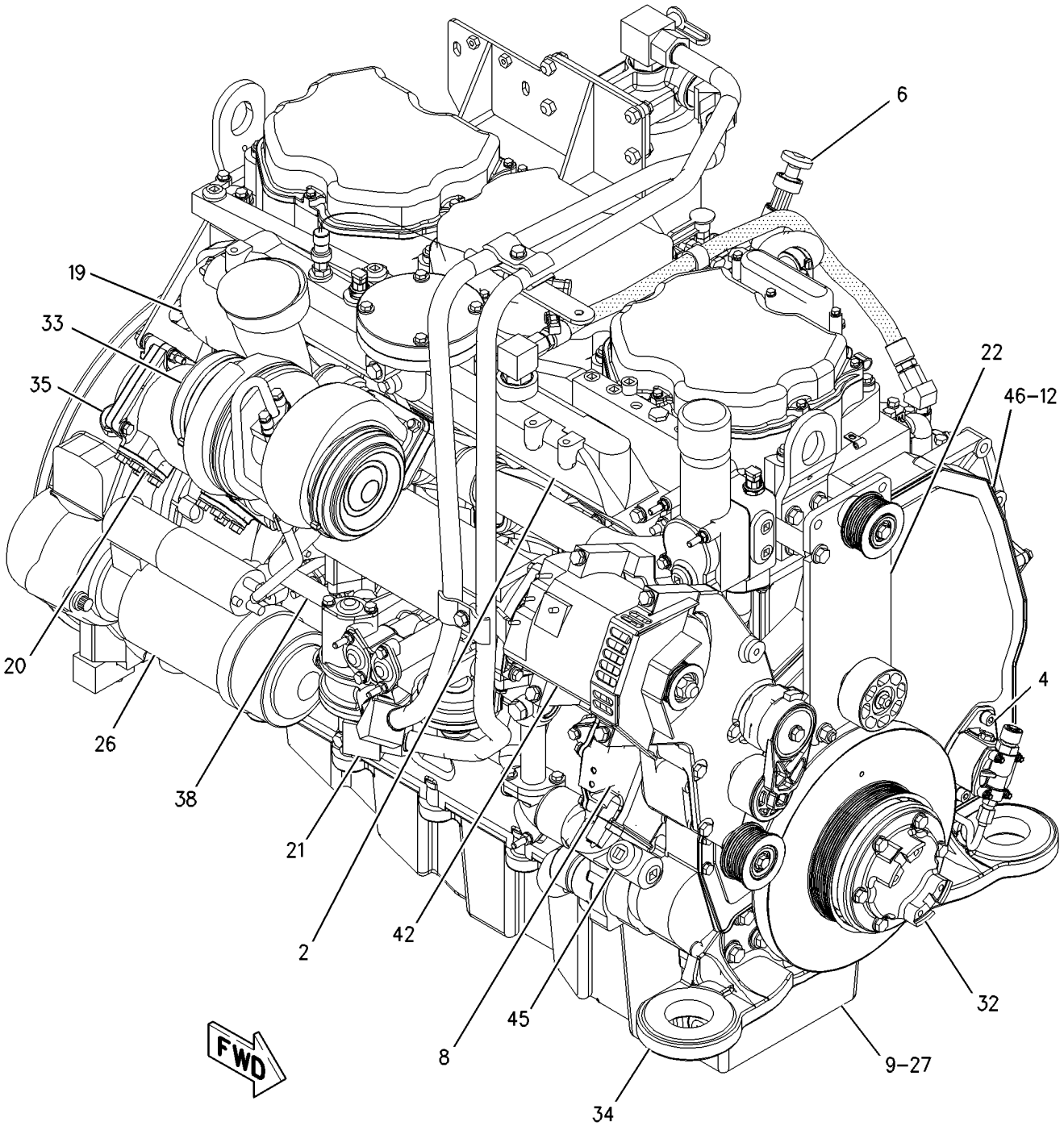


GRAPHIC #1 g00843090

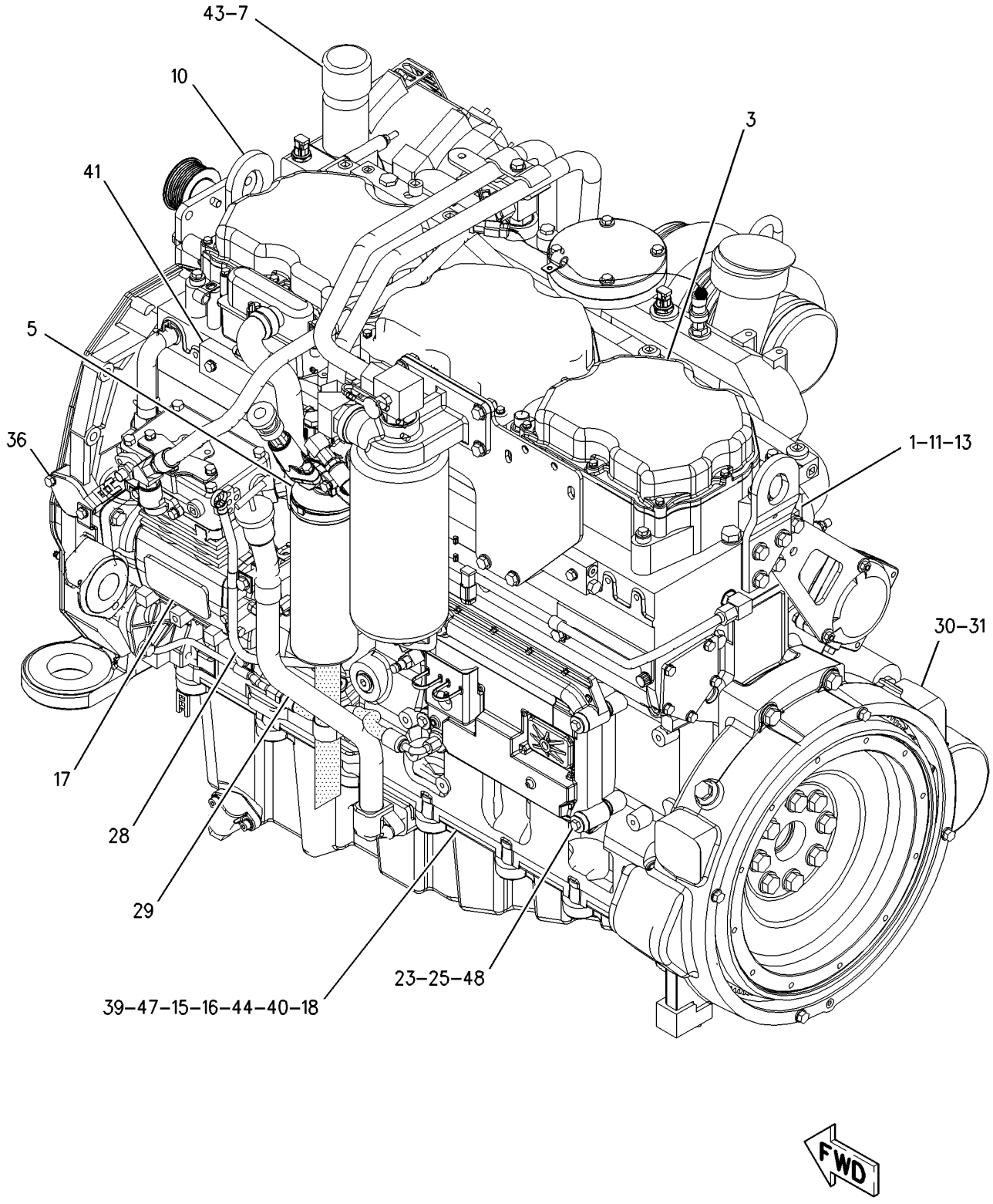


GRAPHIC #2 **<END>** g00892119

# ENGINE ARRANGEMENT

## 160-5101 ENGINE AR

**S/N: 3PD4381-UP**

**PART OF 159-4615 GENERAL AR**

**SMCS-1000** **i02339420**

| NOTE | PART NUMBER | QTY | PART NAME 1 2 3 4 5 6 (PRODUCT LEVEL) | SEE PAGE |
|---|---|---|---|---|
| Y | *234-2413* | 1 | AIR COMPRESSOR GP | 16 |
| Y | *234-2412* | 1 | BELT TENSIONER GP | 20 |
| Y | *171-3062* | 1 | CAMSHAFT GP | 22 |
| Y | *232-5990* | 1 | CONTROL & MTG GP-ENGINE ELEK | 156 |
| Y | *163-9322* | 1 | COOLER GP-TRANSMISSION OIL | 432 |
| | | | S/N: 3PD4381-12556 | |
| Y | *262-7138* | 1 | COOLER GP-TRANSMISSION OIL | 434 |
| | | | S/N: 3PD12557-UP | |
| Y | *174-1762* | 1 | COVER GP-CYLINDER BLOCK | 23 |
| Y | *132-3210* | 1 | CRANKSHAFT GP | 25 |
| Y | *180-6662* | 1 | CYLINDER BLOCK GP | 29 |
| Y | *116-1085* | 1 | CYLINDER HEAD GP | 33 |
| Y | *174-1591* | 1 | DRIVE GP-ACCESSORY | 35 |
| | *174-1541* | 1 | ELECTRONICS GP | |
| Y | *174-1579* | 1 | FILLER GP-ENGINE OIL | 65 |
| Y | *164-2490* | 1 | FILTER GP-ENGINE OIL | 66 |
| Y | *116-5436* | 1 | FILTER GP-FUEL | 113 |
| Y | *174-1581* | 1 | FLYWHEEL GP | 37 |
| Y | *174-1576* | 1 | GAUGE GP-OIL LEVEL (DIPSTICK) (ENGINE) | 68 |
| Y | *117-2750* | 1 | GEAR GP-FRONT | 38 |
| Y | *174-1584* | 1 | HOUSING GP-FLYWHEEL | 39 |
| Y | *133-7075* | 1 | HOUSING GP-FRONT | 41 |
| Y | *117-2748* | 1 | LIFTING GP-ENGINE | 44 |
| Y | *233-6663* | 1 | LINES GP-FUEL | 116 |
| Y | *179-9565* | 1 | LINES GP-TURBOCHARGER OIL | 70 |
| Y | *116-5460* | 1 | LINES GP-WATER (BYPASS) | 81 |
| Y | *215-2063* | 1 | LINES GP-WATER | 87 |
| Y | *118-2808* | 1 | LINES GP-WATER (INLET ELBOW) | 82 |
| | | | S/N: 3PD4381-12556 | |
| Y | *255-5307* | 1 | LINES GP-WATER | 89 |
| | | | S/N: 3PD12557-UP | |
| Y | *156-3680* | 1 | MANIFOLD GP-EXHAUST | 101 |
| Y | *116-5405* | 1 | MANIFOLD GP-INLET | 102 |
| Y | *116-5408* | 1 | MOUNTING GP-VALVE MECHANISM | 46 |
| Y | *174-1574* | 1 | PAN GP-OIL | 47 |
| | | | S/N: 3PD4381-10191 | |
| Y | *252-8692* | 1 | PAN GP-OIL | 49 |
| | | | S/N: 3PD10192-UP | |
| Y | *132-3203* | 6 | PISTON & ROD GP | 51 |
| Y | *138-2028* | 1 | PLUG GP-CYLINDER BLOCK | 52 |
| | | | S/N: 3PD4381-12556 | |
| Y | *265-3855* | 1 | PLUG GP-CYLINDER BLOCK | 52 |
| | | | S/N: 3PD12557-UP | |
| Y | *174-1760* | 1 | PLUG GP-ENGINE | 53 |
| Y | *116-5428* | 1 | PUMP & MTG GP-FUEL TRANSFER | 123 |
| Y | *117-2746* | 1 | PUMP GP-ENGINE OIL | 71 |
| Y | *190-6017* | 6 | PUMP GP-FUEL INJECTION | 124 |
| Y | *116-5438* | 1 | PUMP GP-FUEL PRIMING | 125 |
| | | | S/N: 3PD4381-12556 | |
| Y | *263-8506* | 1 | PUMP GP-FUEL PRIMING | 126 |
| | | | S/N: 3PD12557-UP | |
| Y | *117-2674* | 1 | PUMP GP-WATER | 91 |
| Y | *116-1091* | 1 | SEAL GP-CRANKSHAFT | 57 |
| Y | *174-0620* | 1 | STARTING MOTOR GP-ELECTRIC | 296 |
| Y | *174-1627* | 1 | SUPPORT GP-ENGINE | 58 |
| Y | *174-1604* | 1 | TURBOCHARGER GP | 107 |

## 160-5101 ENGINE AR *(contd. )* i02339420

| NOTE | PART NUMBER | QTY | PART NAME 1 2 3 4 5 6 (PRODUCT LEVEL) | SEE PAGE |
|---|---|---|---|---|
| Y | *117-2749* | 1 | VALVE MECHANISM GP | 60 |
| Y | *171-1103* | 1 | WIRING GP-ENGINE | 317 |
| Y | *117-2760* | 1 | WIRING GP-UNIT INJECTOR | 407 |
| | | | | |
| | | | GASKET KITS WILL BE PROVIDED WHEN AVAILABLE | |

Y-SEPARATE ILLUSTRATION

# BASIC ENGINE

## 131-6679 AIR COMPRESSOR GP*R

**S/N: 3PD1-UP**

**PART OF 133-7031, 234-2413 AIR COMPRESSOR GP**

**SMCS-1803** **i01855609**

| NOTE | REF NO | GRAPHIC REF | PART NUMBER | QTY | PART NAME 1 2 3 4 5 6 (PRODUCT LEVEL) | SEE PAGE |
|---|---|---|---|---|---|---|
| | 1 | 1 | **7C-6178** | 2 | BEARING-REAR | |
| | 2 | 1 | **7E-8928** | 1 | GASKET | |
| | 3 | 1 | **3B-4505** | 4 | LOCKWASHER (.097IN THK) | |
| | 4 | 1 | **4P-3977** | 1 | GASKET-CYLINDER HEAD | |
| | 5 | 1 | **0S-1617** | 12 | BOLT (5/16-18X0.75-IN) | |
| | 6 | 1 | **8T-6764** | 2 | PLUG-PIPE | |
| | 7 | 1 | **4P-3966** | 2 | PISTON & ROD AS | |
| | 8 | 1 | **8T-6762** | 1 | PLUG-PIPE | |
| | 9 | 1 | **0L-1352** | 6 | BOLT (3/8-16X3.25-IN) | |
| | 10 | 1 | **146-0835** | 2 | STUD | |
| | 11 | 1 | **2H-3934** | 1 | SEAL-O-RING | |
| | 12 | 1 | **103-6216** | 1 | KEY-WOODRUFF | |
| | 13 | 1 | **124-5572** | 1 | VALVE AS-RELIEF | |
| | 14 | 1 | **130-5997** | 1 | PLATE-INFORMATION (AIR COMPRESSOR) | |
| | | | | | AVAILABLE REPAIR KIT(S): | |
| | | | **7E-8923** | 1 | KIT-CRANKSHAFT BEARING (AIR COMPRESSOR) | |
| | | | | | (INCLUDES SEALS, BEARINGS, INSERTS, GASKETS, AND WASHER) | |
| | | | **7E-8925** | 1 | KIT-STANDARD RING (AIR COMPRESSOR) | |
| | | | | | (INCLUDES RINGS) | |
| | | | **7E-8926** | 1 | KIT-CYLINDER HEAD (AIR COMPRESSOR) | |
| | | | | | (INCLUDES GASKETS, PISTONS, SPRINGS, VALVES, SEATS, AND O-RING) | |
| | | | **150-5146** | 1 | KIT-UNLOADER (AIR COMPRESSOR) | |

**131-6679 AIR COMPRESSOR GP** *(contd. )* **i01855609**

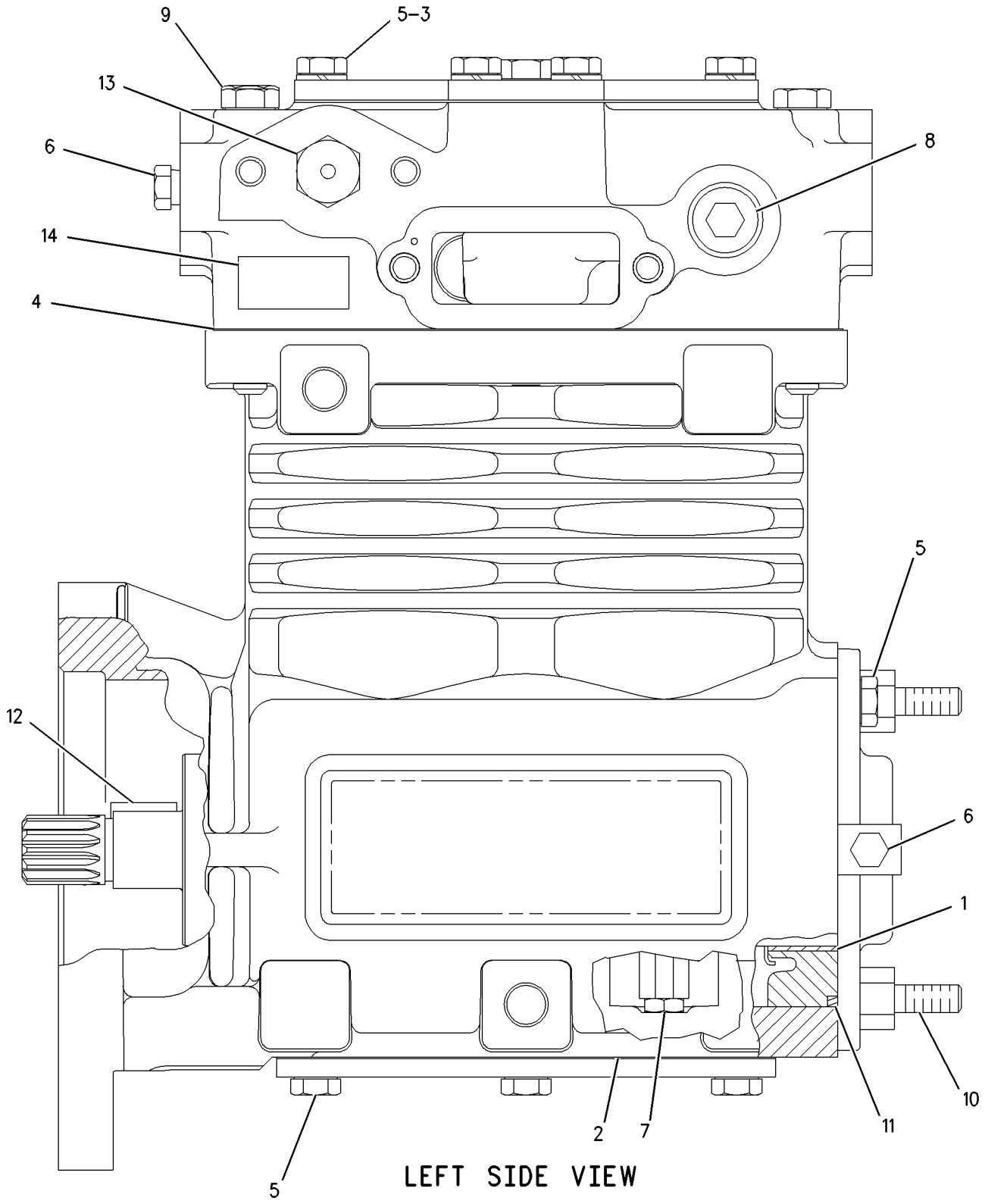


LEFT SIDE VIEW

GRAPHIC #1 **<END>** g00783724

# BASIC ENGINE

## *133-7031* AIR COMPRESSOR GP

**S/N: 3PD1-4380**

**13.2 CFM AT 1250 RPM, 1.14:1 RATIO. TWO CYLINDER, SINGLE STAGE**

**PART OF 160-5101 ENGINE AR**

**SMCS-1803** **i01855298**

| NOTE | REF NO | GRAPHIC REF | PART NUMBER | QTY | PART NAME 1 2 3 4 5 6 (PRODUCT LEVEL) | SEE PAGE |
|---|---|---|---|---|---|---|
| I | 1 | 1 | **1W-0428** | 1 | HOSE AS | |
| | 2 | 1 | **7W-5499** | 1 | ELBOW | |
| M | 3 | 1 | **6V-8197** | 3 | BOLT (M12X1.75X40-MM) | |
| | 4 | 1 | **8M-7065** | 1 | GASKET | |
| | 5 | 1 | **9M-2904** | 1 | CLAMP-HOSE | |
| | 6 | 1 | **172-4702** | 2 | CLAMP | |
| I | 7 | 1 | **9Y-1116** | 1 | HOSE AS | |
| | 8 | 1 | **032-3631** | 1 | ELBOW | |
| | 9 | 1 | **090-8635** | 1 | SPACER (5-MM THK) | |
| | 10 | 1 | **117-0221** | 1 | RING-PILOT | |
| | 11 | 1 | **126-0146** | 1 | HOSE-FUMES DISPOSAL | |
| | 12 | 1 | **128-0331** | 1 | HOSE | |
| | 13 | 1 | **128-0420** | 1 | GEAR (42-TEETH) | |
| | 14 | 1 | **129-2181** | 1 | SEAL-INTEGRAL | |
| | 15 | 1 | **131-2171** | 1 | CONNECTOR | |
| YR | 16 | 1 | **131-6679** | 1 | AIR COMPRESSOR GP | 12 |
| | 17 | 1 | **153-7062** | 1 | BRACKET | |
| | 18 | 1 | **166-6352** | 1 | TUBE AS (M10X1.50X25MM) | |
| | 19 | 1 | **005-0658** | 1 | ELBOW-FLARED | |
| | 19A | 1 | **6V-5063** | 1 | SEAL-O-RING | |
| | 20 | 1 | **001-7043** | 1 | ELBOW (12.7MM ID) | |
| | 21 | 1 | **118-4728** | 1 | ELBOW | |
| | 22 | 1 | **2B-2695** | 2 | BOLT (5/16-18X0.875-IN) | |
| | 23 | 1 | **2S-2053** | 1 | CLIP | |
| | 24 | 1 | **3E-4353** | 2 | WASHER-HARD (11X25X3-MM THK) | |
| | 25 | 1 | **5P-8245** | 3 | WASHER-HARD (13.5X25.5X3-MM THK) | |
| | 26 | 1 | **5S-0003** | 2 | NUT (5/16-18-THD) | |
| | 27 | 1 | **6D-4244** | 1 | CLIP | |
| | 28 | 1 | **6M-7476** | 1 | ELBOW | |
| | 29 | 1 | **6V-3251** | 2 | SEAL-O-RING | |
| M | 30 | 1 | **6V-4248** | 3 | BOLT (M10X1.5X25-MM) | |
| | 31 | 1 | **6V-5839** | 1 | WASHER (11X21X2.5-MM THK) | |
| | 32 | 1 | **6V-6609** | 1 | SEAL-O-RING | |
| M | 33 | 1 | **6V-7742** | 1 | NUT-FULL (M20X2.5-THD) | |
| | 34 | 1 | **8L-6557** | 1 | CONNECTOR | |
| | 35 | 1 | **8M-2770** | 1 | CLIP | |
| | 36 | 1 | **8T-3282** | 1 | WASHER-HARD (22X35X3.5-MM THK) | |
| | 37 | 1 | **9M-1974** | 2 | WASHER-HARD (8.8X16X2-MM THK) | |
| | 38 | 1 | **9N-0869** | 2 | WASHER-HARD (8.8X25.5X2-MM THK) | |

I-REFER TO HYDRAULIC INFORMATION SYSTEM
M-METRIC PART
R-REMFG PART MAY BE AVAILABLE
Y-SEPARATE ILLUSTRATION

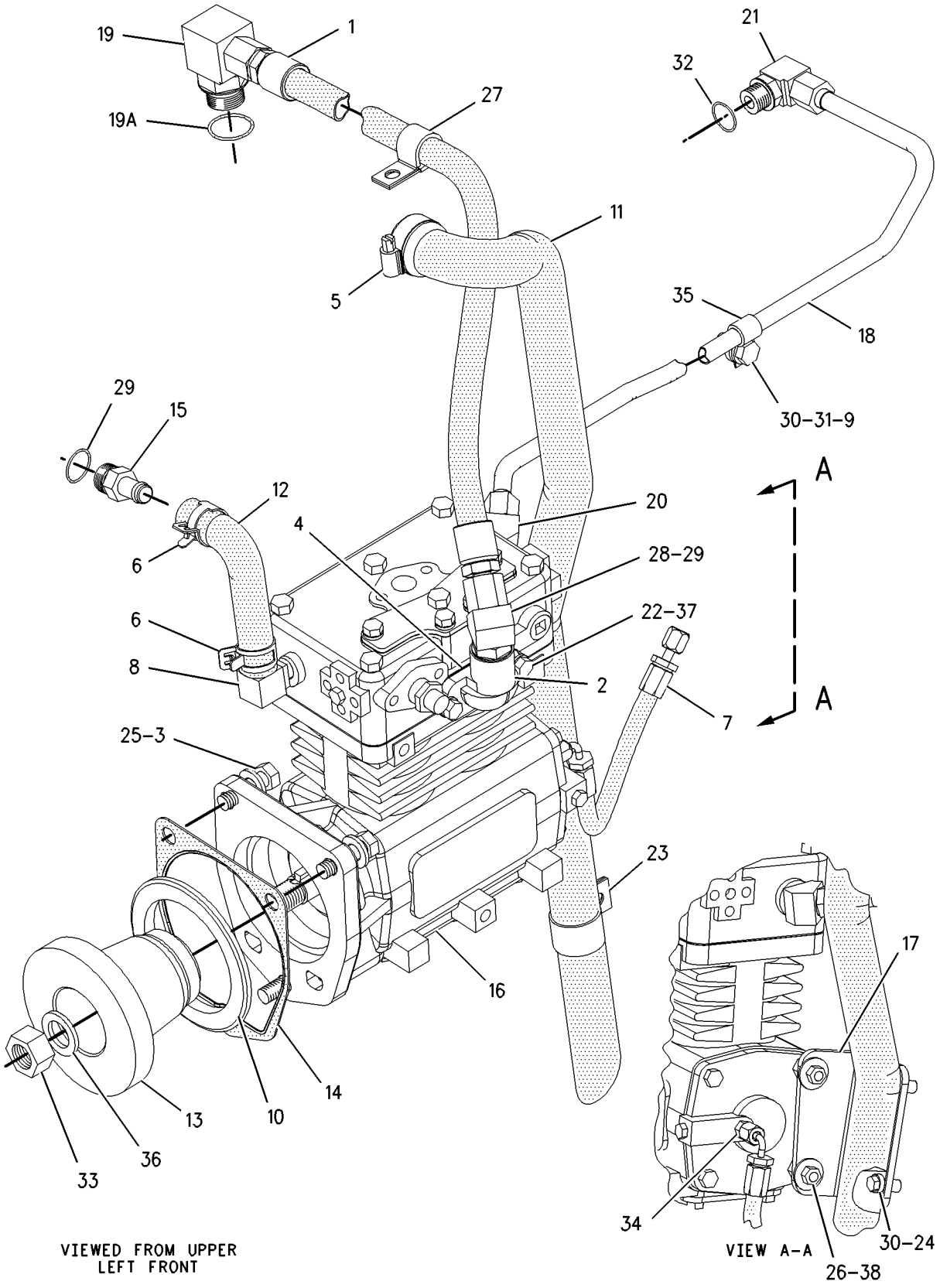


GRAPHIC #1 **<END>** g00911466

# BASIC ENGINE

## *234-2413* AIR COMPRESSOR GP

**S/N: 3PD4381-UP**

**PART OF 160-5101 ENGINE AR**

**SMCS-1803** **i01931666**

| NOTE | REF NO | GRAPHIC REF | PART NUMBER | QTY | PART NAME 1 2 3 4 5 6 (PRODUCT LEVEL) | SEE PAGE |
|---|---|---|---|---|---|---|
| I | 1 | 1 | **1W-0428** | 1 | HOSE AS | |
| | 2 | 1 | **7W-5499** | 1 | ELBOW | |
| M | 3 | 1 | **6V-8197** | 3 | BOLT (M12X1.75X40-MM) | |
| | 4 | 1 | **8M-7065** | 1 | GASKET | |
| | 5 | 1 | **9M-2904** | 1 | CLAMP-HOSE | |
| I | 6 | 1 | **9Y-1116** | 1 | HOSE AS | |
| | 7 | 1 | **032-3631** | 1 | ELBOW | |
| | 8 | 1 | **090-8635** | 1 | SPACER (5-MM THK) | |
| | 9 | 1 | **117-0221** | 1 | RING-PILOT | |
| | 10 | 1 | **126-0146** | 1 | HOSE-FUMES DISPOSAL | |
| | 11 | 1 | **128-0331** | 1 | HOSE | |
| | 12 | 1 | **128-0420** | 1 | GEAR (42-TEETH) | |
| | 13 | 1 | **129-2181** | 1 | SEAL-INTEGRAL | |
| | 14 | 1 | **131-2171** | 1 | CONNECTOR | |
| YR | 15 | 1 | **131-6679** | 1 | AIR COMPRESSOR GP | 12 |
| | 16 | 1 | **153-7062** | 1 | BRACKET | |
| | 17 | 1 | **166-6352** | 1 | TUBE AS | |
| | 18 | 1 | *166-6368* | 1 | ELBOW AS | |
| | 18A | 1 | **005-0658** | 1 | ELBOW-FLARED | |
| | 18B | 1 | **6V-5063** | 1 | SEAL-O-RING | |
| | 19 | 1 | **172-4702** | 2 | CLAMP | |
| | 20 | 1 | **001-7043** | 1 | ELBOW | |
| | 21 | 1 | **118-4728** | 1 | ELBOW | |
| | 22 | 1 | **2B-2695** | 2 | BOLT (5/16-18X0.875-IN) | |
| | 23 | 1 | **2S-2053** | 1 | CLIP | |
| | 24 | 1 | **3E-4353** | 2 | WASHER-HARD (11X25X3-MM THK) | |
| | 25 | 1 | **5P-8245** | 3 | WASHER-HARD (13.5X25.5X3-MM THK) | |
| | 26 | 1 | **5S-0003** | 2 | NUT (5/16-18-THD) | |
| | 27 | 1 | **6D-4244** | 1 | CLIP | |
| | 28 | 1 | **6M-7476** | 1 | ELBOW | |
| | 29 | 1 | **6V-3251** | 2 | SEAL-O-RING | |
| M | 30 | 1 | **6V-4248** | 3 | BOLT (M10X1.5X25-MM) | |
| | 31 | 1 | **6V-5839** | 1 | WASHER (11X21X2.5-MM THK) | |
| | 32 | 1 | **6V-6609** | 1 | SEAL-O-RING | |
| M | 33 | 1 | **6V-7742** | 1 | NUT-FULL (M20X2.5-THD) | |
| | 34 | 1 | **8L-6557** | 1 | CONNECTOR | |
| | 35 | 1 | **8M-2770** | 1 | CLIP | |
| | 36 | 1 | **8T-3282** | 1 | WASHER-HARD (22X35X3.5-MM THK) | |
| | 37 | 1 | **9M-1974** | 2 | WASHER-HARD (8.8X16X2-MM THK) | |
| | 38 | 1 | **9N-0869** | 2 | WASHER-HARD (8.8X25.5X2-MM THK) | |

I-REFER TO HYDRAULIC INFORMATION SYSTEM
M-METRIC PART
R-REMFG PART MAY BE AVAILABLE
Y-SEPARATE ILLUSTRATION

*234-2413* **AIR COMPRESSOR GP** *(contd.)* **i01931666**

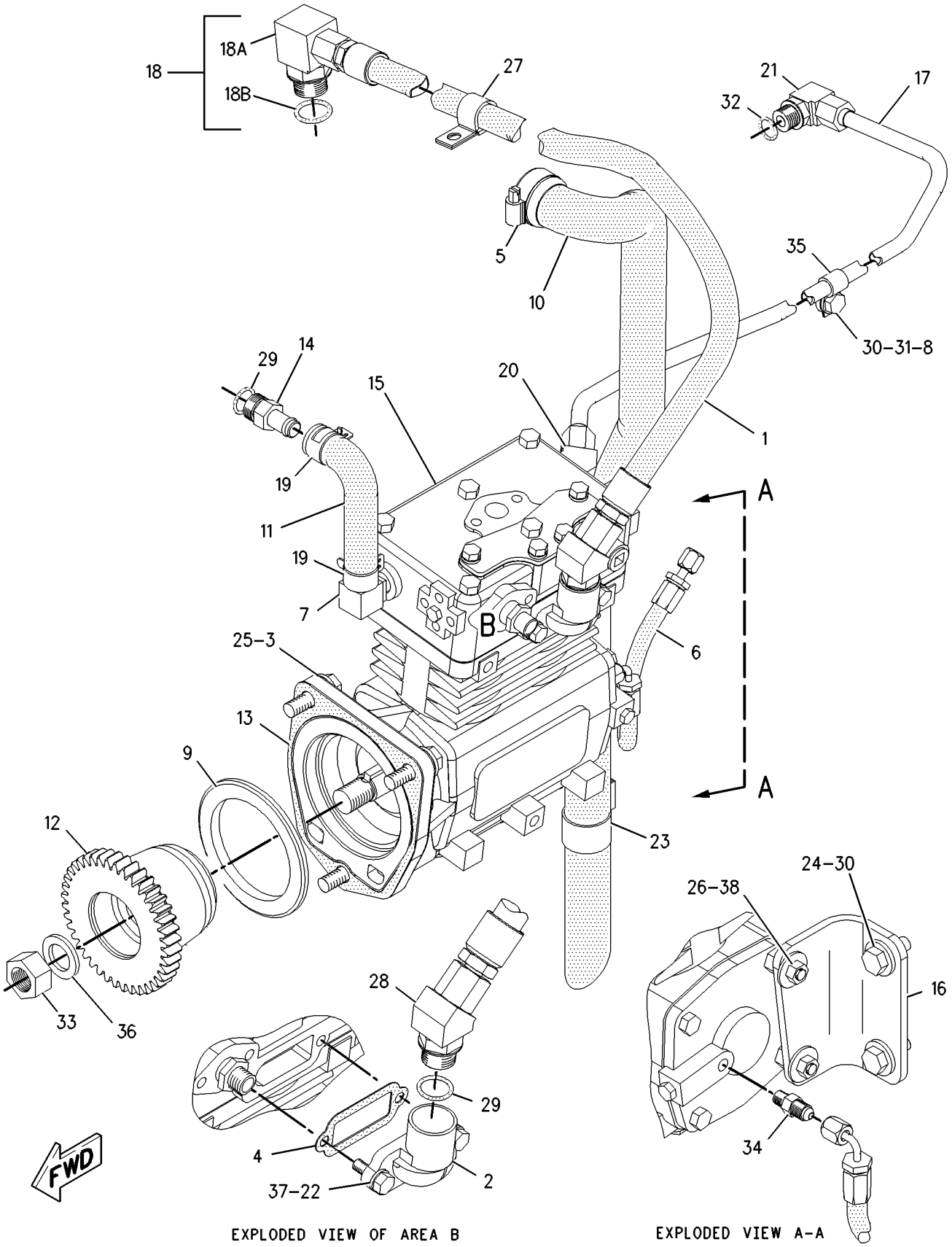


GRAPHIC #1 **<END>** g00998189

# BASIC ENGINE

## *167-0017* BELT TENSIONER GP

**S/N: 3PD1-4380**

**PART OF 160-5101 ENGINE AR**

**SMCS-1358** **i01855421**

| NOTE | REF NO | GRAPHIC REF | PART NUMBER | QTY | PART NAME 1 2 3 4 5 6 (PRODUCT LEVEL) | SEE PAGE |
|---|---|---|---|---|---|---|
| | 1 | 1 | **9Y-5631** | 2 | SPACER (13X26X89.9-MM THK) | |
| | 2 | 1 | **123-0790** | 1 | PULLEY (8-GROOVE) | |
| | 3 | 1 | **142-2011** | 1 | PULLEY GP-IDLER | |
| | 3A | 1 | **121-7137** | 1 | SEAL-O-RING | |
| | 3B | 1 | **144-5611** | 1 | PULLEY AS-IDLER | |
| | 3C | 1 | **179-6851** | 1 | SPACER | |
| | 3D | 1 | **179-6852** | 1 | COVER | |
| M | 3E | 1 | **179-6853** | 1 | BOLT | |
| | 4 | 1 | **173-1498** | 1 | PULLEY AS-IDLER (8-GROOVE) | |
| | 4A | 1 | **151-2900** | 1 | BOLT (M10X1.5X54.25-MM) | |
| | 4B | 1 | **166-6358** | 1 | COVER-DUST | |
| | 4C | 1 | **173-1500** | 1 | SPACER (10.4X45.1X1.8-MM THK) | |
| | 5 | 1 | **178-4875** | 1 | PLATE | |
| | 6 | 1 | **178-5252** | 1 | PULLEY AS-IDLER | |
| | 6A | 1 | **8T-4121** | 1 | WASHER-HARD (11X21X2.5-MM THK) | |
| M | 6B | 1 | **8T-5005** | 1 | BOLT (M10X1.5X70-MM) | |
| | 6C | 1 | **121-7137** | 1 | SEAL-O-RING | |
| | 6D | 1 | **166-6358** | 1 | COVER-DUST | |
| | 6E | 1 | **178-5253** | 1 | SPACER | |
| M | 7 | 1 | **123-0764** | 2 | STUD-TAPERLOCK (BOLT) | |
| | 8 | 1 | **190-0649** | 1 | TIGHTENER | |
| | 9 | 1 | **5P-8245** | 2 | WASHER-HARD (13.5X25.5X3-MM THK) | |
| | 10 | 1 | **5R-7137** | 2 | WASHER-SEALING | |
| | 11 | 1 | **6V-5839** | 1 | WASHER (11X21X2.5-MM THK) | |
| M | 12 | 1 | **6V-8004** | 2 | BOLT (M12X1.75X120-MM) | |
| M | 13 | 1 | **6V-8149** | 2 | NUT (M12X1.75-THD) | |
| M | 14 | 1 | **8T-0643** | 1 | BOLT (M10X1.5X80-MM) | |

M-METRIC PART

*167-0017* **BELT TENSIONER GP** *(contd.)* **i01855421**

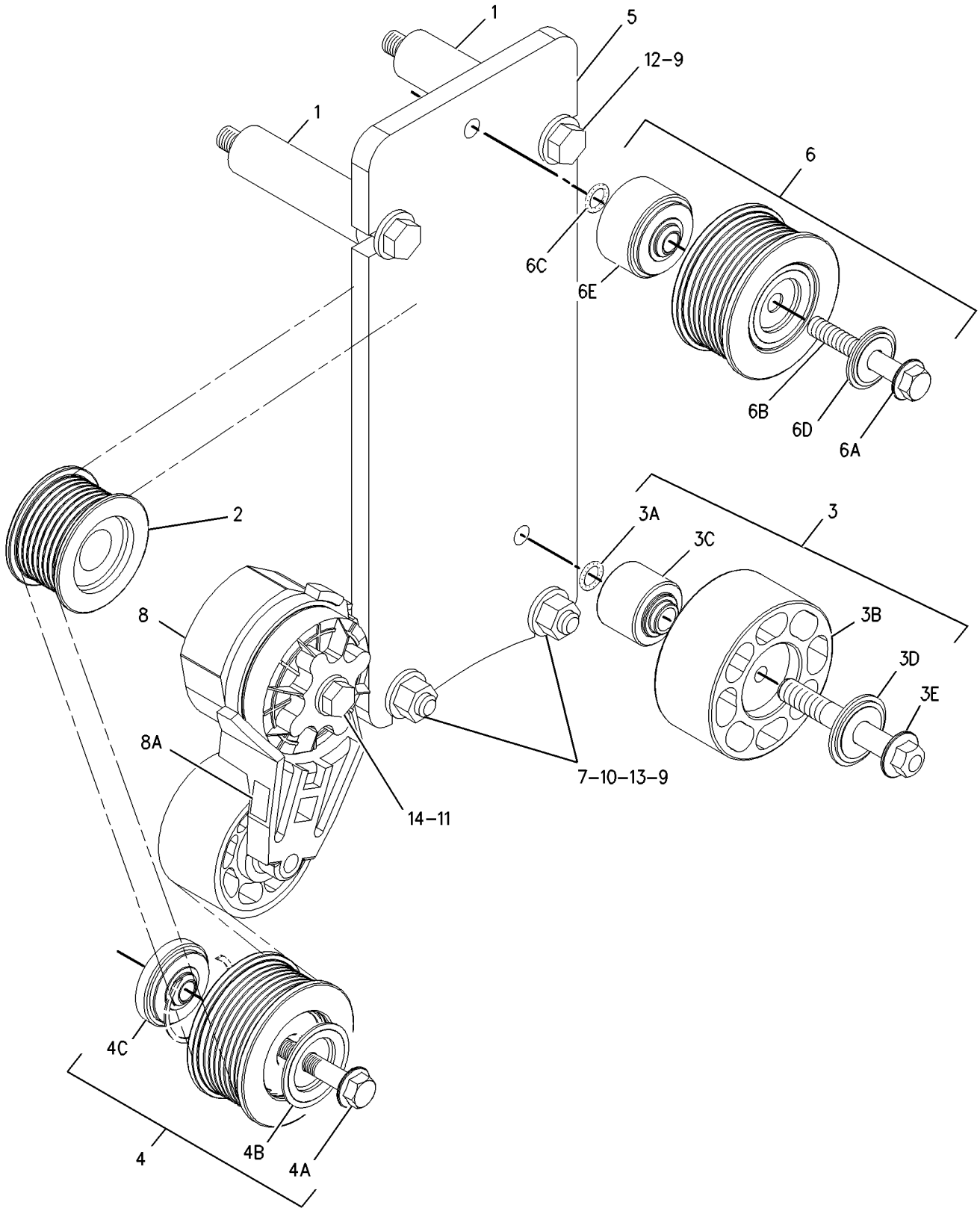


GRAPHIC #1 **<END>** g00673126

# BASIC ENGINE

## *234-2412* BELT TENSIONER GP

**S/N: 3PD4381-UP**

**PART OF 160-5101 ENGINE AR**

**SMCS-1358** **i01931604**

| NOTE | REF NO | GRAPHIC REF | PART NUMBER | QTY | PART NAME 1 2 3 4 5 6 (PRODUCT LEVEL) | SEE PAGE |
|---|---|---|---|---|---|---|
| | 1 | 1 | **5R-7137** | 2 | WASHER-SEALING | |
| | 2 | 1 | **9Y-5631** | 2 | SPACER (13X26X89.9-MM THK) | |
| | 3 | 1 | **142-2011** | 1 | PULLEY GP-IDLER | |
| | 3A | 1 | **121-7137** | 1 | SEAL-O-RING | |
| | 3B | 1 | **144-5611** | 1 | PULLEY AS-IDLER | |
| | 3C | 1 | **179-6851** | 1 | SPACER | |
| | 3D | 1 | **179-6852** | 1 | COVER | |
| M | 3E | 1 | **179-6853** | 1 | BOLT | |
| | 4 | 1 | **169-4657** | 1 | BRACKET | |
| | 5 | 1 | **173-1498** | 1 | PULLEY AS-IDLER (8-GROOVE) | |
| | 5A | 1 | **151-2900** | 1 | BOLT (M10X1.5X54.25-MM) | |
| | 5B | 1 | **166-6358** | 1 | COVER-DUST | |
| | 5C | 1 | **173-1500** | 1 | SPACER (10.4X45.1X1.8-MM THK) | |
| | 6 | 1 | **178-4875** | 1 | PLATE | |
| | 7 | 1 | **190-0649** | 1 | TIGHTENER | |
| | 8 | 1 | **230-4171** | 1 | PULLEY AS-IDLER | |
| M | 9 | 1 | **123-0764** | 2 | STUD-TAPERLOCK (BOLT) | |
| | 10 | 1 | **3E-4353** | 3 | WASHER-HARD (11X25X3-MM THK) | |
| | 11 | 1 | **5P-8245** | 4 | WASHER-HARD (13.5X25.5X3-MM THK) | |
| M | 12 | 1 | **6V-1820** | 3 | BOLT (M10X1.5X30-MM) | |
| M | 13 | 1 | **6V-3822** | 2 | BOLT (M10X1.5X35-MM) | |
| | 14 | 1 | **6V-5839** | 1 | WASHER (11X21X2.5-MM THK) | |
| M | 15 | 1 | **6V-8004** | 2 | BOLT (M12X1.75X120-MM) | |
| M | 16 | 1 | **6V-8149** | 2 | NUT (M12X1.75-THD) | |
| M | 17 | 1 | **8T-0643** | 3 | BOLT (M10X1.5X80-MM) | |

M-METRIC PART

*234-2412* **BELT TENSIONER GP** *(contd.)* **i01931604**

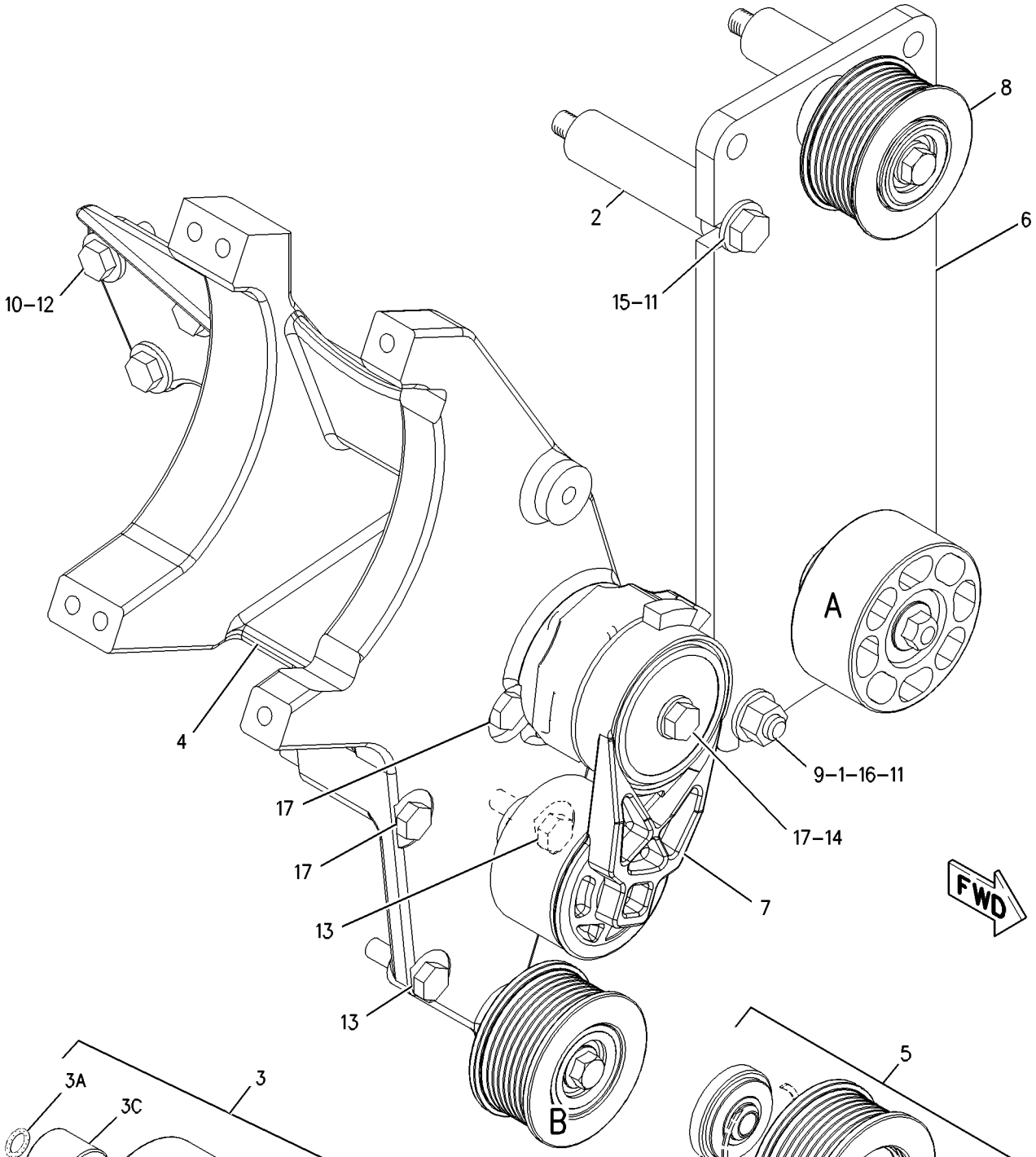


EXPLODED VIEW OF AREA A

EXPLODED VIEW OF AREA B

GRAPHIC #1 **<END>** g00998453

# BASIC ENGINE

## *171-3062* CAMSHAFT GP

**S/N: 3PD1-UP**

**PART OF 160-5101 ENGINE AR**

**SMCS-1210** **i02205137**

| NOTE | REF NO | GRAPHIC REF | PART NUMBER | QTY | PART NAME 1 2 3 4 5 6 (PRODUCT LEVEL) | SEE PAGE |
|---|---|---|---|---|---|---|
| M | 1 | 1 | **6V-5217** | 5 | BOLT (M8X1.25X20-MM) | |
| | 2 | 1 | **9M-1974** | 5 | WASHER-HARD (8.8X16X2-MM THK) | |
| | 3 | 1 | **178-3643** | 1 | PIN-THRUST | |
| | 4 | 1 | **133-7068** | 1 | GASKET-CAMSHAFT COVER | |
| | 5 | 1 | **171-3063** | 1 | CAMSHAFT AS | |
| | 5A | 1 | **1B-8705** | 1 | KEY-WOODRUFF | |
| | 5B | 1 | **128-0411** | 1 | JOURNAL | |
| | 5C | 1 | **133-7100** | 1 | GEAR-CAMSHAFT DRIVE (96-TEETH) | |
| | 6 | 1 | **4K-9841** | 1 | WASHER (0.406X0.75X0.064-IN THK) | |
| | 7 | 1 | **118-0459** | 1 | COVER | |

M-METRIC PART

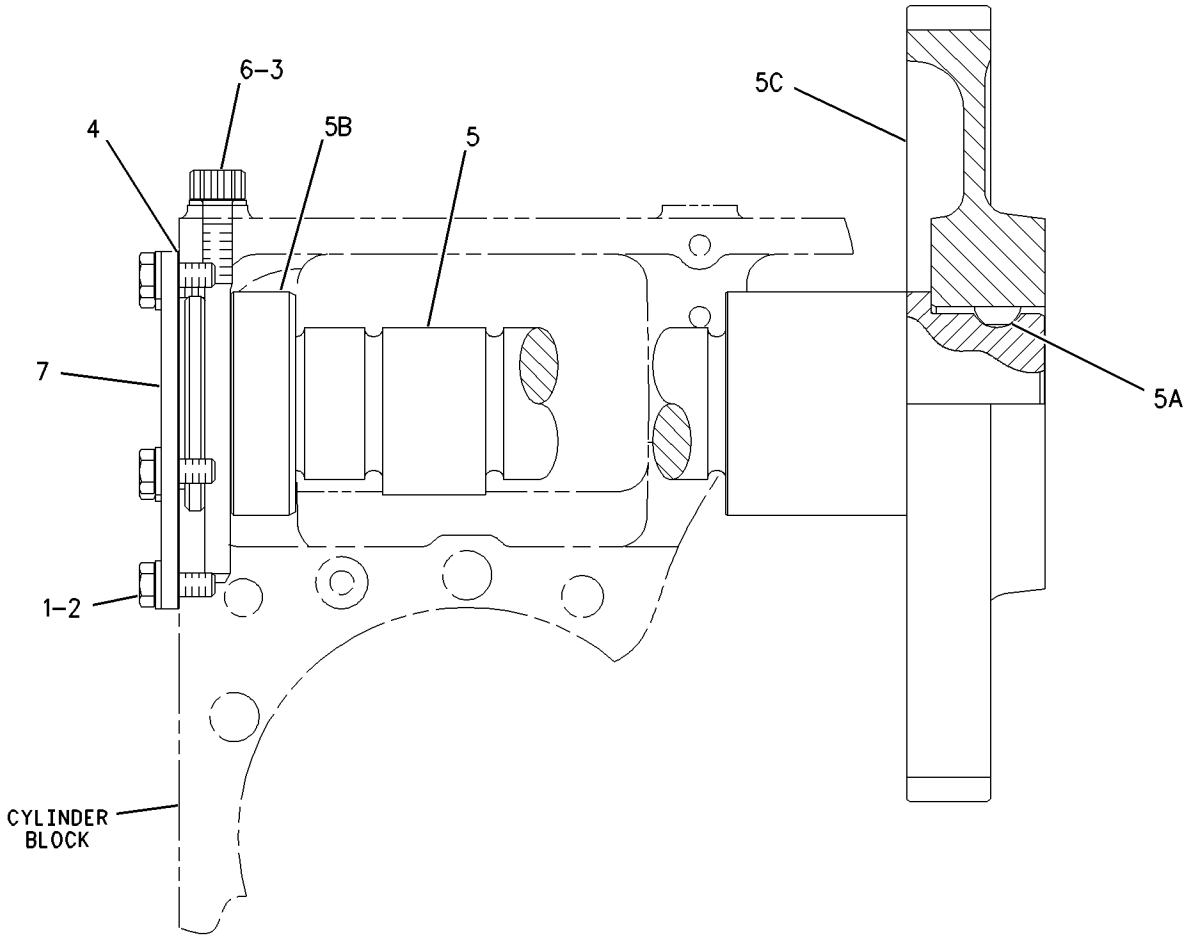


GRAPHIC #1 **<END>** g00674299

# *174-1762* COVER GP-CYLINDER BLOCK

**S/N: 3PD1-UP**

**PART OF 160-5101 ENGINE AR**

**SMCS-1201** **i01855519**

| NOTE | REF NO | GRAPHIC REF | PART NUMBER | QTY | PART NAME 1 2 3 4 5 6 (PRODUCT LEVEL) | SEE PAGE |
|---|---|---|---|---|---|---|
| | 1 | 1 | **3E-4039** | 1 | CAP | |
| | 2 | 1 | **7C-1445** | 3 | COVER | |
| M | 3 | 1 | **9X-2097** | 2 | STUD (M8X1.25-THD) | |
| | 4 | 1 | **184-2524** | 1 | BRACKET AS | |
| | 5 | 1 | **061-9455** | 3 | SEAL-O-RING | |
| | 6 | 1 | **1H-7339** | 1 | SEAL-O-RING | |
| | 7 | 1 | **4P-1650** | 1 | COVER | |
| | 8 | 1 | **4P-6587** | 1 | COVER | |
| M | 9 | 1 | **5P-7970** | 1 | NUT (M8X1.25-THD) | |
| | 10 | 1 | **5S-9134** | 1 | SEAL-O-RING | |
| | 11 | 1 | **6V-1250** | 1 | SEAL-O-RING | |
| M | 12 | 1 | **6V-1820** | 2 | BOLT (M10X1.5X30-MM) | |
| M | 13 | 1 | **6V-2317** | 1 | BOLT (M8X1.25X30-MM) | |
| M | 14 | 1 | **6V-5217** | 5 | BOLT (M8X1.25X20-MM) | |
| | 15 | 1 | **6V-5839** | 2 | WASHER (11X21X2.5-MM THK) | |
| | 16 | 1 | **7C-9542** | 1 | COVER-FILTER BASE | |
| | 17 | 1 | **9M-1974** | 10 | WASHER-HARD (8.8X16X2-MM THK) | |

M-METRIC PART

*174-1762* **COVER GP-CYLINDER BLOCK** *(contd.)* **i01855519**

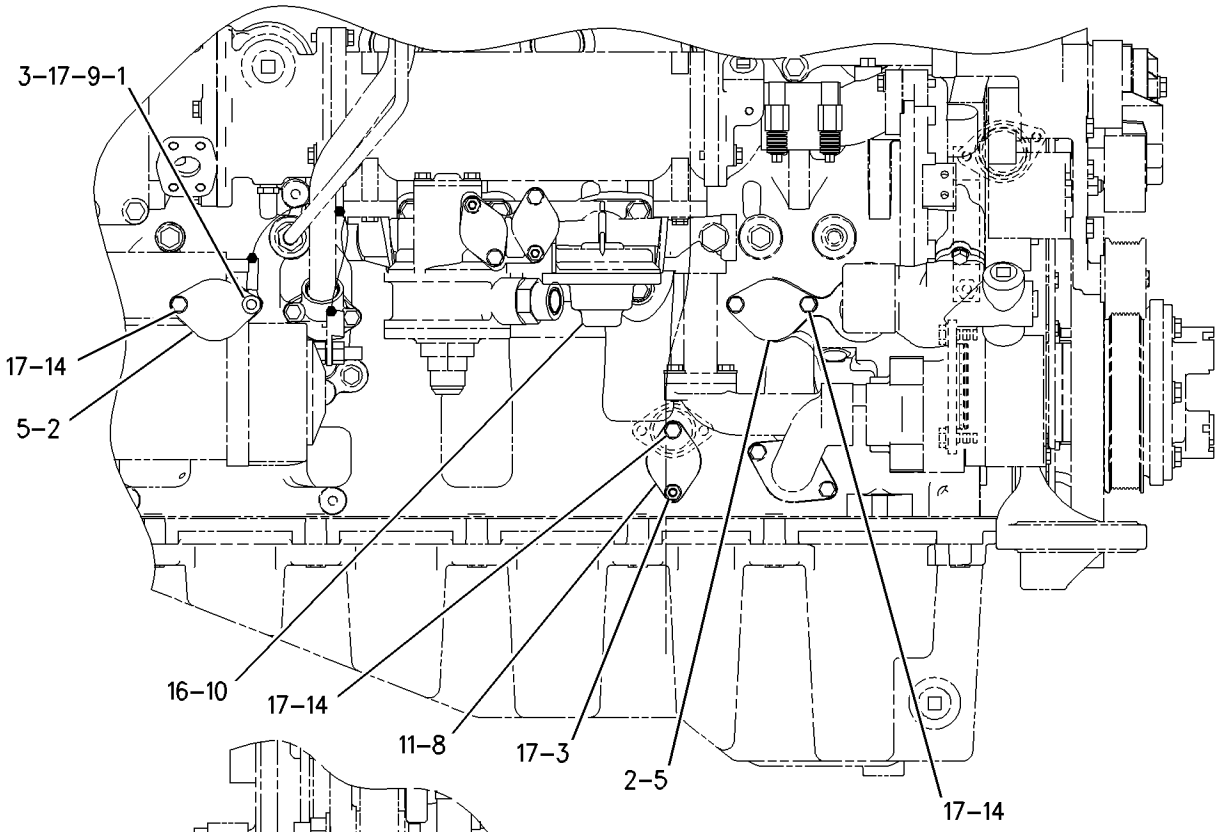


RIGHT SIDE VIEW

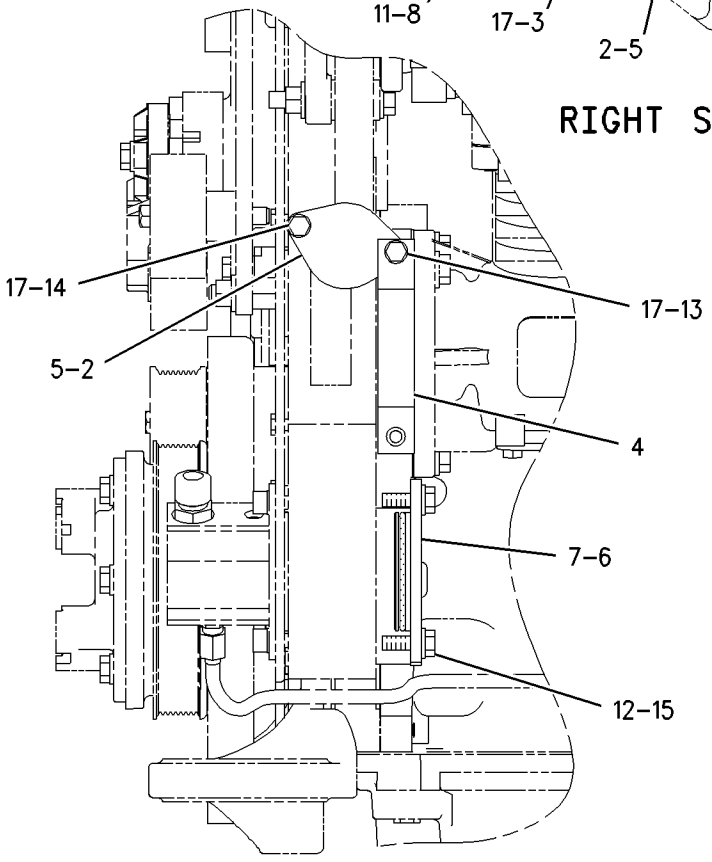


LEFT SIDE VIEW

GRAPHIC #1 **<END>** g00789291

## *132-3210* CRANKSHAFT GP

**S/N: 3PD1-UP**

**PART OF 160-5101 ENGINE AR**

**SMCS-1202, 1203, 1204, 1232** **i02385169**

| NOTE | REF NO | GRAPHIC REF | PART NUMBER | QTY | PART NAME 1 2 3 4 5 6 (PRODUCT LEVEL) | SEE PAGE |
|---|---|---|---|---|---|---|
| J | 1 | 1 | **211-0588** | 3 | BEARING-MAIN | |
| AB | | 1 | **128-0382** | | BEARING-MAIN (0.51-MM US) | |
| AB | | 1 | **128-0383** | | BEARING-MAIN (0.76-MM US) | |
| AB | | 1 | **128-0384** | | BEARING-MAIN (0.51-MM OS) | |
| AB | | 1 | **128-0385** | | BEARING-MAIN (0.51-MM US - 0.51-MM OS) | |
| J | 2 | 1 | **246-3144** | 2 | PLATE-THRUST | |
| J | 3 | 1 | **211-0587** | 4 | BEARING-MAIN | |
| AB | | 1 | **128-0400** | | BEARING-MAIN (0.51-MM US) | |
| AB | | 1 | **128-0401** | | BEARING-MAIN (0.76-MM US) | |
| AB | | 1 | **128-0402** | | BEARING-MAIN (0.51-MM OS) | |
| AB | | 1 | **128-0403** | | BEARING-MAIN (0.51-MM US - 0.51-MM OS) | |
| R | 4 | 1 | **169-4189** | 1 | CRANKSHAFT AS | |
| | 4A | 1 | **6V-3536** | 1 | DOWEL | |
| | 4B | 1 | **187-8972** | 1 | GEAR-CRANKSHAFT (48-TEETH) | |
| | 4C | 1 | **9Y-0821** | 1 | SLEEVE (FRONT) | |
| | 4D | 1 | **9Y-0810** | 1 | SLEEVE-WEAR (REAR) | |
| | | | | | AVAILABLE REPLACEMENT PART(S): | |
| J | | | **196-9521** | | BEARING GP-MAIN (CRANKSHAFT) | |
| | | | | | (INCLUDES STANDARD MAIN BEARINGS AND THRUST PLATES) | |

A-NOT PART OF THIS GROUP
B-USE AS REQUIRED
J-KIT MARKED J INCLUDES PARTS MARKED J
R-REMFG PART MAY BE AVAILABLE

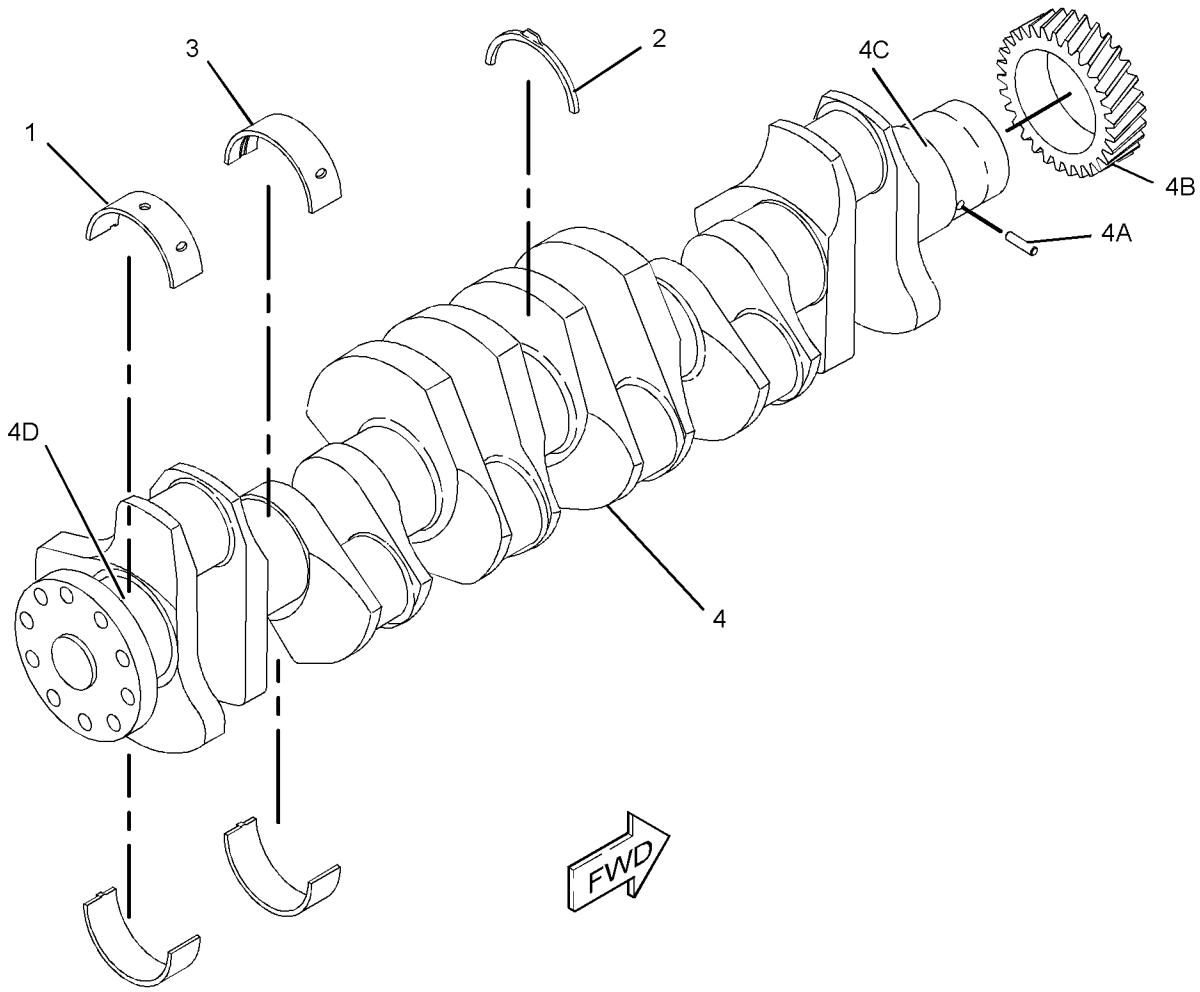


GRAPHIC #1 **<END>** g01188887

# BASIC ENGINE

## *200-2057* CYLINDER BLOCK AS

**S/N: 3PD1-UP**

**PART OF 204-3451 CYLINDER BLOCK AS**

**SMCS-1201** **i01855645**

| NOTE | REF NO | GRAPHIC REF | PART NUMBER | QTY | PART NAME 1 2 3 4 5 6 (PRODUCT LEVEL) | SEE PAGE |
|---|---|---|---|---|---|---|
| | 1 | 1 | **216-5583** | 5 | BEARING-SLEEVE | |
| | 2 | 1 | **216-5585** | 1 | BEARING-SLEEVE | |
| | 3 | 1 | **216-5584** | 1 | BEARING-SLEEVE | |
| | 4 | 1 | **200-2056** | 1 | CYLINDER BLOCK AS | |
| | 4A | 1 | **117-0166** | 7 | CAP-BEARING | |
| | 4B | 1 | **5P-8247** | 14 | WASHER-HARD (17X32X3.5MM THK) | |
| M | 4C | 1 | **175-0454** | 14 | BOLT-HEX HEAD | |

M-METRIC PART

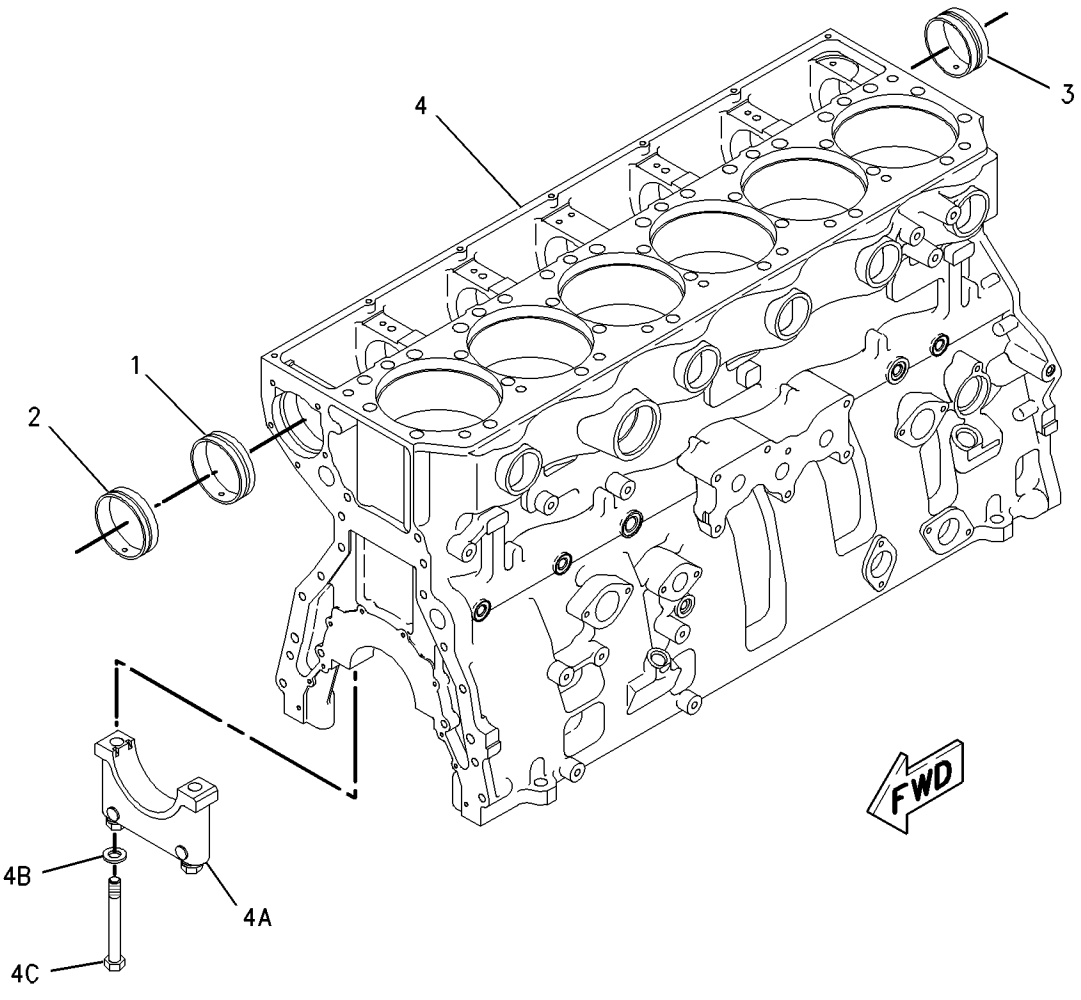


GRAPHIC #1 **<END>** g00821180

# BASIC ENGINE

## *204-3451* CYLINDER BLOCK AS

**S/N: 3PD1-UP**

**PART OF 180-6662 CYLINDER BLOCK GP**

**SMCS-1201** **i01855630**

| NOTE | REF NO | GRAPHIC REF | PART NUMBER | QTY | PART NAME 1 2 3 4 5 6 (PRODUCT LEVEL) | SEE PAGE |
|---|---|---|---|---|---|---|
| Y | 1 | 1 | **200-2057** | 1 | CYLINDER BLOCK AS | 27 |
| | 2 | 1 | **148-2125** | 6 | LINER-CYLINDER | |
| | 3 | 1 | **104-3560** | 6 | SEAL-LINER | |
| | 4 | 1 | **4F-5695** | 6 | PLUG-CUP | |

Y-SEPARATE ILLUSTRATION

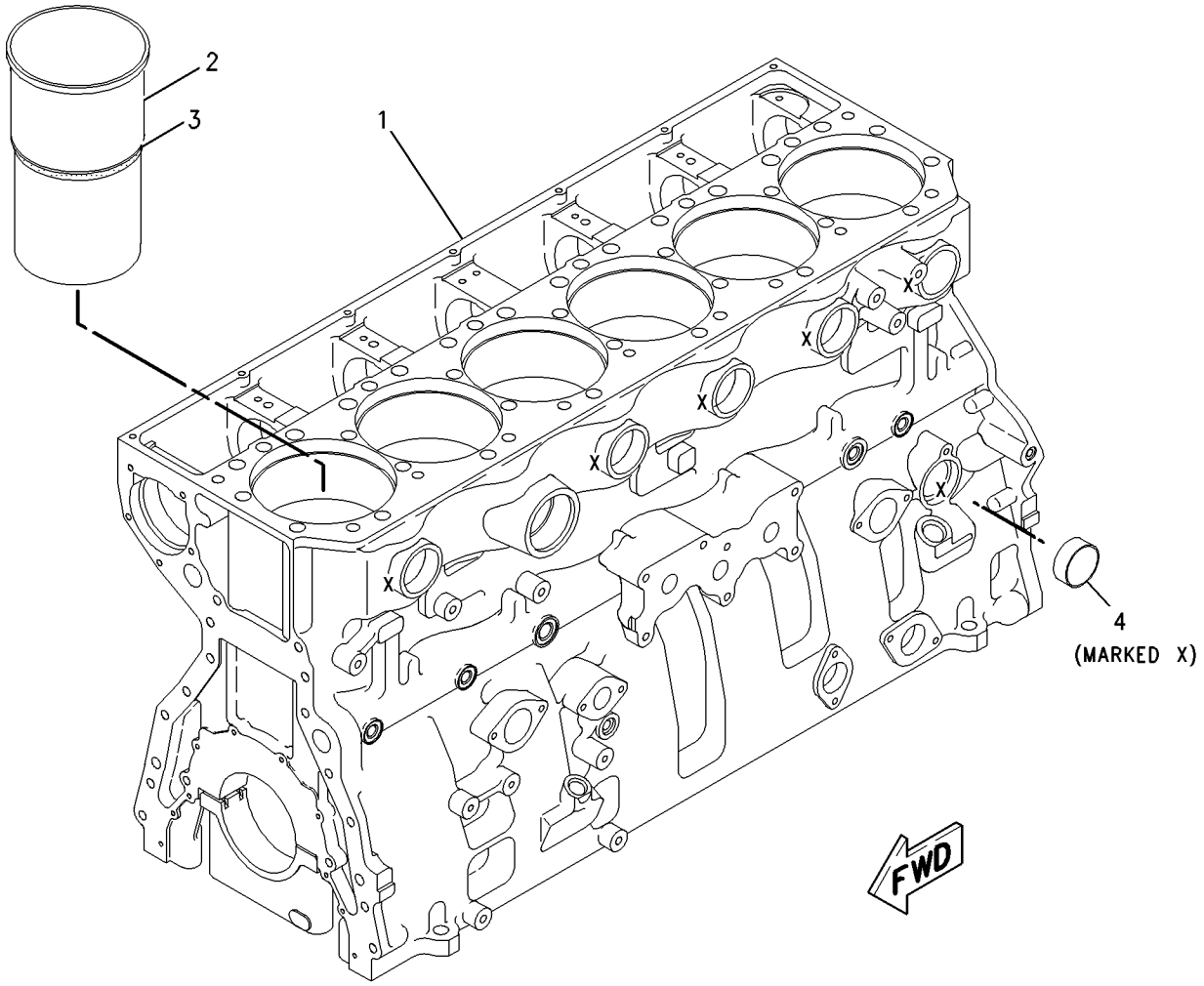


GRAPHIC #1 **<END>** g00820510

# BASIC ENGINE

## *180-6662* CYLINDER BLOCK GP

**S/N: 3PD1-UP**

**PART OF 160-5101 ENGINE AR**

**SMCS-1201** **i01920795**

| NOTE | REF NO | GRAPHIC REF | PART NUMBER | QTY | PART NAME 1 2 3 4 5 6 (PRODUCT LEVEL) | SEE PAGE |
|---|---|---|---|---|---|---|
| Y | 1 | 1 | **204-3451** | 1 | CYLINDER BLOCK AS | 28 |
| | 2 | 1 | **7N-5683** | 4 | DOWEL | |
| | 6 | 1 | **6V-3538** | 2 | DOWEL | |
| | 7 | 1 | **1N-5999** | 2 | PLUG | |
| | 8 | 1 | **5P-7813** | 2 | SEAL-O-RING | |
| | 9 | 1 | **9S-8002** | 1 | PLUG | |
| | 10 | 1 | **6V-5048** | 1 | SEAL-O-RING | |
| | 11 | 1 | **3B-0623** | 3 | PLUG-CUP | |
| | 12 | 1 | **4G-4972** | 6 | SEAL-O-RING | |
| | 13 | 1 | **8C-4403** | 2 | DOWEL | |

Y-SEPARATE ILLUSTRATION

*180-6662* **CYLINDER BLOCK GP** *(contd.)* **i01920795**

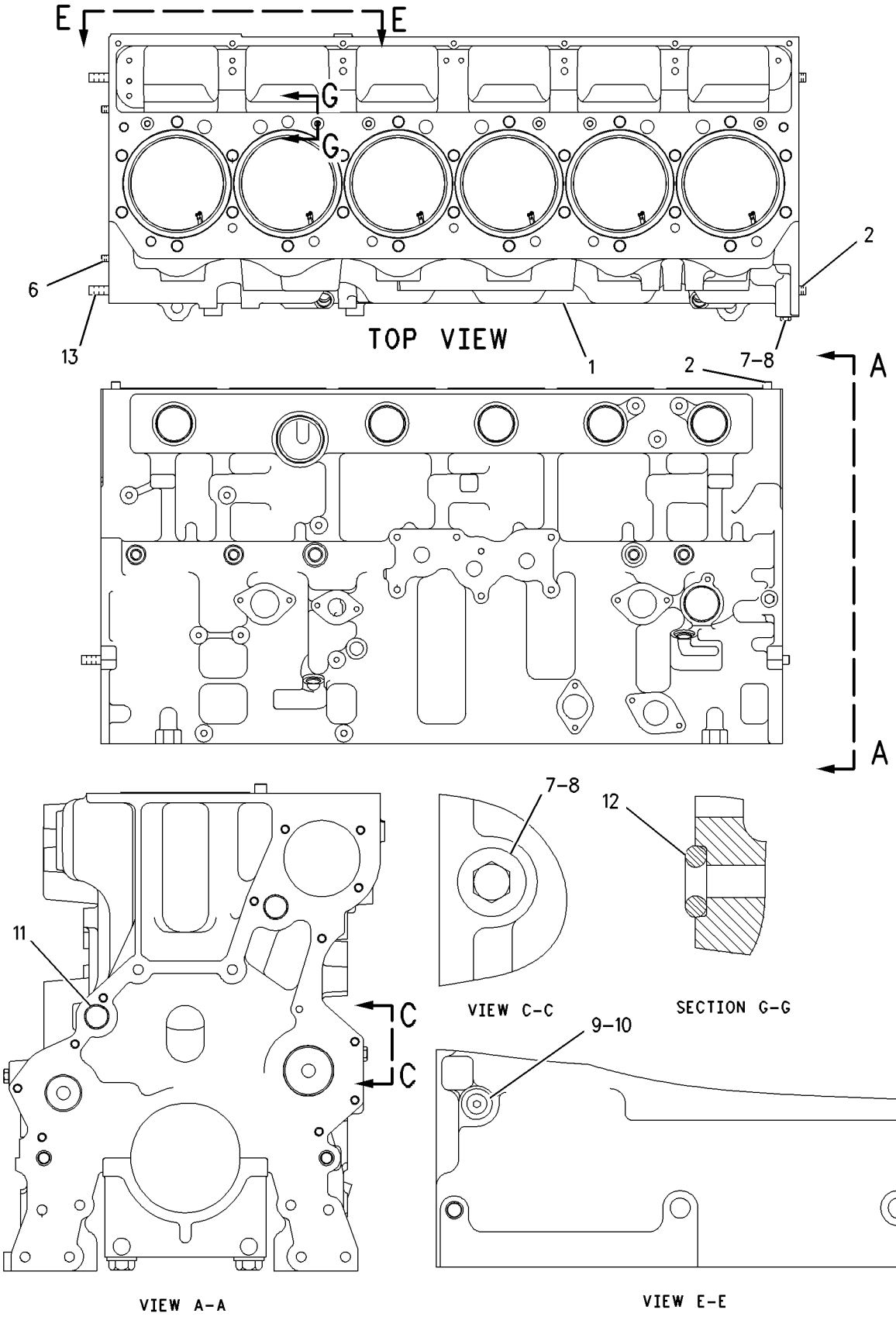


GRAPHIC #1 **<END>** g01005373

# BASIC ENGINE

## *179-9459* CYLINDER HEAD AS

**S/N: 3PD1-UP**

**PART OF 148-2149 CYLINDER HEAD GP**

**SMCS-1100** **i01911329**

| NOTE | REF NO | GRAPHIC REF | PART NUMBER | QTY | PART NAME 1 2 3 4 5 6 (PRODUCT LEVEL) | SEE PAGE |
|---|---|---|---|---|---|---|
| Z | 1 | 1 | | 1 | CYLINDER HEAD | |
| | 2 | 1 | **3B-0623** | 8 | PLUG-CUP | |
| | 3 | 1 | **179-9453** | 12 | INSERT-VALVE SEAT (EXHAUST) | |
| | 4 | 1 | **138-2006** | 12 | INSERT-VALVE SEAT (INLET) | |
| | 5 | 1 | **116-1102** | 6 | SLEEVE-INJECTOR | |
| | 6 | 1 | **6V-7604** | 16 | PLUG-CUP | |

Z-NOT SERVICED SEPARATELY

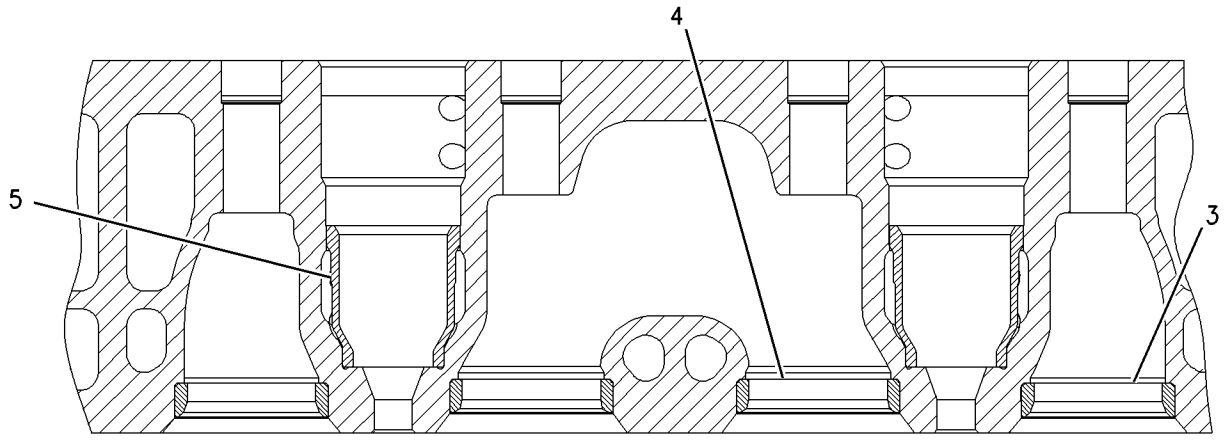


SECTION A-A

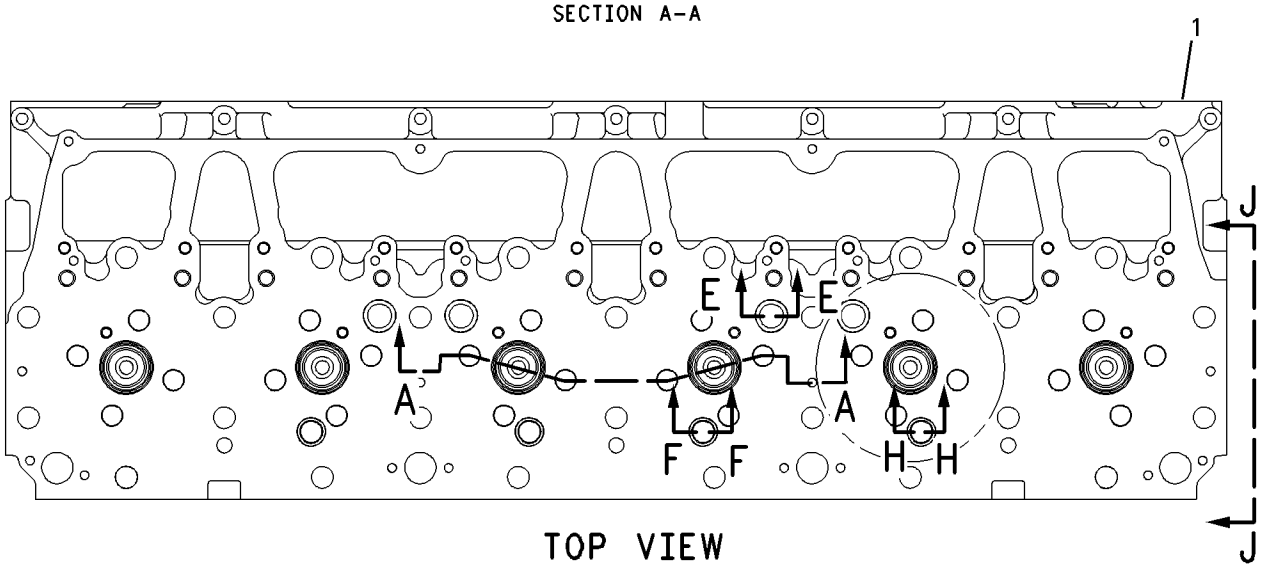


TOP VIEW

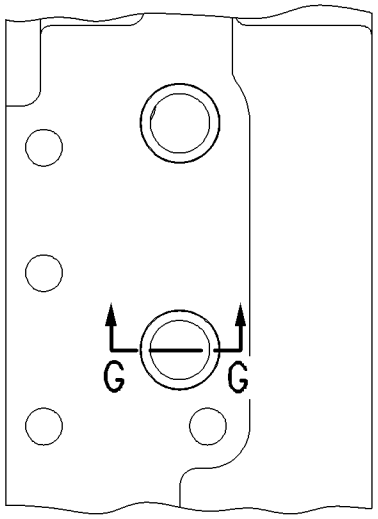


VIEW J-J

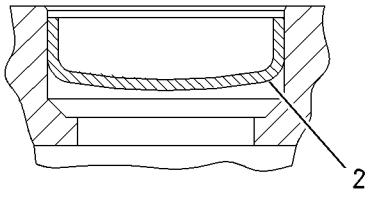


SECTION E-E

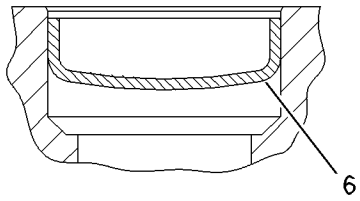


SECTION F-F

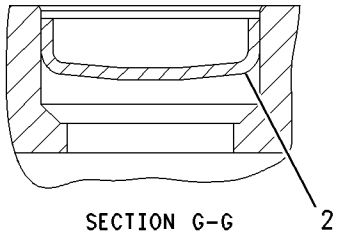


SECTION G-G

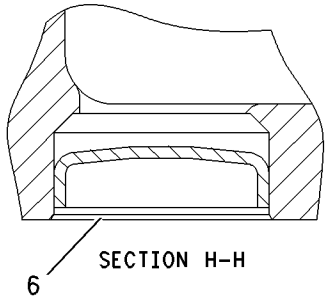


SECTION H-H

GRAPHIC #1 **<END>** g00706910

# BASIC ENGINE

## *116-1085* CYLINDER HEAD GP

**S/N: 3PD1-UP**

**PART OF 160-5101 ENGINE AR**

**SMCS-1100** **i01855158**

| NOTE | REF NO | GRAPHIC REF | PART NUMBER | QTY | PART NAME 1 2 3 4 5 6 (PRODUCT LEVEL) | SEE PAGE |
|---|---|---|---|---|---|---|
| CYR | 1 | 1 | **148-2149** | 1 | CYLINDER HEAD GP | 34 |
| M | 2 | 1 | **6V-9607** | 7 | BOLT (M8X1.25X120MM) | |
| C | 3 | 1 | **187-3307** | 1 | GASKET AS-CYLINDER | |

C-CHANGE FROM PREVIOUS TYPE
M-METRIC PART
R-REMFG PART MAY BE AVAILABLE
Y-SEPARATE ILLUSTRATION

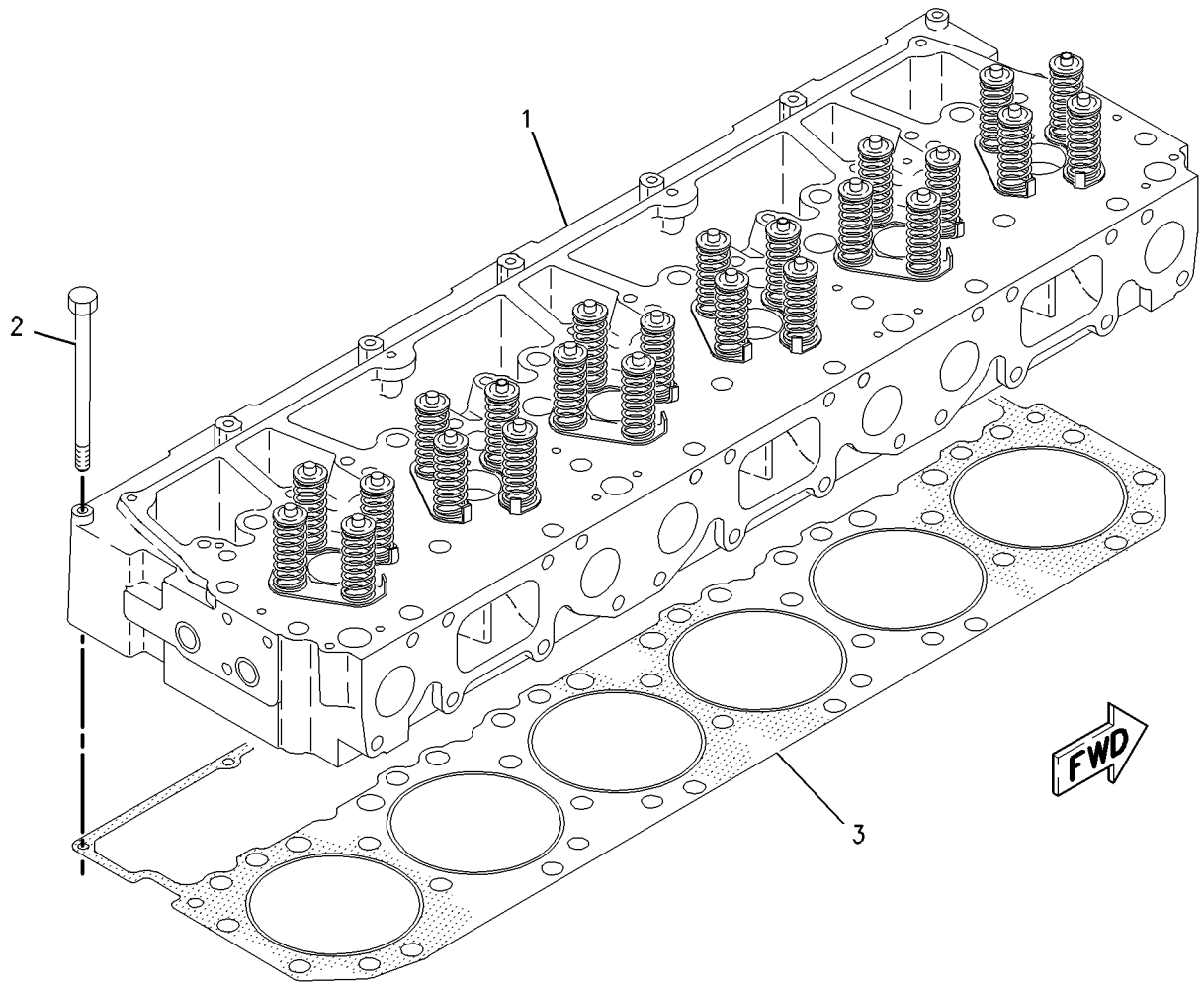


GRAPHIC #1 **<END>** g00783693

# BASIC ENGINE

## *148-2149* CYLINDER HEAD GP*R

**S/N: 3PD1-UP**

**PART OF 116-1085 CYLINDER HEAD GP**

**SMCS-1100** **i01855638**

| NOTE | REF NO | GRAPHIC REF | PART NUMBER | QTY | PART NAME 1 2 3 4 5 6 (PRODUCT LEVEL) | SEE PAGE |
|---|---|---|---|---|---|---|
| Y | 1 | 1 | *179-9459* | 1 | CYLINDER HEAD AS | 31 |
| | 2 | 1 | **100-8150** | 24 | GUIDE-VALVE | |
| | 3 | 1 | **6I-1638** | 12 | BASE-INJECTOR POSITIONING | |
| | 4 | 1 | **2A-4429** | 48 | LOCK-RETAINER | |
| | 5 | 1 | **133-7029** | 12 | VALVE-EXHAUST | |
| | 6 | 1 | **7E-9578** | 12 | VALVE-INLET | |
| | 7 | 1 | **224-4441** | 24 | SPRING | |
| | 8 | 1 | **214-0586** | 24 | SPRING (VALVE) | |
| | 9 | 1 | **6I-2663** | 24 | ROTOCOIL AS | |
| | | | | | (EACH INCLUDES) | |
| | | 1 | **6I-2662** | 1 | SHIELD | |
| | | 1 | **7C-8581** | 1 | ROTOCOIL AS | |

Y-SEPARATE ILLUSTRATION

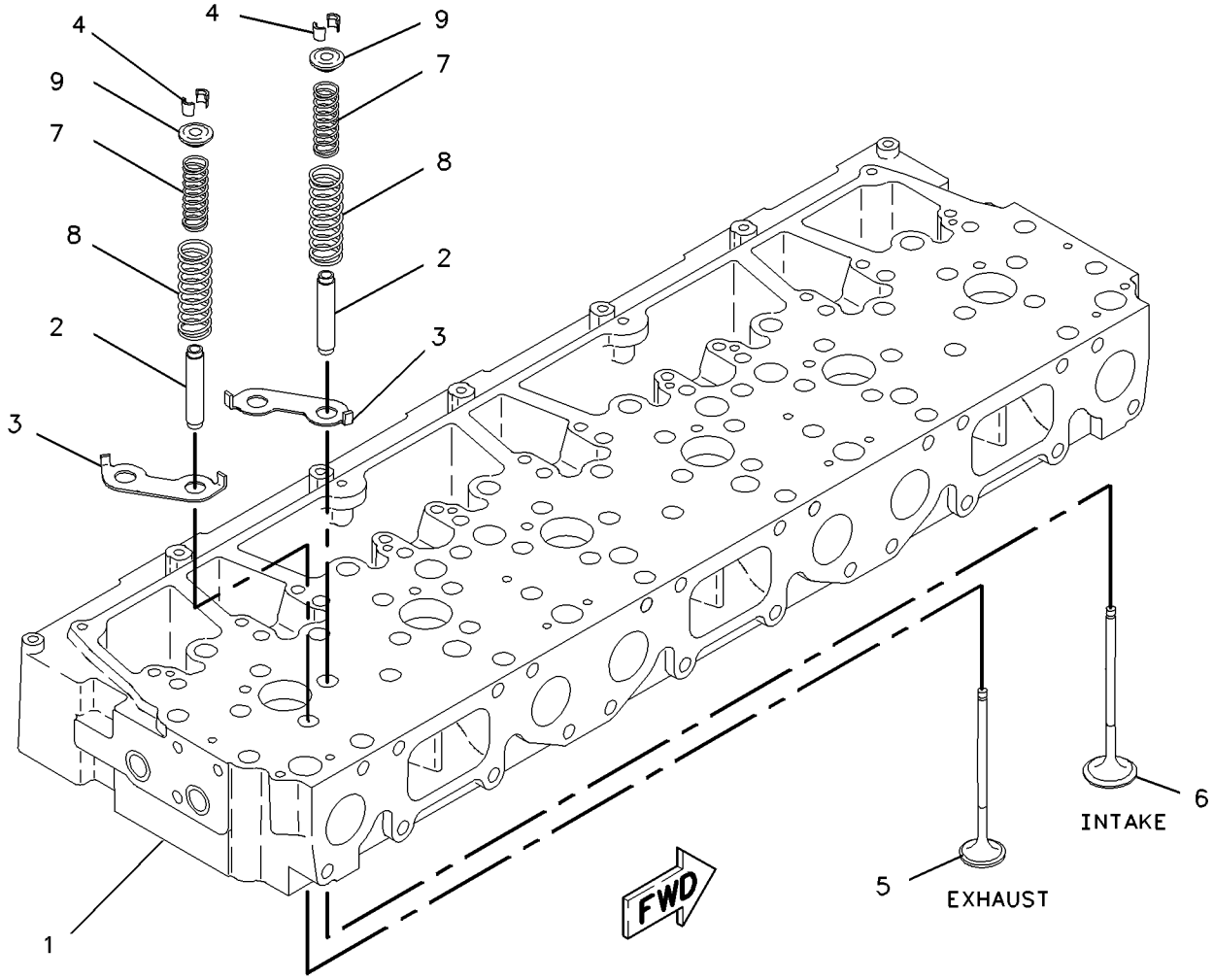


GRAPHIC #1 **<END>** g00783706

# *174-1591* DRIVE GP-ACCESSORY

**S/N: 3PD1-UP**

**PART OF 160-5101 ENGINE AR**

**SMCS-1207** **i01855493**

| NOTE | REF NO | GRAPHIC REF | PART NUMBER | QTY | PART NAME 1 2 3 4 5 6 (PRODUCT LEVEL) | SEE PAGE |
|---|---|---|---|---|---|---|
| | 1 | 1 | **167-8125** | 1 | DAMPER AS | |
| | 2 | 1 | **174-1592** | 1 | YOKE | |
| | 3 | 1 | **174-1593** | 1 | ADAPTER | |
| | 4 | 1 | **175-7314** | 1 | PULLEY | |
| | 5 | 1 | **179-0092** | 1 | ADAPTER | |
| M | 6 | 1 | **136-4183** | 8 | BOLT-12 POINT HEAD (M10X1.5X30MM) | |
| | 7 | 1 | **5P-8247** | 6 | WASHER-HARD (17X32X3.5MM THK) | |
| | 8 | 1 | **6V-5839** | 6 | WASHER (11X21X2.5MM THK) | |
| M | 9 | 1 | **6V-5842** | 6 | BOLT (M10X1.50X40MM) | |
| M | 10 | 1 | **8T-0358** | 6 | BOLT (M16X2.0X90MM) | |
| | 11 | 1 | **9X-2027** | 8 | WASHER (11X18X2MM THK) | |

M-METRIC PART

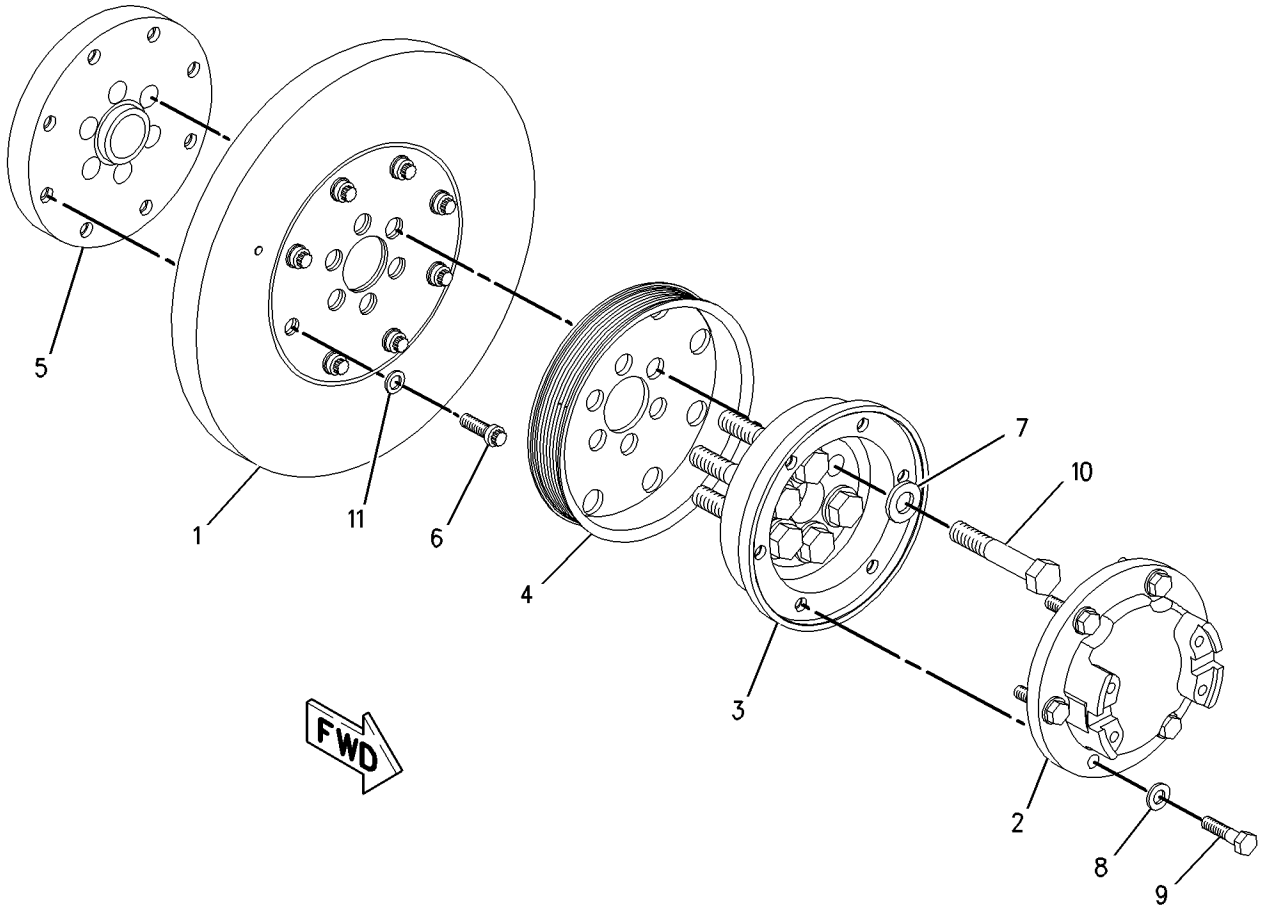


GRAPHIC #1 **<END>** g00786990

# *116-1083* FASTENER GP-CYLINDER HEAD

**S/N: 3PD1-UP**

**PART OF 116-5408 MOUNTING GP-VALVE MECHANISM**

**SMCS-1100** **i01855701**

| NOTE | REF NO | GRAPHIC REF | PART NUMBER | QTY | PART NAME 1 2 3 4 5 6 (PRODUCT LEVEL) | SEE PAGE |
|---|---|---|---|---|---|---|
| M | 1 | 1 | **129-3184** | 26 | BOLT-HEX HEAD (M16X2X160MM) | |
| | 2 | 1 | **2S-5658** | 26 | WASHER-HARD (17X29X3MM THK) | |

M-METRIC PART

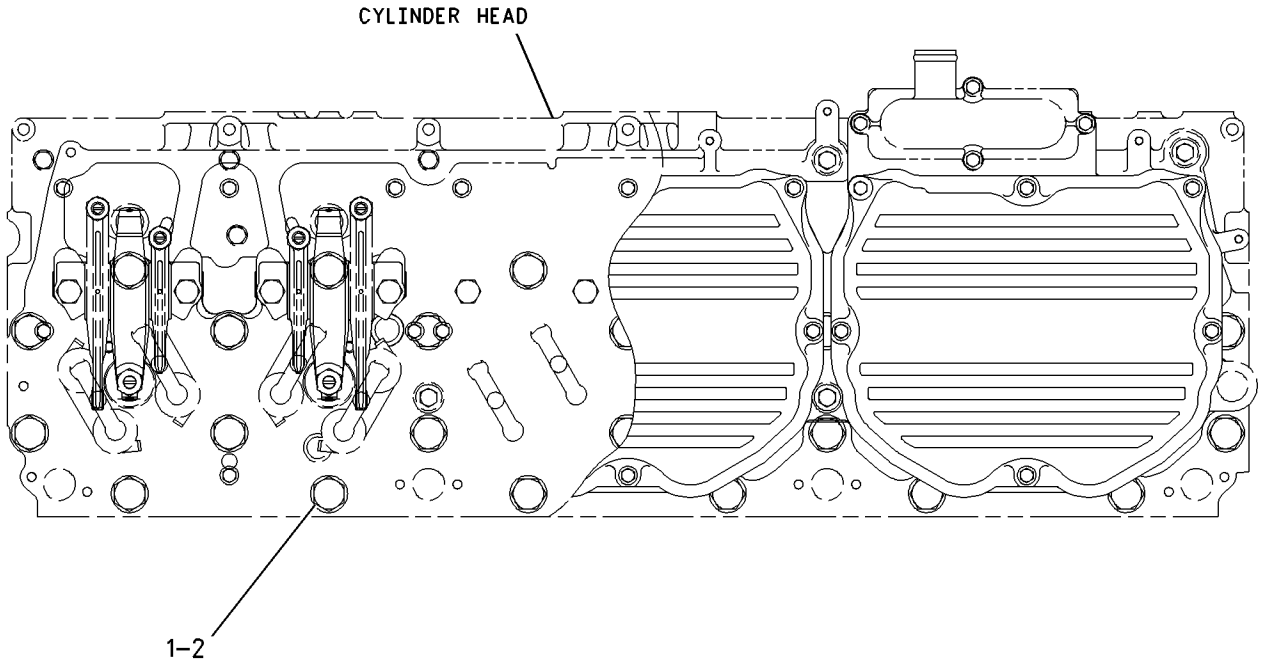


TOP VIEW

GRAPHIC #1 **<END>** g00799119

# BASIC ENGINE

## *174-1581* FLYWHEEL GP

**S/N: 3PD1-UP**

**PART OF 160-5101 ENGINE AR**

**SMCS-1156, 1158** **i01855484**

| NOTE | REF NO | GRAPHIC REF | PART NUMBER | QTY | PART NAME 1 2 3 4 5 6 (PRODUCT LEVEL) | SEE PAGE |
|---|---|---|---|---|---|---|
| M | 1 | 1 | **162-2776** | 8 | BOLT-HEX HEAD (M16X2.0X55MM) | |
| | 2 | 1 | **224-3240** | 1 | FLYWHEEL AS | |
| | 2A | 1 | **160-8185** | 1 | GEAR-FLYWHEEL (138 TEETH) | |
| | 3 | 1 | **5P-8247** | 8 | WASHER-HARD (17X32X3.5MM THK) | |

M-METRIC PART

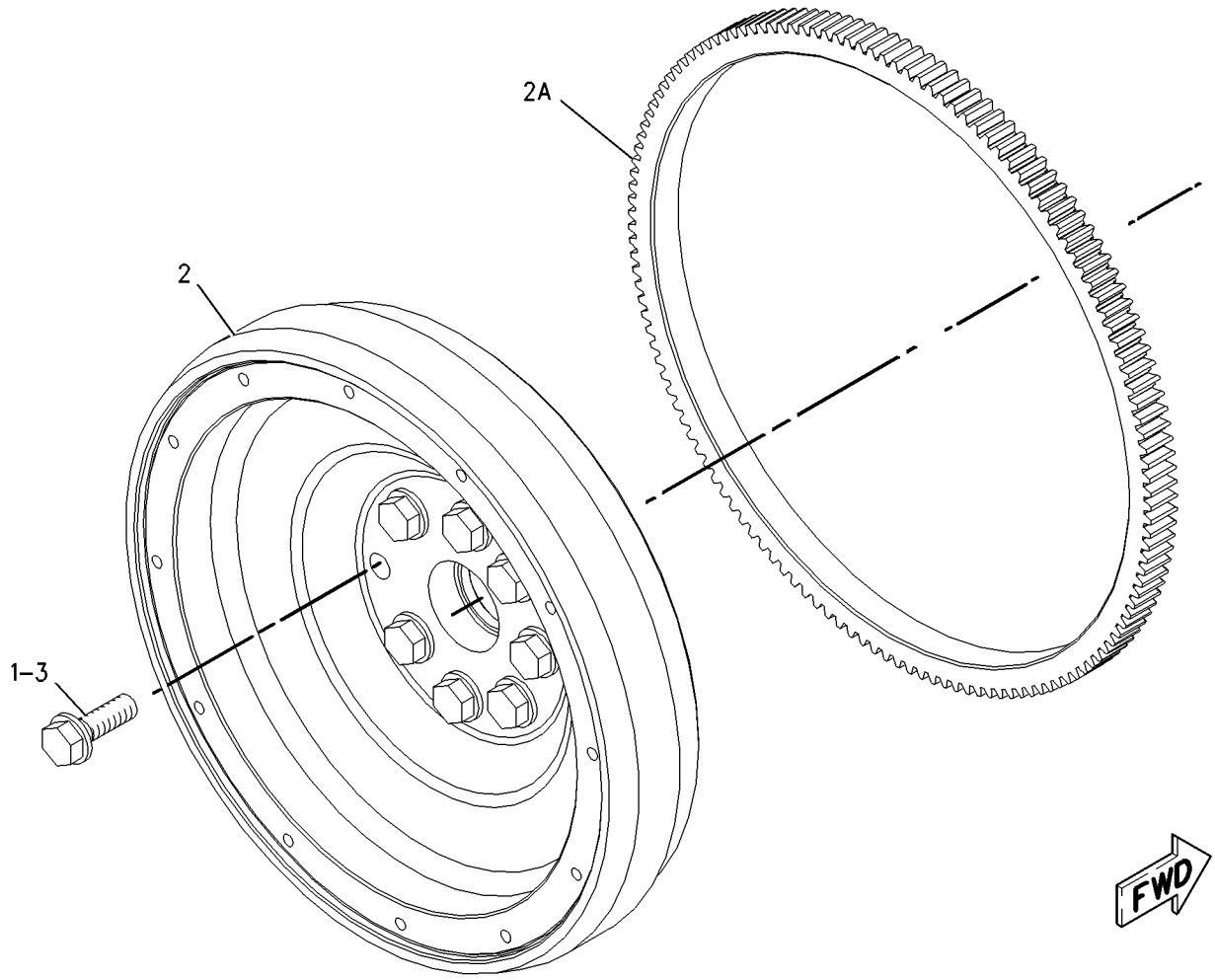


GRAPHIC #1 **<END>** g00915284

# BASIC ENGINE

## *117-2750* GEAR GP-FRONT

**S/N: 3PD1-UP**

**PART OF 160-5101 ENGINE AR**

**SMCS-1151, 1162, 1206** **i01855233**

| NOTE | REF NO | GRAPHIC REF | PART NUMBER | QTY | PART NAME 1 2 3 4 5 6 (PRODUCT LEVEL) | SEE PAGE |
|---|---|---|---|---|---|---|
| | 1 | 1 | **9Y-3520** | 1 | GEAR AS (61 TEETH) | |
| | 2 | 1 | **7C-7852** | 1 | BEARING | |
| M | 3 | 1 | **8T-0281** | 2 | BOLT (M16X2X80MM) | |
| | 4 | 1 | **7C-7851** | 1 | SHAFT | |
| | 5 | 1 | **133-7086** | 1 | GEAR AS-IDLER (71 TEETH) | |
| | 6 | 1 | **133-7083** | 1 | SHAFT | |

M-METRIC PART

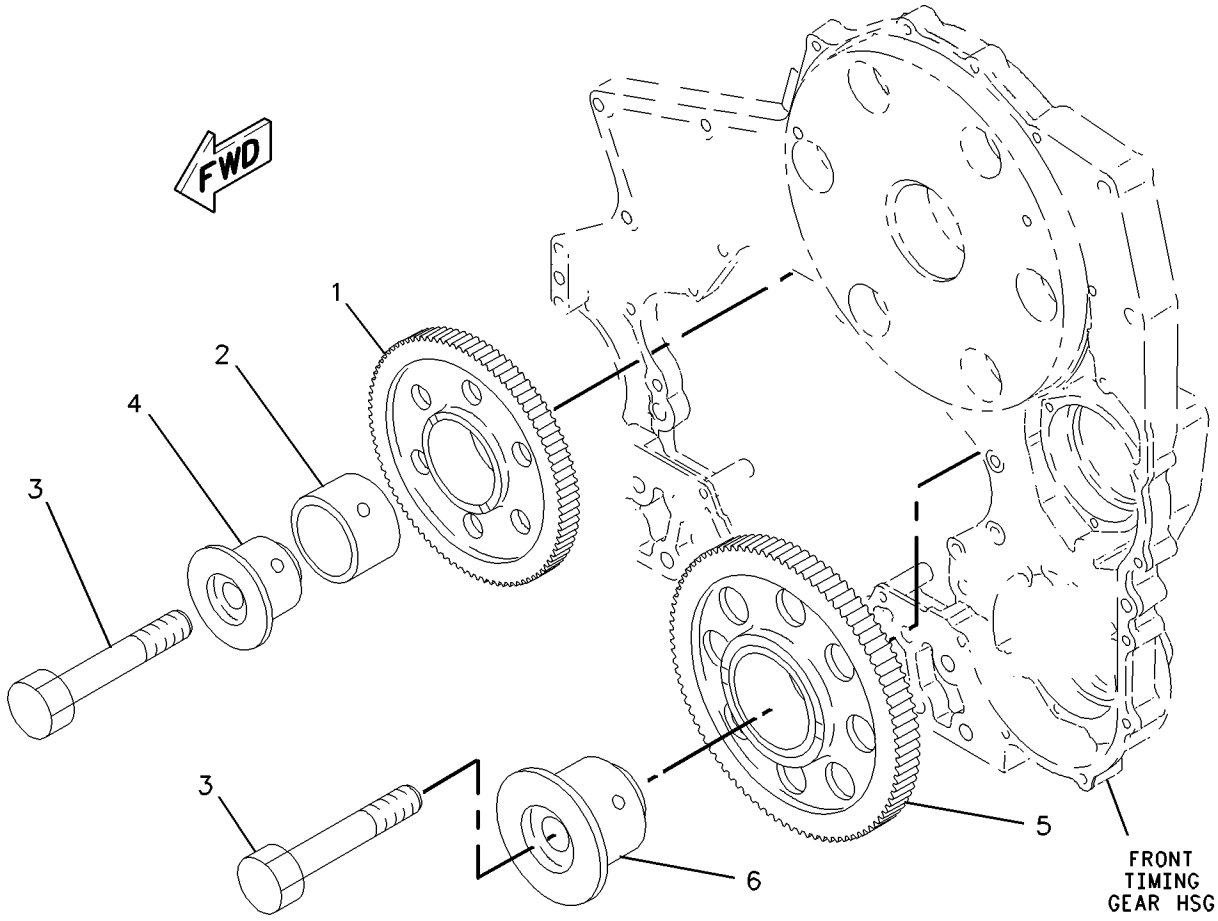


GRAPHIC #1 **<END>** g00783839

# *174-1584* HOUSING GP-FLYWHEEL

**S/N: 3PD1-UP**

**PART OF 160-5101 ENGINE AR**

**SMCS-1157** **i01855490**

| NOTE | REF NO | GRAPHIC REF | PART NUMBER | QTY | PART NAME 1 2 3 4 5 6 (PRODUCT LEVEL) | SEE PAGE |
|---|---|---|---|---|---|---|
| | 1 | 1 | **174-1586** | 1 | HOUSING-FLYWHEEL | |
| | 2 | 1 | **199-4051** | 1 | COVER (1/2-20) | |
| M | 3 | 1 | **099-3649** | 2 | BOLT (M8X1.25X40-MM) | |
| | 4 | 1 | **1H-5728** | 1 | SEAL-O-RING | |
| | 5 | 1 | **214-6277** | 10 | BOLT (M14X21X60-MM) | |
| | 6 | 1 | **214-6278** | 2 | BOLT | |
| | 7 | 1 | **3K-0360** | 1 | SEAL-O-RING | |
| | 8 | 1 | **3K-8460** | 1 | PLUG | |
| | 9 | 1 | **5D-9344** | 1 | SEAL-O-RING | |
| | 10 | 1 | **5P-7814** | 1 | SEAL-O-RING | |
| | 11 | 1 | **5P-8246** | 12 | WASHER-HARD (15.5X29X3-MM THK) | |
| | 12 | 1 | **8T-4224** | 2 | WASHER-HARD (8.8X16X2-MM THK) | |
| | 13 | 1 | **8T-6763** | 1 | PLUG-PIPE | |
| | 14 | 1 | **9S-4185** | 1 | PLUG | |
| B | 15 | 1 | **1U-8846** | | SEALANT-GASKET | |

B-USE AS REQUIRED
M-METRIC PART

*174-1584* **HOUSING GP-FLYWHEEL** *(contd.)* **i01855490**

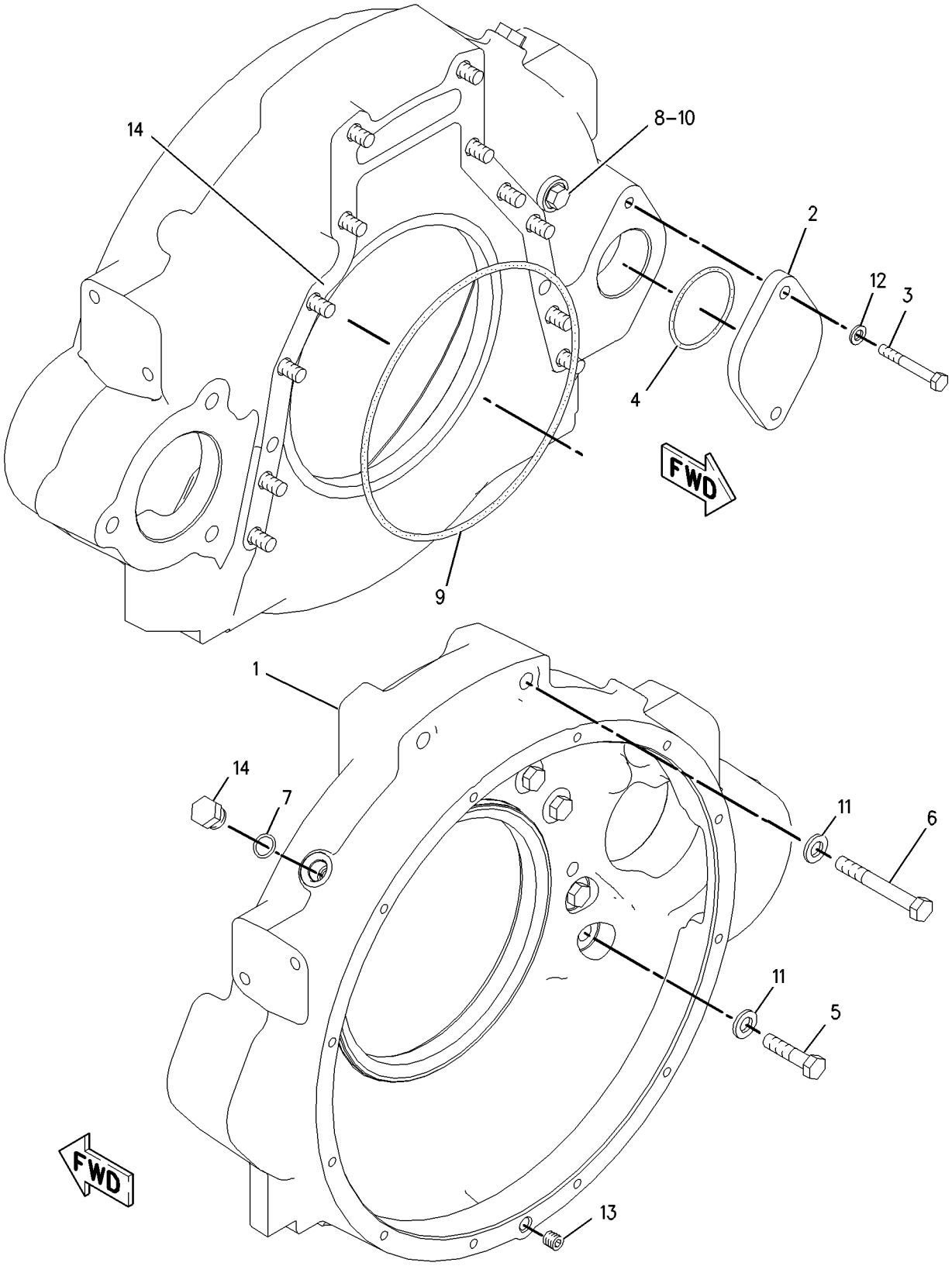


GRAPHIC #1 **<END>** g00842018

# BASIC ENGINE

## *133-7075* HOUSING GP-FRONT

**S/N: 3PD1-UP**

**PART OF 160-5101 ENGINE AR**

**SMCS-1151, 1162, 1206** **i02443306**

| NOTE | REF NO | GRAPHIC REF | PART NUMBER | QTY | PART NAME 1 2 3 4 5 6 (PRODUCT LEVEL) | SEE PAGE |
|---|---|---|---|---|---|---|
| | 1 | 1 | **169-4170** | 1 | HOUSING AS-FRONT | |
| | 1A | 1 | **2H-5549** | 1 | RING-RETAINING | |
| | 1B | 1 | **8H-9789** | 2 | BEARING AS-BALL | |
| | 1C | 1 | **115-9424** | 1 | GEAR-PUMP DRIVE (34-TEETH) | |
| | 1D | 1 | **2A-3348** | 2 | DOWEL | |
| | 1E | 1 | **6V-3538** | 2 | DOWEL | |
| | 1F | 1 | **3H-7654** | 2 | WASHER-HARD (13.5X22.5X3-MM THK) | |
| M | 1G | 1 | **8T-0343** | 2 | BOLT-SOCKET HEAD (M12X1.75X55-MM) | |
| M | 2 | 1 | **204-0712** | 13 | BOLT (M8X1.25X30-MM) | |
| | | | | | —OR— | |
| M | | 1 | **6V-5219** | 13 | BOLT (M8X1.25X40-MM) | |
| | 3 | 1 | **9M-1974** | 33 | WASHER-HARD (8.8X16X2-MM THK) | |
| | 4 | 1 | **262-7131** | 1 | COVER GP-FRONT HOUSING | |
| | 5 | 1 | **174-2475** | 1 | SEAL-INTEGRAL | |
| | 6 | 1 | **262-8382** | 1 | GASKET | |
| | 7 | 1 | **169-4166** | 1 | SEAL GP-CRANKSHAFT | |
| | 8 | 1 | **220-3373** | 1 | SEAL-RING | |
| | 9 | 1 | **5P-0537** | 5 | WASHER-HARD (7.2X14.5X2-MM THK) | |
| M | 10 | 1 | **6V-8225** | 5 | NUT (M6X1-THD) | |
| M | 11 | 1 | **6V-3940** | 19 | BOLT (M8X1.25X25-MM) | |
| M | 12 | 1 | **3E-8016** | 1 | BOLT-SELF-LOCKING (M8X1.25X25-MM) | |

M-METRIC PART

*133-7075* **HOUSING GP-FRONT** *(contd. )* **i02443306**

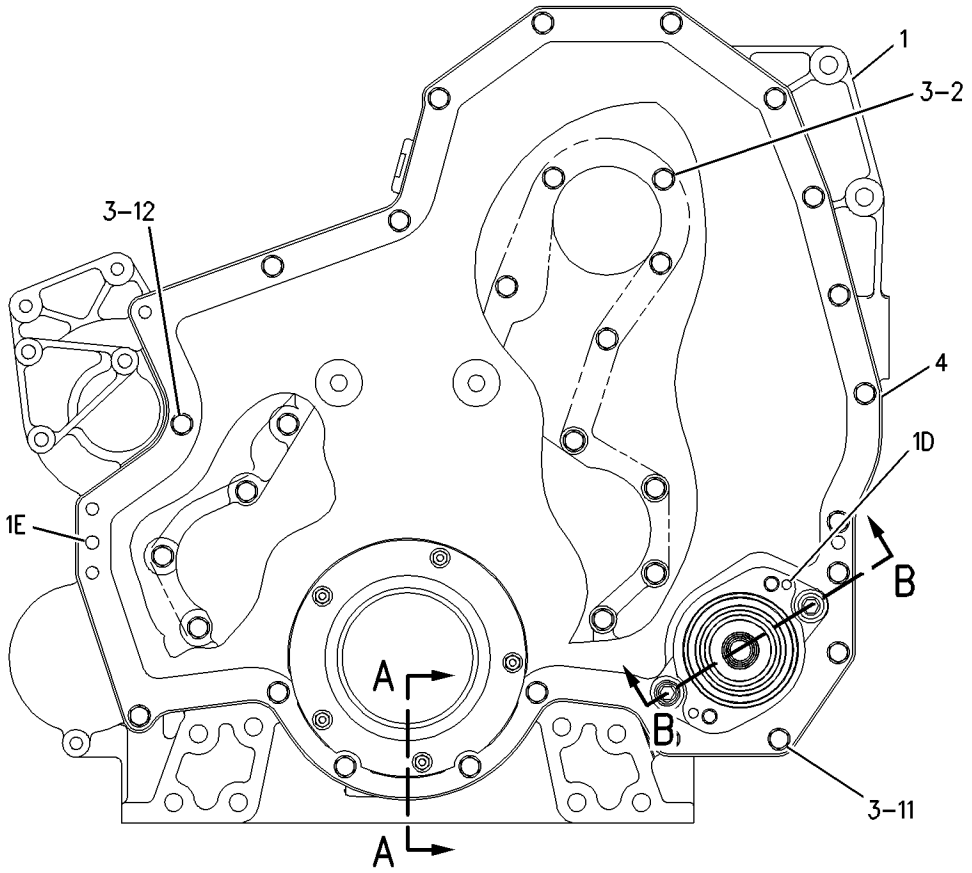


FRONT VIEW

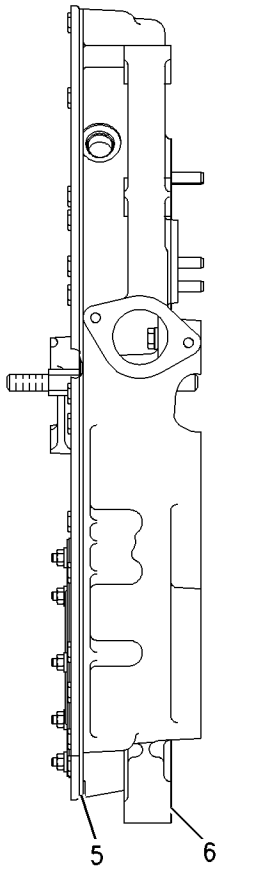


LEFT SIDE VIEW

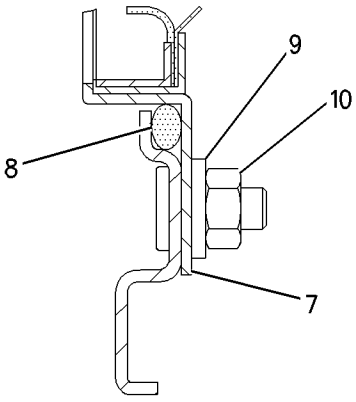


SECTION A-A

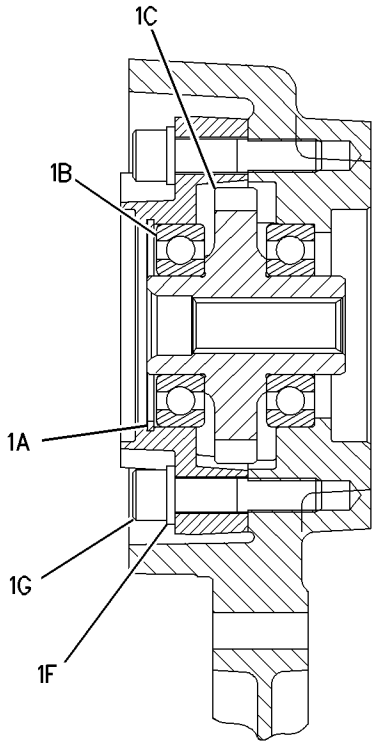


SECTION B-B

GRAPHIC #1 **<END>** g00797087

# 148-2063 LIFTER GP-VALVE

**S/N: 3PD1-UP**

**PART OF 117-2749 VALVE MECHANISM GP**

**SMCS-1209** **i02172312**

| NOTE | REF NO | GRAPHIC REF | PART NUMBER | QTY | PART NAME 1 2 3 4 5 6 (PRODUCT LEVEL) | SEE PAGE |
|---|---|---|---|---|---|---|
| | 1 | 1 | **251-1005** | 6 | LIFTER AS-VALVE | |
| | 2 | 1 | **148-2064** | 1 | BRACKET AS | |
| | 2A | 1 | **6V-3537** | 1 | DOWEL | |
| | 3 | 1 | **148-2065** | 1 | BRACKET AS (OIL SUPPLY) | |
| | 3A | 1 | **129-2893** | 1 | DOWEL | |
| | 4 | 1 | **245-9129** | 1 | SHAFT AS-LIFTER | |
| | 4A | 1 | **0L-1026** | 2 | PLUG-CUP | |
| | 5 | 1 | **202-7475** | 3 | LIFTER AS | |

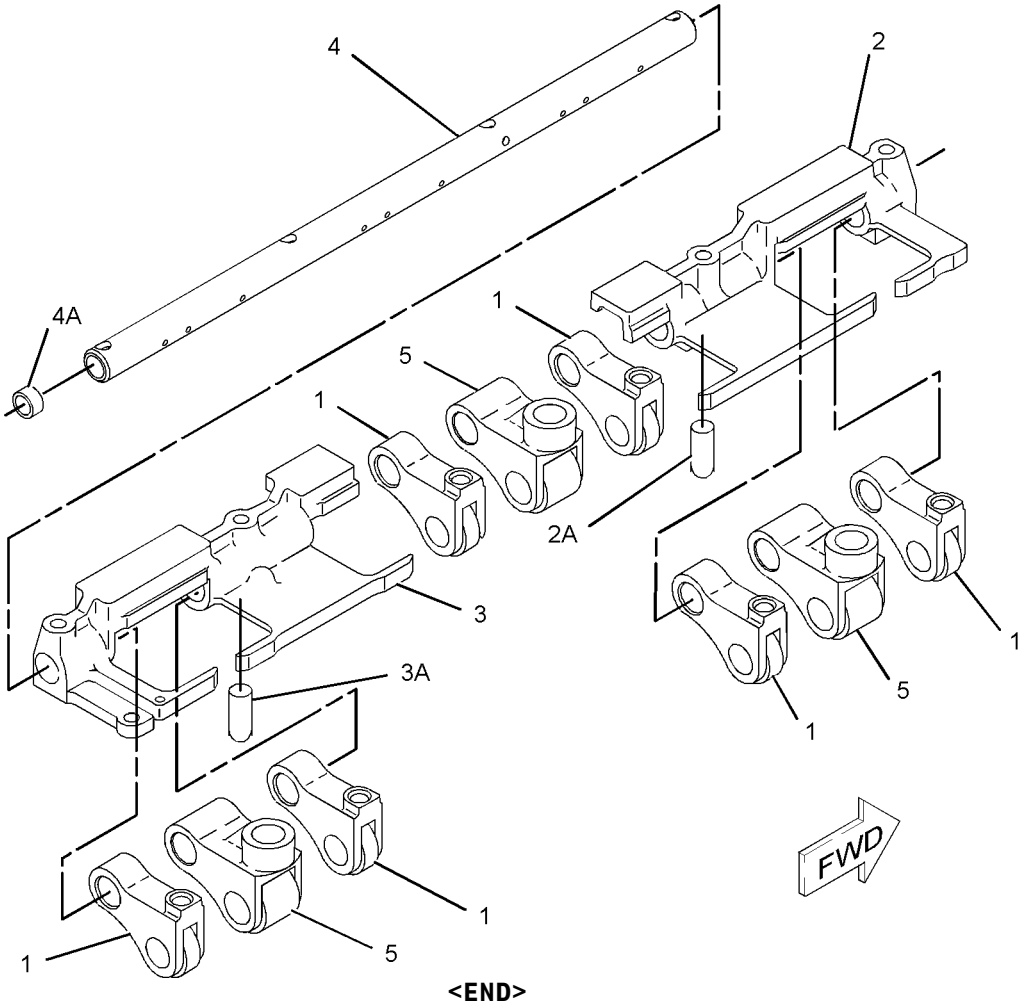


GRAPHIC #1 **<END>** g01103013

# *117-2748* LIFTING GP-ENGINE

**S/N: 3PD1-UP**

**PART OF 160-5101 ENGINE AR**

**SMCS-1122** **i01855217**

| NOTE | REF NO | GRAPHIC REF | PART NUMBER | QTY | PART NAME 1 2 3 4 5 6 (PRODUCT LEVEL) | SEE PAGE |
|---|---|---|---|---|---|---|
| | 1 | 1 | **113-9005** | 2 | PLATE-LIFTING EYE | |
| M | 2 | 1 | **6V-8197** | 6 | BOLT (M12X1.75X40-MM) | |
| | 3 | 1 | **5P-8245** | 6 | WASHER-HARD (13.5X25.5X3-MM THK) | |
| | 4 | 1 | **7C-5736** | 2 | PLATE-EYE SPACER | |

M-METRIC PART

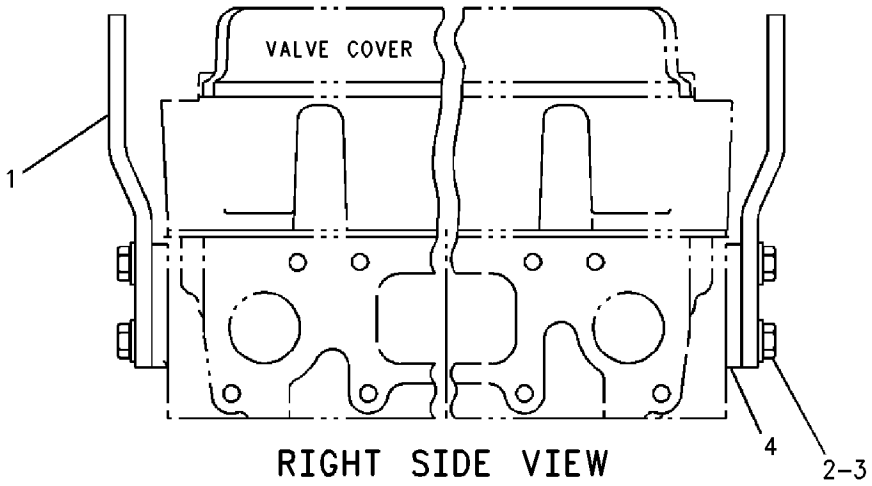


RIGHT SIDE VIEW

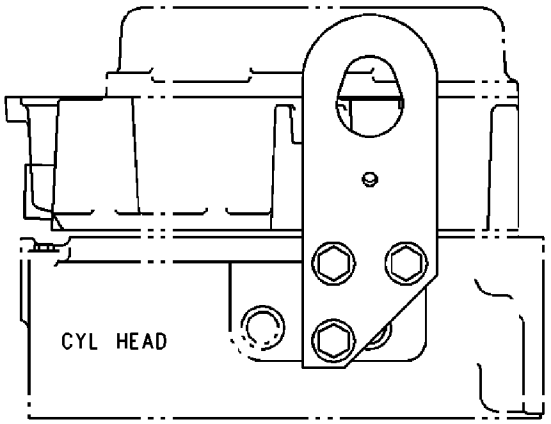


REAR VIEW

GRAPHIC #1 **<END>** g00869909

# *159-5436* MOUNTING GP-ENGINE & TMSN

**S/N: CCA1-UP**

**PART OF 159-4615 GENERAL AR**

**SMCS-1152, 1153, 1154, 3082** **i02205144**

| NOTE | REF NO | GRAPHIC REF | PART NUMBER | QTY | PART NAME 1 2 3 4 5 6 (PRODUCT LEVEL) | SEE PAGE |
|---|---|---|---|---|---|---|
| | 1 | 1 | **174-2952** | 1 | SUPPORT AS (RH) | |
| | 2 | 1 | **174-2953** | 1 | SUPPORT AS (LH) | |
| | 3 | 1 | **174-9527** | 2 | MOUNT AS | |
| | | | | | (EACH INCLUDES) | |
| | | 1 | **9W-6582** | 1 | SLEEVE | |
| | | 1 | **9W-6584** | 1 | WASHER (20.5X114X10-MM THK) | |
| | 4 | 1 | **174-9529** | 2 | MOUNT AS | |
| | | | | | (EACH INCLUDES) | |
| | | 1 | **9W-7385** | 1 | SLEEVE | |
| | | 1 | **9W-7388** | 2 | WASHER (26X144X12-MM THK) | |
| | 5 | 1 | **1J-5929** | 2 | BOLT (1-8X6-IN) | |
| | 6 | 1 | **5S-7382** | 12 | BOLT (3/8-16X1.375-IN) | |
| | 7 | 1 | **8T-4123** | 8 | WASHER-PLATED (22X35X3.5-MM THK) | |
| | 8 | 1 | **8T-4896** | 12 | WASHER-HARD (10.2X18.5X2.5-MM THK) | |
| | 9 | 1 | **8T-4994** | 2 | WASHER-HARD (20X36.5X3.5-MM THK) | |
| | 10 | 1 | **8T-5361** | 2 | WASHER-HARD (28X49X5-MM THK) | |
| M | 11 | 1 | **8T-6430** | 8 | BOLT (M20X2.5X50-MM) | |
| | 12 | 1 | **8T-9311** | 2 | BOLT (3/4-10X4.5-IN) | |

M-METRIC PART

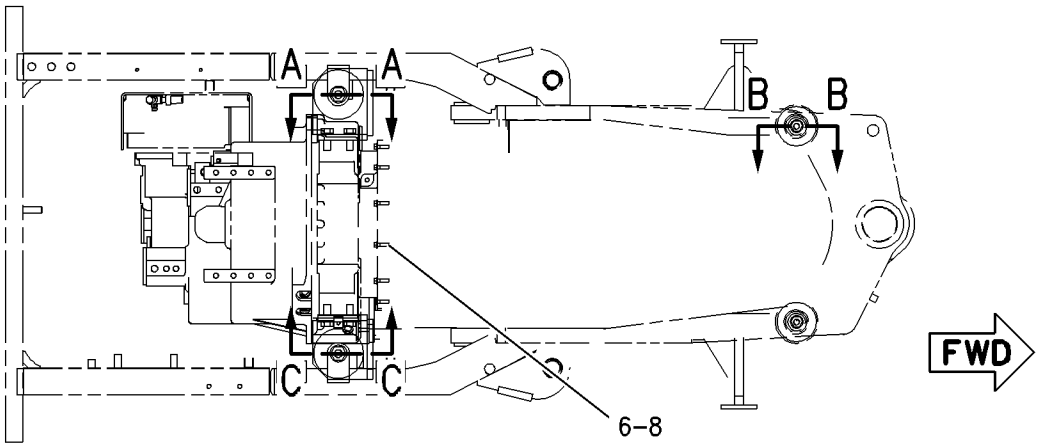


TOP VIEW

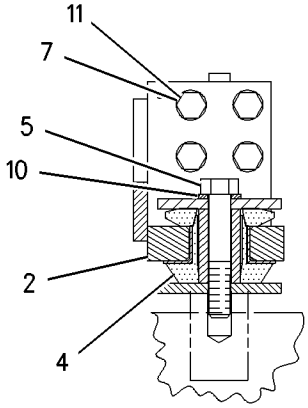


SECTION A-A

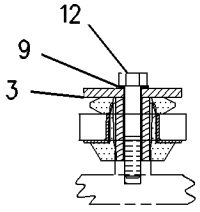


SECTION B-B

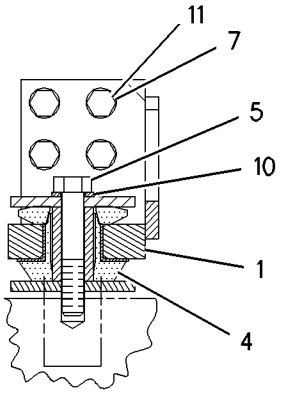


SECTION C-C

GRAPHIC #1 **<END>** g00796877

# *116-5408* MOUNTING GP-VALVE MECHANISM

**S/N: 3PD1-UP**

**PART OF 160-5101 ENGINE AR**

**SMCS-1102, 1107, 1154** **i01855169**

| NOTE | REF NO | GRAPHIC REF | PART NUMBER | QTY | PART NAME 1 2 3 4 5 6 (PRODUCT LEVEL) | SEE PAGE |
|---|---|---|---|---|---|---|
| | 1 | 1 | **176-4168** | 12 | BRIDGE AS-VALVE | |
| Y | 2 | 1 | *116-1083* | 1 | FASTENER GP-CYLINDER HEAD | 36 |
| M | 3 | 1 | **7X-0909** | 12 | BOLT (M12X1.75X140-MM) | |
| M | 4 | 1 | **6V-2315** | 1 | BOLT (M6X1X35-MM) | |
| M | 5 | 1 | **7X-2533** | 17 | BOLT (M6X1X35-MM) | |
| | | 1 | **9X-8256** | 17 | WASHER (6.6X12X2-MM THK) | |
| | 6 | 1 | **5P-4115** | 1 | WASHER-HARD (7.2X19X2-MM THK) | |
| | 7 | 1 | **9Y-4580** | 3 | COVER AS-VALVE MECHANISM | |
| | | | | | (EACH INCLUDES) | |
| D | | 1 | **5P-5678** | | SEAL (1M) | |

D-ORDER BY THE METER
M-METRIC PART
Y-SEPARATE ILLUSTRATION

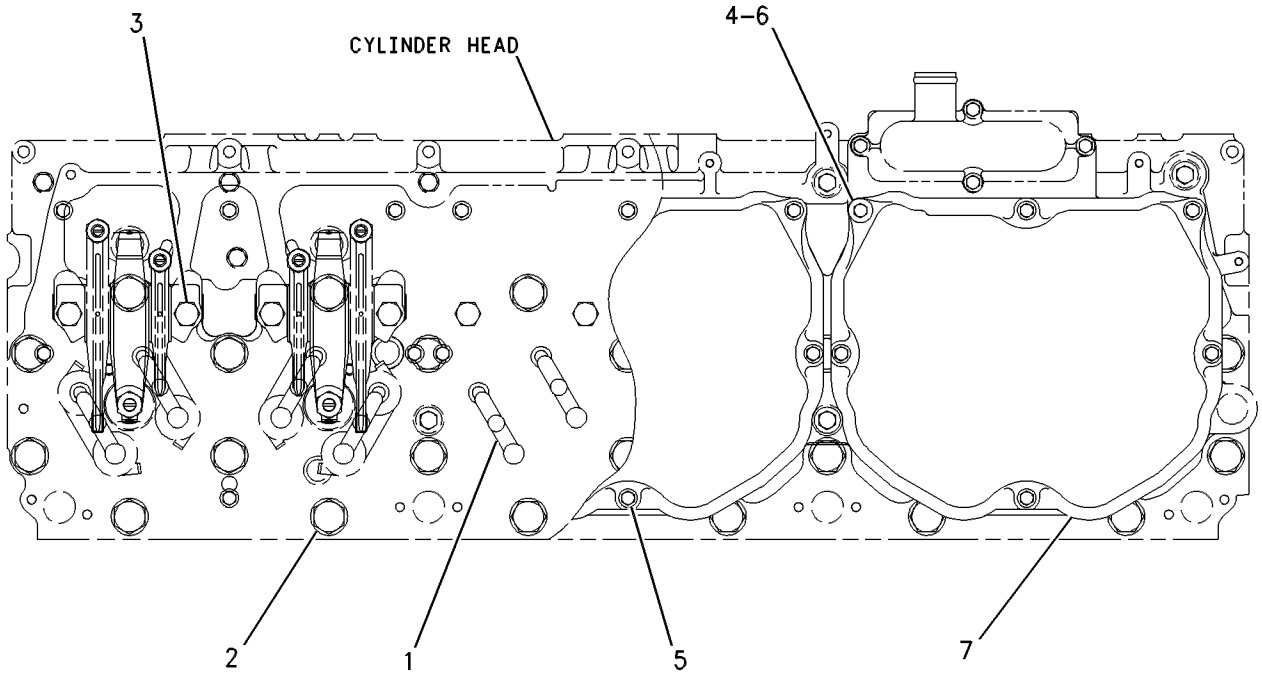


TOP VIEW

GRAPHIC #1 **<END>** g00568748

# BASIC ENGINE

## *174-1574* PAN GP-OIL

**S/N: 3PD1-UP**

**PART OF 160-5101 ENGINE AR**

**SMCS-1302** **i01855459**

| NOTE | REF NO | GRAPHIC REF | PART NUMBER | QTY | PART NAME 1 2 3 4 5 6 (PRODUCT LEVEL) | SEE PAGE |
|---|---|---|---|---|---|---|
| | 1 | 1 | **1V-8230** | 2 | SPACER (0.531X1X0.57-IN THK) | |
| | 2 | 1 | **197-3616** | 1 | ADAPTER-DRAIN | |
| | 3 | 1 | **7E-3369** | 14 | SLEEVE-ISOLATOR | |
| | 4 | 1 | **8N-6854** | 1 | GASKET | |
| | 5 | 1 | **109-5308** | 1 | GASKET-OIL PAN | |
| | 7 | 1 | **174-1575** | 1 | PAN-OIL | |
| | 8 | 1 | **124-2655** | 1 | BELL AS-SUCTION | |
| M | 9 | 1 | **3E-8016** | 2 | BOLT-SELF-LOCKING (M8X1.25X25-MM) | |
| | 10 | 1 | **5P-8211** | 1 | SEAL-O-RING | |
| | 11 | 1 | **5P-8245** | 2 | WASHER-HARD (13.5X25.5X3-MM THK) | |
| | 12 | 1 | **6N-8863** | 14 | WASHER (10.2X32X2.5-MM THK) | |
| M | 13 | 1 | **6V-5192** | 2 | BOLT-SOCKET HEAD (M8X1.25X30-MM) | |
| M | 14 | 1 | **6V-5230** | 14 | BOLT (M10X1.5X60-MM) | |
| M | 15 | 1 | **6V-8197** | 2 | BOLT (M12X1.75X40-MM) | |
| | 16 | 1 | **7C-8296** | 14 | ISOLATOR | |
| | 17 | 1 | **8T-6761** | 1 | PLUG-PIPE | |
| | 18 | 1 | **9M-1974** | 4 | WASHER-HARD (8.8X16X2-MM THK) | |
| | 19 | 1 | **9S-4183** | 1 | PLUG-O RING | |
| | 20 | 1 | **3D-2824** | 1 | SEAL-O-RING | |

M-METRIC PART

*174-1574* **PAN GP-OIL** *(contd.)* **i01855459**

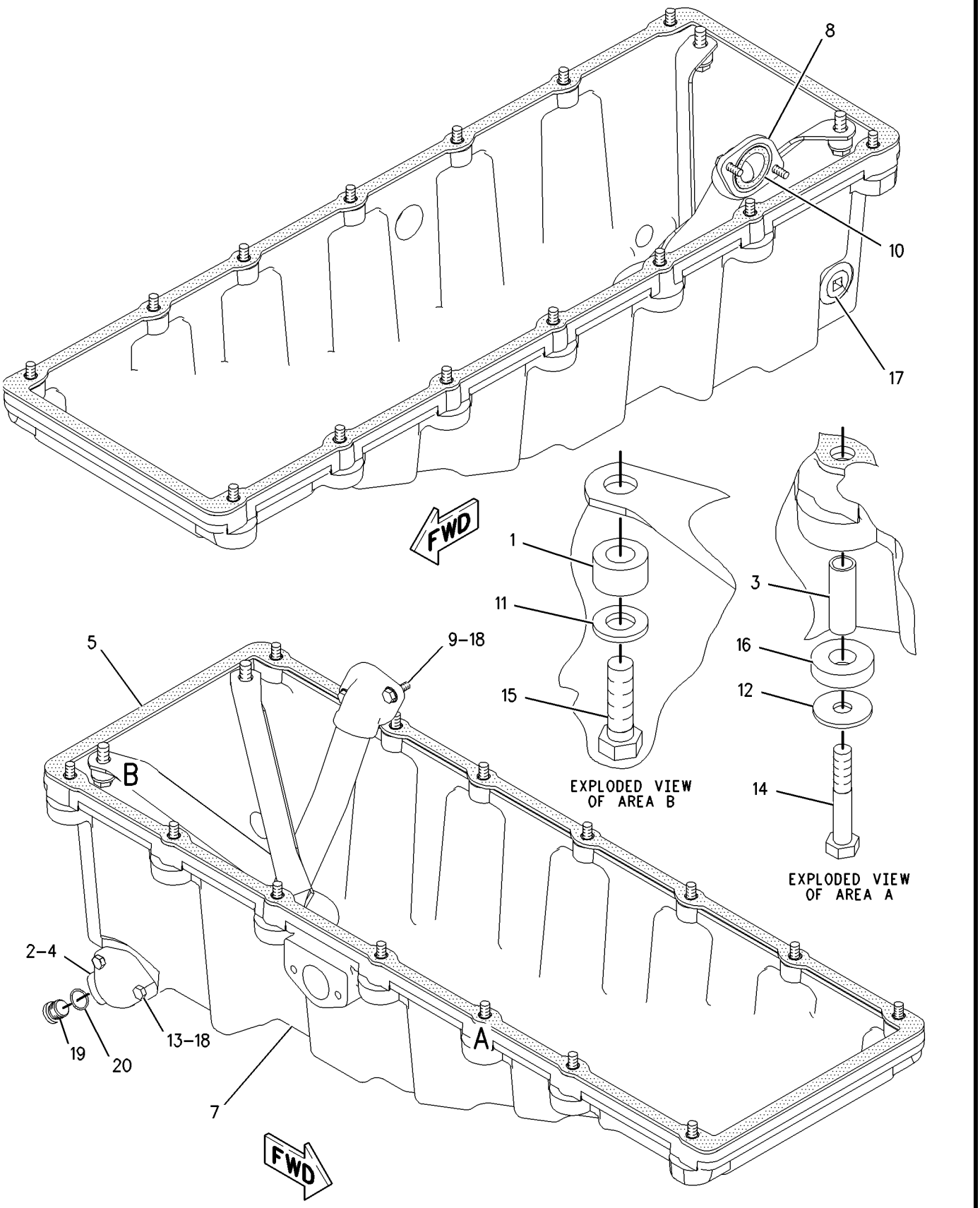


GRAPHIC #1 **<END>** g00840925

## *252-8692* PAN GP-OIL–ENGINE

**S/N: 3PD10192-UP**

**PART OF 160-5101 ENGINE AR**

**SMCS-1302** **i02203459**

| NOTE | REF NO | GRAPHIC REF | PART NUMBER | QTY | PART NAME 1 2 3 4 5 6 (PRODUCT LEVEL) | SEE PAGE |
|---|---|---|---|---|---|---|
| | 1 | 1 | **8N-6854** | 1 | GASKET | |
| | 2 | 1 | **197-3616** | 1 | ADAPTER-DRAIN | |
| | 3 | 1 | **217-3673** | 1 | SEAL-ISOLATION | |
| | 4 | 1 | **248-6919** | 1 | PAN-OIL (ENGINE) | |
| | 5 | 1 | **124-2655** | 1 | BELL AS-SUCTION | |
| | 6 | 1 | **217-3674** | 14 | FASTENER AS | |
| | 7 | 1 | **3D-2824** | 1 | SEAL-O-RING | |
| M | 8 | 1 | **3E-8016** | 2 | BOLT-SELF-LOCKING (M8X1.25X25-MM) | |
| | 9 | 1 | **5P-8211** | 1 | SEAL-O-RING | |
| | 10 | 1 | **5P-8245** | 2 | WASHER-HARD (13.5X25.5X3-MM THK) | |
| M | 11 | 1 | **6A-5591** | 2 | BOLT (M12X1.75X25-MM) | |
| | 12 | 1 | **6N-8863** | 14 | WASHER (10.2X32X2.5-MM THK) | |
| M | 13 | 1 | **6V-4249** | 14 | BOLT (M10X1.5X50-MM) | |
| M | 14 | 1 | **6V-5192** | 2 | BOLT-SOCKET HEAD (M8X1.25X30-MM) | |
| | 15 | 1 | **9M-1974** | 4 | WASHER-HARD (8.8X16X2-MM THK) | |
| | 16 | 1 | **9S-4183** | 1 | PLUG-O RING | |

M-METRIC PART

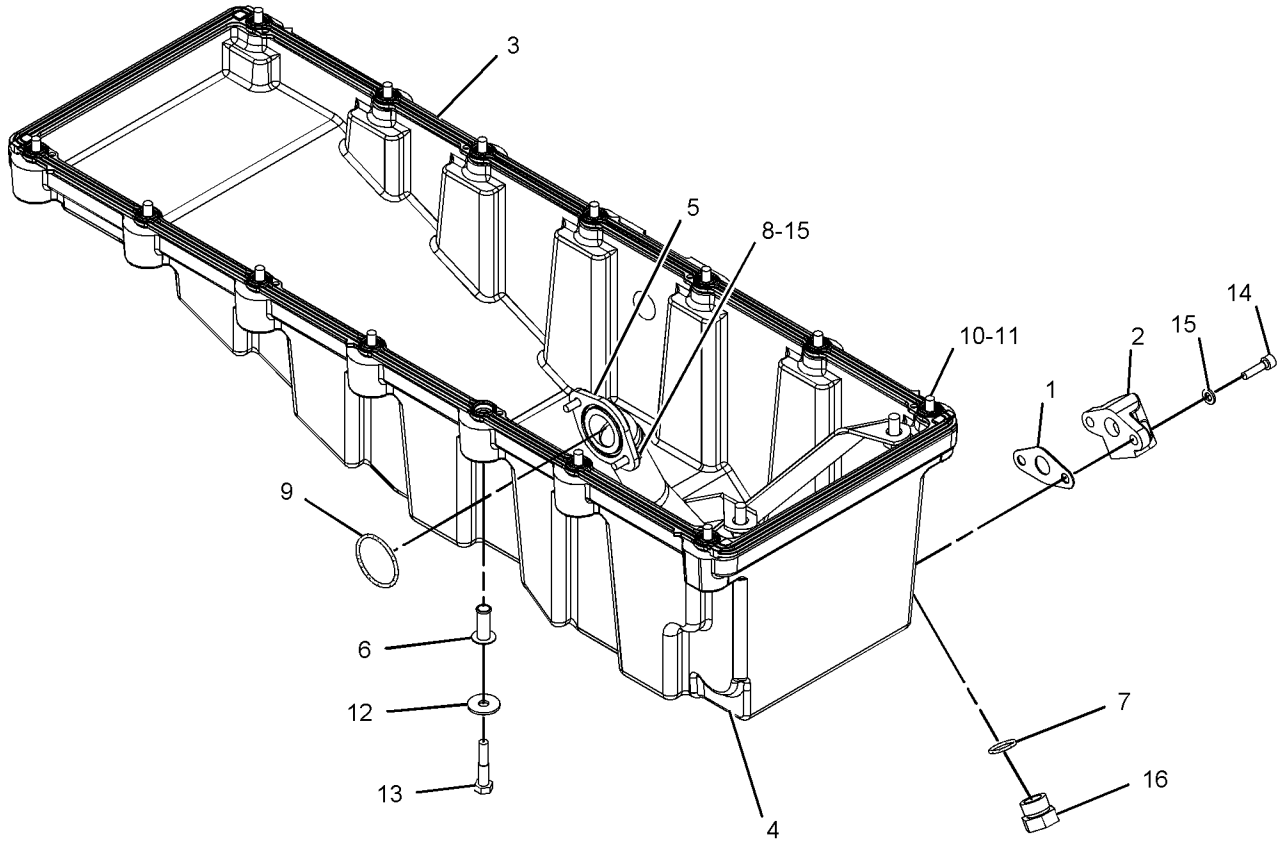


GRAPHIC #1 **<END>** g01096912

# BASIC ENGINE

## *179-6588* PANEL GP-SOUND SUPPRESSION

**S/N: CCA1-UP**

**AN ATTACHMENT**

**SMCS-1801** **i01873002**

| NOTE | REF NO | GRAPHIC REF | PART NUMBER | QTY | PART NAME 1 2 3 4 5 6 (PRODUCT LEVEL) | SEE PAGE |
|---|---|---|---|---|---|---|
| | 1 | 1 | **8W-9227** | 1 | SHIELD (LH) | |
| | 2 | 1 | **8W-9228** | 1 | SHIELD (RH) | |
| | 3 | 1 | **4L-6454** | 12 | BOLT (3/8-16X1 IN) | |
| | 4 | 1 | **8T-4897** | 12 | WASHER (10.2X35X6MM THK) | |

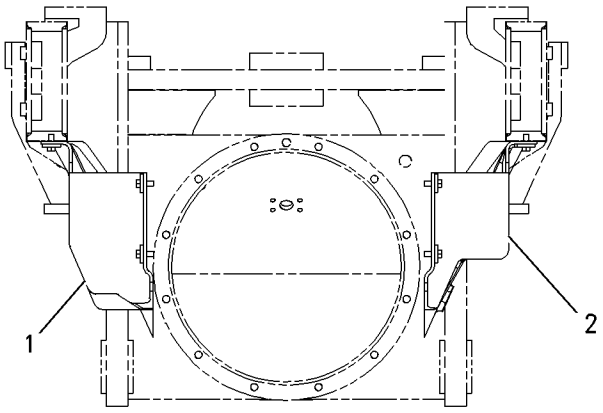


REAR VIEW

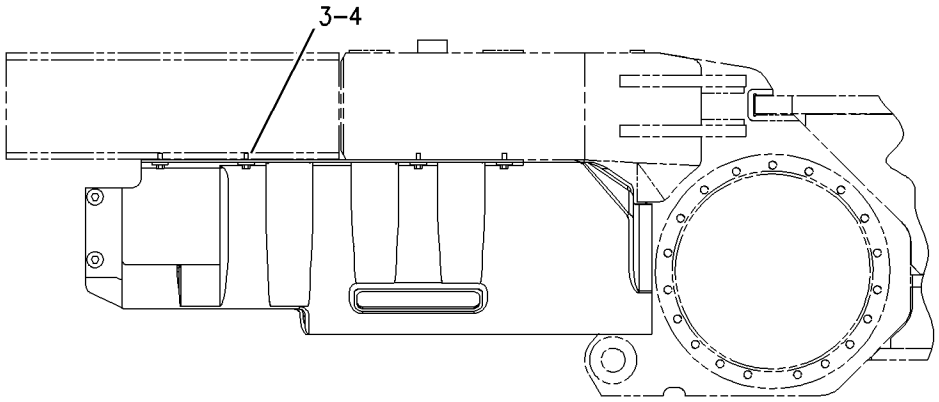


RIGHT SIDE VIEW

GRAPHIC #1 **<END>** g00846002

# BASIC ENGINE

## *132-3203* PISTON & ROD GP

**S/N: 3PD1-UP**
**16:1 COMPRESSION RATIO**
**PART OF 160-5101 ENGINE AR**

**SMCS-1225** **i02111450**

| NOTE | REF NO | GRAPHIC REF | PART NUMBER | QTY | PART NAME 1 2 3 4 5 6 (PRODUCT LEVEL) | SEE PAGE |
|---|---|---|---|---|---|---|
| R | 1 | 1 | **133-7098** | 1 | CROWN AS-PISTON | |
| | 2 | 1 | **6I-2720** | 2 | PLUG-PIN | |
| | 3 | 1 | **168-7276** | 1 | PIN-PISTON | |
| | 4 | 1 | **217-0577** | 1 | BEARING-CONNECTING ROD | |
| R | 5 | 1 | **155-6629** | 1 | ROD AS-CONNECTING | |
| | 5A | 1 | **7W-5844** | 1 | BEARING | |
| | 6 | 1 | **219-4458** | 2 | PIN-DOWEL | |
| M | 7 | 1 | **7C-8639** | 2 | BOLT-CONNECTING ROD | |
| | 8 | 1 | **4P-1659** | 1 | RING-PISTON (OIL) | |
| | 9 | 1 | **101-2042** | 1 | SKIRT-PISTON | |
| | 10 | 1 | **168-7212** | 1 | RING-PISTON (TOP) | |
| | 11 | 1 | **109-5319** | 1 | RING-PISTON (INTERMEDIATE) | |
| M | 12 | 1 | **8T-0100** | 1 | BOLT (M8X1.25X60-MM) | |
| | 13 | 1 | **3E-4352** | 1 | WASHER-HARD (8.8X20.5X2.5-MM THK) | |
| | 14 | 1 | **197-9377** | 1 | JET AS-PISTON COOLING | |

M-METRIC PART
R-REMFG PART MAY BE AVAILABLE

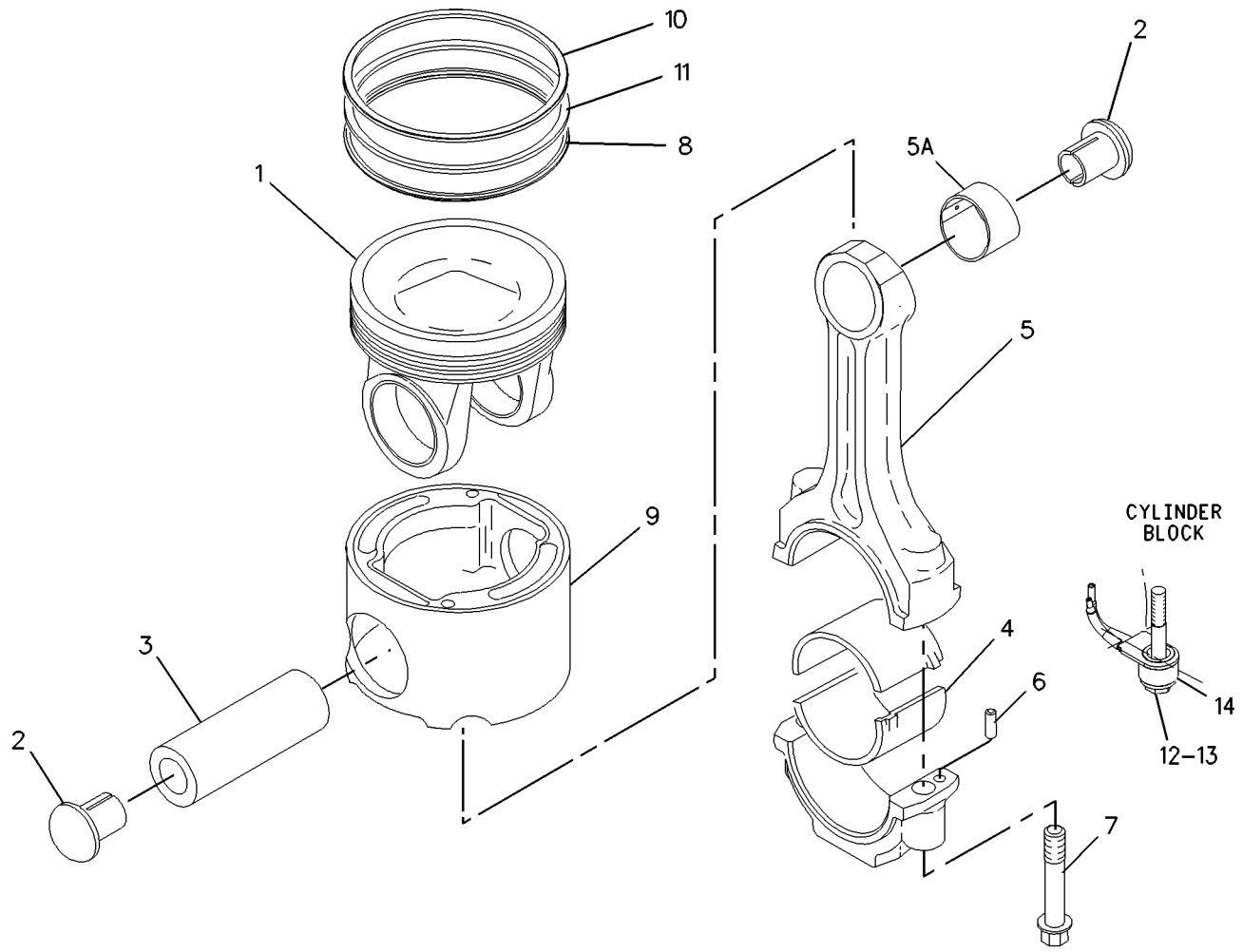


GRAPHIC #1 **<END>** g01001499

## *138-2028* PLUG GP-CYLINDER BLOCK

**S/N: 3PD1-12556**

**PART OF 160-5101 ENGINE AR**

**SMCS-1201** **i01855306**

| NOTE | PART NUMBER | QTY | PART NAME 1 2 3 4 5 6 (PRODUCT LEVEL) | SEE PAGE |
|---|---|---|---|---|
| | **9S-4182** | 1 | PLUG (STRAIGHT THREAD O-RING) (7/16-20 THD) | |
| | **9S-4191** | 1 | PLUG-O RING (9/16-18 THD) | |
| | **8T-6762** | 1 | PLUG-PIPE (1/4-14NPTF THD) | |
| | **3J-1907** | 1 | SEAL-O-RING (11.89MM ID) | |
| | **6V-5048** | 1 | SEAL-O-RING (8.92MM ID) | |

**<END>**

## *265-3855* PLUG GP-CYLINDER BLOCK

**S/N: 3PD12557-UP**

**PART OF 160-5101 ENGINE AR**

**SMCS-1201** **i02339549**

| NOTE | PART NUMBER | QTY | PART NAME 1 2 3 4 5 6 (PRODUCT LEVEL) | SEE PAGE |
|---|---|---|---|---|
| N | **9S-4182** | 1 | PLUG (STRAIGHT THREAD O-RING) | |
| H | **9S-8005** | 1 | PLUG-O RING | |
| J | **9S-4191** | 1 | PLUG-O RING | |
| H | **6V-6609** | 1 | SEAL-O-RING | |
| N | **6V-5048** | 1 | SEAL-O-RING | |
| J | **3J-1907** | 1 | SEAL-O-RING | |

H-USE IN WATER MANIFOLD BLEED OPENING
J-USE IN FUEL PRESSURE OPENING
N-USE IN TIMING PROBE OPENING (CYL BLOCK - RIGHT SIDE)

**<END>**

## *174-1760* PLUG GP-ENGINE

**S/N: 3PD1-UP**

**PART OF 160-5101 ENGINE AR**

**SMCS-1000, 1201** **i02093055**

| NOTE | REF NO | GRAPHIC REF | PART NUMBER | QTY | PART NAME 1 2 3 4 5 6 (PRODUCT LEVEL) | SEE PAGE |
|---|---|---|---|---|---|---|
| | 1 | 1 | **3B-0623** | 1 | PLUG-CUP | |
| | 2 | 1 | **116-5435** | 1 | CONNECTOR | |
| | 3 | 1 | **3J-1907** | 2 | SEAL-O-RING | |
| | 4 | 1 | **3K-0360** | 1 | SEAL-O-RING | |
| | 5 | 1 | **6V-0852** | 1 | CAP-DUST | |
| | 6 | 1 | **6V-3965** | 1 | FITTING AS (QUICK DISCONNECT, MALE) | |
| | 7 | 1 | **6V-4589** | 1 | SEAL-O-RING | |
| | 8 | 1 | **6V-5049** | 3 | SEAL-O-RING | |
| | 9 | 1 | **6V-8397** | 1 | SEAL-O-RING | |
| | 11 | 1 | **9S-4191** | 3 | PLUG-O RING | |
| | 12 | 1 | **9S-8006** | 1 | PLUG | |
| | 13 | 1 | **9X-6650** | 1 | CONNECTOR-O-RING | |

*174-1760* **PLUG GP-ENGINE** *(contd.)* **i02093055**

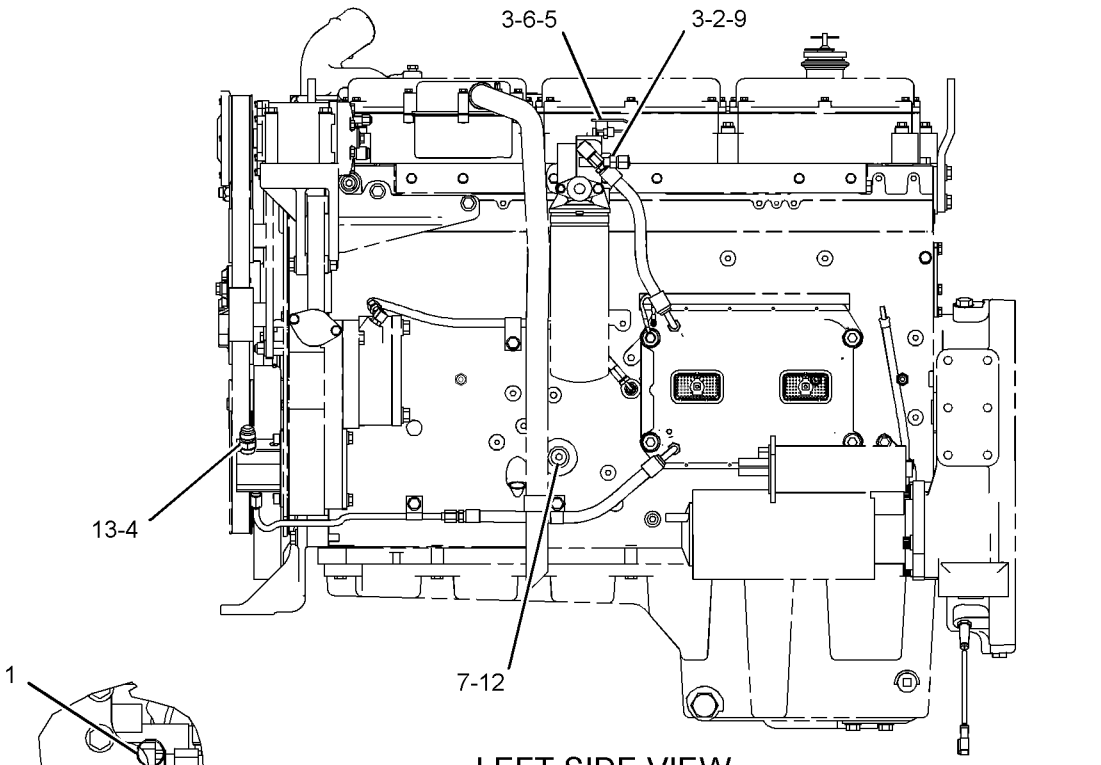


GRAPHIC #1 **<END>** g01067138

# BASIC ENGINE

## *115-9397* ROCKER ARM GP

**S/N: 3PD1-UP**

**PART OF 117-2749 VALVE MECHANISM GP**

**SMCS-1102, 1123** **i02117650**

| NOTE | REF NO | GRAPHIC REF | PART NUMBER | QTY | PART NAME 1 2 3 4 5 6 (PRODUCT LEVEL) | SEE PAGE |
|---|---|---|---|---|---|---|
| R | 1 | 1 | **115-9398** | 2 | ARM-VALVE ROCKER (EXHAUST) | |
| R | 2 | 1 | **115-9400** | 2 | ARM AS (UNIT INJECTION) | |
| | | | | | (EACH INCLUDES) | |
| | | 1 | **2D-6642** | 2 | BALL | |
| | | 1 | **115-9402** | 1 | BEARING | |
| R | 3 | 1 | **115-9399** | 2 | ARM-VALVE ROCKER (INLET) | |
| | 4 | 1 | **7C-1798** | 2 | SCREW-ARM ADJUSTMENT | |
| | 5 | 1 | **245-6095** | 2 | NUT-HEX THIN (M12X1.5-THD) (CLASS 10, HEAT TREATED) | |
| | 6 | 1 | **7W-7235** | 2 | BUTTON | |
| | 7 | 1 | **8L-2777** | 2 | SEAL-O-RING | |
| | 8 | 1 | **115-9403** | 2 | SHAFT AS | |
| | | | | | (EACH INCLUDES) | |
| | 9 | 1 | **3S-6605** | 1 | PLUG-CUP | |
| | 10 | 1 | **096-0014** | 1 | PIN-SPRING | |
| | 11 | 1 | **185-4461** | 2 | SUPPORT AS | |
| | | | | | (EACH INCLUDES) | |
| | 12 | 1 | **180-1538** | 2 | DOWEL | |
| M | 13 | 1 | **183-4365** | 4 | SCREW-ADJUSTMENT (M10X1.15-THD) | |
| M | 14 | 1 | **2Y-5829** | 4 | NUT (M10X1.15-THD) | |

M-METRIC PART
R-REMFG PART MAY BE AVAILABLE

*115-9397* **ROCKER ARM GP** *(contd.)* **i02117650**

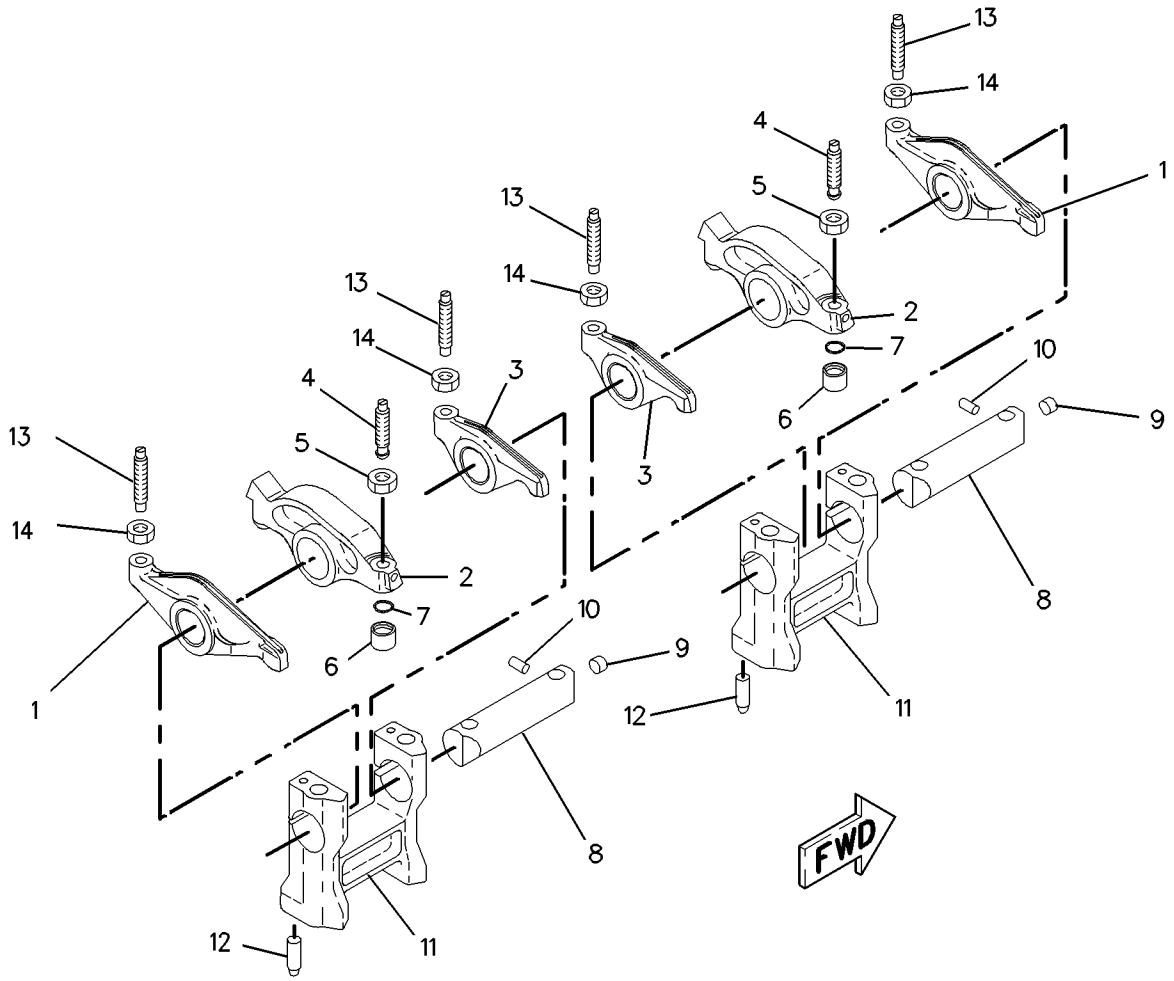


GRAPHIC #1 **<END>** g00785815

# *116-1091* SEAL GP-CRANKSHAFT

**S/N: 3PD1-UP**

**PART OF 160-5101 ENGINE AR**

**SMCS-1160, 1161** **i02586474**

| NOTE | REF NO | GRAPHIC REF | PART NUMBER | QTY | PART NAME 1 2 3 4 5 6 (PRODUCT LEVEL) | SEE PAGE |
|---|---|---|---|---|---|---|
| | 1 | 1 | **160-2323** | 1 | COVER | |
| M | 2 | 1 | **8T-0640** | 6 | BOLT (M6X1X30-MM) | |
| | 3 | 1 | **5P-0537** | 13 | WASHER-HARD (7.2X14.5X2-MM THK) | |
| | 4 | 1 | **294-6007** | 7 | BOLT | |
| | 5 | 1 | **7C-1583** | 1 | GASKET | |
| | 6 | 1 | **107-6280** | 1 | SEAL-O-RING | |
| | 7 | 1 | **7C-1728** | 1 | SEAL-CRANKSHAFT (REAR) (REAR) | |

M-METRIC PART

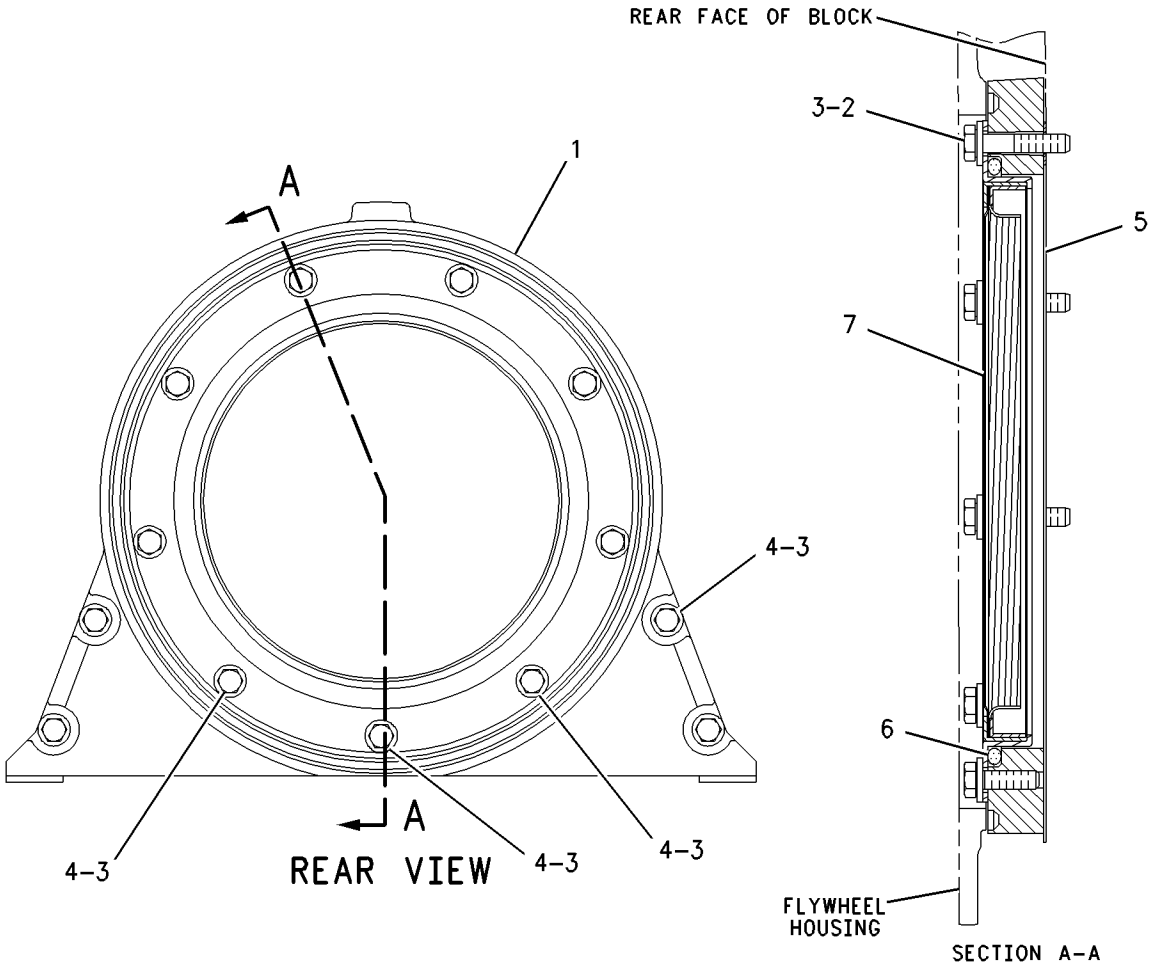


GRAPHIC #1 **<END>** g00785779

# *174-1627* SUPPORT GP-ENGINE

**S/N: 3PD1-UP**

**PART OF 160-5101 ENGINE AR**

**SMCS-1154** **i01855510**

| NOTE | REF NO | GRAPHIC REF | PART NUMBER | QTY | PART NAME 1 2 3 4 5 6 (PRODUCT LEVEL) | SEE PAGE |
|---|---|---|---|---|---|---|
| | 1 | 1 | **174-1628** | 1 | SUPPORT-FRONT | |
| | 2 | 1 | **5P-8245** | 8 | WASHER-HARD (13.5X25.5X3-MM THK) | |
| M | 3 | 1 | **6V-8336** | 8 | BOLT (M12X1.75X70-MM) | |

M-METRIC PART

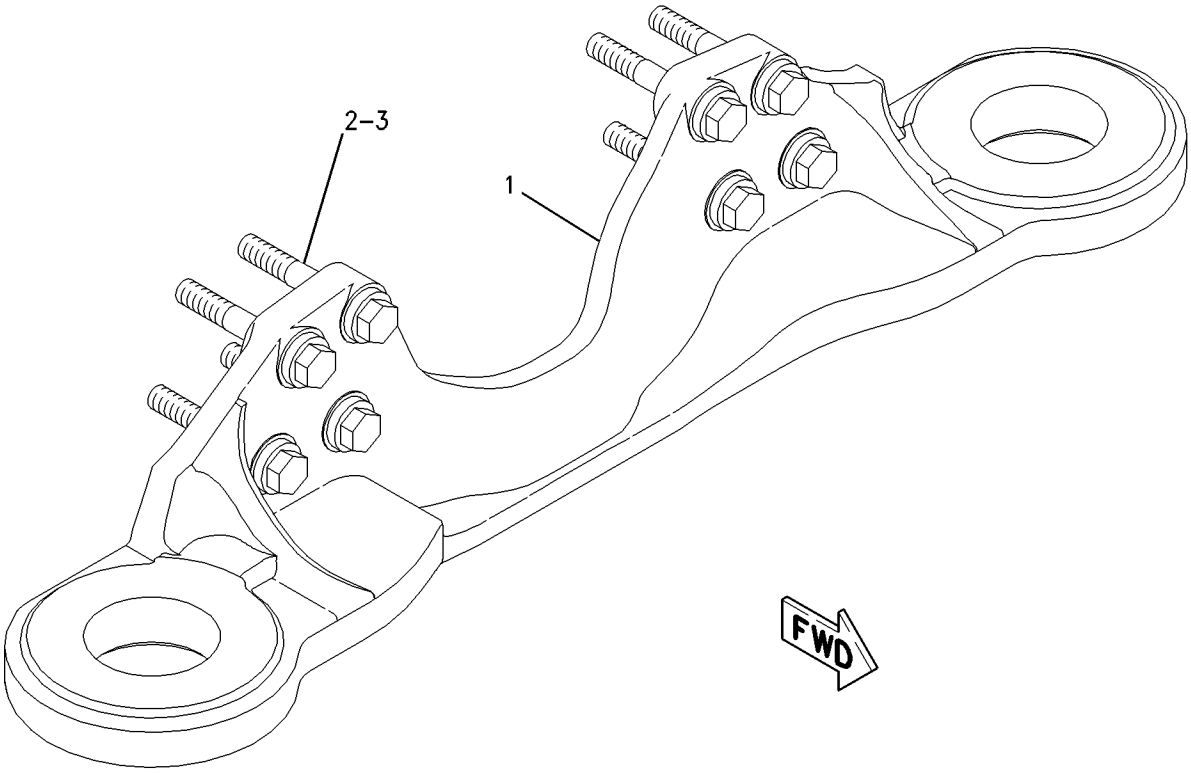


GRAPHIC #1 **<END>** g00787794

## *178-9527* SUPPRESSION GP-SOUND–ENGINE ENCLOSURE

**S/N: CCA1-UP**

**PART OF 207-4453, 210-2044 CONVERSION AR-CERTIFICATION**

**AN ATTACHMENT**

**SMCS-1801** **i02203371**

| NOTE | REF NO | GRAPHIC REF | PART NUMBER | QTY | PART NAME 1 2 3 4 5 6 (PRODUCT LEVEL) | SEE PAGE |
|---|---|---|---|---|---|---|
| | 1 | 1 | **183-2302** | 1 | INSULATION (RH) | |
| | 2 | 1 | **183-2303** | 1 | PANEL (LH) | |
| | 3 | 1 | **183-2304** | 1 | PANEL (FRONT) | |
| | 4 | 1 | **183-2306** | 2 | INSULATION (BLOCK) | |

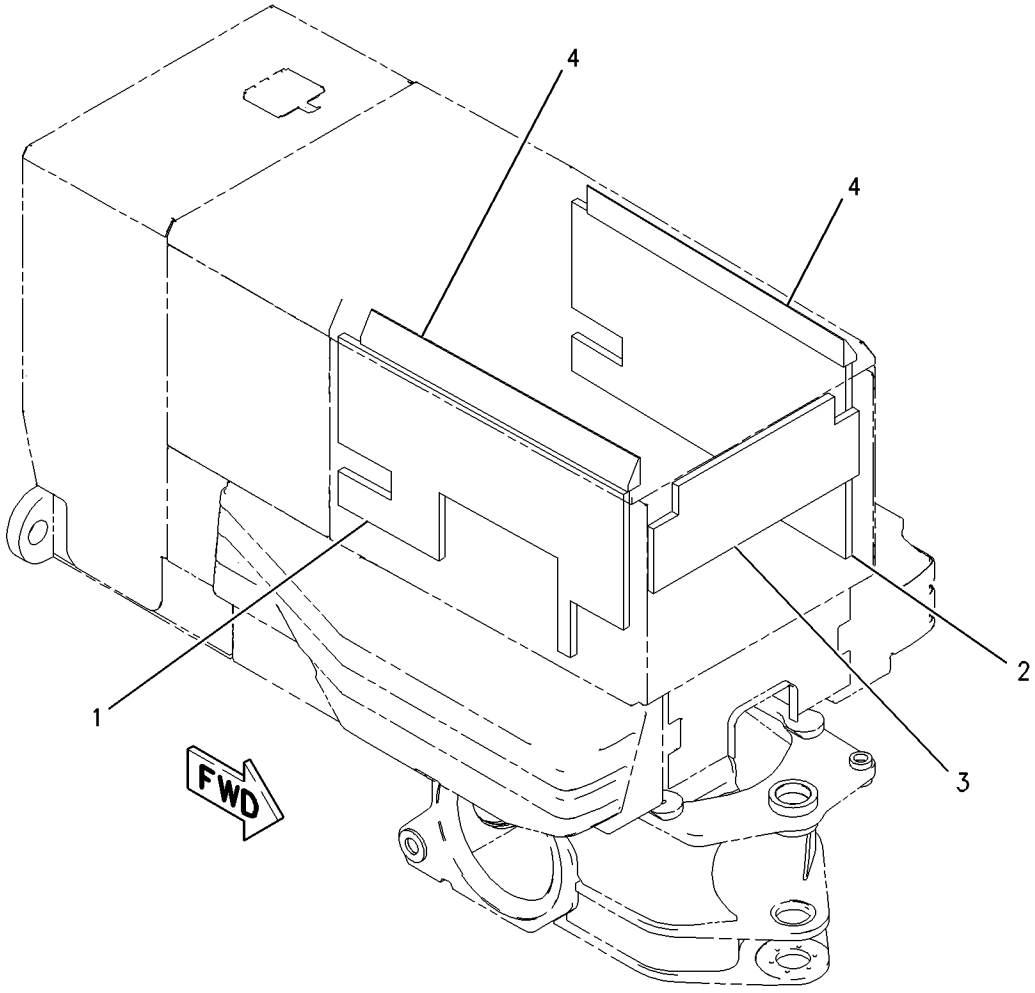


GRAPHIC #1 **<END>** g00907302

# BASIC ENGINE

## *117-2749* VALVE MECHANISM GP

**S/N: 3PD1-UP**

**PART OF 160-5101 ENGINE AR**

**SMCS-1102** **i01855226**

| NOTE | REF NO | GRAPHIC REF | PART NUMBER | QTY | PART NAME 1 2 3 4 5 6 (PRODUCT LEVEL) | SEE PAGE |
|---|---|---|---|---|---|---|
| | 1 | 1 | **9X-8267** | 4 | WASHER (6.6X12X2-MM THK) | |
| M | 2 | 1 | **8T-0275** | 4 | BOLT (M6X1X50-MM) | |
| | 3 | 1 | **3E-4352** | 8 | WASHER-HARD (8.8X20.5X2.5-MM THK) | |
| M | 4 | 1 | **8T-0100** | 16 | BOLT (M8X1.25X60-MM) | |
| | 5 | 1 | **7C-8292** | 8 | ISOLATOR | |
| | 6 | 1 | **9Y-7215** | 8 | SLEEVE-ISOLATOR | |
| | 7 | 1 | **9Y-4357** | 1 | BREATHER AS | |
| | 8 | 1 | **9Y-1758** | 1 | GASKET | |
| | 9 | 1 | **102-5842** | 1 | BASE-VALVE COVER | |
| | 10 | 1 | **109-5309** | 1 | GASKET | |
| Y | 11 | 1 | *115-9397* | 3 | ROCKER ARM GP | 55 |
| Y | 12 | 1 | *148-2063* | 2 | LIFTER GP-VALVE | 43 |
| | 13 | 1 | **104-3567** | 12 | PUSHROD-VALVE | |
| | 14 | 1 | **104-3568** | 6 | PUSHROD | |
| | 15 | 1 | **9M-1974** | 9 | WASHER-HARD (8.8X16X2-MM THK) | |
| M | 16 | 1 | **6V-5217** | 1 | BOLT (M8X1.25X20-MM) | |

M-METRIC PART
Y-SEPARATE ILLUSTRATION

*117-2749* **VALVE MECHANISM GP** *(contd.)* **i01855226**

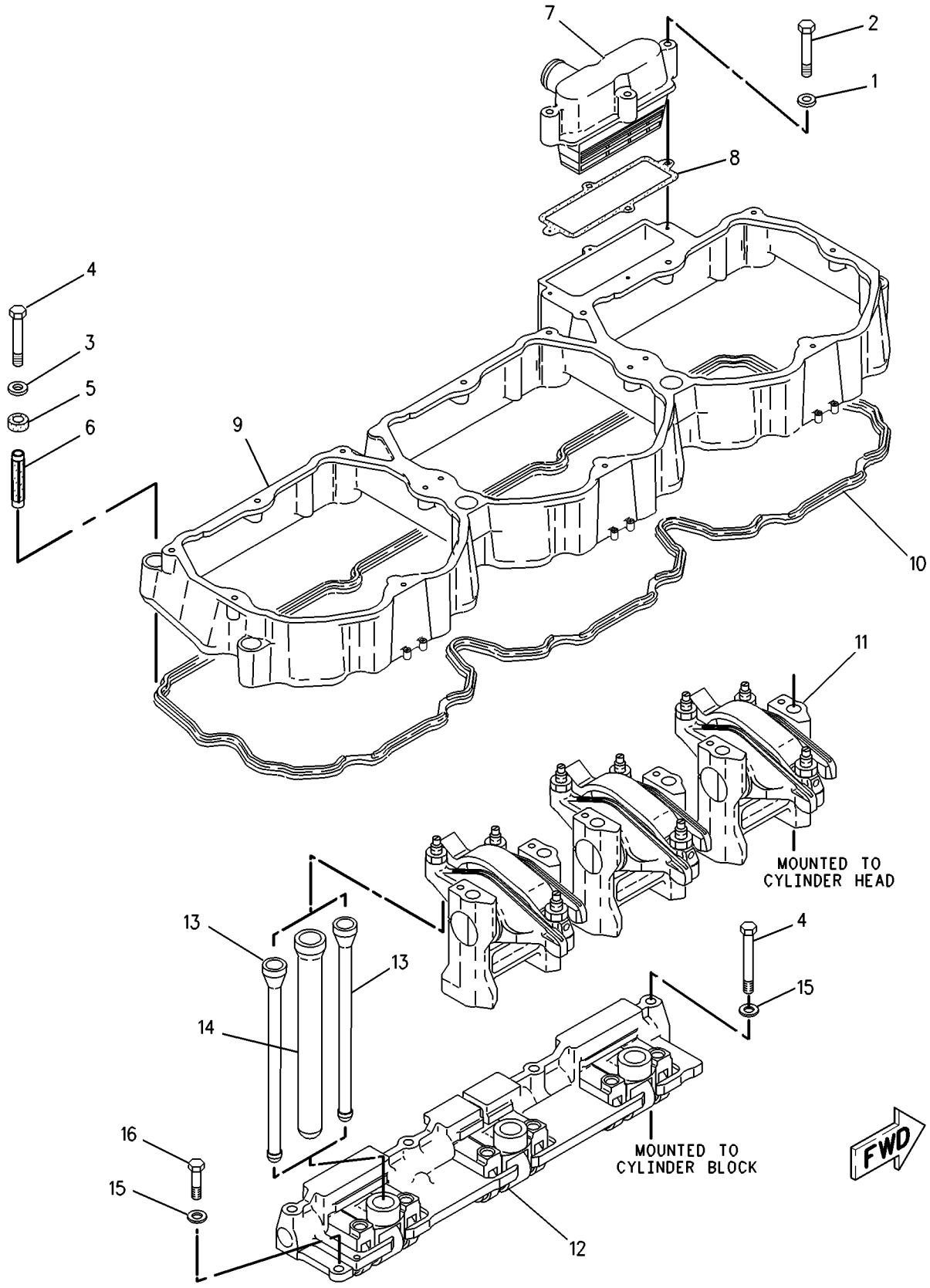


GRAPHIC #1 **<END>** g00784176

# LUBRICATION SYSTEM

## 166-1329 BASE GP-OIL FILTER—ENGINE

**S/N: 3PD1-UP**

**PART OF 164-2490 FILTER GP-ENGINE OIL**

**SMCS-1306** **i02559907**

| NOTE | REF NO | GRAPHIC REF | PART NUMBER | QTY | PART NAME 1 2 3 4 5 6 (PRODUCT LEVEL) | SEE PAGE |
|---|---|---|---|---|---|---|
| | 1 | 1 | **9M-1974** | 6 | WASHER-HARD (8.8X16X2-MM THK) | |
| | 2 | 1 | **166-1328** | 1 | BASE AS | |
| | 2A | 1 | **2P-4304** | 1 | STUD-HOLLOW | |
| | 2B | 1 | **3B-0623** | 1 | PLUG-CUP | |
| | 2C | 1 | **3P-1896** | 2 | PLUG-CUP | |
| | 2D | 1 | **7W-6390** | 1 | STUD-FILTER BASE | |
| | 3 | 1 | **6V-4367** | 3 | SEAL-O-RING | |
| M | 4 | 1 | **6V-3940** | 3 | BOLT (M8X1.25X25-MM) | |
| | 5 | 1 | **7C-2891** | 3 | COVER | |
| | 6 | 1 | **7C-3954** | 1 | SPRING AS | |
| | 6A | 1 | **2N-6005** | | SPRING | |
| | 7 | 1 | **111-2645** | 1 | VALVE-PUMP BYPASS (ENGINE OIL FILTER) | |
| M | 8 | 1 | **6V-8359** | 1 | BOLT (M6X1X70-MM) | |
| | 9 | 1 | **7C-3083** | 1 | SEAT-RELIEF VALVE SPRING | |
| | 10 | 1 | **7C-3082** | 1 | RETAINER | |
| | 11 | 1 | **7C-3081** | 1 | SPACER (6.88X9.53X50-MM THK) | |
| | 12 | 1 | **1A-2170** | 1 | SPRING-RETAINER | |
| | 13 | 1 | **9M-0853** | 2 | PLUNGER-VALVE | |
| | 14 | 1 | **288-3803** | 2 | SPRING AS | |
| | | | | | (EACH INCLUDES) | |
| | 14A | 1 | **4N-8150** | | SPRING | |
| | 15 | 1 | **9S-4185** | 1 | PLUG | |
| | 16 | 1 | **8L-2786** | 1 | SEAL-O-RING | |
| M | 17 | 1 | **9X-2097** | 3 | STUD (M8X1.25-THD) | |

M-METRIC PART

**166-1329 BASE GP-OIL FILTER** *(contd. )* **i02559907**

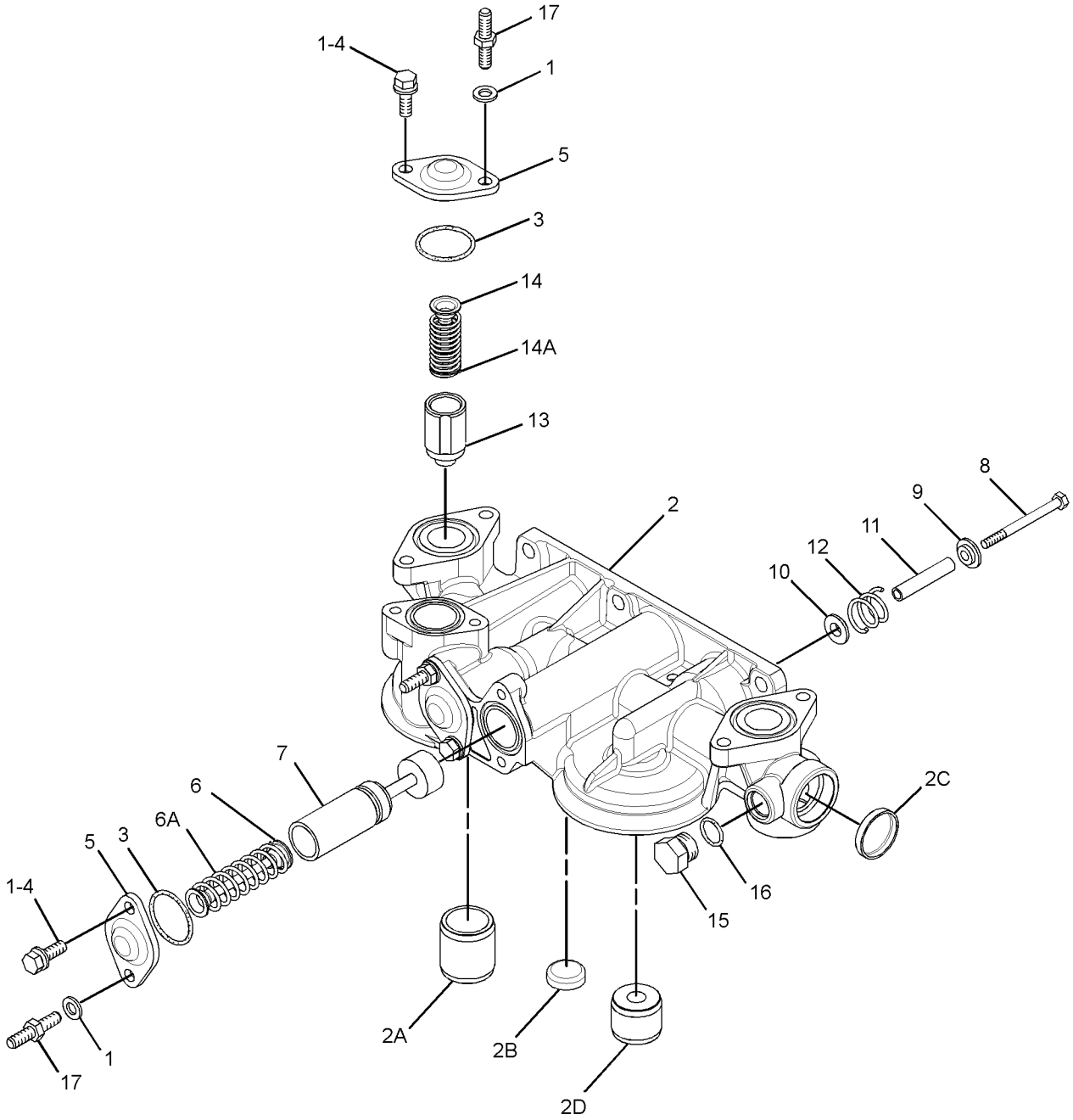


GRAPHIC #1 **<END>** g01293962

# LUBRICATION SYSTEM

## *238-1029* BASE GP-OIL FILTER

**S/N: CCA1867-UP**

**PART OF 235-5812 FILTER GP-OIL**

**SMCS-1306** **i02450519**

| NOTE | REF NO | GRAPHIC REF | PART NUMBER | QTY | PART NAME 1 2 3 4 5 6 (PRODUCT LEVEL) | SEE PAGE |
|---|---|---|---|---|---|---|
| | 1 | 1 | **3T-9549** | 1 | ADAPTER | |
| | 2 | 1 | **7G-4998** | 1 | SPOOL-BYPASS | |
| | 3 | 1 | **7M-1297** | 1 | SPRING | |
| | 4 | 1 | **133-2198** | 1 | SPRING | |
| Y | 5 | 1 | **164-7577** | 1 | SWITCH GP-BYPASS (POWER TRAIN OIL FILTER) | 297 |
| Z | 6 | 1 | | 1 | BASE-FILTER | |
| | 7 | 1 | **2S-4078** | 1 | SEAL-O-RING | |
| | 8 | 1 | **3D-2824** | 1 | SEAL-O-RING | |
| | 9 | 1 | **9S-8008** | 1 | PLUG-DRAIN | |

Y-SEPARATE ILLUSTRATION
Z-NOT SERVICED SEPARATELY

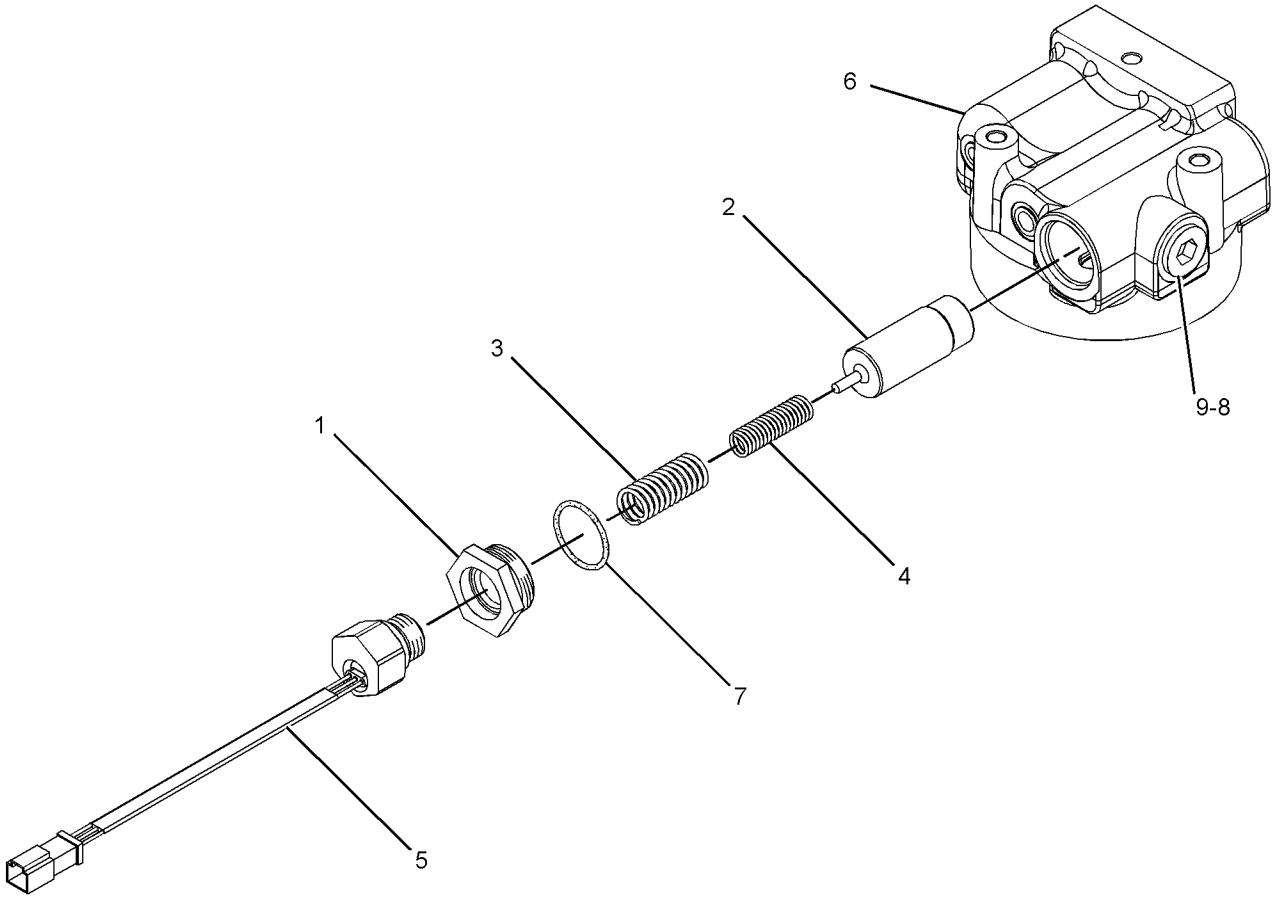


GRAPHIC #1 **<END>** g01218195

# *174-1579* FILLER GP-ENGINE OIL

**S/N: 3PD1-UP**

**PART OF 160-5101 ENGINE AR**

**SMCS-1316, 7513** **i01855476**

| NOTE | REF NO | GRAPHIC REF | PART NUMBER | QTY | PART NAME 1 2 3 4 5 6 (PRODUCT LEVEL) | SEE PAGE |
|---|---|---|---|---|---|---|
| | 1 | 1 | **5L-2952** | 1 | CAP AS-FILLER | |
| | | 1 | **6L-2609** | 1 | SEAL-RUBBER | |
| | 2 | 1 | **174-1580** | 1 | TUBE AS-FILLER | |
| | 3 | 1 | **184-9854** | 1 | BRACKET AS | |
| | 3A | 1 | **3T-0049** | 1 | CLIP | |
| M | 3B | 1 | **8T-3490** | 2 | NUT-WELD (M10X1.5-THD) | |
| | 4 | 1 | **4F-7952** | 1 | SEAL-O-RING | |
| | 5 | 1 | **5P-7854** | 1 | CLIP | |
| M | 6 | 1 | **6V-3822** | 2 | BOLT (M10X1.5X35-MM) | |
| | 7 | 1 | **6V-5839** | 3 | WASHER (11X21X2.5-MM THK) | |
| M | 8 | 1 | **6V-6317** | 1 | BOLT (M10X1.5X20-MM) | |

M-METRIC PART

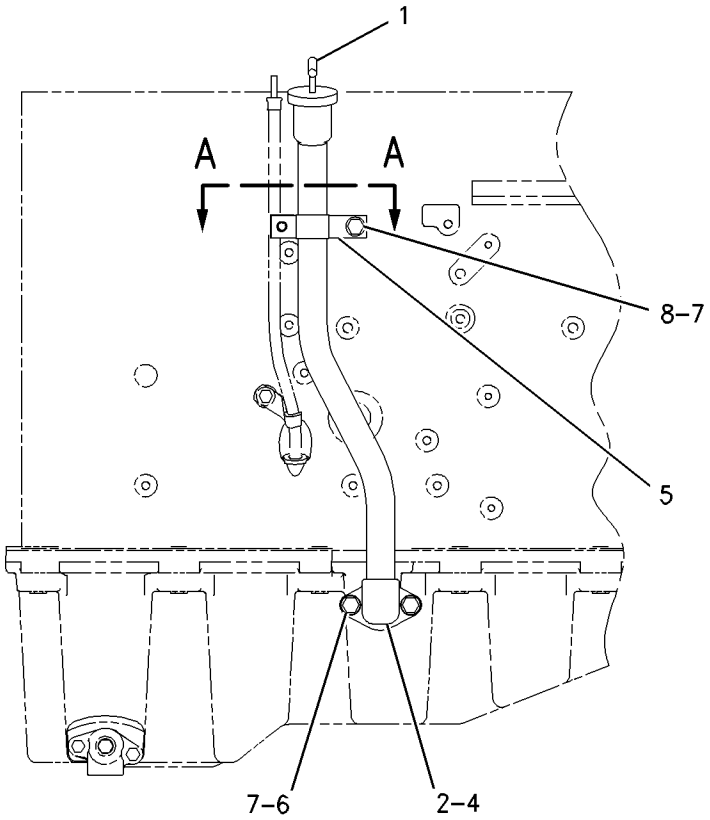


LEFT SIDE VIEW

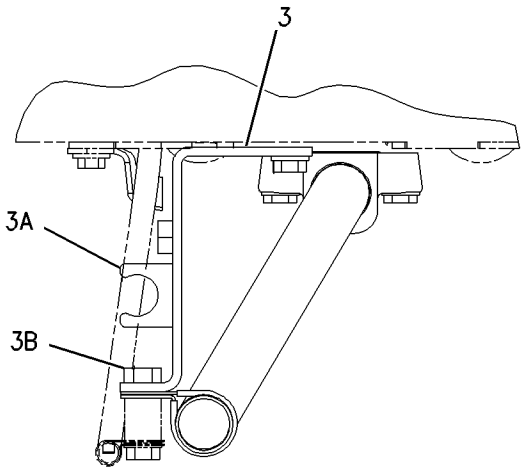


SECTION A-A

GRAPHIC #1 **<END>** g00786384

# LUBRICATION SYSTEM

## *164-2490* FILTER GP-ENGINE OIL

**S/N: 3PD1-UP**

**PART OF 160-5101 ENGINE AR**

**SMCS-1308** **i02550099**

| NOTE | REF NO | GRAPHIC REF | PART NUMBER | QTY | PART NAME 1 2 3 4 5 6 (PRODUCT LEVEL) | SEE PAGE |
|---|---|---|---|---|---|---|
| | 1 | 1 | **1R-0716** | 1 | FILTER AS-ENGINE OIL | |
| | 2 | 1 | **3L-8855** | 1 | SPACER | |
| | 3 | 1 | **8C-3445** | 1 | CAP-DUST (OIL SAMPLING VALVE) | |
| | 4 | 1 | **9C-5344** | 1 | SPACER (10.5X20X18-MM THK) | |
| | 5 | 1 | **102-5828** | 1 | COVER | |
| | 6 | 1 | **102-5829** | 1 | ADAPTER | |
| | 7 | 1 | **104-7995** | 1 | BASE GP-OIL FILTER | |
| | | 1 | **2P-4304** | 1 | STUD-HOLLOW | |
| M | 8 | 1 | **134-5245** | 6 | BOLT (M10X1.5X30-MM) | |
| Y | 9 | 1 | *166-1329* | 1 | BASE GP-OIL FILTER (ENGINE) | 62 |
| | 10 | 1 | **177-4311** | 1 | BRACKET AS | |
| | 11 | 1 | **185-1717** | 1 | TUBE AS | |
| | 12 | 1 | **185-1718** | 1 | TUBE AS | |
| | 13 | 1 | **186-3705** | 1 | ELBOW | |
| | 14 | 1 | **192-7135** | 1 | CLIP AS | |
| M | | 1 | **8T-3490** | 4 | NUT-WELD (M10X1.5-THD) | |
| | 15 | 1 | **106-9586** | 4 | SEAL-O-RING | |
| | 16 | 1 | **3J-7354** | 1 | SEAL-O-RING | |
| | 17 | 1 | **5M-7087** | 2 | CLAMP-TUBE | |
| | 18 | 1 | **5P-4116** | 1 | WASHER-HARD (8.8X20.5X2-MM THK) | |
| | 19 | 1 | **5P-7701** | 4 | SEAL-O-RING | |
| | 21 | 1 | **6V-3831** | 2 | SEAL-O-RING | |
| | 22 | 1 | **6V-3908** | 2 | SEAL-O-RING | |
| M | 23 | 1 | **6V-5218** | 1 | BOLT (M8X1.25X35-MM) | |
| | 24 | 1 | **6V-5839** | 10 | WASHER (11X21X2.5-MM THK) | |
| | 25 | 1 | **6V-9005** | 2 | ELBOW | |
| | 26 | 1 | **6V-9008** | 1 | ELBOW (90-DEG) | |
| | 27 | 1 | **8C-3446** | 1 | VALVE-FLUID SAMPLING (ENGINE OIL) | |
| | 28 | 1 | **8C-5230** | 1 | SEAL-O-RING | |
| | 29 | 1 | **8T-4121** | 3 | WASHER-HARD (11X21X2.5-MM THK) | |
| M | 30 | 1 | **8T-4138** | 2 | BOLT (M6X1X20-MM) | |
| M | 31 | 1 | **8T-4186** | 1 | BOLT (M10X1.5X40-MM) | |
| M | 32 | 1 | **8T-4195** | 4 | BOLT (M10X1.5X30-MM) | |
| M | 33 | 1 | **8T-6466** | 2 | BOLT (M10X1.5X60-MM) | |
| | 34 | 1 | **5P-4115** | 2 | WASHER-HARD (7.2X19X2-MM THK) | |

M-METRIC PART
Y-SEPARATE ILLUSTRATION

*164-2490* **FILTER GP-ENGINE OIL** *(contd.)* **i02550099**

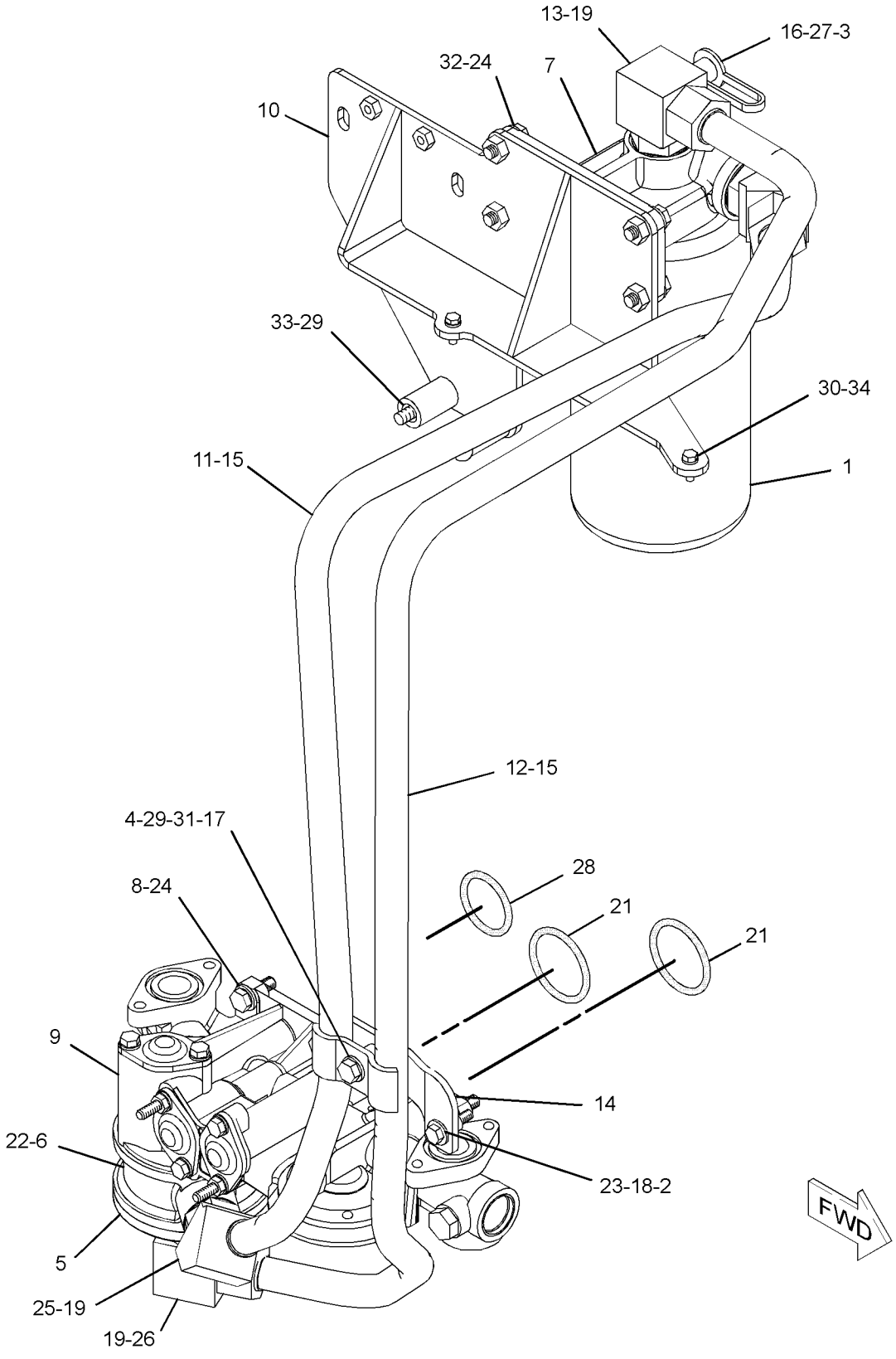


GRAPHIC #1 **<END>** g01280008

# *174-1576* GAUGE GP-OIL LEVEL (DIPSTICK)

**S/N: 3PD1-UP**

**PART OF 160-5101 ENGINE AR**

**SMCS-1326** **i01855468**

| NOTE | REF NO | GRAPHIC REF | PART NUMBER | QTY | PART NAME 1 2 3 4 5 6 (PRODUCT LEVEL) | SEE PAGE |
|---|---|---|---|---|---|---|
| | 1 | 1 | **7C-6921** | 1 | SPACER (11X20X22.8MM THK) | |
| | 2 | 1 | **209-7309** | 3 | PLUG | |
| | 3 | 1 | **174-1577** | 1 | GAUGE AS | |
| | 4 | 1 | **174-1578** | 1 | TUBE AS-OIL | |
| | 5 | 1 | **3E-4352** | 1 | WASHER-HARD (8.8X20.5X2.5MM THK) | |
| | 6 | 1 | **3P-0647** | 1 | SEAL-O-RING | |
| | 7 | 1 | **4B-0418** | 1 | CLIP | |
| M | 8 | 1 | **6V-5215** | 1 | BOLT (M8X1.25X16MM) | |
| | 9 | 1 | **6V-5839** | 1 | WASHER (11X21X2.5MM THK) | |
| M | 10 | 1 | **8T-4185** | 1 | BOLT (M10X1.5X50MM) | |

M-METRIC PART

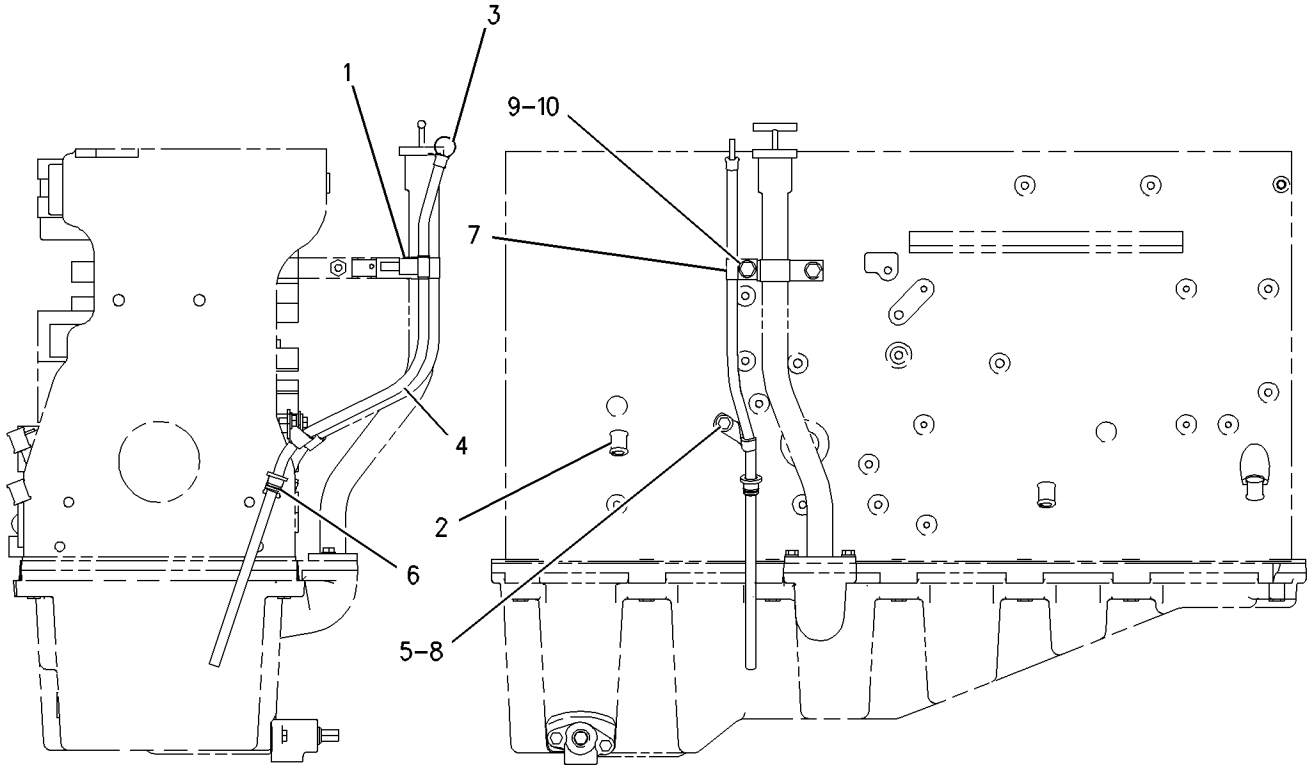


GRAPHIC #1 **<END>** g00786545

# *183-5504* LINES GP-ENGINE OIL DRAIN

**S/N: CCA1-UP**

**PART OF 159-4615 GENERAL AR**

**SMCS-1307** **i02203386**

| NOTE | REF NO | GRAPHIC REF | PART NUMBER | QTY | PART NAME 1 2 3 4 5 6 (PRODUCT LEVEL) | SEE PAGE |
|---|---|---|---|---|---|---|
| | 1 | 1 | **7X-7958** | 1 | CLAMP-HOSE | |
| | 3 | 1 | **206-4669** | 1 | VALVE-DRAIN | |
| I | 4 | 1 | **198-0151** | 1 | HOSE AS | |
| | 5 | 1 | *148-8327* | 1 | CONNECTOR AS | |
| | | 1 | **6V-8637** | 1 | CONNECTOR | |
| | | 1 | **3D-2824** | 1 | SEAL-O-RING | |
| | | 1 | **6V-9746** | 1 | SEAL-O-RING | |
| | 6 | 1 | **212-4174** | 1 | LOCKWASHER | |
| | 8 | 1 | **2S-2053** | 1 | CLIP | |
| | 9 | 1 | **8T-4121** | 1 | WASHER-HARD (11X21X2.5-MM THK) | |
| M | 10 | 1 | **8T-4137** | 1 | BOLT (M10X1.5X20-MM) | |
| E | 11 | 1 | **146-7453** | | HOSE (36-CM) | |

E-ORDER BY THE CENTIMETER
I-REFER TO HYDRAULIC INFORMATION SYSTEM
M-METRIC PART

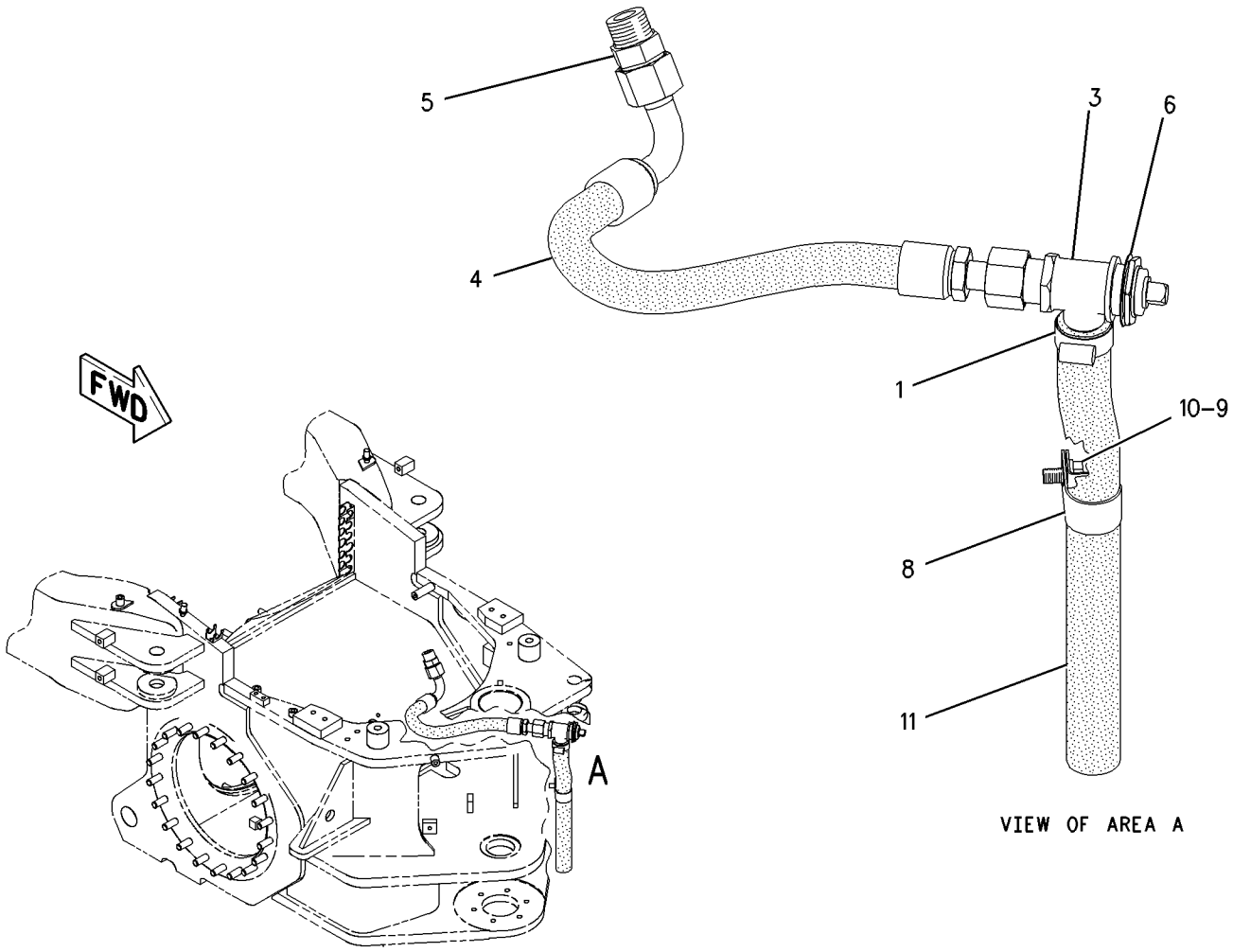


GRAPHIC #1 **<END>** g00845067

# LUBRICATION SYSTEM

## *179-9565* LINES GP-TURBOCHARGER OIL

**S/N: 3PD1-UP**

**PART OF 160-5101 ENGINE AR**

**SMCS-1052, 1307** **i01855535**

| NOTE | REF NO | GRAPHIC REF | PART NUMBER | QTY | PART NAME 1 2 3 4 5 6 (PRODUCT LEVEL) | SEE PAGE |
|---|---|---|---|---|---|---|
| | 1 | 1 | **6N-6033** | 2 | CLIP | |
| | 2 | 1 | **188-6126** | 1 | GASKET | |
| | 3 | 1 | **119-2942** | 1 | ADAPTER | |
| | 4 | 1 | **198-6068** | 1 | SEAL-INTEGRAL | |
| | 5 | 1 | **179-9563** | 1 | TUBE AS | |
| | 6 | 1 | **179-9564** | 1 | TUBE AS | |
| | 7 | 1 | **114-2687** | 1 | SEAL-O-RING | |
| M | 8 | 1 | **5P-7970** | 1 | NUT (M8X1.25-THD) | |
| | 9 | 1 | **5P-8066** | 1 | SEAL-O-RING | |
| M | 10 | 1 | **6V-3940** | 1 | BOLT (M8X1.25X25-MM) | |
| M | 11 | 1 | **6V-5218** | 4 | BOLT (M8X1.25X35-MM) | |
| | 12 | 1 | **8L-2786** | 1 | SEAL-O-RING | |
| | 13 | 1 | **8M-0505** | 1 | CONNECTOR | |
| | 14 | 1 | **9M-1974** | 6 | WASHER-HARD (8.8X16X2-MM THK) | |
| | 15 | 1 | **9G-8661** | 2 | SPACER (10X16X20-MM THK) | |
| M | 16 | 1 | **8T-0276** | 2 | BOLT (M8X1.25X45-MM) | |
| | 17 | 1 | **4K-5824** | 2 | BOSS | |

M-METRIC PART

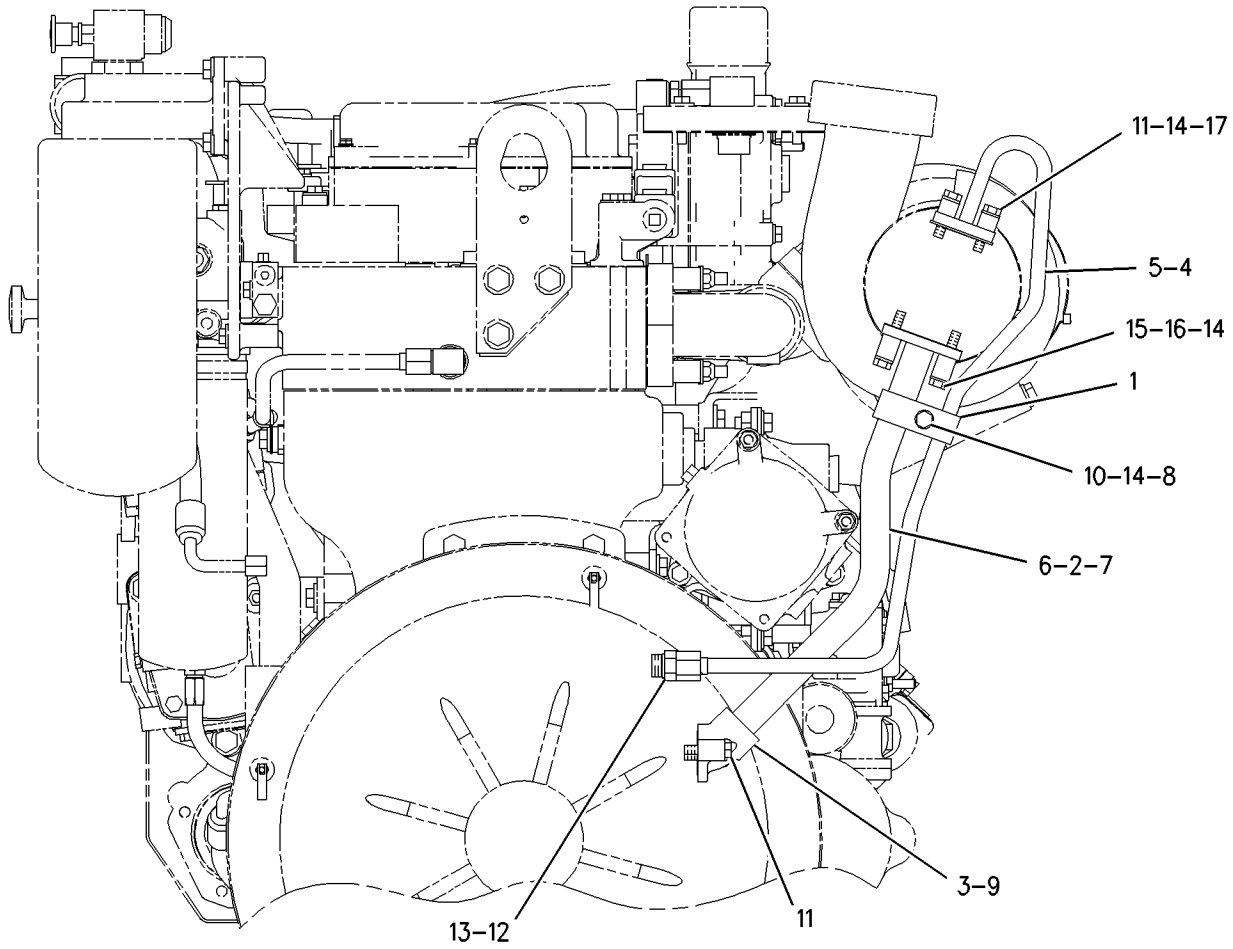


REAR VIEW

GRAPHIC #1 **<END>** g00829389

# *117-2746* PUMP GP-ENGINE OIL

**S/N: 3PD1-UP**

**PART OF 160-5101 ENGINE AR**

**SMCS-1304, 1315** **i02010687**

| NOTE | REF NO | GRAPHIC REF | PART NUMBER | QTY | PART NAME 1 2 3 4 5 6 (PRODUCT LEVEL) | SEE PAGE |
|---|---|---|---|---|---|---|
| | 1 | 1 | **8J-4351** | 1 | SEAL-O-RING | |
| | 2 | 1 | **9M-1974** | 4 | WASHER-HARD (8.8X16X2-MM THK) | |
| M | 3 | 1 | **3E-8016** | 2 | BOLT-SELF-LOCKING (M8X1.25X25-MM) | |
| M | 4 | 1 | **6V-2317** | 2 | BOLT (M8X1.25X30-MM) | |
| | 5 | 1 | **3E-4352** | 2 | WASHER-HARD (8.8X20.5X2.5-MM THK) | |
| | 6 | 1 | **115-3003** | 1 | TUBE AS | |
| | 7 | 1 | **6V-5134** | 3 | SEAL-O-RING | |
| | 8 | 1 | **061-8561** | 1 | SEAL-O-RING | |
| | 9 | 1 | **122-0760** | 1 | ELBOW-OIL PUMP | |
| | 10 | 1 | **7C-1821** | 1 | COUPLING | |
| | 11 | 1 | **7C-1822** | 1 | COUPLING | |
| | 12 | 1 | **5P-8068** | 2 | SEAL-O-RING | |
| M | 13 | 1 | **6V-5221** | 2 | BOLT (M8X1.25X80-MM) | |
| | 14 | 1 | **6V-3834** | 1 | SEAL-O-RING | |
| YR | 15 | 1 | **233-5220** | 1 | PUMP GP-ENGINE OIL | 72 |

M-METRIC PART
R-REMFG PART MAY BE AVAILABLE
Y-SEPARATE ILLUSTRATION

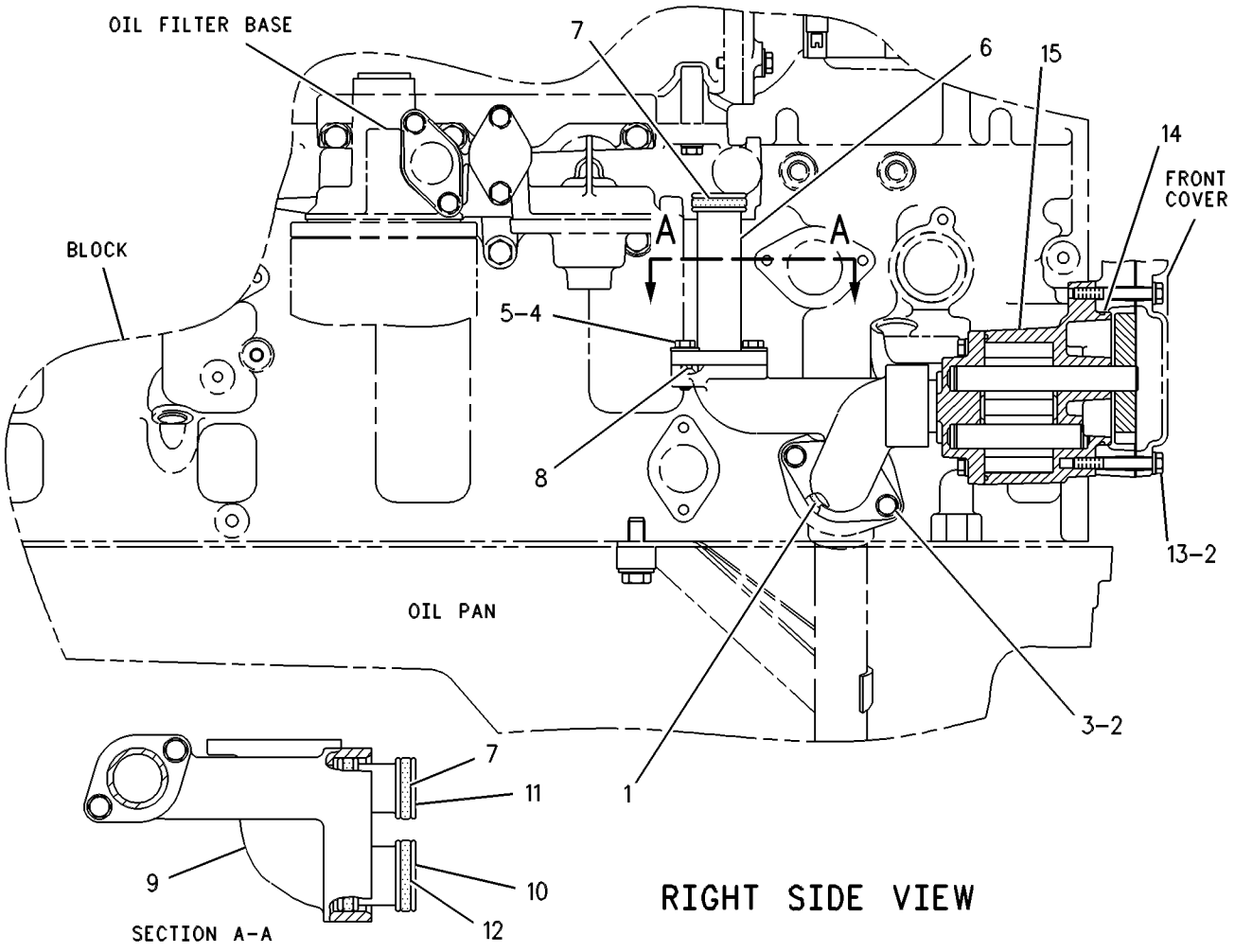


GRAPHIC #1 **<END>** g00251411

# LUBRICATION SYSTEM

## 233-5220 PUMP GP-ENGINE OIL*R

**S/N: 3PD1-UP**

**PART OF 117-2746 PUMP GP-ENGINE OIL**

**SMCS-1304, 1315** **i02010532**

| NOTE | REF NO | GRAPHIC REF | PART NUMBER | QTY | PART NAME 1 2 3 4 5 6 (PRODUCT LEVEL) | SEE PAGE |
|---|---|---|---|---|---|---|
| | 1 | 1 | **9Y-8076** | 1 | SHAFT AS-OIL PUMP (8-TEETH) | |
| | 2 | 1 | **6D-7146** | 1 | SEAL-O-RING | |
| M | 3 | 1 | **6V-2317** | 4 | BOLT (M8X1.25X30-MM) | |
| | 4 | 1 | **9M-1974** | 4 | WASHER-HARD (8.8X16X2-MM THK) | |
| | 5 | 1 | **9Y-8075** | 1 | SHAFT AS-OIL PUMP (8-TEETH) | |

M-METRIC PART

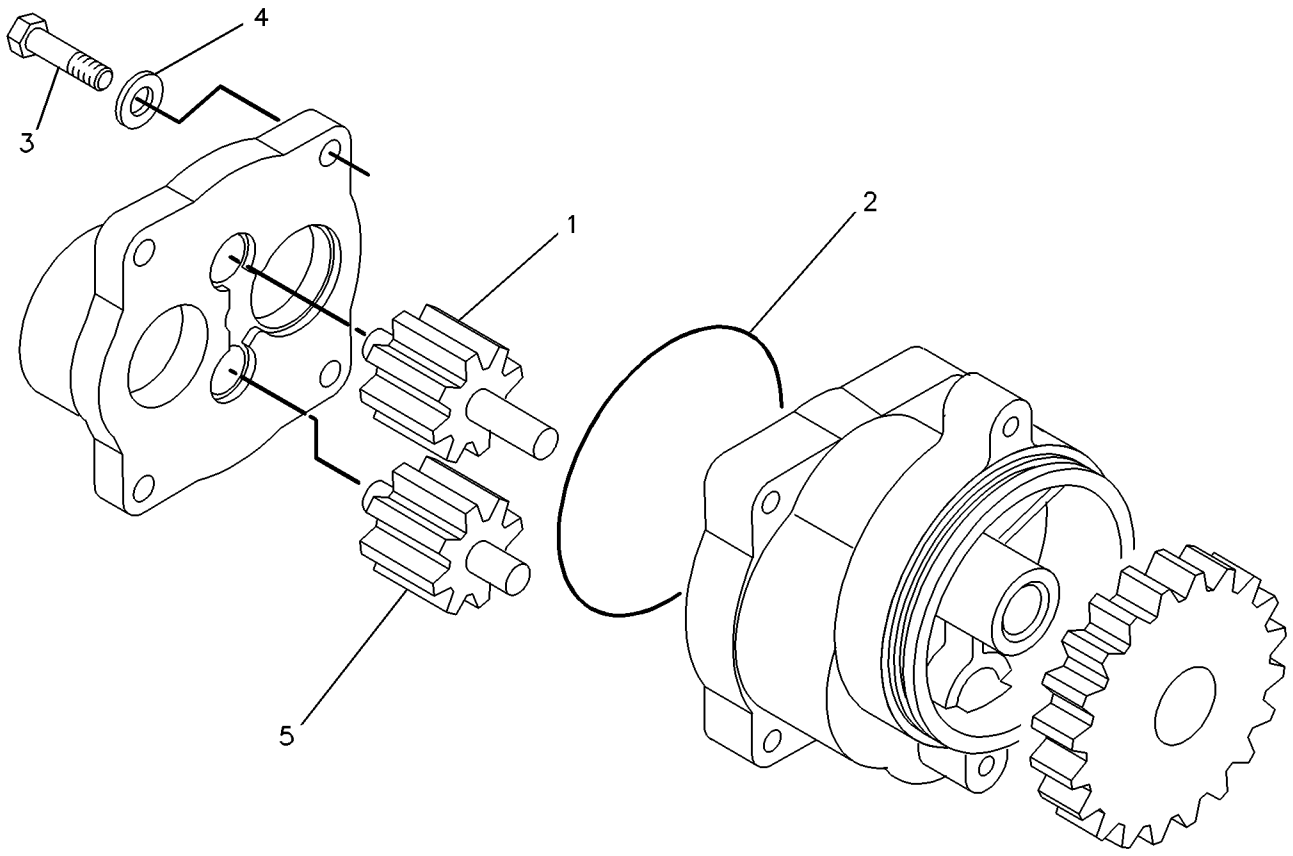


GRAPHIC #1 **<END>** g00228139

## *185-1542* COOLING AR

**S/N: CCA1-894**

**PART OF 159-4615 GENERAL AR**

**SMCS-1350** **i01879320**

| NOTE | REF NO | GRAPHIC REF | PART NUMBER | QTY | PART NAME 1 2 3 4 5 6 (PRODUCT LEVEL) | SEE PAGE |
|---|---|---|---|---|---|---|
| Y | 1 | 1 | *163-0310* | 1 | AFTERCOOLER & MOUNTING GP | 95 |
| Y | 2 | 1 | *175-6981* | 1 | LINES GP-HYDRAULIC FAN | 692 |
| Y | 3 | 1 | *179-3261* | 1 | FAN & MOTOR GP | 76 |
| Y | 4 | 1 | **180-7004** | 1 | RADIATOR GP | 93 |
| | 5 | 1 | *184-0874* | 1 | PLATE GP-RADIATOR | |
| | | 1 | **184-0871** | 1 | PLATE | |
| M | 5A | 1 | **2Y-5829** | 4 | NUT (M10X1.5 THD) | |
| M | 5B | 1 | **6V-4248** | 4 | BOLT (M10X1.50X25MM) | |
| | 5C | 1 | **6V-5839** | 8 | WASHER (11X21X2.5MM THK) | |
| M | 5D | 1 | **8T-4178** | 2 | BOLT (M10X1.5X90MM) | |
| | 5E | 1 | **8T-4222** | 2 | WASHER-PLATED (11X32X2.5MM THK) | |
| | 5F | 1 | **199-2711** | 2 | SPACER (7.82X26.67X75MM THK) | |
| Y | 6 | 1 | *197-1448* | 1 | GUARD & SUPPORT GP-RADIATOR | 567 |

M-METRIC PART
Y-SEPARATE ILLUSTRATION

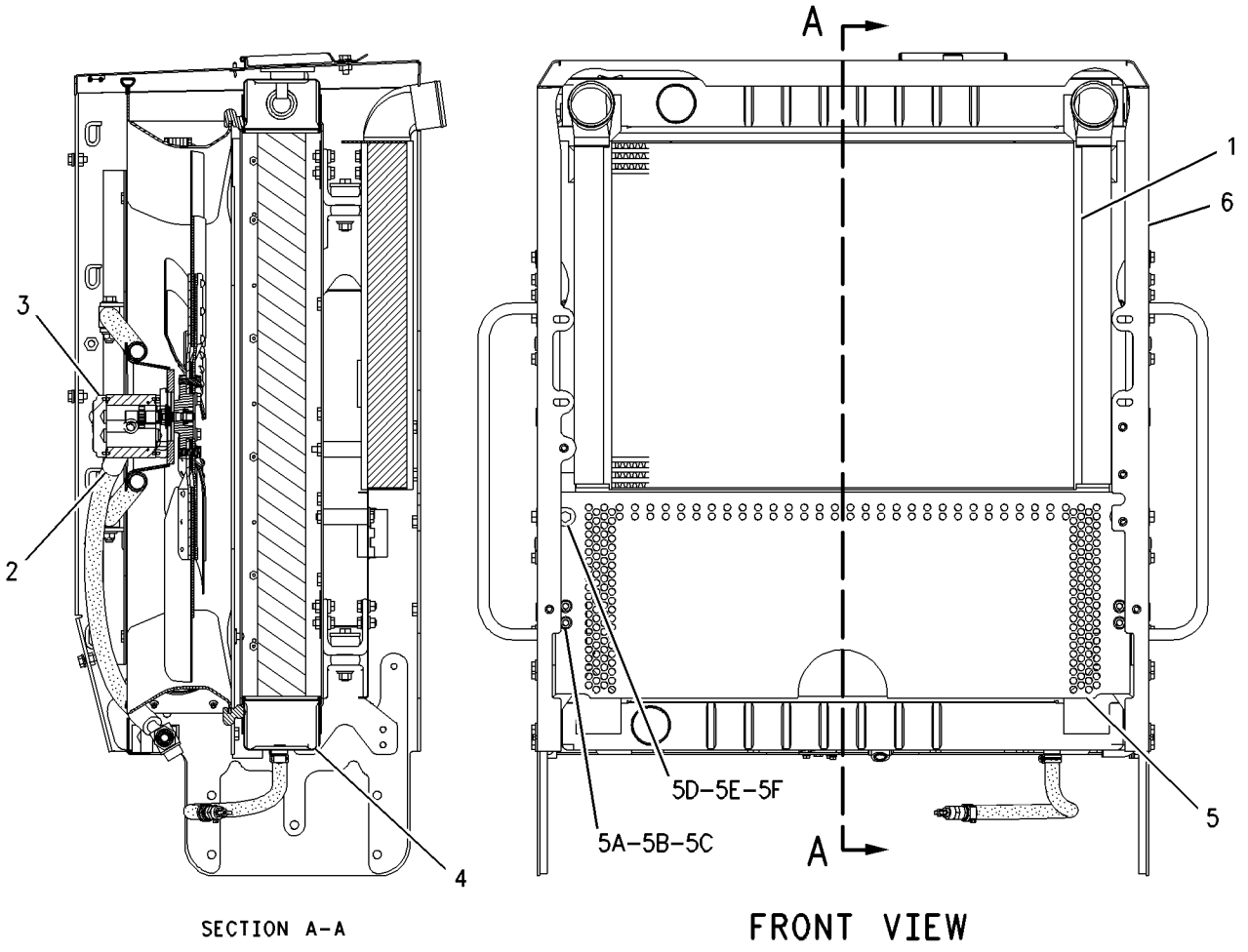


GRAPHIC #1 **<END>** g00940664

# COOLING SYSTEM

## *185-1542* COOLING AR

**S/N: CCA895-UP**

**PART OF 159-4615 GENERAL AR**

**SMCS-1350** **i02158759**

| NOTE | REF NO | GRAPHIC REF | PART NUMBER | QTY | PART NAME 1 2 3 4 5 6 (PRODUCT LEVEL) | SEE PAGE |
|---|---|---|---|---|---|---|
| Y | 1 | 1 | *163-0310* | 1 | AFTERCOOLER & MOUNTING GP | 95 |
| Y | 2 | 1 | *175-6981* | 1 | LINES GP-HYDRAULIC FAN | 692 |
| Y | 3 | 1 | *179-3261* | 1 | FAN & MOTOR GP | 76 |
| CY | 4 | 1 | **241-6949** | 1 | RADIATOR GP | 94 |
| Y | 5 | 1 | *184-0874* | 1 | PLATE GP-RADIATOR | 90 |
| Y | 6 | 1 | *197-1448* | 1 | GUARD & SUPPORT GP-RADIATOR | 567 |

C-CHANGE FROM PREVIOUS TYPE
Y-SEPARATE ILLUSTRATION

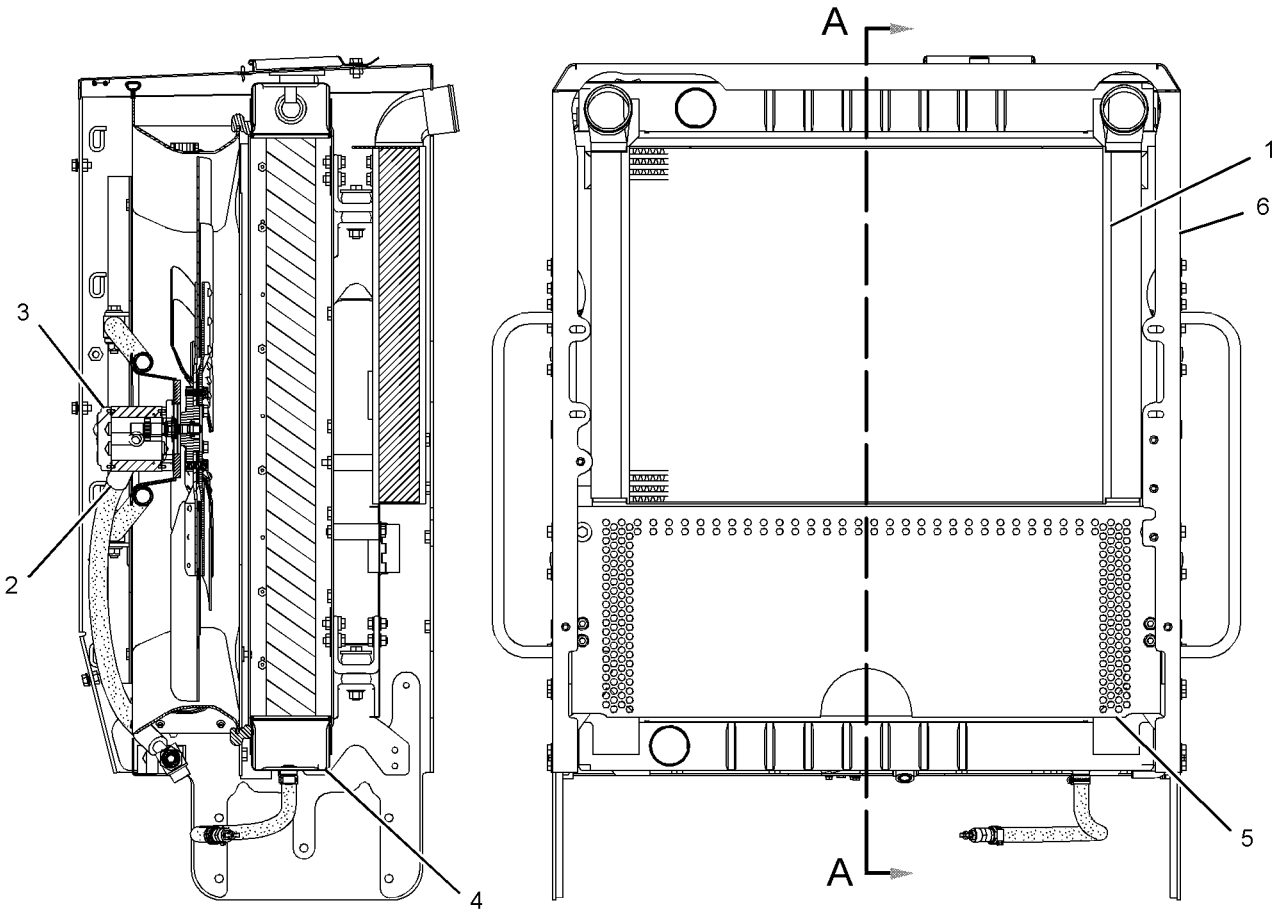


SECTION A-A

FRONT VIEW

GRAPHIC #1 **<END>** g01099186

## *191-9260* COOLING AR

**S/N: CCA1-UP**
**PART OF 207-4453 CONVERSION AR-CERTIFICATION**
**AN ATTACHMENT**

**SMCS-1350** **i01820189**

| NOTE | REF NO | GRAPHIC REF | PART NUMBER | QTY | PART NAME 1 2 3 4 5 6 (PRODUCT LEVEL) | SEE PAGE |
|---|---|---|---|---|---|---|
| Y | 1 | 1 | *163-0310* | 1 | AFTERCOOLER & MOUNTING GP | 95 |
| Y | 2 | 1 | *175-6981* | 1 | LINES GP-HYDRAULIC FAN | 692 |
| Y | 3 | 1 | *179-3261* | 1 | FAN & MOTOR GP | 76 |
| Y | 4 | 1 | **180-7004** | 1 | RADIATOR GP | 93 |
| | 5 | 1 | **184-0871** | 1 | PLATE | |
| | 5A | 1 | **199-2711** | 2 | SPACER (7.82X26.67X75-MM THK) | |
| M | 5B | 1 | **2Y-5829** | 4 | NUT (M10X1.15-THD) | |
| M | 5C | 1 | **6V-4248** | 4 | BOLT (M10X1.5X25-MM) | |
| | 5D | 1 | **6V-5839** | 8 | WASHER (11X21X2.5-MM THK) | |
| M | 5E | 1 | **8T-4178** | 2 | BOLT (M10X1.5X90-MM) | |
| | 5F | 1 | **8T-4222** | 2 | WASHER-PLATED (11X32X2.5-MM THK) | |
| Y | 6 | 1 | *193-8253* | 1 | WIRING GP-REAR LIGHTING | 378 |
| Y | 7 | 1 | *197-1448* | 1 | GUARD & SUPPORT GP-RADIATOR | 567 |

M-METRIC PART
Y-SEPARATE ILLUSTRATION

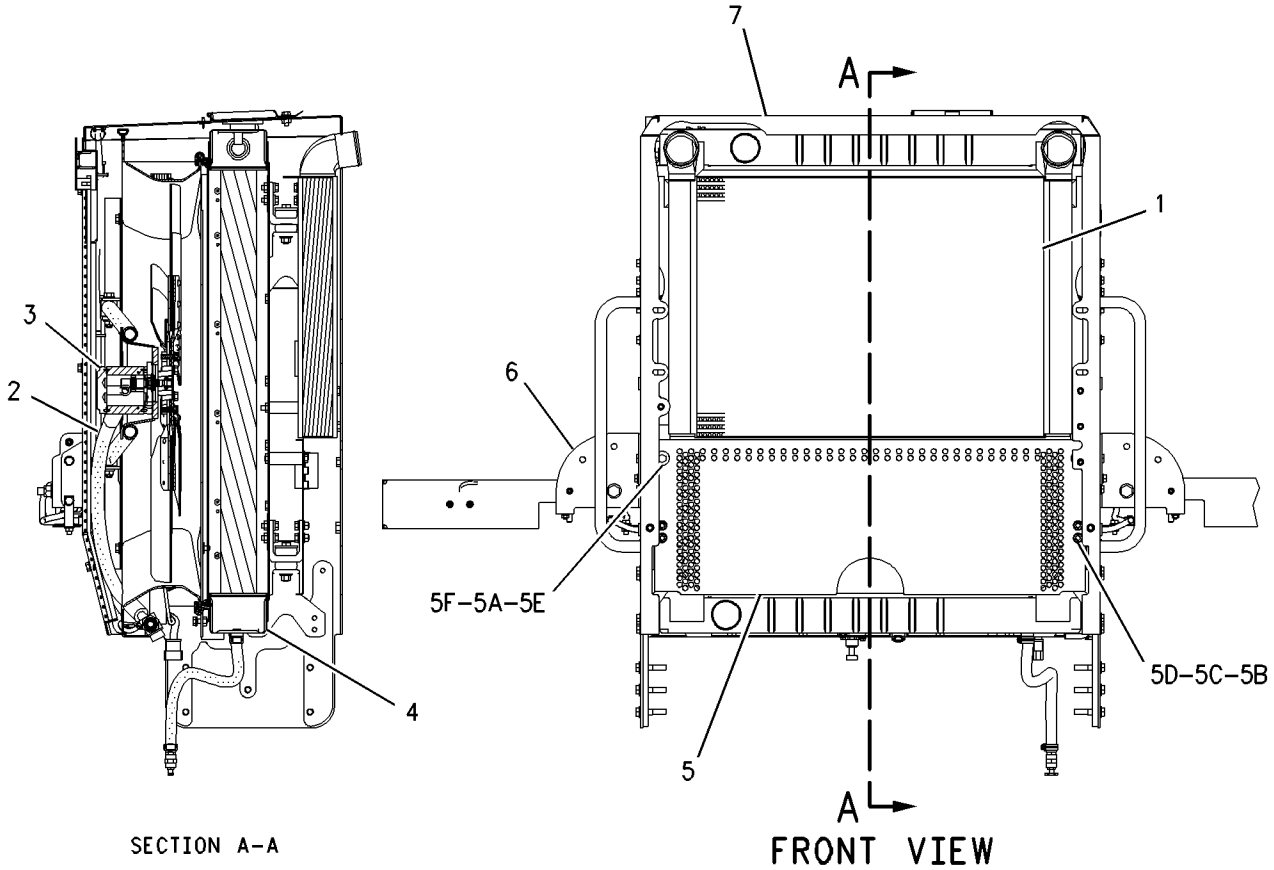


GRAPHIC #1 **<END>** g00954110

# COOLING SYSTEM

## *179-3261* FAN & MOTOR GP

**S/N: CCA1-UP**
**PART OF 185-1542, 191-9260 COOLING AR**
**ALSO AN ATTACHMENT**

**SMCS-1356, 1386** **i01815945**

| NOTE | REF NO | GRAPHIC REF | PART NUMBER | QTY | PART NAME 1 2 3 4 5 6 (PRODUCT LEVEL) | SEE PAGE |
|---|---|---|---|---|---|---|
| Y | 1 | 1 | **224-7040** | 1 | MOTOR GP-GEAR | 719 |
| | 2 | 1 | **174-2104** | 1 | BRACKET AS | |
| | 3 | 1 | **177-5303** | 1 | SPIDER AS-FAN (6 BLADES) | |
| | 4 | 1 | **178-8993** | 1 | ADAPTER | |
| | 5 | 1 | **179-2509** | 4 | BRACKET AS | |
| M | 6 | 1 | **105-3484** | 2 | BOLT-SOCKET HEAD (M10X1.5X25-MM) | |
| | 7 | 1 | *153-6237* | 2 | ELBOW AS | |
| | | | | | (EACH INCLUDES) | |
| | | 1 | **6V-9004** | 1 | ELBOW | |
| | | 1 | **3D-2824** | 1 | SEAL-O-RING | |
| | | 1 | **6V-9746** | 1 | SEAL-O-RING | |
| | 8 | 1 | **5P-1076** | 4 | WASHER-HARD (13.5X30X4-MM THK) | |
| | 9 | 1 | **5P-8245** | 1 | WASHER-HARD (13.5X25.5X3-MM THK) | |
| | 10 | 1 | **6B-6684** | 1 | NUT-FULL (1/2-20-THD) | |
| M | 11 | 1 | **6V-7687** | 4 | LOCKNUT (M12X1.75-THD) | |
| M | 12 | 1 | **6V-8336** | 4 | BOLT (M12X1.75X70-MM) | |
| | 13 | 1 | **8T-4121** | 8 | WASHER-HARD (11X21X2.5-MM THK) | |
| M | 14 | 1 | **8T-4183** | 4 | BOLT (M12X1.75X40-MM) | |
| M | 15 | 1 | **8T-4195** | 6 | BOLT (M10X1.5X30-MM) | |
| | 16 | 1 | **8T-4223** | 8 | WASHER-HARD (13.5X25.5X3-MM THK) | |

M-METRIC PART
Y-SEPARATE ILLUSTRATION

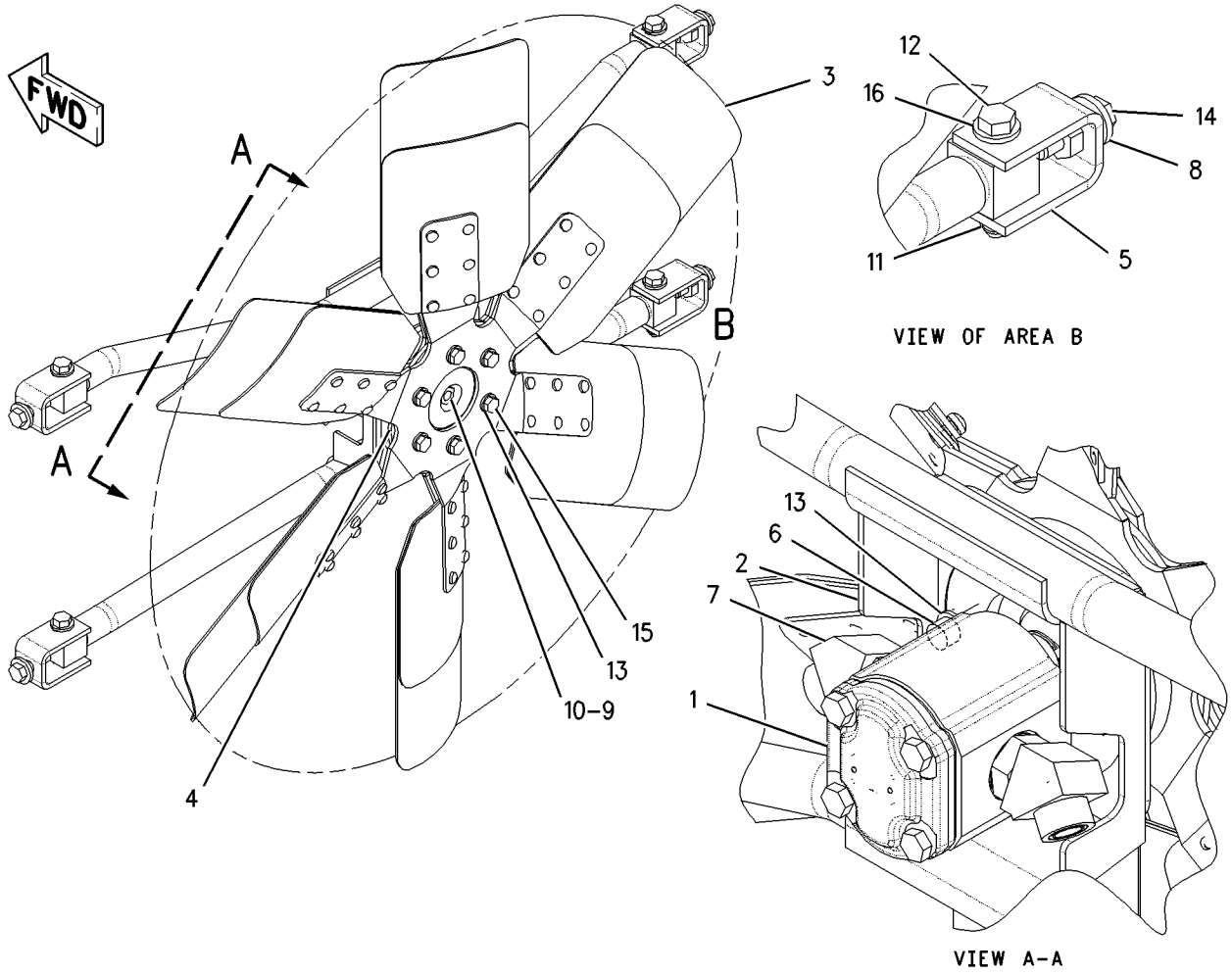


GRAPHIC #1 **<END>** g00788543

## *230-5839* FASTENER GP-RADIATOR

**S/N: CCA1-UP**

**PART OF 159-4615 GENERAL AR**

**SMCS-1353** **i02158817**

| NOTE | PART NUMBER | QTY | PART NAME 1 2 3 4 5 6 (PRODUCT LEVEL) | SEE PAGE |
|---|---|---|---|---|
| M | **8T-4136** | 4 | BOLT (M10X1.5X25-MM) | |
| M | **8T-4910** | 10 | BOLT (M12X1.75X60-MM) | |
| | **242-3633** | 4 | BOSS | |
| | **8T-4223** | 10 | WASHER-HARD (13.5X25.5X3-MM THK) | |

M-METRIC PART

**<END>**

# COOLING SYSTEM

## *215-2062* HOUSING & REGULATOR GP

**S/N: 3PD1-14464**

**PART OF 215-2063 LINES GP-WATER**

**SMCS-1355, 1393** **i01855698**

| NOTE | REF NO | GRAPHIC REF | PART NUMBER | QTY | PART NAME 1 2 3 4 5 6 (PRODUCT LEVEL) | SEE PAGE |
|---|---|---|---|---|---|---|
| | 1 | 1 | **4P-9485** | 1 | MANIFOLD | |
| | 2 | 1 | **7C-3095** | 1 | REGULATOR-WATER TEMPERATURE (98-DEG C) | |
| | 3 | 1 | **7E-7912** | 1 | GASKET | |
| | 4 | 1 | **118-2800** | 1 | HOUSING AS-REGULATOR | |
| | 4A | 1 | **3S-9643** | 1 | SEAL-LIP TYPE | |
| | 4B | 1 | **8T-6757** | 1 | PLUG-PIPE | |
| M | 5 | 1 | **123-4511** | 2 | STUD (M8X1.25-THD) | |
| | 6 | 1 | **7X-7732** | 1 | PLUG-PIPE | |
| M | 7 | 1 | **8T-0292** | 2 | BOLT (M8X1.25X90-MM) | |
| | 8 | 1 | **8T-6762** | 9 | PLUG-PIPE | |
| | 9 | 1 | **8T-6766** | 1 | PLUG-PIPE | |
| | 10 | 1 | **8T-6767** | 1 | PLUG-PIPE | |
| | 11 | 1 | **9M-1974** | 4 | WASHER-HARD (8.8X16X2-MM THK) | |

M-METRIC PART

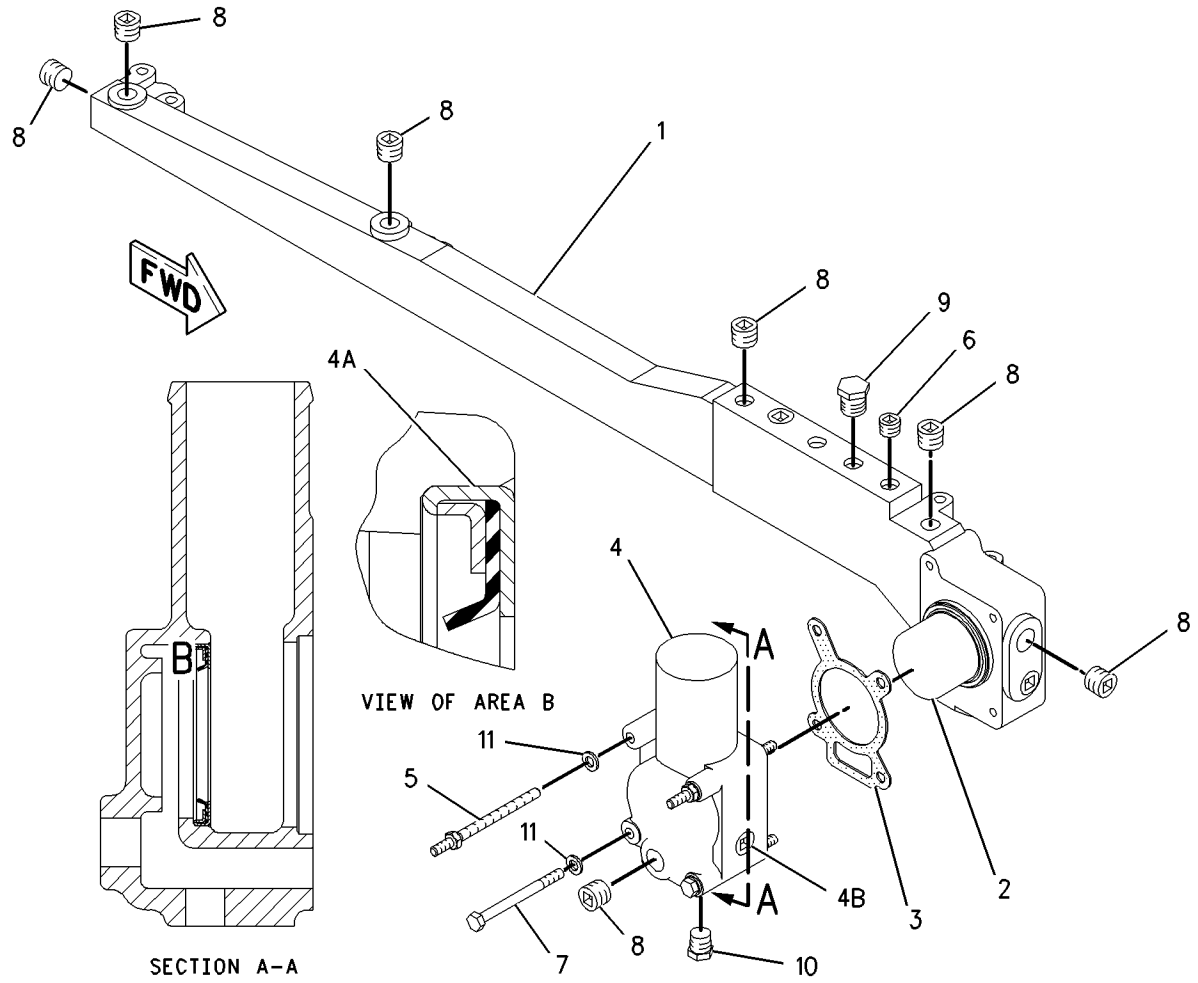


GRAPHIC #1 **<END>** g00841045

# *262-7139* HOUSING & REGULATOR GP

**S/N: 3PD14465-UP**

**PART OF 215-2063 LINES GP-WATER**

**SMCS-1355, 1393** **i02584487**

| NOTE | REF NO | GRAPHIC REF | PART NUMBER | QTY | PART NAME 1 2 3 4 5 6 (PRODUCT LEVEL) | SEE PAGE |
|---|---|---|---|---|---|---|
| | 1 | 1 | **7E-7912** | 1 | GASKET (TEMPERATURE REGULATOR HOUSING) | |
| M | 2 | 1 | **123-4511** | 2 | STUD (M8X1.25-THD) | |
| | 3 | 1 | **247-7133** | 1 | REGULATOR-WATER TEMPERATURE (98-DEG C) | |
| | 4 | 1 | **254-9162** | 1 | MANIFOLD | |
| | 5 | 1 | **255-5310** | 1 | HOUSING AS-REGULATOR | |
| | 5A | 1 | **3S-9643** | 1 | SEAL-LIP TYPE (WATER TEMPERATURE REGULATOR) | |
| | 6 | 1 | **6V-6609** | 4 | SEAL-O-RING | |
| | 7 | 1 | **6V-9027** | 1 | SEAL-O-RING | |
| M | 8 | 1 | **8T-0292** | 2 | BOLT (M8X1.25X90-MM) | |
| | 9 | 1 | **9M-1974** | 4 | WASHER-HARD (8.8X16X2-MM THK) | |
| | 10 | 1 | **9S-4182** | 1 | PLUG (STRAIGHT THREAD O-RING) | |
| | 11 | 1 | **9S-8005** | 3 | PLUG-O RING | |
| | 12 | 1 | **9S-4185** | 1 | PLUG | |

M-METRIC PART

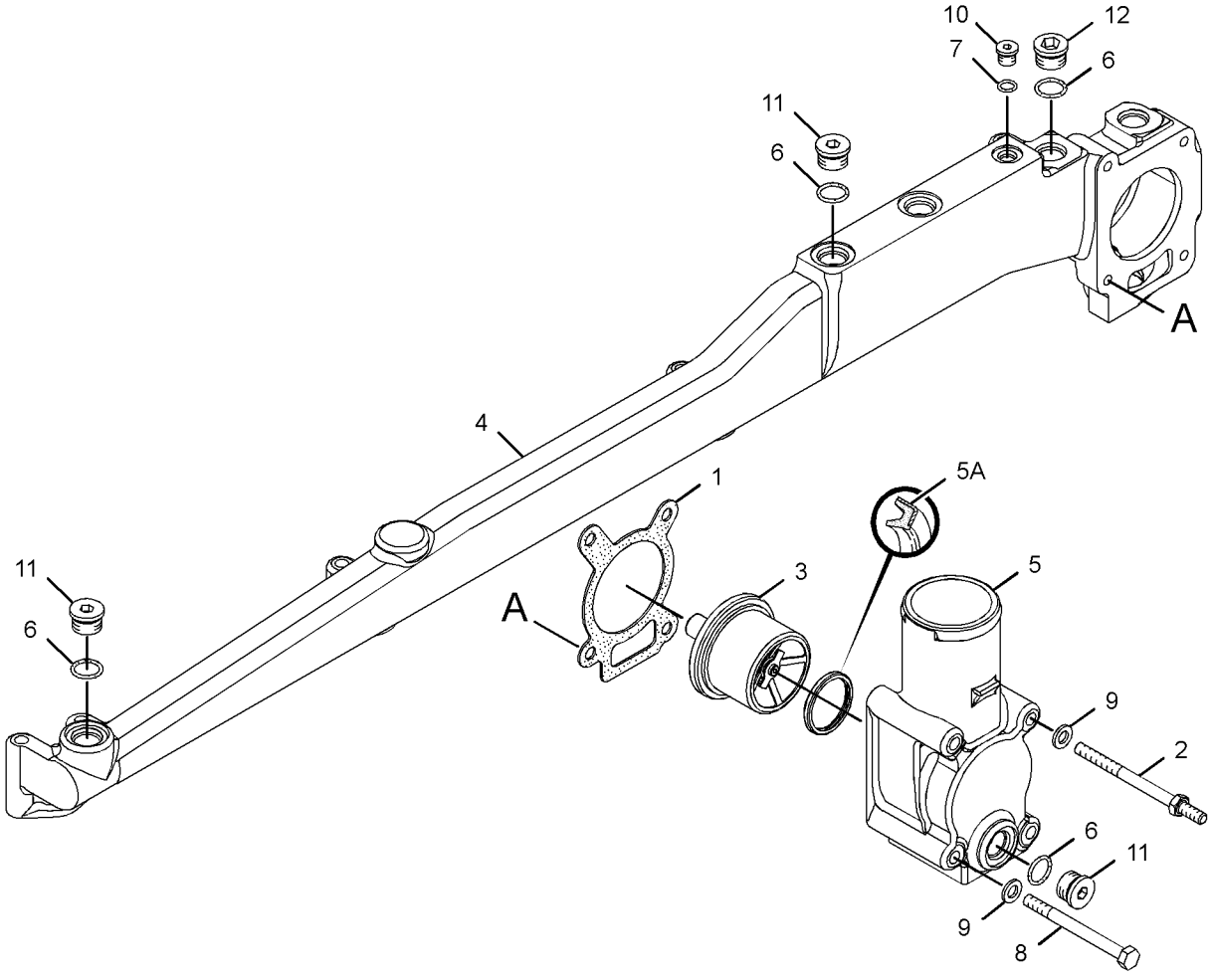


GRAPHIC #1 **<END>** g01297280

# COOLING SYSTEM

## *116-5460* LINES GP-WATER

**S/N: 3PD1-UP**

**PART OF 160-5101 ENGINE AR**

**SMCS-1355, 1380, 1393** **i01855196**

| NOTE | REF NO | GRAPHIC REF | PART NUMBER | QTY | PART NAME 1 2 3 4 5 6 (PRODUCT LEVEL) | SEE PAGE |
|---|---|---|---|---|---|---|
| | 1 | 1 | **3E-4352** | 2 | WASHER-HARD (8.8X20.5X2.5MM THK) | |
| M | 2 | 1 | **6V-3918** | 2 | BOLT (M8X1.25X50MM) | |
| | 3 | 1 | **107-5795** | 1 | TUBE | |
| | 4 | 1 | **7L-6580** | 2 | SEAL-O-RING | |
| | 5 | 1 | **105-4208** | 1 | FLANGE | |
| | 6 | 1 | **7E-5555** | 1 | GASKET | |

M-METRIC PART

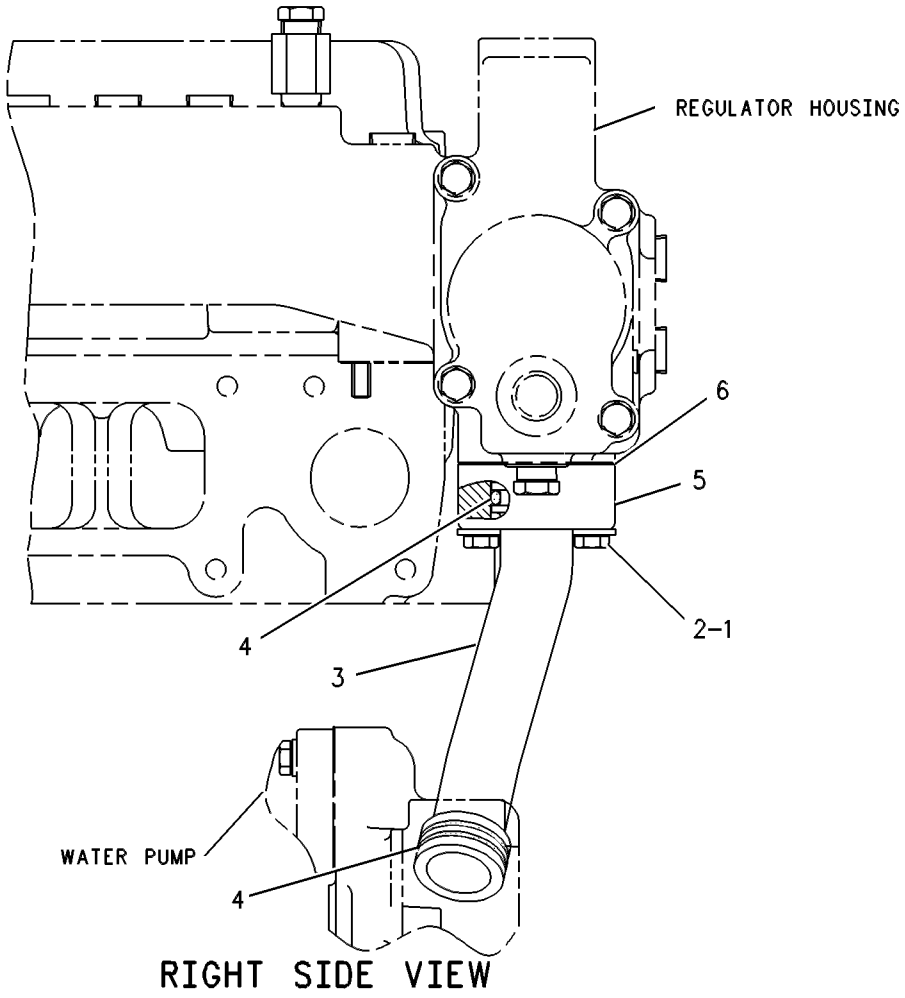


RIGHT SIDE VIEW

GRAPHIC #1 **<END>** g00251320

# COOLING SYSTEM

## *118-2808* LINES GP-WATER

**S/N: 3PD1-12556**

**PART OF 160-5101 ENGINE AR**

**SMCS-1355, 1380, 1393** **i01855586**

| NOTE | REF NO | GRAPHIC REF | PART NUMBER | QTY | PART NAME 1 2 3 4 5 6 (PRODUCT LEVEL) | SEE PAGE |
|---|---|---|---|---|---|---|
| | 1 | 1 | **101-1635** | 1 | GASKET | |
| M | 2 | 1 | **6V-3918** | 2 | BOLT (M8X1.25X50-MM) | |
| | 3 | 1 | **9M-1974** | 1 | WASHER-HARD (8.8X16X2-MM THK) | |
| | 4 | 1 | **102-8785** | 1 | ELBOW-WATER PUMP | |
| | 5 | 1 | **7X-7731** | 3 | PLUG-PIPE | |

M-METRIC PART

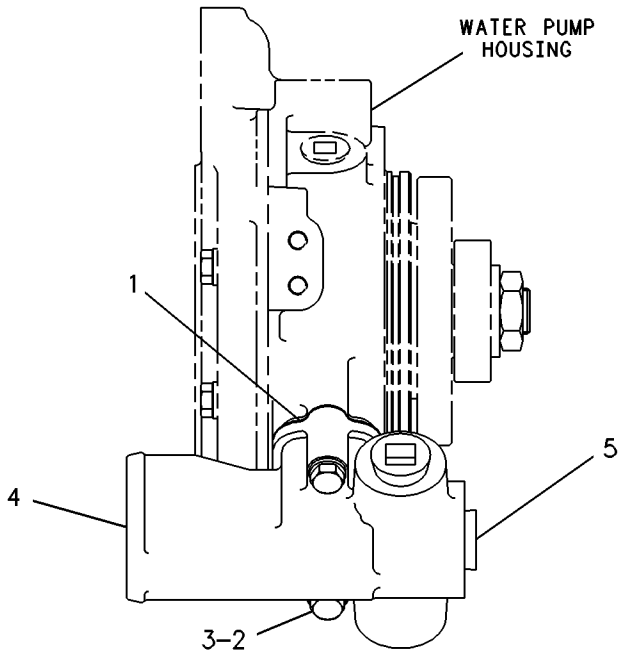


RIGHT SIDE VIEW

GRAPHIC #1 **<END>** g00232449

## *159-5439* LINES GP-WATER

**S/N: CCA1-1086**

**PART OF 159-4615 GENERAL AR**

**SMCS-1355, 1380, 1393** **i01979353**

| NOTE | REF NO | GRAPHIC REF | PART NUMBER | QTY | PART NAME 1 2 3 4 5 6 (PRODUCT LEVEL) | SEE PAGE |
|---|---|---|---|---|---|---|
| | 1 | 1 | **1P-7297** | 1 | VALVE-DRAIN (ENGINE COOLANT) | |
| | 2 | 1 | **4N-7431** | 1 | HOSE-RADIATOR | |
| | 3 | 1 | **5D-1026** | 2 | CLAMP-HOSE | |
| | 4 | 1 | **157-0670** | 1 | CAP-DUST | |
| | 5 | 1 | **7D-7026** | 2 | CONNECTOR-HOSE | |
| | 6 | 1 | **7K-1181** | 2 | STRAP-CABLE | |
| | 7 | 1 | **8N-9071** | 1 | VALVE AS (ENGINE COOLANT) | |
| | | 1 | **7N-7688** | 1 | FERRULE | |
| | | 1 | **8N-9072** | 1 | BODY-VALVE | |
| | | 1 | **9M-5590** | 1 | BALL | |
| | 8 | 1 | **8T-4984** | 8 | CLAMP-HOSE | |
| | 9 | 1 | **9B-4179** | 2 | HOSE | |
| | 10 | 1 | **174-5635** | 1 | TUBE AS | |
| | 11 | 1 | **178-6327** | 1 | HOSE | |
| | 12 | 1 | **179-2426** | 1 | BRACKET AS | |
| | 13 | 1 | **179-2966** | 1 | TUBE AS | |
| | 14 | 1 | **184-5394** | 1 | CLIP | |
| I | 15 | 1 | **212-3266** | 1 | HOSE AS | |
| | 16 | 1 | **003-9514** | 1 | COUPLING-PIPE | |
| | 17 | 1 | **154-9025** | 1 | VALVE-FLUID SAMPLING (ENGINE) | |
| | 18 | 1 | **2N-8037** | 1 | ELBOW | |
| | 19 | 1 | **4S-1962** | 1 | CLIP | |
| | 20 | 1 | **6V-1581** | 2 | CLIP (SLOT) | |
| | 21 | 1 | **6V-1582** | 2 | CLIP (TAB) | |
| | 22 | 1 | **8T-4121** | 4 | WASHER-HARD (11X21X2.5-MM THK) | |
| M | 23 | 1 | **8T-4137** | 2 | BOLT (M10X1.5X20-MM) | |
| M | 24 | 1 | **8T-4186** | 1 | BOLT (M10X1.5X40-MM) | |
| M | 25 | 1 | **8T-4195** | 1 | BOLT (M10X1.5X30-MM) | |
| E | 26 | 1 | **5P-0767** | | HOSE (48CM) | |

E-ORDER BY THE CENTIMETER
I-REFER TO HYDRAULIC INFORMATION SYSTEM
M-METRIC PART

*159-5439* **LINES GP-WATER** *(contd.)* **i01979353**

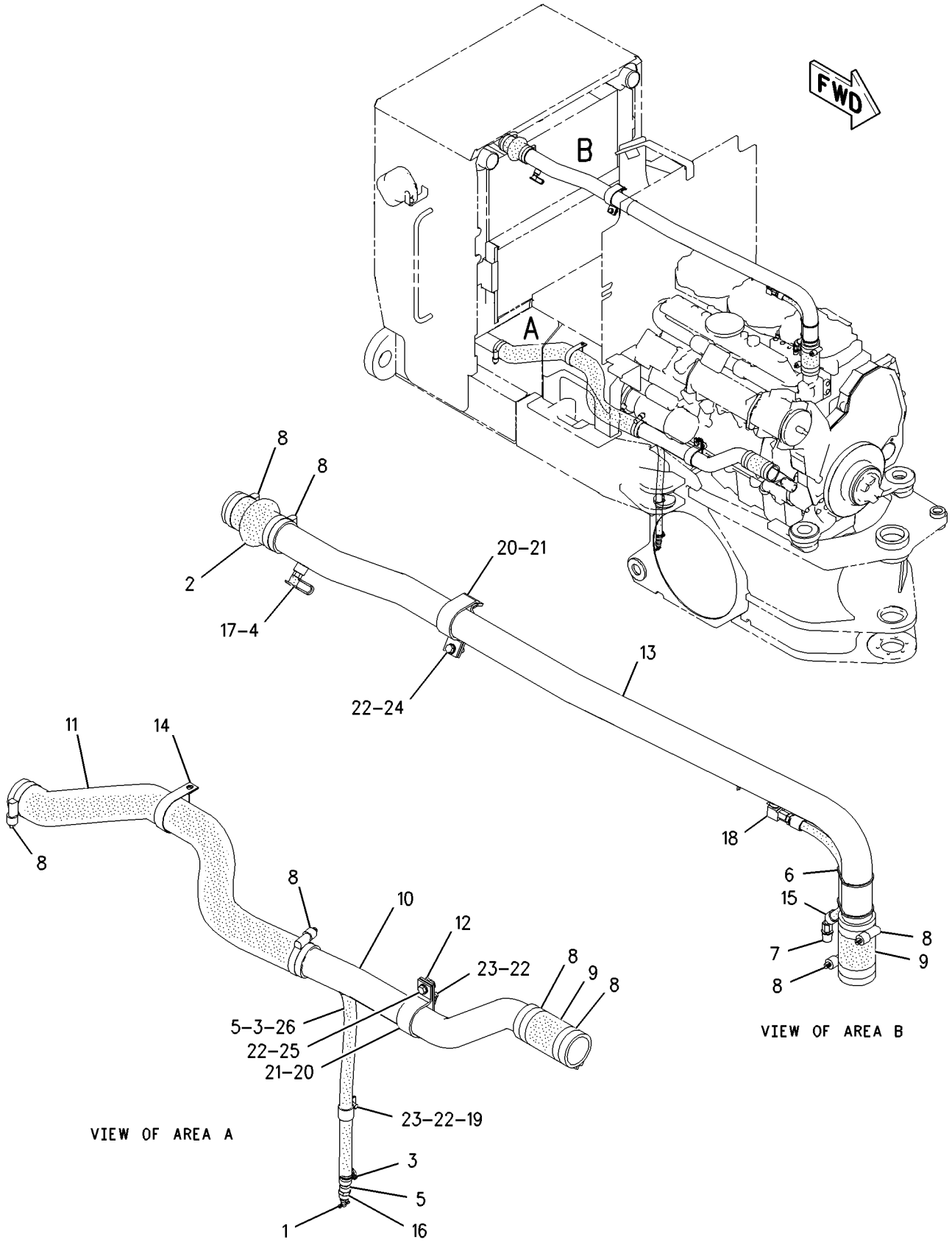


GRAPHIC #1 **<END>** g00985814

## *159-5439* LINES GP-WATER

**S/N: CCA1087-UP**

**PART OF 159-4615 GENERAL AR**

**SMCS-1355, 1380, 1393** **i02402263**

| NOTE | REF NO | GRAPHIC REF | PART NUMBER | QTY | PART NAME 1 2 3 4 5 6 (PRODUCT LEVEL) | SEE PAGE |
|---|---|---|---|---|---|---|
| | 1 | 1 | **3J-7354** | 1 | SEAL-O-RING | |
| | 2 | 1 | **4N-7431** | 1 | HOSE-RADIATOR | |
| | 4 | 1 | **157-0670** | 1 | CAP-DUST | |
| | 5 | 1 | **8C-7325** | 1 | ADAPTER | |
| | 6 | 1 | **7K-1181** | 2 | STRAP-CABLE | |
| | 7 | 1 | **281-0226** | 1 | VALVE AS | |
| | | 1 | **7N-7688** | 1 | FERRULE | |
| | | 1 | **9M-5590** | 1 | BALL | |
| | | 1 | **280-9021** | 1 | BODY-VALVE | |
| | 8 | 1 | **8T-4984** | 8 | CLAMP-HOSE | |
| E | 9 | 1 | **5P-1262** | 2 | HOSE (15.24-CM EACH) | |
| C | 10 | 1 | **251-1730** | 1 | TUBE | |
| | 11 | 1 | **178-6327** | 1 | HOSE | |
| | 12 | 1 | **179-2426** | 1 | BRACKET AS | |
| | 13 | 1 | **179-2966** | 1 | TUBE AS | |
| | 14 | 1 | **122-3606** | 1 | CLIP | |
| I | 15 | 1 | **212-3266** | 1 | HOSE AS | |
| | 16 | 1 | **3K-0360** | 1 | SEAL-O-RING | |
| | 17 | 1 | **154-9025** | 1 | VALVE-FLUID SAMPLING (ENGINE) | |
| | 18 | 1 | **2N-8037** | 1 | ELBOW | |
| | 20 | 1 | **6V-1581** | 2 | CLIP (SLOT) | |
| | 21 | 1 | **6V-1582** | 2 | CLIP (TAB) | |
| C | 22 | 1 | **8T-4121** | 3 | WASHER-HARD (11X21X2.5-MM THK) | |
| CM | 23 | 1 | **8T-4137** | 1 | BOLT (M10X1.5X20-MM) | |
| M | 24 | 1 | **8T-4186** | 1 | BOLT (M10X1.5X40-MM) | |
| M | 25 | 1 | **8T-4195** | 1 | BOLT (M10X1.5X30-MM) | |

C-CHANGE FROM PREVIOUS TYPE
E-ORDER BY THE CENTIMETER
I-REFER TO HYDRAULIC INFORMATION SYSTEM
M-METRIC PART

*159-5439* **LINES GP-WATER** *(contd.)* **i02402263**

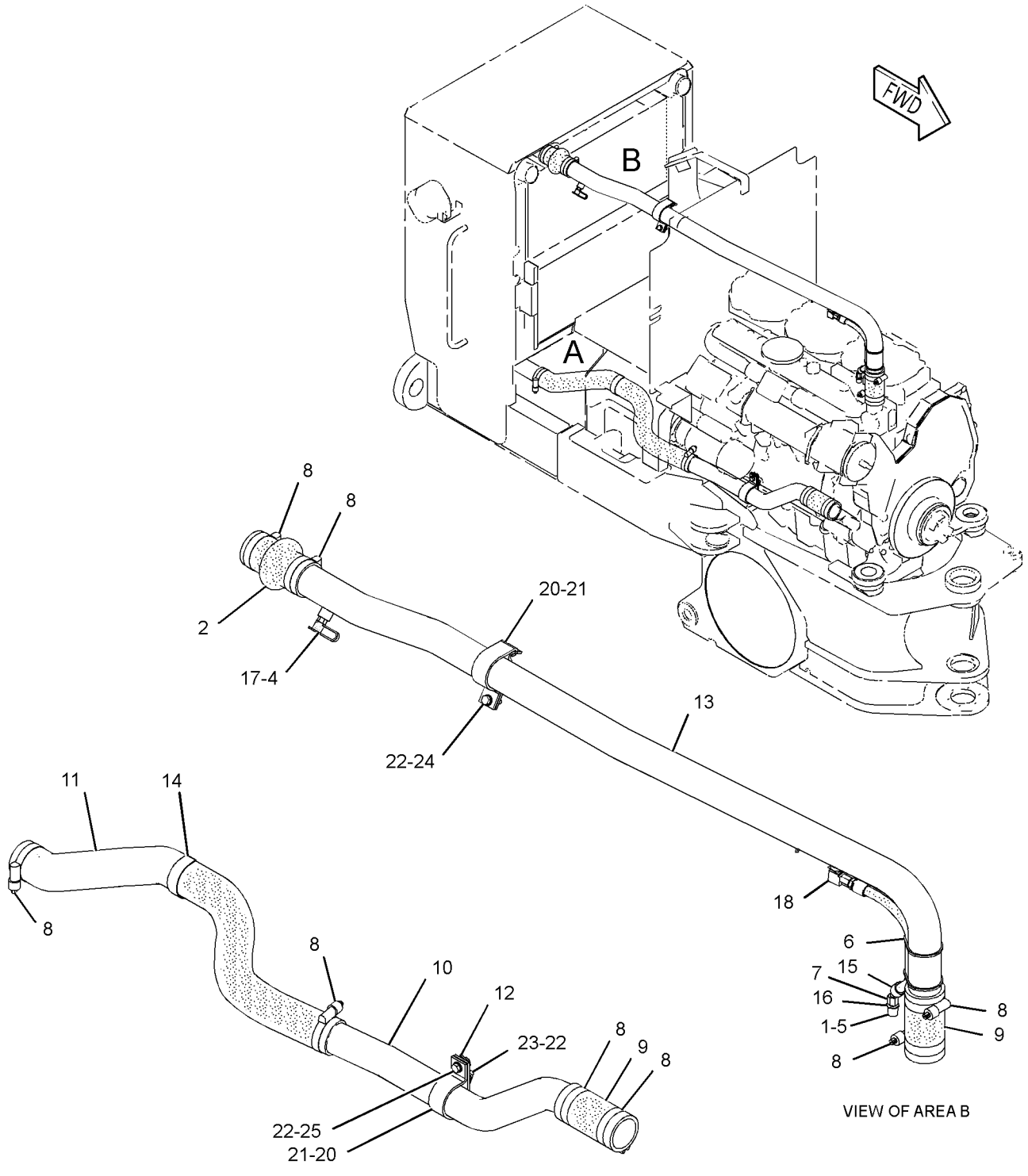


GRAPHIC #1 **<END>** g01224601

# COOLING SYSTEM

## *215-2063* LINES GP-WATER

**S/N: 3PD1-14464**

**PART OF 160-5101 ENGINE AR**

**SMCS-1355, 1380, 1393** **i01855571**

| NOTE | REF NO | GRAPHIC REF | PART NUMBER | QTY | PART NAME 1 2 3 4 5 6 (PRODUCT LEVEL) | SEE PAGE |
|---|---|---|---|---|---|---|
| Y | 1 | 1 | *215-2062* | 1 | HOUSING & REGULATOR GP | 79 |
| | 2 | 1 | **118-2797** | 4 | GASKET | |
| M | 3 | 1 | **5P-8347** | 7 | BOLT (M8X1.25X70MM) | |
| M | 4 | 1 | **6V-3821** | 1 | BOLT (M8X1.25X110MM) | |
| | 5 | 1 | **9M-1974** | 8 | WASHER-HARD (8.8X16X2MM THK) | |

M-METRIC PART
Y-SEPARATE ILLUSTRATION

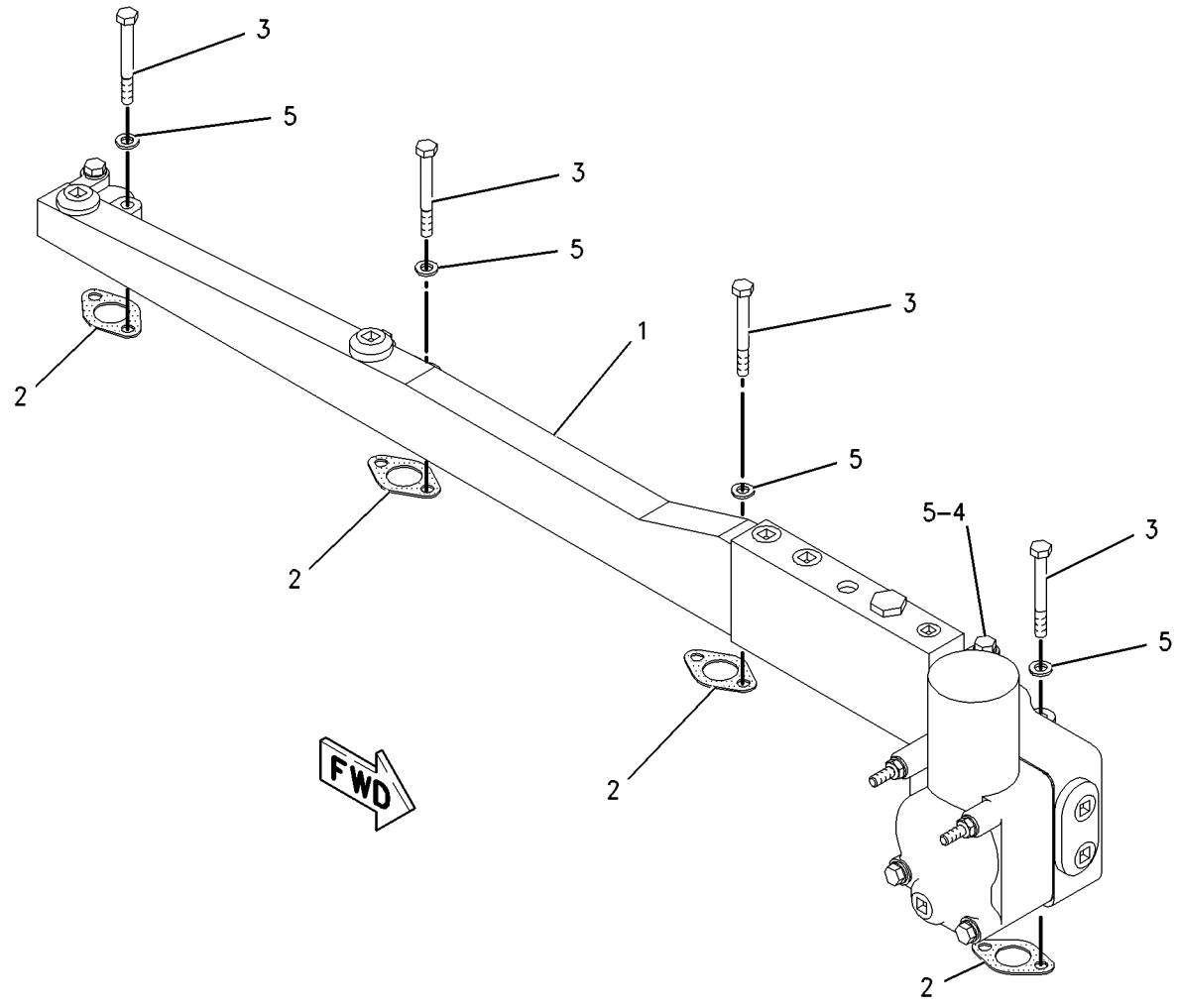


GRAPHIC #1 **<END>** g00840862

# COOLING SYSTEM

## *215-2063* LINES GP-WATER

**S/N: 3PD14465-UP**

**PART OF 160-5101 ENGINE AR**

**SMCS-1355, 1380, 1393** **i02469829**

| NOTE | REF NO | GRAPHIC REF | PART NUMBER | QTY | PART NAME 1 2 3 4 5 6 (PRODUCT LEVEL) | SEE PAGE |
|---|---|---|---|---|---|---|
| CY | 1 | 1 | *262-7139* | 1 | HOUSING & REGULATOR GP | 80 |
| | 2 | 1 | **118-2797** | 4 | GASKET | |
| M | 3 | 1 | **5P-8347** | 7 | BOLT (M8X1.25X70-MM) | |
| M | 4 | 1 | **6V-3821** | 1 | BOLT (M8X1.25X110-MM) | |
| | 5 | 1 | **9M-1974** | 8 | WASHER-HARD (8.8X16X2-MM THK) | |

C-CHANGE FROM PREVIOUS TYPE
M-METRIC PART
Y-SEPARATE ILLUSTRATION

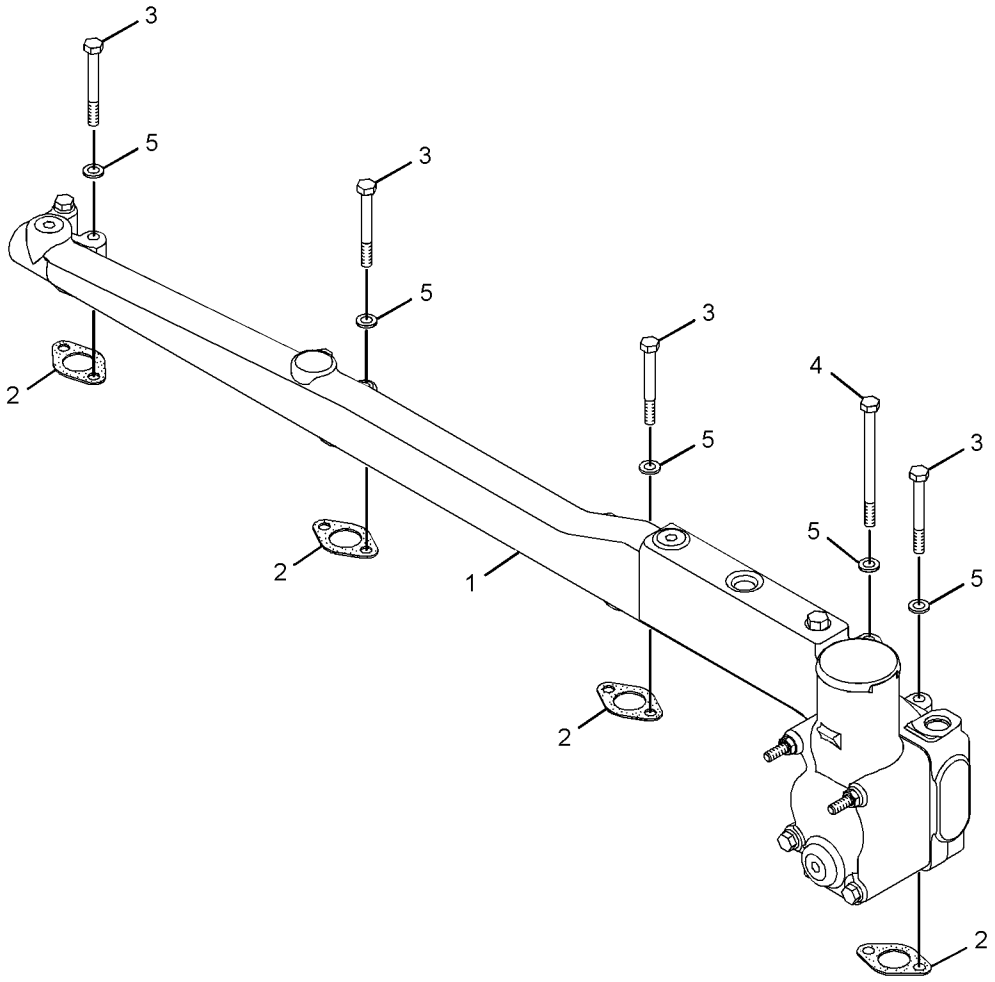


GRAPHIC #1 **<END>** g01268036

## *255-5307* LINES GP-WATER

**S/N: 3PD12557-UP**

**PART OF 160-5101 ENGINE AR**

**SMCS-1355, 1380, 1393** **i02339550**

| NOTE | REF NO | GRAPHIC REF | PART NUMBER | QTY | PART NAME 1 2 3 4 5 6 (PRODUCT LEVEL) | SEE PAGE |
|---|---|---|---|---|---|---|
| | 1 | 1 | **101-1635** | 1 | GASKET | |
| | 2 | 1 | **254-9177** | 1 | ELBOW-WATER PUMP | |
| M | 3 | 1 | **6V-3918** | 2 | BOLT (M8X1.25X50-MM) | |
| | 4 | 1 | **6V-5063** | 3 | SEAL-O-RING | |
| | 5 | 1 | **9M-1974** | 2 | WASHER-HARD (8.8X16X2-MM THK) | |
| | 6 | 1 | **9S-4183** | 3 | PLUG-O RING | |

M-METRIC PART

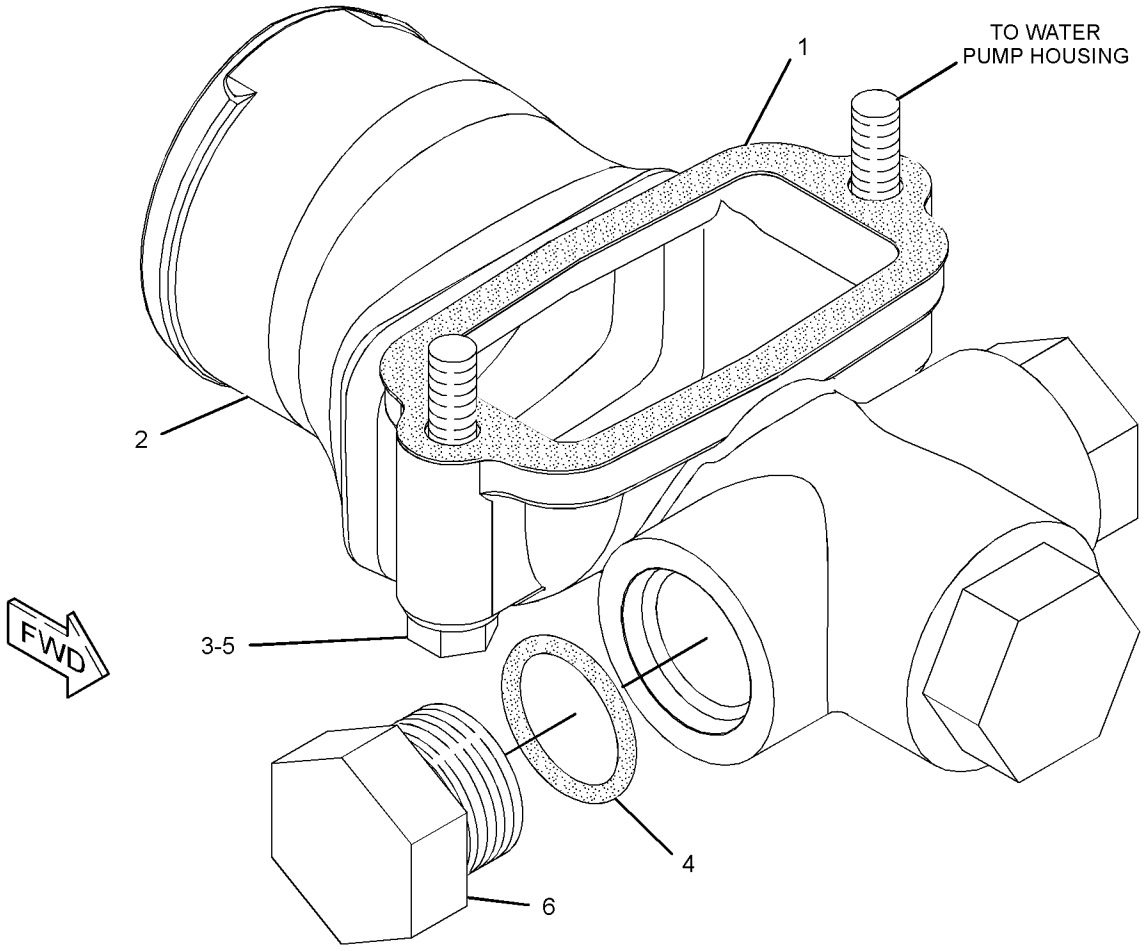


GRAPHIC #1 **<END>** g01175486

# COOLING SYSTEM

## *184-0874* PLATE GP-RADIATOR

**S/N: CCA895-UP**

**PART OF 185-1542 COOLING AR**

**SMCS-1353** **i02168705**

| NOTE | REF NO | GRAPHIC REF | PART NUMBER | QTY | PART NAME 1 2 3 4 5 6 (PRODUCT LEVEL) | SEE PAGE |
|---|---|---|---|---|---|---|
| | 1 | 1 | **184-0871** | 1 | PLATE | |
| | 2 | 1 | **199-2711** | 2 | SPACER (7.82X26.67X75-MM THK) | |
| M | 3 | 1 | **2Y-5829** | 4 | NUT (M10X1.5-THD) | |
| M | 4 | 1 | **6V-4248** | 4 | BOLT (M10X1.5X25-MM) | |
| | 5 | 1 | **6V-5839** | 8 | WASHER (11X21X2.5-MM THK) | |
| M | 6 | 1 | **8T-4178** | 2 | BOLT (M10X1.5X90-MM) | |
| | 7 | 1 | **8T-4222** | 2 | WASHER-PLATED (11X32X2.5-MM THK) | |

M-METRIC PART

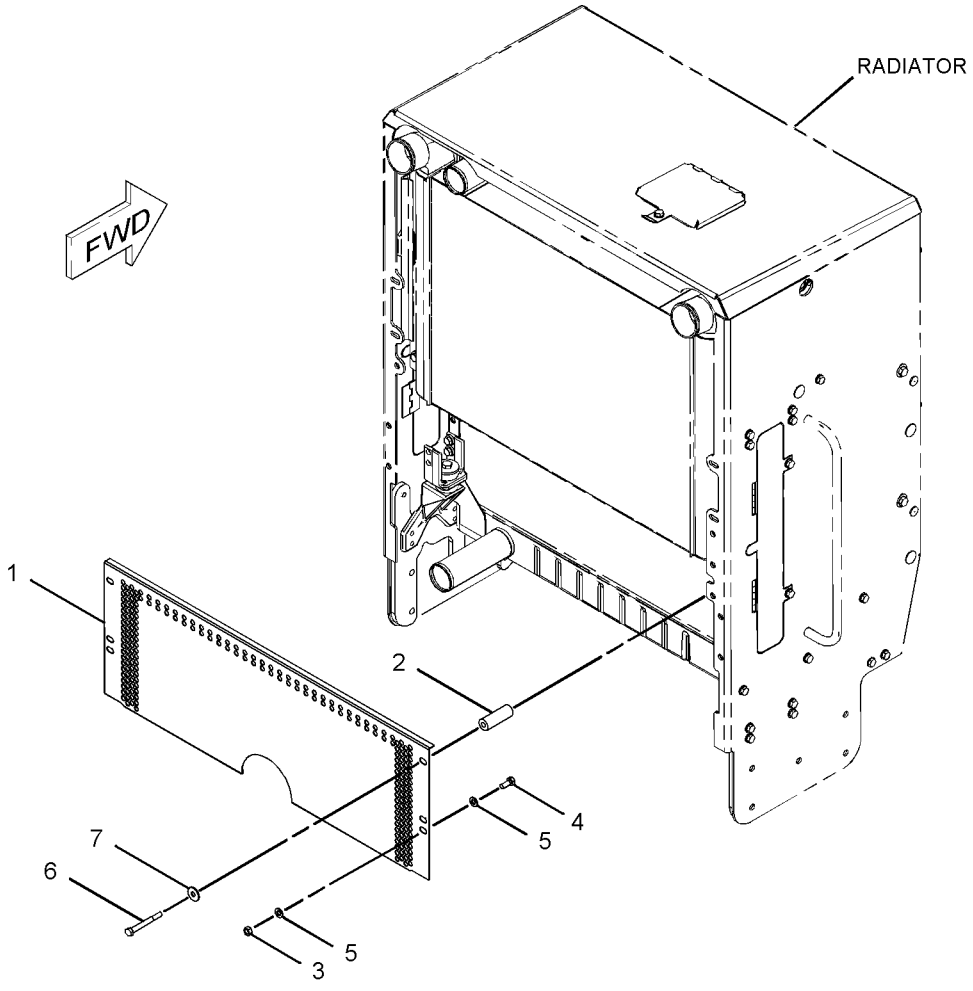


GRAPHIC #1 **<END>** g01074952

## *117-2674* PUMP GP-WATER

**S/N: 3PD1-UP**

**PART OF 160-5101 ENGINE AR**

**SMCS-1361** **i01855200**

| NOTE | REF NO | GRAPHIC REF | PART NUMBER | QTY | PART NAME 1 2 3 4 5 6 (PRODUCT LEVEL) | SEE PAGE |
|---|---|---|---|---|---|---|
| YR | 1 | 1 | **176-7000** | 1 | PUMP GP-WATER | 92 |
| M | 2 | 1 | **6V-5221** | 2 | BOLT (M8X1.25X80MM) | |
| | 3 | 1 | **9M-1974** | 2 | WASHER-HARD (8.8X16X2MM THK) | |
| | 4 | 1 | **6V-7350** | 1 | SEAL-O-RING | |

M-METRIC PART
R-REMFG PART MAY BE AVAILABLE
Y-SEPARATE ILLUSTRATION

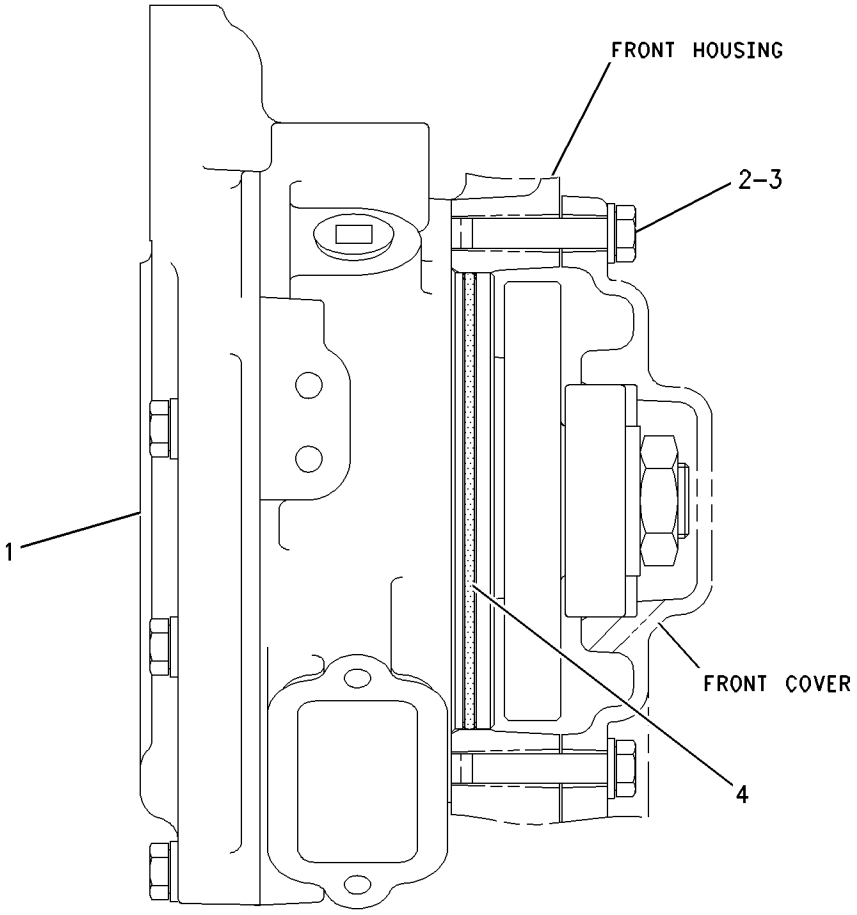


RIGHT SIDE VIEW

GRAPHIC #1 **<END>** g00796828

# COOLING SYSTEM

## *176-7000* PUMP GP-WATER*R

**S/N: 3PD1-UP**

**PART OF 117-2674 PUMP GP-WATER**

**SMCS-1361** **i01855709**

| NOTE | REF NO | GRAPHIC REF | PART NUMBER | QTY | PART NAME 1 2 3 4 5 6 (PRODUCT LEVEL) | SEE PAGE |
|---|---|---|---|---|---|---|
| | 1 | 1 | **9Y-3513** | 1 | GEAR (41-TEETH) | |
| | 2 | 1 | **105-4210** | 1 | GASKET | |
| | 3 | 1 | **147-5088** | 1 | SEAL AS-WATER PUMP | |
| | 4 | 1 | **176-6994** | 1 | WASHER | |
| | 5 | 1 | **176-6995** | 1 | COVER-PUMP | |
| | 6 | 1 | **176-6997** | 1 | SHAFT | |
| | 7 | 1 | **176-6998** | 1 | IMPELLER-PUMP | |
| | 8 | 1 | **176-6999** | 1 | HOUSING AS-PUMP | |
| | 9 | 1 | **1B-3867** | 2 | BALL BEARING | |
| M | 10 | 1 | **6V-3940** | 6 | BOLT (M8X1.25X25-MM) | |
| | 11 | 1 | **7X-7731** | 1 | PLUG-PIPE | |
| | 12 | 1 | **8C-3100** | 1 | SEAL-LIP TYPE | |
| | 13 | 1 | **8T-6762** | 1 | PLUG-PIPE | |
| M | 14 | 1 | **8T-9515** | 1 | BOLT-SOCKET HEAD (M10X1.5X40-MM) | |
| | 15 | 1 | **8T-9598** | 1 | RING-RETAINING | |
| | 16 | 1 | **9M-1974** | 6 | WASHER-HARD (8.8X16X2-MM THK) | |

M-METRIC PART

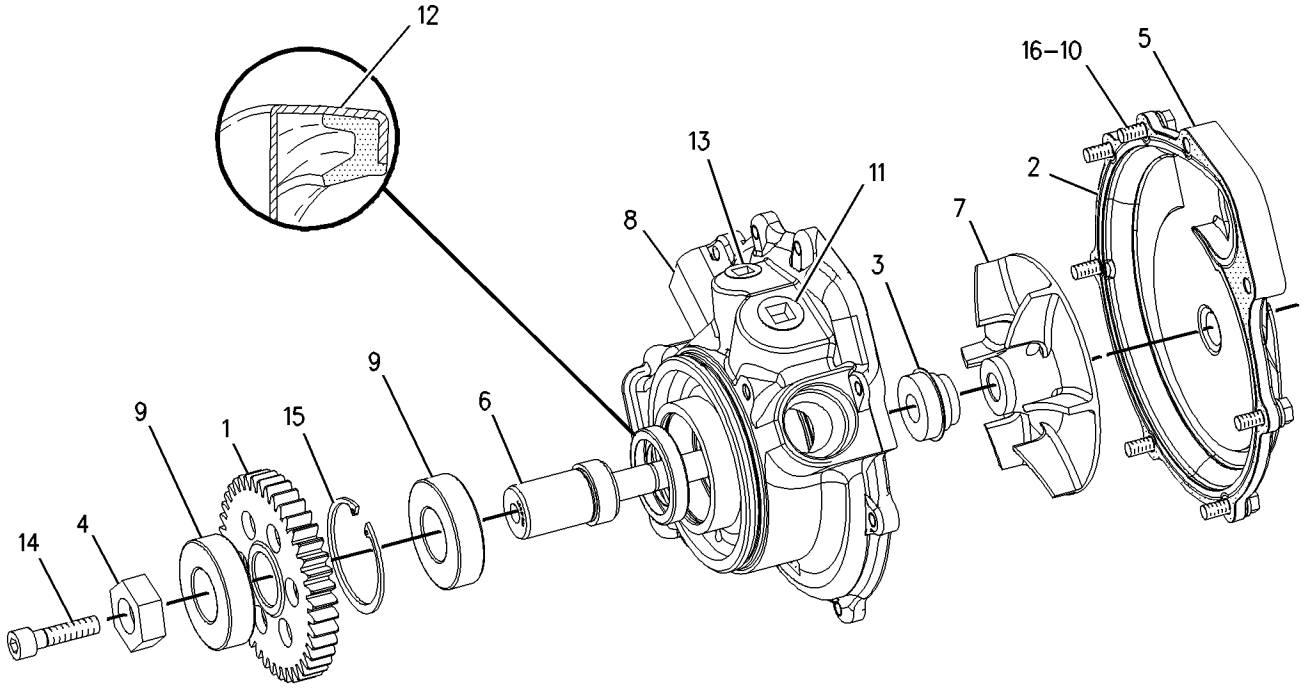


GRAPHIC #1 **<END>** g00713988

## 180-7004 RADIATOR GP

**S/N: CCA1-894**
**PART OF 185-1542, 191-9260 COOLING AR**
**ALSO AN ATTACHMENT**

**SMCS-1353** **i02207315**

| NOTE | REF NO | GRAPHIC REF | PART NUMBER | QTY | PART NAME 1 2 3 4 5 6 (PRODUCT LEVEL) | SEE PAGE |
|---|---|---|---|---|---|---|
| | 1 | 1 | **4H-2633** | 4 | CLIP | |
| | 2 | 1 | **6L-8617** | 1 | CAP-PRESSURE (7-PSI) | |
| | 3 | 1 | **8N-8846** | 1 | NECK-FILLER | |
| | 4 | 1 | **9Y-9236** | 1 | GAUGE-SIGHT | |
| G | 5 | 1 | **9X-2388** | | HOSE (63-IN) | |

G-ORDER BY THE INCH

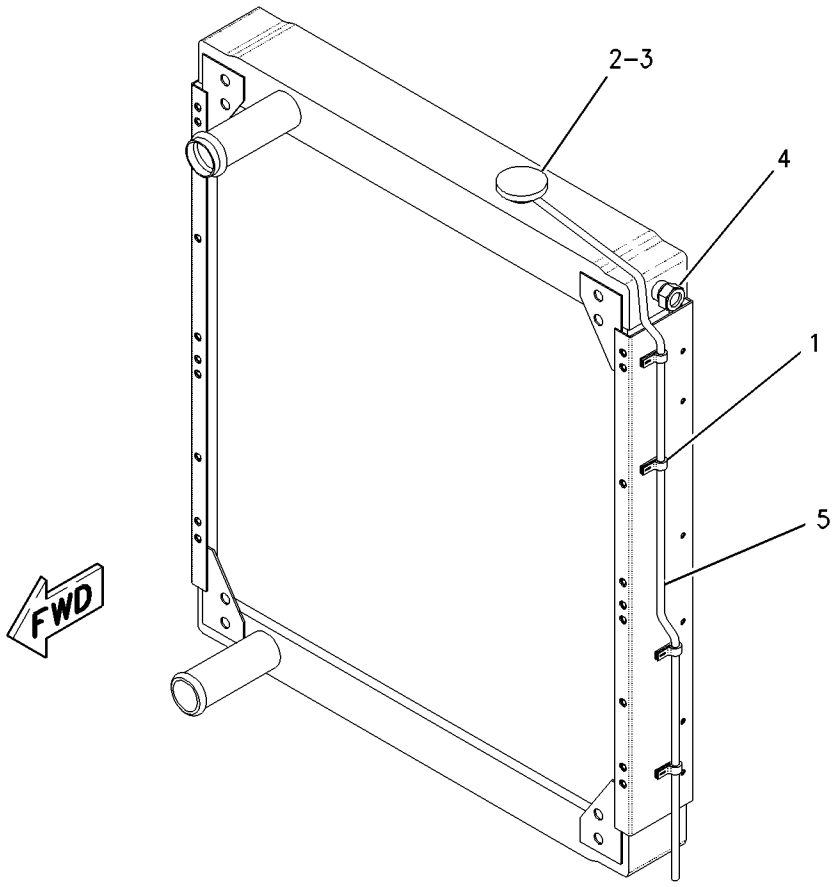


GRAPHIC #1 **<END>** g00954123

# COOLING SYSTEM

## *241-6949* RADIATOR GP

**S/N: CCA895-UP**

**PART OF 185-1542 COOLING AR**

**SMCS-1353** **i02158686**

| NOTE | REF NO | GRAPHIC REF | PART NUMBER | QTY | PART NAME 1 2 3 4 5 6 (PRODUCT LEVEL) | SEE PAGE |
|---|---|---|---|---|---|---|
| | 1 | 1 | **4H-2633** | 4 | CLIP | |
| | 2 | 1 | **6L-8617** | 1 | CAP-PRESSURE (7-PSI) | |
| | 3 | 1 | **8N-8846** | 1 | NECK-FILLER | |
| | 4 | 1 | **9Y-9236** | 1 | GAUGE-SIGHT (COOLANT LEVEL) | |
| G | 5 | 1 | **9X-2388** | | HOSE (63-IN) | |

G-ORDER BY THE INCH

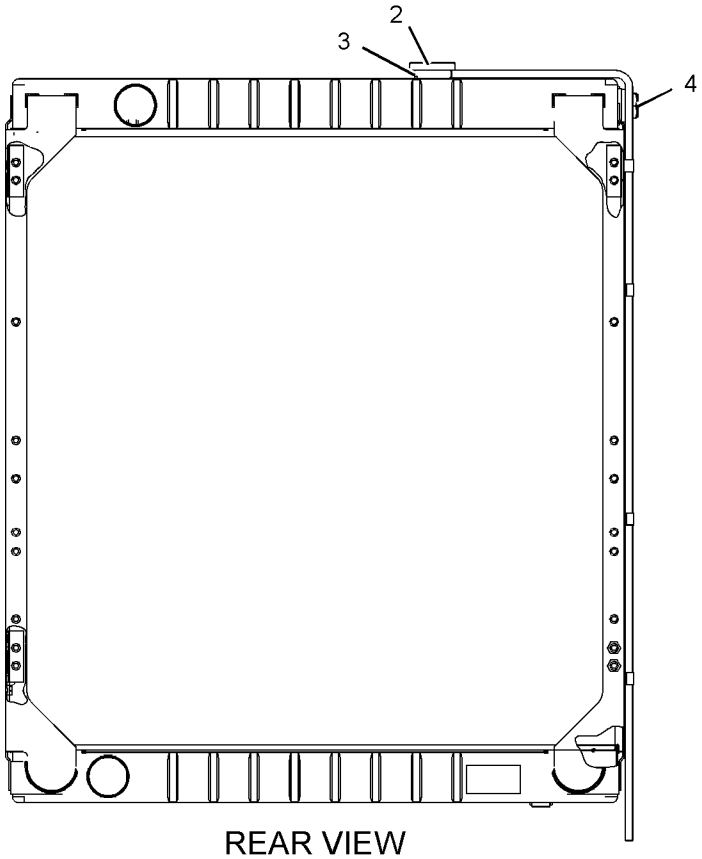


REAR VIEW

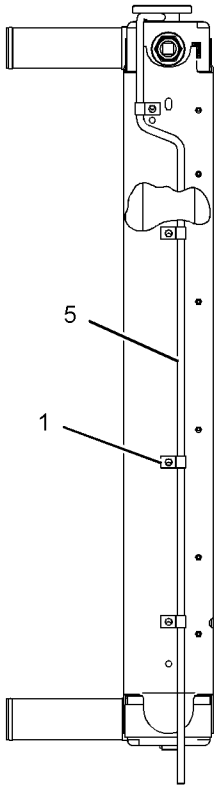


RIGHT SIDE VIEW

GRAPHIC #1 **<END>** g01079093

# AIR INLET AND EXHAUST SYSTEM

## *163-0310* AFTERCOOLER & MOUNTING GP

**S/N: CCA1-UP**
**PART OF 185-1542, 191-9260 COOLING AR**
**ALSO AN ATTACHMENT**

**SMCS-1063** **i02203528**

| NOTE | REF NO | GRAPHIC REF | PART NUMBER | QTY | PART NAME 1 2 3 4 5 6 (PRODUCT LEVEL) | SEE PAGE |
|---|---|---|---|---|---|---|
| | 1 | 1 | **167-3911** | 1 | CORE AS-AFTERCOOLER | |
| | 2 | 1 | **199-2711** | 2 | SPACER (7.82X26.67X75-MM THK) | |
| | 3 | 1 | **4S-9191** | 4 | WASHER (12X22.5X5-MM THK) | |
| M | 4 | 1 | **6V-1820** | 4 | BOLT (M10X1.5X30-MM) | |
| | 5 | 1 | **7X-7729** | 2 | WASHER (11X25X3-MM THK) | |
| M | 6 | 1 | **8T-5436** | 2 | BOLT (M10X1.5X130-MM) | |
| E | 7 | 1 | **123-3827** | 2 | SEAL (42-CM EACH) | |

E-ORDER BY THE CENTIMETER
M-METRIC PART

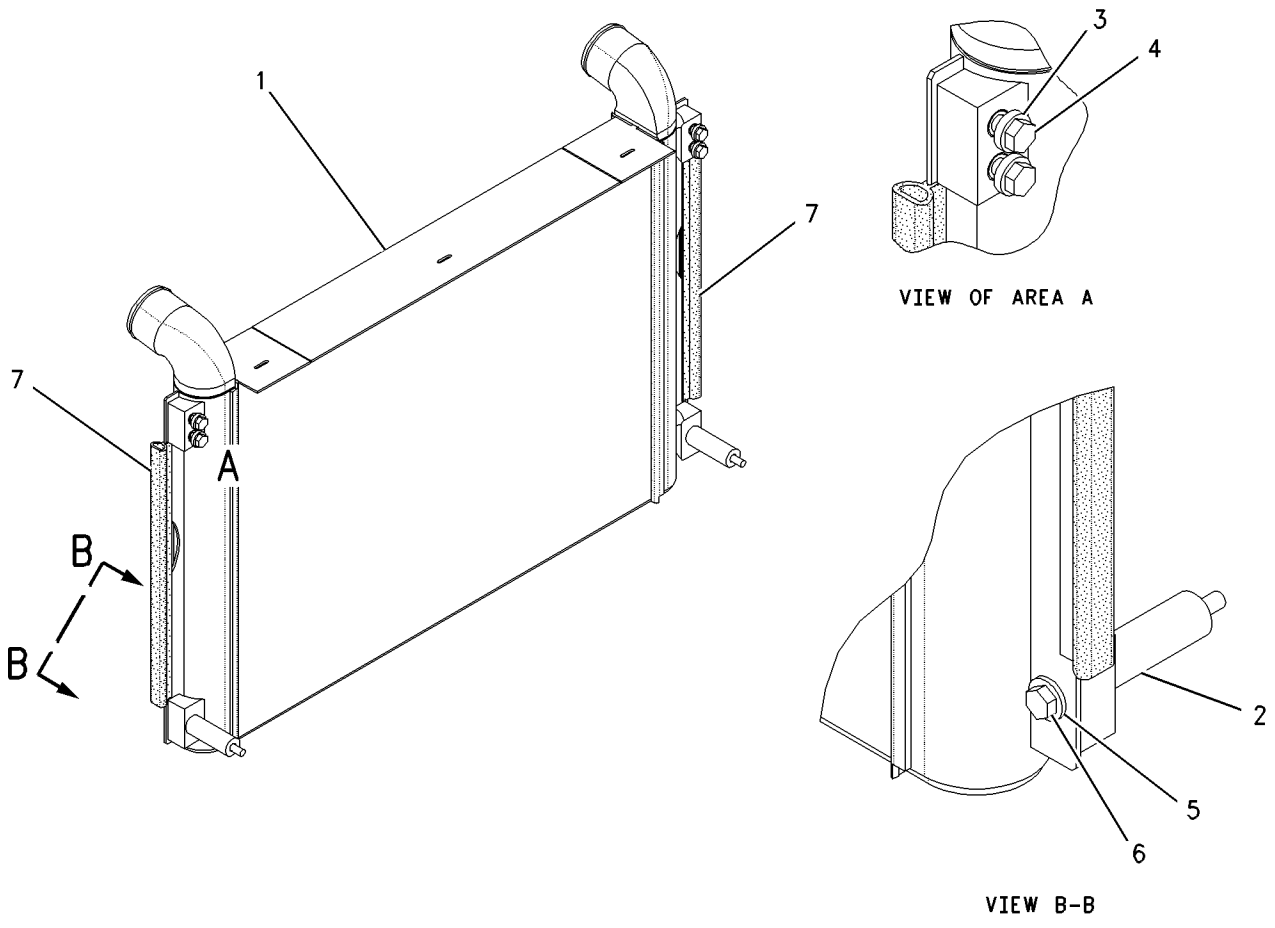


GRAPHIC #1 **<END>** g00954129

# AIR INLET AND EXHAUST SYSTEM

## *159-7364* AIR CLEANER GP

**S/N: CCA1-UP**

**PART OF 159-4615 GENERAL AR**

**SMCS-1051, 1054** **i02454518**

| NOTE | REF NO | GRAPHIC REF | PART NUMBER | QTY | PART NAME 1 2 3 4 5 6 (PRODUCT LEVEL) | SEE PAGE |
|---|---|---|---|---|---|---|
| | 1 | 1 | **5P-4405** | 1 | CONNECTOR-AIR | |
| Y | 2 | 1 | **7S-9396** | 1 | PRESCREENER AS | 106 |
| | 3 | 1 | **8N-2694** | 1 | INDICATOR GP-AIR FILTER CHANGE | |
| | 4 | 1 | **9M-2904** | 2 | CLAMP-HOSE | |
| | 5 | 1 | **174-1610** | 1 | HOSE | |
| Y | 6 | 1 | **174-1612** | 1 | AIR CLEANER GP | 98 |
| | 7 | 1 | **174-1613** | 1 | BRACKET AS | |
| M | | 1 | **8T-3490** | 2 | NUT-WELD (M10X1.5-THD) | |
| | 8 | 1 | **193-1758** | 1 | BRACKET AS | |
| M | | 1 | **8T-3490** | 2 | NUT-WELD (M10X1.5-THD) | |
| | 9 | 1 | **237-0226** | 2 | CLAMP | |
| | 10 | 1 | **5K-5068** | 1 | FITTING | |
| | 11 | 1 | **5P-4423** | 1 | ELBOW | |
| | 12 | 1 | **7X-7729** | 10 | WASHER (11X25X3-MM THK) | |
| M | 13 | 1 | **8T-4195** | 8 | BOLT (M10X1.5X30-MM) | |
| M | 14 | 1 | **8T-4196** | 2 | BOLT (M10X1.5X35-MM) | |
| E | 15 | 1 | **5P-2817** | | HOSE (38-CM) | |
| D | 16 | 1 | **5P-6011** | | TUBE (0.4-M) | |

D-ORDER BY THE METER
E-ORDER BY THE CENTIMETER
M-METRIC PART
Y-SEPARATE ILLUSTRATION

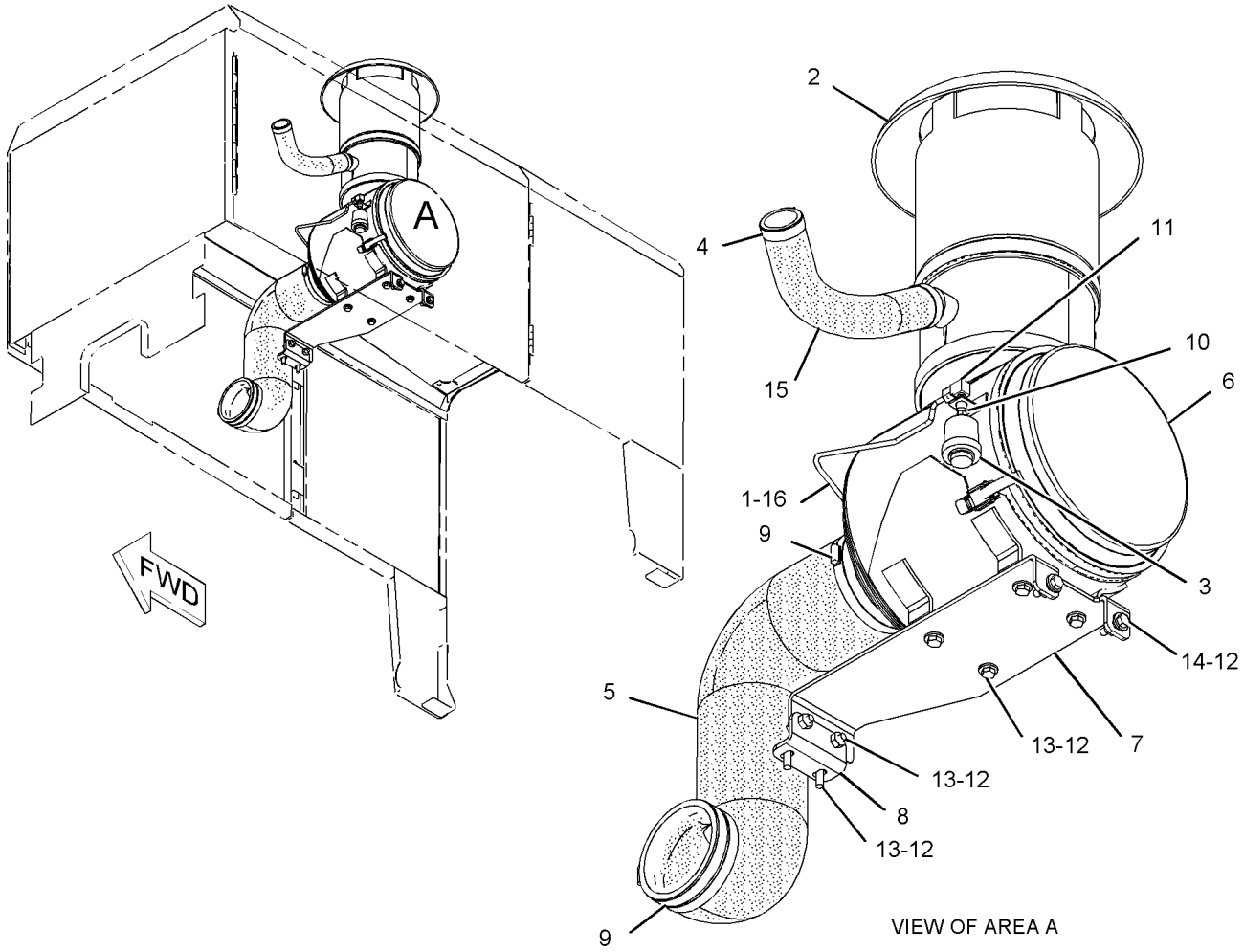


GRAPHIC #1

**<END>**

g01112745

# AIR INLET AND EXHAUST SYSTEM

## 174-1612 AIR CLEANER GP

**S/N: CCA1-UP**

**PART OF 159-7364 AIR CLEANER GP**

**SMCS-1051, 1054** **i02023644**

| NOTE | REF NO | GRAPHIC REF | PART NUMBER | QTY | PART NAME 1 2 3 4 5 6 (PRODUCT LEVEL) | SEE PAGE |
|---|---|---|---|---|---|---|
| | 1 | 1 | **6I-0273** | 1 | ELEMENT AS-PRIMARY | |
| | 2 | 1 | **6I-0274** | 1 | ELEMENT AS-SECONDARY | |
| | 3 | 1 | **6I-0275** | 1 | COVER AS-AIR CLEANER | |
| | | 1 | **4P-5524** | 1 | SEAL-O-RING | |
| | | 1 | **101-2850** | 1 | FILM-INFORMATION (AIR CLEANER) | |
| | 4 | 1 | **8N-4617** | 1 | KIT-AIR CLEANER CLAMP | |
| | | 1 | **1N-4403** | 1 | CLIP AS | |
| | | 1 | **9B-2596** | 1 | RIVET | |
| | 5 | 1 | **227-2517** | 1 | PRECLEANER | |
| | 6 | 1 | **227-4676** | 1 | AIR CLEANER GP | |

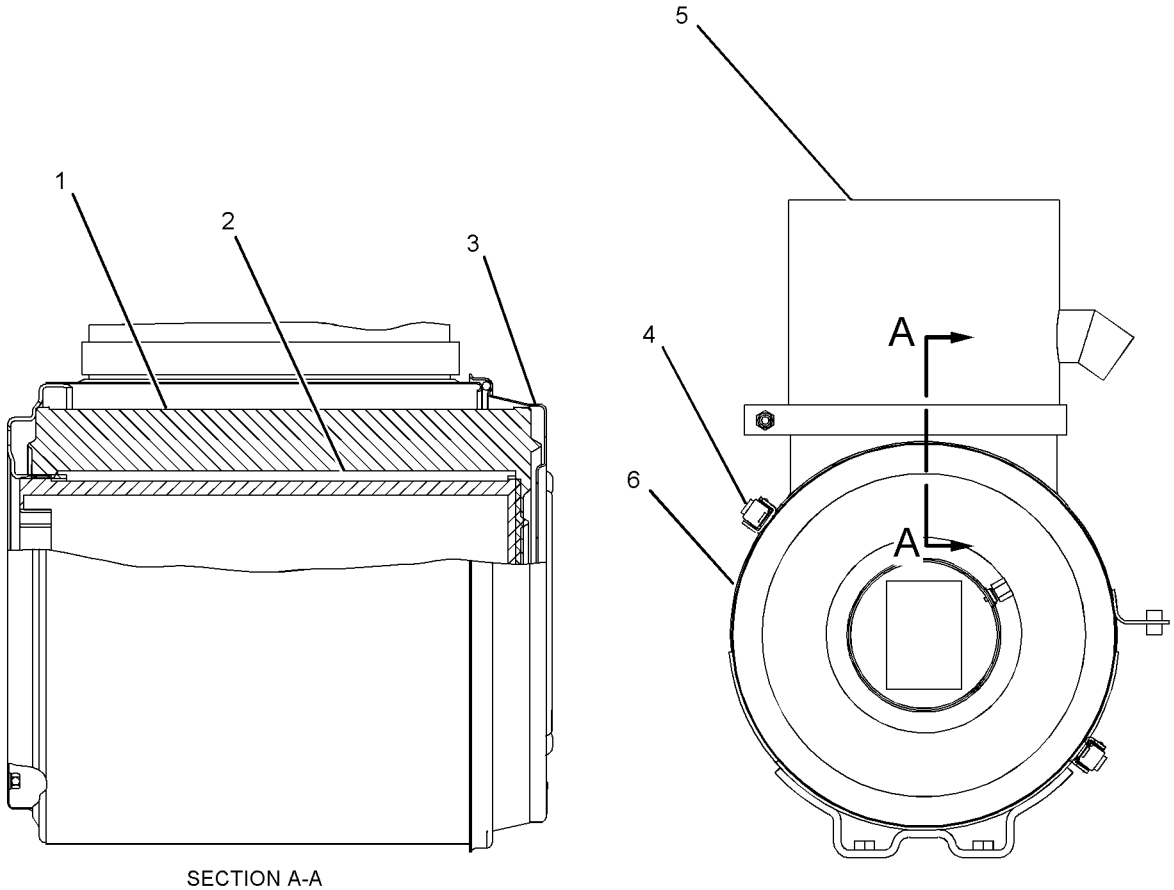


SECTION A-A

GRAPHIC #1 **<END>** g01049616

# AIR INLET AND EXHAUST SYSTEM

## *165-6762* LINES GP-AIR–AFTERCOOLER

**S/N: CCA1-UP**

**PART OF 159-4615 GENERAL AR**

**SMCS-1071** **i02365190**

| NOTE | REF NO | GRAPHIC REF | PART NUMBER | QTY | PART NAME 1 2 3 4 5 6 (PRODUCT LEVEL) | SEE PAGE |
|---|---|---|---|---|---|---|
| | 1 | 1 | **7E-8629** | 2 | HOSE-REDUCER | |
| | 2 | 1 | **9R-5008** | 2 | SPACER (11X20X6-MM THK) | |
| | 3 | 1 | **127-0929** | 1 | CLAMP | |
| | 4 | 1 | **129-6400** | 1 | ADAPTER | |
| | 5 | 1 | **163-0319** | 1 | TUBE | |
| | 6 | 1 | **177-0581** | 2 | HOSE | |
| | 7 | 1 | *177-2202* | 1 | ELBOW GP | |
| | | 1 | **174-1602** | 1 | ELBOW | |
| M | | 1 | **6V-2317** | 4 | BOLT (M8X1.25X30-MM) | |
| | | 1 | **8T-6765** | 1 | PLUG-PIPE | |
| | | 1 | **9M-1974** | 4 | WASHER-HARD (8.8X16X2-MM THK) | |
| | | 1 | **101-3125** | 1 | GASKET (AIR INLET MANIFOLD) | |
| | 8 | 1 | **177-9615** | 1 | TUBE | |
| | 9 | 1 | **209-4578** | 6 | CLAMP | |
| | 10 | 1 | **208-7448** | 2 | CLAMP | |
| | 11 | 1 | **2A-3034** | 2 | CLAMP-AIR CLEANER | |
| | 12 | 1 | **7X-7729** | 2 | WASHER (11X25X3-MM THK) | |
| | 13 | 1 | **8C-3089** | 1 | SEAL-O-RING | |
| M | 14 | 1 | **8T-4196** | 2 | BOLT (M10X1.5X35-MM) | |

M-METRIC PART

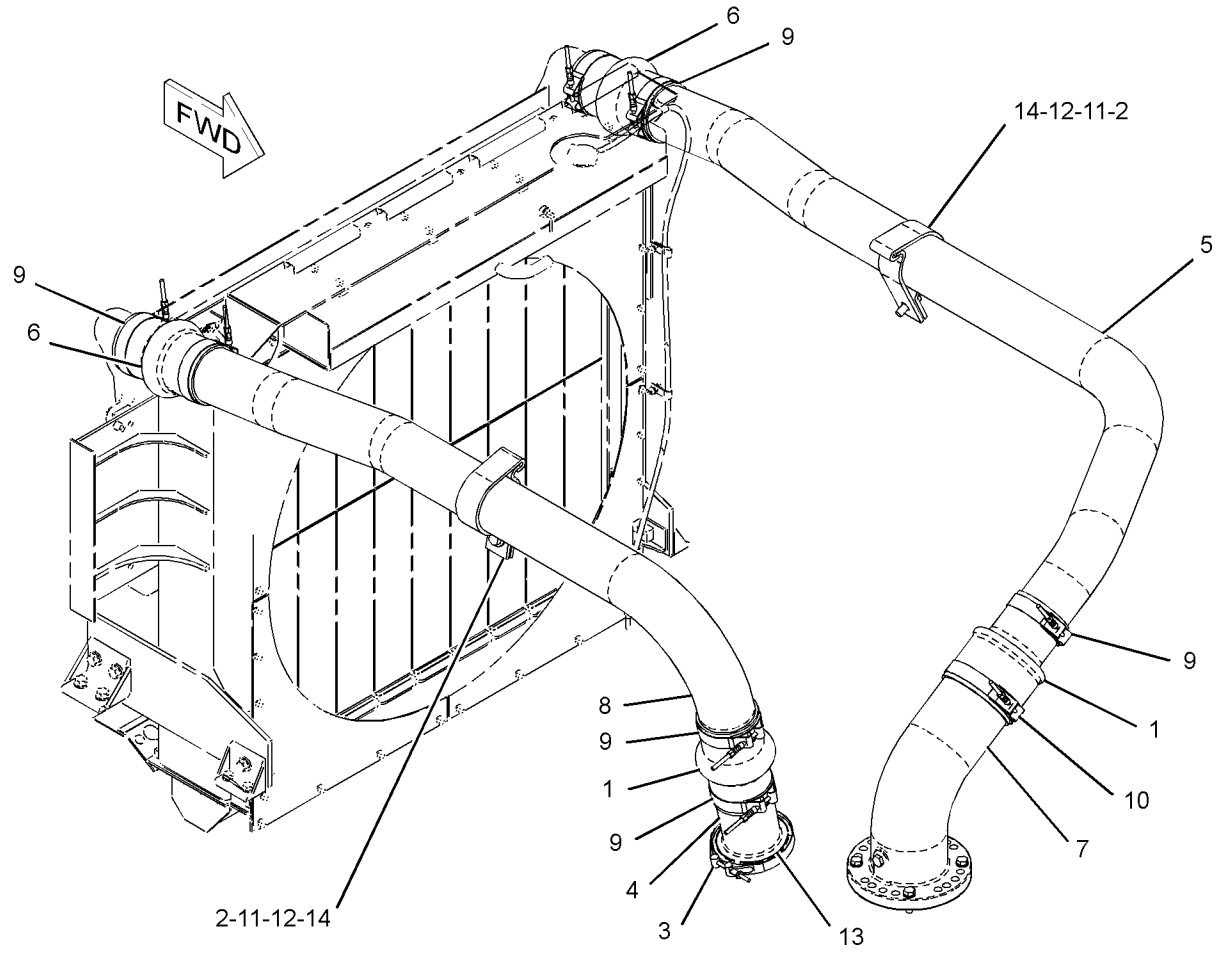


GRAPHIC #1 **<END>** g01197833

# AIR INLET AND EXHAUST SYSTEM

## *209-7827* LINES GP-AIR–TANK

**S/N: CCA1-UP**

**PART OF 159-4615 GENERAL AR**

**SMCS-1071** **i01814299**

| NOTE | REF NO | GRAPHIC REF | PART NUMBER | QTY | PART NAME 1 2 3 4 5 6 (PRODUCT LEVEL) | SEE PAGE |
|---|---|---|---|---|---|---|
| | 1 | 1 | **2H-3940** | 1 | ELBOW | |
| | 2 | 1 | **8W-1614** | 2 | CLIP | |
| | 3 | 1 | **8W-8528** | 4 | SLEEVE | |
| I | 4 | 1 | **8X-5395** | 1 | HOSE AS | |
| | 5 | 1 | **177-4142** | 1 | HOSE AS | |
| | 6 | 1 | **3V-0409** | 1 | SPACER (0.423X0.675X1.25-IN THK) | |
| | 7 | 1 | **4D-2560** | 1 | CONNECTOR-PIPE | |
| | 8 | 1 | **8L-5008** | 1 | ELBOW-PIPE | |
| | 9 | 1 | **8T-4121** | 1 | WASHER-HARD (11X21X2.5-MM THK) | |
| M | 10 | 1 | **8T-4185** | 1 | BOLT (M10X1.5X50-MM) | |

I-REFER TO HYDRAULIC INFORMATION SYSTEM
M-METRIC PART

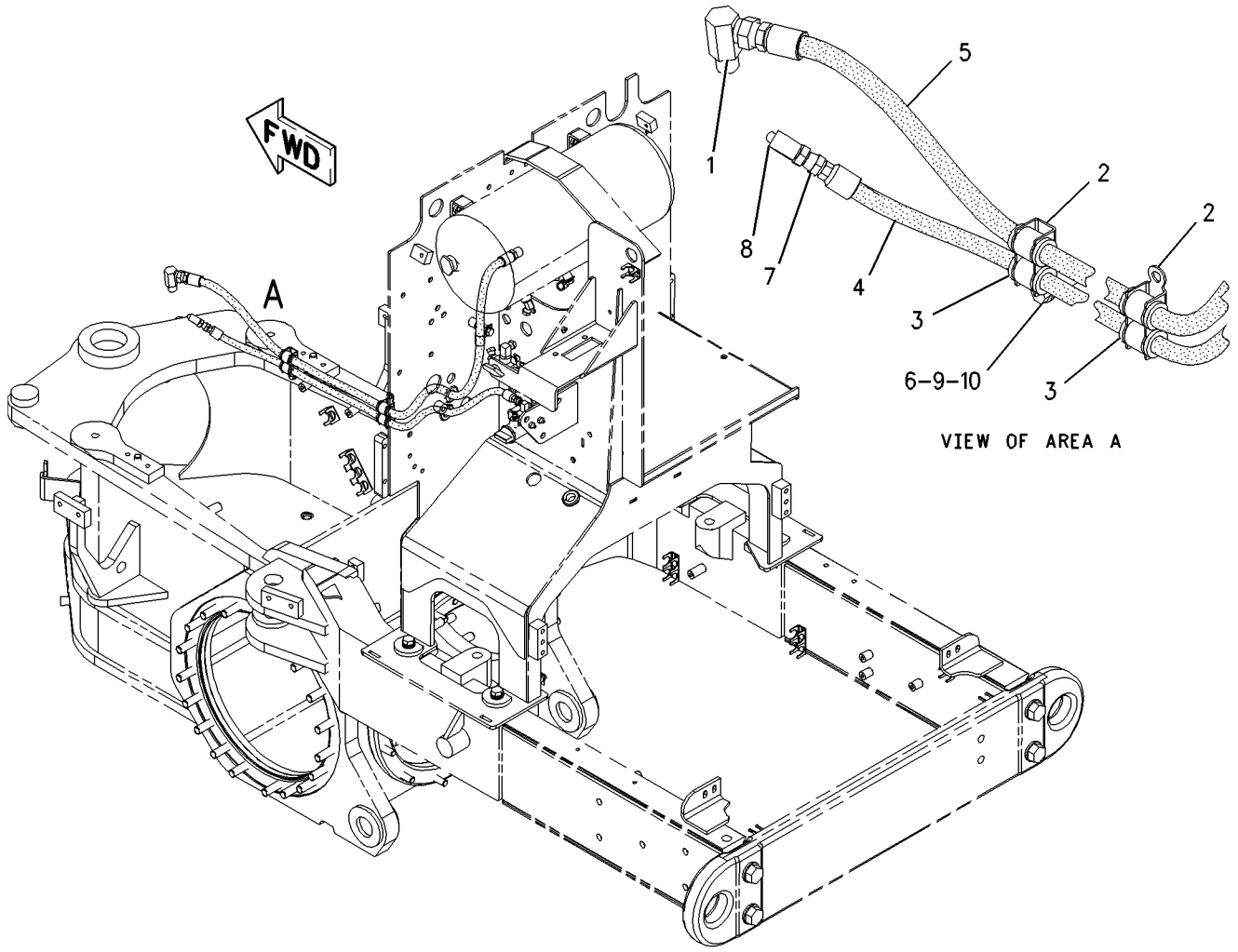


GRAPHIC #1 **<END>** g00831228

# AIR INLET AND EXHAUST SYSTEM

## *156-3680* MANIFOLD GP-EXHAUST

**S/N: 3PD1-UP**

**PART OF 160-5101 ENGINE AR**

**SMCS-1059** **i01855662**

| NOTE | REF NO | GRAPHIC REF | PART NUMBER | QTY | PART NAME 1 2 3 4 5 6 (PRODUCT LEVEL) | SEE PAGE |
|---|---|---|---|---|---|---|
| | 1 | 1 | **4P-8279** | 1 | MANIFOLD-EXHAUST | |
| | 2 | 1 | **117-0228** | 1 | MANIFOLD-EXHAUST | |
| | 3 | 1 | **4P-8280** | 1 | MANIFOLD-EXHAUST | |
| | 4 | 1 | **109-5313** | 6 | GASKET | |
| | 5 | 1 | **4P-4369** | 12 | SPACER (12X19X23.5-MM THK) | |
| M | 6 | 1 | **116-3715** | 12 | STUD-TAPERLOCK (M10X1.5X85-MM) | |
| M | 7 | 1 | **8T-7044** | 4 | STUD-TAPERLOCK (M10X1.5X40-MM) | |
| M | 8 | 1 | **3E-8017** | 12 | LOCKNUT (M10X1.5-MM THD) | |
| | 9 | 1 | **6V-5839** | 12 | WASHER (11X21X2.5-MM THK) | |

M-METRIC PART

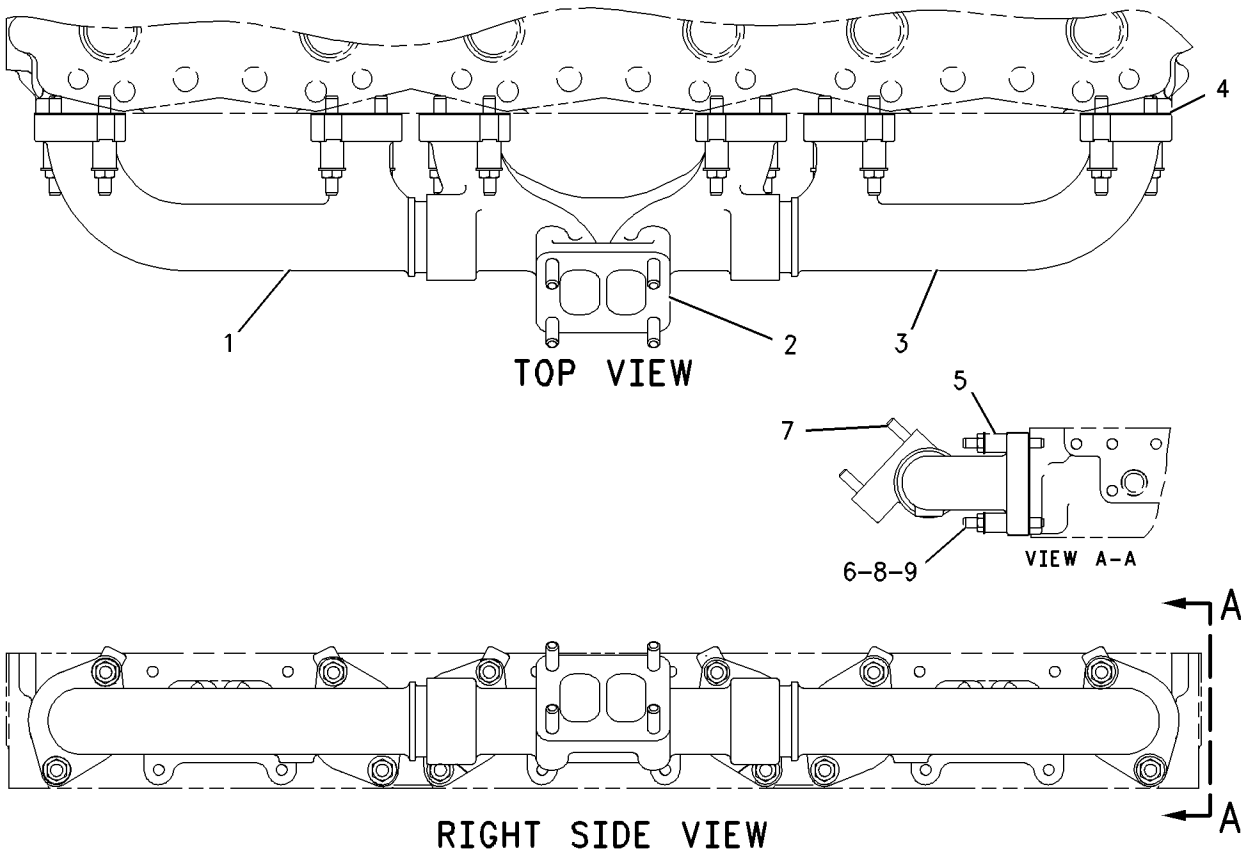


GRAPHIC #1 **<END>** g00784369

# AIR INLET AND EXHAUST SYSTEM

## *116-5405* MANIFOLD GP-INLET

**S/N: 3PD1-UP**

**PART OF 160-5101 ENGINE AR**

**SMCS-1058** **i01855163**

| NOTE | REF NO | GRAPHIC REF | PART NUMBER | QTY | PART NAME 1 2 3 4 5 6 (PRODUCT LEVEL) | SEE PAGE |
|---|---|---|---|---|---|---|
| | 1 | 1 | **7W-5164** | 3 | GASKET | |
| | 2 | 1 | **6V-5839** | 12 | WASHER (11X21X2.5-MM THK) | |
| M | 3 | 1 | **6V-7981** | 6 | BOLT (M10X1.5X70-MM) | |
| M | 4 | 1 | **6V-5842** | 6 | BOLT (M10X1.5X40-MM) | |
| | 5 | 1 | **116-5406** | 1 | MANIFOLD-INLET | |
| | 6 | 1 | **8T-6767** | 1 | PLUG-PIPE | |
| | 7 | 1 | **8T-6765** | 1 | PLUG-PIPE | |
| | 8 | 1 | **9S-4191** | 1 | PLUG-O RING | |
| | 9 | 1 | **3J-1907** | 1 | SEAL-O-RING | |

M-METRIC PART

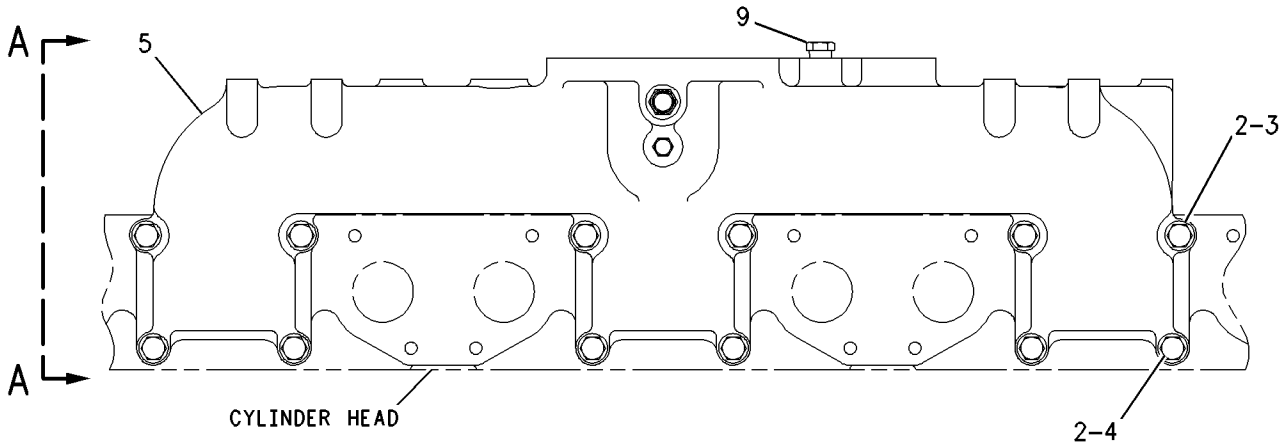


RIGHT SIDE VIEW

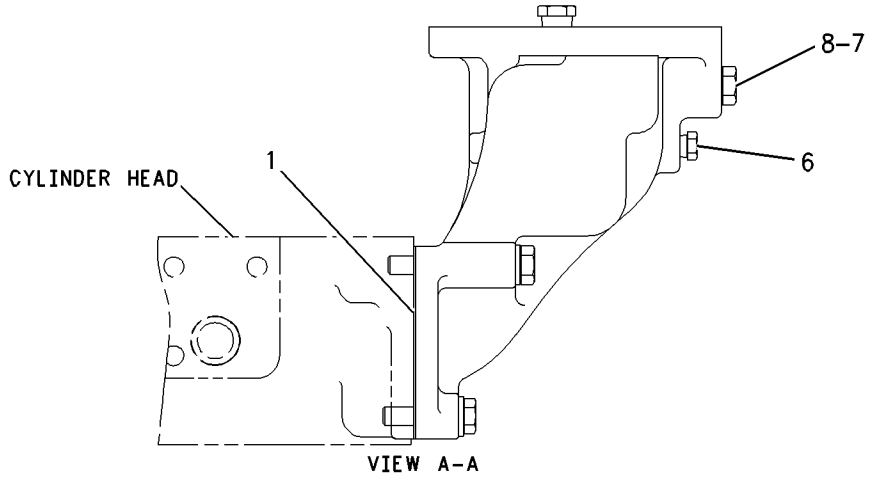


GRAPHIC #1 **<END>** g00796669

# AIR INLET AND EXHAUST SYSTEM

## *159-7368* MUFFLER GP

**S/N: CCA1-UP**

**PART OF 159-4615 GENERAL AR**

**SMCS-1062** **i02559850**

| NOTE | REF NO | GRAPHIC REF | PART NUMBER | QTY | PART NAME 1 2 3 4 5 6 (PRODUCT LEVEL) | SEE PAGE |
|---|---|---|---|---|---|---|
| | 1 | 1 | **1W-2431** | 1 | CLAMP-BAND | |
| | 2 | 1 | **4P-0659** | 1 | CLAMP | |
| | 3 | 1 | **6F-6405** | 1 | SPACER (0.438X0.75X0.375-IN THK) | |
| | 4 | 1 | **132-5789** | 1 | CLIP | |
| | 5 | 1 | **141-1480** | 1 | CLAMP AS | |
| | 6 | 1 | **186-6098** | 1 | EJECTOR AS | |
| | 7 | 1 | **192-6492** | 1 | CLIP AS | |
| | 8 | 1 | **209-3332** | 1 | PLATE AS | |
| | 9 | 1 | **209-3334** | 1 | PLATE AS | |
| | 10 | 1 | **212-6961** | 1 | MUFFLER AS | |
| | 11 | 1 | **212-6962** | 1 | PLATE AS | |
| | 13 | 1 | **213-2264** | 1 | TUBE AS | |
| | 14 | 1 | **240-5919** | 1 | SHIELD-HEAT | |
| | 15 | 1 | **276-1326** | 3 | BOLT (M10X1.5X55-MM) | |
| | 16 | 1 | **0T-0065** | 1 | BOLT (3/8-16X3.5-IN) | |
| | 17 | 1 | **198-4777** | 4 | WASHER-HARD (11X25X10-MM THK) | |
| | 18 | 1 | **1B-5355** | 1 | NUT-FULL (3/8-16-THD) | |
| | 19 | 1 | **3S-2093** | 1 | STRAP-CABLE | |
| | 20 | 1 | **5M-2894** | 2 | WASHER-HARD (10.2X18.5X2.5-MM THK) | |
| | 21 | 1 | **5M-7087** | 2 | CLAMP-TUBE | |
| | 22 | 1 | **7X-7729** | 6 | WASHER (11X25X3-MM THK) | |
| | 23 | 1 | **8T-4121** | 5 | WASHER-HARD (11X21X2.5-MM THK) | |
| M | 24 | 1 | **8T-4186** | 1 | BOLT (M10X1.5X40-MM) | |
| M | 25 | 1 | **8T-4195** | 7 | BOLT (M10X1.5X30-MM) | |
| M | 26 | 1 | **8T-4196** | 4 | BOLT (M10X1.5X35-MM) | |

M-METRIC PART

*159-7368* **MUFFLER GP** *(contd.)* **i02559850**

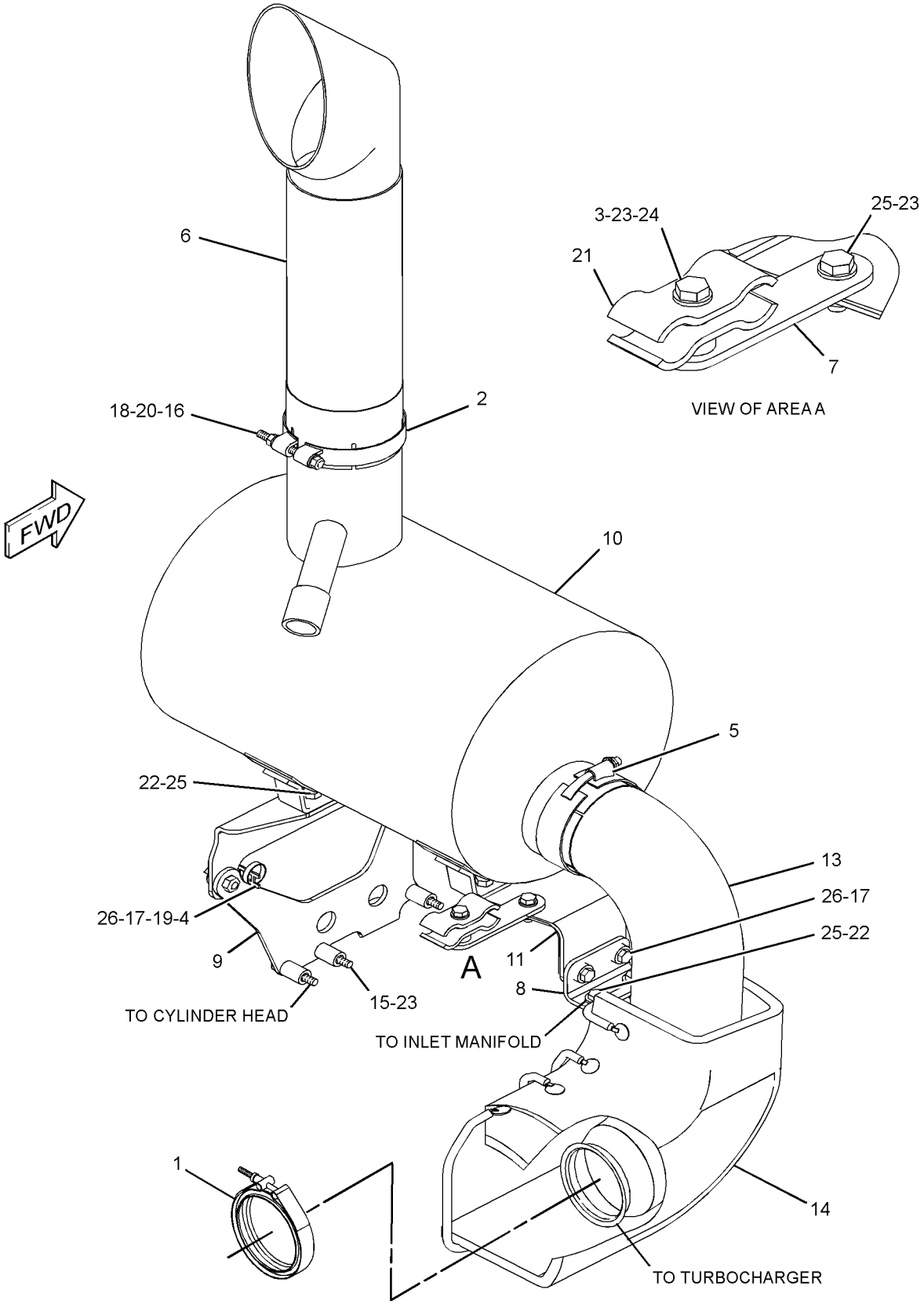


GRAPHIC #1 **<END>** g01169655

# AIR INLET AND EXHAUST SYSTEM

## *226-1187* PRECLEANER GP

**S/N: CCA1-UP**

**AN ATTACHMENT**

**SMCS-1055** **i02011461**

| NOTE | REF NO | GRAPHIC REF | PART NUMBER | QTY | PART NAME 1 2 3 4 5 6 (PRODUCT LEVEL) | SEE PAGE |
|---|---|---|---|---|---|---|
| | 1 | 1 | **116-0405** | 1 | ADAPTER GP-AIR CLEANER | |
| | 2 | 1 | **130-3280** | 1 | PRECLEANER AS | |
| | | 1 | **174-5415** | 1 | CLAMP | |
| B | 3 | 1 | **206-7515** | 1 | KIT-PRECLEANER | |
| | | | | | (INCLUDES DUST BOOT, EXTENSION ADAPTER, CLAMP, RUBBER INSERT, MUFFLER COVER, ALTERNATE MUFFLER COVER & MUFFLER PLUG) | |
| B | 4 | 1 | **6V-7571** | 1 | PLUG-CUP | |
| BD | 5 | 1 | **8T-5372** | | SEAL | |
| BD | 6 | 1 | **9X-2532** | | SEAL | |

B-USE AS REQUIRED
D-ORDER BY THE METER

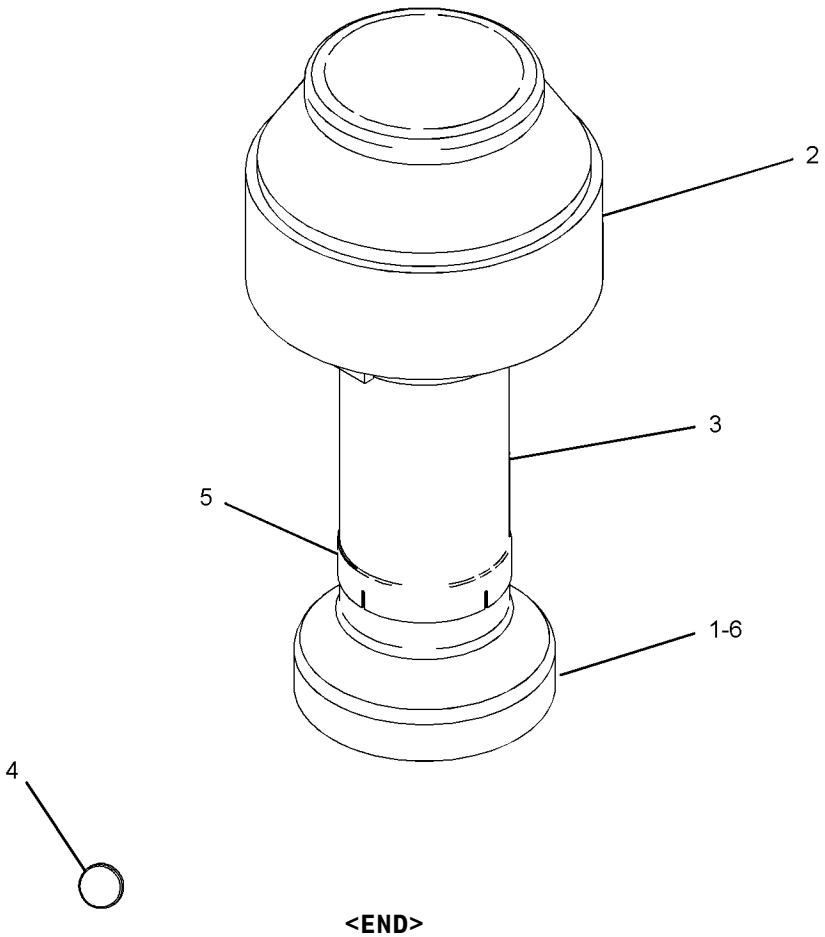


GRAPHIC #1 **<END>** g01070168

# AIR INLET AND EXHAUST SYSTEM

## *7S-9396* PRESCREENER AS

**S/N: CCA1-UP**

**PART OF 159-7364 AIR CLEANER GP**

**SMCS-1055** **i02453693**

| NOTE | REF NO | GRAPHIC REF | PART NUMBER | QTY | PART NAME 1 2 3 4 5 6 (PRODUCT LEVEL) | SEE PAGE |
|---|---|---|---|---|---|---|
| | 1 | 1 | **0S-1591** | 1 | BOLT (3/8-16X1.5-IN) | |
| | 2 | 1 | **6V-8801** | 1 | NUT (3/8-16-THD) | |

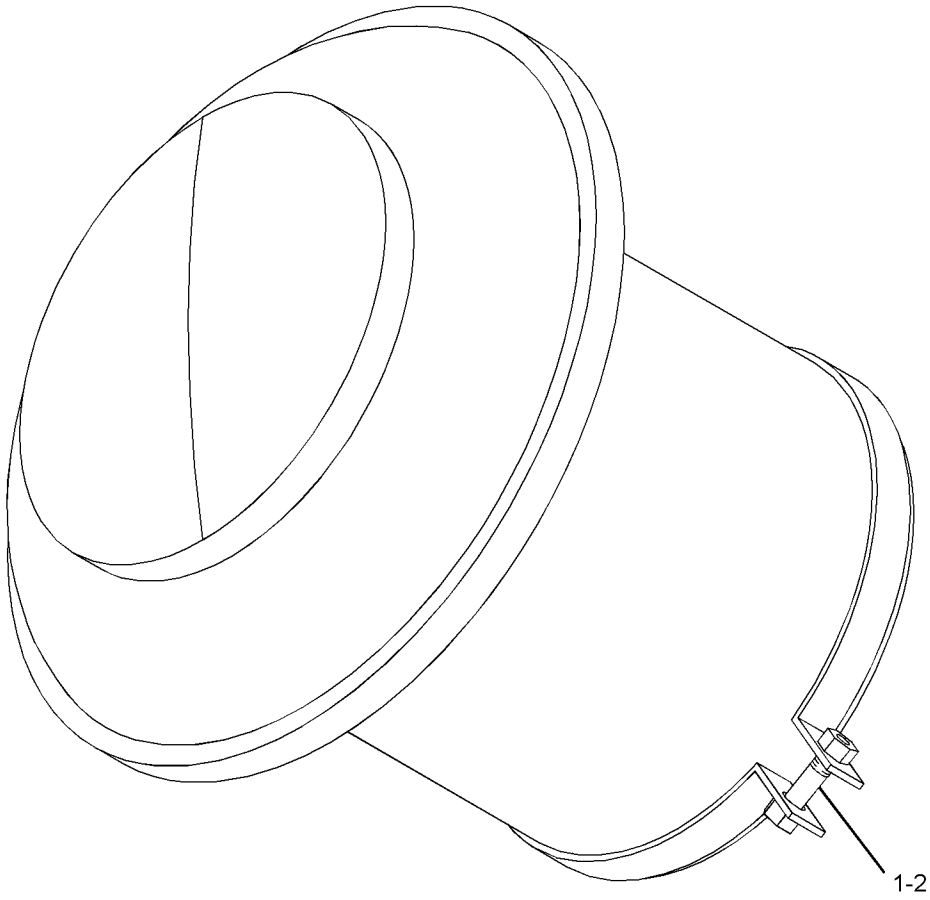


GRAPHIC #1 **<END>** g01208937

# AIR INLET AND EXHAUST SYSTEM

## *174-1604* TURBOCHARGER GP

**S/N: 3PD1-UP**

**PART OF 160-5101 ENGINE AR**

**SMCS-1052, 1053** **i01855503**

| NOTE | REF NO | GRAPHIC REF | PART NUMBER | QTY | PART NAME 1 2 3 4 5 6 (PRODUCT LEVEL) | SEE PAGE |
|---|---|---|---|---|---|---|
| | 1 | 1 | **1P-0451** | 1 | GASKET-TURBOCHARGER | |
| YR | 2 | 1 | **174-1644** | 1 | TURBOCHARGER GP | 108 |
| M | 3 | 1 | **3E-8017** | 4 | LOCKNUT | |

M-METRIC PART
R-REMFG PART MAY BE AVAILABLE
Y-SEPARATE ILLUSTRATION

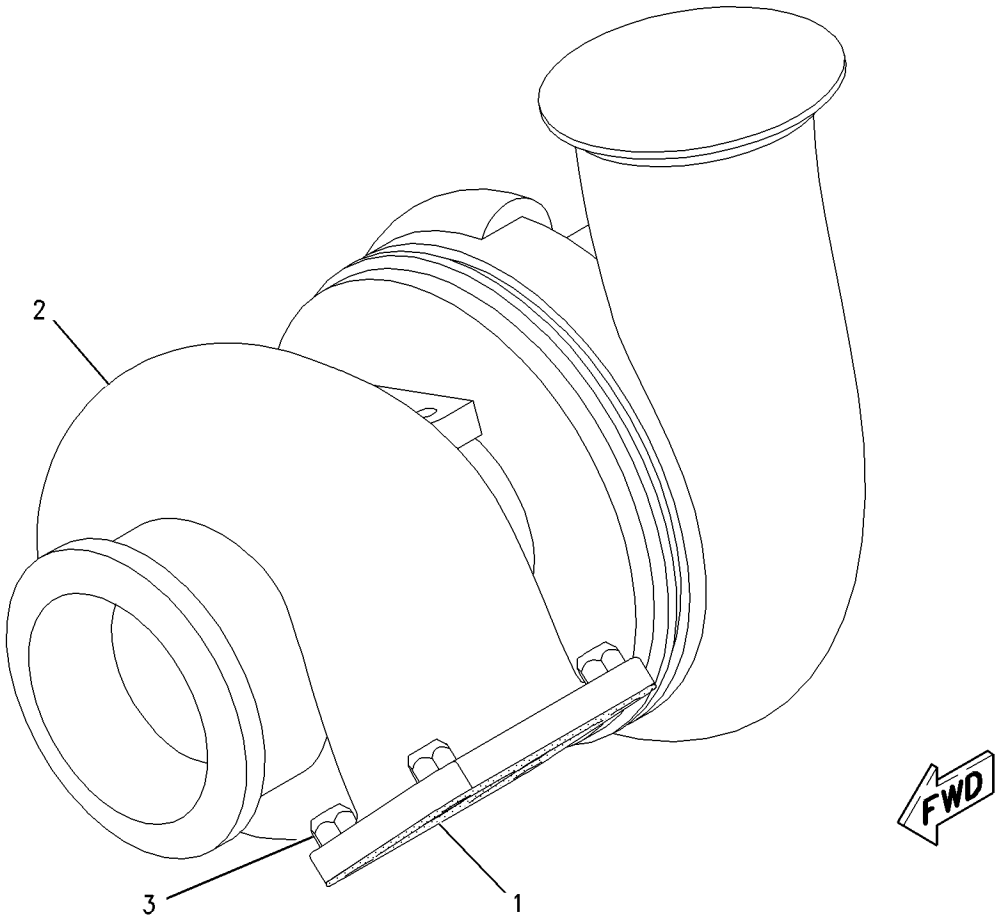


GRAPHIC #1 **<END>** g00786306

# AIR INLET AND EXHAUST SYSTEM

## *174-1644* TURBOCHARGER GP*R

**S/N: 3PD1-UP**

**PART OF 174-1604 TURBOCHARGER GP**

**SMCS-1052, 1053** **i01855722**

| NOTE | REF NO | GRAPHIC REF | PART NUMBER | QTY | PART NAME 1 2 3 4 5 6 (PRODUCT LEVEL) | SEE PAGE |
|---|---|---|---|---|---|---|
| | 1 | 1 | **167-9671** | 1 | CARTRIDGE GP-TURBOCHARGER | |
| | 2 | 1 | **172-6540** | 1 | COVER-COMPRESSOR | |
| | 3 | 1 | **109-8176** | 1 | HOUSING-TURBINE | |
| | 4 | 1 | **7C-9532** | 1 | CLAMP AS (TURBINE) | |
| | 5 | 1 | **7C-9538** | 1 | CLAMP AS-COMPRESSOR | |

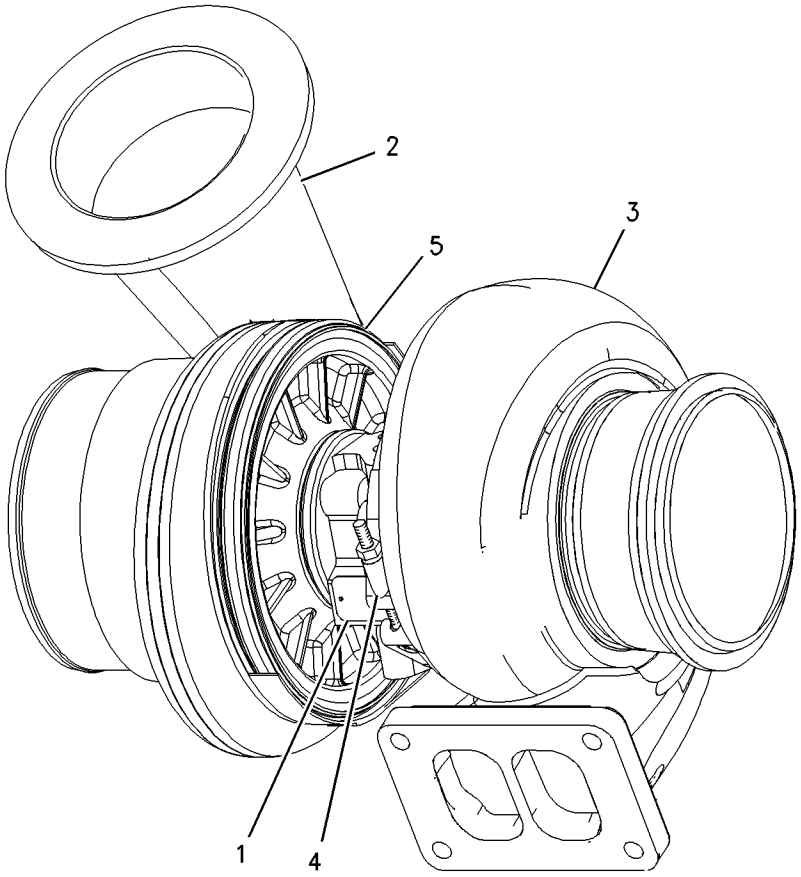


GRAPHIC #1 **<END>** g00786544

# *159-5935* CONTROL GP-GOVERNOR

**S/N: CCA1-UP**

**PART OF 159-4615 GENERAL AR**

**SMCS-1265, 1276** **i02304902**

| NOTE | REF NO | GRAPHIC REF | PART NUMBER | QTY | PART NAME 1 2 3 4 5 6 (PRODUCT LEVEL) | SEE PAGE |
|---|---|---|---|---|---|---|
| | 1 | 1 | **1B-2578** | 1 | NUT (3/8-16-THD) | |
| | 2 | 1 | **141-6343** | 1 | SPRING | |
| | 3 | 1 | **4D-4064** | 1 | ROD END | |
| | 4 | 1 | **5P-9209** | 2 | BEARING AS-NEEDLE | |
| | 5 | 1 | **206-3599** | 1 | LEVER | |
| | 6 | 1 | **7F-0192** | 1 | BOLT (3/8-16X2-IN) | |
| | 7 | 1 | **7V-0446** | 1 | CLIP | |
| | 8 | 1 | **207-4927** | 1 | PEDAL-GOVERNOR CONTROL | |
| | 9 | 1 | **8X-3261** | 1 | LEVER | |
| | 10 | 1 | **116-5710** | 1 | GROMMET | |
| | 11 | 1 | **130-5300** | 1 | CLIP | |
| Y | 12 | 1 | **160-2443** | 1 | SENSOR GP-POSITION (ROTARY) (THROTTLE) | 277 |
| | 13 | 1 | **161-7062** | 1 | HOUSING | |
| | 14 | 1 | **162-8218** | 1 | GASKET | |
| | 15 | 1 | **162-8219** | 1 | COVER | |
| | 16 | 1 | **168-8683** | 1 | SHAFT | |
| | 17 | 1 | **169-0921** | 1 | ROD END (INTERNAL THREAD) | |
| | 18 | 1 | **169-0922** | 1 | ROD | |
| | 19 | 1 | **172-0165** | 1 | SHAFT | |
| | 20 | 1 | **172-4211** | 1 | SPACER (10.5X22X50.8-MM THK) | |
| | 21 | 1 | **009-0008** | 1 | SETSCREW-SOCKET (3/8-16X0.5-IN) | |
| | 22 | 1 | **206-3600** | 1 | LEVER | |
| | 23 | 1 | **129-3173** | 1 | BOLT-12 POINT HEAD (3/8-16X1.25-IN) | |
| | 24 | 1 | **1B-0676** | 1 | PIN | |
| | 25 | 1 | **1B-8704** | 3 | KEY-WOODRUFF | |
| B | 26 | 1 | **2N-9421** | 2 | SPRING-DISC | |
| | 27 | 1 | **5P-1075** | 2 | WASHER-HARD (10.2X22.5X3-MM THK) | |
| | 28 | 1 | **5P-1076** | 1 | WASHER-HARD (13.5X30X4-MM THK) | |
| | 29 | 1 | **5S-7382** | 2 | BOLT (3/8-16X1.375-IN) | |
| M | 30 | 1 | **6V-2313** | 2 | BOLT (M5X0.8X30-MM) | |
| | 31 | 1 | **6V-8801** | 2 | NUT (3/8-16-THD) | |
| | 32 | 1 | **8T-0328** | 2 | WASHER-HARD (5.5X10X1-MM THK) | |
| | 33 | 1 | **8T-4121** | 3 | WASHER-HARD (11X21X2.5-MM THK) | |
| M | 34 | 1 | **8T-4133** | 2 | NUT (M10X1.5-THD) | |
| M | 35 | 1 | **8T-4136** | 3 | BOLT (M10X1.5X25-MM) | |
| M | 36 | 1 | **8T-4182** | 2 | BOLT (M10X1.5X45-MM) | |
| | 37 | 1 | **8T-4226** | 1 | WASHER-PLATED (10.5X45X3-MM THK) | |
| | 38 | 1 | **8T-5390** | 1 | BOLT (3/8-16X3.5-IN) | |
| | 39 | 1 | **6V-0894** | 1 | SEAL-O-RING | |
| | 40 | 1 | **2L-6267** | 1 | LOCKNUT (3/8-24-THD) | |

B-USE AS REQUIRED
M-METRIC PART
Y-SEPARATE ILLUSTRATION

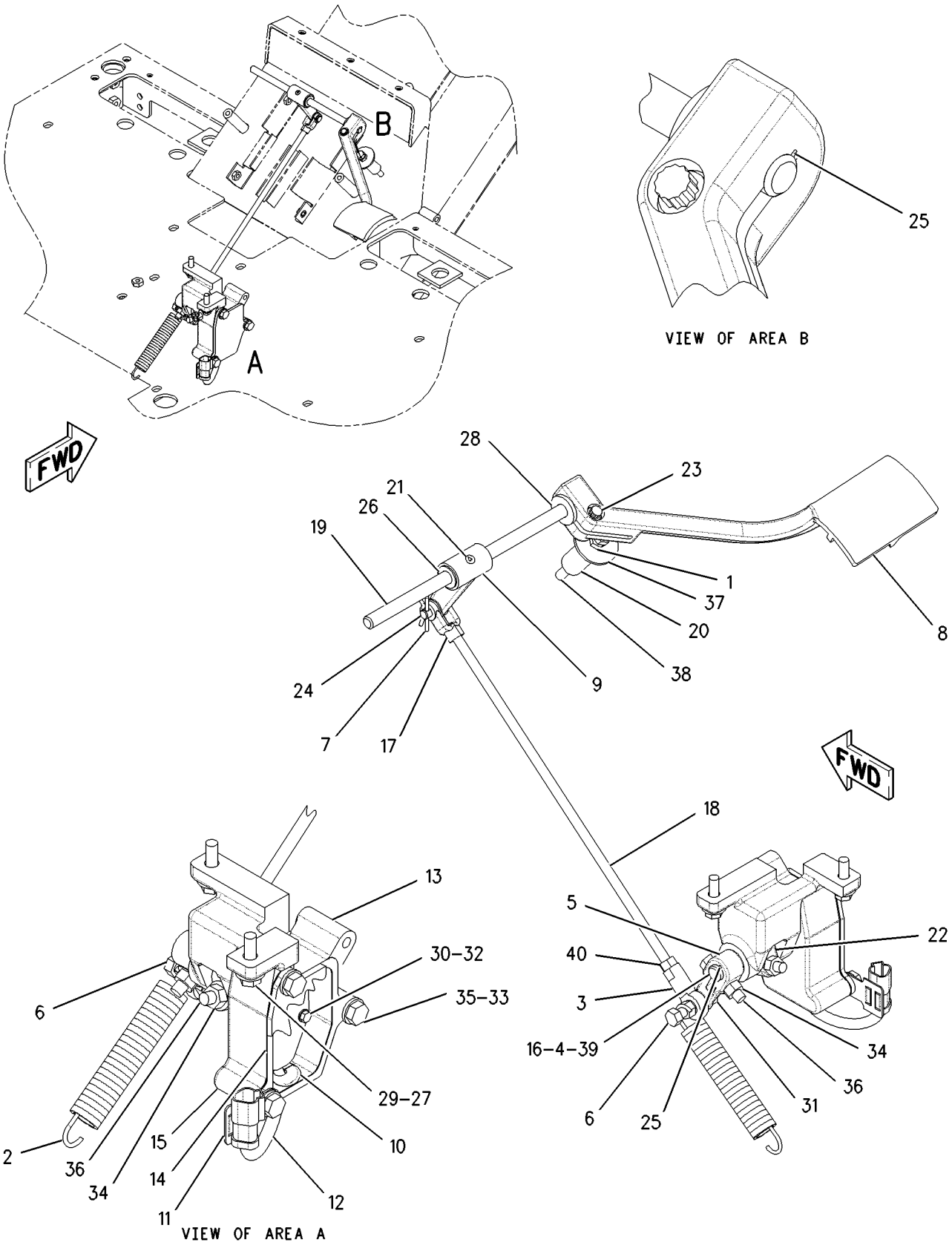


GRAPHIC #1 **<END>** g00906785

# FUEL SYSTEM

## *230-4617* FASTENER GP-FUEL TANK

**S/N: CCA1-1207**

**PART OF 159-4615 GENERAL AR**

**SMCS-1273, 7553** **i01912811**

| NOTE | REF NO | GRAPHIC REF | PART NUMBER | QTY | PART NAME 1 2 3 4 5 6 (PRODUCT LEVEL) | SEE PAGE |
|---|---|---|---|---|---|---|
| | 1 | 1 | **174-5692** | 4 | SPACER (13.87X21.33X28-MM THK) | |
| | 2 | 1 | **5P-1076** | 12 | WASHER-HARD (13.5X30X4-MM THK) | |
| M | 3 | 1 | **8T-4139** | 14 | BOLT (M12X1.75X30-MM) | |
| | 4 | 1 | **8T-4223** | 14 | WASHER-HARD (13.5X25.5X3-MM THK) | |
| M | 5 | 1 | **8T-4910** | 4 | BOLT (M12X1.75X60-MM) | |
| M | 6 | 1 | **8T-4956** | 8 | BOLT (M12X1.75X35-MM) | |

M-METRIC PART

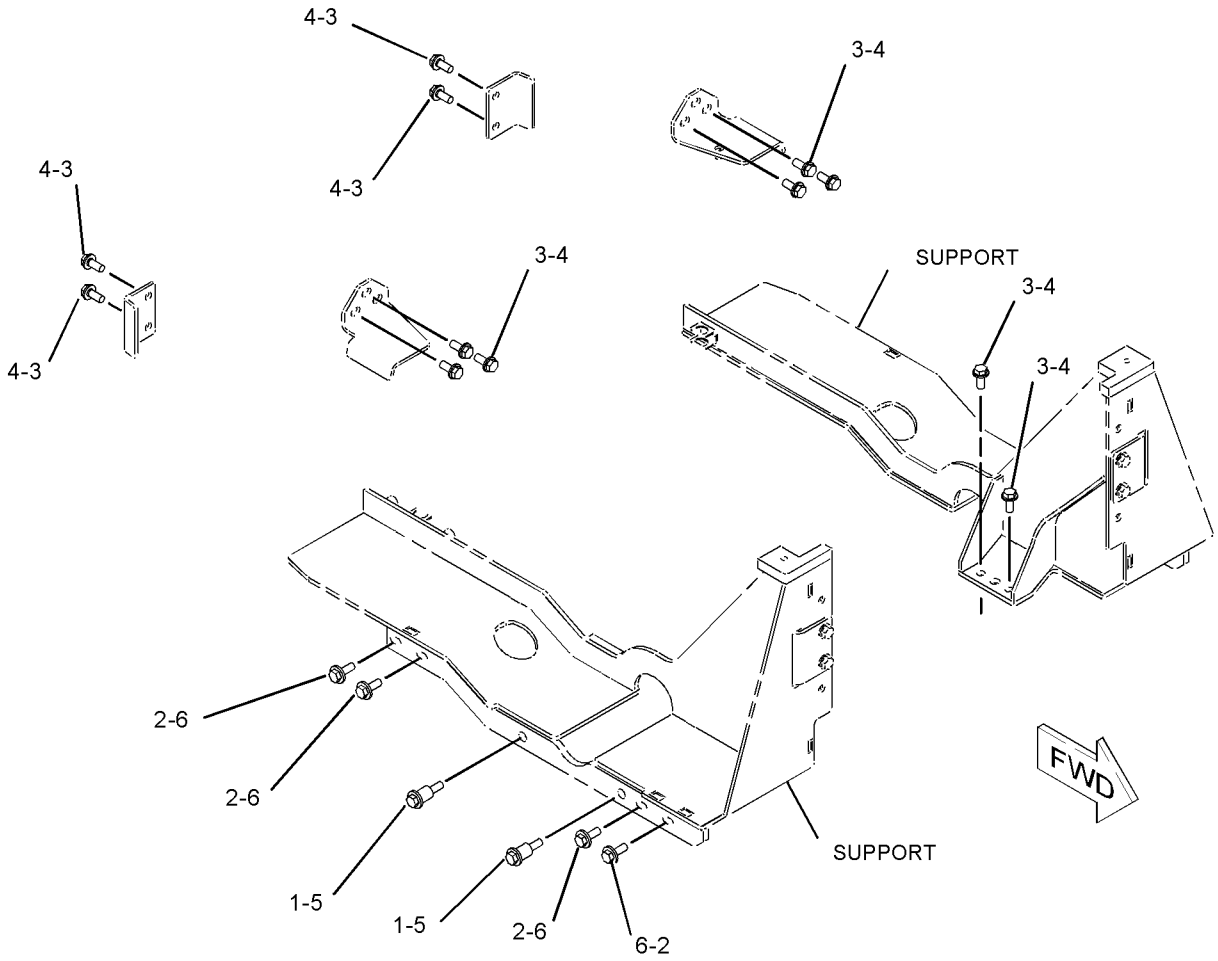


GRAPHIC #1

**<END>**

g01013497

# FUEL SYSTEM

## *249-2460* FASTENER GP-FUEL TANK

**S/N: CCA1208-UP**

**PART OF 159-4615 GENERAL AR**

**SMCS-1273, 7553** **i02252924**

| NOTE | REF NO | GRAPHIC REF | PART NUMBER | QTY | PART NAME 1 2 3 4 5 6 (PRODUCT LEVEL) | SEE PAGE |
|---|---|---|---|---|---|---|
| M | 1 | 1 | **8T-4139** | 14 | BOLT (M12X1.75X30-MM) | |
| | 2 | 1 | **8T-4223** | 14 | WASHER-HARD (13.5X25.5X3-MM THK) | |

M-METRIC PART

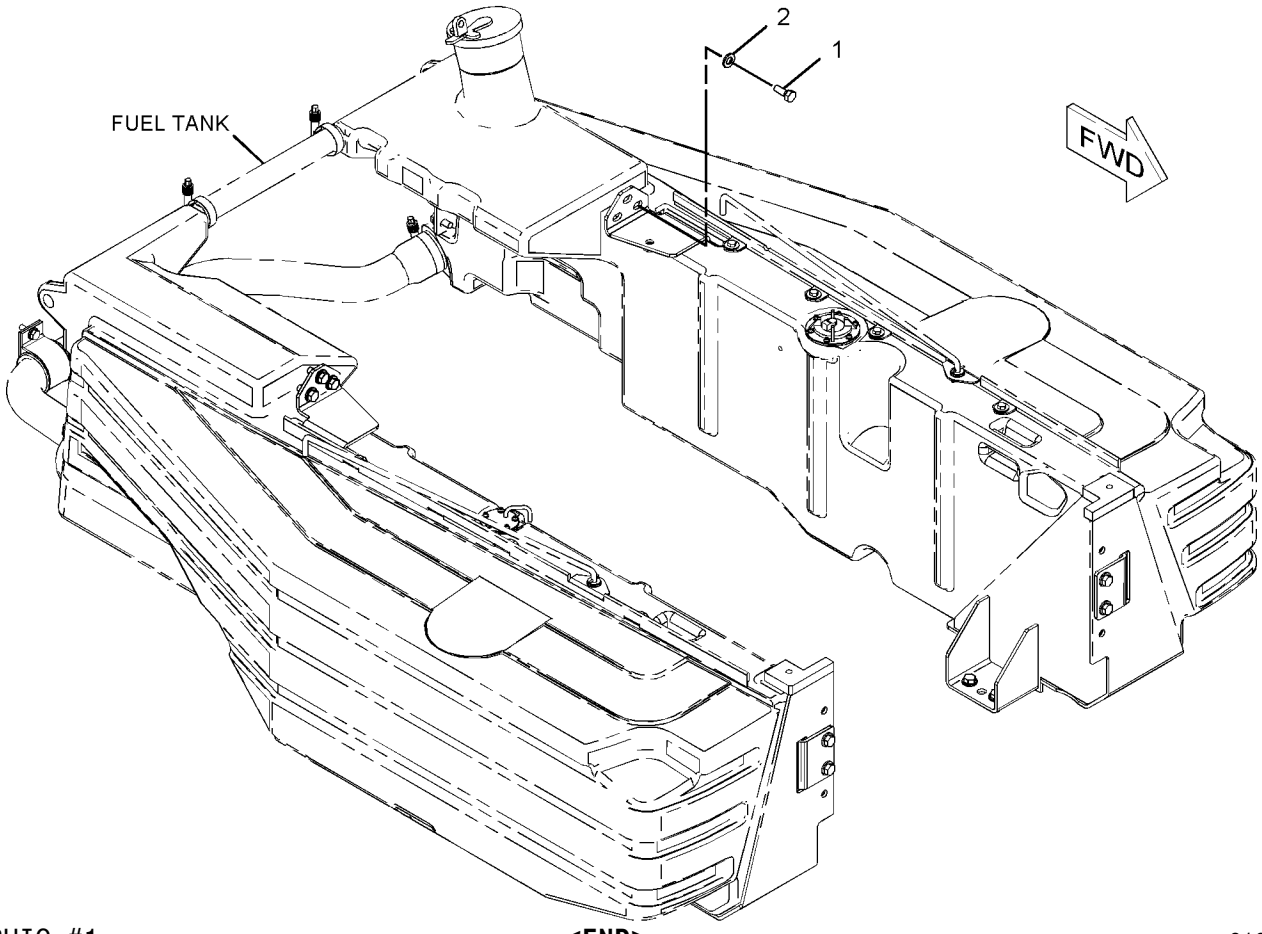


GRAPHIC #1 **<END>** g01077508

# *116-5436* FILTER GP-FUEL

**S/N: 3PD1-UP**

**PART OF 160-5101 ENGINE AR**

**SMCS-1261** **i01855183**

| NOTE | REF NO | GRAPHIC REF | PART NUMBER | QTY | PART NAME 1 2 3 4 5 6 (PRODUCT LEVEL) | SEE PAGE |
|---|---|---|---|---|---|---|
| | 1 | 1 | **1R-0762** | 1 | FILTER AS-FUEL | |

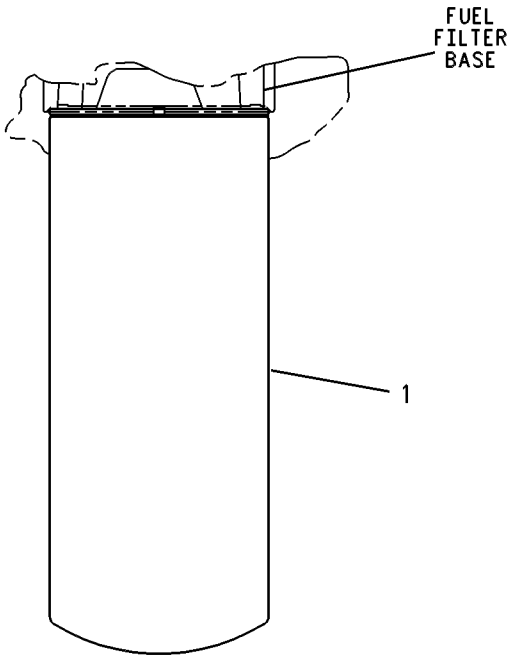


GRAPHIC #1 **<END>** g00269424

# *133-5671* FILTER GP-WATER SEP & FUEL

**S/N: CCA1-UP**

**PART OF 160-7759 LINES GP-FUEL FILTER**

**SMCS-1261, 1263** **i02203540**

| NOTE | REF NO | GRAPHIC REF | PART NUMBER | QTY | PART NAME 1 2 3 4 5 6 (PRODUCT LEVEL) | SEE PAGE |
|---|---|---|---|---|---|---|
| | 1 | 1 | **137-4367** | 1 | BASE AS | |
| | 2 | 1 | **133-5673** | 1 | ELEMENT-FILTER (FUEL, WATER SEPARATOR) (PRIMARY) | |
| | 3 | 1 | **129-0375** | 1 | BOWL AS-WATER COLLECTION | |
| | | | | | AVAILABLE REPLACEMENT PART(S): | |
| | | | **141-0284** | 1 | KIT-FUEL FILTER & WATER SEP | |
| | | | | | (THIS KIT PROVIDES REPLACEMENT SEALS FOR SEALS DAMAGED DURING INSTALLATION OF REPLACEMENT ELEMENT AND/OR BOWL) | |
| | | | **155-2629** | 1 | HEATER GP-FUEL (WATER SEPARATOR, 12-VOLT) | |
| | | | **157-1206** | 1 | BOWL AS-WATER COLLECTION (24-VOLT HEATER) (FUEL FILTER) | |

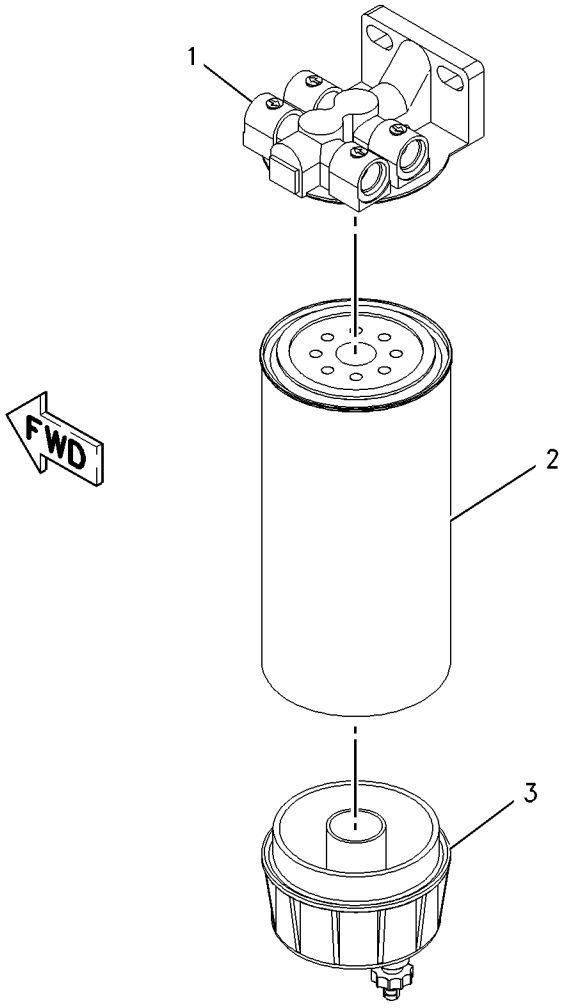


GRAPHIC #1 **<END>** g00986136

# *220-0768* LINES GP-FUEL–REAR CROSSOVER

**S/N: CCA1-UP**

**PART OF 159-4615 GENERAL AR**

**SMCS-1274** **i01906064**

| NOTE | REF NO | GRAPHIC REF | PART NUMBER | QTY | PART NAME 1 2 3 4 5 6 (PRODUCT LEVEL) | SEE PAGE |
|---|---|---|---|---|---|---|
| | 1 | 1 | **8T-4984** | 4 | CLAMP-HOSE | |
| | 2 | 1 | **197-0949** | 1 | HOSE (RH) | |
| | 3 | 1 | **197-0951** | 1 | HOSE (LH) | |
| | 4 | 1 | **197-4637** | 1 | FITTING (QUICK) | |
| | 5 | 1 | **197-4638** | 1 | COUPLER (QUICK) | |
| | 6 | 1 | **162-9523** | 2 | GROMMET | |
| | 7 | 1 | **6V-1572** | 2 | CLIP (SLOT) | |
| | 8 | 1 | **6V-1573** | 2 | CLIP (TAB) | |
| | 9 | 1 | **8T-4121** | 2 | WASHER-HARD (11X21X2.5-MM THK) | |
| M | 10 | 1 | **8T-4195** | 2 | BOLT (M10X1.5X30-MM) | |

M-METRIC PART

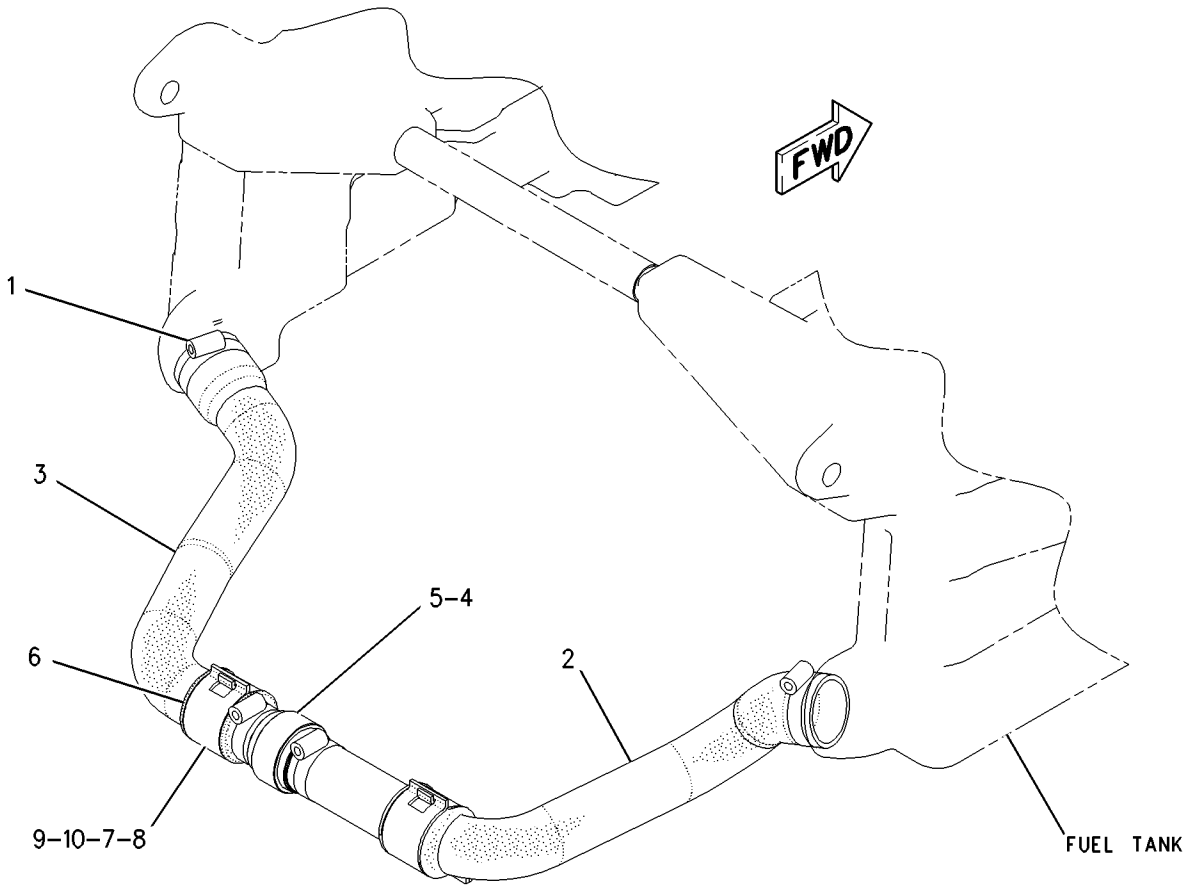


GRAPHIC #1 **<END>** g00876793

# FUEL SYSTEM

## *233-6663* LINES GP-FUEL

**S/N: 3PD4381-UP**

**PART OF 160-5101 ENGINE AR**

**SMCS-1274** **i02111495**

| NOTE | REF NO | GRAPHIC REF | PART NUMBER | QTY | PART NAME 1 2 3 4 5 6 (PRODUCT LEVEL) | SEE PAGE |
|---|---|---|---|---|---|---|
| I | 1 | 1 | **8S-1162** | 1 | HOSE AS | |
| | 2 | 1 | **9C-5344** | 1 | SPACER (10.5X20X18-MM THK) | |
| | 3 | 1 | **126-0179** | 1 | MANIFOLD-FUEL | |
| Y | 4 | 1 | *233-6742* | 1 | VALVE GP-CHECK (FUEL) | 137 |
| | 5 | 1 | **238-6780** | 1 | BASE AS-FUEL FILTER | |
| | | 1 | **9S-4167** | 1 | STUD-HOLLOW (1-14X1.47-IN) | |
| | 6 | 1 | **030-7947** | 1 | ELBOW | |
| | 7 | 1 | *183-3408* | 3 | PLUG AS | |
| | | | | | (EACH INCLUDES) | |
| | 7A | 1 | **6V-5049** | 1 | SEAL-O-RING | |
| | | 1 | **9S-8004** | 1 | PLUG | |
| | 8 | 1 | **3J-1907** | 2 | SEAL-O-RING | |
| | 9 | 1 | **3S-2093** | 1 | STRAP-CABLE | |
| | 10 | 1 | **4P-8134** | 1 | CLIP | |
| M | 11 | 1 | **5C-7261** | 1 | NUT (M8X1.25-THD) | |
| | 12 | 1 | **5P-3456** | 6 | SEAL-O-RING | |
| M | 13 | 1 | **6V-5218** | 5 | BOLT (M8X1.25X35-MM) | |
| | 14 | 1 | **6V-8676** | 1 | SEAL-O-RING | |
| | 15 | 1 | **7K-4129** | 1 | UNION-FLARED | |
| | 16 | 1 | **8M-2773** | 1 | CLIP | |
| M | 17 | 1 | **8T-0276** | 2 | BOLT (M8X1.25X45-MM) | |
| | 18 | 1 | **8T-4121** | 1 | WASHER-HARD (11X21X2.5-MM THK) | |
| M | 19 | 1 | **8T-4186** | 1 | BOLT (M10X1.5X40-MM) | |
| | 20 | 1 | **8T-4224** | 1 | WASHER-HARD (8.8X16X2-MM THK) | |
| | 21 | 1 | **9M-1974** | 7 | WASHER-HARD (8.8X16X2-MM THK) | |
| | 22 | 1 | **9S-4191** | 1 | PLUG-O RING | |

I-REFER TO HYDRAULIC INFORMATION SYSTEM
M-METRIC PART
Y-SEPARATE ILLUSTRATION

*233-6663* **LINES GP-FUEL** *(contd.)* **i02111495**

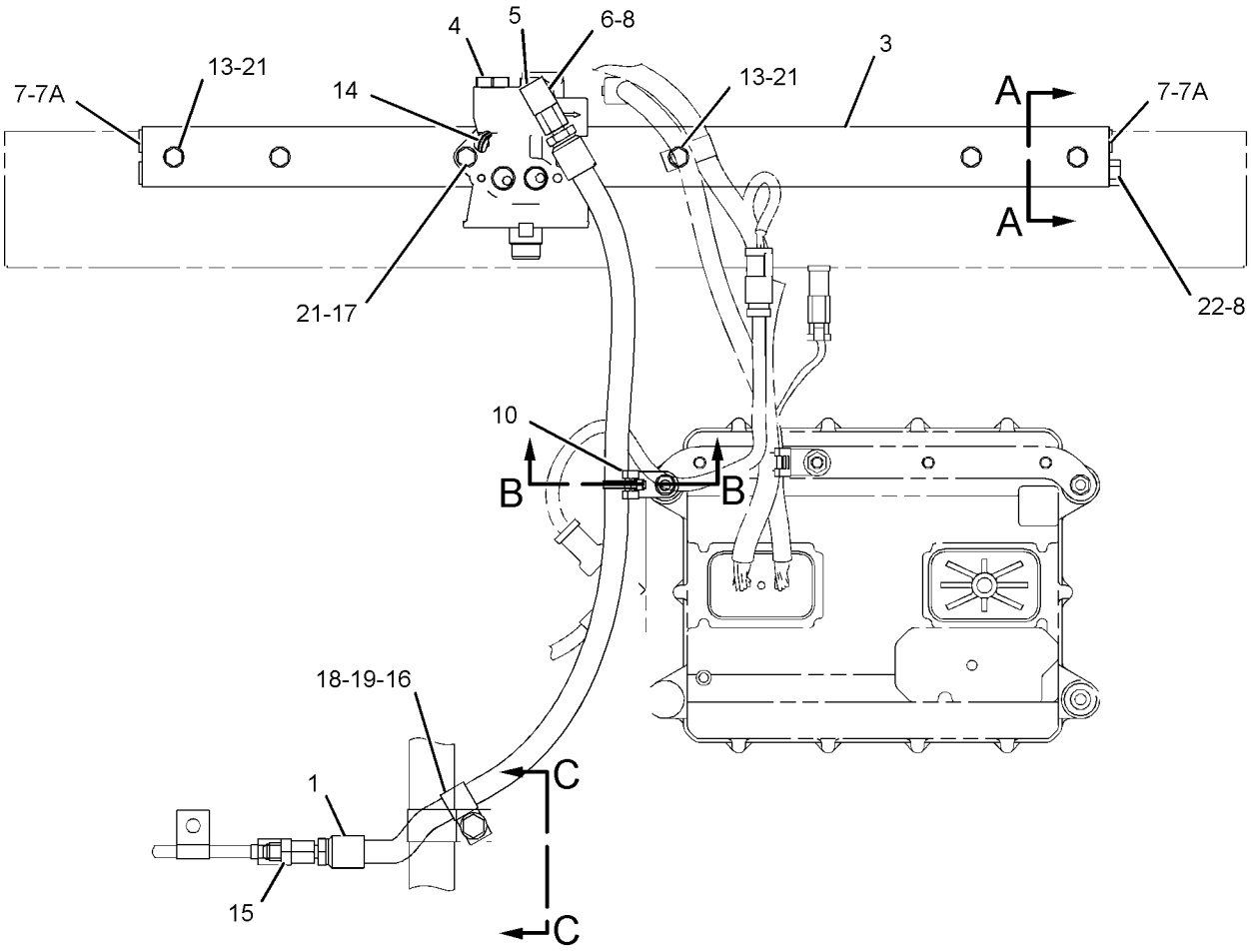


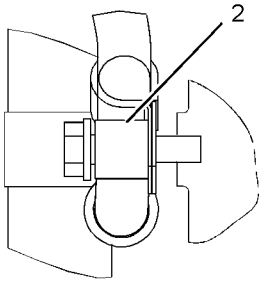


SECTION C-C

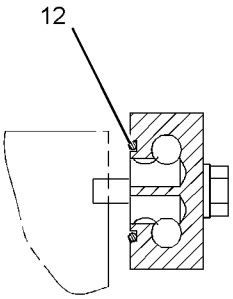


SECTION A-A

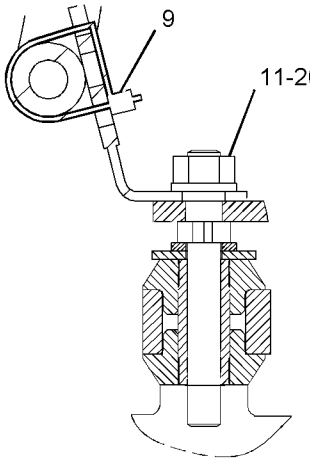


SECTION B-B

GRAPHIC #1

**<END>**

g01077102

# FUEL SYSTEM

## *160-7759* LINES GP-FUEL FILTER

**S/N: CCA1-UP**

**PART OF 159-4615 GENERAL AR**

**SMCS-1261, 1274** **i02203545**

| NOTE | REF NO | GRAPHIC REF | PART NUMBER | QTY | PART NAME 1 2 3 4 5 6 (PRODUCT LEVEL) | SEE PAGE |
|---|---|---|---|---|---|---|
| | 1 | 1 | **1F-7854** | 1 | SPACER (11.01X19.05X49.21-MM THK) | |
| | 2 | 1 | **1P-4278** | 1 | CLAMP-HOSE | |
| | 3 | 1 | **8W-8527** | 1 | SLEEVE | |
| I | 4 | 1 | **103-4660** | 2 | HOSE AS | |
| Y | 5 | 1 | **133-5671** | 1 | FILTER GP-WATER SEP & FUEL | 114 |
| I | 6 | 1 | **246-2591** | 1 | HOSE AS | |
| | 7 | 1 | **177-4292** | 1 | CLIP AS | |
| | 8 | 1 | **177-4394** | 1 | CLIP AS | |
| I | 9 | 1 | **183-3072** | 1 | HOSE AS | |
| | 10 | 1 | **183-4386** | 1 | TUBE AS | |
| I | 11 | 1 | **246-2596** | 1 | HOSE AS | |
| | 12 | 1 | **250-7695** | 2 | FITTING (QUICK) | |
| | 13 | 1 | **195-0852** | 1 | HOSE AS | |
| | 14 | 1 | *148-8318* | 1 | CONNECTOR AS | |
| | | 1 | **6V-8634** | | CONNECTOR | |
| | | 1 | **3K-0360** | 1 | SEAL-O-RING | |
| | | 1 | **6V-8397** | 1 | SEAL-O-RING | |
| | 15 | 1 | *148-8340* | 1 | CONNECTOR AS | |
| | | 1 | **6V-8639** | 1 | CONNECTOR | |
| | | 1 | **3K-0360** | 1 | SEAL-O-RING | |
| | | 1 | **6V-8398** | 1 | SEAL-O-RING | |
| | 16 | 1 | **148-8354** | 3 | ELBOW AS | |
| | | | | | (EACH INCLUDES) | |
| | | 1 | **6V-9002** | 1 | ELBOW | |
| | | 1 | **3K-0360** | 1 | SEAL-O-RING | |
| | | 1 | **6V-8398** | 1 | SEAL-O-RING | |
| | 17 | 1 | *148-8358* | 2 | ELBOW AS | |
| | | | | | (EACH INCLUDES) | |
| | | 1 | **6V-8624** | 1 | ELBOW | |
| | | 1 | **6V-8398** | 1 | SEAL-O-RING | |
| | | 1 | **2M-9780** | 1 | SEAL-O-RING | |
| | 18 | 1 | *148-8374* | 1 | ELBOW AS | |
| | | 1 | **6V-8723** | 1 | ELBOW | |
| | | 1 | **3K-0360** | 1 | SEAL-O-RING | |
| | | 1 | **6V-8397** | 1 | SEAL-O-RING | |
| | 19 | 1 | **148-8411** | 2 | PLUG AS | |
| | | | | | (EACH INCLUDES) | |
| | | 1 | **9S-4185** | 1 | PLUG | |
| | | 1 | **3K-0360** | 1 | SEAL-O-RING | |
| | 20 | 1 | *148-8338* | 1 | CONNECTOR AS | |
| | | 1 | **8T-0075** | 1 | CONNECTOR | |
| | | 1 | **3J-1907** | 1 | SEAL-O-RING | |
| | | 1 | **6V-8397** | 1 | SEAL-O-RING | |
| | 21 | 1 | *164-5572* | 1 | UNION AS | |
| | | 1 | **6V-8731** | 1 | UNION | |
| | | 1 | **6V-8398** | 2 | SEAL-O-RING | |
| | 22 | 1 | *164-5605* | 2 | CONNECTOR AS | |
| | | | | | (EACH INCLUDES) | |
| | | 1 | **8T-0076** | 1 | CONNECTOR | |
| | | 1 | **3K-0360** | 1 | SEAL-O-RING | |
| | | 1 | **6V-8397** | 1 | SEAL-O-RING | |
| | 23 | 1 | **3S-8665** | 7 | CLIP | |
| | 24 | 1 | **4B-0418** | 1 | CLIP | |
| | 25 | 1 | **4D-7735** | 1 | CLIP | |
| | 26 | 1 | **5P-4116** | 2 | WASHER-HARD (8.8X20.5X2-MM THK) | |
| | 27 | 1 | **6K-8178** | 1 | CLIP | |

## *160-7759* **LINES GP-FUEL FILTER** *(contd.)* **i02203545**

| NOTE | REF NO | GRAPHIC REF | PART NUMBER | QTY | PART NAME 1 2 3 4 5 6 (PRODUCT LEVEL) | SEE PAGE |
|---|---|---|---|---|---|---|
| | 28 | 1 | **8T-4121** | 12 | WASHER-HARD (11X21X2.5-MM THK) | |
| M | 29 | 1 | **8T-4136** | 1 | BOLT (M10X1.5X25-MM) | |
| M | 30 | 1 | **8T-4137** | 10 | BOLT (M10X1.5X20-MM) | |
| M | 31 | 1 | **8T-5005** | 1 | BOLT (M10X1.5X70-MM) | |
| M | 32 | 1 | **8T-7547** | 2 | BOLT (M8X1.25X30-MM) | |
| E | 33 | 1 | **8C-6959** | | HOSE (60-CM) | |

E-ORDER BY THE CENTIMETER
I-REFER TO HYDRAULIC INFORMATION SYSTEM
M-METRIC PART
Y-SEPARATE ILLUSTRATION

*160-7759* **LINES GP-FUEL FILTER** *(contd.)* **i02203545**

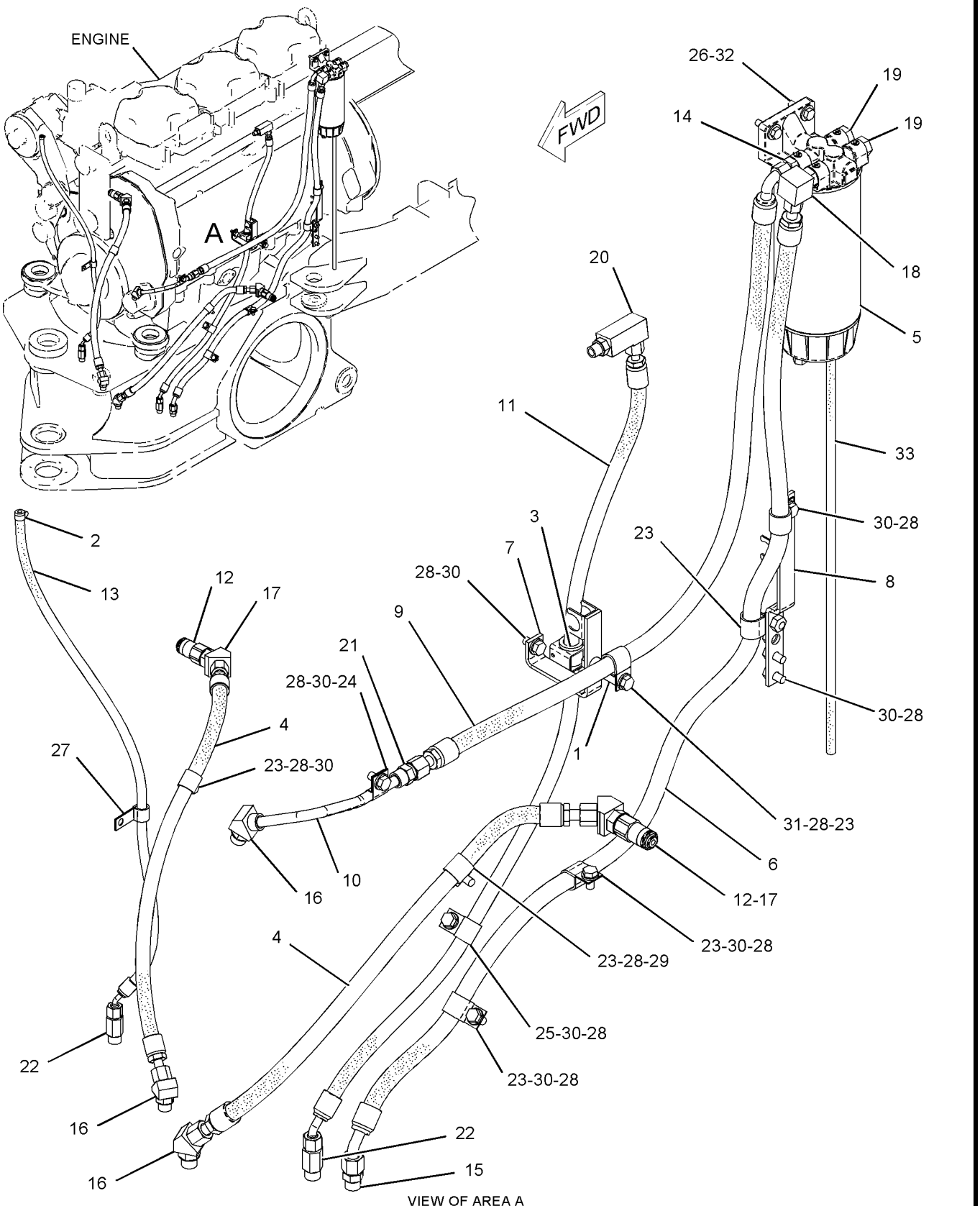


GRAPHIC #1

**<END>**

g01073029

# *204-0638* LINES GP-FUEL INJECTION

**S/N: 3PD1-4380**

**PART OF 160-5101 ENGINE AR**

**SMCS-1252, 1254** **i01855558**

| NOTE | REF NO | GRAPHIC REF | PART NUMBER | QTY | PART NAME 1 2 3 4 5 6 (PRODUCT LEVEL) | SEE PAGE |
|---|---|---|---|---|---|---|
| | 1 | 1 | **9C-5344** | 1 | SPACER (10.5X20X18-MM THK) | |
| I | 2 | 1 | **116-5416** | 1 | HOSE AS | |
| I | 3 | 1 | **116-5418** | 1 | HOSE AS | |
| | 4 | 1 | **126-0179** | 1 | MANIFOLD-FUEL | |
| | 5 | 1 | **145-1780** | 1 | BASE AS | |
| | | 1 | **9S-4167** | 1 | STUD-HOLLOW (1-14X1.47-IN) | |
| Y | 6 | 1 | **156-5783** | 1 | VALVE GP-CHECK | 136 |
| | 7 | 1 | **030-7947** | 1 | ELBOW | |
| | 8 | 1 | **3J-1907** | 5 | SEAL-O-RING | |
| | 9 | 1 | **5P-3456** | 6 | SEAL-O-RING | |
| | 10 | 1 | **6V-4589** | 1 | SEAL-O-RING | |
| M | 11 | 1 | **6V-5218** | 5 | BOLT (M8X1.25X35-MM) | |
| | 12 | 1 | **6V-8676** | 1 | SEAL-O-RING | |
| | 13 | 1 | **8M-2773** | 1 | CLIP | |
| M | 14 | 1 | **8T-0276** | 2 | BOLT (M8X1.25X45-MM) | |
| | 15 | 1 | **8T-4121** | 1 | WASHER-HARD (11X21X2.5-MM THK) | |
| M | 16 | 1 | **8T-4186** | 1 | BOLT (M10X1.5X40-MM) | |
| | 17 | 1 | **9M-1974** | 7 | WASHER-HARD (8.8X16X2-MM THK) | |
| | 18 | 1 | **9S-4191** | 1 | PLUG-O RING | |
| | 19 | 1 | **9S-8004** | 3 | PLUG | |

I-REFER TO HYDRAULIC INFORMATION SYSTEM
M-METRIC PART
Y-SEPARATE ILLUSTRATION

*204-0638* **LINES GP-FUEL INJECTION** *(contd.)* **i01855558**

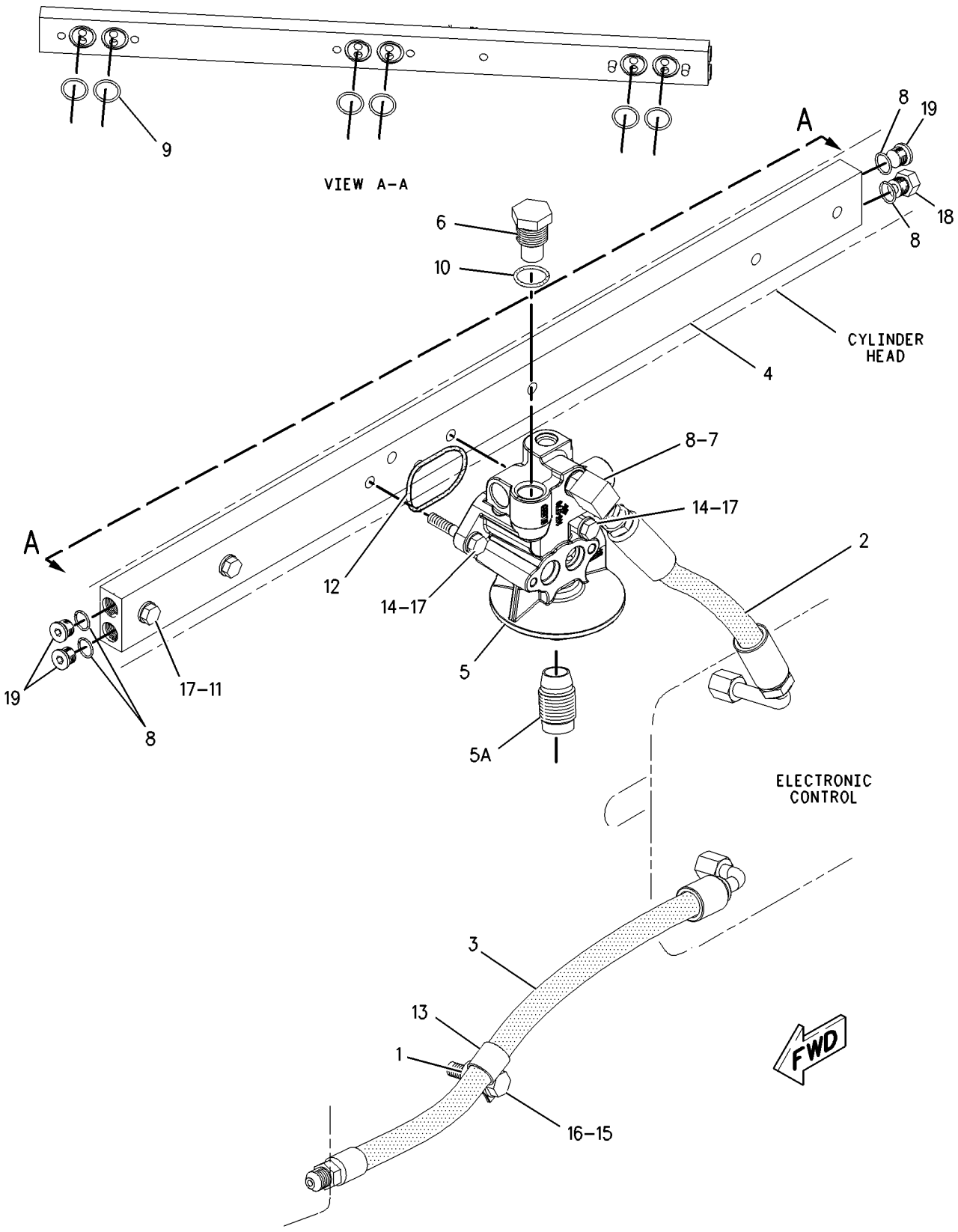


GRAPHIC #1 **<END>** g00785881

# *116-5428* PUMP & MTG GP-FUEL TRANSFER

**S/N: 3PD1-UP**

**PART OF 160-5101 ENGINE AR**

**SMCS-1256** **i02163627**

| NOTE | REF NO | GRAPHIC REF | PART NUMBER | QTY | PART NAME 1 2 3 4 5 6 (PRODUCT LEVEL) | SEE PAGE |
|---|---|---|---|---|---|---|
| | 1 | 1 | **092-2570** | 2 | WASHER-SEALING | |
| | 2 | 1 | **222-2060** | 1 | PUMP GP-FUEL TRANSFER | |
| | 3 | 1 | **193-3982** | 1 | TUBE AS | |
| | 4 | 1 | **2R-6806** | 1 | CONNECTOR-O-RING | |
| | 5 | 1 | **3J-1907** | 1 | SEAL-O-RING | |
| | 6 | 1 | **252-9685** | 1 | GASKET | |
| | 7 | 1 | **6V-5839** | 1 | WASHER (11X21X2.5-MM THK) | |
| M | 8 | 1 | **6V-6317** | 1 | BOLT (M10X1.5X20-MM) | |
| | 9 | 1 | **5P-9297** | 1 | CLIP | |
| M | 10 | 1 | **8T-1159** | 2 | BOLT-SOCKET HEAD (M10X1.5X25-MM) | |

M-METRIC PART

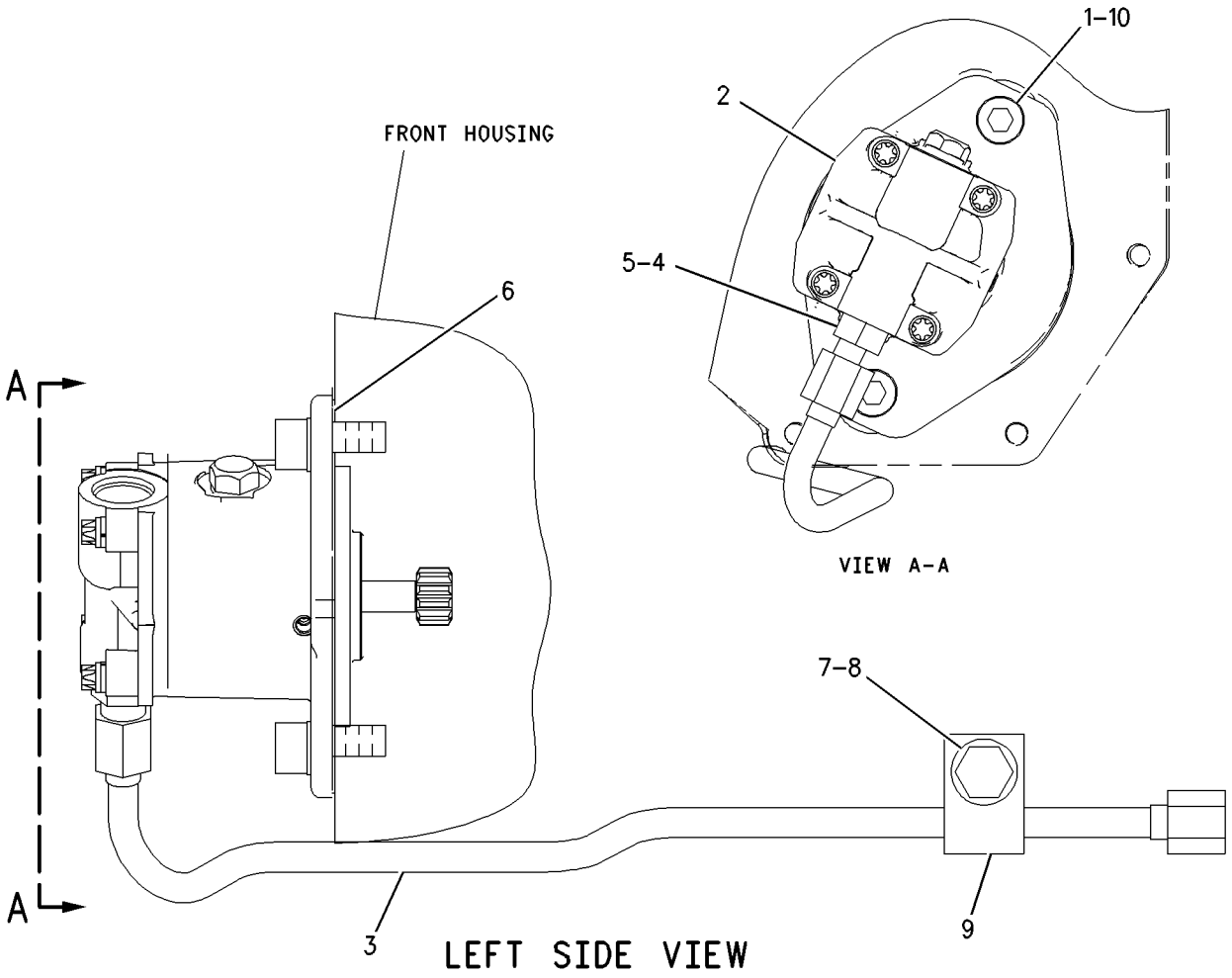


GRAPHIC #1 **<END>** g00832171

# FUEL SYSTEM

## *190-6017* PUMP GP-FUEL INJECTION

**S/N: 3PD1-UP**

**PART OF 160-5101 ENGINE AR**

**SMCS-1251, 1290** **i02203549**

| NOTE | REF NO | GRAPHIC REF | PART NUMBER | QTY | PART NAME 1 2 3 4 5 6 (PRODUCT LEVEL) | SEE PAGE |
|---|---|---|---|---|---|---|
| M | 1 | 1 | **152-3001** | 1 | BOLT (8X1.25X7-MM) | |
| R | 2 | 1 | **208-9160** | 1 | INJECTOR GP-FUEL | |
| | 2A | 1 | **9X-7317** | 1 | SEAL-O-RING | |
| | 2B | 1 | **119-8784** | 1 | SEAL-O-RING | |
| | 2C | 1 | **215-3198** | 1 | SEAL-O-RING | |
| | 3 | 1 | **7C-8851** | 1 | CLAMP-INJECTOR | |
| | 4 | 1 | **4P-8525** | 1 | SPACER (9X16X30-MM THK) | |

M-METRIC PART
R-REMFG PART MAY BE AVAILABLE

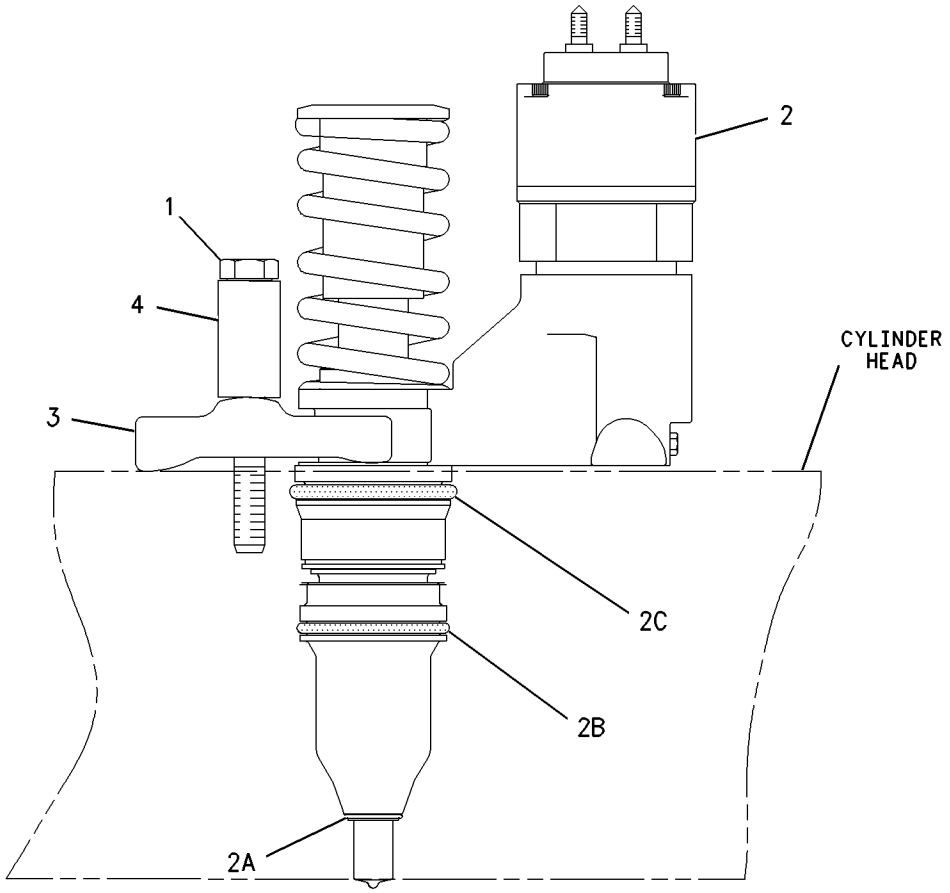


GRAPHIC #1 **<END>** g00933456

# *116-5438* PUMP GP-FUEL PRIMING

**S/N: 3PD1-12556**

**PART OF 160-5101 ENGINE AR**

**SMCS-1258** **i02206932**

| NOTE | REF NO | GRAPHIC REF | PART NUMBER | QTY | PART NAME 1 2 3 4 5 6 (PRODUCT LEVEL) | SEE PAGE |
|---|---|---|---|---|---|---|
| | 1 | 1 | **7C-4993** | 1 | ADAPTER-PRIMING PUMP | |
| | 2 | 1 | **1P-0436** | 2 | GASKET (FUEL PRIMING PUMP) | |
| M | 3 | 1 | **6V-2317** | 1 | BOLT (M8X1.25X30-MM) | |
| | 4 | 1 | **9M-1974** | 2 | WASHER-HARD (8.8X16X2-MM THK) | |
| M | 5 | 1 | **8T-0640** | 1 | BOLT (M6X1X30-MM) | |
| | 6 | 1 | **5P-0537** | 2 | WASHER-HARD (7.2X14.5X2-MM THK) | |
| | 7 | 1 | **1B-7182** | 1 | BOLT (5/16-18X1.25-IN) | |
| | 8 | 1 | **9F-6580** | 1 | BOLT (1/4-20X1.125-IN) | |
| | 9 | 1 | **105-2508** | 1 | PUMP AS-FUEL PRIMING | |

M-METRIC PART

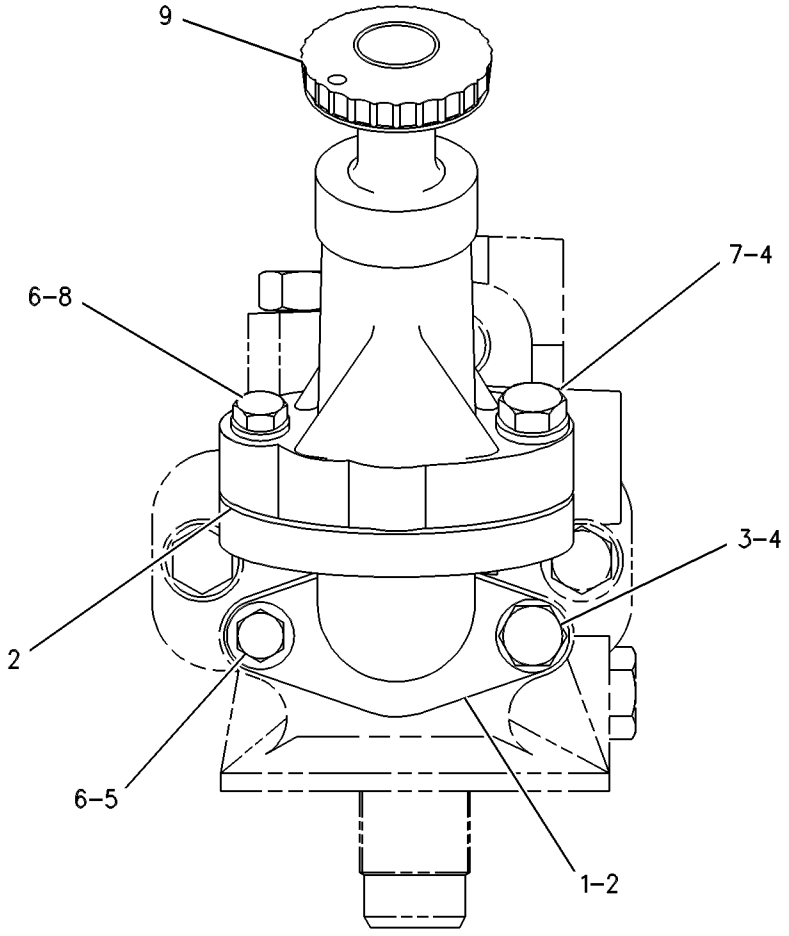


GRAPHIC #1 **<END>** g00273435

# *263-8506* PUMP GP-FUEL PRIMING

**S/N: 3PD12557-UP**

**PART OF 160-5101 ENGINE AR**

**SMCS-1258** **i02339548**

| NOTE | REF NO | GRAPHIC REF | PART NUMBER | QTY | PART NAME 1 2 3 4 5 6 (PRODUCT LEVEL) | SEE PAGE |
|---|---|---|---|---|---|---|
| | 1 | 1 | **1P-0436** | 2 | GASKET (FUEL PRIMING PUMP) (COVER) | |
| | 2 | 1 | **7C-4993** | 1 | ADAPTER-PRIMING PUMP | |
| | 3 | 1 | **137-5541** | 1 | PUMP GP-FUEL PRIMING | |
| | | 1 | **061-7539** | 1 | SEAL-O-RING | |
| | | 1 | **229-3218** | 2 | VALVE AS | |
| | 4 | 1 | **1B-7182** | 1 | BOLT (5/16-18X1.25-IN) | |
| | 5 | 1 | **5P-0537** | 2 | WASHER-HARD (7.2X14.5X2-MM THK) | |
| M | 6 | 1 | **6V-2317** | 1 | BOLT (M8X1.25X30-MM) | |
| M | 7 | 1 | **8T-0640** | 1 | BOLT (M6X1X30-MM) | |
| | 8 | 1 | **9F-6580** | 1 | BOLT (1/4-20X1.125-IN) | |
| | 9 | 1 | **9M-1974** | 2 | WASHER-HARD (8.8X16X2-MM THK) | |

M-METRIC PART

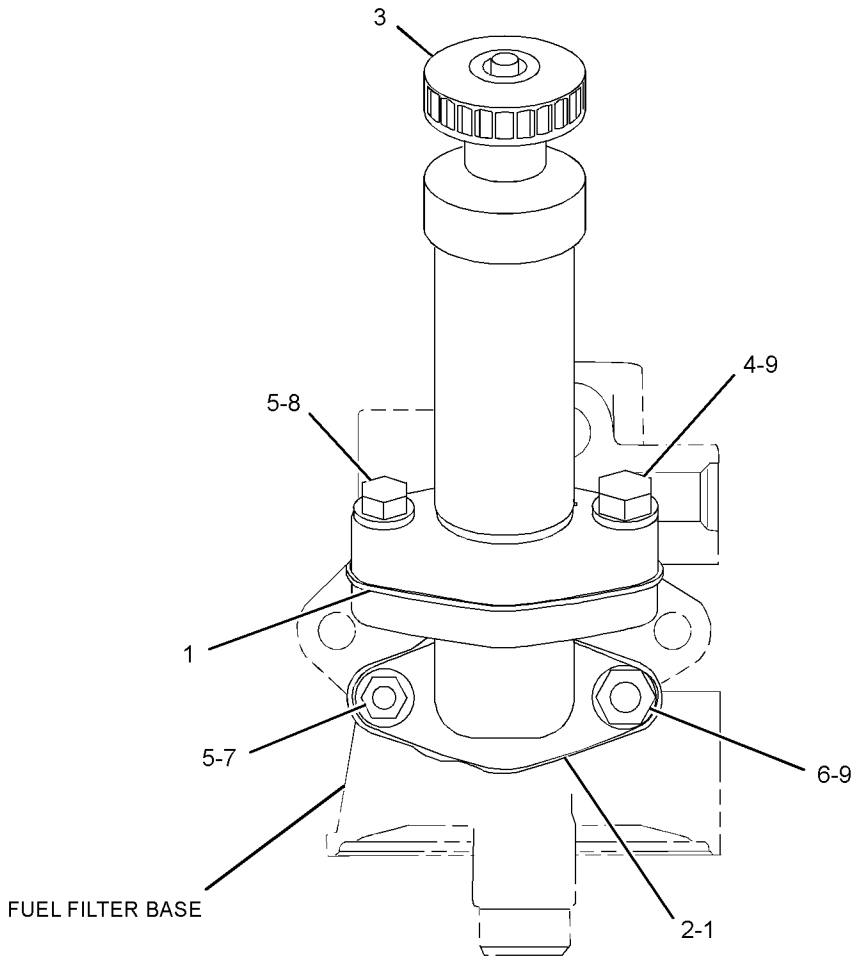


GRAPHIC #1 **<END>** g01269013

# *159-3931* TANK GP-FUEL

**S/N: CCA1-UP**

**PART OF 159-4615 GENERAL AR**

**SMCS-1273** **i02580108**

| NOTE | REF NO | GRAPHIC REF | PART NUMBER | QTY | PART NAME 1 2 3 4 5 6 (PRODUCT LEVEL) | SEE PAGE |
|---|---|---|---|---|---|---|
| | 1 | 1 | **7X-1387** | 4 | WASHER (10.26X22.22X1.9-MM THK) | |
| | 2 | 1 | **8T-6703** | 2 | CLAMP-HOSE | |
| | 3 | 1 | **113-8457** | 2 | ROD | |
| | 4 | 1 | **199-9907** | 1 | STRAINER-FUEL | |
| Y | 5 | 1 | *199-9912* | 1 | TANK GP-FUEL (RH) | 128 |
| Y | 6 | 1 | *199-9913* | 1 | TANK GP-FUEL (LH) | 130 |
| | 7 | 1 | **3B-4615** | 4 | PIN-COTTER | |
| | 8 | 1 | **5P-8439** | 2 | GROMMET | |
| E | 9 | 1 | **5P-1291** | | HOSE (34-CM) | |

E-ORDER BY THE CENTIMETER
Y-SEPARATE ILLUSTRATION

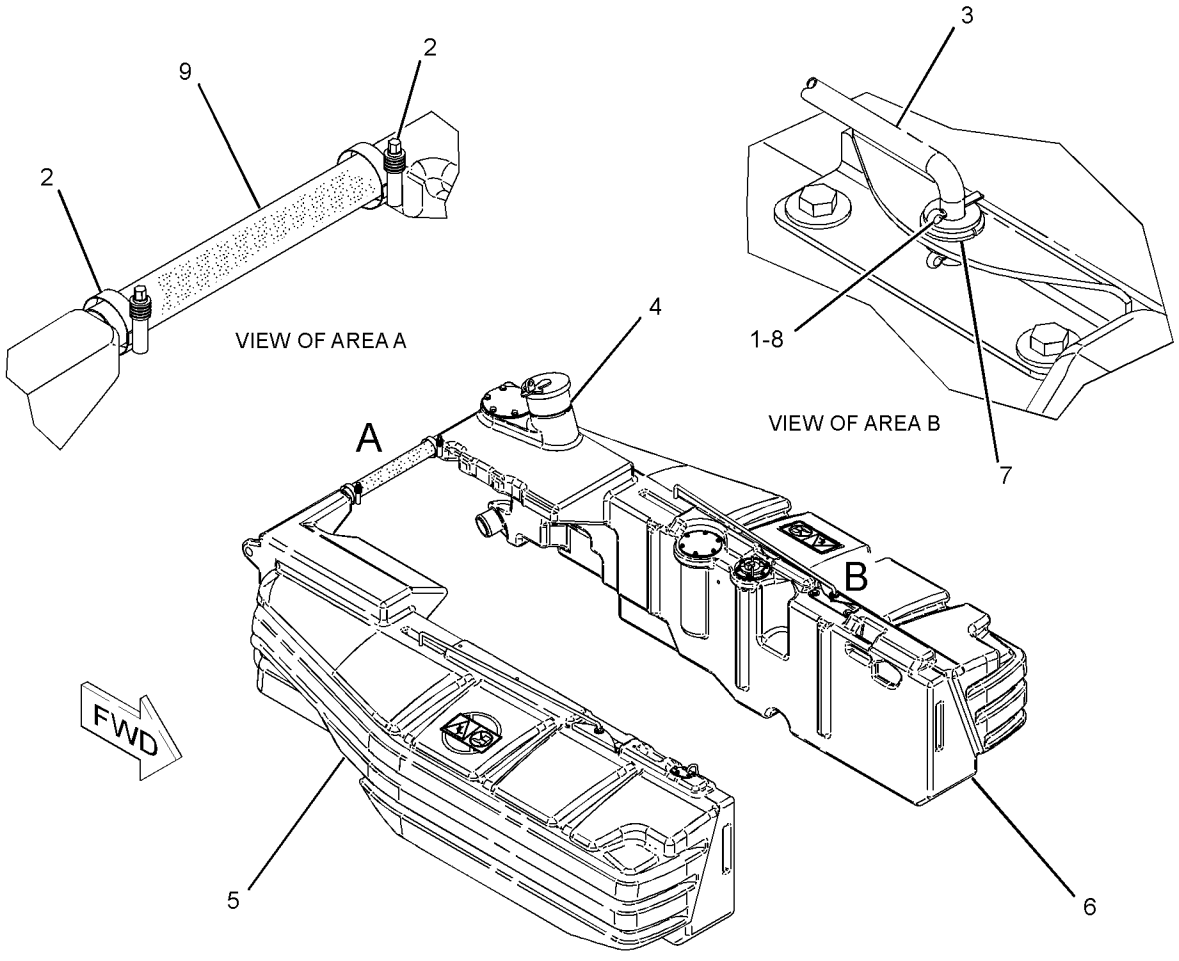


GRAPHIC #1 **<END>** g01292712

# *199-9912* TANK GP-FUEL–RH

**S/N: CCA1-UP**
**PART OF 159-3931 TANK GP-FUEL**
**TYPE 1**

**SMCS-1273** **i02200099**

| NOTE | REF NO | GRAPHIC REF | PART NUMBER | QTY | PART NAME 1 2 3 4 5 6 (PRODUCT LEVEL) | SEE PAGE |
|---|---|---|---|---|---|---|
| | 1 | 1 | **6V-6959** | 5 | BOLT-SOCKET HEAD (8-32X0.625-IN) | |
| | 2 | 1 | **159-9169** | 1 | TANK AS-FUEL (RH) | |
| | 2A | 1 | **002-6454** | 1 | NIPPLE-PIPE | |
| | 2B | 1 | **110-2445** | 1 | CLAMP-HOSE | |
| | 2C | 1 | **214-6598** | 2 | FILM (NO-STEP) | |
| | 3 | 1 | **194-2612** | 1 | COUPLER | |
| | 4 | 1 | **197-1708** | 1 | VENT AS | |
| | 5 | 1 | **199-9731** | 1 | BRACKET | |
| | 6 | 1 | **4B-4863** | 5 | WASHER (4.7X11X1.2-MM THK) | |
| | 7 | 1 | **7X-0579** | 4 | WASHER-HARD (8.8X25.5X2-MM THK) | |
| M | 8 | 1 | **8T-4189** | 4 | BOLT (M8X1.25X20-MM) | |
| | 9 | 1 | **9R-7240** | 1 | GASKET | |

M-METRIC PART

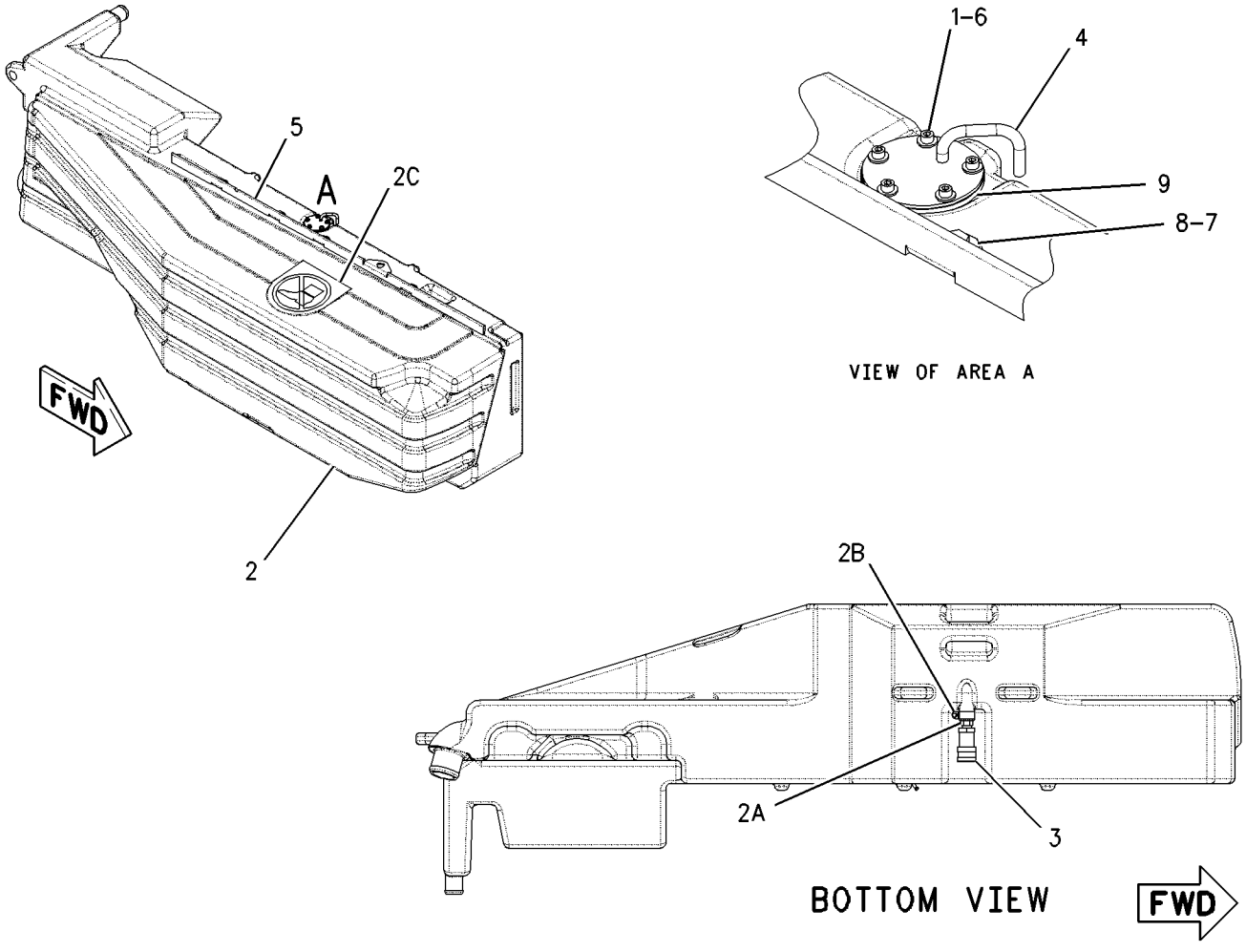


GRAPHIC #1 **<END>** g00846501

# 199-9912 TANK GP-FUEL–RH

**S/N: CCA1-UP**
**PART OF 159-3931 TANK GP-FUEL**
**TYPE 2**

**SMCS-1273** **i02200098**

| NOTE | REF NO | GRAPHIC REF | PART NUMBER | QTY | PART NAME 1 2 3 4 5 6 (PRODUCT LEVEL) | SEE PAGE |
|---|---|---|---|---|---|---|
| | 1 | 1 | **6V-6959** | 5 | BOLT-SOCKET HEAD (8-32X0.625-IN) | |
| C | 2 | 1 | **227-6672** | 1 | BRACKET | |
| CY | 3 | 1 | **229-5816** | 1 | TANK GP-FUEL (RH) | 135 |
| C | 4 | 1 | **230-4672** | 1 | VENT AS | |
| | 5 | 1 | **4B-4863** | 5 | WASHER (4.7X11X1.2-MM THK) | |
| C | 6 | 1 | **7X-0579** | 2 | WASHER-HARD (8.8X25.5X2-MM THK) | |
| CM | 7 | 1 | **8T-4189** | 2 | BOLT (M8X1.25X20-MM) | |
| | 8 | 1 | **9R-7240** | 1 | GASKET | |

C-CHANGE FROM PREVIOUS TYPE
M-METRIC PART
Y-SEPARATE ILLUSTRATION

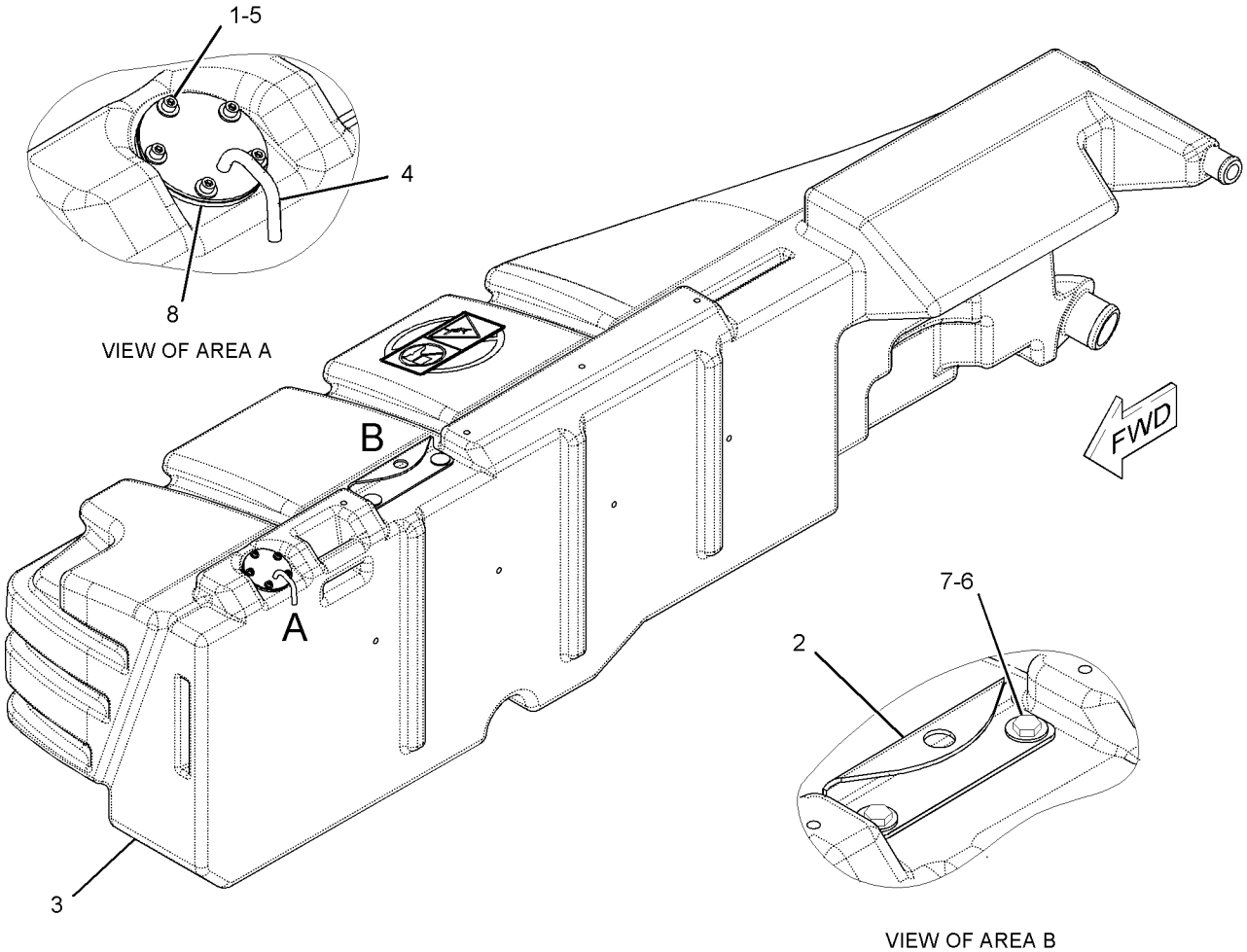


GRAPHIC #1 **<END>** g01013159

# *199-9913* TANK GP-FUEL–LH

**S/N: CCA1-UP**
**PART OF 159-3931 TANK GP-FUEL**
**TYPE 1**

**SMCS-1273** **i01943916**

| NOTE | REF NO | GRAPHIC REF | PART NUMBER | QTY | PART NAME 1 2 3 4 5 6 (PRODUCT LEVEL) | SEE PAGE |
|---|---|---|---|---|---|---|
| | 1 | 1 | **6V-6959** | 6 | BOLT-SOCKET HEAD (8-32X0.625-IN) | |
| | 2 | 1 | **159-9170** | 1 | TANK AS-FUEL (LH) | |
| | 2A | 1 | **002-6454** | 1 | NIPPLE-PIPE | |
| | 2B | 1 | **110-2445** | 1 | CLAMP-HOSE | |
| | 2C | 1 | **190-6535** | 1 | FILM-WARNING (NO-STEP) | |
| | 2D | 1 | **214-6598** | 1 | FILM (NO-STEP) | |
| | 3 | 1 | **164-4858** | 1 | CAP GP-FUEL FILLER (EXTREME SERVICE, LOCKABLE) | |
| | | 1 | **9X-8600** | 1 | SEAL-O-RING | |
| | | 1 | **190-9775** | 1 | COVER AS-FILTER | |
| | 4 | 1 | **173-2018** | 1 | SENDER AS-FUEL LEVEL | |
| | | 1 | **194-8535** | 1 | KIT-DIAL SENSOR (FUEL LEVEL) | |
| | | | | | (INCLUDES RECEPTACLE KIT, PINS, SCREWS & WEDGE) | |
| | 5 | 1 | **194-2612** | 1 | COUPLER | |
| | 6 | 1 | **199-9732** | 1 | BRACKET | |
| | 7 | 1 | **199-9907** | 1 | STRAINER-FUEL | |
| | 8 | 1 | **208-0800** | 1 | GASKET | |
| B | 9 | 1 | **103-2006** | 1 | SCREW-PAN HEAD (6-19X0.37-IN) | |
| | 10 | 1 | **194-6523** | 1 | ADAPTER (FUEL CAP) | |
| | 11 | 1 | **4B-4863** | 6 | WASHER (4.7X11X1.2-MM THK) | |
| | 12 | 1 | **7X-0579** | 4 | WASHER-HARD (8.8X25.5X2-MM THK) | |
| M | 13 | 1 | **8T-4189** | 4 | BOLT (M8X1.25X20-MM) | |

B-USE AS REQUIRED
M-METRIC PART

*199-9913* **TANK GP-FUEL** *(contd.)* **i01943916**

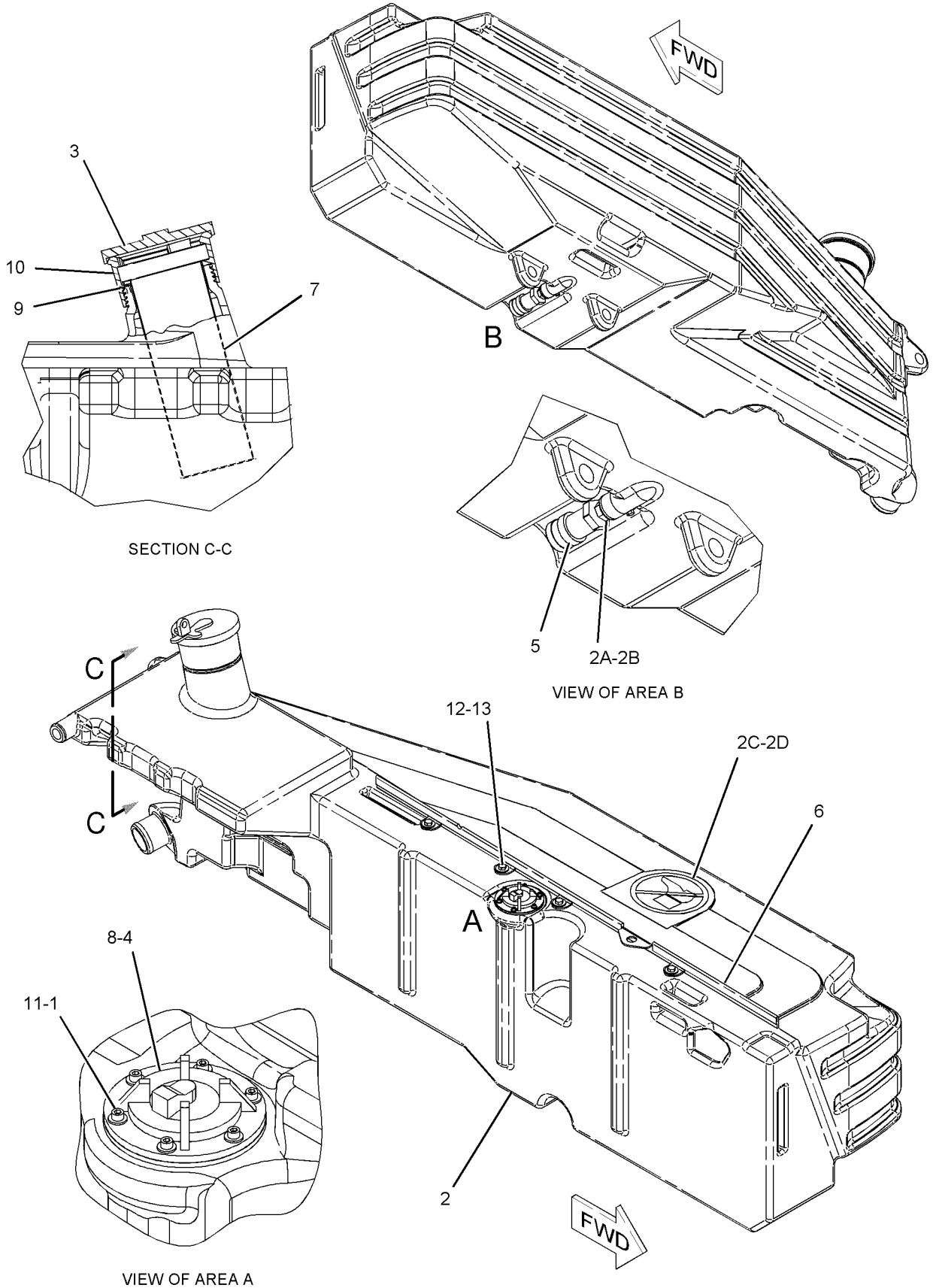


GRAPHIC #1 **<END>** g01013037

# *199-9913* TANK GP-FUEL–LH

**S/N: CCA1-UP**
**PART OF 159-3931 TANK GP-FUEL**
**TYPE 2**

**SMCS-1273** **i01943911**

| NOTE | REF NO | GRAPHIC REF | PART NUMBER | QTY | PART NAME 1 2 3 4 5 6 (PRODUCT LEVEL) | SEE PAGE |
|---|---|---|---|---|---|---|
| | 1 | 1 | **6V-6959** | 12 | BOLT-SOCKET HEAD (8-32X0.625-IN) | |
| | 2 | 1 | **164-4858** | 1 | CAP GP-FUEL FILLER (EXTREME SERVICE, LOCKABLE) | |
| | | 1 | **9X-8600** | 1 | SEAL-O-RING | |
| | | 1 | **190-9775** | 1 | COVER AS-FILTER | |
| | 3 | 1 | **173-2018** | 1 | SENDER AS-FUEL LEVEL | |
| | | 1 | **194-8535** | 1 | KIT-DIAL SENSOR (FUEL LEVEL) | |
| | | | | | (INCLUDES RECEPTACLE KIT, PINS, SCREWS & WEDGE) | |
| | 4 | 1 | **199-9907** | 1 | STRAINER-FUEL | |
| | 5 | 1 | **199-9984** | 1 | PLATE | |
| | 6 | 1 | **199-9985** | 1 | PLATE | |
| | 7 | 1 | **203-9807** | 1 | GASKET | |
| | 8 | 1 | **203-9808** | 1 | GASKET | |
| | 9 | 1 | **208-0800** | 1 | GASKET | |
| | 11 | 1 | **221-0319** | 1 | GASKET | |
| C | 12 | 1 | **227-6672** | 1 | BRACKET | |
| CY | 13 | 1 | **229-5815** | 1 | TANK GP-FUEL (LH) | 134 |
| B | 14 | 1 | **103-2006** | 1 | SCREW-PAN HEAD (6-19X0.37-IN) | |
| | 15 | 1 | **194-6523** | 1 | ADAPTER (FUEL CAP) | |
| | 16 | 1 | **4B-4863** | 12 | WASHER (4.7X11X1.2-MM THK) | |
| M | 17 | 1 | **5C-9553** | 4 | BOLT (M6X1X16-MM) | |
| | 18 | 1 | **7X-0579** | 2 | WASHER-HARD (8.8X25.5X2-MM THK) | |
| M | 19 | 1 | **8T-4189** | 8 | BOLT (M8X1.25X20-MM) | |
| | 20 | 1 | **8T-4224** | 6 | WASHER-HARD (8.8X16X2-MM THK) | |
| | 21 | 1 | **9X-8256** | 4 | WASHER (6.6X12X2-MM THK) | |

B-USE AS REQUIRED
C-CHANGE FROM PREVIOUS TYPE
M-METRIC PART
Y-SEPARATE ILLUSTRATION

*199-9913* **TANK GP-FUEL** *(contd.)* **i01943911**

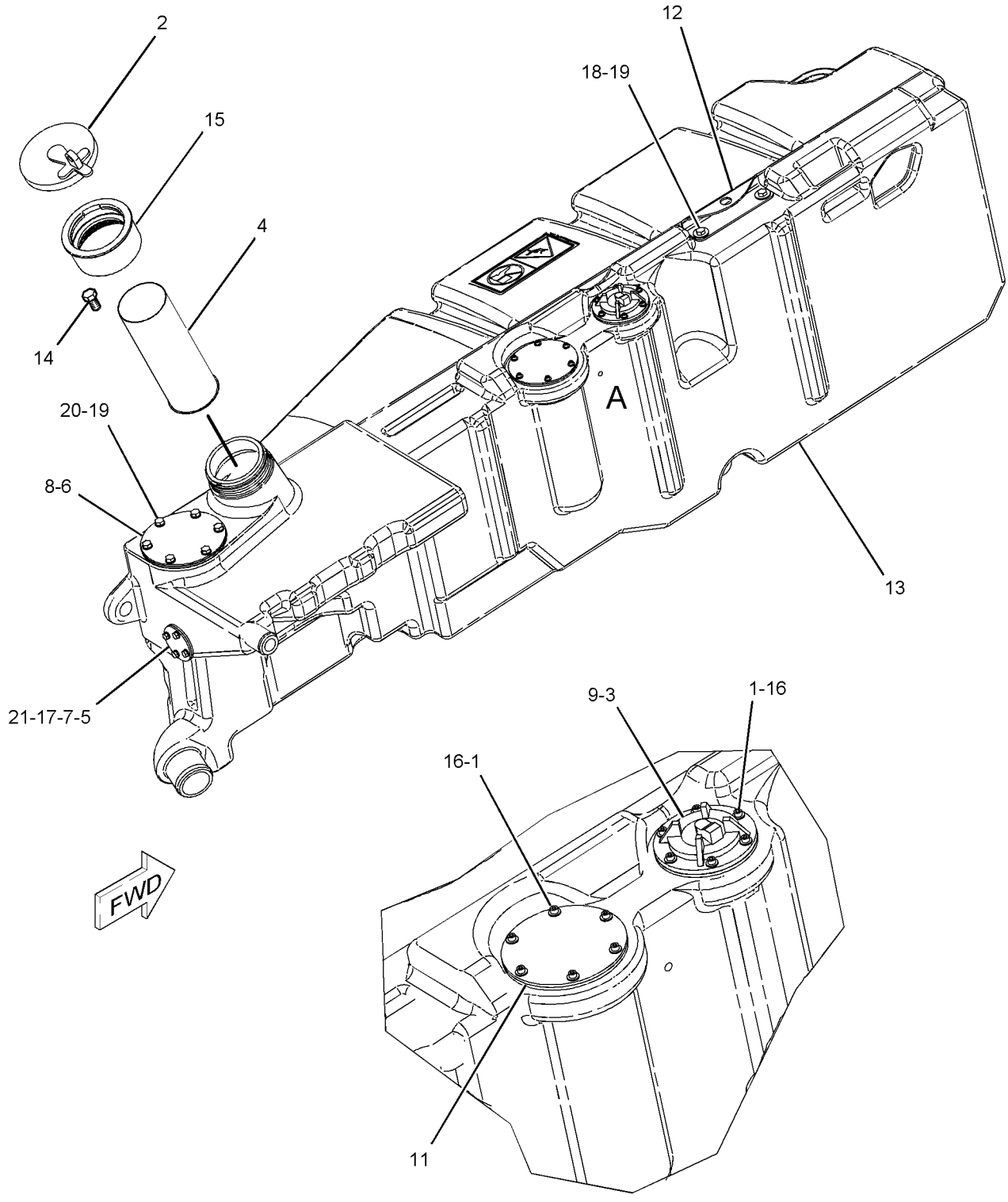


VIEW OF AREA A

GRAPHIC #1 **<END>** g01013261

# 229-5815 TANK GP-FUEL–LH

**S/N: CCA1-UP**

**PART OF 199-9913 TANK GP-FUEL**

**SMCS-1273** **i02206902**

| NOTE | REF NO | GRAPHIC REF | PART NUMBER | QTY | PART NAME 1 2 3 4 5 6 (PRODUCT LEVEL) | SEE PAGE |
|---|---|---|---|---|---|---|
| | 2 | 1 | **110-2445** | 1 | CLAMP-HOSE | |
| | 3 | 1 | **194-2612** | 1 | COUPLER | |
| | 4 | 1 | **230-4477** | 1 | FILM-WARNING (NO STEP) | |
| | 5 | 1 | **231-0221** | 1 | FILM-WARNING (NO STEP) | |
| | 6 | 1 | **002-6454** | 1 | NIPPLE-PIPE | |

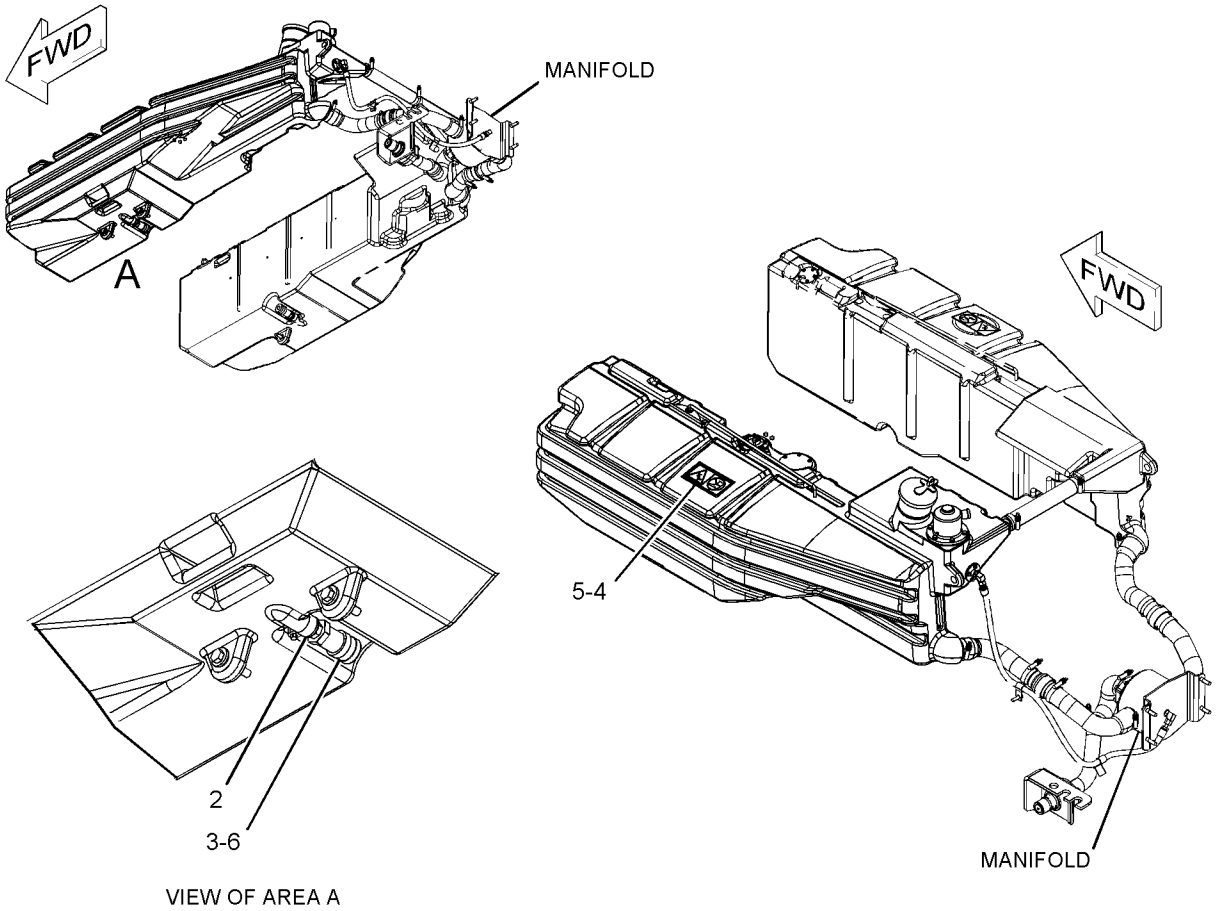


VIEW OF AREA A

GRAPHIC #1 **<END>** g01064295

# 229-5816 TANK GP-FUEL–RH

**S/N: CCA1-UP**

**PART OF 199-9912 TANK GP-FUEL**

**SMCS-1273** **i02206900**

| NOTE | REF NO | GRAPHIC REF | PART NUMBER | QTY | PART NAME 1 2 3 4 5 6 (PRODUCT LEVEL) | SEE PAGE |
|---|---|---|---|---|---|---|
| | 2 | 1 | **110-2445** | 1 | CLAMP-HOSE | |
| | 3 | 1 | **194-2612** | 1 | COUPLER | |
| | 4 | 1 | **230-4477** | 1 | FILM-WARNING (NO STEP) | |
| | 5 | 1 | **231-0221** | 1 | FILM-WARNING (NO STEP) | |
| | 6 | 1 | **002-6454** | 1 | NIPPLE-PIPE | |

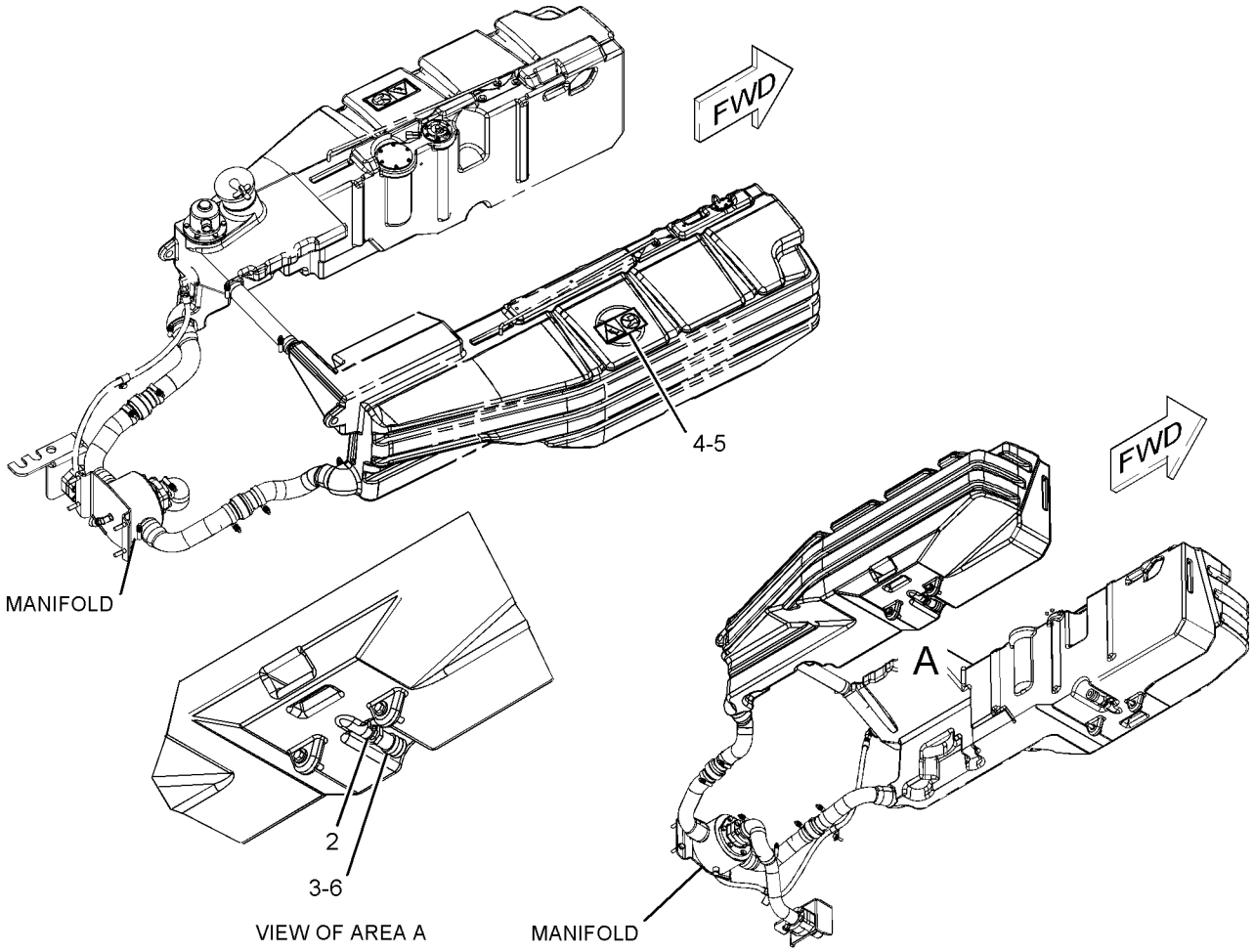


GRAPHIC #1

**<END>**

g01064308

# *156-5783* VALVE GP-CHECK

**S/N: 3PD1-4380**

**PART OF 204-0638 LINES GP-FUEL INJECTION**

**SMCS-1250, 1274** **i01672625**

| NOTE | REF NO | GRAPHIC REF | PART NUMBER | QTY | PART NAME 1 2 3 4 5 6 (PRODUCT LEVEL) | SEE PAGE |
|---|---|---|---|---|---|---|
| | 1 | 1 | **6V-6923** | 1 | RING-BACKUP (13.16MM ID) | |
| | 2 | 1 | **033-6033** | 1 | SEAL-O-RING (12.42MM ID) | |

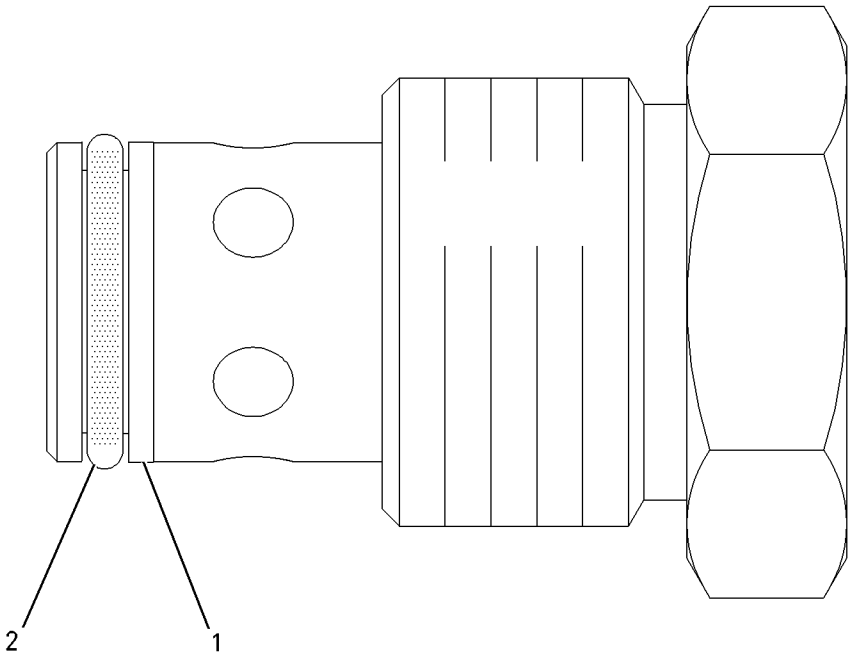


GRAPHIC #1 **<END>** g00864141

# *233-6742* VALVE GP-CHECK–FUEL

**S/N: 3PD4381-UP**

**PART OF 233-6663 LINES GP-FUEL**

**SMCS-1250, 1274** **i02447191**

| NOTE | REF NO | GRAPHIC REF | PART NUMBER | QTY | PART NAME 1 2 3 4 5 6 (PRODUCT LEVEL) | SEE PAGE |
|---|---|---|---|---|---|---|
| Y | 1 | 1 | **281-2725** | 1 | VALVE GP-CHECK (FUEL) | 138 |
| | 2 | 1 | **6V-4589** | 1 | SEAL-O-RING | |

Y-SEPARATE ILLUSTRATION

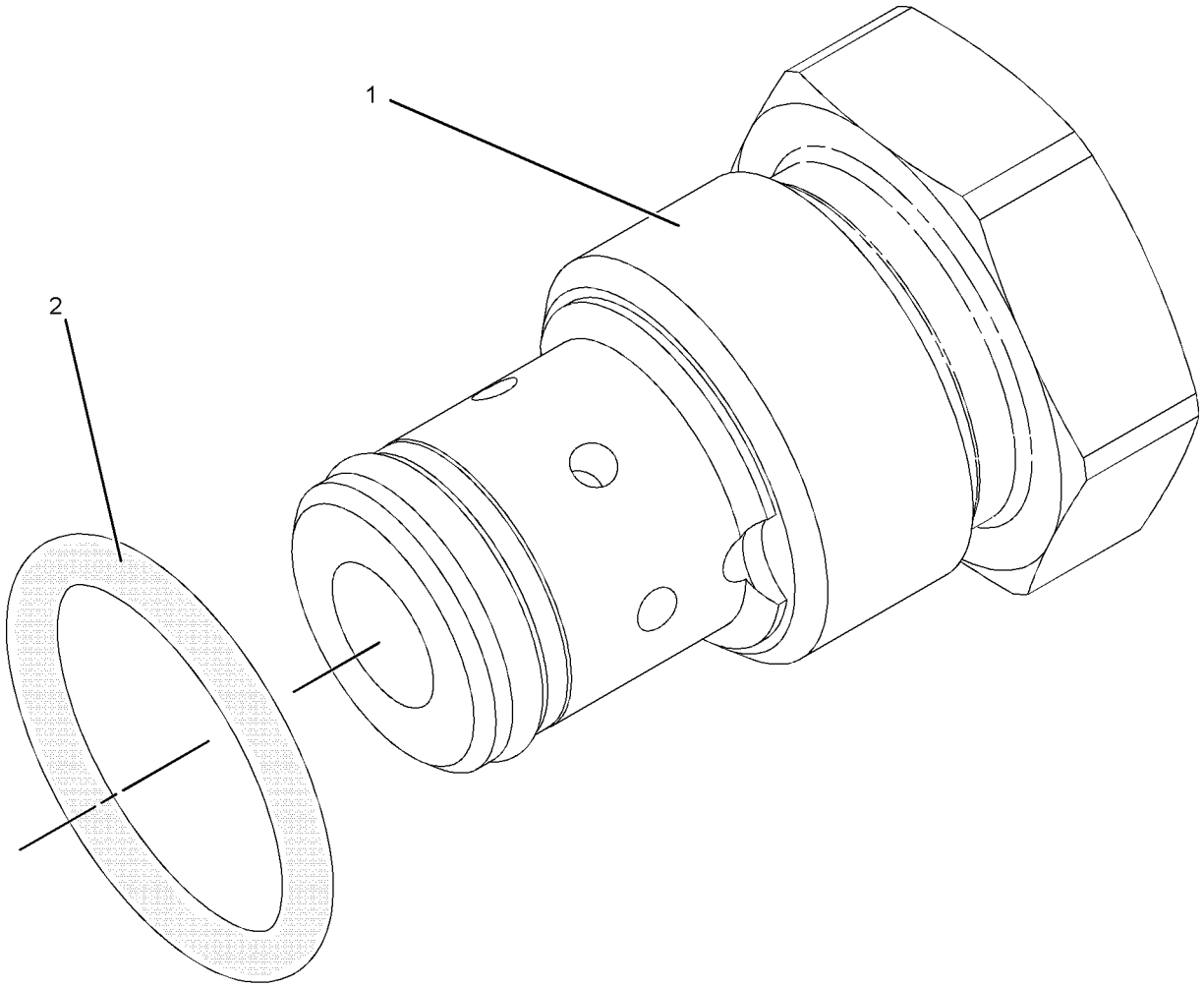


GRAPHIC #1 **<END>** g01031823

# *281-2725* VALVE GP-CHECK–FUEL

**S/N: 3PD4381-UP**

**PART OF 233-6742 VALVE GP-CHECK**

**SMCS-1250, 1274** **i02448132**

| NOTE | REF NO | GRAPHIC REF | PART NUMBER | QTY | PART NAME 1 2 3 4 5 6 (PRODUCT LEVEL) | SEE PAGE |
|---|---|---|---|---|---|---|
| | 1 | 1 | **6V-6923** | 1 | RING-BACKUP | |
| | 2 | 1 | **033-6033** | 1 | SEAL-O-RING | |

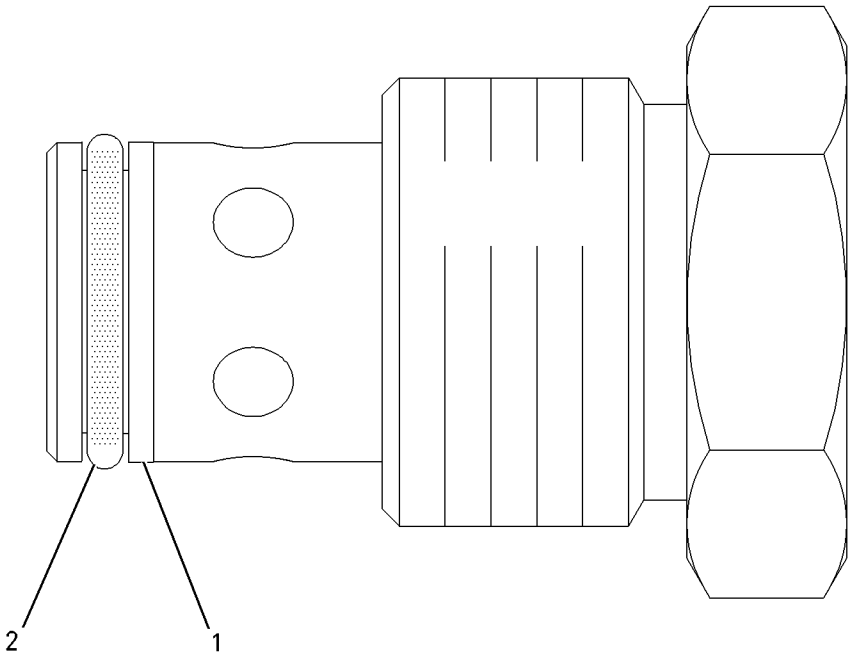


GRAPHIC #1 **<END>** g00864141

# *3E-6328* ALARM GP–ACTION

**S/N: CCA1-UP**
**24 VOLT**
**PART OF 159-5839, 159-5841 WIRING GP-SHIFT CONSOLE**
**ALSO AN ATTACHMENT**

**SMCS-7400, 7402, 7407** **i02021590**

| NOTE | REF NO | GRAPHIC REF | PART NUMBER | QTY | PART NAME 1 2 3 4 5 6 (PRODUCT LEVEL) | SEE PAGE |
|---|---|---|---|---|---|---|
| | 1 | 1 | **102-8802** | 1 | KIT-RECEPTACLE (2-PIN) | |
| | | | | | (INCLUDES RECEPTACLE AS & WEDGE) | |
| | 2 | 1 | **186-3735** | 2 | PIN-CONNECTOR (16-GA TO 18-GA) | |

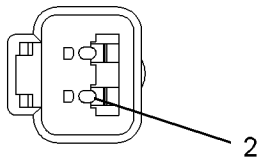


VIEW A–A

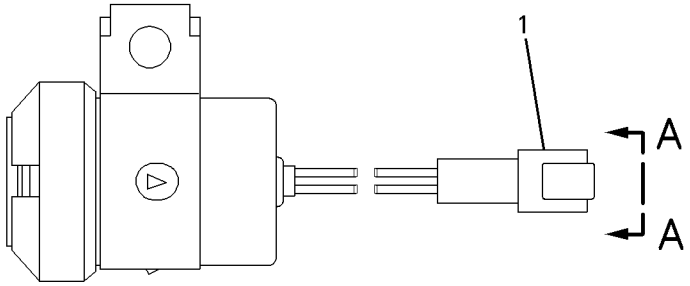


GRAPHIC #1 **<END>** g00697818

# *123-6449* ALARM GP–BACKUP

**S/N: CCA1-UP**
**PART OF 193-8253 WIRING GP-REAR LIGHTING**
**AN ATTACHMENT**

**SMCS-7400, 7402, 7407** **i02207310**

| NOTE | REF NO | GRAPHIC REF | PART NUMBER | QTY | PART NAME 1 2 3 4 5 6 (PRODUCT LEVEL) | SEE PAGE |
|---|---|---|---|---|---|---|
| | 1 | 1 | **102-8802** | 1 | KIT-RECEPTACLE (2-PIN) (BACK UP ALARM) | |
| | | | | | (INCLUDES RECEPTACLE AS & WEDGE) | |
| E | 2 | 1 | **9X-1813** | | SLEEVE (28-CM) | |
| | 3 | 1 | **186-3735** | 2 | PIN-CONNECTOR (16-GA TO 18-GA) | |
| B | 4 | 1 | **5P-5677** | | WIRE (18-GA, BLACK) | |

B-USE AS REQUIRED
E-ORDER BY THE CENTIMETER

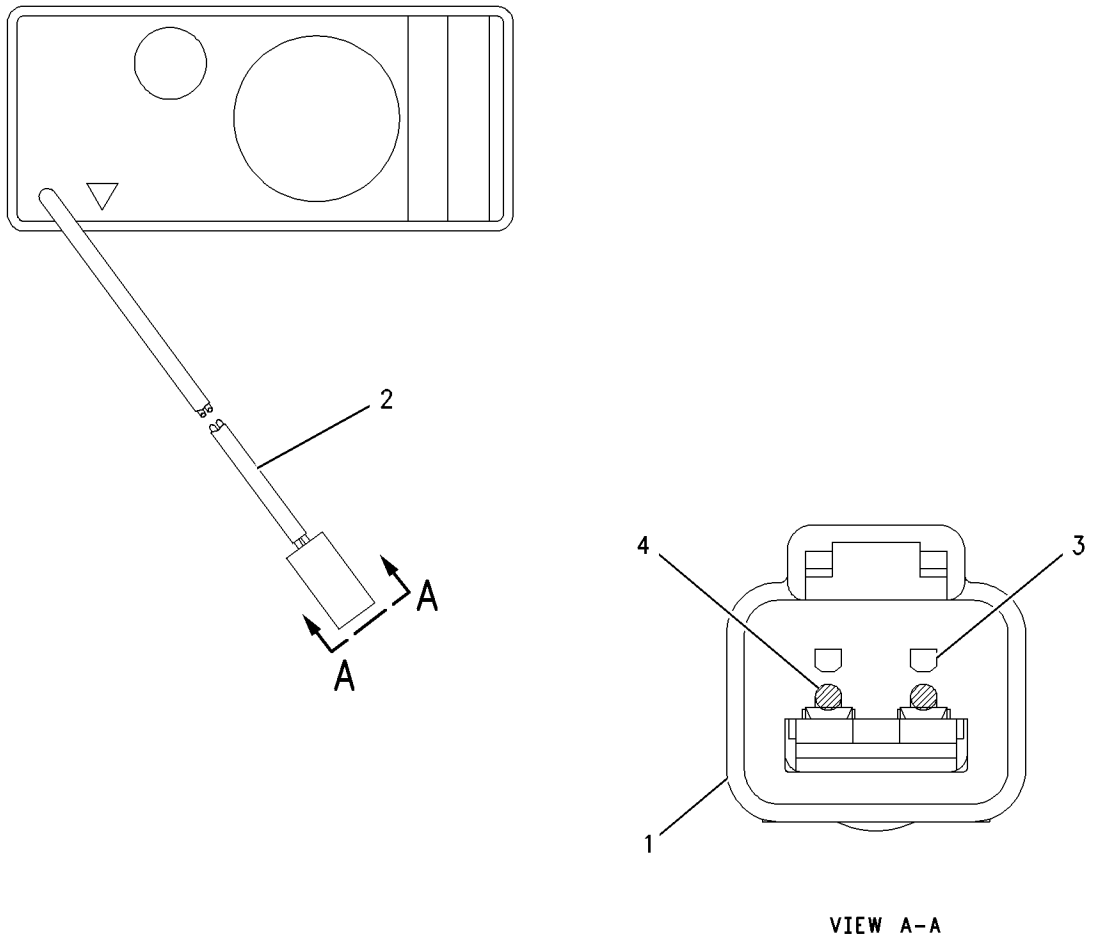


VIEW A-A

GRAPHIC #1 **<END>** g00942858

# *200-2232* ALTERNATOR GP-CHARGING*R

**S/N: CCA361-UP; 3PD1-UP**

**PART OF 212-0615, 233-0712 ALTERNATOR GP-CHARGING**

**SMCS-1405** **i02125262**

| NOTE | REF NO | GRAPHIC REF | PART NUMBER | QTY | PART NAME 1 2 3 4 5 6 (PRODUCT LEVEL) | SEE PAGE |
|---|---|---|---|---|---|---|
| | 1 | 1 | **8T-4205** | 2 | WASHER-HARD (7.2X14.5X2-MM THK) | |
| | 2 | 1 | **1H-3244** | 2 | LOCKWASHER | |
| | 3 | 1 | **6V-8187** | 1 | NUT (1/4-28-THD) | |
| | 4 | 1 | **5S-7349** | 1 | BOLT (1/4-20X0.5-IN) | |
| | 5 | 1 | **9L-6770** | 1 | CAP | |
| | 6 | 1 | **231-6133** | 1 | KIT-BEARING | |
| | | | | | (INCLUDES BEARING AS AND RACE) | |
| | 7 | 1 | **231-6134** | 1 | KIT-RECTIFIER | |
| | 8 | 1 | **202-2708** | 1 | DIODE AS | |
| | 9 | 1 | **3T-6354** | 1 | REGULATOR AS-VOLTAGE (24-VOLT) | |
| | 10 | 1 | **229-8906** | 1 | CAPACITOR AS | |
| | 11 | 1 | **202-9897** | 1 | BEARING-SPECIAL BALL | |
| | 12 | 1 | **100-6531** | 1 | FAN-ALTERNATOR (11-BLADE) | |
| | 13 | 1 | **187-2034** | 1 | NUT-FLANGE (5/8-18-THD) | |
| | 14 | 1 | **202-2783** | 1 | PLATE | |
| | 15 | 1 | **202-7711** | 1 | HOUSING AS | |
| | 16 | 1 | **202-7713** | 1 | FRAME AS | |
| | 17 | 1 | **202-8647** | 1 | STATOR AS | |
| | 18 | 1 | **202-2703** | 1 | COIL AS | |
| | 19 | 1 | **9S-2390** | 1 | RETAINER | |
| | 20 | 1 | **9S-2302** | 1 | ROTOR AS | |
| | 21 | 1 | **4B-2047** | 1 | NUT (10-24-THD) | |
| | 22 | 1 | **8T-0328** | 1 | WASHER-HARD (5.5X10X1-MM THK) | |
| | 23 | 1 | **8F-1434** | 1 | LOCKWASHER | |
| | 24 | 1 | **202-2784** | 1 | KIT-ALTERNATOR TERMINAL | |
| | 25 | 1 | **202-2785** | 1 | KIT-ALTERNATOR TERMINAL | |
| | 26 | 1 | **202-2786** | 1 | KIT-ALTERNATOR TERMINAL | |
| | | | | | AVAILABLE REPAIR KIT(S): | |
| | | | **202-2787** | | KIT-HARDWARE | |
| | | | | | (INCLUDES BOLTS, NUTS, PLUGS, SCREWS, LOCKWASHER, CONNECTOR, COLLAR AND BOOT) | |

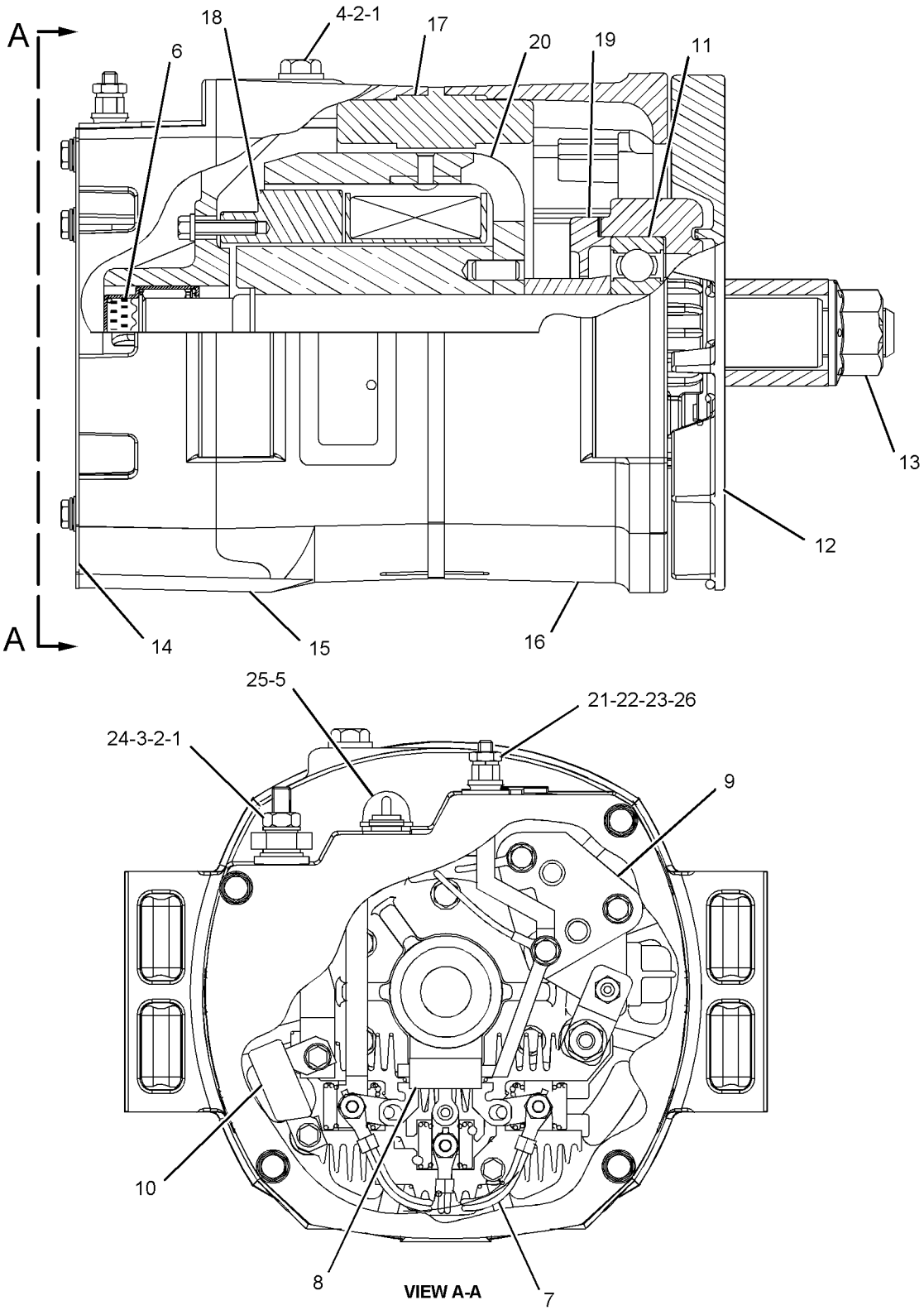


GRAPHIC #1

**<END>**

g01082788

# *212-0615* ALTERNATOR GP-CHARGING

**S/N: 3PD1-4380**

**PART OF 160-5101 ENGINE AR**

**SMCS-1405** **i01855562**

| NOTE | REF NO | GRAPHIC REF | PART NUMBER | QTY | PART NAME 1 2 3 4 5 6 (PRODUCT LEVEL) | SEE PAGE |
|---|---|---|---|---|---|---|
| | 1 | 1 | **169-4657** | 1 | BRACKET | |
| | 2 | 1 | **199-9959** | 1 | GUARD AS | |
| YR | 3 | 1 | **200-2232** | 1 | ALTERNATOR GP-CHARGING | 141 |
| | 4 | 1 | **3E-4353** | 3 | WASHER-HARD (11X25X3-MM THK) | |
| M | 5 | 1 | **6V-1820** | 3 | BOLT (M10X1.5X30-MM) | |
| M | 6 | 1 | **8T-0643** | 2 | BOLT (M10X1.5X80-MM) | |
| | 7 | 1 | **8T-4121** | 4 | WASHER-HARD (11X21X2.5-MM THK) | |
| M | 8 | 1 | **8T-4198** | 4 | BOLT (M10X1.5X100-MM) | |
| M | 9 | 1 | **6V-3822** | 2 | BOLT (M10X1.5X35-MM) | |

M-METRIC PART
R-REMFG PART MAY BE AVAILABLE
Y-SEPARATE ILLUSTRATION

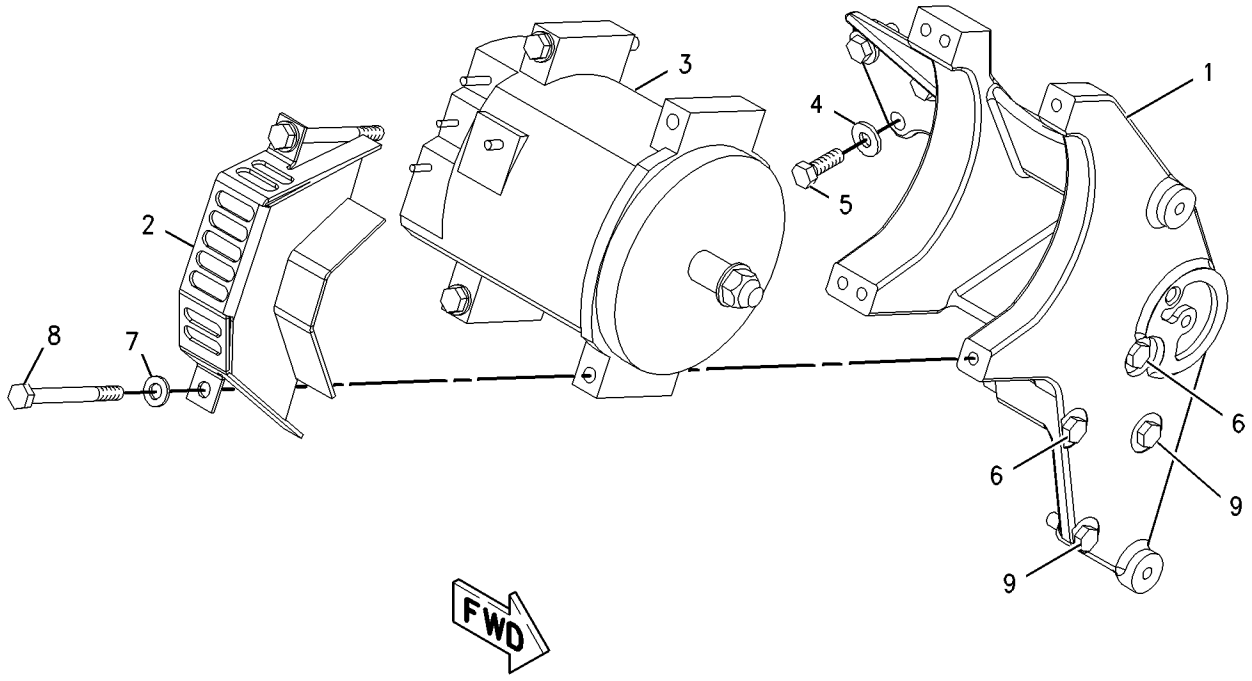


GRAPHIC #1 **<END>** g00906401

# *226-7683* ALTERNATOR GP-CHARGING

**S/N: CCA1-UP**

**PART OF 233-0713 ALTERNATOR GP-CHARGING**

**AN ATTACHMENT**

**SMCS-1405** **i02160631**

| NOTE | REF NO | GRAPHIC REF | PART NUMBER | QTY | PART NAME 1 2 3 4 5 6 (PRODUCT LEVEL) | SEE PAGE |
|---|---|---|---|---|---|---|
| | 1 | 1 | **228-9656** | 1 | MOUNTING GP-ALTERNATOR | |
| | 2 | 1 | **5S-7349** | 1 | BOLT (1/4-20X0.5-IN) | |
| | 3 | 1 | **185-2639** | 1 | FAN AS | |
| | 4 | 1 | **1H-3244** | 1 | LOCKWASHER | |
| | 5 | 1 | **228-9655** | 1 | FRAME AS-ALTERNATOR | |
| | 6 | 1 | **2K-4821** | 1 | LOCKNUT (5/8-18-THD) | |
| | 7 | 1 | **5P-8247** | 1 | WASHER-HARD (17X32X3.5-MM THK) | |
| | 8 | 1 | **228-9657** | 1 | COVER AS | |
| | 9 | 1 | **8T-4205** | 1 | WASHER-HARD (7.2X14.5X2-MM THK) | |
| | 10 | 1 | **185-2647** | 1 | GROMMET | |
| | 11 | 1 | **9L-6770** | 1 | CAP | |
| | 12 | 1 | **205-0626** | 1 | STATOR AS-ALTERNATOR | |
| | 13 | 1 | **185-2638** | 2 | COLLAR | |
| | 14 | 1 | **185-2654** | 1 | PLATE | |
| | 15 | 1 | **185-2650** | 1 | ROTOR AS | |
| | 16 | 1 | **185-2644** | 1 | COIL AS | |
| | 17 | 1 | **185-2648** | 1 | REGULATOR AS-VOLTAGE (24-VOLT) (ALTERNATOR) | |
| | 18 | 1 | **6V-8189** | 1 | NUT (5/16-18-THD) | |
| | 19 | 1 | **8T-4224** | 1 | WASHER-HARD (8.8X16X2-MM THK) | |
| | 20 | 1 | **3F-9556** | 1 | LOCKWASHER | |
| | | | | | AVAILABLE REPAIR KIT(S): | |
| | | | **185-2655** | 1 | KIT-BEARING (ALTERNATOR) | |
| | | | | | (INCLUDES BEARINGS) | |
| | | | **185-2658** | 1 | KIT-HARDWARE (ALTERNATOR) | |
| | | | | | (INCLUDES BOLTS) | |
| | | | **199-8436** | 1 | KIT-TERMINAL (ALTERNATOR) | |
| | | | | | (INCLUDES HOLDER AS, PLATE, INSULATOR, PIN, BOLT KIT, GROMMET, AND NUT) | |
| | | | **199-7891** | 1 | KIT-TERMINAL (ALTERNATOR) | |
| | | | | | (INCLUDES INSULATORS, WASHERS, NUT AND STEP NUT) | |

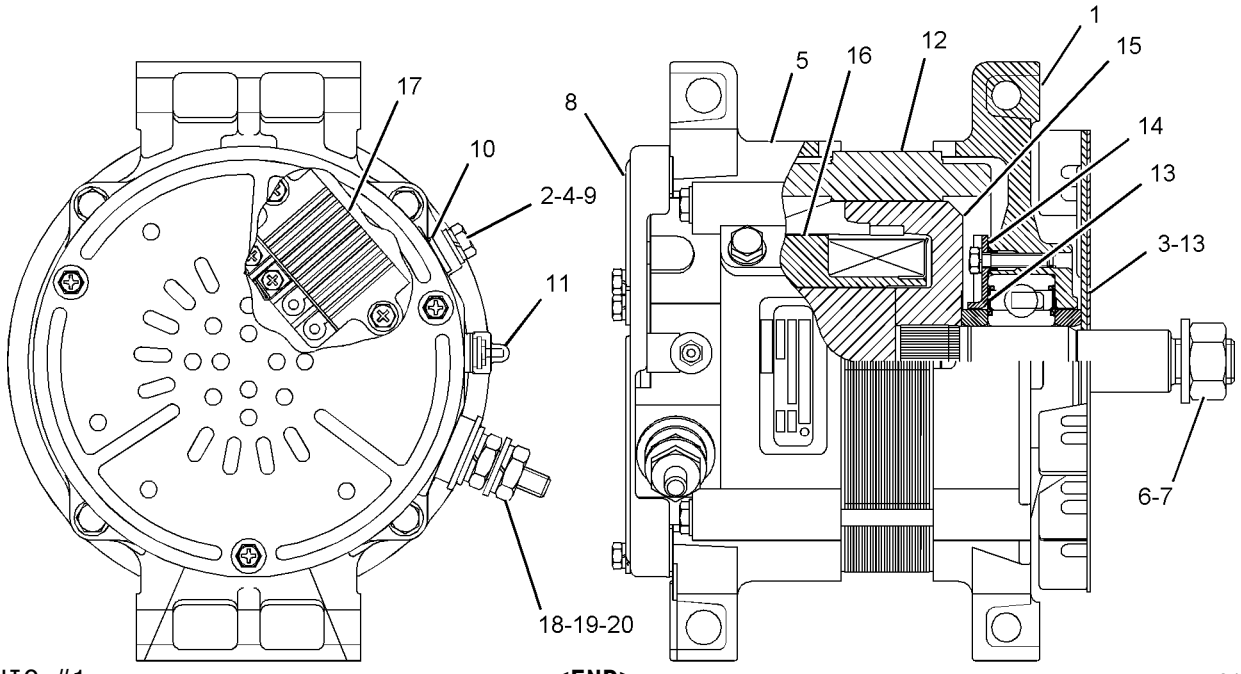


GRAPHIC #1 **<END>** g01088551

# *233-0712* ALTERNATOR GP-CHARGING

**S/N: CCA361-UP**

**PART OF 159-4615 GENERAL AR**

**SMCS-1405** **i01912820**

| NOTE | REF NO | GRAPHIC REF | PART NUMBER | QTY | PART NAME 1 2 3 4 5 6 (PRODUCT LEVEL) | SEE PAGE |
|---|---|---|---|---|---|---|
| | 1 | 1 | **123-0790** | 1 | PULLEY (8-GROOVE) | |
| | 2 | 1 | **178-8481** | 1 | BELT-SERPENTINE (ALTERNATOR WITHOUT A/C) | |
| | 3 | 1 | **199-9959** | 1 | GUARD AS | |
| YR | 4 | 1 | **200-2232** | 1 | ALTERNATOR GP-CHARGING | 141 |
| | 5 | 1 | **8T-4121** | 4 | WASHER-HARD (11X21X2.5-MM THK) | |
| M | 6 | 1 | **8T-4198** | 4 | BOLT (M10X1.5X100-MM) | |

M-METRIC PART
R-REMFG PART MAY BE AVAILABLE
Y-SEPARATE ILLUSTRATION

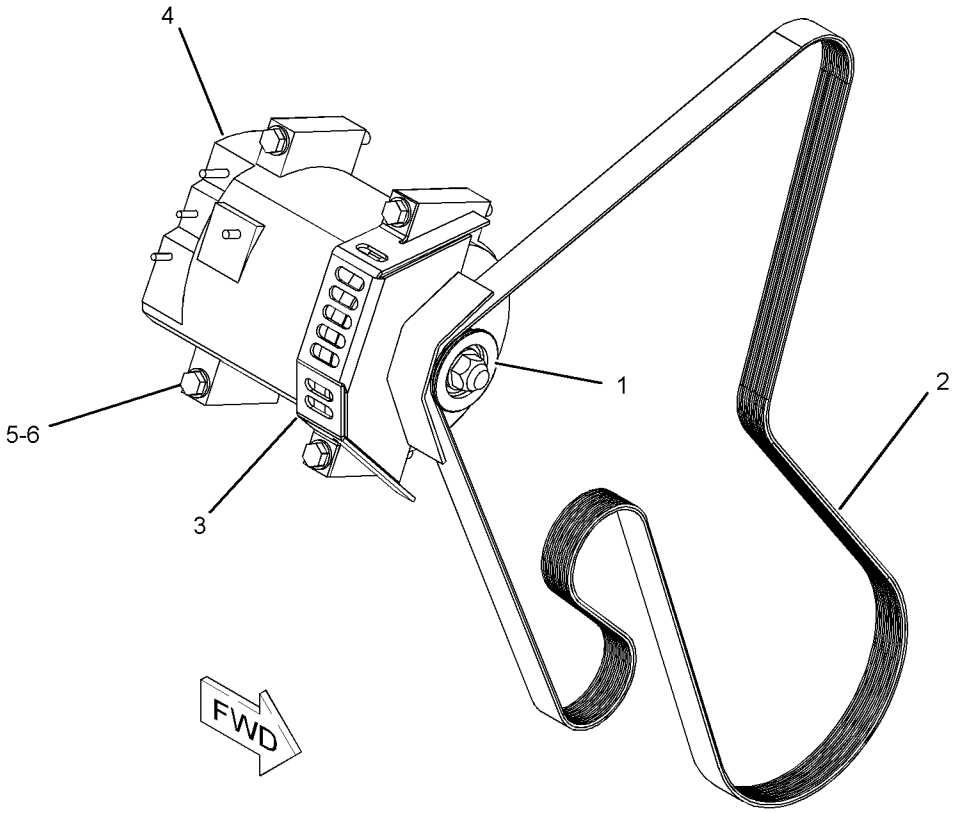


GRAPHIC #1 **<END>** g01032645

# ELECTRICAL AND STARTING SYSTEM

## *233-0713* ALTERNATOR GP-CHARGING

**S/N: CCA1-UP**
**95-100 AMPERES**
**AN ATTACHMENT**

**SMCS-1405** **i02160613**

| NOTE | PART NUMBER | QTY | PART NAME 1 2 3 4 5 6 (PRODUCT LEVEL) | SEE PAGE |
|---|---|---|---|---|
| Y | **226-7683** | 1 | ALTERNATOR GP-CHARGING | 144 |
| Y | *236-5498* | 1 | CIRCUIT BREAKER GP (ALTERNATOR) | 154 |

Y-SEPARATE ILLUSTRATION

**<END>**

# *177-9548* BATTERY GP–HEAVY DUTY

**S/N: CCA1-UP**
**AN ATTACHMENT**

**SMCS-1401** **i02205175**

| NOTE | REF NO | GRAPHIC REF | PART NUMBER | QTY | PART NAME 1 2 3 4 5 6 (PRODUCT LEVEL) | SEE PAGE |
|---|---|---|---|---|---|---|
| | 1 | 1 | **8V-0622** | 1 | CABLE AS | |
| | | 1 | **8C-5917** | 1 | TERMINAL AS-BATTERY (POSITIVE) | |
| | | 1 | **1M-6119** | 2 | BOLT (5/16-18X1.375-IN) | |
| | | 1 | **1M-6120** | 2 | NUT (5/16-18-THD) | |
| E | | 1 | **5P-0761** | | CABLE (00-GA, RED) (14-CM) | |
| | | 1 | **8T-9757** | 1 | TERMINAL AS-BATTERY (NEGATIVE) | |
| | | 1 | **9G-0003** | 1 | COVER-TERMINAL (BLACK) | |
| | | 1 | **9G-0004** | 1 | COVER-TERMINAL (RED) | |
| | 2 | 1 | **153-5700** | 2 | BATTERY GP (12-VOLT, MAINTENANCE FREE) (1100 AMPS) | |
| | 3 | 1 | **189-0146** | 1 | HOLD-DOWN | |
| | 4 | 1 | **229-0674** | 1 | BAR | |
| | 5 | 1 | **174-5907** | 2 | CLIP | |
| M | 6 | 1 | **8T-0389** | 2 | LOCKNUT (M10X1.15-THD) | |
| | 7 | 1 | **8T-4121** | 5 | WASHER-HARD (11X21X2.5-MM THK) | |
| M | 8 | 1 | **8T-4133** | 1 | NUT (M10X1.5-THD) | |
| M | 9 | 1 | **8T-4136** | 1 | BOLT (M10X1.5X25-MM) | |
| M | 10 | 1 | **8T-4182** | 2 | BOLT (M10X1.5X45-MM) | |
| | 11 | 1 | **9R-6414** | 2 | ROD | |

E-ORDER BY THE CENTIMETER
M-METRIC PART

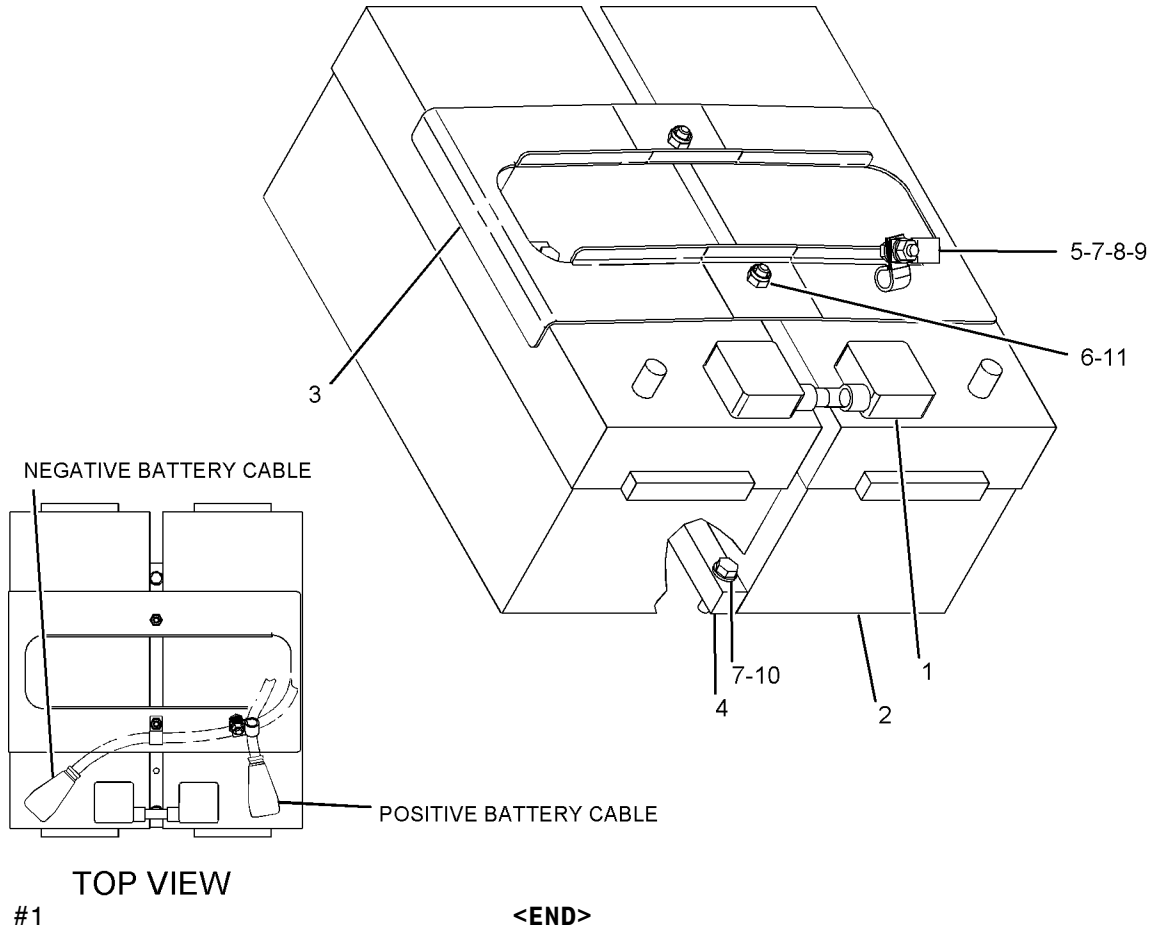


GRAPHIC #1 **<END>** g01064316

# *177-9549* BATTERY GP–HEAVY DUTY

**S/N: CCA1-UP**
**PART OF 197-5955, 236-3948 SNOW AR-MOTOR GRADER**
**AN ATTACHMENT**

**SMCS-1401** **i02203568**

| NOTE | REF NO | GRAPHIC REF | PART NUMBER | QTY | PART NAME 1 2 3 4 5 6 (PRODUCT LEVEL) | SEE PAGE |
|---|---|---|---|---|---|---|
| | 1 | 1 | **8V-0622** | 1 | CABLE AS | |
| | | 1 | **1M-6119** | 2 | BOLT (5/16-18X1.375-IN) | |
| E | | 1 | **5P-0761** | | CABLE (00-GA, RED) (14-CM) | |
| | | 1 | **9G-0003** | 1 | COVER-TERMINAL (BLACK) | |
| | | 1 | **9G-0004** | 1 | COVER-TERMINAL (RED) | |
| | | 1 | **1M-6120** | 2 | NUT (5/16-18-THD) | |
| | | 1 | **8T-9757** | 1 | TERMINAL AS-BATTERY (NEGATIVE) | |
| | | 1 | **8C-5917** | 1 | TERMINAL AS-BATTERY (POSITIVE) | |
| | 2 | 1 | **153-5710** | 2 | BATTERY (12-VOLT, MAINTENANCE FREE) (WET) | |
| | 3 | 1 | **189-0146** | 1 | HOLD-DOWN | |
| | 4 | 1 | **229-0674** | 1 | BAR | |
| | 5 | 1 | **174-5907** | 2 | CLIP | |
| M | 6 | 1 | **8T-0389** | 2 | LOCKNUT (M10X1.15-THD) | |
| | 7 | 1 | **8T-4121** | 5 | WASHER-HARD (11X21X2.5-MM THK) | |
| M | 8 | 1 | **8T-4133** | 1 | NUT (M10X1.5-THD) | |
| M | 9 | 1 | **8T-4136** | 1 | BOLT (M10X1.5X25-MM) | |
| M | 10 | 1 | **8T-4182** | 2 | BOLT (M10X1.5X45-MM) | |
| | 11 | 1 | **9R-6414** | 2 | ROD | |

E-ORDER BY THE CENTIMETER
M-METRIC PART

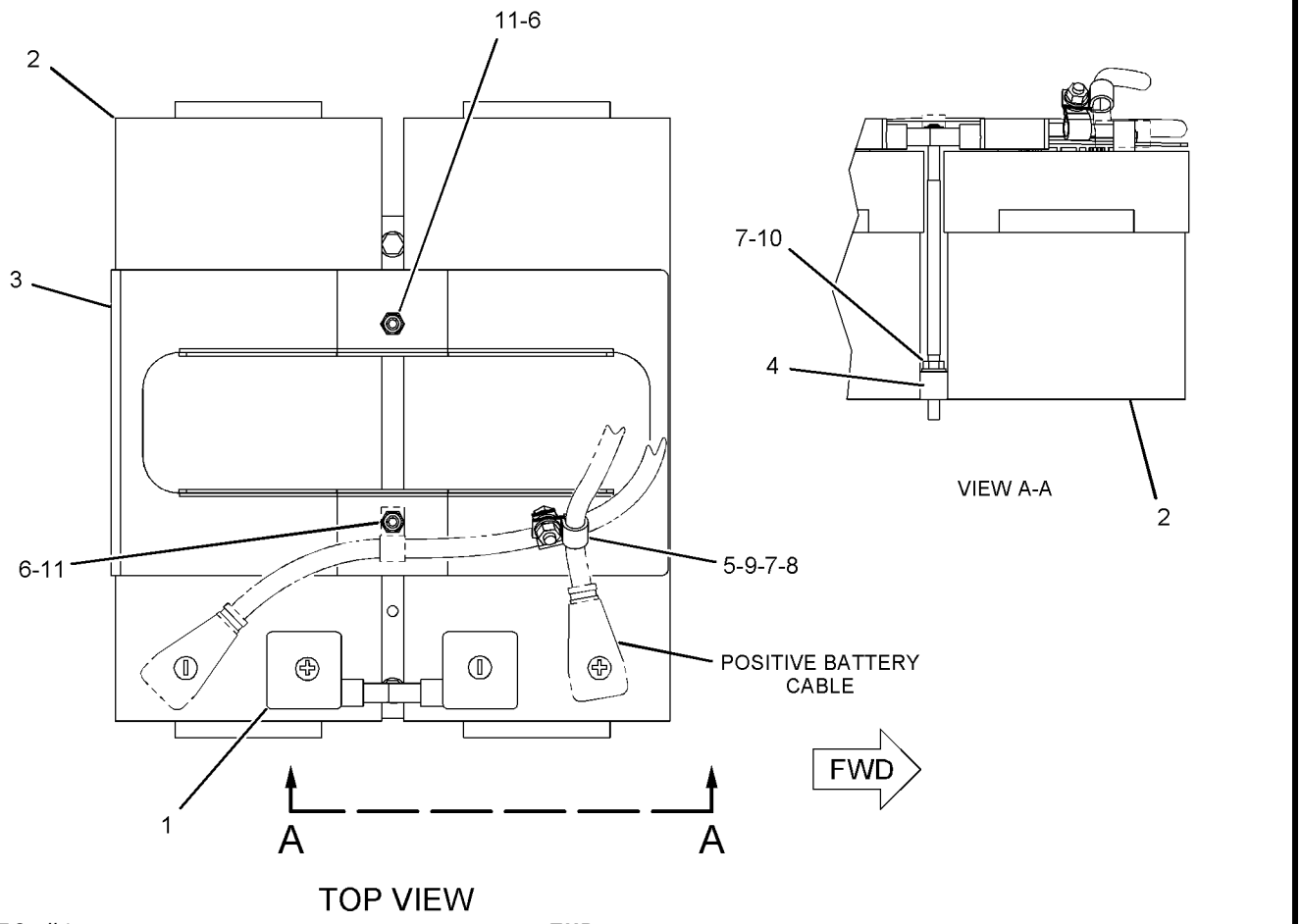


GRAPHIC #1 **<END>** g01038568

# *187-8028* BATTERY GP–EU

**S/N: CCA1-UP**
**PART OF 171-6700 SUPPORT AR-REAR CHASSIS**
**AN ATTACHMENT**

**SMCS-1401** **i02203569**

| NOTE | REF NO | GRAPHIC REF | PART NUMBER | QTY | PART NAME 1 2 3 4 5 6 (PRODUCT LEVEL) | SEE PAGE |
|---|---|---|---|---|---|---|
| | 1 | 1 | **8V-0622** | 1 | CABLE AS | |
| E | | 1 | **5P-0761** | | CABLE (00-GA, RED) (14-CM) | |
| | | 1 | **8C-5917** | 1 | TERMINAL AS-BATTERY (POSITIVE) | |
| | | 1 | **1M-6119** | 2 | BOLT (5/16-18X1.375-IN) | |
| | | 1 | **1M-6120** | 2 | NUT (5/16-18-THD) | |
| | | 1 | **8T-9757** | 1 | TERMINAL AS-BATTERY (NEGATIVE) | |
| | | 1 | **9G-0003** | 1 | COVER-TERMINAL (BLACK) | |
| | | 1 | **8L-8413** | 1 | STRAP-CABLE | |
| | | 1 | **9G-0004** | 1 | COVER-TERMINAL (RED) | |
| | | 1 | **8L-8413** | 1 | STRAP-CABLE | |
| | 2 | 1 | **153-5700** | 2 | BATTERY GP (12-VOLT, MAINTENANCE FREE) | |
| | 3 | 1 | **229-0674** | 1 | BAR | |
| | 4 | 1 | **189-0146** | 1 | HOLD-DOWN | |
| | 5 | 1 | **9R-6414** | 2 | ROD | |
| M | 6 | 1 | **8T-0389** | 2 | LOCKNUT (M10X1.15-THD) | |
| | 7 | 1 | **8T-4121** | 5 | WASHER-HARD (11X21X2.5-MM THK) | |
| M | 8 | 1 | **8T-4182** | 2 | BOLT (M10X1.5X45-MM) | |
| M | 9 | 1 | **8T-4133** | 1 | NUT (M10X1.5-THD) | |
| M | 10 | 1 | **8T-4136** | 1 | BOLT (M10X1.5X25-MM) | |
| | 11 | 1 | **174-5907** | 2 | CLIP | |

E-ORDER BY THE CENTIMETER
M-METRIC PART

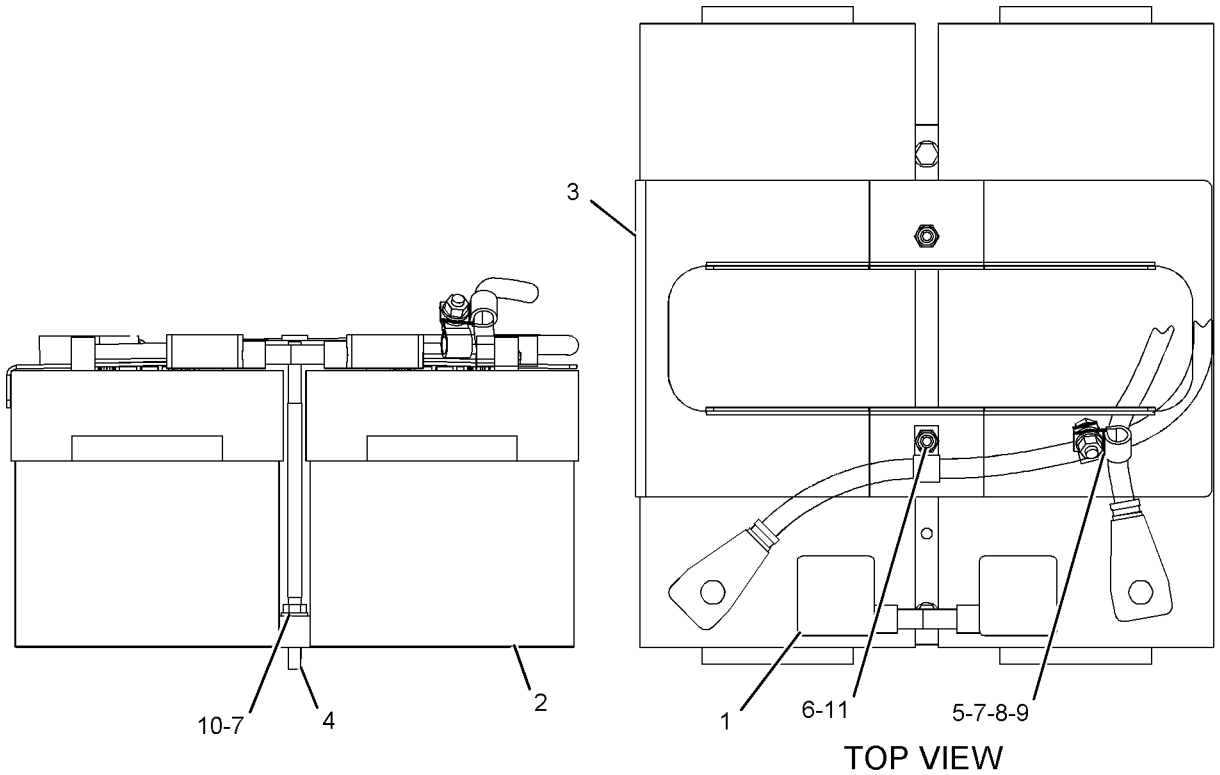


GRAPHIC #1 **<END>** g01069127

# *188-3951* BATTERY GP—MAINTENANCE FREE

**S/N: CCA1-UP**

**PART OF 185-3143 SUPPORT AR-REAR CHASSIS**

**SMCS-1401** **i02089948**

| NOTE | REF NO | GRAPHIC REF | PART NUMBER | QTY | PART NAME 1 2 3 4 5 6 (PRODUCT LEVEL) | SEE PAGE |
|---|---|---|---|---|---|---|
| | 1 | 1 | **111-7978** | 1 | HOLD-DOWN AS | |
| | 2 | 1 | **128-0314** | 1 | CABLE AS | |
| | | 1 | **9G-0002** | 1 | COVER-TERMINAL (RED) (LH POS) | |
| | | 1 | **9G-0005** | 1 | COVER-TERMINAL (BLACK) (RH NEG) | |
| E | | 1 | **5P-0761** | | CABLE (00-GA, RED) (29-CM) | |
| | | 1 | **8C-5918** | 1 | TERMINAL AS (NEGATIVE) (RH) | |
| | | 1 | **8T-9756** | 1 | TERMINAL AS (POSITIVE) (LH) | |
| | 3 | 1 | **188-3959** | 1 | BRACKET | |
| | 4 | 1 | **229-0674** | 1 | BAR | |
| | 5 | 1 | **3T-5760** | 2 | BATTERY (12-VOLT, MAINTENANCE FREE) | |
| M | 6 | 1 | **8T-0389** | 2 | LOCKNUT (M10X1.15-THD) | |
| | 7 | 1 | **8T-4121** | 3 | WASHER-HARD (11X21X2.5-MM THK) | |
| M | 8 | 1 | **8T-4137** | 1 | BOLT (M10X1.5X20-MM) | |
| M | 9 | 1 | **8T-4182** | 2 | BOLT (M10X1.5X45-MM) | |
| | 10 | 1 | **9R-6414** | 2 | ROD | |

E-ORDER BY THE CENTIMETER
M-METRIC PART

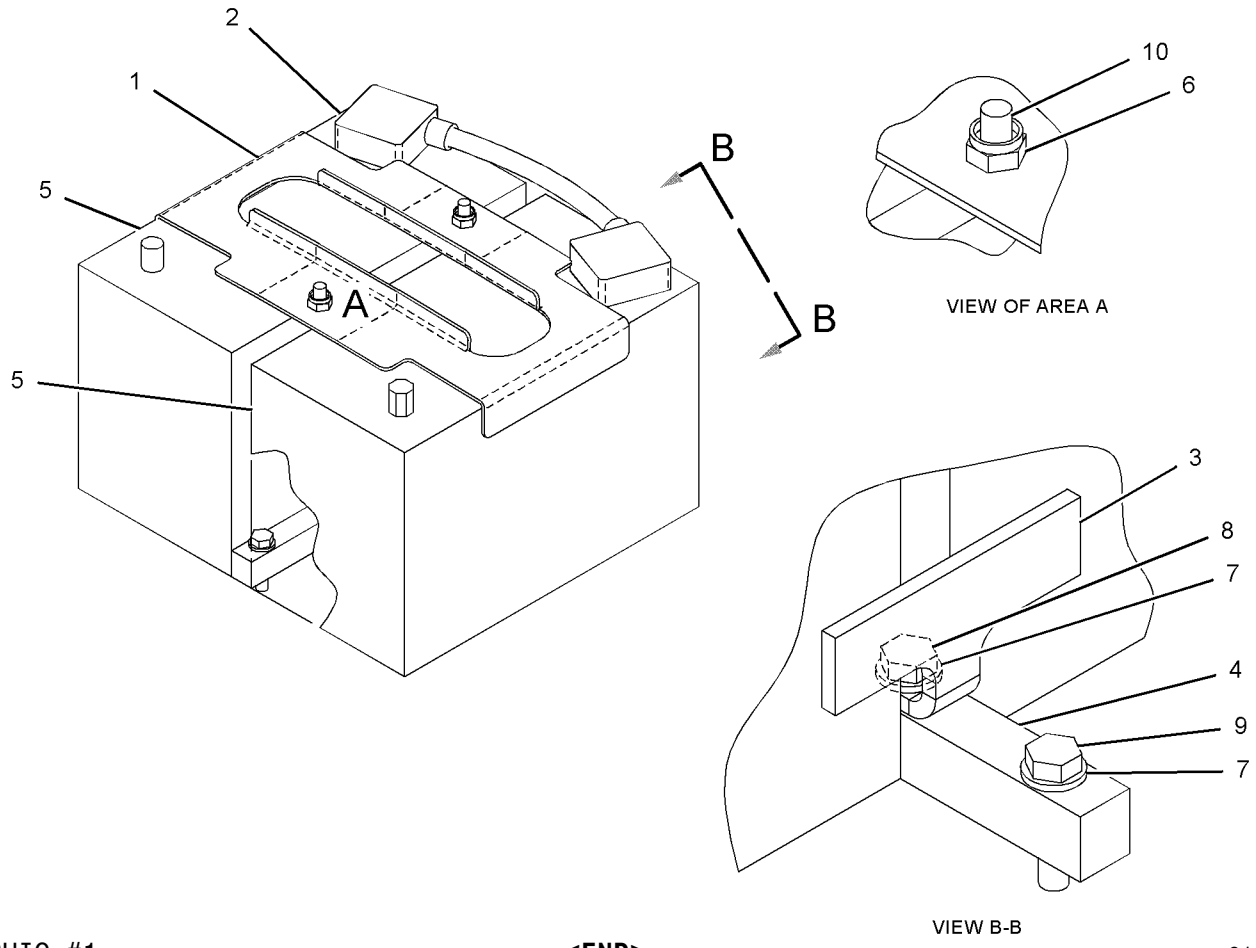


GRAPHIC #1 **<END>** g01066908

# *9W-0742* BLOCK GP-JUNCTION

**S/N: CCA1-UP**
**PART OF 178-0163 WIRING GP-REAR**
**ALSO AN ATTACHMENT**

**SMCS-1408, 7426** **i02203621**

| NOTE | REF NO | GRAPHIC REF | PART NUMBER | QTY | PART NAME 1 2 3 4 5 6 (PRODUCT LEVEL) | SEE PAGE |
|---|---|---|---|---|---|---|
| | 1 | 1 | **8C-6358** | 1 | BLOCK GP-JUNCTION | |
| | 2 | 1 | **8T-3519** | 3 | BOLT-BRONZE (1/2-13X2-IN) | |
| | 3 | 1 | **8C-6921** | 3 | NUT-SPACER (1/2-13-THD) | |
| | 4 | 1 | **8T-3518** | 6 | NUT-FULL (1/2-13-THD) | |
| | 5 | 1 | **7F-0560** | 6 | WASHER (0.516X0.938X0.101-IN THK) | |
| BD | 6 | 1 | **6V-2722** | | TUBE-HEAT SHRINK (25.4-MM DIA) | |

B-USE AS REQUIRED
D-ORDER BY THE METER

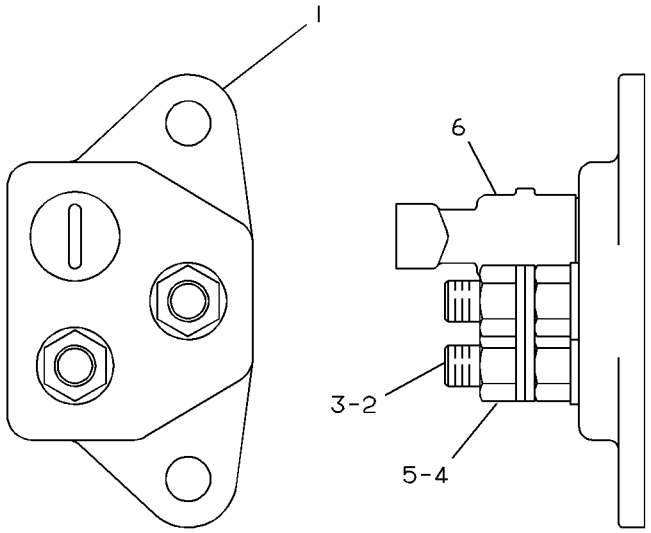


GRAPHIC #1 **<END>** g00082186

# *201-1036* CIRCUIT BREAKER GP–DUAL

**S/N: CCA1-UP**
**PART OF 161-0771, 179-1548 LIGHTING AR-FLOOD & SIGNAL, 171-6700 SUPPORT AR-REAR CHASSIS AN ATTACHMENT**

**SMCS-1420** **i02203625**

| NOTE | REF NO | GRAPHIC REF | PART NUMBER | QTY | PART NAME 1 2 3 4 5 6 (PRODUCT LEVEL) | SEE PAGE |
|---|---|---|---|---|---|---|
| | 1 | 1 | **195-2097** | 1 | WIRE AS | |
| | 2 | 1 | **201-8424** | 1 | STRAP | |
| | 3 | 1 | **3K-8106** | 4 | SCREW-MACHINE (8-32X1-IN) | |
| | 4 | 1 | **3T-2662** | 1 | CIRCUIT BREAKER AS (15-AMPERE) (LIGHTBAR WORKLAMPS) | |
| | 4A | 1 | **3T-2662** | 1 | CIRCUIT BREAKER AS (15-AMPERE) (HEADLAMPS) | |
| | | | | | (EACH CIRCUIT BREAKER AS INCLUDES) | |
| | | 1 | **6V-8376** | 2 | SCREW-MACHINE (8-32X0.25-IN) | |
| | | 1 | **9B-7233** | 2 | LOCKWASHER | |
| | 5 | 1 | **7F-7685** | 1 | SCREW-MACHINE | |
| | 6 | 1 | **9B-7233** | 4 | LOCKWASHER | |

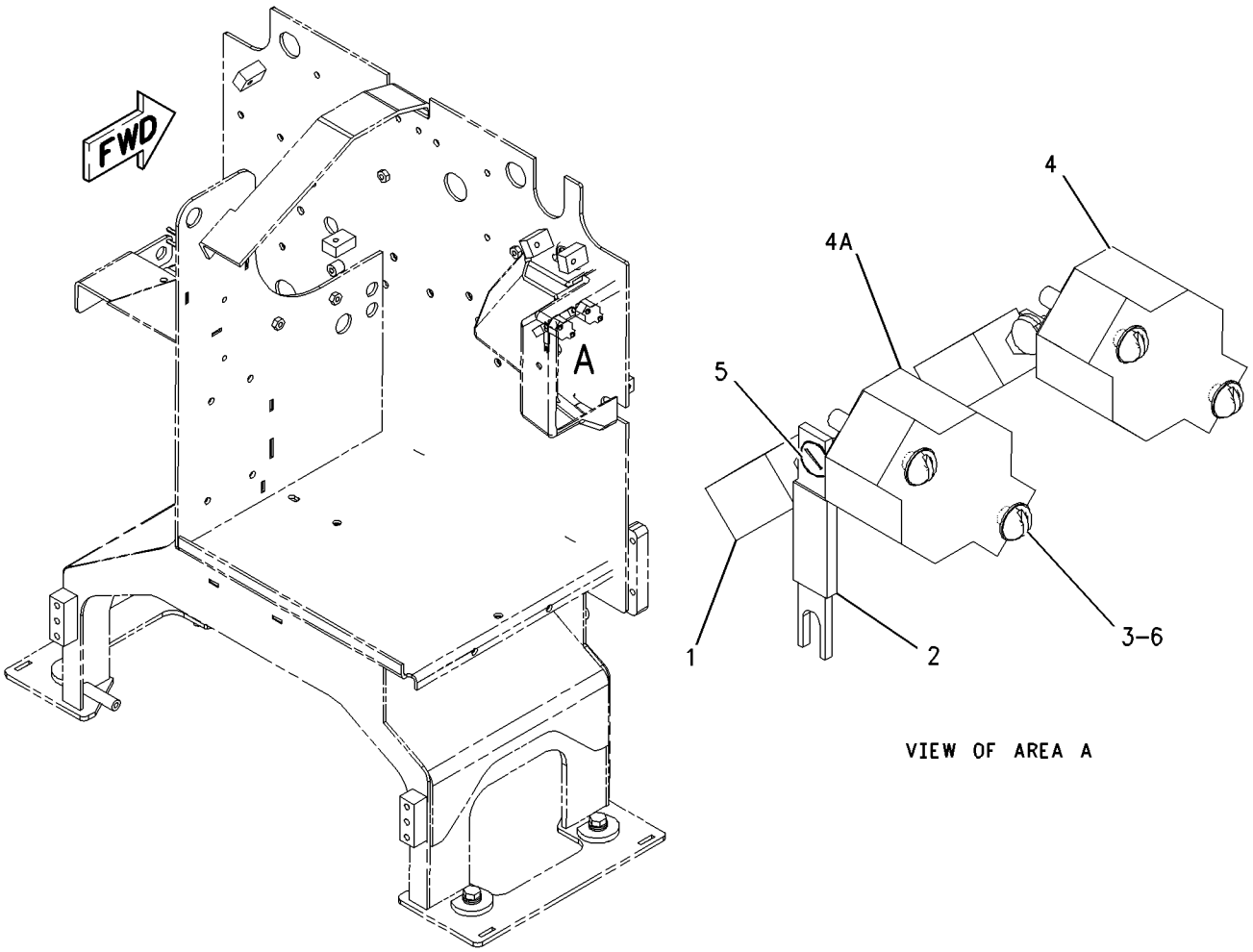


VIEW OF AREA A

GRAPHIC #1 **<END>** g00983765

# *201-1038* CIRCUIT BREAKER GP–SINGLE

**S/N: CCA1-UP**

**PART OF 259-5738 CONVERSION AR-MACHINE, 188-9328 LIGHTING AR-FLOOD, 161-0770 LIGHTING AR-FLOOD & SIGNAL**

**AN ATTACHMENT**

**SMCS-1420** **i02203642**

| NOTE | REF NO | GRAPHIC REF | PART NUMBER | QTY | PART NAME 1 2 3 4 5 6 (PRODUCT LEVEL) | SEE PAGE |
|---|---|---|---|---|---|---|
| | 1 | 1 | **201-8424** | 1 | STRAP | |
| | 2 | 1 | **3K-8106** | 2 | SCREW-MACHINE (8-32X1-IN) | |
| | 3 | 1 | **3T-2662** | 1 | CIRCUIT BREAKER AS (15-AMPERE) (HEADLAMPS) | |
| | | 1 | **6V-8376** | 2 | SCREW-MACHINE (8-32XO.25-IN) | |
| | | 1 | **9B-7233** | 2 | LOCKWASHER | |
| | 4 | 1 | **9B-7233** | 2 | LOCKWASHER | |

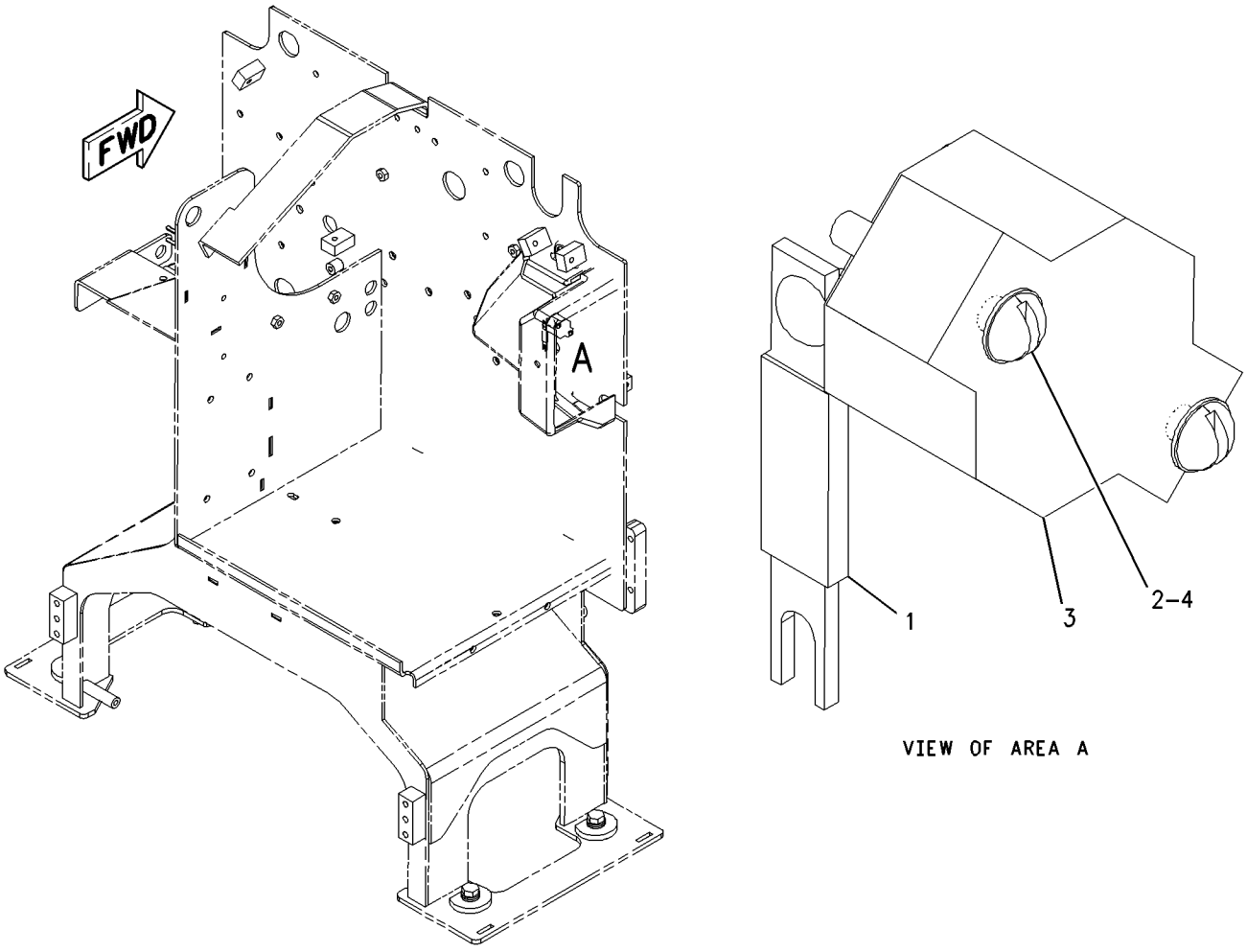


VIEW OF AREA A

GRAPHIC #1 **<END>** g00844652

## *236-5498* CIRCUIT BREAKER GP–ALTERNATOR

**S/N: CCA1-UP**
**105 AMPERE**
**PART OF 233-0713 ALTERNATOR GP-CHARGING**
**AN ATTACHMENT**

**SMCS-1420** **i02160629**

| NOTE | PART NUMBER | QTY | PART NAME 1 2 3 4 5 6 (PRODUCT LEVEL) | SEE PAGE |
|---|---|---|---|---|
| | **171-2212** | 1 | CIRCUIT BREAKER AS (105-AMPERE) (ALTERNATOR) | |
| | **6V-8187** | 2 | NUT (1/4-28-THD) | |
| | **8T-4205** | 2 | WASHER-HARD (7.2X14.5X2-MM THK) | |
| | **253-2111** | 2 | LOCKWASHER | |

**<END>**

# *168-4490* CONTROL & MTG GP-ENGINE ELEK

**S/N: 3PD1-4380**

**PART OF 160-5101 ENGINE AR**

**SMCS-1901** **i01855423**

| NOTE | REF NO | GRAPHIC REF | PART NUMBER | QTY | PART NAME 1 2 3 4 5 6 (PRODUCT LEVEL) | SEE PAGE |
|---|---|---|---|---|---|---|
| | 1 | 1 | **6I-1418** | 2 | SPACER (8.2X12.7X28.7-MM THK) | |
| | 2 | 1 | **8T-9655** | 8 | MOUNT-ISOLATION | |
| | 4 | 1 | **168-4594** | 2 | SPACER | |
| Y | 5 | 1 | *210-0849* | 1 | CONTROL GP-ENGINE ELECTRONIC | 159 |
| M | 6 | 1 | **5P-8347** | 2 | BOLT (M8X1.25X70-MM) | |
| M | 7 | 1 | **8T-0276** | 2 | BOLT (M8X1.25X45-MM) | |
| | 8 | 1 | **9M-1974** | 1 | WASHER-HARD (8.8X16X2-MM THK) | |
| | 9 | 1 | **9N-0869** | 4 | WASHER-HARD (8.8X25.5X2-MM THK) | |

M-METRIC PART
Y-SEPARATE ILLUSTRATION

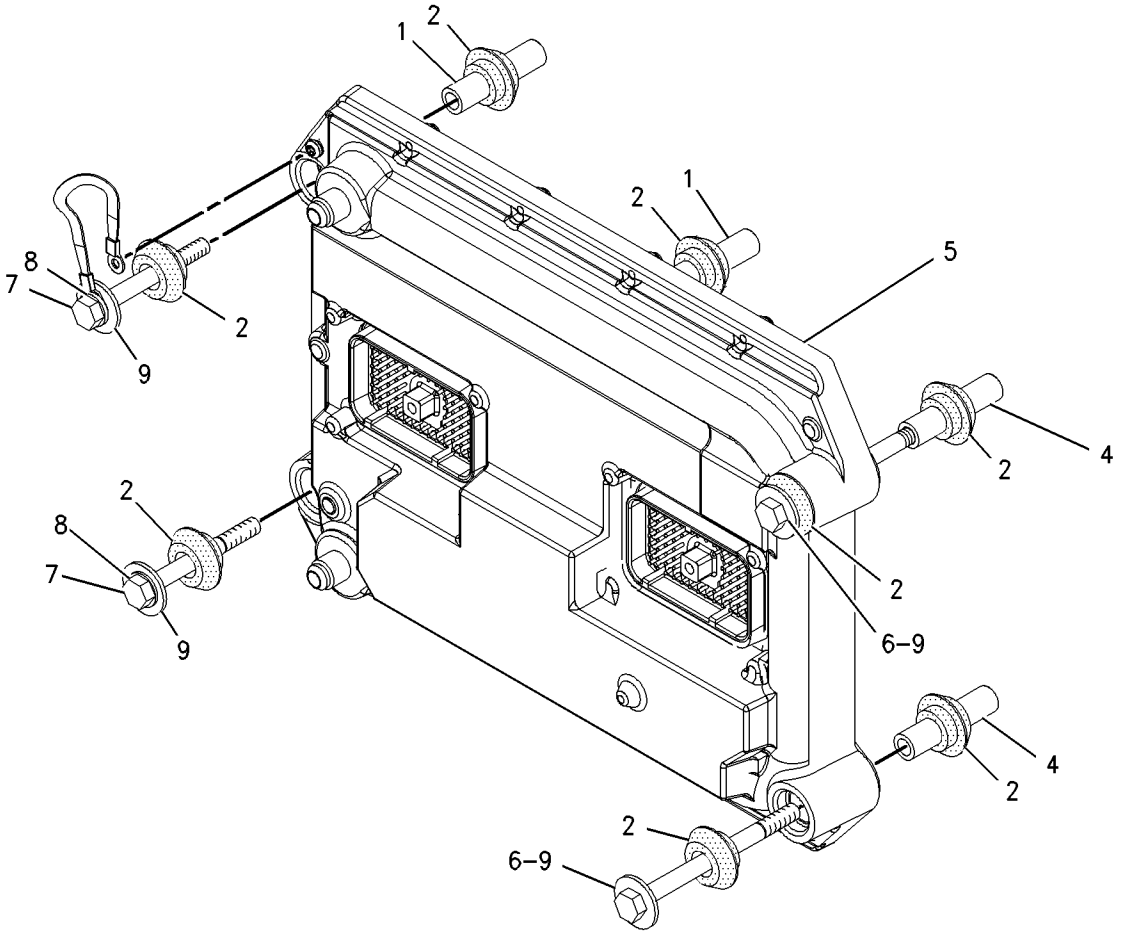


GRAPHIC #1 **<END>** g00673168

## *232-5990* CONTROL & MTG GP-ENGINE ELEK

**S/N: 3PD4381-UP**

**PART OF 160-5101 ENGINE AR**

**SMCS-1901** **i01931601**

| NOTE | REF NO | GRAPHIC REF | PART NUMBER | QTY | PART NAME 1 2 3 4 5 6 (PRODUCT LEVEL) | SEE PAGE |
|---|---|---|---|---|---|---|
| | 1 | 1 | **6I-1418** | 4 | SPACER (8.2X12.7X28.7-MM THK) | |
| | 2 | 1 | **8T-9655** | 8 | MOUNT-ISOLATION | |
| M | 3 | 1 | **9X-2098** | 2 | STUD-TAPERLOCK (BOLT) | |
| Y | 5 | 1 | *209-9588* | 1 | CONTROL GP-ENGINE ELECTRONIC | 158 |
| M | 6 | 1 | **8T-0276** | 2 | BOLT (M8X1.25X45-MM) | |
| | 7 | 1 | **8T-4224** | 2 | WASHER-HARD (8.8X16X2-MM THK) | |
| | 8 | 1 | **9N-0869** | 4 | WASHER-HARD (8.8X25.5X2-MM THK) | |

M-METRIC PART
Y-SEPARATE ILLUSTRATION

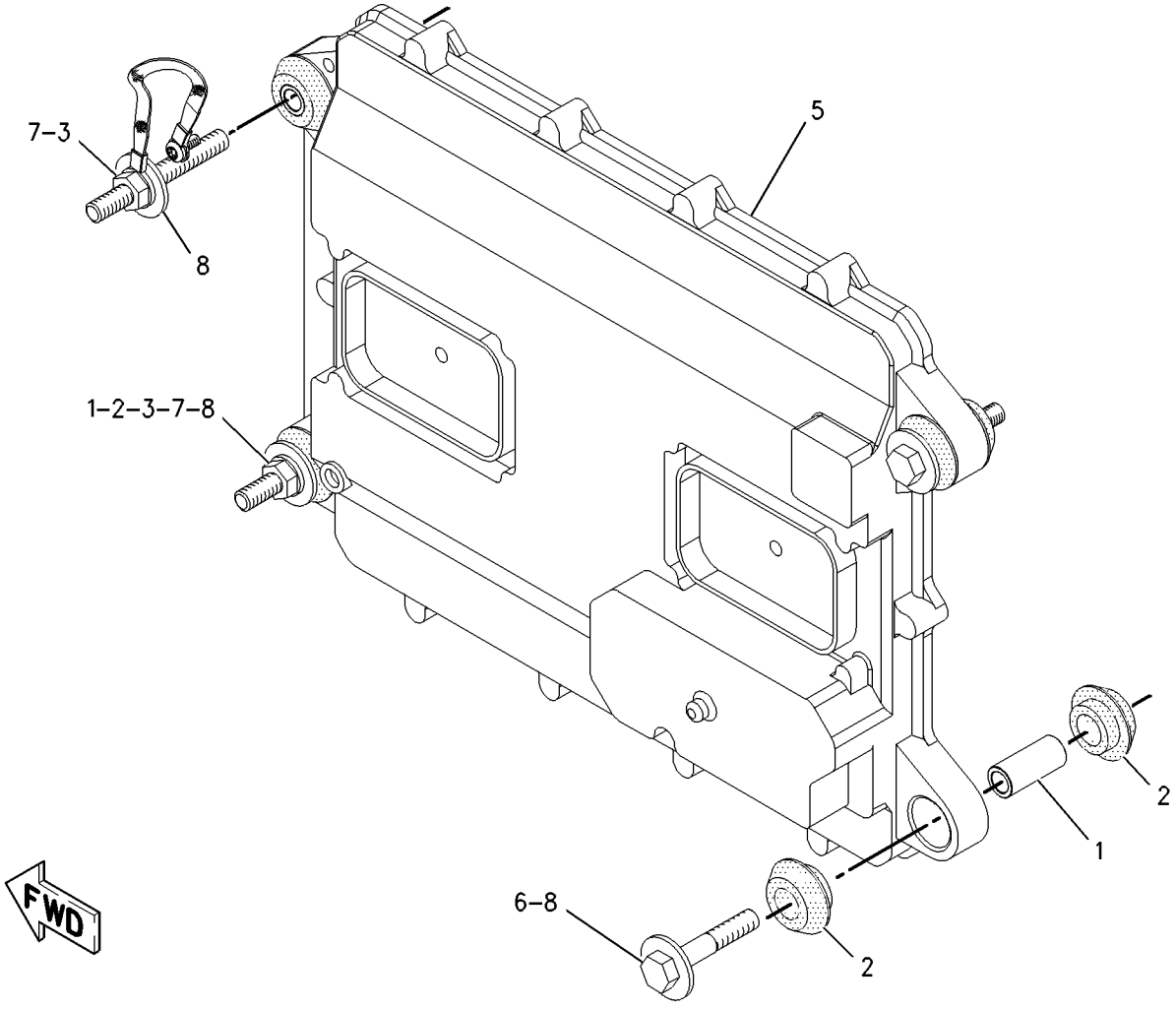


GRAPHIC #1 **<END>** g00998301

## *209-9587* CONTROL GP-ENGINE ELECTRONIC

**S/N: 3PD4381-UP**

**PART OF 209-9588 CONTROL GP-ENGINE ELECTRONIC**

**FIELD REPLACEMENT FOR 209-9588—PAGE 158**

**SMCS-1901** **i01802523**

| NOTE | REF NO | GRAPHIC REF | PART NUMBER | QTY | PART NAME 1 2 3 4 5 6 (PRODUCT LEVEL) | SEE PAGE |
|---|---|---|---|---|---|---|
| | 1 | 1 | **184-2472** | 1 | SCREW-PAN HEAD (NO 8-32X9.52-MM) | |
| | 2 | 1 | **7X-6315** | 1 | STRAP AS-GROUND | |

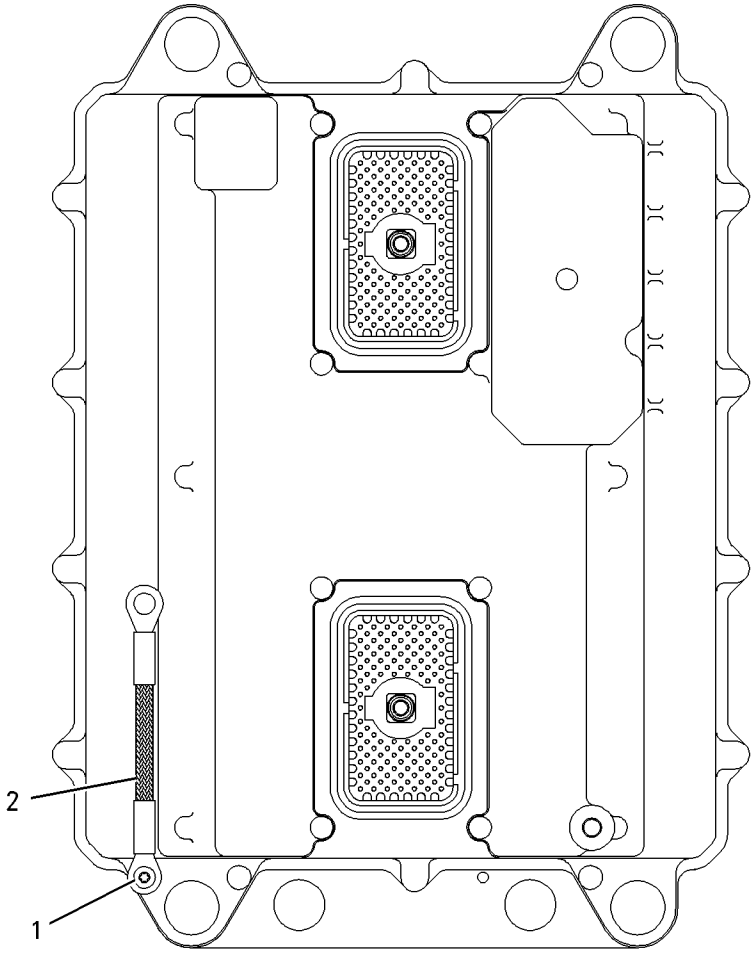


GRAPHIC #1 **<END>** g00912273

## *209-9588* CONTROL GP-ENGINE ELECTRONIC

**S/N: 3PD4381-UP**

**PART OF 232-5990 CONTROL & MTG GP-ENGINE ELEK**

**FIELD REPLACEMENT ORDER 209-9587—PAGE 157**

**SMCS-1901** **i01809422**

| NOTE | REF NO | GRAPHIC REF | PART NUMBER | QTY | PART NAME 1 2 3 4 5 6 (PRODUCT LEVEL) | SEE PAGE |
|---|---|---|---|---|---|---|
| Y | 1 | 1 | **209-9587** | 1 | CONTROL GP-ENGINE ELECTRONIC | 157 |

Y-SEPARATE ILLUSTRATION

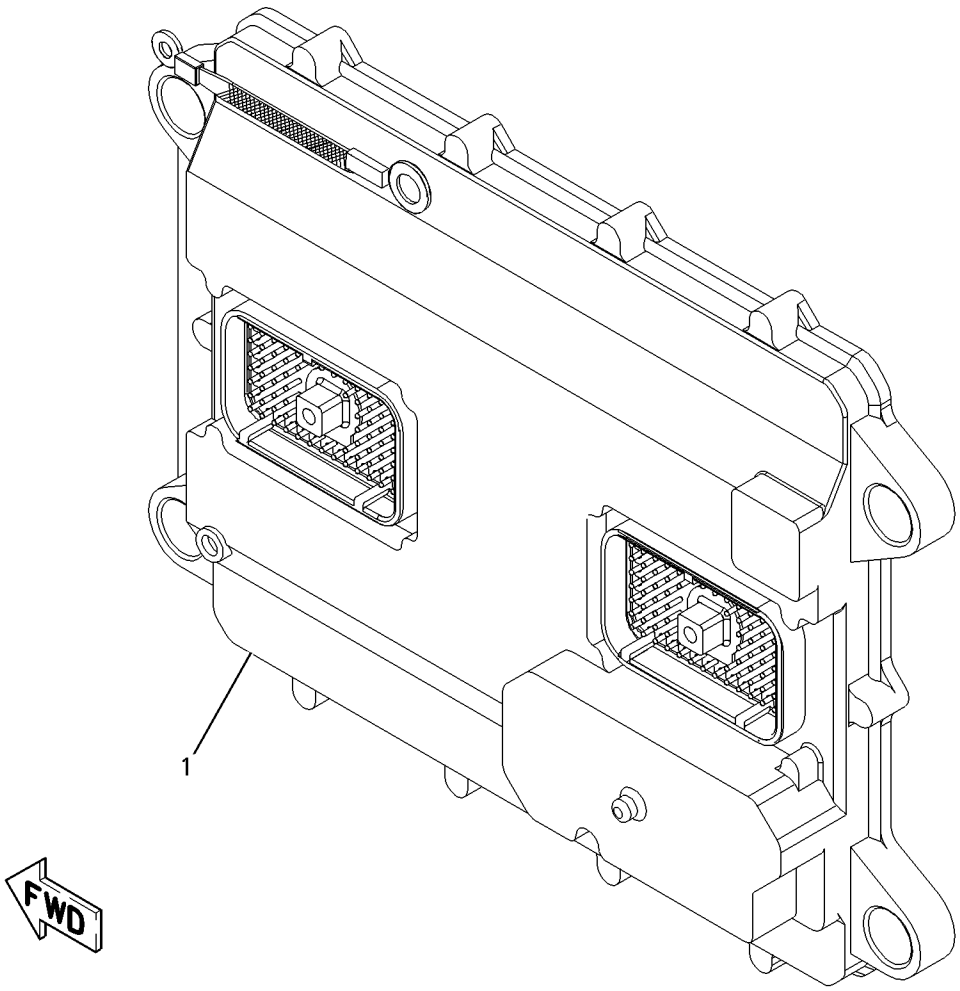


GRAPHIC #1 **<END>** g00913420

# *210-0849* CONTROL GP-ENGINE ELECTRONIC

**S/N: 3PD1-UP**

**PART OF 168-4490 CONTROL & MTG GP-ENGINE ELEK**

**SMCS-1901** **i02181352**

| NOTE | REF NO | GRAPHIC REF | PART NUMBER | QTY | PART NAME 1 2 3 4 5 6 (PRODUCT LEVEL) | SEE PAGE |
|---|---|---|---|---|---|---|
| Y | 1 | 1 | **240-5304** | 1 | CONTROL GP-ENGINE ELECTRONIC | 160 |

Y-SEPARATE ILLUSTRATION

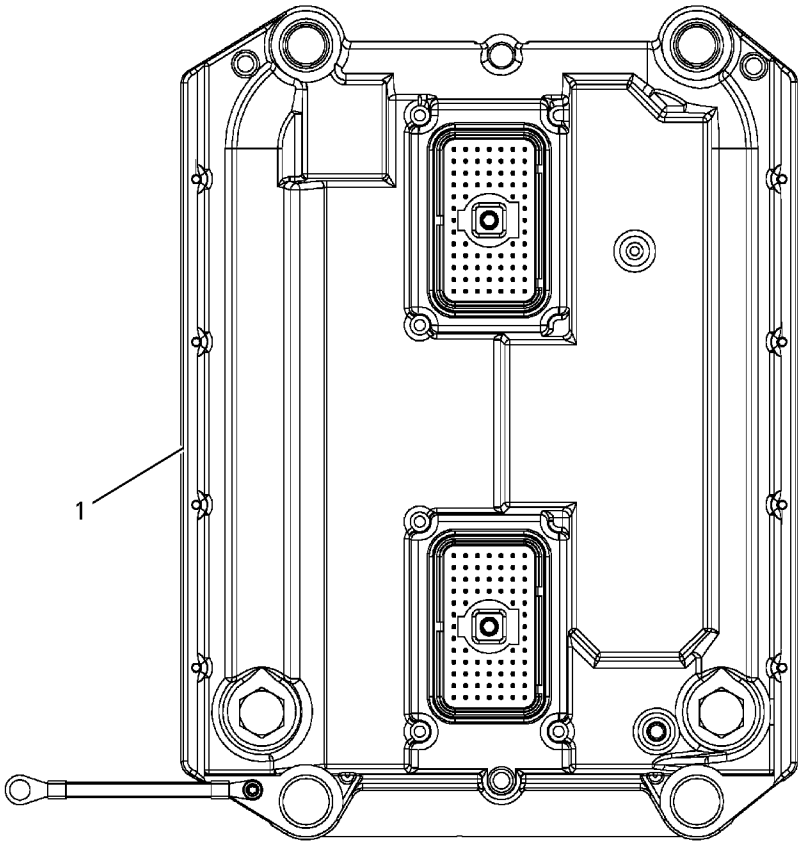


GRAPHIC #1 **<END>** g00907973

# ELECTRICAL AND STARTING SYSTEM

## 240-5304 CONTROL GP-ENGINE ELECTRONIC

**S/N: 3PD1-UP**

**PART OF 210-0849 CONTROL GP-ENGINE ELECTRONIC**

**SMCS-1901** **i02181925**

| NOTE | REF NO | GRAPHIC REF | PART NUMBER | QTY | PART NAME 1 2 3 4 5 6 (PRODUCT LEVEL) | SEE PAGE |
|---|---|---|---|---|---|---|
| | 1 | 1 | **7X-6315** | 1 | STRAP AS-GROUND | |
| | 2 | 1 | **184-2472** | 1 | SCREW-PAN HEAD (NO 8-32X9.52-MM) | |

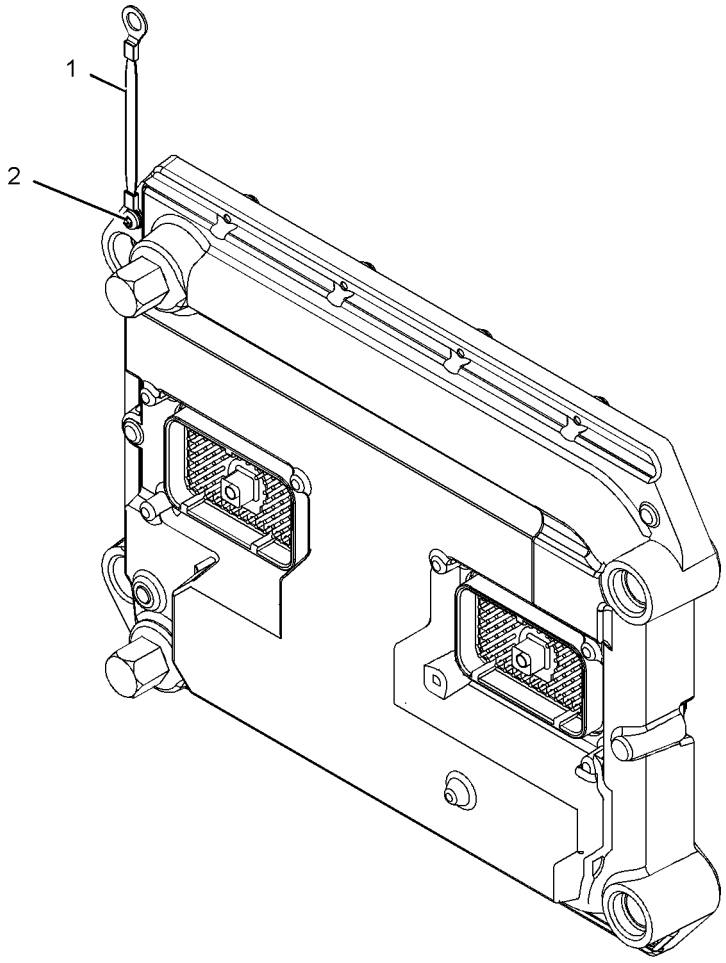


GRAPHIC #1 **<END>** g01055257

## *132-6640* CONTROL GP-SECONDARY STEERING

**S/N: CCA1-UP**

**PART OF 161-1020 WIRING GP-SECONDARY STEERING, 159-5841 WIRING GP-SHIFT CONSOLE**

**AN ATTACHMENT**

**SMCS-4343** **i01701309**

| NOTE | REF NO | GRAPHIC REF | PART NUMBER | QTY | PART NAME 1 2 3 4 5 6 (PRODUCT LEVEL) | SEE PAGE |
|---|---|---|---|---|---|---|
| Z | 1 | 1 | | 1 | CONTROL AS-STEERING | |
| | 2 | 1 | **102-8801** | 1 | KIT-RECEPTACLE (12-PIN) | |
| | | | | | (INCLUDES RECEPTACLE AS & WEDGE) | |
| | 3 | 1 | **3E-5180** | 1 | WEDGE-RECEPTACLE LOCK (12-PIN) | |
| | 4 | 1 | **186-3735** | 11 | PIN-CONNECTOR (16-GA TO 18-GA) | |
| | 5 | 1 | **8T-8737** | 1 | PLUG-SEAL | |
| | 6 | 1 | **1S-9593** | 4 | STRAP-CABLE | |

Z-NOT SERVICED SEPARATELY

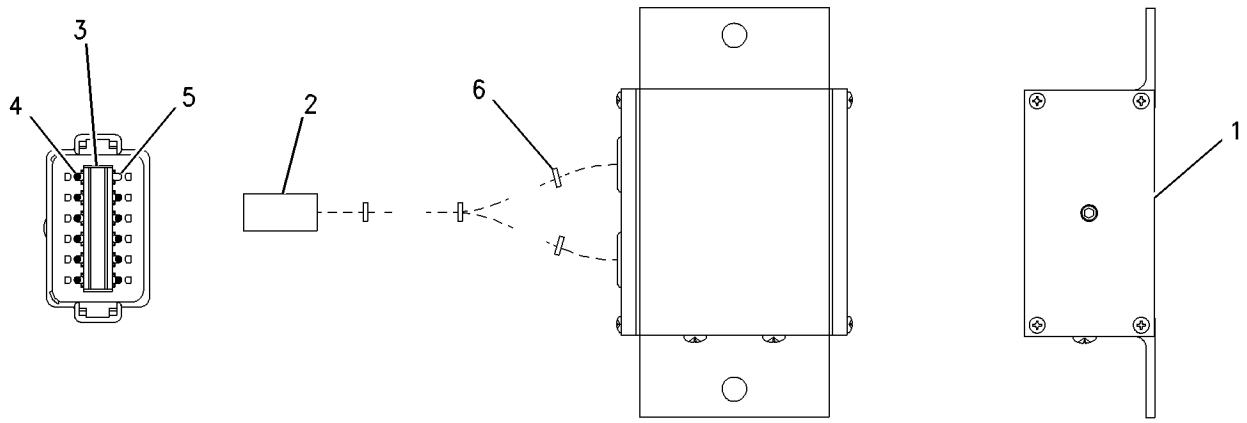


GRAPHIC #1 **<END>** g00672584

# *172-9389* CONTROL GP-UNPROGRAMMED–POWER TRAIN

**S/N: CCA1-UP**

**PART OF 159-5856, 159-5865 WIRING GP-FRONT**

**ALSO AN ATTACHMENT**

**SMCS-7610** **i01885436**

| NOTE | REF NO | GRAPHIC REF | PART NUMBER | QTY | PART NAME 1 2 3 4 5 6 (PRODUCT LEVEL) | SEE PAGE |
|---|---|---|---|---|---|---|
| | 1 | 1 | **7X-6315** | 1 | STRAP AS-GROUND | |
| | 2 | 1 | **101-0852** | 1 | SCREW-PAN HEAD (NO 8X3/8-IN) | |
| M | 3 | 1 | **6V-6703** | 2 | KIT-RETAINING BOLT (CONTROL GP) | |
| | | | | | (EACH INCLUDES BOLT, RING, AND SEALS) | |
| | 4 | 1 | **134-4126** | 1 | WASHER (4.52X8.28X0.76-MM THK) | |
| | | | | | | |
| | | | | | | |
| | | | | | FOR SOFTWARE, SEE ELECTRONICS GP | |

M-METRIC PART

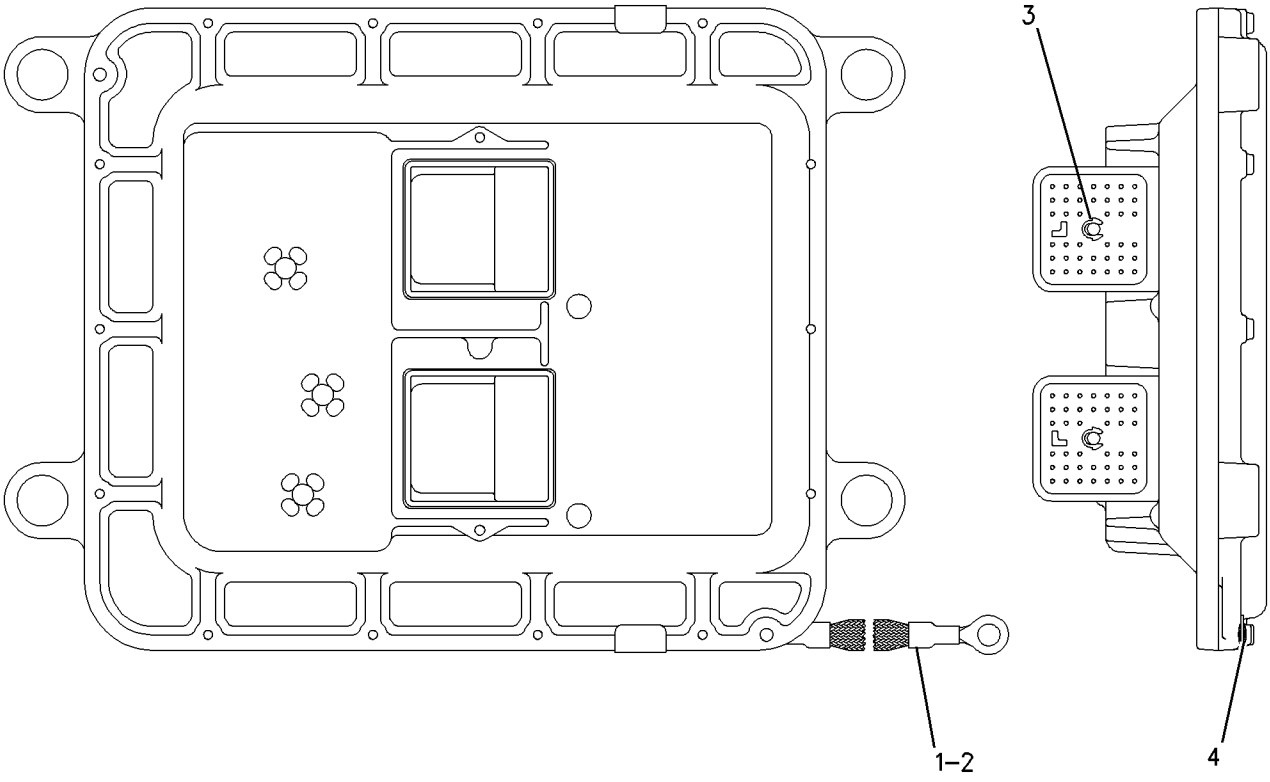


GRAPHIC #1 **<END>** g00951290

## *161-0776* CONVERTER AR-ELECTRICAL—POWER PORT-LOW

**S/N: CCA1-UP**
**12-VOLT**
**AN ATTACHMENT**

**SMCS-1421** **i02586668**

| NOTE | PART NUMBER | QTY | PART NAME 1 2 3 4 5 6 (PRODUCT LEVEL) | SEE PAGE |
|---|---|---|---|---|
| Y | *171-7185* | 1 | ACCESSORY GP-CAB | 1093 |
| Y | *180-4643* | 1 | CONVERTER GP-ELECTRICAL (12-VOLT) (POWER PORT) | 166 |

Y-SEPARATE ILLUSTRATION

**<END>**

## *161-0777* CONVERTER AR-ELECTRICAL—12V POWER PORT—HIGH

**S/N: CCA1-UP**
**AN ATTACHMENT**

**SMCS-1421** **i02586674**

| NOTE | PART NUMBER | QTY | PART NAME 1 2 3 4 5 6 (PRODUCT LEVEL) | SEE PAGE |
|---|---|---|---|---|
| Y | *171-7186* | 1 | ACCESSORY GP-CAB | 1094 |
| Y | *180-4643* | 1 | CONVERTER GP-ELECTRICAL (12-VOLT) (POWER PORT) | 166 |

Y-SEPARATE ILLUSTRATION

**<END>**

## *145-1297* CONVERTER GP-ELECTRICAL

**S/N: CCA1-UP**
**5/7.5 AMPERE**
**PART OF 145-1300 INSTALLATION AR-RADIO**
**AN ATTACHMENT**

**SMCS-1421** **i02203914**

| NOTE | REF NO | GRAPHIC REF | PART NUMBER | QTY | PART NAME 1 2 3 4 5 6 (PRODUCT LEVEL) | SEE PAGE |
|---|---|---|---|---|---|---|
| | 1 | 1 | **8X-1853** | 2 | SPACER (13.1X15.9X30.4-MM THK) (10.3X15.9X30MM THK) | |
| | 2 | 1 | **9W-1442** | 1 | FUSE (10-AMPERE) (CONVERTER) | |
| | 3 | 1 | **205-4285** | 1 | CONVERTER GP-ELECTRICAL (24-VOLT TO 12-VOLT) | |
| | 4 | 1 | **208-7782** | 1 | PLATE AS | |
| | 5 | 1 | **096-6166** | 2 | WASHER-HARD (4.5X9X1-MM THK) | |
| M | 6 | 1 | **8T-0285** | 2 | SCREW-MACHINE (M4X0.7X12-MM) | |
| | 7 | 1 | **8T-2501** | 2 | BOLT (3/8-16X2-IN) | |
| | 8 | 1 | **8T-4896** | 2 | WASHER-HARD (10.2X18.5X2.5-MM THK) | |

M-METRIC PART

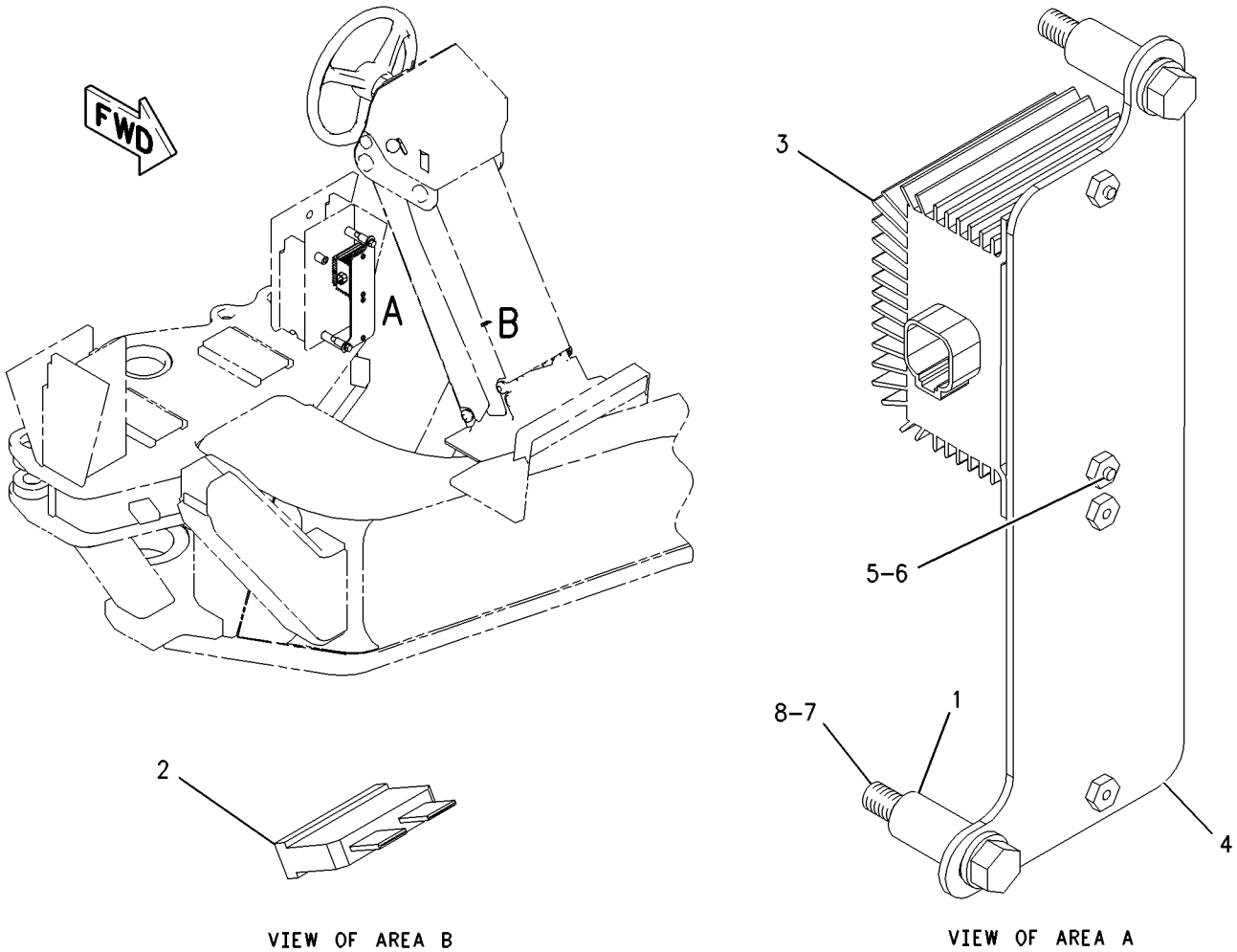


GRAPHIC #1 **<END>** g00918329

# *167-8382* CONVERTER GP-ELECTRICAL

**S/N: CCA1-UP**
**25 AMPERE**
**PART OF 259-5738 CONVERSION AR-MACHINE**
**AN ATTACHMENT**

**SMCS-1421** **i02586681**

| NOTE | REF NO | GRAPHIC REF | PART NUMBER | QTY | PART NAME 1 2 3 4 5 6 (PRODUCT LEVEL) | SEE PAGE |
|---|---|---|---|---|---|---|
| | 1 | 1 | **9W-1441** | 1 | FUSE (15-AMPERE) (CONVERTER-POWER) | |
| Y | 2 | 1 | *233-6659* | 1 | CONVERTER GP-ELECTRICAL (25-AMPERE) | 167 |

Y-SEPARATE ILLUSTRATION

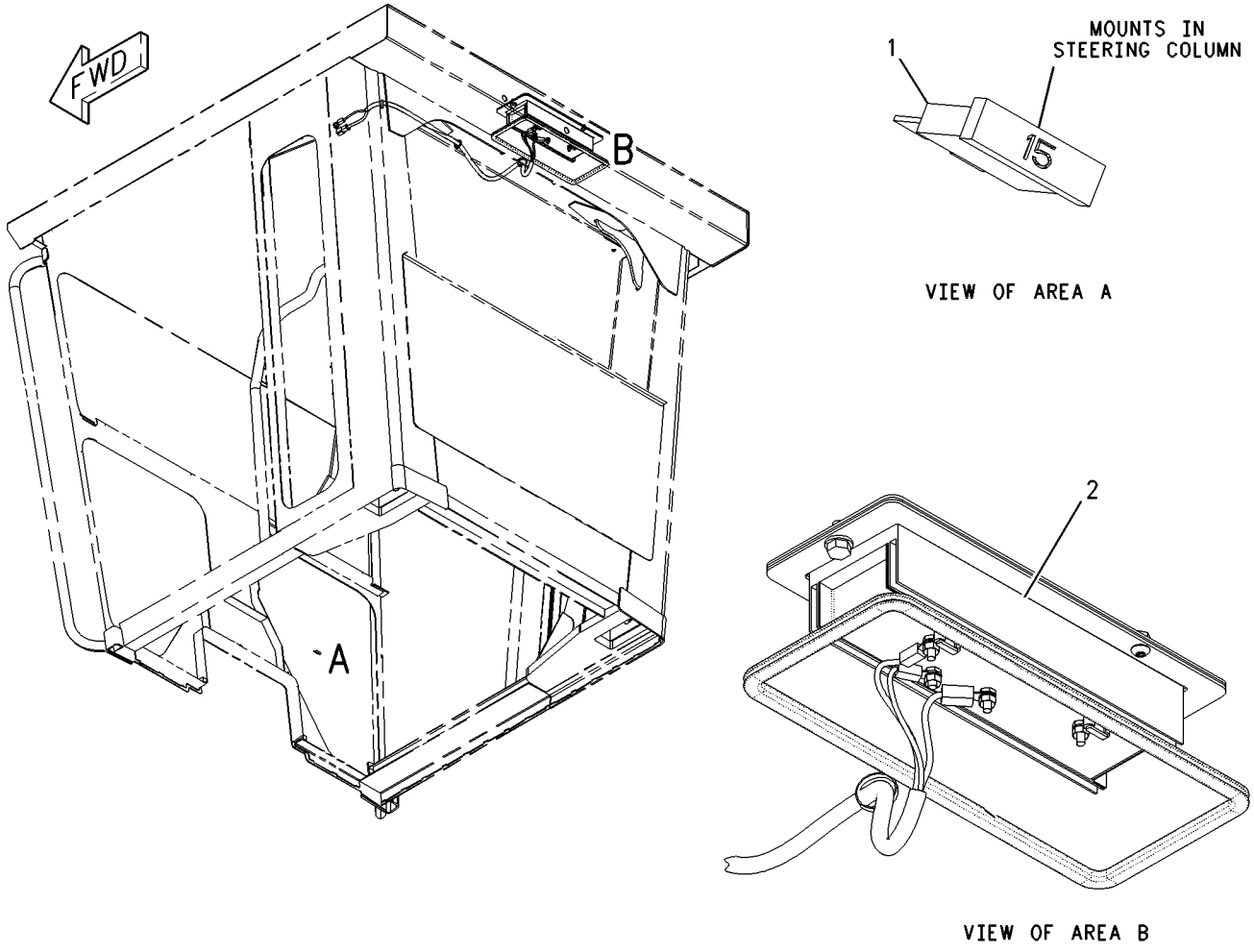


GRAPHIC #1 **<END>** g00975196

## *180-4643* CONVERTER GP-ELECTRICAL—POWER PORT

**S/N: CCA1-UP**
**12-VOLT**
**PART OF 161-0776, 161-0777 CONVERTER AR-ELECTRICAL**
**AN ATTACHMENT**

**SMCS-1421** **i01936021**

| NOTE | REF NO | GRAPHIC REF | PART NUMBER | QTY | PART NAME 1 2 3 4 5 6 (PRODUCT LEVEL) | SEE PAGE |
|---|---|---|---|---|---|---|
| | 1 | 1 | **9W-1442** | 1 | FUSE (10-AMPERE) (POWER CONVERTER) | |
| | 2 | 1 | **205-4285** | 1 | CONVERTER GP-ELECTRICAL (24-VOLT TO 12-VOLT) | |
| | 3 | 1 | **208-7782** | 1 | PLATE AS | |
| | 4 | 1 | **096-6166** | 2 | WASHER-HARD (4.5X9X1-MM THK) | |
| | 5 | 1 | **8T-2501** | 2 | BOLT (3/8-16X2-IN) | |
| M | 6 | 1 | **8T-0285** | 2 | SCREW-MACHINE (M4X0.7X12-MM) | |
| | 7 | 1 | **8T-4896** | 2 | WASHER-HARD (10.2X18.5X2.5-MM THK) | |
| | 8 | 1 | **8X-1853** | 2 | SPACER (13.1X15.9X30.4-MM THK) | |

M-METRIC PART

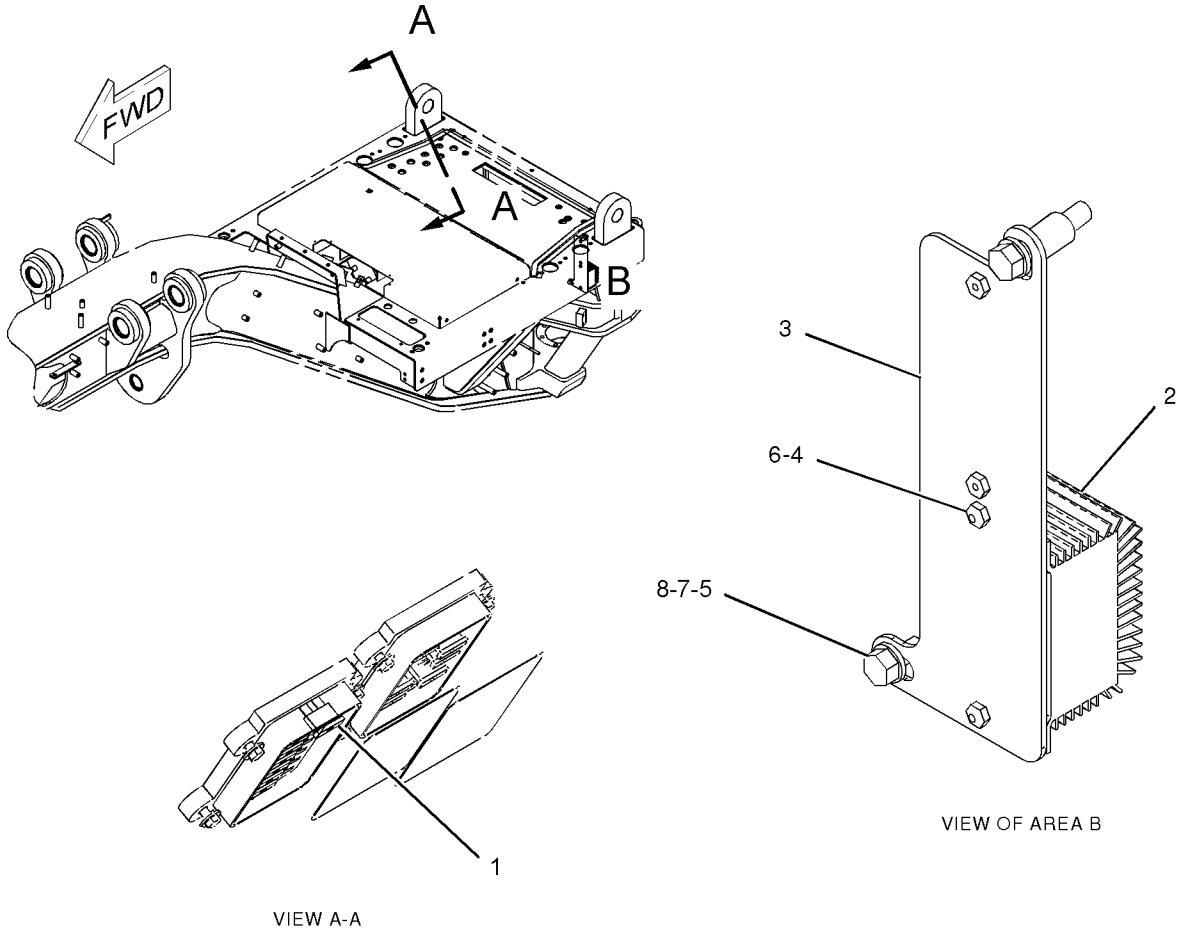


GRAPHIC #1 **<END>** g01010434

# *233-6659* CONVERTER GP-ELECTRICAL

**S/N: CCA1-UP**
**25-AMPERE**
**PART OF 167-8382 CONVERTER GP-ELECTRICAL**
**AN ATTACHMENT**

**SMCS-1421** **i02236683**

| NOTE | REF NO | GRAPHIC REF | PART NUMBER | QTY | PART NAME 1 2 3 4 5 6 (PRODUCT LEVEL) | SEE PAGE |
|---|---|---|---|---|---|---|
| | 1 | 1 | **3E-8646** | 1 | CONVERTER-POWER (24-VOLT TO 12-VOLT, 25-AMPERE) | |
| | | 1 | **8T-9636** | 2 | FUSE (30-AMPERE) | |
| | 2 | 1 | **3S-2093** | 8 | STRAP-CABLE | |
| | 3 | 1 | **168-8233** | 1 | PLATE | |
| | 4 | 1 | **168-8235** | 1 | PLATE AS | |
| | 5 | 1 | **169-3523** | 1 | HARNESS AS-RADIO | |
| | | 1 | **177-9645** | 1 | KIT-RECEPTACLE (2-PIN) | |
| | | 1 | **102-8802** | 1 | KIT-RECEPTACLE (2-PIN) | |
| | | | | | (EACH INCLUDES RECEPTACLE AS & WEDGE) | |
| | | 1 | **177-9648** | 1 | KIT-CONNECTING PLUG (2-PIN) | |
| | | | | | (INCLUDES PLUG AS & WEDGE) | |
| | 6 | 1 | **6V-8801** | 1 | NUT (3/8-16-THD) | |
| | 7 | 1 | **8T-4121** | 2 | WASHER-HARD (11X21X2.5-MM THK) | |
| M | 8 | 1 | **8T-4137** | 2 | BOLT (M10X1.5X20-MM) | |
| | 9 | 1 | **8T-4896** | 1 | WASHER-HARD (10.2X18.5X2.5-MM THK) | |
| M | 10 | 1 | **9X-2042** | 2 | SCREW-TRUSS HEAD (M6X1X12-MM) | |
| E | 11 | 1 | **7X-7877** | | STRIP-EDGING (106-CM) | |

E-ORDER BY THE CENTIMETER
M-METRIC PART

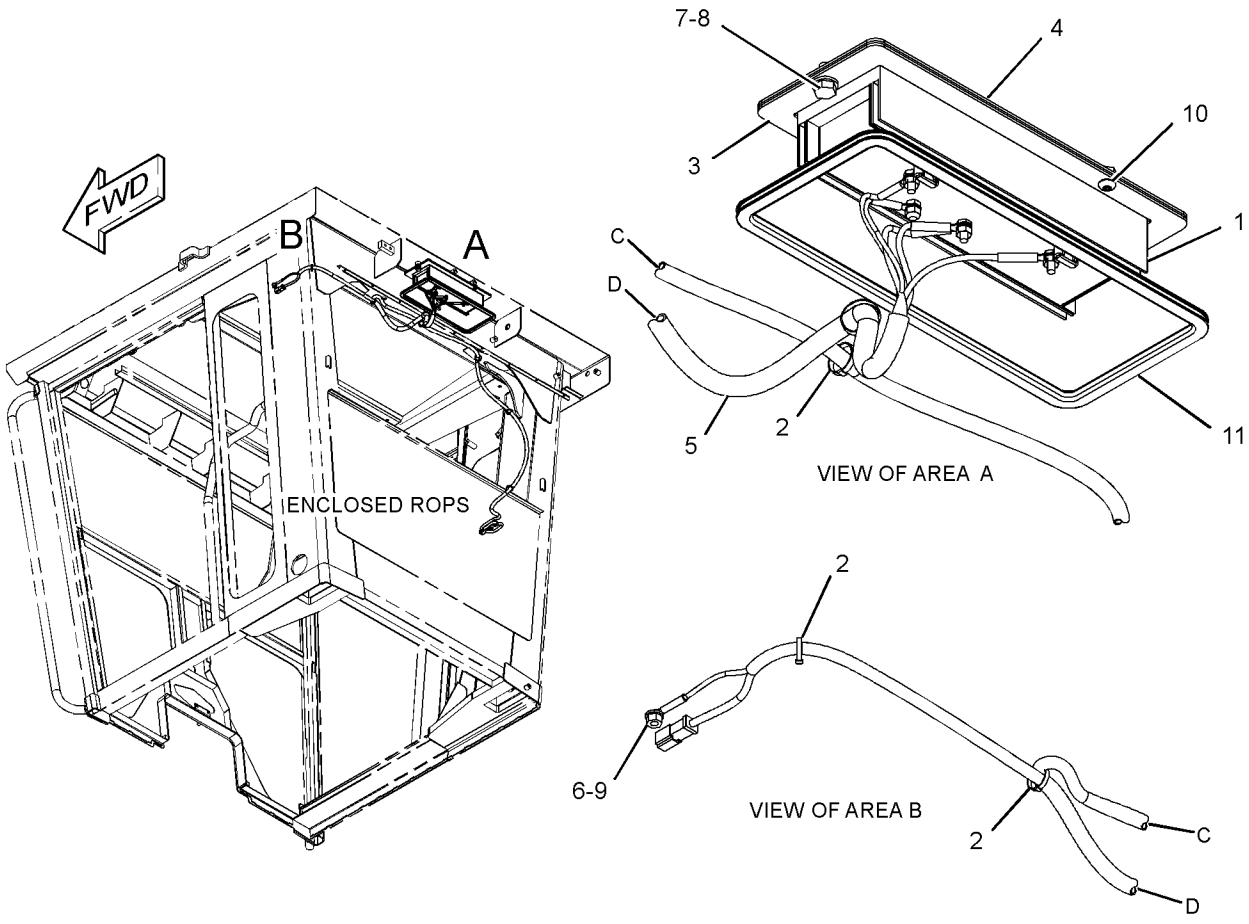


GRAPHIC #1 **<END>** g01239147

# ELECTRICAL AND STARTING SYSTEM

## *198-7332* ELECTRONICS GP-MONITOR

**S/N: CCA1-UP**
**PART OF 159-5856, 159-5865 WIRING GP-FRONT**
**ALSO AN ATTACHMENT**

**SMCS-7490, 7610, 7620** **i02291592**

| NOTE | PART NUMBER | QTY | PART NAME 1 2 3 4 5 6 (PRODUCT LEVEL) | SEE PAGE |
|---|---|---|---|---|
| | **264-6077** | 1 | SOFTWARE GP-MONITOR (CATERPILLAR MONITORING SYSTEM) | |
| | | | —OR— | |
| | **264-6078** | 1 | SERVICE GP-MONITOR (CATERPILLAR MONITORING SYSTEM) | |
| | | | (OPTIONAL SERVICE REPLACEMENT) | |
| | **264-6077** | 1 | SOFTWARE GP-MONITOR (CATERPILLAR MONITORING SYSTEM) | |
| | **252-4503** | 1 | CONTROL GP-UNPROGRAMMED (CATERPILLAR MONITORING SYSTEM) | |

**<END>**

## *161-1016* ELECTRONICS GP-POWER TRAIN—LIMITED ROAD SPEED—MOTOR GRADER

**S/N: CCA1-UP**
**AN ATTACHMENT**

**SMCS-4800, 4808, 7610, 7620** **i02585164**

| NOTE | PART NUMBER | QTY | PART NAME 1 2 3 4 5 6 (PRODUCT LEVEL) | SEE PAGE |
|---|---|---|---|---|
| | | | (NO SERVICED PARTS) | |

**<END>**

## *171-5941* ELECTRONICS GP-POWER TRAIN—MOTOR GRADER

**S/N: CCA1-UP**
**PART OF 159-5856, 159-5865 WIRING GP-FRONT**
**ALSO AN ATTACHMENT**

**SMCS-4800, 4808, 7610, 7620** **i02304568**

| NOTE | PART NUMBER | QTY | PART NAME 1 2 3 4 5 6 (PRODUCT LEVEL) | SEE PAGE |
|---|---|---|---|---|
| | **230-7279** | 1 | SOFTWARE GP-POWER TRAIN | |
| | | | -OR- | |
| | | | (OPTIONAL SERVICE REPLACEMENT) | |
| | **230-7280** | 1 | SERVICE GP-POWER TRAIN | |
| | **230-7279** | 1 | SOFTWARE GP-POWER TRAIN | |
| R | **172-9389** | 1 | CONTROL GP-UNPROGRAMMED (POWER TRAIN) | |

R-REMFG PART MAY BE AVAILABLE

**<END>**

# ELECTRICAL AND STARTING SYSTEM

## *247-6453* GRADE CONTROL AR

**S/N: CCA1611-UP**

**AN ATTACHMENT**

**SMCS-7220** **i02353371**

| NOTE | REF NO | GRAPHIC REF | PART NUMBER | QTY | PART NAME 1 2 3 4 5 6 (PRODUCT LEVEL) | SEE PAGE |
|---|---|---|---|---|---|---|
| | 1 | 1 | **3S-2093** | 6 | STRAP-CABLE | |
| M | 7 | 1 | **121-9870** | 2 | SCREW-MACHINE (M6X1X40-MM) | |
| | 8 | 1 | **130-5300** | 4 | CLIP | |
| | 9 | 1 | **152-6824** | 1 | KNOB AS (BLADE LIFT, RH) | |
| | | 1 | **8T-8737** | 1 | PLUG-SEAL | |
| | | 1 | **102-8804** | 1 | KIT-RECEPTACLE (4-PIN) | |
| | | | | | (INCLUDES RECEPTACLE AS & WEDGE) | |
| | | 1 | **186-3735** | 3 | PIN-CONNECTOR (16-GA TO 18-GA) | |
| | 10 | 1 | **152-6825** | 1 | KNOB AS (BLADE LIFT, LH) | |
| | | 1 | **8T-8737** | 1 | PLUG-SEAL | |
| | | 1 | **102-8804** | 1 | KIT-RECEPTACLE (4-PIN) | |
| | | | | | (INCLUDES RECEPTACLE AS & WEDGE) | |
| | | 1 | **186-3735** | 3 | PIN-CONNECTOR (16-GA TO 18-GA) | |
| | 11 | 1 | **1V-7368** | 2 | SPACER (0.364X0.54X1.06-IN THK) | |
| | 12 | 1 | **246-6561** | 1 | KNOB AS (RH) (BLADE LIFT) | |
| | | 1 | **102-8804** | 1 | KIT-RECEPTACLE (4-PIN) | |
| | | | | | (INCLUDES RECEPTACLE AS & WEDGE) | |
| | | 1 | **186-3735** | 4 | PIN-CONNECTOR (16-GA TO 18-GA) | |
| | 13 | 1 | **246-6562** | 1 | KNOB AS (LH) (BLADE LIFT) | |
| | | 1 | **102-8804** | 1 | KIT-RECEPTACLE (4-PIN) | |
| | | | | | (INCLUDES RECEPTACLE AS & WEDGE) | |
| | | 1 | **186-3735** | 4 | PIN-CONNECTOR (16-GA TO 18-GA) | |
| | 15 | 1 | **8T-4896** | 2 | WASHER-HARD (10.2X18.5X2.5-MM THK) | |
| | | | | | | |
| FY | | | *126-6933* | 1 | GUARD GP-PLATFORM (ACCUGRADE) | 575 |
| FY | | | *247-6433* | 1 | WIRING GP-FRONT | 330 |
| FY | | | *247-6449* | 1 | MOUNTING GP-GRADE CONTROL (DRAWBAR) | 1077 |
| FY | | | *251-1080* | 1 | WIRING GP-REAR | 376 |
| FY | | | *252-5709* | 1 | WIRING GP-GRADE CONTROL (CAB, INDICATOR LAMP) | 338 |
| FY | | | *267-6695* | 1 | BRACKET GP-MOUNTING (GRADE CONTROL) | 550 |

F-NOT SHOWN
M-METRIC PART
Y-SEPARATE ILLUSTRATION

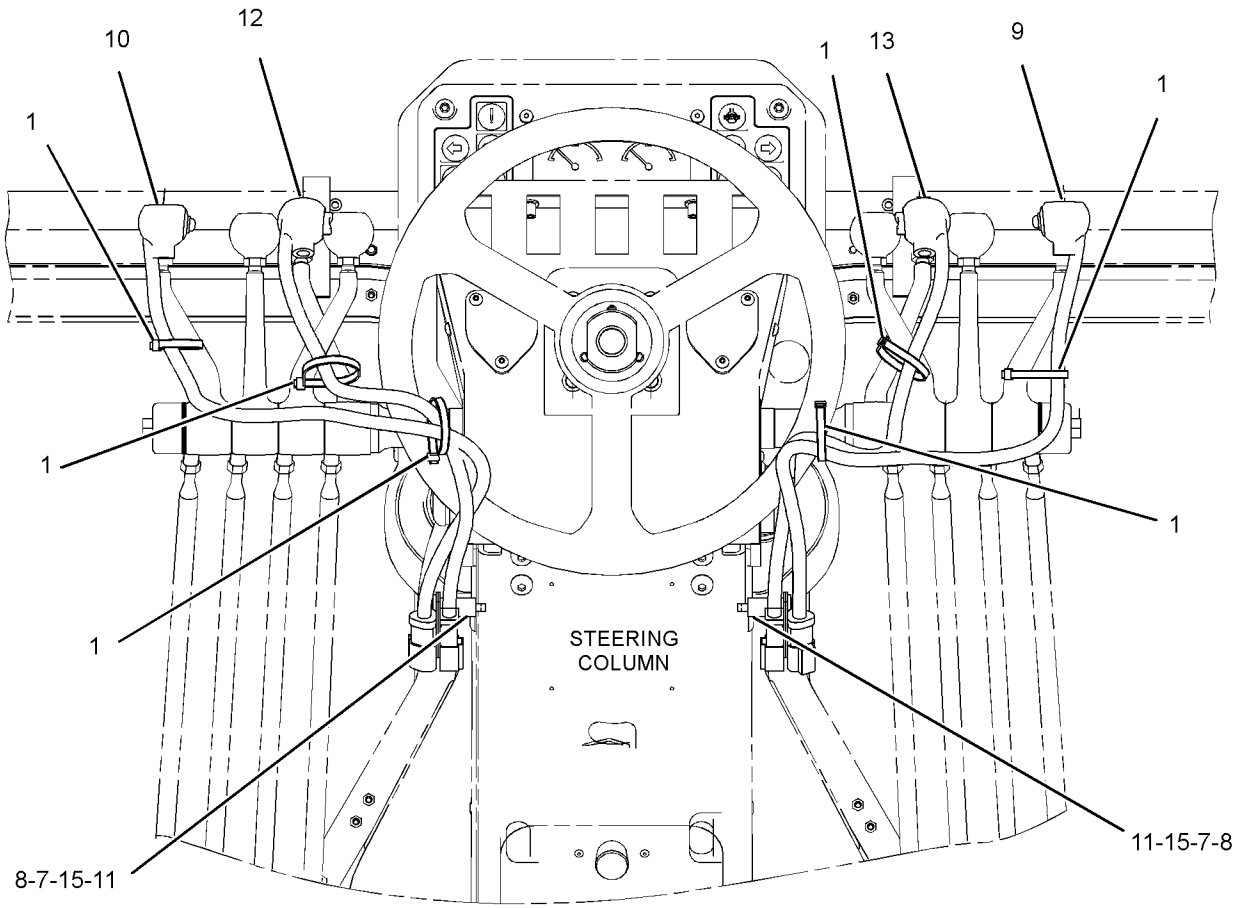


REAR VIEW

GRAPHIC #1 **<END>** g01266036

# *131-8126* HEATER GP-JACKET WATER

**S/N: CCA1-UP**
**120 VOLT/1250 WATT**
**PART OF 197-5955, 236-3948 SNOW AR-MOTOR GRADER**
**AN ATTACHMENT**

**SMCS-1383** **i02203921**

| NOTE | REF NO | GRAPHIC REF | PART NUMBER | QTY | PART NAME 1 2 3 4 5 6 (PRODUCT LEVEL) | SEE PAGE |
|---|---|---|---|---|---|---|
| | 1 | 1 | **131-8627** | 1 | ELEMENT AS-JACKET WATER HEATER (120-VOLT, 1250-WATT) | |
| B | 2 | 1 | **133-6517** | 1 | CAP AS-DUST | |
| | 3 | 1 | **7X-6312** | 1 | CORD AS-JACKET WATER HEATER | |

B-USE AS REQUIRED

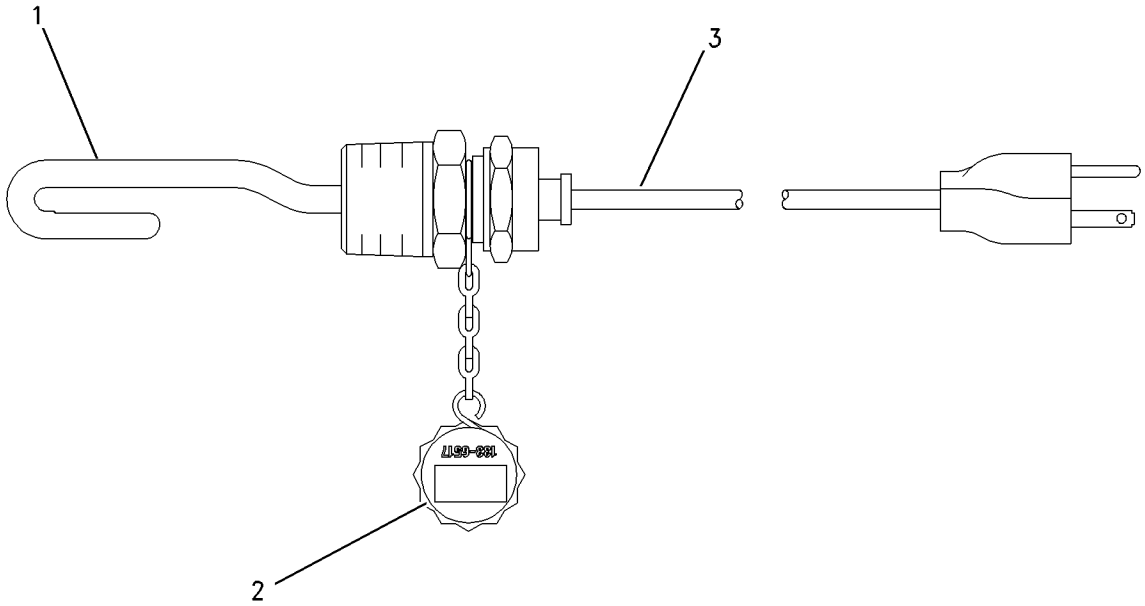


GRAPHIC #1 **<END>** g00832252

# *154-7246* HEATER GP-JACKET WATER

**S/N: CCA1-UP**
**240 VOLT/1250 WATT**
**AN ATTACHMENT**

**SMCS-1383** **i02204071**

| NOTE | REF NO | GRAPHIC REF | PART NUMBER | QTY | PART NAME 1 2 3 4 5 6 (PRODUCT LEVEL) | SEE PAGE |
|---|---|---|---|---|---|---|
| | 1 | 1 | **154-2881** | 1 | ELEMENT AS-HEATER (240-VOLT, 1250-WATT) | |
| | 1A | 1 | **133-6517** | 1 | CAP AS-DUST | |
| | 2 | 1 | **127-8609** | 1 | CORD AS-JACKET WATER HEATER | |

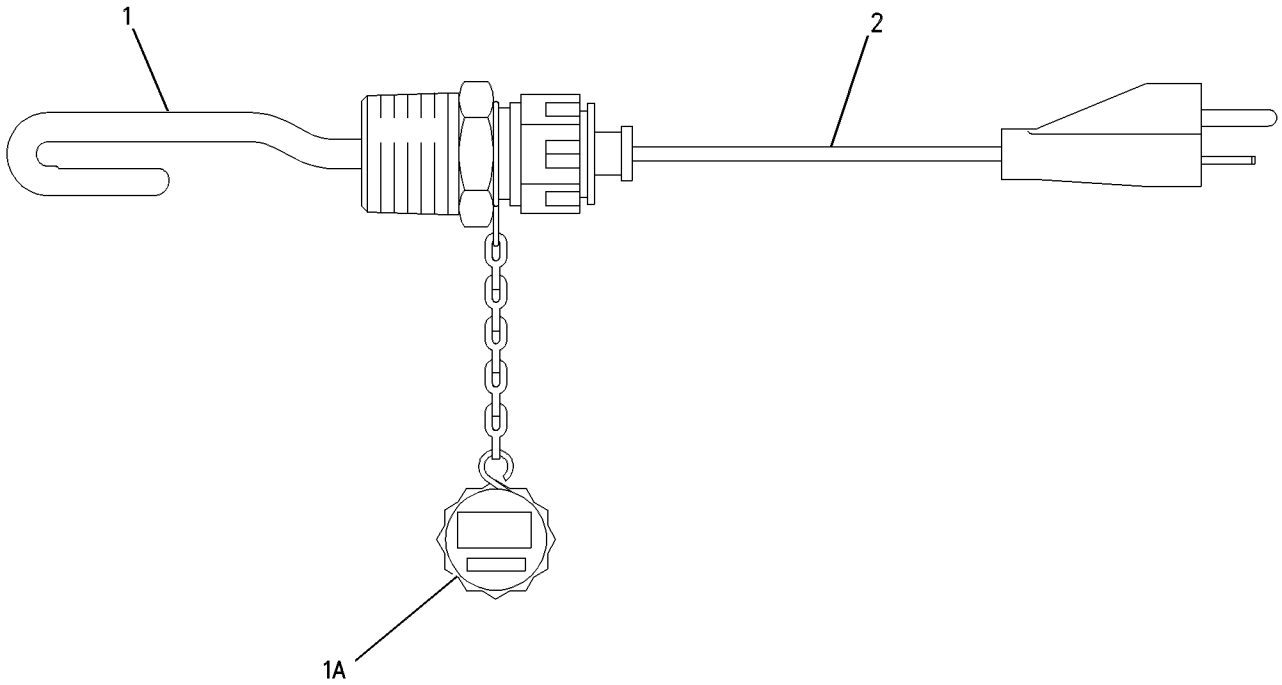


GRAPHIC #1 **<END>** g00508489

# *249-5516* HEATER GP-JACKET WATER

**S/N: CCA1598-UP**
**(120 VOLT,1250 WATTS)**
**PART OF 197-5955, 236-3948 SNOW AR-MOTOR GRADER**
**AN ATTACHMENT**

**SMCS-1383** **i02586696**

| NOTE | REF NO | GRAPHIC REF | PART NUMBER | QTY | PART NAME 1 2 3 4 5 6 (PRODUCT LEVEL) | SEE PAGE |
|---|---|---|---|---|---|---|
| | 1 | 1 | **239-7342** | 1 | ELEMENT AS-JACKET WATER HEATER (120-VOLT, 1250-WATT) | |
| | 1A | 1 | **7M-8485** | 1 | SEAL-O-RING | |
| | 1B | 1 | **133-6517** | 1 | CAP AS-DUST | |
| | 2 | 1 | **7X-6312** | 1 | CORD AS-JACKET WATER HEATER | |

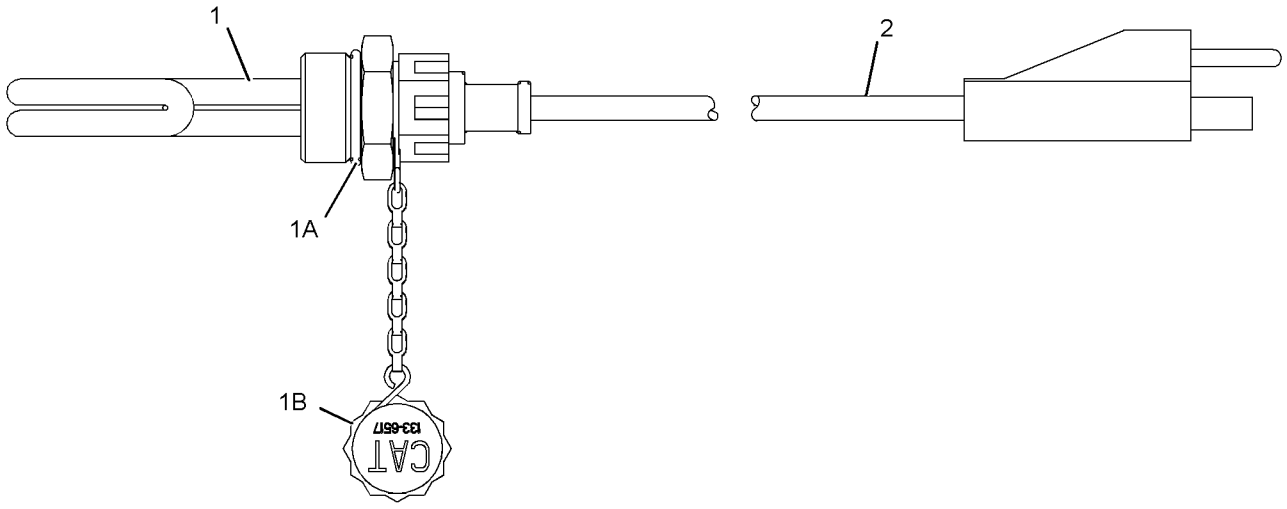


GRAPHIC #1 **<END>** g01112866

# *239-9362* INSTALLATION GP-WARNING BEACON

**S/N: CCA1-UP**

**PART OF 161-1921 WIRING GP-CAB**

**AN ATTACHMENT**

**SMCS-1408, 1431** **i02013135**

| NOTE | REF NO | GRAPHIC REF | PART NUMBER | QTY | PART NAME 1 2 3 4 5 6 (PRODUCT LEVEL) | SEE PAGE |
|---|---|---|---|---|---|---|
| | 1 | 1 | **107-4932** | 1 | PLATE AS | |
| | 2 | 1 | **130-5300** | 1 | CLIP | |
| | 3 | 1 | **5P-8525** | 1 | GROMMET | |
| | 4 | 1 | **8T-4121** | 2 | WASHER-HARD (11X21X2.5-MM THK) | |
| M | 5 | 1 | **8T-4136** | 2 | BOLT (M10X1.5X25-MM) | |
| | 6 | 1 | *9X-9639* | 1 | SWITCH AS-ROCKER (WARNING BEACON) | |
| | | 1 | **3E-8822** | 1 | ACTUATOR-ROCKER | |
| | | 1 | **3E-8825** | 1 | LAMP (24-VOLT) | |
| | | 1 | **102-9862** | 1 | SWITCH AS (WARNING BEACON) | |

M-METRIC PART

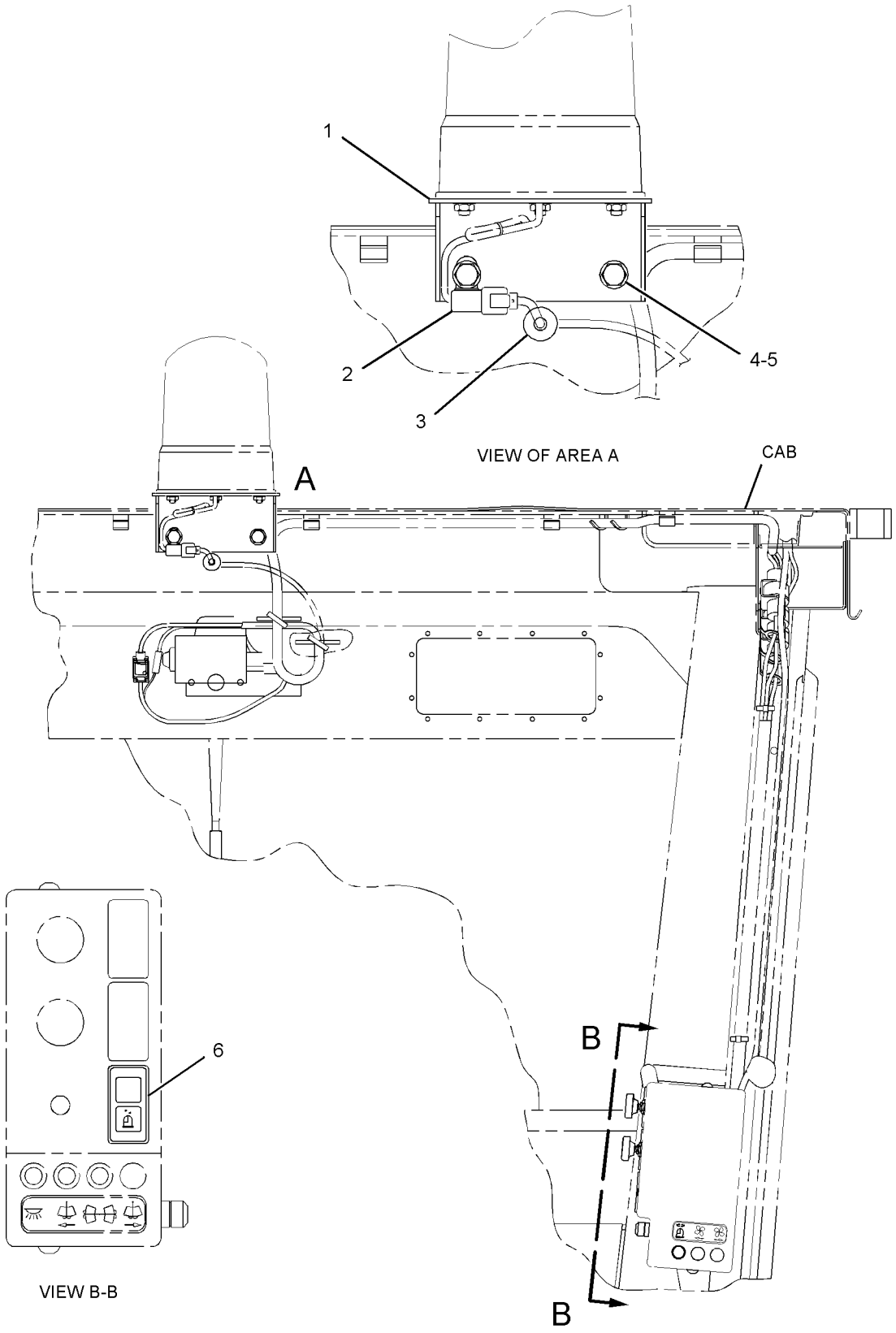


GRAPHIC #1

**<END>**

g01069654

# 3E-6389 LAMP GP-DOME

**S/N: CCA1-UP**
**24-VOLT, WITH SWITCH**
**PART OF 159-5878, 193-7359, 223-3941 WIRING GP-CAB**
**ALSO AN ATTACHMENT**

**SMCS-1433** **i02561652**

| NOTE | REF NO | GRAPHIC REF | PART NUMBER | QTY | PART NAME 1 2 3 4 5 6 (PRODUCT LEVEL) | SEE PAGE |
|---|---|---|---|---|---|---|
| | 1 | 1 | **7N-9943** | 1 | LAMP (24-VOLT) | |
| | 2 | 1 | **102-8803** | 1 | KIT-RECEPTACLE (3-PIN) | |
| | | | | | (INCLUDES RECEPTACLE AS & WEDGE) | |
| | 3 | 1 | **186-3735** | 3 | PIN-CONNECTOR (16-GA TO 18-GA) | |
| | 4 | 1 | **7T-0020** | 1 | LENS-DOME LAMP | |

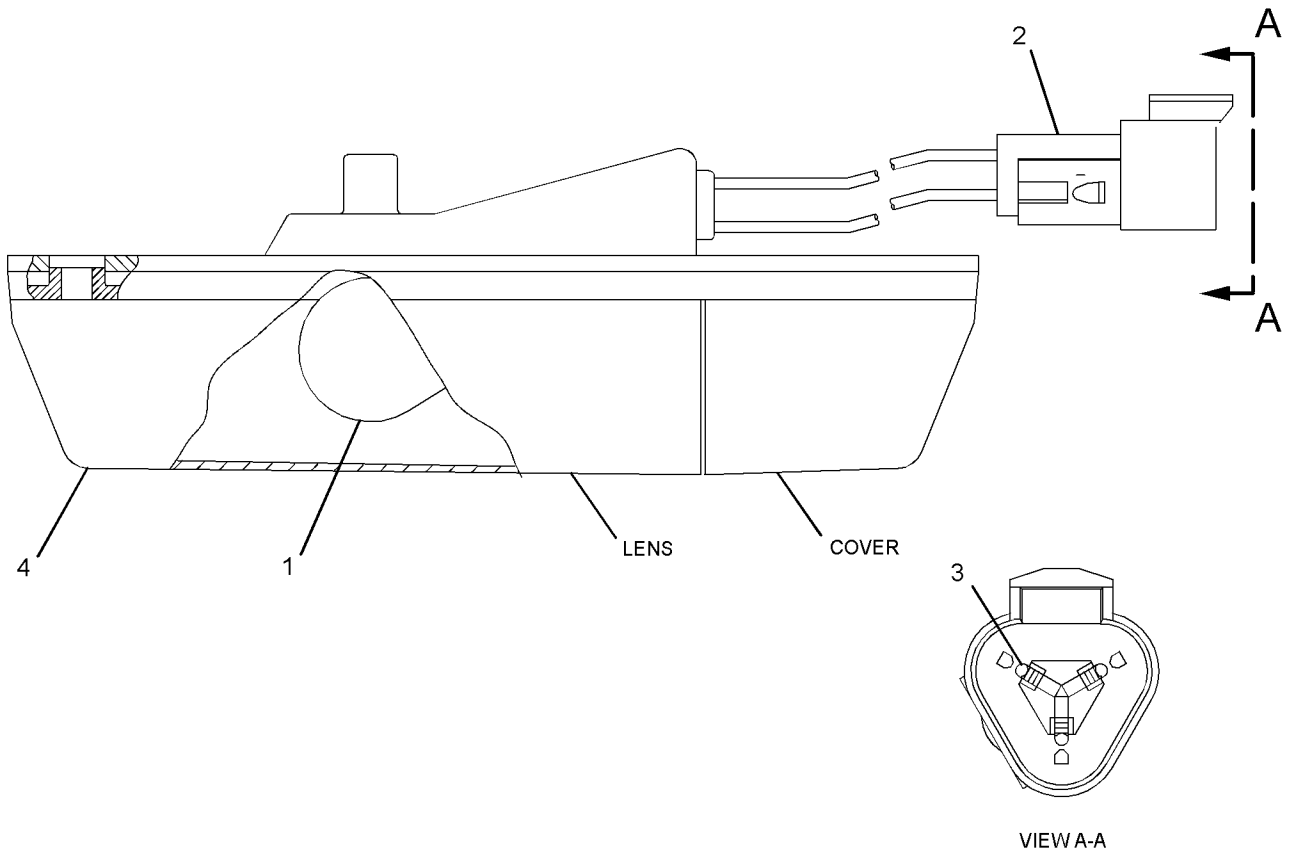


GRAPHIC #1 **<END>** g01270113

# 153-2073 LAMP GP-FLOOD–VERTICAL MOUNT

**S/N: CCA1-UP**
**24-VOLT**
**PART OF 161-0769, 161-0778, 161-0779, 161-1021, 183-4069, 188-9324, 196-8532, 196-8559 LIGHTING GP-FLOOD**
**AN ATTACHMENT**

**SMCS-1434** **i02207331**

| NOTE | REF NO | GRAPHIC REF | PART NUMBER | QTY | PART NAME 1 2 3 4 5 6 (PRODUCT LEVEL) | SEE PAGE |
|---|---|---|---|---|---|---|
| | 1 | 1 | **9X-3463** | 1 | LAMP-HALOGEN (24-VOLT, 65-WATT) | |
| | 2 | 1 | **158-0250** | 1 | BODY AS-LAMP | |
| | 3 | 1 | **158-0248** | 1 | LENS AS | |
| | 4 | 1 | **158-0252** | 1 | BEZEL | |
| | 5 | 1 | **188-8849** | 2 | CLAMP | |

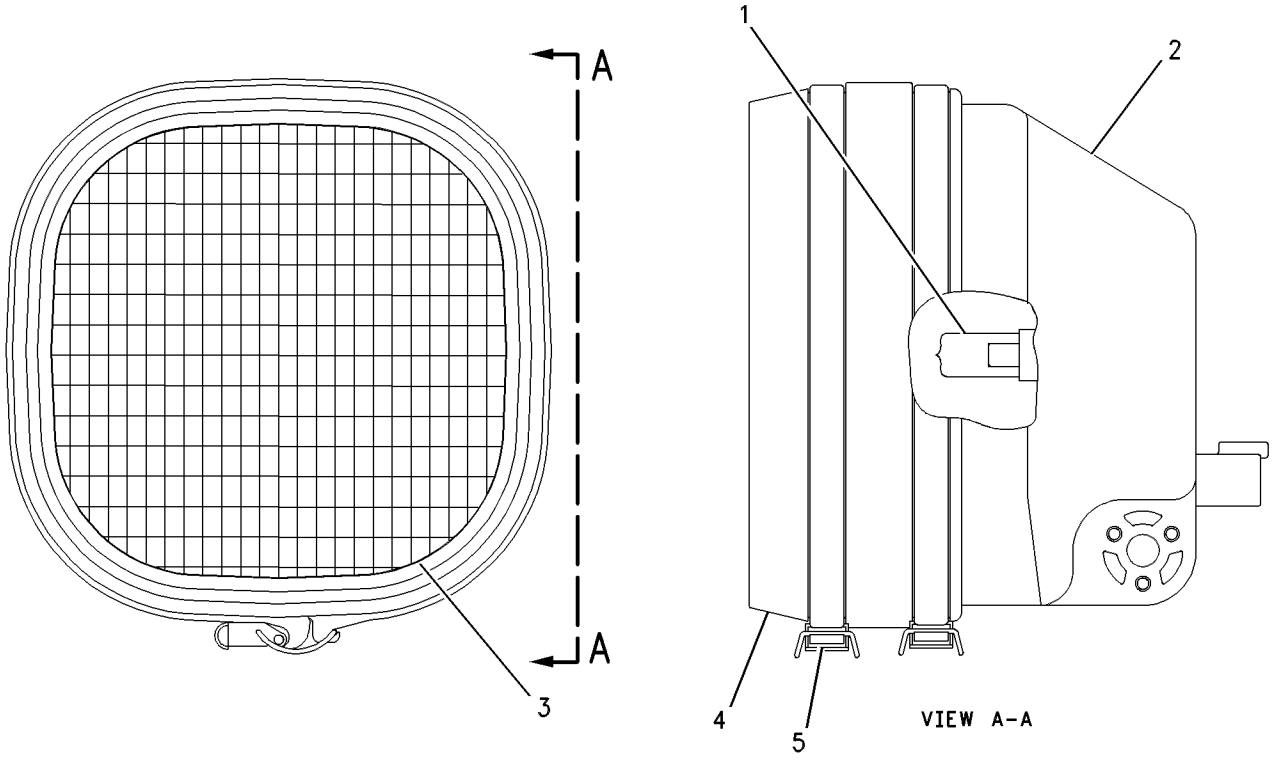


GRAPHIC #1 **<END>** g00449633

# *225-5075* LAMP GP-FLOOD

**S/N: CCA1-UP**
**24 VOLT**
**PART OF 262-0896 LIGHTING GP-CAB**
**AN ATTACHMENT**

**SMCS-1434** **i01898150**

| NOTE | REF NO | GRAPHIC REF | PART NUMBER | QTY | PART NAME 1 2 3 4 5 6 (PRODUCT LEVEL) | SEE PAGE |
|---|---|---|---|---|---|---|
| | 1 | 1 | **9X-3463** | 1 | LAMP-HALOGEN (24-VOLT, 65-WATT) (FLOOD) | |
| M | 2 | 1 | **8T-6912** | 1 | BOLT (M8X1.25X50-MM) | |
| M | 3 | 1 | **5C-7261** | 1 | NUT (M8X1.25-THD) | |
| | 4 | 1 | **8T-4224** | 2 | WASHER-HARD (8.8X16X2-MM THK) | |
| | 5 | 1 | **9X-4244** | 2 | SCREW-SPECIAL | |
| | 6 | 1 | **202-6611** | 1 | LENS AS (FLOODLIGHT) | |
| | 7 | 1 | **227-0169** | 1 | BODY AS | |
| | 8 | 1 | **164-7556** | 1 | CLIP (LAMP RETAINING) | |
| | 9 | 1 | **175-4291** | 1 | BRACKET AS | |
| | 10 | 1 | **102-8802** | 1 | KIT-RECEPTACLE (2-PIN) | |
| | | | | | (INCLUDES RECEPTACLE AS & WEDGE) | |
| | 11 | 1 | **186-3735** | 2 | PIN-CONNECTOR (16-GA TO 18-GA) | |
| | 12 | 1 | **3E-3365** | 1 | WEDGE-RECEPTACLE LOCK (2-PIN) | |

M-METRIC PART

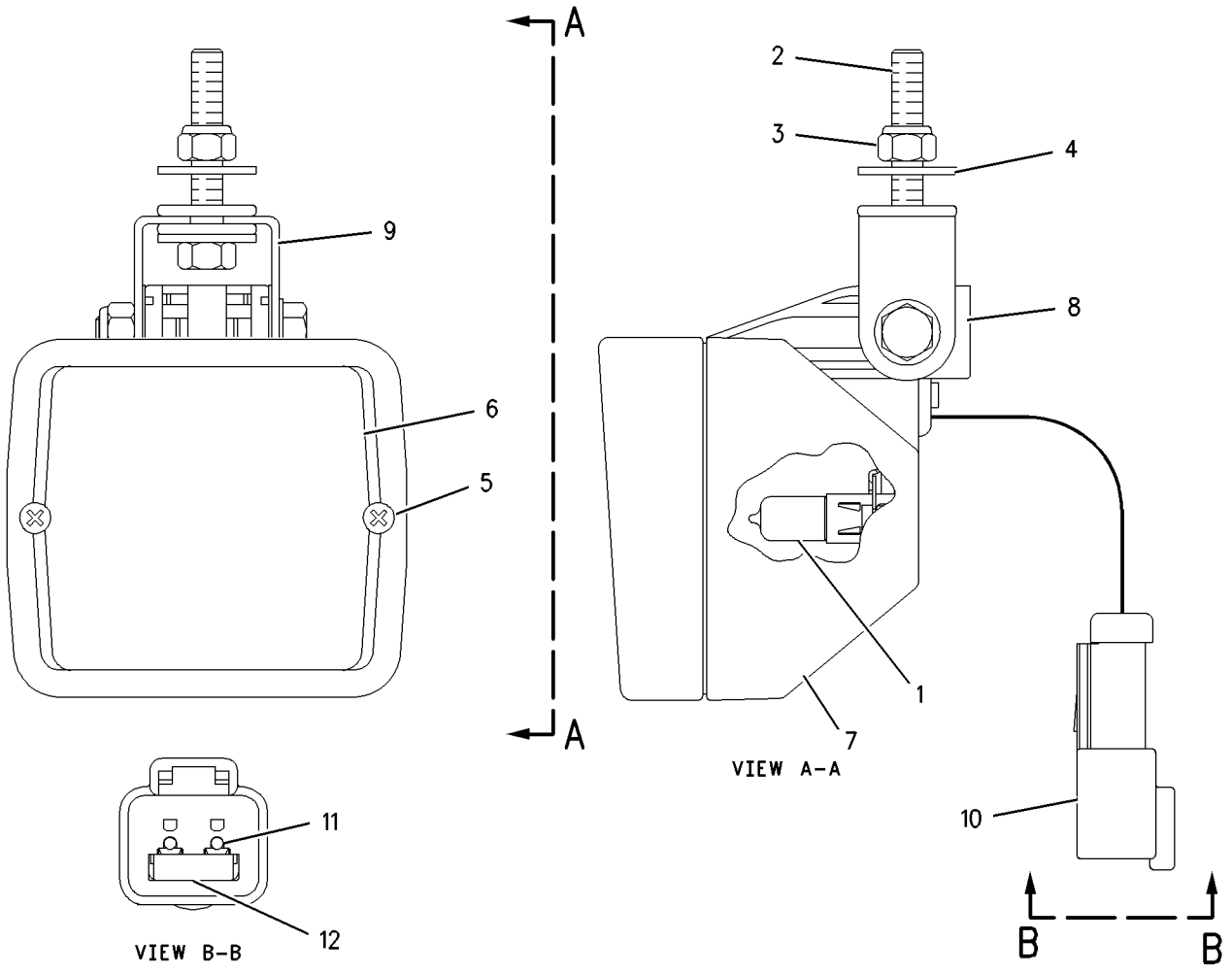


GRAPHIC #1 **<END>** g00912419

# 234-4323 LAMP GP-FLOOD—LOW BEAM

**S/N: CCA1-UP**
**24-VOLT**
**PART OF 161-0778, 161-0779, 161-1015, 161-1017, 161-1021, 183-4069, 188-9324, 196-8559 LIGHTING GP-FLOOD**
**AN ATTACHMENT**

**SMCS-1434** **i02013814**

| NOTE | REF NO | GRAPHIC REF | PART NUMBER | QTY | PART NAME 1 2 3 4 5 6 (PRODUCT LEVEL) | SEE PAGE |
|---|---|---|---|---|---|---|
| | 1 | 1 | **9X-3463** | 1 | LAMP-HALOGEN (24-VOLT, 65-WATT) (FLOODLIGHT) | |
| | 2 | 1 | **9X-4244** | 2 | SCREW-SPECIAL | |
| | 3 | 1 | **202-6614** | 1 | LENS AS (FLOODLIGHT) | |
| | 4 | 1 | **234-7730** | 1 | BODY AS | |
| | 5 | 1 | **164-7556** | 1 | CLIP (LAMP RETAINING) | |
| M | 6 | 1 | **8T-4133** | 1 | NUT (M10X1.5-THD) | |
| | 7 | 1 | **234-7731** | 1 | BRACKET AS | |

M-METRIC PART

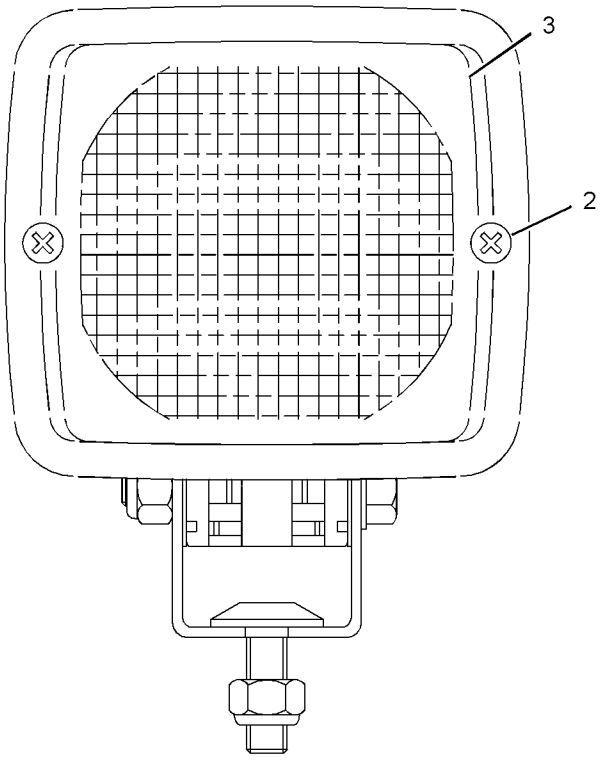


FRONT VIEW

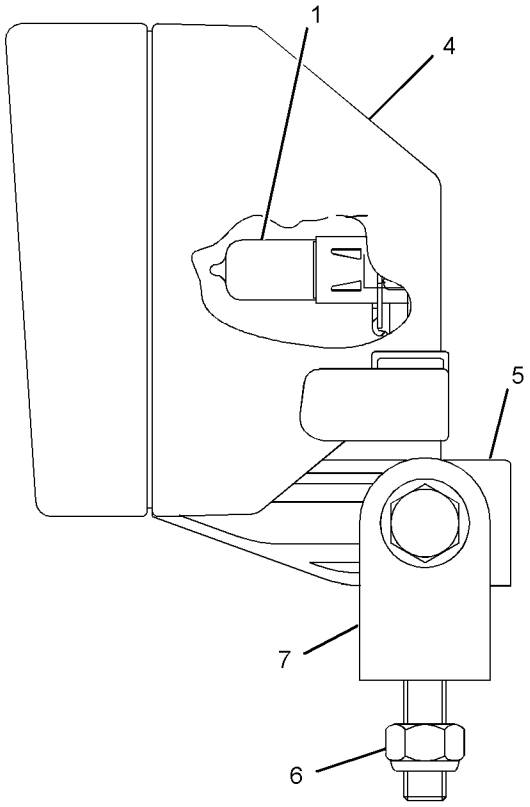


LEFT SIDE VIEW

GRAPHIC #1 **<END>** g01023946

# 234-4324 LAMP GP-FLOOD–HIGH BEAM

**S/N: CCA1-UP**

**PART OF 161-1015 LIGHTING GP-FLOOD**

**AN ATTACHMENT**

**SMCS-1434** **i02549180**

| NOTE | REF NO | GRAPHIC REF | PART NUMBER | QTY | PART NAME 1 2 3 4 5 6 (PRODUCT LEVEL) | SEE PAGE |
|---|---|---|---|---|---|---|
| | 1 | 1 | **9X-3463** | 1 | LAMP-HALOGEN (24-VOLT, 65-WATT) | |
| | 2 | 1 | **9X-4244** | 2 | SCREW-SPECIAL | |
| | 3 | 1 | **202-6611** | 1 | LENS AS (FLOODLIGHT) | |
| | 4 | 1 | **234-7730** | 1 | BODY AS | |
| | 5 | 1 | **164-7556** | 1 | CLIP (LAMP RETAINING) | |
| M | 6 | 1 | **8T-0389** | 1 | LOCKNUT (M10X1.15-THD) | |
| | 7 | 1 | **234-7731** | 1 | BRACKET AS | |
| | 8 | 1 | **8T-4121** | 1 | WASHER-HARD (11X21X2.5-MM THK) | |

M-METRIC PART

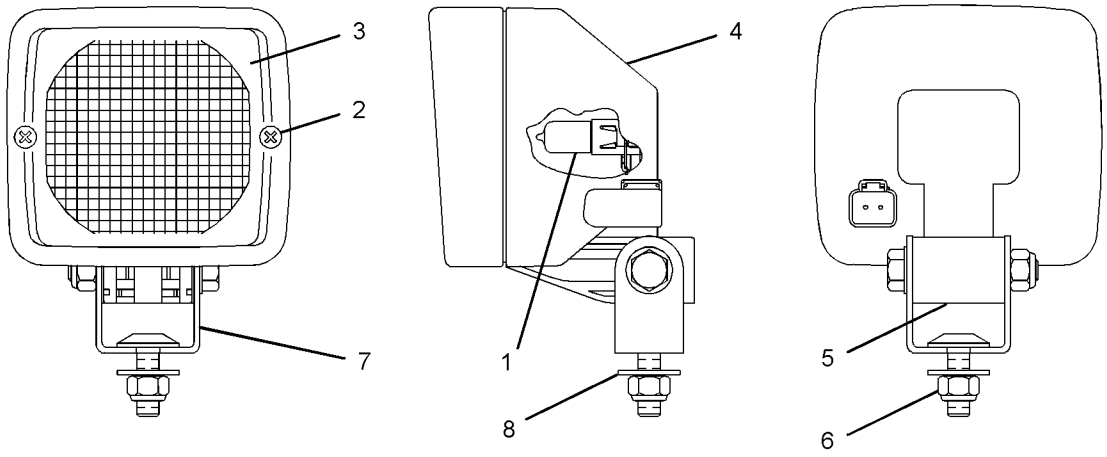


GRAPHIC #1 **<END>** g01276050

# 234-4325 LAMP GP-FLOOD–SUSPENDED MOUNT

**S/N: CCA1-UP**
**24-VOLT**
**PART OF 161-0769, 161-0772, 196-8532 LIGHTING GP-FLOOD**
**AN ATTACHMENT**

**SMCS-1434** **i02011383**

| NOTE | REF NO | GRAPHIC REF | PART NUMBER | QTY | PART NAME 1 2 3 4 5 6 (PRODUCT LEVEL) | SEE PAGE |
|---|---|---|---|---|---|---|
| | 1 | 1 | **9X-3463** | 1 | LAMP-HALOGEN (24-VOLT, 65-WATT) (FLOODLIGHT) | |
| M | 2 | 1 | **8T-4133** | 1 | NUT (M10X1.5-THD) | |
| | 3 | 1 | **9X-4244** | 2 | SCREW-SPECIAL | |
| | 4 | 1 | **202-6614** | 1 | LENS AS (FLOODLIGHT) | |
| | 5 | 1 | **234-7730** | 1 | BODY AS | |
| | 6 | 1 | **164-7556** | 1 | CLIP (LAMP RETAINING) | |
| | 7 | 1 | **234-7731** | 1 | BRACKET AS | |

M-METRIC PART

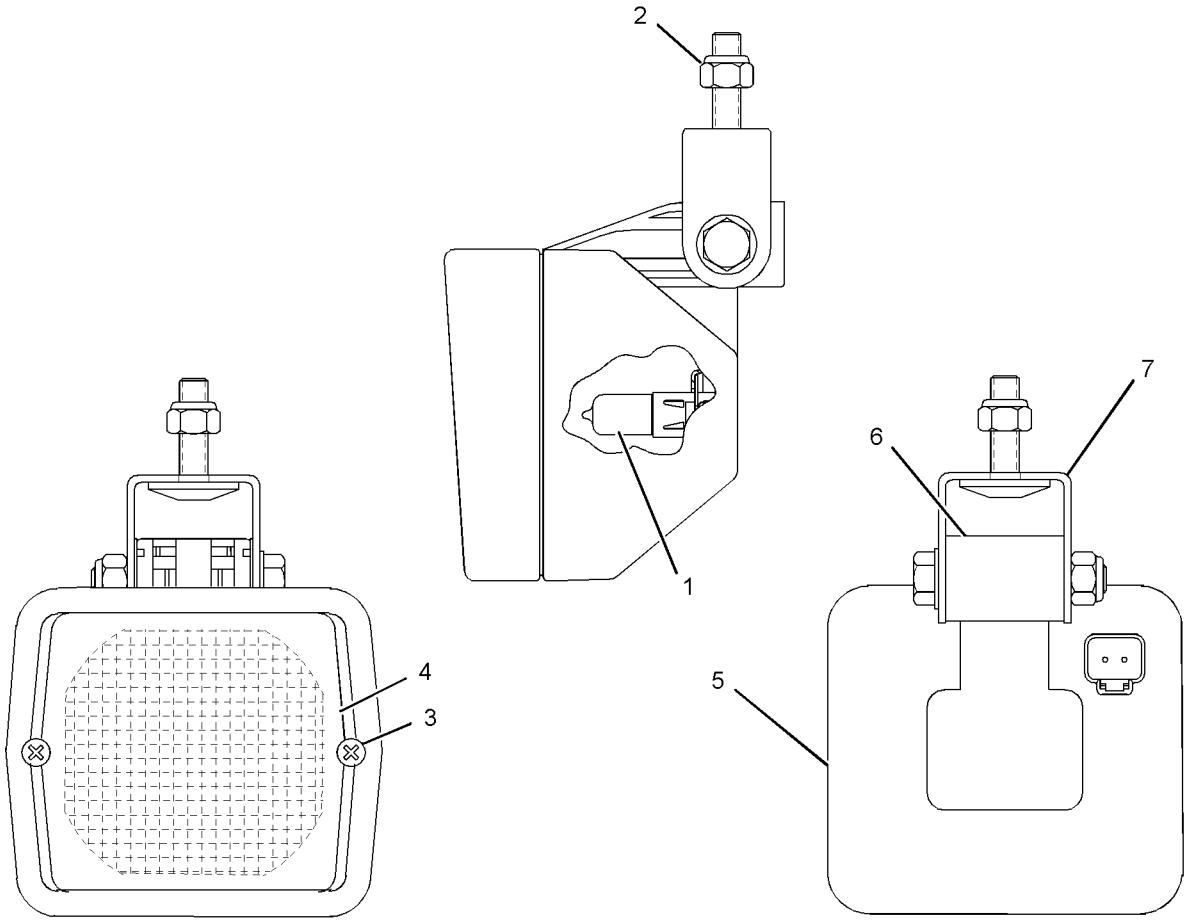


GRAPHIC #1 **<END>** g01026923

# 234-4326 LAMP GP-FLOOD–SUSPENDED

**S/N: CCA1-UP**
**24 VOLT**
**PART OF 161-0772 LIGHTING GP-FLOOD**
**AN ATTACHMENT**

**SMCS-1434** **i02549179**

| NOTE | REF NO | GRAPHIC REF | PART NUMBER | QTY | PART NAME 1 2 3 4 5 6 (PRODUCT LEVEL) | SEE PAGE |
|---|---|---|---|---|---|---|
| | 1 | 1 | **9X-3463** | 1 | LAMP-HALOGEN (24-VOLT, 65-WATT) | |
| M | 2 | 1 | **8T-0389** | 1 | LOCKNUT (M10X1.15-THD) | |
| | 3 | 1 | **9X-4244** | 2 | SCREW-SPECIAL | |
| | 4 | 1 | **202-6611** | 1 | LENS AS (FLOODLIGHT) | |
| | 5 | 1 | **234-7730** | 1 | BODY AS | |
| | 6 | 1 | **164-7556** | 1 | CLIP (LAMP RETAINING) | |
| | 7 | 1 | **234-7731** | 1 | BRACKET AS | |
| | 8 | 1 | **8T-4121** | 1 | WASHER-HARD (11X21X2.5-MM THK) | |

M-METRIC PART

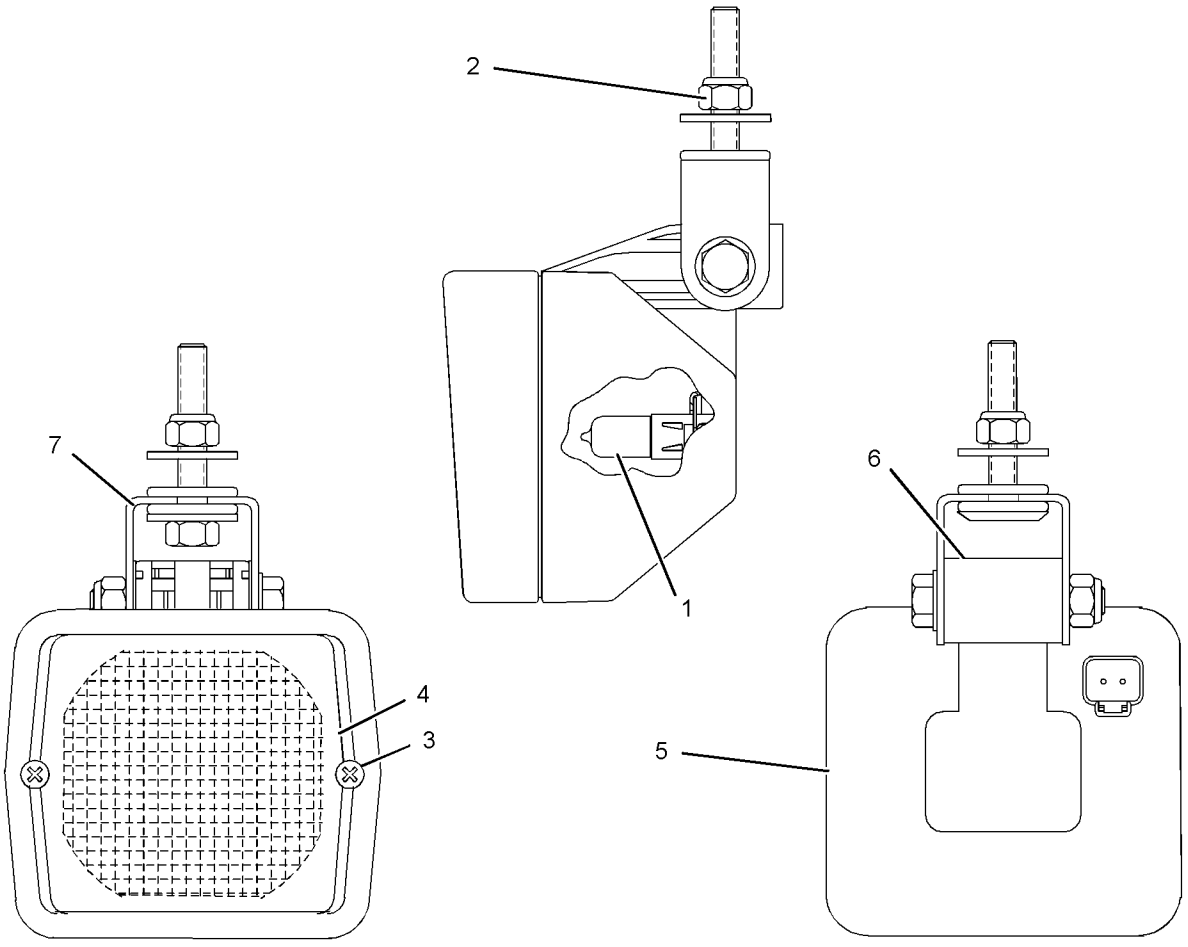


GRAPHIC #1 **<END>** g01276026

# 161-3509 LAMP GP-HEAD–LOW BEAM

**S/N: CCA1-UP**

**PART OF 161-1015, 161-1017 LIGHTING GP-FLOOD**

**AN ATTACHMENT**

**SMCS-1429** **i01755148**

| NOTE | REF NO | GRAPHIC REF | PART NUMBER | QTY | PART NAME 1 2 3 4 5 6 (PRODUCT LEVEL) | SEE PAGE |
|---|---|---|---|---|---|---|
| | 1 | 1 | **9X-3463** | 1 | LAMP-HALOGEN (24-VOLT, 65-WATT) (LOW BEAM) | |
| | 2 | 1 | **158-0250** | 1 | BODY AS-LAMP | |
| | 3 | 1 | **162-2077** | 1 | LENS AS (HEADLAMP)(LOW BEAM) | |
| | 4 | 1 | **158-0252** | 1 | BEZEL | |
| | 5 | 1 | **188-8849** | 2 | CLAMP | |

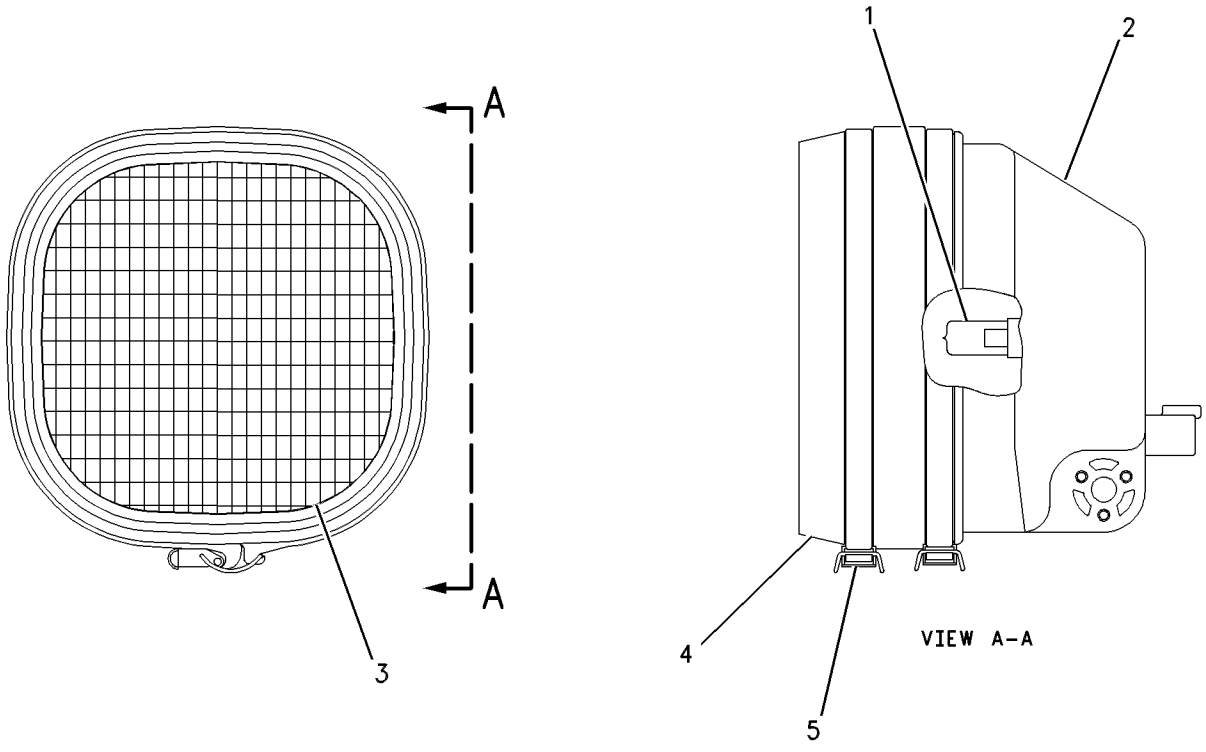


GRAPHIC #1 **<END>** g00514339

# 180-1300 LAMP GP-HEAD–HIGH BEAM

**S/N: CCA1-UP**

**PART OF 161-1015 LIGHTING GP-FLOOD**

**AN ATTACHMENT**

**SMCS-1429** **i02204073**

| NOTE | REF NO | GRAPHIC REF | PART NUMBER | QTY | PART NAME 1 2 3 4 5 6 (PRODUCT LEVEL) | SEE PAGE |
|---|---|---|---|---|---|---|
| | 1 | 1 | **9X-3463** | 1 | LAMP-HALOGEN (24-VOLT, 65-WATT) (HIGH BEAM) | |
| | 2 | 1 | **158-0250** | 1 | BODY AS-LAMP | |
| | 3 | 1 | **158-0249** | 1 | LENS AS (HIGH BEAM) | |
| | 4 | 1 | **158-0252** | 1 | BEZEL | |
| | 5 | 1 | **188-8849** | 2 | CLAMP | |

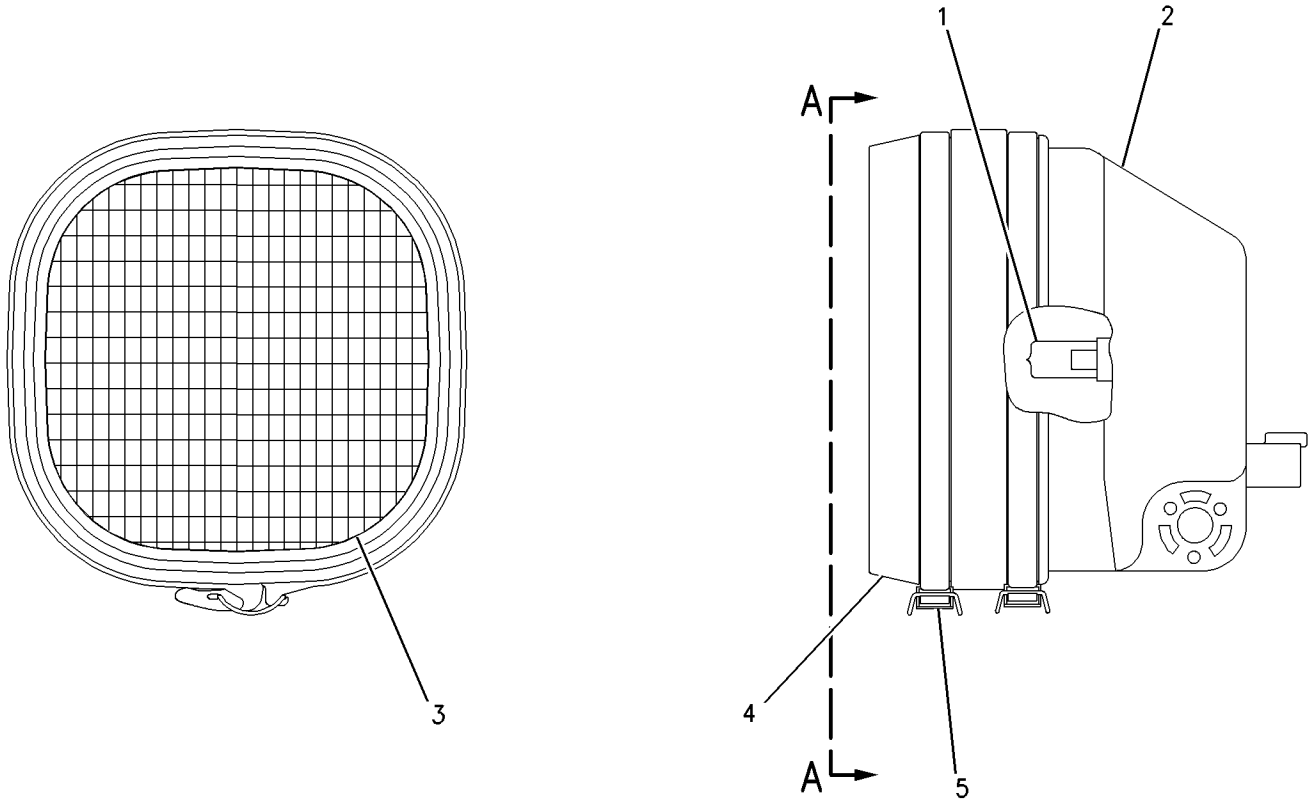


VIEW A-A

GRAPHIC #1 **<END>** g00703486

# 203-7625 LAMP GP-HEAD–LH–EU

**S/N: CCA1-UP**
**24 VOLT**
**PART OF 203-7620 LIGHTING GP-FLOOD, 207-9193 LIGHTING GP-ROADING**
**AN ATTACHMENT**

**SMCS-1429** **i01862078**

| NOTE | REF NO | GRAPHIC REF | PART NUMBER | QTY | PART NAME 1 2 3 4 5 6 (PRODUCT LEVEL) | SEE PAGE |
|---|---|---|---|---|---|---|
| | 1 | 1 | **9X-4244** | 4 | SCREW-SPECIAL | |
| | 2 | 1 | **100-3251** | 2 | SCREW-LENS | |
| | 3 | 1 | **9X-9865** | 1 | SEAL | |
| | 4 | 1 | **100-3249** | 1 | LENS AS (HEAD) | |
| | 5 | 1 | **9X-3465** | 1 | LAMP (24-VOLT, 75/70-WATT) (HIGH/LOW BEAM) | |
| | 6 | 1 | **136-3848** | 1 | LENS AS (AMBER) (TURN) | |
| M | 7 | 1 | **8T-5005** | 1 | BOLT (M10X1.5X70-MM) | |
| M | 8 | 1 | **8T-0389** | 1 | LOCKNUT (M10X1.15-THD) | |
| | 9 | 1 | **100-3253** | 1 | SPACER | |
| | 10 | 1 | **100-3254** | 1 | SPACER | |
| | 11 | 1 | **100-3255** | 1 | WASHER | |
| | 12 | 1 | **102-8805** | 1 | KIT-RECEPTACLE (6-PIN) | |
| | | | | | (INCLUDES RECEPTACLE AS & WEDGE) | |
| | 13 | 1 | **186-3735** | 5 | PIN-CONNECTOR (16-GA TO 18-GA) | |
| | 14 | 1 | **3E-3383** | 1 | WEDGE-RECEPTACLE LOCK (6-PIN) | |
| | 15 | 1 | **8T-8737** | 1 | PLUG-SEAL | |
| | 16 | 1 | **100-3245** | 1 | LAMP (24-VOLT) (POSITION) | |
| | 16A | 1 | **100-3245** | 1 | LAMP (24-VOLT) (TURN) | |
| | 17 | 1 | **9X-4493** | 1 | LAMP (24-VOLT, 21-WATT) (TURN) | |
| | 18 | 1 | **100-3250** | 1 | LENS (AMBER) (TURN) | |
| | 19 | 1 | **136-3845** | 1 | BODY AS-LAMP | |

M-METRIC PART

**203-7625 LAMP GP-HEAD** *(contd. )* **i01862078**

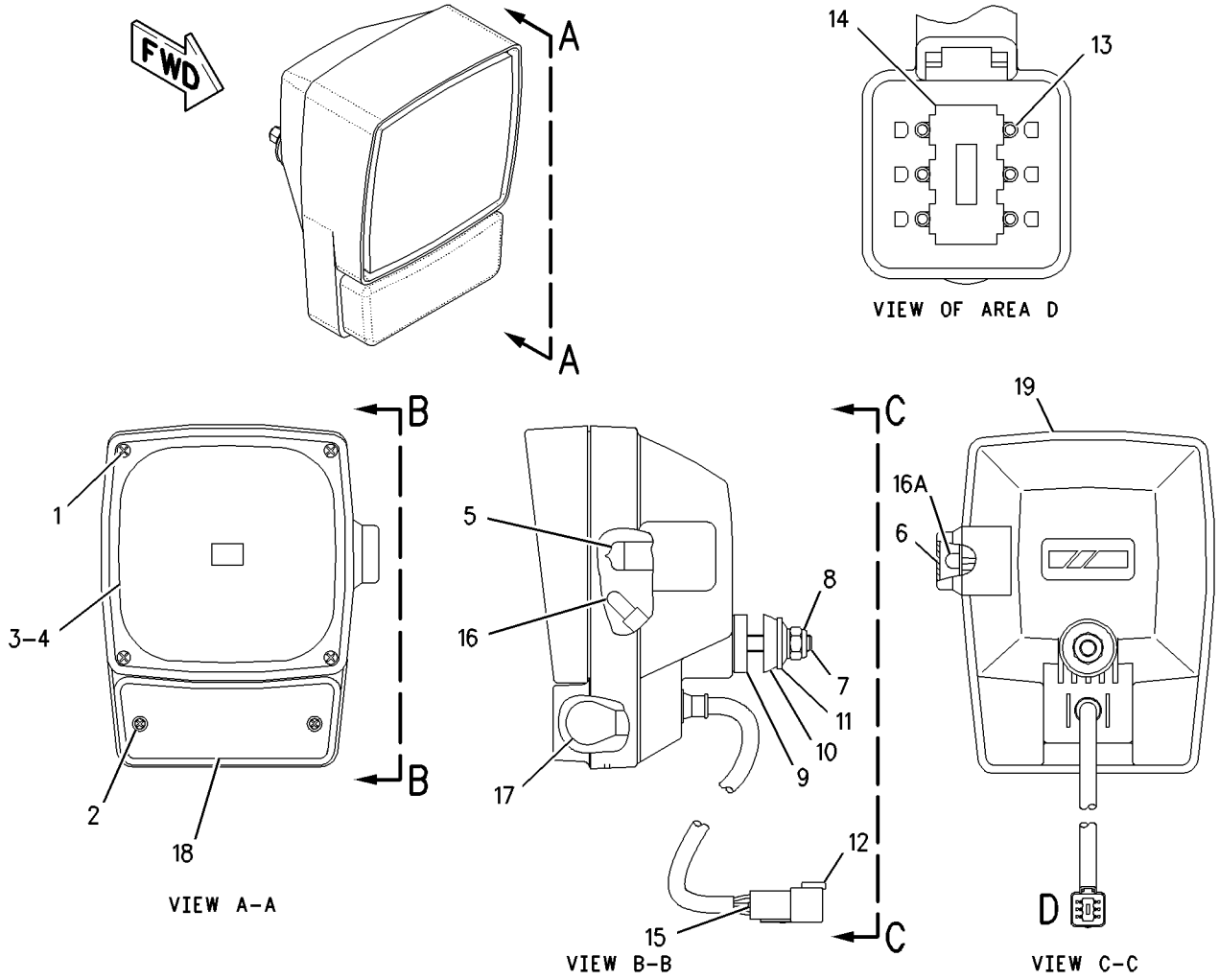


GRAPHIC #1

**<END>**

g00892357

# 203-7626 LAMP GP-HEAD–RH–EU

**S/N: CCA1-UP**
**24 VOLT**
**PART OF 203-7620 LIGHTING GP-FLOOD, 207-9193 LIGHTING GP-ROADING**
**AN ATTACHMENT**

**SMCS-1429** **i01862084**

| NOTE | REF NO | GRAPHIC REF | PART NUMBER | QTY | PART NAME 1 2 3 4 5 6 (PRODUCT LEVEL) | SEE PAGE |
|---|---|---|---|---|---|---|
| | 1 | 1 | **9X-4244** | 4 | SCREW-SPECIAL | |
| | 2 | 1 | **100-3251** | 2 | SCREW-LENS | |
| | 3 | 1 | **9X-9865** | 1 | SEAL | |
| | 4 | 1 | **100-3249** | 1 | LENS AS (HEAD) | |
| | 5 | 1 | **9X-3465** | 1 | LAMP (24-VOLT, 75/70-WATT) (HIGH/LOW BEAM) | |
| | 6 | 1 | **136-3848** | 1 | LENS AS (AMBER) (TURN) | |
| M | 7 | 1 | **8T-5005** | 1 | BOLT (M10X1.5X70-MM) | |
| M | 8 | 1 | **8T-0389** | 1 | LOCKNUT (M10X1.15-THD) | |
| | 9 | 1 | **100-3253** | 1 | SPACER | |
| | 10 | 1 | **100-3254** | 1 | SPACER | |
| | 11 | 1 | **100-3255** | 1 | WASHER | |
| | 12 | 1 | **102-8805** | 1 | KIT-RECEPTACLE (6-PIN) | |
| | | | | | (INCLUDES RECEPTACLE AS & WEDGE) | |
| | 13 | 1 | **186-3735** | 5 | PIN-CONNECTOR (16-GA TO 18-GA) | |
| | 14 | 1 | **3E-3383** | 1 | WEDGE-RECEPTACLE LOCK (6-PIN) | |
| | 15 | 1 | **8T-8737** | 1 | PLUG-SEAL | |
| | 16 | 1 | **100-3245** | 1 | LAMP (24-VOLT) (POSITION) | |
| | 16A | 1 | **100-3245** | 1 | LAMP (24-VOLT) (TURN) | |
| | 17 | 1 | **9X-4493** | 1 | LAMP (24-VOLT, 21-WATT) (TURN) | |
| | 18 | 1 | **100-3250** | 1 | LENS (AMBER) (TURN) | |
| | 19 | 1 | **136-3846** | 1 | BODY AS-LAMP | |

M-METRIC PART

**203-7626 LAMP GP-HEAD** *(contd.)* **i01862084**

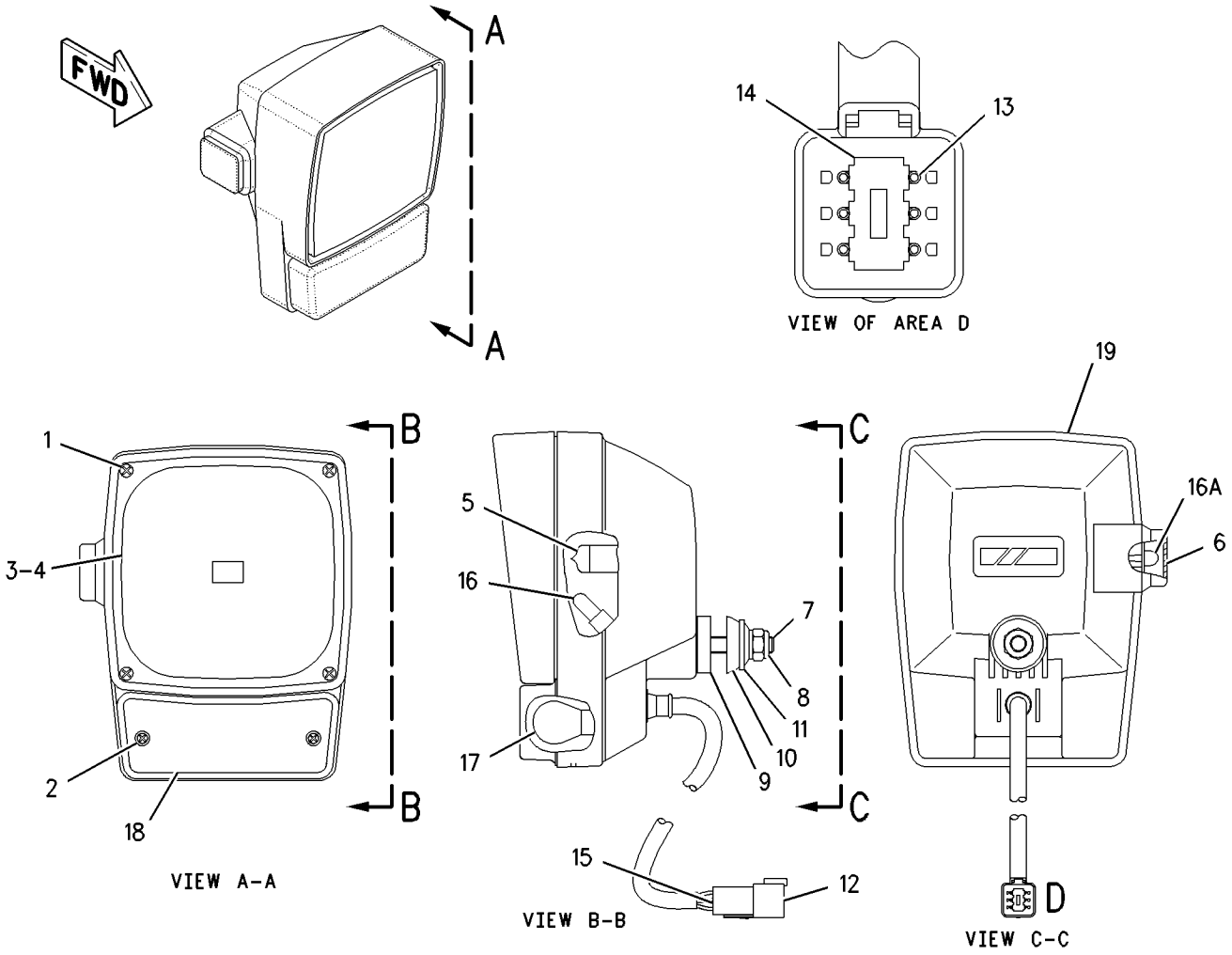


GRAPHIC #1 **<END>** g00892432

# 105-4849 LAMP GP-HEAD & SIGNAL–LH

**S/N: CCA1-UP**
**PART OF 159-5865 WIRING GP-FRONT**
**AN ATTACHMENT**

**SMCS-1429, 1430** **i02205177**

| NOTE | REF NO | GRAPHIC REF | PART NUMBER | QTY | PART NAME 1 2 3 4 5 6 (PRODUCT LEVEL) | SEE PAGE |
|---|---|---|---|---|---|---|
| | 1 | 1 | **9X-4244** | 4 | SCREW-SPECIAL | |
| | 2 | 1 | **100-3251** | 2 | SCREW-LENS | |
| | 3 | 1 | **9X-9865** | 1 | SEAL | |
| | 4 | 1 | **100-3248** | 1 | LENS AS (HEADLIGHT) | |
| | 5 | 1 | **9X-3465** | 1 | LAMP (24-VOLT, 75/70-WATT) | |
| | 6 | 1 | **136-3848** | 1 | LENS AS (AMBER) (SIGNAL) | |
| M | 7 | 1 | **8T-5005** | 1 | BOLT (M10X1.5X70-MM) | |
| M | 8 | 1 | **8T-0389** | 1 | LOCKNUT (M10X1.15-THD) | |
| | 9 | 1 | **100-3253** | 1 | SPACER | |
| | 10 | 1 | **100-3254** | 1 | SPACER | |
| | 11 | 1 | **100-3255** | 1 | WASHER | |
| | 13 | 1 | **8T-8729** | 5 | PIN-CONNECTOR | |
| | 14 | 1 | **3E-3383** | 1 | WEDGE-RECEPTACLE LOCK (6-PIN) | |
| | 15 | 1 | **8T-8737** | 1 | PLUG-SEAL | |
| | 16 | 1 | **100-3245** | 2 | LAMP (24-VOLT) | |
| | 17 | 1 | **9X-4493** | 1 | LAMP (24-VOLT, 21-WATT) (SIGNAL) | |
| | 18 | 1 | **100-3250** | 1 | LENS (AMBER) (SIGNAL) | |
| | 19 | 1 | **136-3845** | 1 | BODY AS-LAMP | |
| | 20 | 1 | **102-8805** | 1 | KIT-RECEPTACLE (6-PIN) | |
| | | | | | (INCLUDES RECEPTACLE AS & WEDGE) | |

M-METRIC PART

**105-4849 LAMP GP-HEAD & SIGNAL** *(contd. )* **i02205177**

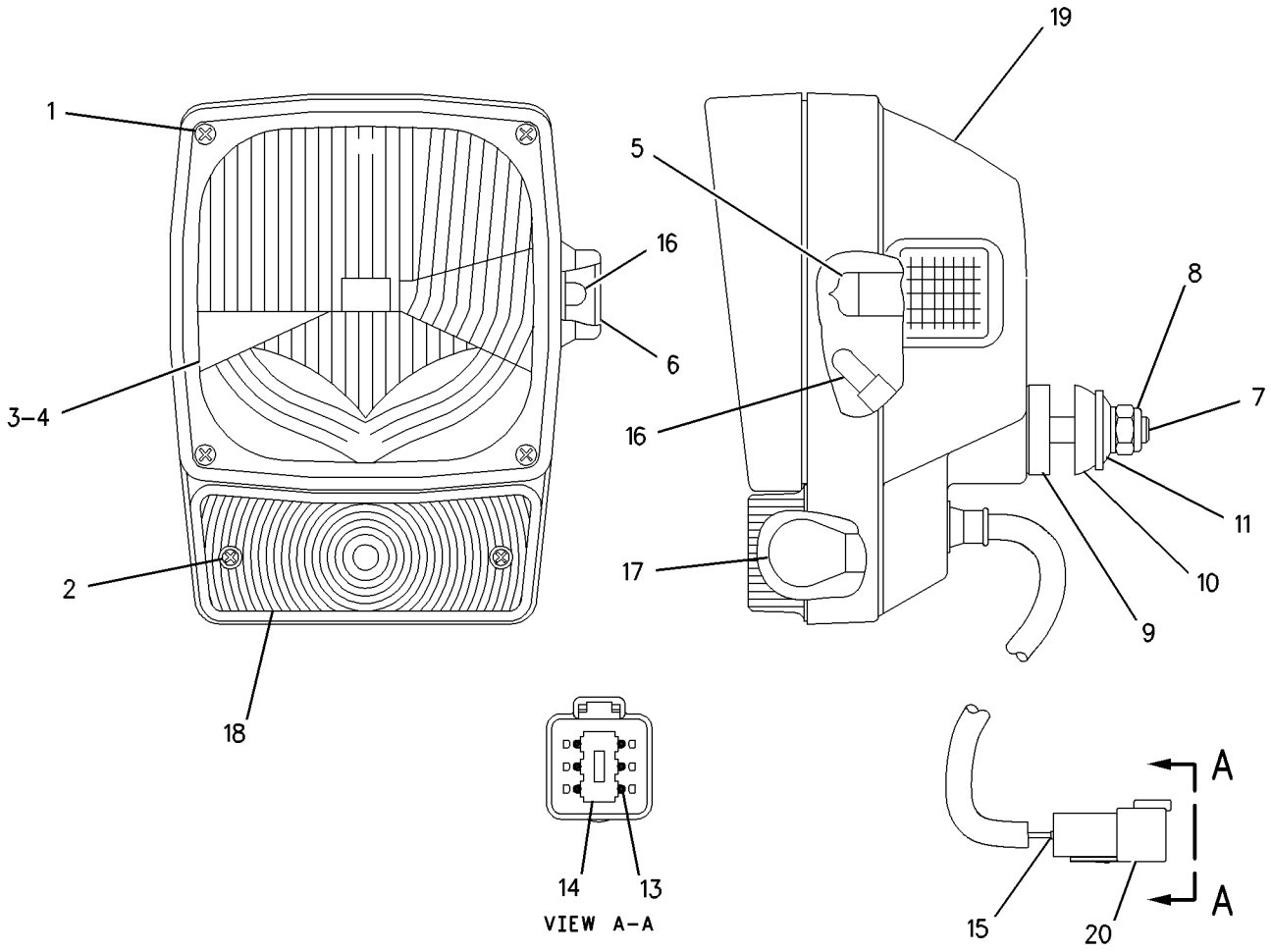


GRAPHIC #1 **<END>** g00661265

# 105-4850 LAMP GP-HEAD & SIGNAL–RH

**S/N: CCA1-UP**
**PART OF 159-5865 WIRING GP-FRONT**
**AN ATTACHMENT**

**SMCS-1429, 1430** **i02205178**

| NOTE | REF NO | GRAPHIC REF | PART NUMBER | QTY | PART NAME 1 2 3 4 5 6 (PRODUCT LEVEL) | SEE PAGE |
|---|---|---|---|---|---|---|
| | 1 | 1 | **9X-4244** | 4 | SCREW-SPECIAL | |
| | 2 | 1 | **100-3251** | 2 | SCREW-LENS | |
| | 3 | 1 | **9X-9865** | 1 | SEAL | |
| | 4 | 1 | **100-3248** | 1 | LENS AS (HEADLIGHT) | |
| | 5 | 1 | **9X-3465** | 1 | LAMP (24-VOLT, 75/70-WATT) (HEAD) | |
| | 6 | 1 | **136-3848** | 1 | LENS AS (AMBER) (SIGNAL) | |
| M | 7 | 1 | **8T-5005** | 1 | BOLT (M10X1.5X70-MM) | |
| M | 8 | 1 | **8T-0389** | 1 | LOCKNUT (M10X1.15-THD) | |
| | 9 | 1 | **100-3253** | 1 | SPACER | |
| | 10 | 1 | **100-3254** | 1 | SPACER | |
| | 11 | 1 | **100-3255** | 1 | WASHER | |
| | 12 | 1 | **102-8805** | 1 | KIT-RECEPTACLE (6-PIN) | |
| | | | | | (INCLUDES RECEPTACLE AS & WEDGE) | |
| | 13 | 1 | **186-3735** | 5 | PIN-CONNECTOR (16-GA TO 18-GA) | |
| | 14 | 1 | **3E-3383** | 1 | WEDGE-RECEPTACLE LOCK (6-PIN) | |
| | 15 | 1 | **8T-8737** | 1 | PLUG-SEAL | |
| | 16 | 1 | **100-3245** | 2 | LAMP (24-VOLT) (SIGNAL) | |
| | 17 | 1 | **9X-4493** | 1 | LAMP (24-VOLT, 21-WATT) (SIGNAL) | |
| | 18 | 1 | **100-3250** | 1 | LENS (AMBER) (SIGNAL) | |
| | 19 | 1 | **136-3846** | 1 | BODY AS-LAMP | |

M-METRIC PART

**105-4850 LAMP GP-HEAD & SIGNAL** *(contd. )* **i02205178**

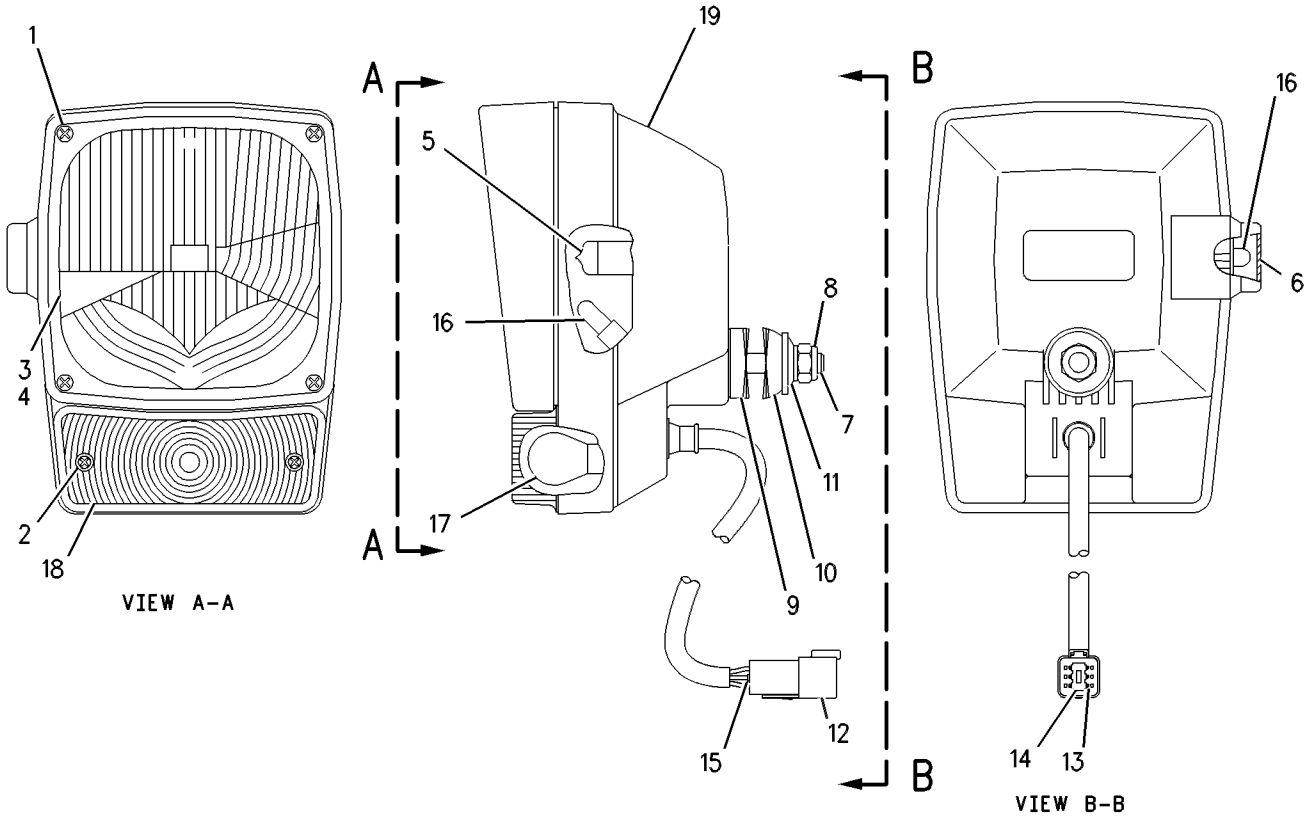


GRAPHIC #1 **<END>** g00610742

# 212-3924 LAMP GP-MARKER

**S/N: CCA1-UP**
**PART OF 211-1520 LIGHTING GP-ROADING**
**AN ATTACHMENT**

**SMCS-1429** **i01745446**

| NOTE | REF NO | GRAPHIC REF | PART NUMBER | QTY | PART NAME 1 2 3 4 5 6 (PRODUCT LEVEL) | SEE PAGE |
|---|---|---|---|---|---|---|
| | 1 | 1 | **102-8802** | 1 | KIT-RECEPTACLE (2-PIN) | |
| | | | | | (INCLUDES RECEPTACLE AS. & WEDGE) | |
| | 2 | 1 | **3E-3365** | 1 | WEDGE-RECEPTACLE LOCK (2-PIN) | |
| | 3 | 1 | **186-3735** | 2 | PIN-CONNECTOR (16-GA TO 18-GA) | |
| | 4 | 1 | **9X-4494** | 1 | LAMP (24-VOLT) (CAB POSITION) | |
| M | 5 | 1 | **104-3601** | 2 | SCREW-MACHINE (M5X0.8X25-MM) | |
| | 6 | 1 | **8H-3481** | 2 | LOCKWASHER | |

M-METRIC PART

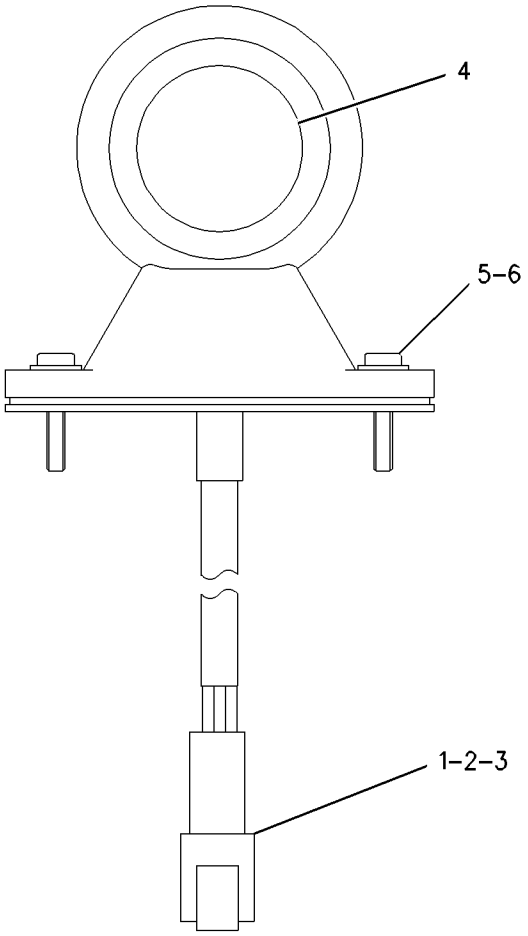


GRAPHIC #1 **<END>** g00939448

# *117-8319* LAMP GP-REGISTRATION PLATE–EU

**S/N: CCA1-UP**

**PART OF 211-1519, 261-9261 MOUNTING GP-REGISTRATION AN ATTACHMENT**

**SMCS-1429** **i02585379**

| NOTE | REF NO | GRAPHIC REF | PART NUMBER | QTY | PART NAME 1 2 3 4 5 6 (PRODUCT LEVEL) | SEE PAGE |
|---|---|---|---|---|---|---|
| | 1 | 1 | **8T-8729** | 2 | PIN-CONNECTOR | |
| | 2 | 1 | **102-8802** | 1 | KIT-RECEPTACLE (2-PIN) (REGISTRATION PLATE LAMP) | |
| | 3 | 1 | **5C-9583** | 1 | LAMP (24-VOLT) (REGISTRATION PLATE) | |
| | 4 | 1 | **134-6751** | 1 | LENS (REGISTRATION PLATE) | |
| M | 5 | 1 | **5C-2874** | 2 | NUT (M5X0.8-THD) | |
| | 6 | 1 | **8F-1434** | 2 | LOCKWASHER | |
| | 7 | 1 | **134-6749** | 2 | SCREW-LENS | |

M-METRIC PART

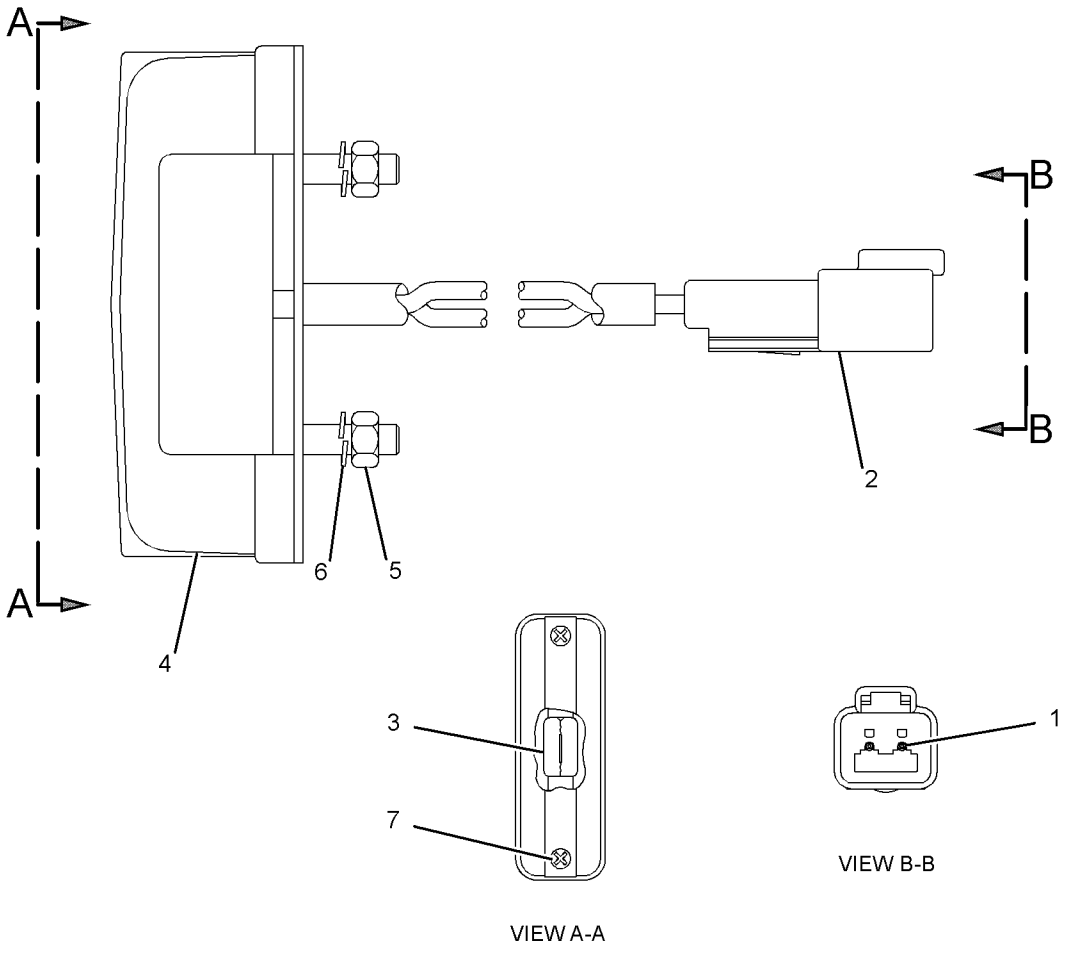


GRAPHIC #1 **<END>** g01294373

# 135-0426 LAMP GP-SIGNAL–STOP/TAIL

**S/N: CCA1-UP**
**24 VOLT**
**PART OF 184-1299 WIRING GP-REAR**

**SMCS-1430** **i02443767**

| NOTE | REF NO | GRAPHIC REF | PART NUMBER | QTY | PART NAME 1 2 3 4 5 6 (PRODUCT LEVEL) | SEE PAGE |
|---|---|---|---|---|---|---|
| | 1 | 1 | **102-8803** | 1 | KIT-RECEPTACLE (3-PIN) | |
| | | | | | (INCLUDES RECEPTACLE AS & WEDGE) | |
| | 2 | 1 | **186-3735** | 3 | PIN-CONNECTOR (16-GA TO 18-GA) | |

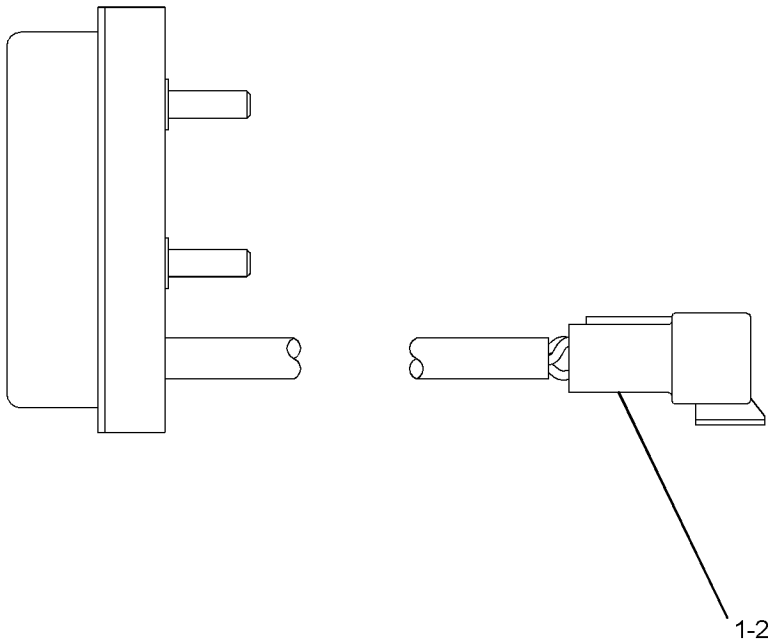


GRAPHIC #1 **<END>** g01213248

# 135-0427 LAMP GP-SIGNAL–TURN/PARK

**S/N: CCA1-UP**

**PART OF 161-0772, 161-1015 LIGHTING GP-FLOOD, 188-9331 LIGHTING GP-SIGNAL AN ATTACHMENT**

**SMCS-1430** **i02526811**

| NOTE | REF NO | GRAPHIC REF | PART NUMBER | QTY | PART NAME 1 2 3 4 5 6 (PRODUCT LEVEL) | SEE PAGE |
|---|---|---|---|---|---|---|
| | 1 | 1 | **102-8803** | 1 | KIT-RECEPTACLE (3-PIN) | |
| | | | | | (INCLUDES RECEPTACLE AS & WEDGE) | |
| | 2 | 1 | **186-3735** | 3 | PIN-CONNECTOR (16-GA TO 18-GA) | |

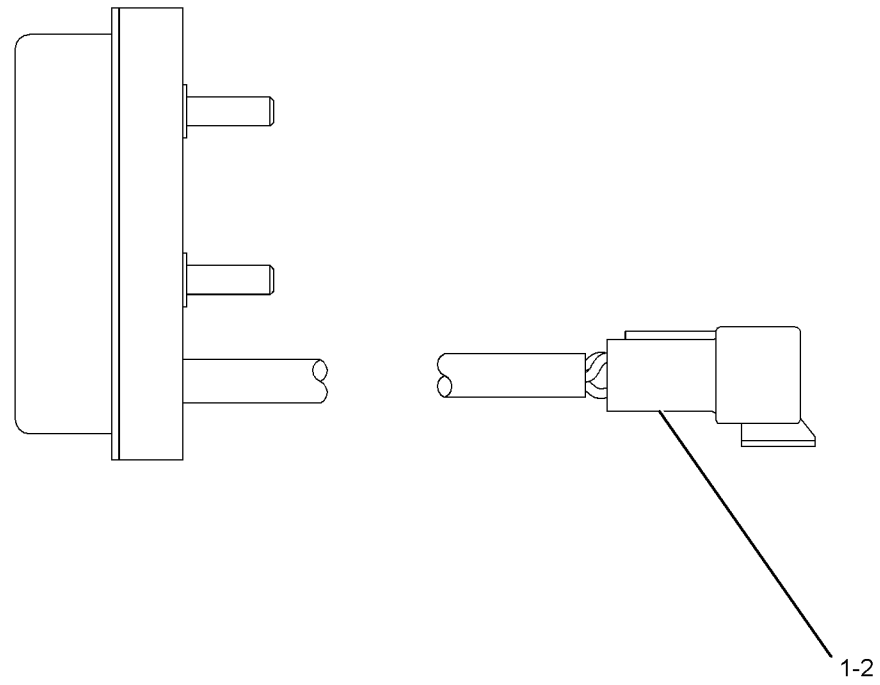


GRAPHIC #1 **<END>** g01273007

# 199-3368 LAMP GP-SIGNAL–24-VOLT, TURN

**S/N: CCA214-UP**
**PART OF 188-9331 LIGHTING GP-SIGNAL**
**AN ATTACHMENT**

**SMCS-1430** **i02561657**

| NOTE | REF NO | GRAPHIC REF | PART NUMBER | QTY | PART NAME 1 2 3 4 5 6 (PRODUCT LEVEL) | SEE PAGE |
|---|---|---|---|---|---|---|
| | 1 | 1 | **102-8802** | 1 | KIT-RECEPTACLE (2-PIN) | |
| | | | | | (INCLUDES RECEPTACLE AS AND WEDGE) | |
| | 2 | 1 | **186-3735** | 2 | PIN-CONNECTOR (16-GA TO 18-GA) | |

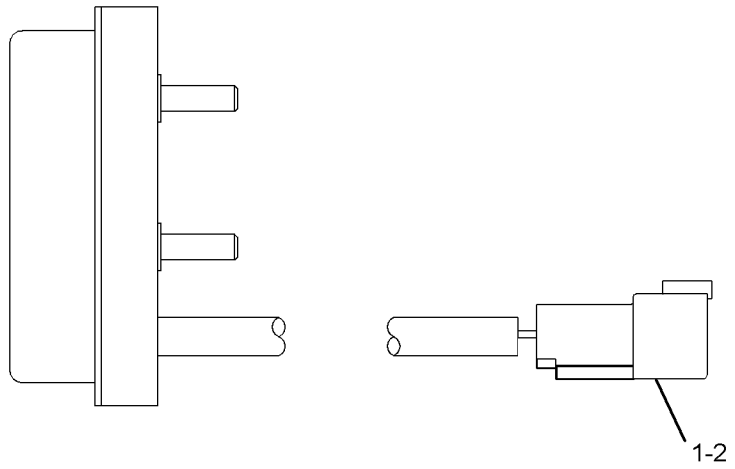


GRAPHIC #1 **<END>** g01217868

# *128-6983* LAMP GP-WARNING BEACON–AMBER

**S/N: CCA1-UP**
**24-VOLT. ROTATING**
**PART OF 233-4253 LIGHTING GP-WARNING**
**AN ATTACHMENT**

**SMCS-1431** **i02200122**

| NOTE | REF NO | GRAPHIC REF | PART NUMBER | QTY | PART NAME 1 2 3 4 5 6 (PRODUCT LEVEL) | SEE PAGE |
|---|---|---|---|---|---|---|
| | 1 | 1 | **9X-8121** | 1 | LENS (AMBER, WARNING BEACON) | |
| | 2 | 1 | **9X-7849** | 1 | LAMP (24-VOLT, 70-WATT) (WARNING BEACON) | |
| | 3 | 1 | **9X-8139** | 1 | BELT-DRIVE | |
| M | 4 | 1 | **6V-8225** | 3 | NUT (M6X1-THD) | |
| | 5 | 1 | **5P-0537** | 3 | WASHER-HARD (7.2X14.5X2-MM THK) | |
| | 6 | 1 | **102-8802** | 1 | KIT-RECEPTACLE (2-PIN) | |
| | | | | | (INCLUDES RECEPTACLE AS AND WEDGE) | |
| | 7 | 1 | **3E-3365** | 1 | WEDGE-RECEPTACLE LOCK (2-PIN) | |
| | 8 | 1 | **186-3735** | 2 | PIN-CONNECTOR (16-GA TO 18-GA) | |

M-METRIC PART

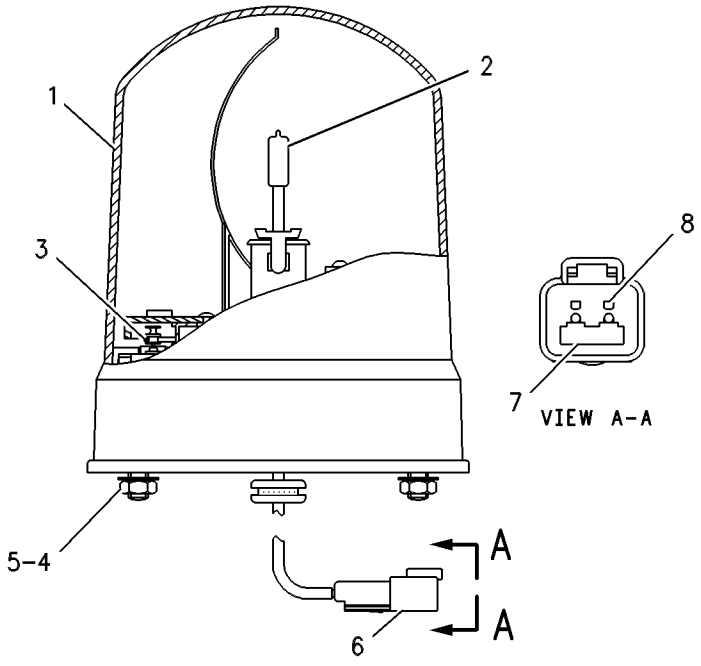


GRAPHIC #1 **<END>** g00109215

# 235-3937 LAMP GP-WARNING BEACON–AMBER

**S/N: CCA1-UP**
**24-VOLT. ROTATING**
**PART OF 233-4253, 261-8101, 262-4932 LIGHTING GP-WARNING, 239-9354 LIGHTING GP-WARNING BEACON**
**AN ATTACHMENT**

**SMCS-1431** **i02585409**

| NOTE | REF NO | GRAPHIC REF | PART NUMBER | QTY | PART NAME 1 2 3 4 5 6 (PRODUCT LEVEL) | SEE PAGE |
|---|---|---|---|---|---|---|
| | 1 | 1 | **272-9800** | 1 | LENS (AMBER, WARNING BEACON) | |
| | 2 | 1 | **9X-7849** | 1 | LAMP (24-VOLT, 70-WATT) | |
| | 3 | 1 | **9X-8139** | 1 | BELT-DRIVE | |
| M | 5 | 1 | **6V-8225** | 3 | NUT (M6X1-THD) | |
| | 6 | 1 | **5P-0537** | 3 | WASHER-HARD (7.2X14.5X2-MM THK) | |
| | 7 | 1 | **102-8802** | 1 | KIT-RECEPTACLE (2-PIN) | |
| | | | | | (INCLUDES RECEPTACLE AS & WEDGE) | |
| | 9 | 1 | **186-3735** | 2 | PIN-CONNECTOR (16-GA TO 18-GA) | |

M-METRIC PART

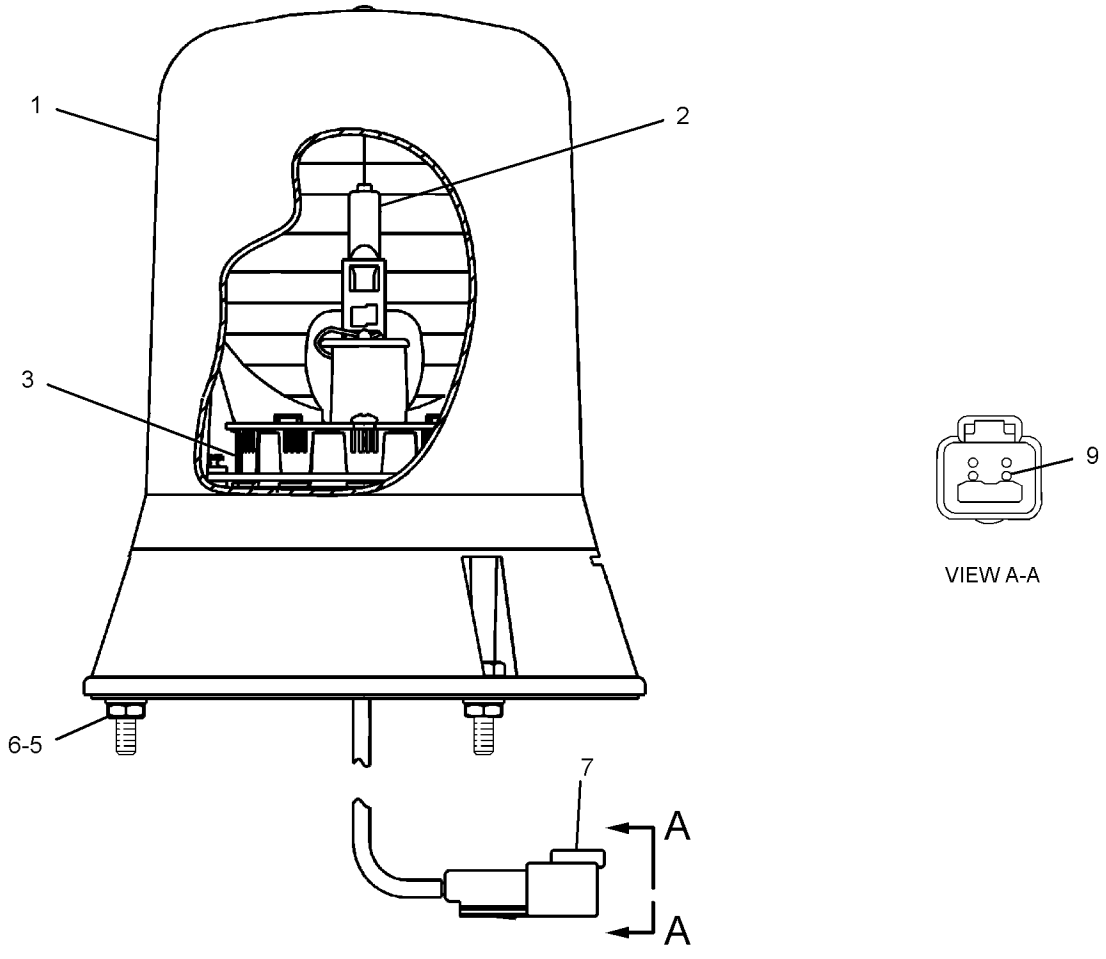


GRAPHIC #1 **<END>** g01199570

## *161-0768* LIGHTING AR-FLOOD

**S/N: CCA1-UP**
**AN ATTACHMENT**

**SMCS-1434** **i01917159**

| NOTE | PART NUMBER | QTY | PART NAME 1 2 3 4 5 6 (PRODUCT LEVEL) | SEE PAGE |
|---|---|---|---|---|
| Y | *161-0769* | 1 | LIGHTING GP-FLOOD (CAB) | 210 |
| Y | *161-0779* | 1 | LIGHTING GP-FLOOD (BLADE) | 220 |
| Y | *188-9324* | 1 | LIGHTING GP-FLOOD (REAR) | 245 |

Y-SEPARATE ILLUSTRATION

**<END>**

## *188-9321* LIGHTING AR-FLOOD—FRONT & REAR

**S/N: CCA1-UP**
**PART OF 197-5955, 236-3948 SNOW AR-MOTOR GRADER**
**AN ATTACHMENT**

**SMCS-1434** **i01861307**

| NOTE | PART NUMBER | QTY | PART NAME 1 2 3 4 5 6 (PRODUCT LEVEL) | SEE PAGE |
|---|---|---|---|---|
| Y | *161-0778* | 1 | LIGHTING GP-FLOOD (BLADE) | 217 |
| Y | *188-9324* | 1 | LIGHTING GP-FLOOD (REAR) | 245 |

Y-SEPARATE ILLUSTRATION

**<END>**

## *188-9328* LIGHTING AR-FLOOD—BOLSTER—TURN

**S/N: CCA1-UP**
**AN ATTACHMENT**

**SMCS-1434** **i02586884**

| NOTE | PART NUMBER | QTY | PART NAME 1 2 3 4 5 6 (PRODUCT LEVEL) | SEE PAGE |
|---|---|---|---|---|
| Y | *201-1038* | 1 | CIRCUIT BREAKER GP (SINGLE) | 153 |
| Y | *161-1015* | 1 | LIGHTING GP-FLOOD (DOUBLE BOLSTER) | 223 |
| Y | *188-9331* | 1 | LIGHTING GP-SIGNAL (REAR TURN) | 263 |

Y-SEPARATE ILLUSTRATION

**<END>**

## *203-6536* LIGHTING AR-FLOOD—MOLDBOARD

**S/N: CCA1-UP**
**AN ATTACHMENT**

**SMCS-1434** **i01683936**

| NOTE | PART NUMBER | QTY | PART NAME 1 2 3 4 5 6 (PRODUCT LEVEL) | SEE PAGE |
|---|---|---|---|---|
| Y | *196-8532* | 1 | LIGHTING GP-FLOOD (MOLDBOARD) | 249 |
| Y | *203-6551* | 1 | WIRING GP-CAB (MOLDBOARD) | 311 |

Y-SEPARATE ILLUSTRATION

**<END>**

# ELECTRICAL AND STARTING SYSTEM

## *204-6109* LIGHTING AR-FLOOD–MOLDBOARD–EU

**S/N: CCA1-UP**

**AN ATTACHMENT**

**SMCS-1434** **i01880922**

| NOTE | REF NO | GRAPHIC REF | PART NUMBER | QTY | PART NAME 1 2 3 4 5 6 (PRODUCT LEVEL) | SEE PAGE |
|---|---|---|---|---|---|---|
| | 1 | 1 | **106-8704** | 1 | SUPPRESSOR AS-ARC | |
| | | 1 | **186-3735** | 2 | PIN-CONNECTOR (16-GA TO 18-GA) | |
| | | 1 | **102-8802** | 1 | KIT-RECEPTACLE (2-PIN) | |
| | | | | | (INCLUDES RECEPTACLE AS & WEDGE) | |
| Y | 2 | 1 | *196-8532* | 1 | LIGHTING GP-FLOOD (MOLDBOARD) | 249 |
| Y | 3 | 1 | *204-6127* | 1 | WIRING GP-CAB (MOLDBOARD) | 313 |

Y-SEPARATE ILLUSTRATION

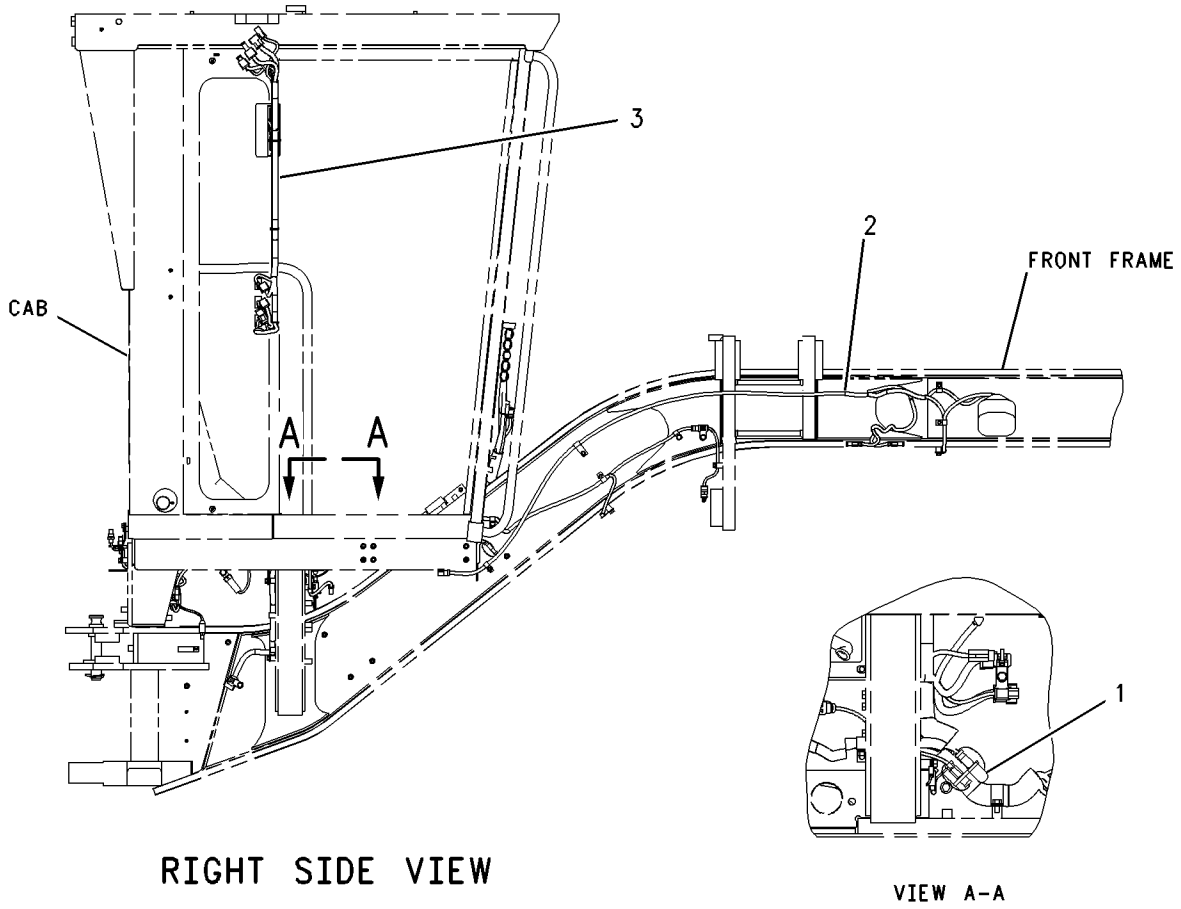


RIGHT SIDE VIEW

VIEW A-A

GRAPHIC #1 **<END>** g00938077

## *161-0770* LIGHTING AR-FLOOD & SIGNAL—HEAD—TURN

**S/N: CCA1-UP**

**AN ATTACHMENT**

**SMCS-1430, 1434** **i02586914**

| NOTE | PART NUMBER | QTY | PART NAME 1 2 3 4 5 6 (PRODUCT LEVEL) | SEE PAGE |
|---|---|---|---|---|
| Y | *201-1038* | 1 | CIRCUIT BREAKER GP (SINGLE) | 153 |
| Y | *161-0772* | 1 | LIGHTING GP-FLOOD (FRONT) | 212 |
| Y | *188-9331* | 1 | LIGHTING GP-SIGNAL (REAR) | 263 |
| Y | *161-1018* | 1 | SWITCH GP-LIGHT (TURN) | 299 |

Y-SEPARATE ILLUSTRATION

**<END>**

## *161-0771* LIGHTING AR-FLOOD & SIGNAL—HEAD—TURN—BOLSTER

**S/N: CCA1-UP**

**AN ATTACHMENT**

**SMCS-1430, 1434** **i01861316**

| NOTE | PART NUMBER | QTY | PART NAME 1 2 3 4 5 6 (PRODUCT LEVEL) | SEE PAGE |
|---|---|---|---|---|
| Y | *201-1036* | 1 | CIRCUIT BREAKER GP (DUEL) | 152 |
| Y | *161-0772* | 1 | LIGHTING GP-FLOOD (FRONT) | 212 |
| Y | *161-1017* | 1 | LIGHTING GP-FLOOD (BOLSTER) | 229 |
| Y | *188-9331* | 1 | LIGHTING GP-SIGNAL (REAR) | 263 |

Y-SEPARATE ILLUSTRATION

**<END>**

## *179-1548* LIGHTING AR-FLOOD & SIGNAL—EXTENDED BOLSTER

**S/N: CCA1-UP**

**AN ATTACHMENT**

**SMCS-1430, 1434** **i02586892**

| NOTE | PART NUMBER | QTY | PART NAME 1 2 3 4 5 6 (PRODUCT LEVEL) | SEE PAGE |
|---|---|---|---|---|
| Y | *201-1036* | 1 | CIRCUIT BREAKER GP (DUEL) | 152 |
| Y | *161-0772* | 1 | LIGHTING GP-FLOOD (FRONT) | 212 |
| Y | *183-4069* | 1 | LIGHTING GP-FLOOD (EXTENDED BOLSTER) | 239 |
| Y | *188-9331* | 1 | LIGHTING GP-SIGNAL (REAR) | 263 |

Y-SEPARATE ILLUSTRATION

**<END>**

# ELECTRICAL AND STARTING SYSTEM

## *171-7096* LIGHTING GP-BACKUP

**S/N: CCA1-UP**

**AN ATTACHMENT**

**SMCS-1408** **i02205181**

| NOTE | REF NO | GRAPHIC REF | PART NUMBER | QTY | PART NAME 1 2 3 4 5 6 (PRODUCT LEVEL) | SEE PAGE |
|---|---|---|---|---|---|---|
| | 1 | 1 | **3E-0109** | 5 | PLUG | |
| | 2 | 1 | **3E-5239** | 1 | RELAY AS (24-VOLT) (AUXILIARY BACKUP LAMP) | |
| | 3 | 1 | **3S-2093** | 5 | STRAP-CABLE | |
| | 4 | 1 | **9W-1442** | 1 | FUSE (10-AMPERE) (BACKUP LAMP) | |
| | 5 | 1 | **145-3350** | 1 | PLATE | |
| | 6 | 1 | **153-2147** | 1 | PLATE | |
| | 7 | 1 | **168-8243** | 1 | HARNESS AS-PANEL | |
| | | 1 | **102-8802** | 1 | KIT-RECEPTACLE (2-PIN) | |
| | | 1 | **102-8804** | 2 | KIT-RECEPTACLE (4-PIN) | |
| | | 1 | **102-8806** | 1 | KIT-RECEPTACLE (8-PIN) | |
| | | 1 | **102-8801** | 1 | KIT-RECEPTACLE (12-PIN) | |
| | | | | | (INCLUDES RECEPTACLE AS & WEDGE) | |
| | | 1 | **155-2255** | 1 | KIT-CONNECTING PLUG (12-PIN) | |
| | | 1 | **155-2265** | 4 | KIT-CONNECTING PLUG (8-PIN) | |
| | | 1 | **155-2270** | 1 | KIT-CONNECTING PLUG (2-PIN) | |
| | | 1 | **155-2271** | 1 | KIT-CONNECTING PLUG (4-PIN) | |
| | | | | | (INCLUDES PLUG AS & WEDGE) | |
| | 8 | 1 | **172-6556** | 1 | PANEL (UPPER SWITCH) | |
| | 9 | 1 | **178-6267** | 1 | HARNESS AS-ALARM | |
| | | 1 | **102-8804** | 1 | KIT-RECEPTACLE (4-PIN) | |
| | | | | | (INCLUDES RECEPTACLE AS & WEDGE) | |
| | | 1 | **9X-1054** | 1 | PLUG AS-CONNECTOR (4-PIN) | |
| | 10 | 1 | **188-3862** | 1 | BRACKET AS | |
| | 11 | 1 | **161-1418** | 1 | SWITCH AS (AUXILIARY BACKUP) | |
| | | 1 | **3E-8825** | 2 | LAMP (24-VOLT) (AUXILIARY BACKUP LAMP) | |
| | | 1 | **161-1417** | 1 | ACTUATOR-ROCKER | |
| M | 12 | 1 | **9X-2043** | 7 | SCREW-TRUSS HEAD (M6X1X14-MM) | |
| | 13 | 1 | **9X-8256** | 1 | WASHER (6.6X12X2-MM THK) | |

M-METRIC PART

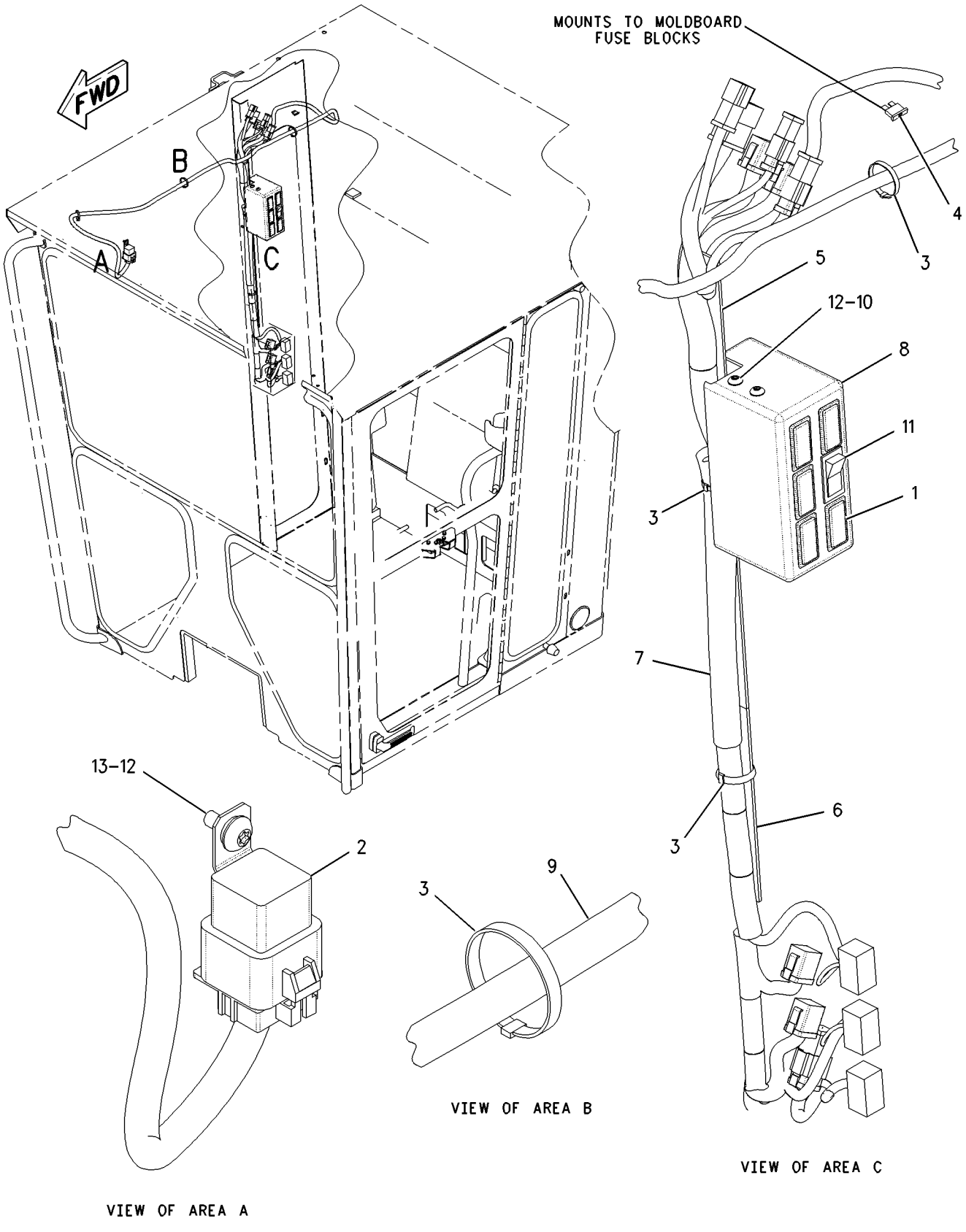


GRAPHIC #1 **<END>** g00846331

## *197-1744* LIGHTING GP-BACKUP–EU

**S/N: CCA1-UP**

**AN ATTACHMENT**

**SMCS-1408** **i02205184**

| NOTE | REF NO | GRAPHIC REF | PART NUMBER | QTY | PART NAME 1 2 3 4 5 6 (PRODUCT LEVEL) | SEE PAGE |
|---|---|---|---|---|---|---|
| | 1 | 1 | **3E-0109** | 5 | PLUG | |
| | 2 | 1 | **3E-5239** | 1 | RELAY AS (24-VOLT) | |
| | 3 | 1 | **3S-2093** | 5 | STRAP-CABLE | |
| | 4 | 1 | **9W-1442** | 1 | FUSE (10-AMPERE) (AUXILIARY BACK-UP ALARM) | |
| | 5 | 1 | **145-3350** | 1 | PLATE | |
| | 6 | 1 | **153-2147** | 1 | PLATE | |
| | 7 | 1 | **172-6556** | 1 | PANEL | |
| | 8 | 1 | **178-6267** | 1 | HARNESS AS-ALARM | |
| | | 1 | **9X-1054** | 1 | PLUG AS-CONNECTOR (4-PIN) | |
| | | 1 | **102-8804** | 1 | KIT-RECEPTACLE (4-PIN) | |
| | 9 | 1 | **188-3862** | 1 | BRACKET AS | |
| | 10 | 1 | **196-8557** | 1 | HARNESS AS-CAB | |
| | | 1 | **155-2255** | 1 | KIT-CONNECTING PLUG (12-PIN) | |
| | | 1 | **155-2265** | 4 | KIT-CONNECTING PLUG (8-PIN) | |
| | | 1 | **155-2270** | 1 | KIT-CONNECTING PLUG (2-PIN) (SIDE FLOOD LAMP) | |
| | | 1 | **155-2271** | 1 | KIT-CONNECTING PLUG (4-PIN) | |
| | | 1 | **102-8802** | 1 | KIT-RECEPTACLE (2-PIN) | |
| | | 1 | **102-8804** | 2 | KIT-RECEPTACLE (4-PIN) | |
| | | 1 | **102-8806** | 1 | KIT-RECEPTACLE (8-PIN) | |
| | | 1 | **102-8801** | 1 | KIT-RECEPTACLE (12-PIN) | |
| | 11 | 1 | **3E-8770** | 1 | SWITCH AS (24-VOLT) (AUXILIARY BACK-UP ALARM) | |
| | | 1 | **141-2325** | 1 | ACTUATOR-ROCKER | |
| | | 1 | **3E-8825** | 1 | LAMP (24-VOLT) (AUXILIARY BACK-UP ALARM) | |
| M | 12 | 1 | **9X-2043** | 7 | SCREW-TRUSS HEAD (M6X1X14-MM) | |
| | 13 | 1 | **9X-8256** | 1 | WASHER (6.6X12X2-MM THK) | |

M-METRIC PART

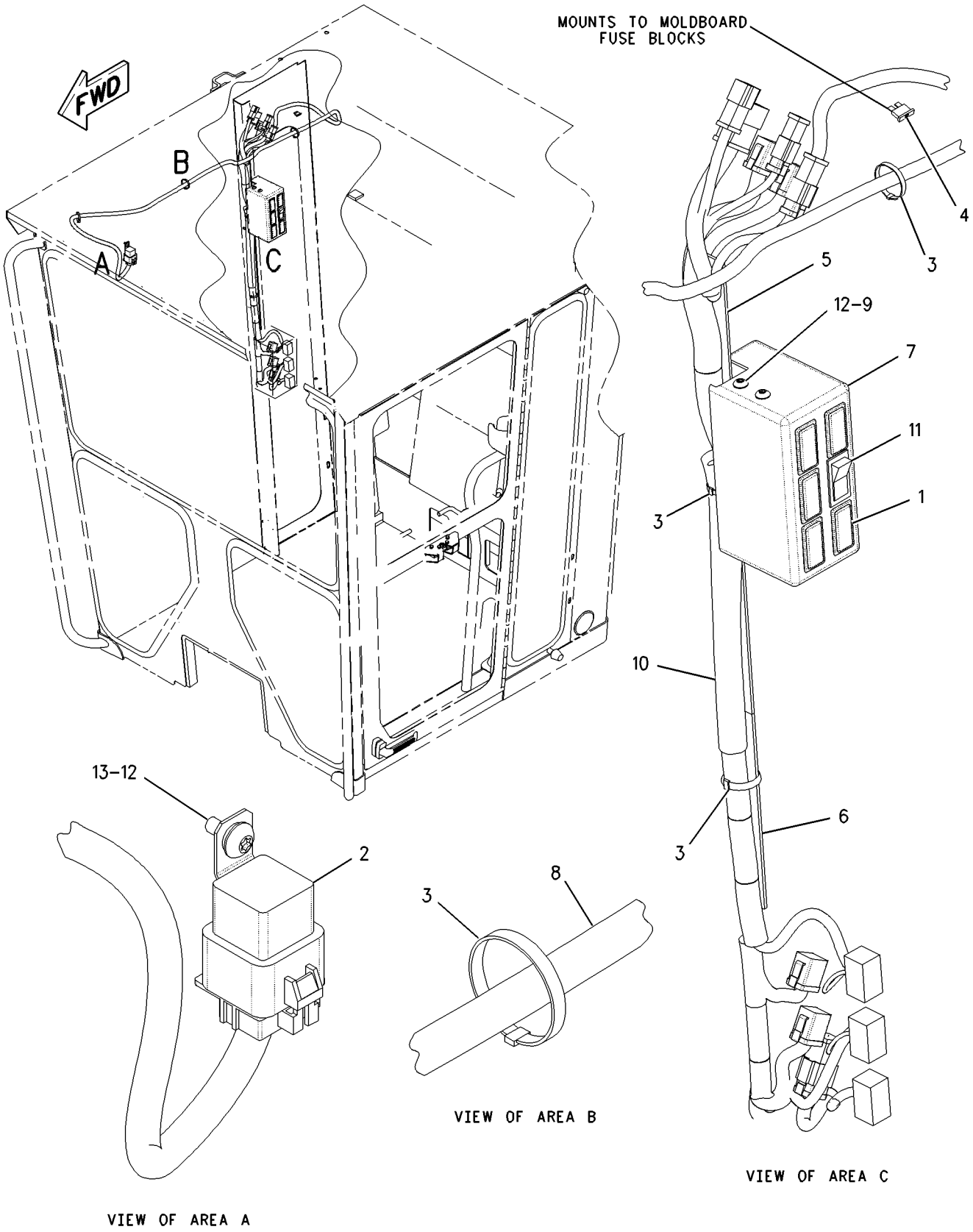


GRAPHIC #1 **<END>** g00849513

# ELECTRICAL AND STARTING SYSTEM

## *262-0896* LIGHTING GP-CAB

**S/N: CCA1-UP**
**AUSTRALIA**
**AN ATTACHMENT**

**SMCS-1433** **i02237350**

| NOTE | REF NO | GRAPHIC REF | PART NUMBER | QTY | PART NAME 1 2 3 4 5 6 (PRODUCT LEVEL) | SEE PAGE |
|---|---|---|---|---|---|---|
| | 1 | 1 | **3E-0109** | 5 | PLUG | |
| | 2 | 1 | **3E-5239** | 1 | RELAY AS (24-VOLT) (BACKUP ALARM) | |
| | 3 | 1 | **3S-2093** | 5 | STRAP-CABLE | |
| | 4 | 1 | **9W-1442** | 1 | FUSE (10-AMPERE) | |
| | 5 | 1 | **145-3350** | 1 | PLATE | |
| | 6 | 1 | **153-2147** | 1 | PLATE | |
| | 7 | 1 | **168-8243** | 1 | HARNESS AS-PANEL | |
| | | 1 | **155-2272** | 1 | PLUG AS-CONNECTOR (4-PIN) | |
| | | 1 | **102-8802** | 1 | KIT-RECEPTACLE (2-PIN) | |
| | | 1 | **102-8804** | 2 | KIT-RECEPTACLE (4-PIN) | |
| | | 1 | **102-8806** | 1 | KIT-RECEPTACLE (8-PIN) | |
| | | 1 | **102-8801** | 1 | KIT-RECEPTACLE (12-PIN) | |
| | | | | | (EACH INCLUDES RECEPTACLE AS & WEDGE) | |
| | | 1 | **155-2255** | 1 | KIT-CONNECTING PLUG (12-PIN) | |
| | | 1 | **155-2265** | 4 | KIT-CONNECTING PLUG (8-PIN) | |
| | | 1 | **155-2270** | 1 | KIT-CONNECTING PLUG (2-PIN) | |
| | | | | | (EACH INCLUDES PLUG AS & WEDGE) | |
| | 8 | 1 | **172-6556** | 1 | PANEL | |
| | 9 | 1 | **178-6267** | 1 | HARNESS AS-ALARM | |
| | | 1 | **9X-1054** | 1 | PLUG AS-CONNECTOR (4-PIN) | |
| | | 1 | **102-8804** | 1 | KIT-RECEPTACLE (4-PIN) | |
| | | | | | (INCLUDES RECEPTACLE AS & WEDGE) | |
| | 10 | 1 | **188-3862** | 1 | BRACKET AS | |
| Y | 11 | 1 | **225-5075** | 4 | LAMP GP-FLOOD (24-VOLT) | 179 |
| | 12 | 1 | **267-2547** | 1 | HARNESS AS-CAB | |
| | | 1 | **102-8802** | 1 | KIT-RECEPTACLE (2-PIN) | |
| | | | | | (INCLUDES RECEPTACLE AS & WEDGE) | |
| | | 1 | **155-2270** | 5 | KIT-CONNECTING PLUG (2-PIN) | |
| | | | | | (EACH INCLUDES PLUG AS & WEDGE) | |
| | 13 | 1 | **3E-8766** | 1 | SWITCH AS (24-VOLT) (AUXILIARY BACKUP LIGHTS) | |
| | | | **3E-8782** | 1 | ACTUATOR-ROCKER | |
| | | | **3E-8825** | 1 | LAMP (24-VOLT) | |
| | 14 | 1 | **6V-8801** | 1 | NUT (3/8-16-THD) | |
| | 15 | 1 | **8T-4121** | 4 | WASHER-HARD (11X21X2.5-MM THK) | |
| | 16 | 1 | **8T-4896** | 1 | WASHER-HARD (10.2X18.5X2.5-MM THK) | |
| | 17 | 1 | **9D-3768** | 2 | GROMMET | |
| M | 18 | 1 | **9X-2043** | 7 | SCREW-TRUSS HEAD (M6X1X14-MM) | |
| | 19 | 1 | **9X-8256** | 1 | WASHER (6.6X12X2-MM THK) | |

M-METRIC PART
Y-SEPARATE ILLUSTRATION

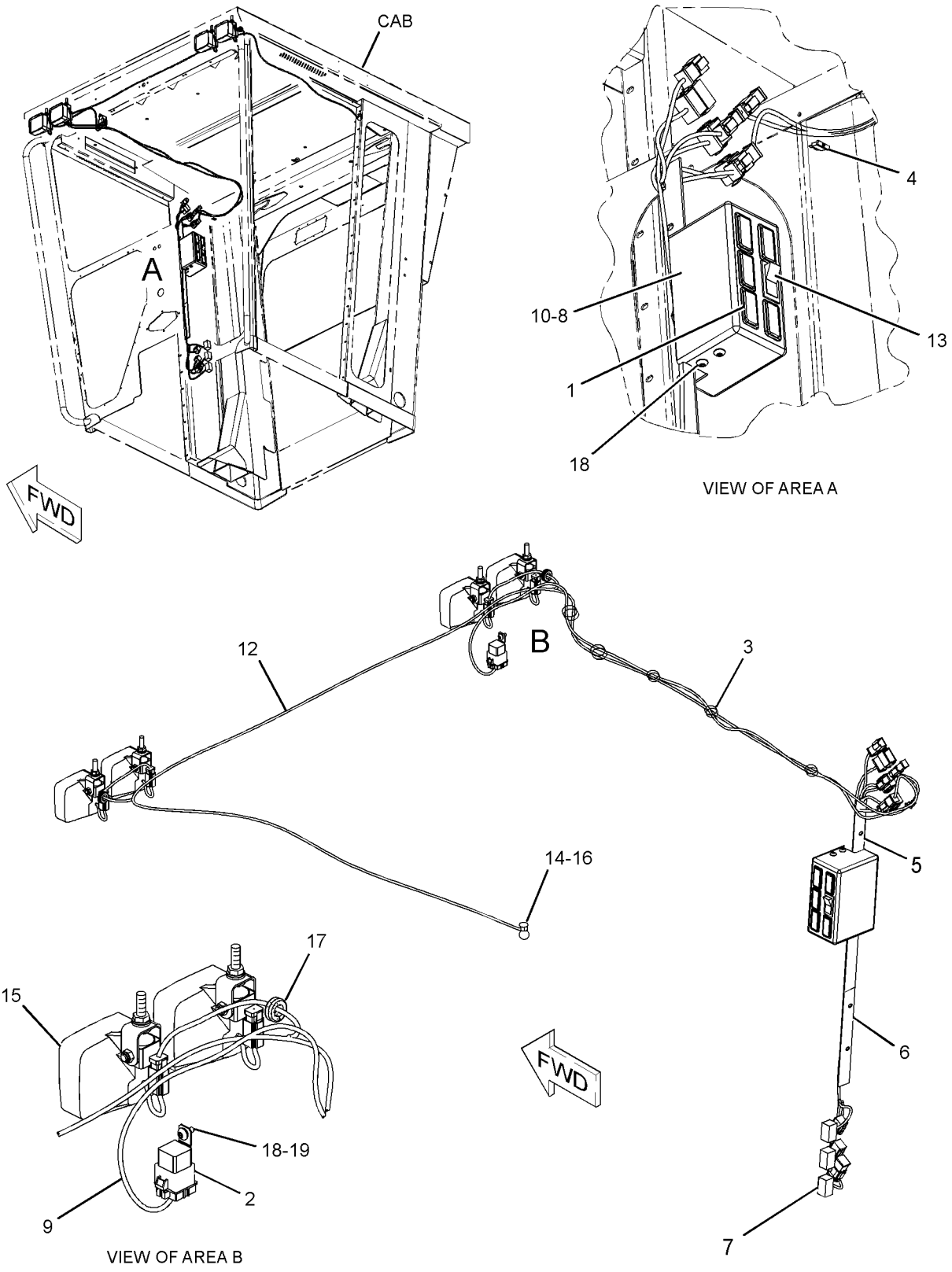


GRAPHIC #1 **<END>** g01167809

# *161-0769* LIGHTING GP-FLOOD–CAB

**S/N: CCA1-UP**
**PART OF 161-0768 LIGHTING AR-FLOOD**
**AN ATTACHMENT**
**TYPE 1**

**SMCS-1434** **i01930235**

| NOTE | REF NO | GRAPHIC REF | PART NUMBER | QTY | PART NAME 1 2 3 4 5 6 (PRODUCT LEVEL) | SEE PAGE |
|---|---|---|---|---|---|---|
| | 1 | 1 | **184-0903** | 4 | BRACKET AS | |
| Y | 2 | 1 | **153-2073** | 4 | LAMP GP-FLOOD (24-VOLT, 65-WATT) (CAB) | 178 |
| | 3 | 1 | **9D-3768** | 2 | GROMMET | |
| M | 4 | 1 | **5C-7261** | 4 | NUT (M8X1.25-THD) | |
| | 5 | 1 | **8T-4121** | 4 | WASHER-HARD (11X21X2.5-MM THK) | |
| M | 6 | 1 | **8T-4137** | 4 | BOLT (M10X1.5X20-MM) | |
| | 7 | 1 | **8T-4224** | 4 | WASHER-HARD (8.8X16X2-MM THK) | |
| M | 8 | 1 | **8T-6869** | 4 | BOLT (M8X1.25X60-MM) | |

M-METRIC PART
Y-SEPARATE ILLUSTRATION

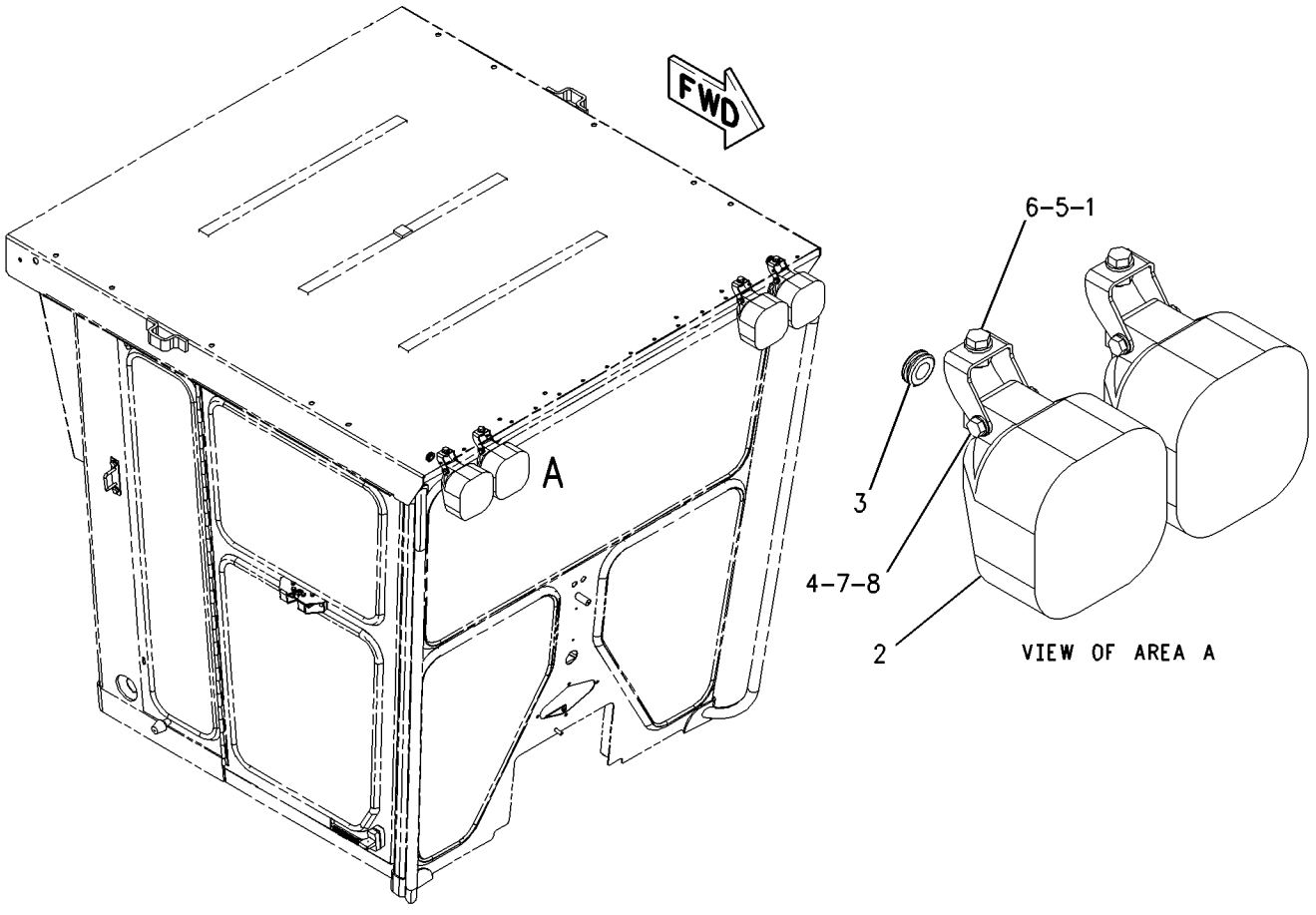


GRAPHIC #1 **<END>** g00843667

# *161-0769* LIGHTING GP-FLOOD–CAB

**S/N: CCA1-UP**
**PART OF 161-0768 LIGHTING AR-FLOOD**
**AN ATTACHMENT**
**TYPE 2**

**SMCS-1434** **i02011377**

| NOTE | REF NO | GRAPHIC REF | PART NUMBER | QTY | PART NAME 1 2 3 4 5 6 (PRODUCT LEVEL) | SEE PAGE |
|---|---|---|---|---|---|---|
| CY | 1 | 1 | **234-4325** | 4 | LAMP GP-FLOOD (24-VOLT, SUSPENDED MOUNT) (CAB) | 182 |
| | 2 | 1 | **8T-4121** | 4 | WASHER-HARD (11X21X2.5-MM THK) | |
| | 3 | 1 | **9D-3768** | 2 | GROMMET | |

C-CHANGE FROM PREVIOUS TYPE
Y-SEPARATE ILLUSTRATION

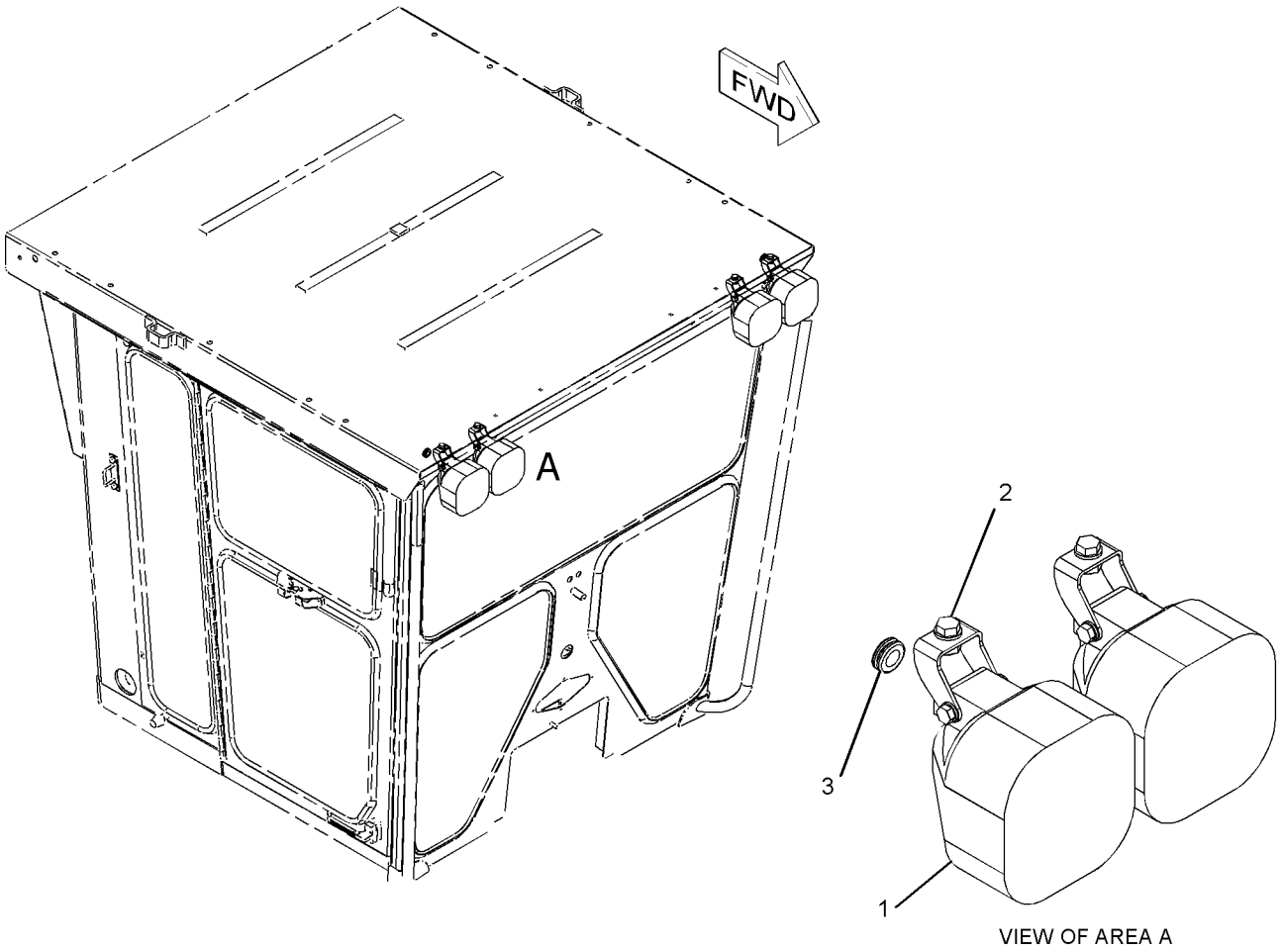


VIEW OF AREA A

GRAPHIC #1 **<END>** g01046640

# *161-0772* LIGHTING GP-FLOOD—CAB, FRONT

**S/N: CCA1-UP**

**PART OF 161-0770, 161-0771, 179-1548 LIGHTING AR-FLOOD & SIGNAL**

**AN ATTACHMENT**

**TYPE 1**

**SMCS-1434** **i02586952**

| NOTE | REF NO | GRAPHIC REF | PART NUMBER | QTY | PART NAME 1 2 3 4 5 6 (PRODUCT LEVEL) | SEE PAGE |
|---|---|---|---|---|---|---|
| | 1 | 1 | **116-5710** | 2 | GROMMET | |
| | 2 | 1 | **135-0427** | 1 | LAMP GP-SIGNAL (24-VOLT) (LH) | |
| | 2A | 1 | **135-0427** | 1 | LAMP GP-SIGNAL (24-VOLT) (RH) | |
| | | | | | (EACH LAMP GP INCLUDES) | |
| | | 1 | **102-8803** | 1 | KIT-RECEPTACLE (3-PIN) | |
| | | | | | (INCLUDES RECEPTACLE AS & WEDGE) | |
| | | 1 | **3E-3371** | 1 | WEDGE-RECEPTACLE LOCK (3-PIN) | |
| | | 1 | **186-3735** | 3 | PIN-CONNECTOR (16-GA TO 18-GA) | |
| | 3 | 1 | **184-0903** | 4 | BRACKET AS | |
| | 4 | 1 | **193-7416** | 2 | PLATE AS | |
| | 5 | 1 | **130-5300** | 2 | CLIP | |
| | 6 | 1 | **157-0305** | 2 | LAMP GP-HEAD (24-VOLT) (HIGH BEAM) | |
| | | | | | (EACH INCLUDES) | |
| | | 1 | **158-0249** | 1 | LENS AS (HIGH BEAM) | |
| | | 1 | **158-0250** | 1 | BODY AS-LAMP | |
| | | 1 | **158-0252** | 1 | BEZEL | |
| | | 1 | **9X-3463** | 1 | LAMP-HALOGEN (24-VOLT, 65-WATT) (HIGH BEAM) | |
| | | 1 | **188-8849** | 2 | CLAMP | |
| | 7 | 1 | **161-0908** | 2 | LAMP GP-HEAD (24-VOLT) (LOW BEAM) | |
| | | | | | (EACH INCLUDES) | |
| | | 1 | **162-2077** | 1 | LENS AS (LOW BEAM) | |
| | | 1 | **158-0250** | 1 | BODY AS-LAMP | |
| | | 1 | **158-0252** | 1 | BEZEL | |
| | | 1 | **9X-3463** | 1 | LAMP-HALOGEN (24-VOLT, 65-WATT) (LOW BEAM) | |
| | | 1 | **188-8849** | 2 | CLAMP | |
| | 8 | 1 | **9D-3768** | 2 | GROMMET | |
| M | 9 | 1 | **5C-2890** | 6 | NUT (M6X1-THD) | |
| M | 10 | 1 | **5C-7261** | 4 | NUT (M8X1.25-THD) | |
| | 11 | 1 | **8T-4121** | 8 | WASHER-HARD (11X21X2.5-MM THK) | |
| M | 12 | 1 | **8T-4137** | 8 | BOLT (M10X1.5X20-MM) | |
| | 13 | 1 | **8T-4224** | 8 | WASHER-HARD (8.8X16X2-MM THK) | |
| M | 14 | 1 | **8T-6869** | 4 | BOLT (M8X1.25X60-MM) | |
| | 15 | 1 | **9X-8256** | 6 | WASHER (6.6X12X2-MM THK) | |

M-METRIC PART

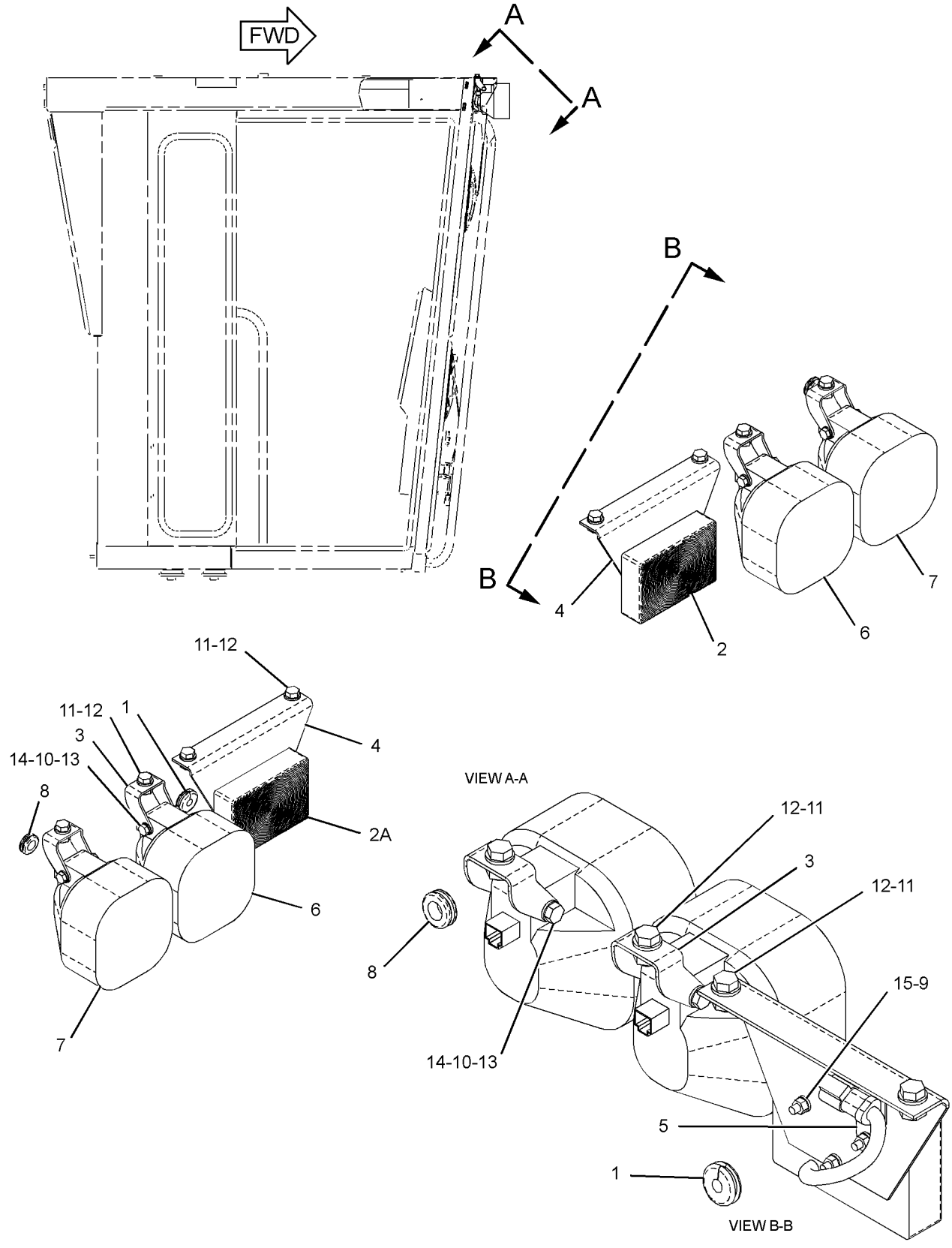


GRAPHIC #1 **<END>** g01295188

# *161-0772* LIGHTING GP-FLOOD—CAB, FRONT

**S/N: CCA1-UP**

**PART OF 161-0770, 161-0771, 179-1548 LIGHTING AR-FLOOD & SIGNAL**

**AN ATTACHMENT**

**TYPE 2**

**SMCS-1434** **i02585472**

| NOTE | REF NO | GRAPHIC REF | PART NUMBER | QTY | PART NAME 1 2 3 4 5 6 (PRODUCT LEVEL) | SEE PAGE |
|---|---|---|---|---|---|---|
| | 1 | 1 | **9G-1307** | 2 | GROMMET | |
| Y | 2 | 1 | **135-0427** | 1 | LAMP GP-SIGNAL (24-VOLT) (PARK, TURN) | 197 |
| Y | 2A | 1 | **135-0427** | 1 | LAMP GP-SIGNAL (24-VOLT) (PARK, TURN) | 197 |
| | 3 | 1 | **193-7416** | 2 | PLATE AS | |
| M | | 1 | **8T-3490** | 2 | NUT-WELD (M10X1.5-THD) | |
| CY | 4 | 1 | **234-4325** | 2 | LAMP GP-FLOOD (24-VOLT) (LOW BEAM) | 182 |
| CY | 5 | 1 | **234-4326** | 2 | LAMP GP-FLOOD (24-VOLT) (HIGH BEAM) | 183 |
| | 6 | 1 | **130-5300** | 2 | CLIP | |
| M | 7 | 1 | **5C-2890** | 6 | NUT (M6X1-THD) | |
| | 8 | 1 | **8T-4121** | 8 | WASHER-HARD (11X21X2.5-MM THK) | |
| CM | 9 | 1 | **8T-4137** | 4 | BOLT (M10X1.5X20-MM) | |
| | 10 | 1 | **8T-4205** | 6 | WASHER-HARD (7.2X14.5X2-MM THK) | |
| | 11 | 1 | **9D-3768** | 2 | GROMMET | |

C-CHANGE FROM PREVIOUS TYPE
M-METRIC PART
Y-SEPARATE ILLUSTRATION

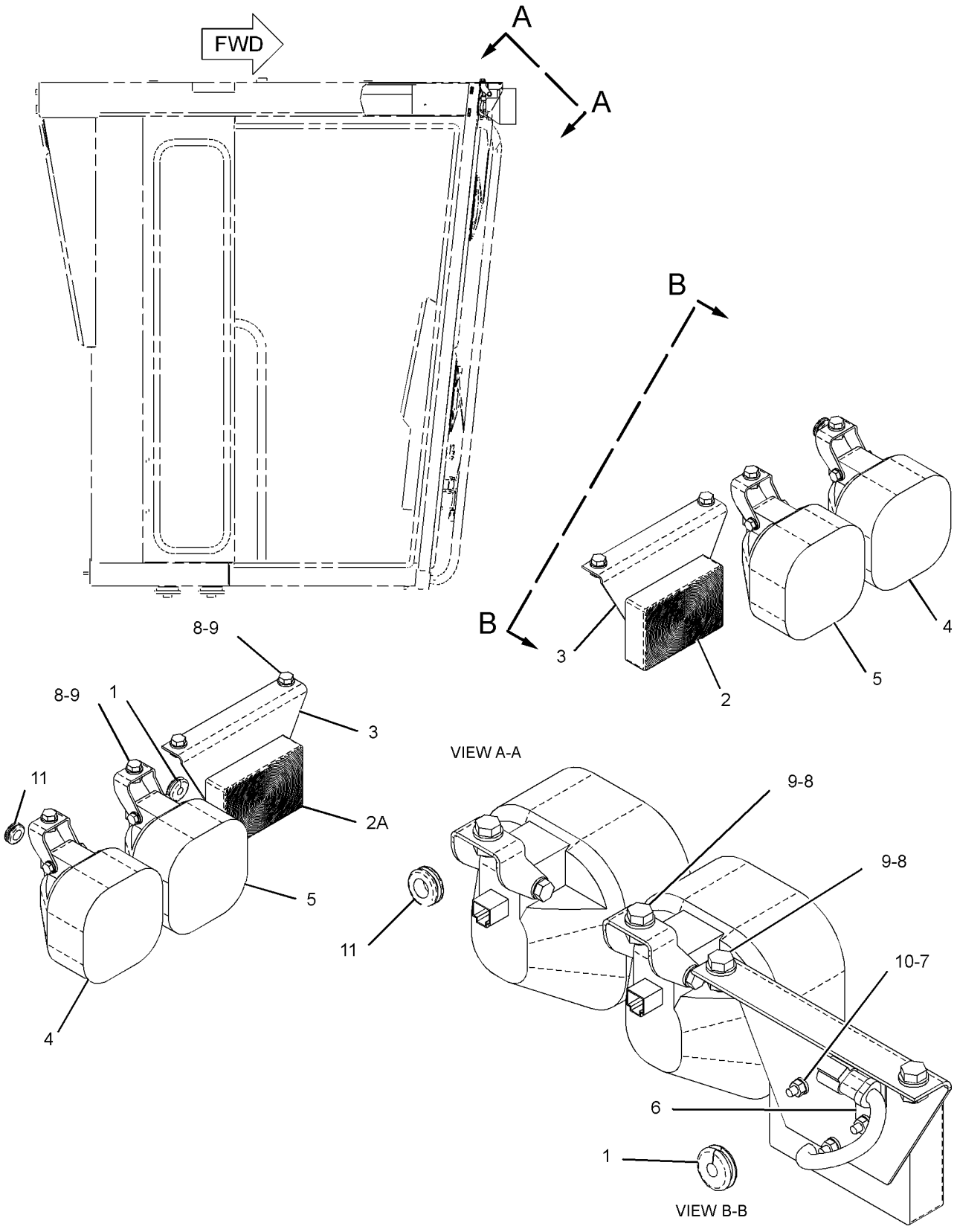


GRAPHIC #1

g01294419

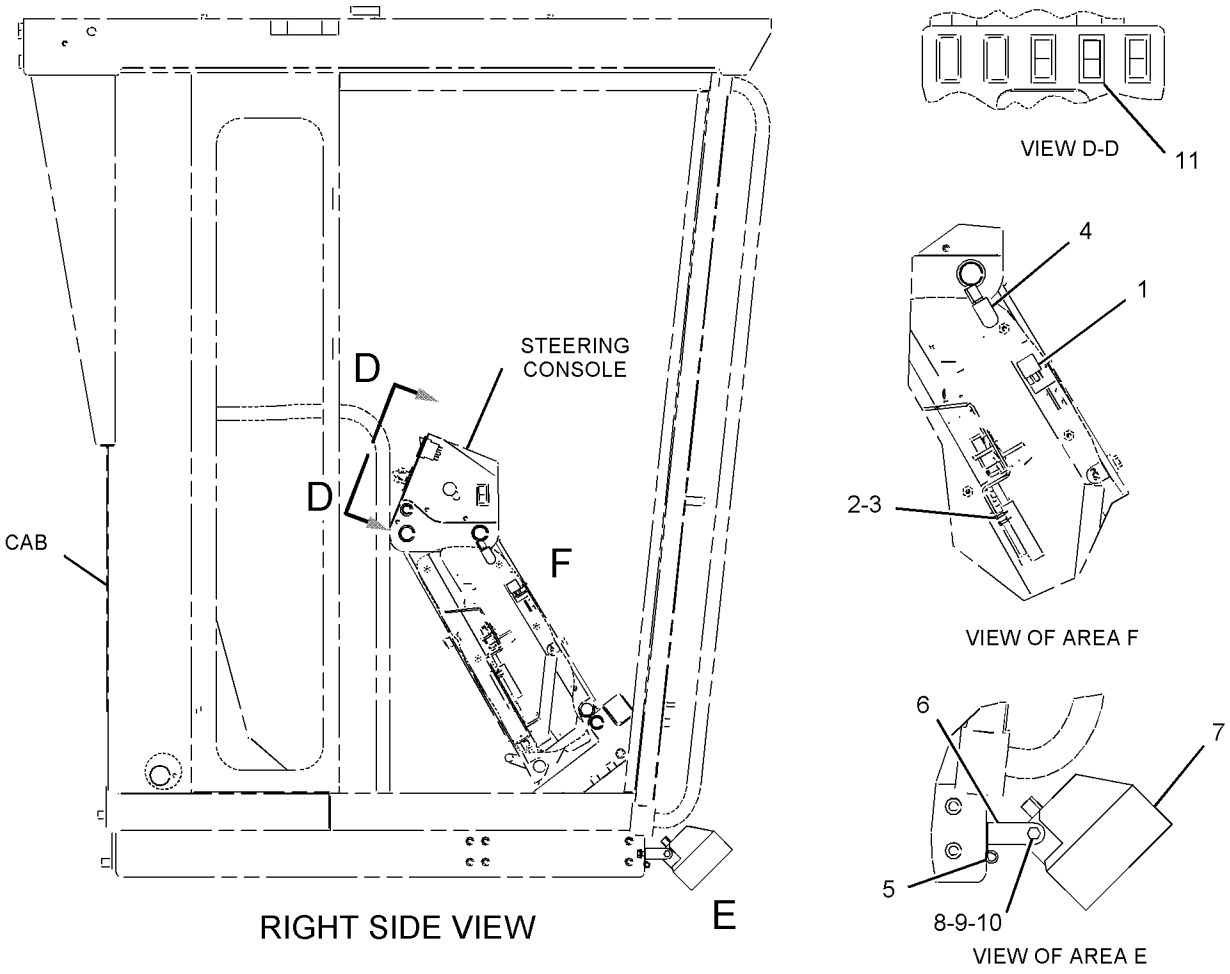


GRAPHIC #2 **<END>** g01078050

# *161-0778* LIGHTING GP-FLOOD–BLADE

**S/N: CCA1-UP**
**PART OF 188-9321 LIGHTING AR-FLOOD**
**AN ATTACHMENT**
**TYPE 1**

**SMCS-1434** **i02586969**

| NOTE | REF NO | GRAPHIC REF | PART NUMBER | QTY | PART NAME 1 2 3 4 5 6 (PRODUCT LEVEL) | SEE PAGE |
|---|---|---|---|---|---|---|
| | 1 | 1 | **9W-1442** | 2 | FUSE (10-AMPERE) (BLADE/FRONT FLOODLAMP) | |
| | 2 | 1 | **178-8067** | 2 | BRACKET AS | |
| Y | 3 | 1 | **153-2073** | 2 | LAMP GP-FLOOD (24-VOLT, 65-WATT) (VERTICAL MOUNT) | 178 |
| M | 4 | 1 | **5C-7261** | 2 | NUT (M8X1.25-THD) | |
| | 5 | 1 | **119-5708** | 2 | CLIP | |
| | 8 | 1 | **8T-4224** | 2 | WASHER-HARD (8.8X16X2-MM THK) | |
| M | 9 | 1 | **8T-6869** | 2 | BOLT (M8X1.25X60-MM) | |
| | 10 | 1 | **3E-8772** | 1 | SWITCH AS-ROCKER (BLADE)(FRONT FLOODLAMP) | |
| | | 1 | **3E-8815** | 1 | ACTUATOR-ROCKER | |
| | | 1 | **3E-8825** | 2 | LAMP (24-VOLT) (BLADE)(FRONT FLOODLAMP) | |

M-METRIC PART
Y-SEPARATE ILLUSTRATION

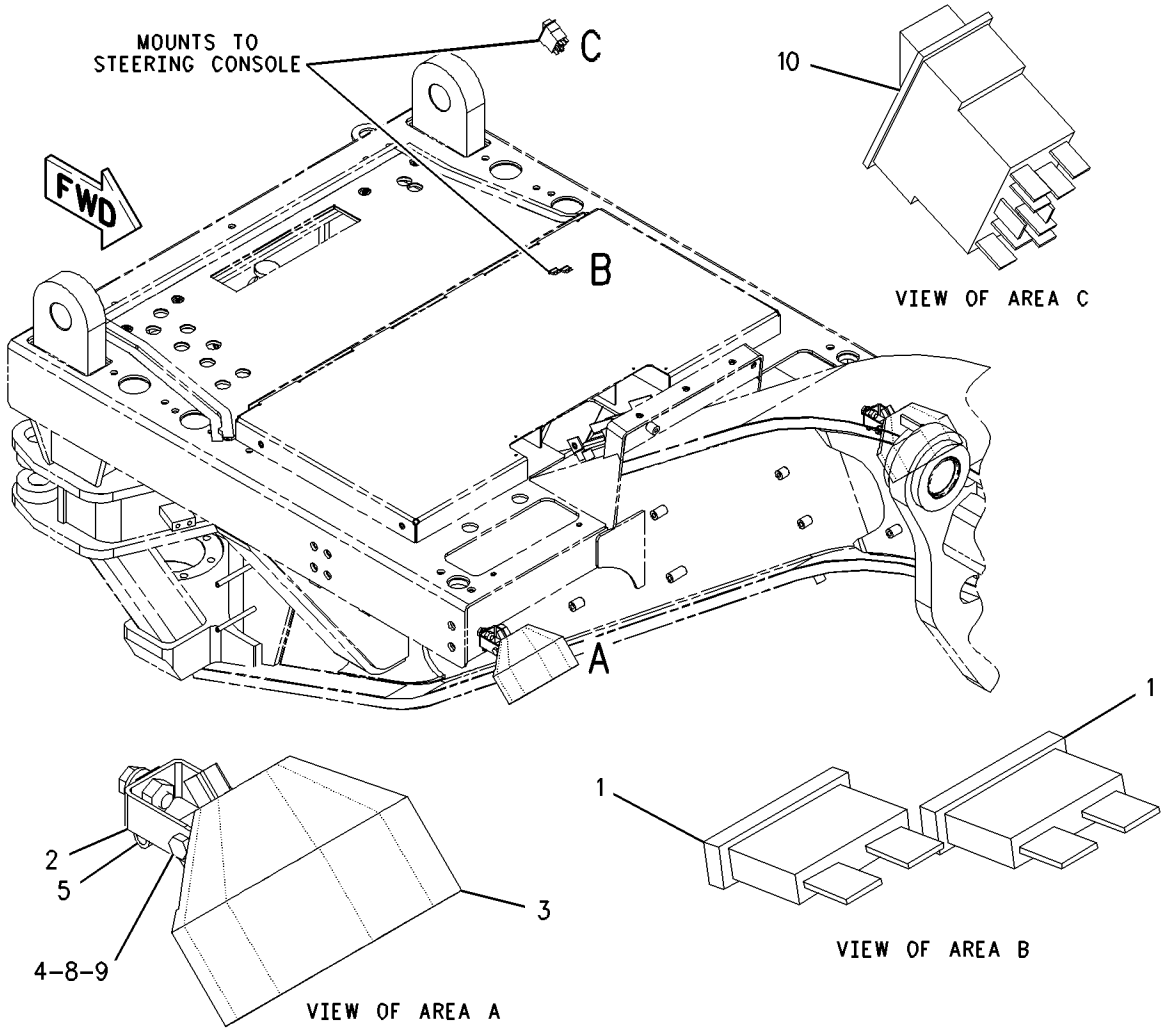


GRAPHIC #1 **<END>** g00931705

# *161-0778* LIGHTING GP-FLOOD—BLADE

**S/N: CCA1-UP**
**PART OF 188-9321 LIGHTING AR-FLOOD**
**AN ATTACHMENT**
**TYPE 2**

**SMCS-1434** **i02034207**

| NOTE | REF NO | GRAPHIC REF | PART NUMBER | QTY | PART NAME 1 2 3 4 5 6 (PRODUCT LEVEL) | SEE PAGE |
|---|---|---|---|---|---|---|
| | 1 | 1 | **9W-1442** | 2 | FUSE (10-AMPERE) (BLADE LAMP) | |
| CY | 2 | 1 | **234-4323** | 2 | LAMP GP-FLOOD (24-VOLT, VERTICAL MOUNT) | 180 |
| | 3 | 1 | **119-5708** | 2 | CLIP | |
| C | 4 | 1 | **8T-4121** | 2 | WASHER-HARD (11X21X2.5-MM THK) | |
| | 5 | 1 | **3E-8772** | 1 | SWITCH AS-ROCKER (BLADE LAMP) | |
| | | | **3E-8815** | 1 | ACTUATOR-ROCKER | |
| | | | **3E-8825** | 2 | LAMP (24-VOLT) (BLADE LAMP) | |

C-CHANGE FROM PREVIOUS TYPE
Y-SEPARATE ILLUSTRATION

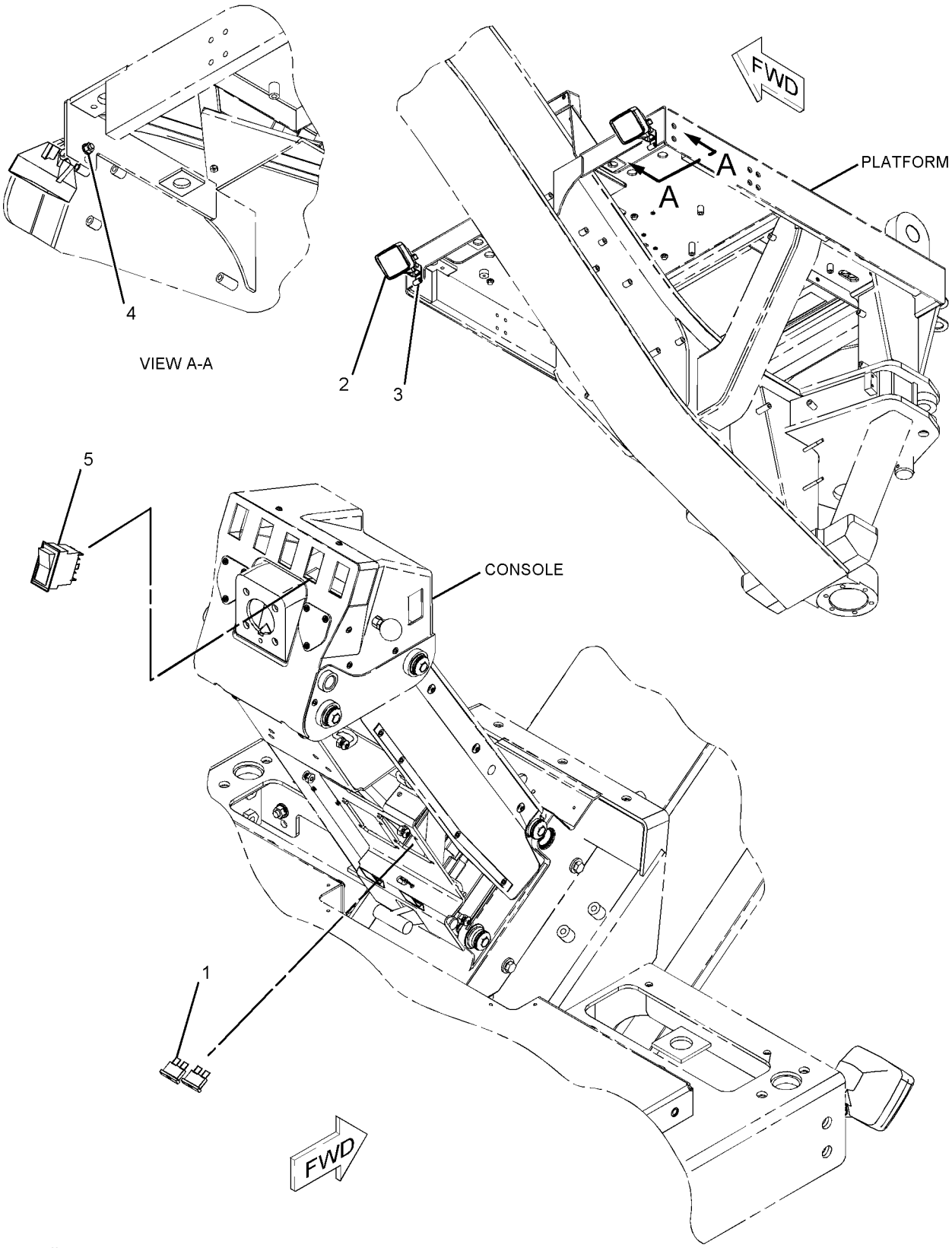


GRAPHIC #1 **<END>** g01072592

# *161-0779* LIGHTING GP-FLOOD—BLADE

**S/N: CCA1-UP**
**PART OF 161-0768 LIGHTING AR-FLOOD**
**AN ATTACHMENT**
**TYPE 1**

**SMCS-1434** **i02585532**

| NOTE | REF NO | GRAPHIC REF | PART NUMBER | QTY | PART NAME 1 2 3 4 5 6 (PRODUCT LEVEL) | SEE PAGE |
|---|---|---|---|---|---|---|
| | 1 | 1 | **3E-6477** | 1 | RELAY AS (24-VOLT) (WORK LIGHTS) | |
| | 2 | 1 | **9W-1441** | 1 | FUSE (15-AMPERE) (CAB FLOOD LIGHTS) | |
| | 3 | 1 | **9W-1442** | 2 | FUSE (10-AMPERE) (WORK LIGHTS) | |
| | 4 | 1 | **106-8704** | 1 | SUPPRESSOR AS-ARC | |
| | | 1 | **102-8802** | 1 | KIT-RECEPTACLE (2-PIN) | |
| | | | | | (INCLUDES RECEPTACLE AS & WEDGE) | |
| | | 1 | **3E-3365** | 1 | WEDGE-RECEPTACLE LOCK (2-PIN) | |
| | | 1 | **186-3735** | 2 | PIN-CONNECTOR (16-GA TO 18-GA) | |
| | 5 | 1 | **178-8067** | 1 | BRACKET AS | |
| | 6 | 1 | **119-5708** | 2 | CLIP | |
| Y | 7 | 1 | **153-2073** | 2 | LAMP GP-FLOOD (24-VOLT, 65-WATT) (BLADE) | 178 |
| M | 8 | 1 | **5C-7261** | 2 | NUT (M8X1.25-THD) | |
| | 9 | 1 | **8T-4224** | 2 | WASHER-HARD (8.8X16X2-MM THK) | |
| M | 10 | 1 | **8T-6869** | 2 | BOLT (M8X1.25X60-MM) | |
| | 11 | 1 | **3E-8772** | 1 | SWITCH AS-ROCKER (BLADE FLOOD LAMP) | |
| | | | **3E-8815** | 1 | ACTUATOR-ROCKER | |
| | | | **3E-8825** | 2 | LAMP (24-VOLT) (BLADE FLOOD) | |

M-METRIC PART
Y-SEPARATE ILLUSTRATION

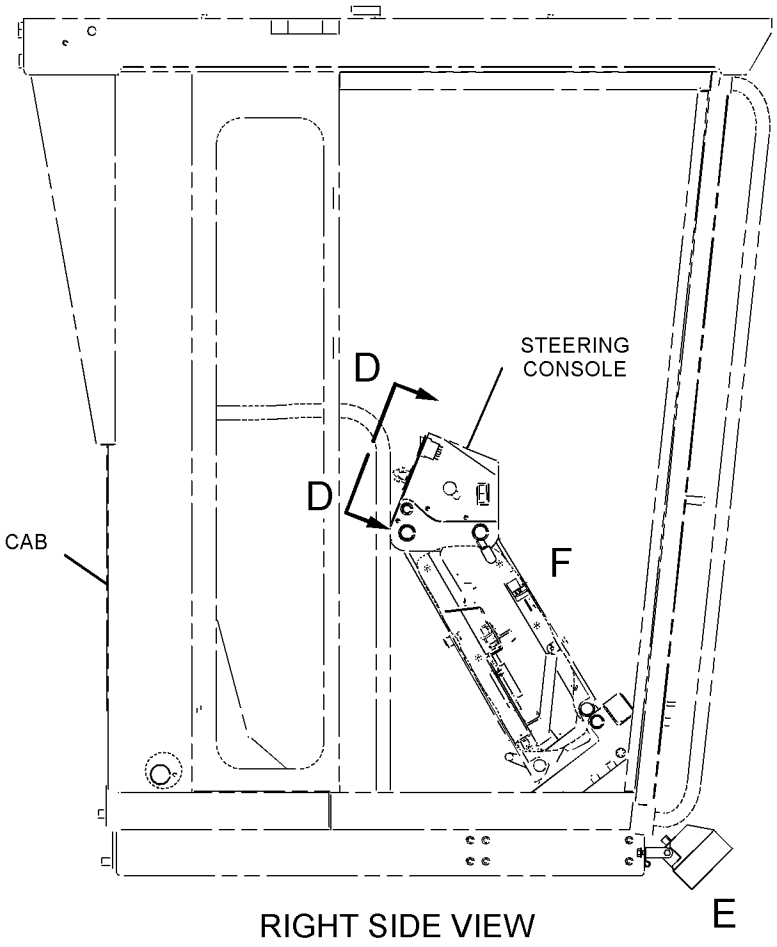


RIGHT SIDE VIEW

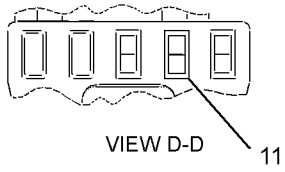


VIEW D-D

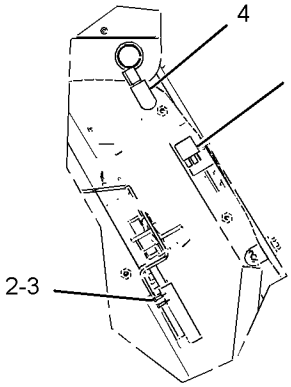


VIEW OF AREA F

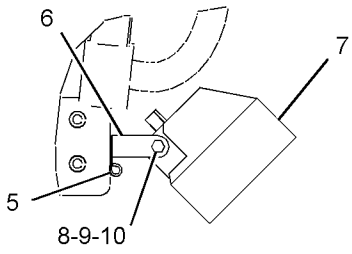


VIEW OF AREA E

GRAPHIC #1 **<END>** g01294442

# *161-0779* LIGHTING GP-FLOOD–BLADE

**S/N: CCA1-UP**
**PART OF 161-0768 LIGHTING AR-FLOOD**
**AN ATTACHMENT**
**TYPE 2**

**SMCS-1434** **i02585521**

| NOTE | REF NO | GRAPHIC REF | PART NUMBER | QTY | PART NAME 1 2 3 4 5 6 (PRODUCT LEVEL) | SEE PAGE |
|---|---|---|---|---|---|---|
| | 1 | 1 | **3E-6477** | 1 | RELAY AS (24-VOLT) (WORK LIGHTS) | |
| | 2 | 1 | **9W-1441** | 1 | FUSE (15-AMPERE) (CAB FLOOD LIGHTS) | |
| | 3 | 1 | **9W-1442** | 2 | FUSE (10-AMPERE) (WORK LIGHTS) | |
| | 4 | 1 | **106-8704** | 1 | SUPPRESSOR AS-ARC | |
| | | 1 | **102-8802** | 1 | KIT-RECEPTACLE (2-PIN) | |
| | | | | | (INCLUDES RECEPTACLE AS & WEDGE) | |
| | | 1 | **3E-3365** | 1 | WEDGE-RECEPTACLE LOCK (2-PIN) | |
| | | 1 | **186-3735** | 2 | PIN-CONNECTOR (16-GA TO 18-GA) | |
| CY | 5 | 1 | **234-4323** | 2 | LAMP GP-FLOOD (24-VOLT) (BLADE) | 180 |
| | 6 | 1 | **119-5708** | 2 | CLIP | |
| C | 7 | 1 | **8T-4121** | 2 | WASHER-HARD (11X21X2.5-MM THK) | |
| | 8 | 1 | **3E-8772** | 1 | SWITCH AS-ROCKER (BLADE FLOOD LAMP) | |
| | | | **3E-8815** | 1 | ACTUATOR-ROCKER | |
| | | | **3E-8825** | 2 | LAMP (24-VOLT) (BLADE FLOOD) | |

C-CHANGE FROM PREVIOUS TYPE
Y-SEPARATE ILLUSTRATION

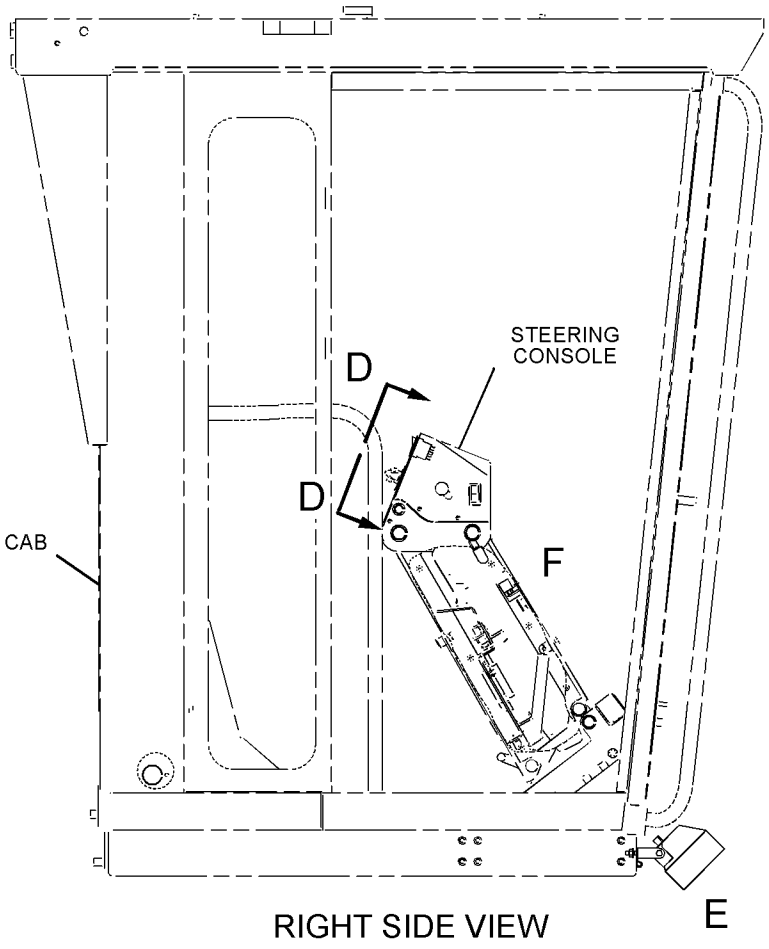


RIGHT SIDE VIEW

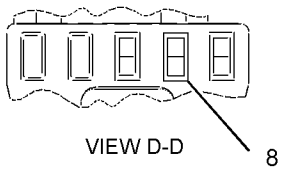


VIEW D-D

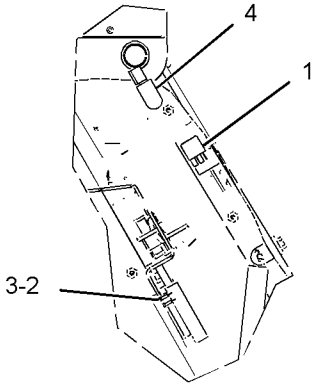


VIEW OF AREA F

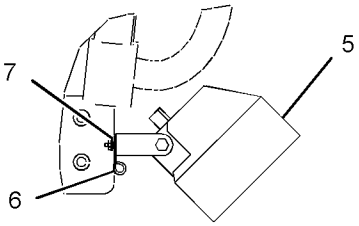


VIEW OF AREA E

GRAPHIC #1 **<END>** g01294438

# *161-1015* LIGHTING GP-FLOOD–BOLSTER–DOUBLE WORKLAMPS

**S/N: CCA1-UP**
**PART OF 188-9328 LIGHTING AR-FLOOD**
**AN ATTACHMENT**
**TYPE 1**

**SMCS-1434** **i02204072**

| NOTE | REF NO | GRAPHIC REF | PART NUMBER | QTY | PART NAME 1 2 3 4 5 6 (PRODUCT LEVEL) | SEE PAGE |
|---|---|---|---|---|---|---|
| | 1 | 1 | **2G-0617** | 4 | CLAMP | |
| | 2 | 1 | **2G-0988** | 2 | CAP | |
| | 3 | 1 | **3K-9520** | 3 | GROMMET | |
| | 4 | 1 | **3S-2093** | 4 | STRAP-CABLE | |
| | 5 | 1 | **5T-9313** | 1 | TUBE | |
| | 6 | 1 | **8X-5153** | 1 | FILM-FACE (TURN SIGNAL, HAZARD) | |
| | 7 | 1 | **8X-5154** | 1 | FILM-FACE (HEADLIGHTS HIGH, LOW BEAM) | |
| | 8 | 1 | **9W-1442** | 1 | FUSE (10-AMPERE) | |
| | 9 | 1 | **103-1592** | 2 | PLATE | |
| | 10 | 1 | **103-5678** | 1 | SWITCH AS-ROTARY (HIGH, LOW BEAM) | |
| | | 1 | **5L-7200** | 1 | SCREW (8-32X0.375-IN) | |
| | | 1 | **9B-7233** | 1 | LOCKWASHER | |
| | 11 | 1 | **108-0358** | 1 | FLASHER AS (24-VOLT) (TURN SIGNAL, HAZARD) | |
| Y | 12 | 1 | **135-0427** | 2 | LAMP GP-SIGNAL (24-VOLT) (PARK, TURN) | 197 |
| | 13 | 1 | **137-9410** | 4 | CLAMP | |
| | 14 | 1 | **169-3176** | 1 | HARNESS AS-LIGHTING | |
| | | 1 | **155-2260** | 2 | KIT-CONNECTING PLUG (3-PIN) (TURN SIGNAL) | |
| | | 1 | **155-2270** | 4 | KIT-CONNECTING PLUG (2-PIN) (HEADLAMP) | |
| | | 1 | **102-8801** | 1 | KIT-RECEPTACLE (12-PIN) | |
| | 15 | 1 | **173-3064** | 1 | SWITCH GP-ROTARY (TURN SIGNAL, HAZARD) | |
| | | 1 | **5L-7200** | 1 | SCREW (8-32X0.375-IN) | |
| | | 1 | **9B-7233** | 1 | LOCKWASHER | |
| | 16 | 1 | **178-8067** | 4 | BRACKET AS | |
| | | | | | (EACH INCLUDES) | |
| M | | 1 | **8T-3490** | 1 | NUT-WELD (M10X1.5-THD) | |
| | 17 | 1 | **179-8700** | 1 | HARNESS AS-FRONT CHASSIS | |
| | | 1 | **155-2270** | 2 | KIT-CONNECTING PLUG (2-PIN) | |
| | | 1 | **102-8801** | 1 | KIT-RECEPTACLE (12-PIN) | |
| Y | 18 | 1 | **180-1300** | 2 | LAMP GP-HEAD (24-VOLT) (HIGH BEAM) | 185 |
| | 19 | 1 | **108-3519** | 4 | CLAMP | |
| | 20 | 1 | **130-5300** | 2 | CLIP | |
| Y | 21 | 1 | **161-3509** | 2 | LAMP GP-HEAD (24-VOLT, LOW BEAM) | 184 |
| | 22 | 1 | **3E-8772** | 1 | SWITCH AS-ROCKER (HEADLIGHTS, TAIL LIGHTS) | |
| | | 1 | **3E-8825** | 2 | LAMP (24-VOLT) | |
| | | 1 | **3E-9326** | 1 | ACTUATOR-ROCKER | |
| | 23 | 1 | **4D-7794** | 4 | CLIP | |
| | 24 | 1 | **4K-8864** | 2 | CLIP | |
| | 25 | 1 | **4L-6454** | 4 | BOLT (3/8-16X1-IN) | |
| M | 26 | 1 | **5C-2890** | 8 | NUT (M6X1-THD) | |
| M | 27 | 1 | **5C-7261** | 4 | NUT (M8X1.25-THD) | |
| | 28 | 1 | **5M-3062** | 1 | BOLT (3/8-16X0.75-IN) | |
| | 29 | 1 | **5S-7379** | 4 | BOLT (3/8-16X0.875-IN) | |
| | 30 | 1 | **6V-8801** | 4 | NUT (3/8-16-THD) | |
| | 31 | 1 | **8T-4121** | 4 | WASHER-HARD (11X21X2.5-MM THK) | |
| M | 32 | 1 | **8T-4136** | 4 | BOLT (M10X1.5X25-MM) | |
| | 33 | 1 | **8T-4205** | 2 | WASHER-HARD (7.2X14.5X2-MM THK) | |
| | 34 | 1 | **8T-4224** | 4 | WASHER-HARD (8.8X16X2-MM THK) | |
| | 35 | 1 | **8T-4896** | 9 | WASHER-HARD (10.2X18.5X2.5-MM THK) | |
| M | 36 | 1 | **8T-6869** | 4 | BOLT (M8X1.25X60-MM) | |
| | 37 | 1 | **8X-6296** | 1 | LEVER (HEADLIGHT DIMMER) | |
| | 37A | 1 | **8X-6296** | 1 | LEVER (TURN SIGNAL) | |
| | 38 | 1 | **9D-6164** | 4 | BOSS (3/8-16-THD) | |
| M | 39 | 1 | **9X-2043** | 2 | SCREW-TRUSS HEAD (M6X1X14-MM) | |
| | 40 | 1 | **9X-8256** | 6 | WASHER (6.6X12X2-MM THK) | |

M-METRIC PART
Y-SEPARATE ILLUSTRATION

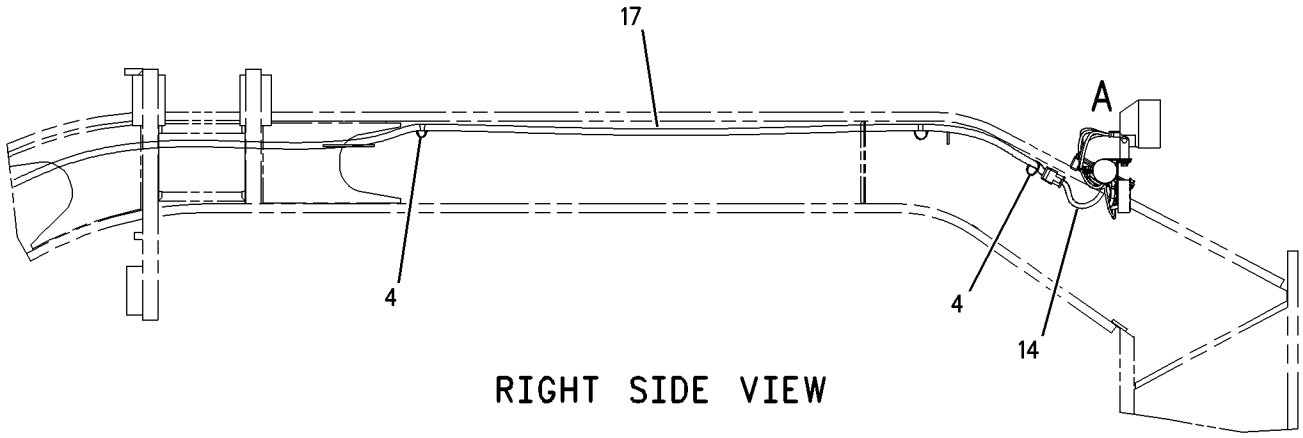


RIGHT SIDE VIEW

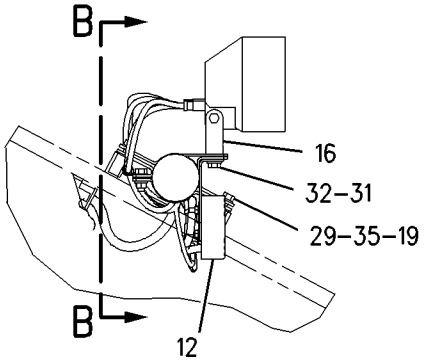


VIEW OF AREA A

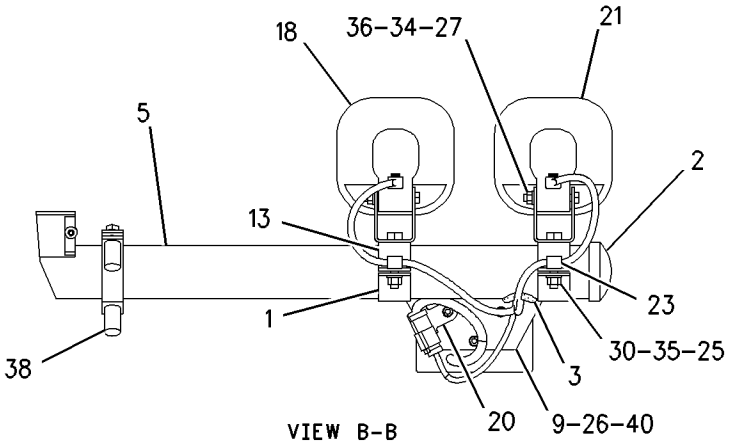


VIEW B-B

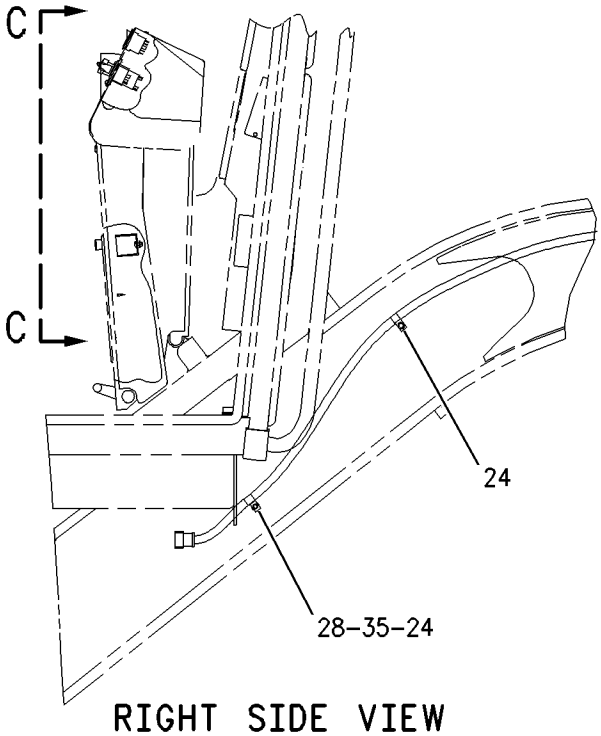


RIGHT SIDE VIEW

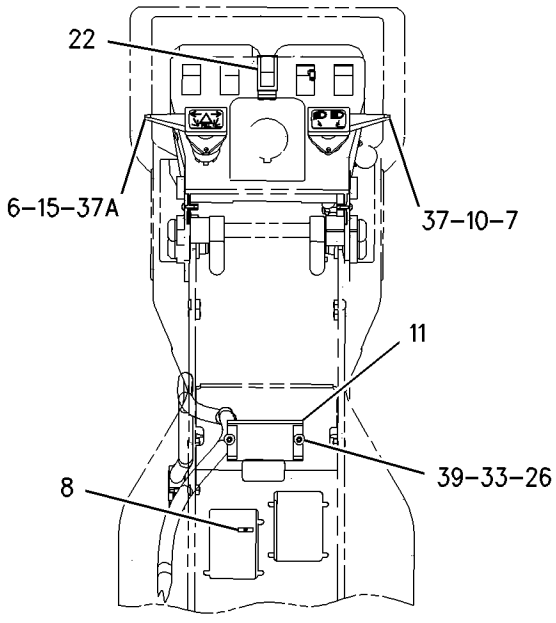


VIEW C-C

GRAPHIC #1 **<END>** g00845105

# ELECTRICAL AND STARTING SYSTEM

## *161-1015* LIGHTING GP-FLOOD–BOLSTER–DOUBLE WORKLAMPS

**S/N: CCA1-UP**
**PART OF 188-9328 LIGHTING AR-FLOOD**
**AN ATTACHMENT**
**TYPE 2**

**SMCS-1434** **i02200299**

| NOTE | REF NO | GRAPHIC REF | PART NUMBER | QTY | PART NAME 1 2 3 4 5 6 (PRODUCT LEVEL) | SEE PAGE |
|---|---|---|---|---|---|---|
| | 1 | 1 | **2G-0617** | 4 | CLAMP | |
| | 2 | 1 | **2G-0988** | 2 | CAP | |
| | 3 | 1 | **3K-9520** | 3 | GROMMET | |
| | 4 | 1 | **3S-2093** | 4 | STRAP-CABLE | |
| | 5 | 1 | **5T-9313** | 1 | TUBE | |
| | 6 | 2 | **8X-5153** | 1 | FILM-FACE (TURN SIGNAL, HAZARD) | |
| | 7 | 2 | **8X-5154** | 1 | FILM-FACE (HEADLIGHTS HIGH, LOW BEAM) | |
| | 8 | 2 | **9W-1442** | 1 | FUSE (10-AMPERE) (TURN SIGNAL, HAZARD) | |
| | 9 | 1 | **103-1592** | 2 | PLATE | |
| | 10 | 2 | **103-5678** | 1 | SWITCH AS-ROTARY (HEADLIGHT DIMMER) | |
| | | 2 | **5L-7200** | 1 | SCREW (8-32X0.375-IN) | |
| | | 2 | **9B-7233** | 1 | LOCKWASHER | |
| | 11 | 2 | **108-0358** | 1 | FLASHER AS (24-VOLT) (TURN SIGNAL, HAZARD) | |
| Y | 12 | 1 | **135-0427** | 2 | LAMP GP-SIGNAL (24-VOLT) (PARK, TURN) | 197 |
| | 13 | 1 | **137-9410** | 4 | CLAMP | |
| | 14 | 1 | **169-3176** | 1 | HARNESS AS-LIGHTING | |
| | | 1 | **155-2260** | 2 | KIT-CONNECTING PLUG (3-PIN) | |
| | | 1 | **155-2270** | 4 | KIT-CONNECTING PLUG (2-PIN) | |
| | | | | | (INCLUDES PLUG AS & WEDGE) | |
| | | 1 | **102-8801** | 1 | KIT-RECEPTACLE (12-PIN) | |
| | | | | | (INCLUDES RECEPTACLE AS & WEDGE) | |
| | 15 | 2 | **173-3064** | 1 | SWITCH GP-ROTARY (TURN SIGNAL, HAZARD) | |
| | | 2 | **5L-7200** | 1 | SCREW (8-32X0.375-IN) | |
| | | 2 | **9B-7233** | 1 | LOCKWASHER | |
| | 16 | 1 | **179-8700** | 1 | HARNESS AS-FRONT CHASSIS | |
| | | 1 | **155-2270** | 2 | KIT-CONNECTING PLUG (2-PIN) | |
| | | | | | (INCLUDES PLUG AS & WEDGE) | |
| | | 1 | **102-8801** | 1 | KIT-RECEPTACLE (12-PIN) | |
| | | | | | (INCLUDES RECEPTACLE AS & WEDGE) | |
| Y | 17 | 1 | **234-4323** | 2 | LAMP GP-FLOOD (24-VOLT) (LOW BEAM) | 180 |
| Y | 18 | 1 | **234-4324** | 2 | LAMP GP-FLOOD (24-VOLT) (HIGH BEAM) | 181 |
| | 19 | 1 | **108-3519** | 4 | CLAMP | |
| | 20 | 1 | **130-5300** | 2 | CLIP | |
| | 21 | 2 | *3E-9317* | 1 | SWITCH AS-ROCKER | |
| | | 2 | **3E-8772** | 1 | SWITCH AS-ROCKER (HEADLIGHTS, TAIL LIGHTS) | |
| | | 2 | **3E-8825** | 2 | LAMP (24-VOLT) (HEADLIGHTS, TAIL LIGHTS) | |
| | | 2 | **3E-9326** | 1 | ACTUATOR-ROCKER | |
| | 22 | 1 | **4D-7794** | 4 | CLIP | |
| | 23 | 2 | **4K-8864** | 2 | CLIP | |
| | 24 | 1 | **4L-6454** | 4 | BOLT (3/8-16X1-IN) | |
| M | 25 | 1,2 | **5C-2890** | 8 | NUT (M6X1-THD) | |
| | 26 | 2 | **5M-3062** | 1 | BOLT (3/8-16X0.75-IN) | |
| | 27 | 1 | **5S-7379** | 4 | BOLT (3/8-16X0.875-IN) | |
| | 28 | 1 | **6V-8801** | 4 | NUT (3/8-16-THD) | |
| | 29 | 1 | **8T-4121** | 4 | WASHER-HARD (11X21X2.5-MM THK) | |
| | 30 | 1,2 | **8T-4205** | 8 | WASHER-HARD (7.2X14.5X2-MM THK) | |
| | 31 | 1,2 | **8T-4896** | 9 | WASHER-HARD (10.2X18.5X2.5-MM THK) | |
| | 32 | 2 | **8X-6296** | 1 | LEVER (HEADLIGHT DIMMER) | |
| | 32A | 2 | **8X-6296** | 1 | LEVER (TURN SIGNAL) | |
| | 33 | 1 | **9D-6164** | 4 | BOSS (3/8-16-THD) | |
| M | 34 | 2 | **9X-2043** | 2 | SCREW-TRUSS HEAD (M6X1X14-MM) | |

M-METRIC PART
Y-SEPARATE ILLUSTRATION

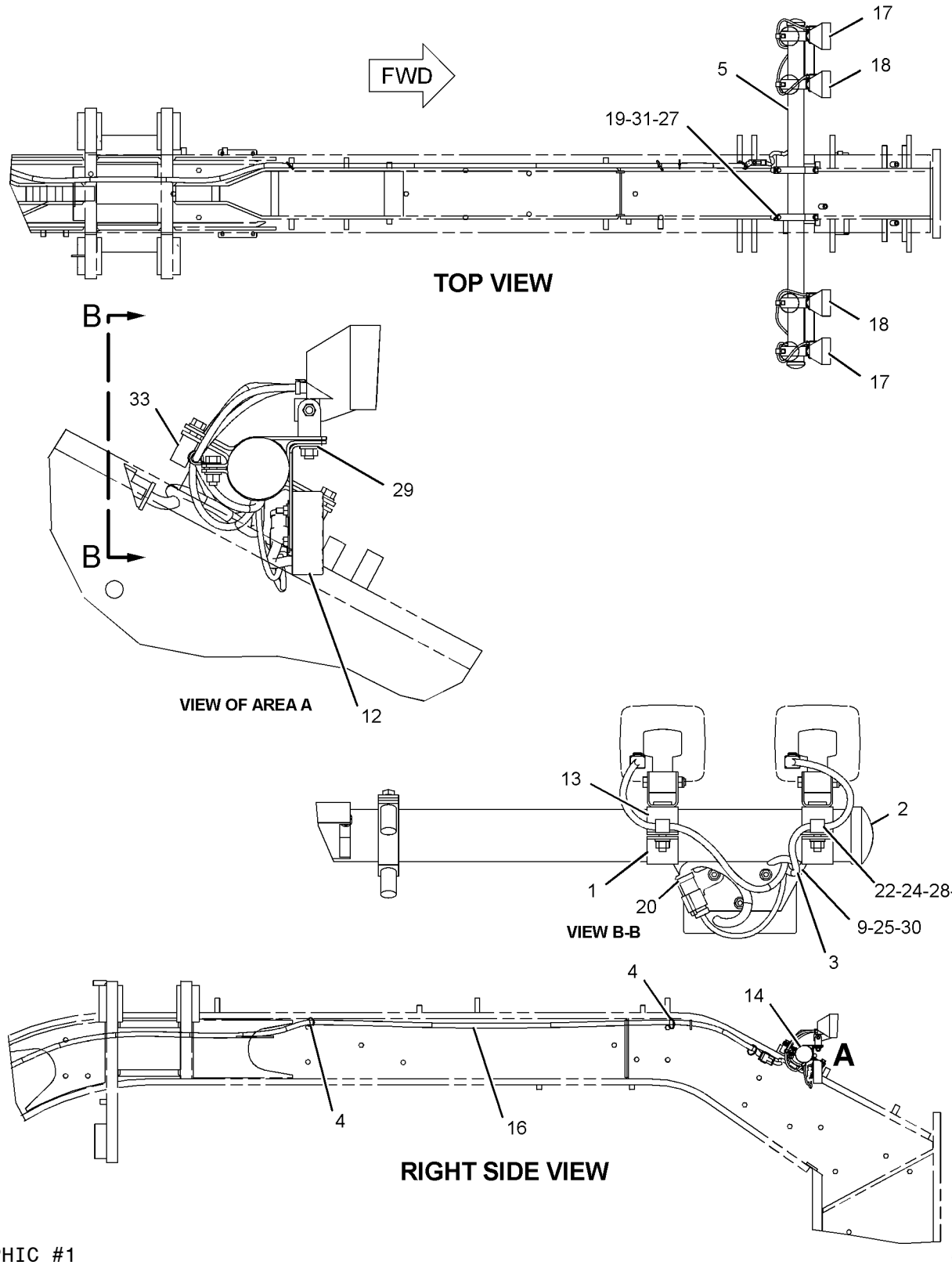


GRAPHIC #1

g01086888

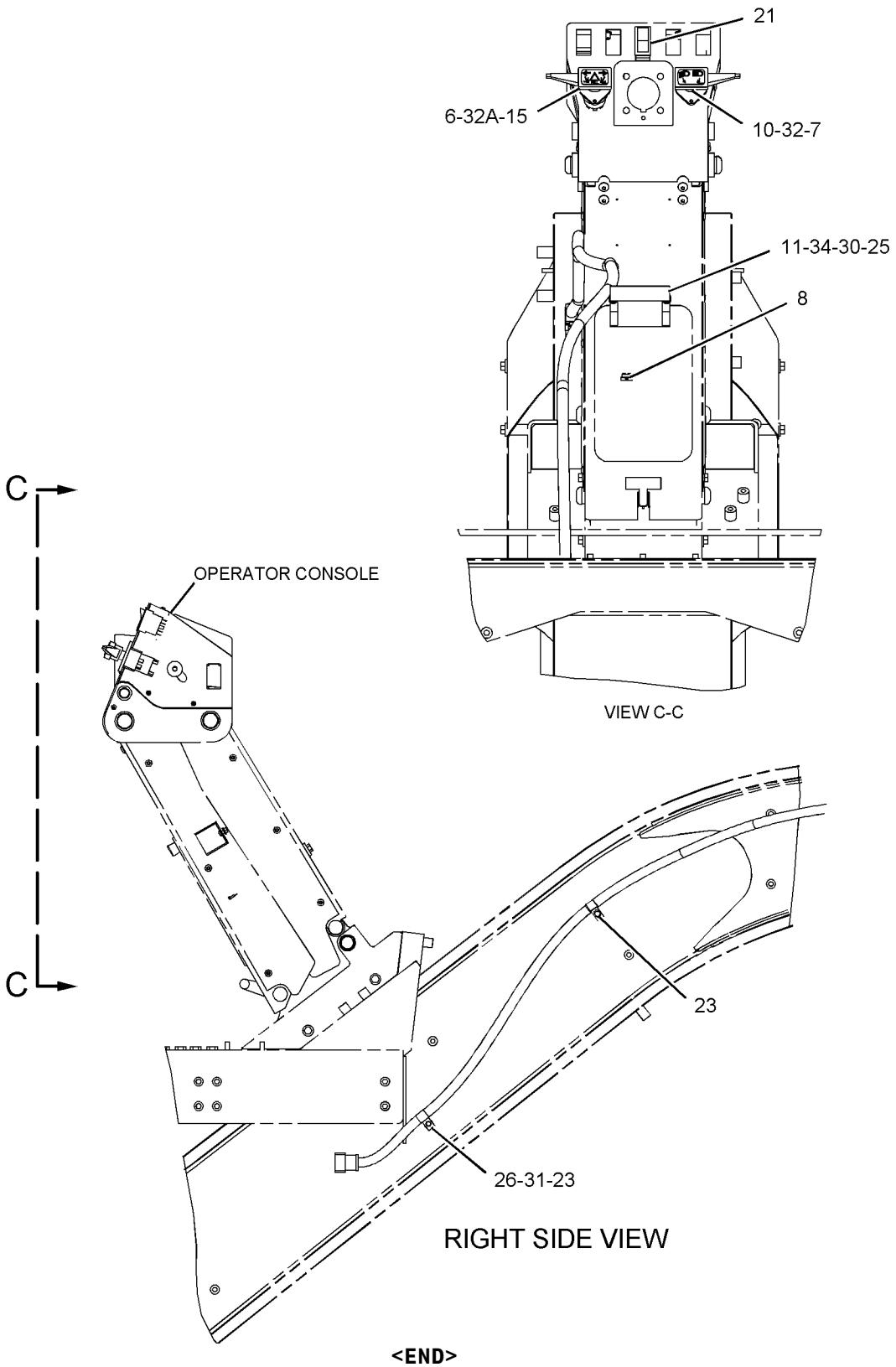


GRAPHIC #2 **<END>** g01086992

# ELECTRICAL AND STARTING SYSTEM

## *161-1017* LIGHTING GP-FLOOD—BOLSTER

**S/N: CCA1-UP**
**PART OF 161-0771 LIGHTING AR-FLOOD & SIGNAL**
**AN ATTACHMENT**
**TYPE 1**

**SMCS-1434** **i02204083**

| NOTE | REF NO | GRAPHIC REF | PART NUMBER | QTY | PART NAME 1 2 3 4 5 6 (PRODUCT LEVEL) | SEE PAGE |
|---|---|---|---|---|---|---|
| | 1 | 1 | **2G-0617** | 2 | CLAMP | |
| | 2 | 1 | **2G-0988** | 2 | CAP | |
| | 3 | 1 | **3K-9520** | 3 | GROMMET | |
| | 4 | 1 | **3S-2093** | 4 | STRAP-CABLE | |
| | 5 | 1 | **5T-9313** | 1 | TUBE | |
| | 6 | 1 | **8X-5153** | 1 | FILM-FACE (TURN SIGNAL, HAZARD) | |
| | 7 | 1 | **8X-5154** | 1 | FILM-FACE (HEADLIGHTS HIGH, LOW BEAM) | |
| | 8 | 1 | **9W-1442** | 1 | FUSE (10-AMPERE) | |
| | 9 | 1 | **103-5678** | 1 | SWITCH AS-ROTARY (HEADLIGHT DIMMER) | |
| | | 1 | **5L-7200** | 1 | SCREW (8-32X0.375-IN) | |
| | | 1 | **9B-7233** | 1 | LOCKWASHER | |
| | 10 | 1 | **108-0358** | 1 | FLASHER AS (24-VOLT) (TURN SIGNAL, HAZARD) | |
| | 11 | 1 | **137-9410** | 2 | CLAMP | |
| | 12 | 1 | **169-3181** | 1 | HARNESS AS-LIGHTING | |
| | | 1 | **155-2270** | 2 | KIT-CONNECTING PLUG (2-PIN) | |
| | | | | | (EACH INCLUDES PLUG AS & WEDGE) | |
| | | 1 | **102-8801** | 1 | KIT-RECEPTACLE (12-PIN) | |
| | | | | | (INCLUDES RECEPTACLE AS & WEDGE) | |
| | 13 | 1 | **173-3064** | 1 | SWITCH GP-ROTARY (TURN SIGNAL, HAZARD) | |
| | | 1 | **5L-7200** | 1 | SCREW (8-32X0.375-IN) | |
| | | 1 | **9B-7233** | 1 | LOCKWASHER | |
| | 14 | 1 | **178-8067** | 2 | BRACKET AS | |
| | 15 | 1 | **179-8700** | 1 | HARNESS AS-FRONT CHASSIS | |
| | | 1 | **155-2255** | 2 | KIT-CONNECTING PLUG (12-PIN) | |
| | | | | | (EACH INCLUDES PLUG AS & WEDGE) | |
| | | 1 | **102-8801** | 1 | KIT-RECEPTACLE (12-PIN) | |
| | | | | | (INCLUDES RECEPTACLE AS & WEDGE) | |
| | 16 | 1 | **108-3519** | 4 | CLAMP | |
| Y | 17 | 1 | **161-3509** | 2 | LAMP GP-HEAD (24-VOLT, LOW BEAM) | 184 |
| | 18 | 1 | **3E-8772** | 1 | SWITCH AS-ROCKER (HEADLIGHTS, TAIL LIGHTS) | |
| | | 1 | **3E-8825** | 2 | LAMP (24-VOLT) | |
| | | 1 | **3E-9326** | 1 | ACTUATOR-ROCKER | |
| | 19 | 1 | **4D-7794** | 2 | CLIP | |
| | 20 | 1 | **4L-6454** | 2 | BOLT (3/8-16X1-IN) | |
| M | 21 | 1 | **5C-2890** | 2 | NUT (M6X1-THD) | |
| M | 22 | 1 | **5C-7261** | 2 | NUT (M8X1.25-THD) | |
| | 23 | 1 | **5M-3062** | 1 | BOLT (3/8-16X0.75-IN) | |
| | 24 | 1 | **5S-7379** | 4 | BOLT (3/8-16X0.875-IN) | |
| | 25 | 1 | **6V-8801** | 2 | NUT (3/8-16-THD) | |
| | 26 | 1 | **8T-4121** | 2 | WASHER-HARD (11X21X2.5-MM THK) | |
| M | 27 | 1 | **8T-4136** | 2 | BOLT (M10X1.5X25-MM) | |
| | 28 | 1 | **8T-4205** | 2 | WASHER-HARD (7.2X14.5X2-MM THK) | |
| | 29 | 1 | **8T-4224** | 2 | WASHER-HARD (8.8X16X2-MM THK) | |
| | 30 | 1 | **8T-4896** | 7 | WASHER-HARD (10.2X18.5X2.5-MM THK) | |
| M | 31 | 1 | **8T-6869** | 2 | BOLT (M8X1.25X60-MM) | |
| | 32 | 1 | **8X-6296** | 1 | LEVER (TURN SIGNAL) | |
| | 32A | 1 | **8X-6296** | 1 | LEVER (HEADLIGHT DIMMER) | |
| | 33 | 1 | **9D-6164** | 4 | BOSS (3/8-16-THD) | |
| M | 34 | 1 | **9X-2043** | 2 | SCREW-TRUSS HEAD (M6X1X14-MM) | |
| | 35 | 1 | **9X-9631** | 1 | SWITCH AS-ROCKER (LIGHTBAR LOW BEAM) | |
| | | 1 | **3E-8814** | 1 | ACTUATOR-ROCKER | |
| | | 1 | **3E-8825** | 1 | LAMP (24-VOLT) | |
| | 36 | 1 | **174-5907** | 2 | CLIP | |

## *161-1017* **LIGHTING GP-FLOOD** *(contd.)* **i02204083**

M-METRIC PART
Y-SEPARATE ILLUSTRATION

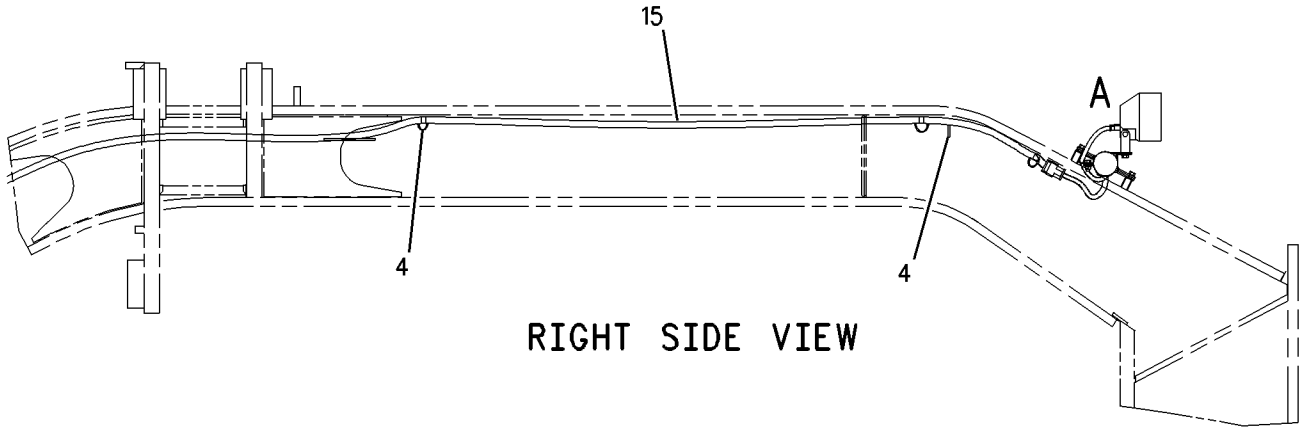


RIGHT SIDE VIEW

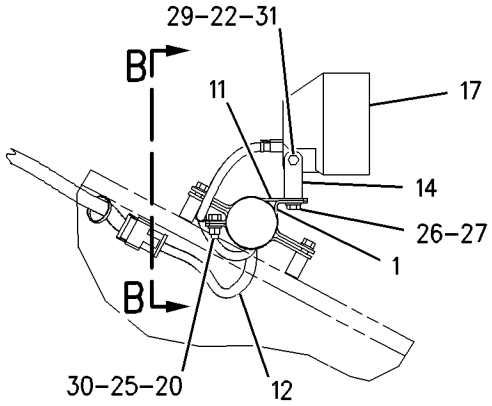


VIEW OF AREA A

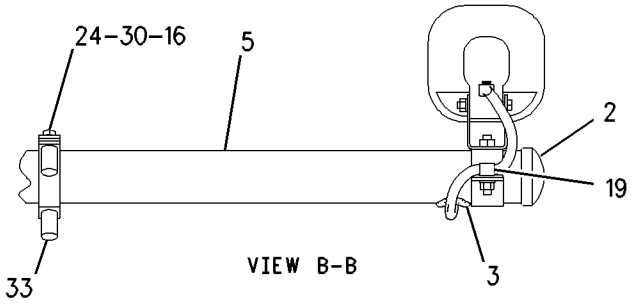


VIEW B-B

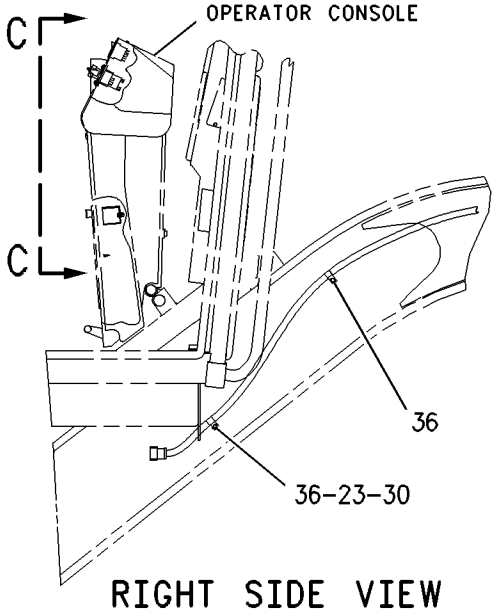


RIGHT SIDE VIEW

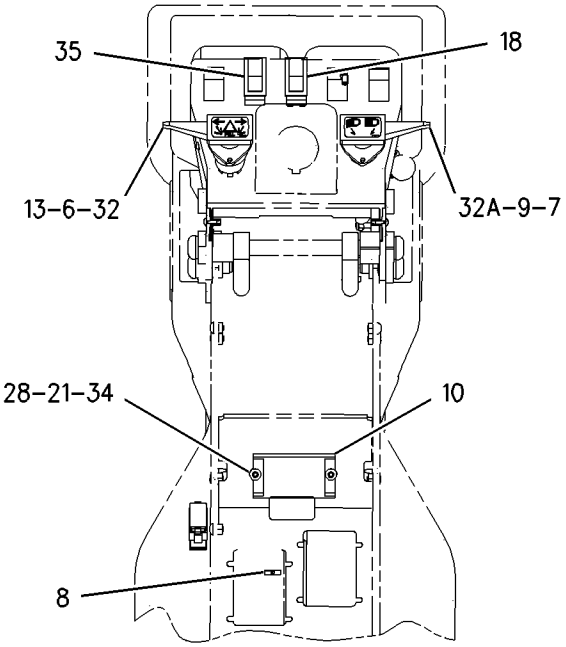


VIEW C-C

GRAPHIC #1 **<END>** g00921424

# *161-1017* LIGHTING GP-FLOOD–BOLSTER

**S/N: CCA1-UP**
**PART OF 161-0771 LIGHTING AR-FLOOD & SIGNAL**
**AN ATTACHMENT**
**TYPE 2**

**SMCS-1434** **i02204084**

| NOTE | REF NO | GRAPHIC REF | PART NUMBER | QTY | PART NAME 1 2 3 4 5 6 (PRODUCT LEVEL) | SEE PAGE |
|---|---|---|---|---|---|---|
| | 1 | 1 | **2G-0617** | 2 | CLAMP | |
| | 2 | 1 | **2G-0988** | 2 | CAP | |
| | 3 | 1 | **3K-9520** | 3 | GROMMET | |
| | 4 | 1 | **3S-2093** | 4 | STRAP-CABLE | |
| | 5 | 1 | **5T-9313** | 1 | TUBE | |
| | 6 | 2 | **8X-5153** | 1 | FILM-FACE (TURN SIGNAL, HAZARD) | |
| | 7 | 2 | **8X-5154** | 1 | FILM-FACE (HEADLIGHTS HIGH, LOW BEAM) | |
| | 8 | 2 | **9W-1442** | 1 | FUSE (10-AMPERE) | |
| | 9 | 2 | **103-5678** | 1 | SWITCH AS-ROTARY (HEADLIGHT DIMMER) | |
| | | 2 | **5L-7200** | 1 | SCREW (8-32X0.375-IN) | |
| | | 2 | **9B-7233** | 1 | LOCKWASHER | |
| | 10 | 2 | **108-0358** | 1 | FLASHER AS (24-VOLT) (TURN SIGNAL, HAZARD) | |
| | 11 | 1 | **137-9410** | 2 | CLAMP | |
| | 12 | 1 | **169-3181** | 1 | HARNESS AS-LIGHTING | |
| | | 1 | **155-2270** | 2 | KIT-CONNECTING PLUG (2-PIN) | |
| | | | | | (EACH INCLUDES PLUG AS & WEDGE) | |
| | | 1 | **102-8801** | 1 | KIT-RECEPTACLE (12-PIN) | |
| | | | | | (INCLUDES RECEPTACLE AS & WEDGE) | |
| | 13 | 2 | **173-3064** | 1 | SWITCH GP-ROTARY (TURN SIGNAL, HAZARD) | |
| | | 2 | **5L-7200** | 1 | SCREW (8-32X0.375-IN) | |
| | | 2 | **9B-7233** | 1 | LOCKWASHER | |
| | 14 | 1 | **179-8700** | 1 | HARNESS AS-FRONT CHASSIS | |
| | | 1 | **155-2255** | 2 | KIT-CONNECTING PLUG (12-PIN) | |
| | | | | | (EACH INCLUDES PLUG AS & WEDGE) | |
| | | 1 | **102-8801** | 1 | KIT-RECEPTACLE (12-PIN) | |
| | | | | | (INCLUDES RECEPTACLE AS & WEDGE) | |
| Y | 15 | 1 | **234-4323** | 2 | LAMP GP-FLOOD (24-VOLT) (LOW BEAM) | 180 |
| | 16 | 1 | **108-3519** | 4 | CLAMP | |
| | 17 | 2 | **174-5907** | 2 | CLIP | |
| | 18 | 2 | **3E-8772** | 1 | SWITCH AS-ROCKER (HEADLIGHTS, TAIL LIGHTS) | |
| | | 2 | **3E-8825** | 2 | LAMP (24-VOLT) | |
| | | 2 | **3E-9326** | 1 | ACTUATOR-ROCKER | |
| | 19 | 1 | **4D-7794** | 2 | CLIP | |
| | 20 | 1 | **4L-6454** | 2 | BOLT (3/8-16X1-IN) | |
| M | 21 | 2 | **5C-2890** | 2 | NUT (M6X1-THD) | |
| | 22 | 2 | **5M-3062** | 1 | BOLT (3/8-16X0.75-IN) | |
| | 23 | 1 | **5S-7379** | 4 | BOLT (3/8-16X0.875-IN) | |
| | 24 | 1 | **6V-8801** | 2 | NUT (3/8-16-THD) | |
| | 25 | 1 | **8T-4121** | 2 | WASHER-HARD (11X21X2.5-MM THK) | |
| | 26 | 2 | **8T-4205** | 2 | WASHER-HARD (7.2X14.5X2-MM THK) | |
| | 27 | 1,2 | **8T-4896** | 7 | WASHER-HARD (10.2X18.5X2.5-MM THK) | |
| | 28 | 2 | **8X-6296** | 1 | LEVER (TURN SIGNAL) | |
| | 28A | 2 | **8X-6296** | 1 | LEVER (HEADLIGHT DIMMER) | |
| | 29 | 1 | **9D-6164** | 4 | BOSS (3/8-16-THD) | |
| M | 30 | 2 | **9X-2043** | 2 | SCREW-TRUSS HEAD (M6X1X14-MM) | |
| | 31 | 2 | **9X-9631** | 1 | SWITCH AS-ROCKER (LIGHTBAR LOW BEAM) | |
| | | 2 | **3E-8814** | 1 | ACTUATOR-ROCKER | |
| | | 2 | **3E-8825** | 1 | LAMP (24-VOLT) | |

M-METRIC PART
Y-SEPARATE ILLUSTRATION

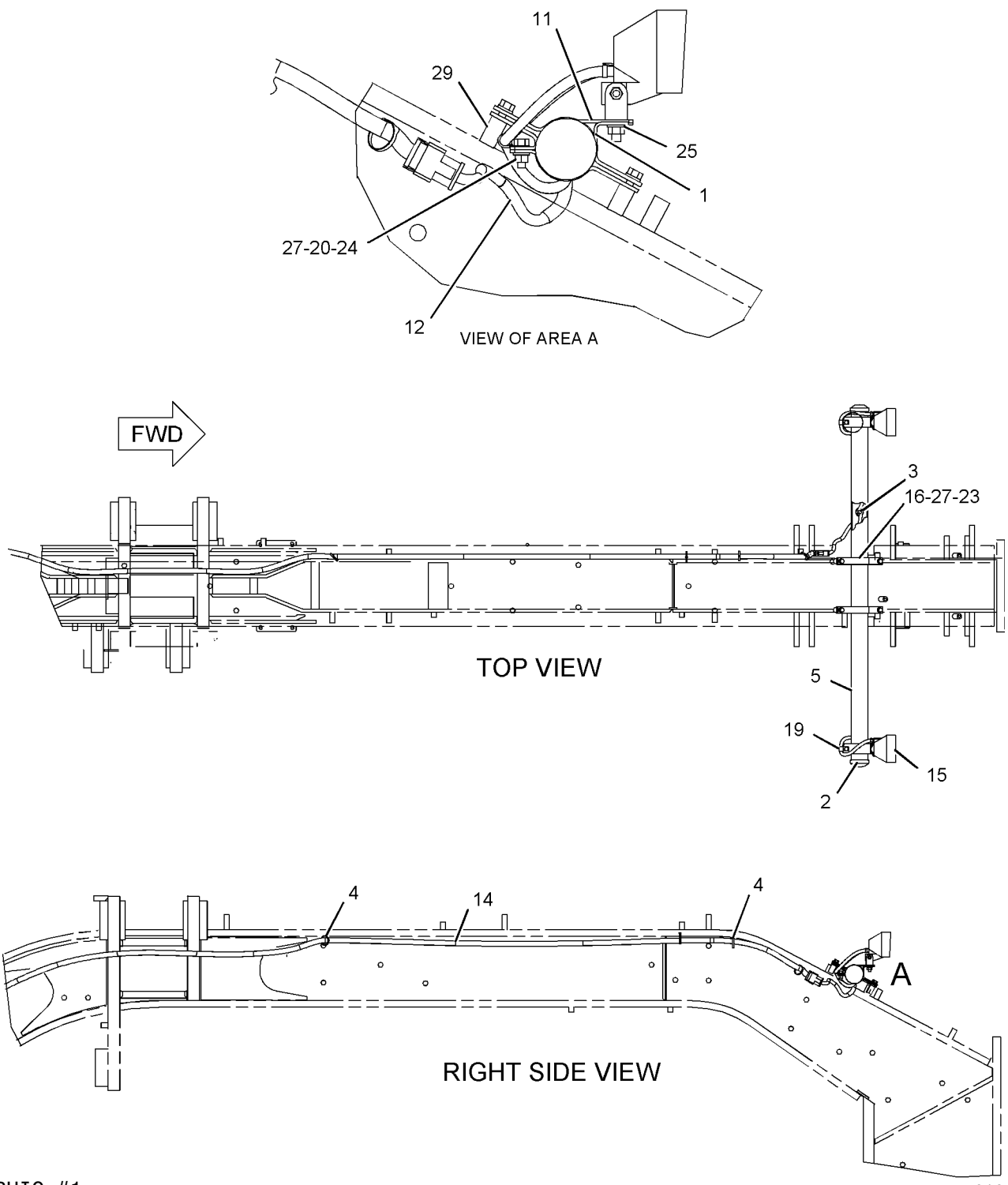


GRAPHIC #1 g01075288

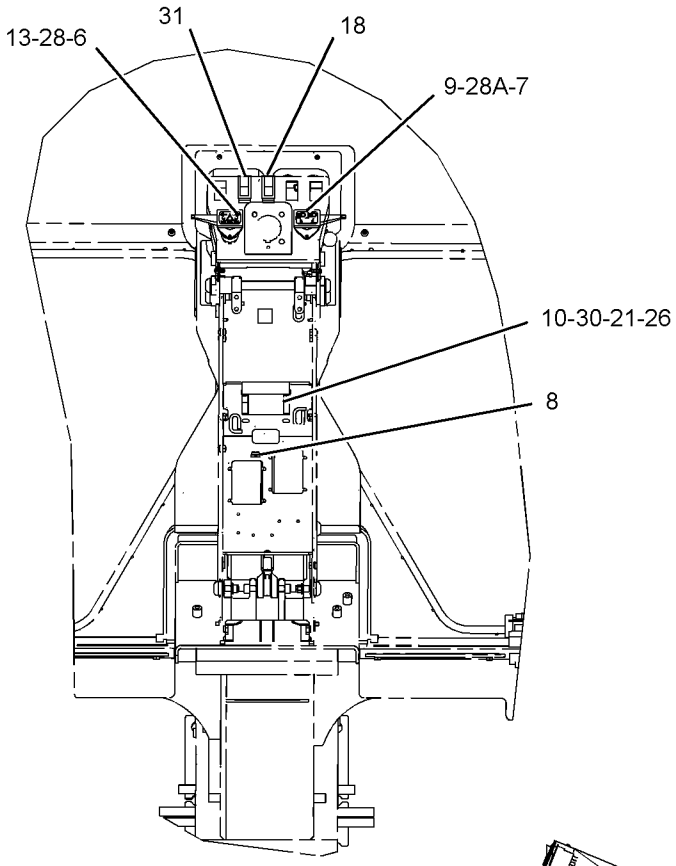


REAR VIEW

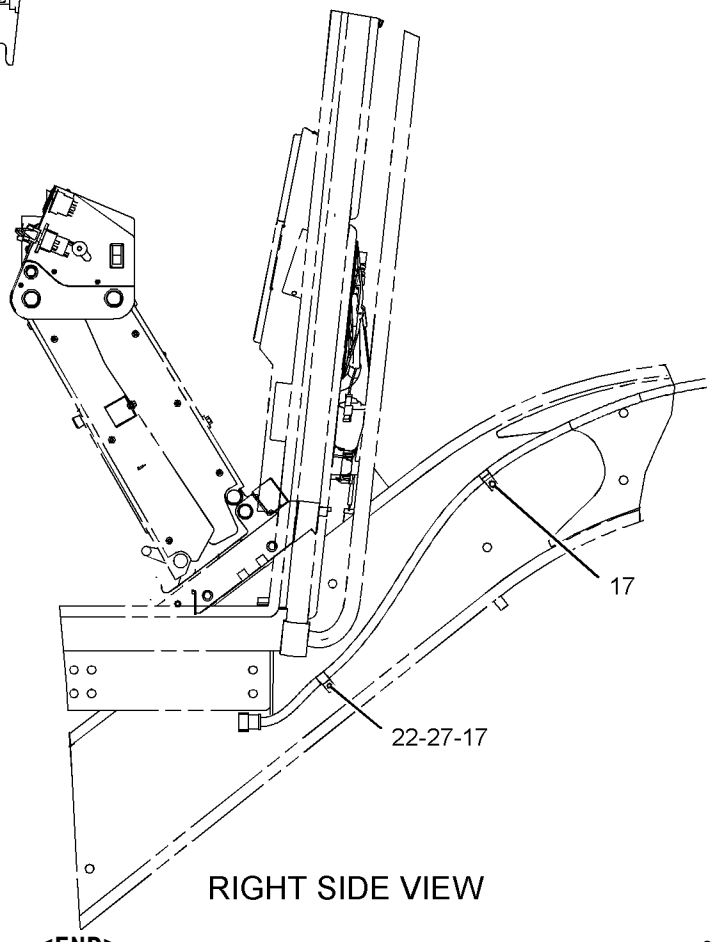


RIGHT SIDE VIEW

GRAPHIC #2

**<END>**

g01075730

# *161-1021* LIGHTING GP-FLOOD–CAB–SNOW–RH

**S/N: CCA1-UP**
**PART OF 197-5955, 236-3948 SNOW AR-MOTOR GRADER**
**AN ATTACHMENT**
**TYPE 1**

**SMCS-1434** **i02586974**

| NOTE | REF NO | GRAPHIC REF | PART NUMBER | QTY | PART NAME 1 2 3 4 5 6 (PRODUCT LEVEL) | SEE PAGE |
|---|---|---|---|---|---|---|
| | 1 | 1 | **3E-0109** | 5 | PLUG | |
| C | 2 | 1 | **3S-2093** | 2 | STRAP-CABLE | |
| | 3 | 1 | **9W-1442** | 1 | FUSE (10-AMPERE) | |
| C | 4 | 1 | **145-3350** | 1 | PLATE | |
| C | 5 | 1 | **153-2147** | 1 | PLATE | |
| | 6 | 1 | **168-8243** | 1 | HARNESS AS-PANEL | |
| | | 1 | **102-8802** | 4 | KIT-RECEPTACLE (2-PIN) | |
| | | 1 | **102-8804** | 4 | KIT-RECEPTACLE (4-PIN) | |
| | | 1 | **102-8806** | 1 | KIT-RECEPTACLE (8-PIN) | |
| | | 1 | **102-8801** | 1 | KIT-RECEPTACLE (12-PIN) | |
| | | | | | (EACH INCLUDES RECEPTACLE AS & WEDGE) | |
| | | 1 | **155-2255** | 1 | KIT-CONNECTING PLUG (12-PIN) | |
| | | 1 | **155-2265** | 1 | KIT-CONNECTING PLUG (8-PIN) | |
| | | 1 | **155-2270** | 1 | KIT-CONNECTING PLUG (2-PIN) | |
| | | 1 | **155-2271** | 1 | KIT-CONNECTING PLUG (4-PIN) | |
| | | | | | (EACH INCLUDES PLUG AS & WEDGE) | |
| | 7 | 1 | **171-6175** | 1 | HARNESS AS-FRONT LIGHTING | |
| | | 1 | **155-2270** | 1 | KIT-CONNECTING PLUG (2-PIN) | |
| | | | | | (INCLUDES PLUG AS & WEDGE) | |
| | | 1 | **102-8802** | 1 | KIT-RECEPTACLE (2-PIN) | |
| | | | | | (INCLUDES RECEPTACLE AS & WEDGE) | |
| | 8 | 1 | **172-6556** | 1 | PANEL | |
| | 9 | 1 | **188-3862** | 1 | BRACKET AS | |
| | 10 | 1 | **190-1680** | 1 | BRACKET | |
| | 11 | 1 | **3E-8766** | 1 | SWITCH AS (24-VOLT) (FLOODLAMP RH) | |
| | | 1 | **3E-8782** | 1 | ACTUATOR-ROCKER | |
| | | 1 | **3E-8825** | 1 | LAMP (24-VOLT) | |
| Y | 12 | 1 | **153-2073** | 1 | LAMP GP-FLOOD (24-VOLT, 65-WATT) (VERTICAL) | 178 |
| | 13 | 1 | **116-5710** | 1 | GROMMET | |
| | 14 | 1 | **5P-8525** | 1 | GROMMET | |
| M | 15 | 1 | **6V-9189** | 1 | LOCKNUT (M8X1.25-THD) | |
| | 16 | 1 | **8T-4224** | 1 | WASHER-HARD (8.8X16X2-MM THK) | |
| M | 17 | 1 | **8T-6869** | 1 | BOLT (M8X1.25X60-MM) | |
| M | 18 | 1 | **9X-2043** | 6 | SCREW-TRUSS HEAD (M6X1X14-MM) | |

C-CHANGE FROM PREVIOUS TYPE
M-METRIC PART
Y-SEPARATE ILLUSTRATION

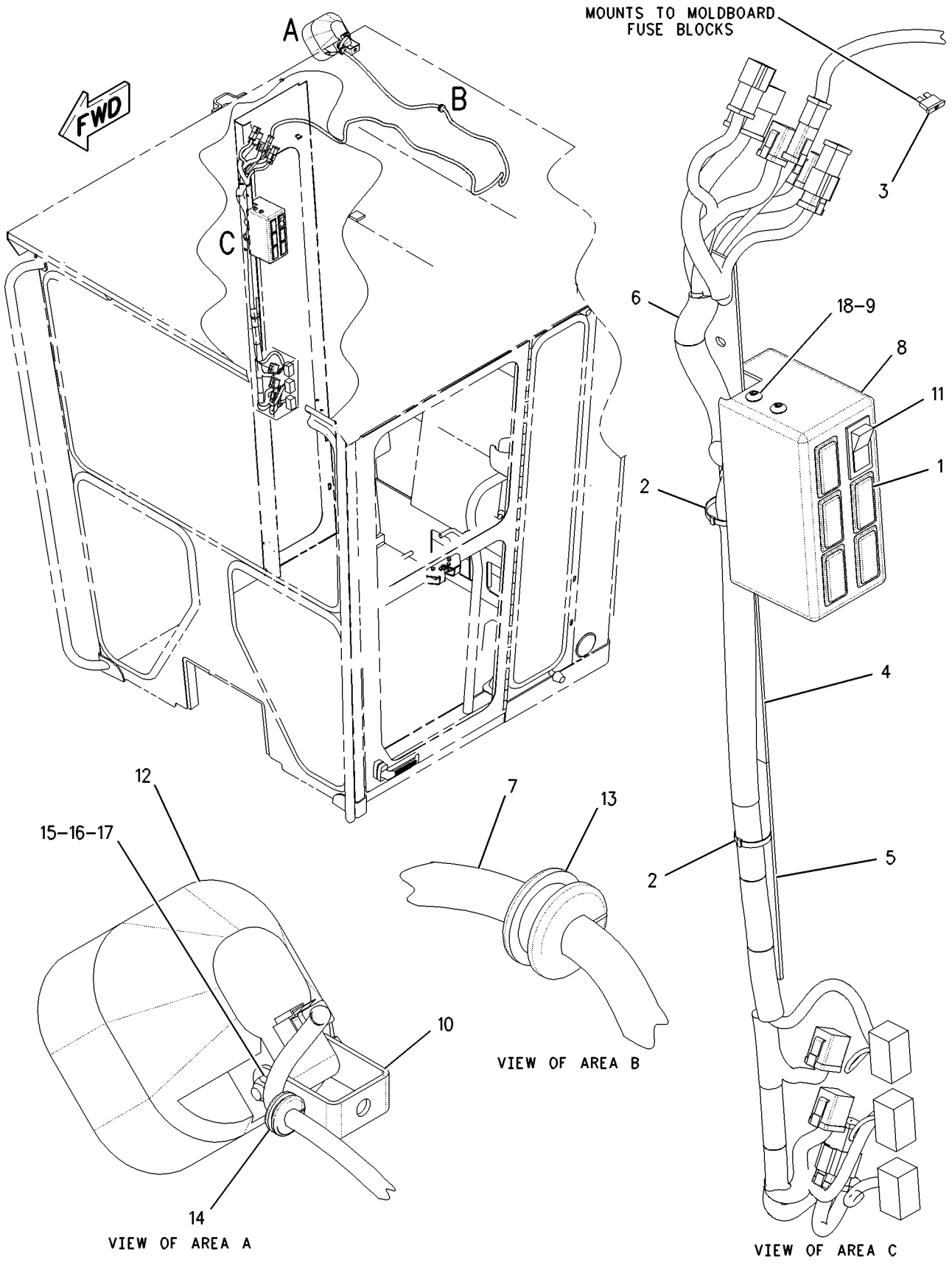


GRAPHIC #1 **<END>** g00846133

# *161-1021* LIGHTING GP-FLOOD—CAB—SNOW—RH

**S/N: CCA1-UP**
**PART OF 197-5955, 236-3948 SNOW AR-MOTOR GRADER**
**AN ATTACHMENT**
**TYPE 2**

**SMCS-1434** **i02206894**

| NOTE | REF NO | GRAPHIC REF | PART NUMBER | QTY | PART NAME 1 2 3 4 5 6 (PRODUCT LEVEL) | SEE PAGE |
|---|---|---|---|---|---|---|
| | 1 | 1 | **3E-0109** | 5 | PLUG | |
| | 2 | 1 | **3S-2093** | 2 | STRAP-CABLE | |
| C | 3 | 1 | **9L-1566** | 1 | SUPPORT | |
| | 4 | 1 | **9W-1442** | 1 | FUSE (10-AMPERE) | |
| | 5 | 1 | **116-5710** | 1 | GROMMET | |
| | 6 | 1 | **145-3350** | 1 | PLATE | |
| | 7 | 1 | **153-2147** | 1 | PLATE | |
| | 8 | 1 | **168-8243** | 1 | HARNESS AS-PANEL | |
| | | 1 | **102-8802** | 4 | KIT-RECEPTACLE (2-PIN) | |
| | | 1 | **102-8804** | 4 | KIT-RECEPTACLE (4-PIN) | |
| | | 1 | **102-8806** | 1 | KIT-RECEPTACLE (8-PIN) | |
| | | 1 | **102-8801** | 1 | KIT-RECEPTACLE (12-PIN) | |
| | | | | | (EACH INCLUDES RECEPTACLE AS & WEDGE) | |
| | | 1 | **155-2255** | 1 | KIT-CONNECTING PLUG (12-PIN) | |
| | | 1 | **155-2265** | 1 | KIT-CONNECTING PLUG (8-PIN) | |
| | | 1 | **155-2270** | 1 | KIT-CONNECTING PLUG (2-PIN) | |
| | | 1 | **155-2271** | 1 | KIT-CONNECTING PLUG (4-PIN) | |
| | | | | | (EACH INCLUDES PLUG AS & WEDGE) | |
| | 9 | 1 | **171-6175** | 1 | HARNESS AS-FRONT LIGHTING | |
| | | 1 | **155-2270** | 1 | KIT-CONNECTING PLUG (2-PIN) | |
| | | | | | (INCLUDES PLUG AS & WEDGE) | |
| | | 1 | **102-8802** | 1 | KIT-RECEPTACLE (2-PIN) | |
| | | | | | (INCLUDES RECEPTACLE AS & WEDGE) | |
| | 10 | 1 | **172-6556** | 1 | PANEL | |
| | 11 | 1 | **188-3862** | 1 | BRACKET AS | |
| CY | 12 | 1 | **234-4323** | 1 | LAMP GP-FLOOD (24-VOLT) (RH) | 180 |
| | 13 | 1 | **3E-8766** | 1 | SWITCH AS (24-VOLT) (FLOODLAMP RH) | |
| | | | **3E-8782** | 1 | ACTUATOR-ROCKER | |
| | | | **3E-8825** | 1 | LAMP (24-VOLT) | |
| | 14 | 1 | **5P-8525** | 1 | GROMMET | |
| C | 15 | 1 | **8T-4121** | 1 | WASHER-HARD (11X21X2.5-MM THK) | |
| M | 16 | 1 | **9X-2043** | 6 | SCREW-TRUSS HEAD (M6X1X14-MM) | |

C-CHANGE FROM PREVIOUS TYPE
M-METRIC PART
Y-SEPARATE ILLUSTRATION

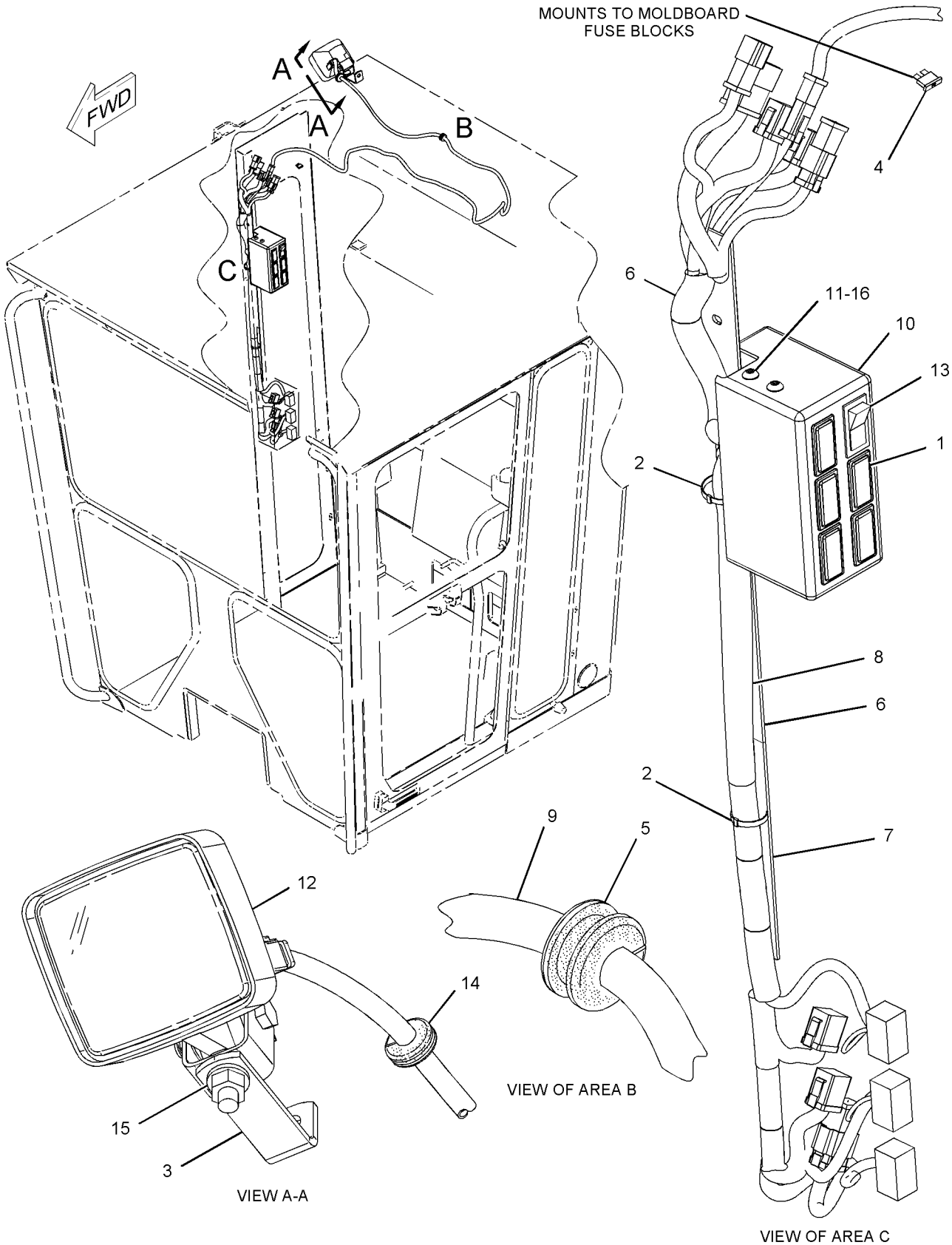


GRAPHIC #1 **<END>** g01070197

# ELECTRICAL AND STARTING SYSTEM

## *183-4069* LIGHTING GP-FLOOD—EXTENDED BOLSTER

**S/N: CCA1-UP**
**24 VOLT**
**PART OF 179-1548 LIGHTING AR-FLOOD & SIGNAL**
**AN ATTACHMENT**
**TYPE 1**

**SMCS-1434** **i02586981**

| NOTE | REF NO | GRAPHIC REF | PART NUMBER | QTY | PART NAME 1 2 3 4 5 6 (PRODUCT LEVEL) | SEE PAGE |
|---|---|---|---|---|---|---|
| | 1 | 1 | **2G-0617** | 2 | CLAMP | |
| | 2 | 1 | **2G-0659** | 2 | BRACKET | |
| | 3 | 1 | **2G-0988** | 2 | CAP | |
| | 4 | 1 | **3K-9520** | 3 | GROMMET | |
| | 5 | 1 | **3S-2093** | 4 | STRAP-CABLE | |
| | 6 | 1 | **8X-5153** | 1 | FILM-FACE (TURN SIGNAL, HAZARD) | |
| | 7 | 1 | **8X-5154** | 1 | FILM-FACE (HEADLIGHTS HIGH, LOW BEAM) | |
| | 8 | 1 | **9W-1442** | 1 | FUSE (10-AMPERE) | |
| | 9 | 1 | **103-5678** | 1 | SWITCH AS-ROTARY (HEADLIGHT DIMMER) | |
| | | 1 | **5L-7200** | 1 | SCREW (8-32X0.375-IN) | |
| | | 1 | **9B-7233** | 1 | LOCKWASHER | |
| | 10 | 1 | **108-0358** | 1 | FLASHER AS (24-VOLT) (TURN SIGNAL, HAZARD) | |
| | 11 | 1 | **137-9410** | 2 | CLAMP | |
| | 12 | 1 | **173-3064** | 1 | SWITCH GP-ROTARY (TURN SIGNAL, HAZARD) | |
| | | 1 | **5L-7200** | 1 | SCREW (8-32X0.375-IN) | |
| | | 1 | **9B-7233** | 1 | LOCKWASHER | |
| | 13 | 1 | **178-8067** | 2 | BRACKET AS | |
| | 14 | 1 | **179-1549** | 1 | TUBE | |
| | 15 | 1 | **179-1550** | 2 | CLAMP | |
| | 16 | 1 | **179-8700** | 1 | HARNESS AS-FRONT CHASSIS (BOLSTER LIGHT BAR) | |
| | | 1 | **155-2255** | 1 | KIT-CONNECTING PLUG (12-PIN) | |
| | | | | | (INCLUDES PLUG AS & WEDGE) | |
| | | 1 | **102-8801** | 1 | KIT-RECEPTACLE (12-PIN) | |
| | | | | | (INCLUDES RECEPTACLE AS & WEDGE) | |
| | 17 | 1 | **179-8701** | 1 | HARNESS AS-FRONT LIGHTING (ELEVATED LIGHT BAR) | |
| | | 1 | **155-2270** | 2 | KIT-CONNECTING PLUG (2-PIN) | |
| | | | | | (INCLUDES PLUG AS & WEDGE) | |
| | | 1 | **102-8801** | 1 | KIT-RECEPTACLE (12-PIN) | |
| | | | | | (INCLUDES RECEPTACLE AS & WEDGE) | |
| Y | 18 | 1 | **153-2073** | 2 | LAMP GP-FLOOD (24-VOLT, 65-WATT) (VERTICAL MOUNT) | 178 |
| | 19 | 1 | **3E-8772** | 1 | SWITCH AS-ROCKER (HEADLIGHTS, TAIL LIGHTS) | |
| | | 1 | **3E-8825** | 1 | LAMP (24-VOLT) | |
| | | 1 | **3E-9326** | 2 | ACTUATOR-ROCKER | |
| | 20 | 1 | **174-5907** | 2 | CLIP | |
| M | 21 | 1 | **5C-2890** | 2 | NUT (M6X1-THD) | |
| M | 22 | 1 | **5C-7261** | 2 | NUT (M8X1.25-THD) | |
| | 23 | 1 | **5M-3062** | 1 | BOLT (3/8-16X0.75-IN) | |
| | 24 | 1 | **8M-2770** | 2 | CLIP | |
| | 25 | 1 | **8T-4121** | 4 | WASHER-HARD (11X21X2.5-MM THK) | |
| M | 26 | 1 | **8T-4133** | 2 | NUT (M10X1.5-THD) | |
| M | 27 | 1 | **8T-4136** | 4 | BOLT (M10X1.5X25-MM) | |
| | 28 | 1 | **8T-4205** | 2 | WASHER-HARD (7.2X14.5X2-MM THK) | |
| | 29 | 1 | **8T-4223** | 4 | WASHER-HARD (13.5X25.5X3-MM THK) | |
| | 30 | 1 | **8T-4224** | 2 | WASHER-HARD (8.8X16X2-MM THK) | |
| M | 31 | 1 | **8T-4244** | 4 | NUT (M12X1.75-THD) | |
| | 32 | 1 | **8T-4896** | 1 | WASHER-HARD (10.2X18.5X2.5-MM THK) | |
| M | 33 | 1 | **8T-5412** | 4 | BOLT (M12X1.75X140-MM) | |
| M | 34 | 1 | **8T-6869** | 2 | BOLT (M8X1.25X60-MM) | |
| | 35 | 1 | **8X-6296** | 1 | LEVER (TURN SIGNAL) | |
| | 35A | 1 | **8X-6296** | 1 | LEVER (HEADLIGHT DIMMER) | |
| M | 36 | 1 | **9X-2043** | 2 | SCREW-TRUSS HEAD (M6X1X14-MM) | |

*183-4069* **LIGHTING GP-FLOOD** *(contd.)* **i02586981**

| NOTE | REF NO | GRAPHIC REF | PART NUMBER | QTY | PART NAME 1 2 3 4 5 6 (PRODUCT LEVEL) | SEE PAGE |
|---|---|---|---|---|---|---|
| | 37 | 1 | **9X-9631** | 1 | SWITCH AS-ROCKER (LIGHTBAR LOW BEAM) | |
| | | 1 | **3E-8814** | 1 | ACTUATOR-ROCKER | |
| | | 1 | **3E-8825** | 1 | LAMP (24-VOLT) | |

M-METRIC PART
Y-SEPARATE ILLUSTRATION

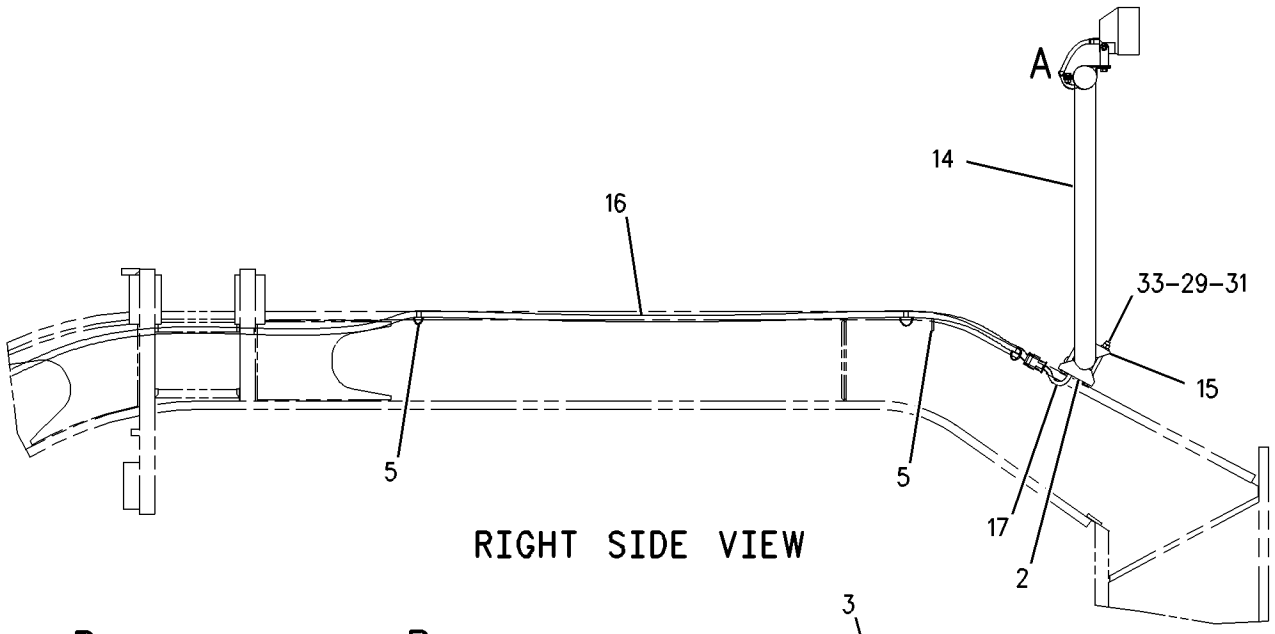


RIGHT SIDE VIEW

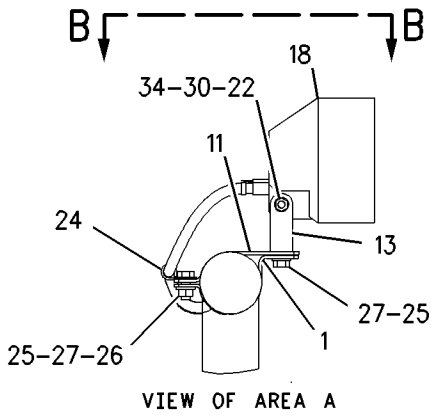


VIEW OF AREA A

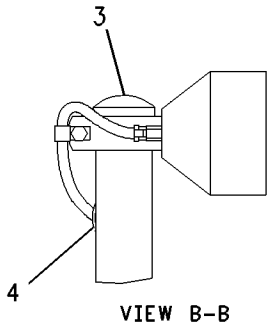


VIEW B-B

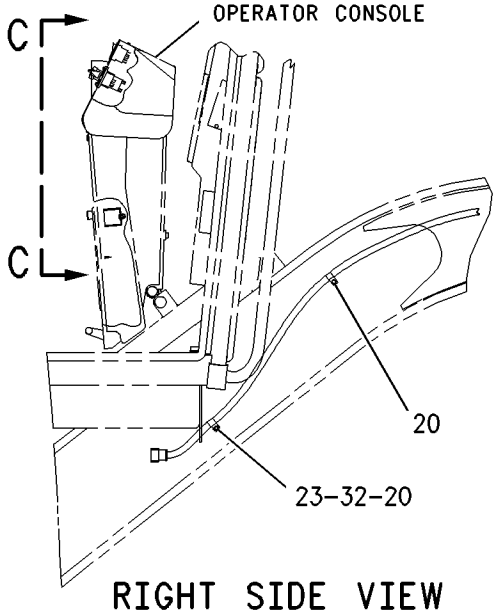


RIGHT SIDE VIEW

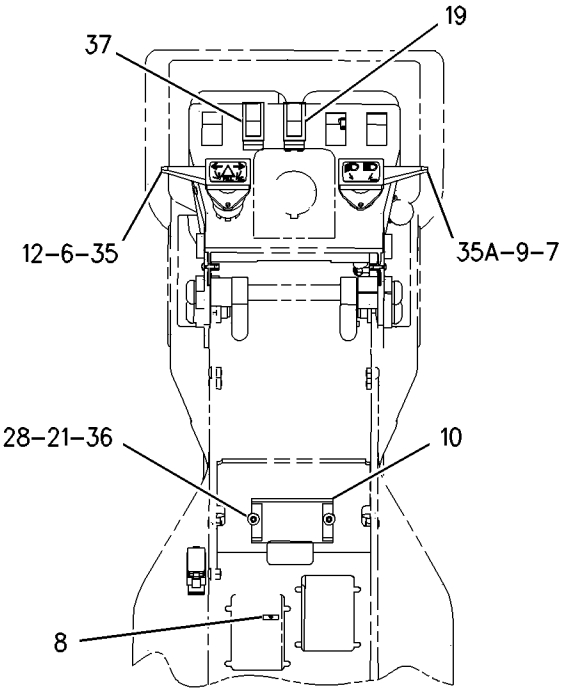


VIEW C-C

GRAPHIC #1 **<END>** g00845039

# ELECTRICAL AND STARTING SYSTEM

## *183-4069* LIGHTING GP-FLOOD—EXTENDED BOLSTER

**S/N: CCA1-UP**
**24 VOLT**
**PART OF 179-1548 LIGHTING AR-FLOOD & SIGNAL**
**AN ATTACHMENT**
**TYPE 2**

**SMCS-1434** **i02204103**

| NOTE | REF NO | GRAPHIC REF | PART NUMBER | QTY | PART NAME 1 2 3 4 5 6 (PRODUCT LEVEL) | SEE PAGE |
|---|---|---|---|---|---|---|
| | 1 | 2 | **2G-0617** | 2 | CLAMP | |
| | 2 | 2 | **2G-0659** | 2 | BRACKET | |
| | 3 | 2 | **2G-0988** | 2 | CAP | |
| | 4 | 2 | **3K-9520** | 3 | GROMMET | |
| | 5 | 2 | **3S-2093** | 4 | STRAP-CABLE | |
| | 6 | 1 | **8X-5153** | 1 | FILM-FACE (TURN SIGNAL, HAZARD) | |
| | 7 | 1 | **8X-5154** | 1 | FILM-FACE (HEADLIGHTS HIGH, LOW BEAM) | |
| | 8 | 1 | **9W-1442** | 1 | FUSE (10-AMPERE) | |
| | 9 | 1 | **103-5678** | 1 | SWITCH AS-ROTARY (HEADLIGHT DIMMER) | |
| | | 1 | **5L-7200** | 1 | SCREW (8-32X0.375-IN) | |
| | | 1 | **9B-7233** | 1 | LOCKWASHER | |
| | 10 | 1 | **108-0358** | 1 | FLASHER AS (24-VOLT) (TURN SIGNAL, HAZARD) | |
| | 11 | 2 | **137-9410** | 2 | CLAMP | |
| | 12 | 1 | **173-3064** | 1 | SWITCH GP-ROTARY (TURN SIGNAL, HAZARD) | |
| | | 1 | **5L-7200** | 1 | SCREW (8-32X0.375-IN) | |
| | | 1 | **9B-7233** | 1 | LOCKWASHER | |
| | 13 | 2 | **179-1549** | 1 | TUBE | |
| | 14 | 2 | **179-1550** | 2 | CLAMP | |
| | 15 | 2 | **179-8700** | 1 | HARNESS AS-FRONT CHASSIS (WORK LIGHTS, FRONT) | |
| | | 2 | **155-2255** | 1 | KIT-CONNECTING PLUG (12-PIN) | |
| | | | | | (INCLUDES PLUG AS & WEDGE) | |
| | | 2 | **102-8801** | 1 | KIT-RECEPTACLE (12-PIN) | |
| | | | | | (INCLUDES RECEPTACLE AS & WEDGE) | |
| | 16 | 2 | **179-8701** | 1 | HARNESS AS-FRONT LIGHTING (WORK LIGHTS) | |
| | | 2 | **155-2270** | 2 | KIT-CONNECTING PLUG (2-PIN) | |
| | | | | | (EACH INCLUDES PLUG AS & WEDGE) | |
| | | 2 | **102-8801** | 1 | KIT-RECEPTACLE (12-PIN) | |
| | | | | | (INCLUDES RECEPTACLE AS & WEDGE) | |
| CY | 17 | 2 | **234-4323** | 2 | LAMP GP-FLOOD (24-VOLT) (WORK LIGHTS) | 180 |
| | 18 | 1 | **174-5907** | 2 | CLIP | |
| | 19 | 1 | **3E-8772** | 1 | SWITCH AS-ROCKER (HEADLIGHTS, TAIL LIGHTS) | |
| | | 1 | **3E-8825** | 1 | LAMP (24-VOLT) | |
| | | 1 | **3E-9326** | 2 | ACTUATOR-ROCKER | |
| M | 20 | 1 | **5C-2890** | 2 | NUT (M6X1-THD) | |
| | 21 | 1 | **5M-3062** | 1 | BOLT (3/8-16X0.75-IN) | |
| | 22 | 2 | **8M-2770** | 2 | CLIP | |
| | 23 | 2 | **8T-4121** | 4 | WASHER-HARD (11X21X2.5-MM THK) | |
| M | 24 | 1 | **8T-4133** | 2 | NUT (M10X1.5-THD) | |
| CM | 25 | 2 | **8T-4136** | 2 | BOLT (M10X1.5X25-MM) | |
| | 26 | 1 | **8T-4205** | 2 | WASHER-HARD (7.2X14.5X2-MM THK) | |
| | 27 | 2 | **8T-4223** | 4 | WASHER-HARD (13.5X25.5X3-MM THK) | |
| M | 28 | 2 | **8T-4244** | 4 | NUT (M12X1.75-THD) | |
| | 29 | 1 | **8T-4896** | 1 | WASHER-HARD (10.2X18.5X2.5-MM THK) | |
| M | 30 | 2 | **8T-5412** | 4 | BOLT (M12X1.75X140-MM) | |
| | 31 | 1 | **8X-6296** | 1 | LEVER (TURN SIGNAL) | |
| | 31A | 1 | **8X-6296** | 1 | LEVER (HEADLIGHT DIMMER) | |
| M | 32 | 1 | **9X-2043** | 2 | SCREW-TRUSS HEAD (M6X1X14-MM) | |
| | 33 | 1 | **9X-9631** | 1 | SWITCH AS-ROCKER (WORK LIGHTS, FRONT) | |
| | | 1 | **3E-8814** | 1 | ACTUATOR-ROCKER | |
| | | 1 | **3E-8825** | 1 | LAMP (24-VOLT) | |

C-CHANGE FROM PREVIOUS TYPE
M-METRIC PART
Y-SEPARATE ILLUSTRATION

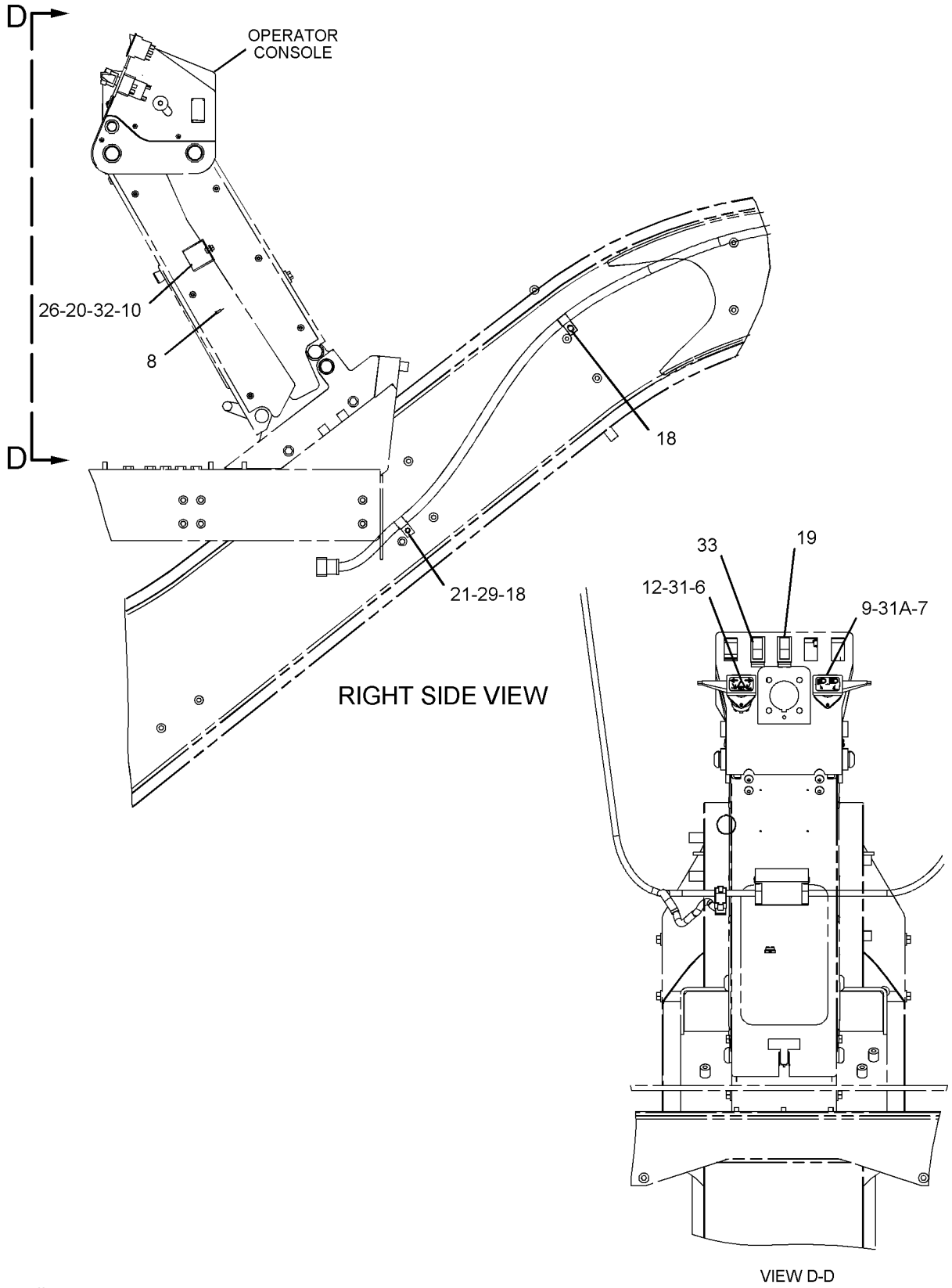


GRAPHIC #1

g01088161

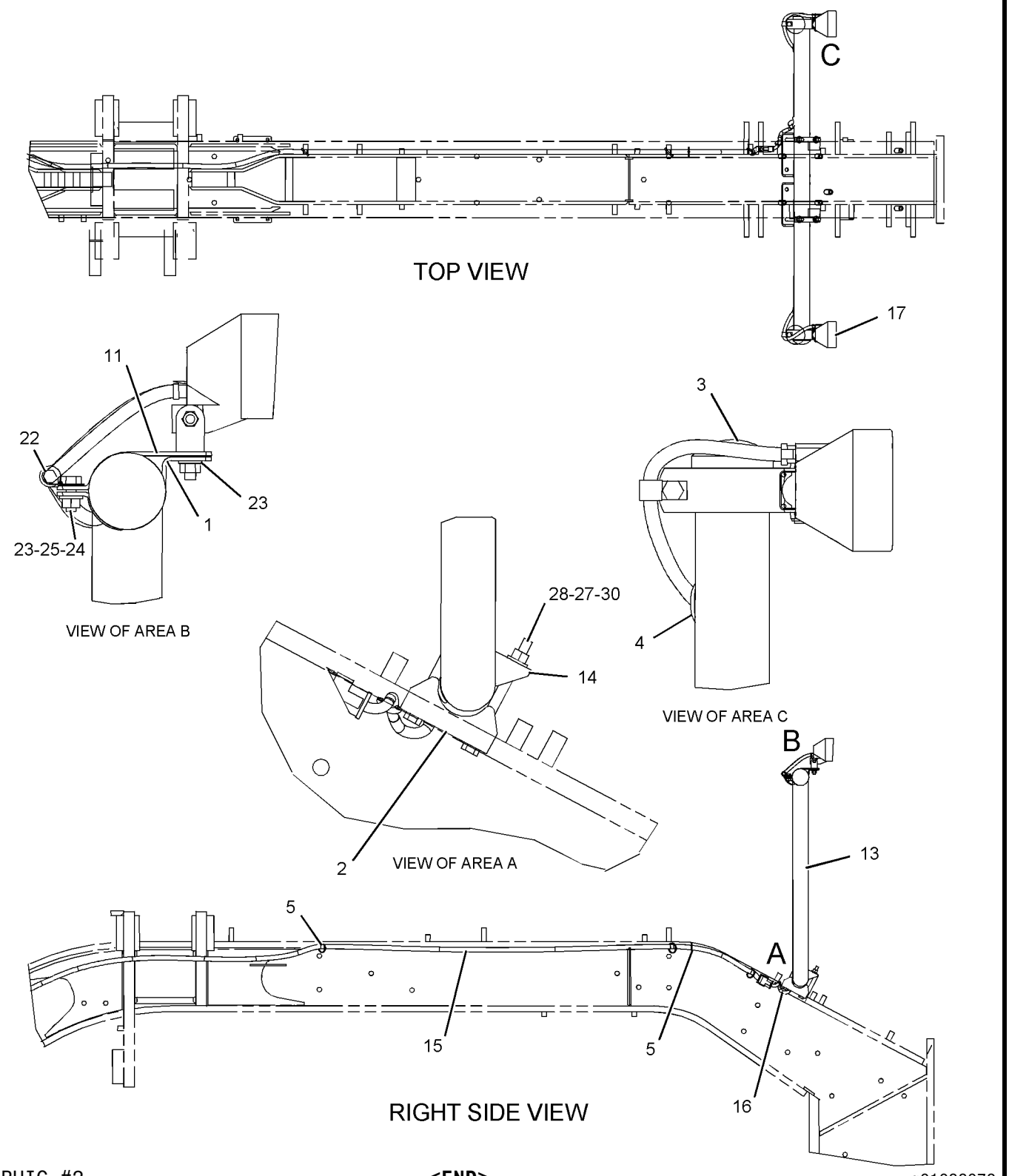


GRAPHIC #2 **<END>** g01088078

# *188-9324* LIGHTING GP-FLOOD—SNOW—REAR

**S/N: CCA1-UP**

**PART OF 161-0768, 188-9321 LIGHTING AR-FLOOD**

**AN ATTACHMENT**

**TYPE 1**

**SMCS-1434** **i02586989**

| NOTE | REF NO | GRAPHIC REF | PART NUMBER | QTY | PART NAME 1 2 3 4 5 6 (PRODUCT LEVEL) | SEE PAGE |
|---|---|---|---|---|---|---|
| | 1 | 1 | **9X-9365** | 2 | BRACKET | |
| | 2 | 1 | **116-5710** | 2 | GROMMET | |
| | 3 | 1 | **169-3520** | 1 | HARNESS AS-REAR LIGHTING | |
| | | 1 | **155-2270** | 2 | KIT-CONNECTING PLUG (2-PIN) | |
| | | | | | (INCLUDES PLUG ASSEMBLY AND WEDGE) | |
| | | 1 | **102-8802** | 1 | KIT-RECEPTACLE (2-PIN) | |
| | | | | | (INCLUDES RECEPTACLE ASSEMBLY AND WEDGE) | |
| | 4 | 1 | **178-8067** | 2 | BRACKET AS | |
| Y | 5 | 1 | **153-2073** | 2 | LAMP GP-FLOOD (24-VOLT, 65-WATT) (VERTICAL MOUNT) | 178 |
| M | 6 | 1 | **5C-7261** | 2 | NUT (M8X1.25-THD) | |
| | 7 | 1 | **5K-3294** | 4 | CLIP | |
| | 8 | 1 | **6V-3265** | 6 | CLIP | |
| | 9 | 1 | **8T-4121** | 12 | WASHER-HARD (11X21X2.5-MM THK) | |
| M | 10 | 1 | **8T-4136** | 2 | BOLT (M10X1.5X25-MM) | |
| M | 11 | 1 | **8T-4137** | 10 | BOLT (M10X1.5X20-MM) | |
| | 12 | 1 | **8T-4224** | 4 | WASHER-HARD (8.8X16X2-MM THK) | |
| M | 13 | 1 | **8T-6869** | 2 | BOLT (M8X1.25X60-MM) | |

M-METRIC PART
Y-SEPARATE ILLUSTRATION

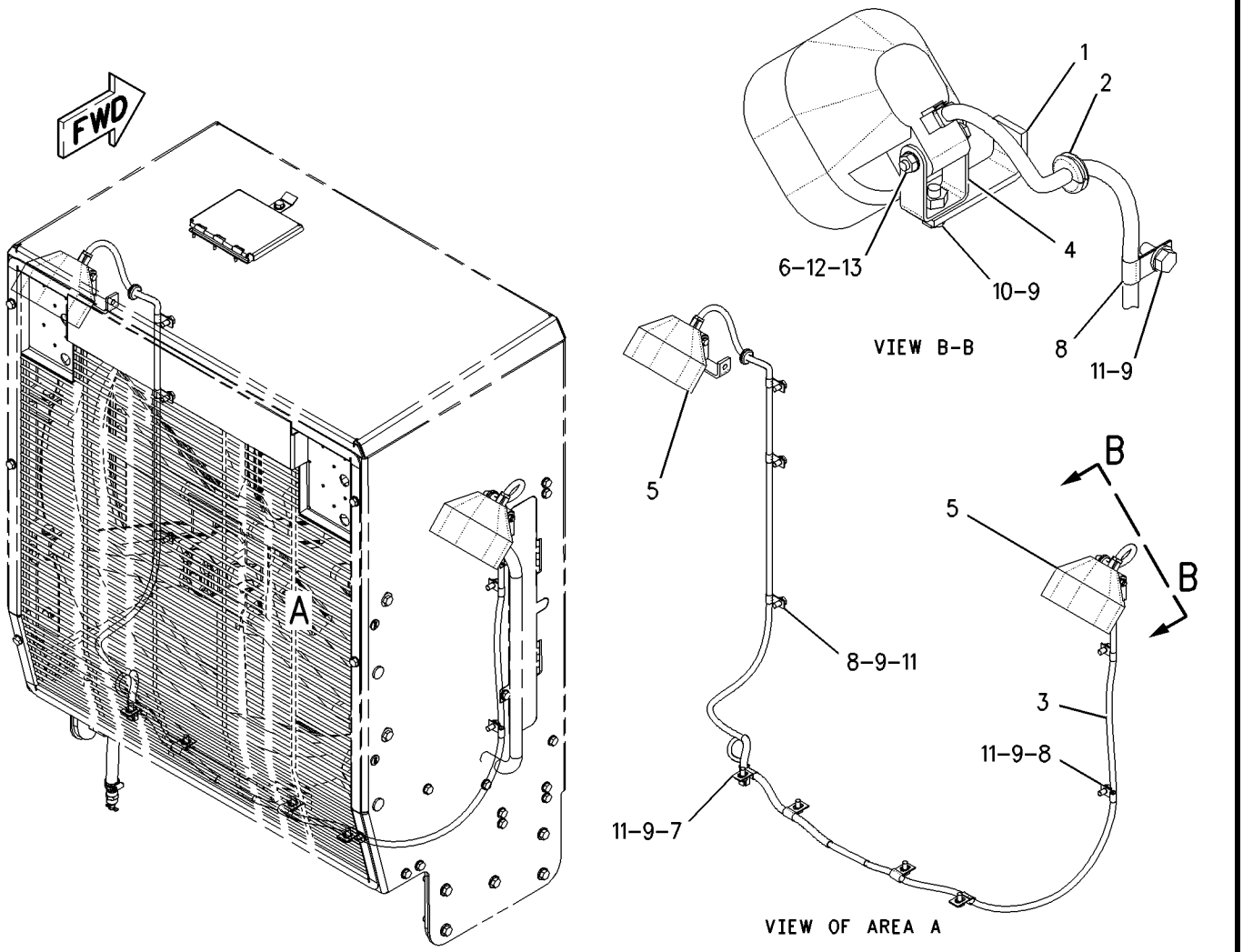


GRAPHIC #1 **<END>** g00844562

## *188-9324* LIGHTING GP-FLOOD—SNOW—REAR

**S/N: CCA1-UP**
**PART OF 161-0768, 188-9321 LIGHTING AR-FLOOD**
**AN ATTACHMENT**
**TYPE 2**

**SMCS-1434** **i02585578**

| NOTE | REF NO | GRAPHIC REF | PART NUMBER | QTY | PART NAME 1 2 3 4 5 6 (PRODUCT LEVEL) | SEE PAGE |
|---|---|---|---|---|---|---|
| | 1 | 1 | **9X-9365** | 2 | BRACKET | |
| | 2 | 1 | **116-5710** | 2 | GROMMET | |
| | 3 | 1 | **169-3520** | 1 | HARNESS AS-REAR LIGHTING | |
| | | 1 | **155-2270** | 2 | KIT-CONNECTING PLUG (2-PIN) | |
| | | | | | (EACH INCLUDES PLUG ASSEMBLY & WEDGE) | |
| | | 1 | **102-8802** | 1 | KIT-RECEPTACLE (2-PIN) | |
| | | | | | (INCLUDES RECEPTACLE ASSEMBLY & WEDGE) | |
| Y | 4 | 1 | **234-4323** | 2 | LAMP GP-FLOOD (24-VOLT) (REAR) | 180 |
| | 5 | 1 | **5K-3294** | 4 | CLIP | |
| | 6 | 1 | **6V-3265** | 6 | CLIP | |
| | 7 | 1 | **8T-4121** | 12 | WASHER-HARD (11X21X2.5-MM THK) | |
| M | 8 | 1 | **8T-4137** | 10 | BOLT (M10X1.5X20-MM) | |

M-METRIC PART
Y-SEPARATE ILLUSTRATION

*188-9324* **LIGHTING GP-FLOOD** *(contd.)* **i02585578**

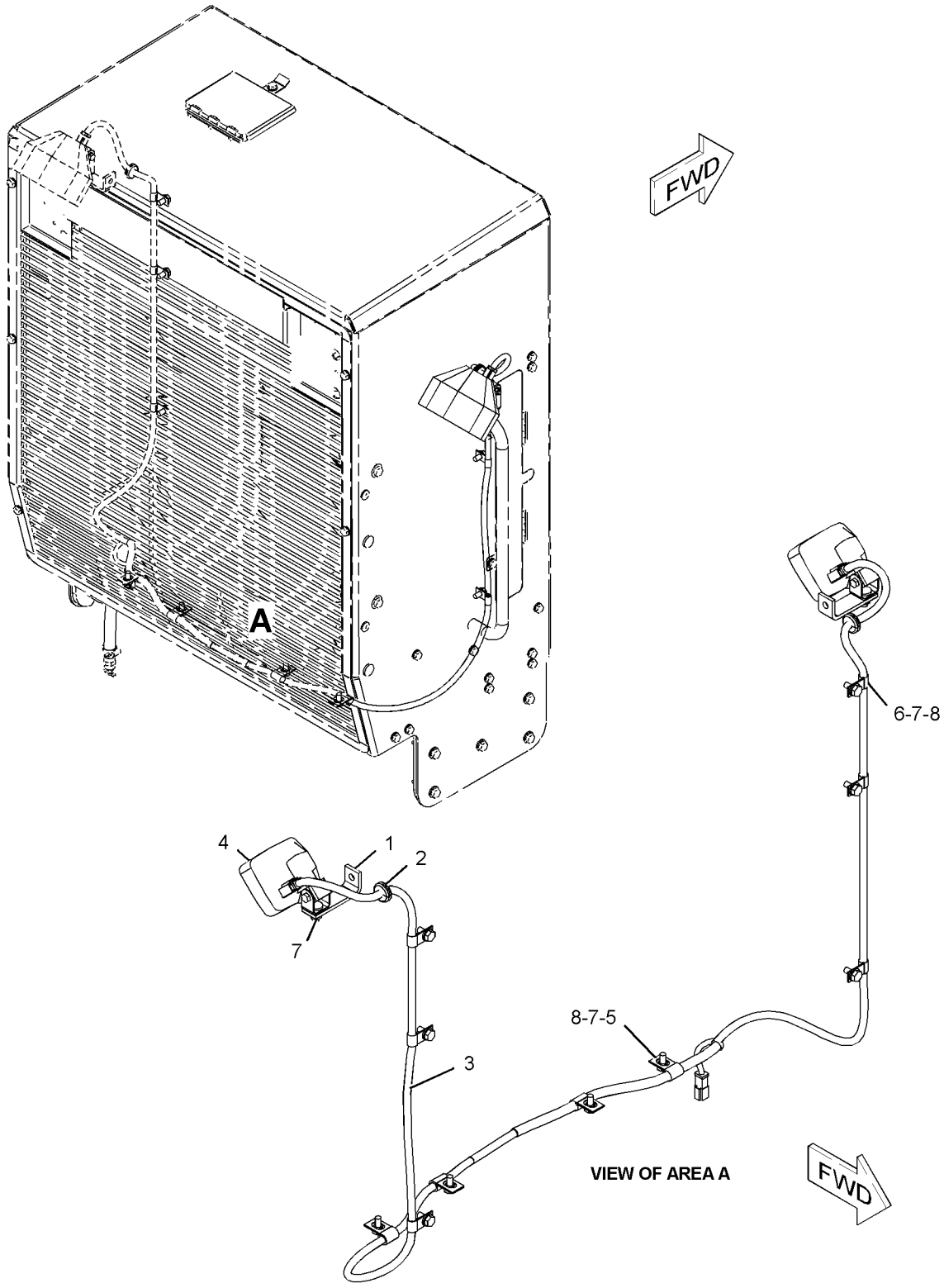


GRAPHIC #1 **<END>** g01092773

# *196-8532* LIGHTING GP-FLOOD—MOLDBOARD

**S/N: CCA1-UP**
**PART OF 203-6536, 204-6109 LIGHTING AR-FLOOD**
**AN ATTACHMENT**
**TYPE 1**

**SMCS-1434** **i02586997**

| NOTE | REF NO | GRAPHIC REF | PART NUMBER | QTY | PART NAME 1 2 3 4 5 6 (PRODUCT LEVEL) | SEE PAGE |
|---|---|---|---|---|---|---|
| | 2 | 1 | **169-3147** | 1 | HARNESS AS-CHASSIS | |
| | | 1 | **102-8802** | 4 | KIT-RECEPTACLE (2-PIN) | |
| | | 1 | **102-8803** | 1 | KIT-RECEPTACLE (3-PIN) | |
| | | | | | (EACH INCLUDES RECEPTACLES AS & WEDGE) | |
| | 3 | 1 | **183-9606** | 2 | BRACKET | |
| | 4 | 1 | **033-8248** | 5 | CLIP | |
| Y | 5 | 1 | **153-2073** | 2 | LAMP GP-FLOOD (24-VOLT, 65-WATT) (SUSPENDED MOUNT) | 178 |
| | 6 | 1 | **4D-9517** | 1 | CLIP | |
| M | 7 | 1 | **5C-7261** | 2 | NUT (M8X1.25-THD) | |
| | 8 | 1 | **5P-8167** | 3 | BOLT (3/8-16X0.625-IN) | |
| | 9 | 1 | **8M-2770** | 1 | CLIP | |
| | 10 | 1 | **8T-4224** | 2 | WASHER-HARD (8.8X16X2-MM THK) | |
| | 11 | 1 | **8T-4896** | 3 | WASHER-HARD (10.2X18.5X2.5-MM THK) | |
| M | 12 | 1 | **8T-6869** | 2 | BOLT (M8X1.25X60-MM) | |

M-METRIC PART
Y-SEPARATE ILLUSTRATION

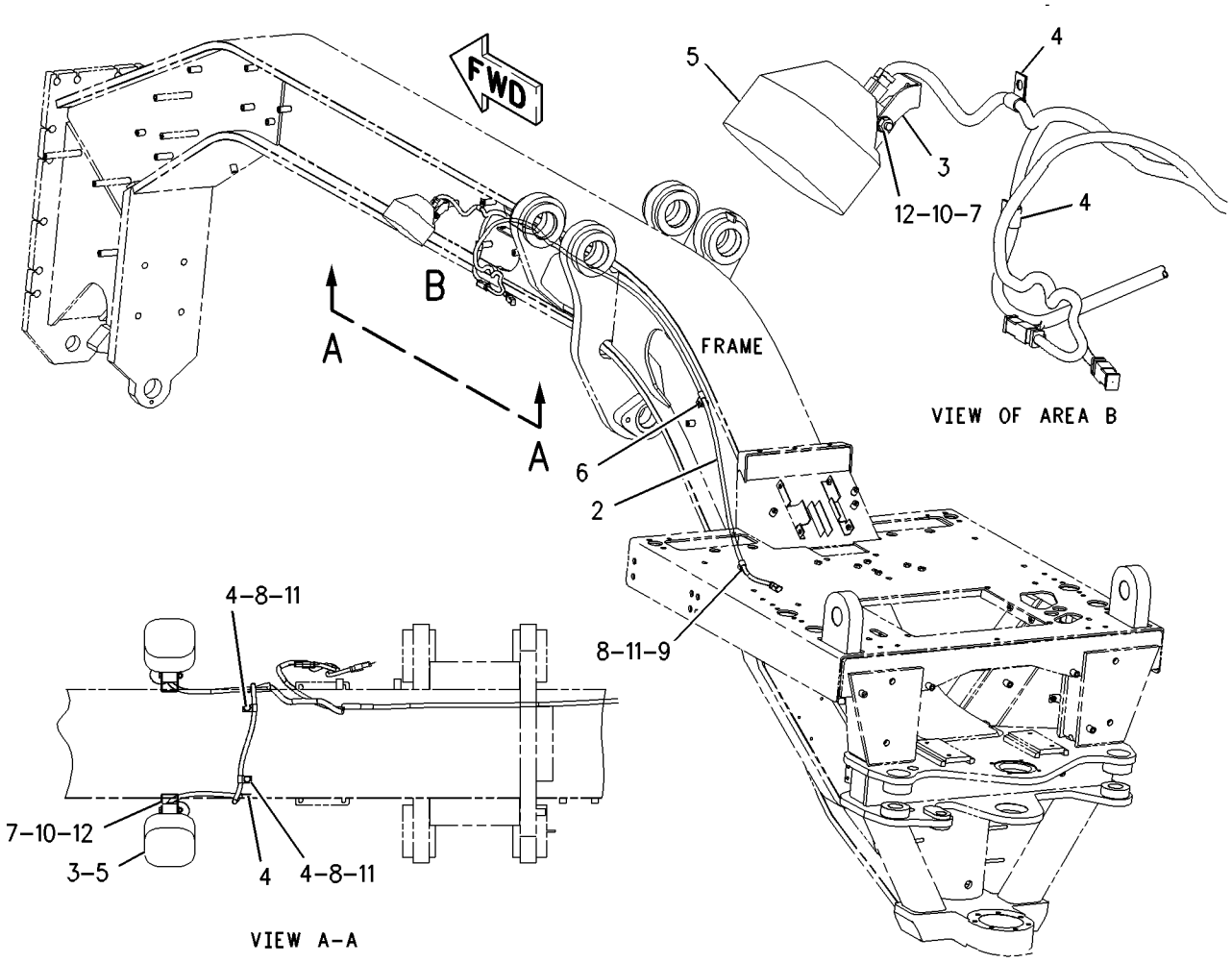


GRAPHIC #1 **<END>** g00890532

# *196-8532* LIGHTING GP-FLOOD—MOLDBOARD

**S/N: CCA1-UP**
**PART OF 203-6536, 204-6109 LIGHTING AR-FLOOD**
**AN ATTACHMENT**
**TYPE 2**

**SMCS-1434** **i02588753**

| NOTE | REF NO | GRAPHIC REF | PART NUMBER | QTY | PART NAME 1 2 3 4 5 6 (PRODUCT LEVEL) | SEE PAGE |
|---|---|---|---|---|---|---|
| | 1 | 1 | **9L-1566** | 2 | SUPPORT | |
| | 3 | 1 | **169-3147** | 1 | HARNESS AS-CHASSIS (MOLDBOARD) | |
| | | 1 | **155-2270** | 4 | KIT-CONNECTING PLUG (2-PIN) | |
| | | | | | (INCLUDES PLUG AS & WEDGE) | |
| | | 1 | **102-8802** | 4 | KIT-RECEPTACLE (2-PIN) | |
| | | 1 | **102-8803** | 1 | KIT-RECEPTACLE (3-PIN) | |
| | | | | | (INCLUDES RECEPTACLE AS & WEDGE) | |
| Y | 4 | 1 | **234-4325** | 2 | LAMP GP-FLOOD (24-VOLT) (SUSPENDED) | 182 |
| | 5 | 1 | **033-8248** | 5 | CLIP | |
| | 6 | 1 | **147-0385** | 2 | CLIP | |
| | 7 | 1 | **5P-8167** | 3 | BOLT (3/8-16X0.625-IN) | |
| | 8 | 1 | **5S-7379** | 2 | BOLT (3/8-16X0.875-IN) | |
| | 9 | 1 | **8T-4121** | 4 | WASHER-HARD (11X21X2.5-MM THK) | |
| | 10 | 1 | **8T-4896** | 3 | WASHER-HARD (10.2X18.5X2.5-MM THK) | |

Y-SEPARATE ILLUSTRATION

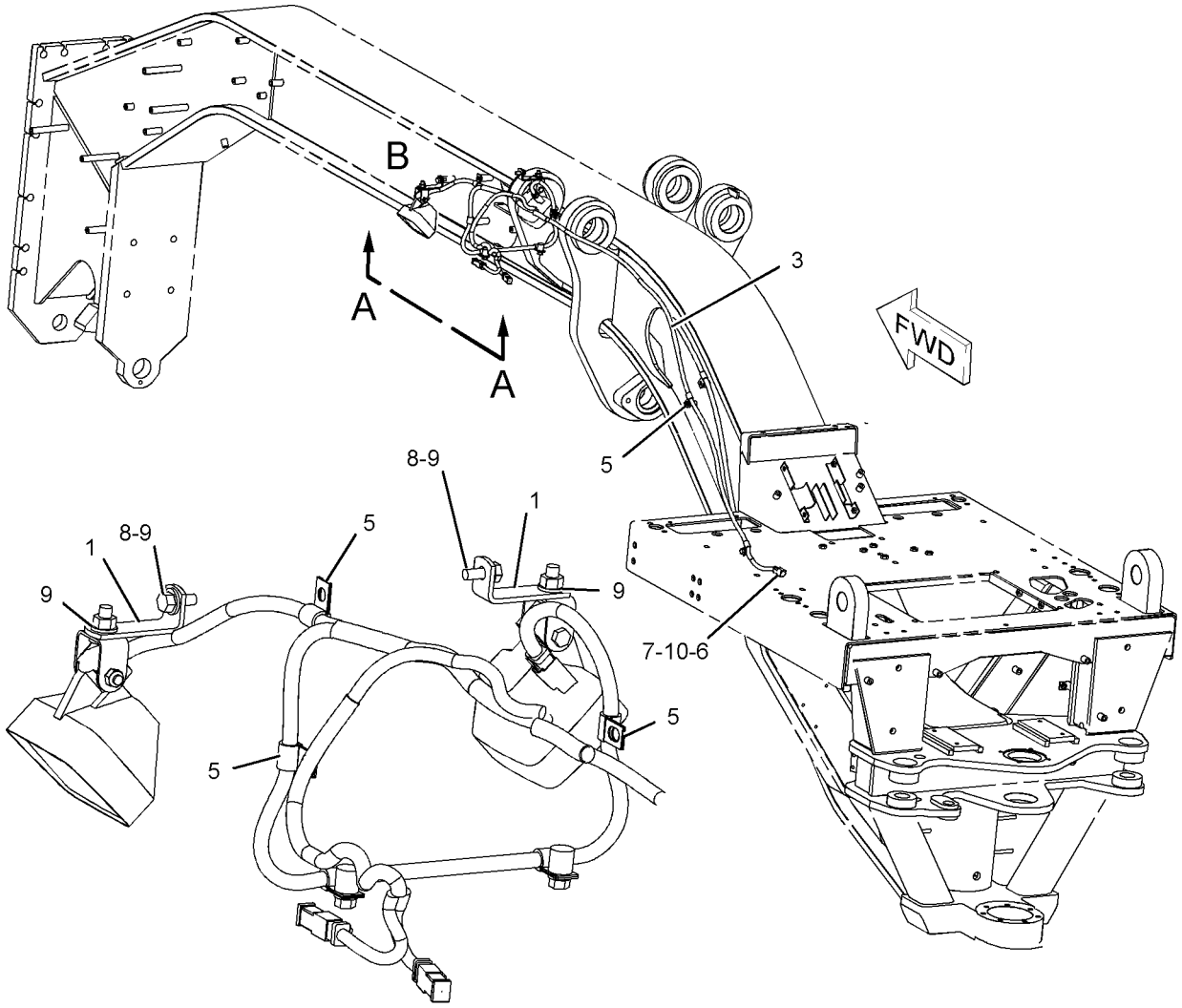


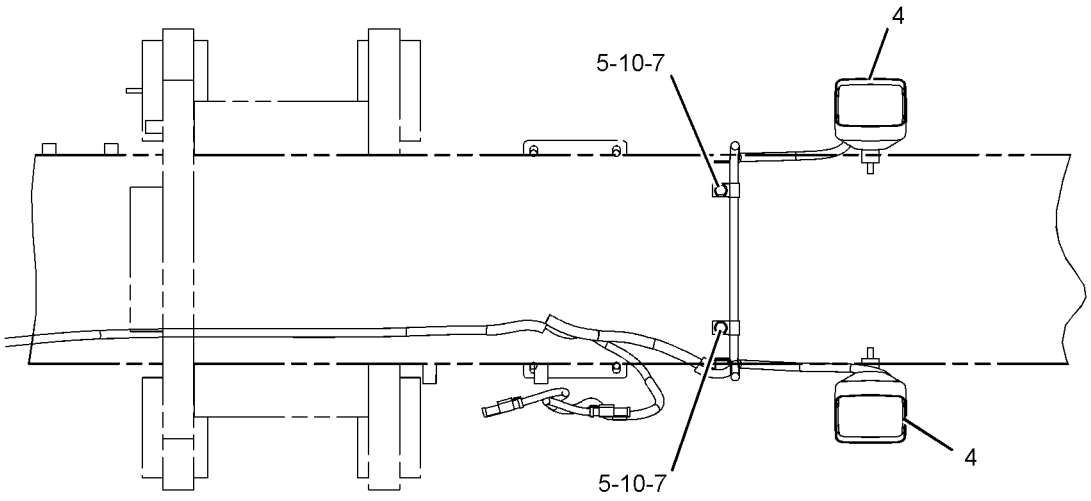


GRAPHIC #1 **<END>** g01075816

# *196-8559* LIGHTING GP-FLOOD–CAB–SNOW–RH

**S/N: CCA1-UP**
**PART OF 221-5368 LIGHTING GP-FLOOD**
**AN ATTACHMENT**
**TYPE 1**

**SMCS-1434** **i02204124**

| NOTE | REF NO | GRAPHIC REF | PART NUMBER | QTY | PART NAME 1 2 3 4 5 6 (PRODUCT LEVEL) | SEE PAGE |
|---|---|---|---|---|---|---|
| | 1 | 1 | **3E-0109** | 5 | PLUG | |
| | 2 | 1 | **3S-2093** | 2 | STRAP-CABLE | |
| | 3 | 1 | **9W-1442** | 1 | FUSE (10-AMPERE) | |
| | 4 | 1 | **145-3350** | 1 | PLATE | |
| B | 5 | 1 | **153-2147** | 1 | PLATE | |
| | 6 | 1 | **171-6175** | 1 | HARNESS AS-FRONT LIGHTING | |
| | | 1 | **155-2270** | 1 | KIT-CONNECTING PLUG (2-PIN) | |
| | | | | | (INCLUDES PLUG AS & WEDGE) | |
| | | 1 | **102-8802** | 1 | KIT-RECEPTACLE (2-PIN) | |
| | | | | | (INCLUDES RECEPTACLE AS & WEDGE) | |
| | 7 | 1 | **172-6556** | 1 | PANEL | |
| | 8 | 1 | **188-3862** | 1 | BRACKET AS | |
| | 9 | 1 | **190-1680** | 1 | BRACKET | |
| | 10 | 1 | **196-8557** | 1 | HARNESS AS-CAB | |
| | | 1 | **155-2255** | 1 | KIT-CONNECTING PLUG (12-PIN) | |
| | | 1 | **155-2265** | 4 | KIT-CONNECTING PLUG (8-PIN) | |
| | | 1 | **155-2270** | 4 | KIT-CONNECTING PLUG (2-PIN) | |
| | | 1 | **155-2271** | 1 | KIT-CONNECTING PLUG (4-PIN) | |
| | | | | | (EACH INCLUDES PLUG AS & WEDGE) | |
| | | 1 | **102-8802** | 1 | KIT-RECEPTACLE (2-PIN) | |
| | | 1 | **102-8804** | 2 | KIT-RECEPTACLE (4-PIN) | |
| | | 1 | **102-8806** | 1 | KIT-RECEPTACLE (8-PIN) | |
| | | 1 | **102-8801** | 1 | KIT-RECEPTACLE (12-PIN) | |
| | | | | | (EACH INCLUDES RECEPTACLE AS & WEDGE) | |
| | 11 | 1 | **3E-8766** | 1 | SWITCH AS (24-VOLT) (CAB-RH FLOOD) | |
| | | 1 | **3E-8782** | 1 | ACTUATOR-ROCKER | |
| | | 1 | **3E-8825** | 1 | LAMP (24-VOLT) | |
| Y | 12 | 1 | **153-2073** | 1 | LAMP GP-FLOOD (24-VOLT, 65-WATT) (CAB-RH) | 178 |
| | 13 | 1 | **116-5710** | 1 | GROMMET | |
| | 14 | 1 | **5P-8439** | 1 | GROMMET | |
| M | 15 | 1 | **6V-9189** | 1 | LOCKNUT (M8X1.25-THD) | |
| | 16 | 1 | **8T-4224** | 1 | WASHER-HARD (8.8X16X2-MM THK) | |
| M | 17 | 1 | **8T-6869** | 1 | BOLT (M8X1.25X60-MM) | |
| M | 18 | 1 | **9X-2043** | 6 | SCREW-TRUSS HEAD (M6X1X14-MM) | |

B-USE AS REQUIRED
M-METRIC PART
Y-SEPARATE ILLUSTRATION

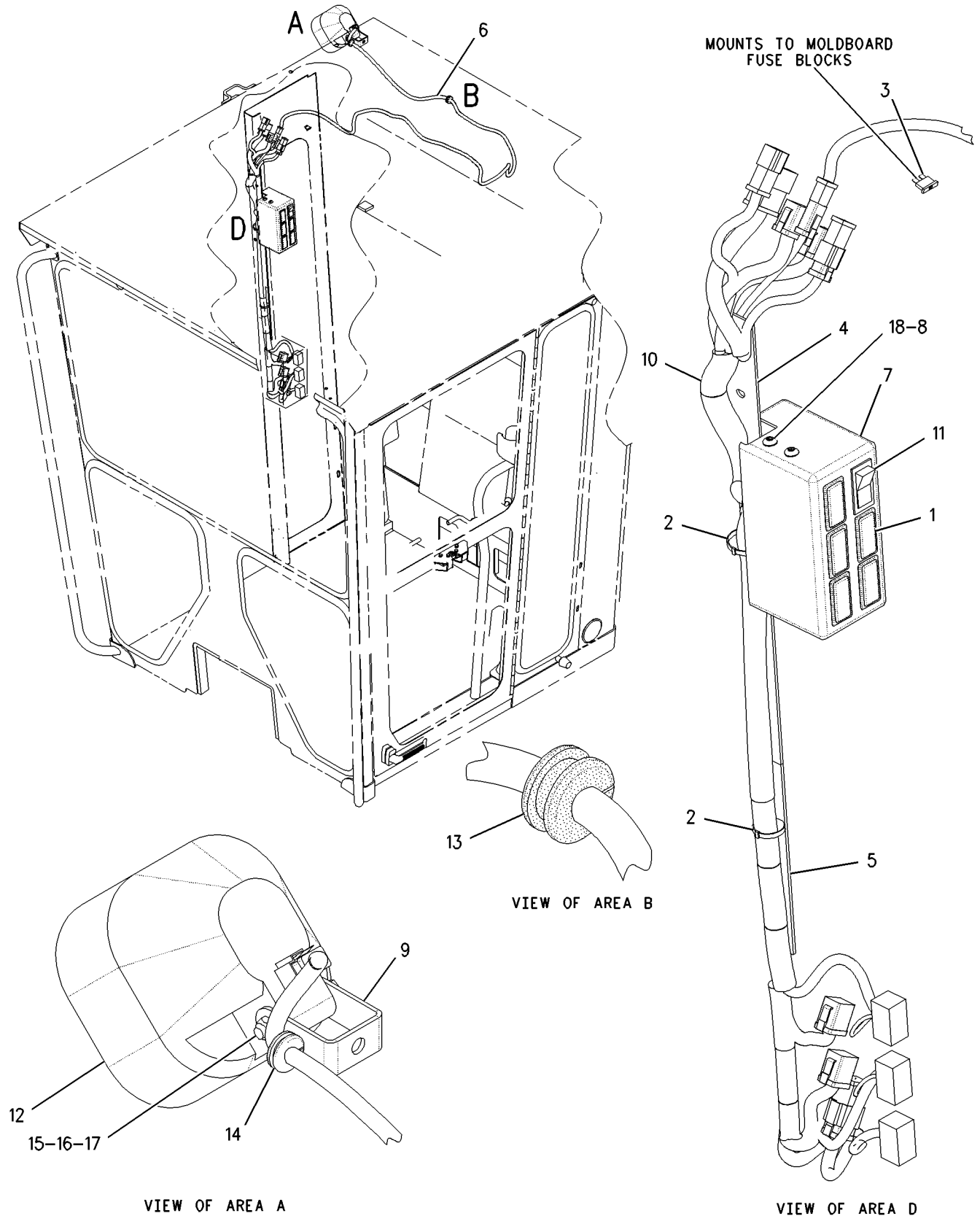


GRAPHIC #1 **<END>** g00917517

# *196-8559* LIGHTING GP-FLOOD–CAB–SNOW–RH

**S/N: CCA1-UP**
**PART OF 221-5368 LIGHTING GP-FLOOD**
**AN ATTACHMENT**
**TYPE 2**

**SMCS-1434** **i02204125**

| NOTE | REF NO | GRAPHIC REF | PART NUMBER | QTY | PART NAME 1 2 3 4 5 6 (PRODUCT LEVEL) | SEE PAGE |
|---|---|---|---|---|---|---|
| | 1 | 1 | **3E-0109** | 5 | PLUG | |
| | 2 | 1 | **3S-2093** | 2 | STRAP-CABLE | |
| C | 3 | 1 | **9L-1566** | 1 | SUPPORT | |
| | 4 | 1 | **9W-1442** | 1 | FUSE (10-AMPERE) | |
| | 5 | 1 | **116-5710** | 1 | GROMMET | |
| | 6 | 1 | **145-3350** | 1 | PLATE | |
| B | 7 | 1 | **153-2147** | 1 | PLATE | |
| | 8 | 1 | **171-6175** | 1 | HARNESS AS-FRONT LIGHTING | |
| | | 1 | **155-2270** | 1 | KIT-CONNECTING PLUG (2-PIN) | |
| | | | | | (INCLUDES PLUG AS & WEDGE) | |
| | | 1 | **102-8802** | 1 | KIT-RECEPTACLE (2-PIN) | |
| | | | | | (INCLUDES RECEPTACLE AS & WEDGE) | |
| | 9 | 1 | **172-6556** | 1 | PANEL | |
| | 10 | 1 | **188-3862** | 1 | BRACKET AS | |
| | 11 | 1 | **196-8557** | 1 | HARNESS AS-CAB | |
| | | 1 | **155-2255** | 1 | KIT-CONNECTING PLUG (12-PIN) | |
| | | 1 | **155-2265** | 4 | KIT-CONNECTING PLUG (8-PIN) | |
| | | 1 | **155-2270** | 4 | KIT-CONNECTING PLUG (2-PIN) | |
| | | 1 | **155-2271** | 1 | KIT-CONNECTING PLUG (4-PIN) | |
| | | | | | (EACH INCLUDES PLUG AS & WEDGE) | |
| | | 1 | **102-8802** | 1 | KIT-RECEPTACLE (2-PIN) | |
| | | 1 | **102-8804** | 2 | KIT-RECEPTACLE (4-PIN) | |
| | | 1 | **102-8806** | 1 | KIT-RECEPTACLE (8-PIN) | |
| | | 1 | **102-8801** | 1 | KIT-RECEPTACLE (12-PIN) | |
| | | | | | (EACH INCLUDES RECEPTACLE AS & WEDGE) | |
| CY | 12 | 1 | **234-4323** | 1 | LAMP GP-FLOOD (24-VOLT) (CAB-RH) | 180 |
| | 13 | 1 | **3E-8766** | 1 | SWITCH AS (24-VOLT) (CAB-RH FLOOD) | |
| | | | **3E-8782** | 1 | ACTUATOR-ROCKER | |
| | | | **3E-8825** | 1 | LAMP (24-VOLT) | |
| | 14 | 1 | **5P-8439** | 1 | GROMMET | |
| C | 15 | 1 | **8T-4121** | 1 | WASHER-HARD (11X21X2.5-MM THK) | |
| M | 16 | 1 | **9X-2043** | 6 | SCREW-TRUSS HEAD (M6X1X14-MM) | |

B-USE AS REQUIRED
C-CHANGE FROM PREVIOUS TYPE
M-METRIC PART
Y-SEPARATE ILLUSTRATION

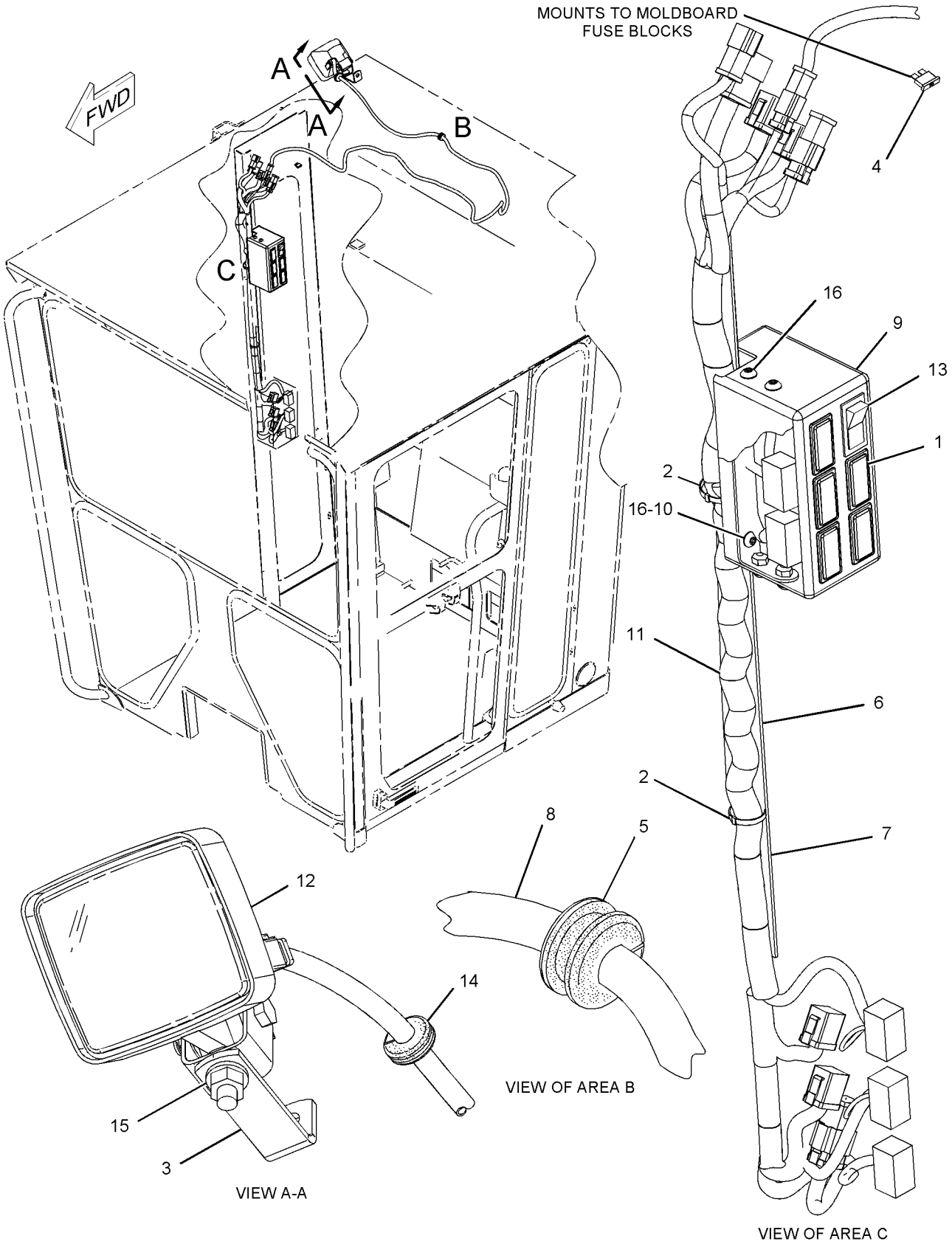


GRAPHIC #1 **<END>** g01070388

# ELECTRICAL AND STARTING SYSTEM

## *203-7620* LIGHTING GP-FLOOD—BOLSTER

**S/N: CCA1-UP**

**AN ATTACHMENT**

**SMCS-1434** **i01683969**

| NOTE | PART NUMBER | QTY | PART NAME 1 2 3 4 5 6 (PRODUCT LEVEL) | SEE PAGE |
|---|---|---|---|---|
| Y | **203-7625** | 1 | LAMP GP-HEAD (LH) | 186 |
| Y | **203-7626** | 1 | LAMP GP-HEAD (RH) | 188 |

Y-SEPARATE ILLUSTRATION

**<END>**

# *221-5368* LIGHTING GP-FLOOD—CAB

**S/N: CCA1-UP**

**AN ATTACHMENT**

**SMCS-1434** **i01835680**

| NOTE | REF NO | GRAPHIC REF | PART NUMBER | QTY | PART NAME 1 2 3 4 5 6 (PRODUCT LEVEL) | SEE PAGE |
|---|---|---|---|---|---|---|
| | 1 | 1 | **106-8704** | 1 | SUPPRESSOR AS-ARC | |
| | | 1 | **3E-3365** | 1 | WEDGE-RECEPTACLE LOCK (2-PIN) | |
| | | 1 | **186-3735** | 2 | PIN-CONNECTOR (16-GA TO 18-GA) | |
| | | 1 | **102-8802** | 1 | KIT-RECEPTACLE (2-PIN) | |
| | | | | | (INCLUDES RECEPTACLE AS & WEDGE) | |
| Y | 2 | 1 | *196-8559* | 1 | LIGHTING GP-FLOOD (CAB)(RH) | 252 |

Y-SEPARATE ILLUSTRATION

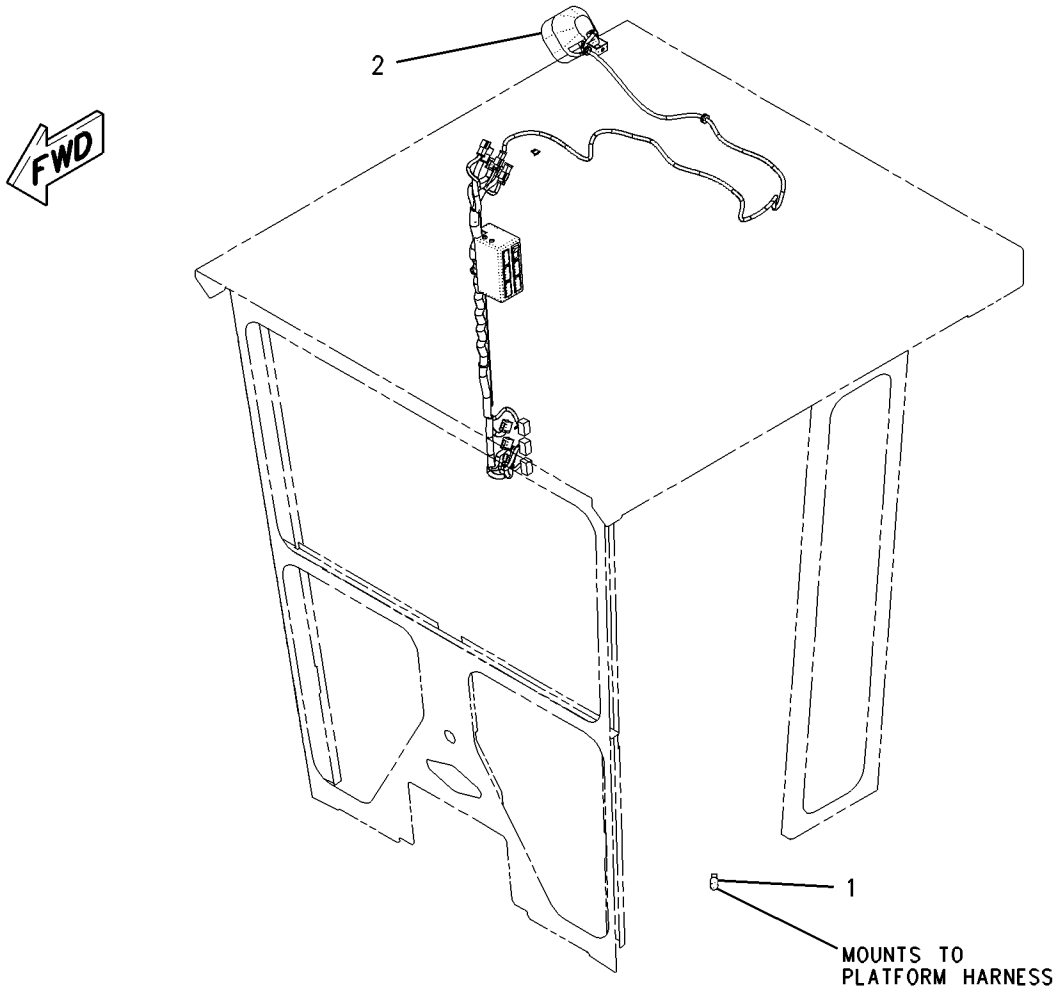


GRAPHIC #1 **<END>** g00915219

# *246-4964* LIGHTING GP-FLOOD

**S/N: CCA1-UP**
**PART OF 259-5738 CONVERSION AR-MACHINE**
**AN ATTACHMENT**

**SMCS-1434** **i02229792**

| NOTE | REF NO | GRAPHIC REF | PART NUMBER | QTY | PART NAME 1 2 3 4 5 6 (PRODUCT LEVEL) | SEE PAGE |
|---|---|---|---|---|---|---|
| | 1 | 1 | **116-5710** | 2 | GROMMET | |
| | 2 | 1 | **169-3520** | 1 | HARNESS AS-REAR LIGHTING | |
| | | 1 | **102-8802** | 1 | KIT-RECEPTACLE (2-PIN) | |
| | | | | | (INCLUDES RECEPTACLE AS & WEDGE) | |
| | | 1 | **155-2270** | 2 | KIT-CONNECTING PLUG (2-PIN) | |
| | | | | | (EACH INCLUDES PLUG AS & WEDGE) | |
| | 3 | 1 | **5K-3294** | 4 | CLIP | |
| | 4 | 1 | **6V-3265** | 6 | CLIP | |
| | 5 | 1 | **8T-4121** | 10 | WASHER-HARD (11X21X2.5-MM THK) | |
| M | 6 | 1 | **8T-4137** | 10 | BOLT (M10X1.5X20-MM) | |

M-METRIC PART

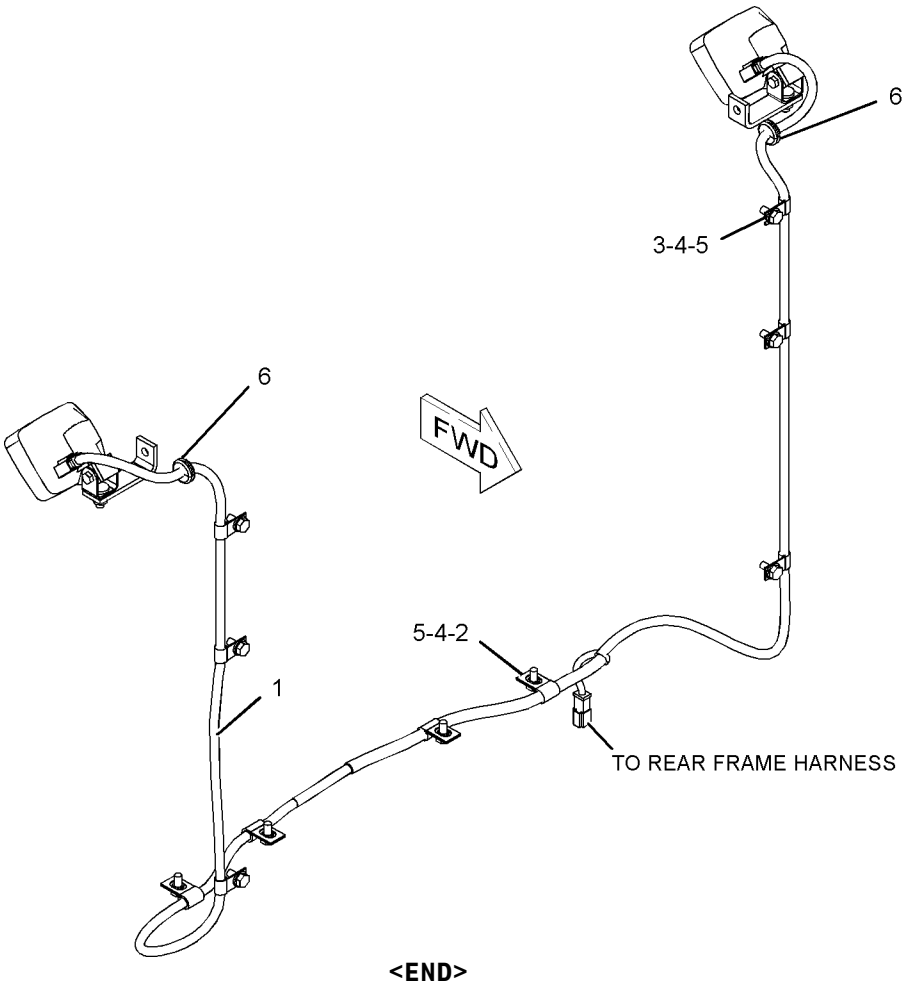


GRAPHIC #1 **<END>** g01129487

# ELECTRICAL AND STARTING SYSTEM

## *207-9193* LIGHTING GP-ROADING

**S/N: CCA1-UP**
**PART OF 259-5738 CONVERSION AR-MACHINE**
**AN ATTACHMENT**

**SMCS-1429** **i02587002**

| NOTE | REF NO | GRAPHIC REF | PART NUMBER | QTY | PART NAME 1 2 3 4 5 6 (PRODUCT LEVEL) | SEE PAGE |
|---|---|---|---|---|---|---|
| | 1 | 1 | **2C-8469** | 1 | TUBE AS | |
| | 2 | 1 | **2G-0988** | 2 | CAP | |
| | 3 | 1 | **2G-0659** | 2 | BRACKET | |
| | 4 | 1 | **5R-2557** | 2 | U-BOLT | |
| | 5 | 1 | **1D-5117** | 4 | NUT-JAM (1/2-13-THD) | |
| | 6 | 1 | **137-9410** | 2 | CLAMP | |
| | 7 | 1 | **2G-0617** | 2 | CLAMP | |
| | 8 | 1 | **4L-6454** | 2 | BOLT (3/8-16X1-IN) | |
| | 9 | 1,2 | **8T-4896** | 3 | WASHER-HARD (10.2X18.5X2.5-MM THK) | |
| | 10 | 1 | **6V-8801** | 2 | NUT (3/8-16-THD) | |
| Y | 11 | 1 | **203-7625** | 1 | LAMP GP-HEAD (LH) (LOW/HI BEAM) | 186 |
| Y | 12 | 1 | **203-7626** | 1 | LAMP GP-HEAD (RH) (LOW/HI BEAM) | 188 |
| | 13 | 1 | **3K-9520** | 3 | GROMMET | |
| | 14 | 1 | **203-9177** | 1 | HARNESS AS-FRONT LIGHTING | |
| | | 1 | **155-2274** | 2 | KIT-CONNECTING PLUG (6-PIN) | |
| | | | | | (EACH INCLUDES PLUG AS & WEDGE) | |
| | | 1 | **102-8801** | 1 | KIT-RECEPTACLE (12-PIN) | |
| | | | | | (INCLUDES RECEPTACLE AS & WEDGE) | |
| | 15 | 1 | **3S-2093** | 4 | STRAP-CABLE | |
| | 16 | 1 | **8M-2770** | 2 | CLIP | |
| | 17 | 2 | **4K-8864** | 2 | CLIP | |
| | 18 | 2 | **108-0358** | 1 | FLASHER AS (24-VOLT) (TURN SIGNAL/HAZARD LAMPS) | |
| M | 19 | 2 | **9X-2043** | 2 | SCREW-TRUSS HEAD (M6X1X14-MM) | |
| | 20 | 1 | **5P-8245** | 4 | WASHER-HARD (13.5X25.5X3-MM THK) | |
| | 21 | 2 | **9W-1442** | 1 | FUSE (10-AMPERE) | |
| | 22 | 2 | **8X-6296** | 1 | LEVER (HIGH/LOW BEAM) | |
| | 22A | 2 | **8X-6296** | 1 | LEVER (TURN/HAZARD) | |
| | 23 | 2 | **8X-5154** | 1 | FILM-FACE (HEADLIGHTS HIGH, LOW BEAM) | |
| | 24 | 2 | **8X-5153** | 1 | FILM-FACE (TURN SIGNAL, HAZARD) | |
| | 25 | 2 | **3E-8772** | 1 | SWITCH AS-ROCKER (HEAD LAMP/TAIL) | |
| | | | **3E-8825** | 2 | LAMP (24-VOLT) | |
| | | | **3E-9326** | 1 | ACTUATOR-ROCKER | |
| | 26 | 2 | **103-5678** | 1 | SWITCH AS-ROTARY (HIGH/LOW BEAM) | |
| | | 2 | **5L-7200** | 1 | SCREW (8-32X0.375-IN) | |
| | | 2 | **9B-7233** | 1 | LOCKWASHER | |
| | 27 | 2 | **173-3064** | 1 | SWITCH GP-ROTARY (TURN SIGNAL, HAZARD) | |
| | | 2 | **5L-7200** | 1 | SCREW (8-32X0.375-IN) | |
| | | 2 | **9B-7233** | 1 | LOCKWASHER | |
| Y | 28 | 2 | *188-9331* | 1 | LIGHTING GP-SIGNAL (REAR) | 263 |
| | 29 | 2 | **5M-3062** | 1 | BOLT (3/8-16X0.75-IN) | |
| | 30 | 1 | **186-2508** | 1 | HARNESS AS-FRONT CHASSIS | |
| | | 1 | **155-2255** | 1 | KIT-CONNECTING PLUG (12-PIN) | |
| | | | | | (INCLUDES PLUG AS & WEDGE) | |
| | | 1 | **102-8801** | 1 | KIT-RECEPTACLE (12-PIN) | |
| | | | | | (INCLUDES RECEPTACLE AS & WEDGE) | |
| | 31 | 2 | **8T-4205** | 2 | WASHER-HARD (7.2X14.5X2-MM THK) | |
| M | 32 | 2 | **5C-2890** | 2 | NUT (M6X1-THD) | |
| | 33 | 1 | **7K-1181** | 2 | STRAP-CABLE | |

M-METRIC PART
Y-SEPARATE ILLUSTRATION

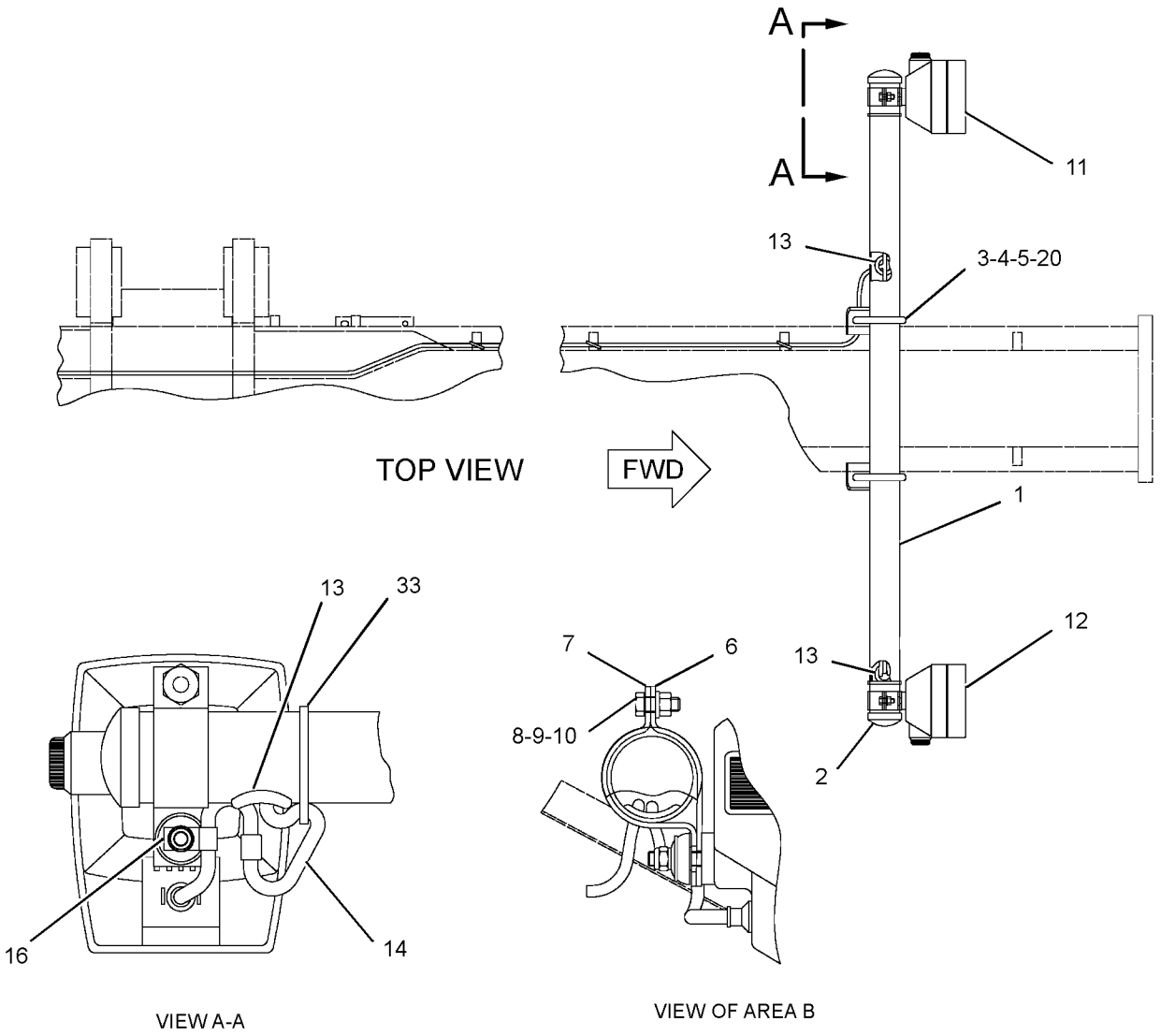


GRAPHIC #1

g01295253

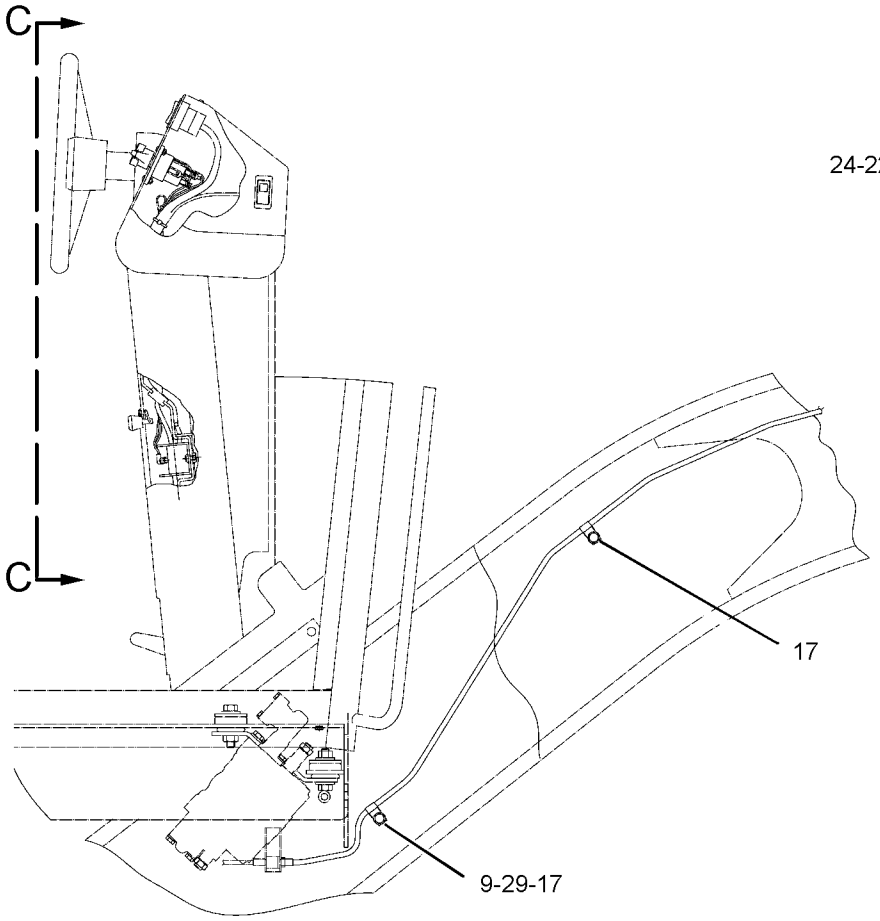


RIGHT SIDE VIEW

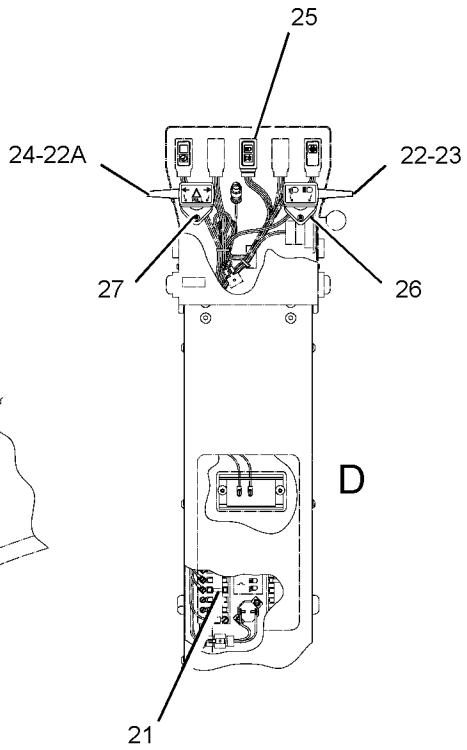


VIEW C-C

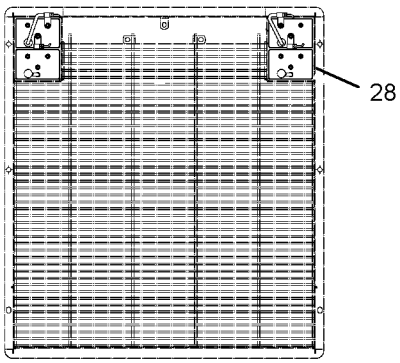


REAR VIEW
RADIATOR

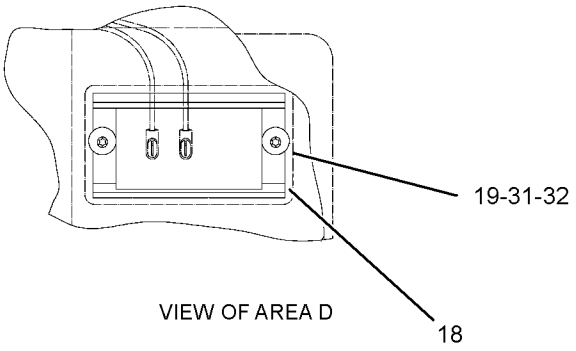


VIEW OF AREA D

GRAPHIC #2 **<END>** g01295308

# *211-1520* LIGHTING GP-ROADING—CAB POSITION LAMP—EU

**S/N: CCA1-UP**
**PART OF 197-5572 ROADING AR**
**AN ATTACHMENT**

**SMCS-1429** **i02204135**

| NOTE | REF NO | GRAPHIC REF | PART NUMBER | QTY | PART NAME 1 2 3 4 5 6 (PRODUCT LEVEL) | SEE PAGE |
|---|---|---|---|---|---|---|
| Y | 1 | 1 | **212-3924** | 2 | LAMP GP-MARKER | 194 |
| | 2 | 1 | **130-5300** | 2 | CLIP | |
| M | 3 | 1 | **5C-2874** | 4 | NUT (M5X0.8 THD) | |
| | 4 | 1 | **8T-4121** | 2 | WASHER-HARD (11X21X2.5-MM THK) | |
| M | 5 | 1 | **8T-4137** | 2 | BOLT (M10X1.5X20-MM) | |
| | 6 | 1 | **8T-4205** | 4 | WASHER-HARD (7.2X14.5X2-MM THK) | |

M-METRIC PART
Y-SEPARATE ILLUSTRATION

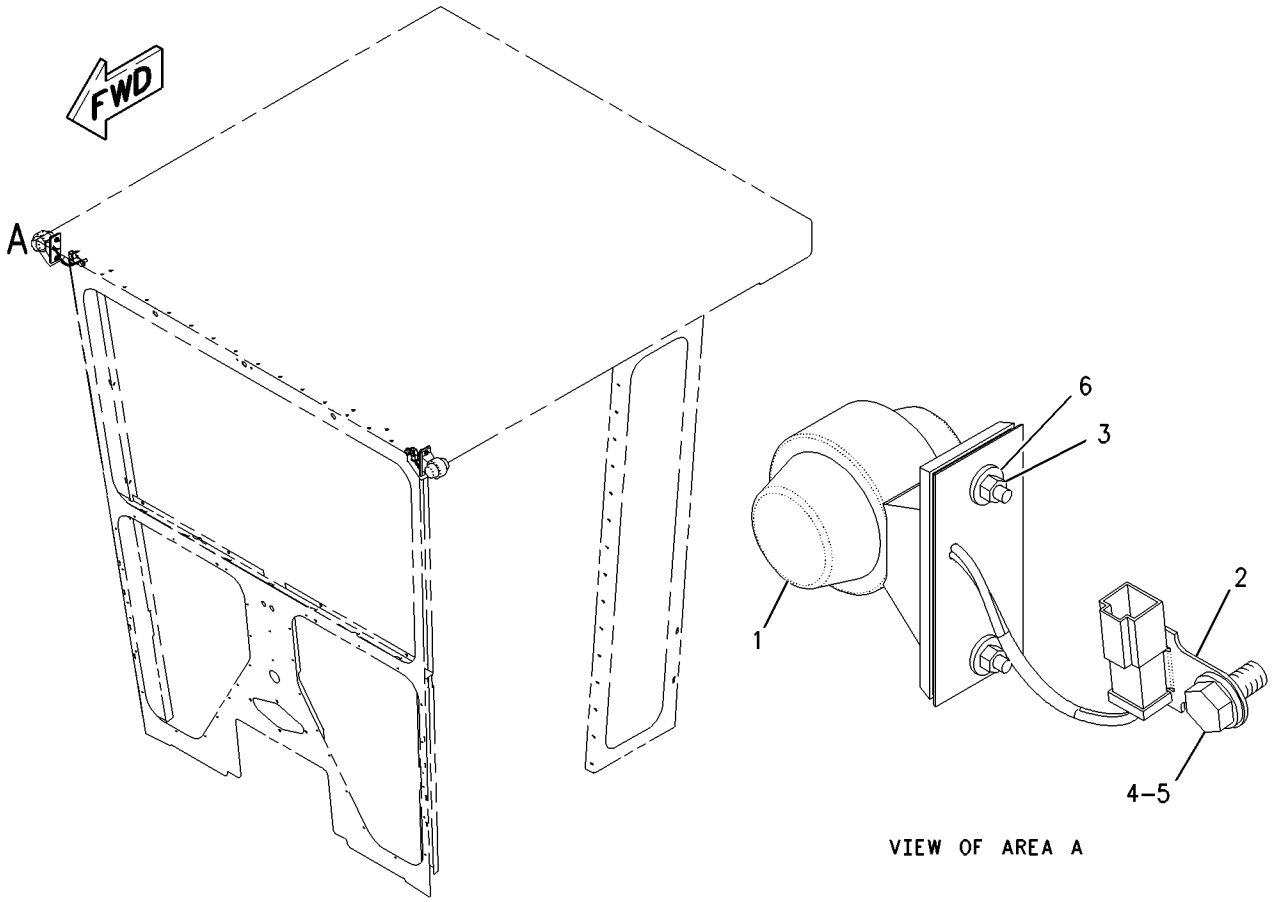


VIEW OF AREA A

GRAPHIC #1 **<END>** g00892028

## *188-9331* LIGHTING GP-SIGNAL–REAR TURN LAMPS

**S/N: CCA1-213**

**PART OF 188-9328 LIGHTING AR-FLOOD, 161-0770, 161-0771, 179-1548 LIGHTING AR-FLOOD & SIGNAL AN ATTACHMENT**

**SMCS-1430** **i02587036**

| NOTE | REF NO | GRAPHIC REF | PART NUMBER | QTY | PART NAME 1 2 3 4 5 6 (PRODUCT LEVEL) | SEE PAGE |
|---|---|---|---|---|---|---|
| Y | 1 | 1 | **135-0427** | 2 | LAMP GP-SIGNAL (24-VOLT) (PARK, TURN) | 197 |
| M | 2 | 1 | **5C-2890** | 6 | NUT (M6X1-THD) | |
| | 3 | 1 | **8T-4224** | 6 | WASHER-HARD (8.8X16X2-MM THK) | |

M-METRIC PART
Y-SEPARATE ILLUSTRATION

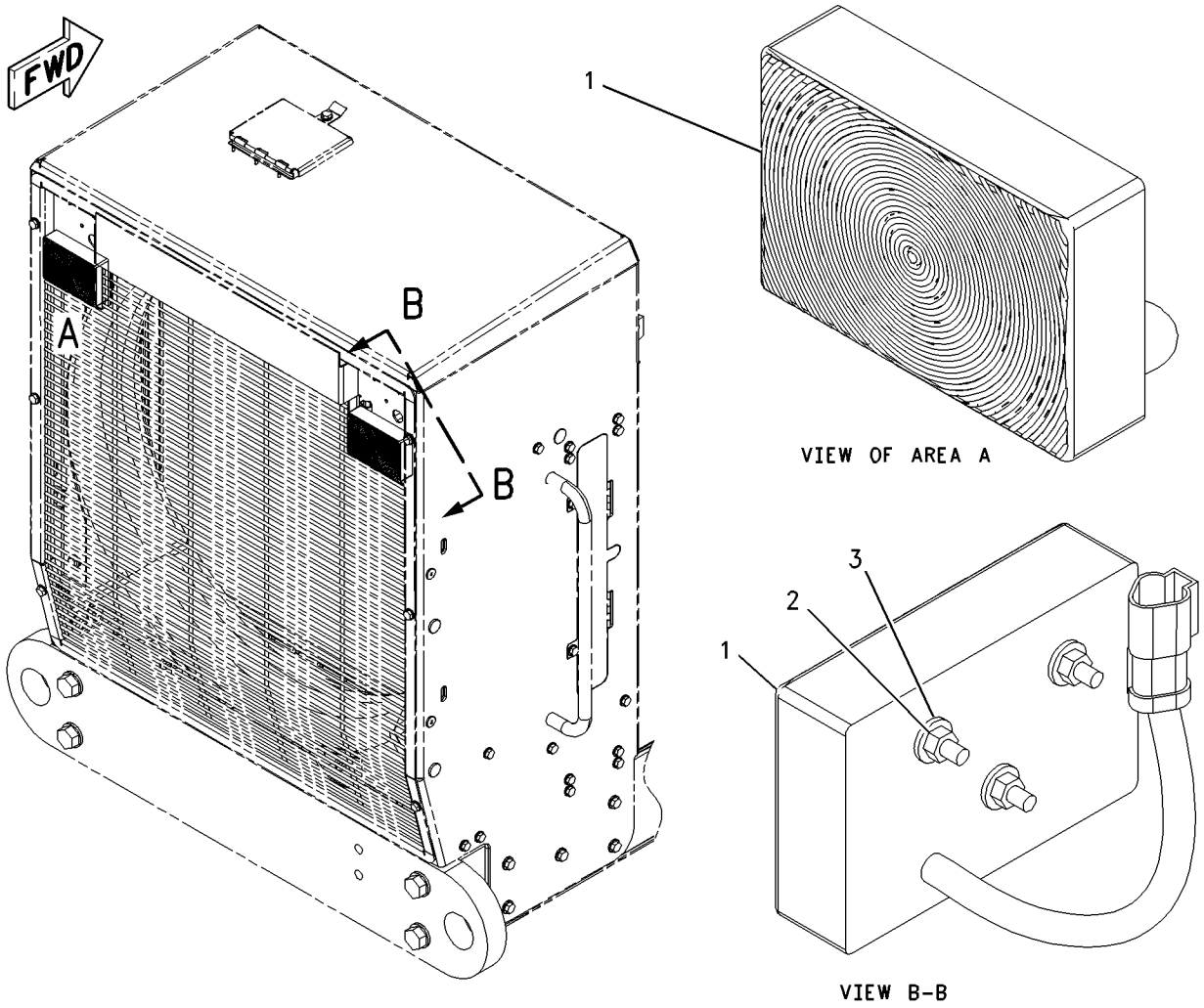


GRAPHIC #1 **<END>** g00843802

# *188-9331* LIGHTING GP-SIGNAL–REAR TURN LAMPS

**S/N: CCA1-UP**

**PART OF 188-9328 LIGHTING AR-FLOOD, 161-0770, 161-0771, 179-1548 LIGHTING AR-FLOOD & SIGNAL, 207-9193 LIGHTING GP-ROADING AN ATTACHMENT**

**SMCS-1430** **i02204141**

| NOTE | REF NO | GRAPHIC REF | PART NUMBER | QTY | PART NAME 1 2 3 4 5 6 (PRODUCT LEVEL) | SEE PAGE |
|---|---|---|---|---|---|---|
| CY | 1 | 1 | **199-3368** | 2 | LAMP GP-SIGNAL (24-VOLT, TURN) (PARK, TURN) | 198 |
| M | 2 | 1 | **5C-2890** | 6 | NUT (M6X1-THD) | |
| | 3 | 1 | **8T-4224** | 6 | WASHER-HARD (8.8X16X2-MM THK) | |

C-CHANGE FROM PREVIOUS TYPE
M-METRIC PART
Y-SEPARATE ILLUSTRATION

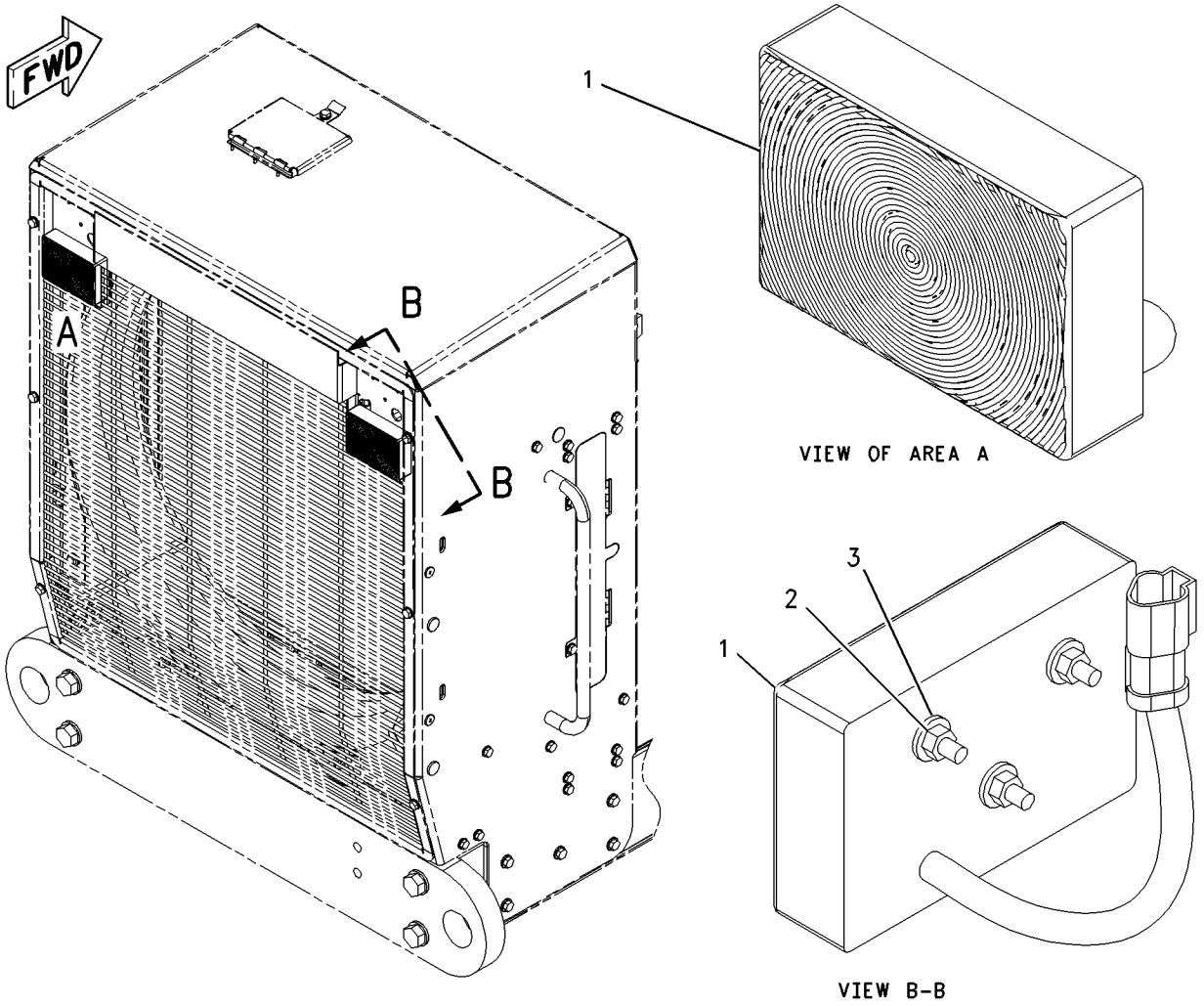


GRAPHIC #1 **<END>** g00843802

## *161-0773* LIGHTING GP-WARNING–ROTATING

**S/N: CCA1-UP**

**AN ATTACHMENT**

**SMCS-1429, 1431** **i02204140**

| NOTE | REF NO | GRAPHIC REF | PART NUMBER | QTY | PART NAME 1 2 3 4 5 6 (PRODUCT LEVEL) | SEE PAGE |
|---|---|---|---|---|---|---|
| | 1 | 1 | **9W-1442** | 1 | FUSE (10-AMPERE) | |
| Y | 2 | 1 | **233-4253** | 1 | LIGHTING GP-WARNING | 268 |

Y-SEPARATE ILLUSTRATION

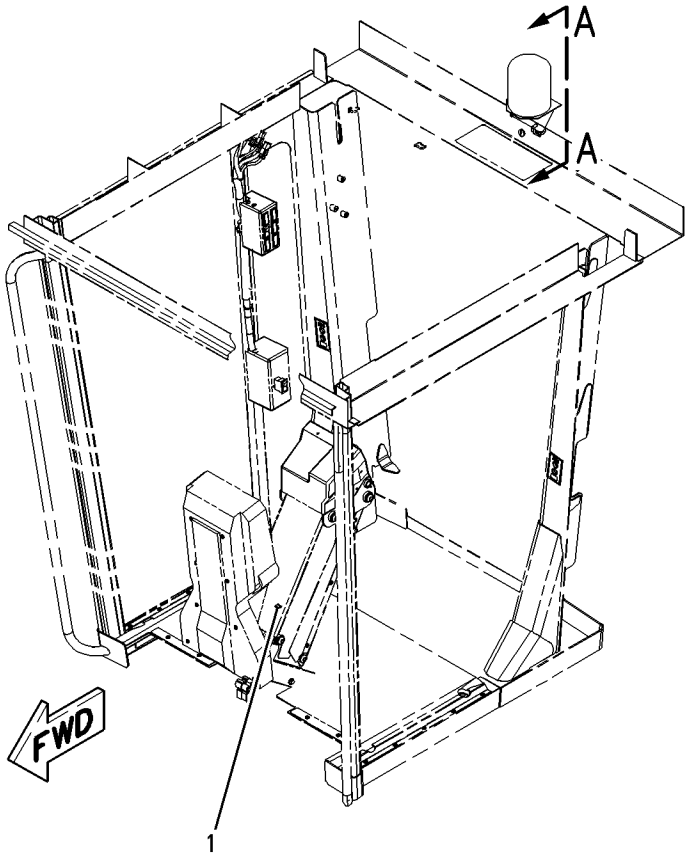


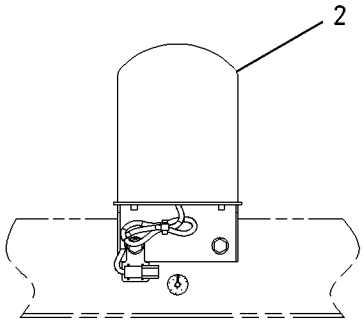


VIEW A–A

GRAPHIC #1 **<END>** g01005309

# *161-0774* LIGHTING GP-WARNING—ROTATING

**S/N: CCA1-UP**

**AN ATTACHMENT**

**SMCS-1429, 1431** **i01990760**

| NOTE | REF NO | GRAPHIC REF | PART NUMBER | QTY | PART NAME 1 2 3 4 5 6 (PRODUCT LEVEL) | SEE PAGE |
|---|---|---|---|---|---|---|
| | 1 | 1 | **9W-1442** | 1 | FUSE (10-AMPERE) (WARNING BEACON) | |
| Y | 2 | 1 | *239-9354* | 1 | LIGHTING GP-WARNING BEACON | 273 |

Y-SEPARATE ILLUSTRATION

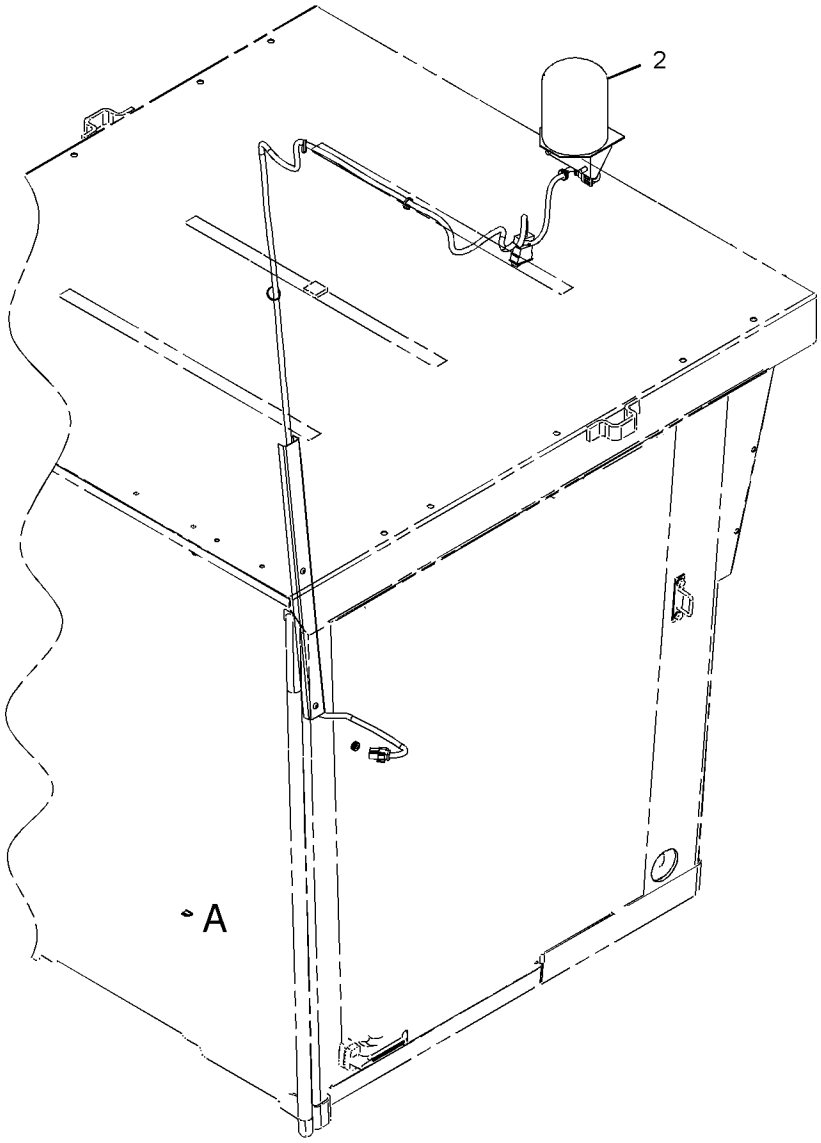


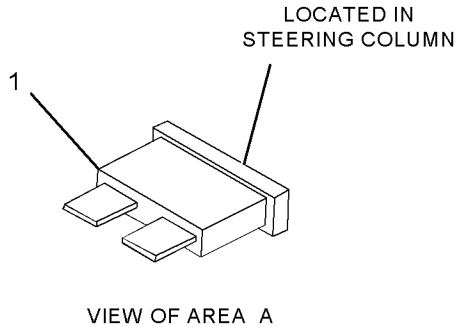


VIEW OF AREA A

GRAPHIC #1 **<END>** g01035618

# *233-4253* LIGHTING GP-WARNING

**S/N: CCA1-UP**
**PART OF 161-0773 LIGHTING GP-WARNING**
**AN ATTACHMENT**
**TYPE 1**

**SMCS-1429, 1431** **i02587046**

| NOTE | REF NO | GRAPHIC REF | PART NUMBER | QTY | PART NAME 1 2 3 4 5 6 (PRODUCT LEVEL) | SEE PAGE |
|---|---|---|---|---|---|---|
| | 1 | 1 | **3S-2093** | 1 | STRAP-CABLE | |
| | 2 | 1 | **107-4932** | 1 | PLATE AS | |
| Y | 3 | 1 | **128-6983** | 1 | LAMP GP-WARNING BEACON (24-VOLT, AMBER) (ROTATING) | 199 |
| | 4 | 1 | **130-5300** | 1 | CLIP | |
| | 5 | 1 | **5P-8525** | 1 | GROMMET | |
| | 6 | 1 | **8T-4121** | 2 | WASHER-HARD (11X21X2.5-MM THK) | |
| M | 7 | 1 | **8T-4136** | 2 | BOLT (M10X1.5X25-MM) | |
| | 8 | 1 | **102-9862** | 1 | SWITCH AS (WARNING BEACON) | |
| | | 1 | **3E-8822** | 1 | ACTUATOR-ROCKER | |
| | | 1 | **3E-8825** | 1 | LAMP (24-VOLT) | |
| | | 1 | **165-5674** | 1 | LAMP-LED | |

M-METRIC PART
Y-SEPARATE ILLUSTRATION

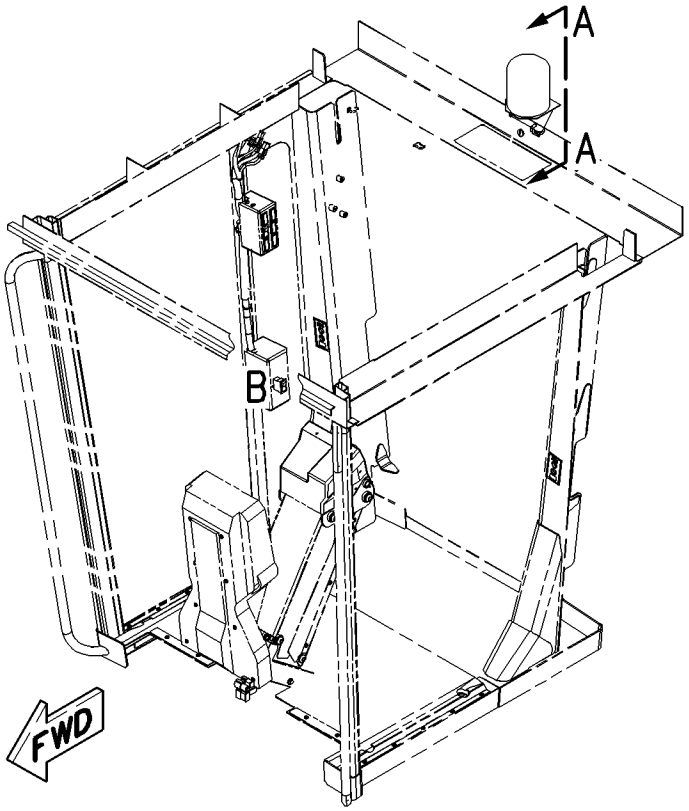


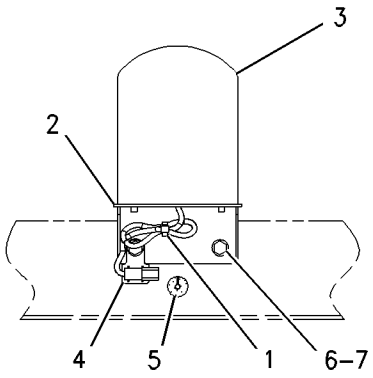

VIEW A-A

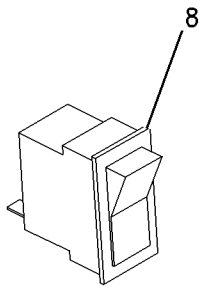

VIEW OF AREA B

GRAPHIC #1 **<END>** g01005314

# *233-4253* LIGHTING GP-WARNING

**S/N: CCA1-UP**
**PART OF 161-0773 LIGHTING GP-WARNING**
**AN ATTACHMENT**
**TYPE 2**

**SMCS-1429, 1431** **i02587055**

| NOTE | REF NO | GRAPHIC REF | PART NUMBER | QTY | PART NAME 1 2 3 4 5 6 (PRODUCT LEVEL) | SEE PAGE |
|---|---|---|---|---|---|---|
| | 1 | 1 | **3S-2093** | 1 | STRAP-CABLE | |
| | 2 | 1 | **107-4932** | 1 | PLATE AS | |
| CY | 3 | 1 | **235-3937** | 1 | LAMP GP-WARNING BEACON (24-VOLT, AMBER) (ROTATING) | 200 |
| | 4 | 1 | **130-5300** | 1 | CLIP | |
| | 5 | 1 | **5P-8525** | 1 | GROMMET | |
| | 6 | 1 | **8T-4121** | 2 | WASHER-HARD (11X21X2.5-MM THK) | |
| M | 7 | 1 | **8T-4136** | 2 | BOLT (M10X1.5X25-MM) | |
| | 8 | 1 | **102-9862** | 1 | SWITCH AS (WARNING BEACON) | |
| | | 1 | **3E-8822** | 1 | ACTUATOR-ROCKER | |
| | | 1 | **3E-8825** | 1 | LAMP (24-VOLT) | |
| | | 1 | **165-5674** | 1 | LAMP-LED | |

C-CHANGE FROM PREVIOUS TYPE
M-METRIC PART
Y-SEPARATE ILLUSTRATION

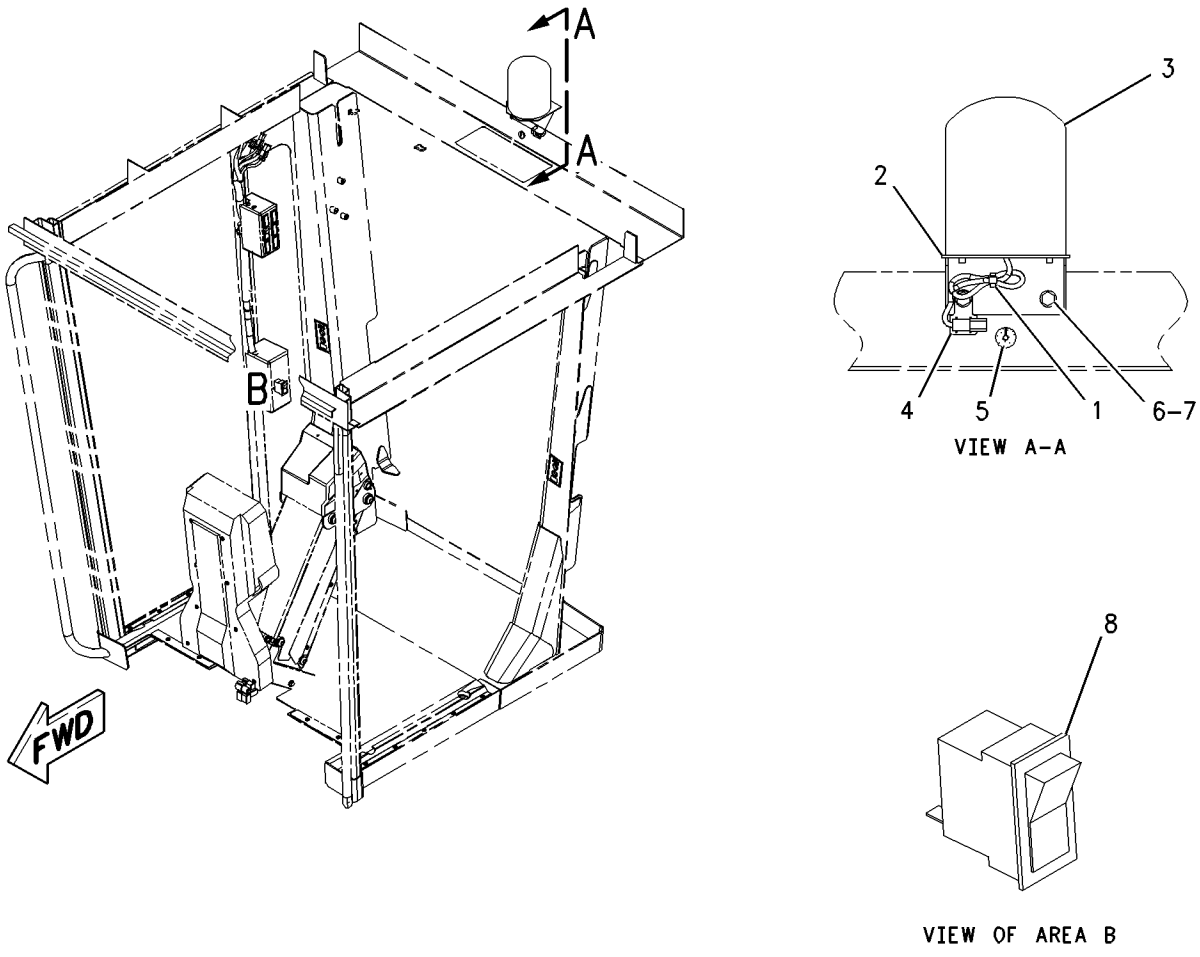


GRAPHIC #1 **<END>** g01005314

# ELECTRICAL AND STARTING SYSTEM

## *261-8101* LIGHTING GP-WARNING

**S/N: CCA1-UP**
**PART OF 259-5738 CONVERSION AR-MACHINE**
**AN ATTACHMENT**

**SMCS-1429, 1431** **i02252309**

| NOTE | REF NO | GRAPHIC REF | PART NUMBER | QTY | PART NAME 1 2 3 4 5 6 (PRODUCT LEVEL) | SEE PAGE |
|---|---|---|---|---|---|---|
| | 1 | 1 | **3S-2093** | 1 | STRAP-CABLE | |
| | 2 | 1 | **261-8100** | 1 | GUARD AS | |
| | | 1 | **9B-2923** | 2 | HINGE | |
| Y | 3 | 1 | **235-3937** | 1 | LAMP GP-WARNING BEACON (24-VOLT, AMBER) | 200 |
| | 4 | 1 | **9W-1442** | 1 | FUSE (10-AMPERE) (BACKUP ALARM) | |
| | 5 | 1 | **130-5300** | 1 | CLIP | |
| | 6 | 1 | **2G-6684** | 3 | BUMPER | |
| | 7 | 1 | **5P-8525** | 1 | GROMMET | |
| | 8 | 1 | **8T-4121** | 2 | WASHER-HARD (11X21X2.5-MM THK) | |
| M | 9 | 1 | **8T-4136** | 2 | BOLT (M10X1.5X25-MM) | |
| | 10 | 1 | *9X-9639* | 1 | SWITCH AS-ROCKER (WARNING BEACON) | |
| | | 1 | **102-9862** | 1 | SWITCH AS (WARNING BEACON) | |
| | | 1 | **3E-8822** | 1 | ACTUATOR-ROCKER | |
| | | 1 | **3E-8825** | 1 | LAMP (24-VOLT) | |
| | 11 | 1 | **8T-8908** | 1 | BOLT (1/4-20X1-IN) | |
| | 12 | 1 | **8T-4205** | 1 | WASHER-HARD (7.2X14.5X2-MM THK) | |
| | 13 | 1 | **6V-8185** | 1 | NUT (1/4-20-THD) | |
| M | 14 | 1 | **6V-7357** | 3 | BOLT (M6X1X25-MM) | |

M-METRIC PART
Y-SEPARATE ILLUSTRATION

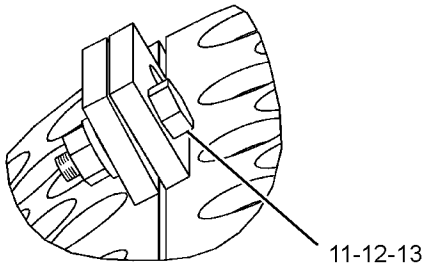


VIEW OF AREA B

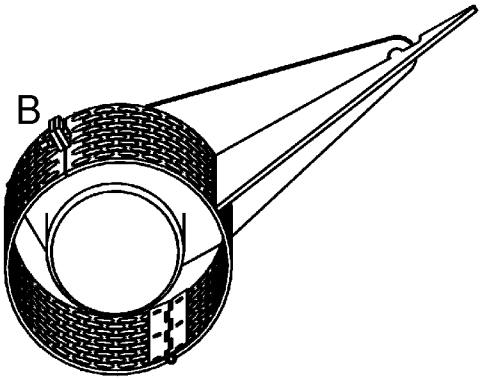


VIEW A-A

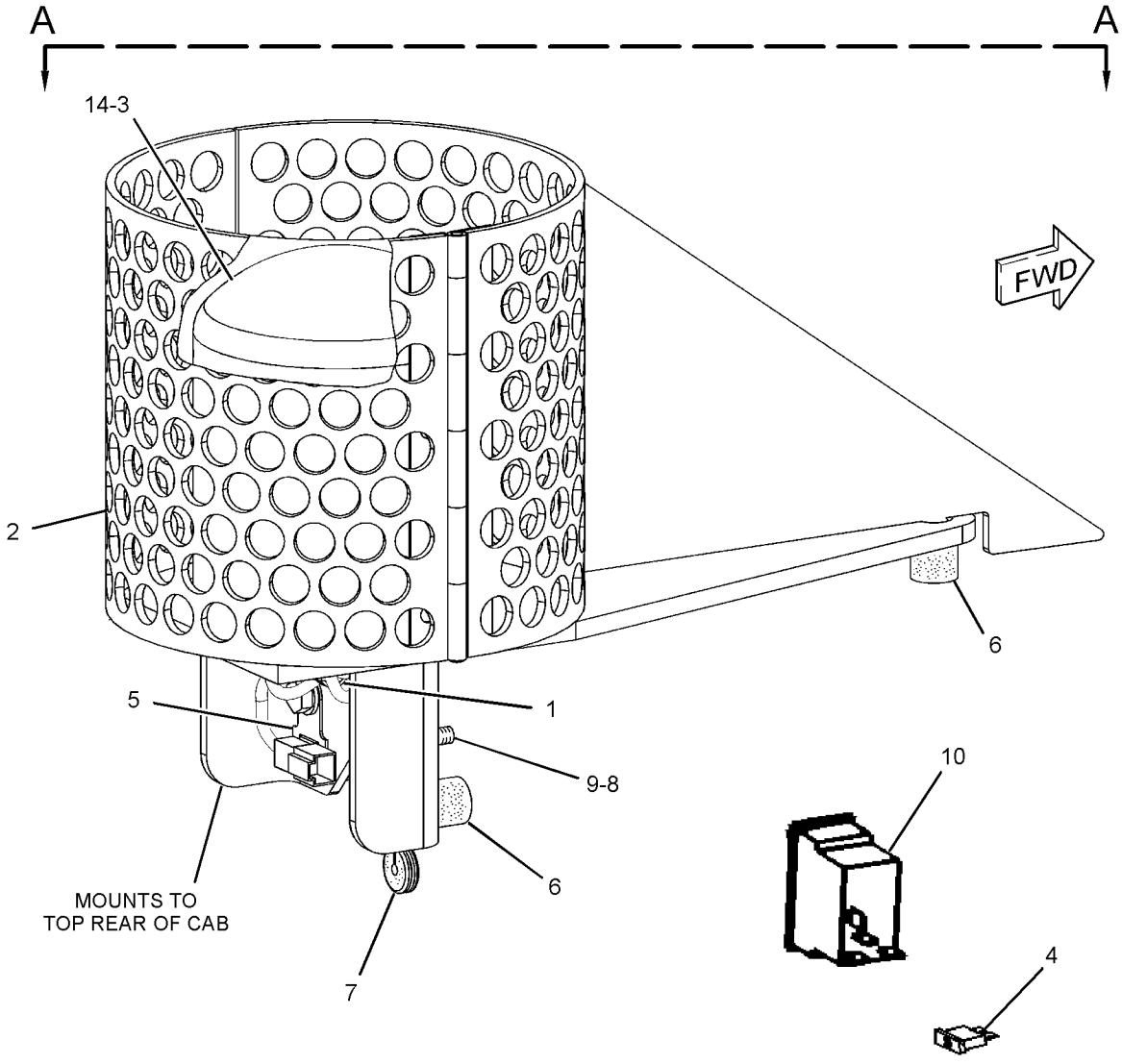


GRAPHIC #1 **<END>** g01239584

# *262-4932* LIGHTING GP-WARNING–AMBER

**S/N: CCA1-UP**
**ROTATING**
**FOR USE WITH 161-1921–PAGE 308**
**AN ATTACHMENT**

**SMCS-1429, 1431** **i02304825**

| NOTE | REF NO | GRAPHIC REF | PART NUMBER | QTY | PART NAME 1 2 3 4 5 6 (PRODUCT LEVEL) | SEE PAGE |
|---|---|---|---|---|---|---|
| | 1 | 1 | **3S-2093** | 1 | STRAP-CABLE | |
| Y | 2 | 1 | **235-3937** | 1 | LAMP GP-WARNING BEACON (24-VOLT, AMBER) | 200 |

Y-SEPARATE ILLUSTRATION

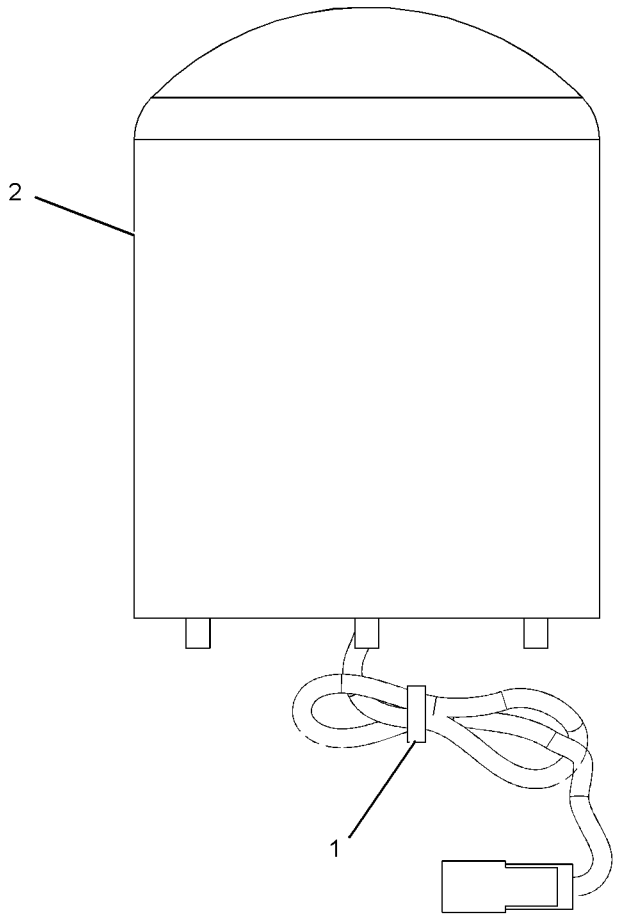


GRAPHIC #1 **<END>** g01139248

# *239-9354* LIGHTING GP-WARNING BEACON—AMBER

**S/N: CCA1-UP**
**PART OF 161-0774 LIGHTING GP-WARNING**
**AN ATTACHMENT**

**SMCS-1431** **i02563383**

| NOTE | REF NO | GRAPHIC REF | PART NUMBER | QTY | PART NAME 1 2 3 4 5 6 (PRODUCT LEVEL) | SEE PAGE |
|---|---|---|---|---|---|---|
| | 1 | 1 | **3S-2093** | 6 | STRAP-CABLE | |
| | 2 | 1 | **107-4932** | 1 | PLATE AS | |
| Y | 3 | 1 | **235-3937** | 1 | LAMP GP-WARNING BEACON (24-VOLT, AMBER) | 200 |
| | 4 | 1 | **169-3230** | 1 | HARNESS AS-FRONT LIGHTING | |
| | | 1 | **102-8804** | 1 | KIT-RECEPTACLE (4-PIN) | |
| | | | | | (INCLUDES RECEPTACLE AS & WEDGE) | |
| | | 1 | **155-2270** | 1 | KIT-CONNECTING PLUG (2-PIN) | |
| | | | | | (INCLUDES PLUG AS & WEDGE) | |
| | 5 | 1 | **173-1885** | 1 | COVER | |
| | 6 | 1 | **115-3070** | 1 | CLIP AS-CONNECT (4-PIN) | |
| | 7 | 1 | **130-5300** | 1 | CLIP | |
| | 8 | 1 | **5P-8525** | 1 | GROMMET | |
| | 9 | 1 | **8T-4121** | 2 | WASHER-HARD (11X21X2.5-MM THK) | |
| M | 10 | 1 | **8T-4136** | 2 | BOLT (M10X1.5X25-MM) | |
| | 11 | 1 | **9D-8508** | 1 | GROMMET | |
| M | 12 | 1 | **9X-2043** | 2 | SCREW-TRUSS HEAD (M6X1X14-MM) | |
| | 13 | 1 | **102-9862** | 1 | SWITCH AS (WARNING BEACON) | |
| | | 1 | **3E-8822** | 1 | ACTUATOR-ROCKER | |
| | | 1 | **3E-8825** | 1 | LAMP (24-VOLT) | |

M-METRIC PART
Y-SEPARATE ILLUSTRATION

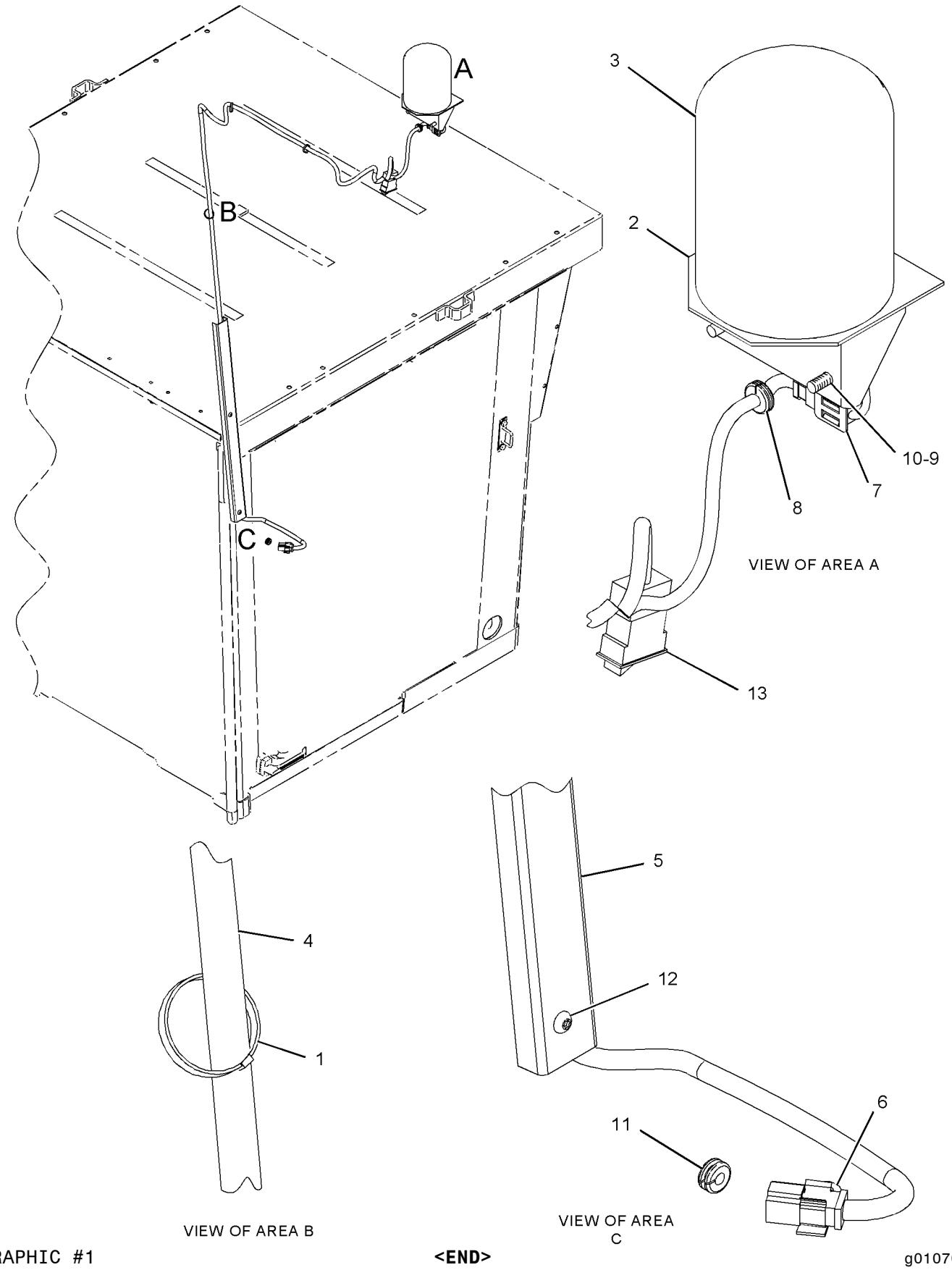


GRAPHIC #1 **<END>** g01070888

# *117-3915* MOTOR GP-ELECTRIC

**S/N: CCA1-UP**
**24-VOLT**
**PART OF 123-8867 PUMP & MOTOR GP-SEC STEERING**
**AN ATTACHMENT**

**SMCS-5927** **i00138924**

| NOTE | REF NO | GRAPHIC REF | PART NUMBER | QTY | PART NAME 1 2 3 4 5 6 (PRODUCT LEVEL) | SEE PAGE |
|---|---|---|---|---|---|---|
| | 1 | 1 | **6V-8801** | 2 | NUT (3/8-16-THD) | |
| | 2 | 1 | **7X-0608** | 2 | WASHER-HARD (10.2X16X2-MM THK) | |

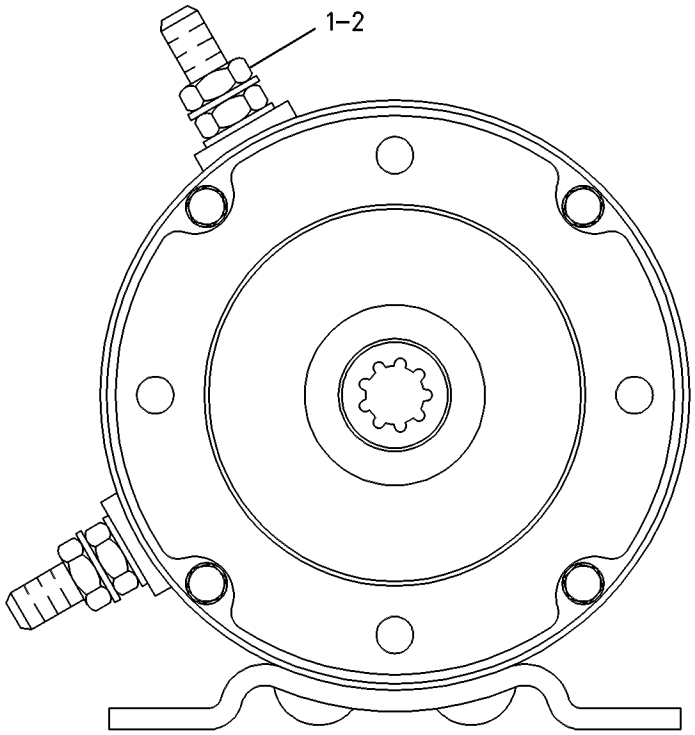


GRAPHIC #1 **<END>** g00085784

## *170-5335* MOTOR GP-ELECTRIC–CIRCULATING FAN

**S/N: CCA1-UP**
**PART OF 170-4820, 170-5334 FAN GP-DEFROSTER**
**AN ATTACHMENT**

**SMCS-5927** **i02463158**

| NOTE | REF NO | GRAPHIC REF | PART NUMBER | QTY | PART NAME 1 2 3 4 5 6 (PRODUCT LEVEL) | SEE PAGE |
|---|---|---|---|---|---|---|
| | 1 | 1 | **102-8802** | 1 | KIT-RECEPTACLE (2-PIN) | |
| | | | | | (INCLUDES RECEPTACLE AS & WEDGE) | |
| | 2 | 1 | **9W-0852** | 2 | PIN-CONNECTOR (14-GA) | |

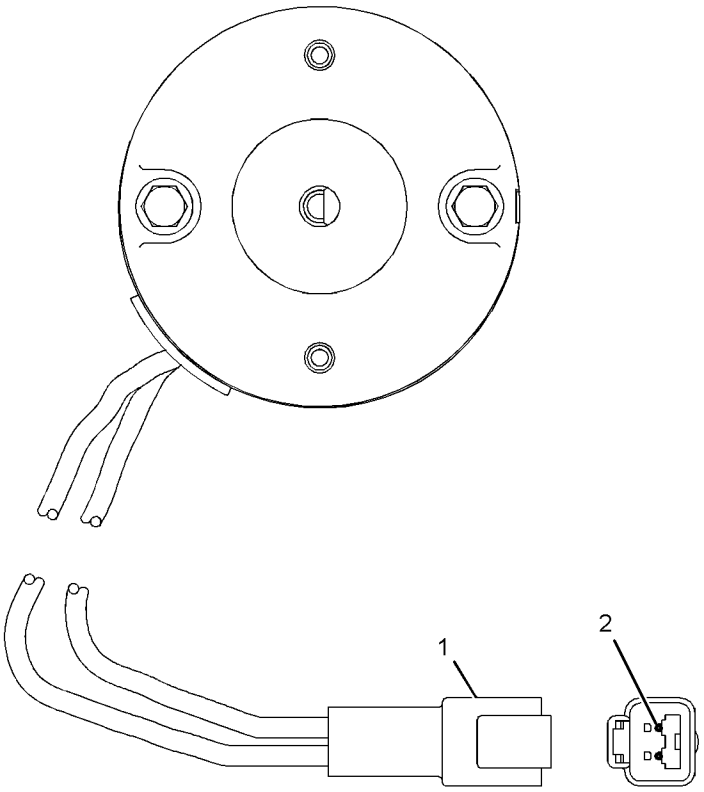


GRAPHIC #1 **<END>** g01240075

# *160-2443* SENSOR GP-POSITION–THROTTLE CONTROL

**S/N: CCA1-UP**
**ROTARY**
**PART OF 159-5935 CONTROL GP-GOVERNOR**

**SMCS-1439, 1913, 3050, 5258** **i01431988**

| NOTE | REF NO | GRAPHIC REF | PART NUMBER | QTY | PART NAME 1 2 3 4 5 6 (PRODUCT LEVEL) | SEE PAGE |
|---|---|---|---|---|---|---|
| | 1 | 1 | **102-8803** | 1 | KIT-RECEPTACLE (3-PIN) | |
| | | | | | (INCLUDES RECEPTACLE AS & WEDGE) | |
| | 2 | 1 | **8T-8729** | 3 | PIN-CONNECTOR | |
| | 3 | 1 | **3E-3371** | 1 | WEDGE-RECEPTACLE LOCK (3-PIN) | |

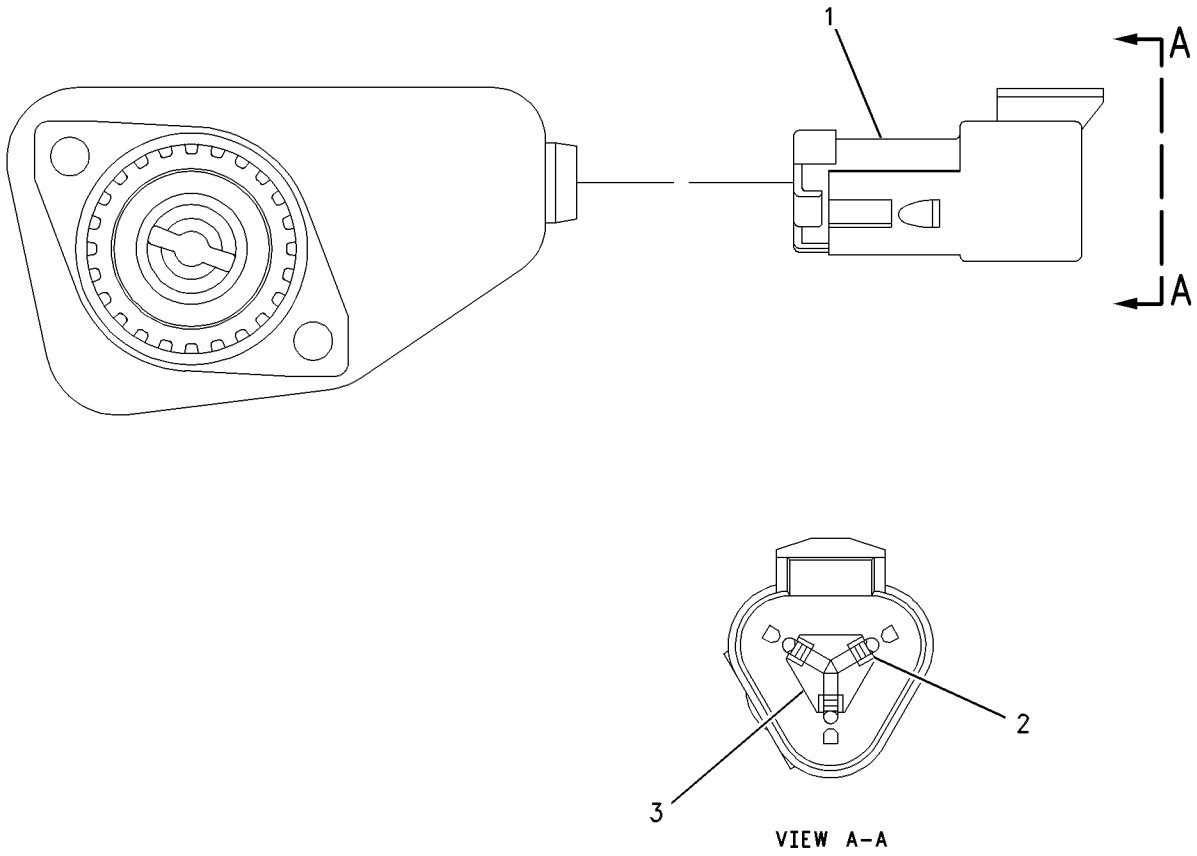


GRAPHIC #1 **<END>** g00637818

# *214-4863* SENSOR GP-POSITION–ROTARY–CLUTCH

**S/N: CCA1-UP**

**PART OF 159-5933 CONTROL GP-CLUTCH**

**SMCS-1439, 1913, 3050, 5258** **i01898168**

| NOTE | REF NO | GRAPHIC REF | PART NUMBER | QTY | PART NAME 1 2 3 4 5 6 (PRODUCT LEVEL) | SEE PAGE |
|---|---|---|---|---|---|---|
| | 1 | 1 | **102-8803** | 1 | KIT-RECEPTACLE (3-PIN) | |
| | | | | | (INCLUDES RECEPTACLE AS & WEDGE) | |
| | 2 | 1 | **186-3735** | 1 | PIN-CONNECTOR (16-GA TO 18-GA) | |
| | 3 | 1 | **3E-3371** | 1 | WEDGE-RECEPTACLE LOCK (3-PIN) | |

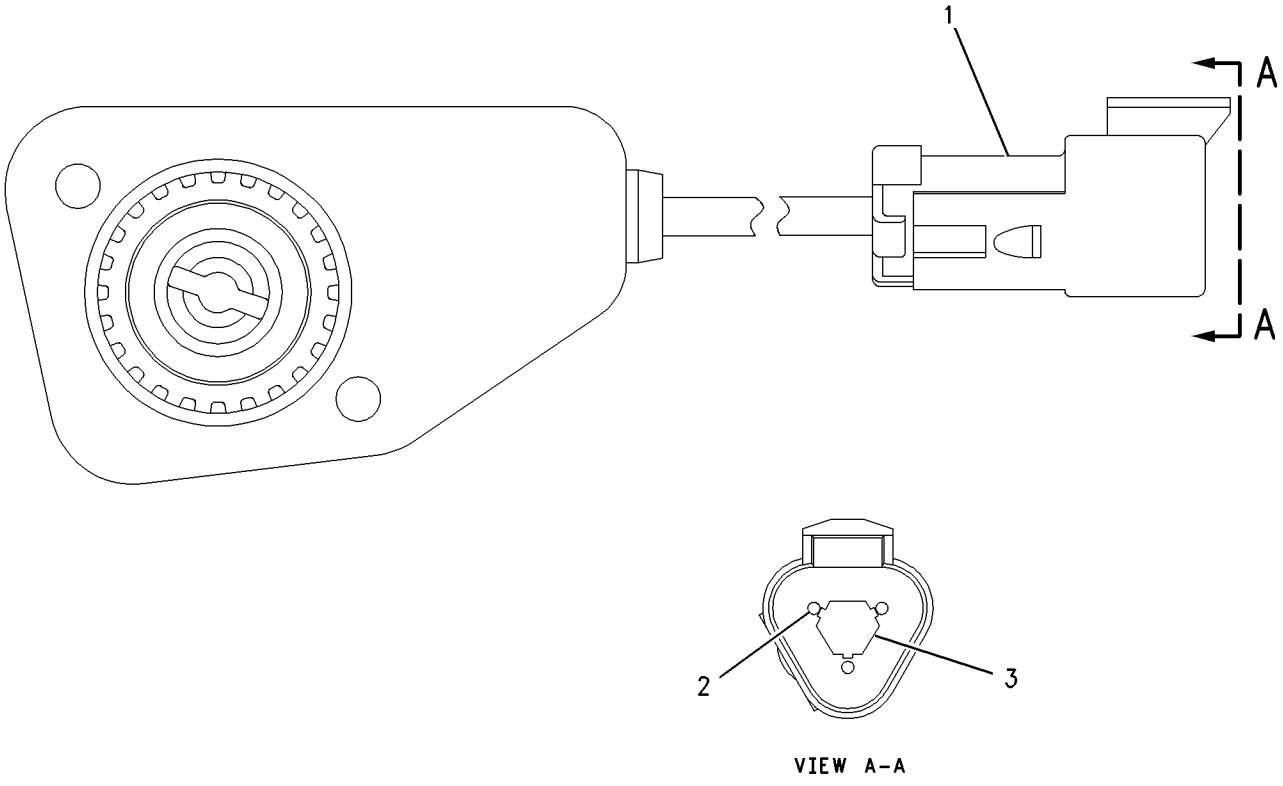


VIEW A-A

GRAPHIC #1 **<END>** g00925281

## *167-1709* SENSOR GP-PRESSURE–HYDRAULIC FAN

**S/N: CCA1-534**

**PART OF 175-6981 LINES GP-HYDRAULIC FAN**

**ALSO AN ATTACHMENT**

**SMCS-1052, 1058, 1439, 1718, 1917, 1923, 1924, 1925** **i02207361**

| NOTE | REF NO | GRAPHIC REF | PART NUMBER | QTY | PART NAME 1 2 3 4 5 6 (PRODUCT LEVEL) | SEE PAGE |
|---|---|---|---|---|---|---|
| E | 1 | 1 | **9X-1813** | | SLEEVE (34-CM) | |
| | 2 | 1 | **155-2260** | 1 | KIT-CONNECTING PLUG (3-PIN) | |
| | | | | | (KIT INCLUDES PLUG AS & WEDGE) | |
| | 3 | 1 | **194-5226** | 3 | WIRE AS-HARNESS (16-GA TO 18-GA) | |
| | | | | | –OR– | |
| | | 1 | **194-5227** | 3 | WIRE AS-HARNESS (14-GA WIRE) | |
| | 4 | 1 | **3E-3368** | 1 | WEDGE-PLUG LOCK (3-PIN) | |

E-ORDER BY THE CENTIMETER

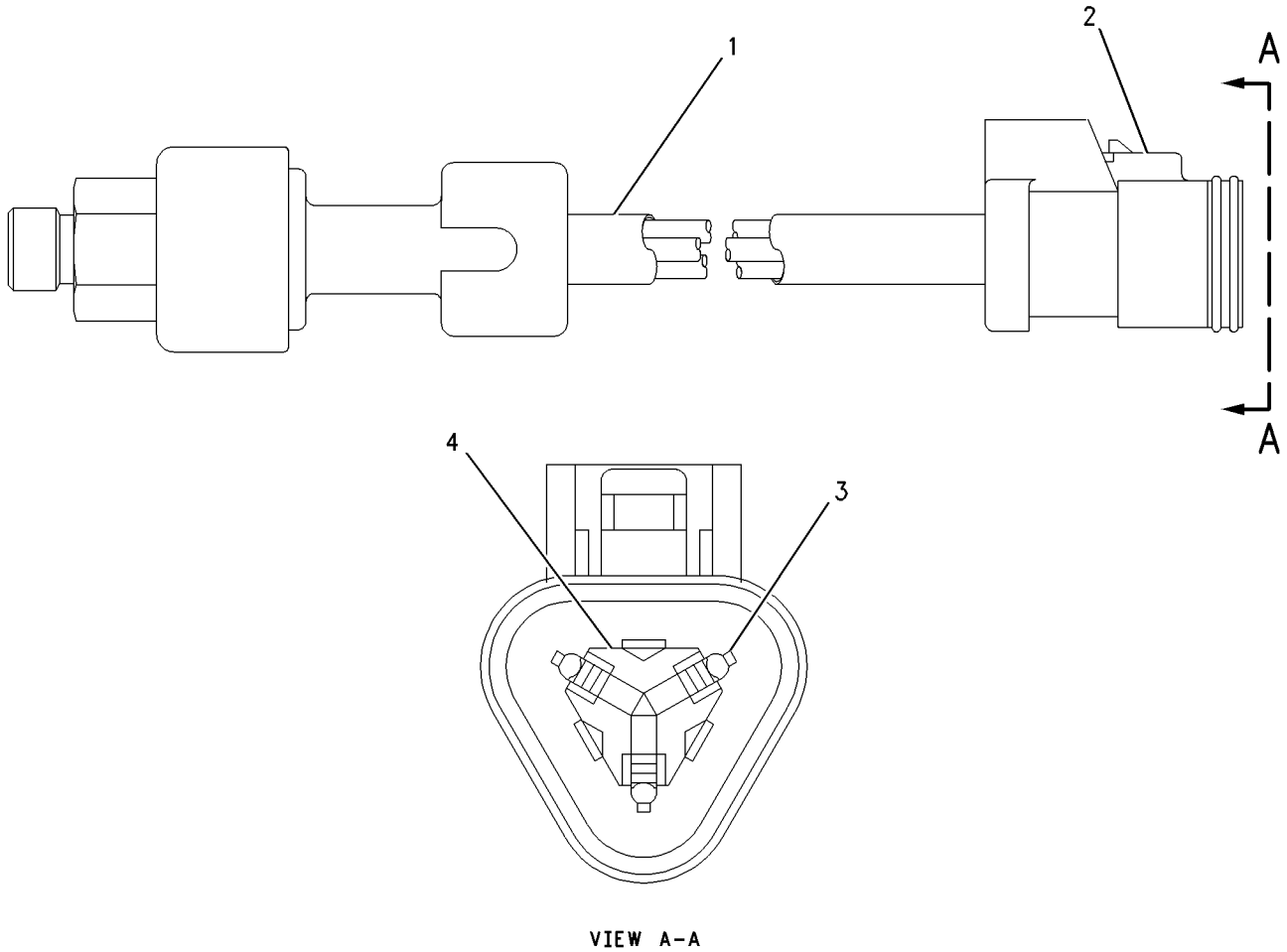


VIEW A-A

GRAPHIC #1 **<END>** g00888413

## *194-6724* SENSOR GP-PRESSURE–INLET MANIFOLD

**S/N: 3PD1-UP**

**PART OF 197-8395 SENSOR GP-PRESSURE**

**SMCS-1052, 1058, 1439, 1718, 1917, 1923, 1924, 1925** **i02034021**

| NOTE | REF NO | GRAPHIC REF | PART NUMBER | QTY | PART NAME 1 2 3 4 5 6 (PRODUCT LEVEL) | SEE PAGE |
|---|---|---|---|---|---|---|
| BE | 1 | 1 | **9X-1813** | | SLEEVE | |
| | 2 | 1 | **155-2260** | 1 | KIT-CONNECTING PLUG (3-PIN) | |
| | | | | | (INCLUDES PLUG AS AND WEDGE) | |
| | 3 | 1 | **180-9340** | 3 | SOCKET-CONNECTOR | |
| | 4 | 1 | **3E-3368** | 1 | WEDGE-PLUG LOCK (3-PIN) | |

B-USE AS REQUIRED
E-ORDER BY THE CENTIMETER

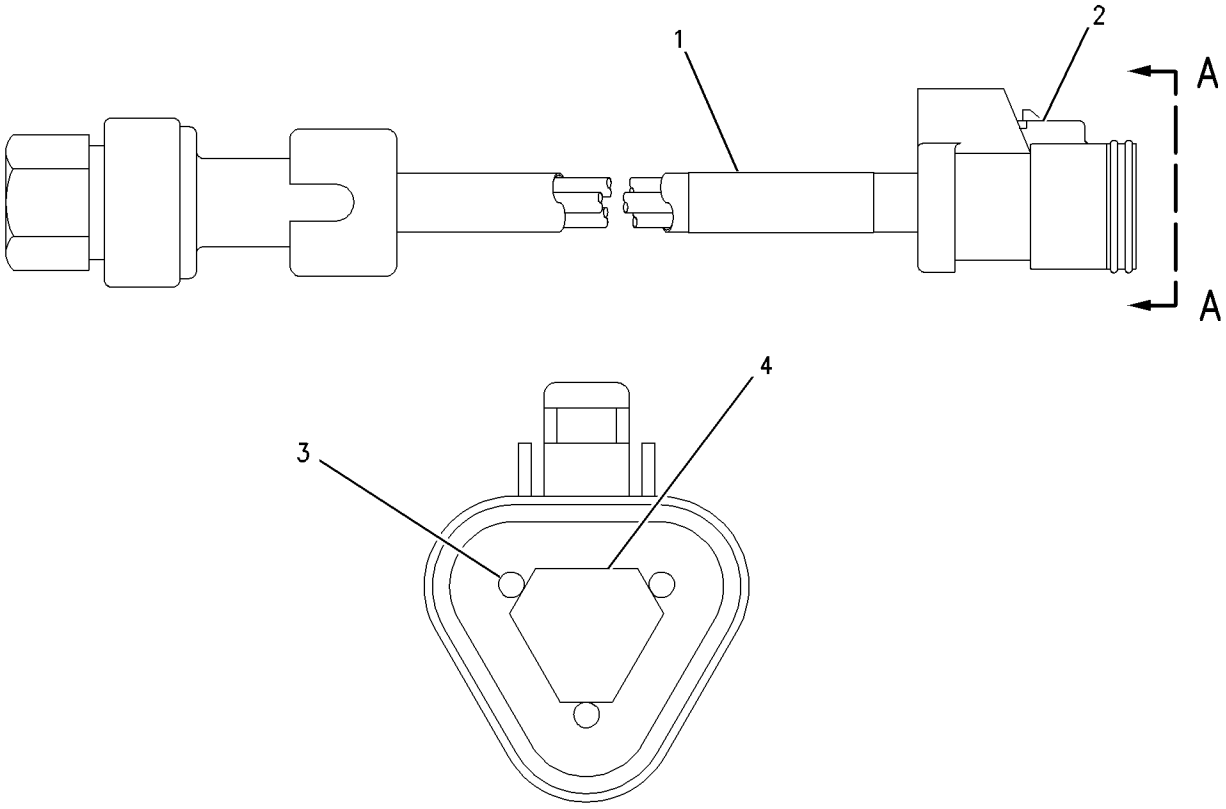


VIEW A-A

GRAPHIC #1 **<END>** g00851220

## *197-8393* SENSOR GP-PRESSURE–ATMOSPHERIC AIR

**S/N: 3PD1-UP**

**PART OF 171-1103 WIRING GP-ENGINE**

**SMCS-1052, 1058, 1439, 1718, 1917, 1923, 1924, 1925** **i01855744**

| NOTE | REF NO | GRAPHIC REF | PART NUMBER | QTY | PART NAME 1 2 3 4 5 6 (PRODUCT LEVEL) | SEE PAGE |
|---|---|---|---|---|---|---|
| | 1 | 1 | **161-1703** | 1 | SENSOR GP-PRESSURE | |
| | 2 | 1 | **6V-5049** | 1 | SEAL-O-RING | |

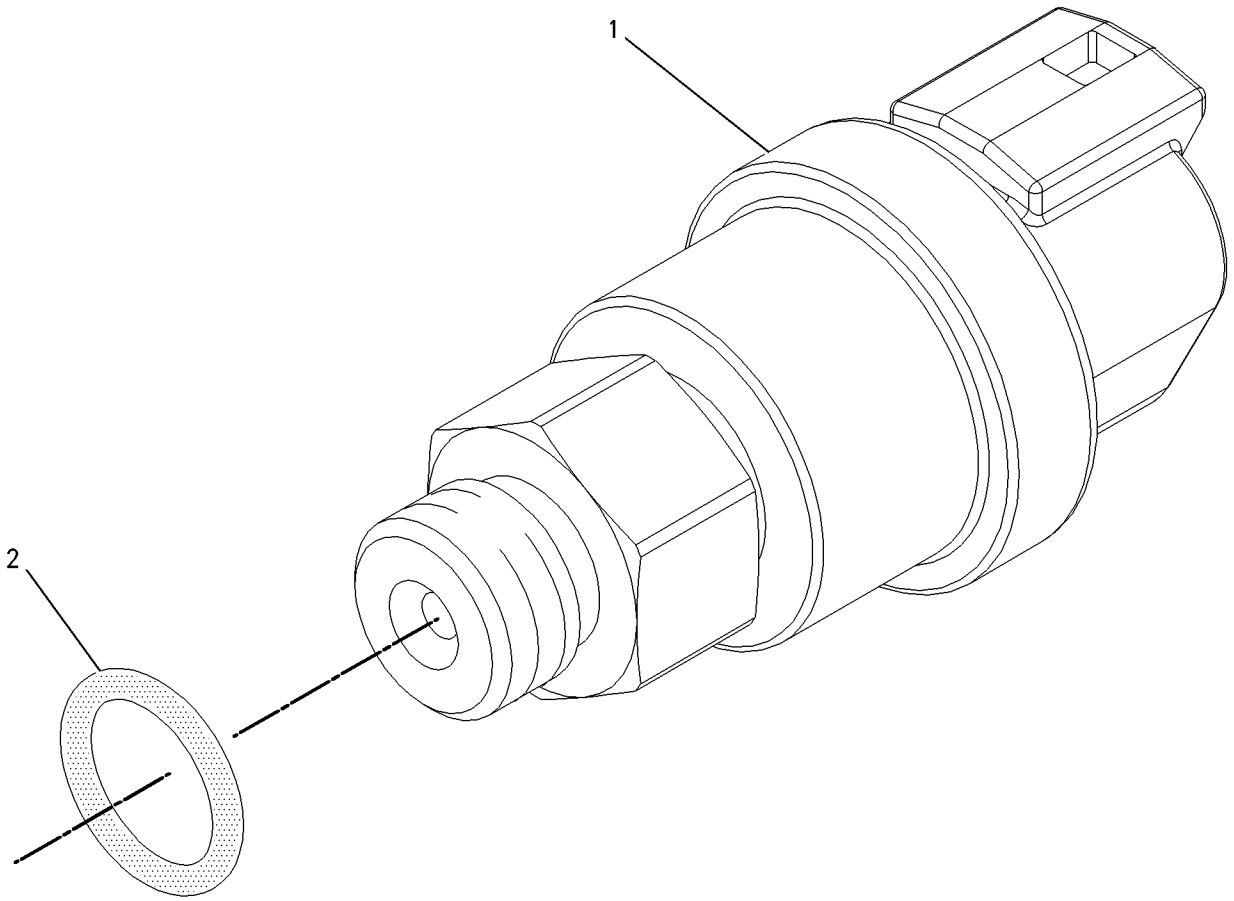


GRAPHIC #1 **<END>** g00855973

## *197-8394* SENSOR GP-PRESSURE–FUEL

**S/N: 3PD1-UP**

**PART OF 171-1103 WIRING GP-ENGINE**

**SMCS-1052, 1058, 1439, 1718, 1917, 1923, 1924, 1925** **i01855745**

| NOTE | REF NO | GRAPHIC REF | PART NUMBER | QTY | PART NAME 1 2 3 4 5 6 (PRODUCT LEVEL) | SEE PAGE |
|---|---|---|---|---|---|---|
| | 1 | 1 | **161-1705** | 1 | SENSOR AS-PRESSURE | |
| | 2 | 1 | **6V-5048** | 1 | SEAL-O-RING | |

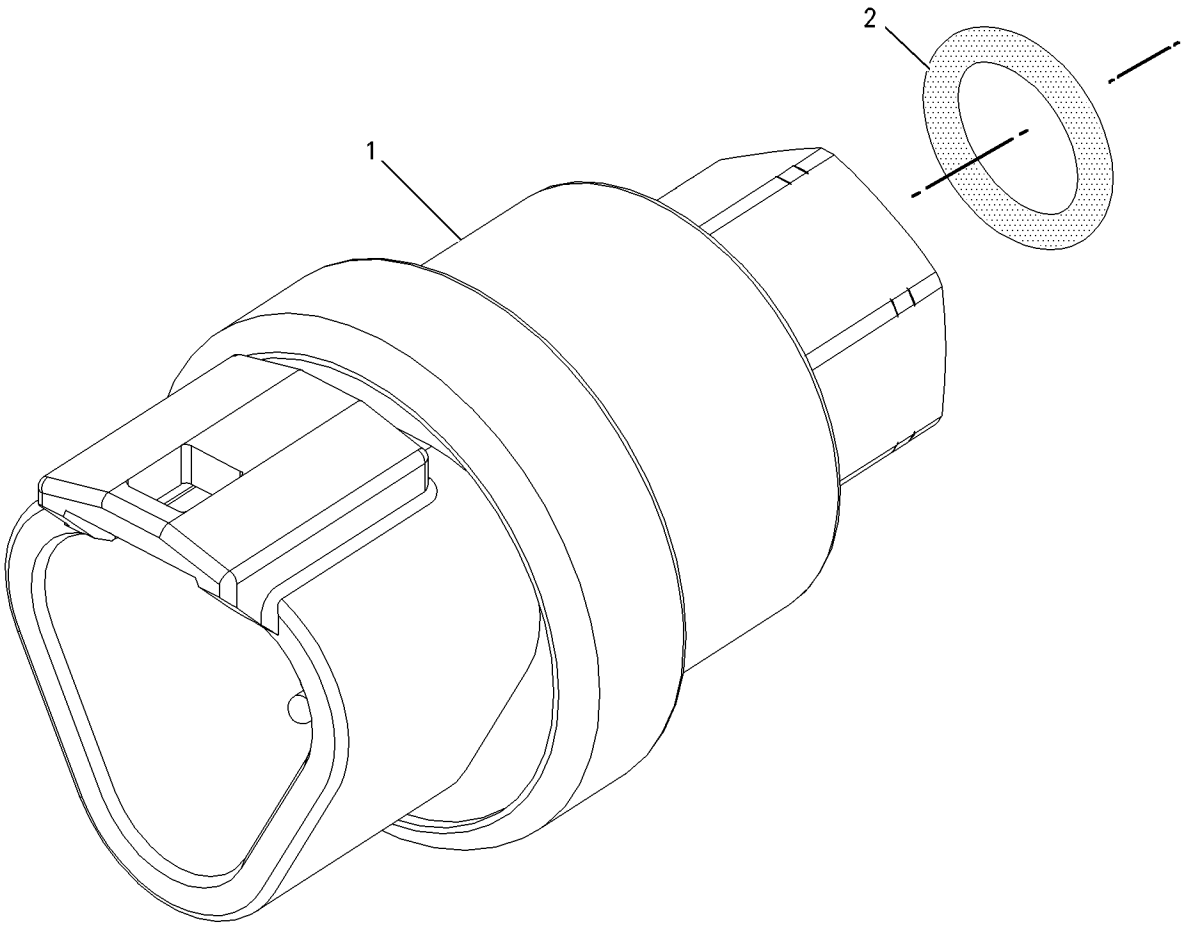


GRAPHIC #1 **<END>** g00856107

## *197-8395* SENSOR GP-PRESSURE–INLET MANIFOLD

**S/N: 3PD1-UP**

**PART OF 171-1103 WIRING GP-ENGINE**

**SMCS-1052, 1058, 1439, 1718, 1917, 1923, 1924, 1925** **i01855747**

| NOTE | REF NO | GRAPHIC REF | PART NUMBER | QTY | PART NAME 1 2 3 4 5 6 (PRODUCT LEVEL) | SEE PAGE |
|---|---|---|---|---|---|---|
| Y | 1 | 1 | **194-6724** | 1 | SENSOR GP-PRESSURE | 280 |
| | 2 | 1 | **6V-5048** | 1 | SEAL-O-RING | |

Y-SEPARATE ILLUSTRATION

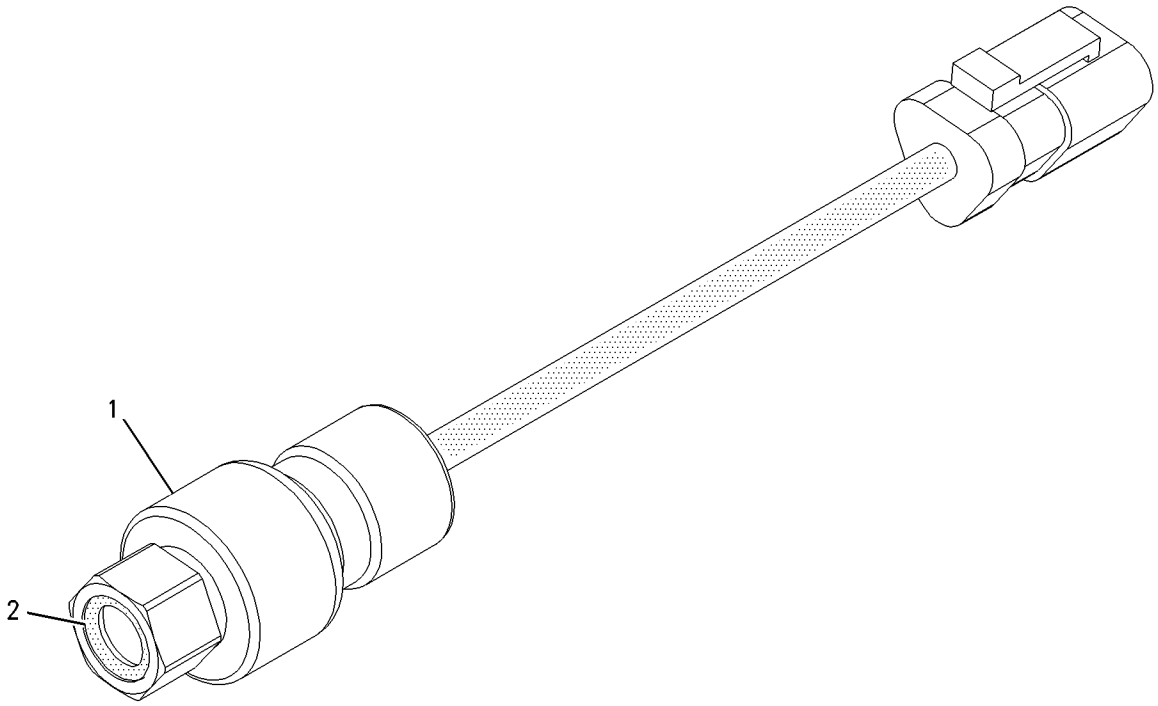


GRAPHIC #1 **<END>** g00870289

# 183-8597 SENSOR GP-SPEED–TRANSMISSION INPUT, OUTPUT

**S/N: EDB1-UP; BJN1-99999**

**PART OF 180-9146 CASE & PARTS GP-TRANSMISSION**

**SMCS-1439, 1907, 1912, 3141, 3175, 4803** **i02207423**

| NOTE | REF NO | GRAPHIC REF | PART NUMBER | QTY | PART NAME 1 2 3 4 5 6 (PRODUCT LEVEL) | SEE PAGE |
|---|---|---|---|---|---|---|
| | 1 | 1 | **171-5349** | 1 | STRAP-MARKER | |
| | 2 | 1 | **102-8802** | 1 | KIT-RECEPTACLE (2-PIN) | |
| | | | | | (INCLUDES RECEPTACLE AS & WEDGE) | |
| | 3 | 1 | **186-3735** | 2 | PIN-CONNECTOR (16-GA TO 18-GA) | |
| | 4 | 1 | **3E-3365** | 1 | WEDGE-RECEPTACLE LOCK (2-PIN) | |
| E | 5 | 1 | **9X-1813** | | SLEEVE (14-CM) | |

E-ORDER BY THE CENTIMETER

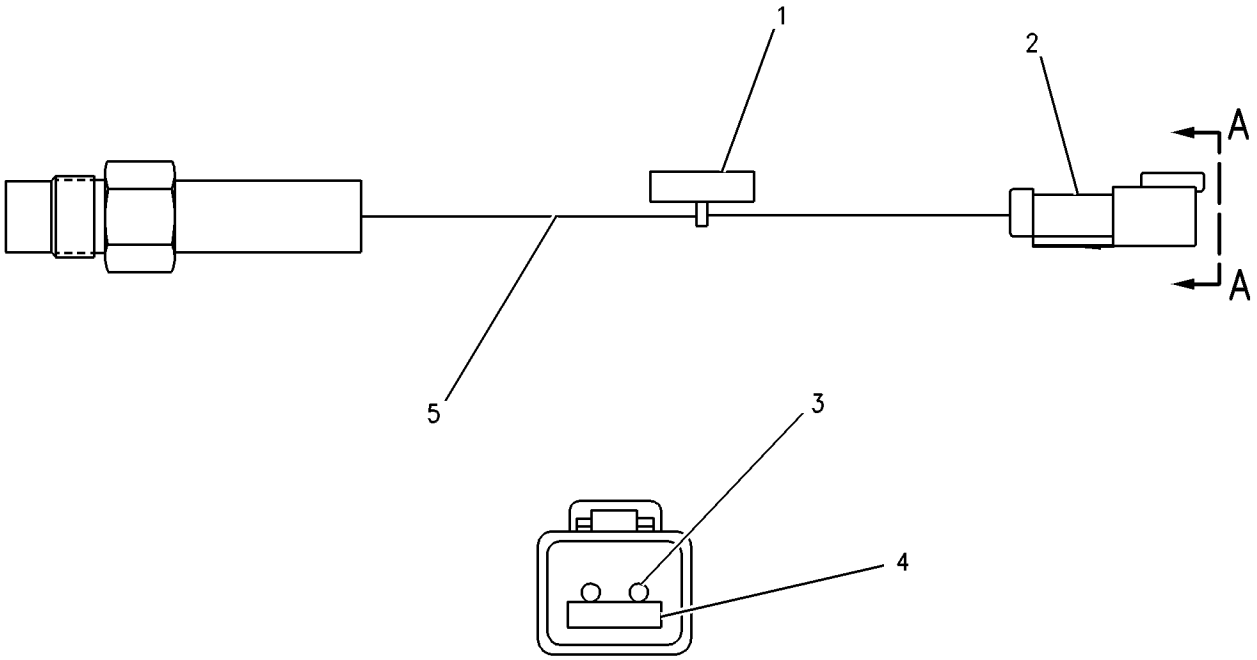


VIEW A-A

GRAPHIC #1 **<END>** g00680294

## *197-8396* SENSOR GP-SPEED—TIMING, CRANKSHAFT

**S/N: 3PD1-UP**

**PART OF 171-1103 WIRING GP-ENGINE**

**SMCS-1439, 1907, 1912, 3141, 3175, 4803** **i01855748**

| NOTE | REF NO | GRAPHIC REF | PART NUMBER | QTY | PART NAME 1 2 3 4 5 6 (PRODUCT LEVEL) | SEE PAGE |
|---|---|---|---|---|---|---|
| | 1 | 1 | **188-7511** | 1 | SENSOR GP-SPEED | |
| | 2 | 1 | **203-3940** | 1 | SEAL-O-RING | |

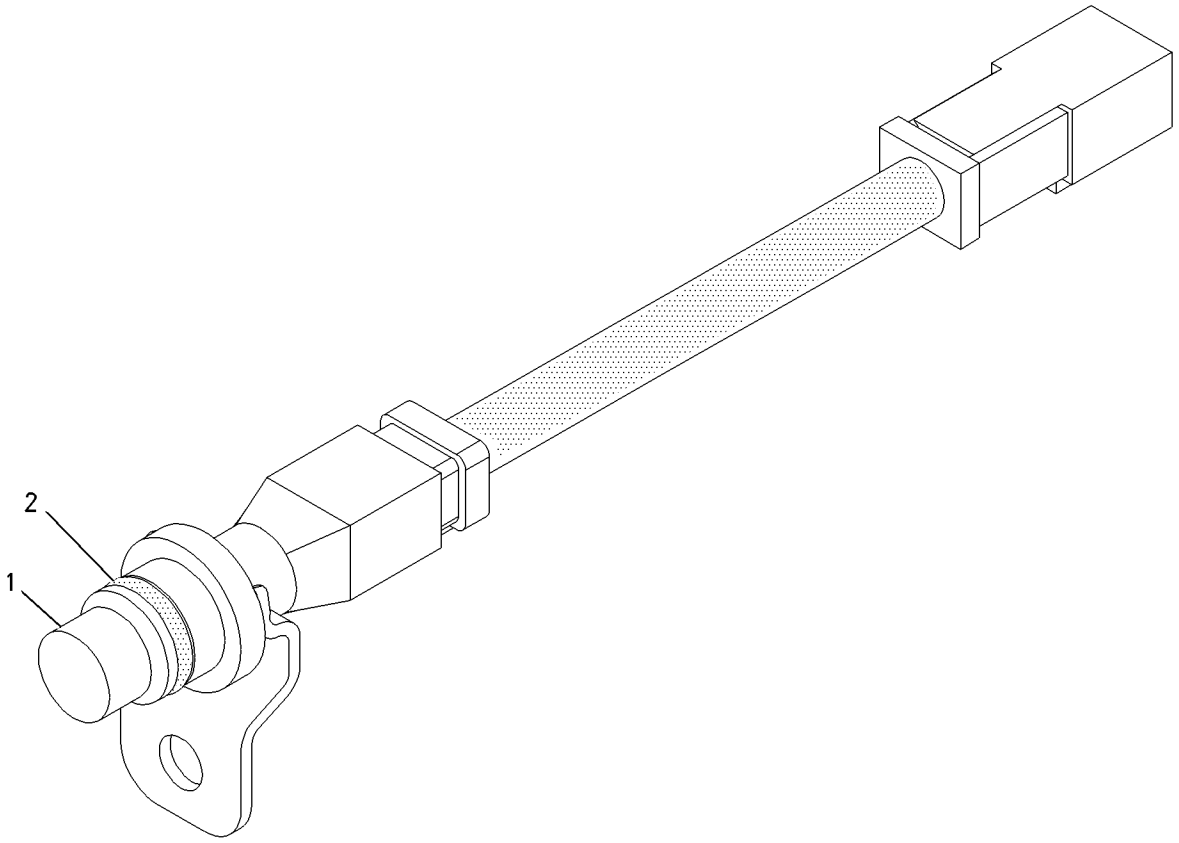


GRAPHIC #1 **<END>** g00870282

# *197-8397* SENSOR GP-SPEED–TIMING, CAMSHAFT

**S/N: 3PD1-UP**

**PART OF 171-1103 WIRING GP-ENGINE**

**SMCS-1439, 1907, 1912, 3141, 3175, 4803** **i01855749**

| NOTE | REF NO | GRAPHIC REF | PART NUMBER | QTY | PART NAME 1 2 3 4 5 6 (PRODUCT LEVEL) | SEE PAGE |
|---|---|---|---|---|---|---|
| | 1 | 1 | **189-9801** | 1 | SENSOR GP-SPEED | |
| | 2 | 1 | **203-3940** | 1 | SEAL-O-RING | |

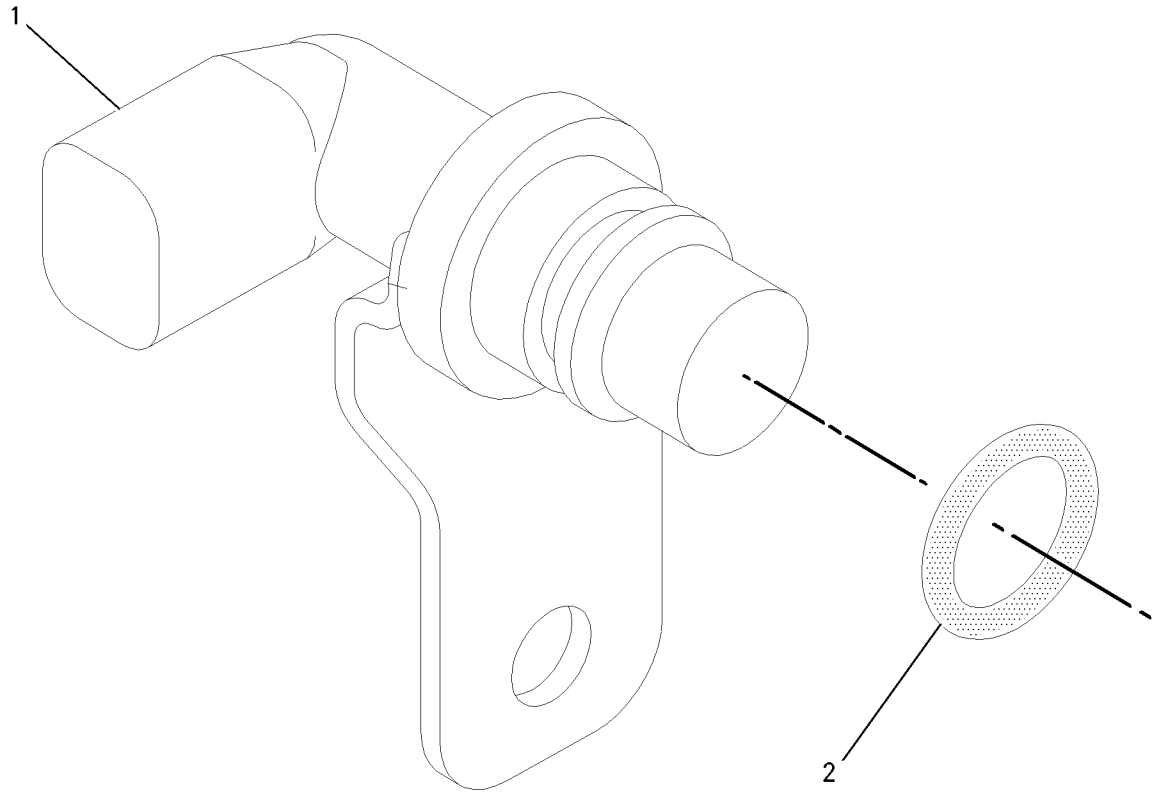


GRAPHIC #1 **<END>** g00856021

## *3E-8700* SENSOR GP-TEMPERATURE–TRANSMISSION OIL

**S/N: EDB1-UP; BJN1-99999**

**PART OF 180-9146 CASE & PARTS GP-TRANSMISSION**

**SMCS-1087, 1439, 1906, 1919, 1921, 1922, 1928, 1929, 192T, 1932, 301T, 3194, 3290, 429T, 509T, 7344** **i02204190**

| NOTE | REF NO | GRAPHIC REF | PART NUMBER | QTY | PART NAME 1 2 3 4 5 6 (PRODUCT LEVEL) | SEE PAGE |
|---|---|---|---|---|---|---|
| | 1 | 1 | **8T-8730** | 3 | SOCKET-CONNECTOR | |
| | 2 | 1 | **102-8813** | 1 | SEAL | |
| | 3 | 1 | **102-8808** | 1 | KIT-CONNECTING PLUG (3-PIN) | |
| E | 4 | 1 | **9X-1813** | | SLEEVE (31-CM) | |
| | 5 | 1 | **3E-3368** | 1 | WEDGE-PLUG LOCK (3-PIN) | |

E-ORDER BY THE CENTIMETER

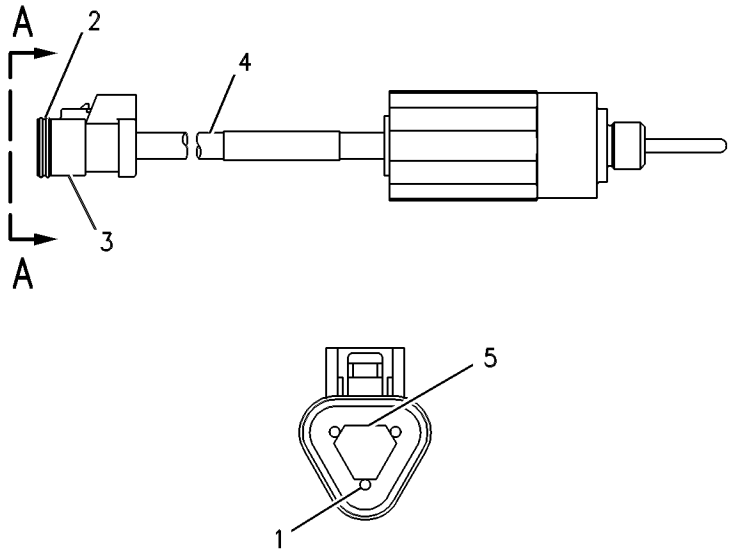


VIEW A–A

GRAPHIC #1 **<END>** g00248316

## *197-8391* SENSOR GP-TEMPERATURE–FUEL–INLET MANIFOLD

**S/N: 3PD1-UP**

**PART OF 171-1103 WIRING GP-ENGINE**

**SMCS-1087, 1439, 1906, 1919, 1921, 1922, 1928, 1929, 192T, 1932, 301T, 3194, 3290, 429T, 509T, 7344** **i02203394**

| NOTE | REF NO | GRAPHIC REF | PART NUMBER | QTY | PART NAME 1 2 3 4 5 6 (PRODUCT LEVEL) | SEE PAGE |
|---|---|---|---|---|---|---|
| | 1 | 1 | **130-9811** | 1 | SENSOR GP-TEMPERATURE (2-PIN) | |
| | 2 | 1 | **8L-2786** | 1 | SEAL-O-RING | |

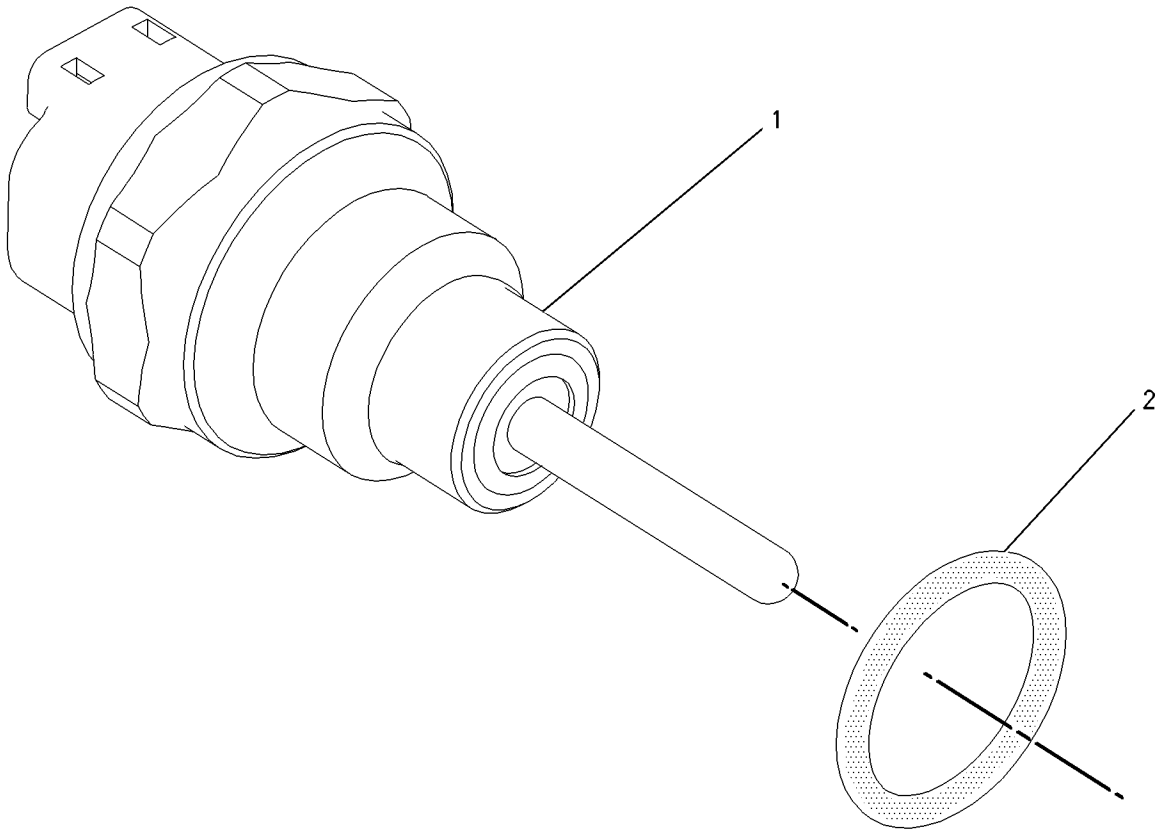


GRAPHIC #1 **<END>** g00856011

## *197-8392* SENSOR GP-TEMPERATURE–COOLANT

**S/N: 3PD1-UP**

**PART OF 171-1103 WIRING GP-ENGINE**

**SMCS-1087, 1439, 1906, 1919, 1921, 1922, 1928, 1929, 192T, 1932, 301T, 3194, 3290, 429T, 509T, 7344**

**i02203395**

| NOTE | REF NO | GRAPHIC REF | PART NUMBER | QTY | PART NAME 1 2 3 4 5 6 (PRODUCT LEVEL) | SEE PAGE |
|---|---|---|---|---|---|---|
| | 1 | 1 | **130-9811** | 1 | SENSOR GP-TEMPERATURE (2-PIN) | |
| | 2 | 1 | **6V-6609** | 1 | SEAL-O-RING | |

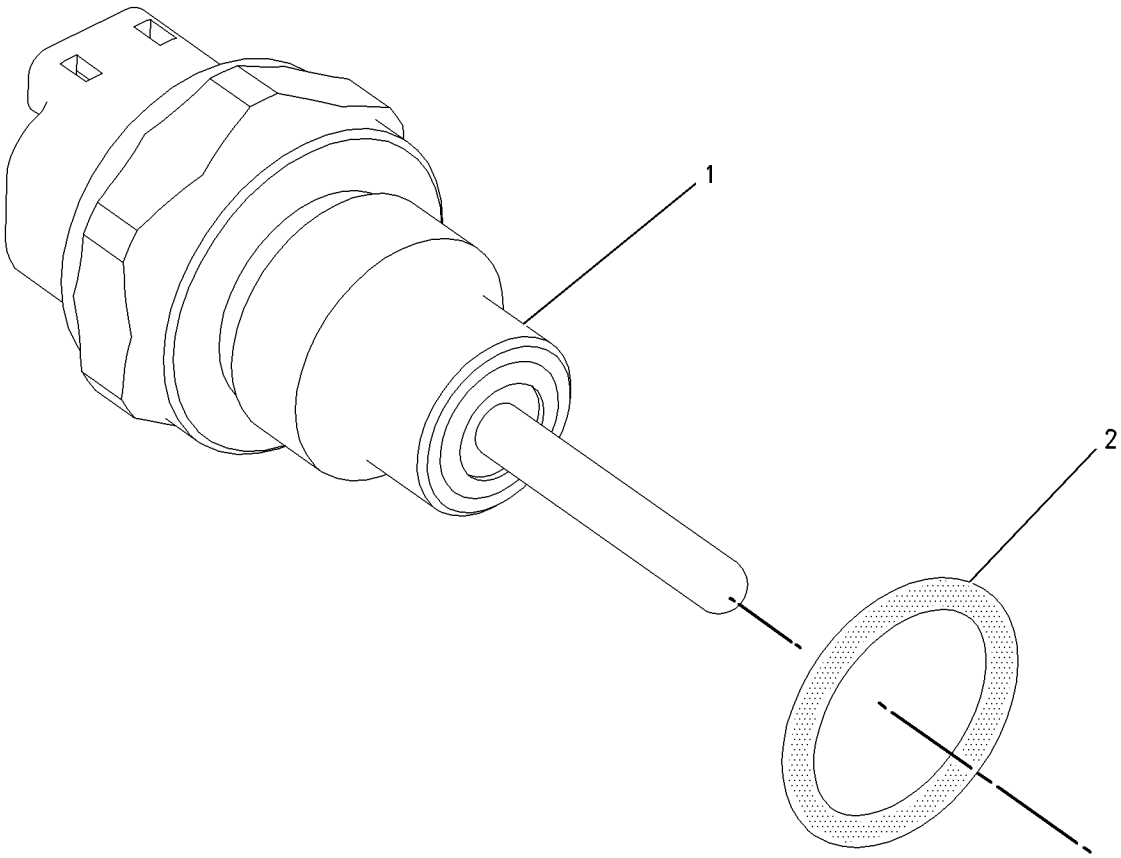


GRAPHIC #1

**<END>**

g00856005

# *173-5304* STARTING AID GP-ETHER—SERVICE

**S/N: CCA1-UP**
**PART OF 197-0579 STARTING AID GP-ETHER**
**AN ATTACHMENT**

**SMCS-1456** **i02559854**

| NOTE | REF NO | GRAPHIC REF | PART NUMBER | QTY | PART NAME 1 2 3 4 5 6 (PRODUCT LEVEL) | SEE PAGE |
|---|---|---|---|---|---|---|
| | 1 | 1 | **3E-5239** | 1 | RELAY AS (24-VOLT) (ETHER STARTING AID) | |
| | 2 | 1 | **3E-6332** | 1 | VALVE GP-ETHER STARTING (24-VOLT) | |
| | | 1 | **3E-3365** | 1 | WEDGE-RECEPTACLE LOCK (2-PIN) | |
| | | 1 | **7N-9801** | 1 | GASKET | |
| | | 1 | **186-3735** | 2 | PIN-CONNECTOR (16-GA TO 18-GA) | |
| | | 1 | **102-8802** | 1 | KIT-RECEPTACLE (2-PIN) | |
| | | | | | (INCLUDES RECEPTACLE AS & WEDGE) | |
| | 3 | 1 | **3S-2093** | 2 | STRAP-CABLE | |
| | 4 | 1 | **7N-2059** | 1 | CLAMP AS | |
| | 5 | 1 | **174-5636** | 1 | TUBE AS | |
| | 6 | 1 | **177-9812** | 1 | HARNESS AS-STARTING AID | |
| | | 1 | **155-2270** | 1 | KIT-CONNECTING PLUG (2-PIN) | |
| | | | | | (INCLUDES PLUG AS, WEDGE, & INTERFACE SEAL) | |
| | | 1 | **102-8804** | 1 | KIT-RECEPTACLE (4-PIN) | |
| | | | | | (INCLUDES RECEPTACLE AS & WEDGE) | |
| | | 1 | **9X-1054** | 1 | PLUG AS-CONNECTOR (4-PIN) | |
| | 7 | 1 | **033-8248** | 1 | CLIP | |
| | 8 | 1 | **130-5300** | 1 | CLIP | |
| | 9 | 1 | **4D-7794** | 1 | CLIP | |
| | 10 | 1 | **4H-2558** | 1 | GROMMET | |
| | 11 | 1 | **6V-2686** | 1 | CLIP | |
| | 12 | 1 | **8T-4121** | 2 | WASHER-HARD (11X21X2.5-MM THK) | |
| M | 13 | 1 | **8T-4136** | 1 | BOLT (M10X1.5X25-MM) | |
| M | 14 | 1 | **8T-4189** | 4 | BOLT (M8X1.25X20-MM) | |
| M | 15 | 1 | **8T-4191** | 1 | BOLT (M10X1.5X16-MM) | |
| | 16 | 1 | **8T-4224** | 5 | WASHER-HARD (8.8X16X2-MM THK) | |
| M | 17 | 1 | **5C-9553** | 1 | BOLT (M6X1X16-MM) | |
| | | | | | | |
| AF | | | **7N-0296** | 1 | CYLINDER AS-ETHER | |
| | | | | | (MAY BE PROCURED LOCALLY FROM CAT DEALER) | |

A-NOT PART OF THIS GROUP
F-NOT SHOWN
M-METRIC PART

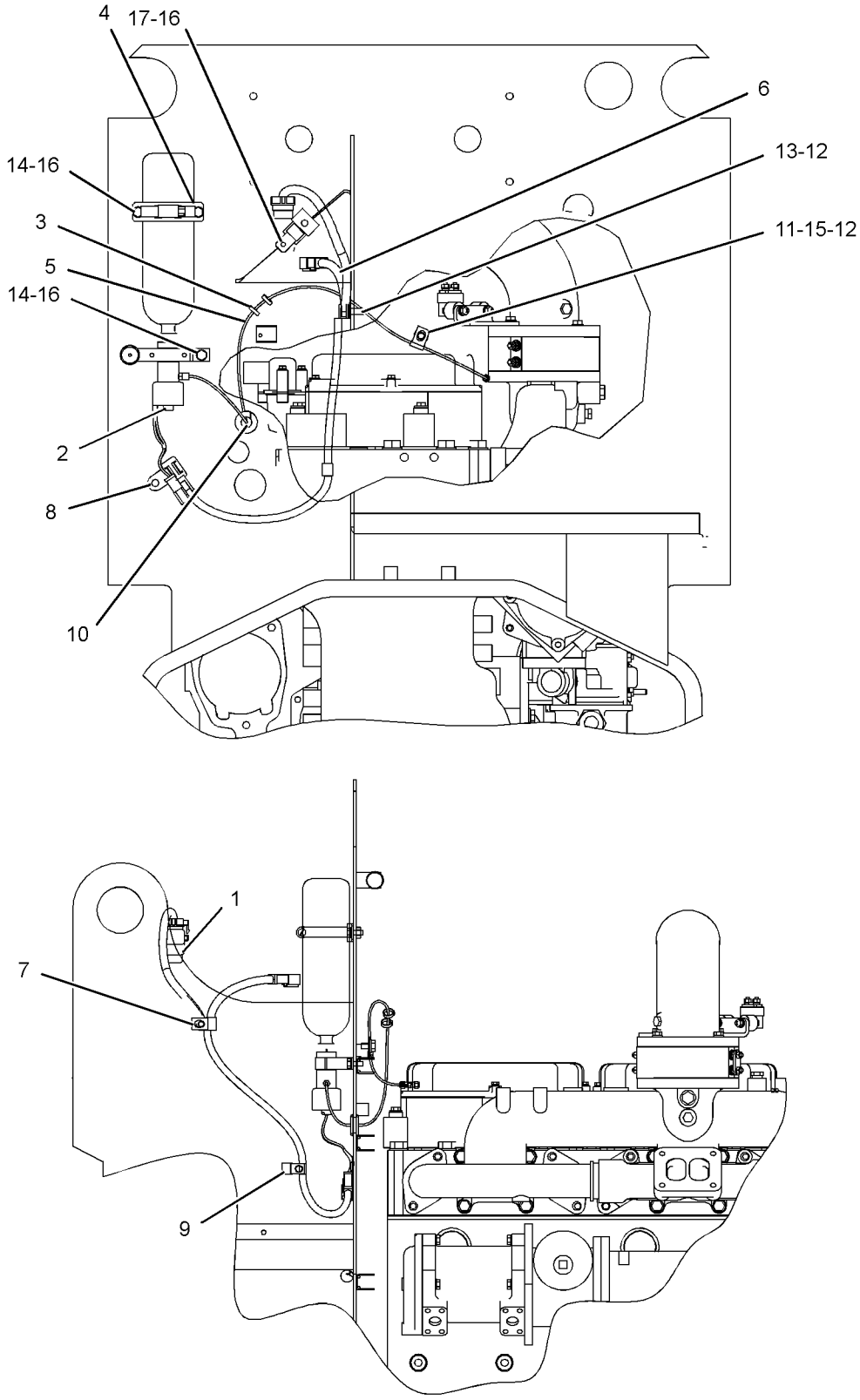


GRAPHIC #1 **<END>** g01284806

# ELECTRICAL AND STARTING SYSTEM

## *197-0579* STARTING AID GP-ETHER

**S/N: CCA1-UP**
**PART OF 197-5955, 236-3948 SNOW AR-MOTOR GRADER**
**AN ATTACHMENT**

**SMCS-1456** **i02587656**

| NOTE | PART NUMBER | QTY | PART NAME 1 2 3 4 5 6 (PRODUCT LEVEL) | SEE PAGE |
|---|---|---|---|---|
| Y | *173-5304* | 1 | STARTING AID GP-ETHER (SERVICE) | 290 |
| Y | *197-0580* | 1 | STARTING AID GP-ETHER (ENGINE) | 293 |

Y-SEPARATE ILLUSTRATION

**<END>**

# *197-0580* STARTING AID GP-ETHER–ENGINE

**S/N: CCA1-UP**
**PART OF 197-0579 STARTING AID GP-ETHER**
**AN ATTACHMENT**

**SMCS-1456** **i02399610**

| NOTE | REF NO | GRAPHIC REF | PART NUMBER | QTY | PART NAME 1 2 3 4 5 6 (PRODUCT LEVEL) | SEE PAGE |
|---|---|---|---|---|---|---|
| | 1 | 1 | **7J-5606** | 1 | ATOMIZER AS-ETHER | |
| | 2 | 1 | **7N-3725** | 2 | BRACKET | |
| | 3 | 1 | **175-1367** | 2 | SPACER (8.8X16X10-MM THK) | |
| | 4 | 1 | **176-6391** | 1 | TUBE | |
| | 5 | 1 | **3E-8768** | 1 | SWITCH AS (24-VOLT) (ETHER STARTING AID) | |
| | | 1 | **3E-8825** | 1 | LAMP (24-VOLT) (ETHER STARTING AID) | |
| | | 1 | **3E-8776** | 1 | ACTUATOR-ROCKER | |
| | 6 | 1 | **6V-2686** | 2 | CLIP | |
| M | 7 | 1 | **8T-3647** | 2 | BOLT (M8X1.25X80-MM) | |
| | 8 | 1 | **8T-4121** | 4 | WASHER-HARD (11X21X2.5-MM THK) | |
| M | 9 | 1 | **8T-4133** | 2 | NUT (M10X1.5-THD) | |
| M | 10 | 1 | **8T-4137** | 2 | BOLT (M10X1.5X20-MM) | |
| | 11 | 1 | **8T-4224** | 2 | WASHER-HARD (8.8X16X2-MM THK) | |

M-METRIC PART

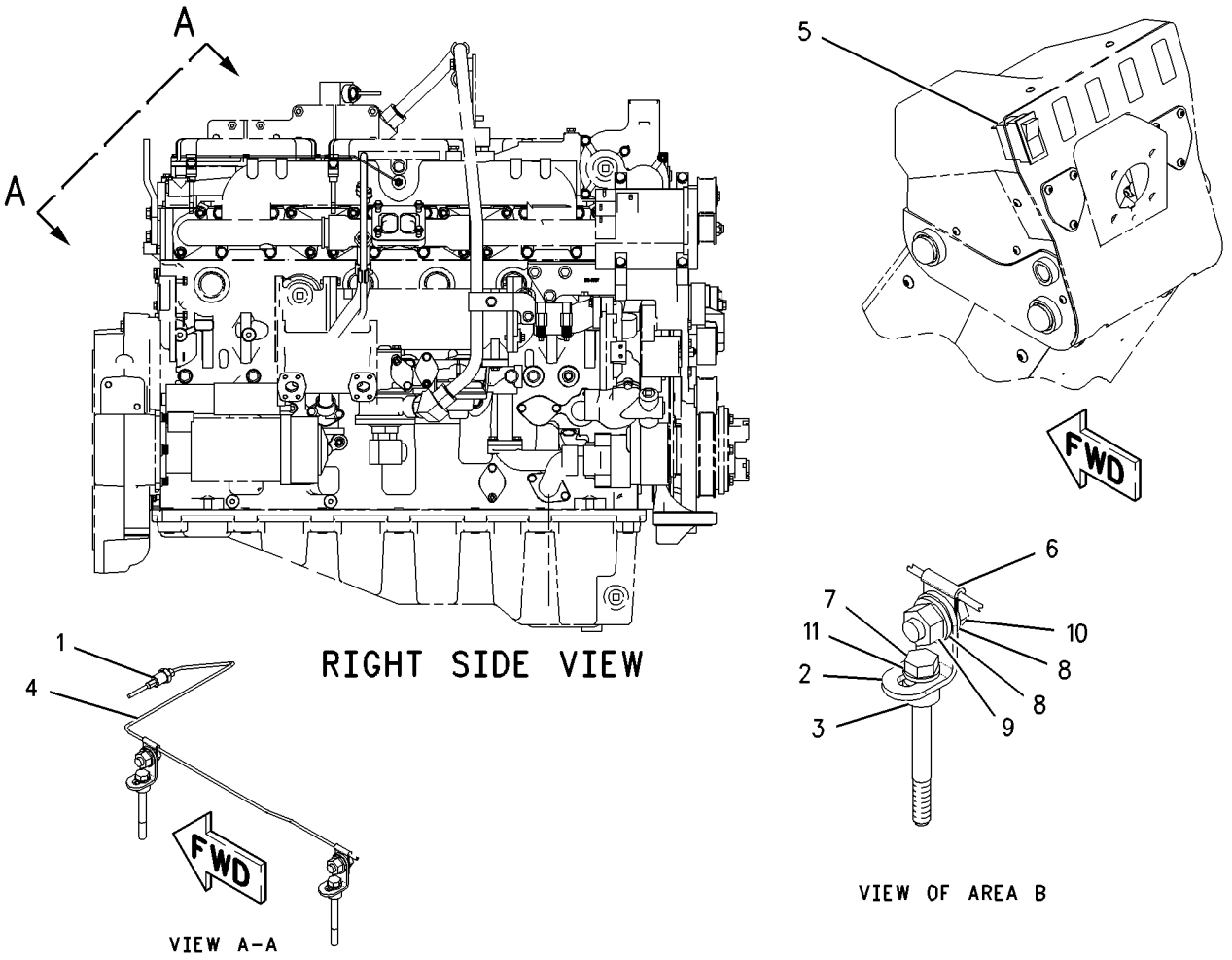


GRAPHIC #1 **<END>** g00807749

# ELECTRICAL AND STARTING SYSTEM

## *165-4619* STARTING MOTOR GP-ELECTRIC*R

**S/N: 3PD1-UP**
**24 VOLT**
**PART OF 174-0620 STARTING MOTOR GP-ELECTRIC**

**SMCS-1453** **i01855720**

| NOTE | REF NO | GRAPHIC REF | PART NUMBER | QTY | PART NAME 1 2 3 4 5 6 (PRODUCT LEVEL) | SEE PAGE |
|---|---|---|---|---|---|---|
| | 1 | 1 | **3T-3434** | 6 | PLUG | |
| | 2 | 1 | **7T-3279** | 1 | HOUSING AS | |
| | 3 | 1 | **212-0443** | 1 | TERMINAL AS | |
| | 4 | 1 | **6V-8188** | 4 | NUT (1/2-13-THD) | |
| | 5 | 1 | **7X-0562** | 4 | WASHER-HARD (13.5X19X0.8-MM THK) | |
| | 6 | 1 | **3T-3422** | 1 | WIRE AS | |
| | 7 | 1 | **7T-3278** | 1 | HOLDER AS-BRUSH | |
| | 8 | 1 | **7T-3277** | 1 | COIL AS-FIELD | |
| | 9 | 1 | **7T-3454** | 1 | INSULATOR | |
| | 10 | 1 | **7T-3271** | 1 | CONNECTOR | |
| | 11 | 1 | **7T-3451** | 1 | INSULATOR-TERMINAL | |
| | 12 | 1 | **8T-8569** | 1 | INSULATOR-TERMINAL | |
| | 13 | 1 | **5S-7349** | 4 | BOLT (1/4-20X0.5-IN) | |
| | 14 | 1 | **8T-4205** | 4 | WASHER-HARD (7.2X14.5X2-MM THK) | |
| | 15 | 1 | **8H-1141** | 4 | SHOE-POLE | |
| | 16 | 1 | **1H-2629** | 2 | STRIP-INSULATION | |
| | 17 | 1 | **3F-0379** | 8 | SCREW-POLE SHOE (3/8-24-THD) | |
| | 18 | 1 | **7T-3276** | 1 | ARMATURE AS (24-VOLT) | |
| | 19 | 1 | **7T-3973** | 1 | HOUSING AS-LEVER | |
| | 20 | 1 | **4M-1831** | 1 | PLUG-LEVER HOUSING | |
| | 21 | 1 | **7L-2894** | 1 | GASKET | |
| | 22 | 1 | **036-9823** | 5 | BOLT (1/4-28X1-IN) | |
| | 23 | 1 | **184-6964** | 1 | DRIVE AS-MOTOR | |
| | 24 | 1 | **7T-3974** | 1 | HOUSING AS-DRIVE | |
| | 25 | 1 | **7X-3373** | 6 | BOLT (5/16-18X0.88-IN) | |
| | 26 | 1 | **193-8570** | 1 | SOLENOID AS (24-VOLT) | |
| | 27 | 1 | **6V-8378** | 2 | NUT (10-32-THD) | |
| | 28 | 1 | **8F-1434** | 2 | LOCKWASHER | |
| | 29 | 1 | **8T-0328** | 2 | WASHER-HARD (5.5X10X1-MM THK) | |
| | 30 | 1 | **9X-4824** | 1 | COVER-STARTING MOTOR | |
| | | | | | AVAILABLE REPAIR KIT(S): | |
| | | | **8T-9884** | 1 | KIT-INSULATOR (STARTING MOTOR) | |
| | | | | | (INCLUDES INSULATORS AND BUSHING) | |
| | | | **8C-3655** | 1 | KIT-BRUSH (STARTING MOTOR) | |
| | | | | | (INCLUDES BRUSH,SPRING,SCREW,SEAL AND SCREW ASSEMBLY) | |
| | | | **7T-3267** | 1 | KIT-BUSHING (STARTING MOTOR) | |
| | | | | | (INCLUDES BUSHINGS WICKS,CUPS SEALS,GASKET, | |
| | | | | | SCREW ASSEMBLIES,WASHERS,SPACER AND NUT) | |
| | | | **7T-3268** | 1 | KIT-LEVER (STARTING MOTOR) | |
| | | | | | (INCLUDES LEVER ASSEMBLIES,SEALS,NUT,GASKET AND RETAINER) | |

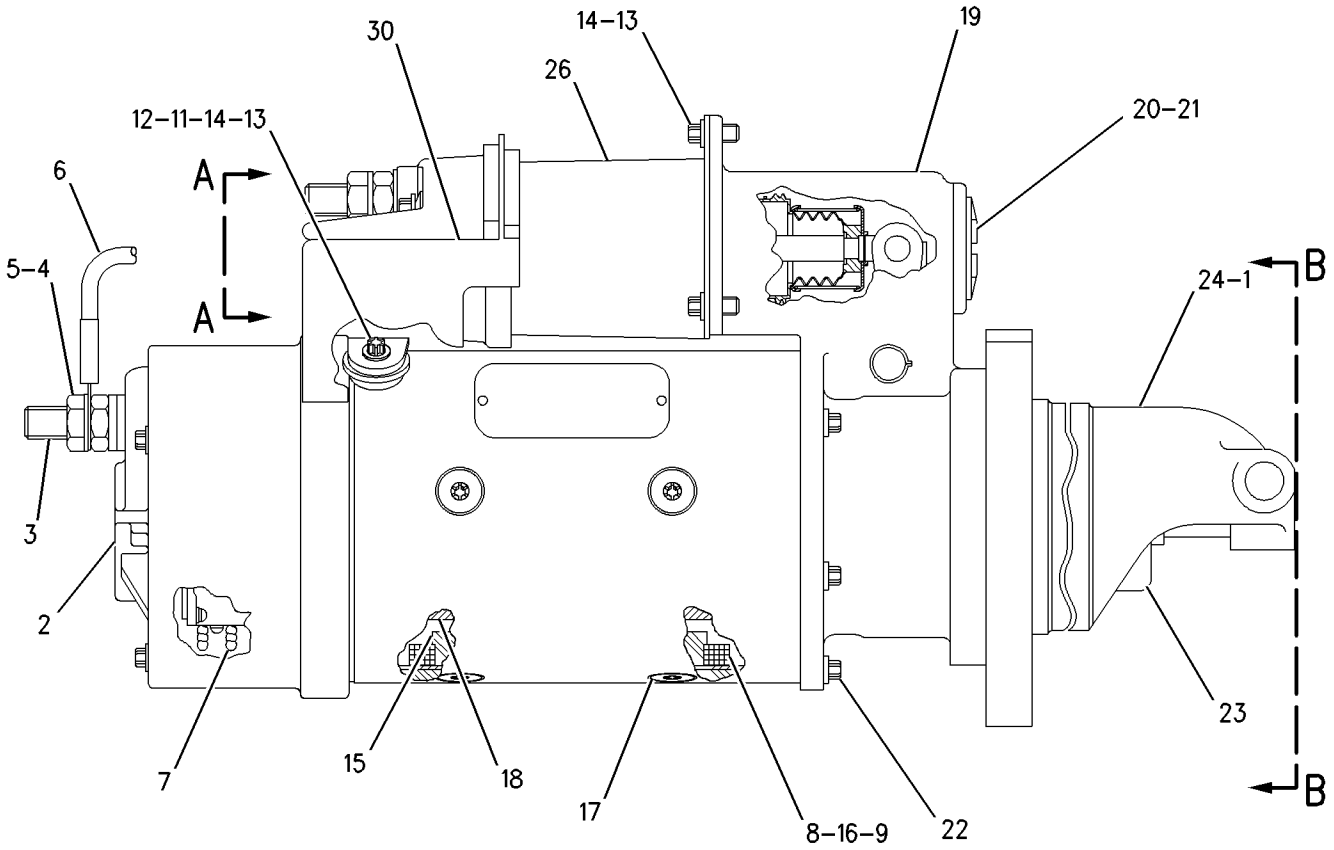


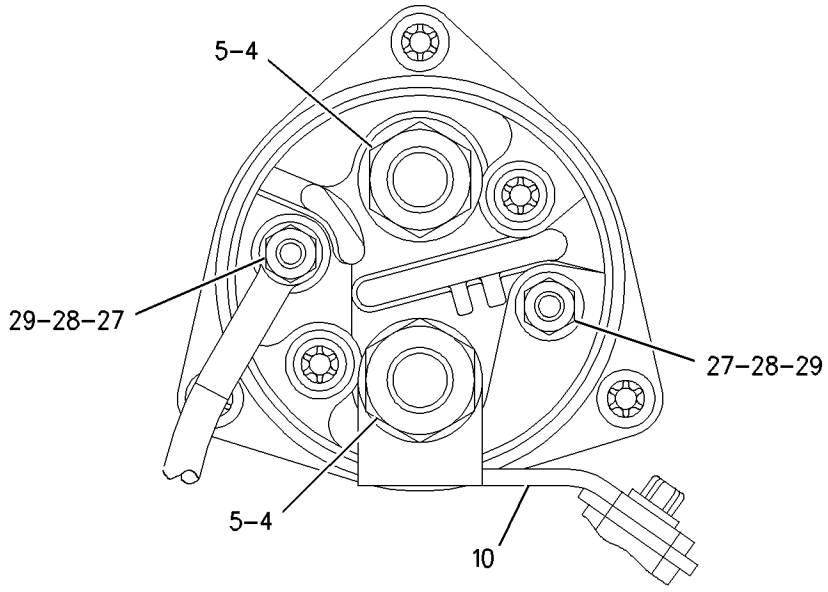


VIEW A-A

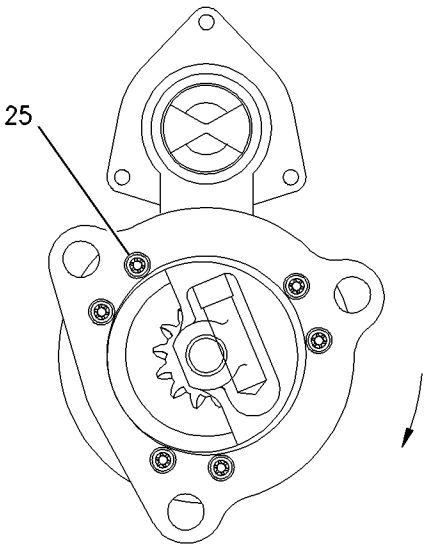


VIEW B-B

GRAPHIC #1 **<END>** g00767005

# *174-0620* STARTING MOTOR GP-ELECTRIC

**S/N: 3PD1-UP**
**24 VOLT**
**PART OF 160-5101 ENGINE AR**

**SMCS-1453** **i01855451**

| NOTE | REF NO | GRAPHIC REF | PART NUMBER | QTY | PART NAME 1 2 3 4 5 6 (PRODUCT LEVEL) | SEE PAGE |
|---|---|---|---|---|---|---|
| | 1 | 1 | **4N-1059** | 1 | GASKET | |
| | 2 | 1 | **105-4728** | 1 | WIRE AS | |
| YR | 3 | 1 | **165-4619** | 1 | STARTING MOTOR GP-ELECTRIC | 294 |
| | 4 | 1 | **6V-0371** | 3 | BOLT (5/8-11X1.375) | |

R-REMFG PART MAY BE AVAILABLE
Y-SEPARATE ILLUSTRATION

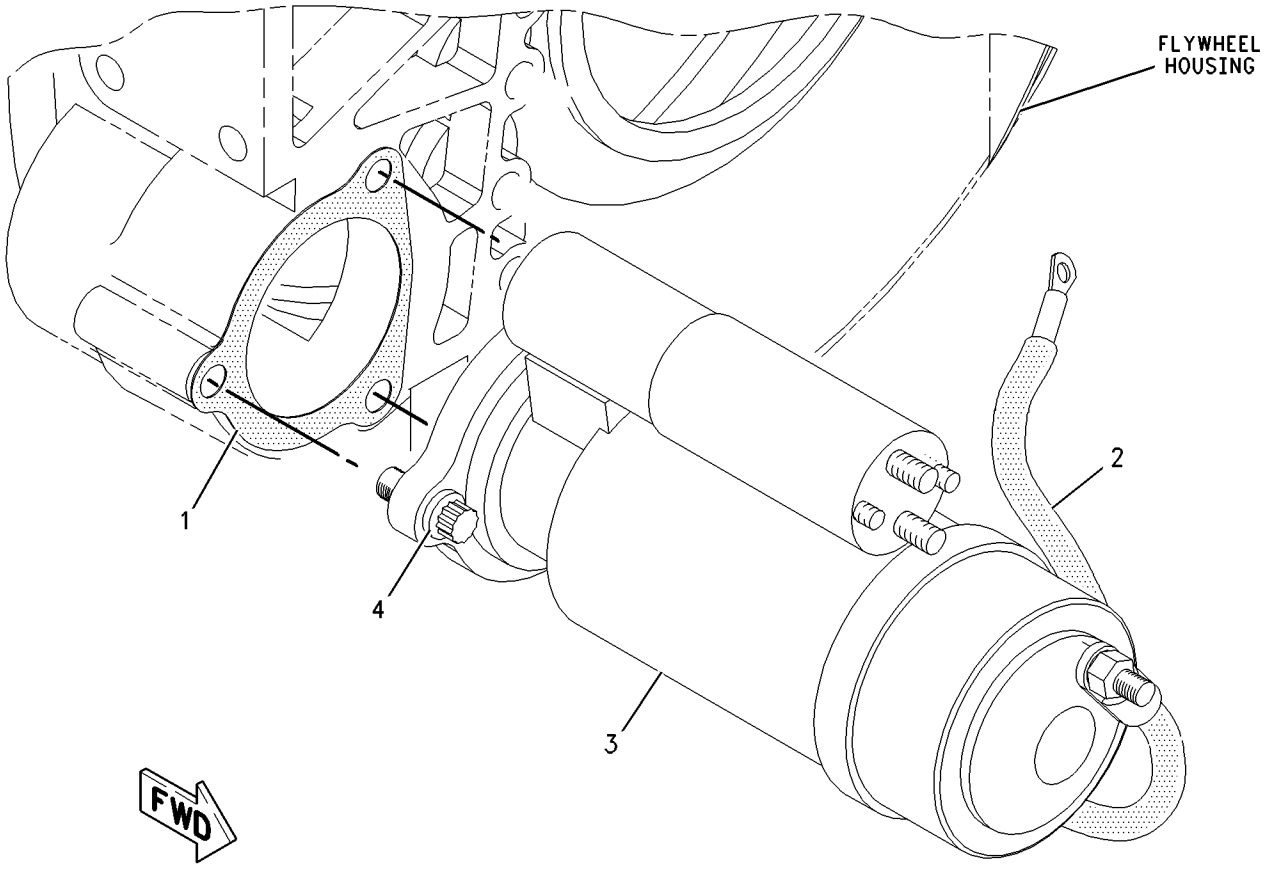


GRAPHIC #1 **<END>** g00894444

# *164-7577* SWITCH GP-BYPASS–TRANSMISSION OIL FILTER

**S/N: CCA1-UP**

**PART OF 238-1029 BASE GP-OIL FILTER, 207-3819 FILTER GP-OIL**

**ALSO AN ATTACHMENT**

**SMCS-1408, 1435** **i02204195**

| NOTE | REF NO | GRAPHIC REF | PART NUMBER | QTY | PART NAME 1 2 3 4 5 6 (PRODUCT LEVEL) | SEE PAGE |
|---|---|---|---|---|---|---|
| E | 1 | 1 | **9X-1813** | | SLEEVE (19-CM) | |
| | 2 | 1 | **102-8802** | 1 | KIT-RECEPTACLE (2-PIN) | |
| | | | | | (INCLUDES RECEPTACLE AS & WEDGE) | |
| | 3 | 1 | **186-3735** | 2 | PIN-CONNECTOR (16-GA TO 18-GA) | |
| | 4 | 1 | **3E-3365** | 1 | WEDGE-RECEPTACLE LOCK (2-PIN) | |
| | 5 | 1 | **3D-2824** | 1 | SEAL-O-RING | |
| Z | 6 | 1 | | 1 | SWITCH AS | |

E-ORDER BY THE CENTIMETER
Z-NOT SERVICED SEPARATELY

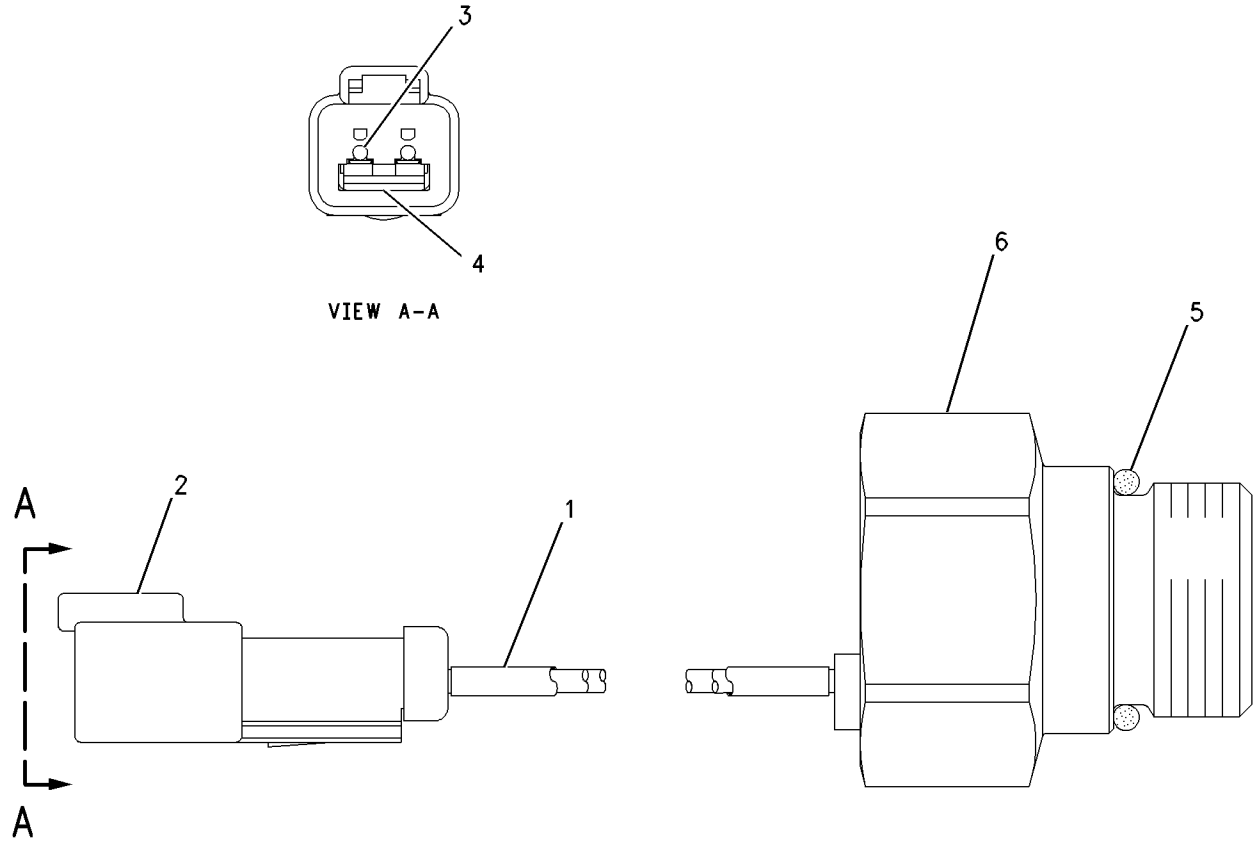


GRAPHIC #1 **<END>** g00750019

# *7N-0718* SWITCH GP-DISCONNECT–BATTERY

**S/N: CCA1-UP**
**PART OF 178-0163 WIRING GP-REAR**
**ALSO AN ATTACHMENT**

**SMCS-1411** **i02587657**

| NOTE | REF NO | GRAPHIC REF | PART NUMBER | QTY | PART NAME 1 2 3 4 5 6 (PRODUCT LEVEL) | SEE PAGE |
|---|---|---|---|---|---|---|
| | 1 | 1 | **8H-5306** | 1 | KEY (BATTERY DISCONNECT) | |
| | 2 | 1 | **8H-5303** | 1 | NUT (3/4-16-THD) | |
| | 3 | 1 | **2H-3922** | 2 | LOCKWASHER | |
| | 4 | 1 | **9F-5644** | 2 | LOCKWASHER | |
| | 5 | 1 | **6F-7045** | 2 | NUT-FULL (3/8X24-THD) | |

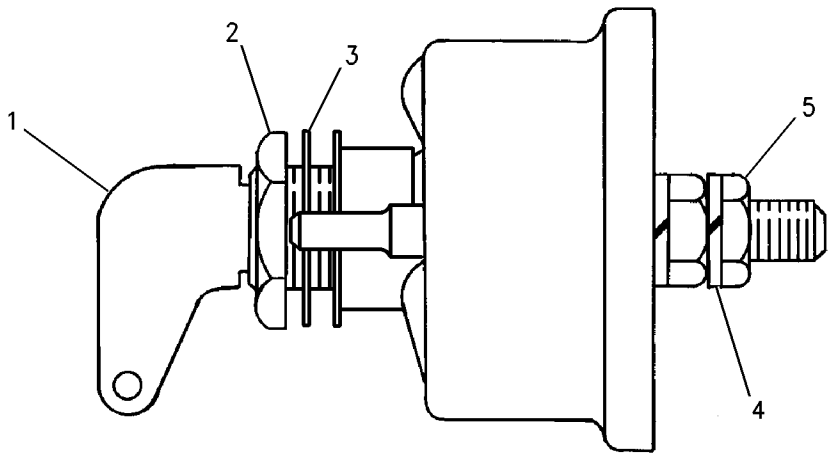


GRAPHIC #1 **<END>** g00715584

# *161-1018* SWITCH GP-LIGHT–TURN

**S/N: CCA1-UP**

**PART OF 161-0770 LIGHTING AR-FLOOD & SIGNAL**

**AN ATTACHMENT**

**SMCS-1429, 1435, 7332** **i02204198**

| NOTE | REF NO | GRAPHIC REF | PART NUMBER | QTY | PART NAME 1 2 3 4 5 6 (PRODUCT LEVEL) | SEE PAGE |
|---|---|---|---|---|---|---|
| | 1 | 1 | **8X-5153** | 1 | FILM-FACE (TURN SIGNAL, HAZARD) | |
| | 2 | 1 | **8X-5154** | 1 | FILM-FACE (HEADLIGHTS HIGH, LOW BEAM) | |
| | 3 | 1 | **9W-1442** | 1 | FUSE (10-AMPERE) | |
| | 4 | 1 | **103-5678** | 1 | SWITCH AS-ROTARY (TURN SIGNAL) | |
| | | 1 | **5L-7200** | 1 | SCREW (8-32X0.375-IN) | |
| | | 1 | **9B-7233** | 1 | LOCKWASHER | |
| | 5 | 1 | **108-0358** | 1 | FLASHER AS (24-VOLT) (TURN SIGNAL, HAZARD) | |
| | 6 | 1 | **173-3064** | 1 | SWITCH GP-ROTARY (TURN SIGNAL, HAZARD) | |
| | | 1 | **5L-7200** | 1 | SCREW (8-32X0.375-IN) | |
| | | 1 | **9B-7233** | 1 | LOCKWASHER | |
| | 7 | 1 | **3E-8772** | 1 | SWITCH AS-ROCKER (HEADLIGHTS, TAIL LIGHTS) | |
| | | 1 | **3E-8825** | 2 | LAMP (24-VOLT) | |
| | | 1 | **3E-9326** | 1 | ACTUATOR-ROCKER | |
| M | 8 | 1 | **5C-2890** | 2 | NUT (M6X1-THD) | |
| | 9 | 1 | **8X-6296** | 1 | LEVER (TURN SIGNAL) | |
| | 9A | 1 | **8X-6296** | 1 | LEVER (HEADLIGHT DIMMER) | |
| M | 10 | 1 | **9X-2043** | 2 | SCREW-TRUSS HEAD (M6X1X14-MM) | |
| | 11 | 1 | **9X-8256** | 2 | WASHER (6.6X12X2-MM THK) | |

M-METRIC PART

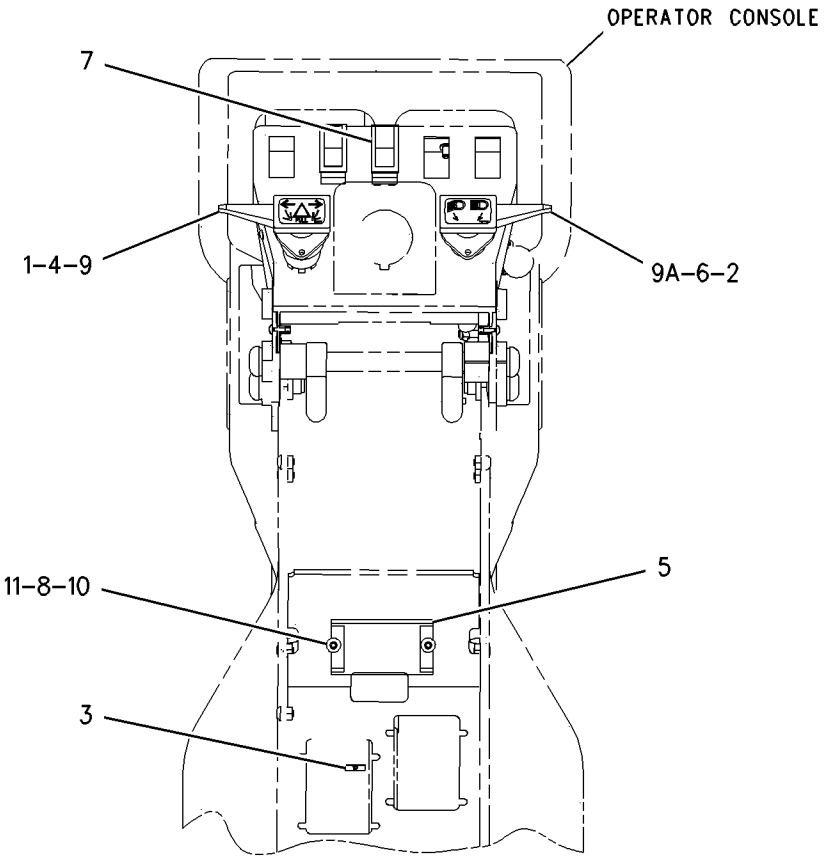


REAR VIEW

GRAPHIC #1 **<END>** g00846541

## *3E-0154* SWITCH GP-MAGNETIC—SECONDARY STEERING RELAY

**S/N: CCA1-UP**

**PART OF 194-3200 WIRING GP-REAR, 161-1020 WIRING GP-SECONDARY STEERING AN ATTACHMENT**

**SMCS-7499** **i01676990**

| NOTE | REF NO | GRAPHIC REF | PART NUMBER | QTY | PART NAME 1 2 3 4 5 6 (PRODUCT LEVEL) | SEE PAGE |
|---|---|---|---|---|---|---|
| | 1 | 1 | **7X-0620** | 2 | WASHER-HARD (5.5X13X1.6-MM THK) | |
| | 2 | 1 | **8F-1434** | 2 | LOCKWASHER | |
| | 3 | 1 | **6V-8378** | 2 | NUT (10-32-THD) | |
| | 4 | 1 | **6V-8801** | 2 | NUT (3/8-16-THD) | |
| | 5 | 1 | **7X-0608** | 2 | WASHER-HARD (10.2X16X2-MM THK) | |
| | 6 | 1 | **4D-1326** | 2 | LOCKWASHER | |

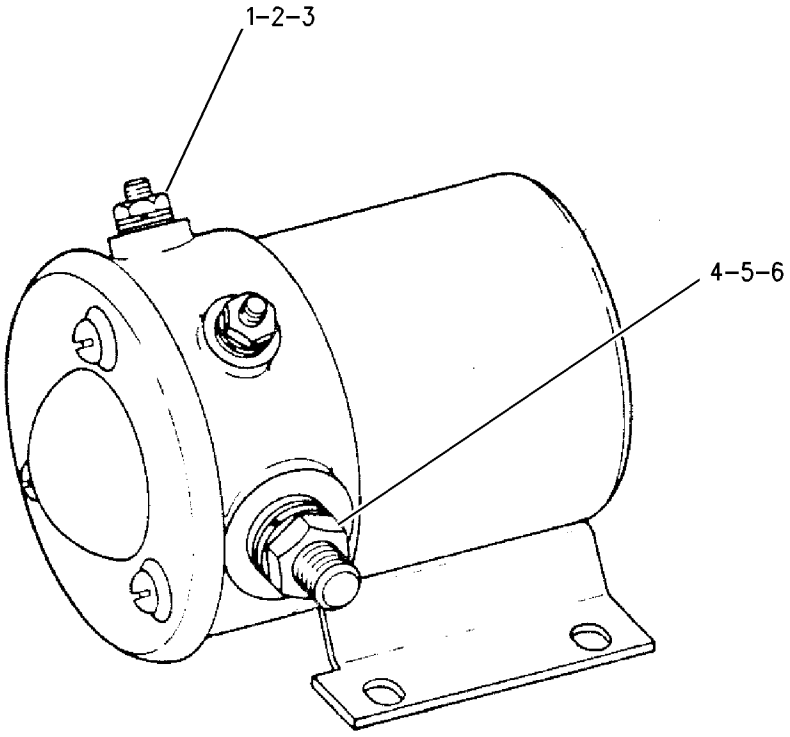


GRAPHIC #1 **<END>** g00726410

# *167-0138* SWITCH GP-MAGNETIC–MAIN RELAY

**S/N: CCA1-UP**
**24-VOLT**
**PART OF 178-0163 WIRING GP-REAR**
**ALSO AN ATTACHMENT**

**SMCS-7499** **i02021607**

| NOTE | REF NO | GRAPHIC REF | PART NUMBER | QTY | PART NAME 1 2 3 4 5 6 (PRODUCT LEVEL) | SEE PAGE |
|---|---|---|---|---|---|---|
| | 1 | 1 | **4F-2294** | 2 | NUT-JAM (5/16-24-THD) | |
| | 2 | 1 | **6V-8186** | 2 | NUT-FULL (5/16-24-THD) | |
| | 3 | 1 | **155-2270** | 1 | KIT-CONNECTING PLUG (2-PIN) | |
| | 4 | 1 | **8T-8730** | 2 | SOCKET-CONNECTOR | |
| | 5 | 1 | **155-2261** | 1 | WEDGE-PLUG LOCK (2-PIN) | |

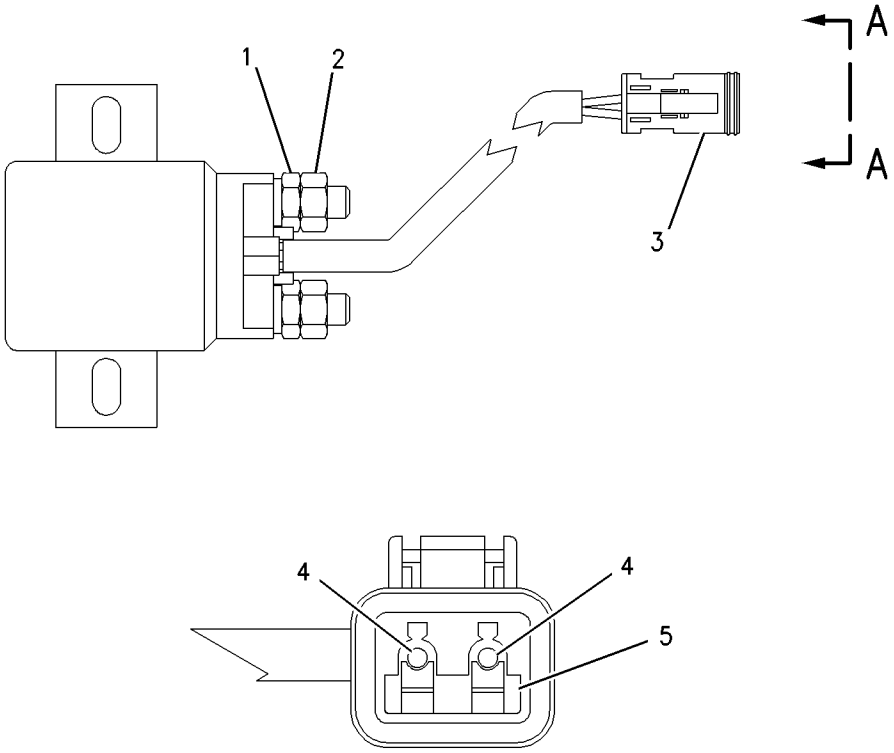


VIEW A-A

GRAPHIC #1 **<END>** g00823979

# *3E-0155* SWITCH GP-WIPER–INTERMITTENT

**S/N: CCA1-UP**

**PART OF 177-8784 WIPER GP-WINDOW, 193-7359 WIRING GP-CAB**

**AN ATTACHMENT**

**SMCS-7305, 7332** **i01864892**

| NOTE | REF NO | GRAPHIC REF | PART NUMBER | QTY | PART NAME 1 2 3 4 5 6 (PRODUCT LEVEL) | SEE PAGE |
|---|---|---|---|---|---|---|
| C | 1 | 1 | **102-8806** | 1 | KIT-RECEPTACLE (8-PIN) | |
| | | | | | (INCLUDES RECEPTACLE AS & WEDGE) | |
| | 2 | 1 | **7T-9302** | 1 | KNOB (WIPER, WASHER) | |
| | | 1 | **014-0816** | 1 | SETSCREW (8-32X0.5-IN) | |
| | 3 | 1 | **8T-8737** | 1 | PLUG-SEAL | |
| | 4 | 1 | **3E-3389** | 1 | WEDGE-RECEPTACLE LOCK | |
| C | 5 | 1 | **8T-8729** | 3 | PIN-CONNECTOR | |
| | 6 | 1 | **6V-8369** | 1 | NUT (7/16-28-THD) | |
| | 7 | 1 | **2H-3920** | 1 | LOCKWASHER | |
| C | 8 | 1 | **9W-0852** | 4 | PIN-CONNECTOR (14-GA) | |

C-CHANGE FROM PREVIOUS TYPE

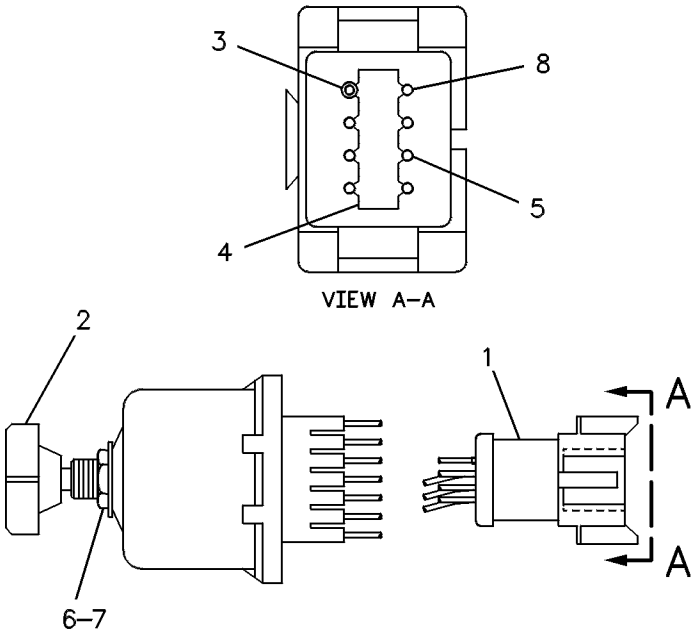


GRAPHIC #1 **<END>** g00120668

# *161-1022* WIRING GP-BLADE CUSHION

**S/N: CCA1-UP**

**PART OF 166-3337, 221-2961 ACCUMULATOR AR-BLADE CUSHION AN ATTACHMENT**

**SMCS-1408** **i02205195**

| NOTE | REF NO | GRAPHIC REF | PART NUMBER | QTY | PART NAME 1 2 3 4 5 6 (PRODUCT LEVEL) | SEE PAGE |
|---|---|---|---|---|---|---|
| | 1 | 1 | **3S-2093** | 2 | STRAP-CABLE | |
| | 2 | 1 | **130-5300** | 2 | CLIP | |
| | 3 | 1 | **169-3147** | 1 | HARNESS AS-CHASSIS | |
| | | 1 | **102-8802** | 4 | KIT-RECEPTACLE (2-PIN) | |
| | | 1 | **102-8803** | 1 | KIT-RECEPTACLE (3-PIN) | |
| | | | | | (EACH INCLUDES RECEPTACLE AS & WEDGE) | |
| | | 1 | **155-2270** | 4 | KIT-CONNECTING PLUG (2-PIN) | |
| | | | | | (INCLUDES PLUG AS & WEDGE) | |
| | 4 | 1 | **033-8248** | 1 | CLIP | |
| | 5 | 1 | **147-0385** | 2 | CLIP | |
| | 6 | 1 | **4L-6459** | 2 | BOLT (3/8-16X2.5-IN) | |
| | 7 | 1 | **5P-8167** | 1 | BOLT (3/8-16X0.625-IN) | |
| | 8 | 1 | **6V-8801** | 2 | NUT (3/8-16-THD) | |
| | 10 | 1 | **8T-4896** | 5 | WASHER-HARD (10.2X18.5X2.5-MM THK) | |
| | 11 | 1 | **3E-8763** | 1 | SWITCH AS (BLADE CUSHION) | |
| | | 1 | **3E-8812** | 1 | ACTUATOR-ROCKER | |
| | | 1 | **3E-8825** | 1 | LAMP (24-VOLT) (BLADE CUSHION SWITCH) | |

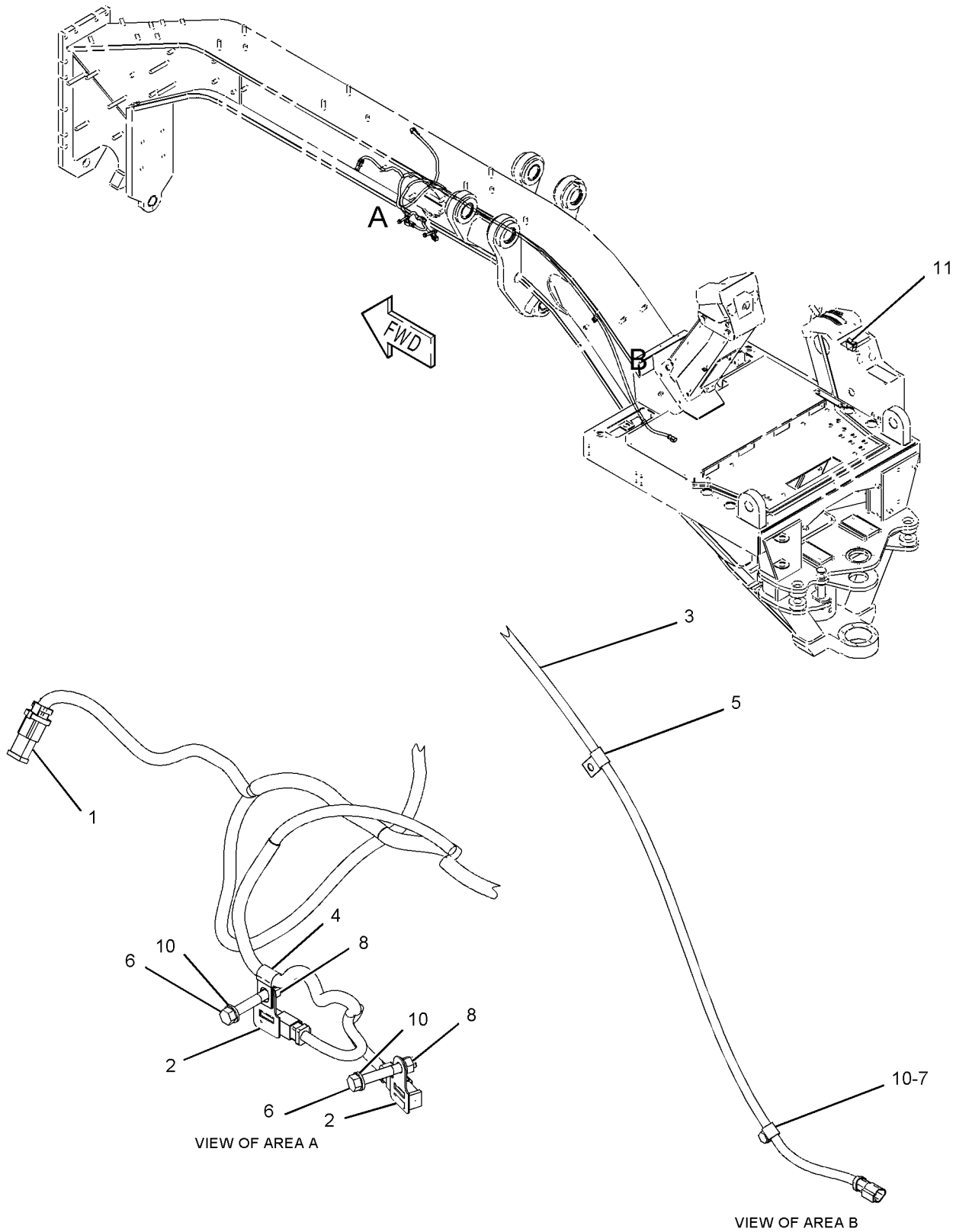


GRAPHIC #1 **<END>** g01113643

# ELECTRICAL AND STARTING SYSTEM

## *159-5878* WIRING GP-CAB

**S/N: CCA1-UP**

**PART OF 159-4615 GENERAL AR**

**SMCS-1408, 7301** **i02204202**

| NOTE | REF NO | GRAPHIC REF | PART NUMBER | QTY | PART NAME 1 2 3 4 5 6 (PRODUCT LEVEL) | SEE PAGE |
|---|---|---|---|---|---|---|
| | 1 | 1 | **3E-0109** | 3 | PLUG | |
| Y | 2 | 1 | **3E-6389** | 1 | LAMP GP-DOME (24-VOLT, WITH SWITCH) | 177 |
| | 3 | 1 | **3S-2093** | 23 | STRAP-CABLE | |
| | 4 | 1 | **131-5171** | 1 | CLIP | |
| | 5 | 1 | **6V-6578** | 2 | RIVET-BLIND | |
| | 6 | 1 | **7T-9302** | 2 | KNOB (WIPER, WASHER) (FRONT) | |
| | 7 | 1 | **9W-1441** | 1 | FUSE (15-AMPERE) | |
| | 8 | 1 | **112-6174** | 2 | SWITCH AS-ROTARY (24-VOLT) (FRONT WIPER CONTROL) | |
| | | | | | (EACH INCLUDES) | |
| | | 1 | **2H-3920** | 1 | LOCKWASHER | |
| | | 1 | **3E-3389** | 1 | WEDGE-RECEPTACLE LOCK | |
| | | 1 | **6V-8369** | 1 | NUT (7/16-28-THD) | |
| | | 1 | **186-3735** | 6 | PIN-CONNECTOR (16-GA TO 18-GA) | |
| | | 1 | **8T-8737** | 2 | PLUG-SEAL | |
| | | 1 | **102-8806** | 1 | KIT-RECEPTACLE (8-PIN) | |
| | 9 | 1 | **160-6382** | 1 | GROMMET | |
| | 10 | 1 | **167-7504** | 1 | HARNESS AS-CAB (SWITCH PANEL) | |
| | | 1 | **102-8806** | 1 | KIT-RECEPTACLE (8-PIN) | |
| | | 1 | **102-8801** | 1 | KIT-RECEPTACLE (12-PIN) | |
| | | 1 | **155-2255** | 1 | KIT-CONNECTING PLUG (12-PIN) | |
| | | 1 | **155-2265** | 4 | KIT-CONNECTING PLUG (8-PIN) | |
| | 11 | 1 | **167-7505** | 1 | HARNESS AS-CAB (REAR) | |
| | | 1 | **102-8802** | 2 | KIT-RECEPTACLE (2-PIN) | |
| | | 1 | **102-8805** | 1 | KIT-RECEPTACLE (6-PIN) | |
| | | 1 | **102-8806** | 1 | KIT-RECEPTACLE (8-PIN) | |
| | | 1 | **155-2270** | 2 | KIT-CONNECTING PLUG (2-PIN) | |
| | | 1 | **155-2274** | 1 | KIT-CONNECTING PLUG (6-PIN) | |
| | 12 | 1 | **168-8248** | 1 | HARNESS AS-CAB (FRONT) | |
| | | 1 | **102-8802** | 9 | KIT-RECEPTACLE (2-PIN) | |
| | | 1 | **102-8803** | 2 | KIT-RECEPTACLE (3-PIN) | |
| | | 1 | **102-8804** | 1 | KIT-RECEPTACLE (4-PIN) | |
| | | 1 | **102-8806** | 1 | KIT-RECEPTACLE (8-PIN) | |
| | | 1 | **102-8801** | 2 | KIT-RECEPTACLE (12-PIN) | |
| | | 1 | **155-2255** | 2 | KIT-CONNECTING PLUG (12-PIN) | |
| | | 1 | **155-2265** | 1 | KIT-CONNECTING PLUG (8-PIN) | |
| | | 1 | **155-2260** | 3 | KIT-CONNECTING PLUG (3-PIN) | |
| | | 1 | **155-2270** | 9 | KIT-CONNECTING PLUG (2-PIN) | |
| | | 1 | **155-2274** | 1 | KIT-CONNECTING PLUG (6-PIN) | |
| | 13 | 1 | **169-8938** | 1 | PLATE AS | |
| | 14 | 1 | **172-6555** | 1 | PANEL | |
| | 15 | 1 | **172-8641** | 1 | PLATE | |
| | 16 | 1 | **172-9316** | 1 | FILM-FUSE (LIGHTS, WASHER, WIPER, DEFROST) | |
| | 17 | 1 | **096-6166** | 3 | WASHER-HARD (4.5X9X1-MM THK) | |
| M | 18 | 1 | **5C-8312** | 3 | NUT (M4X0.7-THD) | |
| | 19 | 1 | **6V-5645** | 4 | SCREW-MACHINE (10-32X0.87-IN) | |
| | 20 | 1 | **6V-8801** | 1 | NUT (3/8-16-THD) | |
| | 21 | 1 | **8T-4896** | 1 | WASHER-HARD (10.2X18.5X2.5-MM THK) | |
| M | 22 | 1 | **9X-1046** | 3 | SCREW (M4X0.7X18-MM) | |
| M | 23 | 1 | **9X-2042** | 4 | SCREW-TRUSS HEAD (M6X1X12-MM) | |
| E | 24 | 1 | **7X-7877** | | STRIP-EDGING (10-CM) | |

E-ORDER BY THE CENTIMETER
M-METRIC PART
Y-SEPARATE ILLUSTRATION

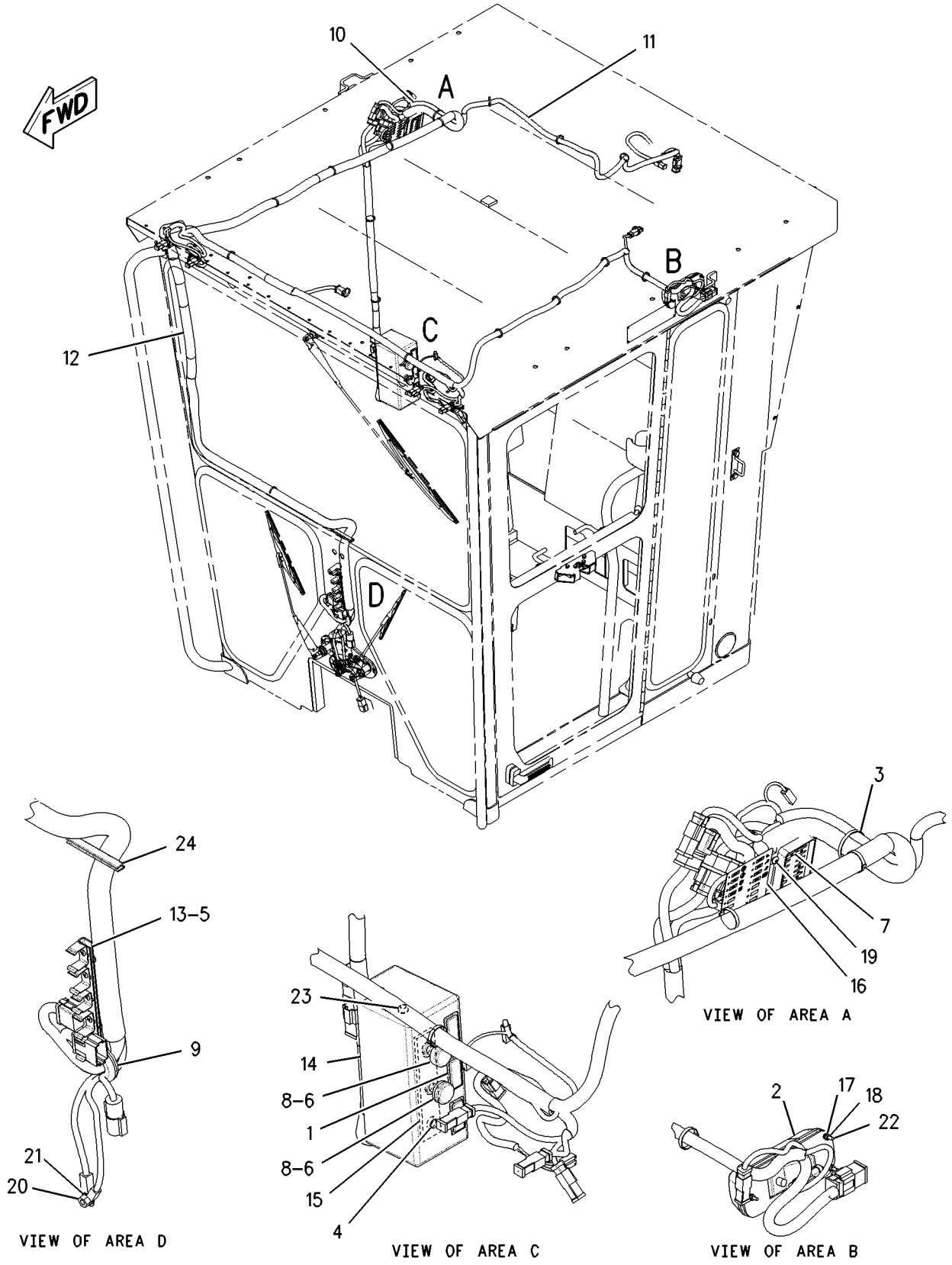


GRAPHIC #1 **<END>** g00808291

## *161-1921* WIRING GP-CAB–WARNING BEACON

**S/N: CCA1-UP**

**PART OF 197-5955, 236-3948 SNOW AR-MOTOR GRADER**

**AN ATTACHMENT**

**SMCS-1408, 7301** **i02587666**

| NOTE | REF NO | GRAPHIC REF | PART NUMBER | QTY | PART NAME 1 2 3 4 5 6 (PRODUCT LEVEL) | SEE PAGE |
|---|---|---|---|---|---|---|
| | 1 | 1 | **9W-1442** | 1 | FUSE (10-AMPERE) (WARNING BEACON) | |
| Y | 2 | 1 | **239-9362** | 1 | INSTALLATION GP-WARNING BEACON | 175 |

Y-SEPARATE ILLUSTRATION

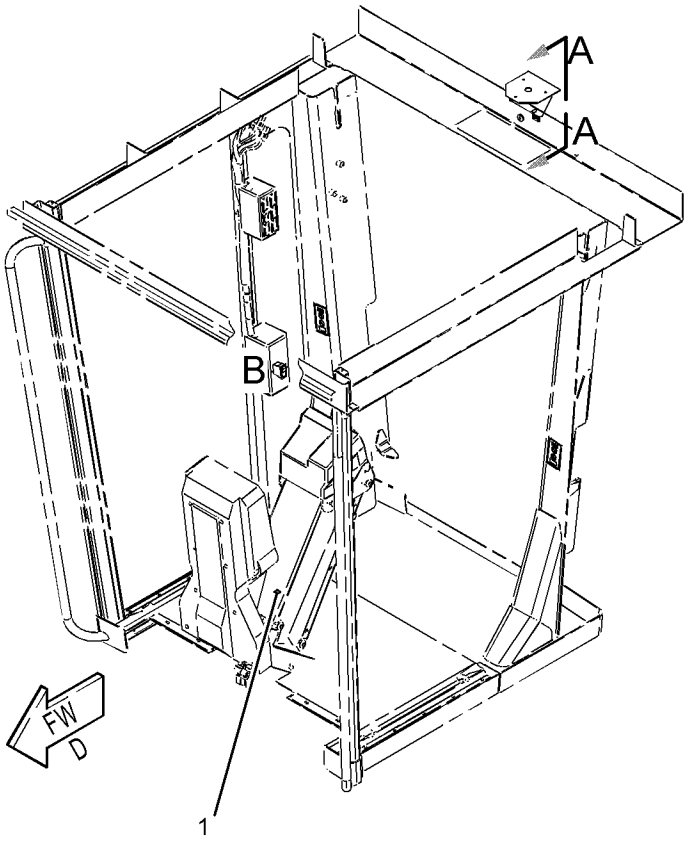


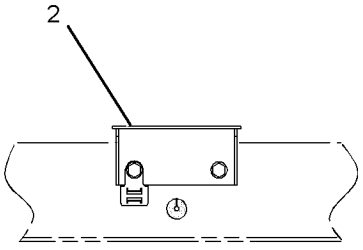


VIEW A-A

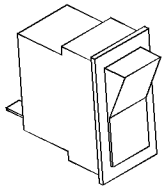

VIEW OF AREA B

GRAPHIC #1 **<END>** g01060901

# ELECTRICAL AND STARTING SYSTEM

## *193-7359* WIRING GP-CAB–EU

**S/N: CCA1-UP**
**PART OF 207-4453, 210-2044 CONVERSION AR-CERTIFICATION, 218-4759 ROPS**
**GP-ENCLOSED**
**AN ATTACHMENT**

**SMCS-1408, 7301** **i02204205**

| NOTE | REF NO | GRAPHIC REF | PART NUMBER | QTY | PART NAME 1 2 3 4 5 6 (PRODUCT LEVEL) | SEE PAGE |
|---|---|---|---|---|---|---|
| | 1 | 1 | **3E-0109** | 3 | PLUG | |
| Y | 2 | 1 | **3E-0155** | 2 | SWITCH GP-WIPER (24-VOLT, INTERMITTENT) (FRONT INTERMITTENT) | 303 |
| Y | 3 | 1 | **3E-6389** | 1 | LAMP GP-DOME (24-VOLT, WITH SWITCH) | 177 |
| | 4 | 1 | **3S-2093** | 23 | STRAP-CABLE | |
| | 5 | 1 | **131-5171** | 1 | CLIP | |
| | 6 | 1 | **6V-6578** | 2 | RIVET-BLIND | |
| | 8 | 1 | **9W-1441** | 1 | FUSE (15-AMPERE) | |
| | 9 | 1 | **160-6382** | 1 | GROMMET | |
| | 10 | 1 | **167-7504** | 1 | HARNESS AS-CAB (FRONT) | |
| | | 1 | **155-2255** | 1 | KIT-CONNECTING PLUG (12-PIN) | |
| | | 1 | **155-2265** | 4 | KIT-CONNECTING PLUG (8-PIN) | |
| | | | | | (KIT INCLUDES PLUG AS & WEDGE) | |
| | | 1 | **102-8806** | 1 | KIT-RECEPTACLE (8-PIN) | |
| | | 1 | **102-8801** | 1 | KIT-RECEPTACLE (12-PIN) | |
| | | | | | (KIT INCLUDES RECEPTACLE AS & WEDGE) | |
| | 11 | 1 | **167-7505** | 1 | HARNESS AS-CAB (REAR) | |
| | | 1 | **155-2270** | 2 | KIT-CONNECTING PLUG (2-PIN) | |
| | | 1 | **155-2274** | 1 | KIT-CONNECTING PLUG (6-PIN) | |
| | | | | | (KIT INCLUDES PLUG AS & WEDGE) | |
| | | 1 | **102-8802** | 2 | KIT-RECEPTACLE (2-PIN) | |
| | | 1 | **102-8805** | 1 | KIT-RECEPTACLE (6-PIN) | |
| | | 1 | **102-8806** | 1 | KIT-RECEPTACLE (8-PIN) | |
| | | | | | (KIT INCLUDES RECEPTACLE AS & WEDGE) | |
| | 12 | 1 | **169-8938** | 1 | PLATE AS | |
| | 13 | 1 | **172-6555** | 1 | PANEL | |
| | 14 | 1 | **172-8641** | 1 | PLATE | |
| | 15 | 1 | **172-9316** | 1 | FILM-FUSE | |
| | 16 | 1 | **196-9373** | 1 | HARNESS AS-CAB (SWITCH PANEL) | |
| | | 1 | **155-2255** | 2 | KIT-CONNECTING PLUG (12-PIN) | |
| | | 1 | **155-2265** | 1 | KIT-CONNECTING PLUG (8-PIN) | |
| | | 1 | **155-2260** | 1 | KIT-CONNECTING PLUG (3-PIN) | |
| | | 1 | **155-2270** | 11 | KIT-CONNECTING PLUG (2-PIN) | |
| | | 1 | **155-2271** | 1 | KIT-CONNECTING PLUG (4-PIN) | |
| | | 1 | **155-2274** | 1 | KIT-CONNECTING PLUG (6-PIN) | |
| | | | | | (KITS INCLUDE PLUG AS & WEDGE) | |
| | | 1 | **127-5484** | 1 | RECEPTACLE AS-CONNECTOR (1-PIN) | |
| | | 1 | **102-8802** | 11 | KIT-RECEPTACLE (2-PIN) | |
| | | 1 | **102-8804** | 1 | KIT-RECEPTACLE (4-PIN) | |
| | | 1 | **102-8806** | 1 | KIT-RECEPTACLE (8-PIN) | |
| | | 1 | **102-8801** | 2 | KIT-RECEPTACLE (12-PIN) | |
| | | | | | (KITS INCLUDE RECEPTACLE AS & WEDGE) | |
| | 17 | 1 | **096-6166** | 3 | WASHER-HARD (4.5X9X1-MM THK) | |
| M | 18 | 1 | **5C-8312** | 3 | NUT (M4X0.7-THD) | |
| | 19 | 1 | **6V-5645** | 4 | SCREW-MACHINE (10-32X0.87-IN) | |
| | 20 | 1 | **6V-8801** | 1 | NUT (3/8-16-THD) | |
| | 21 | 1 | **8T-4896** | 1 | WASHER-HARD (10.2X18.5X2.5-MM THK) | |
| M | 22 | 1 | **9X-1046** | 3 | SCREW (M4X0.7X18-MM) | |
| M | 23 | 1 | **9X-2042** | 4 | SCREW-TRUSS HEAD (M6X1X12-MM) | |
| BE | 24 | 1 | **7X-7877** | | STRIP-EDGING | |

B-USE AS REQUIRED
E-ORDER BY THE CENTIMETER
M-METRIC PART
Y-SEPARATE ILLUSTRATION

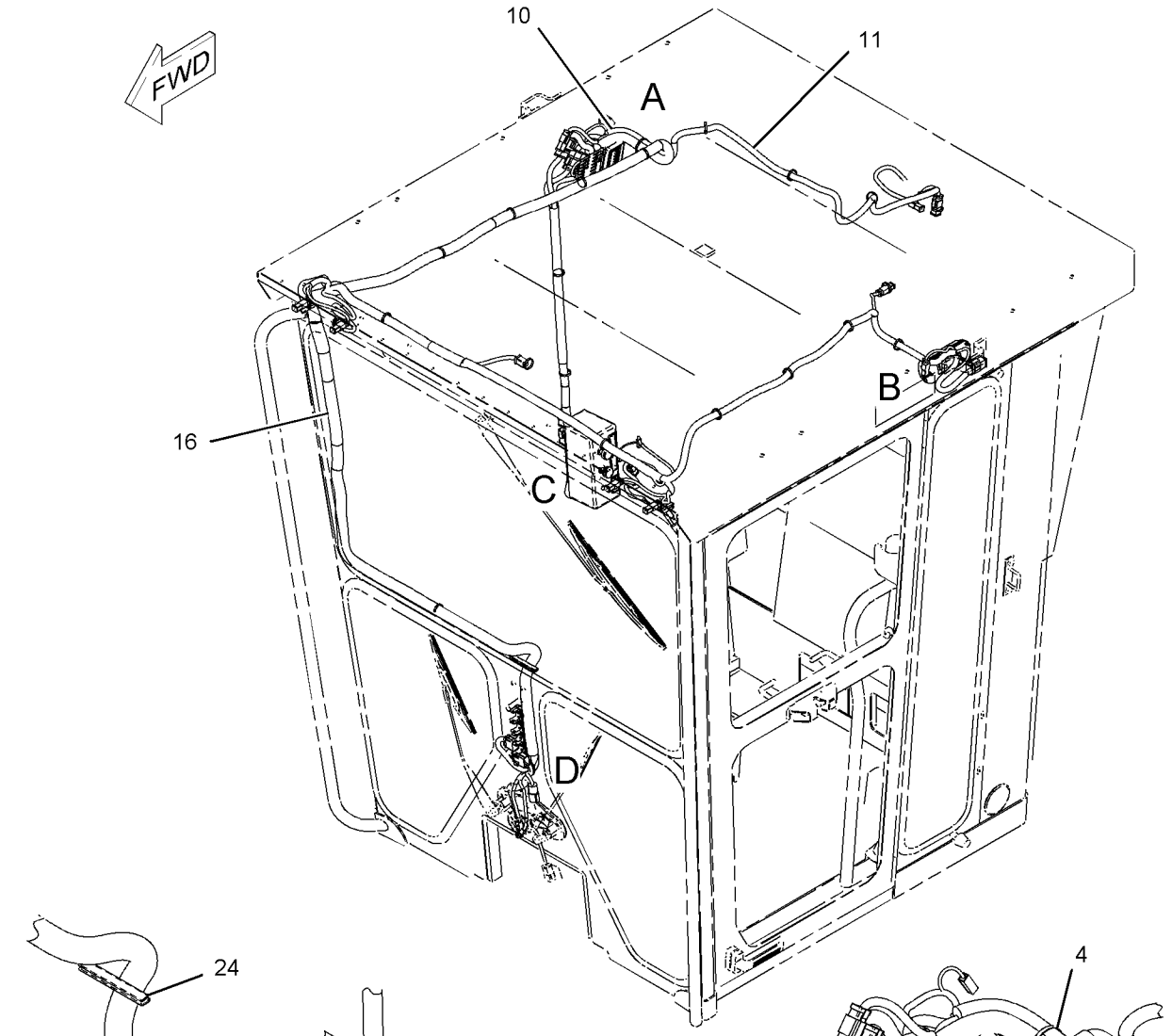


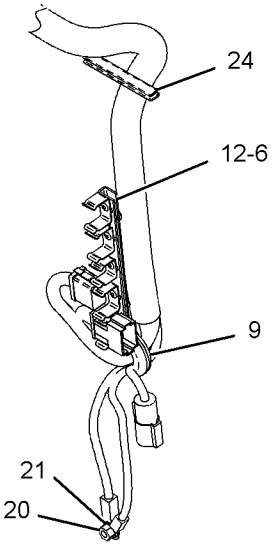


VIEW OF AREA D

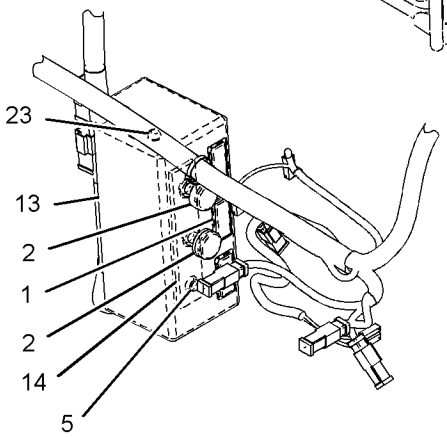


VIEW OF AREA C

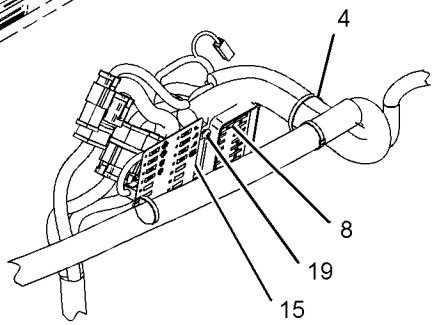


VIEW OF AREA A

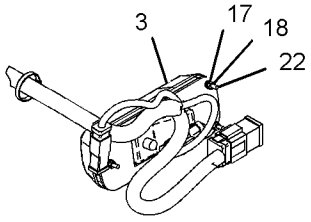


VIEW OF AREA B

GRAPHIC #1 **<END>** g01010923

# *203-6551* WIRING GP-CAB–MOLDBOARD

**S/N: CCA1-UP**
**PART OF 203-6536 LIGHTING AR-FLOOD**
**AN ATTACHMENT**

**SMCS-1408, 7301** **i02204209**

| NOTE | REF NO | GRAPHIC REF | PART NUMBER | QTY | PART NAME 1 2 3 4 5 6 (PRODUCT LEVEL) | SEE PAGE |
|---|---|---|---|---|---|---|
| | 1 | 1 | **3E-0109** | 5 | PLUG | |
| | 2 | 1 | **3S-2093** | 2 | STRAP-CABLE | |
| | 3 | 1 | **9W-1442** | 1 | FUSE (10-AMPERE) | |
| | 4 | 1 | **145-3350** | 1 | PLATE | |
| | 5 | 1 | **153-2147** | 1 | PLATE | |
| | 6 | 1 | **168-8243** | 1 | HARNESS AS-PANEL | |
| | | 1 | **155-2255** | 1 | KIT-CONNECTING PLUG (12-PIN) | |
| | | 1 | **155-2265** | 4 | KIT-CONNECTING PLUG (8-PIN) | |
| | | 1 | **155-2270** | 1 | KIT-CONNECTING PLUG (2-PIN) | |
| | | 1 | **155-2271** | 1 | KIT-CONNECTING PLUG (4-PIN) | |
| | | | | | (EACH INCLUDES A PLUG AS & WEDGE) | |
| | | 1 | **102-8802** | 1 | KIT-RECEPTACLE (2-PIN) | |
| | | 1 | **102-8804** | 2 | KIT-RECEPTACLE (4-PIN) | |
| | | 1 | **102-8806** | 1 | KIT-RECEPTACLE (8-PIN) | |
| | | 1 | **102-8801** | 1 | KIT-RECEPTACLE (12-PIN) | |
| | | | | | (EACH INCLUDES A RECEPTACLE AS & WEDGE) | |
| | 7 | 1 | **172-6556** | 1 | PANEL | |
| | 8 | 1 | **188-3862** | 1 | BRACKET AS | |
| | 9 | 1 | **3E-8766** | 1 | SWITCH AS (24-VOLT) (MOLDBOARD) | |
| | | 1 | **3E-8782** | 1 | ACTUATOR-ROCKER | |
| | | 1 | **3E-8825** | 1 | LAMP (24-VOLT) | |
| M | 10 | 1 | **9X-2043** | 6 | SCREW-TRUSS HEAD (M6X1X14-MM) | |

M-METRIC PART

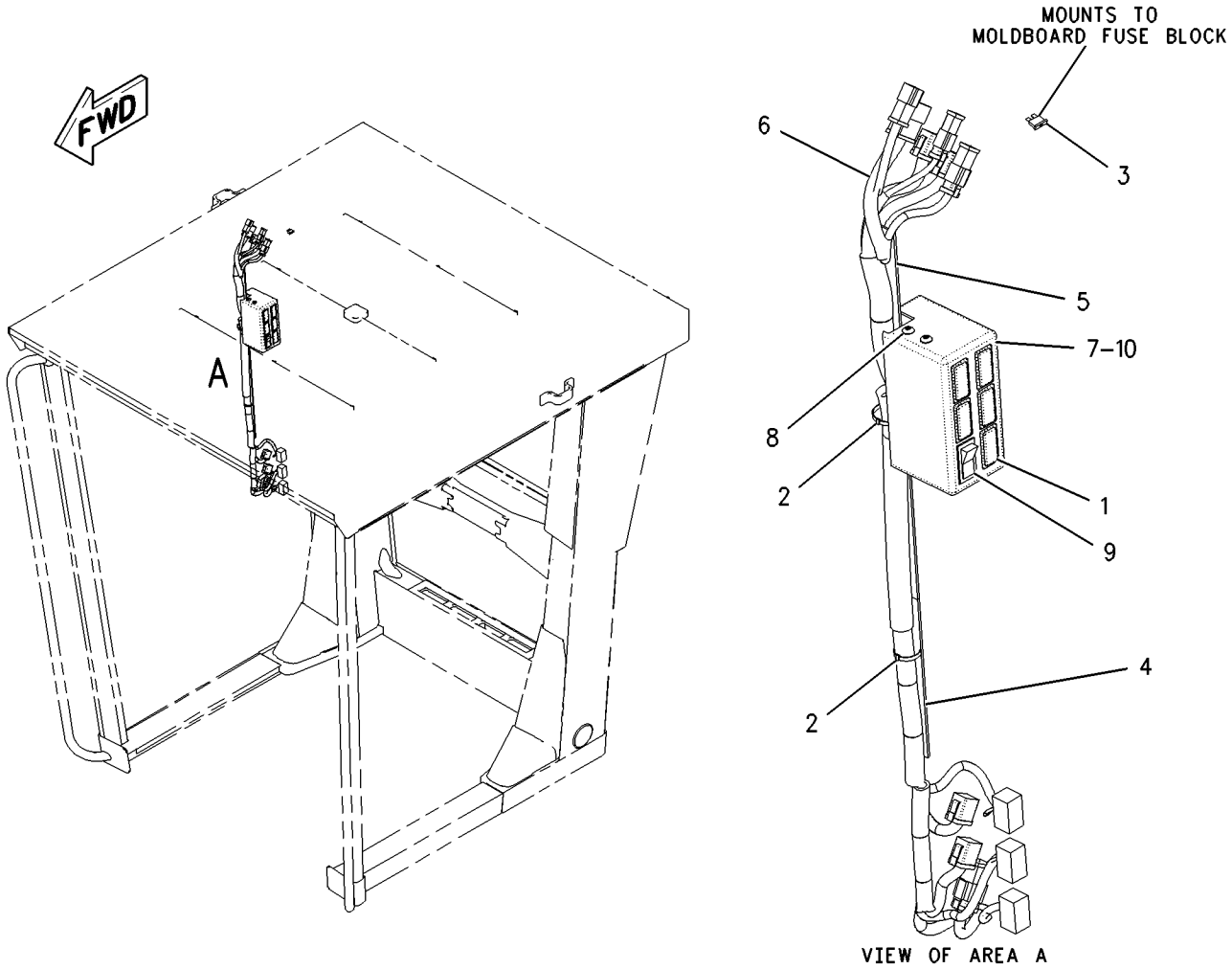


GRAPHIC #1 **<END>** g00941003

# *204-6127* WIRING GP-CAB–MOLDBOARD

**S/N: CCA1-UP**

**PART OF 204-6109 LIGHTING AR-FLOOD**

**AN ATTACHMENT**

**SMCS-1408, 7301** **i02204211**

| NOTE | REF NO | GRAPHIC REF | PART NUMBER | QTY | PART NAME 1 2 3 4 5 6 (PRODUCT LEVEL) | SEE PAGE |
|---|---|---|---|---|---|---|
| | 1 | 1 | **3E-0109** | 5 | PLUG | |
| | 2 | 1 | **3S-2093** | 2 | STRAP-CABLE | |
| | 3 | 1 | **9W-1442** | 1 | FUSE (10-AMPERE) | |
| | 4 | 1 | **145-3350** | 1 | PLATE | |
| | 5 | 1 | **153-2147** | 1 | PLATE | |
| | 6 | 1 | **172-6556** | 1 | PANEL | |
| | 7 | 1 | **188-3862** | 1 | BRACKET AS | |
| | 8 | 1 | **196-8557** | 1 | HARNESS AS-CAB | |
| | | 1 | **102-8802** | 1 | KIT-RECEPTACLE (2-PIN) | |
| | | 1 | **102-8804** | 2 | KIT-RECEPTACLE (4-PIN) | |
| | | 1 | **102-8806** | 1 | KIT-RECEPTACLE (8-PIN) | |
| | | 1 | **102-8801** | 1 | KIT-RECEPTACLE (12-PIN) | |
| | | 1 | **155-2255** | 1 | KIT-CONNECTING PLUG (12-PIN) | |
| | | 1 | **155-2265** | 4 | KIT-CONNECTING PLUG (8-PIN) | |
| | | 1 | **155-2270** | 1 | KIT-CONNECTING PLUG (2-PIN) | |
| | | 1 | **155-2271** | 1 | KIT-CONNECTING PLUG (4-PIN) | |
| | 9 | 1 | **3E-8766** | 1 | SWITCH AS (24-VOLT) (MOLDBOARD) | |
| | | 1 | **3E-8782** | 1 | ACTUATOR-ROCKER | |
| | | 1 | **3E-8825** | 1 | LAMP (24-VOLT) | |
| M | 10 | 1 | **9X-2043** | 6 | SCREW-TRUSS HEAD (M6X1X14-MM) | |

M-METRIC PART

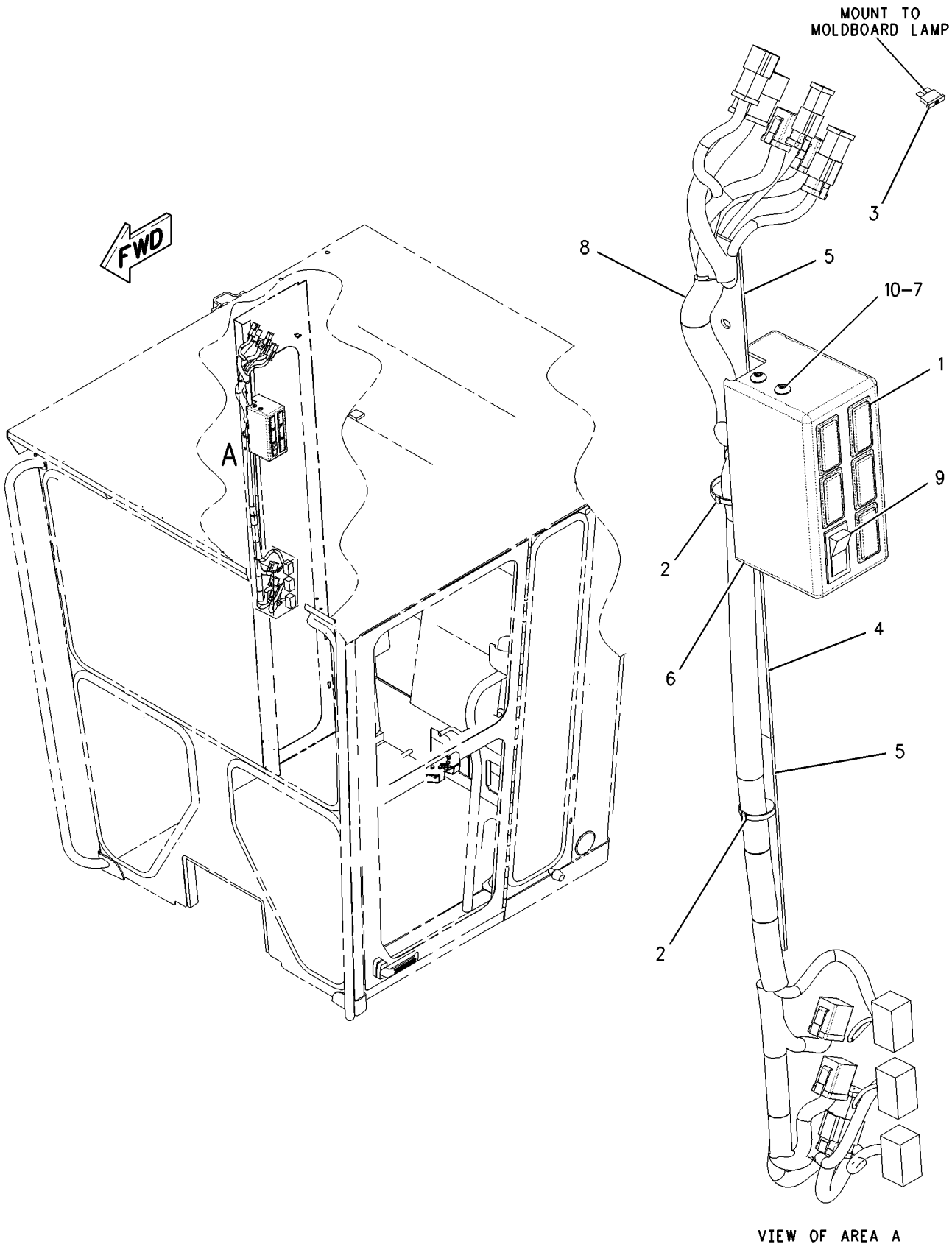


GRAPHIC #1 **<END>** g00843569

# *223-3941* WIRING GP-CAB

**S/N: CCA1-UP**
**PART OF 223-3937 CAB GP**
**AN ATTACHMENT**

**SMCS-1408, 7301** **i02204213**

| NOTE | REF NO | GRAPHIC REF | PART NUMBER | QTY | PART NAME 1 2 3 4 5 6 (PRODUCT LEVEL) | SEE PAGE |
|---|---|---|---|---|---|---|
| E | 1 | 1 | **7X-7877** | | STRIP-EDGING (10-CM) | |
| Y | 2 | 1 | **3E-6389** | 1 | LAMP GP-DOME (24-VOLT, WITH SWITCH) | 177 |
| | 3 | 1 | **3S-2093** | 6 | STRAP-CABLE | |
| | 4 | 1 | **3V-4694** | 1 | PLUG-BUTTON | |
| | 5 | 1 | **7T-9302** | 1 | KNOB (WIPER, WASHER) | |
| | | 1 | **014-0816** | 1 | SETSCREW (8-32X0.5-IN) | |
| | 6 | 1 | **112-6174** | 1 | SWITCH AS-ROTARY (24-VOLT) (FRONT WIPER) | |
| | | 1 | **2H-3920** | 1 | LOCKWASHER | |
| | | 1 | **3E-3389** | 1 | WEDGE-RECEPTACLE LOCK | |
| | | 1 | **6V-8369** | 1 | NUT (7/16-28-THD) | |
| | | 1 | **186-3735** | 6 | PIN-CONNECTOR (16-GA TO 18-GA) | |
| | | 1 | **8T-8737** | 2 | PLUG-SEAL | |
| | | 1 | **102-8806** | 1 | KIT-RECEPTACLE (8-PIN) | |
| | | | | | (INCLUDES RECEPTACLE AS & WEDGE) | |
| | 7 | 1 | **129-4647** | 1 | PLATE | |
| | 8 | 1 | **169-8938** | 1 | PLATE AS | |
| | 9 | 1 | **171-6561** | 1 | FILM (WINDOW WASHER) | |
| | 10 | 1 | **223-3939** | 1 | HARNESS AS-WINDOW WIPER (CONTROL) | |
| | | 1 | **155-2265** | 2 | KIT-CONNECTING PLUG (8-PIN) | |
| | | | | | (EACH INCLUDES PLUG AS & WEDGE) | |
| | 11 | 1 | **223-3940** | 1 | HARNESS AS-WINDOW WIPER (FUSE BOX) | |
| | | 1 | **102-8806** | 1 | KIT-RECEPTACLE (8-PIN) | |
| | | 1 | **102-8801** | 1 | KIT-RECEPTACLE (12-PIN) | |
| | | | | | (EACH INCLUDES RECEPTACLE AS & WEDGE) | |
| | | 1 | **127-5484** | 1 | RECEPTACLE AS-CONNECTOR (1-PIN) | |
| | | 1 | **155-2260** | 1 | KIT-CONNECTING PLUG (3-PIN) | |
| | | 1 | **155-2274** | 1 | KIT-CONNECTING PLUG (6-PIN) | |
| | 12 | 1 | **096-6166** | 3 | WASHER-HARD (4.5X9X1-MM THK) | |
| | 13 | 1 | **3K-8782** | 1 | FUSE (10-AMPERE) | |
| | 14 | 1 | **4K-5122** | 1 | HOLDER AS-FUSE | |
| | | | | | (EACH INCLUDES) | |
| | | 1 | **6T-8115** | 1 | NUT (1/2-24-THD) | |
| | | 1 | **139-0178** | 1 | CAP | |
| M | 15 | 1 | **5C-8312** | 3 | NUT (M4X0.7-THD) | |
| | 16 | 1 | **6V-6578** | 2 | RIVET-BLIND | |
| | 17 | 1 | **6V-8801** | 1 | NUT (3/8-16-THD) | |
| | 18 | 1 | **8T-4896** | 1 | WASHER-HARD (10.2X18.5X2.5-MM THK) | |
| M | 19 | 1 | **9X-1046** | 3 | SCREW (M4X0.7X18-MM) | |
| M | 20 | 1 | **9X-2043** | 2 | SCREW-TRUSS HEAD (M6X1X14-MM) | |

E-ORDER BY THE CENTIMETER
M-METRIC PART
Y-SEPARATE ILLUSTRATION

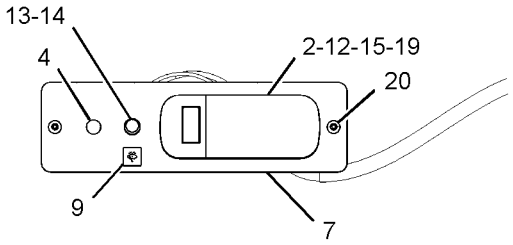


VIEW OF AREA A

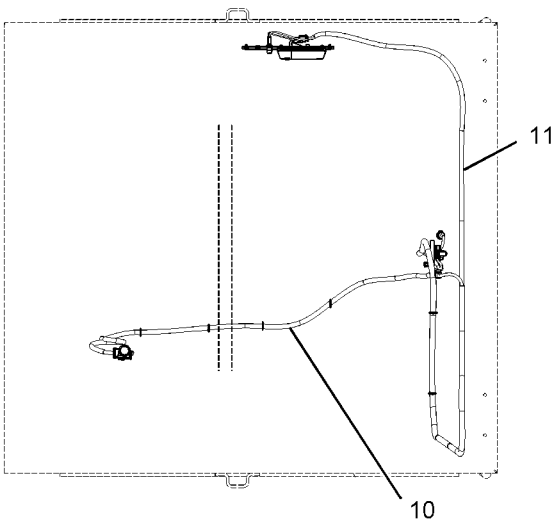


TOP VIEW

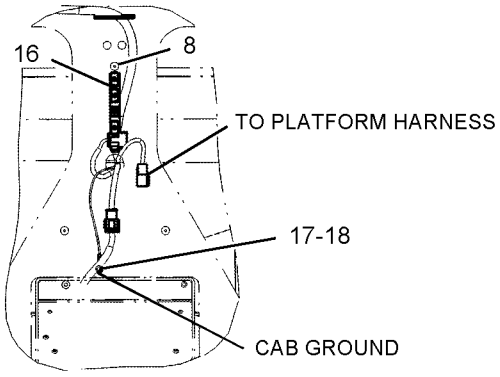


VIEW C-C

FWD

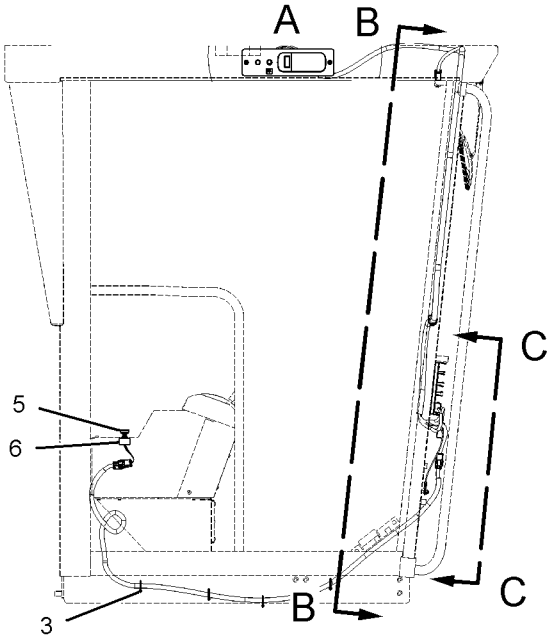


RIGHT SIDE VIEW

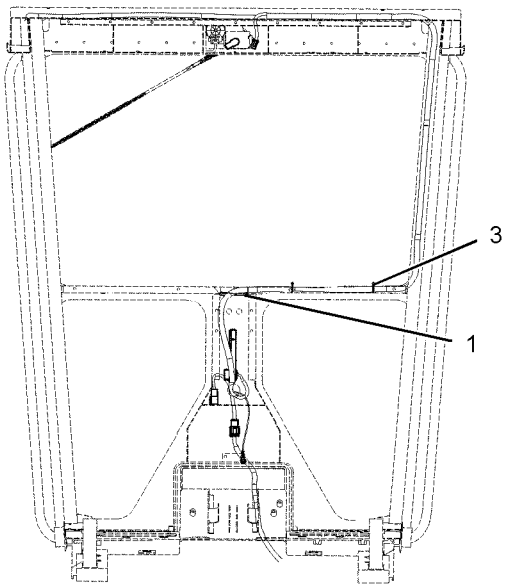


VIEW B-B

GRAPHIC #1 **<END>** g01031236

# *171-1103* WIRING GP-ENGINE

**S/N: 3PD1-UP**
**PART OF 160-5101 ENGINE AR**
**TYPE 1**

**SMCS-1408** **i02586002**

| NOTE | REF NO | GRAPHIC REF | PART NUMBER | QTY | PART NAME 1 2 3 4 5 6 (PRODUCT LEVEL) | SEE PAGE |
|---|---|---|---|---|---|---|
| | 1 | 1 | **2M-7077** | 1 | SPACER (0.406X0.62X0.37-IN THK) | |
| | 2 | 1 | **3E-7448** | 1 | CONNECTOR | |
| | 3 | 1 | **3S-2093** | 5 | STRAP-CABLE | |
| | 4 | 1 | **4P-5918** | 1 | CLIP | |
| | 5 | 1 | **9X-0262** | 1 | ADAPTER | |
| Y | 6 | 1 | *197-8391* | 1 | SENSOR GP-TEMPERATURE (INLET MANIFOLD) | 288 |
| Y | 7 | 1 | *197-8392* | 1 | SENSOR GP-TEMPERATURE (WATER COOLANT) | 289 |
| Y | 8 | 1 | *197-8393* | 1 | SENSOR GP-PRESSURE (ATMOSPHERIC) | 281 |
| Y | 9 | 1 | *197-8394* | 1 | SENSOR GP-PRESSURE (FUEL) | 282 |
| Y | 10 | 1 | *197-8395* | 1 | SENSOR GP-PRESSURE (INLET MANIFOLD) | 283 |
| Y | 11 | 1 | *197-8396* | 1 | SENSOR GP-SPEED (CRANKSHAFT) | 285 |
| Y | 12 | 1 | *197-8397* | 1 | SENSOR GP-SPEED (CAMSHAFT) | 286 |
| | 13 | 1 | **164-9609** | 1 | ELBOW | |
| | 14 | 1 | **222-4086** | 1 | HARNESS AS (ENGINE ELECTRONIC) | |
| | | 1 | **155-2255** | 1 | KIT-CONNECTING PLUG (12-PIN) | |
| | | | | | (INCLUDES PLUG AS AND WEDGE) | |
| | | 1 | **155-2260** | 3 | KIT-CONNECTING PLUG (3-PIN) | |
| | | | | | (INCLUDES PLUG AS AND WEDGE) | |
| | | 1 | **155-2270** | 7 | KIT-CONNECTING PLUG (2-PIN) | |
| | | | | | (INCLUDES PLUG AS AND WEDGE) | |
| | | 1 | **102-8802** | 1 | KIT-RECEPTACLE (2-PIN) | |
| | | | | | (INCLUDES RECEPTACLE AS AND WEDGE) | |
| | | 1 | **102-8803** | 1 | KIT-RECEPTACLE (3-PIN) | |
| | | | | | (INCLUDES RECEPTACLE AS AND WEDGE) | |
| | | 1 | **160-7690** | 1 | PLUG AS-CONNECTOR (70-PIN) | |
| | | 1 | **159-9322** | 1 | SEAL-O-RING | |
| | | 1 | **3S-2093** | 2 | STRAP-CABLE (MODULE CONNECTOR) | |
| | 15 | 1 | **102-8802** | 1 | KIT-RECEPTACLE (2-PIN) (AIR INLET HEATER) | |
| | 16 | 1 | **3E-4353** | 1 | WASHER-HARD (11X25X3-MM THK) | |
| | 17 | 1 | **4D-7794** | 1 | CLIP | |
| | 18 | 1 | **4K-8864** | 2 | CLIP | |
| | 19 | 1 | **4P-8134** | 3 | CLIP | |
| | 20 | 1 | **5P-4115** | 2 | WASHER-HARD (7.2X19X2-MM THK) | |
| | 21 | 1 | **6V-5048** | 2 | SEAL-O-RING | |
| | 22 | 1 | **6V-5049** | 1 | SEAL-O-RING | |
| M | 23 | 1 | **6V-5215** | 2 | BOLT (M8X1.25X16-MM) | |
| | 24 | 1 | **6V-5839** | 1 | WASHER (11X21X2.5-MM THK) | |
| M | 25 | 1 | **6V-6317** | 1 | BOLT (M10X1.5X20-MM) | |
| M | 26 | 1 | **6V-7981** | 1 | BOLT (M10X1.5X70-MM) | |
| M | 27 | 1 | **6V-8214** | 2 | BOLT (M6X1X20-MM) | |
| M | 28 | 1 | **6V-8837** | 1 | BOLT (M6X1X16-MM) | |
| | 29 | 1 | **8J-1256** | 1 | CLIP | |
| | 30 | 1 | **8M-2770** | 4 | CLIP | |
| | 31 | 1 | **8M-2771** | 1 | CLIP | |
| M | 32 | 1 | **8T-0642** | 1 | BOLT (M8X1.25X14-MM) | |
| | 33 | 1 | **8T-8737** | 2 | PLUG-SEAL | |
| | 34 | 1 | **9M-1974** | 2 | WASHER-HARD (8.8X16X2-MM THK) | |
| | 35 | 1 | **9S-4191** | 1 | PLUG-O RING | |
| | 36 | 1 | **9X-8267** | 1 | WASHER (6.6X12X2-MM THK) | |
| Y | 37 | 1 | *197-8391* | 1 | SENSOR GP-TEMPERATURE (FUEL) | 288 |
| Y | 38 | 1 | *197-8394* | 1 | SENSOR GP-PRESSURE (FUEL) | 282 |

M-METRIC PART
Y-SEPARATE ILLUSTRATION

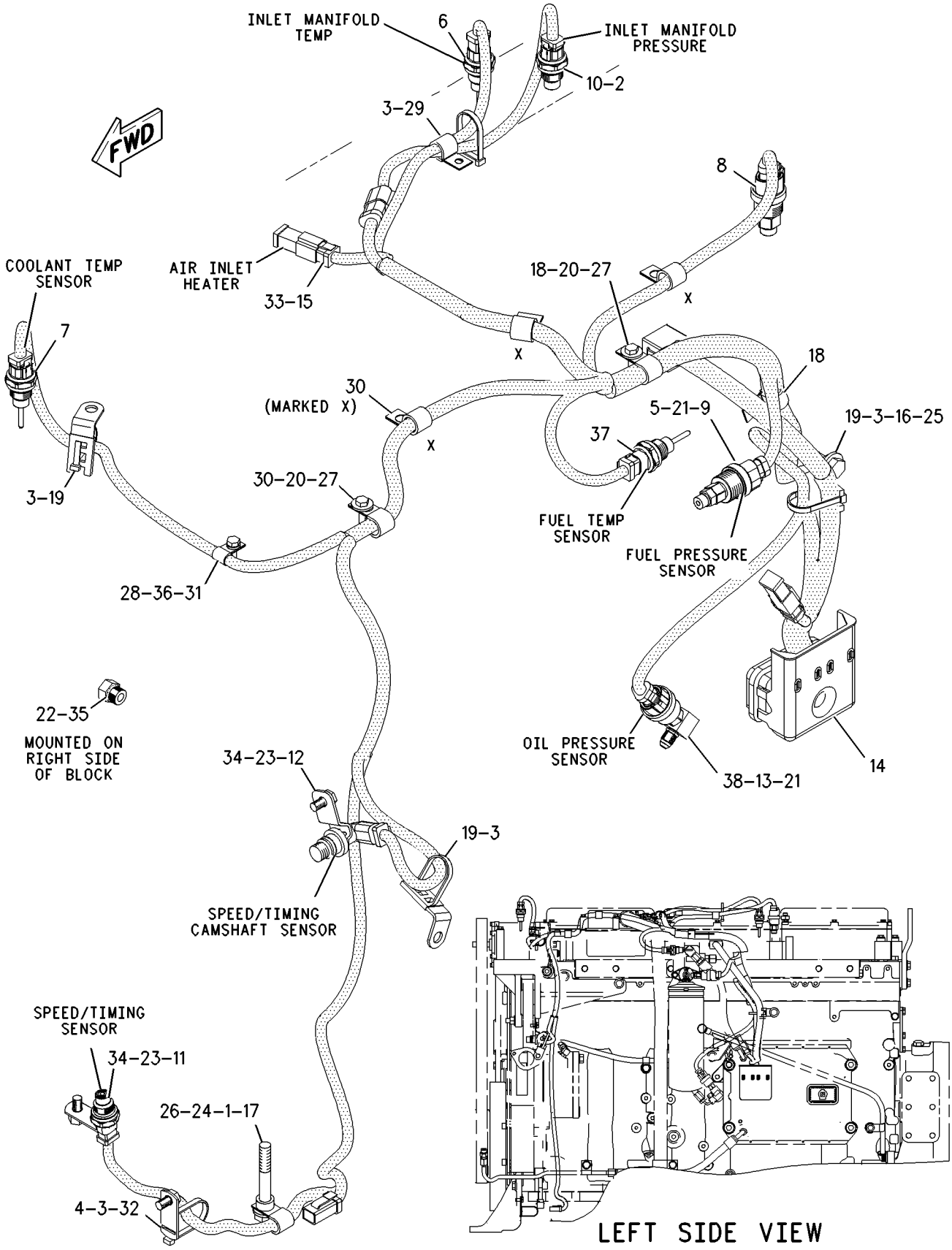


GRAPHIC #1 **<END>** g01007424

# ELECTRICAL AND STARTING SYSTEM

## *171-1103* WIRING GP-ENGINE

**S/N: 3PD1-UP**
**PART OF 160-5101 ENGINE AR**
**TYPE 2**

**SMCS-1408** **i02434641**

| NOTE | REF NO | GRAPHIC REF | PART NUMBER | QTY | PART NAME 1 2 3 4 5 6 (PRODUCT LEVEL) | SEE PAGE |
|---|---|---|---|---|---|---|
| | 1 | 1 | **2M-7077** | 1 | SPACER (0.406X0.62X0.37-IN THK) | |
| | 2 | 1 | **3E-7448** | 1 | CONNECTOR | |
| | 3 | 1 | **3S-2093** | 4 | STRAP-CABLE | |
| | 4 | 1 | **4P-5918** | 1 | CLIP | |
| | 5 | 1 | **9X-0262** | 1 | ADAPTER | |
| Y | 6 | 1 | *197-8391* | 1 | SENSOR GP-TEMPERATURE (AIR INLET MANIFOLD) | 288 |
| Y | 7 | 1 | *197-8392* | 1 | SENSOR GP-TEMPERATURE (WATER, COOLANT) | 289 |
| Y | 8 | 1 | *197-8393* | 1 | SENSOR GP-PRESSURE (ATMOSPHERIC) | 281 |
| Y | 9 | 1 | *197-8394* | 1 | SENSOR GP-PRESSURE (FUEL) | 282 |
| Y | 10 | 1 | *197-8395* | 1 | SENSOR GP-PRESSURE (AIR INLET MANIFOLD) | 283 |
| Y | 11 | 1 | *197-8396* | 1 | SENSOR GP-SPEED (CRANKSHAFT TIMING) | 285 |
| Y | 12 | 1 | *197-8397* | 1 | SENSOR GP-SPEED (CAMSHAFT TIMING) | 286 |
| | 13 | 1 | **164-9609** | 1 | ELBOW | |
| | 14 | 1 | **183-4403** | 1 | CLIP | |
| | 15 | 1 | **222-4086** | 1 | HARNESS AS (ENGINE ELECTRONIC) | |
| | | 1 | **155-2255** | 1 | KIT-CONNECTING PLUG (12-PIN) | |
| | | | | | (INCLUDES PLUG AS AND WEDGE) | |
| | | 1 | **155-2260** | 3 | KIT-CONNECTING PLUG (3-PIN) | |
| | | | | | (EACH INCLUDES PLUG AS AND WEDGE) | |
| | | 1 | **155-2270** | 6 | KIT-CONNECTING PLUG (2-PIN) | |
| | | | | | (EACH INCLUDES PLUG AS AND WEDGE) | |
| | | 1 | **102-8802** | 1 | KIT-RECEPTACLE (2-PIN) | |
| | | | | | (INCLUDES RECEPTACLE AS AND WEDGE) | |
| | | 1 | **102-8803** | 1 | KIT-RECEPTACLE (3-PIN) | |
| | | | | | (INCLUDES RECEPTACLE AS AND WEDGE) | |
| | | 1 | **160-7690** | 1 | PLUG AS-CONNECTOR (7O-PIN) | |
| | | 1 | **159-9322** | 1 | SEAL-O-RING | |
| | | 1 | **3S-2093** | 2 | STRAP-CABLE | |
| | 16 | 1 | **2V-3216** | 1 | CLIP | |
| | 17 | 1 | **3E-4353** | 1 | WASHER-HARD (11X25X3-MM THK) | |
| | 18 | 1 | **4D-7794** | 1 | CLIP | |
| | 19 | 1 | **4P-7581** | 1 | CLIP | |
| | 20 | 1 | **4P-8134** | 2 | CLIP | |
| | 21 | 1 | **5P-4115** | 2 | WASHER-HARD (7.2X19X2-MM THK) | |
| | 22 | 1 | **6V-4369** | 1 | CLIP | |
| | 23 | 1 | **6V-5048** | 2 | SEAL-O-RING | |
| | 24 | 1 | **6V-5049** | 1 | SEAL-O-RING | |
| M | 25 | 1 | **6V-5215** | 2 | BOLT (M8X1.25X16-MM) | |
| | 26 | 1 | **6V-5839** | 1 | WASHER (11X21X2.5-MM THK) | |
| M | 27 | 1 | **6V-6317** | 1 | BOLT (M10X1.5X20-MM) | |
| M | 28 | 1 | **6V-7981** | 1 | BOLT (M10X1.5X70-MM) | |
| M | 29 | 1 | **6V-8214** | 2 | BOLT (M6X1X20-MM) | |
| M | 30 | 1 | **6V-8837** | 1 | BOLT (M6X1X16-MM) | |
| | 31 | 1 | **7K-1181** | 1 | STRAP-CABLE | |
| | 32 | 1 | **8J-1256** | 2 | CLIP | |
| | 33 | 1 | **8M-2771** | 1 | CLIP | |
| | 34 | 1 | **8M-2773** | 1 | CLIP | |
| M | 35 | 1 | **8T-0642** | 1 | BOLT (M8X1.25X14-MM) | |
| | 36 | 1 | **9M-1974** | 2 | WASHER-HARD (8.8X16X2-MM THK) | |
| | 37 | 1 | **9S-4191** | 1 | PLUG-O RING | |
| | 38 | 1 | **9X-8267** | 1 | WASHER (6.6X12X2-MM THK) | |
| Y | 39 | 1 | *197-8391* | 1 | SENSOR GP-TEMPERATURE (FUEL) | 288 |
| Y | 40 | 1 | *197-8394* | 1 | SENSOR GP-PRESSURE (ENGINE OIL) | 282 |

M-METRIC PART
Y-SEPARATE ILLUSTRATION

*171-1103* **WIRING GP-ENGINE** *(contd. )* **i02434641**

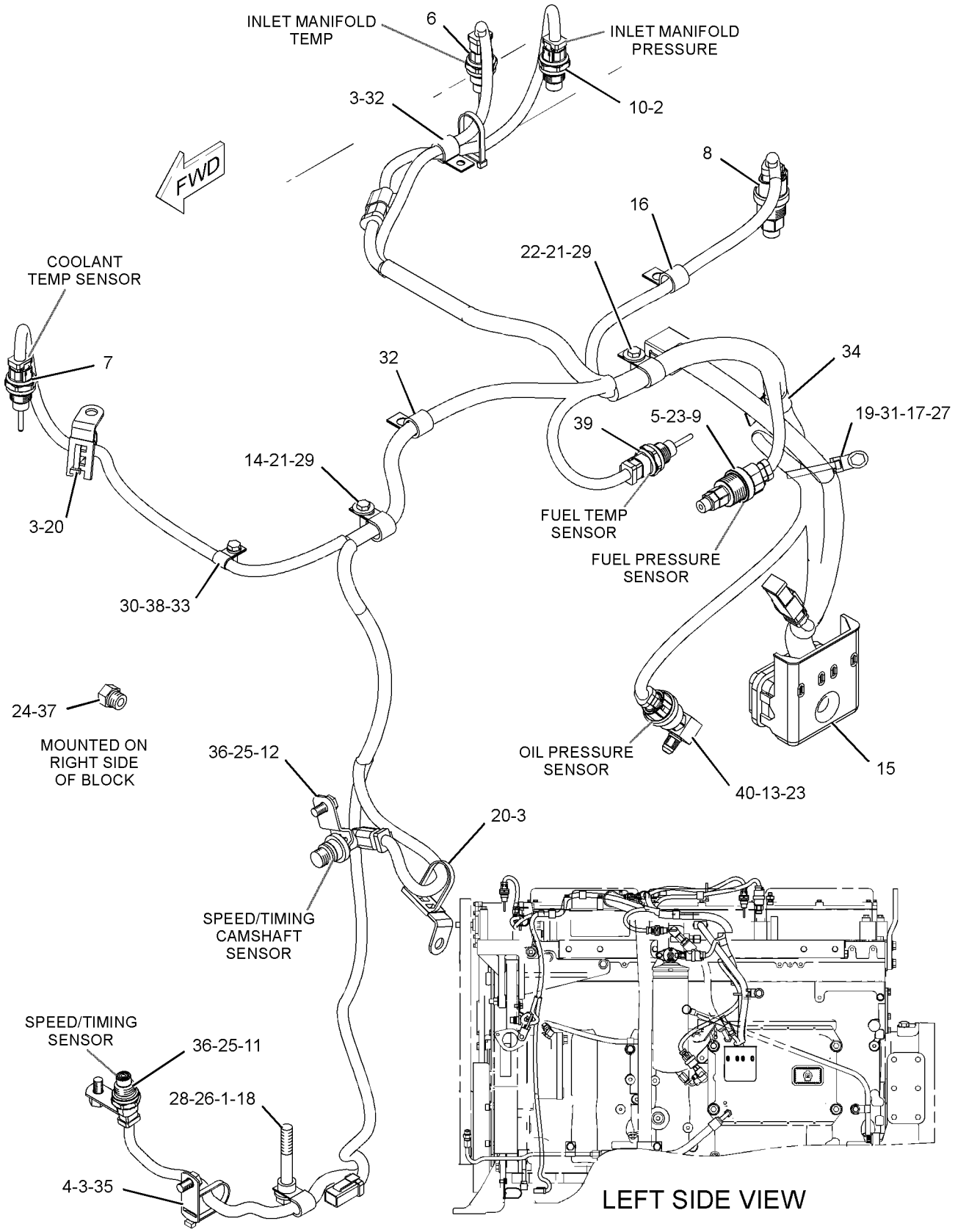


GRAPHIC #1 **<END>** g01279223

# ELECTRICAL AND STARTING SYSTEM

## *159-5856* WIRING GP-FRONT

**S/N: CCA1-UP**

**PART OF 159-4615 GENERAL AR**

**SMCS-1408** **i02587692**

| NOTE | REF NO | GRAPHIC REF | PART NUMBER | QTY | PART NAME 1 2 3 4 5 6 (PRODUCT LEVEL) | SEE PAGE |
|---|---|---|---|---|---|---|
| | 1 | 1 | **1S-2342** | 1 | STRAP AS-GROUND | |
| | 2 | 1 | **3E-2026** | 1 | SWITCH AS-PRESSURE (STOP LAMP) | |
| | | 1 | **186-3735** | 2 | PIN-CONNECTOR (16-GA TO 18-GA) | |
| | | 1 | **102-8802** | 1 | KIT-RECEPTACLE (2-PIN) | |
| | | | | | (INCLUDES RECEPTACLE AS & WEDGE) | |
| | 3 | 1 | **3E-3636** | 1 | SWITCH AS-BALL (CENTERSHIFT INDICATOR) | |
| | | 1 | **186-3735** | 4 | PIN-CONNECTOR (16-GA TO 18-GA) | |
| | | 1 | **102-8804** | 1 | KIT-RECEPTACLE (4-PIN) | |
| | | | | | (INCLUDES RECEPTACLE AS & WEDGE) | |
| | 4 | 1,2 | **3S-2093** | 15 | STRAP-CABLE | |
| | 5 | 2 | **6I-1418** | 4 | SPACER (8.2X12.7X28.7-MM THK) | |
| | 6 | 1,2 | **7K-1181** | 5 | STRAP-CABLE | |
| | 7 | 2 | **8T-9655** | 8 | MOUNT-ISOLATION | |
| | 8 | 1,2 | **9L-1566** | 3 | SUPPORT | |
| | 9 | 1 | **9L-6331** | 1 | BRACKET | |
| | 10 | 1 | **114-9281** | 2 | SWITCH AS-PRESSURE (AIR BRAKES) | |
| | | | | | (EACH INCLUDES) | |
| | | 1 | **186-3735** | 2 | PIN-CONNECTOR (16-GA TO 18-GA) | |
| | | 1 | **102-8802** | 1 | KIT-RECEPTACLE (2-PIN) | |
| | | | | | (INCLUDES RECEPTACLE AS & WEDGE) | |
| | 11 | 1 | **131-4135** | 1 | SWITCH AS-TEMPERATURE (HYDRAULIC OIL) | |
| | | 1 | **186-3735** | 2 | PIN-CONNECTOR (16-GA TO 18-GA) | |
| | | 1 | **102-8802** | 1 | KIT-RECEPTACLE (2-PIN) | |
| | | | | | (INCLUDES RECEPTACLE AS & WEDGE) | |
| | 12 | 1,2 | **169-5414** | 5 | CLIP | |
| Y | 13 | 2 | *171-5941* | 1 | ELECTRONICS GP-POWER TRAIN | 169 |
| YR | 14 | 2 | **172-9389** | 1 | CONTROL GP-UNPROGRAMMED (POWER TRAIN) | 162 |
| | 15 | 1 | **185-4076** | 1 | HARNESS AS-PLATFORM | |
| | | 1 | **9X-1343** | 1 | RECEPTACLE AS-CONNECTOR (40-PIN) | |
| | | 1 | **127-5484** | 3 | RECEPTACLE AS-CONNECTOR (1-PIN) | |
| | | 1 | **127-5486** | 1 | RECEPTACLE AS-CONNECTOR (1-PIN) | |
| | | 1 | **129-7164** | 1 | RECEPTACLE AS-CONNECTOR (1-PIN) | |
| | | 1 | **102-8802** | 2 | KIT-RECEPTACLE (2-PIN) | |
| | | 1 | **102-8803** | 2 | KIT-RECEPTACLE (3-PIN) | |
| | | 1 | **102-8805** | 4 | KIT-RECEPTACLE (6-PIN) | |
| | | 1 | **102-8801** | 8 | KIT-RECEPTACLE (12-PIN) | |
| | | | | | (EACH INCLUDES RECEPTACLE AS & WEDGE) | |
| | | 1 | **127-5483** | 3 | PLUG AS-CONNECTOR (1-PIN) | |
| | | 1 | **127-5485** | 1 | PLUG AS-CONNECTOR (1-PIN) | |
| | | 1 | **129-7163** | 1 | PLUG AS-CONNECTOR (1-PIN) | |
| | | 1 | **155-2255** | 6 | KIT-CONNECTING PLUG (12-PIN) | |
| | | 1 | **155-2265** | 1 | KIT-CONNECTING PLUG (8-PIN) | |
| | | 1 | **155-2260** | 4 | KIT-CONNECTING PLUG (3-PIN) | |
| | | 1 | **155-2270** | 11 | KIT-CONNECTING PLUG (2-PIN) | |
| | | 1 | **155-2271** | 1 | KIT-CONNECTING PLUG (4-PIN) | |
| | | 1 | **155-2274** | 4 | KIT-CONNECTING PLUG (6-PIN) | |
| | | | | | (EACH INCLUDES PLUG AS & WEDGE) | |
| | 16 | 2 | **201-5244** | 1 | PLATE AS | |
| | 17 | 1 | **6V-1889** | 1 | CLIP | |
| | 18 | 2 | **096-6166** | 4 | WASHER-HARD (4.5X9X1-MM THK) | |
| | 19 | 1,2 | **130-5300** | 8 | CLIP | |
| | 20 | 1 | **3J-1907** | 1 | SEAL-O-RING | |
| | 21 | 1 | **3K-0360** | 1 | SEAL-O-RING | |
| | 22 | 1 | **4D-7388** | 2 | CLIP | |
| | 23 | 1,2 | **4D-7794** | 10 | CLIP | |
| | 24 | 1 | **4K-8864** | 1 | CLIP | |

*159-5856* **WIRING GP-FRONT** ***(contd.)*** **i02587692**

| NOTE | REF NO | GRAPHIC REF | PART NUMBER | QTY | PART NAME 1 2 3 4 5 6 (PRODUCT LEVEL) | SEE PAGE |
|---|---|---|---|---|---|---|
| | 25 | 1,2 | **4L-6454** | 4 | BOLT (3/8-16X1-IN) | |
| | 26 | 1,2 | **4P-8134** | 2 | CLIP | |
| | 27 | 1 | **4S-4455** | 1 | CLIP | |
| | 28 | 1,2 | **5M-3062** | 31 | BOLT (3/8-16X0.75-IN) | |
| | 29 | 1 | **5S-7379** | 1 | BOLT (3/8-16X0.875-IN) | |
| | 30 | 1 | **6D-4246** | 1 | CLIP | |
| | 31 | 1,2 | **6V-3265** | 5 | CLIP | |
| | 32 | 2 | **6V-3964** | 4 | WASHER-HARD (8.8X25.5X5-MM THK) | |
| | 33 | 1,2 | **6V-8801** | 4 | NUT (3/8-16-THD) | |
| | 34 | 1 | **7C-4354** | 1 | CLIP | |
| | 35 | 2 | **7X-0440** | 4 | BOLT (5/16-18X1.75-IN) | |
| B | 36 | 1 | **8F-1974** | 10 | SHIM (0.13-MM THK) | |
| | 37 | 2 | **8M-2770** | 1 | CLIP | |
| | 38 | 1,2 | **8T-4121** | 5 | WASHER-HARD (11X21X2.5-MM THK) | |
| M | 39 | 1 | **8T-4137** | 1 | BOLT (M10X1.5X20-MM) | |
| M | 40 | 2 | **8T-4647** | 4 | SCREW-MACHINE (M4X0.7X20-MM) | |
| | 41 | 1,2 | **8T-4896** | 40 | WASHER-HARD (10.2X18.5X2.5-MM THK) | |
| | 42 | 1 | **174-5907** | 2 | CLIP | |
| M | 43 | 1,2 | **8T-4195** | 2 | BOLT (M10X1.5X30-MM) | |
| M | 44 | 1,2 | **8T-4133** | 2 | NUT (M10X1.5-THD) | |
| | 45 | 1,2 | **7D-7233** | 2 | CLIP | |
| | 46 | 1 | **8M-2773** | 1 | CLIP | |
| | 47 | 1 | **114-9281** | 1 | SWITCH AS-PRESSURE (PARKING BRAKE) | |
| | | 1 | **186-3735** | 2 | PIN-CONNECTOR (16-GA TO 18-GA) | |
| | | 1 | **102-8802** | 1 | KIT-RECEPTACLE (2-PIN) (INCLUDES RECEPTACLE AS & WEDGE) | |
| | | | | | | |
| FY | | | *198-7332* | 1 | ELECTRONICS GP-MONITOR (CATERPILLAR MONITORING SYSTEM) | 169 |

B-USE AS REQUIRED
F-NOT SHOWN
M-METRIC PART
R-REMFG PART MAY BE AVAILABLE
Y-SEPARATE ILLUSTRATION

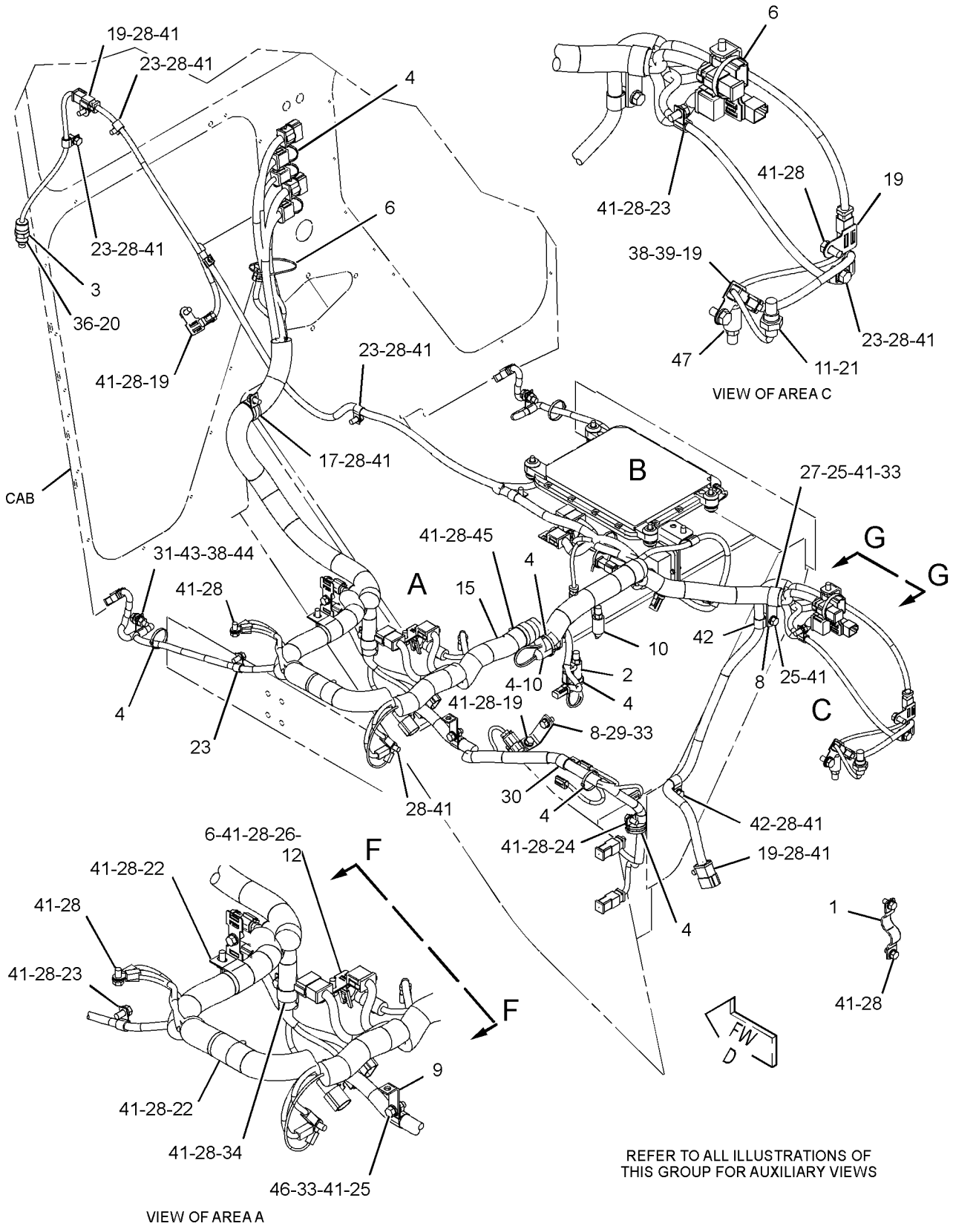


GRAPHIC #1 g01294501

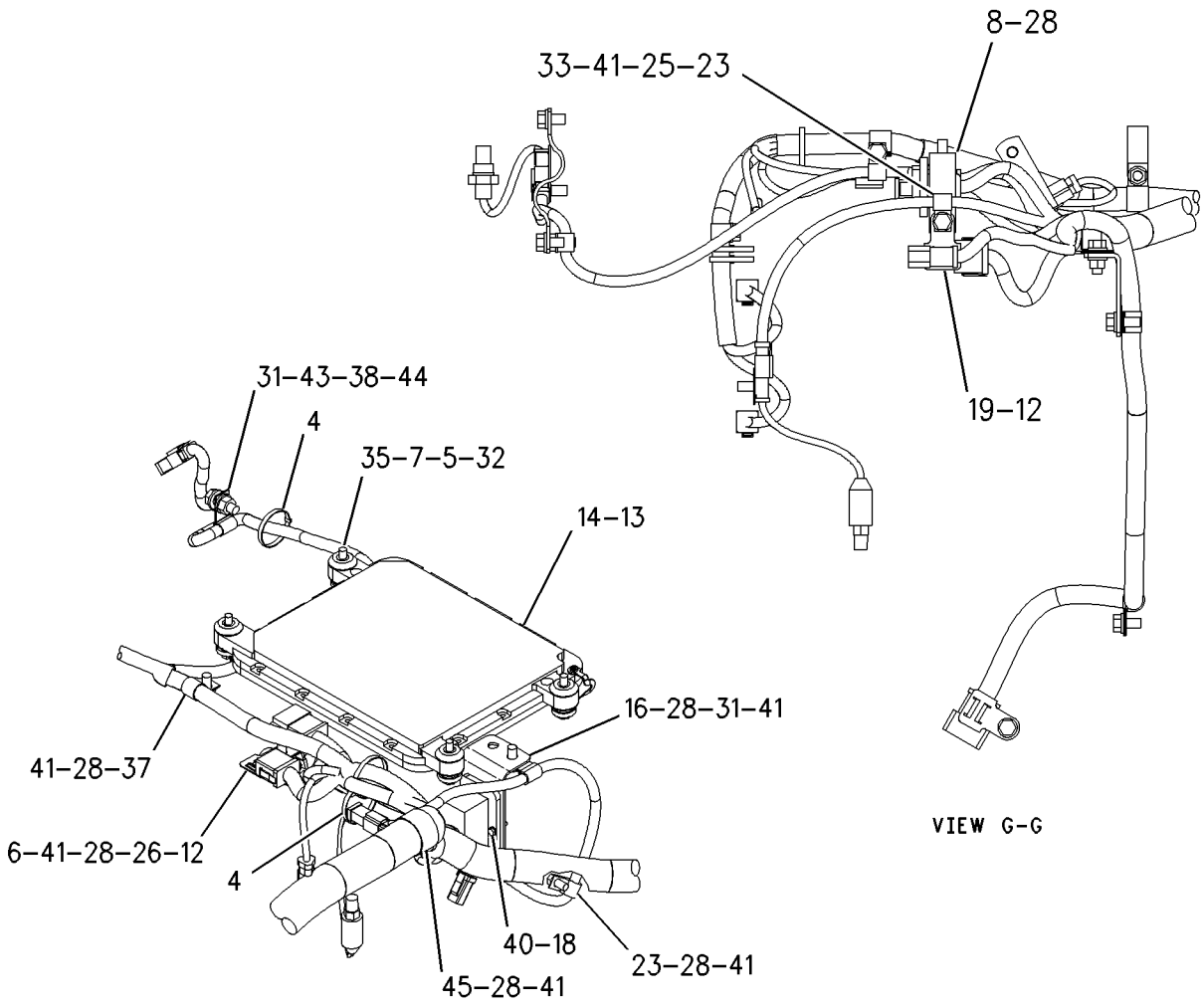


VIEW G-G

VIEW OF AREA B

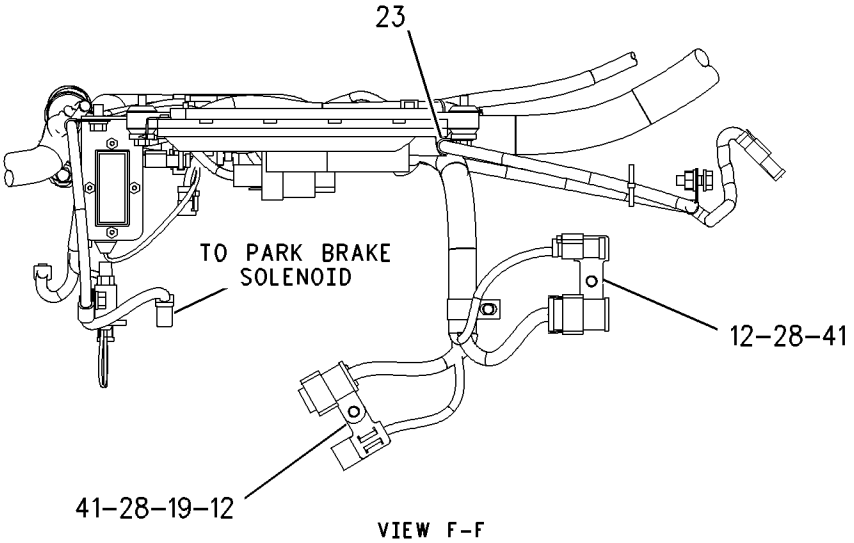


VIEW F-F

GRAPHIC #2 **<END>** g00941203

## *159-5865* WIRING GP-FRONT–EU

**S/N: CCA1-UP**

**PART OF 207-4453, 210-2044 CONVERSION AR-CERTIFICATION AN ATTACHMENT**

**SMCS-1408** **i02587733**

| NOTE | REF NO | GRAPHIC REF | PART NUMBER | QTY | PART NAME 1 2 3 4 5 6 (PRODUCT LEVEL) | SEE PAGE |
|---|---|---|---|---|---|---|
| | 1 | 3 | **1S-2342** | 1 | STRAP AS-GROUND | |
| | 2 | 1 | **2G-0617** | 2 | CLAMP | |
| | 3 | 1 | **2G-0988** | 2 | CAP | |
| | 4 | 3 | **2L-0273** | 1 | FITTING (RUBBER) | |
| | 5 | 3 | **3E-2026** | 1 | SWITCH AS-PRESSURE (STOP LAMP) | |
| | | 3 | **186-3735** | 2 | PIN-CONNECTOR (16-GA TO 18-GA) | |
| | | 3 | **102-8802** | 1 | KIT-RECEPTACLE (2-PIN) | |
| | | | | | (INCLUDES RECEPTACLE AS & WEDGE) | |
| | 6 | 2 | **3E-3636** | 1 | SWITCH AS-BALL (CENTERSHIFT INDICATOR) | |
| | | 2 | **186-3735** | 4 | PIN-CONNECTOR (16-GA TO 18-GA) | |
| | | 2 | **102-8804** | 1 | KIT-RECEPTACLE (4-PIN) | |
| | | | | | (INCLUDES RECEPTACLE AS & WEDGE) | |
| | 7 | 3 | **3E-6450** | 1 | SWITCH AS-PRESSURE (PRIMARY STEERING) | |
| | | 3 | **186-3735** | 3 | PIN-CONNECTOR (16-GA TO 18-GA) | |
| | | 3 | **102-8803** | 1 | KIT-RECEPTACLE (3-PIN) | |
| | | | | | (INCLUDES RECEPTACLE AS & WEDGE) | |
| | 8 | 1 | **3K-9520** | 3 | GROMMET | |
| | 9 | 1,2,3 | **3S-2093** | 17 | STRAP-CABLE | |
| | 10 | 3 | **6I-1418** | 4 | SPACER (8.2X12.7X28.7-MM THK) | |
| | 11 | 1,2,3 | **7K-1181** | 7 | STRAP-CABLE | |
| | 12 | 3 | **8T-9655** | 8 | MOUNT-ISOLATION | |
| | 13 | 2,3 | **9L-1566** | 3 | SUPPORT | |
| | 14 | 3 | **9L-6331** | 1 | BRACKET | |
| Y | 15 | 1 | **105-4849** | 1 | LAMP GP-HEAD & SIGNAL (LH) | 190 |
| Y | 16 | 1 | **105-4850** | 1 | LAMP GP-HEAD & SIGNAL (RH) | 192 |
| | 17 | 3 | **114-9281** | 2 | SWITCH AS-PRESSURE (AIR BRAKE) | |
| | | | | | (EACH INCLUDES) | |
| | | 3 | **186-3735** | 2 | PIN-CONNECTOR (16-GA TO 18-GA) | |
| | | 3 | **102-8802** | 1 | KIT-RECEPTACLE (2-PIN) | |
| | | | | | (INCLUDES RECEPTACLE AS & WEDGE) | |
| | 17A | 2,3 | **114-9281** | 1 | SWITCH AS-PRESSURE (PARKING BRAKE) | |
| | | 2,3 | **186-3735** | 2 | PIN-CONNECTOR (16-GA TO 18-GA) | |
| | | 2,3 | **102-8802** | 1 | KIT-RECEPTACLE (2-PIN) | |
| | | | | | (INCLUDES RECEPTACLE AS & WEDGE) | |
| | 18 | 3 | **131-4135** | 1 | SWITCH AS-TEMPERATURE (HYDRAULIC OIL) | |
| | | 3 | **186-3735** | 2 | PIN-CONNECTOR (16-GA TO 18-GA) | |
| | | 3 | **102-8802** | 1 | KIT-RECEPTACLE (2-PIN) | |
| | | | | | (INCLUDES RECEPTACLE AS & WEDGE) | |
| | 19 | 1 | **137-9410** | 2 | CLAMP | |
| | 20 | 3 | **140-8864** | 1 | CABLE AS | |
| | 21 | 1 | **159-3959** | 1 | TUBE | |
| | 22 | 2,3 | **169-5414** | 5 | CLIP | |
| Y | 23 | 3 | *171-5941* | 1 | ELECTRONICS GP-POWER TRAIN | 169 |
| YR | 24 | 3 | **172-9389** | 1 | CONTROL GP-UNPROGRAMMED (POWER TRAIN) | 162 |
| | 25 | 1 | **179-8700** | 1 | HARNESS AS-FRONT CHASSIS | |
| | | 1 | **155-2255** | 1 | KIT-CONNECTING PLUG (12-PIN) | |
| | | | | | (INCLUDES PLUG AS & WEDGE) | |
| | | 1 | **102-8801** | 1 | KIT-RECEPTACLE (12-PIN) | |
| | | | | | (INCLUDES RECEPTACLE AS & WEDGE) | |
| | 26 | 3 | *194-2903* | 1 | ELBOW AS | |
| | | 3 | **3K-0360** | 1 | SEAL-O-RING | |
| | | 3 | **8T-0119** | 1 | ELBOW | |
| | 27 | 2 | **196-4226** | 1 | HARNESS AS-PLATFORM | |
| | | 2 | **127-5483** | 3 | PLUG AS-CONNECTOR (1-PIN) | |
| | | 2 | **9X-1343** | 1 | RECEPTACLE AS-CONNECTOR (40-PIN) | |

*159-5865* **WIRING GP-FRONT** ***(contd.)*** **i02587733**

| NOTE | REF NO | GRAPHIC REF | PART NUMBER | QTY | PART NAME 1 2 3 4 5 6 (PRODUCT LEVEL) | SEE PAGE |
|---|---|---|---|---|---|---|
| | | 2 | **155-2255** | 6 | KIT-CONNECTING PLUG (12-PIN) | |
| | | 2 | **155-2265** | 1 | KIT-CONNECTING PLUG (8-PIN) | |
| | | 2 | **155-2260** | 4 | KIT-CONNECTING PLUG (3-PIN) | |
| | | 2 | **155-2270** | 13 | KIT-CONNECTING PLUG (2-PIN) | |
| | | 2 | **155-2271** | 1 | KIT-CONNECTING PLUG (4-PIN) | |
| | | 2 | **155-2274** | 4 | KIT-CONNECTING PLUG (6-PIN) | |
| | | | | | (EACH INCLUDES PLUG AS & WEDGE) | |
| | | 2 | **102-8802** | 4 | KIT-RECEPTACLE (2-PIN) | |
| | | 2 | **102-8803** | 1 | KIT-RECEPTACLE (3-PIN) | |
| | | 2 | **102-8805** | 5 | KIT-RECEPTACLE (6-PIN) | |
| | | 2 | **102-8801** | 7 | KIT-RECEPTACLE (12-PIN) | |
| | | | | | (EACH INCLUDES RECEPTACLE AS & WEDGE) | |
| | 28 | 1 | **197-1988** | 1 | HARNESS AS-FRONT LIGHTING | |
| | | 1 | **155-2274** | 2 | KIT-CONNECTING PLUG (6-PIN) | |
| | | | | | (EACH INCLUDES PLUG AS & WEDGE) | |
| | | 1 | **102-8801** | 1 | KIT-RECEPTACLE (12-PIN) (PS) | |
| | | | | | (INCLUDES RECEPTACLE AS & WEDGE) | |
| | 29 | 3 | **201-5244** | 1 | PLATE AS | |
| | 30 | 3 | **096-6166** | 4 | WASHER-HARD (4.5X9X1-MM THK) | |
| | 31 | 1 | **108-3519** | 4 | CLAMP | |
| | 32 | 2,3 | **130-5300** | 9 | CLIP | |
| | 33 | 2,3 | **174-5907** | 4 | CLIP | |
| | 35 | 2 | **3J-1907** | 1 | SEAL-O-RING | |
| | 36 | 3 | **3K-0360** | 2 | SEAL-O-RING | |
| | 37 | 2,3 | **4D-7794** | 10 | CLIP | |
| | 38 | 3 | **4K-8864** | 1 | CLIP | |
| | 39 | 1,2 | **4L-6454** | 6 | BOLT (3/8-16X1-IN) | |
| | 40 | 3 | **4P-8134** | 2 | CLIP | |
| | 41 | 2 | **4S-4455** | 1 | CLIP | |
| | 42 | 1 | **5M-2894** | 4 | WASHER-HARD (10.2X18.5X2.5-MM THK) | |
| | 43 | 2,3 | **5M-3062** | 32 | BOLT (3/8-16X0.75-IN) | |
| | 44 | 1,3 | **5S-7379** | 5 | BOLT (3/8-16X0.875-IN) | |
| | 45 | 3 | **6D-4246** | 1 | CLIP | |
| | 46 | 2 | **6V-1889** | 1 | CLIP | |
| | 47 | 2,3 | **6V-3265** | 5 | CLIP | |
| | 48 | 3 | **6V-3964** | 4 | WASHER-HARD (8.8X25.5X5-MM THK) | |
| | 49 | 1,2,3 | **6V-8801** | 6 | NUT (3/8-16-THD) | |
| | 50 | 3 | **7C-4354** | 1 | CLIP | |
| | 51 | 2 | **7D-7233** | 4 | CLIP | |
| | 52 | 3 | **7X-0440** | 4 | BOLT (5/16-18X1.75-IN) | |
| B | 53 | 2 | **8F-1974** | 10 | SHIM (0.13-MM THK) | |
| | 54 | 1,3 | **8M-2770** | 3 | CLIP | |
| | 55 | 3 | **8M-2773** | 1 | CLIP | |
| | 56 | 2,3 | **8T-4121** | 5 | WASHER-HARD (11X21X2.5-MM THK) | |
| M | 57 | 2,3 | **8T-4133** | 2 | NUT (M10X1.5-THD) | |
| M | 58 | 2 | **8T-4137** | 1 | BOLT (M10X1.5X20-MM) | |
| M | 59 | 2,3 | **8T-4195** | 2 | BOLT (M10X1.5X30-MM) | |
| M | 60 | 3 | **8T-4647** | 4 | SCREW-MACHINE (M4X0.7X20-MM) | |
| | 61 | 1,2,3 | **8T-4896** | 43 | WASHER-HARD (10.2X18.5X2.5-MM THK) | |
| | 62 | 1 | **9D-6164** | 4 | BOSS (3/8-16-THD) | |
| | | | | | | |
| FY | | | *198-7332* | 1 | ELECTRONICS GP-MONITOR (CATERPILLAR MONITORING SYSTEM) | 169 |

B-USE AS REQUIRED
F-NOT SHOWN
M-METRIC PART
R-REMFG PART MAY BE AVAILABLE
Y-SEPARATE ILLUSTRATION

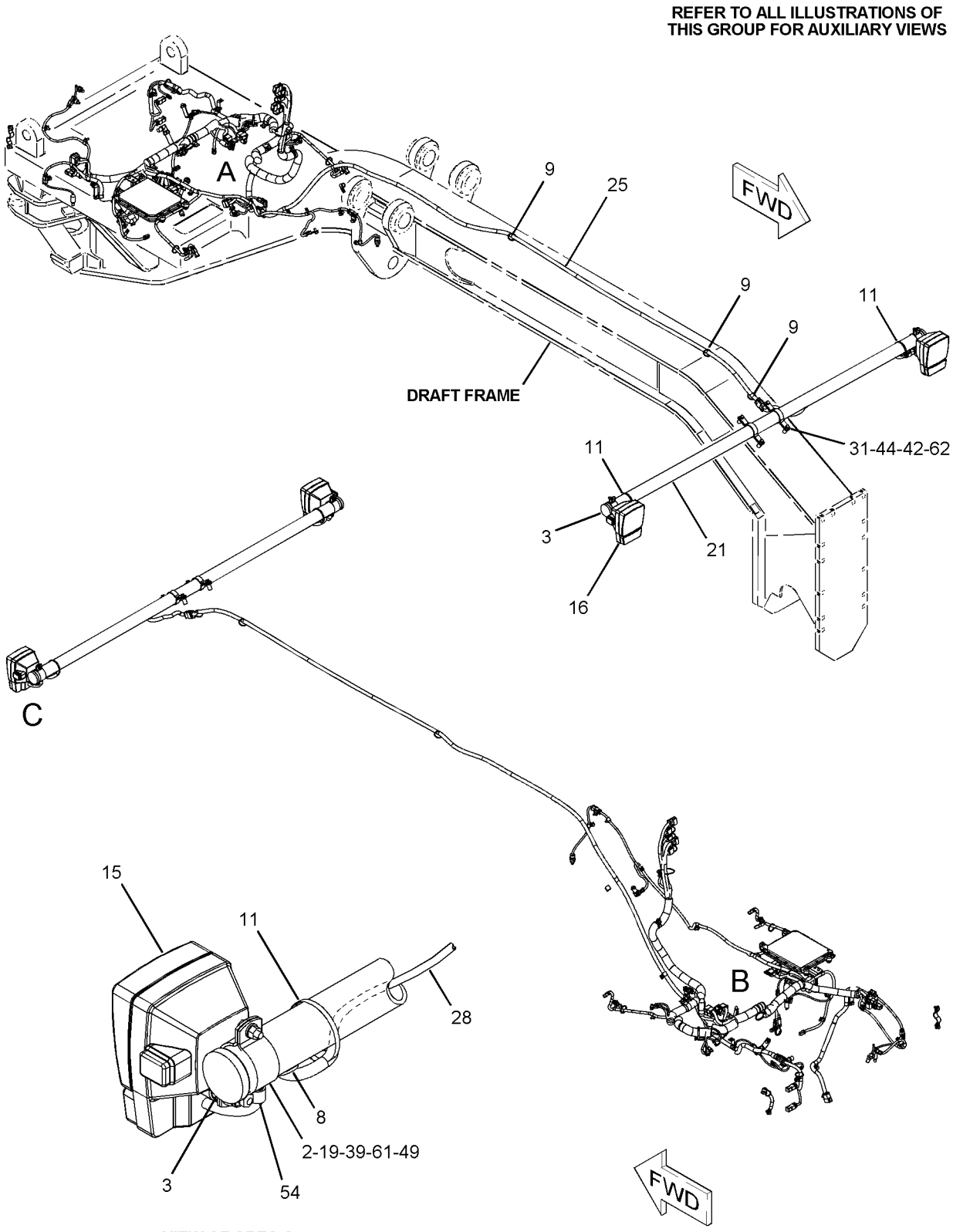


GRAPHIC #1

g01086317

*159-5865* **WIRING GP-FRONT** *(contd.)* **i02587733**

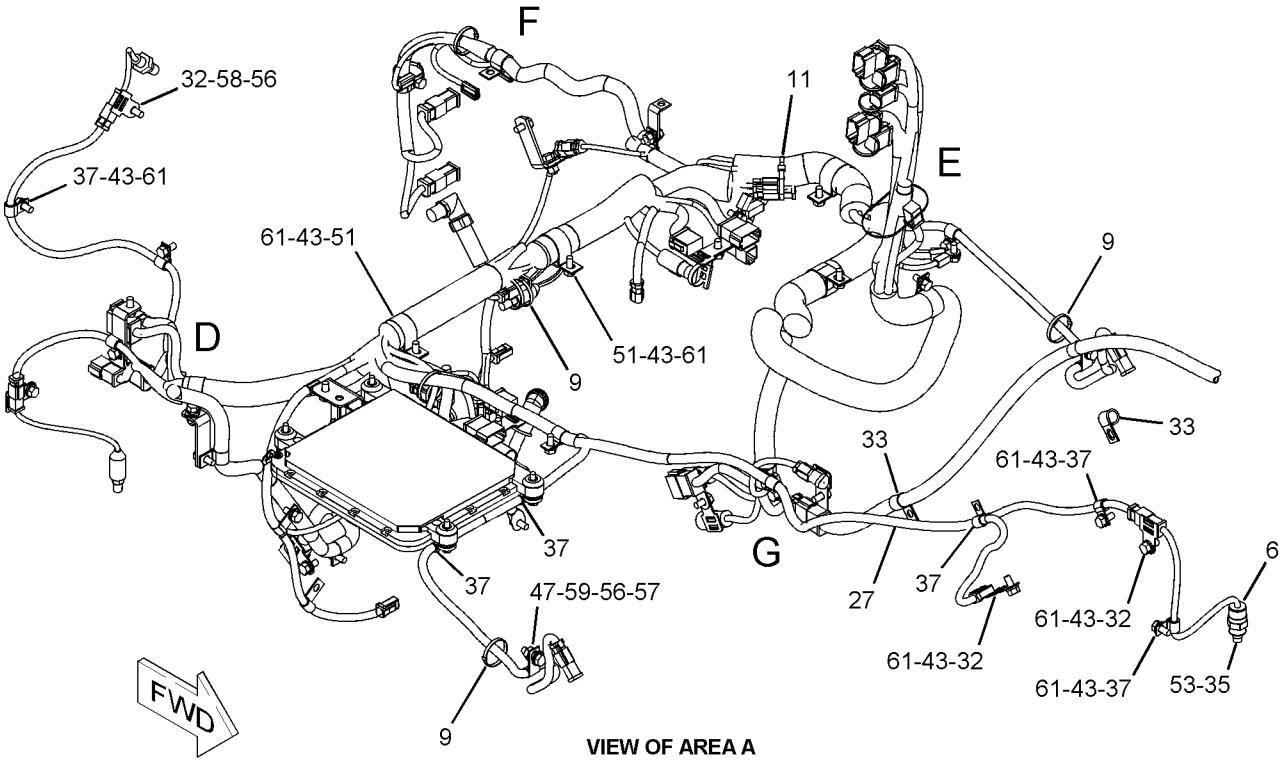


**VIEW OF AREA A**

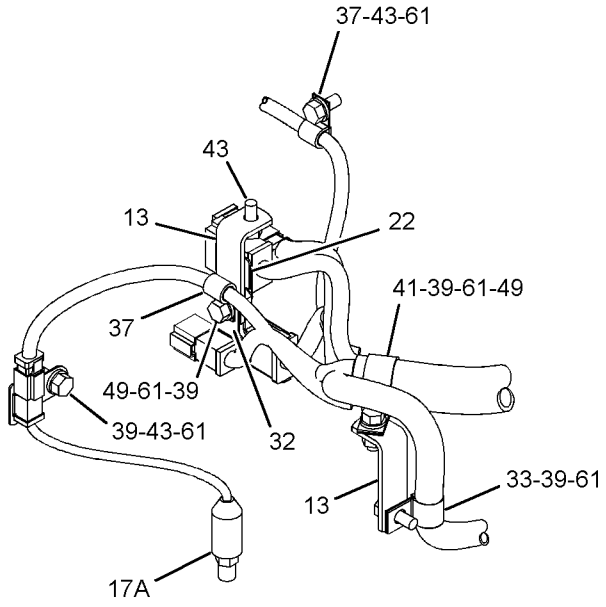


**VIEW OF AREA D**

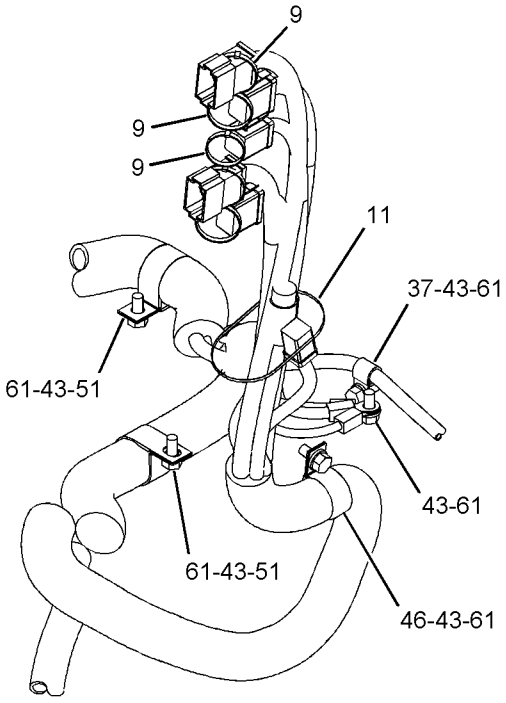


**VIEW OF AREA E**

**REFER TO ALL ILLUSTRATIONS OF THIS GROUP FOR AUXILIARY VIEWS**

GRAPHIC #2

g01086319

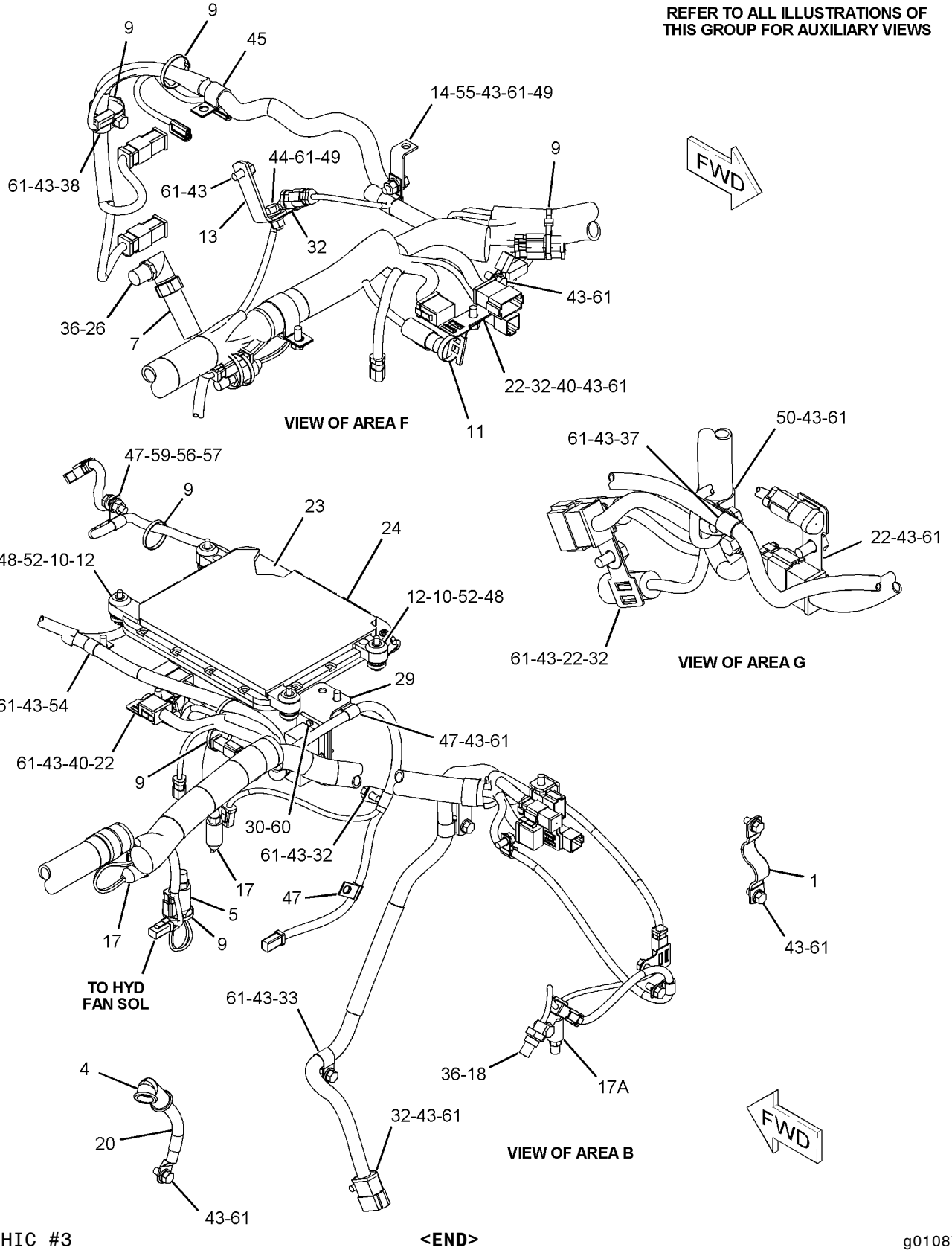


GRAPHIC #3 **<END>** g01087648

# ELECTRICAL AND STARTING SYSTEM

## *247-6433* WIRING GP-FRONT

**S/N: CCA1611-UP**
**PART OF 247-6453 GRADE CONTROL AR**
**AN ATTACHMENT**

**SMCS-1408** **i02563138**

| NOTE | REF NO | GRAPHIC REF | PART NUMBER | QTY | PART NAME 1 2 3 4 5 6 (PRODUCT LEVEL) | SEE PAGE |
|---|---|---|---|---|---|---|
| | 1 | 5 | **8T-9655** | 8 | MOUNT-ISOLATION | |
| | 2 | 2 | **9L-1566** | 1 | SUPPORT | |
| | 3 | 4,5 | **132-8487** | 4 | NUT-RING | |
| | 4 | 4 | **151-6187** | 16 | SCREW-MACHINE (NO 4X22.22-MM) | |
| | 5 | 1 | **169-5414** | 1 | CLIP | |
| | 6 | 4 | **233-4626** | 1 | BRACKET AS | |
| | 7 | 6 | **244-5873** | 1 | WIRE AS | |
| | 8 | 5 | **244-5880** | 1 | BRACKET | |
| | 9 | 4 | **244-5889** | 1 | BRACKET AS | |
| | 10 | 3 | **245-7403** | 1 | BRACKET AS | |
| | 11 | 1 | **258-0696** | 1 | HARNESS AS-REAR LIGHTING | |
| | | 1 | **102-8804** | 1 | KIT-RECEPTACLE (4-PIN) | |
| | | 1 | **102-8801** | 1 | KIT-RECEPTACLE (12-PIN) | |
| | | | | | (EACH INCLUDES RECEPTACLE AS & WEDGE) | |
| | | 1 | **3S-2093** | 1 | STRAP-CABLE | |
| | | 1 | **134-2540** | 1 | RECEPTACLE AS-CONNECTOR (3-PIN) | |
| | | 1 | **174-0503** | 1 | KIT-CONNECTING PLUG (3-PIN) | |
| | | | | | (INCLUDES PLUG AS & WEDGE) | |
| | 12 | 2 | **259-2977** | 1 | HARNESS AS-PLATFORM | |
| | | 2 | **126-1774** | 1 | COVER | |
| | | 2 | **3S-2093** | 3 | STRAP-CABLE | |
| | | 2 | **7K-1181** | 4 | STRAP-CABLE | |
| | | 2 | **6D-5257** | 1 | PLUG AS-CONNECTOR (8-PIN) | |
| | | 2 | **3R-9965** | 1 | PLUG AS-CONNECTOR (8-PIN) | |
| | | 2 | **147-1445** | 1 | PLUG AS-CONNECTOR (70-PIN) | |
| | | 2 | **147-1446** | 1 | PLUG AS-CONNECTOR (70-PIN) | |
| | | 2 | **9X-4385** | 1 | PLUG AS-CONNECTOR (6-PIN) | |
| | | 2 | **129-7163** | 1 | PLUG AS-CONNECTOR (1-PIN) | |
| | | 2 | **9X-1343** | 1 | RECEPTACLE AS-CONNECTOR (40-PIN) | |
| | | 2 | **134-2540** | 2 | RECEPTACLE AS-CONNECTOR (3-PIN) | |
| | | 2 | **102-8802** | 1 | KIT-RECEPTACLE (2-PIN) | |
| | | 2 | **190-7614** | 1 | KIT-RECEPTACLE (12-PIN) | |
| | | | | | (INCLUDES RECEPTACLE AS & WEDGE) | |
| | | 2 | **155-2255** | 1 | KIT-CONNECTING PLUG (12-PIN) | |
| | | 2 | **155-2256** | 1 | KIT-CONNECTING PLUG (12-PIN) | |
| | | 2 | **155-2270** | 4 | KIT-CONNECTING PLUG (2-PIN) | |
| | | 2 | **155-2274** | 1 | KIT-CONNECTING PLUG (6-PIN) | |
| | | 2 | **174-0503** | 2 | KIT-CONNECTING PLUG (3-PIN) | |
| | | | | | (EACH INCLUDES PLUG AS, WEDGE, & INTERFACE SEAL) | |
| Y | 13 | 5 | *260-7647* | 1 | APPLICATION GP-POWER TRAIN | 408 |
| | 14 | 5 | **033-8248** | 1 | CLIP | |
| | 15 | 5 | **111-4871** | 1 | RELAY (24-VOLT) (IMPLEMENT) | |
| | 15A | 5 | **111-4871** | 1 | RELAY (24-VOLT) (GRADE CONTROL) | |
| | 16 | 1,2,4 | **130-5300** | 3 | CLIP | |
| | 17 | 1 | **132-5789** | 4 | CLIP | |
| | 18 | 1 | **1K-6870** | 1 | LOCKNUT (3/4-10-THD) | |
| | 19 | 4 | **1S-0994** | 1 | CLIP | |
| | 20 | 5 | **225-3109** | 4 | SCREW-TRUSS HEAD (M4X0.7X14-MM) | |
| | 21 | 1 | **244-1899** | 1 | HARNESS AS-FRONT (CIRCLE) | |
| | | 1 | **3S-2093** | 1 | STRAP-CABLE | |
| | | 1 | **134-2540** | 1 | RECEPTACLE AS-CONNECTOR (3-PIN) | |
| | | 1 | **155-2272** | 3 | PLUG AS-CONNECTOR (4-PIN) | |
| | | 1 | **174-0503** | 1 | KIT-CONNECTING PLUG (3-PIN) | |
| | | | | | (INCLUDES PLUG AS & WEDGE) | |

*247-6433* **WIRING GP-FRONT** ***(contd.)*** **i02563138**

| NOTE | REF NO | GRAPHIC REF | PART NUMBER | QTY | PART NAME 1 2 3 4 5 6 (PRODUCT LEVEL) | SEE PAGE |
|---|---|---|---|---|---|---|
| | | 1 | **102-8804** | 2 | KIT-RECEPTACLE (4-PIN) | |
| | | | | | (EACH INCLUDES RECEPTACLE AS & WEDGE) | |
| | 22 | 4 | **2Y-1834** | 2 | CLIP | |
| | 23 | 2,6 | **4D-7794** | 5 | CLIP | |
| | 24 | 4 | **4D-9517** | 1 | CLIP | |
| | 25 | 1,5 | **4P-7581** | 2 | CLIP | |
| M | 26 | 5 | **5C-7261** | 2 | NUT (M8X1.25-THD) | |
| M | 27 | 5 | **5C-9553** | 2 | BOLT (M6X1X16-MM) | |
| | 28 | 2,3,4, 5 | **5M-3062** | 17 | BOLT (3/8-16X0.75-IN) | |
| | 29 | 1 | **5P-4135** | 1 | BOLT (3/4-10X8-IN) | |
| | 30 | 1,4 | **5P-9297** | 3 | CLIP | |
| | 31 | 2 | **5P-9299** | 1 | CLIP | |
| | 32 | 2 | **5S-7379** | 1 | BOLT (3/8-16X0.875-IN) | |
| | 33 | 2,3,4, 5 | **6V-1889** | 13 | CLIP | |
| | 34 | 2 | **6V-8801** | 1 | NUT (3/8-16-THD) | |
| | 35 | 4 | **7C-4354** | 1 | CLIP | |
| | 36 | 1,2,3, 4,5,6 | **7K-1181** | 26 | STRAP-CABLE | |
| | 37 | 4 | **7X-0325** | 1 | BOLT (1/2-13X2.5-IN) | |
| | 38 | 4,5 | **7X-0550** | 8 | WASHER-HARD (13.5X32X5-MM THK) | |
| | 39 | 5 | **7X-0579** | 8 | WASHER-HARD (8.8X25.5X2-MM THK) | |
| | 40 | 1 | **7X-0619** | 4 | WASHER-HARD (20X30X2.5-MM THK) | |
| | 41 | 1,4 | **8T-4121** | 4 | WASHER-HARD (11X21X2.5-MM THK) | |
| M | 42 | 1,4 | **8T-4191** | 4 | BOLT (M10X1.5X16-MM) | |
| | 43 | 5 | **8T-4224** | 4 | WASHER-HARD (8.8X16X2-MM THK) | |
| | 44 | 4,5 | **8T-4835** | 4 | BOLT (1/2-13X2-IN) | |
| | 45 | 2,3,4, 5 | **8T-4896** | 19 | WASHER-HARD (10.2X18.5X2.5-MM THK) | |
| M | 46 | 5 | **8T-6869** | 4 | BOLT (M8X1.25X60-MM) | |
| | 47 | 4 | **8T-7971** | 1 | WASHER-HARD (13.5X25.5X5-MM THK) | |
| | 48 | 5 | **8T-9658** | 4 | SPACER (8.2X12.7X25.4-MM THK) | |
| | 49 | 2 | **9M-8406** | 1 | CLIP | |
| | 50 | 5 | **9X-8256** | 2 | WASHER (6.6X12X2-MM THK) | |
| | 51 | 2 | **290-4752** | 1 | PLUG AS-CONNECTOR | |
| | | 2 | **8T-8737** | 40 | PLUG-SEAL | |
| | | 2 | **9X-0141** | 1 | PLUG AS-CONNECTOR (40-PIN) | |
| | | 2 | **3E-4367** | 1 | RING-RETAINING | |
| M | | 2 | **3E-8557** | 1 | BOLT (M5X0.8X39.37-MM) | |
| | | 2 | **9X-3490** | 2 | SEAL-CONNECTOR | |

M-METRIC PART
Y-SEPARATE ILLUSTRATION

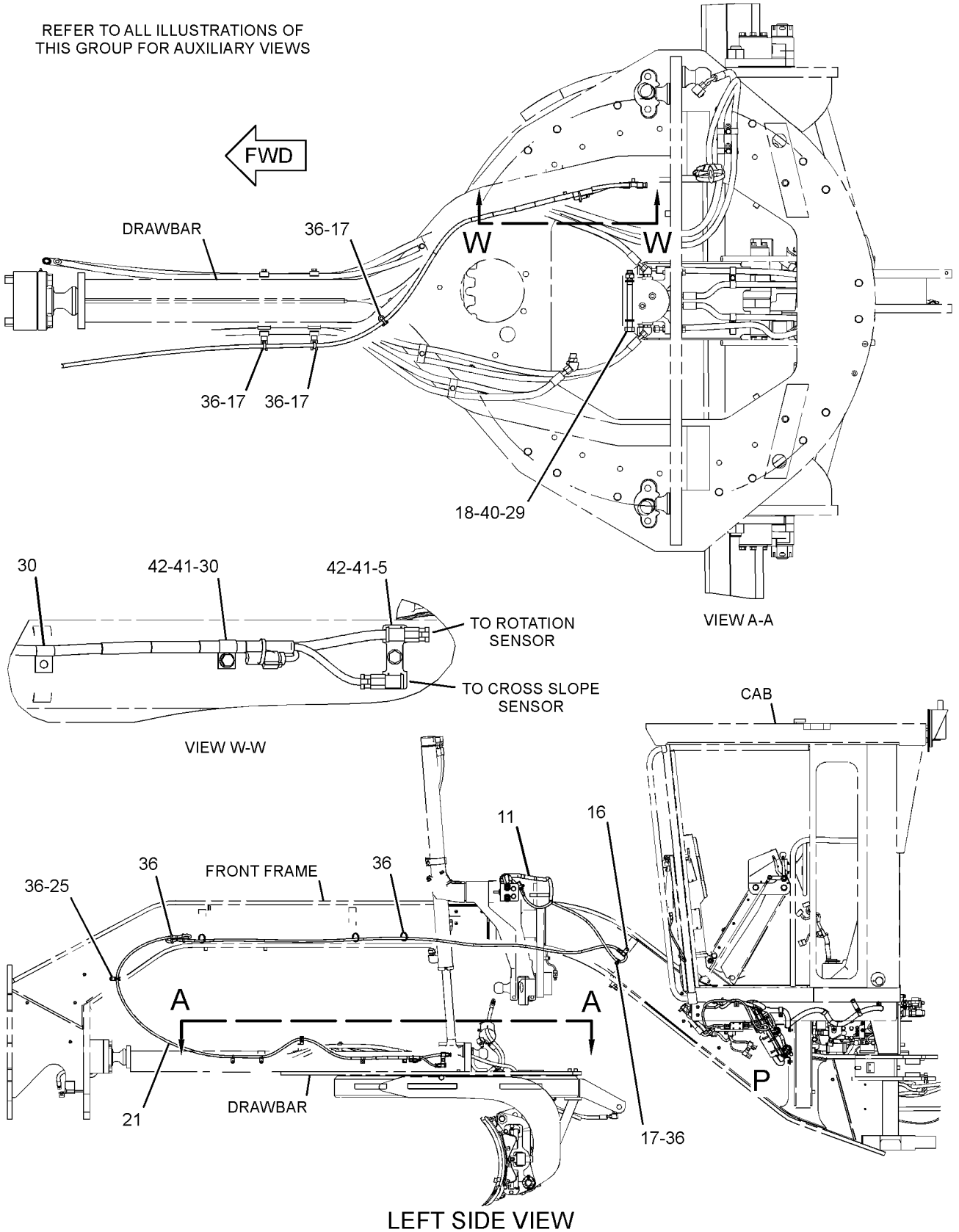


GRAPHIC #1 g01281106

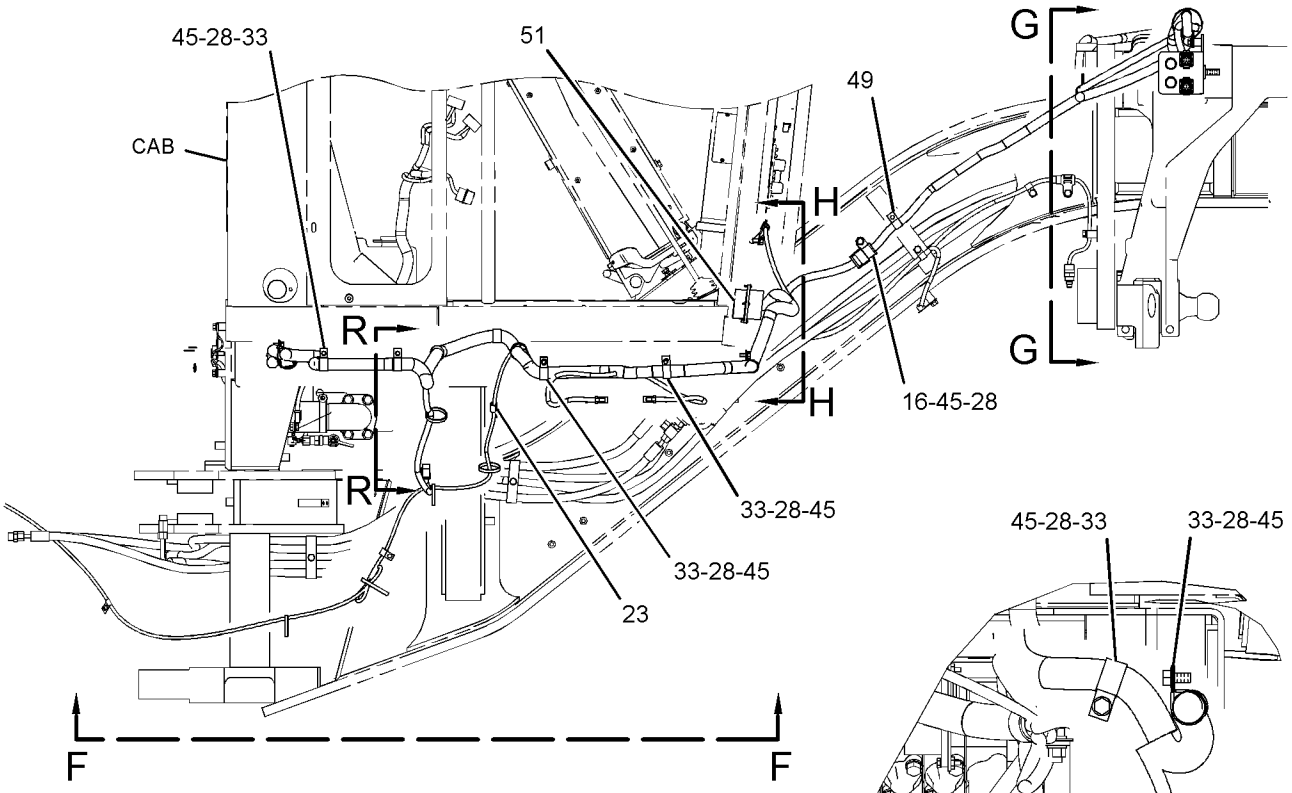


RIGHT SIDE VIEW

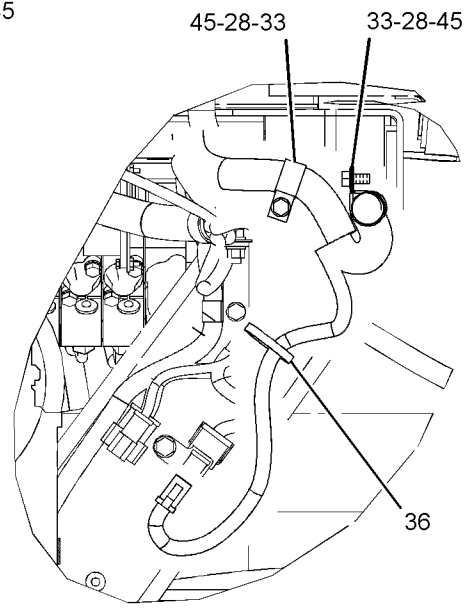


VIEW R-R

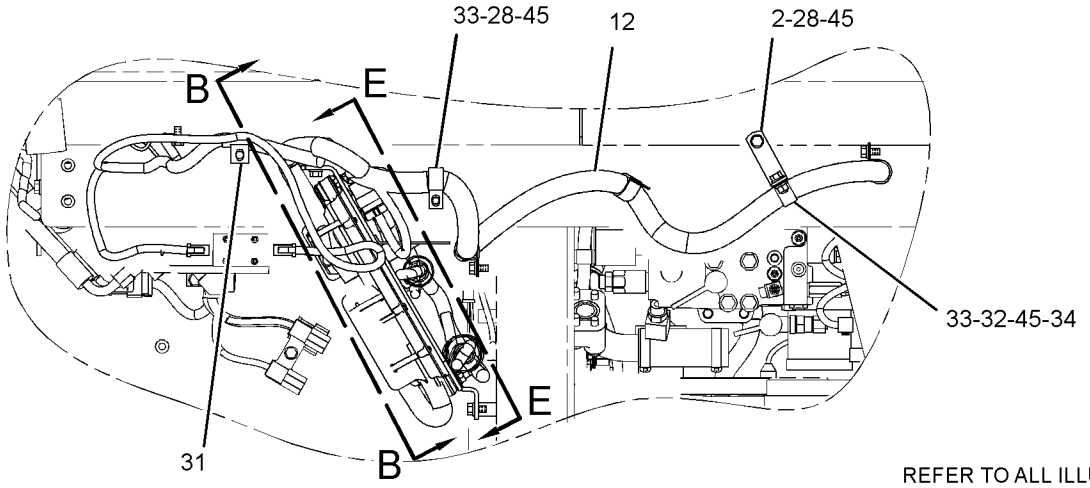


VIEW OF AREA P

REFER TO ALL ILLUSTRATIONS OF THIS GROUP FOR AUXILIARY VIEWS

GRAPHIC #2

g01283298

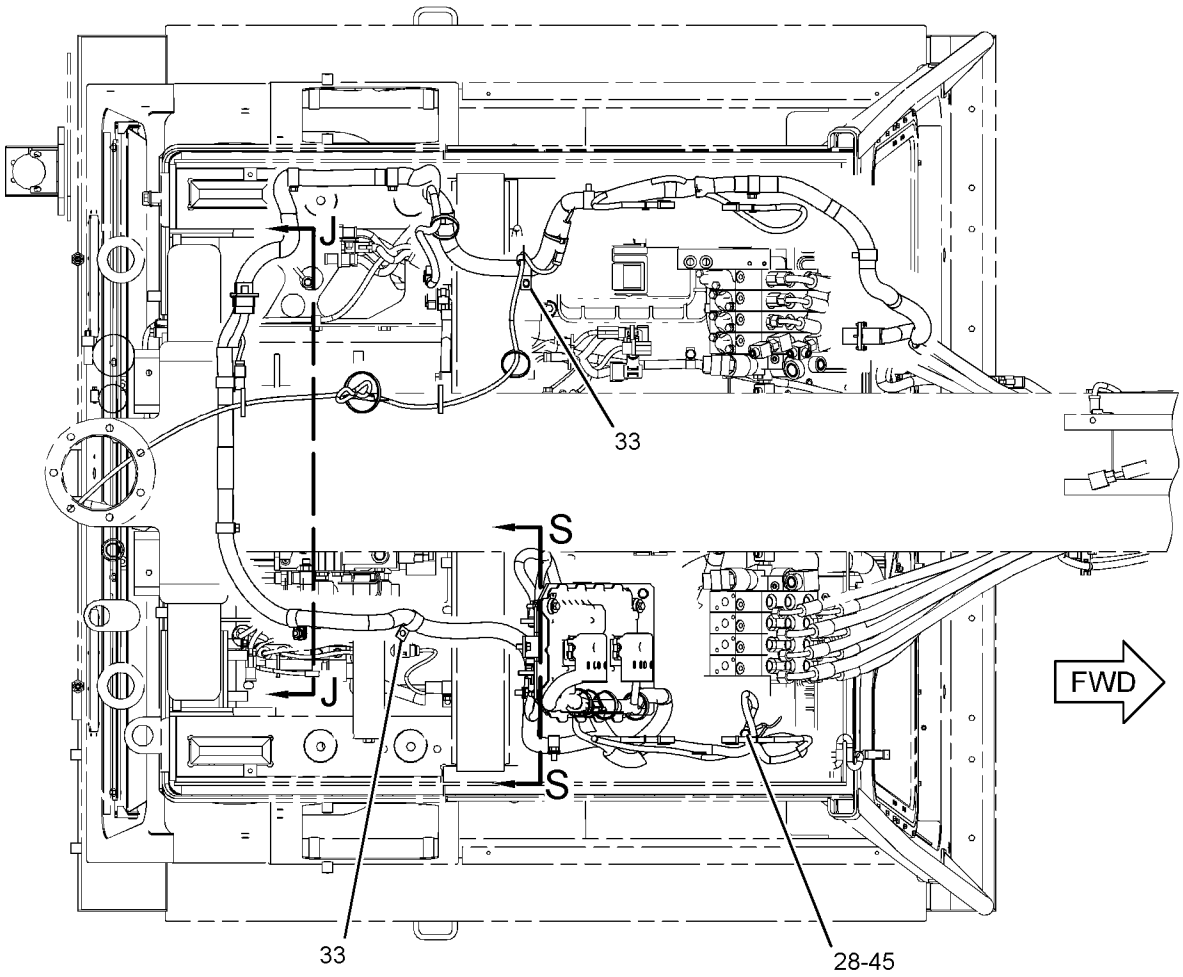


VIEW F-F

REFER TO ALL ILLUSTRATIONS OF THIS GROUP FOR AUXILIARY VIEWS

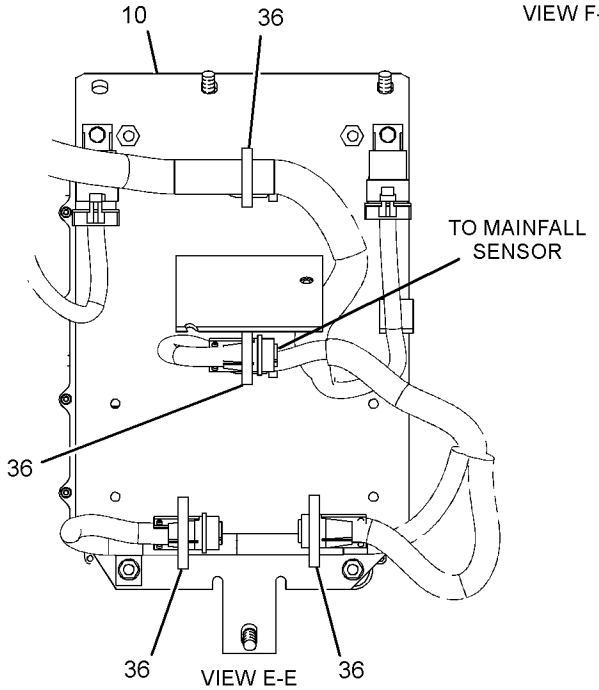


VIEW E-E

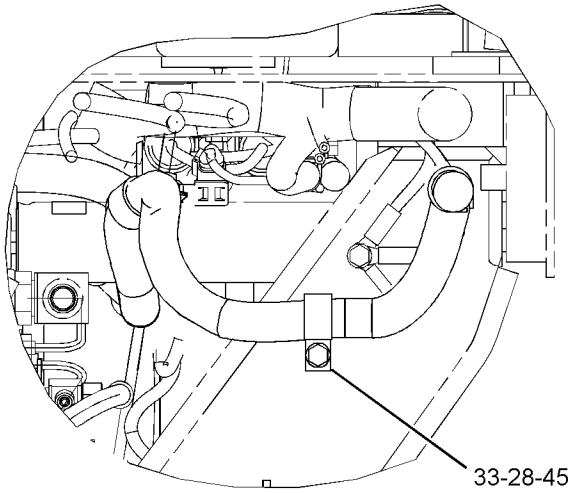


VIEW S-S

GRAPHIC #3

g01283324

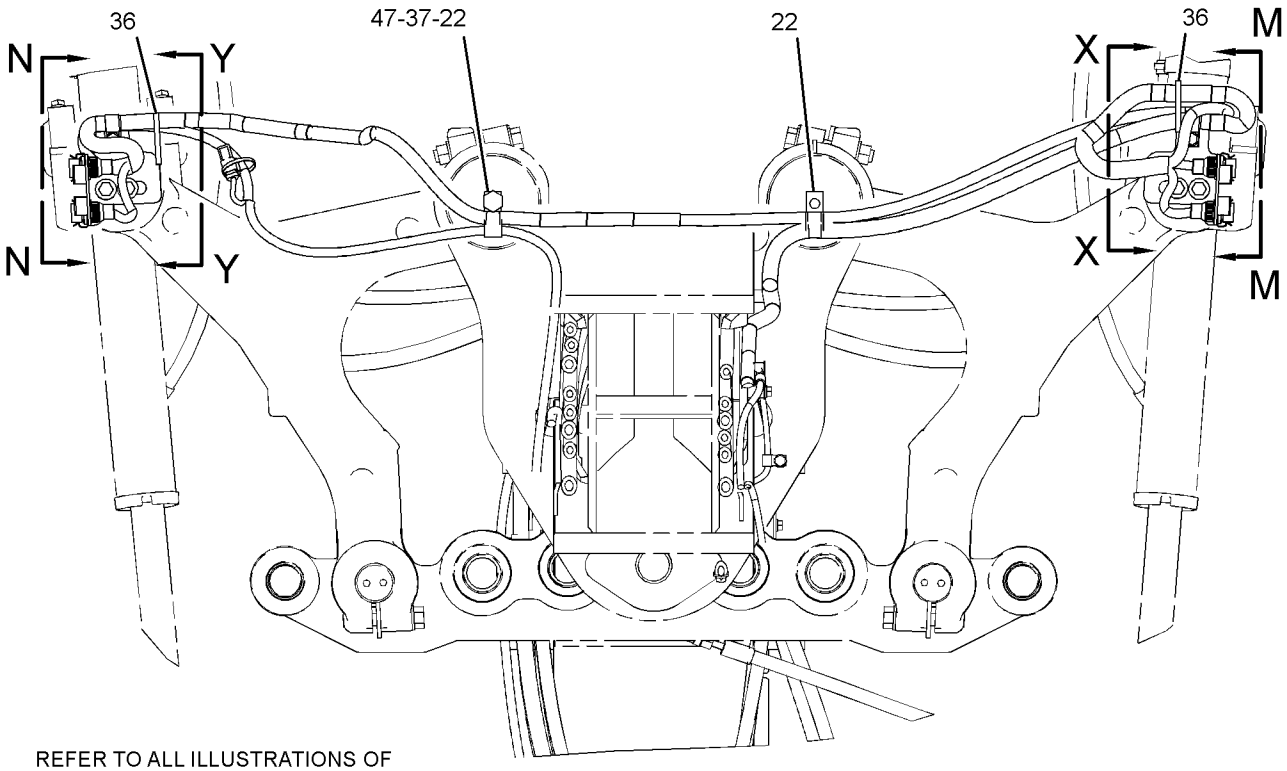


REFER TO ALL ILLUSTRATIONS OF THIS GROUP FOR AUXILIARY VIEWS

VIEW G-G

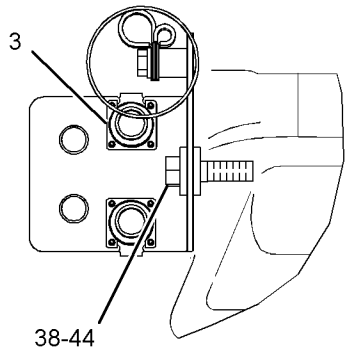


VIEW Y-Y

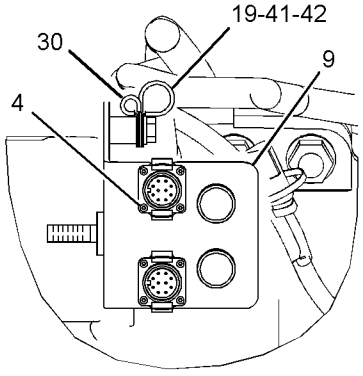


VIEW N-N

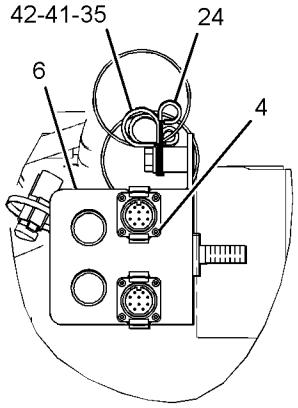


VIEW M-M

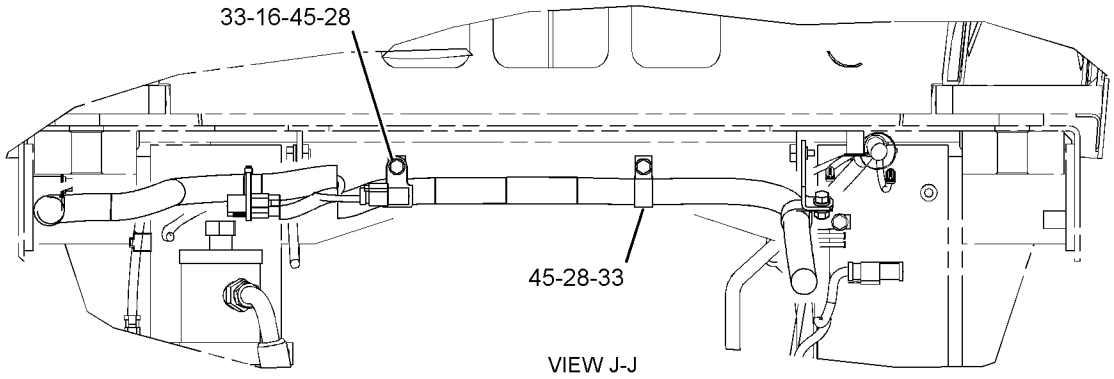


VIEW J-J

GRAPHIC #4

g01281110

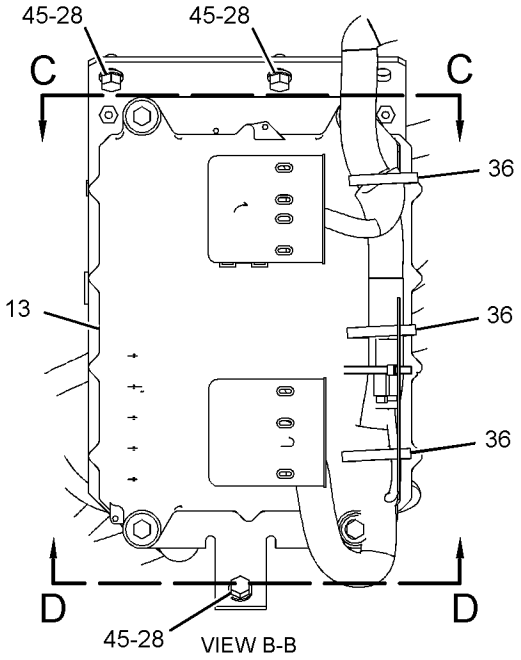


VIEW B-B

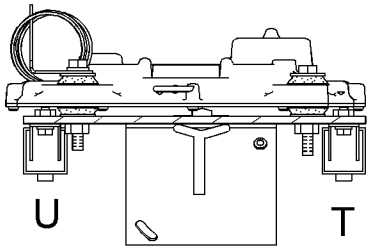


SECTION C-C

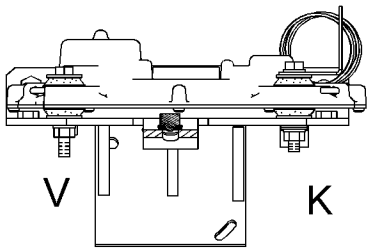


SECTION D-D

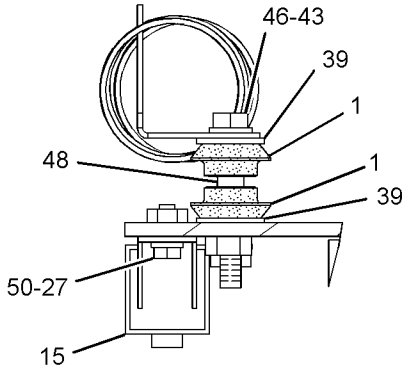


VIEW OF AREA U

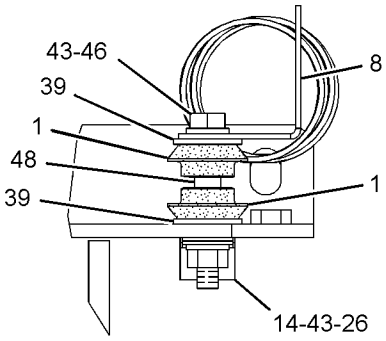


VIEW OF AREA K

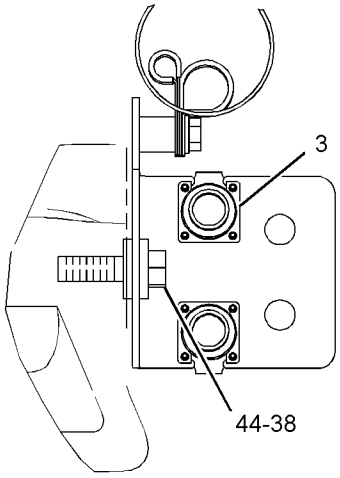


VIEW X-X

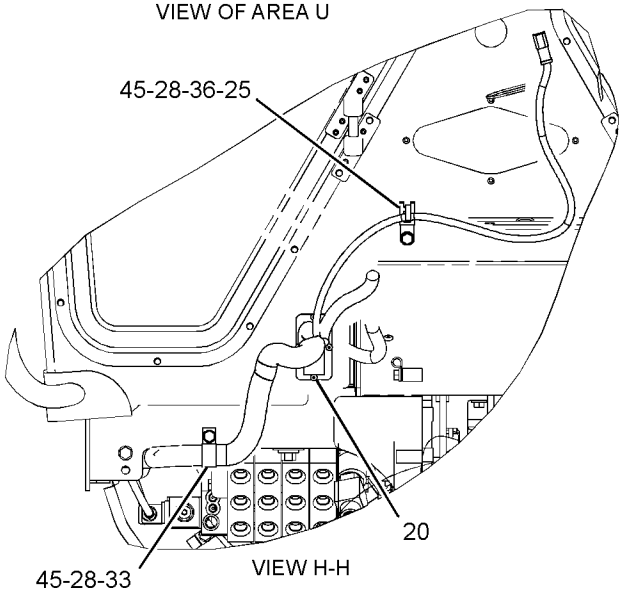


VIEW H-H

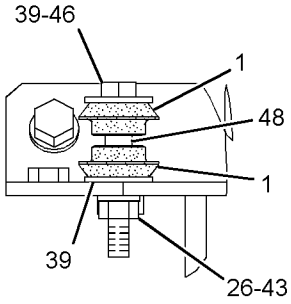


VIEW OF AREA V

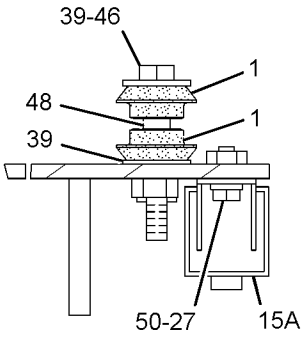


VIEW OF AREA T

GRAPHIC #5

g01281112

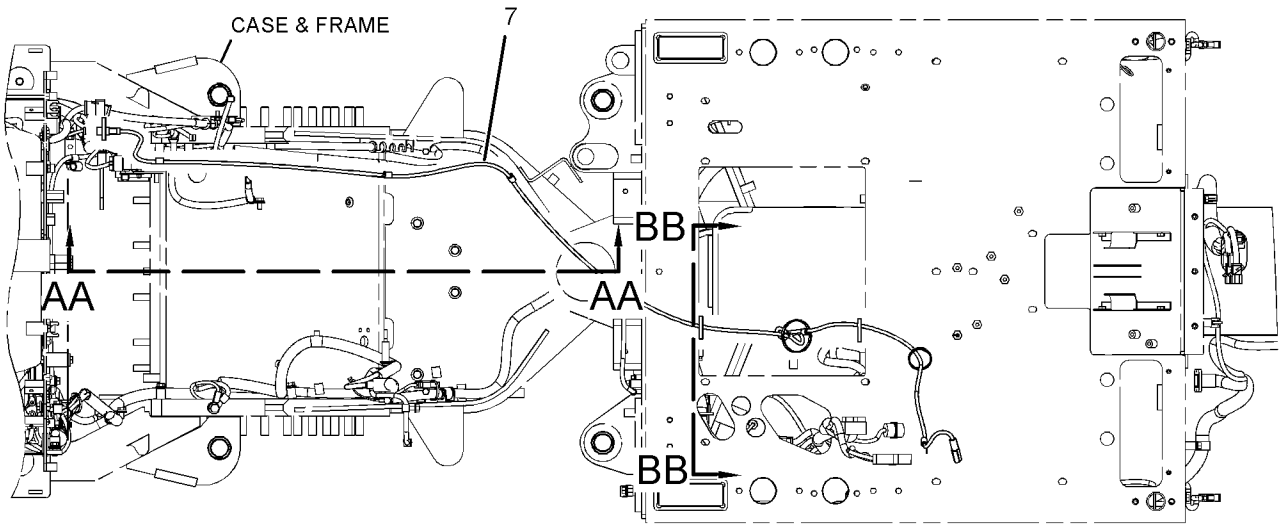


FWD

TOP VIEW
(REAR FRAME)

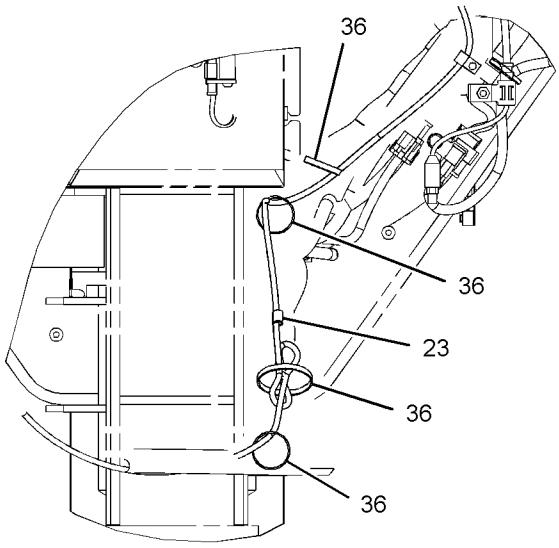


VIEW BB-BB

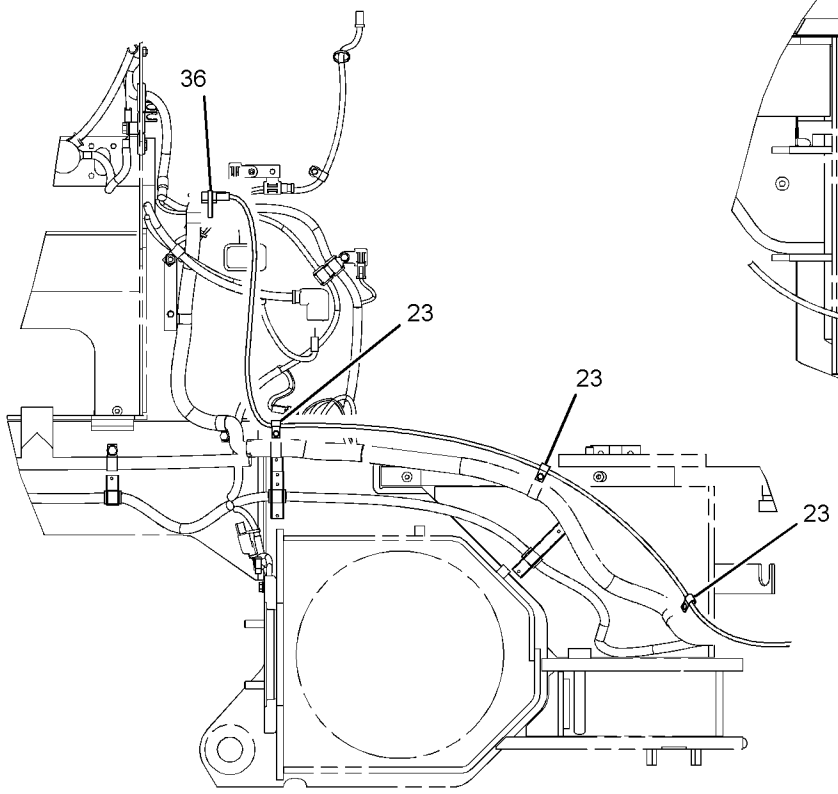


VIEW AA-AA

GRAPHIC #6 **<END>** g01281115

# *252-5709* WIRING GP-GRADE CONTROL

**S/N: CCA1611-UP**
**PART OF 247-6453 GRADE CONTROL AR**
**AN ATTACHMENT**

**SMCS-1408** **i02397347**

| NOTE | REF NO | GRAPHIC REF | PART NUMBER | QTY | PART NAME 1 2 3 4 5 6 (PRODUCT LEVEL) | SEE PAGE |
|---|---|---|---|---|---|---|
| | 1 | 1 | **115-1748** | 1 | LAMP (24-VOLT, 3-WATT) | |
| | 2 | 1 | **247-6457** | 1 | WIRING AS | |

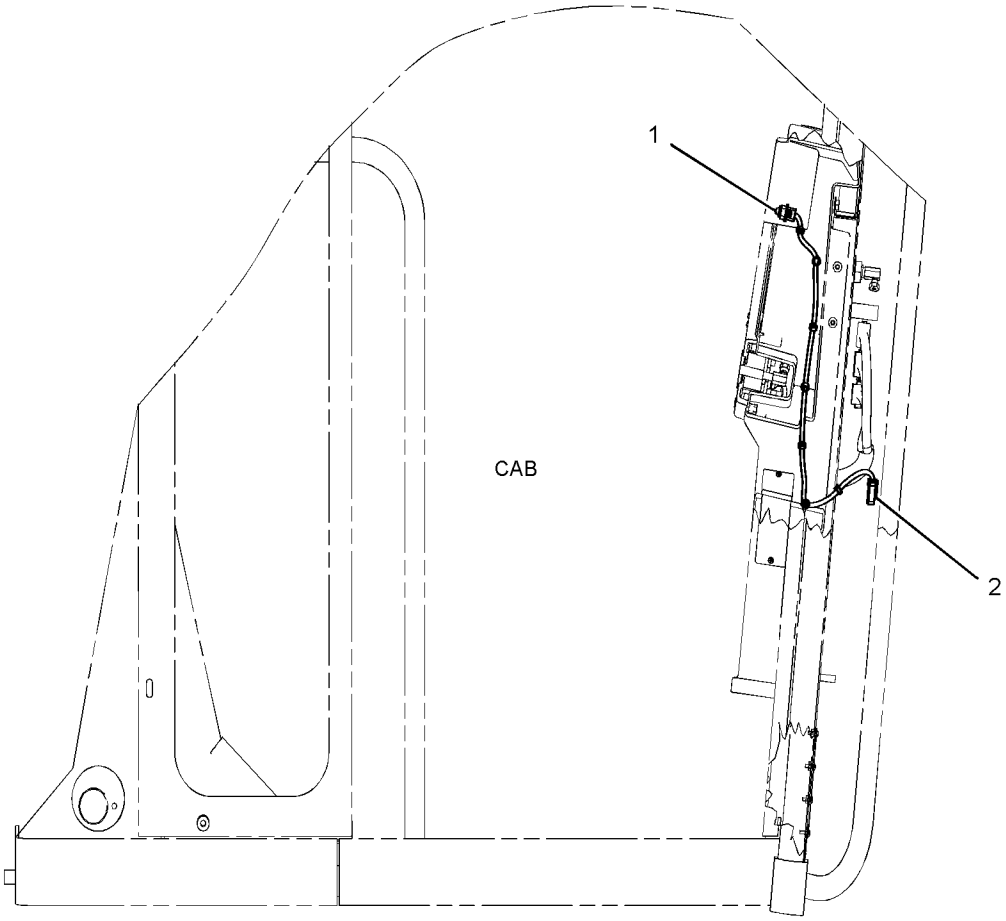


RIGHT SIDE VIEW

GRAPHIC #1 **<END>** g01239581

## *159-5877* WIRING GP-REAR

**S/N: CCA1-1329, 1334-1336**

**PART OF 159-4615 GENERAL AR**

**SMCS-1408** **i02252929**

| NOTE | REF NO | GRAPHIC REF | PART NUMBER | QTY | PART NAME 1 2 3 4 5 6 (PRODUCT LEVEL) | SEE PAGE |
|---|---|---|---|---|---|---|
| | 1 | 1 | **3S-2093** | 6 | STRAP-CABLE | |
| | 2 | 1 | **7G-1060** | 1 | STRAP AS-GROUND | |
| | 3 | 1 | **7K-1181** | 1 | STRAP-CABLE | |
| | 4 | 1 | **8W-3642** | 1 | CABLE AS | |
| | | 1 | **1S-7251** | 2 | TERMINAL-RING (FOR 1/2-IN BOLT) | |
| E | | 1 | **5P-0747** | | CABLE (00-GA, BLACK) (90-CM) | |
| | | 1 | **9G-8909** | 1 | COVER-TERMINAL (BLACK) | |
| | 5 | 1 | **8W-8527** | 1 | SLEEVE | |
| | 6 | 1,2 | **8W-8528** | 4 | SLEEVE | |
| | 7 | 2 | **9L-1566** | 1 | SUPPORT | |
| | 8 | 2 | **9L-3059** | 1 | SUPPORT-TUBE | |
| | 9 | 2 | **9M-4594** | 2 | SPACER (0.406X0.875X0.75-IN THK) | |
| | 10 | 2 | **9U-2277** | 1 | CLIP AS | |
| | 11 | 1 | **061-7661** | 1 | CABLE AS | |
| | | 1 | **1S-7251** | 2 | TERMINAL-RING (FOR 1/2-IN BOLT) | |
| E | | 1 | **5P-0747** | | CABLE (00-GA, BLACK) (42-CM) | |
| | 12 | 2 | **106-8704** | 1 | SUPPRESSOR AS-ARC | |
| | | 2 | **3E-3365** | 1 | WEDGE-RECEPTACLE LOCK (2-PIN) | |
| | | 2 | **102-8802** | 1 | KIT-RECEPTACLE (2-PIN) | |
| | | | | | (INCLUDES RECEPTACLE AS & WEDGE) | |
| | | 2 | **186-3735** | 1 | PIN-CONNECTOR (16-GA TO 18-GA) | |
| | 13 | 2 | **123-3688** | 1 | PLATE AS | |
| | | 2 | **7L-0811** | 1 | DOWEL | |
| | 14 | 2 | **123-3689** | 1 | PLATE AS | |
| | 15 | 2 | **123-3692** | 1 | ARM | |
| | 16 | 2 | **123-3695** | 1 | PLATE | |
| | 17 | 1 | **139-2116** | 1 | SWITCH AS-TOGGLE (GROUND LEVEL ENGINE SHUTDOWN) | |
| | 18 | 1 | **139-6122** | 1 | BOSS | |
| | 19 | 1 | **169-3292** | 1 | HARNESS AS-TRANSMISSION | |
| | | 1 | **102-8802** | 2 | KIT-RECEPTACLE (2-PIN) | |
| | | 1 | **102-8803** | 2 | KIT-RECEPTACLE (3-PIN) | |
| | | 1 | **102-8805** | 1 | KIT-RECEPTACLE (6-PIN) | |
| | | 1 | **102-8801** | 3 | KIT-RECEPTACLE (12-PIN) | |
| | | | | | (EACH INCLUDES RECEPTACLE AS & WEDGE) | |
| | | 1 | **110-6846** | 1 | PLUG AS-CONNECTOR (40-PIN) | |
| | | 1 | **9X-0141** | 1 | PLUG AS-CONNECTOR (40-PIN) | |
| | | 1 | **110-6848** | 1 | PLUG AS-CONNECTOR (40-PIN) | |
| | | 1 | **160-7689** | 1 | PLUG AS-CONNECTOR (70-PIN) | |
| | | 1 | **155-2255** | 3 | KIT-CONNECTING PLUG (12-PIN) | |
| | | 1 | **155-2260** | 4 | KIT-CONNECTING PLUG (3-PIN) | |
| | | 1 | **155-2270** | 3 | KIT-CONNECTING PLUG (2-PIN) | |
| | | 1 | **155-2271** | 1 | KIT-CONNECTING PLUG (4-PIN) | |
| | | 1 | **155-2274** | 1 | KIT-CONNECTING PLUG (6-PIN) | |
| | | | | | (EACH INCLUDES PLUG AS & WEDGE) | |
| | | 1 | **126-1774** | 1 | COVER | |
| | 20 | 1 | **169-3502** | 1 | HARNESS AS-REAR CHASSIS | |
| | | 1 | **102-8802** | 2 | KIT-RECEPTACLE (2-PIN) | |
| | | | | | (EACH INCLUDES RECEPTACLE AS & WEDGE) | |
| | | 1 | **155-2255** | 2 | KIT-CONNECTING PLUG (12-PIN) | |
| | | 1 | **155-2270** | 5 | KIT-CONNECTING PLUG (2-PIN) | |
| | | | | | (EACH INCLUDES PLUG AS & WEDGE) | |
| | 21 | 2 | **169-5414** | 1 | CLIP | |
| | 22 | 1 | **179-2187** | 1 | HARNESS AS-REAR CHASSIS | |
| | | 1 | **102-8802** | 1 | KIT-RECEPTACLE (2-PIN) | |

*159-5877* **WIRING GP-REAR** ***(contd.)*** **i02252929**

| NOTE | REF NO | GRAPHIC REF | PART NUMBER | QTY | PART NAME 1 2 3 4 5 6 (PRODUCT LEVEL) | SEE PAGE |
|---|---|---|---|---|---|---|
| | | 1 | **102-8805** | 1 | KIT-RECEPTACLE (6-PIN) | |
| | | | | | (EACH INCLUDES RECEPTACLE AS & WEDGE) | |
| | | 1 | **127-5483** | 5 | PLUG AS-CONNECTOR (1-PIN) | |
| | | 1 | **127-5485** | 1 | PLUG AS-CONNECTOR (1-PIN) | |
| | | 1 | **155-2255** | 1 | KIT-CONNECTING PLUG (12-PIN) | |
| | | 1 | **155-2270** | 2 | KIT-CONNECTING PLUG (2-PIN) | |
| | | | | | (EACH INCLUDES PLUG AS & WEDGE) | |
| | | 1 | **127-5484** | 5 | RECEPTACLE AS-CONNECTOR (1-PIN) | |
| | | 1 | **8T-8827** | 1 | BOOT | |
| | 23 | 2 | **187-1008** | 1 | SENDER AS-POSITION (ARTICULATION) | |
| | | 2 | **3E-3365** | 1 | WEDGE-RECEPTACLE LOCK (2-PIN) | |
| E | | 2 | **9X-1813** | | SLEEVE (15-CM) | |
| | | 2 | **102-8802** | 1 | KIT-RECEPTACLE (2-PIN) | |
| | | | | | (INCLUDES RECEPTACLE AS & WEDGE) | |
| | | 2 | **186-3735** | 2 | PIN-CONNECTOR (16-GA TO 18-GA) | |
| | 24 | 1 | **033-8248** | 1 | CLIP | |
| | 25 | 1 | **109-0361** | 1 | FILM-INSTRUCTION (ENGINE SHUTDOWN) | |
| | 26 | 2 | **115-3073** | 1 | CLIP AS-CONNECTING | |
| | 27 | 1,2 | **130-5300** | 5 | CLIP | |
| | 28 | 1 | **130-5301** | 1 | CLIP | |
| | 29 | 2 | **139-6857** | 1 | PLATE | |
| | 30 | 1,2 | **174-5907** | 4 | CLIP | |
| | 31 | 1 | **1S-0994** | 1 | CLIP | |
| | 32 | 1,2 | **1S-0996** | 2 | CLIP | |
| | 33 | 1 | **3E-5169** | 1 | GUARD-SWITCH | |
| | 34 | 2 | **4D-1432** | 2 | SPACER (1.8-IN THK) | |
| | 35 | 1 | **4D-7388** | 2 | CLIP | |
| | 36 | 1,2 | **4D-7794** | 4 | CLIP | |
| | 37 | 2 | **4K-8864** | 1 | CLIP | |
| | 38 | 1 | **4S-4455** | 3 | CLIP | |
| | 39 | 1 | **5M-3062** | 1 | BOLT (3/8-16X0.75-IN) | |
| | 40 | 2 | **5P-1075** | 2 | WASHER-HARD (10.2X22.5X3-MM THK) | |
| | 41 | 2 | **5P-4116** | 1 | WASHER-HARD (8.8X20.5X2-MM THK) | |
| | 42 | 2 | **5P-8167** | 2 | BOLT (3/8-16X0.625-IN) | |
| | 43 | 1,2 | **6D-4244** | 3 | CLIP | |
| | 44 | 1,2 | **6D-4246** | 3 | CLIP | |
| | 45 | 2 | **6V-6893** | 3 | BOLT (6-32X0.375-IN) | |
| | 46 | 2 | **6V-8801** | 1 | NUT (3/8-16-THD) | |
| | 47 | 1,2 | **7C-4354** | 6 | CLIP | |
| M | 48 | 2 | **7X-2537** | 1 | BOLT (M8X1.25X35-MM) | |
| | 49 | 2 | **8D-9671** | 1 | CLIP | |
| | 50 | 2 | **8M-2773** | 3 | CLIP | |
| | 51 | 1,2 | **8T-4121** | 28 | WASHER-HARD (11X21X2.5-MM THK) | |
| M | 52 | 1,2 | **8T-4133** | 4 | NUT (M10X1.5-THD) | |
| M | 53 | 1,2 | **8T-4136** | 5 | BOLT (M10X1.5X25-MM) | |
| M | 54 | 1,2 | **8T-4137** | 16 | BOLT (M10X1.5X20-MM) | |
| M | 55 | 1,2 | **8T-4179** | 3 | BOLT (M12X1.75X20-MM) | |
| M | 56 | 1 | **8T-4185** | 1 | BOLT (M10X1.5X50-MM) | |
| M | 57 | 1 | **8T-4191** | 2 | BOLT (M10X1.5X16-MM) | |
| M | 58 | 2 | **8T-4195** | 1 | BOLT (M10X1.5X30-MM) | |
| M | 59 | 2 | **8T-4196** | 1 | BOLT (M10X1.5X35-MM) | |
| M | 60 | 1 | **8T-4200** | 1 | BOLT (M8X1.25X16-MM) | |
| | 61 | 2 | **8T-4205** | 2 | WASHER-HARD (7.2X14.5X2-MM THK) | |
| | 62 | 1,2 | **8T-4223** | 3 | WASHER-HARD (13.5X25.5X3-MM THK) | |
| | 63 | 1,2 | **8T-4224** | 3 | WASHER-HARD (8.8X16X2-MM THK) | |
| | 64 | 2 | **8T-4226** | 1 | WASHER-PLATED (10.5X45X3-MM THK) | |
| | 65 | 1,2 | **8T-4896** | 3 | WASHER-HARD (10.2X18.5X2.5-MM THK) | |
| M | 66 | 2 | **8T-6870** | 2 | BOLT (M8X1.25X70-MM) | |
| | 67 | 2 | **8T-9364** | 2 | BOLT (1/4-20X0.625-IN) | |

*159-5877* **WIRING GP-REAR** ***(contd.)*** **i02252929**

| NOTE | REF NO | GRAPHIC REF | PART NUMBER | QTY | PART NAME 1 2 3 4 5 6 (PRODUCT LEVEL) | SEE PAGE |
|---|---|---|---|---|---|---|
| | 68 | 1 | **8W-8909** | 3 | SLEEVE | |
| | 69 | 1 | **8X-5489** | 1 | SLEEVE | |

E-ORDER BY THE CENTIMETER
M-METRIC PART

*159-5877* **WIRING GP-REAR** *(contd.)* **i02252929**

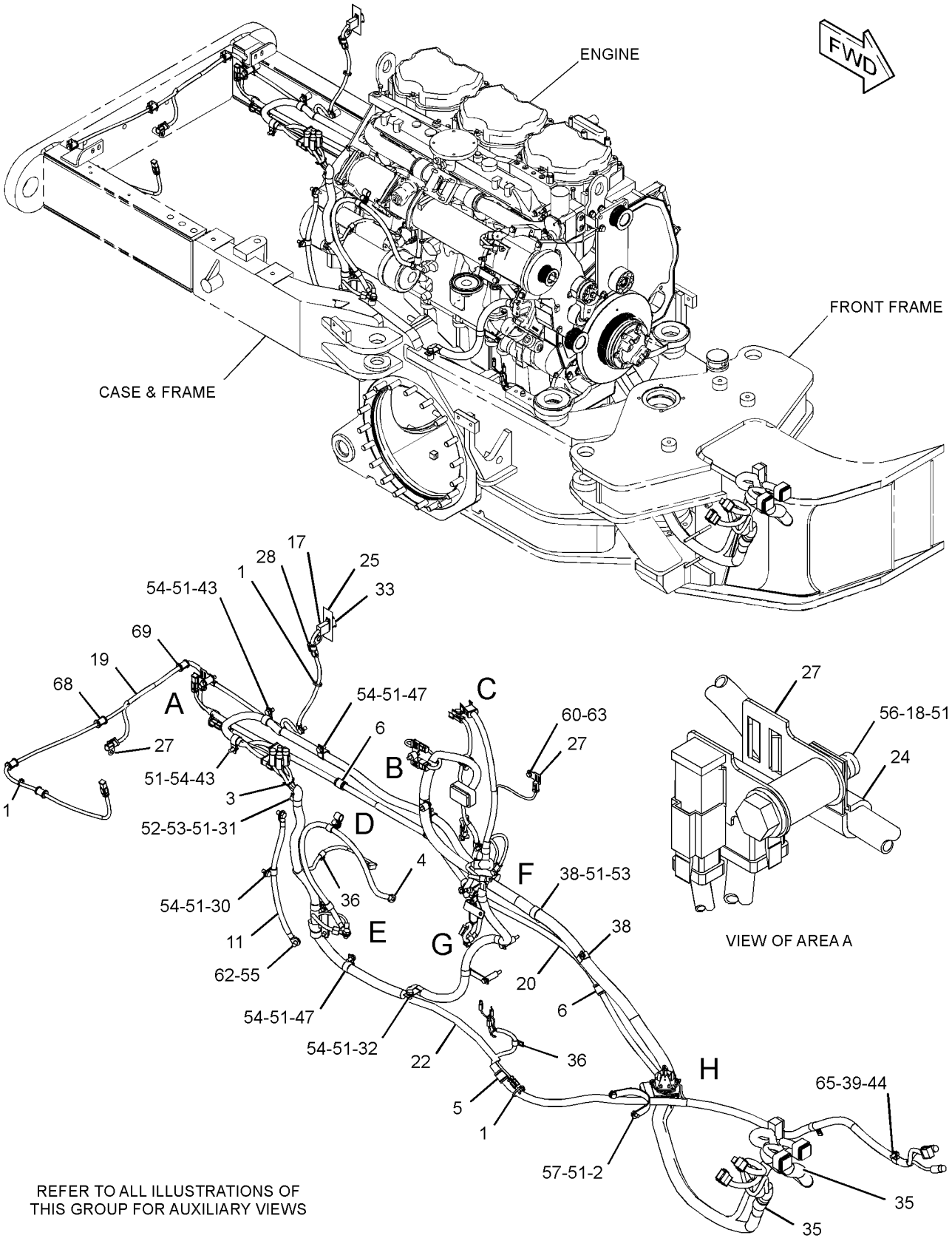


GRAPHIC #1 g01204140

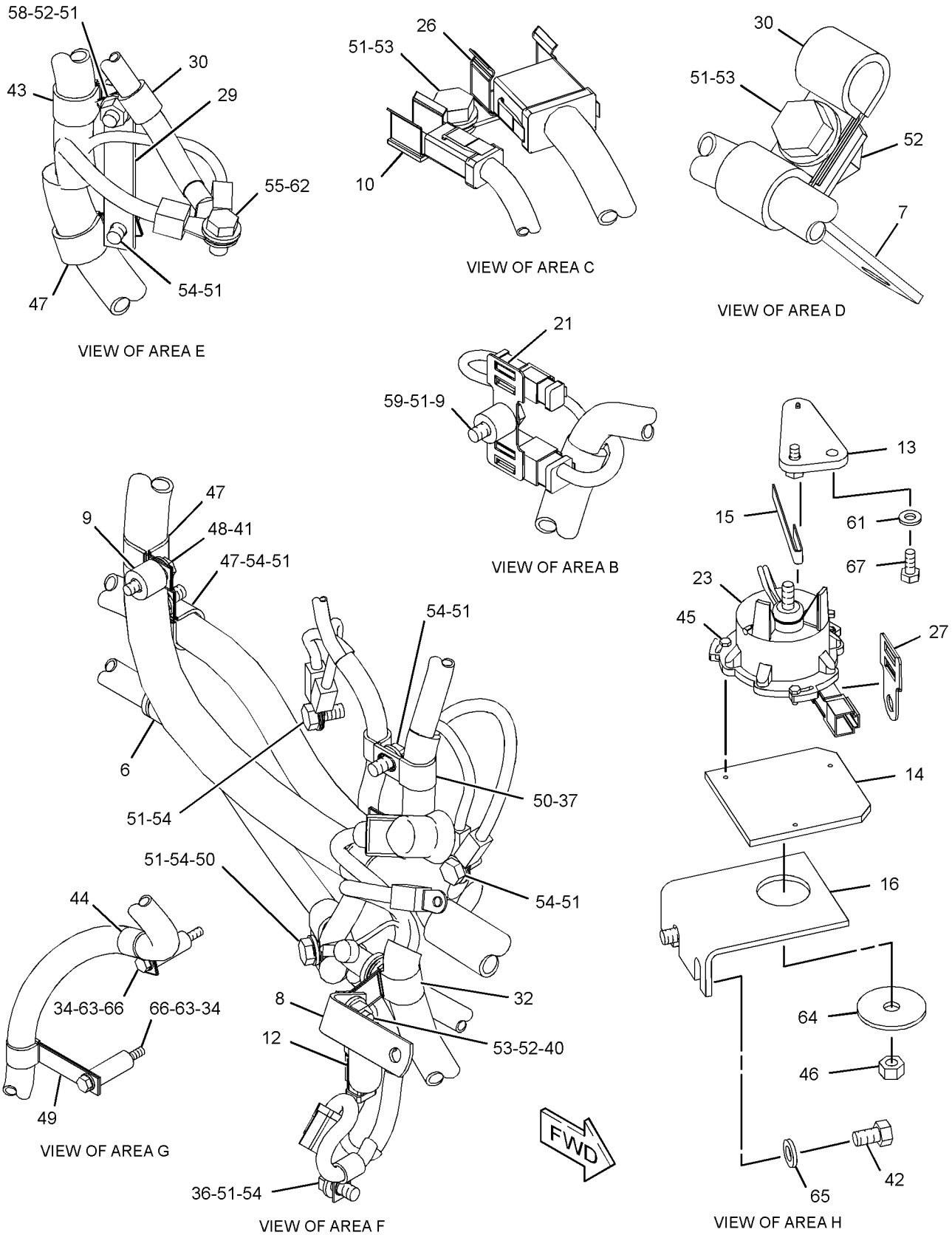


GRAPHIC #2 **<END>** g01166702

# ELECTRICAL AND STARTING SYSTEM

## *159-5877* WIRING GP-REAR

**S/N: CCA1330, 1337-UP**
**PART OF 159-4615 GENERAL AR**

**SMCS-1408** **i02291623**

| NOTE | REF NO | GRAPHIC REF | PART NUMBER | QTY | PART NAME 1 2 3 4 5 6 (PRODUCT LEVEL) | SEE PAGE |
|---|---|---|---|---|---|---|
| | 1 | 1 | **3S-2093** | 6 | STRAP-CABLE | |
| | 2 | 1 | **7G-1060** | 1 | STRAP AS-GROUND | |
| | 3 | 1 | **7K-1181** | 1 | STRAP-CABLE | |
| | 4 | 1 | **8W-3642** | 1 | CABLE AS | |
| | | 1 | **1S-7251** | 2 | TERMINAL-RING (FOR 1/2-IN BOLT) | |
| E | | 1 | **5P-0747** | | CABLE (00-GA, BLACK) (90-CM) | |
| | | 1 | **9G-8909** | 1 | COVER-TERMINAL (BLACK) | |
| | 5 | 1 | **8W-8527** | 1 | SLEEVE | |
| | 6 | 1,2 | **8W-8528** | 4 | SLEEVE | |
| | 7 | 2 | **9L-1566** | 1 | SUPPORT | |
| | 8 | 2 | **9L-3059** | 1 | SUPPORT-TUBE | |
| | 9 | 2 | **9M-4594** | 2 | SPACER (0.406X0.875X0.75-IN THK) | |
| | 10 | 2 | **9U-2277** | 1 | CLIP AS | |
| | 11 | 1 | **061-7661** | 1 | CABLE AS | |
| | | 1 | **1S-7251** | 2 | TERMINAL-RING (FOR 1/2-IN BOLT) | |
| E | | 1 | **5P-0747** | | CABLE (00-GA, BLACK) (42-CM) | |
| | 12 | 2 | **106-8704** | 1 | SUPPRESSOR AS-ARC | |
| | | 2 | **3E-3365** | 1 | WEDGE-RECEPTACLE LOCK (2-PIN) | |
| | | 2 | **102-8802** | 1 | KIT-RECEPTACLE (2-PIN) | |
| | | | | | (INCLUDES RECEPTACLE AS & WEDGE) | |
| | | 2 | **186-3735** | 1 | PIN-CONNECTOR (16-GA TO 18-GA) | |
| | 13 | 2 | **123-3688** | 1 | PLATE AS | |
| | | 2 | **7L-0811** | 1 | DOWEL | |
| | 14 | 2 | **123-3689** | 1 | PLATE AS | |
| | 15 | 2 | **123-3692** | 1 | ARM | |
| | 16 | 2 | **123-3695** | 1 | PLATE | |
| | 17 | 1 | **139-2116** | 1 | SWITCH AS-TOGGLE (GROUND LEVEL ENGINE SHUTDOWN) | |
| | | 1 | **6T-3631** | 2 | NUT-HEX (15/32-32-THD) | |
| | | 1 | **6T-3632** | 1 | LOCKWASHER | |
| | | 1 | **6T-3633** | 1 | RING-LOCKING | |
| | | 1 | **186-3735** | 3 | PIN-CONNECTOR (16-GA TO 18-GA) | |
| | | 1 | **102-8803** | 2 | KIT-RECEPTACLE (3-PIN) | |
| | | | | | (EACH INCLUDES RECEPTACLE AS & WEDGE) | |
| | 18 | 1 | **139-6122** | 1 | BOSS | |
| C | 19 | 1 | **254-9243** | 1 | HARNESS AS-TRANSMISSION | |
| | | 1 | **126-1774** | 1 | COVER | |
| | | 1 | **102-8802** | 2 | KIT-RECEPTACLE (2-PIN) | |
| | | 1 | **102-8803** | 2 | KIT-RECEPTACLE (3-PIN) | |
| | | 1 | **102-8805** | 1 | KIT-RECEPTACLE (6-PIN) | |
| | | 1 | **102-8801** | 2 | KIT-RECEPTACLE (12-PIN) | |
| | | | | | (EACH INCLUDES RECEPTACLE AS & WEDGE) | |
| | | 1 | **110-6846** | 1 | PLUG AS-CONNECTOR (40-PIN) | |
| | | 1 | **9X-0141** | 1 | PLUG AS-CONNECTOR (40-PIN) | |
| | | 1 | **110-6848** | 1 | PLUG AS-CONNECTOR (40-PIN) | |
| | | 1 | **160-7689** | 1 | PLUG AS-CONNECTOR (70-PIN) | |
| | | 1 | **155-2255** | 3 | KIT-CONNECTING PLUG (12-PIN) | |
| | | 1 | **155-2260** | 1 | KIT-CONNECTING PLUG (3-PIN) | |
| | | 1 | **155-2270** | 3 | KIT-CONNECTING PLUG (2-PIN) | |
| | | 1 | **155-2274** | 2 | KIT-CONNECTING PLUG (6-PIN) | |
| | | | | | (EACH INCLUDES PLUG AS & WEDGE) | |
| | 20 | 1 | **169-3502** | 1 | HARNESS AS-REAR CHASSIS | |
| | | 1 | **102-8802** | 2 | KIT-RECEPTACLE (2-PIN) | |
| | | | | | (EACH INCLUDES RECEPTACLE AS & WEDGE) | |
| | | 1 | **155-2255** | 2 | KIT-CONNECTING PLUG (12-PIN) | |

*159-5877* **WIRING GP-REAR** ***(contd.)*** **i02291623**

| NOTE | REF NO | GRAPHIC REF | PART NUMBER | QTY | PART NAME 1 2 3 4 5 6 (PRODUCT LEVEL) | SEE PAGE |
|---|---|---|---|---|---|---|
| | | 1 | **155-2270** | 5 | KIT-CONNECTING PLUG (2-PIN) | |
| | | | | | (EACH INCLUDES PLUG AS & WEDGE) | |
| | 21 | 2 | **169-5414** | 1 | CLIP | |
| | 22 | 1 | **179-2187** | 1 | HARNESS AS-REAR CHASSIS | |
| | | 1 | **102-8802** | 1 | KIT-RECEPTACLE (2-PIN) | |
| | | 1 | **102-8805** | 1 | KIT-RECEPTACLE (6-PIN) | |
| | | | | | (EACH INCLUDES RECEPTACLE AS & WEDGE) | |
| | | 1 | **127-5483** | 5 | PLUG AS-CONNECTOR (1-PIN) | |
| | | 1 | **127-5485** | 1 | PLUG AS-CONNECTOR (1-PIN) | |
| | | 1 | **155-2255** | 1 | KIT-CONNECTING PLUG (12-PIN) | |
| | | 1 | **155-2270** | 2 | KIT-CONNECTING PLUG (2-PIN) | |
| | | | | | (EACH INCLUDES PLUG AS & WEDGE) | |
| | 23 | 2 | **187-1008** | 1 | SENDER AS-POSITION (ARTICULATION) | |
| | | 2 | **3E-3365** | 1 | WEDGE-RECEPTACLE LOCK (2-PIN) | |
| E | | 2 | **9X-1813** | | SLEEVE (15-CM) | |
| | | 2 | **102-8802** | 1 | KIT-RECEPTACLE (2-PIN) | |
| | | | | | (INCLUDES RECEPTACLE AS & WEDGE) | |
| | | 2 | **186-3735** | 2 | PIN-CONNECTOR (16-GA TO 18-GA) | |
| | 24 | 1 | **033-8248** | 1 | CLIP | |
| | 25 | 1 | **109-0361** | 1 | FILM-INSTRUCTION (ENGINE SHUTDOWN) | |
| | 26 | 2 | **115-3073** | 1 | CLIP AS-CONNECTING | |
| | 27 | 1,2 | **130-5300** | 5 | CLIP | |
| | 28 | 1 | **130-5301** | 1 | CLIP | |
| | 29 | 2 | **139-6857** | 1 | PLATE | |
| | 30 | 1,2 | **174-5907** | 4 | CLIP | |
| | 31 | 1 | **1S-0994** | 1 | CLIP | |
| | 32 | 1,2 | **1S-0996** | 2 | CLIP | |
| | 33 | 1 | **3E-5169** | 1 | GUARD-SWITCH | |
| | 34 | 2 | **4D-1432** | 2 | SPACER (1.8-IN THK) | |
| | 35 | 1 | **4D-7388** | 1 | CLIP | |
| | 36 | 1,2 | **4D-7794** | 4 | CLIP | |
| | 37 | 2 | **4K-8864** | 1 | CLIP | |
| | 38 | 1 | **4S-4455** | 3 | CLIP | |
| | 39 | 1 | **5M-3062** | 1 | BOLT (3/8-16X0.75-IN) | |
| | 40 | 2 | **5P-1075** | 2 | WASHER-HARD (10.2X22.5X3-MM THK) | |
| | 41 | 2 | **5P-4116** | 1 | WASHER-HARD (8.8X20.5X2-MM THK) | |
| | 42 | 2 | **5P-8167** | 2 | BOLT (3/8-16X0.625-IN) | |
| | 43 | 1,2 | **6D-4244** | 3 | CLIP | |
| | 44 | 1,2 | **6D-4246** | 3 | CLIP | |
| | 45 | 2 | **6V-6893** | 3 | BOLT (6-32X0.375-IN) | |
| | 46 | 2 | **6V-8801** | 1 | NUT (3/8-16-THD) | |
| | 47 | 1,2 | **7C-4354** | 6 | CLIP | |
| M | 48 | 2 | **7X-2537** | 1 | BOLT (M8X1.25X35-MM) | |
| | 49 | 2 | **8D-9671** | 1 | CLIP | |
| | 50 | 2 | **8M-2773** | 3 | CLIP | |
| | 51 | 1,2 | **8T-4121** | 28 | WASHER-HARD (11X21X2.5-MM THK) | |
| M | 52 | 1,2 | **8T-4133** | 4 | NUT (M10X1.5-THD) | |
| M | 53 | 1,2 | **8T-4136** | 5 | BOLT (M10X1.5X25-MM) | |
| M | 54 | 1,2 | **8T-4137** | 16 | BOLT (M10X1.5X20-MM) | |
| M | 55 | 1,2 | **8T-4179** | 3 | BOLT (M12X1.75X20-MM) | |
| M | 56 | 1 | **8T-4185** | 1 | BOLT (M10X1.5X50-MM) | |
| M | 57 | 1 | **8T-4191** | 2 | BOLT (M10X1.5X16-MM) | |
| M | 58 | 2 | **8T-4195** | 1 | BOLT (M10X1.5X30-MM) | |
| M | 59 | 2 | **8T-4196** | 1 | BOLT (M10X1.5X35-MM) | |
| M | 60 | 1 | **8T-4200** | 1 | BOLT (M8X1.25X16-MM) | |
| | 61 | 2 | **8T-4205** | 2 | WASHER-HARD (7.2X14.5X2-MM THK) | |
| | 62 | 1,2 | **8T-4223** | 3 | WASHER-HARD (13.5X25.5X3-MM THK) | |
| | 63 | 1,2 | **8T-4224** | 3 | WASHER-HARD (8.8X16X2-MM THK) | |
| | 64 | 2 | **8T-4226** | 1 | WASHER-PLATED (10.5X45X3-MM THK) | |

*159-5877* **WIRING GP-REAR** ***(contd.)*** **i02291623**

| NOTE | REF NO | GRAPHIC REF | PART NUMBER | QTY | PART NAME 1 2 3 4 5 6 (PRODUCT LEVEL) | SEE PAGE |
|---|---|---|---|---|---|---|
| | 65 | 1,2 | **8T-4896** | 3 | WASHER-HARD (10.2X18.5X2.5-MM THK) | |
| M | 66 | 2 | **8T-6870** | 2 | BOLT (M8X1.25X70-MM) | |
| | 67 | 2 | **8T-9364** | 2 | BOLT (1/4-20X0.625-IN) | |
| | 68 | 1 | **8W-8909** | 3 | SLEEVE | |
| | 69 | 1 | **8X-5489** | 1 | SLEEVE | |

C-CHANGE FROM PREVIOUS TYPE
E-ORDER BY THE CENTIMETER
M-METRIC PART

*159-5877* **WIRING GP-REAR** *(contd.)* **i02291623**

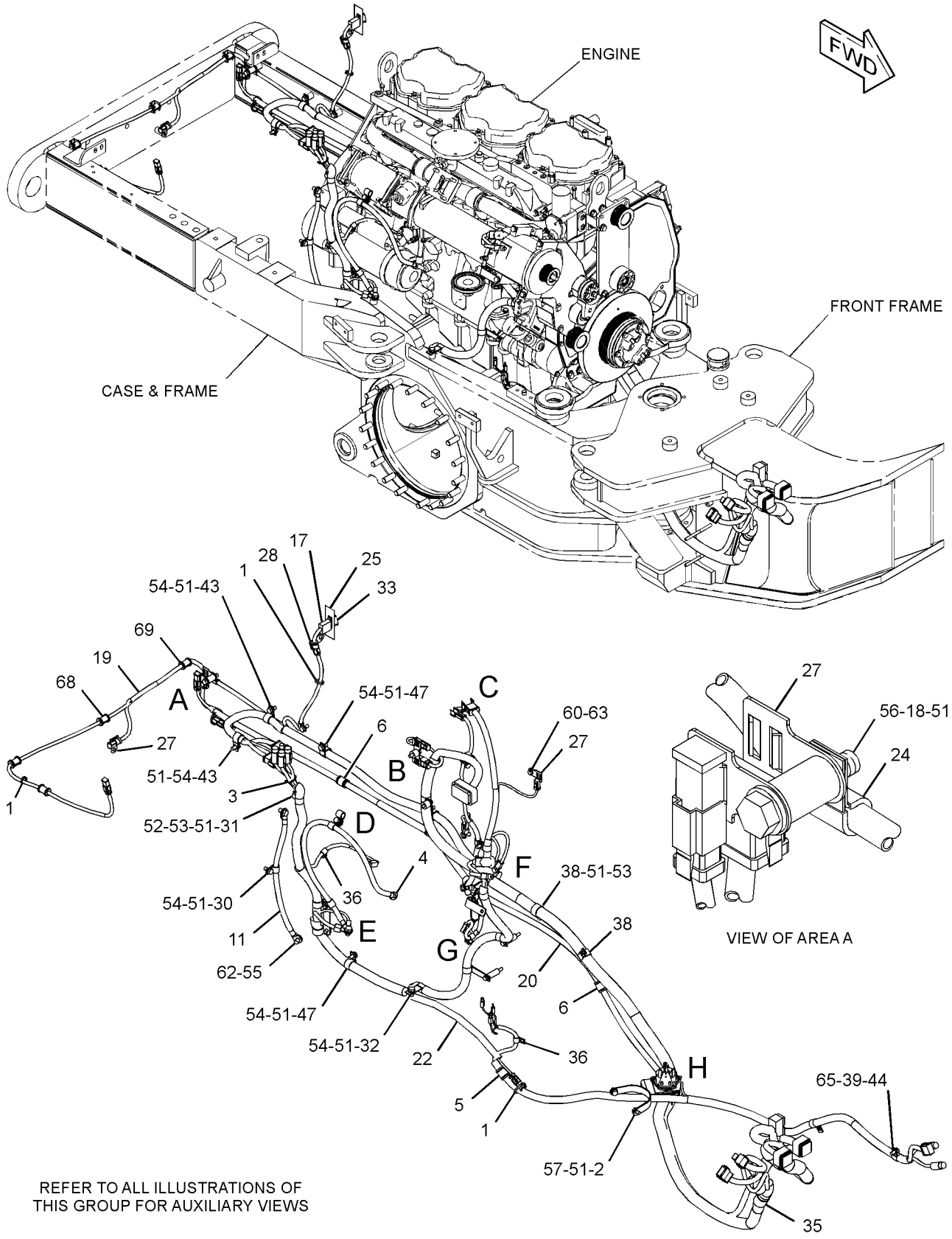


GRAPHIC #1 g01166701

*159-5877* **WIRING GP-REAR** *(contd.)* **i02291623**

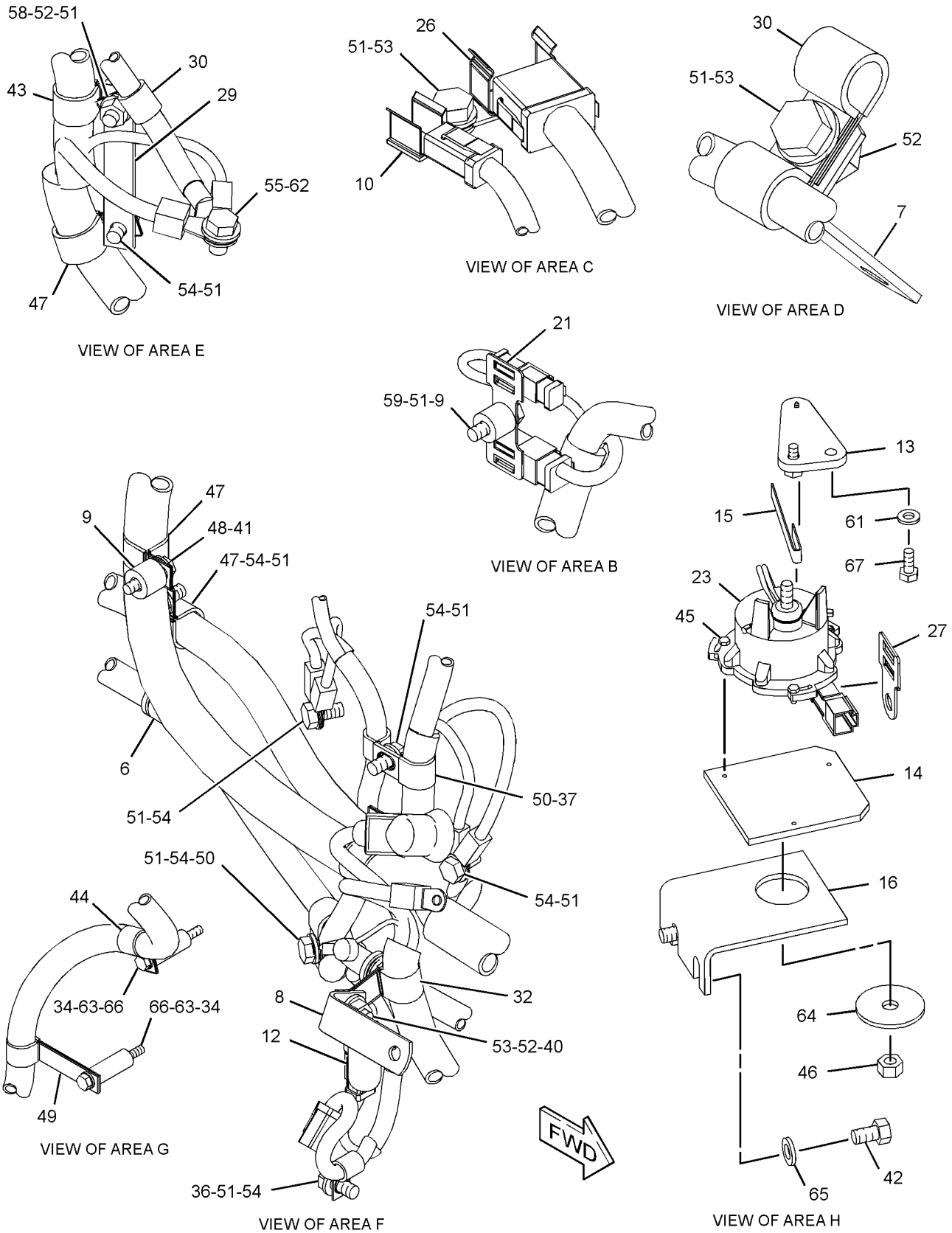


GRAPHIC #2 **<END>** g01166702

# *178-0163* WIRING GP-REAR–SERVICE CENTER

**S/N: CCA1-1028**
**PART OF 171-6700, 185-3143 SUPPORT AR-REAR CHASSIS**
**ALSO AN ATTACHMENT**

**SMCS-1408** **i02585702**

| NOTE | REF NO | GRAPHIC REF | PART NUMBER | QTY | PART NAME 1 2 3 4 5 6 (PRODUCT LEVEL) | SEE PAGE |
|---|---|---|---|---|---|---|
| | 1 | 2 | **2L-0273** | 1 | FITTING (RUBBER) | |
| | 2 | 2 | **3E-8320** | 1 | PLATE-INSTRUCTION (BATTERY) | |
| | 3 | 2 | **3S-2093** | 2 | STRAP-CABLE | |
| | 4 | 2 | **6V-4283** | 1 | PLATE-IDENTIFICATION (ALTERNATOR) | |
| | 5 | 2 | **7K-4743** | 2 | SPACER (10.31X25.4X6.35-MM THK) | |
| | 6 | 2 | **7V-9275** | 1 | STRAP | |
| | 7 | 1 | **9L-1566** | 1 | SUPPORT | |
| | 8 | 1 | **112-4428** | 1 | CABLE AS | |
| | | 1 | **1S-7251** | 1 | TERMINAL-RING (FOR 1/2-IN BOLT) | |
| | | 1 | **1S-7252** | 1 | TERMINAL-RING (FOR 3/8-IN BOLT) | |
| | | 1 | **5P-0747** | | CABLE (00-GA, BLACK) (27-CM) | |
| | 9 | 1 | **115-5593** | 1 | CABLE AS | |
| | | 1 | **1S-7252** | 1 | TERMINAL-RING (FOR 3/8-IN BOLT) | |
| E | | 1 | **5P-0747** | | CABLE (00-GA, BLACK) (119-CM) | |
| | | 1 | **7N-5274** | 1 | COVER-TERMINAL (BLACK) | |
| | | 1 | **3S-6050** | 1 | TERMINAL AS-BATTERY (NEGATIVE) | |
| | | 1 | **1M-6119** | 1 | BOLT (5/16-18X1.375-IN) | |
| | | 1 | **1M-6120** | 1 | NUT (5/16-18-THD) | |
| | 10 | 2 | **118-3534** | 1 | SWITCH GP-MAGNETIC (24-VOLT) (CRANKING RELAY) | |
| | 11 | 2 | **125-6390** | 1 | PLATE-INFORMATION (ENGINE) | |
| Y | 12 | 2 | **167-0138** | 1 | SWITCH GP-MAGNETIC (24-VOLT) (MAIN RELAY) | 302 |
| | 13 | 2 | **169-5414** | 1 | CLIP | |
| | 14 | 1 | **169-7262** | 1 | HARNESS AS-REAR (SERVICE CENTER, RH) | |
| | | 1 | **102-8802** | 1 | KIT-RECEPTACLE (2-PIN) | |
| | | 1 | **127-5484** | 1 | RECEPTACLE AS-CONNECTOR (1-PIN) | |
| | | 1 | **127-5486** | 1 | RECEPTACLE AS-CONNECTOR (1-PIN) | |
| | | | | | (INCLUDES RECEPTACLE AS AND WEDGE) | |
| | | 1 | **155-2270** | 1 | KIT-CONNECTING PLUG (2-PIN) | |
| | | 1 | **155-2274** | 2 | KIT-CONNECTING PLUG (6-PIN) | |
| | | | | | (INCLUDES PLUG AS AND WEDGE) | |
| | 15 | 1 | **169-7263** | 1 | HARNESS AS-REAR (SERVICE CENTER, LH) | |
| | | 1 | **102-8802** | 1 | KIT-RECEPTACLE (2-PIN) | |
| | | 1 | **102-8804** | 1 | KIT-RECEPTACLE (4-PIN) | |
| | | 1 | **102-8805** | 1 | KIT-RECEPTACLE (6-PIN) | |
| | | 1 | **102-8801** | 1 | KIT-RECEPTACLE (12-PIN) | |
| | | | | | (INCLUDES RECEPTACLE AS AND WEDGE) | |
| | | 1 | **155-2270** | 1 | KIT-CONNECTING PLUG (2-PIN) | |
| | | 1 | **155-2271** | 1 | KIT-CONNECTING PLUG (4-PIN) | |
| | | | | | (INCLUDES PLUG AS AND WEDGE) | |
| | 16 | 2 | **171-2210** | 1 | CIRCUIT BREAKER AS (80-AMPERE) (MAIN) | |
| | 16A | 2 | **171-2210** | 1 | CIRCUIT BREAKER AS (80-AMPERE) (ALTERNATOR) | |
| | | | | | (EACH INCLUDES) | |
| | | 2 | **8T-4205** | 2 | WASHER-HARD (7.2X14.5X2-MM THK) | |
| | | 2 | **6V-8187** | 2 | NUT (1/4-28-THD) | |
| | | 2 | **1H-3244** | 2 | LOCKWASHER | |
| | 17 | 1 | **177-8802** | 1 | CABLE AS | |
| | | 1 | **1S-7251** | 1 | TERMINAL-RING (FOR 1/2-IN BOLT) | |
| E | | 1 | **5P-0761** | | CABLE (00-GA, RED) (32-CM) | |
| | | 1 | **8N-0869** | 1 | COVER-TERMINAL (RED) | |
| | | 1 | **8N-1725** | 1 | COVER-TERMINAL (RED) | |
| | | 1 | **3S-6049** | 1 | TERMINAL AS-BATTERY (POSITIVE) | |
| | | 1 | **1M-6119** | 1 | BOLT (5/16-18X1.375-IN) | |
| | | 1 | **1M-6120** | 1 | NUT (5/16-18-THD) | |
| | 18 | 2 | **177-9813** | 1 | CABLE AS | |
| | | 2 | **2L-8050** | 1 | TERMINAL-RING (6-GA, 1/4-IN) | |

*178-0163* **WIRING GP-REAR** *(contd.)* **i02585702**

| NOTE | REF NO | GRAPHIC REF | PART NUMBER | QTY | PART NAME 1 2 3 4 5 6 (PRODUCT LEVEL) | SEE PAGE |
|---|---|---|---|---|---|---|
| | | 2 | **2L-8058** | 1 | TERMINAL-RING (8-GA, 1/4-IN) | |
| | | 2 | **8N-1546** | 1 | PIN-CONNECTOR | |
| | | 2 | **127-5484** | 1 | RECEPTACLE AS-CONNECTOR (1-PIN) | |
| | 19 | 1 | **177-9814** | 1 | CABLE AS | |
| | | 1 | **9G-4343** | 1 | TERMINAL (4-GA) | |
| | | 1 | **8N-1548** | 1 | PIN-CONNECTOR | |
| | | 1 | **127-5484** | 1 | RECEPTACLE AS-CONNECTOR (1-PIN) | |
| | 20 | 2 | **178-0160** | 1 | WIRE AS | |
| | 21 | 2 | **178-0162** | 1 | CABLE AS | |
| BD | | 2 | **5P-5689** | | WIRE (08-GA) | |
| | | 2 | **2L-8050** | 1 | TERMINAL-RING (6-GA, 1/4-IN) | |
| | | 2 | **2L-8058** | 1 | TERMINAL-RING (8-GA, 1/4-IN) | |
| | 22 | 2 | **178-0555** | 1 | CABLE AS | |
| | | 2 | **9G-4343** | 1 | TERMINAL (4-GA) | |
| | | 2 | **5P-3454** | 1 | TERMINAL (4-GA) | |
| | 23 | 2 | **189-0108** | 1 | PLATE | |
| | 24 | 2 | **194-1854** | 1 | COVER | |
| | 25 | 1 | **195-4990** | 1 | WIRE AS | |
| | 26 | 1 | **174-3897** | 1 | CABLE AS | |
| | | 1 | **1S-7251** | 2 | TERMINAL-RING (FOR 1/2-IN BOLT) | |
| E | | 1 | **5P-0761** | | CABLE (00-GA, RED) (117-CM) | |
| | | 1 | **8N-0869** | 2 | COVER-TERMINAL (RED) | |
| | 27 | 1 | **033-8248** | 1 | CLIP | |
| | 28 | 1 | **130-5300** | 3 | CLIP | |
| | 29 | 1 | **132-6938** | 1 | PLATE | |
| | 30 | 2 | **157-2528** | 1 | SPACER (7X16X20-MM THK) | |
| | 31 | 1,2 | **174-5907** | 6 | CLIP | |
| | 32 | 1,2 | **1S-0994** | 2 | CLIP | |
| | 33 | 2 | **1S-1015** | 1 | CLIP | |
| | 34 | 2 | **1V-6688** | 1 | GROMMET | |
| | 35 | 2 | **3K-8106** | 2 | SCREW-MACHINE (8-32X1-IN) | |
| | 36 | 2 | **4B-4274** | 4 | WASHER (5.5X13X1.2-MM THK) | |
| | 37 | 2 | **4B-4863** | 2 | WASHER (4.7X11X1.2-MM THK) | |
| | 38 | 1,2 | **4D-7794** | 3 | CLIP | |
| | 39 | 2 | **4D-8948** | 1 | CLIP | |
| | 40 | 1 | **4H-2558** | 2 | GROMMET | |
| M | 41 | 1 | **5C-9553** | 1 | BOLT (M6X1X16-MM) | |
| | 42 | 2 | **5L-4507** | 4 | SCREW-MACHINE (10-32X0.875-IN) | |
| | 43 | 1 | **5P-4116** | 1 | WASHER-HARD (8.8X20.5X2-MM THK) | |
| | 44 | 2 | **6D-3479** | 1 | CLIP | |
| | 45 | 1,2 | **6K-8178** | 2 | CLIP | |
| | 46 | 2 | **6T-3643** | 1 | CIRCUIT BREAKER GP (15-AMPERE) (ENGINE CONTROL) | |
| | | 2 | **6V-8376** | 2 | SCREW-MACHINE (8-32X0.25-IN) | |
| | | 2 | **9B-7233** | 2 | LOCKWASHER | |
| M | 47 | 2 | **6V-7357** | 1 | BOLT (M6X1X25-MM) | |
| Y | 48 | 2 | **7N-0718** | 1 | SWITCH GP-DISCONNECT (BATTERY) | 298 |
| | 49 | 2 | **7N-3718** | 1 | CLIP | |
| | 50 | 2 | **7Y-8169** | 1 | GROMMET | |
| M | 51 | 2 | **8C-8451** | 1 | BOLT (M6X1X40-MM) | |
| | 52 | 1 | **8M-2772** | 1 | CLIP | |
| M | 53 | 2 | **8T-0293** | 1 | BOLT (M12X1.75X20-MM) | |
| | 54 | 1,2 | **8T-4121** | 19 | WASHER-HARD (11X21X2.5-MM THK) | |
| M | 55 | 1 | **8T-4133** | 1 | NUT (M10X1.5-THD) | |
| M | 56 | 1,2 | **8T-4136** | 10 | BOLT (M10X1.5X25-MM) | |
| M | 57 | 1,2 | **8T-4137** | 6 | BOLT (M10X1.5X20-MM) | |
| M | 58 | 2 | **8T-4138** | 2 | BOLT (M6X1X20-MM) | |
| M | 59 | 1 | **8T-4189** | 3 | BOLT (M8X1.25X20-MM) | |
| M | 60 | 1 | **8T-4191** | 2 | BOLT (M10X1.5X16-MM) | |
| | 61 | 2 | **8T-4205** | 4 | WASHER-HARD (7.2X14.5X2-MM THK) | |

*178-0163* **WIRING GP-REAR** *(contd.)* **i02585702**

| NOTE | REF NO | GRAPHIC REF | PART NUMBER | QTY | PART NAME 1 2 3 4 5 6 (PRODUCT LEVEL) | SEE PAGE |
|---|---|---|---|---|---|---|
| | 62 | 2 | **8T-4223** | 1 | WASHER-HARD (13.5X25.5X3-MM THK) | |
| | 63 | 1 | **8T-4224** | 3 | WASHER-HARD (8.8X16X2-MM THK) | |
| Y | 64 | 1 | *9W-0742* | 1 | BLOCK GP-JUNCTION | 151 |

B-USE AS REQUIRED
D-ORDER BY THE METER
E-ORDER BY THE CENTIMETER
M-METRIC PART
Y-SEPARATE ILLUSTRATION

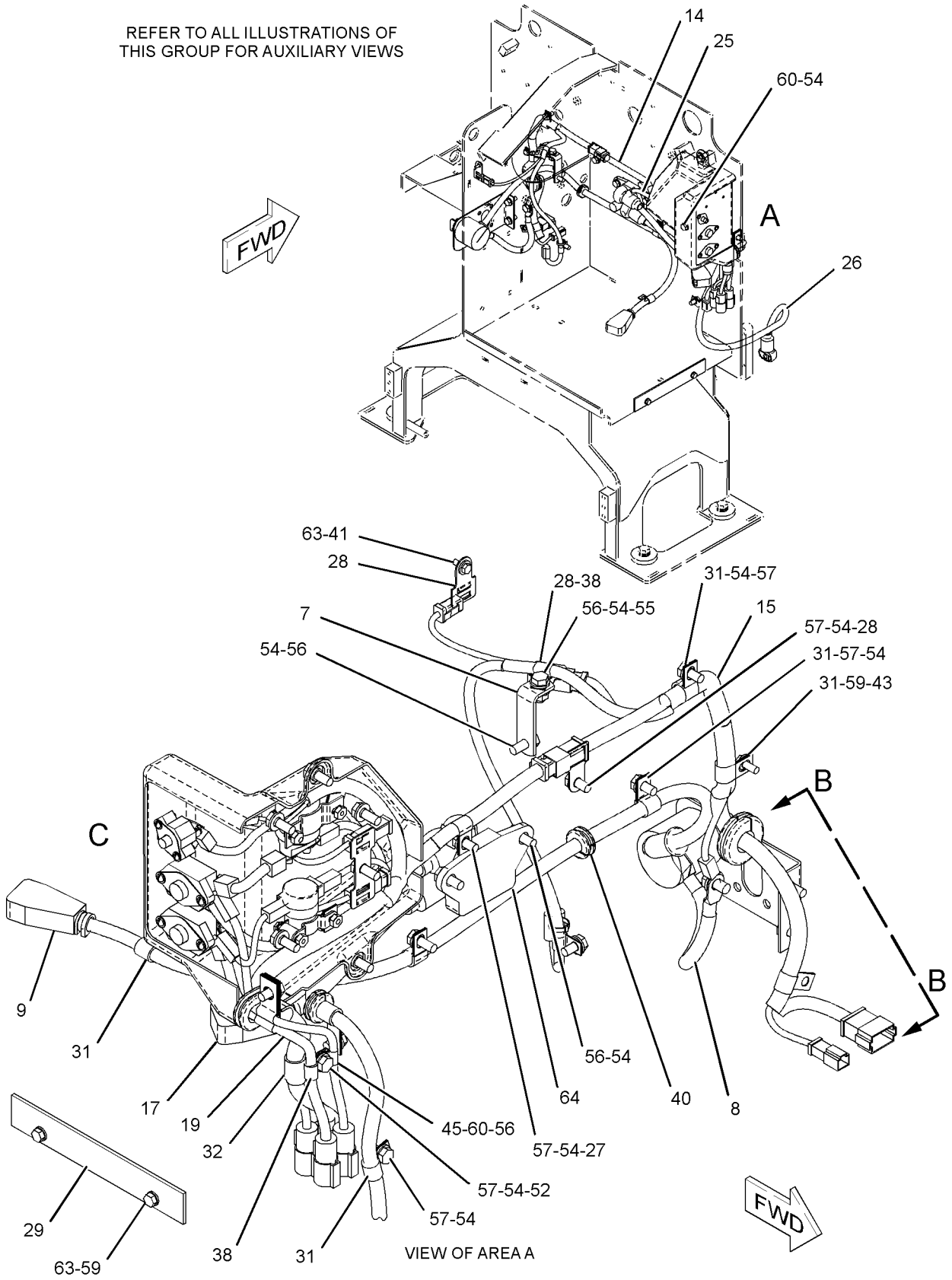


GRAPHIC #1 g01294550

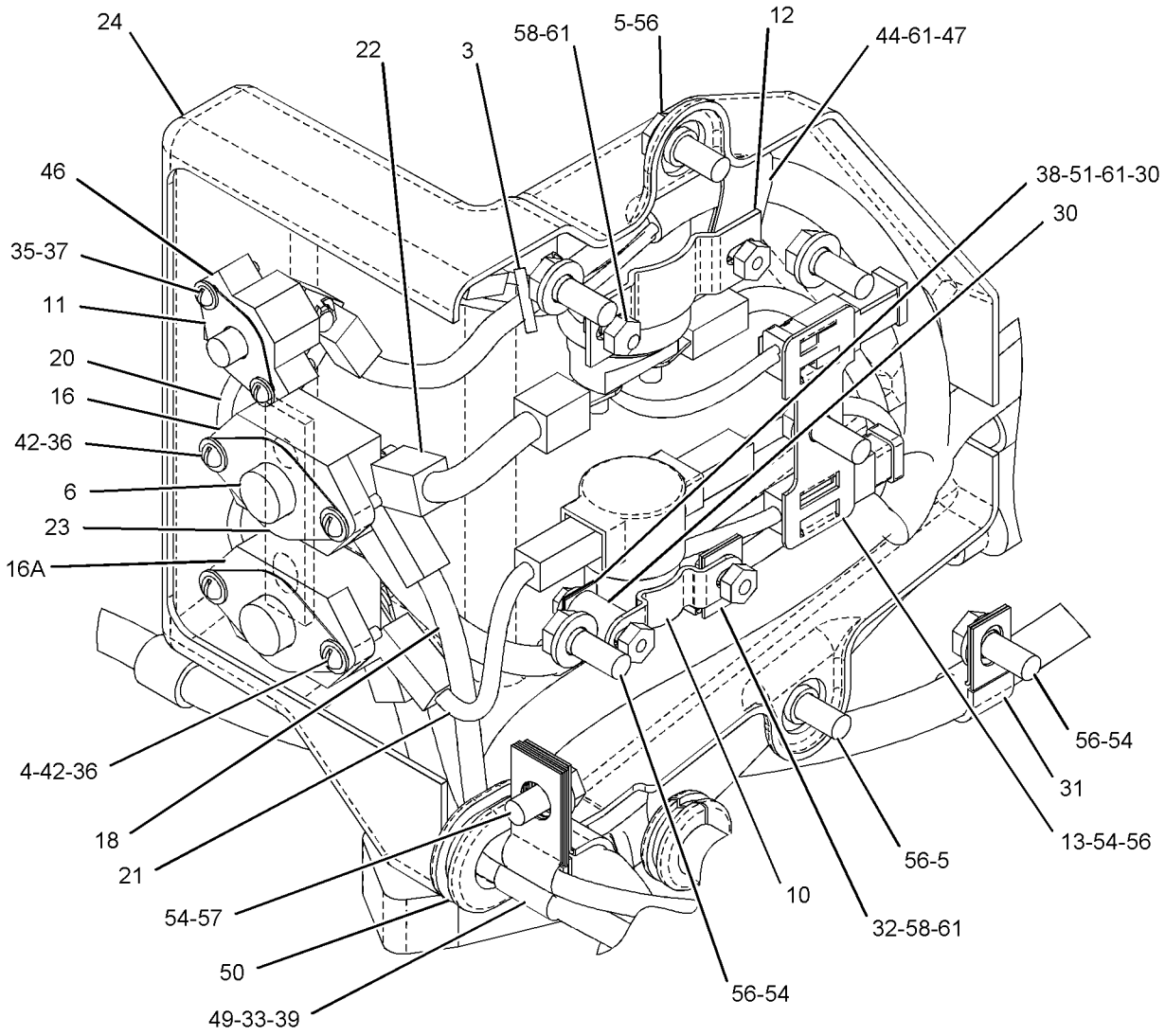


VIEW OF AREA C

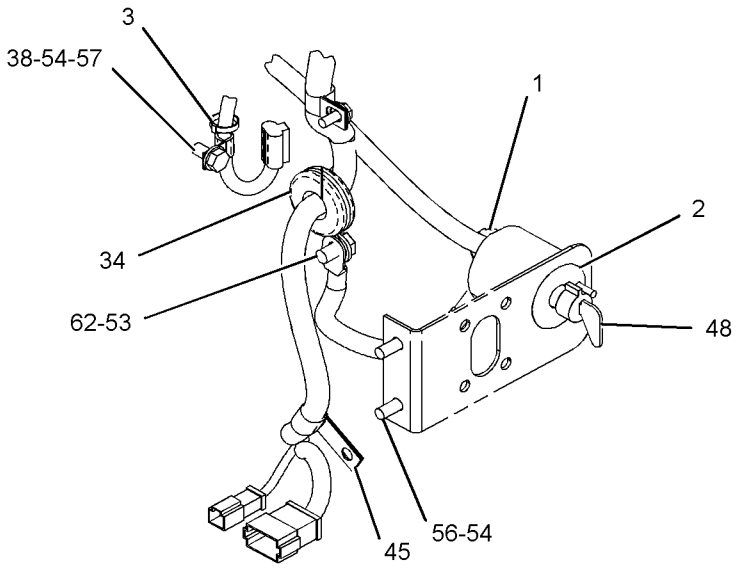


VIEW B-B

GRAPHIC #2 **<END>** g01026086

## *178-0163* WIRING GP-REAR–SERVICE CENTER

**S/N: CCA1029-1866**

**PART OF 171-6700, 185-3143 SUPPORT AR-REAR CHASSIS**

**ALSO AN ATTACHMENT**

**SMCS-1408** **i02236481**

| NOTE | REF NO | GRAPHIC REF | PART NUMBER | QTY | PART NAME 1 2 3 4 5 6 (PRODUCT LEVEL) | SEE PAGE |
|---|---|---|---|---|---|---|
| | 1 | 2 | **2L-0273** | 1 | FITTING (RUBBER) | |
| | 2 | 2 | **3E-8320** | 1 | PLATE-INSTRUCTION (BATTERY) | |
| | 3 | 2 | **3S-2093** | 2 | STRAP-CABLE | |
| | 4 | 2 | **6V-4283** | 1 | PLATE-IDENTIFICATION (ALTERNATOR) | |
| C | 5 | 2 | **249-4364** | 2 | SPACER | |
| | 6 | 2 | **7V-9275** | 1 | STRAP | |
| | 7 | 1 | **9L-1566** | 1 | SUPPORT | |
| | 8 | 1 | **112-4428** | 1 | CABLE AS | |
| | | 1 | **1S-7251** | 1 | TERMINAL-RING (FOR 1/2-IN BOLT) | |
| | | 1 | **1S-7252** | 1 | TERMINAL-RING (FOR 3/8-IN BOLT) | |
| E | | 1 | **5P-0747** | | CABLE (00-GA, BLACK) (27-CM) | |
| | 9 | 1 | **115-5593** | 1 | CABLE AS | |
| | | 1 | **1S-7252** | 1 | TERMINAL-RING (FOR 3/8-IN BOLT) | |
| E | | 1 | **5P-0747** | | CABLE (00-GA, BLACK) (119-CM) | |
| | | 1 | **7N-5274** | 1 | COVER-TERMINAL (BLACK) | |
| | | 1 | **3S-6050** | 1 | TERMINAL AS-BATTERY (NEGATIVE) | |
| | | 1 | **1M-6119** | 1 | BOLT (5/16-18X1.375-IN) | |
| | | 1 | **1M-6120** | 1 | NUT (5/16-18-THD) | |
| | 10 | 2 | **118-3534** | 1 | SWITCH GP-MAGNETIC (24-VOLT) (STARTER RELAY) | |
| | 11 | 2 | **125-6390** | 1 | PLATE-INFORMATION (ENGINE) | |
| Y | 12 | 2 | **167-0138** | 1 | SWITCH GP-MAGNETIC (24-VOLT) (MAIN RELAY) | 302 |
| | 13 | 2 | **169-5414** | 1 | CLIP | |
| | 14 | 1 | **169-7262** | 1 | HARNESS AS-REAR (SERVICE CENTER, RH) | |
| | | 1 | **102-8802** | 1 | KIT-RECEPTACLE (2-PIN) | |
| | | 1 | **127-5484** | 1 | RECEPTACLE AS-CONNECTOR (1-PIN) | |
| | | 1 | **127-5486** | 1 | RECEPTACLE AS-CONNECTOR (1-PIN) | |
| | | | | | (EACH INCLUDES RECEPTACLE AS & WEDGE) | |
| | | 1 | **155-2270** | 1 | KIT-CONNECTING PLUG (2-PIN) | |
| | | 1 | **155-2274** | 2 | KIT-CONNECTING PLUG (6-PIN) | |
| | | | | | (EACH INCLUDES PLUG AS & WEDGE) | |
| | 15 | 1 | **169-7263** | 1 | HARNESS AS-REAR (SERVICE CENTER, LH) | |
| | | 1 | **102-8802** | 1 | KIT-RECEPTACLE (2-PIN) | |
| | | 1 | **102-8804** | 1 | KIT-RECEPTACLE (4-PIN) | |
| | | 1 | **102-8805** | 1 | KIT-RECEPTACLE (6-PIN) | |
| | | 1 | **102-8801** | 1 | KIT-RECEPTACLE (12-PIN) | |
| | | | | | (EACH INCLUDES RECEPTACLE AS & WEDGE) | |
| | | 1 | **155-2270** | 1 | KIT-CONNECTING PLUG (2-PIN) | |
| | | 1 | **155-2271** | 1 | KIT-CONNECTING PLUG (4-PIN) | |
| | | | | | (EACH INCLUDES PLUG AS & WEDGE) | |
| | 16 | 2 | **171-2210** | 1 | CIRCUIT BREAKER AS (80-AMPERE) (MAIN) | |
| | 16A | 2 | **171-2210** | 1 | CIRCUIT BREAKER AS (80-AMPERE) (ALTERNATOR) | |
| | | | | | (EACH INCLUDES) | |
| | | 2 | **8T-4205** | 2 | WASHER-HARD (7.2X14.5X2-MM THK) | |
| | | 2 | **6V-8187** | 2 | NUT (1/4-28-THD) | |
| | | 2 | **253-2111** | 2 | LOCKWASHER | |
| | 17 | 1 | **177-8802** | 1 | CABLE AS | |
| | | 1 | **1S-7251** | 1 | TERMINAL-RING (FOR 1/2-IN BOLT) | |
| E | | 1 | **5P-0761** | | CABLE (00-GA, RED) (32-CM) | |
| | | 1 | **8N-0869** | 1 | COVER-TERMINAL (RED) | |
| | | 1 | **8N-1725** | 1 | COVER-TERMINAL (RED) | |
| | | 1 | **3S-6049** | 1 | TERMINAL AS-BATTERY (POSITIVE) | |
| | | 1 | **1M-6119** | 1 | BOLT (5/16-18X1.375-IN) | |
| | | 1 | **1M-6120** | 1 | NUT (5/16-18-THD) | |
| | 18 | 2 | **177-9813** | 1 | CABLE AS | |
| BD | | 2 | **5P-5675** | | WIRE (06-GA) | |

*178-0163* **WIRING GP-REAR** ***(contd.)*** **i02236481**

| NOTE | REF NO | GRAPHIC REF | PART NUMBER | QTY | PART NAME 1 2 3 4 5 6 (PRODUCT LEVEL) | SEE PAGE |
|---|---|---|---|---|---|---|
| | | 2 | **2L-8050** | 1 | TERMINAL-RING (6-GA, 1/4-IN) | |
| | | 2 | **2L-8058** | 1 | TERMINAL-RING (8-GA, 1/4-IN) | |
| | | 2 | **8N-1546** | 1 | PIN-CONNECTOR | |
| | | 2 | **127-5484** | 1 | RECEPTACLE AS-CONNECTOR (1-PIN) | |
| BE | | 2 | **114-8843** | | SLEEVE-PLASTIC (32-MM DIA) | |
| | 19 | 1 | **177-9814** | 1 | CABLE AS | |
| BE | | 1 | **114-8843** | | SLEEVE-PLASTIC (32-MM DIA) | |
| BD | | 1 | **6V-2369** | | WIRE (04-GA, BLACK) | |
| | | 1 | **9G-4343** | 1 | TERMINAL (4-GA) | |
| | | 1 | **7T-4369** | 1 | PIN-CONNECTOR | |
| | | 1 | **127-5484** | 1 | RECEPTACLE AS-CONNECTOR (1-PIN) | |
| | 20 | 2 | **178-0160** | 1 | WIRE AS | |
| | 21 | 2 | **178-0162** | 1 | CABLE AS | |
| BD | | 2 | **5P-5689** | | WIRE (08-GA) | |
| | | 2 | **2L-8050** | 1 | TERMINAL-RING (6-GA, 1/4-IN) | |
| | | 2 | **2L-8058** | 1 | TERMINAL-RING (8-GA, 1/4-IN) | |
| | 22 | 2 | **178-0555** | 1 | CABLE AS | |
| BD | | 2 | **6V-2369** | | WIRE (04-GA, BLACK) | |
| | | 2 | **9G-4343** | 1 | TERMINAL (4-GA) | |
| | | 2 | **5P-3454** | 1 | TERMINAL (4-GA) | |
| | 23 | 2 | **189-0108** | 1 | PLATE | |
| | 24 | 2 | **194-1854** | 1 | COVER | |
| | 25 | 1 | **195-4990** | 1 | WIRE AS | |
| | 26 | 1 | **174-3897** | 1 | CABLE AS | |
| | | 1 | **1S-7251** | 2 | TERMINAL-RING (FOR 1/2-IN BOLT) | |
| E | | 1 | **5P-0761** | | CABLE (00-GA, RED) (117-CM) | |
| | | 1 | **8N-0869** | 2 | COVER-TERMINAL (RED) | |
| | 27 | 1 | **033-8248** | 1 | CLIP | |
| | 28 | 1 | **130-5300** | 3 | CLIP | |
| | 30 | 2 | **157-2528** | 1 | SPACER (7X16X20-MM THK) | |
| | 31 | 1,2 | **174-5907** | 6 | CLIP | |
| | 32 | 1,2 | **1S-0994** | 2 | CLIP | |
| | 33 | 2 | **1S-1015** | 1 | CLIP | |
| | 34 | 2 | **1V-6688** | 1 | GROMMET | |
| | 35 | 2 | **3K-8106** | 2 | SCREW-MACHINE (8-32X1-IN) | |
| | 36 | 2 | **4B-4274** | 4 | WASHER (5.5X13X1.2-MM THK) | |
| | 37 | 2 | **4B-4863** | 2 | WASHER (4.7X11X1.2-MM THK) | |
| | 38 | 1,2 | **4D-7794** | 3 | CLIP | |
| | 39 | 2 | **4D-8948** | 1 | CLIP | |
| | 40 | 1 | **4H-2558** | 2 | GROMMET | |
| M | 41 | 1 | **5C-9553** | 1 | BOLT (M6X1X16-MM) | |
| | 42 | 2 | **5L-4507** | 4 | SCREW-MACHINE (10-32X0.875-IN) | |
| | 43 | 1 | **5P-4116** | 1 | WASHER-HARD (8.8X20.5X2-MM THK) | |
| | 44 | 2 | **6D-3479** | 1 | CLIP | |
| C | 45 | 1 | **6K-8178** | 1 | CLIP | |
| | 46 | 2 | **6T-3643** | 1 | CIRCUIT BREAKER GP (15-AMPERE) (ENGINE CONTROL) | |
| | | 2 | **6V-8376** | 2 | SCREW-MACHINE (8-32X0.25-IN) | |
| | | 2 | **9B-7233** | 2 | LOCKWASHER | |
| M | 47 | 2 | **6V-7357** | 1 | BOLT (M6X1X25-MM) | |
| Y | 48 | 2 | **7N-0718** | 1 | SWITCH GP-DISCONNECT (BATTERY) | 298 |
| | 49 | 2 | **7N-3718** | 1 | CLIP | |
| | 50 | 2 | **7Y-8169** | 1 | GROMMET | |
| M | 51 | 2 | **8C-8451** | 1 | BOLT (M6X1X40-MM) | |
| | 52 | 1 | **8M-2772** | 1 | CLIP | |
| M | 53 | 2 | **8T-0293** | 1 | BOLT (M12X1.75X20-MM) | |
| C | 54 | 1,2 | **8T-4121** | 17 | WASHER-HARD (11X21X2.5-MM THK) | |
| M | 55 | 1 | **8T-4133** | 1 | NUT (M10X1.5-THD) | |
| M | 56 | 1,2 | **8T-4136** | 10 | BOLT (M10X1.5X25-MM) | |
| M | 57 | 1,2 | **8T-4137** | 6 | BOLT (M10X1.5X20-MM) | |

*178-0163* **WIRING GP-REAR** *(contd.)* **i02236481**

| NOTE | REF NO | GRAPHIC REF | PART NUMBER | QTY | PART NAME 1 2 3 4 5 6 (PRODUCT LEVEL) | SEE PAGE |
|---|---|---|---|---|---|---|
| M | 58 | 2 | **8T-4138** | 2 | BOLT (M6X1X20-MM) | |
| CM | 59 | 1 | **8T-4189** | 1 | BOLT (M8X1.25X20-MM) | |
| M | 60 | 1 | **8T-4191** | 2 | BOLT (M10X1.5X16-MM) | |
| | 61 | 2 | **8T-4205** | 4 | WASHER-HARD (7.2X14.5X2-MM THK) | |
| | 62 | 2 | **8T-4223** | 1 | WASHER-HARD (13.5X25.5X3-MM THK) | |
| C | 63 | 1 | **8T-4224** | 1 | WASHER-HARD (8.8X16X2-MM THK) | |
| Y | 64 | 1 | *9W-0742* | 1 | BLOCK GP-JUNCTION | 151 |
| C | 65 | 2 | **5P-4295** | 1 | CLIP | |

B-USE AS REQUIRED
C-CHANGE FROM PREVIOUS TYPE
D-ORDER BY THE METER
E-ORDER BY THE CENTIMETER
M-METRIC PART
Y-SEPARATE ILLUSTRATION

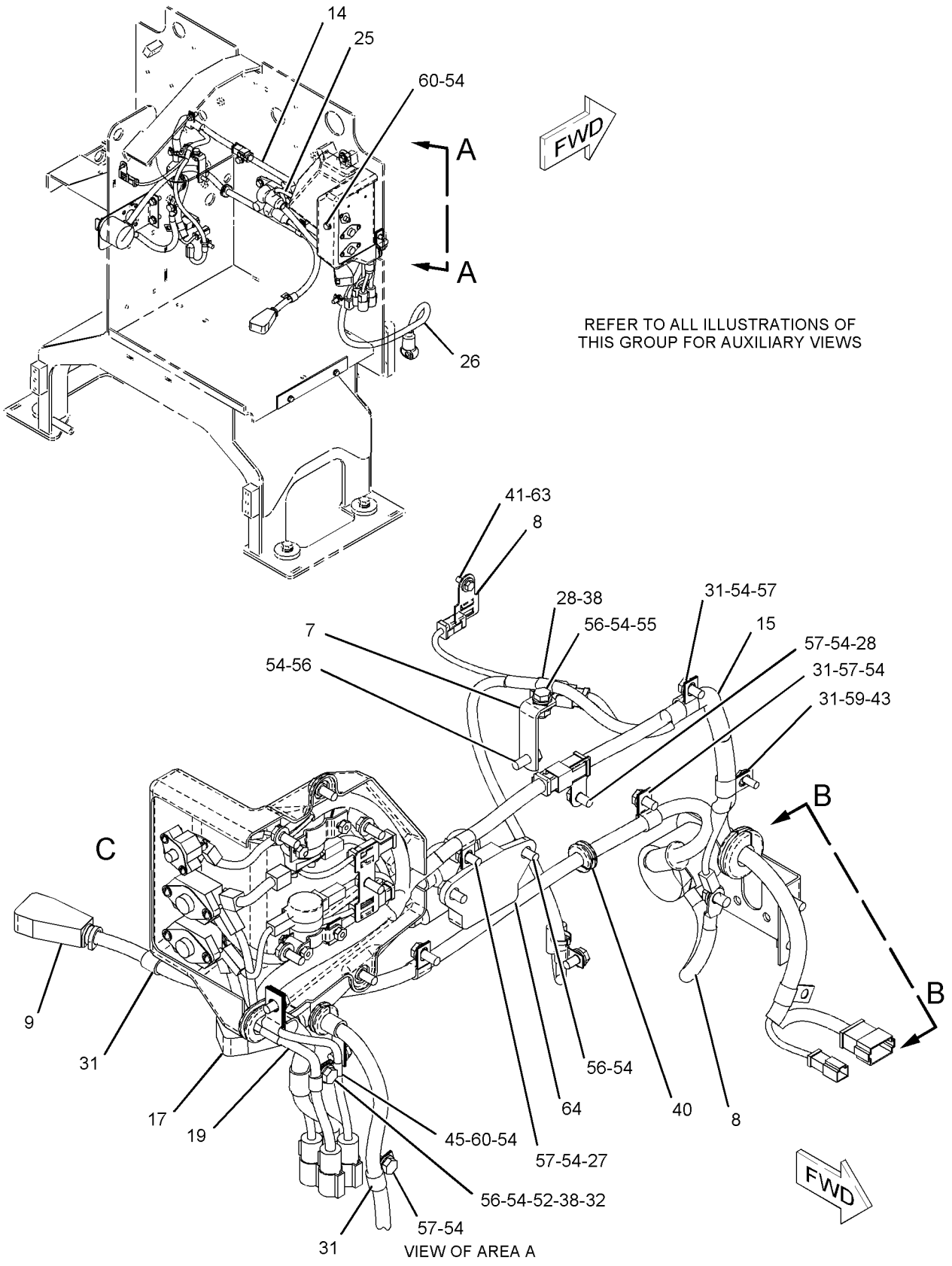


GRAPHIC #1 g01132278

*178-0163* **WIRING GP-REAR** *(contd.)* **i02236481**

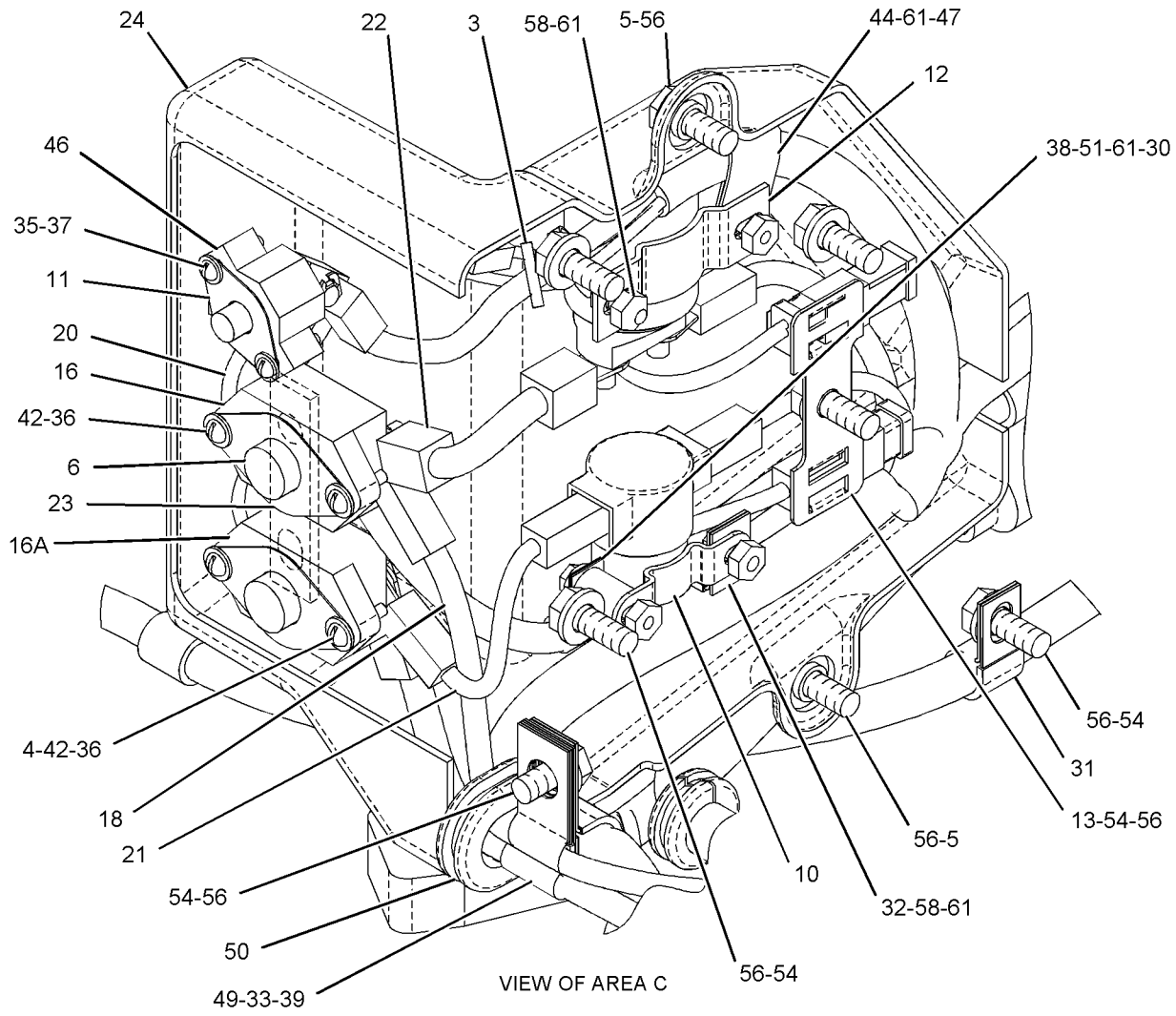


VIEW OF AREA C

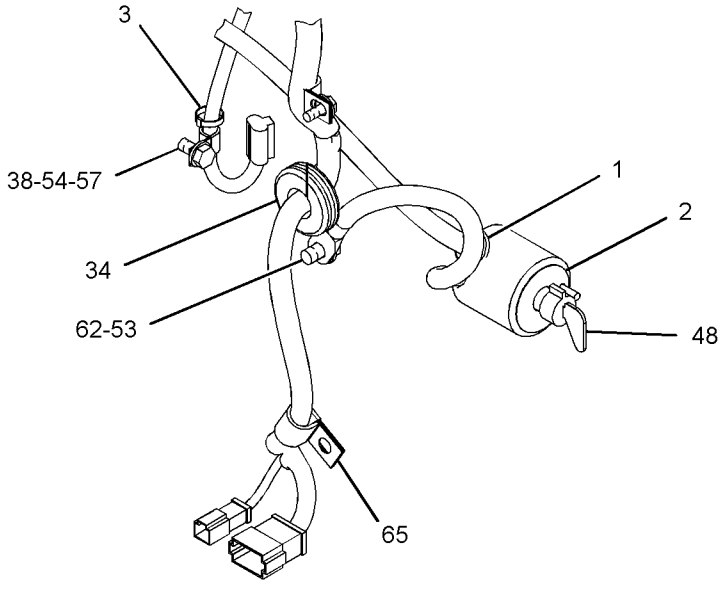


VIEW B-B

GRAPHIC #2 **<END>** g01132276

# ELECTRICAL AND STARTING SYSTEM

## *178-0163* WIRING GP-REAR—SERVICE CENTER

**S/N: CCA1867-UP**

**PART OF 171-6700, 185-3143 SUPPORT AR-REAR CHASSIS**

**ALSO AN ATTACHMENT**

**SMCS-1408** **i02575792**

| NOTE | REF NO | GRAPHIC REF | PART NUMBER | QTY | PART NAME 1 2 3 4 5 6 (PRODUCT LEVEL) | SEE PAGE |
|---|---|---|---|---|---|---|
| | 1 | 1 | **2L-0273** | 1 | FITTING (RUBBER) | |
| | 2 | 2 | **3E-8320** | 1 | PLATE-INSTRUCTION (BATTERY) | |
| | 3 | 1,2 | **3S-2093** | 2 | STRAP-CABLE | |
| | 4 | 2 | **6V-4283** | 1 | PLATE-IDENTIFICATION (ALTERNATOR) | |
| | 5 | 1 | **7V-9275** | 1 | STRAP | |
| | 6 | 2 | **112-4428** | 1 | CABLE AS | |
| | | 2 | **1S-7251** | 1 | TERMINAL-RING (FOR 1/2-IN BOLT) | |
| | | 2 | **1S-7252** | 1 | TERMINAL-RING (FOR 3/8-IN BOLT) | |
| E | | 2 | **5P-0747** | | CABLE (00-GA, BLACK) (27-CM) | |
| | 7 | 1 | **115-5593** | 1 | CABLE AS | |
| | | 1 | **1S-7252** | 1 | TERMINAL-RING (FOR 3/8-IN BOLT) | |
| E | | 1 | **5P-0747** | | CABLE (00-GA, BLACK) (119-CM) | |
| | | 1 | **7N-5274** | 1 | COVER-TERMINAL (BLACK) | |
| | | 1 | **3S-6050** | 1 | TERMINAL AS-BATTERY (NEGATIVE) | |
| | | 1 | **1M-6119** | 1 | BOLT (5/16-18X1.375-IN) | |
| | | 1 | **1M-6120** | 1 | NUT (5/16-18-THD) | |
| | 8 | 2 | **118-3534** | 1 | SWITCH GP-MAGNETIC (24-VOLT) (STARTER RELAY) | |
| | 9 | 2 | **125-6390** | 1 | PLATE-INFORMATION (ENGINE) | |
| Y | 10 | 2 | **167-0138** | 1 | SWITCH GP-MAGNETIC (24-VOLT) (MAIN RELAY) | 302 |
| | 11 | 2 | **169-5414** | 1 | CLIP | |
| | 12 | 1 | **169-7262** | 1 | HARNESS AS-REAR (SERVICE CENTER, RH) | |
| | | 1 | **127-5484** | 1 | RECEPTACLE AS-CONNECTOR (1-PIN) | |
| | | 1 | **127-5486** | 1 | RECEPTACLE AS-CONNECTOR (1-PIN) | |
| | | 1 | **102-8802** | 1 | KIT-RECEPTACLE (2-PIN) | |
| | | | | | (INCLUDES RECEPTACLE AS & WEDGE) | |
| | | 1 | **155-2270** | 1 | KIT-CONNECTING PLUG (2-PIN) | |
| | | 1 | **155-2274** | 2 | KIT-CONNECTING PLUG (6-PIN) | |
| | | | | | (EACH INCLUDES PLUG AS, WEDGE, & INTERFACE SEAL) | |
| | 13 | 1 | **169-7263** | 1 | HARNESS AS-REAR (SERVICE CENTER, LH) | |
| | | 1 | **155-2272** | 1 | PLUG AS-CONNECTOR (4-PIN) | |
| | | 1 | **102-8802** | 1 | KIT-RECEPTACLE (2-PIN) | |
| | | 1 | **102-8804** | 1 | KIT-RECEPTACLE (4-PIN) | |
| | | 1 | **102-8805** | 1 | KIT-RECEPTACLE (6-PIN) | |
| | | 1 | **102-8801** | 1 | KIT-RECEPTACLE (12-PIN) | |
| | | | | | (EACH INCLUDES RECEPTACLE AS & WEDGE) | |
| | | 1 | **155-2270** | 1 | KIT-CONNECTING PLUG (2-PIN) | |
| | | | | | (INCLUDES PLUG AS, WEDGE, & INTERFACE SEAL) | |
| | 14 | 2 | **171-2210** | 1 | CIRCUIT BREAKER AS (80-AMPERE) (MAIN) | |
| | 14A | 2 | **171-2210** | 1 | CIRCUIT BREAKER AS (80-AMPERE) (ALTERNATOR) | |
| | | | | | (EACH INCLUDES) | |
| | | 2 | **8T-4205** | 2 | WASHER-HARD (7.2X14.5X2-MM THK) | |
| | | 2 | **6V-8187** | 2 | NUT (1/4-28-THD) | |
| | | 2 | **253-2111** | 2 | LOCKWASHER | |
| | 15 | 1 | **174-3897** | 1 | CABLE AS | |
| | | 1 | **1S-7251** | 2 | TERMINAL-RING (FOR 1/2-IN BOLT) | |
| E | | 1 | **5P-0761** | | CABLE (00-GA, RED) (117-CM) | |
| | | 1 | **8N-0869** | 2 | COVER-TERMINAL (RED) | |
| | 16 | 1 | **177-8802** | 1 | CABLE AS | |
| | | 1 | **1S-7251** | 1 | TERMINAL-RING (FOR 1/2-IN BOLT) | |
| E | | 1 | **5P-0761** | | CABLE (00-GA, RED) (32-CM) | |
| | | 1 | **8N-0869** | 1 | COVER-TERMINAL (RED) | |
| | | 1 | **8N-1725** | 1 | COVER-TERMINAL (RED) | |
| | | 1 | **3S-6049** | 1 | TERMINAL AS-BATTERY (POSITIVE) | |

*178-0163* **WIRING GP-REAR** *(contd.)* **i02575792**

| NOTE | REF NO | GRAPHIC REF | PART NUMBER | QTY | PART NAME 1 2 3 4 5 6 (PRODUCT LEVEL) | SEE PAGE |
|---|---|---|---|---|---|---|
| | | 1 | **1M-6119** | 1 | BOLT (5/16-18X1.375-IN) | |
| | | 1 | **1M-6120** | 1 | NUT (5/16-18-THD) | |
| | 17 | 2 | **177-9813** | 1 | CABLE AS | |
| D | | 2 | **5P-5675** | | WIRE (06-GA) (0.5-M) | |
| | | 2 | **2L-8050** | 1 | TERMINAL-RING (6-GA, 1/4-IN) | |
| | | 2 | **2L-8058** | 1 | TERMINAL-RING (8-GA, 1/4-IN) | |
| | | 2 | **8N-1546** | 1 | PIN-CONNECTOR | |
| | | 2 | **127-5484** | 1 | RECEPTACLE AS-CONNECTOR (1-PIN) | |
| E | | 2 | **114-8843** | | SLEEVE-PLASTIC (32-MM DIA) (20-CM) | |
| | 18 | 2 | **177-9814** | 1 | CABLE AS | |
| | | 2 | **8N-1548** | 1 | PIN-CONNECTOR | |
| E | | 2 | **114-8843** | | SLEEVE-PLASTIC (32-MM DIA) (70-CM) | |
| D | | 2 | **6V-2369** | | WIRE (04-GA, BLACK) (0.4-M) | |
| | | 2 | **9G-4343** | 1 | TERMINAL (4-GA) | |
| | | 2 | **7T-4369** | 1 | PIN-CONNECTOR | |
| | | 2 | **127-5484** | 1 | RECEPTACLE AS-CONNECTOR (1-PIN) | |
| | 19 | 1 | **178-0160** | 1 | WIRE AS | |
| | 20 | 2 | **178-0162** | 1 | CABLE AS | |
| D | | 2 | **5P-5689** | | WIRE (08-GA) (0.2-M) | |
| | | 2 | **2L-8050** | 1 | TERMINAL-RING (6-GA, 1/4-IN) | |
| | | 2 | **2L-8058** | 1 | TERMINAL-RING (8-GA, 1/4-IN) | |
| | 21 | 2 | **178-0555** | 1 | CABLE AS | |
| D | | 2 | **6V-2369** | | WIRE (04-GA, BLACK) (0.2-M) | |
| | | 2 | **9G-4343** | 1 | TERMINAL (4-GA) | |
| | | 2 | **5P-3454** | 1 | TERMINAL (4-GA) | |
| | 22 | 2 | **189-0108** | 1 | PLATE | |
| | 23 | 2 | **194-1854** | 1 | COVER | |
| | 24 | 1 | **195-4990** | 1 | WIRE AS | |
| | 25 | 2 | **249-4364** | 2 | SPACER | |
| | 26 | 1 | **033-8248** | 1 | CLIP | |
| | 27 | 1 | **130-5300** | 3 | CLIP | |
| | 28 | 2 | **157-2528** | 1 | SPACER (7X16X20-MM THK) | |
| | 29 | 1,2 | **174-5907** | 6 | CLIP | |
| | 30 | 1,2 | **1S-0994** | 2 | CLIP | |
| | 31 | 2 | **1S-1015** | 1 | CLIP | |
| | 32 | 2 | **1V-6688** | 1 | GROMMET | |
| | 33 | 2 | **3K-8106** | 2 | SCREW-MACHINE (8-32X1-IN) | |
| | 34 | 2 | **4B-4274** | 4 | WASHER (5.5X13X1.2-MM THK) | |
| | 35 | 2 | **4B-4863** | 2 | WASHER (4.7X11X1.2-MM THK) | |
| C | 36 | 1,2 | **4D-7794** | 4 | CLIP | |
| | 37 | 2 | **4D-8948** | 1 | CLIP | |
| | 38 | 1 | **4H-2558** | 2 | GROMMET | |
| | 39 | 2 | **5L-4507** | 4 | SCREW-MACHINE (10-32X0.875-IN) | |
| | 40 | 1,2 | **5P-4116** | 1 | WASHER-HARD (8.8X20.5X2-MM THK) | |
| | 41 | 2 | **5P-4295** | 1 | CLIP | |
| | 42 | 2 | **6D-3479** | 1 | CLIP | |
| | 43 | 1 | **6K-8178** | 1 | CLIP | |
| | 44 | 2 | **6T-3643** | 1 | CIRCUIT BREAKER GP (15-AMPERE) (ENGINE CONTROL) | |
| | | 2 | **6V-8376** | 2 | SCREW-MACHINE (8-32X0.25-IN) | |
| | | 2 | **9B-7233** | 2 | LOCKWASHER | |
| M | 45 | 2 | **6V-7357** | 1 | BOLT (M6X1X25-MM) | |
| Y | 46 | 2 | **7N-0718** | 1 | SWITCH GP-DISCONNECT (BATTERY) | 298 |
| | 47 | 2 | **7N-3718** | 1 | CLIP | |
| | 48 | 2 | **7Y-8169** | 1 | GROMMET | |
| M | 49 | 2 | **8C-8451** | 1 | BOLT (M6X1X40-MM) | |
| | 50 | 1 | **8M-2772** | 1 | CLIP | |
| M | 51 | 2 | **8T-0293** | 1 | BOLT (M12X1.75X20-MM) | |
| C | 52 | 1,2 | **8T-4121** | 15 | WASHER-HARD (11X21X2.5-MM THK) | |
| CM | 53 | 1,2 | **8T-4136** | 9 | BOLT (M10X1.5X25-MM) | |

## *178-0163* **WIRING GP-REAR** *(contd.)* **i02575792**

| NOTE | REF NO | GRAPHIC REF | PART NUMBER | QTY | PART NAME 1 2 3 4 5 6 (PRODUCT LEVEL) | SEE PAGE |
|---|---|---|---|---|---|---|
| M | 54 | 1 | **8T-4137** | 6 | BOLT (M10X1.5X20-MM) | |
| M | 55 | 2 | **8T-4138** | 2 | BOLT (M6X1X20-MM) | |
| M | 56 | 1,2 | **8T-4189** | 1 | BOLT (M8X1.25X20-MM) | |
| M | 57 | 1 | **8T-4191** | 2 | BOLT (M10X1.5X16-MM) | |
| | 58 | 2 | **8T-4205** | 4 | WASHER-HARD (7.2X14.5X2-MM THK) | |
| | 59 | 2 | **8T-4223** | 1 | WASHER-HARD (13.5X25.5X3-MM THK) | |
| Y | 60 | 1 | *9W-0742* | 1 | BLOCK GP-JUNCTION | 151 |

C-CHANGE FROM PREVIOUS TYPE
D-ORDER BY THE METER
E-ORDER BY THE CENTIMETER
M-METRIC PART
Y-SEPARATE ILLUSTRATION

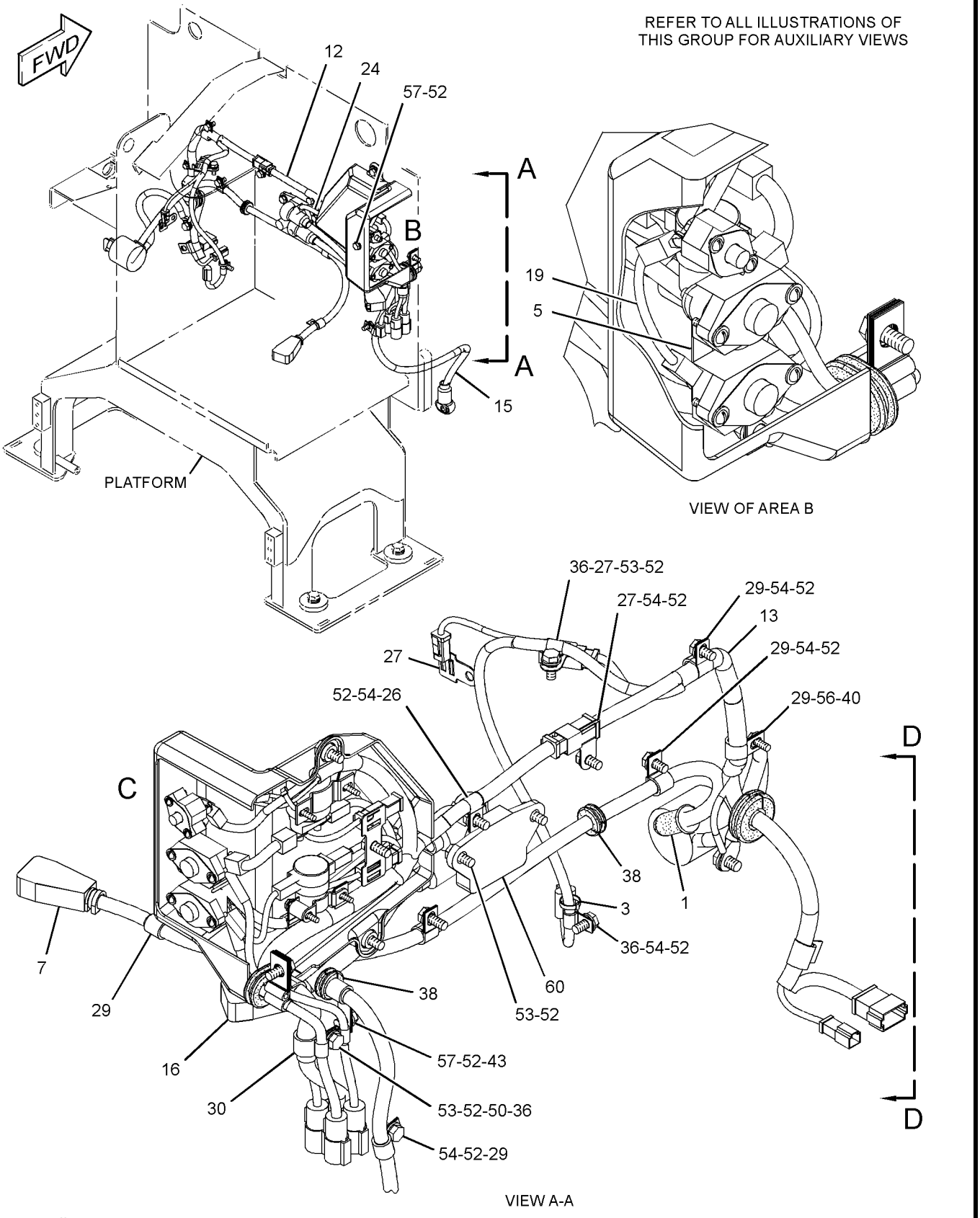


GRAPHIC #1

g01288260

*178-0163* **WIRING GP-REAR** *(contd.)* **i02575792**

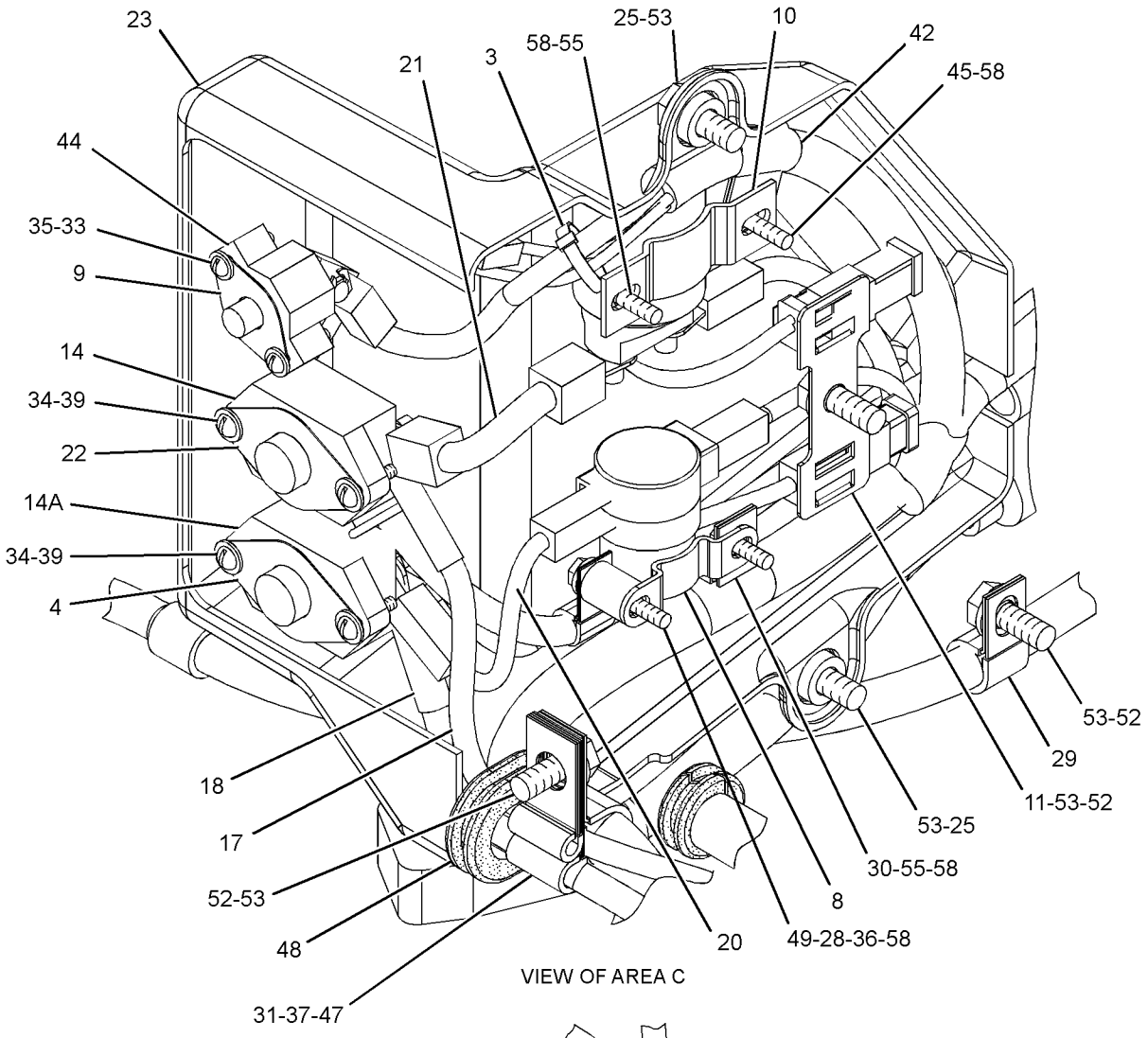


VIEW OF AREA C

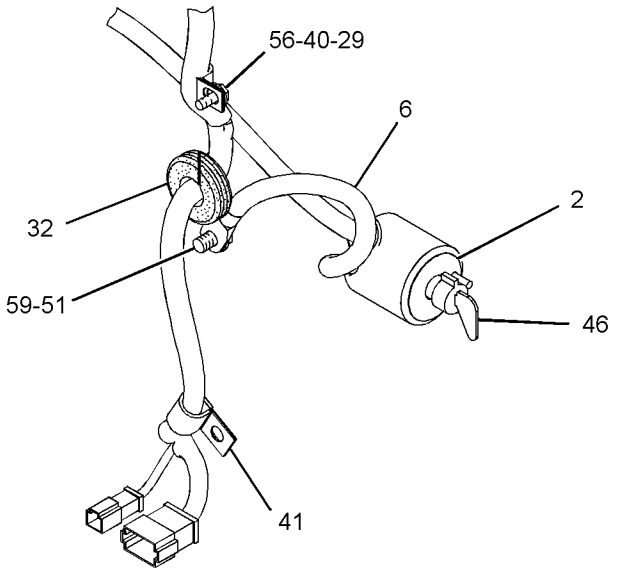


VIEW D-D

GRAPHIC #2 **<END>** g01288263

## *184-1299* WIRING GP-REAR–BACKUP ALARM, LIGHTS

**S/N: CCA1-UP**

**PART OF 159-4615 GENERAL AR**

**SMCS-1408** **i02587784**

| NOTE | REF NO | GRAPHIC REF | PART NUMBER | QTY | PART NAME 1 2 3 4 5 6 (PRODUCT LEVEL) | SEE PAGE |
|---|---|---|---|---|---|---|
| | 1 | 1 | **3S-2093** | 9 | STRAP-CABLE | |
| | 2 | 1 | **213-9100** | 1 | ALARM AS (BACKUP) | |
| | | 1 | **102-8802** | 1 | KIT-RECEPTACLE (2-PIN) | |
| | | | | | (INCLUDES RECEPTACLE AS & WEDGE) | |
| D | | 1 | **5P-5623** | | WIRE-ELECTRICAL (16-GA, BLACK) (0.4-M) | |
| | | 1 | **186-3735** | 2 | PIN-CONNECTOR (16-GA TO 18-GA) | |
| E | | 1 | **9X-1813** | | SLEEVE (31-CM) | |
| | 3 | 1 | **231-4527** | 1 | HARNESS AS-REAR LIGHTING | |
| | | 1 | **102-8802** | 2 | KIT-RECEPTACLE (2-PIN) | |
| | | 1 | **102-8801** | 1 | KIT-RECEPTACLE (12-PIN) | |
| | | | | | (EACH INCLUDES RECEPTACLE AS & WEDGE) | |
| | | 1 | **155-2260** | 2 | KIT-CONNECTING PLUG (3-PIN) | |
| | | 1 | **155-2270** | 3 | KIT-CONNECTING PLUG (2-PIN) | |
| | | | | | (EACH INCLUDES PLUG AS & WEDGE) | |
| | 4 | 1 | **130-5300** | 5 | CLIP | |
| Y | 5 | 1 | **135-0426** | 2 | LAMP GP-SIGNAL (24-VOLT, STOP, TAIL) | 196 |
| M | 6 | 1 | **5C-2890** | 6 | NUT (M6X1-THD) | |
| | 7 | 1 | **5P-4116** | 4 | WASHER-HARD (8.8X20.5X2-MM THK) | |
| M | 8 | 1 | **8T-4189** | 4 | BOLT (M8X1.25X20-MM) | |
| | 9 | 1 | **8T-4224** | 6 | WASHER-HARD (8.8X16X2-MM THK) | |

D-ORDER BY THE METER
E-ORDER BY THE CENTIMETER
M-METRIC PART
Y-SEPARATE ILLUSTRATION

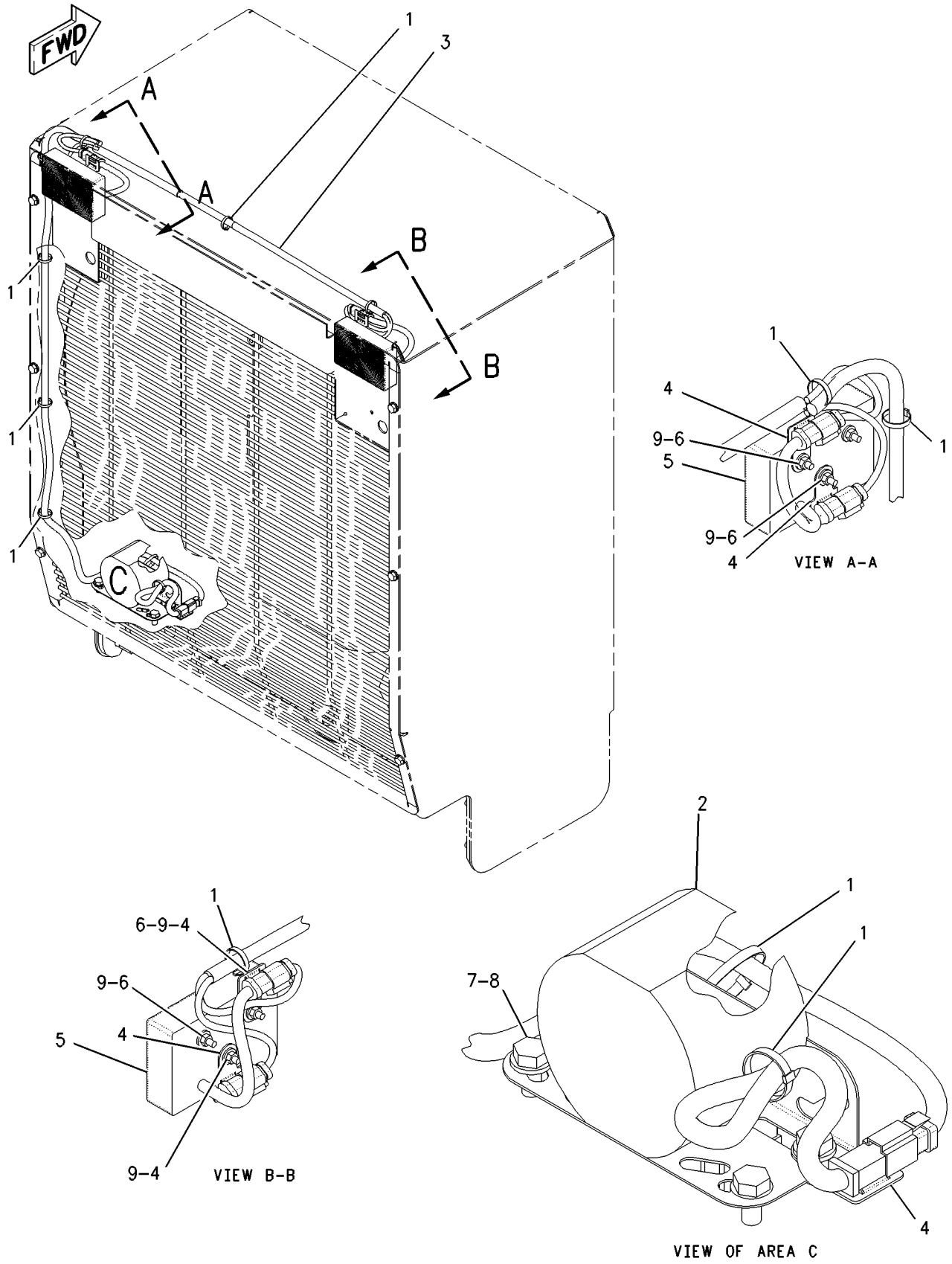


GRAPHIC #1 **<END>** g00940373

# ELECTRICAL AND STARTING SYSTEM

## *194-3200* WIRING GP-REAR–PLATFORM

**S/N: CCA1-1329, 1334-1336**
**PART OF 207-4453, 210-2044 CONVERSION AR-CERTIFICATION**
**AN ATTACHMENT**

**SMCS-1408** **i02252994**

| NOTE | REF NO | GRAPHIC REF | PART NUMBER | QTY | PART NAME 1 2 3 4 5 6 (PRODUCT LEVEL) | SEE PAGE |
|---|---|---|---|---|---|---|
| | 1 | 2 | **3E-7842** | 1 | RESISTOR AS | |
| | | 2 | **3E-3365** | 1 | WEDGE-RECEPTACLE LOCK (2-PIN) | |
| D | | 2 | **5P-5677** | | WIRE (18-GA, BLACK) (0.1-M) | |
| | | 2 | **6T-3610** | 1 | RESISTOR | |
| | | 2 | **186-3735** | 2 | PIN-CONNECTOR (16-GA TO 18-GA) | |
| | | 2 | **102-8802** | 1 | KIT-RECEPTACLE (2-PIN) | |
| | | | | | (INCLUDES RECEPTACLE AS & WEDGE) | |
| | 2 | 1,2 | **3S-2093** | 9 | STRAP-CABLE | |
| | 3 | 1 | **134-3355** | 1 | STRAP AS | |
| | 4 | 2 | **7K-1181** | 1 | STRAP-CABLE | |
| | 5 | 2 | **8W-3642** | 1 | CABLE AS | |
| | | 2 | **5P-0747** | | CABLE (00-GA, BLACK) (90-CM) | |
| | | 2 | **1S-7251** | 2 | TERMINAL-RING (FOR 1/2-IN BOLT) | |
| | | 2 | **9G-8909** | 1 | COVER-TERMINAL (BLACK) | |
| | 6 | 2 | **8W-8527** | 1 | SLEEVE | |
| | 7 | 1,2 | **8W-8528** | 4 | SLEEVE | |
| | 8 | 2 | **9L-1566** | 1 | SUPPORT | |
| | 9 | 2 | **9L-3059** | 1 | SUPPORT-TUBE | |
| | 10 | 2 | **9M-4594** | 2 | SPACER (0.406X0.875X0.75-IN THK) | |
| | 11 | 2 | **9U-2277** | 1 | CLIP AS | |
| | 12 | 2 | **061-7661** | 1 | CABLE AS | |
| E | | 2 | **5P-0747** | | CABLE (00-GA, BLACK) (42-CM) | |
| | | 2 | **1S-7251** | 2 | TERMINAL-RING (FOR 1/2-IN BOLT) | |
| | 13 | 2 | **106-8704** | 1 | SUPPRESSOR AS-ARC | |
| | | 2 | **3E-3365** | 1 | WEDGE-RECEPTACLE LOCK (2-PIN) | |
| | | 2 | **186-3735** | 2 | PIN-CONNECTOR (16-GA TO 18-GA) | |
| | | 2 | **102-8802** | 1 | KIT-RECEPTACLE (2-PIN) | |
| | | | | | (INCLUDES RECEPTACLE AS & WEDGE) | |
| | 14 | 2 | **118-7809** | 1 | PLATE | |
| | 15 | 1 | **123-3688** | 1 | PLATE AS | |
| | | 1 | **7L-0811** | 1 | DOWEL | |
| | 16 | 1 | **123-3689** | 1 | PLATE AS | |
| | 17 | 1 | **123-3692** | 1 | ARM | |
| | 18 | 1 | **123-3695** | 1 | PLATE | |
| | 19 | 2 | **139-2116** | 1 | SWITCH AS-TOGGLE (ENGINE SHUTDOWN) | |
| | 20 | 2 | **139-6122** | 1 | BOSS | |
| | 21 | 2 | **169-3292** | 1 | HARNESS AS-TRANSMISSION | |
| | | 2 | **155-2272** | 1 | PLUG AS-CONNECTOR (4-PIN) | |
| | | 2 | **110-6846** | 1 | PLUG AS-CONNECTOR (40-PIN) | |
| | | 2 | **9X-0141** | 1 | PLUG AS-CONNECTOR (40-PIN) | |
| | | 2 | **160-7689** | 1 | PLUG AS-CONNECTOR (70-PIN) | |
| | | 2 | **155-2255** | 3 | KIT-CONNECTING PLUG (12-PIN) | |
| | | 2 | **155-2274** | 1 | KIT-CONNECTING PLUG (6-PIN) | |
| | | 2 | **155-2260** | 1 | KIT-CONNECTING PLUG (3-PIN) | |
| | | 2 | **155-2270** | 3 | KIT-CONNECTING PLUG (2-PIN) | |
| | | | | | (EACH INCLUDES PLUG AS & WEDGE) | |
| | | 2 | **102-8802** | 2 | KIT-RECEPTACLE (2-PIN) | |
| | | 2 | **102-8803** | 2 | KIT-RECEPTACLE (3-PIN) | |
| | | 2 | **102-8805** | 1 | KIT-RECEPTACLE (6-PIN) | |
| | | 2 | **102-8801** | 2 | KIT-RECEPTACLE (12-PIN) | |
| | | | | | (EACH INCLUDES RECEPTACLE AS & WEDGE) | |
| | 22 | 2 | **169-5414** | 1 | CLIP | |
| | 23 | 2 | **178-0101** | 1 | CABLE AS (RED) | |
| D | | 2 | **6V-2722** | | TUBE-HEAT SHRINK (25.4-MM DIA) (0.1-M) | |
| E | | 2 | **5P-0761** | | CABLE (00-GA, RED) (87-CM) | |

*194-3200* **WIRING GP-REAR** ***(contd.)*** **i02252994**

| NOTE | REF NO | GRAPHIC REF | PART NUMBER | QTY | PART NAME 1 2 3 4 5 6 (PRODUCT LEVEL) | SEE PAGE |
|---|---|---|---|---|---|---|
| | | 2 | **1S-7252** | 1 | TERMINAL-RING (FOR 3/8-IN BOLT) | |
| | | 2 | **8N-0869** | 1 | COVER-TERMINAL (RED) | |
| | | 2 | **9X-9825** | 1 | TERMINAL-CABLE (FOR 1/2-IN BOLT) | |
| | 24 | 1 | **178-0102** | 1 | CABLE AS (RED) | |
| E | | 1 | **5P-0761** | | CABLE (00-GA, RED) (148-CM) | |
| | | 1 | **1S-7252** | 2 | TERMINAL-RING (FOR 3/8-IN BOLT) | |
| | | 1 | **9X-6932** | 2 | BOOT-TERMINAL | |
| | 25 | 2 | **179-2187** | 1 | HARNESS AS-REAR CHASSIS | |
| | | 2 | **127-5483** | 5 | PLUG AS-CONNECTOR (1-PIN) | |
| | | 2 | **127-5485** | 1 | PLUG AS-CONNECTOR (1-PIN) | |
| | | 2 | **155-2255** | 1 | KIT-CONNECTING PLUG (12-PIN) | |
| | | 2 | **155-2270** | 2 | KIT-CONNECTING PLUG (2-PIN) | |
| | | | | | (EACH INCLUDES PLUG AS & WEDGE) | |
| | | 2 | **102-8802** | 1 | KIT-RECEPTACLE (2-PIN) | |
| | | 2 | **102-8805** | 1 | KIT-RECEPTACLE (6-PIN) | |
| | | | | | (EACH INCLUDES RECEPTACLE AS & WEDGE) | |
| | 26 | 1 | **187-1008** | 1 | SENDER AS-POSITION (ARTICULATION) | |
| | | 1 | **3E-3365** | 1 | WEDGE-RECEPTACLE LOCK (2-PIN) | |
| E | | 1 | **9X-1813** | | SLEEVE (15-CM) | |
| | | 1 | **102-8802** | 1 | KIT-RECEPTACLE (2-PIN) | |
| | | | | | (INCLUDES RECEPTACLE AS & WEDGE) | |
| | | 1 | **186-3735** | 2 | PIN-CONNECTOR (16-GA TO 18-GA) | |
| | 27 | 2 | **195-0434** | 1 | BRACKET | |
| | 28 | 2 | **196-2970** | 1 | HARNESS AS-REAR LIGHTING | |
| | | 2 | **155-2255** | 2 | KIT-CONNECTING PLUG (12-PIN) | |
| | | 2 | **155-2270** | 5 | KIT-CONNECTING PLUG (2-PIN) | |
| | | | | | (EACH INCLUDES PLUG AS & WEDGE) | |
| | | 2 | **102-8802** | 2 | KIT-RECEPTACLE (2-PIN) | |
| | | | | | (EACH INCLUDES RECEPTACLE AS & WEDGE) | |
| | 29 | 2 | **197-1459** | 1 | PLATE | |
| | 30 | 2 | **033-8248** | 1 | CLIP | |
| | 31 | 2 | **109-0361** | 1 | FILM-INSTRUCTION (ENGINE SHUTDOWN) | |
| | 32 | 2 | **115-3073** | 1 | CLIP AS-CONNECTING | |
| | 33 | 1,2 | **130-5300** | 5 | CLIP | |
| | 34 | 2 | **130-5301** | 1 | CLIP | |
| | 35 | 2 | **174-5907** | 7 | CLIP | |
| | 36 | 2 | **1S-0994** | 1 | CLIP | |
| | 37 | 2 | **1S-0996** | 2 | CLIP | |
| Y | 38 | 2 | **3E-0154** | 1 | SWITCH GP-MAGNETIC (SECONDARY STEERING RELAY) | 301 |
| | 39 | 2 | **3E-5169** | 1 | GUARD-SWITCH | |
| | 40 | 2 | **4D-1432** | 2 | SPACER (1.8-IN THK) | |
| | 41 | 1 | **4D-7388** | 2 | CLIP | |
| | 42 | 2 | **4D-7794** | 4 | CLIP | |
| | 43 | 2 | **4K-8864** | 1 | CLIP | |
| | 44 | 1 | **4S-4455** | 3 | CLIP | |
| | 45 | 1 | **5M-3062** | 1 | BOLT (3/8-16X0.75-IN) | |
| | 46 | 2 | **5P-1075** | 2 | WASHER-HARD (10.2X22.5X3-MM THK) | |
| | 47 | 2 | **5P-4116** | 1 | WASHER-HARD (8.8X20.5X2-MM THK) | |
| | 48 | 1 | **5P-8167** | 2 | BOLT (3/8-16X0.625-IN) | |
| | 49 | 2 | **6D-4244** | 3 | CLIP | |
| | 50 | 1,2 | **6D-4246** | 3 | CLIP | |
| | 51 | 2 | **6V-1322** | 4 | BOLT (1/4-20X0.375-IN) | |
| | 52 | 1 | **6V-6893** | 3 | BOLT (6-32X0.375-IN) | |
| | 53 | 1 | **6V-8801** | 1 | NUT (3/8-16-THD) | |
| | 54 | 2 | **7C-4354** | 6 | CLIP | |
| M | 55 | 2 | **7X-2537** | 1 | BOLT (M8X1.25X35-MM) | |
| | 56 | 2 | **7X-7729** | 1 | WASHER (11X25X3-MM THK) | |
| | 57 | 2 | **8D-9671** | 1 | CLIP | |
| | 58 | 2 | **8M-2773** | 3 | CLIP | |

*194-3200* **WIRING GP-REAR** ***(contd.)*** **i02252994**

| NOTE | REF NO | GRAPHIC REF | PART NUMBER | QTY | PART NAME 1 2 3 4 5 6 (PRODUCT LEVEL) | SEE PAGE |
|---|---|---|---|---|---|---|
| | 59 | 1,2 | **8T-4121** | 34 | WASHER-HARD (11X21X2.5-MM THK) | |
| M | 60 | 2 | **8T-4133** | 6 | NUT (M10X1.5-THD) | |
| M | 61 | 2 | **8T-4136** | 5 | BOLT (M10X1.5X25-MM) | |
| M | 62 | 1,2 | **8T-4137** | 21 | BOLT (M10X1.5X20-MM) | |
| M | 63 | 2 | **8T-4179** | 3 | BOLT (M12X1.75X20-MM) | |
| M | 64 | 2 | **8T-4185** | 1 | BOLT (M10X1.5X50-MM) | |
| M | 65 | 1 | **8T-4191** | 2 | BOLT (M10X1.5X16-MM) | |
| M | 66 | 2 | **8T-4196** | 1 | BOLT (M10X1.5X35-MM) | |
| M | 67 | 2 | **8T-4200** | 1 | BOLT (M8X1.25X16-MM) | |
| | 68 | 1,2 | **8T-4205** | 6 | WASHER-HARD (7.2X14.5X2-MM THK) | |
| | 69 | 2 | **8T-4223** | 3 | WASHER-HARD (13.5X25.5X3-MM THK) | |
| | 70 | 2 | **8T-4224** | 3 | WASHER-HARD (8.8X16X2-MM THK) | |
| | 71 | 1 | **8T-4226** | 1 | WASHER-PLATED (10.5X45X3-MM THK) | |
| | 72 | 1 | **8T-4896** | 3 | WASHER-HARD (10.2X18.5X2.5-MM THK) | |
| M | 73 | 2 | **8T-6870** | 2 | BOLT (M8X1.25X70-MM) | |
| | 74 | 1 | **8T-9364** | 2 | BOLT (1/4-20X0.625-IN) | |
| | 75 | 1,2 | **8W-8909** | 3 | SLEEVE | |
| | 76 | 2 | **8X-5489** | 1 | SLEEVE | |
| | 77 | 2 | **139-6857** | 1 | PLATE | |
| M | 78 | 2 | **8T-4195** | 1 | BOLT (M10X1.5X30-MM) | |

D-ORDER BY THE METER
E-ORDER BY THE CENTIMETER
M-METRIC PART
Y-SEPARATE ILLUSTRATION

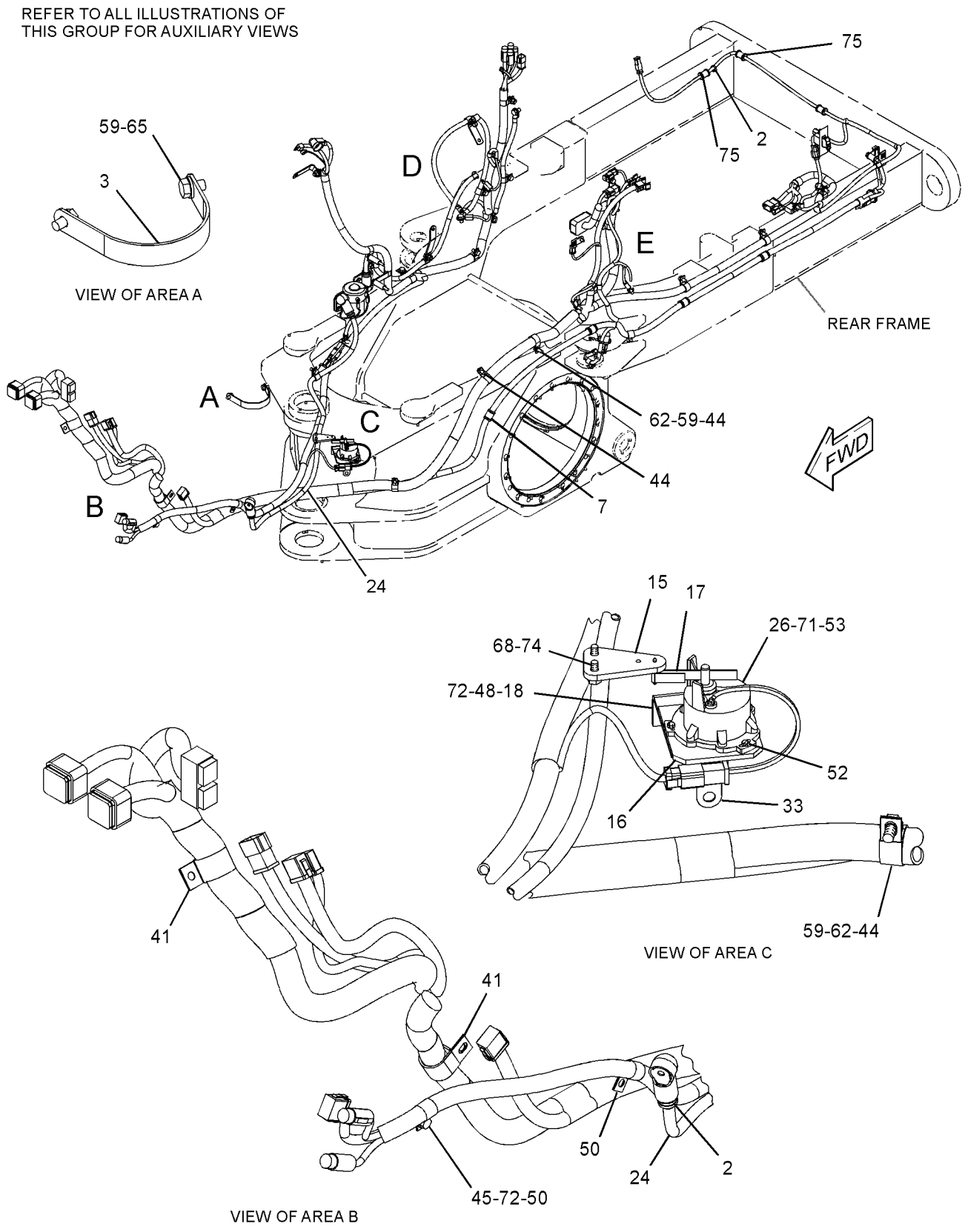


GRAPHIC #1 g01187932

*194-3200* **WIRING GP-REAR** *(contd.)* **i02252994**

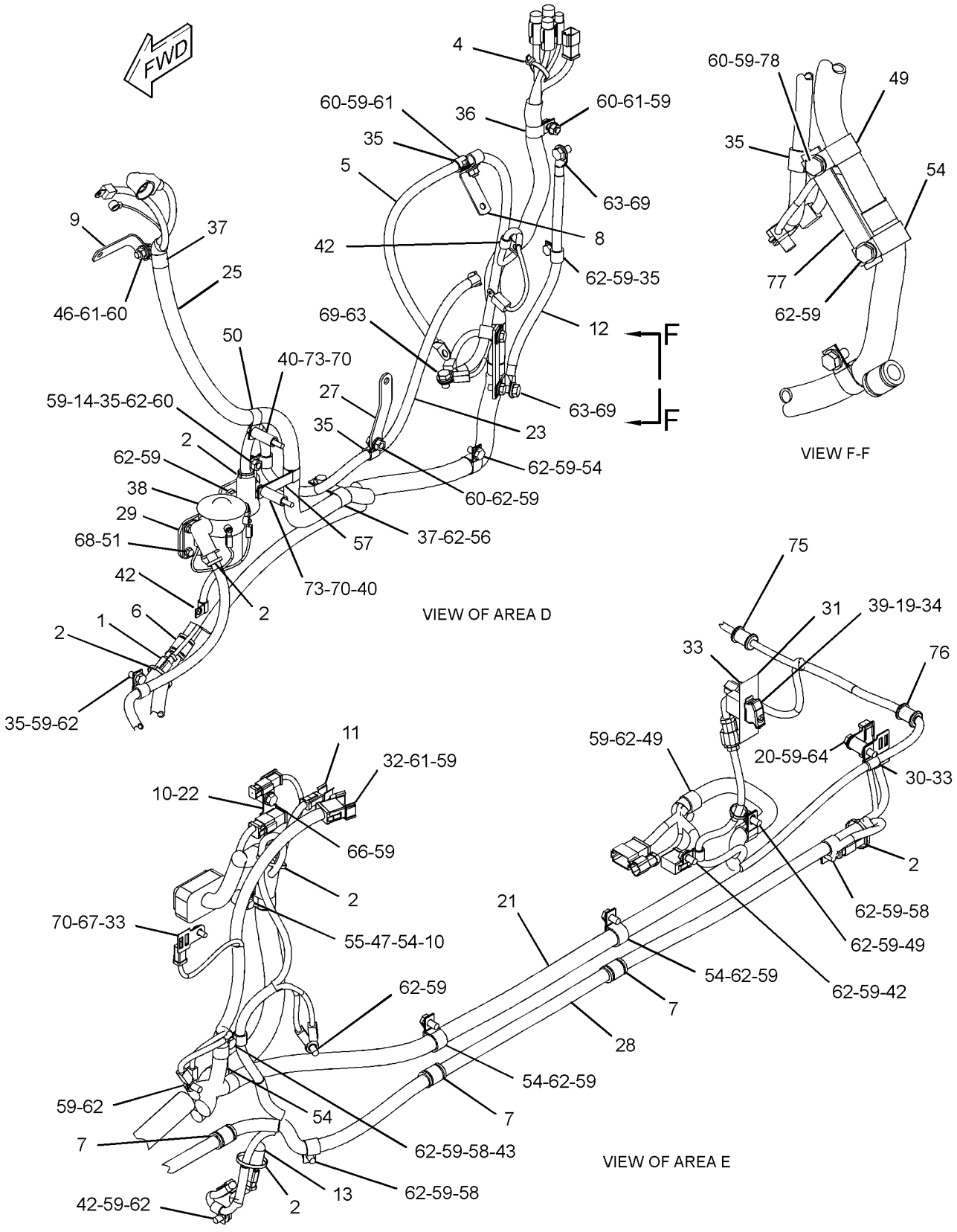


GRAPHIC #2 **<END>** g01138982

## *194-3200* WIRING GP-REAR–PLATFORM

**S/N: CCA1330-1333, 1337-UP**

**PART OF 207-4453, 210-2044 CONVERSION AR-CERTIFICATION**

**AN ATTACHMENT**

**SMCS-1408** **i02304023**

| NOTE | REF NO | GRAPHIC REF | PART NUMBER | QTY | PART NAME 1 2 3 4 5 6 (PRODUCT LEVEL) | SEE PAGE |
|---|---|---|---|---|---|---|
| | 1 | 2 | **3E-7842** | 1 | RESISTOR AS | |
| | | 2 | **3E-3365** | 1 | WEDGE-RECEPTACLE LOCK (2-PIN) | |
| D | | 2 | **5P-5677** | | WIRE (18-GA, BLACK) (0.1-M) | |
| | | 2 | **6T-3610** | 1 | RESISTOR | |
| | | 2 | **186-3735** | 2 | PIN-CONNECTOR (16-GA TO 18-GA) | |
| | | 2 | **102-8802** | 1 | KIT-RECEPTACLE (2-PIN) | |
| | | | | | (INCLUDES RECEPTACLE AS & WEDGE) | |
| | 2 | 1,2 | **3S-2093** | 9 | STRAP-CABLE | |
| | 3 | 1 | **134-3355** | 1 | STRAP AS | |
| | 4 | 2 | **7K-1181** | 1 | STRAP-CABLE | |
| | 5 | 2 | **8W-3642** | 1 | CABLE AS | |
| | | 2 | **5P-0747** | | CABLE (00-GA, BLACK) (90-CM) | |
| | | 2 | **1S-7251** | 2 | TERMINAL-RING (FOR 1/2-IN BOLT) | |
| | | 2 | **9G-8909** | 1 | COVER-TERMINAL (BLACK) | |
| | 6 | 2 | **8W-8527** | 1 | SLEEVE | |
| | 7 | 1,2 | **8W-8528** | 4 | SLEEVE | |
| | 8 | 2 | **9L-1566** | 1 | SUPPORT | |
| | 9 | 2 | **9L-3059** | 1 | SUPPORT-TUBE | |
| | 10 | 2 | **9M-4594** | 2 | SPACER (0.406X0.875X0.75-IN THK) | |
| | 11 | 2 | **9U-2277** | 1 | CLIP AS | |
| | 12 | 2 | **061-7661** | 1 | CABLE AS | |
| E | | 2 | **5P-0747** | | CABLE (00-GA, BLACK) (42-CM) | |
| | | 2 | **1S-7251** | 1 | TERMINAL-RING (FOR 1/2-IN BOLT) | |
| | 13 | 2 | **106-8704** | 1 | SUPPRESSOR AS-ARC | |
| | | 2 | **3E-3365** | 1 | WEDGE-RECEPTACLE LOCK (2-PIN) | |
| | | 2 | **186-3735** | 2 | PIN-CONNECTOR (16-GA TO 18-GA) | |
| | | 2 | **102-8802** | 1 | KIT-RECEPTACLE (2-PIN) | |
| | | | | | (INCLUDES RECEPTACLE AS & WEDGE) | |
| | 14 | 2 | **118-7809** | 1 | PLATE | |
| | 15 | 1 | **123-3688** | 1 | PLATE AS | |
| | | 1 | **7L-0811** | 1 | DOWEL | |
| | 16 | 1 | **123-3689** | 1 | PLATE AS | |
| | 17 | 1 | **123-3692** | 1 | ARM | |
| | 18 | 1 | **123-3695** | 1 | PLATE | |
| | 19 | 2 | **139-2116** | 1 | SWITCH AS-TOGGLE (ENGINE SHUTDOWN) | |
| | 20 | 2 | **139-6122** | 1 | BOSS | |
| C | 21 | 2 | **254-9243** | 1 | HARNESS AS-TRANSMISSION | |
| | | 2 | **102-8802** | 2 | KIT-RECEPTACLE (2-PIN) | |
| | | 2 | **102-8803** | 2 | KIT-RECEPTACLE (3-PIN) | |
| | | 2 | **102-8805** | 1 | KIT-RECEPTACLE (6-PIN) | |
| | | 2 | **102-8801** | 2 | KIT-RECEPTACLE (12-PIN) | |
| | | | | | (EACH INCLUDES RECEPTACLE AS & WEDGE) | |
| | | 2 | **155-2255** | 3 | KIT-CONNECTING PLUG (12-PIN) | |
| | | 2 | **155-2260** | 1 | KIT-CONNECTING PLUG (3-PIN) | |
| | | 2 | **155-2270** | 3 | KIT-CONNECTING PLUG (2-PIN) | |
| | | 2 | **155-2274** | 2 | KIT-CONNECTING PLUG (6-PIN) | |
| | | | | | (EACH INCLUDES PLUG AS & WEDGE) | |
| | | 2 | **160-7689** | 1 | PLUG AS-CONNECTOR (70-PIN) | |
| | | 2 | **110-6846** | 1 | PLUG AS-CONNECTOR (40-PIN) | |
| | | 2 | **9X-0141** | 1 | PLUG AS-CONNECTOR (40-PIN) | |
| | | 2 | **110-6848** | 1 | PLUG AS-CONNECTOR (40-PIN) | |
| | | 2 | **126-1774** | 1 | COVER | |
| | 22 | 2 | **169-5414** | 1 | CLIP | |
| | 23 | 2 | **178-0101** | 1 | CABLE AS (RED) | |
| D | | 2 | **6V-2722** | | TUBE-HEAT SHRINK (25.4-MM DIA) (0.1-M) | |

*194-3200* **WIRING GP-REAR** *(contd.)* **i02304023**

| NOTE | REF NO | GRAPHIC REF | PART NUMBER | QTY | PART NAME 1 2 3 4 5 6 (PRODUCT LEVEL) | SEE PAGE |
|---|---|---|---|---|---|---|
| E | | 2 | **5P-0761** | | CABLE (00-GA, RED) (87-CM) | |
| | | 2 | **1S-7252** | 1 | TERMINAL-RING (FOR 3/8-IN BOLT) | |
| | | 2 | **8N-0869** | 1 | COVER-TERMINAL (RED) | |
| | | 2 | **9X-9825** | 1 | TERMINAL-CABLE (FOR 1/2-IN BOLT) | |
| | 24 | 1 | **178-0102** | 1 | CABLE AS (RED) | |
| E | | 1 | **5P-0761** | | CABLE (00-GA, RED) (148-CM) | |
| | | 1 | **1S-7252** | 2 | TERMINAL-RING (FOR 3/8-IN BOLT) | |
| | | 1 | **9X-6932** | 2 | BOOT-TERMINAL | |
| | 25 | 2 | **179-2187** | 1 | HARNESS AS-REAR CHASSIS | |
| | | 2 | **127-5483** | 5 | PLUG AS-CONNECTOR (1-PIN) | |
| | | 2 | **127-5485** | 1 | PLUG AS-CONNECTOR (1-PIN) | |
| | | 2 | **155-2255** | 1 | KIT-CONNECTING PLUG (12-PIN) | |
| | | 2 | **155-2270** | 2 | KIT-CONNECTING PLUG (2-PIN) | |
| | | | | | (EACH INCLUDES PLUG AS & WEDGE) | |
| | | 2 | **102-8802** | 1 | KIT-RECEPTACLE (2-PIN) | |
| | | 2 | **102-8805** | 1 | KIT-RECEPTACLE (6-PIN) | |
| | | | | | (EACH INCLUDES RECEPTACLE AS & WEDGE) | |
| | 26 | 1 | **187-1008** | 1 | SENDER AS-POSITION (ARTICULATION) | |
| | | 1 | **3E-3365** | 1 | WEDGE-RECEPTACLE LOCK (2-PIN) | |
| E | | 1 | **9X-1813** | | SLEEVE (15-CM) | |
| | | 1 | **102-8802** | 1 | KIT-RECEPTACLE (2-PIN) | |
| | | | | | (INCLUDES RECEPTACLE AS & WEDGE) | |
| | | 1 | **186-3735** | 2 | PIN-CONNECTOR (16-GA TO 18-GA) | |
| | 27 | 2 | **195-0434** | 1 | BRACKET | |
| | 28 | 2 | **196-2970** | 1 | HARNESS AS-REAR LIGHTING | |
| | | 2 | **155-2255** | 2 | KIT-CONNECTING PLUG (12-PIN) | |
| | | 2 | **155-2270** | 5 | KIT-CONNECTING PLUG (2-PIN) | |
| | | | | | (EACH INCLUDES PLUG AS & WEDGE) | |
| | | 2 | **102-8802** | 2 | KIT-RECEPTACLE (2-PIN) | |
| | | | | | (EACH INCLUDES RECEPTACLE AS & WEDGE) | |
| | 29 | 2 | **197-1459** | 1 | PLATE | |
| | 30 | 2 | **033-8248** | 1 | CLIP | |
| | 31 | 2 | **109-0361** | 1 | FILM-INSTRUCTION (ENGINE SHUTDOWN) | |
| | 32 | 2 | **115-3073** | 1 | CLIP AS-CONNECTING | |
| | 33 | 1,2 | **130-5300** | 5 | CLIP | |
| | 34 | 2 | **130-5301** | 1 | CLIP | |
| | 35 | 2 | **174-5907** | 7 | CLIP | |
| | 36 | 2 | **1S-0994** | 1 | CLIP | |
| | 37 | 2 | **1S-0996** | 2 | CLIP | |
| Y | 38 | 2 | **3E-0154** | 1 | SWITCH GP-MAGNETIC (SECONDARY STEERING RELAY) | 301 |
| | 39 | 2 | **3E-5169** | 1 | GUARD-SWITCH | |
| | 40 | 2 | **4D-1432** | 2 | SPACER (1.8-IN THK) | |
| | 41 | 1 | **4D-7388** | 2 | CLIP | |
| | 42 | 2 | **4D-7794** | 4 | CLIP | |
| | 43 | 2 | **4K-8864** | 1 | CLIP | |
| | 44 | 1 | **4S-4455** | 3 | CLIP | |
| | 45 | 1 | **5M-3062** | 1 | BOLT (3/8-16X0.75-IN) | |
| | 46 | 2 | **5P-1075** | 2 | WASHER-HARD (10.2X22.5X3-MM THK) | |
| | 47 | 2 | **5P-4116** | 1 | WASHER-HARD (8.8X20.5X2-MM THK) | |
| | 48 | 1 | **5P-8167** | 2 | BOLT (3/8-16X0.625-IN) | |
| | 49 | 2 | **6D-4244** | 3 | CLIP | |
| | 50 | 1,2 | **6D-4246** | 3 | CLIP | |
| | 51 | 2 | **6V-1322** | 4 | BOLT (1/4-20X0.375-IN) | |
| | 52 | 1 | **6V-6893** | 3 | BOLT (6-32X0.375-IN) | |
| | 53 | 1 | **6V-8801** | 1 | NUT (3/8-16-THD) | |
| | 54 | 2 | **7C-4354** | 6 | CLIP | |
| M | 55 | 2 | **7X-2537** | 1 | BOLT (M8X1.25X35-MM) | |
| | 56 | 2 | **7X-7729** | 1 | WASHER (11X25X3-MM THK) | |
| | 57 | 2 | **8D-9671** | 1 | CLIP | |

*194-3200* **WIRING GP-REAR** ***(contd.)*** **i02304023**

| NOTE | REF NO | GRAPHIC REF | PART NUMBER | QTY | PART NAME 1 2 3 4 5 6 (PRODUCT LEVEL) | SEE PAGE |
|---|---|---|---|---|---|---|
| | 58 | 2 | **8M-2773** | 3 | CLIP | |
| | 59 | 1,2 | **8T-4121** | 34 | WASHER-HARD (11X21X2.5-MM THK) | |
| M | 60 | 2 | **8T-4133** | 6 | NUT (M10X1.5-THD) | |
| M | 61 | 2 | **8T-4136** | 5 | BOLT (M10X1.5X25-MM) | |
| M | 62 | 1,2 | **8T-4137** | 21 | BOLT (M10X1.5X20-MM) | |
| M | 63 | 2 | **8T-4179** | 3 | BOLT (M12X1.75X20-MM) | |
| M | 64 | 2 | **8T-4185** | 1 | BOLT (M10X1.5X50-MM) | |
| M | 65 | 1 | **8T-4191** | 2 | BOLT (M10X1.5X16-MM) | |
| M | 66 | 2 | **8T-4196** | 1 | BOLT (M10X1.5X35-MM) | |
| M | 67 | 2 | **8T-4200** | 1 | BOLT (M8X1.25X16-MM) | |
| | 68 | 1,2 | **8T-4205** | 6 | WASHER-HARD (7.2X14.5X2-MM THK) | |
| | 69 | 2 | **8T-4223** | 3 | WASHER-HARD (13.5X25.5X3-MM THK) | |
| | 70 | 2 | **8T-4224** | 3 | WASHER-HARD (8.8X16X2-MM THK) | |
| | 71 | 1 | **8T-4226** | 1 | WASHER-PLATED (10.5X45X3-MM THK) | |
| | 72 | 1 | **8T-4896** | 3 | WASHER-HARD (10.2X18.5X2.5-MM THK) | |
| M | 73 | 2 | **8T-6870** | 2 | BOLT (M8X1.25X70-MM) | |
| | 74 | 1 | **8T-9364** | 2 | BOLT (1/4-20X0.625-IN) | |
| | 75 | 1,2 | **8W-8909** | 3 | SLEEVE | |
| | 76 | 2 | **8X-5489** | 1 | SLEEVE | |
| | 77 | 2 | **139-6857** | 1 | PLATE | |
| M | 78 | 2 | **8T-4195** | 1 | BOLT (M10X1.5X30-MM) | |

C-CHANGE FROM PREVIOUS TYPE
D-ORDER BY THE METER
E-ORDER BY THE CENTIMETER
M-METRIC PART
Y-SEPARATE ILLUSTRATION

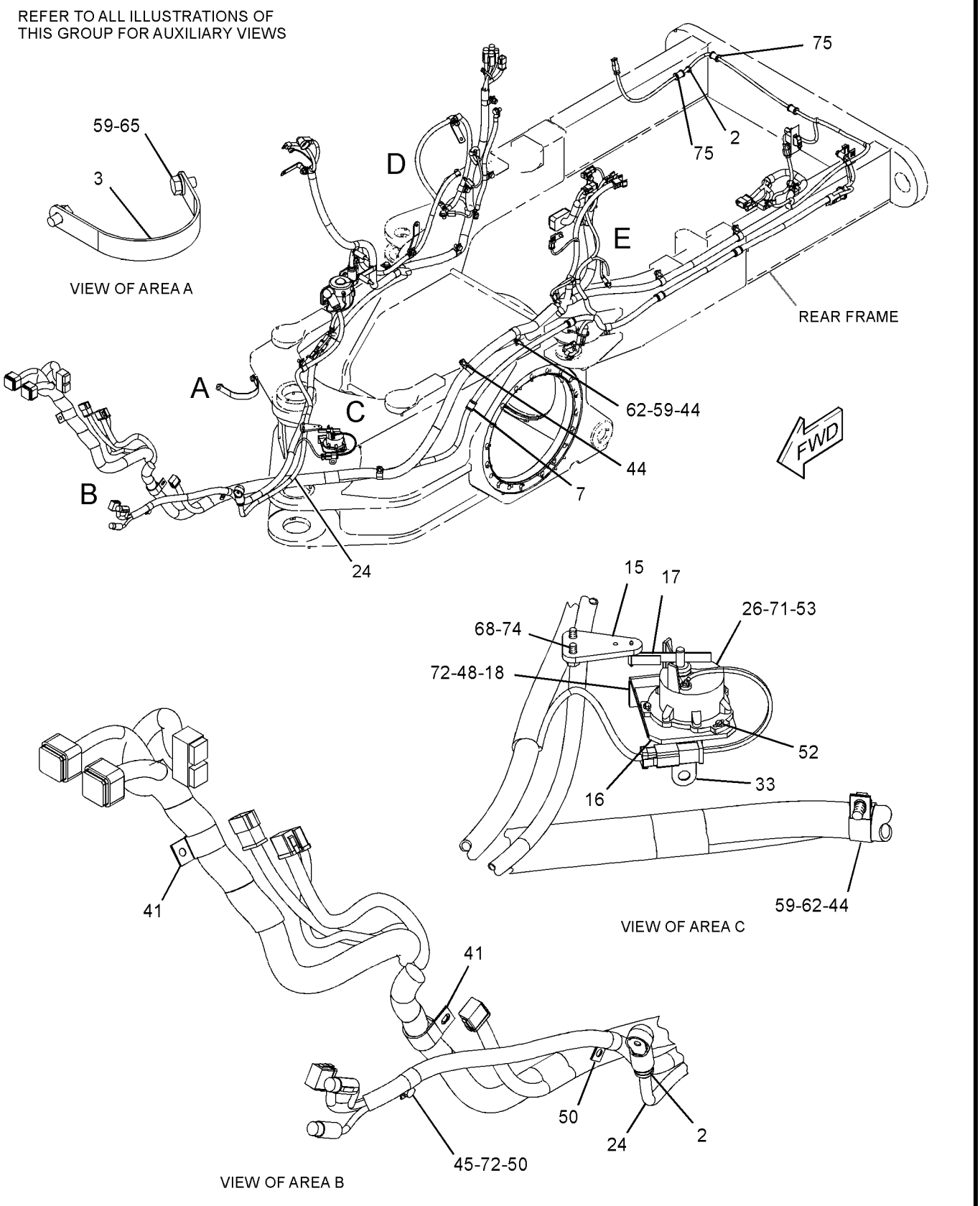


GRAPHIC #1 g01187932

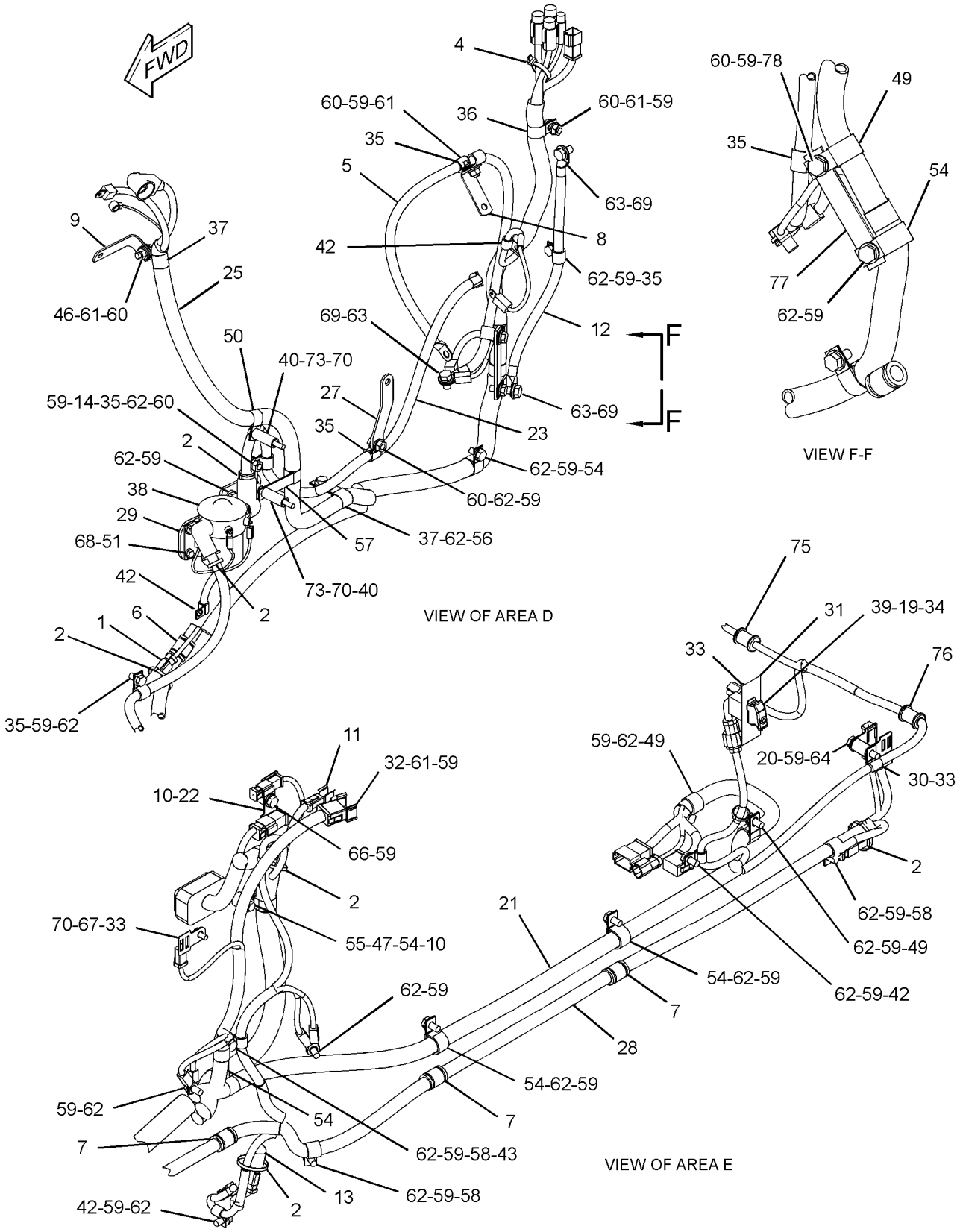


GRAPHIC #2 **<END>** g01138982

# *251-1080* WIRING GP-REAR

**S/N: CCA1611-UP**
**PART OF 247-6453 GRADE CONTROL AR**
**AN ATTACHMENT**

**SMCS-1408** **i02383658**

| NOTE | REF NO | GRAPHIC REF | PART NUMBER | QTY | PART NAME 1 2 3 4 5 6 (PRODUCT LEVEL) | SEE PAGE |
|---|---|---|---|---|---|---|
| C | 1 | 1 | **3S-2093** | 6 | STRAP-CABLE | |
| | 2 | 1 | **125-6390** | 1 | PLATE-INFORMATION (ENGINE) | |
| | 3 | 1 | **246-1682** | 1 | WIRE AS | |
| | 4 | 1 | **132-5789** | 1 | CLIP | |
| C | 5 | 1 | **263-9458** | 1 | WIRE AS | |
| | 6 | 1 | **4B-4863** | 2 | WASHER (4.7X11X1.2-MM THK) | |
| C | 7 | 1 | **4D-7794** | 1 | CLIP | |
| | 8 | 1 | **6T-3644** | 1 | CIRCUIT BREAKER GP (20-AMPERE) (GRADE CONTROL) | |
| | | 1 | **6V-8376** | 2 | SCREW-MACHINE (8-32X0.25-IN) | |
| | | 1 | **9B-7233** | 2 | LOCKWASHER | |
| | 9 | 1 | **9M-4704** | 2 | BOLT (8-32X1-IN) | |

C-CHANGE FROM PREVIOUS TYPE

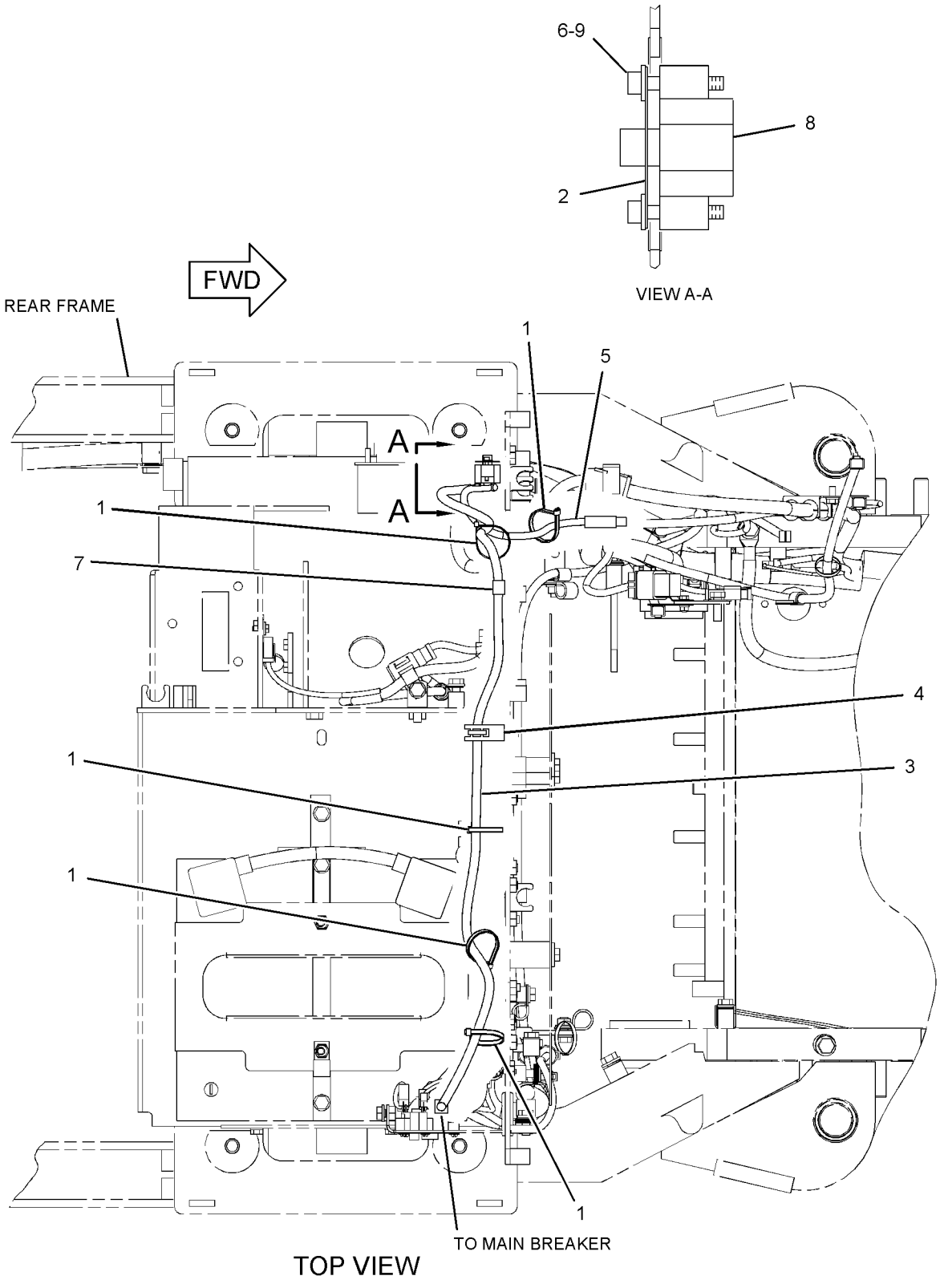


TOP VIEW

GRAPHIC #1 **<END>** g01239142

# *193-8253* WIRING GP-REAR LIGHTING–

**BACKUP ALARM, LIGHTS, EU**

**S/N: CCA1-213**

**PART OF 191-9260 COOLING AR**

**AN ATTACHMENT**

**SMCS-1408, 1429** **i02587795**

| NOTE | REF NO | GRAPHIC REF | PART NUMBER | QTY | PART NAME 1 2 3 4 5 6 (PRODUCT LEVEL) | SEE PAGE |
|---|---|---|---|---|---|---|
| | 1 | 1 | **3S-2093** | 12 | STRAP-CABLE | |
| | 2 | 1 | *5C-9930* | 1 | LAMP GP (STOP, TURN, TAIL, RH) | |
| | | 1 | **4V-8116** | 1 | LAMP (24-VOLT, 5-WATT) | |
| | | 1 | **5C-9584** | 2 | LAMP (24-VOLT, 21-WATT) | |
| | | 1 | **6C-0109** | 1 | LAMP AS | |
| | | 1 | **5M-6725** | 1 | SCREW-TAPPING (8-18X0.625-IN) | |
| | | 1 | **8L-5828** | 1 | SCREW-TAPPING (8-18X0.875-IN) | |
| | | 1 | **188-9694** | 1 | LENS | |
| | | 1 | **188-9695** | 1 | SEAL | |
| | 3 | 1 | *5C-9931* | 1 | LAMP GP (STOP, TAIL, TURN, LH) | |
| | | 1 | **4V-8116** | 1 | LAMP (24-VOLT, 5-WATT) | |
| | | 1 | **5C-9584** | 2 | LAMP (24-VOLT, 21-WATT) | |
| | | 1 | **6C-0110** | 1 | LAMP AS | |
| | | 1 | **5M-6725** | 1 | SCREW-TAPPING (8-18X0.625-IN) | |
| | | 1 | **8L-5828** | 1 | SCREW-TAPPING (8-18X0.875-IN) | |
| | | 1 | **188-9694** | 1 | LENS | |
| | | 1 | **188-9695** | 1 | SEAL | |
| | 4 | 1 | **6C-5233** | 1 | BRACKET AS | |
| | 5 | 1 | **6C-5234** | 1 | BRACKET AS | |
| | 6 | 1 | **7V-7835** | 1 | ARM AS | |
| | | 1 | **5C-9563** | 1 | SPACER (11.02X26.67X55-MM THK) | |
| | 7 | 1 | **7V-7838** | 1 | ARM AS | |
| | | 1 | **5C-9563** | 1 | SPACER (11.02X26.67X55-MM THK) | |
| | 8 | 1 | **7X-2393** | 4 | BUMPER-CONICAL | |
| | 9 | 1 | **9S-1316** | 2 | SPRING | |
| | 10 | 1 | **112-5555** | 2 | ROD | |
| | 11 | 1 | **156-0283** | 2 | WASHER-HARD (8.4X35X2.5-MM THK) | |
| | 12 | 1 | **196-4609** | 1 | HARNESS AS-REAR LIGHTING | |
| | | 1 | **102-8802** | 2 | KIT-RECEPTACLE (2-PIN) | |
| | | 1 | **102-8801** | 1 | KIT-RECEPTACLE (12-PIN) | |
| | | | | | (EACH INCLUDES RECEPTACLE AS & WEDGE) | |
| | | 1 | **155-2270** | 2 | KIT-CONNECTING PLUG (2-PIN) | |
| | | | | | (EACH INCLUDES PLUG AS & WEDGE) | |
| | 13 | 1 | **208-7933** | 2 | PLATE | |
| | 15 | 1 | **2V-3216** | 2 | CLIP | |
| | 16 | 1 | **3B-5301** | 2 | PIN-COTTER | |
| M | 17 | 1 | **5C-2890** | 6 | NUT (M6X1-THD) | |
| M | 18 | 1 | **5C-7261** | 4 | NUT (M8X1.25-THD) | |
| | 19 | 1 | **8D-5641** | 4 | BEARING | |
| | 20 | 1 | **8T-4121** | 12 | WASHER-HARD (11X21X2.5-MM THK) | |
| | 21 | 1 | **8T-4122** | 4 | WASHER-HARD (17X32X3.5-MM THK) | |
| M | 22 | 1 | **8T-4136** | 8 | BOLT (M10X1.5X25-MM) | |
| M | 23 | 1 | **8T-4171** | 2 | BOLT (M6X1X12-MM) | |
| M | 24 | 1 | **8T-4173** | 2 | BOLT (M16X2X110-MM) | |
| | 25 | 1 | **8T-4205** | 6 | WASHER-HARD (7.2X14.5X2-MM THK) | |
| | 26 | 1 | **8T-4223** | 2 | WASHER-HARD (13.5X25.5X3-MM THK) | |
| | 27 | 1 | **8T-4224** | 4 | WASHER-HARD (8.8X16X2-MM THK) | |
| M | 28 | 1 | **8T-4778** | 2 | LOCKNUT (M16X2-THD) | |
| | 29 | 1 | **9M-5870** | 2 | GROMMET | |
| M | 30 | 1 | **8T-4133** | 2 | NUT (M10X1.5-THD) | |
| M | 31 | 1 | **8T-4198** | 2 | BOLT (M10X1.5X100-MM) | |
| Y | 32 | 1 | **123-6449** | 1 | ALARM GP (BACKUP) | 140 |
| | 33 | 1 | **130-5300** | 3 | CLIP | |
| | 34 | 1 | **160-1744** | 2 | BRACKET | |

## *193-8253* **WIRING GP-REAR LIGHTING** *(contd. )* **i02587795**

| NOTE | REF NO | GRAPHIC REF | PART NUMBER | QTY | PART NAME 1 2 3 4 5 6 (PRODUCT LEVEL) | SEE PAGE |
|---|---|---|---|---|---|---|
| | 35 | 1 | **213-1413** | 1 | HARNESS AS-REAR LIGHTING (RH) | |
| | | 1 | **102-8804** | 1 | KIT-RECEPTACLE (4-PIN) | |
| | | | | | (INCLUDES RECEPTACLE AS & WEDGE) | |
| | 36 | 1 | **213-1414** | 1 | HARNESS AS-REAR LIGHTING (LH) | |
| | | 1 | **102-8804** | 1 | KIT-RECEPTACLE (4-PIN) | |
| | | | | | (INCLUDES RECEPTACLE AS & WEDGE) | |

M-METRIC PART
Y-SEPARATE ILLUSTRATION

*193-8253* **WIRING GP-REAR LIGHTING** *(contd. )* **i02587795**

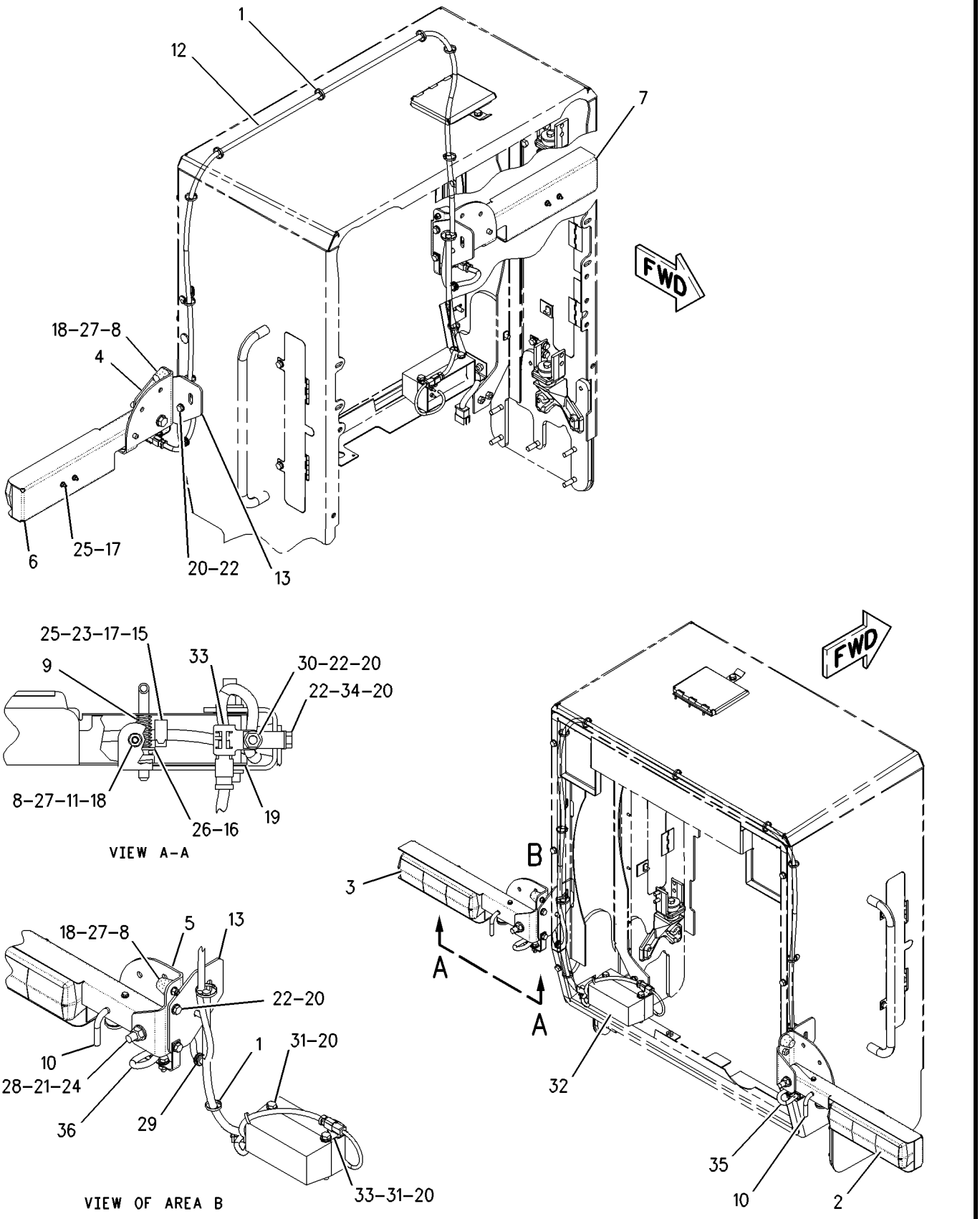


GRAPHIC #1 **<END>** g00845742

## *193-8253* WIRING GP-REAR LIGHTING–
### BACKUP ALARM, LIGHTS, EU
**S/N: CCA1-UP**

**PART OF 207-4453, 210-2044 CONVERSION AR-CERTIFICATION, 191-9260 COOLING AR AN ATTACHMENT**

**SMCS-1408, 1429** **i02585728**

| NOTE | REF NO | GRAPHIC REF | PART NUMBER | QTY | PART NAME 1 2 3 4 5 6 (PRODUCT LEVEL) | SEE PAGE |
|---|---|---|---|---|---|---|
| C | 1 | 1 | **3S-2093** | 13 | STRAP-CABLE | |
| | 2 | 1 | *5C-9930* | 1 | LAMP GP (STOP, TURN, TAIL, RH) | |
| | | 1 | **4V-8116** | 1 | LAMP (24-VOLT, 5-WATT) | |
| | | 1 | **5C-9584** | 2 | LAMP (24-VOLT, 21-WATT) | |
| | | 1 | **6C-0109** | 1 | LAMP AS | |
| | 3 | 1 | *5C-9931* | 1 | LAMP GP (STOP, TAIL, TURN, LH) | |
| | | 1 | **4V-8116** | 1 | LAMP (24-VOLT, 5-WATT) | |
| | | 1 | **5C-9584** | 2 | LAMP (24-VOLT, 21-WATT) | |
| | | 1 | **6C-0110** | 1 | LAMP AS | |
| | 4 | 1 | **6C-5233** | 1 | BRACKET AS | |
| M | | 1 | **8T-3490** | 2 | NUT-WELD (M10X1.5-THD) | |
| | 5 | 1 | **6C-5234** | 1 | BRACKET AS | |
| M | | 1 | **8T-3490** | 2 | NUT-WELD (M10X1.5-THD) | |
| | 6 | 1 | **7V-7835** | 1 | ARM AS (RH) | |
| | | 1 | **5C-9563** | 1 | SPACER (11.02X26.67X55-MM THK) | |
| | 7 | 1 | **7V-7838** | 1 | ARM AS (LH) | |
| | | 1 | **5C-9563** | 1 | SPACER (11.02X26.67X55-MM THK) | |
| | 8 | 1,2 | **7X-2393** | 4 | BUMPER-CONICAL | |
| | 9 | 2 | **9S-1316** | 2 | SPRING | |
| | 10 | 1 | **112-5555** | 2 | ROD | |
| | 11 | 2 | **156-0283** | 2 | WASHER-HARD (8.4X35X2.5-MM THK) | |
| | 12 | 2 | **160-1744** | 2 | BRACKET | |
| | 13 | 1 | **196-4609** | 1 | HARNESS AS-REAR LIGHTING | |
| | | 1 | **102-8802** | 2 | KIT-RECEPTACLE (2-PIN) | |
| | | 1 | **102-8801** | 1 | KIT-RECEPTACLE (12-PIN) | |
| | | | | | (EACH INCLUDES RECEPTACLE AS & WEDGE) | |
| | | 1 | **155-2270** | 2 | KIT-CONNECTING PLUG (2-PIN) | |
| | | 1 | **155-2271** | 2 | KIT-CONNECTING PLUG (4-PIN) | |
| | | | | | (EACH INCLUDES PLUG AS & WEDGE) | |
| | 14 | 1 | **208-7933** | 2 | PLATE | |
| | 15 | 2 | **213-1413** | 1 | HARNESS AS-REAR LIGHTING (RH) | |
| | | 2 | **102-8804** | 1 | KIT-RECEPTACLE (4-PIN) | |
| | | | | | (INCLUDES RECEPTACLE AS & WEDGE) | |
| | 16 | 2 | **213-1414** | 1 | HARNESS AS-REAR LIGHTING (LH) | |
| | | 2 | **102-8804** | 1 | KIT-RECEPTACLE (4-PIN) | |
| | | | | | (INCLUDES RECEPTACLE AS & WEDGE) | |
| C | 17 | 1 | **213-9100** | 1 | ALARM AS (BACKUP) | |
| | 18 | 1,2 | **130-5300** | 3 | CLIP | |
| | 19 | 2 | **2V-3216** | 2 | CLIP | |
| | 20 | 2 | **3B-5301** | 2 | PIN-COTTER | |
| M | 21 | 1,2 | **5C-2890** | 6 | NUT (M6X1-THD) | |
| M | 22 | 1,2 | **5C-7261** | 4 | NUT (M8X1.25-THD) | |
| C | 23 | 1 | **5P-1076** | 2 | WASHER-HARD (13.5X30X4-MM THK) | |
| | 24 | 1 | **5P-4116** | 4 | WASHER-HARD (8.8X20.5X2-MM THK) | |
| C | 25 | 1,2 | **7G-7053** | 2 | GROMMET | |
| | 26 | 2 | **8D-5641** | 4 | BEARING | |
| | 27 | 1,2 | **8T-4121** | 8 | WASHER-HARD (11X21X2.5-MM THK) | |
| | 28 | 2 | **8T-4122** | 4 | WASHER-HARD (17X32X3.5-MM THK) | |
| M | 29 | 2 | **8T-4133** | 2 | NUT (M10X1.5-THD) | |
| CM | 30 | 1,2 | **8T-4136** | 6 | BOLT (M10X1.5X25-MM) | |
| CM | 31 | 1 | **8T-4139** | 2 | BOLT (M12X1.75X30-MM) | |
| M | 32 | 2 | **8T-4171** | 2 | BOLT (M6X1X12-MM) | |
| M | 33 | 2 | **8T-4173** | 2 | BOLT (M16X2X110-MM) | |
| CM | 34 | 1 | **8T-4189** | 4 | BOLT (M8X1.25X20-MM) | |

## *193-8253* **WIRING GP-REAR LIGHTING** *(contd.)* **i02585728**

| NOTE | REF NO | GRAPHIC REF | PART NUMBER | QTY | PART NAME 1 2 3 4 5 6 (PRODUCT LEVEL) | SEE PAGE |
|---|---|---|---|---|---|---|
| | 35 | 1,2 | **8T-4205** | 6 | WASHER-HARD (7.2X14.5X2-MM THK) | |
| | 36 | 2 | **8T-4223** | 2 | WASHER-HARD (13.5X25.5X3-MM THK) | |
| | 37 | 1,2 | **8T-4224** | 4 | WASHER-HARD (8.8X16X2-MM THK) | |
| M | 38 | 2 | **8T-4778** | 2 | LOCKNUT (M16X2-THD) | |

C-CHANGE FROM PREVIOUS TYPE
M-METRIC PART

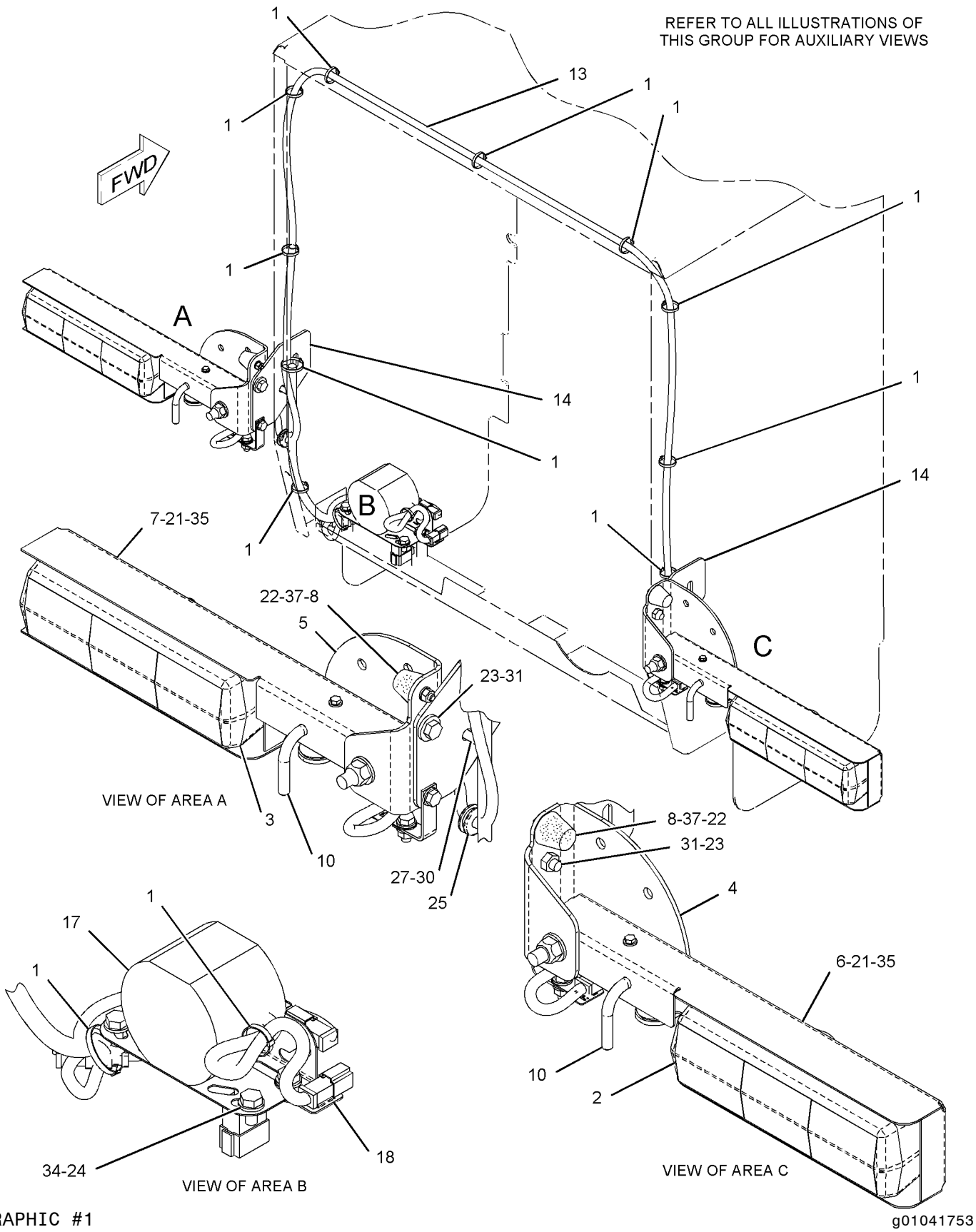


GRAPHIC #1

g01041753

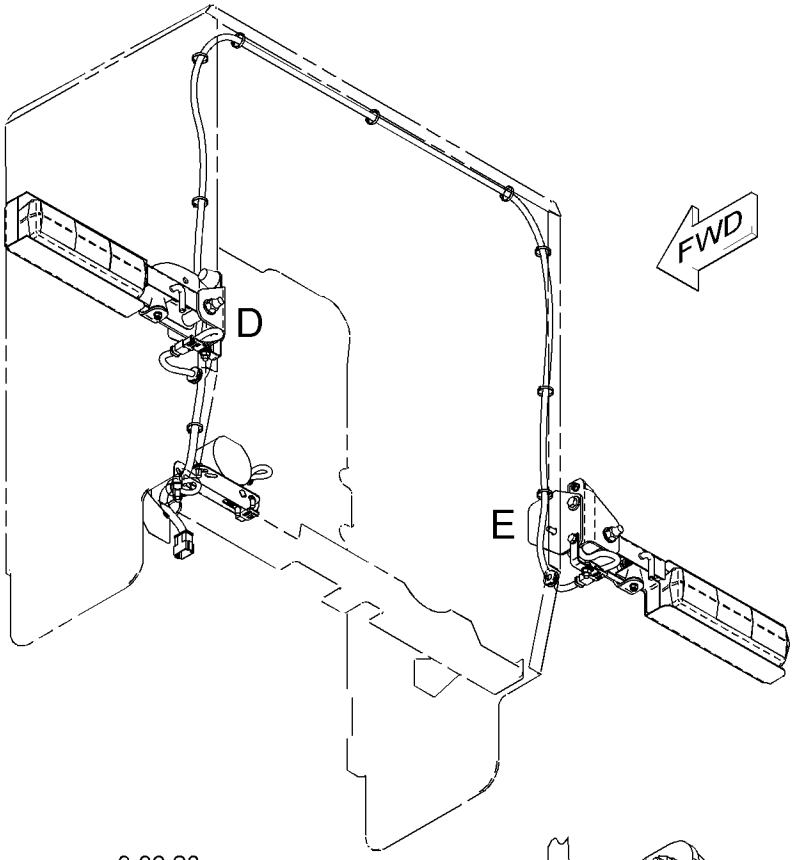


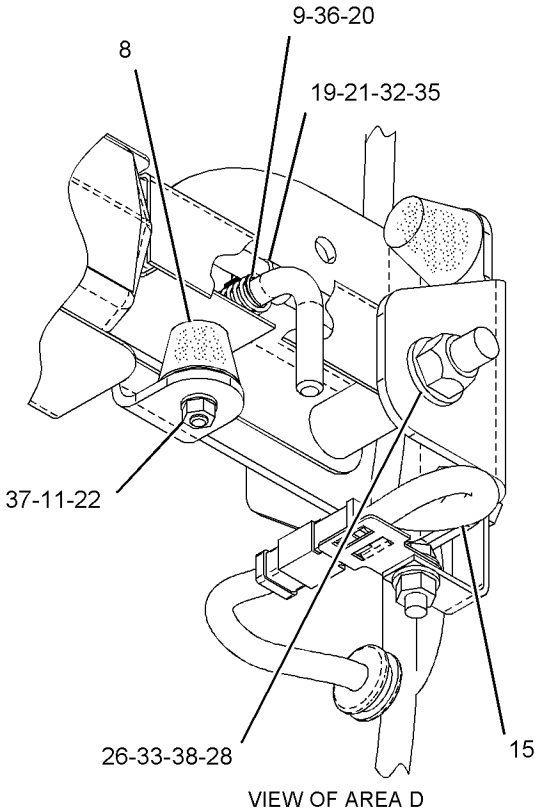


VIEW OF AREA D

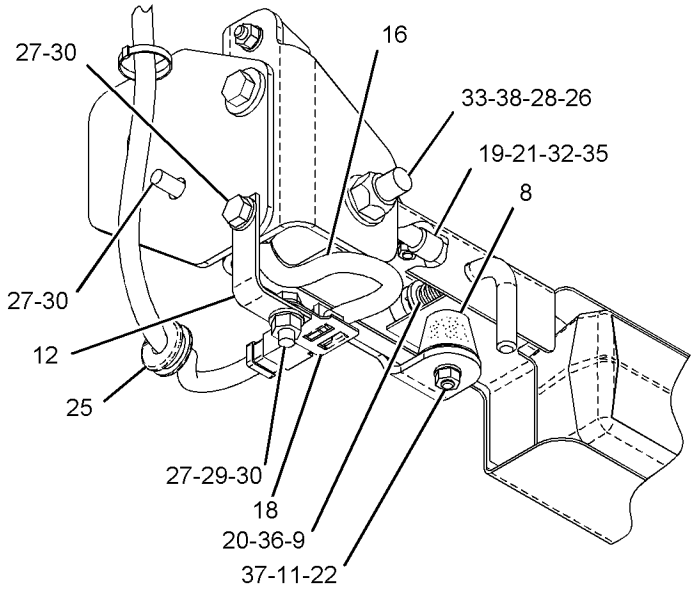


VIEW OF AREA E

GRAPHIC #2 **<END>** g01093417

# ELECTRICAL AND STARTING SYSTEM

## *161-1020* WIRING GP-SECONDARY STEERING

**S/N: CCA1-UP**
**PART OF 166-3302 STEERING AR-SECONDARY**
**AN ATTACHMENT**

**SMCS-1408, 4334** **i02204633**

| NOTE | REF NO | GRAPHIC REF | PART NUMBER | QTY | PART NAME 1 2 3 4 5 6 (PRODUCT LEVEL) | SEE PAGE |
|---|---|---|---|---|---|---|
| | 1 | 1 | **2L-0273** | 1 | FITTING (RUBBER) | |
| Y | 2 | 1 | **3E-0154** | 1 | SWITCH GP-MAGNETIC (SECONDARY STEERING) | 301 |
| | 3 | 1 | **3E-6450** | 1 | SWITCH AS-PRESSURE (SECONDARY STEERING) | |
| | | 1 | **102-8803** | 1 | KIT-RECEPTACLE (3-PIN) | |
| | | | | | (INCLUDES RECEPTACLE AS & WEDGE) | |
| | | 1 | **186-3735** | 3 | PIN-CONNECTOR (16-GA TO 18-GA) | |
| | 4 | 1 | **3E-7842** | 1 | RESISTOR AS (SECONDARY STEERING INDICATOR) | |
| | | 1 | **102-8802** | 1 | KIT-RECEPTACLE (2-PIN) | |
| | | | | | (INCLUDES RECEPTACLE AS & WEDGE) | |
| | | 1 | **6T-3610** | 1 | RESISTOR | |
| | | 1 | **186-3735** | 2 | PIN-CONNECTOR (16-GA TO 18-GA) | |
| | 5 | 1 | **3S-2093** | 2 | STRAP-CABLE | |
| | 6 | 1 | **9L-1566** | 1 | SUPPORT | |
| | 7 | 1 | **9W-1442** | 2 | FUSE (10-AMPERE) | |
| | 8 | 1 | **118-7809** | 1 | PLATE | |
| Y | 9 | 1 | **132-6640** | 1 | CONTROL GP-SECONDARY STEERING | 161 |
| | 10 | 1 | **134-3355** | 1 | STRAP AS | |
| | 11 | 1 | **140-8864** | 1 | CABLE AS | |
| | | 1 | **1S-7252** | 2 | TERMINAL-RING (FOR 3/8-IN BOLT) | |
| E | | 1 | **5P-0747** | | CABLE (00-GA, BLACK) (20-CM) | |
| | 12 | 1 | **178-0101** | 1 | CABLE AS | |
| | | 1 | **1S-7252** | 1 | TERMINAL-RING (FOR 3/8-IN BOLT) | |
| E | | 1 | **5P-0761** | | CABLE (00-GA, RED) (87-CM) | |
| | | 1 | **8N-0869** | 1 | COVER-TERMINAL (RED) | |
| | | 1 | **9X-9825** | 1 | TERMINAL-CABLE (FOR 1/2-IN BOLT) | |
| | 13 | 1 | **178-0102** | 1 | CABLE AS | |
| | | 1 | **1S-7252** | 2 | TERMINAL-RING (FOR 3/8-IN BOLT) (148CM) | |
| E | | 1 | **5P-0761** | | CABLE (00-GA, RED) (148-CM) | |
| | | 1 | **9X-6932** | 2 | BOOT-TERMINAL | |
| | 14 | 1 | *194-2903* | 1 | ELBOW AS | |
| | | 1 | **8T-0119** | 1 | ELBOW | |
| | | 1 | **3K-0360** | 1 | SEAL-O-RING | |
| | 15 | 1 | **195-0434** | 1 | BRACKET | |
| | 16 | 1 | **197-1459** | 1 | PLATE | |
| | 17 | 1 | **130-5300** | 1 | CLIP | |
| | 18 | 1 | **174-5907** | 3 | CLIP | |
| | 19 | 1 | **3E-6754** | 1 | GROMMET | |
| | 20 | 1 | **3K-0360** | 1 | SEAL-O-RING | |
| M | 21 | 1 | **5C-2890** | 2 | NUT (M6X1-THD) | |
| | 22 | 1 | **5M-3062** | 2 | BOLT (3/8-16X0.75-IN) | |
| | 23 | 1 | **6V-1322** | 4 | BOLT (1/4-20X0.375-IN) | |
| | 24 | 1 | **6V-8801** | 2 | NUT (3/8-16-THD) | |
| | 25 | 1 | **8T-4121** | 7 | WASHER-HARD (11X21X2.5-MM THK) | |
| M | 26 | 1 | **8T-4133** | 2 | NUT (M10X1.5-THD) | |
| M | 27 | 1 | **8T-4137** | 5 | BOLT (M10X1.5X20-MM) | |
| | 28 | 1 | **8T-4205** | 4 | WASHER-HARD (7.2X14.5X2-MM THK) | |
| | 29 | 1 | **8T-4896** | 4 | WASHER-HARD (10.2X18.5X2.5-MM THK) | |
| M | 31 | 1 | **9X-2045** | 2 | SCREW-TRUSS HEAD (M6X1X20-MM) | |
| | 32 | 1 | **9X-8256** | 2 | WASHER (6.6X12X2-MM THK) | |
| | 33 | 1 | **3E-8765** | 1 | SWITCH AS (24-VOLT) (SECONDARY STEERING) | |
| | | 1 | **3E-8816** | 1 | ACTUATOR-ROCKER | |
| | | 1 | **3E-8825** | 2 | LAMP (24-VOLT) | |

E-ORDER BY THE CENTIMETER
M-METRIC PART
Y-SEPARATE ILLUSTRATION

*161-1020* **WIRING GP-SECONDARY STEERING** *(contd.)* **i02204633**

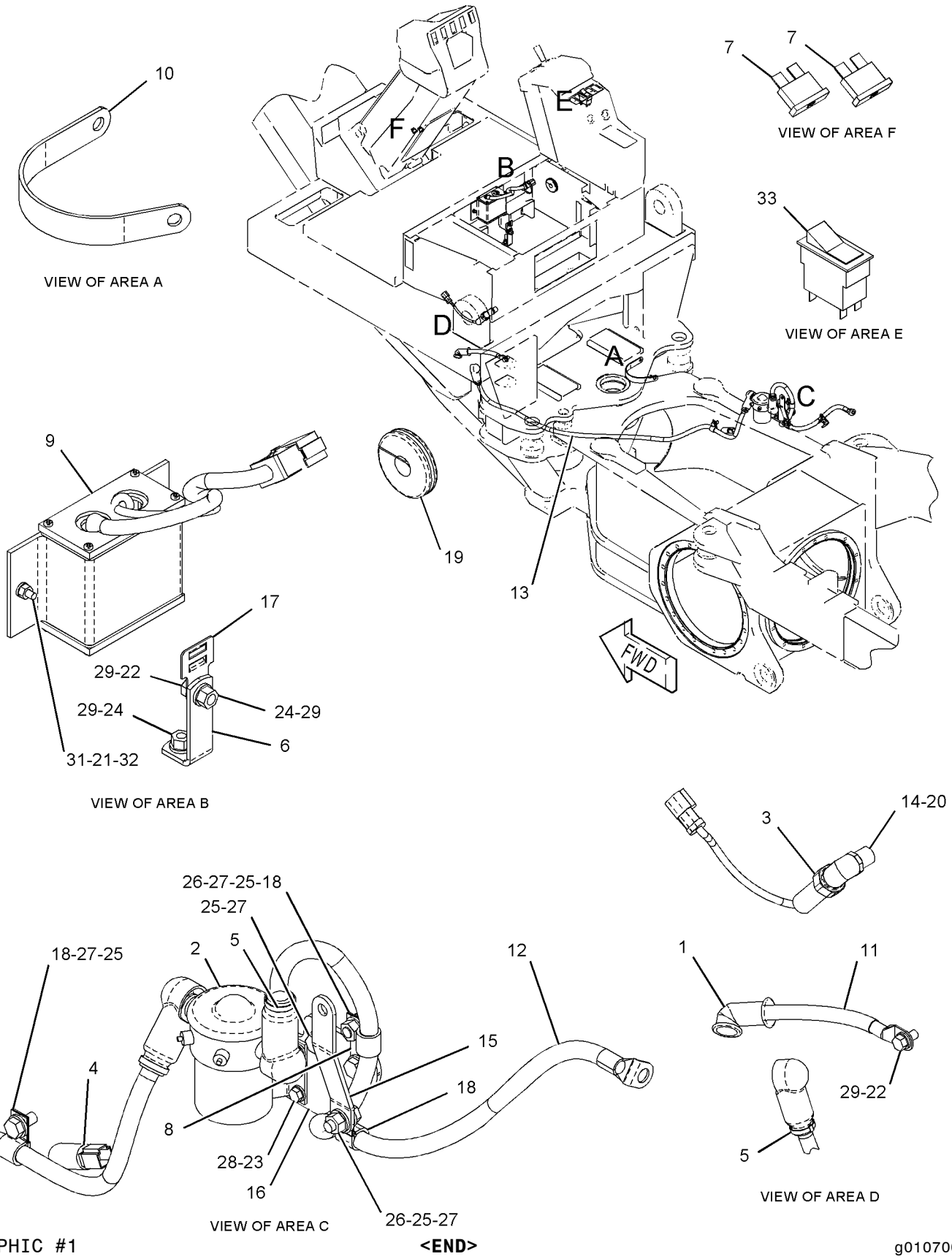


GRAPHIC #1 **<END>** g01070020

# *159-5839* WIRING GP-SHIFT CONSOLE

**S/N: CCA1-1327, 1334-1336**
**PART OF 159-4615 GENERAL AR**

**SMCS-1408, 1435** **i02204645**

| NOTE | REF NO | GRAPHIC REF | PART NUMBER | QTY | PART NAME 1 2 3 4 5 6 (PRODUCT LEVEL) | SEE PAGE |
|---|---|---|---|---|---|---|
| | 1 | 1 | **3E-0109** | 4 | PLUG | |
| Y | 2 | 1 | **3E-6328** | 1 | ALARM GP (24-VOLT) (ACTION) | 139 |
| | 3 | 1 | **3S-2093** | 5 | STRAP-CABLE | |
| | 4 | 1 | **7N-5876** | 1 | LAMP (24-VOLT) | |
| | 5 | 1 | **8C-6354** | 1 | CAP-RECEPTACLE | |
| | 6 | 1 | **110-7887** | 1 | SWITCH GP-START (KEY) | |
| | | 1 | **3E-3377** | 1 | WEDGE-RECEPTACLE LOCK (4-PIN) | |
| | | 1 | **7T-6799** | 1 | NUT-MOUNTING (1-32-THD) | |
| | | 1 | **186-3735** | 4 | PIN-CONNECTOR (16-GA TO 18-GA) | |
| | | 1 | **102-8804** | 1 | KIT-RECEPTACLE (4-PIN) | |
| | 8 | 1 | **167-7506** | 1 | HARNESS AS-OPERATOR CONTROLS | |
| | | 1 | **102-8804** | 1 | KIT-RECEPTACLE (4-PIN) | |
| | | 1 | **102-8805** | 1 | KIT-RECEPTACLE (6-PIN) | |
| | | 1 | **102-8801** | 1 | KIT-RECEPTACLE (12-PIN) | |
| | | 1 | **155-2255** | 2 | KIT-CONNECTING PLUG (12-PIN) | |
| | | 1 | **155-2270** | 1 | KIT-CONNECTING PLUG (2-PIN) | |
| | | 1 | **155-2271** | 2 | KIT-CONNECTING PLUG (4-PIN) | |
| | | 1 | **155-2274** | 2 | KIT-CONNECTING PLUG (6-PIN) | |
| | | 1 | **102-8801** | 1 | KIT-RECEPTACLE (12-PIN) | |
| | 9 | 1 | **167-7536** | 1 | HARNESS AS-CONSOLE | |
| | | 1 | **7X-6222** | 1 | PLUG AS-CONNECTOR (24-PIN) | |
| | | 1 | **102-8804** | 1 | KIT-RECEPTACLE (4-PIN) | |
| | | 1 | **102-8801** | 1 | KIT-RECEPTACLE (12-PIN) | |
| | | 1 | **155-2255** | 1 | KIT-CONNECTING PLUG (12-PIN) | |
| | 10 | 1 | **169-5414** | 2 | CLIP | |
| | 11 | 1 | **196-7268** | 1 | SWITCH AS (THROTTLE SPEED SET) | |
| | | 1 | **3E-8825** | 2 | LAMP (24-VOLT) | |
| | | 1 | **183-2136** | 1 | ACTUATOR-ROCKER | |
| | 12 | 1 | **190-0370** | 1 | SWITCH AS (THROTTLE HOLD MODE) | |
| | | 1 | **3E-8825** | 2 | LAMP (24-VOLT) | |
| | | 1 | **187-9380** | 1 | ACTUATOR-ROCKER | |
| | 13 | 1 | **130-5300** | 2 | CLIP | |
| | 14 | 1 | **2V-8259** | 2 | GROMMET | |
| | 15 | 1 | **3H-2900** | 1 | GROMMET | |
| | 16 | 1 | **4D-7794** | 1 | CLIP | |
| | 17 | 1 | **4L-6454** | 1 | BOLT (3/8-16X1-IN) | |
| | 18 | 1 | **4P-7581** | 1 | CLIP | |
| | 19 | 1 | **5M-3062** | 3 | BOLT (3/8-16X0.75-IN) | |
| | 20 | 1 | **5S-4246** | 4 | LOCKWASHER | |
| | 21 | 1 | **6B-4540** | 4 | NUT (4-40-THD) | |
| | 22 | 1 | **6V-2480** | 4 | SCREW (4-40X0.5-IN) | |
| | 23 | 1 | **6V-8801** | 1 | NUT (3/8-16-THD) | |
| | 24 | 1 | **7C-4354** | 1 | CLIP | |
| | 25 | 1 | **7G-7053** | 1 | GROMMET | |
| | 26 | 1 | **8M-2770** | 1 | CLIP | |
| | 27 | 1 | **8T-4121** | 1 | WASHER-HARD (11X21X2.5-MM THK) | |
| M | 28 | 1 | **8T-4137** | 1 | BOLT (M10X1.5X20-MM) | |
| | 29 | 1 | **8T-4896** | 5 | WASHER-HARD (10.2X18.5X2.5-MM THK) | |
| | 30 | 1 | **9W-0335** | 1 | LIGHTER AS (CIGAR, 24-VOLT) | |
| | 31 | 1 | **3E-9327** | 1 | SWITCH AS (CENTERSHIFT PIN PULLER) | |
| | | 1 | **3E-8817** | 1 | ACTUATOR-ROCKER | |
| | | 1 | **3E-8825** | 1 | LAMP (24-VOLT) | |

M-METRIC PART
Y-SEPARATE ILLUSTRATION

*159-5839* **WIRING GP-SHIFT CONSOLE** *(contd.)* **i02204645**

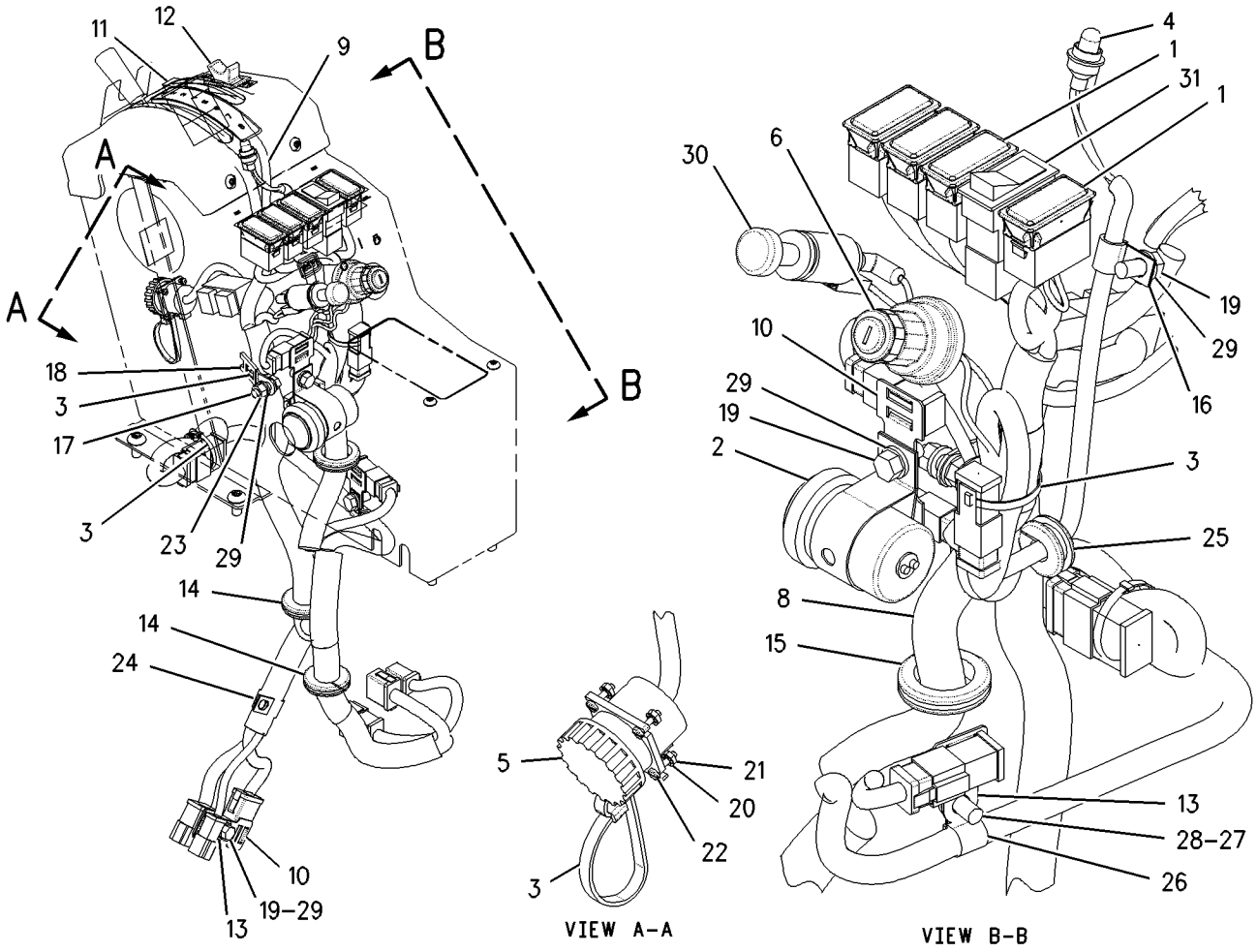


GRAPHIC #1 **<END>** g00865816

# *159-5839* WIRING GP-SHIFT CONSOLE

**S/N: CCA1328-1333, 1337-UP**
**PART OF 159-4615 GENERAL AR**

**SMCS-1408, 1435** **i02454509**

| NOTE | REF NO | GRAPHIC REF | PART NUMBER | QTY | PART NAME 1 2 3 4 5 6 (PRODUCT LEVEL) | SEE PAGE |
|---|---|---|---|---|---|---|
| | 1 | 1 | **3E-0109** | 4 | PLUG | |
| Y | 2 | 1 | **3E-6328** | 1 | ALARM GP (24-VOLT) (ACTION) | 139 |
| | 3 | 1 | **3S-2093** | 5 | STRAP-CABLE | |
| | 4 | 1 | **7N-5876** | 1 | LAMP (24-VOLT) | |
| | 5 | 1 | **8C-6354** | 1 | CAP-RECEPTACLE | |
| | 6 | 1 | **110-7887** | 1 | SWITCH GP-START (KEY) | |
| | | 1 | **7T-6799** | 1 | NUT-MOUNTING (1-32-THD) | |
| | | 1 | **186-3735** | 4 | PIN-CONNECTOR (16-GA TO 18-GA) | |
| | | 1 | **102-8804** | 1 | KIT-RECEPTACLE (4-PIN) (KEY SWITCH) | |
| | | | | | (INCLUDES RECEPTACLE AS & WEDGE) | |
| | 8 | 1 | **167-7506** | 1 | HARNESS AS-OPERATOR CONTROLS | |
| | | 1 | **199-8382** | 1 | RECEPTACLE AS | |
| | | 1 | **102-8804** | 1 | KIT-RECEPTACLE (4-PIN) | |
| | | 1 | **102-8805** | 1 | KIT-RECEPTACLE (6-PIN) | |
| | | 1 | **102-8801** | 1 | KIT-RECEPTACLE (12-PIN) | |
| | | | | | (EACH INCLUDES RECEPTACLE AS & WEDGE) | |
| | | 1 | **155-2255** | 2 | KIT-CONNECTING PLUG (12-PIN) | |
| | | 1 | **155-2270** | 1 | KIT-CONNECTING PLUG (2-PIN) (ACTION ALARM) | |
| | | 1 | **155-2271** | 2 | KIT-CONNECTING PLUG (4-PIN) | |
| | | 1 | **155-2274** | 2 | KIT-CONNECTING PLUG (6-PIN) | |
| | | | | | (EACH INCLUDES PLUG AS & WEDGE) | |
| C | 9 | 1 | **169-5414** | 3 | CLIP | |
| | 10 | 1 | **196-7268** | 1 | SWITCH AS (THROTTLE HOLD MODE) | |
| | | 1 | **3E-8825** | 2 | LAMP (24-VOLT) | |
| | | 1 | **183-2136** | 1 | ACTUATOR-ROCKER | |
| | 11 | 1 | **185-2197** | 1 | SWITCH AS-ROCKER (THROTTLE LOCK SET, RESET) | |
| C | 12 | 1 | **254-9249** | 1 | HARNESS AS-CONSOLE | |
| | | 1 | **7X-6222** | 1 | PLUG AS-CONNECTOR (24-PIN) | |
| | | 1 | **155-2255** | 1 | KIT-CONNECTING PLUG (12-PIN) | |
| | | 1 | **155-2274** | 1 | KIT-CONNECTING PLUG (6-PIN) | |
| | | | | | (EACH INCLUDES PLUG AS & WEDGE) | |
| | | 1 | **102-8805** | 2 | KIT-RECEPTACLE (6-PIN) | |
| | | 1 | **102-8801** | 1 | KIT-RECEPTACLE (12-PIN) | |
| | | | | | (EACH INCLUDES RECEPTACLE AS & WEDGE) | |
| C | 13 | 1 | **130-5300** | 1 | CLIP | |
| | 15 | 1 | **3H-2900** | 3 | GROMMET | |
| | 16 | 1 | **4D-7794** | 1 | CLIP | |
| | 17 | 1 | **4L-6454** | 1 | BOLT (3/8-16X1-IN) | |
| | 18 | 1 | **4P-7581** | 1 | CLIP | |
| | 19 | 1 | **5M-3062** | 3 | BOLT (3/8-16X0.75-IN) | |
| | 20 | 1 | **5S-4246** | 4 | LOCKWASHER | |
| | 21 | 1 | **6B-4540** | 4 | NUT (4-40-THD) | |
| | 22 | 1 | **6V-2480** | 4 | SCREW (4-40X0.5-IN) | |
| | 23 | 1 | **6V-8801** | 1 | NUT (3/8-16-THD) | |
| | 24 | 1 | **7C-4354** | 1 | CLIP | |
| | 25 | 1 | **7G-7053** | 1 | GROMMET | |
| | 26 | 1 | **8M-2770** | 1 | CLIP | |
| | 27 | 1 | **8T-4121** | 1 | WASHER-HARD (11X21X2.5-MM THK) | |
| M | 28 | 1 | **8T-4137** | 1 | BOLT (M10X1.5X20-MM) | |
| | 29 | 1 | **8T-4896** | 4 | WASHER-HARD (10.2X18.5X2.5-MM THK) | |
| | 30 | 1 | **9W-0335** | 1 | LIGHTER AS (CIGAR, 24-VOLT) | |
| | 31 | 1 | **3E-9327** | 1 | SWITCH AS (CENTERSHIFT PIN) | |
| | | | **3E-8817** | 1 | ACTUATOR-ROCKER | |
| | | | **3E-8825** | 1 | LAMP (24-VOLT) | |

## *159-5839* **WIRING GP-SHIFT CONSOLE** *(contd.)* **i02454509**

C-CHANGE FROM PREVIOUS TYPE
M-METRIC PART
Y-SEPARATE ILLUSTRATION

*159-5839* **WIRING GP-SHIFT CONSOLE** *(contd. )* **i02454509**

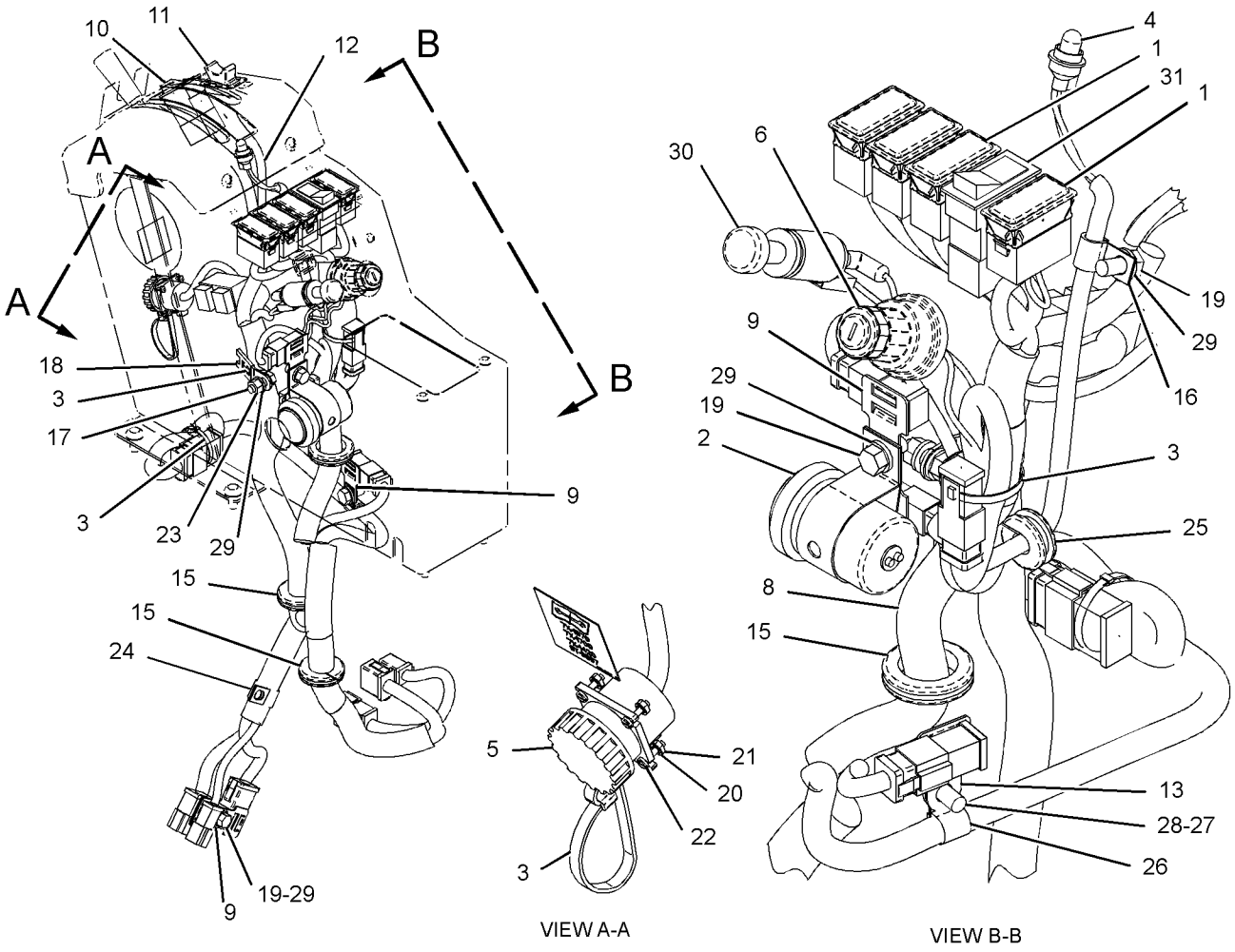


GRAPHIC #1 **<END>** g01238615

# ELECTRICAL AND STARTING SYSTEM

## *159-5841* WIRING GP-SHIFT CONSOLE

**S/N: CCA1-1329, 1334-1336**

**PART OF 207-4453, 210-2044 CONVERSION AR-CERTIFICATION**

**AN ATTACHMENT**

**SMCS-1408, 1435** **i02585740**

| NOTE | REF NO | GRAPHIC REF | PART NUMBER | QTY | PART NAME 1 2 3 4 5 6 (PRODUCT LEVEL) | SEE PAGE |
|---|---|---|---|---|---|---|
| | 1 | 2 | **3E-0109** | 3 | PLUG | |
| Y | 2 | 1 | **3E-6328** | 1 | ALARM GP (24-VOLT) (ACTION) | 139 |
| | 3 | 1,2 | **3S-2093** | 6 | STRAP-CABLE | |
| | 4 | 1 | **7N-5876** | 1 | LAMP (24-VOLT) | |
| | 5 | 1 | **8C-6354** | 1 | CAP-RECEPTACLE | |
| | 6 | 1 | **110-7887** | 1 | SWITCH GP-START (KEY) | |
| | | 1 | **3E-3377** | 1 | WEDGE-RECEPTACLE LOCK (4-PIN) | |
| | | 1 | **7T-6799** | 1 | NUT-MOUNTING (1-32-THD) | |
| | | 1 | **186-3735** | 4 | PIN-CONNECTOR (16-GA TO 18-GA) | |
| | | 1 | **102-8804** | 1 | KIT-RECEPTACLE (4-PIN) | |
| | | | | | (INCLUDES RECEPTACLE AS & WEDGE) | |
| Y | 8 | 2 | **132-6640** | 1 | CONTROL GP-SECONDARY STEERING | 161 |
| | 9 | 1 | **167-7506** | 1 | HARNESS AS-OPERATOR CONTROLS | |
| | | 1 | **155-2255** | 2 | KIT-CONNECTING PLUG (12-PIN) | |
| | | 1 | **155-2270** | 1 | KIT-CONNECTING PLUG (2-PIN) | |
| | | 1 | **155-2271** | 2 | KIT-CONNECTING PLUG (4-PIN) | |
| | | 1 | **155-2274** | 2 | KIT-CONNECTING PLUG (6-PIN) | |
| | | | | | (EACH INCLUDES PLUG AS & WEDGE) | |
| | | 1 | **102-8804** | 1 | KIT-RECEPTACLE (4-PIN) | |
| | | 1 | **102-8805** | 1 | KIT-RECEPTACLE (6-PIN) | |
| | | 1 | **102-8801** | 1 | KIT-RECEPTACLE (12-PIN) | |
| | | | | | (EACH INCLUDES RECEPTACLE AS & WEDGE) | |
| | 10 | 1 | **167-7536** | 1 | HARNESS AS-CONSOLE | |
| | | 1 | **155-2255** | 1 | KIT-CONNECTING PLUG (12-PIN) | |
| | | | | | (INCLUDES PLUG AS & WEDGE) | |
| | | 1 | **102-8804** | 1 | KIT-RECEPTACLE (4-PIN) | |
| | | 1 | **102-8801** | 1 | KIT-RECEPTACLE (12-PIN) | |
| | | | | | (EACH INCLUDES RECEPTACLE AS & WEDGE) | |
| | | 1 | **7X-6222** | 1 | PLUG AS-CONNECTOR (24-PIN) | |
| | 11 | 2 | **169-5414** | 2 | CLIP | |
| | 12 | 1 | **196-7268** | 1 | SWITCH AS (THROTTLE LOCK ENABLE) | |
| | | 1 | **183-2136** | 1 | ACTUATOR-ROCKER | |
| | | 1 | **3E-8825** | 2 | LAMP (24-VOLT) | |
| | 13 | 1 | **185-2197** | 1 | SWITCH AS-ROCKER (THROTTLE LOCK SET, RESET) | |
| | 14 | 1,2 | **130-5300** | 2 | CLIP | |
| | 15 | 1 | **2V-8259** | 2 | GROMMET | |
| | 16 | 2 | **3E-6754** | 1 | GROMMET | |
| | 17 | 1 | **3H-2900** | 1 | GROMMET | |
| | 18 | 1 | **4D-7794** | 1 | CLIP | |
| | 19 | 1 | **4L-6454** | 1 | BOLT (3/8-16X1-IN) | |
| | 20 | 1 | **4P-7581** | 1 | CLIP | |
| M | 21 | 2 | **5C-2890** | 2 | NUT (M6X1-THD) | |
| | 22 | 2 | **5M-3062** | 3 | BOLT (3/8-16X0.75-IN) | |
| | 23 | 1 | **5S-4246** | 4 | LOCKWASHER | |
| | 24 | 1 | **6B-4540** | 4 | NUT (4-40-THD) | |
| | 25 | 1 | **6V-2480** | 4 | SCREW (4-40X0.5-IN) | |
| | 26 | 1 | **6V-8801** | 1 | NUT (3/8-16-THD) | |
| | 27 | 1 | **7C-4354** | 1 | CLIP | |
| | 28 | 1 | **7G-7053** | 1 | GROMMET | |
| | 29 | 1 | **8M-2770** | 1 | CLIP | |
| | 30 | 1 | **8T-4121** | 1 | WASHER-HARD (11X21X2.5-MM THK) | |
| M | 31 | 1 | **8T-4137** | 1 | BOLT (M10X1.5X20-MM) | |
| | 32 | 1,2 | **8T-4896** | 5 | WASHER-HARD (10.2X18.5X2.5-MM THK) | |
| | 33 | 1 | **9W-0335** | 1 | LIGHTER AS (CIGAR, 24-VOLT) | |
| M | 34 | 2 | **9X-2045** | 2 | SCREW-TRUSS HEAD (M6X1X20-MM) | |

## *159-5841* **WIRING GP-SHIFT CONSOLE** *(contd. )* **i02585740**

| NOTE | REF NO | GRAPHIC REF | PART NUMBER | QTY | PART NAME 1 2 3 4 5 6 (PRODUCT LEVEL) | SEE PAGE |
|---|---|---|---|---|---|---|
| | 35 | 2 | **9X-8256** | 2 | WASHER (6.6X12X2-MM THK) | |
| | 36 | 2 | **9X-9633** | 1 | SWITCH AS-ROCKER (SECONDARY STEERING) | |
| | | 2 | **3E-8816** | 1 | ACTUATOR-ROCKER | |
| | | 2 | **3E-8825** | 2 | LAMP (24-VOLT) | |
| | 37 | 2 | **3E-9327** | 1 | SWITCH AS (CENTERSHIFT PIN PULLER) | |
| | | 2 | **3E-8825** | 1 | LAMP (24-VOLT) | |
| | | 2 | **3E-8817** | 1 | ACTUATOR-ROCKER | |

M-METRIC PART
Y-SEPARATE ILLUSTRATION

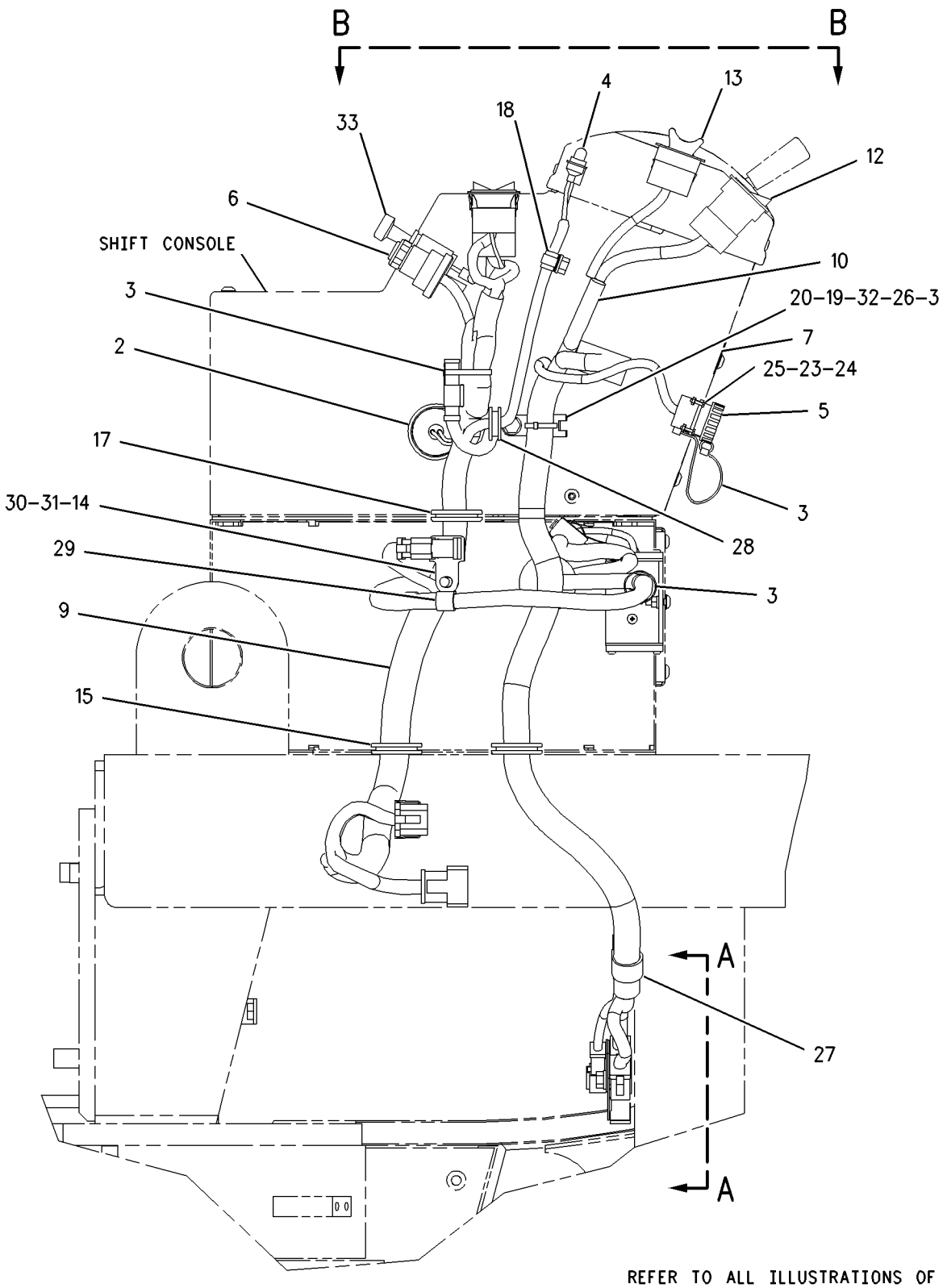


RIGHT SIDE VIEW

GRAPHIC #1 g00934782

*159-5841* **WIRING GP-SHIFT CONSOLE** *(contd. )* **i02585740**

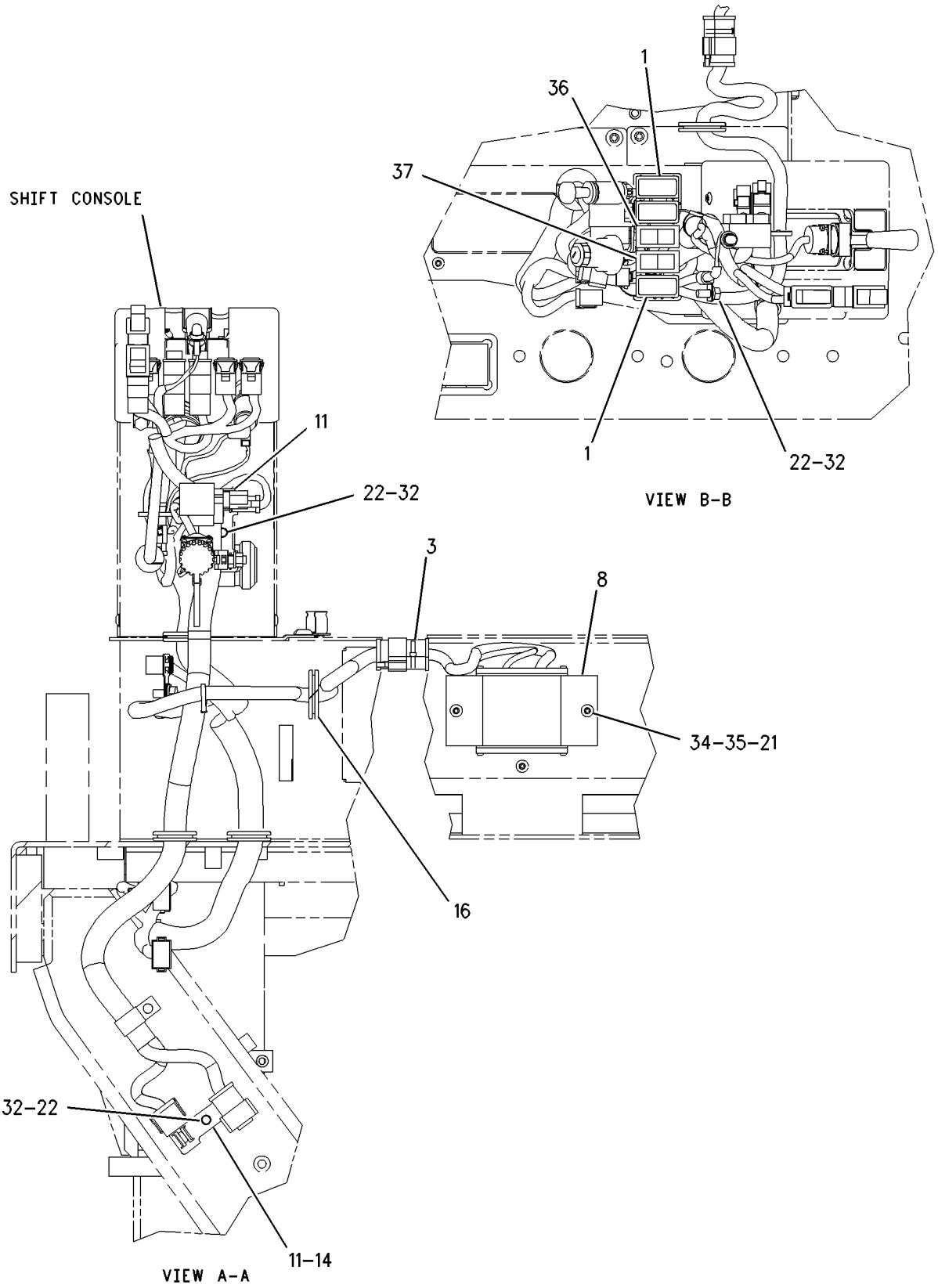


GRAPHIC #2 **<END>** g00934783

# ELECTRICAL AND STARTING SYSTEM

## *159-5841* WIRING GP-SHIFT CONSOLE

**S/N: CCA1330-1333, 1337-UP**
**PART OF 207-4453, 210-2044 CONVERSION AR-CERTIFICATION**
**AN ATTACHMENT**

**SMCS-1408, 1435** **i02585754**

| NOTE | REF NO | GRAPHIC REF | PART NUMBER | QTY | PART NAME 1 2 3 4 5 6 (PRODUCT LEVEL) | SEE PAGE |
|---|---|---|---|---|---|---|
| | 1 | 1 | **3E-0109** | 3 | PLUG | |
| Y | 2 | 1 | **3E-6328** | 1 | ALARM GP (24-VOLT) (ACTION) | 139 |
| | 3 | 1 | **3S-2093** | 6 | STRAP-CABLE | |
| | 4 | 1 | **7N-5876** | 1 | LAMP (24-VOLT) | |
| | 5 | 1 | **8C-6354** | 1 | CAP-RECEPTACLE | |
| | 6 | 1 | **110-7887** | 1 | SWITCH GP-START (KEY) | |
| | | 1 | **7T-6799** | 1 | NUT-MOUNTING (1-32-THD) | |
| | | 1 | **8T-8729** | 4 | PIN-CONNECTOR | |
| | | 1 | **102-8804** | 1 | KIT-RECEPTACLE (4-PIN) | |
| | | | | | (INCLUCES RECEPTACLE AS & WEDGE) | |
| Y | 8 | 1 | **132-6640** | 1 | CONTROL GP-SECONDARY STEERING | 161 |
| | 9 | 1 | **167-7506** | 1 | HARNESS AS-OPERATOR CONTROLS | |
| | | 1 | **199-8382** | 1 | RECEPTACLE AS | |
| | | 1 | **102-8804** | 1 | KIT-RECEPTACLE (4-PIN) | |
| | | 1 | **102-8805** | 1 | KIT-RECEPTACLE (6-PIN) | |
| | | 1 | **102-8801** | 1 | KIT-RECEPTACLE (12-PIN) | |
| | | | | | (EACH INCLUDES RECEPTACLE AS & WEDGE) | |
| | | 1 | **155-2255** | 2 | KIT-CONNECTING PLUG (12-PIN) | |
| | | 1 | **155-2270** | 1 | KIT-CONNECTING PLUG (2-PIN) | |
| | | 1 | **155-2271** | 2 | KIT-CONNECTING PLUG (4-PIN) | |
| | | 1 | **155-2274** | 2 | KIT-CONNECTING PLUG (6-PIN) | |
| | | | | | (EACH INCLUDES PLUG AS, WEDGE, & INTERFACE SEAL) | |
| C | 10 | 1 | **169-5414** | 3 | CLIP | |
| | 11 | 1 | **196-7268** | 1 | SWITCH AS (THROTTLE HOLD MODE) | |
| | | | **3E-8825** | 2 | LAMP (24-VOLT) | |
| | | | **183-2136** | 1 | ACTUATOR-ROCKER | |
| | 12 | 1 | **185-2197** | 1 | SWITCH AS-ROCKER (THROTTLE LOCK SET, RESET) | |
| C | 13 | 1 | **254-9249** | 1 | HARNESS AS-CONSOLE | |
| | | 1 | **102-8805** | 2 | KIT-RECEPTACLE (6-PIN) | |
| | | 1 | **102-8801** | 1 | KIT-RECEPTACLE (12-PIN) | |
| | | | | | (EACH INCLUDES RECEPTACLE AS & WEDGE) | |
| | | 1 | **155-2255** | 1 | KIT-CONNECTING PLUG (12-PIN) | |
| | | 1 | **155-2274** | 1 | KIT-CONNECTING PLUG (6-PIN) | |
| | | | | | (EACH INCLUDES PLUG AS, WEDGE, & INTERFACE SEAL) | |
| | | 1 | **7X-6222** | 1 | PLUG AS-CONNECTOR (24-PIN) | |
| C | 14 | 1 | **130-5300** | 1 | CLIP | |
| | 15 | 1 | **2V-8259** | 2 | GROMMET | |
| | 16 | 1 | **3E-6754** | 1 | GROMMET | |
| | 17 | 1 | **3H-2900** | 1 | GROMMET | |
| | 18 | 1 | **4D-7794** | 1 | CLIP | |
| | 19 | 1 | **4L-6454** | 1 | BOLT (3/8-16X1-IN) | |
| | 20 | 1 | **4P-7581** | 1 | CLIP | |
| M | 21 | 1 | **5C-2890** | 2 | NUT (M6X1-THD) | |
| | 22 | 1 | **5M-3062** | 3 | BOLT (3/8-16X0.75-IN) | |
| | 23 | 1 | **5S-4246** | 4 | LOCKWASHER | |
| | 24 | 1 | **6B-4540** | 4 | NUT (4-40-THD) | |
| | 25 | 1 | **6V-2480** | 4 | SCREW (4-40X0.5-IN) | |
| | 26 | 1 | **6V-8801** | 1 | NUT (3/8-16-THD) | |
| | 27 | 1 | **7C-4354** | 1 | CLIP | |
| | 28 | 1 | **7G-7053** | 1 | GROMMET | |
| | 29 | 1 | **8M-2770** | 1 | CLIP | |
| | 30 | 1 | **8T-4121** | 1 | WASHER-HARD (11X21X2.5-MM THK) | |
| M | 31 | 1 | **8T-4137** | 1 | BOLT (M10X1.5X20-MM) | |

## *159-5841* **WIRING GP-SHIFT CONSOLE** *(contd. )* **i02585754**

| NOTE | REF NO | GRAPHIC REF | PART NUMBER | QTY | PART NAME 1 2 3 4 5 6 (PRODUCT LEVEL) | SEE PAGE |
|---|---|---|---|---|---|---|
| | 32 | 1 | **8T-4896** | 5 | WASHER-HARD (10.2X18.5X2.5-MM THK) | |
| | 33 | 1 | **9W-0335** | 1 | LIGHTER AS (CIGAR, 24-VOLT) | |
| M | 34 | 1 | **9X-2045** | 2 | SCREW-TRUSS HEAD (M6X1X20-MM) | |
| | 35 | 1 | **9X-8256** | 2 | WASHER (6.6X12X2-MM THK) | |
| | 36 | 1 | **3E-8765** | 1 | SWITCH AS (24-VOLT) (SECONDARY STEERING TEST) | |
| | | | **3E-8825** | 2 | LAMP (24-VOLT) | |
| | | | **3E-8816** | 1 | ACTUATOR-ROCKER | |
| | 37 | 1 | **3E-9327** | 1 | SWITCH AS (CENTERSHIFT PIN PULLER) | |
| | | | **3E-8825** | 1 | LAMP (24-VOLT) | |
| | | | **3E-8817** | 1 | ACTUATOR-ROCKER | |

C-CHANGE FROM PREVIOUS TYPE
M-METRIC PART
Y-SEPARATE ILLUSTRATION

*159-5841* **WIRING GP-SHIFT CONSOLE** *(contd.)* **i02585754**

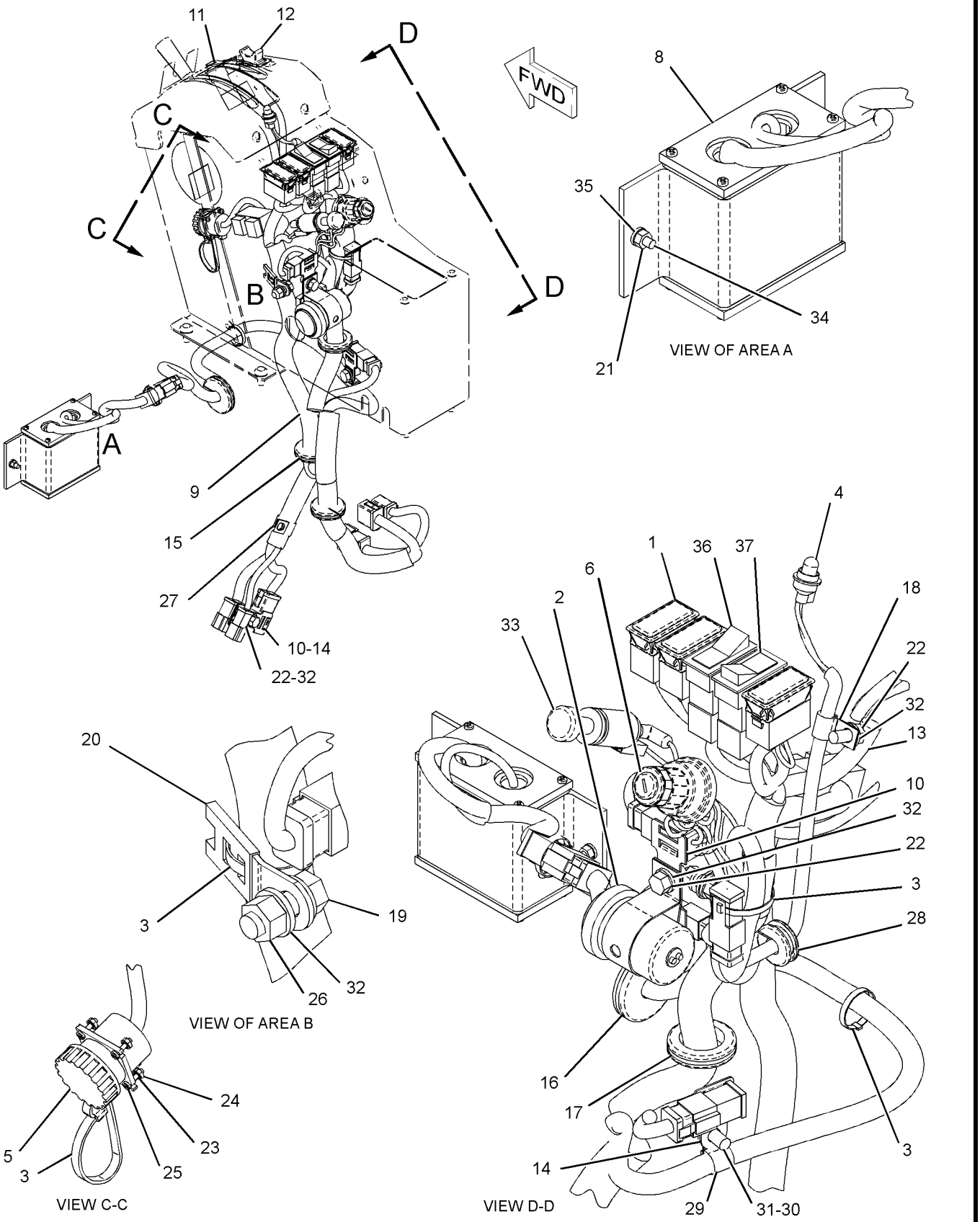


GRAPHIC #1 **<END>** g01294588

# *159-5845* WIRING GP-STEERING CONSOLE

**S/N: CCA1-UP**

**PART OF 159-4615 GENERAL AR**

**SMCS-4334** **i02585769**

| NOTE | REF NO | GRAPHIC REF | PART NUMBER | QTY | PART NAME 1 2 3 4 5 6 (PRODUCT LEVEL) | SEE PAGE |
|---|---|---|---|---|---|---|
| | 1 | 1 | **3E-0109** | 3 | PLUG | |
| | 2 | 1 | **3E-6477** | 1 | RELAY AS (24-VOLT) (TAIL, PANEL LAMPS) | |
| | 3 | 1 | **3S-2093** | 8 | STRAP-CABLE | |
| | 4 | 1 | **9W-1441** | 1 | FUSE (15-AMPERE) | |
| | 5 | 1 | **9W-1442** | 11 | FUSE (10-AMPERE) | |
| | 6 | 1 | **102-9383** | 1 | PLATE | |
| | 7 | 1 | **112-6175** | 2 | SWITCH AS-LIMIT (INCHING PEDAL) | |
| | | | | | (EACH INCLUDES) | |
| | | 1 | **6V-8376** | 3 | SCREW-MACHINE (8-32X0.25-IN) | |
| | | 1 | **9B-7233** | 3 | LOCKWASHER | |
| | 8 | 1 | **239-8335** | 1 | HARNESS AS-CONSOLE (STEERING) | |
| | | 1 | **127-5483** | 1 | PLUG AS-CONNECTOR (1-PIN) | |
| | | 1 | **155-2255** | 1 | KIT-CONNECTING PLUG (12-PIN) | |
| | | 1 | **155-2260** | 1 | KIT-CONNECTING PLUG (3-PIN) | |
| | | 1 | **155-2270** | 2 | KIT-CONNECTING PLUG (2-PIN) | |
| | | 1 | **155-2271** | 1 | KIT-CONNECTING PLUG (4-PIN) | |
| | | 1 | **155-2255** | 2 | KIT-CONNECTING PLUG (12-PIN) | |
| | | 1 | **155-2270** | 2 | KIT-CONNECTING PLUG (2-PIN) | |
| | | | | | (EACH INCLUDES PLUG AS & WEDGE) | |
| | | 1 | **127-5484** | 2 | RECEPTACLE AS-CONNECTOR (1-PIN) | |
| | | 1 | **102-8804** | 1 | KIT-RECEPTACLE (4-PIN) | |
| | | 1 | **102-8801** | 2 | KIT-RECEPTACLE (12-PIN) | |
| | | | | | (EACH INCLUDES RECEPTACLE AS & WEDGE) | |
| | 9 | 1 | **180-4028** | 2 | BRACKET | |
| | 10 | 1 | **180-7033** | 1 | COVER | |
| | 11 | 1 | **186-1714** | 1 | FILM-FUSE (LH) | |
| | 12 | 1 | **186-1715** | 1 | FILM-FUSE (RH) | |
| | 13 | 1 | **194-4181** | 1 | RESISTOR AS | |
| | | 1 | **8C-3334** | 1 | RIVET-TUBULAR | |
| | | 1 | **186-3735** | 2 | PIN-CONNECTOR (16-GA TO 18-GA) | |
| | | 1 | **1S-9593** | 1 | STRAP-CABLE | |
| D | | 1 | **5P-6008** | | TUBE (6.35-MM DIA) (0.1-M) | |
| | | 1 | **102-8802** | 1 | KIT-RECEPTACLE (2-PIN) | |
| | | | | | (INCLUDES RECEPTACLE AS & WEDGE) | |
| | 14 | 1 | **130-5300** | 2 | CLIP | |
| | 15 | 1 | **139-2120** | 1 | SWITCH AS (DIFFERENTIAL LOCK) | |
| | | 1 | **3E-8825** | 2 | LAMP (24-VOLT) | |
| | | 1 | **123-5861** | 1 | ACTUATOR-ROCKER | |
| M | 16 | 1 | **151-4957** | 4 | BOLT-SOCKET HEAD (M3X0.5X25-MM) | |
| M | 17 | 1 | **174-8131** | 1 | SCREW-TRUSS HEAD (M4X0.7X12-MM) | |
| | 18 | 1 | **228-5009** | 4 | CLIP | |
| M | 19 | 1 | **3C-6969** | 4 | NUT (M3X0.5-THD) | |
| | 20 | 1 | **3E-9324** | 1 | SWITCH AS (PANEL LAMP DIMMER) | |
| | | 1 | **3E-8783** | 1 | ACTUATOR-ROCKER | |
| | | 1 | **3E-8825** | 1 | LAMP (24-VOLT) | |
| | 21 | 1 | **3E-8763** | 1 | SWITCH AS (TAIL LAMP) | |
| | | 1 | **3E-8825** | 1 | LAMP (24-VOLT) | |
| | | 1 | **3E-9323** | 1 | ACTUATOR-ROCKER | |
| | 22 | 1 | **3L-8187** | 4 | LOCKWASHER | |
| | 23 | 1 | **4B-1281** | 4 | SCREW-MACHINE (1/4-20X0.625-IN) | |
| | 24 | 1 | **4B-4274** | 16 | WASHER (5.5X13X1.2-MM THK) | |
| | 25 | 1 | **4D-1212** | 1 | GROMMET | |
| M | 26 | 1 | **5C-2890** | 3 | NUT (M6X1-THD) | |
| M | 27 | 1 | **5C-8312** | 1 | NUT (M4X0.7-THD) | |
| M | 28 | 1 | **5C-9553** | 2 | BOLT (M6X1X16-MM) | |
| | 29 | 1 | **5P-4115** | 2 | WASHER-HARD (7.2X19X2-MM THK) | |

## *159-5845* **WIRING GP-STEERING CONSOLE** *(contd.)* **i02585769**

| NOTE | REF NO | GRAPHIC REF | PART NUMBER | QTY | PART NAME 1 2 3 4 5 6 (PRODUCT LEVEL) | SEE PAGE |
|---|---|---|---|---|---|---|
| | 30 | 1 | **6D-4244** | 2 | CLIP | |
| | 31 | 1 | **6J-0488** | 1 | SCREW-BUTTON HEAD (3/8-16X0.875-IN) | |
| | 32 | 1 | **6V-8185** | 4 | NUT (1/4-20-THD) | |
| | 33 | 1 | **6V-8801** | 1 | NUT (3/8-16-THD) | |
| | 34 | 1 | **8C-7508** | 2 | LOCKWASHER | |
| | 36 | 1 | **8L-6521** | 8 | BOLT (10-32X0.5-IN) | |
| | 37 | 1 | **8T-4205** | 2 | WASHER-HARD (7.2X14.5X2-MM THK) | |
| | 38 | 1 | **8T-4896** | 1 | WASHER-HARD (10.2X18.5X2.5-MM THK) | |
| M | 39 | 1 | **8T-4971** | 1 | BOLT (M6X1X30-MM) | |
| | 40 | 1 | **9P-2553** | 1 | SPACER (6.83X10.28X11-MM THK) | |
| M | 41 | 1 | **9X-1046** | 6 | SCREW (M4X0.7X18-MM) | |
| M | 42 | 1 | **9X-2042** | 1 | SCREW-TRUSS HEAD (M6X1X12-MM) | |
| | 43 | 1 | **9X-8256** | 6 | WASHER (6.6X12X2-MM THK) | |
| | 44 | 1 | **3E-0109** | 1 | PLUG (ETHER STARTING AID) | |
| | 45 | 1 | **3E-0109** | 1 | PLUG (FLOOD LAMP CONNECTOR) | |

D-ORDER BY THE METER
M-METRIC PART

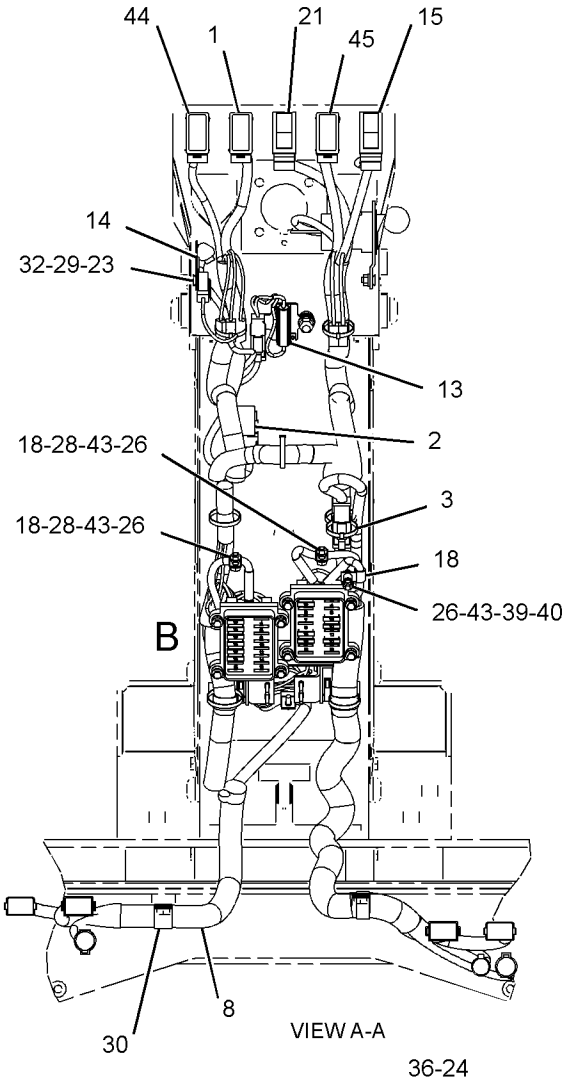


VIEW A-A

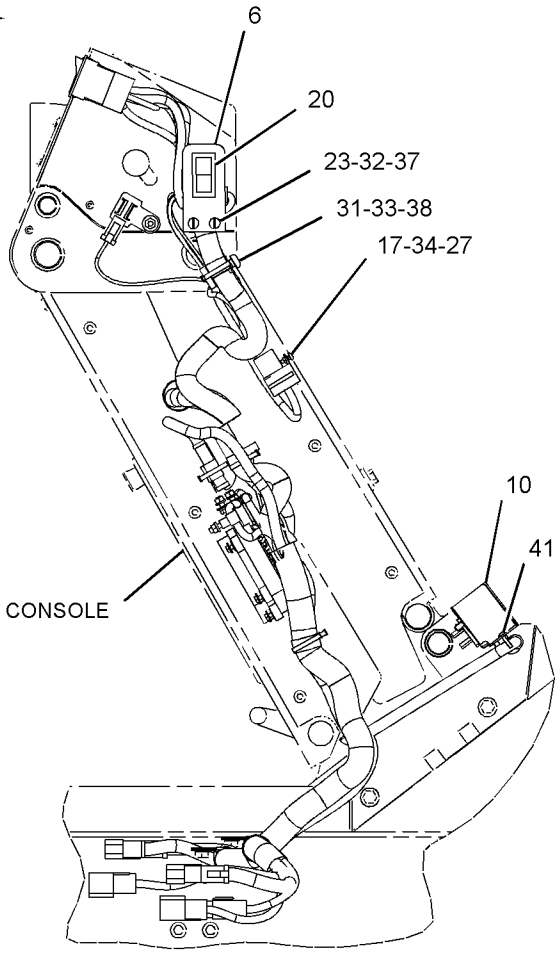


RIGHT SIDE VIEW

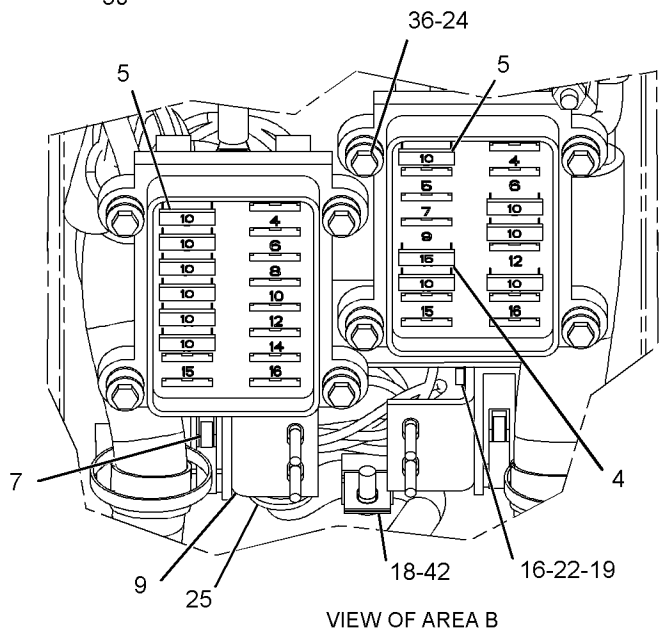


VIEW OF AREA B

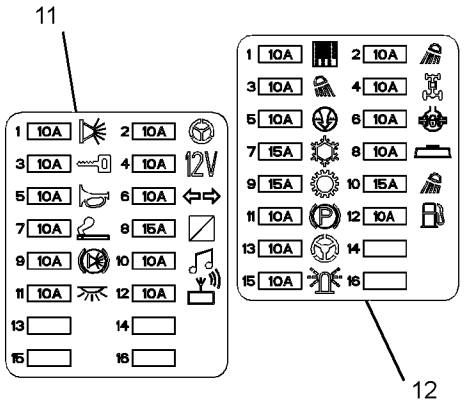


FUSE BLOCK COVERS

GRAPHIC #1 **<END>** g01294595

# ELECTRICAL AND STARTING SYSTEM

## *159-5853* WIRING GP-STEERING CONSOLE–EU

**S/N: CCA1-UP**

**PART OF 207-4453, 210-2044 CONVERSION AR-CERTIFICATION**

**AN ATTACHMENT**

**SMCS-4334** **i02204687**

| NOTE | REF NO | GRAPHIC REF | PART NUMBER | QTY | PART NAME 1 2 3 4 5 6 (PRODUCT LEVEL) | SEE PAGE |
|---|---|---|---|---|---|---|
| | 1 | 1 | **3E-0109** | 3 | PLUG | |
| | 2 | 2 | **3E-6477** | 3 | RELAY AS (24-VOLT) (TAIL,PANEL LAMPS) | |
| | 3 | 1 | **3S-2093** | 8 | STRAP-CABLE | |
| | 4 | 1 | **8X-5153** | 1 | FILM-FACE (TURN SIGNAL, HAZARD) | |
| | 5 | 1 | **8X-5154** | 1 | FILM-FACE (HEADLIGHTS HIGH, LOW BEAM) | |
| | 6 | 1 | **9W-1441** | 1 | FUSE (15-AMPERE) | |
| | 7 | 1 | **9W-1442** | 12 | FUSE (10-AMPERE) | |
| | 8 | 2 | **102-9383** | 1 | PLATE | |
| | 9 | 2 | **112-6175** | 1 | SWITCH AS-LIMIT (INCHING PEDAL) | |
| | | 2 | **6V-8376** | 3 | SCREW-MACHINE (8-32X0.25-IN) | |
| | | 2 | **9B-7233** | 3 | LOCKWASHER | |
| | 10 | 1 | **173-3064** | 1 | SWITCH GP-ROTARY (TURN SIGNAL, HAZARD) | |
| | | 1 | **5L-7200** | 1 | SCREW (8-32X0.375-IN) | |
| | | 1 | **9B-7233** | 1 | LOCKWASHER | |
| | 11 | 1 | **173-4490** | 1 | FLASHER AS (24 VOLT) | |
| | 12 | 2 | **180-4028** | 2 | BRACKET | |
| | 13 | 2 | **180-7033** | 1 | COVER | |
| | 14 | 1 | **186-1715** | 1 | FILM-FUSE (LH) | |
| | 15 | 2 | **194-4181** | 1 | RESISTOR AS (PANEL LAMP DIMMER) | |
| | 16 | 1 | **239-8336** | 1 | HARNESS AS (CONSOLE) | |
| | | 1 | **127-5483** | 1 | PLUG AS-CONNECTOR (1-PIN) | |
| | | 1 | **127-5484** | 2 | RECEPTACLE AS-CONNECTOR (1-PIN) | |
| | | 1 | **102-8802** | 1 | KIT-RECEPTACLE (2-PIN) | |
| | | 1 | **102-8803** | 1 | KIT-RECEPTACLE (3-PIN) | |
| | | 1 | **102-8804** | 1 | KIT-RECEPTACLE (4-PIN) | |
| | | 1 | **102-8801** | 2 | KIT-RECEPTACLE (12-PIN) | |
| | | | | | (EACH INCLUDES RECEPTACLE AS & WEDGE) | |
| | | 1 | **155-2255** | 2 | KIT-CONNECTING PLUG (12-PIN) | |
| | | 1 | **155-2260** | 1 | KIT-CONNECTING PLUG (3-PIN) | |
| | | 1 | **155-2270** | 4 | KIT-CONNECTING PLUG (2-PIN) | |
| | | 1 | **155-2271** | 1 | KIT-CONNECTING PLUG (4-PIN) | |
| | | 1 | **155-2274** | 1 | KIT-CONNECTING PLUG (6-PIN) | |
| | | | | | (EACH INCLUDES PLUG AS & WEDGE) | |
| | 17 | 1 | **197-5453** | 1 | FILM-FUSE (RH) | |
| | 18 | 1 | **089-7960** | 2 | WASHER (5.3X25X1.6-MM THK) | |
| | 19 | 1 | **103-5678** | 1 | SWITCH AS-ROTARY (HEADLIGHT DIMMER) | |
| | | 1 | **5L-7200** | 1 | SCREW (8-32X0.375-IN) | |
| | | 1 | **9B-7233** | 1 | LOCKWASHER | |
| | 20 | 1 | **130-5300** | 2 | CLIP | |
| | 21 | 1 | **139-2120** | 1 | SWITCH AS (DIFFERENTIAL LOCK) | |
| | | 1 | **3E-8825** | 2 | LAMP (24-VOLT) | |
| | | 1 | **123-5861** | 1 | ACTUATOR-ROCKER | |
| M | 22 | 2 | **151-4957** | 4 | BOLT-SOCKET HEAD (M3X0.5X25-MM) | |
| M | 23 | 2 | **174-8131** | 2 | SCREW-TRUSS HEAD (M4X0.7X12-MM) | |
| | 24 | 1,2 | **228-5009** | 4 | CLIP | |
| M | 25 | 2 | **3C-6969** | 4 | NUT (M3X0.5-THD) | |
| | 26 | 1 | **3E-8772** | 1 | SWITCH AS-ROCKER (HEADLIGHTS, TAIL LIGHTS) | |
| | | 1 | **3E-8825** | 2 | LAMP (24-VOLT) | |
| | | 1 | **3E-9326** | 1 | ACTUATOR-ROCKER | |
| | 27 | 2 | **3E-9324** | 1 | SWITCH AS (PANEL BACKLIGHTS) | |
| | | 2 | **3E-8825** | 1 | LAMP (24-VOLT) | |
| | | 2 | **3E-8783** | 1 | ACTUATOR-ROCKER | |
| | 28 | 2 | **3L-8187** | 4 | LOCKWASHER | |
| | 29 | 1,2 | **4B-1281** | 4 | SCREW-MACHINE (1/4-20X0.625-IN) | |
| | 30 | 1 | **4B-2047** | 2 | NUT (10-24-THD) | |

## *159-5853* **WIRING GP-STEERING CONSOLE** *(contd.)* **i02204687**

| NOTE | REF NO | GRAPHIC REF | PART NUMBER | QTY | PART NAME 1 2 3 4 5 6 (PRODUCT LEVEL) | SEE PAGE |
|---|---|---|---|---|---|---|
| | 31 | 1 | **4B-4274** | 18 | WASHER (5.5X13X1.2-MM THK) | |
| | 32 | 2 | **4D-1212** | 1 | GROMMET | |
| M | 33 | 1 | **5C-2890** | 3 | NUT (M6X1-THD) | |
| M | 34 | 2 | **5C-8312** | 2 | NUT (M4X0.7-THD) | |
| M | 35 | 1 | **5C-9553** | 2 | BOLT (M6X1X16-MM) | |
| | 36 | 1 | **5M-6755** | 2 | SCREW-MACHINE (NO 10X0.562-IN) | |
| | 37 | 1 | **5P-4115** | 2 | WASHER-HARD (7.2X19X2-MM THK) | |
| | 38 | 1 | **6D-4244** | 2 | CLIP | |
| | 39 | 2 | **6J-0488** | 1 | SCREW-BUTTON HEAD (3/8-16X0.875-IN) | |
| | 40 | 1,2 | **6V-8185** | 4 | NUT (1/4-20-THD) | |
| | 41 | 2 | **6V-8801** | 1 | NUT (3/8-16-THD) | |
| | 42 | 2 | **8C-7508** | 4 | LOCKWASHER | |
| | 44 | 1 | **8L-6521** | 8 | BOLT (10-32X0.5-IN) | |
| | 45 | 2 | **8T-4205** | 2 | WASHER-HARD (7.2X14.5X2-MM THK) | |
| | 46 | 2 | **8T-4896** | 1 | WASHER-HARD (10.2X18.5X2.5-MM THK) | |
| M | 47 | 1 | **8T-4971** | 1 | BOLT (M6X1X30-MM) | |
| | 48 | 1 | **8X-6296** | 1 | LEVER (TURN SIGNAL, HAZARD) | |
| | 49 | 1 | **9P-2553** | 1 | SPACER (6.83X10.28X11-MM THK) | |
| M | 50 | 2 | **9X-1046** | 6 | SCREW (M4X0.7X18-MM) | |
| M | 51 | 2 | **9X-2042** | 1 | SCREW-TRUSS HEAD (M6X1X12-MM) | |
| | 52 | 1 | **9X-8256** | 6 | WASHER (6.6X12X2-MM THK) | |
| | 53 | 2 | **112-6175** | 1 | SWITCH AS-LIMIT (BRAKE PEDAL) | |
| | | 2 | **6V-8376** | 3 | SCREW-MACHINE (8-32X0.25-IN) | |
| | | 2 | **9B-7233** | 3 | LOCKWASHER | |
| | 54 | 1 | **8X-6296** | 1 | LEVER (HEADLAMP DIMMER) | |

M-METRIC PART

*159-5853* **WIRING GP-STEERING CONSOLE** *(contd. )* **i02204687**

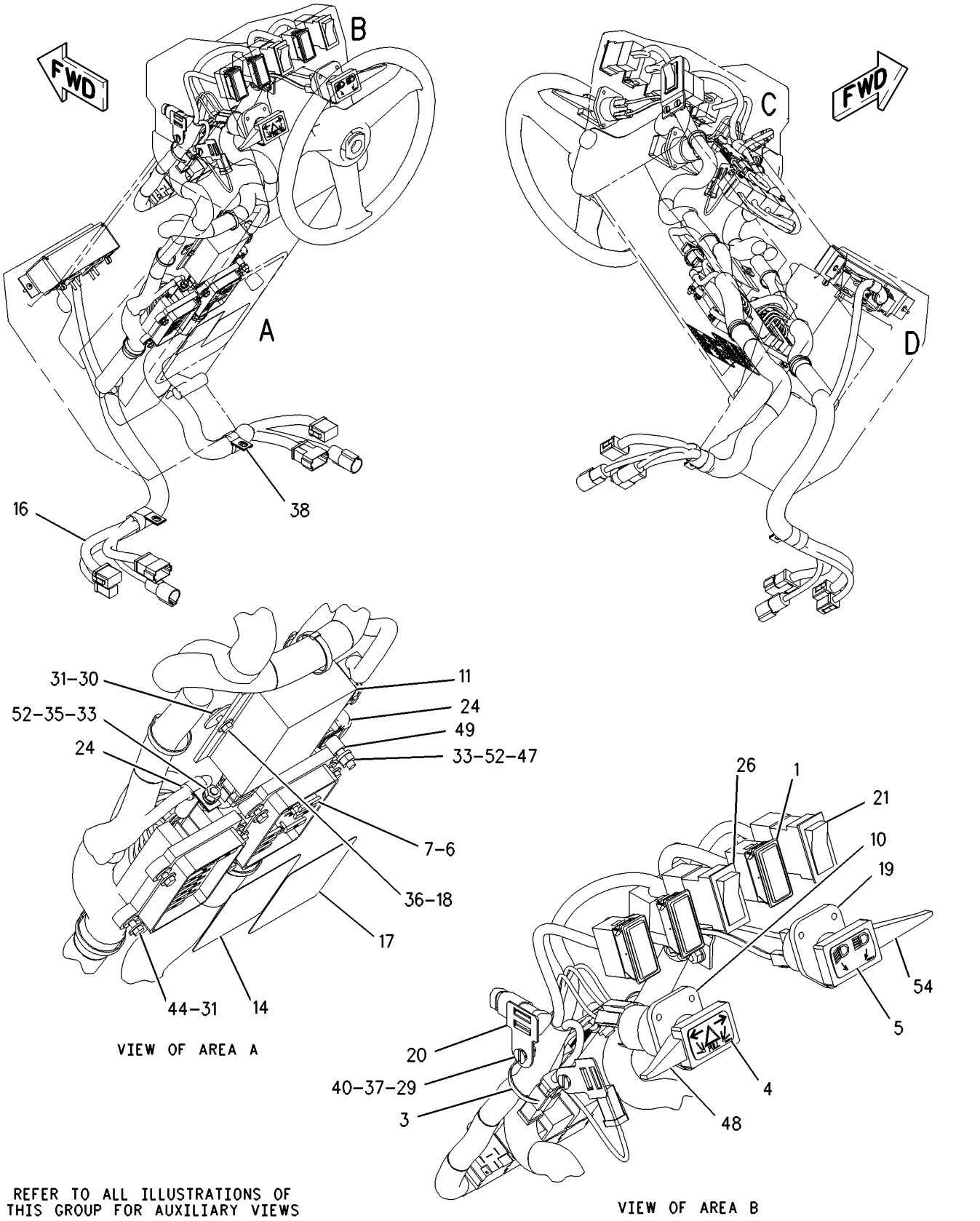


GRAPHIC #1 g00941586

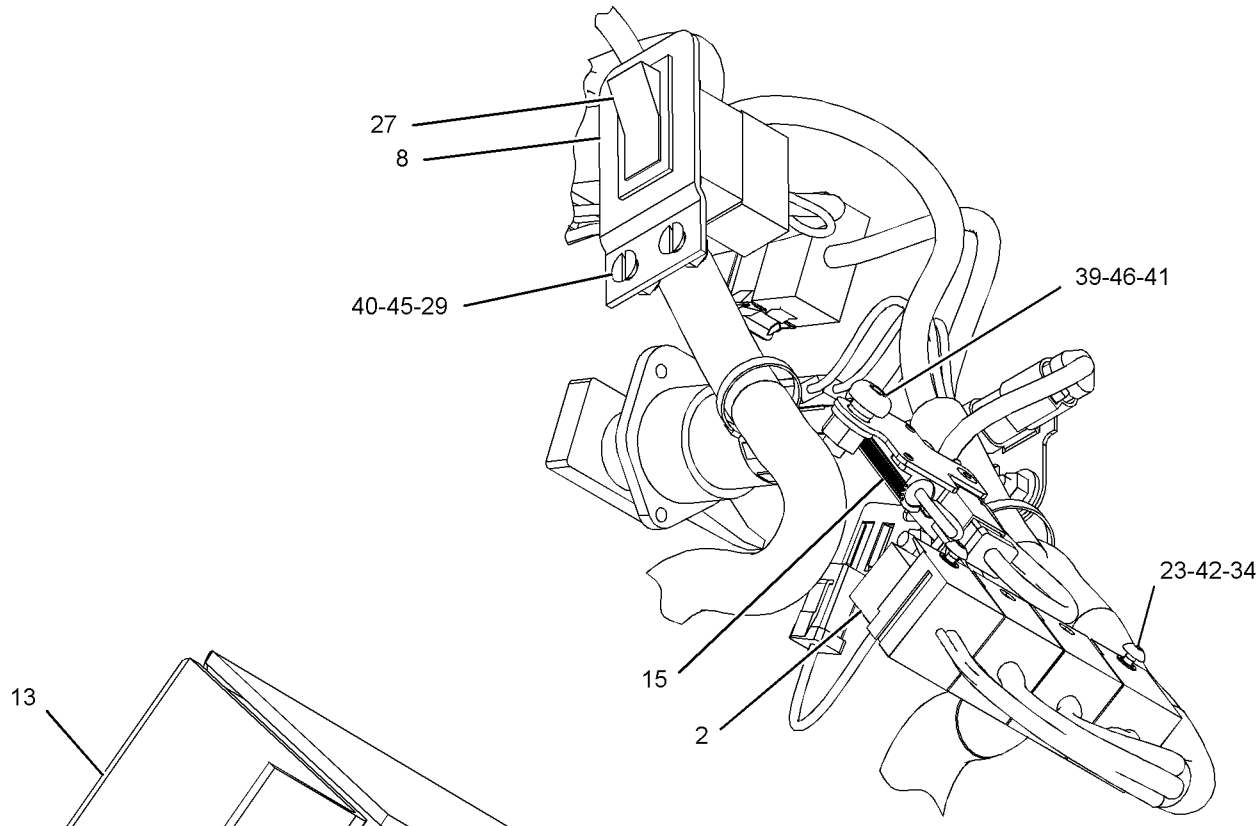


VIEW OF AREA C

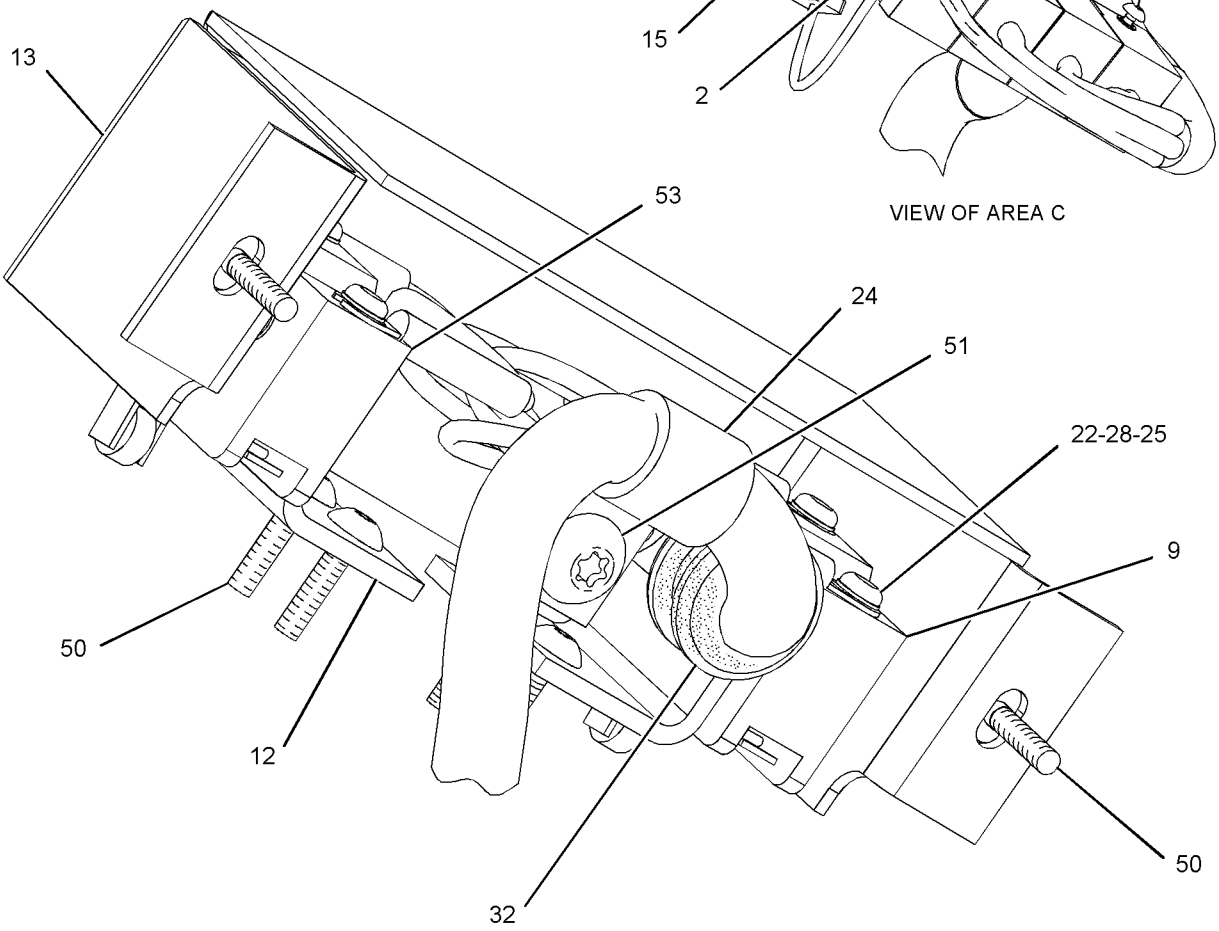


VIEW OF AREA D

GRAPHIC #2 **<END>** g01056251

# *180-9324* WIRING GP-TRANSMISSION

**S/N: EDB4459-UP**

**PART OF 281-3165 CONTROL GP-TRANSMISSION HYD**

**SMCS-3104** **i02502591**

| NOTE | REF NO | GRAPHIC REF | PART NUMBER | QTY | PART NAME 1 2 3 4 5 6 (PRODUCT LEVEL) | SEE PAGE |
|---|---|---|---|---|---|---|
| | 1 | 1 | **213-9842** | 1 | HARNESS AS-TRANSMISSION | |
| | | 1 | **102-8801** | 1 | KIT-RECEPTACLE (12-PIN) | |
| | | | | | (INCLUDES RECEPTACLE AS & WEDGE) | |
| | | 1 | **155-2270** | 8 | KIT-CONNECTING PLUG (2-PIN) | |
| | | | | | (EACH INCLUDES PLUG AS, WEDGE, & INTERFACE SEAL) | |
| | 2 | 1 | **207-6034** | 1 | PLATE AS | |
| | 3 | 1 | **205-8847** | 1 | PLATE AS | |
| | 4 | 1 | **3S-2093** | 7 | STRAP-CABLE | |
| | 5 | 1 | **205-8839** | 1 | CLIP AS | |
| M | 6 | 1 | **8T-0639** | 1 | BOLT (M6X1X12-MM) | |

M-METRIC PART

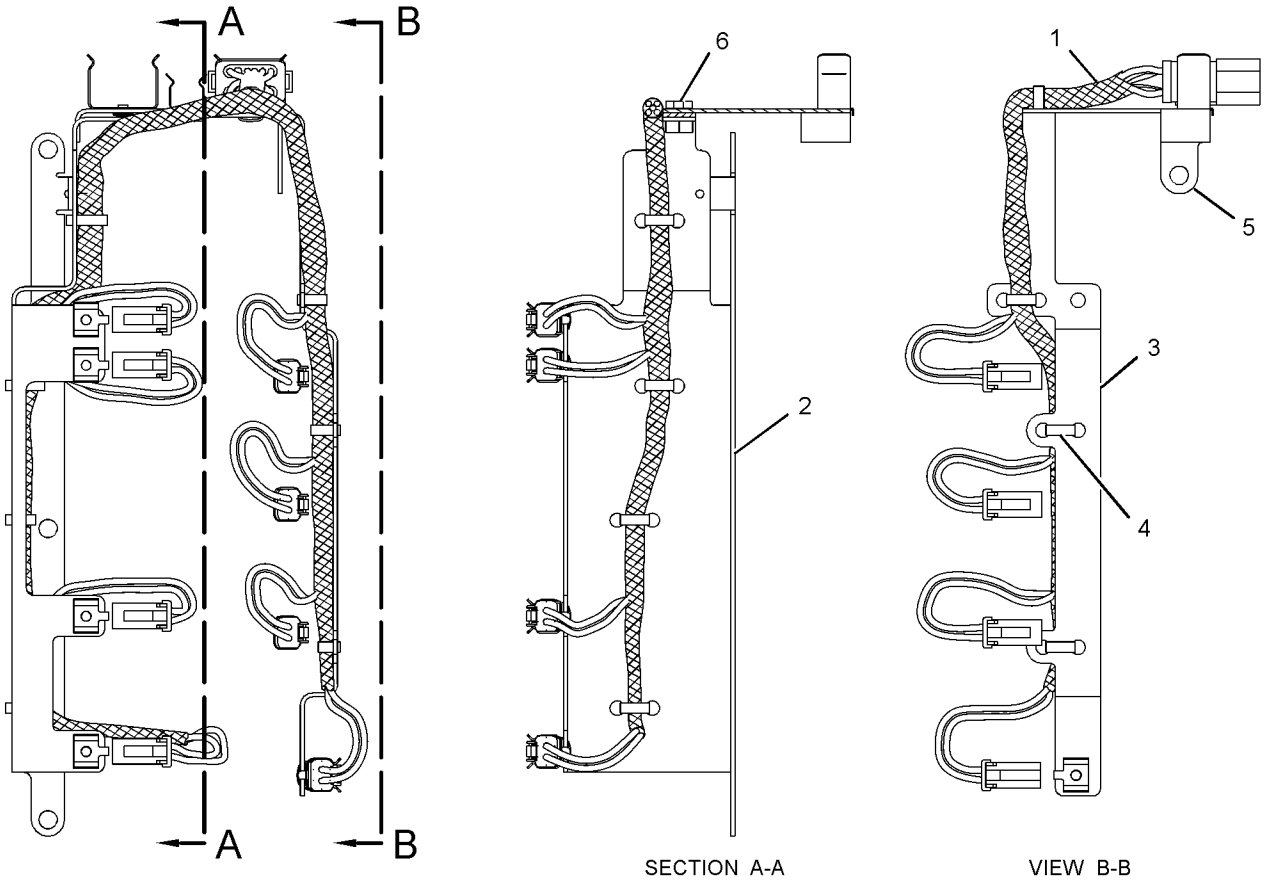


SECTION A-A VIEW B-B

GRAPHIC #1 **<END>** g01256130

# *117-2760* WIRING GP-UNIT INJECTOR

**S/N: 3PD1-UP**

**PART OF 160-5101 ENGINE AR**

**SMCS-1408** **i02200301**

| NOTE | REF NO | GRAPHIC REF | PART NUMBER | QTY | PART NAME 1 2 3 4 5 6 (PRODUCT LEVEL) | SEE PAGE |
|---|---|---|---|---|---|---|
| | 1 | 1 | **4P-9537** | 1 | HARNESS AS-WIRING (UNIT INJECTOR) | |
| | 2 | 1 | **2V-3216** | 4 | CLIP | |
| | 3 | 1 | **7X-2468** | 3 | CLIP | |
| | 4 | 1 | **7E-6508** | 6 | CAP AS | |
| M | 5 | 1 | **6V-8214** | 9 | BOLT (M6X1X20-MM) | |
| | 6 | 1 | **5P-0537** | 9 | WASHER-HARD (7.2X14.5X2-MM THK) | |

M-METRIC PART

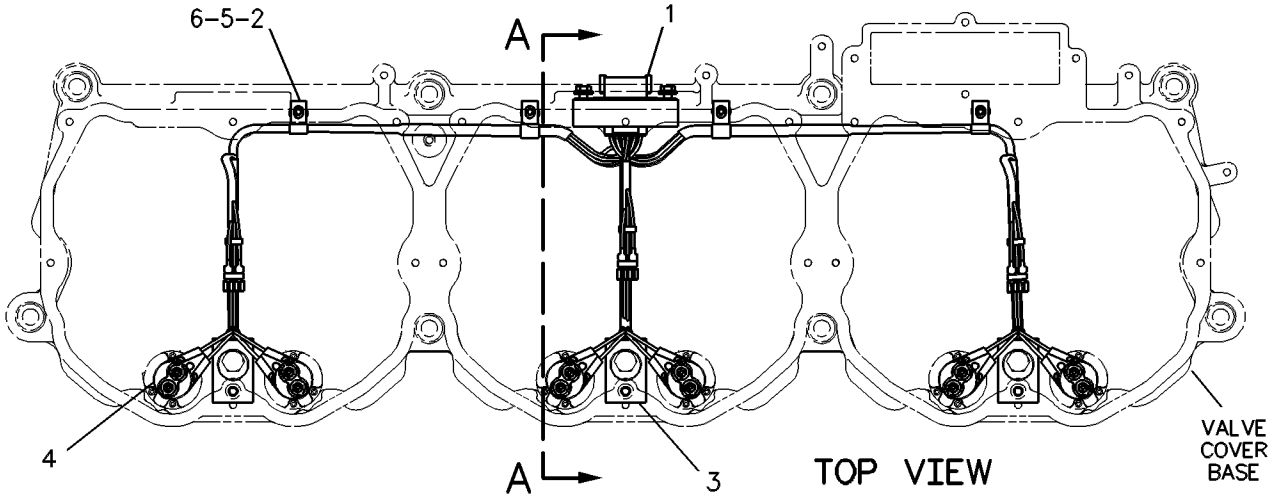


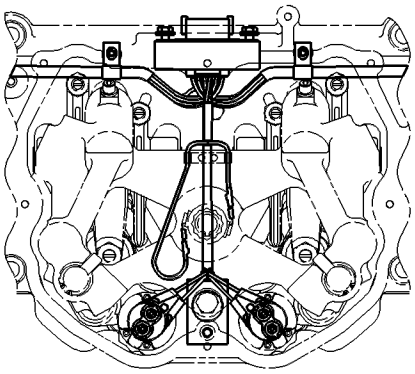

WIRING CONNECTIONS SHOWN FOR USE WITH ENGINE RETARDER

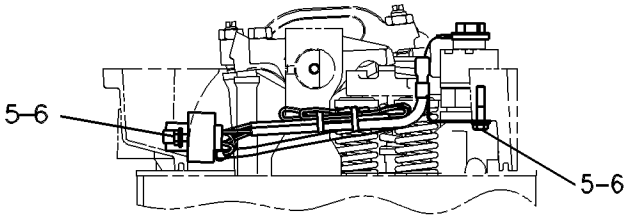


VIEW A-A

GRAPHIC #1 **<END>** g00399410

## *260-7647* APPLICATION GP-POWER TRAIN

**S/N: CCA1611-UP**
**PART OF 247-6433 WIRING GP-FRONT**
**AN ATTACHMENT**

**i02385710**

| NOTE | PART NUMBER | QTY | PART NAME 1 2 3 4 5 6 (PRODUCT LEVEL) | SEE PAGE |
|---|---|---|---|---|
| | **262-1408** | 1 | CONTROL GP-UNPROGRAMMED (POWER TRAIN) | |

**<END>**

## *161-0764* AUTOSHIFT AR—TRANSMISSION

**S/N: CCA1-UP**
**PART OF 207-4453, 210-2044 CONVERSION AR-CERTIFICATION, 259-5738 CONVERSION AR-MACHINE, 197-5955, 236-3948 SNOW AR-MOTOR GRADER**
**AN ATTACHMENT**

**SMCS-3168** **i01816435**

| NOTE | PART NUMBER | QTY | PART NAME 1 2 3 4 5 6 (PRODUCT LEVEL) | SEE PAGE |
|---|---|---|---|---|
| Z | | 1 | ELECTRONICS GP-POWER TRAIN (AUTOSHIFT) | |
| | **3E-8763** | 1 | SWITCH AS (AUTOSHIFT TRANSMISSION) | |
| | **3E-8784** | 1 | ACTUATOR-ROCKER | |
| | **3E-8825** | 1 | LAMP (24-VOLT) (AUTOSHIFT) | |

Z-NOT SERVICED SEPARATELY

**<END>**

## *180-9146* CASE & PARTS GP-TRANSMISSION

**S/N: EDB1-3223; BJN1-99999**

**PART OF 160-2196 TRANSMISSION AR**

**SMCS-3064** **i02585952**

| NOTE | REF NO | GRAPHIC REF | PART NUMBER | QTY | PART NAME 1 2 3 4 5 6 (PRODUCT LEVEL) | SEE PAGE |
|---|---|---|---|---|---|---|
| | 1 | 1 | **178-9158** | 1 | CASE AS | |
| | | 1 | **7T-6496** | 7 | PLUG | |
| | | 1 | **8M-6521** | 2 | DOWEL | |
| | 2 | 1 | **6Y-5728** | 1 | COVER AS-TRANSMISSION | |
| | | 1 | **7T-6496** | 1 | PLUG | |
| M | 3 | 1 | **6V-1820** | 37 | BOLT (M10X1.5X30-MM) | |
| M | 4 | 1 | **8T-5436** | 2 | BOLT (M10X1.5X130-MM) | |
| | 5 | 1,2 | **9S-4185** | 2 | PLUG | |
| | 6 | 1,2 | **3K-0360** | 9 | SEAL-O-RING | |
| | 7 | 1 | **2J-0157** | 1 | SEAL-O-RING | |
| B | 8 | 1,2 | **1U-8846** | | SEALANT-GASKET (15-ML) | |
| | 9 | 1 | **8T-6765** | 1 | PLUG-PIPE | |
| | 10 | 1 | **5M-6200** | 1 | SEAL-O-RING | |
| | 11 | 1 | **8E-1133** | 1 | TUBE AS | |
| | 12 | 1 | **6L-1650** | 1 | SEAL-O-RING | |
| M | 13 | 1,2 | **6V-5217** | 13 | BOLT (M8X1.25X20-MM) | |
| | 14 | 1,2 | **5P-3863** | 5 | SEAL-O-RING | |
| | 15 | 1,2 | **9W-1454** | 5 | COVER | |
| | 16 | 1 | **8S-9129** | 1 | FILTER-MAGNETIC (TRANSMISSION) | |
| | 17 | 1 | **8S-9130** | 1 | SCREEN-SUCTION (TRANSMISSION CASE) | |
| | 18 | 1 | **4M-6108** | 2 | RACE-BEARING OUTER | |
| | 19 | 1 | **148-1925** | 2 | VALVE-RELIEF | |
| | 20 | 1 | **9X-4609** | 2 | SEAL-O-RING | |
| | 21 | 1 | **9W-7038** | 1 | RING-SNAP | |
| M | 22 | 1 | **6V-3940** | 4 | BOLT (M8X1.25X25-MM) | |
| | 23 | 1 | **6Y-9763** | 1 | GEAR AS (38-TEETH) | |
| | | 1 | **4K-8603** | 1 | PLUG-CUP | |
| | 24 | 1 | **2S-3029** | 1 | BALL BEARING | |
| | 25 | 1 | **9W-6465** | 1 | RETAINER-BEARING | |
| | 26 | 1,2 | **9S-4190** | 5 | PLUG | |
| | 27 | 1,2 | **2M-9780** | 6 | SEAL-O-RING | |
| | 28 | 2 | **9S-4191** | 1 | PLUG-O RING | |
| | 29 | 1,2 | **3J-1907** | 2 | SEAL-O-RING | |
| | 30 | 1,2 | **8T-4121** | 11 | WASHER-HARD (11X21X2.5-MM THK) | |
| | 31 | 1 | **190-1684** | 1 | PLATE AS | |
| M | 32 | 1 | **6V-8212** | 1 | BOLT (M10X1.5X16-MM) | |
| | 33 | 1 | **5P-4483** | 1 | PLUG | |
| | 34 | 1 | **7M-8485** | 4 | SEAL-O-RING | |
| M | 35 | 1,2 | **6V-7981** | 5 | BOLT (M10X1.5X70-MM) | |
| M | 36 | 1,2 | **6V-4248** | 8 | BOLT (M10X1.5X25-MM) | |
| | 37 | 2 | **9S-8006** | 1 | PLUG | |
| | 38 | 2 | **9S-8005** | 4 | PLUG-O RING | |
| | 39 | 2 | **6I-8642** | 4 | RACE-BEARING OUTER | |
| | 40 | 2 | **5P-3924** | 2 | RACE-BEARING OUTER | |
| | 41 | 2 | **9M-2042** | 1 | RACE-BEARING OUTER | |
| | 42 | 2 | **191-3680** | 1 | COVER AS | |
| | | 2 | **4F-2609** | 2 | DOWEL | |
| | 43 | 2 | **2H-6489** | 1 | RACE-BEARING OUTER | |
| | 44 | 2 | **226-6621** | 1 | HARNESS AS-SENSOR (TRANSMISSION) | |
| | | 2 | **155-2255** | 1 | KIT-CONNECTING PLUG (12-PIN) | |
| | | 2 | **155-2270** | 3 | KIT-CONNECTING PLUG (2-PIN) | |
| | | | | | (EACH INCLUDES PLUG AS & WEDGE) | |
| | 45 | 1,2 | **191-9256** | 2 | CLIP | |
| M | 46 | 1,2 | **8T-4137** | 4 | BOLT (M10X1.5X20-MM) | |
| | 47 | 2 | **6V-1720** | 1 | PLATE-SERIAL NUMBER (TRANSMISSION) | |
| Y | 48 | 2 | **183-8597** | 1 | SENSOR GP-SPEED (TRANSMISSION INPUT) | 284 |

## *180-9146* **CASE & PARTS GP-TRANSMISSION** *(contd.)* **i02585952**

| NOTE | REF NO | GRAPHIC REF | PART NUMBER | QTY | PART NAME 1 2 3 4 5 6 (PRODUCT LEVEL) | SEE PAGE |
|---|---|---|---|---|---|---|
| Y | 48A | 2 | **183-8597** | 2 | SENSOR GP-SPEED (TRANSMISSION OUTPUT) | 284 |
| | 49 | 2 | **201-0387** | 1 | CLIP AS | |
| M | 50 | 2 | **8T-4133** | 1 | NUT (M10X1.5-THD) | |
| | 51 | 2 | **143-5373** | 1 | GUARD AS | |
| | 52 | 1 | **5P-9299** | 1 | CLIP | |
| Y | 53 | 1 | **3E-8700** | 1 | SENSOR GP-TEMPERATURE (TRANSMISSION OIL) | 287 |
| | 54 | 1 | **4P-7581** | 1 | CLIP | |
| | 55 | 1 | **9S-4181** | 3 | PLUG-O RING | |
| | 56 | 1 | **1B-5174** | 1 | PLUG-PIPE | |
| | 57 | 2 | **113-7745** | 1 | PLATE AS | |
| | 58 | 1 | **7K-1181** | 1 | STRAP-CABLE | |
| | 59 | 2 | **206-3713** | 1 | PLATE AS | |
| | 60 | 1 | **145-8039** | 3 | LOCK | |
| | 61 | 2 | **133-5631** | 1 | PLUG | |
| | 62 | 2 | **5F-1678** | 1 | SEAL-O-RING | |
| M | 63 | 2 | **6V-5219** | 4 | BOLT (M8X1.25X40-MM) | |
| | 64 | 2 | **190-5212** | 1 | ROTOR | |
| M | 65 | 2 | **6V-8202** | 4 | BOLT-SOCKET HEAD (M8X1.25X16-MM) | |
| | 66 | 1 | **130-5300** | 1 | CLIP | |
| | 67 | 1 | **206-3714** | 1 | PLATE | |
| M | 68 | 2 | **6V-2317** | 2 | BOLT (M8X1.25X30-MM) | |

B-USE AS REQUIRED
M-METRIC PART
Y-SEPARATE ILLUSTRATION

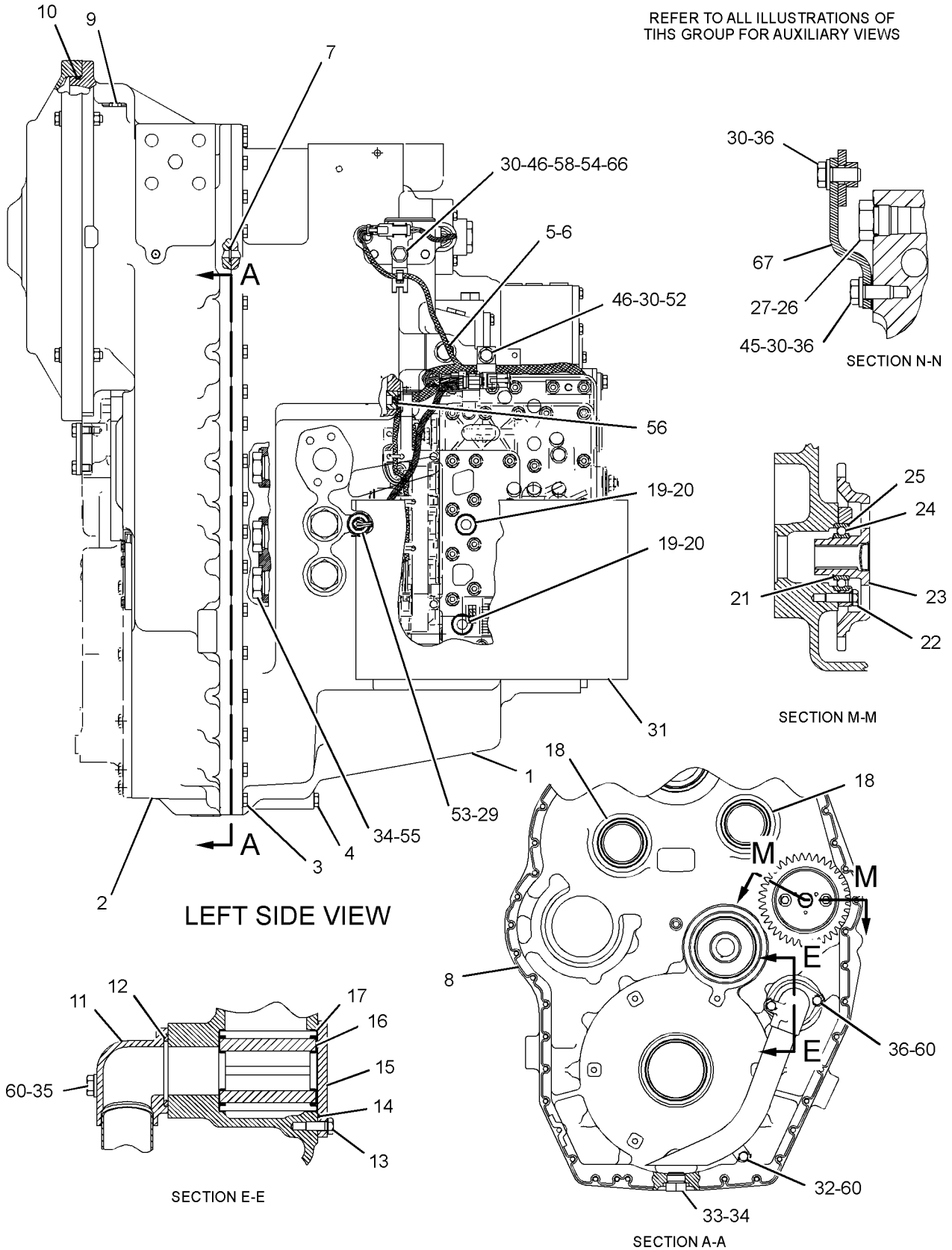


GRAPHIC #1

g01294683

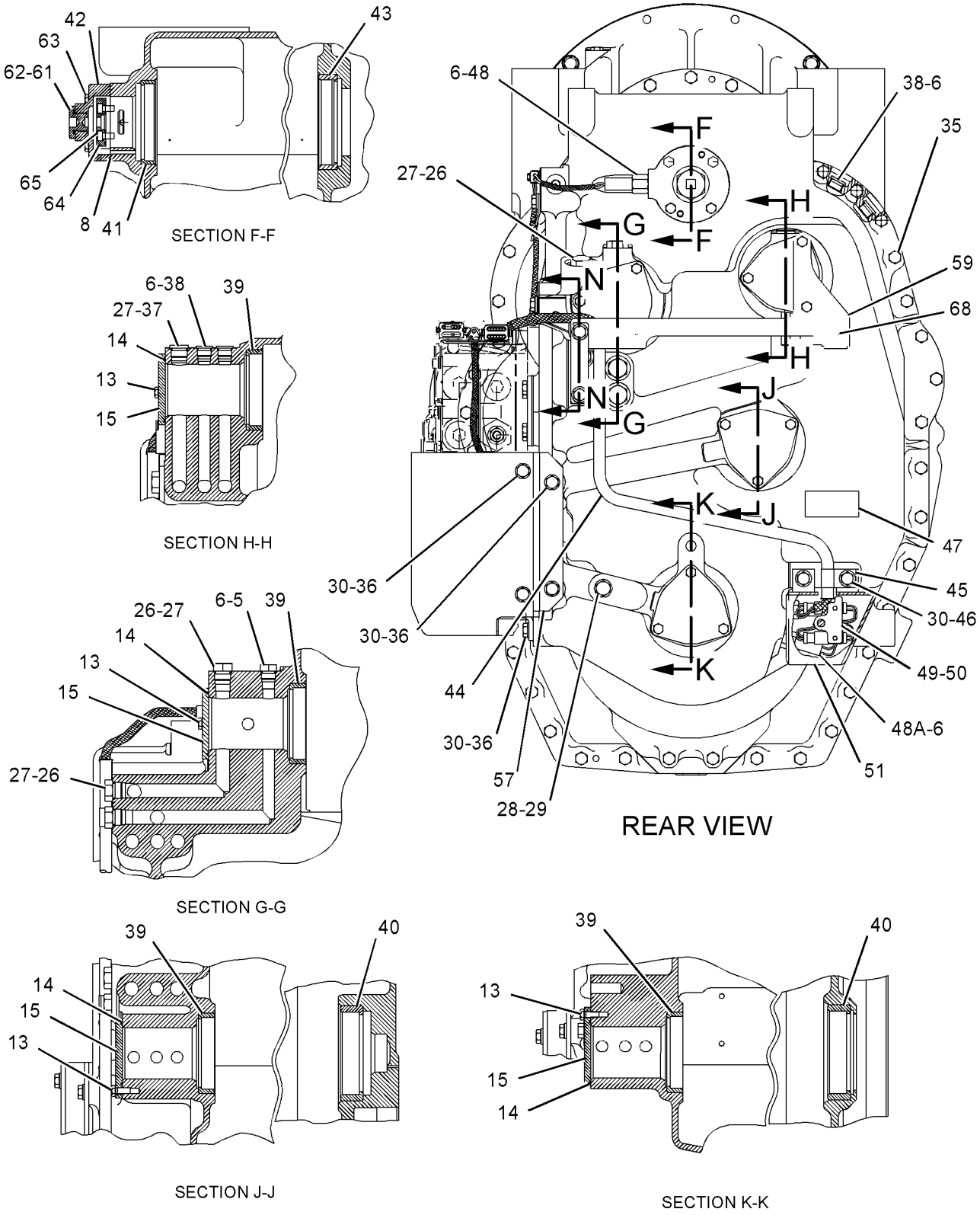


GRAPHIC #2 **<END>** g01294685

## *180-9146* CASE & PARTS GP-TRANSMISSION

**S/N: EDB3224-UP**

**PART OF 160-2196 TRANSMISSION AR**

**SMCS-3064** **i02325063**

| NOTE | REF NO | GRAPHIC REF | PART NUMBER | QTY | PART NAME 1 2 3 4 5 6 (PRODUCT LEVEL) | SEE PAGE |
|---|---|---|---|---|---|---|
| | 1 | 1 | **178-9158** | 1 | CASE AS | |
| | | 1 | **7T-6496** | 7 | PLUG | |
| | | 1 | **8M-6521** | 2 | DOWEL | |
| | 2 | 1 | **6Y-5728** | 1 | COVER AS-TRANSMISSION | |
| | | 1 | **7T-6496** | 1 | PLUG | |
| M | 3 | 1 | **6V-1820** | 37 | BOLT (M10X1.5X30-MM) | |
| M | 4 | 1 | **8T-5436** | 2 | BOLT (M10X1.5X130-MM) | |
| | 5 | 1,2 | **9S-4185** | 2 | PLUG | |
| C | 6 | 1,2 | **3K-0360** | 8 | SEAL-O-RING | |
| | 7 | 1 | **2J-0157** | 1 | SEAL-O-RING | |
| B | 8 | 1,2 | **1U-8846** | | SEALANT-GASKET (15-ML) | |
| | 9 | 1 | **8T-6765** | 1 | PLUG-PIPE | |
| | 10 | 1 | **5M-6200** | 1 | SEAL-O-RING | |
| | 11 | 1 | **8E-1133** | 1 | TUBE AS | |
| | 12 | 1 | **6L-1650** | 1 | SEAL-O-RING | |
| M | 13 | 1,2 | **6V-5217** | 13 | BOLT (M8X1.25X20-MM) | |
| | 14 | 1,2 | **5P-3863** | 5 | SEAL-O-RING | |
| | 15 | 1,2 | **9W-1454** | 5 | COVER | |
| | 16 | 1 | **8S-9129** | 1 | FILTER-MAGNETIC (TRANSMISSION) | |
| | 17 | 1 | **8S-9130** | 1 | SCREEN-SUCTION (TRANSMISSION CASE) | |
| | 18 | 1 | **4M-6108** | 2 | RACE-BEARING OUTER | |
| | 19 | 1 | **148-1925** | 2 | VALVE-RELIEF | |
| | 20 | 1 | **9X-4609** | 2 | SEAL-O-RING | |
| | 21 | 1 | **9W-7038** | 1 | RING-SNAP | |
| M | 22 | 1 | **6V-3940** | 4 | BOLT (M8X1.25X25-MM) | |
| | 23 | 1 | **6Y-9763** | 1 | GEAR AS (38-TEETH) | |
| | | 1 | **6Y-1007** | 1 | GEAR (38-TEETH) | |
| | | 1 | **4K-8603** | 1 | PLUG-CUP | |
| | 24 | 1 | **2S-3029** | 1 | BALL BEARING | |
| | 25 | 1 | **9W-6465** | 1 | RETAINER-BEARING | |
| | 26 | 1,2 | **9S-4190** | 5 | PLUG | |
| | 27 | 1,2 | **2M-9780** | 6 | SEAL-O-RING | |
| | 28 | 2 | **9S-4191** | 1 | PLUG-O RING | |
| | 29 | 1,2 | **3J-1907** | 2 | SEAL-O-RING | |
| | 30 | 1,2 | **8T-4121** | 11 | WASHER-HARD (11X21X2.5-MM THK) | |
| | 31 | 1 | **190-1684** | 1 | PLATE AS | |
| M | 32 | 1 | **6V-8212** | 1 | BOLT (M10X1.5X16-MM) | |
| | 33 | 1 | **5P-4483** | 1 | PLUG | |
| | 34 | 1 | **7M-8485** | 1 | SEAL-O-RING | |
| M | 35 | 1,2 | **6V-7981** | 5 | BOLT (M10X1.5X70-MM) | |
| M | 36 | 1,2 | **6V-4248** | 8 | BOLT (M10X1.5X25-MM) | |
| | 37 | 2 | **9S-8006** | 1 | PLUG | |
| | 38 | 2 | **9S-8005** | 4 | PLUG-O RING | |
| | 39 | 2 | **6I-8642** | 4 | RACE-BEARING OUTER | |
| | 40 | 2 | **5P-3924** | 2 | RACE-BEARING OUTER | |
| | 41 | 2 | **9M-2042** | 1 | RACE-BEARING OUTER | |
| C | 42 | 2 | **248-2046** | 1 | COVER AS | |
| | 43 | 2 | **2H-6489** | 1 | RACE-BEARING OUTER | |
| | 44 | 2 | **226-6621** | 1 | HARNESS AS-SENSOR | |
| | | 2 | **155-2255** | 1 | KIT-CONNECTING PLUG (12-PIN) | |
| | | 2 | **155-2270** | 3 | KIT-CONNECTING PLUG (2-PIN) | |
| | | | | | (EACH INCLUDES PLUG AS & WEDGE) | |
| | 45 | 1,2 | **191-9256** | 2 | CLIP | |
| M | 46 | 1,2 | **8T-4137** | 4 | BOLT (M10X1.5X20-MM) | |
| | 47 | 2 | **6V-1720** | 1 | PLATE-SERIAL NUMBER (TRANSMISSION) | |
| CY | 48 | 2 | **183-8597** | 2 | SENSOR GP-SPEED (TRANSMISSION OUTPUT) | 284 |

## *180-9146* **CASE & PARTS GP-TRANSMISSION** *(contd.)* **i02325063**

| NOTE | REF NO | GRAPHIC REF | PART NUMBER | QTY | PART NAME 1 2 3 4 5 6 (PRODUCT LEVEL) | SEE PAGE |
|---|---|---|---|---|---|---|
| | 49 | 2 | **201-0387** | 1 | CLIP AS | |
| M | 50 | 2 | **8T-4133** | 1 | NUT (M10X1.5-THD) | |
| | 51 | 2 | **143-5373** | 1 | GUARD AS | |
| | 52 | 1 | **5P-9299** | 1 | CLIP | |
| Y | 53 | 1 | **3E-8700** | 1 | SENSOR GP-TEMPERATURE (TRANSMISSION OIL) | 287 |
| | 54 | 1 | **4P-7581** | 1 | CLIP | |
| | 55 | 1 | **164-4180** | 3 | PLUG AS | |
| | | | | | (EACH INCLUDES) | |
| | | 1 | **9S-4181** | 1 | PLUG-O RING | |
| | | 1 | **7M-8485** | 1 | SEAL-O-RING | |
| | 56 | 1 | **1B-5174** | 1 | PLUG-PIPE | |
| | 57 | 2 | **113-7745** | 1 | PLATE AS | |
| | 58 | 1 | **7K-1181** | 1 | STRAP-CABLE | |
| | 59 | 2 | **206-3713** | 1 | PLATE AS | |
| | 60 | 1 | **145-8039** | 3 | LOCK | |
| | 61 | 2 | **133-5631** | 1 | PLUG | |
| | 62 | 2 | **5F-1678** | 1 | SEAL-O-RING | |
| M | 63 | 2 | **6V-5219** | 4 | BOLT (M8X1.25X40-MM) | |
| | 64 | 2 | **190-5212** | 1 | ROTOR | |
| M | 65 | 2 | **6V-8202** | 4 | BOLT-SOCKET HEAD (M8X1.25X16-MM) | |
| | 67 | 1 | **206-3714** | 1 | PLATE | |
| M | 68 | 2 | **6V-2317** | 2 | BOLT (M8X1.25X30-MM) | |
| C | 69 | 2 | **191-8303** | 1 | SENSOR GP-SPEED (TRANSMISSION INPUT) | |
| C | 70 | 2 | **117-1385** | 1 | SEAL-O-RING | |
| C | 71 | 2 | **9M-1974** | 1 | WASHER-HARD (8.8X16X2-MM THK) | |
| CM | 72 | 2 | **6V-5215** | 1 | BOLT (M8X1.25X16-MM) | |

B-USE AS REQUIRED
C-CHANGE FROM PREVIOUS TYPE
M-METRIC PART
Y-SEPARATE ILLUSTRATION

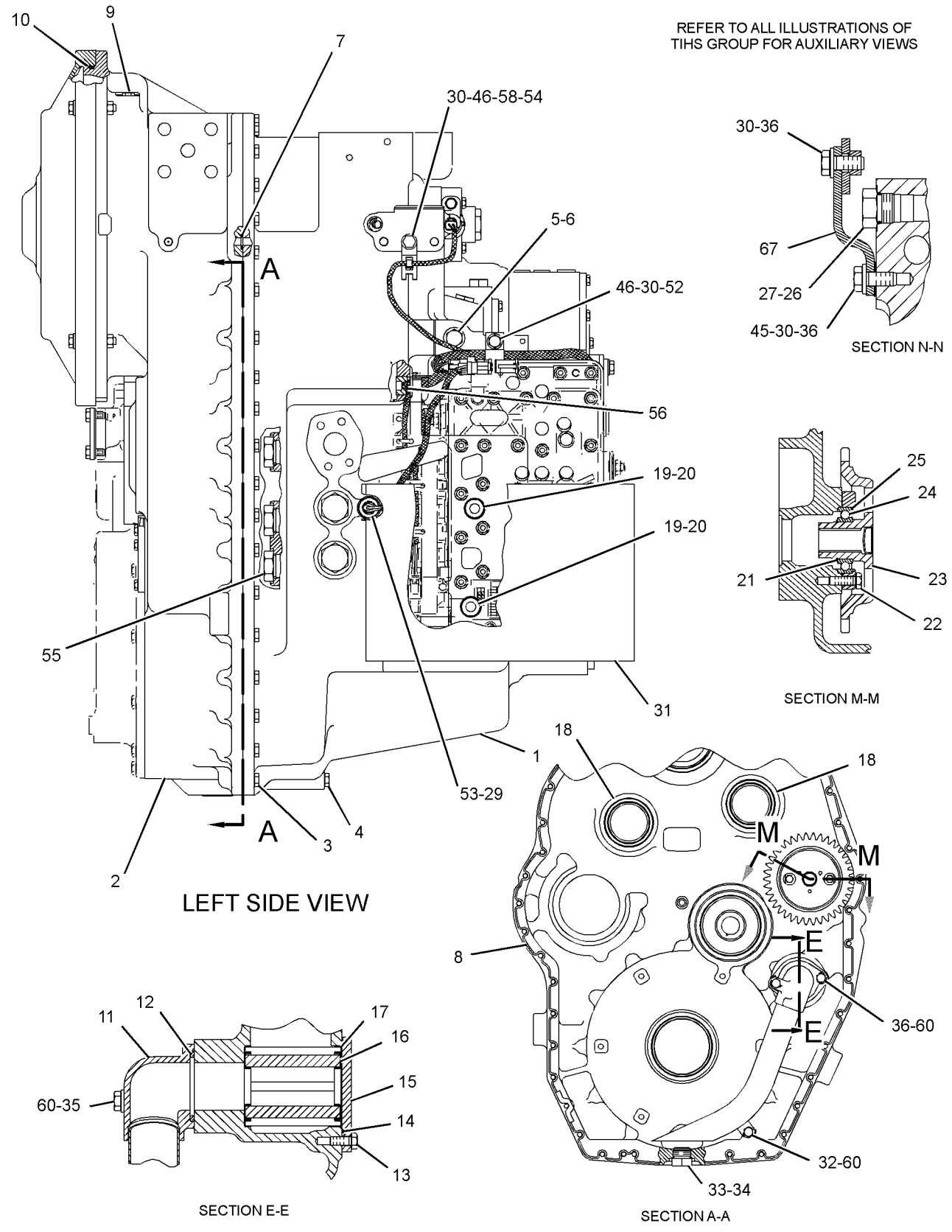


GRAPHIC #1

g01207099

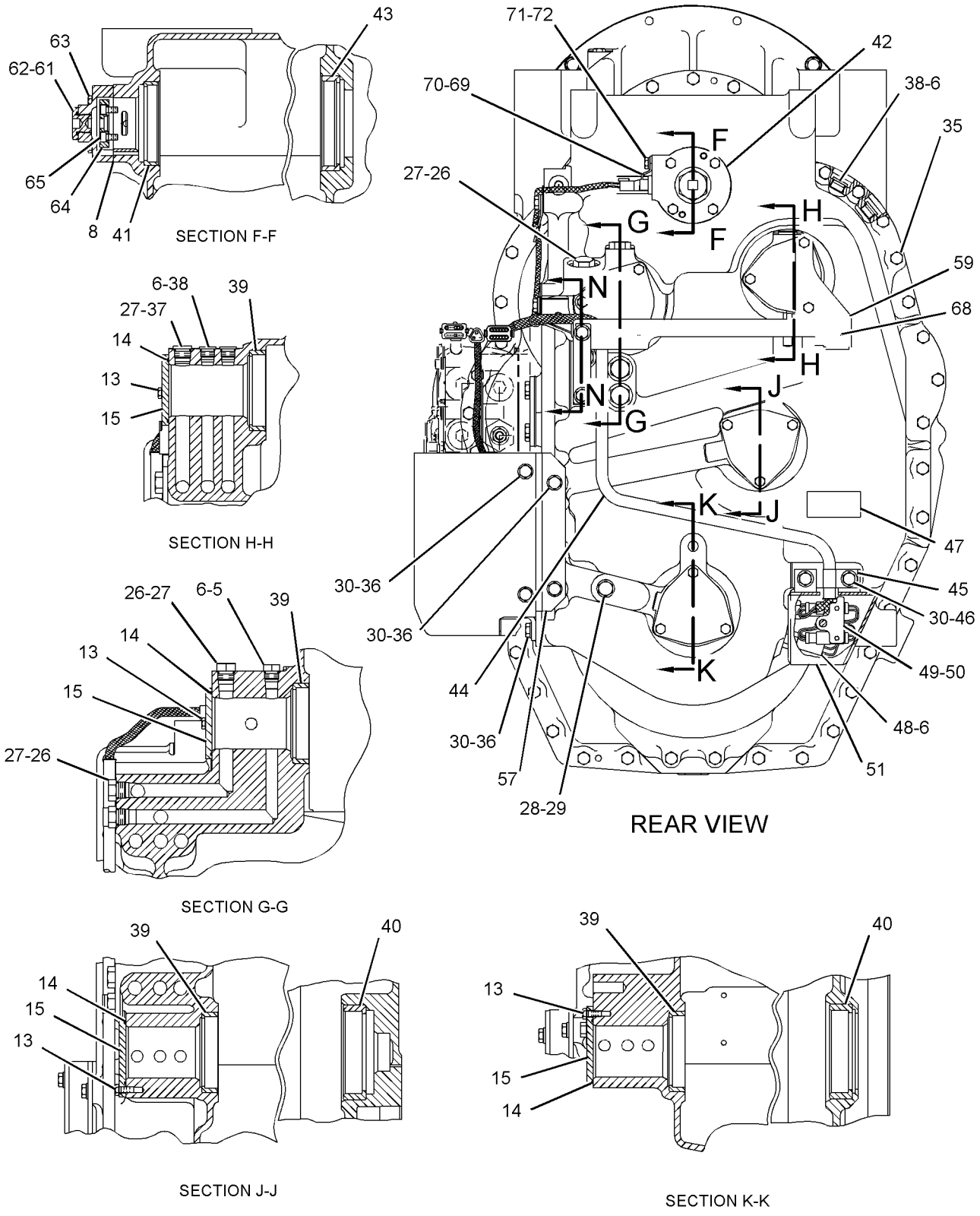


GRAPHIC #2 **<END>** g01207095

# *6G-1755* CHAIN GP-DRIVE

**S/N: CCA1-UP**

**PART OF 159-4615 GENERAL AR**

**SMCS-3261, 4063** **i02202894**

| NOTE | REF NO | GRAPHIC REF | PART NUMBER | QTY | PART NAME 1 2 3 4 5 6 (PRODUCT LEVEL) | SEE PAGE |
|---|---|---|---|---|---|---|
| | 1 | 1 | **6G-1633** | 4 | CHAIN GP | |
| | | | | | (EACH INCLUDES) | |
| | 2 | 1 | **6G-1631** | 1 | LINK-CONNECTING | |
| | | | | | (CHAIN TO CONSIST OF 24 PIN LINKS, 25 ROLLER LINKS, 1 CONNECTING LINK & COTTERS) | |

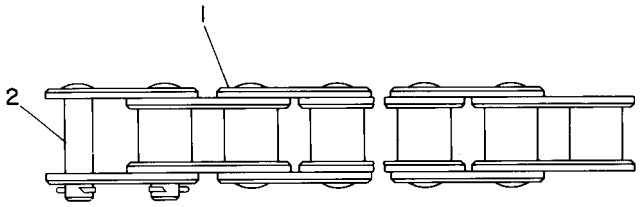


GRAPHIC #1 **<END>** g00108322

## *6Y-2303* CLUTCH GP-TRANSMISSION–1ST & 3RD

**S/N: EDB1-UP; BJN1-99999**

**PART OF 160-2196 TRANSMISSION AR**

**SMCS-3063, 3155, 3170** **i01052624**

| NOTE | REF NO | GRAPHIC REF | PART NUMBER | QTY | PART NAME 1 2 3 4 5 6 (PRODUCT LEVEL) | SEE PAGE |
|---|---|---|---|---|---|---|
| | 1 | 1,2 | **6Y-1878** | 1 | SHAFT AS (64-TEETH) | |
| | 2 | 1,2 | **6Y-1000** | 1 | GEAR (69-TEETH) | |
| | 3 | 1,2 | **8E-1909** | 1 | GEAR AS (54-TEETH) | |
| | 4 | 1,2 | **6Y-1895** | 1 | BEARING-SLEEVE | |
| | 5 | 1,2 | **3B-8921** | 1 | BEARING-INNER | |
| | 6 | 1,2 | **6Y-8285** | 1 | RING-SEAL | |
| | 7 | 1,2 | **7T-4897** | 2 | DISC-THRUST | |
| | 8 | 1,2 | **6Y-1891** | 1 | HUB AS | |
| | 9 | 1,2 | **8E-5734** | 2 | RING-SEAL EXTENSION | |
| | 10 | 1,2 | **6Y-1887** | 2 | PISTON | |
| | 11 | 1,2 | **5H-8985** | 1 | PIN-SPRING | |
| | 12 | 1,2 | **6I-8912** | 10 | DISC-FRICTION | |
| | 13 | 1,2 | **110-7723** | 8 | PLATE-CLUTCH | |
| | 14 | 1,2 | **6Y-2312** | 1 | HUB AS | |
| | 15 | 1,2 | **8E-1910** | 1 | GEAR AS (79-TEETH) | |
| | 16 | 1,2 | **6Y-2419** | 1 | BEARING-SLEEVE | |
| | 17 | 1,2 | **6I-8641** | 1 | RACE & BEARING | |
| | 18 | 1,2 | **7G-4822** | 3 | RING-SEAL | |
| M | 19 | 1,2 | **6V-1819** | 2 | BOLT (M10X1.5X100-MM) | |
| | 20 | 1,2 | **6Y-2425** | 1 | CARRIER-SEAL | |
| | 21 | 1,2 | **8F-3469** | 3 | SEAL-O-RING | |
| | 22 | 1,2 | **8E-8319** | 4 | DISC-THRUST | |
| | 23 | 1,2 | **6Y-1115** | 4 | RING-HALF | |
| | 24 | 1,2 | **6Y-1114** | 2 | LOCKWASHER | |
| | 25 | 1,2 | **9W-9905** | 4 | RING-LOCK | |
| | 26 | 1,2 | **102-5881** | 2 | SPRING-WAVE | |
| | 27 | 1,2 | **8E-5742** | 2 | RING-SEAL | |
| | 28 | 1,2 | **6Y-0982** | 1 | GEAR (30-TEETH) | |

M-METRIC PART

*6Y-2303* **CLUTCH GP-TRANSMISSION** *(contd.)* **i01052624**

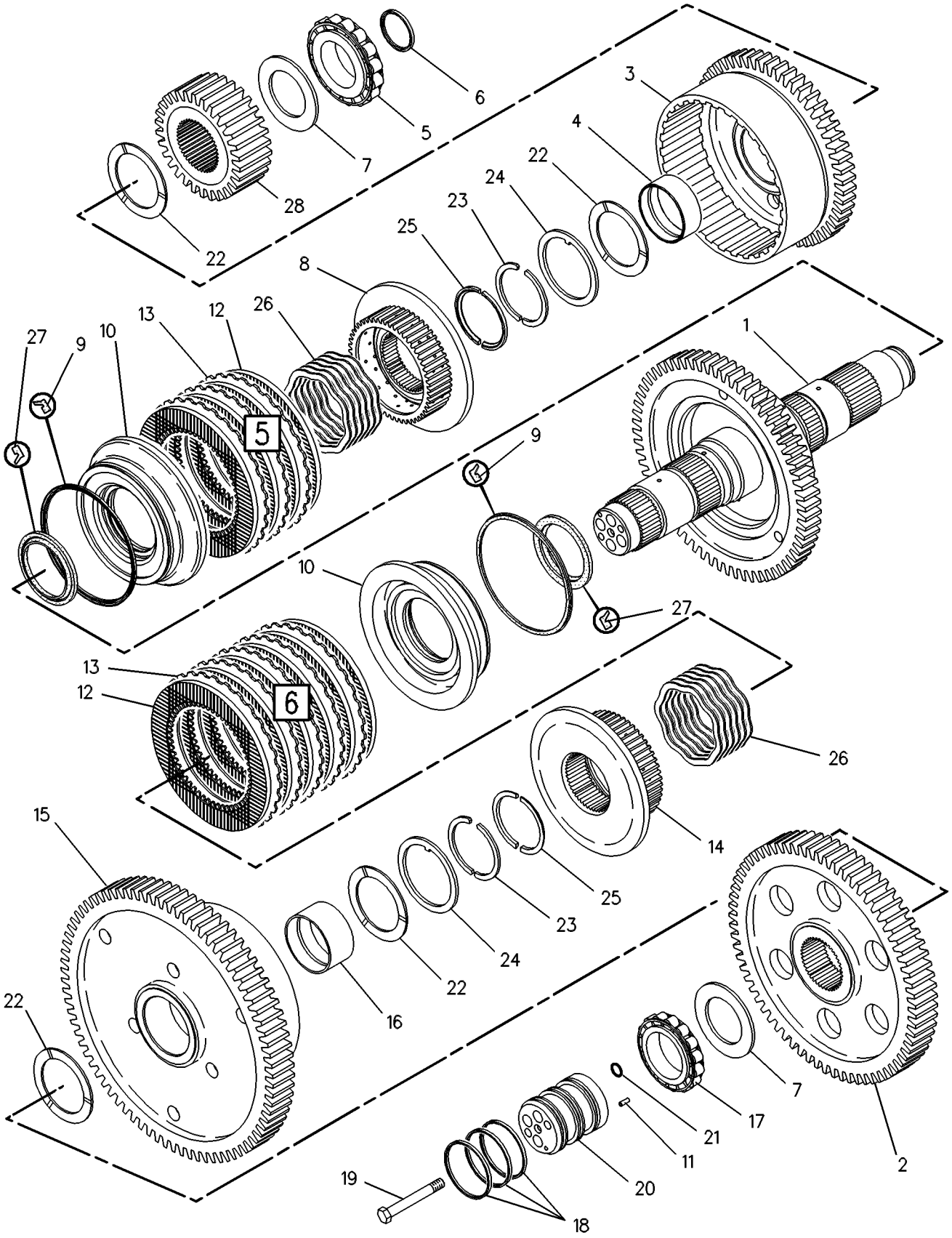


GRAPHIC #1 g00108910

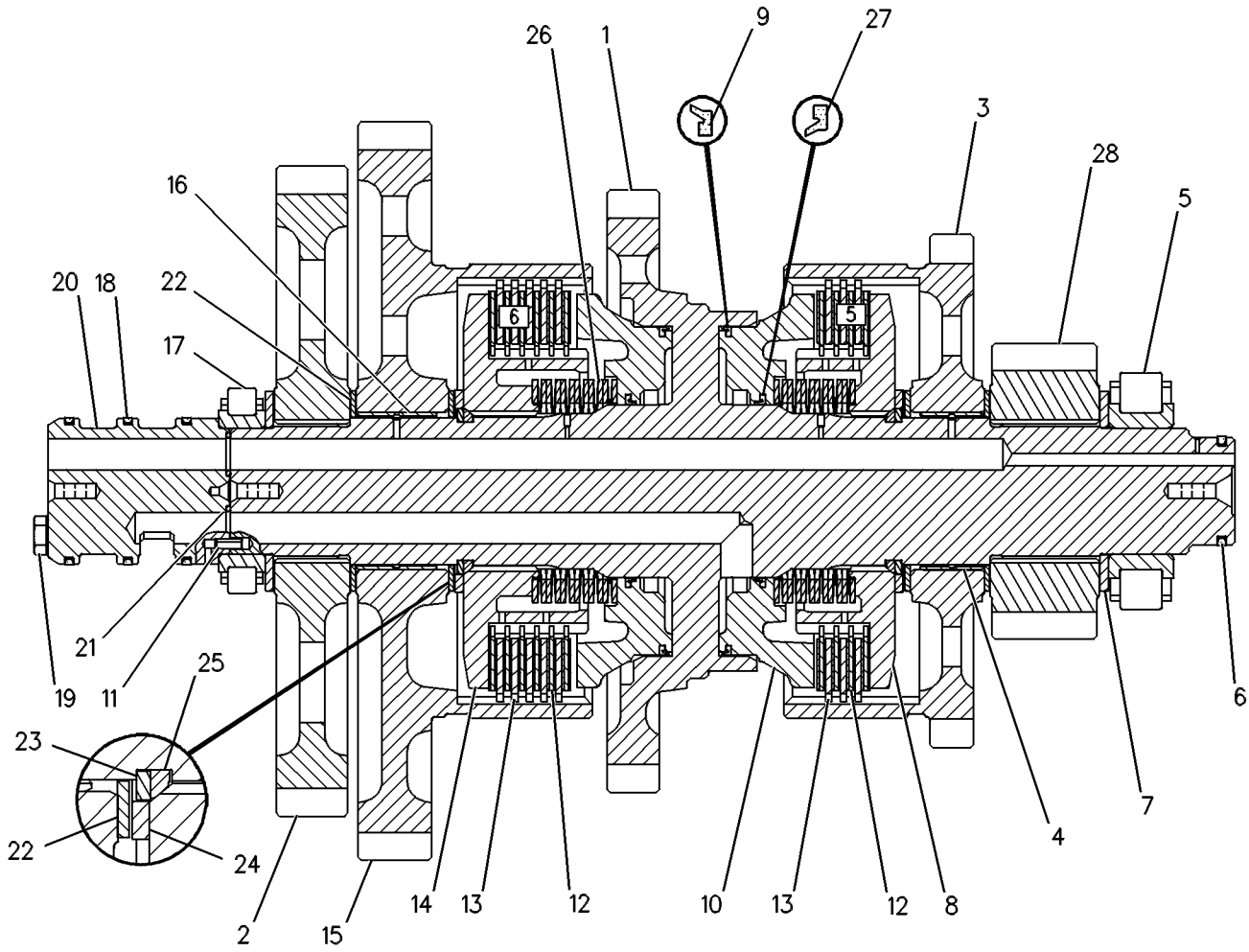


GRAPHIC #2 **<END>** g00108656

# POWER TRAIN

## *8E-9316* CLUTCH GP-TRANSMISSION—HI & LO

**S/N: EDB1-UP; BJN1-99999**

**PART OF 160-2196 TRANSMISSION AR**

**SMCS-3063, 3155, 3170** **i02428896**

| NOTE | REF NO | GRAPHIC REF | PART NUMBER | QTY | PART NAME 1 2 3 4 5 6 (PRODUCT LEVEL) | SEE PAGE |
|---|---|---|---|---|---|---|
| | 1 | 1,2 | **6Y-1864** | 1 | SHAFT AS | |
| | 2 | 1,2 | **8M-4295** | 15 | SPRING | |
| | 3 | 1,2 | **6Y-2428** | 1 | PISTON | |
| | 4 | 1,2 | **6Y-1890** | 1 | RING-RETAINING | |
| | 5 | 1,2 | **9W-9905** | 4 | RING-LOCK | |
| | 6 | 1,2 | **6Y-1114** | 2 | LOCKWASHER | |
| | 7 | 1,2 | **6Y-1115** | 4 | RING-HALF | |
| | 8 | 1,2 | **8E-8319** | 4 | DISC-THRUST | |
| | 9 | 1,2 | **7T-4897** | 1 | DISC-THRUST | |
| | 10 | 1,2 | **3B-8921** | 1 | BEARING-INNER | |
| | 11 | 1,2 | **8E-1913** | 1 | GEAR AS (84-TEETH) | |
| | 12 | 1,2 | **9W-6467** | 2 | BEARING-SLEEVE | |
| | 13 | 1,2 | **6Y-7981** | 7 | DISC-FRICTION | |
| | 14 | 1,2 | **3P-0337** | 8 | PLATE-CLUTCH | |
| | 15 | 1,2 | **8E-5736** | 2 | RING-SEAL EXTENSION | |
| | 16 | 1,2 | **6Y-2429** | 1 | PISTON-BALANCE | |
| | 17 | 1,2 | **102-5881** | 1 | SPRING-WAVE | |
| | 18 | 1,2 | **8E-5742** | 2 | RING-SEAL | |
| | 19 | 1,2 | **8E-5734** | 1 | RING-SEAL EXTENSION | |
| | 20 | 1,2 | **6I-9502** | 5 | PLATE-CLUTCH | |
| | 21 | 1,2 | **6I-8912** | 6 | DISC-FRICTION | |
| | 22 | 1,2 | **132-9635** | 1 | GEAR AS (45-TEETH) | |
| | 23 | 1,2 | **9W-6467** | 2 | BEARING-SLEEVE | |
| | 24 | 1,2 | **131-3919** | 1 | BEARING-ROLLER | |
| | 25 | 1,2 | **6Y-2425** | 1 | CARRIER-SEAL | |
| M | 26 | 1,2 | **6V-1819** | 2 | BOLT (M10X1.5X100-MM) | |
| | 27 | 1,2 | **7G-4822** | 3 | RING-SEAL | |
| | 28 | 1,2 | **8F-3469** | 3 | SEAL-O-RING | |
| | 29 | 1,2 | **6Y-2312** | 1 | HUB AS | |
| | 30 | 1,2 | **5H-8985** | 1 | PIN-SPRING | |
| | 31 | 1,2 | **6Y-1887** | 1 | PISTON | |
| | 32 | 1,2 | **218-3339** | 1 | HUB AS | |
| | 33 | 1,2 | **8E-1161** | 1 | ROTOR | |

M-METRIC PART

## *8E-9316* **CLUTCH GP-TRANSMISSION** *(contd.)* **i02428896**

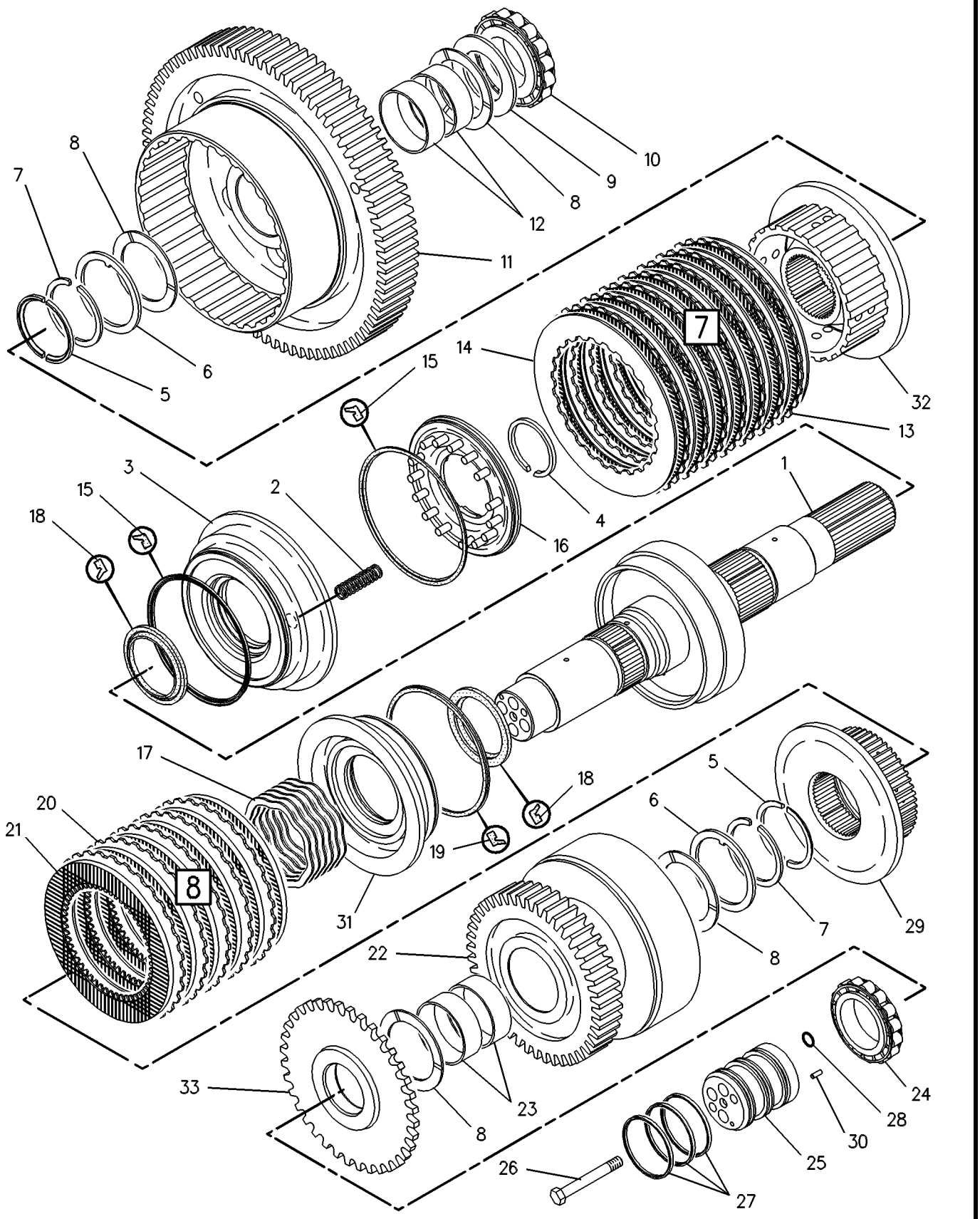


GRAPHIC #1 g00108909

*8E-9316* **CLUTCH GP-TRANSMISSION** *(contd.)* **i02428896**

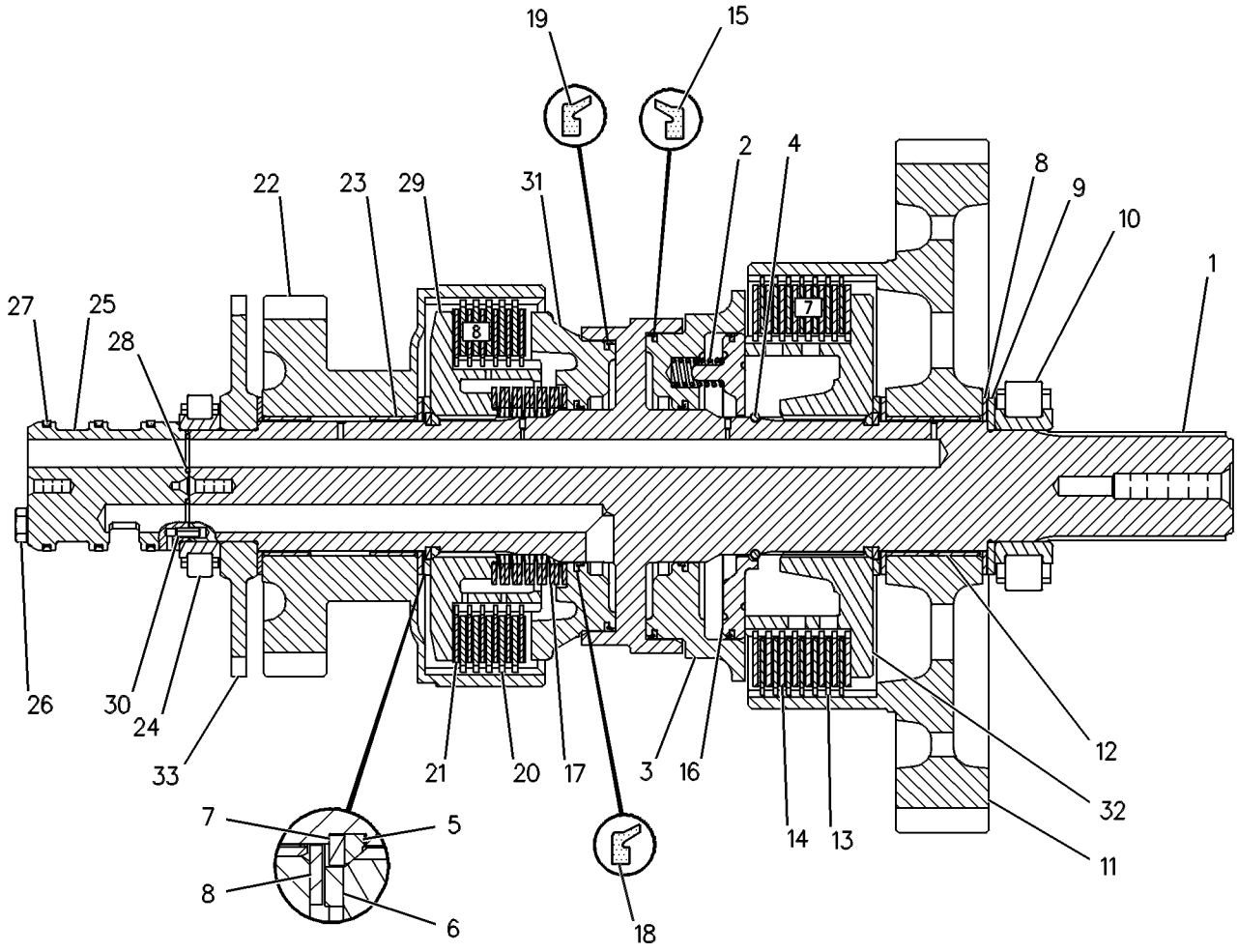


GRAPHIC #2 **<END>** g00108658

## *159-9228* CLUTCH GP-TRANSMISSION–FORWARD

**S/N: EDB1-UP; BJN1-99999**

**PART OF 160-2196 TRANSMISSION AR**

**SMCS-3063, 3155, 3170** **i02204737**

| NOTE | REF NO | GRAPHIC REF | PART NUMBER | QTY | PART NAME 1 2 3 4 5 6 (PRODUCT LEVEL) | SEE PAGE |
|---|---|---|---|---|---|---|
| | 1 | 1 | **171-7091** | 1 | SHAFT AS | |
| | | 1 | **1P-0604** | 1 | PLUG-CUP | |
| | 2 | 1 | **159-0308** | 2 | PISTON | |
| | 3 | 1 | **159-9258** | 2 | VALVE AS | |
| | 4 | 1 | **9U-8815** | 2 | SPRING | |
| | 5 | 1 | **161-6713** | 2 | PLATE-LOCK | |
| | 6 | 1 | **6Y-1115** | 4 | RING-HALF | |
| | 7 | 1 | **8E-8319** | 4 | DISC-THRUST | |
| | 8 | 1 | **5H-8985** | 1 | PIN-SPRING | |
| | 9 | 1 | **4M-6107** | 1 | BEARING-INNER | |
| | 10 | 1 | **9W-2029** | 1 | RACE-THRUST BEARING | |
| | 11 | 1 | **8E-1263** | 2 | BEARING-ROLLER | |
| | 12 | 1 | **132-9625** | 1 | GEAR AS (50-TEETH) | |
| | 13 | 1 | **171-7093** | 2 | HUB AS | |
| | 14 | 1 | **6I-8911** | 5 | DISC-FRICTION | |
| | 15 | 1 | **9U-9995** | 6 | PLATE-CLUTCH | |
| | 16 | 1 | **8E-5742** | 2 | RING-SEAL | |
| | 17 | 1 | **9W-9371** | 2 | RING-SEAL | |
| | 18 | 1 | **131-3919** | 1 | BEARING-ROLLER | |
| | 19 | 1 | **7G-4822** | 3 | RING-SEAL | |
| M | 20 | 1 | **6V-1819** | 2 | BOLT (M10X1.5X100-MM) | |
| | 21 | 1 | **6Y-1119** | 1 | CARRIER-SEAL | |
| | 22 | 1 | **8F-3469** | 4 | SEAL-O-RING | |
| | 23 | 1 | **7T-4897** | 2 | DISC-THRUST | |
| | 24 | 1 | **6Y-1116** | 1 | GEAR AS (43-TEETH) | |
| | 25 | 1 | **110-7723** | 6 | PLATE-CLUTCH | |
| | 26 | 1 | **6I-8912** | 6 | DISC-FRICTION | |
| | 27 | 1 | **108-5751** | 2 | DISC-FRICTION | |
| | 28 | 1 | **159-0927** | 1 | DISC-FRICTION | |
| | 29 | 1 | **9W-9905** | 4 | RING-LOCK | |
| M | 30 | 1 | **5C-7423** | 4 | SCREW (M6X1X16-MM) | |

M-METRIC PART

*159-9228* **CLUTCH GP-TRANSMISSION** *(contd.)* **i02204737**

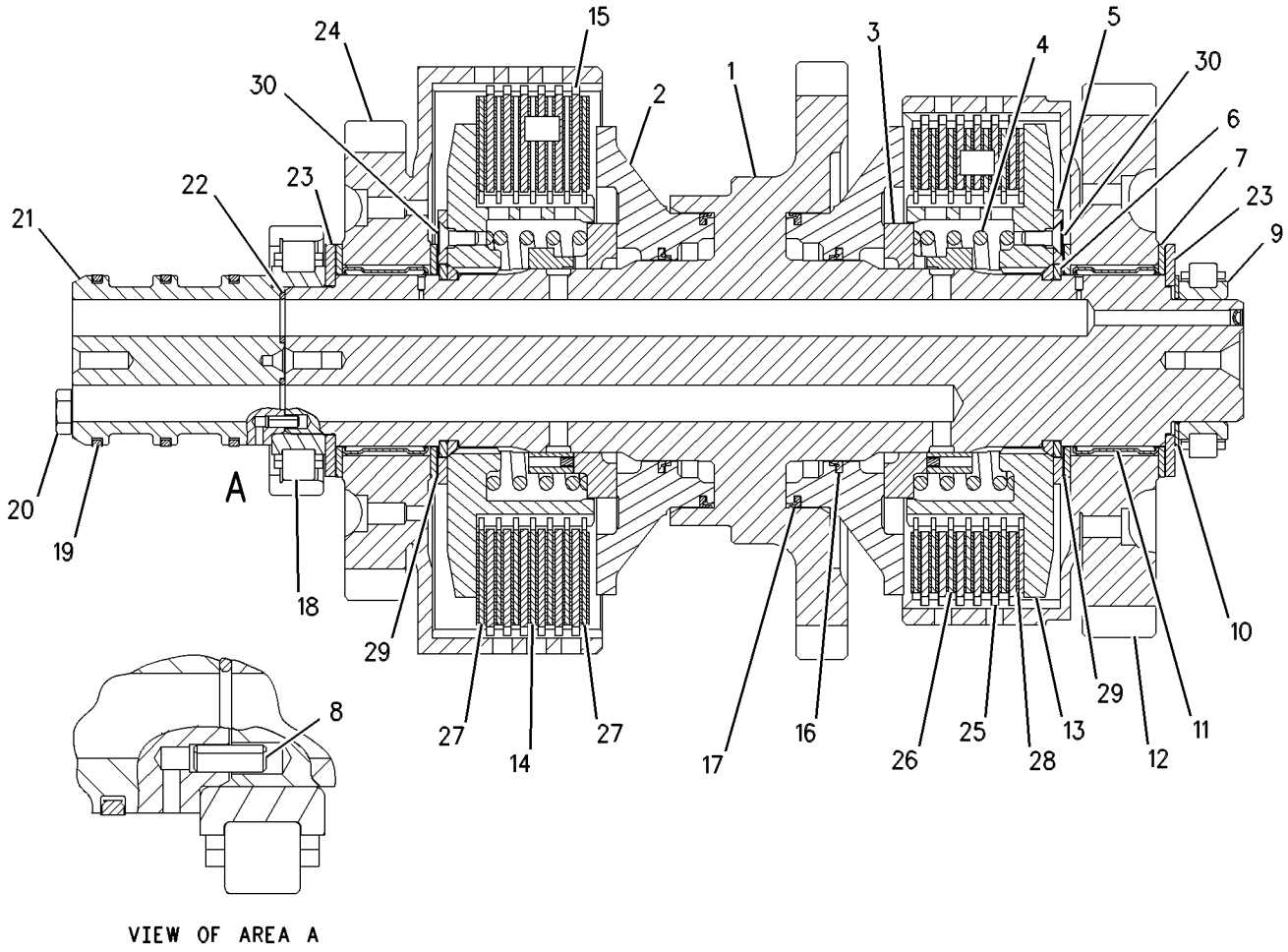


VIEW OF AREA A

GRAPHIC #1 **<END>** g00574942

## *159-9229* CLUTCH GP-TRANSMISSION–REVERSE & 2ND

**S/N: EDB1-UP; BJN1-99999**

**PART OF 160-2196 TRANSMISSION AR**

**SMCS-3063, 3155, 3170** **i02204738**

| NOTE | REF NO | GRAPHIC REF | PART NUMBER | QTY | PART NAME 1 2 3 4 5 6 (PRODUCT LEVEL) | SEE PAGE |
|---|---|---|---|---|---|---|
| | 1 | 1 | **171-7095** | 1 | SHAFT AS | |
| | | 1 | **1P-0604** | 1 | PLUG-CUP | |
| | 2 | 1 | **159-0308** | 1 | PISTON | |
| | 3 | 1 | **159-9258** | 1 | VALVE AS | |
| | 4 | 1 | **9U-8815** | 1 | SPRING | |
| | 5 | 1 | **6Y-1114** | 1 | LOCKWASHER | |
| | 6 | 1 | **6Y-1115** | 4 | RING-HALF | |
| | 7 | 1 | **8E-8319** | 4 | DISC-THRUST | |
| | 8 | 1 | **7T-4897** | 1 | DISC-THRUST | |
| | 9 | 1 | **4M-6107** | 1 | BEARING-INNER | |
| | 10 | 1 | **6Y-3855** | 1 | GEAR AS (46-TEETH) | |
| | 11 | 1 | **9W-2029** | 1 | RACE-THRUST BEARING | |
| | 12 | 1 | **8E-1263** | 1 | BEARING-ROLLER | |
| | 13 | 1 | **171-7093** | 1 | HUB AS | |
| | 14 | 1 | **110-7723** | 9 | PLATE-CLUTCH | |
| | 15 | 1 | **6I-8912** | 10 | DISC-FRICTION | |
| | 16 | 1 | **5H-8985** | 1 | PIN-SPRING | |
| | 17 | 1 | **8E-5742** | 2 | RING-SEAL | |
| | 18 | 1 | **9W-9371** | 1 | RING-SEAL | |
| | 19 | 1 | **8E-5734** | 1 | RING-SEAL EXTENSION | |
| | 20 | 1 | **6Y-1888** | 1 | PLATE-CLUTCH | |
| | 21 | 1 | **6Y-0976** | 1 | GEAR (29-TEETH) | |
| | 22 | 1 | **6Y-2307** | 1 | SPACER (61X82.55X43.88-MM THK) | |
| | 23 | 1 | **131-3919** | 1 | BEARING-ROLLER | |
| | 24 | 1 | **6Y-1119** | 1 | CARRIER-SEAL | |
| M | 25 | 1 | **6V-1819** | 2 | BOLT (M10X1.5X100-MM) | |
| | 26 | 1 | **7G-4822** | 3 | RING-SEAL | |
| | 27 | 1 | **8F-3469** | 4 | SEAL-O-RING | |
| | 28 | 1 | **8E-1908** | 1 | GEAR AS (44-TEETH) | |
| | | 1 | **6Y-1895** | 1 | BEARING-SLEEVE | |
| | 29 | 1 | **6Y-1891** | 1 | HUB AS | |
| | 30 | 1 | **6Y-1887** | 1 | PISTON | |
| | 31 | 1 | **102-5881** | 1 | SPRING-WAVE | |
| | 32 | 1 | **9W-9905** | 4 | RING-LOCK | |
| | 33 | 1 | **159-0927** | 1 | DISC-FRICTION | |
| | 34 | 1 | **161-6713** | 1 | PLATE-LOCK | |
| M | 35 | 1 | **5C-7423** | 2 | SCREW (M6X1X16-MM) | |

M-METRIC PART

*159-9229* **CLUTCH GP-TRANSMISSION** *(contd.)* **i02204738**

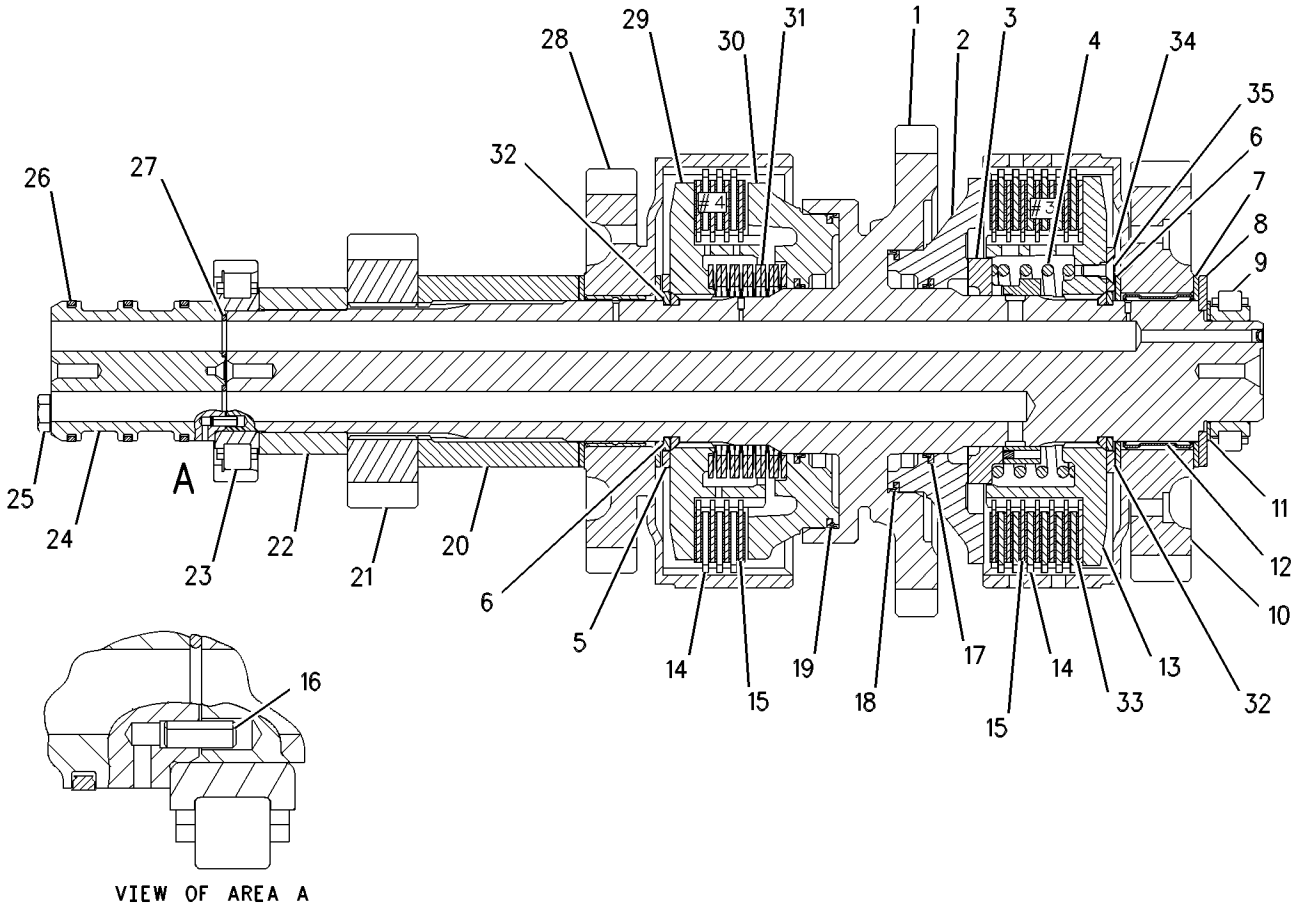


GRAPHIC #1 **<END>** g00574994

# *160-7756* CONTROL GP-DIFFERENTIAL LOCK

**S/N: CCA1-UP**

**PART OF 159-4615 GENERAL AR**

**SMCS-3264** **i02309456**

| NOTE | REF NO | GRAPHIC REF | PART NUMBER | QTY | PART NAME 1 2 3 4 5 6 (PRODUCT LEVEL) | SEE PAGE |
|---|---|---|---|---|---|---|
| | 1 | 1 | **6D-0580** | 1 | TUBE | |
| | 2 | 1 | **6V-0852** | 1 | CAP-DUST | |
| I | 3 | 1 | **7T-1159** | 1 | HOSE AS | |
| | 4 | 1 | *164-5567* | 1 | FITTING AS (QUICK DISCONNECT, MALE) | |
| | | 1 | **6V-3965** | 1 | FITTING AS (QUICK DISCONNECT, MALE) | |
| | | 1 | **3J-1907** | 1 | SEAL-O-RING | |
| | 5 | 1 | **165-9928** | 1 | PLATE | |
| Y | 6 | 1 | **174-3705** | 1 | VALVE & MTG GP-DIFF LOCK | 477 |
| I | 7 | 1 | **250-1128** | 1 | HOSE AS | |
| | 8 | 1 | *180-9933* | 1 | ADAPTER GP | |
| | | 1 | **135-9941** | 1 | ADAPTER-90 DEGREE | |
| | | 1 | **3J-7354** | 1 | SEAL-O-RING | |
| | 9 | 1 | **130-5300** | 1 | CLIP | |
| | 10 | 1 | *148-8316* | 1 | CONNECTOR AS | |
| | | 1 | **6V-8647** | 1 | CONNECTOR | |
| | | 1 | **3J-7354** | 1 | SEAL-O-RING | |
| | | 1 | **4J-5477** | 1 | SEAL-O-RING | |
| | 11 | 1 | *148-8368* | 1 | ELBOW AS | |
| | | 1 | **6V-8627** | 1 | ELBOW | |
| | | 1 | **3J-1907** | 1 | SEAL-O-RING | |
| | | 1 | **4J-5477** | 1 | SEAL-O-RING | |
| | 12 | 1 | *148-8369* | 1 | ELBOW AS | |
| | | 1 | **6V-8628** | 1 | ELBOW | |
| | | 1 | **3J-7354** | 1 | SEAL-O-RING | |
| | | 1 | **4J-5477** | 1 | SEAL-O-RING | |
| | 13 | 1 | **4J-2506** | 2 | SEAL-O-RING | |
| | 14 | 1 | **4P-8134** | 1 | CLIP | |
| | 15 | 1 | **8M-4438** | 2 | SEAL-O-RING | |
| | 16 | 1 | **8T-2501** | 2 | BOLT (3/8-16X2-IN) | |
| | 17 | 1 | **8T-4896** | 2 | WASHER-HARD (10.2X18.5X2.5-MM THK) | |
| | 18 | 1 | **9X-6772** | 1 | STRAP-CABLE | |
| | 19 | 1 | **9G-9154** | 2 | CLIP | |
| | 20 | 1 | **8X-5489** | 2 | SLEEVE | |

I-REFER TO HYDRAULIC INFORMATION SYSTEM
Y-SEPARATE ILLUSTRATION

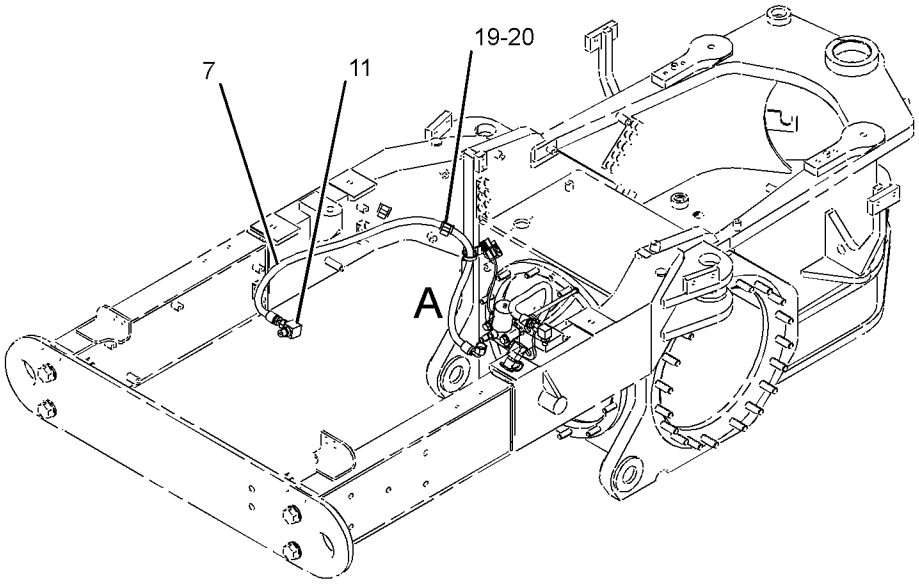


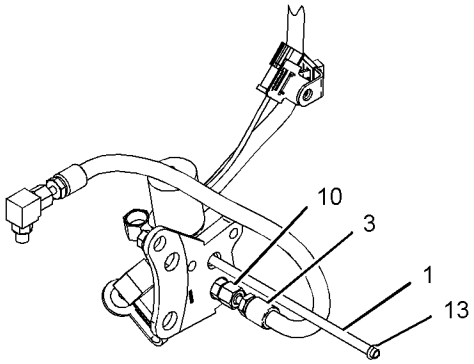


VIEW B-B

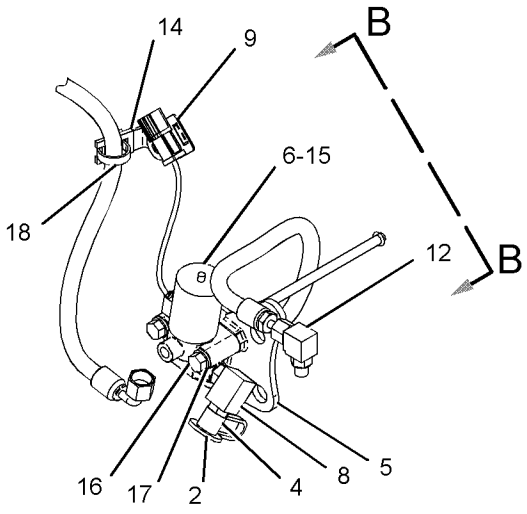


VIEW OF AREA A

GRAPHIC #1 **<END>** g01164288

# *179-6064* CONTROL GP-TRANSMISSION HYD

**S/N: EDB1-4458; BJN1-99999**
**PART OF 160-2196 TRANSMISSION AR**

**SMCS-3073, 3167** **i02204746**

| NOTE | REF NO | GRAPHIC REF | PART NUMBER | QTY | PART NAME 1 2 3 4 5 6 (PRODUCT LEVEL) | SEE PAGE |
|---|---|---|---|---|---|---|
| Y | 1 | 1 | **179-6063** | 1 | VALVE GP-TRANSMISSION CONTROL | 490 |
| M | 2 | 1 | **6V-3918** | 5 | BOLT (M8X1.25X50-MM) | |
| | 3 | 1 | **9P-9150** | 66 | WASHER (8.25X18X0.84-MM THK) | |
| | 4 | 1 | **1T-0738** | 31 | WASHER (8.4X19X1.83-MM THK) | |
| M | 5 | 1 | **8C-4984** | 14 | BOLT (M8X1.25X150-MM) | |
| M | 6 | 1 | **3E-8005** | 14 | BOLT (M8X1.25X160-MM) | |
| | 7 | 1 | **4S-5879** | 1 | SEAL-O-RING | |
| | 8 | 1 | **180-9322** | 1 | HARNESS AS-TRANSMISSION | |
| | | 1 | **102-8801** | 1 | KIT-RECEPTACLE (12-PIN) | |
| | | | | | (INCLUDES RECEPTACLE AS & WEDGE) | |
| | | 1 | **155-2270** | 8 | KIT-CONNECTING PLUG (2-PIN) | |
| | | | | | (EACH INCLUDES PLUG AS & WEDGE) | |
| M | 9 | 1 | **8T-0639** | 2 | BOLT (M6X1X12-MM) | |
| M | 10 | 1 | **6V-5217** | 3 | BOLT (M8X1.25X20-MM) | |
| | 11 | 1 | **198-7657** | 1 | BLOCK | |

M-METRIC PART
Y-SEPARATE ILLUSTRATION

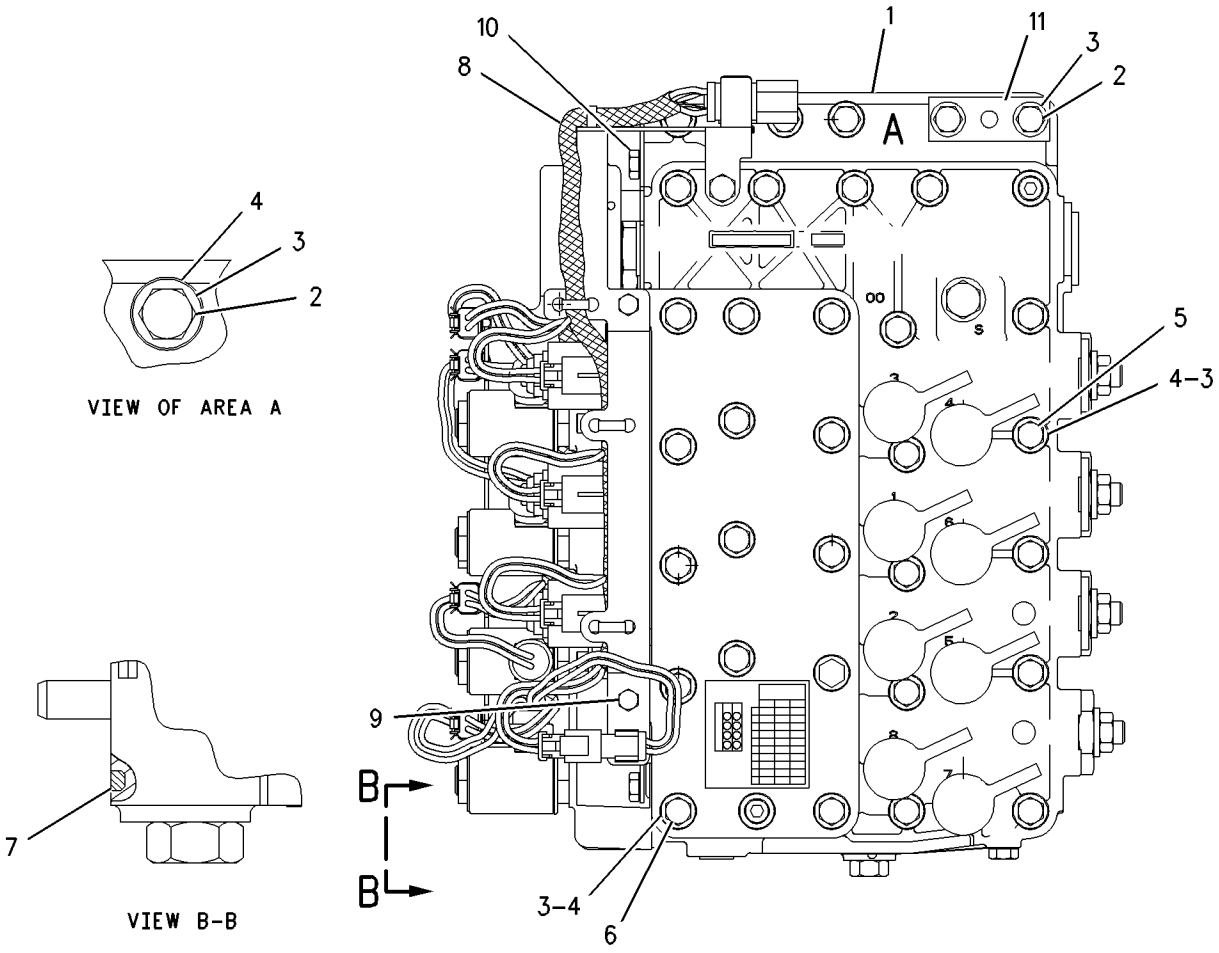


GRAPHIC #1 **<END>** g00864228

# *281-3165* CONTROL GP-TRANSMISSION HYD

**S/N: EDB4459-UP**

**PART OF 160-2196 TRANSMISSION AR**

**SMCS-3073, 3167** **i02490493**

| NOTE | REF NO | GRAPHIC REF | PART NUMBER | QTY | PART NAME 1 2 3 4 5 6 (PRODUCT LEVEL) | SEE PAGE |
|---|---|---|---|---|---|---|
| Y | 1 | 1 | **281-3163** | 1 | VALVE GP-TRANSMISSION CONTROL | 492 |
| M | 2 | 1 | **6V-3918** | 5 | BOLT (M8X1.25X50-MM) | |
| | 3 | 1 | **9P-9150** | 66 | WASHER (8.25X18X0.84-MM THK) | |
| | 4 | 1 | **1T-0738** | 31 | WASHER (8.4X19X1.83-MM THK) | |
| M | 5 | 1 | **8C-4984** | 14 | BOLT (M8X1.25X150-MM) | |
| M | 6 | 1 | **3E-8005** | 14 | BOLT (M8X1.25X160-MM) | |
| | 7 | 1 | **4S-5879** | 1 | SEAL-O-RING | |
| Y | 8 | 1 | *180-9324* | 1 | WIRING GP-TRANSMISSION | 406 |
| M | 9 | 1 | **8T-0639** | 2 | BOLT (M6X1X12-MM) | |
| M | 10 | 1 | **6V-5217** | 3 | BOLT (M8X1.25X20-MM) | |
| | 11 | 1 | **198-7657** | 1 | BLOCK | |

M-METRIC PART
Y-SEPARATE ILLUSTRATION

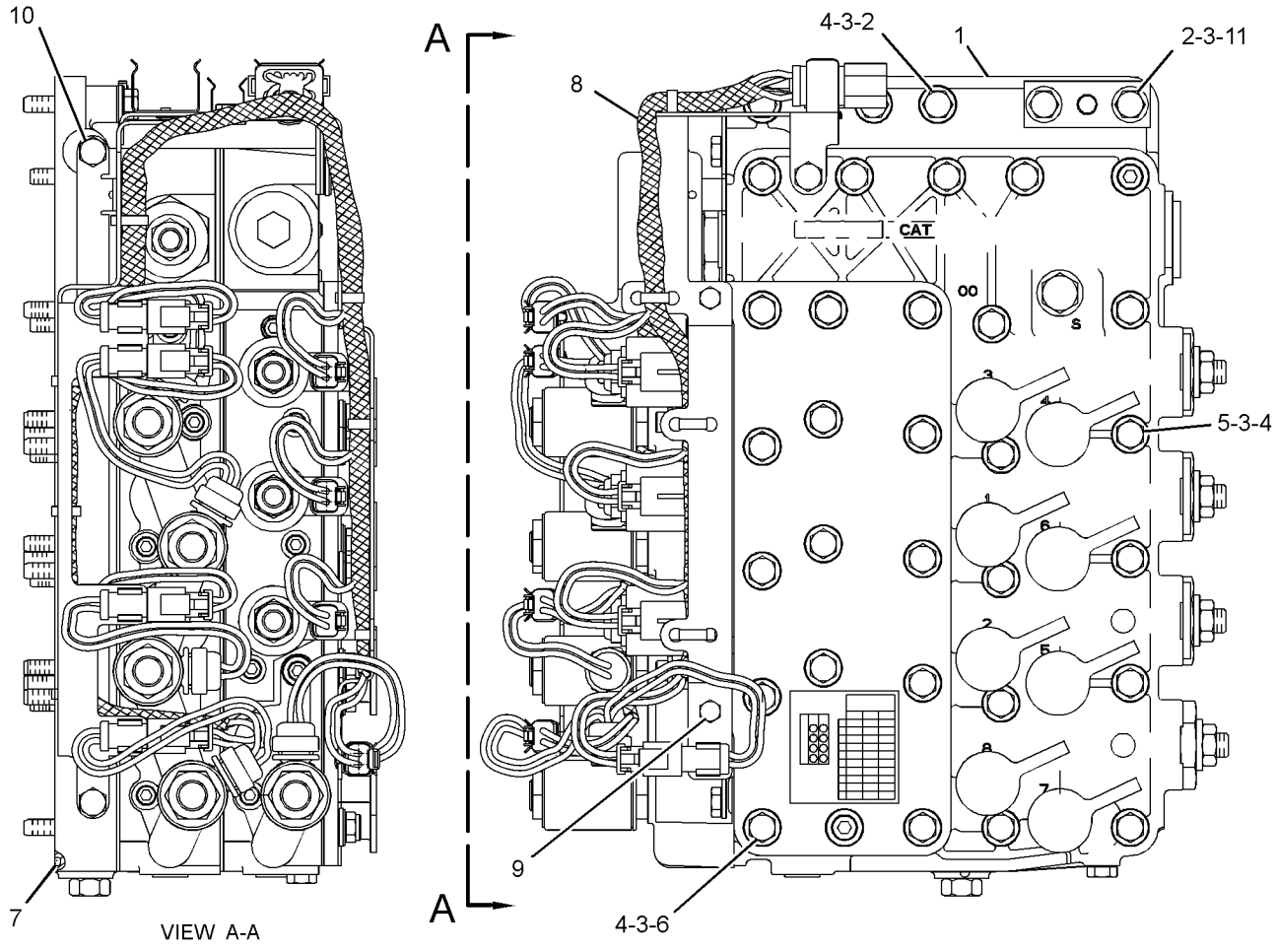


GRAPHIC #1 **<END>** g01254682

# *163-9322* COOLER GP-TRANSMISSION OIL

**S/N: 3PD1-12556**

**PART OF 160-5101 ENGINE AR**

**SMCS-1375** **i01855419**

| NOTE | REF NO | GRAPHIC REF | PART NUMBER | QTY | PART NAME 1 2 3 4 5 6 (PRODUCT LEVEL) | SEE PAGE |
|---|---|---|---|---|---|---|
| | 1 | 1 | **8T-4984** | 2 | CLAMP-HOSE | |
| | 2 | 1 | **100-8525** | 1 | GASKET | |
| R | 3 | 1 | **115-4517** | 1 | CORE AS-ENGINE OIL COOLER | |
| | 4 | 1 | **122-0763** | 1 | ELBOW | |
| | 5 | 1 | **124-5043** | 1 | COUPLING | |
| M | 6 | 1 | **131-0353** | 2 | STUD (M8X1.25X60-MM) | |
| | 7 | 1 | **131-6645** | 1 | HOSE | |
| | 8 | 1 | **155-7970** | 1 | BONNET-OIL COOLER | |
| | 9 | 1 | **174-1637** | 1 | ELBOW | |
| | 10 | 1 | **175-7453** | 1 | CORE AS | |
| | 11 | 1 | **209-1743** | 1 | BRACKET | |
| | 12 | 1 | **209-7389** | 1 | BONNET | |
| | 13 | 1 | **061-7540** | 2 | SEAL-O-RING | |
| | 14 | 1 | **117-3036** | 2 | SEAL-O-RING | |
| | 15 | 1 | **129-2861** | 2 | GASKET | |
| | 16 | 1 | **2N-0475** | 2 | SEAL-O-RING | |
| | 17 | 1 | **3E-4352** | 4 | WASHER-HARD (8.8X20.5X2.5-MM THK) | |
| | 18 | 1 | **5P-4116** | 4 | WASHER-HARD (8.8X20.5X2-MM THK) | |
| M | 19 | 1 | **5P-7970** | 4 | NUT (M8X1.25-THD) | |
| | 20 | 1 | **5P-8245** | 2 | WASHER-HARD (13.5X25.5X3-MM THK) | |
| M | 21 | 1 | **6V-2317** | 10 | BOLT (M8X1.25X30-MM) | |
| M | 22 | 1 | **6V-3918** | 2 | BOLT (M8X1.25X50-MM) | |
| M | 23 | 1 | **6V-5218** | 6 | BOLT (M8X1.25X35-MM) | |
| | 24 | 1 | **6V-9027** | 1 | SEAL-O-RING | |
| | 25 | 1 | **7X-7731** | 1 | PLUG-PIPE | |
| M | 26 | 1 | **6A-5591** | 2 | BOLT (M12X1.75X25-MM) | |
| | 27 | 1 | **8T-6761** | 1 | PLUG-PIPE | |
| | 28 | 1 | **8T-6767** | 1 | PLUG-PIPE | |
| | 29 | 1 | **9M-1974** | 16 | WASHER-HARD (8.8X16X2-MM THK) | |
| | 30 | 1 | **9S-4182** | 2 | PLUG (STRAIGHT THREAD O-RING) | |

M-METRIC PART
R-REMFG PART MAY BE AVAILABLE

*163-9322* **COOLER GP-TRANSMISSION OIL** *(contd.)* **i01855419**

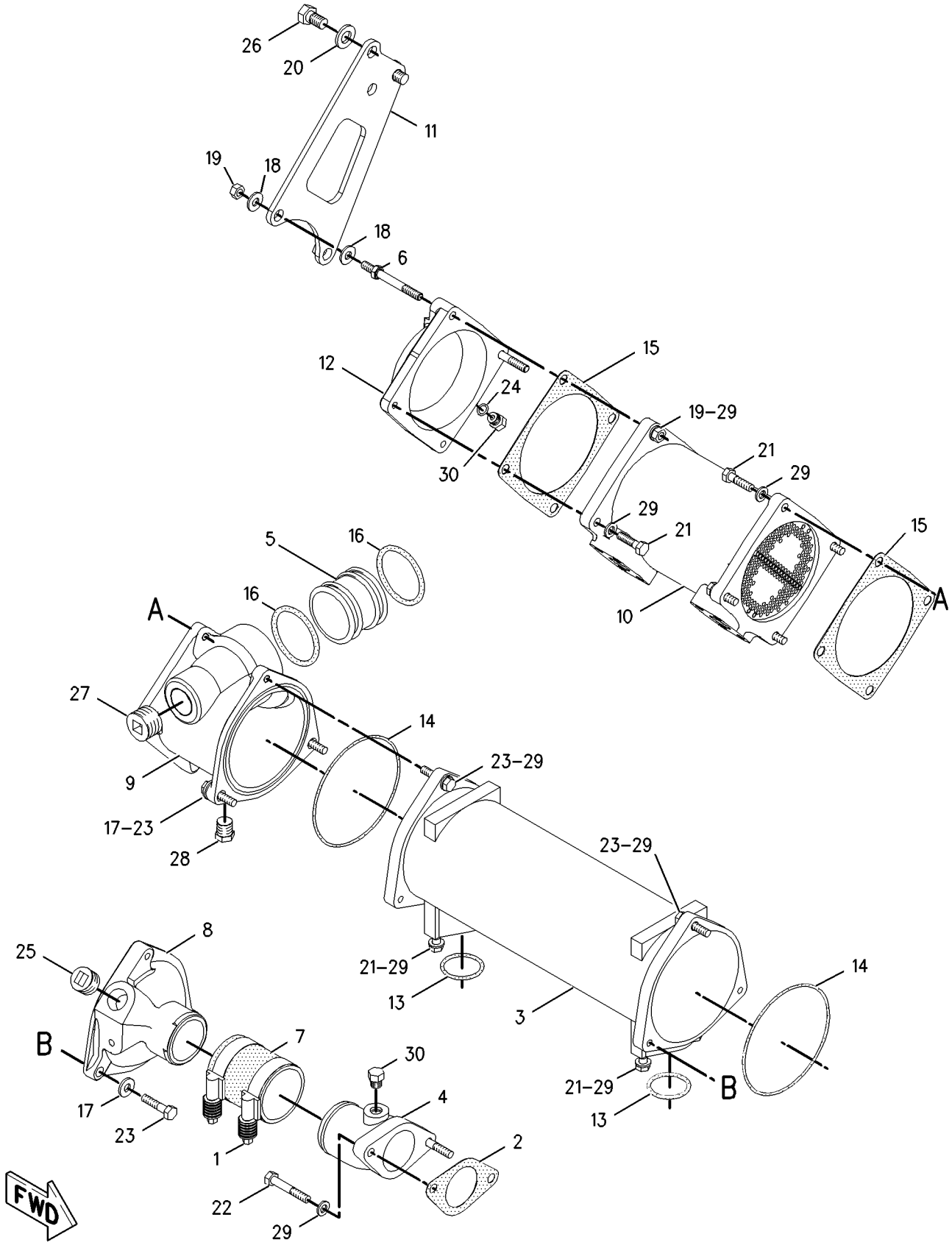


GRAPHIC #1 **<END>** g00834518

# *262-7138* COOLER GP-TRANSMISSION OIL

**S/N: 3PD12557-UP**

**PART OF 160-5101 ENGINE AR**

**SMCS-1375** **i02339546**

| NOTE | REF NO | GRAPHIC REF | PART NUMBER | QTY | PART NAME 1 2 3 4 5 6 (PRODUCT LEVEL) | SEE PAGE |
|---|---|---|---|---|---|---|
| | 1 | 1 | **100-8525** | 1 | GASKET | |
| R | 2 | 1 | **115-4517** | 1 | CORE AS-ENGINE OIL COOLER | |
| | 3 | 1 | **122-0763** | 1 | ELBOW | |
| | 4 | 2 | **124-5043** | 1 | COUPLING | |
| M | 5 | 2 | **131-0353** | 2 | STUD (M8X1.25X60-MM) (M8X1.25X82.75-MM) | |
| | 6 | 1 | **131-6645** | 1 | HOSE | |
| | 7 | 2 | **175-7453** | 1 | CORE AS (TRANSMISSION OIL COOLER) | |
| | 8 | 2 | **209-1743** | 1 | BRACKET | |
| | 9 | 2 | **209-7389** | 1 | BONNET | |
| | 10 | 1 | **254-9166** | 1 | BONNET-OIL COOLER | |
| | 11 | 2 | **254-9181** | 1 | ELBOW-OIL COOLER | |
| | 12 | 1 | **061-7540** | 2 | SEAL-O-RING | |
| | 13 | 1,2 | **117-3036** | 2 | SEAL-O-RING | |
| | 14 | 2 | **129-2861** | 2 | GASKET | |
| | 15 | 2 | **2N-0475** | 2 | SEAL-O-RING | |
| | 16 | 1,2 | **3E-4352** | 4 | WASHER-HARD (8.8X20.5X2.5-MM THK) | |
| | 17 | 2 | **5P-4116** | 4 | WASHER-HARD (8.8X20.5X2-MM THK) | |
| M | 18 | 2 | **5P-7970** | 4 | NUT (M8X1.25-THD) | |
| | 19 | 2 | **5P-8245** | 2 | WASHER-HARD (13.5X25.5X3-MM THK) | |
| M | 20 | 2 | **6A-5591** | 2 | BOLT (M12X1.75X25-MM) | |
| M | 21 | 1,2 | **6V-2317** | 10 | BOLT (M8X1.25X30-MM) | |
| | 22 | 1 | **6V-3250** | 1 | SEAL-O-RING | |
| M | 23 | 1 | **6V-3918** | 2 | BOLT (M8X1.25X50-MM) | |
| | 24 | 1 | **6V-5063** | 1 | SEAL-O-RING | |
| | 25 | 1 | **6V-5064** | 1 | SEAL-O-RING | |
| M | 26 | 1,2 | **6V-5218** | 6 | BOLT (M8X1.25X35-MM) | |
| | 27 | 1,2 | **6V-9027** | 2 | SEAL-O-RING | |
| | 28 | 1 | **8T-4984** | 2 | CLAMP-HOSE | |
| | 29 | 1,2 | **9M-1974** | 16 | WASHER-HARD (8.8X16X2-MM THK) | |
| | 30 | 1,2 | **9S-4182** | 2 | PLUG (STRAIGHT THREAD O-RING) | |
| | 31 | 1 | **9S-8004** | 1 | PLUG | |
| | 32 | 1 | **9S-8008** | 1 | PLUG-DRAIN | |
| | 33 | 1 | **9S-9334** | 1 | PLUG | |

M-METRIC PART
R-REMFG PART MAY BE AVAILABLE

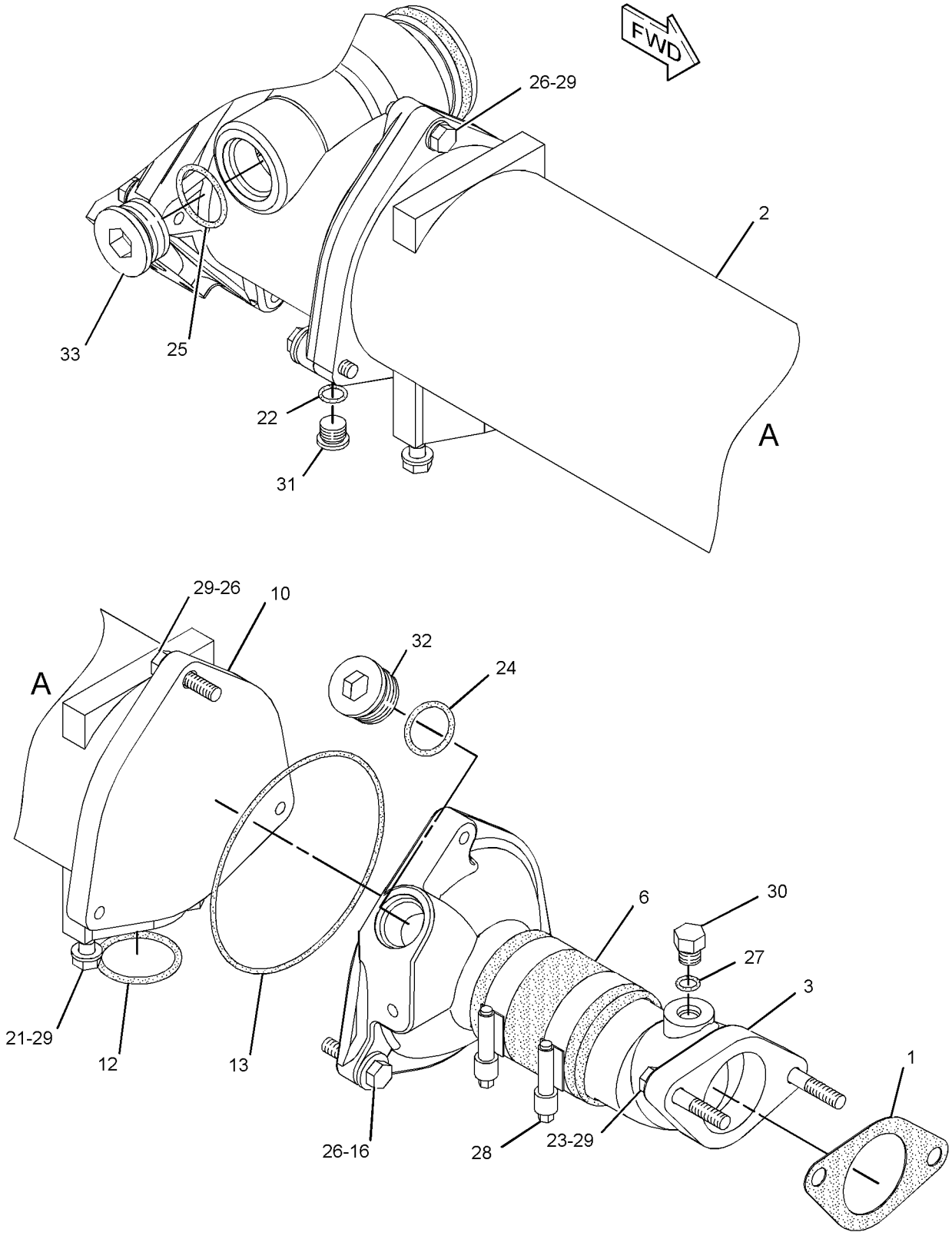


GRAPHIC #1

g01174940

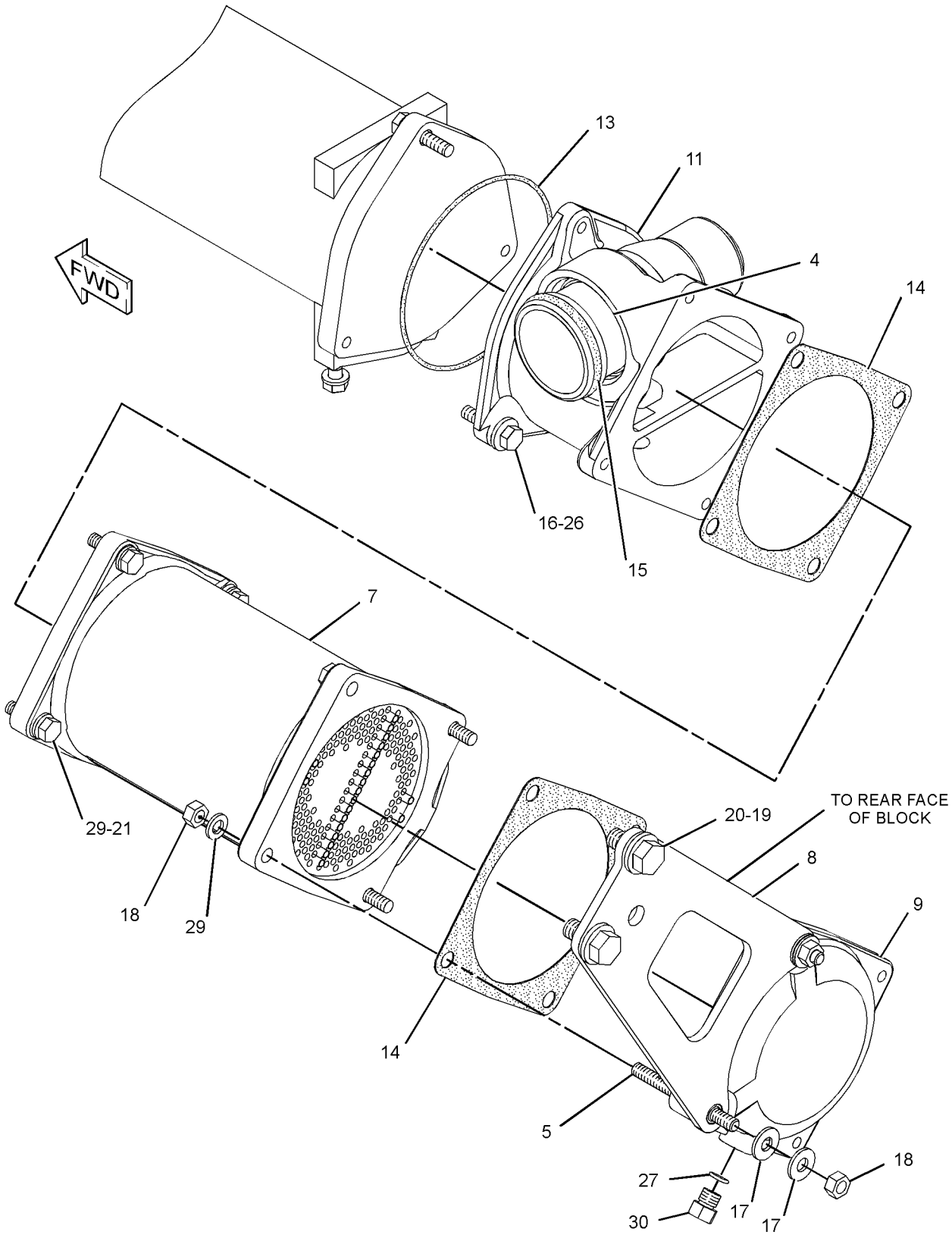


GRAPHIC #2 **<END>** g01174941

# *8E-3366* COUPLING GP-TORSIONAL

**S/N: CCA1-UP**
**DRIVE**
**PART OF 159-4615 GENERAL AR**

**SMCS-3252, 3279** **i02591118**

| NOTE | REF NO | GRAPHIC REF | PART NUMBER | QTY | PART NAME 1 2 3 4 5 6 (PRODUCT LEVEL) | SEE PAGE |
|---|---|---|---|---|---|---|
| | 1 | 1 | **283-1099** | 1 | COUPLING AS | |
| | 2 | 1 | **165-3928** | 12 | BOLT (3/8-16-THD) | |
| | 3 | 1 | **5M-2894** | 12 | WASHER-HARD (10.2X18.5X2.5-MM THK) | |

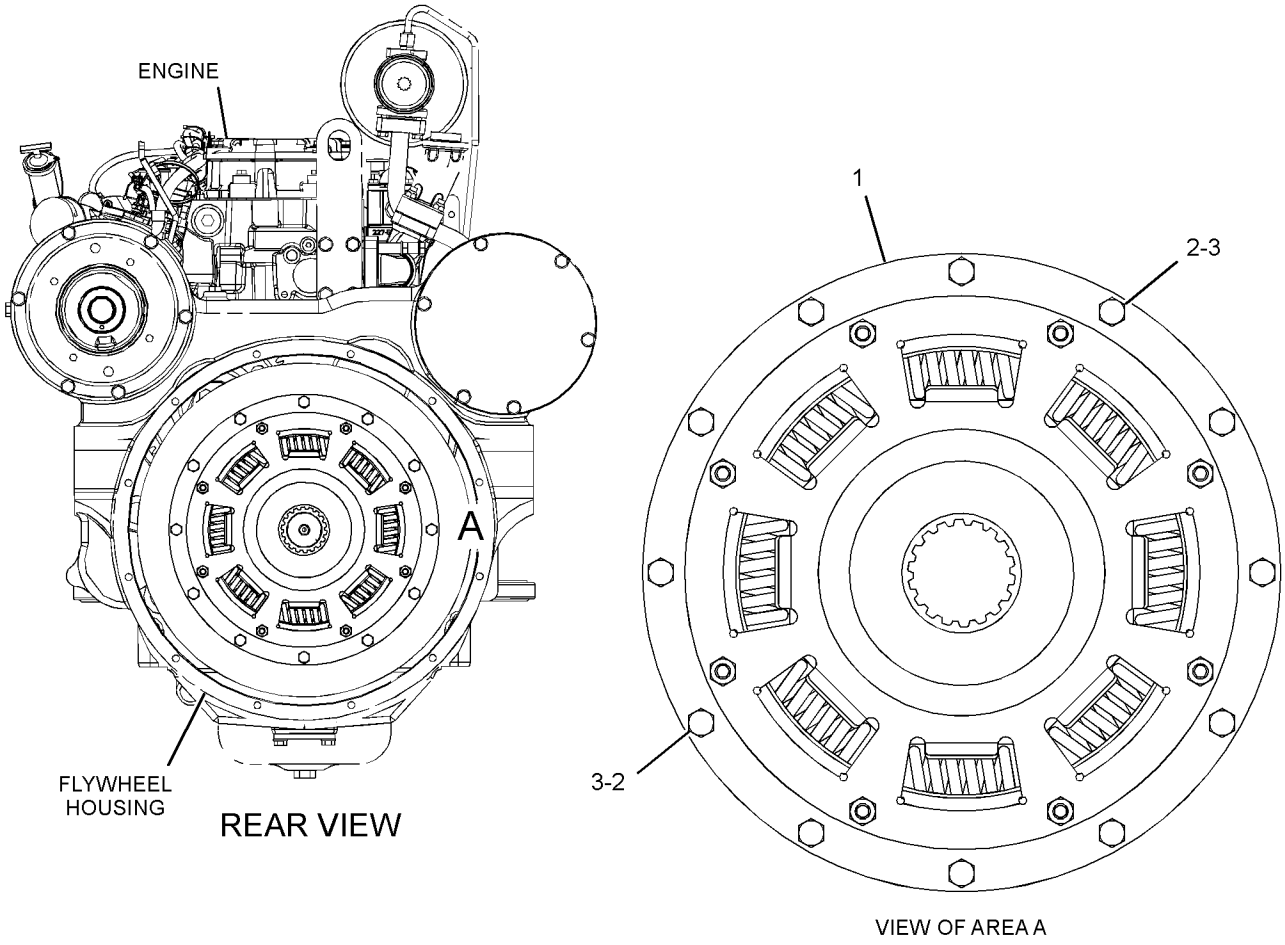


GRAPHIC #1 **<END>** g01293620

# POWER TRAIN

## *8W-5430* DIFFERENTIAL & BEVEL GEAR GP

**S/N: CCA1-UP**

**PART OF 159-4615 GENERAL AR**

**SMCS-3256, 3258** **i02204763**

| NOTE | REF NO | GRAPHIC REF | PART NUMBER | QTY | PART NAME 1 2 3 4 5 6 (PRODUCT LEVEL) | SEE PAGE |
|---|---|---|---|---|---|---|
| | 1 | 1 | **5D-9844** | 1 | BOLT-LOCKING (3/8-16X2-IN) | |
| | 2 | 1 | **5P-8247** | 20 | WASHER-HARD (17X32X3.5-MM THK) | |
| | 3 | 1 | **034-3557** | 5 | BOLT-LOCKING (3/8-16X1.125-IN) | |
| | 4 | 1 | **5M-2894** | 8 | WASHER-HARD (10.2X18.5X2.5-MM THK) | |
| | 5 | 1 | **2K-5109** | 1 | GASKET | |
| | 6 | 1 | **8W-5279** | 1 | RETAINER | |
| | 7 | 1 | **123-4003** | 1 | SEAL-LIP TYPE | |
| | 8 | 1 | **8T-8883** | 1 | SEAL-O-RING | |
| | 9 | 1 | **5P-5813** | 1 | LOCKNUT-BEARING | |
| | 10 | 1 | **9B-0143** | 1 | LOCK-NUT | |
| | 11 | 1 | **7D-8347** | 1 | WASHER-TAB | |
| | 12 | 1 | **8X-2534** | 1 | HOUSING | |
| | 13 | 1 | **5L-2031** | 1 | CUP-BEARING | |
| | 14 | 1 | **5L-2030** | 1 | CONE-BEARING | |
| | 15 | 1 | **9X-8880** | 8 | BOLT (5/8-11X2-IN) | |
| | 16 | 1 | **2K-5106** | 1 | SHIM (2.54-MM THK) | |
| | 17 | 1 | **4K-0367** | 12 | NUT-FULL (5/8-11-THD) | |
| | 18 | 1 | **4H-6520** | 1 | SEAL-O-RING | |
| | 19 | 1 | **1J-4757** | 1 | CONE-BEARING | |
| | 20 | 1 | **1J-2860** | 1 | CUP-BEARING | |
| | 21 | 1 | **8D-8197** | 1 | CAGE | |
| | 22 | 1 | **6G-4703** | | NUT (5 1/4-12-THD) | |
| | 23 | 1 | **126-2729** | 1 | CONE-SPECIAL TAPERED | |
| | 24 | 1 | **5P-2503** | 1 | CUP | |
| | 25 | 1 | **6F-0698** | 1 | DOWEL | |
| | 26 | 1 | **8D-9784** | 2 | LOCK | |
| | 27 | 1 | **030-8535** | 2 | BOLT-LOCKING (3/8-16X0.875-IN) | |
| C | 28 | 1 | **154-2687** | 1 | CARRIER AS | |
| | 29 | 1 | **0S-1756** | 4 | BOLT (3/4-10X4.25-IN) | |
| | 30 | 1 | **5P-8248** | 4 | WASHER-HARD (20X36.5X3.5-MM THK) | |
| | 31 | 1 | **4D-5292** | 1 | RING-RETAINING | |
| | 32 | 1 | **1P-2662** | 1 | CONE-BEARING | |
| | 33 | 1 | **1P-2636** | 1 | CUP-BEARING | |
| | 34 | 1 | **6G-4701** | 1 | NUT (4 1/4-12-THD) | |
| | 35 | 1 | **8X-2308** | 1 | CAGE AS | |
| | | 1 | **2D-6642** | 1 | BALL | |
| | 36 | 1 | **2H-5001** | | SEAL-O-RING | |
| | 37 | 1 | **8W-5111** | 1 | SLEEVE | |
| | 38 | 1 | **169-1548** | 1 | SHAFT-PINION (15-TEETH) | |
| | 40 | 1 | **9G-2991** | 2 | RING-SEAL | |
| CY | 42 | 1 | **154-2688** | 1 | DIFFERENTIAL GP | 440 |

C-CHANGE FROM PREVIOUS TYPE
Y-SEPARATE ILLUSTRATION

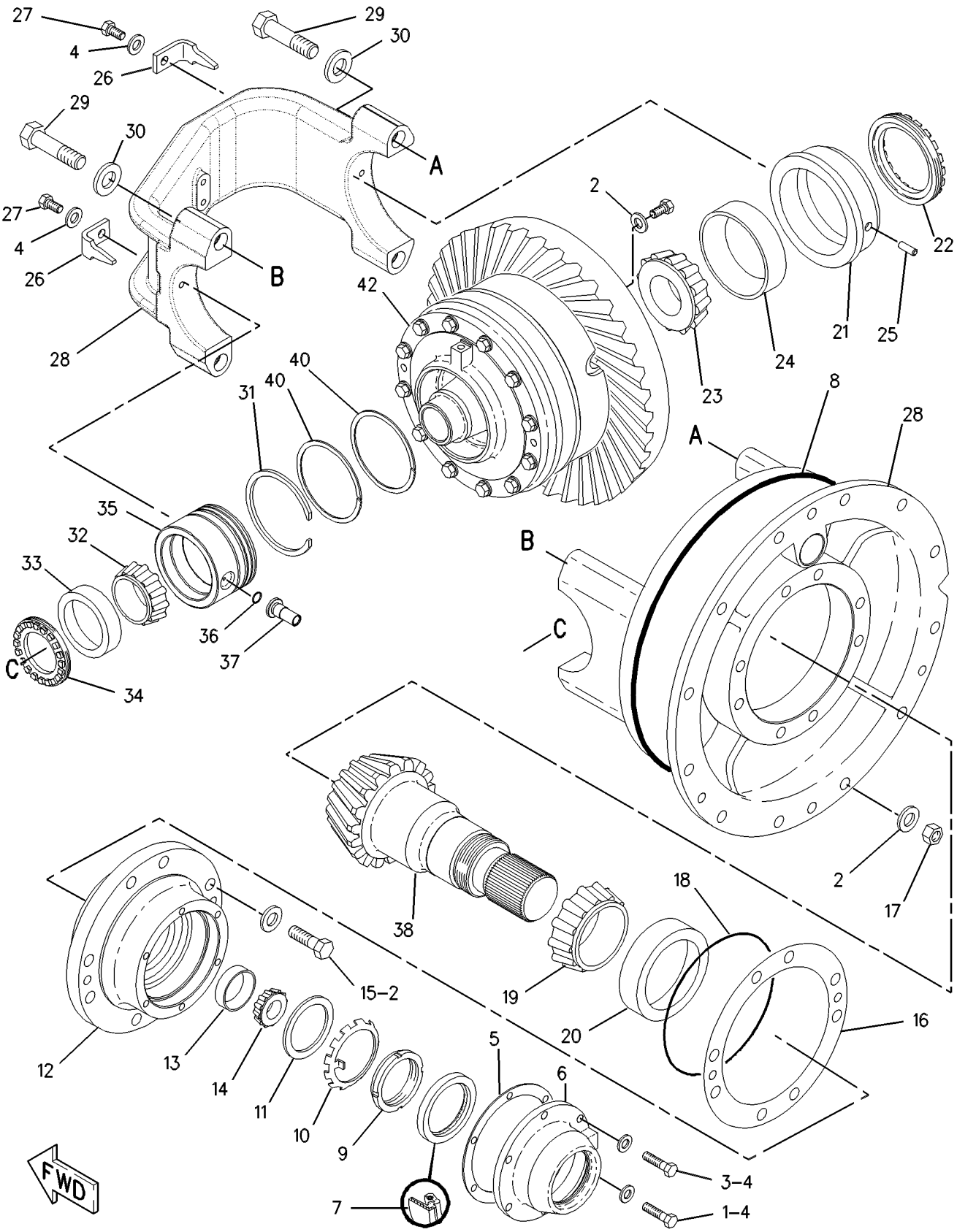


GRAPHIC #1 **<END>** g00635014

# *154-2688* DIFFERENTIAL GP

**S/N: CCA1-UP**

**PART OF 8W-5430 DIFFERENTIAL & BEVEL GEAR GP**

**SMCS-3258** **i02580119**

| NOTE | REF NO | GRAPHIC REF | PART NUMBER | QTY | PART NAME 1 2 3 4 5 6 (PRODUCT LEVEL) | SEE PAGE |
|---|---|---|---|---|---|---|
| | 1 | 1 | **8D-4291** | 1 | PISTON | |
| | 2 | 1 | **7D-8225** | 1 | SEAL-RING | |
| | 3 | 1 | **7D-8226** | 1 | SEAL-RING | |
| | 4 | 1 | **6Y-7954** | 7 | DISC-FRICTION | |
| | 5 | 1 | **169-1549** | 1 | GEAR-BEVEL (54-TEETH) | |
| | 6 | 1 | **8X-2528** | 1 | HOUSING AS | |
| | 6A | 1 | **2D-6642** | 1 | BALL | |
| | 6C | 1 | **3D-6509** | 2 | DOWEL | |
| | 7 | 1 | **8X-4641** | 4 | SPACER-THRUST | |
| | 8 | 1 | **155-2283** | 4 | PINION AS (14-TEETH) | |
| | | | | | (EACH INCLUDES) | |
| | 8A | 1 | **174-6819** | 1 | BEARING-SLEEVE | |
| | 9 | 1 | **154-2692** | 1 | HOUSING AS | |
| | 9A | 1 | **3D-6509** | 2 | DOWEL | |
| | 10 | 1 | **8D-4064** | 2 | WASHER-THRUST | |
| | 11 | 1 | **109-4582** | 1 | GEAR-BEVEL (24-TEETH) | |
| | 12 | 1 | **109-4583** | 1 | GEAR-BEVEL (24-TEETH) | |
| | 13 | 1 | **8D-4282** | 1 | DISC (DIFFERENTIAL LOCK CLUTCH) | |
| | 14 | 1 | **7D-8185** | 8 | DISC (DIFFERENTIAL LOCK CLUTCH) | |
| | 15 | 1 | **2B-0947** | 12 | BOLT (1/2-13X2.25-IN) | |
| | 16 | 1 | **5P-8245** | 12 | WASHER-HARD (13.5X25.5X3-MM THK) | |
| | 17 | 1 | **5P-8247** | 24 | WASHER-HARD (17X32X3.5-MM THK) | |
| | 18 | 1 | **5B-0841** | 24 | BOLT (5/8-18X1.75-IN) | |
| | 19 | 1 | **154-2689** | 1 | SPIDER | |

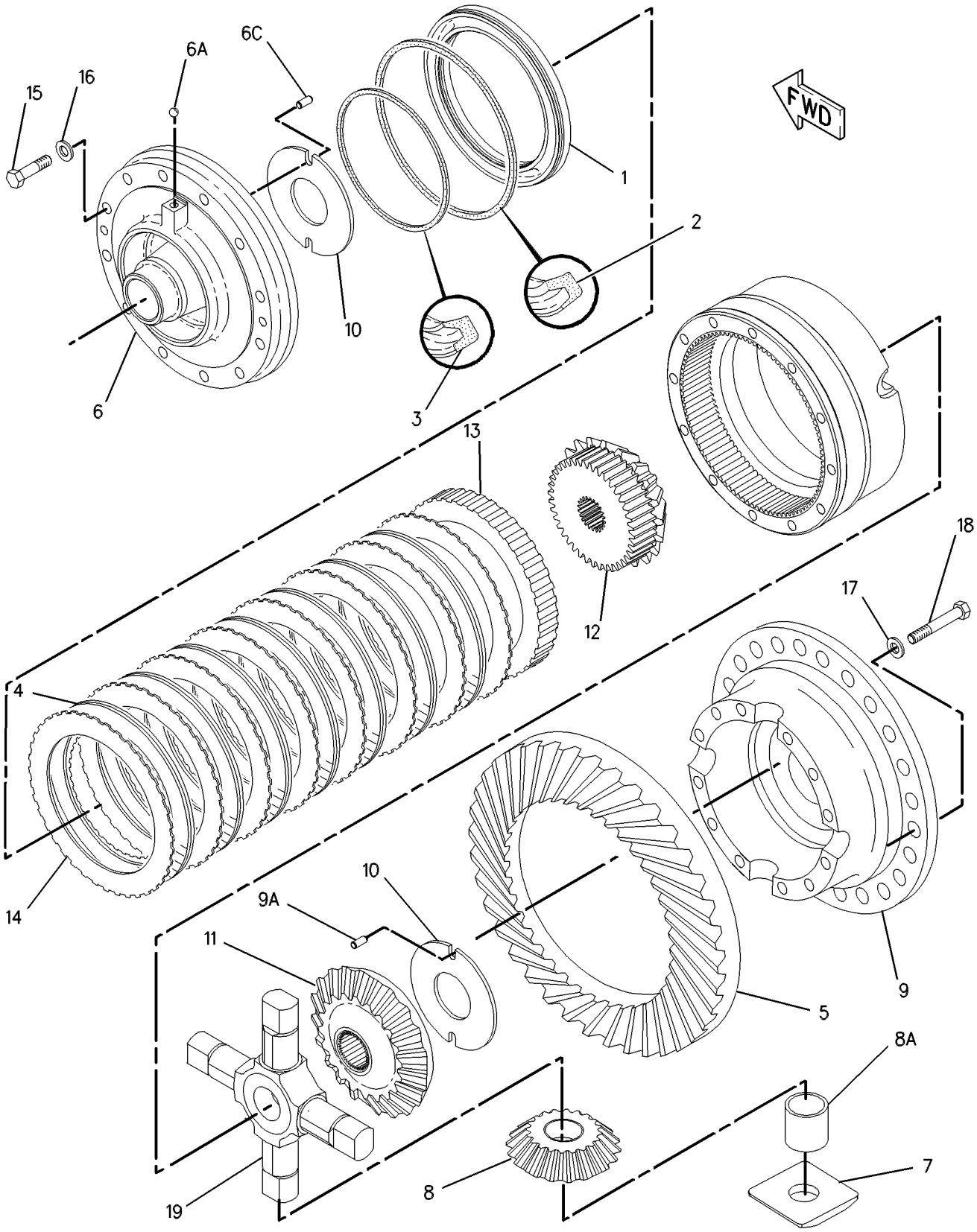


GRAPHIC #1 **<END>** g00597332

# *159-6173* FILLER GP-POWER TRAIN OIL

**S/N: CCA1-UP**

**PART OF 159-4615 GENERAL AR**

**SMCS-3005, 3081, 7513** **i02252931**

| NOTE | REF NO | GRAPHIC REF | PART NUMBER | QTY | PART NAME 1 2 3 4 5 6 (PRODUCT LEVEL) | SEE PAGE |
|---|---|---|---|---|---|---|
| | 1 | 1 | **8X-4271** | 1 | GAUGE AS-OIL LEVEL (DIPSTICK) (TRANSMISSION) | |
| | 2 | 1 | **9G-5127** | 1 | BREATHER AS (POWER TRAIN OIL FILLER) | |
| | 3 | 1 | **200-5924** | 1 | TUBE AS | |
| | 4 | 1 | **7J-8611** | 1 | ELBOW | |
| | 5 | 1 | **8B-1615** | 1 | GASKET | |
| | 6 | 1 | **8T-4121** | 2 | WASHER-HARD (11X21X2.5-MM THK) | |
| M | 7 | 1 | **134-5245** | 2 | BOLT (M10X1.5X30-MM) | |

M-METRIC PART

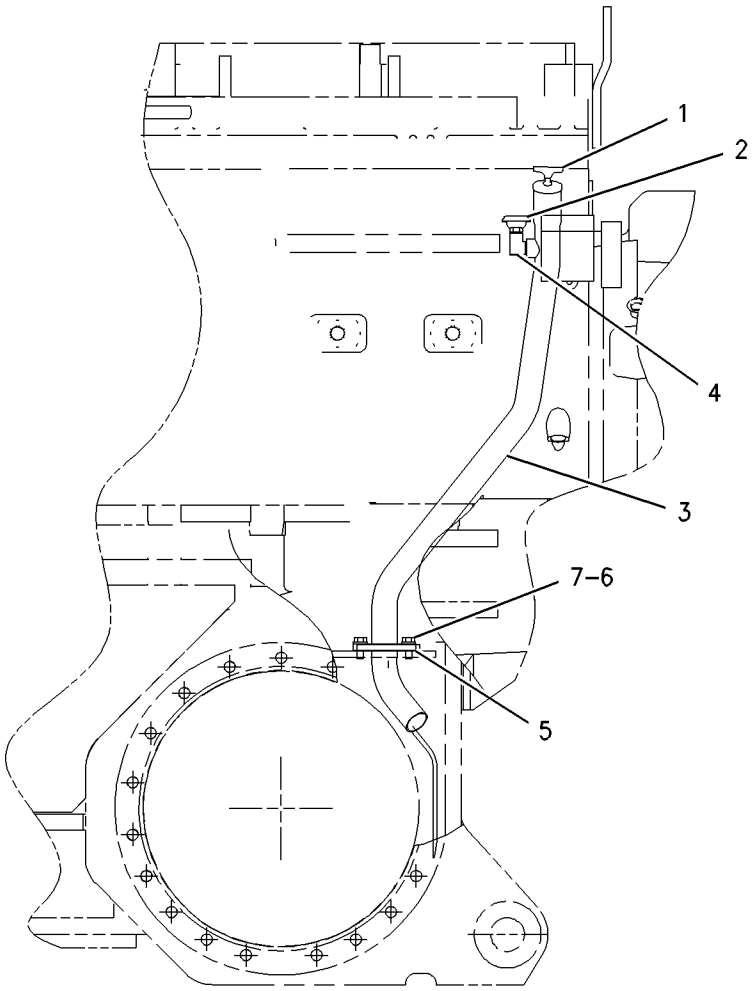


GRAPHIC #1 **<END>** g00807177

# *169-3651* FILTER & MTG GP-OIL—TRANSMISSION

**S/N: CCA361-1866**

**PART OF 159-4615 GENERAL AR, 171-6700 SUPPORT AR-REAR CHASSIS**

**ALSO AN ATTACHMENT**

**SMCS-3067, 5068** **i02304522**

| NOTE | REF NO | GRAPHIC REF | PART NUMBER | QTY | PART NAME 1 2 3 4 5 6 (PRODUCT LEVEL) | SEE PAGE |
|---|---|---|---|---|---|---|
| | 1 | 1 | **5P-4961** | 1 | CLAMP-HOSE | |
| | 2 | 1 | *164-5590* | 1 | VALVE AS-FLUID SAMPLING (TRANSMISSION OIL) | |
| | | 1 | **8C-3446** | 1 | VALVE-FLUID SAMPLING | |
| | | 1 | **3J-7354** | 1 | SEAL-O-RING | |
| Y | 3 | 1 | **207-3819** | 1 | FILTER GP-OIL (TRANSMISSION) | 447 |
| | 4 | 1 | **242-0407** | 1 | VALVE-DRAIN (TRANSMISSION OIL) | |
| | 5 | 1 | *148-8339* | 1 | CONNECTOR AS | |
| | | 1 | **6V-8716** | 1 | CONNECTOR | |
| | | 1 | **6V-9746** | 1 | SEAL-O-RING | |
| | | 1 | **7M-8485** | 1 | SEAL-O-RING | |
| | 6 | 1 | *148-8357* | 1 | ELBOW AS | |
| | | 1 | **6V-9008** | 1 | ELBOW | |
| | | 1 | **5K-9090** | 1 | SEAL-O-RING | |
| | | 1 | **7M-8485** | 1 | SEAL-O-RING | |
| | 7 | 1 | *148-8392* | 1 | ELBOW AS | |
| | | 1 | **6V-9853** | 1 | ELBOW | |
| | | 1 | **6V-9746** | 1 | SEAL-O-RING | |
| | 8 | 1 | **3K-0360** | 1 | SEAL-O-RING | |
| | 9 | 1 | **5M-3062** | 3 | BOLT (3/8-16X0.75-IN) | |
| | 10 | 1 | **8C-3447** | 1 | CAP-DUST | |
| | 11 | 1 | **8T-4896** | 3 | WASHER-HARD (10.2X18.5X2.5-MM THK) | |
| | 12 | 1 | **8X-5489** | 1 | SLEEVE | |
| | 13 | 1 | **9S-8005** | 1 | PLUG-O RING | |
| E | 14 | 1 | **9X-2023** | | HOSE (57-CM) | |
| | 15 | 1 | **3J-1907** | 1 | SEAL-O-RING | |

E-ORDER BY THE CENTIMETER
Y-SEPARATE ILLUSTRATION

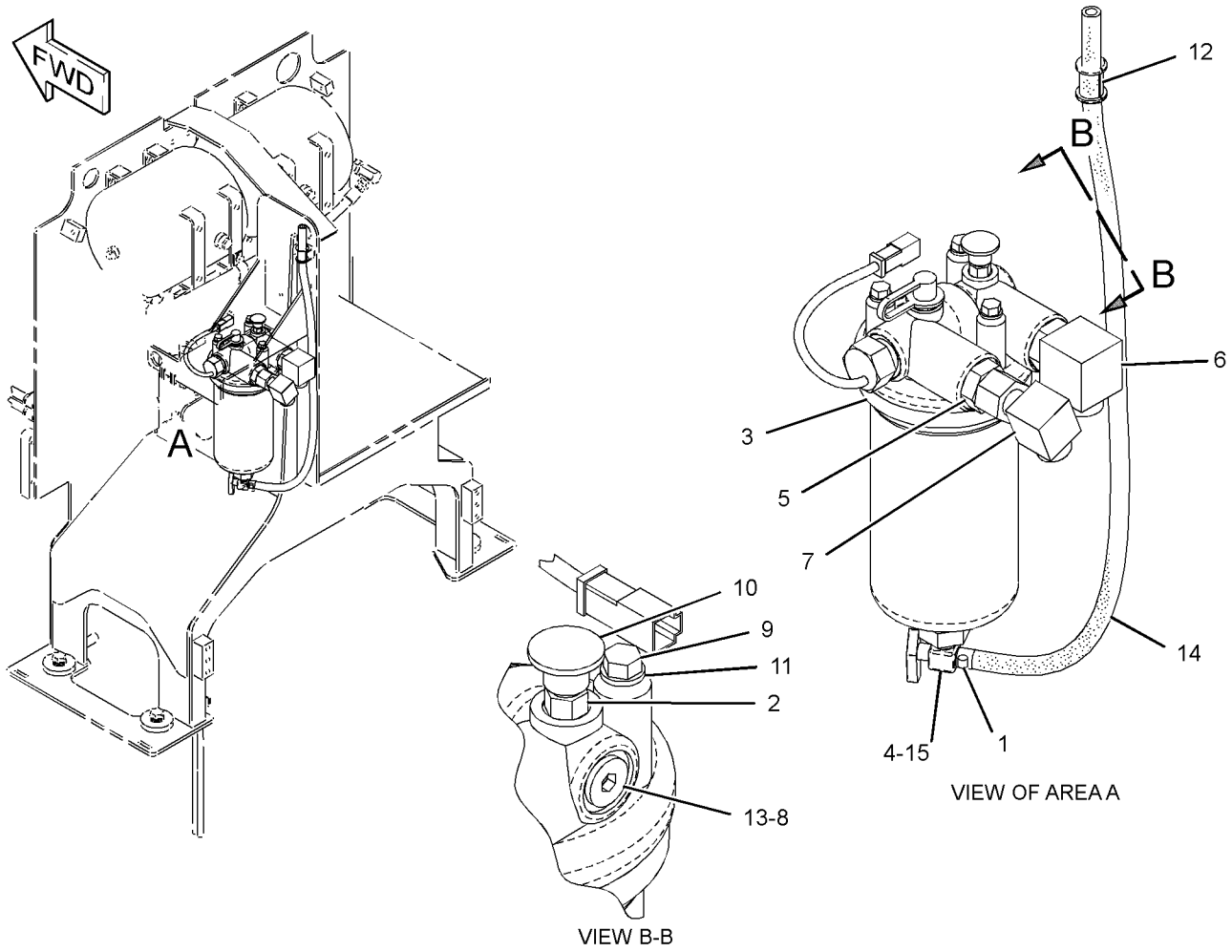


GRAPHIC #1 **<END>** g01159693

## *250-0471* FILTER & MTG GP-OIL—TRANSMISSION

**S/N: CCA1867-UP**

**PART OF 159-4615 GENERAL AR**

**SMCS-3067, 5068** **i02587851**

| NOTE | REF NO | GRAPHIC REF | PART NUMBER | QTY | PART NAME 1 2 3 4 5 6 (PRODUCT LEVEL) | SEE PAGE |
|---|---|---|---|---|---|---|
| | 1 | 1 | **5P-4961** | 1 | CLAMP-HOSE | |
| | 2 | 1 | **9G-9154** | 1 | CLIP | |
| | 3 | 1 | *164-6874* | 2 | FITTING AS-ELBOW | |
| | | | | | (EACH INCLUDES) | |
| | | 1 | **3J-1907** | 1 | SEAL-O-RING | |
| | | 1 | **085-7356** | 1 | FITTING | |
| | 4 | 1 | *165-6365* | 1 | FITTING AS | |
| | | 1 | **3J-1907** | 1 | SEAL-O-RING | |
| | | 1 | **7W-7381** | 1 | FITTING-OUTLET | |
| Y | 5 | 1 | **235-5812** | 1 | FILTER GP-OIL (BYPASS) | 449 |
| | 6 | 1 | **242-0407** | 1 | VALVE-DRAIN | |
| | 7 | 1 | *148-8305* | 1 | ADAPTER AS | |
| | | 1 | **3J-1907** | 1 | SEAL-O-RING | |
| | | 1 | **5P-9617** | 1 | ADAPTER (STRAIGHT THREAD O-RING) | |
| | 8 | 1 | *148-8339* | 1 | CONNECTOR AS | |
| | | 1 | **6V-8716** | 1 | CONNECTOR (SEAL) | |
| | | 1 | **6V-9746** | 1 | SEAL-O-RING | |
| | | 1 | **7M-8485** | 1 | SEAL-O-RING | |
| | 9 | 1 | *148-8357* | 1 | ELBOW AS | |
| | | 1 | **5K-9090** | 1 | SEAL-O-RING | |
| | | 1 | **6V-9008** | 1 | ELBOW (90-DEG) (90 DEGREE) | |
| | | 1 | **7M-8485** | 1 | SEAL-O-RING | |
| | 10 | 1 | *148-8392* | 1 | ELBOW AS | |
| | | 1 | **6V-9746** | 1 | SEAL-O-RING | |
| | | 1 | **6V-9853** | 1 | ELBOW (SWIVEL) | |
| | 11 | 1 | *150-4047* | 1 | ADAPTER AS | |
| | | 1 | **3J-7354** | 1 | SEAL-O-RING | |
| | | 1 | **8T-2353** | 1 | ADAPTER | |
| | 12 | 1 | *165-4931* | 2 | ELBOW AS | |
| | | | | | (EACH INCLUDES) | |
| | | 1 | **3J-1907** | 1 | SEAL-O-RING | |
| | | 1 | **6V-8077** | 1 | ELBOW | |
| | 13 | 1 | **4L-6454** | 3 | BOLT (3/8-16X1-IN) | |
| | 14 | 1 | **8T-4896** | 3 | WASHER-HARD (10.2X18.5X2.5-MM THK) | |
| | 15 | 1 | **8X-5489** | 1 | SLEEVE | |
| E | 16 | 1 | **9X-2023** | | HOSE (75-CM) | |

E-ORDER BY THE CENTIMETER
Y-SEPARATE ILLUSTRATION

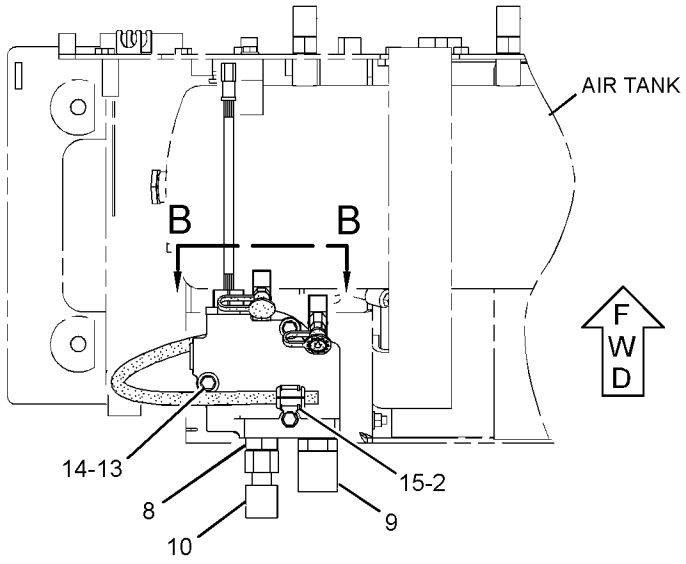


TOP VIEW

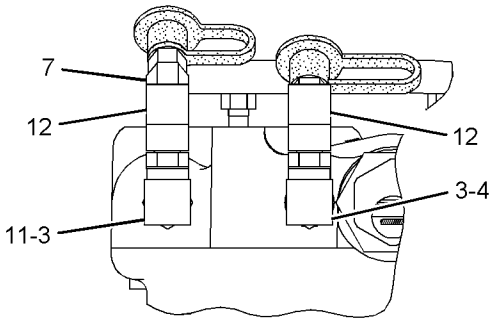


SECTION B-B

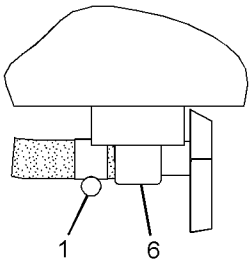


VIEW OF AREA A

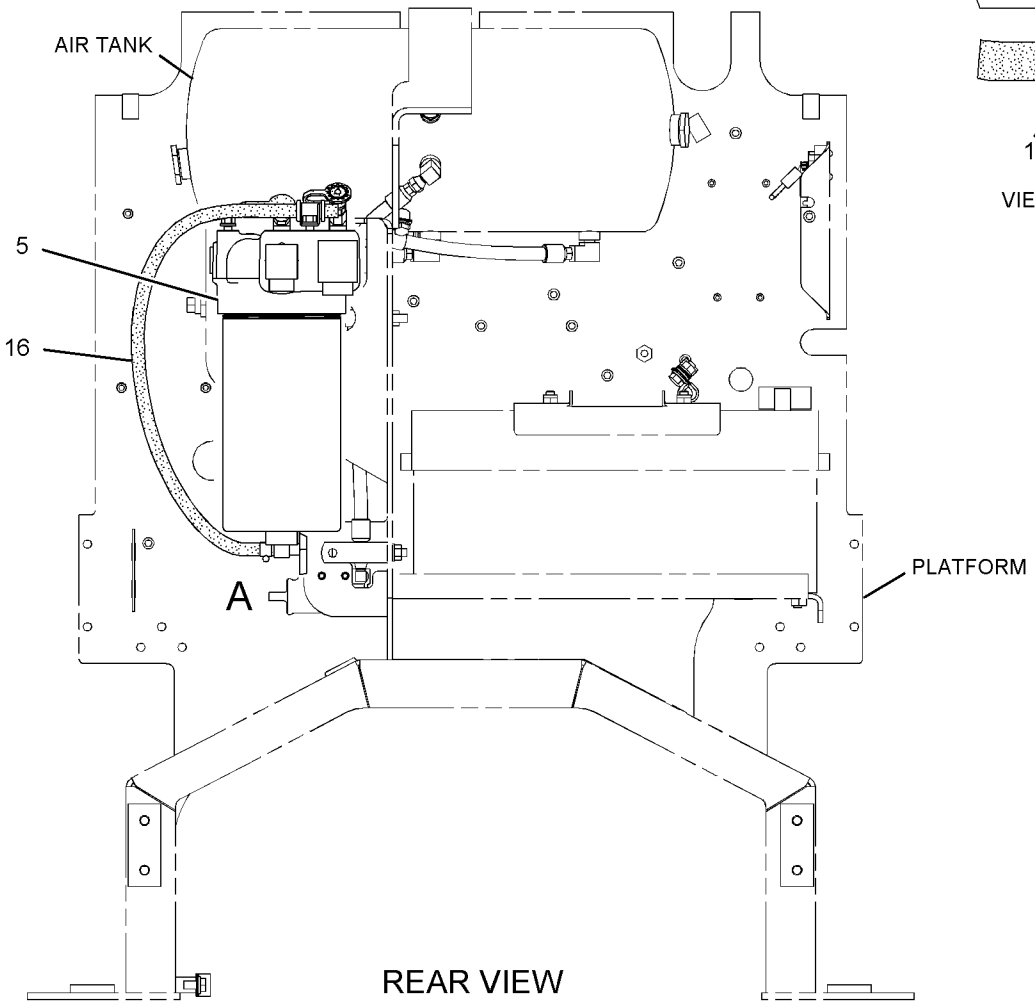


REAR VIEW

GRAPHIC #1 **<END>** g01241685

# 207-3819 FILTER GP-OIL–TRANSMISSION

**S/N: CCA1-UP**
**PART OF 169-3651 FILTER & MTG GP-OIL**
**ALSO AN ATTACHMENT**

**SMCS-3004, 3067** **i02585977**

| NOTE | REF NO | GRAPHIC REF | PART NUMBER | QTY | PART NAME 1 2 3 4 5 6 (PRODUCT LEVEL) | SEE PAGE |
|---|---|---|---|---|---|---|
| | 1 | 1 | **9T-8326** | 1 | BASE | |
| Y | 2 | 1 | **164-7577** | 1 | SWITCH GP-BYPASS (HYDRAULIC OIL FILTER) | 297 |
| | 3 | 1 | **6V-0852** | 1 | CAP-DUST | |
| | 4 | 1 | **6V-3965** | 1 | FITTING AS (QUICK DISCONNECT, MALE) | |
| | 5 | 1 | **3J-1907** | 1 | SEAL-O-RING | |
| | 6 | 1 | **2S-8439** | 1 | SEAL-O-RING | |
| | 7 | 1 | **133-1278** | 1 | HOUSING AS-OIL FILTER | |
| | 8 | 1 | **132-8875** | 1 | FILTER ELEMENT AS-OIL (TRANSMISSION) | |
| | 9 | 1 | **8M-6393** | 1 | RING-RETAINING | |
| | 10 | 1 | **133-1288** | 1 | RETAINER | |
| | 11 | 1 | **148-8407** | 1 | PLUG AS (TRANSMISSION OIL FILTER DRAIN) | |
| | 12 | 1 | **3S-8652** | 1 | SPRING | |
| | 13 | 1 | **6T-9222** | 1 | SPOOL | |
| | 14 | 1 | **133-2199** | 1 | SPRING | |

Y-SEPARATE ILLUSTRATION

**207-3819 FILTER GP-OIL** *(contd. )* **i02585977**

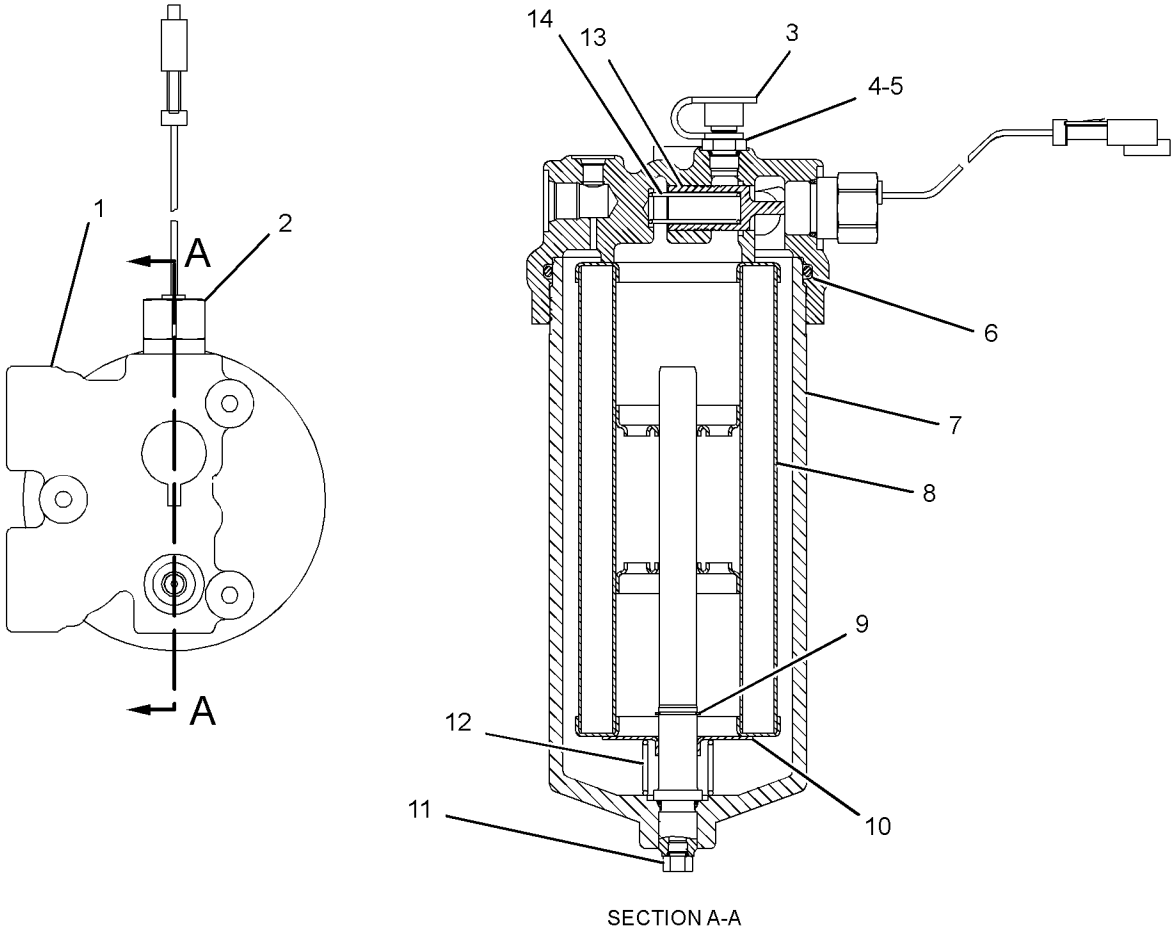


SECTION A-A

GRAPHIC #1 **<END>** g01294699

# 235-5812 FILTER GP-OIL–BYPASS

**S/N: CCA1867-UP**

**PART OF 250-0471 FILTER & MTG GP-OIL**

**SMCS-3004, 3067** **i02588340**

| NOTE | REF NO | GRAPHIC REF | PART NUMBER | QTY | PART NAME 1 2 3 4 5 6 (PRODUCT LEVEL) | SEE PAGE |
|---|---|---|---|---|---|---|
| | 1 | 1 | **1R-1809** | 1 | FILTER ELEMENT AS-OIL (ULTRA HIGH EFFICIENCY) | |
| | | 1 | **130-0229** | 1 | SEAL-O-RING | |
| | 2 | 1 | **6V-0852** | 1 | CAP-DUST | |
| | 3 | 1 | **8C-3447** | 1 | CAP-DUST | |
| Y | 4 | 1 | *238-1029* | 1 | BASE GP-OIL FILTER | 64 |
| | 5 | 1 | **241-3352** | 1 | HOUSING AS (OIL FILTER) | |
| | | 1 | **3J-1907** | 1 | SEAL-O-RING | |
| | | 1 | **9S-8004** | 1 | PLUG | |
| | 6 | 1 | **3J-1907** | 1 | SEAL-O-RING | |
| | 7 | 1 | **3J-7354** | 1 | SEAL-O-RING | |
| | 8 | 1 | **6V-3965** | 1 | FITTING AS (QUICK DISCONNECT, MALE) | |
| | 9 | 1 | **8C-3446** | 1 | VALVE-FLUID SAMPLING | |
| | 10 | 1 | **130-0229** | 1 | SEAL-O-RING | |

Y-SEPARATE ILLUSTRATION

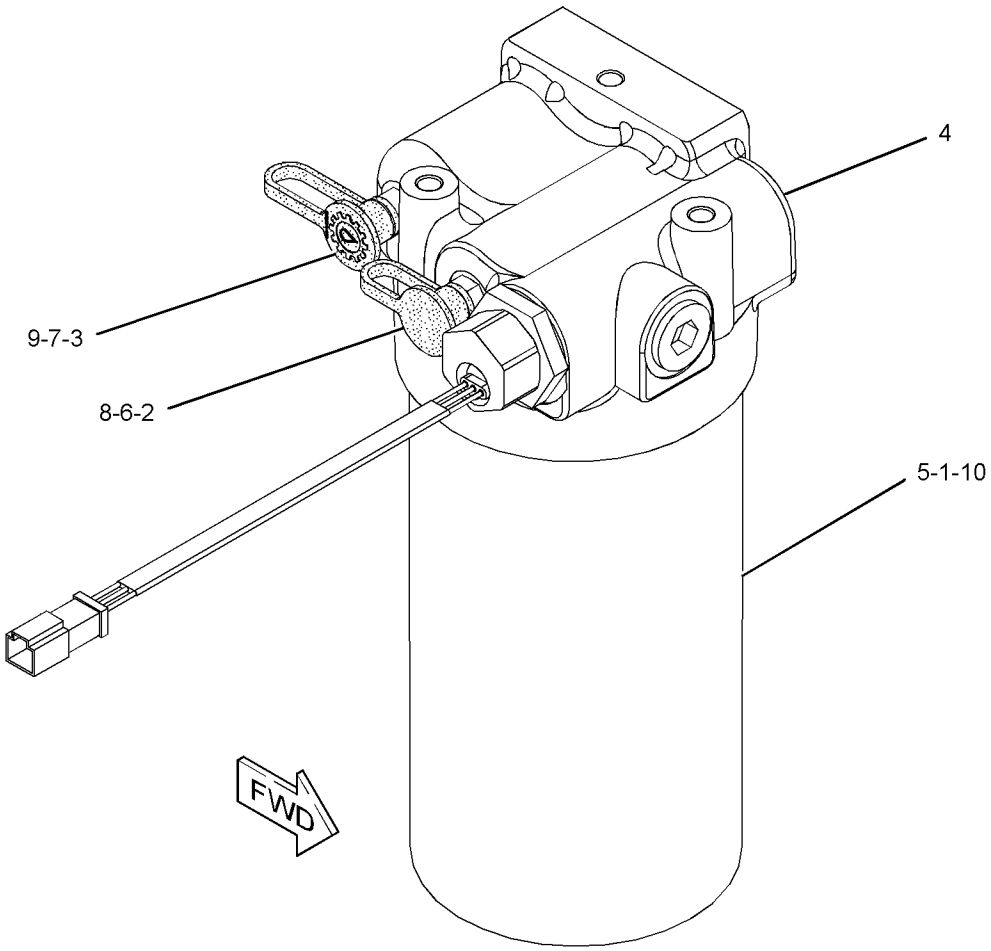


GRAPHIC #1 **<END>** g01217116

# POWER TRAIN

## *8W-4368* FINAL DRIVE GP

**S/N: CCA1-UP**

**PART OF 159-4615 GENERAL AR**

**SMCS-4050** **i02580081**

| NOTE | REF NO | GRAPHIC REF | PART NUMBER | QTY | PART NAME 1 2 3 4 5 6 (PRODUCT LEVEL) | SEE PAGE |
|---|---|---|---|---|---|---|
| | 1 | 1 | **191-5973** | 2 | SHAFT-SUN GEAR (18-TEETH) | |
| | 2 | 1 | **282-4350** | 2 | SEAL-LIP TYPE | |
| | 3 | 1 | **8D-3591** | 2 | CARRIER-PLANETARY | |
| | 4 | 1 | **030-8535** | 18 | BOLT-LOCKING (3/8-16X0.875-IN) | |
| | 5 | 1 | **5M-2894** | 30 | WASHER-HARD (10.2X18.5X2.5-MM THK) | |
| | 6 | 1 | **7D-7889** | 2 | GEAR-RING (72-TEETH) | |
| | 7 | 1 | **7D-0035** | 8 | PLATE | |
| | 8 | 1 | **7S-4571** | 2 | SEAL-O-RING | |
| | 9 | 1 | **5P-8248** | 38 | WASHER-HARD (20X36.5X3.5-MM THK) | |
| | 10 | 1 | **2J-3506** | 38 | NUT-FULL (3/4-10-THD) | |
| | 11 | 1 | **9F-2247** | 2 | PLUG-PIPE | |
| | 12 | 1 | **3E-4307** | 36 | BOLT-LOCKING (5/8-11X1.75-IN) | |
| | 13 | 1 | **4D-3704** | 32 | WASHER-HARD (17X30X5-MM THK) | |
| | 14 | 1 | **8D-3743** | 2 | SPROCKET (20-TEETH) | |
| | 15 | 1 | **236-7724** | 2 | RETAINER | |
| | 16 | 1 | **8W-8317** | 2 | SPROCKET (20-TEETH) | |
| | 17 | 1 | **4D-6695** | 2 | SEAL-O-RING | |
| B | 18 | 1 | **6G-3212** | 2 | SHIM PACK (INCLUDES 10-SHIMS) | |
| | 19 | 1 | **1P-4693** | 4 | CUP-BEARING | |
| | 20 | 1 | **5P-3490** | 2 | CONE-BEARING | |
| | 21 | 1 | **8W-4142** | 2 | SHAFT-DRIVE | |
| | 22 | 1 | **5D-0353** | 12 | BOLT-LOCKING (3/8-16X1-IN) | |
| | 23 | 1 | **265-9125** | 6 | RETAINER | |
| | 24 | 1 | **8S-9092** | 32 | BOLT (5/8-11X2.25-IN) | |
| | 25 | 1 | **200-7929** | 2 | HOUSING | |
| | 26 | 1 | **218-4406** | 4 | RING-WEAR | |
| | 27 | 1 | **1P-4694** | 2 | CONE-BEARING | |
| | 28 | 1 | **6G-3206** | 4 | WASHER-THRUST (131.75X154.79X1.6-MM THK) | |
| | 29 | 1 | **5T-7129** | 2 | HOUSING | |
| | 30 | 1 | **8D-3902** | 2 | SEAL-LIP TYPE | |
| | 31 | 1 | **8W-2308** | 6 | SHAFT-PLANETARY | |
| | 32 | 1 | **8D-3540** | 2 | NUT (3 1/4-12-THD) | |
| | 33 | 1 | **129-2381** | 6 | GEAR-PLANETARY (26-TEETH) | |
| | 34 | 1 | **8W-4141** | 2 | LOCK | |
| | 35 | 1 | **1S-9110** | 12 | ROLLER AS | |
| | 36 | 1 | **8X-8377** | 12 | WASHER (47.57X82.55X2.92-MM THK) | |
| | 37 | 1 | **8D-3886** | 2 | RING-RETAINING | |
| | 38 | 1 | **8D-3885** | 2 | WASHER (50.8X107.95X6.35-MM THK) | |
| | 39 | 1 | **198-4768** | 36 | WASHER-HARD (17.5X32X8-MM THK) | |

B-USE AS REQUIRED

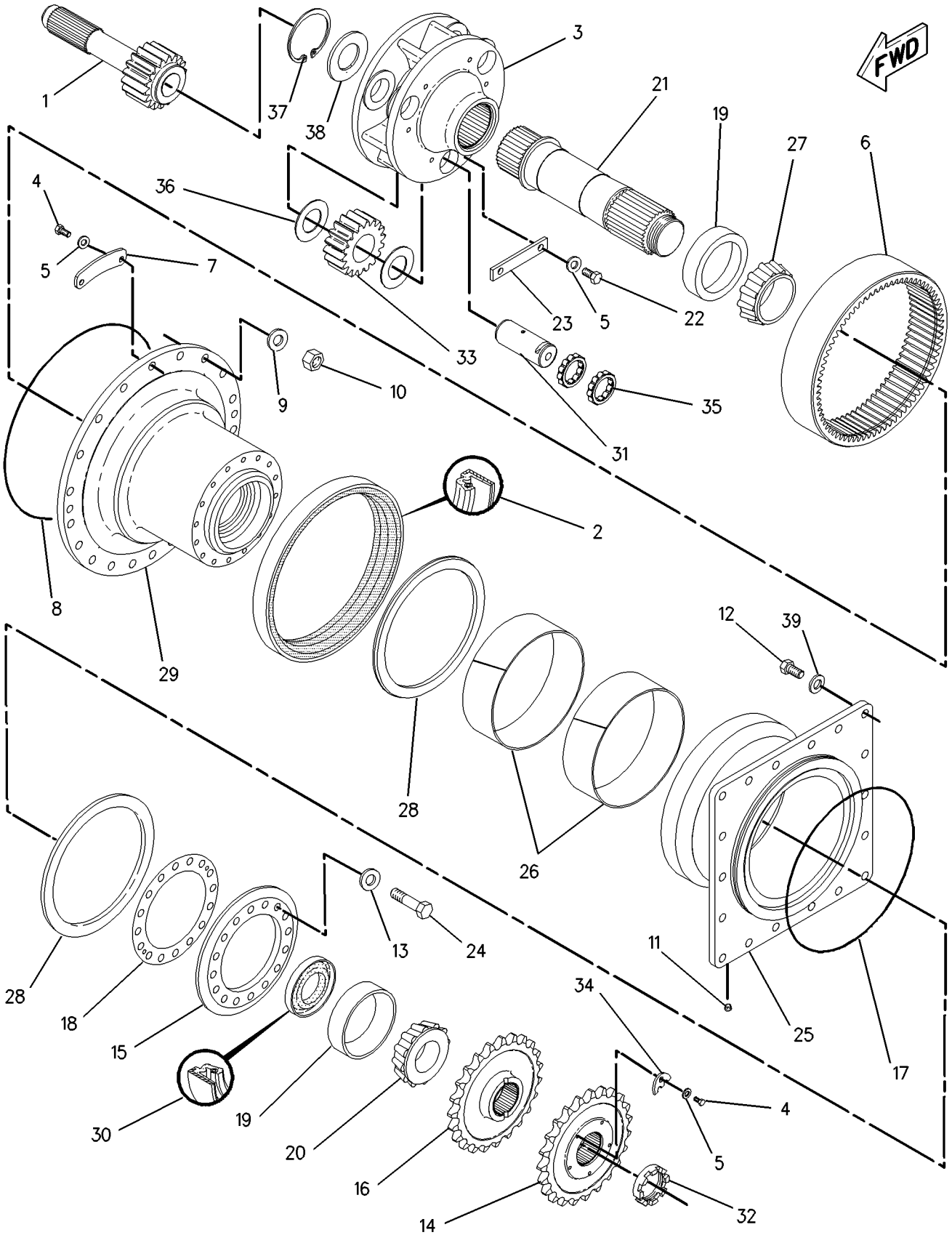


GRAPHIC #1 **<END>** g00954365

# POWER TRAIN

## *159-6174* LINES GP-TRANSMISSION OIL

**S/N: CCA1-1348**

**PART OF 159-4615 GENERAL AR**

**SMCS-3154** **i02588342**

| NOTE | REF NO | GRAPHIC REF | PART NUMBER | QTY | PART NAME 1 2 3 4 5 6 (PRODUCT LEVEL) | SEE PAGE |
|---|---|---|---|---|---|---|
| | 1 | 1 | **5D-1026** | 2 | CLAMP-HOSE | |
| | 2 | 1 | **7N-3725** | 1 | BRACKET | |
| | 3 | 2 | **8T-4983** | 2 | CLAMP-HOSE | |
| | 4 | 1 | **8X-5121** | 1 | TUBE | |
| | 5 | 2 | **8X-7317** | 1 | HOSE | |
| | 6 | 2 | **8X-8916** | 1 | PLATE | |
| | 7 | 2 | **9C-5344** | 1 | SPACER (10.5X20X18-MM THK) | |
| | 8 | 2 | **9C-9467** | 1 | CLIP | |
| | 9 | 1 | **005-7898** | 2 | CONNECTOR-HOSE | |
| | 10 | 1 | **113-9048** | 1 | BAFFLE | |
| | 11 | 2 | **132-8875** | 1 | FILTER ELEMENT AS-OIL (TRANSMISSION) | |
| | 12 | 1,2 | **173-2087** | 3 | SPACER (11X20X28-MM THK) | |
| I | 13 | 1 | **176-9747** | 1 | HOSE AS | |
| I | 14 | 1 | **177-1633** | 1 | HOSE AS | |
| I | 15 | 1 | **177-1677** | 1 | HOSE AS | |
| | 16 | 2 | **178-3695** | 1 | ADAPTER | |
| | 17 | 1 | **183-1406** | 2 | CLIP | |
| I | 18 | 1 | **203-6016** | 1 | HOSE AS | |
| | 19 | 1 | **203-6018** | 1 | HOSE AS | |
| | 20 | 2 | **203-6019** | 1 | TUBE AS | |
| | 21 | 2 | *148-8335* | 1 | CONNECTOR AS | |
| | | 2 | **6V-8635** | 1 | CONNECTOR | |
| | | 2 | **5K-9090** | 1 | SEAL-O-RING | |
| | | 2 | **7M-8485** | 1 | SEAL-O-RING | |
| | 22 | 2 | *148-8339* | 1 | CONNECTOR AS | |
| | | 2 | **6V-8716** | 1 | CONNECTOR | |
| | | 2 | **6V-9746** | 1 | SEAL-O-RING | |
| | | 2 | **7M-8485** | 1 | SEAL-O-RING | |
| | 23 | 2 | *148-8392* | 1 | ELBOW AS | |
| | | 2 | **6V-9853** | 1 | ELBOW | |
| | | 2 | **6V-9746** | 1 | SEAL-O-RING | |
| | 24 | 2 | *148-8407* | 1 | PLUG AS | |
| | | 2 | **9S-4191** | 1 | PLUG-O RING | |
| | | 2 | **3J-1907** | 1 | SEAL-O-RING | |
| | 25 | 1 | **1L-0509** | 2 | BOLT (3/8-16X0.74-IN) | |
| | 26 | 1 | **1P-4577** | 10 | FLANGE-HALF | |
| | 27 | 2 | **1P-4578** | 2 | FLANGE-HALF | |
| | 28 | 1 | **3B-7732** | 1 | ELBOW-STREET | |
| | 29 | 1 | **4F-7389** | 2 | SEAL-O-RING | |
| | 30 | 1,2 | **4J-0520** | 6 | SEAL-O-RING | |
| | 31 | 2 | **4J-0522** | 1 | SEAL-O-RING | |
| | 32 | 2 | **5K-9090** | 1 | SEAL-O-RING | |
| | 33 | 1 | **5S-7382** | 8 | BOLT (3/8-16X1.375-IN) | |
| | 34 | 1,2 | **6V-1889** | 6 | CLIP | |
| | 35 | 2 | **7X-0342** | 1 | BOLT (5/8-11X0.75-IN) | |
| M | 36 | 1 | **7X-2552** | 1 | BOLT (M16X2X30-MM) | |
| | 37 | 1 | **7X-7729** | 1 | WASHER (11X25X3-MM THK) | |
| M | 38 | 1 | **8T-0722** | 4 | BOLT-LOCKING (M10X1.5X30-MM) | |
| | 39 | 1,2 | **8T-4121** | 20 | WASHER-HARD (11X21X2.5-MM THK) | |
| M | 40 | 1 | **8T-4133** | 1 | NUT (M10X1.5-THD) | |
| M | 41 | 1 | **8T-7547** | 1 | BOLT (M8X1.25X30-MM) | |
| M | 42 | 2 | **8T-4182** | 2 | BOLT (M10X1.5X45-MM) | |
| M | 43 | 1 | **8T-4195** | 3 | BOLT (M10X1.5X30-MM) | |
| M | 44 | 1 | **8T-4196** | 8 | BOLT (M10X1.5X35-MM) | |
| | 45 | 1 | **8T-4896** | 10 | WASHER-HARD (10.2X18.5X2.5-MM THK) | |
| M | 46 | 1,2 | **8T-6466** | 5 | BOLT (M10X1.5X60-MM) | |

## *159-6174* LINES GP-TRANSMISSION OIL *(contd.)* i02588342

| NOTE | REF NO | GRAPHIC REF | PART NUMBER | QTY | PART NAME 1 2 3 4 5 6 (PRODUCT LEVEL) | SEE PAGE |
|---|---|---|---|---|---|---|
| | 47 | 1 | **9X-8257** | 1 | WASHER (17.5X30X3.5-MM THK) | |
| E | 48 | 1 | **5P-0765** | | HOSE (47-CM) | |
| M | 49 | 1 | **5C-7261** | 1 | NUT (M8X1.25-THD) | |
| | 50 | 1 | **5P-4116** | 2 | WASHER-HARD (8.8X20.5X2-MM THK) | |

E-ORDER BY THE CENTIMETER
I-REFER TO HYDRAULIC INFORMATION SYSTEM
M-METRIC PART

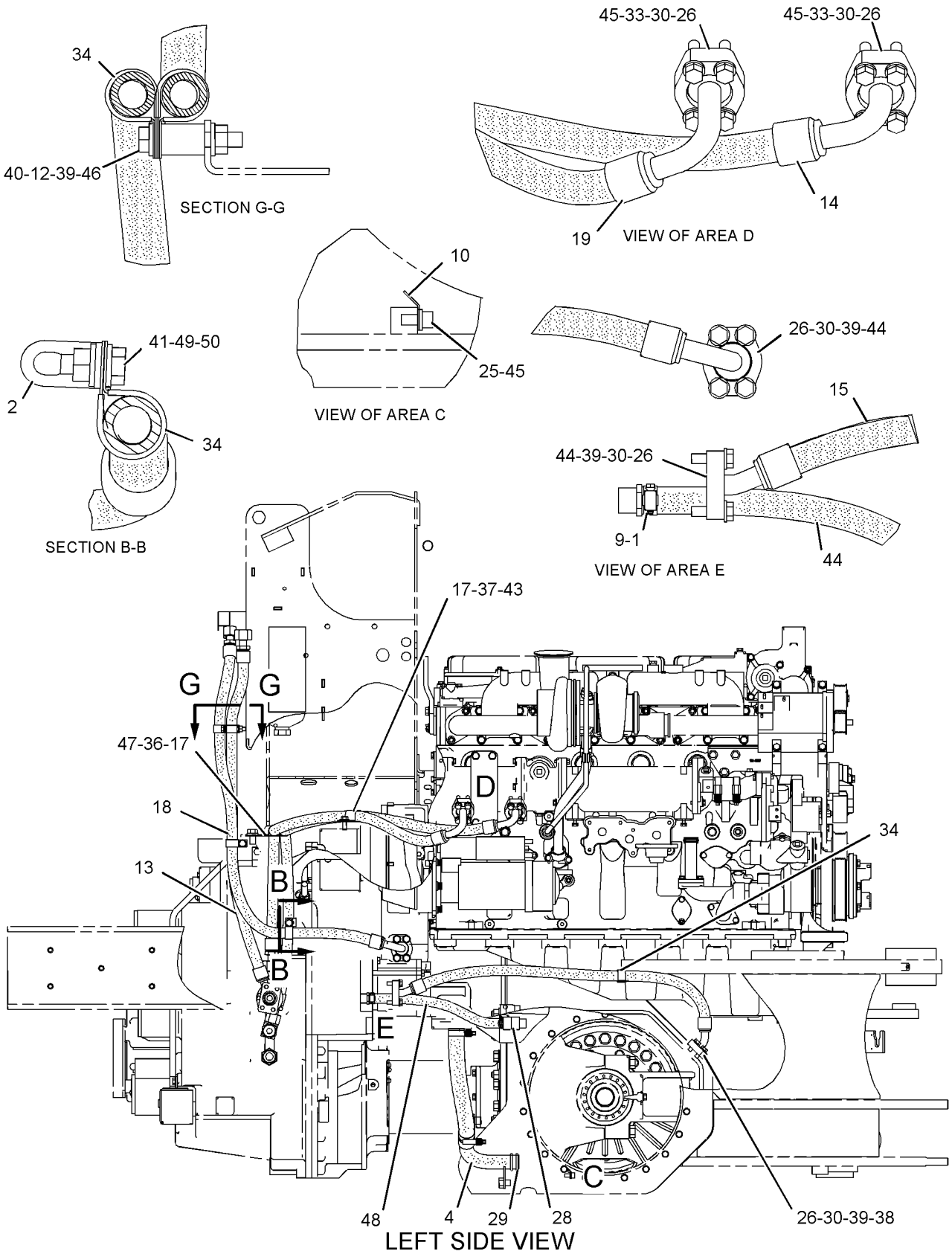


GRAPHIC #1

g01090892

*159-6174* **LINES GP-TRANSMISSION OIL** *(contd.)* **i02588342**

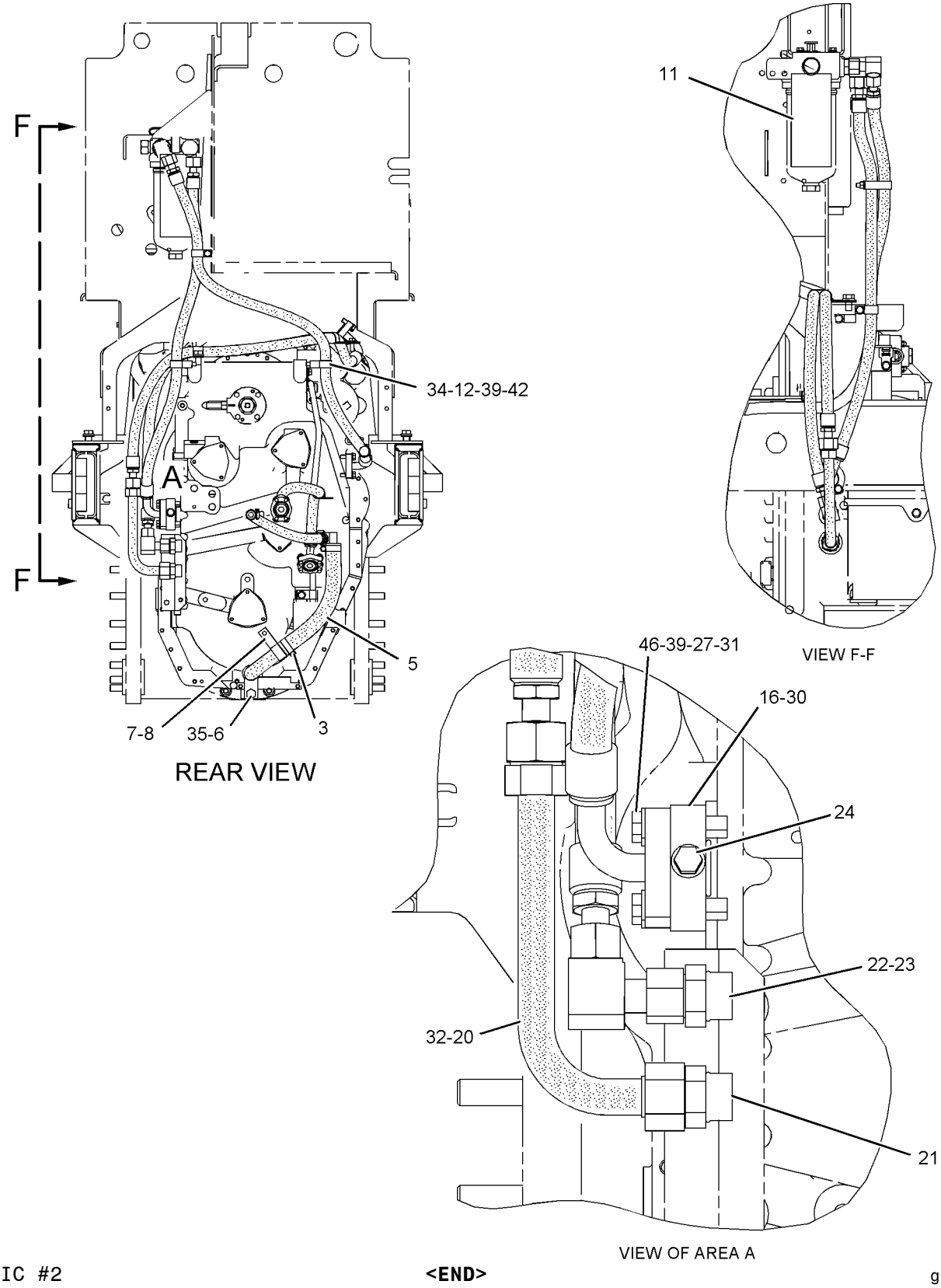


GRAPHIC #2

**<END>**

g01075091

# POWER TRAIN

## *159-6174* LINES GP-TRANSMISSION OIL

**S/N: CCA1349-1867**

**PART OF 159-4615 GENERAL AR**

**SMCS-3154** **i02304906**

| NOTE | REF NO | GRAPHIC REF | PART NUMBER | QTY | PART NAME 1 2 3 4 5 6 (PRODUCT LEVEL) | SEE PAGE |
|---|---|---|---|---|---|---|
| | 1 | 1 | **5D-1026** | 2 | CLAMP-HOSE | |
| | 2 | 1 | **7N-3725** | 1 | BRACKET | |
| | 3 | 2 | **8T-4983** | 2 | CLAMP-HOSE | |
| | 4 | 1 | **8X-5121** | 1 | TUBE | |
| | 5 | 2 | **8X-7317** | 1 | HOSE | |
| | 6 | 2 | **8X-8916** | 1 | PLATE | |
| | 7 | 2 | **9C-5344** | 1 | SPACER (10.5X20X18-MM THK) | |
| | 8 | 2 | **9C-9467** | 1 | CLIP | |
| | 9 | 1 | **005-7898** | 2 | CONNECTOR-HOSE | |
| | 10 | 1 | **113-9048** | 1 | BAFFLE | |
| C | 12 | 2 | **173-2087** | 3 | SPACER (11X20X28-MM THK) | |
| CI | 13 | 1 | **176-9747** | 1 | HOSE AS | |
| I | 14 | 1 | **177-1633** | 1 | HOSE AS | |
| I | 15 | 1 | **177-1677** | 1 | HOSE AS | |
| | 16 | 2 | **178-3695** | 1 | ADAPTER | |
| | 17 | 1 | **183-1406** | 2 | CLIP | |
| CI | 18 | 1 | **203-6016** | 1 | HOSE AS | |
| | 19 | 1 | **203-6018** | 1 | HOSE AS | |
| | 20 | 2 | **203-6019** | 1 | TUBE AS | |
| | 21 | 2 | *148-8335* | 1 | CONNECTOR AS | |
| | | 2 | **6V-8635** | 1 | CONNECTOR | |
| | | 2 | **5K-9090** | 1 | SEAL-O-RING | |
| | | 2 | **7M-8485** | 1 | SEAL-O-RING | |
| | 22 | 2 | *148-8339* | 1 | CONNECTOR AS | |
| | | 2 | **6V-8716** | 1 | CONNECTOR | |
| | | 2 | **6V-9746** | 1 | SEAL-O-RING | |
| | | 2 | **7M-8485** | 1 | SEAL-O-RING | |
| | 23 | 2 | *148-8392* | 1 | ELBOW AS | |
| | | 2 | **6V-9853** | 1 | ELBOW | |
| | | 2 | **6V-9746** | 1 | SEAL-O-RING | |
| | 24 | 2 | *148-8407* | 1 | PLUG AS | |
| | | 2 | **9S-4191** | 1 | PLUG-O RING | |
| | | 2 | **3J-1907** | 1 | SEAL-O-RING | |
| | 25 | 1 | **1L-0509** | 2 | BOLT (3/8-16X0.74-IN) | |
| | 26 | 1 | **1P-4577** | 10 | FLANGE-HALF | |
| | 27 | 2 | **1P-4578** | 2 | FLANGE-HALF | |
| | 28 | 1 | **3B-7732** | 1 | ELBOW-STREET | |
| | 29 | 1 | **4F-7389** | 2 | SEAL-O-RING | |
| | 30 | 1,2 | **4J-0520** | 6 | SEAL-O-RING | |
| | 31 | 2 | **4J-0522** | 1 | SEAL-O-RING | |
| | 32 | 2 | **5K-9090** | 1 | SEAL-O-RING | |
| | 33 | 1 | **5S-7382** | 8 | BOLT (3/8-16X1.375-IN) | |
| | 34 | 1,2 | **6V-1889** | 6 | CLIP | |
| | 35 | 2 | **7X-0342** | 1 | BOLT (5/8-11X0.75-IN) | |
| M | 36 | 1 | **7X-2552** | 1 | BOLT (M16X2X30-MM) | |
| | 37 | 1 | **7X-7729** | 1 | WASHER (11X25X3-MM THK) | |
| CM | 38 | 1 | **134-5245** | 4 | BOLT (M10X1.5X30-MM) | |
| | 39 | 1,2 | **8T-4121** | 20 | WASHER-HARD (11X21X2.5-MM THK) | |
| M | 40 | 1 | **8T-4133** | 1 | NUT (M10X1.5-THD) | |
| M | 41 | 1 | **8T-7547** | 1 | BOLT (M8X1.25X30-MM) | |
| M | 42 | 2 | **8T-4182** | 2 | BOLT (M10X1.5X45-MM) | |
| CM | 43 | 1 | **8T-4195** | 2 | BOLT (M10X1.5X30-MM) | |
| M | 44 | 1 | **8T-4196** | 8 | BOLT (M10X1.5X35-MM) | |
| | 45 | 1 | **8T-4896** | 10 | WASHER-HARD (10.2X18.5X2.5-MM THK) | |
| CM | 46 | 2 | **8T-6466** | 4 | BOLT (M10X1.5X60-MM) | |
| | 47 | 1 | **9X-8257** | 1 | WASHER (17.5X30X3.5-MM THK) | |

## *159-6174* LINES GP-TRANSMISSION OIL *(contd.)* i02304906

| NOTE | REF NO | GRAPHIC REF | PART NUMBER | QTY | PART NAME 1 2 3 4 5 6 (PRODUCT LEVEL) | SEE PAGE |
|---|---|---|---|---|---|---|
| E | 48 | 1 | **5P-0765** | | HOSE (47-CM) | |
| M | 49 | 1 | **5C-7261** | 1 | NUT (M8X1.25-THD) | |
| | 50 | 1 | **5P-4116** | 2 | WASHER-HARD (8.8X20.5X2-MM THK) | |
| | 51 | 1 | **6V-5839** | 1 | WASHER (11X21X2.5-MM THK) | |
| | 52 | 1 | **132-8875** | 2 | FILTER ELEMENT AS-OIL | |
| M | 53 | 1 | **140-0174** | 1 | BOLT (M10X1.5X75-MM) | |

C-CHANGE FROM PREVIOUS TYPE
E-ORDER BY THE CENTIMETER
I-REFER TO HYDRAULIC INFORMATION SYSTEM
M-METRIC PART

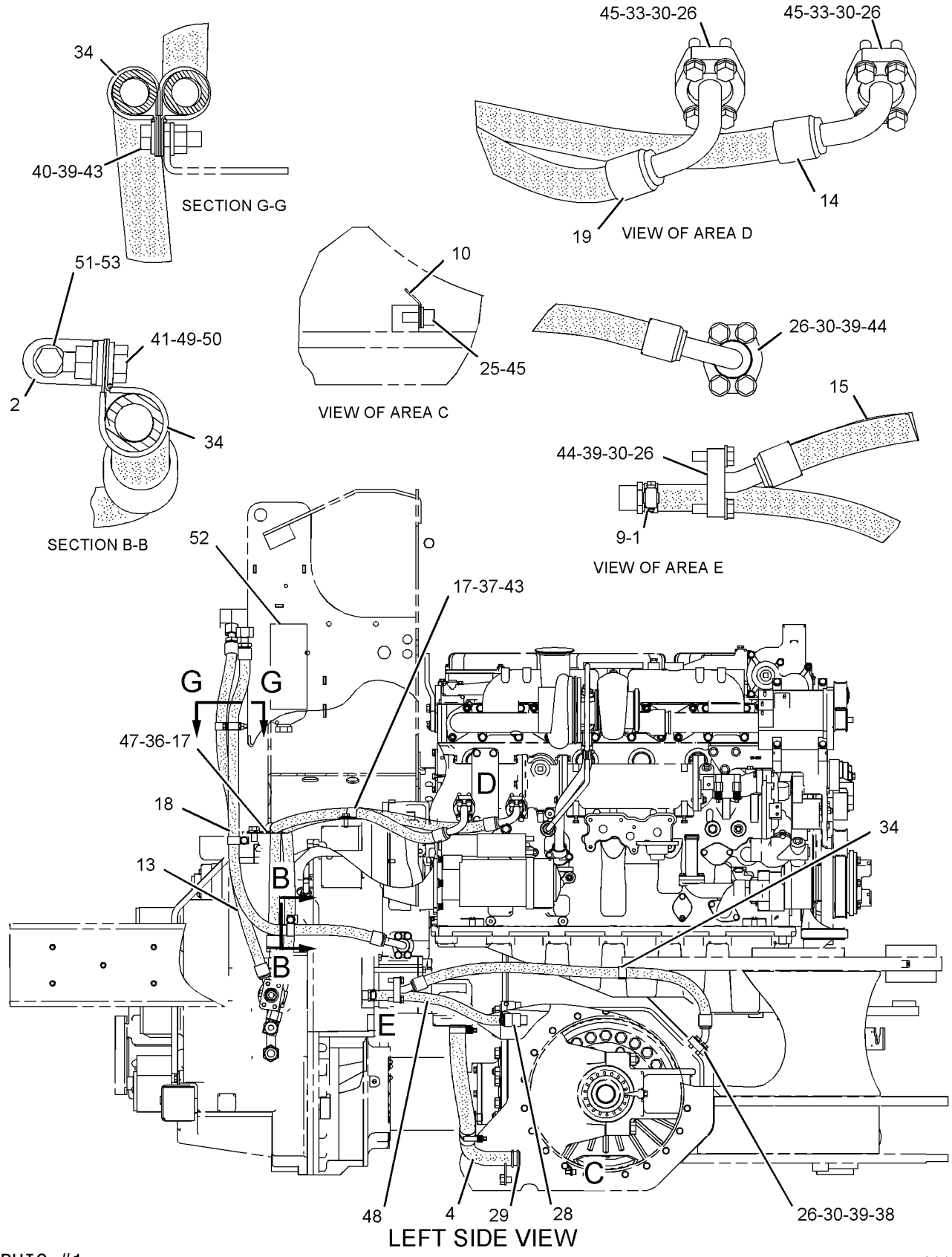


GRAPHIC #1

g01147888

*159-6174* **LINES GP-TRANSMISSION OIL** *(contd.)* **i02304906**

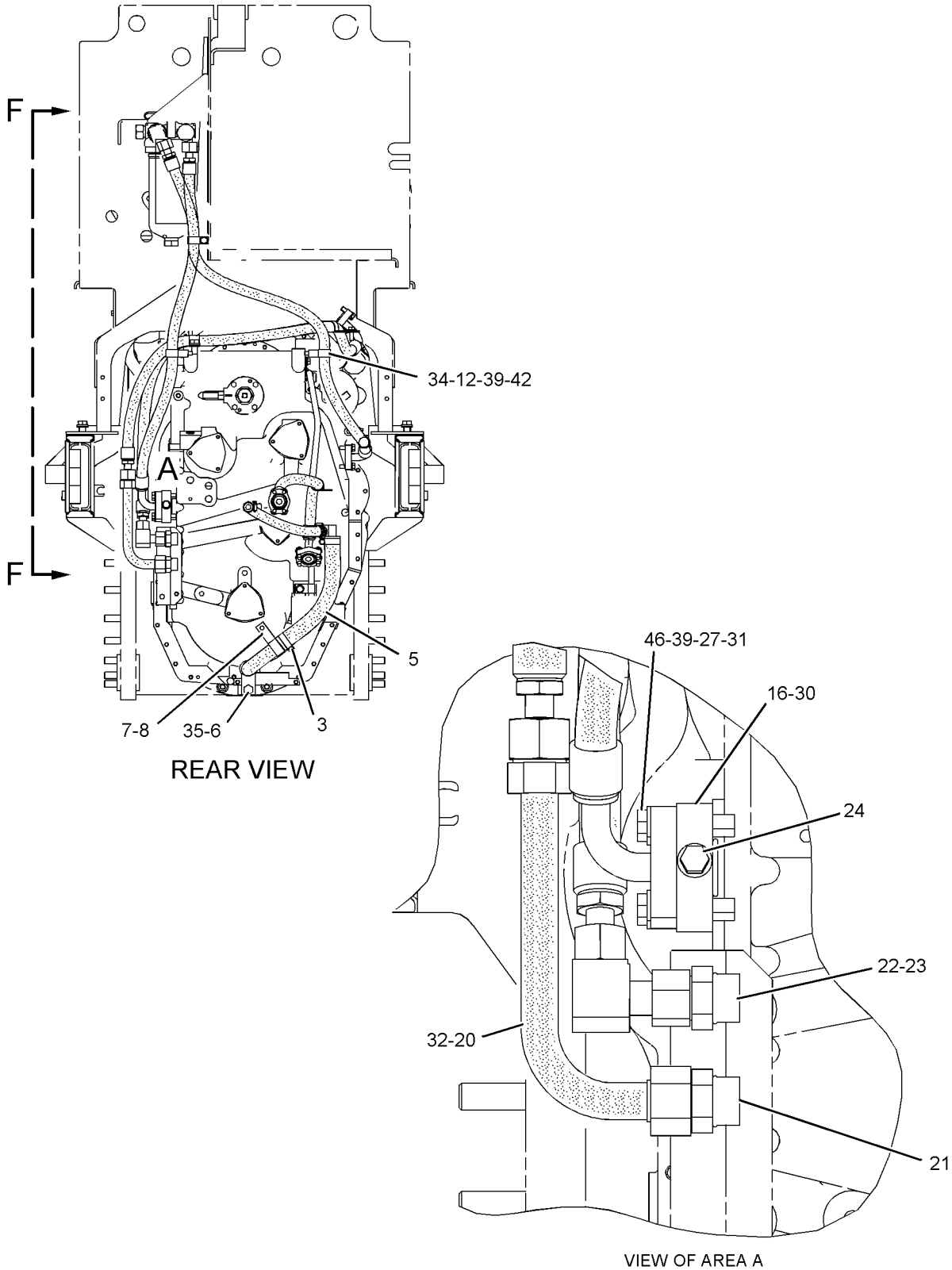


GRAPHIC #2 **<END>** g01147889

# POWER TRAIN

## *159-6174* LINES GP-TRANSMISSION OIL

**S/N: CCA1868-UP**

**PART OF 159-4615 GENERAL AR**

**SMCS-3154** **i02589577**

| NOTE | REF NO | GRAPHIC REF | PART NUMBER | QTY | PART NAME 1 2 3 4 5 6 (PRODUCT LEVEL) | SEE PAGE |
|---|---|---|---|---|---|---|
| | 1 | 1 | **5D-1026** | 2 | CLAMP-HOSE | |
| | 2 | 1 | **7N-3725** | 1 | BRACKET | |
| | 3 | 2 | **8T-4983** | 2 | CLAMP-HOSE | |
| | 4 | 1 | **8X-5121** | 1 | TUBE | |
| | 5 | 2 | **8X-7317** | 1 | HOSE | |
| | 6 | 2 | **8X-8916** | 1 | PLATE | |
| | 7 | 2 | **9C-5344** | 1 | SPACER (10.5X20X18-MM THK) | |
| | 8 | 2 | **9C-9467** | 1 | CLIP | |
| | 9 | 1 | **005-7898** | 2 | CONNECTOR-HOSE | |
| | 10 | 1 | **113-9048** | 1 | BAFFLE | |
| | 12 | 2 | **173-2087** | 3 | SPACER (11X20X28-MM THK) | |
| CI | 13 | 1 | **258-6468** | 1 | HOSE AS | |
| I | 14 | 1 | **177-1633** | 1 | HOSE AS | |
| I | 15 | 1 | **177-1677** | 1 | HOSE AS | |
| | 16 | 2 | **178-3695** | 1 | ADAPTER | |
| | 17 | 1 | **183-1406** | 2 | CLIP | |
| CI | 18 | 1 | **258-6469** | 1 | HOSE AS | |
| | 19 | 1 | **203-6018** | 1 | HOSE AS | |
| | 20 | 2 | **203-6019** | 1 | TUBE AS | |
| | 21 | 2 | *148-8335* | 1 | CONNECTOR AS | |
| | | 2 | **6V-8635** | 1 | CONNECTOR | |
| | | 2 | **5K-9090** | 1 | SEAL-O-RING | |
| | | 2 | **7M-8485** | 1 | SEAL-O-RING | |
| | 22 | 2 | *148-8339* | 1 | CONNECTOR AS | |
| | | 2 | **6V-8716** | 1 | CONNECTOR | |
| | | 2 | **6V-9746** | 1 | SEAL-O-RING | |
| | | 2 | **7M-8485** | 1 | SEAL-O-RING | |
| | 23 | 2 | *148-8392* | 1 | ELBOW AS | |
| | | 2 | **6V-9853** | 1 | ELBOW | |
| | | 2 | **6V-9746** | 1 | SEAL-O-RING | |
| | 24 | 2 | *148-8407* | 1 | PLUG AS | |
| | | 2 | **9S-4191** | 1 | PLUG-O RING | |
| | | 2 | **3J-1907** | 1 | SEAL-O-RING | |
| | 25 | 1 | **1L-0509** | 2 | BOLT (3/8-16X0.74-IN) | |
| | 26 | 1 | **1P-4577** | 10 | FLANGE-HALF | |
| | 27 | 2 | **1P-4578** | 2 | FLANGE-HALF | |
| | 28 | 1 | **3B-7732** | 1 | ELBOW-STREET | |
| | 29 | 1 | **4F-7389** | 2 | SEAL-O-RING | |
| | 30 | 1,2 | **4J-0520** | 6 | SEAL-O-RING | |
| | 31 | 2 | **4J-0522** | 1 | SEAL-O-RING | |
| | 32 | 2 | **5K-9090** | 1 | SEAL-O-RING | |
| | 33 | 1 | **5S-7382** | 8 | BOLT (3/8-16X1.375-IN) | |
| | 34 | 1,2 | **6V-1889** | 6 | CLIP | |
| | 35 | 2 | **7X-0342** | 1 | BOLT (5/8-11X0.75-IN) | |
| M | 36 | 1 | **7X-2552** | 1 | BOLT (M16X2X30-MM) | |
| | 37 | 1 | **7X-7729** | 1 | WASHER (11X25X3-MM THK) | |
| M | 38 | 1 | **134-5245** | 4 | BOLT (M10X1.5X30-MM) | |
| | 39 | 1,2 | **8T-4121** | 20 | WASHER-HARD (11X21X2.5-MM THK) | |
| M | 40 | 1 | **8T-4133** | 1 | NUT (M10X1.5-THD) | |
| M | 41 | 1 | **8T-7547** | 1 | BOLT (M8X1.25X30-MM) | |
| M | 42 | 2 | **8T-4182** | 2 | BOLT (M10X1.5X45-MM) | |
| M | 43 | 1 | **8T-4195** | 2 | BOLT (M10X1.5X30-MM) | |
| M | 44 | 1 | **8T-4196** | 8 | BOLT (M10X1.5X35-MM) | |
| | 45 | 1 | **8T-4896** | 10 | WASHER-HARD (10.2X18.5X2.5-MM THK) | |
| M | 46 | 2 | **8T-6466** | 4 | BOLT (M10X1.5X60-MM) | |
| | 47 | 1 | **9X-8257** | 1 | WASHER (17.5X30X3.5-MM THK) | |

## *159-6174* LINES GP-TRANSMISSION OIL *(contd.)* i02589577

| NOTE | REF NO | GRAPHIC REF | PART NUMBER | QTY | PART NAME 1 2 3 4 5 6 (PRODUCT LEVEL) | SEE PAGE |
|---|---|---|---|---|---|---|
| E | 48 | 1 | **5P-0765** | | HOSE (47-CM) | |
| M | 49 | 1 | **5C-7261** | 1 | NUT (M8X1.25-THD) | |
| | 50 | 1 | **5P-4116** | 2 | WASHER-HARD (8.8X20.5X2-MM THK) | |
| | 51 | 1 | **6V-5839** | 1 | WASHER (11X21X2.5-MM THK) | |
| C | 52 | 1 | **1R-1809** | 1 | FILTER ELEMENT AS-OIL (ULTRA HIGH EFFICIENCY) | |
| M | 53 | 1 | **140-0174** | 1 | BOLT (M10X1.5X75-MM) | |

C-CHANGE FROM PREVIOUS TYPE
E-ORDER BY THE CENTIMETER
I-REFER TO HYDRAULIC INFORMATION SYSTEM
M-METRIC PART

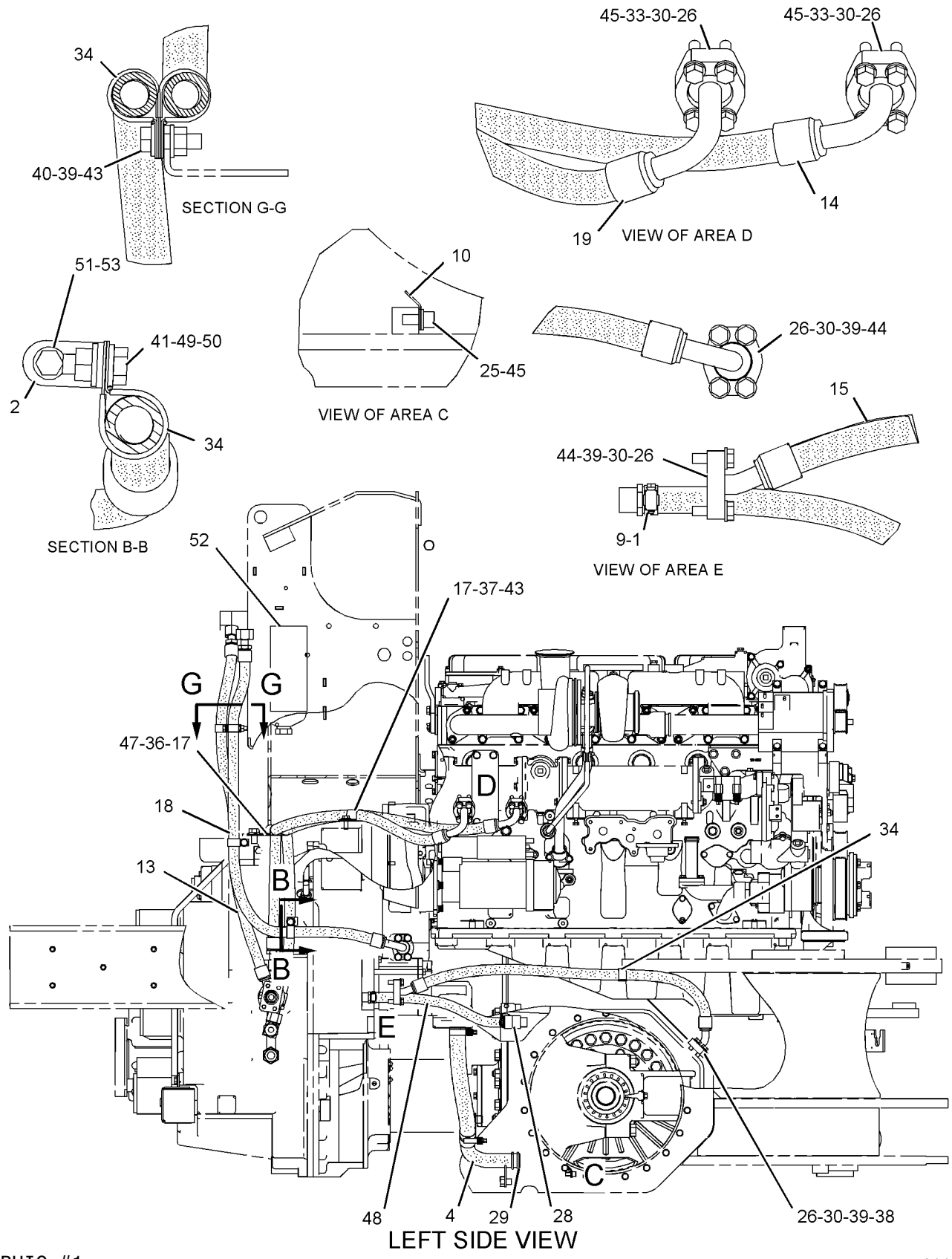


GRAPHIC #1

g01147888

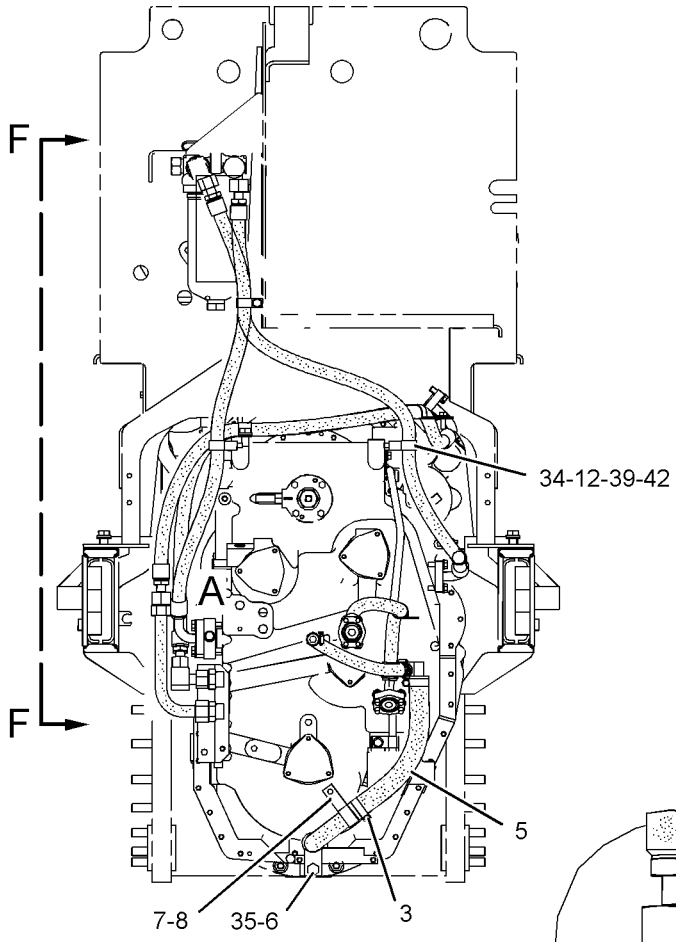


REAR VIEW

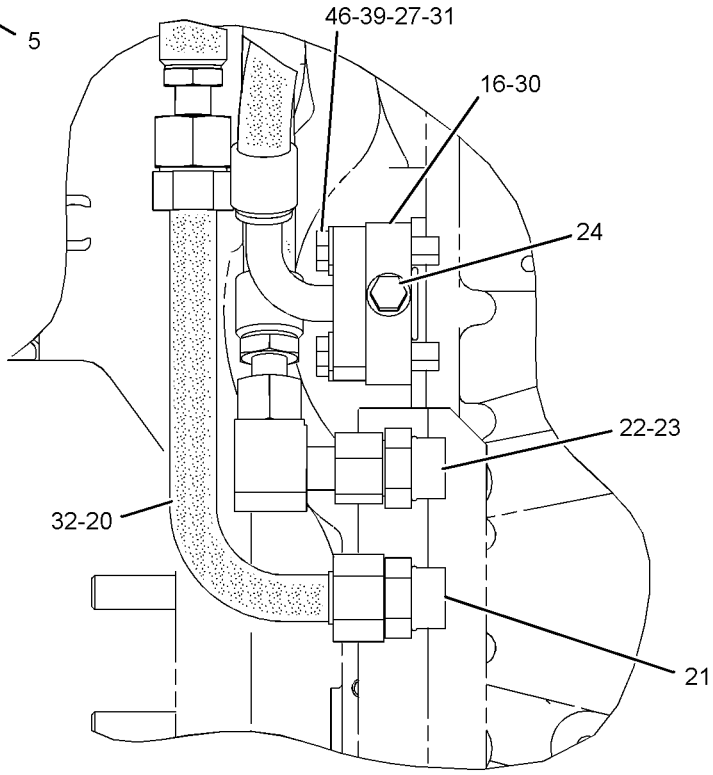


VIEW OF AREA A

GRAPHIC #2 **<END>** g01147889

# *142-6203* MOUNTING GP-WHEEL

**S/N: CCA1-UP**

**PART OF 159-4615 GENERAL AR**

**SMCS-4201** **i01055119**

| NOTE | PART NUMBER | QTY | PART NAME 1 2 3 4 5 6 (PRODUCT LEVEL) | SEE PAGE |
|---|---|---|---|---|
| | **0S-1973** | 60 | BOLT (7/8-9X2IN) | |
| | **4M-6953** | 60 | WASHER-HARD (3.5MM THK) | |

**<END>**

# 6Y-8764 PUMP GP-GEAR–TRANSMISSION*R

**S/N: EDB1-UP; BJN1-99999**

**2 SECTION**

**PART OF 6Y-8765 PUMP GP-GEAR**

**SMCS-3066, 3115, 5073** **i02204764**

| NOTE | REF NO | GRAPHIC REF | PART NUMBER | QTY | PART NAME 1 2 3 4 5 6 (PRODUCT LEVEL) | SEE PAGE |
|---|---|---|---|---|---|---|
| | 1 | 1 | **9N-4163** | 1 | COVER AS-PUMP | |
| | 2 | 1 | **1M-3780** | 2 | BEARING-SLEEVE (23.81-MM THK) | |
| | 3 | 1 | **9N-4162** | 1 | GEAR AS-OIL PUMP (12-TEETH) | |
| | | 1 | **2B-9373** | 1 | KEY-WOODRUFF | |
| | 4 | 1 | **9N-4159** | 1 | BODY AS-OIL PUMP | |
| | 5 | 1 | **1M-3780** | 2 | BEARING-SLEEVE (23.81-MM THK) | |
| | 6 | 1 | **5S-4385** | 1 | BODY AS-OIL PUMP | |
| | | 1 | **8M-8489** | 4 | DOWEL | |
| | 7 | 1 | **9N-4158** | 2 | GEAR (8-TEETH) | |
| | 8 | 1 | **2B-9373** | 1 | KEY-WOODRUFF | |
| | 9 | 1 | **2D-8009** | 3 | SEAL-O-RING | |
| | 10 | 1 | **3S-0004** | 6 | WASHER (0.406X0.728X0.09-IN THK) | |
| M | 11 | 1 | **8T-5030** | 2 | BOLT (M10X1.5X120-MM) | |
| | 12 | 1 | **6Y-5010** | 8 | WASHER (10.16X19X0.84-MM THK) | |
| M | 13 | 1 | **8C-2926** | 4 | BOLT (M10X1.5X140-MM) | |
| | 14 | 1 | **9N-4161** | 1 | GEAR AS-OIL PUMP (12-TEETH) | |
| | | 1 | **2B-9373** | 1 | KEY-WOODRUFF | |
| | 15 | 1 | **9N-4156** | 1 | MANIFOLD AS-PUMP | |
| | | 1 | **8M-8489** | 2 | DOWEL | |

M-METRIC PART

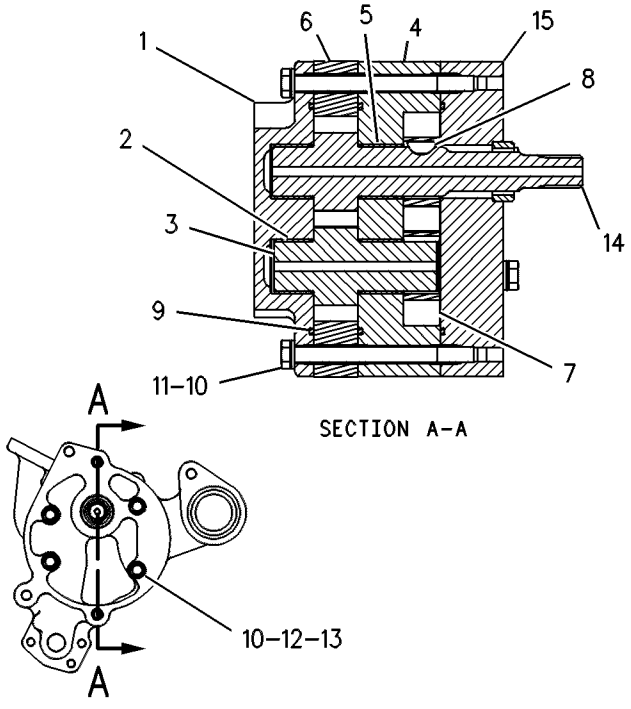


SECTION A-A

GRAPHIC #1 **<END>** g00108548

# *6Y-8765* PUMP GP-GEAR–TRANSMISSION

**S/N: EDB1-UP; BJN1-99999**
**2 SECTION**
**PART OF 160-2196 TRANSMISSION AR**

**SMCS-3066, 3115, 5073** **i02588346**

| NOTE | REF NO | GRAPHIC REF | PART NUMBER | QTY | PART NAME 1 2 3 4 5 6 (PRODUCT LEVEL) | SEE PAGE |
|---|---|---|---|---|---|---|
| YR | 1 | 1 | **6Y-8764** | 1 | PUMP GP-GEAR (TRANSMISSION) | 465 |
| | 2 | 1 | **4F-7952** | 1 | SEAL-O-RING | |
| | 3 | 1 | **7F-8268** | 1 | SEAL-O-RING | |
| M | 4 | 1 | **6V-1820** | 3 | BOLT (M10X1.5X30-MM) | |

M-METRIC PART
R-REMFG PART MAY BE AVAILABLE
Y-SEPARATE ILLUSTRATION

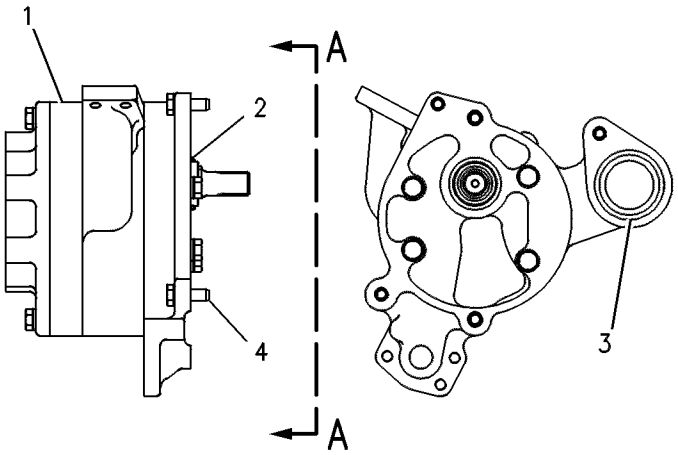


VIEW A-A

GRAPHIC #1 **<END>** g00108547

# *9W-5134* SCREEN GP-MAGNETIC—TRANSMISSION

**S/N: EDB1-UP; BJN1-99999**

**PART OF 160-2196 TRANSMISSION AR**

**SMCS-3067** **i01623693**

| NOTE | REF NO | GRAPHIC REF | PART NUMBER | QTY | PART NAME 1 2 3 4 5 6 (PRODUCT LEVEL) | SEE PAGE |
|---|---|---|---|---|---|---|
| | 1 | 1 | **6Y-3861** | 1 | COVER AS | |
| | 2 | 1 | **6Y-3860** | 1 | HOUSING-FILTER | |
| | 3 | 1 | **8S-9130** | 1 | SCREEN-SUCTION (TRANSMISSION) | |
| | 4 | 1 | **8S-9129** | 1 | FILTER-MAGNETIC (TRANSMISSION) | |
| | 5 | 1 | **5P-3863** | 1 | SEAL-O-RING | |
| M | 6 | 1 | **6V-5219** | 3 | BOLT (M8X1.25X40-MM) | |
| | 7 | 1 | **5F-8000** | 1 | SEAL-O-RING | |
| M | 8 | 1 | **8T-0355** | 3 | BOLT (M10X1.5X110-MM) | |

M-METRIC PART

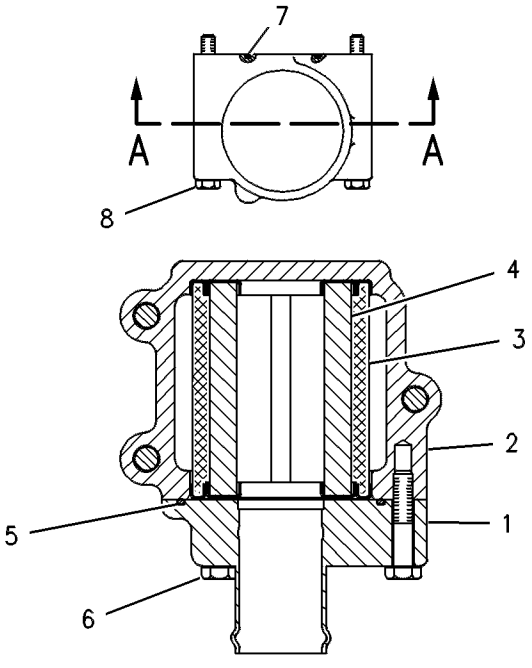


VIEW A–A

GRAPHIC #1 **<END>** g00108551

# *8W-5394* SHAFT GP-DRIVE

**S/N: CCA1-UP**

**PART OF 159-4615 GENERAL AR**

**SMCS-3253** **i01701959**

| NOTE | REF NO | GRAPHIC REF | PART NUMBER | QTY | PART NAME 1 2 3 4 5 6 (PRODUCT LEVEL) | SEE PAGE |
|---|---|---|---|---|---|---|
| | 1 | 1 | **8X-5620** | 2 | SHIELD AS | |
| | | | | | (EACH INCLUDES) | |
| M | | 1 | **8T-3597** | 1 | NUT-WELD (M12X1.75-THD) | |
| | 2 | 1 | **8W-1592** | 1 | YOKE AS | |
| | | 1 | **3K-0986** | 1 | PLUG | |
| | 3 | 1 | **3K-0196** | 1 | GUARD | |
| | 4 | 1 | **0S-1604** | 4 | BOLT (1/2-20X2.5-IN) | |
| | 5 | 1 | **5P-7213** | 4 | WASHER-HARD (13.5X20.5X2-MM THK) | |
| | 6 | 1 | **6B-6684** | 4 | NUT-FULL (1/2-20-THD) | |
| | 7 | 1 | **6V-1911** | 4 | BOLT-LOCKING | |
| Y | 8 | 1 | **8X-5005** | 1 | UNIVERSAL JOINT GP | 476 |
| M | 9 | 1 | **8T-4179** | 2 | BOLT (M12X1.75X20-MM) | |
| | 10 | 1 | **8T-4223** | 6 | WASHER-HARD (13.5X25.5X3-MM THK) | |
| M | 11 | 1 | **8T-4192** | 4 | BOLT (M12X1.75X25-MM) | |

M-METRIC PART
Y-SEPARATE ILLUSTRATION

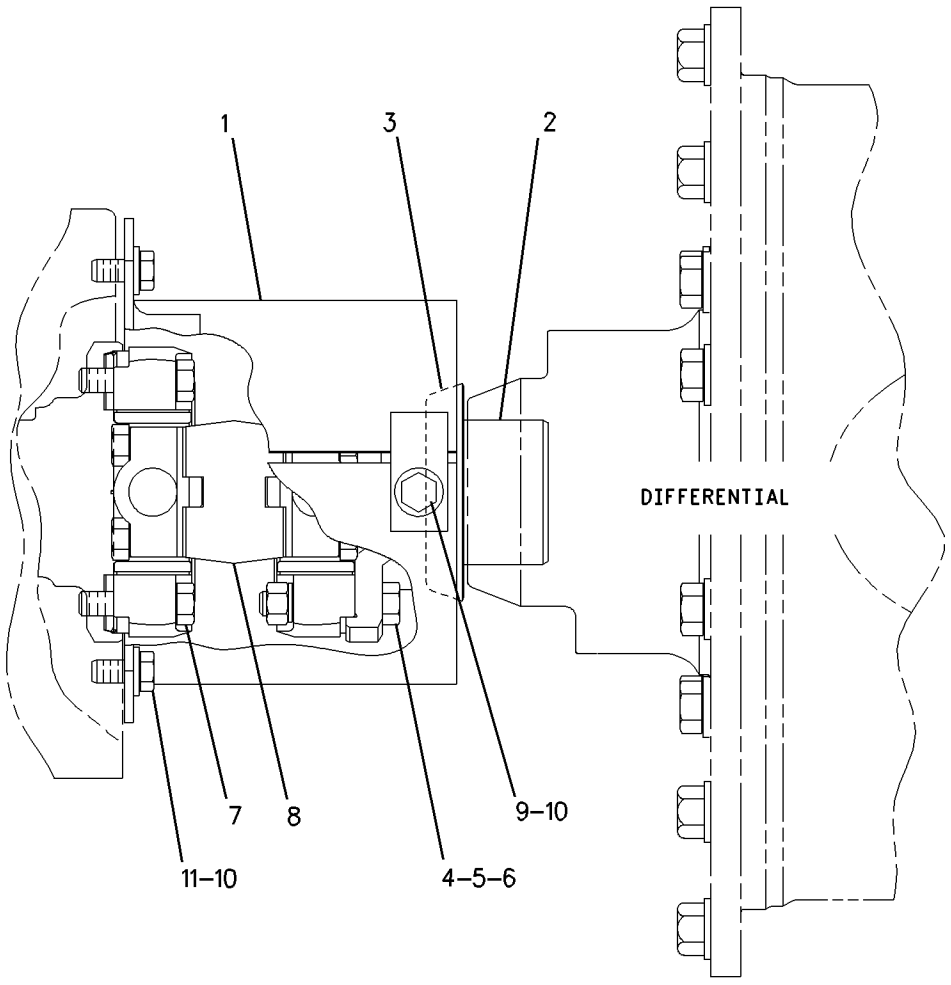


GRAPHIC #1 **<END>** g00718327

# *176-6465* SHAFT GP-INPUT

**S/N: EDB1-UP; BJN1-99999**
**PART OF 160-2196 TRANSMISSION AR**

**SMCS-3063** **i02204771**

| NOTE | REF NO | GRAPHIC REF | PART NUMBER | QTY | PART NAME 1 2 3 4 5 6 (PRODUCT LEVEL) | SEE PAGE |
|---|---|---|---|---|---|---|
| | 1 | 1 | **176-6464** | 1 | SHAFT AS | |
| | | 1 | **4B-4845** | 1 | PLUG | |
| | 2 | 1 | **3T-4377** | 2 | SEAL-RING | |
| | 3 | 1 | **6Y-0591** | 1 | GEAR (45-TEETH) | |
| | 4 | 1 | **6Y-0590** | 1 | GEAR (38-TEETH) | |
| | 5 | 1 | **2H-6490** | 1 | BEARING-INNER | |
| | 6 | 1 | **1M-4095** | 1 | BEARING-INNER | |

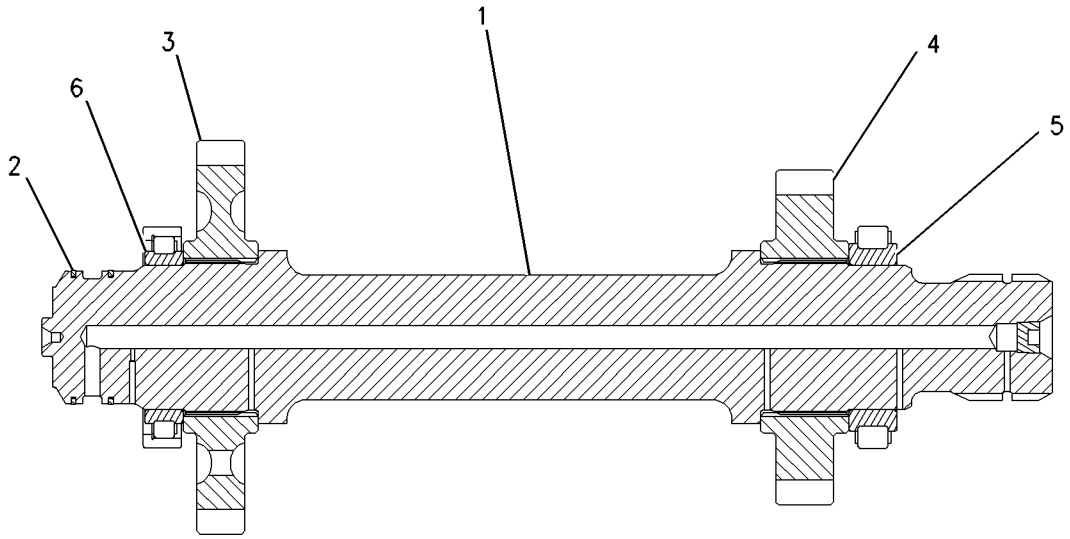


GRAPHIC #1 **<END>** g00788549

# POWER TRAIN

## *190-1688* TANDEM & COVER GP

**S/N: CCA1-1106**

**PART OF 159-4615 GENERAL AR**

**SMCS-4062, 4064** **i01814297**

| NOTE | REF NO | GRAPHIC REF | PART NUMBER | QTY | PART NAME 1 2 3 4 5 6 (PRODUCT LEVEL) | SEE PAGE |
|---|---|---|---|---|---|---|
| | 1 | 1 | **1F-8488** | 2 | BREATHER AS (TANDEM) | |
| | 2 | 1 | **2A-6938** | 2 | COVER | |
| | 3 | 1 | **2B-3147** | 8 | GASKET | |
| | 4 | 1 | **2B-3148** | 8 | COVER | |
| | 5 | 1 | **3D-2981** | 4 | GASKET | |
| | 6 | 1 | **8T-6468** | 48 | BOLT (1/2-13X1-IN) | |
| | 7 | 1 | **002-6453** | 2 | ELBOW | |
| | 8 | 1 | **190-1690** | 1 | HOUSING AS-TANDEM DRIVE (RH) | |
| | 9 | 1 | **190-1691** | 1 | HOUSING AS-TANDEM DRIVE (LH) | |
| | 10 | 1 | **2G-9791** | 2 | GASKET | |
| | 11 | 1 | **2M-9780** | 2 | SEAL-O-RING | |
| | 12 | 1 | **3J-5389** | 2 | PLUG | |
| | 13 | 1 | **3K-0360** | 2 | SEAL-O-RING | |
| | 14 | 1 | **5P-8245** | 32 | WASHER-HARD (13.5X25.5X3-MM THK) | |
| | 15 | 1 | **6B-5072** | 2 | BUSHING-REDUCING | |
| | 16 | 1 | **6E-5047** | 2 | PLUG | |
| | 17 | 1 | **7D-6567** | 4 | COVER | |
| | 18 | 1 | **9S-4190** | 2 | PLUG (TRANSMISSION OIL) | |

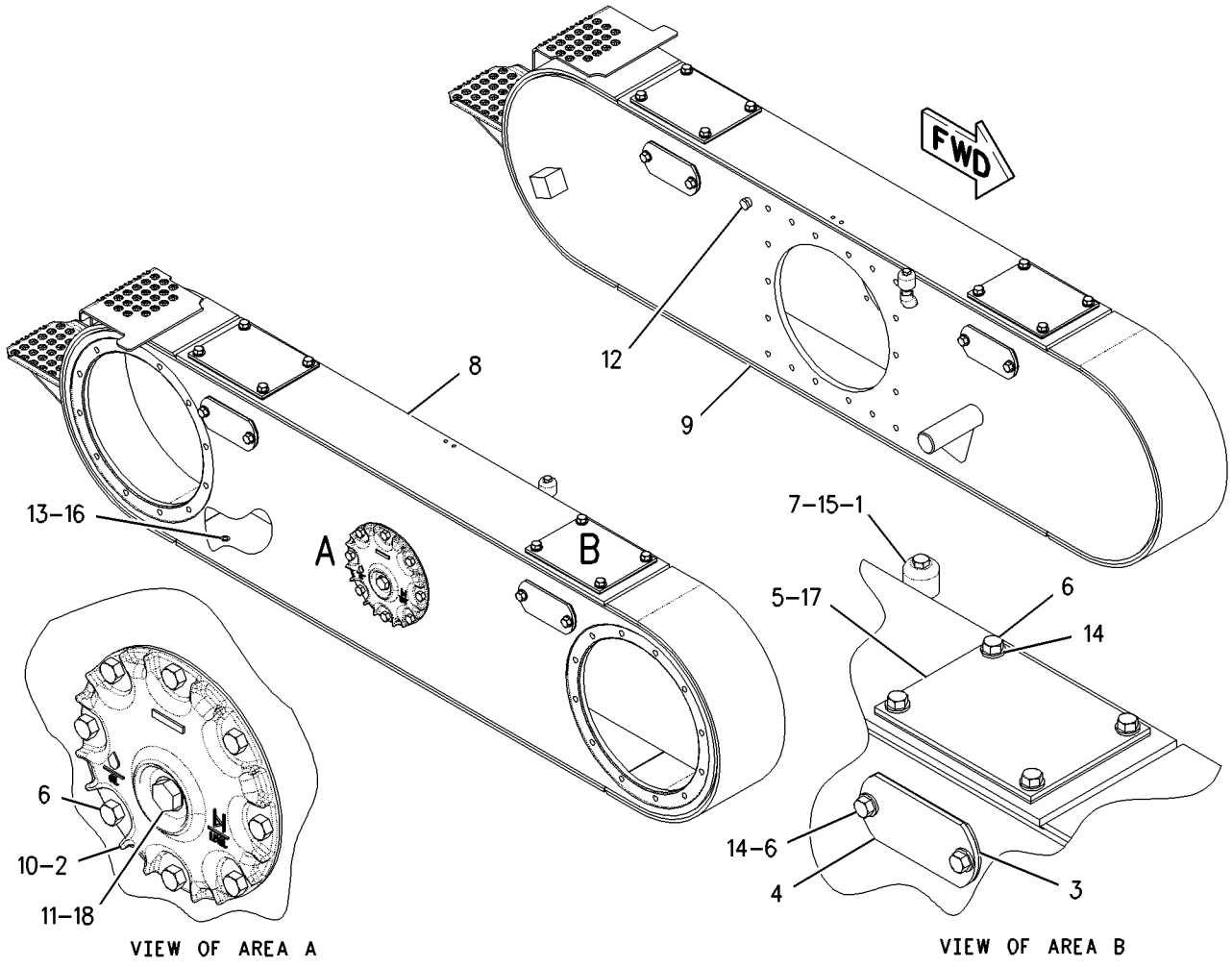


GRAPHIC #1 **<END>** g00828990

# POWER TRAIN

## *190-1688* TANDEM & COVER GP

**S/N: CCA1107-UP**

**PART OF 159-4615 GENERAL AR**

**SMCS-4062, 4064** **i02230129**

| NOTE | REF NO | GRAPHIC REF | PART NUMBER | QTY | PART NAME 1 2 3 4 5 6 (PRODUCT LEVEL) | SEE PAGE |
|---|---|---|---|---|---|---|
| | 2 | 1 | **2A-6938** | 2 | COVER | |
| | 3 | 1 | **2B-3147** | 8 | GASKET | |
| | 4 | 1 | **2B-3148** | 6 | COVER | |
| | 5 | 1 | **3D-2981** | 4 | GASKET | |
| | 6 | 1 | **8T-6468** | 48 | BOLT (1/2-13X1-IN) | |
| | 8 | 1 | **190-1690** | 1 | HOUSING AS-TANDEM DRIVE (RH) | |
| | 9 | 1 | **190-1691** | 1 | HOUSING AS-TANDEM DRIVE (LH) | |
| | 10 | 1 | **2G-9791** | 2 | GASKET | |
| | 11 | 1 | **2M-9780** | 2 | SEAL-O-RING | |
| | 12 | 1 | **3J-5389** | 4 | PLUG | |
| | 13 | 1 | **3K-0360** | 2 | SEAL-O-RING | |
| | 14 | 1 | **5P-8245** | 32 | WASHER-HARD (13.5X25.5X3-MM THK) | |
| | 16 | 1 | **6E-5047** | 2 | PLUG | |
| | 17 | 1 | **7D-6567** | 4 | COVER | |
| | 18 | 1 | **9S-4190** | 2 | PLUG | |
| | 19 | 1 | **248-1377** | 2 | COVER AS | |
| | | | | | (EACH INCLUDES) | |
| | | 1 | **4H-6112** | 1 | BREATHER (TANDEM) | |
| | | 1 | **002-6453** | 1 | ELBOW | |
| | | 1 | **6B-5072** | 1 | BUSHING-REDUCING | |

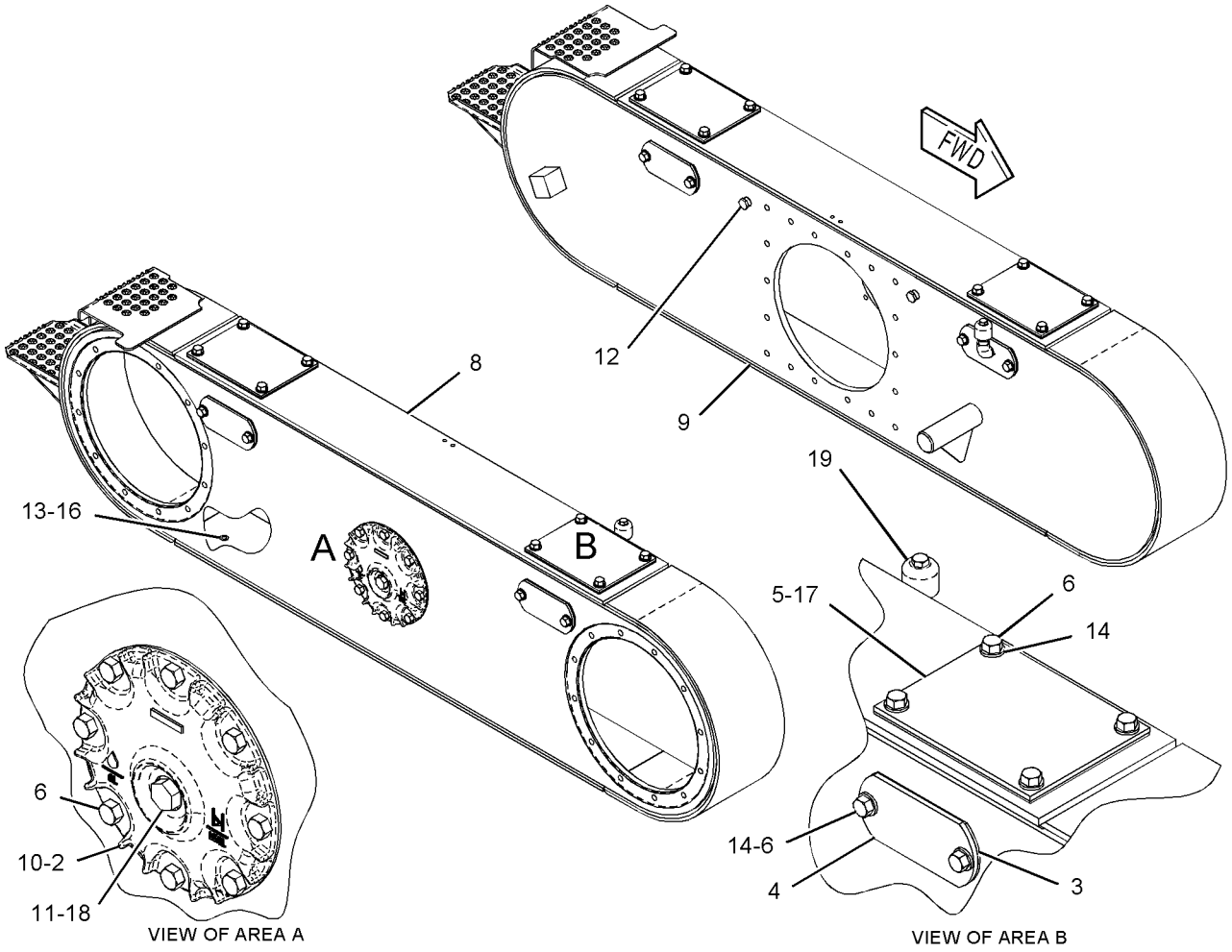


GRAPHIC #1 **<END>** g01084867

# POWER TRAIN

## 160-2196 TRANSMISSION AR

**S/N: EDB1-4458; BJN1-99999**
**PART OF 159-4615 GENERAL AR**

**SMCS-3030** **i01882503**

| NOTE | REF NO | GRAPHIC REF | PART NUMBER | QTY | PART NAME 1 2 3 4 5 6 (PRODUCT LEVEL) | SEE PAGE |
|---|---|---|---|---|---|---|
| Y | 1 | 1 | *176-6465* | 1 | SHAFT GP-INPUT | 469 |
| Y | 2 | 1 | *159-9228* | 1 | CLUTCH GP-TRANSMISSION (FWD) | 424 |
| Y | 3 | 1 | *159-9229* | 1 | CLUTCH GP-TRANSMISSION (REV & 2ND) | 426 |
| Y | 4 | 1 | *6Y-2303* | 1 | CLUTCH GP-TRANSMISSION (1ST & 3RD) | 418 |
| Y | 5 | 1 | *8E-9316* | 1 | CLUTCH GP-TRANSMISSION (HI & LO) | 421 |
| Y | 6 | 1 | *180-9146* | 1 | CASE & PARTS GP-TRANSMISSION | 409 |
| Y | 7 | 1 | *9W-5132* | 1 | BRAKE GP-PARKING | 609 |
| Y | 8 | 1 | *9W-5134* | 1 | SCREEN GP-MAGNETIC (TRANSMISSION) | 467 |
| Y | 9 | 1 | *6Y-8765* | 1 | PUMP GP-GEAR (TRANSMISSION) | 466 |
| Y | 10 | 1 | *179-6064* | 1 | CONTROL GP-TRANSMISSION HYD | 430 |

Y-SEPARATE ILLUSTRATION

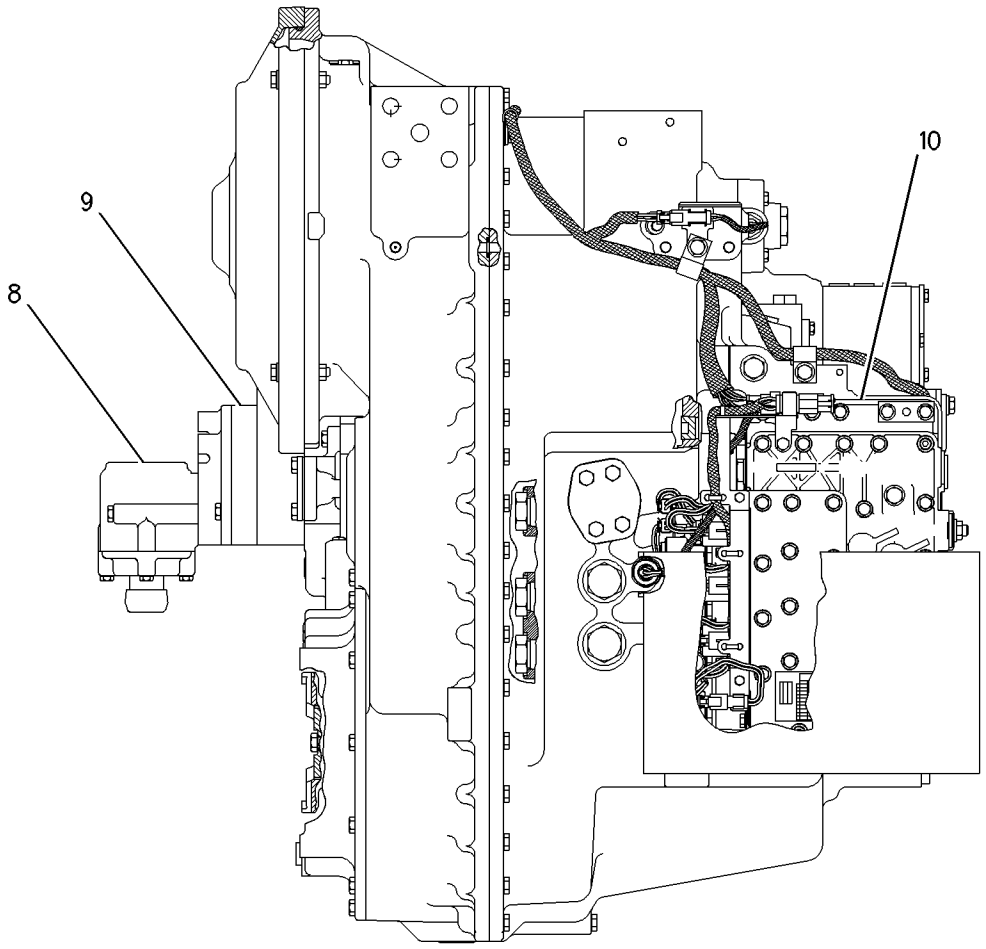


LEFT SIDE VIEW

GRAPHIC #1 g00978850

**160-2196 TRANSMISSION AR** *(contd. )* **i01882503**

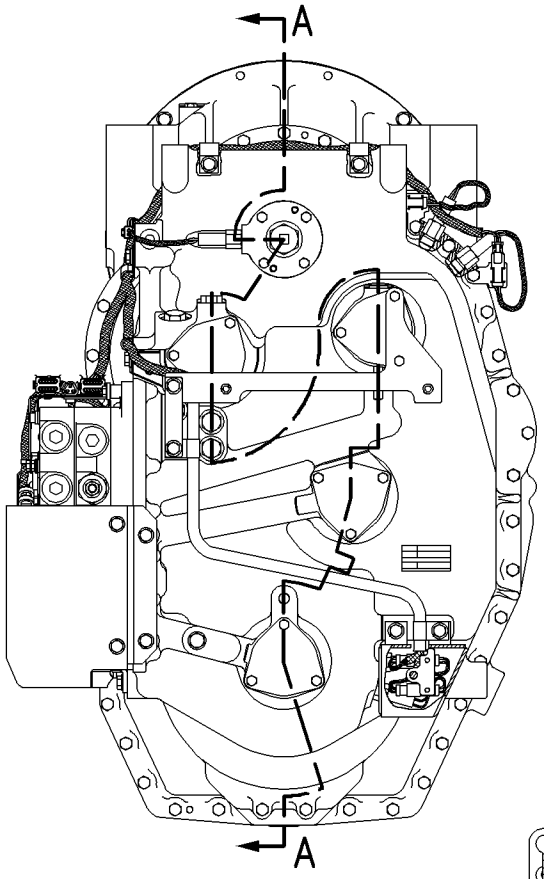


REAR VIEW

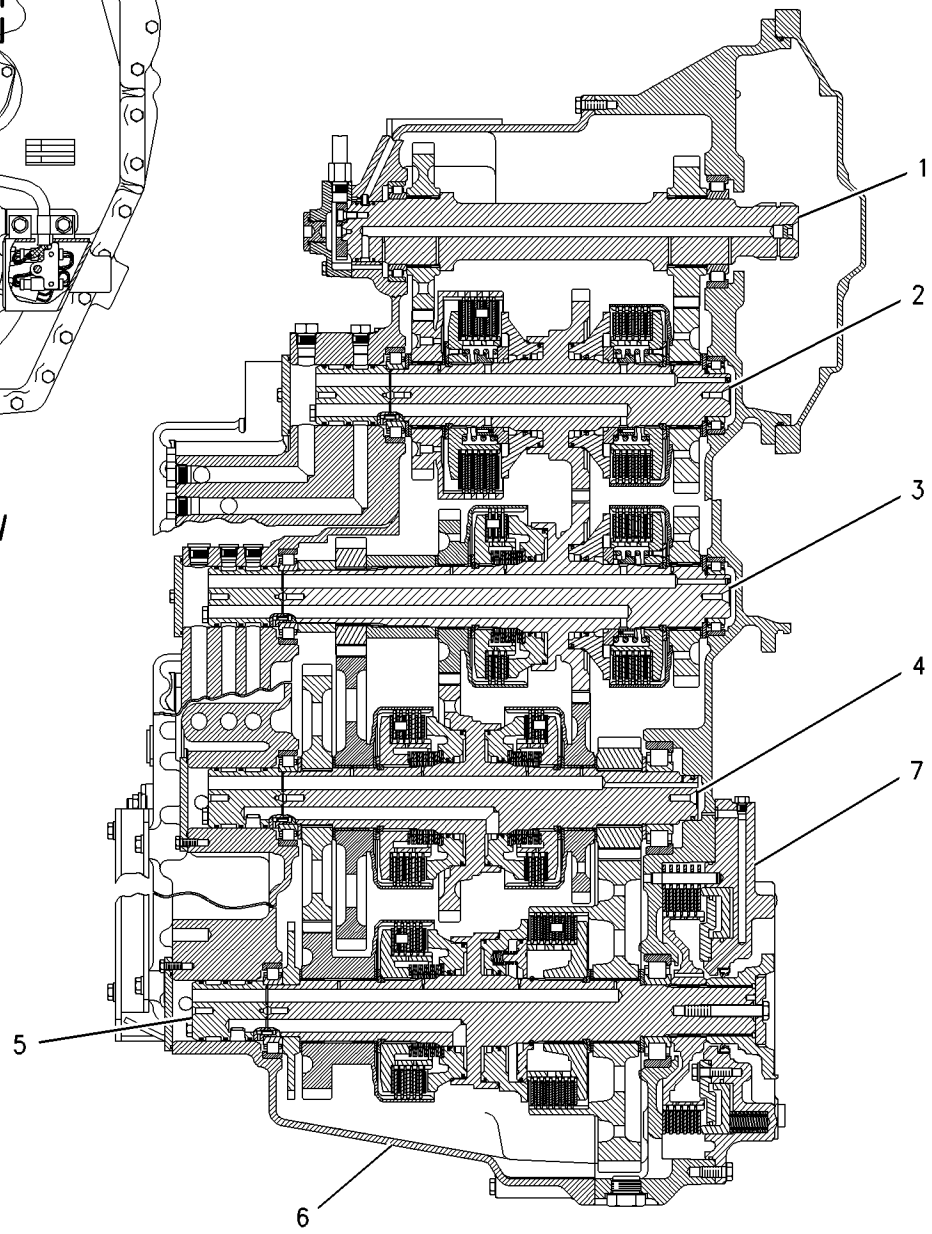


SECTION A-A

GRAPHIC #2 **<END>** g00978852

# POWER TRAIN

## 160-2196 TRANSMISSION AR

**S/N: EDB4459-UP**

**PART OF 159-4615 GENERAL AR**

**SMCS-3030** **i02490577**

| NOTE | REF NO | GRAPHIC REF | PART NUMBER | QTY | PART NAME 1 2 3 4 5 6 (PRODUCT LEVEL) | SEE PAGE |
|---|---|---|---|---|---|---|
| Y | 1 | 1 | *176-6465* | 1 | SHAFT GP-INPUT | 469 |
| Y | 2 | 1 | *159-9228* | 1 | CLUTCH GP-TRANSMISSION (FWD) | 424 |
| Y | 3 | 1 | *159-9229* | 1 | CLUTCH GP-TRANSMISSION (REV, 2ND) | 426 |
| Y | 4 | 1 | *6Y-2303* | 1 | CLUTCH GP-TRANSMISSION (1ST, 3RD) | 418 |
| Y | 5 | 1 | *8E-9316* | 1 | CLUTCH GP-TRANSMISSION (HIGH, LOW) | 421 |
| Y | 6 | 1 | *180-9146* | 1 | CASE & PARTS GP-TRANSMISSION | 409 |
| Y | 7 | 1 | *9W-5132* | 1 | BRAKE GP-PARKING | 609 |
| Y | 8 | 1 | *9W-5134* | 1 | SCREEN GP-MAGNETIC (TRANSMISSION) | 467 |
| Y | 9 | 1 | **6Y-8765** | 1 | PUMP GP-GEAR (TRANSMISSION) | 466 |
| CY | 10 | 1 | *281-3165* | 1 | CONTROL GP-TRANSMISSION HYD | 431 |

C-CHANGE FROM PREVIOUS TYPE
Y-SEPARATE ILLUSTRATION

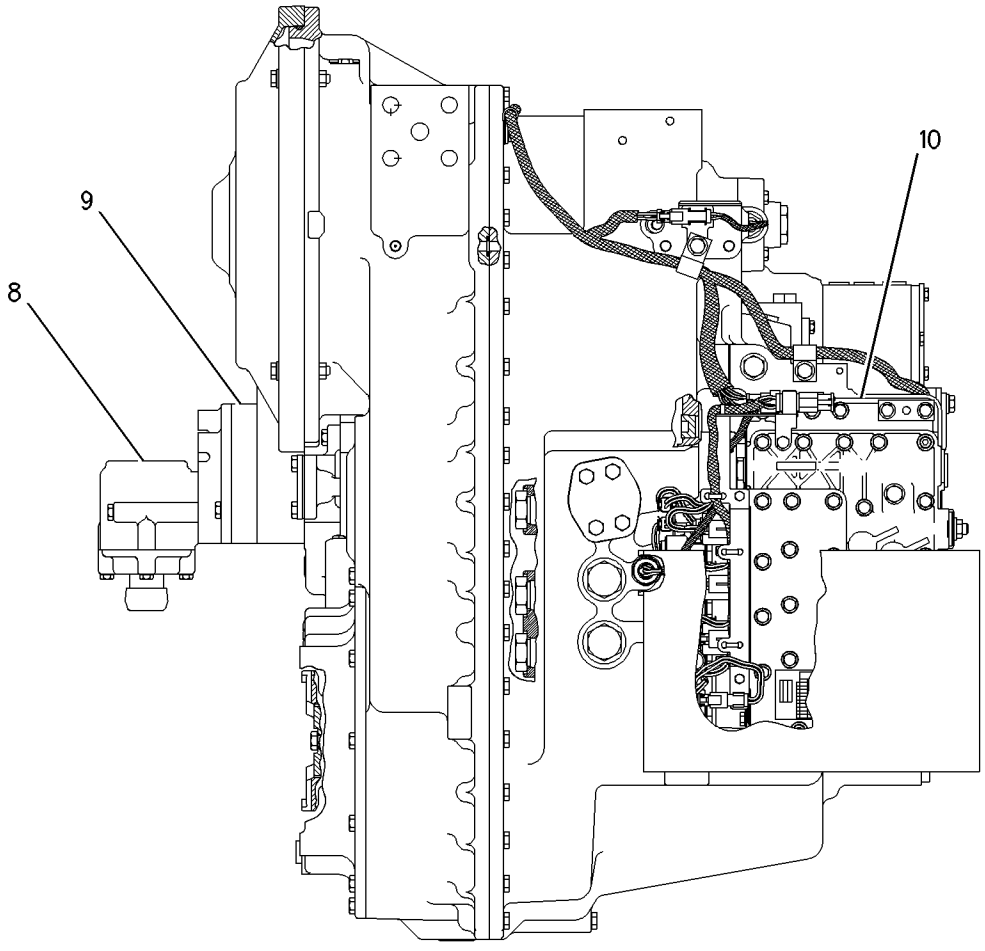


LEFT SIDE VIEW

GRAPHIC #1 g00978853

**160-2196 TRANSMISSION AR** *(contd. )* **i02490577**

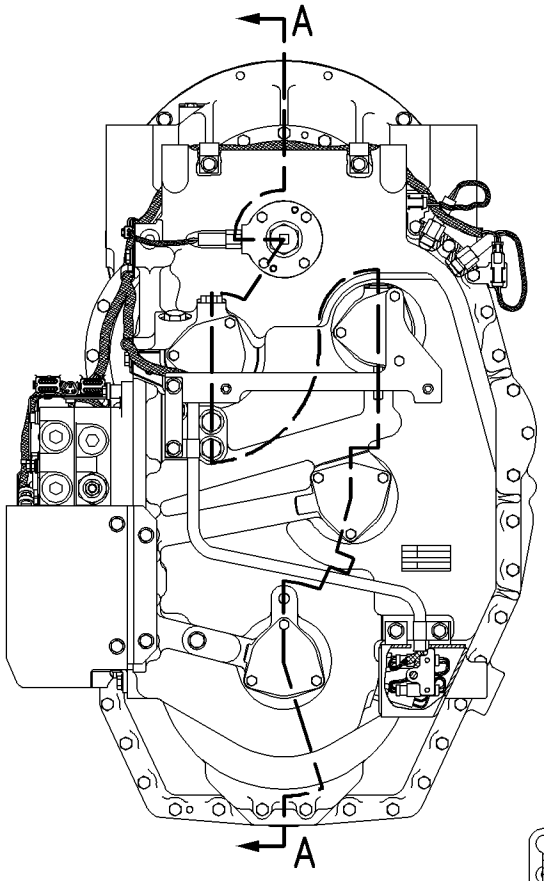


REAR VIEW

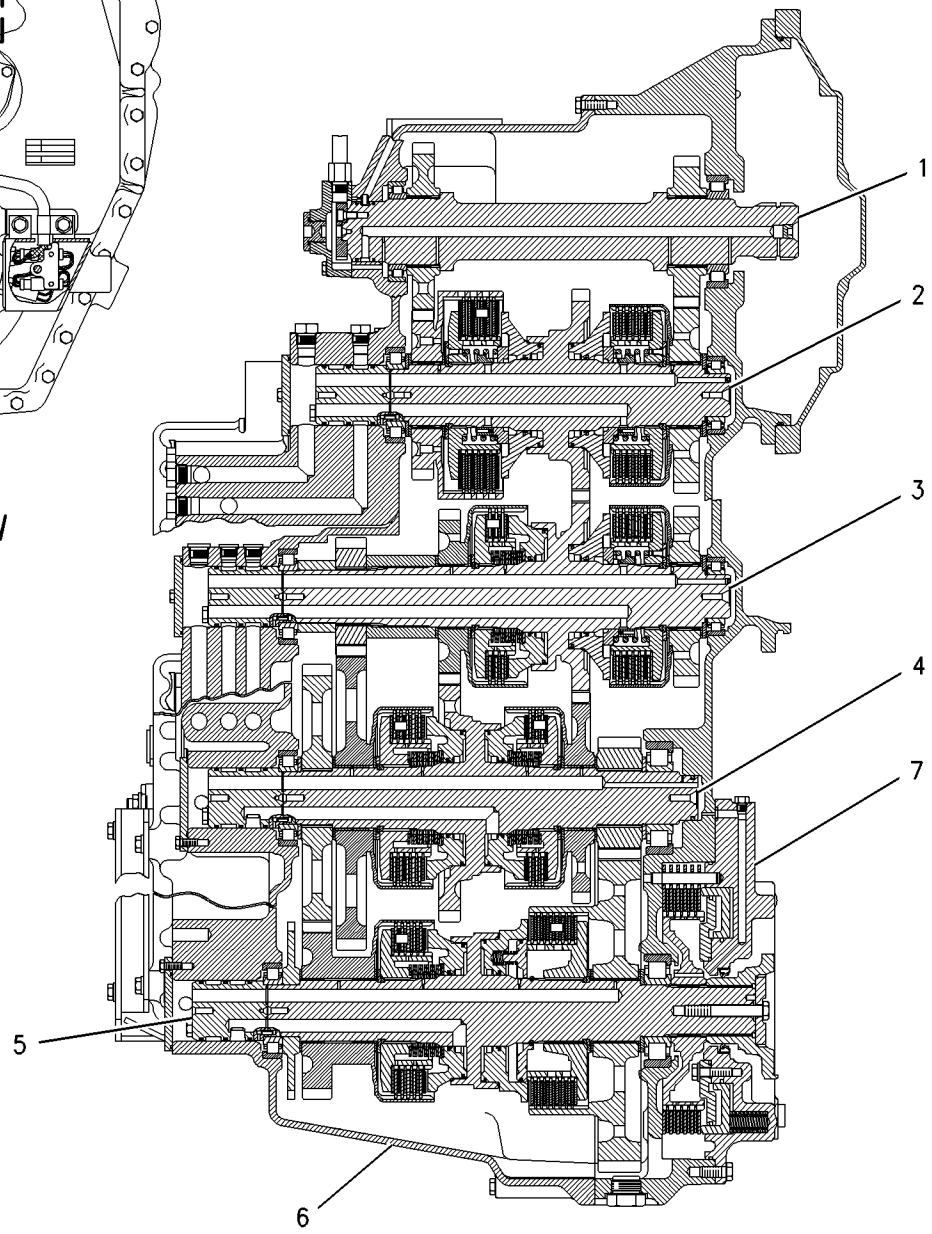


SECTION A-A

GRAPHIC #2 **<END>** g00978855

# 8X-5005 UNIVERSAL JOINT GP

**S/N: CCA1-UP**

**PART OF 8W-5394 SHAFT GP-DRIVE**

**SMCS-3251, 3253** **i00135798**

| NOTE | REF NO | GRAPHIC REF | PART NUMBER | QTY | PART NAME 1 2 3 4 5 6 (PRODUCT LEVEL) | SEE PAGE |
|---|---|---|---|---|---|---|
| | 1 | 1 | **3D-6689** | 1 | YOKE-COUPLING | |
| | 2 | 1 | **9P-0356** | 2 | SPIDER & BEARING AS | |
| | 3 | 1 | **0S-1579** | 8 | BOLT (1/2-20X2IN) | |

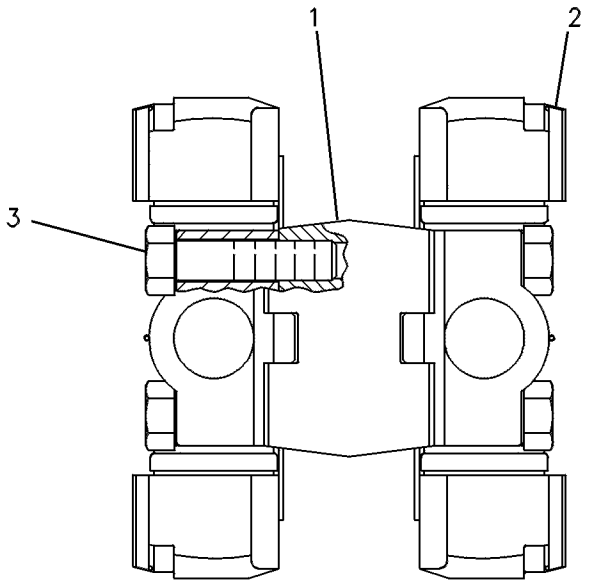


GRAPHIC #1 **<END>** g00108575

# *174-3705* VALVE & MTG GP-DIFF LOCK

**S/N: CCA1-UP**

**PART OF 160-7756 CONTROL GP-DIFFERENTIAL LOCK**

**SMCS-3272** **i02204770**

| NOTE | REF NO | GRAPHIC REF | PART NUMBER | QTY | PART NAME 1 2 3 4 5 6 (PRODUCT LEVEL) | SEE PAGE |
|---|---|---|---|---|---|---|
| | 1 | 1 | **6G-5979** | 1 | KIT-SEAL (DIFFERENTIAL LOCK) | |
| | | | | | (INCLUDES O-RINGS) | |
| Y | 2 | 1 | **154-3064** | 1 | VALVE GP-SOLENOID | 487 |
| | 3 | 1 | **148-2516** | 1 | MANIFOLD | |

Y-SEPARATE ILLUSTRATION

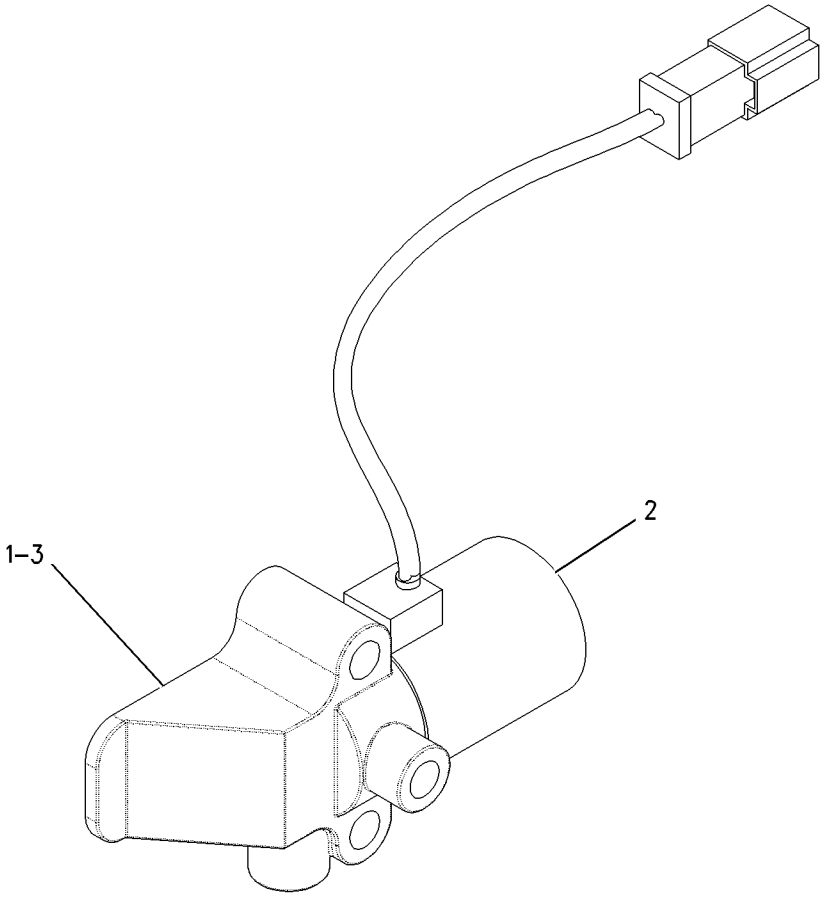


GRAPHIC #1 **<END>** g00806911

## *184-1130* VALVE GP-SELECTOR & PRESS CONT–
### DIRECTION, RANGE, TRANSMISSION
**S/N: EDB1-UP; BJN1-99999**

**PART OF 179-6063, 281-3163 VALVE GP-TRANSMISSION CONTROL**

**SMCS-3083** **i02580360**

| NOTE | REF NO | GRAPHIC REF | PART NUMBER | QTY | PART NAME 1 2 3 4 5 6 (PRODUCT LEVEL) | SEE PAGE |
|---|---|---|---|---|---|---|
| | 1 | 1 | **154-6309** | 1 | BODY | |
| M | 2 | 1 | **6V-5683** | 5 | BOLT (M6X1X16-MM) | |
| | 3 | 1 | **7M-8485** | 5 | SEAL-O-RING | |
| | 4 | 1 | **3D-4245** | 1 | SEAL-O-RING | |
| | 5 | 1 | **5F-9144** | 1 | SEAL-O-RING | |
| | 6 | 1 | **8E-9894** | 1 | SPOOL | |
| | 7 | 1 | **9U-8068** | 1 | SLUG | |
| | 8 | 1 | **9U-9282** | 1 | SPRING | |
| | 9 | 1 | **9U-9316** | 1 | SPRING | |
| | 10 | 1 | **108-6523** | 1 | ADJUSTER AS | |
| | | 1 | **4K-2039** | 1 | SEAL-O-RING | |
| | | 1 | **7M-8485** | 1 | SEAL-O-RING | |
| | | 1 | **8T-4223** | 1 | WASHER-HARD (13.5X25.5X3-MM THK) | |
| | | 1 | **9U-8069** | 1 | PLUG | |
| M | | 1 | **095-1207** | 1 | NUT (M12X1.75-THD) | |
| | | 1 | **101-9754** | 1 | SCREW-ADJUSTMENT (M12X1.75X18-MM-THD) | |
| | 11 | 1 | **9U-8620** | 1 | ORIFICE | |
| | 12 | 1 | **9U-8067** | 1 | RETAINER | |
| | 13 | 1 | **8E-9895** | 1 | PISTON-LOAD | |
| | 14 | 1 | **9W-7412** | 1 | SPRING | |
| | 15 | 1 | **4J-2506** | 1 | SEAL-O-RING | |
| | 16 | 1 | **6F-4855** | 1 | SEAL-O-RING | |
| B | 17 | 1 | **5J-1036** | 4 | SHIM (0.8-MM THK) | |
| | 18 | 1 | **8E-9896** | 1 | PISTON-SELECTOR | |
| | 19 | 1 | **179-1298** | 3 | SPACER | |
| | 20 | 1 | **7T-0570** | 1 | SPRING | |
| B | 21 | 1 | **4M-1751** | 2 | SPACER (15.09X0.4-MM THK) | |
| | 22 | 1 | **4J-7533** | 1 | SEAL-O-RING | |
| Y | 23 | 1 | **186-1526** | 1 | VALVE GP-SOLENOID (24-VOLT DC) (SELECTOR & PRESSURE RANGE) | 488 |
| | 25 | 1 | **9G-7132** | 1 | PLUG-ORIFICE | |
| | 26 | 1 | **9S-8004** | 1 | PLUG | |
| | 27 | 1 | **3J-1907** | 1 | SEAL-O-RING | |
| | 28 | 1 | **180-9327** | 1 | MANIFOLD | |
| | 30 | 1 | **3K-6116** | 1 | WASHER (0.266X0.47X0.031-IN THK) | |
| M | 31 | 1 | **8T-8442** | 1 | BOLT-SOCKET HEAD (M6X1X30-MM) | |
| | 32 | 1 | **5P-0537** | 6 | WASHER-HARD (7.2X14.5X2-MM THK) | |
| | 33 | 1 | **9X-7384** | 3 | SEAL-O-RING | |
| | 34 | 1 | **175-3893** | 1 | VALVE GP-SOLENOID (PROPN SOL FOR CL PACK 1) | |
| | 34A | 1 | **175-3893** | 1 | VALVE GP-SOLENOID (PROPN SOL FOR CL PACK 2) | |
| | 34B | 1 | **175-3893** | 1 | VALVE GP-SOLENOID (PROPN SOL FOR CL PACK 3) | |
| | | | | | (EACH CLUTCH PACK INCLUDES) | |
| | | 1 | **145-1144** | 1 | COIL AS | |
| | | 1 | **164-2108** | 1 | WASHER (13.03X25.4X2.38-MM THK) | |
| | | 1 | **167-9524** | 1 | NUT-SELF-LOCKING (1/2-28-THD) | |
| | 35 | 1 | **183-6774** | 1 | PLATE | |
| M | 36 | 1 | **8C-6965** | 1 | BOLT-SOCKET HEAD (M6X1X45-MM) | |
| | 37 | 1 | **154-7172** | 1 | SPOOL | |
| | 38 | 1 | **6Y-4638** | 5 | PLUG-HEX SOCKET (1-5/16-12-2A-THD) | |
| | 39 | 1 | **183-6775** | 3 | SPOOL AS | |
| | | | | | (EACH INCLUDES) | |
| | | 1 | **167-0566** | 1 | CARTRIDGE | |
| | 40 | 1 | **154-7175** | 3 | SLUG | |
| | 41 | 1 | **154-7176** | 3 | SPRING | |
| | 42 | 1 | **154-7177** | 3 | SPRING | |

## *184-1130* VALVE GP-SELECTOR & PRESS CONT *(contd.)* i02580360

B-USE AS REQUIRED
M-METRIC PART
Y-SEPARATE ILLUSTRATION

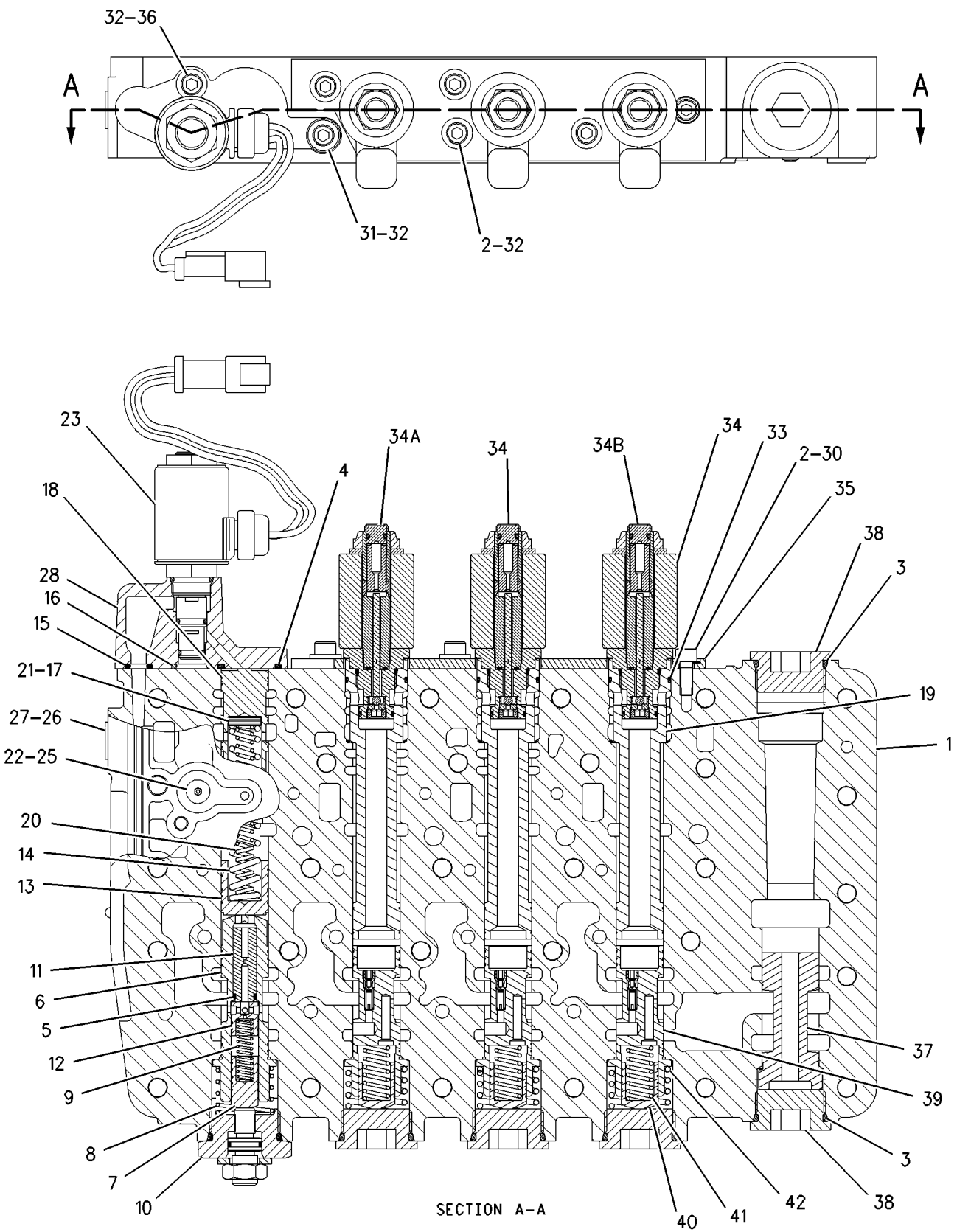


GRAPHIC #1 **<END>** g00876452

## *184-1132* VALVE GP-SELECTOR & PRESS CONT–
### TRANSMISSION SPEED
**S/N: EDB1-4458; BJN1-99999**

**PART OF 179-6063 VALVE GP-TRANSMISSION CONTROL**

**SMCS-3083** **i01755276**

| NOTE | REF NO | GRAPHIC REF | PART NUMBER | QTY | PART NAME 1 2 3 4 5 6 (PRODUCT LEVEL) | SEE PAGE |
|---|---|---|---|---|---|---|
| | 1 | 1 | **110-5158** | 1 | BODY | |
| | 2 | 1 | **8E-7714** | 2 | ORIFICE | |
| | 3 | 1 | **5F-9144** | 4 | SEAL-O-RING | |
| | 4 | 1 | **8E-9894** | 4 | SPOOL | |
| | 5 | 1 | **9U-8068** | 4 | SLUG | |
| | 6 | 1 | **9U-9316** | 4 | SPRING (INNER) | |
| | 7 | 1 | **9U-9282** | 4 | SPRING (OUTER) | |
| | 8 | 1 | **7M-8485** | 1 | SEAL-O-RING | |
| | 9 | 1 | **9U-8067** | 4 | RETAINER | |
| | 10 | 1 | **8E-9895** | 4 | PISTON-LOAD | |
| | 11 | 1 | **4J-2506** | 1 | SEAL-O-RING | |
| | 12 | 1 | **6F-4855** | 4 | SEAL-O-RING | |
| | 13 | 1 | **8E-9896** | 4 | PISTON-SELECTOR | |
| B | 14 | 1 | **4M-1751** | 3 | SPACER (15.09X0.4-MM THK) | |
| B | 15 | 1 | **5J-1036** | 14 | SHIM (0.8-MM THK) | |
| | 16 | 1 | **3D-4245** | 4 | SEAL-O-RING | |
| | 17 | 1 | **9W-7410** | 2 | SPRING (OUTER) | |
| | 18 | 1 | **7T-0570** | 2 | SPRING (INNER) | |
| | 19 | 1 | **8E-1143** | 1 | SLUG | |
| | 20 | 1 | **9U-8668** | 1 | SPOOL AS | |
| | | 1 | **3D-8317** | 1 | RING-RETAINING | |
| | | 1 | **4B-9880** | 1 | BALL | |
| | | 1 | **4M-2381** | 1 | SPRING | |
| | | 1 | **8E-9893** | 1 | SPOOL-RELIEF | |
| | | 1 | **9U-8669** | 1 | RETAINER | |
| | 21 | 1 | **9U-9595** | 1 | SPRING | |
| | 22 | 1 | **9N-4500** | 1 | SPRING (OUTER) | |
| | 23 | 1 | **9N-4498** | 1 | SPRING (INNER) | |
| | 24 | 1 | **8E-9897** | 1 | SPOOL | |
| | 25 | 1 | **9W-0898** | 1 | SLUG | |
| | 26 | 1 | **4J-7533** | 4 | SEAL-O-RING | |
| | 27 | 1 | **8E-6570** | 1 | MANIFOLD | |
| Y | 28 | 1 | **186-1526** | 4 | VALVE GP-SOLENOID (24-VOLT DC) (SELECTOR & PRESSURE RANGE) | 488 |
| M | 31 | 1 | **8C-6965** | 4 | BOLT-SOCKET HEAD (M6X1X45-MM) | |
| | 32 | 1 | **5P-0537** | 5 | WASHER-HARD (7.2X14.5X2-MM THK) | |
| M | 33 | 1 | **8T-8442** | 1 | BOLT-SOCKET HEAD (M6X1X30-MM) | |
| | 34 | 1 | **9U-8620** | 1 | ORIFICE | |
| | 35 | 1 | **9G-7132** | 4 | PLUG-ORIFICE | |
| | 36 | 1 | **3J-7354** | 1 | SEAL-O-RING | |
| | 37 | 1 | **9S-8002** | 1 | PLUG | |
| | 38 | 1 | **9S-8004** | 1 | PLUG | |
| | 39 | 1 | **3J-1907** | 1 | SEAL-O-RING | |
| | 40 | 1 | **108-6523** | 5 | ADJUSTER AS | |
| | | | | | (EACH INCLUDES) | |
| | | 1 | **4K-2039** | 1 | SEAL-O-RING | |
| | | 1 | **7M-8485** | 1 | SEAL-O-RING | |
| | | 1 | **8T-4223** | 1 | WASHER-HARD (13.5X25.5X3-MM THK) | |
| | | 1 | **9U-8069** | 1 | PLUG | |
| M | | 1 | **095-1207** | 1 | NUT (M12X1.75-THD) | |
| | | 1 | **101-9754** | 1 | SCREW-ADJUSTMENT (M12X1.75X18-MM-THD) | |
| | 41 | 1 | **6Y-4638** | 1 | PLUG-HEX SOCKET (1-5/16-12-2A-THD) | |
| | 42 | 1 | **8E-7713** | 1 | ORIFICE | |
| | 43 | 1 | **9W-7412** | 2 | SPRING (OUTER) | |
| | 44 | 1 | **7G-5453** | 1 | SPRING (INNER) | |

## *184-1132* VALVE GP-SELECTOR & PRESS CONT *(contd.)* i01755276

| NOTE | REF NO | GRAPHIC REF | PART NUMBER | QTY | PART NAME 1 2 3 4 5 6 (PRODUCT LEVEL) | SEE PAGE |
|---|---|---|---|---|---|---|
| | 45 | 1 | **108-3129** | 1 | STOP | |

B-USE AS REQUIRED
M-METRIC PART
Y-SEPARATE ILLUSTRATION

*184-1132* **VALVE GP-SELECTOR & PRESS CONT** *(contd.)* **i01755276**

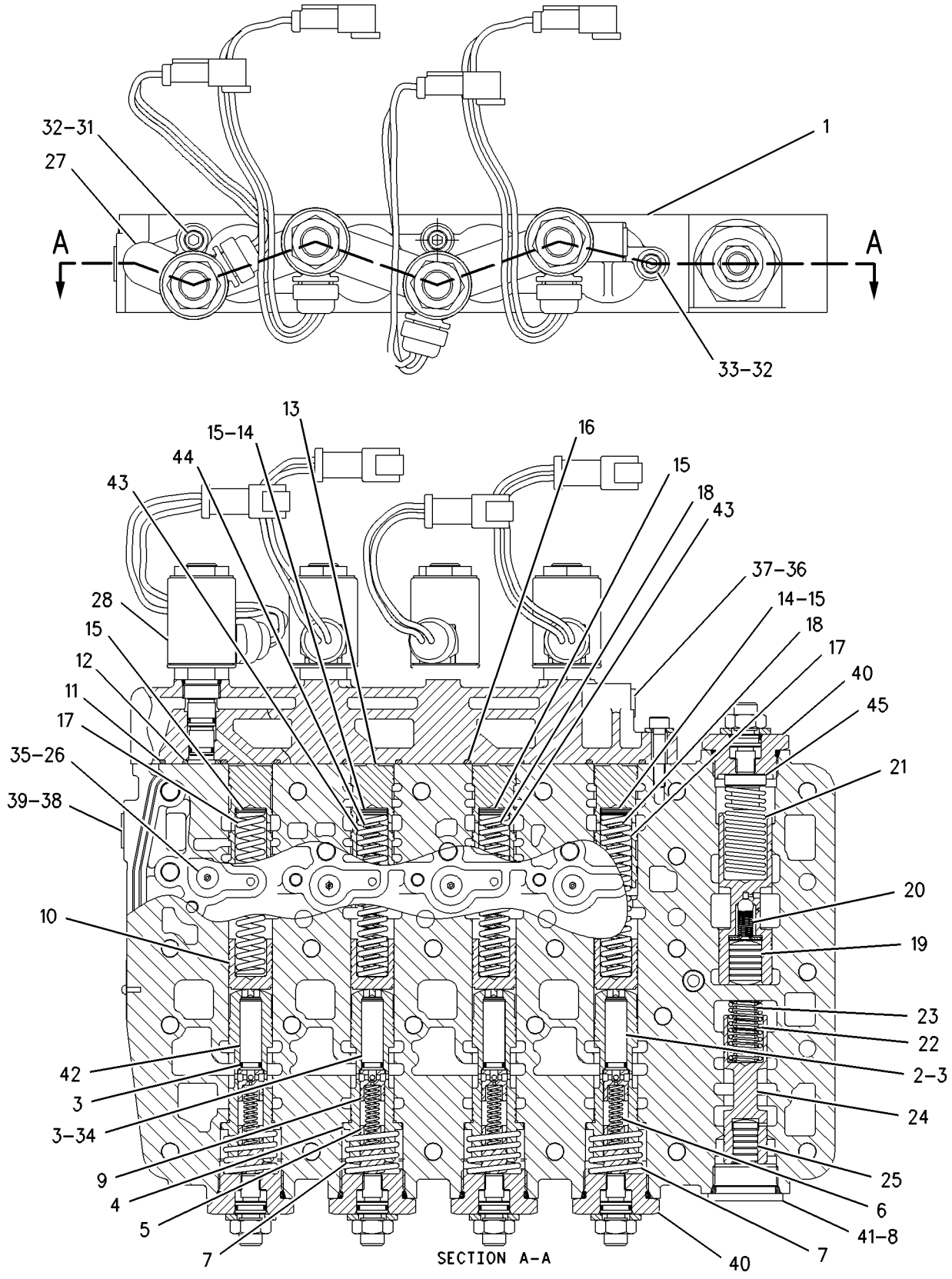


GRAPHIC #1 **<END>** g00898353

## 281-3160 VALVE GP-SELECTOR & PRESS CONT–
### SPEED, RANGE, TRANSMISSION
**S/N: EDB4459-UP**

**PART OF 281-3163 VALVE GP-TRANSMISSION CONTROL**

**SMCS-3083** **i02490569**

| NOTE | REF NO | GRAPHIC REF | PART NUMBER | QTY | PART NAME 1 2 3 4 5 6 (PRODUCT LEVEL) | SEE PAGE |
|---|---|---|---|---|---|---|
| | 1 | 1 | **161-7055** | 1 | BODY | |
| | 2 | 1 | **8E-7714** | 2 | ORIFICE | |
| | 3 | 1 | **5F-9144** | 4 | SEAL-O-RING | |
| | 4 | 1 | **8E-9894** | 4 | SPOOL | |
| | 5 | 1 | **9U-8068** | 4 | SLUG | |
| | 6 | 1 | **9U-9316** | 4 | SPRING | |
| | 7 | 1 | **9U-9282** | 4 | SPRING | |
| | 8 | 1 | **7M-8485** | 1 | SEAL-O-RING | |
| | 9 | 1 | **9U-8067** | 4 | RETAINER | |
| | 10 | 1 | **8E-9895** | 4 | PISTON-LOAD | |
| | 11 | 1 | **4J-2506** | 1 | SEAL-O-RING | |
| | 12 | 1 | **6F-4855** | 4 | SEAL-O-RING | |
| | 13 | 1 | **8E-9896** | 4 | PISTON-SELECTOR | |
| | 14 | 1 | **4M-1751** | 4 | SPACER (15.09X0.4-MM THK) | |
| B | 15 | 1 | **5J-1036** | 15 | SHIM (0.8-MM THK) | |
| | 16 | 1 | **3D-4245** | 4 | SEAL-O-RING | |
| | 17 | 1 | **9W-7410** | 1 | SPRING | |
| | 18 | 1 | **7T-0570** | 3 | SPRING | |
| | 19 | 1 | **8E-1143** | 1 | SLUG | |
| | 20 | 1 | **9U-8668** | 1 | SPOOL AS | |
| | | 1 | **3D-8317** | 1 | RING-RETAINING | |
| | | 1 | **4B-9880** | 1 | BALL | |
| | | 1 | **4M-2381** | 1 | SPRING | |
| | | 1 | **8E-9893** | 1 | SPOOL-RELIEF | |
| | | 1 | **9U-8669** | 1 | RETAINER | |
| | 21 | 1 | **9U-9595** | 1 | SPRING | |
| | 22 | 1 | **9N-4500** | 1 | SPRING | |
| | 23 | 1 | **9N-4498** | 1 | SPRING | |
| | 24 | 1 | **8E-9897** | 1 | SPOOL | |
| | 25 | 1 | **9W-0898** | 1 | SLUG | |
| | 26 | 1 | **4J-7533** | 4 | SEAL-O-RING | |
| | 27 | 1 | **8E-6570** | 1 | MANIFOLD | |
| Y | 28 | 1 | **186-1526** | 4 | VALVE GP-SOLENOID (24-VOLT DC) (SPEED, RANGE, TRANSMISSION) | 488 |
| M | 31 | 1 | **8C-6965** | 4 | BOLT-SOCKET HEAD (M6X1X45-MM) | |
| | 32 | 1 | **5P-0537** | 5 | WASHER-HARD (7.2X14.5X2-MM THK) | |
| M | 33 | 1 | **8T-8442** | 1 | BOLT-SOCKET HEAD (M6X1X30-MM) | |
| | 34 | 1 | **9U-8620** | 1 | ORIFICE | |
| | 35 | 1 | **9G-7132** | 4 | PLUG-ORIFICE | |
| | 36 | 1 | **3J-7354** | 1 | SEAL-O-RING | |
| | 37 | 1 | **9S-8002** | 1 | PLUG | |
| | 38 | 1 | **9S-8004** | 1 | PLUG | |
| | 39 | 1 | **3J-1907** | 1 | SEAL-O-RING | |
| | 40 | 1 | **108-6523** | 5 | ADJUSTER AS | |
| | | | | | (EACH INCLUDES) | |
| | | 1 | **4K-2039** | 1 | SEAL-O-RING | |
| | | 1 | **7M-8485** | 1 | SEAL-O-RING | |
| | | 1 | **8T-4223** | 1 | WASHER-HARD (13.5X25.5X3-MM THK) | |
| | | 1 | **9U-8069** | 1 | PLUG | |
| M | | 1 | **095-1207** | 1 | NUT (M12X1.75-THD) | |
| | | 1 | **101-9754** | 1 | SCREW-ADJUSTMENT (M12X1.75X18-MM-THD) | |
| | 41 | 1 | **6Y-4638** | 1 | PLUG-HEX SOCKET (1-5/16-12-2A-THD) | |
| | 42 | 1 | **8E-7713** | 1 | ORIFICE | |
| | 43 | 1 | **9W-7412** | 3 | SPRING | |
| | 44 | 1 | **7G-5453** | 1 | SPRING | |

## 281-3160 VALVE GP-SELECTOR & PRESS CONT *(contd. )* i02490569

| NOTE | REF NO | GRAPHIC REF | PART NUMBER | QTY | PART NAME 1 2 3 4 5 6 (PRODUCT LEVEL) | SEE PAGE |
|---|---|---|---|---|---|---|
| | 45 | 1 | **108-3129** | 1 | STOP | |

B-USE AS REQUIRED
M-METRIC PART
Y-SEPARATE ILLUSTRATION

## 281-3160 VALVE GP-SELECTOR & PRESS CONT *(contd.)* i02490569

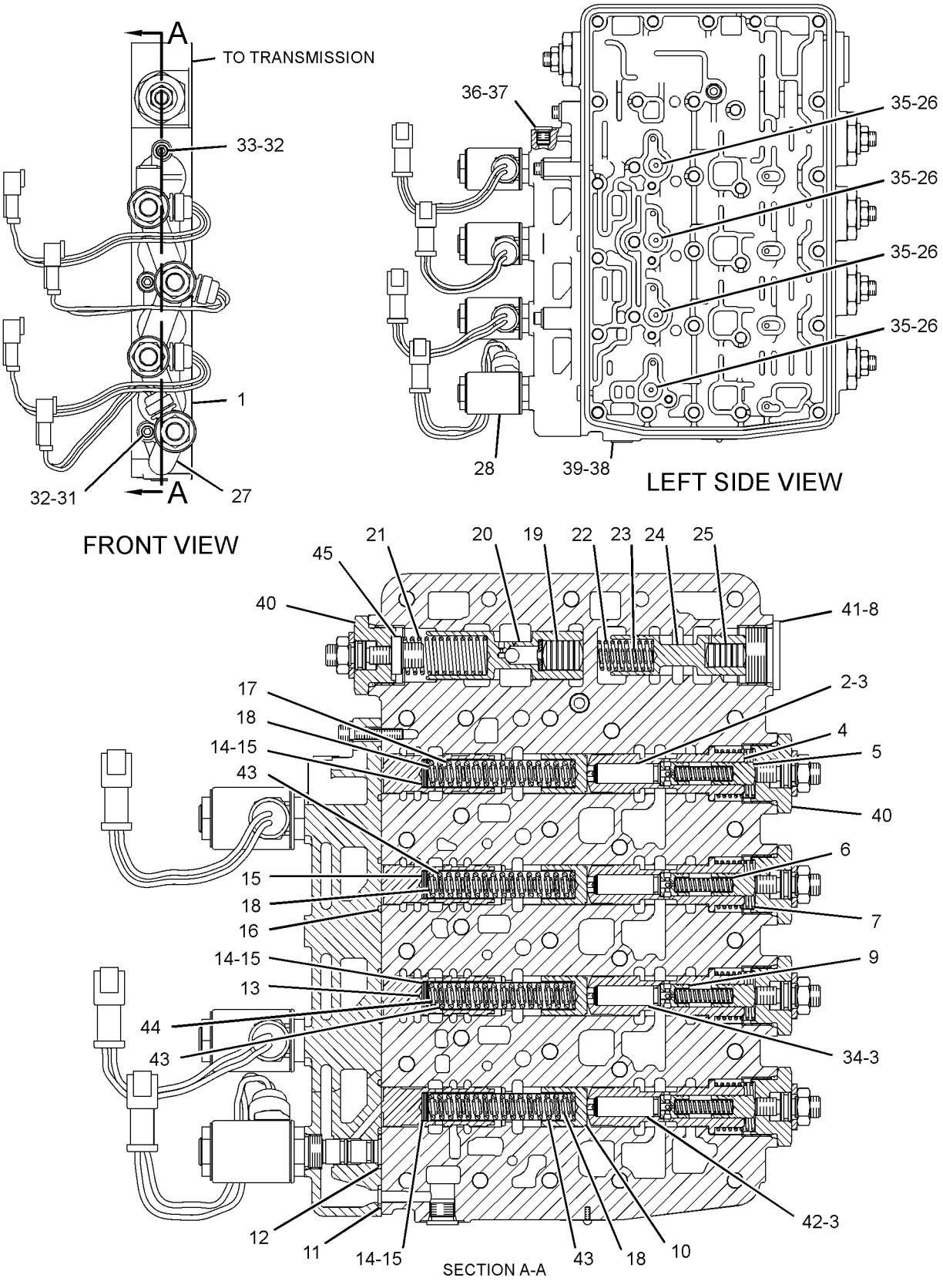


GRAPHIC #1 **<END>** g01225646

# 154-3064 VALVE GP-SOLENOID–DIFFERENTIAL LOCK

**S/N: CCA1-UP**
**24-VDC**
**PART OF 174-3705 VALVE & MTG GP-DIFF LOCK**

**SMCS-5479** **i02204767**

| NOTE | REF NO | GRAPHIC REF | PART NUMBER | QTY | PART NAME 1 2 3 4 5 6 (PRODUCT LEVEL) | SEE PAGE |
|---|---|---|---|---|---|---|
| | 1 | 1 | **8C-9987** | 1 | WASHER (8.3X28X2.5-MM THK) | |
| | 2 | 1 | **111-0343** | 1 | LOCKNUT (5/16-18-THD) | |
| | 3 | 1 | **142-0350** | 1 | CARTRIDGE AS | |
| | | 1 | **8C-9987** | 1 | WASHER (8.3X28X2.5-MM THK) | |
| | | 1 | **111-0343** | 1 | LOCKNUT (5/16-18-THD) | |
| | 4 | 1 | **189-0189** | 1 | COIL AS | |
| | | 1 | **1S-9593** | 2 | STRAP-CABLE | |
| | | 1 | **102-8802** | 1 | KIT-RECEPTACLE (2-PIN) | |
| | | | | | (INCLUDES RECEPTACLE AS & WEDGE) | |
| | | 1 | **3E-3365** | 1 | WEDGE-RECEPTACLE LOCK (2-PIN) | |
| | | 1 | **186-3735** | 2 | PIN-CONNECTOR (16-GA TO 18-GA) | |
| | | | | | AVAILABLE REPAIR KIT(S): | |
| | | | **6G-5979** | 1 | KIT-SEAL (DIFFERENTIAL LOCK VALVE) | |

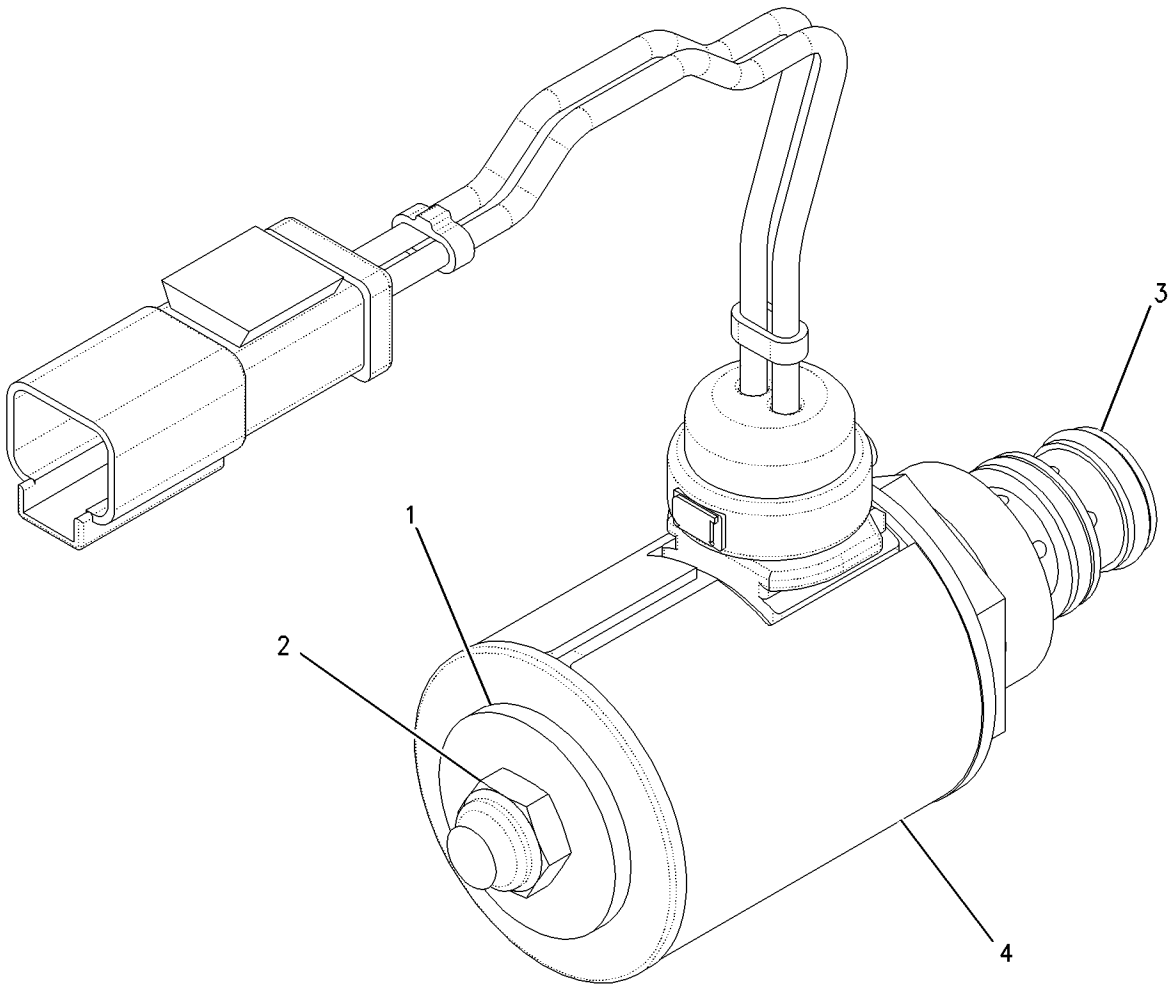


GRAPHIC #1 **<END>** g00877963

# 186-1526 VALVE GP-SOLENOID–SPEED, RANGE, TRANSMISSION–TMSN DIRECTION, SPEED, RANGE

**S/N: EDB1-UP; BJN1-99999**

**PART OF 184-1130, 184-1132, 281-3160 VALVE GP-SELECTOR & PRESS CONT**

**SMCS-5479** **i02204907**

| NOTE | REF NO | GRAPHIC REF | PART NUMBER | QTY | PART NAME 1 2 3 4 5 6 (PRODUCT LEVEL) | SEE PAGE |
|---|---|---|---|---|---|---|
| J | 1 | 1 | **234-6666** | 1 | CARTRIDGE AS-VALVE | |
| | 2 | 1 | **104-3947** | 1 | LOCKNUT (5/8-11-THD) | |
| | 3 | 1 | **240-6822** | 1 | COIL AS | |
| | 4 | 1 | **1S-9593** | 2 | STRAP-CABLE | |
| | 5 | 1 | **102-8802** | 1 | KIT-RECEPTACLE (2-PIN) | |
| | | | | | (INCLUDES RECEPTACLE AS & WEDGE) | |
| | 6 | 1 | **3E-3365** | 1 | WEDGE-RECEPTACLE LOCK (2-PIN) | |
| | 7 | 1 | **186-3735** | 2 | PIN-CONNECTOR (16-GA TO 18-GA) | |
| | | | | | AVAILABLE REPAIR KIT(S): | |
| J | | | **7T-4515** | | KIT-SEAL (TRANSMISSION SOLENOID) | |
| | | | | | (INCLUDES SEAL-O-RINGS) | |

J-KIT MARKED J SERVICES PART MARKED J

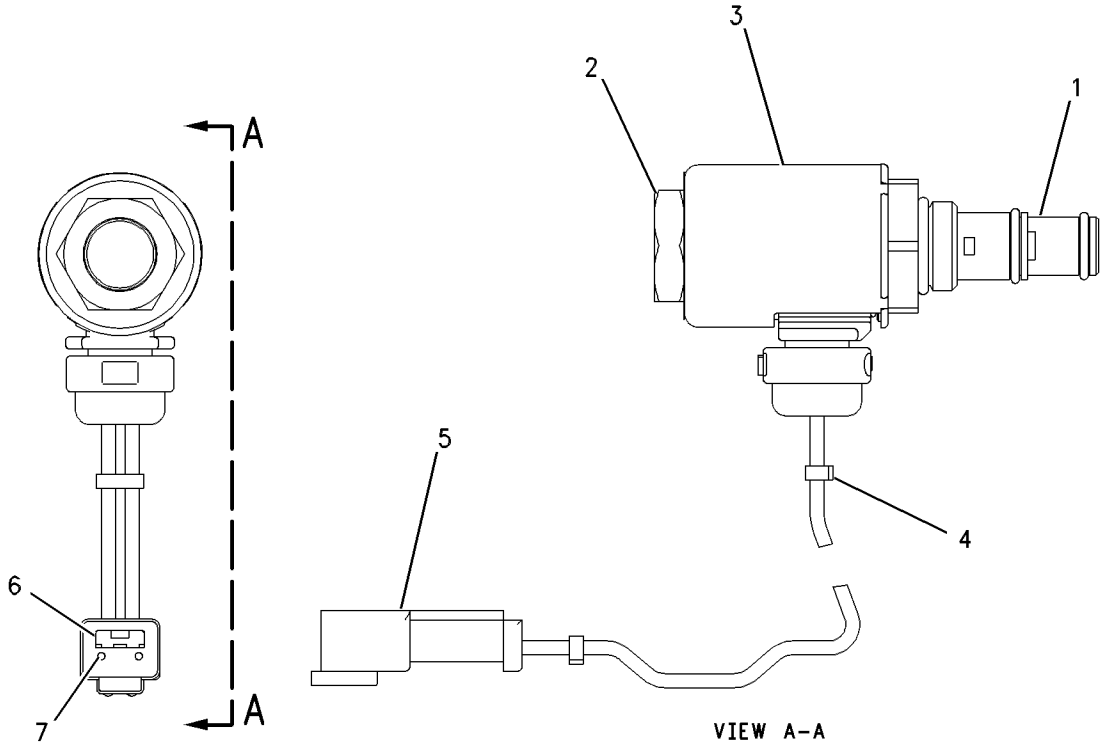


GRAPHIC #1 **<END>** g00661740

# 2G-6595 VALVE GP-TIRE

**S/N: CCA1-UP**

**PART OF 142-6348, 183-1418, 204-8785 WHEEL & TIRE GP, 170-0436, 216-7445 WHEEL GP**

**AN ATTACHMENT**

**SMCS-4203** **i00680585**

| NOTE | PART NUMBER | QTY | PART NAME 1 2 3 4 5 6 (PRODUCT LEVEL) | SEE PAGE |
|---|---|---|---|---|
| | 9K-7951 | | CAP-VALVE | |
| | 7D-5252 | | SPUD AS | |
| | 5Y-0158 | | STEM AS | |

**<END>**

# *179-6063* VALVE GP-TRANSMISSION CONTROL

**S/N: EDB1-4458; BJN1-99999**

**PART OF 179-6064 CONTROL GP-TRANSMISSION HYD**

**SMCS-3073** **i02207516**

| NOTE | REF NO | GRAPHIC REF | PART NUMBER | QTY | PART NAME 1 2 3 4 5 6 (PRODUCT LEVEL) | SEE PAGE |
|---|---|---|---|---|---|---|
| Y | 1 | 1 | **184-1130** | 1 | VALVE GP-SELECTOR & PRESS CONT (TRANSMISSION DIRECTION) | 478 |
| | 2 | 1 | **154-6306** | 1 | PLATE | |
| Y | 3 | 1 | **184-1132** | 1 | VALVE GP-SELECTOR & PRESS CONT (TRANSMISSION SPEED) | 481 |
| | 4 | 1 | **110-5161** | 1 | MANIFOLD | |
| | 5 | 1 | **154-6307** | 1 | PLATE | |
| | 6 | 1 | **8E-9474** | 1 | COVER | |
| | 7 | 1 | **6V-3965** | 8 | FITTING AS (QUICK DISCONNECT, MALE) | |
| | 8 | 1 | **3J-1907** | 10 | SEAL-O-RING | |
| | 9 | 1 | **6V-0852** | 8 | CAP-DUST | |
| | 11 | 1 | **1T-0738** | 2 | WASHER (8.4X19X1.83-MM THK) | |
| | 12 | 1 | **9P-9150** | 4 | WASHER (8.25X18X0.84-MM THK) | |
| M | 13 | 1 | **3E-8006** | 2 | BOLT (M8X1.25X130-MM) | |
| | 15 | 1 | **9L-9068** | 6 | DOWEL | |
| | 16 | 1 | **8F-6230** | 1 | SEAL-O-RING | |
| | 17 | 1 | **4D-6695** | 4 | SEAL-O-RING | |
| | 18 | 1 | **142-1767** | 1 | POPPET | |
| | 19 | 1 | **4D-1322** | 1 | RING-RETAINING | |
| | 20 | 1 | **6Y-2584** | 1 | RETAINER | |
| | 21 | 1 | **3J-6956** | 1 | SPRING | |
| | 22 | 1 | **6I-9395** | 1 | SCREEN (TRANSMISSION CONTROL VALVE) | |
| M | 23 | 1 | **6V-5217** | 1 | BOLT (M8X1.25X20-MM) | |
| | 24 | 1 | **9S-4191** | 2 | PLUG-O RING | |

M-METRIC PART
Y-SEPARATE ILLUSTRATION

*179-6063* **VALVE GP-TRANSMISSION CONTROL** *(contd.)* **i02207516**

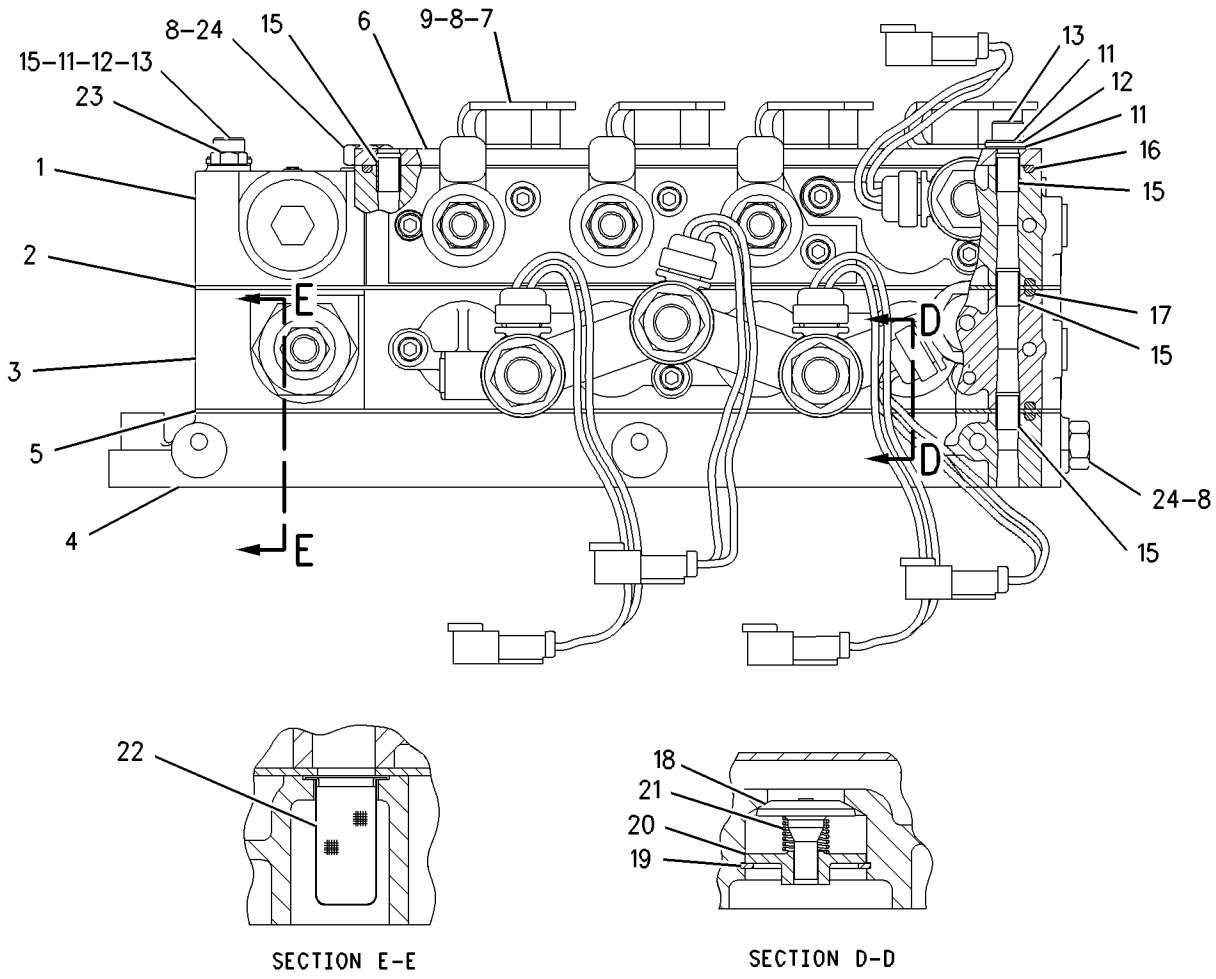


GRAPHIC #1 **<END>** g00928707

# *281-3163* VALVE GP-TRANSMISSION CONTROL

**S/N: EDB4459-UP**

**PART OF 281-3165 CONTROL GP-TRANSMISSION HYD**

**SMCS-3073** **i02490562**

| NOTE | REF NO | GRAPHIC REF | PART NUMBER | QTY | PART NAME 1 2 3 4 5 6 (PRODUCT LEVEL) | SEE PAGE |
|---|---|---|---|---|---|---|
| Y | 1 | 1 | **184-1130** | 1 | VALVE GP-SELECTOR & PRESS CONT (DIRECTION, RANGE, TRANSMISSION) | 478 |
| | 2 | 1 | **154-6306** | 1 | PLATE | |
| Y | 3 | 1 | **281-3160** | 1 | VALVE GP-SELECTOR & PRESS CONT (SPEED, RANGE, TRANSMISSION) | 484 |
| | 4 | 1 | **110-5161** | 1 | MANIFOLD | |
| | 5 | 1 | **154-6307** | 1 | PLATE | |
| | 6 | 1 | **8E-9474** | 1 | COVER | |
| | 7 | 1 | **6V-3965** | 8 | FITTING AS (QUICK DISCONNECT, MALE) | |
| | 8 | 1 | **3J-1907** | 10 | SEAL-O-RING | |
| | 9 | 1 | **6V-0852** | 8 | CAP-DUST | |
| | 11 | 1 | **1T-0738** | 2 | WASHER (8.4X19X1.83-MM THK) | |
| | 12 | 1 | **9P-9150** | 4 | WASHER (8.25X18XO.84-MM THK) | |
| M | 13 | 1 | **3E-8006** | 2 | BOLT (M8X1.25X130-MM) | |
| | 15 | 1 | **9L-9068** | 6 | DOWEL | |
| | 16 | 1 | **8F-6230** | 1 | SEAL-O-RING | |
| | 17 | 1 | **4D-6695** | 4 | SEAL-O-RING | |
| | 18 | 1 | **142-1767** | 1 | POPPET | |
| | 19 | 1 | **4D-1322** | 1 | RING-RETAINING | |
| | 20 | 1 | **6Y-2584** | 1 | RETAINER | |
| | 21 | 1 | **3J-6956** | 1 | SPRING | |
| | 22 | 1 | **6I-9395** | 1 | SCREEN (TRANSMISSION CONTROL VALVE) | |
| M | 23 | 1 | **6V-5217** | 1 | BOLT (M8X1.25X20-MM) | |
| | 24 | 1 | **9S-4191** | 2 | PLUG-O RING | |

M-METRIC PART
Y-SEPARATE ILLUSTRATION

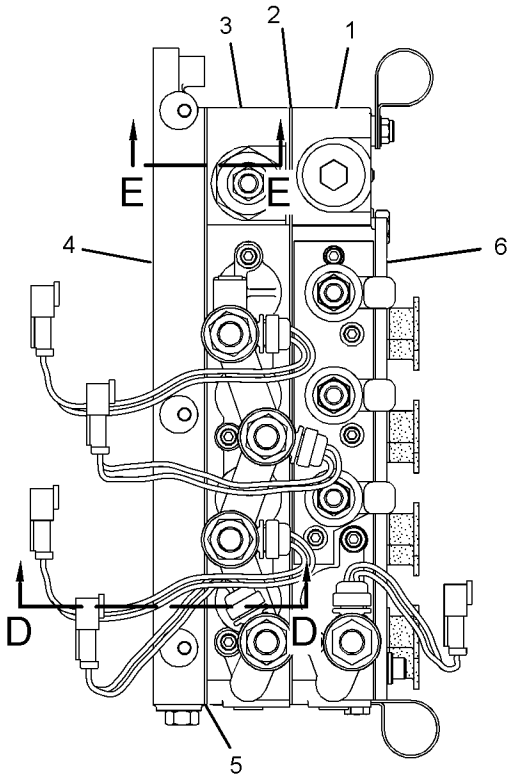


FRONT VIEW

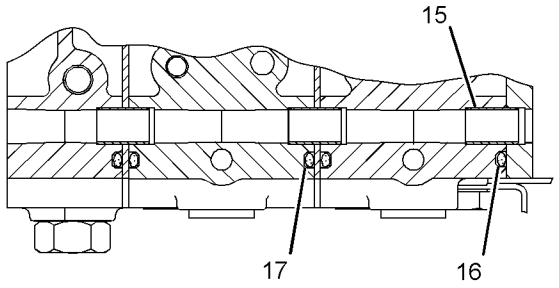


SECTION A-A

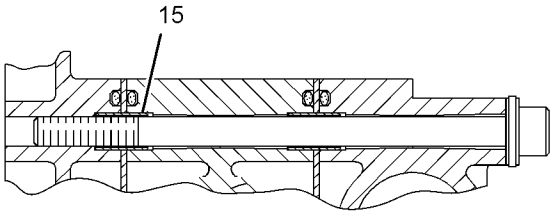


SECTION C-C

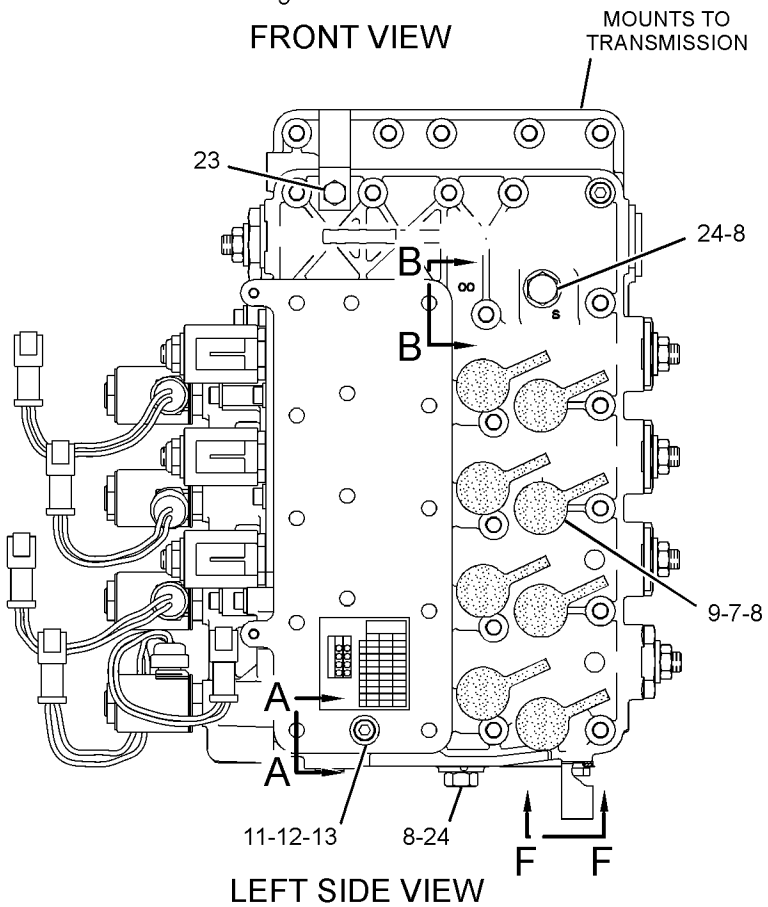


LEFT SIDE VIEW

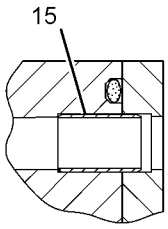


SECTION B-B

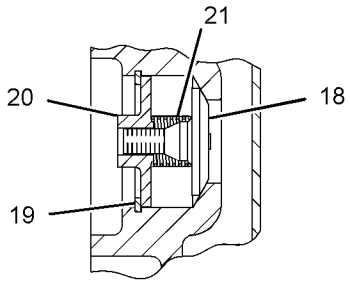


SECTION D-D

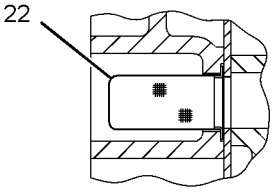


SECTION E-E

GRAPHIC #1 **<END>** g01225007

## *142-6445* WHEEL & TIRE AR

**S/N: CCA1-UP**
**AN ATTACHMENT**

**SMCS-4200** **i00751976**

| NOTE | PART NUMBER | QTY | PART NAME 1 2 3 4 5 6 (PRODUCT LEVEL) | SEE PAGE |
|---|---|---|---|---|
| Y | *142-6297* | 6 | WHEEL & TIRE GP | 508 |

Y-SEPARATE ILLUSTRATION

**<END>**

## *142-6446* WHEEL & TIRE AR

**S/N: CCA1-UP**
**AN ATTACHMENT**

**SMCS-4200** **i00751969**

| NOTE | PART NUMBER | QTY | PART NAME 1 2 3 4 5 6 (PRODUCT LEVEL) | SEE PAGE |
|---|---|---|---|---|
| Y | *142-6298* | 6 | WHEEL & TIRE GP | 508 |

Y-SEPARATE ILLUSTRATION

**<END>**

## *142-6448* WHEEL & TIRE AR

**S/N: CCA1-UP**
**AN ATTACHMENT**

**SMCS-4200** **i00758986**

| NOTE | PART NUMBER | QTY | PART NAME 1 2 3 4 5 6 (PRODUCT LEVEL) | SEE PAGE |
|---|---|---|---|---|
| Y | *142-6300* | 6 | WHEEL & TIRE GP | 509 |

Y-SEPARATE ILLUSTRATION

**<END>**

## *142-6449* WHEEL & TIRE AR

**S/N: CCA1-UP**
**AN ATTACHMENT**

**SMCS-4200** **i00759108**

| NOTE | PART NUMBER | QTY | PART NAME 1 2 3 4 5 6 (PRODUCT LEVEL) | SEE PAGE |
|---|---|---|---|---|
| Y | *142-6301* | 6 | WHEEL & TIRE GP | 509 |

Y-SEPARATE ILLUSTRATION

**<END>**

## *142-6454* WHEEL & TIRE AR

**S/N: CCA1-UP**
**AN ATTACHMENT**

**SMCS-4200** **i00758826**

| NOTE | PART NUMBER | QTY | PART NAME 1 2 3 4 5 6 (PRODUCT LEVEL) | SEE PAGE |
|---|---|---|---|---|
| Y | *142-6306* | 6 | WHEEL & TIRE GP | 510 |

Y-SEPARATE ILLUSTRATION

**<END>**

## *142-6455* WHEEL & TIRE AR

**S/N: CCA1-UP**
**AN ATTACHMENT**

**SMCS-4200** **i00758972**

| NOTE | PART NUMBER | QTY | PART NAME 1 2 3 4 5 6 (PRODUCT LEVEL) | SEE PAGE |
|---|---|---|---|---|
| Y | *142-6307* | 6 | WHEEL & TIRE GP | 510 |

Y-SEPARATE ILLUSTRATION

**<END>**

## *142-6457* WHEEL & TIRE AR

**S/N: CCA1-UP**
**AN ATTACHMENT**

**SMCS-4200** **i00758987**

| NOTE | PART NUMBER | QTY | PART NAME 1 2 3 4 5 6 (PRODUCT LEVEL) | SEE PAGE |
|---|---|---|---|---|
| Y | *142-6309* | 6 | WHEEL & TIRE GP | 511 |

Y-SEPARATE ILLUSTRATION

**<END>**

## *142-6458* WHEEL & TIRE AR

**S/N: CCA1-UP**
**AN ATTACHMENT**

**SMCS-4200** **i00759110**

| NOTE | PART NUMBER | QTY | PART NAME 1 2 3 4 5 6 (PRODUCT LEVEL) | SEE PAGE |
|---|---|---|---|---|
| Y | *142-6310* | 6 | WHEEL & TIRE GP | 511 |

Y-SEPARATE ILLUSTRATION

**<END>**

## *142-6460* WHEEL & TIRE AR

**S/N: CCA1-UP**
**AN ATTACHMENT**

**SMCS-4200** **i00758825**

| NOTE | PART NUMBER | QTY | PART NAME 1 2 3 4 5 6 (PRODUCT LEVEL) | SEE PAGE |
|---|---|---|---|---|
| Y | *142-6312* | 6 | WHEEL & TIRE GP | 512 |

Y-SEPARATE ILLUSTRATION

**<END>**

## *142-6461* WHEEL & TIRE AR

**S/N: CCA1-UP**
**AN ATTACHMENT**

**SMCS-4200** **i00758822**

| NOTE | PART NUMBER | QTY | PART NAME 1 2 3 4 5 6 (PRODUCT LEVEL) | SEE PAGE |
|---|---|---|---|---|
| Y | *142-6313* | 6 | WHEEL & TIRE GP | 512 |

Y-SEPARATE ILLUSTRATION

**<END>**

## *142-6463* WHEEL & TIRE AR

**S/N: CCA1-UP**
**AN ATTACHMENT**

**SMCS-4200** **i00758971**

| NOTE | PART NUMBER | QTY | PART NAME 1 2 3 4 5 6 (PRODUCT LEVEL) | SEE PAGE |
|---|---|---|---|---|
| Y | *142-6315* | 6 | WHEEL & TIRE GP | 513 |

Y-SEPARATE ILLUSTRATION

**<END>**

## *142-6464* WHEEL & TIRE AR

**S/N: CCA1-UP**
**AN ATTACHMENT**

**SMCS-4200** **i00758982**

| NOTE | PART NUMBER | QTY | PART NAME 1 2 3 4 5 6 (PRODUCT LEVEL) | SEE PAGE |
|---|---|---|---|---|
| Y | *142-6316* | 6 | WHEEL & TIRE GP | 513 |

Y-SEPARATE ILLUSTRATION

**<END>**

## *142-6466* WHEEL & TIRE AR

**S/N: CCA1-UP**
**AN ATTACHMENT**

**SMCS-4200** **i00766611**

| NOTE | PART NUMBER | QTY | PART NAME 1 2 3 4 5 6 (PRODUCT LEVEL) | SEE PAGE |
|---|---|---|---|---|
| Y | *142-6318* | 6 | WHEEL & TIRE GP | 514 |

Y-SEPARATE ILLUSTRATION

**<END>**

## *142-6467* WHEEL & TIRE AR

**S/N: CCA1-UP**
**AN ATTACHMENT**

**SMCS-4200** **i00766609**

| NOTE | PART NUMBER | QTY | PART NAME 1 2 3 4 5 6 (PRODUCT LEVEL) | SEE PAGE |
|---|---|---|---|---|
| Y | *142-6319* | 6 | WHEEL & TIRE GP | 514 |

Y-SEPARATE ILLUSTRATION

**<END>**

## *142-6469* WHEEL & TIRE AR

**S/N: CCA1-UP**
**AN ATTACHMENT**

**SMCS-4200** **i00766607**

| NOTE | PART NUMBER | QTY | PART NAME 1 2 3 4 5 6 (PRODUCT LEVEL) | SEE PAGE |
|---|---|---|---|---|
| Y | *142-6321* | 6 | WHEEL & TIRE GP | 515 |

Y-SEPARATE ILLUSTRATION

**<END>**

## *142-6470* WHEEL & TIRE AR

**S/N: CCA1-UP**
**AN ATTACHMENT**

**SMCS-4200** **i00766617**

| NOTE | PART NUMBER | QTY | PART NAME 1 2 3 4 5 6 (PRODUCT LEVEL) | SEE PAGE |
|---|---|---|---|---|
| Y | *142-6322* | 6 | WHEEL & TIRE GP | 515 |

Y-SEPARATE ILLUSTRATION

**<END>**

## *142-6472* WHEEL & TIRE AR

**S/N: CCA1-UP**
**AN ATTACHMENT**

**SMCS-4200** **i00766614**

| NOTE | PART NUMBER | QTY | PART NAME 1 2 3 4 5 6 (PRODUCT LEVEL) | SEE PAGE |
|---|---|---|---|---|
| Y | *142-6324* | 6 | WHEEL & TIRE GP | 516 |

Y-SEPARATE ILLUSTRATION

**<END>**

## *142-6474* WHEEL & TIRE AR

**S/N: CCA1-UP**
**AN ATTACHMENT**

**SMCS-4200** **i00766612**

| NOTE | PART NUMBER | QTY | PART NAME 1 2 3 4 5 6 (PRODUCT LEVEL) | SEE PAGE |
|---|---|---|---|---|
| Y | *142-6325* | 6 | WHEEL & TIRE GP | 516 |

Y-SEPARATE ILLUSTRATION

**<END>**

## *142-6477* WHEEL & TIRE AR

**S/N: CCA1-UP**
**AN ATTACHMENT**

**SMCS-4200** **i00766608**

| NOTE | PART NUMBER | QTY | PART NAME 1 2 3 4 5 6 (PRODUCT LEVEL) | SEE PAGE |
|---|---|---|---|---|
| Y | *142-6328* | 6 | WHEEL & TIRE GP | 517 |

Y-SEPARATE ILLUSTRATION

**<END>**

## *142-6479* WHEEL & TIRE AR

**S/N: CCA1-UP**
**AN ATTACHMENT**

**SMCS-4200** **i00766605**

| NOTE | PART NUMBER | QTY | PART NAME 1 2 3 4 5 6 (PRODUCT LEVEL) | SEE PAGE |
|---|---|---|---|---|
| Y | *142-6330* | 6 | WHEEL & TIRE GP | 517 |

Y-SEPARATE ILLUSTRATION

**<END>**

## *151-0334* WHEEL & TIRE AR

**S/N: CCA1-UP**
**AN ATTACHMENT**

**SMCS-4200** **i02237307**

| NOTE | PART NUMBER | QTY | PART NAME 1 2 3 4 5 6 (PRODUCT LEVEL) | SEE PAGE |
|---|---|---|---|---|
| Y | *142-6348* | 6 | WHEEL & TIRE GP | 518 |

Y-SEPARATE ILLUSTRATION

**<END>**

## *151-0361* WHEEL & TIRE AR

**S/N: CCA1-UP**
**AN ATTACHMENT**

**SMCS-4200** **i02164874**

| NOTE | PART NUMBER | QTY | PART NAME 1 2 3 4 5 6 (PRODUCT LEVEL) | SEE PAGE |
|---|---|---|---|---|
| Y | *150-4467* | 6 | WHEEL & TIRE GP | 528 |

Y-SEPARATE ILLUSTRATION

**<END>**

## *151-0362* WHEEL & TIRE AR

**S/N: CCA1-UP**
**AN ATTACHMENT**

**SMCS-4200** **i00775616**

| NOTE | PART NUMBER | QTY | PART NAME 1 2 3 4 5 6 (PRODUCT LEVEL) | SEE PAGE |
|---|---|---|---|---|
| Y | *142-6332* | 6 | WHEEL & TIRE GP | 518 |

Y-SEPARATE ILLUSTRATION

**<END>**

## *151-0364* WHEEL & TIRE AR

**S/N: CCA1-UP**
**AN ATTACHMENT**

**SMCS-4200** **i00759127**

| NOTE | PART NUMBER | QTY | PART NAME 1 2 3 4 5 6 (PRODUCT LEVEL) | SEE PAGE |
|---|---|---|---|---|
| Y | *142-6353* | 6 | WHEEL & TIRE GP | 519 |

Y-SEPARATE ILLUSTRATION

**<END>**

## *151-0365* WHEEL & TIRE AR

**S/N: CCA1-UP**
**AN ATTACHMENT**

**SMCS-4200** **i00759194**

| NOTE | PART NUMBER | QTY | PART NAME 1 2 3 4 5 6 (PRODUCT LEVEL) | SEE PAGE |
|---|---|---|---|---|
| Y | *142-6360* | 6 | WHEEL & TIRE GP | 522 |

Y-SEPARATE ILLUSTRATION

**<END>**

## *151-0366* WHEEL & TIRE AR

**S/N: CCA1-UP**
**AN ATTACHMENT**

**SMCS-4200** **i00759349**

| NOTE | PART NUMBER | QTY | PART NAME 1 2 3 4 5 6 (PRODUCT LEVEL) | SEE PAGE |
|---|---|---|---|---|
| Y | *142-6363* | 6 | WHEEL & TIRE GP | 523 |

Y-SEPARATE ILLUSTRATION

**<END>**

## *151-0367* WHEEL & TIRE AR

**S/N: CCA1-UP**
**AN ATTACHMENT**

**SMCS-4200** **i00759353**

| NOTE | PART NUMBER | QTY | PART NAME 1 2 3 4 5 6 (PRODUCT LEVEL) | SEE PAGE |
|---|---|---|---|---|
| Y | *142-6366* | 6 | WHEEL & TIRE GP | 524 |

Y-SEPARATE ILLUSTRATION

**<END>**

## *151-0368* WHEEL & TIRE AR

**S/N: CCA1-UP**
**AN ATTACHMENT**

**SMCS-4200** **i00759354**

| NOTE | PART NUMBER | QTY | PART NAME 1 2 3 4 5 6 (PRODUCT LEVEL) | SEE PAGE |
|---|---|---|---|---|
| Y | *142-6371* | 6 | WHEEL & TIRE GP | 525 |

Y-SEPARATE ILLUSTRATION

**<END>**

## *151-0371* WHEEL & TIRE AR

**S/N: CCA1-UP**
**AN ATTACHMENT**

**SMCS-4200** **i00759269**

| NOTE | PART NUMBER | QTY | PART NAME 1 2 3 4 5 6 (PRODUCT LEVEL) | SEE PAGE |
|---|---|---|---|---|
| Y | *142-6354* | 6 | WHEEL & TIRE GP | 519 |

Y-SEPARATE ILLUSTRATION

**<END>**

## *151-0372* WHEEL & TIRE AR

**S/N: CCA1-UP**
**AN ATTACHMENT**

**SMCS-4200** **i00759272**

| NOTE | PART NUMBER | QTY | PART NAME 1 2 3 4 5 6 (PRODUCT LEVEL) | SEE PAGE |
|---|---|---|---|---|
| Y | *142-6372* | 6 | WHEEL & TIRE GP | 525 |

Y-SEPARATE ILLUSTRATION

**<END>**

## *151-0374* WHEEL & TIRE AR

**S/N: CCA1-UP**
**AN ATTACHMENT**

**SMCS-4200** **i00759278**

| NOTE | PART NUMBER | QTY | PART NAME 1 2 3 4 5 6 (PRODUCT LEVEL) | SEE PAGE |
|---|---|---|---|---|
| Y | *142-6355* | 6 | WHEEL & TIRE GP | 520 |

Y-SEPARATE ILLUSTRATION

**<END>**

## *151-0375* WHEEL & TIRE AR

**S/N: CCA1-UP**
**AN ATTACHMENT**

**SMCS-4200** **i00759351**

| NOTE | PART NUMBER | QTY | PART NAME 1 2 3 4 5 6 (PRODUCT LEVEL) | SEE PAGE |
|---|---|---|---|---|
| Y | *142-6373* | 6 | WHEEL & TIRE GP | 526 |

Y-SEPARATE ILLUSTRATION

**<END>**

## *151-0378* WHEEL & TIRE AR

**S/N: CCA1-UP**
**AN ATTACHMENT**

**SMCS-4200** **i00759357**

| NOTE | PART NUMBER | QTY | PART NAME 1 2 3 4 5 6 (PRODUCT LEVEL) | SEE PAGE |
|---|---|---|---|---|
| Y | *142-6356* | 6 | WHEEL & TIRE GP | 520 |

Y-SEPARATE ILLUSTRATION

**<END>**

## *151-0379* WHEEL & TIRE AR

**S/N: CCA1-UP**
**AN ATTACHMENT**

**SMCS-4200** **i00759358**

| NOTE | PART NUMBER | QTY | PART NAME 1 2 3 4 5 6 (PRODUCT LEVEL) | SEE PAGE |
|---|---|---|---|---|
| Y | *142-6361* | 6 | WHEEL & TIRE GP | 522 |

Y-SEPARATE ILLUSTRATION

**<END>**

## *151-0380* WHEEL & TIRE AR

**S/N: CCA1-UP**
**AN ATTACHMENT**

**SMCS-4200** **i00759275**

| NOTE | PART NUMBER | QTY | PART NAME 1 2 3 4 5 6 (PRODUCT LEVEL) | SEE PAGE |
|---|---|---|---|---|
| Y | *142-6364* | 6 | WHEEL & TIRE GP | 523 |

Y-SEPARATE ILLUSTRATION

**<END>**

## *151-0381* WHEEL & TIRE AR

**S/N: CCA1-UP**
**AN ATTACHMENT**

**SMCS-4200** **i00760333**

| NOTE | PART NUMBER | QTY | PART NAME 1 2 3 4 5 6 (PRODUCT LEVEL) | SEE PAGE |
|---|---|---|---|---|
| Y | *142-6367* | 6 | WHEEL & TIRE GP | 524 |

Y-SEPARATE ILLUSTRATION

**<END>**

## *151-0382* WHEEL & TIRE AR

**S/N: CCA1-UP**
**AN ATTACHMENT**

**SMCS-4200** **i00760334**

| NOTE | PART NUMBER | QTY | PART NAME 1 2 3 4 5 6 (PRODUCT LEVEL) | SEE PAGE |
|---|---|---|---|---|
| Y | *142-6374* | 6 | WHEEL & TIRE GP | 526 |

Y-SEPARATE ILLUSTRATION

**<END>**

## *151-0385* WHEEL & TIRE AR

**S/N: CCA1-UP**
**AN ATTACHMENT**

**SMCS-4200** **i00775615**

| NOTE | PART NUMBER | QTY | PART NAME 1 2 3 4 5 6 (PRODUCT LEVEL) | SEE PAGE |
|---|---|---|---|---|
| Y | *142-6385* | 6 | WHEEL & TIRE GP | 528 |

Y-SEPARATE ILLUSTRATION

**<END>**

## *151-0388* WHEEL & TIRE AR

**S/N: CCA1-UP**
**AN ATTACHMENT**

**SMCS-4200** **i00760579**

| NOTE | PART NUMBER | QTY | PART NAME 1 2 3 4 5 6 (PRODUCT LEVEL) | SEE PAGE |
|---|---|---|---|---|
| Y | *142-6357* | 6 | WHEEL & TIRE GP | 521 |

Y-SEPARATE ILLUSTRATION

**<END>**

## *151-0389* WHEEL & TIRE AR

**S/N: CCA1-UP**
**AN ATTACHMENT**

**SMCS-4200** **i00760599**

| NOTE | PART NUMBER | QTY | PART NAME 1 2 3 4 5 6 (PRODUCT LEVEL) | SEE PAGE |
|---|---|---|---|---|
| Y | *142-6375* | 6 | WHEEL & TIRE GP | 527 |

Y-SEPARATE ILLUSTRATION

**<END>**

## *151-0392* WHEEL & TIRE AR

**S/N: CCA1-UP**
**AN ATTACHMENT**

**SMCS-4200** **i00760499**

| NOTE | PART NUMBER | QTY | PART NAME 1 2 3 4 5 6 (PRODUCT LEVEL) | SEE PAGE |
|---|---|---|---|---|
| Y | *142-6358* | 6 | WHEEL & TIRE GP | 521 |

Y-SEPARATE ILLUSTRATION

**<END>**

## *151-0393* WHEEL & TIRE AR

**S/N: CCA1-UP**
**AN ATTACHMENT**

**SMCS-4200** **i00760539**

| NOTE | PART NUMBER | QTY | PART NAME 1 2 3 4 5 6 (PRODUCT LEVEL) | SEE PAGE |
|---|---|---|---|---|
| Y | *142-6376* | 6 | WHEEL & TIRE GP | 527 |

Y-SEPARATE ILLUSTRATION

**<END>**

## *153-5460* WHEEL & TIRE AR

**S/N: CCA1-UP**
**AN ATTACHMENT**

**SMCS-4200** **i00767526**

| NOTE | PART NUMBER | QTY | PART NAME 1 2 3 4 5 6 (PRODUCT LEVEL) | SEE PAGE |
|---|---|---|---|---|
| Y | *153-5459* | 6 | WHEEL & TIRE GP | 529 |

Y-SEPARATE ILLUSTRATION

**<END>**

## *153-5464* WHEEL & TIRE AR

**S/N: CCA1-UP**
**AN ATTACHMENT**

**SMCS-4200** **i00767583**

| NOTE | PART NUMBER | QTY | PART NAME 1 2 3 4 5 6 (PRODUCT LEVEL) | SEE PAGE |
|---|---|---|---|---|
| Y | *153-5463* | 6 | WHEEL & TIRE GP | 530 |

Y-SEPARATE ILLUSTRATION

**<END>**

## *153-5468* WHEEL & TIRE AR

**S/N: CCA1-UP**
**AN ATTACHMENT**

**SMCS-4200** **i00767538**

| NOTE | PART NUMBER | QTY | PART NAME 1 2 3 4 5 6 (PRODUCT LEVEL) | SEE PAGE |
|---|---|---|---|---|
| Y | *153-5467* | 6 | WHEEL & TIRE GP | 530 |

Y-SEPARATE ILLUSTRATION

**<END>**

## *159-1782* WHEEL & TIRE AR

**S/N: CCA1-UP**
**AN ATTACHMENT**

**SMCS-4200** **i01035793**

| NOTE | PART NUMBER | QTY | PART NAME 1 2 3 4 5 6 (PRODUCT LEVEL) | SEE PAGE |
|---|---|---|---|---|
| Y | *159-1785* | 6 | WHEEL & TIRE GP | 531 |

Y-SEPARATE ILLUSTRATION

**<END>**

## *163-0375* WHEEL & TIRE AR

**S/N: CCA1-UP**
**AN ATTACHMENT**

**SMCS-4200** **i02164193**

| NOTE | PART NUMBER | QTY | PART NAME 1 2 3 4 5 6 (PRODUCT LEVEL) | SEE PAGE |
|---|---|---|---|---|
| Y | *163-0376* | 6 | WHEEL & TIRE GP | 531 |

Y-SEPARATE ILLUSTRATION

**<END>**

## *174-2304* WHEEL & TIRE AR

**S/N: CCA1-UP**
**AN ATTACHMENT**

**SMCS-4200** **i01680354**

| NOTE | PART NUMBER | QTY | PART NAME 1 2 3 4 5 6 (PRODUCT LEVEL) | SEE PAGE |
|---|---|---|---|---|
| Y | *173-7813* | 6 | WHEEL & TIRE GP | 532 |

Y-SEPARATE ILLUSTRATION

**<END>**

## *183-1416* WHEEL & TIRE AR

**S/N: CCA1-UP**
**AN ATTACHMENT**

**SMCS-4200** **i02164215**

| NOTE | PART NUMBER | QTY | PART NAME 1 2 3 4 5 6 (PRODUCT LEVEL) | SEE PAGE |
|---|---|---|---|---|
| Y | *183-1415* | 6 | WHEEL & TIRE GP | 532 |

Y-SEPARATE ILLUSTRATION

**<END>**

## *183-1417* WHEEL & TIRE AR

**S/N: CCA1-UP**
**AN ATTACHMENT**

**SMCS-4200** **i02164201**

| NOTE | PART NUMBER | QTY | PART NAME 1 2 3 4 5 6 (PRODUCT LEVEL) | SEE PAGE |
|---|---|---|---|---|
| Y | *183-1418* | 6 | WHEEL & TIRE GP | 533 |

Y-SEPARATE ILLUSTRATION

**<END>**

## *184-2362* WHEEL & TIRE AR

**S/N: CCA1-UP**
**AN ATTACHMENT**

**SMCS-4200** **i01459486**

| NOTE | PART NUMBER | QTY | PART NAME 1 2 3 4 5 6 (PRODUCT LEVEL) | SEE PAGE |
|---|---|---|---|---|
| Y | *184-2346* | 6 | WHEEL & TIRE GP | 533 |

Y-SEPARATE ILLUSTRATION

**<END>**

## *184-2363* WHEEL & TIRE AR

**S/N: CCA1-UP**
**AN ATTACHMENT**

**SMCS-4200** **i01459493**

| NOTE | PART NUMBER | QTY | PART NAME 1 2 3 4 5 6 (PRODUCT LEVEL) | SEE PAGE |
|---|---|---|---|---|
| Y | *184-2347* | 6 | WHEEL & TIRE GP | 534 |

Y-SEPARATE ILLUSTRATION

**<END>**

## *198-6565* WHEEL & TIRE AR

**S/N: CCA1-UP**
**AN ATTACHMENT**

**SMCS-4200** **i02164297**

| NOTE | PART NUMBER | QTY | PART NAME 1 2 3 4 5 6 (PRODUCT LEVEL) | SEE PAGE |
|---|---|---|---|---|
| Y | *198-6572* | 6 | WHEEL & TIRE GP | 534 |

Y-SEPARATE ILLUSTRATION

**<END>**

## *204-8786* WHEEL & TIRE AR

**S/N: CCA1-UP**
**AN ATTACHMENT**

**SMCS-4200** **i01562289**

| NOTE | PART NUMBER | QTY | PART NAME 1 2 3 4 5 6 (PRODUCT LEVEL) | SEE PAGE |
|---|---|---|---|---|
| Y | *204-8785* | 6 | WHEEL & TIRE GP | 535 |

Y-SEPARATE ILLUSTRATION

**<END>**

## *207-9862* WHEEL & TIRE AR

**S/N: CCA1-UP**
**AN ATTACHMENT**

**SMCS-4200** **i02164332**

| NOTE | PART NUMBER | QTY | PART NAME 1 2 3 4 5 6 (PRODUCT LEVEL) | SEE PAGE |
|---|---|---|---|---|
| Y | *207-9861* | 6 | WHEEL & TIRE GP | 535 |

Y-SEPARATE ILLUSTRATION

**<END>**

## *216-7444* WHEEL & TIRE AR

**S/N: CCA1-UP**
**AN ATTACHMENT**

**SMCS-4200** **i02164771**

| NOTE | PART NUMBER | QTY | PART NAME 1 2 3 4 5 6 (PRODUCT LEVEL) | SEE PAGE |
|---|---|---|---|---|
| Y | *216-7443* | 6 | WHEEL & TIRE GP | 536 |

Y-SEPARATE ILLUSTRATION

**<END>**

## *228-9265* WHEEL & TIRE AR

**S/N: CCA1-UP**
**AN ATTACHMENT**

**SMCS-4200** **i02164807**

| NOTE | PART NUMBER | QTY | PART NAME 1 2 3 4 5 6 (PRODUCT LEVEL) | SEE PAGE |
|---|---|---|---|---|
| Y | *226-0735* | 6 | WHEEL & TIRE GP | 536 |

Y-SEPARATE ILLUSTRATION

**<END>**

## *142-6297* WHEEL & TIRE GP

**S/N: CCA1-UP**
**PART OF 142-6445 WHEEL & TIRE AR**
**AN ATTACHMENT**

**SMCS-4200** **i02205244**

| NOTE | PART NUMBER | QTY | PART NAME 1 2 3 4 5 6 (PRODUCT LEVEL) | SEE PAGE |
|---|---|---|---|---|
| | **123-3420** | 1 | RIM AS (9X24) | |
| | *142-6170* | 1 | TIRE (14-24) | |
| | **2D-2511** | 1 | VALVE GP-TIRE | |
| | **9K-7951** | 1 | CAP-VALVE (STEM) | |
| | **6F-3930** | 1 | CORE-VALVE | |
| | **7D-5252** | 1 | SPUD AS | |
| | **2D-2508** | 1 | GROMMET | |
| | **2D-2509** | 1 | LOCKNUT (11/16-16-THD) | |
| | **2D-2507** | 1 | SPUD | |

**<END>**

## *142-6298* WHEEL & TIRE GP

**S/N: CCA1-UP**
**PART OF 142-6446 WHEEL & TIRE AR**
**AN ATTACHMENT**

**SMCS-4200** **i02205245**

| NOTE | PART NUMBER | QTY | PART NAME 1 2 3 4 5 6 (PRODUCT LEVEL) | SEE PAGE |
|---|---|---|---|---|
| Y | *142-6226* | 1 | WHEEL GP | 539 |
| | | | | |
| | **2D-2565** | 1 | SEAL-O-RING | |
| | *142-6170* | 1 | TIRE (14-24) | |
| | **110-4213** | 1 | VALVE GP-TIRE | |
| | **7D-5252** | 1 | SPUD AS | |
| | **2D-2508** | 1 | GROMMET | |
| | **2D-2509** | 1 | LOCKNUT (11/16-16-THD) | |
| | **110-4214** | 1 | STEM AS | |
| | **9K-7951** | 1 | CAP-VALVE (STEM) | |
| | **6F-3930** | 1 | CORE-VALVE | |

Y-SEPARATE ILLUSTRATION

**<END>**

## *142-6300* WHEEL & TIRE GP

**S/N: CCA1-UP**
**PART OF 142-6448 WHEEL & TIRE AR**
**AN ATTACHMENT**

**SMCS-4200** **i02205249**

| NOTE | PART NUMBER | QTY | PART NAME 1 2 3 4 5 6 (PRODUCT LEVEL) | SEE PAGE |
|---|---|---|---|---|
| | **123-3420** | 1 | RIM AS (9X24) | |
| | *142-6171* | 1 | TIRE (14-24) | |
| | **2D-2511** | 1 | VALVE GP-TIRE | |
| | **9K-7951** | 1 | CAP-VALVE (STEM) | |
| | **6F-3930** | 1 | CORE-VALVE | |
| | **7D-5252** | 1 | SPUD AS | |
| | **2D-2508** | 1 | GROMMET | |
| | **2D-2509** | 1 | LOCKNUT (11/16-16-THD) | |
| | **2D-2507** | 1 | SPUD | |

**<END>**

## *142-6301* WHEEL & TIRE GP

**S/N: CCA1-UP**
**PART OF 142-6449 WHEEL & TIRE AR**
**AN ATTACHMENT**

**SMCS-4200** **i02205296**

| NOTE | PART NUMBER | QTY | PART NAME 1 2 3 4 5 6 (PRODUCT LEVEL) | SEE PAGE |
|---|---|---|---|---|
| Y | *142-6226* | 1 | WHEEL GP | 539 |
| | | | | |
| | **2D-2565** | 1 | SEAL-O-RING | |
| | *142-6171* | 1 | TIRE (14-24) | |
| | **110-4213** | 1 | VALVE GP-TIRE | |
| | **7D-5252** | 1 | SPUD AS | |
| | **2D-2508** | 1 | GROMMET | |
| | **2D-2509** | 1 | LOCKNUT (11/16-16-THD) | |
| | **110-4214** | 1 | STEM AS | |
| | **9K-7951** | 1 | CAP-VALVE (STEM) | |
| | **6F-3930** | 1 | CORE-VALVE | |

Y-SEPARATE ILLUSTRATION

**<END>**

## *142-6306* WHEEL & TIRE GP

**S/N: CCA1-UP**
**PART OF 142-6454 WHEEL & TIRE AR**
**AN ATTACHMENT**

**SMCS-4200** **i02205305**

| NOTE | PART NUMBER | QTY | PART NAME 1 2 3 4 5 6 (PRODUCT LEVEL) | SEE PAGE |
|---|---|---|---|---|
| | **123-3420** | 1 | RIM AS (9X24) | |
| | *142-6173* | 1 | TIRE (14-24) | |
| | **2D-2511** | 1 | VALVE GP-TIRE | |
| | **9K-7951** | 1 | CAP-VALVE (STEM) | |
| | **6F-3930** | 1 | CORE-VALVE | |
| | **7D-5252** | 1 | SPUD AS | |
| | **2D-2508** | 1 | GROMMET | |
| | **2D-2509** | 1 | LOCKNUT (11/16-16-THD) | |
| | **2D-2507** | 1 | SPUD | |

**<END>**

## *142-6307* WHEEL & TIRE GP

**S/N: CCA1-UP**
**PART OF 142-6455 WHEEL & TIRE AR**
**AN ATTACHMENT**

**SMCS-4200** **i02205306**

| NOTE | PART NUMBER | QTY | PART NAME 1 2 3 4 5 6 (PRODUCT LEVEL) | SEE PAGE |
|---|---|---|---|---|
| Y | *142-6226* | 1 | WHEEL GP | 539 |
| | | | | |
| | **2D-2565** | 1 | SEAL-O-RING | |
| | *142-6173* | 1 | TIRE (14-24) | |
| | **110-4213** | 1 | VALVE GP-TIRE | |
| | **7D-5252** | 1 | SPUD AS | |
| | **2D-2508** | 1 | GROMMET | |
| | **2D-2509** | 1 | LOCKNUT (11/16-16-THD) | |
| | **110-4214** | 1 | STEM AS | |
| | **6F-3930** | 1 | CORE-VALVE | |
| | **9K-7951** | 1 | CAP-VALVE (STEM) | |

Y-SEPARATE ILLUSTRATION

**<END>**

## *142-6309* WHEEL & TIRE GP

**S/N: CCA1-UP**
**PART OF 142-6457 WHEEL & TIRE AR**
**AN ATTACHMENT**

**SMCS-4200** **i02205309**

| NOTE | PART NUMBER | QTY | PART NAME 1 2 3 4 5 6 (PRODUCT LEVEL) | SEE PAGE |
|---|---|---|---|---|
| | **123-3420** | 1 | RIM AS (9X24) | |
| | *142-6174* | 1 | TIRE (14-24) | |
| | **2D-2511** | 1 | VALVE GP-TIRE | |
| | **9K-7951** | 1 | CAP-VALVE (STEM) | |
| | **6F-3930** | 1 | CORE-VALVE | |
| | **7D-5252** | 1 | SPUD AS | |
| | **2D-2508** | 1 | GROMMET | |
| | **2D-2509** | 1 | LOCKNUT (11/16-16-THD) | |
| | **2D-2507** | 1 | SPUD | |

**<END>**

## *142-6310* WHEEL & TIRE GP

**S/N: CCA1-UP**
**PART OF 142-6458 WHEEL & TIRE AR**
**AN ATTACHMENT**

**SMCS-4200** **i02205321**

| NOTE | PART NUMBER | QTY | PART NAME 1 2 3 4 5 6 (PRODUCT LEVEL) | SEE PAGE |
|---|---|---|---|---|
| Y | *142-6226* | 1 | WHEEL GP | 539 |
| | | | | |
| | *142-6174* | 1 | TIRE (14-24) | |
| | **2D-2565** | 1 | SEAL-O-RING | |
| | **110-4213** | 1 | VALVE GP-TIRE | |
| | **7D-5252** | 1 | SPUD AS | |
| | **2D-2508** | 1 | GROMMET | |
| | **2D-2509** | 1 | LOCKNUT (11/16-16-THD) | |
| | **110-4214** | 1 | STEM AS | |
| | **9K-7951** | 1 | CAP-VALVE (STEM) | |
| | **6F-3930** | 1 | CORE-VALVE | |

Y-SEPARATE ILLUSTRATION

**<END>**

# POWER TRAIN

## *142-6312* WHEEL & TIRE GP

**S/N: CCA1-UP**
**PART OF 142-6460 WHEEL & TIRE AR**
**AN ATTACHMENT**

**SMCS-4200** **i02205329**

| NOTE | PART NUMBER | QTY | PART NAME 1 2 3 4 5 6 (PRODUCT LEVEL) | SEE PAGE |
|---|---|---|---|---|
| | **123-3420** | 1 | RIM AS (9X24) | |
| | *142-6175* | 1 | TIRE (14-24) | |
| | **2D-2511** | 1 | VALVE GP-TIRE | |
| | **9K-7951** | 1 | CAP-VALVE (STEM) | |
| | **6F-3930** | 1 | CORE-VALVE | |
| | **7D-5252** | 1 | SPUD AS | |
| | **2D-2508** | 1 | GROMMET | |
| | **2D-2509** | 1 | LOCKNUT (11/16-16-THD) | |
| | **2D-2507** | 1 | SPUD | |

**<END>**

## *142-6313* WHEEL & TIRE GP

**S/N: CCA1-UP**
**PART OF 142-6461 WHEEL & TIRE AR**
**AN ATTACHMENT**

**SMCS-4200** **i02205334**

| NOTE | PART NUMBER | QTY | PART NAME 1 2 3 4 5 6 (PRODUCT LEVEL) | SEE PAGE |
|---|---|---|---|---|
| Y | *142-6226* | 1 | WHEEL GP | 539 |
| | | | | |
| | **2D-2565** | 1 | SEAL-O-RING | |
| | *142-6175* | 1 | TIRE (14-24) | |
| | **110-4213** | 1 | VALVE GP-TIRE | |
| | **7D-5252** | 1 | SPUD AS | |
| | **2D-2508** | 1 | GROMMET | |
| | **2D-2509** | 1 | LOCKNUT (11/16-16-THD) | |
| | **110-4214** | | STEM AS | |
| | **9K-7951** | 1 | CAP-VALVE (STEM) | |
| | **6F-3930** | 1 | CORE-VALVE | |

Y-SEPARATE ILLUSTRATION

**<END>**

## *142-6315* WHEEL & TIRE GP

**S/N: CCA1-UP**
**PART OF 142-6463 WHEEL & TIRE AR**
**AN ATTACHMENT**

**SMCS-4200** **i02205330**

| NOTE | PART NUMBER | QTY | PART NAME 1 2 3 4 5 6 (PRODUCT LEVEL) | SEE PAGE |
|---|---|---|---|---|
| | **123-3420** | 1 | RIM AS (9X24) | |
| | *112-9813* | 1 | TIRE (14-R24) | |
| | **2D-2511** | 1 | VALVE GP-TIRE | |
| | **9K-7951** | 1 | CAP-VALVE (STEM) | |
| | **6F-3930** | 1 | CORE-VALVE | |
| | **7D-5252** | 1 | SPUD AS | |
| | **2D-2508** | 1 | GROMMET | |
| | **2D-2509** | 1 | LOCKNUT (11/16-16-THD) | |
| | **2D-2507** | 1 | SPUD | |

**<END>**

## *142-6316* WHEEL & TIRE GP

**S/N: CCA1-UP**
**PART OF 142-6464 WHEEL & TIRE AR**
**AN ATTACHMENT**

**SMCS-4200** **i02205331**

| NOTE | PART NUMBER | QTY | PART NAME 1 2 3 4 5 6 (PRODUCT LEVEL) | SEE PAGE |
|---|---|---|---|---|
| Y | *142-6226* | 1 | WHEEL GP | 539 |
| | | | | |
| | **2D-2565** | 1 | SEAL-O-RING | |
| | *112-9813* | 1 | TIRE (14-R24) | |
| | **110-4213** | 1 | VALVE GP-TIRE | |
| | **7D-5252** | 1 | SPUD AS | |
| | **2D-2508** | 1 | GROMMET | |
| | **2D-2509** | 1 | LOCKNUT (11/16-16-THD) | |
| | **110-4214** | 1 | STEM AS | |
| | **6F-3930** | 1 | CORE-VALVE | |
| | **9K-7951** | 1 | CAP-VALVE (STEM) | |

Y-SEPARATE ILLUSTRATION

**<END>**

## *142-6318* WHEEL & TIRE GP

**S/N: CCA1-UP**
**PART OF 142-6466 WHEEL & TIRE AR**
**AN ATTACHMENT**

**SMCS-4200** **i02205332**

| NOTE | PART NUMBER | QTY | PART NAME 1 2 3 4 5 6 (PRODUCT LEVEL) | SEE PAGE |
|---|---|---|---|---|
| | **123-3420** | 1 | RIM AS (9X24) | |
| | *123-3178* | 1 | TIRE (14-R24) | |
| | **2D-2511** | 1 | VALVE GP-TIRE | |
| | **9K-7951** | 1 | CAP-VALVE (STEM) | |
| | **6F-3930** | 1 | CORE-VALVE | |
| | **7D-5252** | 1 | SPUD AS | |
| | **2D-2508** | 1 | GROMMET | |
| | **2D-2509** | 1 | LOCKNUT (11/16-16-THD) | |
| | **2D-2507** | 1 | SPUD | |

**<END>**

## *142-6319* WHEEL & TIRE GP

**S/N: CCA1-UP**
**PART OF 142-6467 WHEEL & TIRE AR**
**AN ATTACHMENT**

**SMCS-4200** **i02205335**

| NOTE | PART NUMBER | QTY | PART NAME 1 2 3 4 5 6 (PRODUCT LEVEL) | SEE PAGE |
|---|---|---|---|---|
| Y | *142-6226* | 1 | WHEEL GP | 539 |
| | | | | |
| | **2D-2565** | 1 | SEAL-O-RING | |
| | *123-3178* | 1 | TIRE (14-R24) | |
| | **110-4213** | 1 | VALVE GP-TIRE | |
| | **7D-5252** | 1 | SPUD AS | |
| | **2D-2508** | 1 | GROMMET | |
| | **2D-2509** | 1 | LOCKNUT (11/16-16-THD) | |
| | **110-4214** | 1 | STEM AS | |
| | **9K-7951** | 1 | CAP-VALVE (STEM) | |
| | **6F-3930** | 1 | CORE-VALVE | |

Y-SEPARATE ILLUSTRATION

**<END>**

## *142-6321* WHEEL & TIRE GP

**S/N: CCA1-UP**
**PART OF 142-6469 WHEEL & TIRE AR**
**AN ATTACHMENT**

**SMCS-4200** **i02205364**

| NOTE | PART NUMBER | QTY | PART NAME 1 2 3 4 5 6 (PRODUCT LEVEL) | SEE PAGE |
|---|---|---|---|---|
| | **123-3420** | 1 | RIM AS (9X24) | |
| | *106-1567* | 1 | TIRE (14-R24) | |
| | **2D-2511** | 1 | VALVE GP-TIRE | |
| | **9K-7951** | 1 | CAP-VALVE (STEM) | |
| | **6F-3930** | 1 | CORE-VALVE | |
| | **7D-5252** | 1 | SPUD AS | |
| | **2D-2508** | 1 | GROMMET | |
| | **2D-2509** | 1 | LOCKNUT (11/16-16-THD) | |
| | **2D-2507** | 1 | SPUD | |

**<END>**

## *142-6322* WHEEL & TIRE GP

**S/N: CCA1-UP**
**PART OF 142-6470 WHEEL & TIRE AR**
**AN ATTACHMENT**

**SMCS-4200** **i02205366**

| NOTE | PART NUMBER | QTY | PART NAME 1 2 3 4 5 6 (PRODUCT LEVEL) | SEE PAGE |
|---|---|---|---|---|
| Y | *142-6226* | 1 | WHEEL GP | 539 |
| | | | | |
| | **2D-2565** | 1 | SEAL-O-RING | |
| | *106-1567* | 1 | TIRE (14-R24) | |
| | **110-4213** | 1 | VALVE GP-TIRE | |
| | **7D-5252** | 1 | SPUD AS | |
| | **2D-2508** | 1 | GROMMET | |
| | **2D-2509** | 1 | LOCKNUT (11/16-16-THD) | |
| | **110-4214** | 1 | STEM AS | |
| | **6F-3930** | 1 | CORE-VALVE | |
| | **9K-7951** | 1 | CAP-VALVE (STEM) | |

Y-SEPARATE ILLUSTRATION

**<END>**

## *142-6324* WHEEL & TIRE GP

**S/N: CCA1-UP**
**PART OF 142-6472 WHEEL & TIRE AR**
**AN ATTACHMENT**

**SMCS-4200** **i02205367**

| NOTE | PART NUMBER | QTY | PART NAME 1 2 3 4 5 6 (PRODUCT LEVEL) | SEE PAGE |
|---|---|---|---|---|
| | **123-3420** | 1 | RIM AS (9X24) | |
| | *129-5454* | 1 | TIRE (14-R24) | |
| | **2D-2511** | 1 | VALVE GP-TIRE | |
| | **9K-7951** | 1 | CAP-VALVE (STEM) | |
| | **6F-3930** | 1 | CORE-VALVE | |
| | **7D-5252** | 1 | SPUD AS | |
| | **2D-2508** | 1 | GROMMET | |
| | **2D-2509** | 1 | LOCKNUT (11/16-16-THD) | |
| | **2D-2507** | 1 | SPUD | |

**<END>**

## *142-6325* WHEEL & TIRE GP

**S/N: CCA1-UP**
**PART OF 142-6474 WHEEL & TIRE AR**
**AN ATTACHMENT**

**SMCS-4200** **i02205368**

| NOTE | PART NUMBER | QTY | PART NAME 1 2 3 4 5 6 (PRODUCT LEVEL) | SEE PAGE |
|---|---|---|---|---|
| Y | *142-6226* | 1 | WHEEL GP | 539 |
| | | | | |
| | **2D-2565** | 1 | SEAL-O-RING | |
| | *129-5454* | 1 | TIRE (14-R24) | |
| | **110-4213** | 1 | VALVE GP-TIRE | |
| | **7D-5252** | 1 | SPUD AS | |
| | **2D-2508** | 1 | GROMMET | |
| | **2D-2509** | 1 | LOCKNUT (11/16-16-THD) | |
| | **110-4214** | 1 | STEM AS | |
| | **9K-7951** | 1 | CAP-VALVE (STEM) | |
| | **6F-3930** | 1 | CORE-VALVE | |

Y-SEPARATE ILLUSTRATION

**<END>**

## *142-6328* WHEEL & TIRE GP

**S/N: CCA1-UP**
**PART OF 142-6477 WHEEL & TIRE AR**
**AN ATTACHMENT**

**SMCS-4200** **i02205369**

| NOTE | PART NUMBER | QTY | PART NAME 1 2 3 4 5 6 (PRODUCT LEVEL) | SEE PAGE |
|---|---|---|---|---|
| Y | *142-6226* | 1 | WHEEL GP | 539 |
| | | | | |
| | **2D-2565** | 1 | SEAL-O-RING | |
| | *141-0360* | 1 | TIRE (14-R24) | |
| | **110-4213** | 1 | VALVE GP-TIRE | |
| | **7D-5252** | 1 | SPUD AS | |
| | **2D-2507** | 1 | SPUD | |
| | **2D-2508** | 1 | GROMMET | |
| | **2D-2509** | 1 | LOCKNUT (11/16-16-THD) | |
| | **110-4214** | 1 | STEM AS | |
| | **6F-3930** | 1 | CORE-VALVE | |
| | **9K-7951** | 1 | CAP-VALVE (STEM) | |
| Y-SEPARATE ILLUSTRATION | | | | |

**<END>**

## *142-6330* WHEEL & TIRE GP

**S/N: CCA1-UP**
**PART OF 142-6479 WHEEL & TIRE AR**
**AN ATTACHMENT**

**SMCS-4200** **i02205370**

| NOTE | PART NUMBER | QTY | PART NAME 1 2 3 4 5 6 (PRODUCT LEVEL) | SEE PAGE |
|---|---|---|---|---|
| Y | *142-6226* | 1 | WHEEL GP | 539 |
| | | | | |
| | **2D-2565** | 1 | SEAL-O-RING | |
| | *140-3607* | 1 | TIRE (14-R24) | |
| | **110-4213** | 1 | VALVE GP-TIRE | |
| | **7D-5252** | 1 | SPUD AS | |
| | **2D-2508** | 1 | GROMMET | |
| | **2D-2509** | 1 | LOCKNUT (11/16-16-THD) | |
| | **110-4214** | 1 | STEM AS | |
| | **9K-7951** | 1 | CAP-VALVE (STEM) | |
| | **6F-3930** | 1 | CORE-VALVE | |
| Y-SEPARATE ILLUSTRATION | | | | |

**<END>**

## *142-6332* WHEEL & TIRE GP

**S/N: CCA1-UP**
**PART OF 151-0362 WHEEL & TIRE AR**
**AN ATTACHMENT**

**SMCS-4200** **i02205434**

| NOTE | PART NUMBER | QTY | PART NAME 1 2 3 4 5 6 (PRODUCT LEVEL) | SEE PAGE |
|---|---|---|---|---|
| Y | *142-6226* | 1 | WHEEL GP | 539 |
| | | | | |
| | **2D-2565** | 1 | SEAL-O-RING | |
| | *8W-7957* | 1 | TIRE (14-R24) | |
| | **110-4213** | 1 | VALVE GP-TIRE | |
| | **7D-5252** | 1 | SPUD AS | |
| | **2D-2508** | 1 | GROMMET | |
| | **2D-2509** | 1 | LOCKNUT (11/16-16-THD) | |
| | **110-4214** | 1 | STEM AS | |
| | **9K-7951** | 1 | CAP-VALVE (STEM) | |
| | **6F-3930** | 1 | CORE-VALVE | |

Y-SEPARATE ILLUSTRATION

**<END>**

## *142-6348* WHEEL & TIRE GP

**S/N: CCA1-UP**
**PART OF 151-0334 WHEEL & TIRE AR**
**AN ATTACHMENT**

**SMCS-4200** **i02559882**

| NOTE | PART NUMBER | QTY | PART NAME 1 2 3 4 5 6 (PRODUCT LEVEL) | SEE PAGE |
|---|---|---|---|---|
| Y | **2G-6595** | 1 | VALVE GP-TIRE (TIRE INFLATION) | 489 |
| Y | *142-6230* | 1 | WHEEL GP | 540 |
| | | | | |
| | **4K-4879** | 1 | SEAL-O-RING | |
| | *6C-3248* | 1 | TIRE (15.5-R25) | |

Y-SEPARATE ILLUSTRATION

**<END>**

## *142-6353* WHEEL & TIRE GP

**S/N: CCA1-UP**
**PART OF 151-0364 WHEEL & TIRE AR**
**AN ATTACHMENT**

**SMCS-4200** **i02468962**

| NOTE | PART NUMBER | QTY | PART NAME 1 2 3 4 5 6 (PRODUCT LEVEL) | SEE PAGE |
|---|---|---|---|---|
| | **8X-1160** | 1 | RIM AS (13X25) | |
| | *128-5450* | 1 | TIRE (17.5-25) | |
| | **2G-6595** | 1 | VALVE GP-TIRE (TIRE INFLATION) | |
| | **9K-7951** | 1 | CAP-VALVE (STEM) | |
| | **6F-3930** | 1 | CORE-VALVE | |
| | **7D-5252** | 1 | SPUD AS | |
| | **2D-2507** | 1 | SPUD | |
| | **2D-2508** | 1 | GROMMET | |
| | **2D-2509** | 1 | LOCKNUT (11/16-16-THD) | |

**<END>**

## *142-6354* WHEEL & TIRE GP

**S/N: CCA1-UP**
**PART OF 151-0371 WHEEL & TIRE AR**
**AN ATTACHMENT**

**SMCS-4200** **i02205436**

| NOTE | PART NUMBER | QTY | PART NAME 1 2 3 4 5 6 (PRODUCT LEVEL) | SEE PAGE |
|---|---|---|---|---|
| | **8X-1160** | 1 | RIM AS (13X25) | |
| | *142-6183* | 1 | TIRE (17.5-25) | |
| | **2G-6595** | 1 | VALVE GP-TIRE | |
| | **9K-7951** | 1 | CAP-VALVE (STEM) | |
| | **6F-3930** | 1 | CORE-VALVE | |
| | **7D-5252** | 1 | SPUD AS | |
| | **2D-2508** | 1 | GROMMET | |
| | **2D-2509** | 1 | LOCKNUT (11/16-16-THD) | |
| | **2D-2507** | 1 | SPUD | |

**<END>**

## *142-6355* WHEEL & TIRE GP

**S/N: CCA1-UP**
**PART OF 151-0374 WHEEL & TIRE AR**
**AN ATTACHMENT**

**SMCS-4200** **i02205437**

| NOTE | PART NUMBER | QTY | PART NAME 1 2 3 4 5 6 (PRODUCT LEVEL) | SEE PAGE |
|---|---|---|---|---|
| | **8X-1160** | 1 | RIM AS (13X25) | |
| | *142-6184* | 1 | TIRE (17.5-25) | |
| | **2G-6595** | 1 | VALVE GP-TIRE | |
| | **9K-7951** | 1 | CAP-VALVE (STEM) | |
| | **6F-3930** | 1 | CORE-VALVE | |
| | **7D-5252** | 1 | SPUD AS | |
| | **2D-2508** | 1 | GROMMET | |
| | **2D-2509** | 1 | LOCKNUT (11/16-16-THD) | |
| | **2D-2507** | 1 | SPUD | |

**<END>**

## *142-6356* WHEEL & TIRE GP

**S/N: CCA1-UP**
**PART OF 151-0378 WHEEL & TIRE AR**
**AN ATTACHMENT**

**SMCS-4200** **i02525540**

| NOTE | PART NUMBER | QTY | PART NAME 1 2 3 4 5 6 (PRODUCT LEVEL) | SEE PAGE |
|---|---|---|---|---|
| Y | *142-6229* | 1 | WHEEL GP | 539 |
| | | | | |
| | **4K-4879** | 1 | SEAL-O-RING | |
| | *128-5450* | 1 | TIRE (17.5-25) | |
| | **2G-6595** | 1 | VALVE GP-TIRE (TIRE INFLATION) | |
| | **9K-7951** | 1 | CAP-VALVE (STEM) | |
| | **6F-3930** | 1 | CORE-VALVE | |
| | **7D-5252** | 1 | SPUD AS | |
| | **2D-2508** | 1 | GROMMET | |
| | **2D-2509** | 1 | LOCKNUT (11/16-16-THD) | |
| | **2D-2507** | 1 | SPUD | |

Y-SEPARATE ILLUSTRATION

**<END>**

## *142-6357* WHEEL & TIRE GP

**S/N: CCA1-UP**
**PART OF 151-0388 WHEEL & TIRE AR**
**AN ATTACHMENT**

**SMCS-4200** **i02525538**

| NOTE | PART NUMBER | QTY | PART NAME 1 2 3 4 5 6 (PRODUCT LEVEL) | SEE PAGE |
|---|---|---|---|---|
| Y | *142-6229* | 1 | WHEEL GP | 539 |
| | | | | |
| | **4K-4879** | 1 | SEAL-O-RING | |
| | *142-6183* | 1 | TIRE (17.5-25) | |
| | **2G-6595** | 1 | VALVE GP-TIRE (TIRE INFLATION) | |
| | **9K-7951** | 1 | CAP-VALVE (STEM) | |
| | **6F-3930** | 1 | CORE-VALVE | |
| | **7D-5252** | 1 | SPUD AS | |
| | **2D-2508** | 1 | GROMMET | |
| | **2D-2509** | 1 | LOCKNUT (11/16-16-THD) | |
| | **2D-2507** | 1 | SPUD | |

Y-SEPARATE ILLUSTRATION

**<END>**

## *142-6358* WHEEL & TIRE GP

**S/N: CCA1-UP**
**PART OF 151-0392 WHEEL & TIRE AR**
**AN ATTACHMENT**

**SMCS-4200** **i02510301**

| NOTE | PART NUMBER | QTY | PART NAME 1 2 3 4 5 6 (PRODUCT LEVEL) | SEE PAGE |
|---|---|---|---|---|
| Y | *142-6229* | 1 | WHEEL GP | 539 |
| | | | | |
| | **4K-4879** | 1 | SEAL-O-RING | |
| | *142-6184* | 1 | TIRE (17.5-25) | |
| | **2G-6595** | 1 | VALVE GP-TIRE | |
| | **9K-7951** | 1 | CAP-VALVE (STEM) | |
| | **6F-3930** | 1 | CORE-VALVE | |
| | **7D-5252** | 1 | SPUD AS | |
| | **2D-2507** | 1 | SPUD | |
| | **2D-2508** | 1 | GROMMET | |
| | **2D-2509** | 1 | LOCKNUT (11/16-16-THD) | |

Y-SEPARATE ILLUSTRATION

**<END>**

## *142-6360* WHEEL & TIRE GP

**S/N: CCA1-UP**
**PART OF 151-0365 WHEEL & TIRE AR**
**AN ATTACHMENT**

**SMCS-4200** **i01755157**

| NOTE | PART NUMBER | QTY | PART NAME 1 2 3 4 5 6 (PRODUCT LEVEL) | SEE PAGE |
|---|---|---|---|---|
| | **8X-1160** | 1 | RIM AS (13X25) | |
| | *6C-7366* | 1 | TIRE (17.5-R25) | |
| | **2G-6595** | 1 | VALVE GP-TIRE | |
| | **6F-3930** | 1 | CORE-VALVE | |
| | **9K-7951** | 1 | CAP-VALVE (STEM) | |
| | **7D-5252** | 1 | SPUD AS | |
| | **2D-2507** | 1 | SPUD | |
| | **2D-2508** | 1 | GROMMET | |
| | **2D-2509** | 1 | LOCKNUT (11/16-16-THD) | |

**<END>**

## *142-6361* WHEEL & TIRE GP

**S/N: CCA1-UP**
**PART OF 151-0379 WHEEL & TIRE AR**
**AN ATTACHMENT**

**SMCS-4200** **i02525535**

| NOTE | PART NUMBER | QTY | PART NAME 1 2 3 4 5 6 (PRODUCT LEVEL) | SEE PAGE |
|---|---|---|---|---|
| Y | *142-6229* | 1 | WHEEL GP | 539 |
| | | | | |
| | **4K-4879** | 1 | SEAL-O-RING | |
| | *6C-7366* | 1 | TIRE (17.5-R25) | |
| | **2G-6595** | 1 | VALVE GP-TIRE (TIRE INFLATION) | |
| | **9K-7951** | 1 | CAP-VALVE (STEM) | |
| | **6F-3930** | 1 | CORE-VALVE | |
| | **7D-5252** | 1 | SPUD AS | |
| | **2D-2508** | 1 | GROMMET | |
| | **2D-2509** | 11 | LOCKNUT (11/16-16-THD) | |
| | **2D-2507** | 1 | SPUD | |

Y-SEPARATE ILLUSTRATION

**<END>**

## *142-6363* WHEEL & TIRE GP

**S/N: CCA1-UP**
**PART OF 151-0366 WHEEL & TIRE AR**
**AN ATTACHMENT**

**SMCS-4200** **i01755167**

| NOTE | PART NUMBER | QTY | PART NAME 1 2 3 4 5 6 (PRODUCT LEVEL) | SEE PAGE |
|---|---|---|---|---|
| | **8X-1160** | 1 | RIM AS (13X25) | |
| | *6C-3246* | 1 | TIRE (17.5-R25) | |
| | **2G-6595** | 1 | VALVE GP-TIRE | |
| | **6F-3930** | 1 | CORE-VALVE | |
| | **9K-7951** | 1 | CAP-VALVE (STEM) | |
| | **7D-5252** | 1 | SPUD AS | |
| | **2D-2507** | 1 | SPUD | |
| | **2D-2508** | 1 | GROMMET | |
| | **2D-2509** | 1 | LOCKNUT (11/16-16-THD) | |

**<END>**

## *142-6364* WHEEL & TIRE GP

**S/N: CCA1-UP**
**PART OF 151-0380 WHEEL & TIRE AR**
**AN ATTACHMENT**

**SMCS-4200** **i02525536**

| NOTE | PART NUMBER | QTY | PART NAME 1 2 3 4 5 6 (PRODUCT LEVEL) | SEE PAGE |
|---|---|---|---|---|
| Y | *142-6229* | 1 | WHEEL GP | 539 |
| | | | | |
| | **4K-4879** | 1 | SEAL-O-RING | |
| | *6C-3246* | 1 | TIRE (17.5-R25) | |
| | **2G-6595** | 1 | VALVE GP-TIRE (TIRE INFLATION) | |
| | **6F-3930** | 1 | CORE-VALVE | |
| | **9K-7951** | 1 | CAP-VALVE (STEM) | |
| | **7D-5252** | 1 | SPUD AS | |
| | **2D-2507** | 1 | SPUD | |
| | **2D-2508** | 1 | GROMMET | |
| | **2D-2509** | 1 | LOCKNUT (11/16-16-THD) | |

Y-SEPARATE ILLUSTRATION

**<END>**

## *142-6366* WHEEL & TIRE GP

**S/N: CCA1-UP**
**PART OF 151-0367 WHEEL & TIRE AR**
**AN ATTACHMENT**

**SMCS-4200** **i01755200**

| NOTE | PART NUMBER | QTY | PART NAME 1 2 3 4 5 6 (PRODUCT LEVEL) | SEE PAGE |
|---|---|---|---|---|
| | **8X-1160** | 1 | RIM AS (13X25) | |
| | *106-4835* | 1 | TIRE (17.5-R25) | |
| | **2G-6595** | 1 | VALVE GP-TIRE | |
| | **6F-3930** | 1 | CORE-VALVE | |
| | **9K-7951** | 1 | CAP-VALVE (STEM) | |
| | **7D-5252** | 1 | SPUD AS | |
| | **2D-2507** | 1 | SPUD | |
| | **2D-2508** | 1 | GROMMET | |
| | **2D-2509** | 1 | LOCKNUT (11/16-16-THD) | |

**<END>**

## *142-6367* WHEEL & TIRE GP

**S/N: CCA1-UP**
**PART OF 151-0381 WHEEL & TIRE AR**
**AN ATTACHMENT**

**SMCS-4200** **i02525537**

| NOTE | PART NUMBER | QTY | PART NAME 1 2 3 4 5 6 (PRODUCT LEVEL) | SEE PAGE |
|---|---|---|---|---|
| Y | *142-6229* | 1 | WHEEL GP | 539 |
| | | | | |
| | **4K-4879** | 1 | SEAL-O-RING | |
| | *106-4835* | 1 | TIRE (17.5-R25) | |
| | **2G-6595** | 1 | VALVE GP-TIRE (TIRE INFLATION) | |
| | **6F-3930** | 1 | CORE-VALVE | |
| | **9K-7951** | 1 | CAP-VALVE (STEM) | |
| | **7D-5252** | 1 | SPUD AS | |
| | **2D-2507** | 1 | SPUD | |
| | **2D-2508** | 1 | GROMMET | |
| | **2D-2509** | 1 | LOCKNUT (11/16-16-THD) | |

Y-SEPARATE ILLUSTRATION

**<END>**

## *142-6371* WHEEL & TIRE GP

**S/N: CCA1-UP**
**PART OF 151-0368 WHEEL & TIRE AR**
**AN ATTACHMENT**

**SMCS-4200** **i02469284**

| NOTE | PART NUMBER | QTY | PART NAME 1 2 3 4 5 6 (PRODUCT LEVEL) | SEE PAGE |
|---|---|---|---|---|
| | **8X-1160** | 1 | RIM AS (13X25) | |
| | *128-5451* | 1 | TIRE (17.5-25) | |
| | **2G-6595** | 1 | VALVE GP-TIRE | |
| | **9K-7951** | 1 | CAP-VALVE (STEM) | |
| | **6F-3930** | 1 | CORE-VALVE | |
| | **7D-5252** | 1 | SPUD AS | |
| | **2D-2508** | 1 | GROMMET | |
| | **2D-2509** | 1 | LOCKNUT (11/16-16-THD) | |
| | **2D-2507** | 1 | SPUD | |

**<END>**

## *142-6372* WHEEL & TIRE GP

**S/N: CCA1-UP**
**PART OF 151-0372 WHEEL & TIRE AR**
**AN ATTACHMENT**

**SMCS-4200** **i01755168**

| NOTE | PART NUMBER | QTY | PART NAME 1 2 3 4 5 6 (PRODUCT LEVEL) | SEE PAGE |
|---|---|---|---|---|
| | **8X-1160** | 1 | RIM AS (13X25) | |
| | *142-6186* | 1 | TIRE (17.5-25) | |
| | **2G-6595** | 1 | VALVE GP-TIRE | |
| | **9K-7951** | 1 | CAP-VALVE (STEM) | |
| | **6F-3930** | 1 | CORE-VALVE | |
| | **7D-5252** | 1 | SPUD AS | |
| | **2D-2508** | 1 | GROMMET | |
| | **2D-2509** | 1 | LOCKNUT (11/16-16-THD) | |
| | **2D-2507** | 1 | SPUD | |

**<END>**

## *142-6373* WHEEL & TIRE GP

**S/N: CCA1-UP**
**PART OF 151-0375 WHEEL & TIRE AR**
**AN ATTACHMENT**

**SMCS-4200** **i02205493**

| NOTE | PART NUMBER | QTY | PART NAME 1 2 3 4 5 6 (PRODUCT LEVEL) | SEE PAGE |
|---|---|---|---|---|
| | **8X-1160** | 1 | RIM AS (13X25) | |
| | *142-6187* | 1 | TIRE (17.5-25) | |
| | **2G-6595** | 1 | VALVE GP-TIRE | |
| | **9K-7951** | 1 | CAP-VALVE (STEM) | |
| | **6F-3930** | 1 | CORE-VALVE | |
| | **7D-5252** | 1 | SPUD AS | |
| | **2D-2508** | 1 | GROMMET | |
| | **2D-2509** | 1 | LOCKNUT (11/16-16-THD) | |
| | **2D-2507** | 1 | SPUD | |

**<END>**

## *142-6374* WHEEL & TIRE GP

**S/N: CCA1-UP**
**PART OF 151-0382 WHEEL & TIRE AR**
**AN ATTACHMENT**

**SMCS-4200** **i02510300**

| NOTE | PART NUMBER | QTY | PART NAME 1 2 3 4 5 6 (PRODUCT LEVEL) | SEE PAGE |
|---|---|---|---|---|
| Y | *142-6229* | 1 | WHEEL GP | 539 |
| | | | | |
| | **4K-4879** | 1 | SEAL-O-RING | |
| | *128-5451* | 1 | TIRE (17.5-25) | |
| | **2G-6595** | 1 | VALVE GP-TIRE | |
| | **9K-7951** | 1 | CAP-VALVE (STEM) | |
| | **6F-3930** | 1 | CORE-VALVE | |
| | **7D-5252** | 1 | SPUD AS | |
| | **2D-2507** | 1 | SPUD | |
| | **2D-2508** | 1 | GROMMET | |
| | **2D-2509** | 1 | LOCKNUT (11/16-16-THD) | |

Y-SEPARATE ILLUSTRATION

**<END>**

## *142-6375* WHEEL & TIRE GP

**S/N: CCA1-UP**
**PART OF 151-0389 WHEEL & TIRE AR**
**AN ATTACHMENT**

**SMCS-4200** **i02510299**

| NOTE | PART NUMBER | QTY | PART NAME 1 2 3 4 5 6 (PRODUCT LEVEL) | SEE PAGE |
|---|---|---|---|---|
| Y | *142-6229* | 1 | WHEEL GP | 539 |
| | | | | |
| | **4K-4879** | 1 | SEAL-O-RING | |
| | *142-6186* | 1 | TIRE (17.5-25) | |
| | **2G-6595** | 1 | VALVE GP-TIRE | |
| | **9K-7951** | 1 | CAP-VALVE (STEM) | |
| | **6F-3930** | 1 | CORE-VALVE | |
| | **7D-5252** | 1 | SPUD AS | |
| | **2D-2507** | 1 | SPUD | |
| | **2D-2508** | 1 | GROMMET | |
| | **2D-2509** | 1 | LOCKNUT (11/16-16-THD) | |

Y-SEPARATE ILLUSTRATION

**<END>**

## *142-6376* WHEEL & TIRE GP

**S/N: CCA1-UP**
**PART OF 151-0393 WHEEL & TIRE AR**
**AN ATTACHMENT**

**SMCS-4200** **i02510298**

| NOTE | PART NUMBER | QTY | PART NAME 1 2 3 4 5 6 (PRODUCT LEVEL) | SEE PAGE |
|---|---|---|---|---|
| Y | *142-6229* | 1 | WHEEL GP | 539 |
| | | | | |
| | **4K-4879** | 1 | SEAL-O-RING | |
| | *142-6187* | 1 | TIRE (17.5-25) | |
| | **2G-6595** | 1 | VALVE GP-TIRE | |
| | **9K-7951** | 1 | CAP-VALVE (STEM) | |
| | **6F-3930** | 1 | CORE-VALVE | |
| | **7D-5252** | 1 | SPUD AS | |
| | **2D-2507** | 1 | SPUD | |
| | **2D-2508** | 1 | GROMMET | |
| | **2D-2509** | 1 | LOCKNUT (11/16-16-THD) | |

Y-SEPARATE ILLUSTRATION

**<END>**

## *142-6385* WHEEL & TIRE GP

**S/N: CCA1-UP**
**PART OF 151-0385 WHEEL & TIRE AR**
**AN ATTACHMENT**

**SMCS-4200** **i02510297**

| NOTE | PART NUMBER | QTY | PART NAME 1 2 3 4 5 6 (PRODUCT LEVEL) | SEE PAGE |
|---|---|---|---|---|
| Y | *142-6229* | 1 | WHEEL GP | 539 |
| | | | | |
| | **4K-4879** | 1 | SEAL-O-RING | |
| | *105-3249* | 1 | TIRE (17.5-R25) | |
| | **2G-6595** | 1 | VALVE GP-TIRE (TIRE INFLATION) | |
| | **9K-7951** | 1 | CAP-VALVE (STEM) | |
| | **6F-3930** | 1 | CORE-VALVE | |
| | **7D-5252** | 1 | SPUD AS | |
| | **2D-2507** | 1 | SPUD | |
| | **2D-2508** | 1 | GROMMET | |
| | **2D-2509** | 1 | LOCKNUT (11/16-16-THD) | |

Y-SEPARATE ILLUSTRATION

**<END>**

## *150-4467* WHEEL & TIRE GP

**S/N: CCA1-UP**
**PART OF 151-0361 WHEEL & TIRE AR**
**AN ATTACHMENT**

**SMCS-4200** **i02164875**

| NOTE | PART NUMBER | QTY | PART NAME 1 2 3 4 5 6 (PRODUCT LEVEL) | SEE PAGE |
|---|---|---|---|---|
| Y | *142-6226* | 1 | WHEEL GP | 539 |
| | | | | |
| | **2D-2565** | 1 | SEAL-O-RING | |
| | *150-7955* | 1 | TIRE (14-24) | |
| | **110-4213** | 1 | VALVE GP-TIRE | |
| | **7D-5252** | 1 | SPUD AS | |
| | **2D-2507** | 1 | SPUD | |
| | **2D-2508** | 1 | GROMMET | |
| | **2D-2509** | 1 | LOCKNUT (11/16-16-THD) | |
| | **110-4214** | 1 | STEM AS | |
| | **6F-3930** | 1 | CORE-VALVE | |
| | **9K-7951** | 1 | CAP-VALVE (STEM) | |

Y-SEPARATE ILLUSTRATION

**<END>**

## *150-4482* WHEEL & TIRE GP

**S/N: CCA1-UP**
**PART OF 151-0370 WHEEL AR**
**AN ATTACHMENT**

**SMCS-4200** **i02164885**

| NOTE | PART NUMBER | QTY | PART NAME 1 2 3 4 5 6 (PRODUCT LEVEL) | SEE PAGE |
|---|---|---|---|---|
| Y | *142-6226* | 1 | WHEEL GP | 539 |
| | | | | |
| | **2D-2565** | 1 | SEAL-O-RING | |
| | *150-7956* | 1 | TIRE (14-24) | |
| | **110-4213** | 1 | VALVE GP-TIRE | |
| | **7D-5252** | 1 | SPUD AS | |
| | **2D-2507** | 1 | SPUD | |
| | **2D-2508** | 1 | GROMMET | |
| | **2D-2509** | 1 | LOCKNUT (11/16-16-THD) | |
| | **110-4214** | 1 | STEM AS | |
| | **6F-3930** | 1 | CORE-VALVE | |
| | **9K-7951** | 1 | CAP-VALVE (STEM) | |

Y-SEPARATE ILLUSTRATION

**<END>**

## *153-5459* WHEEL & TIRE GP

**S/N: CCA1-UP**
**PART OF 153-5460 WHEEL & TIRE AR**
**AN ATTACHMENT**

**SMCS-4200** **i02205539**

| NOTE | PART NUMBER | QTY | PART NAME 1 2 3 4 5 6 (PRODUCT LEVEL) | SEE PAGE |
|---|---|---|---|---|
| | **8X-1160** | 1 | RIM AS (13X25) | |
| | *153-5425* | 1 | TIRE (15.5-25) | |
| | **2G-6595** | 1 | VALVE GP-TIRE | |
| | **9K-7951** | 1 | CAP-VALVE (STEM) | |
| | **6F-3930** | 1 | CORE-VALVE | |
| | **7D-5252** | 1 | SPUD AS | |
| | **2D-2508** | 1 | GROMMET | |
| | **2D-2509** | 1 | LOCKNUT (11/16-16-THD) | |
| | **2D-2507** | 1 | SPUD | |

**<END>**

## *153-5463* WHEEL & TIRE GP

**S/N: CCA1-UP**
**PART OF 153-5464 WHEEL & TIRE AR**
**AN ATTACHMENT**

**SMCS-4200** **i02205540**

| NOTE | PART NUMBER | QTY | PART NAME 1 2 3 4 5 6 (PRODUCT LEVEL) | SEE PAGE |
|---|---|---|---|---|
| | **8X-1160** | 1 | RIM AS (13X25) | |
| | *153-5427* | 1 | TIRE (15.5-R25) | |
| | **2G-6595** | 1 | VALVE GP-TIRE | |
| | **9K-7951** | 1 | CAP-VALVE (STEM) | |
| | **6F-3930** | 1 | CORE-VALVE | |
| | **7D-5252** | 1 | SPUD AS | |
| | **2D-2508** | 1 | GROMMET | |
| | **2D-2509** | 1 | LOCKNUT (11/16-16-THD) | |
| | **2D-2507** | 1 | SPUD | |

**<END>**

## *153-5467* WHEEL & TIRE GP

**S/N: CCA1-UP**
**PART OF 153-5468 WHEEL & TIRE AR**
**AN ATTACHMENT**

**SMCS-4200** **i02205541**

| NOTE | PART NUMBER | QTY | PART NAME 1 2 3 4 5 6 (PRODUCT LEVEL) | SEE PAGE |
|---|---|---|---|---|
| | **8X-1160** | 1 | RIM AS (13X25) | |
| | *105-3249* | 1 | TIRE (17.5-R25) | |
| | **2G-6595** | 1 | VALVE GP-TIRE | |
| | **9K-7951** | 1 | CAP-VALVE (STEM) | |
| | **6F-3930** | 1 | CORE-VALVE | |
| | **7D-5252** | 1 | SPUD AS | |
| | **2D-2508** | 1 | GROMMET | |
| | **2D-2509** | 1 | LOCKNUT (11/16-16-THD) | |
| | **2D-2507** | 1 | SPUD | |

**<END>**

## *159-1785* WHEEL & TIRE GP

**S/N: CCA1-UP**
**PART OF 159-1782 WHEEL & TIRE AR**
**AN ATTACHMENT**

**SMCS-4200** **i02526131**

| NOTE | PART NUMBER | QTY | PART NAME 1 2 3 4 5 6 (PRODUCT LEVEL) | SEE PAGE |
|---|---|---|---|---|
| Y | *142-6229* | 1 | WHEEL GP | 539 |
| | | | | |
| | **4K-4879** | 1 | SEAL-O-RING | |
| | *154-0051* | 1 | TIRE (17.5-R25) | |
| | **2G-6595** | 1 | VALVE GP-TIRE (TIRE INFLATION) | |
| | **9K-7951** | 1 | CAP-VALVE (STEM) | |
| | **6F-3930** | 1 | CORE-VALVE | |
| | **7D-5252** | 1 | SPUD AS | |
| | **2D-2507** | 1 | SPUD | |
| | **2D-2508** | 1 | GROMMET | |
| | **2D-2509** | 1 | LOCKNUT (11/16-16-THD) | |

Y-SEPARATE ILLUSTRATION

**<END>**

## *163-0376* WHEEL & TIRE GP

**S/N: CCA1-UP**
**PART OF 163-0375 WHEEL & TIRE AR**
**AN ATTACHMENT**

**SMCS-4200** **i02205543**

| NOTE | PART NUMBER | QTY | PART NAME 1 2 3 4 5 6 (PRODUCT LEVEL) | SEE PAGE |
|---|---|---|---|---|
| | **8X-1160** | 1 | RIM AS (13X25) | |
| | *154-0051* | 1 | TIRE (17.5-R25) | |
| | **2G-6595** | 1 | VALVE GP-TIRE | |
| | **6F-3930** | 1 | CORE-VALVE | |
| | **9K-7951** | 1 | CAP-VALVE (STEM) | |
| | **7D-5252** | 1 | SPUD AS | |
| | **2D-2507** | 1 | SPUD | |
| | **2D-2508** | 1 | GROMMET | |
| | **2D-2509** | 1 | LOCKNUT (11/16-16-THD) | |

**<END>**

## *173-7813* WHEEL & TIRE GP

**S/N: CCA1-UP**
**PART OF 174-2304 WHEEL & TIRE AR**
**AN ATTACHMENT**

**SMCS-4200** **i02205568**

| NOTE | PART NUMBER | QTY | PART NAME 1 2 3 4 5 6 (PRODUCT LEVEL) | SEE PAGE |
|---|---|---|---|---|
| Y | *142-6226* | 1 | WHEEL GP | 539 |
| | | | | |
| | **2D-2565** | 1 | SEAL-O-RING | |
| | *173-7830* | 1 | TIRE (14-R24) | |
| | **110-4213** | 1 | VALVE GP-TIRE | |
| | **110-4214** | 1 | STEM AS | |
| | **6F-3930** | 1 | CORE-VALVE | |
| | **9K-7951** | 1 | CAP-VALVE (STEM) | |
| | **7D-5252** | 1 | SPUD AS | |
| | **2D-2508** | 1 | GROMMET | |
| | **2D-2509** | 1 | LOCKNUT (11/16-16-THD) | |

Y-SEPARATE ILLUSTRATION

**<END>**

## *183-1415* WHEEL & TIRE GP

**S/N: CCA1-UP**
**PART OF 183-1416 WHEEL & TIRE AR**
**AN ATTACHMENT**

**SMCS-4200** **i02304943**

| NOTE | PART NUMBER | QTY | PART NAME 1 2 3 4 5 6 (PRODUCT LEVEL) | SEE PAGE |
|---|---|---|---|---|
| Y | *142-6229* | 1 | WHEEL GP | 539 |
| | | | | |
| | **2D-2565** | 1 | SEAL-O-RING | |
| | *180-9853* | 1 | TIRE (17.5-25) | |
| | **2G-6595** | 1 | VALVE GP-TIRE (TIRE INFLATION) | |
| | **9K-7951** | 1 | CAP-VALVE (STEM) | |
| | **6F-3930** | 1 | CORE-VALVE | |
| | **7D-5252** | 1 | SPUD AS | |
| | **2D-2507** | 1 | SPUD | |
| | **2D-2508** | 1 | GROMMET | |
| | **2D-2509** | 1 | LOCKNUT (11/16-16-THD) | |

Y-SEPARATE ILLUSTRATION

**<END>**

## *183-1418* WHEEL & TIRE GP

**S/N: CCA1-UP**
**PART OF 183-1417 WHEEL & TIRE AR**
**AN ATTACHMENT**

**SMCS-4200** **i02559873**

| NOTE | PART NUMBER | QTY | PART NAME 1 2 3 4 5 6 (PRODUCT LEVEL) | SEE PAGE |
|---|---|---|---|---|
| Y | **2G-6595** | 1 | VALVE GP-TIRE | 489 |
| Y | *142-6229* | 1 | WHEEL GP | 539 |
| | | | | |
| | **4K-4879** | 1 | SEAL-O-RING | |
| | *180-9852* | 1 | TIRE (17.5-R25) | |

Y-SEPARATE ILLUSTRATION

**<END>**

## *184-2346* WHEEL & TIRE GP

**S/N: CCA1-UP**
**PART OF 184-2362 WHEEL & TIRE AR**
**AN ATTACHMENT**

**SMCS-4200** **i02205580**

| NOTE | PART NUMBER | QTY | PART NAME 1 2 3 4 5 6 (PRODUCT LEVEL) | SEE PAGE |
|---|---|---|---|---|
| | **123-3420** | 1 | RIM AS (9X24) | |
| | *184-1681* | 1 | TIRE (14-R24) | |
| | **2D-2511** | 1 | VALVE GP-TIRE | |
| | **3D-2239** | 1 | VALVE AS-TIRE | |
| | **6F-3930** | 1 | CORE-VALVE | |
| | **9K-7951** | 1 | CAP-VALVE (STEM) | |
| | **7D-5252** | 1 | SPUD AS | |
| | **2D-2508** | 1 | GROMMET | |
| | **2D-2509** | 1 | LOCKNUT (11/16-16-THD) | |

**<END>**

## *184-2347* WHEEL & TIRE GP

**S/N: CCA1-UP**
**PART OF 184-2363 WHEEL & TIRE AR**
**AN ATTACHMENT**

**SMCS-4200** **i02205581**

| NOTE | PART NUMBER | QTY | PART NAME 1 2 3 4 5 6 (PRODUCT LEVEL) | SEE PAGE |
|---|---|---|---|---|
| Y | *142-6226* | 1 | WHEEL GP | 539 |
| | | | | |
| | **2D-2565** | 1 | SEAL-O-RING | |
| | *184-1681* | 1 | TIRE (14-R24) | |
| | **110-4213** | 1 | VALVE GP-TIRE | |
| | **7D-5252** | 1 | SPUD AS | |
| | **2D-2508** | 1 | GROMMET | |
| | **2D-2509** | 1 | LOCKNUT (11/16-16-THD) | |
| | **110-4214** | 1 | STEM AS | |
| | **6F-3930** | 1 | CORE-VALVE | |
| | **9K-7951** | 1 | CAP-VALVE (STEM) | |

Y-SEPARATE ILLUSTRATION

**<END>**

## *198-6572* WHEEL & TIRE GP

**S/N: CCA1-UP**
**PART OF 198-6565 WHEEL & TIRE AR**
**AN ATTACHMENT**

**SMCS-4200** **i02164298**

| NOTE | PART NUMBER | QTY | PART NAME 1 2 3 4 5 6 (PRODUCT LEVEL) | SEE PAGE |
|---|---|---|---|---|
| | **8X-1160** | 1 | RIM AS (13X25) | |
| | *180-9852* | 1 | TIRE (17.5-R25) | |
| | **2G-6595** | 1 | VALVE GP-TIRE | |
| | **6F-3930** | 1 | CORE-VALVE | |
| | **9K-7951** | 1 | CAP-VALVE (STEM) | |
| | **7D-5252** | 1 | SPUD AS | |
| | **2D-2507** | 1 | SPUD | |
| | **2D-2508** | 1 | GROMMET | |
| | **2D-2509** | 1 | LOCKNUT (11/16-16-THD) | |

**<END>**

## *204-8785* WHEEL & TIRE GP

**S/N: CCA1-UP**
**PART OF 204-8786 WHEEL & TIRE AR**
**AN ATTACHMENT**

**SMCS-4200** **i02559891**

| NOTE | PART NUMBER | QTY | PART NAME 1 2 3 4 5 6 (PRODUCT LEVEL) | SEE PAGE |
|---|---|---|---|---|
| Y | **2G-6595** | 1 | VALVE GP-TIRE | 489 |
| Y | *142-6229* | 1 | WHEEL GP | 539 |
| | | | | |
| | **4K-4879** | 1 | SEAL-O-RING | |
| | *187-2019* | 1 | TIRE (17.5-R25) | |

Y-SEPARATE ILLUSTRATION

**<END>**

## *207-9861* WHEEL & TIRE GP

**S/N: CCA1-UP**
**PART OF 207-9862 WHEEL & TIRE AR**
**AN ATTACHMENT**

**SMCS-4200** **i02164334**

| NOTE | PART NUMBER | QTY | PART NAME 1 2 3 4 5 6 (PRODUCT LEVEL) | SEE PAGE |
|---|---|---|---|---|
| | **8X-1160** | 1 | RIM AS (13X25) | |
| | *170-0432* | 1 | TIRE (17.5-R25) | |
| | **2G-6595** | 1 | VALVE GP-TIRE | |
| | **6F-3930** | 1 | CORE-VALVE | |
| | **9K-7951** | 1 | CAP-VALVE (STEM) | |
| | **7D-5252** | 1 | SPUD AS | |
| | **2D-2507** | 1 | SPUD | |
| | **2D-2508** | 1 | GROMMET | |
| | **2D-2509** | 1 | LOCKNUT (11/16-16-THD) | |

**<END>**

## *216-7443* WHEEL & TIRE GP

**S/N: CCA1-UP**
**PART OF 216-7444 WHEEL & TIRE AR**
**AN ATTACHMENT**

**SMCS-4200** **i02164773**

| NOTE | PART NUMBER | QTY | PART NAME 1 2 3 4 5 6 (PRODUCT LEVEL) | SEE PAGE |
|---|---|---|---|---|
| Y | *142-6226* | 1 | WHEEL GP | 539 |
| | | | | |
| | **2D-2565** | 1 | SEAL-O-RING | |
| | *216-7435* | 1 | TIRE (14-24) | |
| | **110-4213** | 1 | VALVE GP-TIRE | |
| | **7D-5252** | 1 | SPUD AS | |
| | **2D-2507** | 1 | SPUD | |
| | **2D-2508** | 1 | GROMMET | |
| | **2D-2509** | 1 | LOCKNUT (11/16-16-THD) | |
| | **110-4214** | 1 | STEM AS | |
| | **6F-3930** | 1 | CORE-VALVE | |
| | **9K-7951** | 1 | CAP-VALVE (STEM) | |

Y-SEPARATE ILLUSTRATION

**<END>**

## *226-0735* WHEEL & TIRE GP

**S/N: CCA1-UP**
**PART OF 228-9265 WHEEL & TIRE AR**
**AN ATTACHMENT**

**SMCS-4200** **i02563455**

| NOTE | PART NUMBER | QTY | PART NAME 1 2 3 4 5 6 (PRODUCT LEVEL) | SEE PAGE |
|---|---|---|---|---|
| Y | *142-6229* | 1 | WHEEL GP | 539 |
| | | | | |
| | **4K-4879** | 1 | SEAL-O-RING | |
| | *226-0733* | 1 | TIRE (17.5-R25) | |
| | **2G-6595** | 1 | VALVE GP-TIRE (TIRE INFLATION) | |
| | **6F-3930** | 1 | CORE-VALVE | |
| | **9K-7951** | 1 | CAP-VALVE (STEM) | |
| | **7D-5252** | 1 | SPUD AS | |
| | **2D-2507** | 1 | SPUD | |
| | **2D-2508** | 1 | GROMMET | |
| | **2D-2509** | 1 | LOCKNUT (11/16-16-THD) | |

Y-SEPARATE ILLUSTRATION

**<END>**

## *142-6303* WHEEL AR

**S/N: CCA1-UP**

**AN ATTACHMENT**

**SMCS-4208** **i00761194**

| NOTE | PART NUMBER | QTY | PART NAME 1 2 3 4 5 6 (PRODUCT LEVEL) | SEE PAGE |
|---|---|---|---|---|
| Y | *142-6172* | 6 | WHEEL GP | 539 |

Y-SEPARATE ILLUSTRATION

**<END>**

## *142-6305* WHEEL AR

**S/N: CCA1-UP**

**AN ATTACHMENT**

**SMCS-4208** **i02588546**

| NOTE | PART NUMBER | QTY | PART NAME 1 2 3 4 5 6 (PRODUCT LEVEL) | SEE PAGE |
|---|---|---|---|---|
| Y | *142-6304* | 6 | WHEEL GP | 540 |

Y-SEPARATE ILLUSTRATION

**<END>**

## *148-2405* WHEEL AR

**S/N: CCA1-UP**

**AN ATTACHMENT**

**SMCS-4208** **i01880496**

| NOTE | PART NUMBER | QTY | PART NAME 1 2 3 4 5 6 (PRODUCT LEVEL) | SEE PAGE |
|---|---|---|---|---|
| Y | *148-2404* | 6 | WHEEL GP | 540 |

Y-SEPARATE ILLUSTRATION

**<END>**

## *148-2409* WHEEL AR

**S/N: CCA1-UP**

**AN ATTACHMENT**

**SMCS-4208** **i02588550**

| NOTE | PART NUMBER | QTY | PART NAME 1 2 3 4 5 6 (PRODUCT LEVEL) | SEE PAGE |
|---|---|---|---|---|
| Y | *148-2408* | 6 | WHEEL GP | 541 |

Y-SEPARATE ILLUSTRATION

**<END>**

## *151-0370* WHEEL AR

**S/N: CCA1-UP**

**AN ATTACHMENT**

**SMCS-4208** **i02164886**

| NOTE | PART NUMBER | QTY | PART NAME 1 2 3 4 5 6 (PRODUCT LEVEL) | SEE PAGE |
|---|---|---|---|---|
| Y | *150-4482* | 6 | WHEEL & TIRE GP | 529 |

Y-SEPARATE ILLUSTRATION

**<END>**

## *174-7507* WHEEL AR

**S/N: CCA1-UP**

**AN ATTACHMENT**

**SMCS-4208** **i01825874**

| NOTE | PART NUMBER | QTY | PART NAME 1 2 3 4 5 6 (PRODUCT LEVEL) | SEE PAGE |
|---|---|---|---|---|
| Y | *170-0436* | 6 | WHEEL GP | 541 |

Y-SEPARATE ILLUSTRATION

**<END>**

## *186-4461* WHEEL AR

**S/N: CCA1-UP**

**AN ATTACHMENT**

**SMCS-4208** **i02164210**

| NOTE | PART NUMBER | QTY | PART NAME 1 2 3 4 5 6 (PRODUCT LEVEL) | SEE PAGE |
|---|---|---|---|---|
| Y | *186-4460* | 6 | WHEEL GP | 542 |

Y-SEPARATE ILLUSTRATION

**<END>**

## *216-7446* WHEEL AR

**S/N: CCA1-UP**

**AN ATTACHMENT**

**SMCS-4208** **i02164777**

| NOTE | PART NUMBER | QTY | PART NAME 1 2 3 4 5 6 (PRODUCT LEVEL) | SEE PAGE |
|---|---|---|---|---|
| Y | *216-7445* | 6 | WHEEL GP | 542 |

Y-SEPARATE ILLUSTRATION

**<END>**

## *142-6172* WHEEL GP—BAREFOOT

**S/N: CCA1-UP**
**(9 X 24)**
**PART OF 142-6303 WHEEL AR**
**AN ATTACHMENT**

**SMCS-4006, 4201, 4208** **i02205609**

| NOTE | PART NUMBER | QTY | PART NAME 1 2 3 4 5 6 (PRODUCT LEVEL) | SEE PAGE |
|---|---|---|---|---|
| | 123-3420 | 1 | RIM AS (9X24) | |
| | 2D-2511 | 1 | VALVE GP-TIRE | |
| | 9K-7951 | 1 | CAP-VALVE (STEM) | |
| | 6F-3930 | 1 | CORE-VALVE | |
| | 7D-5252 | 1 | SPUD AS | |
| | 2D-2508 | 1 | GROMMET | |
| | 2D-2509 | 1 | LOCKNUT (11/16-16-THD) | |
| | 2D-2507 | 1 | SPUD | |

**<END>**

## *142-6226* WHEEL GP

**S/N: CCA1-UP**
**PART OF 142-6298, 142-6301, 142-6307, 142-6310, 142-6313, 142-6316, 142-6319, 142-6322, 142-6325, 142-6328, 142-6330, 142-6332, 150-4467, 150-4482, 173-7813, 184-2347, 216-7443 WHEEL & TIRE GP, 142-6304, 186-4460 WHEEL GP**
**AN ATTACHMENT**

**SMCS-4006, 4201, 4208** **i02477407**

| NOTE | PART NUMBER | QTY | PART NAME 1 2 3 4 5 6 (PRODUCT LEVEL) | SEE PAGE |
|---|---|---|---|---|
| | 8W-9566 | 1 | FLANGE AS | |
| | 184-2309 | 1 | RIM AS (10X24) | |
| | 2D-2654 | 1 | RING-LOCK | |

**<END>**

## *142-6229* WHEEL GP

**S/N: CCA1-UP**
**PART OF 142-6356, 142-6357, 142-6358, 142-6361, 142-6364, 142-6367, 142-6374, 142-6375, 142-6376, 142-6385, 159-1785, 183-1415, 183-1418, 204-8785, 226-0735 WHEEL & TIRE GP, 148-2408, 170-0436, 216-7445 WHEEL GP**
**AN ATTACHMENT**

**SMCS-4006, 4201, 4208** **i00756189**

| NOTE | PART NUMBER | QTY | PART NAME 1 2 3 4 5 6 (PRODUCT LEVEL) | SEE PAGE |
|---|---|---|---|---|
| | 8W-9594 | 1 | FLANGE AS | |
| | 4K-4881 | 1 | LOCKRING | |
| | 6G-1528 | 1 | WHEEL | |

**<END>**

## *142-6230* WHEEL GP

**S/N: CCA1-UP**
**(12X25)**
**PART OF 142-6348 WHEEL & TIRE GP**
**AN ATTACHMENT**

**SMCS-4006, 4201, 4208** **i02237305**

| NOTE | PART NUMBER | QTY | PART NAME 1 2 3 4 5 6 (PRODUCT LEVEL) | SEE PAGE |
|---|---|---|---|---|
| | **8W-9582** | 1 | FLANGE AS | |
| | **6G-1527** | 1 | RIM AS | |
| | **4K-4881** | 1 | RING-LOCK | |

**<END>**

## *142-6304* WHEEL GP—BAREFOOT

**S/N: CCA1-UP**
**PART OF 142-6305 WHEEL AR**
**AN ATTACHMENT**

**SMCS-4006, 4201, 4208** **i02205614**

| NOTE | PART NUMBER | QTY | PART NAME 1 2 3 4 5 6 (PRODUCT LEVEL) | SEE PAGE |
|---|---|---|---|---|
| Y | *142-6226* | 1 | WHEEL GP | 539 |
| | | | | |
| | **2D-2565** | 1 | SEAL-O-RING | |
| | **110-4213** | 1 | VALVE GP-TIRE | |
| | **7D-5252** | 1 | SPUD AS | |
| | **2D-2508** | 1 | GROMMET | |
| | **2D-2509** | 1 | LOCKNUT (11/16-16-THD) | |
| | **110-4214** | 1 | STEM AS | |
| | **6F-3930** | 1 | CORE-VALVE | |
| | **9K-7951** | 1 | CAP-VALVE (STEM) | |

Y-SEPARATE ILLUSTRATION

**<END>**

## *148-2404* WHEEL GP—BAREFOOT

**S/N: CCA1-UP**
**PART OF 148-2405 WHEEL AR**
**AN ATTACHMENT**

**SMCS-4006, 4201, 4208** **i01755146**

| NOTE | PART NUMBER | QTY | PART NAME 1 2 3 4 5 6 (PRODUCT LEVEL) | SEE PAGE |
|---|---|---|---|---|
| | **8X-1160** | 1 | RIM AS (13X25) | |
| | **2G-6595** | 1 | VALVE GP-TIRE | |
| | **9K-7951** | 1 | CAP-VALVE (STEM) | |
| | **6F-3930** | 1 | CORE-VALVE | |
| | **7D-5252** | 1 | SPUD AS | |
| | **2D-2508** | 1 | GROMMET | |
| | **2D-2509** | 1 | LOCKNUT (11/16-16-THD) | |
| | **2D-2507** | 1 | SPUD | |

**<END>**

## *148-2408* WHEEL GP—BAREFOOT

**S/N: CCA1-UP**
**PART OF 148-2409 WHEEL AR**
**AN ATTACHMENT**

**SMCS-4006, 4201, 4208** **i02526144**

| NOTE | PART NUMBER | QTY | PART NAME 1 2 3 4 5 6 (PRODUCT LEVEL) | SEE PAGE |
|---|---|---|---|---|
| Y | *142-6229* | 1 | WHEEL GP | 539 |
| | | | | |
| | **4K-4879** | 1 | SEAL-O-RING | |
| | **2G-6595** | 1 | VALVE GP-TIRE (TIRE INFLATION) | |
| | **9K-7951** | 1 | CAP-VALVE (STEM) | |
| | **6F-3930** | 1 | CORE-VALVE | |
| | **7D-5252** | 1 | SPUD AS | |
| | **2D-2508** | 1 | GROMMET | |
| | **2D-2509** | 1 | LOCKNUT (11/16-16-THD) | |
| | **2D-2507** | 1 | SPUD | |
| Y-SEPARATE ILLUSTRATION | | | | |

**<END>**

## *170-0436* WHEEL GP

**S/N: CCA1-UP**
**PART OF 174-7507 WHEEL AR**
**AN ATTACHMENT**

**SMCS-4006, 4201, 4208** **i02559885**

| NOTE | PART NUMBER | QTY | PART NAME 1 2 3 4 5 6 (PRODUCT LEVEL) | SEE PAGE |
|---|---|---|---|---|
| Y | **2G-6595** | 1 | VALVE GP-TIRE | 489 |
| Y | *142-6229* | 1 | WHEEL GP | 539 |
| | | | | |
| | **4K-4879** | 1 | SEAL-O-RING | |
| | *170-0432* | 1 | TIRE (17.5-R25) | |
| Y-SEPARATE ILLUSTRATION | | | | |

**<END>**

## *186-4460* WHEEL GP

**S/N: CCA1-UP**
**PART OF 186-4461 WHEEL AR**
**AN ATTACHMENT**

**SMCS-4006, 4201, 4208** **i02205670**

| NOTE | PART NUMBER | QTY | PART NAME 1 2 3 4 5 6 (PRODUCT LEVEL) | SEE PAGE |
|---|---|---|---|---|
| Y | *142-6226* | 1 | WHEEL GP | 539 |
| | | | | |
| | **2D-2565** | 1 | SEAL-O-RING | |
| | *186-3696* | 1 | TIRE (14-24) | |
| | **110-4213** | 1 | VALVE GP-TIRE | |
| | **7D-5252** | 1 | SPUD AS | |
| | **2D-2507** | 1 | SPUD | |
| | **2D-2508** | 1 | GROMMET | |
| | **2D-2509** | 1 | LOCKNUT (11/16-16-THD) | |
| | **110-4214** | 1 | STEM AS | |
| | **6F-3930** | 1 | CORE-VALVE | |
| | **9K-7951** | 1 | CAP-VALVE (STEM) | |

Y-SEPARATE ILLUSTRATION

**<END>**

## *216-7445* WHEEL GP

**S/N: CCA1-UP**
**PART OF 216-7446 WHEEL AR**
**AN ATTACHMENT**

**SMCS-4006, 4201, 4208** **i02580170**

| NOTE | PART NUMBER | QTY | PART NAME 1 2 3 4 5 6 (PRODUCT LEVEL) | SEE PAGE |
|---|---|---|---|---|
| Y | **2G-6595** | 1 | VALVE GP-TIRE | 489 |
| Y | *142-6229* | 1 | WHEEL GP | 539 |
| | | | | |
| | **4K-4879** | 1 | SEAL-O-RING | |
| | *216-7437* | 1 | TIRE (17.5-25) | |

Y-SEPARATE ILLUSTRATION

**<END>**

# FRAME AND BODY

## *134-1080* AXLE GP-FRONT

**S/N: CCA1-1307**

**PART OF 159-4615 GENERAL AR**

**SMCS-4305, 4313, 5225** **i01721141**

| NOTE | REF NO | GRAPHIC REF | PART NUMBER | QTY | PART NAME 1 2 3 4 5 6 (PRODUCT LEVEL) | SEE PAGE |
|---|---|---|---|---|---|---|
| R | 1 | 1 | **5K-5288** | 2 | SEAL GP-DUO-CONE | |
| | 2 | 1 | **2G-8626** | 2 | WASHER-THRUST (2.02X3.63X0.16-MM THK) | |
| | 3 | 1 | **3B-8489** | 7 | FITTING-GREASE (WHEEL LEAN CYLINDER) | |
| | 4 | 1 | **4D-3704** | 2 | WASHER-HARD (17X30X5-MM THK) | |
| | 5 | 1 | **2G-8615** | 4 | WASHER-THRUST (2.015X3.625X0.11-IN THK) | |
| | 6 | 1 | **2G-8742** | 2 | WASHER-HARD (20X65X5-MM THK) | |
| | 7 | 1 | **2H-3740** | 4 | BOLT (3/4-16X1.25-IN) | |
| | 8 | 1 | **2G-8741** | 4 | RING-METAL SEAL | |
| | 9 | 1 | **2G-8777** | 4 | SEAL | |
| | 10 | 1 | **9M-2092** | 4 | SEAL-O-RING | |
| | 11 | 1 | **8W-5293** | 4 | PIN | |
| | 12 | 1 | **8W-4652** | 1 | HOUSING-SPINDLE | |
| | 13 | 1 | **8W-4653** | 1 | HOUSING-SPINDLE | |
| | 14 | 1 | **8D-2811** | 2 | WASHER (1.25X1.94X0.032-IN THK) | |
| | 15 | 1 | **2G-8633** | 2 | PIN | |
| | 16 | 1 | **1D-4627** | 2 | BOLT (7/8-9X3-IN) | |
| | 17 | 1 | **2J-3505** | 2 | NUT-FULL (7/8-9-THD) | |
| | 18 | 1 | **7X-7731** | 2 | PLUG-PIPE | |
| | 19 | 1 | **5P-8842** | 8 | SEAL-LIP TYPE | |
| | 20 | 1 | **3B-8489** | 4 | FITTING-GREASE (STEERING CYLINDER) | |
| | 21 | 1 | **5P-1075** | 4 | WASHER-HARD (10.2X22.5X3-MM THK) | |
| | 22 | 1 | **5S-7379** | 4 | BOLT (3/8-16X0.875-IN) | |
| | 23 | 1 | **2G-8768** | 4 | WASHER (10.5X53.8X3-MM THK) | |
| | 24 | 1 | **103-9125** | 1 | BAR AS | |
| | | 1 | **2G-8624** | 2 | BEARING-SLEEVE | |
| | 25 | 1 | **5P-8890** | 2 | SEAL-LIP TYPE | |
| | 26 | 1 | **030-0060** | 2 | CUP-BEARING | |
| | 27 | 1 | **030-0061** | 2 | CONE-BEARING | |
| | 28 | 1 | **7D-8637** | 2 | CUP-BEARING | |
| | 29 | 1 | **7D-8636** | 2 | CONE-BEARING | |
| | 30 | 1 | **3B-4618** | 2 | PIN-COTTER | |
| | 31 | 1 | **7D-8643** | 2 | RETAINER | |
| B | 32 | 1 | **2G-3865** | 6 | SHIM (0.127-MM THK) | |
| | 33 | 1 | **0V-0375** | 6 | BOLT (1/2-13X3.25-IN) | |
| | 34 | 1 | **9D-9797** | 2 | LOCK | |
| | 35 | 1 | **5T-0906** | 2 | COVER | |
| | 36 | 1 | **2J-8163** | 2 | SEAL-O-RING | |
| | 37 | 1 | **5D-0353** | 4 | BOLT-LOCKING (3/8-16X1-IN) | |
| | 38 | 1 | **0S-1585** | 1 | BOLT (1/2-13X1.5-IN) | |
| | 39 | 1 | **7D-1649** | 1 | WASHER-HARD (13.5X32X5-MM THK) | |
| | 40 | 1 | **5P-8843** | 2 | SEAL-LIP TYPE | |
| B | 41 | 1 | **2G-5673** | 2 | WASHER (2.031X4X0.06-IN THK) | |
| | 42 | 1 | **9G-5211** | 1 | SPACER (12.95X19.05X9-MM THK) | |
| | 43 | 1 | **130-3595** | 1 | PIN AS | |
| | 44 | 1 | **147-3400** | 2 | SPINDLE | |
| | 45 | 1 | **0S-1592** | 2 | BOLT (5/8-11X1.25-IN) | |
| | 46 | 1 | **2G-5667** | 2 | RETAINER | |
| Y | 47 | 1 | *7D-8912* | 1 | LINK GP-STEERING | 591 |
| | 48 | 1 | **134-1081** | 1 | AXLE AS-FRONT | |
| | 49 | 1 | **2G-8631** | 4 | BEARING-SLEEVE | |
| | 50 | 1 | **131-4428** | 2 | BEARING-SLEEVE | |
| | 51 | 1 | **8X-3434** | 1 | ARM AS-LEANING (LH) | |
| | 52 | 1 | **146-1842** | 1 | BEARING-SLEEVE | |
| | 53 | 1 | **146-1843** | 1 | BEARING-SLEEVE | |
| | 54 | 1 | **8W-6476** | 1 | PIN | |
| | 56 | 1 | **8X-3435** | 1 | ARM AS-LEANING (RH) | |

## *134-1080* **AXLE GP-FRONT** *(contd.)* **i01721141**

| NOTE | REF NO | GRAPHIC REF | PART NUMBER | QTY | PART NAME 1 2 3 4 5 6 (PRODUCT LEVEL) | SEE PAGE |
|---|---|---|---|---|---|---|
| | 57 | 1 | **146-1842** | 1 | BEARING-SLEEVE | |
| | 58 | 1 | **146-1843** | 1 | BEARING-SLEEVE | |
| | 59 | 1 | **8W-6497** | 1 | PIN | |
| | 61 | 1 | **9D-3523** | 1 | WASHER (2.062X4X0.188-MM THK) | |

B-USE AS REQUIRED
R-REMFG PART MAY BE AVAILABLE
Y-SEPARATE ILLUSTRATION

*134-1080* **AXLE GP-FRONT** *(contd.)* **i01721141**

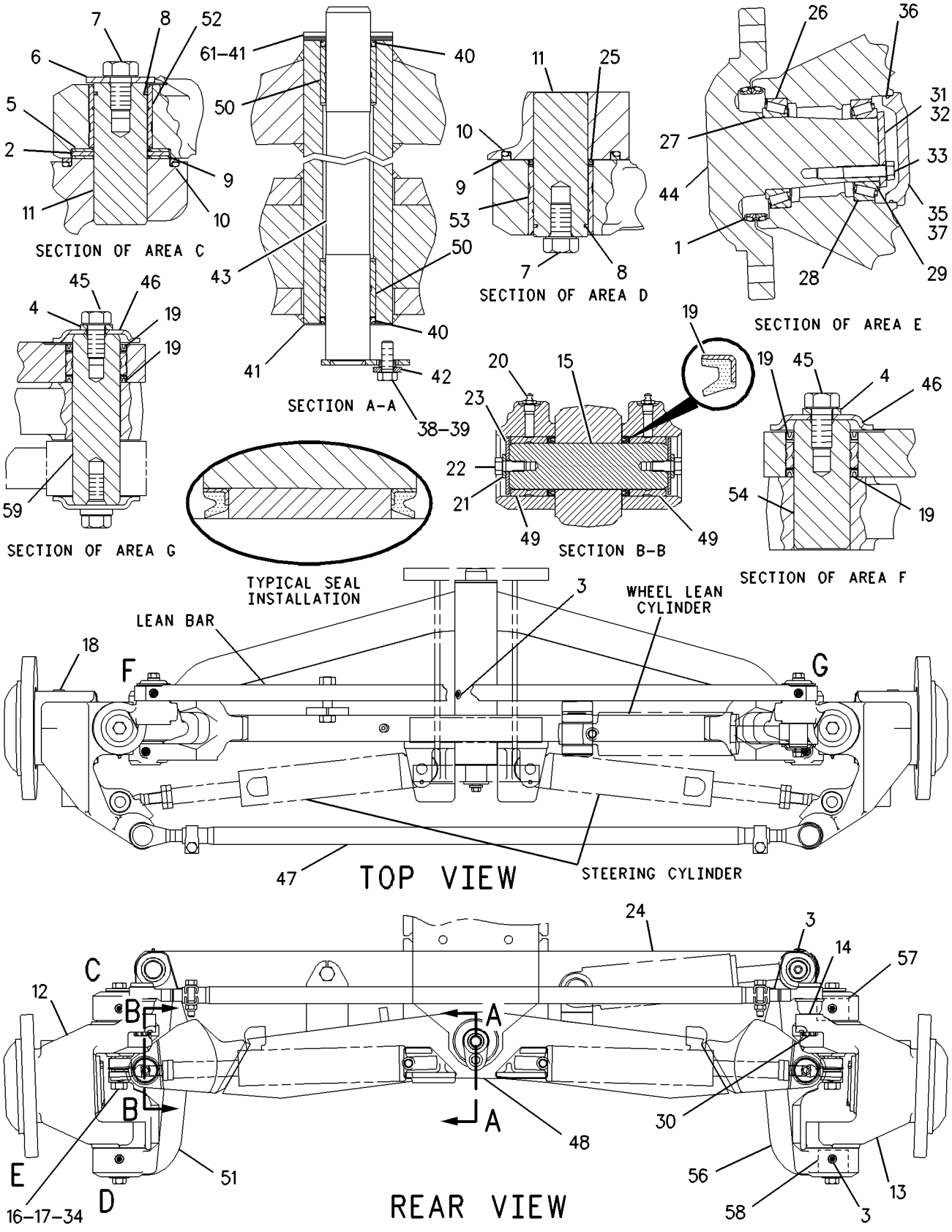


GRAPHIC #1 **<END>** g00885270

# FRAME AND BODY

## *134-1080* AXLE GP-FRONT

**S/N: CCA1308-UP**

**PART OF 159-4615 GENERAL AR**

**SMCS-4305, 4313, 5225** **i02399307**

| NOTE | REF NO | GRAPHIC REF | PART NUMBER | QTY | PART NAME 1 2 3 4 5 6 (PRODUCT LEVEL) | SEE PAGE |
|---|---|---|---|---|---|---|
| R | 1 | 1 | **5K-5288** | 2 | SEAL GP-DUO-CONE | |
| | | | | | (EACH INCLUDES) | |
| | | 1 | **5K-5129** | 2 | RING-SEALING | |
| | 2 | 1 | **2G-8626** | 2 | WASHER-THRUST (2.02X3.63X0.16-MM THK) | |
| | 3 | 1 | **3B-8489** | 7 | FITTING-GREASE (WHEEL LEAN CYLINDER) | |
| | 4 | 1 | **4D-3704** | 2 | WASHER-HARD (17X30X5-MM THK) | |
| | 5 | 1 | **2G-8615** | 4 | WASHER-THRUST (2.015X3.625X0.11-IN THK) | |
| | 6 | 1 | **2G-8742** | 2 | WASHER-HARD (20X65X5-MM THK) | |
| | 7 | 1 | **2H-3740** | 4 | BOLT (3/4-16X1.25-IN) | |
| | 8 | 1 | **2G-8741** | 4 | RING-METAL SEAL | |
| | 9 | 1 | **2G-8777** | 4 | SEAL | |
| | 10 | 1 | **9M-2092** | 4 | SEAL-O-RING | |
| | 11 | 1 | **8W-5293** | 4 | PIN | |
| | 12 | 1 | **8W-4652** | 1 | HOUSING-SPINDLE | |
| | 13 | 1 | **8W-4653** | 1 | HOUSING-SPINDLE | |
| | 14 | 1 | **8D-2811** | 2 | WASHER (1.25X1.94X0.032-IN THK) | |
| | 15 | 1 | **2G-8633** | 2 | PIN | |
| | 16 | 1 | **1D-4627** | 2 | BOLT (7/8-9X3-IN) | |
| | 17 | 1 | **2J-3505** | 2 | NUT-FULL (7/8-9-THD) | |
| | 18 | 1 | **7X-7731** | 2 | PLUG-PIPE | |
| | 19 | 1 | **5P-8842** | 8 | SEAL-LIP TYPE | |
| | 20 | 1 | **3B-8489** | 4 | FITTING-GREASE (STEERING CYLINDER) | |
| | 21 | 1 | **5P-1075** | 4 | WASHER-HARD (10.2X22.5X3-MM THK) | |
| | 22 | 1 | **5S-7379** | 4 | BOLT (3/8-16X0.875-IN) | |
| | 23 | 1 | **2G-8768** | 4 | WASHER (10.5X53.8X3-MM THK) | |
| | 24 | 1 | **103-9125** | 1 | BAR AS | |
| | | 1 | **2G-8624** | 2 | BEARING-SLEEVE | |
| | 25 | 1 | **5P-8890** | 2 | SEAL-LIP TYPE | |
| | 26 | 1 | **030-0060** | 2 | CUP-BEARING | |
| | 27 | 1 | **030-0061** | 2 | CONE-BEARING | |
| | 28 | 1 | **7D-8637** | 2 | CUP-BEARING | |
| | 29 | 1 | **7D-8636** | 2 | CONE-BEARING | |
| | 30 | 1 | **3B-4618** | 2 | PIN-COTTER | |
| | 31 | 1 | **7D-8643** | 2 | RETAINER | |
| B | 32 | 1 | **2G-3865** | 6 | SHIM (0.127-MM THK) | |
| | 33 | 1 | **0V-0375** | 6 | BOLT (1/2-13X3.25-IN) | |
| | 34 | 1 | **9D-9797** | 2 | LOCK | |
| | 35 | 1 | **5T-0906** | 2 | COVER | |
| | 36 | 1 | **2J-8163** | 2 | SEAL-O-RING | |
| | 37 | 1 | **5D-0353** | 4 | BOLT-LOCKING (3/8-16X1-IN) | |
| | 38 | 1 | **0S-1585** | 1 | BOLT (1/2-13X1.5-IN) | |
| | 39 | 1 | **7D-1649** | 1 | WASHER-HARD (13.5X32X5-MM THK) | |
| | 40 | 1 | **5P-8843** | 2 | SEAL-LIP TYPE | |
| B | 41 | 1 | **2G-5673** | 2 | WASHER (2.031X4X0.06-IN THK) | |
| | 42 | 1 | **9G-5211** | 1 | SPACER (12.95X19.05X9-MM THK) | |
| | 43 | 1 | **130-3595** | 1 | PIN AS | |
| | 44 | 1 | **147-3400** | 2 | SPINDLE | |
| | 45 | 1 | **0S-1592** | 2 | BOLT (5/8-11X1.25-IN) | |
| | 46 | 1 | **2G-5667** | 2 | RETAINER | |
| Y | 47 | 1 | *131-3740* | 1 | LINK GP-STEERING | 592 |
| | 48 | 1 | **134-1081** | 1 | AXLE AS-FRONT | |
| | 49 | 1 | **2G-8631** | 4 | BEARING-SLEEVE | |
| | 50 | 1 | **131-4428** | 2 | BEARING-SLEEVE | |
| | 51 | 1 | **8X-3434** | 1 | ARM AS-LEANING (LH) | |
| | 52 | 1 | **146-1842** | 1 | BEARING-SLEEVE | |
| | 53 | 1 | **146-1843** | 1 | BEARING-SLEEVE | |

*134-1080* **AXLE GP-FRONT** ***(contd.)*** **i02399307**

| NOTE | REF NO | GRAPHIC REF | PART NUMBER | QTY | PART NAME 1 2 3 4 5 6 (PRODUCT LEVEL) | SEE PAGE |
|---|---|---|---|---|---|---|
| | 54 | 1 | **8W-6476** | 1 | PIN | |
| | 56 | 1 | **8X-3435** | 1 | ARM AS-LEANING (RH) | |
| | 57 | 1 | **146-1842** | 1 | BEARING-SLEEVE | |
| | 58 | 1 | **146-1843** | 1 | BEARING-SLEEVE | |
| | 59 | 1 | **8W-6497** | 1 | PIN | |
| | 61 | 1 | **9D-3523** | 1 | WASHER (2.062X4X0.188-MM THK) | |

B-USE AS REQUIRED
R-REMFG PART MAY BE AVAILABLE
Y-SEPARATE ILLUSTRATION

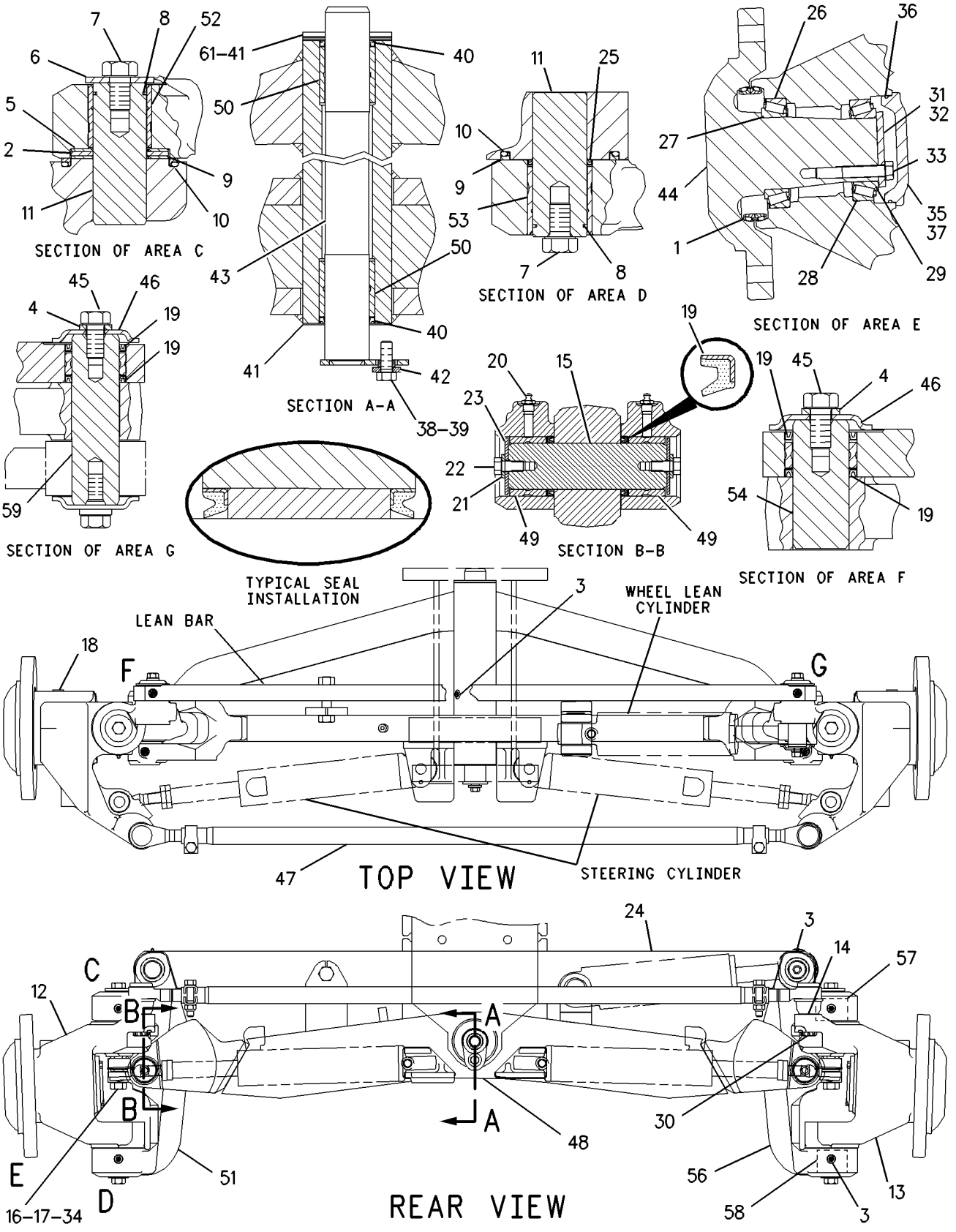


GRAPHIC #1 **<END>** g00885270

## *254-0084* BRACKET GP-BLADE

**S/N: CCA1-UP**
**AN ATTACHMENT**

**SMCS-5254** **i02579431**

| NOTE | PART NUMBER | QTY | PART NAME 1 2 3 4 5 6 (PRODUCT LEVEL) | SEE PAGE |
|---|---|---|---|---|
| | **253-5331** | 2 | BRACKET | |

**<END>**

## *254-0083* BRACKET GP-MOUNTING

**S/N: CCA1-UP**
**AN ATTACHMENT**

**SMCS-7220** **i02579370**

| NOTE | PART NUMBER | QTY | PART NAME 1 2 3 4 5 6 (PRODUCT LEVEL) | SEE PAGE |
|---|---|---|---|---|
| | **244-1900** | 1 | BRACKET | |
| | **253-5331** | 1 | BRACKET | |

**<END>**

# *267-6695* BRACKET GP-MOUNTING

**S/N: CCA1611-UP**
**PART OF 247-6453 GRADE CONTROL AR**
**AN ATTACHMENT**

**SMCS-7220** **i02561200**

| NOTE | REF NO | GRAPHIC REF | PART NUMBER | QTY | PART NAME 1 2 3 4 5 6 (PRODUCT LEVEL) | SEE PAGE |
|---|---|---|---|---|---|---|
| | 1 | 1 | **267-6699** | 2 | PLATE AS | |

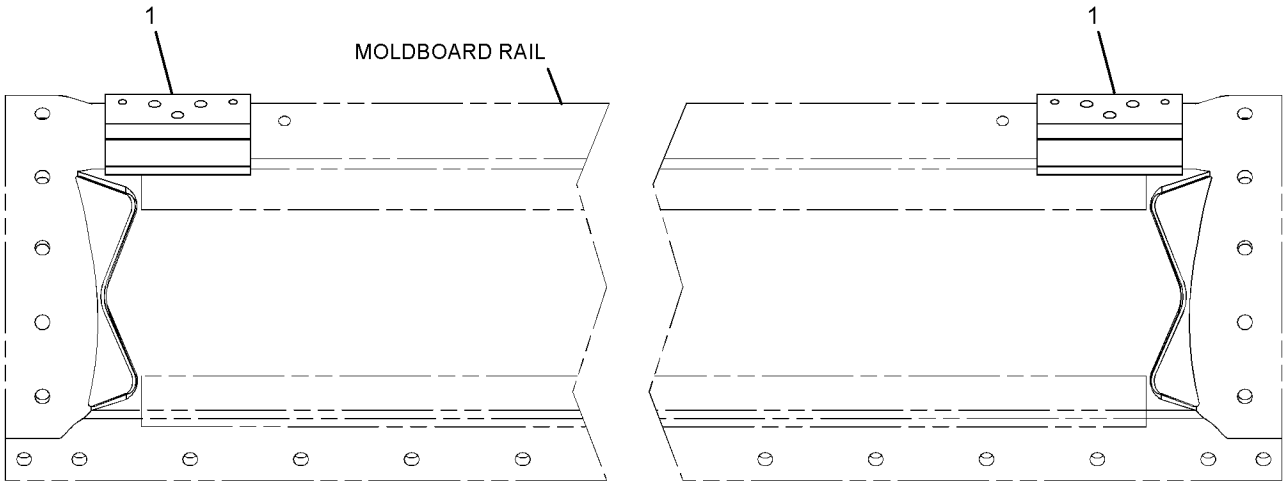


REAR VIEW

GRAPHIC #1 **<END>** g01238159

# *159-3928* CASE & FRAME GP

**S/N: CCA1-UP**
**PART OF 159-4615 GENERAL AR**
**TYPE 1**

**SMCS-7051** **i02585950**

| NOTE | REF NO | GRAPHIC REF | PART NUMBER | QTY | PART NAME 1 2 3 4 5 6 (PRODUCT LEVEL) | SEE PAGE |
|---|---|---|---|---|---|---|
| | 1 | 1 | **2A-3398** | 1 | GASKET | |
| | 2 | 1 | **8M-3837** | 1 | PLUG-MAGNETIC (CASE DRAIN) | |
| | 3 | 1 | **159-3934** | 1 | CASE & FRAME AS | |
| | 3A | 1 | **198-9298** | 1 | VALVE-DRAIN (FUEL SUMP) | |
| | 3B | 1 | **4W-4813** | 1 | PLUG | |
| | 3C | 1 | **009-2062** | 1 | SEAL-O-RING | |
| | 4 | 1 | **2D-8822** | 12 | STUD-TAPERLOCK (5/8-11X2.36-IN) | |
| | 5 | 1 | **2R-1600** | 38 | STUD-TAPERLOCK | |
| | 6 | 1 | **4D-8148** | 3 | DOWEL | |
| | 7 | 1 | **7X-0399** | 4 | BOLT (1-8X1.25-IN) | |
| | 8 | 1 | **8T-5361** | 4 | WASHER-HARD (28X49X5-MM THK) | |

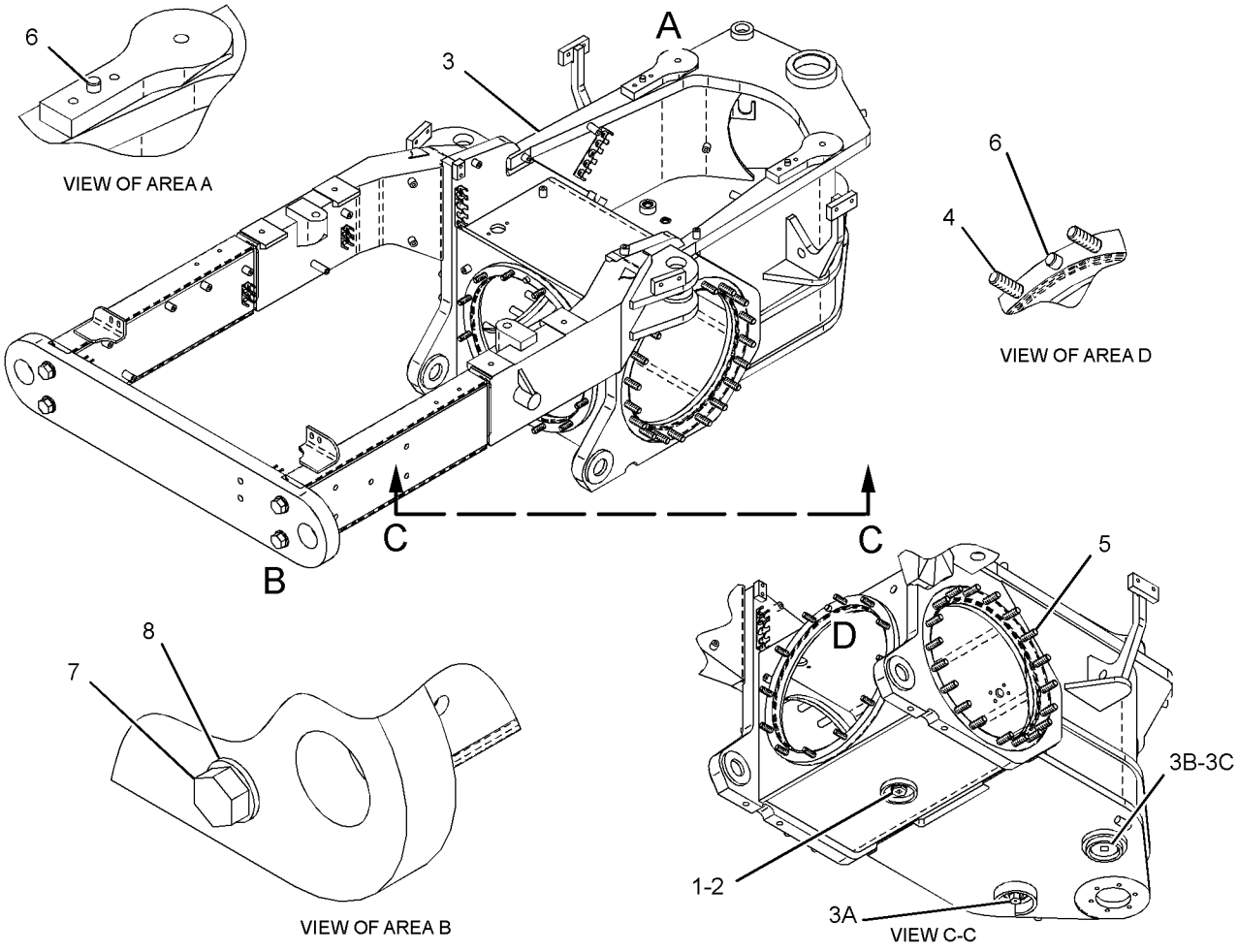


GRAPHIC #1 **<END>** g01294684

# FRAME AND BODY

## *159-3928* CASE & FRAME GP

**S/N: CCA1-UP**
**PART OF 159-4615 GENERAL AR**
**TYPE 2**

**SMCS-7051** **i02412891**

| NOTE | REF NO | GRAPHIC REF | PART NUMBER | QTY | PART NAME 1 2 3 4 5 6 (PRODUCT LEVEL) | SEE PAGE |
|---|---|---|---|---|---|---|
| | 1 | 1 | **2A-3398** | 1 | GASKET | |
| | 2 | 1 | **8M-3837** | 1 | PLUG-MAGNETIC (CASE DRAIN) | |
| | 3 | 1 | **159-3934** | 1 | CASE & FRAME AS | |
| | 3A | 1 | **4W-4813** | 1 | PLUG | |
| | 3B | 1 | **009-2062** | 1 | SEAL-O-RING | |
| | 4 | 1 | **2D-8822** | 12 | STUD-TAPERLOCK (5/8-11X2.36-IN) | |
| | 5 | 1 | **2R-1600** | 38 | STUD-TAPERLOCK | |
| | 6 | 1 | **4D-8148** | 3 | DOWEL | |
| | 7 | 1 | **7X-0399** | 4 | BOLT (1-8X1.25-IN) | |
| | 8 | 1 | **8T-5361** | 4 | WASHER-HARD (28X49X5-MM THK) | |

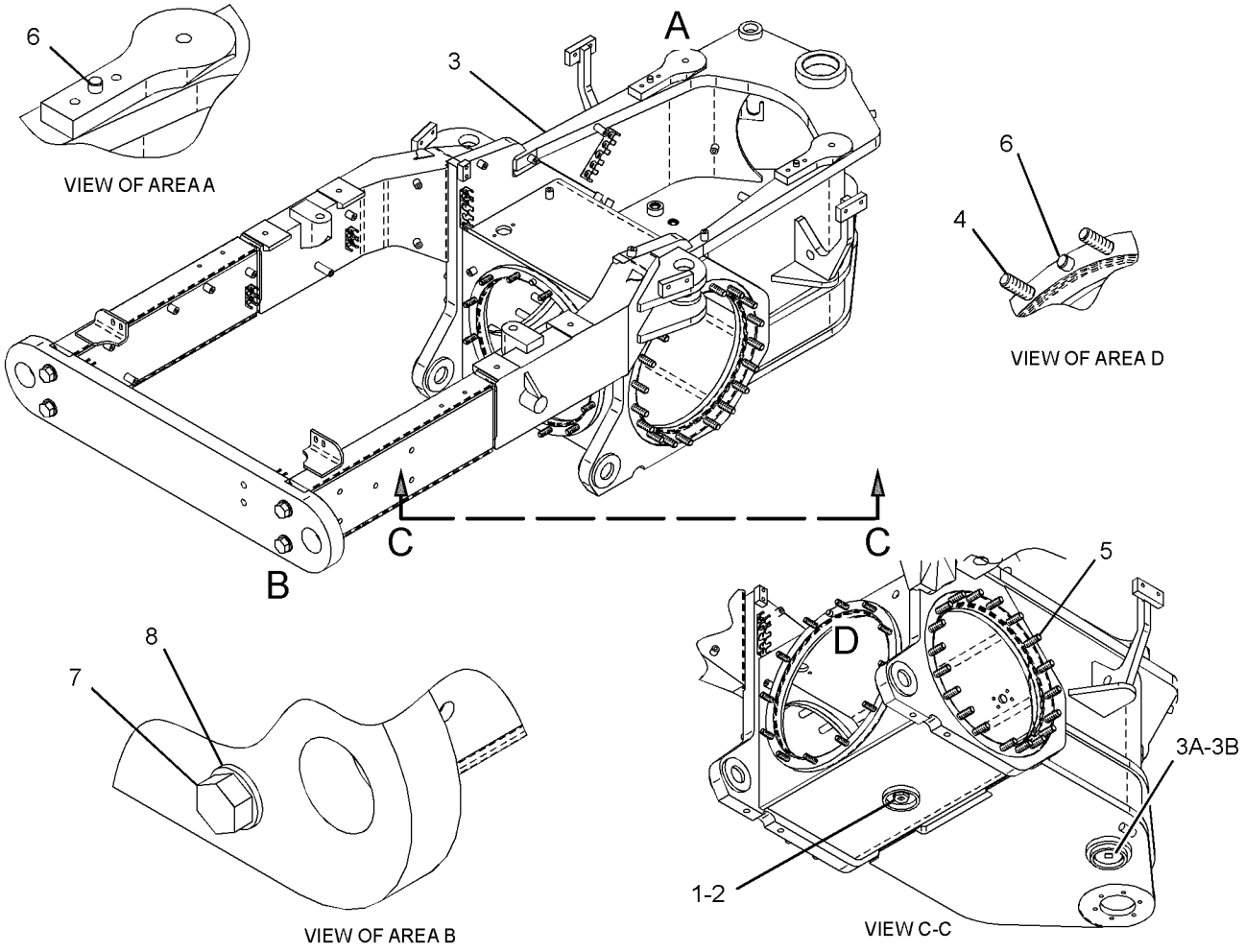


GRAPHIC #1 **<END>** g01205996

# FRAME AND BODY

## *179-5776* COVER GP-ACCESS

**S/N: CCA1-UP**

**AN ATTACHMENT**

**SMCS-726A** **i02103063**

| NOTE | REF NO | GRAPHIC REF | PART NUMBER | QTY | PART NAME 1 2 3 4 5 6 (PRODUCT LEVEL) | SEE PAGE |
|---|---|---|---|---|---|---|
| | 1 | 1 | **199-4318** | 44 | TURNBUCKLE | |
| | 2 | 1 | **199-7111** | 1 | COVER (MUFFLER) | |
| | 3 | 1 | **199-7113** | 1 | COVER (LOWER RH) | |
| | 4 | 1 | **199-7118** | 1 | SCREEN (LOWER RH) | |
| | 5 | 1 | **199-7119** | 1 | SCREEN (MUFFLER) | |
| | 6 | 1 | **215-2409** | 1 | COVER (DOOR RH) | |
| | 7 | 1 | **215-2410** | 1 | COVER (DOOR LH) | |
| | 8 | 1 | **215-2412** | 1 | COVER (TOP) | |
| | 9 | 1 | **215-2413** | 1 | SCREEN (TOP) | |
| | 10 | 1 | **215-2414** | 1 | SCREEN (DOOR RH) | |
| | 11 | 1 | **215-2415** | 1 | SCREEN (DOOR LH) | |
| | 12 | 1 | **215-2430** | 1 | COVER (LOWER LH) | |
| | 13 | 1 | **215-2431** | 1 | SCREEN (LOWER LH) | |
| | 14 | 1 | **9N-1995** | 88 | RIVET-POP | |

*179-5776* **COVER GP-ACCESS** *(contd.)* **i02103063**

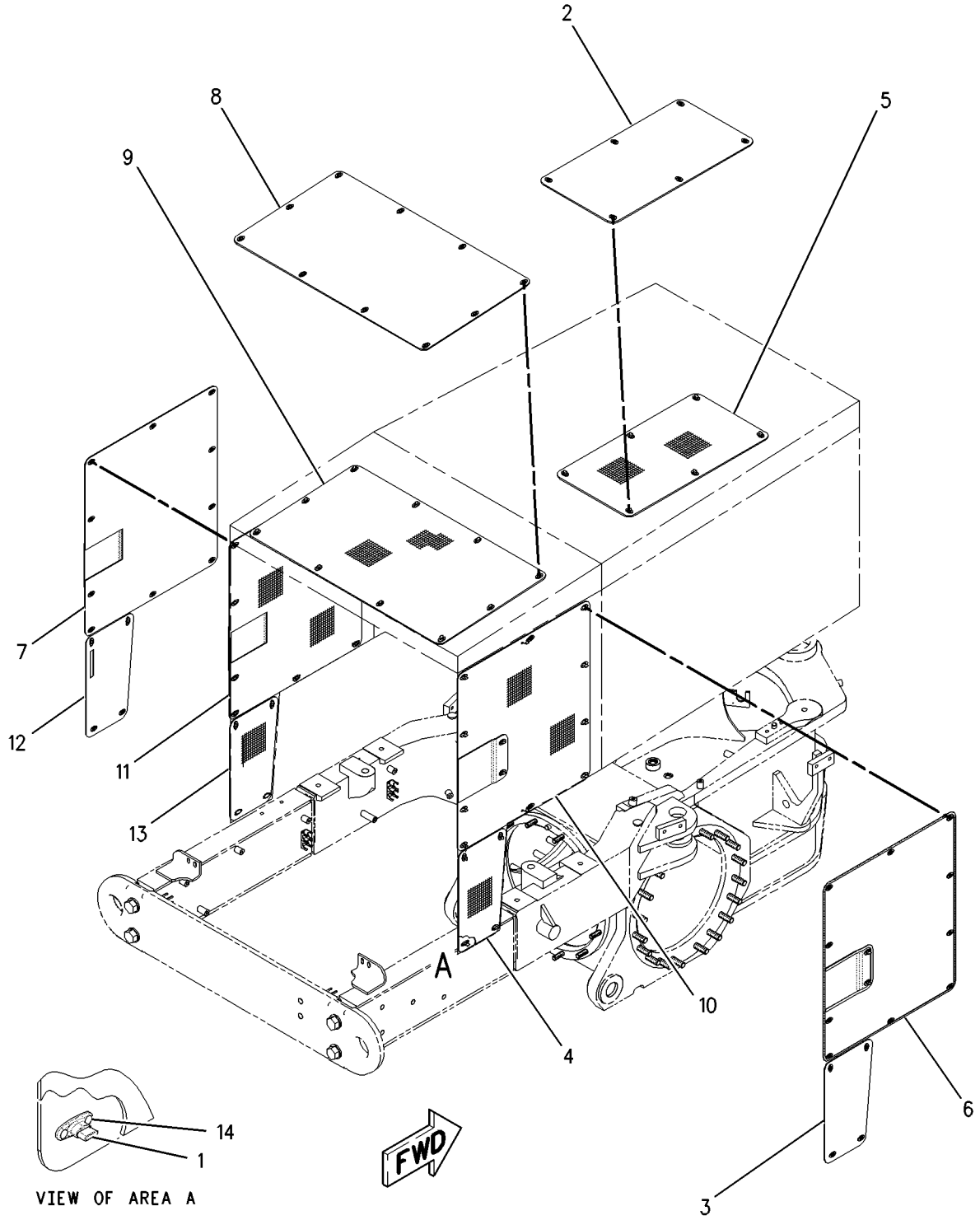


GRAPHIC #1 **<END>** g00947308

# 179-5777 COVER GP-ACCESS

**S/N: CCA1-UP**
**AN ATTACHMENT**

**SMCS-726A** **i02103060**

| NOTE | REF NO | GRAPHIC REF | PART NUMBER | QTY | PART NAME 1 2 3 4 5 6 (PRODUCT LEVEL) | SEE PAGE |
|---|---|---|---|---|---|---|
| | 1 | 1 | **199-4318** | 44 | TURNBUCKLE | |
| | 2 | 1 | **215-2431** | 1 | SCREEN (LOWER LH) | |
| | 3 | 1 | **199-7118** | 1 | SCREEN (LOWER RH) | |
| | 4 | 1 | **199-7119** | 1 | SCREEN (MUFFLER) | |
| | 5 | 1 | **215-2413** | 1 | SCREEN (RADIATOR TOP) | |
| | 6 | 1 | **215-2415** | 1 | SCREEN (DOOR LH) | |
| | 7 | 1 | **215-2414** | 1 | SCREEN (DOOR RH) | |
| | 8 | 1 | **9N-1995** | 88 | RIVET-POP | |

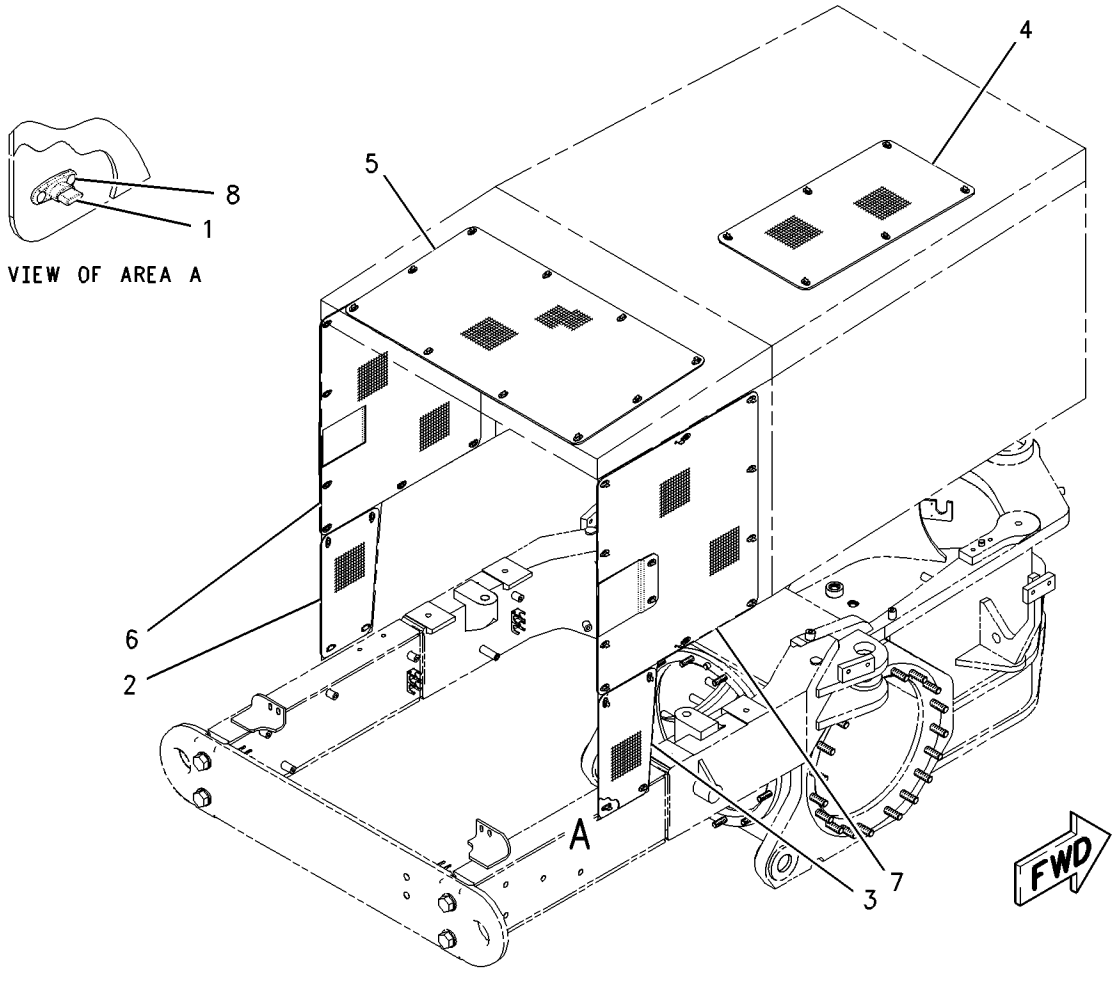


GRAPHIC #1 **<END>** g00797440

# FRAME AND BODY

## *159-3923* ENCLOSURE GP-ENGINE

**S/N: CCA1-638**

**PART OF 159-4615 GENERAL AR**

**SMCS-7263** **i02205088**

| NOTE | REF NO | GRAPHIC REF | PART NUMBER | QTY | PART NAME 1 2 3 4 5 6 (PRODUCT LEVEL) | SEE PAGE |
|---|---|---|---|---|---|---|
| | 1 | 1 | **3P-9900** | 2 | WASHER (10.5X30X3-MM THK) | |
| | 2 | 1 | **4B-4909** | 2 | SPRING | |
| | 3 | 1 | **132-4354** | 2 | SPACER (10.5X19X26.5-MM THK) | |
| | 4 | 1 | **139-2944** | 2 | ROD | |
| | 5 | 1 | **175-5480** | 1 | HOOD AS | |
| | 6 | 1 | **176-2918** | 1 | PILLAR AS (RH) | |
| | 7 | 1 | **176-2922** | 1 | PILLAR AS (LH) | |
| | 8 | 1 | **176-5760** | 1 | DOOR AS (RH) (ENGINE) | |
| | | 1 | **178-0131** | 1 | HINGE | |
| | 9 | 1 | **176-5765** | 1 | DOOR AS (LH) (ENGINE) | |
| | | 1 | **178-0131** | 1 | HINGE | |
| | 10 | 1 | **176-5767** | 2 | CATCH AS | |
| | | | | | (EACH INCLUDES) | |
| | | 1 | **176-5768** | 1 | PLATE | |
| | 11 | 1 | **176-5770** | 1 | PANEL AS (RH) | |
| | 12 | 1 | **176-5775** | 1 | PANEL AS (LH) | |
| | 13 | 1 | **177-2932** | 2 | CATCH AS | |
| | 14 | 1 | **177-4118** | 2 | HANDHOLD (TOP) | |
| | 15 | 1 | **177-4120** | 2 | HANDHOLD (SIDE) | |
| | 16 | 1 | **187-0976** | 2 | PLATE | |
| | 17 | 1 | **192-5629** | 4 | LATCH AS | |
| | | | | | (EACH INCLUDES) | |
| | | 1 | **126-7168** | 1 | LOCK AS | |
| | | 1 | **7F-9223** | 1 | LOCKWASHER | |
| | | 1 | **8T-5004** | 1 | SCREW-MACHINE (1/4-28X0.375-IN) | |
| | 18 | 1 | **192-5638** | 4 | PAWL | |
| B | 19 | 1 | **194-4939** | 2 | SHIM (5-MM THK) | |
| | 20 | 1 | **194-7987** | 1 | COVER AS | |
| | 21 | 1 | **199-9983** | 2 | GRAB IRON AS | |
| | 22 | 1 | **212-3590** | 1 | PLATE (LH) | |
| | 23 | 1 | **212-3591** | 1 | PLATE (RH) | |
| | 24 | 1 | **212-7431** | 1 | PANEL AS (RH) | |
| | 25 | 1 | **212-7432** | 1 | PANEL AS (LH) | |
| | 26 | 1 | **212-9510** | 1 | DASH AS | |
| | 27 | 1 | **212-9511** | 1 | PLATE AS | |
| M | 28 | 1 | **127-4038** | 16 | SCREW-MACHINE (M6X1X16-MM) | |
| M | 29 | 1 | **129-3178** | 16 | LOCKNUT (M6X1-THD) | |
| | 30 | 1 | **2K-5986** | 2 | PIN-SPRING | |
| | 31 | 1 | **5P-1076** | 12 | WASHER-HARD (13.5X30X4-MM THK) | |
| | 32 | 1 | **7X-0632** | 4 | WASHER-HARD (11X36X6-MM THK) | |
| | 33 | 1 | **7X-7729** | 58 | WASHER (11X25X3-MM THK) | |
| M | 34 | 1 | **8T-0389** | 4 | LOCKNUT (M10X1.15-THD) | |
| | 35 | 1 | **8T-4121** | 2 | WASHER-HARD (11X21X2.5-MM THK) | |
| M | 36 | 1 | **8T-4133** | 4 | NUT (M10X1.5-THD) | |
| M | 37 | 1 | **8T-4136** | 49 | BOLT (M10X1.5X25-MM) | |
| M | 38 | 1 | **8T-4139** | 10 | BOLT (M12X1.75X30-MM) | |
| M | 39 | 1 | **8T-4179** | 2 | BOLT (M12X1.75X20-MM) | |
| M | 40 | 1 | **8T-4182** | 2 | BOLT (M10X1.5X45-MM) | |
| M | 41 | 1 | **8T-4195** | 13 | BOLT (M10X1.5X30-MM) | |
| M | 42 | 1 | **8T-4196** | 2 | BOLT (M10X1.5X35-MM) | |
| | 43 | 1 | **8T-4994** | 2 | WASHER-HARD (20X36.5X3.5-MM THK) | |
| | 44 | 1 | **9X-8256** | 16 | WASHER (6.6X12X2-MM THK) | |
| D | 45 | 1 | **5P-5923** | 2 | SEAL (.7M EACH) | |
| D | 46 | 1 | **5P-5923** | 4 | SEAL (.05M EACH) | |

*159-3923* **ENCLOSURE GP-ENGINE** *(contd.)* **i02205088**

B-USE AS REQUIRED
D-ORDER BY THE METER
M-METRIC PART

*159-3923* **ENCLOSURE GP-ENGINE** *(contd.)* **i02205088**

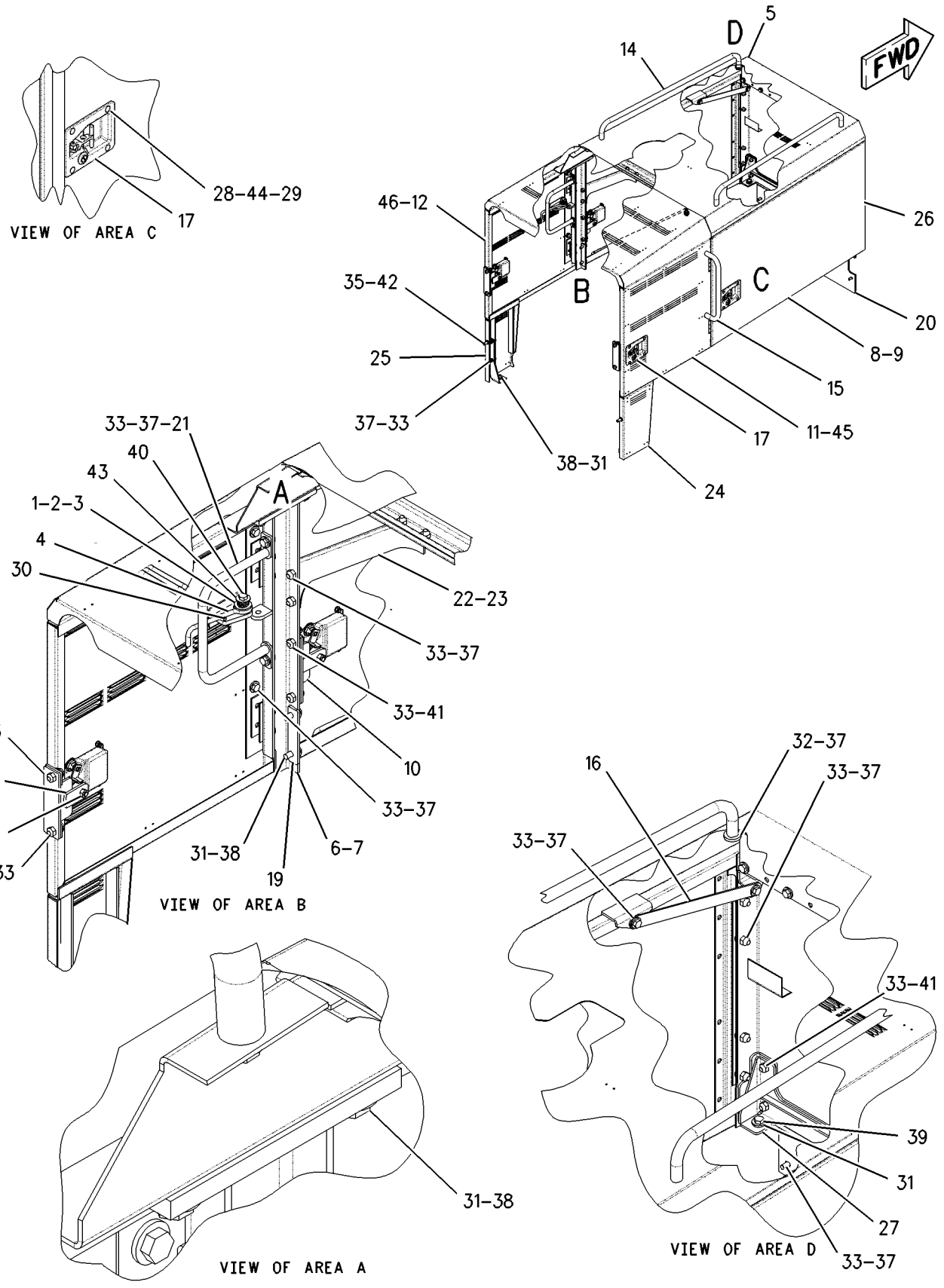


GRAPHIC #1 **<END>** g00939362

# FRAME AND BODY

## *159-3923* ENCLOSURE GP-ENGINE

**S/N: CCA639-UP**

**PART OF 159-4615 GENERAL AR**

**SMCS-7263** **i01989839**

| NOTE | REF NO | GRAPHIC REF | PART NUMBER | QTY | PART NAME 1 2 3 4 5 6 (PRODUCT LEVEL) | SEE PAGE |
|---|---|---|---|---|---|---|
| | 1 | 1 | **3P-9900** | 2 | WASHER (10.5X30X3-MM THK) | |
| | 2 | 1 | **4B-4909** | 2 | SPRING | |
| | 3 | 1 | **132-4354** | 2 | SPACER (10.5X19X26.5-MM THK) | |
| | 4 | 1 | **139-2944** | 2 | ROD | |
| | 5 | 1 | **175-5480** | 1 | HOOD AS | |
| | 6 | 1 | **176-2918** | 1 | PILLAR AS (RH) | |
| | 7 | 1 | **176-2922** | 1 | PILLAR AS (LH) | |
| | 8 | 1 | **176-5760** | 1 | DOOR AS (RH) (ENGINE) | |
| | | 1 | **178-0131** | 1 | HINGE | |
| | 9 | 1 | **176-5765** | 1 | DOOR AS (LH) (ENGINE) | |
| | | 1 | **178-0131** | 1 | HINGE | |
| | 10 | 1 | **176-5767** | 2 | CATCH AS | |
| | | | | | (EACH INCLUDES) | |
| | | 1 | **176-5768** | 1 | PLATE | |
| | 11 | 1 | **176-5770** | 1 | PANEL AS (RH) | |
| | 12 | 1 | **176-5775** | 1 | PANEL AS (LH) | |
| | 13 | 1 | **177-2932** | 2 | CATCH AS | |
| | 14 | 1 | **177-4118** | 2 | HANDHOLD (TOP) | |
| | 15 | 1 | **177-4120** | 2 | HANDHOLD (SIDE) | |
| | 16 | 1 | **187-0976** | 2 | PLATE | |
| | 17 | 1 | **192-5629** | 4 | LATCH AS | |
| | | | | | (EACH INCLUDES) | |
| | | 1 | **126-7168** | 1 | LOCK AS | |
| | | 1 | **7F-9223** | 1 | LOCKWASHER | |
| | | 1 | **8T-5004** | 1 | SCREW-MACHINE (1/4-28X0.375-IN) | |
| | 18 | 1 | **192-5638** | 4 | PAWL | |
| B | 19 | 1 | **194-4939** | 2 | SHIM (5-MM THK) | |
| C | 20 | 1 | **194-6158** | 1 | COVER AS | |
| | 21 | 1 | **199-9983** | 2 | GRAB IRON AS | |
| | 23 | 1 | **212-3591** | 1 | PLATE (RH) | |
| C | 24 | 1 | **235-1123** | 1 | PANEL AS (RH) | |
| C | 25 | 1 | **235-1122** | 1 | PANEL AS (LH) | |
| | 26 | 1 | **212-9510** | 1 | DASH AS | |
| | 27 | 1 | **212-9511** | 1 | PLATE AS | |
| M | 28 | 1 | **127-4038** | 16 | SCREW-MACHINE (M6X1X16-MM) | |
| M | 29 | 1 | **129-3178** | 16 | LOCKNUT (M6X1-THD) | |
| | 30 | 1 | **2K-5986** | 2 | PIN-SPRING | |
| C | 31 | 1 | **5P-1076** | 10 | WASHER-HARD (13.5X30X4-MM THK) | |
| | 32 | 1 | **7X-0632** | 4 | WASHER-HARD (11X36X6-MM THK) | |
| | 33 | 1 | **7X-7729** | 54 | WASHER (11X25X3-MM THK) | |
| M | 34 | 1 | **8T-0389** | 4 | LOCKNUT (M10X1.15-THD) | |
| C | 35 | 1 | **8T-4121** | 4 | WASHER-HARD (11X21X2.5-MM THK) | |
| M | 36 | 1 | **8T-4133** | 4 | NUT (M10X1.5-THD) | |
| M | 37 | 1 | **8T-4136** | 45 | BOLT (M10X1.5X25-MM) | |
| CM | 38 | 1 | **8T-4139** | 8 | BOLT (M12X1.75X30-MM) | |
| M | 39 | 1 | **8T-4179** | 2 | BOLT (M12X1.75X20-MM) | |
| M | 40 | 1 | **8T-4182** | 2 | BOLT (M10X1.5X45-MM) | |
| M | 41 | 1 | **8T-4195** | 13 | BOLT (M10X1.5X30-MM) | |
| CM | 42 | 1 | **8T-4196** | 4 | BOLT (M10X1.5X35-MM) | |
| | 43 | 1 | **8T-4994** | 2 | WASHER-HARD (20X36.5X3.5-MM THK) | |
| | 44 | 1 | **9X-8256** | 16 | WASHER (6.6X12X2-MM THK) | |
| BJ | 45 | 1 | **5P-5923** | | SEAL | |

B-USE AS REQUIRED
C-CHANGE FROM PREVIOUS TYPE
J-ORDER BY THE DECIMETER
M-METRIC PART

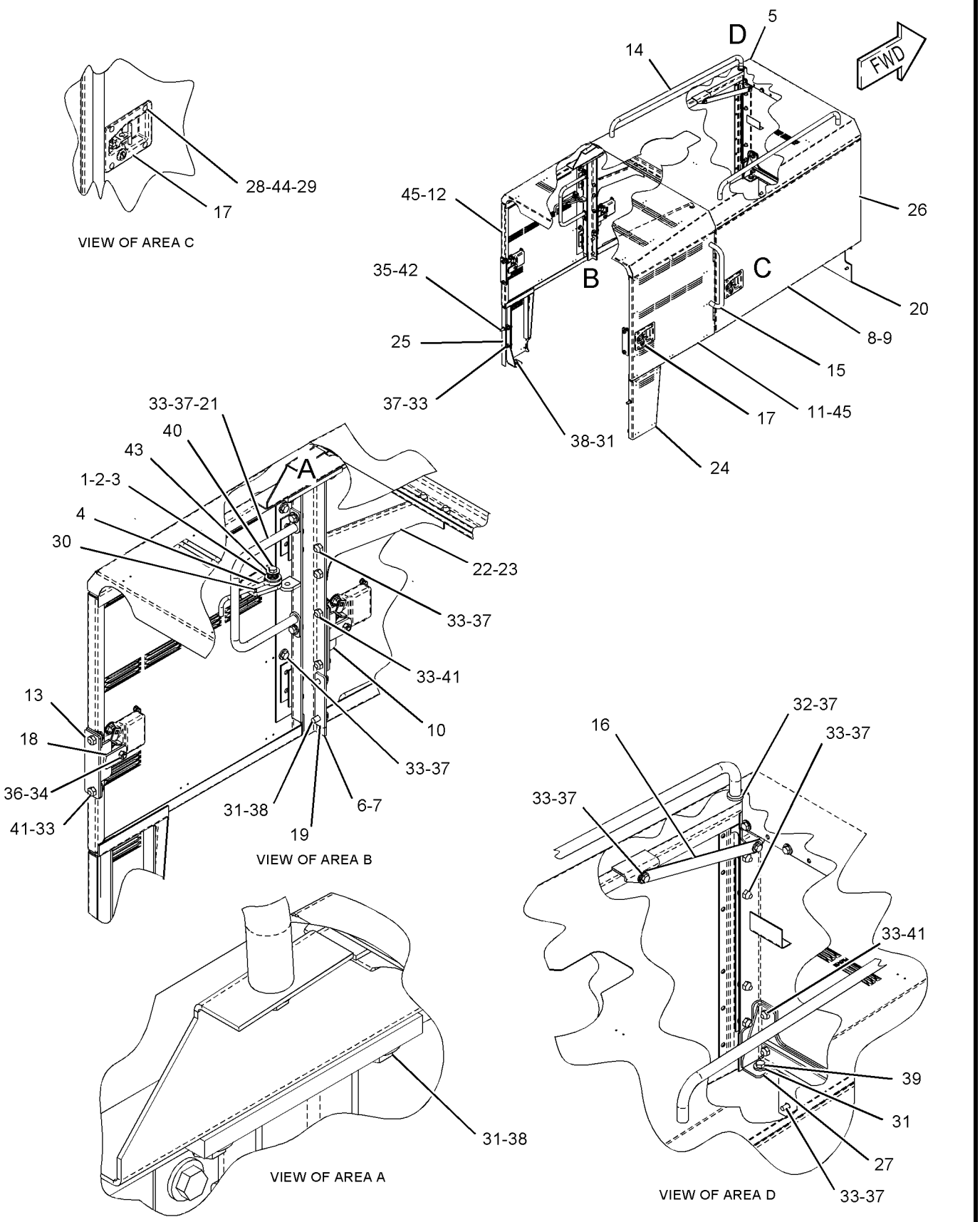


GRAPHIC #1 **<END>** g01110880

## *230-7570* FASTENER GP—CENTRAL LUBRICATION MOUNTING

**S/N: CCA1-UP**

**PART OF 159-4615 GENERAL AR**

**SMCS-7510** **i01892331**

| NOTE | PART NUMBER | QTY | PART NAME 1 2 3 4 5 6 (PRODUCT LEVEL) | SEE PAGE |
|---|---|---|---|---|
| M | **8T-4140** | 4 | BOLT (M16X2X60-MM) | |
| | **3E-4356** | 4 | WASHER-HARD (17.5X30X6-MM THK) | |

M-METRIC PART

**<END>**

# FRAME AND BODY

## *197-0002* FENDER & SUPPORT GP

**S/N: CCA1-UP**

**AN ATTACHMENT**

**SMCS-7252** **i02236495**

| NOTE | REF NO | GRAPHIC REF | PART NUMBER | QTY | PART NAME 1 2 3 4 5 6 (PRODUCT LEVEL) | SEE PAGE |
|---|---|---|---|---|---|---|
| | 1 | 1 | **8T-6473** | 16 | BOLT-LOCKING (5/8-11X2.75-IN) | |
| | 2 | 1 | **195-2274** | 2 | FILM-REFLECTOR (YELLOW) | |
| | 3 | 1 | **215-7224** | 2 | FENDER (FRONT) | |
| | 4 | 1 | **215-7225** | 2 | FENDER (REAR) | |
| | 5 | 1 | **216-6791** | 2 | FLAP | |
| | 6 | 1 | **216-6797** | 2 | PLATE AS | |
| | 7 | 1 | **216-6798** | 2 | PLATE AS | |
| | 8 | 1 | **216-6799** | 2 | PLATE AS | |
| | 9 | 1 | **216-6800** | 1 | SUPPORT AS | |
| | 10 | 1 | **216-6801** | 1 | SUPPORT AS | |
| | 11 | 1 | **216-6802** | 1 | SUPPORT AS | |
| | 12 | 1 | **216-6803** | 1 | SUPPORT AS | |
| | 13 | 1 | **216-6804** | 1 | BRACKET AS | |
| | 14 | 1 | **216-6806** | 2 | BRACKET AS | |
| | 15 | 1 | **216-6809** | 1 | COVER | |
| | 16 | 1 | **216-6810** | 1 | COVER | |
| | 17 | 1 | **216-6811** | 1 | COVER | |
| | 18 | 1 | **216-6812** | 1 | COVER | |
| | 19 | 1 | **233-4439** | 1 | BRACKET AS | |
| | 20 | 1 | **233-4440** | 10 | PLATE AS | |
| | 21 | 1 | **233-4441** | 4 | PLATE | |
| M | 22 | 1 | **099-3649** | 30 | BOLT (M8X1.25X40-MM) | |
| | 23 | 1 | **4D-3704** | 16 | WASHER-HARD (17X30X5-MM THK) | |
| | 24 | 1 | **5P-4116** | 62 | WASHER-HARD (8.8X20.5X2-MM THK) | |
| M | 25 | 1 | **8T-4189** | 20 | BOLT (M8X1.25X20-MM) | |
| | 26 | 1 | **8T-4224** | 6 | WASHER-HARD (8.8X16X2-MM THK) | |
| M | 27 | 1 | **8T-4908** | 18 | BOLT (M8X1.25X25-MM) | |

M-METRIC PART

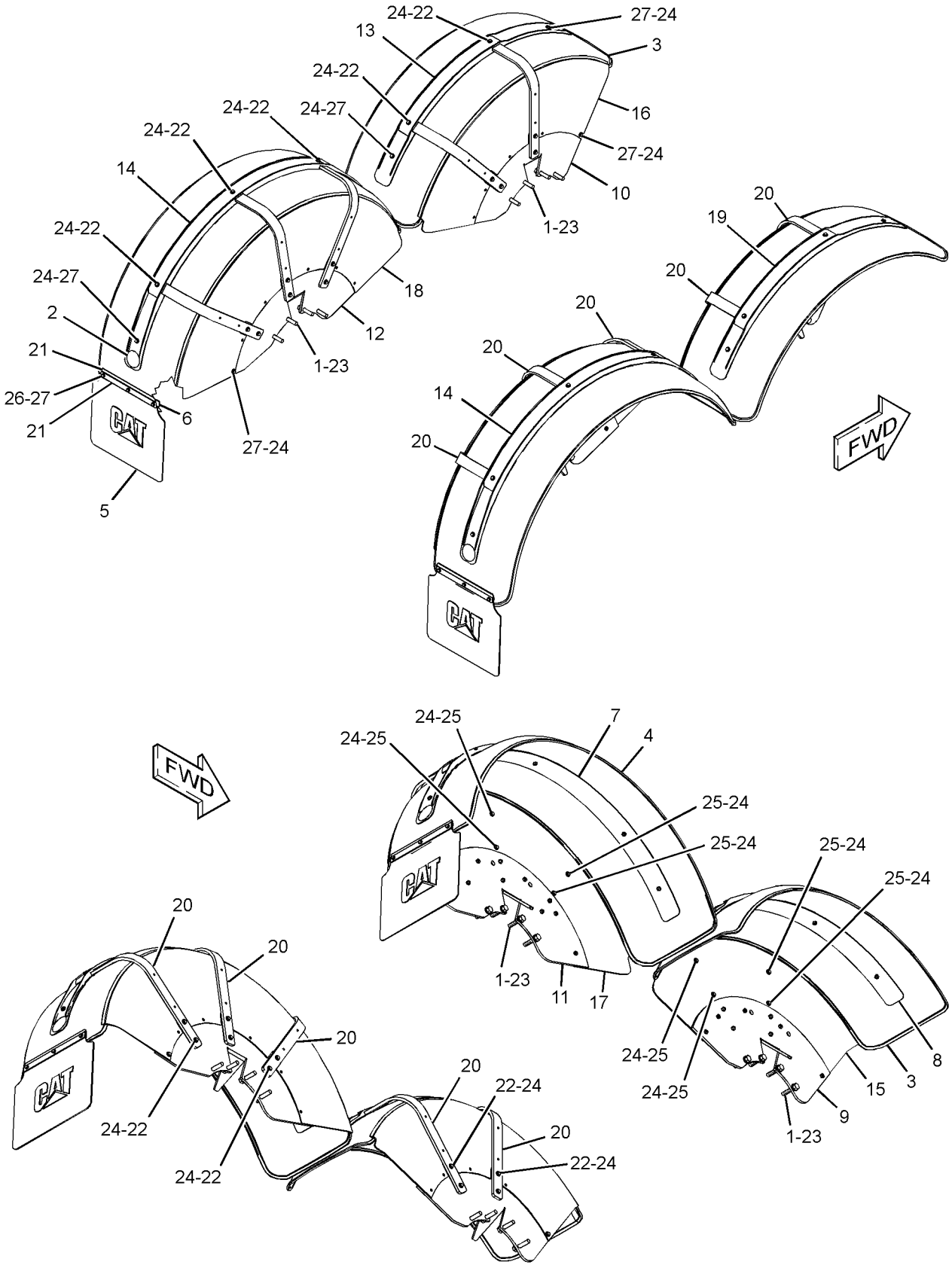


GRAPHIC #1 **<END>** g01175204

# FRAME AND BODY

## *269-9318* FRAME GP

**S/N: CCA1-UP**

**AN ATTACHMENT**

**SMCS-7050, 7051** **i02385620**

| NOTE | PART NUMBER | QTY | PART NAME 1 2 3 4 5 6 (PRODUCT LEVEL) | SEE PAGE |
|---|---|---|---|---|
| | **269-9317** | 1 | FRAME AS | |
| | **168-7408** | 1 | FRAME AS-PLATFORM & SEAT | |

**<END>**

# FRAME AND BODY

## *160-7681* FRAME GP-FRONT

**S/N: CCA1-UP**

**PART OF 159-4615 GENERAL AR**

**SMCS-7050, 7051** **i02531066**

| NOTE | REF NO | GRAPHIC REF | PART NUMBER | QTY | PART NAME 1 2 3 4 5 6 (PRODUCT LEVEL) | SEE PAGE |
|---|---|---|---|---|---|---|
| | 1 | 1 | **8D-3791** | 1 | PIN | |
| | 2 | 1 | **8X-3200** | 1 | PLATE AS | |
| | 3 | 1 | **9D-6584** | 1 | SEAL-LIP TYPE | |
| | 4 | 1 | **9D-6589** | 8 | SEAL-LIP TYPE | |
| | 5 | 1 | **9D-9257** | 1 | PIN | |
| | 6 | 1 | **111-3945** | 2 | PLATE | |
| | 7 | 1 | **144-2161** | 1 | PLATE | |
| | 8 | 1 | **191-5293** | 1 | INSULATION | |
| | 9 | 1 | **145-5968** | 1 | COVER (RH) | |
| | 10 | 1 | **145-5969** | 1 | COVER (LH) | |
| | 11 | 1 | **168-7408** | 1 | FRAME AS-PLATFORM & SEAT | |
| | 12 | 1 | **4L-6454** | 7 | BOLT (3/8-16X1-IN) | |
| | 13 | 1 | **5M-3062** | 20 | BOLT (3/8-16X0.75-IN) | |
| | 14 | 1 | **5P-1075** | 27 | WASHER-HARD (10.2X22.5X3-MM THK) | |
| | 15 | 1 | **5P-8167** | 3 | BOLT (3/8-16X0.625-IN) | |
| | 16 | 1 | **6K-4076** | 1 | BEARING-SLEEVE | |
| | 17 | 1 | **8D-9159** | 4 | BEARING-SLEEVE | |
| | 18 | 1 | **8T-4896** | 16 | WASHER-HARD (10.2X18.5X2.5-MM THK) | |
| | 19 | 1 | **9D-3311** | 1 | BEARING-SLEEVE | |
| BD | 20 | 1 | **5P-5969** | | SEAL | |
| BD | 20A | 1 | **5P-5969** | | SEAL | |
| BD | 20B | 1 | **5P-5969** | | SEAL | |
| BE | 21 | 1 | **144-7620** | | TAPE | |
| BE | 21A | 1 | **144-7620** | | TAPE | |
| BE | 21B | 1 | **144-7620** | | TAPE | |

B-USE AS REQUIRED
D-ORDER BY THE METER
E-ORDER BY THE CENTIMETER

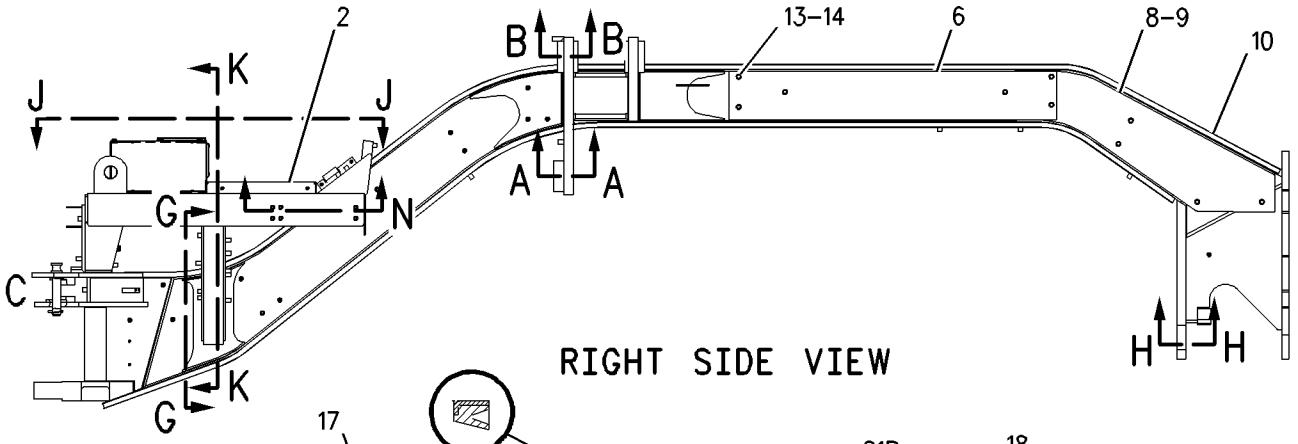


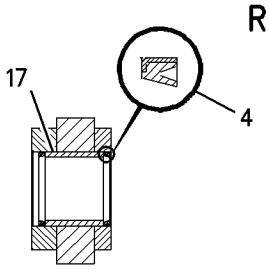


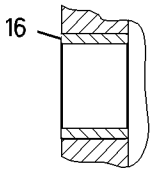


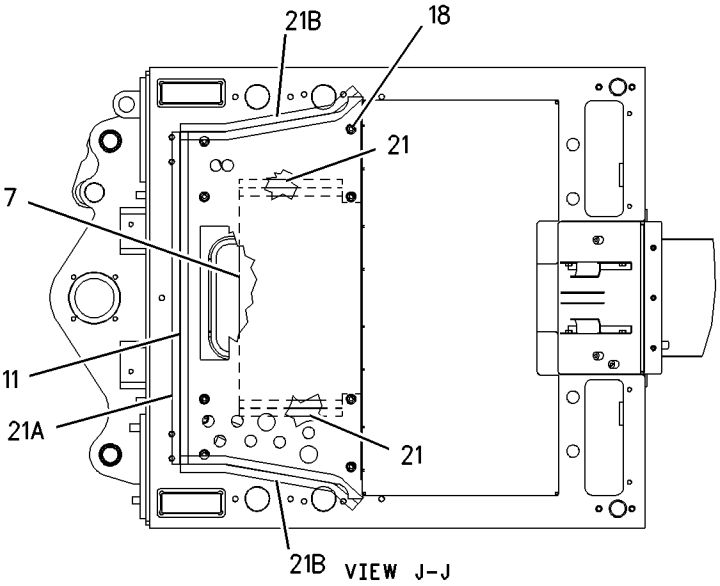


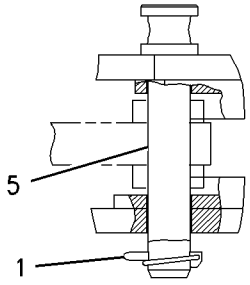


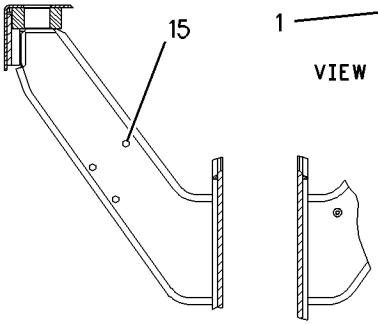


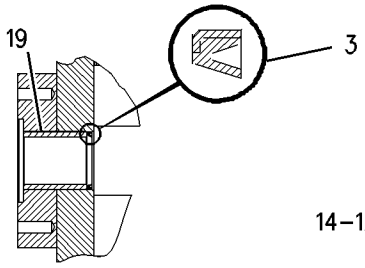


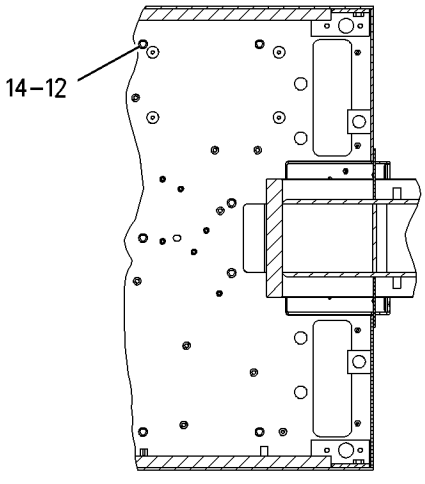


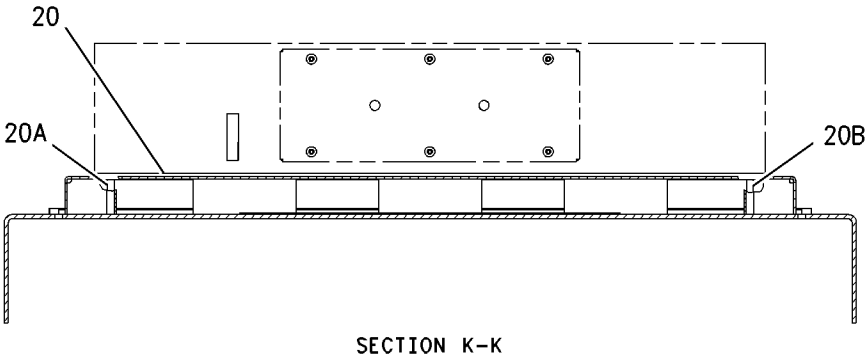


GRAPHIC #1 **<END>** g00954113

# *197-1448* GUARD & SUPPORT GP-RADIATOR

**S/N: CCA1-UP**
**PART OF 185-1542, 191-9260 COOLING AR**
**ALSO AN ATTACHMENT**

**SMCS-7155, 7272** **i02385512**

| NOTE | REF NO | GRAPHIC REF | PART NUMBER | QTY | PART NAME 1 2 3 4 5 6 (PRODUCT LEVEL) | SEE PAGE |
|---|---|---|---|---|---|---|
| | 1 | 1 | **5D-1026** | 1 | CLAMP-HOSE | |
| | 2 | 1 | **8F-8151** | 1 | VALVE AS-SHUTOFF | |
| | 4 | 1 | **131-5171** | 4 | CLIP | |
| | 5 | 1 | **166-0939** | 1 | SHROUD AS-FAN | |
| | 6 | 1 | **173-3882** | 2 | PLATE | |
| | 7 | 1 | **173-3924** | 2 | BAFFLE | |
| | 8 | 2 | **173-3942** | 1 | GUARD | |
| | 9 | 1 | **174-2863** | 2 | MOUNT AS (UPPER) | |
| | | | | | (EACH INCLUDES) | |
| | | 1 | **8F-6437** | 1 | WASHER (13.5X50.8X4.76-MM THK) | |
| | | 1 | **8T-4223** | 1 | WASHER-HARD (13.5X25.5X3-MM THK) | |
| M | | 1 | **8T-4244** | 1 | NUT (M12X1.75-THD) | |
| M | | 1 | **8T-6868** | 1 | BOLT (M12X1.75X80-MM) | |
| | | 1 | **9R-3141** | 1 | MOUNT AS | |
| | | 1 | **183-6933** | 1 | BRACKET | |
| | | 1 | **194-4863** | 1 | BRACKET | |
| | 10 | 2 | **177-4119** | 2 | HANDHOLD | |
| | 12 | 2 | **183-7913** | 1 | PLATE AS | |
| M | | 2 | **8T-3490** | 8 | NUT-WELD (M10X1.5-THD) | |
| | 13 | 1 | **197-1444** | 1 | SUPPORT AS | |
| | 14 | 1 | **199-2756** | 2 | MOUNT AS (LOWER) | |
| | | | | | (EACH INCLUDES) | |
| | | 1 | **8F-6437** | 1 | WASHER (13.5X50.8X4.76-MM THK) | |
| | | 1 | **8T-4223** | 1 | WASHER-HARD (13.5X25.5X3-MM THK) | |
| M | | 1 | **8T-4244** | 1 | NUT (M12X1.75-THD) | |
| M | | 1 | **8T-6868** | 1 | BOLT (M12X1.75X80-MM) | |
| | | 1 | **9R-3141** | 1 | MOUNT AS | |
| | | 1 | **198-9942** | 1 | BRACKET | |
| | | 1 | **226-9996** | 1 | BRACKET | |
| | 15 | 1 | **214-6867** | 2 | PLATE | |
| | 17 | 1 | **4S-9191** | 8 | WASHER (12X22.5X5-MM THK) | |
| M | 18 | 1 | **6V-1820** | 8 | BOLT (M10X1.5X30-MM) | |
| M | 19 | 1 | **6V-8214** | 12 | BOLT (M6X1X20-MM) | |
| | 20 | 1,2 | **7X-7729** | 6 | WASHER (11X25X3-MM THK) | |
| | 21 | 1,2 | **8T-4121** | 43 | WASHER-HARD (11X21X2.5-MM THK) | |
| M | 22 | 1,2 | **8T-4136** | 31 | BOLT (M10X1.5X25-MM) | |
| M | 23 | 1,2 | **8T-4195** | 12 | BOLT (M10X1.5X30-MM) | |
| M | 24 | 1 | **8T-4196** | 4 | BOLT (M10X1.5X35-MM) | |
| | 25 | 1 | **9D-3767** | 6 | PLUG-BUTTON | |
| | 26 | 1 | **9X-8267** | 12 | WASHER (6.6X12X2-MM THK) | |
| E | 27 | 1 | **5P-0767** | | HOSE (48-CM) | |
| E | 28 | 2 | **123-3827** | | SEAL (100-CM) | |
| E | 29 | 2 | **204-9840** | | SEAL (169-CM) | |
| E | 30 | 2 | **7X-7877** | | STRIP-EDGING (16-CM) | |
| M | 31 | 1 | **8T-4191** | 2 | BOLT (M10X1.5X16-MM) | |

E-ORDER BY THE CENTIMETER
M-METRIC PART

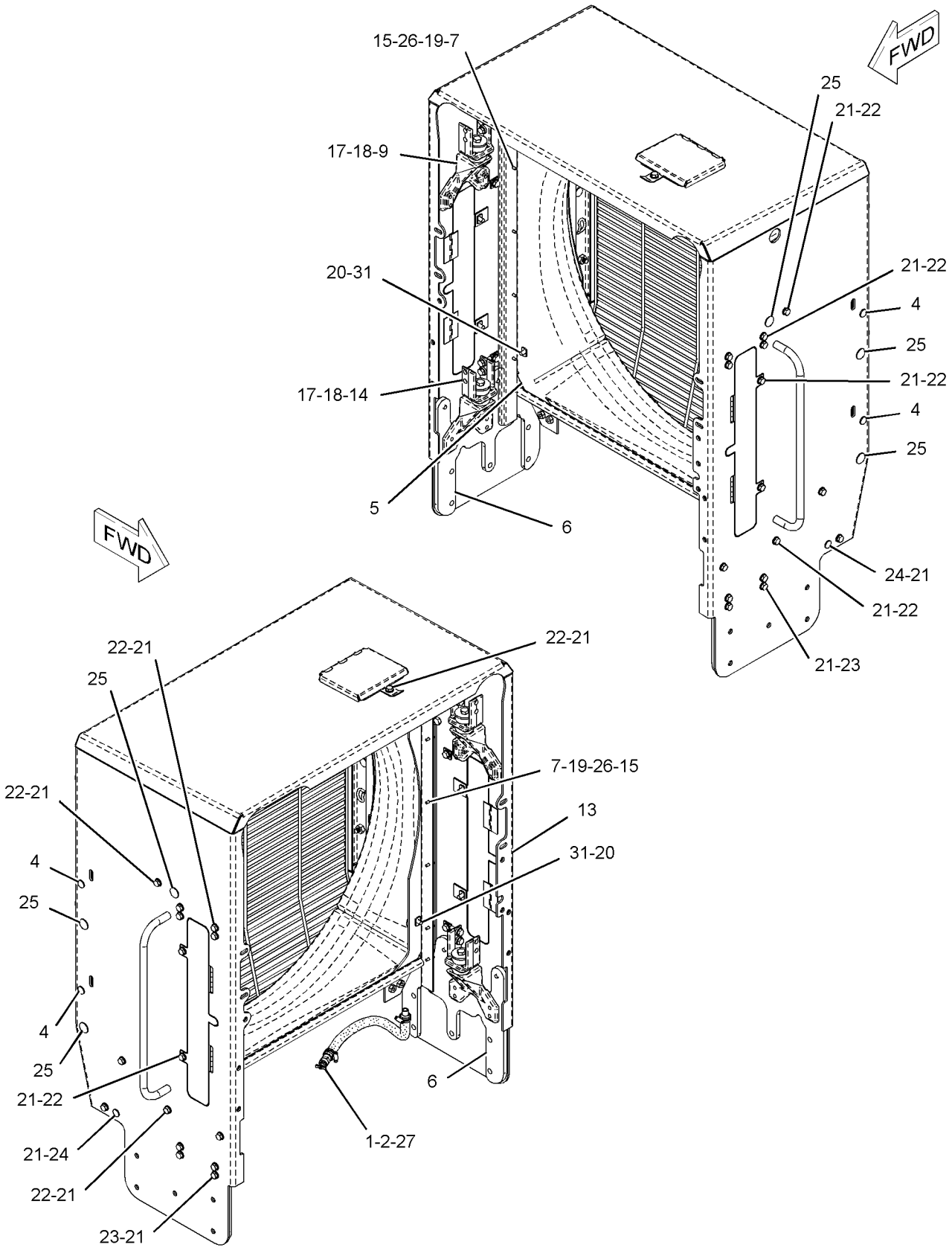


GRAPHIC #1

g01190121

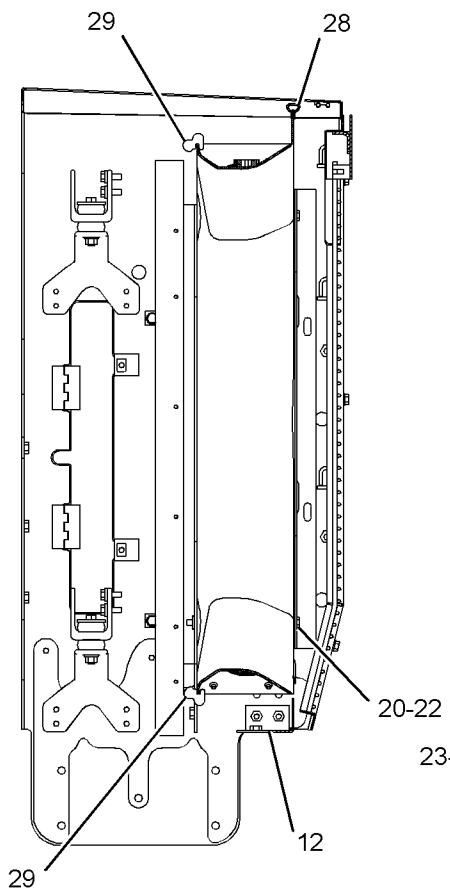


SECTION A-A

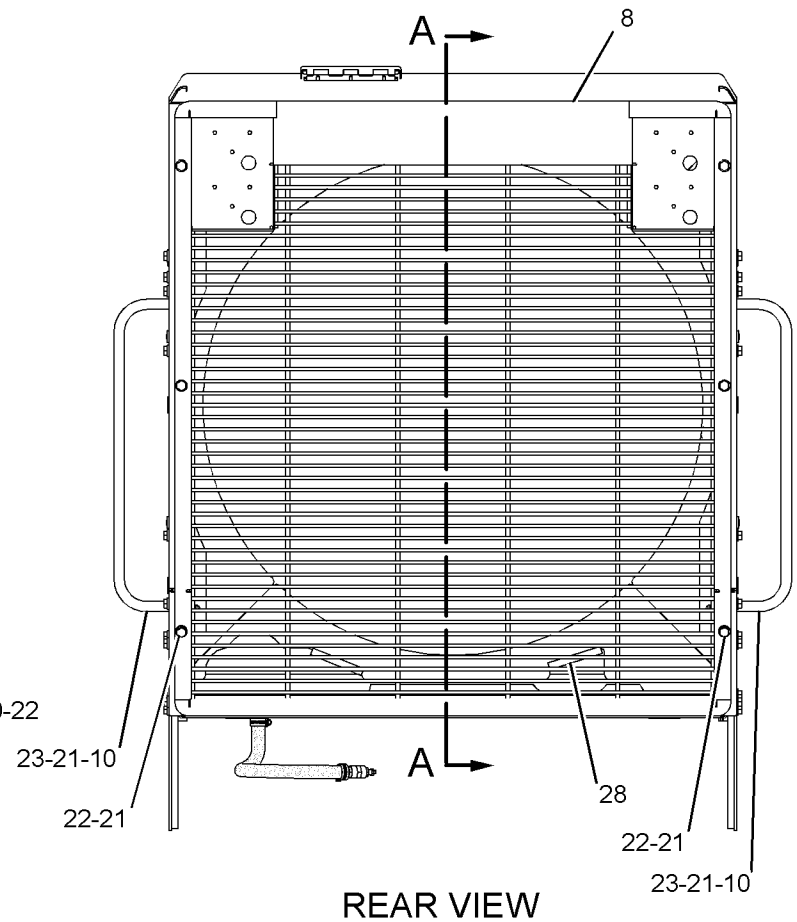


REAR VIEW

GRAPHIC #2 **<END>** g01190833

# *203-2260* GUARD GP-BOTTOM

**S/N: CCA1-UP**
**PART OF 207-4453, 210-2044 CONVERSION AR-CERTIFICATION**
**AN ATTACHMENT**

**SMCS-7153** **i01991850**

| NOTE | REF NO | GRAPHIC REF | PART NUMBER | QTY | PART NAME 1 2 3 4 5 6 (PRODUCT LEVEL) | SEE PAGE |
|---|---|---|---|---|---|---|
| | 1 | 1 | **7D-7496** | 2 | PIN AS | |
| | 2 | 1 | **8W-6626** | 2 | CAP | |
| | 3 | 1 | **8W-6627** | 1 | SUPPORT AS | |
| | | 1 | **1F-0750** | 4 | NUT-WELD (3/8-16-THD) | |
| | 4 | 1 | **8W-8412** | 1 | GUARD AS | |
| | 5 | 1 | **0L-1178** | 4 | BOLT (3/4-10X2-IN) | |
| | 6 | 1 | **8T-8919** | 8 | BOLT (1/2-13X1.75-IN) | |
| | 7 | 1 | **5P-6652** | 4 | WASHER (20X44.5X6-MM THK) | |
| | 8 | 1 | **8K-0530** | 2 | PIN-CABLE SOCKET | |
| | 9 | 1 | **8T-4223** | 8 | WASHER-HARD (13.5X25.5X3-MM THK) | |

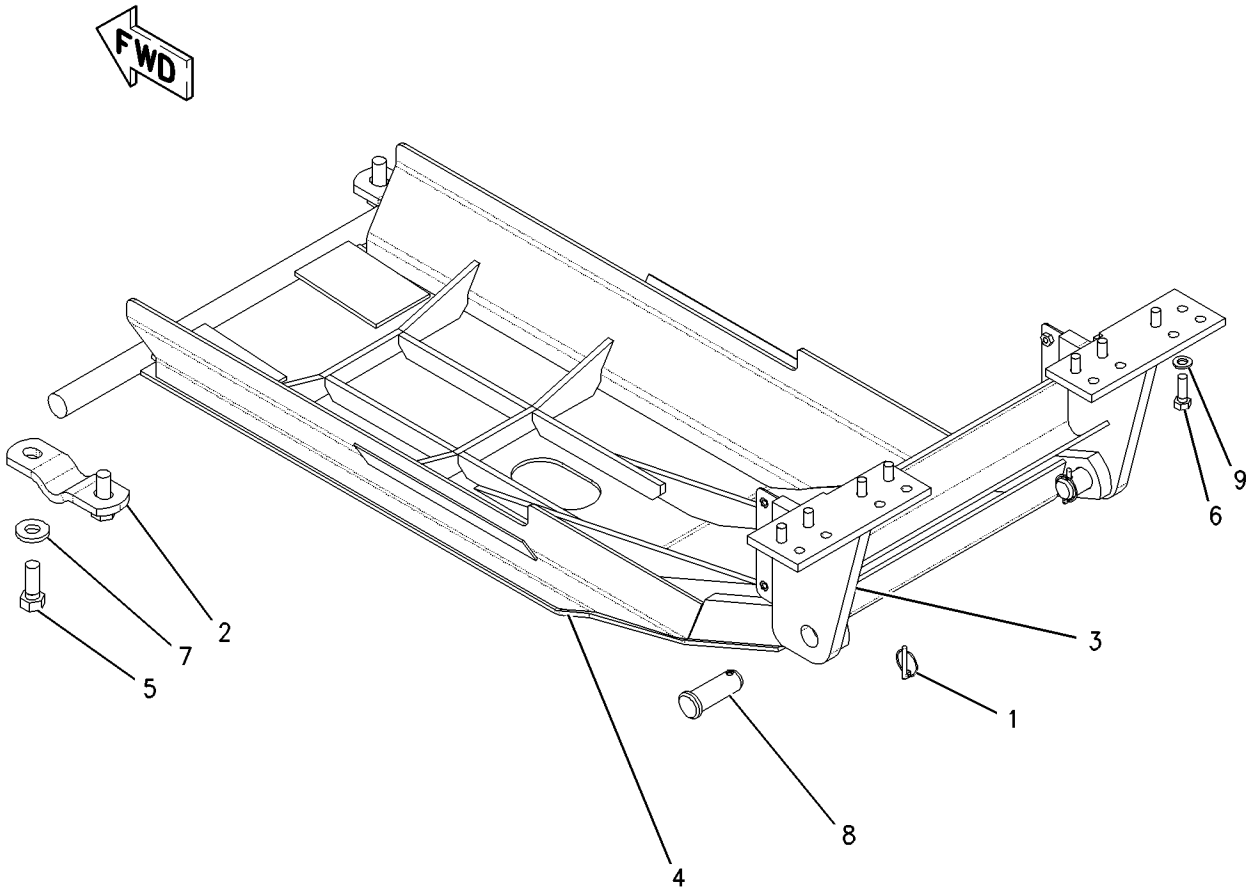


GRAPHIC #1 **<END>** g00793710

# FRAME AND BODY

## *269-1002* GUARD GP-BOTTOM

**S/N: CCA1-UP**

**AN ATTACHMENT**

**SMCS-7153** **i02579656**

| NOTE | REF NO | GRAPHIC REF | PART NUMBER | QTY | PART NAME 1 2 3 4 5 6 (PRODUCT LEVEL) | SEE PAGE |
|---|---|---|---|---|---|---|
| | 1 | 1 | **267-9437** | 1 | COVER AS | |
| | 2 | 1 | **269-1000** | 4 | PLATE | |
| | 3 | 1 | **4L-6454** | 8 | BOLT (3/8-16X1-IN) | |
| | 4 | 1 | **8T-4896** | 8 | WASHER-HARD (10.2X18.5X2.5-MM THK) | |

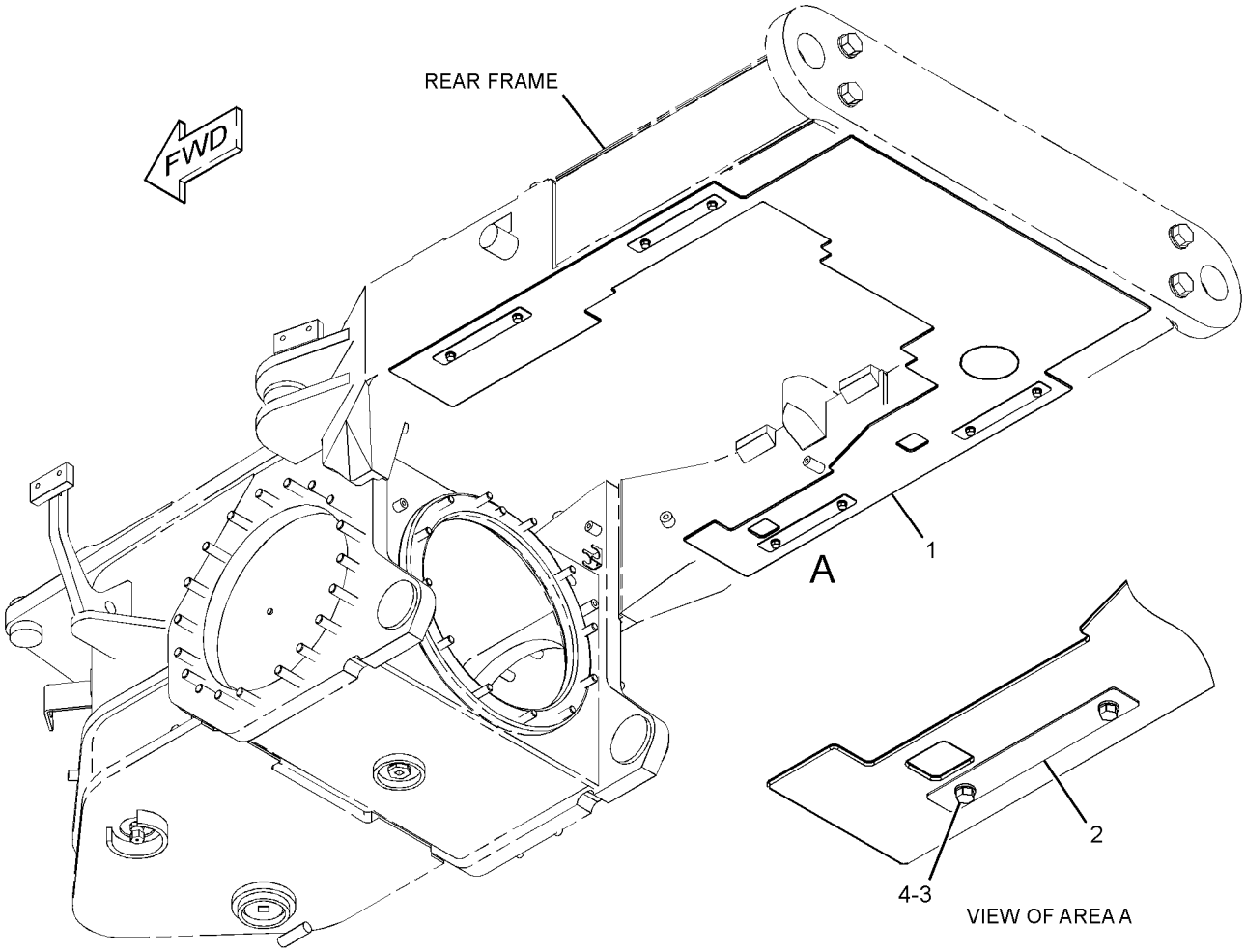


GRAPHIC #1 **<END>** g01292794

# FRAME AND BODY

## *190-1697* GUARD GP-BRAKE LINES

**S/N: CCA1-UP**

**AN ATTACHMENT**

**SMCS-7166** **i01884399**

| NOTE | REF NO | GRAPHIC REF | PART NUMBER | QTY | PART NAME 1 2 3 4 5 6 (PRODUCT LEVEL) | SEE PAGE |
|---|---|---|---|---|---|---|
| | 1 | 1 | **190-1699** | 1 | HOUSING AS (RH) | |
| | 2 | 1 | **190-1700** | 1 | HOUSING AS (LH) | |
| | 3 | 1 | **199-2625** | 2 | PLATE | |
| | 4 | 1 | **199-2626** | 2 | PLATE | |
| | 5 | 1 | **8T-4121** | 14 | WASHER-HARD (11X21X2.5-MM THK) | |
| M | 6 | 1 | **8T-4137** | 14 | BOLT (M10X1.5X20-MM) | |

M-METRIC PART

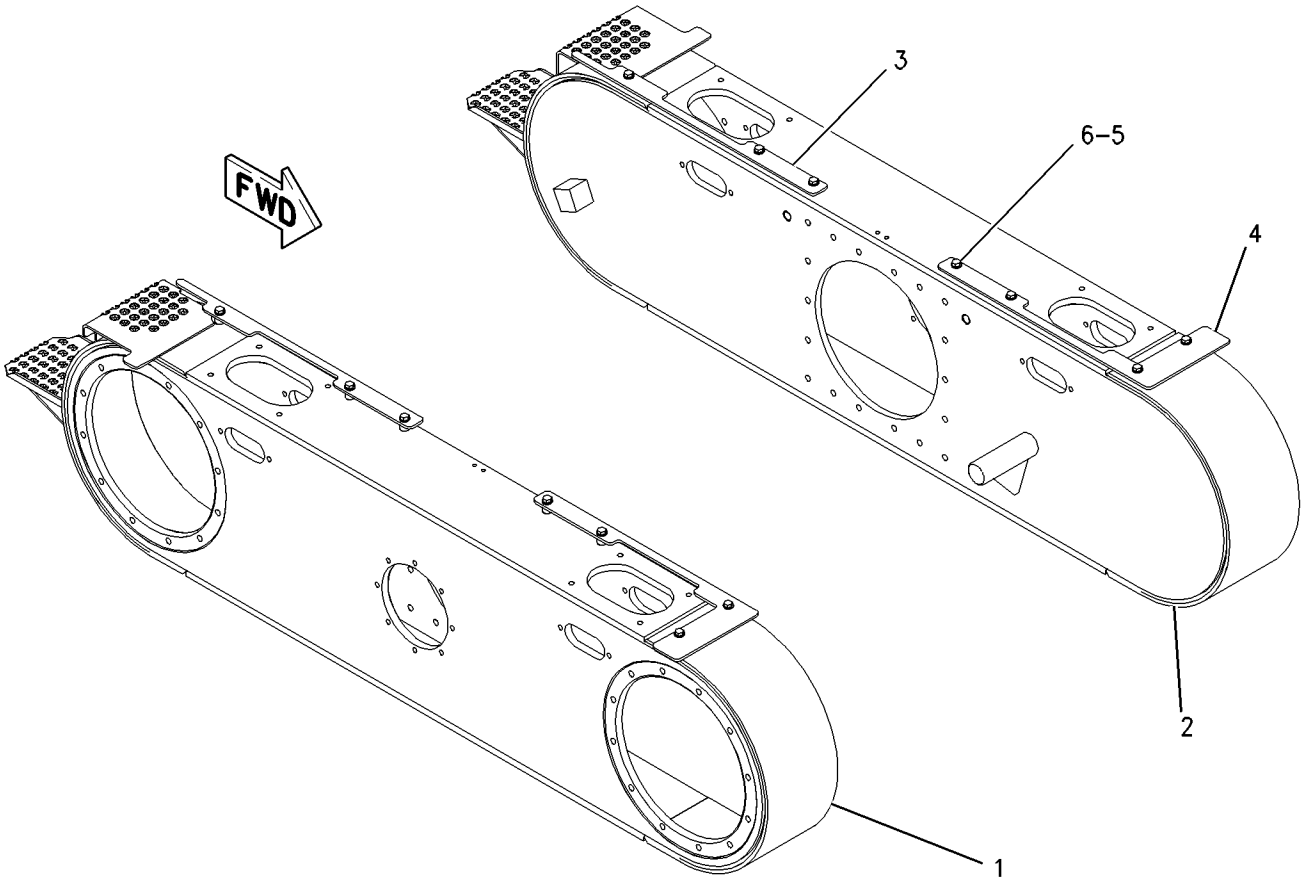


GRAPHIC #1 **<END>** g00877986

# FRAME AND BODY

## *171-8077* GUARD GP-FUEL TANK

**S/N: CCA1-UP**
**AN ATTACHMENT**

**SMCS-1273, 7150** **i01879080**

| NOTE | REF NO | GRAPHIC REF | PART NUMBER | QTY | PART NAME 1 2 3 4 5 6 (PRODUCT LEVEL) | SEE PAGE |
|---|---|---|---|---|---|---|
| | 1 | 1 | **124-2456** | 2 | FILM-INSTRUCTION (NO STEP) | |
| | 2 | 1 | **183-6633** | 1 | PLATE AS | |
| | 3 | 1 | **183-6638** | 1 | PLATE AS | |
| | 4 | 1 | **185-2042** | 1 | PLATE AS | |
| | 5 | 1 | **185-2049** | 1 | PLATE AS | |
| | 6 | 1 | **197-1351** | 2 | BRACKET | |
| | 7 | 1 | **197-1801** | 2 | PLATE AS | |
| | 8 | 1 | **7X-7729** | 18 | WASHER (11X25X3-MM THK) | |
| M | 9 | 1 | **8T-0389** | 2 | LOCKNUT (M10X1.5-THD) | |
| M | 10 | 1 | **8T-4137** | 12 | BOLT (M10X1.5X20-MM) | |
| M | 11 | 1 | **8T-4185** | 4 | BOLT (M10X1.5X50-MM) | |

M-METRIC PART

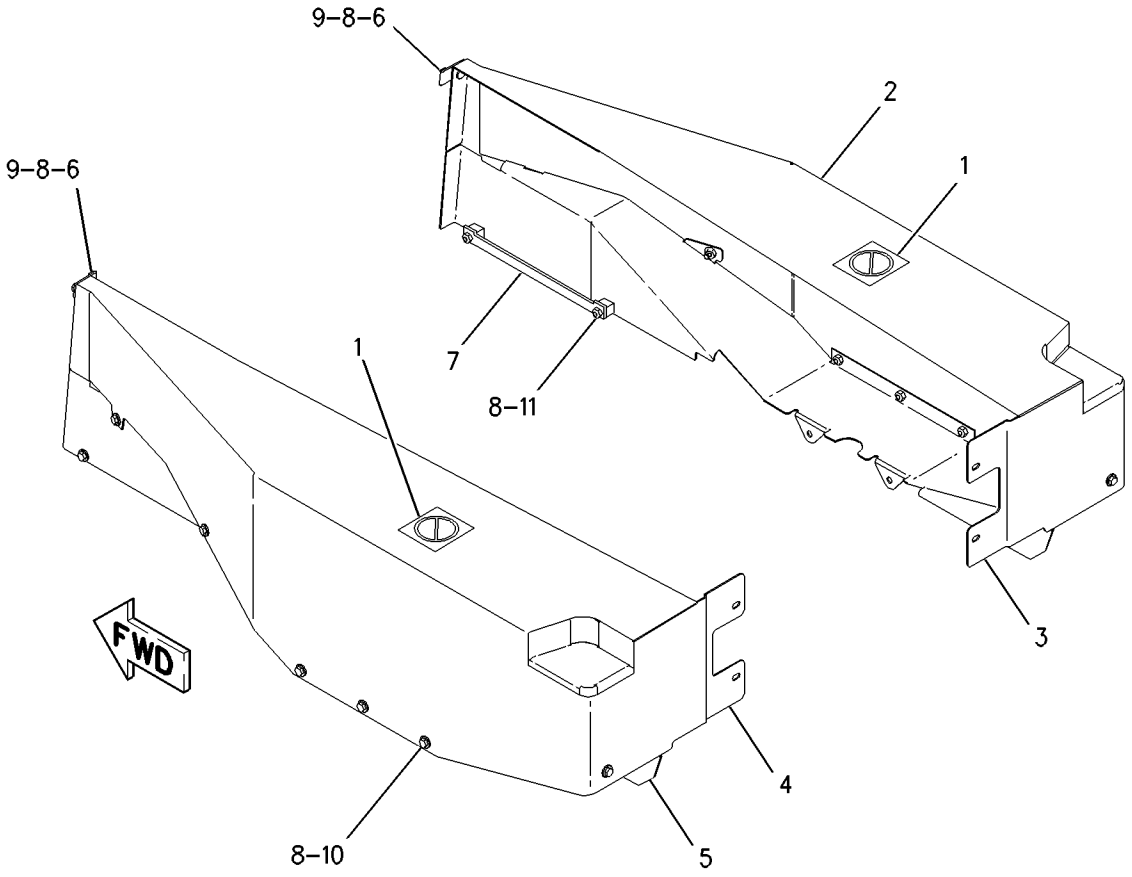


GRAPHIC #1 **<END>** g00950001

# *207-9235* GUARD GP-LIGHTING

**S/N: CCA1-UP**
**AN ATTACHMENT**

**SMCS-715L** **i02209944**

| NOTE | REF NO | GRAPHIC REF | PART NUMBER | QTY | PART NAME 1 2 3 4 5 6 (PRODUCT LEVEL) | SEE PAGE |
|---|---|---|---|---|---|---|
| | 1 | 1 | **207-9236** | 1 | GUARD AS (RH) | |
| | 2 | 1 | **207-9237** | 1 | GUARD AS (LH) | |

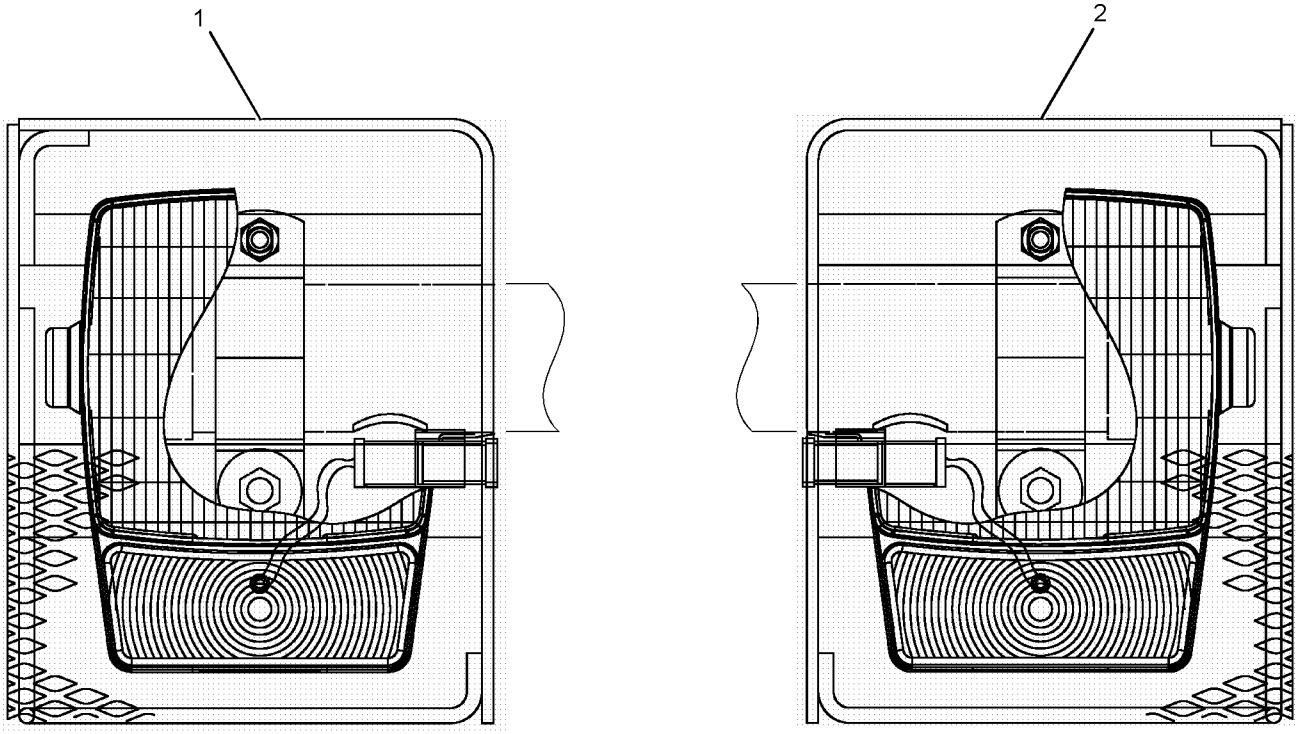


GRAPHIC #1 **<END>** g01125010

# *126-6933* GUARD GP-PLATFORM–ACCUGRADE

**S/N: CCA1-306**

**PART OF 207-4453, 210-2044 CONVERSION AR-CERTIFICATION**

**AN ATTACHMENT**

**SMCS-7150, 7253** **i01772241**

| NOTE | REF NO | GRAPHIC REF | PART NUMBER | QTY | PART NAME 1 2 3 4 5 6 (PRODUCT LEVEL) | SEE PAGE |
|---|---|---|---|---|---|---|
| B | 1 | 1 | **1W-3011** | 1 | SPACER (10.5X22X73.5-MM THK) | |
| | 2 | 1 | **126-6929** | 1 | COVER | |
| | 3 | 1 | **126-6930** | 1 | COVER | |
| | 4 | 1 | **129-5049** | 4 | BRACKET AS | |
| | 5 | 1 | **201-7603** | 2 | PLATE-WARNING (CRUSH HAZARD) | |
| | 6 | 1 | **220-1922** | 2 | BRACKET | |
| | 7 | 1 | **1F-5339** | 4 | LUG (3/8-16-THD) | |
| | 8 | 1 | **4L-6454** | 4 | BOLT (3/8-16X1-IN) | |
| | 9 | 1 | **5M-3062** | 4 | BOLT (3/8-16X0.75-IN) | |
| | 10 | 1 | **5P-1075** | 14 | WASHER-HARD (10.2X22.5X3-MM THK) | |
| | 11 | 1 | **6D-4244** | 2 | CLIP | |
| | 12 | 1 | **6V-8801** | 2 | NUT (3/8-16-THD) | |
| B | 13 | 1 | **7X-0291** | 1 | BOLT (3/8-16X3.75-IN) | |
| | 14 | 1 | **8T-8915** | 4 | BOLT (3/8-16X3.25-IN) | |
| | 15 | 1 | **9D-5659** | 2 | BOSS (3/8-16-THD) | |

B-USE AS REQUIRED

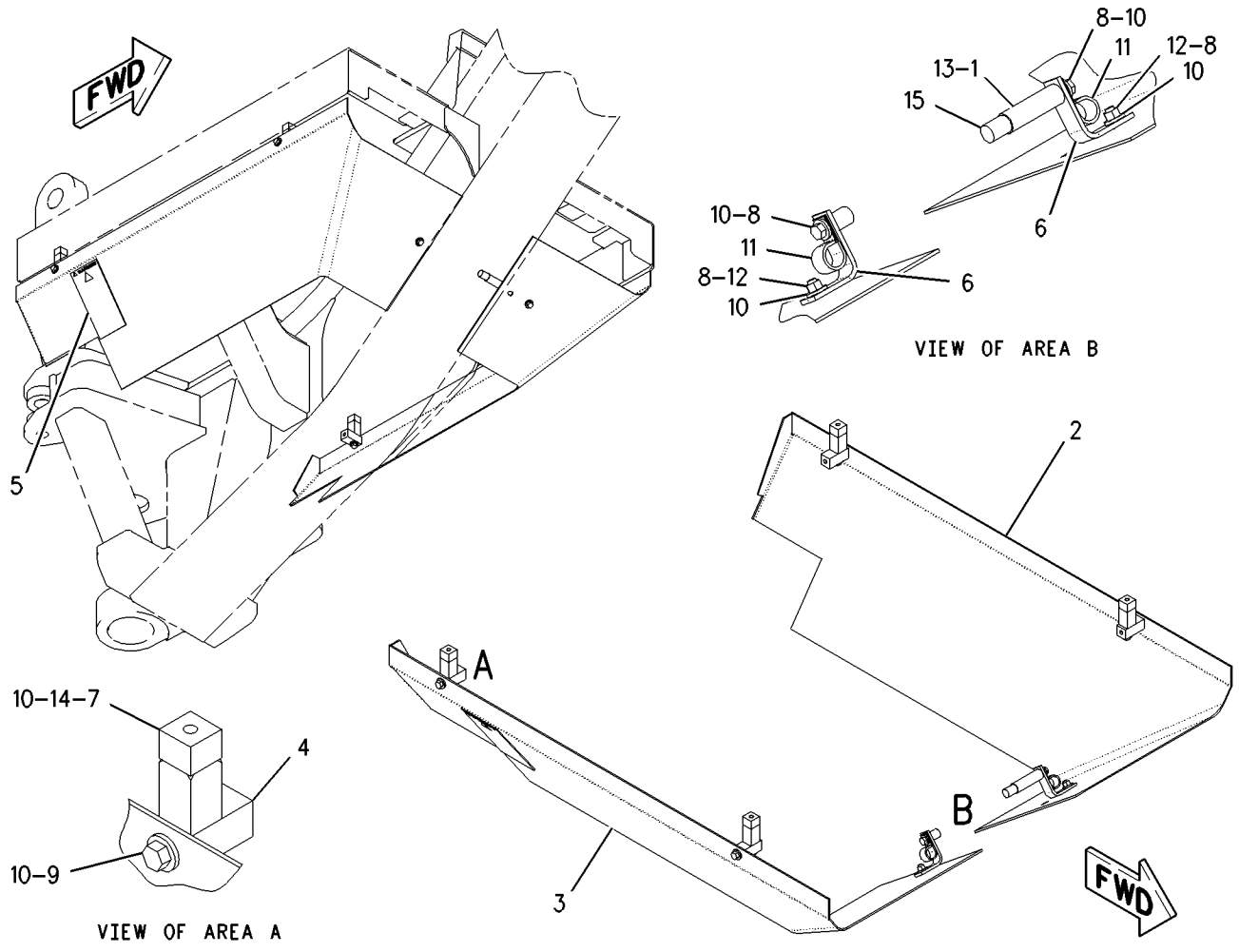


GRAPHIC #1 **<END>** g00943601

## *126-6933* GUARD GP-PLATFORM–ACCUGRADE

**S/N: CCA307-UP**
**PART OF 207-4453, 210-2044 CONVERSION AR-CERTIFICATION**
**AN ATTACHMENT**
**TYPE 1**

**SMCS-7150, 7253** **i02064126**

| NOTE | REF NO | GRAPHIC REF | PART NUMBER | QTY | PART NAME 1 2 3 4 5 6 (PRODUCT LEVEL) | SEE PAGE |
|---|---|---|---|---|---|---|
| C | 1 | 1 | **4T-8050** | 1 | SPACER (11X19X57-MM THK) | |
| | 2 | 1,2 | **129-5049** | 4 | BRACKET AS | |
| | 3 | 1 | **201-7603** | 2 | PLATE-WARNING (CRUSH HAZARD) | |
| C | 4 | 1 | **224-5844** | 1 | COVER (LH) | |
| C | 5 | 1 | **224-5845** | 1 | COVER -RH | |
| C | 6 | 2 | **224-5912** | 1 | BRACKET | |
| C | 7 | 2 | **231-5251** | 1 | BRACKET | |
| | 8 | 1,2 | **1F-5339** | 4 | LUG (3/8-16-THD) | |
| | 9 | 1,2 | **5M-3062** | 4 | BOLT (3/8-16X0.75-IN) | |
| | 10 | 1,2 | **5P-1075** | 12 | WASHER-HARD (10.2X22.5X3-MM THK) | |
| | 11 | 1,2 | **5S-7382** | 2 | BOLT (3/8-16X1.375-IN) | |
| | 12 | 2 | **6V-1889** | 1 | CLIP | |
| | 13 | 1,2 | **6V-8801** | 2 | NUT (3/8-16-THD) | |
| C | 14 | 1,2 | **8T-8915** | 5 | BOLT (3/8-16X3.25-IN) | |

C-CHANGE FROM PREVIOUS TYPE

REFER TO ALL ILLUSTRATIONS OF THIS GROUP FOR AUXILIARY VIEWS

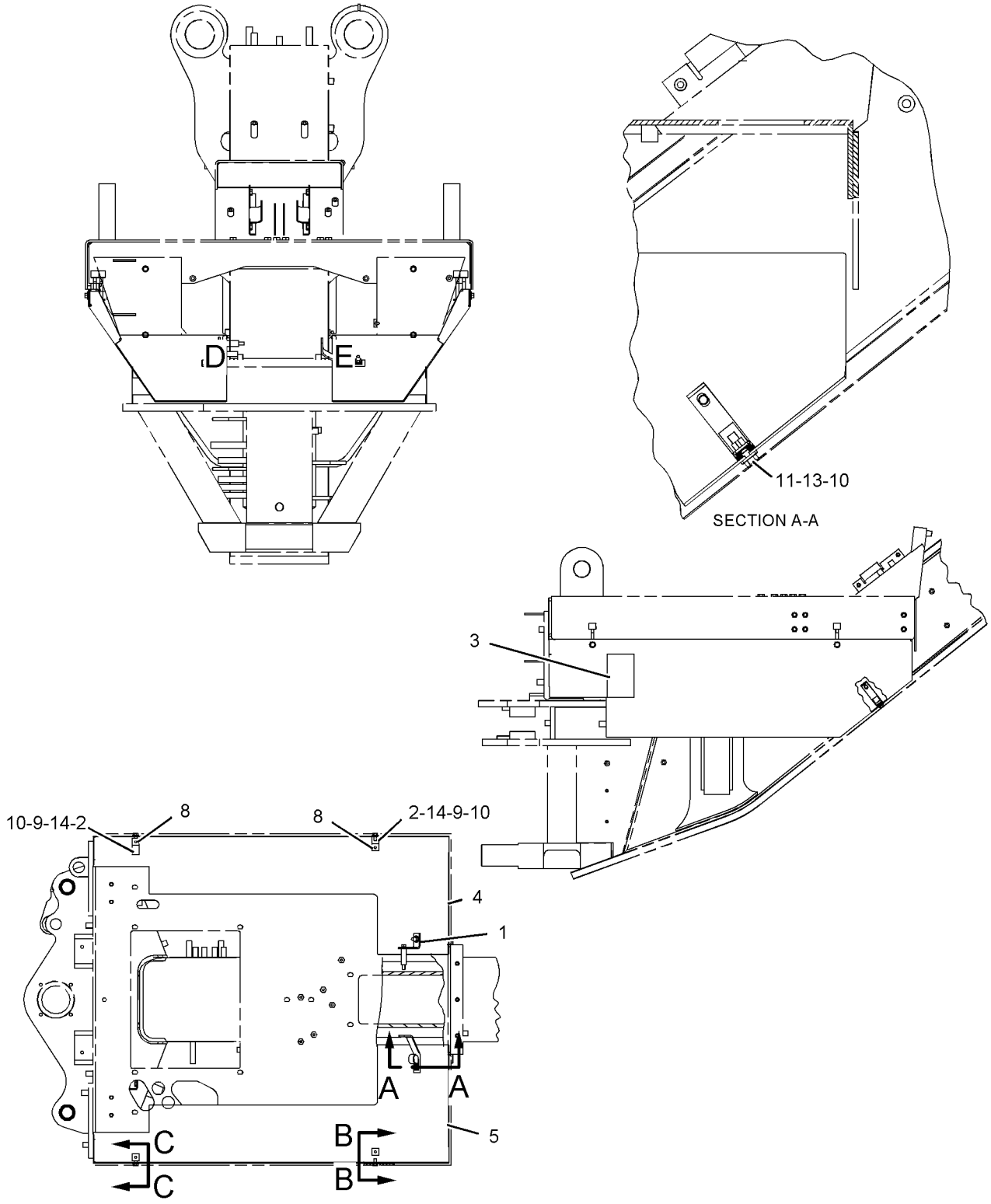


GRAPHIC #1

g01059273

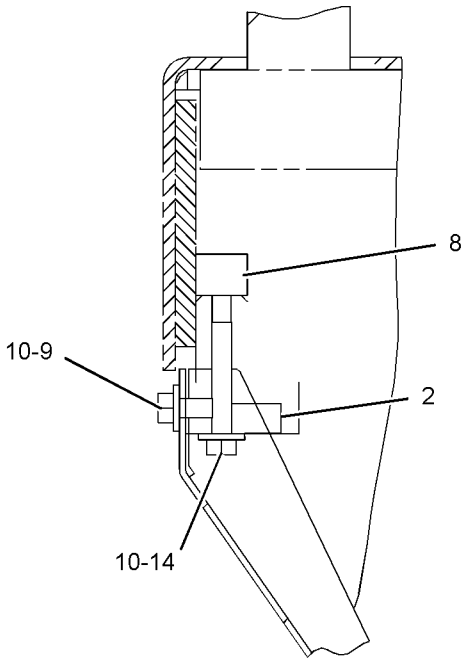


SECTION C-C

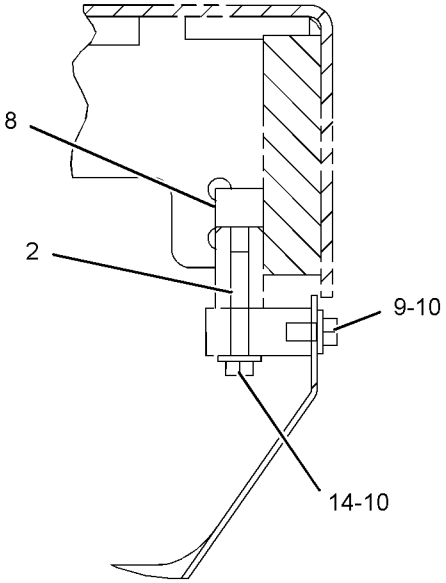


SECTION B-B

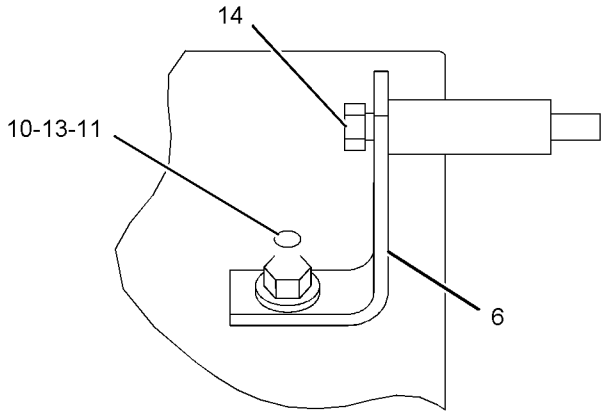


VIEW OF AREA E

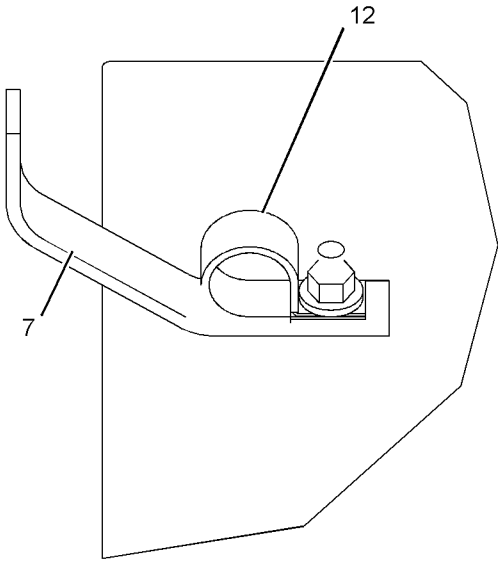


VIEW OF AREA F

GRAPHIC #2 **<END>** g01059299

# *126-6933* GUARD GP-PLATFORM–ACCUGRADE

**S/N: CCA307-UP**
**PART OF 207-4453, 210-2044 CONVERSION AR-CERTIFICATION, 247-6453 GRADE CONTROL AR**
**AN ATTACHMENT**
**TYPE 2**

**SMCS-7150, 7253** **i02230061**

| NOTE | REF NO | GRAPHIC REF | PART NUMBER | QTY | PART NAME 1 2 3 4 5 6 (PRODUCT LEVEL) | SEE PAGE |
|---|---|---|---|---|---|---|
| | 1 | 1 | **4T-8050** | 1 | SPACER (11X19X57-MM THK) | |
| | 2 | 1,2 | **129-5049** | 4 | BRACKET AS | |
| | 3 | 2 | **224-5912** | 1 | BRACKET | |
| | 4 | 1 | **226-1240** | 2 | FILM-WARNING (CRUSH HAZARD, STAY BACK) | |
| | 5 | 2 | **231-5251** | 1 | BRACKET | |
| C | 6 | 1 | **245-3930** | 1 | COVER (RH) | |
| C | 7 | 1 | **245-3933** | 1 | COVER (LH) | |
| | 8 | 1,2 | **1F-5339** | 4 | LUG (3/8-16-THD) | |
| | 9 | 1,2 | **5M-3062** | 4 | BOLT (3/8-16X0.75-IN) | |
| | 10 | 1,2 | **5P-1075** | 12 | WASHER-HARD (10.2X22.5X3-MM THK) | |
| | 11 | 1,2 | **5S-7382** | 2 | BOLT (3/8-16X1.375-IN) | |
| | 12 | 2 | **6V-1889** | 1 | CLIP | |
| | 13 | 1,2 | **6V-8801** | 2 | NUT (3/8-16-THD) | |
| | 14 | 1,2 | **8T-8915** | 5 | BOLT (3/8-16X3.25-IN) | |

C-CHANGE FROM PREVIOUS TYPE

REFER TO ALL ILLUSTRATIONS OF THIS GROUP FOR AUXILIARY VIEWS

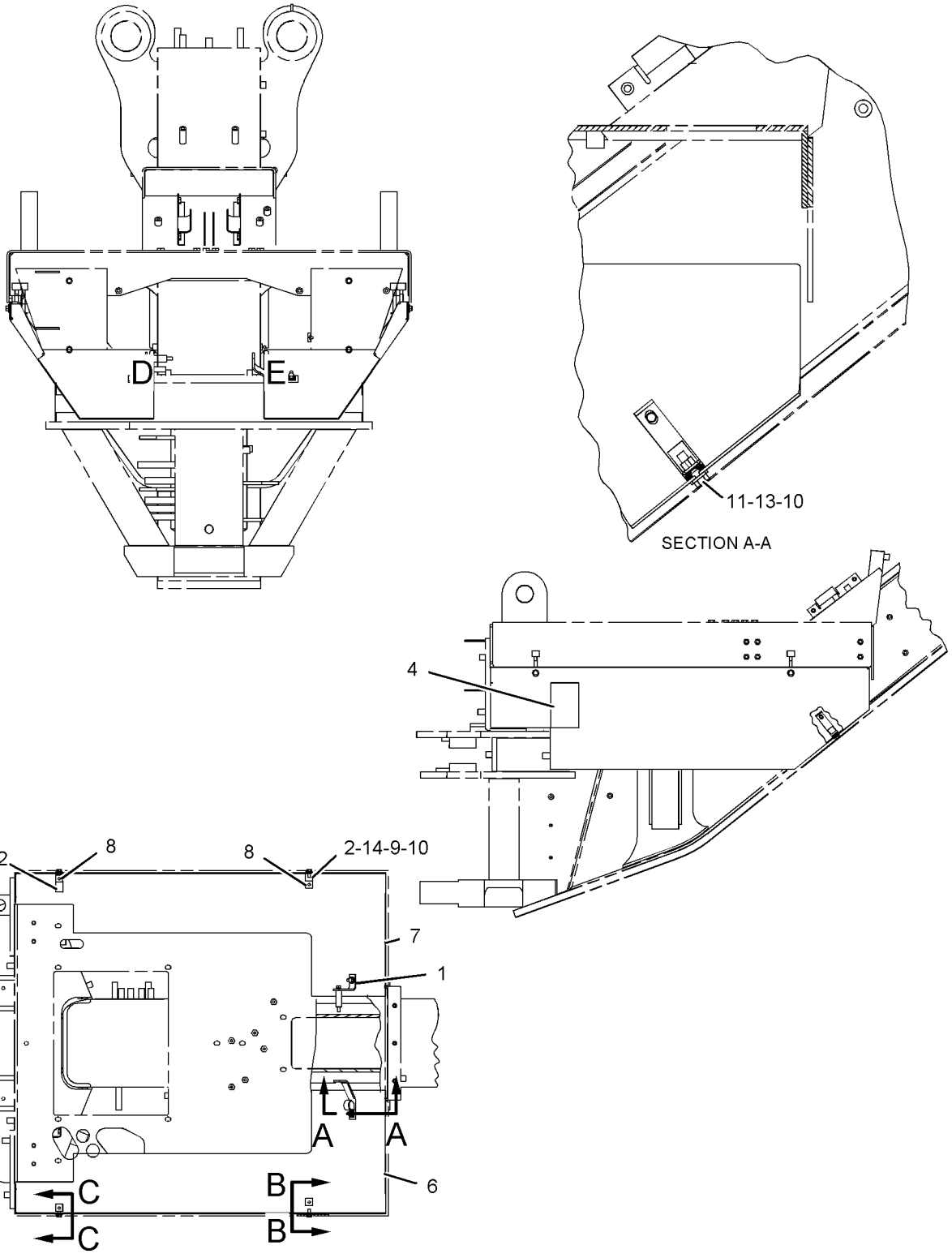


GRAPHIC #1

g01119645

*126-6933* **GUARD GP-PLATFORM** *(contd.)* **i02230061**

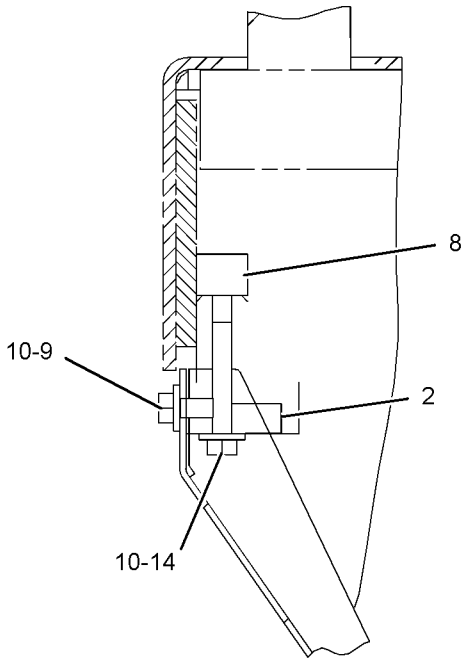


SECTION C-C

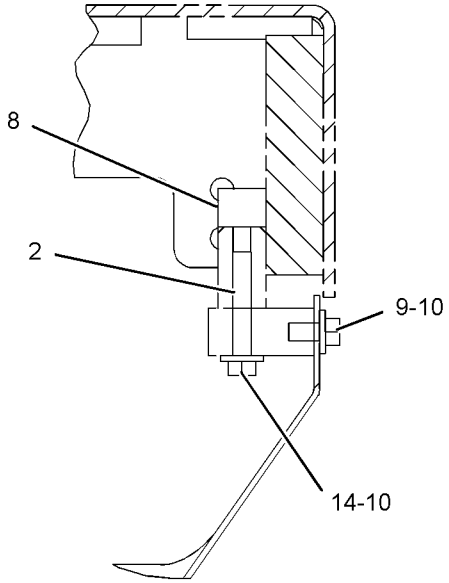


SECTION B-B

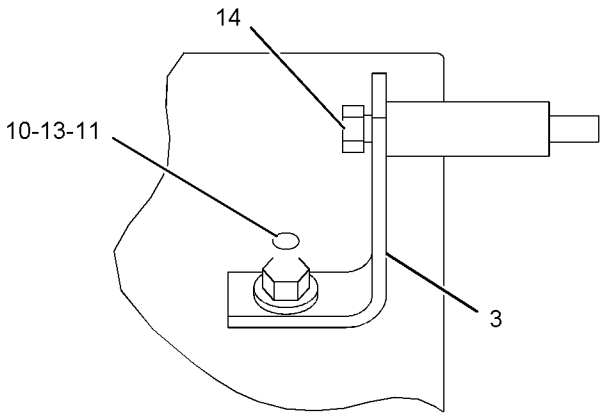


VIEW OF AREA E

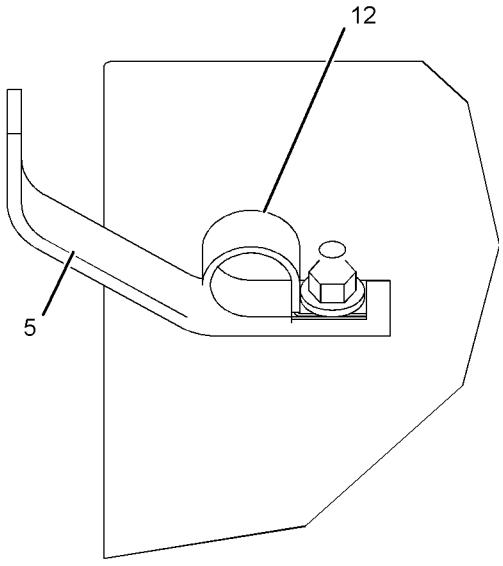


VIEW OF AREA D

GRAPHIC #2 **<END>** g01119647

## *166-7064* GUARD GP-PLATFORM—OPEN—HIGH PROFILE

**S/N: CCA1-UP**
**PART OF 177-8778 ROPS AR-OPEN**
**AN ATTACHMENT**

**SMCS-7150, 7253** **i02205105**

| NOTE | REF NO | GRAPHIC REF | PART NUMBER | QTY | PART NAME 1 2 3 4 5 6 (PRODUCT LEVEL) | SEE PAGE |
|---|---|---|---|---|---|---|
| | 1 | 1 | **7G-7920** | 1 | PLUG-SEAL | |
| | 2 | 1 | **7K-1181** | 1 | STRAP-CABLE | |
| | 3 | 1 | **8T-8737** | 30 | PLUG-SEAL | |
| | 4 | 1 | **8X-2226** | 2 | PLATE | |
| | 5 | 1 | **8X-2913** | 2 | COVER AS | |
| | | | | | (EACH INCLUDES) | |
| M | | 1 | **6V-9632** | 2 | NUT-WELD (M6X1-THD) | |
| | 6 | 1 | **8X-6475** | 2 | PLATE | |
| | 7 | 1 | **8X-8505** | 2 | PLATE | |
| | 9 | 1 | **160-6382** | 1 | GROMMET | |
| | 10 | 1 | **169-5414** | 1 | CLIP | |
| | 11 | 1 | **198-8588** | 1 | PANEL | |
| | 12 | 1 | **200-3967** | 1 | PANEL AS | |
| M | | 1 | **6V-9632** | 8 | NUT-WELD (M6X1-THD) | |
| M | | 1 | **8T-3490** | 1 | NUT-WELD (M10X1.5-THD) | |
| | 13 | 1 | **115-3072** | 1 | CLIP AS-CONNECTOR (8-PIN) | |
| | 14 | 1 | **127-5484** | 1 | RECEPTACLE AS-CONNECTOR (1-PIN) | |
| | 15 | 1 | **155-2255** | 1 | KIT-CONNECTING PLUG (12-PIN) | |
| | | | | | (INCLUDES PLUG ASSEMBLY AND WEDGE) | |
| | 16 | 1 | **102-8805** | 1 | KIT-RECEPTACLE (6-PIN) | |
| | | | | | (INCLUDES RECEPTACLE ASSEMBLY AND WEDGE) | |
| | 17 | 1 | **102-8801** | 1 | KIT-RECEPTACLE (12-PIN) | |
| | | | | | (INCLUDES RECEPTACLE ASSEMBLY AND WEDGE) | |
| | 18 | 1 | **3P-3839** | 1 | GROMMET | |
| | 19 | 1 | **4L-6454** | 3 | BOLT (3/8-16X1-IN) | |
| | 20 | 1 | **4M-5281** | 4 | BOLT (1/4-20X0.75-IN) | |
| | 21 | 1 | **5P-1075** | 3 | WASHER-HARD (10.2X22.5X3-MM THK) | |
| | 22 | 1 | **5P-4115** | 4 | WASHER-HARD (7.2X19X2-MM THK) | |
| | 23 | 1 | **5P-9085** | 2 | CLIP | |
| | 24 | 1 | **6V-2687** | 4 | SCREW-PAN HEAD (10-24X1-IN) | |
| | 25 | 1 | **8T-4121** | 2 | WASHER-HARD (11X21X2.5-MM THK) | |
| M | 26 | 1 | **8T-4137** | 2 | BOLT (M10X1.5X20-MM) | |
| M | 27 | 1 | **9X-2043** | 22 | SCREW-TRUSS HEAD (M6X1X14-MM) | |

M-METRIC PART

*166-7064* **GUARD GP-PLATFORM** *(contd.)* **i02205105**

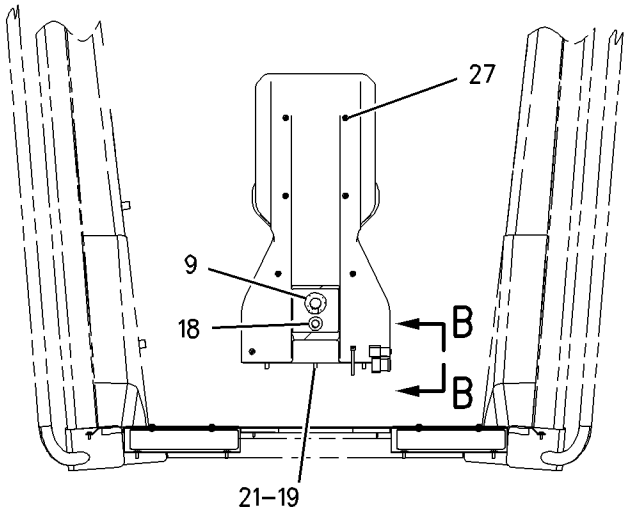


FRONT VIEW

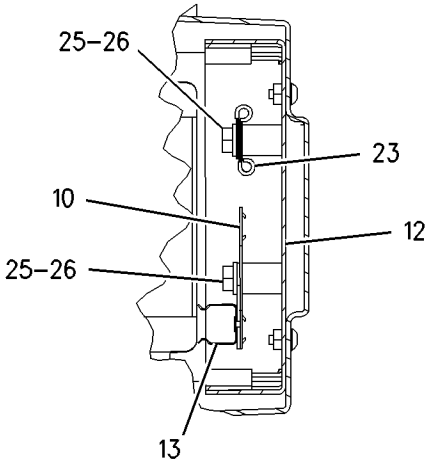


SECTION A-A

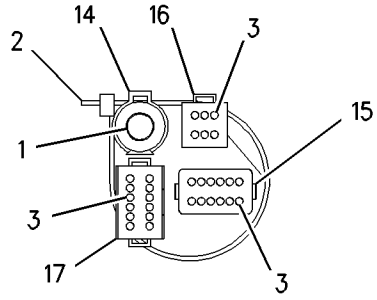


VIEW B-B

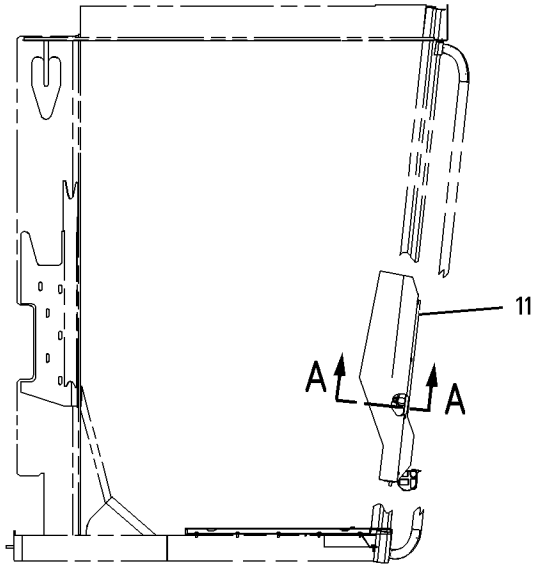


RIGHT SIDE VIEW

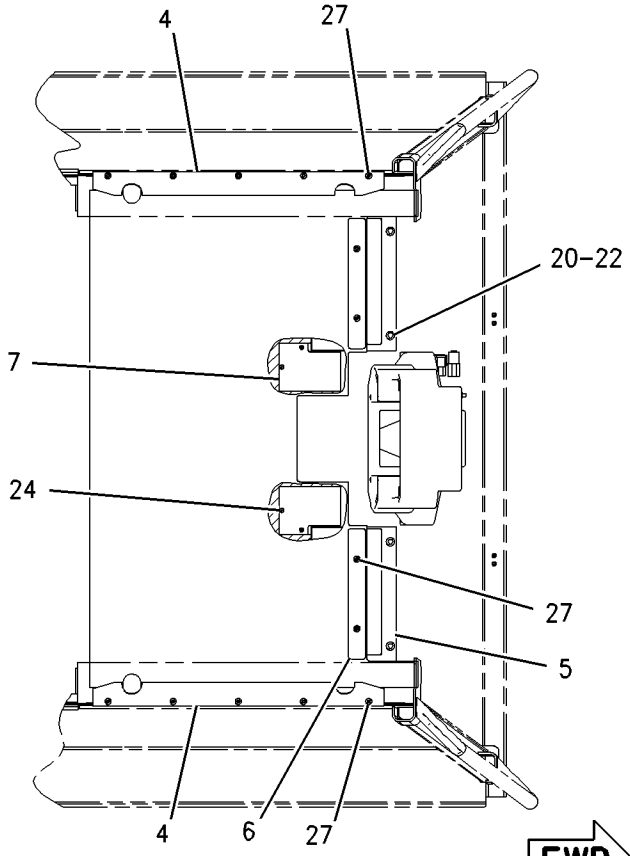


TOP VIEW

GRAPHIC #1 **<END>** g00846264

## *166-7065* GUARD GP-PLATFORM—NON-ROPS

**S/N: CCA1-UP**
**PART OF 183-3018 CONVERSION AR-NON-ROPS**
**AN ATTACHMENT**

**SMCS-7150, 7253** **i02585966**

| NOTE | REF NO | GRAPHIC REF | PART NUMBER | QTY | PART NAME 1 2 3 4 5 6 (PRODUCT LEVEL) | SEE PAGE |
|---|---|---|---|---|---|---|
| | 1 | 1 | **7G-7920** | 1 | PLUG-SEAL | |
| | 2 | 1 | **7K-1181** | 1 | STRAP-CABLE | |
| | 3 | 1 | **8T-8737** | 30 | PLUG-SEAL | |
| | 4 | 1 | **8W-3902** | 1 | SUPPORT AS | |
| | 5 | 1 | **8X-2913** | 2 | COVER AS | |
| | | | | | (EACH INCLUDES) | |
| M | | 1 | **6V-9632** | 2 | NUT-WELD (M6X1-THD) | |
| | 6 | 1 | **8X-6419** | 1 | FLOOR MAT | |
| | 7 | 1 | **8X-6475** | 2 | PLATE | |
| | 8 | 1 | **8X-8505** | 2 | PLATE | |
| | 9 | 1 | **8X-9464** | 2 | STEP AS | |
| | 10 | 1 | **135-3894** | 1 | PIPE AS | |
| | 11 | 1 | **160-6382** | 1 | GROMMET | |
| | 12 | 1 | **169-5414** | 1 | CLIP | |
| | 13 | 1 | **198-8588** | 1 | PANEL | |
| | 14 | 1 | **200-3967** | 1 | PANEL AS | |
| M | | 1 | **6V-9632** | 8 | NUT-WELD (M6X1-THD) | |
| M | | 1 | **8T-3490** | 1 | NUT-WELD (M10X1.5-THD) | |
| | 15 | 1 | **115-3072** | 1 | CLIP AS-CONNECTOR (8-PIN) | |
| | 16 | 1 | **127-5484** | 1 | RECEPTACLE AS-CONNECTOR (1-PIN) | |
| | 17 | 1 | **155-2255** | 1 | KIT-CONNECTING PLUG (12-PIN) | |
| | | | | | (INCLUDES PLUG AS & WEDGE) | |
| | 18 | 1 | **102-8805** | 1 | KIT-RECEPTACLE (6-PIN) | |
| | 19 | 1 | **102-8801** | 1 | KIT-RECEPTACLE (12-PIN) | |
| | | | | | (EACH RECEPTACLE KIT INCLUDES A RECEPTACLE AS & WEDGE) | |
| | 20 | 1 | **3P-3839** | 1 | GROMMET | |
| | 21 | 1 | **4L-6454** | 7 | BOLT (3/8-16X1-IN) | |
| | 22 | 1 | **4M-5281** | 4 | BOLT (1/4-20X0.75-IN) | |
| | 23 | 1 | **5P-1075** | 7 | WASHER-HARD (10.2X22.5X3-MM THK) | |
| | 24 | 1 | **5P-2566** | 8 | BOLT (1/2-13X1.5-IN) | |
| | 25 | 1 | **5P-4115** | 4 | WASHER-HARD (7.2X19X2-MM THK) | |
| | 26 | 1 | **5P-9085** | 2 | CLIP | |
| | 27 | 1 | **6V-2687** | 4 | SCREW-PAN HEAD (10-24X1-IN) | |
| | 28 | 1 | **6V-8188** | 4 | NUT (1/2-13-THD) | |
| | 29 | 1 | **7X-0328** | 4 | BOLT (1/2-13X3.5-IN) | |
| | 30 | 1 | **8T-4121** | 2 | WASHER-HARD (11X21X2.5-MM THK) | |
| M | 31 | 1 | **8T-4137** | 2 | BOLT (M10X1.5X20-MM) | |
| | 32 | 1 | **8T-4223** | 16 | WASHER-HARD (13.5X25.5X3-MM THK) | |
| M | 33 | 1 | **9X-2043** | 12 | SCREW-TRUSS HEAD (M6X1X14-MM) | |

M-METRIC PART

*166-7065* **GUARD GP-PLATFORM** *(contd.)* **i02585966**

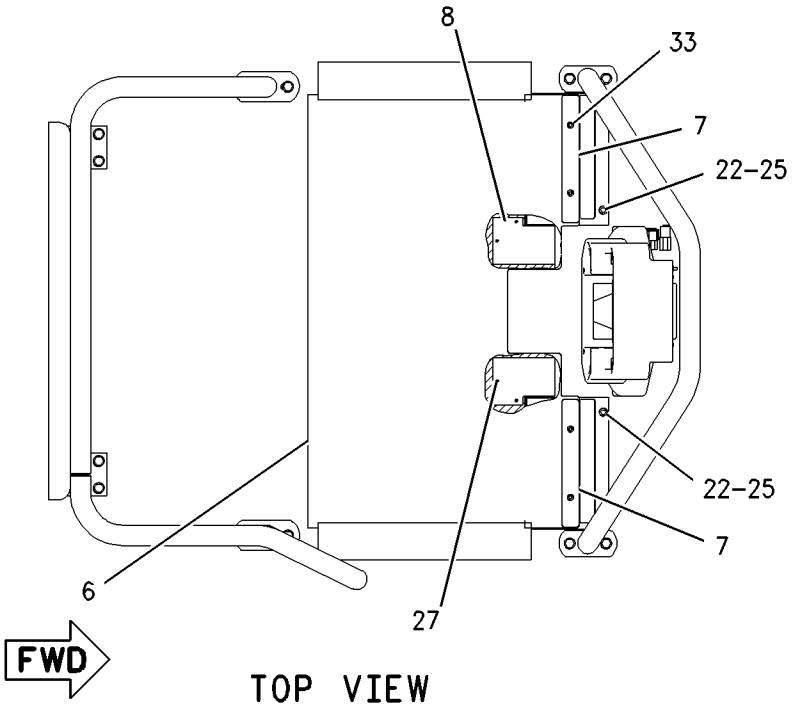


TOP VIEW

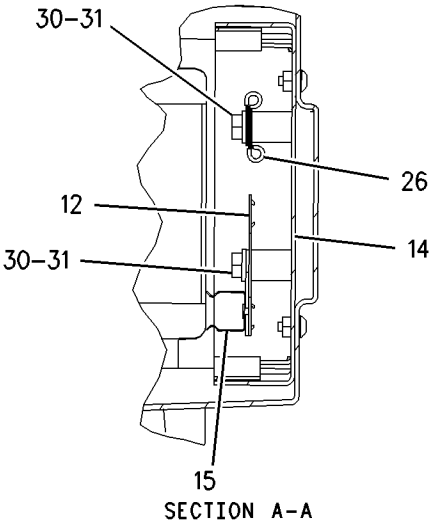


SECTION A-A

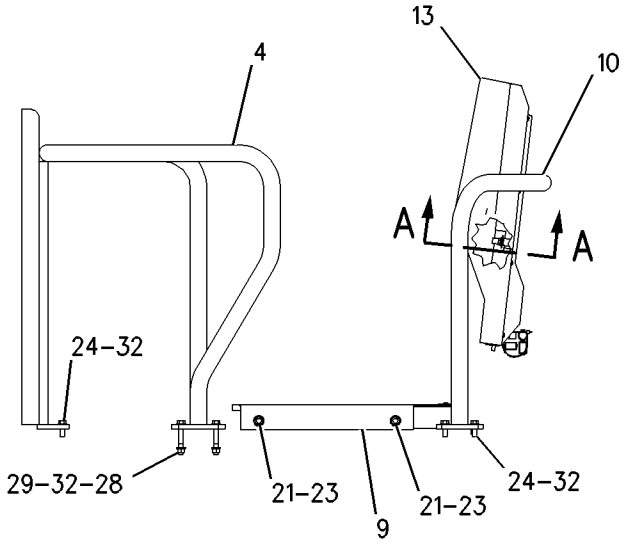


RIGHT SIDE VIEW

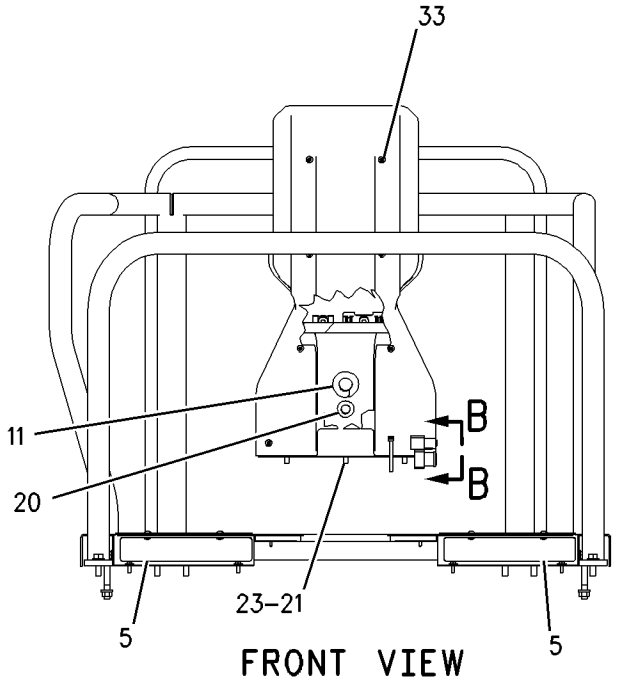


FRONT VIEW

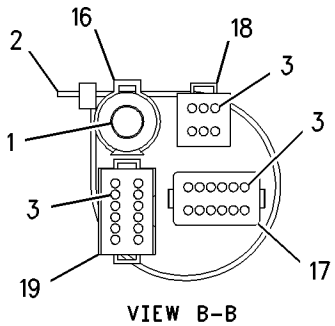


VIEW B-B

GRAPHIC #1 **<END>** g00847815

## *106-4884* HITCH GP-ARTICULATING

**S/N: CCA1-UP**

**PART OF 159-4615 GENERAL AR**

**SMCS-7057, 7100** **i00652991**

| NOTE | REF NO | GRAPHIC REF | PART NUMBER | QTY | PART NAME 1 2 3 4 5 6 (PRODUCT LEVEL) | SEE PAGE |
|---|---|---|---|---|---|---|
| | 1 | 1 | **4K-8659** | 1 | BEARING-SLEEVE | |
| | 2 | 1 | **4K-7463** | 2 | SEAL-LIP TYPE | |
| | 3 | 1 | **0S-1587** | 2 | BOLT (1/2-13X1.75-IN) | |
| | 4 | 1 | **5P-8245** | 19 | WASHER-HARD (13.5X25.5X3-MM THK) | |
| | 5 | 1 | **6G-0417** | 1 | COVER | |
| | 6 | 1 | **1A-1460** | 4 | BOLT (1/2-13X2-IN) | |
| | 7 | 1 | **2V-4331** | 1 | COLLAR | |
| | 8 | 1 | **5K-0984** | 1 | BEARING-SLEEVE | |
| | 9 | 1 | **124-3240** | 1 | PIN | |
| | 10 | 1 | **5K-0871** | 1 | PIN-LOWER | |
| | 11 | 1 | **5K-0987** | 1 | SPACER | |
| B | 12 | 1 | **5K-0988** | 1 | SHIM PACK (INCLUDES 35-SHIMS) | |
| | 13 | 1 | **5K-0985** | 1 | BEARING AS-ROLLER | |
| B | 14 | 1 | **4K-7464** | 1 | SHIM PACK (INCLUDES 19-SHIMS) | |
| | 15 | 1 | **0S-1585** | 6 | BOLT (1/2-13X1.5-IN) | |
| | 16 | 1 | **0S-1589** | 4 | BOLT (5/8-11X1.75-IN) | |
| | 17 | 1 | **5P-8247** | 4 | WASHER-HARD (17X32X3.5-MM THK) | |
| | 18 | 1 | **4V-0015** | 1 | PLATE-LOCK | |
| | 19 | 1 | **4K-6781** | 1 | SPACER | |
| | 20 | 1 | **5K-0991** | 1 | CAP-LOWER | |
| | 21 | 1 | **5K-0983** | 2 | SEAL-LIP TYPE | |
| | 22 | 1 | **5K-0989** | 1 | CAP-UPPER | |
| | 23 | 1 | **1D-4569** | 7 | BOLT (1/2-13X4.25-IN) | |

B-USE AS REQUIRED

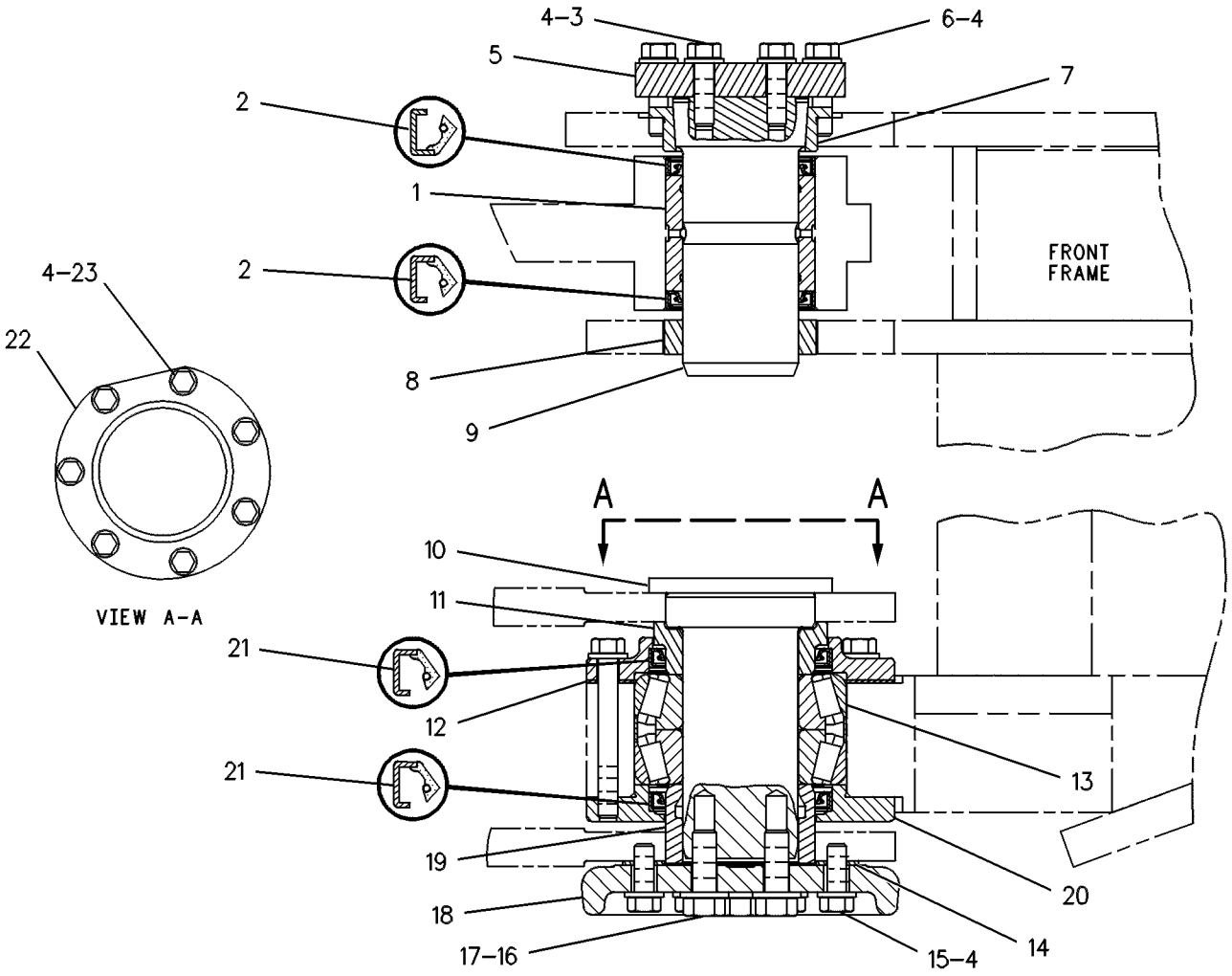


GRAPHIC #1 **<END>** g00108584

# FRAME AND BODY

## *168-7960* HITCH GP-TOWING

**S/N: CCA1-UP**

**PART OF 159-4615 GENERAL AR**

**SMCS-7116** **i01673564**

| NOTE | REF NO | GRAPHIC REF | PART NUMBER | QTY | PART NAME 1 2 3 4 5 6 (PRODUCT LEVEL) | SEE PAGE |
|---|---|---|---|---|---|---|
| | 1 | 1 | **175-7698** | 1 | HITCH AS | |
| | 2 | 1 | **7X-0403** | 4 | BOLT (1-8X2.25 IN) | |
| | 3 | 1 | **8T-5361** | 4 | WASHER-HARD (28X49X5MM THK) | |

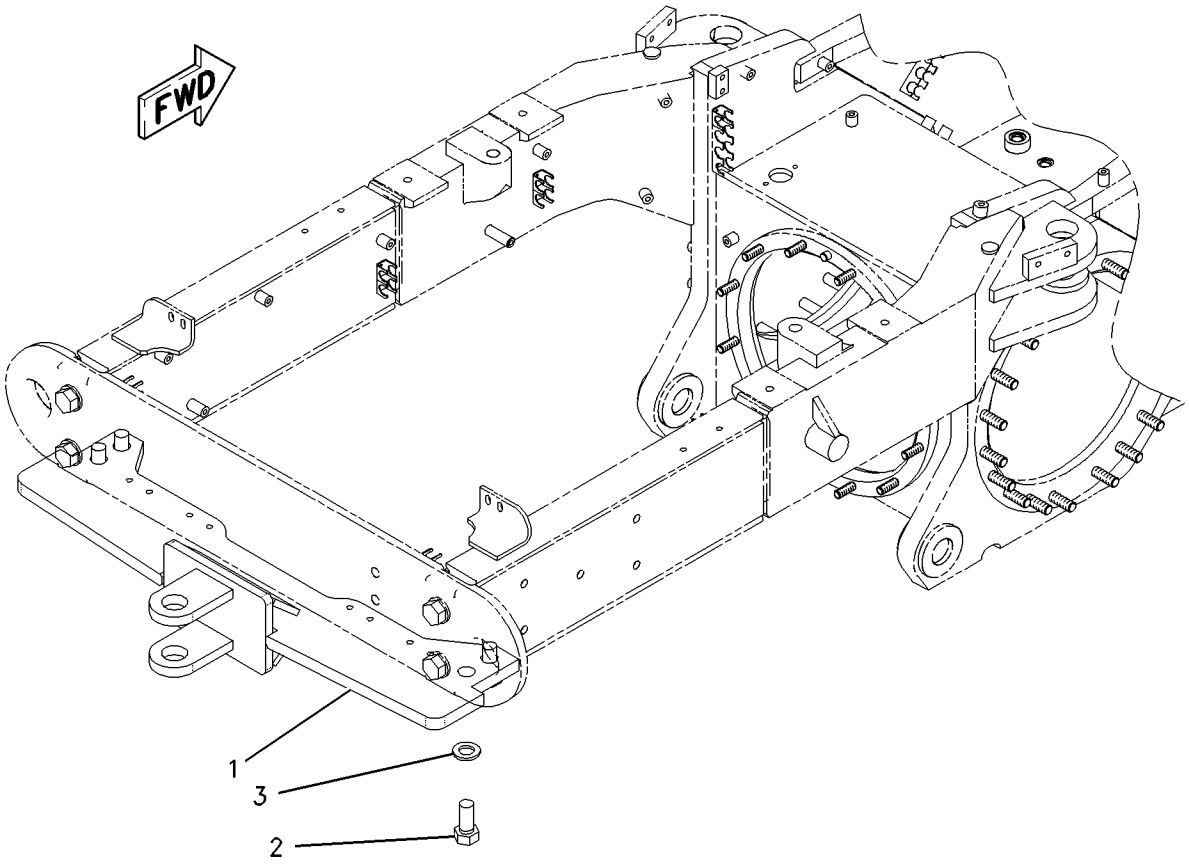


GRAPHIC #1 **<END>** g00788973

# 228-7559 HITCH GP-TOWING

**S/N: CCA1-UP**

**PART OF 159-4615 GENERAL AR**

**SMCS-7116** **i01837501**

| NOTE | REF NO | GRAPHIC REF | PART NUMBER | QTY | PART NAME 1 2 3 4 5 6 (PRODUCT LEVEL) | SEE PAGE |
|---|---|---|---|---|---|---|
| | 1 | 1 | **219-6701** | 1 | HITCH AS | |
| | 2 | 1 | **7X-0404** | 2 | BOLT (1-8X2.50IN) | |
| | 3 | 1 | **8T-4994** | 2 | WASHER-HARD (20X36.5X3.5MM THK) | |
| | 4 | 1 | **8T-5361** | 2 | WASHER-HARD (28X49X5MM THK) | |
| | 5 | 1 | **8T-8924** | 2 | BOLT (3/4-10X2.50 IN) | |

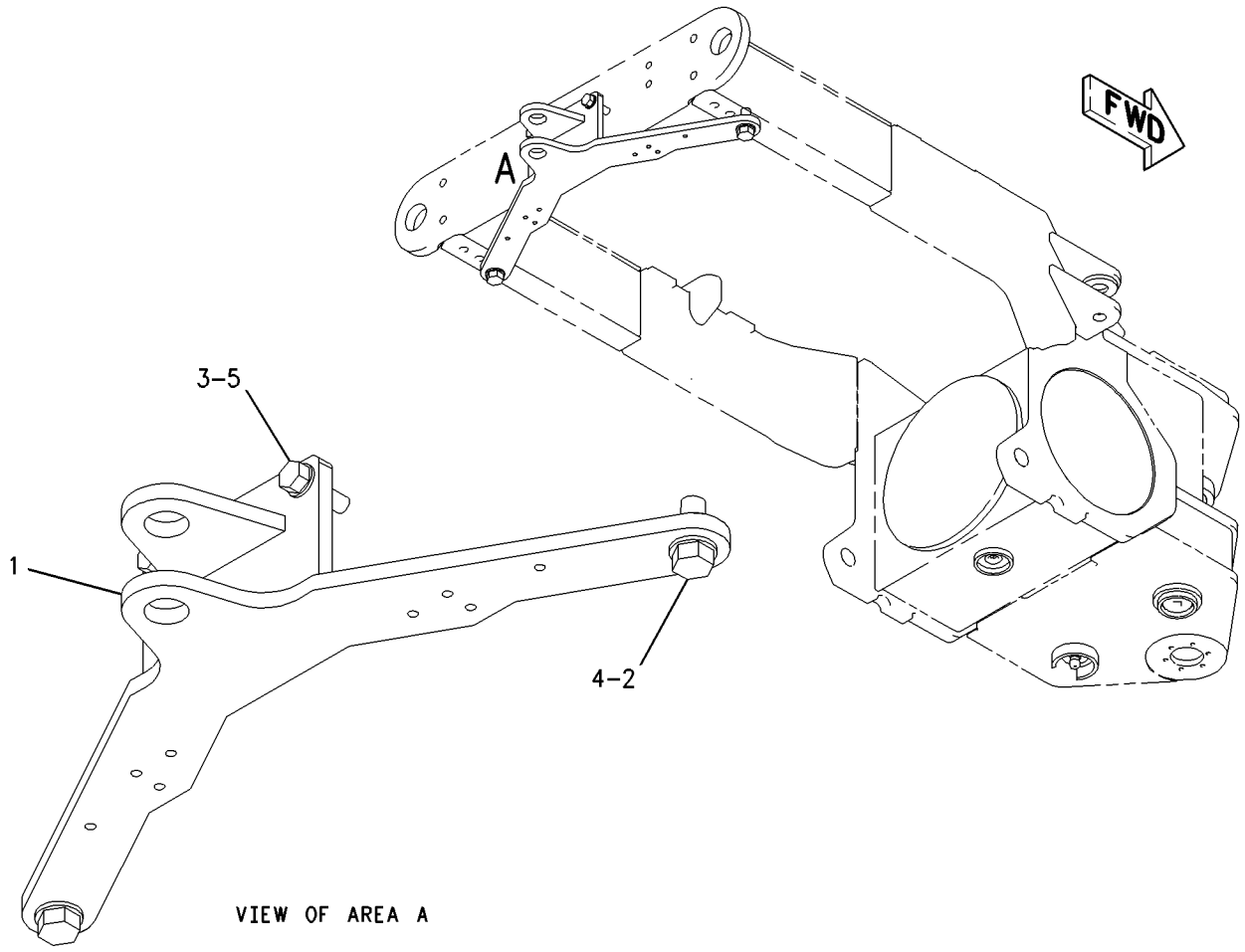


GRAPHIC #1 **<END>** g00939652

# *7I-4610* LINES GP-LUBRICATION

**S/N: CCA1-UP**

**PART OF 159-4615 GENERAL AR**

**SMCS-7510, 7540** **i01456162**

| NOTE | REF NO | GRAPHIC REF | PART NUMBER | QTY | PART NAME 1 2 3 4 5 6 (PRODUCT LEVEL) | SEE PAGE |
|---|---|---|---|---|---|---|
| | 1 | 1 | **3B-7733** | 1 | FITTING | |
| | 2 | 1 | **3B-6769** | 2 | ELBOW | |
| | 3 | 1 | **3B-8489** | 2 | FITTING-GREASE (ARTICULATION HITCH) | |
| | 4 | 1 | **4D-7794** | 1 | CLIP | |
| | 5 | 1 | **5H-7826** | 1 | NIPPLE-PIPE | |
| I | 6 | 1 | **3G-6659** | 2 | HOSE AS | |

I-REFER TO HYDRAULIC INFORMATION SYSTEM

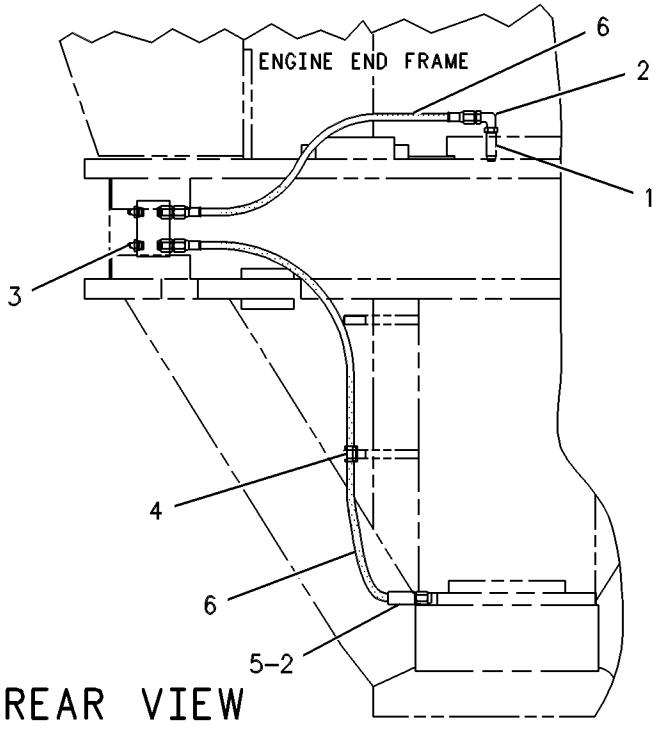


GRAPHIC #1 **<END>** g00109092

# *7D-8912* LINK GP-STEERING

**S/N: CCA1-1307**

**PART OF 134-1080 AXLE GP-FRONT**

**SMCS-4305** **i02588568**

| NOTE | REF NO | GRAPHIC REF | PART NUMBER | QTY | PART NAME 1 2 3 4 5 6 (PRODUCT LEVEL) | SEE PAGE |
|---|---|---|---|---|---|---|
| | 1 | 1 | **131-3738** | 1 | TIE ROD GP (LH THREAD, RH) | |
| | | 1 | **132-1143** | 1 | SEAL-BOOT | |
| | 2 | 1 | **2F-8057** | 1 | NUT-SLOTTED | |
| C | 3 | 1 | **132-1144** | 2 | CLAMP | |
| C | 4 | 1 | **1B-4367** | 2 | BOLT (5/8-11X3-IN) | |
| C | | 1 | **3K-2889** | 2 | LOCKNUT (5/8-11-THD) | |
| | 5 | 1 | **131-3739** | 1 | TIE ROD | |
| | 6 | 1 | **131-3737** | 1 | TIE ROD GP (RH THREAD, LH) | |
| | | 1 | **132-1143** | 1 | SEAL-BOOT | |
| | 7 | 1 | **2F-8057** | 1 | NUT-SLOTTED | |

C-CHANGE FROM PREVIOUS TYPE

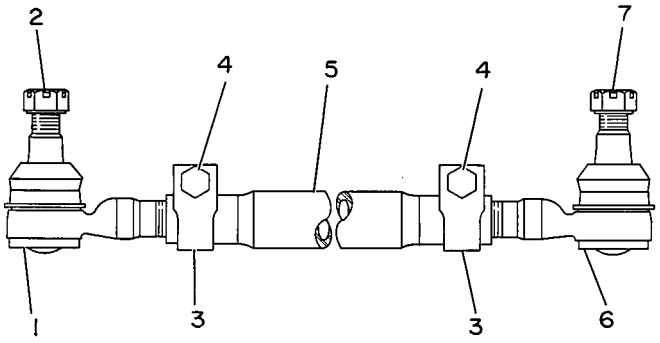


GRAPHIC #1 **<END>** g00108232

# *131-3740* LINK GP-STEERING

**S/N: CCA1308-UP**

**PART OF 134-1080 AXLE GP-FRONT**

**SMCS-4305** **i00136164**

| NOTE | REF NO | GRAPHIC REF | PART NUMBER | QTY | PART NAME 1 2 3 4 5 6 (PRODUCT LEVEL) | SEE PAGE |
|---|---|---|---|---|---|---|
| | 1 | 1 | **131-3739** | 1 | TIE ROD | |
| | 2 | 1 | **131-3738** | 1 | TIE ROD GP (LH THREAD, RH) | |
| | | 1 | **2F-8057** | 1 | NUT-SLOTTED | |
| | | 1 | **132-1143** | 1 | SEAL-BOOT | |
| | 3 | 1 | **131-3737** | 1 | TIE ROD GP (RH THREAD, LH) | |
| | | 1 | **2F-8057** | 1 | NUT-SLOTTED | |
| | | 1 | **132-1143** | 1 | SEAL-BOOT | |
| | 4 | 1 | **132-1144** | 2 | CLAMP | |
| | 5 | 1 | **1B-4367** | 2 | BOLT (5/8-11X3-IN) | |
| | 6 | 1 | **3K-2889** | 2 | LOCKNUT (5/8-11-THD) | |

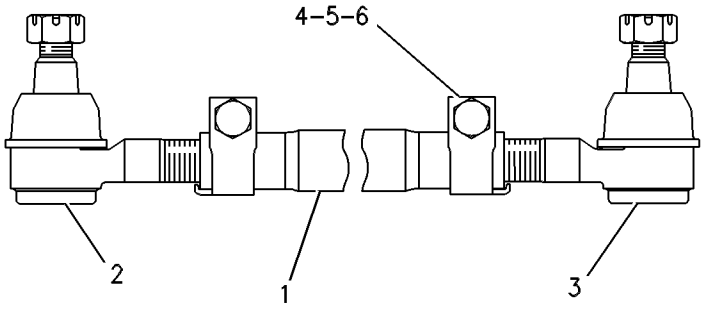


GRAPHIC #1 **<END>** g00109239

# *211-1519* MOUNTING GP-REGISTRATION–EU

**S/N: CCA1-UP**
**PART OF 197-5572 ROADING AR**
**AN ATTACHMENT**

**SMCS-1429, 7050** **i01855288**

| NOTE | REF NO | GRAPHIC REF | PART NUMBER | QTY | PART NAME 1 2 3 4 5 6 (PRODUCT LEVEL) | SEE PAGE |
|---|---|---|---|---|---|---|
| | 1 | 1 | **3S-2093** | 6 | STRAP-CABLE | |
| Y | 2 | 1 | **117-8319** | 1 | LAMP GP-REGISTRATION PLATE | 195 |
| | 3 | 1 | **213-3733** | 1 | PLATE | |
| | 4 | 1 | **213-4099** | 1 | HARNESS AS-REAR LIGHTING | |
| | | 1 | **155-2270** | 1 | KIT-CONNECTING PLUG (2-PIN) | |
| | | | | | (INCLUDES PLUG AS & WEDGE) | |
| | 5 | 1 | **224-2821** | 4 | PLATE AS | |
| | 6 | 1 | **130-5300** | 1 | CLIP | |
| M | 8 | 1 | **8T-4908** | 4 | BOLT (M8X1.25X25-MM) | |
| | 9 | 1 | **5P-4116** | 4 | WASHER-HARD (8.8X20.5X2-MM THK) | |

M-METRIC PART
Y-SEPARATE ILLUSTRATION

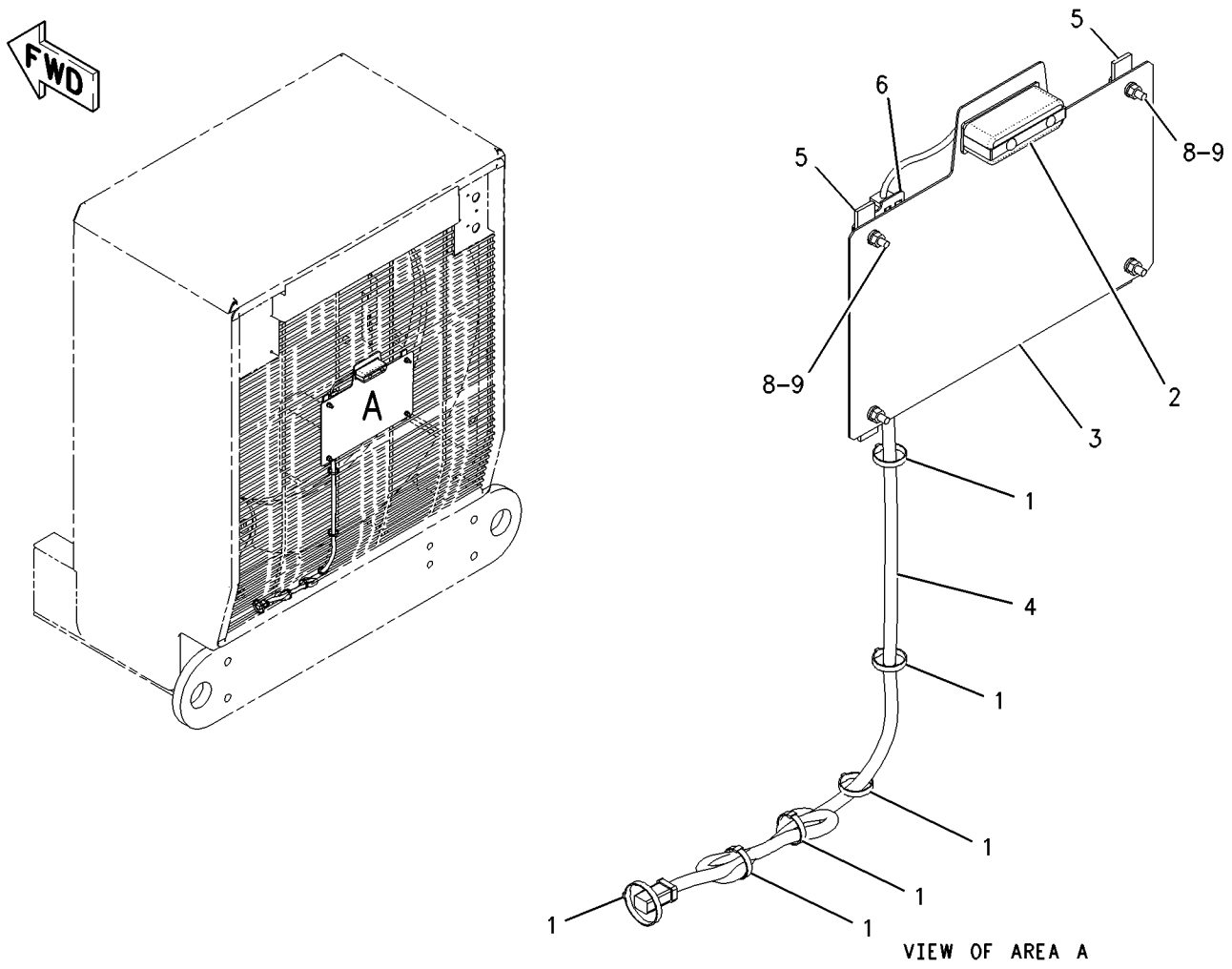


GRAPHIC #1 **<END>** g00954126

# *261-9261* MOUNTING GP-REGISTRATION

**S/N: CCA1-UP**
**PART OF 259-5738 CONVERSION AR-MACHINE**
**AN ATTACHMENT**

**SMCS-1429, 7050** **i02252333**

| NOTE | REF NO | GRAPHIC REF | PART NUMBER | QTY | PART NAME 1 2 3 4 5 6 (PRODUCT LEVEL) | SEE PAGE |
|---|---|---|---|---|---|---|
| | 1 | 1 | **261-9262** | 1 | PLATE AS | |
| | | 1 | **4K-9097** | 2 | NUT-WELD (5/16-18-THD) | |
| | 2 | 1 | **9S-2544** | 4 | SCREW-HEX HEAD (8-32X11.13-MM) | |
| | 3 | 1 | **8T-4224** | 2 | WASHER-HARD (8.8X16X2-MM THK) | |
| | 4 | 1 | **5K-0906** | 2 | BOLT (5/16-18X0.625-IN) | |
| | 5 | 1 | **261-9231** | 1 | HARNESS AS-WIRING (REGISTRATION) | |
| | | 1 | **102-8803** | 1 | KIT-RECEPTACLE (3-PIN) | |
| | | | | | (INCLUDES RECEPTACLE AS & WEDGE) | |
| | | 1 | **155-2270** | 2 | KIT-CONNECTING PLUG (2-PIN) | |
| | | 1 | **155-2260** | 1 | KIT-CONNECTING PLUG (3-PIN) | |
| | | | | | (EACH INCLUDES PLUG AS, WEDGE, & INTERFACE SEAL) | |
| Y | 6 | 1 | **117-8319** | 2 | LAMP GP-REGISTRATION PLATE | 195 |
| | 7 | 1 | **130-5300** | 3 | CLIP | |
| | 8 | 1 | **3S-2093** | 3 | STRAP-CABLE | |
| | 9 | 1 | **262-2068** | 1 | GUARD AS | |
| | 10 | 1 | **5P-4115** | 2 | WASHER-HARD (7.2X19X2-MM THK) | |

Y-SEPARATE ILLUSTRATION

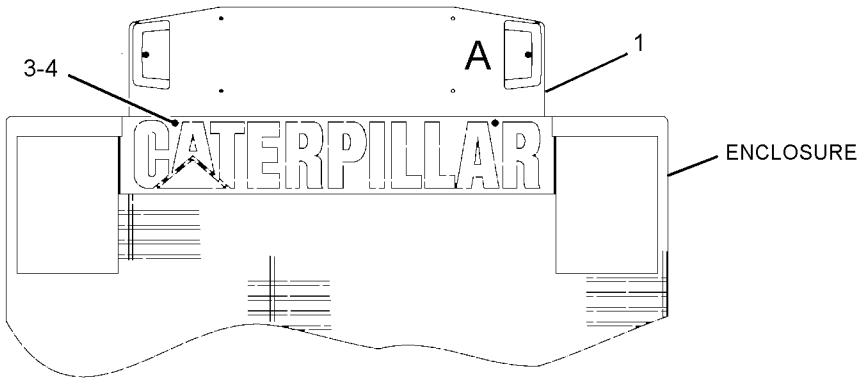


REAR VIEW

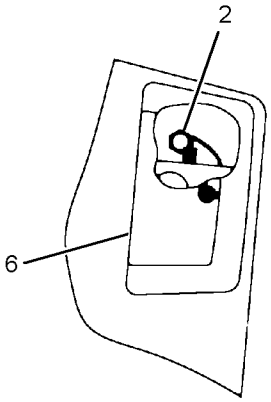


VIEW OF AREA A

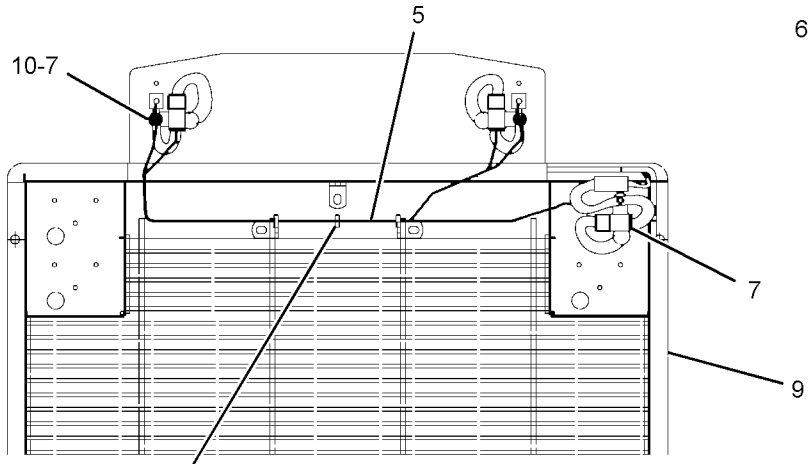


FRONT VIEW

GRAPHIC #1 **<END>** g01240650

# *8W-5870* SHIELD GP-DRIVE SHAFT

**S/N: CCA1-UP**

**PART OF 159-4615 GENERAL AR**

**SMCS-3253, 7153** **i00134722**

| NOTE | REF NO | GRAPHIC REF | PART NUMBER | QTY | PART NAME 1 2 3 4 5 6 (PRODUCT LEVEL) | SEE PAGE |
|---|---|---|---|---|---|---|
| | 1 | 1 | **5P-1075** | 2 | WASHER-HARD (3MM THK) | |
| | 2 | 1 | **8T-7971** | 4 | WASHER-HARD (5MM THK) | |
| | 3 | 1 | **5S-7379** | 2 | BOLT (3/8-16X.875IN) | |
| | 4 | 1 | **5C-6565** | 4 | BOLT (1/2-13X1.25IN) | |
| | 5 | 1 | **103-5419** | 1 | SHIELD AS | |
| | | 1 | **9F-2978** | 2 | NUT-WELD (3/8-16 THD) | |
| | 6 | 1 | **103-5417** | 1 | SHIELD | |

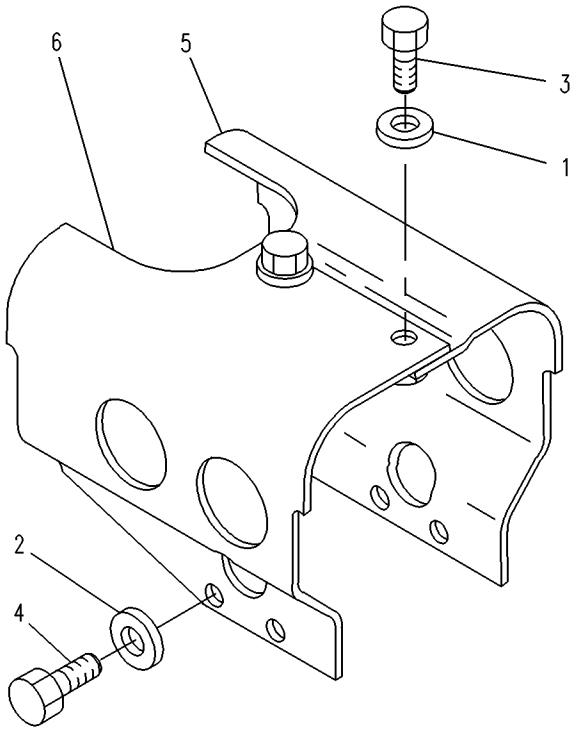


GRAPHIC #1 **<END>** g00108482

# FRAME AND BODY

## *8X-1030* STEP GP

**S/N: CCA1-UP**

**PART OF 159-4615 GENERAL AR**

**SMCS-7254** **i01561201**

| NOTE | REF NO | GRAPHIC REF | PART NUMBER | QTY | PART NAME 1 2 3 4 5 6 (PRODUCT LEVEL) | SEE PAGE |
|---|---|---|---|---|---|---|
| | 1 | 1 | **4V-9804** | 8 | PLATE | |
| | 2 | 1 | **4V-9809** | 2 | STEP AS | |
| | | 1 | **4V-9803** | 2 | PLATE | |
| | 3 | 1 | **8X-1032** | 4 | BELT | |
| | 4 | 1 | **123-3698** | 2 | PLATE | |
| | 5 | 1 | **123-3699** | 2 | PLATE | |
| | 6 | 1 | **198-7379** | 2 | STEP AS | |
| | | 1 | **4V-9803** | 2 | PLATE | |
| | 7 | 1 | **198-7380** | 2 | STEP AS | |
| | | 1 | **4V-9803** | 2 | PLATE | |
| | 8 | 1 | **1D-4689** | 24 | BOLT (1/2-13X1.75-IN) | |
| | 9 | 1 | **1K-6872** | 24 | LOCKNUT (1/2-13-THD) | |
| | 10 | 1 | **5P-1076** | 8 | WASHER-HARD (13.5X30X4-MM THK) | |
| | 11 | 1 | **8T-4223** | 24 | WASHER-HARD (13.5X25.5X3-MM THK) | |
| | 12 | 1 | **8T-8919** | 8 | BOLT (1/2-13X1.75-IN) | |

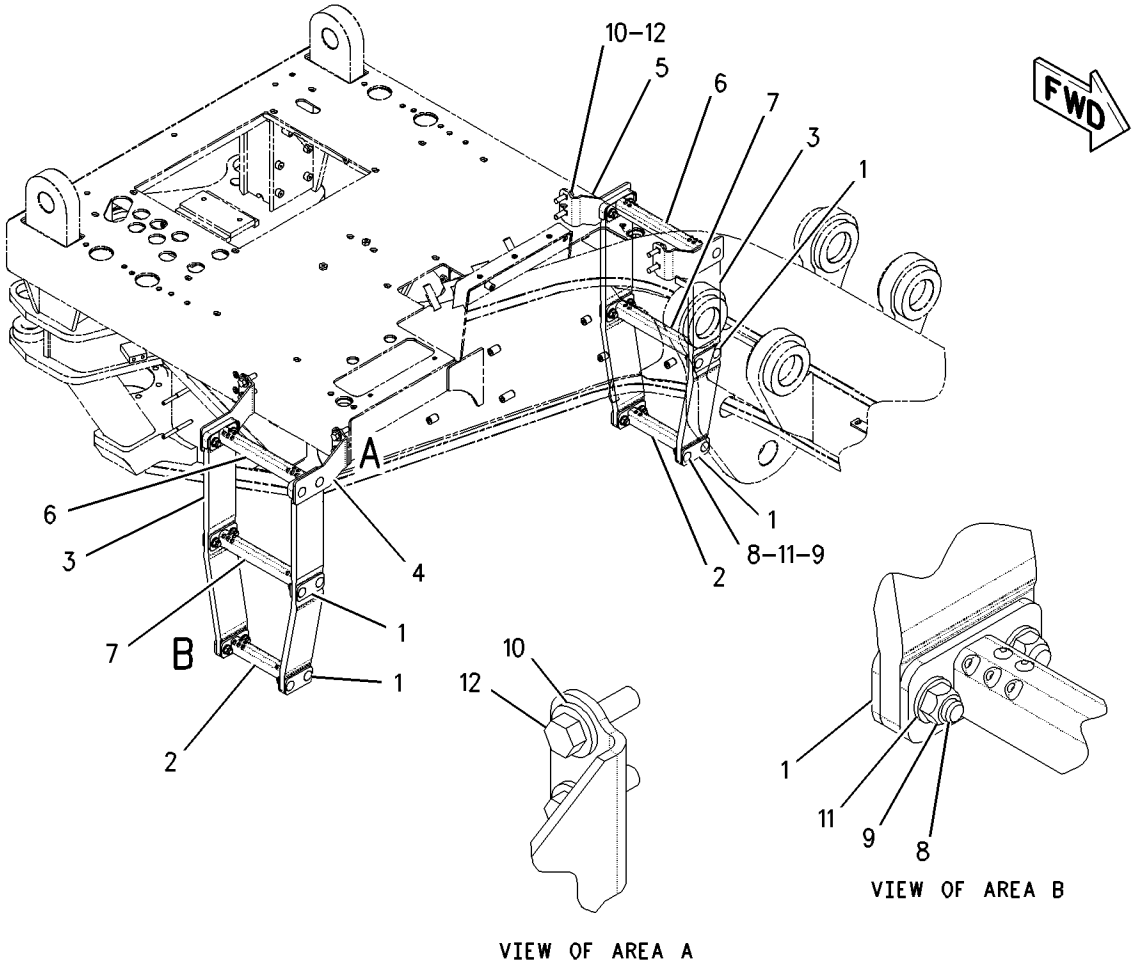


GRAPHIC #1 **<END>** g00773667

# *171-6700* SUPPORT AR-REAR CHASSIS–EU

**S/N: CCA1-387**

**PART OF 207-4453, 210-2044 CONVERSION AR-CERTIFICATION**

**AN ATTACHMENT**

**SMCS-7509** **i02588571**

| NOTE | REF NO | GRAPHIC REF | PART NUMBER | QTY | PART NAME 1 2 3 4 5 6 (PRODUCT LEVEL) | SEE PAGE |
|---|---|---|---|---|---|---|
| Y | 1 | 1 | *159-3924* | 1 | SUPPORT GP-PLATFORM (REAR) | 603 |
| Y | 2 | 1 | *169-3651* | 1 | FILTER & MTG GP-OIL (TRANSMISSION) | 443 |
| Y | 3 | 1 | *178-0163* | 1 | WIRING GP-REAR (SERVICE CENTER) | 349 |
| Y | 4 | 1 | *187-8028* | 1 | BATTERY GP | 149 |
| Y | 5 | 1 | *201-1036* | 1 | CIRCUIT BREAKER GP (DUAL) | 152 |
| Y | 6 | 1 | *209-9986* | 1 | TANK GP-AIR | 620 |

Y-SEPARATE ILLUSTRATION

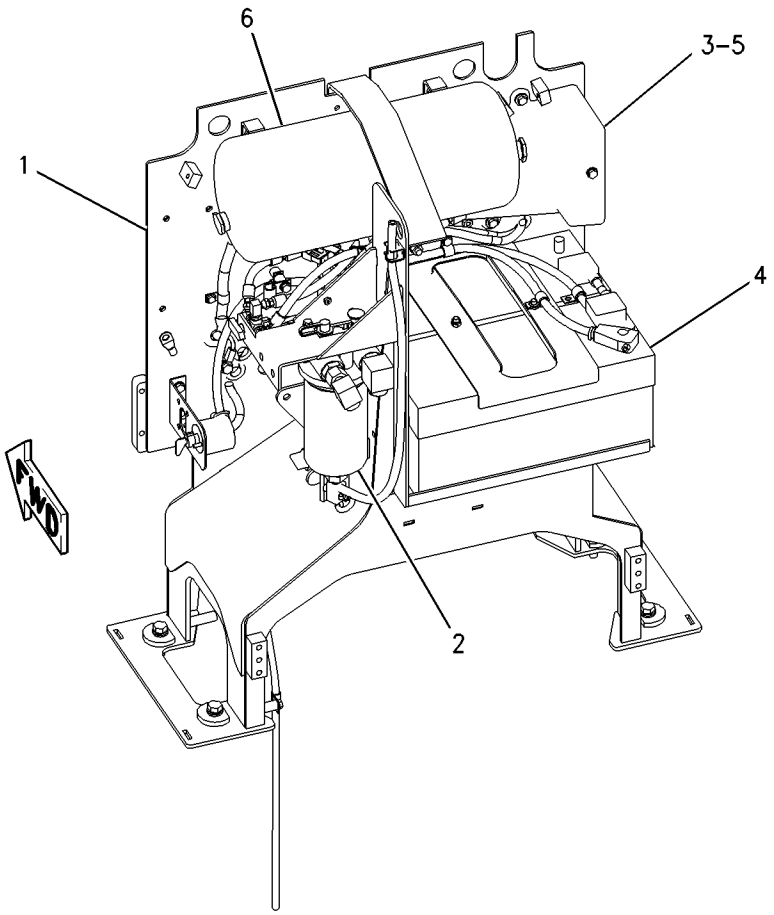


GRAPHIC #1 **<END>** g00951668

# *171-6700* SUPPORT AR-REAR CHASSIS–EU

**S/N: CCA388-UP**

**PART OF 207-4453, 210-2044 CONVERSION AR-CERTIFICATION**

**AN ATTACHMENT**

**SMCS-7509** **i02588575**

| NOTE | REF NO | GRAPHIC REF | PART NUMBER | QTY | PART NAME 1 2 3 4 5 6 (PRODUCT LEVEL) | SEE PAGE |
|---|---|---|---|---|---|---|
| Y | 1 | 1 | *178-0163* | 1 | WIRING GP-REAR (SERVICE CENTER) | 349 |
| Y | 2 | 1 | *187-8028* | 1 | BATTERY GP (EUI) | 149 |
| Y | 3 | 1 | *201-1036* | 1 | CIRCUIT BREAKER GP (DUAL) | 152 |
| Y | 4 | 1 | *209-9986* | 1 | TANK GP-AIR | 620 |
| C | 5 | 1 | **258-6599** | 1 | PLATFORM AS-REAR | |

C-CHANGE FROM PREVIOUS TYPE
Y-SEPARATE ILLUSTRATION

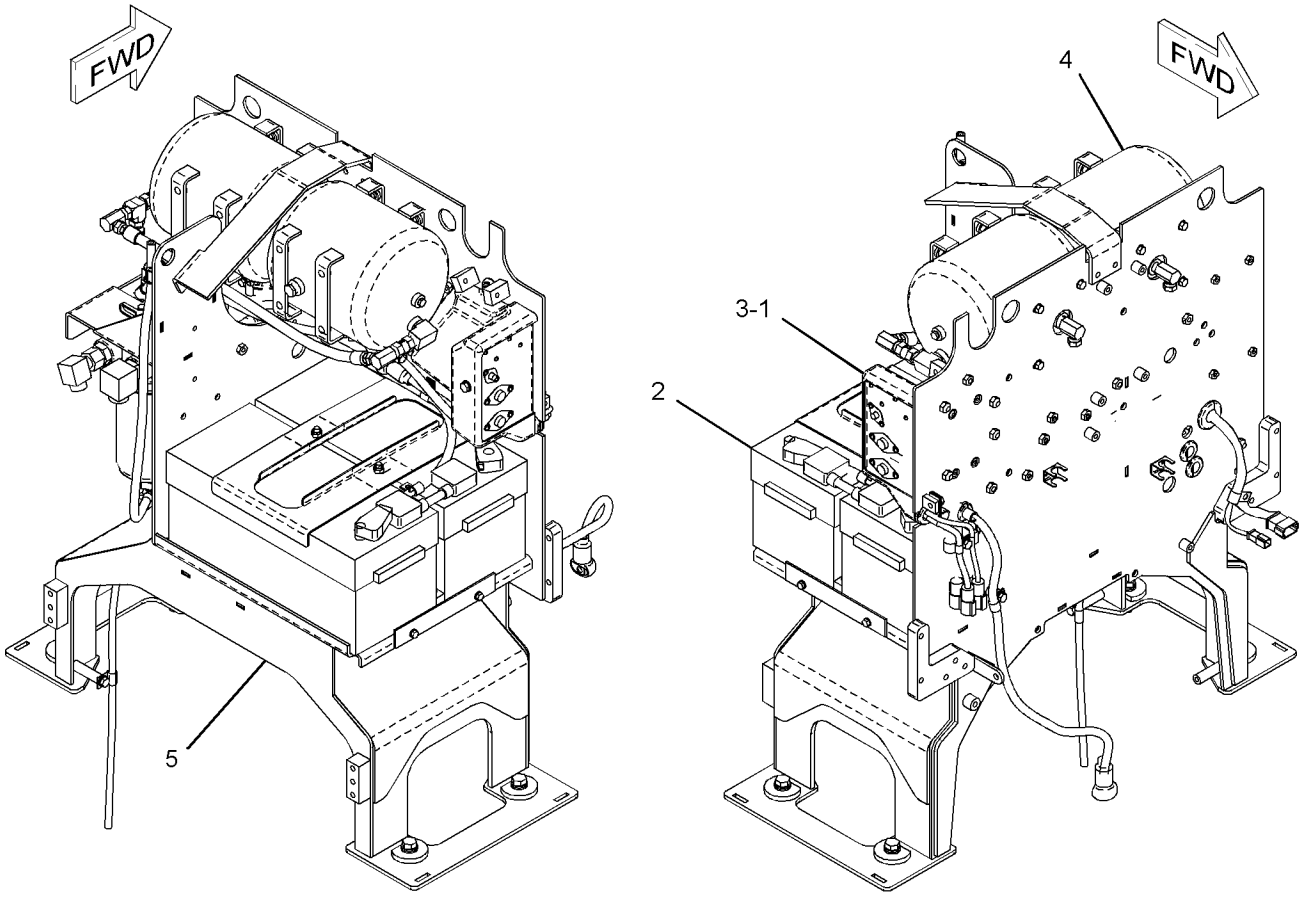


GRAPHIC #1 **<END>** g01207213

# FRAME AND BODY

## *185-3143* SUPPORT AR-REAR CHASSIS

**S/N: CCA1-UP**

**PART OF 159-4615 GENERAL AR**

**SMCS-7509** **i02588579**

| NOTE | REF NO | GRAPHIC REF | PART NUMBER | QTY | PART NAME 1 2 3 4 5 6 (PRODUCT LEVEL) | SEE PAGE |
|---|---|---|---|---|---|---|
| Y | 1 | 1 | *178-0163* | 1 | WIRING GP-REAR (SERVICE CENTER) | 349 |
| Y | 2 | 1 | *188-3951* | 1 | BATTERY GP (MAINTENANCE FREE) | 150 |
| Y | 3 | 1 | *209-9986* | 1 | TANK GP-AIR | 620 |
| | 4 | 1 | **258-6599** | 1 | PLATFORM AS-REAR | |

Y-SEPARATE ILLUSTRATION

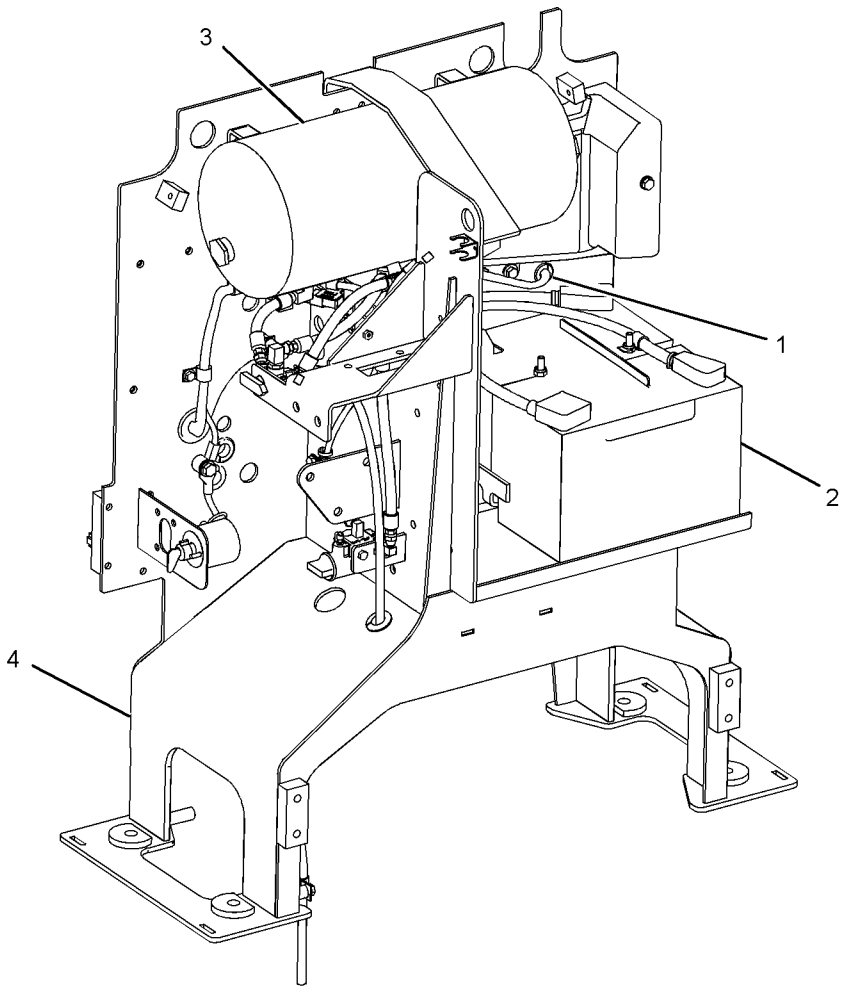


GRAPHIC #1 **<END>** g01026994

# FRAME AND BODY

## *193-8257* SUPPORT GP-FUEL TANK

**S/N: CCA1-1207**

**PART OF 159-4615 GENERAL AR**

**SMCS-1273** **i01813817**

| NOTE | REF NO | GRAPHIC REF | PART NUMBER | QTY | PART NAME 1 2 3 4 5 6 (PRODUCT LEVEL) | SEE PAGE |
|---|---|---|---|---|---|---|
| | 1 | 1 | **193-1728** | 1 | SUPPORT AS (RH) | |
| | 2 | 1 | **193-1729** | 1 | SUPPORT AS (LH) | |
| | 3 | 1 | **193-9147** | 2 | BRACKET | |
| | 4 | 1 | **194-4679** | 1 | BRACKET | |
| | 5 | 1 | **225-5182** | 2 | PLATE | |
| | 6 | 1 | **196-9295** | 1 | BRACKET AS | |
| M | 7 | 1 | **8T-4139** | 18 | BOLT (M12X1.75X30-MM) | |
| | 8 | 1 | **8T-4223** | 18 | WASHER-HARD (13.5X25.5X3-MM THK) | |
| M | 9 | 1 | **8T-4956** | 8 | BOLT (M12X1.75X35-MM) | |
| | 10 | 1 | **5P-1076** | 8 | WASHER-HARD (13.5X30X4-MM THK) | |

M-METRIC PART

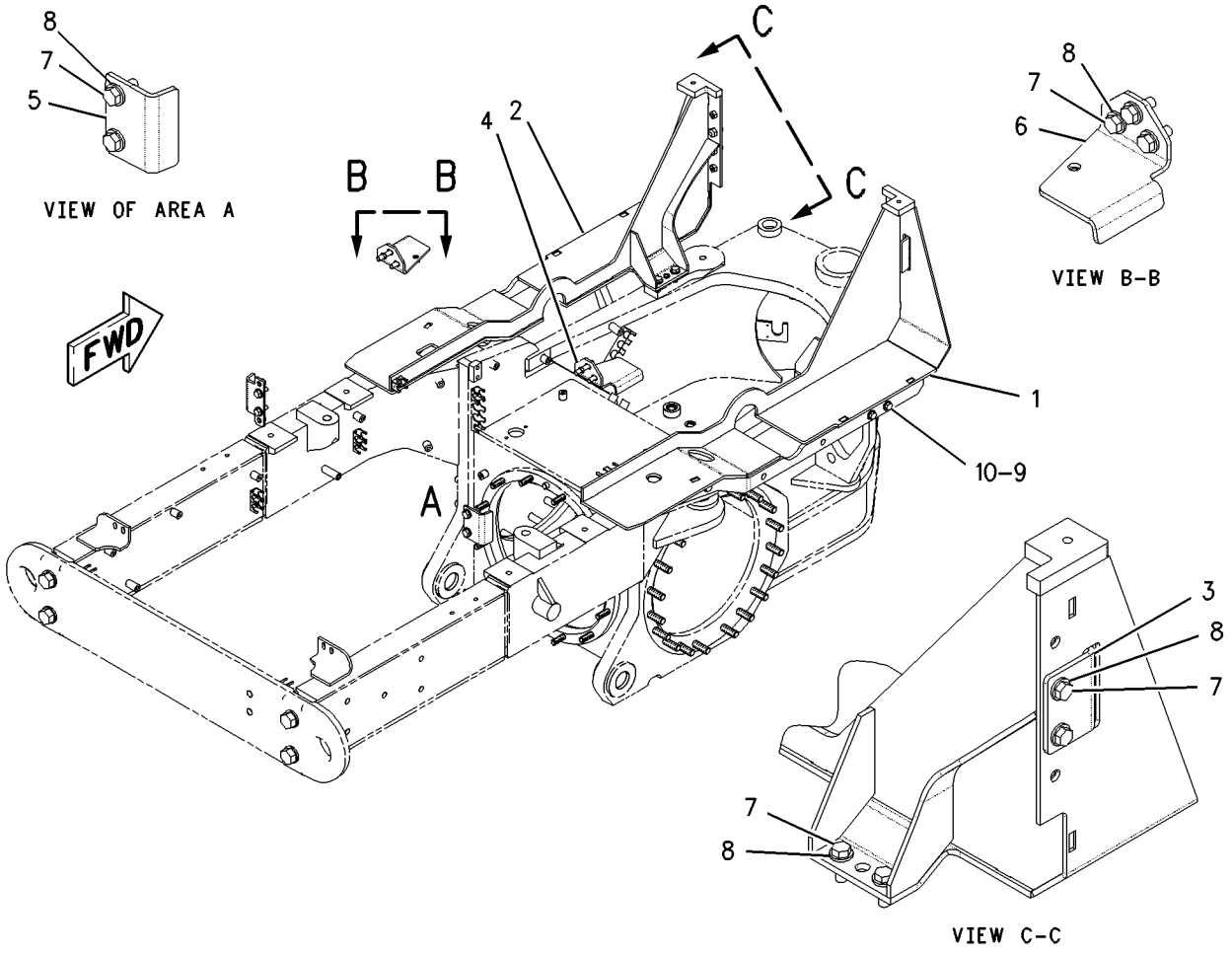


GRAPHIC #1 **<END>** g00912486

# FRAME AND BODY

## *236-7757* SUPPORT GP-FUEL TANK

**S/N: CCA1208-UP**

**PART OF 159-4615 GENERAL AR**

**SMCS-1273** **i02252923**

| NOTE | REF NO | GRAPHIC REF | PART NUMBER | QTY | PART NAME 1 2 3 4 5 6 (PRODUCT LEVEL) | SEE PAGE |
|---|---|---|---|---|---|---|
| | 1 | 1 | **193-9147** | 2 | BRACKET | |
| | 2 | 1 | **194-4679** | 1 | BRACKET | |
| | 3 | 1 | **196-9295** | 1 | BRACKET AS | |
| | 4 | 1 | **225-5182** | 2 | PLATE | |
| | 5 | 1 | **236-7755** | 1 | BRACKET AS | |
| | 6 | 1 | **236-7756** | 1 | BRACKET AS | |
| M | 7 | 1 | **8T-4139** | 4 | BOLT (M12X1.75X30-MM) | |
| | 8 | 1 | **8T-4223** | 4 | WASHER-HARD (13.5X25.5X3-MM THK) | |

M-METRIC PART

*236-7757* **SUPPORT GP-FUEL TANK** *(contd.)* **i02252923**

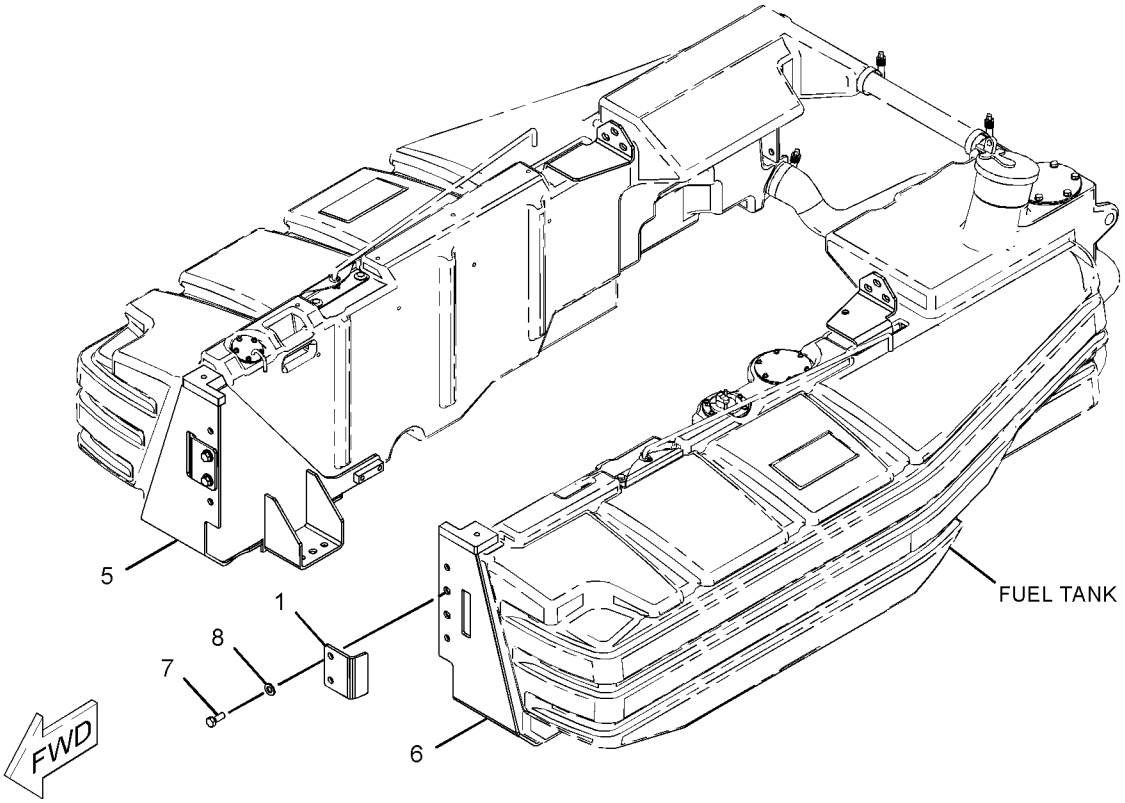


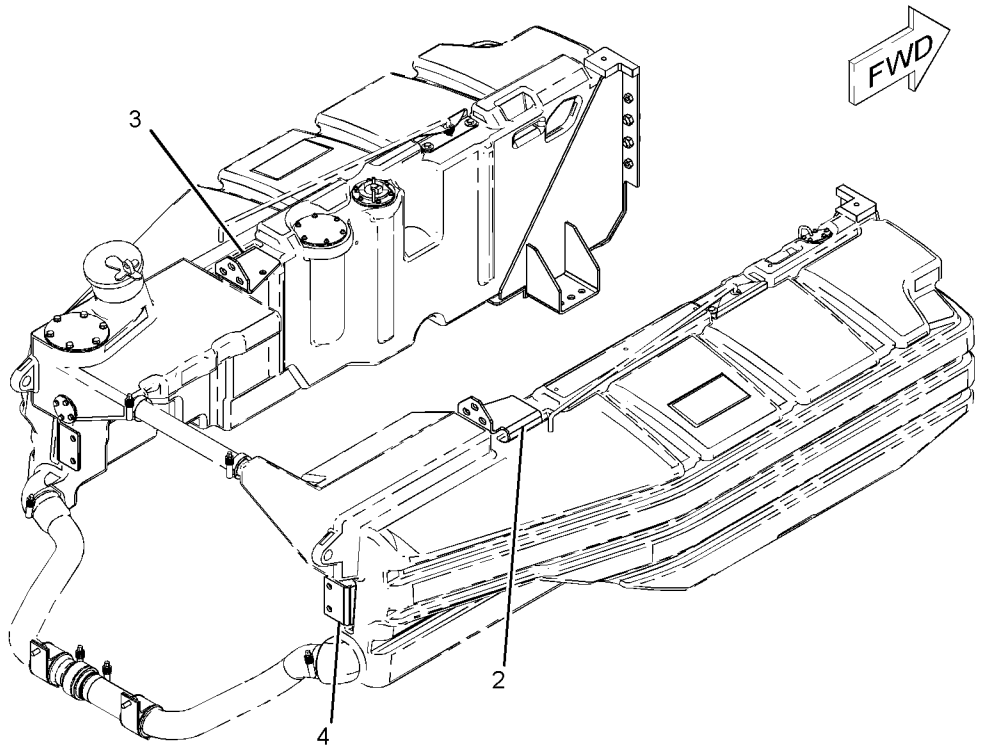


GRAPHIC #1 **<END>** g01074449

# *159-3924* SUPPORT GP-PLATFORM–REAR

**S/N: CCA1-387**

**PART OF 171-6700 SUPPORT AR-REAR CHASSIS**

**AN ATTACHMENT**

**SMCS-7253** **i01837495**

| NOTE | REF NO | GRAPHIC REF | PART NUMBER | QTY | PART NAME 1 2 3 4 5 6 (PRODUCT LEVEL) | SEE PAGE |
|---|---|---|---|---|---|---|
| | 1 | 1 | **167-1776** | 1 | PLATFORM AS | |
| M | 2 | 1 | **8T-4140** | 4 | BOLT (M16X2X60-MM) | |
| | 3 | 1 | **9X-8257** | 8 | WASHER (17.5X30X3.5-MM THK) | |

M-METRIC PART

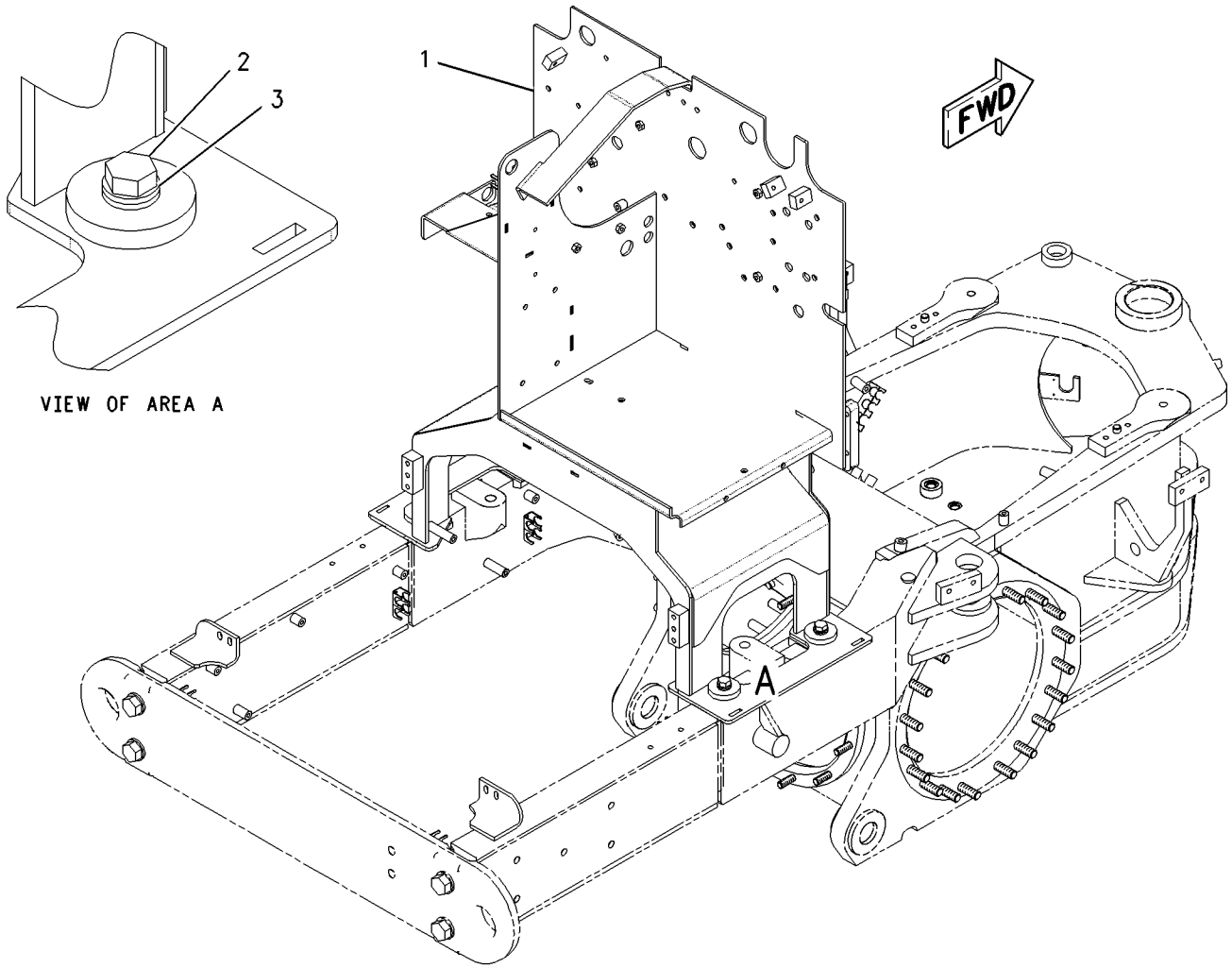


GRAPHIC #1 **<END>** g00921765

# MEMORANDA

# *160-7760* AIR DRYER GP–SNOW

**S/N: CCA1-UP**
**PART OF 197-5955, 236-3948 SNOW AR-MOTOR GRADER**
**AN ATTACHMENT**

**SMCS-4285** **i02200124**

| NOTE | REF NO | GRAPHIC REF | PART NUMBER | QTY | PART NAME 1 2 3 4 5 6 (PRODUCT LEVEL) | SEE PAGE |
|---|---|---|---|---|---|---|
| | 1 | 1 | **9W-1442** | 1 | FUSE (10-AMPERE) (AIR DRYER) | |
| | 2 | 1 | **178-4626** | 1 | HOSE AS | |
| Y | 3 | 1 | *208-0014* | 1 | AIR DRYER GP (SNOW) | 606 |

Y-SEPARATE ILLUSTRATION

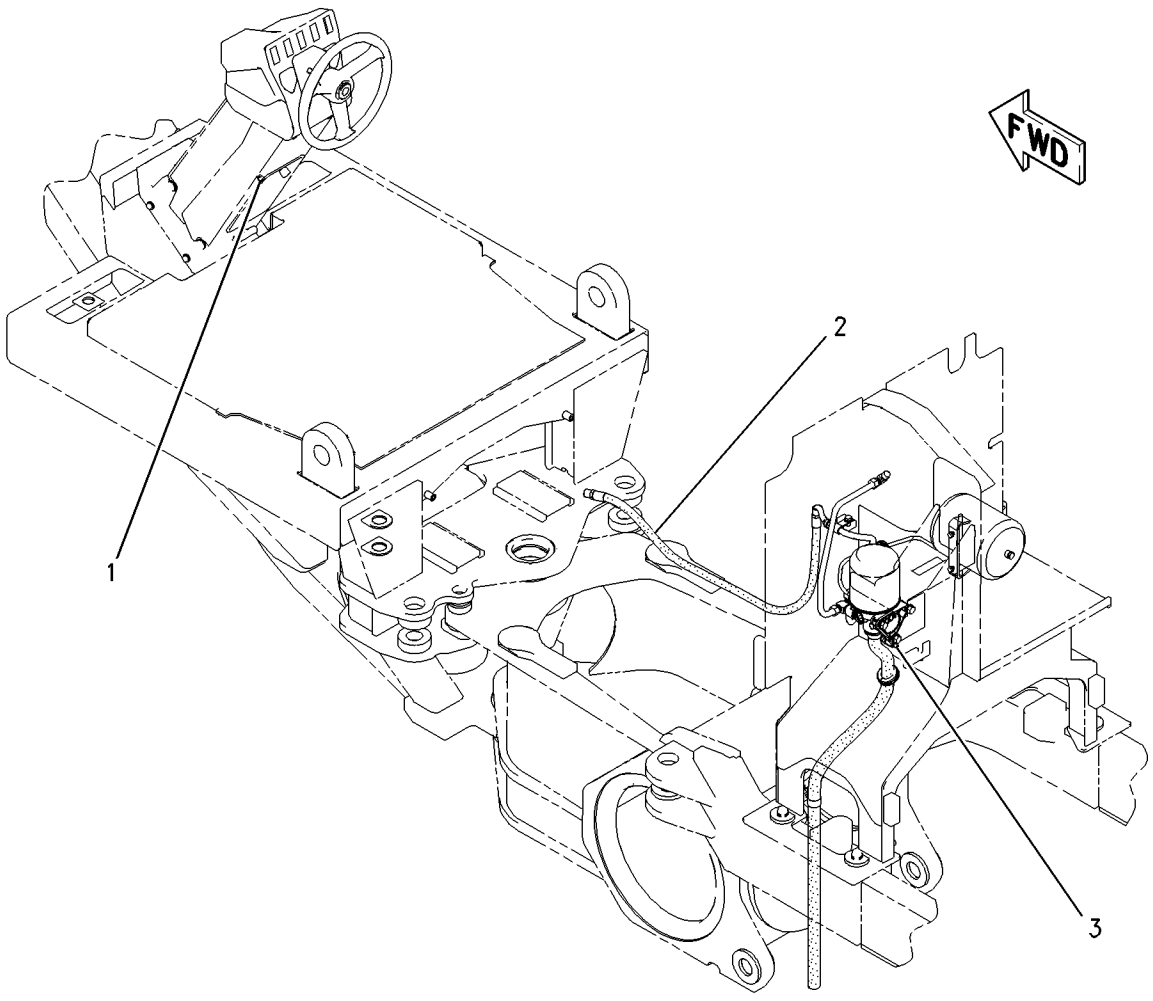


GRAPHIC #1 **<END>** g00918439

# BRAKING SYSTEM

## *208-0014* AIR DRYER GP–SNOW

**S/N: CCA1-UP**
**PART OF 160-7760 AIR DRYER GP**
**AN ATTACHMENT**

**SMCS-4285** **i02590898**

| NOTE | REF NO | GRAPHIC REF | PART NUMBER | QTY | PART NAME 1 2 3 4 5 6 (PRODUCT LEVEL) | SEE PAGE |
|---|---|---|---|---|---|---|
| | 1 | 1 | **0A-3721** | 1 | CLIP | |
| | 2 | 1 | **2S-3440** | 1 | CLAMP-HOSE | |
| | 3 | 1 | **5P-4401** | 1 | CONNECTOR-AIR BRAKE | |
| | 4 | 1 | **5P-4424** | 1 | ELBOW-AIR BRAKE | |
| | 5 | 1 | **5P-4426** | 3 | ELBOW-AIR BRAKE | |
| | 6 | 1 | **6V-2610** | 1 | FITTING | |
| | 7 | 1 | **177-0279** | 1 | HOSE AS | |
| | 8 | 1 | **191-3645** | 1 | RESERVOIR | |
| | 9 | 1 | **208-1512** | 1 | TUBE AS | |
| Y | 10 | 1 | **215-3005** | 1 | AIR DRYER GP (SNOW) | 608 |
| | 11 | 1 | **260-9133** | 1 | PLATE | |
| | 12 | 1 | **260-9194** | 1 | TUBE | |
| | 13 | 1 | **268-3456** | 1 | TUBE | |
| | 14 | 1 | **3J-5390** | 1 | PLUG | |
| C | 15 | 1 | **5P-2566** | 3 | BOLT (1/2-13X1.5-IN) | |
| | 16 | 1 | **6K-8178** | 1 | CLIP | |
| | 17 | 1 | **6P-6641** | 1 | GROMMET | |
| | 18 | 1 | **7D-0215** | 1 | CONNECTOR-PIPE | |
| | 19 | 1 | **7D-4903** | 1 | ADAPTER | |
| | 20 | 1 | **7J-8611** | 1 | ELBOW | |
| C | 21 | 1 | **8D-1470** | 1 | GROMMET | |
| | 22 | 1 | **8T-4121** | 2 | WASHER-HARD (11X21X2.5-MM THK) | |
| M | 23 | 1 | **8T-4137** | 2 | BOLT (M10X1.5X20-MM) | |
| | 24 | 1 | **8T-4223** | 3 | WASHER-HARD (13.5X25.5X3-MM THK) | |
| | 25 | 1 | **8T-4224** | 2 | WASHER-HARD (8.8X16X2-MM THK) | |
| M | 26 | 1 | **8T-7547** | 2 | BOLT (M8X1.25X30-MM) | |
| E | 27 | 1 | **8I-1362** | | HOSE (100-CM) | |

C-CHANGE FROM PREVIOUS TYPE
E-ORDER BY THE CENTIMETER
M-METRIC PART
Y-SEPARATE ILLUSTRATION

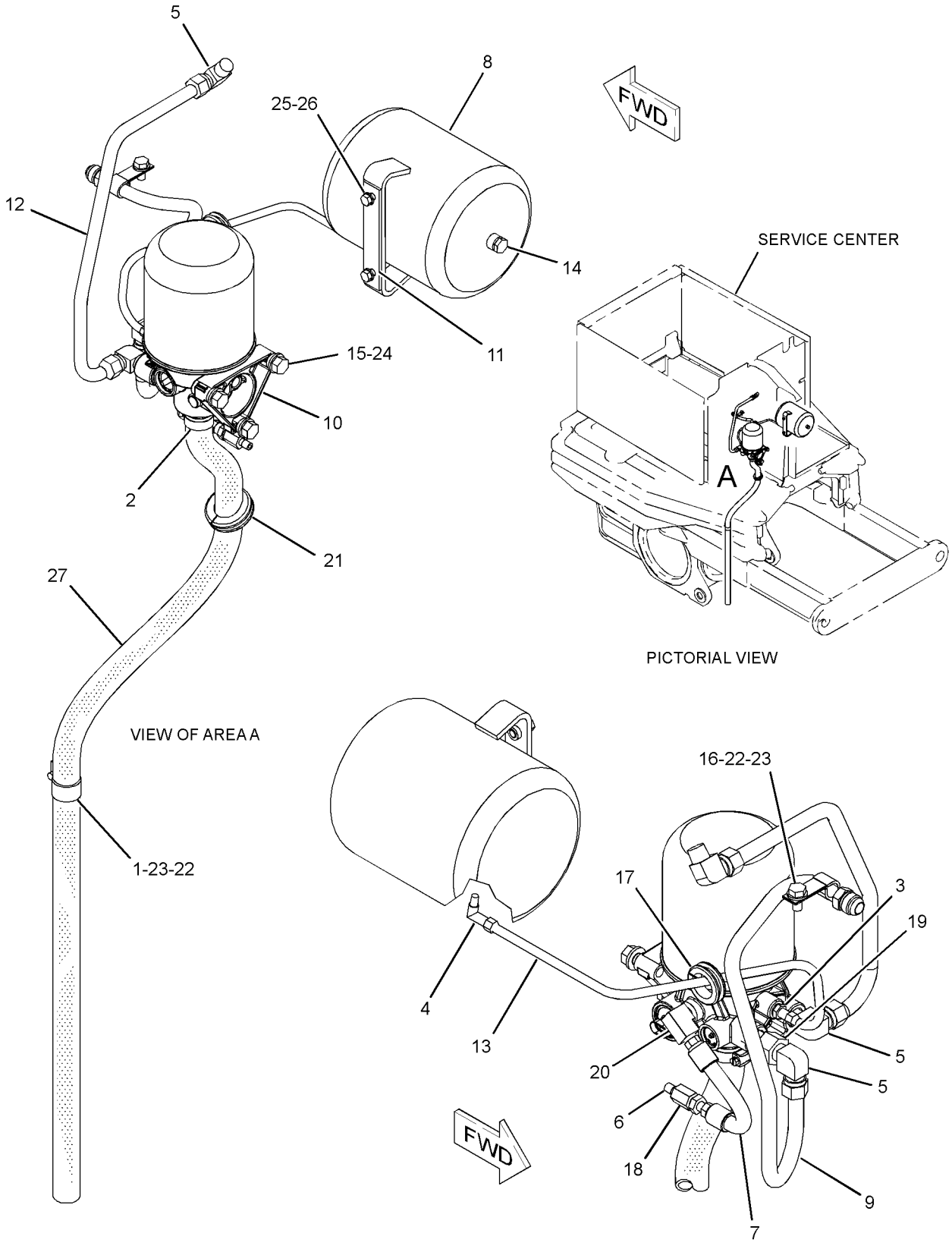


GRAPHIC #1 **<END>** g01188762

# 215-3005 AIR DRYER GP–SNOW

**S/N: CCA1-UP**
**PART OF 208-0014 AIR DRYER GP**
**AN ATTACHMENT**

**SMCS-4285** **i02306471**

| NOTE | REF NO | GRAPHIC REF | PART NUMBER | QTY | PART NAME 1 2 3 4 5 6 (PRODUCT LEVEL) | SEE PAGE |
|---|---|---|---|---|---|---|
| | 1 | 1 | **203-2390** | 1 | VALVE | |
| | 2 | 1 | **203-2391** | 1 | VALVE AS | |
| | 3 | 1 | **203-2423** | 1 | ELEMENT-HEATING (AIR DRYER) | |
| | 4 | 1 | **203-2389** | 1 | CARTRIDGE AS-DESICCANT (AIR DRYER) | |
| | 5 | 1 | **218-2971** | 1 | VALVE GP-PURGE (AIR DRYER) | |

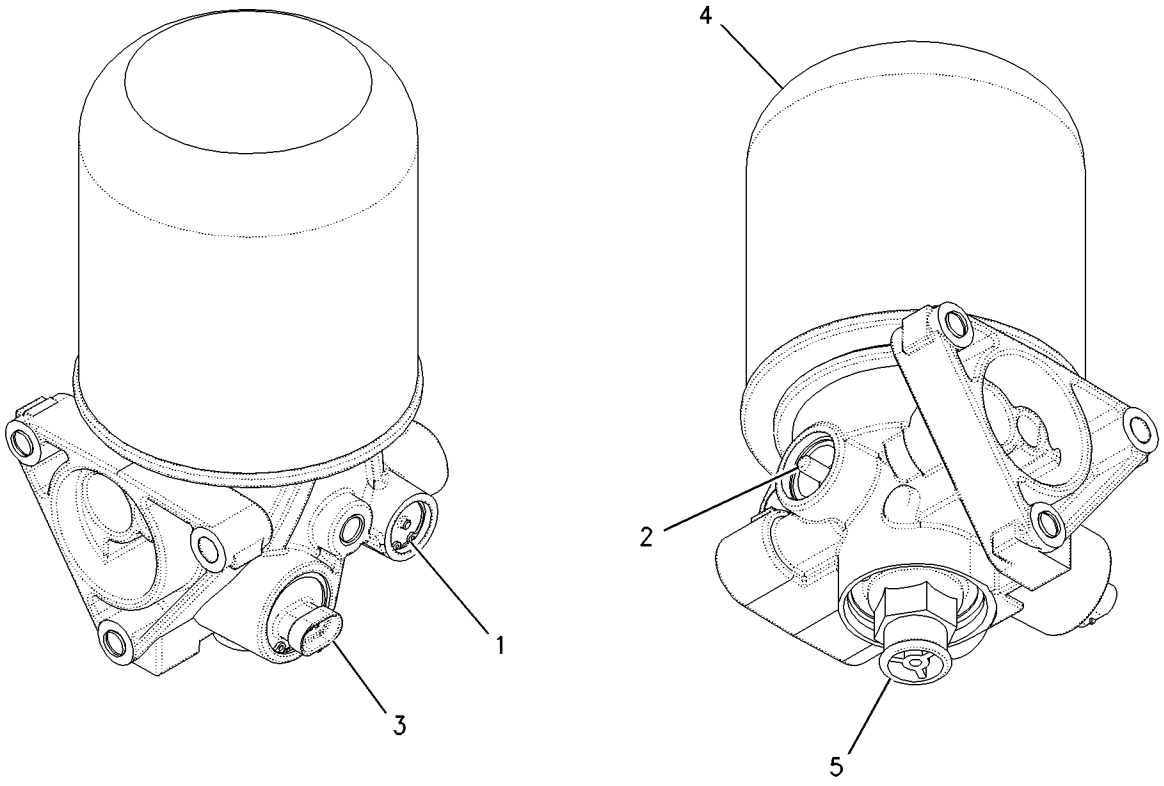


GRAPHIC #1 **<END>** g00945969

# *9W-5132* BRAKE GP-PARKING

**S/N: EDB1-UP; BJN1-99999**

**PART OF 160-2196 TRANSMISSION AR**

**SMCS-3077, 4267** **i02024329**

| NOTE | REF NO | GRAPHIC REF | PART NUMBER | QTY | PART NAME 1 2 3 4 5 6 (PRODUCT LEVEL) | SEE PAGE |
|---|---|---|---|---|---|---|
| M | 1 | 1 | **6V-5842** | 6 | BOLT (M10X1.5X40-MM) | |
| | 2 | 1 | **6V-5839** | 6 | WASHER (11X21X2.5-MM THK) | |
| | 3 | 1 | **6Y-3849** | 1 | HUB-CLUTCH | |
| | 4 | 1 | **9M-4335** | 6 | DOWEL-REACTION | |
| | 5 | 1 | **5J-1086** | 1 | SEAL-O-RING | |
| | 6 | 1 | **6Y-3850** | 1 | HOUSING-BRAKE | |
| | 7 | 1 | **4S-5838** | 1 | RETAINER | |
| M | 8 | 1 | **8T-0372** | 1 | BOLT (M12X1.75X90-MM) | |
| | 9 | 1 | **4F-7390** | 1 | SEAL-O-RING | |
| | 10 | 1 | **1P-7521** | 1 | YOKE | |
| | 11 | 1 | **203-5957** | 1 | SEAL | |
| | 12 | 1 | **9W-4431** | 20 | SPRING | |
| | 13 | 1 | **9W-4430** | 20 | SPRING | |
| M | 14 | 1 | **6V-3668** | 12 | BOLT (M12X1.75X30-MM) | |
| | 15 | 1 | **7G-0437** | 6 | PLATE-CLUTCH | |
| | 16 | 1 | **6Y-5352** | 5 | DISC-FRICTION | |
| | 17 | 1 | **2J-6274** | 1 | SEAL-O-RING | |
| | 18 | 1 | **9S-4182** | 1 | PLUG (STRAIGHT THREAD O-RING) | |
| | 19 | 1 | **3J-7354** | 1 | SEAL-O-RING | |
| | 20 | 1 | **203-5958** | 1 | SEAL | |
| | 21 | 1 | **9W-4452** | 1 | PISTON | |
| | 22 | 1 | **9W-4453** | 1 | PISTON | |
| | 23 | 1 | **4H-9105** | 1 | SEAL-O-RING | |
| | 24 | 1 | **6Y-3852** | 1 | PLUG | |
| | 25 | 1 | **9N-6152** | 1 | PLUG | |
| | 26 | 1 | **2M-9780** | 1 | SEAL-O-RING | |
| | 27 | 1 | **9X-7743** | 1 | SEAL-LIP TYPE | |

M-METRIC PART

*9W-5132* **BRAKE GP-PARKING** *(contd. )* **i02024329**

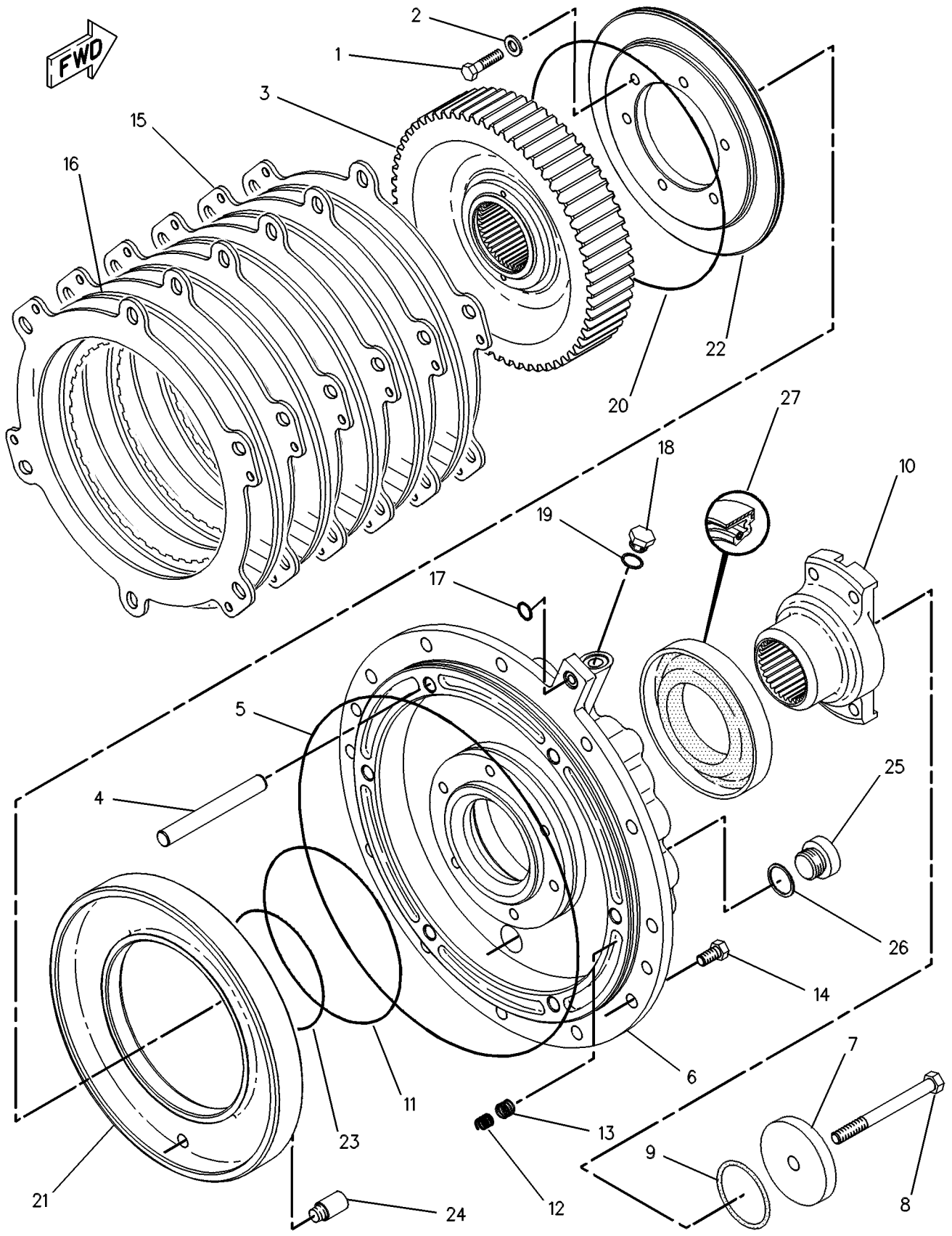


GRAPHIC #1 **<END>** g00108550

## *7D-8440* BRAKE GP-SERVICE

**S/N: CCA1-UP**

**PART OF 159-4615 GENERAL AR**

**SMCS-4251** **i02267850**

| NOTE | REF NO | GRAPHIC REF | PART NUMBER | QTY | PART NAME 1 2 3 4 5 6 (PRODUCT LEVEL) | SEE PAGE |
|---|---|---|---|---|---|---|
| | 1 | 1 | **7D-8354** | 4 | SPROCKET (20-TEETH) | |
| | 2 | 1 | **7D-8437** | 4 | CONE-BEARING | |
| | 3 | 1 | **1P-4693** | 8 | CUP-BEARING | |
| | 4 | 1 | **5P-9118** | 12 | BOLT-LOCKING (5/8-11X2.5-IN) | |
| B | 5 | 1 | **7D-8439** | 20 | SHIM (0.007-MM THK) | |
| B | 6 | 1 | **7D-8441** | 28 | SHIM (0.005-MM THK) | |
| B | 7 | 1 | **9D-7047** | 8 | SHIM (0.02-MM THK) | |
| | 8 | 1 | **9D-3075** | 4 | RETAINER | |
| | 9 | 1 | **4S-5879** | 8 | SEAL-O-RING | |
| C | 10 | 1 | **0S-1566** | 16 | BOLT (5/8-11X1.5-IN) | |
| C | 11 | 1 | **4D-3704** | 64 | WASHER-HARD (17X30X5-MM THK) | |
| | 12 | 1 | **7D-8434** | 40 | DISC | |
| | 13 | 1 | **4D-5497** | 4 | SEAL-D-RING | |
| | 14 | 1 | **6Y-7916** | 36 | DISC-FRICTION | |
| | 15 | 1 | **6G-0905** | 24 | BOLT (7/16-14X4.37-IN) | |
| | 16 | 1 | **9J-5498** | 24 | SPRING | |
| | 17 | 1 | **5P-8244** | 24 | WASHER-HARD (12X22.5X2.5-MM THK) | |
| | 18 | 1 | **4B-7270** | 4 | CONE-BEARING | |
| R | 19 | 1 | **5K-5288** | 4 | SEAL GP-DUO-CONE | |
| | | | | | (EACH INCLUDES) | |
| | | 1 | **5K-5129** | 2 | RING-SEALING | |
| C | 20 | 1 | **147-3310** | 4 | SPINDLE-WHEEL | |
| C | 21 | 1 | **8W-8124** | 4 | HOUSING | |
| | 22 | 1 | **6G-3378** | 4 | PISTON | |
| | 23 | 1 | **7D-8436** | 4 | SEAL-D-RING | |
| | 24 | 1 | **2G-6337** | 4 | HUB-BRAKE | |
| C | 25 | 1 | **8T-6472** | 40 | BOLT-LOCKING (5/8-11X2.5-IN) | |
| | 26 | 1 | **7D-8362** | 4 | COVER | |
| | 27 | 1 | **3J-5390** | 4 | PLUG | |
| C | 28 | 1 | **8T-6473** | 8 | BOLT-LOCKING (5/8-11X2.75-IN) | |

B-USE AS REQUIRED
C-CHANGE FROM PREVIOUS TYPE
R-REMFG PART MAY BE AVAILABLE

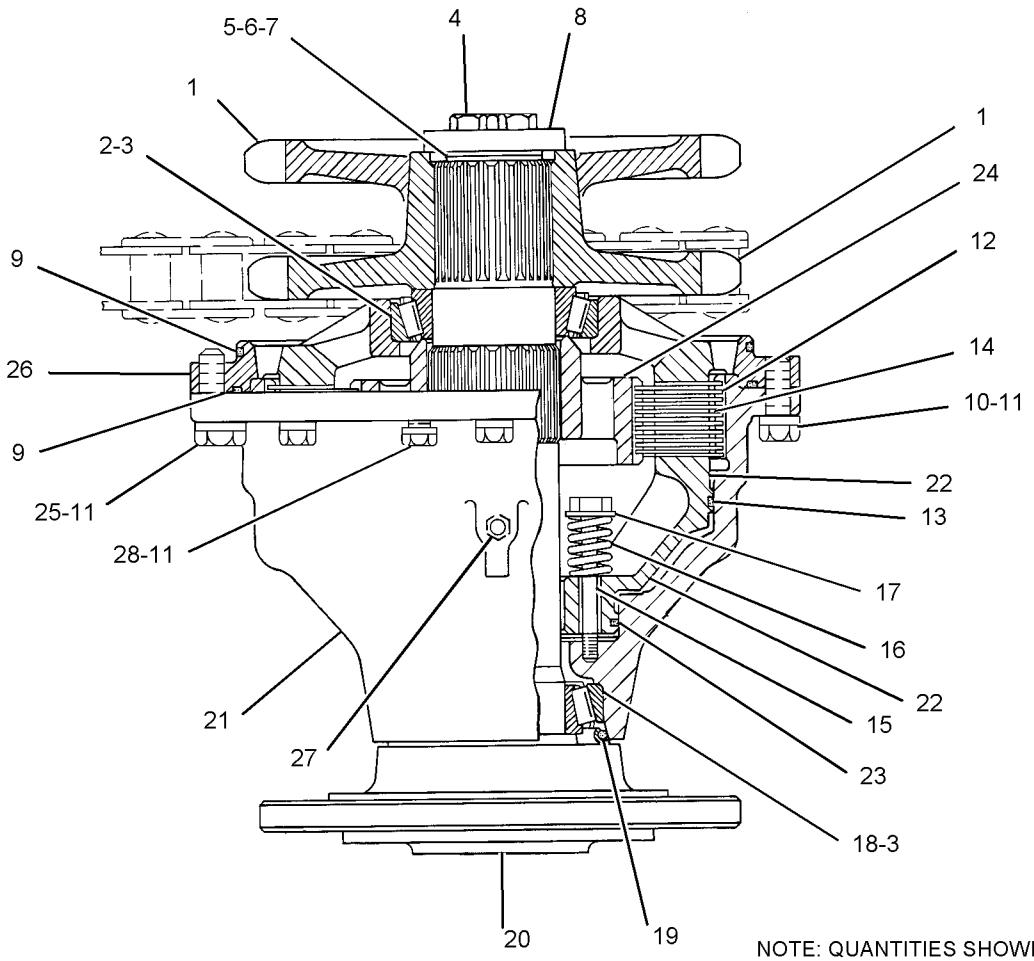


NOTE: QUANTITIES SHOWN ARE THOSE REQUIRED FOR BOTH RH & LH SIDES

GRAPHIC #1 **<END>** g01137517

# *160-7753* CONTROL GP-PARKING BRAKE

**S/N: CCA1-UP**

**PART OF 159-4615 GENERAL AR**

**SMCS-4282, 4284** **i02237530**

| NOTE | REF NO | GRAPHIC REF | PART NUMBER | QTY | PART NAME 1 2 3 4 5 6 (PRODUCT LEVEL) | SEE PAGE |
|---|---|---|---|---|---|---|
| | 1 | 1 | **3B-8822** | 1 | ELBOW | |
| I | 2 | 1 | **4S-7529** | 1 | HOSE AS | |
| | 3 | 1 | **4S-7606** | 2 | ELBOW | |
| | 4 | 1 | **5T-8285** | 1 | JUNCTION BLOCK | |
| | 5 | 1 | **6D-1432** | 1 | VALVE-CHECK (PARKING BRAKE) | |
| I | 6 | 1 | **7D-3963** | 1 | HOSE AS | |
| | 7 | 1 | **7X-4736** | 1 | GROMMET | |
| | 8 | 1 | **8W-8528** | 2 | SLEEVE | |
| | 9 | 1 | **8X-5160** | 1 | GROMMET | |
| I | 10 | 1 | **112-4834** | 1 | HOSE AS | |
| Y | 11 | 1 | **185-0008** | 1 | VALVE GP-SOLENOID (PARKING BRAKE) | 626 |
| C | 12 | 1 | **253-4347** | 1 | VALVE AS-AIR (PARKING BRAKE) | |
| | 13 | 1 | **130-5300** | 1 | CLIP | |
| | 14 | 1 | **3D-8884** | 1 | ELBOW | |
| | 15 | 1 | **4D-6585** | 1 | ELBOW-PIPE | |
| | 16 | 1 | **4H-6147** | 1 | CONNECTOR (PIPE) | |
| | 17 | 1 | **5H-4778** | 2 | ELBOW | |
| C | 18 | 1 | **5K-1094** | 1 | LOCKWASHER | |
| | 19 | 1 | **5K-2408** | 2 | FITTING | |
| | 20 | 1 | **5M-3062** | 1 | BOLT (3/8-16X0.75-IN) | |
| | 21 | 1 | **5M-6213** | 2 | PLUG-PIPE | |
| | 22 | 1 | **6V-8801** | 1 | NUT (3/8-16-THD) | |
| | 23 | 1 | **8T-2502** | 2 | BOLT (3/8-16X1.125-IN) | |
| | 24 | 1 | **8T-4896** | 3 | WASHER-HARD (10.2X18.5X2.5-MM THK) | |

C-CHANGE FROM PREVIOUS TYPE
I-REFER TO HYDRAULIC INFORMATION SYSTEM
Y-SEPARATE ILLUSTRATION

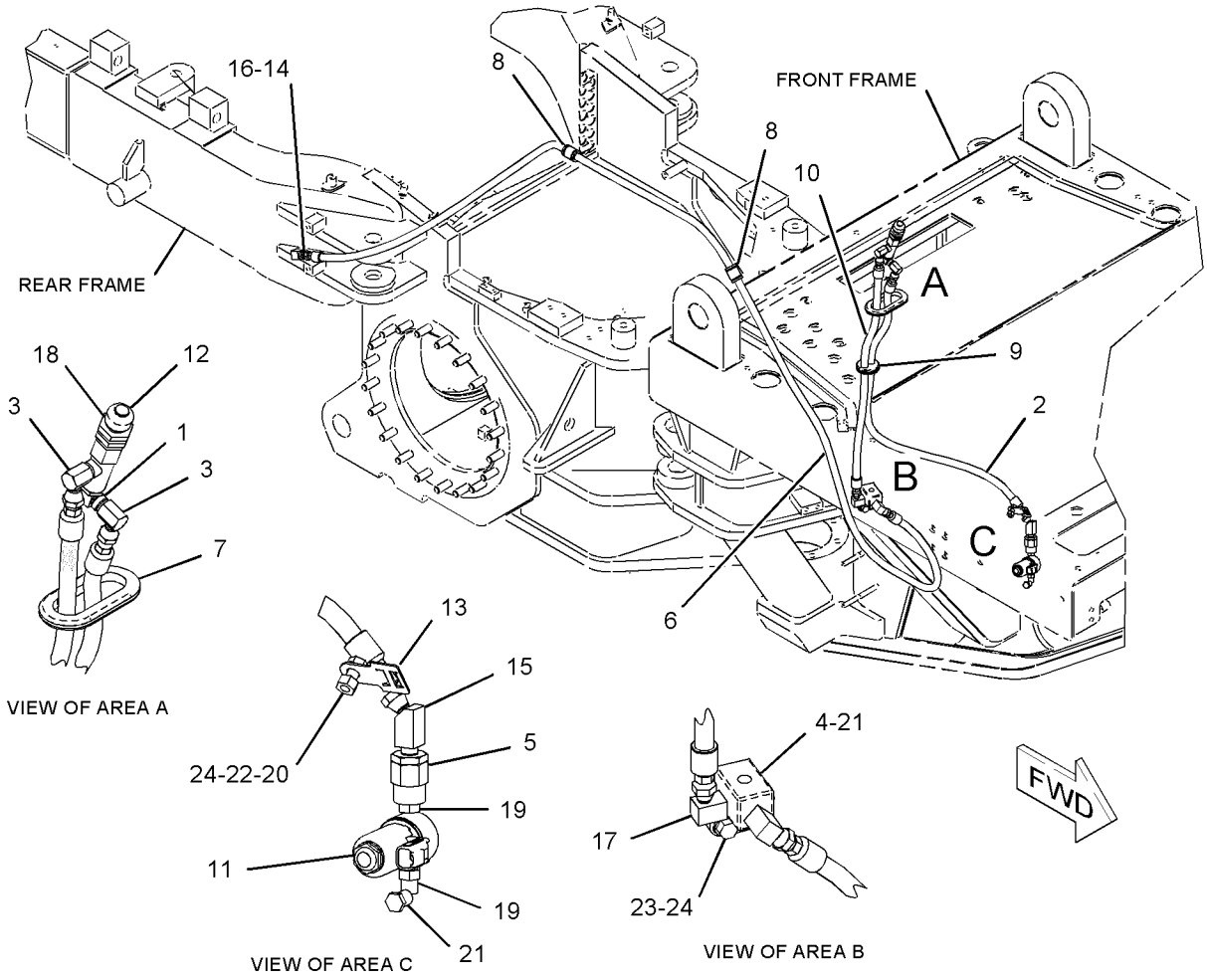


GRAPHIC #1 **<END>** g01132761

# BRAKING SYSTEM

## *160-7754* CONTROL GP-SERVICE BRAKE

**S/N: CCA1-UP**

**PART OF 159-4615 GENERAL AR**

**SMCS-4265, 4269** **i02590914**

| NOTE | REF NO | GRAPHIC REF | PART NUMBER | QTY | PART NAME 1 2 3 4 5 6 (PRODUCT LEVEL) | SEE PAGE |
|---|---|---|---|---|---|---|
| | 1 | 1 | **1B-2578** | 1 | NUT (3/8-16-THD) | |
| | 2 | 1 | **1F-4622** | 2 | BEARING AS-NEEDLE | |
| | 3 | 2 | **2D-7325** | 1 | TEE-PIPE | |
| | 4 | 2 | **2L-3331** | 4 | CONNECTOR-PIPE | |
| | 5 | 1 | **3S-2093** | 1 | STRAP-CABLE | |
| | 6 | 2 | **3S-2713** | 1 | NUT-FULL (3/8-24-THD) | |
| | 7 | 2 | **3T-0050** | 4 | CLIP | |
| I | 8 | 2 | **4D-6885** | 1 | HOSE AS | |
| | 9 | 2 | **5K-9238** | 4 | CONNECTOR | |
| | 10 | 1 | **5T-8285** | 1 | JUNCTION BLOCK | |
| I | 11 | 1 | **6D-9855** | 1 | HOSE AS | |
| | 12 | 2 | **6K-6826** | 4 | ELBOW | |
| I | 13 | 2 | **6M-9537** | 1 | HOSE AS | |
| | 14 | 2 | **6W-5817** | 1 | SPRING | |
| | 15 | 2 | **242-9245** | 2 | HOSE AS | |
| | 16 | 1,2 | **7V-0446** | 2 | CLIP | |
| | 17 | 2 | **8D-7026** | 4 | GUARD | |
| | 18 | 2 | **8L-6005** | 3 | TEE-PIPE | |
| | 19 | 1,2 | **8W-8527** | 15 | SLEEVE | |
| | 20 | 1 | **8W-8532** | 1 | CLIP | |
| | 21 | 1 | **8W-8903** | 1 | CLIP | |
| Y | 22 | 1 | **8X-2650** | 1 | VALVE GP-AIR CONTROL (SERVICE BRAKE) | 624 |
| | 23 | 1 | **8X-2680** | 1 | BRACKET AS | |
| | 24 | 1 | **8X-7603** | 2 | HOSE AS | |
| | 25 | 1 | **8X-8451** | 1 | PLATE | |
| | 26 | 2 | **9G-8140** | 1 | SPACER (10.5X25X15-MM THK) | |
| | 27 | 1 | **9J-8783** | 1 | SHIM (0.508-MM THK) | |
| | 28 | 2 | **9S-1302** | 2 | WASHER (27X44.45X2.5-MM THK) | |
| | 29 | 2 | **9S-7706** | 2 | ELBOW-FLARED | |
| | 30 | 2 | **9X-8606** | 8 | CLIP | |
| | 31 | 2 | **110-3326** | 1 | PLATE AS | |
| | | 2 | **3S-0391** | 1 | BOSS (3/8-16-THD) | |
| | 32 | 1 | **169-0921** | 1 | ROD END (INTERNAL THREAD) | |
| | 33 | 1 | **172-4211** | 1 | SPACER (10.5X22X50.8-MM THK) | |
| | 34 | 2 | **176-2945** | 2 | FITTING-BULKHEAD | |
| | 35 | 1 | **177-1713** | 1 | ROD | |
| | 36 | 2 | **177-3582** | 2 | HOSE AS | |
| | 37 | 1 | **180-4027** | 1 | CAM | |
| | 38 | 1 | **180-7147** | 1 | LEVER | |
| | 39 | 1,2 | **180-9867** | 2 | CLAMP | |
| | 40 | 1,2 | **183-4691** | 2 | CLAMP | |
| | 41 | 1,2 | **184-6665** | 2 | CLAMP | |
| | 42 | 2 | **185-1122** | 1 | BRACKET | |
| | 43 | 1,2 | **187-0745** | 4 | CLAMP | |
| | 44 | 2 | **198-5438** | 2 | BLOCK | |
| | 45 | 2 | **198-5439** | 1 | TUBE AS | |
| | 46 | 2 | **198-5440** | 1 | TUBE AS | |
| | 47 | 2 | **203-3337** | 1 | TUBE AS | |
| | 48 | 2 | **203-3340** | 1 | TUBE AS | |
| | 49 | 2 | **203-3341** | 1 | TUBE AS | |
| | 50 | 2 | **203-3342** | 1 | TUBE AS | |
| | 51 | 1 | **207-4924** | 1 | PEDAL-BRAKE | |
| | 52 | 2 | **214-2242** | 1 | BRACKET AS | |
| | 53 | 2 | **214-2466** | 1 | PLATE AS | |
| | 54 | 1 | **129-3173** | 1 | BOLT-12 POINT HEAD (3/8-16X1.25-IN) | |
| | 55 | 1 | **1B-0676** | 1 | PIN | |

## *160-7754* **CONTROL GP-SERVICE BRAKE** *(contd.)* **i02590914**

| NOTE | REF NO | GRAPHIC REF | PART NUMBER | QTY | PART NAME 1 2 3 4 5 6 (PRODUCT LEVEL) | SEE PAGE |
|---|---|---|---|---|---|---|
| | 56 | 2 | **1H-7724** | 3 | BUSHING-REDUCER | |
| | 57 | 2 | **3B-7721** | 1 | BUSHING-REDUCER | |
| | 58 | 1,2 | **3K-6060** | 8 | LOCKNUT (3/8-16-THD) | |
| | 59 | 2 | **3K-8280** | 1 | PIN-CLEVIS | |
| | 60 | 1 | **4B-6060** | 1 | SETSCREW-SOCKET (1/4-20X0.375-IN) | |
| | 61 | 2 | **4D-0577** | 1 | ELBOW | |
| | 62 | 1,2 | **4D-0582** | 5 | ELBOW | |
| | 63 | 2 | **4J-3914** | 1 | ELBOW | |
| | 64 | 2 | **4J-8922** | 1 | ROD END | |
| | 65 | 1 | **4L-6454** | 4 | BOLT (3/8-16X1-IN) | |
| | 66 | 2 | **4M-6425** | 1 | BOLT (5/16-18X1-IN) | |
| M | 67 | 2 | **5C-2890** | 3 | NUT (M6X1-THD) | |
| | 68 | 1 | **5H-4778** | 1 | ELBOW | |
| | 69 | 2 | **5M-3062** | 1 | BOLT (3/8-16X0.75-IN) | |
| | 70 | 1 | **5M-6213** | 1 | PLUG-PIPE | |
| | 71 | 1 | **5P-1075** | 2 | WASHER-HARD (10.2X22.5X3-MM THK) | |
| | 72 | 2 | **6V-4245** | 1 | ELBOW | |
| M | 73 | 2 | **6V-7357** | 1 | BOLT (M6X1X25-MM) | |
| | 74 | 2 | **6V-8189** | 3 | NUT (5/16-18-THD) | |
| | 75 | 1,2 | **6V-8801** | 4 | NUT (3/8-16-THD) | |
| | 76 | 2 | **6V-8918** | 2 | BOLT (5/16-18X1.25-IN) | |
| | 77 | 2 | **7M-7410** | 6 | PLUG-PIPE | |
| | 78 | 1 | **8T-2502** | 1 | BOLT (3/8-16X1.125-IN) | |
| | 79 | 2 | **8T-4121** | 5 | WASHER-HARD (11X21X2.5-MM THK) | |
| M | 80 | 2 | **8T-4137** | 5 | BOLT (M10X1.5X20-MM) | |
| | 81 | 2 | **8T-4224** | 5 | WASHER-HARD (8.8X16X2-MM THK) | |
| | 82 | 1 | **8T-4226** | 1 | WASHER-PLATED (10.5X45X3-MM THK) | |
| | 83 | 1,2 | **8T-4896** | 22 | WASHER-HARD (10.2X18.5X2.5-MM THK) | |
| | 84 | 1 | **8T-5390** | 1 | BOLT (3/8-16X3.5-IN) | |
| | 85 | 2 | **8T-9056** | 4 | BOLT (3/8-16X1.25-IN) | |
| | 86 | 1 | **8X-8450** | 1 | PLATE | |
| | 87 | 2 | **9B-7237** | 1 | BOLT (3/8-16X1.25-IN) | |
| | 88 | 2 | **9X-8256** | 1 | WASHER (6.6X12X2-MM THK) | |
| E | 89 | 2 | **5P-0767** | | HOSE (60 CM) | |

E-ORDER BY THE CENTIMETER
I-REFER TO HYDRAULIC INFORMATION SYSTEM
M-METRIC PART
Y-SEPARATE ILLUSTRATION

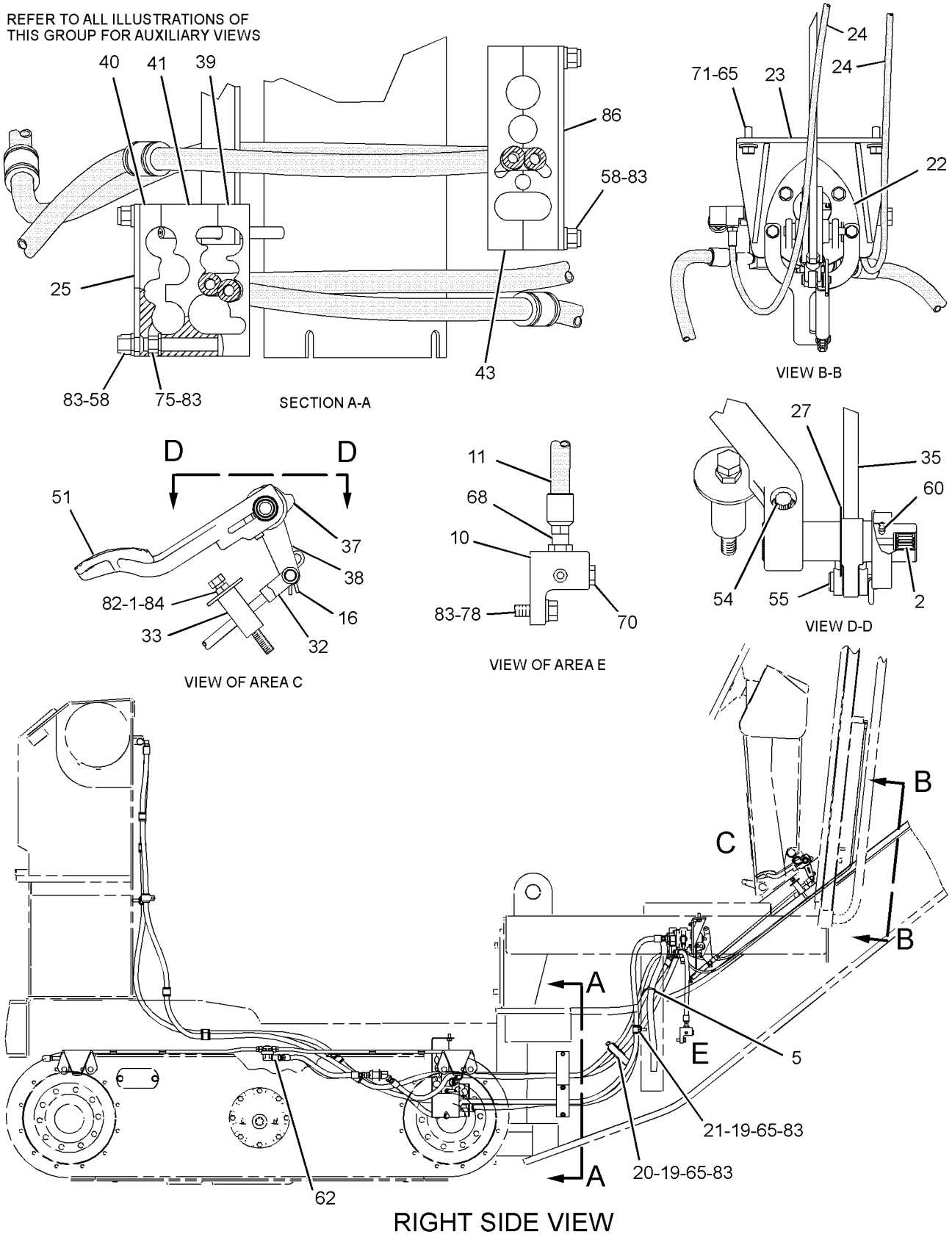


GRAPHIC #1 g01297141

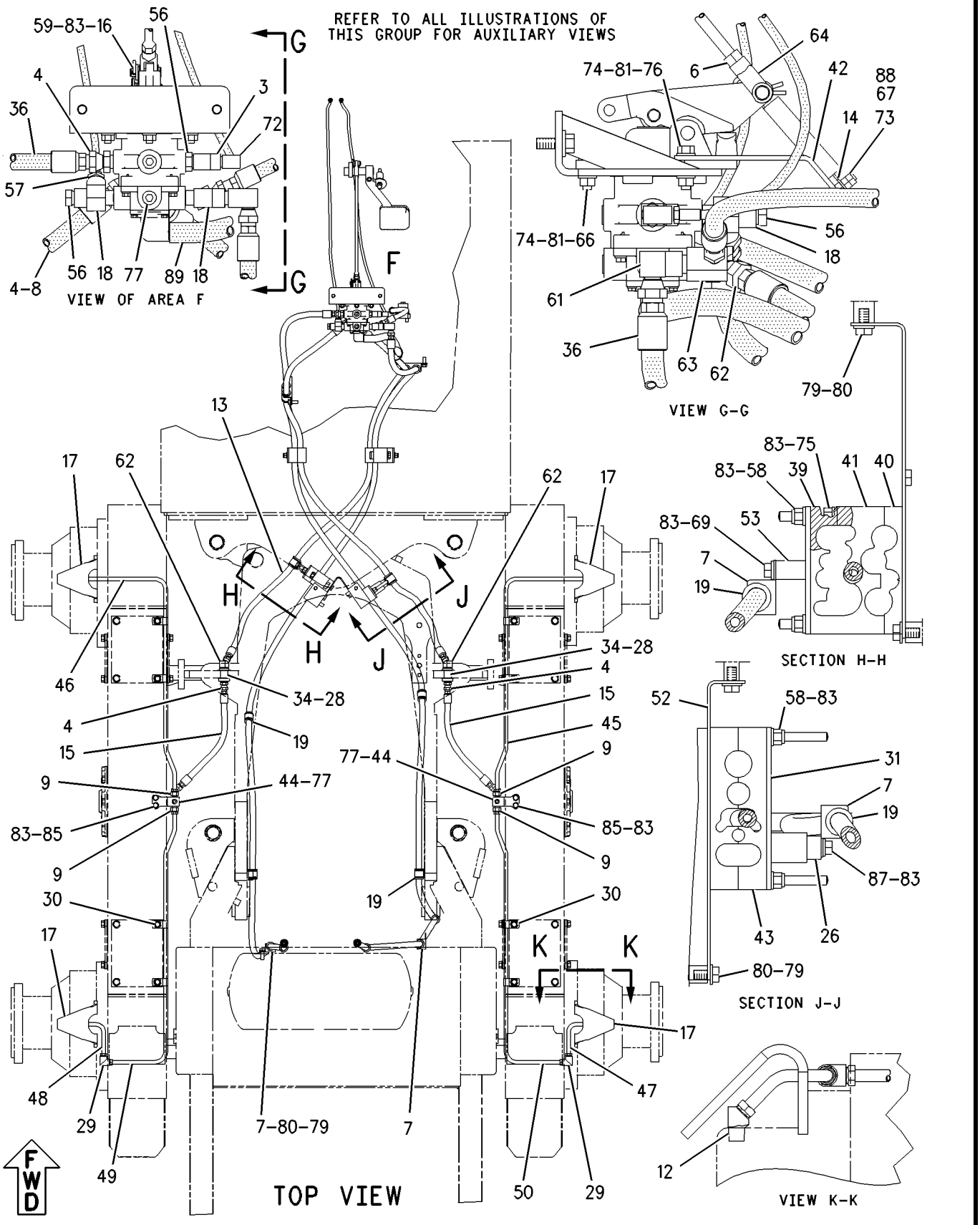


GRAPHIC #2 **<END>** g00941030

# *207-9269* KIT-AIR INFLATION

**S/N: CCA1-UP**
**PART OF 259-5738 CONVERSION AR-MACHINE**
**AN ATTACHMENT**

**SMCS-4265** **i02229794**

| NOTE | REF NO | GRAPHIC REF | PART NUMBER | QTY | PART NAME 1 2 3 4 5 6 (PRODUCT LEVEL) | SEE PAGE |
|---|---|---|---|---|---|---|
| | 1 | 1 | **8L-6005** | 1 | TEE-PIPE | |
| | 2 | 1 | **9M-5501** | 1 | ELBOW-STREET | |
| | 3 | 1 | **3J-5390** | 1 | PLUG | |

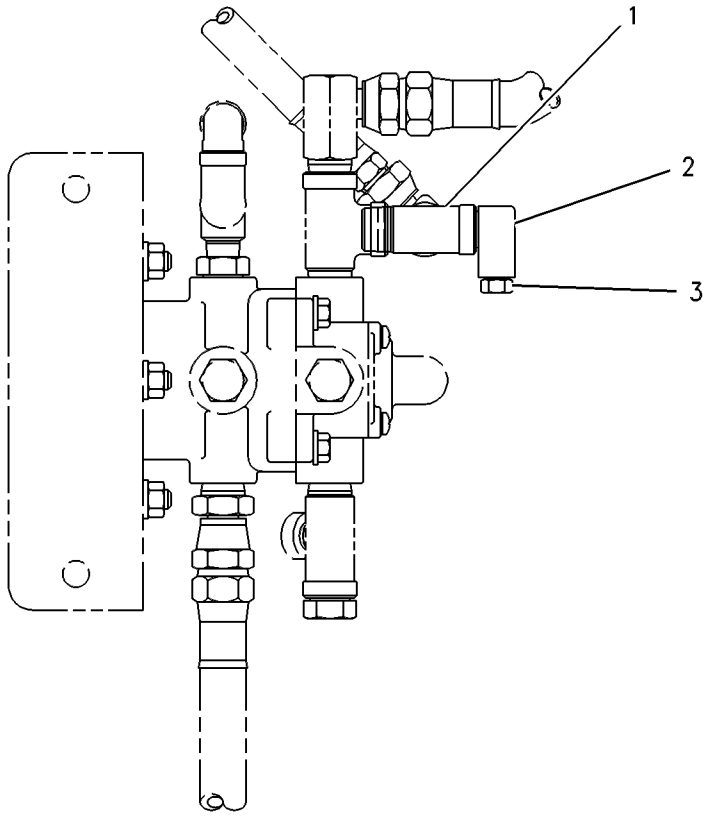


LEFT SIDE VIEW

GRAPHIC #1 **<END>** g00290770

# BRAKING SYSTEM

## *209-9986* TANK GP-AIR

**S/N: CCA1-1404**
**PART OF 171-6700, 185-3143 SUPPORT AR-REAR CHASSIS**
**ALSO AN ATTACHMENT**

**SMCS-4272** **i02252883**

| NOTE | REF NO | GRAPHIC REF | PART NUMBER | QTY | PART NAME 1 2 3 4 5 6 (PRODUCT LEVEL) | SEE PAGE |
|---|---|---|---|---|---|---|
| | 1 | 1 | **1P-4278** | 1 | CLAMP-HOSE | |
| | 2 | 1 | **1P-9328** | 1 | FITTING | |
| | 3 | 1 | **2G-1034** | 1 | VALVE-AIR RELIEF | |
| | 4 | 1 | **2H-9091** | 1 | CONNECTOR-PIPE | |
| | 5 | 1 | **5F-5434** | 1 | VALVE AS-RELIEF (AIR TANK) | |
| | 6 | 1 | **6V-0852** | 2 | CAP-DUST | |
| I | 7 | 1 | **8X-5816** | 1 | HOSE AS | |
| I | 8 | 1 | **9D-6677** | 1 | HOSE AS | |
| | 9 | 1 | **117-0291** | 2 | ADAPTER | |
| | 10 | 1 | **139-6122** | 2 | BOSS | |
| | 11 | 1 | **177-0279** | 2 | HOSE AS | |
| | 12 | 1 | **191-2314** | 1 | HOSE AS | |
| J | 13 | 1 | **205-7187** | 1 | GOVERNOR AS (AIR COMPRESSOR) | |
| | | 1 | **2S-2923** | 1 | COVER | |
| | 14 | 1 | **208-0520** | 1 | VALVE-DRAIN (AIR TANK) | |
| | 15 | 1 | **209-9985** | 1 | TANK GP-AIR | |
| | | 1 | **208-6678** | 1 | VALVE-CHECK (AIR TANK PRESSURE) | |
| | 16 | 1 | **002-6453** | 3 | ELBOW | |
| | 17 | 1 | *164-5567* | 2 | FITTING AS (QUICK DISCONNECT, MALE) | |
| | | 1 | **6V-3965** | 1 | FITTING AS (QUICK DISCONNECT, MALE) | |
| | | 1 | **3J-1907** | 1 | SEAL-O-RING | |
| | 18 | 1 | **1M-4543** | 4 | GROMMET | |
| | 19 | 1 | **4D-7735** | 1 | CLIP | |
| | 20 | 1 | **4S-7606** | 1 | ELBOW | |
| | 21 | 1 | **5H-4778** | 3 | ELBOW | |
| | 22 | 1 | **5P-9299** | 2 | CLIP | |
| | 23 | 1 | **6D-6489** | 2 | CONNECTOR-PIPE | |
| | 24 | 1 | **7J-8611** | 3 | ELBOW | |
| | 25 | 1 | **8T-4121** | 9 | WASHER-HARD (11X21X2.5-MM THK) | |
| M | 26 | 1 | **8T-4137** | 2 | BOLT (M10X1.5X20-MM) | |
| M | 27 | 1 | **8T-4185** | 5 | BOLT (M10X1.5X50-MM) | |
| M | 28 | 1 | **8T-4191** | 1 | BOLT (M10X1.5X16-MM) | |
| M | 29 | 1 | **8T-6466** | 1 | BOLT (M10X1.5X60-MM) | |
| | 30 | 1 | **8T-6757** | 4 | PLUG-PIPE | |
| M | 31 | 1 | **8T-6974** | 2 | BOLT (M6X1X80-MM) | |
| | 32 | 1 | **9M-8406** | 2 | CLIP | |
| | 33 | 1 | **9X-8256** | 2 | WASHER (6.6X12X2-MM THK) | |
| E | 34 | 1 | **5P-1465** | | HOSE (163-CM) | |
| | | | | | AVAILABLE REPAIR KIT(S): | |
| J | | | **9M-0402** | 1 | KIT-GOVERNOR OVERHAUL (AIR COMPRESSOR) | |
| | | | | | (INCLUDES GROMMETS, FILTER, SPRING, VALVE, COVER, RING, & GASKET) | |

E-ORDER BY THE CENTIMETER
I-REFER TO HYDRAULIC INFORMATION SYSTEM
J-KIT MARKED J IS AVAILABLE FOR PART MARKED J
M-METRIC PART

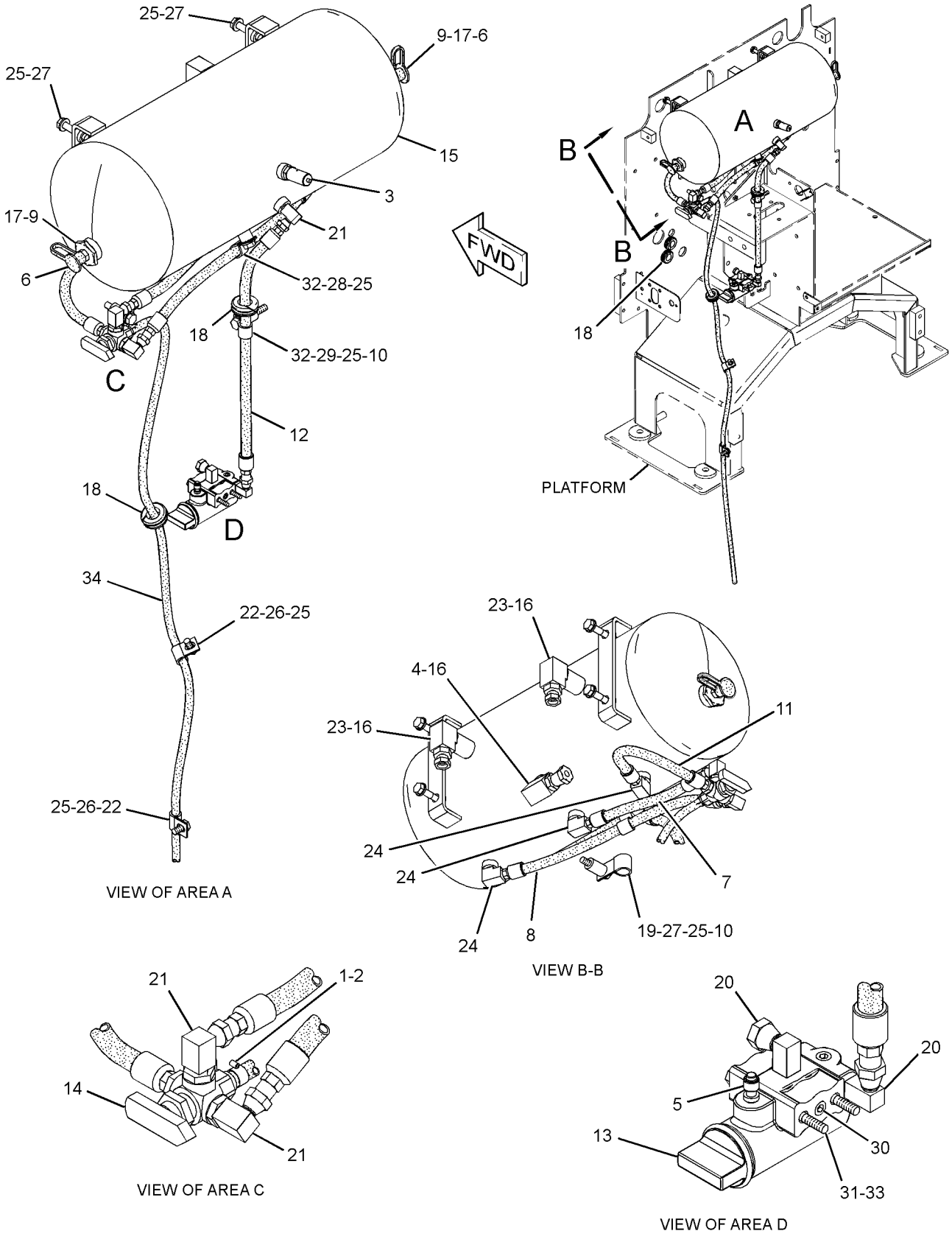


GRAPHIC #1 **<END>** g01175763

# BRAKING SYSTEM

## *209-9986* TANK GP-AIR

**S/N: CCA1405-UP**

**PART OF 171-6700, 185-3143 SUPPORT AR-REAR CHASSIS**

**ALSO AN ATTACHMENT**

**SMCS-4272** **i02399369**

| NOTE | REF NO | GRAPHIC REF | PART NUMBER | QTY | PART NAME 1 2 3 4 5 6 (PRODUCT LEVEL) | SEE PAGE |
|---|---|---|---|---|---|---|
| | 1 | 1 | **1P-4278** | 1 | CLAMP-HOSE | |
| | 2 | 1 | **1P-9328** | 1 | FITTING | |
| | 3 | 1 | **2G-1034** | 1 | VALVE-AIR RELIEF | |
| | 4 | 1 | **2H-9091** | 1 | CONNECTOR-PIPE | |
| | 5 | 1 | **5F-5434** | 1 | VALVE AS-RELIEF (AIR TANK) | |
| | 6 | 1 | **6V-0852** | 2 | CAP-DUST | |
| | 7 | 1 | **117-0291** | 2 | ADAPTER | |
| C | 8 | 1 | **139-6122** | 1 | BOSS | |
| | 9 | 1 | **177-0279** | 1 | HOSE AS | |
| C | 10 | 1 | **191-2314** | 2 | HOSE AS | |
| J | 11 | 1 | **205-7187** | 1 | GOVERNOR AS (AIR COMPRESSOR) | |
| | | 1 | **2S-2923** | 1 | COVER | |
| | 12 | 1 | **208-0520** | 1 | VALVE-DRAIN (AIR TANK) | |
| | 13 | 1 | **209-9985** | 1 | TANK GP-AIR | |
| | | 1 | **208-6678** | 1 | VALVE-CHECK (AIR TANK PRESSURE) | |
| | 14 | 1 | **269-7892** | 1 | HOSE AS | |
| | 15 | 1 | **002-6453** | 3 | ELBOW | |
| | 16 | 1 | **164-5567** | 2 | FITTING AS (QUICK DISCONNECT, MALE) | |
| | | | | | (EACH INCLUDES) | |
| | | 1 | **6V-3965** | 1 | FITTING AS (QUICK DISCONNECT, MALE) | |
| | | 1 | **3J-1907** | 1 | SEAL-O-RING | |
| C | 17 | 1 | **1M-4543** | 1 | GROMMET | |
| | 18 | 1 | **3D-7587** | 1 | ELBOW | |
| C | 19 | 1 | **4H-2558** | 1 | GROMMET | |
| | 20 | 1 | **4S-7606** | 1 | ELBOW | |
| C | 21 | 1 | **5H-4778** | 3 | ELBOW | |
| | 22 | 1 | **5P-9299** | 2 | CLIP | |
| | 23 | 1 | **6D-6489** | 2 | CONNECTOR-PIPE | |
| C | 24 | 1 | **7J-8611** | 3 | ELBOW | |
| C | 25 | 1 | **8T-4121** | 8 | WASHER-HARD (11X21X2.5-MM THK) | |
| M | 26 | 1 | **8T-4137** | 2 | BOLT (M10X1.5X20-MM) | |
| CM | 27 | 1 | **8T-4185** | 4 | BOLT (M10X1.5X50-MM) | |
| M | 28 | 1 | **8T-4191** | 1 | BOLT (M10X1.5X16-MM) | |
| M | 29 | 1 | **8T-6466** | 1 | BOLT (M10X1.5X60-MM) | |
| | 30 | 1 | **8T-6757** | 4 | PLUG-PIPE | |
| M | 31 | 1 | **8T-6974** | 2 | BOLT (M6X1X80-MM) | |
| | 32 | 1 | **9M-8406** | 2 | CLIP | |
| | 33 | 1 | **9X-8256** | 2 | WASHER (6.6X12X2-MM THK) | |
| E | 34 | 1 | **5P-1465** | | HOSE (163-CM) | |
| | | | | | AVAILABLE REPAIR KIT(S): | |
| J | | | **9M-0402** | 1 | KIT-GOVERNOR OVERHAUL (AIR COMPRESSOR) | |
| | | | | | (INCLUDES GROMMETS, FILTER, SPRING, VALVE, COVER, RING, & GASKET) | |

C-CHANGE FROM PREVIOUS TYPE
E-ORDER BY THE CENTIMETER
J-KIT MARKED J IS AVAILABLE FOR PART MARKED J
M-METRIC PART

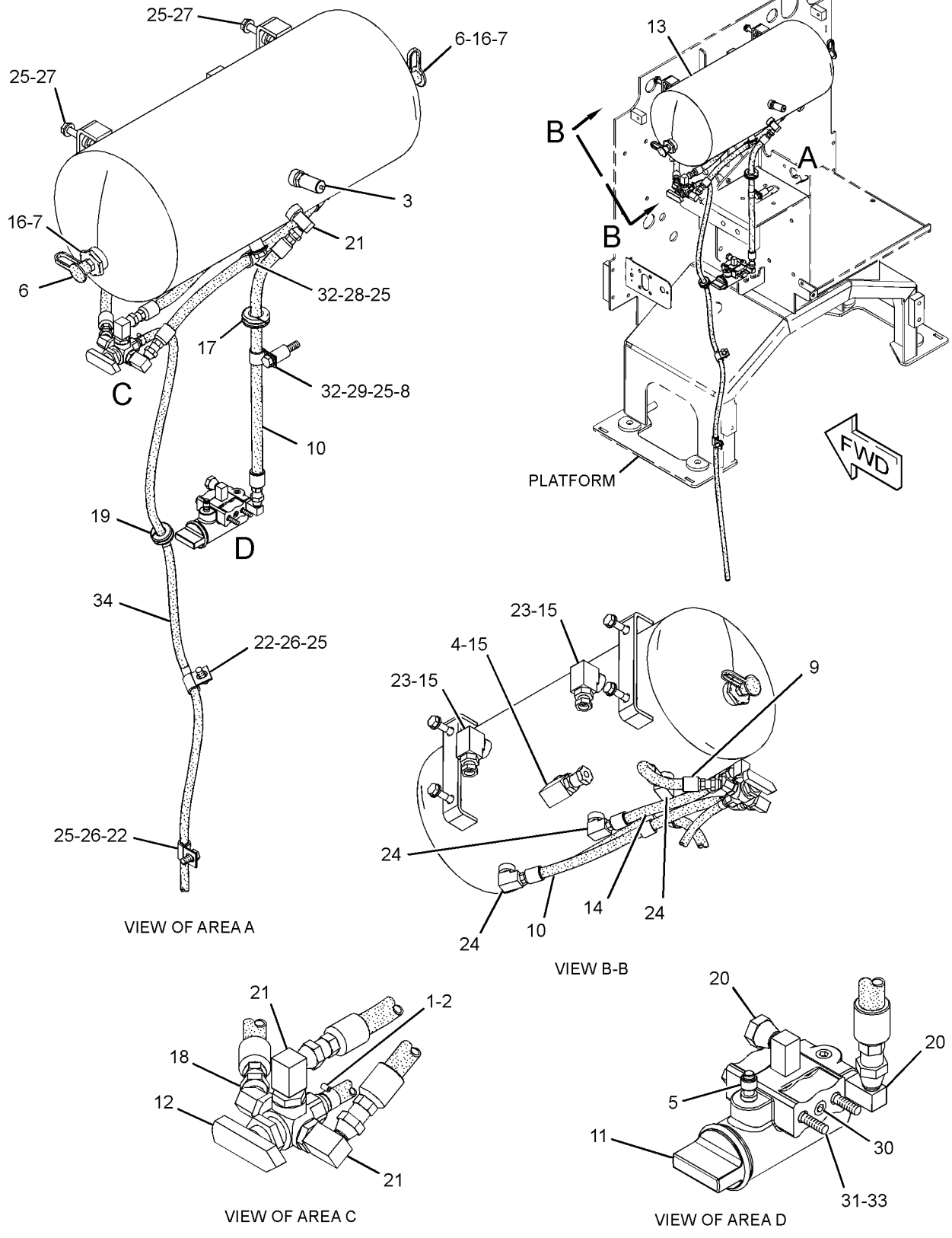


GRAPHIC #1 **<END>** g01199025

# BRAKING SYSTEM

## *8X-2650* VALVE GP-AIR CONTROL—SERVICE BRAKE

**S/N: CCA1-UP**

**PART OF 160-7754 CONTROL GP-SERVICE BRAKE**

**SMCS-4280, 4282** **i02200392**

| NOTE | REF NO | GRAPHIC REF | PART NUMBER | QTY | PART NAME 1 2 3 4 5 6 (PRODUCT LEVEL) | SEE PAGE |
|---|---|---|---|---|---|---|
| | 1 | 1 | **8X-2646** | 1 | LEVER AS | |
| | 2 | 1 | **9D-8121** | 1 | ROLLER | |
| | 3 | 1 | **3B-4607** | 1 | PIN-COTTER | |
| | | 1 | **7B-9323** | 1 | PIN | |
| | 4 | 1 | **5D-3636** | 1 | BOOT | |
| | 5 | 1 | **2R-0719** | 1 | PLUNGER | |
| | 6 | 1 | **125-5321** | 3 | BOLT | |
| | 7 | 1 | **2R-0694** | 1 | PLATE-BRAKE VALVE | |
| | 8 | 1 | **2R-0724** | 1 | BUTTON-STOP | |
| | 9 | 1 | **2D-6006** | 1 | PIN | |
| | 10 | 1 | **3B-4610** | 1 | PIN-COTTER | |
| J | 11 | 1 | **8W-5651** | 1 | VALVE GP-CONTROL (AIR) | |
| | | 1 | **5D-0768** | 1 | SPRING | |
| | | | | | AVAILABLE REPAIR KIT(S): | |
| J | | | **2G-6285** | 1 | KIT-AIR CONTROL VALVE | |
| | | | | | (INCLUDES SPRINGS, INLET & EXHAUST VALVES,O-RINGS, BOOT,SCREW, | |
| | | | | | LOCKNUT & FILTER) | |

J-KIT MARKED J IS AVAILABLE FOR PART MARKED J

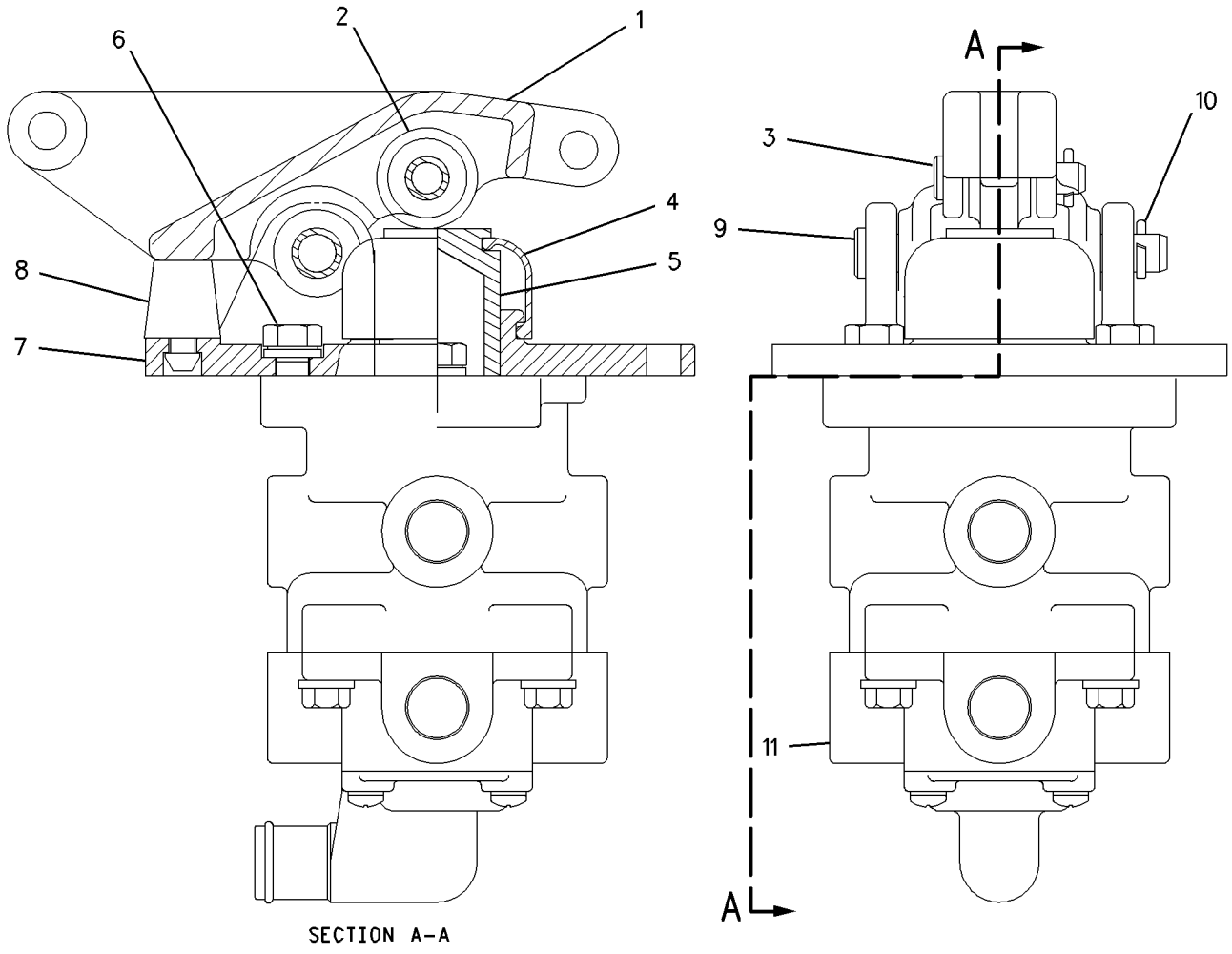


GRAPHIC #1 **<END>** g00688575

## *185-0008* VALVE GP-SOLENOID—AIR HORN

**S/N: CCA1-UP**
**24 VDC**
**PART OF 160-7753 CONTROL GP-PARKING BRAKE, 160-7758 HORN GP-AIR**

**SMCS-5479** **i02311059**

| NOTE | REF NO | GRAPHIC REF | PART NUMBER | QTY | PART NAME 1 2 3 4 5 6 (PRODUCT LEVEL) | SEE PAGE |
|---|---|---|---|---|---|---|
| | 1 | 1 | **156-5970** | 1 | NUT (1/2-20-2B THD) | |
| | 2 | 1 | **164-2108** | 1 | WASHER (13.03X25.4X2.38-MM THK) | |
| | 3 | 1 | **226-9637** | 1 | COIL AS | |

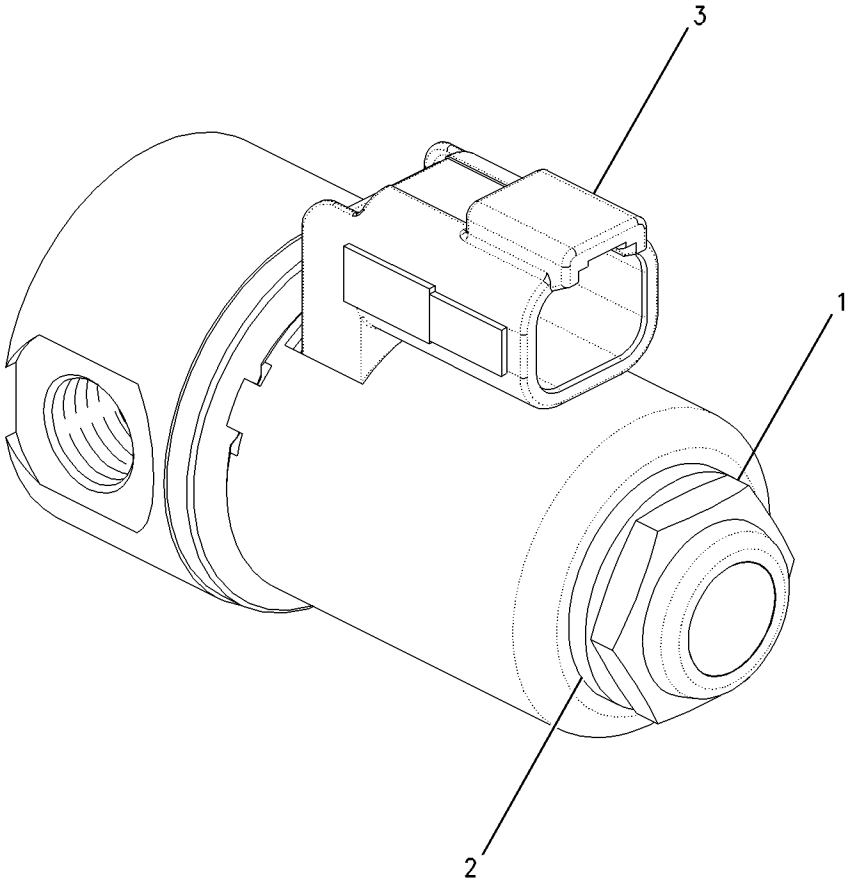


GRAPHIC #1 **<END>** g00925213

# 188-9250 VALVE GP-SOLENOID–AIR

**S/N: CCA1-681, 716-719**
**PART OF 160-7758 HORN GP-AIR**

**SMCS-5479** **i01674409**

| NOTE | REF NO | GRAPHIC REF | PART NUMBER | QTY | PART NAME 1 2 3 4 5 6 (PRODUCT LEVEL) | SEE PAGE |
|---|---|---|---|---|---|---|
| | 1 | 1 | **102-8802** | 1 | KIT-RECEPTACLE (2-PIN) (SOLENOID VALVE) | |
| | | 1 | **3E-3365** | 1 | WEDGE-RECEPTACLE LOCK (2-PIN) | |
| | | 1 | **8T-8729** | 2 | PIN-CONNECTOR | |

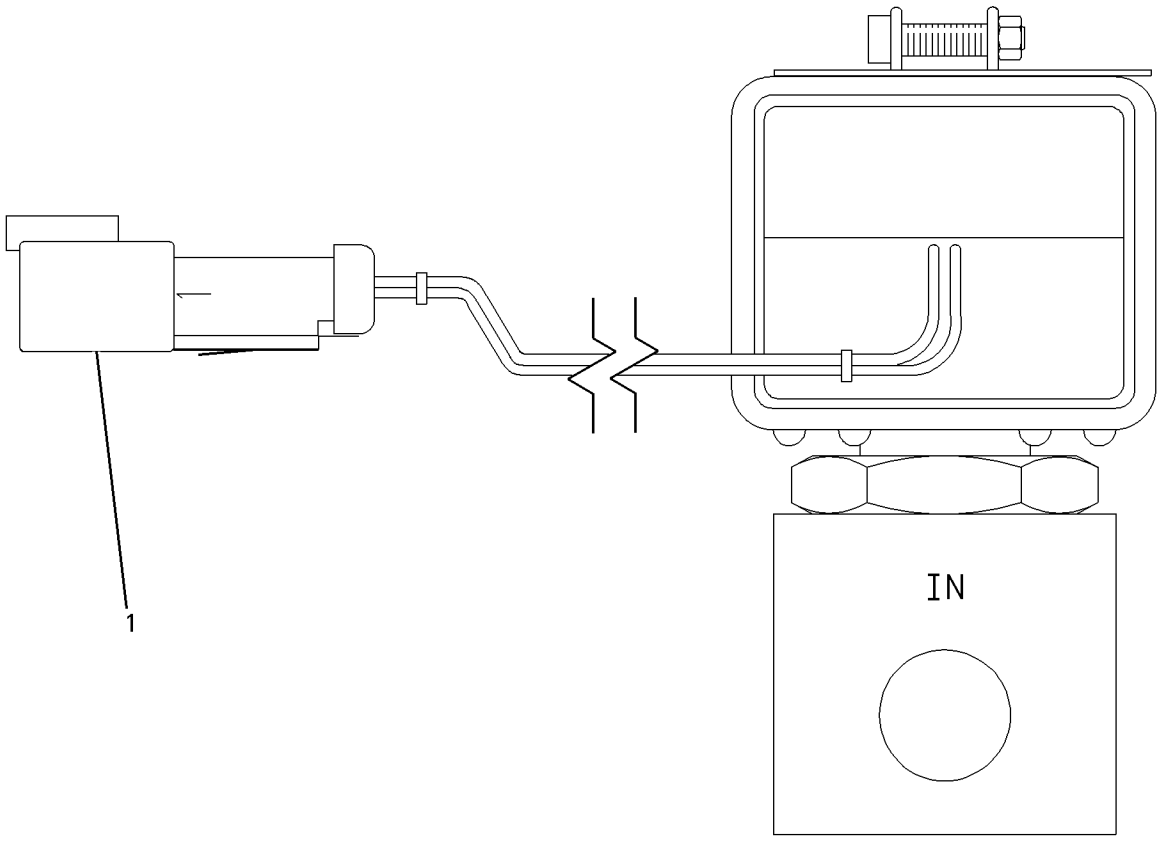


GRAPHIC #1 **<END>** g00825932

# *162-7451* ACCUMULATOR & MTG GP-HYDRAULIC–
## BLADE CUSHION
**S/N: CCA1-UP**
**PART OF 166-3337 ACCUMULATOR AR-BLADE CUSHION**
**AN ATTACHMENT**

**SMCS-5077** **i01680376**

| NOTE | REF NO | GRAPHIC REF | PART NUMBER | QTY | PART NAME 1 2 3 4 5 6 (PRODUCT LEVEL) | SEE PAGE |
|---|---|---|---|---|---|---|
| | 1 | 1 | **4N-5091** | 2 | SPACER (0.53X1X3.375-IN THK) | |
| | 2 | 1 | **162-7449** | 2 | CLAMP | |
| Y | 3 | 1 | *162-7450* | 2 | ACCUMULATOR GP-HYDRAULIC (BLADE CUSHION) | 631 |
| | 4 | 1 | **168-8758** | 1 | PLATE AS | |
| | 5 | 1 | **2M-4779** | 3 | STUD-TAPERLOCK (3/8-16X0.177-IN) | |
| | 6 | 1 | **6V-8801** | 3 | NUT (3/8-16-THD) | |
| | 7 | 1 | **7X-0333** | 2 | BOLT (1/2-13X4.75-IN) | |
| | 8 | 1 | **8T-4223** | 2 | WASHER-HARD (13.5X25.5X3-MM THK) | |
| | 9 | 1 | **8T-4896** | 3 | WASHER-HARD (10.2X18.5X2.5-MM THK) | |

Y-SEPARATE ILLUSTRATION

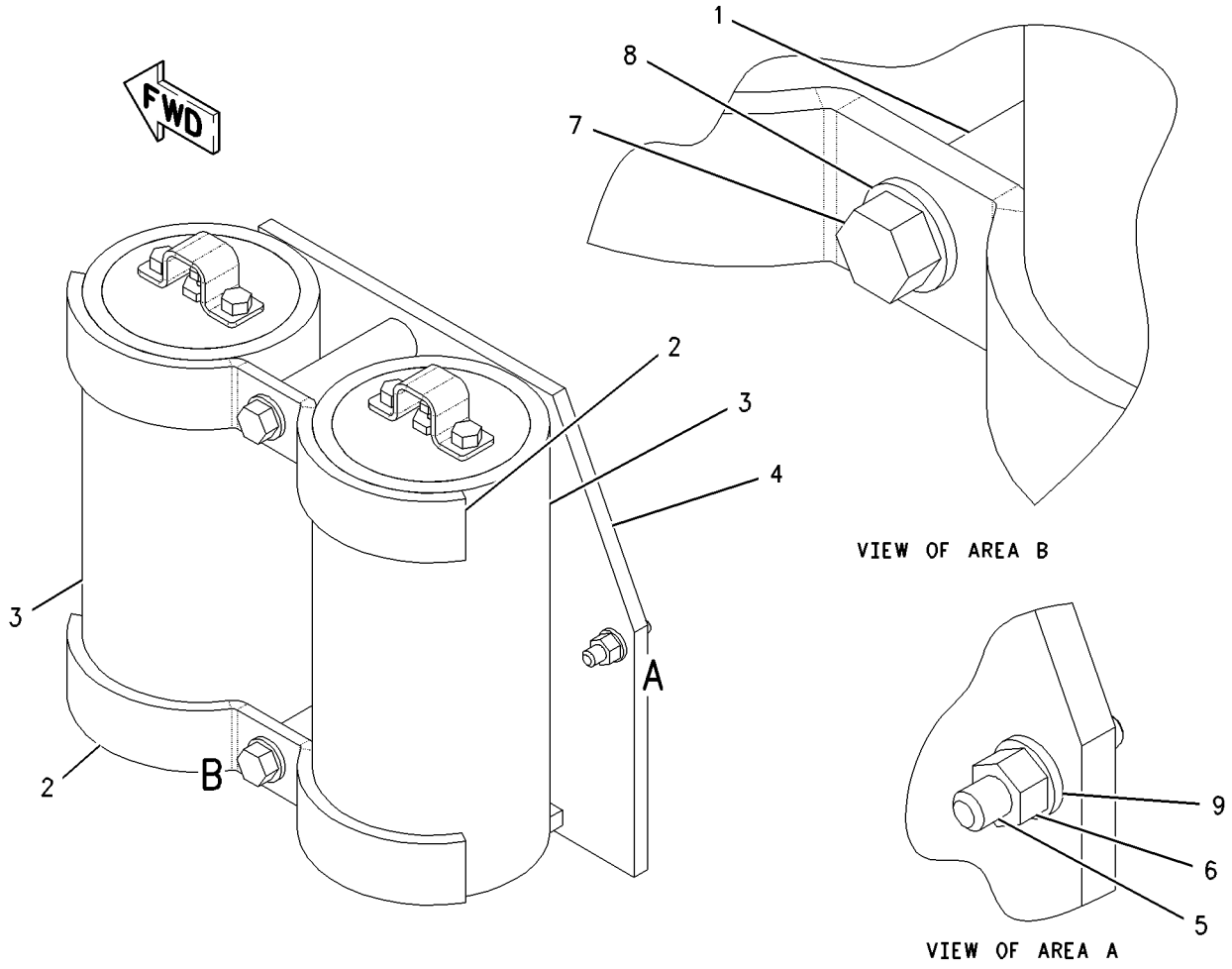


GRAPHIC #1 **<END>** g00788552

## *166-3337* ACCUMULATOR AR-BLADE CUSHION

**S/N: CCA1-UP**
**AN ATTACHMENT**

**SMCS-5077, 5081** **i01678738**

| NOTE | PART NUMBER | QTY | PART NAME 1 2 3 4 5 6 (PRODUCT LEVEL) | SEE PAGE |
|---|---|---|---|---|
| Y | *162-7451* | 1 | ACCUMULATOR & MTG GP-HYDRAULIC (BLADE CUSHION) | 628 |
| Y | *166-3336* | 1 | LINES GP-ACCUMULATOR | 672 |
| Y | *161-1022* | 1 | WIRING GP-BLADE CUSHION | 304 |
| Y-SEPARATE ILLUSTRATION | | | | |

**<END>**

## *221-2961* ACCUMULATOR AR-BLADE CUSHION

**S/N: CCA1-UP**
**EU**
**AN ATTACHMENT**

**SMCS-5077, 5081** **i02591086**

| NOTE | PART NUMBER | QTY | PART NAME 1 2 3 4 5 6 (PRODUCT LEVEL) | SEE PAGE |
|---|---|---|---|---|
| Y | *221-2801* | 1 | ACCUMULATOR GP-HYDRAULIC (BLADE CUSHION) | 633 |
| Y | *166-3336* | 1 | LINES GP-ACCUMULATOR | 672 |
| Y | *161-1022* | 1 | WIRING GP-BLADE CUSHION | 304 |
| Y-SEPARATE ILLUSTRATION | | | | |

**<END>**

## *179-9398* ACCUMULATOR GP—BLADE CUSHION

**S/N: CCA1-UP**
**PART OF 162-7451 ACCUMULATOR & MTG GP-HYDRAULIC**

**SMCS-5077** **i02591088**

| NOTE | PART NUMBER | QTY | PART NAME 1 2 3 4 5 6 (PRODUCT LEVEL) | SEE PAGE |
|---|---|---|---|---|
| Y | **162-7450** | 1 | ACCUMULATOR GP-HYDRAULIC (BLADE CUSHION) | 631 |
| Y-SEPARATE ILLUSTRATION | | | | |

**<END>**

# HYDRAULIC SYSTEM

## *219-7265* ACCUMULATOR GP—BLADE CUSHION

**S/N: CCA1-UP**
**PART OF 221-2801 ACCUMULATOR GP-HYDRAULIC**
**FIELD REPLACEMENT ORDER 219-7258—PAGE 632**
**AN ATTACHMENT**

**SMCS-5077** **i01861306**

| NOTE | PART NUMBER | QTY | PART NAME 1 2 3 4 5 6 (PRODUCT LEVEL) | SEE PAGE |
|---|---|---|---|---|
| | **222-2367** | 1 | VALVE-GAS | |
| | **190-3850** | 1 | CORE | |
| | | | | |
| | | | AVAILABLE REPAIR KIT(S): | |
| | **170-0493** | 1 | KIT-SEAL | |
| | | | (INCLUDES RINGS, SEALS, & WASHERS) | |

**<END>**

# *162-7450* ACCUMULATOR GP-HYDRAULIC—BLADE CUSHION

**S/N: CCA1-UP**

**PART OF 162-7451 ACCUMULATOR & MTG GP-HYDRAULIC, 179-9398 ACCUMULATOR GP**

**FIELD REPLACEMENT ORDER 179-9398—PAGE 629**

**AN ATTACHMENT**

**SMCS-5077** **i02200399**

| NOTE | REF NO | GRAPHIC REF | PART NUMBER | QTY | PART NAME 1 2 3 4 5 6 (PRODUCT LEVEL) | SEE PAGE |
|---|---|---|---|---|---|---|
| | 1 | 1 | **135-7123** | 1 | PISTON | |
| | 2 | 1 | **170-0493** | 1 | KIT-SEAL (BLADE CUSHION ACCUMULATOR) | |
| | 3 | 1 | **188-9390** | 1 | VALVE AS | |
| | | 1 | **6M-5062** | 1 | SEAL-O-RING | |
| | | 1 | **190-3850** | 1 | CORE | |
| | 4 | 1 | **111-9110** | 1 | PROTECTOR-GAS VALVE | |
| | 5 | 1 | **1J-9671** | 1 | SEAL-O-RING | |
| | 6 | 1 | **5M-3062** | 2 | BOLT (3/8-16X0.75-IN) | |
| | 7 | 1 | **170-0503** | 1 | FILM-WARNING (ACCUM, HIGH PRESS, READ OMM) (ACCUMULATOR) | |

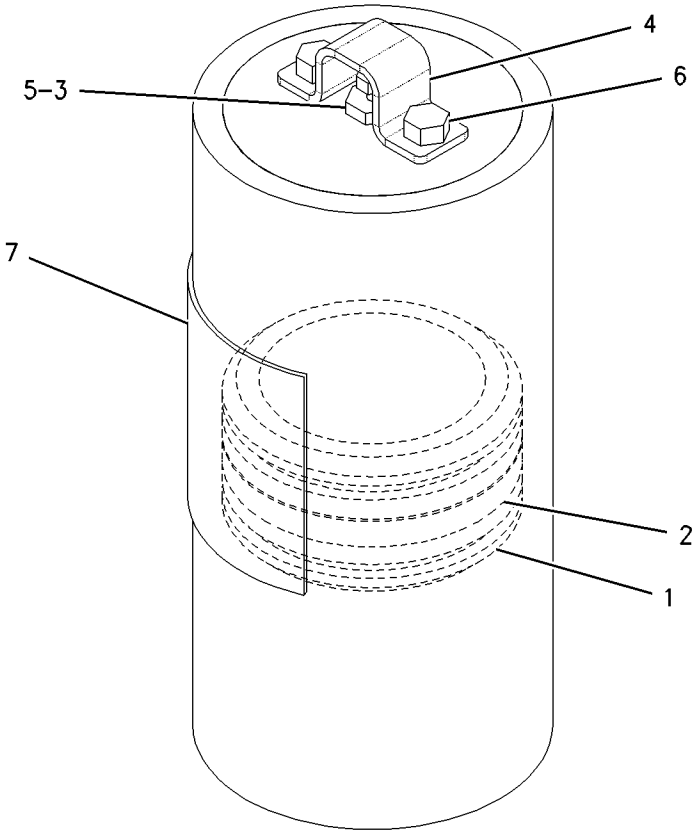


GRAPHIC #1 **<END>** g00789082

## *219-7258* ACCUMULATOR GP-HYDRAULIC—BLADE CUSHION

**S/N: CCA1-UP**

**PART OF 221-2801 ACCUMULATOR GP-HYDRAULIC**

**FIELD REPLACEMENT FOR 219-7265—PAGE 630**

**SMCS-5077** **i01861308**

| NOTE | PART NUMBER | QTY | PART NAME 1 2 3 4 5 6 (PRODUCT LEVEL) | SEE PAGE |
|---|---|---|---|---|
| | **222-2367** | 1 | VALVE GP-ACCUMULATOR CHARGING | |
| | **190-3850** | 1 | CORE | |
| | | | | |
| | | | AVAILABLE REPAIR KIT(S): | |
| | **170-0493** | 1 | KIT-SEAL | |
| | | | (INCLUDES RINGS, SEALS, & WASHERS) | |

**<END>**

# *221-2801* ACCUMULATOR GP-HYDRAULIC—BLADE CUSHION

**S/N: CCA1-UP**

**PART OF 221-2961 ACCUMULATOR AR-BLADE CUSHION**

**AN ATTACHMENT**

**SMCS-5077** **i02585169**

| NOTE | REF NO | GRAPHIC REF | PART NUMBER | QTY | PART NAME 1 2 3 4 5 6 (PRODUCT LEVEL) | SEE PAGE |
|---|---|---|---|---|---|---|
| | 1 | 1 | **4N-5091** | 2 | SPACER (0.53X1X3.375-IN THK) | |
| | 2 | 1 | **162-7449** | 2 | CLAMP | |
| | 3 | 1 | **168-8758** | 1 | PLATE AS | |
| Y | 4 | 1 | *219-7265* | 2 | ACCUMULATOR GP (BLADE CUSHION) | 630 |
| | 5 | 1 | **2M-4779** | 3 | STUD-TAPERLOCK (3/8-16X0.177-IN) (3/8-16X1.8 IN) | |
| | 6 | 1 | **6V-8801** | 3 | NUT (3/8-16-THD) | |
| | 7 | 1 | **7X-0333** | 2 | BOLT (1/2-13X4.75-IN) | |
| | 8 | 1 | **8T-4223** | 2 | WASHER-HARD (13.5X25.5X3-MM THK) | |
| | 9 | 1 | **8T-4896** | 3 | WASHER-HARD (10.2X18.5X2.5-MM THK) | |

Y-SEPARATE ILLUSTRATION

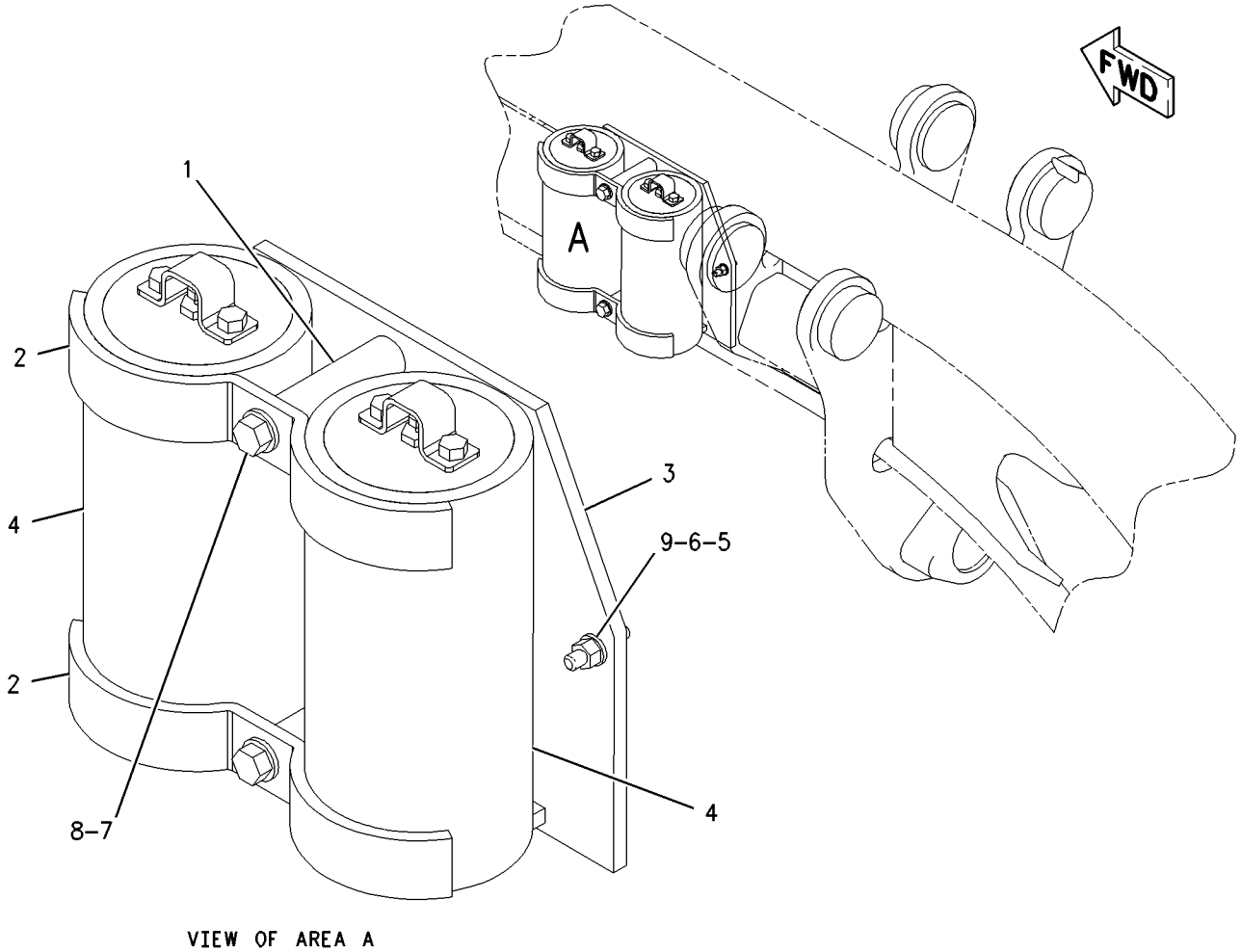


VIEW OF AREA A

GRAPHIC #1 **<END>** g00943450

# HYDRAULIC SYSTEM

## *248-6251* ACCUMULATOR GP-STEERING

**S/N: CCA1-UP**

**PART OF 160-9179 LINES GP-STEERING**

**SMCS-4331** **i02164999**

| NOTE | REF NO | GRAPHIC REF | PART NUMBER | QTY | PART NAME 1 2 3 4 5 6 (PRODUCT LEVEL) | SEE PAGE |
|---|---|---|---|---|---|---|
| | 1 | 1 | **224-5132** | 1 | CAP | |
| | 2 | 1 | **224-5152** | 1 | VALVE-GAS | |
| | 3 | 1 | **3J-7354** | 1 | SEAL-O-RING | |
| | 4 | 1 | **1J-9671** | 1 | SEAL-O-RING | |

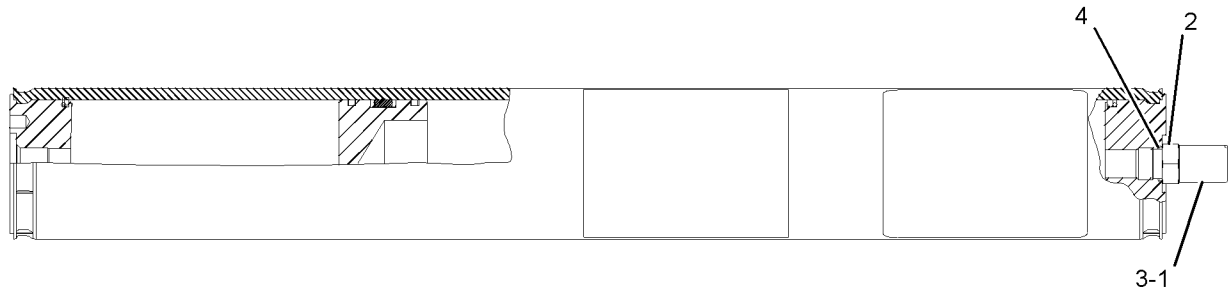


GRAPHIC #1 **<END>** g01040064

# HYDRAULIC SYSTEM

## *166-3305* CONTROL AR-HYDRAULIC

**S/N: CCA1-UP**
**AN ATTACHMENT**

**SMCS-5050** **i02585301**

| NOTE | PART NUMBER | QTY | PART NAME 1 2 3 4 5 6 (PRODUCT LEVEL) | SEE PAGE |
|---|---|---|---|---|
| Y | *166-3308* | 1 | LINES GP-RIPPER | 703 |
| Y | *7I-4622* | 1 | VALVE & LINKAGE GP (4-BANK, RH; 5-BANK, LH) | 742 |

Y-SEPARATE ILLUSTRATION

**<END>**

## *179-4356* CONTROL AR-HYDRAULIC

**S/N: CCA1-UP**
**AN ATTACHMENT**

**SMCS-5050** **i02585319**

| NOTE | PART NUMBER | QTY | PART NAME 1 2 3 4 5 6 (PRODUCT LEVEL) | SEE PAGE |
|---|---|---|---|---|
| Y | *166-3308* | 1 | LINES GP-RIPPER | 703 |
| Y | *107-3856* | 1 | VALVE & LINKAGE GP (5-BANK, RH; 7-BANK, LH) | 752 |

Y-SEPARATE ILLUSTRATION

**<END>**

## *184-7303* CONTROL AR-HYDRAULIC

**S/N: CCA1-UP**
**AN ATTACHMENT**

**SMCS-5050** **i02585373**

| NOTE | PART NUMBER | QTY | PART NAME 1 2 3 4 5 6 (PRODUCT LEVEL) | SEE PAGE |
|---|---|---|---|---|
| Y | *166-3308* | 1 | LINES GP-RIPPER | 703 |
| Y | *112-5499* | 1 | VALVE & LINKAGE GP (5-BANK, RH, LH) | 755 |

Y-SEPARATE ILLUSTRATION

**<END>**

## *184-7304* CONTROL AR-HYDRAULIC

**S/N: CCA1-UP**
**AN ATTACHMENT**

**SMCS-5050** **i02585374**

| NOTE | PART NUMBER | QTY | PART NAME 1 2 3 4 5 6 (PRODUCT LEVEL) | SEE PAGE |
|---|---|---|---|---|
| Y | *166-3308* | 1 | LINES GP-RIPPER | 703 |
| Y | *115-0805* | 1 | VALVE & LINKAGE GP (6-BANK, RH; 7-BANK, LH) | 759 |

Y-SEPARATE ILLUSTRATION

**<END>**

## *184-7305* CONTROL AR-HYDRAULIC—EU

**S/N: CCA1-UP**
**AN ATTACHMENT**

**SMCS-5050** **i02585364**

| NOTE | PART NUMBER | QTY | PART NAME 1 2 3 4 5 6 (PRODUCT LEVEL) | SEE PAGE |
|---|---|---|---|---|
| Y | *166-3308* | 1 | LINES GP-RIPPER | 703 |
| Y | *121-4099* | 1 | VALVE & LINKAGE GP (6-BANK, RH; 7-BANK, LH) | 779 |
| Y-SEPARATE ILLUSTRATION | | | | |

**<END>**

## *184-7306* CONTROL AR-HYDRAULIC—EU

**S/N: CCA1-UP**
**AN ATTACHMENT**

**SMCS-5050** **i02585368**

| NOTE | PART NUMBER | QTY | PART NAME 1 2 3 4 5 6 (PRODUCT LEVEL) | SEE PAGE |
|---|---|---|---|---|
| Y | *166-3308* | 1 | LINES GP-RIPPER | 703 |
| Y | *121-4096* | 1 | VALVE & LINKAGE GP (5-BANK, RH; 7-BANK, LH) | 773 |
| Y-SEPARATE ILLUSTRATION | | | | |

**<END>**

## *184-7307* CONTROL AR-HYDRAULIC

**S/N: CCA1-UP**
**AN ATTACHMENT**

**SMCS-5050** **i02585371**

| NOTE | PART NUMBER | QTY | PART NAME 1 2 3 4 5 6 (PRODUCT LEVEL) | SEE PAGE |
|---|---|---|---|---|
| Y | *166-3308* | 1 | LINES GP-RIPPER | 703 |
| Y | *121-4097* | 1 | VALVE & LINKAGE GP (5-BANK, RH, LH) | 775 |
| Y-SEPARATE ILLUSTRATION | | | | |

**<END>**

## *184-7308* CONTROL AR-HYDRAULIC—EU

**S/N: CCA1-UP**
**AN ATTACHMENT**

**SMCS-5050** **i02585369**

| NOTE | PART NUMBER | QTY | PART NAME 1 2 3 4 5 6 (PRODUCT LEVEL) | SEE PAGE |
|---|---|---|---|---|
| Y | *166-3308* | 1 | LINES GP-RIPPER | 703 |
| Y | *121-4090* | 1 | VALVE & LINKAGE GP (4-BANK, RH; 5-BANK, LH) | 767 |
| Y-SEPARATE ILLUSTRATION | | | | |

**<END>**

# HYDRAULIC SYSTEM

## *184-7315* CONTROL AR-HYDRAULIC

**S/N: CCA1-UP**
**AN ATTACHMENT**

**SMCS-5050** **i02585377**

| NOTE | PART NUMBER | QTY | PART NAME 1 2 3 4 5 6 (PRODUCT LEVEL) | SEE PAGE |
|---|---|---|---|---|
| Y | *166-3308* | 1 | LINES GP-RIPPER | 703 |
| Y | *153-7964* | 1 | VALVE & LINKAGE GP (6-BANK, RH, LH) | 794 |

Y-SEPARATE ILLUSTRATION

**<END>**

## *184-7317* CONTROL AR-HYDRAULIC

**S/N: CCA1-UP**
**AN ATTACHMENT**

**SMCS-5050** **i02585375**

| NOTE | PART NUMBER | QTY | PART NAME 1 2 3 4 5 6 (PRODUCT LEVEL) | SEE PAGE |
|---|---|---|---|---|
| Y | *166-3308* | 1 | LINES GP-RIPPER | 703 |
| Y | *153-7966* | 1 | VALVE & LINKAGE GP (6-BANK, RH; 7-BANK, LH) | 796 |

Y-SEPARATE ILLUSTRATION

**<END>**

## *192-4969* CONTROL AR-HYDRAULIC

**S/N: CCA1-UP**
**AN ATTACHMENT**

**SMCS-5050** **i02585372**

| NOTE | PART NUMBER | QTY | PART NAME 1 2 3 4 5 6 (PRODUCT LEVEL) | SEE PAGE |
|---|---|---|---|---|
| Y | *166-3308* | 1 | LINES GP-RIPPER | 703 |
| Y | *132-6478* | 1 | VALVE & LINKAGE GP (6-BANK, RH; 5-BANK, LH) | 790 |

Y-SEPARATE ILLUSTRATION

**<END>**

## *192-4970* CONTROL AR-HYDRAULIC

**S/N: CCA1-UP**
**AN ATTACHMENT**

**SMCS-5050** **i02585367**

| NOTE | PART NUMBER | QTY | PART NAME 1 2 3 4 5 6 (PRODUCT LEVEL) | SEE PAGE |
|---|---|---|---|---|
| Y | *166-3308* | 1 | LINES GP-RIPPER | 703 |
| Y | *143-8938* | 1 | VALVE & LINKAGE GP (5-BANK, RH; 7-BANK, LH) | 792 |

Y-SEPARATE ILLUSTRATION

**<END>**

# HYDRAULIC SYSTEM

## *194-4019* CONTROL AR-HYDRAULIC

**S/N: CCA1-UP**
**AN ATTACHMENT**

**SMCS-5050** **i02585388**

| NOTE | PART NUMBER | QTY | PART NAME 1 2 3 4 5 6 (PRODUCT LEVEL) | SEE PAGE |
|---|---|---|---|---|
| Y | *166-3308* | 1 | LINES GP-RIPPER | 703 |
| Y | *125-2236* | 1 | VALVE & LINKAGE GP (7-BANK, RH, LH) | 788 |

Y-SEPARATE ILLUSTRATION

**<END>**

## *194-4020* CONTROL AR-HYDRAULIC

**S/N: CCA1-UP**
**AN ATTACHMENT**

**SMCS-5050** **i02585389**

| NOTE | PART NUMBER | QTY | PART NAME 1 2 3 4 5 6 (PRODUCT LEVEL) | SEE PAGE |
|---|---|---|---|---|
| Y | *166-3308* | 1 | LINES GP-RIPPER | 703 |
| Y | *125-2235* | 1 | VALVE & LINKAGE GP (4-BANK, RH; 7-BANK, LH) | 786 |

Y-SEPARATE ILLUSTRATION

**<END>**

## *250-0445* CONTROL AR-HYDRAULIC

**S/N: CCA1-UP**
**AN ATTACHMENT**

**SMCS-5050** **i02344362**

| NOTE | PART NUMBER | QTY | PART NAME 1 2 3 4 5 6 (PRODUCT LEVEL) | SEE PAGE |
|---|---|---|---|---|
| Y | *166-3308* | 1 | LINES GP-RIPPER | 703 |
| Y | *250-0426* | 1 | VALVE & LINKAGE GP (4-BANK, 5-BANK) | 819 |

Y-SEPARATE ILLUSTRATION

**<END>**

## *250-0446* CONTROL AR-HYDRAULIC

**S/N: CCA1-UP**
**AN ATTACHMENT**

**SMCS-5050** **i02585449**

| NOTE | PART NUMBER | QTY | PART NAME 1 2 3 4 5 6 (PRODUCT LEVEL) | SEE PAGE |
|---|---|---|---|---|
| Y | *166-3308* | 1 | LINES GP-RIPPER | 703 |
| Y | *250-0427* | 1 | VALVE & LINKAGE GP (4-BANK, RH; 5-BANK, LH) | 822 |

Y-SEPARATE ILLUSTRATION

**<END>**

## *250-0447* CONTROL AR-HYDRAULIC

**S/N: CCA1-UP**
**AN ATTACHMENT**

**SMCS-5050** **i02585463**

| NOTE | PART NUMBER | QTY | PART NAME 1 2 3 4 5 6 (PRODUCT LEVEL) | SEE PAGE |
|---|---|---|---|---|
| Y | *166-3308* | 1 | LINES GP-RIPPER | 703 |
| Y | *250-0430* | 1 | VALVE & LINKAGE GP (5-BANK, RH, LH) | 833 |

Y-SEPARATE ILLUSTRATION

**<END>**

## *250-0448* CONTROL AR-HYDRAULIC

**S/N: CCA1-UP**
**AN ATTACHMENT**

**SMCS-5050** **i02585464**

| NOTE | PART NUMBER | QTY | PART NAME 1 2 3 4 5 6 (PRODUCT LEVEL) | SEE PAGE |
|---|---|---|---|---|
| Y | *166-3308* | 1 | LINES GP-RIPPER | 703 |
| Y | *250-0431* | 1 | VALVE & LINKAGE GP (5-BANK, RH, LH) | 837 |

Y-SEPARATE ILLUSTRATION

**<END>**

## *250-0450* CONTROL AR-HYDRAULIC

**S/N: CCA1-UP**
**AN ATTACHMENT**

**SMCS-5050** **i02585465**

| NOTE | PART NUMBER | QTY | PART NAME 1 2 3 4 5 6 (PRODUCT LEVEL) | SEE PAGE |
|---|---|---|---|---|
| Y | *166-3308* | 1 | LINES GP-RIPPER | 703 |
| Y | *250-0435* | 1 | VALVE & LINKAGE GP (6-BANK, RH; 5-BANK, LH) | 849 |

Y-SEPARATE ILLUSTRATION

**<END>**

## *250-0451* CONTROL AR-HYDRAULIC

**S/N: CCA1-UP**
**AN ATTACHMENT**

**SMCS-5050** **i02585466**

| NOTE | PART NUMBER | QTY | PART NAME 1 2 3 4 5 6 (PRODUCT LEVEL) | SEE PAGE |
|---|---|---|---|---|
| Y | *166-3308* | 1 | LINES GP-RIPPER | 703 |
| Y | *250-0439* | 1 | VALVE & LINKAGE GP (5-BANK, RH; 7-BANK, LH) | 864 |

Y-SEPARATE ILLUSTRATION

**<END>**

# HYDRAULIC SYSTEM

## *250-0452* CONTROL AR-HYDRAULIC

**S/N: CCA1-UP**

**AN ATTACHMENT**

**SMCS-5050** **i02585476**

| NOTE | PART NUMBER | QTY | PART NAME 1 2 3 4 5 6 (PRODUCT LEVEL) | SEE PAGE |
|---|---|---|---|---|
| Y | *166-3308* | 1 | LINES GP-RIPPER | 703 |
| Y | *250-0440* | 1 | VALVE & LINKAGE GP (5-BANK, RH; 7-BANK, LH) | 867 |

Y-SEPARATE ILLUSTRATION

**<END>**

## *250-0453* CONTROL AR-HYDRAULIC

**S/N: CCA1-UP**

**AN ATTACHMENT**

**SMCS-5050** **i02585477**

| NOTE | PART NUMBER | QTY | PART NAME 1 2 3 4 5 6 (PRODUCT LEVEL) | SEE PAGE |
|---|---|---|---|---|
| Y | *166-3308* | 1 | LINES GP-RIPPER | 703 |
| Y | *250-0441* | 1 | VALVE & LINKAGE GP (6-BANK, RH, LH) | 870 |

Y-SEPARATE ILLUSTRATION

**<END>**

## *250-0454* CONTROL AR-HYDRAULIC

**S/N: CCA1-UP**

**AN ATTACHMENT**

**SMCS-5050** **i02585478**

| NOTE | PART NUMBER | QTY | PART NAME 1 2 3 4 5 6 (PRODUCT LEVEL) | SEE PAGE |
|---|---|---|---|---|
| Y | *166-3308* | 1 | LINES GP-RIPPER | 703 |
| Y | *250-0442* | 1 | VALVE & LINKAGE GP (6-BANK, RH; 7-BANK, LH) | 874 |

Y-SEPARATE ILLUSTRATION

**<END>**

## *250-0455* CONTROL AR-HYDRAULIC

**S/N: CCA1-UP**

**AN ATTACHMENT**

**SMCS-5050** **i02585479**

| NOTE | PART NUMBER | QTY | PART NAME 1 2 3 4 5 6 (PRODUCT LEVEL) | SEE PAGE |
|---|---|---|---|---|
| Y | *166-3308* | 1 | LINES GP-RIPPER | 703 |
| Y | *250-0443* | 1 | VALVE & LINKAGE GP (6-BANK, RH; 7-BANK, LH) | 877 |

Y-SEPARATE ILLUSTRATION

**<END>**

# HYDRAULIC SYSTEM

## *250-0456* CONTROL AR-HYDRAULIC

**S/N: CCA1-UP**
**AN ATTACHMENT**

**SMCS-5050** **i02585480**

| NOTE | PART NUMBER | QTY | PART NAME 1 2 3 4 5 6 (PRODUCT LEVEL) | SEE PAGE |
|---|---|---|---|---|
| Y | *166-3308* | 1 | LINES GP-RIPPER | 703 |
| Y | *250-0444* | 1 | VALVE & LINKAGE GP (7-BANK, RH, LH) | 880 |

Y-SEPARATE ILLUSTRATION

**<END>**

## *265-7818* CONTROL AR-HYDRAULIC

**S/N: CCA1-UP**
**AN ATTACHMENT**

**SMCS-5050** **i02585481**

| NOTE | PART NUMBER | QTY | PART NAME 1 2 3 4 5 6 (PRODUCT LEVEL) | SEE PAGE |
|---|---|---|---|---|
| Y | *166-3308* | 1 | LINES GP-RIPPER | 703 |
| Y | *265-7819* | 1 | VALVE & LINKAGE GP (5-BANK, RH; 7-BANK, LH) | 900 |

Y-SEPARATE ILLUSTRATION

**<END>**

## *265-7820* CONTROL AR-HYDRAULIC

**S/N: CCA1-UP**
**AN ATTACHMENT**

**SMCS-5050** **i02585482**

| NOTE | PART NUMBER | QTY | PART NAME 1 2 3 4 5 6 (PRODUCT LEVEL) | SEE PAGE |
|---|---|---|---|---|
| Y | *166-3308* | 1 | LINES GP-RIPPER | 703 |
| Y | *265-7822* | 1 | VALVE & LINKAGE GP (6-BANK, RH; 7-BANK, LH) | 904 |

Y-SEPARATE ILLUSTRATION

**<END>**

# HYDRAULIC SYSTEM

## *152-7903* CONTROL GP-HYDRAULIC LOCKOUT

**S/N: CCA1-UP**
**PART OF 207-4453, 210-2044 CONVERSION AR-CERTIFICATION**
**AN ATTACHMENT**

**SMCS-5001** **i01069961**

| NOTE | REF NO | GRAPHIC REF | PART NUMBER | QTY | PART NAME 1 2 3 4 5 6 (PRODUCT LEVEL) | SEE PAGE |
|---|---|---|---|---|---|---|
| | 1 | 1 | **107-5014** | 4 | KNOB | |
| | 2 | 1 | **152-5430** | 4 | BLOCK | |
| B | 3 | 1 | **152-5431** | 12 | COLLAR | |
| | 4 | 1 | **152-5436** | 2 | PLATE AS | |
| | | | | | (EACH INCLUDES) | |
| | | 1 | **3W-6485** | 2 | SPRING | |
| BM | 5 | 1 | **095-1260** | 12 | SETSCREW-SOCKET (M6X1X6-MM) | |
| M | 6 | 1 | **9X-2043** | 4 | SCREW-TRUSS HEAD | |
| BD | 7 | 1 | **5P-5969** | | SEAL | |

B-USE AS REQUIRED
D-ORDER BY THE METER
M-METRIC PART

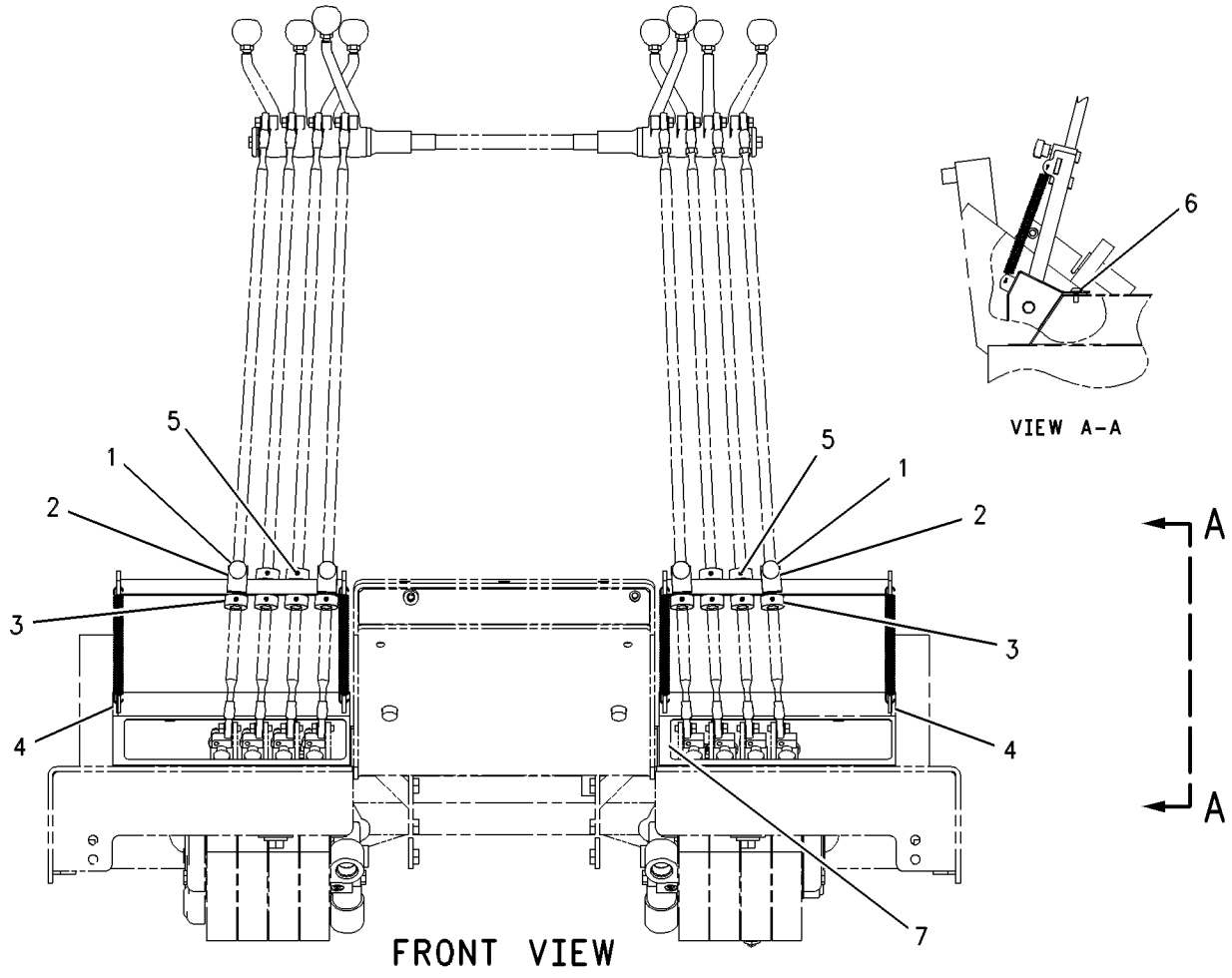


GRAPHIC #1 **<END>** g00377492

# *160-9177* CYLINDER & MTG GP-ARTICULATION

**S/N: CCA1-UP**

**PART OF 159-4615 GENERAL AR**

**SMCS-5265** **i01811278**

| NOTE | REF NO | GRAPHIC REF | PART NUMBER | QTY | PART NAME 1 2 3 4 5 6 (PRODUCT LEVEL) | SEE PAGE |
|---|---|---|---|---|---|---|
| | 1 | 1 | **2K-0420** | 12 | WASHER (1.766X3.5X0.032-IN THK) | |
| | 2 | 1 | **7K-6117** | 4 | WASHER (0.656X2.5X0.5-IN THK) | |
| | 3 | 1 | **8D-4766** | 4 | PIN-CYLINDER | |
| Y | 4 | 1 | **173-5981** | 2 | CYLINDER GP-ARTICULATION | 652 |
| | 5 | 1 | **7K-9202** | 8 | SEAL-LIP TYPE | |
| | 6 | 1 | **7X-0346** | 2 | BOLT (5/8-11X2-IN) | |
| | 7 | 1 | **8D-7086** | 4 | BEARING | |
| | 8 | 1 | **8T-4122** | 4 | WASHER-HARD (17X32X3.5-MM THK) | |
| | 9 | 1 | **8T-6871** | 2 | BOLT (5/8-11X2.5-IN) | |

Y-SEPARATE ILLUSTRATION

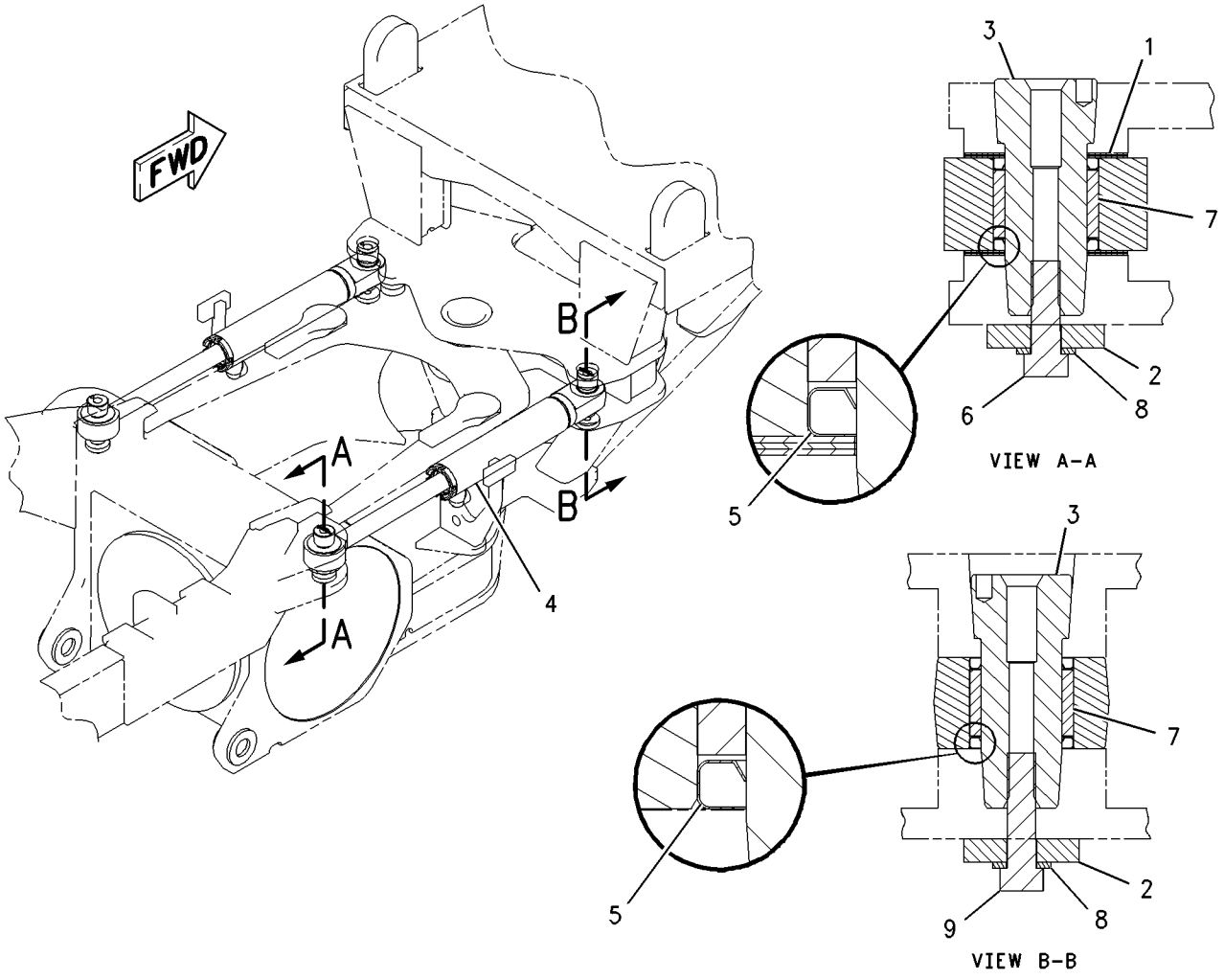


GRAPHIC #1 **<END>** g00946132

# HYDRAULIC SYSTEM

## *8X-1947* CYLINDER & MTG GP-BLADE LIFT

**S/N: CCA1-UP**

**PART OF 159-4615 GENERAL AR**

**SMCS-5102** **i02206186**

| NOTE | REF NO | GRAPHIC REF | PART NUMBER | QTY | PART NAME 1 2 3 4 5 6 (PRODUCT LEVEL) | SEE PAGE |
|---|---|---|---|---|---|---|
| CY | 1 | 1 | **132-4929** | 2 | CYLINDER GP-LIFT (BLADE) | 656 |
| | 2 | 1 | **0S-1573** | 8 | BOLT (1/2-13X4-IN) | |
| | 3 | 1 | **2M-0849** | 8 | WASHER-HARD (13.5X25.5X5-MM THK) | |
| | 4 | 1 | **1D-4628** | 4 | BOLT (7/8-9X3.25-IN) | |
| | 5 | 1 | **5P-8249** | 4 | WASHER-HARD (24X41.5X4-MM THK) | |
| | 7 | 1 | **8W-2842** | 4 | CAP AS | |
| | | | | | (EACH INCLUDES) | |
| | | 1 | **8D-7996** | 1 | BEARING-SLEEVE | |
| | 8 | 1 | **8X-4741** | 4 | INSERT | |
| B | 9 | 1 | **2G-9103** | 8 | SHIM (0.5-MM THK) | |
| | 10 | 1 | **3B-8485** | 2 | FITTING-GREASE (BLADE LIFT CYLINDER) | |
| | 11 | 1 | **2G-9098** | 2 | CAP | |

QUANTITIES SHOWN ARE THOSE REQUIRED FOR BOTH LH AND RH SIDES
B-USE AS REQUIRED
C-CHANGE FROM PREVIOUS TYPE
Y-SEPARATE ILLUSTRATION

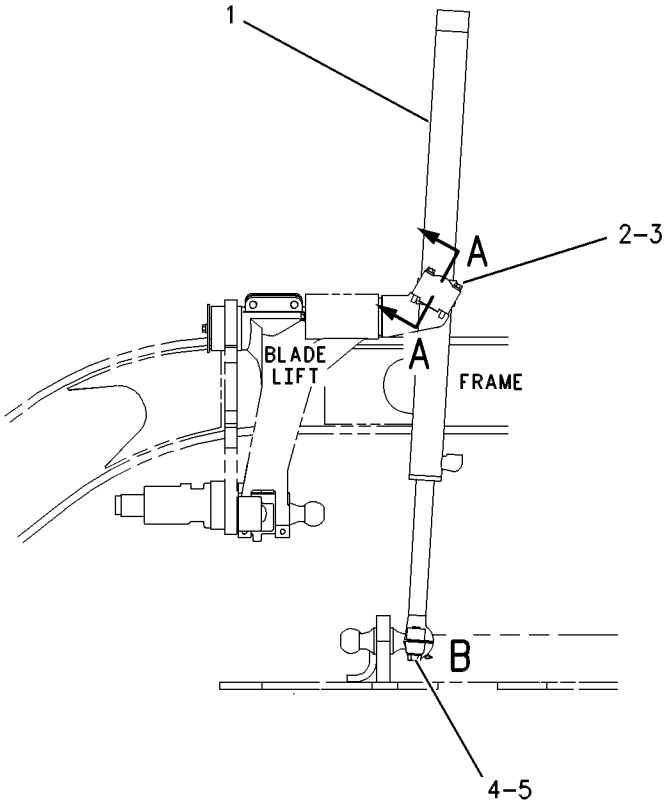


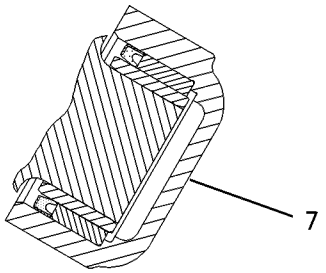


SECTION A-A

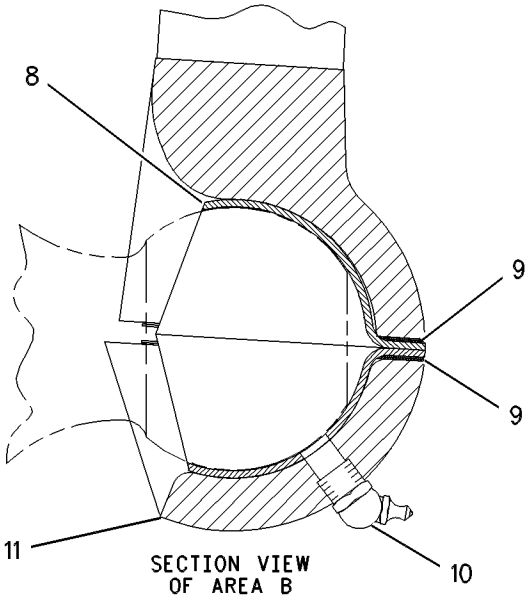


SECTION VIEW OF AREA B

GRAPHIC #1 **<END>** g00544601

# *8X-1943* CYLINDER & MTG GP-BLADE TIP

**S/N: CCA1-UP**

**PART OF 159-4615 GENERAL AR**

**SMCS-5106** **i01117955**

| NOTE | REF NO | GRAPHIC REF | PART NUMBER | QTY | PART NAME 1 2 3 4 5 6 (PRODUCT LEVEL) | SEE PAGE |
|---|---|---|---|---|---|---|
| | 1 | 1 | **3B-5329** | 1 | COTTER | |
| | 2 | 1 | **8D-7678** | 1 | PIN | |
| CY | 3 | 1 | **131-7191** | 1 | CYLINDER GP-BLADE TIP | 653 |
| | 4 | 1 | **2G-3967** | 2 | SPACER (19.84 MM THK) | |
| | 5 | 1 | **5K-5552** | 1 | BOLT-LOCKING | |
| | 6 | 1 | **8D-6687** | 1 | PIN | |
| | 7 | 1 | **8F-4102** | 2 | PLATE-SEAL | |

C-CHANGE FROM PREVIOUS TYPE
Y-SEPARATE ILLUSTRATION

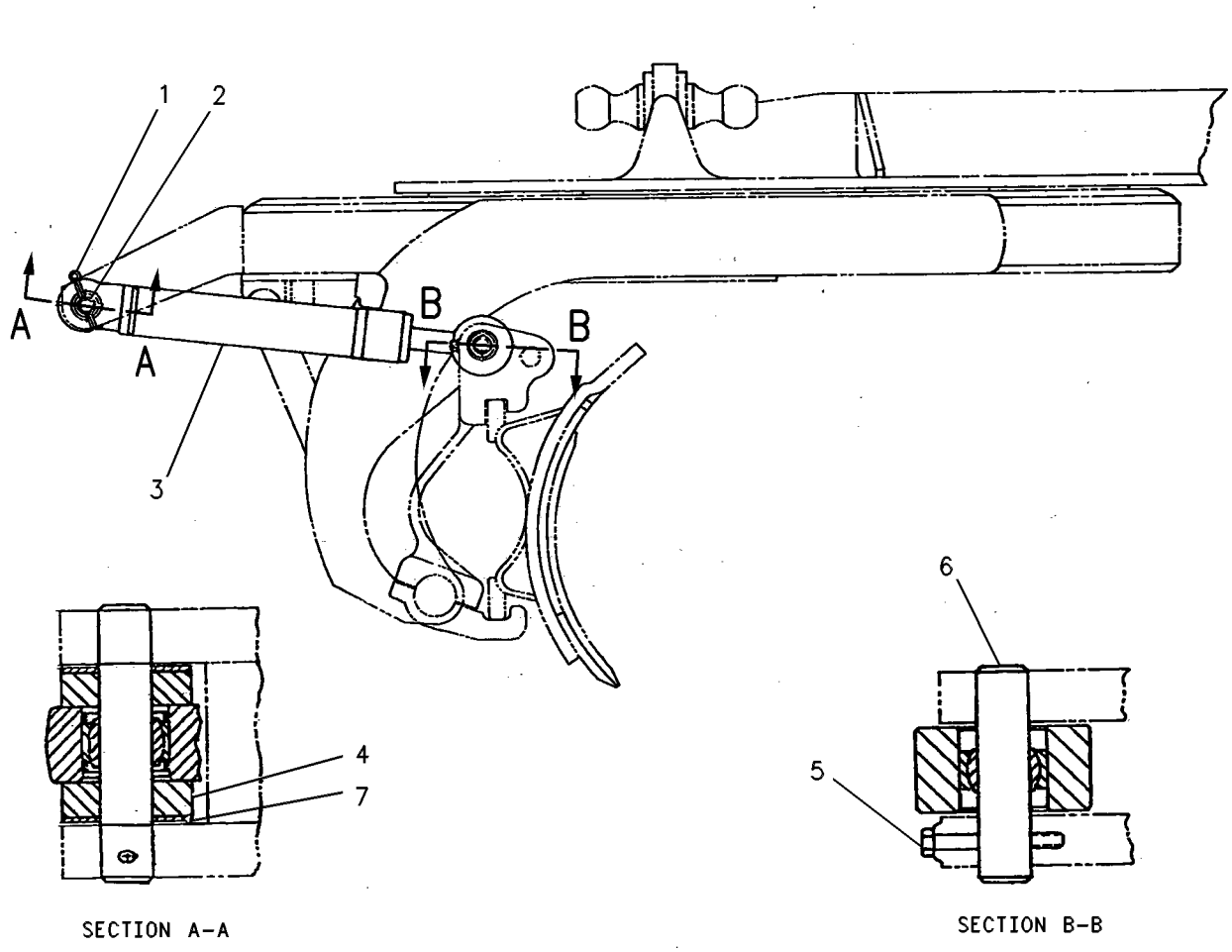


GRAPHIC #1 **<END>** g00108521

# HYDRAULIC SYSTEM

## *8X-1944* CYLINDER & MTG GP-CENTERSHIFT

**S/N: CCA1-UP**

**PART OF 159-4615 GENERAL AR**

**SMCS-5223** **i01459165**

| NOTE | REF NO | GRAPHIC REF | PART NUMBER | QTY | PART NAME 1 2 3 4 5 6 (PRODUCT LEVEL) | SEE PAGE |
|---|---|---|---|---|---|---|
| Y | 1 | 1 | **6E-1343** | 1 | CYLINDER GP-CENTERSHIFT | 654 |
| | 2 | 1 | **2G-9098** | 2 | CAP | |
| | 3 | 1 | **3B-8485** | 2 | FITTING-GREASE (CENTERSHIFT CYLINDER SOCKET) | |
| B | 4 | 1 | **2G-9103** | 8 | SHIM (.5MM THK) | |
| | 5 | 1 | **8X-4741** | 4 | INSERT | |
| | 6 | 1 | **1D-4628** | 4 | BOLT (7/8-9X3.25 IN) | |
| | 7 | 1 | **5P-8249** | 4 | WASHER-HARD (24X41.5X4MM THK) | |

B-USE AS REQUIRED
Y-SEPARATE ILLUSTRATION

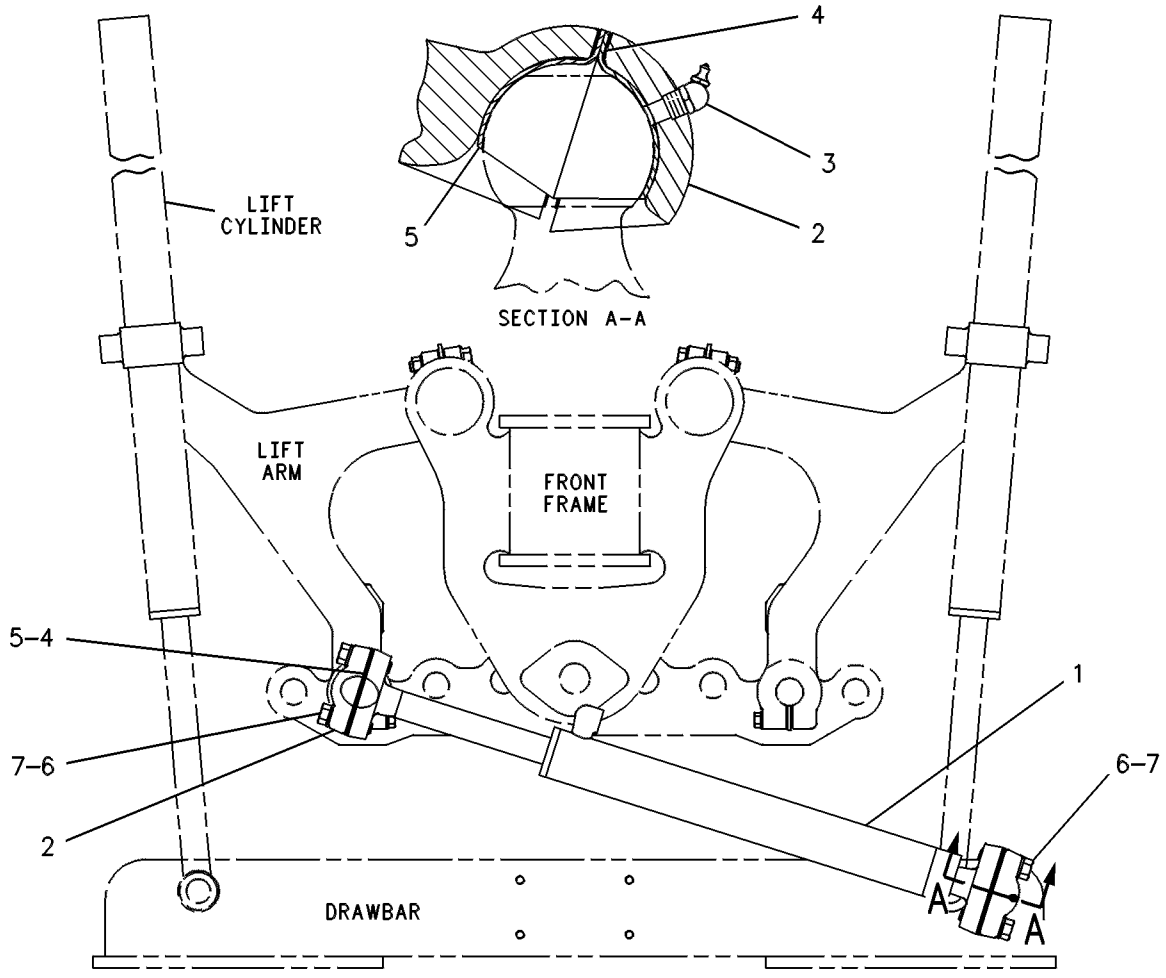


GRAPHIC #1 **<END>** g00108522

# *8W-2913* CYLINDER & MTG GP-SCARIFIER

**S/N: CCA1-UP**
**PART OF 108-1104, 113-0704 SCARIFIER AR**
**AN ATTACHMENT**

**SMCS-5213, 6165** **i01755262**

| NOTE | REF NO | GRAPHIC REF | PART NUMBER | QTY | PART NAME 1 2 3 4 5 6 (PRODUCT LEVEL) | SEE PAGE |
|---|---|---|---|---|---|---|
| | 1 | 1 | **7K-9202** | 4 | SEAL-LIP TYPE | |
| | 2 | 1 | **8D-7086** | 2 | BEARING | |
| Y | 3 | 1 | **165-2510** | 1 | CYLINDER GP-SCARIFIER | 658 |
| | 4 | 1 | **6G-7187** | 2 | LOCK | |
| | 5 | 1 | **8D-7225** | 2 | PIN | |
| | 6 | 1 | **0S-1621** | 4 | BOLT (1/2-13X1-IN) | |
| | | 1 | **5P-8245** | 4 | WASHER-HARD (13.5X25.5X3-MM THK) | |

Y-SEPARATE ILLUSTRATION

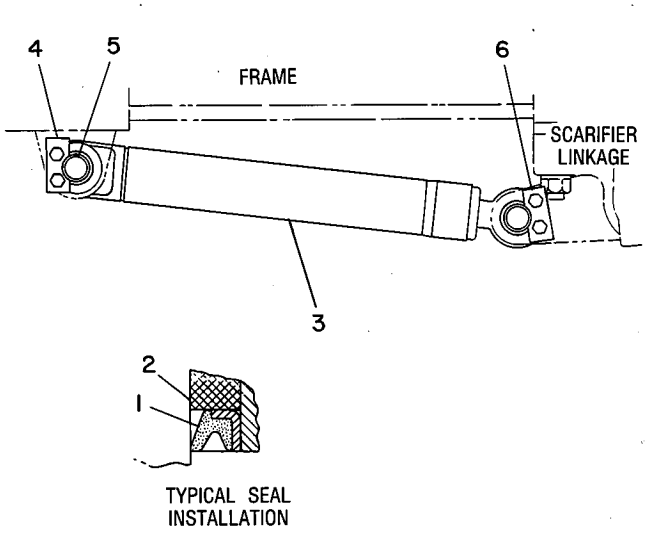


GRAPHIC #1 **<END>** g00108274

# HYDRAULIC SYSTEM

## *112-7463* CYLINDER & MTG GP-SIDESHIFT

**S/N: CCA1-UP**

**PART OF 159-4615 GENERAL AR**

**SMCS-5229** **i02252903**

| NOTE | REF NO | GRAPHIC REF | PART NUMBER | QTY | PART NAME 1 2 3 4 5 6 (PRODUCT LEVEL) | SEE PAGE |
|---|---|---|---|---|---|---|
| | 1 | 1 | **6H-0211** | 2 | WASHER (1.563X2.75X0.06-IN THK) | |
| | 2 | 1 | **5T-5295** | 1 | PIN | |
| | 3 | 1 | **1B-2886** | 1 | BOLT (1/2-13X3.75-IN) | |
| | 5 | 1 | **1K-6872** | 1 | LOCKNUT (1/2-13-THD) | |
| | 6 | 1 | **3B-4647** | 1 | PIN-COTTER | |
| | 7 | 1 | **5T-8417** | 1 | PIN | |
| | 8 | 1 | **112-7462** | 1 | BRACKET | |
| | 9 | 1 | **2A-1538** | 4 | BOLT (3/4-10X2.25-IN) | |
| | 10 | 1 | **5P-8248** | 4 | WASHER-HARD (20X36.5X3.5-MM THK) | |
| Y | 11 | 1 | **112-5575** | 1 | CYLINDER GP-SIDESHIFT | 659 |

Y-SEPARATE ILLUSTRATION

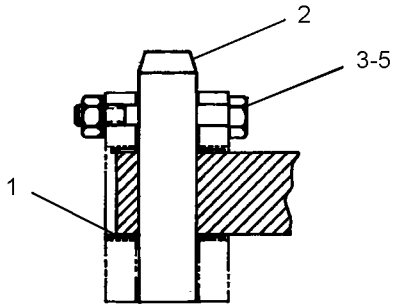


SECTION A-A

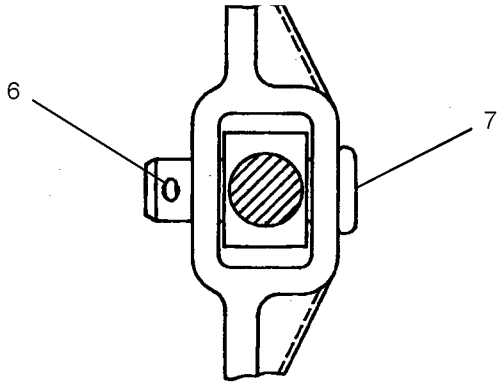


SECTION B-B

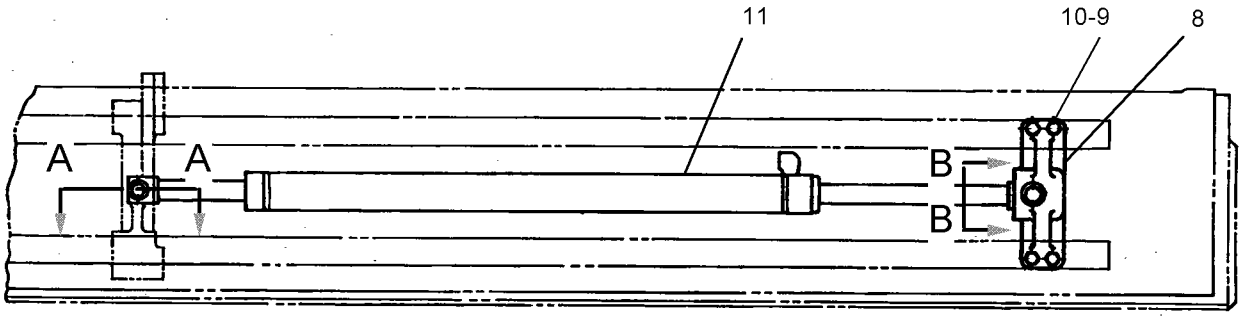


GRAPHIC #1 **<END>** g01131607

# HYDRAULIC SYSTEM

## *8W-2290* CYLINDER & MTG GP-STEERING

**S/N: CCA1-UP**

**PART OF 159-4615 GENERAL AR**

**SMCS-4303** **i02202916**

| NOTE | REF NO | GRAPHIC REF | PART NUMBER | QTY | PART NAME 1 2 3 4 5 6 (PRODUCT LEVEL) | SEE PAGE |
|---|---|---|---|---|---|---|
| | 1 | 1 | **2H-3786** | 2 | NUT-JAM (1-14-THD) | |
| | 2 | 1 | **8D-2429** | 2 | PIN AS | |
| | 3 | 1 | **8D-2638** | 4 | SPACER (1.016X1.25X0.39-IN THK) | |
| Y | 4 | 1 | **130-9041** | 1 | CYLINDER GP-STEERING (LH) | 660 |
| Y | 5 | 1 | **130-9042** | 1 | CYLINDER GP-STEERING (RH) | 661 |
| | 6 | 1 | **131-3736** | 2 | TIE ROD GP (STEERING) | |
| | | | | | (EACH INCLUDES) | |
| | | 1 | **2F-8057** | 1 | NUT-SLOTTED | |
| | | 1 | **132-1143** | 1 | SEAL-BOOT | |
| | 7 | 1 | **3B-4618** | 2 | PIN-COTTER | |
| | 8 | 1 | **5S-7379** | 2 | BOLT (3/8-16X0.875-IN) | |
| | 9 | 1 | **8D-2811** | 2 | WASHER (1.25X1.94X0.032-IN THK) | |
| | 10 | 1 | **8T-4896** | 2 | WASHER-HARD (10.2X18.5X2.5-MM THK) | |

Y-SEPARATE ILLUSTRATION

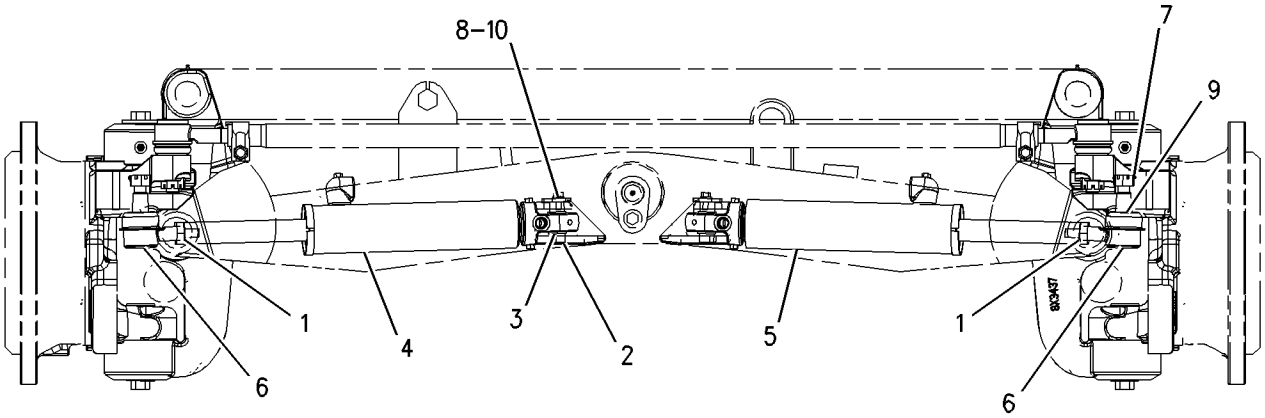


GRAPHIC #1 **<END>** g00743415

# *8W-2737* CYLINDER & MTG GP-WHEEL LEAN

**S/N: CCA1-UP**

**PART OF 159-4615 GENERAL AR**

**SMCS-5211** **i01458451**

| NOTE | REF NO | GRAPHIC REF | PART NUMBER | QTY | PART NAME 1 2 3 4 5 6 (PRODUCT LEVEL) | SEE PAGE |
|---|---|---|---|---|---|---|
| | 1 | 1 | **6H-1717** | 2 | BOLT (1/2-13X1.125-IN) | |
| | | 1 | **5P-8245** | 2 | WASHER-HARD (13.5X25.5X3-MM THK) | |
| | 2 | 1 | **3B-8489** | 2 | FITTING-GREASE (WHEEL LEAN) | |
| | 3 | 1 | **2G-8609** | 1 | PIN | |
| | 4 | 1 | **6G-7187** | 1 | LOCK | |
| Y | 5 | 1 | **121-9242** | 1 | CYLINDER GP-WHEEL LEAN | 663 |
| | 6 | 1 | **2G-5667** | 1 | RETAINER | |
| | 7 | 1 | **0S-1592** | 1 | BOLT (5/8-11X1.25-IN) | |
| | | 1 | **4D-3704** | 1 | WASHER-HARD (17X30X5-MM THK) | |
| | 8 | 1 | **5P-8842** | 4 | SEAL-LIP TYPE | |

Y-SEPARATE ILLUSTRATION

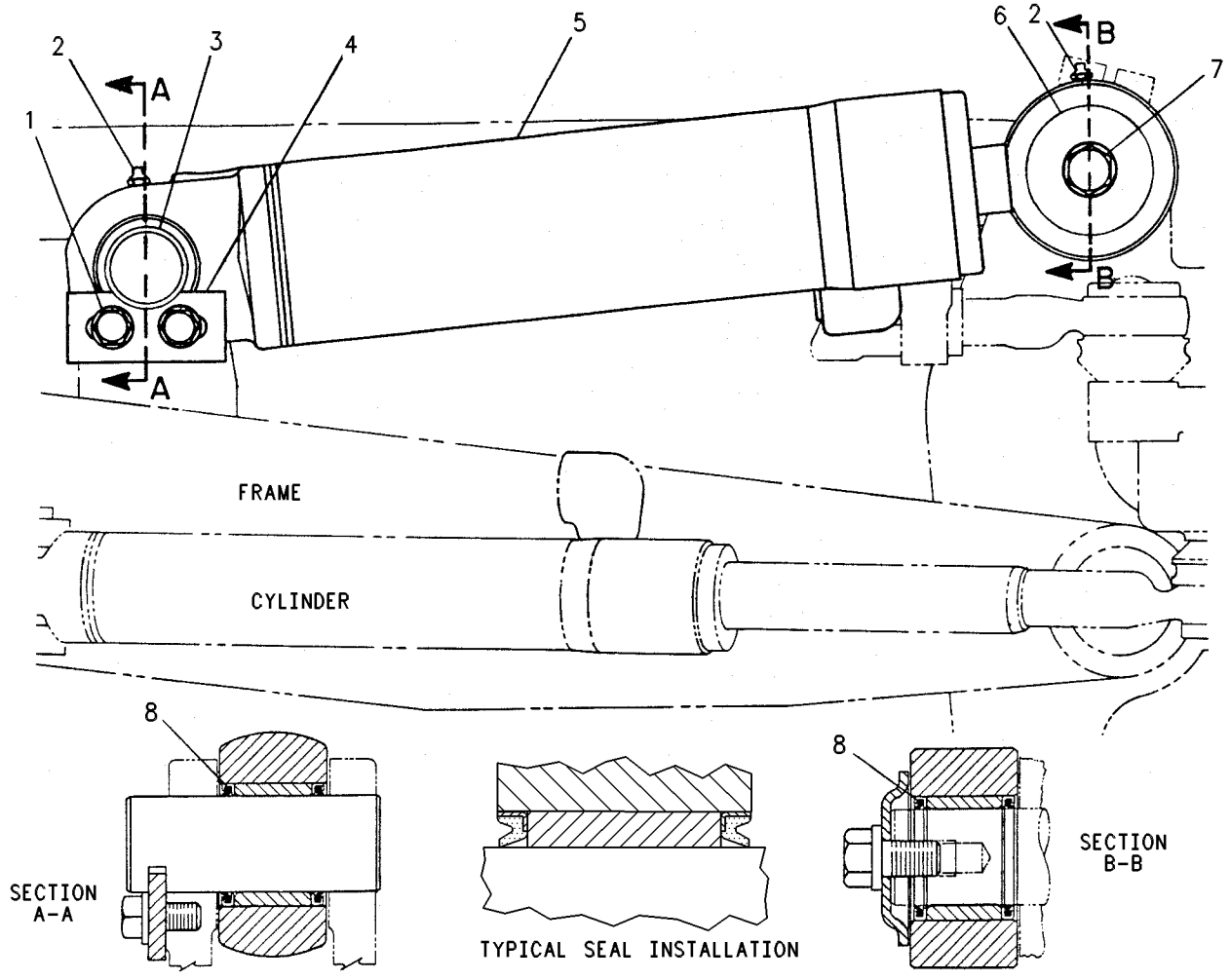


GRAPHIC #1 **<END>** g00108800

## 173-5981 CYLINDER GP-ARTICULATION

**S/N: CCA1-UP**
**82.6 MM BORE X 284.3 MM STROKE**
**PART OF 160-9177 CYLINDER & MTG GP-ARTICULATION**

**SMCS-5265** **i02134796**

| NOTE | REF NO | GRAPHIC REF | PART NUMBER | QTY | PART NAME 1 2 3 4 5 6 (PRODUCT LEVEL) | SEE PAGE |
|---|---|---|---|---|---|---|
| | 1 | 1 | **6E-0123** | 1 | HEAD | |
| | 2 | 1 | **137-6791** | 1 | CYLINDER AS | |
| | 3 | 1 | **137-8130** | 1 | PISTON | |
| | 4 | 1 | **173-5990** | 1 | ROD AS | |
| | 5 | 1 | **167-2192** | 1 | SEAL AS-BUFFER | |
| | 6 | 1 | **167-2302** | 1 | SEAL-U-CUP | |
| M | 7 | 1 | **173-9683** | 1 | BOLT (M30X3.5X90-MM) | |
| | 8 | 1 | **175-7897** | 1 | SEAL-O-RING | |
| | 9 | 1 | **227-1143** | 1 | SEAL-WIPER | |
| | 10 | 1 | **4T-6779** | 1 | RING | |
| | 11 | 1 | **6J-0793** | 1 | SEAL AS | |
| | | 1 | **6J-0789** | 1 | RING-EXPANDER | |
| | | 1 | **6J-0790** | 1 | SEAL | |
| | 12 | 1 | **6J-1381** | 1 | RING-BACKUP | |
| | 13 | 1 | **8J-6371** | 1 | RING-WEAR | |
| | 14 | 1 | **9X-8399** | 1 | WASHER (33X56X6-MM THK) | |

M-METRIC PART

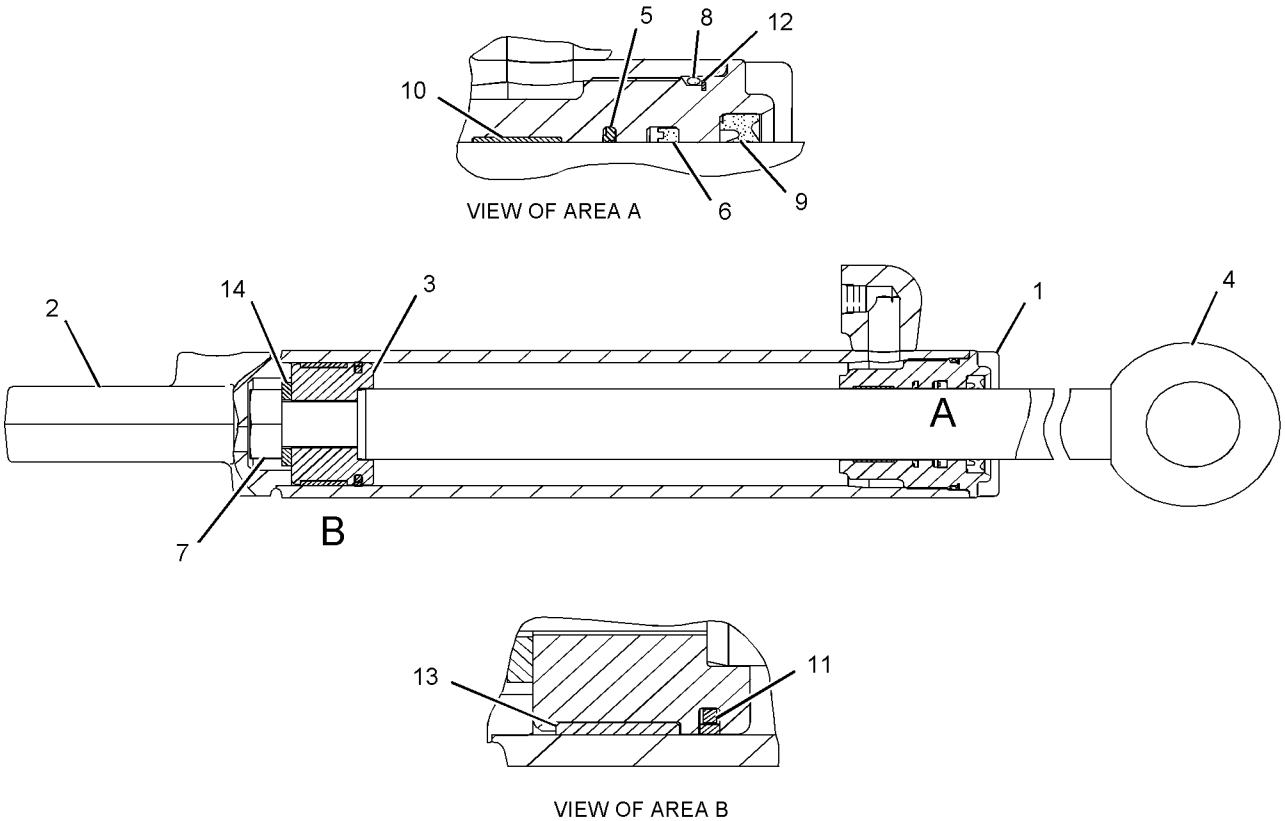


GRAPHIC #1

**<END>**

g01100028

# 131-7191 CYLINDER GP-BLADE TIP

**S/N: CCA1-UP**
**69.85 MM BORE X 307.00 MM STROKE**
**PART OF 8X-1943 CYLINDER & MTG GP-BLADE TIP**

**SMCS-5106** **i02108889**

| NOTE | REF NO | GRAPHIC REF | PART NUMBER | QTY | PART NAME 1 2 3 4 5 6 (PRODUCT LEVEL) | SEE PAGE |
|---|---|---|---|---|---|---|
| | 1 | 1 | **131-7194** | 1 | CYLINDER AS | |
| | | 1 | **2D-8652** | 1 | BEARING | |
| M | 2 | 1 | **173-9685** | 1 | BOLT (M20X2.5X70-MM) | |
| | 3 | 1 | **8T-3282** | 1 | WASHER-HARD (22X35X3.5-MM THK) | |
| J | 4 | 1 | **5J-7010** | 1 | SEAL AS | |
| J | 5 | 1 | **8J-0112** | 1 | RING-WEAR | |
| | 6 | 1 | **9T-2457** | 1 | PISTON | |
| J | 7 | 1 | **175-7895** | 1 | SEAL-O-RING | |
| J | 8 | 1 | **4J-9225** | 1 | RING-BACKUP | |
| | 9 | 1 | **6E-4940** | 1 | HEAD | |
| | 10 | 1 | **131-7195** | 1 | ROD AS | |
| | | 1 | **2D-8652** | 1 | BEARING | |
| J | 11 | 1 | **4T-6780** | 1 | RING-WEAR | |
| J | 12 | 1 | **167-2186** | 1 | SEAL AS-BUFFER | |
| J | 13 | 1 | **167-2294** | 1 | SEAL-U-CUP | |
| J | 14 | 1 | **226-8202** | 1 | SEAL-WIPER | |
| | | | | | AVAILABLE REPAIR KIT(S): | |
| AJ | | | **185-6596** | 1 | KIT-SEAL | |
| | | | | | (INCLUDES SEALS & RINGS) | |

A-NOT PART OF THIS GROUP
J-KIT MARKED J INCLUDES PARTS MARKED J
M-METRIC PART

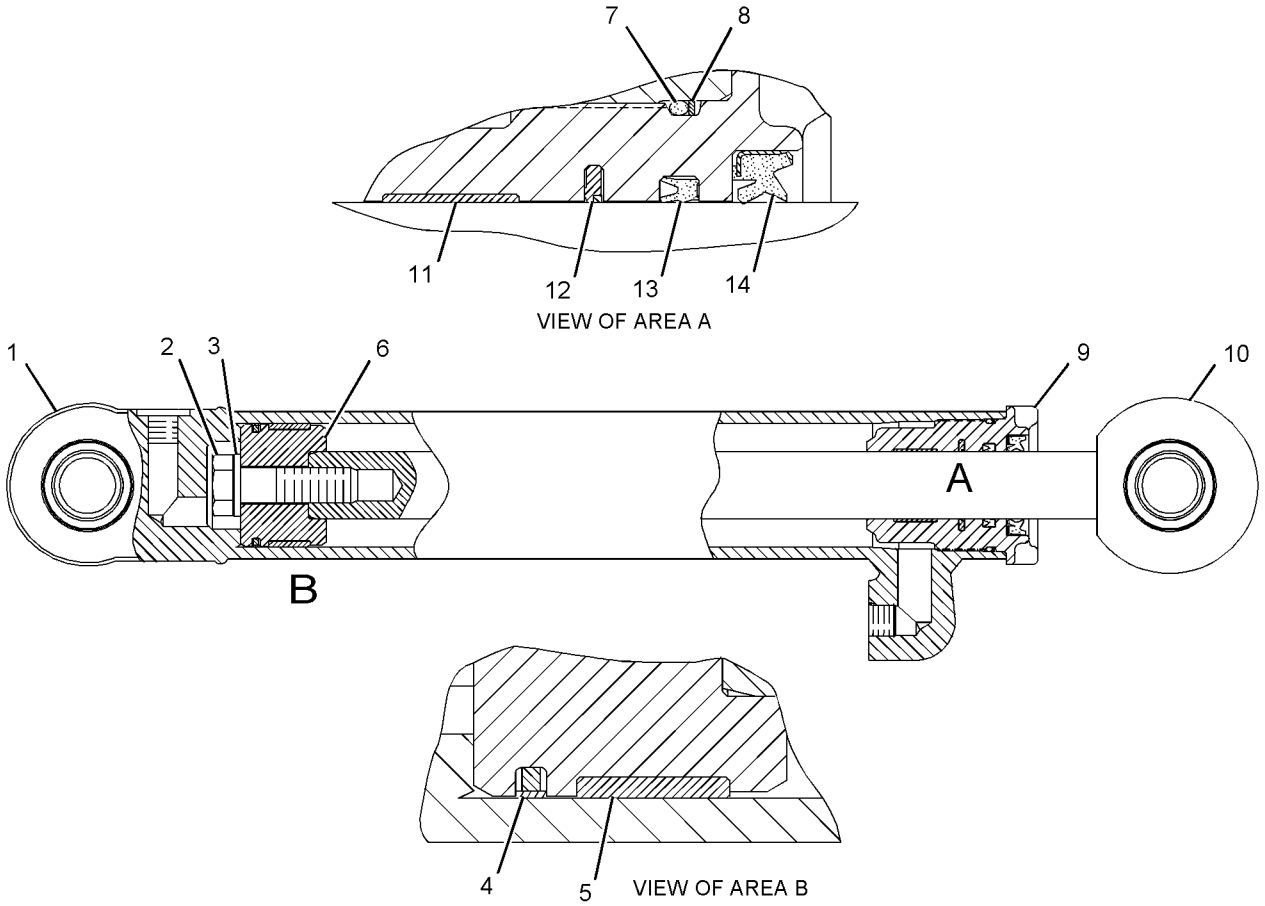


GRAPHIC #1

**<END>**

g01097877

# HYDRAULIC SYSTEM

## 6E-1343 CYLINDER GP-CENTERSHIFT

**S/N: CCA1-UP**

**76.2 MM BORE X 630.0 MM STROKE**

**PART OF 8X-1944 CYLINDER & MTG GP-CENTERSHIFT**

**SMCS-5223** **i02108899**

| NOTE | REF NO | GRAPHIC REF | PART NUMBER | QTY | PART NAME 1 2 3 4 5 6 (PRODUCT LEVEL) | SEE PAGE |
|---|---|---|---|---|---|---|
| | 1 | 1 | **6E-1344** | 1 | CYLINDER AS | |
| M | 2 | 1 | **173-9683** | 1 | BOLT (M30X3.5X90-MM) | |
| | 3 | 1 | **3S-7023** | 1 | WASHER (34X57X6-MM THK) | |
| | 4 | 1 | **6E-1131** | 1 | PISTON | |
| | 5 | 1 | **6E-1346** | 1 | ROD AS | |
| J | 6 | 1 | **175-7896** | 1 | SEAL-O-RING | |
| J | 7 | 1 | **6J-5731** | 1 | RING-BACKUP | |
| | 8 | 1 | **148-2593** | 1 | HEAD | |
| J | 9 | 1 | **6J-5733** | 1 | RING-WEAR | |
| J | 10 | 1 | **6J-1972** | 1 | SEAL AS | |
| J | 11 | 1 | **229-9382** | 1 | SEAL-WIPER | |
| J | 12 | 1 | **167-2304** | 1 | SEAL-U-CUP | |
| J | 13 | 1 | **167-2195** | 1 | SEAL AS-BUFFER | |
| J | 14 | 1 | **4T-5613** | 1 | RING-WEAR | |
| | | | | | AVAILABLE REPAIR KIT(S): | |
| J | | | **238-4462** | 1 | KIT-SEAL | |
| | | | | | (INCLUDES SEALS AND RINGS) | |

J-KIT MARKED J INCLUDES PARTS MARKED J
M-METRIC PART

**6E-1343 CYLINDER GP-CENTERSHIFT** *(contd. )* **i02108899**

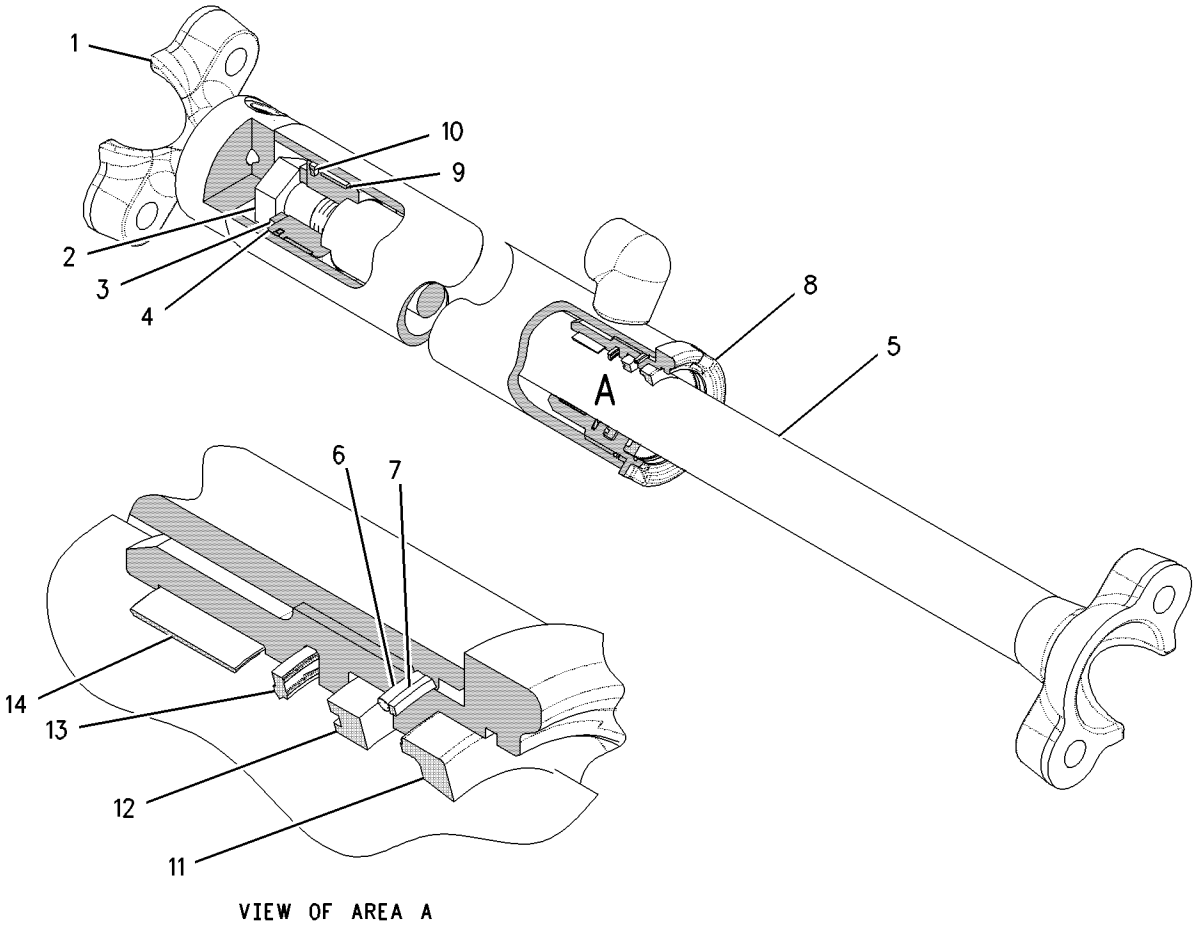


VIEW OF AREA A

GRAPHIC #1 **<END>** g00762040

# HYDRAULIC SYSTEM

## 132-4929 CYLINDER GP-LIFT

**S/N: CCA1-UP**
**76.2 MM BORE X 1245.0 MM STROKE**
**PART OF 8X-1947 CYLINDER & MTG GP-BLADE LIFT**

**SMCS-5102** **i02108887**

| NOTE | REF NO | GRAPHIC REF | PART NUMBER | QTY | PART NAME 1 2 3 4 5 6 (PRODUCT LEVEL) | SEE PAGE |
|---|---|---|---|---|---|---|
| R | 1 | 1 | **132-4928** | 1 | CYLINDER AS | |
| | | 1 | **8J-6384** | 2 | BEARING-SLEEVE | |
| M | 2 | 1 | **173-9683** | 1 | BOLT (M30X3.5X90-MM) | |
| | 3 | 1 | **3S-7023** | 1 | WASHER (34X57X6-MM THK) | |
| | 4 | 1 | **6J-1972** | 1 | SEAL AS | |
| | 5 | 1 | **6J-5733** | 1 | RING-WEAR | |
| | 6 | 1 | **6E-1131** | 1 | PISTON | |
| | 7 | 1 | **175-7896** | 1 | SEAL-O-RING | |
| | 8 | 1 | **6J-5731** | 1 | RING-BACKUP | |
| | 9 | 1 | **148-2593** | 1 | HEAD | |
| R | 10 | 1 | **123-3793** | 1 | ROD AS | |
| | 11 | 1 | **229-9382** | 1 | SEAL-WIPER | |
| | 12 | 1 | **167-2304** | 1 | SEAL-U-CUP | |
| | 13 | 1 | **167-2195** | 1 | SEAL AS-BUFFER | |
| | 14 | 1 | **4T-5613** | 1 | RING-WEAR | |

M-METRIC PART
R-REMFG PART MAY BE AVAILABLE

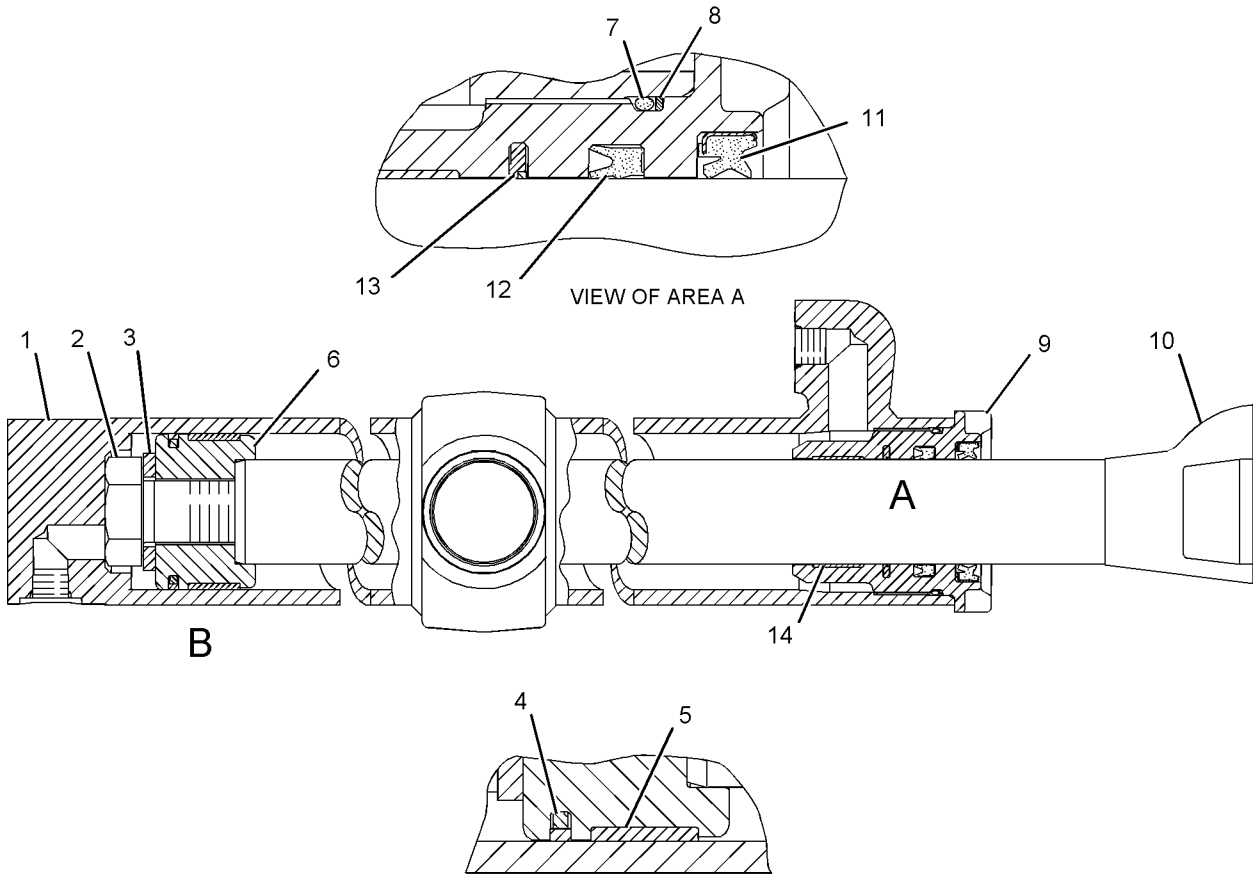


GRAPHIC #1

**<END>**

g01098705

# 113-7754 CYLINDER GP-RIPPER

**S/N: CCA1-UP**
**101.6 MM BORE X 482.6 MM STROKE**
**PART OF 175-2559 RIPPER AR**
**AN ATTACHMENT**

**SMCS-5352, 5356** **i01988942**

| NOTE | REF NO | GRAPHIC REF | PART NUMBER | QTY | PART NAME 1 2 3 4 5 6 (PRODUCT LEVEL) | SEE PAGE |
|---|---|---|---|---|---|---|
| R | 1 | 1 | **113-7755** | 1 | CYLINDER AS | |
| | 1A | 1 | **8J-9911** | 2 | BEARING-SLEEVE | |
| | 1B | 1 | **9T-8958** | 1 | TRUNNION | |
| M | 2 | 1 | **173-9683** | 1 | BOLT (M30X3.5X90-MM) | |
| | 3 | 1 | **3S-7023** | 1 | WASHER (34X57X6-MM THK) | |
| | 4 | 1 | **5J-5402** | 1 | SEAL AS | |
| | 5 | 1 | **6J-2797** | 1 | RING-WEAR | |
| | 6 | 1 | **9T-3133** | 1 | PISTON | |
| R | 7 | 1 | **113-7756** | 1 | ROD AS | |
| | 7A | 1 | **8J-9910** | 1 | BEARING-SLEEVE | |
| | 8 | 1 | **175-7900** | 1 | SEAL-O-RING | |
| | 9 | 1 | **2K-6830** | 1 | RING-BACKUP | |
| | 10 | 1 | **6E-0775** | 1 | HEAD | |
| | 11 | 1 | **4T-5613** | 1 | RING-WEAR | |
| | 12 | 1 | **167-2195** | 1 | SEAL AS-BUFFER | |
| | 13 | 1 | **167-2304** | 1 | SEAL-U-CUP | |
| | 14 | 1 | **229-9382** | 1 | SEAL-WIPER | |

M-METRIC PART
R-REMFG PART MAY BE AVAILABLE

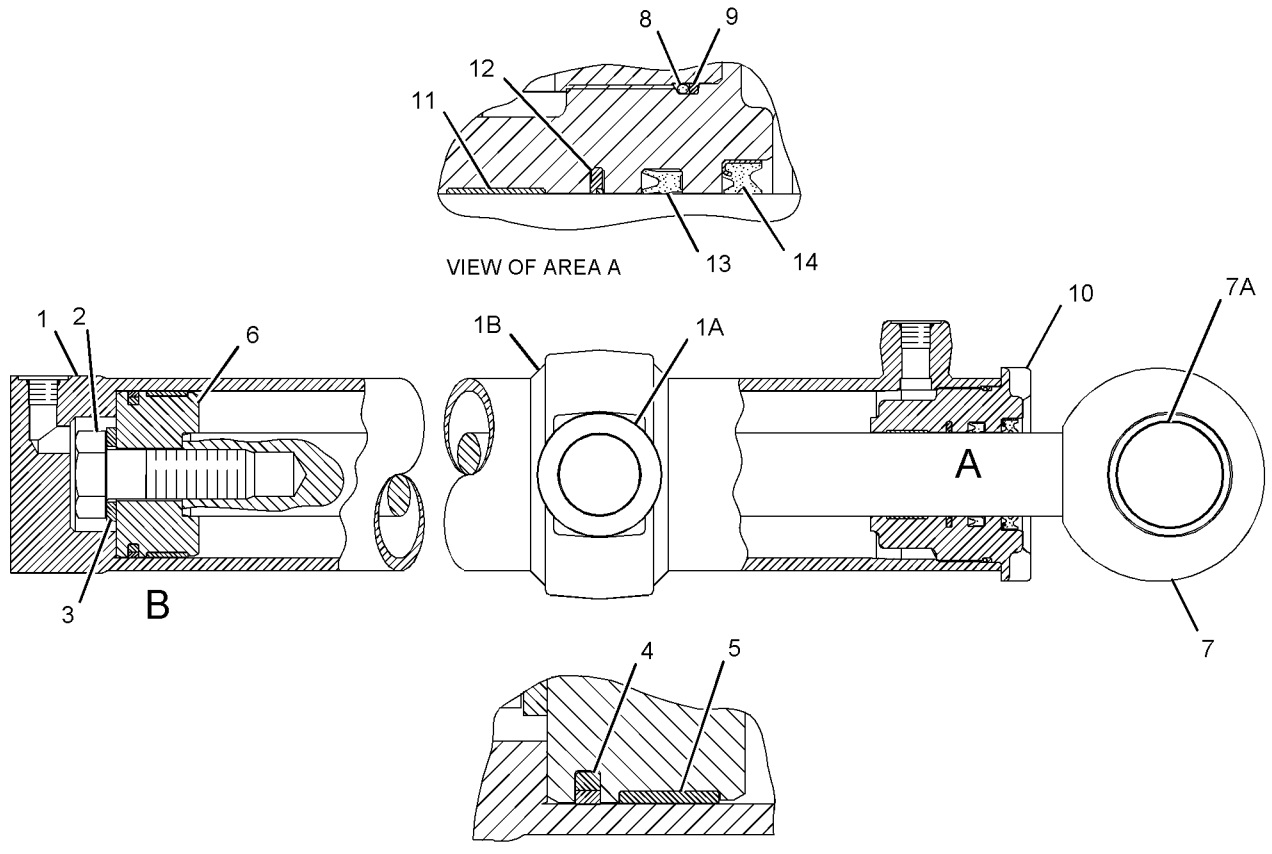


GRAPHIC #1

**<END>**

g01069015

# HYDRAULIC SYSTEM

## 165-2510 CYLINDER GP-SCARIFIER

**S/N: CCA1-UP**
**76.2 MM BORE X 406.5 MM STROKE**
**PART OF 8W-2913 CYLINDER & MTG GP-SCARIFIER**
**AN ATTACHMENT**

**SMCS-5213** **i01963757**

| NOTE | REF NO | GRAPHIC REF | PART NUMBER | QTY | PART NAME 1 2 3 4 5 6 (PRODUCT LEVEL) | SEE PAGE |
|---|---|---|---|---|---|---|
| | 1 | 1 | **9T-4211** | 1 | PISTON | |
| | 2 | 1 | **168-9108** | 1 | CYLINDER AS | |
| | 3 | 1 | **168-9110** | 1 | ROD AS | |
| | 4 | 1 | **184-9843** | 1 | HEAD | |
| J | 5 | 1 | **167-2190** | 1 | SEAL AS-BUFFER | |
| J | 6 | 1 | **167-2300** | 1 | SEAL-U-CUP | |
| J | 7 | 1 | **231-3539** | 1 | SEAL-WIPER | |
| M | 8 | 1 | **173-9779** | 1 | BOLT (M24X3X80-MM) | |
| J | 9 | 1 | **175-7896** | 1 | SEAL-O-RING | |
| J | 10 | 1 | **4T-6907** | 1 | RING-WEAR | |
| J | 11 | 1 | **6J-1972** | 1 | SEAL AS | |
| J | 12 | 1 | **6J-5731** | 1 | RING-BACKUP | |
| J | 13 | 1 | **6J-5733** | 1 | RING-WEAR | |
| | 14 | 1 | **6V-8237** | 1 | WASHER (26X44X4-MM THK) | |
| | | | | | AVAILABLE REPAIR KIT(S): | |
| AJ | | | **185-7025** | 1 | KIT-SEAL | |
| | | | | | (INCLUDES SEAL-O-RING) | |

A-NOT PART OF THIS GROUP
J-KIT MARKED J INCLUDES PARTS MARKED J
M-METRIC PART

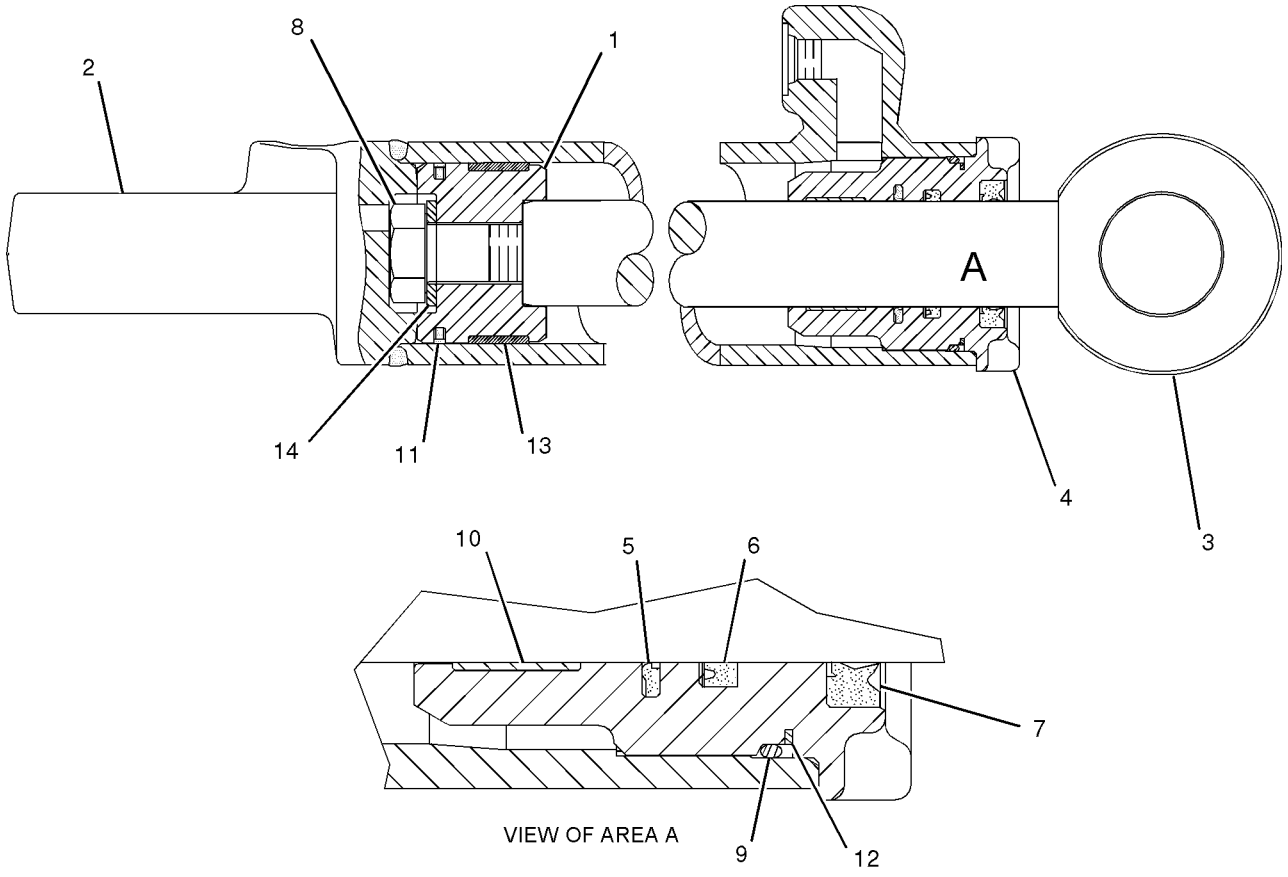


GRAPHIC #1 **<END>** g01045248

# 112-5575 CYLINDER GP-SIDESHIFT

**S/N: CCA1-UP**
**76.2 MM BORE X 1185.0 MM STROKE**
**PART OF 112-7463 CYLINDER & MTG GP-SIDESHIFT**

**SMCS-5229** **i02503930**

| NOTE | REF NO | GRAPHIC REF | PART NUMBER | QTY | PART NAME 1 2 3 4 5 6 (PRODUCT LEVEL) | SEE PAGE |
|---|---|---|---|---|---|---|
| R | 1 | 1 | **9T-2482** | 1 | CYLINDER AS | |
| M | 2 | 1 | **8T-0667** | 1 | BOLT (M24X3X100-MM) | |
| | 3 | 1 | **150-1280** | 1 | WASHER-HARD (26X44X22-MM THK) | |
| | 4 | 1 | **9T-4211** | 1 | PISTON | |
| | 5 | 1 | **175-7896** | 1 | SEAL-O-RING | |
| | 6 | 1 | **6J-5731** | 1 | RING-BACKUP | |
| R | 7 | 1 | **112-9035** | 1 | ROD AS | |
| | 8 | 1 | **184-9843** | 1 | HEAD | |
| | 9 | 1 | **231-3539** | 1 | SEAL-WIPER | |
| | 10 | 1 | **167-2300** | 1 | SEAL-U-CUP | |
| | 11 | 1 | **167-2190** | 1 | SEAL AS-BUFFER | |
| | 12 | 1 | **4T-6907** | 1 | RING-WEAR | |
| | 13 | 1 | **6J-5733** | 1 | RING-WEAR | |
| | 14 | 1 | **6J-1972** | 1 | SEAL AS | |

M-METRIC PART
R-REMFG PART MAY BE AVAILABLE

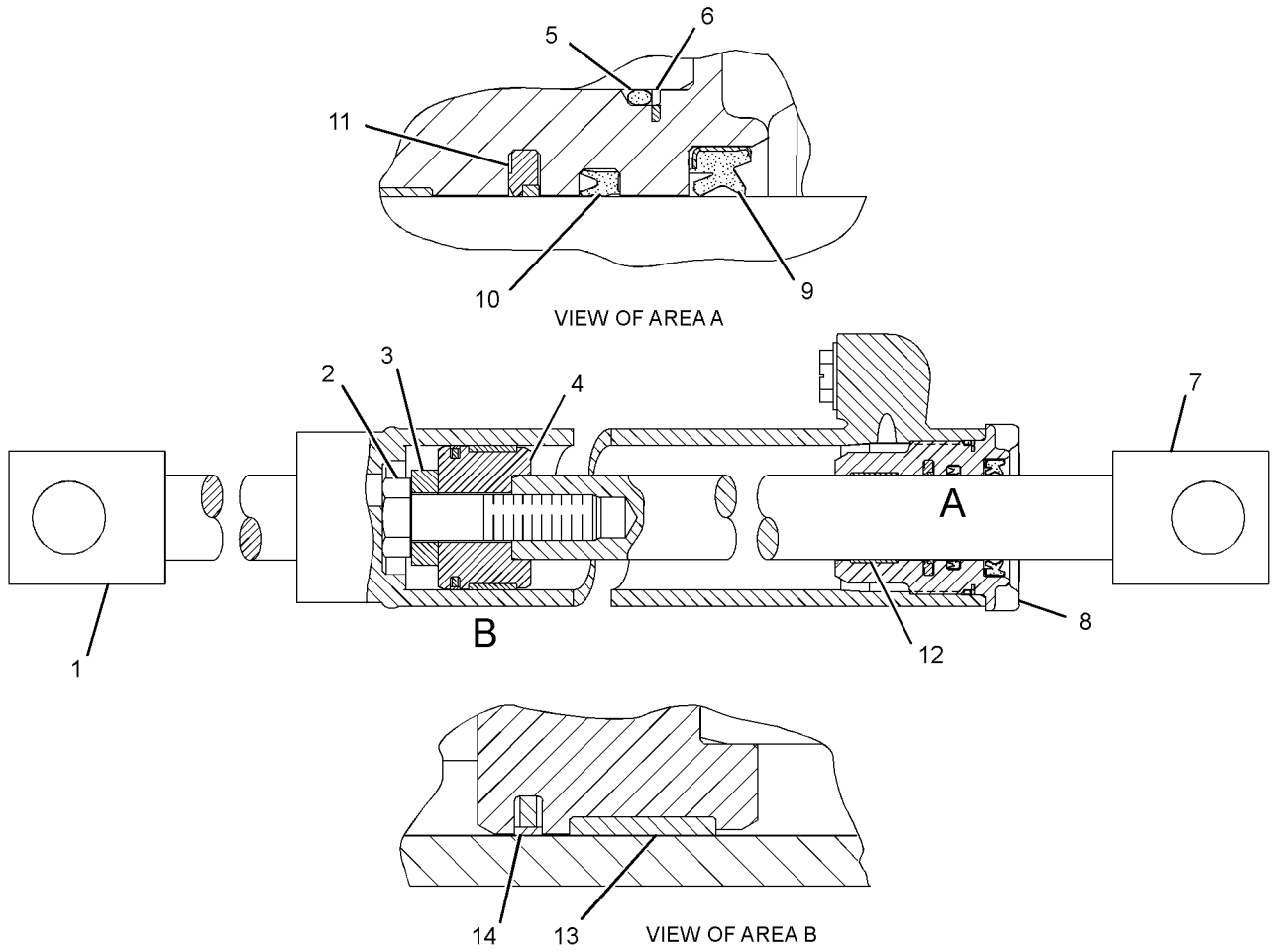


GRAPHIC #1 **<END>** g01259478

# HYDRAULIC SYSTEM

## 130-9041 CYLINDER GP-STEERING–LH

**S/N: CCA1-UP**
**57.15 MM BORE X 267.00 MM STROKE**
**PART OF 8W-2290 CYLINDER & MTG GP-STEERING**

**SMCS-4303** **i02097612**

| NOTE | REF NO | GRAPHIC REF | PART NUMBER | QTY | PART NAME 1 2 3 4 5 6 (PRODUCT LEVEL) | SEE PAGE |
|---|---|---|---|---|---|---|
| | 1 | 1 | **9T-2388** | 1 | PISTON | |
| | 2 | 1 | **130-9044** | 1 | CYLINDER AS-LH | |
| | | 1 | **148-2592** | 1 | BOSS AS | |
| | | 1 | **1N-5999** | 1 | PLUG | |
| | | 1 | **7J-0204** | 1 | SEAL-O-RING | |
| | 3 | 1 | **154-6579** | 1 | ROD | |
| | 4 | 1 | *162-6448* | 2 | PLUG AS | |
| | | | | | (EACH INCLUDES) | |
| | | 1 | **1N-5999** | 1 | PLUG | |
| | | 1 | **7J-0204** | 1 | SEAL-O-RING | |
| | 5 | 1 | **167-2186** | 1 | SEAL AS-BUFFER | |
| | 6 | 1 | **167-2294** | 1 | SEAL-U-CUP | |
| M | 7 | 1 | **173-9685** | 1 | BOLT (M20X2.5X70-MM) | |
| | 8 | 1 | **175-7895** | 1 | SEAL-O-RING | |
| | 9 | 1 | **1U-3998** | 1 | SEAL AS | |
| | 10 | 1 | **226-8202** | 1 | SEAL-WIPER | |
| | 11 | 1 | **4J-9225** | 1 | RING-BACKUP | |
| | 12 | 1 | **7H-2423** | 1 | RING-WEAR | |
| | 13 | 1 | **8T-3282** | 1 | WASHER-HARD (22X35X3.5-MM THK) | |
| | 14 | 1 | **9T-3727** | 1 | HEAD | |

M-METRIC PART

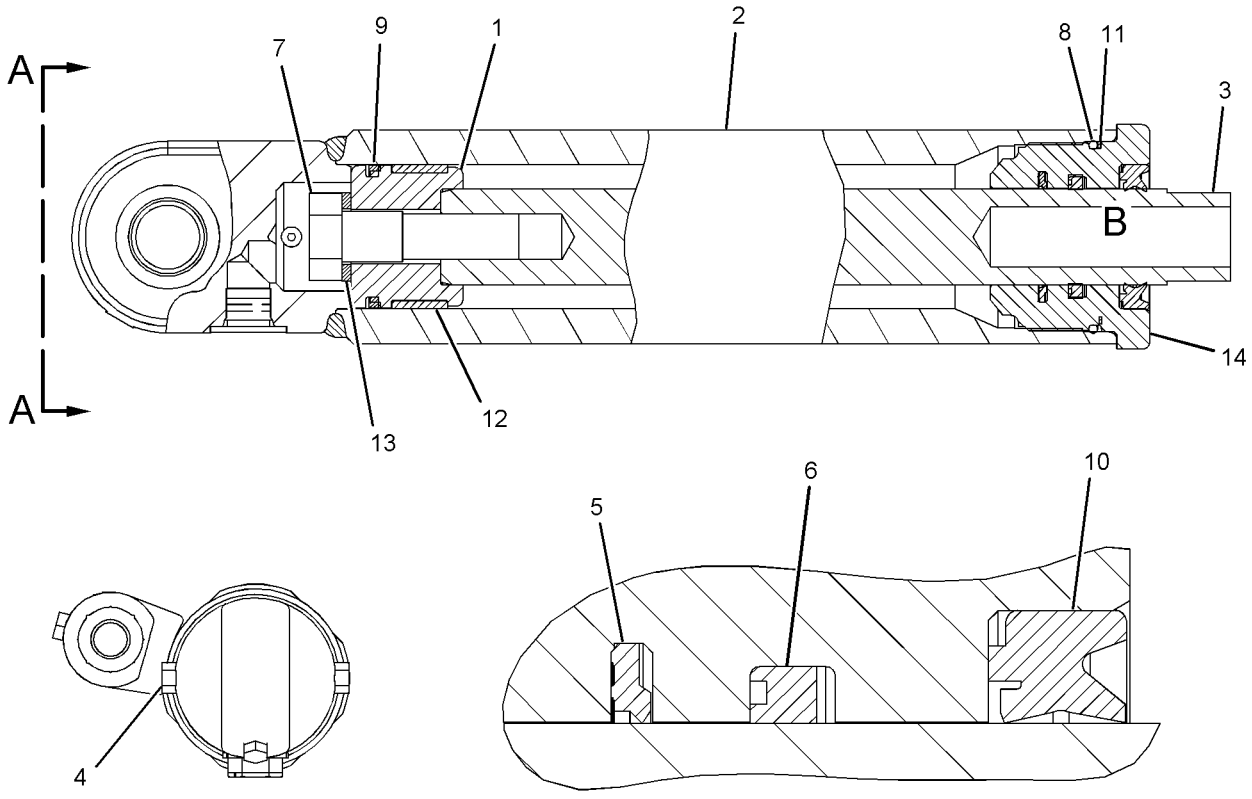


VIEW A-A

VIEW OF AREA B

GRAPHIC #1 **<END>** g01069447

# HYDRAULIC SYSTEM

## 130-9042 CYLINDER GP-STEERING–RH

**S/N: CCA1-UP**
**57.15 MM BORE X 267.00 MM STROKE**
**PART OF 8W-2290 CYLINDER & MTG GP-STEERING**

**SMCS-4303** **i01961840**

| NOTE | REF NO | GRAPHIC REF | PART NUMBER | QTY | PART NAME 1 2 3 4 5 6 (PRODUCT LEVEL) | SEE PAGE |
|---|---|---|---|---|---|---|
| | 1 | 1 | **9T-2388** | 1 | PISTON | |
| | 2 | 1 | **130-9045** | 1 | CYLINDER AS (RH) | |
| | | 1 | **1N-5999** | 1 | PLUG | |
| | | 1 | **7J-0204** | 1 | SEAL-O-RING | |
| | | 1 | **142-0308** | 1 | ELBOW | |
| | | 1 | **005-8639** | 1 | BEARING-ALIGNING | |
| | 3 | 1 | **154-6579** | 1 | ROD | |
| | 4 | 1 | **167-2186** | 1 | SEAL AS-BUFFER | |
| | 5 | 1 | **167-2294** | 1 | SEAL-U-CUP | |
| | 6 | 1 | **226-8202** | 1 | SEAL-WIPER | |
| M | 7 | 1 | **173-9685** | 1 | BOLT (M20X2.5X70-MM) | |
| | 8 | 1 | **175-7895** | 1 | SEAL-O-RING | |
| | 9 | 1 | *162-6448* | 2 | PLUG AS | |
| | | | | | (EACH INCLUDES) | |
| | | 1 | **1N-5999** | 1 | PLUG | |
| | | 1 | **7J-0204** | 1 | SEAL-O-RING | |
| | 10 | 1 | **1U-3998** | 1 | SEAL AS | |
| | 11 | 1 | **4J-9225** | 1 | RING-BACKUP | |
| | 12 | 1 | **7H-2423** | 1 | RING-WEAR | |
| | 14 | 1 | **8T-3282** | 1 | WASHER-HARD (22X35X3.5-MM THK) | |
| | 15 | 1 | **9T-3727** | 1 | HEAD | |

M-METRIC PART

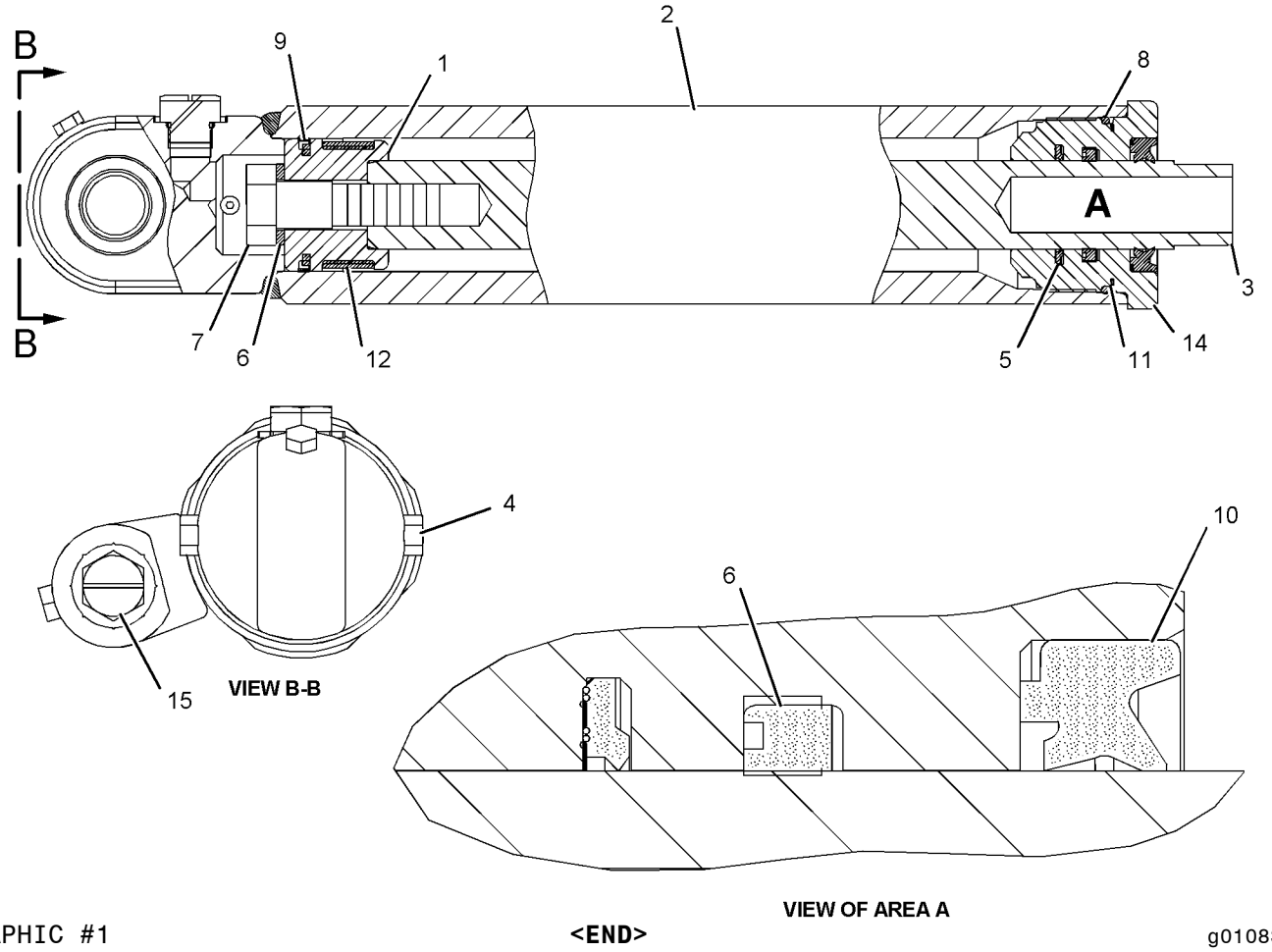


GRAPHIC #1 **<END>** g01083880

# HYDRAULIC SYSTEM

## 121-9242 CYLINDER GP-WHEEL LEAN

**S/N: CCA1-UP**
**88.9 MM BORE X 149.0 MM STROKE**
**PART OF 8W-2737 CYLINDER & MTG GP-WHEEL LEAN**

**SMCS-5211** **i02108923**

| NOTE | REF NO | GRAPHIC REF | PART NUMBER | QTY | PART NAME 1 2 3 4 5 6 (PRODUCT LEVEL) | SEE PAGE |
|---|---|---|---|---|---|---|
| | 1 | 1 | **123-1076** | 1 | CYLINDER AS | |
| M | 2 | 1 | **173-9683** | 1 | BOLT (M30X3.5X90-MM) | |
| | 3 | 1 | **9X-8399** | 1 | WASHER (33X56X6-MM THK) | |
| | 4 | 1 | **4T-8054** | 1 | SEAL AS | |
| | 5 | 1 | **7J-9885** | 1 | RING-WEAR | |
| | 6 | 1 | **9T-9040** | 1 | PISTON | |
| | 7 | 1 | **175-7898** | 1 | SEAL-O-RING | |
| | 8 | 1 | **4J-9224** | 1 | RING-BACKUP | |
| | 9 | 1 | **6E-4974** | 1 | HEAD | |
| | 10 | 1 | **121-9245** | 1 | ROD AS | |
| | | 1 | **2G-8631** | 1 | BEARING-SLEEVE | |
| | 11 | 1 | **229-9382** | 1 | SEAL-WIPER | |
| | 12 | 1 | **167-2304** | 1 | SEAL-U-CUP | |
| | 13 | 1 | **167-2195** | 1 | SEAL AS-BUFFER | |
| | 14 | 1 | **4T-5613** | 1 | RING-WEAR | |

M-METRIC PART

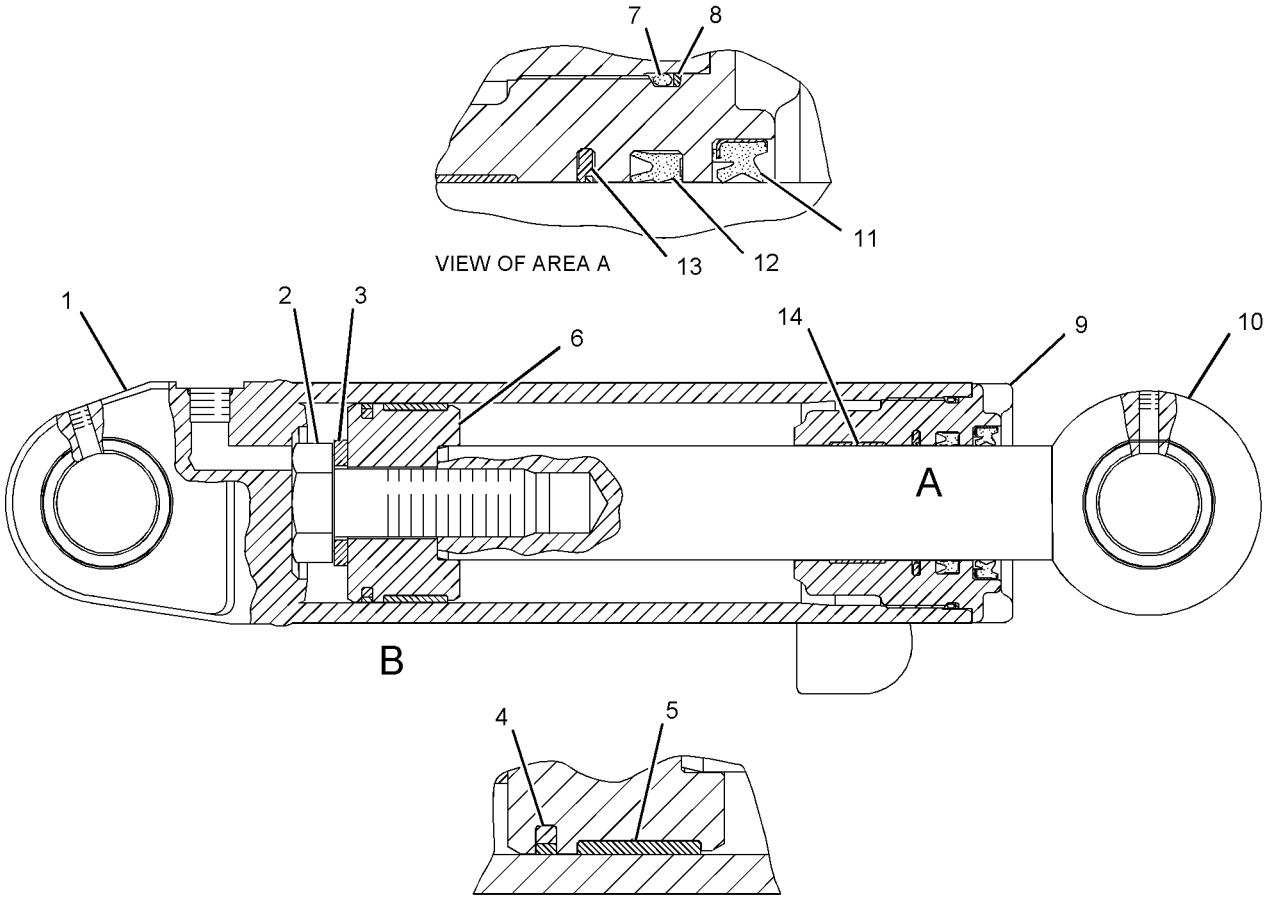


GRAPHIC #1

**<END>**

g01098821

# 108-4916 DETENT GP-CONTROL VALVE–PLOW, BULLDOZER LIFT

**S/N: CCA1-UP**

**PART OF 107-0547, 153-8907, 6E-3031, 6E-3037 VALVE GP-CONTROL**

**ALSO AN ATTACHMENT**

**SMCS-5051** **i00131376**

| NOTE | REF NO | GRAPHIC REF | PART NUMBER | QTY | PART NAME 1 2 3 4 5 6 (PRODUCT LEVEL) | SEE PAGE |
|---|---|---|---|---|---|---|
| | 1 | 1 | **101-1974** | 1 | RETAINER | |
| | 2 | 1 | **101-1975** | 1 | RETAINER | |
| | 3 | 1 | **102-7423** | 1 | SPRING | |
| | 4 | 1 | **5B-9318** | 6 | BALL | |

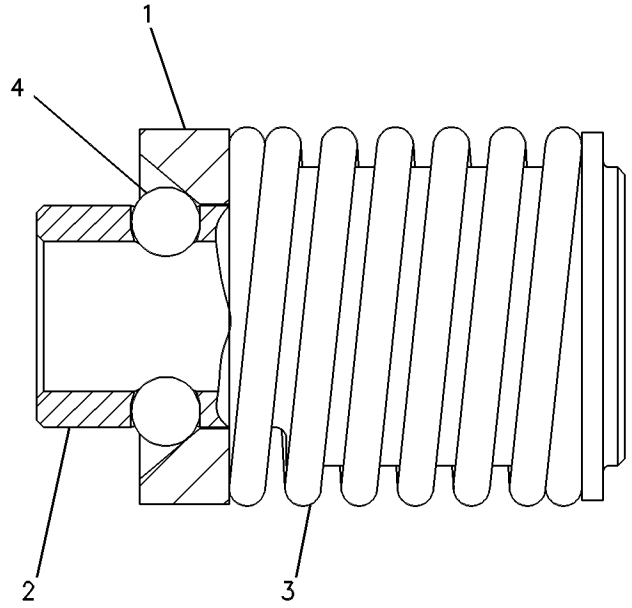


GRAPHIC #1 **<END>** g00108519

# 130-3535 DETENT GP-CONTROL VALVE

**S/N: CCA1-UP**

**PART OF 128-8647, 130-3110, 130-3111 VALVE GP-CONTROL**

**AN ATTACHMENT**

**SMCS-5051** **i01623986**

| NOTE | REF NO | GRAPHIC REF | PART NUMBER | QTY | PART NAME 1 2 3 4 5 6 (PRODUCT LEVEL) | SEE PAGE |
|---|---|---|---|---|---|---|
| M | 1 | 1 | **7X-2540** | 2 | BOLT (M8X1.25X120-MM) | |
| | 2 | 1 | **8T-4224** | 2 | WASHER-HARD (8.8X16X2-MM THK) | |
| | 3 | 1 | **6V-5722** | 2 | SEAL-O-RING | |
| | 4 | 1 | **4J-7533** | 2 | SEAL-O-RING | |
| | 5 | 1 | **9S-8001** | 2 | PLUG | |
| | 6 | 1 | **124-2890** | 1 | HOUSING | |
| | 7 | 1 | **9S-8006** | 1 | PLUG | |
| | 8 | 1 | **2M-9780** | 1 | SEAL-O-RING | |
| | 9 | 1 | **124-2887** | 1 | PISTON | |
| | 10 | 1 | **124-2889** | 1 | STOP | |
| | 11 | 1 | **5B-9318** | 6 | BALL | |
| | 12 | 1 | **101-1974** | 1 | RETAINER | |
| | 13 | 1 | **124-2888** | 1 | RETAINER | |
| | 14 | 1 | **124-2891** | 1 | SPACER | |
| | 15 | 1 | **2K-8199** | 2 | SEAL-O-RING | |
| | 16 | 1 | **128-8643** | 1 | SPRING (INNER) | |
| | 17 | 1 | **128-8644** | 1 | SPRING (OUTER) | |

M-METRIC PART

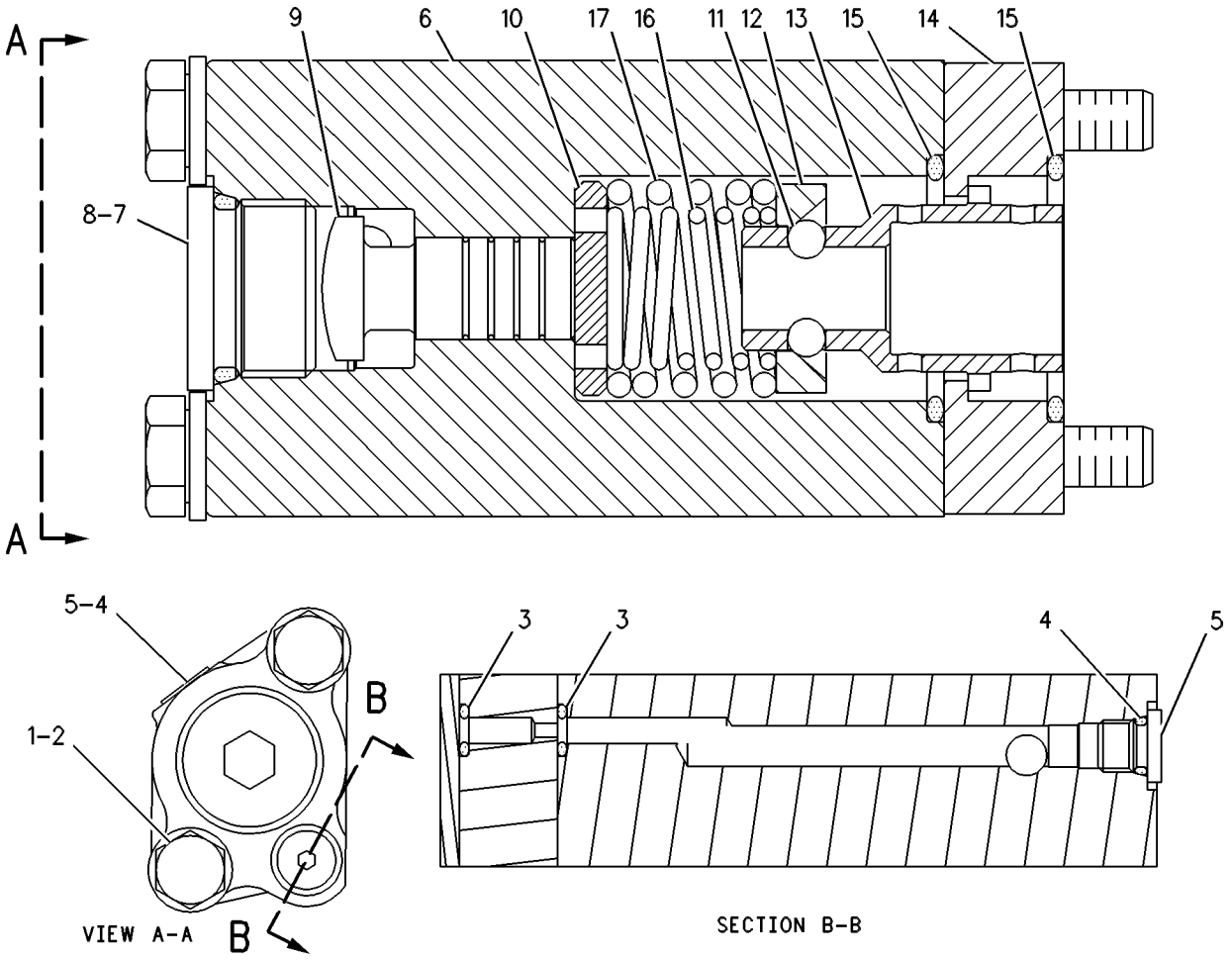


GRAPHIC #1 **<END>** g00109431

# HYDRAULIC SYSTEM

## 5T-0570 DRIVE GP-CIRCLE

**S/N: CCA1-UP**

**PART OF 159-4615 GENERAL AR**

**SMCS-5207** **i02585536**

| NOTE | REF NO | GRAPHIC REF | PART NUMBER | QTY | PART NAME 1 2 3 4 5 6 (PRODUCT LEVEL) | SEE PAGE |
|---|---|---|---|---|---|---|
| CY | 1 | 1 | **105-3196** | 1 | MOTOR GP-GEROTOR (CIRCLE DRIVE) | 720 |
| | 2 | 1 | **1B-4046** | 2 | CONE-BEARING | |
| | 3 | 1 | **1B-4038** | 2 | CUP-BEARING | |
| | 4 | 1 | **1B-5174** | 1 | PLUG-PIPE | |
| | 5 | 1 | **9D-1142** | 1 | WORM-CIRCLE DRIVE | |
| | 6 | 1 | **1H-7339** | 1 | SEAL-O-RING | |
| | 7 | 1 | **9D-1491** | 1 | COUPLING | |
| | 8 | 1 | **4H-6996** | 1 | PIN-SPRING | |
| | 9 | 1 | **2G-6695** | 1 | BRACKET | |
| B | 10 | 1 | **7D-8983** | 10 | SHIM (0.127-MM THK) | |
| B | 11 | 1 | **7D-8984** | 6 | SHIM (0.178-MM THK) | |
| | 12 | 1 | **2H-9247** | 1 | SEAL-O-RING | |
| | 13 | 2 | **6G-5548** | 1 | SPACER (69.5X89X0.8-MM THK) | |
| B | 14 | 2 | **6G-5543** | 6 | SHIM (0.13-MM THK) | |
| R | 15 | 2 | **5K-5288** | 1 | SEAL GP-DUO-CONE | |
| | 15A | 2 | **5K-5129** | 2 | RING-SEALING | |
| B | 16 | 2 | **6G-5544** | 9 | SHIM (0.25-MM THK) | |
| | 17 | 2 | **6G-5538** | 1 | COVER | |
| | 18 | 1 | **6H-1717** | 5 | BOLT (1/2-13X1.125-IN) | |
| | 19 | 1,2 | **5P-8245** | 19 | WASHER-HARD (13.5X25.5X3-MM THK) | |
| | 20 | 1 | **2B-7410** | 1 | PLUG-PIPE | |
| | 21 | 1 | **8T-0336** | 1 | FITTING-PRESSURE RELIEF | |
| | 22 | 1 | **5K-8454** | 3 | BOLT (1/2-13X1.12-IN) | |
| | 23 | 1 | **6G-5534** | 1 | COVER AS | |
| | | 1 | **6G-5537** | 1 | BEARING | |
| C | 24 | 2 | **1F-7958** | 4 | NUT-FULL (1/2-13-THD) | |
| | 25 | 2 | **5H-4909** | 1 | SEAL-O-RING | |
| | 26 | 2 | **6G-5539** | 1 | GASKET | |
| | 27 | 2 | **6G-5547** | 1 | PLATE | |
| | 28 | 2 | **6G-5533** | 1 | GEAR-WORM (36-TEETH) | |
| C | 29 | 2 | **9X-8887** | 2 | BOLT (3/4-10X3-IN) | |
| | 30 | 2 | **7M-2360** | 2 | WASHER (19.8X41X9.5-MM THK) | |
| | 31 | 2 | **8D-7425** | 2 | WASHER-THRUST (2.8X4.25X0.12-MM THK) | |
| | 32 | 2 | **6G-5532** | 1 | SHAFT-DRIVE PINION | |
| | 33 | 2 | **4F-9653** | 1 | SEAL-O-RING | |
| | 34 | 2 | **5P-8248** | 4 | WASHER-HARD (20X36.5X3.5-MM THK) | |
| | 35 | 2 | **2J-3506** | 4 | NUT-FULL (3/4-10-THD) | |
| | 36 | 2 | **8D-7424** | 1 | SPACER (48X81X6-MM THK) | |
| | 37 | 2 | **8D-7423** | 1 | WASHER-SPECIAL (1.906X3.19X1.6-MM THK) | |
| | 38 | 2 | **1A-1415** | 1 | NUT (23/4X17/8-THD) | |
| | 39 | 2 | **261-8553** | 1 | PINION-CIRCLE DRIVE | |
| | 40 | 2 | **6G-1908** | 1 | HOUSING AS-DRIVE | |
| | 40A | 2 | **2D-8154** | 4 | STUD-TAPERLOCK (1/2-13X2.36-IN) | |
| | 40B | 2 | **8D-7426** | 1 | BEARING-SLEEVE | |
| | 40C | 2 | **7D-3504** | 4 | STUD-TAPERLOCK (3/4-10X3.39-IN) | |
| | | 2 | **8D-9804** | 1 | HOUSING-DRIVE | |
| | 41 | 2 | **6G-5542** | 2 | SPACER (119.2X178X9.3-MM THK) | |
| | 42 | 1,2 | **0S-1585** | 7 | BOLT (1/2-13X1.5-IN) | |
| | 43 | 2 | **6Y-7953** | 6 | DISC-FRICTION (2.87MM .112IN THK) | |
| | 44 | 2 | **2G-0478** | 5 | PLATE (1.52MM THK) | |
| | 45 | 2 | **6G-6122** | 1 | SPRING-DISC | |
| | 46 | 1 | **5S-7379** | 4 | BOLT (3/8-16X0.875-IN) | |
| | 47 | 1 | **8T-4896** | 4 | WASHER-HARD (10.2X18.5X2.5-MM THK) | |

B-USE AS REQUIRED
C-CHANGE FROM PREVIOUS TYPE
R-REMFG PART MAY BE AVAILABLE
Y-SEPARATE ILLUSTRATION

**5T-0570 DRIVE GP-CIRCLE** *(contd. )* **i02585536**

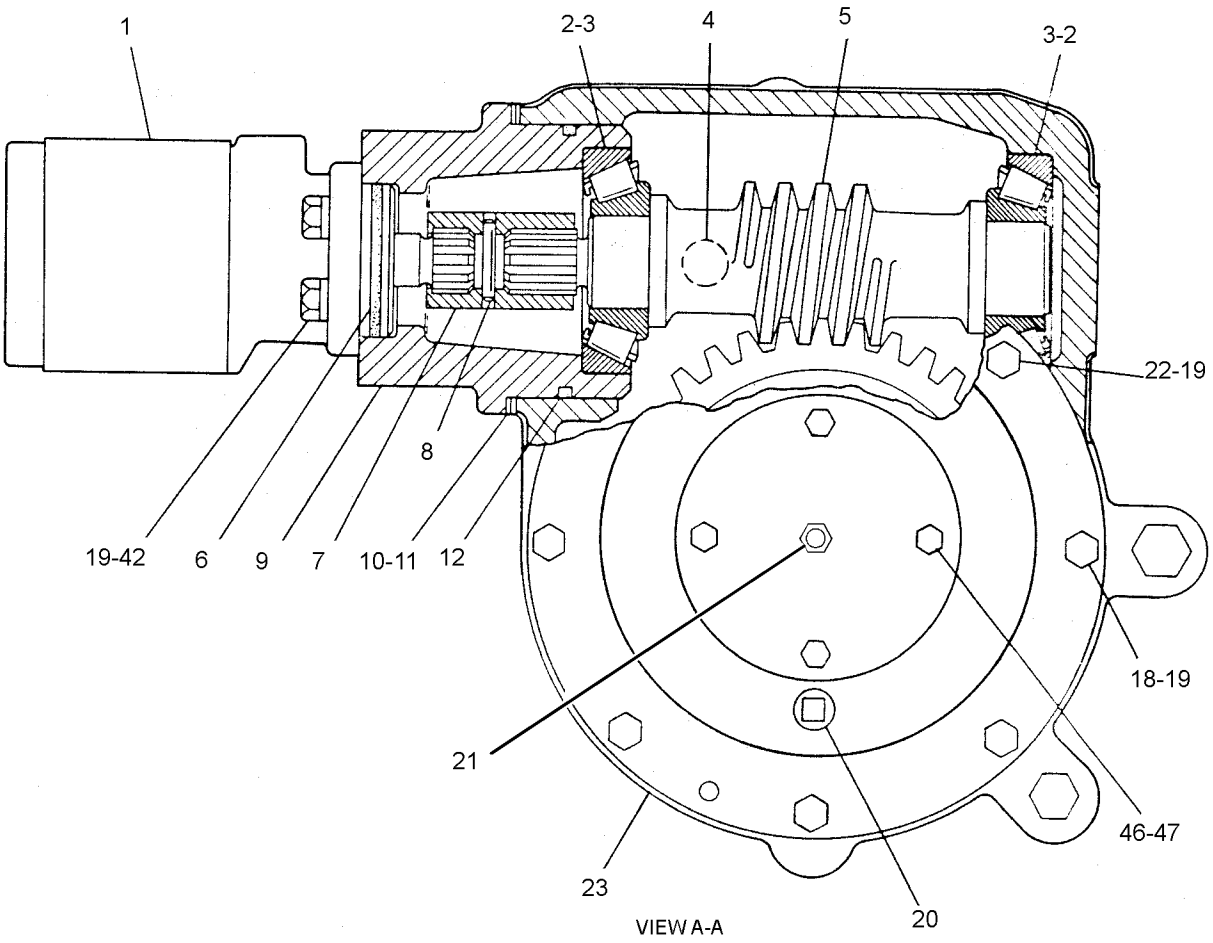


GRAPHIC #1 g01207051

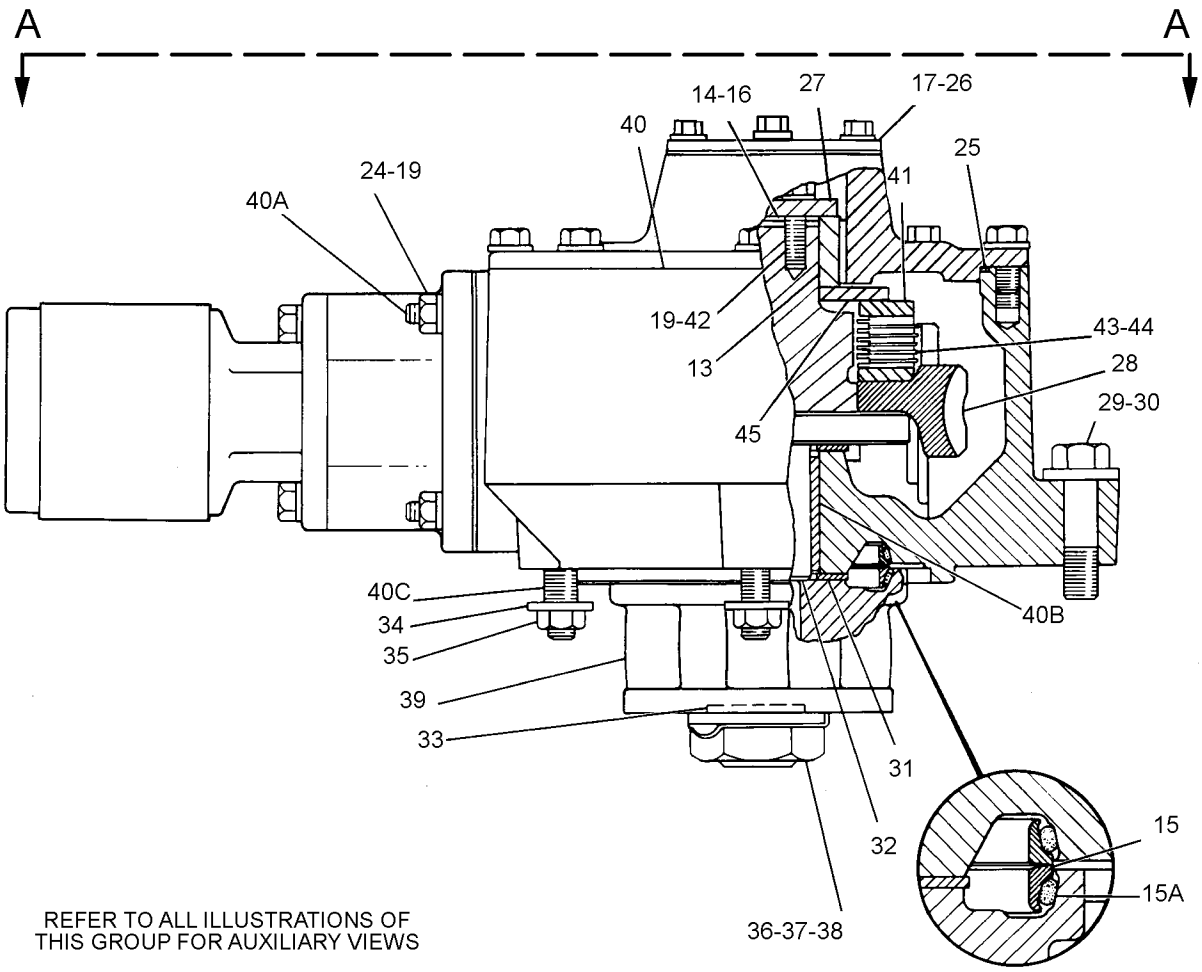


GRAPHIC #2 **<END>** g01294444

# HYDRAULIC SYSTEM

## *241-3013* HYDRAULIC AR

**S/N: CCA1-UP**

**AN ATTACHMENT**

**SMCS-5050** **i02011452**

| NOTE | PART NUMBER | QTY | PART NAME 1 2 3 4 5 6 (PRODUCT LEVEL) | SEE PAGE |
|---|---|---|---|---|
| | **141-6968** | 1 | FILM-IDENTIFICATION (BIODEGRADABLE HYDRAULIC OIL) | |
| | | | ATTACH FILM NEAR THE IMPLEMENT HYDRAULIC OIL FILLER TUBE | |

**<END>**

# HYDRAULIC SYSTEM

## *166-3336* LINES GP-ACCUMULATOR

**S/N: CCA1-UP**

**PART OF 166-3337, 221-2961 ACCUMULATOR AR-BLADE CUSHION AN ATTACHMENT**

**SMCS-5057** **i01680380**

| NOTE | REF NO | GRAPHIC REF | PART NUMBER | QTY | PART NAME 1 2 3 4 5 6 (PRODUCT LEVEL) | SEE PAGE |
|---|---|---|---|---|---|---|
| | 1 | 1 | **9D-0953** | 1 | SPACER (0.406X0.75X0.88-IN THK) | |
| I | 2 | 1 | **108-0706** | 1 | HOSE AS | |
| Y | 3 | 1 | **112-2240** | 2 | MANIFOLD GP-CONTROL (BLADE CUSHION) | 714 |
| I | 4 | 1 | **134-0744** | 1 | HOSE AS | |
| I | 5 | 1 | **134-0746** | 1 | HOSE AS | |
| I | 6 | 1 | **151-9849** | 1 | HOSE AS | |
| | 7 | 1 | *171-6466* | 2 | UNION AS | |
| | | | | | (EACH INCLUDES) | |
| | | 1 | **5P-9810** | 1 | UNION | |
| | | 1 | **3D-2824** | 2 | SEAL-O-RING | |
| | 8 | 1 | *148-8328* | 2 | CONNECTOR AS | |
| | | | | | (EACH INCLUDES) | |
| | | 1 | **6V-8633** | 1 | CONNECTOR | |
| | | 1 | **3D-2824** | 1 | SEAL-O-RING | |
| | | 1 | **6V-8398** | 1 | SEAL-O-RING | |
| | 9 | 1 | *148-8370* | 1 | ELBOW AS | |
| | | 1 | **6V-9851** | 1 | ELBOW | |
| | | 1 | **6V-8398** | 1 | SEAL-O-RING | |
| | 10 | 1 | *148-8444* | 2 | TEE AS-SWIVEL | |
| | | | | | (EACH INCLUDES) | |
| | | 1 | **6V-9837** | 1 | TEE-SWIVEL | |
| | | 1 | **6V-8398** | 2 | SEAL-O-RING | |
| | 11 | 1 | **6D-4244** | 2 | CLIP | |
| | 12 | 1 | **7X-0289** | 1 | BOLT (3/8-16X1.875-IN) | |
| | 13 | 1 | **8T-4896** | 1 | WASHER-HARD (10.2X18.5X2.5-MM THK) | |

I-REFER TO HYDRAULIC INFORMATION SYSTEM
Y-SEPARATE ILLUSTRATION

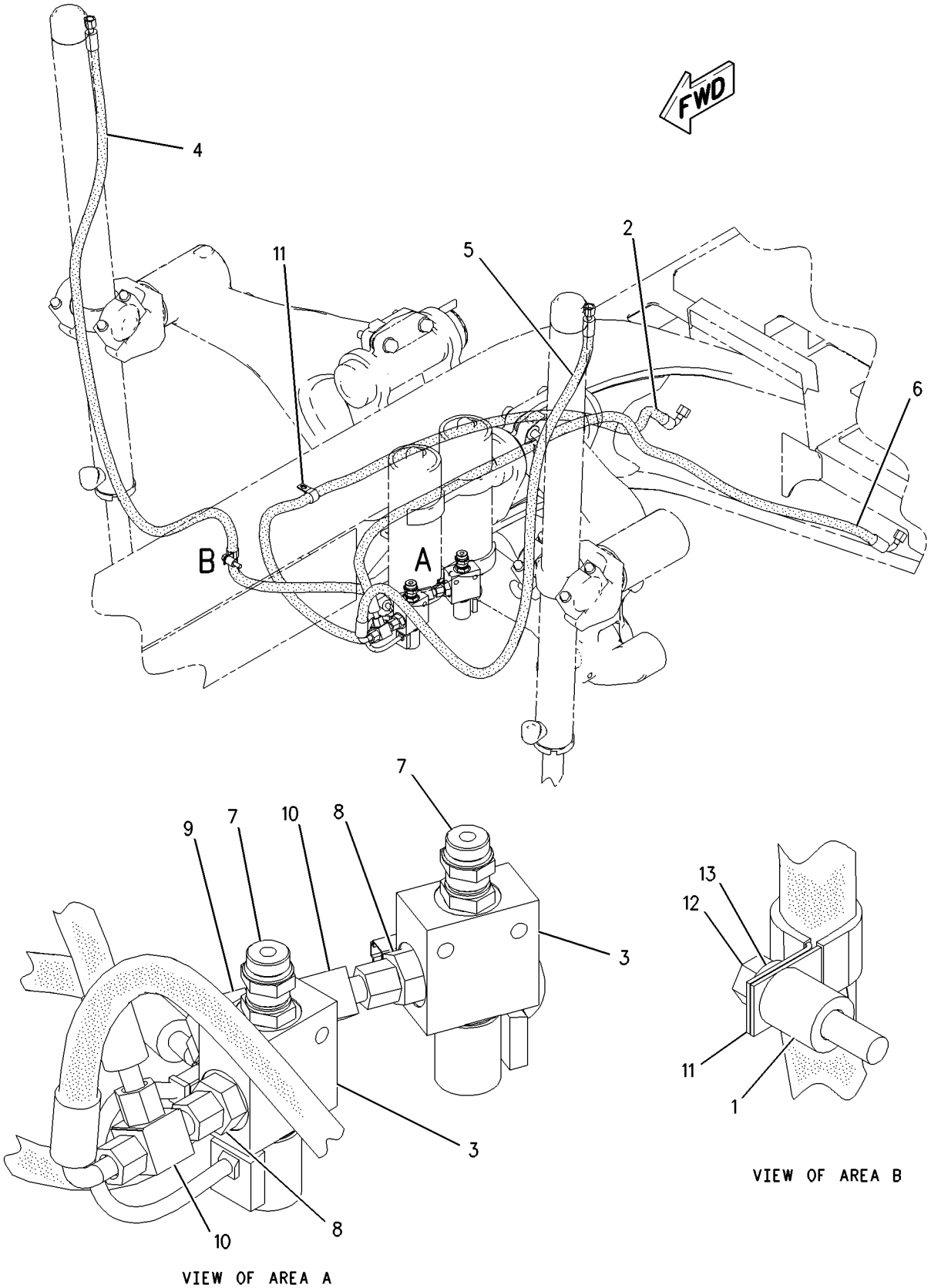


GRAPHIC #1 **<END>** g00889359

# HYDRAULIC SYSTEM

## *8X-6070* LINES GP-HYDRAULIC—SCARIFIER

**S/N: CCA1-UP**
**PART OF 108-1104, 113-0704 SCARIFIER AR**
**AN ATTACHMENT**

**SMCS-5057** **i01459260**

| NOTE | REF NO | GRAPHIC REF | PART NUMBER | QTY | PART NAME 1 2 3 4 5 6 (PRODUCT LEVEL) | SEE PAGE |
|---|---|---|---|---|---|---|
| | 1 | 1 | **2B-0941** | 1 | SPACER (10.5X19X19-MM THK) | |
| | 2 | 1 | **4J-5468** | 1 | CLAMP | |
| I | 3 | 1 | **112-3199** | 1 | HOSE AS | |
| I | 4 | 1 | **112-3200** | 1 | HOSE AS | |
| | 5 | 1 | *164-5605* | 1 | CONNECTOR AS | |
| | | 1 | **3K-0360** | 1 | SEAL-O-RING | |
| | | 1 | **6V-8397** | 1 | SEAL-O-RING | |
| | | 1 | **8T-0076** | | CONNECTOR | |
| | 6 | 1 | *148-8318* | 2 | CONNECTOR AS | |
| | | | | | (EACH INCLUDES) | |
| | | 1 | **3K-0360** | 1 | SEAL-O-RING | |
| | | 1 | **6V-8397** | 1 | SEAL-O-RING | |
| | | 1 | **6V-8634** | 1 | CONNECTOR | |
| | 7 | 1 | *148-8374* | 1 | ELBOW AS | |
| | | 1 | **3K-0360** | 1 | SEAL-O-RING | |
| | | 1 | **6V-8397** | 1 | SEAL-O-RING | |
| | | 1 | **6V-8723** | 1 | ELBOW | |
| | 8 | 1 | **6D-4247** | 1 | CLIP | |
| | 9 | 1 | **7X-0289** | 1 | BOLT (3/8-16X1.875-IN) | |
| | 10 | 1 | **8T-4896** | 1 | WASHER-HARD (10.2X18.5X2.5-MM THK) | |

I-REFER TO HYDRAULIC INFORMATION SYSTEM

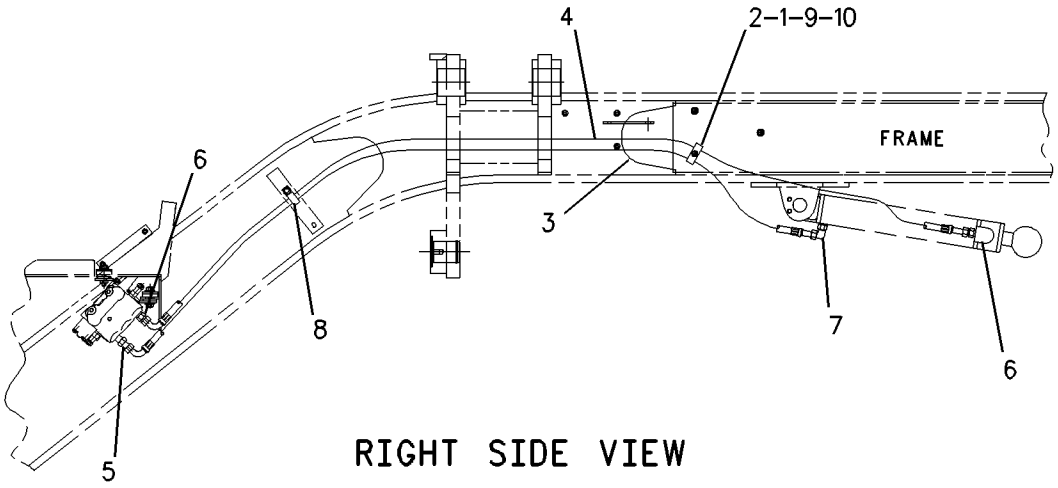


RIGHT SIDE VIEW

GRAPHIC #1 **<END>** g00633579

# HYDRAULIC SYSTEM

## *114-0025* LINES GP-HYDRAULIC—DOZER LIFT, PLOW

**S/N: CCA1-UP**

**AN ATTACHMENT**

**SMCS-5057** **i02585616**

| NOTE | REF NO | GRAPHIC REF | PART NUMBER | QTY | PART NAME 1 2 3 4 5 6 (PRODUCT LEVEL) | SEE PAGE |
|---|---|---|---|---|---|---|
| I | 1 | 1 | **114-0027** | 2 | HOSE AS | |
| | 2 | 1 | *164-5605* | 1 | CONNECTOR AS | |
| | | 1 | **8T-0076** | 1 | CONNECTOR | |
| | | 1 | **3K-0360** | 1 | SEAL-O-RING | |
| | | 1 | **6V-8397** | 1 | SEAL-O-RING | |
| | 3 | 1 | *148-8318* | 1 | CONNECTOR AS | |
| | | 1 | **6V-8634** | 1 | CONNECTOR | |
| | | 1 | **3K-0360** | 1 | SEAL-O-RING | |
| | | 1 | **6V-8397** | 1 | SEAL-O-RING | |

I-REFER TO HYDRAULIC INFORMATION SYSTEM

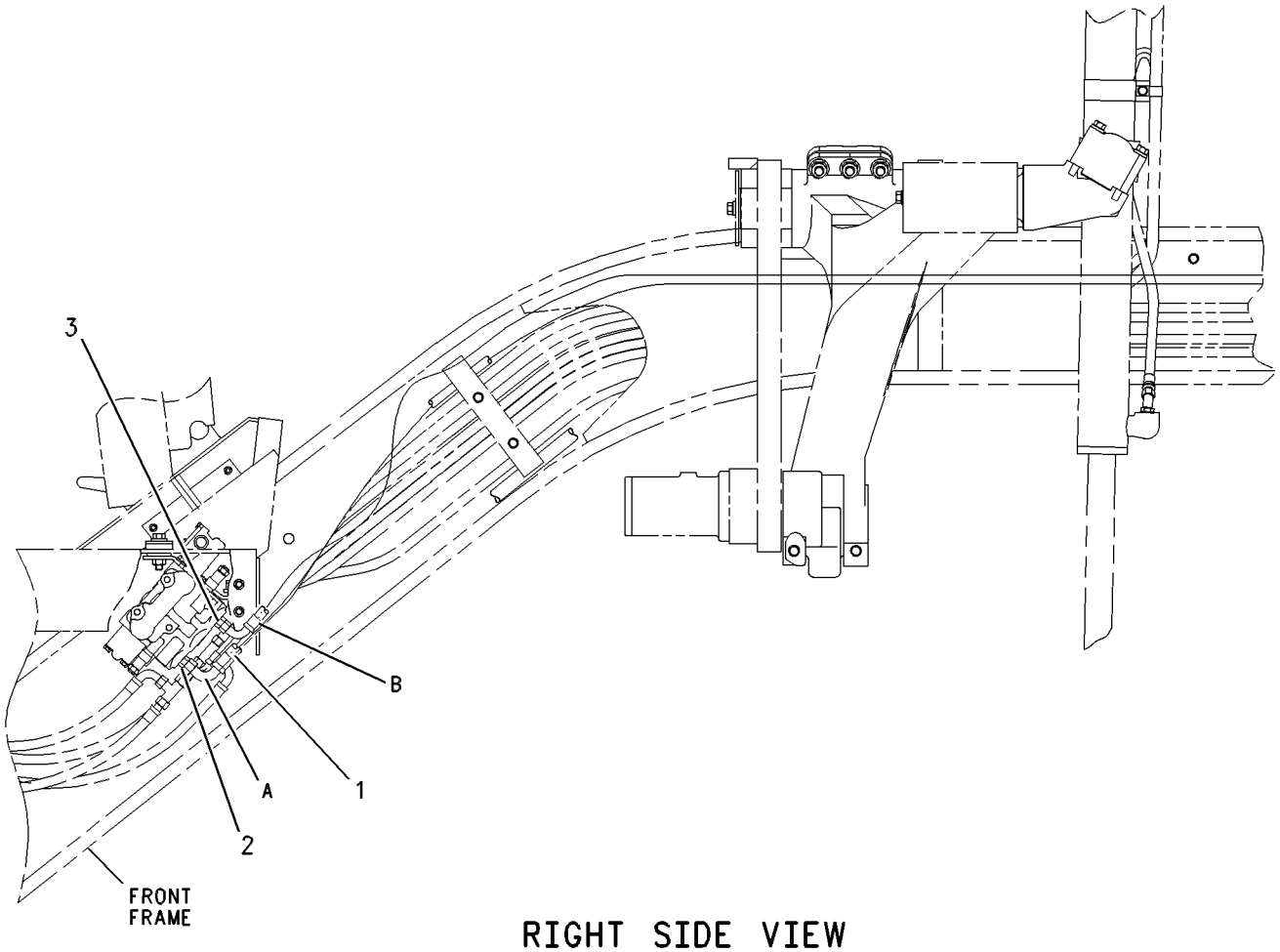


RIGHT SIDE VIEW

GRAPHIC #1 **<END>** g00636139

# HYDRAULIC SYSTEM

## *155-4077* LINES GP-HYDRAULIC–LIFT, LH

**S/N: CCA1-UP**

**AN ATTACHMENT**

**SMCS-5057** **i01876732**

| NOTE | REF NO | GRAPHIC REF | PART NUMBER | QTY | PART NAME 1 2 3 4 5 6 (PRODUCT LEVEL) | SEE PAGE |
|---|---|---|---|---|---|---|
| I | 1 | 1 | **114-0026** | 2 | HOSE AS | |
| | 2 | 1 | *148-8318* | 1 | CONNECTOR AS | |
| | | 1 | **6V-8634** | 1 | CONNECTOR | |
| | | 1 | **3K-0360** | 1 | SEAL-O-RING | |
| | | 1 | **6V-8397** | 1 | SEAL-O-RING | |
| | 3 | 1 | *164-5605* | 1 | CONNECTOR AS | |
| | | 1 | **8T-0076** | 1 | CONNECTOR | |
| | | 1 | **3K-0360** | 1 | SEAL-O-RING | |
| | | 1 | **6V-8397** | 1 | SEAL-O-RING | |

I-REFER TO HYDRAULIC INFORMATION SYSTEM

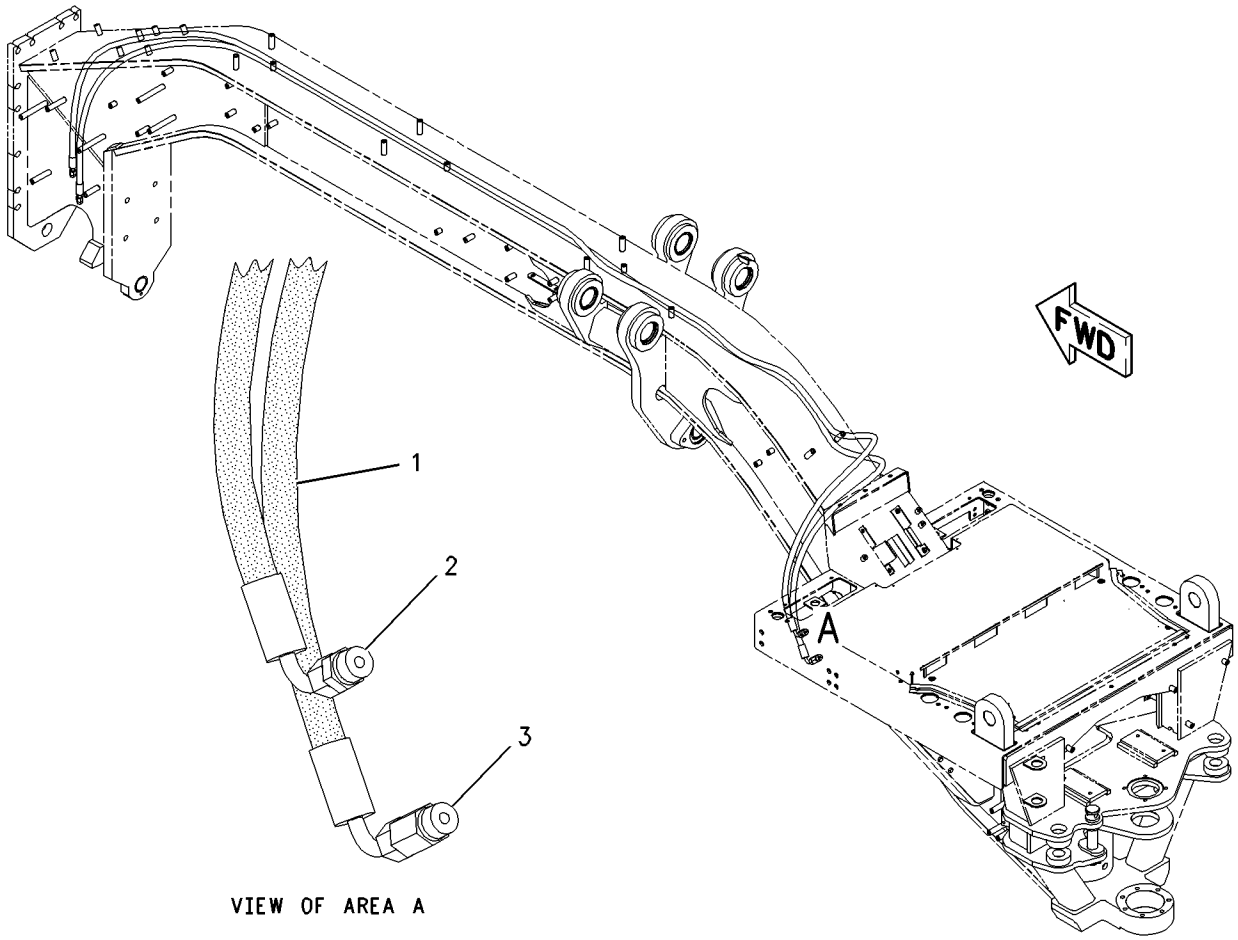


VIEW OF AREA A

GRAPHIC #1 **<END>** g00830992

# HYDRAULIC SYSTEM

## *159-4729* LINES GP-HYDRAULIC—CENTERSHIFT LOCK

**S/N: CCA1-UP**

**PART OF 159-4615 GENERAL AR**

**SMCS-5057** **i02412613**

| NOTE | REF NO | GRAPHIC REF | PART NUMBER | QTY | PART NAME 1 2 3 4 5 6 (PRODUCT LEVEL) | SEE PAGE |
|---|---|---|---|---|---|---|
| I | 1 | 1 | **148-7027** | 1 | HOSE AS | |
| I | 2 | 1 | **247-2731** | 1 | HOSE AS | |
| I | 3 | 1 | **178-9962** | 1 | HOSE AS | |
| | 4 | 1 | *148-8336* | 3 | CONNECTOR AS | |
| | | | | | (EACH INCLUDES) | |
| | | 1 | **6V-8636** | 1 | CONNECTOR | |
| | | 1 | **3J-1907** | 1 | SEAL-O-RING | |
| | | 1 | **6V-8397** | 1 | SEAL-O-RING | |
| | 5 | 1 | *148-8367* | 2 | ELBOW AS | |
| | | | | | (EACH INCLUDES) | |
| | | 1 | **6V-9850** | 1 | ELBOW (SWIVEL) | |
| | | 1 | **6V-8397** | 1 | SEAL-O-RING | |
| | 6 | 1 | *148-8378* | 2 | ELBOW AS | |
| | | | | | (EACH INCLUDES) | |
| | | 1 | **6V-8724** | 1 | ELBOW | |
| | | 1 | **3J-1907** | 1 | SEAL-O-RING | |
| | | 1 | **6V-8397** | 1 | SEAL-O-RING | |
| | 7 | 1 | *156-4281* | 1 | TEE AS | |
| | | 1 | **7X-0838** | 1 | TEE-O-RING | |
| | | 1 | **3J-7354** | 1 | SEAL-O-RING | |
| | | 1 | **6V-8397** | 2 | SEAL-O-RING | |
| | 8 | 1 | **4D-7733** | 4 | CLIP | |
| | 9 | 1 | **5S-7379** | 1 | BOLT (3/8-16X0.875-IN) | |
| | 10 | 1 | **8M-2773** | 1 | CLIP | |
| | 11 | 1 | **8T-4121** | 1 | WASHER-HARD (11X21X2.5-MM THK) | |
| M | 12 | 1 | **8T-4137** | 1 | BOLT (M10X1.5X20-MM) | |
| | 13 | 1 | **8T-4896** | 1 | WASHER-HARD (10.2X18.5X2.5-MM THK) | |

I-REFER TO HYDRAULIC INFORMATION SYSTEM
M-METRIC PART

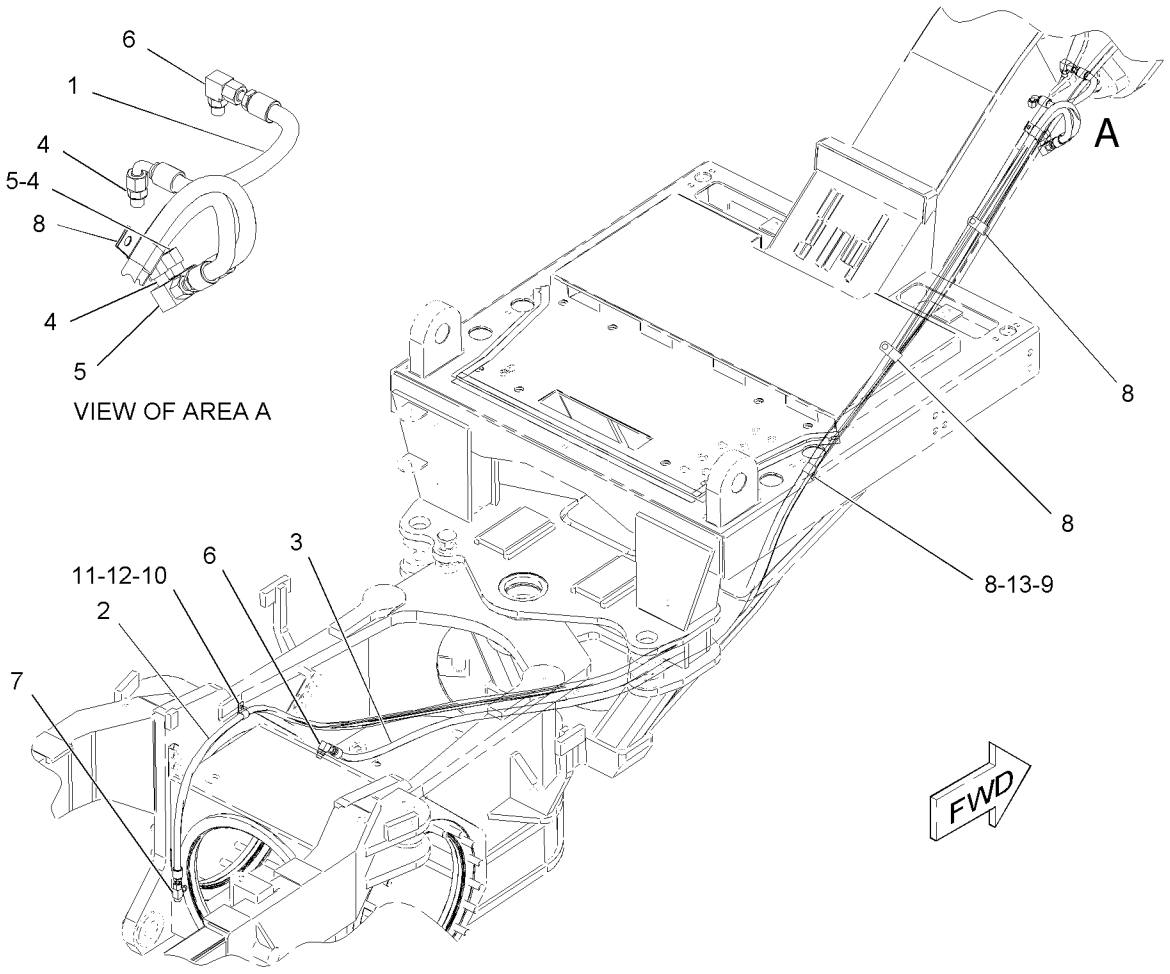


GRAPHIC #1 **<END>** g01018849

# HYDRAULIC SYSTEM

## *159-4730* LINES GP-HYDRAULIC—LH BANK

**S/N: CCA1-1553**

**PART OF 159-4615 GENERAL AR**

**SMCS-5057** **i02100375**

| NOTE | REF NO | GRAPHIC REF | PART NUMBER | QTY | PART NAME 1 2 3 4 5 6 (PRODUCT LEVEL) | SEE PAGE |
|---|---|---|---|---|---|---|
| | 1 | 1 | **2A-7081** | 1 | GUIDE AS-HOSE | |
| | 2 | 1 | **2B-0941** | 3 | SPACER (10.5X19X19-MM THK) | |
| | 3 | 1 | **2G-5493** | 1 | CLAMP | |
| | 4 | 1 | **4J-5468** | 6 | CLAMP | |
| | 5 | 1 | **5D-2645** | 3 | CLAMP | |
| I | 6 | 1 | **5T-9986** | 1 | HOSE AS | |
| | 7 | 1 | **7W-5672** | 1 | PIPE | |
| I | 8 | 1 | **8W-4193** | 1 | HOSE AS | |
| I | 9 | 1 | **8W-4194** | 1 | HOSE AS | |
| | 10 | 1 | **9D-0953** | 4 | SPACER (0.406X0.75X0.88-IN THK) | |
| I | 11 | 1 | **9R-1183** | 1 | HOSE AS | |
| I | 12 | 1 | **107-8143** | 2 | HOSE AS | |
| I | 13 | 1 | **107-8144** | 2 | HOSE AS | |
| I | 14 | 1 | **107-8149** | 2 | HOSE AS | |
| I | 15 | 1 | **107-8150** | 1 | HOSE AS | |
| | 16 | 1 | **108-1610** | 4 | CLAMP | |
| I | 17 | 1 | **134-0747** | 1 | HOSE AS | |
| | 18 | 1 | **135-0451** | 1 | PLATE | |
| | 19 | 1 | **135-0452** | 2 | PLATE | |
| | 20 | 1 | *164-5605* | 1 | CONNECTOR AS | |
| | | 1 | **8T-0076** | 1 | CONNECTOR | |
| | | 1 | **3K-0360** | 1 | SEAL-O-RING | |
| | | 1 | **6V-8397** | 1 | SEAL-O-RING | |
| | 21 | 1 | *164-5608* | 2 | CONNECTOR AS | |
| | | | | | (EACH INCLUDES) | |
| | | 1 | **8T-1687** | 1 | CONNECTOR | |
| | | 1 | **3K-0360** | 1 | SEAL-O-RING | |
| | | 1 | **6V-8398** | 1 | SEAL-O-RING | |
| Y | 22 | 1 | **173-1011** | 1 | SWIVEL GP | 734 |
| | 23 | 1 | *148-8318* | 8 | CONNECTOR AS | |
| | | | | | (EACH INCLUDES) | |
| | | 1 | **6V-8634** | 1 | CONNECTOR | |
| | | 1 | **3K-0360** | 1 | SEAL-O-RING | |
| | | 1 | **6V-8397** | 1 | SEAL-O-RING | |
| | 24 | 1 | *148-8340* | 1 | CONNECTOR AS | |
| | | 1 | **6V-8639** | 1 | CONNECTOR | |
| | | 1 | **3K-0360** | 1 | SEAL-O-RING | |
| | | 1 | **6V-8398** | 1 | SEAL-O-RING | |
| | 25 | 1 | *148-8358* | 2 | ELBOW AS | |
| | | | | | (EACH INCLUDES) | |
| | | 1 | **6V-8624** | 1 | ELBOW | |
| | | 1 | **2M-9780** | 1 | SEAL-O-RING | |
| | | 1 | **6V-8398** | 1 | SEAL-O-RING | |
| | 26 | 1 | *148-8363* | 6 | ELBOW AS | |
| | | | | | (EACH INCLUDES) | |
| | | 1 | **6V-9876** | 1 | ELBOW | |
| | | 1 | **3K-0360** | 1 | SEAL-O-RING | |
| | | 1 | **6V-8397** | 1 | SEAL-O-RING | |
| | 27 | 1 | *148-8364* | 1 | ELBOW AS | |
| | | 1 | **6V-8625** | 1 | ELBOW | |
| | | 1 | **3K-0360** | 1 | SEAL-O-RING | |
| | | 1 | **6V-8398** | 1 | SEAL-O-RING | |
| | 28 | 1 | *148-8374* | 3 | ELBOW AS | |
| | | | | | (EACH INCLUDES) | |
| | | 1 | **6V-8723** | 1 | ELBOW | |
| | | 1 | **3K-0360** | 1 | SEAL-O-RING | |

*159-4730* **LINES GP-HYDRAULIC** *(contd.)* **i02100375**

| NOTE | REF NO | GRAPHIC REF | PART NUMBER | QTY | PART NAME 1 2 3 4 5 6 (PRODUCT LEVEL) | SEE PAGE |
|---|---|---|---|---|---|---|
| | | 1 | **6V-8397** | 1 | SEAL-O-RING | |
| | 29 | 1 | **1S-0994** | 8 | CLIP | |
| | 30 | 1 | **2H-9889** | 1 | BOLT (3/8-16X2.375-IN) | |
| | 31 | 1 | **3B-4628** | 2 | PIN-COTTER | |
| | 32 | 1 | **5S-7379** | 7 | BOLT (3/8-16X0.875-IN) | |
| | 33 | 1 | **7X-0288** | 3 | BOLT (3/8-16X1.625-IN) | |
| | 34 | 1 | **6D-4244** | 2 | CLIP | |
| | 35 | 1 | **6V-8801** | 6 | NUT (3/8-16-THD) | |
| | 36 | 1 | **8D-9092** | 1 | PIN | |
| | 37 | 1 | **8T-2501** | 2 | BOLT (3/8-16X2-IN) | |
| | 38 | 1 | **8T-2502** | 2 | BOLT (3/8-16X1.125-IN) | |
| | 39 | 1 | **8T-4223** | 4 | WASHER-HARD (13.5X25.5X3-MM THK) | |
| | 40 | 1 | **8T-4896** | 20 | WASHER-HARD (10.2X18.5X2.5-MM THK) | |
| | 41 | 1 | **8T-4994** | 2 | WASHER-HARD (20X36.5X3.5-MM THK) | |
| | 42 | 1 | **8T-7008** | 1 | BOLT (3/8-16X3-IN) | |
| | 43 | 1 | **8T-9389** | 4 | BOLT (1/2-13X2.75-IN) | |
| BD | 44 | 1 | **5P-5931** | | SEAL | |
| B | 45 | 1 | **8T-1296** | 4 | WASHER (10.5X19X3.5-MM THK) | |

B-USE AS REQUIRED
D-ORDER BY THE METER
I-REFER TO HYDRAULIC INFORMATION SYSTEM
Y-SEPARATE ILLUSTRATION

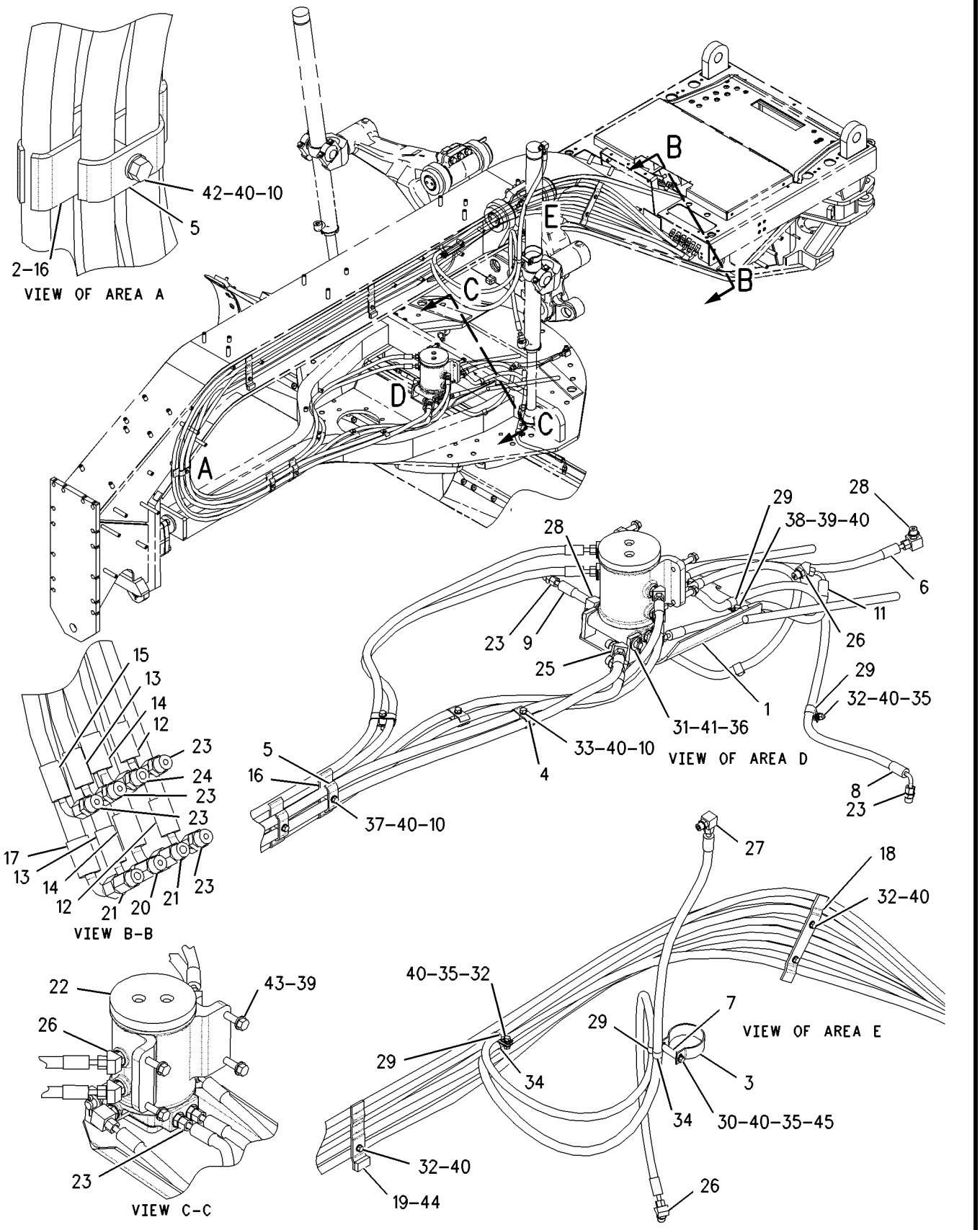


GRAPHIC #1 **<END>** g00844468

# HYDRAULIC SYSTEM

## *159-4730* LINES GP-HYDRAULIC—LH BANK

**S/N: CCA1554-UP**

**PART OF 159-4615 GENERAL AR**

**SMCS-5057** **i02505137**

| NOTE | REF NO | GRAPHIC REF | PART NUMBER | QTY | PART NAME 1 2 3 4 5 6 (PRODUCT LEVEL) | SEE PAGE |
|---|---|---|---|---|---|---|
| | 1 | 1 | **2A-7081** | 1 | GUIDE AS-HOSE | |
| | 2 | 1 | **2B-0941** | 3 | SPACER (10.5X19X19-MM THK) | |
| | 3 | 1 | **2G-5493** | 1 | CLAMP | |
| | 4 | 1 | **4J-5468** | 6 | CLAMP | |
| | 5 | 1 | **5D-2645** | 3 | CLAMP | |
| I | 6 | 1 | **5T-9986** | 1 | HOSE AS | |
| | 7 | 1 | **7W-5672** | 1 | PIPE | |
| I | 8 | 1 | **8W-4193** | 1 | HOSE AS | |
| I | 9 | 1 | **8W-4194** | 1 | HOSE AS | |
| | 10 | 1 | **9D-0953** | 4 | SPACER (0.406X0.75X0.88-IN THK) | |
| I | 11 | 1 | **9R-1183** | 1 | HOSE AS | |
| I | 12 | 1 | **107-8143** | 2 | HOSE AS | |
| I | 13 | 1 | **107-8144** | 2 | HOSE AS | |
| I | 14 | 1 | **107-8149** | 2 | HOSE AS | |
| I | 15 | 1 | **107-8150** | 1 | HOSE AS | |
| | 16 | 1 | **108-1610** | 4 | CLAMP | |
| I | 17 | 1 | **134-0747** | 1 | HOSE AS | |
| | 18 | 1 | **135-0451** | 1 | PLATE | |
| | 19 | 1 | **135-0452** | 2 | PLATE | |
| | 20 | 1 | *164-5605* | 1 | CONNECTOR AS | |
| | | 1 | **8T-0076** | 1 | CONNECTOR | |
| | | 1 | **3K-0360** | 1 | SEAL-O-RING | |
| | | 1 | **6V-8397** | 1 | SEAL-O-RING | |
| | 21 | 1 | *164-5608* | 2 | CONNECTOR AS | |
| | | | | | (EACH INCLUDES) | |
| | | 1 | **8T-1687** | 1 | CONNECTOR | |
| | | 1 | **3K-0360** | 1 | SEAL-O-RING | |
| | | 1 | **6V-8398** | 1 | SEAL-O-RING | |
| CY | 22 | 1 | **260-6502** | 1 | SWIVEL GP (HYDRAULIC LINES) | 735 |
| | 23 | 1 | *148-8318* | 8 | CONNECTOR AS | |
| | | | | | (EACH INCLUDES) | |
| | | 1 | **6V-8634** | 1 | CONNECTOR | |
| | | 1 | **3K-0360** | 1 | SEAL-O-RING | |
| | | 1 | **6V-8397** | 1 | SEAL-O-RING | |
| | 24 | 1 | *148-8340* | 1 | CONNECTOR AS | |
| | | 1 | **6V-8639** | 1 | CONNECTOR | |
| | | 1 | **3K-0360** | 1 | SEAL-O-RING | |
| | | 1 | **6V-8398** | 1 | SEAL-O-RING | |
| | 25 | 1 | *148-8358* | 2 | ELBOW AS | |
| | | | | | (EACH INCLUDES) | |
| | | 1 | **6V-8624** | 1 | ELBOW | |
| | | 1 | **2M-9780** | 1 | SEAL-O-RING | |
| | | 1 | **6V-8398** | 1 | SEAL-O-RING | |
| | 26 | 1 | *148-8363* | 6 | ELBOW AS | |
| | | | | | (EACH INCLUDES) | |
| | | 1 | **6V-9876** | 1 | ELBOW | |
| | | 1 | **3K-0360** | 1 | SEAL-O-RING | |
| | | 1 | **6V-8397** | 1 | SEAL-O-RING | |
| | 27 | 1 | *148-8364* | 1 | ELBOW AS | |
| | | 1 | **6V-8625** | 1 | ELBOW | |
| | | 1 | **3K-0360** | 1 | SEAL-O-RING | |
| | | 1 | **6V-8398** | 1 | SEAL-O-RING | |
| | 28 | 1 | *148-8374* | 3 | ELBOW AS | |
| | | | | | (EACH INCLUDES) | |
| | | 1 | **6V-8723** | 1 | ELBOW | |
| | | 1 | **3K-0360** | 1 | SEAL-O-RING | |

## *159-4730* **LINES GP-HYDRAULIC** *(contd.)* **i02505137**

| NOTE | REF NO | GRAPHIC REF | PART NUMBER | QTY | PART NAME 1 2 3 4 5 6 (PRODUCT LEVEL) | SEE PAGE |
|---|---|---|---|---|---|---|
| | | 1 | **6V-8397** | 1 | SEAL-O-RING | |
| | 29 | 1 | **1S-0994** | 8 | CLIP | |
| | 30 | 1 | **2H-9889** | 1 | BOLT (3/8-16X2.375-IN) | |
| | 31 | 1 | **3B-4628** | 2 | PIN-COTTER | |
| | 32 | 1 | **5S-7379** | 7 | BOLT (3/8-16X0.875-IN) | |
| | 33 | 1 | **7X-0288** | 3 | BOLT (3/8-16X1.625-IN) | |
| | 34 | 1 | **6D-4244** | 2 | CLIP | |
| | 35 | 1 | **6V-8801** | 6 | NUT (3/8-16-THD) | |
| | 36 | 1 | **8D-9092** | 1 | PIN | |
| | 37 | 1 | **8T-2501** | 2 | BOLT (3/8-16X2-IN) | |
| | 38 | 1 | **8T-2502** | 2 | BOLT (3/8-16X1.125-IN) | |
| | 39 | 1 | **8T-4223** | 4 | WASHER-HARD (13.5X25.5X3-MM THK) | |
| | 40 | 1 | **8T-4896** | 20 | WASHER-HARD (10.2X18.5X2.5-MM THK) | |
| | 41 | 1 | **8T-4994** | 2 | WASHER-HARD (20X36.5X3.5-MM THK) | |
| | 42 | 1 | **8T-7008** | 1 | BOLT (3/8-16X3-IN) | |
| CM | 43 | 1 | **8T-4648** | 4 | BOLT (M12X1.75X70-MM) | |
| D | 44 | 1 | **5P-5931** | | SEAL (0.1-M) | |
| B | 45 | 1 | **8T-1296** | 4 | WASHER (10.5X19X3.5-MM THK) | |

B-USE AS REQUIRED
C-CHANGE FROM PREVIOUS TYPE
D-ORDER BY THE METER
I-REFER TO HYDRAULIC INFORMATION SYSTEM
M-METRIC PART
Y-SEPARATE ILLUSTRATION

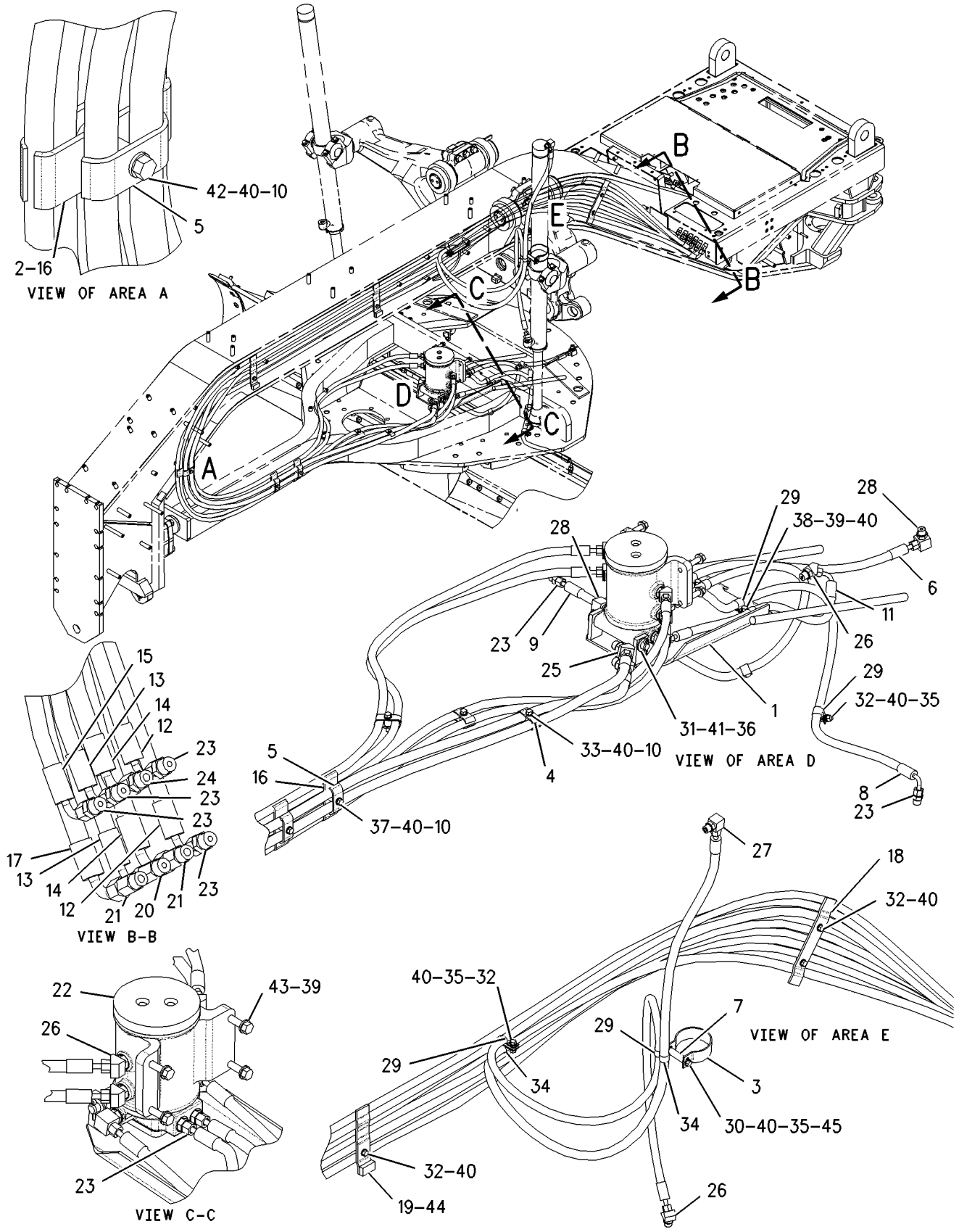


GRAPHIC #1 **<END>** g00844468

# HYDRAULIC SYSTEM

## *159-4731* LINES GP-HYDRAULIC–RH BANK

**S/N: CCA1-UP**

**PART OF 159-4615 GENERAL AR**

**SMCS-5057** **i02398504**

| NOTE | REF NO | GRAPHIC REF | PART NUMBER | QTY | PART NAME 1 2 3 4 5 6 (PRODUCT LEVEL) | SEE PAGE |
|---|---|---|---|---|---|---|
| | 1 | 1 | **2B-0941** | 4 | SPACER (10.5X19X19-MM THK) | |
| | 2 | 1 | **2G-5493** | 1 | CLAMP | |
| | 3 | 1 | **3S-2093** | 1 | STRAP-CABLE | |
| | 4 | 1 | **4J-5468** | 3 | CLAMP | |
| | 5 | 1 | **5D-2645** | 2 | CLAMP | |
| | 6 | 1 | **5D-4988** | 3 | CLAMP | |
| | 7 | 1 | **5P-0599** | 1 | CLAMP-BAND | |
| | 8 | 1 | **7W-5672** | 1 | PIPE | |
| B | 9 | 1 | **8T-1296** | 4 | WASHER (10.5X19X3.5-MM THK) | |
| I | 10 | 1 | **4Y-9736** | 1 | HOSE AS | |
| I | 11 | 1 | **8W-0302** | 1 | HOSE AS | |
| | 12 | 1 | **9R-8870** | 1 | BLOCK | |
| I | 13 | 1 | **8W-5643** | 1 | HOSE AS | |
| I | 14 | 1 | **122-8358** | 1 | HOSE AS | |
| I | 15 | 1 | **8W-2948** | 1 | HOSE AS | |
| I | 16 | 1 | **107-8147** | 1 | HOSE AS | |
| I | 17 | 1 | **107-8148** | 1 | HOSE AS | |
| I | 18 | 1 | **107-8150** | 1 | HOSE AS | |
| | 19 | 1 | **108-1610** | 2 | CLAMP | |
| I | 20 | 1 | **110-3003** | 1 | HOSE AS | |
| I | 21 | 1 | **134-0747** | 1 | HOSE AS | |
| | 22 | 1 | **135-0450** | 2 | PLATE | |
| | 23 | 1 | **135-0453** | 1 | PLATE | |
| | 24 | 1 | *164-5605* | 2 | CONNECTOR AS | |
| | | | | | (EACH INCLUDES) | |
| | | 1 | **8T-0076** | 1 | CONNECTOR | |
| | | 1 | **3K-0360** | 1 | SEAL-O-RING | |
| | | 1 | **6V-8397** | 1 | SEAL-O-RING | |
| | 25 | 1 | *164-5608* | 1 | CONNECTOR AS | |
| | | 1 | **8T-1687** | 1 | CONNECTOR | |
| | | 1 | **3K-0360** | 1 | SEAL-O-RING | |
| | | 1 | **6V-8398** | 1 | SEAL-O-RING | |
| | 26 | 1 | **100-4336** | 1 | CLIP | |
| | 27 | 1 | *148-8318* | 6 | CONNECTOR AS | |
| | | | | | (EACH INCLUDES) | |
| | | 1 | **6V-8634** | 1 | CONNECTOR | |
| | | 1 | **3K-0360** | 1 | SEAL-O-RING | |
| | | 1 | **6V-8397** | 1 | SEAL-O-RING | |
| | 28 | 1 | *148-8363* | 2 | ELBOW AS | |
| | | | | | (EACH INCLUDES) | |
| | | 1 | **6V-9876** | 1 | ELBOW | |
| | | 1 | **3K-0360** | 1 | SEAL-O-RING | |
| | | 1 | **6V-8397** | 1 | SEAL-O-RING | |
| | 29 | 1 | *148-8364* | 1 | ELBOW AS | |
| | | 1 | **6V-8625** | 1 | ELBOW | |
| | | 1 | **3K-0360** | 1 | SEAL-O-RING | |
| | | 1 | **6V-8398** | 1 | SEAL-O-RING | |
| | 30 | 1 | *148-8374* | 4 | ELBOW AS | |
| | | | | | (EACH INCLUDES) | |
| | | 1 | **6V-8723** | 1 | ELBOW | |
| | | 1 | **3K-0360** | 1 | SEAL-O-RING | |
| | | 1 | **6V-8397** | 1 | SEAL-O-RING | |
| | 31 | 1 | *148-8383* | 2 | ELBOW AS | |
| | | | | | (EACH INCLUDES) | |
| | | 1 | **8T-1683** | 1 | ELBOW | |
| | | 1 | **3K-0360** | 1 | SEAL-O-RING | |

## *159-4731* **LINES GP-HYDRAULIC** *(contd.)* **i02398504**

| NOTE | REF NO | GRAPHIC REF | PART NUMBER | QTY | PART NAME 1 2 3 4 5 6 (PRODUCT LEVEL) | SEE PAGE |
|---|---|---|---|---|---|---|
| | | 1 | **6V-8397** | 1 | SEAL-O-RING | |
| | 32 | 1 | *148-8433* | 2 | TEE AS | |
| | | | | | (EACH INCLUDES) | |
| | | 1 | **6V-9836** | 1 | TEE-SWIVEL | |
| | | 1 | **6V-8397** | 2 | SEAL-O-RING | |
| | 33 | 1 | **1S-0994** | 6 | CLIP | |
| | 34 | 1 | **2H-9889** | 1 | BOLT (3/8-16X2.375-IN) | |
| | 35 | 1 | **4L-6454** | 1 | BOLT (3/8-16X1-IN) | |
| | 36 | 1 | **5S-7379** | 12 | BOLT (3/8-16X0.875-IN) | |
| | 37 | 1 | **5S-7383** | 1 | BOLT (3/8-16X1.75-IN) | |
| | 38 | 1 | **6D-4244** | 2 | CLIP | |
| | 39 | 1 | **6V-8801** | 3 | NUT (3/8-16-THD) | |
| | 40 | 1 | **7X-0288** | 1 | BOLT (3/8-16X1.625-IN) | |
| | 41 | 1 | **7X-0289** | 1 | BOLT (3/8-16X1.875-IN) | |
| | 42 | 1 | **8T-2501** | 1 | BOLT (3/8-16X2-IN) | |
| | 43 | 1 | **8T-4896** | 22 | WASHER-HARD (10.2X18.5X2.5-MM THK) | |
| | 44 | 1 | **9B-7237** | 1 | BOLT (3/8-16X1.25-IN) | |
| D | 45 | 1 | **5P-5931** | | SEAL (0.1-M) | |
| | 46 | 1 | **6D-4247** | 4 | CLIP | |

B-USE AS REQUIRED
D-ORDER BY THE METER
I-REFER TO HYDRAULIC INFORMATION SYSTEM

*159-4731* **LINES GP-HYDRAULIC** *(contd.)* **i02398504**

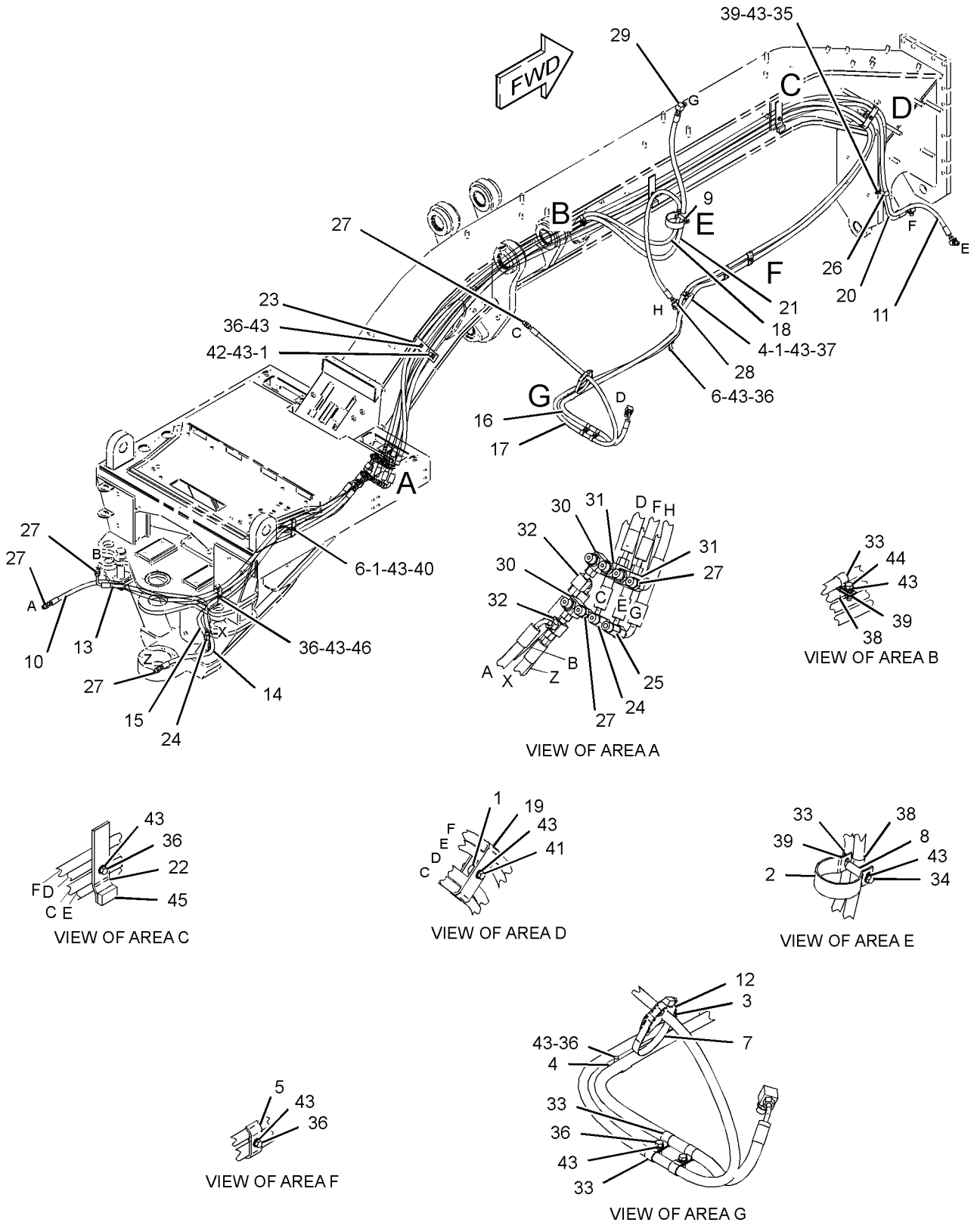


GRAPHIC #1 **<END>** g01159646

# *192-4699* LINES GP-HYDRAULIC—PLOW/DOZER ANGLE—RH

**S/N: CCA1-UP**

**AN ATTACHMENT**

**SMCS-5057** **i01682187**

| NOTE | REF NO | GRAPHIC REF | PART NUMBER | QTY | PART NAME 1 2 3 4 5 6 (PRODUCT LEVEL) | SEE PAGE |
|---|---|---|---|---|---|---|
| I | 1 | 1 | **114-2886** | 1 | HOSE AS | |
| I | 2 | 1 | **119-7997** | 1 | HOSE AS | |
| | 3 | 1 | *148-8340* | 1 | CONNECTOR AS | |
| | | 1 | **6V-8639** | 1 | CONNECTOR | |
| | | 1 | **3K-0360** | 1 | SEAL-O-RING | |
| | | 1 | **6V-8398** | 1 | SEAL-O-RING | |
| | 4 | 1 | *164-8908* | 1 | CONNECTOR AS | |
| | | 1 | **8T-0077** | 1 | CONNECTOR | |
| | | 1 | **3K-0360** | 1 | SEAL-O-RING | |
| | | 1 | **6V-8398** | 1 | SEAL-O-RING | |
| | 5 | 1 | **5S-7379** | 1 | BOLT (3/8-16X0.875-IN) | |
| | 6 | 1 | **6D-1641** | 1 | CLIP | |
| | 7 | 1 | **6D-4244** | 1 | CLIP | |
| | 8 | 1 | **8T-4896** | 1 | WASHER-HARD (10.2X18.5X2.5-MM THK) | |

I-REFER TO HYDRAULIC INFORMATION SYSTEM

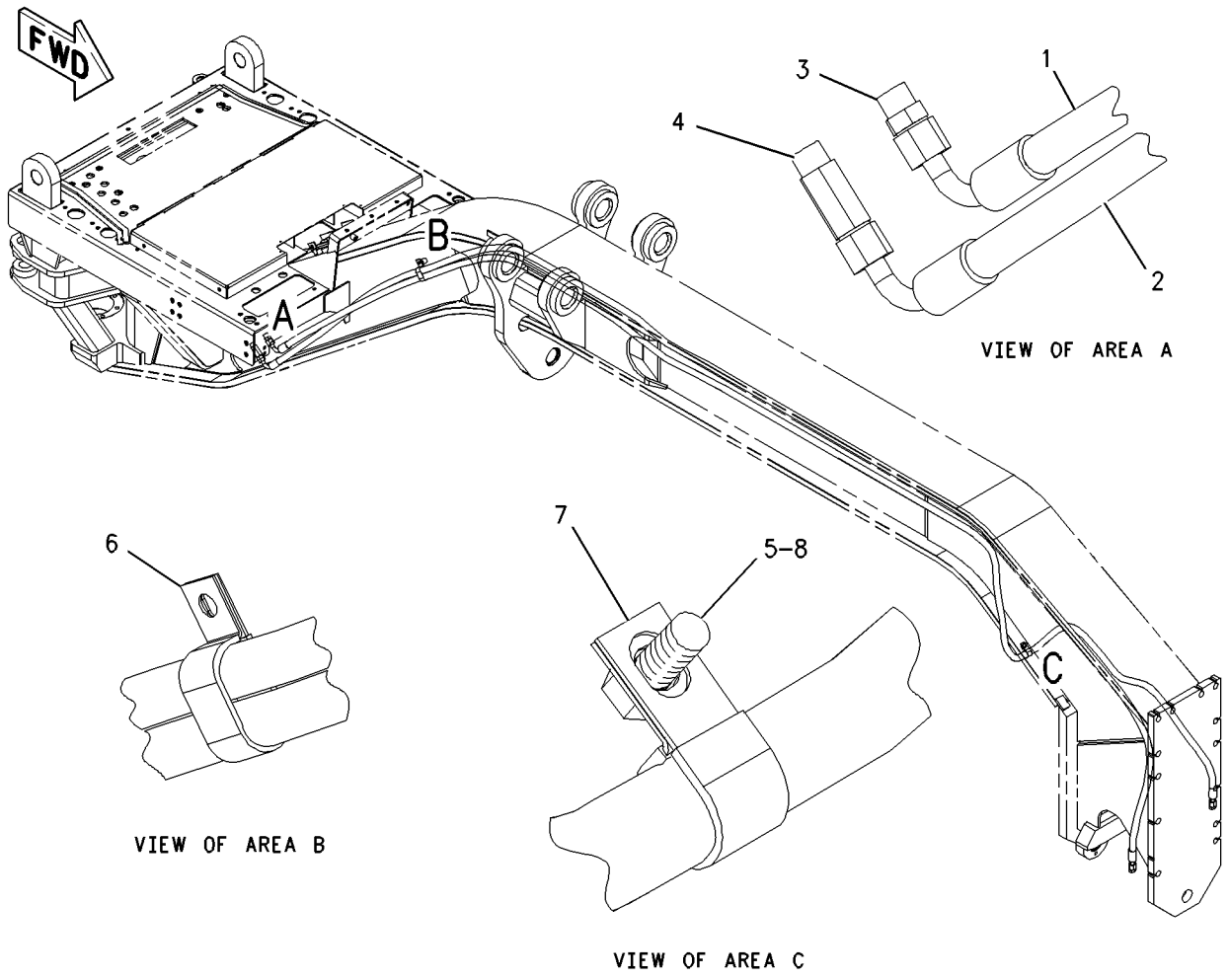


GRAPHIC #1 **<END>** g00847325

# HYDRAULIC SYSTEM

## *175-6978* LINES GP-HYDRAULIC FAN

**S/N: CCA1-UP**

**PART OF 159-4615 GENERAL AR**

**SMCS-1359, 1386, 1387, 5057** **i02591791**

| NOTE | REF NO | GRAPHIC REF | PART NUMBER | QTY | PART NAME 1 2 3 4 5 6 (PRODUCT LEVEL) | SEE PAGE |
|---|---|---|---|---|---|---|
| I | 1 | 1 | **165-4632** | 1 | HOSE AS | |
| | 2 | 1 | **174-8961** | 1 | TUBE AS | |
| I | 3 | 1 | **176-3896** | 1 | HOSE AS | |
| I | 4 | 1 | **183-1156** | 1 | HOSE AS | |
| Y | 5 | 1 | **191-5292** | 1 | MANIFOLD GP-CONTROL (FAN SPEED) | 715 |
| | 6 | 1 | *148-8326* | 1 | CONNECTOR AS | |
| | | 1 | **6V-9872** | 1 | CONNECTOR | |
| | | 1 | **3J-7354** | 1 | SEAL-O-RING | |
| | | 1 | **6V-8397** | 1 | SEAL-O-RING | |
| | 7 | 1 | *148-8353* | 1 | ELBOW AS | |
| | | 1 | **6V-9001** | 1 | ELBOW | |
| | | 1 | **3J-1907** | 1 | SEAL-O-RING | |
| | | 1 | **6V-8397** | 1 | SEAL-O-RING | |
| | 8 | 1 | *148-8368* | 1 | ELBOW AS | |
| | | 1 | **6V-8627** | 1 | ELBOW | |
| | | 1 | **3J-1907** | 1 | SEAL-O-RING | |
| | | 1 | **4J-5477** | 1 | SEAL-O-RING | |
| | 9 | 1 | *148-8369* | 1 | ELBOW AS | |
| | | 1 | **6V-8628** | 1 | ELBOW | |
| | | 1 | **3J-7354** | 1 | SEAL-O-RING | |
| | | 1 | **4J-5477** | 1 | SEAL-O-RING | |
| | 10 | 1 | *148-8392* | 1 | ELBOW AS | |
| | | 1 | **6V-9853** | 1 | ELBOW | |
| | | 1 | **6V-9746** | 1 | SEAL-O-RING | |
| | 11 | 1 | *164-5567* | 1 | FITTING AS (QUICK DISCONNECT, MALE) | |
| | | 1 | **6V-3965** | 1 | FITTING AS (QUICK DISCONNECT, MALE) | |
| | | 1 | **3J-1907** | 1 | SEAL-O-RING | |
| | 12 | 1 | *169-7397* | 1 | ADAPTER GP | |
| | | 1 | **3P-1932** | 1 | ADAPTER | |
| | | 1 | **3K-0360** | 1 | SEAL-O-RING | |
| | 13 | 1 | **4J-5267** | 2 | SEAL-O-RING | |
| | 14 | 1 | **5P-7854** | 4 | CLIP | |
| | 15 | 1 | **5S-7379** | 3 | BOLT (3/8-16X0.875-IN) | |
| | 16 | 1 | **6V-0852** | 1 | CAP-DUST | |
| | 17 | 1 | **6V-1889** | 4 | CLIP | |
| | 18 | 1 | **6V-5839** | 4 | WASHER (11X21X2.5-MM THK) | |
| M | 19 | 1 | **6V-7981** | 4 | BOLT (M10X1.5X70-MM) | |
| | 20 | 1 | **8C-3205** | 2 | FLANGE-HALF | |
| | 21 | 1 | **8M-2773** | 2 | CLIP | |
| | 22 | 1 | **8T-4121** | 6 | WASHER-HARD (11X21X2.5-MM THK) | |
| M | 23 | 1 | **8T-4137** | 6 | BOLT (M10X1.5X20-MM) | |
| | 24 | 1 | **8T-4896** | 3 | WASHER-HARD (10.2X18.5X2.5-MM THK) | |

I-REFER TO HYDRAULIC INFORMATION SYSTEM
M-METRIC PART
Y-SEPARATE ILLUSTRATION

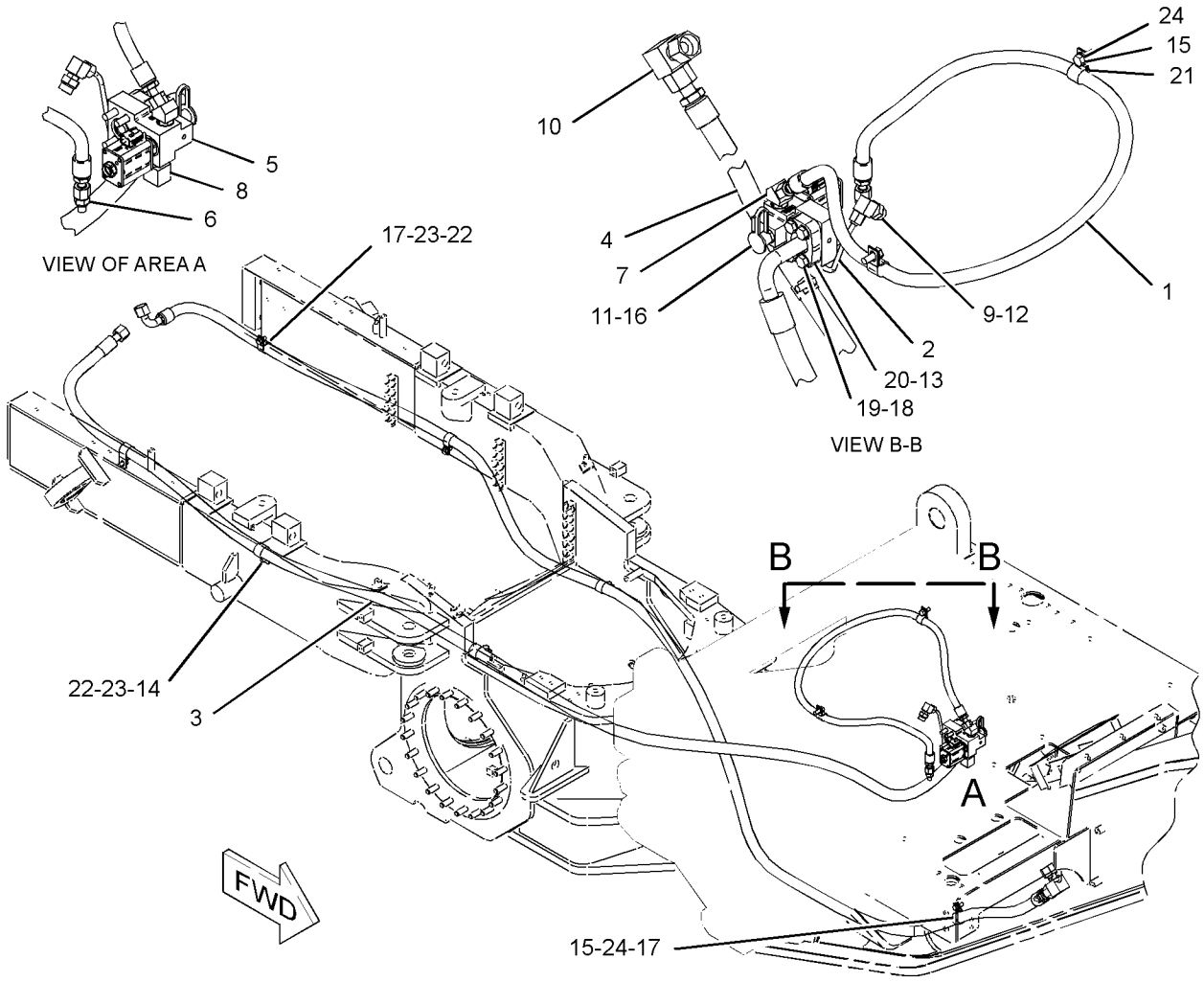


GRAPHIC #1 **<END>** g01297420

# HYDRAULIC SYSTEM

## *175-6981* LINES GP-HYDRAULIC FAN–RADIATOR

**S/N: CCA1-UP**

**PART OF 185-1542, 191-9260 COOLING AR**

**ALSO AN ATTACHMENT**

**SMCS-1359, 1386, 1387, 5057** **i01829006**

| NOTE | REF NO | GRAPHIC REF | PART NUMBER | QTY | PART NAME 1 2 3 4 5 6 (PRODUCT LEVEL) | SEE PAGE |
|---|---|---|---|---|---|---|
| I | 1 | 1 | **4E-9628** | 2 | HOSE AS | |
| Y | 2 | 1 | **167-1709** | 1 | SENSOR GP-PRESSURE (RADIATOR FAN) | 279 |
| | 3 | 1 | **175-0447** | 1 | VALVE AS-CHECK (RADIATOR FAN) | |
| | 4 | 1 | **175-7049** | 1 | BODY | |
| | 5 | 1 | *148-8327* | 1 | CONNECTOR AS | |
| | | 1 | **6V-8637** | 1 | CONNECTOR | |
| | | 1 | **3D-2824** | 1 | SEAL-O-RING | |
| | | 1 | **6V-9746** | 1 | SEAL-O-RING | |
| | 6 | 1 | **148-8347** | 1 | ELBOW AS | |
| | | 1 | **3D-2824** | 1 | SEAL-O-RING | |
| | | 1 | **6V-9746** | 1 | SEAL-O-RING | |
| | 7 | 1 | *148-8449* | 1 | TEE AS-SWIVEL | |
| | | 1 | **6V-9839** | 1 | TEE-SWIVEL | |
| | | 1 | **6V-9746** | 2 | SEAL-O-RING | |
| M | 8 | 1 | **5C-9553** | 3 | BOLT (M6X1X16-MM) | |
| | 9 | 1 | **7J-0204** | 1 | SEAL-O-RING | |
| | 10 | 1 | **9X-8256** | 3 | WASHER (6.6X12X2-MM THK) | |

I-REFER TO HYDRAULIC INFORMATION SYSTEM
M-METRIC PART
Y-SEPARATE ILLUSTRATION

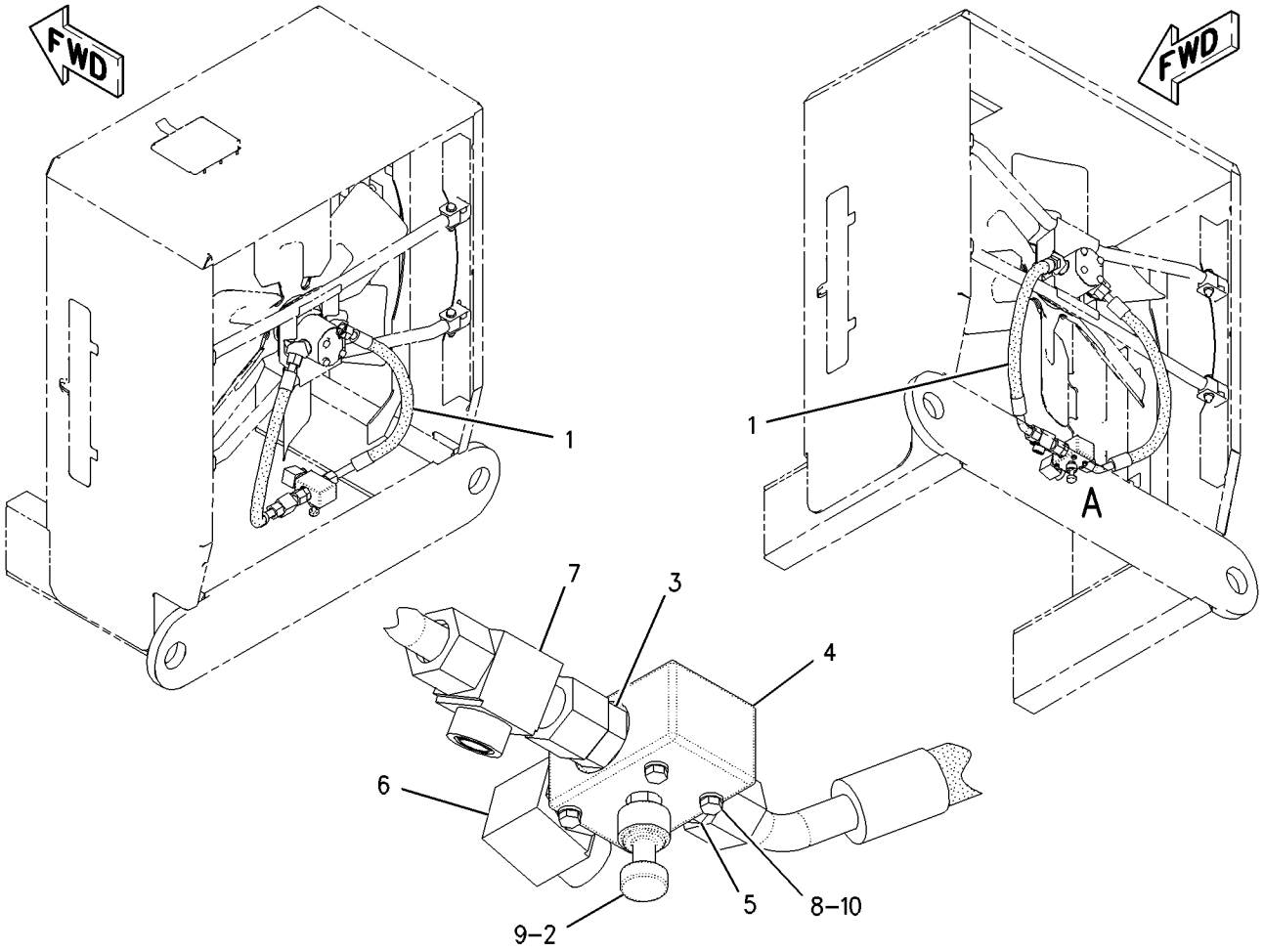


VIEW OF AREA A

GRAPHIC #1 **<END>** g00889990

# HYDRAULIC SYSTEM

## *160-9178* LINES GP-PUMP

**S/N: CCA1-UP**
**PART OF 159-4615 GENERAL AR**
**TYPE 1**

**SMCS-5057** **i02205099**

| NOTE | REF NO | GRAPHIC REF | PART NUMBER | QTY | PART NAME 1 2 3 4 5 6 (PRODUCT LEVEL) | SEE PAGE |
|---|---|---|---|---|---|---|
| | 1 | 1 | **5P-4868** | 4 | CLAMP-HOSE | |
| | 2 | 1 | **6E-1926** | 1 | ADAPTER | |
| E | 3 | 1 | **5P-1295** | | HOSE (13-CM) | |
| | 4 | 1 | **6V-0852** | 1 | CAP-DUST (HYDRAULIC OIL) | |
| E | 5 | 1 | **5P-1291** | | HOSE (13-CM) | |
| E | 6 | 1 | **5P-1295** | | HOSE (10-CM) | |
| I | 7 | 1 | **8W-2624** | 1 | HOSE AS | |
| I | 8 | 1 | **8W-3166** | 1 | HOSE AS | |
| I | 9 | 1 | **8X-7820** | 1 | HOSE AS | |
| I | 10 | 1 | **8X-7973** | 1 | HOSE AS | |
| I | 11 | 1 | **8X-7974** | 1 | HOSE AS | |
| | 12 | 1 | **8X-8813** | 1 | ELBOW | |
| | 13 | 1 | **9M-0164** | 4 | CLAMP-HOSE | |
| Y | 14 | 1 | **9T-5957** | 1 | VALVE GP-COMBINATION | 970 |
| | 15 | 1 | **104-4286** | 1 | TUBE | |
| | 16 | 1 | **113-9533** | 1 | HOSE | |
| I | 17 | 1 | **116-3211** | 1 | HOSE AS | |
| I | 18 | 1 | **125-9487** | 1 | HOSE AS | |
| | 19 | 1 | **132-2906** | 1 | TUBE AS | |
| | 20 | 1 | *148-8368* | 2 | ELBOW AS | |
| | | | | | (EACH INCLUDES) | |
| | | 1 | **6V-8627** | 1 | ELBOW | |
| | | 1 | **3J-1907** | 1 | SEAL-O-RING | |
| | | 1 | **4J-5477** | 1 | SEAL-O-RING | |
| | 21 | 1 | *164-5567* | 1 | FITTING AS (QUICK DISCONNECT, MALE) | |
| | | 1 | **6V-3965** | 1 | FITTING AS (QUICK DISCONNECT, MALE) | |
| | | 1 | **3J-1907** | 1 | SEAL-O-RING | |
| | 22 | 1 | *164-5641* | 1 | TEE AS | |
| | | 1 | **128-7625** | 1 | TEE | |
| | | 1 | **3D-2824** | 1 | SEAL-O-RING | |
| | | 1 | **5K-9090** | 1 | SEAL-O-RING | |
| | | 1 | **6V-9746** | 1 | SEAL-O-RING | |
| | 23 | 1 | *165-7014* | 1 | FITTING GP-TEE | |
| | | 1 | **8C-3309** | 1 | TEE | |
| | | 1 | **3J-1907** | 1 | SEAL-O-RING | |
| | | 1 | **4J-5477** | 1 | SEAL-O-RING | |
| | 24 | 1 | **170-9051** | 1 | TUBE | |
| | 25 | 1 | **173-8290** | 1 | ELBOW | |
| I | 26 | 1 | **174-2253** | 1 | HOSE AS | |
| I | 27 | 1 | **201-8430** | 1 | HOSE AS | |
| | 28 | 1 | *148-8316* | 2 | CONNECTOR AS | |
| | | | | | (EACH INCLUDES) | |
| | | 1 | **6V-8647** | 1 | CONNECTOR | |
| | | 1 | **3J-7354** | 1 | SEAL-O-RING | |
| | | 1 | **4J-5477** | 1 | SEAL-O-RING | |
| | 29 | 1 | *148-8323* | 1 | CONNECTOR GP | |
| | | 1 | **6V-9875** | 1 | CONNECTOR | |
| | | 1 | **2S-4078** | 1 | SEAL-O-RING | |
| | | 1 | **5K-9090** | 1 | SEAL-O-RING | |
| | 30 | 1 | *148-8347* | 5 | ELBOW AS | |
| | | | | | (EACH INCLUDES) | |
| | | 1 | **6V-9007** | 1 | ELBOW | |
| | | 1 | **3D-2824** | 1 | SEAL-O-RING | |
| | | 1 | **6V-9746** | 1 | SEAL-O-RING | |
| | 31 | 1 | *148-8364* | 1 | ELBOW AS | |

*160-9178* **LINES GP-PUMP** ***(contd.)*** **i02205099**

| NOTE | REF NO | GRAPHIC REF | PART NUMBER | QTY | PART NAME 1 2 3 4 5 6 (PRODUCT LEVEL) | SEE PAGE |
|---|---|---|---|---|---|---|
| | | 1 | **6V-8625** | 1 | ELBOW | |
| | | 1 | **3K-0360** | 1 | SEAL-O-RING | |
| | | 1 | **6V-8398** | 1 | SEAL-O-RING | |
| | 32 | 1 | *148-8407* | 2 | PLUG AS | |
| | | | | | (EACH INCLUDES) | |
| | | 1 | **9S-4191** | 1 | PLUG-O RING | |
| | | 1 | **3J-1907** | 1 | SEAL-O-RING | |
| | 33 | 1 | *148-8408* | 1 | PLUG AS | |
| | | 1 | **9S-4183** | 1 | PLUG-O RING | |
| | | 1 | **3D-2824** | 1 | SEAL-O-RING | |
| | 34 | 1 | *148-8429* | 1 | TEE AS | |
| | | 1 | **6V-9840** | 1 | TEE-SWIVEL | |
| | | 1 | **5K-9090** | 2 | SEAL-O-RING | |
| | 35 | 1 | *150-5968* | 1 | TEE AS | |
| | | 1 | **6V-9835** | 1 | TEE-SWIVEL | |
| | | 1 | **4J-5477** | 2 | SEAL-O-RING | |
| | 36 | 1 | *153-6237* | 2 | ELBOW AS | |
| | | | | | (EACH INCLUDES) | |
| | | 1 | **6V-9004** | 1 | ELBOW | |
| | | 1 | **3D-2824** | 1 | SEAL-O-RING | |
| | | 1 | **6V-9746** | 1 | SEAL-O-RING | |
| | 37 | 1 | *153-6259* | 1 | TEE AS | |
| | | 1 | **6V-8777** | 1 | TEE-FACE SEAL | |
| | | 1 | **3D-2824** | 1 | SEAL-O-RING | |
| | | 1 | **6V-9746** | 2 | SEAL-O-RING | |
| | 38 | 1 | **4J-0521** | 2 | SEAL-O-RING | |
| | 39 | 1 | **4J-0523** | 1 | SEAL-O-RING | |
| | 40 | 1 | **5H-8848** | 1 | SEAL-O-RING | |
| | 41 | 1 | **5K-9090** | 1 | SEAL-O-RING | |
| M | 42 | 1 | **6V-5696** | 1 | BOLT (M12X1.75X80-MM) | |
| M | 43 | 1 | **8T-0646** | 3 | BOLT (M12X1.75X110-MM) | |
| M | 44 | 1 | **8T-3957** | 1 | BOLT-SOCKET HEAD (M12X1.75X30-MM) | |
| | 45 | 1 | **8T-4121** | 4 | WASHER-HARD (11X21X2.5-MM THK) | |
| M | 46 | 1 | **8T-4172** | 2 | BOLT (M10X1.5X80-MM) | |
| | 47 | 1 | **8T-4223** | 8 | WASHER-HARD (13.5X25.5X3-MM THK) | |
| M | 48 | 1 | **8T-4956** | 4 | BOLT (M12X1.75X35-MM) | |
| M | 49 | 1 | **8T-6685** | 2 | BOLT (M10X1.5X110-MM) | |
| | 50 | 1 | *148-8312* | 1 | ADAPTER AS | |
| | | 1 | **3T-4965** | 1 | ADAPTER-O-RING | |
| | | 1 | **3D-2824** | 1 | SEAL-O-RING | |

E-ORDER BY THE CENTIMETER
I-REFER TO HYDRAULIC INFORMATION SYSTEM
M-METRIC PART
Y-SEPARATE ILLUSTRATION

*160-9178* **LINES GP-PUMP** *(contd. )* **i02205099**

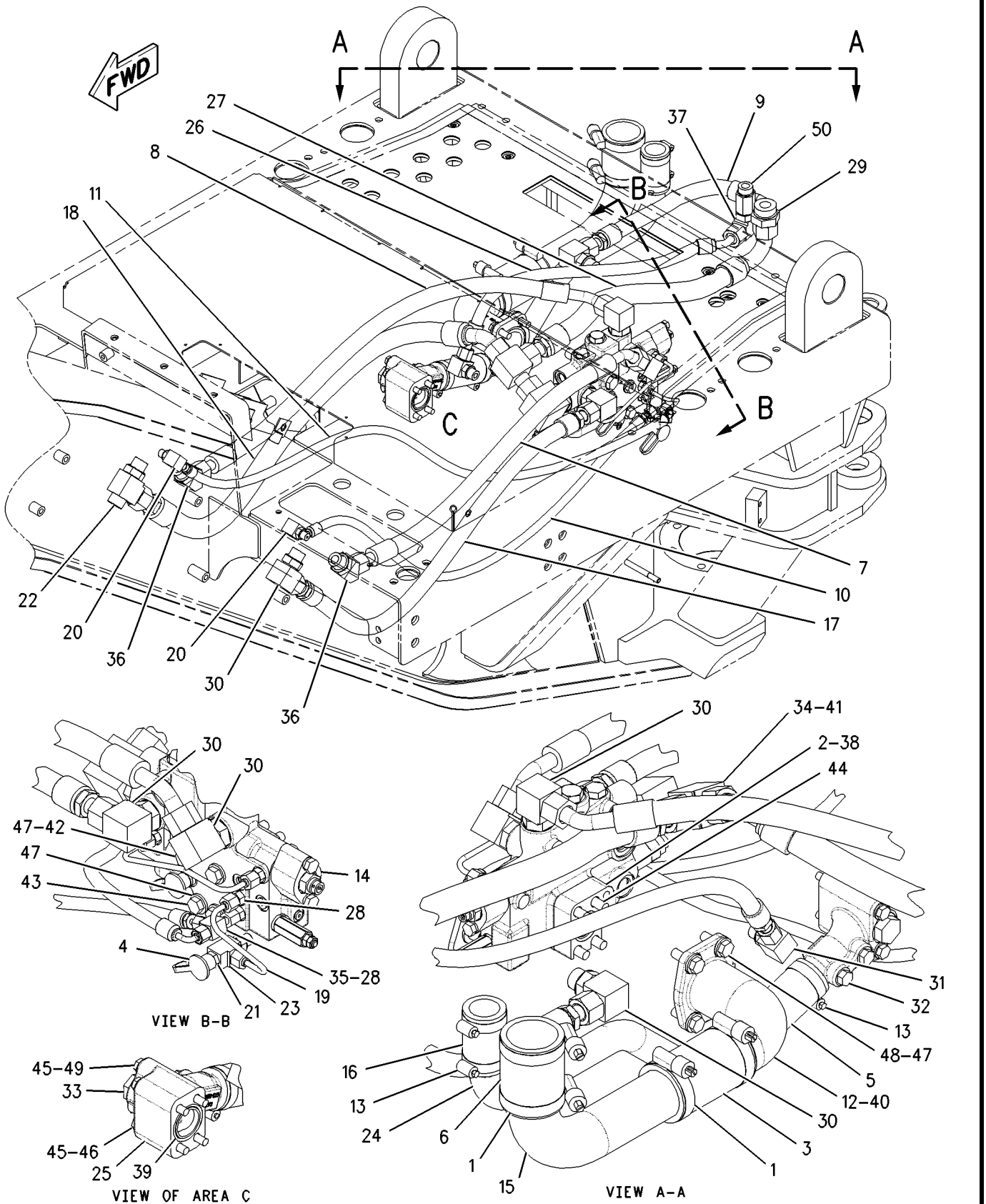


GRAPHIC #1 **<END>** g00894423

# HYDRAULIC SYSTEM

## *160-9178* LINES GP-PUMP

**S/N: CCA1-UP**
**PART OF 159-4615 GENERAL AR**
**TYPE 2**

**SMCS-5057** **i02585654**

| NOTE | REF NO | GRAPHIC REF | PART NUMBER | QTY | PART NAME 1 2 3 4 5 6 (PRODUCT LEVEL) | SEE PAGE |
|---|---|---|---|---|---|---|
| | 1 | 1 | **5P-4868** | 4 | CLAMP-HOSE | |
| | 2 | 1 | **6E-1926** | 1 | ADAPTER | |
| BE | 3 | 1 | **5P-1295** | | HOSE (13-CM) | |
| | 4 | 1 | **6V-0852** | 1 | CAP-DUST (HYDRAULIC OIL) | |
| BE | 5 | 1 | **5P-1291** | | HOSE (13-CM) | |
| BE | 6 | 1 | **5P-1295** | | HOSE (10-CM) | |
| I | 7 | 1 | **8W-2624** | 1 | HOSE AS | |
| I | 8 | 1 | **8W-3166** | 1 | HOSE AS | |
| I | 9 | 1 | **8X-7820** | 1 | HOSE AS | |
| I | 10 | 1 | **8X-7973** | 1 | HOSE AS | |
| I | 11 | 1 | **8X-7974** | 1 | HOSE AS | |
| | 12 | 1 | **8X-8813** | 1 | ELBOW | |
| | 13 | 1 | **9M-0164** | 4 | CLAMP-HOSE | |
| Y | 14 | 1 | **229-7155** | 1 | VALVE GP-COMBINATION | 972 |
| | 15 | 1 | **104-4286** | 1 | TUBE | |
| | 16 | 1 | **113-9533** | 1 | HOSE | |
| I | 17 | 1 | **116-3211** | 1 | HOSE AS | |
| I | 18 | 1 | **125-9487** | 1 | HOSE AS | |
| | 19 | 1 | **230-8089** | 1 | TUBE AS | |
| | 20 | 1 | *148-8368* | 2 | ELBOW AS | |
| | | | | | (EACH INCLUDES) | |
| | | 1 | **6V-8627** | 1 | ELBOW | |
| | | 1 | **3J-1907** | 1 | SEAL-O-RING | |
| | | 1 | **4J-5477** | 1 | SEAL-O-RING | |
| | 21 | 1 | *164-5567* | 1 | FITTING AS (QUICK DISCONNECT, MALE) | |
| | | 1 | **6V-3965** | 1 | FITTING AS (QUICK DISCONNECT, MALE) | |
| | | 1 | **3J-1907** | 1 | SEAL-O-RING | |
| | 22 | 1 | *164-5641* | 1 | TEE AS | |
| | | 1 | **128-7625** | 1 | TEE | |
| | | 1 | **3D-2824** | 1 | SEAL-O-RING | |
| | | 1 | **5K-9090** | 1 | SEAL-O-RING | |
| | | 1 | **6V-9746** | 1 | SEAL-O-RING | |
| | 23 | 1 | *150-4035* | 1 | TEE AS | |
| | | 1 | **3J-1907** | 1 | SEAL-O-RING | |
| | | 1 | **8T-9107** | 1 | TEE | |
| | 24 | 1 | **170-9051** | 1 | TUBE | |
| | 25 | 1 | **173-8290** | 1 | ELBOW | |
| I | 26 | 1 | **174-2253** | 1 | HOSE AS | |
| I | 27 | 1 | **201-8430** | 1 | HOSE AS | |
| | 28 | 1 | *148-8316* | 2 | CONNECTOR AS | |
| | | | | | (EACH INCLUDES) | |
| | | 1 | **6V-8647** | 1 | CONNECTOR | |
| | | 1 | **3J-7354** | 1 | SEAL-O-RING | |
| | | 1 | **4J-5477** | 1 | SEAL-O-RING | |
| | 29 | 1 | *148-8323* | 1 | CONNECTOR GP | |
| | | 1 | **6V-9875** | 1 | CONNECTOR | |
| | | 1 | **2S-4078** | 1 | SEAL-O-RING | |
| | | 1 | **5K-9090** | 1 | SEAL-O-RING | |
| | 30 | 1 | *148-8347* | 5 | ELBOW AS | |
| | | | | | (EACH INCLUDES) | |
| | | 1 | **6V-9007** | 1 | ELBOW | |
| | | 1 | **3D-2824** | 1 | SEAL-O-RING | |
| | | 1 | **6V-9746** | 1 | SEAL-O-RING | |
| | 31 | 1 | *148-8364* | 1 | ELBOW AS | |
| | | 1 | **6V-8625** | 1 | ELBOW | |

## *160-9178* **LINES GP-PUMP** *(contd.)* **i02585654**

| NOTE | REF NO | GRAPHIC REF | PART NUMBER | QTY | PART NAME 1 2 3 4 5 6 (PRODUCT LEVEL) | SEE PAGE |
|---|---|---|---|---|---|---|
| | | 1 | **3K-0360** | 1 | SEAL-O-RING | |
| | | 1 | **6V-8398** | 1 | SEAL-O-RING | |
| | 32 | 1 | *148-8407* | 2 | PLUG AS | |
| | | | | | (EACH INCLUDES) | |
| | | 1 | **9S-4191** | 1 | PLUG-O RING | |
| | | 1 | **3J-1907** | 1 | SEAL-O-RING | |
| | 33 | 1 | *148-8408* | 1 | PLUG AS | |
| | | 1 | **9S-4183** | 1 | PLUG-O RING | |
| | | 1 | **3D-2824** | 1 | SEAL-O-RING | |
| | 34 | 1 | *148-8429* | 1 | TEE AS | |
| | | 1 | **6V-9840** | 1 | TEE-SWIVEL | |
| | | 1 | **5K-9090** | 2 | SEAL-O-RING | |
| | 35 | 1 | *150-5968* | 1 | TEE AS | |
| | | 1 | **6V-9835** | 1 | TEE-SWIVEL | |
| | | 1 | **4J-5477** | 2 | SEAL-O-RING | |
| | 36 | 1 | *153-6237* | 2 | ELBOW AS | |
| | | | | | (EACH INCLUDES) | |
| | | 1 | **6V-9004** | 1 | ELBOW | |
| | | 1 | **3D-2824** | 1 | SEAL-O-RING | |
| | | 1 | **6V-9746** | 1 | SEAL-O-RING | |
| | 37 | 1 | *153-6259* | 1 | TEE AS | |
| | | 1 | **6V-8777** | 1 | TEE-FACE SEAL | |
| | | 1 | **3D-2824** | 1 | SEAL-O-RING | |
| | | 1 | **6V-9746** | 2 | SEAL-O-RING | |
| | 38 | 1 | **4J-0521** | 2 | SEAL-O-RING | |
| | 39 | 1 | **4J-0523** | 1 | SEAL-O-RING | |
| | 40 | 1 | **5H-8848** | 1 | SEAL-O-RING | |
| | 41 | 1 | **5K-9090** | 1 | SEAL-O-RING | |
| M | 42 | 1 | **6V-5696** | 1 | BOLT (M12X1.75X80-MM) | |
| M | 43 | 1 | **8T-0646** | 3 | BOLT (M12X1.75X110-MM) | |
| M | 44 | 1 | **8T-3957** | 1 | BOLT-SOCKET HEAD (M12X1.75X30-MM) | |
| | 45 | 1 | **8T-4121** | 4 | WASHER-HARD (11X21X2.5-MM THK) | |
| M | 46 | 1 | **8T-4172** | 2 | BOLT (M10X1.5X80-MM) | |
| | 47 | 1 | **8T-4223** | 8 | WASHER-HARD (13.5X25.5X3-MM THK) | |
| M | 48 | 1 | **8T-4956** | 4 | BOLT (M12X1.75X35-MM) | |
| M | 49 | 1 | **8T-6685** | 2 | BOLT (M10X1.5X110-MM) | |
| | 50 | 1 | *148-8312* | 1 | ADAPTER AS | |
| | | 1 | **3T-4965** | 1 | ADAPTER-O-RING | |
| | | 1 | **3D-2824** | 1 | SEAL-O-RING | |
| Y | 51 | 1 | **131-0753** | 1 | VALVE GP-SHUTTLE | 1044 |

B-USE AS REQUIRED
E-ORDER BY THE CENTIMETER
I-REFER TO HYDRAULIC INFORMATION SYSTEM
M-METRIC PART
Y-SEPARATE ILLUSTRATION

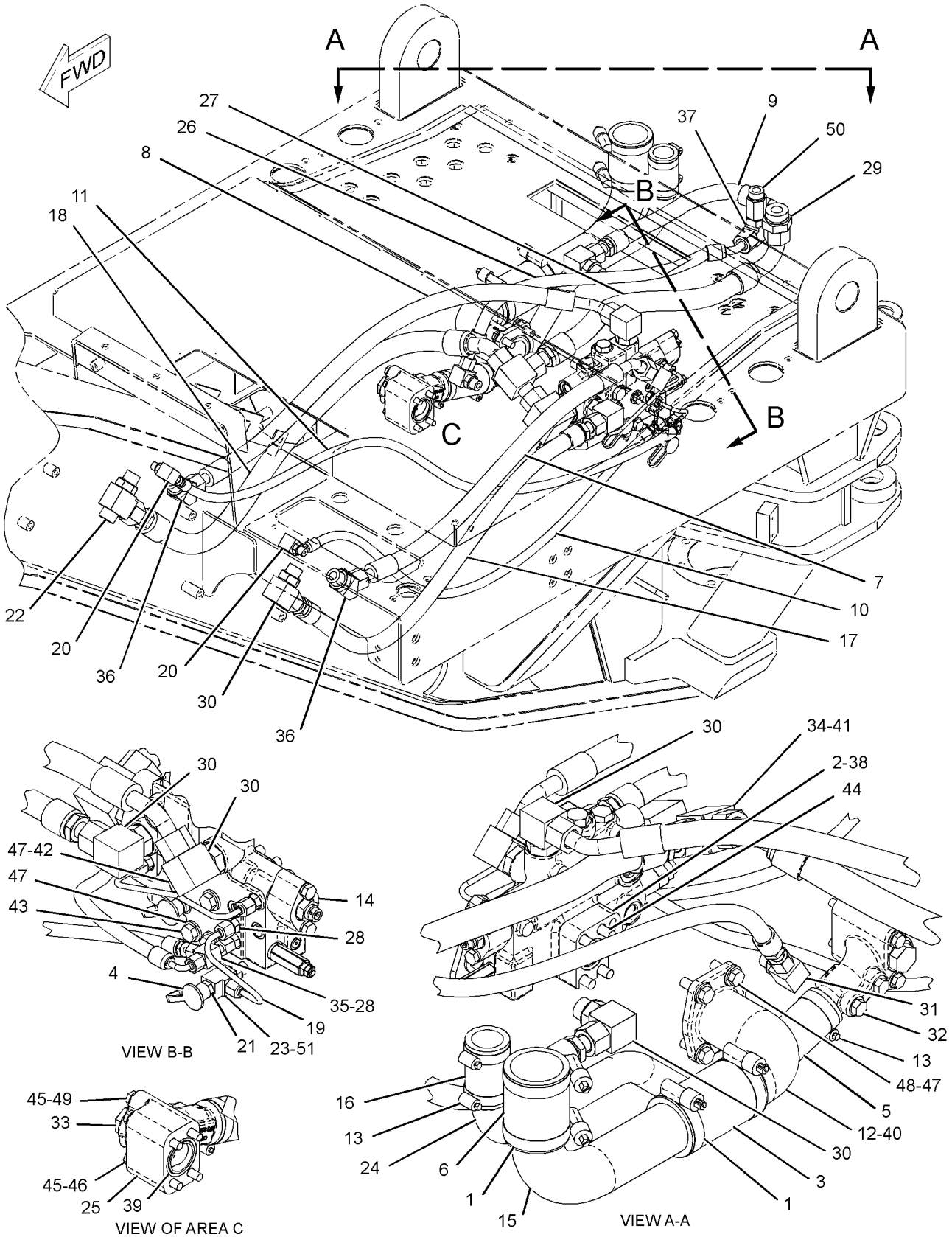


GRAPHIC #1 **<END>** g01294546

# HYDRAULIC SYSTEM

## *160-9178* LINES GP-PUMP

**S/N: CCA1-UP**
**PART OF 159-4615 GENERAL AR**
**TYPE 3**

**SMCS-5057** **i02585637**

| NOTE | REF NO | GRAPHIC REF | PART NUMBER | QTY | PART NAME 1 2 3 4 5 6 (PRODUCT LEVEL) | SEE PAGE |
|---|---|---|---|---|---|---|
| | 1 | 1 | **5P-4868** | 4 | CLAMP-HOSE | |
| | 2 | 1 | **6E-1926** | 1 | ADAPTER | |
| E | 3 | 1 | **6K-9034** | | HOSE (13-CM) | |
| | 4 | 1 | **6V-0852** | 1 | CAP-DUST | |
| E | 5 | 1 | **5P-1291** | | HOSE (13-CM) | |
| E | 6 | 1 | **8V-8082** | | HOSE (10-CM) | |
| I | 7 | 1 | **8W-3166** | 1 | HOSE AS | |
| I | 8 | 1 | **8X-7820** | 1 | HOSE AS | |
| I | 9 | 1 | **8X-7973** | 1 | HOSE AS | |
| I | 10 | 1 | **8X-7974** | 1 | HOSE AS | |
| | 11 | 1 | **8X-8813** | 1 | ELBOW | |
| | 12 | 1 | **9M-0164** | 4 | CLAMP-HOSE | |
| Y | 13 | 1 | **9T-5957** | 1 | VALVE GP-COMBINATION | 970 |
| | 14 | 1 | **104-4286** | 1 | TUBE | |
| | 15 | 1 | **113-9533** | 1 | HOSE | |
| I | 16 | 1 | **116-3211** | 1 | HOSE AS | |
| I | 17 | 1 | **125-9487** | 1 | HOSE AS | |
| C | 18 | 1 | **132-2906** | 1 | TUBE AS | |
| C | 19 | 1 | *165-7014* | 1 | FITTING GP-TEE | |
| | | 1 | **8C-3309** | 1 | TEE | |
| | | 1 | **3J-1907** | 1 | SEAL-O-RING | |
| | | 1 | **4J-5477** | 1 | SEAL-O-RING | |
| | 20 | 1 | **170-9051** | 1 | TUBE | |
| | 21 | 1 | **173-8290** | 1 | ELBOW | |
| I | 22 | 1 | **174-2253** | 1 | HOSE AS | |
| I | 23 | 1 | **201-8430** | 1 | HOSE AS | |
| I | 24 | 1 | **264-1433** | 1 | HOSE AS | |
| | 25 | 1 | **092-7385** | 1 | CLIP | |
| | 26 | 1 | *148-8312* | 1 | ADAPTER AS | |
| | | 1 | **3T-4965** | 1 | ADAPTER-O-RING | |
| | | 1 | **3D-2824** | 1 | SEAL-O-RING | |
| | 27 | 1 | *148-8316* | 2 | CONNECTOR AS | |
| | | | | | (EACH INCLUDES) | |
| | | 1 | **6V-8647** | 1 | CONNECTOR | |
| | | 1 | **3J-7354** | 1 | SEAL-O-RING | |
| | | 1 | **4J-5477** | 1 | SEAL-O-RING | |
| | 28 | 1 | *148-8323* | 1 | CONNECTOR GP | |
| | | 1 | **6V-9875** | 1 | CONNECTOR | |
| | | 1 | **2S-4078** | 1 | SEAL-O-RING | |
| | | 1 | **5K-9090** | 1 | SEAL-O-RING | |
| | 29 | 1 | *148-8327* | 1 | CONNECTOR AS | |
| | | 1 | **6V-8637** | 1 | CONNECTOR | |
| | | 1 | **3D-2824** | 1 | SEAL-O-RING | |
| | | 1 | **6V-9746** | 1 | SEAL-O-RING | |
| | 30 | 1 | *148-8347* | 4 | ELBOW AS | |
| | | | | | (EACH INCLUDES) | |
| | | 1 | **6V-9007** | 1 | ELBOW | |
| | | 1 | **3D-2824** | 1 | SEAL-O-RING | |
| | | 1 | **6V-9746** | 1 | SEAL-O-RING | |
| | 31 | 1 | *148-8364* | 1 | ELBOW AS | |
| | | 1 | **6V-8625** | 1 | ELBOW | |
| | | 1 | **3K-0360** | 1 | SEAL-O-RING | |
| | | 1 | **6V-8398** | 1 | SEAL-O-RING | |
| | 32 | 1 | *148-8368* | 2 | ELBOW AS | |
| | | | | | (EACH INCLUDES) | |

## *160-9178* **LINES GP-PUMP** *(contd.)* **i02585637**

| NOTE | REF NO | GRAPHIC REF | PART NUMBER | QTY | PART NAME 1 2 3 4 5 6 (PRODUCT LEVEL) | SEE PAGE |
|---|---|---|---|---|---|---|
| | | 1 | **6V-8627** | 1 | ELBOW | |
| | | 1 | **3J-1907** | 1 | SEAL-O-RING | |
| | | 1 | **4J-5477** | 1 | SEAL-O-RING | |
| | 33 | 1 | *148-8407* | 2 | PLUG AS | |
| | | | | | (EACH INCLUDES) | |
| | | 1 | **9S-4191** | 1 | PLUG-O RING | |
| | | 1 | **3J-1907** | 1 | SEAL-O-RING | |
| | 34 | 1 | *148-8408* | 1 | PLUG AS | |
| | | 1 | **9S-4183** | 1 | PLUG-O RING | |
| | | 1 | **3D-2824** | 1 | SEAL-O-RING | |
| | 35 | 1 | *148-8429* | 1 | TEE AS | |
| | | 1 | **6V-9840** | 1 | TEE-SWIVEL | |
| | | 1 | **5K-9090** | 2 | SEAL-O-RING | |
| | 36 | 1 | *150-5968* | 1 | TEE AS | |
| | | 1 | **6V-9835** | 1 | TEE-SWIVEL | |
| | | 1 | **4J-5477** | 2 | SEAL-O-RING | |
| | 37 | 1 | *153-6237* | 2 | ELBOW AS | |
| | | | | | (EACH INCLUDES) | |
| | | 1 | **6V-9004** | 1 | ELBOW | |
| | | 1 | **3D-2824** | 1 | SEAL-O-RING | |
| | | 1 | **6V-9746** | 1 | SEAL-O-RING | |
| | 38 | 1 | *153-6259* | 1 | TEE AS | |
| | | 1 | **6V-8777** | 1 | TEE-FACE SEAL | |
| | | 1 | **3D-2824** | 1 | SEAL-O-RING | |
| | | 1 | **6V-9746** | 2 | SEAL-O-RING | |
| | 39 | 1 | *164-5567* | 1 | FITTING AS (QUICK DISCONNECT, MALE) | |
| | | 1 | **6V-3965** | 1 | FITTING AS (QUICK DISCONNECT, MALE) | |
| | | 1 | **3J-1907** | 1 | SEAL-O-RING | |
| | 40 | 1 | *164-5641* | 1 | TEE AS | |
| | | 1 | **128-7625** | 1 | TEE | |
| | | 1 | **3D-2824** | 1 | SEAL-O-RING | |
| | | 1 | **5K-9090** | 1 | SEAL-O-RING | |
| | | 1 | **6V-9746** | 1 | SEAL-O-RING | |
| | 41 | 1 | **4J-0521** | 2 | SEAL-O-RING | |
| | 42 | 1 | **4J-0523** | 1 | SEAL-O-RING | |
| | 43 | 1 | **5H-8848** | 1 | SEAL-O-RING | |
| | 44 | 1 | **5K-9090** | 1 | SEAL-O-RING | |
| M | 45 | 1 | **6V-5696** | 1 | BOLT (M12X1.75X80-MM) | |
| M | 46 | 1 | **8T-0646** | 3 | BOLT (M12X1.75X110-MM) | |
| M | 47 | 1 | **8T-3957** | 1 | BOLT-SOCKET HEAD (M12X1.75X30-MM) | |
| | 48 | 1 | **8T-4121** | 6 | WASHER-HARD (11X21X2.5-MM THK) | |
| M | 49 | 1 | **8T-4133** | 1 | NUT (M10X1.5-THD) | |
| M | 50 | 1 | **8T-4137** | 1 | BOLT (M10X1.5X20-MM) | |
| M | 51 | 1 | **8T-4172** | 2 | BOLT (M10X1.5X80-MM) | |
| | 52 | 1 | **8T-4223** | 8 | WASHER-HARD (13.5X25.5X3-MM THK) | |
| M | 53 | 1 | **8T-4956** | 4 | BOLT (M12X1.75X35-MM) | |
| M | 54 | 1 | **8T-6685** | 2 | BOLT (M10X1.5X110-MM) | |

C-CHANGE FROM PREVIOUS TYPE
E-ORDER BY THE CENTIMETER
I-REFER TO HYDRAULIC INFORMATION SYSTEM
M-METRIC PART
Y-SEPARATE ILLUSTRATION

*160-9178* **LINES GP-PUMP** *(contd.)* **i02585637**

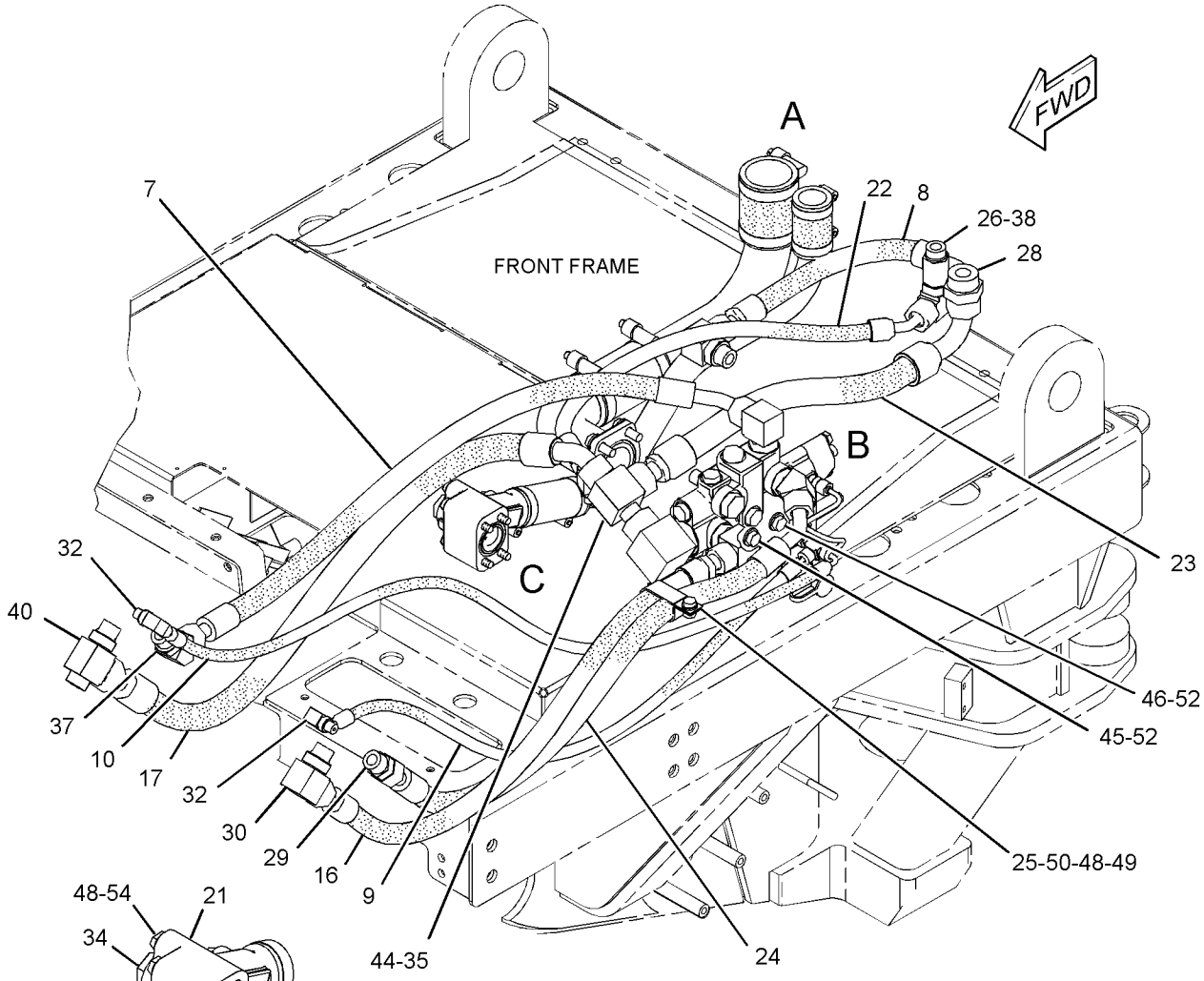


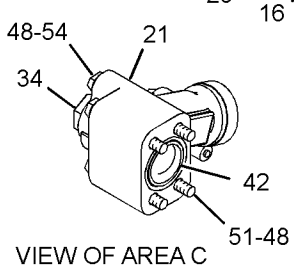


VIEW OF AREA C

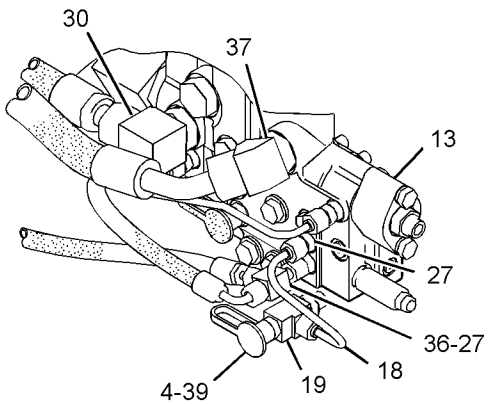


VIEW OF AREA B
(ROTATED 90 DEGREES)

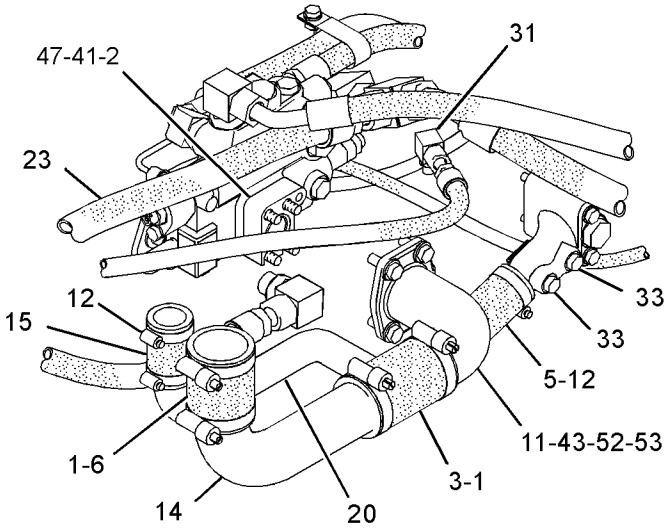


VIEW OF AREA A
(ROTATED 180 DEGREES)

GRAPHIC #1 **<END>** g01294498

# HYDRAULIC SYSTEM

## *166-3308* LINES GP-RIPPER

**S/N: CCA1-UP**

**PART OF 166-3305, 179-4356, 184-7303, 184-7304, 184-7305, 184-7306, 184-7307, 184-7308, 184-7315, 184-7317, 192-4969, 192-4970, 194-4019, 194-4020 CONTROL AR-HYDRAULIC**

**AN ATTACHMENT**

**TYPE 1**

**SMCS-5057** **i01819294**

| NOTE | REF NO | GRAPHIC REF | PART NUMBER | QTY | PART NAME 1 2 3 4 5 6 (PRODUCT LEVEL) | SEE PAGE |
|---|---|---|---|---|---|---|
| J | 1 | 1 | **7F-4617** | 1 | SPACER (0.41X0.75X1.31-IN THK) | |
| I | 3 | 1 | **8W-0206** | 2 | HOSE AS | |
| | 4 | 1 | **8W-8527** | 6 | SLEEVE | |
| | 5 | 1 | *105-7167* | 2 | ADAPTER GP | |
| | | | | | (EACH INCLUDES) | |
| | | 1 | **6V-8397** | 2 | SEAL-O-RING | |
| | | 1 | **8T-5890** | 1 | UNION | |
| JM | 6 | 1 | **116-3715** | 1 | STUD-TAPERLOCK (M10X1.5X85-MM) | |
| | 7 | 1 | *148-8374* | 1 | ELBOW AS | |
| | | 1 | **6V-8723** | 1 | ELBOW | |
| | | 1 | **3K-0360** | 1 | SEAL-O-RING | |
| | | 1 | **6V-8397** | 1 | SEAL-O-RING | |
| | 8 | 1 | *148-8383* | 1 | ELBOW AS | |
| | | 1 | **8T-1683** | 1 | ELBOW | |
| | | 1 | **3K-0360** | 1 | SEAL-O-RING | |
| | | 1 | **6V-8397** | 1 | SEAL-O-RING | |
| J | 9 | 1 | **1S-0994** | 2 | CLIP | |
| | 10 | 1 | **5M-3062** | 1 | BOLT (3/8-16X0.75-IN) | |
| | 11 | 1 | **6D-4247** | 1 | CLIP | |
| | 12 | 1 | **6V-9168** | 2 | NUT (11/16-16-THD) | |
| | 13 | 1 | **6V-9829** | 2 | CAP AS | |
| J | 14 | 1 | **8T-4121** | 1 | WASHER-HARD (11X21X2.5-MM THK) | |
| JM | 15 | 1 | **8T-4133** | 1 | NUT (M10X1.5-THD) | |
| | 16 | 1 | **8T-4896** | 1 | WASHER-HARD (10.2X18.5X2.5-MM THK) | |

I-REFER TO HYDRAULIC INFORMATION SYSTEM
J-PARTS NOT USED ON AWD OR 120H
M-METRIC PART

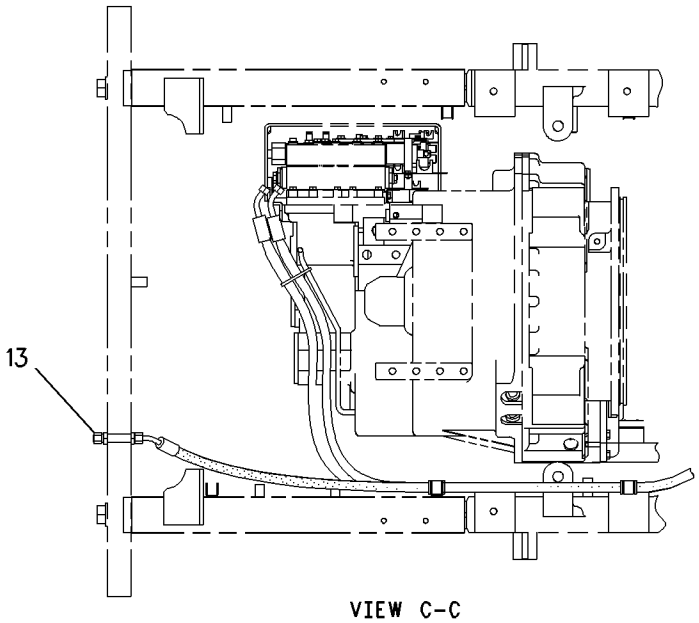


VIEW C-C

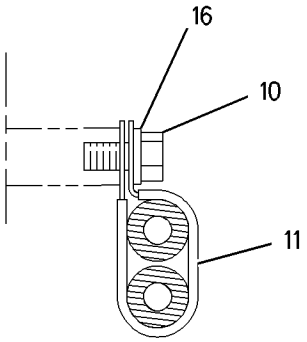


SECTION B-B

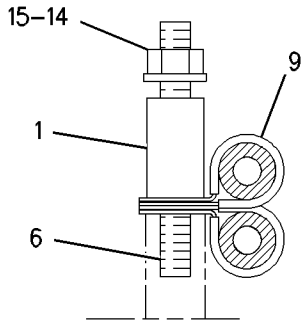


SECTION A-A

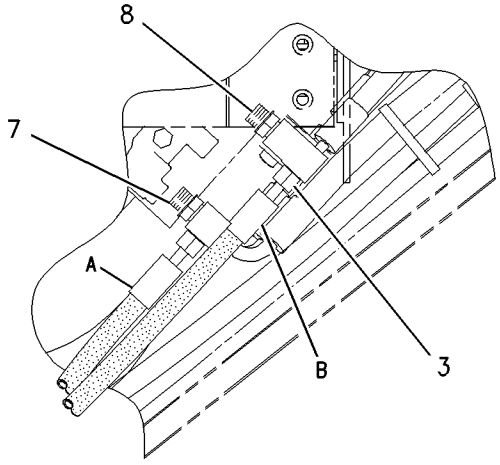


VIEW OF AREA E

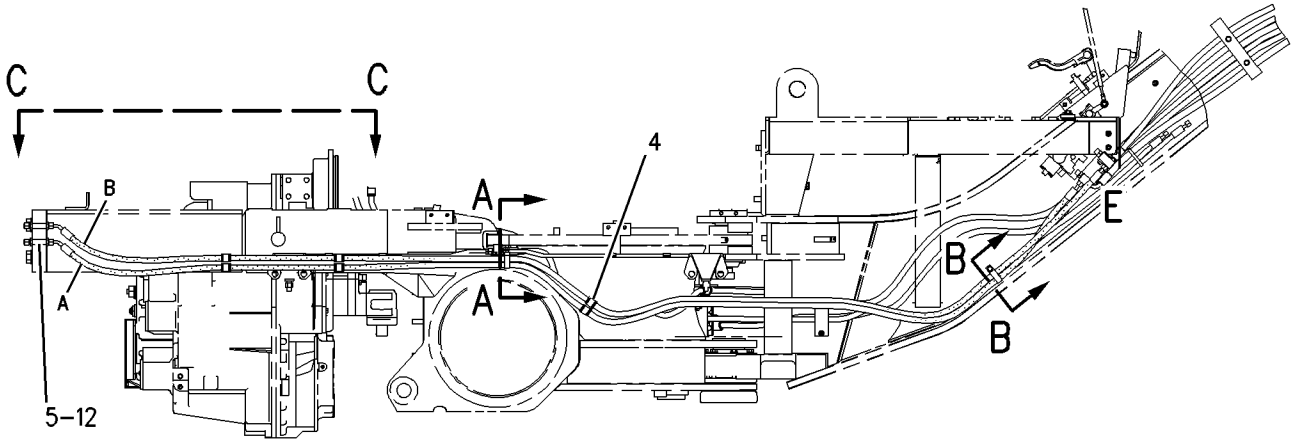


RIGHT SIDE VIEW

GRAPHIC #1 **<END>** g00928693

# *166-3308* LINES GP-RIPPER

**S/N: CCA1-UP**

**PART OF 166-3305, 179-4356, 184-7303, 184-7304, 184-7305, 184-7306, 184-7307, 184-7308, 184-7315, 184-7317, 192-4969, 192-4970, 194-4019, 194-4020, 250-0445, 250-0446, 250-0447, 250-0448, 250-0450, 250-0451, 250-0452, 250-0453, 250-0454, 250-0455, 250-0456, 265-7818, 265-7820 CONTROL**

**AR-HYDRAULIC**

**AN ATTACHMENT**

**TYPE 2**

**SMCS-5057** **i02098279**

| NOTE | REF NO | GRAPHIC REF | PART NUMBER | QTY | PART NAME 1 2 3 4 5 6 (PRODUCT LEVEL) | SEE PAGE |
|---|---|---|---|---|---|---|
| J | 1 | 1 | **7F-4617** | 1 | SPACER (0.41X0.75X1.31-IN THK) | |
| I | 2 | 1 | **8W-0206** | 2 | HOSE AS | |
| | 3 | 1 | **8W-8527** | 6 | SLEEVE | |
| | 4 | 1 | *105-7167* | 2 | ADAPTER GP | |
| | | | | | (EACH INCLUDES) | |
| | | 1 | **6V-8397** | 2 | SEAL-O-RING | |
| | | 1 | **8T-5890** | 1 | UNION | |
| JM | 5 | 1 | **116-3715** | 1 | STUD-TAPERLOCK (M10X1.5X85-MM) | |
| | 6 | 1 | *148-8374* | 1 | ELBOW AS | |
| | | 1 | **6V-8723** | 1 | ELBOW | |
| | | 1 | **3K-0360** | 1 | SEAL-O-RING | |
| | | 1 | **6V-8397** | 1 | SEAL-O-RING | |
| | 7 | 1 | *148-8383* | 1 | ELBOW AS | |
| | | 1 | **8T-1683** | 1 | ELBOW | |
| | | 1 | **3K-0360** | 1 | SEAL-O-RING | |
| | | 1 | **6V-8397** | 1 | SEAL-O-RING | |
| J | 8 | 1 | **1S-0994** | 2 | CLIP | |
| | 9 | 1 | **5M-3062** | 1 | BOLT (3/8-16X0.75-IN) | |
| | 10 | 1 | **6D-4247** | 1 | CLIP | |
| | 11 | 1 | **6V-9168** | 2 | NUT (11/16-16-THD) | |
| J | 12 | 1 | **8T-4121** | 1 | WASHER-HARD (11X21X2.5-MM THK) | |
| JM | 13 | 1 | **8T-4133** | 1 | NUT (M10X1.5-THD) | |
| | 14 | 1 | **8T-4896** | 1 | WASHER-HARD (10.2X18.5X2.5-MM THK) | |

I-REFER TO HYDRAULIC INFORMATION SYSTEM
J-PARTS NOT USED ON AWD OR 120H
M-METRIC PART

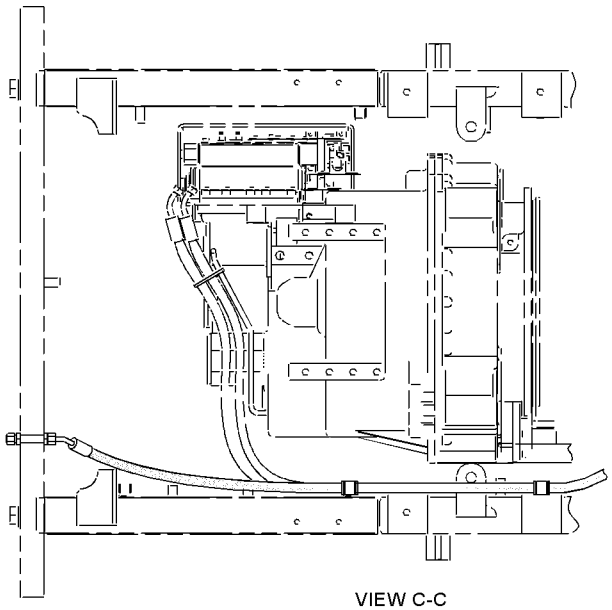

VIEW C-C

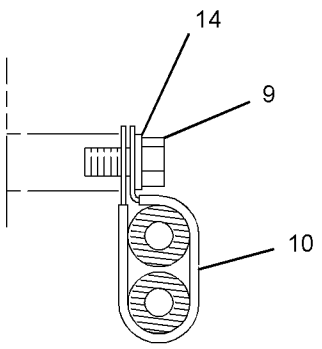


SECTION B-B

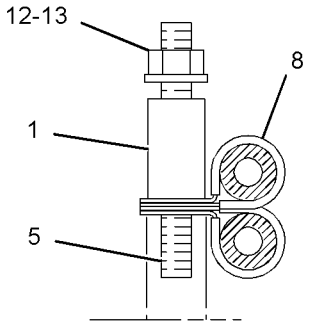


SECTION A-A

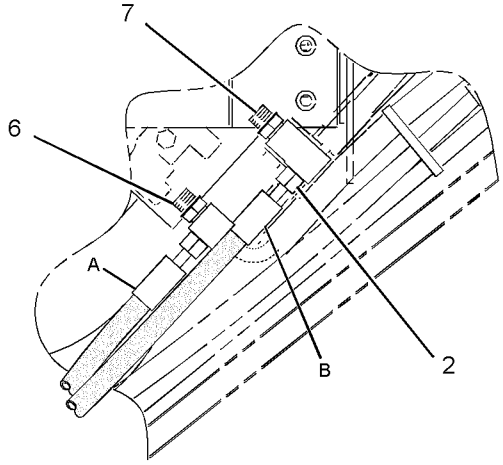


VIEW OF AREA E

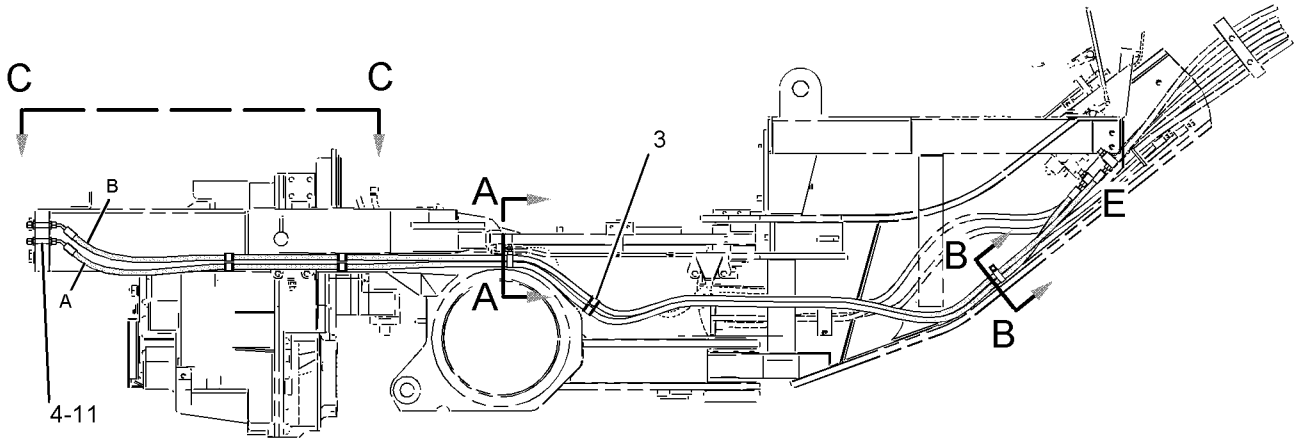


RIGHT SIDE VIEW

GRAPHIC #1 **<END>** g01069774

# HYDRAULIC SYSTEM

## *174-2339* LINES GP-RIPPER

**S/N: CCA1-UP**
**PART OF 175-2559 RIPPER AR**
**AN ATTACHMENT**

**SMCS-5057** **i02524935**

| NOTE | REF NO | GRAPHIC REF | PART NUMBER | QTY | PART NAME 1 2 3 4 5 6 (PRODUCT LEVEL) | SEE PAGE |
|---|---|---|---|---|---|---|
| I | 1 | 1 | **3T-6848** | 1 | HOSE AS | |
| I | 2 | 1 | **7I-5412** | 1 | HOSE AS | |
| | 3 | 1 | *148-8374* | 2 | ELBOW AS | |
| | | | | | (EACH INCLUDES) | |
| | | 1 | **6V-8723** | 1 | ELBOW | |
| | | 1 | **3K-0360** | 1 | SEAL-O-RING | |
| | | 1 | **6V-8397** | 1 | SEAL-O-RING | |
| | 4 | 1 | **1S-3618** | 1 | CLIP | |
| | 5 | 1 | **4D-2886** | 1 | CLIP | |
| | 6 | 1 | **4L-6454** | 1 | BOLT (3/8-16X1-IN) | |
| | 7 | 1 | **5P-1075** | 2 | WASHER-HARD (10.2X22.5X3-MM THK) | |
| | 8 | 1 | **6V-8801** | 1 | NUT (3/8-16-THD) | |

I-REFER TO HYDRAULIC INFORMATION SYSTEM

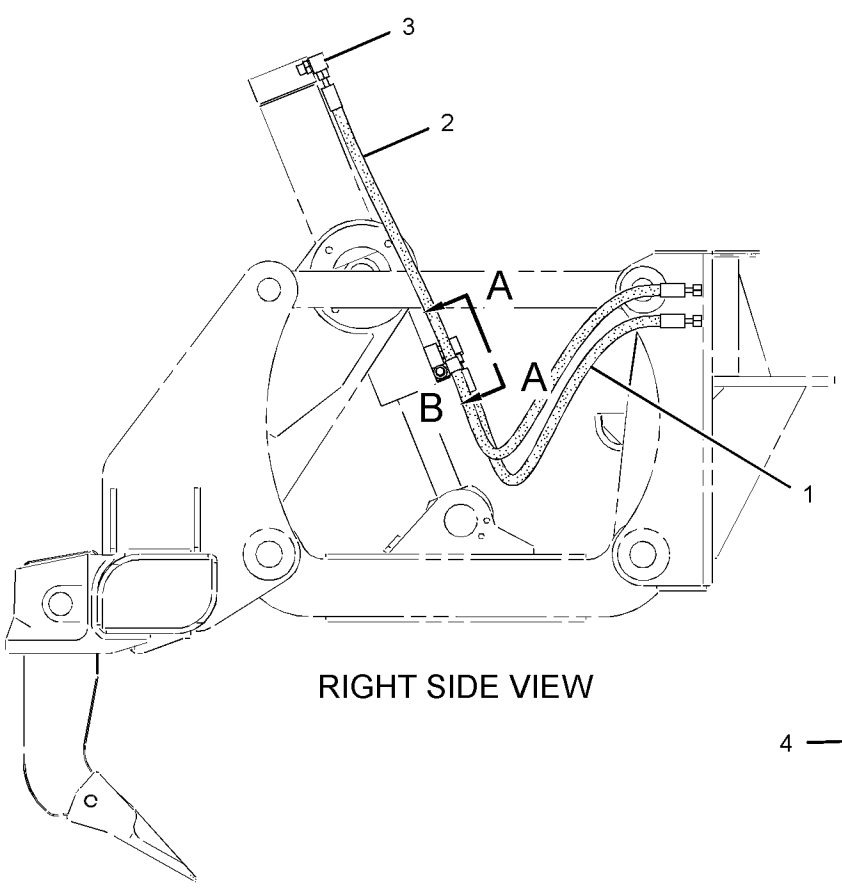


RIGHT SIDE VIEW

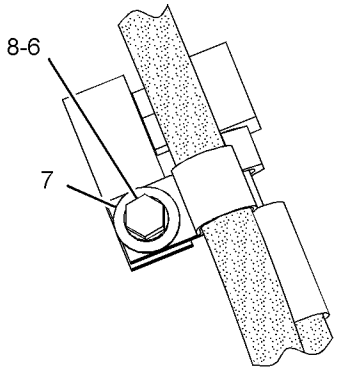


VIEW OF AREA B

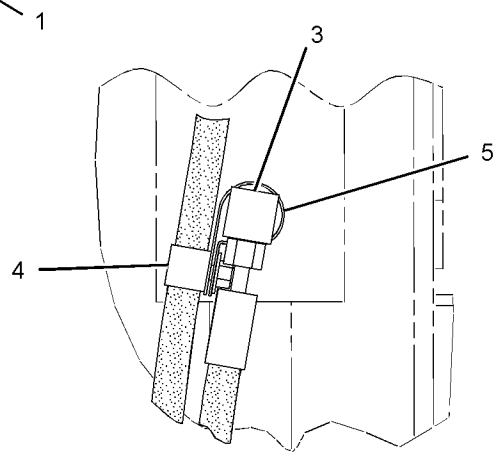


VIEW A-A

GRAPHIC #1 **<END>** g01277149

# HYDRAULIC SYSTEM

## *171-6458* LINES GP-SECONDARY STEERING

**S/N: CCA1-UP**
**PART OF 207-4453, 210-2044 CONVERSION AR-CERTIFICATION, 166-3302 STEERING AR-SECONDARY AN ATTACHMENT**

**SMCS-4304** **i02205106**

| NOTE | REF NO | GRAPHIC REF | PART NUMBER | QTY | PART NAME 1 2 3 4 5 6 (PRODUCT LEVEL) | SEE PAGE |
|---|---|---|---|---|---|---|
| I | 1 | 1 | **4E-6867** | 1 | HOSE AS | |
| | 2 | 1 | **5B-8978** | 1 | TEE | |
| | 3 | 1 | **9T-1013** | 1 | VALVE AS-CHECK | |
| | | 1 | **3K-0360** | 1 | SEAL-O-RING | |
| | | 1 | **6V-8398** | 1 | SEAL-O-RING | |
| | 4 | 1 | **9T-8071** | 1 | VALVE GP-RELIEF | |
| I | 5 | 1 | **243-5466** | 1 | HOSE AS | |
| I | 6 | 1 | **108-0713** | 1 | HOSE AS | |
| | 7 | 1 | *171-6470* | 1 | VALVE GP-CHECK | |
| | | 1 | **3J-7354** | 1 | SEAL-O-RING | |
| | | 1 | **4J-5477** | 1 | SEAL-O-RING | |
| | | 1 | **9T-6146** | 1 | VALVE AS-CHECK | |
| | 8 | 1 | *171-6728* | 1 | ELBOW GP | |
| | | 1 | **8T-0249** | 1 | ELBOW (SWIVEL) | |
| | | 1 | **3K-0360** | 1 | SEAL-O-RING | |
| | 9 | 1 | *148-8351* | 1 | ELBOW AS | |
| | | 1 | **6V-9849** | 1 | ELBOW (SWIVEL) | |
| | | 1 | **4J-5477** | 1 | SEAL-O-RING | |
| | 10 | 1 | *148-8364* | 2 | ELBOW AS | |
| | | | | | (EACH INCLUDES) | |
| | | 1 | **6V-8625** | 1 | ELBOW | |
| | | 1 | **3K-0360** | 1 | SEAL-O-RING | |
| | | 1 | **6V-8398** | 1 | SEAL-O-RING | |
| | 11 | 1 | *148-8381* | 1 | ELBOW AS | |
| | | 1 | **8T-5429** | 1 | ELBOW | |
| | | 1 | **3D-2824** | 1 | SEAL-O-RING | |
| | | 1 | **6V-8398** | 1 | SEAL-O-RING | |
| | 12 | 1 | *150-4037* | 1 | TEE AS | |
| | | 1 | **6V-9844** | 1 | TEE-SWIVEL | |
| | | 1 | **6V-8398** | 2 | SEAL-O-RING | |
| | 13 | 1 | *150-4043* | 1 | CONNECTOR AS | |
| | | 1 | **6V-9873** | 1 | CONNECTOR | |
| | | 1 | **3J-1907** | 1 | SEAL-O-RING | |
| | | 1 | **6V-8398** | 1 | SEAL-O-RING | |
| | 14 | 1 | *165-4931* | 1 | ELBOW AS | |
| | | 1 | **6V-8077** | 1 | ELBOW | |
| | | 1 | **3J-1907** | 1 | SEAL-O-RING | |

I-REFER TO HYDRAULIC INFORMATION SYSTEM

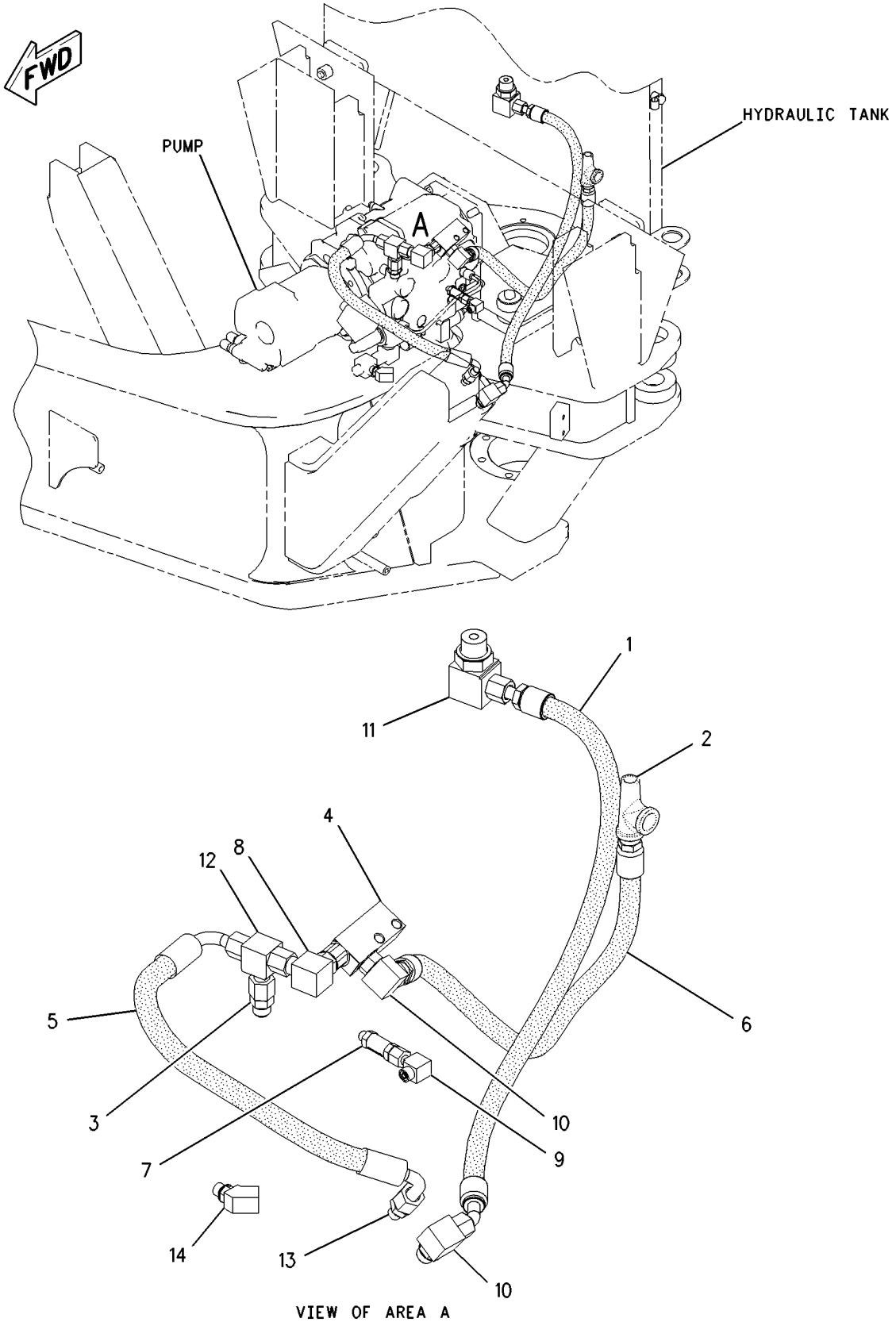


GRAPHIC #1 **<END>** g00894532

# HYDRAULIC SYSTEM

## *160-9179* LINES GP-STEERING

**S/N: CCA1-UP**

**PART OF 159-4615 GENERAL AR**

**SMCS-4304** **i02237310**

| NOTE | REF NO | GRAPHIC REF | PART NUMBER | QTY | PART NAME 1 2 3 4 5 6 (PRODUCT LEVEL) | SEE PAGE |
|---|---|---|---|---|---|---|
| | 1 | 1 | **3S-2093** | 2 | STRAP-CABLE | |
| I | 2 | 1 | **4E-2392** | 1 | HOSE AS | |
| | 3 | 1 | **4J-5468** | 2 | CLAMP | |
| I | 4 | 1 | **5T-9903** | 1 | HOSE AS | |
| | 5 | 1 | **8C-3451** | 1 | CAP-DUST | |
| I | 6 | 1 | **8W-0225** | 1 | HOSE AS | |
| | 7 | 1 | **9D-0953** | 1 | SPACER (0.406X0.75X0.88-IN THK) | |
| I | 8 | 1 | **108-0702** | 3 | HOSE AS | |
| I | 9 | 1 | **108-0714** | 2 | HOSE AS | |
| | 10 | 1 | **108-1610** | 2 | CLAMP | |
| | 11 | 1 | **136-6330** | 1 | SEAL | |
| | 12 | 1 | **136-6331** | 2 | SEAL | |
| I | 13 | 1 | **140-1336** | 1 | HOSE AS | |
| I | 14 | 1 | **150-4868** | 1 | HOSE AS | |
| | 15 | 1 | *164-5586* | 1 | TEE AS | |
| | | 1 | **7X-0871** | 1 | TEE | |
| | | 1 | **6V-8398** | 1 | SEAL-O-RING | |
| | 16 | 1 | *164-5590* | 1 | VALVE AS-FLUID SAMPLING (STEERING OIL) | |
| | | 1 | **8C-3446** | 1 | VALVE-FLUID SAMPLING | |
| | | 1 | **3J-7354** | 1 | SEAL-O-RING | |
| | 17 | 1 | *171-6467* | 4 | UNION AS | |
| | | | | | (EACH INCLUDES) | |
| | | 1 | **8T-5082** | 1 | UNION | |
| | | 1 | **6V-8398** | 1 | SEAL-O-RING | |
| | | 1 | **6V-9746** | 1 | SEAL-O-RING | |
| I | 18 | 1 | **233-9523** | 1 | HOSE AS | |
| Y | 19 | 1 | **248-6251** | 1 | ACCUMULATOR GP-STEERING | 634 |
| | 20 | 1 | *148-8305* | 1 | ADAPTER AS | |
| | | 1 | **5P-9617** | 1 | ADAPTER | |
| | | 1 | **3J-1907** | 1 | SEAL-O-RING | |
| | 21 | 1 | *148-8316* | 2 | CONNECTOR AS | |
| | | | | | (EACH INCLUDES) | |
| | | 1 | **6V-8647** | 1 | CONNECTOR | |
| | | 1 | **3J-7354** | 1 | SEAL-O-RING | |
| | | 1 | **4J-5477** | 1 | SEAL-O-RING | |
| | 22 | 1 | *148-8340* | 5 | CONNECTOR AS | |
| | | | | | (EACH INCLUDES) | |
| | | 1 | **6V-8639** | 1 | CONNECTOR | |
| | | 1 | **3K-0360** | 1 | SEAL-O-RING | |
| | | 1 | **6V-8398** | 1 | SEAL-O-RING | |
| | 23 | 1 | *148-8351* | 1 | ELBOW AS | |
| | | 1 | **6V-9849** | 1 | ELBOW (SWIVEL) | |
| | | 1 | **4J-5477** | 1 | SEAL-O-RING | |
| | 24 | 1 | *148-8354* | 3 | ELBOW AS | |
| | | | | | (EACH INCLUDES) | |
| | | 1 | **6V-9002** | 1 | ELBOW | |
| | | 1 | **3K-0360** | 1 | SEAL-O-RING | |
| | | 1 | **6V-8398** | 1 | SEAL-O-RING | |
| | 25 | 1 | *148-8364* | 2 | ELBOW AS | |
| | | | | | (EACH INCLUDES) | |
| | | 1 | **6V-8625** | 1 | ELBOW | |
| | | 1 | **3K-0360** | 1 | SEAL-O-RING | |
| | | 1 | **6V-8398** | 1 | SEAL-O-RING | |
| | 26 | 1 | *148-8444* | 2 | TEE AS-SWIVEL | |
| | | | | | (EACH INCLUDES) | |
| | | 1 | **6V-9837** | 1 | TEE-SWIVEL | |

## *160-9179* **LINES GP-STEERING** *(contd.)* **i02237310**

| NOTE | REF NO | GRAPHIC REF | PART NUMBER | QTY | PART NAME 1 2 3 4 5 6 (PRODUCT LEVEL) | SEE PAGE |
|---|---|---|---|---|---|---|
| | | 1 | **6V-8398** | 2 | SEAL-O-RING | |
| | 27 | 1 | **3D-2824** | 1 | SEAL-O-RING | |
| | 28 | 1 | **3K-0360** | 2 | SEAL-O-RING | |
| | 29 | 1 | **4L-6454** | 11 | BOLT (3/8-16X1-IN) | |
| | 30 | 1 | **5P-1075** | 6 | WASHER-HARD (10.2X22.5X3-MM THK) | |
| | 31 | 1 | **5P-7854** | 4 | CLIP | |
| | 32 | 1 | **5S-7379** | 2 | BOLT (3/8-16X0.875-IN) | |
| | 33 | 1 | **6D-4244** | 16 | CLIP | |
| | 34 | 1 | **6V-0467** | 1 | CONNECTOR | |
| | 35 | 1 | **6V-1722** | 1 | ADAPTER-O-RING | |
| | 36 | 1 | **6V-8801** | 5 | NUT (3/8-16-THD) | |
| | 37 | 1 | **7X-0289** | 1 | BOLT (3/8-16X1.875-IN) | |
| | 38 | 1 | **8T-4896** | 13 | WASHER-HARD (10.2X18.5X2.5-MM THK) | |

I-REFER TO HYDRAULIC INFORMATION SYSTEM
Y-SEPARATE ILLUSTRATION

*160-9179* **LINES GP-STEERING** *(contd.)* **i02237310**

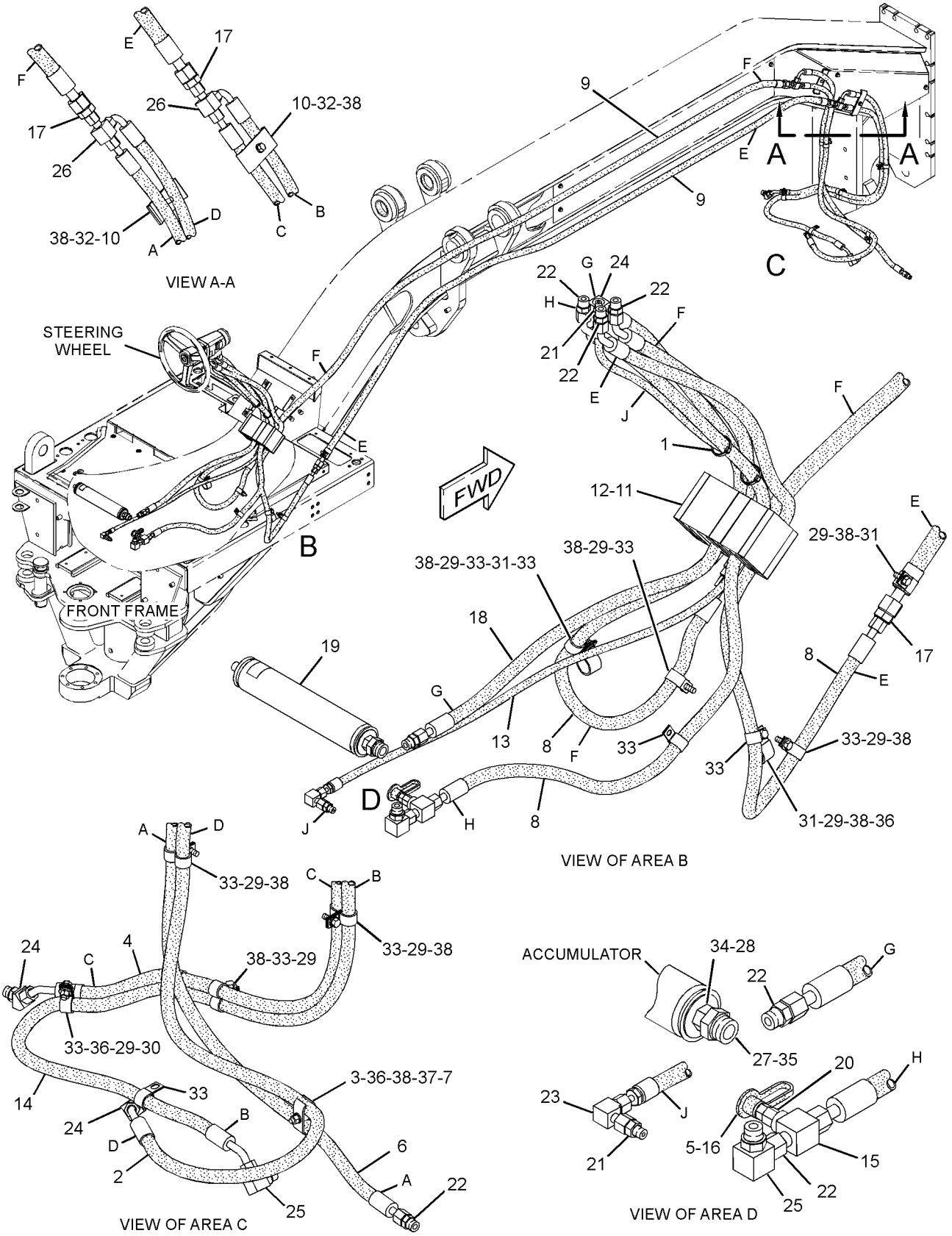


GRAPHIC #1 **<END>** g01172205

# HYDRAULIC SYSTEM

## *164-8462* LOCK GP-CENTERSHIFT

**S/N: CCA1-UP**

**PART OF 159-4615 GENERAL AR**

**SMCS-5221** **i02591819**

| NOTE | REF NO | GRAPHIC REF | PART NUMBER | QTY | PART NAME 1 2 3 4 5 6 (PRODUCT LEVEL) | SEE PAGE |
|---|---|---|---|---|---|---|
| | 1 | 1 | **2H-3931** | 1 | SEAL-O-RING | |
| | 2 | 1 | **4T-8054** | 1 | SEAL AS | |
| | 3 | 1 | **8X-3749** | 1 | PISTON | |
| | 4 | 1 | **9D-6584** | 1 | SEAL-LIP TYPE | |
| | 5 | 1 | **115-0540** | 1 | CYLINDER | |
| | 6 | 1 | **115-0541** | 1 | PIN | |
| | 7 | 1 | **142-5787** | 1 | CAP | |
| Y | 8 | 1 | **152-8346** | 1 | VALVE GP-SOLENOID (CENTERSHIFT LOCK) | 1046 |
| | 9 | 1 | **167-2307** | 1 | SEAL-U-CUP | |
| | 10 | 1 | **7X-0346** | 3 | BOLT (5/8-11X2-IN) | |
| | 11 | 1 | **8T-4122** | 3 | WASHER-HARD (17X32X3.5-MM THK) | |
| | 12 | 1 | **8T-4223** | 2 | WASHER-HARD (13.5X25.5X3-MM THK) | |
| | 13 | 1 | **8T-8917** | 2 | BOLT (1/2-13X1.25-IN) | |

Y-SEPARATE ILLUSTRATION

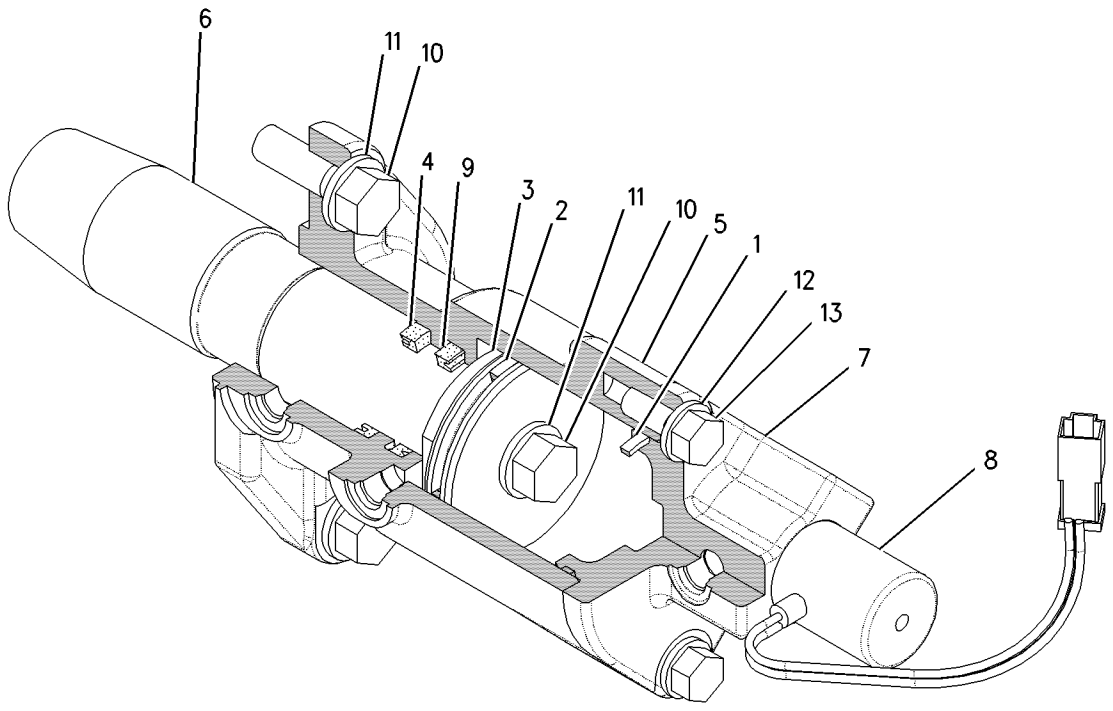


GRAPHIC #1 **<END>** g00788558

# HYDRAULIC SYSTEM

## 112-2240 MANIFOLD GP-CONTROL–BLADE CUSHION

**S/N: CCA1-UP**
**PART OF 166-3336 LINES GP-ACCUMULATOR**
**AN ATTACHMENT**

**SMCS-5051, 5069, 5264, 5467, 5479** **i02591821**

| NOTE | REF NO | GRAPHIC REF | PART NUMBER | QTY | PART NAME 1 2 3 4 5 6 (PRODUCT LEVEL) | SEE PAGE |
|---|---|---|---|---|---|---|
| Y | 1 | 1 | **149-2610** | 1 | VALVE GP-SOLENOID (24-VOLT) (BLADE CUSHION) | 1045 |
| | 2 | 1 | **8C-6162** | 1 | MANIFOLD | |

Y-SEPARATE ILLUSTRATION

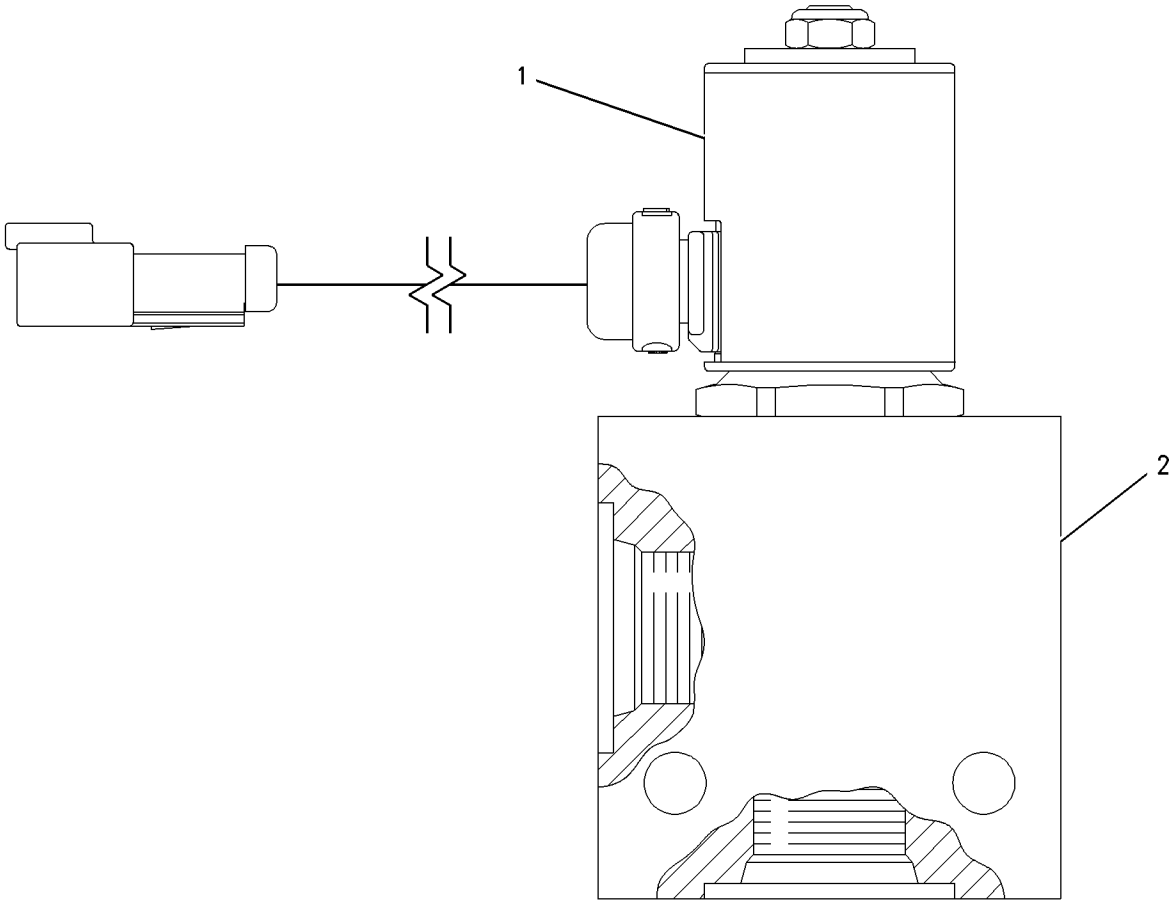


GRAPHIC #1 **<END>** g00995443

# 191-5292 MANIFOLD GP-CONTROL–FAN SPEED

**S/N: CCA1-UP**

**PART OF 175-6978 LINES GP-HYDRAULIC FAN**

**SMCS-5051, 5069, 5264, 5467, 5479** **i01701706**

| NOTE | REF NO | GRAPHIC REF | PART NUMBER | QTY | PART NAME 1 2 3 4 5 6 (PRODUCT LEVEL) | SEE PAGE |
|---|---|---|---|---|---|---|
| | 1 | 1 | **183-7595** | 1 | VALVE GP-SOLENOID (24-VOLT) (HYDRAULIC FAN) | |
| | 2 | 1 | **192-5490** | 1 | MANIFOLD AS | |
| | | | | | AVAILABLE REPAIR KIT(S): | |
| | | | **100-4318** | 1 | KIT-SEAL | |
| | | | | | (INCLUDES SEALS & RINGS) | |

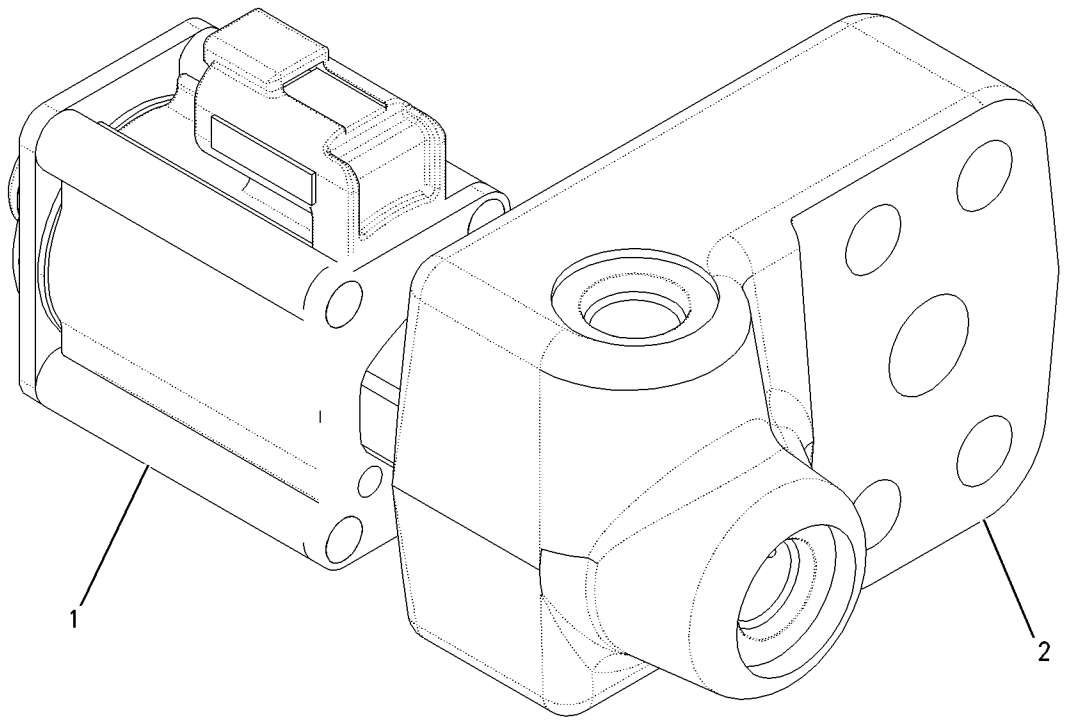


GRAPHIC #1 **<END>** g00889834

# HYDRAULIC SYSTEM

## *239-9893* MANIFOLD GP-CONTROL–LH

**S/N: CCA1-UP**

**PART OF 250-0547, 250-0550 VALVE GP-BANK 5, 250-0566, 250-0567, 250-0573 VALVE GP-BANK 6, 250-0568, 250-0571, 250-0572, 263-6435 VALVE GP-BANK 7 AN ATTACHMENT**

**SMCS-5051, 5069, 5264, 5467, 5479** **i02453962**

| NOTE | REF NO | GRAPHIC REF | PART NUMBER | QTY | PART NAME 1 2 3 4 5 6 (PRODUCT LEVEL) | SEE PAGE |
|---|---|---|---|---|---|---|
| J | 1 | 1 | **284-0815** | 1 | VALVE GP-CHECK E | |
| | 2 | 1 | **249-3251** | 1 | VALVE GP-CONTROL | |
| | 3 | 1 | **275-9638** | 1 | VALVE GP-CONTROL | |
| | 4 | 1 | **8C-6512** | 4 | BOLT-SOCKET HEAD (10-24X2-IN) | |
| | 5 | 1 | **241-5889** | 1 | VALVE GP-SHUTTLE | |
| | 6 | 1 | **266-1600** | 1 | VALVE GP-SOLENOID & MANIFOLD | |
| | 7 | 1 | **266-1599** | 1 | VALVE GP-SOLENOID & MANIFOLD | |
| | 8 | 1 | **9S-8003** | 1 | PLUG (HEX) | |
| | 9 | 1 | **3J-7354** | 1 | SEAL-O-RING | |
| | 10 | 1 | **9S-8001** | 12 | PLUG (STRAIGHT THREAD O-RING) | |
| | 11 | 1 | **4J-7533** | 12 | SEAL-O-RING | |
| | | | | | AVAILABLE REPAIR KIT(S): | |
| J | | | **284-3045** | 1 | KIT-SEAL | |

J-(KIT MARKED J SERVICES PARTS MARKED J)

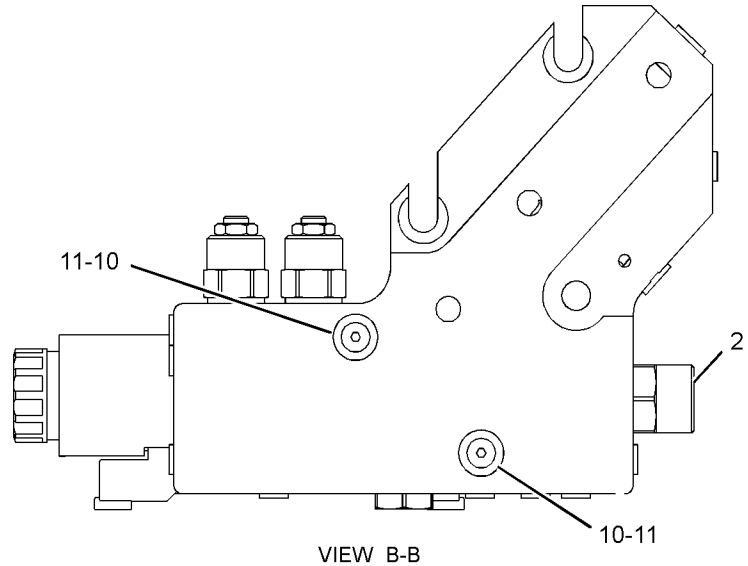


VIEW B-B

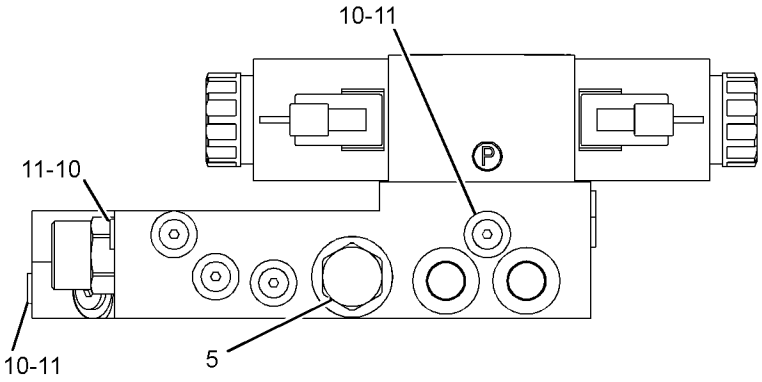


VIEW C-C

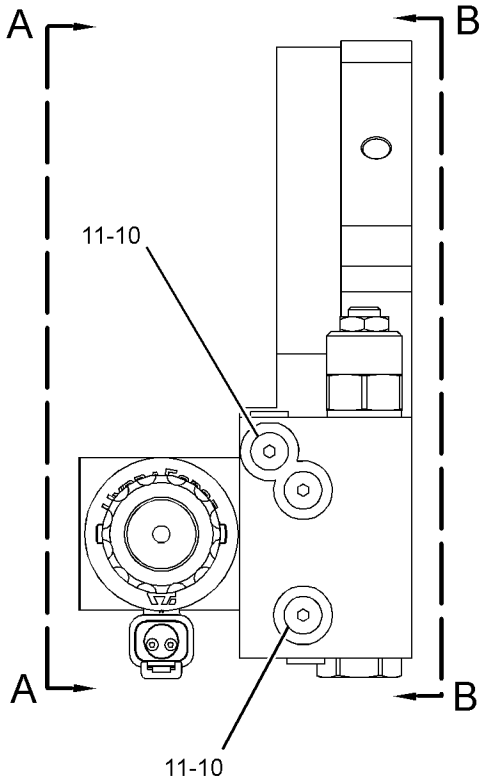


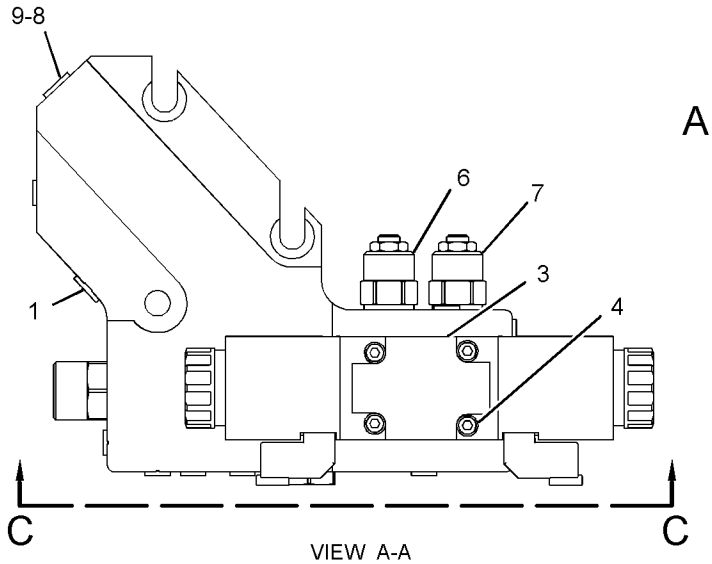


VIEW A-A

GRAPHIC #1 **<END>** g01249469

# *239-9894* MANIFOLD GP-CONTROL–RH

**S/N: CCA1-UP**

**PART OF 250-0546 VALVE GP-BANK 4, 250-0548 VALVE GP-BANK 5, 250-0552, 250-0565, 250-0574 VALVE GP-BANK 6, 250-0576 VALVE GP-BANK 7 AN ATTACHMENT**

**SMCS-5051, 5069, 5264, 5467, 5479** **i02462900**

| NOTE | REF NO | GRAPHIC REF | PART NUMBER | QTY | PART NAME 1 2 3 4 5 6 (PRODUCT LEVEL) | SEE PAGE |
|---|---|---|---|---|---|---|
| J | 1 | 1 | **284-0815** | 1 | VALVE GP-CHECK E | |
| | | 1 | **3J-7354** | 1 | SEAL-O-RING | |
| | 2 | 1 | **249-3251** | 1 | VALVE GP-CONTROL | |
| | 3 | 1 | **275-9638** | 1 | VALVE GP-CONTROL | |
| | 4 | 1 | **8C-6512** | 4 | BOLT-SOCKET HEAD (10-24X2-IN) | |
| | 5 | 1 | **241-5889** | 1 | VALVE GP-SHUTTLE | |
| | 6 | 1 | **266-1599** | 1 | VALVE GP-SOLENOID & MANIFOLD | |
| | 7 | 1 | **266-1598** | 1 | VALVE GP-COUNTERBALANCE | |
| | 8 | 1 | **9S-8003** | 1 | PLUG (HEX) | |
| | 9 | 1 | **3J-7354** | 1 | SEAL-O-RING | |
| | 10 | 1 | **9S-8001** | 12 | PLUG (STRAIGHT THREAD O-RING) | |
| | 11 | 1 | **4J-7533** | 12 | SEAL-O-RING | |
| | | | | | AVAILABLE REPAIR KIT(S): | |
| J | | | **284-3045** | 1 | KIT-SEAL | |

J-KIT MARKED J ICLUDES PARTS MARKED J

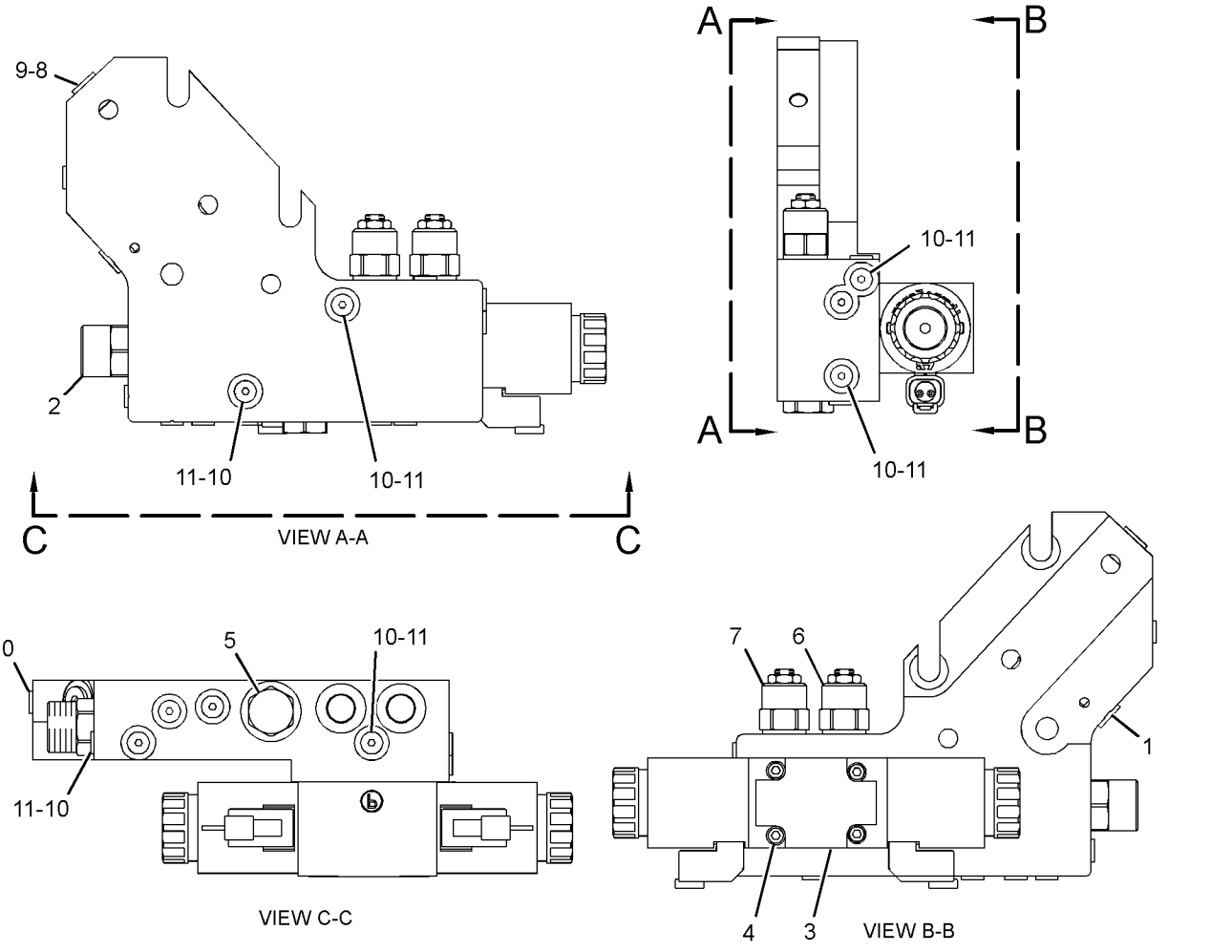


GRAPHIC #1 **<END>** g01249909

# *224-7040* MOTOR GP-GEAR–HYDRAULIC FAN

**S/N: CCA1-UP**
**PART OF 179-3261 FAN & MOTOR GP**
**ALSO AN ATTACHMENT**

**SMCS-1386, 5061** **i02205129**

| NOTE | REF NO | GRAPHIC REF | PART NUMBER | QTY | PART NAME 1 2 3 4 5 6 (PRODUCT LEVEL) | SEE PAGE |
|---|---|---|---|---|---|---|
| | 1 | 1 | **6B-6684** | 1 | NUT-FULL (1/2-20-THD) | |
| | 2 | 1 | **5P-8245** | 1 | WASHER-HARD (13.5X25.5X3-MM THK) | |
| J | 3 | 1 | **176-0209** | 1 | SEAL-LIP TYPE | |
| J | 4 | 1 | **8J-6273** | 1 | RING-RETAINING | |
| J | 5 | 1 | **177-4255** | 1 | SEAL-SHAFT | |
| | 6 | 1 | **199-4321** | 1 | FLANGE | |
| | 7 | 1 | **099-3095** | 4 | DOWEL | |
| J | 8 | 1 | **4W-7356** | 2 | SEAL | |
| | 9 | 1 | **199-4322** | 1 | COVER | |
| | 10 | 1 | **199-4317** | 4 | BOLT (M10X1.5X115-MM) | |
| | | | | | AVAILABLE REPAIR KIT(S): | |
| J | | | **199-4320** | 1 | KIT-SEAL (HYDRAULIC FAN MOTOR) | |

J-KIT MARKED J INCLUDES PARTS MARKED J

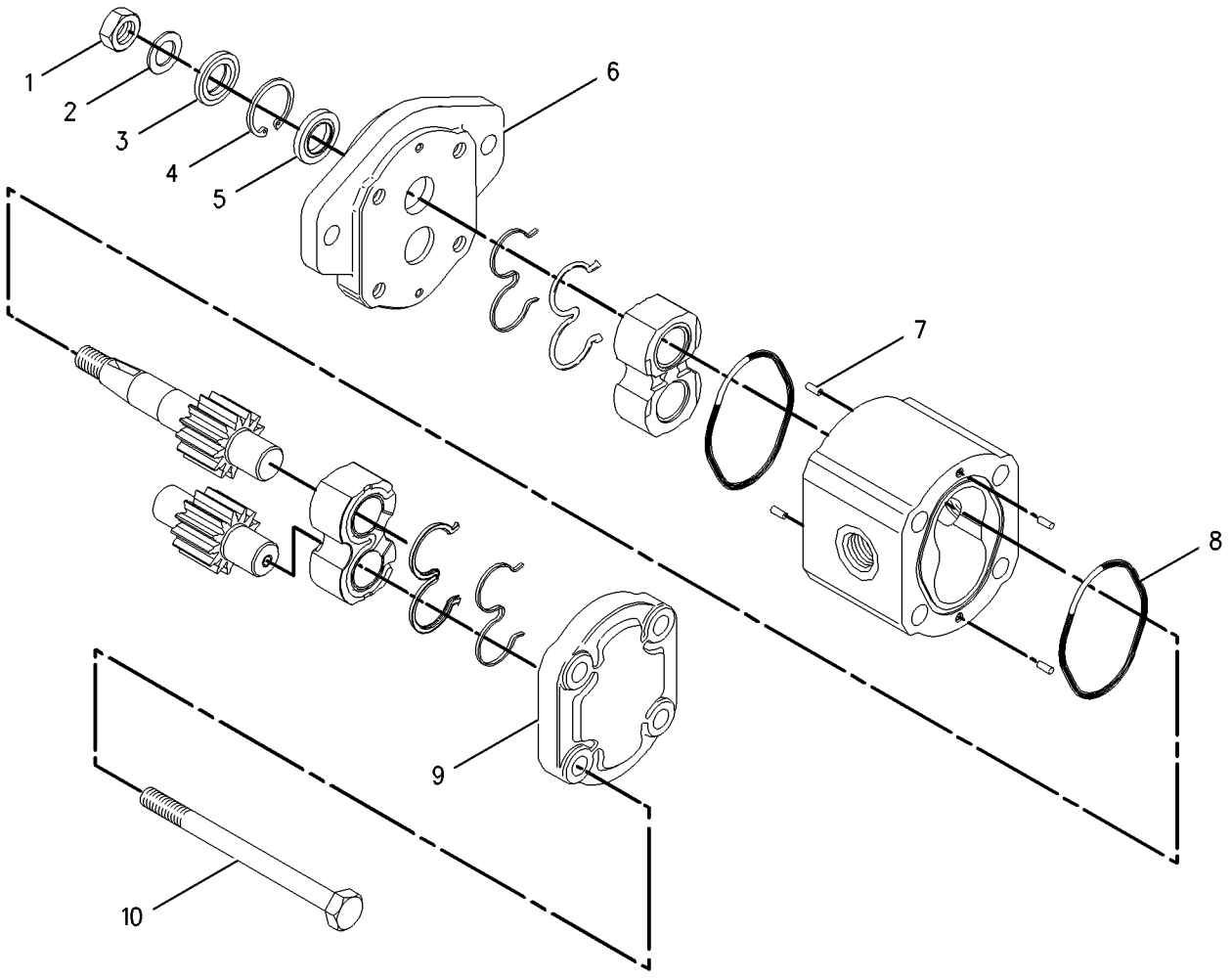


GRAPHIC #1 **<END>** g00914004

# HYDRAULIC SYSTEM

## *105-3196* MOTOR GP-GEROTOR—CIRCLE DRIVE

**S/N: CCA1-UP**

**PART OF 5T-0570 DRIVE GP-CIRCLE**

**SMCS-5082** **i02205130**

| NOTE | REF NO | GRAPHIC REF | PART NUMBER | QTY | PART NAME 1 2 3 4 5 6 (PRODUCT LEVEL) | SEE PAGE |
|---|---|---|---|---|---|---|
| | 1 | 1 | **9T-8051** | 7 | BOLT (3/8-24X4.12-IN) | |
| | 2 | 1 | **9T-8070** | 1 | HOUSING AS | |
| | 3 | 1 | **6Y-2934** | 1 | BEARING-ROLLER | |
| | 4 | 1 | **6Y-2933** | 2 | RING-THRUST | |
| | 5 | 1 | **6Y-2932** | 1 | BEARING-THRUST | |
| | 6 | 1 | **8T-1698** | 1 | BEARING AS-NEEDLE | |
| | 7 | 1 | **9T-9071** | 1 | SHIM | |
| | 8 | 1 | **9T-8058** | 1 | BACKUP | |
| | 9 | 1 | **9T-8059** | 1 | SEAL | |
| | 10 | 1 | **9T-8056** | 1 | SHAFT | |
| | 11 | 1 | **6Y-2935** | 1 | BEARING | |
| | 12 | 1 | **9T-8053** | 5 | SEAL | |
| | 13 | 1 | **9T-8054** | 1 | LINK | |
| | 14 | 1 | **9T-8061** | 1 | PLATE | |
| | 15 | 1 | **9T-8063** | 1 | ROTOR SET | |
| | 16 | 1 | **9T-8065** | 1 | MANIFOLD | |
| | 17 | 1 | **9J-4963** | 1 | RING | |
| | 18 | 1 | **9T-8069** | 1 | PLATE AS | |
| | 19 | 1 | **9T-8067** | 1 | COVER | |
| | | | | | AVAILABLE REPAIR KIT(S): | |
| | | | **9T-9072** | 1 | KIT-SEAL (MOTOR) (CIRCLE DRIVE) | |
| | | | | | (INCLUDES RING, SHIM, SEALS & GREASE PACK) | |

*105-3196* **MOTOR GP-GEROTOR** *(contd.)* **i02205130**

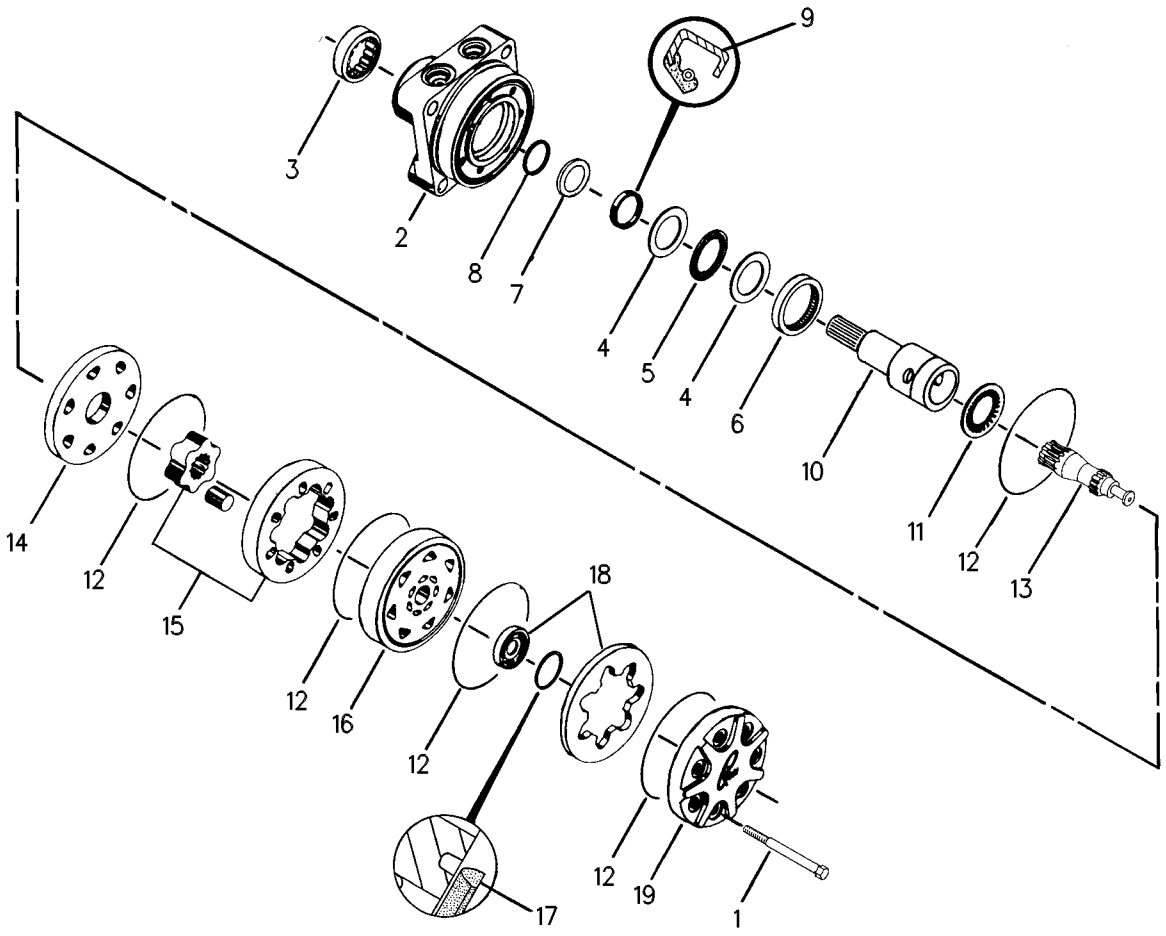


GRAPHIC #1 **<END>** g00108578

# HYDRAULIC SYSTEM

## *123-8867* PUMP & MOTOR GP-SEC STEERING

**S/N: CCA1-UP**
**PART OF 8X-9751 PUMP & MTG GP-SECONDARY STEER**
**AN ATTACHMENT**

**SMCS-4324** **i00138981**

| NOTE | REF NO | GRAPHIC REF | PART NUMBER | QTY | PART NAME 1 2 3 4 5 6 (PRODUCT LEVEL) | SEE PAGE |
|---|---|---|---|---|---|---|
| Y | 1 | 1 | **117-3915** | 1 | MOTOR GP-ELECTRIC | 275 |
| | 2 | 1 | **1A-2209** | 2 | BOLT (3/8-24X1.25-IN) | |
| | 3 | 1 | **2Y-5828** | 2 | LOCKWASHER | |
| | 4 | 1 | **123-8866** | 1 | PUMP | |

Y-SEPARATE ILLUSTRATION

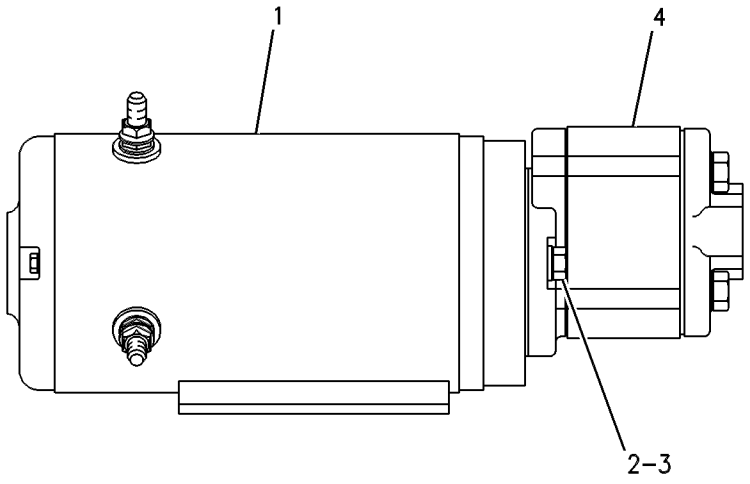


GRAPHIC #1 **<END>** g00085788

# HYDRAULIC SYSTEM

## *160-9180* PUMP & MTG GP-PISTON

**S/N: CCA1-UP**

**PART OF 159-4615 GENERAL AR**

**SMCS-5070** **i02099534**

| NOTE | REF NO | GRAPHIC REF | PART NUMBER | QTY | PART NAME 1 2 3 4 5 6 (PRODUCT LEVEL) | SEE PAGE |
|---|---|---|---|---|---|---|
| | 1 | 1 | **5R-4787** | 4 | PLATE | |
| | 2 | 1 | **8X-4467** | 1 | PLATE AS | |
| YR | 3 | 1 | **169-4882** | 1 | PUMP GP-PISTON (HYDRAULIC, STEERING) | 725 |
| YR | 4 | 1 | **169-4883** | 1 | PUMP GP-PISTON (HYDRAULIC FAN) | 727 |
| | 5 | 1 | **196-1867** | 4 | MOUNT AS | |
| | 6 | 1 | **201-8328** | 1 | COUPLING | |
| | 7 | 1 | **1A-5822** | 4 | BOLT (1/2-13X2.75-IN) | |
| | 8 | 1 | **5P-8245** | 2 | WASHER-HARD (13.5X25.5X3-MM THK) | |
| | 9 | 1 | **6D-7146** | 1 | SEAL-O-RING | |
| M | 10 | 1 | **6V-8675** | 2 | BOLT (M12X1.75X35-MM) | |
| | 11 | 1 | **6V-8765** | 4 | WASHER-HARD (15X26X3-MM THK) | |
| M | 12 | 1 | **8C-3425** | 4 | BOLT (M14X2X35-MM) | |
| B | 13 | 1 | **8W-6590** | 6 | SHIM (0.8-MM THK) | |

B-USE AS REQUIRED
M-METRIC PART
R-REMFG PART MAY BE AVAILABLE
Y-SEPARATE ILLUSTRATION

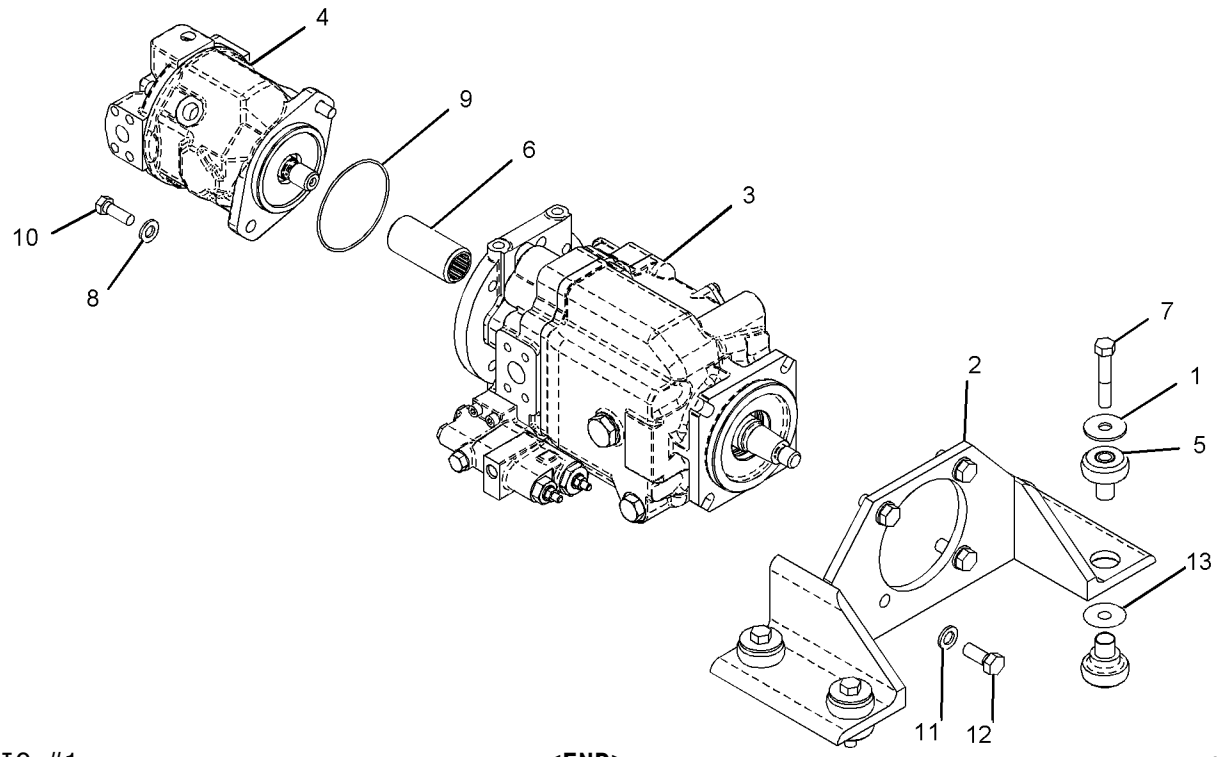


GRAPHIC #1 **<END>** g01071424

# HYDRAULIC SYSTEM

## *8X-9751* PUMP & MTG GP-SECONDARY STEER

**S/N: CCA1-UP**
**PART OF 207-4453, 210-2044 CONVERSION AR-CERTIFICATION, 166-3302 STEERING AR-SECONDARY**
**AN ATTACHMENT**

**SMCS-4324** **i00136018**

| NOTE | REF NO | GRAPHIC REF | PART NUMBER | QTY | PART NAME 1 2 3 4 5 6 (PRODUCT LEVEL) | SEE PAGE |
|---|---|---|---|---|---|---|
| CY | 1 | 1 | *123-8867* | 1 | PUMP & MOTOR GP-SEC STEERING | 722 |

C-CHANGE FROM PREVIOUS TYPE
Y-SEPARATE ILLUSTRATION

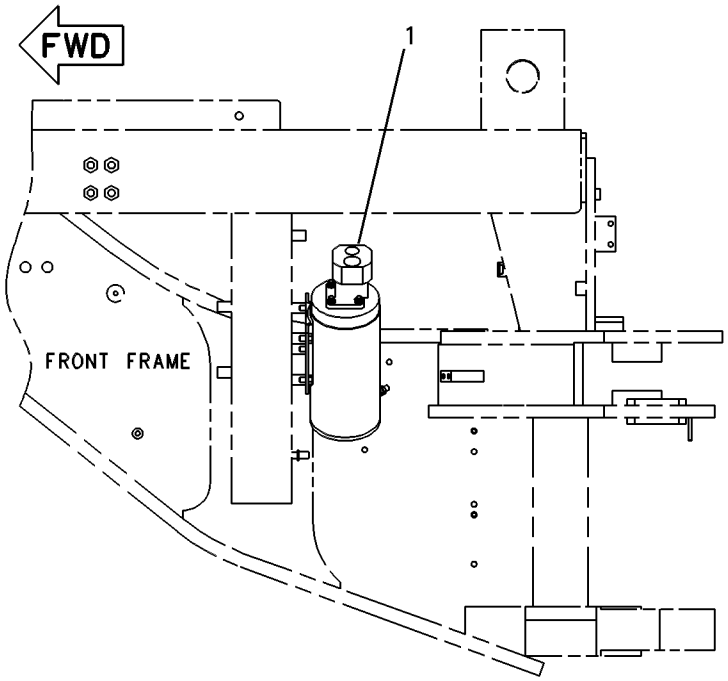


LEFT SIDE VIEW

GRAPHIC #1 **<END>** g00108835

## *169-4882* PUMP GP-PISTON—STEERING*R

**S/N: CCA1-UP**

**PART OF 160-9180 PUMP & MTG GP-PISTON**

**SMCS-5070** **i01771923**

| NOTE | REF NO | GRAPHIC REF | PART NUMBER | QTY | PART NAME 1 2 3 4 5 6 (PRODUCT LEVEL) | SEE PAGE |
|---|---|---|---|---|---|---|
| | 1 | 1 | **6E-4224** | 1 | PLUG-SWASHPLATE | |
| | 2 | 1 | **033-6036** | 1 | SEAL-O-RING | |
| | 3 | 1 | **100-3402** | 1 | BEARING-SWASH | |
| | 4 | 1 | **100-3405** | 1 | BEARING-SWASH | |
| M | 5 | 1 | **6V-8837** | 3 | BOLT (M6X1X16-MM) | |
| | 6 | 1 | **4F-4097** | 1 | SEAL-O-RING | |
| M | 7 | 1 | **3E-4302** | 2 | SCREW-FLAT HEAD (M4X0.7X10-MM) | |
| | 8 | 1 | **100-3404** | 1 | COVER-TRUNNION | |
| | 9 | 1 | **9T-1636** | 1 | SEAT | |
| | 10 | 1 | **9T-1710** | 1 | POPPET | |
| | 11 | 1 | **9T-1699** | 1 | SPRING | |
| | 12 | 1 | **102-4108** | 1 | HEAD-PUMP | |
| B | 13 | 1 | **6E-1436** | 1 | KIT-SHIM (INCLUDES 17-SHIMS) | |
| | 14 | 1 | **6Y-4280** | 1 | CONE-BEARING | |
| | 15 | 1 | **7T-9755** | 1 | CUP-BEARING | |
| | 16 | 1 | **9T-7775** | 1 | PLATE-VALVE | |
| | 17 | 1 | **3E-7417** | 2 | PLUG | |
| | 18 | 1 | **8T-7876** | 2 | SEAL-O-RING | |
| | 19 | 1 | **7L-9061** | 2 | SEAL-O-RING | |
| | 20 | 1 | **100-3413** | 1 | GASKET | |
| Y | 21 | 1 | **100-3412** | 1 | ROTATING GP-PUMP (STEERING) | 729 |
| | 22 | 1 | **100-3409** | 1 | SPRING-BIAS | |
| | 23 | 1 | **100-3408** | 1 | KIT-BIAS PISTON | |
| | | | | | (KIT INCLUDES SPRING, ROD, PISTON, AND SEAL) | |
| | 24 | 1 | **002-1212** | 1 | CUP-BEARING | |
| | 25 | 1 | **2F-8509** | 1 | CONE-BEARING | |
| | 26 | 1 | **203-3175** | 1 | SHAFT | |
| | 27 | 1 | **100-3407** | 1 | HOUSING-PUMP | |
| | 28 | 1 | **006-8663** | 1 | RING | |
| | 29 | 1 | **8T-4750** | 1 | SEAL-LIP TYPE | |
| Y | 30 | 1 | **169-3290** | 1 | SWASHPLATE GP | 733 |
| | 31 | 1 | **100-3415** | 1 | KIT-CONTROL PISTON | |
| | | | | | (KIT INCLUDES ROD, PISTON, AND SEAL) | |
| | 32 | 1 | **9T-1652** | 1 | PIN | |
| M | 33 | 1 | **6V-8336** | 1 | BOLT (M12X1.75X70-MM) | |
| M | 34 | 1 | **6V-7673** | 4 | BOLT (M12X1.75X50-MM) | |
| M | 35 | 1 | **8T-0372** | 1 | BOLT (M12X1.75X90-MM) | |
| M | 36 | 1 | **6V-8337** | 4 | BOLT-SOCKET HEAD (M8X1.25X35-MM) | |
| Y | 37 | 1 | **104-3122** | 1 | VALVE GP-PUMP CONTROL (PRESSURE, FLOW COMPENSATOR) (HYDRAULIC STEERING) | 1022 |
| | 38 | 1 | **3D-2824** | 1 | SEAL-O-RING | |
| | 39 | 1 | **9S-4183** | 1 | PLUG-O RING | |
| | 40 | 1 | **095-0888** | 2 | PIN-SPRING | |
| | 41 | 1 | **109-3204** | 3 | SEAL-O-RING | |
| | 42 | 1 | **104-3124** | 1 | SHIELD | |
| | 43 | 1 | **8C-3089** | 1 | SEAL-O-RING | |
| | 44 | 1 | **201-8327** | 1 | ADAPTER | |
| M | 45 | 1 | **7X-2607** | 2 | BOLT (M12X1.75X130-MM) | |

B-USE AS REQUIRED
M-METRIC PART
Y-SEPARATE ILLUSTRATION

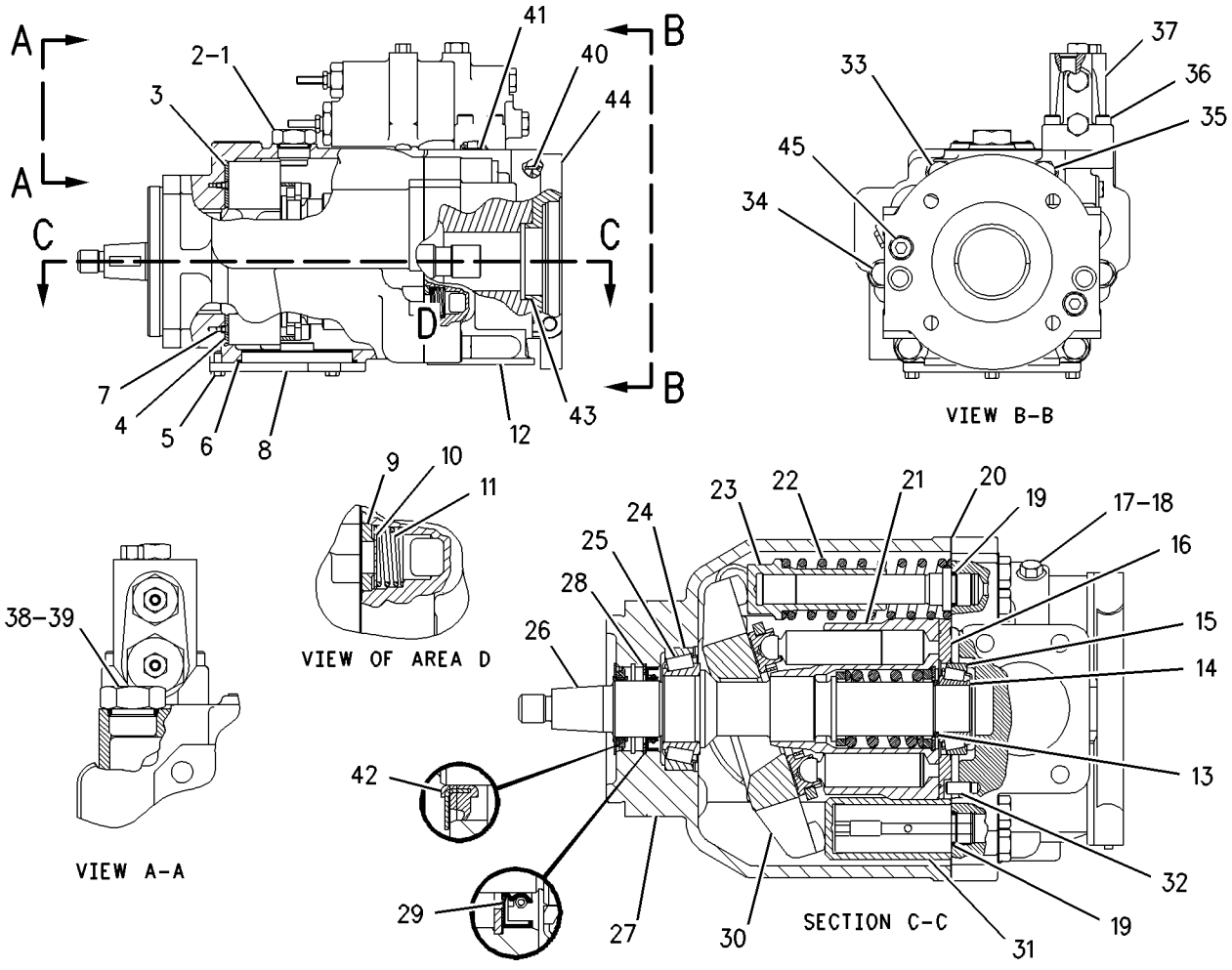


GRAPHIC #1 **<END>** g00790750

# HYDRAULIC SYSTEM

## *169-4883* PUMP GP-PISTON—HYDRAULIC FAN*R

**S/N: CCA1-UP**

**PART OF 160-9180 PUMP & MTG GP-PISTON**

**SMCS-5070** **i01756828**

| NOTE | REF NO | GRAPHIC REF | PART NUMBER | QTY | PART NAME 1 2 3 4 5 6 (PRODUCT LEVEL) | SEE PAGE |
|---|---|---|---|---|---|---|
| | 1 | 1 | **8T-9597** | 1 | RING-RETAINING | |
| | 2 | 1 | **155-9134** | 2 | PLATE | |
| Y | 3 | 1 | **194-9453** | 1 | ROTATING GP-PUMP (HYDRAULIC FAN) | 730 |
| | 4 | 1 | **8U-6457** | 4 | SEAL-O-RING | |
| M | 5 | 1 | **9X-6032** | 4 | BOLT-SOCKET HEAD (M10X1.5X30-MM) | |
| | 6 | 1 | **191-7583** | 1 | BEARING AS-ROLLER | |
| | 7 | 1 | **191-7582** | 1 | SHIM (2.5-MM THK) | |
| | 8 | 1 | **176-1378** | 1 | SEAL-O-RING | |
| | 9 | 1 | **155-9142** | 1 | GUIDE | |
| | 10 | 1 | **155-9143** | 1 | SPRING | |
| | 11 | 1 | **155-9141** | 1 | PISTON | |
| | 14 | 1 | **191-7581** | 1 | SHAFT | |
| | 15 | 1 | **155-9125** | 1 | BEARING AS-ROLLER | |
| | 16 | 1 | **155-9127** | 1 | SEAL | |
| | 17 | 1 | **195-9634** | 1 | SWASHPLATE AS | |
| | 18 | 1 | **155-9139** | 1 | PISTON | |
| | 19 | 1 | **191-7584** | 1 | GUIDE | |
| | 20 | 1 | **136-8423** | 1 | PLUG-BREAK OFF | |
| | 21 | 1 | **9X-8979** | 1 | DOWEL | |
| | 22 | 1 | **155-9129** | 1 | HOUSING | |
| Y | 23 | 1 | **195-9639** | 1 | VALVE GP-PUMP CONTROL (PRESSURE, FLOW COMPENSATOR) (HYDRAULIC FAN) | 1024 |
| | 24 | 1 | **9X-7680** | 3 | SEAL-O-RING | |
| | 25 | 1 | **9S-8002** | 1 | PLUG | |
| | 26 | 1 | **3J-7354** | 1 | SEAL-O-RING | |
| M | 27 | 1 | **8T-8442** | 4 | BOLT-SOCKET HEAD (M6X1X30-MM) | |

M-METRIC PART
Y-SEPARATE ILLUSTRATION

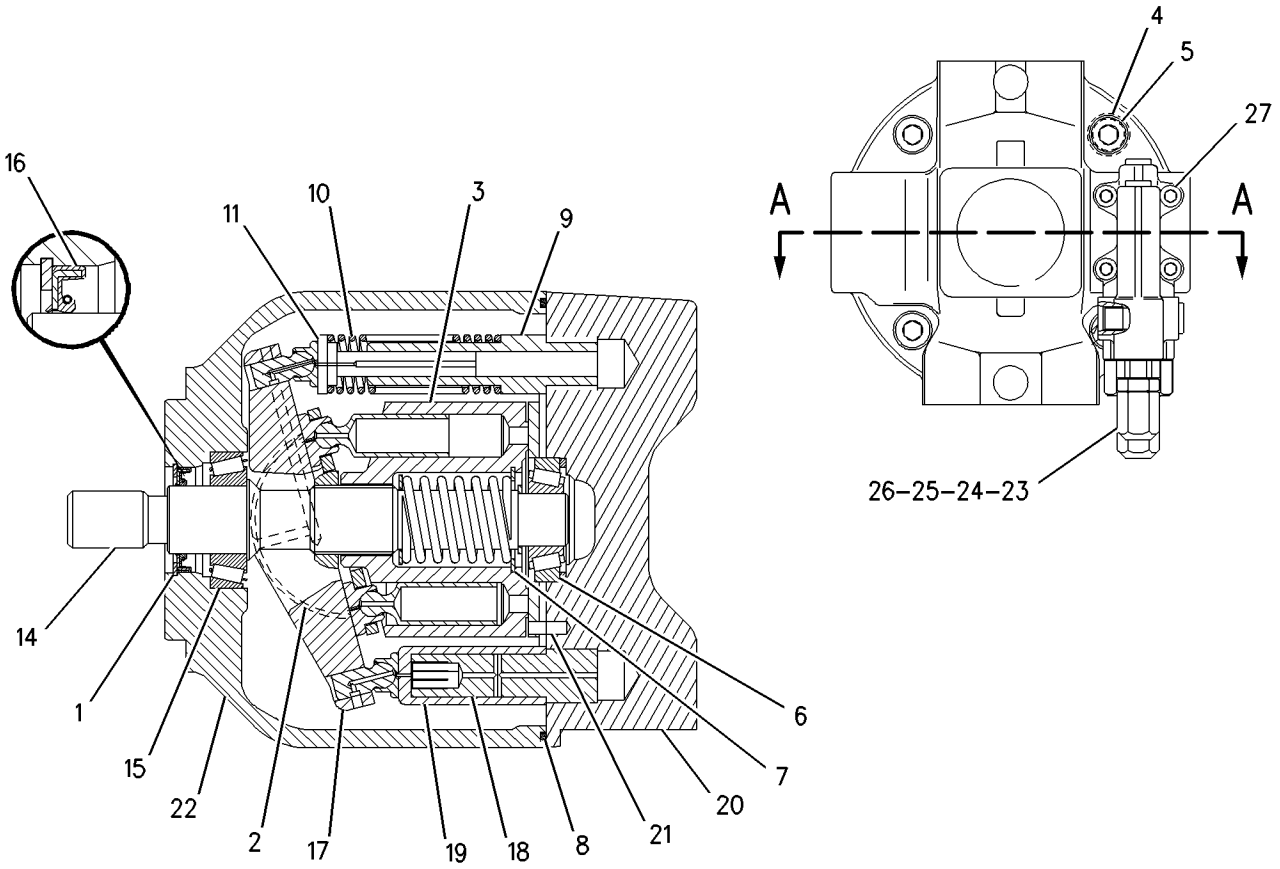


SECTION A–A

GRAPHIC #1 **<END>** g00898603

# 100-3412 ROTATING GP-PUMP—STEERING

**S/N: CCA1-UP**

**PART OF 169-4882 PUMP GP-PISTON**

**SMCS-5070** **i00130809**

| NOTE | REF NO | GRAPHIC REF | PART NUMBER | QTY | PART NAME 1 2 3 4 5 6 (PRODUCT LEVEL) | SEE PAGE |
|---|---|---|---|---|---|---|
| | 1 | 1 | **9T-7774** | 1 | BARREL | |
| | 2 | 1 | **3J-8500** | 1 | RING-RETAINING | |
| | 3 | 1 | **9T-7769** | 1 | GUIDE-OUTER | |
| M | 4 | 1 | **6V-5192** | 4 | BOLT-SOCKET HEAD (M8X1.25X30-MM) | |
| | 5 | 1 | **100-3410** | 2 | PLATE | |
| | 6 | 1 | **100-3411** | 2 | PLATE-SPACER | |
| | 7 | 1 | **9T-7765** | 9 | PISTON | |
| | 8 | 1 | **9T-7767** | 1 | PLATE-RETRACTION | |
| | 9 | 1 | **9T-7773** | 1 | GUIDE-INNER | |
| | 10 | 1 | **9T-7771** | 1 | SPRING | |

M-METRIC PART

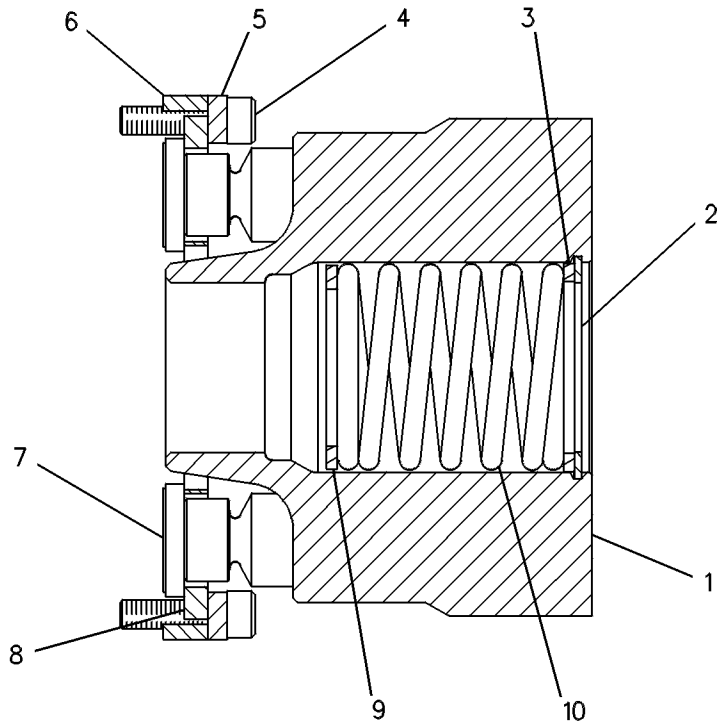


GRAPHIC #1 **<END>** g00084780

# *194-9453* ROTATING GP-PUMP–HYDRAULIC FAN

**S/N: CCA1-UP**

**PART OF 169-4883 PUMP GP-PISTON**

**SMCS-5070** **i01529266**

| NOTE | REF NO | GRAPHIC REF | PART NUMBER | QTY | PART NAME 1 2 3 4 5 6 (PRODUCT LEVEL) | SEE PAGE |
|---|---|---|---|---|---|---|
| | 1 | 1 | **155-9112** | 9 | PISTON AS | |
| | 2 | 1 | **155-9136** | 1 | BARREL | |
| | 3 | 1 | **155-9115** | 1 | PLATE | |
| | 4 | 1 | **155-9116** | 1 | GUIDE-BALL | |
| | 5 | 1 | **155-9117** | 1 | SPRING | |
| | 6 | 1 | **194-9479** | 3 | PIN | |
| | 7 | 1 | **194-9480** | 1 | RING-RETAINING | |
| | 8 | 1 | **194-9481** | 1 | DISC-THRUST | |
| | 9 | 1 | **194-9478** | 1 | PLATE-PORT | |

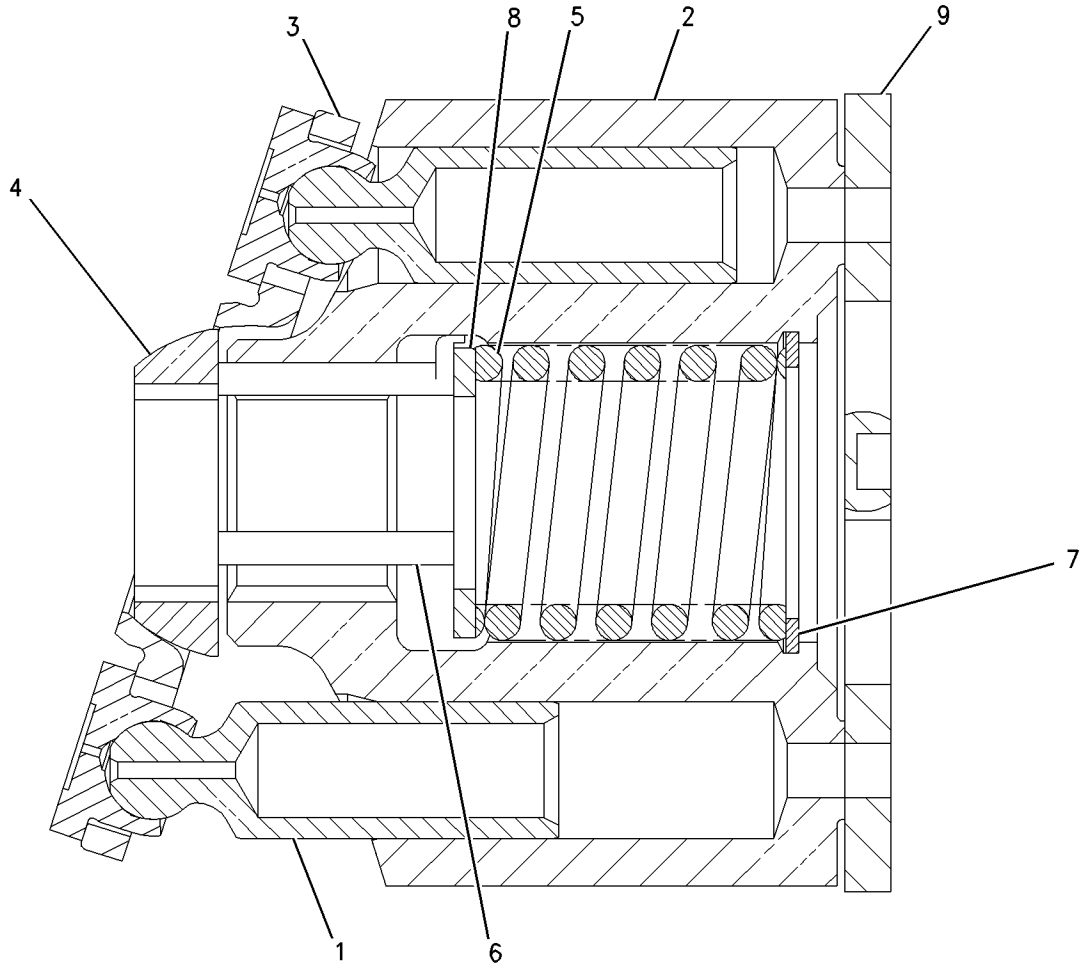


GRAPHIC #1 **<END>** g00796070

# HYDRAULIC SYSTEM

## *178-9582* SHAFT GP-PUMP DRIVE

**S/N: CCA1-UP**

**PART OF 159-4615 GENERAL AR**

**SMCS-3108** **i01990067**

| NOTE | REF NO | GRAPHIC REF | PART NUMBER | QTY | PART NAME 1 2 3 4 5 6 (PRODUCT LEVEL) | SEE PAGE |
|---|---|---|---|---|---|---|
| | 1 | 1 | **1B-8737** | 1 | KEY-WOODRUFF | |
| | 2 | 1 | **1D-5120** | 1 | NUT-JAM (3/4-16-THD) | |
| | 3 | 1 | **7D-9267** | 1 | YOKE | |
| | 4 | 1 | *178-7983* | 1 | SLIP JOINT GP | |
| | | 1 | **0L-0478** | 8 | BOLT (3/8-24X1.75-IN) | |
| | | 1 | **5T-1362** | 2 | SPIDER & BEARING AS | |
| | | 1 | **178-7985** | 1 | YOKE AS | |
| | 5 | 1 | **0L-0478** | 4 | BOLT (3/8-24X1.75-IN) | |
| | 6 | 1 | **0S-1571** | 4 | BOLT (3/8-16X1.75-IN) | |
| | 7 | 1 | **5P-8248** | 1 | WASHER-HARD (20X36.5X3.5-MM THK) | |

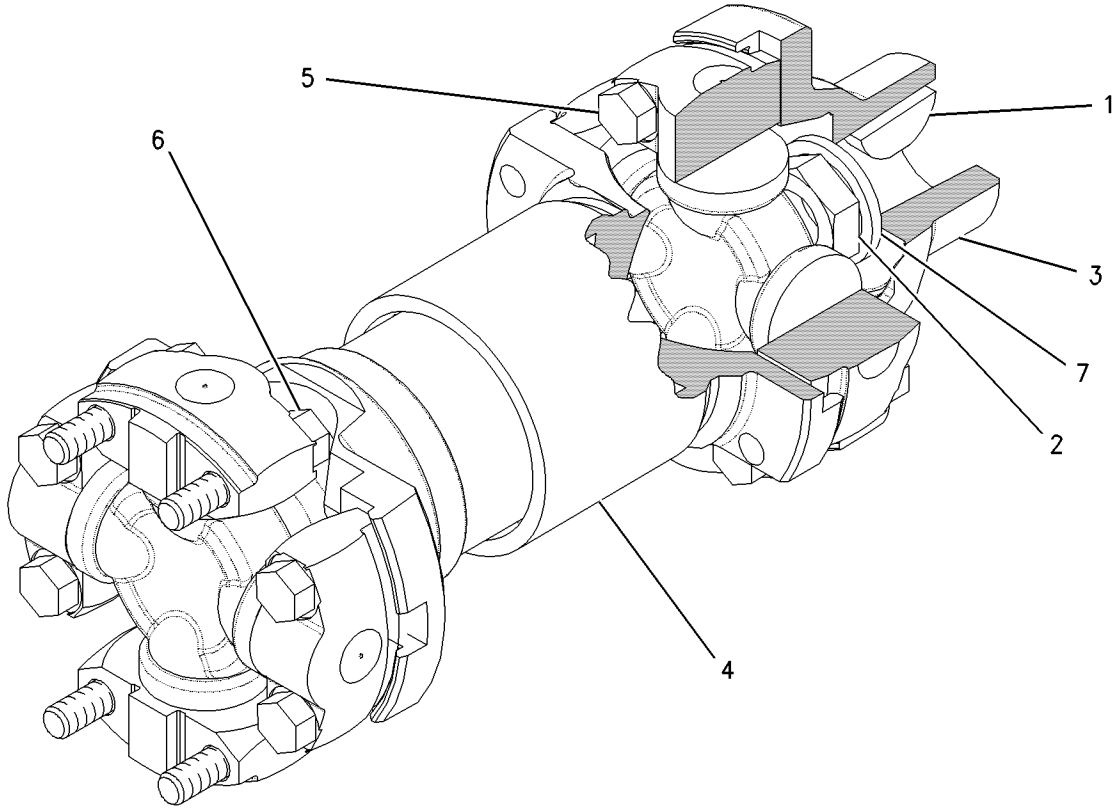


GRAPHIC #1 **<END>** g00808419

# HYDRAULIC SYSTEM

## *166-3302* STEERING AR-SECONDARY

**S/N: CCA1-UP**

**AN ATTACHMENT**

**SMCS-4300** **i01839077**

| NOTE | PART NUMBER | QTY | PART NAME 1 2 3 4 5 6 (PRODUCT LEVEL) | SEE PAGE |
|---|---|---|---|---|
| Y | *171-6458* | 1 | LINES GP-SECONDARY STEERING | 708 |
| Y | *8X-9751* | 1 | PUMP & MTG GP-SECONDARY STEER | 724 |
| Y | *161-1020* | 1 | WIRING GP-SECONDARY STEERING | 385 |

Y-SEPARATE ILLUSTRATION

**<END>**

# *169-3290* SWASHPLATE GP–VARIABLE

**S/N: CCA1-UP**

**PART OF 169-4882 PUMP GP-PISTON**

**SMCS-5070** **i01771931**

| NOTE | REF NO | GRAPHIC REF | PART NUMBER | QTY | PART NAME 1 2 3 4 5 6 (PRODUCT LEVEL) | SEE PAGE |
|---|---|---|---|---|---|---|
| | 1 | 1 | **1H-3937** | 2 | PIN | |
| | 2 | 1 | **167-1801** | 2 | STOP-SWASHPLATE | |

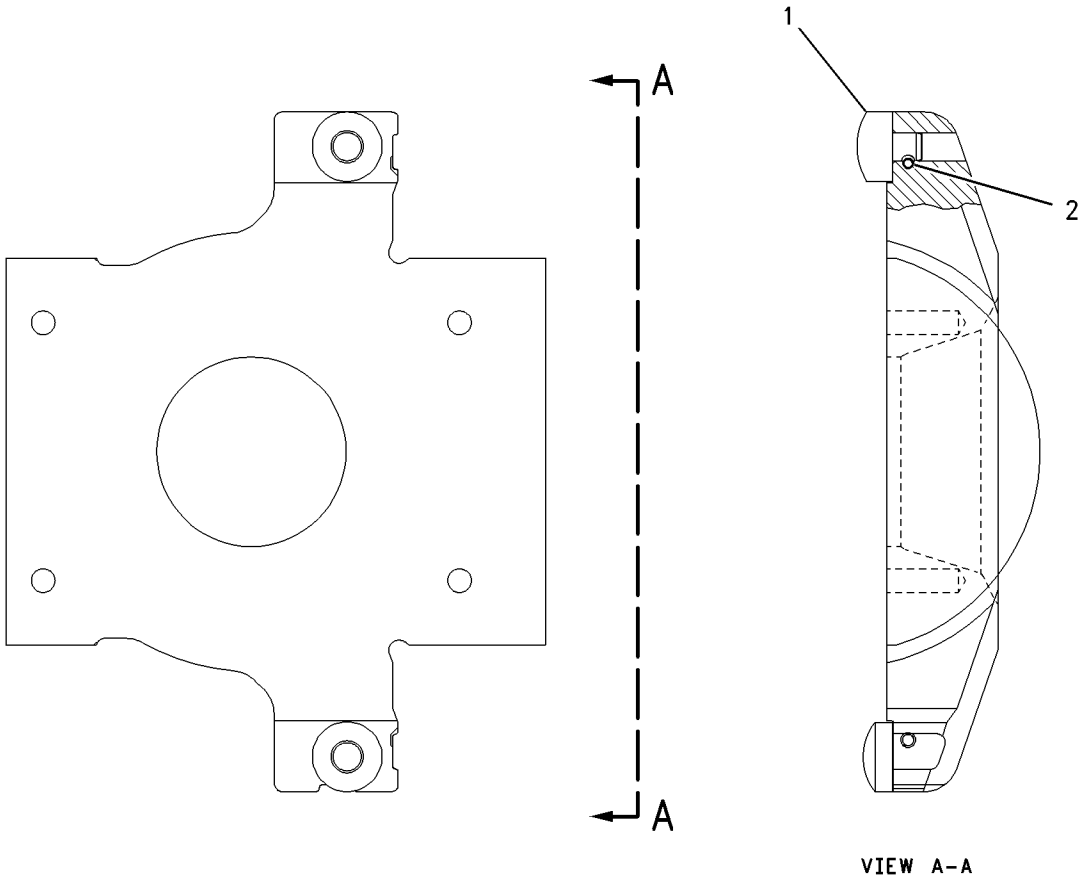


GRAPHIC #1 **<END>** g00938671

# HYDRAULIC SYSTEM

## *173-1011* SWIVEL GP

**S/N: CCA1-1553**

**PART OF 159-4730 LINES GP-HYDRAULIC**

**SMCS-5060** **i01871252**

| NOTE | REF NO | GRAPHIC REF | PART NUMBER | QTY | PART NAME 1 2 3 4 5 6 (PRODUCT LEVEL) | SEE PAGE |
|---|---|---|---|---|---|---|
| | 1 | 1 | **173-1009** | 1 | RETAINER | |
| | 2 | 1 | **8J-2331** | 7 | SEAL | |
| | 3 | 1 | **2H-3928** | 7 | SEAL-O-RING | |
| | 4 | 1 | **173-1007** | 2 | SEAL | |
| | 5 | 1 | **9T-5603** | 1 | BODY | |
| | 6 | 1 | **4J-9964** | 2 | SEAL | |
| | 7 | 1 | **8T-4223** | 4 | WASHER-HARD (13.5X25.5X3-MM THK) | |
| | 8 | 1 | **5P-2566** | 6 | BOLT (1/2-13X1.5-IN) | |
| | 9 | 1 | **1P-3700** | 4 | SEAL-RECTANGULAR | |
| | 10 | 1 | **223-0580** | 1 | COVER | |
| | 11 | 1 | **173-1008** | 1 | ROTOR | |
| B | 12 | 1 | **5J-1246** | 6 | SHIM (0.13-MM THK) | |

B-USE AS REQUIRED

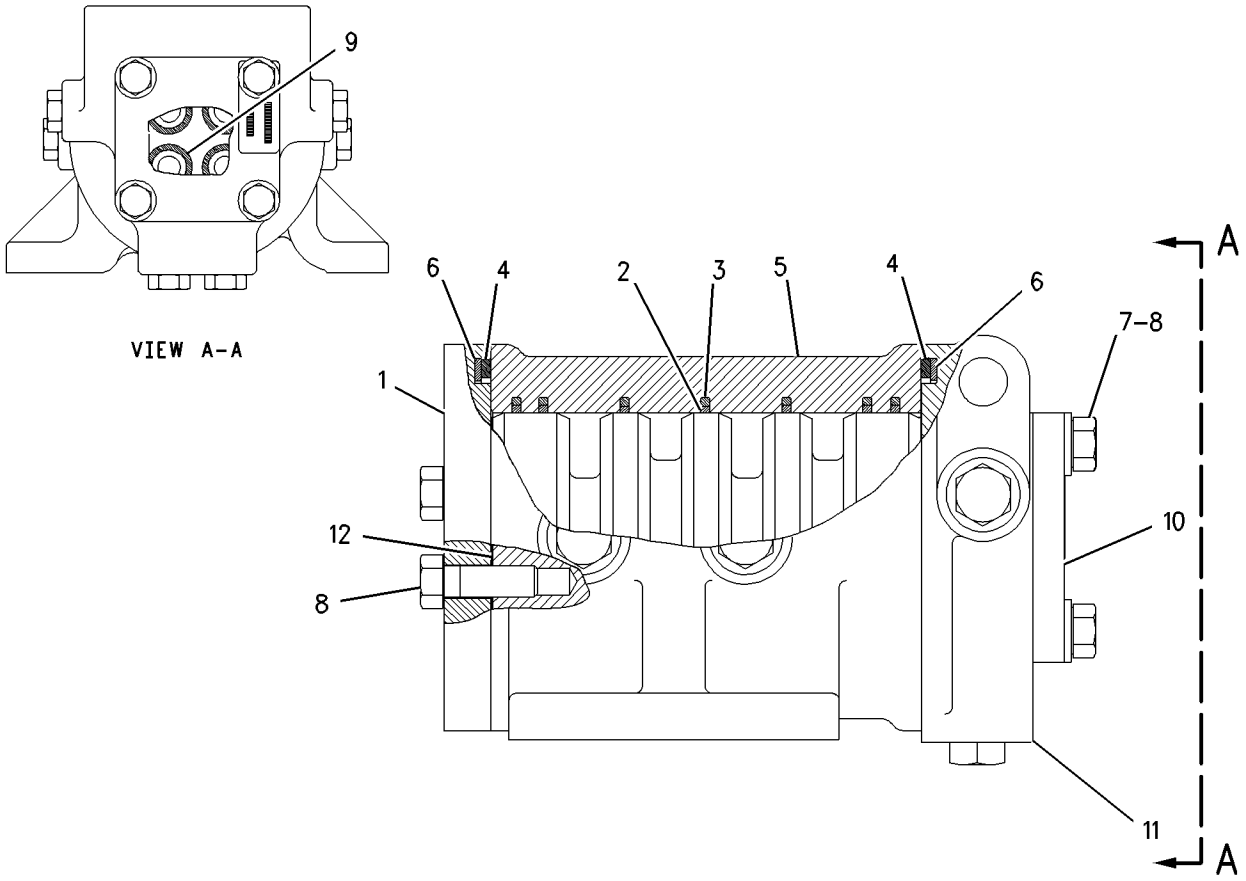


GRAPHIC #1 **<END>** g00710910

# HYDRAULIC SYSTEM

## 260-6502 SWIVEL GP

**S/N: CCA1554-UP**

**PART OF 159-4730 LINES GP-HYDRAULIC**

**SMCS-5060** **i02322216**

| NOTE | REF NO | GRAPHIC REF | PART NUMBER | QTY | PART NAME 1 2 3 4 5 6 (PRODUCT LEVEL) | SEE PAGE |
|---|---|---|---|---|---|---|
| B | 1 | 1 | **5J-1246** | 6 | SHIM (0.13-MM THK) | |
| | 2 | 1 | **8J-2331** | 7 | SEAL | |
| | 3 | 1 | **173-1008** | 1 | ROTOR | |
| | 4 | 1 | **173-1009** | 1 | RETAINER | |
| | 5 | 1 | **223-0580** | 1 | COVER | |
| | 7 | 1 | **260-6501** | 1 | BODY | |
| | 8 | 1 | **173-1007** | 2 | SEAL | |
| | 9 | 1 | **1P-3700** | 4 | SEAL-RECTANGULAR | |
| | 10 | 1 | **2H-3928** | 7 | SEAL-O-RING | |
| | 11 | 1 | **4J-9964** | 2 | SEAL | |
| | 12 | 1 | **5P-2566** | 6 | BOLT (1/2-13X1.5-IN) | |
| | 13 | 1 | **8T-4223** | 4 | WASHER-HARD (13.5X25.5X3-MM THK) | |

B-USE AS REQUIRED

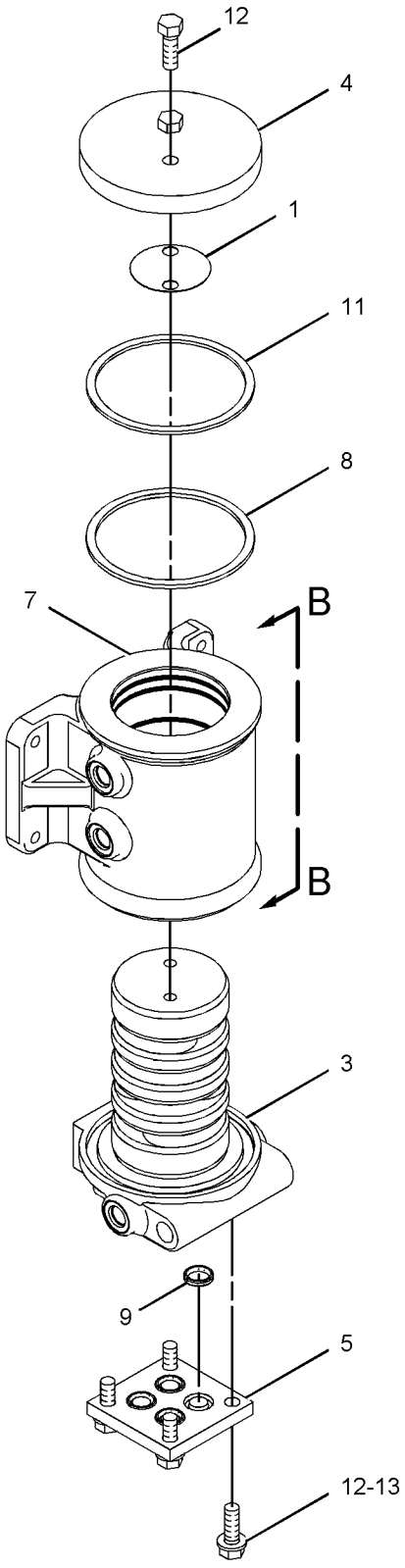


VIEW OF AREA A

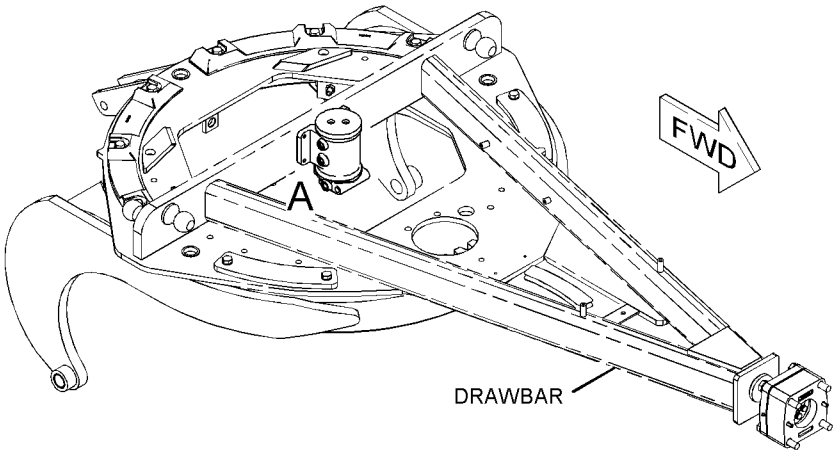


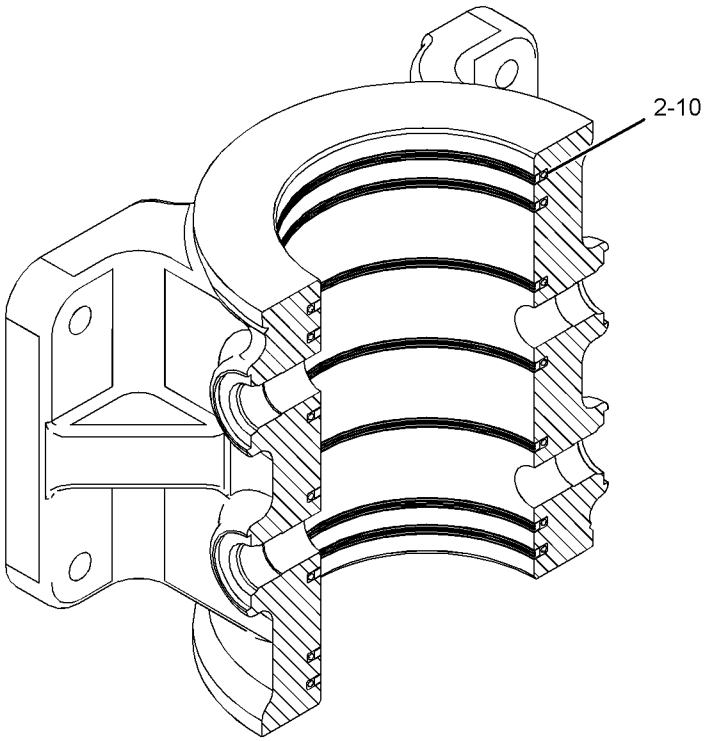


SECTION B-B

GRAPHIC #1 **<END>** g01142114

# HYDRAULIC SYSTEM

## *207-2410* TANK & FILTER GP-HYDRAULIC

**S/N: CCA1-UP**

**PART OF 207-2409 TANK & MTG GP-HYDRAULIC**

**SMCS-4332, 5056, 5068** **i02591822**

| NOTE | REF NO | GRAPHIC REF | PART NUMBER | QTY | PART NAME 1 2 3 4 5 6 (PRODUCT LEVEL) | SEE PAGE |
|---|---|---|---|---|---|---|
| | 2 | 1 | **1R-0774** | 1 | FILTER ELEMENT AS-OIL (STANDARD EFFICIENCY) | |
| | 3 | 1 | **2D-4202** | 1 | PLATE | |
| | 4 | 1 | **3F-1547** | 1 | SEAL-O-RING | |
| | 6 | 1 | **4M-6921** | 1 | WASHER-SPRING | |
| | 7 | 1 | **5D-1911** | 1 | COVER-HYDRAULIC CAP | |
| | 8 | 1 | **226-2871** | 1 | ROD | |
| | 9 | 1 | **7H-1447** | 1 | CAP-FILLER (HYDRAULIC OIL TANK) | |
| | 10 | 1 | **9J-1979** | 1 | RETAINER AS | |
| | 13 | 1 | **9J-3047** | 1 | STRAINER (HYDRAULIC TANK FILL) (HYDRAULIC OIL TANK) | |
| | 14 | 1 | **9M-7394** | 1 | LEVER (HYDRAULIC TANK FILL) | |
| | 15 | 1 | **207-2411** | 1 | TANK AS-HYDRAULIC | |
| | 16 | 1 | **226-2870** | 1 | CAP AS (HYDRAULIC TANK) | |
| | 17 | 1 | **217-2661** | 1 | GAUGE-SIGHT (HYDRAULIC OIL) | |
| | | 1 | **5J-2974** | 2 | SEAL-O-RING | |
| | | 1 | **215-6425** | 2 | BOLT (1/2-20X1.46-IN) | |
| | 18 | 1 | **086-0507** | 1 | PIN | |
| | 19 | 1 | **141-9661** | 1 | SPACER (20X128X6-MM THK) | |
| | 20 | 1 | **1L-5072** | 1 | DOWEL | |
| | 21 | 1 | **2J-7761** | 1 | RING-RETAINING | |
| | 22 | 1 | **2K-4973** | 1 | LOCKNUT (3/8-16-THD) | |
| | 23 | 1 | **2S-5100** | 1 | VALVE AS-MANUAL | |
| | 24 | 1 | **3G-0361** | 1 | GASKET | |
| | 26 | 1 | **7D-1195** | 1 | SEAL-O-RING | |
| | 27 | 1 | **8T-2275** | 1 | BALL | |
| | 28 | 1 | **8T-4121** | 4 | WASHER-HARD (11X21X2.5-MM THK) | |
| M | 29 | 1 | **8T-4195** | 4 | BOLT (M10X1.5X30-MM) | |
| | 30 | 1 | **9H-6454** | 1 | GASKET | |
| | 31 | 1 | **3B-4610** | 1 | PIN-COTTER | |
| | 32 | 1 | **4B-2913** | 1 | PIN-CLEVIS | |

M-METRIC PART

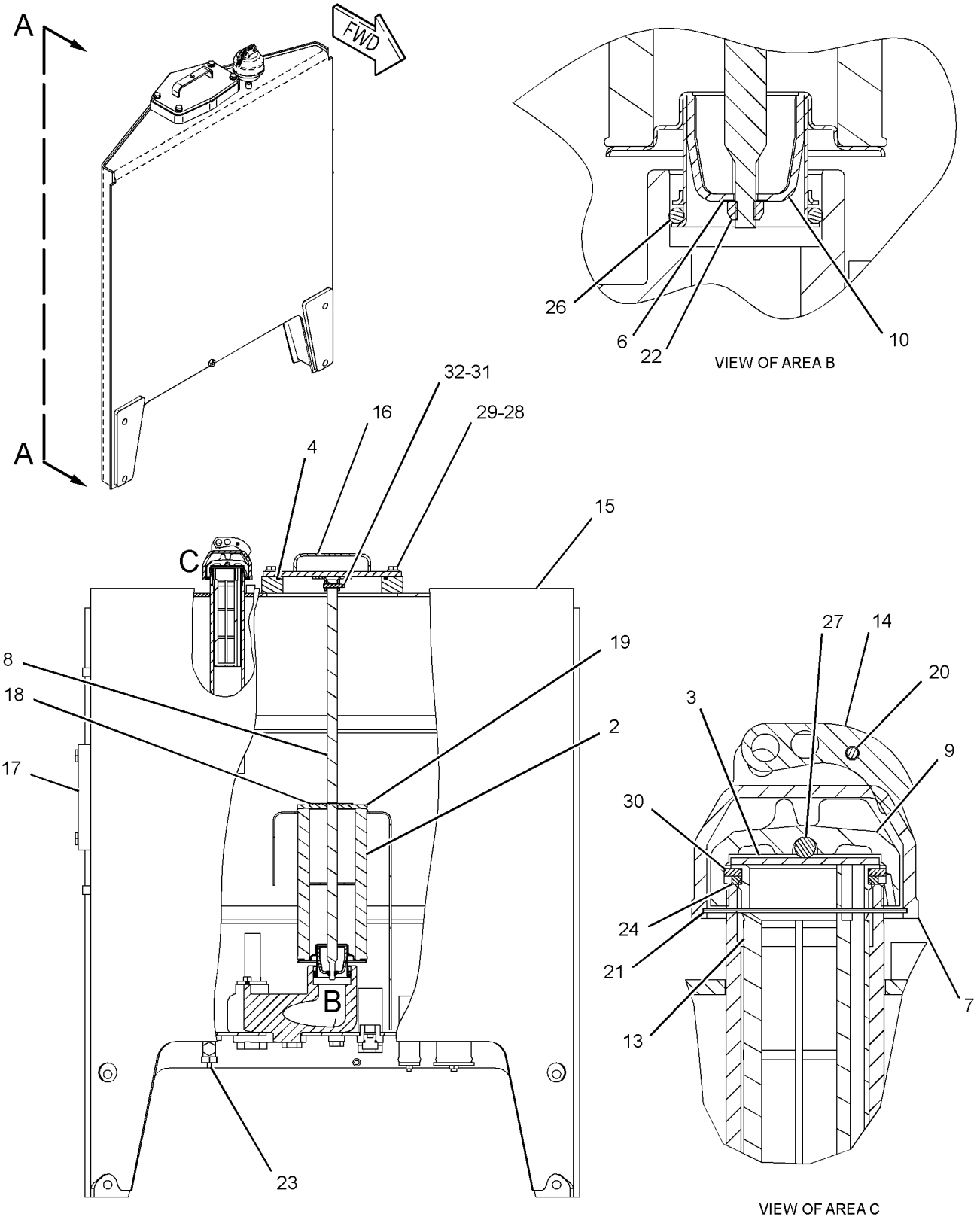


GRAPHIC #1 **<END>** g01297446

# *207-2409* TANK & MTG GP-HYDRAULIC

**S/N: CCA1-UP**

**PART OF 159-4615 GENERAL AR**

**SMCS-4332, 5056, 5068** **i02385493**

| NOTE | REF NO | GRAPHIC REF | PART NUMBER | QTY | PART NAME 1 2 3 4 5 6 (PRODUCT LEVEL) | SEE PAGE |
|---|---|---|---|---|---|---|
| | 1 | 1 | **246-2641** | 1 | PADLOCK GP | |
| | | 1 | **5P-8500** | 2 | KEY | |
| Y | 2 | 1 | *207-2410* | 1 | TANK & FILTER GP-HYDRAULIC | 737 |
| | 3 | 1 | **7X-0325** | 4 | BOLT (1/2-13X2.5-IN) | |
| | 4 | 1 | **8T-4223** | 4 | WASHER-HARD (13.5X25.5X3-MM THK) | |

Y-SEPARATE ILLUSTRATION

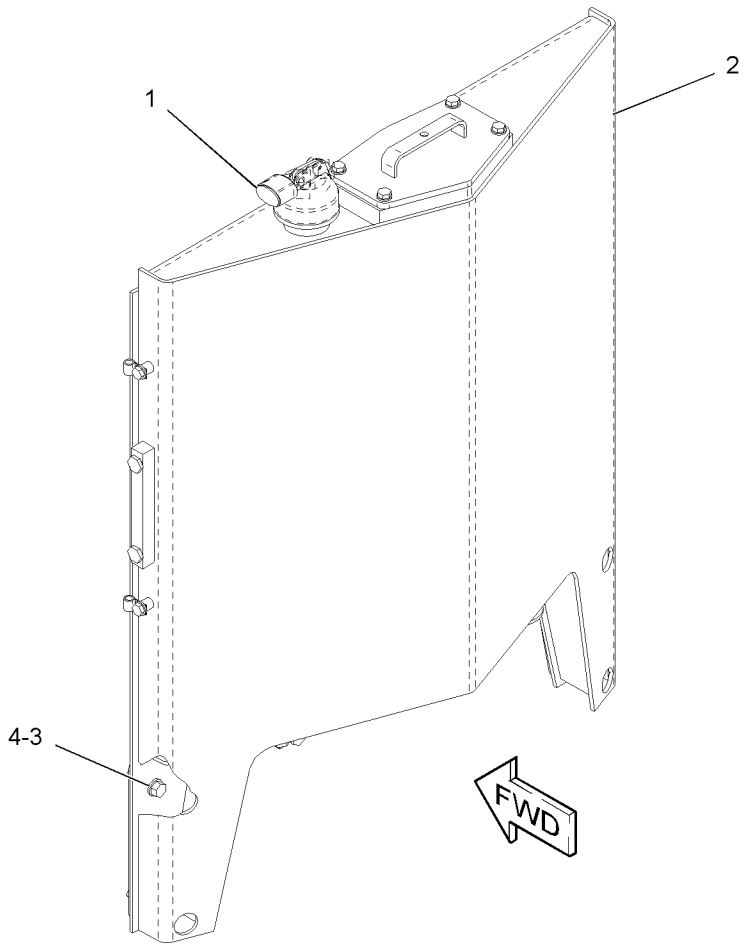


GRAPHIC #1 **<END>** g01190564

# HYDRAULIC SYSTEM

## *7I-4621* VALVE & LINKAGE GP—BANK 5 LH-RH

**S/N: CCA1-UP**

**AN ATTACHMENT**

**SMCS-5051, 5063** **i02591824**

| NOTE | REF NO | GRAPHIC REF | PART NUMBER | QTY | PART NAME 1 2 3 4 5 6 (PRODUCT LEVEL) | SEE PAGE |
|---|---|---|---|---|---|---|
| Y | 1 | 1 | **104-8671** | 1 | VALVE GP-BANK 5 (RH) | 920 |
| Y | 2 | 1 | **104-8646** | 1 | VALVE GP-BANK 5 (LH) | 919 |
| | 3 | 1 | **8X-5499** | 2 | RETAINER | |
| | 4 | 1 | **101-2457** | 1 | LEVER (SCARIFIER) | |
| | 4A | 1 | **101-2457** | 1 | LEVER (ARTICULATION) | |
| | 5 | 1 | **8D-5634** | 1 | LEVER (BLADE LIFT, LH) | |
| | 5A | 1 | **8D-5634** | 1 | LEVER (CENTERSHIFT) | |
| | 6 | 1 | **4L-6459** | 1 | BOLT (3/8-16X2.5-IN) | |
| | 7 | 1 | **8W-0456** | 1 | SHAFT | |
| | 8 | 1 | **8X-4276** | 10 | ROD | |
| | | 1 | **6V-8186** | 20 | NUT-FULL (5/16-24-THD) | |
| | | 1 | **7H-3641** | 20 | END-ROD (5/16-24-THD) | |
| | 9 | 1 | **8D-5633** | 1 | LEVER (SIDESHIFT) | |
| | 9A | 1 | **8D-5633** | 1 | LEVER (WHEEL LEAN) | |
| | 10 | 1 | **101-2458** | 1 | LEVER (BLADE TIP) | |
| | 10A | 1 | **101-2458** | 1 | LEVER (PLOW, BULLDOZER LIFT) | |
| | 11 | 1 | **137-4515** | 2 | BUSHING | |
| | 12 | 1 | **8D-5640** | 12 | BEARING | |
| B | 13 | 1 | **8D-5636** | 4 | SHIM (0.254-MM THK) | |
| B | 14 | 1 | **8D-5637** | 4 | SHIM (0.762-MM THK) | |
| | 15 | 1 | **6L-1962** | 10 | NUT-JAM (3/8-24-THD) | |
| | 16 | 1 | **8T-9043** | 20 | BOLT (5/16-18X0.875-IN) | |
| | 17 | 1 | **3F-9556** | 20 | LOCKWASHER | |
| | 18 | 1 | **9B-7237** | 1 | BOLT (3/8-16X1.25-IN) | |
| | 19 | 1 | **8D-5641** | 10 | BEARING | |
| | 20 | 1 | **2G-6757** | 1 | KNOB-BLADE LIFT (BLADE LIFT) | |
| M | 21 | 1 | **8T-4136** | 4 | BOLT (M10X1.5X25-MM) | |
| | 22 | 1 | **2G-6749** | 1 | KNOB-SIDESHIFT | |
| | 23 | 1 | **2G-6747** | 1 | KNOB-BLADE TIP | |
| | 24 | 1 | **8D-5632** | 1 | LEVER (CIRCLE DRIVE) | |
| | 24A | 1 | **8D-5632** | 1 | LEVER (BLADE LIFT, RH) | |
| | 25 | 1 | **2G-6751** | 1 | KNOB-CIRCLE DRIVE | |
| | 26 | 1 | **2G-6748** | 1 | KNOB-BLADE LIFT | |
| | 27 | 1 | **2G-6756** | 1 | KNOB-WHEEL LEAN | |
| | 28 | 1 | **2G-6752** | 1 | KNOB-ARTICULATION | |
| | 29 | 1 | **2G-6755** | 1 | KNOB-CENTERSHIFT | |
| | 30 | 1 | **5P-1075** | 2 | WASHER-HARD (10.2X22.5X3-MM THK) | |
| | 31 | 1 | **9M-1853** | 6 | MOUNTING | |
| | 32 | 1 | **8T-4121** | 8 | WASHER-HARD (11X21X2.5-MM THK) | |
| M | 33 | 1 | **8T-4195** | 4 | BOLT (M10X1.5X30-MM) | |
| | 34 | 1 | **6V-8188** | 2 | NUT (1/2-13-THD) | |
| | 35 | 1 | **5P-2424** | 6 | BOLT (1/2-13X2.25-IN) | |
| | 36 | 1 | **5P-1076** | 6 | WASHER-HARD (13.5X30X4-MM THK) | |
| | 37 | 1 | **6B-0933** | 4 | SPACER (10.31X19.05X6.35-MM THK) | |
| | 38 | 1 | **104-7740** | 1 | PLATE AS (LH) | |
| | 39 | 1 | **104-7419** | 1 | PLATE AS (RH) | |
| | | | | | (EACH PLATE AS INCLUDES) | |
| | 40 | 1 | **1F-0748** | 2 | NUT-WELD (1/2-13-THD) | |
| | 41 | 1 | **2G-6753** | 1 | KNOB-SCARIFIER | |
| | 42 | 1 | **137-4516** | 1 | SHAFT | |
| | 43 | 1 | **104-7429** | 2 | PLATE | |
| | 44 | 1 | **8F-6437** | 6 | WASHER (13.5X50.8X4.76-MM THK) | |
| | 45 | 1 | **2G-6754** | 1 | KNOB (DOZER LIFT, PLOW) | |

B-USE AS REQUIRED
M-METRIC PART
Y-SEPARATE ILLUSTRATION

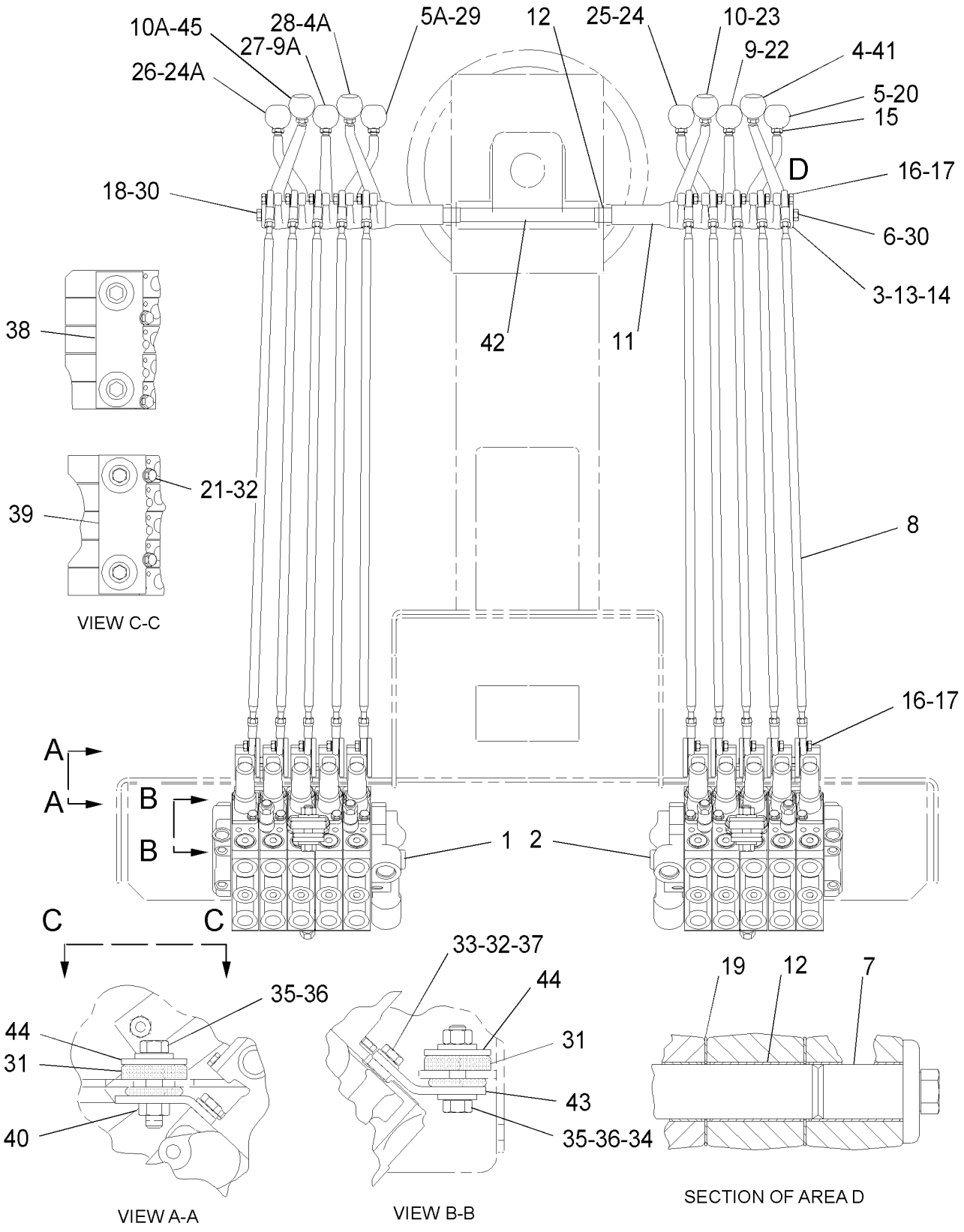


GRAPHIC #1 **<END>** g01297450

# HYDRAULIC SYSTEM

## *7I-4622* VALVE & LINKAGE GP—BANK 4-RH—BANK 5-LH

**S/N: CCA1-UP**
**PART OF 166-3305 CONTROL AR-HYDRAULIC**
**AN ATTACHMENT**

**SMCS-5051, 5063** **i02274215**

| NOTE | REF NO | GRAPHIC REF | PART NUMBER | QTY | PART NAME 1 2 3 4 5 6 (PRODUCT LEVEL) | SEE PAGE |
|---|---|---|---|---|---|---|
| Y | 1 | 1 | **6E-3032** | 1 | VALVE GP-BANK 4 (RH) | 907 |
| Y | 2 | 1 | **104-8645** | 1 | VALVE GP-BANK 5 (LH) | 918 |
| | 3 | 1 | **8X-5499** | 2 | RETAINER | |
| | 4 | 1 | **101-2457** | 2 | LEVER | |
| | 5 | 1 | **8D-5634** | 2 | LEVER | |
| | 6 | 1 | **8X-4276** | 9 | ROD | |
| | 7 | 1 | **6V-8186** | 18 | NUT-FULL (5/16-24-THD) | |
| | 8 | 1 | **7H-3641** | 18 | END-ROD (5/16-24-THD) | |
| | 9 | 1 | **8D-5633** | 2 | LEVER | |
| | 10 | 1 | **101-2458** | 1 | LEVER | |
| | 11 | 1 | **137-4515** | 2 | BUSHING | |
| | 12 | 1 | **8D-5640** | 11 | BEARING | |
| B | 13 | 1 | **8D-5636** | 4 | SHIM (0.254-MM THK) | |
| B | 14 | 1 | **8D-5637** | 4 | SHIM (0.762-MM THK) | |
| | 15 | 1 | **6L-1962** | 9 | NUT-JAM (3/8-24-THD) | |
| | 16 | 1 | **8T-9043** | 18 | BOLT (5/16-18X0.875-IN) | |
| | 17 | 1 | **3F-9556** | 18 | LOCKWASHER | |
| | 18 | 1 | **9B-7237** | 2 | BOLT (3/8-16X1.25-IN) | |
| | 19 | 1 | **8D-5641** | 9 | BEARING | |
| | 20 | 1 | **2G-6757** | 1 | KNOB-BLADE LIFT | |
| M | 21 | 1 | **8T-4136** | 4 | BOLT (M10X1.5X25-MM) | |
| | 22 | 1 | **2G-6749** | 1 | KNOB-SIDESHIFT | |
| | 23 | 1 | **2G-6747** | 1 | KNOB-BLADE TIP | |
| | 24 | 1 | **8D-5632** | 2 | LEVER | |
| | 25 | 1 | **2G-6751** | 1 | KNOB-CIRCLE DRIVE | |
| | 26 | 1 | **2G-6748** | 1 | KNOB-BLADE LIFT | |
| | 27 | 1 | **2G-6756** | 1 | KNOB-WHEEL LEAN | |
| | 28 | 1 | **2G-6752** | 1 | KNOB-ARTICULATION | |
| | 29 | 1 | **2G-6755** | 1 | KNOB-CENTERSHIFT | |
| | 30 | 1 | **5P-1075** | 2 | WASHER-HARD (10.2X22.5X3-MM THK) | |
| | 31 | 1 | **9M-1853** | 6 | MOUNTING | |
| | 32 | 1 | **8T-4121** | 8 | WASHER-HARD (11X21X2.5-MM THK) | |
| M | 33 | 1 | **8T-4195** | 4 | BOLT (M10X1.5X30-MM) | |
| | 34 | 1 | **6V-8188** | 2 | NUT (1/2-13-THD) | |
| | 35 | 1 | **5P-2424** | 6 | BOLT (1/2-13X2.25-IN) | |
| | 36 | 1 | **5P-1076** | 6 | WASHER-HARD (13.5X30X4-MM THK) | |
| | 37 | 1 | **6B-0933** | 4 | SPACER (10.31X19.05X6.35-MM THK) | |
| | 38 | 1 | **104-7740** | 1 | PLATE AS (LH) | |
| | 39 | 1 | **104-7419** | 1 | PLATE AS (RH) | |
| | | | | | (EACH INCLUDES) | |
| | 40 | 1 | **1F-0748** | 2 | NUT-WELD (1/2-13-THD) | |
| | 41 | 1 | **2G-6740** | 1 | KNOB-RIPPER | |
| | 42 | 1 | **137-4516** | 1 | SHAFT | |
| | 43 | 1 | **104-7429** | 2 | PLATE | |
| | 44 | 1 | **8F-6437** | 6 | WASHER (13.5X50.8X4.76-MM THK) | |

B-USE AS REQUIRED
M-METRIC PART
Y-SEPARATE ILLUSTRATION

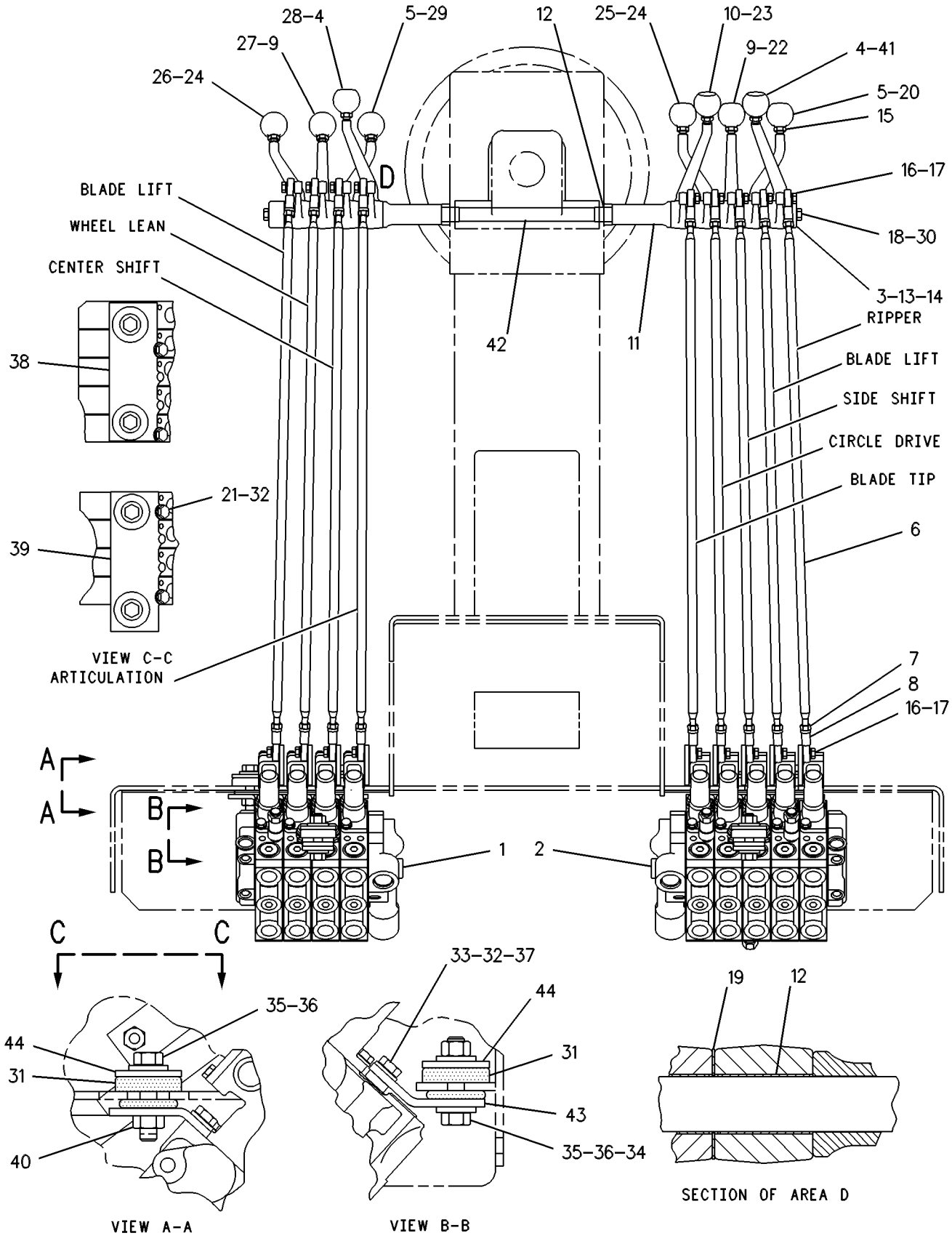


GRAPHIC #1 **<END>** g01138892

# HYDRAULIC SYSTEM

## *7I-4623* VALVE & LINKAGE GP—BANK 5-RH—BANK 6-LH

**S/N: CCA1-UP**
**AN ATTACHMENT**

**SMCS-5051, 5063** **i02591829**

| NOTE | REF NO | GRAPHIC REF | PART NUMBER | QTY | PART NAME 1 2 3 4 5 6 (PRODUCT LEVEL) | SEE PAGE |
|---|---|---|---|---|---|---|
| Y | 1 | 1 | **104-8671** | 1 | VALVE GP-BANK 5 (RH) | 920 |
| Y | 2 | 1 | **104-8648** | 1 | VALVE GP-BANK 6 (LH) | 934 |
| | 3 | 1 | **8X-5499** | 2 | RETAINER | |
| | 4 | 1 | **101-2457** | 2 | LEVER | |
| | 5 | 1 | **8D-5634** | 2 | LEVER | |
| | 6 | 1 | **8X-4276** | 11 | ROD | |
| | 7 | 1 | **6V-8186** | 22 | NUT-FULL (5/16-24-THD) | |
| | 8 | 1 | **7H-3641** | 22 | END-ROD (5/16-24-THD) | |
| | 9 | 1 | **8D-5633** | 2 | LEVER | |
| | 10 | 1 | **101-2458** | 2 | LEVER | |
| | 11 | 1 | **4L-6459** | 2 | BOLT (3/8-16X2.5-IN) | |
| | 12 | 1 | **8D-5640** | 13 | BEARING | |
| B | 13 | 1 | **8D-5636** | 4 | SHIM (0.254-MM THK) | |
| B | 14 | 1 | **8D-5637** | 4 | SHIM (0.762-MM THK) | |
| | 15 | 1 | **6L-1962** | 11 | NUT-JAM (3/8-24-THD) | |
| | 16 | 1 | **8T-9043** | 22 | BOLT (5/16-18X0.875-IN) | |
| | 17 | 1 | **3F-9556** | 22 | LOCKWASHER | |
| M | 18 | 1 | **8T-4195** | 4 | BOLT (M10X1.5X30-MM) | |
| | 19 | 1 | **8D-5641** | 11 | BEARING | |
| | 20 | 1 | **2G-6757** | 1 | KNOB-BLADE LIFT | |
| M | 21 | 1 | **8T-4136** | 4 | BOLT (M10X1.5X25-MM) | |
| | 22 | 1 | **2G-6749** | 1 | KNOB-SIDESHIFT | |
| | 23 | 1 | **2G-6747** | 1 | KNOB-BLADE TIP | |
| | 24 | 1 | **8D-5632** | 2 | LEVER | |
| | 25 | 1 | **2G-6751** | 1 | KNOB-CIRCLE DRIVE | |
| | 26 | 1 | **2G-6748** | 1 | KNOB-BLADE LIFT | |
| | 27 | 1 | **2G-6756** | 1 | KNOB-WHEEL LEAN | |
| | 28 | 1 | **2G-6752** | 1 | KNOB-ARTICULATION | |
| | 29 | 1 | **2G-6755** | 1 | KNOB-CENTERSHIFT | |
| | 30 | 1 | **5P-1075** | 2 | WASHER-HARD (10.2X22.5X3-MM THK) | |
| | 31 | 1 | **9M-1853** | 6 | MOUNTING | |
| | 32 | 1 | **8W-0456** | 2 | SHAFT | |
| | 33 | 1 | **8F-6437** | 6 | WASHER (13.5X50.8X4.76-MM THK) | |
| | 34 | 1 | **6V-8188** | 2 | NUT (1/2-13-THD) | |
| | 35 | 1 | **5P-2424** | 6 | BOLT (1/2-13X2.25-IN) | |
| | 36 | 1 | **5P-1076** | 6 | WASHER-HARD (13.5X30X4-MM THK) | |
| | 37 | 1 | **6B-0933** | 4 | SPACER (10.31X19.05X6.35-MM THK) | |
| | 38 | 1 | **104-7740** | 1 | PLATE AS (LH) | |
| | 39 | 1 | **104-7419** | 1 | PLATE AS (RH) | |
| | | | | | (EACH INCLUDES) | |
| | 40 | 1 | **1F-0748** | 2 | NUT-WELD (1/2-13-THD) | |
| | 41 | 1 | **137-4515** | 2 | BUSHING | |
| | 42 | 1 | **2G-7107** | 1 | KNOB-WING LIFT | |
| | 43 | 1 | **104-7429** | 2 | PLATE | |
| | 44 | 1 | **137-4516** | 1 | SHAFT | |
| | 45 | 1 | **2G-7108** | 1 | KNOB-WING TILT | |
| | 46 | 1 | **2G-6754** | 1 | KNOB (DOZER LIFT, PLOW) | |
| | 47 | 1 | **103-1597** | 1 | LEVER | |
| | 48 | 1 | **8T-4121** | 8 | WASHER-HARD (11X21X2.5-MM THK) | |

B-USE AS REQUIRED
M-METRIC PART
Y-SEPARATE ILLUSTRATION

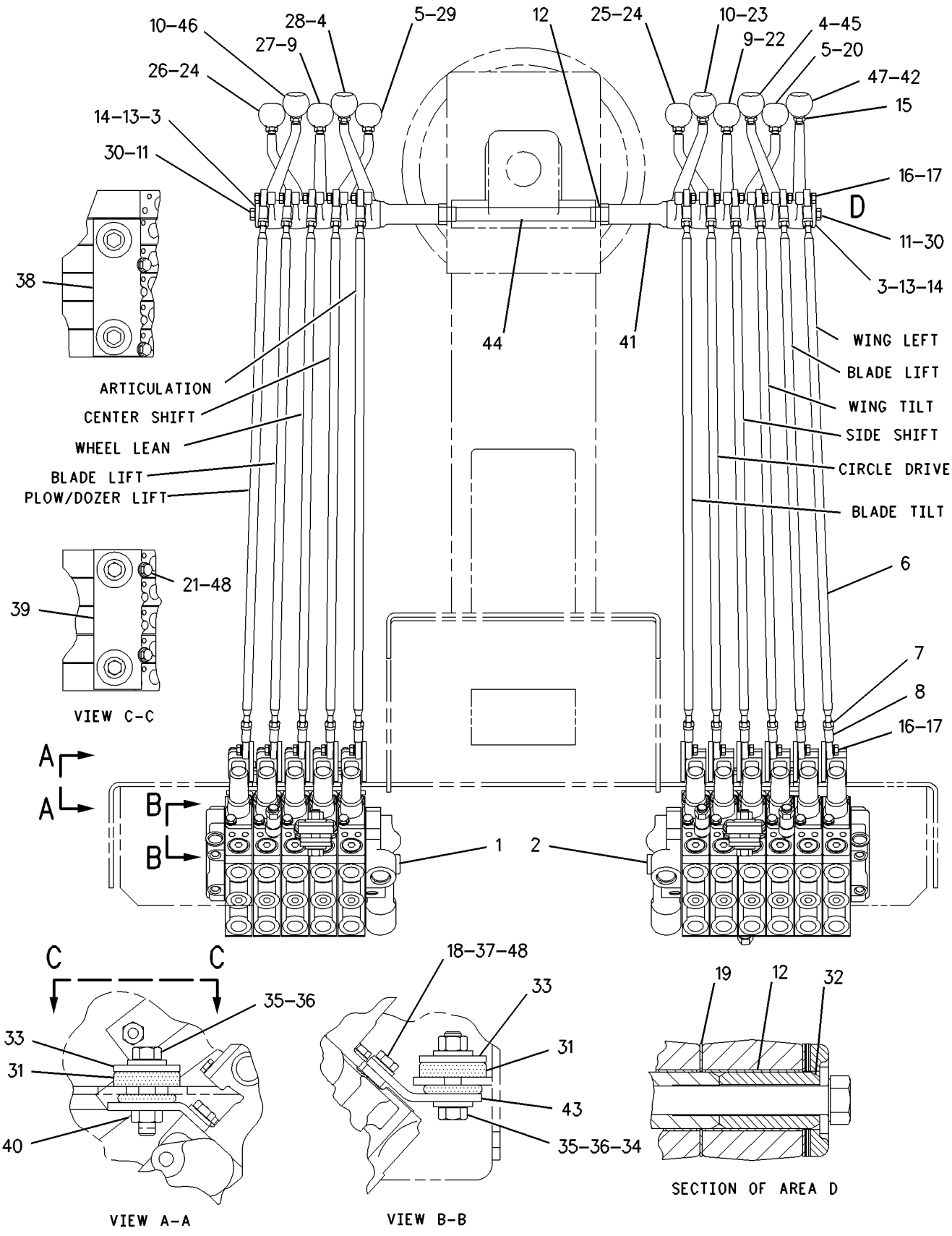


GRAPHIC #1 **<END>** g00956362

# HYDRAULIC SYSTEM

## *7I-4624* VALVE & LINKAGE GP—BANK 4-RH—BANK 5-LH

**S/N: CCA1-UP**

**AN ATTACHMENT**

**SMCS-5051, 5063** **i01755244**

| NOTE | REF NO | GRAPHIC REF | PART NUMBER | QTY | PART NAME 1 2 3 4 5 6 (PRODUCT LEVEL) | SEE PAGE |
|---|---|---|---|---|---|---|
| Y | 1 | 1 | **6E-3032** | 1 | VALVE GP-BANK 4 (RH) | 907 |
| Y | 2 | 1 | **104-8646** | 1 | VALVE GP-BANK 5 (LH) | 919 |
| | 3 | 1 | **8X-5499** | 2 | RETAINER | |
| | 4 | 1 | **101-2457** | 2 | LEVER | |
| | 5 | 1 | **8D-5634** | 2 | LEVER | |
| | 6 | 1 | **8X-4276** | 9 | ROD | |
| | 7 | 1 | **6V-8186** | 18 | NUT-FULL (5/16-24-THD) | |
| | 8 | 1 | **7H-3641** | 18 | END-ROD (5/16-24-THD) | |
| | 9 | 1 | **8D-5633** | 2 | LEVER | |
| | 10 | 1 | **101-2458** | 1 | LEVER | |
| | 11 | 1 | **137-4515** | 2 | BUSHING | |
| | 12 | 1 | **8D-5640** | 11 | BEARING | |
| B | 13 | 1 | **8D-5636** | 4 | SHIM (0.254-MM THK) | |
| B | 14 | 1 | **8D-5637** | 4 | SHIM (0.762-MM THK) | |
| | 15 | 1 | **6L-1962** | 9 | NUT-JAM (3/8-24-THD) | |
| | 16 | 1 | **8T-9043** | 18 | BOLT (5/16-18X0.875-IN) | |
| | 17 | 1 | **3F-9556** | 18 | LOCKWASHER | |
| | 18 | 1 | **9B-7237** | 2 | BOLT (3/8-16X1.25-IN) | |
| | 19 | 1 | **8D-5641** | 9 | BEARING | |
| | 20 | 1 | **2G-6757** | 1 | KNOB-BLADE LIFT | |
| M | 21 | 1 | **8T-4136** | 4 | BOLT (M10X1.5X25-MM) | |
| | 22 | 1 | **2G-6749** | 1 | KNOB-SIDESHIFT | |
| | 23 | 1 | **2G-6747** | 1 | KNOB-BLADE TIP | |
| | 24 | 1 | **8D-5632** | 2 | LEVER | |
| | 25 | 1 | **2G-6751** | 1 | KNOB-CIRCLE DRIVE | |
| | 26 | 1 | **2G-6748** | 1 | KNOB-BLADE LIFT | |
| | 27 | 1 | **2G-6756** | 1 | KNOB-WHEEL LEAN | |
| | 28 | 1 | **2G-6752** | 1 | KNOB-ARTICULATION | |
| | 29 | 1 | **2G-6755** | 1 | KNOB-CENTERSHIFT | |
| | 30 | 1 | **5P-1075** | 2 | WASHER-HARD (10.2X22.5X3-MM THK) | |
| | 31 | 1 | **9M-1853** | 6 | MOUNTING | |
| | 32 | 1 | **8T-4121** | 8 | WASHER-HARD (11X21X2.5-MM THK) | |
| M | 33 | 1 | **8T-4195** | 4 | BOLT (M10X1.5X30-MM) | |
| | 34 | 1 | **6V-8188** | 2 | NUT (1/2-13-THD) | |
| | 35 | 1 | **5P-2424** | 6 | BOLT (1/2-13X2.25-IN) | |
| | 36 | 1 | **5P-1076** | 6 | WASHER-HARD (13.5X30X4-MM THK) | |
| | 37 | 1 | **6B-0933** | 4 | SPACER (10.31X19.05X6.35-MM THK) | |
| | 38 | 1 | **104-7740** | 1 | PLATE AS (LH) | |
| | 39 | 1 | **104-7419** | 1 | PLATE AS (RH) | |
| | | | | | (EACH INCLUDES) | |
| | 40 | 1 | **1F-0748** | 2 | NUT-WELD (1/2-13-THD) | |
| | 41 | 1 | **2G-6753** | 1 | KNOB-SCARIFIER | |
| | 42 | 1 | **137-4516** | 1 | SHAFT | |
| | 43 | 1 | **104-7429** | 2 | PLATE | |
| | 44 | 1 | **8F-6437** | 6 | WASHER (13.5X50.8X4.76-MM THK) | |

B-USE AS REQUIRED
M-METRIC PART
Y-SEPARATE ILLUSTRATION

*7I-4624* **VALVE & LINKAGE GP** *(contd.)* **i01755244**

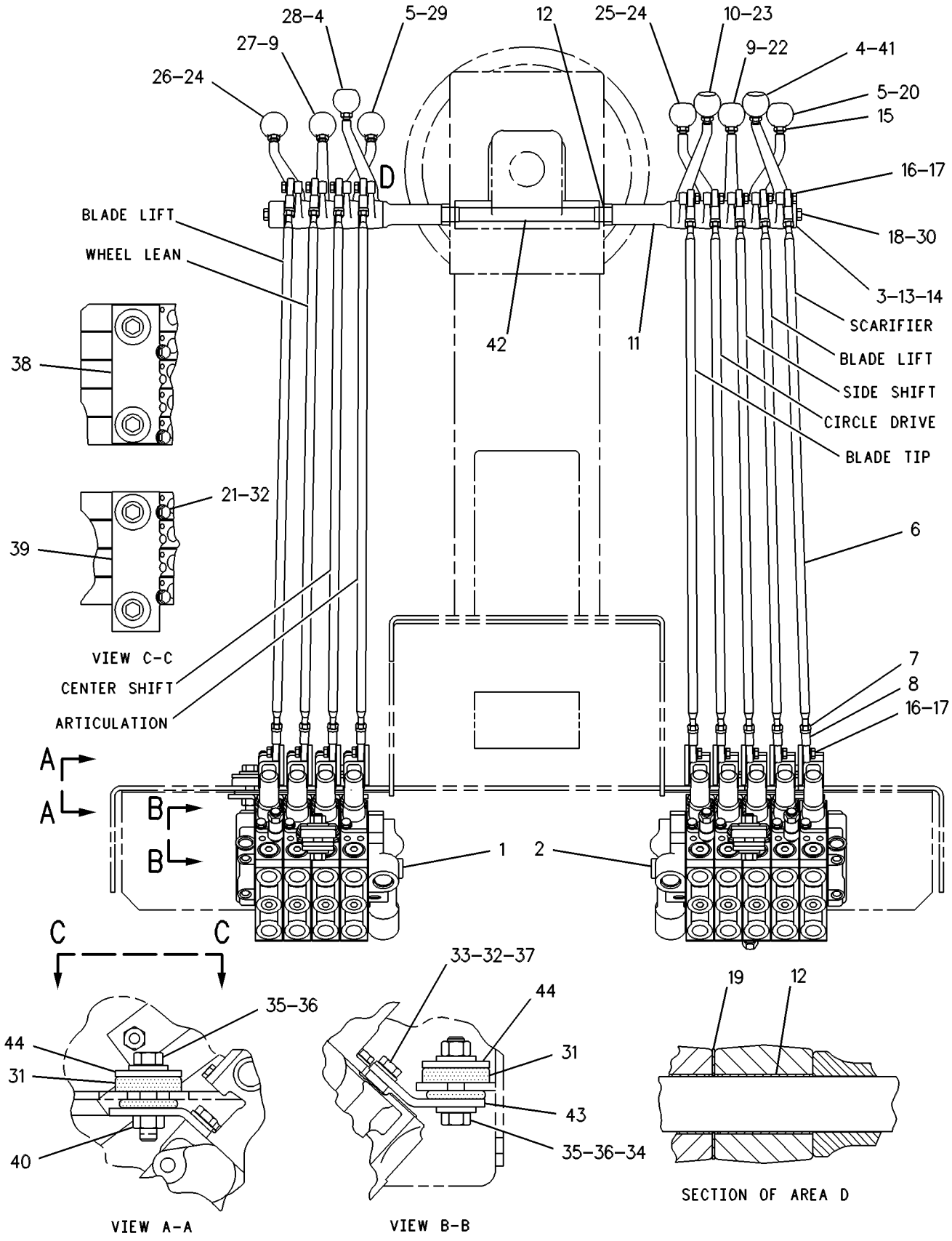


GRAPHIC #1 **<END>** g00286447

# HYDRAULIC SYSTEM

## *8X-1949* VALVE & LINKAGE GP—BANK 4-LH,RH

**S/N: CCA1-UP**

**PART OF 159-4615 GENERAL AR**

**SMCS-5051, 5063** **i01755259**

| NOTE | REF NO | GRAPHIC REF | PART NUMBER | QTY | PART NAME 1 2 3 4 5 6 (PRODUCT LEVEL) | SEE PAGE |
|---|---|---|---|---|---|---|
| Y | 1 | 1 | **6E-3032** | 1 | VALVE GP-BANK 4 (RH) | 907 |
| Y | 2 | 1 | **6E-3038** | 1 | VALVE GP-BANK 4 (LH) | 908 |
| | 3 | 1 | **8X-5498** | 2 | RETAINER | |
| | 4 | 1 | **101-2457** | 1 | LEVER | |
| | 5 | 1 | **8D-5634** | 2 | LEVER | |
| | 6 | 1 | **8F-6437** | 6 | WASHER (13.5X50.8X4.76-MM THK) | |
| M | 7 | 1 | **8T-4195** | 4 | BOLT (M10X1.5X30-MM) | |
| | 8 | 1 | **8X-4276** | 8 | ROD | |
| | | 1 | **6V-8186** | 16 | NUT-FULL (5/16-24-THD) | |
| | | 1 | **7H-3641** | 16 | END-ROD (5/16-24-THD) | |
| | 9 | 1 | **8D-5633** | 2 | LEVER | |
| | 10 | 1 | **101-2458** | 1 | LEVER | |
| | 11 | 1 | **137-4515** | 2 | BUSHING | |
| | 12 | 1 | **8D-5640** | 10 | BEARING | |
| B | 13 | 1 | **8D-5636** | 4 | SHIM (0.254-MM THK) | |
| B | 14 | 1 | **8D-5637** | 4 | SHIM (0.762-MM THK) | |
| | 15 | 1 | **6L-1962** | 8 | NUT-JAM (3/8-24-THD) | |
| | 16 | 1 | **8T-9043** | 16 | BOLT (5/16-18X0.875-IN) | |
| | 17 | 1 | **3F-9556** | 16 | LOCKWASHER | |
| | 18 | 1 | **9B-7237** | 2 | BOLT (3/8-16X1.25-IN) | |
| | 19 | 1 | **8D-5641** | 8 | BEARING | |
| | 20 | 1 | **2G-6757** | 1 | KNOB-BLADE LIFT | |
| M | 21 | 1 | **8T-4136** | 4 | BOLT (M10X1.5X25-MM) | |
| | 22 | 1 | **2G-6749** | 1 | KNOB-SIDESHIFT | |
| | 23 | 1 | **2G-6747** | 1 | KNOB-BLADE TIP | |
| | 24 | 1 | **8D-5632** | 2 | LEVER | |
| | 25 | 1 | **2G-6751** | 1 | KNOB-CIRCLE DRIVE | |
| | 26 | 1 | **2G-6748** | 1 | KNOB-BLADE LIFT | |
| | 27 | 1 | **2G-6756** | 1 | KNOB-WHEEL LEAN | |
| | 28 | 1 | **2G-6752** | 1 | KNOB-ARTICULATION | |
| | 29 | 1 | **2G-6755** | 1 | KNOB-CENTERSHIFT | |
| | 30 | 1 | **5P-1075** | 2 | WASHER-HARD (10.2X22.5X3-MM THK) | |
| | 31 | 1 | **9M-1853** | 6 | MOUNTING | |
| | 32 | 1 | **6V-8188** | 2 | NUT (1/2-13-THD) | |
| | 33 | 1 | **5P-2424** | 6 | BOLT (1/2-13X2.25-IN) | |
| | 34 | 1 | **6B-0933** | 4 | SPACER (10.31X19.05X6.35-MM THK) | |
| | 35 | 1 | **8T-4121** | 8 | WASHER-HARD (11X21X2.5-MM THK) | |
| | 36 | 1 | **5P-1076** | 6 | WASHER-HARD (13.5X30X4-MM THK) | |
| | 37 | 1 | **137-4516** | 1 | SHAFT | |
| | 38 | 1 | **104-7740** | 1 | PLATE AS (LH) | |
| | | 1 | **1F-0748** | 2 | NUT-WELD (1/2-13-THD) | |
| | 39 | 1 | **104-7419** | 1 | PLATE AS (RH) | |
| | | 1 | **1F-0748** | 2 | NUT-WELD (1/2-13-THD) | |
| | 40 | 1 | **104-7429** | 2 | PLATE | |

B-USE AS REQUIRED
M-METRIC PART
Y-SEPARATE ILLUSTRATION

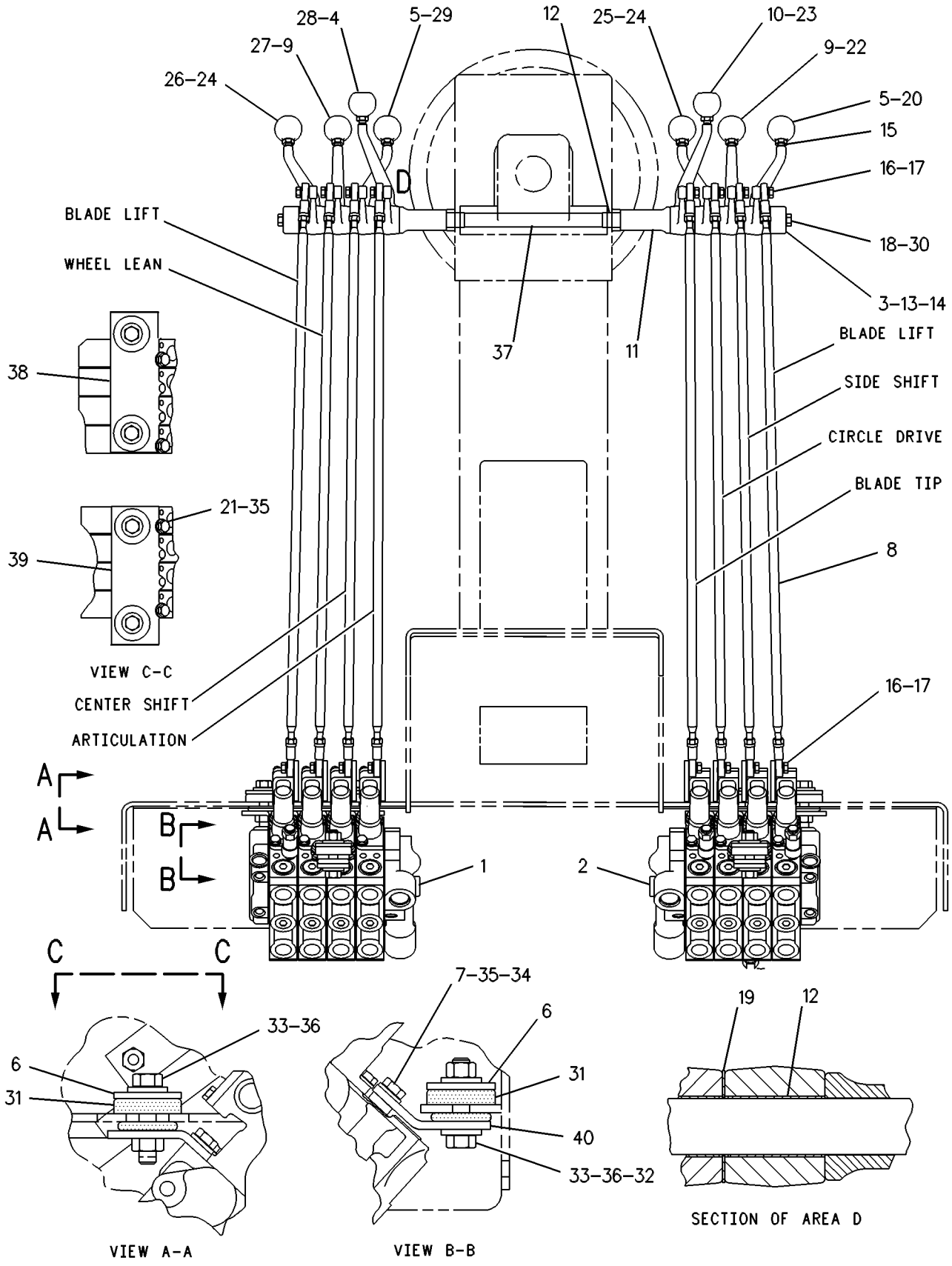


GRAPHIC #1 **<END>** g00286448

# HYDRAULIC SYSTEM

## *8X-4280* VALVE & LINKAGE GP—BANK 5-RH—BANK 7-LH

**S/N: CCA1-UP**

**AN ATTACHMENT**

**SMCS-5051, 5063** **i02591831**

| NOTE | REF NO | GRAPHIC REF | PART NUMBER | QTY | PART NAME 1 2 3 4 5 6 (PRODUCT LEVEL) | SEE PAGE |
|---|---|---|---|---|---|---|
| Y | 1 | 1 | **104-8671** | 1 | VALVE GP-BANK 5 (RH) | 920 |
| Y | 2 | 1 | **104-8647** | 1 | VALVE GP-BANK 7 (LH) | 955 |
| | 3 | 1 | **8X-5499** | 2 | RETAINER | |
| | 4 | 1 | **101-2457** | 1 | LEVER (SCARIFIER) | |
| | 4A | 1 | **101-2457** | 1 | LEVER (ARTICULATION) | |
| | 5 | 1 | **8D-5634** | 1 | LEVER (BLADE LIFT, RH) | |
| | 5A | 1 | **8D-5634** | 1 | LEVER (CENTERSHIFT) | |
| | 6 | 1 | **2G-7107** | 1 | KNOB-WING LIFT | |
| | 7 | 1 | **8X-4277** | 12 | ROD AS | |
| | 10 | 1 | **101-2458** | 1 | LEVER (WING LIFT) | |
| | 10A | 1 | **101-2458** | 1 | LEVER (BLADE TIP) | |
| | 10B | 1 | **101-2458** | 1 | LEVER (PLOW, DOZER) | |
| | 11 | 1 | **137-4515** | 2 | BUSHING | |
| | 12 | 1 | **8D-5640** | 14 | BEARING | |
| B | 13 | 1 | **8D-5636** | 4 | SHIM (0.254-MM THK) | |
| B | 14 | 1 | **8D-5637** | 4 | SHIM (0.762-MM THK) | |
| | 15 | 1 | **6L-1962** | 12 | NUT-JAM (3/8-24-THD) | |
| | 16 | 1 | **8T-9043** | 24 | BOLT (5/16-18X0.875-IN) | |
| | 17 | 1 | **3F-9556** | 24 | LOCKWASHER | |
| | 18 | 1 | **4L-6459** | 1 | BOLT (3/8-16X2.5-IN) | |
| | 19 | 1 | **8D-5641** | 12 | BEARING | |
| | 20 | 1 | **2G-6757** | 1 | KNOB-BLADE LIFT | |
| M | 21 | 1 | **8T-4136** | 4 | BOLT (M10X1.5X25-MM) | |
| | 22 | 1 | **2G-6749** | 1 | KNOB-SIDESHIFT | |
| | 23 | 1 | **2G-6747** | 1 | KNOB-BLADE TIP | |
| | 24 | 1 | **8D-5632** | 1 | LEVER (CIRCLE DRIVE) | |
| | 24A | 1 | **8D-5632** | 1 | LEVER (BLADE LIFT, LH) | |
| | 25 | 1 | **2G-6751** | 1 | KNOB-CIRCLE DRIVE | |
| | 26 | 1 | **2G-6748** | 1 | KNOB-BLADE LIFT | |
| | 27 | 1 | **2G-6756** | 1 | KNOB-WHEEL LEAN | |
| | 28 | 1 | **2G-6752** | 1 | KNOB-ARTICULATION | |
| | 29 | 1 | **2G-6755** | 1 | KNOB-CENTERSHIFT | |
| | 30 | 1 | **5P-1075** | 2 | WASHER-HARD (10.2X22.5X3-MM THK) | |
| | 31 | 1 | **9M-1853** | 6 | MOUNTING | |
| | 32 | 1 | **104-7740** | 1 | PLATE AS (LH) | |
| | 34 | 1 | **104-7419** | 1 | PLATE AS (RH) | |
| | 36 | 1 | **5P-1076** | 6 | WASHER-HARD (13.5X30X4-MM THK) | |
| | 37 | 1 | **8F-6437** | 6 | WASHER (13.5X50.8X4.76-MM THK) | |
| | 38 | 1 | **8D-5633** | 1 | LEVER (SIDESHIFT) | |
| | 38A | 1 | **8D-5633** | 1 | LEVER (WHEEL LEAN) | |
| | 39 | 1 | **103-1597** | 1 | LEVER (WING TILT) | |
| | 40 | 1 | **8W-0456** | 3 | SHAFT | |
| | 41 | 1 | **7X-0291** | 1 | BOLT (3/8-16X3.75-IN) | |
| | 42 | 1 | **2G-7108** | 1 | KNOB-WING TILT | |
| | 43 | 1 | **104-7429** | 2 | PLATE | |
| | 44 | 1 | **137-4516** | 1 | SHAFT | |
| | 45 | 1 | **8T-4121** | 8 | WASHER-HARD (11X21X2.5-MM THK) | |
| | 46 | 1 | **6B-0933** | 4 | SPACER (10.31X19.05X6.35-MM THK) | |
| | 47 | 1 | **5P-2424** | 6 | BOLT (1/2-13X2.25-IN) | |
| | 48 | 1 | **6V-8188** | 2 | NUT (1/2-13-THD) | |
| M | 49 | 1 | **8T-4195** | 4 | BOLT (M10X1.5X30-MM) | |
| | 50 | 1 | **2G-6754** | 1 | KNOB (DOZER LIFT, PLOW) | |
| | 51 | 1 | **2G-6753** | 1 | KNOB-SCARIFIER | |

B-USE AS REQUIRED
M-METRIC PART
Y-SEPARATE ILLUSTRATION

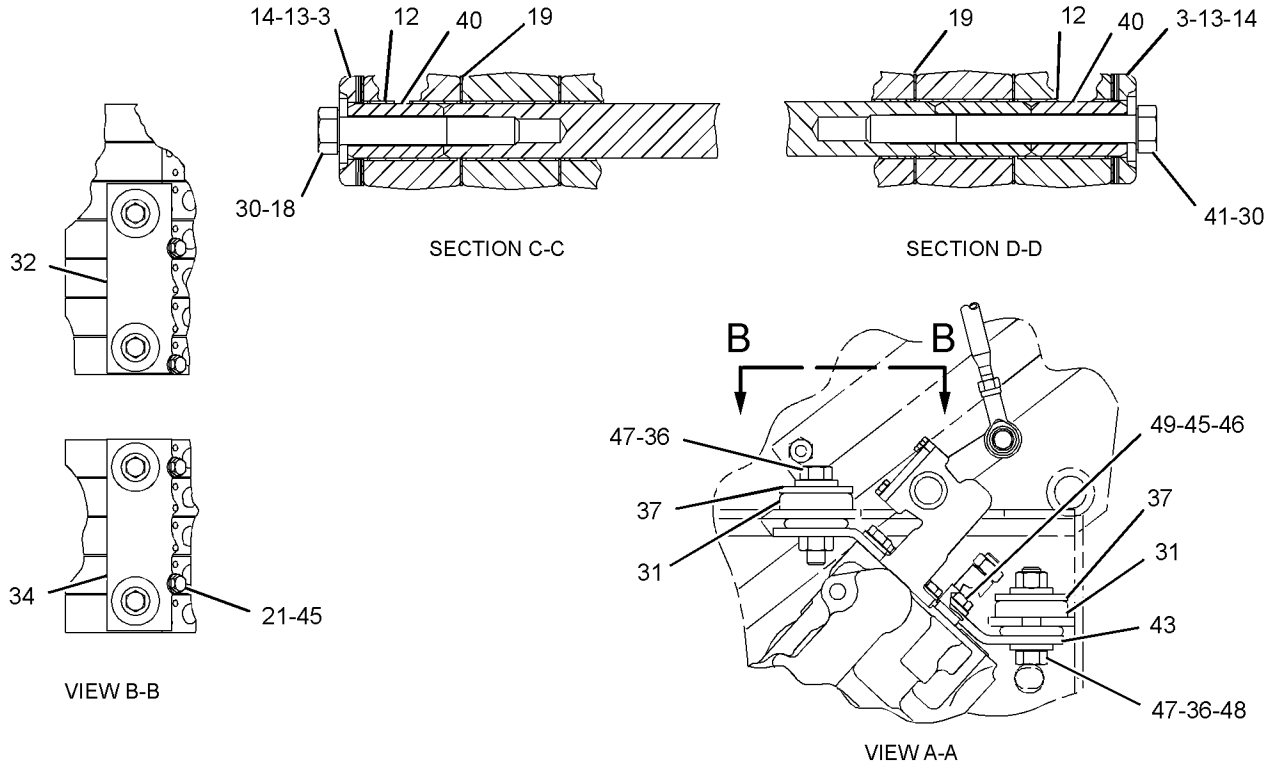


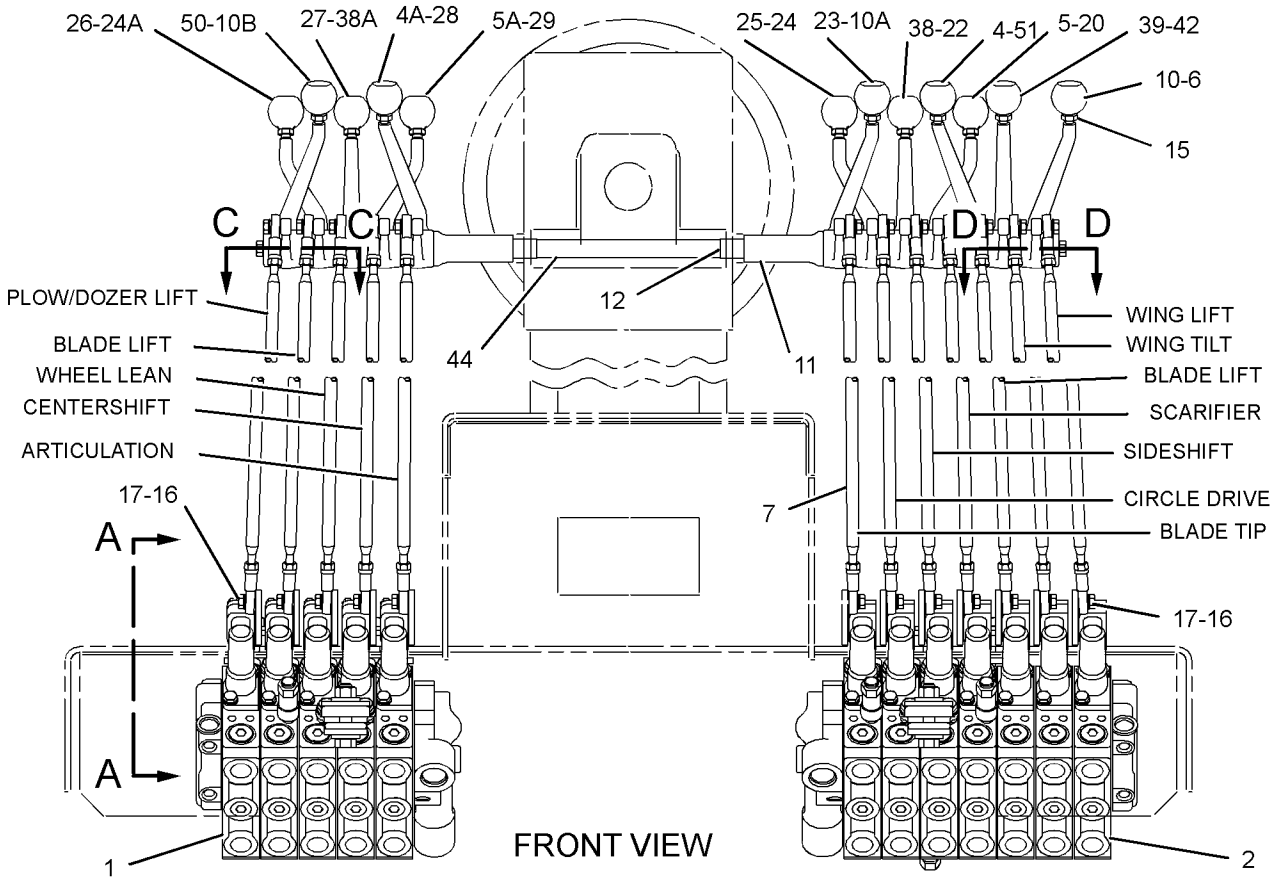


GRAPHIC #1 **<END>** g01297469

# HYDRAULIC SYSTEM

## *107-3856* VALVE & LINKAGE GP—BANK 5-RH—BANK 7-LH

**S/N: CCA1-UP**

**PART OF 179-4356 CONTROL AR-HYDRAULIC**

**AN ATTACHMENT**

**SMCS-5051, 5063** **i02267117**

| NOTE | REF NO | GRAPHIC REF | PART NUMBER | QTY | PART NAME 1 2 3 4 5 6 (PRODUCT LEVEL) | SEE PAGE |
|---|---|---|---|---|---|---|
| Y | 1 | 1 | **104-8671** | 1 | VALVE GP-BANK 5 (RH) | 920 |
| Y | 2 | 1 | **104-8651** | 1 | VALVE GP-BANK 7 (LH) | 956 |
| | 3 | 1 | **8X-5499** | 2 | RETAINER | |
| | 4 | 1 | **101-2457** | 1 | LEVER (ARTICULATION) | |
| | 4A | 1 | **101-2457** | 1 | LEVER (RIPPER) | |
| | 5 | 1 | **8D-5634** | 1 | LEVER (CENTERSHIFT) | |
| | 5A | 1 | **8D-5634** | 1 | LEVER (BLADE LIFT, LH) | |
| | 6 | 1 | **8F-6437** | 6 | WASHER (13.5X50.8X4.76-MM THK) | |
| | 7 | 1 | **8W-0456** | 3 | SHAFT | |
| | 8 | 1 | **8X-4277** | 12 | ROD AS | |
| | 9 | 1 | **8D-5633** | 1 | LEVER (SIDESHIFT) | |
| | 9A | 1 | **8D-5633** | 1 | LEVER (WHEEL LEAN) | |
| | 10 | 1 | **101-2458** | 1 | LEVER (WING LIFT) | |
| | 10A | 1 | **101-2458** | 1 | LEVER (BLADE TIP) | |
| | 10B | 1 | **101-2458** | 1 | LEVER (PLOW, DOZER) | |
| C | 11 | 1 | **137-4515** | 2 | BUSHING | |
| | 12 | 1 | **8D-5640** | 14 | BEARING | |
| B | 13 | 1 | **8D-5636** | 4 | SHIM (0.254-MM THK) | |
| B | 14 | 1 | **8D-5637** | 4 | SHIM (0.762-MM THK) | |
| | 15 | 1 | **6L-1962** | 12 | NUT-JAM (3/8-24-THD) | |
| | 16 | 1 | **8T-9043** | 24 | BOLT (5/16-18X0.875-IN) | |
| | 17 | 1 | **3F-9556** | 24 | LOCKWASHER | |
| | 18 | 1 | **4L-6459** | 1 | BOLT (3/8-16X2.5-IN) | |
| | 19 | 1 | **8D-5641** | 12 | BEARING | |
| | 20 | 1 | **2G-6757** | 1 | KNOB-BLADE LIFT | |
| CM | 21 | 1 | **8T-4136** | 4 | BOLT (M10X1.5X25-MM) | |
| | 22 | 1 | **2G-6749** | 1 | KNOB-SIDESHIFT | |
| | 23 | 1 | **2G-6747** | 1 | KNOB-BLADE TIP | |
| | 24 | 1 | **8D-5632** | 1 | LEVER (CIRCLE DRIVE) | |
| | 24A | 1 | **8D-5632** | 1 | LEVER (BLADE LIFT, RH) | |
| | 25 | 1 | **2G-6751** | 1 | KNOB-CIRCLE DRIVE | |
| | 26 | 1 | **2G-6748** | 1 | KNOB-BLADE LIFT | |
| | 27 | 1 | **2G-6756** | 1 | KNOB-WHEEL LEAN | |
| | 28 | 1 | **2G-6752** | 1 | KNOB-ARTICULATION | |
| | 29 | 1 | **2G-6755** | 1 | KNOB-CENTERSHIFT | |
| | 30 | 1 | **5P-1075** | 2 | WASHER-HARD (10.2X22.5X3-MM THK) | |
| | 31 | 1 | **9M-1853** | 6 | MOUNTING | |
| | 32 | 1 | **7X-0291** | 1 | BOLT (3/8-16X3.75-IN) | |
| | 33 | 1 | **2G-7108** | 1 | KNOB-WING TILT | |
| | 34 | 1 | **103-1597** | 1 | LEVER (WING TILT) | |
| | 35 | 1 | **2G-6740** | 1 | KNOB-RIPPER | |
| | 36 | 1 | **5P-1076** | 6 | WASHER-HARD (13.5X30X4-MM THK) | |
| | 37 | 1 | **5P-2424** | 6 | BOLT (1/2-13X2.25-IN) | |
| | 38 | 1 | **104-7740** | 1 | PLATE AS (LH) | |
| | 39 | 1 | **104-7419** | 1 | PLATE AS (RH) | |
| | 40 | 1 | **2G-6754** | 1 | KNOB (DOZER LIFT, PLOW) | |
| M | 41 | 1 | **8T-4195** | 4 | BOLT (M10X1.5X30-MM) | |
| | 42 | 1 | **6V-8188** | 2 | NUT (1/2-13-THD) | |
| | 43 | 1 | **104-7429** | 2 | PLATE | |
| C | 44 | 1 | **137-4516** | 1 | SHAFT | |
| C | 45 | 1 | **8T-4121** | 8 | WASHER-HARD (11X21X2.5-MM THK) | |
| | 46 | 1 | **6B-0933** | 4 | SPACER (10.31X19.05X6.35-MM THK) | |
| | 47 | 1 | **2G-7107** | 1 | KNOB-WING LIFT | |

B-USE AS REQUIRED
C-CHANGE FROM PREVIOUS TYPE
M-METRIC PART
Y-SEPARATE ILLUSTRATION

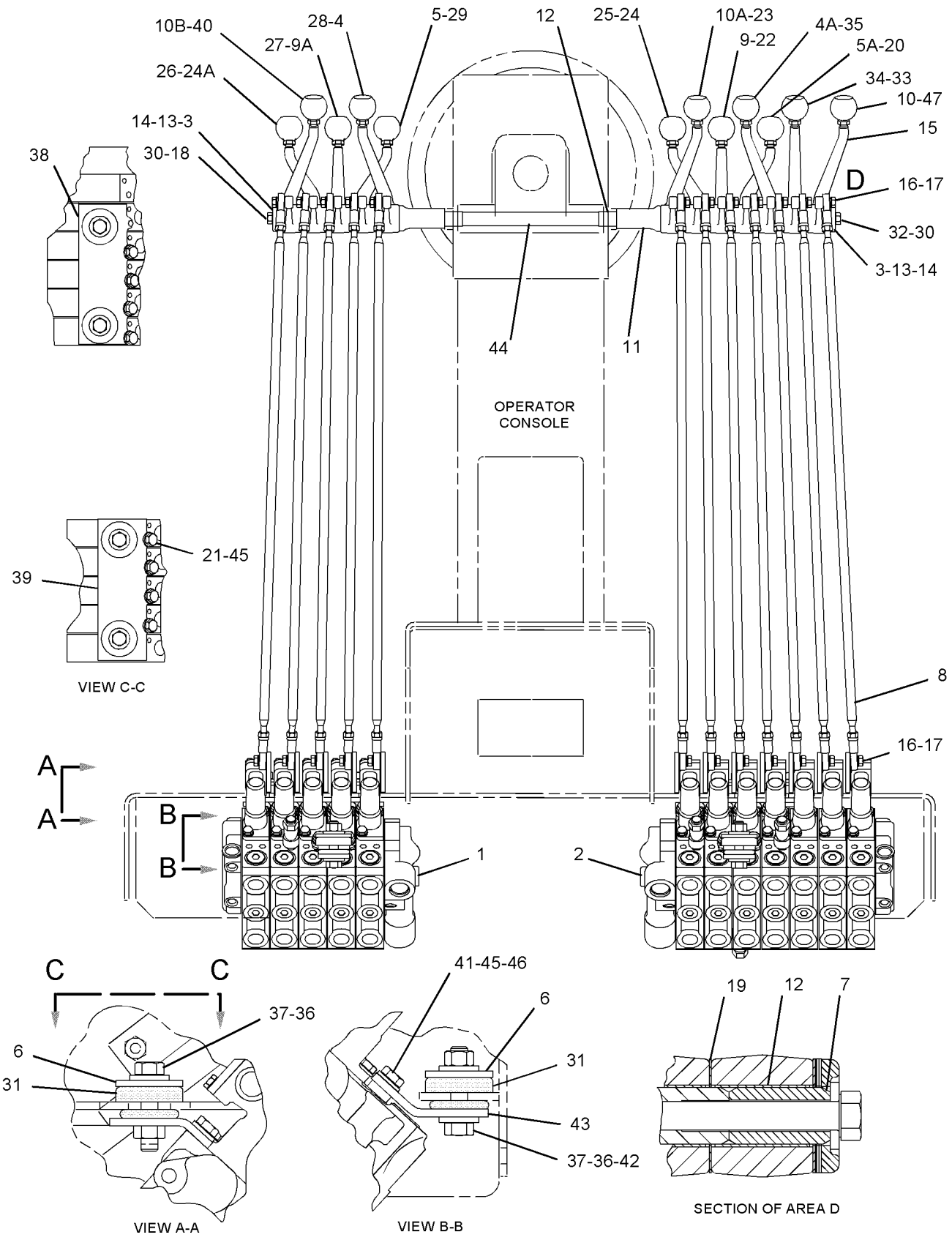


GRAPHIC #1 **<END>** g01138788

# *112-5499* VALVE & LINKAGE GP–BANK 5-LH,RH

**S/N: CCA1-UP**
**PART OF 184-7303 CONTROL AR-HYDRAULIC**
**AN ATTACHMENT**

**SMCS-5051, 5063** **i01697376**

| NOTE | REF NO | GRAPHIC REF | PART NUMBER | QTY | PART NAME 1 2 3 4 5 6 (PRODUCT LEVEL) | SEE PAGE |
|---|---|---|---|---|---|---|
| | 1 | 1 | **8X-5499** | 2 | RETAINER | |
| | 2 | 1 | **101-2457** | 2 | LEVER | |
| | 3 | 1 | **8D-5634** | 2 | LEVER | |
| | 4 | 1 | **4L-6459** | 1 | BOLT (3/8-16X2.5-IN) | |
| | 5 | 1 | **8W-0456** | 1 | SHAFT | |
| | 6 | 1 | **8X-4276** | 10 | ROD | |
| | | 1 | **6V-8186** | 20 | NUT-FULL (5/16-24-THD) | |
| | | 1 | **7H-3641** | 20 | END-ROD (5/16-24-THD) | |
| | 7 | 1 | **8D-5633** | 2 | LEVER | |
| | 8 | 1 | **101-2458** | 2 | LEVER | |
| | 9 | 1 | **137-4515** | 2 | BUSHING | |
| | 10 | 1 | **8D-5640** | 12 | BEARING | |
| B | 11 | 1 | **8D-5636** | 4 | SHIM (0.254-MM THK) | |
| B | 12 | 1 | **8D-5637** | 4 | SHIM (0.762-MM THK) | |
| | 13 | 1 | **6L-1962** | 10 | NUT-JAM (3/8-24-THD) | |
| | 14 | 1 | **8T-9043** | 20 | BOLT (5/16-18X0.875-IN) | |
| | 15 | 1 | **3F-9556** | 20 | LOCKWASHER | |
| | 16 | 1 | **9B-7237** | 1 | BOLT (3/8-16X1.25-IN) | |
| | 17 | 1 | **8D-5641** | 10 | BEARING | |
| | 18 | 1 | **2G-6757** | 1 | KNOB-BLADE LIFT | |
| M | 19 | 1 | **8T-4136** | 4 | BOLT (M10X1.5X25-MM) | |
| | 20 | 1 | **2G-6749** | 1 | KNOB-SIDESHIFT | |
| | 21 | 1 | **2G-6747** | 1 | KNOB-BLADE TIP | |
| | 22 | 1 | **8D-5632** | 2 | LEVER | |
| | 23 | 1 | **2G-6751** | 1 | KNOB-CIRCLE DRIVE | |
| | 24 | 1 | **2G-6748** | 1 | KNOB-BLADE LIFT | |
| | 25 | 1 | **2G-6756** | 1 | KNOB-WHEEL LEAN | |
| | 26 | 1 | **2G-6752** | 1 | KNOB-ARTICULATION | |
| | 27 | 1 | **2G-6755** | 1 | KNOB-CENTERSHIFT | |
| | 28 | 1 | **5P-1075** | 2 | WASHER-HARD (10.2X22.5X3-MM THK) | |
| | 29 | 1 | **9M-1853** | 6 | MOUNTING | |
| | 30 | 1 | **5P-1076** | 6 | WASHER-HARD (13.5X30X4-MM THK) | |
| | 31 | 1 | **104-7740** | 1 | PLATE AS (LH) | |
| | | 1 | **1F-0748** | 2 | NUT-WELD (1/2-13-THD) | |
| | 32 | 1 | **104-7419** | 1 | PLATE AS (RH) | |
| | | 1 | **1F-0748** | 2 | NUT-WELD (1/2-13-THD) | |
| | 33 | 1 | **104-7429** | 2 | PLATE | |
| | 34 | 1 | **137-4516** | 1 | SHAFT | |
| | 35 | 1 | **2G-6740** | 1 | KNOB-RIPPER | |
| | 36 | 1 | **2G-6754** | 1 | KNOB (DOZER LIFT, PLOW) | |
| | 37 | 1 | **6V-8188** | 2 | NUT (1/2-13-THD) | |
| M | 38 | 1 | **8T-4195** | 4 | BOLT (M10X1.5X30-MM) | |
| | 39 | 1 | **8F-6437** | 6 | WASHER (13.5X50.8X4.76-MM THK) | |
| | 40 | 1 | **5P-2424** | 6 | BOLT (1/2-13X2.25-IN) | |
| | 41 | 1 | **6B-0933** | 4 | SPACER (10.31X19.05X6.35-MM THK) | |
| | 42 | 1 | **8T-4121** | 8 | WASHER-HARD (11X21X2.5-MM THK) | |
| Y | 43 | 1 | **104-8671** | 1 | VALVE GP-BANK 5 (RH) | 920 |
| Y | 44 | 1 | **104-8645** | 1 | VALVE GP-BANK 5 (LH) | 918 |

B-USE AS REQUIRED
M-METRIC PART
Y-SEPARATE ILLUSTRATION

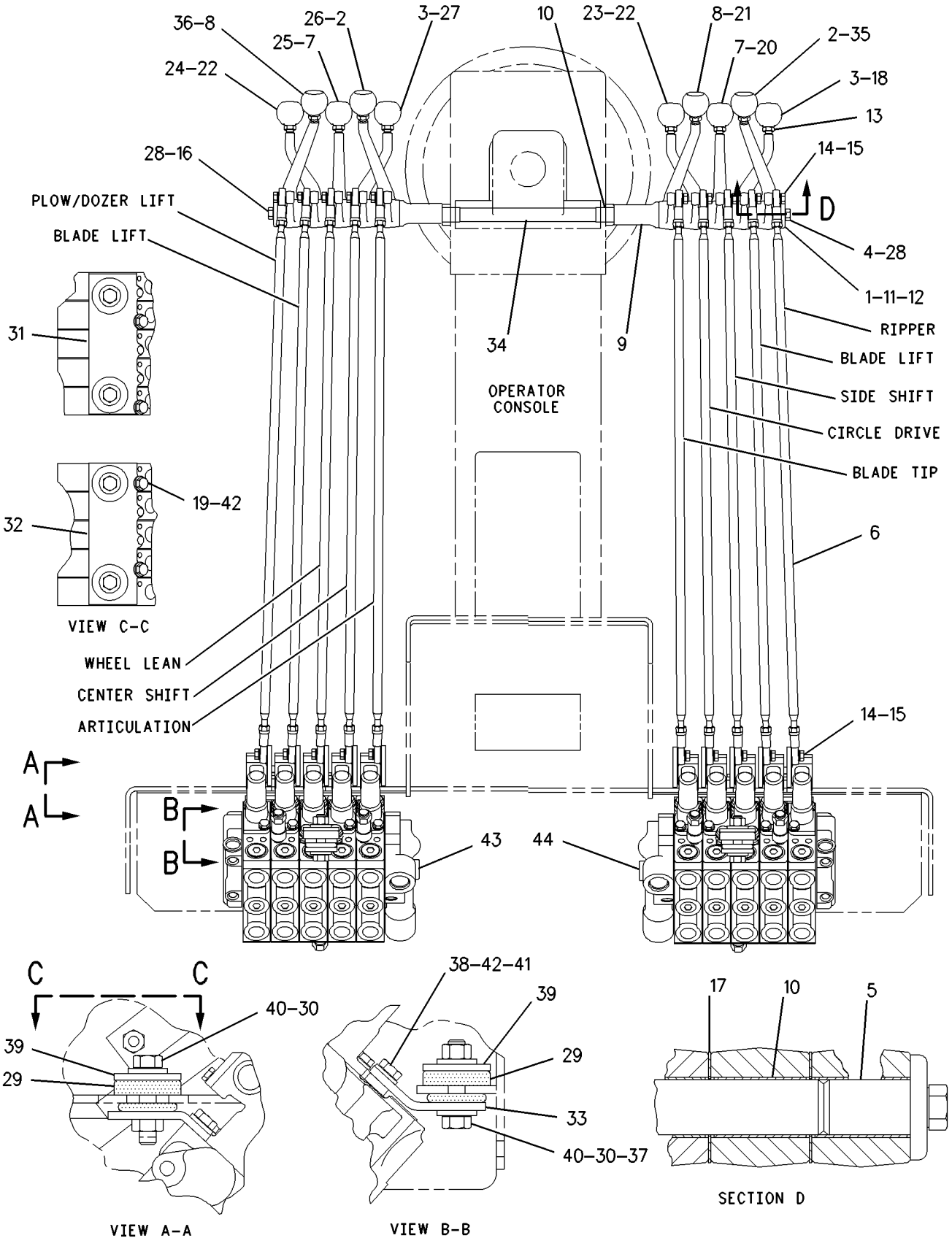


GRAPHIC #1 **<END>** g00873832

# HYDRAULIC SYSTEM

## *115-0791* VALVE & LINKAGE GP—BANK 6-LH,RH

**S/N: CCA1-UP**
**AN ATTACHMENT**

**SMCS-5051, 5063** **i02585630**

| NOTE | REF NO | GRAPHIC REF | PART NUMBER | QTY | PART NAME 1 2 3 4 5 6 (PRODUCT LEVEL) | SEE PAGE |
|---|---|---|---|---|---|---|
| Y | 1 | 1 | **115-1008** | 1 | VALVE GP-BANK 6 (RH) | 935 |
| Y | 2 | 1 | **104-8648** | 1 | VALVE GP-BANK 6 (LH) | 934 |
| | 3 | 1 | **8X-5499** | 2 | RETAINER | |
| | 4 | 1 | **101-2457** | 2 | LEVER | |
| | 5 | 1 | **8D-5634** | 2 | LEVER | |
| | 6 | 1 | **8X-4276** | 12 | ROD | |
| | | 1 | **6V-8186** | 24 | NUT-FULL (5/16-24-THD) | |
| | | 1 | **7H-3641** | 24 | END-ROD (5/16-24-THD) | |
| | 7 | 1 | **8D-5633** | 2 | LEVER | |
| | 8 | 1 | **101-2458** | 2 | LEVER | |
| | 9 | 1 | **8D-5640** | 14 | BEARING | |
| B | 10 | 1 | **8D-5636** | 4 | SHIM (0.254-MM THK) | |
| B | 11 | 1 | **8D-5637** | 4 | SHIM (0.762-MM THK) | |
| | 12 | 1 | **6L-1962** | 12 | NUT-JAM (3/8-24-THD) | |
| | 13 | 1 | **8T-9043** | 24 | BOLT (5/16-18X0.875-IN) | |
| | 14 | 1 | **3F-9556** | 24 | LOCKWASHER | |
| | 15 | 1 | **8D-5641** | 12 | BEARING | |
| | 16 | 1 | **2G-6757** | 1 | KNOB-BLADE LIFT | |
| M | 17 | 1 | **8T-4136** | 4 | BOLT (M10X1.5X25-MM) | |
| | 18 | 1 | **2G-6749** | 1 | KNOB-SIDESHIFT | |
| | 19 | 1 | **2G-6747** | 1 | KNOB-BLADE TIP | |
| | 20 | 1 | **8D-5632** | 2 | LEVER | |
| | 21 | 1 | **2G-6751** | 1 | KNOB-CIRCLE DRIVE | |
| | 22 | 1 | **2G-6748** | 1 | KNOB-BLADE LIFT | |
| | 23 | 1 | **2G-6756** | 1 | KNOB-WHEEL LEAN | |
| | 24 | 1 | **2G-6752** | 1 | KNOB-ARTICULATION | |
| | 25 | 1 | **2G-6755** | 1 | KNOB-CENTERSHIFT | |
| | 26 | 1 | **5P-1075** | 2 | WASHER-HARD (10.2X22.5X3-MM THK) | |
| | 27 | 1 | **9M-1853** | 6 | MOUNTING | |
| | 28 | 1 | **5P-1076** | 6 | WASHER-HARD (13.5X30X4-MM THK) | |
| | 29 | 1 | **104-7740** | 1 | PLATE AS (LH) | |
| | | 1 | **1F-0748** | 2 | NUT-WELD (1/2-13-THD) | |
| | 30 | 1 | **104-7419** | 1 | PLATE AS (RH) | |
| | | 1 | **1F-0748** | 2 | NUT-WELD (1/2-13-THD) | |
| | 31 | 1 | **8T-4121** | 8 | WASHER-HARD (11X21X2.5-MM THK) | |
| | 32 | 1 | **104-7429** | 2 | PLATE | |
| | 33 | 1 | **137-4516** | 1 | SHAFT | |
| | 34 | 1 | **2G-7108** | 1 | KNOB-WING TILT | |
| | 35 | 1 | **2G-6754** | 1 | KNOB (DOZER LIFT, PLOW) | |
| | 36 | 1 | **103-1597** | 2 | LEVER | |
| | 37 | 1 | **2G-7107** | 1 | KNOB-WING LIFT | |
| | 38 | 1 | **137-4515** | 2 | BUSHING | |
| | 39 | 1 | **6B-0933** | 4 | SPACER (10.31X19.05X6.35-MM THK) | |
| | 40 | 1 | **5P-2424** | 6 | BOLT (1/2-13X2.25-IN) | |
| | 41 | 1 | **6V-8188** | 2 | NUT (1/2-13-THD) | |
| | 42 | 1 | **8F-6437** | 6 | WASHER (13.5X50.8X4.76-MM THK) | |
| | 43 | 1 | **8W-0456** | 3 | SHAFT | |
| | 44 | 1 | **4L-6459** | 1 | BOLT (3/8-16X2.5-IN) | |
| M | 45 | 1 | **8T-4195** | 4 | BOLT (M10X1.5X30-MM) | |
| | 46 | 1 | **7X-0291** | 1 | BOLT (3/8-16X3.75-IN) | |
| | 47 | 1 | **117-0472** | 1 | KNOB (PLOW, BULLDOZER ANGLE) | |

B-USE AS REQUIRED
M-METRIC PART
Y-SEPARATE ILLUSTRATION

*115-0791* **VALVE & LINKAGE GP** *(contd.)* **i02585630**

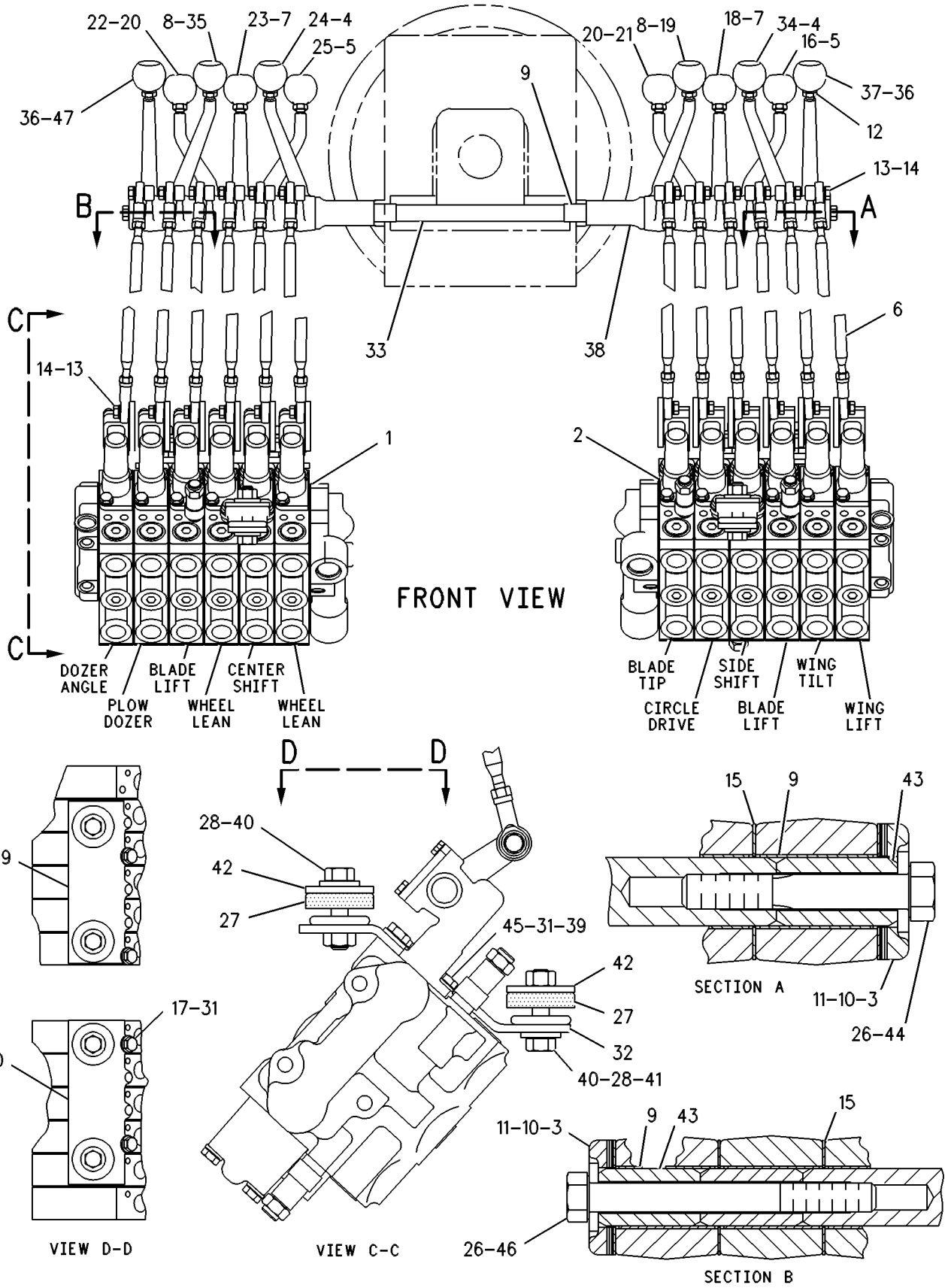


GRAPHIC #1 **<END>** g00109649

# HYDRAULIC SYSTEM

## *115-0805* VALVE & LINKAGE GP—BANK 6-RH—BANK 7-LH

**S/N: CCA1-UP**
**PART OF 184-7304 CONTROL AR-HYDRAULIC**
**AN ATTACHMENT**

**SMCS-5051, 5063** **i02585635**

| NOTE | REF NO | GRAPHIC REF | PART NUMBER | QTY | PART NAME 1 2 3 4 5 6 (PRODUCT LEVEL) | SEE PAGE |
|---|---|---|---|---|---|---|
| Y | 1 | 1 | **115-1008** | 1 | VALVE GP-BANK 6 (RH) | 935 |
| Y | 2 | 1 | **104-8651** | 1 | VALVE GP-BANK 7 (LH) | 956 |
| | 3 | 1 | **8X-5499** | 2 | RETAINER | |
| | 4 | 1 | **101-2457** | 2 | LEVER | |
| | 5 | 1 | **8D-5634** | 2 | LEVER | |
| | 6 | 1 | **2G-7107** | 1 | KNOB-WING LIFT | |
| | 7 | 1 | **8X-4276** | 13 | ROD | |
| | | 1 | **6V-8186** | 26 | NUT-FULL (5/16-24-THD) | |
| | | 1 | **7H-3641** | 26 | END-ROD (5/16-24-THD) | |
| | 8 | 1 | **8D-5633** | 2 | LEVER | |
| | 9 | 1 | **101-2458** | 3 | LEVER | |
| | 10 | 1 | **137-4515** | 2 | BUSHING | |
| | 11 | 1 | **8D-5640** | 15 | BEARING | |
| B | 12 | 1 | **8D-5636** | 4 | SHIM (0.254-MM THK) | |
| B | 13 | 1 | **8D-5637** | 4 | SHIM (0.762-MM THK) | |
| | 14 | 1 | **6L-1962** | 13 | NUT-JAM (3/8-24-THD) | |
| | 15 | 1 | **8T-9043** | 26 | BOLT (5/16-18X0.875-IN) | |
| | 16 | 1 | **3F-9556** | 26 | LOCKWASHER | |
| | 17 | 1 | **8D-5641** | 13 | BEARING | |
| | 18 | 1 | **2G-6757** | 1 | KNOB-BLADE LIFT | |
| M | 19 | 1 | **8T-4136** | 4 | BOLT (M10X1.5X25-MM) | |
| | 20 | 1 | **2G-6749** | 1 | KNOB-SIDESHIFT | |
| | 21 | 1 | **2G-6747** | 1 | KNOB-BLADE TIP | |
| | 22 | 1 | **8D-5632** | 2 | LEVER | |
| | 23 | 1 | **2G-6751** | 1 | KNOB-CIRCLE DRIVE | |
| | 24 | 1 | **2G-6748** | 1 | KNOB-BLADE LIFT | |
| | 25 | 1 | **2G-6756** | 1 | KNOB-WHEEL LEAN | |
| | 26 | 1 | **2G-6752** | 1 | KNOB-ARTICULATION | |
| | 27 | 1 | **2G-6755** | 1 | KNOB-CENTERSHIFT | |
| | 28 | 1 | **5P-1075** | 2 | WASHER-HARD (10.2X22.5X3-MM THK) | |
| | 29 | 1 | **9M-1853** | 6 | MOUNTING | |
| | 30 | 1 | **5P-1076** | 6 | WASHER-HARD (13.5X30X4-MM THK) | |
| | 31 | 1 | **104-7740** | 1 | PLATE AS (LH) | |
| | 32 | 1 | **104-7419** | 1 | PLATE AS (RH) | |
| | | | | | (EACH PLATE AS INCLUDES) | |
| | | 1 | **1F-0748** | 2 | NUT-WELD (1/2-13-THD) | |
| | 33 | 1 | **117-0472** | 1 | KNOB (PLOW, BULLDOZER ANGLE) | |
| | 34 | 1 | **104-7429** | 2 | PLATE | |
| | 35 | 1 | **137-4516** | 1 | SHAFT | |
| | 36 | 1 | **8T-4121** | 8 | WASHER-HARD (11X21X2.5-MM THK) | |
| | 37 | 1 | **6B-0933** | 4 | SPACER (10.31X19.05X6.35-MM THK) | |
| | 38 | 1 | **5P-2424** | 6 | BOLT (1/2-13X2.25-IN) | |
| | 39 | 1 | **6V-8188** | 2 | NUT (1/2-13-THD) | |
| M | 40 | 1 | **8T-4195** | 4 | BOLT (M10X1.5X30-MM) | |
| | 41 | 1 | **2G-6754** | 1 | KNOB (DOZER LIFT, PLOW) | |
| | 42 | 1 | **2G-6740** | 1 | KNOB-RIPPER | |
| | 43 | 1 | **103-1597** | 2 | LEVER | |
| | 44 | 1 | **2G-7108** | 1 | KNOB-WING TILT | |
| | 45 | 1 | **7X-0291** | 2 | BOLT (3/8-16X3.75-IN) | |
| | 46 | 1 | **8W-0456** | 4 | SHAFT | |
| | 47 | 1 | **8F-6437** | 6 | WASHER (13.5X50.8X4.76-MM THK) | |

B-USE AS REQUIRED
M-METRIC PART
Y-SEPARATE ILLUSTRATION

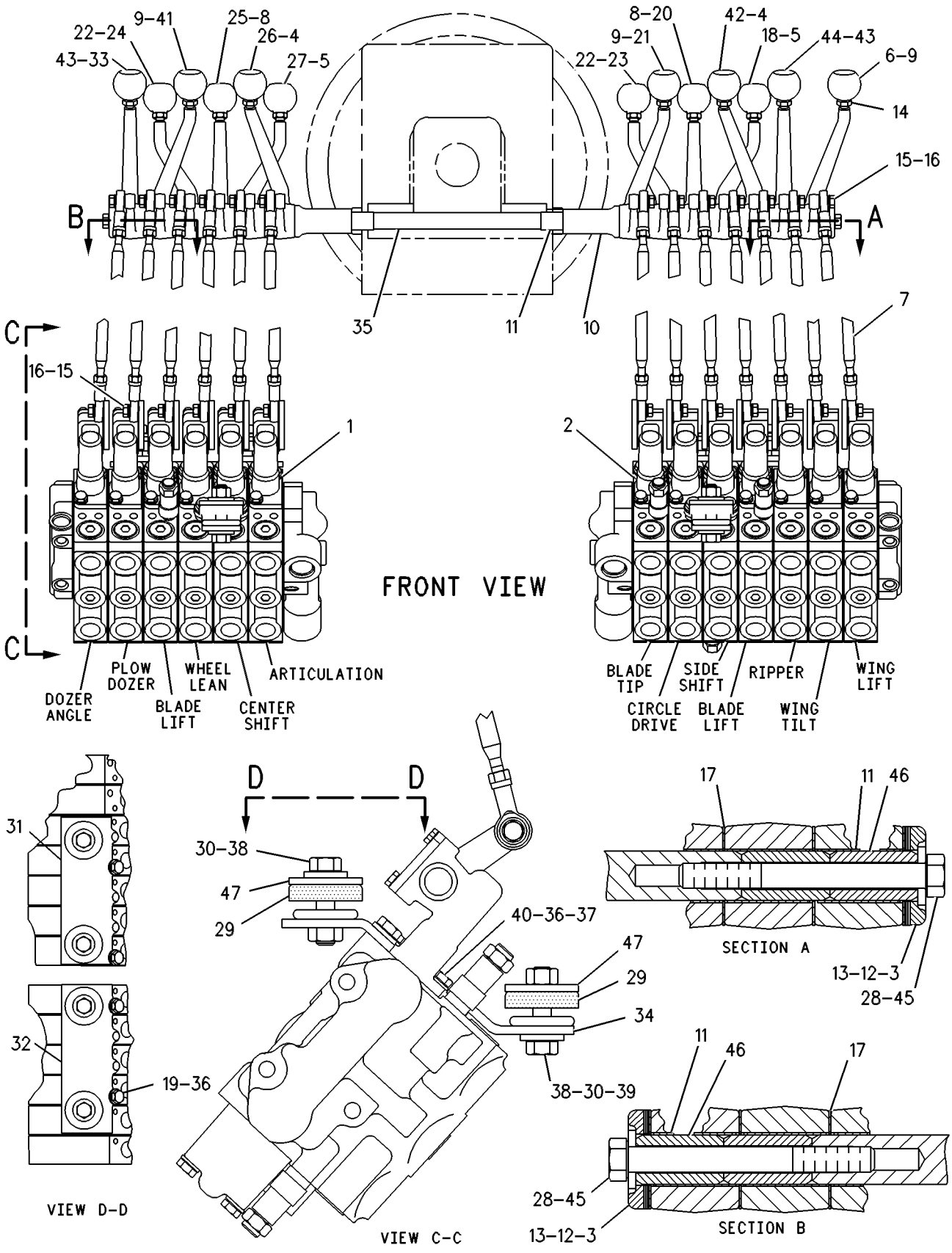


GRAPHIC #1 **<END>** g00109672

# HYDRAULIC SYSTEM

## *121-4083* VALVE & LINKAGE GP—BANK 4-LH,RH

**S/N: CCA1-UP**

**PART OF 207-4453, 210-2044 CONVERSION AR-CERTIFICATION**

**AN ATTACHMENT**

**SMCS-5051, 5063** **i02205094**

| NOTE | REF NO | GRAPHIC REF | PART NUMBER | QTY | PART NAME 1 2 3 4 5 6 (PRODUCT LEVEL) | SEE PAGE |
|---|---|---|---|---|---|---|
| CY | 1 | 1 | **130-3116** | 1 | VALVE GP-BANK 4 (RH) | 909 |
| CY | 2 | 1 | **130-3117** | 1 | VALVE GP-BANK 4 (LH) | 910 |
| | 3 | 1 | **8X-5498** | 2 | RETAINER | |
| | 4 | 1 | **101-2457** | 1 | LEVER (ARTICULATION) | |
| | 5 | 1 | **8D-5634** | 1 | LEVER (CENTERSHIFT) | |
| | 6 | 1 | **8X-4276** | 8 | ROD | |
| | | 1 | **6V-8186** | 16 | NUT-FULL (5/16-24-THD) | |
| | | 1 | **7H-3641** | 16 | END-ROD (5/16-24-THD) | |
| | 7 | 1 | **8D-5633** | 1 | LEVER (WHEEL LEAN) | |
| | 8 | 1 | **101-2458** | 1 | LEVER (BLADE TIP) | |
| | 9 | 1 | **137-4515** | 2 | BUSHING | |
| | 10 | 1 | **8D-5640** | 10 | BEARING | |
| B | 11 | 1 | **8D-5636** | 4 | SHIM (0.254-MM THK) | |
| B | 12 | 1 | **8D-5637** | 4 | SHIM (0.762-MM THK) | |
| | 13 | 1 | **6L-1962** | 8 | NUT-JAM (3/8-24-THD) | |
| | 14 | 1 | **8T-9043** | 16 | BOLT (5/16-18X0.875-IN) | |
| | 15 | 1 | **3F-9556** | 16 | LOCKWASHER | |
| | 16 | 1 | **9B-7237** | 2 | BOLT (3/8-16X1.25-IN) | |
| | 17 | 1 | **8D-5641** | 8 | BEARING | |
| | 18 | 1 | **2G-6757** | 1 | KNOB-BLADE LIFT (LH) | |
| M | 19 | 1 | **8T-4136** | 4 | BOLT (M10X1.5X25-MM) | |
| | 20 | 1 | **2G-6749** | 1 | KNOB-SIDESHIFT | |
| | 21 | 1 | **2G-6747** | 1 | KNOB-BLADE TIP | |
| | 22 | 1 | **8D-5632** | 1 | LEVER (BLADE LIFT-RH) | |
| | 23 | 1 | **2G-6751** | 1 | KNOB-CIRCLE DRIVE | |
| | 24 | 1 | **2G-6748** | 1 | KNOB-BLADE LIFT (RH) | |
| | 25 | 1 | **2G-6756** | 1 | KNOB-WHEEL LEAN | |
| | 26 | 1 | **2G-6752** | 1 | KNOB-ARTICULATION | |
| | 27 | 1 | **2G-6755** | 1 | KNOB-CENTERSHIFT | |
| | 28 | 1 | **5P-1075** | 2 | WASHER-HARD (10.2X22.5X3-MM THK) | |
| | 29 | 1 | **9M-1853** | 6 | MOUNTING | |
| | 30 | 1 | **5P-1076** | 6 | WASHER-HARD (13.5X30X4-MM THK) | |
| | 31 | 1 | **104-7740** | 1 | PLATE AS (LH) | |
| | | 1 | **1F-0748** | 2 | NUT-WELD (1/2-13-THD) | |
| | 32 | 1 | **104-7419** | 1 | PLATE AS (RH) | |
| | | 1 | **1F-0748** | 2 | NUT-WELD (1/2-13-THD) | |
| | 33 | 1 | **104-7429** | 2 | PLATE | |
| | 34 | 1 | **137-4516** | 1 | SHAFT | |
| | 35 | 1 | **8T-4121** | 8 | WASHER-HARD (11X21X2.5-MM THK) | |
| | 36 | 1 | **6B-0933** | 4 | SPACER (10.31X19.05X6.35-MM THK) | |
| | 37 | 1 | **5P-2424** | 6 | BOLT (1/2-13X2.25-IN) | |
| | 38 | 1 | **6V-8188** | 2 | NUT (1/2-13-THD) | |
| M | 39 | 1 | **8T-4195** | 4 | BOLT (M10X1.5X30-MM) | |
| | 40 | 1 | **8F-6437** | 6 | WASHER (13.5X50.8X4.76-MM THK) | |
| | 41 | 1 | **8D-5634** | 1 | LEVER (BLADE LIFT-LH) | |
| | 42 | 1 | **8D-5633** | 1 | LEVER (SIDESHIFT) | |
| | 43 | 1 | **8D-5632** | 1 | LEVER (CIRCLE DRIVE) | |

B-USE AS REQUIRED
C-CHANGE FROM PREVIOUS TYPE
M-METRIC PART
Y-SEPARATE ILLUSTRATION

*121-4083* **VALVE & LINKAGE GP** *(contd. )* **i02205094**

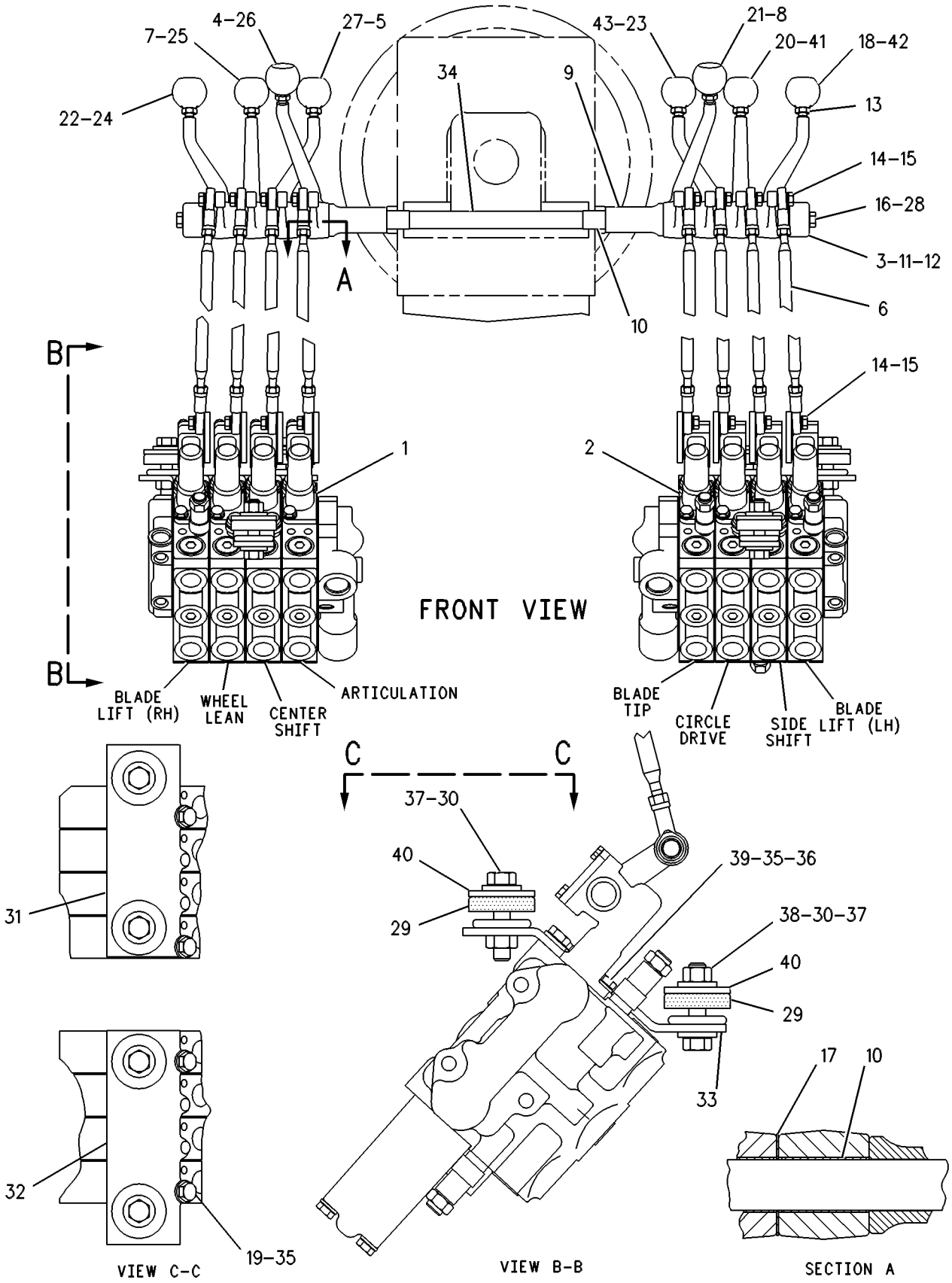


GRAPHIC #1 **<END>** g00293447

# HYDRAULIC SYSTEM

## *121-4084* VALVE & LINKAGE GP—BANK 5-RH—BANK 7-LH

**S/N: CCA1-UP**
**AN ATTACHMENT**

**SMCS-5051, 5063** **i02585636**

| NOTE | REF NO | GRAPHIC REF | PART NUMBER | QTY | PART NAME 1 2 3 4 5 6 (PRODUCT LEVEL) | SEE PAGE |
|---|---|---|---|---|---|---|
| | 1 | 1 | **3F-9556** | 24 | LOCKWASHER | |
| | 2 | 1 | **6B-0933** | 4 | SPACER (10.31X19.05X6.35-MM THK) | |
| | 3 | 1 | **6L-1962** | 12 | NUT-JAM (3/8-24-THD) | |
| | 4 | 1 | **8D-5632** | 2 | LEVER | |
| | 5 | 1 | **8D-5633** | 2 | LEVER | |
| | 6 | 1 | **8D-5634** | 2 | LEVER | |
| B | 7 | 1 | **8D-5636** | 4 | SHIM (0.254-MM THK) | |
| B | 8 | 1 | **8D-5637** | 4 | SHIM (0.762-MM THK) | |
| | 9 | 1 | **8D-5640** | 14 | BEARING | |
| | 10 | 1 | **8D-5641** | 12 | BEARING | |
| | 11 | 1 | **8X-4277** | 12 | ROD AS | |
| | | | | | (EACH INCLUDES) | |
| | 11A | 1 | **146-0705** | 1 | ROD | |
| | 11B | 1 | **7H-3641** | 1 | END-ROD (5/16-24-THD) | |
| | 11C | 1 | **8L-8598** | 1 | ROD END (LH) | |
| | 11D | 1 | **6V-8186** | 1 | NUT-FULL (5/16-24-THD) | |
| | 12 | 1 | **8X-5499** | 2 | RETAINER | |
| | 13 | 1 | **9M-1853** | 6 | MOUNTING | |
| | 14 | 1 | **101-2457** | 2 | LEVER | |
| | 15 | 1 | **101-2458** | 3 | LEVER | |
| | 16 | 1 | **103-1597** | 1 | LEVER | |
| | 17 | 1 | **104-7419** | 1 | PLATE AS (RH) | |
| | 18 | 1 | **104-7429** | 2 | PLATE | |
| | 19 | 1 | **104-7740** | 1 | PLATE AS (LH) | |
| | 20 | 1 | **137-4515** | 2 | BUSHING | |
| | 21 | 1 | **137-4517** | 1 | SHAFT | |
| CY | 22 | 1 | **130-3120** | 1 | VALVE GP-BANK 7 (LH) | 957 |
| CY | 23 | 1 | **130-3123** | 1 | VALVE GP-BANK 5 (RH) | 923 |
| | 24 | 1 | **2G-6747** | 1 | KNOB-BLADE TIP | |
| | 25 | 1 | **2G-6748** | 1 | KNOB-BLADE LIFT | |
| | 26 | 1 | **2G-6749** | 1 | KNOB-SIDESHIFT | |
| | 27 | 1 | **2G-6751** | 1 | KNOB-CIRCLE DRIVE | |
| | 28 | 1 | **2G-6752** | 1 | KNOB-ARTICULATION | |
| | 29 | 1 | **2G-6753** | 1 | KNOB-SCARIFIER | |
| | 30 | 1 | **2G-6754** | 1 | KNOB (DOZER LIFT, PLOW) | |
| | 31 | 1 | **2G-6755** | 1 | KNOB-CENTERSHIFT | |
| | 32 | 1 | **2G-6756** | 1 | KNOB-WHEEL LEAN | |
| | 33 | 1 | **2G-6757** | 1 | KNOB-BLADE LIFT | |
| | 34 | 1 | **2G-7107** | 1 | KNOB-WING LIFT | |
| | 35 | 1 | **2G-7108** | 1 | KNOB-WING TILT | |
| | 36 | 1 | **5P-1075** | 2 | WASHER-HARD (10.2X22.5X3-MM THK) | |
| | 37 | 1 | **5P-1076** | 6 | WASHER-HARD (13.5X30X4-MM THK) | |
| | 38 | 1 | **5P-2424** | 6 | BOLT (1/2-13X2.25-IN) | |
| | 39 | 1 | **6V-8188** | 2 | NUT (1/2-13-THD) | |
| | 40 | 1 | **8F-6437** | 6 | WASHER (13.5X50.8X4.76-MM THK) | |
| | 41 | 1 | **8T-4121** | 8 | WASHER-HARD (11X21X2.5-MM THK) | |
| M | 42 | 1 | **8T-4136** | 4 | BOLT (M10X1.5X25-MM) | |
| M | 43 | 1 | **8T-4195** | 4 | BOLT (M10X1.5X30-MM) | |
| | 44 | 1 | **8T-9043** | 24 | BOLT (5/16-18X0.875-IN) | |
| | 45 | 1 | **9B-7237** | 2 | BOLT (3/8-16X1.25-IN) | |

B-USE AS REQUIRED
C-CHANGE FROM PREVIOUS TYPE
M-METRIC PART
Y-SEPARATE ILLUSTRATION

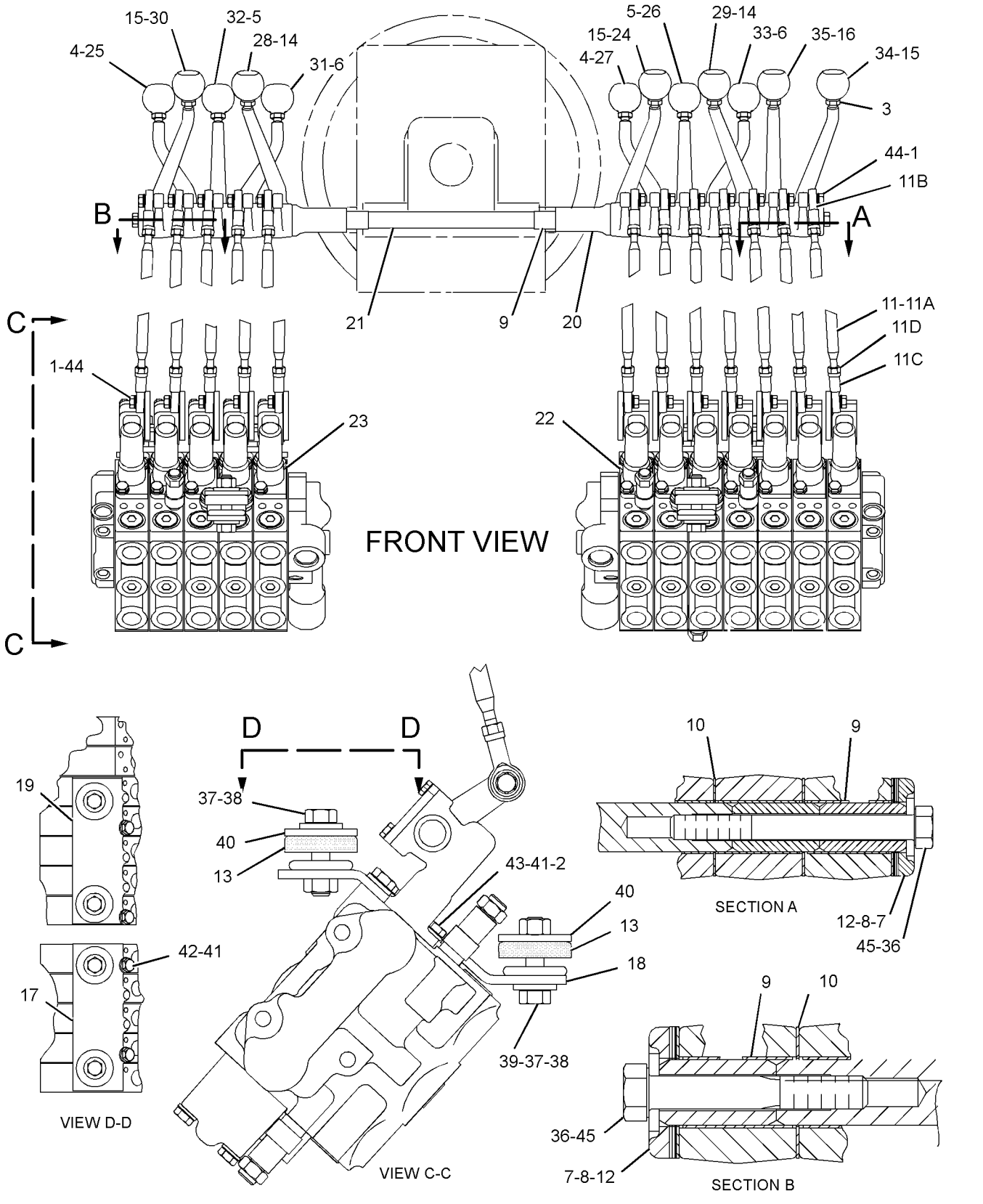


GRAPHIC #1 **<END>** g01294499

# HYDRAULIC SYSTEM

## *121-4086* VALVE & LINKAGE GP–BANK 5 LH-RH

**S/N: CCA1-UP**
**AN ATTACHMENT**

**SMCS-5051, 5063** **i02591845**

| NOTE | REF NO | GRAPHIC REF | PART NUMBER | QTY | PART NAME 1 2 3 4 5 6 (PRODUCT LEVEL) | SEE PAGE |
|---|---|---|---|---|---|---|
| | 1 | 1 | **3F-9556** | 20 | LOCKWASHER | |
| | 2 | 1 | **6B-0933** | 4 | SPACER (10.31X19.05X6.35-MM THK) | |
| | 3 | 1 | **6L-1962** | 10 | NUT-JAM (3/8-24-THD) | |
| | 4 | 1 | **8D-5632** | 2 | LEVER | |
| | 5 | 1 | **8D-5633** | 2 | LEVER | |
| | 6 | 1 | **8D-5634** | 2 | LEVER | |
| B | 7 | 1 | **8D-5636** | 4 | SHIM (0.254-MM THK) | |
| B | 8 | 1 | **8D-5637** | 4 | SHIM (0.762-MM THK) | |
| | 9 | 1 | **8D-5640** | 12 | BEARING | |
| | 10 | 1 | **8D-5641** | 10 | BEARING | |
| | 11 | 1 | **8W-0456** | 1 | SHAFT | |
| | 12 | 1 | **8X-4277** | 10 | ROD AS | |
| | | | | | (EACH INCLUDES) | |
| | 12A | 1 | **146-0705** | 1 | ROD | |
| | 12B | 1 | **7H-3641** | 1 | END-ROD (5/16-24-THD) | |
| | 12C | 1 | **8L-8598** | 1 | ROD END (LH) | |
| | 12D | 1 | **6V-8186** | 1 | NUT-FULL (5/16-24-THD) | |
| | 13 | 1 | **8X-5499** | 2 | RETAINER | |
| | 14 | 1 | **9M-1853** | 6 | MOUNTING | |
| | 15 | 1 | **101-2457** | 2 | LEVER | |
| | 16 | 1 | **101-2458** | 2 | LEVER | |
| | 17 | 1 | **104-7419** | 1 | PLATE AS (RH) | |
| | 18 | 1 | **104-7429** | 2 | PLATE | |
| | 19 | 1 | **104-7740** | 1 | PLATE AS (LH) | |
| | 20 | 1 | **137-4515** | 2 | BUSHING | |
| | 21 | 1 | **137-4516** | 1 | SHAFT | |
| CY | 22 | 1 | **130-3119** | 1 | VALVE GP-BANK 5 (LH) | 922 |
| CY | 23 | 1 | **130-3123** | 1 | VALVE GP-BANK 5 (RH) | 923 |
| | 24 | 1 | **2G-6747** | 1 | KNOB-BLADE TIP | |
| | 25 | 1 | **2G-6748** | 1 | KNOB-BLADE LIFT | |
| | 26 | 1 | **2G-6749** | 1 | KNOB-SIDESHIFT | |
| | 27 | 1 | **2G-6751** | 1 | KNOB-CIRCLE DRIVE | |
| | 28 | 1 | **2G-6752** | 1 | KNOB-ARTICULATION | |
| | 29 | 1 | **2G-6753** | 1 | KNOB-SCARIFIER | |
| | 30 | 1 | **2G-6754** | 1 | KNOB (DOZER LIFT, PLOW) | |
| | 31 | 1 | **2G-6755** | 1 | KNOB-CENTERSHIFT | |
| | 32 | 1 | **2G-6756** | 1 | KNOB-WHEEL LEAN | |
| | 33 | 1 | **2G-6757** | 1 | KNOB-BLADE LIFT | |
| | 34 | 1 | **4L-6459** | 1 | BOLT (3/8-16X2.5-IN) | |
| | 35 | 1 | **5P-1075** | 2 | WASHER-HARD (10.2X22.5X3-MM THK) | |
| | 36 | 1 | **5P-1076** | 6 | WASHER-HARD (13.5X30X4-MM THK) | |
| | 37 | 1 | **5P-2424** | 6 | BOLT (1/2-13X2.25-IN) | |
| | 38 | 1 | **6V-8188** | 2 | NUT (1/2-13-THD) | |
| | 39 | 1 | **8F-6437** | 6 | WASHER (13.5X50.8X4.76-MM THK) | |
| | 40 | 1 | **8T-4121** | 8 | WASHER-HARD (11X21X2.5-MM THK) | |
| M | 41 | 1 | **8T-4136** | 4 | BOLT (M10X1.5X25-MM) | |
| M | 42 | 1 | **8T-4195** | 4 | BOLT (M10X1.5X30-MM) | |
| | 43 | 1 | **8T-9043** | 20 | BOLT (5/16-18X0.875-IN) | |
| | 44 | 1 | **9B-7237** | 1 | BOLT (3/8-16X1.25-IN) | |

B-USE AS REQUIRED
C-CHANGE FROM PREVIOUS TYPE
M-METRIC PART
Y-SEPARATE ILLUSTRATION

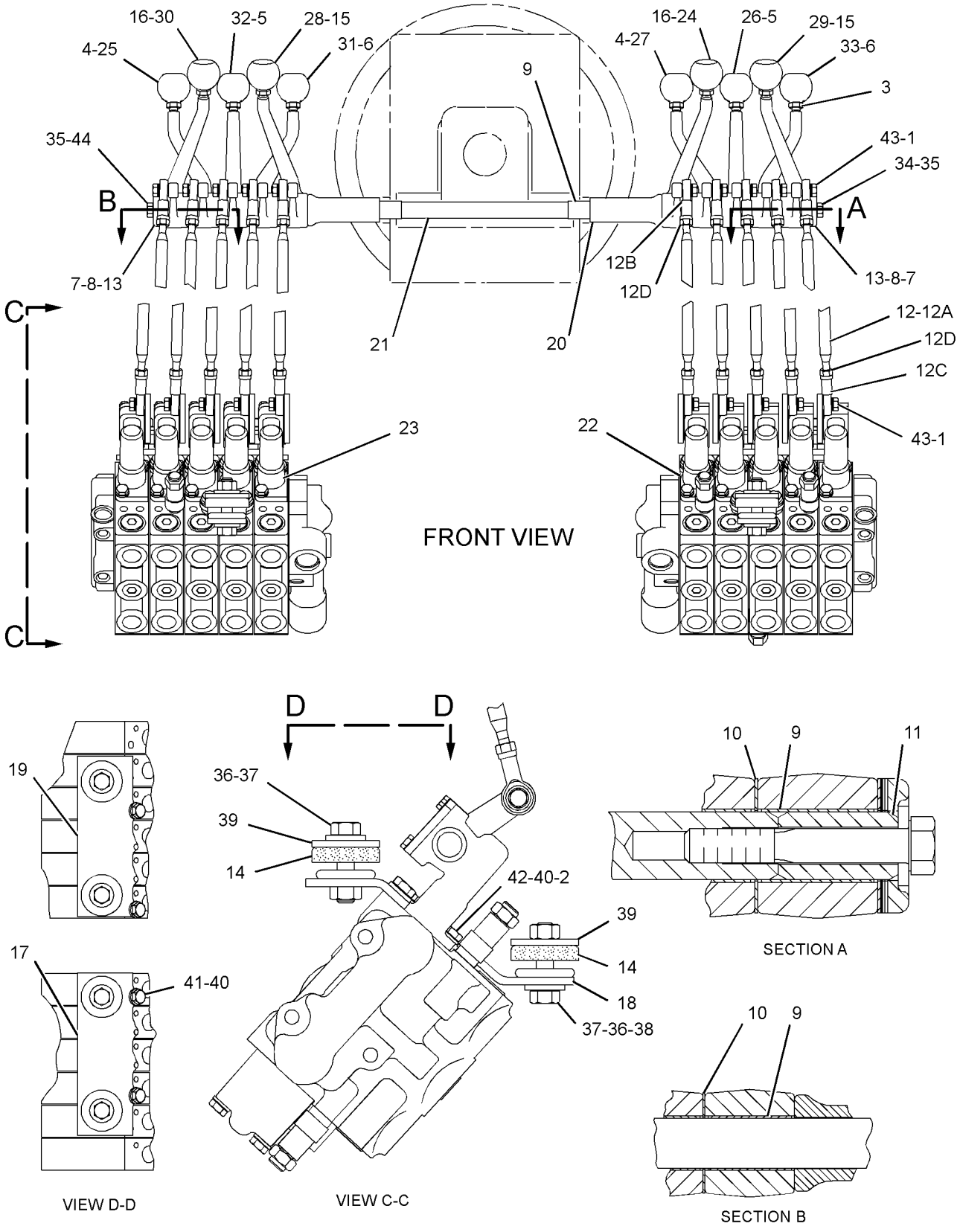


GRAPHIC #1 **<END>** g01297483

# HYDRAULIC SYSTEM

## *121-4090* VALVE & LINKAGE GP—4-BANK, RH; 5-BANK, LH

**S/N: CCA1-UP**

**PART OF 184-7308 CONTROL AR-HYDRAULIC**

**AN ATTACHMENT**

**SMCS-5051, 5063** **i02585656**

| NOTE | REF NO | GRAPHIC REF | PART NUMBER | QTY | PART NAME 1 2 3 4 5 6 (PRODUCT LEVEL) | SEE PAGE |
|---|---|---|---|---|---|---|
| | 1 | 1 | **3F-9556** | 18 | LOCKWASHER | |
| | 2 | 1 | **6B-0933** | 4 | SPACER (10.31X19.05X6.35-MM THK) | |
| | 3 | 1 | **6L-1962** | 9 | NUT-JAM (3/8-24-THD) | |
| | 4 | 1 | **7H-3641** | 9 | END-ROD (5/16-24-THD) | |
| | 5 | 1 | **8D-5632** | 2 | LEVER | |
| | 6 | 1 | **8D-5633** | 2 | LEVER | |
| | 7 | 1 | **8D-5634** | 2 | LEVER | |
| B | 8 | 1 | **8D-5636** | 4 | SHIM (0.254-MM THK) | |
| B | 9 | 1 | **8D-5637** | 4 | SHIM (0.762-MM THK) | |
| | 10 | 1 | **8D-5640** | 11 | BEARING | |
| | 11 | 1 | **8D-5641** | 9 | BEARING | |
| | 12 | 1 | **8L-8598** | 9 | ROD END (LH) | |
| | 13 | 1 | **8X-5499** | 2 | RETAINER | |
| | 14 | 1 | **9M-1853** | 6 | MOUNTING | |
| | 15 | 1 | **101-2457** | 2 | LEVER | |
| | 16 | 1 | **101-2458** | 1 | LEVER | |
| | 17 | 1 | **104-7419** | 1 | PLATE AS (RH) | |
| | | 1 | **1F-0748** | 2 | NUT-WELD (1/2-13-THD) | |
| | 18 | 1 | **104-7429** | 2 | PLATE | |
| | 19 | 1 | **104-7740** | 1 | PLATE AS (LH) | |
| | | 1 | **1F-0748** | 2 | NUT-WELD (1/2-13-THD) | |
| | 20 | 1 | **137-4515** | 2 | BUSHING | |
| | 21 | 1 | **137-4516** | 1 | SHAFT | |
| | 22 | 1 | **146-0705** | 9 | ROD | |
| CY | 23 | 1 | **130-3116** | 1 | VALVE GP-BANK 4 (RH) | 909 |
| CY | 24 | 1 | **130-3118** | 1 | VALVE GP-BANK 5 (LH) | 921 |
| | 25 | 1 | **2G-6740** | 1 | KNOB-RIPPER | |
| | 26 | 1 | **2G-6747** | 1 | KNOB-BLADE TIP | |
| | 27 | 1 | **2G-6748** | 1 | KNOB-BLADE LIFT | |
| | 28 | 1 | **2G-6749** | 1 | KNOB-SIDESHIFT | |
| | 29 | 1 | **2G-6751** | 1 | KNOB-CIRCLE DRIVE | |
| | 30 | 1 | **2G-6752** | 1 | KNOB-ARTICULATION | |
| | 31 | 1 | **2G-6755** | 1 | KNOB-CENTERSHIFT | |
| | 32 | 1 | **2G-6756** | 1 | KNOB-WHEEL LEAN | |
| | 33 | 1 | **2G-6757** | 1 | KNOB-BLADE LIFT | |
| | 34 | 1 | **5P-1075** | 2 | WASHER-HARD (10.2X22.5X3-MM THK) | |
| | 35 | 1 | **5P-1076** | 6 | WASHER-HARD (13.5X30X4-MM THK) | |
| | 36 | 1 | **5P-2424** | 6 | BOLT (1/2-13X2.25-IN) | |
| | 37 | 1 | **6V-8186** | 9 | NUT-FULL (5/16-24-THD) | |
| | 38 | 1 | **6V-8188** | 2 | NUT (1/2-13-THD) | |
| | 39 | 1 | **8F-6437** | 6 | WASHER (13.5X50.8X4.76-MM THK) | |
| | 40 | 1 | **8T-4121** | 8 | WASHER-HARD (11X21X2.5-MM THK) | |
| M | 41 | 1 | **8T-4136** | 4 | BOLT (M10X1.5X25-MM) | |
| M | 42 | 1 | **8T-4195** | 4 | BOLT (M10X1.5X30-MM) | |
| | 43 | 1 | **8T-9043** | 18 | BOLT (5/16-18X0.875-IN) | |
| | 44 | 1 | **9B-7237** | 2 | BOLT (3/8-16X1.25-IN) | |

B-USE AS REQUIRED
C-CHANGE FROM PREVIOUS TYPE
M-METRIC PART
Y-SEPARATE ILLUSTRATION

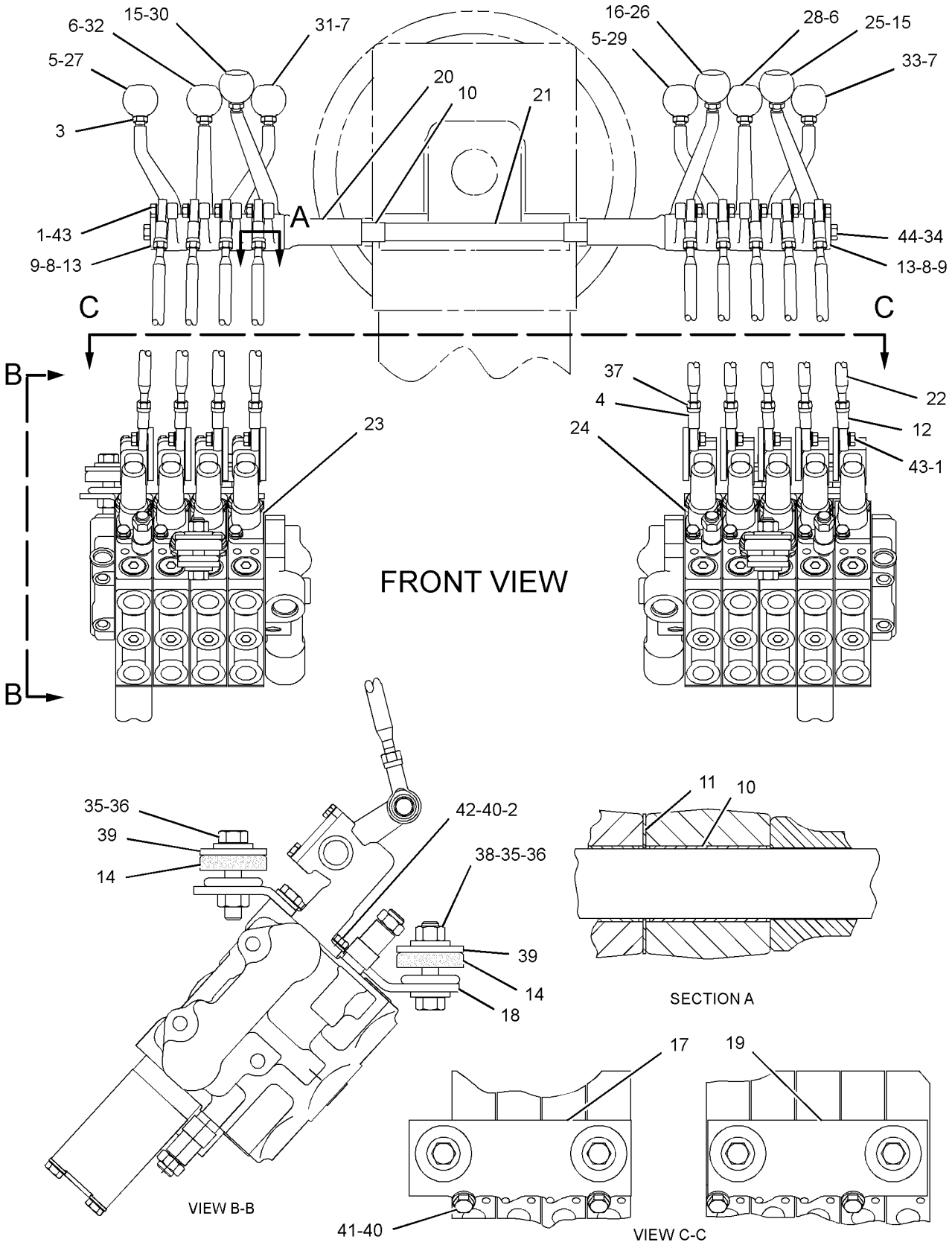


GRAPHIC #1 **<END>** g01294513

# HYDRAULIC SYSTEM

## *121-4094* VALVE & LINKAGE GP—BANK 5-RH—BANK 6-LH

**S/N: CCA1-UP**
**AN ATTACHMENT**

**SMCS-5051, 5063** **i02585655**

| NOTE | REF NO | GRAPHIC REF | PART NUMBER | QTY | PART NAME 1 2 3 4 5 6 (PRODUCT LEVEL) | SEE PAGE |
|---|---|---|---|---|---|---|
| | 1 | 1 | **3F-9556** | 22 | LOCKWASHER | |
| | 2 | 1 | **6B-0933** | 4 | SPACER (10.31X19.05X6.35-MM THK) | |
| | 3 | 1 | **6L-1962** | 11 | NUT-JAM (3/8-24-THD) | |
| | 4 | 1 | **7H-3641** | 11 | END-ROD (5/16-24-THD) | |
| | 5 | 1 | **8D-5632** | 2 | LEVER | |
| | 6 | 1 | **8D-5633** | 2 | LEVER | |
| | 7 | 1 | **8D-5634** | 2 | LEVER | |
| B | 8 | 1 | **8D-5636** | 4 | SHIM (0.254-MM THK) | |
| B | 9 | 1 | **8D-5637** | 4 | SHIM (0.762-MM THK) | |
| | 10 | 1 | **8D-5640** | 13 | BEARING | |
| | 11 | 1 | **8D-5641** | 11 | BEARING | |
| | 12 | 1 | **8L-8598** | 11 | ROD END (LH) | |
| | 13 | 1 | **8W-0456** | 2 | SHAFT | |
| | 14 | 1 | **8X-5499** | 2 | RETAINER | |
| | 15 | 1 | **9M-1853** | 6 | MOUNTING | |
| | 16 | 1 | **101-2457** | 2 | LEVER | |
| | 17 | 1 | **101-2458** | 2 | LEVER | |
| | 18 | 1 | **103-1597** | 1 | LEVER | |
| | 19 | 1 | **104-7419** | 1 | PLATE AS (RH) | |
| | | 1 | **1F-0748** | 2 | NUT-WELD (1/2-13-THD) | |
| | 20 | 1 | **104-7429** | 2 | PLATE | |
| | 21 | 1 | **104-7740** | 1 | PLATE AS (LH) | |
| | | 1 | **1F-0748** | 2 | NUT-WELD (1/2-13-THD) | |
| | 22 | 1 | **137-4515** | 2 | BUSHING | |
| | 23 | 1 | **137-4516** | 1 | SHAFT | |
| | 24 | 1 | **146-0705** | 11 | ROD | |
| CY | 25 | 1 | **130-3121** | 1 | VALVE GP-BANK 6 (LH) | 936 |
| CY | 26 | 1 | **130-3123** | 1 | VALVE GP-BANK 5 (RH) | 923 |
| | 27 | 1 | **2G-6747** | 1 | KNOB-BLADE TIP | |
| | 28 | 1 | **2G-6748** | 1 | KNOB-BLADE LIFT | |
| | 29 | 1 | **2G-6749** | 1 | KNOB-SIDESHIFT | |
| | 30 | 1 | **2G-6751** | 1 | KNOB-CIRCLE DRIVE | |
| | 31 | 1 | **2G-6752** | 1 | KNOB-ARTICULATION | |
| | 32 | 1 | **2G-6754** | 1 | KNOB (DOZER LIFT, PLOW) | |
| | 33 | 1 | **2G-6755** | 1 | KNOB-CENTERSHIFT | |
| | 34 | 1 | **2G-6756** | 1 | KNOB-WHEEL LEAN | |
| | 35 | 1 | **2G-6757** | 1 | KNOB-BLADE LIFT | |
| | 36 | 1 | **2G-7107** | 1 | KNOB-WING LIFT | |
| | 37 | 1 | **2G-7108** | 1 | KNOB-WING TILT | |
| | 38 | 1 | **4L-6459** | 2 | BOLT (3/8-16X2.5-IN) | |
| | 39 | 1 | **5P-1075** | 2 | WASHER-HARD (10.2X22.5X3-MM THK) | |
| | 40 | 1 | **5P-1076** | 6 | WASHER-HARD (13.5X30X4-MM THK) | |
| | 41 | 1 | **5P-2424** | 6 | BOLT (1/2-13X2.25-IN) | |
| | 42 | 1 | **6V-8186** | 11 | NUT-FULL (5/16-24-THD) | |
| | 43 | 1 | **6V-8188** | 2 | NUT (1/2-13-THD) | |
| | 44 | 1 | **8F-6437** | 6 | WASHER (13.5X50.8X4.76-MM THK) | |
| | 45 | 1 | **8T-4121** | 8 | WASHER-HARD (11X21X2.5-MM THK) | |
| M | 46 | 1 | **8T-4136** | 4 | BOLT (M10X1.5X25-MM) | |
| M | 47 | 1 | **8T-4195** | 4 | BOLT (M10X1.5X30-MM) | |
| | 48 | 1 | **8T-9043** | 22 | BOLT (5/16-18X0.875-IN) | |

B-USE AS REQUIRED
C-CHANGE FROM PREVIOUS TYPE
M-METRIC PART
Y-SEPARATE ILLUSTRATION

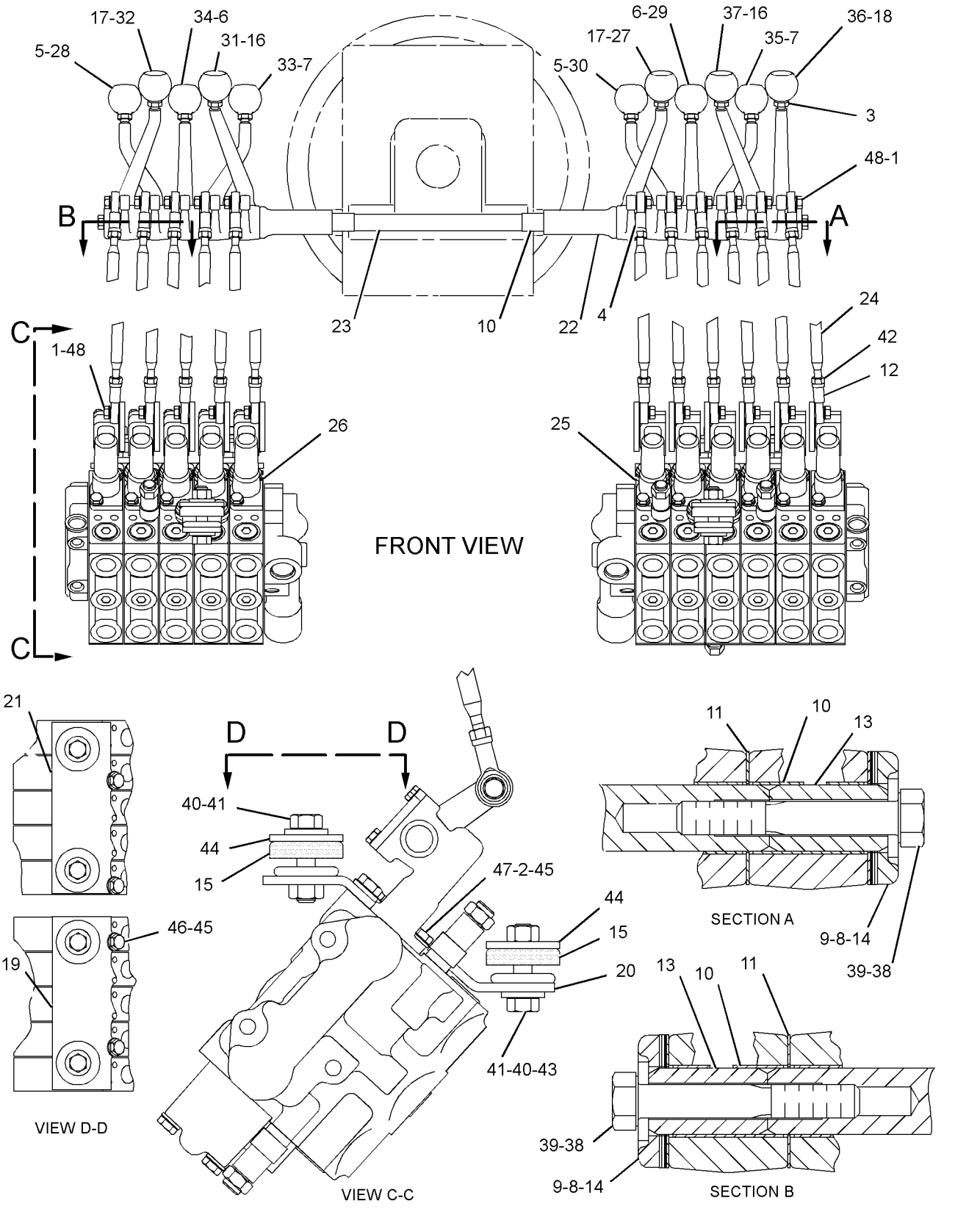


GRAPHIC #1 **<END>** g01294523

# HYDRAULIC SYSTEM

## *121-4095* VALVE & LINKAGE GP—BANK 4-RH—BANK 5-LH

**S/N: CCA1-UP**
**AN ATTACHMENT**

**SMCS-5051, 5063** **i02585653**

| NOTE | REF NO | GRAPHIC REF | PART NUMBER | QTY | PART NAME 1 2 3 4 5 6 (PRODUCT LEVEL) | SEE PAGE |
|---|---|---|---|---|---|---|
| | 1 | 1 | **3F-9556** | 18 | LOCKWASHER | |
| | 2 | 1 | **6B-0933** | 4 | SPACER (10.31X19.05X6.35-MM THK) | |
| | 3 | 1 | **6L-1962** | 9 | NUT-JAM (3/8-24-THD) | |
| | 4 | 1 | **7H-3641** | 9 | END-ROD (5/16-24-THD) | |
| | 5 | 1 | **8D-5632** | 2 | LEVER | |
| | 6 | 1 | **8D-5633** | 2 | LEVER | |
| | 7 | 1 | **8D-5634** | 2 | LEVER | |
| B | 8 | 1 | **8D-5636** | 4 | SHIM (0.254-MM THK) | |
| B | 9 | 1 | **8D-5637** | 4 | SHIM (0.762-MM THK) | |
| | 10 | 1 | **8D-5640** | 11 | BEARING | |
| | 11 | 1 | **8D-5641** | 9 | BEARING | |
| | 12 | 1 | **8L-8598** | 9 | ROD END (LH) | |
| | 13 | 1 | **8X-5499** | 2 | RETAINER | |
| | 14 | 1 | **9M-1853** | 6 | MOUNTING | |
| | 15 | 1 | **101-2457** | 2 | LEVER | |
| | 16 | 1 | **101-2458** | 1 | LEVER | |
| | 17 | 1 | **104-7419** | 1 | PLATE AS (RH) | |
| | | 1 | **1F-0748** | 2 | NUT-WELD (1/2-13-THD) | |
| | 18 | 1 | **104-7429** | 2 | PLATE | |
| | 19 | 1 | **104-7740** | 1 | PLATE AS (LH) | |
| | | 1 | **1F-0748** | 2 | NUT-WELD (1/2-13-THD) | |
| | 20 | 1 | **137-4515** | 2 | BUSHING | |
| | 21 | 1 | **137-4516** | 1 | SHAFT | |
| | 22 | 1 | **146-0705** | 9 | ROD | |
| CY | 23 | 1 | **130-3116** | 1 | VALVE GP-BANK 4 (RH) | 909 |
| CY | 24 | 1 | **130-3119** | 1 | VALVE GP-BANK 5 (LH) | 922 |
| | 25 | 1 | **2G-6747** | 1 | KNOB-BLADE TIP | |
| | 26 | 1 | **2G-6748** | 1 | KNOB-BLADE LIFT | |
| | 27 | 1 | **2G-6749** | 1 | KNOB-SIDESHIFT | |
| | 28 | 1 | **2G-6751** | 1 | KNOB-CIRCLE DRIVE | |
| | 29 | 1 | **2G-6752** | 1 | KNOB-ARTICULATION | |
| | 30 | 1 | **2G-6753** | 1 | KNOB-SCARIFIER | |
| | 31 | 1 | **2G-6755** | 1 | KNOB-CENTERSHIFT | |
| | 32 | 1 | **2G-6756** | 1 | KNOB-WHEEL LEAN | |
| | 33 | 1 | **2G-6757** | 1 | KNOB-BLADE LIFT | |
| | 34 | 1 | **5P-1075** | 2 | WASHER-HARD (10.2X22.5X3-MM THK) | |
| | 35 | 1 | **5P-1076** | 6 | WASHER-HARD (13.5X30X4-MM THK) | |
| | 36 | 1 | **5P-2424** | 6 | BOLT (1/2-13X2.25-IN) | |
| | 37 | 1 | **6V-8186** | 9 | NUT-FULL (5/16-24-THD) | |
| | 38 | 1 | **6V-8188** | 2 | NUT (1/2-13-THD) | |
| | 39 | 1 | **8F-6437** | 6 | WASHER (13.5X50.8X4.76-MM THK) | |
| | 40 | 1 | **8T-4121** | 8 | WASHER-HARD (11X21X2.5-MM THK) | |
| M | 41 | 1 | **8T-4136** | 4 | BOLT (M10X1.5X25-MM) | |
| M | 42 | 1 | **8T-4195** | 4 | BOLT (M10X1.5X30-MM) | |
| | 43 | 1 | **8T-9043** | 18 | BOLT (5/16-18X0.875-IN) | |
| | 44 | 1 | **9B-7237** | 2 | BOLT (3/8-16X1.25-IN) | |

B-USE AS REQUIRED
C-CHANGE FROM PREVIOUS TYPE
M-METRIC PART
Y-SEPARATE ILLUSTRATION

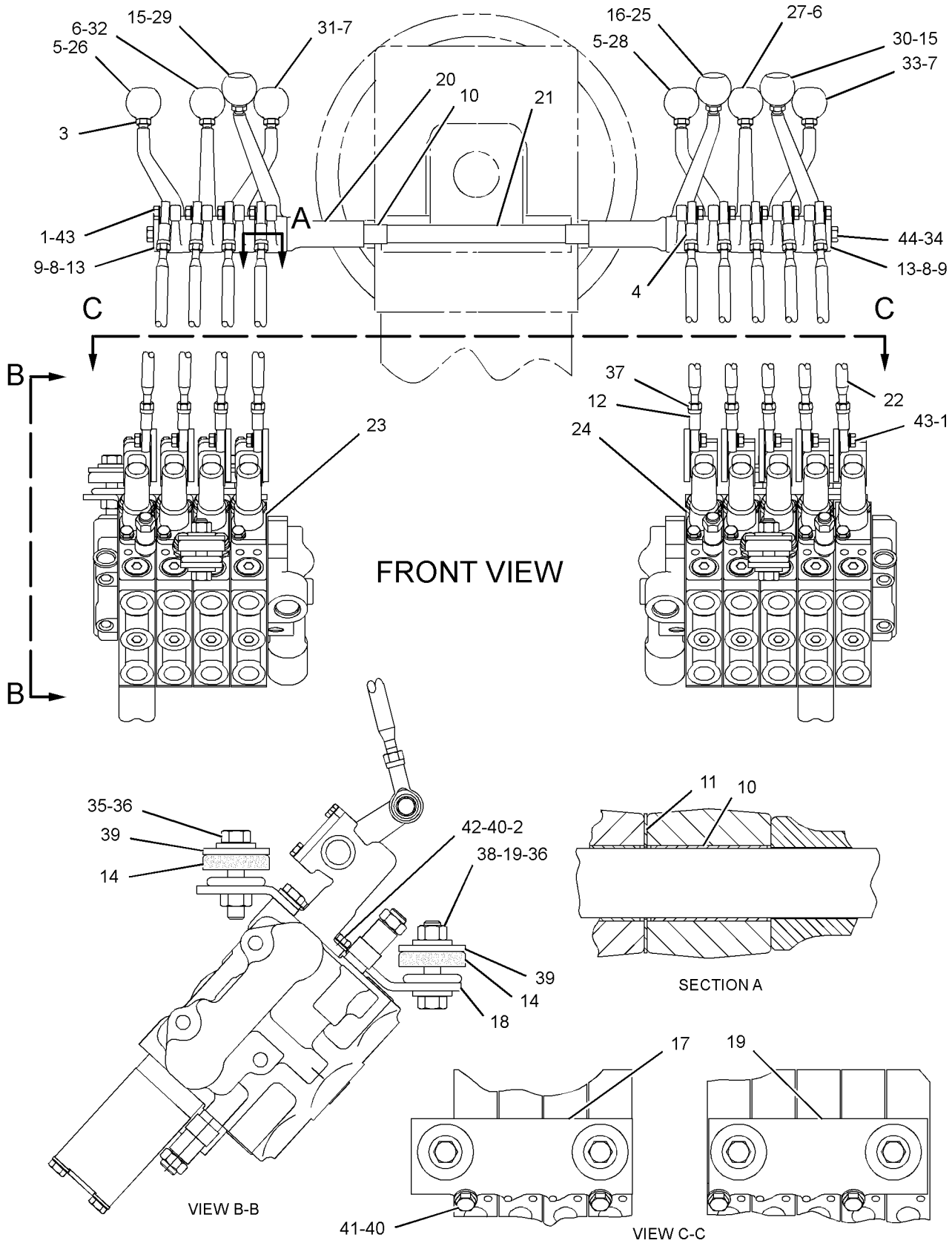


GRAPHIC #1 **<END>** g01294531

# HYDRAULIC SYSTEM

## *121-4096* VALVE & LINKAGE GP—BANK 5-RH, BANK 7-LH

**S/N: CCA1-UP**
**PART OF 184-7306 CONTROL AR-HYDRAULIC**
**AN ATTACHMENT**

**SMCS-5051, 5063** **i02585652**

| NOTE | REF NO | GRAPHIC REF | PART NUMBER | QTY | PART NAME 1 2 3 4 5 6 (PRODUCT LEVEL) | SEE PAGE |
|---|---|---|---|---|---|---|
| | 1 | 1 | **3F-9556** | 24 | LOCKWASHER | |
| | 2 | 1 | **6B-0933** | 4 | SPACER (10.31X19.05X6.35-MM THK) | |
| | 3 | 1 | **6L-1962** | 12 | NUT-JAM (3/8-24-THD) | |
| | 4 | 1 | **7H-3641** | 12 | END-ROD (5/16-24-THD) | |
| | 5 | 1 | **8D-5632** | 2 | LEVER | |
| | 6 | 1 | **8D-5633** | 2 | LEVER | |
| | 7 | 1 | **8D-5634** | 2 | LEVER | |
| B | 8 | 1 | **8D-5636** | 4 | SHIM (0.254-MM THK) | |
| B | 9 | 1 | **8D-5637** | 4 | SHIM (0.762-MM THK) | |
| | 10 | 1 | **8D-5640** | 14 | BEARING | |
| | 11 | 1 | **8D-5641** | 12 | BEARING | |
| | 12 | 1 | **8L-8598** | 12 | ROD END (LH) | |
| | 13 | 1 | **8X-5499** | 2 | RETAINER | |
| | 14 | 1 | **9M-1853** | 6 | MOUNTING | |
| | 15 | 1 | **101-2457** | 2 | LEVER | |
| | 16 | 1 | **101-2458** | 3 | LEVER | |
| | 17 | 1 | **103-1597** | 1 | LEVER | |
| | 18 | 1 | **104-7419** | 1 | PLATE AS (RH) | |
| | | 1 | **1F-0748** | 2 | NUT-WELD (1/2-13-THD) | |
| | 19 | 1 | **104-7429** | 2 | PLATE | |
| | 20 | 1 | **104-7740** | 1 | PLATE AS (LH) | |
| | | 1 | **1F-0748** | 2 | NUT-WELD (1/2-13-THD) | |
| | 21 | 1 | **137-4515** | 2 | BUSHING | |
| | 22 | 1 | **137-4517** | 1 | SHAFT | |
| | 23 | 1 | **146-0705** | 12 | ROD | |
| CY | 24 | 1 | **130-3122** | 1 | VALVE GP-BANK 7 (LH) | 958 |
| CY | 25 | 1 | **130-3123** | 1 | VALVE GP-BANK 5 (RH) | 923 |
| | 26 | 1 | **2G-6740** | 1 | KNOB-RIPPER | |
| | 27 | 1 | **2G-6747** | 1 | KNOB-BLADE TIP | |
| | 28 | 1 | **2G-6748** | 1 | KNOB-BLADE LIFT | |
| | 29 | 1 | **2G-6749** | 1 | KNOB-SIDESHIFT | |
| | 30 | 1 | **2G-6751** | 1 | KNOB-CIRCLE DRIVE | |
| | 31 | 1 | **2G-6752** | 1 | KNOB-ARTICULATION | |
| | 32 | 1 | **2G-6754** | 1 | KNOB (DOZER LIFT, PLOW) | |
| | 33 | 1 | **2G-6755** | 1 | KNOB-CENTERSHIFT | |
| | 34 | 1 | **2G-6756** | 1 | KNOB-WHEEL LEAN | |
| | 35 | 1 | **2G-6757** | 1 | KNOB-BLADE LIFT | |
| | 36 | 1 | **2G-7107** | 1 | KNOB-WING LIFT | |
| | 37 | 1 | **2G-7108** | 1 | KNOB-WING TILT | |
| | 38 | 1 | **5P-1075** | 2 | WASHER-HARD (10.2X22.5X3-MM THK) | |
| | 39 | 1 | **5P-1076** | 6 | WASHER-HARD (13.5X30X4-MM THK) | |
| | 40 | 1 | **5P-2424** | 6 | BOLT (1/2-13X2.25-IN) | |
| | 41 | 1 | **6V-8186** | 12 | NUT-FULL (5/16-24-THD) | |
| | 42 | 1 | **6V-8188** | 2 | NUT (1/2-13-THD) | |
| | 43 | 1 | **8F-6437** | 6 | WASHER (13.5X50.8X4.76-MM THK) | |
| | 44 | 1 | **8T-4121** | 8 | WASHER-HARD (11X21X2.5-MM THK) | |
| M | 45 | 1 | **8T-4136** | 4 | BOLT (M10X1.5X25-MM) | |
| M | 46 | 1 | **8T-4195** | 4 | BOLT (M10X1.5X30-MM) | |
| | 47 | 1 | **8T-9043** | 24 | BOLT (5/16-18X0.875-IN) | |
| | 48 | 1 | **9B-7237** | 2 | BOLT (3/8-16X1.25-IN) | |

B-USE AS REQUIRED
C-CHANGE FROM PREVIOUS TYPE
M-METRIC PART
Y-SEPARATE ILLUSTRATION

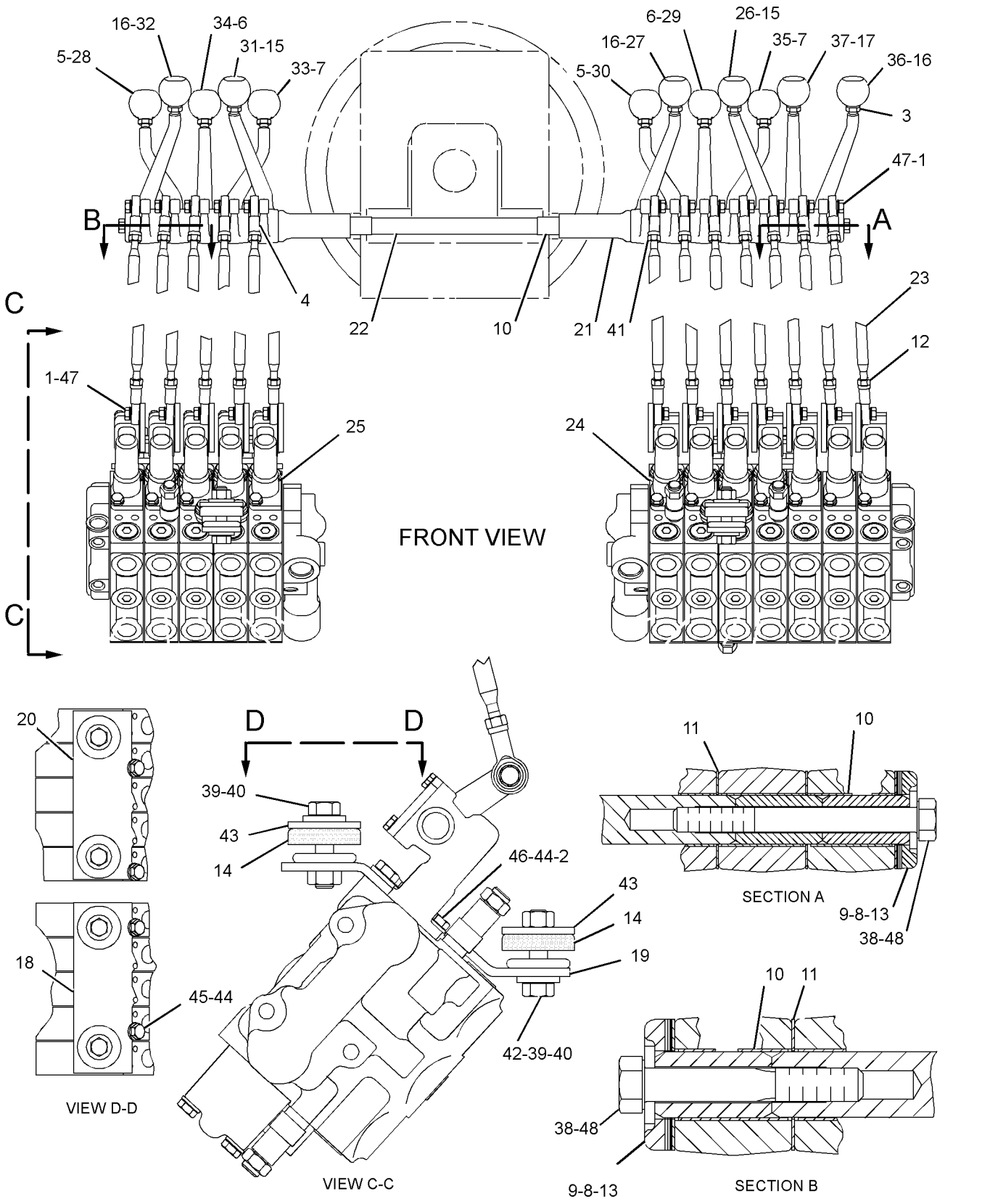


GRAPHIC #1 **<END>** g01294535

# HYDRAULIC SYSTEM

## *121-4097* VALVE & LINKAGE GP—BANK 5-LH,RH

**S/N: CCA1-UP**

**PART OF 184-7307 CONTROL AR-HYDRAULIC**

**AN ATTACHMENT**

**SMCS-5051, 5063** **i02585694**

| NOTE | REF NO | GRAPHIC REF | PART NUMBER | QTY | PART NAME 1 2 3 4 5 6 (PRODUCT LEVEL) | SEE PAGE |
|---|---|---|---|---|---|---|
| | 1 | 1 | **3F-9556** | 20 | LOCKWASHER | |
| | 2 | 1 | **6B-0933** | 4 | SPACER (10.31X19.05X6.35-MM THK) | |
| | 3 | 1 | **6L-1962** | 10 | NUT-JAM (3/8-24-THD) | |
| | 4 | 1 | **7H-3641** | 10 | END-ROD (5/16-24-THD) | |
| | 5 | 1 | **8D-5632** | 2 | LEVER | |
| | 6 | 1 | **8D-5633** | 2 | LEVER | |
| | 7 | 1 | **8D-5634** | 2 | LEVER | |
| B | 8 | 1 | **8D-5636** | 4 | SHIM (0.254-MM THK) | |
| B | 9 | 1 | **8D-5637** | 4 | SHIM (0.762-MM THK) | |
| | 10 | 1 | **8D-5640** | 12 | BEARING | |
| | 11 | 1 | **8D-5641** | 10 | BEARING | |
| | 12 | 1 | **8L-8598** | 10 | ROD END (LH) | |
| | 13 | 1 | **8W-0456** | 1 | SHAFT | |
| | 14 | 1 | **8X-5499** | 2 | RETAINER | |
| | 15 | 1 | **9M-1853** | 6 | MOUNTING | |
| | 16 | 1 | **101-2457** | 2 | LEVER | |
| | 17 | 1 | **101-2458** | 2 | LEVER | |
| | 18 | 1 | **104-7419** | 1 | PLATE AS (RH) | |
| | | 1 | **1F-0748** | 2 | NUT-WELD (1/2-13-THD) | |
| | 19 | 1 | **104-7429** | 2 | PLATE | |
| | 20 | 1 | **104-7740** | 1 | PLATE AS (LH) | |
| | | 1 | **1F-0748** | 2 | NUT-WELD (1/2-13-THD) | |
| | 21 | 1 | **137-4515** | 2 | BUSHING | |
| | 22 | 1 | **137-4516** | 1 | SHAFT | |
| | 23 | 1 | **146-0705** | 10 | ROD | |
| CY | 24 | 1 | **130-3118** | 1 | VALVE GP-BANK 5 (LH) | 921 |
| CY | 25 | 1 | **130-3123** | 1 | VALVE GP-BANK 5 (RH) | 923 |
| | 26 | 1 | **2G-6740** | 1 | KNOB-RIPPER | |
| | 27 | 1 | **2G-6747** | 1 | KNOB-BLADE TIP | |
| | 28 | 1 | **2G-6748** | 1 | KNOB-BLADE LIFT (RH) | |
| | 29 | 1 | **2G-6749** | 1 | KNOB-SIDESHIFT | |
| | 30 | 1 | **2G-6751** | 1 | KNOB-CIRCLE DRIVE | |
| | 31 | 1 | **2G-6752** | 1 | KNOB-ARTICULATION | |
| | 32 | 1 | **2G-6754** | 1 | KNOB (DOZER LIFT, PLOW) | |
| | 33 | 1 | **2G-6755** | 1 | KNOB-CENTERSHIFT | |
| | 34 | 1 | **2G-6756** | 1 | KNOB-WHEEL LEAN | |
| | 35 | 1 | **2G-6757** | 1 | KNOB-BLADE LIFT (LH) | |
| | 36 | 1 | **4L-6459** | 1 | BOLT (3/8-16X2.5-IN) | |
| | 37 | 1 | **5P-1075** | 2 | WASHER-HARD (10.2X22.5X3-MM THK) | |
| | 38 | 1 | **5P-1076** | 6 | WASHER-HARD (13.5X30X4-MM THK) | |
| | 39 | 1 | **5P-2424** | 6 | BOLT (1/2-13X2.25-IN) | |
| | 40 | 1 | **6V-8186** | 10 | NUT-FULL (5/16-24-THD) | |
| | 41 | 1 | **6V-8188** | 2 | NUT (1/2-13-THD) | |
| | 42 | 1 | **8F-6437** | 6 | WASHER (13.5X50.8X4.76-MM THK) | |
| | 43 | 1 | **8T-4121** | 8 | WASHER-HARD (11X21X2.5-MM THK) | |
| M | 44 | 1 | **8T-4136** | 4 | BOLT (M10X1.5X25-MM) | |
| M | 45 | 1 | **8T-4195** | 4 | BOLT (M10X1.5X30-MM) | |
| | 46 | 1 | **8T-9043** | 20 | BOLT (5/16-18X0.875-IN) | |
| | 47 | 1 | **9B-7237** | 1 | BOLT (3/8-16X1.25-IN) | |

B-USE AS REQUIRED
C-CHANGE FROM PREVIOUS TYPE
M-METRIC PART
Y-SEPARATE ILLUSTRATION

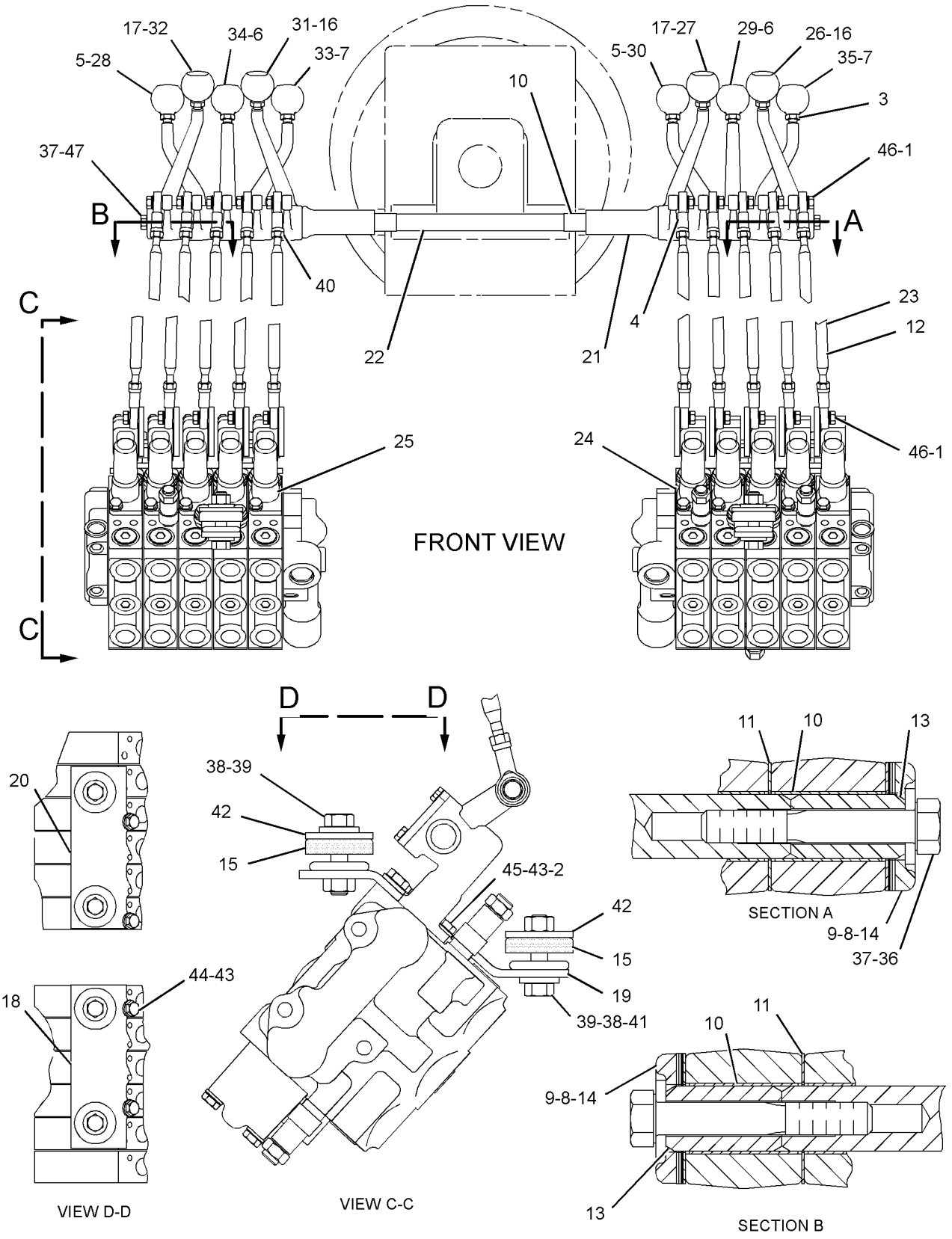


GRAPHIC #1 **<END>** g01294543

# HYDRAULIC SYSTEM

## *121-4098* VALVE & LINKAGE GP—BANK 6-LH,RH

**S/N: CCA1-UP**
**AN ATTACHMENT**

**SMCS-5051, 5063** **i02585695**

| NOTE | REF NO | GRAPHIC REF | PART NUMBER | QTY | PART NAME 1 2 3 4 5 6 (PRODUCT LEVEL) | SEE PAGE |
|---|---|---|---|---|---|---|
| | 1 | 1 | **3F-9556** | 24 | LOCKWASHER | |
| | 2 | 1 | **6B-0933** | 4 | SPACER (10.31X19.05X6.35-MM THK) | |
| | 3 | 1 | **6L-1962** | 12 | NUT-JAM (3/8-24-THD) | |
| | 4 | 1 | **7H-3641** | 12 | END-ROD (5/16-24-THD) | |
| | 5 | 1 | **8D-5632** | 2 | LEVER | |
| | 6 | 1 | **8D-5633** | 2 | LEVER | |
| | 7 | 1 | **8D-5634** | 2 | LEVER | |
| B | 8 | 1 | **8D-5636** | 4 | SHIM (0.254-MM THK) | |
| B | 9 | 1 | **8D-5637** | 4 | SHIM (0.762-MM THK) | |
| | 10 | 1 | **8D-5640** | 14 | BEARING | |
| | 11 | 1 | **8D-5641** | 12 | BEARING | |
| | 12 | 1 | **8L-8598** | 12 | ROD END (LH) | |
| | 13 | 1 | **8X-5499** | 2 | RETAINER | |
| | 14 | 1 | **9M-1853** | 6 | MOUNTING | |
| | 15 | 1 | **101-2457** | 2 | LEVER | |
| | 16 | 1 | **101-2458** | 2 | LEVER | |
| | 17 | 1 | **103-1597** | 2 | LEVER | |
| | 18 | 1 | **104-7419** | 1 | PLATE AS (RH) | |
| | | 1 | **1F-0748** | 2 | NUT-WELD (1/2-13-THD) | |
| | 19 | 1 | **104-7429** | 2 | PLATE | |
| | 20 | 1 | **104-7740** | 1 | PLATE AS (LH) | |
| | | 1 | **1F-0748** | 2 | NUT-WELD (1/2-13-THD) | |
| | 21 | 1 | **137-4515** | 2 | BUSHING | |
| | 22 | 1 | **137-4517** | 1 | SHAFT | |
| | 23 | 1 | **146-0705** | 12 | ROD | |
| | 24 | 1 | **117-0472** | 1 | KNOB (PLOW, BULLDOZER ANGLE) | |
| CY | 25 | 1 | **130-3121** | 1 | VALVE GP-BANK 6 (LH) | 936 |
| CY | 26 | 1 | **130-3124** | 1 | VALVE GP-BANK 6 (RH) | 937 |
| | 27 | 1 | **2G-6747** | 1 | KNOB-BLADE TIP | |
| | 28 | 1 | **2G-6748** | 1 | KNOB-BLADE LIFT | |
| | 29 | 1 | **2G-6749** | 1 | KNOB-SIDESHIFT | |
| | 30 | 1 | **2G-6751** | 1 | KNOB-CIRCLE DRIVE | |
| | 31 | 1 | **2G-6752** | 1 | KNOB-ARTICULATION | |
| | 32 | 1 | **2G-6754** | 1 | KNOB (DOZER LIFT, PLOW) | |
| | 33 | 1 | **2G-6755** | 1 | KNOB-CENTERSHIFT | |
| | 34 | 1 | **2G-6756** | 1 | KNOB-WHEEL LEAN | |
| | 35 | 1 | **2G-6757** | 1 | KNOB-BLADE LIFT | |
| | 36 | 1 | **2G-7107** | 1 | KNOB-WING LIFT | |
| | 37 | 1 | **2G-7108** | 1 | KNOB-WING TILT | |
| | 38 | 1 | **5P-1075** | 2 | WASHER-HARD (10.2X22.5X3-MM THK) | |
| | 39 | 1 | **5P-1076** | 6 | WASHER-HARD (13.5X30X4-MM THK) | |
| | 40 | 1 | **5P-2424** | 6 | BOLT (1/2-13X2.25-IN) | |
| | 41 | 1 | **6V-8186** | 12 | NUT-FULL (5/16-24-THD) | |
| | 42 | 1 | **6V-8188** | 2 | NUT (1/2-13-THD) | |
| | 43 | 1 | **8F-6437** | 6 | WASHER (13.5X50.8X4.76-MM THK) | |
| | 44 | 1 | **8T-4121** | 8 | WASHER-HARD (11X21X2.5-MM THK) | |
| M | 45 | 1 | **8T-4136** | 4 | BOLT (M10X1.5X25-MM) | |
| M | 46 | 1 | **8T-4195** | 4 | BOLT (M10X1.5X30-MM) | |
| | 47 | 1 | **8T-9043** | 24 | BOLT (5/16-18X0.875-IN) | |
| | 48 | 1 | **9B-7237** | 2 | BOLT (3/8-16X1.25-IN) | |

B-USE AS REQUIRED
C-CHANGE FROM PREVIOUS TYPE
M-METRIC PART
Y-SEPARATE ILLUSTRATION

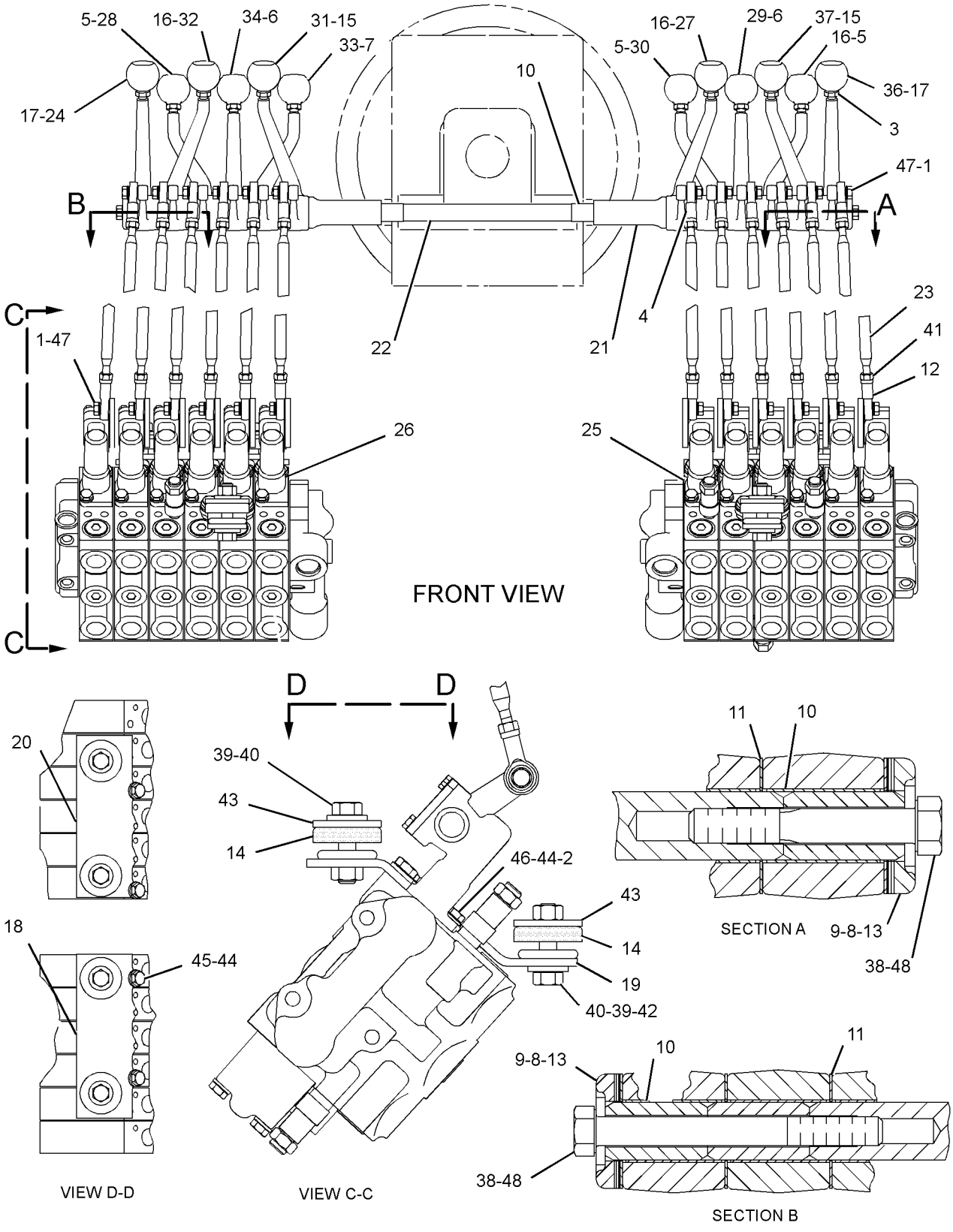


GRAPHIC #1 **<END>** g01294552

# HYDRAULIC SYSTEM

## *121-4099* VALVE & LINKAGE GP—BANK 6-RH, BANK 7-LH

**S/N: CCA1-UP**

**PART OF 184-7305 CONTROL AR-HYDRAULIC**

**AN ATTACHMENT**

**SMCS-5051, 5063** **i02585696**

| NOTE | REF NO | GRAPHIC REF | PART NUMBER | QTY | PART NAME 1 2 3 4 5 6 (PRODUCT LEVEL) | SEE PAGE |
|---|---|---|---|---|---|---|
| | 1 | 1 | **3F-9556** | 26 | LOCKWASHER | |
| | 2 | 1 | **6B-0933** | 4 | SPACER (10.31X19.05X6.35-MM THK) | |
| | 3 | 1 | **6L-1962** | 13 | NUT-JAM (3/8-24-THD) | |
| | 4 | 1 | **7H-3641** | 13 | END-ROD (5/16-24-THD) | |
| | 5 | 1 | **8D-5632** | 2 | LEVER | |
| | 6 | 1 | **8D-5633** | 2 | LEVER | |
| | 7 | 1 | **8D-5634** | 2 | LEVER | |
| B | 8 | 1 | **8D-5636** | 4 | SHIM (0.254-MM THK) | |
| B | 9 | 1 | **8D-5637** | 4 | SHIM (0.762-MM THK) | |
| | 10 | 1 | **8D-5640** | 15 | BEARING | |
| | 11 | 1 | **8D-5641** | 13 | BEARING | |
| | 12 | 1 | **8L-8598** | 13 | ROD END (LH) | |
| | 13 | 1 | **8W-0456** | 1 | SHAFT | |
| | 14 | 1 | **8X-5499** | 2 | RETAINER | |
| | 15 | 1 | **9M-1853** | 6 | MOUNTING | |
| | 16 | 1 | **101-2457** | 2 | LEVER | |
| | 17 | 1 | **101-2458** | 3 | LEVER | |
| | 18 | 1 | **103-1597** | 2 | LEVER | |
| | 19 | 1 | **104-7419** | 1 | PLATE AS (RH) | |
| | | 1 | **1F-0748** | 2 | NUT-WELD (1/2-13-THD) | |
| | 20 | 1 | **104-7429** | 2 | PLATE | |
| | 21 | 1 | **104-7740** | 1 | PLATE AS (LH) | |
| | | 1 | **1F-0748** | 2 | NUT-WELD (1/2-13-THD) | |
| | 22 | 1 | **137-4515** | 2 | BUSHING | |
| | 23 | 1 | **137-4517** | 1 | SHAFT | |
| | 24 | 1 | **146-0705** | 13 | ROD | |
| | 25 | 1 | **117-0472** | 1 | KNOB (PLOW, BULLDOZER ANGLE) | |
| CY | 26 | 1 | **130-3122** | 1 | VALVE GP-BANK 7 (LH) | 958 |
| CY | 27 | 1 | **130-3124** | 1 | VALVE GP-BANK 6 (RH) | 937 |
| | 28 | 1 | **2G-6740** | 1 | KNOB-RIPPER | |
| | 29 | 1 | **2G-6747** | 1 | KNOB-BLADE TIP | |
| | 30 | 1 | **2G-6748** | 1 | KNOB-BLADE LIFT (RH) | |
| | 31 | 1 | **2G-6749** | 1 | KNOB-SIDESHIFT | |
| | 32 | 1 | **2G-6751** | 1 | KNOB-CIRCLE DRIVE | |
| | 33 | 1 | **2G-6752** | 1 | KNOB-ARTICULATION | |
| | 34 | 1 | **2G-6754** | 1 | KNOB (DOZER LIFT, PLOW) | |
| | 35 | 1 | **2G-6755** | 1 | KNOB-CENTERSHIFT | |
| | 36 | 1 | **2G-6756** | 1 | KNOB-WHEEL LEAN | |
| | 37 | 1 | **2G-6757** | 1 | KNOB-BLADE LIFT (LH) | |
| | 38 | 1 | **2G-7107** | 1 | KNOB-WING LIFT | |
| | 39 | 1 | **2G-7108** | 1 | KNOB-WING TILT | |
| | 40 | 1 | **4L-6459** | 1 | BOLT (3/8-16X2.5-IN) | |
| | 41 | 1 | **5P-1075** | 2 | WASHER-HARD (10.2X22.5X3-MM THK) | |
| | 42 | 1 | **5P-1076** | 6 | WASHER-HARD (13.5X30X4-MM THK) | |
| | 43 | 1 | **5P-2424** | 6 | BOLT (1/2-13X2.25-IN) | |
| | 44 | 1 | **6V-8186** | 13 | NUT-FULL (5/16-24-THD) | |
| | 45 | 1 | **6V-8188** | 2 | NUT (1/2-13-THD) | |
| | 46 | 1 | **8F-6437** | 6 | WASHER (13.5X50.8X4.76-MM THK) | |
| | 47 | 1 | **8T-4121** | 8 | WASHER-HARD (11X21X2.5-MM THK) | |
| M | 48 | 1 | **8T-4136** | 4 | BOLT (M10X1.5X25-MM) | |
| M | 49 | 1 | **8T-4195** | 4 | BOLT (M10X1.5X30-MM) | |
| | 50 | 1 | **8T-9043** | 26 | BOLT (5/16-18X0.875-IN) | |
| | 51 | 1 | **9B-7237** | 1 | BOLT (3/8-16X1.25-IN) | |

B-USE AS REQUIRED
C-CHANGE FROM PREVIOUS TYPE
M-METRIC PART
Y-SEPARATE ILLUSTRATION

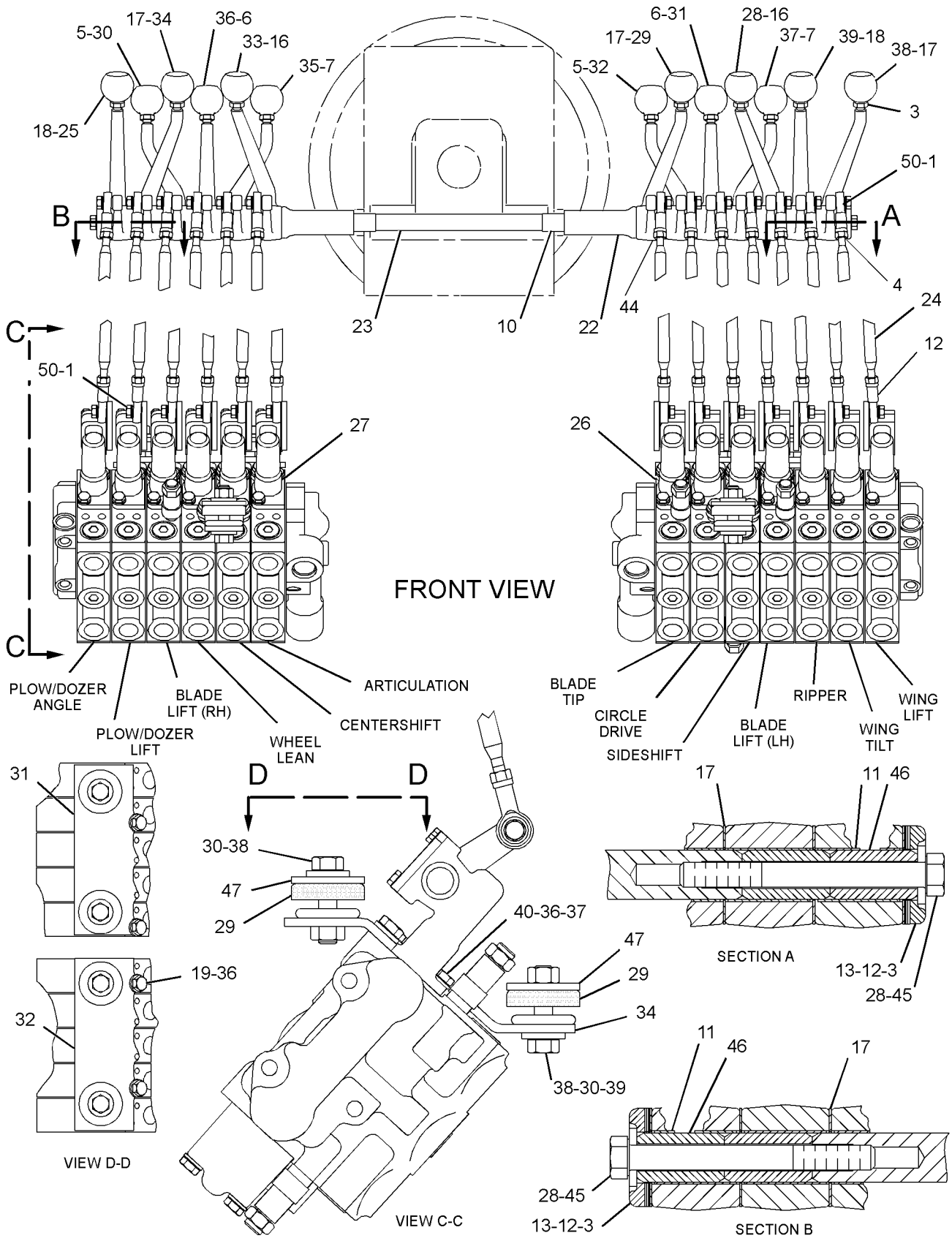


GRAPHIC #1 **<END>** g01294558

# HYDRAULIC SYSTEM

## *124-0311* VALVE & LINKAGE GP—BANK 4-LH—BANK 5-RH

**S/N: CCA1-UP**
**AN ATTACHMENT**

**SMCS-5051, 5063** **i01755237**

| NOTE | REF NO | GRAPHIC REF | PART NUMBER | QTY | PART NAME 1 2 3 4 5 6 (PRODUCT LEVEL) | SEE PAGE |
|---|---|---|---|---|---|---|
| Y | 1 | 1 | **104-8671** | 1 | VALVE GP-BANK 5 (RH) | 920 |
| Y | 2 | 1 | **6E-3038** | 1 | VALVE GP-BANK 4 (LH) | 908 |
| | 3 | 1 | **8X-5499** | 2 | RETAINER | |
| | 4 | 1 | **101-2457** | 1 | LEVER | |
| | 5 | 1 | **8D-5634** | 2 | LEVER | |
| | 6 | 1 | **8X-4276** | 9 | ROD | |
| | | 1 | **6V-8186** | 18 | NUT-FULL (5/16-24-THD) | |
| | | 1 | **7H-3641** | 18 | END-ROD (5/16-24-THD) | |
| | 7 | 1 | **8D-5633** | 2 | LEVER | |
| | 8 | 1 | **101-2458** | 2 | LEVER | |
| | 9 | 1 | **137-4515** | 2 | BUSHING | |
| | 10 | 1 | **8D-5640** | 11 | BEARING | |
| B | 11 | 1 | **8D-5636** | 4 | SHIM (0.254-MM THK) | |
| B | 12 | 1 | **8D-5637** | 4 | SHIM (0.762-MM THK) | |
| | 13 | 1 | **6L-1962** | 9 | NUT-JAM (3/8-24-THD) | |
| | 14 | 1 | **8T-9043** | 18 | BOLT (5/16-18X0.875-IN) | |
| | 15 | 1 | **3F-9556** | 18 | LOCKWASHER | |
| | 16 | 1 | **9B-7237** | 2 | BOLT (3/8-16X1.25-IN) | |
| | 17 | 1 | **8D-5641** | 9 | BEARING | |
| | 18 | 1 | **2G-6757** | 1 | KNOB-BLADE LIFT | |
| M | 19 | 1 | **8T-4136** | 4 | BOLT (M10X1.5X25-MM) | |
| | 20 | 1 | **2G-6749** | 1 | KNOB-SIDESHIFT | |
| | 21 | 1 | **2G-6747** | 1 | KNOB-BLADE TIP | |
| | 22 | 1 | **8D-5632** | 2 | LEVER | |
| | 23 | 1 | **2G-6751** | 1 | KNOB-CIRCLE DRIVE | |
| | 24 | 1 | **2G-6748** | 1 | KNOB-BLADE LIFT | |
| | 25 | 1 | **2G-6756** | 1 | KNOB-WHEEL LEAN | |
| | 26 | 1 | **2G-6752** | 1 | KNOB-ARTICULATION | |
| | 27 | 1 | **2G-6755** | 1 | KNOB-CENTERSHIFT | |
| | 28 | 1 | **5P-1075** | 2 | WASHER-HARD (10.2X22.5X3-MM THK) | |
| | 29 | 1 | **9M-1853** | 6 | MOUNTING | |
| | 30 | 1 | **5P-1076** | 6 | WASHER-HARD (13.5X30X4-MM THK) | |
| | 31 | 1 | **104-7740** | 1 | PLATE AS (LH) | |
| | | 1 | **1F-0748** | 2 | NUT-WELD (1/2-13-THD) | |
| | 32 | 1 | **104-7419** | 1 | PLATE AS (RH) | |
| | | 1 | **1F-0748** | 2 | NUT-WELD (1/2-13-THD) | |
| | 33 | 1 | **104-7429** | 2 | PLATE | |
| | 34 | 1 | **137-4516** | 1 | SHAFT | |
| | 35 | 1 | **2G-6754** | 1 | KNOB (DOZER LIFT, PLOW) | |
| | 36 | 1 | **6V-8188** | 2 | NUT (1/2-13-THD) | |
| M | 37 | 1 | **8T-4195** | 4 | BOLT (M10X1.5X30-MM) | |
| | 38 | 1 | **8T-4121** | 8 | WASHER-HARD (11X21X2.5-MM THK) | |
| | 39 | 1 | **6B-0933** | 4 | SPACER (10.31X19.05X6.35-MM THK) | |
| | 40 | 1 | **8F-6437** | 6 | WASHER (13.5X50.8X4.76-MM THK) | |
| | 41 | 1 | **5P-2424** | 6 | BOLT (1/2-13X2.25-IN) | |

B-USE AS REQUIRED
M-METRIC PART
Y-SEPARATE ILLUSTRATION

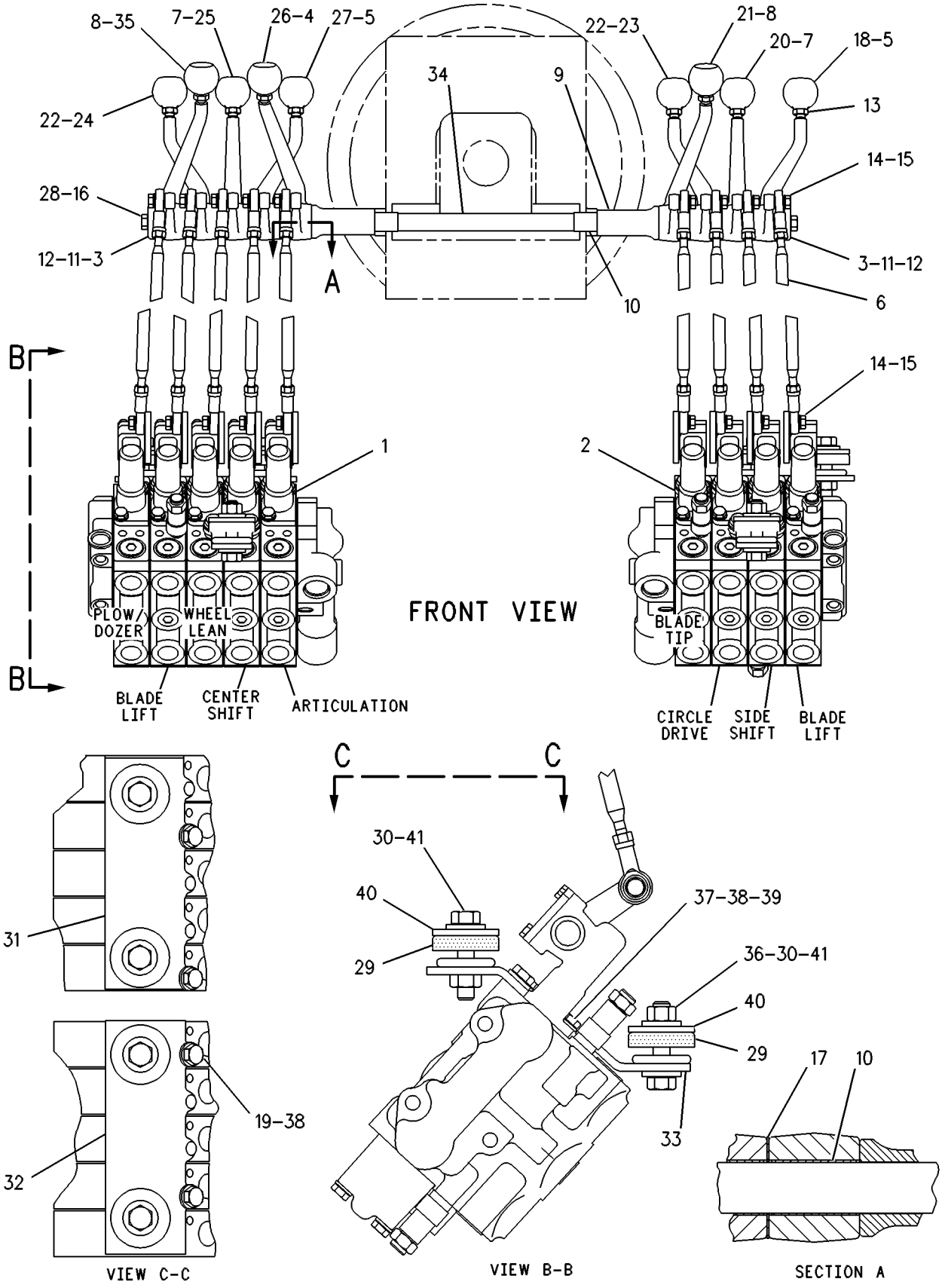


GRAPHIC #1 **<END>** g00109685

# HYDRAULIC SYSTEM

## *124-3771* VALVE & LINKAGE GP—BANK 4-LH —BANK 5-RH

**S/N: CCA1-UP**
**AN ATTACHMENT**

**SMCS-5051, 5063** **i02585697**

| NOTE | REF NO | GRAPHIC REF | PART NUMBER | QTY | PART NAME 1 2 3 4 5 6 (PRODUCT LEVEL) | SEE PAGE |
|---|---|---|---|---|---|---|
| | 1 | 1 | **3F-9556** | 18 | LOCKWASHER | |
| | 2 | 1 | **6B-0933** | 4 | SPACER (10.31X19.05X6.35-MM THK) | |
| | 3 | 1 | **6L-1962** | 9 | NUT-JAM (3/8-24-THD) | |
| | 4 | 1 | **7H-3641** | 9 | END-ROD (5/16-24-THD) | |
| | 5 | 1 | **8D-5632** | 2 | LEVER | |
| | 6 | 1 | **8D-5633** | 2 | LEVER | |
| | 7 | 1 | **8D-5634** | 2 | LEVER | |
| B | 8 | 1 | **8D-5636** | 4 | SHIM (0.254-MM THK) | |
| B | 9 | 1 | **8D-5637** | 4 | SHIM (0.762-MM THK) | |
| | 10 | 1 | **8D-5640** | 11 | BEARING | |
| | 11 | 1 | **8D-5641** | 9 | BEARING | |
| | 12 | 1 | **8L-8598** | 9 | ROD END (LH) | |
| | 13 | 1 | **8X-5499** | 2 | RETAINER | |
| | 14 | 1 | **9M-1853** | 6 | MOUNTING | |
| | 15 | 1 | **101-2457** | 1 | LEVER | |
| | 16 | 1 | **101-2458** | 2 | LEVER | |
| | 17 | 1 | **104-7419** | 1 | PLATE AS (RH) | |
| | | 1 | **1F-0748** | 2 | NUT-WELD (1/2-13-THD) | |
| | 18 | 1 | **104-7429** | 2 | PLATE | |
| | 19 | 1 | **104-7740** | 1 | PLATE AS (LH) | |
| | | 1 | **1F-0748** | 2 | NUT-WELD (1/2-13-THD) | |
| | 20 | 1 | **137-4515** | 2 | BUSHING | |
| | 21 | 1 | **137-4516** | 1 | SHAFT | |
| | 22 | 1 | **146-0705** | 9 | ROD | |
| CY | 23 | 1 | **130-3117** | 1 | VALVE GP-BANK 4 (LH) | 910 |
| CY | 24 | 1 | **130-3123** | 1 | VALVE GP-BANK 5 (RH) | 923 |
| | 25 | 1 | **2G-6747** | 1 | KNOB-BLADE TIP | |
| | 26 | 1 | **2G-6748** | 1 | KNOB-BLADE LIFT | |
| | 27 | 1 | **2G-6749** | 1 | KNOB-SIDESHIFT | |
| | 28 | 1 | **2G-6751** | 1 | KNOB-CIRCLE DRIVE | |
| | 29 | 1 | **2G-6752** | 1 | KNOB-ARTICULATION | |
| | 30 | 1 | **2G-6754** | 1 | KNOB (DOZER LIFT, PLOW) | |
| | 31 | 1 | **2G-6755** | 1 | KNOB-CENTERSHIFT | |
| | 32 | 1 | **2G-6756** | 1 | KNOB-WHEEL LEAN | |
| | 33 | 1 | **2G-6757** | 1 | KNOB-BLADE LIFT | |
| | 34 | 1 | **5P-1075** | 2 | WASHER-HARD (10.2X22.5X3-MM THK) | |
| | 35 | 1 | **5P-1076** | 6 | WASHER-HARD (13.5X30X4-MM THK) | |
| | 36 | 1 | **5P-2424** | 6 | BOLT (1/2-13X2.25-IN) | |
| | 37 | 1 | **6V-8186** | 9 | NUT-FULL (5/16-24-THD) | |
| | 38 | 1 | **6V-8188** | 2 | NUT (1/2-13-THD) | |
| | 39 | 1 | **8F-6437** | 6 | WASHER (13.5X50.8X4.76-MM THK) | |
| | 40 | 1 | **8T-4121** | 8 | WASHER-HARD (11X21X2.5-MM THK) | |
| M | 41 | 1 | **8T-4136** | 4 | BOLT (M10X1.5X25-MM) | |
| M | 42 | 1 | **8T-4195** | 4 | BOLT (M10X1.5X30-MM) | |
| | 43 | 1 | **8T-9043** | 18 | BOLT (5/16-18X0.875-IN) | |
| | 44 | 1 | **9B-7237** | 2 | BOLT (3/8-16X1.25-IN) | |

B-USE AS REQUIRED
C-CHANGE FROM PREVIOUS TYPE
M-METRIC PART
Y-SEPARATE ILLUSTRATION

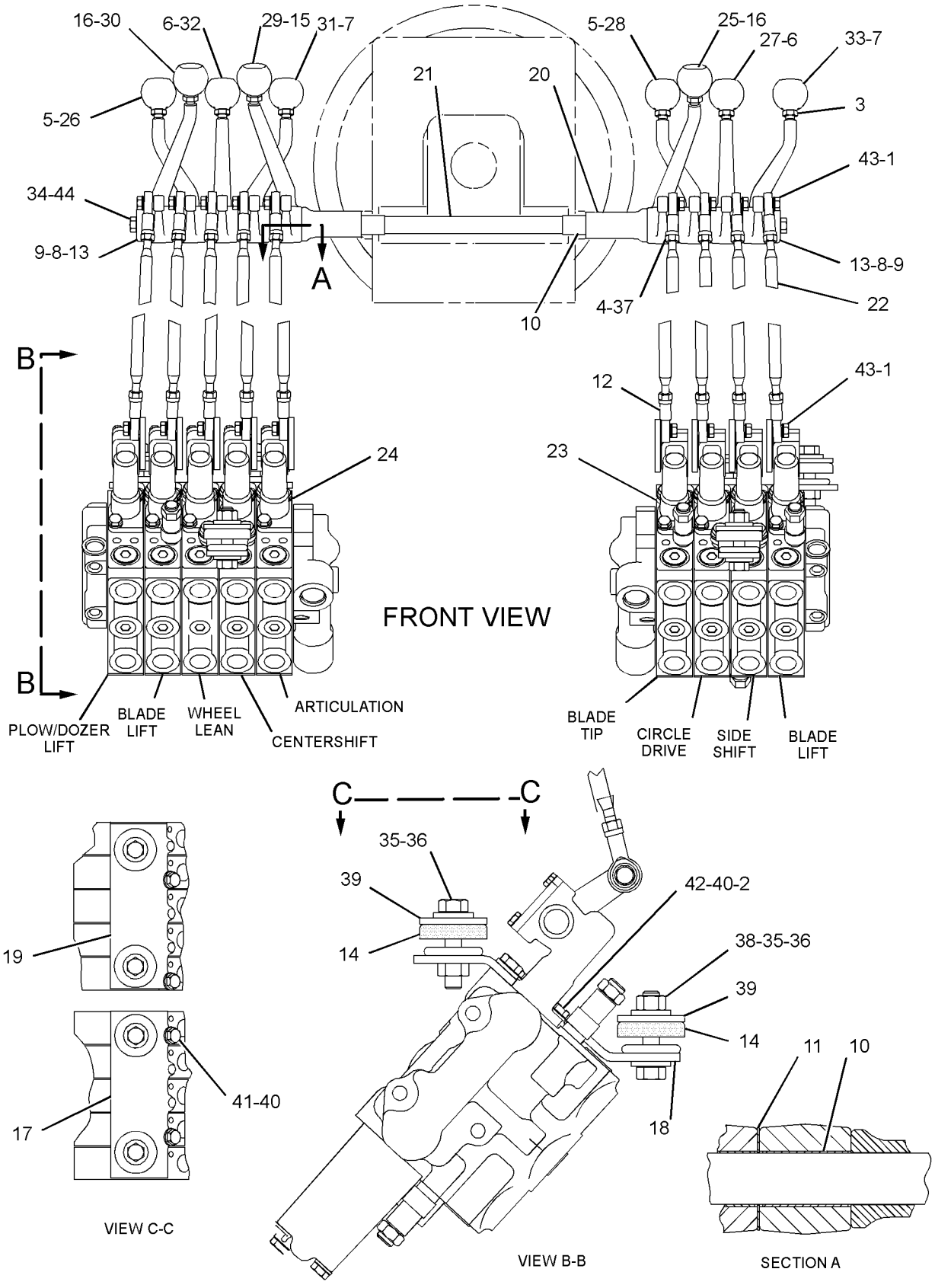


GRAPHIC #1 **<END>** g01294560

# HYDRAULIC SYSTEM

## *125-2235* VALVE & LINKAGE GP—BANK 4-RH—BANK 7-LH

**S/N: CCA1-UP**
**PART OF 194-4020 CONTROL AR-HYDRAULIC**
**AN ATTACHMENT**

**SMCS-5051, 5063** **i02585732**

| NOTE | REF NO | GRAPHIC REF | PART NUMBER | QTY | PART NAME 1 2 3 4 5 6 (PRODUCT LEVEL) | SEE PAGE |
|---|---|---|---|---|---|---|
| Y | 1 | 1 | **130-3116** | 1 | VALVE GP-BANK 4 (RH) | 909 |
| Y | 2 | 1 | **130-3122** | 1 | VALVE GP-BANK 7 (LH) | 958 |
| | 3 | 1 | **8X-5499** | 2 | RETAINER | |
| | 4 | 1 | **101-2457** | 2 | LEVER | |
| | 5 | 1 | **8D-5634** | 2 | LEVER | |
| | 6 | 1 | **2G-7107** | 1 | KNOB-WING LIFT | |
| | 7 | 1 | **146-0705** | 11 | ROD | |
| | 8 | 1 | **8D-5633** | 2 | LEVER | |
| | 9 | 1 | **101-2458** | 2 | LEVER | |
| | 10 | 1 | **137-4515** | 2 | BUSHING | |
| | 11 | 1 | **8D-5640** | 13 | BEARING | |
| B | 12 | 1 | **8D-5636** | 4 | SHIM (0.254-MM THK) | |
| B | 13 | 1 | **8D-5637** | 4 | SHIM (0.762-MM THK) | |
| | 14 | 1 | **6L-1962** | 11 | NUT-JAM (3/8-24-THD) (3/8-24THD) | |
| | 15 | 1 | **8T-9043** | 22 | BOLT (5/16-18X0.875-IN) | |
| | 16 | 1 | **3F-9556** | 22 | LOCKWASHER | |
| | 17 | 1 | **4L-6459** | 2 | BOLT (3/8-16X2.5-IN) | |
| | 18 | 1 | **8D-5641** | 11 | BEARING | |
| | 19 | 1 | **2G-6757** | 1 | KNOB-BLADE LIFT (LH) | |
| M | 20 | 1 | **8T-4136** | 4 | BOLT (M10X1.5X25-MM) | |
| | 21 | 1 | **2G-6749** | 1 | KNOB-SIDESHIFT | |
| | 22 | 1 | **2G-6747** | 1 | KNOB-BLADE TIP | |
| | 23 | 1 | **8D-5632** | 2 | LEVER | |
| | 24 | 1 | **2G-6751** | 1 | KNOB-CIRCLE DRIVE | |
| | 25 | 1 | **2G-6748** | 1 | KNOB-BLADE LIFT (RH) | |
| | 26 | 1 | **2G-6756** | 1 | KNOB-WHEEL LEAN | |
| | 27 | 1 | **2G-6752** | 1 | KNOB-ARTICULATION | |
| | 28 | 1 | **2G-6755** | 1 | KNOB-CENTERSHIFT | |
| | 29 | 1 | **5P-1075** | 2 | WASHER-HARD (10.2X22.5X3-MM THK) | |
| | 30 | 1 | **9M-1853** | 6 | MOUNTING | |
| | 31 | 1 | **5P-1076** | 6 | WASHER-HARD (13.5X30X4-MM THK) | |
| | 32 | 1 | **104-7740** | 1 | PLATE AS (LH) | |
| | 33 | 1 | **104-7419** | 1 | PLATE AS (RH) | |
| | 34 | 1 | **104-7429** | 2 | PLATE | |
| | 35 | 1 | **137-4516** | 1 | SHAFT | |
| | 36 | 1 | **8T-4121** | 8 | WASHER-HARD (11X21X2.5-MM THK) | |
| | 37 | 1 | **6B-0933** | 4 | SPACER (10.31X19.05X6.35-MM THK) | |
| | 38 | 1 | **5P-2424** | 6 | BOLT (1/2-13X2.25-IN) | |
| | 39 | 1 | **6V-8188** | 2 | NUT (1/2-13-THD) | |
| M | 40 | 1 | **8T-4195** | 4 | BOLT (M10X1.5X30-MM) | |
| | 41 | 1 | **2G-6740** | 1 | KNOB-RIPPER | |
| | 42 | 1 | **103-1597** | 1 | LEVER | |
| | 43 | 1 | **2G-7108** | 1 | KNOB-WING TILT | |
| | 44 | 1 | **8W-0456** | 2 | SHAFT | |
| | 45 | 1 | **8F-6437** | 6 | WASHER (13.5X50.8X4.76-MM THK) | |
| | 46 | 1 | **7H-3641** | 11 | END-ROD (5/16-24-THD) | |
| | 47 | 1 | **6V-8186** | 11 | NUT-FULL (5/16-24-THD) | |
| | 48 | 1 | **8L-8598** | 11 | ROD END (LH) | |

B-USE AS REQUIRED
M-METRIC PART
Y-SEPARATE ILLUSTRATION

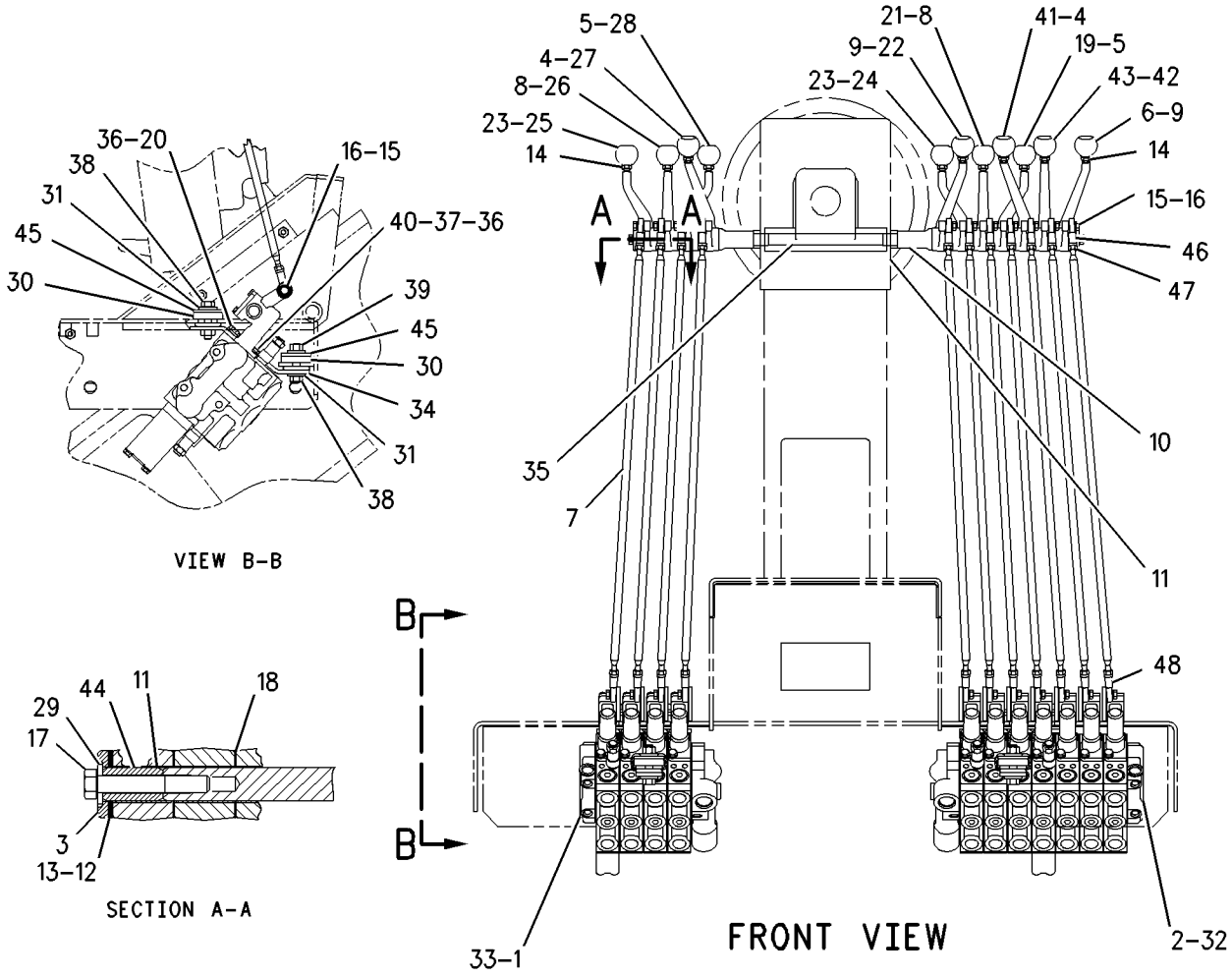


GRAPHIC #1 **<END>** g01294568

# HYDRAULIC SYSTEM

## *125-2236* VALVE & LINKAGE GP—BANK 7-LH,RH

**S/N: CCA1-UP**
**PART OF 194-4019 CONTROL AR-HYDRAULIC**
**AN ATTACHMENT**

**SMCS-5051, 5063** **i02100377**

| NOTE | REF NO | GRAPHIC REF | PART NUMBER | QTY | PART NAME 1 2 3 4 5 6 (PRODUCT LEVEL) | SEE PAGE |
|---|---|---|---|---|---|---|
| Y | 1 | 1 | **4Z-6267** | 1 | VALVE GP-BANK 7 (RH) | 952 |
| Y | 2 | 1 | **130-3122** | 1 | VALVE GP-BANK 7 (LH) | 958 |
| | 3 | 1 | **8X-5499** | 2 | RETAINER | |
| | 4 | 1 | **101-2457** | 3 | LEVER | |
| | 5 | 1 | **8D-5634** | 2 | LEVER | |
| | 6 | 1 | **2G-7107** | 1 | KNOB-WING LIFT | |
| | 7 | 1 | **146-0705** | 14 | ROD | |
| | 8 | 1 | **8D-5633** | 2 | LEVER | |
| | 9 | 1 | **101-2458** | 3 | LEVER | |
| | 10 | 1 | **137-4515** | 2 | BUSHING | |
| | 11 | 1 | **8D-5640** | 16 | BEARING | |
| B | 12 | 1 | **8D-5636** | 4 | SHIM (0.254-MM THK) | |
| B | 13 | 1 | **8D-5637** | 4 | SHIM (0.762-MM THK) | |
| | 14 | 1 | **6L-1962** | 14 | NUT-JAM (3/8-24-THD) | |
| | 15 | 1 | **8T-9043** | 28 | BOLT (5/16-18X0.875-IN) | |
| | 16 | 1 | **3F-9556** | 28 | LOCKWASHER | |
| | 17 | 1 | **8D-5641** | 14 | BEARING | |
| | 18 | 1 | **2G-6757** | 1 | KNOB-BLADE LIFT (LH) | |
| M | 19 | 1 | **8T-4136** | 4 | BOLT (M10X1.5X25-MM) | |
| | 20 | 1 | **2G-6749** | 1 | KNOB-SIDESHIFT | |
| | 21 | 1 | **2G-6747** | 1 | KNOB-BLADE TIP | |
| | 22 | 1 | **8D-5632** | 2 | LEVER | |
| | 23 | 1 | **2G-6751** | 1 | KNOB-CIRCLE DRIVE | |
| | 24 | 1 | **2G-6748** | 1 | KNOB-BLADE LIFT (RH) | |
| | 25 | 1 | **2G-6756** | 1 | KNOB-WHEEL LEAN | |
| | 26 | 1 | **2G-6752** | 1 | KNOB-ARTICULATION | |
| | 27 | 1 | **2G-6755** | 1 | KNOB-CENTERSHIFT | |
| | 28 | 1 | **5P-1075** | 2 | WASHER-HARD (10.2X22.5X3-MM THK) | |
| | 29 | 1 | **9M-1853** | 6 | MOUNTING | |
| | 30 | 1 | **5P-1076** | 6 | WASHER-HARD (13.5X30X4-MM THK) | |
| | 31 | 1 | **104-7740** | 1 | PLATE AS (LH) | |
| | | 1 | **1F-0748** | 2 | NUT-WELD (1/2-13-THD) | |
| | 32 | 1 | **104-7419** | 1 | PLATE AS (RH) | |
| | | 1 | **1F-0748** | 2 | NUT-WELD (1/2-13-THD) | |
| | 33 | 1 | **117-0472** | 2 | KNOB (PLOW, BULLDOZER ANGLE) | |
| | 34 | 1 | **104-7429** | 2 | PLATE | |
| | 35 | 1 | **137-4517** | 1 | SHAFT | |
| | 36 | 1 | **8T-4121** | 8 | WASHER-HARD (11X21X2.5-MM THK) | |
| | 37 | 1 | **6B-0933** | 4 | SPACER (10.31X19.05X6.35-MM THK) | |
| | 38 | 1 | **5P-2424** | 6 | BOLT (1/2-13X2.25-IN) | |
| | 39 | 1 | **6V-8188** | 2 | NUT (1/2-13-THD) | |
| M | 40 | 1 | **8T-4195** | 4 | BOLT (M10X1.5X30-MM) | |
| | 41 | 1 | **2G-6754** | 1 | KNOB (DOZER LIFT, PLOW) | |
| | 42 | 1 | **2G-6740** | 1 | KNOB-RIPPER | |
| | 43 | 1 | **103-1597** | 2 | LEVER | |
| | 44 | 1 | **2G-7108** | 1 | KNOB-WING TILT | |
| | 45 | 1 | **4L-6459** | 2 | BOLT (3/8-16X2.5-IN) | |
| | 46 | 1 | **8W-0456** | 2 | SHAFT | |
| | 47 | 1 | **8F-6437** | 6 | WASHER (13.5X50.8X4.76-MM THK) | |
| | 48 | 1 | **6V-8186** | 14 | NUT-FULL (5/16-24-THD) | |
| | 49 | 1 | **7H-3641** | 14 | END-ROD (5/16-24-THD) | |
| | 50 | 1 | **8L-8598** | 14 | ROD END (LH) | |

B-USE AS REQUIRED
M-METRIC PART
Y-SEPARATE ILLUSTRATION

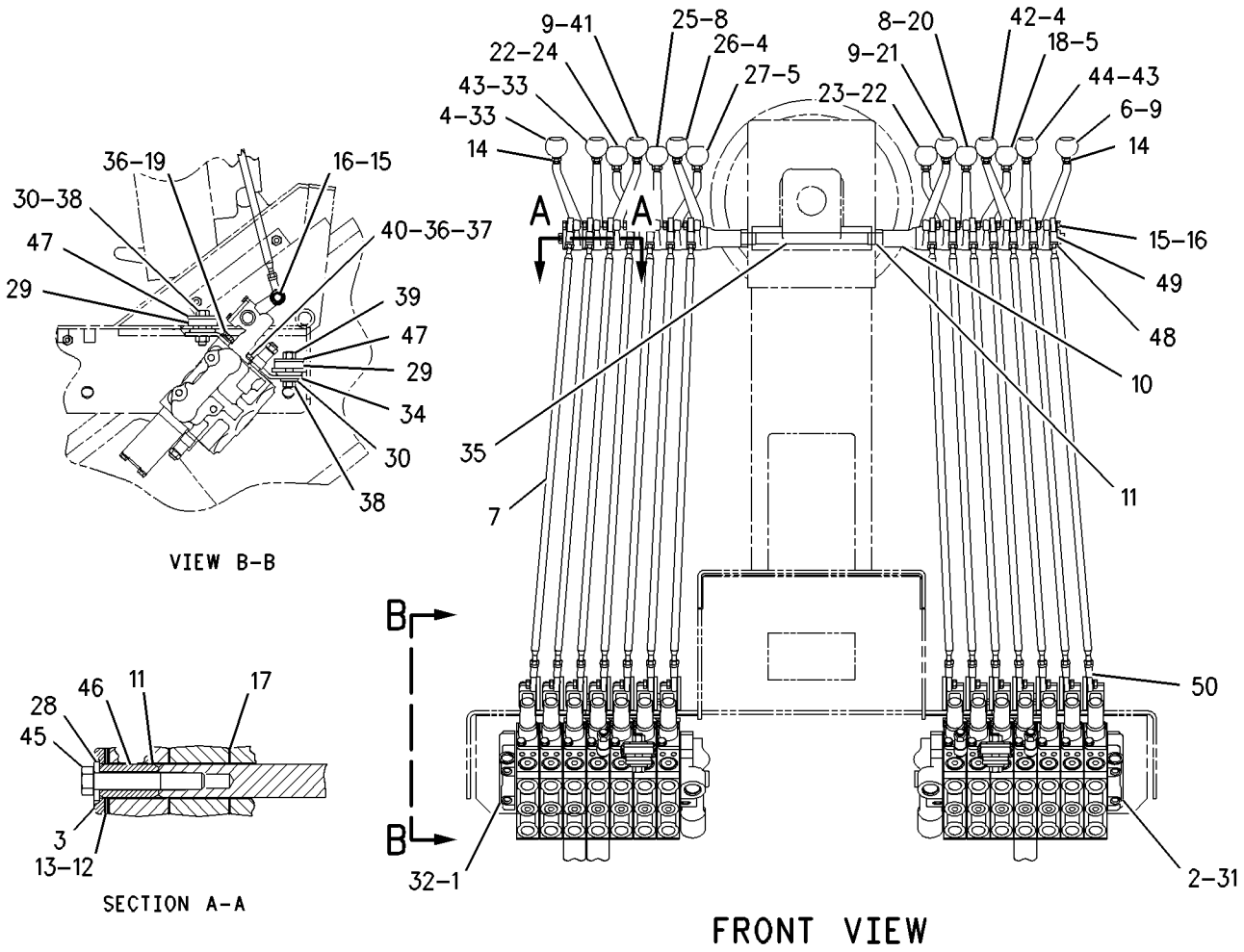


GRAPHIC #1 **<END>** g00955922

# HYDRAULIC SYSTEM

## *132-6478* VALVE & LINKAGE GP—BANK 5-LH—BANK 6-RH

**S/N: CCA1-UP**
**PART OF 192-4969 CONTROL AR-HYDRAULIC**
**AN ATTACHMENT**

**SMCS-5051, 5063** **i01872555**

| NOTE | REF NO | GRAPHIC REF | PART NUMBER | QTY | PART NAME 1 2 3 4 5 6 (PRODUCT LEVEL) | SEE PAGE |
|---|---|---|---|---|---|---|
| Y | 1 | 1 | **115-1008** | 1 | VALVE GP-BANK 6 (RH) | 935 |
| Y | 2 | 1 | **104-8645** | 1 | VALVE GP-BANK 5 (LH) | 918 |
| | 3 | 1 | **8X-5499** | 2 | RETAINER | |
| | 4 | 1 | **101-2457** | 2 | LEVER | |
| | 5 | 1 | **8D-5634** | 2 | LEVER | |
| | 6 | 1 | **8X-4277** | 11 | ROD AS | |
| | | | | | (EACH INCLUDES) | |
| | | 1 | **6V-8186** | 1 | NUT-FULL (5/16-24-THD) | |
| | | 1 | **7H-3641** | 1 | END-ROD (5/16-24-THD) | |
| | | 1 | **8L-8598** | 1 | ROD END (LH) | |
| | 7 | 1 | **8D-5633** | 2 | LEVER | |
| | 8 | 1 | **101-2458** | 2 | LEVER | |
| | 9 | 1 | **137-4515** | 2 | BUSHING | |
| | 10 | 1 | **8D-5640** | 13 | BEARING | |
| B | 11 | 1 | **8D-5636** | 4 | SHIM (0.254-MM THK) | |
| B | 12 | 1 | **8D-5637** | 4 | SHIM (0.762-MM THK) | |
| | 13 | 1 | **6L-1962** | 11 | NUT-JAM (3/8-24-THD) | |
| | 14 | 1 | **8T-9043** | 22 | BOLT (5/16-18X0.875-IN) | |
| | 15 | 1 | **3F-9556** | 22 | LOCKWASHER | |
| | 16 | 1 | **8D-5641** | 11 | BEARING | |
| | 17 | 1 | **2G-6757** | 1 | KNOB-BLADE LIFT (LH) | |
| M | 18 | 1 | **8T-4136** | 4 | BOLT (M10X1.5X25-MM) | |
| | 19 | 1 | **2G-6749** | 1 | KNOB-SIDESHIFT | |
| | 20 | 1 | **2G-6747** | 1 | KNOB-BLADE TIP | |
| | 21 | 1 | **8D-5632** | 2 | LEVER | |
| | 22 | 1 | **2G-6751** | 1 | KNOB-CIRCLE DRIVE | |
| | 23 | 1 | **2G-6748** | 1 | KNOB-BLADE LIFT (RH) | |
| | 24 | 1 | **2G-6756** | 1 | KNOB-WHEEL LEAN | |
| | 25 | 1 | **2G-6752** | 1 | KNOB-ARTICULATION | |
| | 26 | 1 | **2G-6755** | 1 | KNOB-CENTERSHIFT | |
| | 27 | 1 | **5P-1075** | 2 | WASHER-HARD (10.2X22.5X3-MM THK) | |
| | 28 | 1 | **9M-1853** | 6 | MOUNTING | |
| | 29 | 1 | **5P-1076** | 6 | WASHER-HARD (13.5X30X4-MM THK) | |
| | 30 | 1 | **104-7740** | 1 | PLATE AS (LH) | |
| | | 1 | **1F-0748** | 2 | NUT-WELD (1/2-13-THD) | |
| | 31 | 1 | **104-7419** | 1 | PLATE AS (RH) | |
| | | 1 | **1F-0748** | 2 | NUT-WELD (1/2-13-THD) | |
| | 32 | 1 | **117-0472** | 1 | KNOB (PLOW, BULLDOZER ANGLE) | |
| | 33 | 1 | **104-7429** | 2 | PLATE | |
| | 34 | 1 | **137-4516** | 1 | SHAFT | |
| | 35 | 1 | **8T-4121** | 8 | WASHER-HARD (11X21X2.5-MM THK) | |
| | 36 | 1 | **6B-0933** | 4 | SPACER (10.31X19.05X6.35-MM THK) | |
| | 37 | 1 | **5P-2424** | 6 | BOLT (1/2-13X2.25-IN) | |
| | 38 | 1 | **6V-8188** | 2 | NUT (1/2-13-THD) | |
| M | 39 | 1 | **8T-4195** | 4 | BOLT (M10X1.5X30-MM) | |
| | 40 | 1 | **2G-6754** | 1 | KNOB (DOZER LIFT, PLOW) | |
| | 41 | 1 | **2G-6740** | 1 | KNOB-RIPPER | |
| | 42 | 1 | **103-1597** | 1 | LEVER | |
| | 43 | 1 | **8W-0456** | 2 | SHAFT | |
| | 44 | 1 | **8F-6437** | 6 | WASHER (13.5X50.8X4.76-MM THK) | |
| | 45 | 1 | **4L-6459** | 2 | BOLT (3/8-16X2.5-IN) | |

B-USE AS REQUIRED
M-METRIC PART
Y-SEPARATE ILLUSTRATION

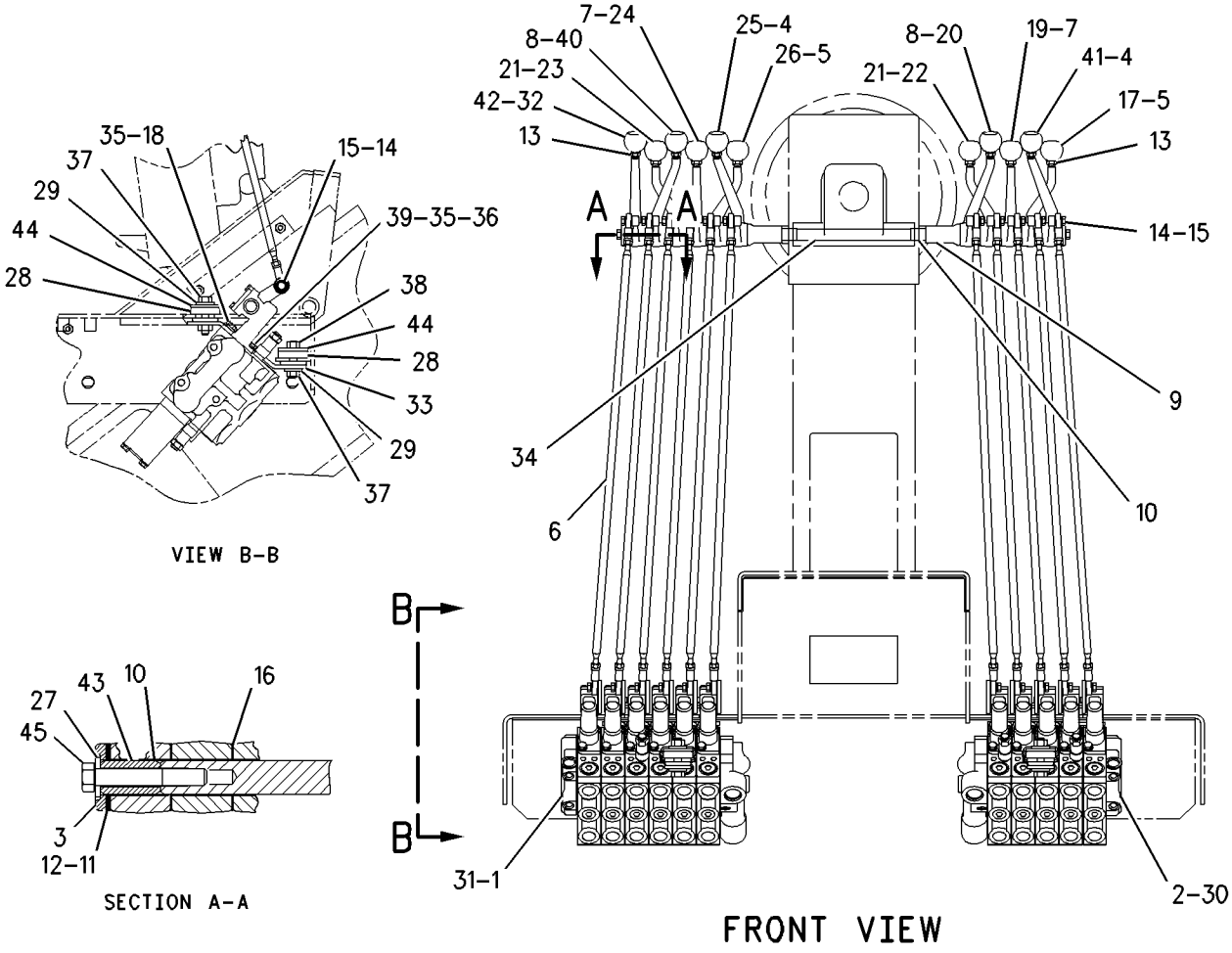


GRAPHIC #1 **<END>** g00791974

# HYDRAULIC SYSTEM

## *143-8938* VALVE & LINKAGE GP—BANK 5-RH—BANK 7-LH

**S/N: CCA1-UP**
**PART OF 192-4970 CONTROL AR-HYDRAULIC**
**AN ATTACHMENT**

**SMCS-5051, 5063** **i01872596**

| NOTE | REF NO | GRAPHIC REF | PART NUMBER | QTY | PART NAME 1 2 3 4 5 6 (PRODUCT LEVEL) | SEE PAGE |
|---|---|---|---|---|---|---|
| Y | 1 | 1 | **104-8671** | 1 | VALVE GP-BANK 5 (RH) | 920 |
| Y | 2 | 1 | **4Z-6346** | 1 | VALVE GP-BANK 7 (LH) | 953 |
| | 3 | 1 | **8X-5499** | 2 | RETAINER | |
| | 4 | 1 | **101-2457** | 2 | LEVER | |
| | 5 | 1 | **8D-5634** | 2 | LEVER | |
| | 6 | 1 | **2G-7107** | 1 | KNOB-WING LIFT | |
| | 7 | 1 | **8X-4277** | 12 | ROD AS | |
| | | | | | (EACH INCLUDES) | |
| | | 1 | **146-0705** | 1 | ROD | |
| | | 1 | **6V-8186** | 1 | NUT-FULL (5/16-24-THD) | |
| | | 1 | **7H-3641** | 1 | END-ROD (5/16-24-THD) | |
| | | 1 | **8L-8598** | 1 | ROD END (LH) | |
| | 8 | 1 | **8D-5633** | 2 | LEVER | |
| | 9 | 1 | **101-2458** | 3 | LEVER | |
| | 10 | 1 | **137-4515** | 2 | BUSHING | |
| | 11 | 1 | **8D-5640** | 14 | BEARING | |
| B | 12 | 1 | **8D-5636** | 4 | SHIM (0.254-MM THK) | |
| B | 13 | 1 | **8D-5637** | 4 | SHIM (0.762-MM THK) | |
| | 14 | 1 | **6L-1962** | 12 | NUT-JAM (3/8-24-THD) | |
| | 15 | 1 | **8T-9043** | 24 | BOLT (5/16-18X0.875-IN) | |
| | 16 | 1 | **3F-9556** | 24 | LOCKWASHER | |
| | 17 | 1 | **4L-6459** | 1 | BOLT (3/8-16X2.5-IN) | |
| | 18 | 1 | **8D-5641** | 12 | BEARING | |
| | 19 | 1 | **2G-6757** | 1 | KNOB-BLADE LIFT (LH) | |
| M | 20 | 1 | **8T-4136** | 4 | BOLT (M10X1.5X25-MM) | |
| | 21 | 1 | **2G-6749** | 1 | KNOB-SIDESHIFT | |
| | 22 | 1 | **2G-6747** | 1 | KNOB-BLADE TIP | |
| | 23 | 1 | **8D-5632** | 2 | LEVER | |
| | 24 | 1 | **2G-6751** | 1 | KNOB-CIRCLE DRIVE | |
| | 25 | 1 | **2G-6748** | 1 | KNOB-BLADE LIFT (RH) | |
| | 26 | 1 | **2G-6756** | 1 | KNOB-WHEEL LEAN | |
| | 27 | 1 | **2G-6752** | 1 | KNOB-ARTICULATION | |
| | 28 | 1 | **2G-6755** | 1 | KNOB-CENTERSHIFT | |
| | 29 | 1 | **5P-1075** | 2 | WASHER-HARD (10.2X22.5X3-MM THK) | |
| | 30 | 1 | **9M-1853** | 6 | MOUNTING | |
| | 31 | 1 | **5P-1076** | 6 | WASHER-HARD (13.5X30X4-MM THK) | |
| | 32 | 1 | **104-7740** | 1 | PLATE AS (LH) | |
| | 33 | 1 | **104-7419** | 1 | PLATE AS (RH) | |
| | 34 | 1 | **104-7429** | 2 | PLATE | |
| | 35 | 1 | **137-4516** | 1 | SHAFT | |
| | 36 | 1 | **8T-4121** | 8 | WASHER-HARD (11X21X2.5-MM THK) | |
| | 37 | 1 | **6B-0933** | 4 | SPACER (10.31X19.05X6.35-MM THK) | |
| | 38 | 1 | **5P-2424** | 6 | BOLT (1/2-13X2.25-IN) | |
| | 39 | 1 | **6V-8188** | 2 | NUT (1/2-13-THD) | |
| M | 40 | 1 | **8T-4195** | 4 | BOLT (M10X1.5X30-MM) | |
| | 41 | 1 | **2G-6754** | 1 | KNOB (DOZER LIFT, PLOW) | |
| | 42 | 1 | **2G-6740** | 1 | KNOB-RIPPER | |
| | 43 | 1 | **103-1597** | 1 | LEVER | |
| | 44 | 1 | **2G-7108** | 1 | KNOB-WING TILT | |
| | 45 | 1 | **7X-0291** | 1 | BOLT (3/8-16X3.75-IN) | |
| | 46 | 1 | **8W-0456** | 3 | SHAFT | |
| | 47 | 1 | **8F-6437** | 6 | WASHER (13.5X50.8X4.76-MM THK) | |

B-USE AS REQUIRED
M-METRIC PART
Y-SEPARATE ILLUSTRATION

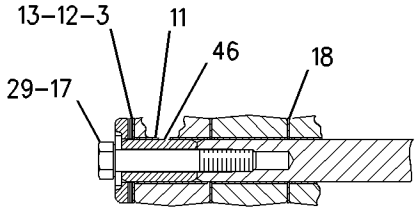


SECTION E-E

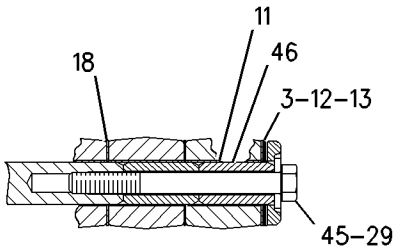


SECTION A-A

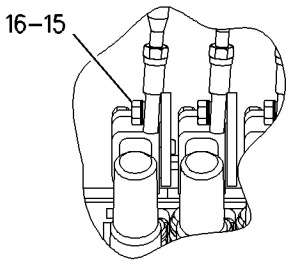


VIEW OF AREA F

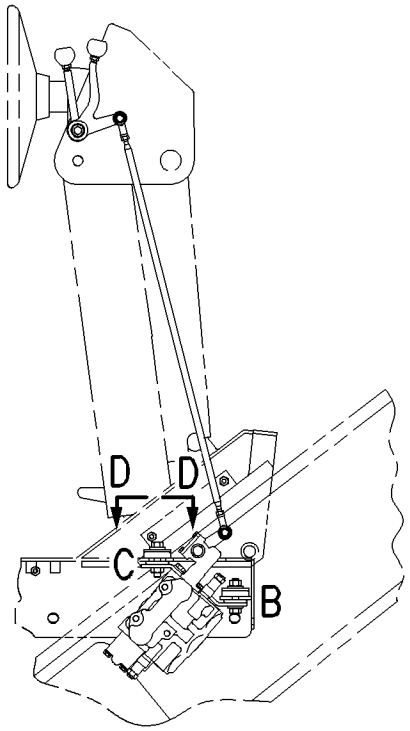


RIGHT SIDE VIEW

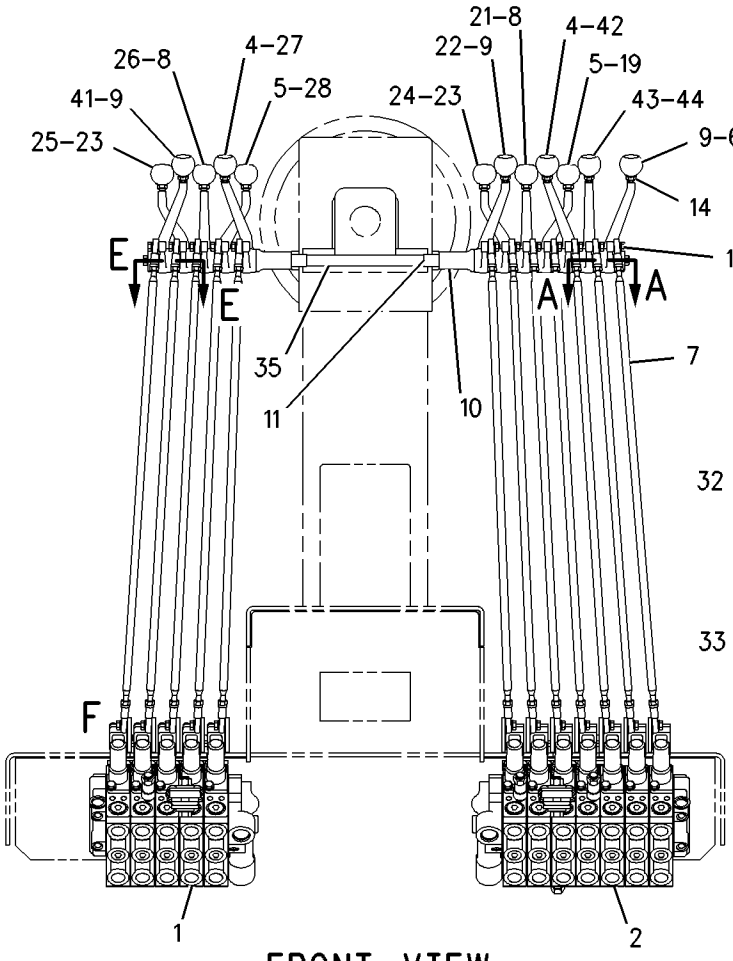


FRONT VIEW

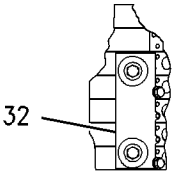


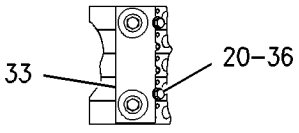


VIEW D-D

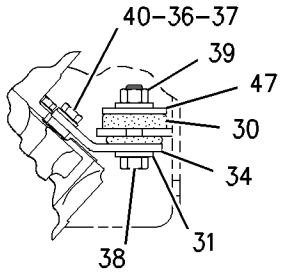


VIEW OF AREA B

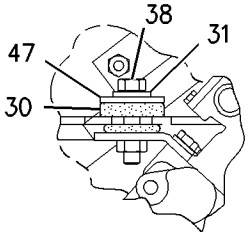


VIEW OF AREA C

GRAPHIC #1 **<END>** g00844982

# HYDRAULIC SYSTEM

## *153-7964* VALVE & LINKAGE GP—BANK 6-LH,RH

**S/N: CCA1-UP**
**PART OF 184-7315 CONTROL AR-HYDRAULIC**
**AN ATTACHMENT**

**SMCS-5051, 5063** **i02585738**

| NOTE | REF NO | GRAPHIC REF | PART NUMBER | QTY | PART NAME 1 2 3 4 5 6 (PRODUCT LEVEL) | SEE PAGE |
|---|---|---|---|---|---|---|
| | 1 | 1 | **2G-6740** | 1 | KNOB-RIPPER | |
| | 2 | 1 | **2G-6747** | 1 | KNOB-BLADE TIP | |
| | 3 | 1 | **2G-6748** | 1 | KNOB-BLADE LIFT (RH) | |
| | 4 | 1 | **2G-6749** | 1 | KNOB-SIDESHIFT | |
| | 5 | 1 | **2G-6751** | 1 | KNOB-CIRCLE DRIVE | |
| | 6 | 1 | **2G-6752** | 1 | KNOB-ARTICULATION | |
| | 7 | 1 | **2G-6754** | 1 | KNOB (DOZER LIFT, PLOW) | |
| | 8 | 1 | **2G-6755** | 1 | KNOB-CENTERSHIFT | |
| | 9 | 1 | **2G-6756** | 1 | KNOB-WHEEL LEAN | |
| | 10 | 1 | **2G-6757** | 1 | KNOB-BLADE LIFT (LH) | |
| | 11 | 1 | **2G-7107** | 1 | KNOB-WING LIFT | |
| | 12 | 1 | **2G-7108** | 1 | KNOB-WING TILT | |
| | 13 | 1 | **3F-9556** | 24 | LOCKWASHER | |
| | 14 | 1 | **6B-0933** | 4 | SPACER (10.31X19.05X6.35-MM THK) | |
| | 15 | 1 | **6L-1962** | 12 | NUT-JAM (3/8-24-THD) | |
| | 16 | 1 | **7H-3641** | 12 | END-ROD (5/16-24-THD) | |
| | 17 | 1 | **8D-5632** | 2 | LEVER | |
| | 18 | 1 | **8D-5633** | 2 | LEVER | |
| | 19 | 1 | **8D-5634** | 2 | LEVER | |
| B | 20 | 1 | **8D-5636** | 4 | SHIM (0.254-MM THK) | |
| B | 21 | 1 | **8D-5637** | 4 | SHIM (0.762-MM THK) | |
| | 22 | 1 | **8D-5640** | 14 | BEARING | |
| | 23 | 1 | **8D-5641** | 12 | BEARING | |
| | 24 | 1 | **8L-8598** | 12 | ROD END (LH) | |
| | 25 | 1 | **8W-0456** | 3 | SHAFT | |
| | 26 | 1 | **8X-5499** | 2 | RETAINER | |
| | 27 | 1 | **9M-1853** | 6 | MOUNTING | |
| | 28 | 1 | **101-2457** | 2 | LEVER | |
| | 29 | 1 | **101-2458** | 2 | LEVER | |
| | 30 | 1 | **103-1597** | 2 | LEVER | |
| | 31 | 1 | **104-7419** | 1 | PLATE AS (RH) | |
| | | 1 | **1F-0748** | 2 | NUT-WELD (1/2-13-THD) | |
| | 32 | 1 | **104-7429** | 2 | PLATE | |
| | | 1 | **104-7740** | 1 | PLATE AS (LH) | |
| | | 1 | **1F-0748** | 2 | NUT-WELD (1/2-13-THD) | |
| | 34 | 1 | **137-4515** | 2 | BUSHING | |
| | 35 | 1 | **137-4516** | 1 | SHAFT | |
| | 36 | 1 | **146-0705** | 12 | ROD | |
| Y | 37 | 1 | **153-8910** | 1 | VALVE GP-BANK 6 (LH) | 938 |
| Y | 38 | 1 | **153-8911** | 1 | VALVE GP-BANK 6 (RH) | 939 |
| | 39 | 1 | **4L-6459** | 1 | BOLT (3/8-16X2.5-IN) | |
| | 40 | 1 | **5P-1075** | 2 | WASHER-HARD (10.2X22.5X3-MM THK) | |
| | 41 | 1 | **5P-1076** | 6 | WASHER-HARD (13.5X30X4-MM THK) | |
| | 42 | 1 | **5P-2424** | 6 | BOLT (1/2-13X2.25-IN) | |
| | 43 | 1 | **6V-8186** | 12 | NUT-FULL (5/16-24-THD) | |
| | 44 | 1 | **6V-8188** | 2 | NUT (1/2-13-THD) | |
| | 45 | 1 | **7X-0291** | 1 | BOLT (3/8-16X3.75-IN) | |
| | 46 | 1 | **8F-6437** | 6 | WASHER (13.5X50.8X4.76-MM THK) | |
| | 47 | 1 | **8T-4121** | 8 | WASHER-HARD (11X21X2.5-MM THK) | |
| M | 48 | 1 | **8T-4136** | 4 | BOLT (M10X1.5X25-MM) | |
| M | 49 | 1 | **8T-4195** | 4 | BOLT (M10X1.5X30-MM) | |
| | 50 | 1 | **8T-9043** | 24 | BOLT (5/16-18X0.875-IN) | |

B-USE AS REQUIRED
M-METRIC PART
Y-SEPARATE ILLUSTRATION

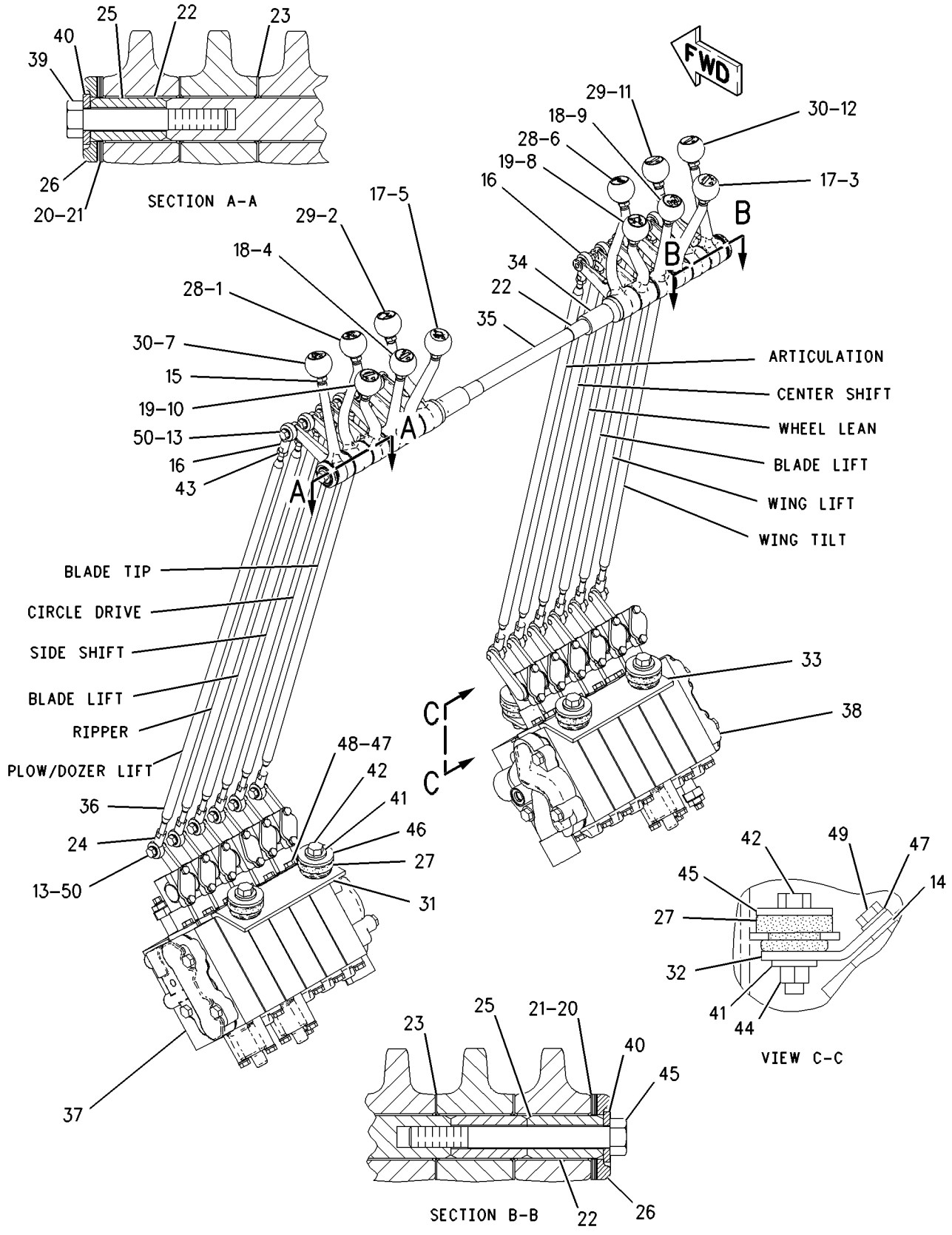


GRAPHIC #1 **<END>** g00873616

# HYDRAULIC SYSTEM

## 153-7966 VALVE & LINKAGE GP—BANK 6-RH—BANK 7-LH

**S/N: CCA1-UP**

**PART OF 184-7317 CONTROL AR-HYDRAULIC**

**AN ATTACHMENT**

**SMCS-5051, 5063** **i02585743**

| NOTE | REF NO | GRAPHIC REF | PART NUMBER | QTY | PART NAME 1 2 3 4 5 6 (PRODUCT LEVEL) | SEE PAGE |
|---|---|---|---|---|---|---|
| | 1 | 1 | **2G-6740** | 1 | KNOB-RIPPER | |
| | 2 | 1 | **2G-6747** | 1 | KNOB-BLADE TIP | |
| | 3 | 1 | **2G-6748** | 1 | KNOB-BLADE LIFT (RH) | |
| | 4 | 1 | **2G-6749** | 1 | KNOB-SIDESHIFT | |
| | 5 | 1 | **2G-6751** | 1 | KNOB-CIRCLE DRIVE | |
| | 6 | 1 | **2G-6752** | 1 | KNOB-ARTICULATION | |
| | 7 | 1 | **2G-6754** | 1 | KNOB (DOZER LIFT, PLOW) | |
| | 8 | 1 | **2G-6755** | 1 | KNOB-CENTERSHIFT | |
| | 9 | 1 | **2G-6756** | 1 | KNOB-WHEEL LEAN | |
| | 10 | 1 | **2G-6757** | 1 | KNOB-BLADE LIFT (LH) | |
| | 11 | 1 | **2G-7107** | 1 | KNOB-WING LIFT | |
| | 12 | 1 | **2G-7108** | 1 | KNOB-WING TILT | |
| | 13 | 1 | **3F-9556** | 26 | LOCKWASHER | |
| | 14 | 1 | **6B-0933** | 4 | SPACER (10.31X19.05X6.35-MM THK) | |
| | 15 | 1 | **6L-1962** | 13 | NUT-JAM (3/8-24-THD) | |
| | 16 | 1 | **7H-3641** | 13 | END-ROD (5/16-24-THD) | |
| | 17 | 1 | **8D-5632** | 2 | LEVER | |
| | 18 | 1 | **8D-5633** | 2 | LEVER | |
| | 19 | 1 | **8D-5634** | 2 | LEVER | |
| B | 20 | 1 | **8D-5636** | 4 | SHIM (0.254-MM THK) | |
| B | 21 | 1 | **8D-5637** | 4 | SHIM (0.762-MM THK) | |
| | 22 | 1 | **8D-5640** | 15 | BEARING | |
| | 23 | 1 | **8D-5641** | 13 | BEARING | |
| | 24 | 1 | **8L-8598** | 13 | ROD END (LH) | |
| | 25 | 1 | **8W-0456** | 4 | SHAFT | |
| | 26 | 1 | **8X-5499** | 2 | RETAINER | |
| | 27 | 1 | **9M-1853** | 6 | MOUNTING | |
| | 28 | 1 | **101-2457** | 2 | LEVER | |
| | 29 | 1 | **101-2458** | 3 | LEVER | |
| | 30 | 1 | **103-1597** | 2 | LEVER | |
| | 31 | 1 | **104-7419** | 1 | PLATE AS (RH) | |
| | | 1 | **1F-0748** | 2 | NUT-WELD (1/2-13-THD) | |
| | 32 | 1 | **104-7429** | 2 | PLATE | |
| | 33 | 1 | **104-7740** | 1 | PLATE AS (LH) | |
| | | 1 | **1F-0748** | 2 | NUT-WELD (1/2-13-THD) | |
| | 34 | 1 | **117-0472** | 1 | KNOB (PLOW, BULLDOZER ANGLE) | |
| | 35 | 1 | **137-4515** | 2 | BUSHING | |
| | 36 | 1 | **137-4517** | 1 | SHAFT | |
| | 37 | 1 | **146-0705** | 13 | ROD | |
| Y | 38 | 1 | **153-8911** | 1 | VALVE GP-BANK 6 (RH) | 939 |
| Y | 39 | 1 | **153-8912** | 1 | VALVE GP-BANK 7 (LH) | 959 |
| | 40 | 1 | **4L-6459** | 1 | BOLT (3/8-16X2.5-IN) | |
| | 41 | 1 | **5P-1075** | 2 | WASHER-HARD (10.2X22.5X3-MM THK) | |
| | 42 | 1 | **5P-1076** | 6 | WASHER-HARD (13.5X30X4-MM THK) | |
| | 43 | 1 | **5P-2424** | 6 | BOLT (1/2-13X2.25-IN) | |
| | 44 | 1 | **6V-8186** | 13 | NUT-FULL (5/16-24-THD) | |
| | 45 | 1 | **6V-8188** | 2 | NUT (1/2-13-THD) | |
| | 46 | 1 | **8F-6437** | 6 | WASHER (13.5X50.8X4.76-MM THK) | |
| | 47 | 1 | **8T-4121** | 8 | WASHER-HARD (11X21X2.5-MM THK) | |
| M | 48 | 1 | **8T-4136** | 4 | BOLT (M10X1.5X25-MM) | |
| M | 49 | 1 | **8T-4195** | 4 | BOLT (M10X1.5X30-MM) | |
| | 50 | 1 | **8T-9043** | 26 | BOLT (5/16-18X0.875-IN) | |
| | 51 | 1 | **9B-7237** | 1 | BOLT (3/8-16X1.25-IN) | |

## 153-7966 VALVE & LINKAGE GP *(contd.)* i02585743

B-USE AS REQUIRED
M-METRIC PART
Y-SEPARATE ILLUSTRATION

## 153-7966 VALVE & LINKAGE GP *(contd. )* i02585743

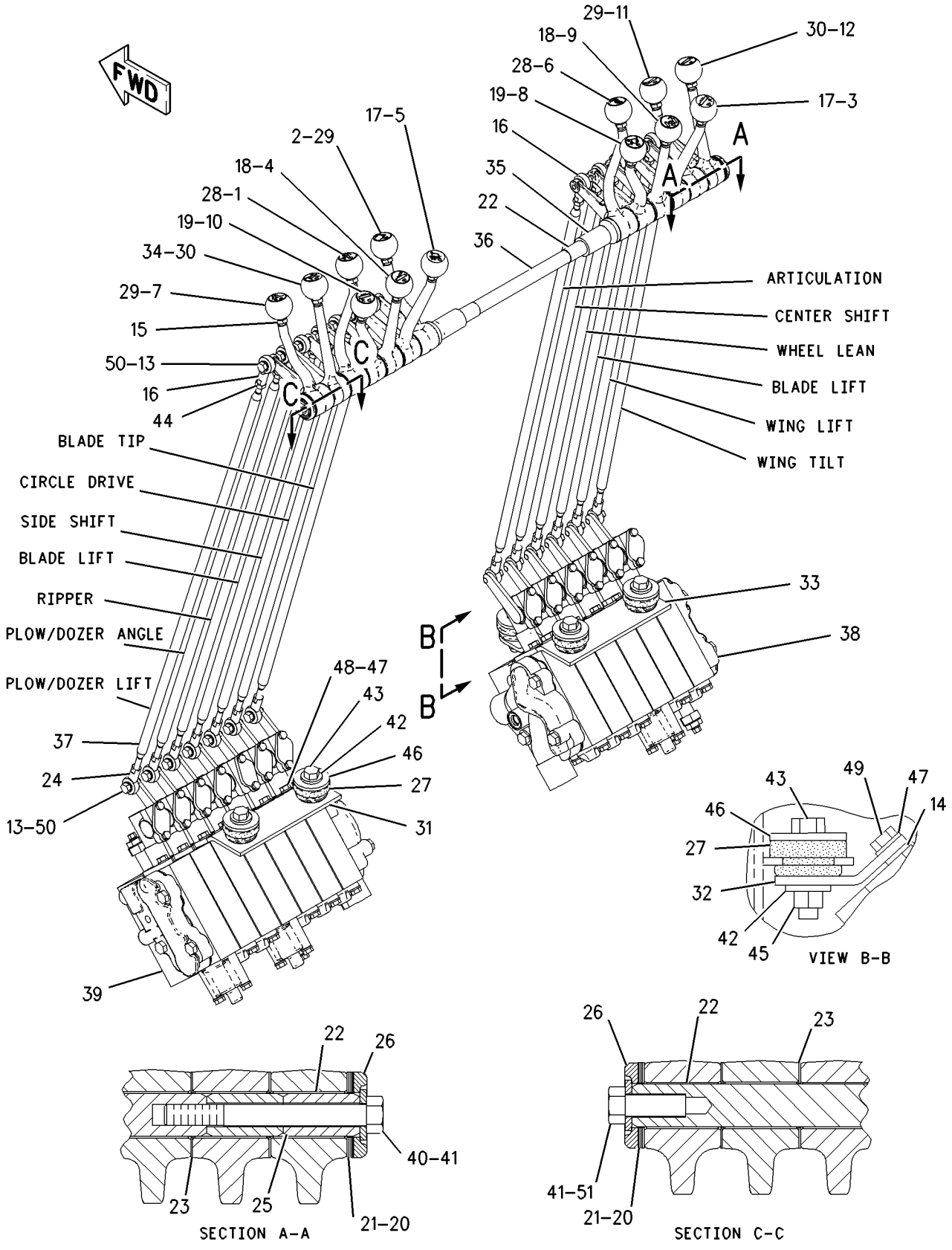


GRAPHIC #1 **<END>** g00873966

# HYDRAULIC SYSTEM

## *250-0421* VALVE & LINKAGE GP

**S/N: CCA1-UP**
**AN ATTACHMENT**

**SMCS-5051, 5063** **i02343232**

| NOTE | REF NO | GRAPHIC REF | PART NUMBER | QTY | PART NAME 1 2 3 4 5 6 (PRODUCT LEVEL) | SEE PAGE |
|---|---|---|---|---|---|---|
| | 1 | 1 | **3F-9556** | 16 | LOCKWASHER | |
| | 2 | 2 | **6B-0933** | 4 | SPACER (10.31X19.05X6.35-MM THK) | |
| | 3 | 1 | **6L-1962** | 8 | NUT-JAM (3/8-24-THD) | |
| | 4 | 1 | **8D-5632** | 1 | LEVER (BLADE LIFT, RH) | |
| | 4A | 1 | **8D-5632** | 1 | LEVER (CIRCLE DRIVE) | |
| | 5 | 1 | **8D-5633** | 1 | LEVER (WHEEL LEAN) | |
| | 5A | 1 | **8D-5633** | 1 | LEVER (SIDESHIFT) | |
| | 6 | 1 | **8D-5634** | 1 | LEVER (CENTERSHIFT) | |
| | 6A | 1 | **8D-5634** | 1 | LEVER (BLADE LIFT, LH) | |
| B | 7 | 1 | **8D-5636** | 4 | SHIM (0.254-MM THK) | |
| B | 8 | 1 | **8D-5637** | 4 | SHIM (0.762-MM THK) | |
| | 9 | 1 | **8D-5640** | 10 | BEARING | |
| | 10 | 1 | **8D-5641** | 8 | BEARING | |
| | 11 | 1 | *8X-4277* | 8 | ROD AS | |
| | | | | | (EACH INCLUDES) | |
| | | 1 | **146-0705** | 1 | ROD | |
| | | 1 | **6V-8186** | 1 | NUT-FULL (5/16-24-THD) | |
| | | 1 | **7H-3641** | 1 | END-ROD (5/16-24-THD) | |
| | | 1 | **8L-8598** | 1 | ROD END (LH) | |
| | 12 | 1 | **8X-5498** | 2 | RETAINER | |
| | 13 | 2 | **9M-1853** | 6 | MOUNTING | |
| | 14 | 1 | **101-2457** | 1 | LEVER (ARTICULATION) | |
| | 15 | 1 | **101-2458** | 1 | LEVER (BLADE TIP) | |
| | 16 | 2 | **104-7419** | 1 | PLATE AS (RH) | |
| | | 2 | **1F-0748** | 2 | NUT-WELD (1/2-13-THD) | |
| | 17 | 2 | **104-7429** | 2 | PLATE | |
| | 18 | 2 | **104-7740** | 1 | PLATE AS (LH) | |
| | | 2 | **1F-0748** | 2 | NUT-WELD (1/2-13-THD) | |
| | 19 | 1 | **137-4515** | 2 | BUSHING | |
| | 20 | 1 | **137-4516** | 1 | SHAFT | |
| | 21 | 2 | *164-5608* | 2 | CONNECTOR AS | |
| | | | | | (EACH INCLUDES) | |
| | | 2 | **8T-1687** | 1 | CONNECTOR | |
| | | 2 | **3K-0360** | 1 | SEAL-O-RING | |
| | | 2 | **6V-8398** | 1 | SEAL-O-RING | |
| | 22 | 1 | **244-2584** | 1 | TUBE AS | |
| | 23 | 1 | **244-2588** | 1 | TUBE AS | |
| | 24 | 1 | **244-2592** | 1 | TUBE AS | |
| | 25 | 1 | **244-2596** | 1 | TUBE AS | |
| Y | 26 | 1 | **250-0543** | 1 | VALVE GP-BANK 4 (LH) | 911 |
| Y | 27 | 1 | **250-0544** | 1 | VALVE GP-BANK 4 (RH) | 913 |
| | 28 | 2 | *148-8318* | 2 | CONNECTOR AS | |
| | | | | | (EACH INCLUDES) | |
| | | 2 | **6V-8634** | 1 | CONNECTOR | |
| | | 2 | **3K-0360** | 1 | SEAL-O-RING | |
| | | 2 | **6V-8397** | 1 | SEAL-O-RING | |
| | 29 | 2 | **153-1818** | 1 | ELBOW | |
| | 30 | 2 | *206-5123* | 4 | TEE AS | |
| | | | | | (EACH INCLUDES) | |
| | | 2 | **206-5122** | 1 | TEE | |
| | | 2 | **6V-8397** | 1 | SEAL-O-RING | |
| | | 2 | **6V-8398** | 1 | SEAL-O-RING | |
| | 31 | 1 | **2G-6747** | 1 | KNOB-BLADE TIP | |
| | 32 | 1 | **2G-6748** | 1 | KNOB-BLADE LIFT (RH) | |
| | 33 | 1 | **2G-6749** | 1 | KNOB-SIDESHIFT | |
| | 34 | 1 | **2G-6751** | 1 | KNOB-CIRCLE DRIVE | |

## *250-0421* **VALVE & LINKAGE GP** *(contd.)* **i02343232**

| NOTE | REF NO | GRAPHIC REF | PART NUMBER | QTY | PART NAME 1 2 3 4 5 6 (PRODUCT LEVEL) | SEE PAGE |
|---|---|---|---|---|---|---|
| | 35 | 1 | **2G-6752** | 1 | KNOB-ARTICULATION | |
| | 36 | 1 | **2G-6755** | 1 | KNOB-CENTERSHIFT | |
| | 37 | 1 | **2G-6756** | 1 | KNOB-WHEEL LEAN | |
| | 38 | 1 | **2G-6757** | 1 | KNOB-BLADE LIFT (LH) | |
| | 39 | 2 | **3J-1907** | 4 | SEAL-O-RING | |
| | 40 | 1 | **5P-1075** | 2 | WASHER-HARD (10.2X22.5X3-MM THK) | |
| | 41 | 2 | **5P-1076** | 6 | WASHER-HARD (13.5X30X4-MM THK) | |
| | 42 | 2 | **5P-2424** | 6 | BOLT (1/2-13X2.25-IN) | |
| | 43 | 2 | **6V-8188** | 2 | NUT (1/2-13-THD) | |
| | 44 | 1,2 | **6V-8397** | 8 | SEAL-O-RING | |
| | 45 | 2 | **6V-9836** | 2 | TEE-SWIVEL | |
| | 46 | 2 | **8F-6437** | 6 | WASHER (13.5X50.8X4.76-MM THK) | |
| | 47 | 2 | **8T-4121** | 8 | WASHER-HARD (11X21X2.5-MM THK) | |
| M | 48 | 2 | **8T-4136** | 4 | BOLT (M10X1.5X25-MM) | |
| M | 49 | 2 | **8T-4195** | 4 | BOLT (M10X1.5X30-MM) | |
| | 50 | 2 | **8T-9041** | 3 | CONNECTOR | |
| | 51 | 1 | **8T-9043** | 16 | BOLT (5/16-18X0.875-IN) | |
| | 52 | 1 | **9B-7237** | 2 | BOLT (3/8-16X1.25-IN) | |

B-USE AS REQUIRED
M-METRIC PART
Y-SEPARATE ILLUSTRATION

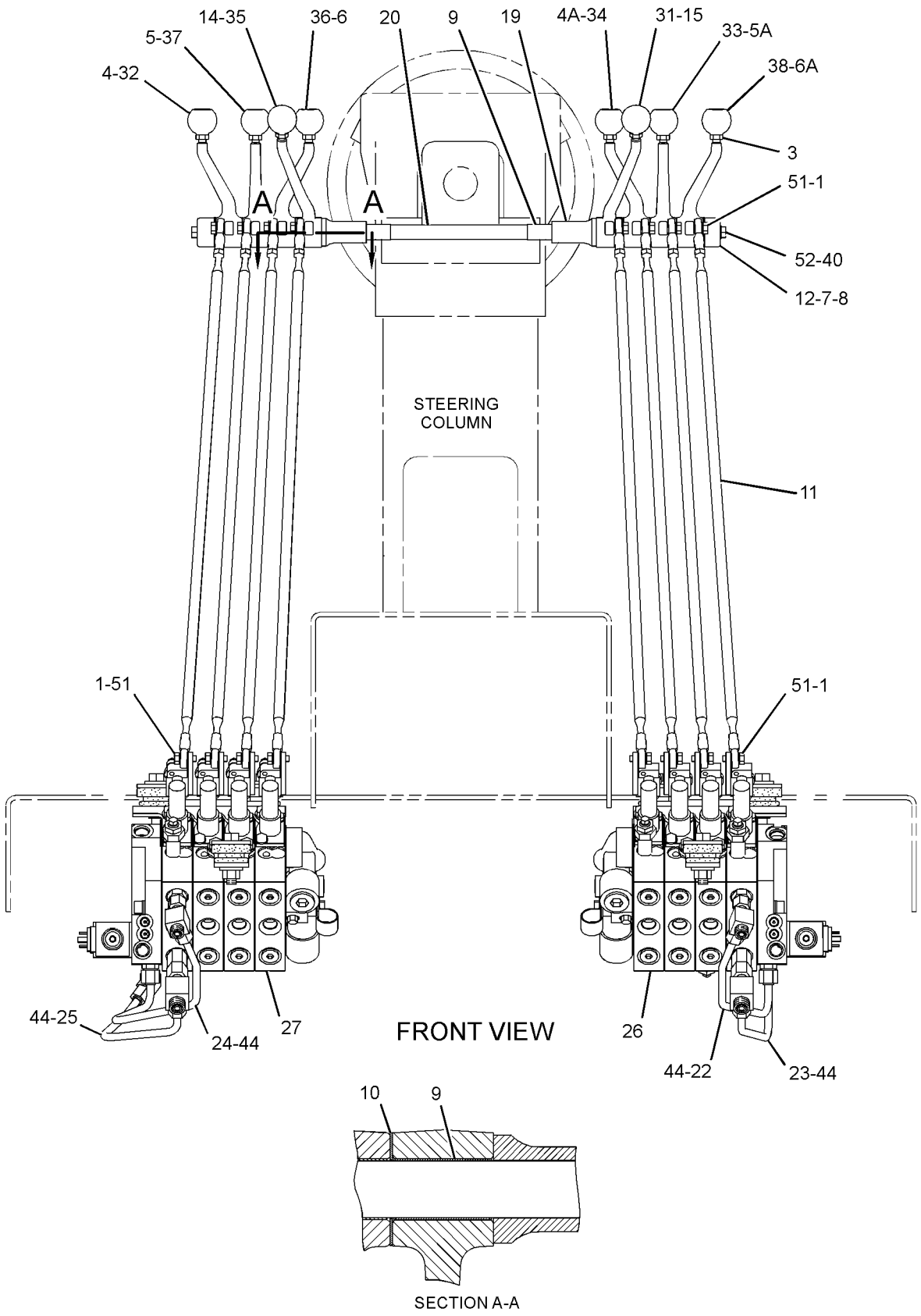


GRAPHIC #1

g01259648

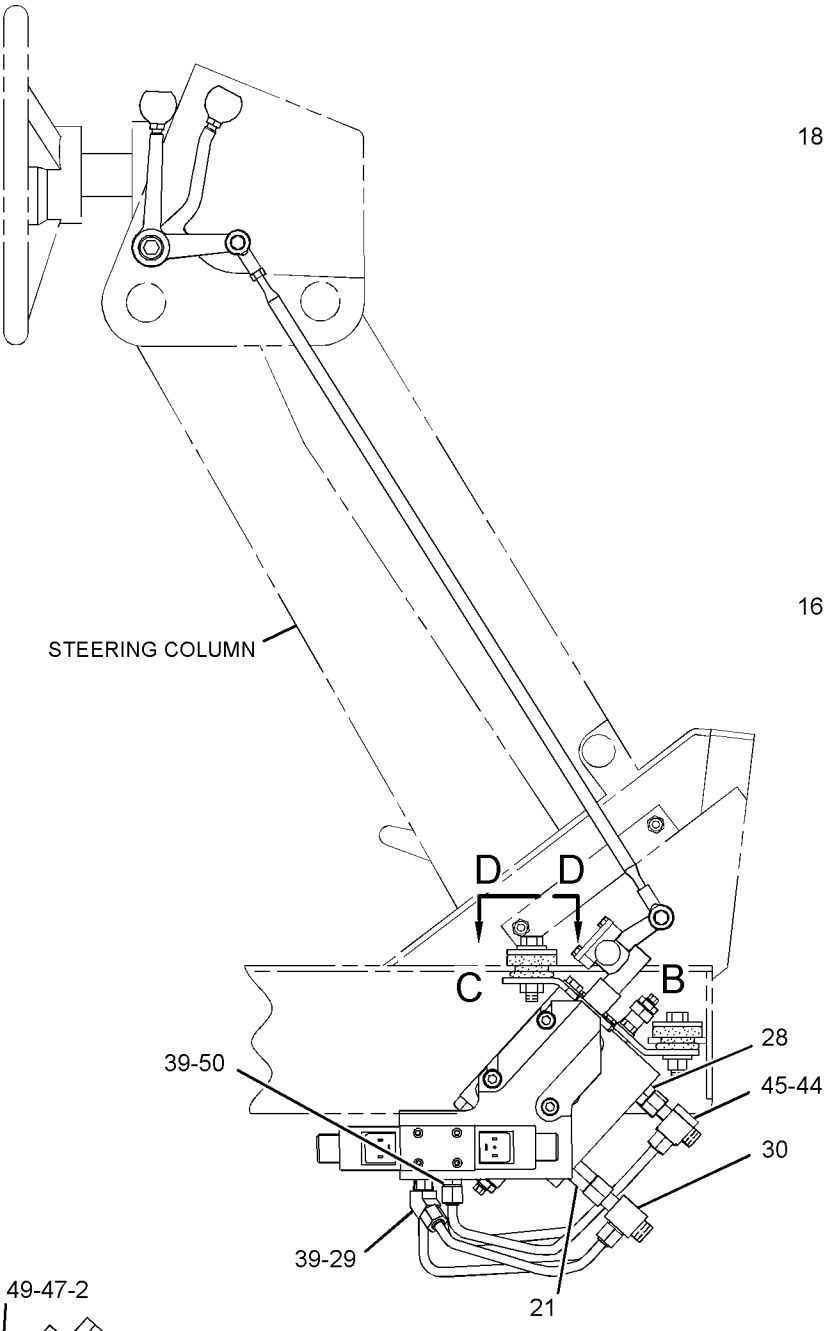


RIGHT SIDE VIEW

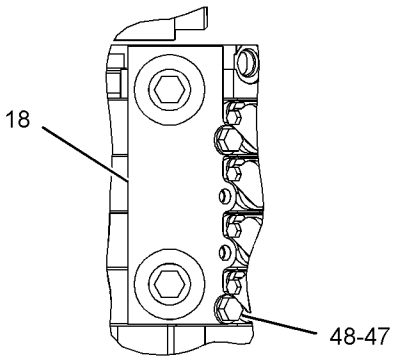


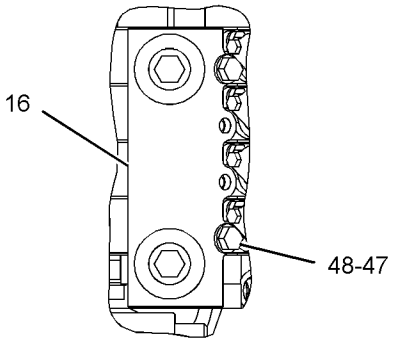


VIEW D-D

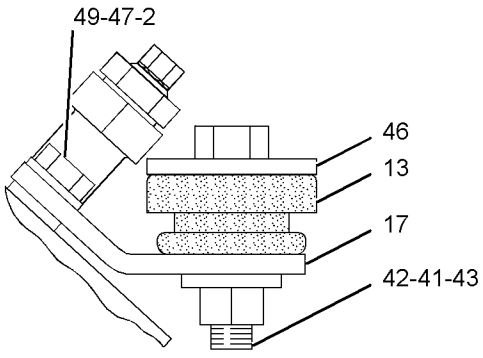


VIEW OF AREA B

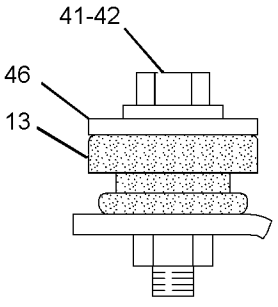


VIEW OF AREA C

GRAPHIC #2 **<END>** g01259647

# HYDRAULIC SYSTEM

## *250-0422* VALVE & LINKAGE GP

**S/N: CCA1-UP**

**AN ATTACHMENT**

**SMCS-5051, 5063** **i02343420**

| NOTE | REF NO | GRAPHIC REF | PART NUMBER | QTY | PART NAME 1 2 3 4 5 6 (PRODUCT LEVEL) | SEE PAGE |
|---|---|---|---|---|---|---|
| | 1 | 1 | **3F-9556** | 16 | LOCKWASHER | |
| | 2 | 2 | **6B-0933** | 4 | SPACER (10.31X19.05X6.35-MM THK) | |
| | 3 | 1 | **6L-1962** | 8 | NUT-JAM (3/8-24-THD) | |
| | 4 | 1 | **8D-5632** | 1 | LEVER (BLADE LIFT, RH) | |
| | 4A | 1 | **8D-5632** | 1 | LEVER (CIRCLE DRIVE) | |
| | 5 | 1 | **8D-5633** | 1 | LEVER (WHEEL LEAN) | |
| | 5A | 1 | **8D-5633** | 1 | LEVER (SIDESHIFT) | |
| | 6 | 1 | **8D-5634** | 1 | LEVER (CENTERSHIFT) | |
| | 6A | 1 | **8D-5634** | 1 | LEVER (BLADE LIFT, LH) | |
| B | 7 | 1 | **8D-5636** | 4 | SHIM (0.254-MM THK) | |
| B | 8 | 1 | **8D-5637** | 4 | SHIM (0.762-MM THK) | |
| | 9 | 1 | **8D-5640** | 10 | BEARING | |
| | 10 | 1 | **8D-5641** | 8 | BEARING | |
| | 11 | 1 | *8X-4277* | 8 | ROD AS | |
| | | | | | (EACH INCLUDES) | |
| | | 1 | **146-0705** | 1 | ROD | |
| | | 1 | **6V-8186** | 1 | NUT-FULL (5/16-24-THD) | |
| | | 1 | **7H-3641** | 1 | END-ROD (5/16-24-THD) | |
| | | 1 | **8L-8598** | 1 | ROD END (LH) | |
| | 12 | 1 | **8X-5498** | 2 | RETAINER | |
| | 13 | 2 | **9M-1853** | 6 | MOUNTING | |
| | 14 | 1 | **101-2457** | 1 | LEVER (ARTICULATION) | |
| | 15 | 1 | **101-2458** | 1 | LEVER (BLADE TIP) | |
| | 16 | 2 | **104-7419** | 1 | PLATE AS (RH) | |
| | | 2 | **1F-0748** | 2 | NUT-WELD (1/2-13-THD) | |
| | 17 | 2 | **104-7429** | 2 | PLATE | |
| | 18 | 2 | **104-7740** | 1 | PLATE AS (LH) | |
| | | 2 | **1F-0748** | 2 | NUT-WELD (1/2-13-THD) | |
| | 19 | 1 | **137-4515** | 2 | BUSHING | |
| | 20 | 1 | **137-4516** | 1 | SHAFT | |
| | 21 | 2 | *164-5608* | 2 | CONNECTOR AS | |
| | | | | | (EACH INCLUDES) | |
| | | 2 | **8T-1687** | 1 | CONNECTOR | |
| | | 2 | **3K-0360** | 1 | SEAL-O-RING | |
| | | 2 | **6V-8398** | 1 | SEAL-O-RING | |
| | 22 | 1 | **244-2584** | 1 | TUBE AS | |
| | 23 | 1 | **244-2588** | 1 | TUBE AS | |
| | 24 | 1 | **244-2592** | 1 | TUBE AS | |
| | 25 | 1 | **244-2596** | 1 | TUBE AS | |
| Y | 26 | 1 | **250-0545** | 1 | VALVE GP-BANK 4 (LH) | 915 |
| Y | 27 | 1 | **250-0546** | 1 | VALVE GP-BANK 4 (RH) | 917 |
| | 28 | 2 | *148-8318* | 2 | CONNECTOR AS | |
| | | | | | (EACH INCLUDES) | |
| | | 2 | **6V-8634** | 1 | CONNECTOR | |
| | | 2 | **3K-0360** | 1 | SEAL-O-RING | |
| | | 2 | **6V-8397** | 1 | SEAL-O-RING | |
| | 29 | 2 | **153-1818** | 1 | ELBOW | |
| | 30 | 2 | *206-5123* | 2 | TEE AS | |
| | | | | | (EACH INCLUDES) | |
| | | 2 | **206-5122** | 1 | TEE | |
| | | 2 | **6V-8397** | 1 | SEAL-O-RING | |
| | | 2 | **6V-8398** | 1 | SEAL-O-RING | |
| | 31 | 1 | **2G-6747** | 1 | KNOB-BLADE TIP | |
| | 32 | 1 | **2G-6748** | 1 | KNOB-BLADE LIFT (RH) | |
| | 33 | 1 | **2G-6749** | 1 | KNOB-SIDESHIFT | |
| | 34 | 1 | **2G-6751** | 1 | KNOB-CIRCLE DRIVE | |

## *250-0422* **VALVE & LINKAGE GP** *(contd.)* **i02343420**

| NOTE | REF NO | GRAPHIC REF | PART NUMBER | QTY | PART NAME 1 2 3 4 5 6 (PRODUCT LEVEL) | SEE PAGE |
|---|---|---|---|---|---|---|
| | 35 | 1 | **2G-6752** | 1 | KNOB-ARTICULATION | |
| | 36 | 1 | **2G-6755** | 1 | KNOB-CENTERSHIFT | |
| | 37 | 1 | **2G-6756** | 1 | KNOB-WHEEL LEAN | |
| | 38 | 1 | **2G-6757** | 1 | KNOB-BLADE LIFT (LH) | |
| | 39 | 2 | **3J-1907** | 4 | SEAL-O-RING | |
| | 40 | 1 | **5P-1075** | 2 | WASHER-HARD (10.2X22.5X3-MM THK) | |
| | 41 | 2 | **5P-1076** | 6 | WASHER-HARD (13.5X30X4-MM THK) | |
| | 42 | 2 | **5P-2424** | 6 | BOLT (1/2-13X2.25-IN) | |
| | 43 | 2 | **6V-8188** | 2 | NUT (1/2-13-THD) | |
| | 44 | 1,2 | **6V-8397** | 8 | SEAL-O-RING | |
| | 45 | 2 | **6V-9836** | 2 | TEE-SWIVEL | |
| | 46 | 2 | **8F-6437** | 6 | WASHER (13.5X50.8X4.76-MM THK) | |
| | 47 | 2 | **8T-4121** | 8 | WASHER-HARD (11X21X2.5-MM THK) | |
| M | 48 | 2 | **8T-4136** | 4 | BOLT (M10X1.5X25-MM) | |
| M | 49 | 2 | **8T-4195** | 4 | BOLT (M10X1.5X30-MM) | |
| | 50 | 2 | **8T-9041** | 3 | CONNECTOR | |
| | 51 | 1 | **8T-9043** | 16 | BOLT (5/16-18X0.875-IN) | |
| | 52 | 1 | **9B-7237** | 2 | BOLT (3/8-16X1.25-IN) | |

B-USE AS REQUIRED
M-METRIC PART
Y-SEPARATE ILLUSTRATION

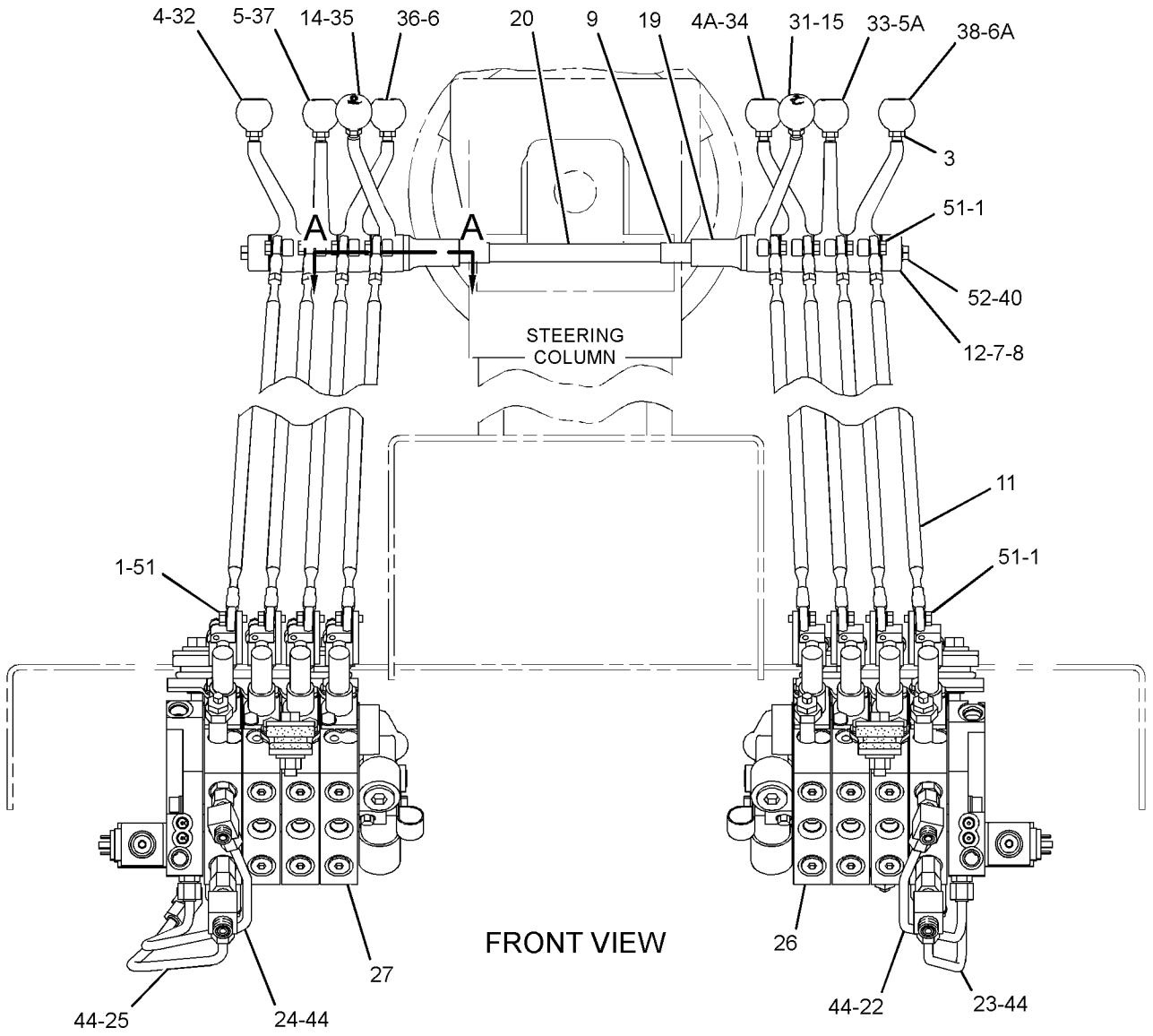


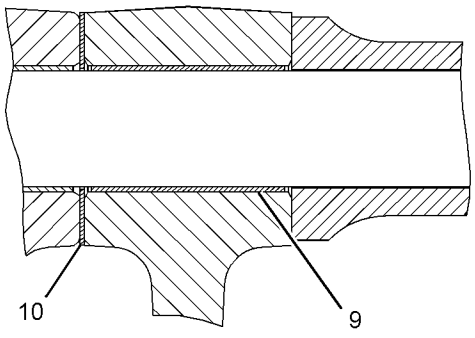


SECTION A-A

GRAPHIC #1

g01258027

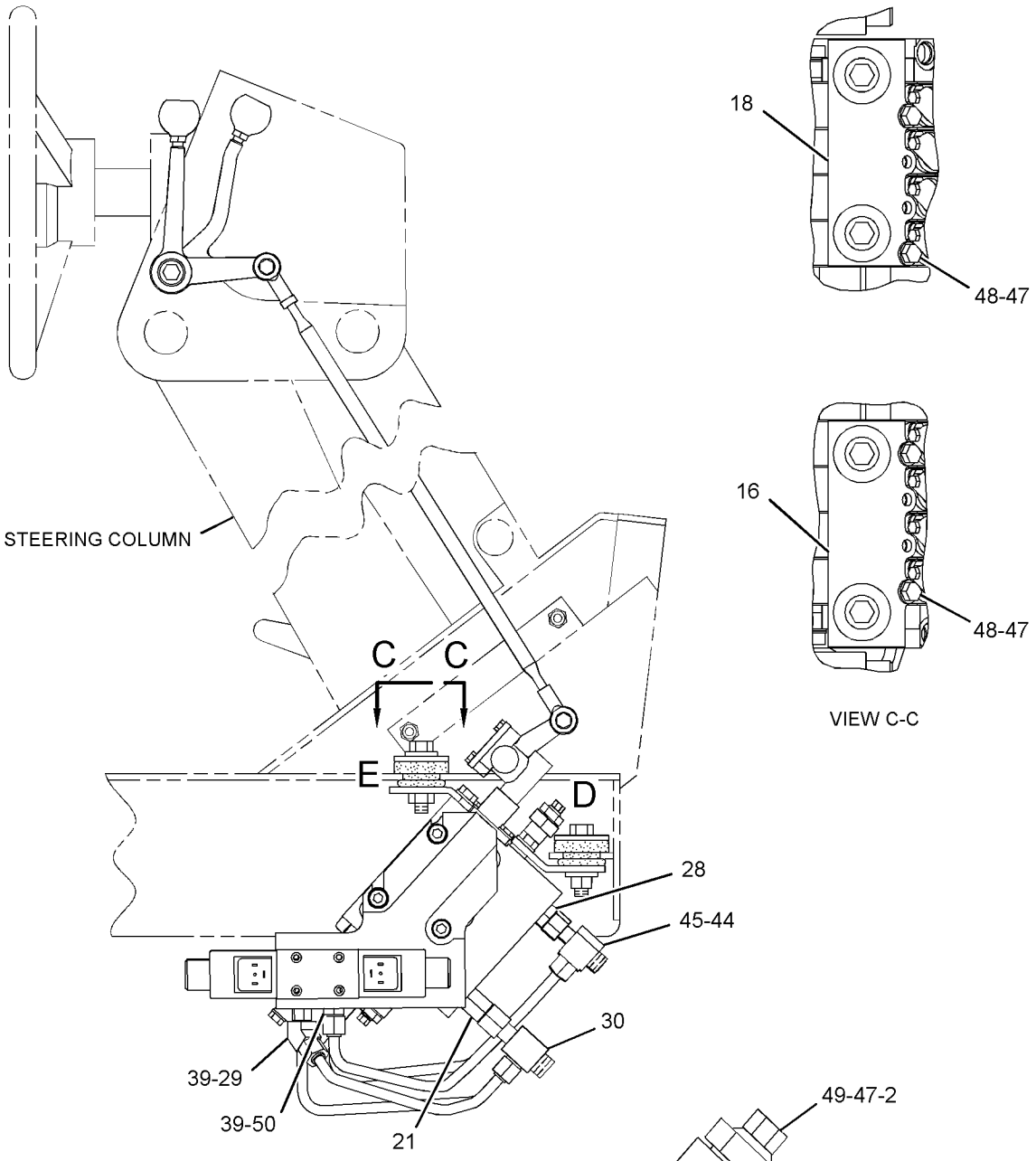


GRAPHIC #2 **<END>** g01258028

# HYDRAULIC SYSTEM

## *250-0423* VALVE & LINKAGE GP—4-BANK, RH; 5-BANK, LH

**S/N: CCA1-UP**

**AN ATTACHMENT**

**SMCS-5051, 5063** **i02344204**

| NOTE | REF NO | GRAPHIC REF | PART NUMBER | QTY | PART NAME 1 2 3 4 5 6 (PRODUCT LEVEL) | SEE PAGE |
|---|---|---|---|---|---|---|
| | 1 | 1 | **3F-9556** | 18 | LOCKWASHER | |
| | 2 | 2 | **6B-0933** | 4 | SPACER (10.31X19.05X6.35-MM THK) | |
| | 3 | 1 | **6L-1962** | 9 | NUT-JAM (3/8-24-THD) | |
| | 4 | 1 | **8D-5632** | 1 | LEVER (CIRCLE DRIVE) | |
| | 4A | 1 | **8D-5632** | 1 | LEVER (BLADE LIFT, RH) | |
| | 5 | 1 | **8D-5633** | 2 | LEVER (WHEEL LEAN) | |
| | 5A | 1 | **8D-5633** | 1 | LEVER (SIDESHIFT) | |
| | 6 | 1 | **8D-5634** | 2 | LEVER (CENTERSHIFT) | |
| | 6A | 1 | **8D-5634** | 1 | LEVER (BLADE LIFT, LH) | |
| B | 7 | 1 | **8D-5636** | 4 | SHIM (0.254-MM THK) | |
| B | 8 | 1 | **8D-5637** | 4 | SHIM (0.762-MM THK) | |
| | 9 | 1 | **8D-5640** | 11 | BEARING | |
| | 10 | 1 | **8D-5641** | 9 | BEARING | |
| | 11 | 1 | *8X-4277* | 9 | ROD AS | |
| | | | | | (EACH INCLUDES) | |
| | | 1 | **146-0705** | 1 | ROD | |
| | | 1 | **8L-8598** | 1 | ROD END (LH) | |
| | | 1 | **7H-3641** | 1 | END-ROD (5/16-24-THD) | |
| | | 1 | **6V-8186** | 1 | NUT-FULL (5/16-24-THD) | |
| | 12 | 1 | **8X-5499** | 2 | RETAINER | |
| | 13 | 2 | **9M-1853** | 6 | MOUNTING | |
| | 14 | 1 | **101-2457** | 1 | LEVER (ARTICULATION) | |
| | 14A | 1 | **101-2457** | 1 | LEVER (SCARIFIER) | |
| | 15 | 1 | **101-2458** | 1 | LEVER (BLADE TIP) | |
| | 16 | 2 | **104-7419** | 1 | PLATE AS (RH) | |
| | | 2 | **1F-0748** | 2 | NUT-WELD (1/2-13-THD) | |
| | 17 | 2 | **104-7429** | 2 | PLATE | |
| | 18 | 2 | **104-7740** | 1 | PLATE AS (LH) | |
| | | 2 | **1F-0748** | 2 | NUT-WELD (1/2-13-THD) | |
| | 19 | 1 | **137-4515** | 2 | BUSHING | |
| | 20 | 1 | **137-4516** | 1 | SHAFT | |
| | 21 | 2 | *164-5608* | 2 | CONNECTOR AS | |
| | | | | | (EACH INCLUDES) | |
| | | 2 | **8T-1687** | 1 | CONNECTOR | |
| | | 2 | **3K-0360** | 1 | SEAL-O-RING | |
| | | 2 | **6V-8398** | 1 | SEAL-O-RING | |
| | 22 | 1 | **244-2585** | 1 | TUBE AS | |
| | 23 | 1 | **244-2589** | 1 | TUBE AS | |
| | 24 | 1 | **244-2592** | 1 | TUBE AS | |
| | 25 | 1 | **244-2596** | 1 | TUBE AS | |
| Y | 26 | 1 | **250-0546** | 1 | VALVE GP-BANK 4 (RH) | 917 |
| Y | 27 | 1 | **250-0547** | 1 | VALVE GP-BANK 5 (LH) | 924 |
| | 28 | 2 | *148-8318* | 2 | CONNECTOR AS | |
| | | | | | (EACH INCLUDES) | |
| | | 2 | **6V-8634** | 1 | CONNECTOR | |
| | | 2 | **3K-0360** | 1 | SEAL-O-RING | |
| | | 2 | **6V-8397** | 1 | SEAL-O-RING | |
| | 29 | 2 | **153-1818** | 1 | ELBOW | |
| | 30 | 2 | *206-5123* | 2 | TEE AS | |
| | | | | | (EACH INCLUDES) | |
| | | 2 | **6V-8397** | 1 | SEAL-O-RING | |
| | | 2 | **6V-8398** | 1 | SEAL-O-RING | |
| | 31 | 1 | **2G-6747** | 1 | KNOB-BLADE TIP | |
| | 32 | 1 | **2G-6748** | 1 | KNOB-BLADE LIFT (RH) | |
| | 33 | 1 | **2G-6749** | 1 | KNOB-SIDESHIFT | |
| | 34 | 1 | **2G-6751** | 1 | KNOB-CIRCLE DRIVE | |

## *250-0423* VALVE & LINKAGE GP *(contd.)* i02344204

| NOTE | REF NO | GRAPHIC REF | PART NUMBER | QTY | PART NAME 1 2 3 4 5 6 (PRODUCT LEVEL) | SEE PAGE |
|---|---|---|---|---|---|---|
| | 35 | 1 | **2G-6752** | 1 | KNOB-ARTICULATION | |
| | 36 | 1 | **2G-6753** | 1 | KNOB-SCARIFIER | |
| | 37 | 1 | **2G-6755** | 1 | KNOB-CENTERSHIFT | |
| | 38 | 1 | **2G-6756** | 1 | KNOB-WHEEL LEAN | |
| | 39 | 1 | **2G-6757** | 1 | KNOB-BLADE LIFT (LH) | |
| | 40 | 2 | **3J-1907** | 4 | SEAL-O-RING | |
| | 41 | 1 | **5P-1075** | 2 | WASHER-HARD (10.2X22.5X3-MM THK) | |
| | 42 | 2 | **5P-1076** | 6 | WASHER-HARD (13.5X30X4-MM THK) | |
| | 43 | 2 | **5P-2424** | 6 | BOLT (1/2-13X2.25-IN) | |
| | 44 | 2 | **6V-8188** | 2 | NUT (1/2-13-THD) | |
| | 45 | 1,2 | **6V-8397** | 8 | SEAL-O-RING | |
| | 46 | 2 | **6V-9836** | 2 | TEE-SWIVEL | |
| | 47 | 2 | **8F-6437** | 6 | WASHER (13.5X50.8X4.76-MM THK) | |
| | 48 | 2 | **8T-4121** | 8 | WASHER-HARD (11X21X2.5-MM THK) | |
| M | 49 | 2 | **8T-4136** | 4 | BOLT (M10X1.5X25-MM) | |
| M | 50 | 2 | **8T-4195** | 4 | BOLT (M10X1.5X30-MM) | |
| | 51 | 2 | **8T-9041** | 3 | CONNECTOR | |
| | 52 | 1 | **8T-9043** | 18 | BOLT (5/16-18X0.875-IN) | |
| | 53 | 1 | **9B-7237** | 2 | BOLT (3/8-16X1.25-IN) | |

B-USE AS REQUIRED
M-METRIC PART
Y-SEPARATE ILLUSTRATION

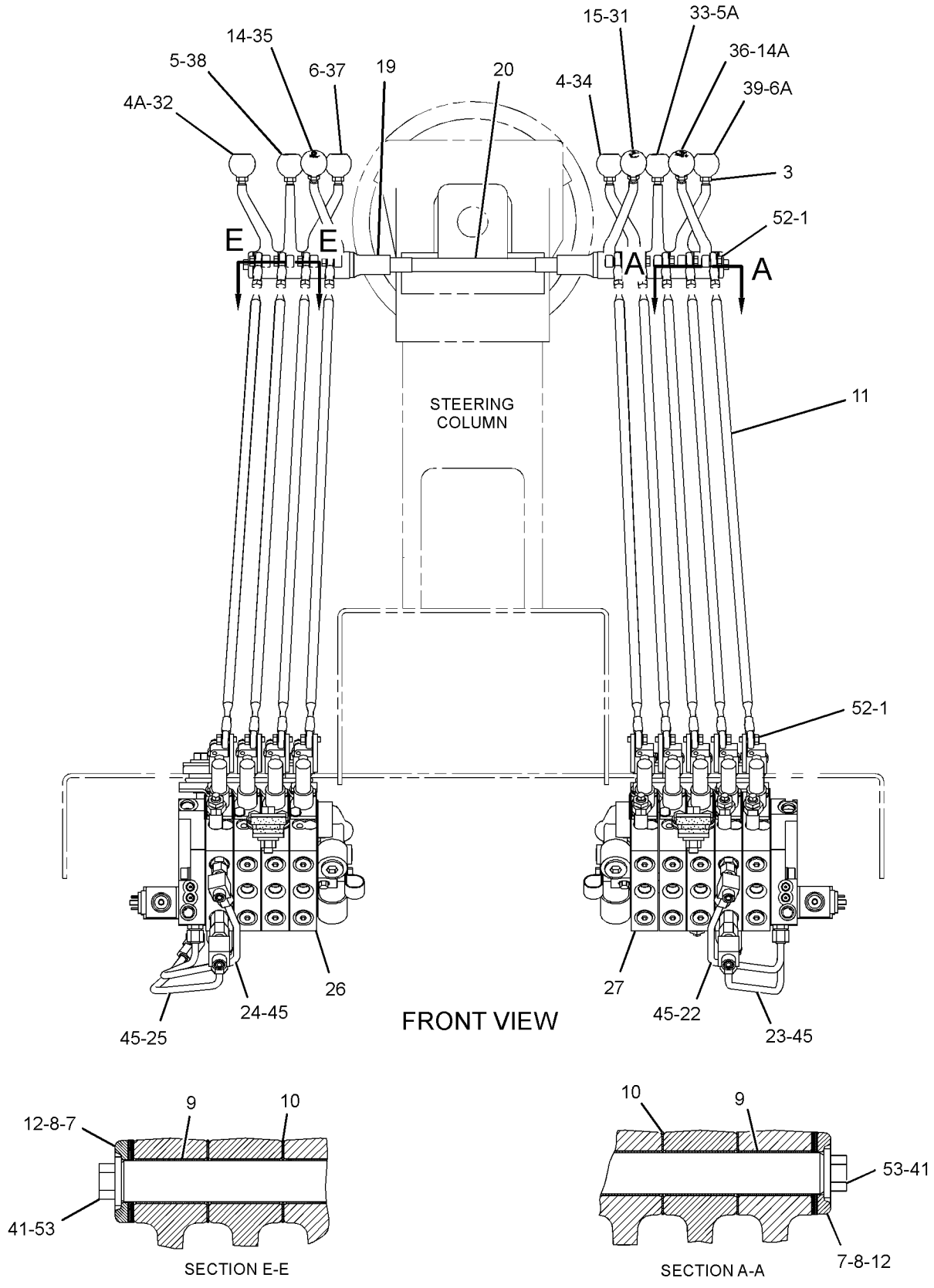


GRAPHIC #1

g01282411

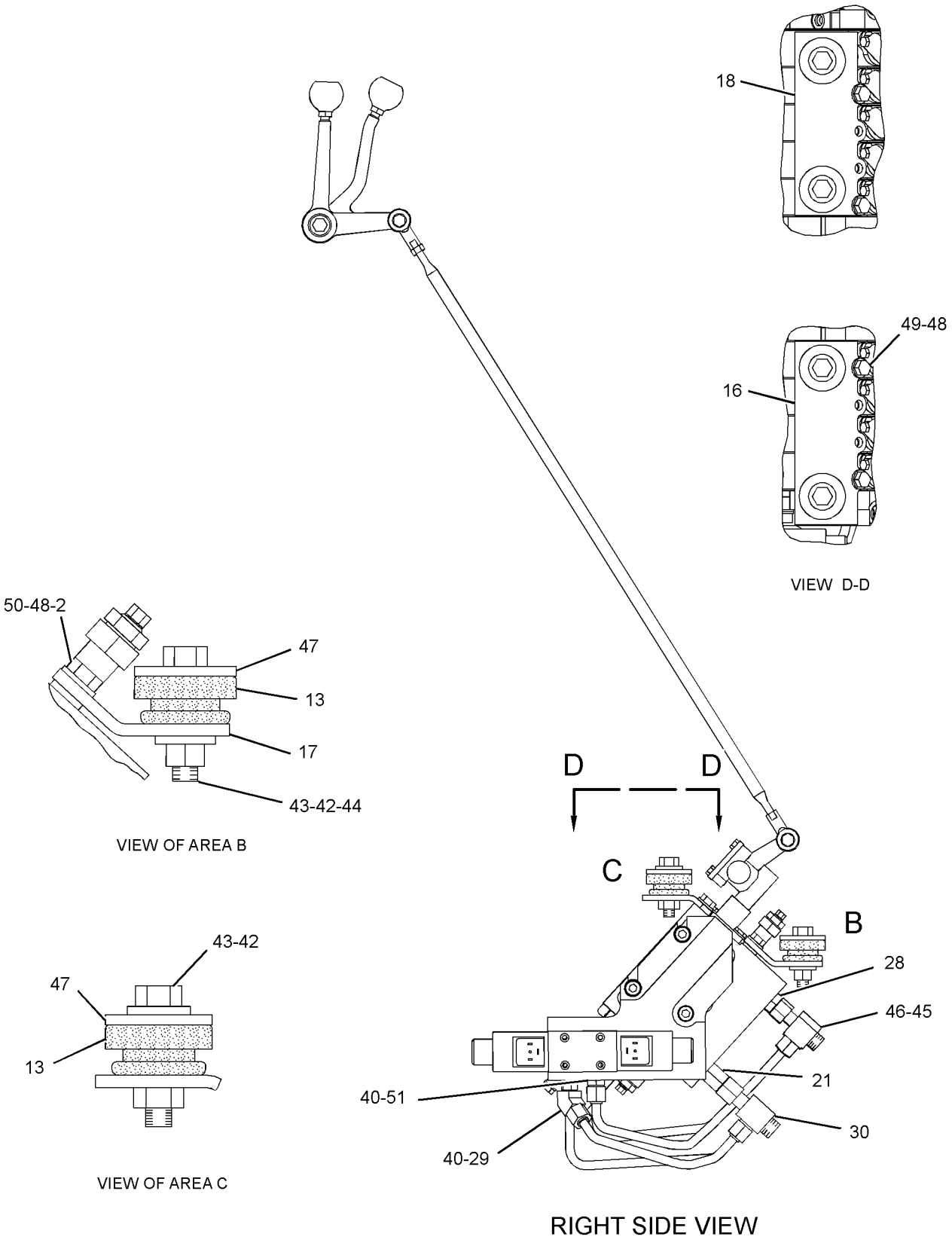


GRAPHIC #2 **<END>** g01256560

# HYDRAULIC SYSTEM

## *250-0424* VALVE & LINKAGE GP—4-BANK, RH; 5-BANK, LH

**S/N: CCA1-UP**

**AN ATTACHMENT**

**SMCS-5051, 5063** **i02344236**

| NOTE | REF NO | GRAPHIC REF | PART NUMBER | QTY | PART NAME 1 2 3 4 5 6 (PRODUCT LEVEL) | SEE PAGE |
|---|---|---|---|---|---|---|
| | 1 | 1 | **3F-9556** | 18 | LOCKWASHER | |
| | 2 | 2 | **6B-0933** | 4 | SPACER (10.31X19.05X6.35-MM THK) | |
| | 3 | 1 | **6L-1962** | 9 | NUT-JAM (3/8-24-THD) | |
| | 4 | 1 | **8D-5632** | 1 | LEVER (BLADE LIFT, RH) | |
| | 4A | 1 | **8D-5632** | 1 | LEVER (CIRCLE DRIVE) | |
| | 5 | 1 | **8D-5633** | 1 | LEVER (WHEEL LEAN) | |
| | 5A | 1 | **8D-5633** | 1 | LEVER (SIDESHIFT) | |
| | 6 | 1 | **8D-5634** | 1 | LEVER (CENTERSHIFT) | |
| | 6A | 1 | **8D-5634** | 1 | LEVER (BLADE LIFT, LH) | |
| B | 7 | 1 | **8D-5636** | 4 | SHIM (0.254-MM THK) | |
| B | 8 | 1 | **8D-5637** | 4 | SHIM (0.762-MM THK) | |
| | 9 | 1 | **8D-5640** | 11 | BEARING | |
| | 10 | 1 | **8D-5641** | 9 | BEARING | |
| | 11 | 1 | *8X-4277* | 9 | ROD AS | |
| | | | | | (EACH INCLUDES) | |
| | | 1 | **146-0705** | 1 | ROD | |
| | | 1 | **6V-8186** | 1 | NUT-FULL (5/16-24-THD) | |
| | | 1 | **7H-3641** | 1 | END-ROD (5/16-24-THD) | |
| | | 1 | **8L-8598** | 1 | ROD END (LH) | |
| | 12 | 1 | **8X-5499** | 2 | RETAINER | |
| | 13 | 2 | **9M-1853** | 6 | MOUNTING | |
| | 14 | 1 | **101-2457** | 1 | LEVER (ARTICULATION) | |
| | 15 | 1 | **101-2458** | 1 | LEVER (PLOW, DOZER) | |
| | 15A | 1 | **101-2458** | 1 | LEVER (BLADE TIP) | |
| | 16 | 2 | **104-7419** | 1 | PLATE AS (RH) | |
| | | 2 | **1F-0748** | 2 | NUT-WELD (1/2-13-THD) | |
| | 17 | 2 | **104-7429** | 2 | PLATE | |
| | 18 | 2 | **104-7740** | 1 | PLATE AS (LH) | |
| | | 2 | **1F-0748** | 2 | NUT-WELD (1/2-13-THD) | |
| | 19 | 1 | **137-4515** | 2 | BUSHING | |
| | 20 | 1 | **137-4516** | 1 | SHAFT | |
| | 21 | 2 | *164-5608* | 2 | CONNECTOR AS | |
| | | | | | (EACH INCLUDES) | |
| | | 2 | **8T-1687** | 1 | CONNECTOR | |
| | | 2 | **3K-0360** | 1 | SEAL-O-RING | |
| | | 2 | **6V-8398** | 1 | SEAL-O-RING | |
| | 22 | 1 | **244-2584** | 1 | TUBE AS | |
| | 23 | 1 | **244-2588** | 1 | TUBE AS | |
| | 24 | 1 | **244-2593** | 1 | TUBE AS | |
| | 25 | 1 | **244-2597** | 1 | TUBE AS | |
| Y | 26 | 1 | **250-0543** | 1 | VALVE GP-BANK 4 (LH) | 911 |
| Y | 27 | 1 | **250-0548** | 1 | VALVE GP-BANK 5 (RH) | 926 |
| | 28 | 2 | *148-8318* | 2 | CONNECTOR AS | |
| | | | | | (EACH INCLUDES) | |
| | | 2 | **6V-8634** | 1 | CONNECTOR | |
| | | 2 | **3K-0360** | 1 | SEAL-O-RING | |
| | | 2 | **6V-8397** | 1 | SEAL-O-RING | |
| | 29 | 2 | *206-5123* | 2 | TEE AS | |
| | | | | | (EACH INCLUDES) | |
| | | 2 | **206-5122** | 1 | TEE | |
| | | 2 | **6V-8397** | 1 | SEAL-O-RING | |
| | | 2 | **6V-8398** | 1 | SEAL-O-RING | |
| | 30 | 1 | **2G-6747** | 1 | KNOB-BLADE TIP | |
| | 31 | 1 | **2G-6748** | 1 | KNOB-BLADE LIFT (RH) | |
| | 32 | 1 | **2G-6749** | 1 | KNOB-SIDESHIFT | |
| | 33 | 1 | **2G-6751** | 1 | KNOB-CIRCLE DRIVE | |

## *250-0424* VALVE & LINKAGE GP *(contd.)* i02344236

| NOTE | REF NO | GRAPHIC REF | PART NUMBER | QTY | PART NAME 1 2 3 4 5 6 (PRODUCT LEVEL) | SEE PAGE |
|---|---|---|---|---|---|---|
| | 34 | 1 | **2G-6752** | 1 | KNOB-ARTICULATION | |
| | 35 | 1 | **2G-6754** | 1 | KNOB (DOZER LIFT, PLOW) | |
| | 36 | 1 | **2G-6755** | 1 | KNOB-CENTERSHIFT | |
| | 37 | 1 | **2G-6756** | 1 | KNOB-WHEEL LEAN | |
| | 38 | 1 | **2G-6757** | 1 | KNOB-BLADE LIFT (LH) | |
| | 39 | 2 | **3J-1907** | 4 | SEAL-O-RING | |
| | 40 | 1 | **5P-1075** | 2 | WASHER-HARD (10.2X22.5X3-MM THK) | |
| | 41 | 2 | **5P-1076** | 6 | WASHER-HARD (13.5X30X4-MM THK) | |
| | 42 | 2 | **5P-2424** | 6 | BOLT (1/2-13X2.25-IN) | |
| | 43 | 2 | **6V-8188** | 2 | NUT (1/2-13-THD) | |
| | 44 | 1,2 | **6V-8397** | 8 | SEAL-O-RING | |
| | 45 | 2 | **6V-9836** | 2 | TEE-SWIVEL | |
| | 46 | 2 | **8F-6437** | 6 | WASHER (13.5X50.8X4.76-MM THK) | |
| | 47 | 2 | **8T-4121** | 8 | WASHER-HARD (11X21X2.5-MM THK) | |
| M | 48 | 2 | **8T-4136** | 4 | BOLT (M10X1.5X25-MM) | |
| M | 49 | 2 | **8T-4195** | 4 | BOLT (M10X1.5X30-MM) | |
| | 50 | 2 | **8T-9041** | 4 | CONNECTOR | |
| | 51 | 1 | **8T-9043** | 18 | BOLT (5/16-18X0.875-IN) | |
| | 52 | 1 | **9B-7237** | 2 | BOLT (3/8-16X1.25-IN) | |

B-USE AS REQUIRED
M-METRIC PART
Y-SEPARATE ILLUSTRATION

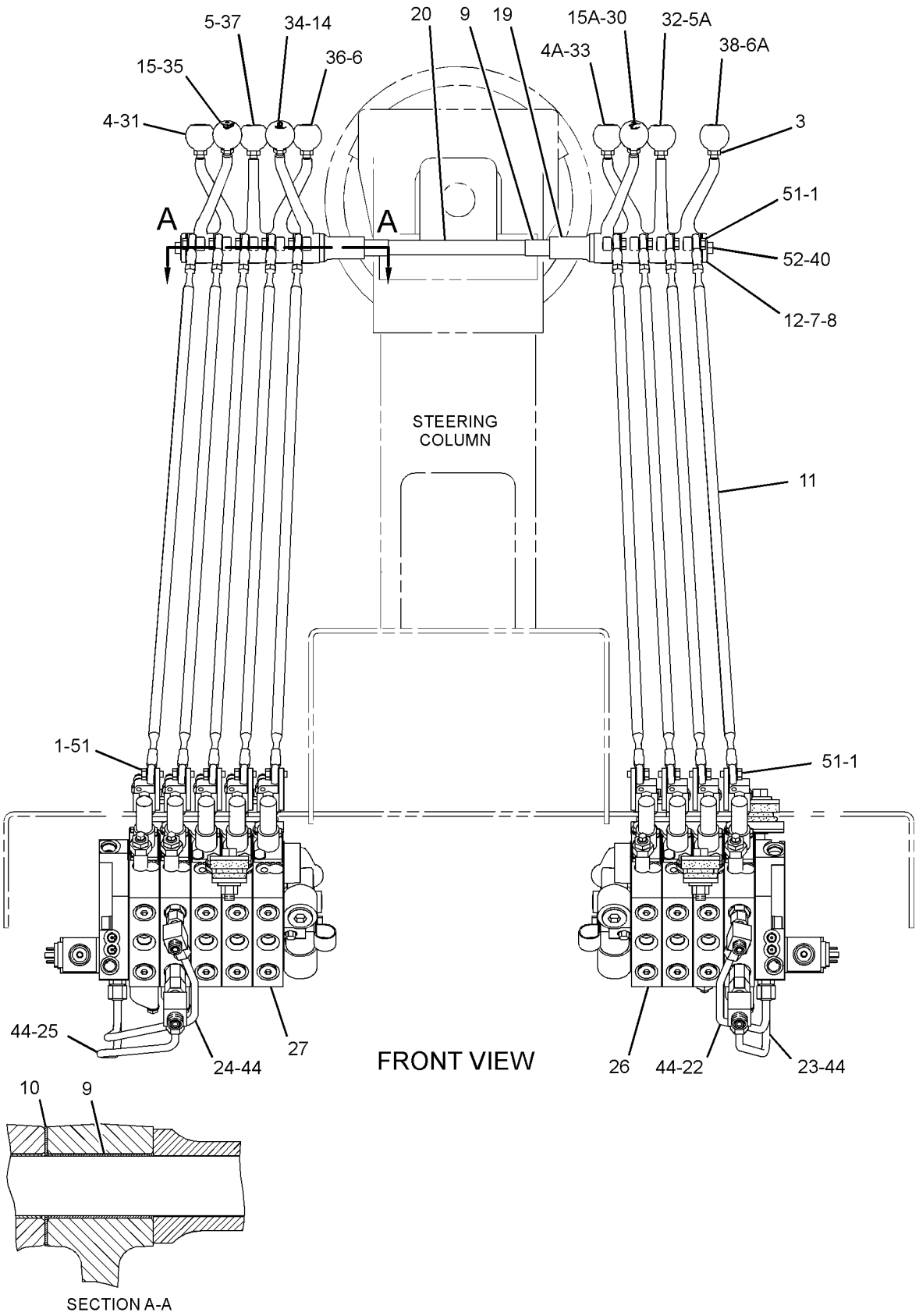


GRAPHIC #1

g01259628

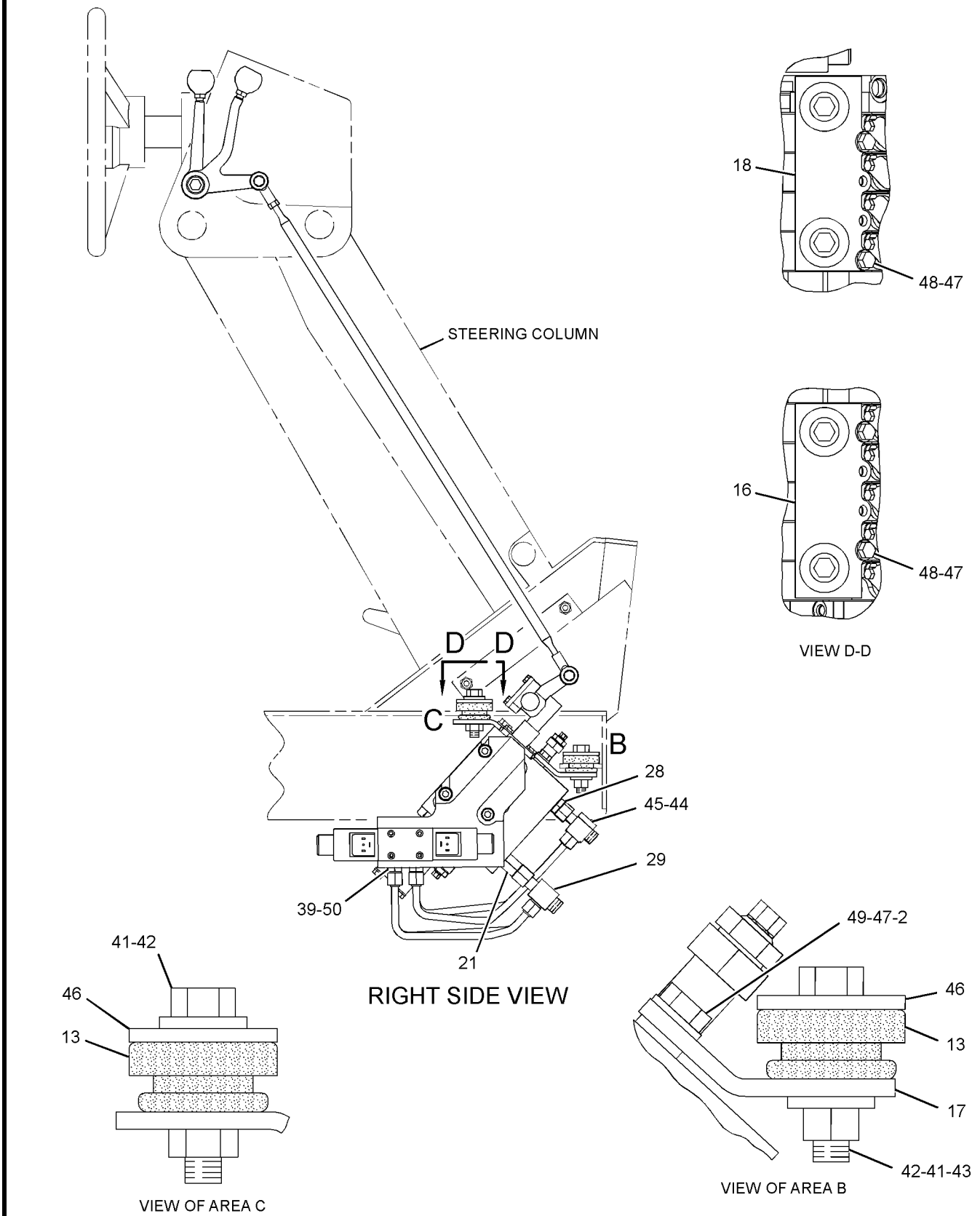


GRAPHIC #2 **<END>** g01259629

# HYDRAULIC SYSTEM

## *250-0425* VALVE & LINKAGE GP—4-BANK, 5-BANK

**S/N: CCA1-UP**

**AN ATTACHMENT**

**SMCS-5051, 5063** **i02344304**

| NOTE | REF NO | GRAPHIC REF | PART NUMBER | QTY | PART NAME 1 2 3 4 5 6 (PRODUCT LEVEL) | SEE PAGE |
|---|---|---|---|---|---|---|
| | 1 | 2 | **3F-9556** | 18 | LOCKWASHER | |
| | 2 | 1 | **6B-0933** | 4 | SPACER (10.31X19.05X6.35-MM THK) | |
| | 3 | 2 | **6L-1962** | 9 | NUT-JAM (3/8-24-THD) | |
| | 4 | 2 | **8D-5632** | 1 | LEVER (BLADE LIFT, RH) | |
| | 4A | 2 | **8D-5632** | 1 | LEVER (CIRCLE DRIVE) | |
| | 5 | 2 | **8D-5633** | 1 | LEVER (WHEEL LEAN) | |
| | 5A | 2 | **8D-5633** | 1 | LEVER (SIDESHIFT) | |
| | 6 | 2 | **8D-5634** | 1 | LEVER (CENTERSHIFT) | |
| | 6A | 2 | **8D-5634** | 1 | LEVER (BLADE LIFT, LH) | |
| B | 7 | 2 | **8D-5636** | 4 | SHIM (0.254-MM THK) | |
| B | 8 | 2 | **8D-5637** | 4 | SHIM (0.762-MM THK) | |
| | 9 | 2 | **8D-5640** | 11 | BEARING | |
| | 10 | 2 | **8D-5641** | 9 | BEARING | |
| | 11 | 2 | *8X-4277* | 9 | ROD AS | |
| | | | | | (EACH INCLUDES) | |
| | | 2 | **146-0705** | 1 | ROD | |
| | | 2 | **6V-8186** | 1 | NUT-FULL (5/16-24-THD) | |
| | | 2 | **7H-3641** | 1 | END-ROD (5/16-24-THD) | |
| | | 2 | **8L-8598** | 1 | ROD END (LH) | |
| | 12 | 2 | **8X-5499** | 2 | RETAINER | |
| | 13 | 1 | **9M-1853** | 6 | MOUNTING | |
| | 14 | 2 | **101-2457** | 1 | LEVER (ARTICULATION) | |
| | 15 | 2 | **101-2458** | 1 | LEVER (PLOW, DOZER) | |
| | 15A | 2 | **101-2458** | 1 | LEVER (BLADE TIP) | |
| | 16 | 1 | **104-7419** | 1 | PLATE AS (RH) | |
| | | 1 | **1F-0748** | 2 | NUT-WELD (1/2-13-THD) | |
| | 17 | 1 | **104-7429** | 2 | PLATE | |
| | 18 | 1 | **104-7740** | 1 | PLATE AS (LH) | |
| | | 1 | **1F-0748** | 2 | NUT-WELD (1/2-13-THD) | |
| | 19 | 2 | **137-4515** | 2 | BUSHING | |
| | 20 | 2 | **137-4516** | 1 | SHAFT | |
| | 21 | 1 | *164-5608* | 2 | CONNECTOR AS | |
| | | | | | (EACH INCLUDES) | |
| | | 1 | **8T-1687** | 1 | CONNECTOR | |
| | | 1 | **3K-0360** | 1 | SEAL-O-RING | |
| | | 1 | **6V-8398** | 1 | SEAL-O-RING | |
| | 22 | 2 | **244-2584** | 1 | TUBE AS | |
| | 23 | 2 | **244-2588** | 1 | TUBE AS | |
| | 24 | 2 | **244-2593** | 1 | TUBE AS | |
| | 25 | 2 | **244-2597** | 1 | TUBE AS | |
| Y | 26 | 2 | **250-0545** | 1 | VALVE GP-BANK 4 (LH) | 915 |
| Y | 27 | 2 | **250-0549** | 1 | VALVE GP-BANK 5 (RH) | 927 |
| | 28 | 1 | *148-8318* | 2 | CONNECTOR AS | |
| | | | | | (EACH INCLUDES) | |
| | | 1 | **6V-8634** | 1 | CONNECTOR | |
| | | 1 | **3K-0360** | 1 | SEAL-O-RING | |
| | | 1 | **6V-8397** | 1 | SEAL-O-RING | |
| | 29 | 1 | *206-5123* | 2 | TEE AS | |
| | | | | | (EACH INCLUDES) | |
| | | 1 | **206-5122** | 1 | TEE | |
| | | 1 | **6V-8397** | 1 | SEAL-O-RING | |
| | | 1 | **6V-8398** | 1 | SEAL-O-RING | |
| | 30 | 2 | **2G-6747** | 1 | KNOB-BLADE TIP | |
| | 31 | 2 | **2G-6748** | 1 | KNOB-BLADE LIFT (RH) | |
| | 32 | 2 | **2G-6749** | 1 | KNOB-SIDESHIFT | |
| | 33 | 2 | **2G-6751** | 1 | KNOB-CIRCLE DRIVE | |

## *250-0425* VALVE & LINKAGE GP *(contd.)* i02344304

| NOTE | REF NO | GRAPHIC REF | PART NUMBER | QTY | PART NAME 1 2 3 4 5 6 (PRODUCT LEVEL) | SEE PAGE |
|---|---|---|---|---|---|---|
| | 34 | 2 | **2G-6752** | 1 | KNOB-ARTICULATION | |
| | 35 | 2 | **2G-6754** | 1 | KNOB (DOZER LIFT, PLOW) | |
| | 36 | 2 | **2G-6755** | 1 | KNOB-CENTERSHIFT | |
| | 37 | 2 | **2G-6756** | 1 | KNOB-WHEEL LEAN | |
| | 38 | 2 | **2G-6757** | 1 | KNOB-BLADE LIFT (LH) | |
| | 39 | 1 | **3J-1907** | 4 | SEAL-O-RING | |
| | 40 | 2 | **5P-1075** | 2 | WASHER-HARD (10.2X22.5X3-MM THK) | |
| | 41 | 1 | **5P-1076** | 6 | WASHER-HARD (13.5X30X4-MM THK) | |
| | 42 | 1 | **5P-2424** | 6 | BOLT (1/2-13X2.25-IN) | |
| | 43 | 1 | **6V-8188** | 2 | NUT (1/2-13-THD) | |
| | 44 | 1,2 | **6V-8397** | 8 | SEAL-O-RING | |
| | 45 | 1 | **6V-9836** | 2 | TEE-SWIVEL | |
| | 46 | 1 | **8F-6437** | 6 | WASHER (13.5X50.8X4.76-MM THK) | |
| | 47 | 1 | **8T-4121** | 8 | WASHER-HARD (11X21X2.5-MM THK) | |
| M | 48 | 1 | **8T-4136** | 4 | BOLT (M10X1.5X25-MM) | |
| M | 49 | 1 | **8T-4195** | 4 | BOLT (M10X1.5X30-MM) | |
| | 50 | 1 | **8T-9041** | 4 | CONNECTOR | |
| | 51 | 2 | **8T-9043** | 18 | BOLT (5/16-18X0.875-IN) | |
| | 52 | 2 | **9B-7237** | 2 | BOLT (3/8-16X1.25-IN) | |

B-USE AS REQUIRED
M-METRIC PART
Y-SEPARATE ILLUSTRATION

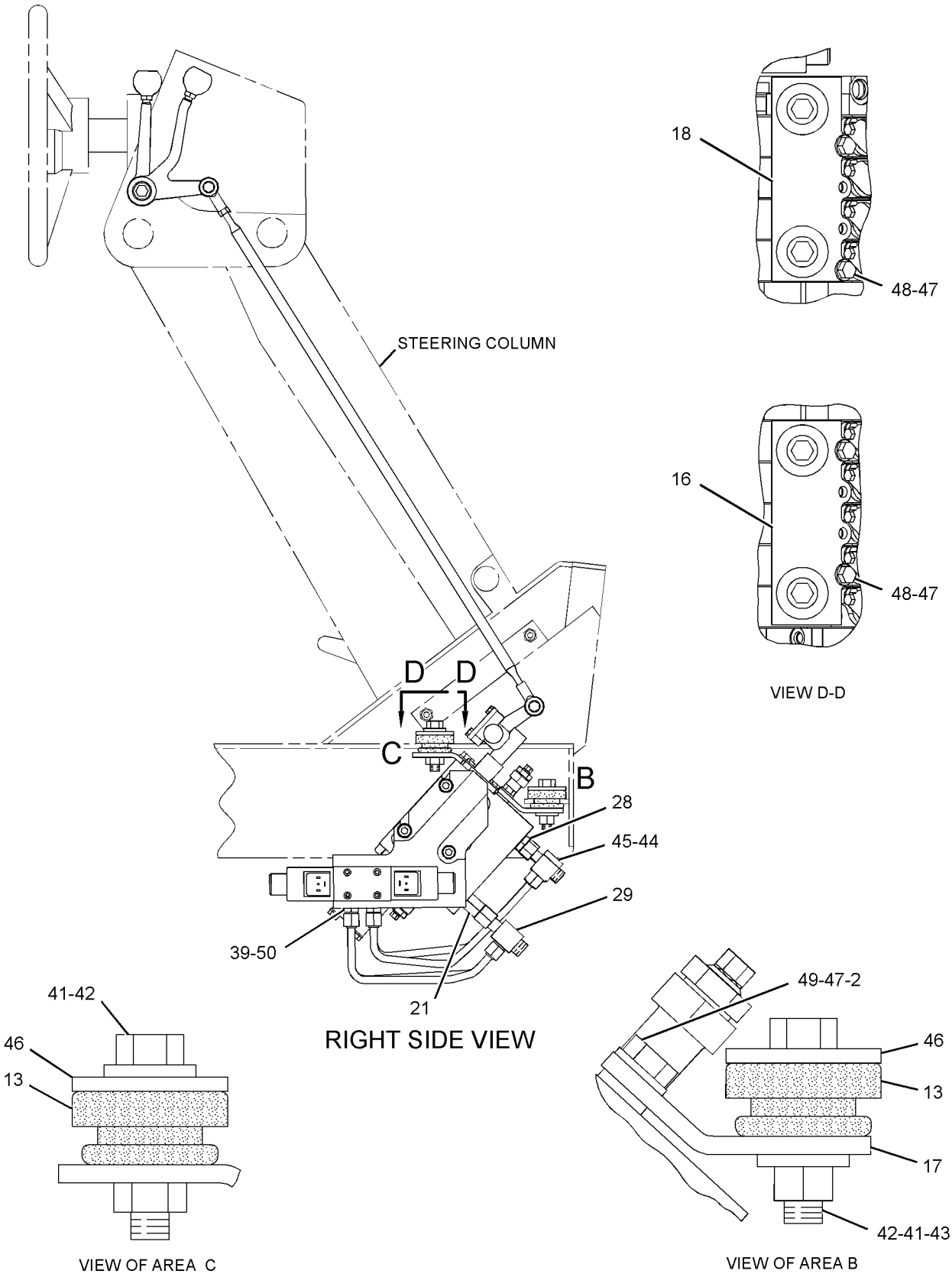


GRAPHIC #1

g01259625

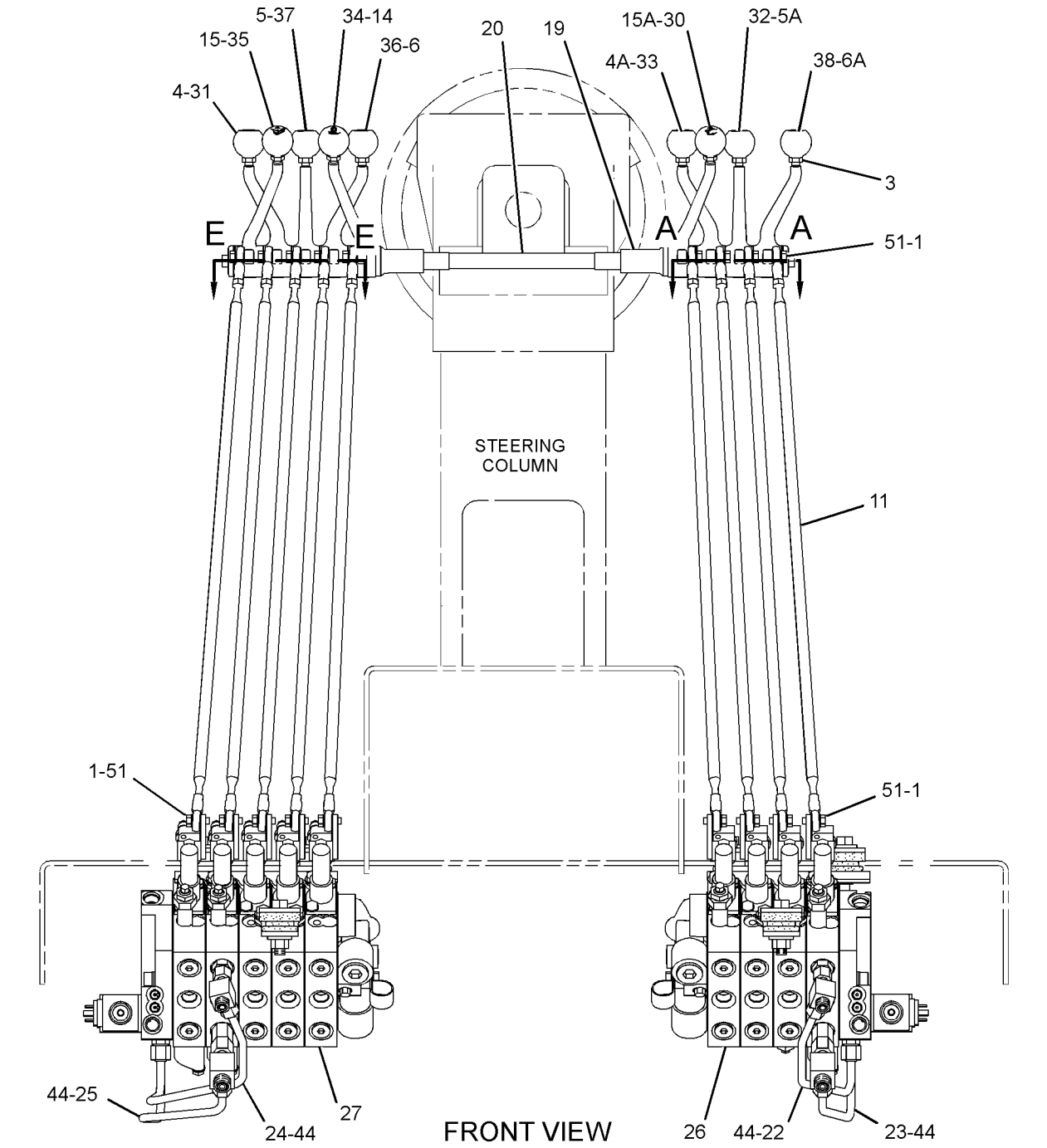


GRAPHIC #2 **<END>** g01259626

# HYDRAULIC SYSTEM

## *250-0426* VALVE & LINKAGE GP—4-BANK, 5-BANK

**S/N: CCA1-UP**

**PART OF 250-0445 CONTROL AR-HYDRAULIC**

**AN ATTACHMENT**

**SMCS-5051, 5063** **i02344364**

| NOTE | REF NO | GRAPHIC REF | PART NUMBER | QTY | PART NAME 1 2 3 4 5 6 (PRODUCT LEVEL) | SEE PAGE |
|---|---|---|---|---|---|---|
| | 1 | 1 | **3F-9556** | 18 | LOCKWASHER | |
| | 2 | 1 | **6B-0933** | 4 | SPACER (10.31X19.05X6.35-MM THK) | |
| | 3 | 1 | **6L-1962** | 9 | NUT-JAM (3/8-24-THD) | |
| | 4 | 1 | **8D-5632** | 1 | LEVER (CIRCLE DRIVE) | |
| | 4A | 1 | **8D-5632** | 1 | LEVER (BLADE LIFT, LH) | |
| | 5 | 1 | **8D-5633** | 1 | LEVER (SIDESHIFT) | |
| | 5A | 1 | **8D-5633** | 1 | LEVER (WHEEL LEAN) | |
| | 6 | 1 | **8D-5634** | 1 | LEVER (BLADE LIFT, RH) | |
| | 6A | 1 | **8D-5634** | 1 | LEVER (CENTERSHIFT) | |
| B | 7 | 1 | **8D-5636** | 4 | SHIM (0.254-MM THK) | |
| B | 8 | 1 | **8D-5637** | 4 | SHIM (0.762-MM THK) | |
| | 9 | 1 | **8D-5640** | 11 | BEARING | |
| | 10 | 1 | **8D-5641** | 9 | BEARING | |
| | 11 | 1 | *8X-4277* | 9 | ROD AS | |
| | | | | | (EACH INCLUDES) | |
| | | 1 | **146-0705** | 1 | ROD | |
| | | 1 | **6V-8186** | 1 | NUT-FULL (5/16-24-THD) | |
| | | 1 | **7H-3641** | 1 | END-ROD (5/16-24-THD) | |
| | | 1 | **8L-8598** | 1 | ROD END (LH) | |
| | 12 | 1 | **8X-5499** | 2 | RETAINER | |
| | 13 | 1 | **9M-1853** | 6 | MOUNTING | |
| | 14 | 1 | **101-2457** | 1 | LEVER (RIPPER) | |
| | 14A | 1 | **101-2457** | 1 | LEVER (ARTICULATION) | |
| | 15 | 1 | **101-2458** | 1 | LEVER (BLADE TIP) | |
| | 16 | 1 | **104-7419** | 1 | PLATE AS (RH) | |
| | | 1 | **1F-0748** | 2 | NUT-WELD (1/2-13-THD) | |
| | 17 | 1 | **104-7429** | 2 | PLATE | |
| | 18 | 1 | **104-7740** | 1 | PLATE AS (LH) | |
| | | 1 | **1F-0748** | 2 | NUT-WELD (1/2-13-THD) | |
| | 19 | 1 | **137-4515** | 2 | BUSHING | |
| | 20 | 1 | **137-4516** | 1 | SHAFT | |
| | 21 | 1 | *164-5608* | 2 | CONNECTOR AS | |
| | | | | | (EACH INCLUDES) | |
| | | 1 | **8T-1687** | 1 | CONNECTOR | |
| | | 1 | **3K-0360** | 1 | SEAL-O-RING | |
| | | 1 | **6V-8398** | 1 | SEAL-O-RING | |
| | 22 | 1 | **244-2585** | 1 | TUBE AS | |
| | 23 | 1 | **244-2589** | 1 | TUBE AS | |
| | 24 | 1 | **244-2592** | 1 | TUBE AS | |
| | 25 | 1 | **244-2596** | 1 | TUBE AS | |
| Y | 26 | 1 | **250-0544** | 1 | VALVE GP-BANK 4 (RH) | 913 |
| Y | 27 | 1 | **250-0550** | 1 | VALVE GP-BANK 5 (LH) | 929 |
| | 28 | 1 | *148-8318* | 2 | CONNECTOR AS | |
| | | | | | (EACH INCLUDES) | |
| | | 1 | **6V-8634** | 1 | CONNECTOR | |
| | | 1 | **3K-0360** | 1 | SEAL-O-RING | |
| | | 1 | **6V-8397** | 1 | SEAL-O-RING | |
| | 29 | 1 | **153-1818** | 1 | ELBOW | |
| | 30 | 1 | *206-5123* | 2 | TEE AS | |
| | | | | | (EACH INCLUDES) | |
| | | 1 | **206-5122** | 1 | TEE | |
| | | 1 | **6V-8397** | 1 | SEAL-O-RING | |
| | | 1 | **6V-8398** | 1 | SEAL-O-RING | |
| | 31 | 1 | **2G-6740** | 1 | KNOB-RIPPER | |
| | 32 | 1 | **2G-6747** | 1 | KNOB-BLADE TIP | |

## *250-0426* VALVE & LINKAGE GP *(contd.)* i02344364

| NOTE | REF NO | GRAPHIC REF | PART NUMBER | QTY | PART NAME 1 2 3 4 5 6 (PRODUCT LEVEL) | SEE PAGE |
|---|---|---|---|---|---|---|
| | 33 | 1 | **2G-6748** | 1 | KNOB-BLADE LIFT (RH) | |
| | 34 | 1 | **2G-6749** | 1 | KNOB-SIDESHIFT | |
| | 35 | 1 | **2G-6751** | 1 | KNOB-CIRCLE DRIVE | |
| | 36 | 1 | **2G-6752** | 1 | KNOB-ARTICULATION | |
| | 37 | 1 | **2G-6755** | 1 | KNOB-CENTERSHIFT | |
| | 38 | 1 | **2G-6756** | 1 | KNOB-WHEEL LEAN | |
| | 39 | 1 | **2G-6757** | 1 | KNOB-BLADE LIFT (LH) | |
| | 40 | 1 | **3J-1907** | 4 | SEAL-O-RING | |
| | 41 | 1 | **5P-1075** | 2 | WASHER-HARD (10.2X22.5X3-MM THK) | |
| | 42 | 1 | **5P-1076** | 6 | WASHER-HARD (13.5X30X4-MM THK) | |
| | 43 | 1 | **5P-2424** | 6 | BOLT (1/2-13X2.25-IN) | |
| | 44 | 1 | **6V-8188** | 2 | NUT (1/2-13-THD) | |
| | 45 | 1 | **6V-8397** | 8 | SEAL-O-RING | |
| | 46 | 1 | **6V-9836** | 2 | TEE-SWIVEL | |
| | 47 | 1 | **8F-6437** | 6 | WASHER (13.5X50.8X4.76-MM THK) | |
| | 48 | 1 | **8T-4121** | 8 | WASHER-HARD (11X21X2.5-MM THK) | |
| M | 49 | 1 | **8T-4136** | 4 | BOLT (M10X1.5X25-MM) | |
| M | 50 | 1 | **8T-4195** | 4 | BOLT (M10X1.5X30-MM) | |
| | 51 | 1 | **8T-9041** | 3 | CONNECTOR | |
| | 52 | 1 | **8T-9043** | 18 | BOLT (5/16-18X0.875-IN) | |
| | 53 | 1 | **9B-7237** | 2 | BOLT (3/8-16X1.25-IN) | |

B-USE AS REQUIRED
M-METRIC PART
Y-SEPARATE ILLUSTRATION

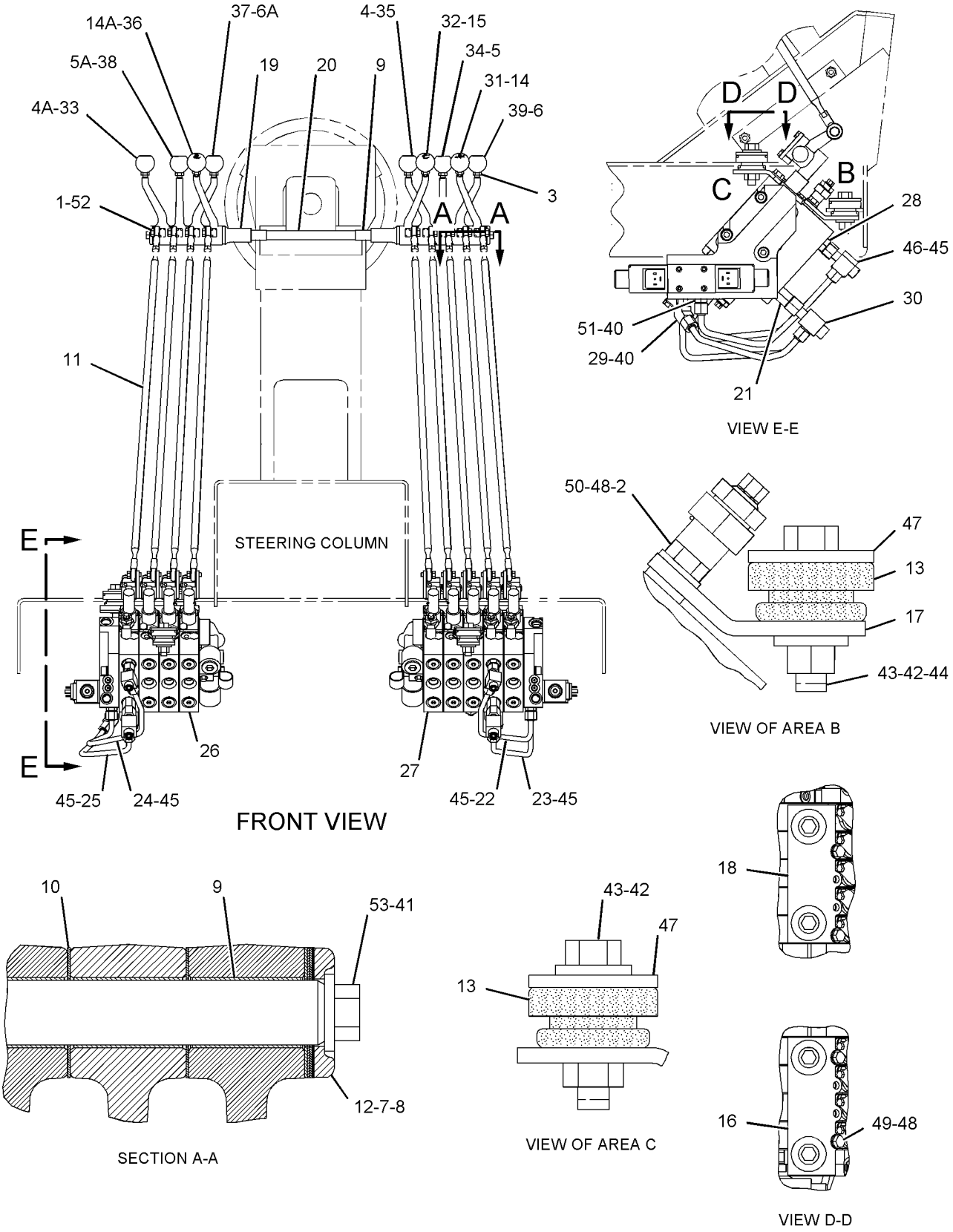


GRAPHIC #1 **<END>** g01141809

# HYDRAULIC SYSTEM

## *250-0427* VALVE & LINKAGE GP—4-BANK, RH; 5-BANK, LH

**S/N: CCA1-UP**

**PART OF 250-0446 CONTROL AR-HYDRAULIC**

**AN ATTACHMENT**

**SMCS-5051, 5063** **i02365202**

| NOTE | REF NO | GRAPHIC REF | PART NUMBER | QTY | PART NAME 1 2 3 4 5 6 (PRODUCT LEVEL) | SEE PAGE |
|---|---|---|---|---|---|---|
| | 1 | 1 | **3F-9556** | 18 | LOCKWASHER | |
| | 2 | 1 | **6B-0933** | 4 | SPACER (10.31X19.05X6.35-MM THK) | |
| | 3 | 1 | **6L-1962** | 9 | NUT-JAM (3/8-24-THD) | |
| | 4 | 1 | **8D-5632** | 1 | LEVER (CIRCLE DRIVE) | |
| | 4A | 1 | **8D-5632** | 1 | LEVER (BLADE LIFT, RH) | |
| | 5 | 1 | **8D-5633** | 1 | LEVER (SIDESHIFT) | |
| | 5A | 1 | **8D-5633** | 1 | LEVER (WHEEL LEAN) | |
| | 6 | 1 | **8D-5634** | 1 | LEVER (BLADE LIFT, LH) | |
| | 6A | 1 | **8D-5634** | 1 | LEVER (CENTERSHIFT) | |
| B | 7 | 1 | **8D-5636** | 4 | SHIM (0.254-MM THK) | |
| B | 8 | 1 | **8D-5637** | 4 | SHIM (0.762-MM THK) | |
| | 9 | 1 | **8D-5640** | 11 | BEARING | |
| | 10 | 1 | **8D-5641** | 9 | BEARING | |
| | 11 | 1 | *8X-4277* | 9 | ROD AS | |
| | | | | | (EACH INCLUDES) | |
| | | 1 | **146-0705** | 1 | ROD | |
| | | 1 | **8L-8598** | 1 | ROD END (LH) | |
| | | 1 | **6V-8186** | 1 | NUT-FULL (5/16-24-THD) | |
| | | 1 | **7H-3641** | 1 | END-ROD (5/16-24-THD) | |
| | 12 | 1 | **8X-5499** | 2 | RETAINER | |
| | 13 | 1 | **9M-1853** | 6 | MOUNTING | |
| | 14 | 1 | **101-2457** | 1 | LEVER (RIPPER) | |
| | 14A | 1 | **101-2457** | 1 | LEVER (ARTICULATION) | |
| | 15 | 1 | **101-2458** | 1 | LEVER (BLADE TIP) | |
| | 16 | 1 | **104-7419** | 1 | PLATE AS (RH) | |
| | | 1 | **1F-0748** | 2 | NUT-WELD (1/2-13-THD) | |
| | 17 | 1 | **104-7429** | 2 | PLATE | |
| | 18 | 1 | **104-7740** | 1 | PLATE AS (LH) | |
| | | 1 | **1F-0748** | 2 | NUT-WELD (1/2-13-THD) | |
| | 19 | 1 | **137-4515** | 2 | BUSHING | |
| | 20 | 1 | **137-4516** | 1 | SHAFT | |
| | 21 | 1 | *164-5608* | 2 | CONNECTOR AS | |
| | | | | | (EACH INCLUDES) | |
| | | 1 | **8T-1687** | 1 | CONNECTOR | |
| | | 1 | **6V-8398** | 1 | SEAL-O-RING | |
| | | 1 | **3K-0360** | 1 | SEAL-O-RING | |
| | 22 | 1 | **244-2585** | 1 | TUBE AS | |
| | 23 | 1 | **244-2589** | 1 | TUBE AS | |
| | 24 | 1 | **244-2592** | 1 | TUBE AS | |
| | 25 | 1 | **244-2596** | 1 | TUBE AS | |
| Y | 26 | 1 | **250-0546** | 1 | VALVE GP-BANK 4 (RH) | 917 |
| Y | 27 | 1 | **250-0551** | 1 | VALVE GP-BANK 5 (LH) | 931 |
| | 28 | 1 | *148-8318* | 2 | CONNECTOR AS | |
| | | | | | (EACH INCLUDES) | |
| | | 1 | **6V-8634** | 1 | CONNECTOR | |
| | | 1 | **3K-0360** | 1 | SEAL-O-RING | |
| | | 1 | **6V-8397** | 1 | SEAL-O-RING | |
| | 29 | 1 | **153-1818** | 1 | ELBOW | |
| | 30 | 1 | *206-5123* | 2 | TEE AS | |
| | | | | | (EACH INCLUDES) | |
| | | 1 | **206-5122** | 1 | TEE | |
| | | 1 | **6V-8398** | 1 | SEAL-O-RING | |
| | | 1 | **6V-8397** | 1 | SEAL-O-RING | |
| | 31 | 1 | **2G-6740** | 1 | KNOB-RIPPER | |
| | 32 | 1 | **2G-6747** | 1 | KNOB-BLADE TIP | |

## *250-0427* **VALVE & LINKAGE GP** *(contd.)* **i02365202**

| NOTE | REF NO | GRAPHIC REF | PART NUMBER | QTY | PART NAME 1 2 3 4 5 6 (PRODUCT LEVEL) | SEE PAGE |
|---|---|---|---|---|---|---|
| | 33 | 1 | **2G-6748** | 1 | KNOB-BLADE LIFT (RH) | |
| | 34 | 1 | **2G-6749** | 1 | KNOB-SIDESHIFT | |
| | 35 | 1 | **2G-6751** | 1 | KNOB-CIRCLE DRIVE | |
| | 36 | 1 | **2G-6752** | 1 | KNOB-ARTICULATION | |
| | 37 | 1 | **2G-6755** | 1 | KNOB-CENTERSHIFT | |
| | 38 | 1 | **2G-6756** | 1 | KNOB-WHEEL LEAN | |
| | 39 | 1 | **2G-6757** | 1 | KNOB-BLADE LIFT (LH) | |
| | 40 | 1 | **3J-1907** | 4 | SEAL-O-RING | |
| | 41 | 1 | **5P-1075** | 2 | WASHER-HARD (10.2X22.5X3-MM THK) | |
| | 42 | 1 | **5P-1076** | 6 | WASHER-HARD (13.5X30X4-MM THK) | |
| | 43 | 1 | **5P-2424** | 6 | BOLT (1/2-13X2.25-IN) | |
| | 44 | 1 | **6V-8188** | 2 | NUT (1/2-13-THD) | |
| | 45 | 1 | **6V-8397** | 8 | SEAL-O-RING | |
| | 46 | 1 | **6V-9836** | 2 | TEE-SWIVEL | |
| | 47 | 1 | **8F-6437** | 6 | WASHER (13.5X50.8X4.76-MM THK) | |
| | 48 | 1 | **8T-4121** | 8 | WASHER-HARD (11X21X2.5-MM THK) | |
| M | 49 | 1 | **8T-4136** | 4 | BOLT (M10X1.5X25-MM) | |
| M | 50 | 1 | **8T-4195** | 4 | BOLT (M10X1.5X30-MM) | |
| | 51 | 1 | **8T-9041** | 3 | CONNECTOR | |
| | 52 | 1 | **8T-9043** | 18 | BOLT (5/16-18X0.875-IN) | |
| | 53 | 1 | **9B-7237** | 2 | BOLT (3/8-16X1.25-IN) | |

B-USE AS REQUIRED
M-METRIC PART
Y-SEPARATE ILLUSTRATION

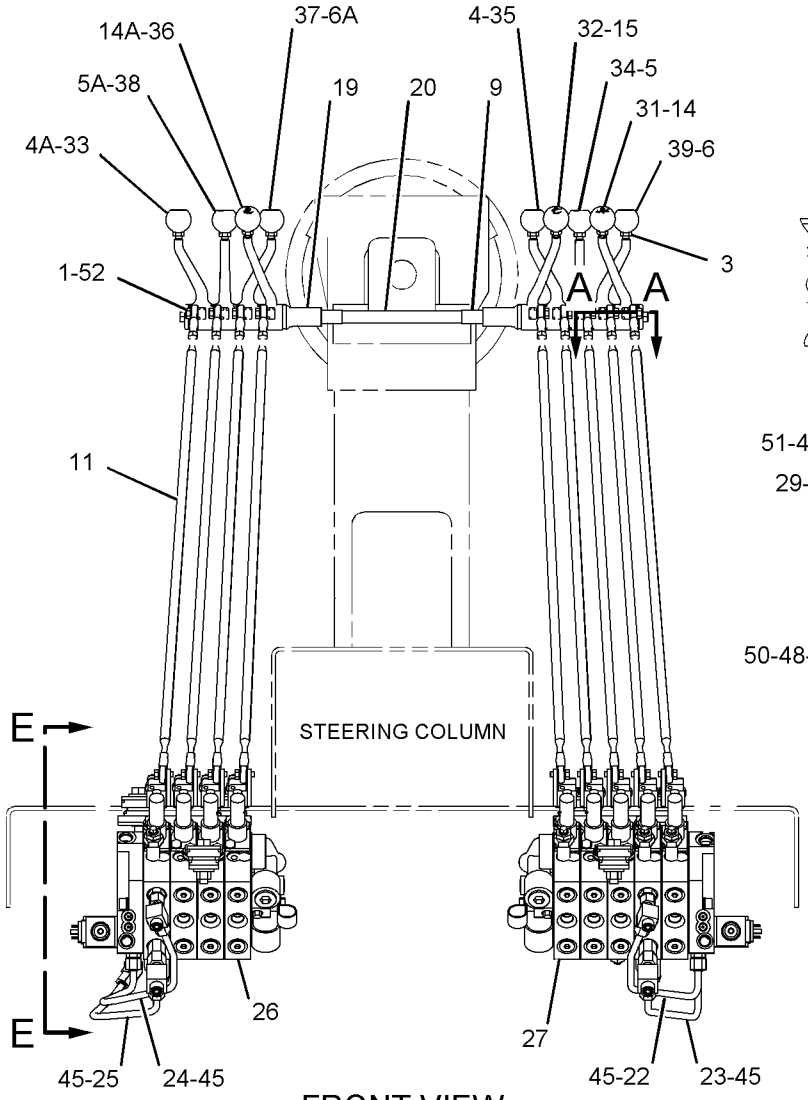


FRONT VIEW

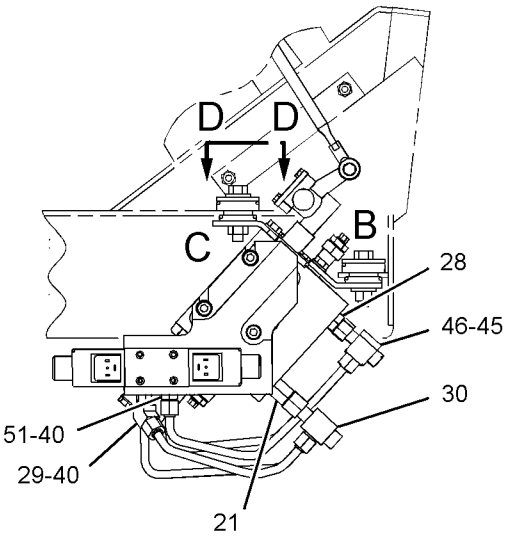


VIEW E-E

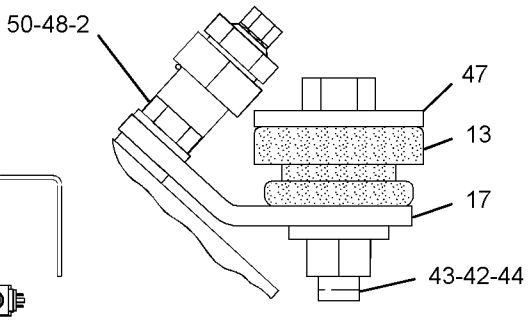


VIEW OF AREA B

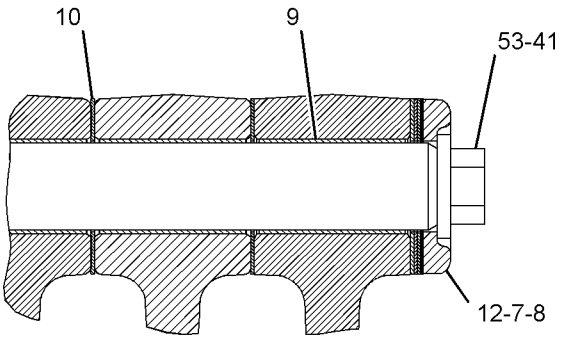


SECTION A-A

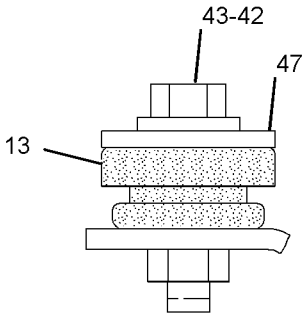


VIEW OF AREA C

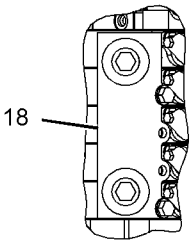


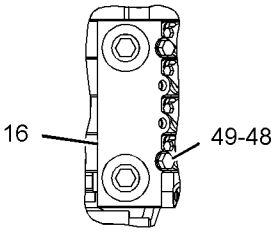


VIEW D-D

GRAPHIC #1 **<END>** g01141818

# HYDRAULIC SYSTEM

## *250-0428* VALVE & LINKAGE GP—5-BANK, RH, LH

**S/N: CCA1-UP**

**AN ATTACHMENT**

**SMCS-5051, 5063** **i02344336**

| NOTE | REF NO | GRAPHIC REF | PART NUMBER | QTY | PART NAME 1 2 3 4 5 6 (PRODUCT LEVEL) | SEE PAGE |
|---|---|---|---|---|---|---|
| | 1 | 1 | **3F-9556** | 20 | LOCKWASHER | |
| | 2 | 2 | **6B-0933** | 4 | SPACER (10.31X19.05X6.35-MM THK) | |
| | 3 | 1 | **6L-1962** | 10 | NUT-JAM (3/8-24-THD) | |
| | 4 | 1 | **8D-5632** | 1 | LEVER (CIRCLE DRIVE) | |
| | 4A | 1 | **8D-5632** | 1 | LEVER (BLADE LIFT, LH) | |
| | 5 | 1 | **8D-5633** | 1 | LEVER (SIDESHIFT) | |
| | 5A | 1 | **8D-5633** | 1 | LEVER (WHEEL LEAN) | |
| | 6 | 1 | **8D-5634** | 1 | LEVER (BLADE LIFT, RH) | |
| | 6A | 1 | **8D-5634** | 1 | LEVER (CENTERSHIFT) | |
| B | 7 | 2 | **8D-5636** | 4 | SHIM (0.254-MM THK) | |
| B | 8 | 2 | **8D-5637** | 4 | SHIM (0.762-MM THK) | |
| | 9 | 1,2 | **8D-5640** | 12 | BEARING | |
| | 10 | 2 | **8D-5641** | 10 | BEARING | |
| | 11 | 2 | **8W-0456** | 1 | SHAFT | |
| | 12 | 1 | *8X-4277* | 10 | ROD AS | |
| | | | | | (EACH INCLUDES) | |
| | | 1 | **146-0705** | 1 | ROD | |
| | | 1 | **6V-8186** | 1 | NUT-FULL (5/16-24-THD) | |
| | | 1 | **7H-3641** | 1 | END-ROD (5/16-24-THD) | |
| | | 1 | **8L-8598** | 1 | ROD END (LH) | |
| | 13 | 2 | **8X-5499** | 2 | RETAINER | |
| | 14 | 2 | **9M-1853** | 6 | MOUNTING | |
| | 15 | 1 | **101-2457** | 1 | LEVER (SCARIFIER) | |
| | 15A | 1 | **101-2457** | 1 | LEVER (ARTICULATION) | |
| | 16 | 1 | **101-2458** | 1 | LEVER (BLADE TIP) | |
| | 16A | 1 | **101-2458** | 1 | LEVER (PLOW, DOZER) | |
| | 17 | 2 | **104-7419** | 1 | PLATE AS (RH) | |
| | | 2 | **1F-0748** | 2 | NUT-WELD (1/2-13-THD) | |
| | 18 | 2 | **104-7429** | 2 | PLATE | |
| | 19 | 2 | **104-7740** | 1 | PLATE AS (LH) | |
| | | 2 | **1F-0748** | 2 | NUT-WELD (1/2-13-THD) | |
| | 20 | 1 | **137-4515** | 2 | BUSHING | |
| | 21 | 1 | **137-4516** | 1 | SHAFT | |
| | 22 | 2 | *164-5608* | 2 | CONNECTOR AS | |
| | | | | | (EACH INCLUDES) | |
| | | 2 | **8T-1687** | 1 | CONNECTOR | |
| | | 2 | **3K-0360** | 1 | SEAL-O-RING | |
| | | 2 | **6V-8398** | 1 | SEAL-O-RING | |
| | 23 | 1 | **244-2585** | 1 | TUBE AS | |
| | 24 | 1 | **244-2589** | 1 | TUBE AS | |
| | 25 | 1 | **244-2593** | 1 | TUBE AS | |
| | 26 | 1 | **244-2597** | 1 | TUBE AS | |
| Y | 27 | 1 | **250-0547** | 1 | VALVE GP-BANK 5 (LH) | 924 |
| Y | 28 | 1 | **250-0549** | 1 | VALVE GP-BANK 5 (RH) | 927 |
| | 29 | 2 | *148-8318* | 2 | CONNECTOR AS | |
| | | | | | (EACH INCLUDES) | |
| | | 2 | **6V-8634** | 1 | CONNECTOR | |
| | | 2 | **3K-0360** | 1 | SEAL-O-RING | |
| | | 2 | **6V-8397** | 1 | SEAL-O-RING | |
| | 30 | 2 | *206-5123* | 2 | TEE AS | |
| | | | | | (EACH INCLUDES) | |
| | | 2 | **206-5122** | 1 | TEE | |
| | | 2 | **6V-8397** | 1 | SEAL-O-RING | |
| | | 2 | **6V-8398** | 1 | SEAL-O-RING | |
| | 31 | 1 | **2G-6747** | 1 | KNOB-BLADE TIP | |
| | 32 | 1 | **2G-6748** | 1 | KNOB-BLADE LIFT (RH) | |

## *250-0428* **VALVE & LINKAGE GP** *(contd.)* **i02344336**

| NOTE | REF NO | GRAPHIC REF | PART NUMBER | QTY | PART NAME 1 2 3 4 5 6 (PRODUCT LEVEL) | SEE PAGE |
|---|---|---|---|---|---|---|
| | 33 | 1 | **2G-6749** | 1 | KNOB-SIDESHIFT | |
| | 34 | 1 | **2G-6751** | 1 | KNOB-CIRCLE DRIVE | |
| | 35 | 1 | **2G-6752** | 1 | KNOB-ARTICULATION | |
| | 36 | 1 | **2G-6753** | 1 | KNOB-SCARIFIER | |
| | 37 | 1 | **2G-6754** | 1 | KNOB (DOZER LIFT, PLOW) | |
| | 38 | 1 | **2G-6755** | 1 | KNOB-CENTERSHIFT | |
| | 39 | 1 | **2G-6756** | 1 | KNOB-WHEEL LEAN | |
| | 40 | 1 | **2G-6757** | 1 | KNOB-BLADE LIFT (LH) | |
| | 41 | 2 | **3J-1907** | 4 | SEAL-O-RING | |
| | 42 | 2 | **4L-6459** | 1 | BOLT (3/8-16X2.5-IN) | |
| | 43 | 2 | **5P-1075** | 2 | WASHER-HARD (10.2X22.5X3-MM THK) | |
| | 44 | 2 | **5P-1076** | 6 | WASHER-HARD (13.5X30X4-MM THK) | |
| | 45 | 2 | **5P-2424** | 6 | BOLT (1/2-13X2.25-IN) | |
| | 46 | 2 | **6V-8188** | 2 | NUT (1/2-13-THD) | |
| | 47 | 1,2 | **6V-8397** | 8 | SEAL-O-RING | |
| | 48 | 2 | **6V-9836** | 2 | TEE-SWIVEL | |
| | 49 | 2 | **8F-6437** | 6 | WASHER (13.5X50.8X4.76-MM THK) | |
| | 50 | 2 | **8T-4121** | 8 | WASHER-HARD (11X21X2.5-MM THK) | |
| M | 51 | 2 | **8T-4136** | 4 | BOLT (M10X1.5X25-MM) | |
| M | 52 | 2 | **8T-4195** | 4 | BOLT (M10X1.5X30-MM) | |
| | 53 | 2 | **8T-9041** | 4 | CONNECTOR | |
| | 54 | 1 | **8T-9043** | 20 | BOLT (5/16-18X0.875-IN) | |
| | 55 | 2 | **9B-7237** | 1 | BOLT (3/8-16X1.25-IN) | |

B-USE AS REQUIRED
M-METRIC PART
Y-SEPARATE ILLUSTRATION

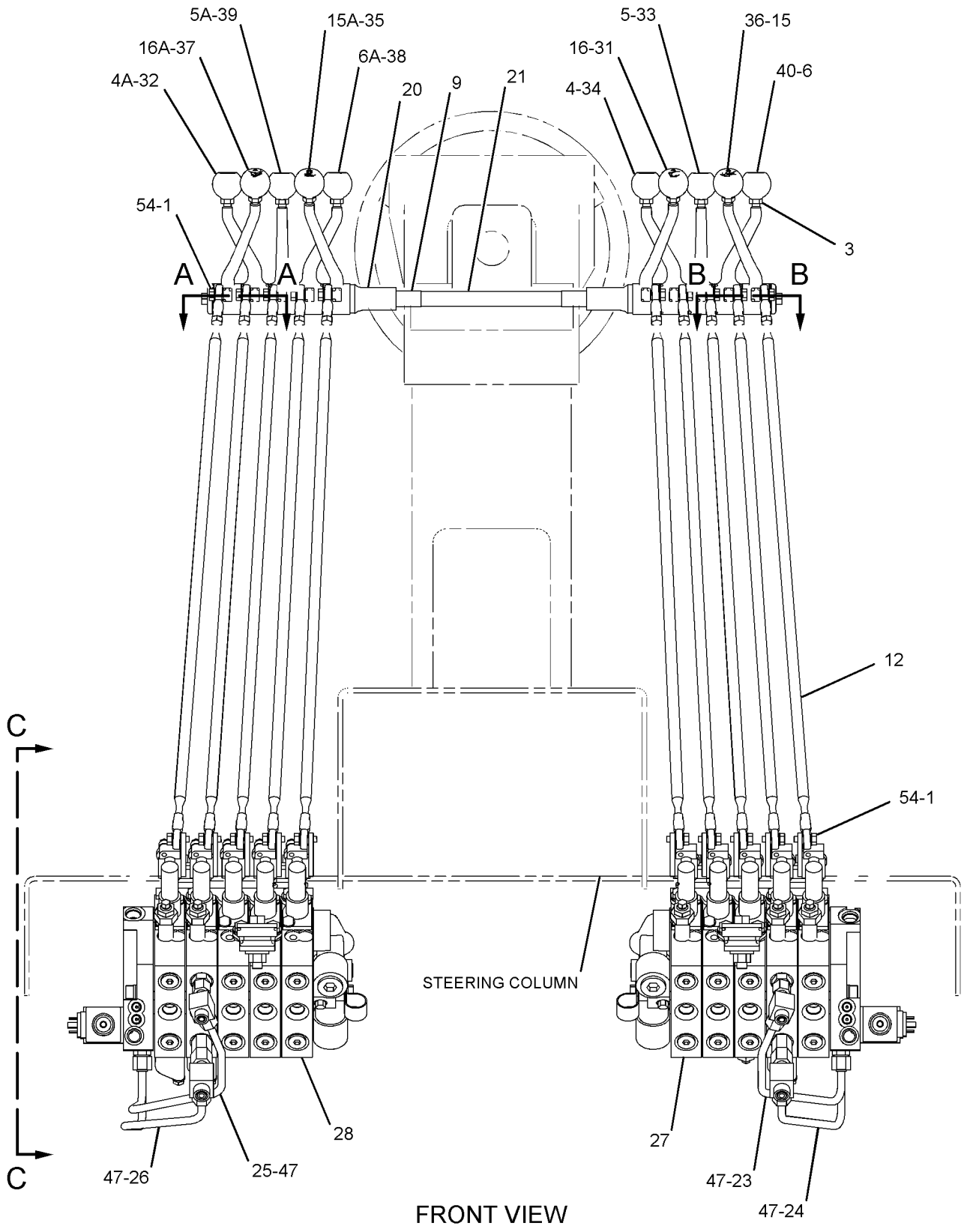


FRONT VIEW

GRAPHIC #1 g01137805

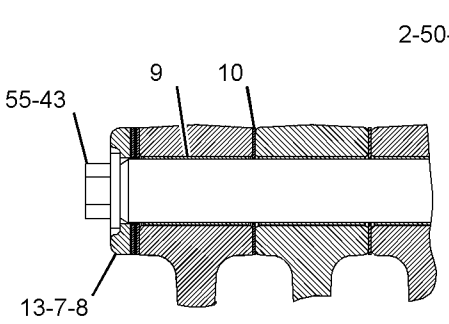


VIEW A-A

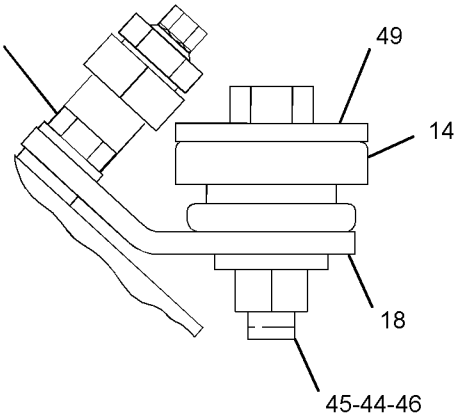


VIEW OF AREA D

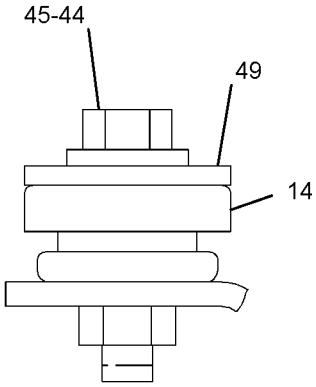


VIEW OF AREA E

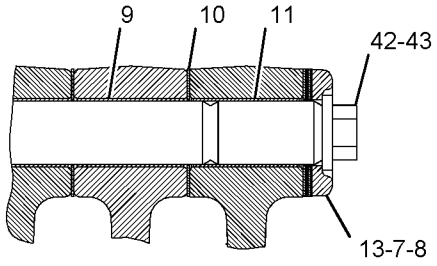


VIEW B-B

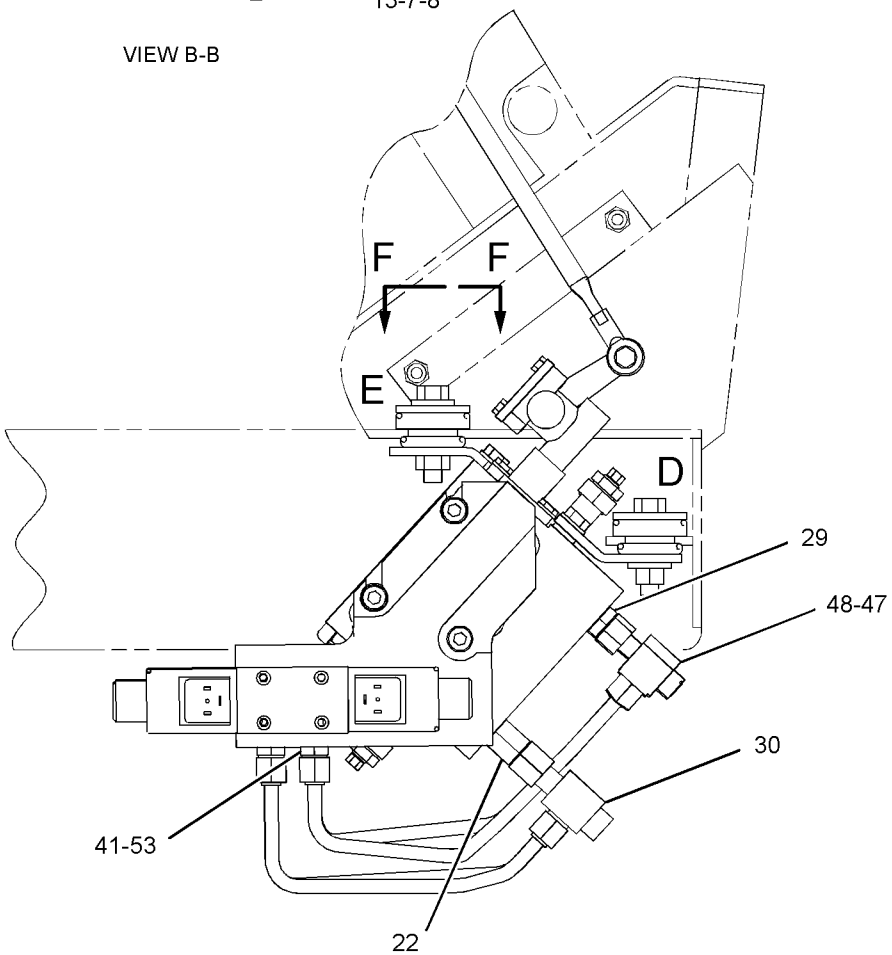


VIEW C-C

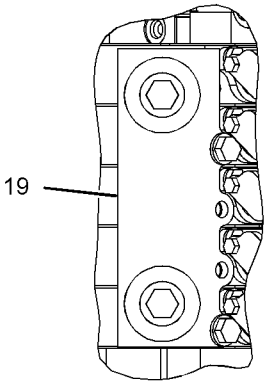


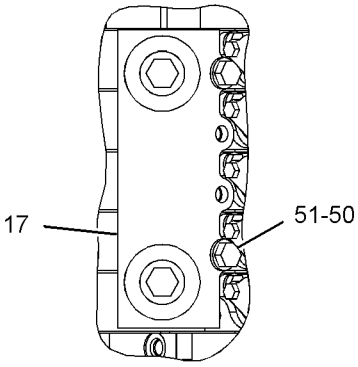


VIEW F-F

GRAPHIC #2 **<END>** g01137806

# HYDRAULIC SYSTEM

## *250-0429* VALVE & LINKAGE GP—6-BANK, RH; 4-BANK, LH

**S/N: CCA1-UP**

**AN ATTACHMENT**

**SMCS-5051, 5063** **i02344339**

| NOTE | REF NO | GRAPHIC REF | PART NUMBER | QTY | PART NAME 1 2 3 4 5 6 (PRODUCT LEVEL) | SEE PAGE |
|---|---|---|---|---|---|---|
| | 1 | 1 | **3F-9556** | 20 | LOCKWASHER | |
| | 2 | 2 | **6B-0933** | 4 | SPACER (10.31X19.05X6.35-MM THK) | |
| | 3 | 1 | **6L-1962** | 10 | NUT-JAM (3/8-24-THD) | |
| | 4 | 1 | **8D-5632** | 1 | LEVER (CIRCLE DRIVE) | |
| | 4A | 1 | **8D-5632** | 1 | LEVER (BLADE LIFT, RH) | |
| | 5 | 1 | **8D-5633** | 1 | LEVER (SIDESHIFT) | |
| | 5A | 1 | **8D-5633** | 1 | LEVER (WHEEL LEAN) | |
| | 6 | 1 | **8D-5634** | 1 | LEVER (BLADE LIFT, LH) | |
| | 6A | 1 | **8D-5634** | 1 | LEVER (CENTERSHIFT) | |
| B | 7 | 2 | **8D-5636** | 4 | SHIM (0.254-MM THK) | |
| B | 8 | 2 | **8D-5637** | 4 | SHIM (0.762-MM THK) | |
| | 9 | 1,2 | **8D-5640** | 12 | BEARING | |
| | 10 | 2 | **8D-5641** | 10 | BEARING | |
| | 11 | 2 | **8W-0456** | 1 | SHAFT | |
| | 12 | 1 | *8X-4277* | 10 | ROD AS | |
| | | | | | (EACH INCLUDES) | |
| | | 1 | **146-0705** | 1 | ROD | |
| | | 1 | **6V-8186** | 1 | NUT-FULL (5/16-24-THD) | |
| | | 1 | **7H-3641** | 1 | END-ROD (5/16-24-THD) | |
| | | 1 | **8L-8598** | 1 | ROD END (LH) | |
| | 13 | 2 | **8X-5499** | 2 | RETAINER | |
| | 14 | 2 | **9M-1853** | 6 | MOUNTING | |
| | 15 | 1 | **101-2457** | 1 | LEVER (ARTICULATION) | |
| | 16 | 1 | **101-2458** | 1 | LEVER (BLADE TIP) | |
| | 16A | 1 | **101-2458** | 1 | LEVER (PLOW, BULLDOZER LIFT) | |
| | 17 | 1 | **103-1597** | 1 | LEVER (PLOW, BULLDOZER ANGLE) | |
| | 18 | 2 | **104-7419** | 1 | PLATE AS (RH) | |
| | | 2 | **1F-0748** | 2 | NUT-WELD (1/2-13-THD) | |
| | 19 | 2 | **104-7429** | 2 | PLATE | |
| | 20 | 2 | **104-7740** | 1 | PLATE AS (LH) | |
| | | 2 | **1F-0748** | 2 | NUT-WELD (1/2-13-THD) | |
| | 21 | 1 | **137-4515** | 2 | BUSHING | |
| | 22 | 1 | **137-4516** | 1 | SHAFT | |
| | 23 | 2 | *164-5608* | 2 | CONNECTOR AS | |
| | | | | | (EACH INCLUDES) | |
| | | 2 | **8T-1687** | 1 | CONNECTOR | |
| | | 2 | **3K-0360** | 1 | SEAL-O-RING | |
| | | 2 | **6V-8398** | 1 | SEAL-O-RING | |
| | 24 | 1 | **244-2584** | 1 | TUBE AS | |
| | 25 | 1 | **244-2588** | 1 | TUBE AS | |
| | 26 | 1 | **244-2594** | 1 | TUBE AS | |
| | 27 | 1 | **244-2598** | 1 | TUBE AS | |
| Y | 28 | 1 | **250-0545** | 1 | VALVE GP-BANK 4 (LH) | 915 |
| Y | 29 | 1 | **250-0552** | 1 | VALVE GP-BANK 6 (RH) | 940 |
| | 30 | 1 | **117-0472** | 1 | KNOB (PLOW, BULLDOZER ANGLE) | |
| | 31 | 2 | *148-8318* | 2 | CONNECTOR AS | |
| | | | | | (EACH INCLUDES) | |
| | | 2 | **6V-8634** | 1 | CONNECTOR | |
| | | 2 | **3K-0360** | 1 | SEAL-O-RING | |
| | | 2 | **6V-8397** | 1 | SEAL-O-RING | |
| | 32 | 2 | *206-5123* | 2 | TEE AS | |
| | | | | | (EACH INCLUDES) | |
| | | 2 | **206-5122** | 2 | TEE | |
| | | 2 | **6V-8397** | 1 | SEAL-O-RING | |
| | | 2 | **6V-8398** | 1 | SEAL-O-RING | |
| | 33 | 1 | **2G-6747** | 1 | KNOB-BLADE TIP | |

## *250-0429* VALVE & LINKAGE GP *(contd.)* i02344339

| NOTE | REF NO | GRAPHIC REF | PART NUMBER | QTY | PART NAME 1 2 3 4 5 6 (PRODUCT LEVEL) | SEE PAGE |
|---|---|---|---|---|---|---|
| | 34 | 1 | **2G-6748** | 1 | KNOB-BLADE LIFT (RH) | |
| | 35 | 1 | **2G-6749** | 1 | KNOB-SIDESHIFT | |
| | 36 | 1 | **2G-6751** | 1 | KNOB-CIRCLE DRIVE | |
| | 37 | 1 | **2G-6752** | 1 | KNOB-ARTICULATION | |
| | 38 | 1 | **2G-6754** | 1 | KNOB (DOZER LIFT, PLOW) | |
| | 39 | 1 | **2G-6755** | 1 | KNOB-CENTERSHIFT | |
| | 40 | 1 | **2G-6756** | 1 | KNOB-WHEEL LEAN | |
| | 41 | 1 | **2G-6757** | 1 | KNOB-BLADE LIFT (LH) | |
| | 42 | 2 | **3J-1907** | 4 | SEAL-O-RING | |
| | 43 | 2 | **4L-6459** | 1 | BOLT (3/8-16X2.5-IN) | |
| | 44 | 2 | **5P-1075** | 2 | WASHER-HARD (10.2X22.5X3-MM THK) | |
| | 45 | 2 | **5P-1076** | 6 | WASHER-HARD (13.5X30X4-MM THK) | |
| | 46 | 2 | **5P-2424** | 6 | BOLT (1/2-13X2.25-IN) | |
| | 47 | 2 | **6V-8188** | 2 | NUT (1/2-13-THD) | |
| | 48 | 1,2 | **6V-8397** | 8 | SEAL-O-RING | |
| | 49 | 2 | **6V-9836** | 2 | TEE-SWIVEL | |
| | 50 | 2 | **8F-6437** | 6 | WASHER (13.5X50.8X4.76-MM THK) | |
| | 51 | 2 | **8T-4121** | 8 | WASHER-HARD (11X21X2.5-MM THK) | |
| M | 52 | 2 | **8T-4136** | 4 | BOLT (M10X1.5X25-MM) | |
| M | 53 | 2 | **8T-4195** | 4 | BOLT (M10X1.5X30-MM) | |
| | 54 | 2 | **8T-9041** | 4 | CONNECTOR | |
| | 55 | 1 | **8T-9043** | 20 | BOLT (5/16-18X0.875-IN) | |
| | 56 | 2 | **9B-7237** | 1 | BOLT (3/8-16X1.25-IN) | |

B-USE AS REQUIRED
M-METRIC PART
Y-SEPARATE ILLUSTRATION

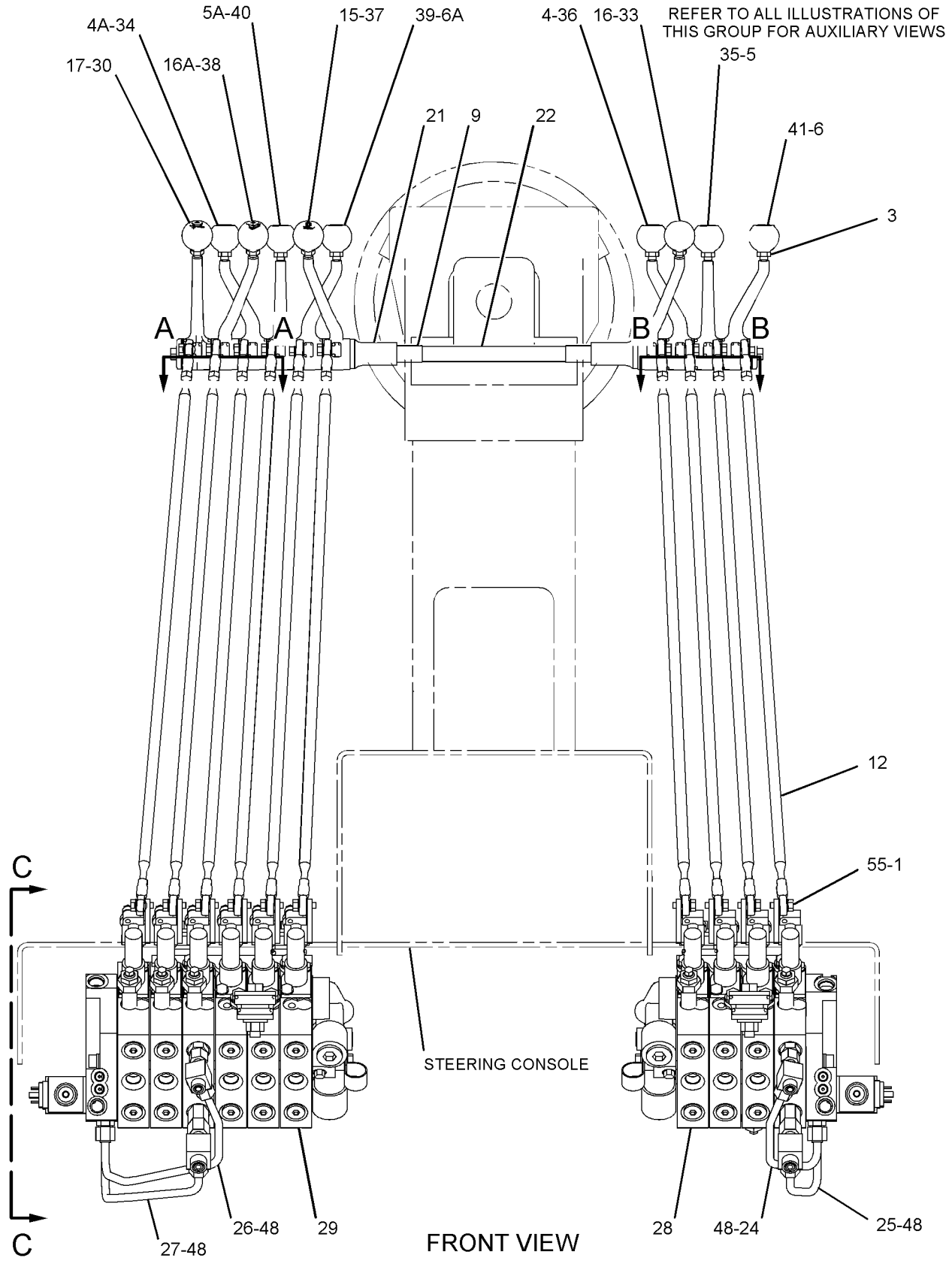


GRAPHIC #1

g01137830

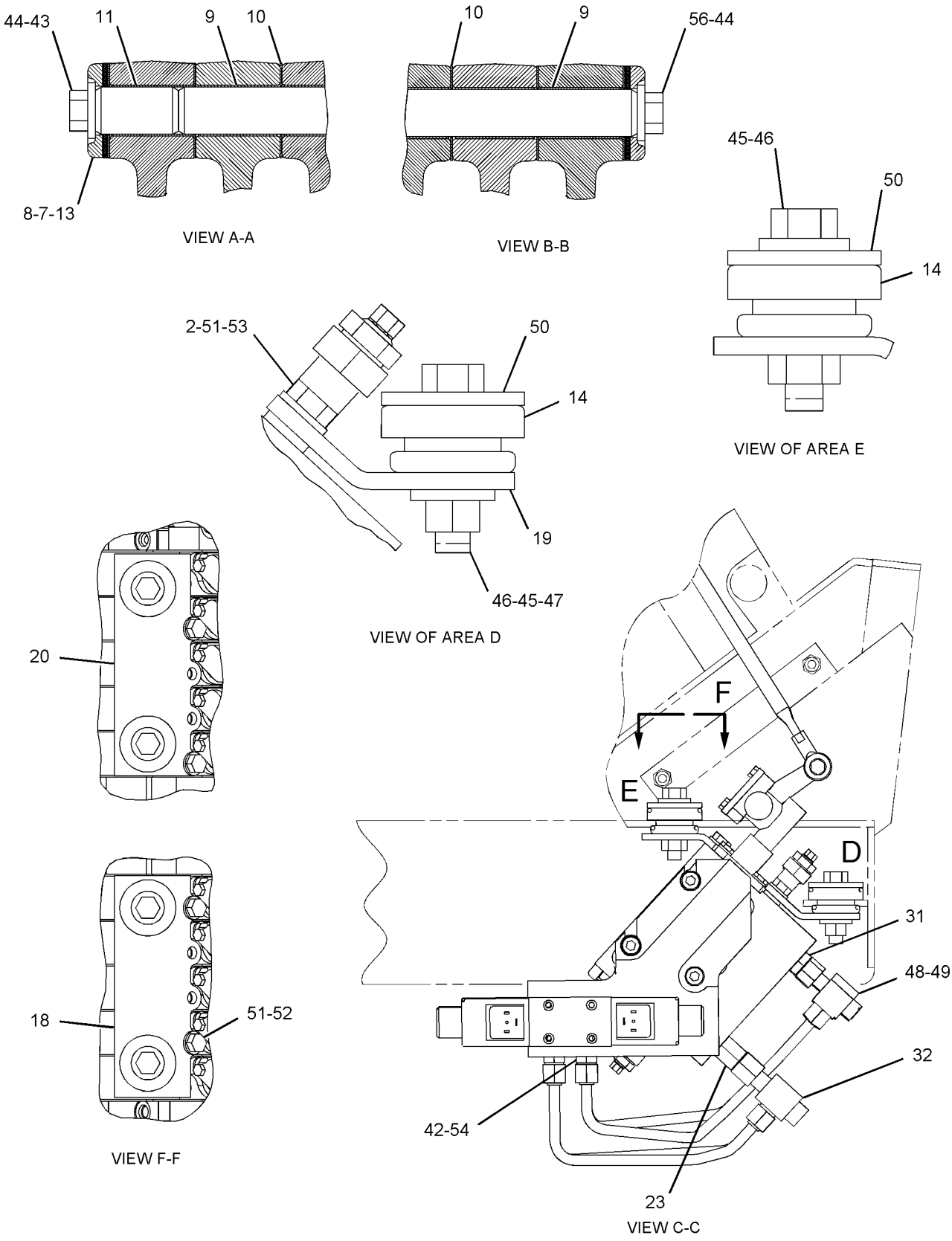


GRAPHIC #2 **<END>** g01137831

# HYDRAULIC SYSTEM

## *250-0430* VALVE & LINKAGE GP—5-BANK, RH, LH

**S/N: CCA1-UP**
**PART OF 250-0447 CONTROL AR-HYDRAULIC**
**AN ATTACHMENT**

**SMCS-5051, 5063** **i02369242**

| NOTE | REF NO | GRAPHIC REF | PART NUMBER | QTY | PART NAME 1 2 3 4 5 6 (PRODUCT LEVEL) | SEE PAGE |
|---|---|---|---|---|---|---|
| | 1 | 1 | **3F-9556** | 20 | LOCKWASHER | |
| | 2 | 2 | **6B-0933** | 4 | SPACER (10.31X19.05X6.35-MM THK) | |
| | 3 | 1 | **6L-1962** | 10 | NUT-JAM (3/8-24-THD) | |
| | 4 | 1 | **8D-5632** | 1 | LEVER (CIRCLE DRIVE) | |
| | 4A | 1 | **8D-5632** | 1 | LEVER (BLADE LIFT, LH) | |
| | 5 | 1 | **8D-5633** | 1 | LEVER (SIDESHIFT) | |
| | 5A | 1 | **8D-5633** | 1 | LEVER (WHEEL LEAN) | |
| | 6 | 1 | **8D-5634** | 1 | LEVER (BLADE LIFT, RH) | |
| | 6A | 1 | **8D-5634** | 1 | LEVER (CENTERSHIFT) | |
| B | 7 | 1,2 | **8D-5636** | 4 | SHIM (0.254-MM THK) | |
| B | 8 | 1,2 | **8D-5637** | 4 | SHIM (0.762-MM THK) | |
| | 9 | 1,2 | **8D-5640** | 12 | BEARING | |
| | 10 | 2 | **8D-5641** | 10 | BEARING | |
| | 11 | 2 | **8W-0456** | 1 | SHAFT | |
| | 12 | 1 | *8X-4277* | 10 | ROD AS | |
| | | | | | (EACH INCLUDES) | |
| | | 1 | **146-0705** | 1 | ROD | |
| | | 1 | **6V-8186** | 1 | NUT-FULL (5/16-24-THD) | |
| | | 1 | **7H-3641** | 1 | END-ROD (5/16-24-THD) | |
| | | 1 | **8L-8598** | 1 | ROD END (LH) | |
| | 13 | 1,2 | **8X-5499** | 2 | RETAINER | |
| | 14 | 2 | **9M-1853** | 6 | MOUNTING | |
| | 15 | 1 | **101-2457** | 1 | LEVER (RIPPER) | |
| | 15A | 1 | **101-2457** | 1 | LEVER (ARTICULATION) | |
| | 16 | 1 | **101-2458** | 1 | LEVER (BLADE TIP) | |
| | 16A | 1 | **101-2458** | 1 | LEVER (PLOW, DOZER) | |
| | 17 | 2 | **104-7419** | 1 | PLATE AS (RH) | |
| | | 2 | **1F-0748** | 2 | NUT-WELD (1/2-13-THD) | |
| | 18 | 2 | **104-7429** | 2 | PLATE | |
| | 19 | 2 | **104-7740** | 1 | PLATE AS (LH) | |
| | | 2 | **1F-0748** | 2 | NUT-WELD (1/2-13-THD) | |
| | 20 | 1 | **137-4515** | 2 | BUSHING | |
| | 21 | 1 | **137-4516** | 1 | SHAFT | |
| | 22 | 2 | *164-5608* | 2 | CONNECTOR AS | |
| | | | | | (EACH INCLUDES) | |
| | | 2 | **8T-1687** | 1 | CONNECTOR | |
| | | 2 | **3K-0360** | 1 | SEAL-O-RING | |
| | | 2 | **6V-8398** | 1 | SEAL-O-RING | |
| | 23 | 1 | **244-2585** | 1 | TUBE AS | |
| | 24 | 1 | **244-2589** | 1 | TUBE AS | |
| | 25 | 1 | **244-2593** | 1 | TUBE AS | |
| | 26 | 1 | **244-2597** | 1 | TUBE AS | |
| Y | 27 | 1 | **250-0548** | 1 | VALVE GP-BANK 5 (RH) | 926 |
| Y | 28 | 1 | **250-0550** | 1 | VALVE GP-BANK 5 (LH) | 929 |
| | 29 | 2 | *148-8318* | 2 | CONNECTOR AS | |
| | | | | | (EACH INCLUDES) | |
| | | 2 | **6V-8634** | 1 | CONNECTOR | |
| | | 2 | **3K-0360** | 1 | SEAL-O-RING | |
| | | 2 | **6V-8397** | 1 | SEAL-O-RING | |
| | 30 | 2 | *206-5123* | 2 | TEE AS | |
| | | | | | (EACH INCLUDES) | |
| | | 2 | **206-5122** | 1 | TEE | |
| | | 2 | **6V-8397** | 1 | SEAL-O-RING | |
| | | 2 | **6V-8398** | 1 | SEAL-O-RING | |
| | 31 | 1 | **2G-6740** | 1 | KNOB-RIPPER | |

## *250-0430* VALVE & LINKAGE GP *(contd.)* i02369242

| NOTE | REF NO | GRAPHIC REF | PART NUMBER | QTY | PART NAME 1 2 3 4 5 6 (PRODUCT LEVEL) | SEE PAGE |
|---|---|---|---|---|---|---|
| | 32 | 1 | **2G-6747** | 1 | KNOB-BLADE TIP | |
| | 33 | 1 | **2G-6748** | 1 | KNOB-BLADE LIFT | |
| | 34 | 1 | **2G-6749** | 1 | KNOB-SIDESHIFT | |
| | 35 | 1 | **2G-6751** | 1 | KNOB-CIRCLE DRIVE | |
| | 36 | 1 | **2G-6752** | 1 | KNOB-ARTICULATION | |
| | 37 | 1 | **2G-6754** | 1 | KNOB (DOZER LIFT, PLOW) | |
| | 38 | 1 | **2G-6755** | 1 | KNOB-CENTERSHIFT | |
| | 39 | 1 | **2G-6756** | 1 | KNOB-WHEEL LEAN | |
| | 40 | 1 | **2G-6757** | 1 | KNOB-BLADE LIFT | |
| | 41 | 2 | **3J-1907** | 4 | SEAL-O-RING | |
| | 42 | 2 | **4L-6459** | 1 | BOLT (3/8-16X2.5-IN) | |
| | 43 | 1,2 | **5P-1075** | 2 | WASHER-HARD (10.2X22.5X3-MM THK) | |
| | 44 | 2 | **5P-1076** | 6 | WASHER-HARD (13.5X30X4-MM THK) | |
| | 45 | 2 | **5P-2424** | 6 | BOLT (1/2-13X2.25-IN) | |
| | 46 | 2 | **6V-8188** | 2 | NUT (1/2-13-THD) | |
| | 47 | 1,2 | **6V-8397** | 8 | SEAL-O-RING | |
| | 48 | 2 | **6V-9836** | 2 | TEE-SWIVEL | |
| | 49 | 2 | **8F-6437** | 6 | WASHER (13.5X50.8X4.76-MM THK) | |
| | 50 | 2 | **8T-4121** | 8 | WASHER-HARD (11X21X2.5-MM THK) | |
| M | 51 | 2 | **8T-4136** | 4 | BOLT (M10X1.5X25-MM) | |
| M | 52 | 2 | **8T-4195** | 4 | BOLT (M10X1.5X30-MM) | |
| | 53 | 2 | **8T-9041** | 4 | CONNECTOR | |
| | 54 | 1 | **8T-9043** | 20 | BOLT (5/16-18X0.875-IN) | |
| | 55 | 1 | **9B-7237** | 1 | BOLT (3/8-16X1.25-IN) | |

B-USE AS REQUIRED
M-METRIC PART
Y-SEPARATE ILLUSTRATION

*250-0430* **VALVE & LINKAGE GP** *(contd.)* **i02369242**

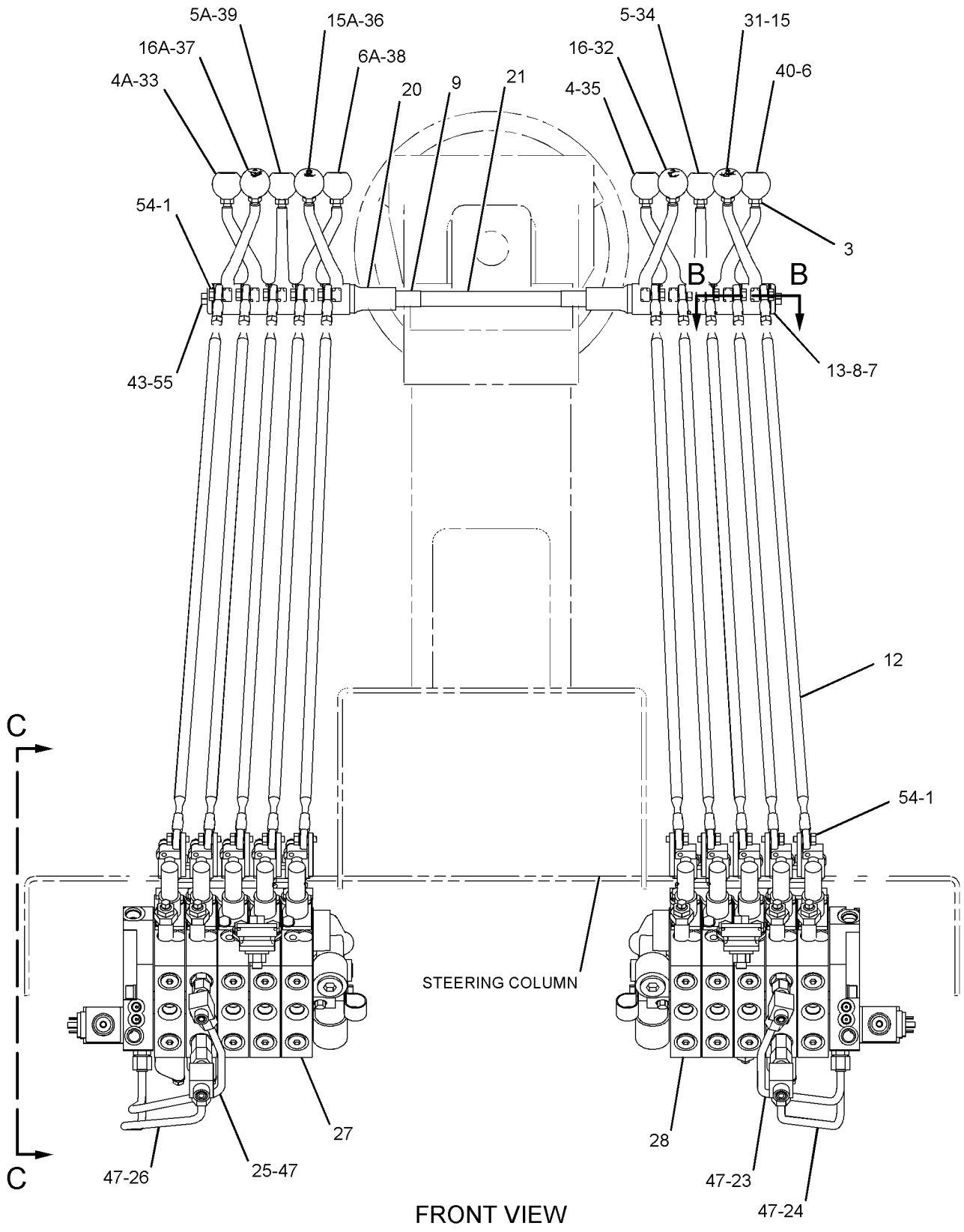


GRAPHIC #1 g01137807

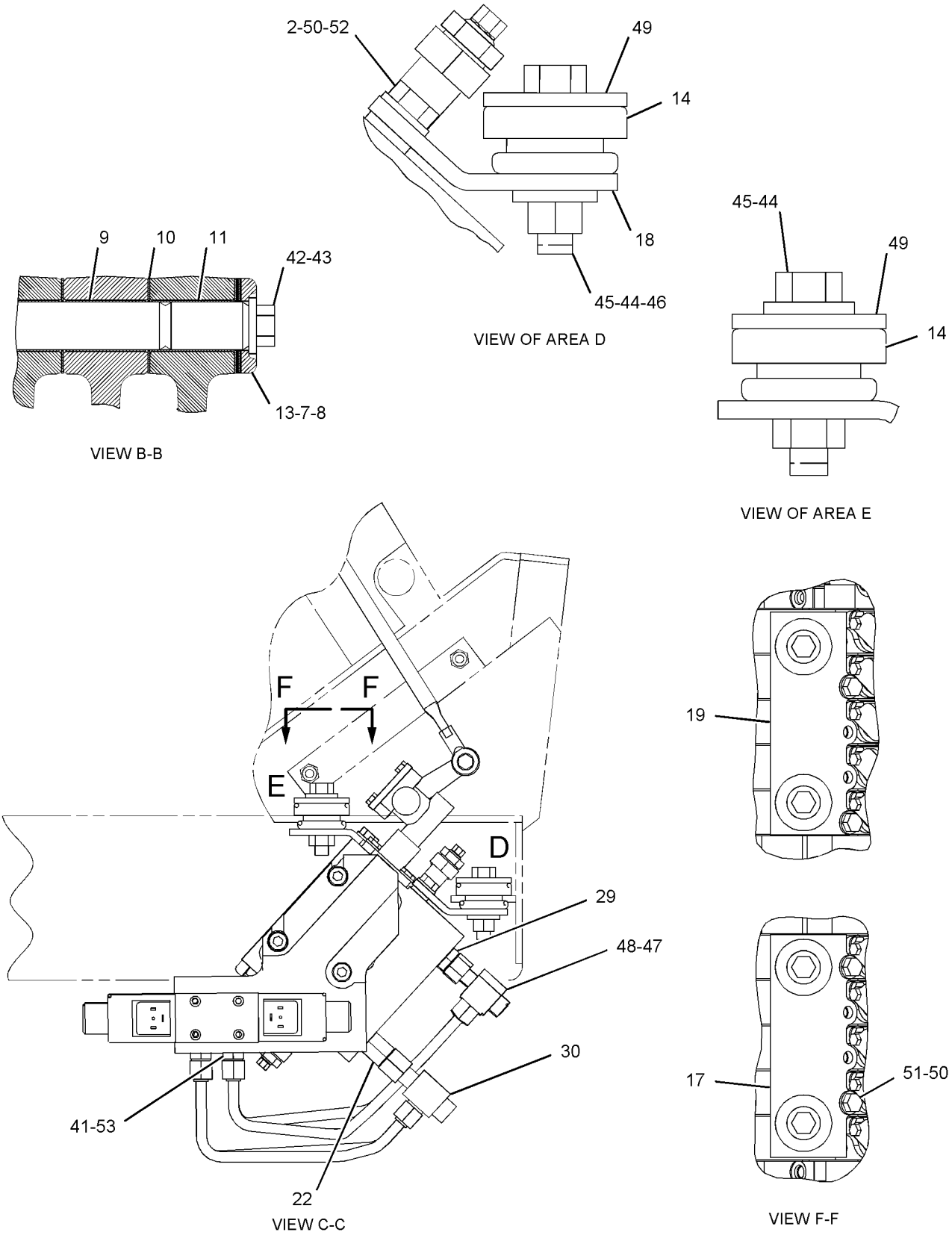


GRAPHIC #2 **<END>** g01137808

# HYDRAULIC SYSTEM

## *250-0431* VALVE & LINKAGE GP–5-BANK, RH, LH

**S/N: CCA1-UP**
**PART OF 250-0448 CONTROL AR-HYDRAULIC**
**AN ATTACHMENT**

**SMCS-5051, 5063** **i02357411**

| NOTE | REF NO | GRAPHIC REF | PART NUMBER | QTY | PART NAME 1 2 3 4 5 6 (PRODUCT LEVEL) | SEE PAGE |
|---|---|---|---|---|---|---|
| | 1 | 1 | **3F-9556** | 20 | LOCKWASHER | |
| | 2 | 2 | **6B-0933** | 4 | SPACER (10.31X19.05X6.35-MM THK) | |
| | 3 | 1 | **6L-1962** | 10 | NUT-JAM (3/8-24-THD) | |
| | 4 | 1 | **8D-5632** | 1 | LEVER (CIRCLE DRIVE) | |
| | 4A | 1 | **8D-5632** | 1 | LEVER (BLADE LIFT, RH) | |
| | 5 | 1 | **8D-5633** | 1 | LEVER (SIDESHIFT) | |
| | 5A | 1 | **8D-5633** | 1 | LEVER (WHEEL LEAN) | |
| | 6 | 1 | **8D-5634** | 1 | LEVER (BLADE LIFT, LH) | |
| | 6A | 1 | **8D-5634** | 1 | LEVER (CENTERSHIFT) | |
| B | 7 | 1 | **8D-5636** | 4 | SHIM (0.254-MM THK) | |
| B | 8 | 1 | **8D-5637** | 4 | SHIM (0.762-MM THK) | |
| | 9 | 1 | **8D-5640** | 12 | BEARING | |
| | 10 | 1 | **8D-5641** | 10 | BEARING | |
| | 11 | 1 | **8W-0456** | 1 | SHAFT | |
| | 12 | 1 | *8X-4277* | 10 | ROD AS | |
| | | | | | (EACH INCLUDES) | |
| | | 1 | **6V-8186** | 1 | NUT-FULL (5/16-24-THD) | |
| | | 1 | **7H-3641** | 1 | END-ROD (5/16-24-THD) | |
| | | 1 | **8L-8598** | 1 | ROD END (LH) | |
| | | 1 | **146-0705** | 1 | ROD | |
| | 13 | 1 | **8X-5499** | 2 | RETAINER | |
| | 14 | 2 | **9M-1853** | 6 | MOUNTING | |
| | 15 | 1 | **101-2457** | 1 | LEVER (RIPPER) | |
| | 15A | 1 | **101-2457** | 1 | LEVER (ARTICULATION) | |
| | 16 | 1 | **101-2458** | 1 | LEVER (BLADE TIP) | |
| | 16A | 1 | **101-2458** | 1 | LEVER (PLOW, DOZER) | |
| | 17 | 2 | **104-7419** | 1 | PLATE AS (RH) | |
| | | 2 | **1F-0748** | 2 | NUT-WELD (1/2-13-THD) | |
| | 18 | 2 | **104-7429** | 2 | PLATE | |
| | 19 | 2 | **104-7740** | 1 | PLATE AS (LH) | |
| | | 2 | **1F-0748** | 2 | NUT-WELD (1/2-13-THD) | |
| | 20 | 1 | **137-4515** | 2 | BUSHING | |
| | 21 | 1 | **137-4516** | 1 | SHAFT | |
| | 22 | 2 | *164-5608* | 2 | CONNECTOR AS | |
| | | | | | (EACH INCLUDES) | |
| | | 2 | **3K-0360** | 1 | SEAL-O-RING | |
| | | 2 | **6V-8398** | 1 | SEAL-O-RING | |
| | | 2 | **8T-1687** | 1 | CONNECTOR | |
| | 23 | 1 | **244-2585** | 1 | TUBE AS | |
| | 24 | 1 | **244-2589** | 1 | TUBE AS | |
| | 25 | 1 | **244-2593** | 1 | TUBE AS | |
| | 26 | 1 | **244-2597** | 1 | TUBE AS | |
| Y | 27 | 1 | **250-0549** | 1 | VALVE GP-BANK 5 (RH) | 927 |
| Y | 28 | 1 | **250-0551** | 1 | VALVE GP-BANK 5 (LH) | 931 |
| | 29 | 2 | *148-8318* | 2 | CONNECTOR AS | |
| | | | | | (EACH INCLUDES) | |
| | | 2 | **3K-0360** | 1 | SEAL-O-RING | |
| | | 2 | **6V-8397** | 1 | SEAL-O-RING | |
| | | 2 | **6V-8634** | 1 | CONNECTOR | |
| | 30 | 2 | *206-5123* | 2 | TEE AS | |
| | | | | | (EACH INCLUDES) | |
| | | 2 | **6V-8397** | 1 | SEAL-O-RING | |
| | | 2 | **6V-8398** | 1 | SEAL-O-RING | |
| | | 2 | **206-5122** | 1 | TEE | |
| | 31 | 1 | **2G-6740** | 1 | KNOB-RIPPER | |

## *250-0431* VALVE & LINKAGE GP *(contd.)* i02357411

| NOTE | REF NO | GRAPHIC REF | PART NUMBER | QTY | PART NAME 1 2 3 4 5 6 (PRODUCT LEVEL) | SEE PAGE |
|---|---|---|---|---|---|---|
| | 32 | 1 | **2G-6747** | 1 | KNOB-BLADE TIP | |
| | 33 | 1 | **2G-6748** | 1 | KNOB-BLADE LIFT (RH) | |
| | 34 | 1 | **2G-6749** | 1 | KNOB-SIDESHIFT | |
| | 35 | 1 | **2G-6751** | 1 | KNOB-CIRCLE DRIVE | |
| | 36 | 1 | **2G-6752** | 1 | KNOB-ARTICULATION | |
| | 37 | 1 | **2G-6754** | 1 | KNOB (DOZER LIFT, PLOW) | |
| | 38 | 1 | **2G-6755** | 1 | KNOB-CENTERSHIFT | |
| | 39 | 1 | **2G-6756** | 1 | KNOB-WHEEL LEAN | |
| | 40 | 1 | **2G-6757** | 1 | KNOB-BLADE LIFT (LH) | |
| | 41 | 2 | **3J-1907** | 4 | SEAL-O-RING | |
| | 42 | 1 | **4L-6459** | 1 | BOLT (3/8-16X2.5-IN) | |
| | 43 | 1 | **5P-1075** | 2 | WASHER-HARD (10.2X22.5X3-MM THK) | |
| | 44 | 2 | **5P-1076** | 6 | WASHER-HARD (13.5X30X4-MM THK) | |
| | 45 | 2 | **5P-2424** | 6 | BOLT (1/2-13X2.25-IN) | |
| | 46 | 2 | **6V-8188** | 2 | NUT (1/2-13-THD) | |
| | 47 | 1,2 | **6V-8397** | 8 | SEAL-O-RING | |
| | 48 | 2 | **6V-9836** | 2 | TEE-SWIVEL | |
| | 49 | 2 | **8F-6437** | 6 | WASHER (13.5X50.8X4.76-MM THK) | |
| | 50 | 2 | **8T-4121** | 8 | WASHER-HARD (11X21X2.5-MM THK) | |
| M | 51 | 2 | **8T-4136** | 4 | BOLT (M10X1.5X25-MM) | |
| M | 52 | 2 | **8T-4195** | 4 | BOLT (M10X1.5X30-MM) | |
| | 53 | 2 | **8T-9041** | 4 | CONNECTOR | |
| | 54 | 1 | **8T-9043** | 20 | BOLT (5/16-18X0.875-IN) | |
| | 55 | 1 | **9B-7237** | 1 | BOLT (3/8-16X1.25-IN) | |

B-USE AS REQUIRED
M-METRIC PART
Y-SEPARATE ILLUSTRATION

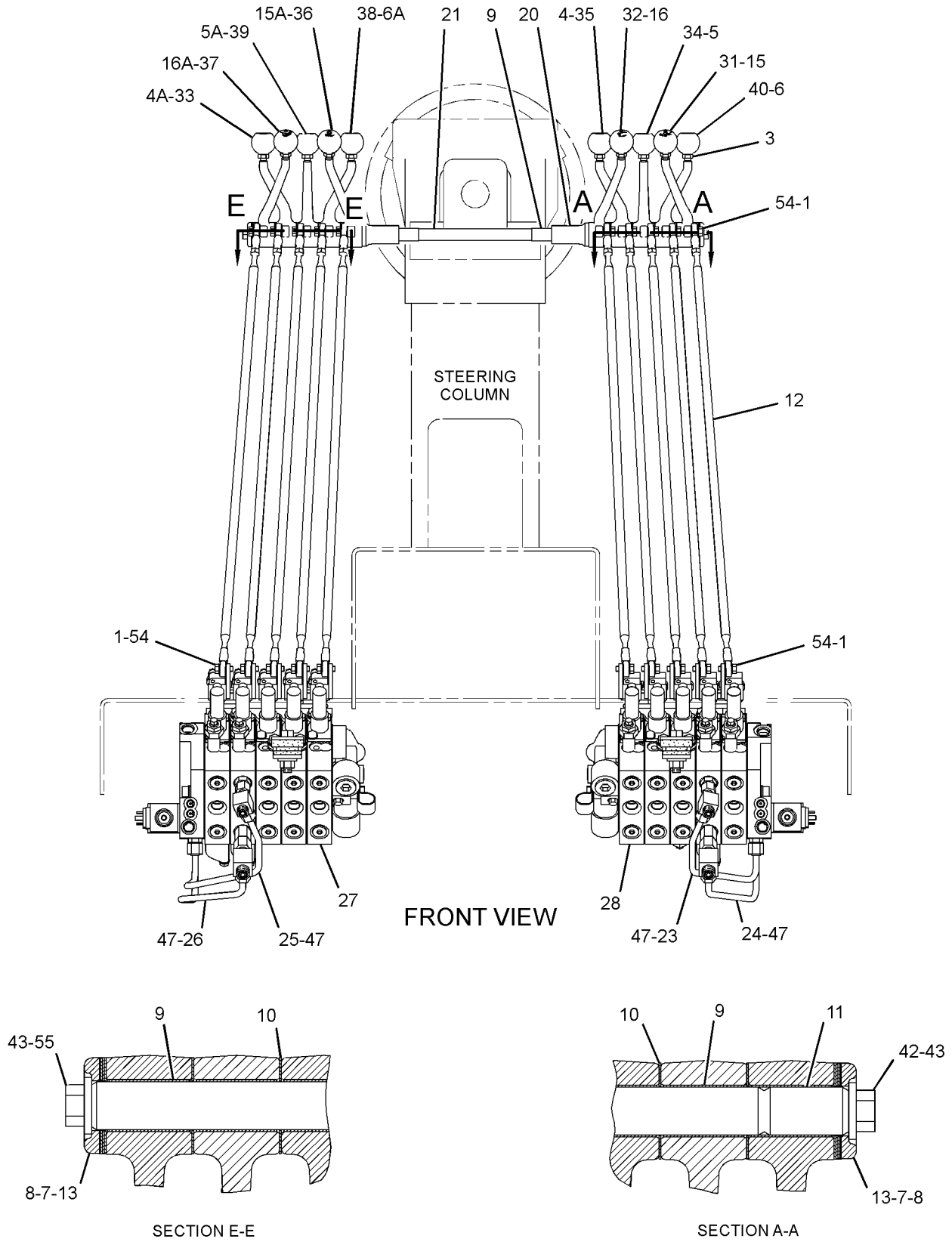


GRAPHIC #1

g01257611

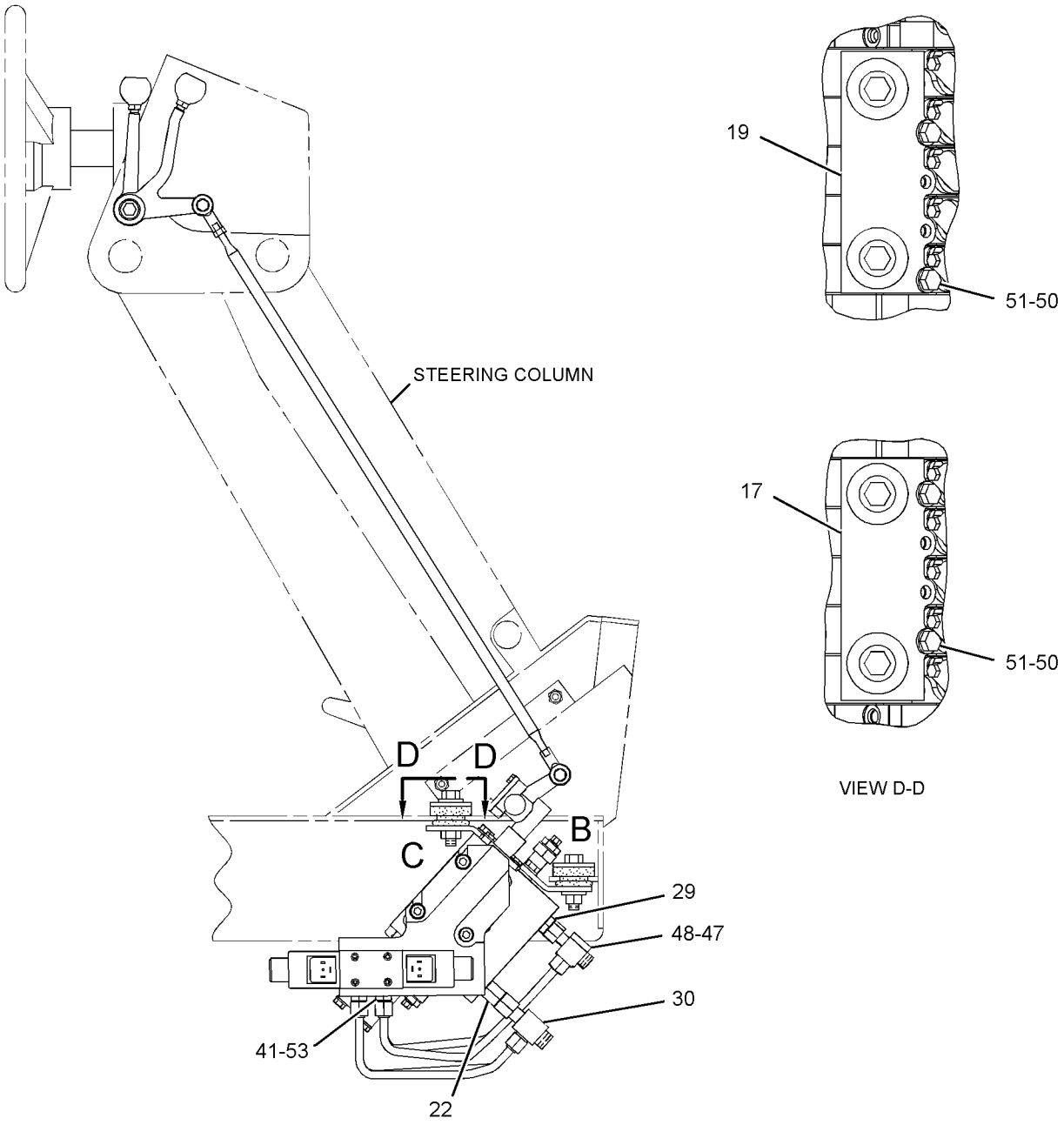


RIGHT SIDE VIEW

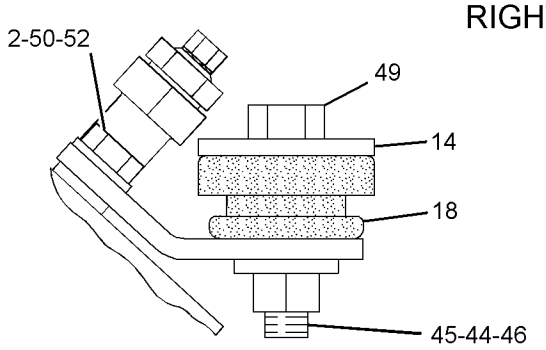


VIEW OF AREA B

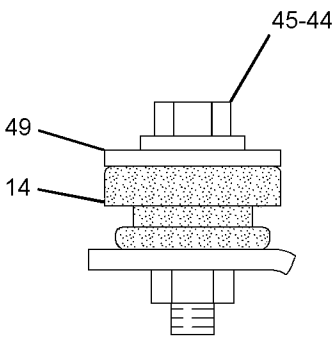


VIEW OF AREA C

GRAPHIC #2 **<END>** g01257608

# HYDRAULIC SYSTEM

## *250-0432* VALVE & LINKAGE GP

**S/N: CCA1-UP**
**AN ATTACHMENT**

**SMCS-5051, 5063** **i02579220**

| NOTE | REF NO | GRAPHIC REF | PART NUMBER | QTY | PART NAME 1 2 3 4 5 6 (PRODUCT LEVEL) | SEE PAGE |
|---|---|---|---|---|---|---|
| | 1 | 1 | **3F-9556** | 20 | LOCKWASHER (INTERNAL TOOTH) | |
| | 2 | 2 | **6B-0933** | 4 | SPACER (10.31X19.05X6.35-MM THK) | |
| | 3 | 1 | **6L-1962** | 10 | NUT-JAM (3/8-24-THD) | |
| | 4 | 1 | **8D-5632** | 2 | LEVER (CIRCLE DRIVE) | |
| | 5 | 1 | **8D-5633** | 2 | LEVER (SIDESHIFT) | |
| | 6 | 1 | **8D-5634** | 2 | LEVER (BLADE LIFT, RH) | |
| B | 7 | 1 | **8D-5636** | 4 | SHIM (0.254-MM THK) | |
| B | 8 | 1 | **8D-5637** | 4 | SHIM (0.762-MM THK) | |
| | 9 | 1 | **8D-5640** | 12 | BEARING | |
| | 10 | 1 | **8D-5641** | 10 | BEARING | |
| | 11 | 1 | **8W-0456** | 1 | SHAFT | |
| | 12 | 1 | **8X-4277** | 10 | ROD AS | |
| | | 1 | **6V-8186** | 1 | NUT-FULL (5/16-24-THD) | |
| | | 1 | **7H-3641** | 1 | END-ROD (5/16-24-THD) | |
| | | 1 | **8L-8598** | 1 | ROD END (LH) | |
| | 13 | 1 | **8X-5499** | 2 | RETAINER | |
| | 14 | 2 | **9M-1853** | 6 | MOUNTING | |
| | 15 | 1 | **101-2457** | 1 | LEVER (ARTICULATION) | |
| | 16 | 1 | **101-2458** | 2 | LEVER (DOZER) | |
| | 17 | 1 | **103-1597** | 1 | LEVER (PLOW, BULLDOZER ANGLE) | |
| | 18 | 2 | **104-7419** | 1 | PLATE AS (RH) | |
| | 19 | 2 | **104-7429** | 2 | PLATE | |
| | 20 | 2 | **104-7740** | 1 | PLATE AS (LH) | |
| | 21 | 1 | **137-4515** | 2 | BUSHING | |
| | 22 | 1 | **137-4516** | 1 | SHAFT | |
| | 23 | 2 | *164-5608* | 2 | CONNECTOR AS | |
| | | | | | (EACH INCLUDES) | |
| | | 2 | **8T-1687** | 1 | CONNECTOR | |
| | | 2 | **3K-0360** | 1 | SEAL-O-RING | |
| | | 2 | **6V-8398** | 1 | SEAL-O-RING | |
| | 24 | 1 | **244-2584** | 1 | TUBE AS | |
| | 25 | 1 | **244-2588** | 1 | TUBE AS | |
| | 26 | 1 | **244-2594** | 1 | TUBE AS | |
| | 27 | 1 | **244-2598** | 1 | TUBE AS | |
| Y | 28 | 1 | **250-0543** | 1 | VALVE GP-BANK 4 (LH) | 911 |
| Y | 29 | 1 | **250-0565** | 1 | VALVE GP-BANK 6 (RH) | 942 |
| | 30 | 1 | **117-0472** | 1 | KNOB (PLOW, BULLDOZER ANGLE) | |
| | 31 | 2 | *148-8318* | 2 | CONNECTOR AS | |
| | | | | | (EACH INCLUDES) | |
| | | 2 | **6V-8634** | 1 | CONNECTOR | |
| | | 2 | **3K-0360** | 1 | SEAL-O-RING | |
| | | 2 | **6V-8397** | 1 | SEAL-O-RING | |
| | 32 | 2 | *206-5123* | 2 | TEE AS (ORFS) | |
| | | | | | (EACH INCLUDES) | |
| | | 2 | **206-5122** | 1 | TEE | |
| | | 2 | **6V-8397** | 1 | SEAL-O-RING | |
| | | 2 | **6V-8398** | 1 | SEAL-O-RING | |
| | 33 | 1 | **2G-6747** | 1 | KNOB-BLADE TIP | |
| | 34 | 1 | **2G-6748** | 1 | KNOB-BLADE LIFT | |
| | 35 | 1 | **2G-6749** | 1 | KNOB-SIDESHIFT | |
| | 36 | 1 | **2G-6751** | 1 | KNOB-CIRCLE DRIVE | |
| | 37 | 1 | **2G-6752** | 1 | KNOB-ARTICULATION | |
| | 38 | 1 | **2G-6754** | 1 | KNOB (DOZER LIFT, PLOW) | |
| | 39 | 1 | **2G-6755** | 1 | KNOB-CENTERSHIFT | |
| | 40 | 1 | **2G-6756** | 1 | KNOB-WHEEL LEAN | |
| | 41 | 1 | **2G-6757** | 1 | KNOB-BLADE LIFT | |

## *250-0432* VALVE & LINKAGE GP *(contd.)* i02579220

| NOTE | REF NO | GRAPHIC REF | PART NUMBER | QTY | PART NAME 1 2 3 4 5 6 (PRODUCT LEVEL) | SEE PAGE |
|---|---|---|---|---|---|---|
| | 42 | 2 | **3J-1907** | 4 | SEAL-O-RING | |
| | 43 | 1 | **4L-6459** | 1 | BOLT (3/8-16X2.5-IN) | |
| | 44 | 1 | **5P-1075** | 2 | WASHER-HARD (10.2X22.5X3-MM THK) | |
| | 45 | 2 | **5P-1076** | 6 | WASHER-HARD (13.5X30X4-MM THK) | |
| | 46 | 2 | **5P-2424** | 6 | BOLT (1/2-13X2.25-IN) | |
| | 47 | 2 | **6V-8188** | 2 | NUT (1/2-13-THD) | |
| | 48 | 1,2 | **6V-8397** | 8 | SEAL-O-RING | |
| | 49 | 2 | **6V-9836** | 2 | TEE-SWIVEL | |
| | 50 | 2 | **8F-6437** | 6 | WASHER (13.5X50.8X4.76-MM THK) | |
| | 51 | 2 | **8T-4121** | 8 | WASHER-HARD (11X21X2.5-MM THK) | |
| M | 52 | 2 | **8T-4136** | 4 | BOLT (M10X1.5X25-MM) | |
| M | 53 | 2 | **8T-4195** | 4 | BOLT (M10X1.5X30-MM) | |
| | 54 | 2 | **8T-9041** | 4 | CONNECTOR | |
| | 55 | 1 | **8T-9043** | 20 | BOLT (5/16-18X0.875-IN) | |
| | 56 | 1 | **9B-7237** | 1 | BOLT (3/8-16X1.25-IN) | |

B-USE AS REQUIRED
M-METRIC PART
Y-SEPARATE ILLUSTRATION

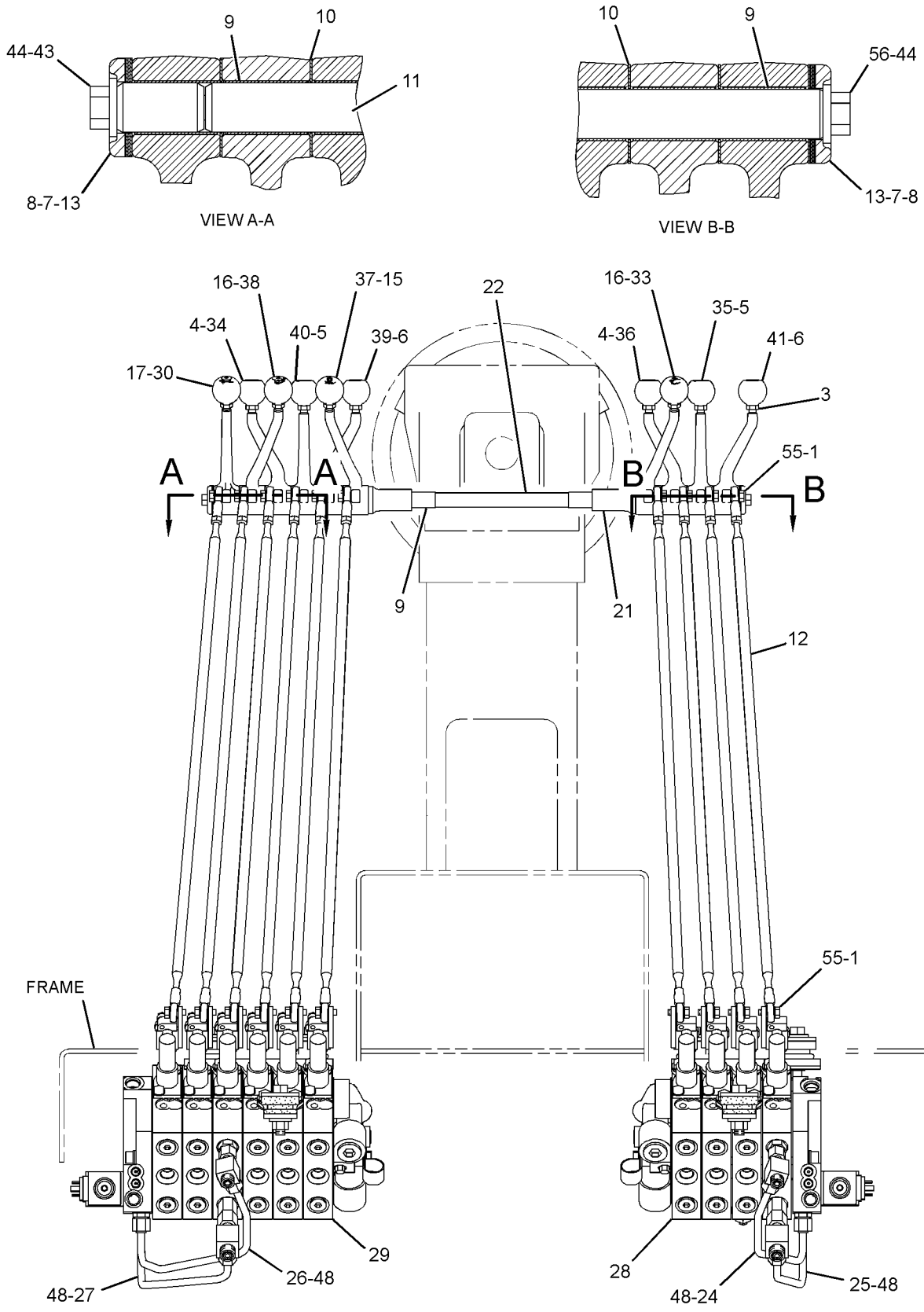


GRAPHIC #1 g01293440

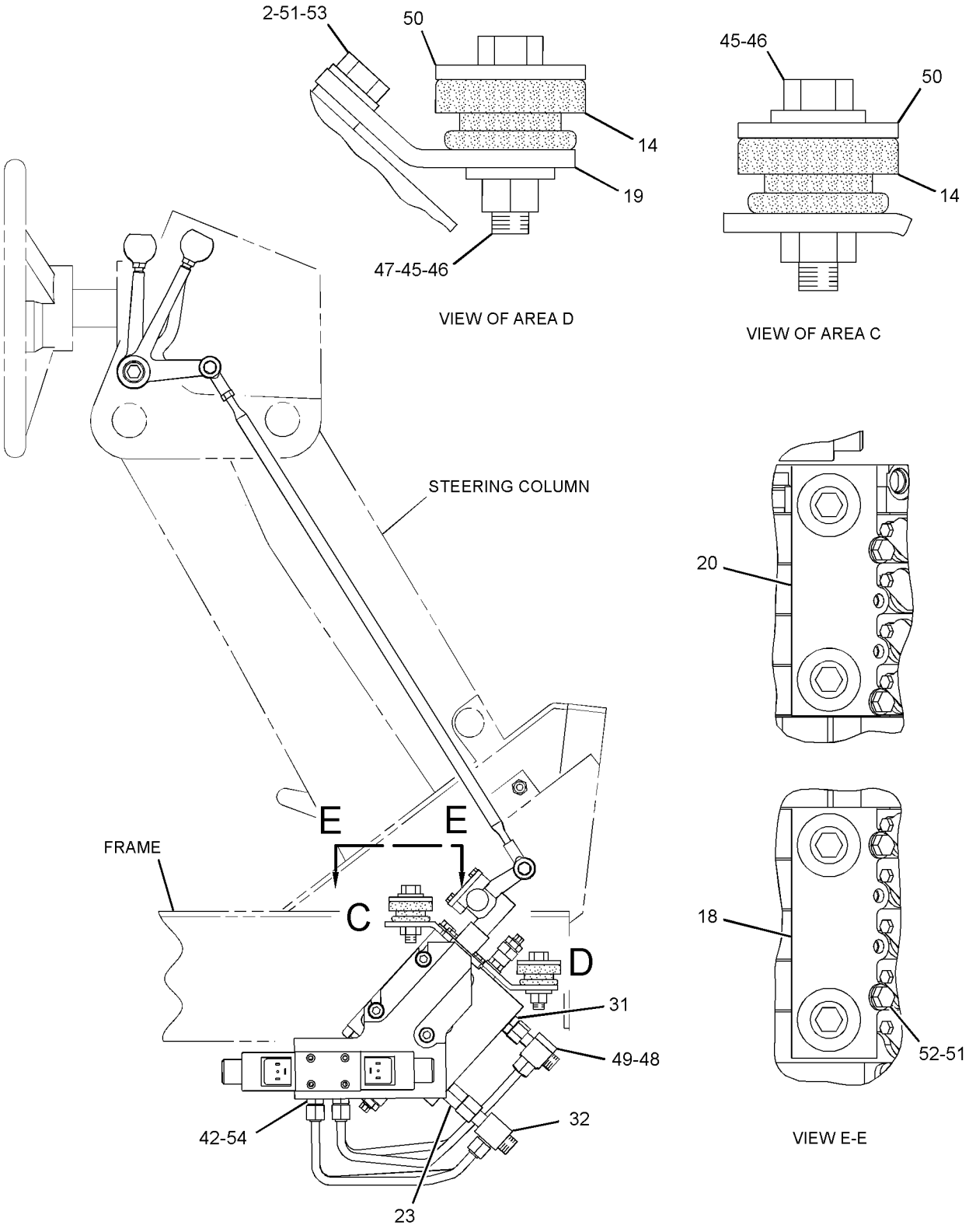


RIGHT SIDE VIEW

GRAPHIC #2 **<END>** g01293441

# HYDRAULIC SYSTEM

## *250-0433* VALVE & LINKAGE GP—5-BANK, RH; 6-BANK, LH

**S/N: CCA1-UP**

**AN ATTACHMENT**

**SMCS-5051, 5063** **i02344345**

| NOTE | REF NO | GRAPHIC REF | PART NUMBER | QTY | PART NAME 1 2 3 4 5 6 (PRODUCT LEVEL) | SEE PAGE |
|---|---|---|---|---|---|---|
| | 1 | 1 | **3F-9556** | 22 | LOCKWASHER | |
| | 2 | 2 | **6B-0933** | 4 | SPACER (10.31X19.05X6.35-MM THK) | |
| | 3 | 1 | **6L-1962** | 11 | NUT-JAM (3/8-24-THD) | |
| | 4 | 1 | **8D-5632** | 1 | LEVER (CIRCLE DRIVE) | |
| | 4A | 1 | **8D-5632** | 1 | LEVER (BLADE LIFT, LH) | |
| | 5 | 1 | **8D-5633** | 1 | LEVER (SIDESHIFT) | |
| | 5A | 1 | **8D-5633** | 1 | LEVER (WHEEL LEAN) | |
| | 6 | 1 | **8D-5634** | 1 | LEVER (BLADE LIFT, RH) | |
| | 6A | 1 | **8D-5634** | 1 | LEVER (CENTERSHIFT) | |
| B | 7 | 2 | **8D-5636** | 4 | SHIM (0.254-MM THK) | |
| B | 8 | 2 | **8D-5637** | 4 | SHIM (0.762-MM THK) | |
| | 9 | 1,2 | **8D-5640** | 13 | BEARING | |
| | 10 | 2 | **8D-5641** | 11 | BEARING | |
| | 11 | 2 | **8W-0456** | 2 | SHAFT | |
| | 12 | 1 | *8X-4277* | 11 | ROD AS | |
| | | | | | (EACH INCLUDES) | |
| | | 1 | **146-0705** | 1 | ROD | |
| | | 1 | **6V-8186** | 1 | NUT-FULL (5/16-24-THD) | |
| | | 1 | **7H-3641** | 1 | END-ROD (5/16-24-THD) | |
| | | 1 | **8L-8598** | 1 | ROD END (LH) | |
| | 13 | 2 | **8X-5499** | 2 | RETAINER | |
| | 14 | 2 | **9M-1853** | 6 | MOUNTING | |
| | 15 | 1 | **101-2457** | 1 | LEVER (WING TILT) | |
| | 15A | 1 | **101-2457** | 1 | LEVER (ARTICULATION) | |
| | 16 | 1 | **101-2458** | 1 | LEVER (BLADE TIP) | |
| | 16A | 1 | **101-2458** | 1 | LEVER (PLOW, DOZER) | |
| | 17 | 1 | **103-1597** | 1 | LEVER (WING LIFT) | |
| | 18 | 2 | **104-7419** | 1 | PLATE AS (RH) | |
| | | 2 | **1F-0748** | 2 | NUT-WELD (1/2-13-THD) | |
| | 19 | 2 | **104-7429** | 2 | PLATE | |
| | 20 | 2 | **104-7740** | 1 | PLATE AS (LH) | |
| | | 2 | **1F-0748** | 2 | NUT-WELD (1/2-13-THD) | |
| | 21 | 1 | **137-4515** | 2 | BUSHING | |
| | 22 | 1 | **137-4516** | 1 | SHAFT | |
| | 23 | 2 | *164-5608* | 2 | CONNECTOR AS | |
| | | | | | (EACH INCLUDES) | |
| | | 2 | **8T-1687** | 1 | CONNECTOR | |
| | | 2 | **3K-0360** | 1 | SEAL-O-RING | |
| | | 2 | **6V-8398** | 1 | SEAL-O-RING | |
| | 24 | 1 | **244-2586** | 1 | TUBE AS | |
| | 25 | 1 | **244-2590** | 1 | TUBE AS | |
| | 26 | 1 | **244-2593** | 1 | TUBE AS | |
| | 27 | 1 | **244-2597** | 1 | TUBE AS | |
| Y | 28 | 1 | **250-0549** | 1 | VALVE GP-BANK 5 (RH) | 927 |
| Y | 29 | 1 | **250-0566** | 1 | VALVE GP-BANK 6 (LH) | 944 |
| | 30 | 2 | *148-8318* | 2 | CONNECTOR AS | |
| | | | | | (EACH INCLUDES) | |
| | | 2 | **6V-8634** | 1 | CONNECTOR | |
| | | 2 | **3K-0360** | 1 | SEAL-O-RING | |
| | | 2 | **6V-8397** | 1 | SEAL-O-RING | |
| | 31 | 2 | *206-5123* | 2 | TEE AS | |
| | | | | | (EACH INCLUDES) | |
| | | 2 | **206-5122** | 1 | TEE | |
| | | 2 | **6V-8397** | 1 | SEAL-O-RING | |
| | | 2 | **6V-8398** | 1 | SEAL-O-RING | |
| | 32 | 1 | **2G-6747** | 1 | KNOB-BLADE TIP | |

## *250-0433* VALVE & LINKAGE GP *(contd.)* i02344345

| NOTE | REF NO | GRAPHIC REF | PART NUMBER | QTY | PART NAME 1 2 3 4 5 6 (PRODUCT LEVEL) | SEE PAGE |
|---|---|---|---|---|---|---|
| | 33 | 1 | **2G-6748** | 1 | KNOB-BLADE LIFT (RH) | |
| | 34 | 1 | **2G-6749** | 1 | KNOB-SIDESHIFT | |
| | 35 | 1 | **2G-6751** | 1 | KNOB-CIRCLE DRIVE | |
| | 36 | 1 | **2G-6752** | 1 | KNOB-ARTICULATION | |
| | 37 | 1 | **2G-6754** | 1 | KNOB (DOZER LIFT, PLOW) | |
| | 38 | 1 | **2G-6755** | 1 | KNOB-CENTERSHIFT | |
| | 39 | 1 | **2G-6756** | 1 | KNOB-WHEEL LEAN | |
| | 40 | 1 | **2G-6757** | 1 | KNOB-BLADE LIFT (LH) | |
| | 41 | 1 | **2G-7107** | 1 | KNOB-WING LIFT | |
| | 42 | 1 | **2G-7108** | 1 | KNOB-WING TILT | |
| | 43 | 2 | **3J-1907** | 4 | SEAL-O-RING | |
| | 44 | 2 | **4L-6459** | 2 | BOLT (3/8-16X2.5-IN) | |
| | 45 | 2 | **5P-1075** | 2 | WASHER-HARD (10.2X22.5X3-MM THK) | |
| | 46 | 2 | **5P-1076** | 6 | WASHER-HARD (13.5X30X4-MM THK) | |
| | 47 | 2 | **5P-2424** | 6 | BOLT (1/2-13X2.25-IN) | |
| | 48 | 2 | **6V-8188** | 2 | NUT (1/2-13-THD) | |
| | 49 | 1,2 | **6V-8397** | 8 | SEAL-O-RING | |
| | 50 | 2 | **6V-9836** | 2 | TEE-SWIVEL | |
| | 51 | 2 | **8F-6437** | 6 | WASHER (13.5X50.8X4.76-MM THK) | |
| | 52 | 2 | **8T-4121** | 8 | WASHER-HARD (11X21X2.5-MM THK) | |
| M | 53 | 2 | **8T-4136** | 4 | BOLT (M10X1.5X25-MM) | |
| M | 54 | 2 | **8T-4195** | 4 | BOLT (M10X1.5X30-MM) | |
| | 55 | 2 | **8T-9041** | 4 | CONNECTOR | |
| | 56 | 1 | **8T-9043** | 22 | BOLT (5/16-18X0.875-IN) | |

B-USE AS REQUIRED
M-METRIC PART
Y-SEPARATE ILLUSTRATION

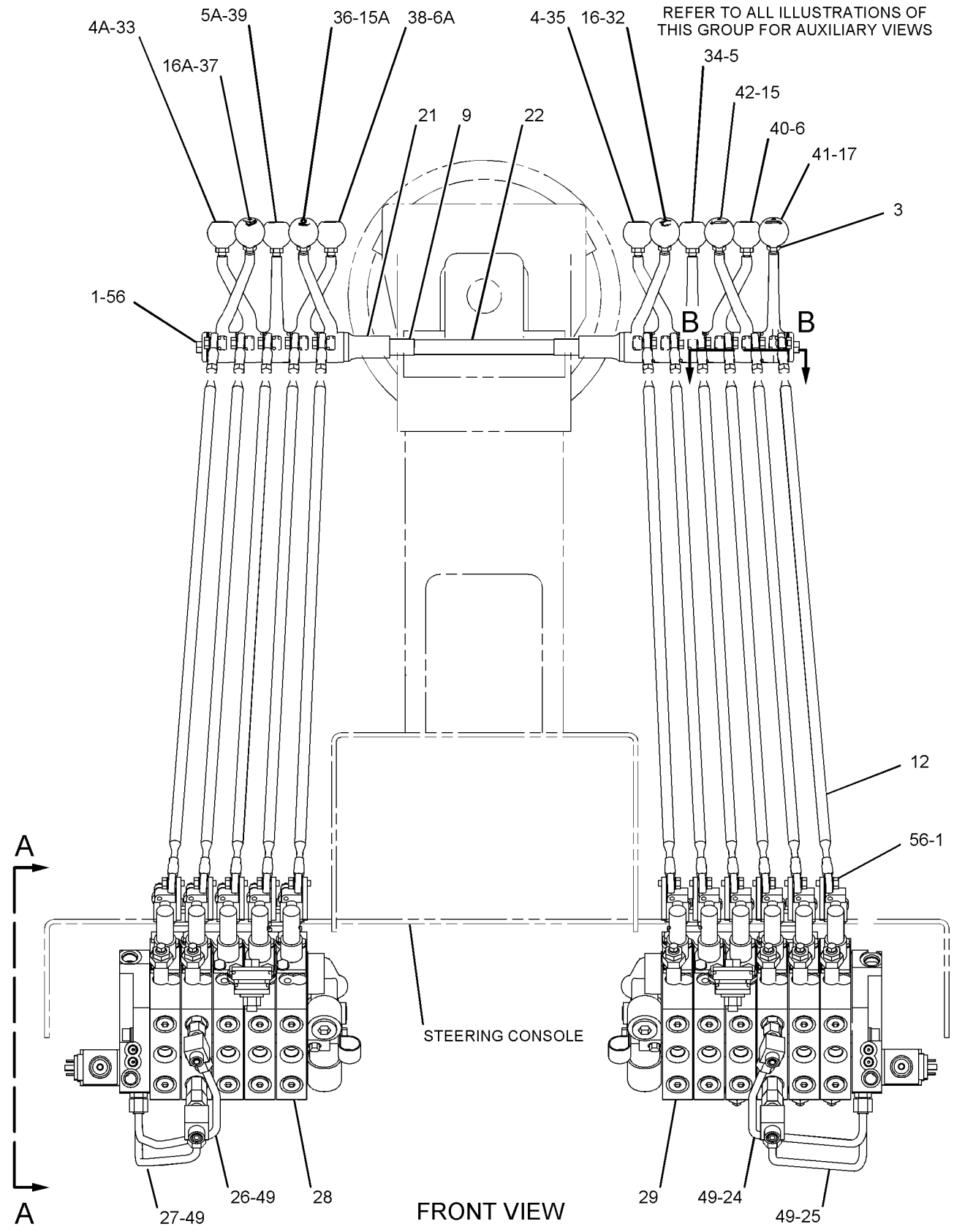


GRAPHIC #1

g01137789

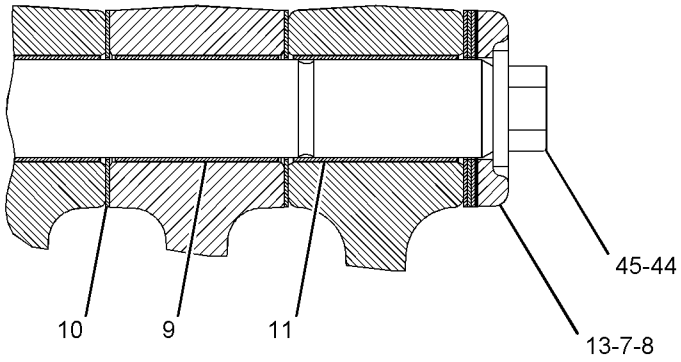


SECTION B-B

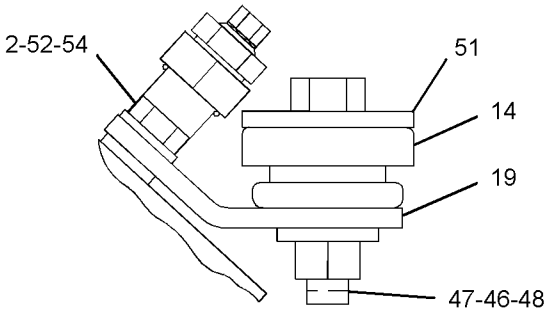


VIEW OF AREA C

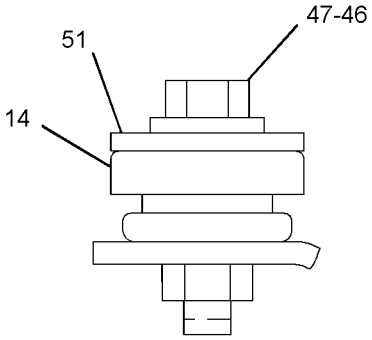


VIEW OF AREA D

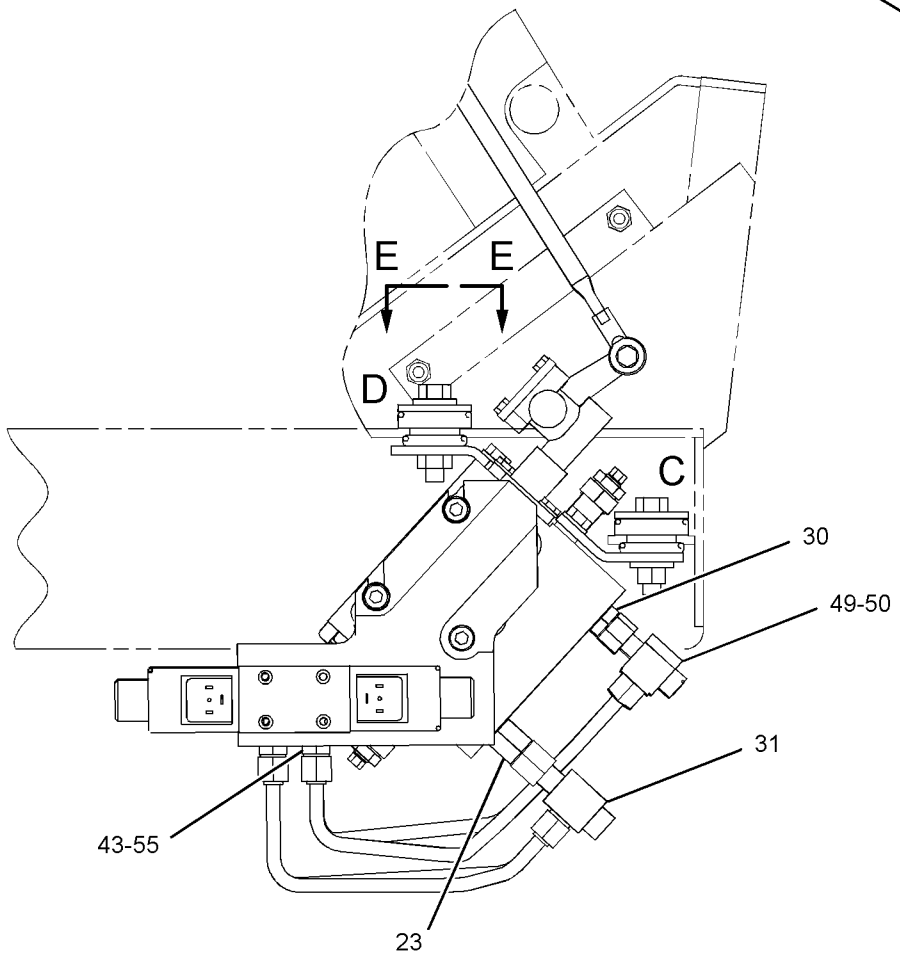


VIEW A-A

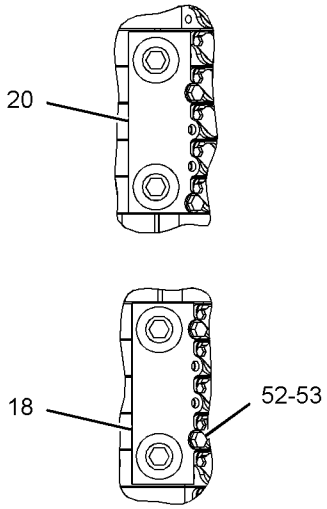


VIEW E-E

GRAPHIC #2 **<END>** g01137790

# HYDRAULIC SYSTEM

## *250-0435* VALVE & LINKAGE GP—6-BANK, RH; 5-BANK, LH

**S/N: CCA1-UP**
**PART OF 250-0450 CONTROL AR-HYDRAULIC**
**AN ATTACHMENT**

**SMCS-5051, 5063** **i02369898**

| NOTE | REF NO | GRAPHIC REF | PART NUMBER | QTY | PART NAME 1 2 3 4 5 6 (PRODUCT LEVEL) | SEE PAGE |
|---|---|---|---|---|---|---|
| | 1 | 1 | **3F-9556** | 22 | LOCKWASHER | |
| | 2 | 2 | **6B-0933** | 4 | SPACER (10.31X19.05X6.35-MM THK) | |
| | 3 | 1 | **6L-1962** | 11 | NUT-JAM (3/8-24-THD) | |
| | 4 | 1 | **8D-5632** | 1 | LEVER (CIRCLE DRIVE) | |
| | 4A | 1 | **8D-5632** | 1 | LEVER (BLADE LIFT, RH) | |
| | 5 | 1 | **8D-5633** | 1 | LEVER (SIDESHIFT) | |
| | 5A | 1 | **8D-5633** | 1 | LEVER (WHEEL LEAN) | |
| | 6 | 1 | **8D-5634** | 1 | LEVER (BLADE LIFT, LH) | |
| | 6A | 1 | **8D-5634** | 1 | LEVER (CENTERSHIFT) | |
| B | 7 | 2 | **8D-5636** | 4 | SHIM (0.254-MM THK) | |
| B | 8 | 2 | **8D-5637** | 4 | SHIM (0.762-MM THK) | |
| | 9 | 1,2 | **8D-5640** | 13 | BEARING | |
| | 10 | 2 | **8D-5641** | 11 | BEARING | |
| | 11 | 2 | **8W-0456** | 2 | SHAFT | |
| | 12 | 1 | *8X-4277* | 11 | ROD AS | |
| | | | | | (EACH INCLUDES) | |
| | | 1 | **6V-8186** | 1 | NUT-FULL (5/16-24-THD) | |
| | | 1 | **7H-3641** | 1 | END-ROD (5/16-24-THD) | |
| | | 1 | **8L-8598** | 1 | ROD END (LH) | |
| | | 1 | **146-0705** | 1 | ROD | |
| | 13 | 2 | **8X-5499** | 2 | RETAINER | |
| | 14 | 2 | **9M-1853** | 6 | MOUNTING | |
| | 15 | 1 | **101-2457** | 1 | LEVER (RIPPER) | |
| | 15A | 1 | **101-2457** | 1 | LEVER (ARTICULATION) | |
| | 16 | 1 | **101-2458** | 1 | LEVER (BLADE TIP) | |
| | 16A | 1 | **101-2458** | 1 | LEVER (PLOW, DOZER) | |
| | 17 | 1 | **103-1597** | 1 | LEVER (PLOW, BULLDOZER ANGLE) | |
| | 18 | 2 | **104-7419** | 1 | PLATE AS (RH) | |
| | | 2 | **1F-0748** | 2 | NUT-WELD (1/2-13-THD) | |
| | 19 | 2 | **104-7429** | 2 | PLATE | |
| | 20 | 2 | **104-7740** | 1 | PLATE AS (LH) | |
| | | 2 | **1F-0748** | 2 | NUT-WELD (1/2-13-THD) | |
| | 21 | 1 | **137-4515** | 2 | BUSHING | |
| | 22 | 1 | **137-4516** | 1 | SHAFT | |
| | 23 | 2 | *164-5608* | 2 | CONNECTOR AS | |
| | | | | | (EACH INCLUDES) | |
| | | 2 | **3K-0360** | 1 | SEAL-O-RING | |
| | | 2 | **6V-8398** | 1 | SEAL-O-RING | |
| | | 2 | **8T-1687** | 1 | CONNECTOR | |
| | 24 | 1 | **244-2585** | 1 | TUBE AS | |
| | 25 | 1 | **244-2589** | 1 | TUBE AS | |
| | 26 | 1 | **244-2594** | 1 | TUBE AS | |
| | 27 | 1 | **244-2598** | 1 | TUBE AS | |
| Y | 28 | 1 | **250-0550** | 1 | VALVE GP-BANK 5 (LH) | 929 |
| Y | 29 | 1 | **250-0565** | 1 | VALVE GP-BANK 6 (RH) | 942 |
| | 30 | 1 | **117-0472** | 1 | KNOB (PLOW, BULLDOZER ANGLE) | |
| | 31 | 2 | *148-8318* | 2 | CONNECTOR AS | |
| | | | | | (EACH INCLUDES) | |
| | | 2 | **3K-0360** | 1 | SEAL-O-RING | |
| | | 2 | **6V-8397** | 1 | SEAL-O-RING | |
| | | 2 | **6V-8634** | 1 | CONNECTOR | |
| | 32 | 2 | *206-5123* | 2 | TEE AS | |
| | | | | | (EACH INCLUDES) | |
| | | 2 | **6V-8397** | 1 | SEAL-O-RING | |
| | | 2 | **6V-8398** | 1 | SEAL-O-RING | |

## *250-0435* VALVE & LINKAGE GP *(contd.)* i02369898

| NOTE | REF NO | GRAPHIC REF | PART NUMBER | QTY | PART NAME 1 2 3 4 5 6 (PRODUCT LEVEL) | SEE PAGE |
|---|---|---|---|---|---|---|
| | 33 | 1 | **2G-6740** | 1 | KNOB-RIPPER | |
| | 34 | 1 | **2G-6747** | 1 | KNOB-BLADE TIP | |
| | 35 | 1 | **2G-6748** | 1 | KNOB-BLADE LIFT (RH) | |
| | 36 | 1 | **2G-6749** | 1 | KNOB-SIDESHIFT | |
| | 37 | 1 | **2G-6751** | 1 | KNOB-CIRCLE DRIVE | |
| | 38 | 1 | **2G-6752** | 1 | KNOB-ARTICULATION | |
| | 39 | 1 | **2G-6754** | 1 | KNOB (DOZER LIFT, PLOW) | |
| | 40 | 1 | **2G-6755** | 1 | KNOB-CENTERSHIFT | |
| | 41 | 1 | **2G-6756** | 1 | KNOB-WHEEL LEAN | |
| | 42 | 1 | **2G-6757** | 1 | KNOB-BLADE LIFT (LH) | |
| | 43 | 2 | **3J-1907** | 4 | SEAL-O-RING | |
| | 44 | 2 | **4L-6459** | 2 | BOLT (3/8-16X2.5-IN) | |
| | 45 | 2 | **5P-1075** | 2 | WASHER-HARD (10.2X22.5X3-MM THK) | |
| | 46 | 2 | **5P-1076** | 6 | WASHER-HARD (13.5X30X4-MM THK) | |
| | 47 | 2 | **5P-2424** | 6 | BOLT (1/2-13X2.25-IN) | |
| | 48 | 2 | **6V-8188** | 2 | NUT (1/2-13-THD) | |
| | 49 | 1,2 | **6V-8397** | 8 | SEAL-O-RING | |
| | 50 | 2 | **6V-9836** | 2 | TEE-SWIVEL | |
| | 51 | 2 | **8F-6437** | 6 | WASHER (13.5X50.8X4.76-MM THK) | |
| | 52 | 2 | **8T-4121** | 8 | WASHER-HARD (11X21X2.5-MM THK) | |
| M | 53 | 2 | **8T-4136** | 4 | BOLT (M10X1.5X25-MM) | |
| M | 54 | 2 | **8T-4195** | 4 | BOLT (M10X1.5X30-MM) | |
| | 55 | 2 | **8T-9041** | 4 | CONNECTOR | |
| | 56 | 1 | **8T-9043** | 22 | BOLT (5/16-18X0.875-IN) | |

B-USE AS REQUIRED
M-METRIC PART
Y-SEPARATE ILLUSTRATION

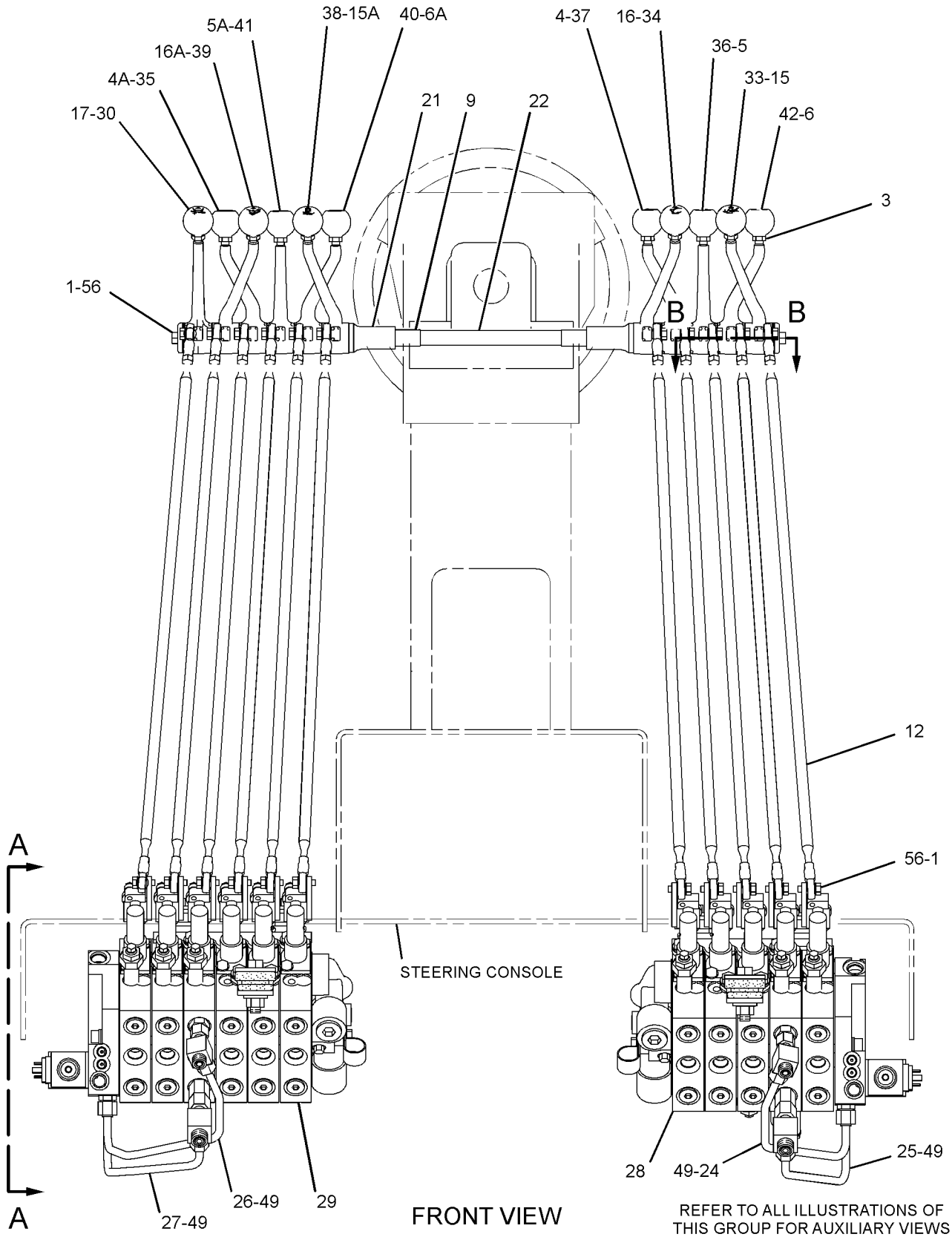


GRAPHIC #1

g01158834

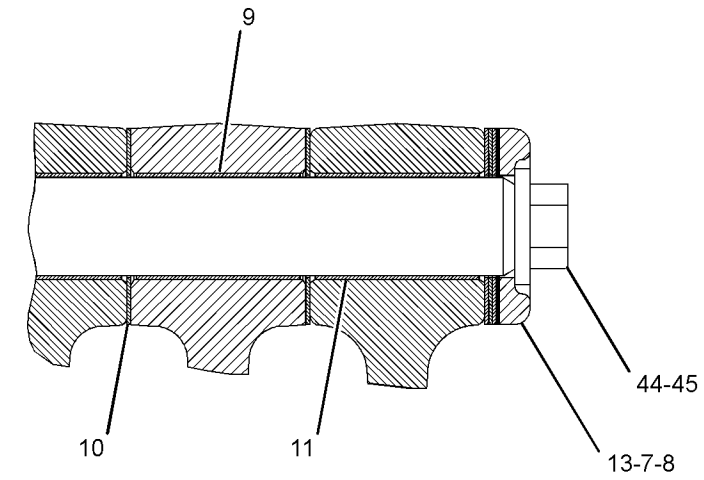


SECTION B-B

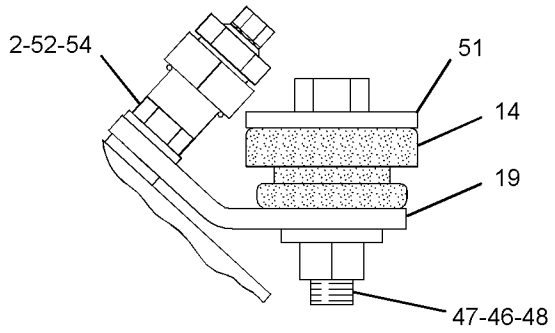


VIEW OF AREA E

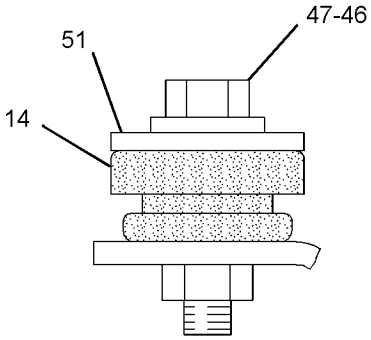


VIEW OF AREA C

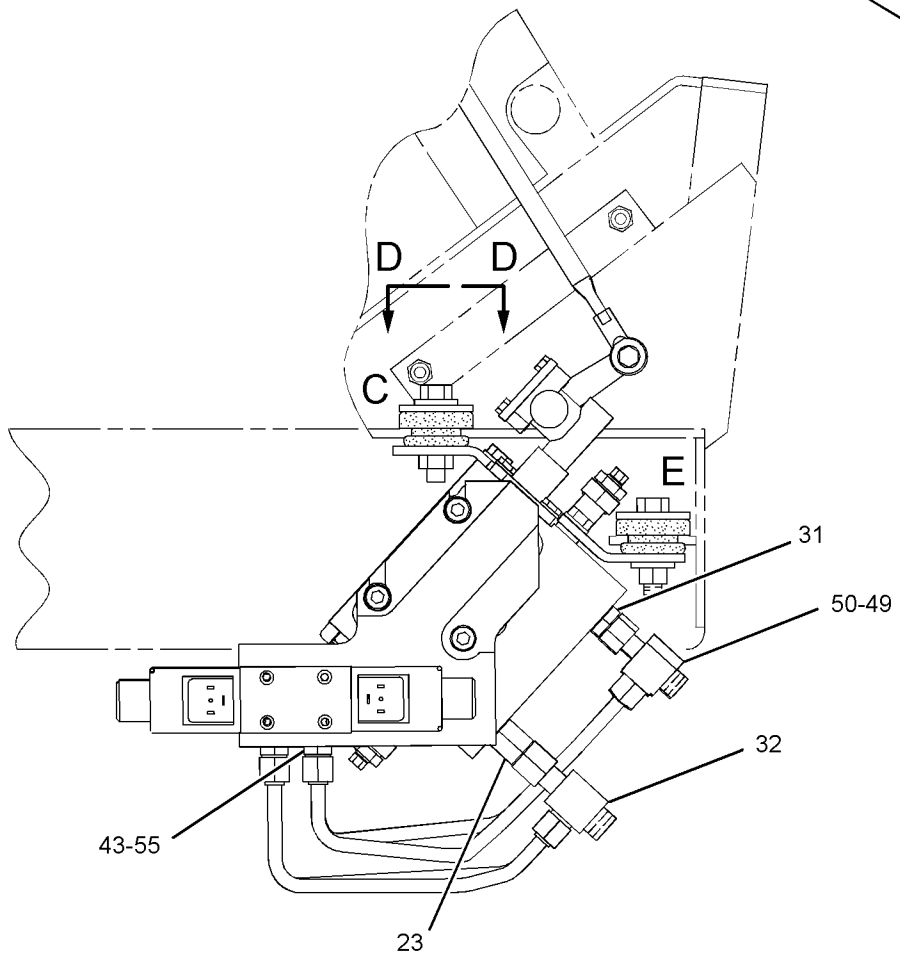


VIEW A-A

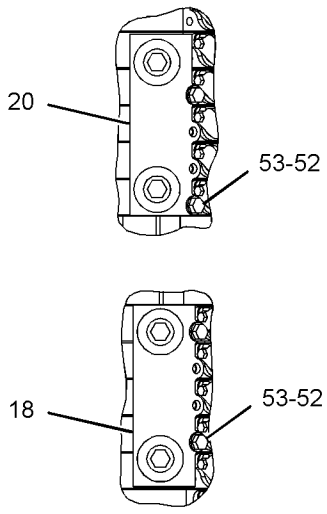


VIEW D-D

GRAPHIC #2 **<END>** g01158836

# HYDRAULIC SYSTEM

## *250-0436* VALVE & LINKAGE GP–6-BANK, RH, LH

**S/N: CCA1-UP**
**AN ATTACHMENT**

**SMCS-5051, 5063** **i02369851**

| NOTE | REF NO | GRAPHIC REF | PART NUMBER | QTY | PART NAME 1 2 3 4 5 6 (PRODUCT LEVEL) | SEE PAGE |
|---|---|---|---|---|---|---|
| | 1 | 1 | **3F-9556** | 24 | LOCKWASHER | |
| | 2 | 2 | **6B-0933** | 4 | SPACER (10.31X19.05X6.35-MM THK) | |
| | 3 | 1 | **6L-1962** | 12 | NUT-JAM (3/8-24-THD) | |
| | 4 | 1 | **8D-5632** | 1 | LEVER (CIRCLE DRIVE) | |
| | 4A | 1 | **8D-5632** | 1 | LEVER (BLADE LIFT, LH) | |
| | 5 | 1 | **8D-5633** | 1 | LEVER (SIDESHIFT) | |
| | 5A | 1 | **8D-5633** | 1 | LEVER (WHEEL LEAN) | |
| | 6 | 1 | **8D-5634** | 1 | LEVER (BLADE LIFT, RH) | |
| | 6A | 1 | **8D-5634** | 1 | LEVER (CENTERSHIFT) | |
| B | 7 | 2 | **8D-5636** | 4 | SHIM (0.254-MM THK) | |
| B | 8 | 2 | **8D-5637** | 4 | SHIM (0.762-MM THK) | |
| | 9 | 1,2 | **8D-5640** | 14 | BEARING | |
| | 10 | 2 | **8D-5641** | 12 | BEARING | |
| | 11 | 1 | *8X-4277* | 12 | ROD AS | |
| | | | | | (EACH INCLUDES) | |
| | | 1 | **146-0705** | 1 | ROD | |
| | | 1 | **6V-8186** | 1 | NUT-FULL (5/16-24-THD) | |
| | | 1 | **7H-3641** | 1 | END-ROD (5/16-24-THD) | |
| | | 1 | **8L-8598** | 1 | ROD END (LH) | |
| | 12 | 2 | **8X-5499** | 2 | RETAINER | |
| | 13 | 2 | **9M-1853** | 6 | MOUNTING | |
| | 14 | 1 | **101-2457** | 1 | LEVER (WING TILT) | |
| | 14A | 1 | **101-2457** | 1 | LEVER (ARTICULATION) | |
| | 15 | 1 | **101-2458** | 1 | LEVER (BLADE TIP) | |
| | 15A | 1 | **101-2458** | 1 | LEVER (PLOW, DOZER) | |
| | 16 | 1 | **103-1597** | 1 | LEVER (WING LIFT) | |
| | 16A | 1 | **103-1597** | 1 | LEVER (PLOW, BULLDOZER ANGLE) | |
| | 17 | 2 | **104-7419** | 1 | PLATE AS (RH) | |
| | | 2 | **1F-0748** | 2 | NUT-WELD (1/2-13-THD) | |
| | 18 | 2 | **104-7429** | 2 | PLATE | |
| | 19 | 2 | **104-7740** | 1 | PLATE AS (LH) | |
| | | 2 | **1F-0748** | 2 | NUT-WELD (1/2-13-THD) | |
| | 20 | 1 | **137-4515** | 2 | BUSHING | |
| | 21 | 1 | **137-4517** | 1 | SHAFT | |
| | 22 | 2 | *164-5608* | 2 | CONNECTOR AS | |
| | | | | | (EACH INCLUDES) | |
| | | 2 | **8T-1687** | 1 | CONNECTOR | |
| | | 2 | **3K-0360** | 1 | SEAL-O-RING | |
| | | 2 | **6V-8398** | 1 | SEAL-O-RING | |
| | 23 | 1 | **244-2586** | 1 | TUBE AS | |
| | 24 | 1 | **244-2590** | 1 | TUBE AS | |
| | 25 | 1 | **244-2594** | 1 | TUBE AS | |
| | 26 | 1 | **244-2598** | 1 | TUBE AS | |
| Y | 27 | 1 | **250-0565** | 1 | VALVE GP-BANK 6 (RH) | 942 |
| Y | 28 | 1 | **250-0567** | 1 | VALVE GP-BANK 6 (LH) | 946 |
| | 29 | 1 | **117-0472** | 1 | KNOB (PLOW, BULLDOZER ANGLE) | |
| | 30 | 2 | *148-8318* | 2 | CONNECTOR AS | |
| | | | | | (EACH INCLUDES) | |
| | | 2 | **6V-8634** | 1 | CONNECTOR | |
| | | 2 | **3K-0360** | 1 | SEAL-O-RING | |
| | | 2 | **6V-8397** | 1 | SEAL-O-RING | |
| | 31 | 2 | *206-5123* | 2 | TEE AS | |
| | 32 | 1 | **2G-6747** | 1 | KNOB-BLADE TIP | |
| | 33 | 1 | **2G-6748** | 1 | KNOB-BLADE LIFT | |
| | 34 | 1 | **2G-6749** | 1 | KNOB-SIDESHIFT | |
| | 35 | 1 | **2G-6751** | 1 | KNOB-CIRCLE DRIVE | |

## *250-0436* VALVE & LINKAGE GP *(contd.)* i02369851

| NOTE | REF NO | GRAPHIC REF | PART NUMBER | QTY | PART NAME 1 2 3 4 5 6 (PRODUCT LEVEL) | SEE PAGE |
|---|---|---|---|---|---|---|
| | 36 | 1 | **2G-6752** | 1 | KNOB-ARTICULATION | |
| | 37 | 1 | **2G-6754** | 1 | KNOB (DOZER LIFT, PLOW) | |
| | 38 | 1 | **2G-6755** | 1 | KNOB-CENTERSHIFT | |
| | 39 | 1 | **2G-6756** | 1 | KNOB-WHEEL LEAN | |
| | 40 | 1 | **2G-6757** | 1 | KNOB-BLADE LIFT | |
| | 41 | 1 | **2G-7107** | 1 | KNOB-WING LIFT | |
| | 42 | 1 | **2G-7108** | 1 | KNOB-WING TILT | |
| | 43 | 2 | **3J-1907** | 4 | SEAL-O-RING | |
| | 44 | 2 | **5P-1075** | 2 | WASHER-HARD (10.2X22.5X3-MM THK) | |
| | 45 | 2 | **5P-1076** | 6 | WASHER-HARD (13.5X30X4-MM THK) | |
| | 46 | 2 | **5P-2424** | 6 | BOLT (1/2-13X2.25-IN) | |
| | 47 | 2 | **6V-8188** | 2 | NUT (1/2-13-THD) | |
| | 48 | 1,2 | **6V-8397** | 8 | SEAL-O-RING | |
| | 49 | 2 | **6V-9836** | 2 | TEE-SWIVEL | |
| | 50 | 2 | **8F-6437** | 6 | WASHER (13.5X50.8X4.76-MM THK) | |
| | 51 | 2 | **8T-4121** | 8 | WASHER-HARD (11X21X2.5-MM THK) | |
| M | 52 | 2 | **8T-4136** | 4 | BOLT (M10X1.5X25-MM) | |
| M | 53 | 2 | **8T-4195** | 4 | BOLT (M10X1.5X30-MM) | |
| | 54 | 2 | **8T-9041** | 4 | CONNECTOR | |
| | 55 | 1 | **8T-9043** | 24 | BOLT (5/16-18X0.875-IN) | |
| | 56 | 2 | **9B-7237** | 2 | BOLT (3/8-16X1.25-IN) | |

B-USE AS REQUIRED
M-METRIC PART
Y-SEPARATE ILLUSTRATION

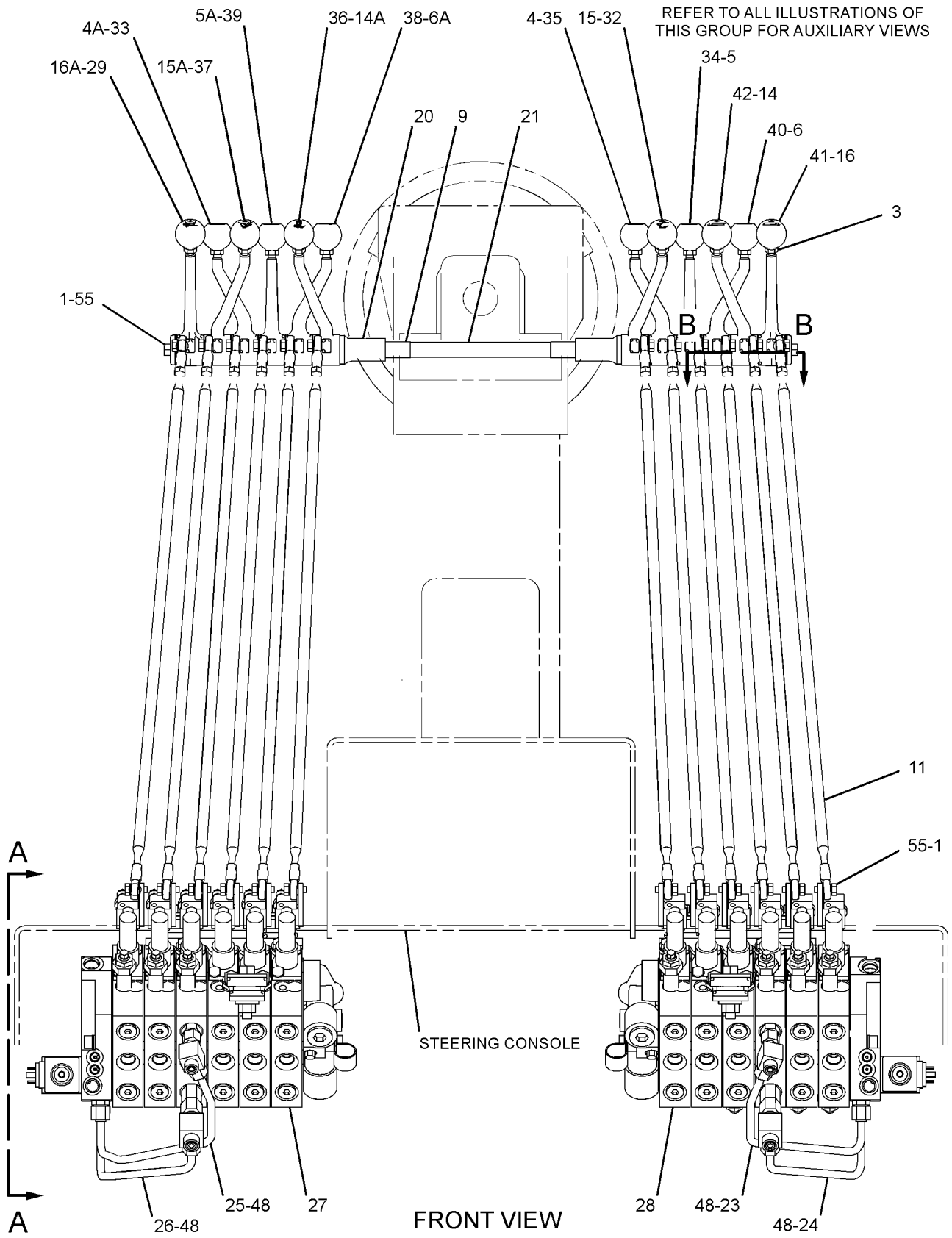


GRAPHIC #1

g01137775

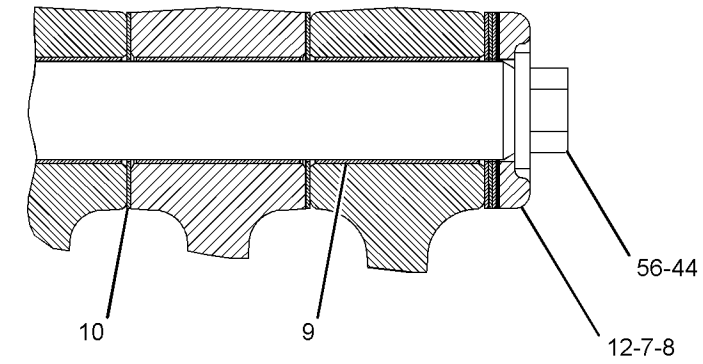


SECTION B-B

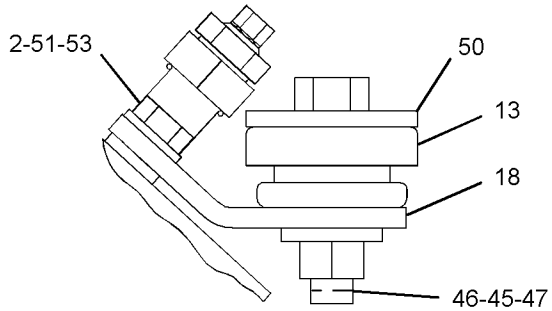


VIEW OF AREA C

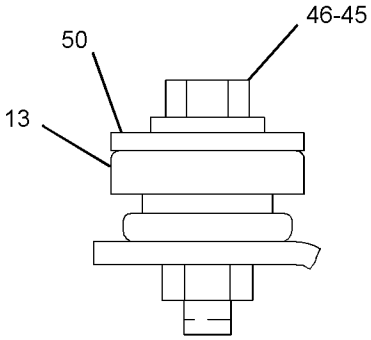


VIEW OF AREA D

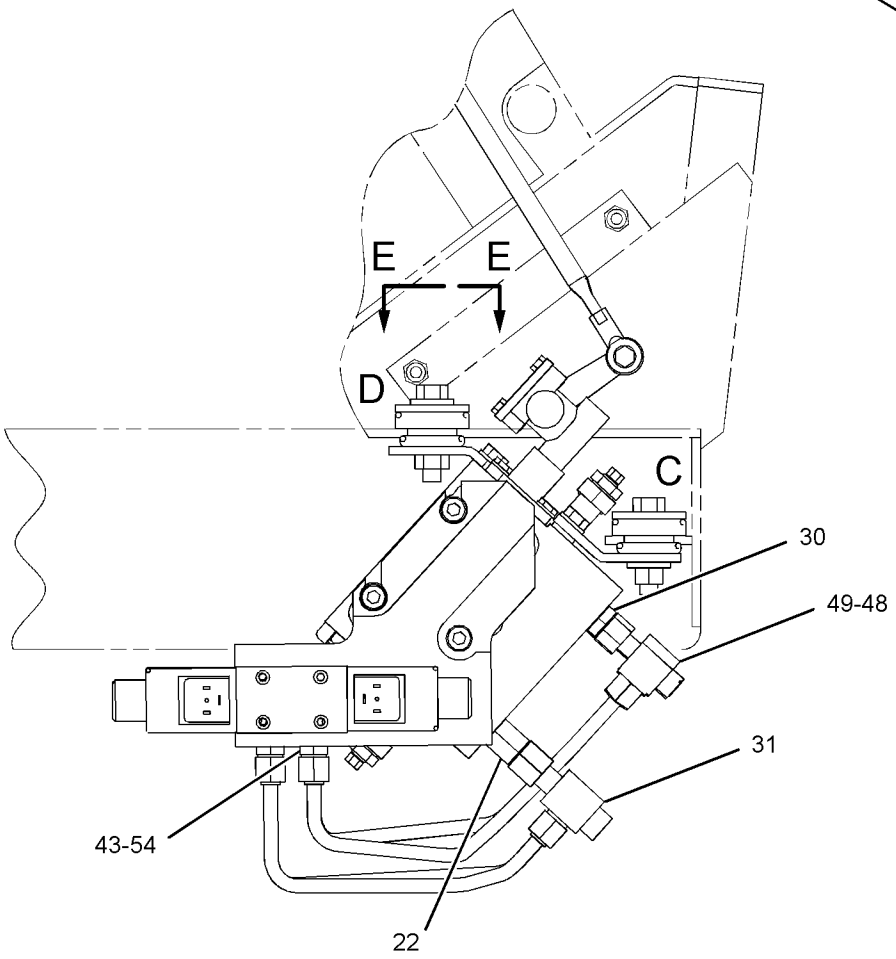


VIEW A-A

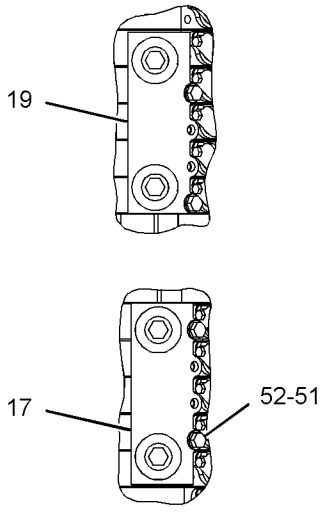


VIEW E-E

GRAPHIC #2 **<END>** g01137776

# HYDRAULIC SYSTEM

## *250-0437* VALVE & LINKAGE GP

**S/N: CCA1-UP**

**AN ATTACHMENT**

**SMCS-5051, 5063** **i02344355**

| NOTE | REF NO | GRAPHIC REF | PART NUMBER | QTY | PART NAME 1 2 3 4 5 6 (PRODUCT LEVEL) | SEE PAGE |
|---|---|---|---|---|---|---|
| | 1 | 1 | **3F-9556** | 24 | LOCKWASHER | |
| | 2 | 1 | **6B-0933** | 4 | SPACER (10.31X19.05X6.35-MM THK) | |
| | 3 | 1 | **6L-1962** | 12 | NUT-JAM (3/8-24-THD) | |
| | 4 | 1 | **8D-5632** | 1 | LEVER (CIRCLE DRIVE) | |
| | 4A | 1 | **8D-5632** | 1 | LEVER (BLADE LIFT, LH) | |
| | 5 | 1 | **8D-5633** | 1 | LEVER (SIDESHIFT) | |
| | 5A | 1 | **8D-5633** | 1 | LEVER (WHEEL LEAN) | |
| | 6 | 1 | **8D-5634** | 1 | LEVER (BLADE LIFT, RH) | |
| | 6A | 1 | **8D-5634** | 1 | LEVER (CENTERSHIFT) | |
| B | 7 | 1 | **8D-5636** | 4 | SHIM (0.254-MM THK) | |
| B | 8 | 1 | **8D-5637** | 4 | SHIM (0.762-MM THK) | |
| | 9 | 1 | **8D-5640** | 14 | BEARING | |
| | 10 | 1 | **8D-5641** | 12 | BEARING | |
| | 11 | 1 | *8X-4277* | 12 | ROD AS | |
| | | | | | (EACH INCLUDES) | |
| | | 1 | **6V-8186** | 1 | NUT-FULL (5/16-24-THD) | |
| | | 1 | **7H-3641** | 1 | END-ROD (5/16-24-THD) | |
| | | 1 | **8L-8598** | 1 | ROD END (LH) | |
| | | 1 | **146-0705** | 1 | ROD | |
| | 12 | 1 | **8X-5499** | 2 | RETAINER | |
| | 13 | 1 | **9M-1853** | 6 | MOUNTING | |
| | 14 | 1 | **101-2457** | 1 | LEVER (SCARIFIER) | |
| | 14A | 1 | **101-2457** | 1 | LEVER (ARTICULATION) | |
| | 15 | 1 | **101-2458** | 1 | LEVER (WING LIFT) | |
| | 15A | 1 | **101-2458** | 1 | LEVER (PLOW, DOZER) | |
| | 15B | 1 | **101-2458** | 1 | LEVER (BLADE TIP) | |
| | 16 | 1 | **103-1597** | 1 | LEVER (WING TILT) | |
| | 17 | 1 | **104-7419** | 1 | PLATE AS (RH) | |
| | | 1 | **1F-0748** | 2 | NUT-WELD (1/2-13-THD) | |
| | 18 | 1 | **104-7429** | 2 | PLATE | |
| | 19 | 1 | **104-7740** | 1 | PLATE AS (LH) | |
| | | 1 | **1F-0748** | 2 | NUT-WELD (1/2-13-THD) | |
| | 20 | 1 | **137-4515** | 2 | BUSHING | |
| | 21 | 1 | **137-4517** | 1 | SHAFT | |
| | 22 | 1 | *164-5608* | 2 | CONNECTOR AS | |
| | | | | | (EACH INCLUDES) | |
| | | 1 | **8T-1687** | 1 | CONNECTOR | |
| | | 1 | **3K-0360** | 1 | SEAL-O-RING | |
| | | 1 | **6V-8398** | 1 | SEAL-O-RING | |
| | 23 | 1 | **244-2587** | 1 | TUBE AS | |
| | 24 | 1 | **244-2591** | 1 | TUBE AS | |
| | 25 | 1 | **244-2593** | 1 | TUBE AS | |
| | 26 | 1 | **244-2597** | 1 | TUBE AS | |
| Y | 27 | 1 | **250-0549** | 1 | VALVE GP-BANK 5 (RH) | 927 |
| Y | 28 | 1 | **250-0568** | 1 | VALVE GP-BANK 7 (LH) | 960 |
| | 29 | 1 | *148-8318* | 2 | CONNECTOR AS | |
| | | | | | (EACH INCLUDES) | |
| | | 1 | **6V-8634** | 1 | CONNECTOR | |
| | | 1 | **3K-0360** | 1 | SEAL-O-RING | |
| | | 1 | **6V-8397** | 1 | SEAL-O-RING | |
| | 30 | 1 | *206-5123* | 2 | TEE AS | |
| | | | | | (EACH INCLUDES) | |
| | | 1 | **206-5122** | 1 | TEE | |
| | | 1 | **6V-8397** | 1 | SEAL-O-RING | |
| | | 1 | **6V-8398** | 1 | SEAL-O-RING | |
| | 31 | 1 | **2G-6747** | 1 | KNOB-BLADE TIP | |

## *250-0437* VALVE & LINKAGE GP *(contd.)* i02344355

| NOTE | REF NO | GRAPHIC REF | PART NUMBER | QTY | PART NAME 1 2 3 4 5 6 (PRODUCT LEVEL) | SEE PAGE |
|---|---|---|---|---|---|---|
| | 32 | 1 | **2G-6748** | 1 | KNOB-BLADE LIFT (RH) | |
| | 33 | 1 | **2G-6749** | 1 | KNOB-SIDESHIFT | |
| | 34 | 1 | **2G-6751** | 1 | KNOB-CIRCLE DRIVE | |
| | 35 | 1 | **2G-6752** | 1 | KNOB-ARTICULATION | |
| | 36 | 1 | **2G-6753** | 1 | KNOB-SCARIFIER | |
| | 37 | 1 | **2G-6754** | 1 | KNOB (DOZER LIFT, PLOW) | |
| | 38 | 1 | **2G-6755** | 1 | KNOB-CENTERSHIFT | |
| | 39 | 1 | **2G-6756** | 1 | KNOB-WHEEL LEAN | |
| | 40 | 1 | **2G-6757** | 1 | KNOB-BLADE LIFT (LH) | |
| | 41 | 1 | **2G-7107** | 1 | KNOB-WING LIFT | |
| | 42 | 1 | **2G-7108** | 1 | KNOB-WING TILT | |
| | 43 | 1 | **3J-1907** | 4 | SEAL-O-RING | |
| | 44 | 1 | **5P-1075** | 2 | WASHER-HARD (10.2X22.5X3-MM THK) | |
| | 45 | 1 | **5P-1076** | 6 | WASHER-HARD (13.5X30X4-MM THK) | |
| | 46 | 1 | **5P-2424** | 6 | BOLT (1/2-13X2.25-IN) | |
| | 47 | 1 | **6V-8188** | 2 | NUT (1/2-13-THD) | |
| | 48 | 1 | **6V-8397** | 8 | SEAL-O-RING | |
| | 49 | 1 | **6V-9836** | 2 | TEE-SWIVEL | |
| | 50 | 1 | **8F-6437** | 6 | WASHER (13.5X50.8X4.76-MM THK) | |
| | 51 | 1 | **8T-4121** | 8 | WASHER-HARD (11X21X2.5-MM THK) | |
| M | 52 | 1 | **8T-4136** | 4 | BOLT (M10X1.5X25-MM) | |
| M | 53 | 1 | **8T-4195** | 4 | BOLT (M10X1.5X30-MM) | |
| | 54 | 1 | **8T-9041** | 4 | CONNECTOR | |
| | 55 | 1 | **8T-9043** | 24 | BOLT (5/16-18X0.875-IN) | |
| | 56 | 1 | **9B-7237** | 2 | BOLT (3/8-16X1.25-IN) | |

B-USE AS REQUIRED
M-METRIC PART
Y-SEPARATE ILLUSTRATION

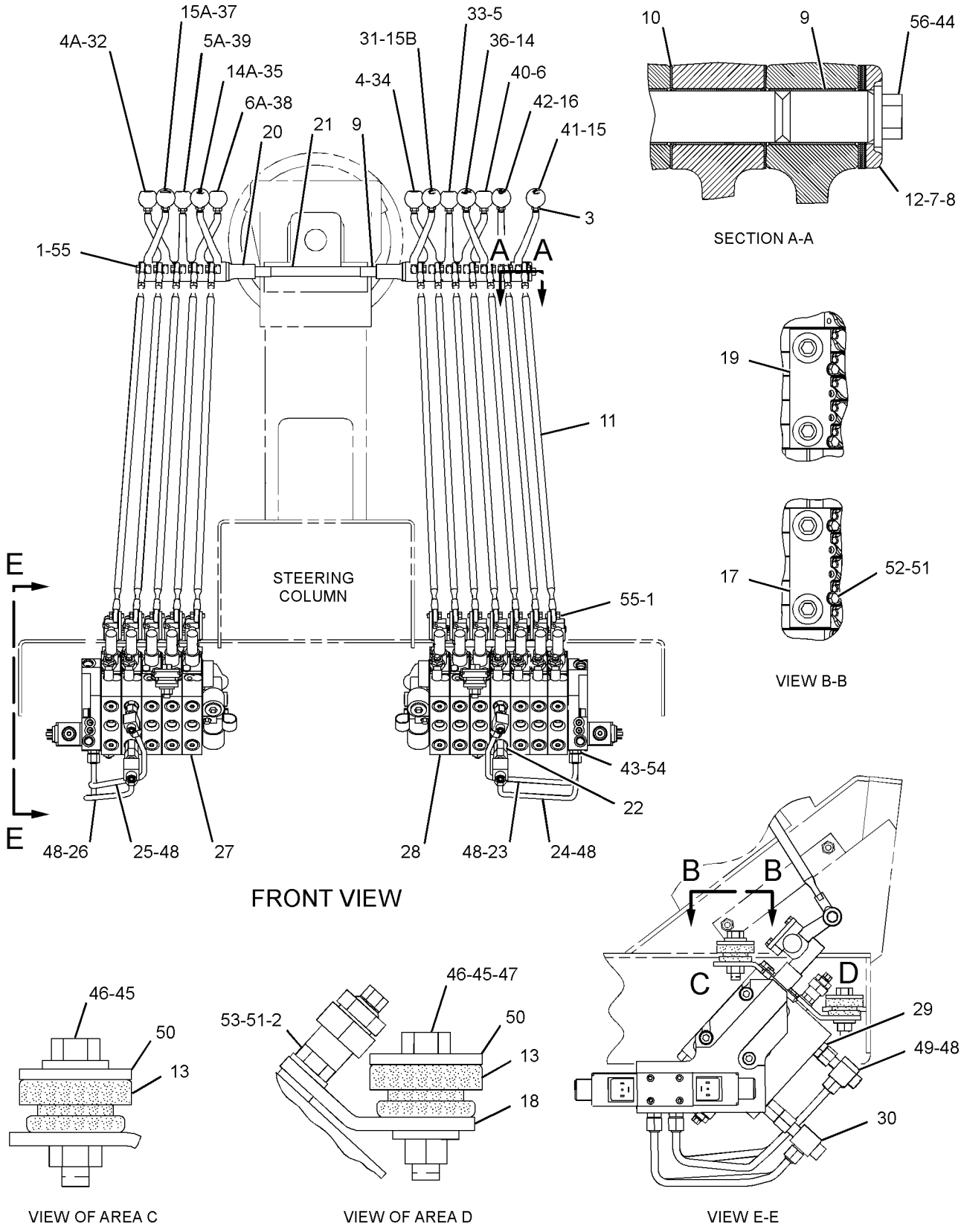


GRAPHIC #1 **<END>** g01153163

# HYDRAULIC SYSTEM

## *250-0438* VALVE & LINKAGE GP

**S/N: CCA1-UP**

**AN ATTACHMENT**

**SMCS-5051, 5063** **i02344361**

| NOTE | REF NO | GRAPHIC REF | PART NUMBER | QTY | PART NAME 1 2 3 4 5 6 (PRODUCT LEVEL) | SEE PAGE |
|---|---|---|---|---|---|---|
| | 1 | 1 | **3F-9556** | 24 | LOCKWASHER | |
| | 2 | 2 | **6B-0933** | 4 | SPACER (10.31X19.05X6.35-MM THK) | |
| | 3 | 1 | **6L-1962** | 12 | NUT-JAM (3/8-24-THD) | |
| | 4 | 1 | **8D-5632** | 1 | LEVER (CIRCLE DRIVE) | |
| | 4A | 1 | **8D-5632** | 1 | LEVER (BLADE LIFT, LH) | |
| | 5 | 1 | **8D-5633** | 1 | LEVER (SIDESHIFT) | |
| | 5A | 1 | **8D-5633** | 1 | LEVER (WHEEL LEAN) | |
| | 6 | 1 | **8D-5634** | 1 | LEVER (BLADE LIFT, RH) | |
| | 6A | 1 | **8D-5634** | 1 | LEVER (CENTERSHIFT) | |
| B | 7 | 2 | **8D-5636** | 4 | SHIM (0.254-MM THK) | |
| B | 8 | 2 | **8D-5637** | 4 | SHIM (0.762-MM THK) | |
| | 9 | 1,2 | **8D-5640** | 14 | BEARING | |
| | 10 | 2 | **8D-5641** | 12 | BEARING | |
| | 11 | 1 | *8X-4277* | 12 | ROD AS | |
| | | | | | (EACH INCLUDES) | |
| | | 1 | **146-0705** | 1 | ROD | |
| | | 1 | **6V-8186** | 1 | NUT-FULL (5/16-24-THD) | |
| | | 1 | **7H-3641** | 1 | END-ROD (5/16-24-THD) | |
| | | 1 | **8L-8598** | 1 | ROD END (LH) | |
| | 12 | 2 | **8X-5499** | 2 | RETAINER | |
| | 13 | 2 | **9M-1853** | 6 | MOUNTING | |
| | 14 | 1 | **101-2457** | 1 | LEVER (WING TILT) | |
| | 14A | 1 | **101-2457** | 1 | LEVER (ARTICULATION) | |
| | 15 | 1 | **101-2458** | 1 | LEVER (BLADE TIP) | |
| | 15A | 1 | **101-2458** | 1 | LEVER (PLOW, DOZER) | |
| | 16 | 1 | **103-1597** | 1 | LEVER (WING LIFT) | |
| | 16A | 1 | **103-1597** | 1 | LEVER (PLOW, BULLDOZER ANGLE) | |
| | 17 | 2 | **104-7419** | 1 | PLATE AS (RH) | |
| | | 2 | **1F-0748** | 2 | NUT-WELD (1/2-13-THD) | |
| | 18 | 2 | **104-7429** | 2 | PLATE | |
| | 19 | 2 | **104-7740** | 1 | PLATE AS (LH) | |
| | | 2 | **1F-0748** | 2 | NUT-WELD (1/2-13-THD) | |
| | 20 | 1 | **137-4515** | 2 | BUSHING | |
| | 21 | 1 | **137-4517** | 1 | SHAFT | |
| | 22 | 2 | *164-5608* | 2 | CONNECTOR AS | |
| | | | | | (EACH INCLUDES) | |
| | | 2 | **8T-1687** | 1 | CONNECTOR | |
| | | 2 | **3K-0360** | 1 | SEAL-O-RING | |
| | | 2 | **6V-8398** | 1 | SEAL-O-RING | |
| | 23 | 1 | **244-2586** | 1 | TUBE AS | |
| | 24 | 1 | **244-2590** | 1 | TUBE AS | |
| | 25 | 1 | **244-2594** | 1 | TUBE AS | |
| | 26 | 1 | **244-2598** | 1 | TUBE AS | |
| Y | 27 | 1 | **250-0552** | 1 | VALVE GP-BANK 6 (RH) | 940 |
| Y | 28 | 1 | **250-0566** | 1 | VALVE GP-BANK 6 (LH) | 944 |
| | 29 | 1 | **117-0472** | 1 | KNOB (PLOW, BULLDOZER ANGLE) | |
| | 30 | 2 | *148-8318* | 2 | CONNECTOR AS | |
| | | | | | (EACH INCLUDES) | |
| | | 2 | **6V-8634** | 1 | CONNECTOR | |
| | | 2 | **3K-0360** | 1 | SEAL-O-RING | |
| | | 2 | **6V-8397** | 1 | SEAL-O-RING | |
| | 31 | 2 | *206-5123* | 2 | TEE AS | |
| | | | | | (EACH INCLUDES) | |
| | | 2 | **206-5122** | 1 | TEE | |
| | | 2 | **6V-8397** | 1 | SEAL-O-RING | |
| | | 2 | **6V-8398** | 1 | SEAL-O-RING | |

## *250-0438* **VALVE & LINKAGE GP** *(contd.)* **i02344361**

| NOTE | REF NO | GRAPHIC REF | PART NUMBER | QTY | PART NAME 1 2 3 4 5 6 (PRODUCT LEVEL) | SEE PAGE |
|---|---|---|---|---|---|---|
| | 32 | 1 | **2G-6747** | 1 | KNOB-BLADE TIP | |
| | 33 | 1 | **2G-6748** | 1 | KNOB-BLADE LIFT (RH) | |
| | 34 | 1 | **2G-6749** | 1 | KNOB-SIDESHIFT | |
| | 35 | 1 | **2G-6751** | 1 | KNOB-CIRCLE DRIVE | |
| | 36 | 1 | **2G-6752** | 1 | KNOB-ARTICULATION | |
| | 37 | 1 | **2G-6754** | 1 | KNOB (DOZER LIFT, PLOW) | |
| | 38 | 1 | **2G-6755** | 1 | KNOB-CENTERSHIFT | |
| | 39 | 1 | **2G-6756** | 1 | KNOB-WHEEL LEAN | |
| | 40 | 1 | **2G-6757** | 1 | KNOB-BLADE LIFT (LH) | |
| | 41 | 1 | **2G-7107** | 1 | KNOB-WING LIFT | |
| | 42 | 1 | **2G-7108** | 1 | KNOB-WING TILT | |
| | 43 | 2 | **3J-1907** | 4 | SEAL-O-RING | |
| | 44 | 2 | **5P-1075** | 2 | WASHER-HARD (10.2X22.5X3-MM THK) | |
| | 45 | 2 | **5P-1076** | 6 | WASHER-HARD (13.5X30X4-MM THK) | |
| | 46 | 2 | **5P-2424** | 6 | BOLT (1/2-13X2.25-IN) | |
| | 47 | 2 | **6V-8188** | 2 | NUT (1/2-13-THD) | |
| | 48 | 1,2 | **6V-8397** | 8 | SEAL-O-RING | |
| | 49 | 2 | **6V-9836** | 2 | TEE-SWIVEL | |
| | 50 | 2 | **8F-6437** | 6 | WASHER (13.5X50.8X4.76-MM THK) | |
| | 51 | 2 | **8T-4121** | 8 | WASHER-HARD (11X21X2.5-MM THK) | |
| M | 52 | 2 | **8T-4136** | 4 | BOLT (M10X1.5X25-MM) | |
| M | 53 | 2 | **8T-4195** | 4 | BOLT (M10X1.5X30-MM) | |
| | 54 | 2 | **8T-9041** | 4 | CONNECTOR | |
| | 55 | 1 | **8T-9043** | 24 | BOLT (5/16-18X0.875-IN) | |
| | 56 | 2 | **9B-7237** | 2 | BOLT (3/8-16X1.25-IN) | |

B-USE AS REQUIRED
M-METRIC PART
Y-SEPARATE ILLUSTRATION

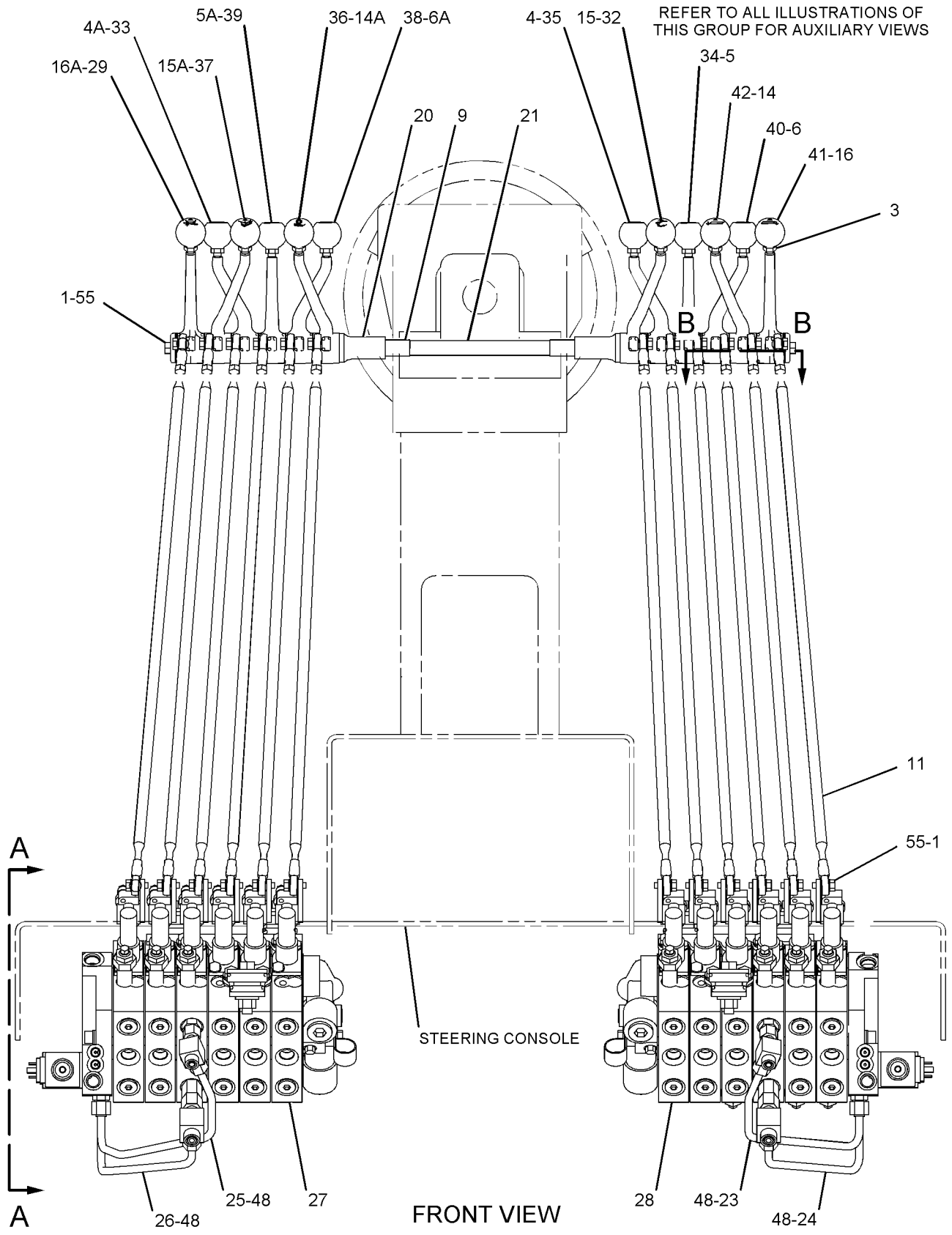


GRAPHIC #1

g01137786

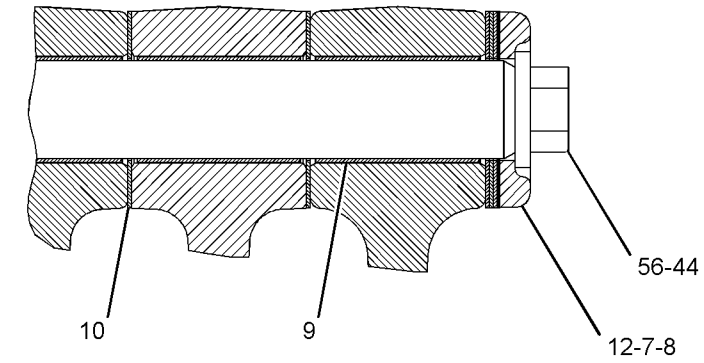


SECTION B-B

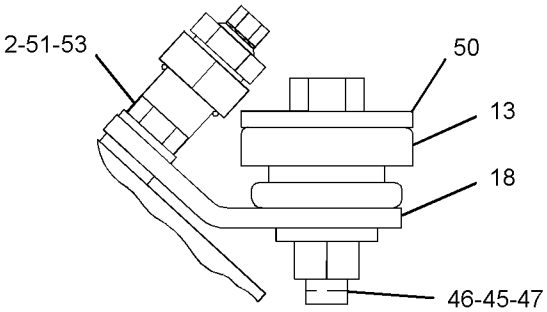


VIEW OF AREA C

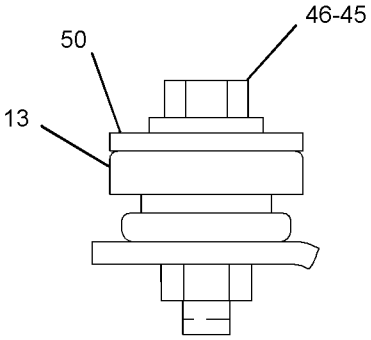


VIEW OF AREA D

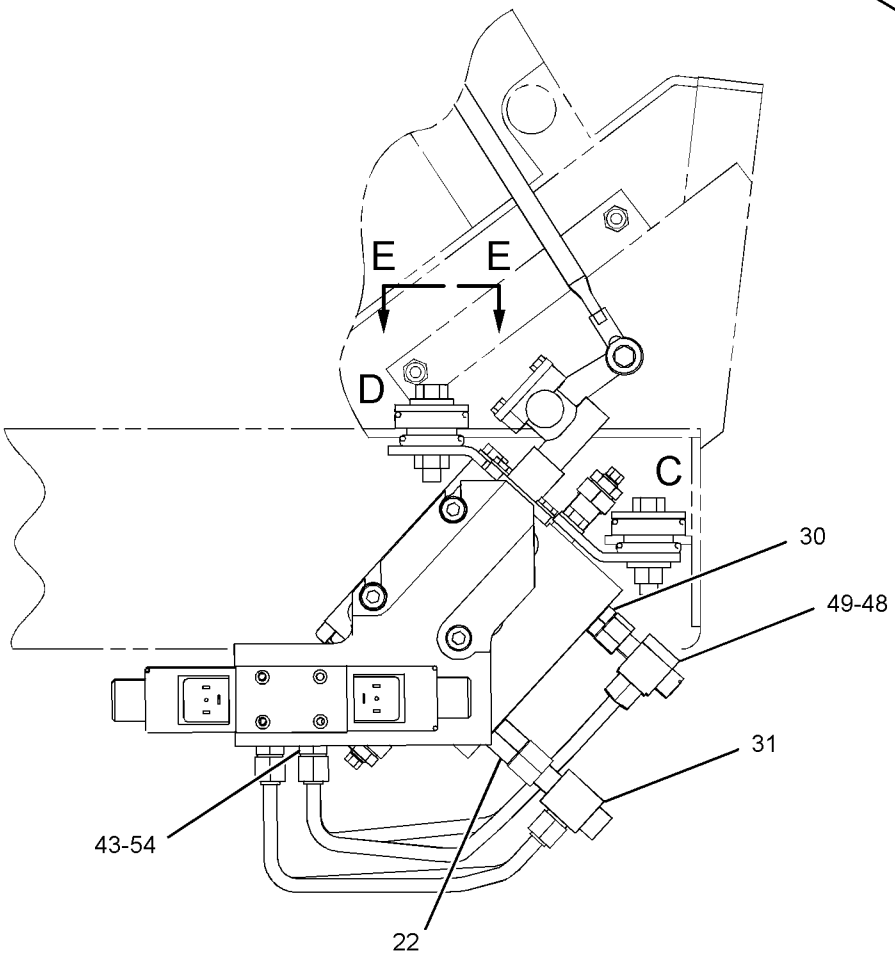


VIEW A-A

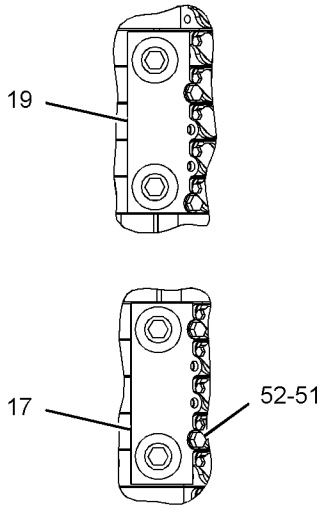


VIEW E-E

GRAPHIC #2 **<END>** g01137787

# HYDRAULIC SYSTEM

## *250-0439* VALVE & LINKAGE GP—5-BANK, RH; 7-BANK, LH

**S/N: CCA1-UP**

**PART OF 250-0451 CONTROL AR-HYDRAULIC**

**AN ATTACHMENT**

**SMCS-5051, 5063** **i02369829**

| NOTE | REF NO | GRAPHIC REF | PART NUMBER | QTY | PART NAME 1 2 3 4 5 6 (PRODUCT LEVEL) | SEE PAGE |
|---|---|---|---|---|---|---|
| | 1 | 1 | **3F-9556** | 24 | LOCKWASHER | |
| | 2 | 1 | **6B-0933** | 4 | SPACER (10.31X19.05X6.35-MM THK) | |
| | 3 | 1 | **6L-1962** | 12 | NUT-JAM (3/8-24-THD) | |
| | 4 | 1 | **8D-5632** | 1 | LEVER (CIRCLE DRIVE) | |
| | 4A | 1 | **8D-5632** | 1 | LEVER (BLADE LIFT, LH) | |
| | 5 | 1 | **8D-5633** | 1 | LEVER (SIDESHIFT) | |
| | 5A | 1 | **8D-5633** | 1 | LEVER (WHEEL LEAN) | |
| | 6 | 1 | **8D-5634** | 1 | LEVER (BLADE LIFT, RH) | |
| | 6A | 1 | **8D-5634** | 1 | LEVER (CENTERSHIFT) | |
| B | 7 | 1 | **8D-5636** | 4 | SHIM (0.254-MM THK) | |
| B | 8 | 1 | **8D-5637** | 4 | SHIM (0.762-MM THK) | |
| | 9 | 1 | **8D-5640** | 14 | BEARING | |
| | 10 | 1 | **8D-5641** | 12 | BEARING | |
| | 11 | 1 | *8X-4277* | 12 | ROD AS | |
| | | | | | (EACH INCLUDES) | |
| | | 1 | **146-0705** | 1 | ROD | |
| | | 1 | **6V-8186** | 1 | NUT-FULL (5/16-24-THD) | |
| | | 1 | **7H-3641** | 1 | END-ROD (5/16-24-THD) | |
| | | 1 | **8L-8598** | 1 | ROD END (LH) | |
| | 12 | 1 | **8X-5499** | 2 | RETAINER | |
| | 13 | 1 | **9M-1853** | 6 | MOUNTING | |
| | 14 | 1 | **101-2457** | 1 | LEVER (RIPPER) | |
| | 14A | 1 | **101-2457** | 1 | LEVER (ARTICULATION) | |
| | 15 | 1 | **101-2458** | 1 | LEVER (WING LIFT) | |
| | 15A | 1 | **101-2458** | 1 | LEVER (PLOW, DOZER) | |
| | 15B | 1 | **101-2458** | 1 | LEVER (BLADE TIP) | |
| | 16 | 1 | **103-1597** | 1 | LEVER (WING TILT) | |
| | 17 | 1 | **104-7419** | 1 | PLATE AS (RH) | |
| | | 1 | **1F-0748** | 2 | NUT-WELD (1/2-13-THD) | |
| | 18 | 1 | **104-7429** | 2 | PLATE | |
| | 19 | 1 | **104-7740** | 1 | PLATE AS (LH) | |
| | | 1 | **1F-0748** | 2 | NUT-WELD (1/2-13-THD) | |
| | 20 | 1 | **137-4515** | 2 | BUSHING | |
| | 21 | 1 | **137-4517** | 1 | SHAFT | |
| | 22 | 1 | *164-5608* | 2 | CONNECTOR AS | |
| | | | | | (EACH INCLUDES) | |
| | | 1 | **8T-1687** | 1 | CONNECTOR | |
| | | 1 | **3K-0360** | 1 | SEAL-O-RING | |
| | | 1 | **6V-8398** | 1 | SEAL-O-RING | |
| | 23 | 1 | **244-2587** | 1 | TUBE AS | |
| | 24 | 1 | **244-2591** | 1 | TUBE AS | |
| | 25 | 1 | **244-2593** | 1 | TUBE AS | |
| | 26 | 1 | **244-2597** | 1 | TUBE AS | |
| Y | 27 | 1 | **250-0548** | 1 | VALVE GP-BANK 5 (RH) | 926 |
| Y | 28 | 1 | **250-0571** | 1 | VALVE GP-BANK 7 (LH) | 962 |
| | 29 | 1 | *148-8318* | 2 | CONNECTOR AS | |
| | | | | | (EACH INCLUDES) | |
| | | 1 | **6V-8634** | 1 | CONNECTOR | |
| | | 1 | **3K-0360** | 1 | SEAL-O-RING | |
| | | 1 | **6V-8397** | 1 | SEAL-O-RING | |
| | 30 | 1 | *206-5123* | 2 | TEE AS | |
| | 31 | 1 | **2G-6740** | 1 | KNOB-RIPPER | |
| | 32 | 1 | **2G-6747** | 1 | KNOB-BLADE TIP | |
| | 33 | 1 | **2G-6748** | 1 | KNOB-BLADE LIFT | |
| | 34 | 1 | **2G-6749** | 1 | KNOB-SIDESHIFT | |

## *250-0439* **VALVE & LINKAGE GP** *(contd.)* **i02369829**

| NOTE | REF NO | GRAPHIC REF | PART NUMBER | QTY | PART NAME 1 2 3 4 5 6 (PRODUCT LEVEL) | SEE PAGE |
|---|---|---|---|---|---|---|
| | 35 | 1 | **2G-6751** | 1 | KNOB-CIRCLE DRIVE | |
| | 36 | 1 | **2G-6752** | 1 | KNOB-ARTICULATION | |
| | 37 | 1 | **2G-6754** | 1 | KNOB (DOZER LIFT, PLOW) | |
| | 38 | 1 | **2G-6755** | 1 | KNOB-CENTERSHIFT | |
| | 39 | 1 | **2G-6756** | 1 | KNOB-WHEEL LEAN | |
| | 40 | 1 | **2G-6757** | 1 | KNOB-BLADE LIFT | |
| | 41 | 1 | **2G-7107** | 1 | KNOB-WING LIFT | |
| | 42 | 1 | **2G-7108** | 1 | KNOB-WING TILT | |
| | 43 | 1 | **3J-1907** | 4 | SEAL-O-RING | |
| | 44 | 1 | **5P-1075** | 2 | WASHER-HARD (10.2X22.5X3-MM THK) | |
| | 45 | 1 | **5P-1076** | 6 | WASHER-HARD (13.5X30X4-MM THK) | |
| | 46 | 1 | **5P-2424** | 6 | BOLT (1/2-13X2.25-IN) | |
| | 47 | 1 | **6V-8188** | 2 | NUT (1/2-13-THD) | |
| | 48 | 1 | **6V-8397** | 8 | SEAL-O-RING | |
| | 49 | 1 | **6V-9836** | 2 | TEE-SWIVEL | |
| | 50 | 1 | **8F-6437** | 6 | WASHER (13.5X50.8X4.76-MM THK) | |
| | 51 | 1 | **8T-4121** | 8 | WASHER-HARD (11X21X2.5-MM THK) | |
| M | 52 | 1 | **8T-4136** | 4 | BOLT (M10X1.5X25-MM) | |
| M | 53 | 1 | **8T-4195** | 4 | BOLT (M10X1.5X30-MM) | |
| | 54 | 1 | **8T-9041** | 4 | CONNECTOR | |
| | 55 | 1 | **8T-9043** | 24 | BOLT (5/16-18X0.875-IN) | |
| | 56 | 1 | **9B-7237** | 2 | BOLT (3/8-16X1.25-IN) | |

B-USE AS REQUIRED
M-METRIC PART
Y-SEPARATE ILLUSTRATION

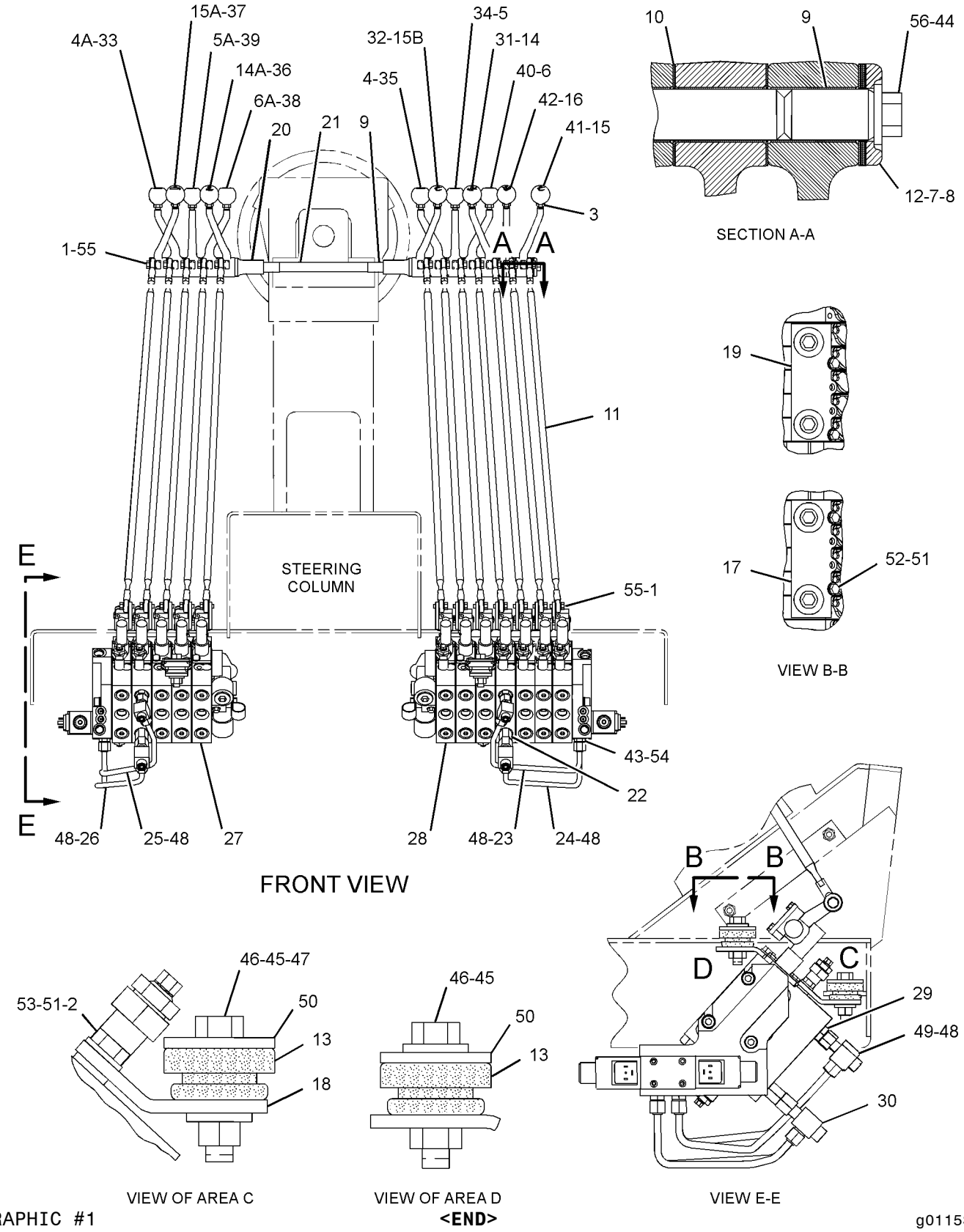


GRAPHIC #1

**<END>**

g01153197

# HYDRAULIC SYSTEM

## *250-0440* VALVE & LINKAGE GP—5-BANK, RH; 7-BANK, LH

**S/N: CCA1-UP**

**PART OF 250-0452 CONTROL AR-HYDRAULIC**

**AN ATTACHMENT**

**SMCS-5051, 5063** **i02369386**

| NOTE | REF NO | GRAPHIC REF | PART NUMBER | QTY | PART NAME 1 2 3 4 5 6 (PRODUCT LEVEL) | SEE PAGE |
|---|---|---|---|---|---|---|
| | 1 | 1 | **3F-9556** | 24 | LOCKWASHER | |
| | 2 | 1 | **6B-0933** | 4 | SPACER (10.31X19.05X6.35-MM THK) | |
| | 3 | 1 | **6L-1962** | 12 | NUT-JAM (3/8-24-THD) | |
| | 4 | 1 | **8D-5632** | 1 | LEVER (CIRCLE DRIVE) | |
| | 4A | 1 | **8D-5632** | 1 | LEVER (BLADE LIFT, LH) | |
| | 5 | 1 | **8D-5633** | 1 | LEVER (SIDESHIFT) | |
| | 5A | 1 | **8D-5633** | 1 | LEVER (WHEEL LEAN) | |
| | 6 | 1 | **8D-5634** | 1 | LEVER (BLADE LIFT, RH) | |
| | 6A | 1 | **8D-5634** | 1 | LEVER (CENTERSHIFT) | |
| B | 7 | 1 | **8D-5636** | 4 | SHIM (0.254-MM THK) | |
| B | 8 | 1 | **8D-5637** | 4 | SHIM (0.762-MM THK) | |
| | 9 | 1 | **8D-5640** | 14 | BEARING | |
| | 10 | 1 | **8D-5641** | 12 | BEARING | |
| | 11 | 1 | *8X-4277* | 12 | ROD AS | |
| | | | | | (EACH INCLUDES) | |
| | | 1 | **146-0705** | 1 | ROD | |
| | | 1 | **6V-8186** | 1 | NUT-FULL (5/16-24-THD) | |
| | | 1 | **7H-3641** | 1 | END-ROD (5/16-24-THD) | |
| | | 1 | **8L-8598** | 1 | ROD END (LH) | |
| | 12 | 1 | **8X-5499** | 2 | RETAINER | |
| | 13 | 1 | **9M-1853** | 6 | MOUNTING | |
| | 14 | 1 | **101-2457** | 1 | LEVER (RIPPER) | |
| | 14A | 1 | **101-2457** | 1 | LEVER (ARTICULATION) | |
| | 15 | 1 | **101-2458** | 1 | LEVER (WING LIFT) | |
| | 15A | 1 | **101-2458** | 1 | LEVER (PLOW, DOZER) | |
| | 15B | 1 | **101-2458** | 1 | LEVER (BLADE TIP) | |
| | 16 | 1 | **103-1597** | 1 | LEVER (WING TILT) | |
| | 17 | 1 | **104-7419** | 1 | PLATE AS (RH) | |
| | | 1 | **1F-0748** | 2 | NUT-WELD (1/2-13-THD) | |
| | 18 | 1 | **104-7429** | 2 | PLATE | |
| | 19 | 1 | **104-7740** | 1 | PLATE AS (LH) | |
| | | 1 | **1F-0748** | 2 | NUT-WELD (1/2-13-THD) | |
| | 20 | 1 | **137-4515** | 2 | BUSHING | |
| | 21 | 1 | **137-4517** | 1 | SHAFT | |
| | 22 | 1 | *164-5608* | 2 | CONNECTOR AS | |
| | | | | | (EACH INCLUDES) | |
| | | 1 | **8T-1687** | 1 | CONNECTOR | |
| | | 1 | **3K-0360** | 1 | SEAL-O-RING | |
| | | 1 | **6V-8398** | 1 | SEAL-O-RING | |
| | 23 | 1 | **244-2587** | 1 | TUBE AS | |
| | 24 | 1 | **244-2591** | 1 | TUBE AS | |
| | 25 | 1 | **244-2593** | 1 | TUBE AS | |
| | 26 | 1 | **244-2597** | 1 | TUBE AS | |
| Y | 27 | 1 | **250-0549** | 1 | VALVE GP-BANK 5 (RH) | 927 |
| Y | 28 | 1 | **250-0572** | 1 | VALVE GP-BANK 7 (LH) | 964 |
| | 29 | 1 | *148-8318* | 2 | CONNECTOR AS | |
| | | | | | (EACH INCLUDES) | |
| | | 1 | **6V-8634** | 1 | CONNECTOR | |
| | | 1 | **3K-0360** | 1 | SEAL-O-RING | |
| | | 1 | **6V-8397** | 1 | SEAL-O-RING | |
| | 30 | 1 | *206-5123* | 2 | TEE AS | |
| | | | | | (EACH INCLUDES) | |
| | | 1 | **206-5122** | 1 | TEE | |
| | | 1 | **6V-8397** | 1 | SEAL-O-RING | |
| | | 1 | **6V-8398** | 1 | SEAL-O-RING | |

## *250-0440* VALVE & LINKAGE GP *(contd.)* i02369386

| NOTE | REF NO | GRAPHIC REF | PART NUMBER | QTY | PART NAME 1 2 3 4 5 6 (PRODUCT LEVEL) | SEE PAGE |
|---|---|---|---|---|---|---|
| | 31 | 1 | **2G-6740** | 1 | KNOB-RIPPER | |
| | 32 | 1 | **2G-6747** | 1 | KNOB-BLADE TIP | |
| | 33 | 1 | **2G-6748** | 1 | KNOB-BLADE LIFT | |
| | 34 | 1 | **2G-6749** | 1 | KNOB-SIDESHIFT | |
| | 35 | 1 | **2G-6751** | 1 | KNOB-CIRCLE DRIVE | |
| | 36 | 1 | **2G-6752** | 1 | KNOB-ARTICULATION | |
| | 37 | 1 | **2G-6754** | 1 | KNOB (DOZER LIFT, PLOW) | |
| | 38 | 1 | **2G-6755** | 1 | KNOB-CENTERSHIFT | |
| | 39 | 1 | **2G-6756** | 1 | KNOB-WHEEL LEAN | |
| | 40 | 1 | **2G-6757** | 1 | KNOB-BLADE LIFT | |
| | 41 | 1 | **2G-7107** | 1 | KNOB-WING LIFT | |
| | 42 | 1 | **2G-7108** | 1 | KNOB-WING TILT | |
| | 43 | 1 | **3J-1907** | 4 | SEAL-O-RING | |
| | 44 | 1 | **5P-1075** | 2 | WASHER-HARD (10.2X22.5X3-MM THK) | |
| | 45 | 1 | **5P-1076** | 6 | WASHER-HARD (13.5X30X4-MM THK) | |
| | 46 | 1 | **5P-2424** | 6 | BOLT (1/2-13X2.25-IN) | |
| | 47 | 1 | **6V-8188** | 2 | NUT (1/2-13-THD) | |
| | 48 | 1 | **6V-8397** | 8 | SEAL-O-RING | |
| | 49 | 1 | **6V-9836** | 2 | TEE-SWIVEL | |
| | 50 | 1 | **8F-6437** | 6 | WASHER (13.5X50.8X4.76-MM THK) | |
| | 51 | 1 | **8T-4121** | 8 | WASHER-HARD (11X21X2.5-MM THK) | |
| M | 52 | 1 | **8T-4136** | 4 | BOLT (M10X1.5X25-MM) | |
| M | 53 | 1 | **8T-4195** | 4 | BOLT (M10X1.5X30-MM) | |
| | 54 | 1 | **8T-9041** | 4 | CONNECTOR | |
| | 55 | 1 | **8T-9043** | 24 | BOLT (5/16-18X0.875-IN) | |
| | 56 | 1 | **9B-7237** | 2 | BOLT (3/8-16X1.25-IN) | |

B-USE AS REQUIRED
M-METRIC PART
Y-SEPARATE ILLUSTRATION

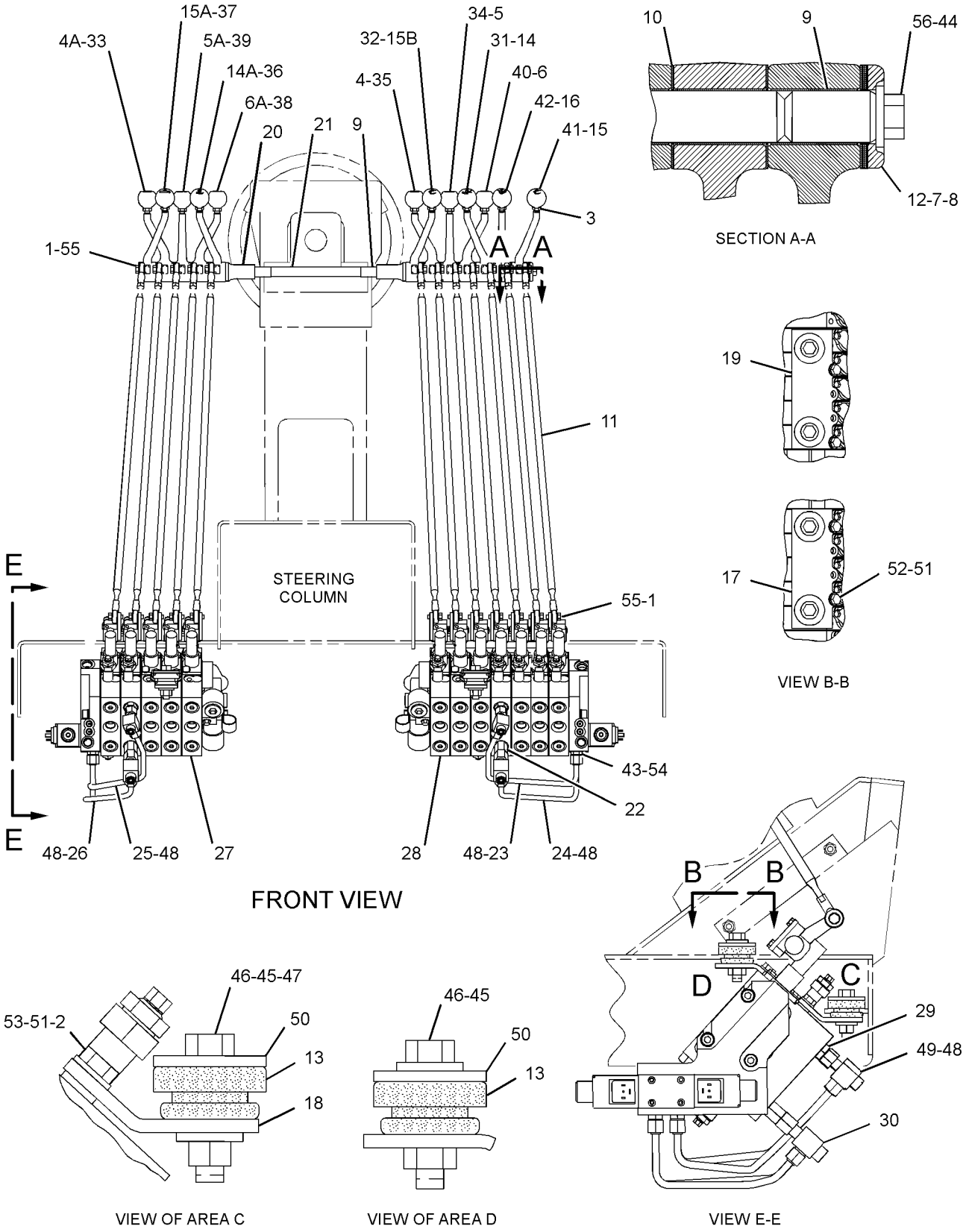


GRAPHIC #1

**<END>**

g01153182

# HYDRAULIC SYSTEM

## *250-0441* VALVE & LINKAGE GP–6-BANK, RH, LH

**S/N: CCA1-UP**

**PART OF 250-0453 CONTROL AR-HYDRAULIC**

**AN ATTACHMENT**

**SMCS-5051, 5063** **i02369553**

| NOTE | REF NO | GRAPHIC REF | PART NUMBER | QTY | PART NAME 1 2 3 4 5 6 (PRODUCT LEVEL) | SEE PAGE |
|---|---|---|---|---|---|---|
| | 1 | 1 | **3F-9556** | 24 | LOCKWASHER | |
| | 2 | 2 | **6B-0933** | 4 | SPACER (10.31X19.05X6.35-MM THK) | |
| | 3 | 1 | **6L-1962** | 12 | NUT-JAM (3/8-24-THD) | |
| | 4 | 1 | **8D-5632** | 1 | LEVER (CIRCLE DRIVE) | |
| | 4A | 1 | **8D-5632** | 1 | LEVER (BLADE LIFT, LH) | |
| | 5 | 1 | **8D-5633** | 1 | LEVER (SIDESHIFT) | |
| | 5A | 1 | **8D-5633** | 1 | LEVER (WHEEL LEAN) | |
| | 6 | 1 | **8D-5634** | 1 | LEVER (BLADE LIFT, RH) | |
| | 6A | 1 | **8D-5634** | 1 | LEVER (CENTERSHIFT) | |
| B | 7 | 2 | **8D-5636** | 4 | SHIM (0.254-MM THK) | |
| B | 8 | 2 | **8D-5637** | 4 | SHIM (0.762-MM THK) | |
| | 9 | 1,2 | **8D-5640** | 14 | BEARING | |
| | 10 | 2 | **8D-5641** | 12 | BEARING | |
| | 11 | 1 | *8X-4277* | 12 | ROD AS | |
| | | | | | (EACH INCLUDES) | |
| | | 1 | **146-0705** | 1 | ROD | |
| | | 1 | **6V-8186** | 1 | NUT-FULL (5/16-24-THD) | |
| | | 1 | **7H-3641** | 1 | END-ROD (5/16-24-THD) | |
| | | 1 | **8L-8598** | 1 | ROD END (LH) | |
| | 12 | 2 | **8X-5499** | 2 | RETAINER | |
| | 13 | 2 | **9M-1853** | 6 | MOUNTING | |
| | 14 | 1 | **101-2457** | 1 | LEVER (RIPPER) | |
| | 14A | 1 | **101-2457** | 1 | LEVER (ARTICULATION) | |
| | 15 | 1 | **101-2458** | 1 | LEVER (BLADE TIP) | |
| | 15A | 1 | **101-2458** | 1 | LEVER (WING LIFT) | |
| | 16 | 1 | **103-1597** | 1 | LEVER (PLOW, DOZER) | |
| | 16A | 1 | **103-1597** | 1 | LEVER (WING TILT) | |
| | 17 | 2 | **104-7419** | 1 | PLATE AS (RH) | |
| | | 2 | **1F-0748** | 2 | NUT-WELD (1/2-13-THD) | |
| | 18 | 2 | **104-7429** | 2 | PLATE | |
| | 19 | 2 | **104-7740** | 1 | PLATE AS (LH) | |
| | | 2 | **1F-0748** | 2 | NUT-WELD (1/2-13-THD) | |
| | 20 | 1 | **137-4515** | 2 | BUSHING | |
| | 21 | 1 | **137-4517** | 1 | SHAFT | |
| | 22 | 2 | *164-5608* | 2 | CONNECTOR AS | |
| | | | | | (EACH INCLUDES) | |
| | | 2 | **8T-1687** | 1 | CONNECTOR | |
| | | 2 | **3K-0360** | 1 | SEAL-O-RING | |
| | | 2 | **6V-8398** | 1 | SEAL-O-RING | |
| | 23 | 1 | **244-2586** | 1 | TUBE AS | |
| | 24 | 1 | **244-2590** | 1 | TUBE AS | |
| | 25 | 1 | **244-2594** | 1 | TUBE AS | |
| | 26 | 1 | **244-2598** | 1 | TUBE AS | |
| Y | 27 | 1 | **250-0573** | 1 | VALVE GP-BANK 6 (LH) | 948 |
| Y | 28 | 1 | **250-0574** | 1 | VALVE GP-BANK 6 (RH) | 950 |
| | 29 | 2 | *148-8318* | 2 | CONNECTOR AS | |
| | | | | | (EACH INCLUDES) | |
| | | 2 | **6V-8634** | 1 | CONNECTOR | |
| | | 2 | **3K-0360** | 1 | SEAL-O-RING | |
| | | 2 | **6V-8397** | 1 | SEAL-O-RING | |
| | 30 | 2 | *206-5123* | 2 | TEE AS | |
| | | | | | (EACH INCLUDES) | |
| | | 2 | **206-5122** | 1 | TEE | |
| | | 2 | **6V-8397** | 1 | SEAL-O-RING | |
| | | 2 | **6V-8398** | 1 | SEAL-O-RING | |

## *250-0441* **VALVE & LINKAGE GP** *(contd.)* **i02369553**

| NOTE | REF NO | GRAPHIC REF | PART NUMBER | QTY | PART NAME 1 2 3 4 5 6 (PRODUCT LEVEL) | SEE PAGE |
|---|---|---|---|---|---|---|
| | 31 | 1 | **2G-6740** | 1 | KNOB-RIPPER | |
| | 32 | 1 | **2G-6747** | 1 | KNOB-BLADE TIP | |
| | 33 | 1 | **2G-6748** | 1 | KNOB-BLADE LIFT | |
| | 34 | 1 | **2G-6749** | 1 | KNOB-SIDESHIFT | |
| | 35 | 1 | **2G-6751** | 1 | KNOB-CIRCLE DRIVE | |
| | 36 | 1 | **2G-6752** | 1 | KNOB-ARTICULATION | |
| | 37 | 1 | **2G-6754** | 1 | KNOB (DOZER LIFT, PLOW) | |
| | 38 | 1 | **2G-6755** | 1 | KNOB-CENTERSHIFT | |
| | 39 | 1 | **2G-6756** | 1 | KNOB-WHEEL LEAN | |
| | 40 | 1 | **2G-6757** | 1 | KNOB-BLADE LIFT | |
| | 41 | 1 | **2G-7107** | 1 | KNOB-WING LIFT | |
| | 42 | 1 | **2G-7108** | 1 | KNOB-WING TILT | |
| | 43 | 2 | **3J-1907** | 4 | SEAL-O-RING | |
| | 44 | 2 | **5P-1075** | 2 | WASHER-HARD (10.2X22.5X3-MM THK) | |
| | 45 | 2 | **5P-1076** | 6 | WASHER-HARD (13.5X30X4-MM THK) | |
| | 46 | 2 | **5P-2424** | 6 | BOLT (1/2-13X2.25-IN) | |
| | 47 | 2 | **6V-8188** | 2 | NUT (1/2-13-THD) | |
| | 48 | 1,2 | **6V-8397** | 8 | SEAL-O-RING | |
| | 49 | 2 | **6V-9836** | 2 | TEE-SWIVEL | |
| | 50 | 2 | **8F-6437** | 6 | WASHER (13.5X50.8X4.76-MM THK) | |
| | 51 | 2 | **8T-4121** | 8 | WASHER-HARD (11X21X2.5-MM THK) | |
| M | 52 | 2 | **8T-4136** | 4 | BOLT (M10X1.5X25-MM) | |
| M | 53 | 2 | **8T-4195** | 4 | BOLT (M10X1.5X30-MM) | |
| | 54 | 2 | **8T-9041** | 4 | CONNECTOR | |
| | 55 | 1 | **8T-9043** | 24 | BOLT (5/16-18X0.875-IN) | |
| | 56 | 2 | **9B-7237** | 2 | BOLT (3/8-16X1.25-IN) | |

B-USE AS REQUIRED
M-METRIC PART
Y-SEPARATE ILLUSTRATION

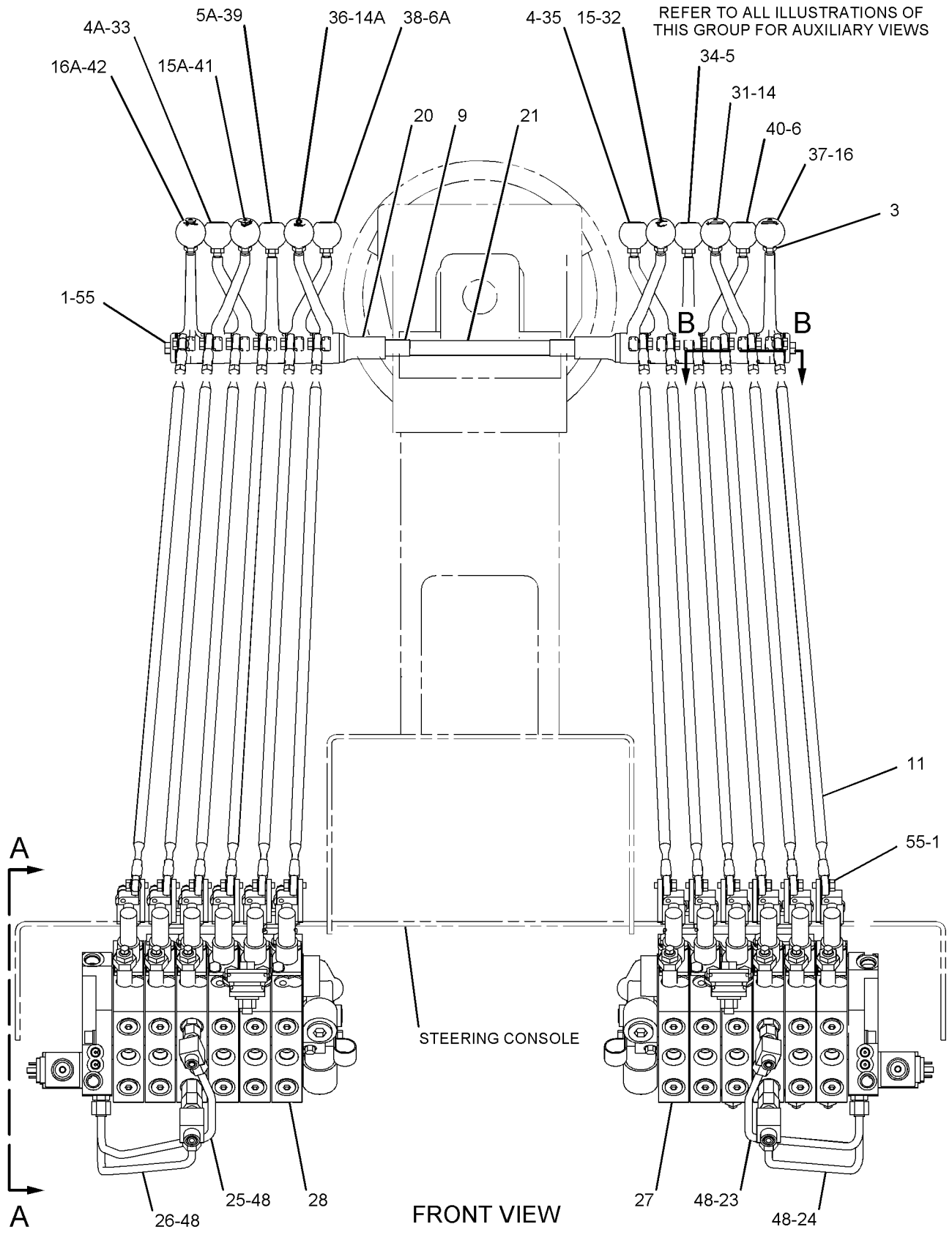


GRAPHIC #1

g01137781

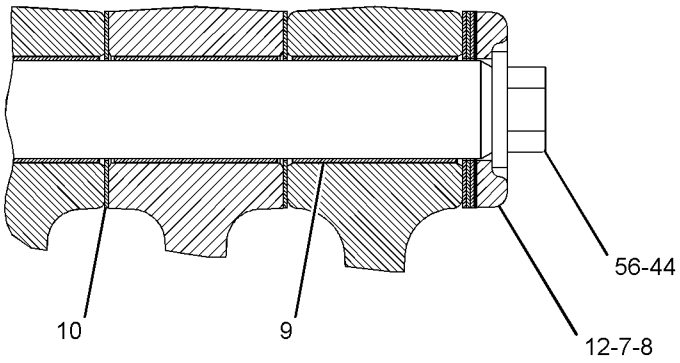


SECTION B-B

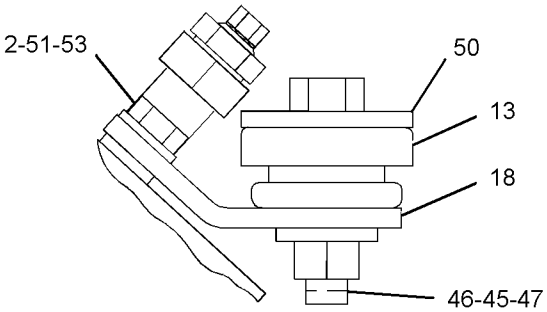


VIEW OF AREA C

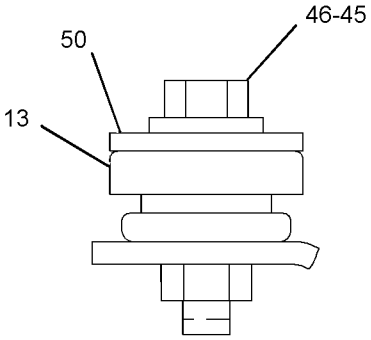


VIEW OF AREA D

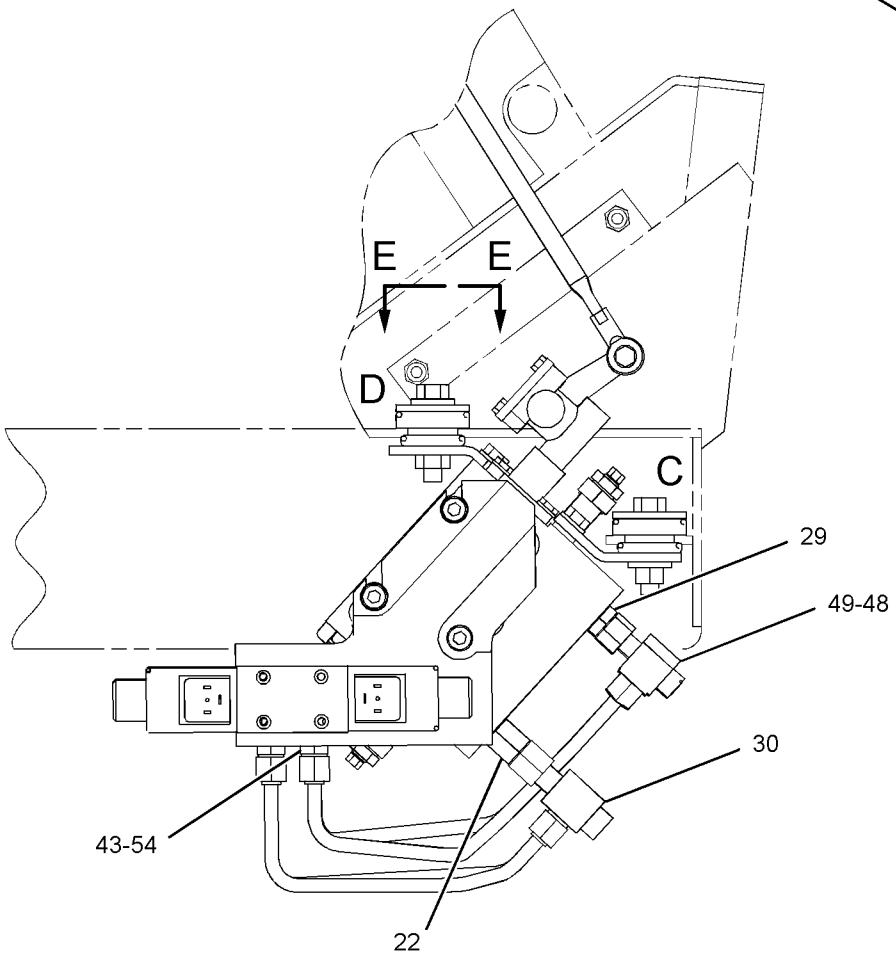


VIEW A-A

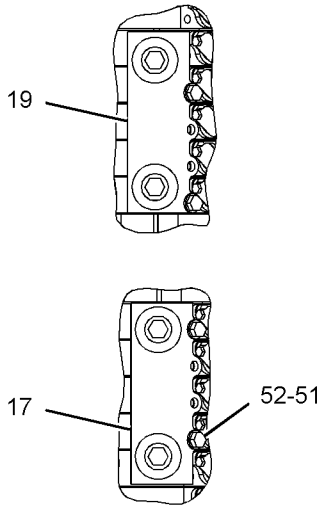


VIEW E-E

GRAPHIC #2 **<END>** g01137780

# HYDRAULIC SYSTEM

## *250-0442* VALVE & LINKAGE GP—6-BANK, RH; 7-BANK, LH

**S/N: CCA1-UP**
**PART OF 250-0454 CONTROL AR-HYDRAULIC**
**AN ATTACHMENT**

**SMCS-5051, 5063** **i02369817**

| NOTE | REF NO | GRAPHIC REF | PART NUMBER | QTY | PART NAME 1 2 3 4 5 6 (PRODUCT LEVEL) | SEE PAGE |
|---|---|---|---|---|---|---|
| | 1 | 1 | **3F-9556** | 26 | LOCKWASHER | |
| | 2 | 1 | **6B-0933** | 4 | SPACER (10.31X19.05X6.35-MM THK) | |
| | 3 | 1 | **6L-1962** | 13 | NUT-JAM (3/8-24-THD) | |
| | 4 | 1 | **8D-5632** | 1 | LEVER (CIRCLE DRIVE) | |
| | 4A | 1 | **8D-5632** | 1 | LEVER (BLADE LIFT, LH) | |
| | 5 | 1 | **8D-5633** | 1 | LEVER (SIDESHIFT) | |
| | 5A | 1 | **8D-5633** | 1 | LEVER (WHEEL LEAN) | |
| | 6 | 1 | **8D-5634** | 1 | LEVER (BLADE LIFT, RH) | |
| | 6A | 1 | **8D-5634** | 1 | LEVER (CENTERSHIFT) | |
| B | 7 | 1 | **8D-5636** | 4 | SHIM (0.254-MM THK) | |
| B | 8 | 1 | **8D-5637** | 4 | SHIM (0.762-MM THK) | |
| | 9 | 1 | **8D-5640** | 15 | BEARING | |
| | 10 | 1 | **8D-5641** | 13 | BEARING | |
| | 11 | 1 | **8W-0456** | 1 | SHAFT | |
| | 12 | 1 | *8X-4277* | 13 | ROD AS | |
| | | | | | (EACH INCLUDES) | |
| | | 1 | **146-0705** | 1 | ROD | |
| | | 1 | **6V-8186** | 1 | NUT-FULL (5/16-24-THD) | |
| | | 1 | **7H-3641** | 1 | END-ROD (5/16-24-THD) | |
| | | 1 | **8L-8598** | 1 | ROD END (LH) | |
| | 13 | 1 | **8X-5499** | 2 | RETAINER | |
| | 14 | 1 | **9M-1853** | 6 | MOUNTING | |
| | 15 | 1 | **101-2457** | 1 | LEVER (RIPPER) | |
| | 15A | 1 | **101-2457** | 1 | LEVER (ARTICULATION) | |
| | 16 | 1 | **101-2458** | 1 | LEVER (WING LIFT) | |
| | 16A | 1 | **101-2458** | 1 | LEVER (PLOW, DOZER) | |
| | 16B | 1 | **101-2458** | 1 | LEVER (BLADE TIP) | |
| | 17 | 1 | **103-1597** | 1 | LEVER (WING TILT) | |
| | 17A | 1 | **103-1597** | 1 | LEVER (PLOW, BULLDOZER ANGLE) | |
| | 18 | 1 | **104-7419** | 1 | PLATE AS (RH) | |
| | | 1 | **1F-0748** | 2 | NUT-WELD (1/2-13-THD) | |
| | 19 | 1 | **104-7429** | 2 | PLATE | |
| | 20 | 1 | **104-7740** | 1 | PLATE AS (LH) | |
| | | 1 | **1F-0748** | 2 | NUT-WELD (1/2-13-THD) | |
| | 21 | 1 | **137-4515** | 2 | BUSHING | |
| | 22 | 1 | **137-4517** | 1 | SHAFT | |
| | 23 | 1 | *164-5608* | 2 | CONNECTOR AS | |
| | | | | | (EACH INCLUDES) | |
| | | 1 | **8T-1687** | 1 | CONNECTOR | |
| | | 1 | **3K-0360** | 1 | SEAL-O-RING | |
| | | 1 | **6V-8398** | 1 | SEAL-O-RING | |
| | 24 | 1 | **244-2587** | 1 | TUBE AS | |
| | 25 | 1 | **244-2591** | 1 | TUBE AS | |
| | 26 | 1 | **244-2594** | 1 | TUBE AS | |
| | 27 | 1 | **244-2598** | 1 | TUBE AS | |
| Y | 28 | 1 | **250-0565** | 1 | VALVE GP-BANK 6 (RH) | 942 |
| Y | 29 | 1 | **250-0571** | 1 | VALVE GP-BANK 7 (LH) | 962 |
| | 30 | 1 | **117-0472** | 1 | KNOB (PLOW, BULLDOZER ANGLE) | |
| | 31 | 1 | *148-8318* | 2 | CONNECTOR AS | |
| | | | | | (EACH INCLUDES) | |
| | | 1 | **6V-8634** | 1 | CONNECTOR | |
| | | 1 | **3K-0360** | 1 | SEAL-O-RING | |
| | | 1 | **6V-8397** | 1 | SEAL-O-RING | |
| | 32 | 1 | *206-5123* | 2 | TEE AS | |
| | 33 | 1 | **2G-6740** | 1 | KNOB-RIPPER | |

## *250-0442* **VALVE & LINKAGE GP** *(contd.)* **i02369817**

| NOTE | REF NO | GRAPHIC REF | PART NUMBER | QTY | PART NAME 1 2 3 4 5 6 (PRODUCT LEVEL) | SEE PAGE |
|---|---|---|---|---|---|---|
| | 34 | 1 | **2G-6747** | 1 | KNOB-BLADE TIP | |
| | 35 | 1 | **2G-6748** | 1 | KNOB-BLADE LIFT | |
| | 36 | 1 | **2G-6749** | 1 | KNOB-SIDESHIFT | |
| | 37 | 1 | **2G-6751** | 1 | KNOB-CIRCLE DRIVE | |
| | 38 | 1 | **2G-6752** | 1 | KNOB-ARTICULATION | |
| | 39 | 1 | **2G-6754** | 1 | KNOB (DOZER LIFT, PLOW) | |
| | 40 | 1 | **2G-6755** | 1 | KNOB-CENTERSHIFT | |
| | 41 | 1 | **2G-6756** | 1 | KNOB-WHEEL LEAN | |
| | 42 | 1 | **2G-6757** | 1 | KNOB-BLADE LIFT | |
| | 43 | 1 | **2G-7107** | 1 | KNOB-WING LIFT | |
| | 44 | 1 | **2G-7108** | 1 | KNOB-WING TILT | |
| | 45 | 1 | **3J-1907** | 4 | SEAL-O-RING | |
| | 46 | 1 | **4L-6459** | 1 | BOLT (3/8-16X2.5-IN) | |
| | 47 | 1 | **5P-1075** | 2 | WASHER-HARD (10.2X22.5X3-MM THK) | |
| | 48 | 1 | **5P-1076** | 6 | WASHER-HARD (13.5X30X4-MM THK) | |
| | 49 | 1 | **5P-2424** | 6 | BOLT (1/2-13X2.25-IN) | |
| | 50 | 1 | **6V-8188** | 2 | NUT (1/2-13-THD) | |
| | 51 | 1 | **6V-8397** | 8 | SEAL-O-RING | |
| | 52 | 1 | **6V-9836** | 2 | TEE-SWIVEL | |
| | 53 | 1 | **8F-6437** | 6 | WASHER (13.5X50.8X4.76-MM THK) | |
| | 54 | 1 | **8T-4121** | 8 | WASHER-HARD (11X21X2.5-MM THK) | |
| M | 55 | 1 | **8T-4136** | 4 | BOLT (M10X1.5X25-MM) | |
| M | 56 | 1 | **8T-4195** | 4 | BOLT (M10X1.5X30-MM) | |
| | 57 | 1 | **8T-9041** | 4 | CONNECTOR | |
| | 58 | 1 | **8T-9043** | 26 | BOLT (5/16-18X0.875-IN) | |
| | 59 | 1 | **9B-7237** | 1 | BOLT (3/8-16X1.25-IN) | |

B-USE AS REQUIRED
M-METRIC PART
Y-SEPARATE ILLUSTRATION

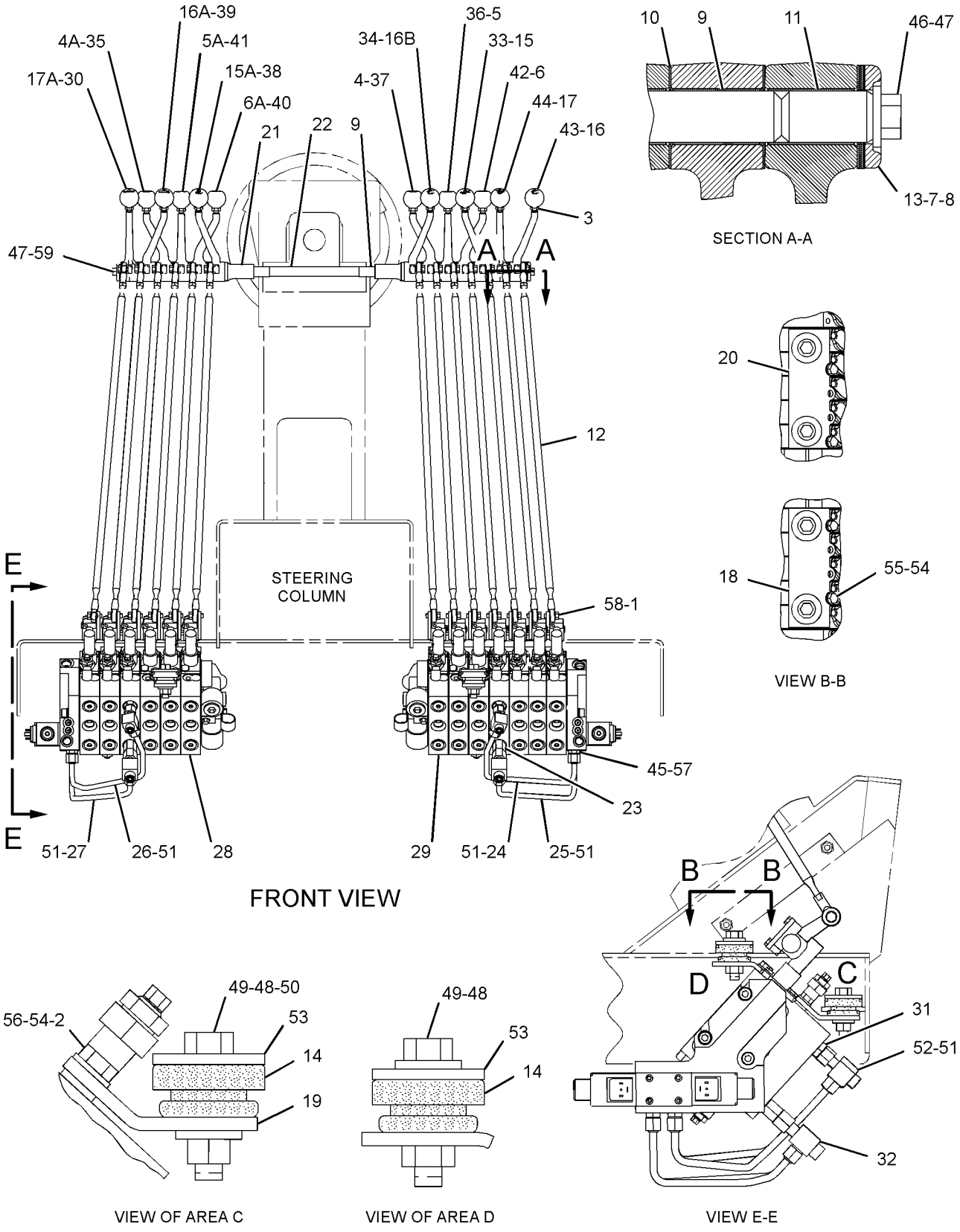


GRAPHIC #1 **<END>** g01153176

# HYDRAULIC SYSTEM

## *250-0443* VALVE & LINKAGE GP—6-BANK, RH; 7-BANK, LH

**S/N: CCA1-UP**

**PART OF 250-0455 CONTROL AR-HYDRAULIC**

**AN ATTACHMENT**

**SMCS-5051, 5063** **i02584508**

| NOTE | REF NO | GRAPHIC REF | PART NUMBER | QTY | PART NAME 1 2 3 4 5 6 (PRODUCT LEVEL) | SEE PAGE |
|---|---|---|---|---|---|---|
| | 1 | 1 | **3F-9556** | 26 | LOCKWASHER | |
| | 2 | 1 | **6B-0933** | 4 | SPACER (10.31X19.05X6.35-MM THK) | |
| | 3 | 1 | **6L-1962** | 13 | NUT-JAM (3/8-24-THD) | |
| | 4 | 1 | **8D-5632** | 2 | LEVER | |
| | 5 | 1 | **8D-5633** | 2 | LEVER | |
| | 6 | 1 | **8D-5634** | 2 | LEVER | |
| B | 7 | 1 | **8D-5636** | 4 | SHIM (0.254-MM THK) | |
| B | 8 | 1 | **8D-5637** | 4 | SHIM (0.762-MM THK) | |
| | 9 | 1 | **8D-5640** | 15 | BEARING | |
| | 10 | 1 | **8D-5641** | 13 | BEARING | |
| | 11 | 1 | **8W-0456** | 1 | SHAFT | |
| | 12 | 1 | *8X-4277* | 13 | ROD AS | |
| | | | | | (EACH INCLUDES) | |
| | | 1 | **146-0705** | 1 | ROD | |
| | | 1 | **6V-8186** | 1 | NUT-FULL (5/16-24-THD) | |
| | | 1 | **7H-3641** | 1 | END-ROD (5/16-24-THD) | |
| | | 1 | **8L-8598** | 1 | ROD END (LH) | |
| | 13 | 1 | **8X-5499** | 2 | RETAINER | |
| | 14 | 1 | **9M-1853** | 6 | MOUNTING | |
| | 15 | 1 | **101-2457** | 2 | LEVER | |
| | 16 | 1 | **101-2458** | 3 | LEVER | |
| | 17 | 1 | **103-1597** | 2 | LEVER | |
| | 18 | 1 | **104-7419** | 1 | PLATE AS (RH) | |
| | | 1 | **1F-0748** | 2 | NUT-WELD (1/2-13-THD) | |
| | 19 | 1 | **104-7429** | 2 | PLATE | |
| | 20 | 1 | **104-7740** | 1 | PLATE AS (LH) | |
| | | 1 | **1F-0748** | 2 | NUT-WELD (1/2-13-THD) | |
| | 21 | 1 | **137-4515** | 2 | BUSHING | |
| | 22 | 1 | **137-4517** | 1 | SHAFT | |
| | 23 | 1 | *164-5608* | 2 | CONNECTOR AS | |
| | | | | | (EACH INCLUDES) | |
| | | 1 | **8T-1687** | 1 | CONNECTOR | |
| | | 1 | **3K-0360** | 1 | SEAL-O-RING | |
| | | 1 | **6V-8398** | 1 | SEAL-O-RING | |
| | 24 | 1 | **244-2587** | 1 | TUBE AS | |
| | 25 | 1 | **244-2591** | 1 | TUBE AS | |
| | 26 | 1 | **244-2594** | 1 | TUBE AS | |
| | 27 | 1 | **244-2598** | 1 | TUBE AS | |
| Y | 28 | 1 | **250-0552** | 1 | VALVE GP-BANK 6 (RH) | 940 |
| Y | 29 | 1 | **250-0572** | 1 | VALVE GP-BANK 7 (LH) | 964 |
| | 30 | 1 | **117-0472** | 1 | KNOB (PLOW, BULLDOZER ANGLE) | |
| | 31 | 1 | *148-8318* | 2 | CONNECTOR AS | |
| | | | | | (EACH INCLUDES) | |
| | | 1 | **6V-8634** | 1 | CONNECTOR | |
| | | 1 | **3K-0360** | 1 | SEAL-O-RING | |
| | | 1 | **6V-8397** | 1 | SEAL-O-RING | |
| | 32 | 1 | *206-5123* | 2 | TEE AS | |
| | | | | | (EACH INCLUDES) | |
| | | 1 | **6V-8397** | 1 | SEAL-O-RING | |
| | | 1 | **6V-8398** | 1 | SEAL-O-RING | |
| | 33 | 1 | **2G-6740** | 1 | KNOB-RIPPER | |
| | 34 | 1 | **2G-6747** | 1 | KNOB-BLADE TIP | |
| | 35 | 1 | **2G-6748** | 1 | KNOB-BLADE LIFT (RH) | |
| | 36 | 1 | **2G-6749** | 1 | KNOB-SIDESHIFT | |
| | 37 | 1 | **2G-6751** | 1 | KNOB-CIRCLE DRIVE | |

## *250-0443* VALVE & LINKAGE GP *(contd.)* i02584508

| NOTE | REF NO | GRAPHIC REF | PART NUMBER | QTY | PART NAME 1 2 3 4 5 6 (PRODUCT LEVEL) | SEE PAGE |
|---|---|---|---|---|---|---|
| | 38 | 1 | **2G-6752** | 1 | KNOB-ARTICULATION | |
| | 39 | 1 | **2G-6754** | 1 | KNOB (DOZER LIFT, PLOW) | |
| | 40 | 1 | **2G-6755** | 1 | KNOB-CENTERSHIFT | |
| | 41 | 1 | **2G-6756** | 1 | KNOB-WHEEL LEAN | |
| | 42 | 1 | **2G-6757** | 1 | KNOB-BLADE LIFT (LH) | |
| | 43 | 1 | **2G-7107** | 1 | KNOB-WING LIFT | |
| | 44 | 1 | **2G-7108** | 1 | KNOB-WING TILT | |
| | 45 | 1 | **3J-1907** | 4 | SEAL-O-RING | |
| | 46 | 1 | **4L-6459** | 1 | BOLT (3/8-16X2.5-IN) | |
| | 47 | 1 | **5P-1075** | 2 | WASHER-HARD (10.2X22.5X3-MM THK) | |
| | 48 | 1 | **5P-1076** | 6 | WASHER-HARD (13.5X30X4-MM THK) | |
| | 49 | 1 | **5P-2424** | 6 | BOLT (1/2-13X2.25-IN) | |
| | 50 | 1 | **6V-8188** | 2 | NUT (1/2-13-THD) | |
| | 51 | 1 | **6V-8397** | 8 | SEAL-O-RING | |
| | 52 | 1 | **6V-9836** | 2 | TEE-SWIVEL | |
| | 53 | 1 | **8F-6437** | 6 | WASHER (13.5X50.8X4.76-MM THK) | |
| | 54 | 1 | **8T-4121** | 8 | WASHER-HARD (11X21X2.5-MM THK) | |
| M | 55 | 1 | **8T-4136** | 4 | BOLT (M10X1.5X25-MM) | |
| M | 56 | 1 | **8T-4195** | 4 | BOLT (M10X1.5X30-MM) | |
| | 57 | 1 | **8T-9041** | 4 | CONNECTOR | |
| | 58 | 1 | **8T-9043** | 26 | BOLT (5/16-18X0.875-IN) | |
| | 59 | 1 | **9B-7237** | 1 | BOLT (3/8-16X1.25-IN) | |

B-USE AS REQUIRED
M-METRIC PART
Y-SEPARATE ILLUSTRATION

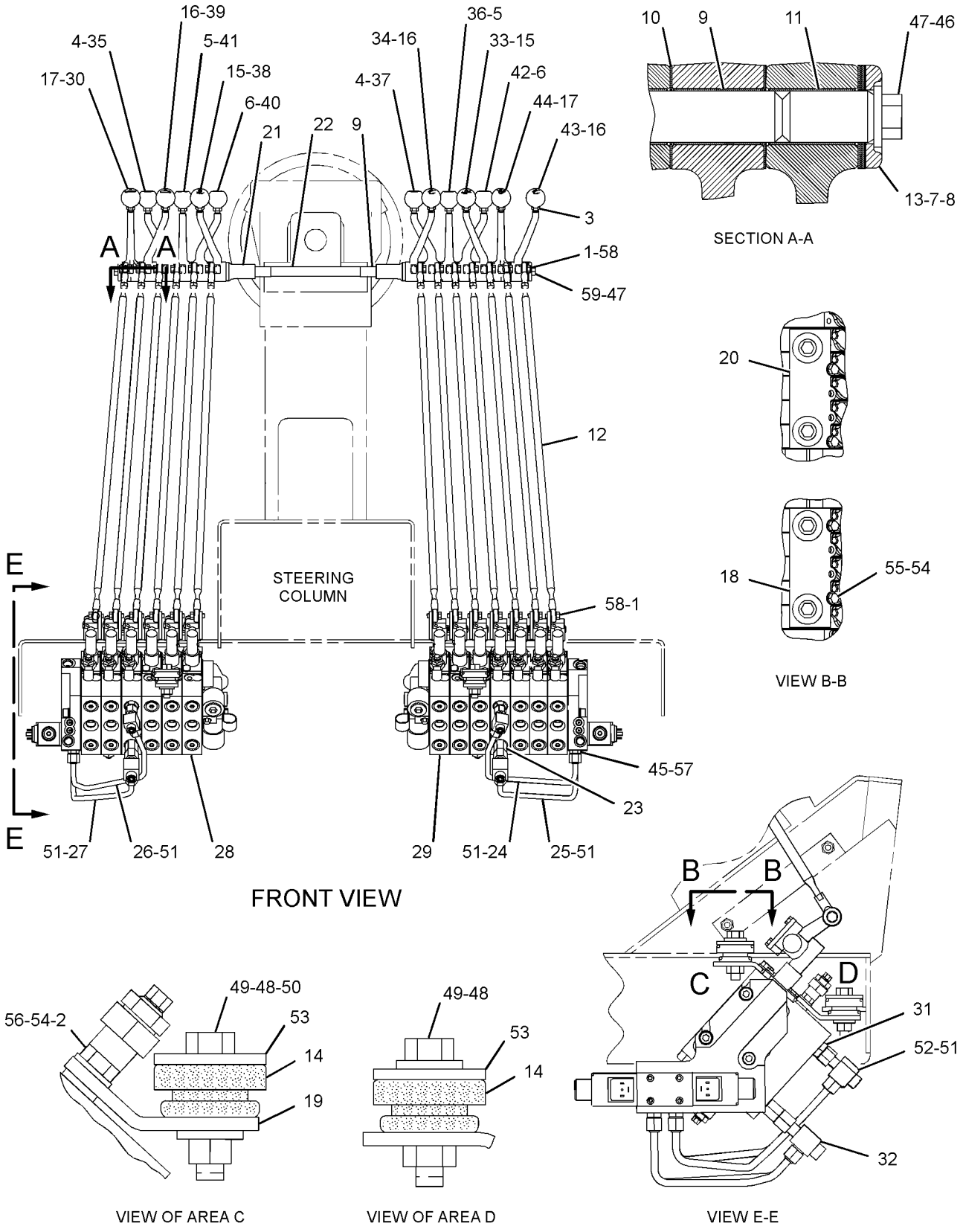


GRAPHIC #1 **<END>** g01197951

# HYDRAULIC SYSTEM

## *250-0444* VALVE & LINKAGE GP

**S/N: CCA1-UP**
**PART OF 250-0456 CONTROL AR-HYDRAULIC**
**AN ATTACHMENT**

**SMCS-5051, 5063** **i02369350**

| NOTE | REF NO | GRAPHIC REF | PART NUMBER | QTY | PART NAME 1 2 3 4 5 6 (PRODUCT LEVEL) | SEE PAGE |
|---|---|---|---|---|---|---|
| | 1 | 1 | **3F-9556** | 28 | LOCKWASHER | |
| | 2 | 2 | **6B-0933** | 4 | SPACER (10.31X19.05X6.35-MM THK) | |
| | 3 | 1 | **6L-1962** | 14 | NUT-JAM (3/8-24-THD) | |
| | 4 | 1 | **8D-5632** | 1 | LEVER (CIRCLE DRIVE) | |
| | 4A | 1 | **8D-5632** | 1 | LEVER (BLADE LIFT, RH) | |
| | 5 | 1 | **8D-5633** | 1 | LEVER (SIDESHIFT) | |
| | 5A | 1 | **8D-5633** | 1 | LEVER (WHEEL LEAN) | |
| | 6 | 1 | **8D-5634** | 1 | LEVER (BLADE LIFT, LH) | |
| | 6A | 1 | **8D-5634** | 1 | LEVER (CENTERSHIFT) | |
| B | 7 | 2 | **8D-5636** | 4 | SHIM (0.254-MM THK) | |
| B | 8 | 2 | **8D-5637** | 4 | SHIM (0.762-MM THK) | |
| | 9 | 1,2 | **8D-5640** | 16 | BEARING | |
| | 10 | 2 | **8D-5641** | 14 | BEARING | |
| | 11 | 2 | **8W-0456** | 2 | SHAFT | |
| | 12 | 1 | **6V-8186** | 14 | NUT-FULL (5/16-24-THD) | |
| | | 1 | **7H-3641** | 14 | END-ROD (5/16-24-THD) | |
| | | 1 | **8L-8598** | 14 | ROD END (LH) | |
| | | 1 | **146-0705** | 14 | ROD | |
| | 13 | 2 | **8X-5499** | 2 | RETAINER | |
| | 14 | 2 | **9M-1853** | 6 | MOUNTING | |
| | 15 | 1 | **101-2457** | 1 | LEVER (RIPPER) | |
| | 15A | 1 | **101-2457** | 1 | LEVER (PLOW, BULLDOZER ANGLE) | |
| | 15B | 1 | **101-2457** | 1 | LEVER (ARTICULATION) | |
| | 16 | 1 | **101-2458** | 1 | LEVER (WING LIFT) | |
| | 16A | 1 | **101-2458** | 1 | LEVER (PLOW, DOZER) | |
| | 16B | 1 | **101-2458** | 1 | LEVER (BLADE TIP) | |
| | 17 | 1 | **103-1597** | 1 | LEVER (WING TILT) | |
| | 17A | 1 | **103-1597** | 1 | LEVER (PLOW, BULLDOZER ANGLE) | |
| | 18 | 2 | **104-7419** | 1 | PLATE AS (RH) | |
| | | 2 | **1F-0748** | 2 | NUT-WELD (1/2-13-THD) | |
| | 19 | 2 | **104-7429** | 2 | PLATE | |
| | 20 | 2 | **104-7740** | 1 | PLATE AS (LH) | |
| | | 2 | **1F-0748** | 2 | NUT-WELD (1/2-13-THD) | |
| | 21 | 1 | **137-4515** | 2 | BUSHING | |
| | 22 | 1 | **137-4517** | 1 | SHAFT | |
| | 23 | 2 | *164-5608* | 2 | CONNECTOR AS | |
| | | | | | (EACH INCLUDES) | |
| | | 2 | **3K-0360** | 1 | SEAL-O-RING | |
| | | 2 | **6V-8398** | 1 | SEAL-O-RING | |
| | | 2 | **8T-1687** | 1 | CONNECTOR | |
| | 24 | 1 | **244-2587** | 1 | TUBE AS | |
| | 25 | 1 | **244-2591** | 1 | TUBE AS | |
| | 26 | 1 | **244-2595** | 1 | TUBE AS | |
| | 27 | 1 | **244-2599** | 1 | TUBE AS | |
| Y | 28 | 1 | **250-0572** | 1 | VALVE GP-BANK 7 (LH) | 964 |
| Y | 29 | 1 | **250-0576** | 1 | VALVE GP-BANK 7 (RH) | 966 |
| | 30 | 1 | **117-0472** | 2 | KNOB (PLOW, BULLDOZER ANGLE) | |
| | 31 | 2 | *148-8318* | 2 | CONNECTOR AS | |
| | | | | | (EACH INCLUDES) | |
| | | 2 | **3K-0360** | 1 | SEAL-O-RING | |
| | | 2 | **6V-8397** | 1 | SEAL-O-RING | |
| | | 2 | **6V-8634** | 1 | CONNECTOR | |
| | 32 | 2 | *206-5123* | 2 | TEE AS | |
| | | | | | (EACH INCLUDES) | |
| | | 2 | **206-5122** | 1 | TEE | |

## *250-0444* VALVE & LINKAGE GP *(contd.)* i02369350

| NOTE | REF NO | GRAPHIC REF | PART NUMBER | QTY | PART NAME 1 2 3 4 5 6 (PRODUCT LEVEL) | SEE PAGE |
|---|---|---|---|---|---|---|
| | | 2 | **6V-8397** | 1 | SEAL-O-RING | |
| | | 2 | **6V-8398** | 1 | SEAL-O-RING | |
| | 33 | 1 | **2G-6740** | 1 | KNOB-RIPPER | |
| | 34 | 1 | **2G-6747** | 1 | KNOB-BLADE TIP (LH) | |
| | 35 | 1 | **2G-6748** | 1 | KNOB-BLADE LIFT (RH) | |
| | 36 | 1 | **2G-6749** | 1 | KNOB-SIDESHIFT | |
| | 37 | 1 | **2G-6751** | 1 | KNOB-CIRCLE DRIVE | |
| | 38 | 1 | **2G-6752** | 1 | KNOB-ARTICULATION | |
| | 39 | 1 | **2G-6754** | 1 | KNOB (DOZER LIFT, PLOW) | |
| | 40 | 1 | **2G-6755** | 1 | KNOB-CENTERSHIFT | |
| | 41 | 1 | **2G-6756** | 1 | KNOB-WHEEL LEAN | |
| | 42 | 1 | **2G-6757** | 1 | KNOB-BLADE LIFT (LH) | |
| | 43 | 1 | **2G-7107** | 1 | KNOB-WING LIFT | |
| | 44 | 1 | **2G-7108** | 1 | KNOB-WING TILT | |
| | 45 | 2 | **3J-1907** | 4 | SEAL-O-RING | |
| | 46 | 2 | **4L-6459** | 2 | BOLT (3/8-16X2.5-IN) | |
| | 47 | 2 | **5P-1075** | 2 | WASHER-HARD (10.2X22.5X3-MM THK) | |
| | 48 | 2 | **5P-1076** | 6 | WASHER-HARD (13.5X30X4-MM THK) | |
| | 49 | 2 | **5P-2424** | 6 | BOLT (1/2-13X2.25-IN) | |
| | 50 | 2 | **6V-8188** | 2 | NUT (1/2-13-THD) | |
| | 51 | 1,2 | **6V-8397** | 8 | SEAL-O-RING | |
| | 52 | 2 | **6V-9836** | 2 | TEE-SWIVEL | |
| | 53 | 2 | **8F-6437** | 6 | WASHER (13.5X50.8X4.76-MM THK) | |
| | 54 | 2 | **8T-4121** | 8 | WASHER-HARD (11X21X2.5-MM THK) | |
| M | 55 | 2 | **8T-4136** | 4 | BOLT (M10X1.5X25-MM) | |
| M | 56 | 2 | **8T-4195** | 4 | BOLT (M10X1.5X30-MM) | |
| | 57 | 2 | **8T-9041** | 4 | CONNECTOR | |
| | 58 | 1 | **8T-9043** | 28 | BOLT (5/16-18X0.875-IN) | |

B-USE AS REQUIRED
M-METRIC PART
Y-SEPARATE ILLUSTRATION

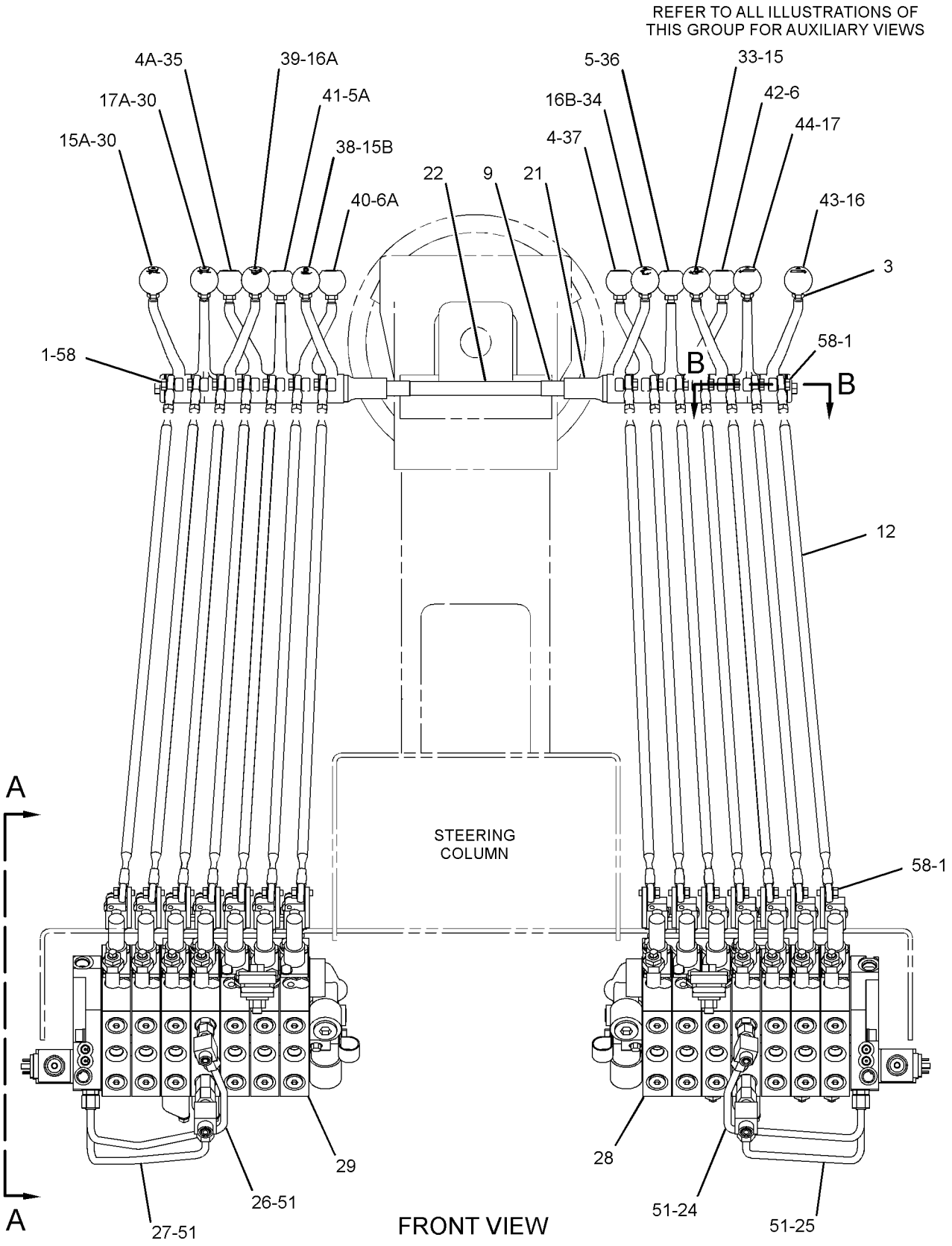


GRAPHIC #1

g01158930

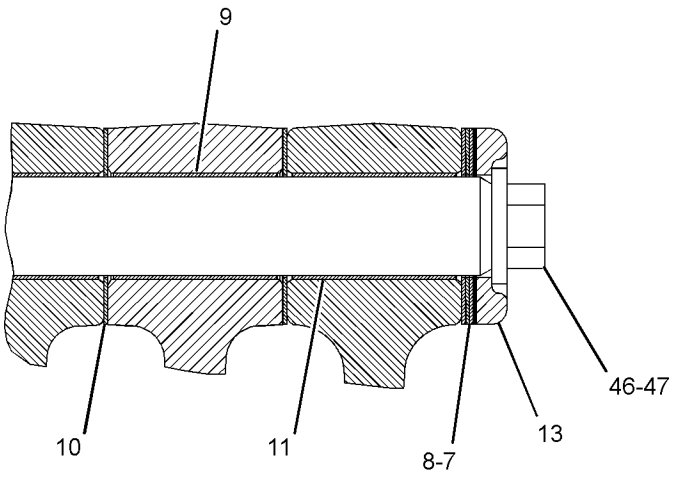


SECTION B-B

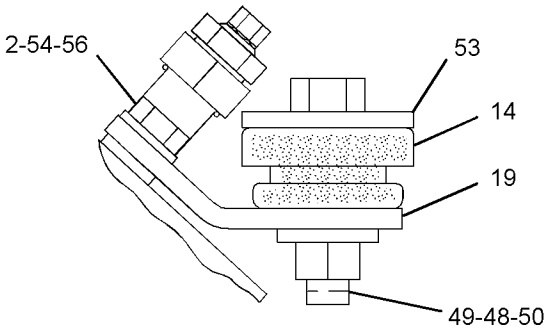


VIEW OF AREA E

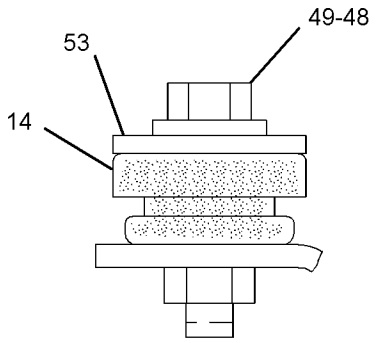


VIEW OF AREA C

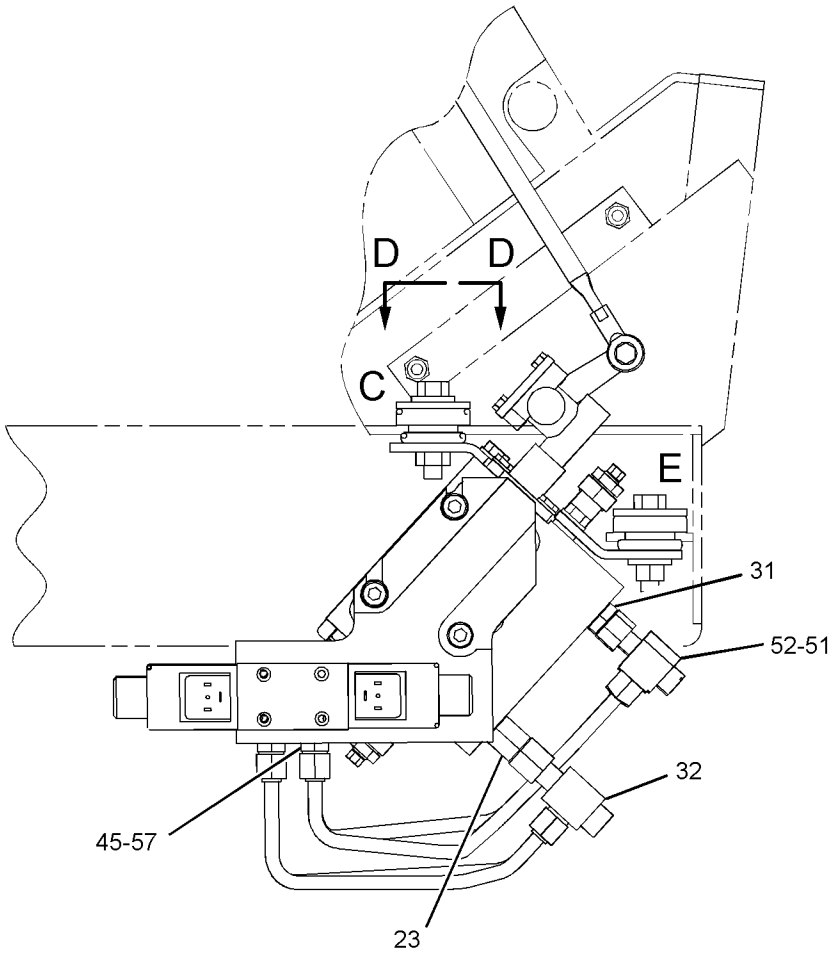


VIEW A-A

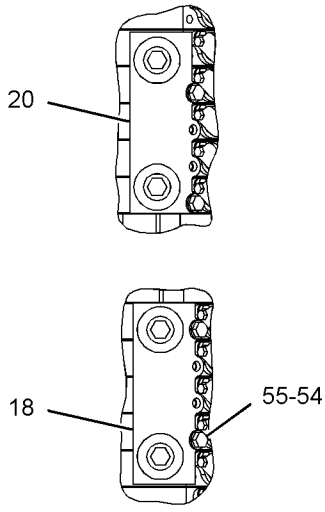


VIEW D-D

GRAPHIC #2 **<END>** g01158931

# HYDRAULIC SYSTEM

## *265-7814* VALVE & LINKAGE GP

**S/N: CCA1611-UP**

**AN ATTACHMENT**

**SMCS-5051, 5063** **i02455222**

| NOTE | REF NO | GRAPHIC REF | PART NUMBER | QTY | PART NAME 1 2 3 4 5 6 (PRODUCT LEVEL) | SEE PAGE |
|---|---|---|---|---|---|---|
| | 1 | 1 | **3F-9556** | 18 | LOCKWASHER | |
| | 2 | 2 | **6B-0933** | 4 | SPACER (10.31X19.05X6.35-MM THK) | |
| | 3 | 1 | **6L-1962** | 9 | NUT-JAM (3/8-24-THD) | |
| | 4 | 1 | **8D-5632** | 1 | LEVER (BLADE LIFT, RH) | |
| | 4A | 1 | **8D-5632** | 1 | LEVER (CIRCLE DRIVE) | |
| | 5 | 1 | **8D-5633** | 1 | LEVER (WHEEL LEAN) | |
| | 5A | 1 | **8D-5633** | 1 | LEVER (SIDESHIFT) | |
| | 6 | 1 | **8D-5634** | 1 | LEVER (CENTERSHIFT) | |
| | 6A | 1 | **8D-5634** | 1 | LEVER (BLADE LIFT, LH) | |
| B | 7 | 2 | **8D-5636** | 4 | SHIM (0.254-MM THK) | |
| B | 8 | 2 | **8D-5637** | 4 | SHIM (0.762-MM THK) | |
| | 9 | 1,2 | **8D-5640** | 11 | BEARING | |
| | 10 | 2 | **8D-5641** | 9 | BEARING | |
| | 11 | 1 | *8X-4277* | 9 | ROD AS | |
| | | | | | (EACH INCLUDES) | |
| | | 1 | **6V-8186** | 2 | NUT-FULL (5/16-24-THD) | |
| | | 1 | **7H-3641** | 1 | END-ROD (5/16-24-THD) | |
| | | 1 | **8L-8598** | 1 | ROD END (LH) | |
| | | 1 | **146-0705** | 1 | ROD | |
| | 12 | 2 | **8X-5499** | 2 | RETAINER | |
| | 13 | 2 | **9M-1853** | 6 | MOUNTING | |
| | 14 | 1 | **101-2457** | 2 | LEVER (ARTICULATION) | |
| | 15 | 1 | **101-2458** | 1 | LEVER (BLADE TIP) | |
| | 16 | 2 | **104-7419** | 1 | PLATE AS (RH) | |
| | | 2 | **1F-0748** | 2 | NUT-WELD (1/2-13-THD) | |
| | 17 | 2 | **104-7429** | 2 | PLATE | |
| | 18 | 2 | **104-7740** | 1 | PLATE AS (LH) | |
| | | 2 | **1F-0748** | 2 | NUT-WELD (1/2-13-THD) | |
| | 19 | 1 | **137-4515** | 2 | BUSHING | |
| | 20 | 1 | **137-4516** | 1 | SHAFT | |
| | 21 | 2 | *164-5608* | 2 | CONNECTOR AS | |
| | | | | | (EACH INCLUDES) | |
| | | 2 | **3K-0360** | 1 | SEAL-O-RING | |
| | | 2 | **6V-8398** | 1 | SEAL-O-RING | |
| | | 2 | **8T-1687** | 1 | CONNECTOR | |
| | 22 | 1 | **244-2585** | 1 | TUBE AS | |
| | 23 | 1 | **244-2589** | 1 | TUBE AS | |
| | 24 | 1 | **244-2592** | 1 | TUBE AS | |
| | 25 | 1 | **244-2596** | 1 | TUBE AS | |
| Y | 26 | 1 | **250-0544** | 1 | VALVE GP-BANK 4 (RH) | 913 |
| | 27 | 2 | *148-8318* | 2 | CONNECTOR AS | |
| | | | | | (EACH INCLUDES) | |
| | | 2 | **6V-8634** | 1 | CONNECTOR | |
| | | 2 | **3K-0360** | 1 | SEAL-O-RING | |
| | | 2 | **6V-8397** | 1 | SEAL-O-RING | |
| | 28 | 2 | **153-1818** | 1 | ELBOW | |
| | 29 | 2 | *206-5123* | 2 | TEE AS | |
| | | | | | (EACH INCLUDES) | |
| | | 2 | **206-5122** | 1 | TEE | |
| | | 2 | **6V-8397** | 1 | SEAL-O-RING | |
| | | 2 | **6V-8398** | 1 | SEAL-O-RING | |
| Y | 30 | 1 | **262-7291** | 1 | VALVE GP-BANK 5 (LH) | 933 |
| | 31 | 1 | **2G-6747** | 1 | KNOB-BLADE TIP | |
| | 32 | 1 | **2G-6748** | 1 | KNOB-BLADE LIFT | |
| | 33 | 1 | **2G-6749** | 1 | KNOB-SIDESHIFT | |
| | 34 | 1 | **2G-6751** | 1 | KNOB-CIRCLE DRIVE | |

## *265-7814* **VALVE & LINKAGE GP** *(contd.)* **i02455222**

| NOTE | REF NO | GRAPHIC REF | PART NUMBER | QTY | PART NAME 1 2 3 4 5 6 (PRODUCT LEVEL) | SEE PAGE |
|---|---|---|---|---|---|---|
| | 35 | 1 | **2G-6752** | 1 | KNOB-ARTICULATION | |
| | 36 | 1 | **2G-6753** | 1 | KNOB-SCARIFIER | |
| | 37 | 1 | **2G-6755** | 1 | KNOB-CENTERSHIFT | |
| | 38 | 1 | **2G-6756** | 1 | KNOB-WHEEL LEAN | |
| | 39 | 1 | **2G-6757** | 1 | KNOB-BLADE LIFT | |
| | 40 | 2 | **3J-1907** | 4 | SEAL-O-RING | |
| | 41 | 2 | **5P-1075** | 2 | WASHER-HARD (10.2X22.5X3-MM THK) | |
| | 42 | 2 | **5P-1076** | 6 | WASHER-HARD (13.5X30X4-MM THK) | |
| | 43 | 2 | **5P-2424** | 6 | BOLT (1/2-13X2.25-IN) | |
| | 44 | 2 | **6V-8188** | 2 | NUT (1/2-13-THD) | |
| | 45 | 1,2 | **6V-8397** | 8 | SEAL-O-RING | |
| | 46 | 2 | **6V-9836** | 2 | TEE-SWIVEL | |
| | 47 | 2 | **8F-6437** | 6 | WASHER (13.5X50.8X4.76-MM THK) | |
| | 48 | 2 | **8T-4121** | 8 | WASHER-HARD (11X21X2.5-MM THK) | |
| M | 49 | 2 | **8T-4136** | 4 | BOLT (M10X1.5X25-MM) | |
| M | 50 | 2 | **8T-4195** | 4 | BOLT (M10X1.5X30-MM) | |
| | 51 | 2 | **8T-9041** | 3 | CONNECTOR | |
| | 52 | 1 | **8T-9043** | 18 | BOLT (5/16-18X0.875-IN) | |
| | 53 | 2 | **9B-7237** | 2 | BOLT (3/8-16X1.25-IN) | |

B-USE AS REQUIRED
M-METRIC PART
Y-SEPARATE ILLUSTRATION

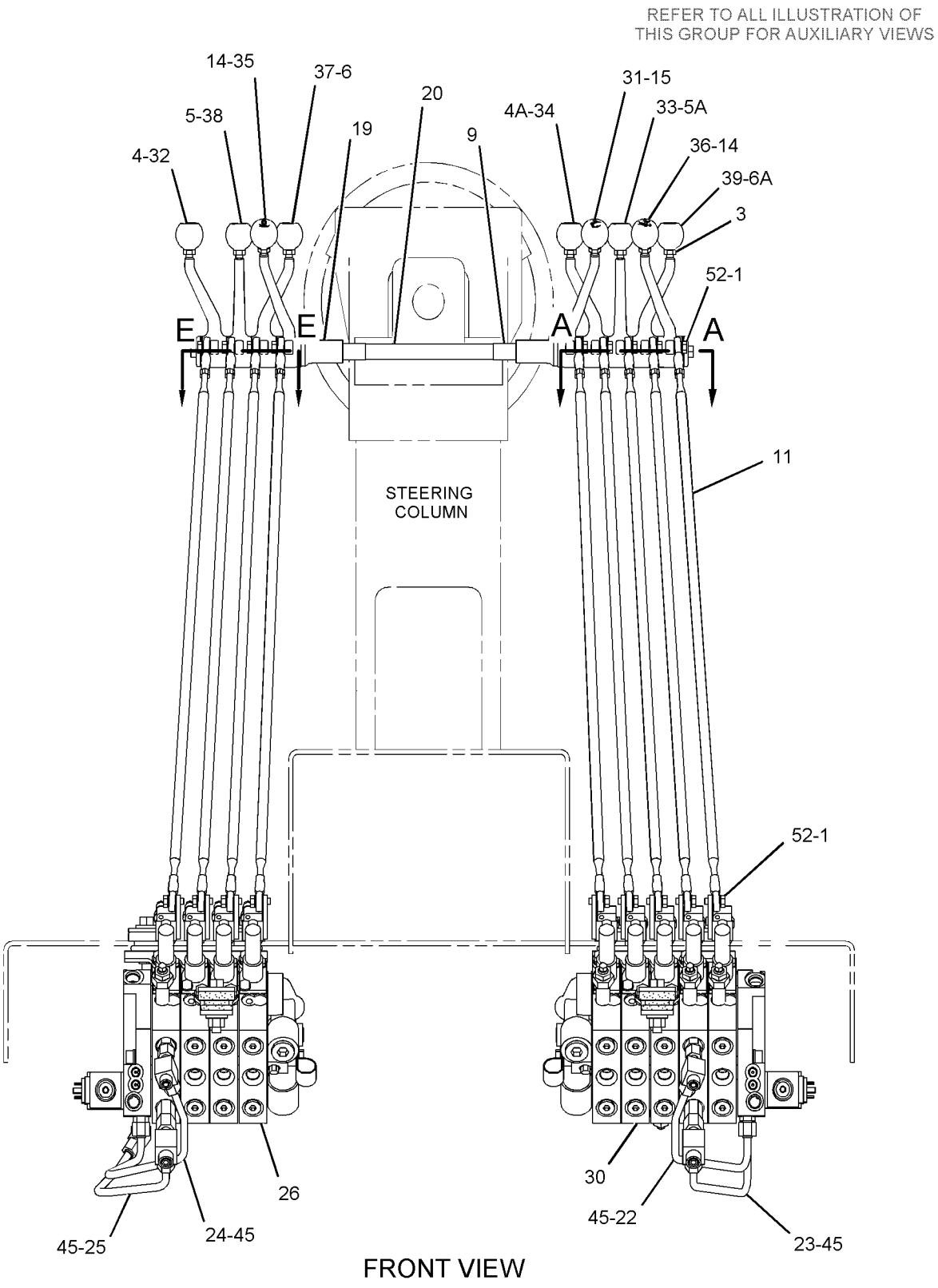


GRAPHIC #1

g01256592

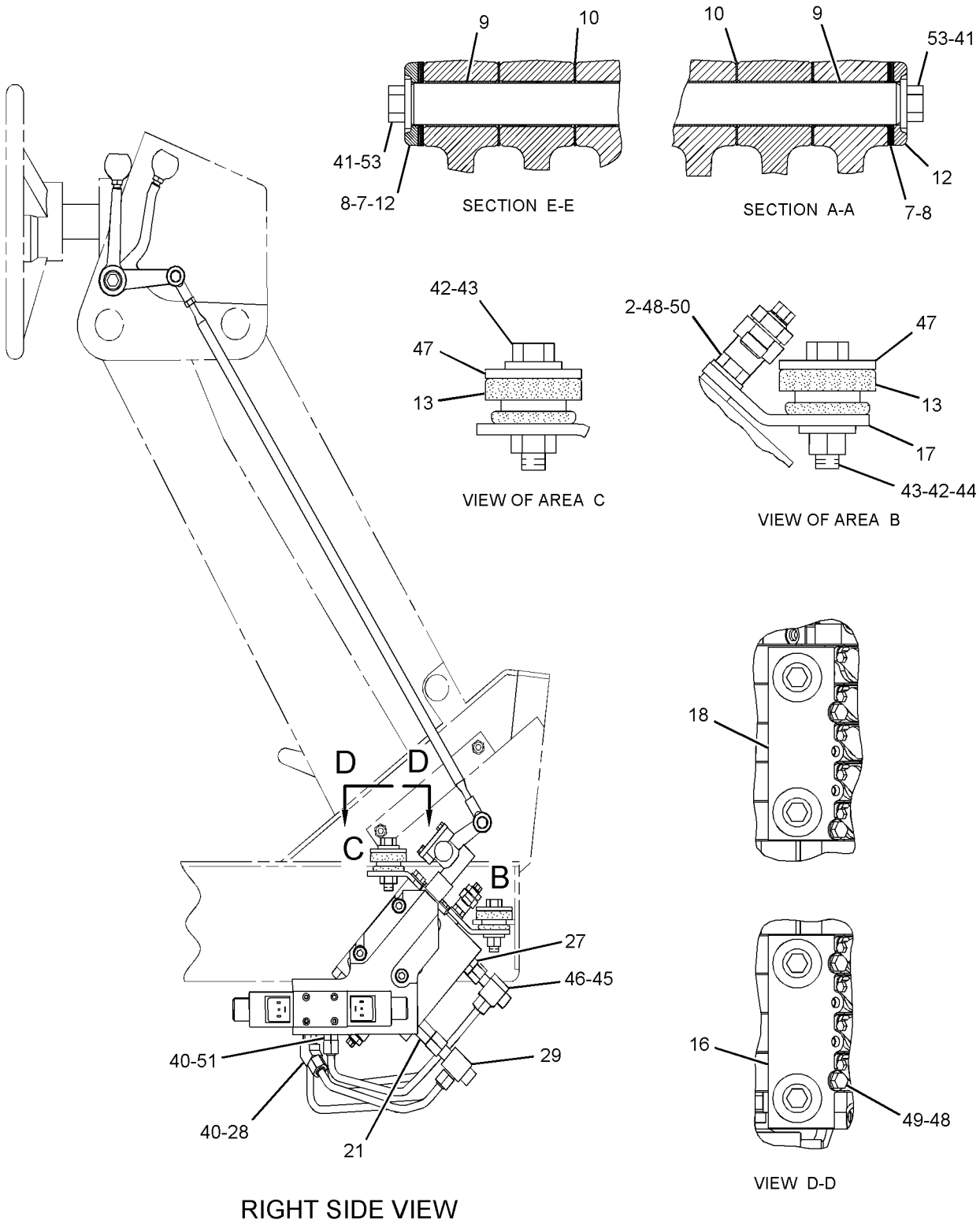


GRAPHIC #2 **<END>** g01256593

# HYDRAULIC SYSTEM

## *265-7815* VALVE & LINKAGE GP

**S/N: CCA1611-UP**
**AN ATTACHMENT**

**SMCS-5051, 5063** **i02349668**

| NOTE | REF NO | GRAPHIC REF | PART NUMBER | QTY | PART NAME 1 2 3 4 5 6 (PRODUCT LEVEL) | SEE PAGE |
|---|---|---|---|---|---|---|
| | 1 | 1 | **3F-9556** | 20 | LOCKWASHER | |
| | 2 | 2 | **6B-0933** | 4 | SPACER (10.31X19.05X6.35-MM THK) | |
| | 3 | 1 | **6L-1962** | 10 | NUT-JAM (3/8-24-THD) | |
| | 4 | 1 | **8D-5632** | 2 | LEVER | |
| | 5 | 1 | **8D-5633** | 2 | LEVER | |
| | 6 | 1 | **8D-5634** | 2 | LEVER | |
| B | 7 | 1 | **8D-5636** | 4 | SHIM (0.254-MM THK) | |
| B | 8 | 1 | **8D-5637** | 4 | SHIM (0.762-MM THK) | |
| | 9 | 1 | **8D-5640** | 12 | BEARING | |
| | 10 | 1 | **8D-5641** | 10 | BEARING | |
| | 11 | 1 | **8W-0456** | 1 | SHAFT | |
| | 12 | 1 | *8X-4277* | 10 | ROD AS | |
| | | | | | (EACH INCLUDES) | |
| | | 1 | **146-0705** | 1 | ROD | |
| | | 1 | **6V-8186** | 1 | NUT-FULL (5/16-24-THD) | |
| | | 1 | **7H-3641** | 1 | END-ROD (5/16-24-THD) | |
| | | 1 | **8L-8598** | 1 | ROD END (LH) | |
| | 13 | 1 | **8X-5499** | 2 | RETAINER | |
| | 14 | 2 | **9M-1853** | 6 | MOUNTING | |
| | 15 | 1 | **101-2457** | 2 | LEVER | |
| | 16 | 1 | **101-2458** | 2 | LEVER | |
| | 17 | 2 | **104-7419** | 1 | PLATE AS (RH) | |
| | | 2 | **1F-0748** | 2 | NUT-WELD (1/2-13-THD) | |
| | 18 | 2 | **104-7429** | 2 | PLATE | |
| | 19 | 2 | **104-7740** | 1 | PLATE AS (LH) | |
| | | 2 | **1F-0748** | 2 | NUT-WELD (1/2-13-THD) | |
| | 20 | 1 | **137-4515** | 2 | BUSHING | |
| | 21 | 1 | **137-4516** | 1 | SHAFT | |
| | 22 | 2 | *164-5608* | 2 | CONNECTOR AS | |
| | | | | | (EACH INCLUDES) | |
| | | 2 | **8T-1687** | 1 | CONNECTOR | |
| | | 2 | **3K-0360** | 1 | SEAL-O-RING | |
| | | 2 | **6V-8398** | 1 | SEAL-O-RING | |
| | 23 | 1 | **244-2585** | 1 | TUBE AS | |
| | 24 | 1 | **244-2589** | 1 | TUBE AS | |
| | 25 | 1 | **244-2593** | 1 | TUBE AS | |
| | 26 | 1 | **244-2597** | 1 | TUBE AS | |
| Y | 27 | 1 | **250-0548** | 1 | VALVE GP-BANK 5 (RH) | 926 |
| | 28 | 2 | *148-8318* | 2 | CONNECTOR AS | |
| | | | | | (EACH INCLUDES) | |
| | | 2 | **6V-8634** | 1 | CONNECTOR | |
| | | 2 | **3K-0360** | 1 | SEAL-O-RING | |
| | | 2 | **6V-8397** | 1 | SEAL-O-RING | |
| | 29 | 2 | *206-5123* | 2 | TEE AS | |
| | | | | | (EACH INCLUDES) | |
| | | 2 | **206-5122** | | TEE | |
| | | 2 | **6V-8397** | 1 | SEAL-O-RING | |
| | | 2 | **6V-8398** | 1 | SEAL-O-RING | |
| Y | 30 | 1 | **262-7291** | 1 | VALVE GP-BANK 5 (LH) | 933 |
| | 31 | 1 | **2G-6747** | 1 | KNOB-BLADE TIP | |
| | 32 | 1 | **2G-6748** | 1 | KNOB-BLADE LIFT (RH) | |
| | 33 | 1 | **2G-6749** | 1 | KNOB-SIDESHIFT | |
| | 34 | 1 | **2G-6751** | 1 | KNOB-CIRCLE DRIVE | |
| | 35 | 1 | **2G-6752** | 1 | KNOB-ARTICULATION | |
| | 36 | 1 | **2G-6753** | 1 | KNOB-SCARIFIER | |
| | 37 | 1 | **2G-6754** | 1 | KNOB (DOZER LIFT, PLOW) | |

## *265-7815* **VALVE & LINKAGE GP** *(contd.)* **i02349668**

| NOTE | REF NO | GRAPHIC REF | PART NUMBER | QTY | PART NAME 1 2 3 4 5 6 (PRODUCT LEVEL) | SEE PAGE |
|---|---|---|---|---|---|---|
| | 38 | 1 | **2G-6755** | 1 | KNOB-CENTERSHIFT | |
| | 39 | 1 | **2G-6756** | 1 | KNOB-WHEEL LEAN | |
| | 40 | 1 | **2G-6757** | 1 | KNOB-BLADE LIFT (LH) | |
| | 41 | 2 | **3J-1907** | 4 | SEAL-O-RING | |
| | 42 | 1 | **4L-6459** | 1 | BOLT (3/8-16X2.5-IN) | |
| | 43 | 1 | **5P-1075** | 2 | WASHER-HARD (10.2X22.5X3-MM THK) | |
| | 44 | 2 | **5P-1076** | 6 | WASHER-HARD (13.5X30X4-MM THK) | |
| | 45 | 2 | **5P-2424** | 6 | BOLT (1/2-13X2.25-IN) | |
| | 46 | 2 | **6V-8188** | 2 | NUT (1/2-13-THD) | |
| | 47 | 1,2 | **6V-8397** | 8 | SEAL-O-RING | |
| | 48 | 2 | **6V-9836** | 2 | TEE-SWIVEL | |
| | 49 | 2 | **8F-6437** | 6 | WASHER (13.5X50.8X4.76-MM THK) | |
| | 50 | 2 | **8T-4121** | 8 | WASHER-HARD (11X21X2.5-MM THK) | |
| M | 51 | 2 | **8T-4136** | 4 | BOLT (M10X1.5X25-MM) | |
| M | 52 | 2 | **8T-4195** | 4 | BOLT (M10X1.5X30-MM) | |
| | 53 | 2 | **8T-9041** | 4 | CONNECTOR | |
| | 54 | 1 | **8T-9043** | 20 | BOLT (5/16-18X0.875-IN) | |
| | 55 | 1 | **9B-7237** | 1 | BOLT (3/8-16X1.25-IN) | |

B-USE AS REQUIRED
M-METRIC PART
Y-SEPARATE ILLUSTRATION

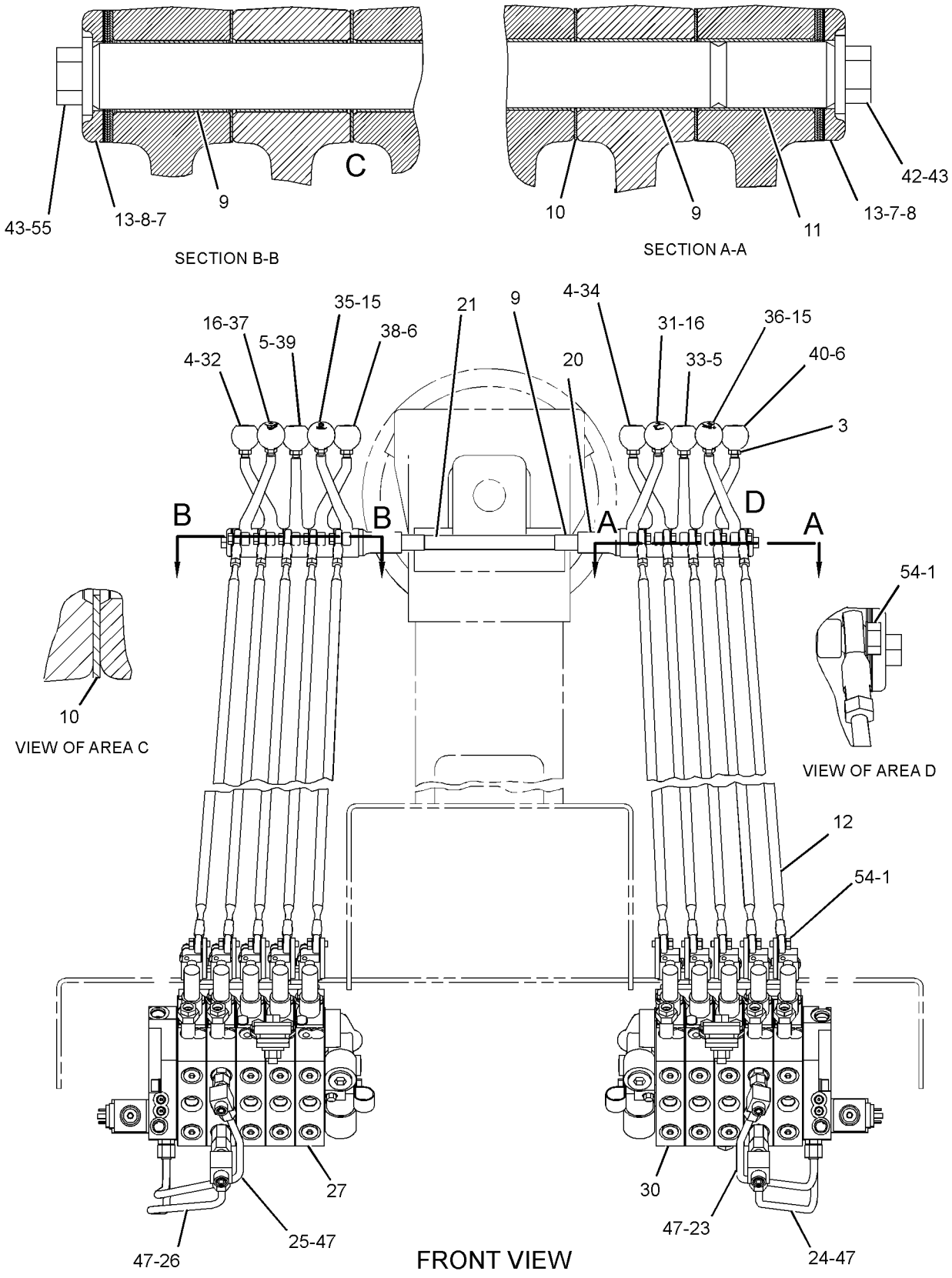


GRAPHIC #1 g01240612

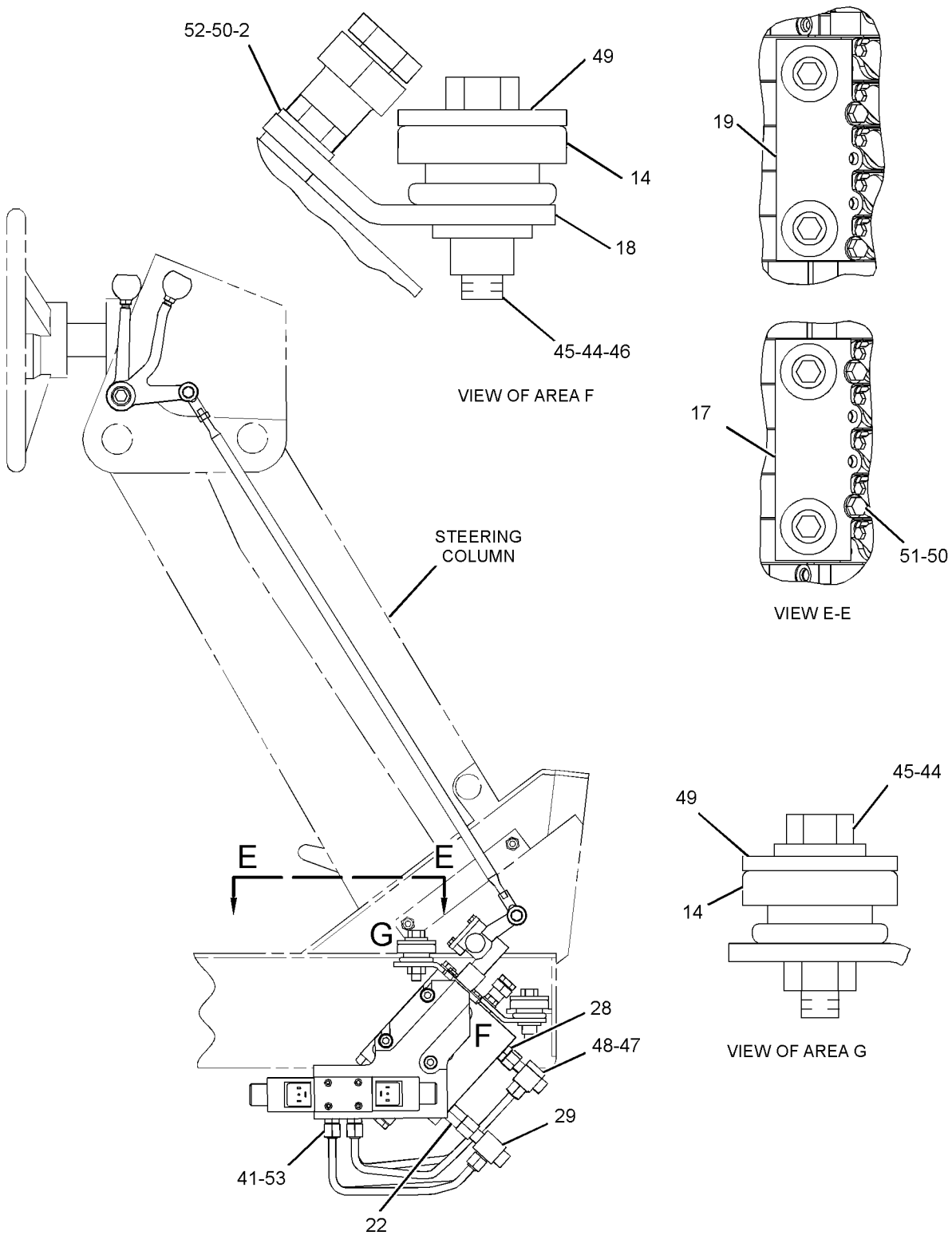


RIGHT SIDE VIEW

GRAPHIC #2 **<END>** g01240613

# HYDRAULIC SYSTEM

## *265-7816* VALVE & LINKAGE GP

**S/N: CCA1-UP**
**AN ATTACHMENT**

**SMCS-5051, 5063** **i02385348**

| NOTE | REF NO | GRAPHIC REF | PART NUMBER | QTY | PART NAME 1 2 3 4 5 6 (PRODUCT LEVEL) | SEE PAGE |
|---|---|---|---|---|---|---|
| | 1 | 1 | **3F-9556** | 22 | LOCKWASHER | |
| | 2 | 2 | **6B-0933** | 4 | SPACER (10.31X19.05X6.35-MM THK) | |
| | 3 | 1 | **6L-1962** | 11 | NUT-JAM (3/8-24-THD) | |
| | 4 | 1 | **8D-5632** | 1 | LEVER (CIRCLE DRIVE) | |
| | 4A | 1 | **8D-5632** | 1 | LEVER (BLADE LIFT, RH) | |
| | 5 | 1 | **8D-5633** | 1 | LEVER (SIDESHIFT) | |
| | 5A | 1 | **8D-5633** | 1 | LEVER (WHEEL LEAN) | |
| | 6 | 1 | **8D-5634** | 1 | LEVER (BLADE LIFT, LH) | |
| | 6A | 1 | **8D-5634** | 1 | LEVER (CENTERSHIFT) | |
| B | 7 | 1 | **8D-5636** | 4 | SHIM (0.254-MM THK) | |
| B | 8 | 1 | **8D-5637** | 4 | SHIM (0.762-MM THK) | |
| | 9 | 1 | **8D-5640** | 13 | BEARING | |
| | 10 | 1 | **8D-5641** | 11 | BEARING | |
| | 11 | 1 | **8W-0456** | 2 | SHAFT | |
| | 12 | 1 | *8X-4277* | 11 | ROD AS | |
| | | | | | (EACH INCLUDES) | |
| | | 1 | **8L-8598** | 1 | ROD END (LH) | |
| | | 1 | **6V-8186** | 1 | NUT-FULL (5/16-24-THD) | |
| | | 1 | **7H-3641** | 1 | END-ROD (5/16-24-THD) | |
| | | 1 | **146-0705** | 1 | ROD | |
| | 13 | 1 | **8X-5499** | 2 | RETAINER | |
| | 14 | 2 | **9M-1853** | 6 | MOUNTING | |
| | 15 | 1 | **101-2457** | 1 | LEVER (WING TILT) | |
| | 15A | 1 | **101-2457** | 1 | LEVER (ARTICULATION) | |
| | 16 | 1 | **101-2458** | 1 | LEVER (BLADE TIP) | |
| | 16A | 1 | **101-2458** | 1 | LEVER (PLOW, DOZER) | |
| | 17 | 1 | **103-1597** | 1 | LEVER (WING LIFT) | |
| | 18 | 2 | **104-7419** | 1 | PLATE AS (RH) | |
| | | 2 | **1F-0748** | 2 | NUT-WELD (1/2-13-THD) | |
| | 19 | 2 | **104-7429** | 2 | PLATE | |
| | 20 | 2 | **104-7740** | 1 | PLATE AS (LH) | |
| | | 2 | **1F-0748** | 2 | NUT-WELD (1/2-13-THD) | |
| | 21 | 1 | **137-4515** | 2 | BUSHING | |
| | 22 | 1 | **137-4516** | 1 | SHAFT | |
| | 23 | 2 | *164-5608* | 2 | CONNECTOR AS | |
| | | | | | (EACH INCLUDES) | |
| | | 2 | **8T-1687** | 1 | CONNECTOR | |
| | | 2 | **6V-8398** | 1 | SEAL-O-RING | |
| | | 2 | **3K-0360** | 1 | SEAL-O-RING | |
| | 24 | 1 | **244-2586** | 1 | TUBE AS | |
| | 25 | 1 | **244-2590** | 1 | TUBE AS | |
| | 26 | 1 | **244-2593** | 1 | TUBE AS | |
| | 27 | 1 | **244-2597** | 1 | TUBE AS | |
| Y | 28 | 1 | **250-0548** | 1 | VALVE GP-BANK 5 (RH) | 926 |
| Y | 29 | 1 | **250-0567** | 1 | VALVE GP-BANK 6 (LH) | 946 |
| | 30 | 2 | *148-8318* | 2 | CONNECTOR AS | |
| | | | | | (EACH INCLUDES) | |
| | | 2 | **6V-8634** | 1 | CONNECTOR | |
| | | 2 | **3K-0360** | 1 | SEAL-O-RING | |
| | | 2 | **6V-8397** | 1 | SEAL-O-RING | |
| | 31 | 2 | *206-5123* | 2 | TEE AS | |
| | | | | | (EACH INCLUDES) | |
| | | 2 | **206-5122** | 1 | TEE | |
| | | 2 | **6V-8397** | 1 | SEAL-O-RING | |
| | | 2 | **6V-8398** | 1 | SEAL-O-RING | |
| | 32 | 1 | **2G-6747** | 1 | KNOB-BLADE TIP | |

## *265-7816* **VALVE & LINKAGE GP** *(contd.)* **i02385348**

| NOTE | REF NO | GRAPHIC REF | PART NUMBER | QTY | PART NAME 1 2 3 4 5 6 (PRODUCT LEVEL) | SEE PAGE |
|---|---|---|---|---|---|---|
| | 33 | 1 | **2G-6748** | 1 | KNOB-BLADE LIFT | |
| | 34 | 1 | **2G-6749** | 1 | KNOB-SIDESHIFT | |
| | 35 | 1 | **2G-6751** | 1 | KNOB-CIRCLE DRIVE | |
| | 36 | 1 | **2G-6752** | 1 | KNOB-ARTICULATION | |
| | 37 | 1 | **2G-6754** | 1 | KNOB (DOZER LIFT, PLOW) | |
| | 38 | 1 | **2G-6755** | 1 | KNOB-CENTERSHIFT | |
| | 39 | 1 | **2G-6756** | 1 | KNOB-WHEEL LEAN | |
| | 40 | 1 | **2G-6757** | 1 | KNOB-BLADE LIFT | |
| | 41 | 1 | **2G-7107** | 1 | KNOB-WING LIFT | |
| | 42 | 1 | **2G-7108** | 1 | KNOB-WING TILT | |
| | 43 | 2 | **3J-1907** | 4 | SEAL-O-RING | |
| | 44 | 1 | **4L-6459** | 2 | BOLT (3/8-16X2.5-IN) | |
| | 45 | 1 | **5P-1075** | 2 | WASHER-HARD (10.2X22.5X3-MM THK) | |
| | 46 | 2 | **5P-1076** | 6 | WASHER-HARD (13.5X30X4-MM THK) | |
| | 47 | 2 | **5P-2424** | 6 | BOLT (1/2-13X2.25-IN) | |
| | 48 | 2 | **6V-8188** | 2 | NUT (1/2-13-THD) | |
| | 49 | 1,2 | **6V-8397** | 8 | SEAL-O-RING | |
| | 50 | 2 | **6V-9836** | 2 | TEE-SWIVEL | |
| | 51 | 2 | **8F-6437** | 6 | WASHER (13.5X50.8X4.76-MM THK) | |
| | 52 | 2 | **8T-4121** | 8 | WASHER-HARD (11X21X2.5-MM THK) | |
| M | 53 | 2 | **8T-4136** | 4 | BOLT (M10X1.5X25-MM) | |
| M | 54 | 2 | **8T-4195** | 4 | BOLT (M10X1.5X30-MM) | |
| | 55 | 2 | **8T-9041** | 4 | CONNECTOR | |
| | 56 | 1 | **8T-9043** | 22 | BOLT (5/16-18X0.875-IN) | |

B-USE AS REQUIRED
M-METRIC PART
Y-SEPARATE ILLUSTRATION

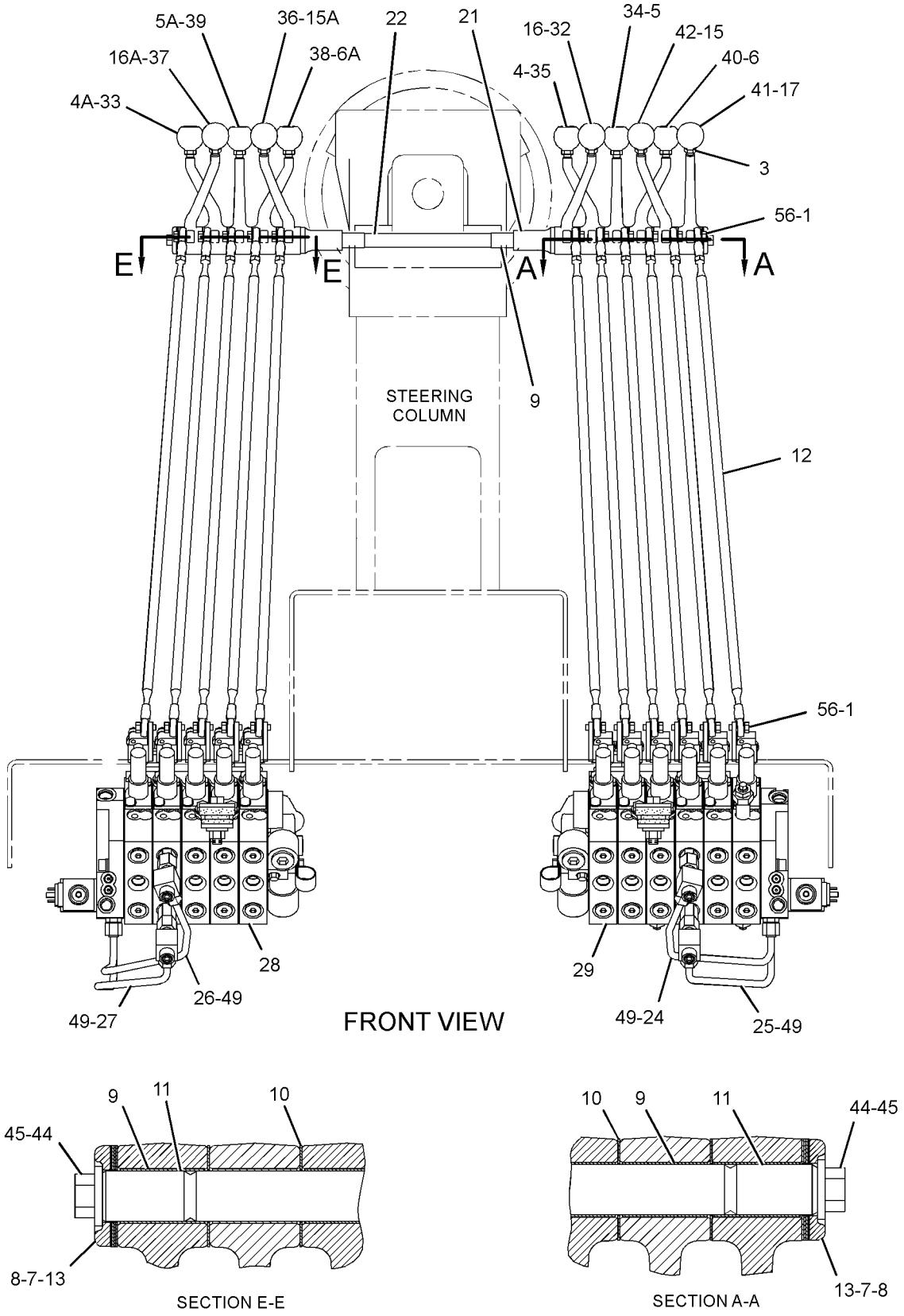


GRAPHIC #1

g01258802

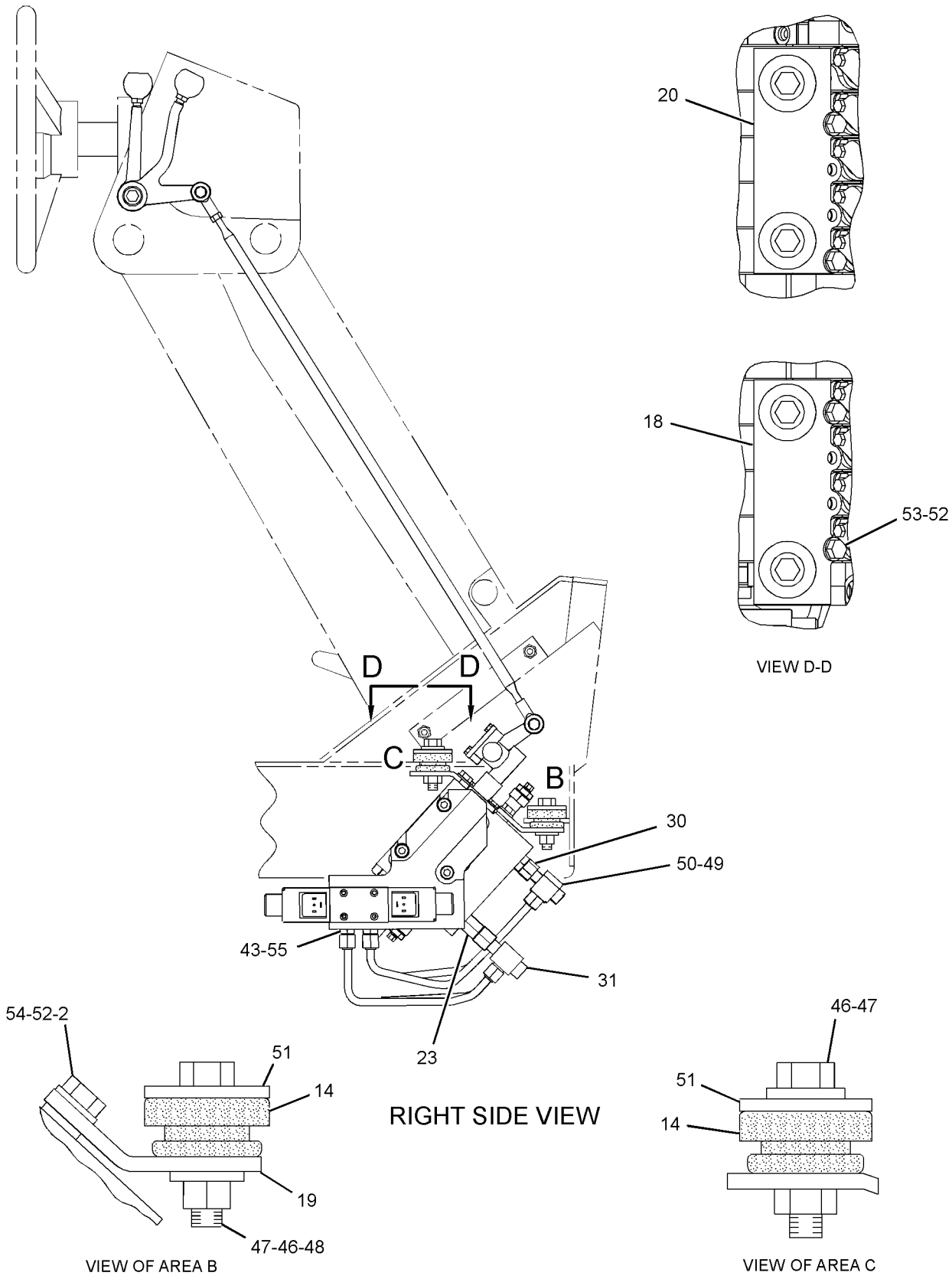


GRAPHIC #2 **<END>** g01258809

# HYDRAULIC SYSTEM

## *265-7817* VALVE & LINKAGE GP

**S/N: CCA1-UP**

**AN ATTACHMENT**

**SMCS-5051, 5063** **i02584515**

| NOTE | REF NO | GRAPHIC REF | PART NUMBER | QTY | PART NAME 1 2 3 4 5 6 (PRODUCT LEVEL) | SEE PAGE |
|---|---|---|---|---|---|---|
| | 1 | 1,2 | **3F-9556** | 24 | LOCKWASHER | |
| | 2 | 2 | **6B-0933** | 4 | SPACER (10.31X19.05X6.35-MM THK) | |
| | 3 | 1 | **6L-1962** | 12 | NUT-JAM (3/8-24-THD) | |
| | 4 | 1 | **8D-5632** | 2 | LEVER | |
| | 5 | 1 | **8D-5633** | 2 | LEVER | |
| | 6 | 1 | **8D-5634** | 2 | LEVER | |
| B | 7 | 1 | **8D-5636** | 4 | SHIM (0.254-MM THK) | |
| B | 8 | 1 | **8D-5637** | 4 | SHIM (0.762-MM THK) | |
| | 9 | 1 | **8D-5640** | 14 | BEARING | |
| | 10 | 1 | **8D-5641** | 12 | BEARING | |
| | 11 | 1 | **8W-0456** | 3 | SHAFT | |
| | 12 | 1 | **8X-4277** | 12 | ROD AS | |
| | | | | | (EACH INCLUDES) | |
| | | 1 | **146-0705** | 1 | ROD | |
| | | 1 | **6V-8186** | 1 | NUT-FULL (5/16-24-THD) | |
| | | 1 | **7H-3641** | 1 | END-ROD (5/16-24-THD) | |
| | | 1 | **8L-8598** | 1 | ROD END (LH) | |
| | 13 | 1 | **8X-5499** | 2 | RETAINER | |
| | 14 | 2 | **9M-1853** | 6 | MOUNTING | |
| | 15 | 1 | **101-2457** | 2 | LEVER | |
| | 16 | 1 | **101-2458** | 3 | LEVER | |
| | 17 | 1 | **103-1597** | 1 | LEVER | |
| | 18 | 2 | **104-7419** | 1 | PLATE AS (RH) | |
| | | 2 | **1F-0748** | 2 | NUT-WELD (1/2-13-THD) | |
| | 19 | 2 | **104-7429** | 2 | PLATE | |
| | 20 | 2 | **104-7740** | 1 | PLATE AS (LH) | |
| | | 2 | **1F-0748** | 2 | NUT-WELD (1/2-13-THD) | |
| | 21 | 1 | **137-4515** | 2 | BUSHING | |
| | 22 | 1 | **137-4516** | 1 | SHAFT | |
| | 23 | 2 | *164-5608* | 2 | CONNECTOR AS | |
| | | | | | (EACH INCLUDES) | |
| | | 2 | **8T-1687** | 1 | CONNECTOR | |
| | | 2 | **3K-0360** | 1 | SEAL-O-RING | |
| | | 2 | **6V-8398** | 1 | SEAL-O-RING | |
| | 24 | 1 | **244-2587** | 1 | TUBE AS | |
| | 25 | 1 | **244-2591** | 1 | TUBE AS | |
| | 26 | 1 | **244-2593** | 1 | TUBE AS | |
| | 27 | 1 | **244-2597** | 1 | TUBE AS | |
| Y | 28 | 1 | **250-0548** | 1 | VALVE GP-BANK 5 (RH) | 926 |
| | 29 | 2 | *148-8318* | 2 | CONNECTOR AS | |
| | | | | | (EACH INCLUDES) | |
| | | 2 | **6V-8634** | 1 | CONNECTOR | |
| | | 2 | **3K-0360** | 1 | SEAL-O-RING | |
| | | 2 | **6V-8397** | 1 | SEAL-O-RING | |
| | 30 | 2 | *206-5123* | 2 | TEE AS (ORFS) | |
| | | | | | (EACH INCLUDES) | |
| | | 2 | **206-5122** | 1 | TEE | |
| | | 2 | **6V-8397** | 1 | SEAL-O-RING | |
| | | 2 | **6V-8398** | 1 | SEAL-O-RING | |
| Y | 31 | 1 | **263-6435** | 1 | VALVE GP-BANK 7 (LH) | 967 |
| | 32 | 1 | **2G-6747** | 1 | KNOB-BLADE TIP | |
| | 33 | 1 | **2G-6748** | 1 | KNOB-BLADE LIFT | |
| | 34 | 1 | **2G-6749** | 1 | KNOB-SIDESHIFT | |
| | 35 | 1 | **2G-6751** | 1 | KNOB-CIRCLE DRIVE | |
| | 36 | 1 | **2G-6752** | 1 | KNOB-ARTICULATION | |
| | 37 | 1 | **2G-6753** | 1 | KNOB-SCARIFIER | |

## *265-7817* **VALVE & LINKAGE GP** *(contd.)* **i02584515**

| NOTE | REF NO | GRAPHIC REF | PART NUMBER | QTY | PART NAME 1 2 3 4 5 6 (PRODUCT LEVEL) | SEE PAGE |
|---|---|---|---|---|---|---|
| | 38 | 1 | **2G-6754** | 1 | KNOB (DOZER LIFT, PLOW) | |
| | 39 | 1 | **2G-6755** | 1 | KNOB-CENTERSHIFT | |
| | 40 | 1 | **2G-6756** | 1 | KNOB-WHEEL LEAN | |
| | 41 | 1 | **2G-6757** | 1 | KNOB-BLADE LIFT | |
| | 42 | 1 | **2G-7107** | 1 | KNOB-WING LIFT | |
| | 43 | 1 | **2G-7108** | 1 | KNOB-WING TILT | |
| | 44 | 2 | **3J-1907** | 4 | SEAL-O-RING | |
| | 45 | 1 | **4L-6459** | 1 | BOLT (3/8-16X2.5-IN) | |
| | 46 | 1 | **5P-1075** | 2 | WASHER-HARD (10.2X22.5X3-MM THK) | |
| | 47 | 2 | **5P-1076** | 6 | WASHER-HARD (13.5X30X4-MM THK) | |
| | 48 | 2 | **5P-2424** | 6 | BOLT (1/2-13X2.25-IN) | |
| | 49 | 2 | **6V-8188** | 2 | NUT (1/2-13-THD) | |
| | 50 | 1,2 | **6V-8397** | 8 | SEAL-O-RING | |
| | 51 | 2 | **6V-9836** | 2 | TEE-SWIVEL | |
| | 52 | 1 | **7X-0291** | 1 | BOLT (3/8-16X3.75-IN) | |
| | 53 | 2 | **8F-6437** | 6 | WASHER (13.5X50.8X4.76-MM THK) | |
| | 54 | 2 | **8T-4121** | 8 | WASHER-HARD (11X21X2.5-MM THK) | |
| M | 55 | 2 | **8T-4136** | 4 | BOLT (M10X1.5X25-MM) | |
| M | 56 | 2 | **8T-4195** | 4 | BOLT (M10X1.5X30-MM) | |
| | 57 | 2 | **8T-9041** | 4 | CONNECTOR | |
| | 58 | 1,2 | **8T-9043** | 24 | BOLT (5/16-18X0.875-IN) | |

B-USE AS REQUIRED
M-METRIC PART
Y-SEPARATE ILLUSTRATION

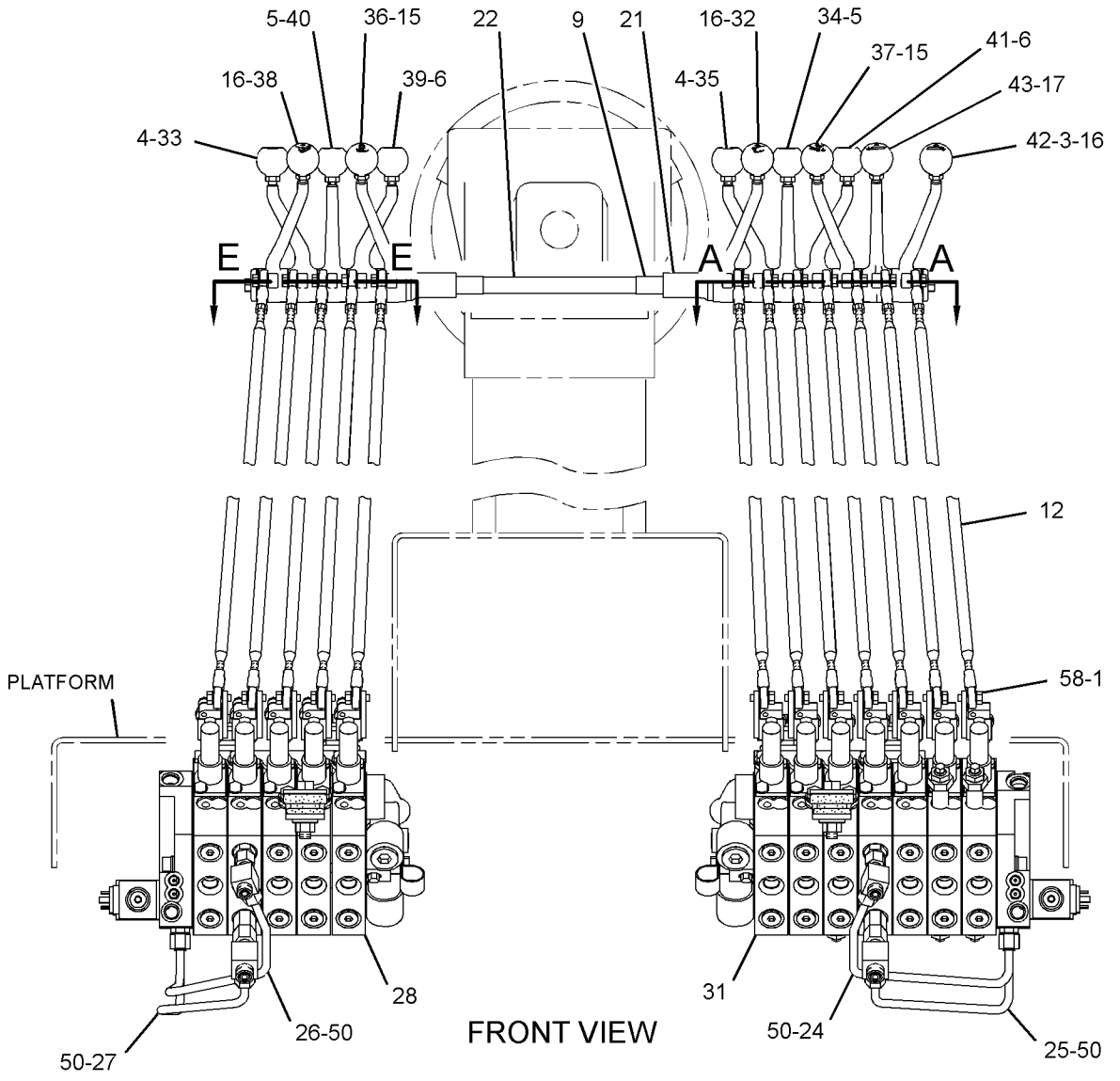


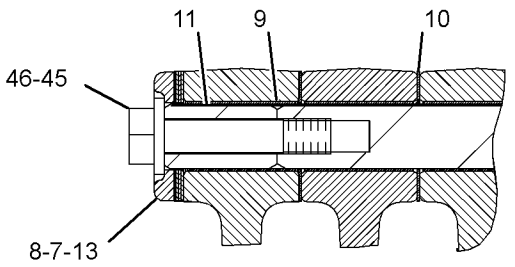


SECTION E-E

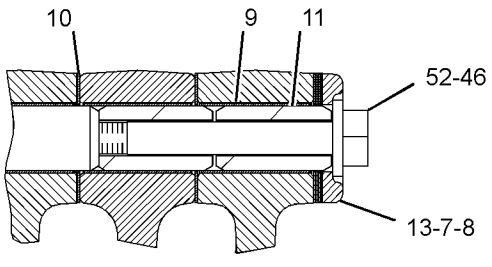


SECTION A-A

REFER TO ALL ILLUSTRATIONS OF
THIS GROUP FOR AUXILIARY VIEWS

GRAPHIC #1

g01242145

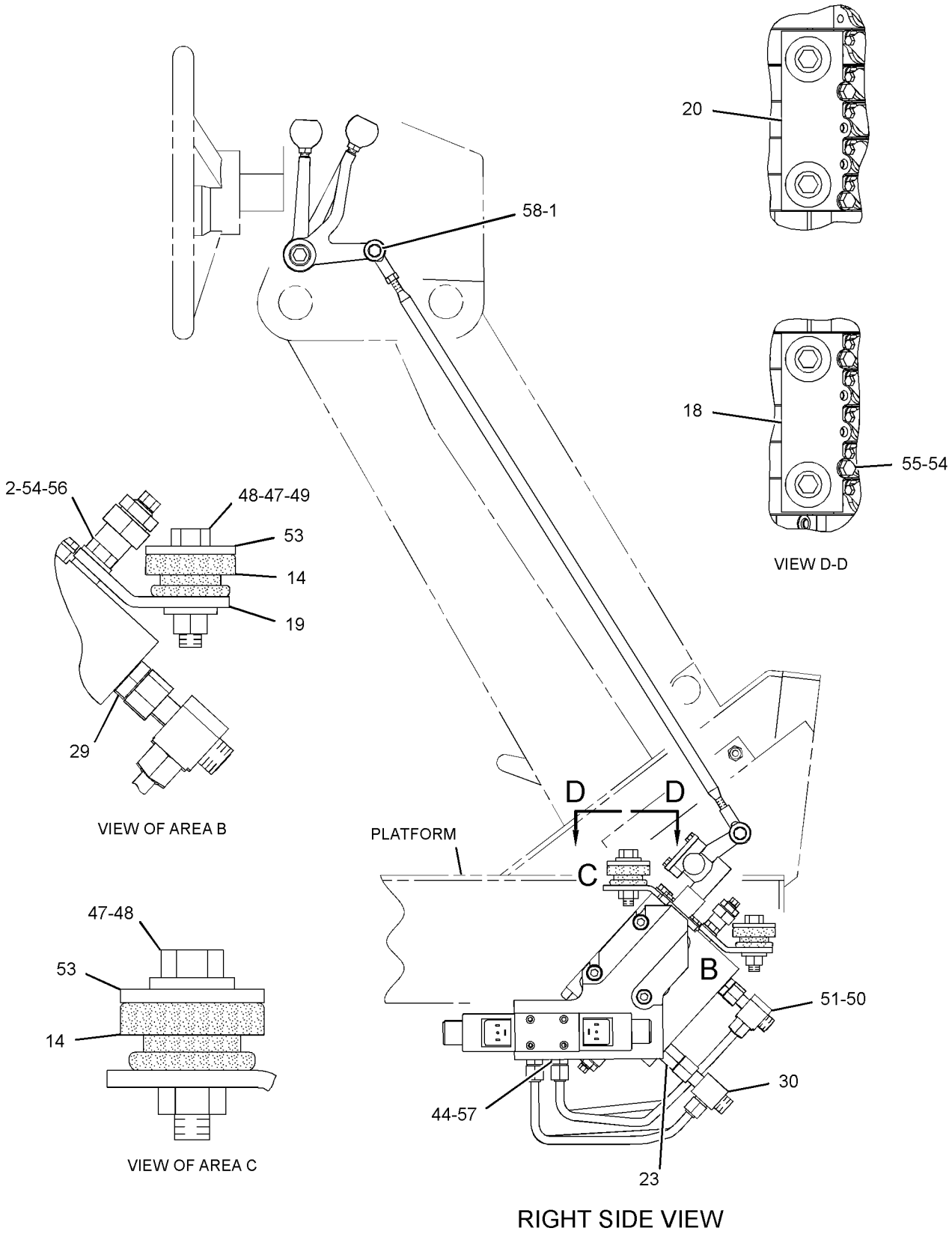


GRAPHIC #2 **<END>** g01242146

# HYDRAULIC SYSTEM

## *265-7819* VALVE & LINKAGE GP—5-BANK, RH; 7-BANK, LH

**S/N: CCA1-UP**

**PART OF 265-7818 CONTROL AR-HYDRAULIC**

**AN ATTACHMENT**

**SMCS-5051, 5063** **i02312140**

| NOTE | REF NO | GRAPHIC REF | PART NUMBER | QTY | PART NAME 1 2 3 4 5 6 (PRODUCT LEVEL) | SEE PAGE |
|---|---|---|---|---|---|---|
| | 1 | 1 | **3F-9556** | 24 | LOCKWASHER | |
| | 2 | 2 | **6B-0933** | 4 | SPACER (10.31X19.05X6.35-MM THK) | |
| | 3 | 1 | **6L-1962** | 12 | NUT-JAM (3/8-24-THD) | |
| | 4 | 1 | **8D-5632** | 1 | LEVER (CIRCLE DRIVE) | |
| | 4A | 1 | **8D-5632** | 1 | LEVER (BLADE LIFT, RH) | |
| | 5 | 1 | **8D-5633** | 1 | LEVER (SIDESHIFT) | |
| | 5A | 1 | **8D-5633** | 1 | LEVER (WHEEL LEAN) | |
| | 6 | 1 | **8D-5634** | 1 | LEVER (BLADE LIFT, LH) | |
| | 6A | 1 | **8D-5634** | 1 | LEVER (CENTERSHIFT) | |
| B | 7 | 1 | **8D-5636** | 4 | SHIM (0.254-MM THK) | |
| B | 8 | 1 | **8D-5637** | 4 | SHIM (0.762-MM THK) | |
| | 9 | 1 | **8D-5640** | 14 | BEARING | |
| | 10 | 1 | **8D-5641** | 12 | BEARING | |
| | 11 | 1 | **8W-0456** | 3 | SHAFT | |
| | 12 | 1 | *8X-4277* | 12 | ROD AS | |
| | | | | | (EACH INCLUDES) | |
| | | 1 | **146-0705** | 1 | ROD | |
| | | 1 | **206-5122** | 1 | TEE | |
| | | 1 | **8L-8598** | 1 | ROD END (LH) | |
| | 13 | 1 | **8X-5499** | 2 | RETAINER | |
| | 14 | 2 | **9M-1853** | 6 | MOUNTING | |
| | 15 | 1 | **101-2457** | 1 | LEVER (RIPPER) | |
| | 15A | 1 | **101-2457** | 1 | LEVER (ARTICULATION) | |
| | 16 | 1 | **101-2458** | 1 | LEVER (WING LIFT) | |
| | 16A | 1 | **101-2458** | 1 | LEVER (PLOW, DOZER) | |
| | 16B | 1 | **101-2458** | 1 | LEVER (BLADE TIP) | |
| | 17 | 1 | **103-1597** | 1 | LEVER (WING TILT) | |
| | 18 | 2 | **104-7419** | 1 | PLATE AS (RH) | |
| | | 2 | **1F-0748** | 2 | NUT-WELD (1/2-13-THD) | |
| | 19 | 2 | **104-7429** | 2 | PLATE | |
| | 20 | 2 | **104-7740** | 1 | PLATE AS (LH) | |
| | | 2 | **1F-0748** | 2 | NUT-WELD (1/2-13-THD) | |
| | 21 | 1 | **137-4515** | 2 | BUSHING | |
| | 22 | 1 | **137-4516** | 1 | SHAFT | |
| | 23 | 2 | *164-5608* | 2 | CONNECTOR AS | |
| | | | | | (EACH INCLUDES) | |
| | | 2 | **8T-1687** | 1 | CONNECTOR | |
| | | 2 | **6V-8398** | 1 | SEAL-O-RING | |
| | | 2 | **3K-0360** | 1 | SEAL-O-RING | |
| | 24 | 1 | **244-2587** | 1 | TUBE AS | |
| | 25 | 1 | **244-2591** | 1 | TUBE AS | |
| | 26 | 1 | **244-2593** | 1 | TUBE AS | |
| | 27 | 1 | **244-2597** | 1 | TUBE AS | |
| Y | 28 | 1 | **250-0548** | 1 | VALVE GP-BANK 5 (RH) | 926 |
| | 29 | 2 | *148-8318* | 2 | CONNECTOR AS | |
| | | | | | (EACH INCLUDES) | |
| | | 2 | **6V-8634** | 1 | CONNECTOR | |
| | | 2 | **3K-0360** | 1 | SEAL-O-RING | |
| | | 2 | **6V-8397** | 1 | SEAL-O-RING | |
| | 30 | 2 | *206-5123* | 2 | TEE AS | |
| | | | | | (EACH INCLUDES) | |
| | | 2 | **206-5122** | 1 | TEE | |
| | | 2 | **6V-8397** | 1 | SEAL-O-RING | |
| | | 2 | **6V-8398** | 1 | SEAL-O-RING | |
| Y | 31 | 1 | **263-6436** | 1 | VALVE GP-BANK 7 (LH) | 968 |

## *265-7819* **VALVE & LINKAGE GP** *(contd.)* **i02312140**

| NOTE | REF NO | GRAPHIC REF | PART NUMBER | QTY | PART NAME 1 2 3 4 5 6 (PRODUCT LEVEL) | SEE PAGE |
|---|---|---|---|---|---|---|
| | 32 | 1 | **2G-6740** | 1 | KNOB-RIPPER | |
| | 33 | 1 | **2G-6747** | 1 | KNOB-BLADE TIP | |
| | 34 | 1 | **2G-6748** | 1 | KNOB-BLADE LIFT | |
| | 35 | 1 | **2G-6749** | 1 | KNOB-SIDESHIFT | |
| | 36 | 1 | **2G-6751** | 1 | KNOB-CIRCLE DRIVE | |
| | 37 | 1 | **2G-6752** | 1 | KNOB-ARTICULATION | |
| | 38 | 1 | **2G-6754** | 1 | KNOB (DOZER LIFT, PLOW) | |
| | 39 | 1 | **2G-6755** | 1 | KNOB-CENTERSHIFT | |
| | 40 | 1 | **2G-6756** | 1 | KNOB-WHEEL LEAN | |
| | 41 | 1 | **2G-6757** | 1 | KNOB-BLADE LIFT | |
| | 42 | 1 | **2G-7107** | 1 | KNOB-WING LIFT | |
| | 43 | 1 | **2G-7108** | 1 | KNOB-WING TILT | |
| | 44 | 2 | **3J-1907** | 4 | SEAL-O-RING | |
| | 45 | 1 | **4L-6459** | 1 | BOLT (3/8-16X2.5-IN) | |
| | 46 | 1 | **5P-1075** | 2 | WASHER-HARD (10.2X22.5X3-MM THK) | |
| | 47 | 2 | **5P-1076** | 6 | WASHER-HARD (13.5X30X4-MM THK) | |
| | 48 | 2 | **5P-2424** | 6 | BOLT (1/2-13X2.25-IN) | |
| | 49 | 2 | **6V-8188** | 2 | NUT (1/2-13-THD) | |
| | 50 | 1,2 | **6V-8397** | 8 | SEAL-O-RING | |
| | 51 | 2 | **6V-9836** | 2 | TEE-SWIVEL | |
| | 52 | 1 | **7X-0291** | 1 | BOLT (3/8-16X3.75-IN) | |
| | 53 | 2 | **8F-6437** | 6 | WASHER (13.5X50.8X4.76-MM THK) | |
| | 54 | 2 | **8T-4121** | 8 | WASHER-HARD (11X21X2.5-MM THK) | |
| M | 55 | 2 | **8T-4136** | 4 | BOLT (M10X1.5X25-MM) | |
| M | 56 | 2 | **8T-4195** | 4 | BOLT (M10X1.5X30-MM) | |
| | 57 | 2 | **8T-9041** | 4 | CONNECTOR | |
| | 58 | 1 | **8T-9043** | 24 | BOLT (5/16-18X0.875-IN) | |

B-USE AS REQUIRED
M-METRIC PART
Y-SEPARATE ILLUSTRATION

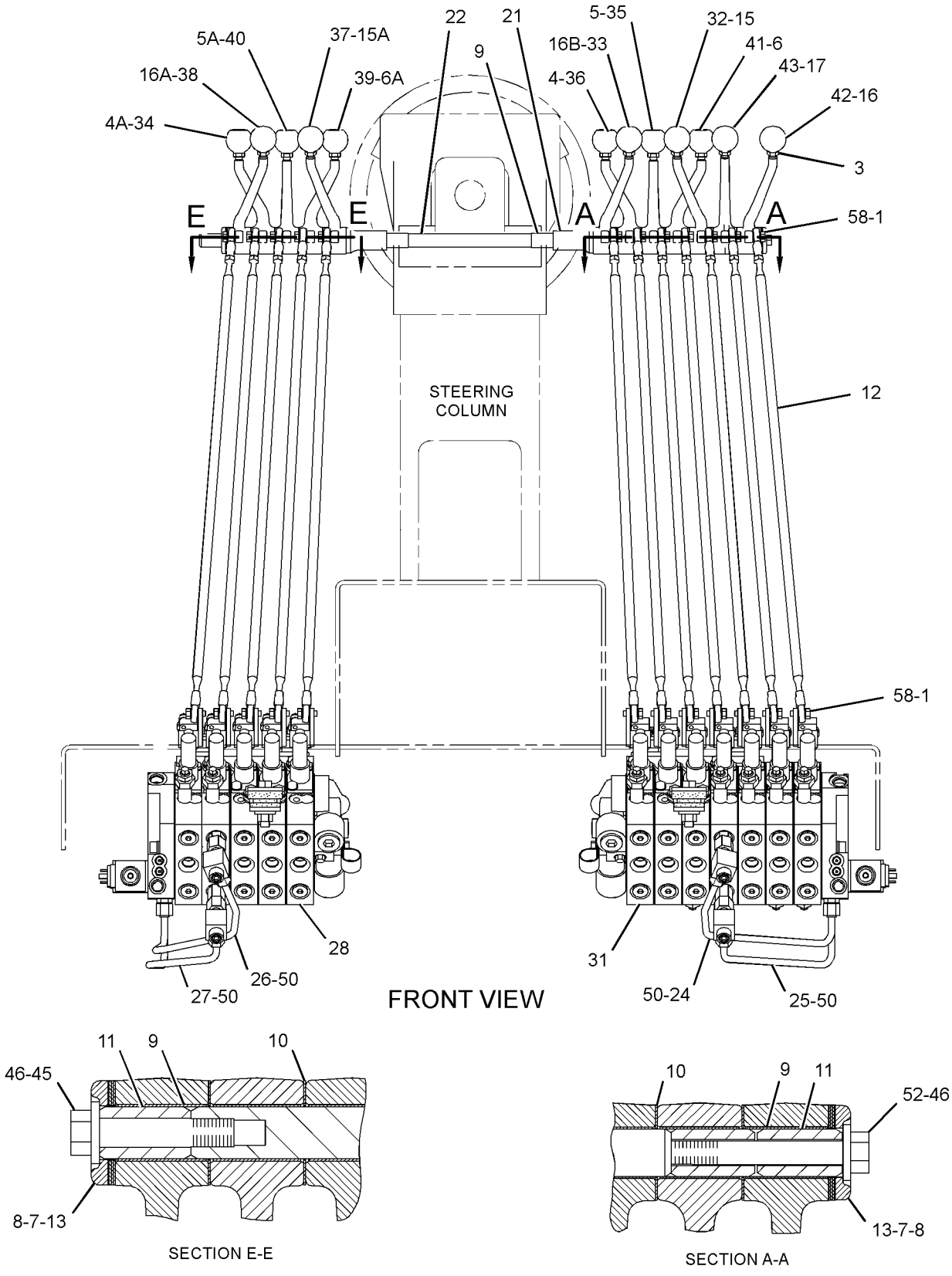


GRAPHIC #1

g01279265

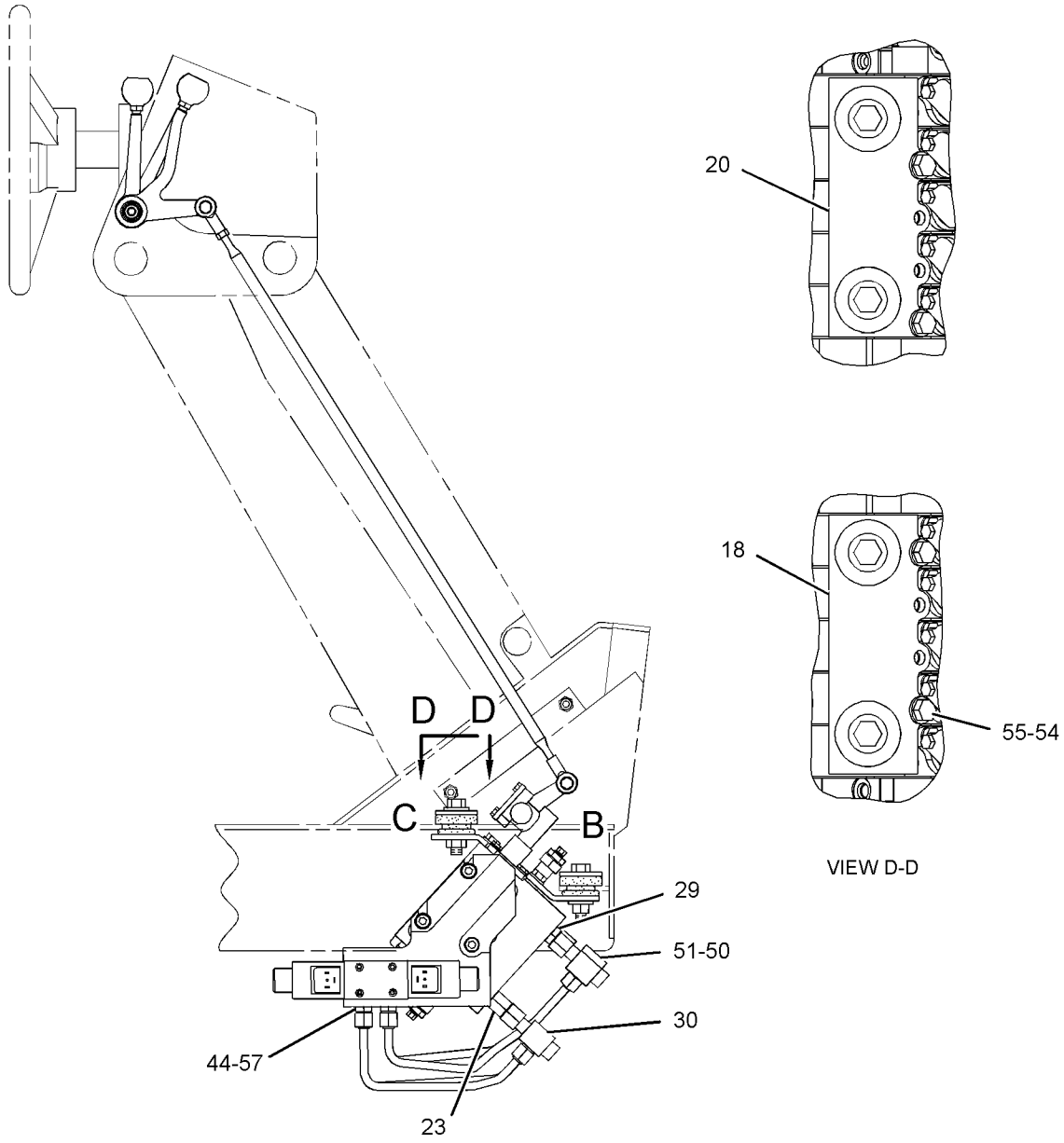


VIEW D-D

RIGHT SIDE VIEW

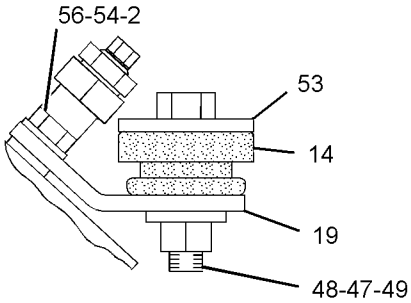


VIEW OF AREA B

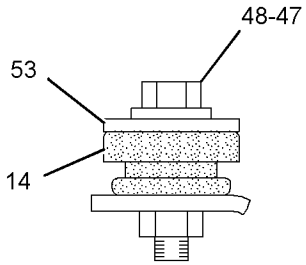


VIEW OF AREA C

GRAPHIC #2 **<END>** g01279266

# HYDRAULIC SYSTEM

## *265-7822* VALVE & LINKAGE GP—6-BANK, RH; 7-BANK, LH

**S/N: CCA1-UP**
**PART OF 265-7820 CONTROL AR-HYDRAULIC**
**AN ATTACHMENT**

**SMCS-5051, 5063** **i02369669**

| NOTE | REF NO | GRAPHIC REF | PART NUMBER | QTY | PART NAME 1 2 3 4 5 6 (PRODUCT LEVEL) | SEE PAGE |
|---|---|---|---|---|---|---|
| | 1 | 1 | **3F-9556** | 26 | LOCKWASHER | |
| | 2 | 1 | **6B-0933** | 4 | SPACER (10.31X19.05X6.35-MM THK) | |
| | 3 | 1 | **6L-1962** | 13 | NUT-JAM (3/8-24-THD) | |
| | 4 | 1 | **8D-5632** | 1 | LEVER (CIRCLE DRIVE) | |
| | 4A | 1 | **8D-5632** | 1 | LEVER (BLADE LIFT, RH) | |
| | 5 | 1 | **8D-5633** | 1 | LEVER (SIDESHIFT) | |
| | 5A | 1 | **8D-5633** | 1 | LEVER (WHEEL LEAN) | |
| | 6 | 1 | **8D-5634** | 1 | LEVER (BLADE LIFT, LH) | |
| | 6A | 1 | **8D-5634** | 1 | LEVER (CENTERSHIFT) | |
| B | 7 | 1 | **8D-5636** | 4 | SHIM (0.254-MM THK) | |
| B | 8 | 1 | **8D-5637** | 4 | SHIM (0.762-MM THK) | |
| | 9 | 1 | **8D-5640** | 15 | BEARING | |
| | 10 | 1 | **8D-5641** | 13 | BEARING | |
| | 11 | 1 | **8W-0456** | 1 | SHAFT | |
| | 12 | 1 | *8X-4277* | 13 | ROD AS | |
| | | | | | (EACH INCLUDES) | |
| | | 1 | **8L-8598** | 1 | ROD END (LH) | |
| | | 1 | **146-0705** | 1 | ROD | |
| | | 1 | **6V-8186** | 1 | NUT-FULL (5/16-24-THD) | |
| | | 1 | **7H-3641** | 1 | END-ROD (5/16-24-THD) | |
| | 13 | 1 | **8X-5499** | 2 | RETAINER | |
| | 14 | 1 | **9M-1853** | 6 | MOUNTING | |
| | 15 | 1 | **101-2457** | 1 | LEVER (RIPPER) | |
| | 15A | 1 | **101-2457** | 1 | LEVER (ARTICULATION) | |
| | 16 | 1 | **101-2458** | 1 | LEVER (PLOW, DOZER) | |
| | 16A | 1 | **101-2458** | 1 | LEVER (BLADE TIP) | |
| | 16B | 1 | **101-2458** | 1 | LEVER (WING LIFT) | |
| | 17 | 1 | **103-1597** | 1 | LEVER (PLOW, BULLDOZER ANGLE) | |
| | 17A | 1 | **103-1597** | 1 | LEVER (WING TILT) | |
| | 18 | 1 | **104-7419** | 1 | PLATE AS (RH) | |
| | | 1 | **1F-0748** | 2 | NUT-WELD (1/2-13-THD) | |
| | 19 | 1 | **104-7429** | 2 | PLATE | |
| | 20 | 1 | **104-7740** | 1 | PLATE AS (LH) | |
| | | 1 | **1F-0748** | 2 | NUT-WELD (1/2-13-THD) | |
| | 21 | 1 | **137-4515** | 2 | BUSHING | |
| | 22 | 1 | **137-4517** | 1 | SHAFT | |
| | 23 | 1 | *164-5608* | 2 | CONNECTOR AS | |
| | | | | | (EACH INCLUDES) | |
| | | 1 | **8T-1687** | 1 | CONNECTOR | |
| | | 1 | **3K-0360** | 1 | SEAL-O-RING | |
| | | 1 | **6V-8398** | 1 | SEAL-O-RING | |
| | 24 | 1 | **244-2587** | 1 | TUBE AS | |
| | 25 | 1 | **244-2591** | 1 | TUBE AS | |
| | 26 | 1 | **244-2594** | 1 | TUBE AS | |
| | 27 | 1 | **244-2598** | 1 | TUBE AS | |
| Y | 28 | 1 | **250-0574** | 1 | VALVE GP-BANK 6 (RH) | 950 |
| | 29 | 1 | **117-0472** | 1 | KNOB (PLOW, BULLDOZER ANGLE) | |
| | 30 | 1 | *148-8318* | 2 | CONNECTOR AS | |
| | | | | | (EACH INCLUDES) | |
| | | 1 | **6V-8634** | 1 | CONNECTOR | |
| | | 1 | **6V-8397** | 1 | SEAL-O-RING | |
| | | 1 | **3K-0360** | 1 | SEAL-O-RING | |
| | 31 | 1 | *206-5123* | 2 | TEE AS | |
| | | | | | (EACH INCLUDES) | |
| | | 1 | **206-5122** | 1 | TEE | |

## *265-7822* **VALVE & LINKAGE GP** *(contd.)* **i02369669**

| NOTE | REF NO | GRAPHIC REF | PART NUMBER | QTY | PART NAME 1 2 3 4 5 6 (PRODUCT LEVEL) | SEE PAGE |
|---|---|---|---|---|---|---|
| | | 1 | **6V-8397** | 1 | SEAL-O-RING | |
| | | 1 | **6V-8398** | 1 | SEAL-O-RING | |
| Y | 32 | 1 | **263-6437** | 1 | VALVE GP-BANK 7 (LH) | 969 |
| | 33 | 1 | **2G-6740** | 1 | KNOB-RIPPER | |
| | 34 | 1 | **2G-6747** | 1 | KNOB-BLADE TIP | |
| | 35 | 1 | **2G-6748** | 1 | KNOB-BLADE LIFT | |
| | 36 | 1 | **2G-6749** | 1 | KNOB-SIDESHIFT | |
| | 37 | 1 | **2G-6751** | 1 | KNOB-CIRCLE DRIVE | |
| | 38 | 1 | **2G-6752** | 1 | KNOB-ARTICULATION | |
| | 39 | 1 | **2G-6754** | 1 | KNOB (DOZER LIFT, PLOW) | |
| | 40 | 1 | **2G-6755** | 1 | KNOB-CENTERSHIFT | |
| | 41 | 1 | **2G-6756** | 1 | KNOB-WHEEL LEAN | |
| | 42 | 1 | **2G-6757** | 1 | KNOB-BLADE LIFT | |
| | 43 | 1 | **2G-7107** | 1 | KNOB-WING LIFT | |
| | 44 | 1 | **2G-7108** | 1 | KNOB-WING TILT | |
| | 45 | 1 | **3J-1907** | 4 | SEAL-O-RING | |
| | 46 | 1 | **4L-6459** | 1 | BOLT (3/8-16X2.5-IN) | |
| | 47 | 1 | **5P-1075** | 2 | WASHER-HARD (10.2X22.5X3-MM THK) | |
| | 48 | 1 | **5P-1076** | 6 | WASHER-HARD (13.5X30X4-MM THK) | |
| | 49 | 1 | **5P-2424** | 6 | BOLT (1/2-13X2.25-IN) | |
| | 50 | 1 | **6V-8188** | 2 | NUT (1/2-13-THD) | |
| | 51 | 1 | **6V-8397** | 8 | SEAL-O-RING | |
| | 52 | 1 | **6V-9836** | 2 | TEE-SWIVEL | |
| | 53 | 1 | **8F-6437** | 6 | WASHER (13.5X50.8X4.76-MM THK) | |
| | 54 | 1 | **8T-4121** | 8 | WASHER-HARD (11X21X2.5-MM THK) | |
| M | 55 | 1 | **8T-4136** | 4 | BOLT (M10X1.5X25-MM) | |
| M | 56 | 1 | **8T-4195** | 4 | BOLT (M10X1.5X30-MM) | |
| | 57 | 1 | **8T-9041** | 4 | CONNECTOR | |
| | 58 | 1 | **8T-9043** | 26 | BOLT (5/16-18X0.875-IN) | |
| | 59 | 1 | **9B-7237** | 1 | BOLT (3/8-16X1.25-IN) | |

B-USE AS REQUIRED
M-METRIC PART
Y-SEPARATE ILLUSTRATION

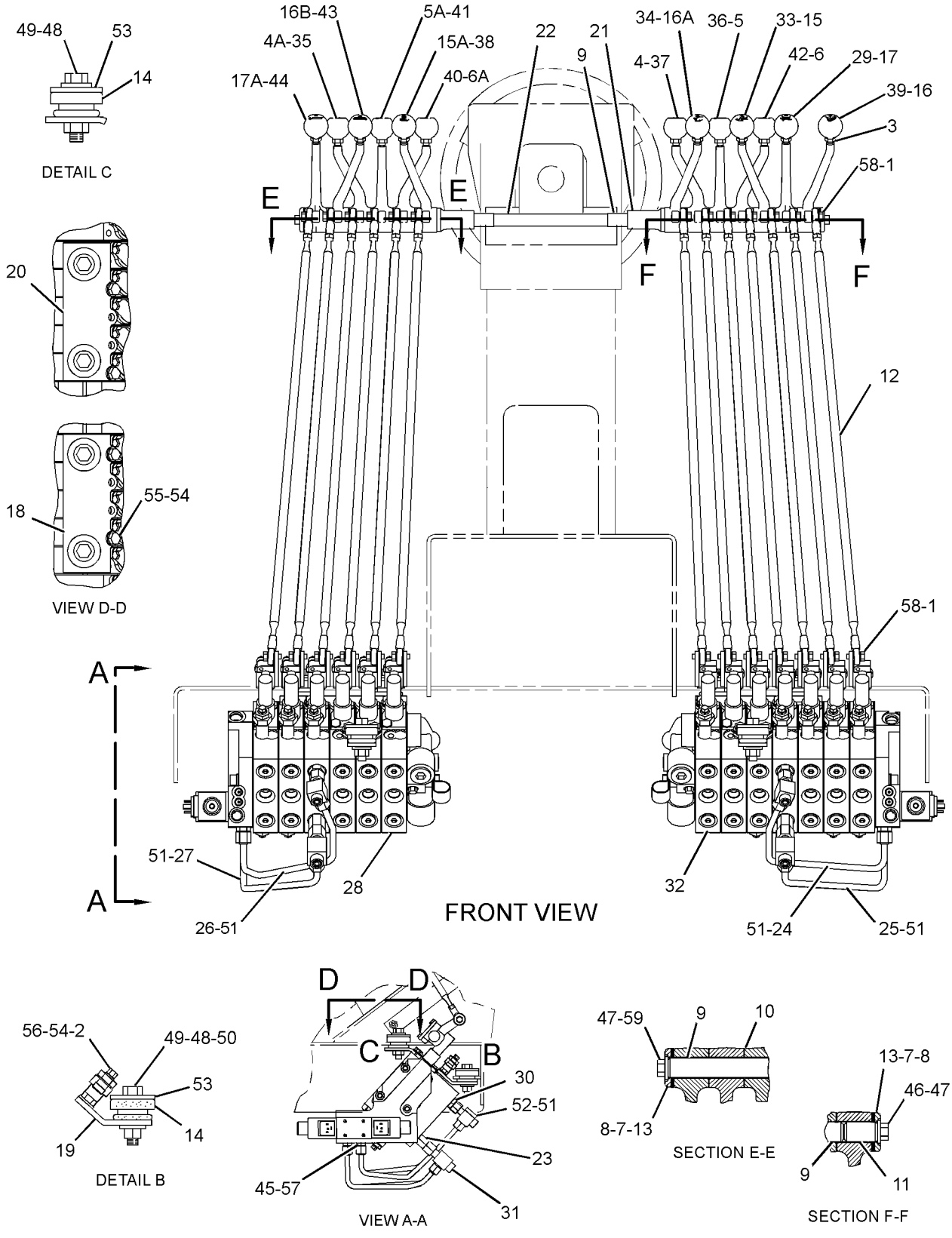


GRAPHIC #1 **<END>** g01261713

# 6E-3032 VALVE GP-BANK 4–RH

**S/N: CCA1-UP**
**PART OF 7I-4622, 7I-4624, 8X-1949 VALVE & LINKAGE GP**
**ALSO AN ATTACHMENT**

**SMCS-5051** **i02591865**

| NOTE | REF NO | GRAPHIC REF | PART NUMBER | QTY | PART NAME 1 2 3 4 5 6 (PRODUCT LEVEL) | SEE PAGE |
|---|---|---|---|---|---|---|
| M | 1 | 1 | **7X-2546** | 2 | BOLT (M10X1.5X180-MM) | |
| M | 2 | 1 | **137-6720** | 1 | BOLT (M10X1.5X160-MM) | |
| | 3 | 1 | **102-6238** | 1 | MANIFOLD | |
| | 4 | 1 | **101-0509** | 5 | SEAL-INTEGRAL | |
| Y | 5 | 1 | **6E-3028** | 1 | VALVE GP-CONTROL (ARTICULATION) | 974 |
| Y | 6 | 1 | **6E-3029** | 1 | VALVE GP-CONTROL (CENTERSHIFT) | 976 |
| Y | 7 | 1 | **6E-3030** | 1 | VALVE GP-CONTROL (WHEEL LEAN) | 978 |
| Y | 8 | 1 | **6E-3031** | 1 | VALVE GP-CONTROL (BLADE LIFT) | 980 |
| | 9 | 1 | **101-9346** | 1 | COVER | |
| M | 10 | 1 | **8T-4186** | 3 | BOLT (M10X1.5X40-MM) | |
| | 12 | 1 | *222-4737* | 1 | PLUG AS | |
| | | 1 | **9S-4180** | 1 | PLUG | |
| | | 1 | **4J-7533** | 1 | SEAL-O-RING | |

M-METRIC PART
Y-SEPARATE ILLUSTRATION

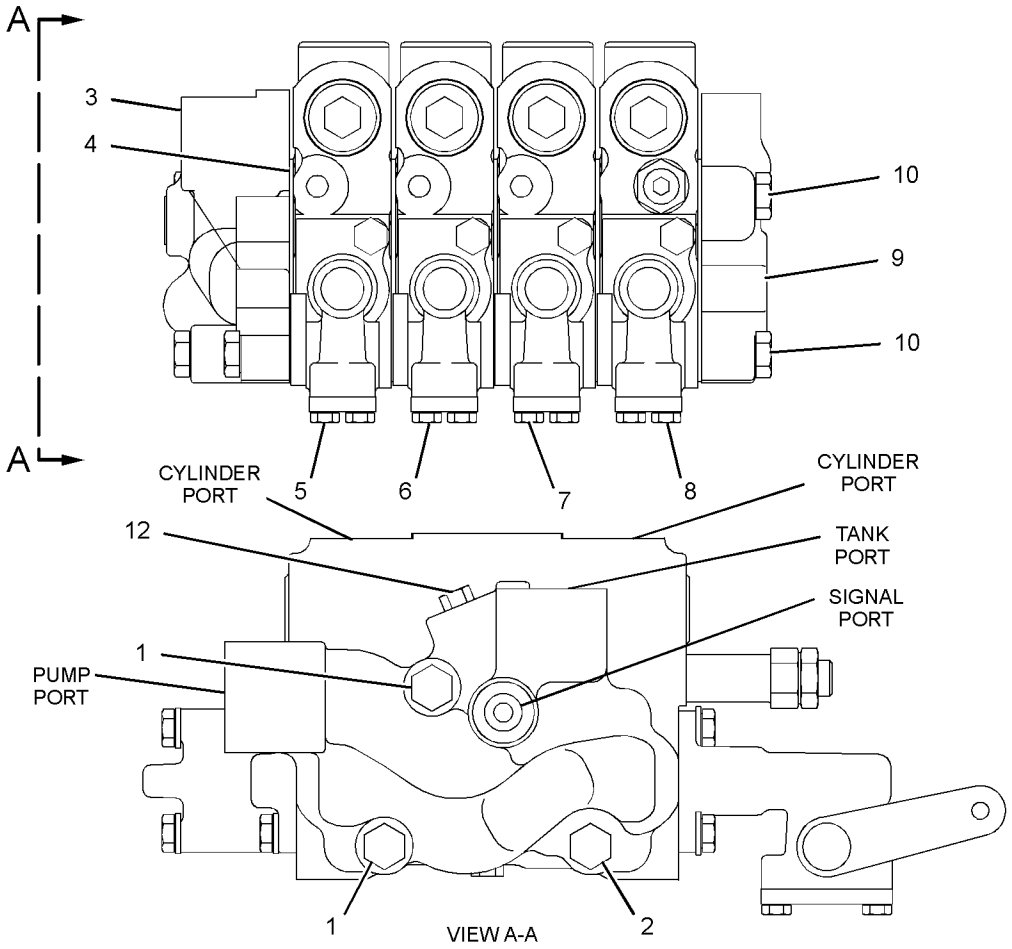


GRAPHIC #1 **<END>** g01297498

# HYDRAULIC SYSTEM

## 6E-3038 VALVE GP-BANK 4–LH

**S/N: CCA1-UP**
**PART OF 124-0311, 8X-1949 VALVE & LINKAGE GP**
**ALSO AN ATTACHMENT**

**SMCS-5051** **i01862273**

| NOTE | REF NO | GRAPHIC REF | PART NUMBER | QTY | PART NAME 1 2 3 4 5 6 (PRODUCT LEVEL) | SEE PAGE |
|---|---|---|---|---|---|---|
| M | 1 | 1 | **7X-2546** | 2 | BOLT (M10X1.5X180-MM) | |
| M | 2 | 1 | **137-6720** | 1 | BOLT (M10X1.5X160-MM) | |
| | 3 | 1 | **102-8385** | 1 | MANIFOLD | |
| | 4 | 1 | **101-0509** | 5 | SEAL-INTEGRAL | |
| Y | 5 | 1 | **6E-3037** | 1 | VALVE GP-CONTROL (BLADE LIFT) | 988 |
| Y | 6 | 1 | **6E-3036** | 1 | VALVE GP-CONTROL (SIDESHIFT) | 986 |
| Y | 7 | 1 | **6E-3035** | 1 | VALVE GP-CONTROL (CIRCLE DRIVE) | 984 |
| Y | 8 | 1 | **6E-3034** | 1 | VALVE GP-CONTROL (BLADE TIP) | 982 |
| | 9 | 1 | **101-9346** | 1 | COVER | |
| M | 10 | 1 | **8T-4186** | 3 | BOLT (M10X1.5X40-MM) | |
| | 11 | 1 | **4J-7533** | 1 | SEAL-O-RING | |
| | 12 | 1 | **9S-4180** | 1 | PLUG | |

M-METRIC PART
Y-SEPARATE ILLUSTRATION

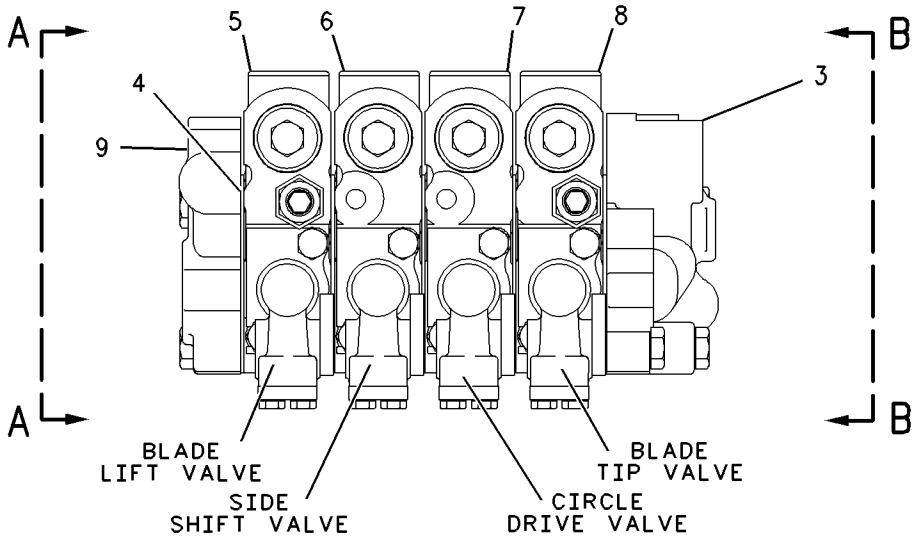


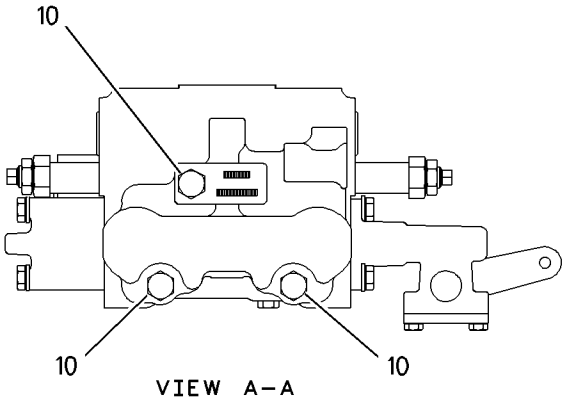


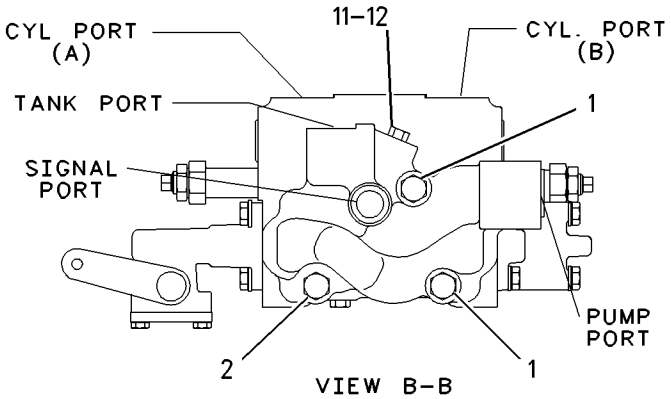


GRAPHIC #1 **<END>** g00898688

# 130-3116 VALVE GP-BANK 4–RH

**S/N: CCA1-UP**

**PART OF 121-4083, 121-4090, 121-4095, 125-2235 VALVE & LINKAGE GP**

**AN ATTACHMENT**

**SMCS-5051** **i01041783**

| NOTE | REF NO | GRAPHIC REF | PART NUMBER | QTY | PART NAME 1 2 3 4 5 6 (PRODUCT LEVEL) | SEE PAGE |
|---|---|---|---|---|---|---|
| M | 1 | 1 | **7X-2546** | 2 | BOLT (M10X1.5X180-MM) | |
| M | 2 | 1 | **137-6720** | 1 | BOLT (M10X1.5X160-MM) | |
| | 3 | 1 | **102-6238** | 1 | MANIFOLD | |
| | 4 | 1 | **101-0509** | 5 | SEAL-INTEGRAL | |
| Y | 5 | 1 | **6E-3028** | 1 | VALVE GP-CONTROL (ARTICULATION) | 974 |
| Y | 6 | 1 | **6E-3029** | 1 | VALVE GP-CONTROL (CENTERSHIFT) | 976 |
| Y | 7 | 1 | **6E-3030** | 1 | VALVE GP-CONTROL (WHEEL LEAN) | 978 |
| Y | 8 | 1 | **128-8647** | 1 | VALVE GP-CONTROL (BLADE LIFT) | 1002 |
| | 9 | 1 | **101-9346** | 1 | COVER | |
| M | 10 | 1 | **8T-4186** | 3 | BOLT (M10X1.5X40-MM) | |
| | 11 | 1 | **4J-7533** | 1 | SEAL-O-RING | |
| | 12 | 1 | **9S-4180** | 1 | PLUG | |

M-METRIC PART
Y-SEPARATE ILLUSTRATION

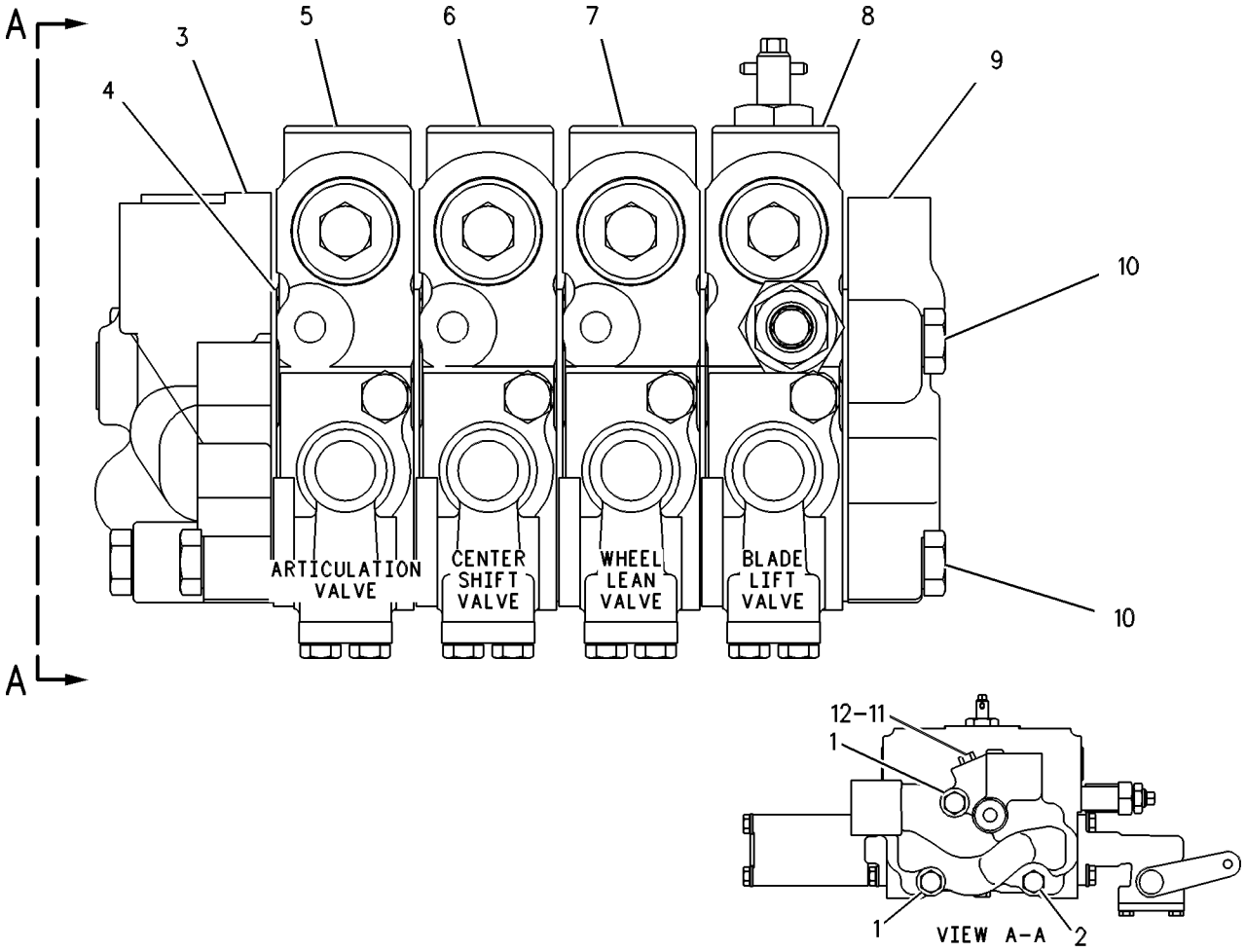


GRAPHIC #1 **<END>** g00109425

# HYDRAULIC SYSTEM

## 130-3117 VALVE GP-BANK 4–LH

**S/N: CCA1-UP**
**PART OF 121-4083, 124-3771 VALVE & LINKAGE GP**
**AN ATTACHMENT**

**SMCS-5051** **i00139068**

| NOTE | REF NO | GRAPHIC REF | PART NUMBER | QTY | PART NAME 1 2 3 4 5 6 (PRODUCT LEVEL) | SEE PAGE |
|---|---|---|---|---|---|---|
| M | 1 | 1 | **7X-2546** | 2 | BOLT (M10X1.5X180-MM) | |
| M | 2 | 1 | **137-6720** | 1 | BOLT (M10X1.5X160-MM) | |
| | 3 | 1 | **102-8385** | 1 | MANIFOLD | |
| | 4 | 1 | **101-0509** | 5 | SEAL-INTEGRAL | |
| | 5 | 1 | **4J-7533** | 1 | SEAL-O-RING | |
| Y | 6 | 1 | **6E-3036** | 1 | VALVE GP-CONTROL (SIDESHIFT) | 986 |
| Y | 7 | 1 | **6E-3035** | 1 | VALVE GP-CONTROL (CIRCLE DRIVE) | 984 |
| Y | 8 | 1 | **6E-3034** | 1 | VALVE GP-CONTROL (BLADE TIP) | 982 |
| | 9 | 1 | **101-9346** | 1 | COVER | |
| Y | 10 | 1 | **130-3110** | 1 | VALVE GP-CONTROL (BLADE LIFT) | 1004 |
| M | 11 | 1 | **8T-4186** | 3 | BOLT (M10X1.5X40-MM) | |
| | 12 | 1 | **9S-4180** | 1 | PLUG | |

M-METRIC PART
Y-SEPARATE ILLUSTRATION

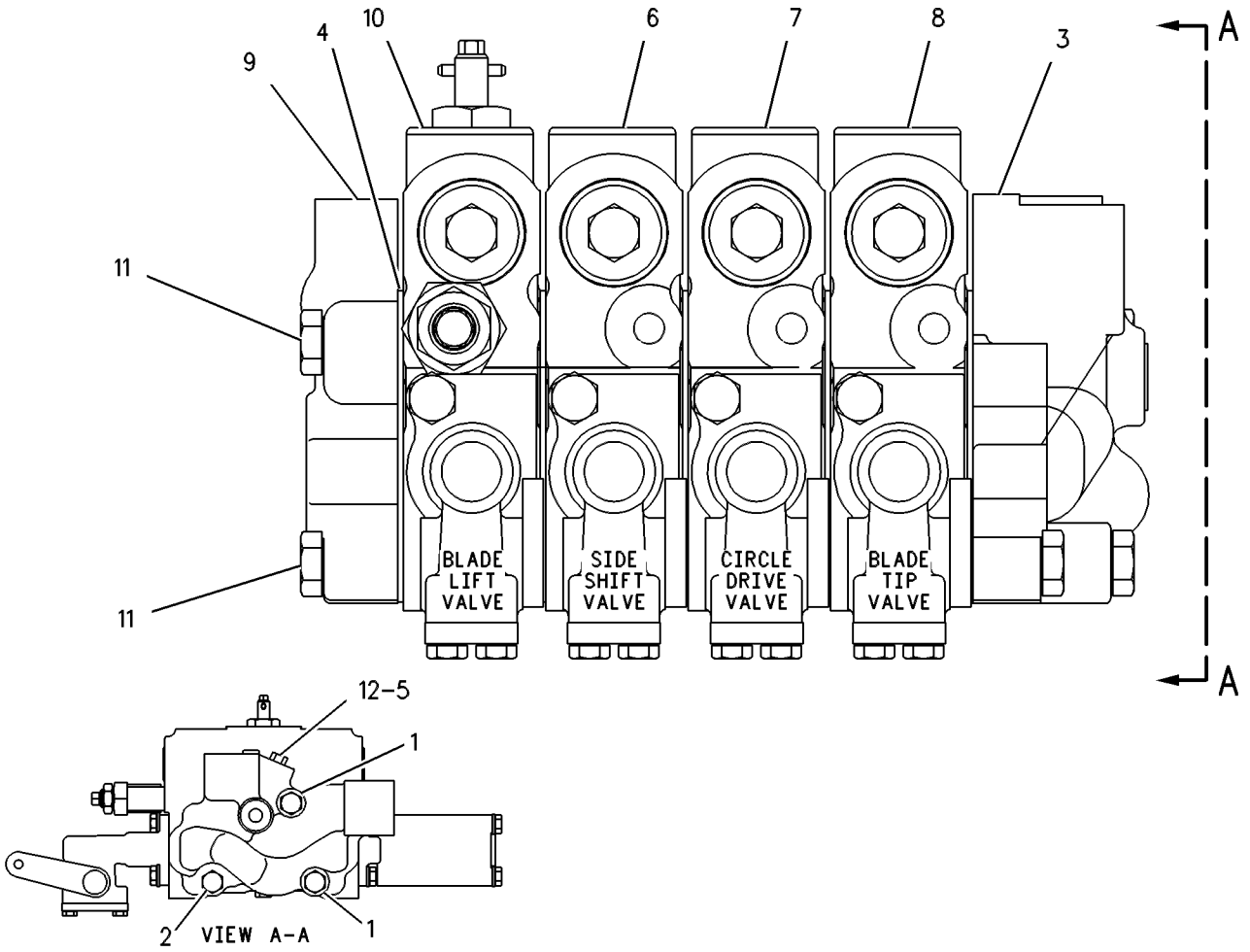


GRAPHIC #1 **<END>** g00109434

# 250-0543 VALVE GP-BANK 4–LH

**S/N: CCA1-UP**

**PART OF 250-0421, 250-0424, 250-0432 VALVE & LINKAGE GP**

**AN ATTACHMENT**

**SMCS-5051** **i02343397**

| NOTE | REF NO | GRAPHIC REF | PART NUMBER | QTY | PART NAME 1 2 3 4 5 6 (PRODUCT LEVEL) | SEE PAGE |
|---|---|---|---|---|---|---|
| Y | 1 | 1 | **6E-3034** | 1 | VALVE GP-CONTROL (BLADE TIP) | 982 |
| Y | 2 | 1 | **6E-3035** | 1 | VALVE GP-CONTROL (CIRCLE DRIVE) | 984 |
| Y | 3 | 1 | **6E-3036** | 1 | VALVE GP-CONTROL (SIDESHIFT) | 986 |
| Y | 4 | 1 | **6E-3037** | 1 | VALVE GP-CONTROL (BLADE LIFT) | 988 |
| | 5 | 1 | **101-0509** | 5 | SEAL-INTEGRAL | |
| | 6 | 1 | **102-8385** | 1 | MANIFOLD | |
| | 7 | 1 | *222-4737* | 1 | PLUG AS | |
| | | 1 | **9S-4180** | 1 | PLUG | |
| | | 1 | **4J-7533** | 1 | SEAL-O-RING | |
| | 8 | 1 | **239-9893** | 1 | MANIFOLD GP-CONTROL (LH) | |
| M | 10 | 1 | **137-6720** | 1 | BOLT (M10X1.5X160-MM) | |
| | 11 | 1 | *148-8409* | 1 | PLUG AS | |
| | | 1 | **9S-8008** | 1 | PLUG-DRAIN | |
| | | 1 | **3D-2824** | 1 | SEAL-O-RING | |
| | 12 | 1 | **3K-6113** | 3 | WASHER-HARD (12X18.5X3-MM THK) | |
| | 13 | 1 | **7S-0530** | 1 | CLIP | |
| M | 14 | 1 | **7X-2546** | 2 | BOLT (M10X1.5X180-MM) | |
| M | 15 | 1 | **8T-4186** | 3 | BOLT (M10X1.5X40-MM) | |

M-METRIC PART
Y-SEPARATE ILLUSTRATION

**250-0543 VALVE GP-BANK 4** *(contd.)* **i02343397**

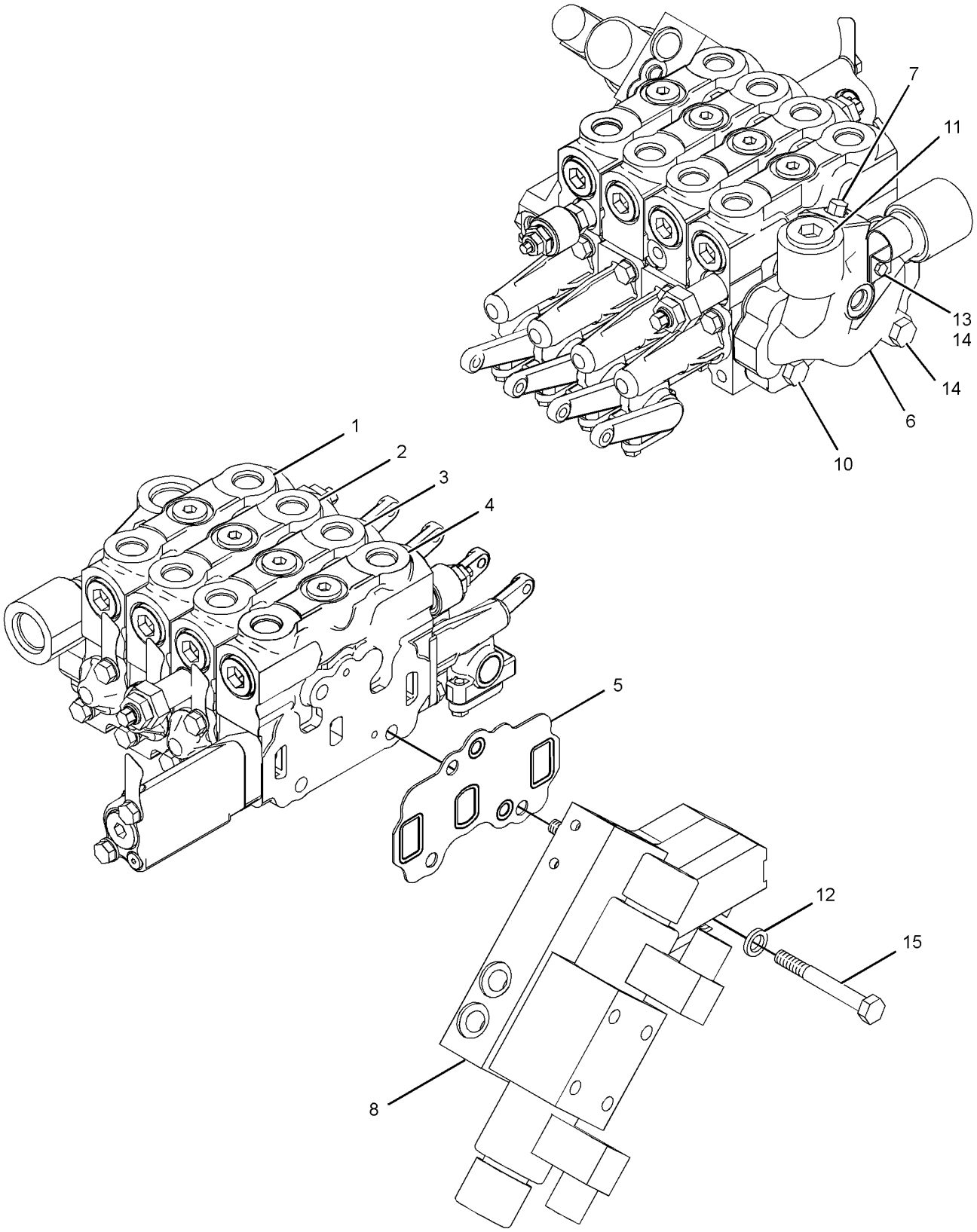


GRAPHIC #1 **<END>** g01191838

# 250-0544 VALVE GP-BANK 4—RH

**S/N: CCA1-UP**

**PART OF 250-0421, 250-0426, 265-7814 VALVE & LINKAGE GP**

**AN ATTACHMENT**

**SMCS-5051** **i02343395**

| NOTE | REF NO | GRAPHIC REF | PART NUMBER | QTY | PART NAME 1 2 3 4 5 6 (PRODUCT LEVEL) | SEE PAGE |
|---|---|---|---|---|---|---|
| Y | 1 | 1 | **6E-3028** | 1 | VALVE GP-CONTROL (ARTICULATION) | 974 |
| Y | 2 | 1 | **6E-3029** | 1 | VALVE GP-CONTROL (CENTERSHIFT) | 976 |
| Y | 3 | 1 | **6E-3030** | 1 | VALVE GP-CONTROL (WHEEL LEAN) | 978 |
| Y | 4 | 1 | **6E-3031** | 1 | VALVE GP-CONTROL (BLADE LIFT) | 980 |
| | 5 | 1 | **101-0509** | 5 | SEAL-INTEGRAL | |
| | 6 | 1 | *222-4737* | 1 | PLUG AS | |
| | | 1 | **4J-7533** | 1 | SEAL-O-RING | |
| | | 1 | **9S-4180** | 1 | PLUG | |
| | 7 | 1 | **239-9894** | 1 | MANIFOLD GP-CONTROL (RH) | |
| | 9 | 1 | **102-6238** | 1 | MANIFOLD | |
| M | 10 | 1 | **137-6720** | 1 | BOLT (M10X1.5X160-MM) | |
| | 11 | 1 | **3K-6113** | 3 | WASHER-HARD (12X18.5X3-MM THK) | |
| M | 12 | 1 | **7X-2546** | 2 | BOLT (M10X1.5X180-MM) | |
| M | 13 | 1 | **8T-4186** | 3 | BOLT (M10X1.5X40-MM) | |

M-METRIC PART
Y-SEPARATE ILLUSTRATION

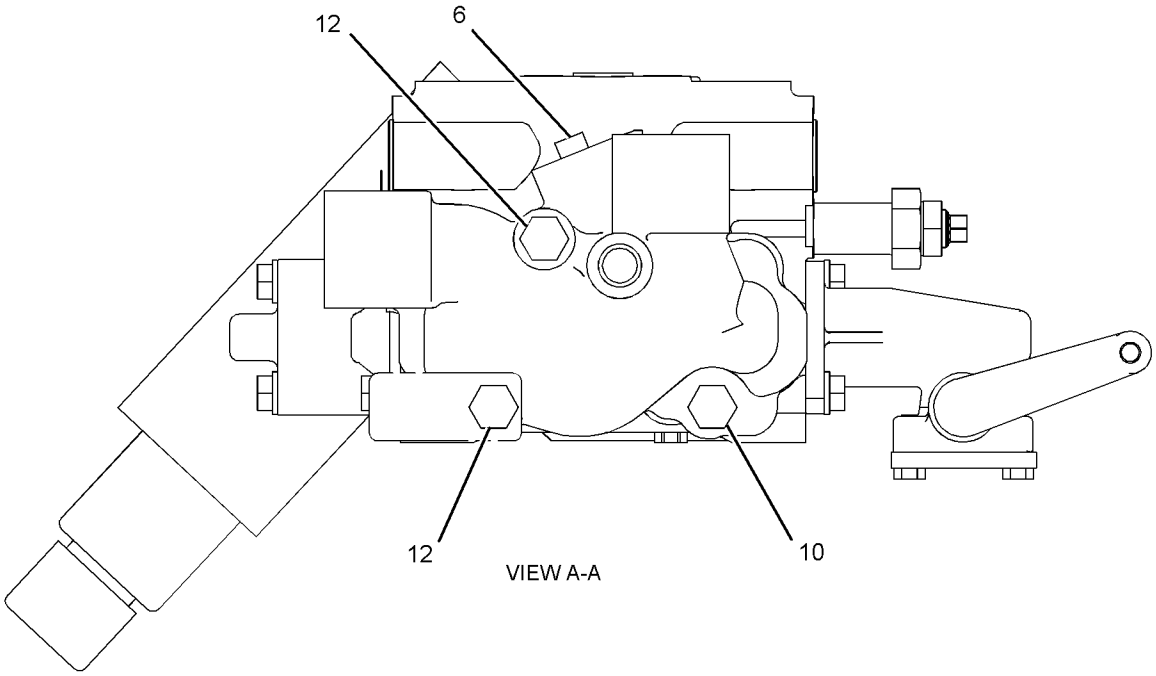


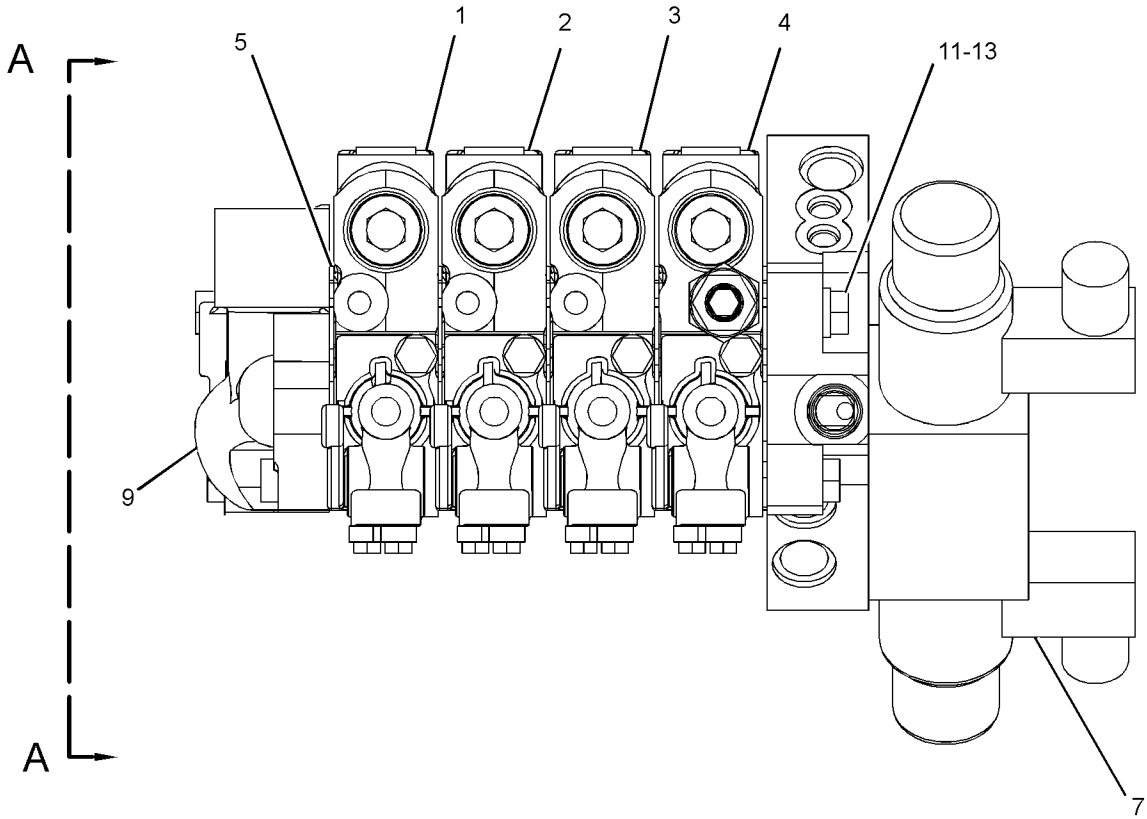


GRAPHIC #1 **<END>** g01239152

# 250-0545 VALVE GP-BANK 4–LH

**S/N: CCA1-UP**

**PART OF 250-0422, 250-0425, 250-0429 VALVE & LINKAGE GP**

**AN ATTACHMENT**

**SMCS-5051** **i02343936**

| NOTE | REF NO | GRAPHIC REF | PART NUMBER | QTY | PART NAME 1 2 3 4 5 6 (PRODUCT LEVEL) | SEE PAGE |
|---|---|---|---|---|---|---|
| Y | 1 | 1 | **6E-3034** | 1 | VALVE GP-CONTROL (BLADE TIP) | 982 |
| Y | 2 | 1 | **6E-3035** | 1 | VALVE GP-CONTROL (CIRCLE DRIVE) | 984 |
| Y | 3 | 1 | **6E-3036** | 1 | VALVE GP-CONTROL (SIDESHIFT) | 986 |
| | 4 | 1 | **101-0509** | 5 | SEAL-INTEGRAL | |
| Y | 5 | 1 | **130-3110** | 1 | VALVE GP-CONTROL (BLADE LIFT) | 1004 |
| | 6 | 1 | *222-4737* | 1 | PLUG AS | |
| | | 1 | **9S-4180** | 1 | PLUG | |
| | | 1 | **4J-7533** | 1 | SEAL-O-RING | |
| | 7 | 1 | **239-9893** | 1 | MANIFOLD GP-CONTROL (LH) | |
| | 9 | 1 | **102-8385** | 1 | MANIFOLD | |
| M | 10 | 1 | **137-6720** | 1 | BOLT (M10X1.5X160-MM) | |
| | 11 | 1 | **3K-6113** | 3 | WASHER-HARD (12X18.5X3-MM THK) | |
| M | 12 | 1 | **7X-2546** | 2 | BOLT (M10X1.5X180-MM) | |
| M | 13 | 1 | **8T-4186** | 3 | BOLT (M10X1.5X40-MM) | |

M-METRIC PART
Y-SEPARATE ILLUSTRATION

**250-0545 VALVE GP-BANK 4** *(contd.)* **i02343936**

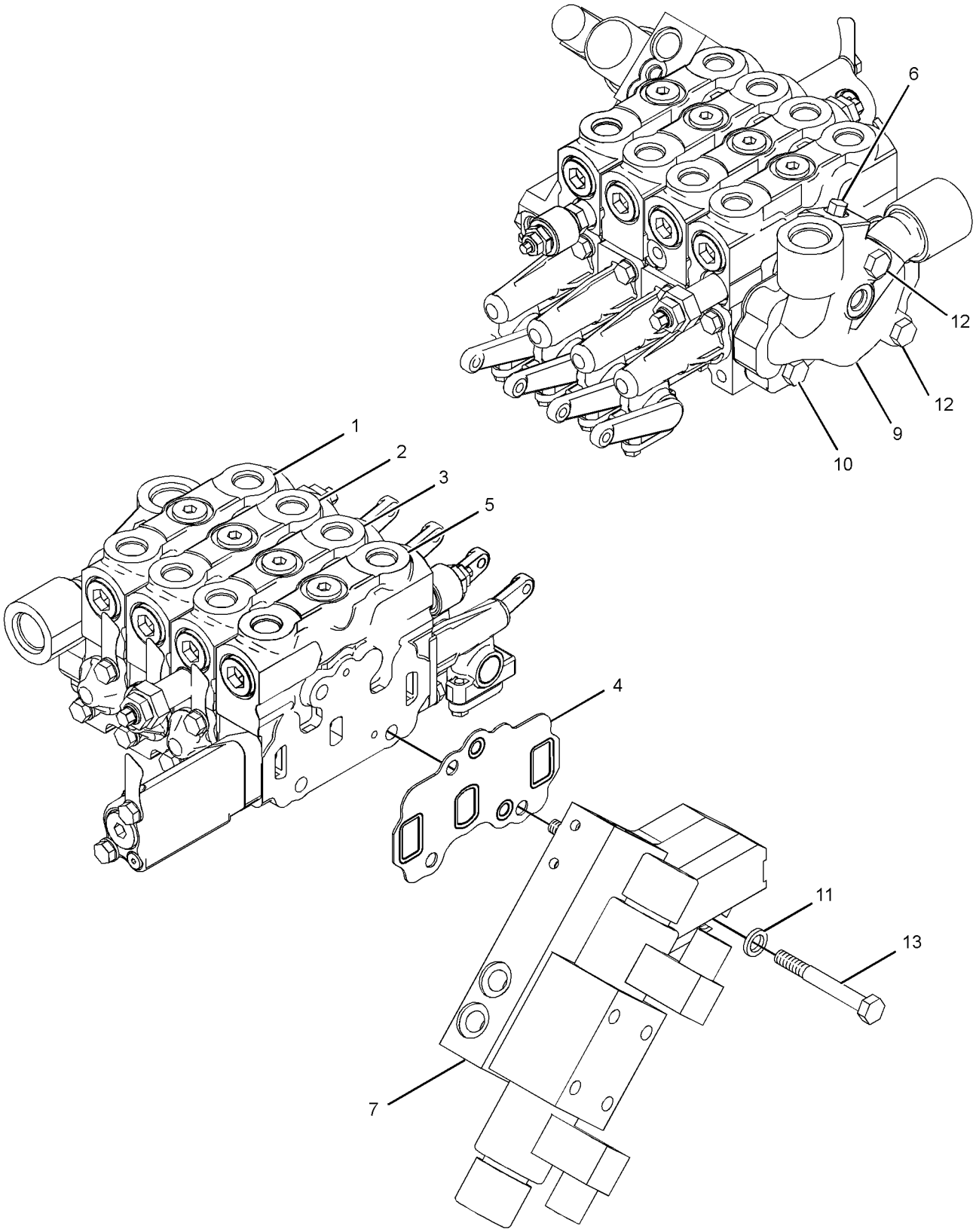


GRAPHIC #1 **<END>** g01191927

# HYDRAULIC SYSTEM

## 250-0546 VALVE GP-BANK 4—RH

**S/N: CCA1-UP**

**PART OF 250-0422, 250-0423, 250-0427 VALVE & LINKAGE GP**

**AN ATTACHMENT**

**SMCS-5051** **i02343947**

| NOTE | REF NO | GRAPHIC REF | PART NUMBER | QTY | PART NAME 1 2 3 4 5 6 (PRODUCT LEVEL) | SEE PAGE |
|---|---|---|---|---|---|---|
| Y | 1 | 1 | **6E-3028** | 1 | VALVE GP-CONTROL (ARTICULATION) | 974 |
| Y | 2 | 1 | **6E-3029** | 1 | VALVE GP-CONTROL (CENTERSHIFT) | 976 |
| Y | 3 | 1 | **6E-3030** | 1 | VALVE GP-CONTROL (WHEEL LEAN) | 978 |
| | 4 | 1 | **101-0509** | 5 | SEAL-INTEGRAL | |
| Y | 5 | 1 | **128-8647** | 1 | VALVE GP-CONTROL (BLADE LIFT) | 1002 |
| | 6 | 1 | *222-4737* | 1 | PLUG AS | |
| | | 1 | **4J-7533** | 1 | SEAL-O-RING | |
| | | 1 | **9S-4180** | 1 | PLUG | |
| Y | 7 | 1 | **239-9894** | 1 | MANIFOLD GP-CONTROL (RH) | 718 |
| | 9 | 1 | **102-6238** | 1 | MANIFOLD | |
| M | 10 | 1 | **137-6720** | 1 | BOLT (M10X1.5X160-MM) | |
| | 11 | 1 | **3K-6113** | 3 | WASHER-HARD (12X18.5X3-MM THK) | |
| M | 12 | 1 | **7X-2546** | 2 | BOLT (M10X1.5X180-MM) | |
| M | 13 | 1 | **8T-4186** | 3 | BOLT (M10X1.5X40-MM) | |

M-METRIC PART
Y-SEPARATE ILLUSTRATION

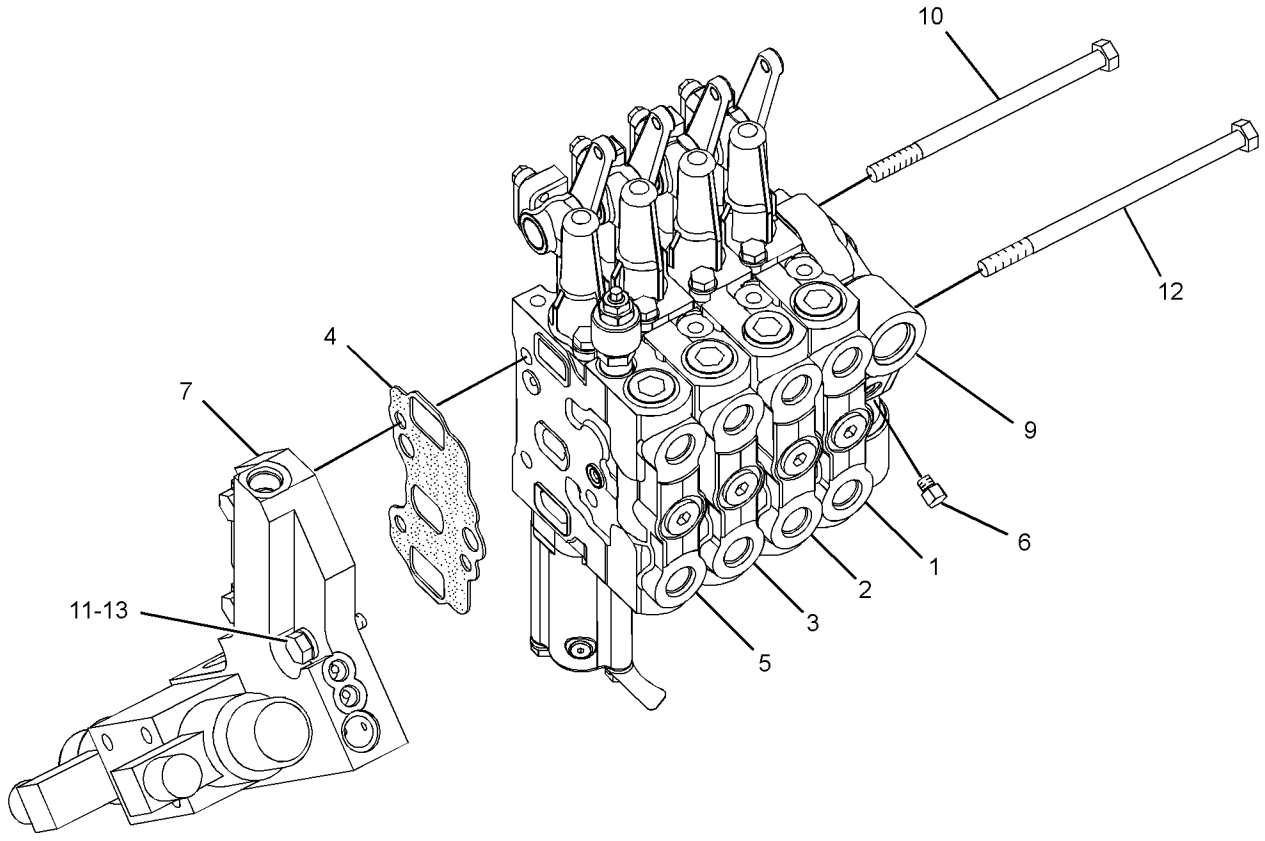


GRAPHIC #1 **<END>** g01239141

# HYDRAULIC SYSTEM

## 104-8645 VALVE GP-BANK 5—LH

**S/N: CCA1-UP**

**PART OF 112-5499, 132-6478, 7I-4622 VALVE & LINKAGE GP**

**AN ATTACHMENT**

**SMCS-5051** **i02591872**

| NOTE | REF NO | GRAPHIC REF | PART NUMBER | QTY | PART NAME 1 2 3 4 5 6 (PRODUCT LEVEL) | SEE PAGE |
|---|---|---|---|---|---|---|
| M | 1 | 1 | **7X-2546** | 2 | BOLT (M10X1.5X180-MM) | |
| M | 2 | 1 | **137-6720** | 1 | BOLT (M10X1.5X160-MM) | |
| | 3 | 1 | **102-8385** | 1 | MANIFOLD | |
| | 4 | 1 | **101-0509** | 6 | SEAL-INTEGRAL | |
| Y | 5 | 1 | **6E-3034** | 1 | VALVE GP-CONTROL (BLADE TIP) | 982 |
| Y | 6 | 1 | **6E-3035** | 1 | VALVE GP-CONTROL (CIRCLE DRIVE) | 984 |
| Y | 7 | 1 | **6E-3036** | 1 | VALVE GP-CONTROL (SIDESHIFT) | 986 |
| Y | 8 | 1 | **6E-3037** | 1 | VALVE GP-CONTROL (BLADE LIFT) | 988 |
| Y | 9 | 1 | **107-0545** | 1 | VALVE GP-CONTROL (RIPPER) | 992 |
| | 10 | 1 | **101-9346** | 1 | COVER | |
| M | 12 | 1 | **137-6719** | 3 | BOLT (M10X1.5X80-MM) | |
| | 13 | 1 | *222-4737* | 1 | PLUG AS | |
| | | 1 | **9S-4180** | 1 | PLUG | |
| | | 1 | **4J-7533** | 1 | SEAL-O-RING | |

M-METRIC PART
Y-SEPARATE ILLUSTRATION

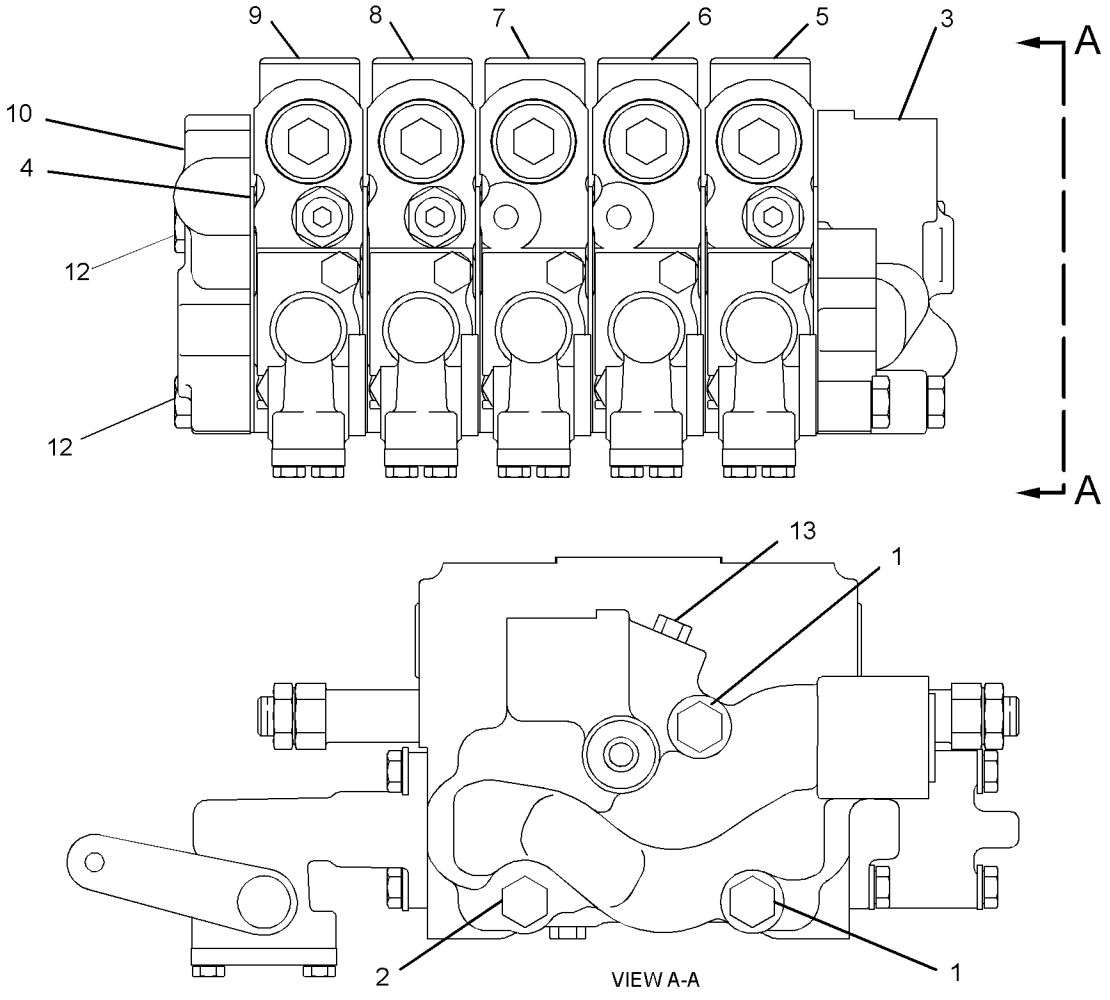


GRAPHIC #1 **<END>** g01297516

# 104-8646 VALVE GP-BANK 5–RH

**S/N: CCA1-UP**
**PART OF 7I-4621, 7I-4624 VALVE & LINKAGE GP**
**AN ATTACHMENT**

**SMCS-5051** **i02591918**

| NOTE | REF NO | GRAPHIC REF | PART NUMBER | QTY | PART NAME 1 2 3 4 5 6 (PRODUCT LEVEL) | SEE PAGE |
|---|---|---|---|---|---|---|
| M | 1 | 1 | **7X-2546** | 2 | BOLT (M10X1.5X180-MM) | |
| M | 2 | 1 | **137-6720** | 1 | BOLT (M10X1.5X160-MM) | |
| | 3 | 1 | **102-8385** | 1 | MANIFOLD | |
| | 4 | 1 | **101-0509** | 6 | SEAL-INTEGRAL | |
| Y | 5 | 1 | **6E-3034** | 1 | VALVE GP-CONTROL (BLADE TIP) | 982 |
| Y | 6 | 1 | **6E-3035** | 1 | VALVE GP-CONTROL (CIRCLE DRIVE) | 984 |
| Y | 7 | 1 | **6E-3036** | 1 | VALVE GP-CONTROL (SIDESHIFT) | 986 |
| Y | 8 | 1 | **6E-3037** | 1 | VALVE GP-CONTROL (BLADE LIFT) | 988 |
| Y | 9 | 1 | **107-0543** | 1 | VALVE GP-CONTROL (SCARIFIER) | 990 |
| | 10 | 1 | **101-9346** | 1 | COVER | |
| | 12 | 1 | **222-4737** | 1 | PLUG AS | |
| | | 1 | **9S-4180** | 1 | PLUG | |
| | | 1 | **4J-7533** | 1 | SEAL-O-RING | |
| M | 13 | 1 | **137-6719** | 3 | BOLT (M10X1.5X80-MM) | |

M-METRIC PART
Y-SEPARATE ILLUSTRATION

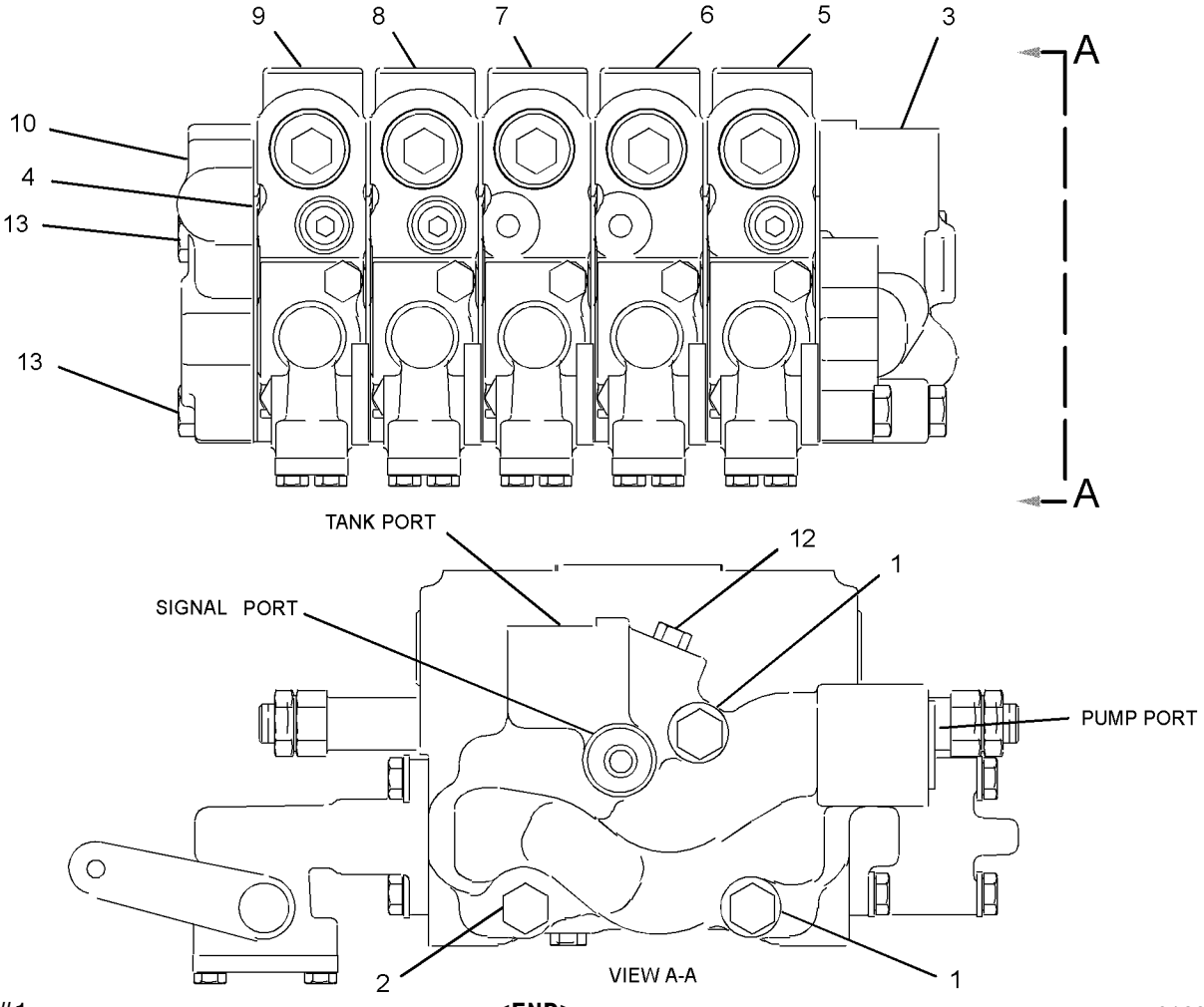


GRAPHIC #1 **<END>** g01297533

# HYDRAULIC SYSTEM

## 104-8671 VALVE GP-BANK 5–RH

**S/N: CCA1-UP**

**PART OF 107-3856, 112-5499, 124-0311, 143-8938, 7I-4621, 7I-4623, 8X-4280**

**VALVE & LINKAGE GP**

**AN ATTACHMENT**

**SMCS-5051** **i02592713**

| NOTE | REF NO | GRAPHIC REF | PART NUMBER | QTY | PART NAME 1 2 3 4 5 6 (PRODUCT LEVEL) | SEE PAGE |
|---|---|---|---|---|---|---|
| M | 1 | 1 | **7X-2546** | 2 | BOLT (M10X1.5X180-MM) | |
| M | 2 | 1 | **137-6720** | 1 | BOLT (M10X1.5X160-MM) | |
| | 3 | 1 | **102-6238** | 1 | MANIFOLD | |
| | 4 | 1 | **101-0509** | 6 | SEAL-INTEGRAL | |
| Y | 5 | 1 | **6E-3028** | 1 | VALVE GP-CONTROL (ARTICULATION) | 974 |
| Y | 6 | 1 | **6E-3029** | 1 | VALVE GP-CONTROL (CENTERSHIFT) | 976 |
| Y | 7 | 1 | **6E-3030** | 1 | VALVE GP-CONTROL (WHEEL LEAN) | 978 |
| Y | 8 | 1 | **6E-3031** | 1 | VALVE GP-CONTROL (BLADE LIFT) | 980 |
| Y | 9 | 1 | **107-0547** | 1 | VALVE GP-CONTROL (DOZER LIFT, PLOW) | 994 |
| | 10 | 1 | **101-9346** | 1 | COVER | |
| M | 11 | 1 | **137-6719** | 3 | BOLT (M10X1.5X80-MM) | |
| | 13 | 1 | *222-4737* | 1 | PLUG AS | |
| | | 1 | **4J-7533** | 1 | SEAL-O-RING | |
| | | 1 | **9S-4180** | 1 | PLUG | |

M-METRIC PART
Y-SEPARATE ILLUSTRATION

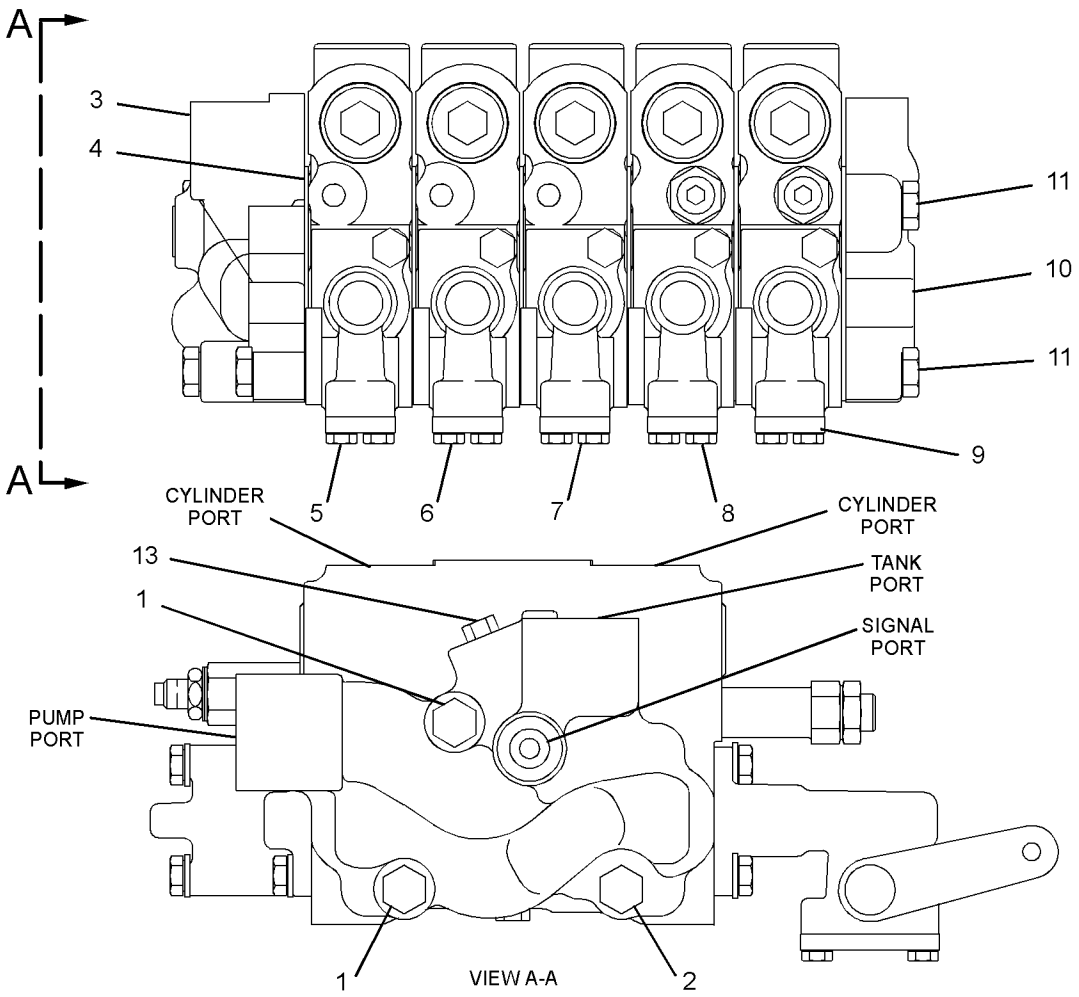


GRAPHIC #1 **<END>** g01297602

# HYDRAULIC SYSTEM

## 130-3118 VALVE GP-BANK 5–LH

**S/N: CCA1-UP**
**PART OF 121-4090, 121-4097 VALVE & LINKAGE GP**
**AN ATTACHMENT**

**SMCS-5051** **i00139065**

| NOTE | REF NO | GRAPHIC REF | PART NUMBER | QTY | PART NAME 1 2 3 4 5 6 (PRODUCT LEVEL) | SEE PAGE |
|---|---|---|---|---|---|---|
| M | 1 | 1 | **7X-2546** | 2 | BOLT (M10X1.5X180-MM) | |
| M | 2 | 1 | **137-6720** | 1 | BOLT (M10X1.5X160-MM) | |
| | 3 | 1 | **102-8385** | 1 | MANIFOLD | |
| | 4 | 1 | **101-0509** | 6 | SEAL-INTEGRAL | |
| Y | 5 | 1 | **6E-3034** | 1 | VALVE GP-CONTROL (BLADE TIP) | 982 |
| Y | 6 | 1 | **6E-3035** | 1 | VALVE GP-CONTROL (CIRCLE DRIVE) | 984 |
| Y | 7 | 1 | **6E-3036** | 1 | VALVE GP-CONTROL (SIDESHIFT) | 986 |
| Y | 8 | 1 | **130-3110** | 1 | VALVE GP-CONTROL (BLADE LIFT) | 1004 |
| Y | 9 | 1 | **119-9550** | 1 | VALVE GP-CONTROL (RIPPER) | 1000 |
| M | 10 | 1 | **137-6719** | 3 | BOLT (M10X1.5X80-MM) | |
| | 11 | 1 | **101-9346** | 1 | COVER | |
| | 12 | 1 | **9S-4180** | 1 | PLUG | |
| | 13 | 1 | **4J-7533** | 1 | SEAL-O-RING | |

M-METRIC PART
Y-SEPARATE ILLUSTRATION

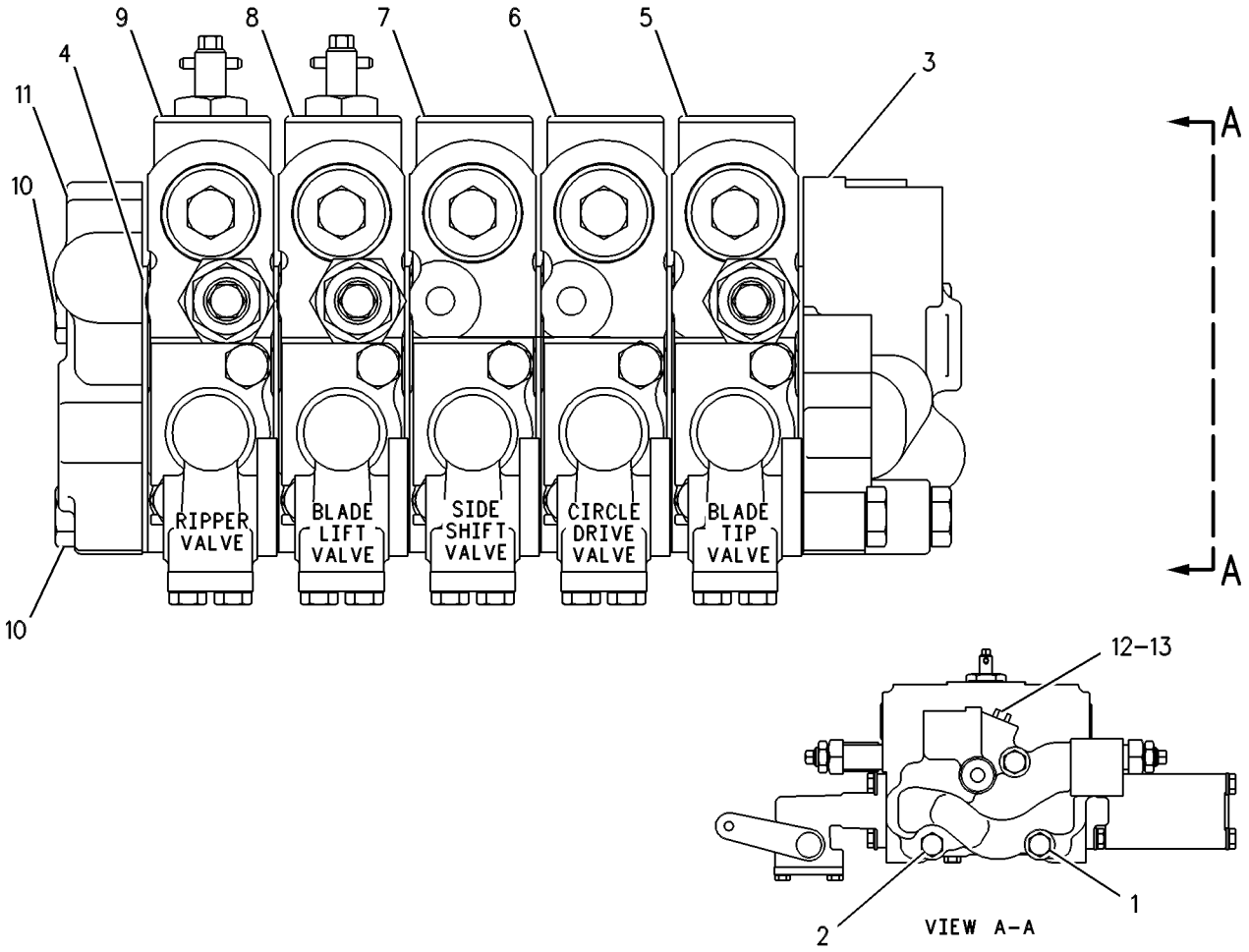


GRAPHIC #1 **<END>** g00109426

# HYDRAULIC SYSTEM

## 130-3119 VALVE GP-BANK 5—LH

**S/N: CCA1-UP**
**PART OF 121-4086, 121-4095 VALVE & LINKAGE GP**
**AN ATTACHMENT**

**SMCS-5051** **i00857068**

| NOTE | REF NO | GRAPHIC REF | PART NUMBER | QTY | PART NAME 1 2 3 4 5 6 (PRODUCT LEVEL) | SEE PAGE |
|---|---|---|---|---|---|---|
| M | 1 | 1 | **7X-2546** | 2 | BOLT (M10X1.5X180-MM) | |
| M | 2 | 1 | **137-6720** | 1 | BOLT (M10X1.5X160-MM) | |
| | 3 | 1 | **102-8385** | 1 | MANIFOLD | |
| | 4 | 1 | **101-0509** | 6 | SEAL-INTEGRAL | |
| Y | 5 | 1 | **6E-3034** | 1 | VALVE GP-CONTROL (BLADE TIP) | 982 |
| Y | 6 | 1 | **6E-3035** | 1 | VALVE GP-CONTROL (CIRCLE DRIVE) | 984 |
| Y | 7 | 1 | **6E-3036** | 1 | VALVE GP-CONTROL (SIDESHIFT) | 986 |
| Y | 8 | 1 | **130-3110** | 1 | VALVE GP-CONTROL (BLADE LIFT) | 1004 |
| Y | 9 | 1 | **119-9549** | 1 | VALVE GP-CONTROL (SCARIFIER) | 998 |
| M | 10 | 1 | **137-6719** | 3 | BOLT (M10X1.5X80-MM) | |
| | 11 | 1 | **101-9346** | 1 | COVER | |
| | 12 | 1 | **9S-4180** | 1 | PLUG | |
| | 13 | 1 | **4J-7533** | 1 | SEAL-O-RING | |

M-METRIC PART
Y-SEPARATE ILLUSTRATION

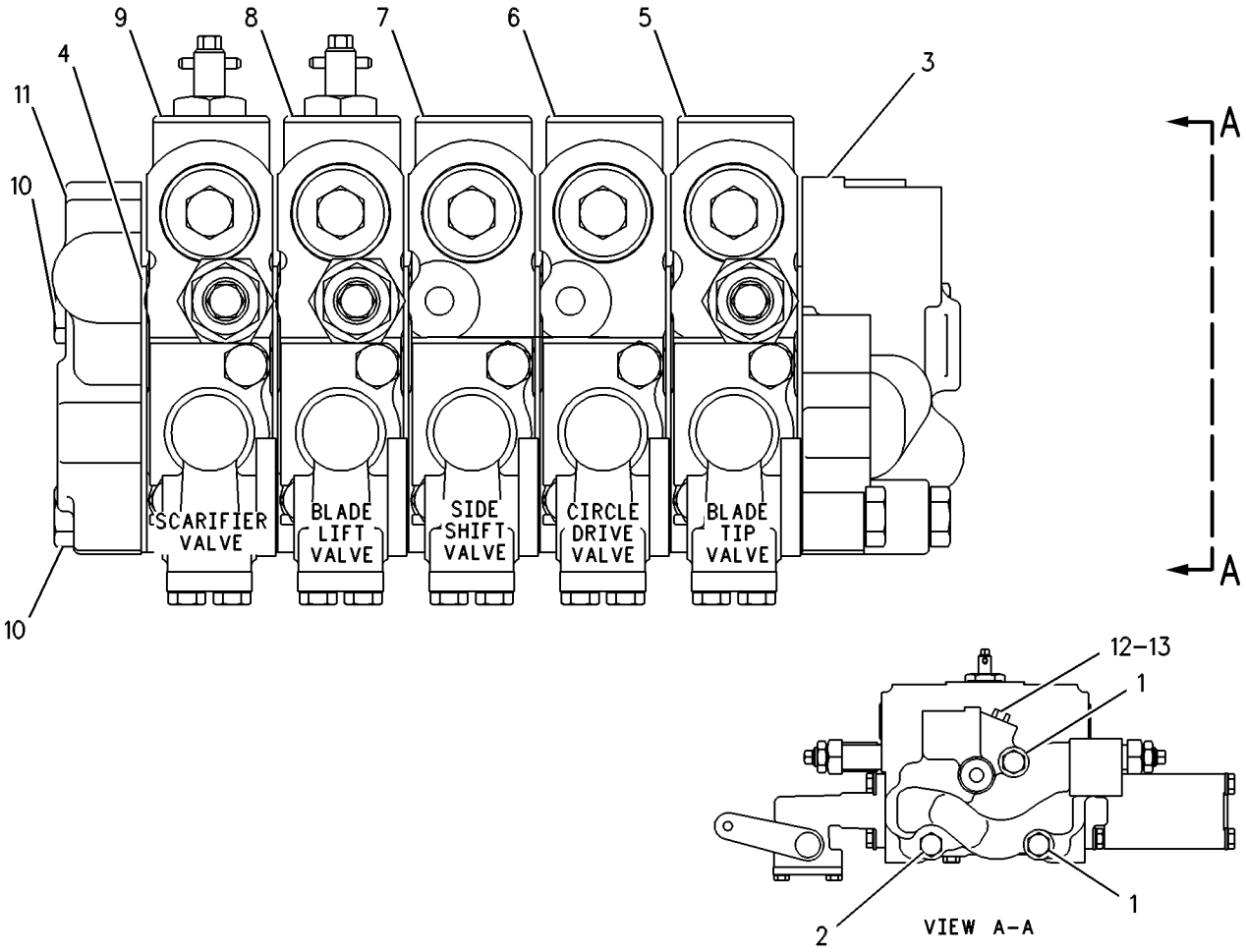


GRAPHIC #1 **<END>** g00109430

# 130-3123 VALVE GP-BANK 5–RH

**S/N: CCA1-UP**

**PART OF 121-4084, 121-4086, 121-4094, 121-4096, 121-4097, 124-3771 VALVE & LINKAGE GP**

**AN ATTACHMENT**

**SMCS-5051** **i01668524**

| NOTE | REF NO | GRAPHIC REF | PART NUMBER | QTY | PART NAME 1 2 3 4 5 6 (PRODUCT LEVEL) | SEE PAGE |
|---|---|---|---|---|---|---|
| M | 1 | 1 | **7X-2546** | 2 | BOLT (M10X1.5X180-MM) | |
| M | 2 | 1 | **137-6720** | 1 | BOLT (M10X1.5X160-MM) | |
| | 3 | 1 | **102-6238** | 1 | MANIFOLD | |
| | 4 | 1 | **101-0509** | 6 | SEAL-INTEGRAL | |
| Y | 5 | 1 | **6E-3028** | 1 | VALVE GP-CONTROL (ARTICULATION) | 974 |
| Y | 6 | 1 | **6E-3029** | 1 | VALVE GP-CONTROL (CENTERSHIFT) | 976 |
| Y | 7 | 1 | **6E-3030** | 1 | VALVE GP-CONTROL (WHEEL LEAN) | 978 |
| | 8 | 1 | **4J-7533** | 1 | SEAL-O-RING | |
| Y | 9 | 1 | **128-8647** | 1 | VALVE GP-CONTROL (BLADE LIFT) | 1002 |
| Y | 10 | 1 | **130-3111** | 1 | VALVE GP-CONTROL (PLOW, BULLDOZER LIFT) | 1006 |
| | 11 | 1 | **101-9346** | 1 | COVER | |
| M | 12 | 1 | **137-6719** | 3 | BOLT (M10X1.5X80-MM) | |
| | 13 | 1 | **9S-4180** | 1 | PLUG | |

M-METRIC PART
Y-SEPARATE ILLUSTRATION

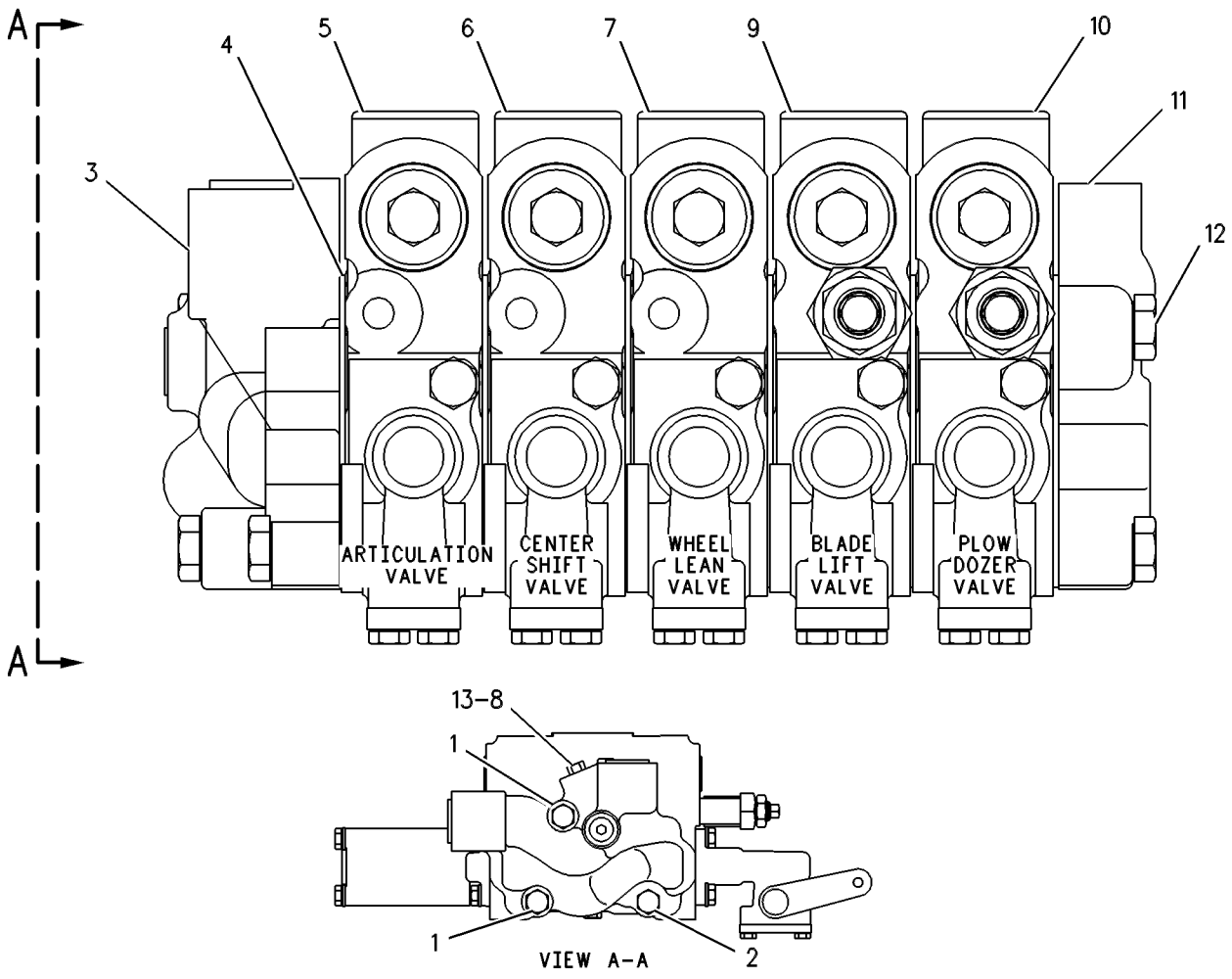


GRAPHIC #1 **<END>** g00272878

# HYDRAULIC SYSTEM

## 250-0547 VALVE GP-BANK 5—LH

**S/N: CCA1-UP**

**PART OF 250-0423, 250-0428 VALVE & LINKAGE GP**

**AN ATTACHMENT**

**SMCS-5051** **i02344223**

| NOTE | REF NO | GRAPHIC REF | PART NUMBER | QTY | PART NAME 1 2 3 4 5 6 (PRODUCT LEVEL) | SEE PAGE |
|---|---|---|---|---|---|---|
| Y | 1 | 1 | **6E-3034** | 1 | VALVE GP-CONTROL (BLADE TIP) | 982 |
| Y | 2 | 1 | **6E-3035** | 1 | VALVE GP-CONTROL (CIRCLE DRIVE) | 984 |
| Y | 3 | 1 | **6E-3036** | 1 | VALVE GP-CONTROL (SIDESHIFT) | 986 |
| | 4 | 1 | **101-0509** | 6 | SEAL-INTEGRAL | |
| | 5 | 1 | **102-8385** | 1 | MANIFOLD | |
| Y | 6 | 1 | **119-9549** | 1 | VALVE GP-CONTROL (SCARIFIER) | 998 |
| Y | 7 | 1 | **130-3110** | 1 | VALVE GP-CONTROL (BLADE LIFT) | 1004 |
| | 8 | 1 | *222-4737* | 1 | PLUG AS | |
| | | 1 | **9S-4180** | 1 | PLUG | |
| | | 1 | **4J-7533** | 1 | SEAL-O-RING | |
| Y | 9 | 1 | **239-9893** | 1 | MANIFOLD GP-CONTROL (LH) | 716 |
| M | 11 | 1 | **137-6719** | 3 | BOLT (M10X1.5X80-MM) | |
| M | 12 | 1 | **137-6720** | 1 | BOLT (M10X1.5X160-MM) | |
| | 13 | 1 | **3K-6113** | 3 | WASHER-HARD (12X18.5X3-MM THK) | |
| M | 14 | 1 | **7X-2546** | 2 | BOLT (M10X1.5X180-MM) | |

M-METRIC PART
Y-SEPARATE ILLUSTRATION

**250-0547 VALVE GP-BANK 5** *(contd. )* **i02344223**

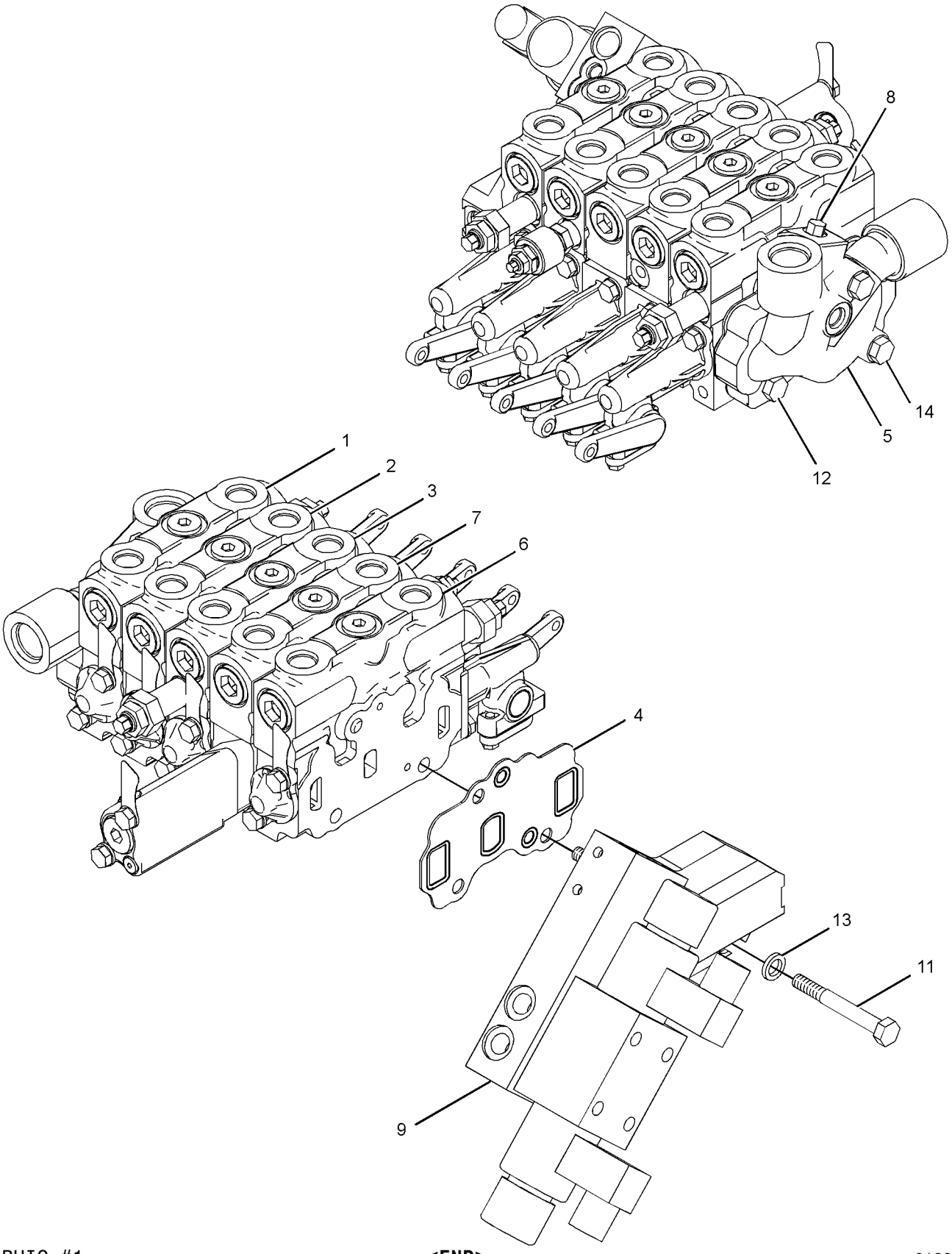


GRAPHIC #1 **<END>** g01228241

# HYDRAULIC SYSTEM

## 250-0548 VALVE GP-BANK 5–RH

**S/N: CCA1-UP**
**PART OF 250-0424, 250-0430, 250-0439, 265-7815, 265-7816, 265-7817, 265-7819**
**VALVE & LINKAGE GP**
**AN ATTACHMENT**

**SMCS-5051** **i02312497**

| NOTE | REF NO | GRAPHIC REF | PART NUMBER | QTY | PART NAME 1 2 3 4 5 6 (PRODUCT LEVEL) | SEE PAGE |
|---|---|---|---|---|---|---|
| Y | 1 | 1 | **6E-3028** | 1 | VALVE GP-CONTROL (ARTICULATION) | 974 |
| Y | 2 | 1 | **6E-3029** | 1 | VALVE GP-CONTROL (CENTERSHIFT) | 976 |
| Y | 3 | 1 | **6E-3030** | 1 | VALVE GP-CONTROL (WHEEL LEAN) | 978 |
| Y | 4 | 1 | **6E-3031** | 1 | VALVE GP-CONTROL (BLADE LIFT) | 980 |
| | 5 | 1 | **101-0509** | 6 | SEAL-INTEGRAL | |
| Y | 6 | 1 | **107-0547** | 1 | VALVE GP-CONTROL (PLOW, DOZER) | 994 |
| | 7 | 1 | *222-4737* | 1 | PLUG AS | |
| | | 1 | **9S-4180** | 1 | PLUG | |
| | | 1 | **4J-7533** | 1 | SEAL-O-RING | |
| Y | 8 | 1 | **239-9894** | 1 | MANIFOLD GP-CONTROL (RH) | 718 |
| | 10 | 1 | **102-6238** | 1 | MANIFOLD | |
| M | 11 | 1 | **137-6719** | 3 | BOLT (M10X1.5X80-MM) | |
| M | 12 | 1 | **137-6720** | 1 | BOLT (M10X1.5X160-MM) | |
| | 13 | 1 | **3K-6113** | 3 | WASHER-HARD (12X18.5X3-MM THK) | |
| M | 14 | 1 | **7X-2546** | 2 | BOLT (M10X1.5X180-MM) | |

M-METRIC PART
Y-SEPARATE ILLUSTRATION

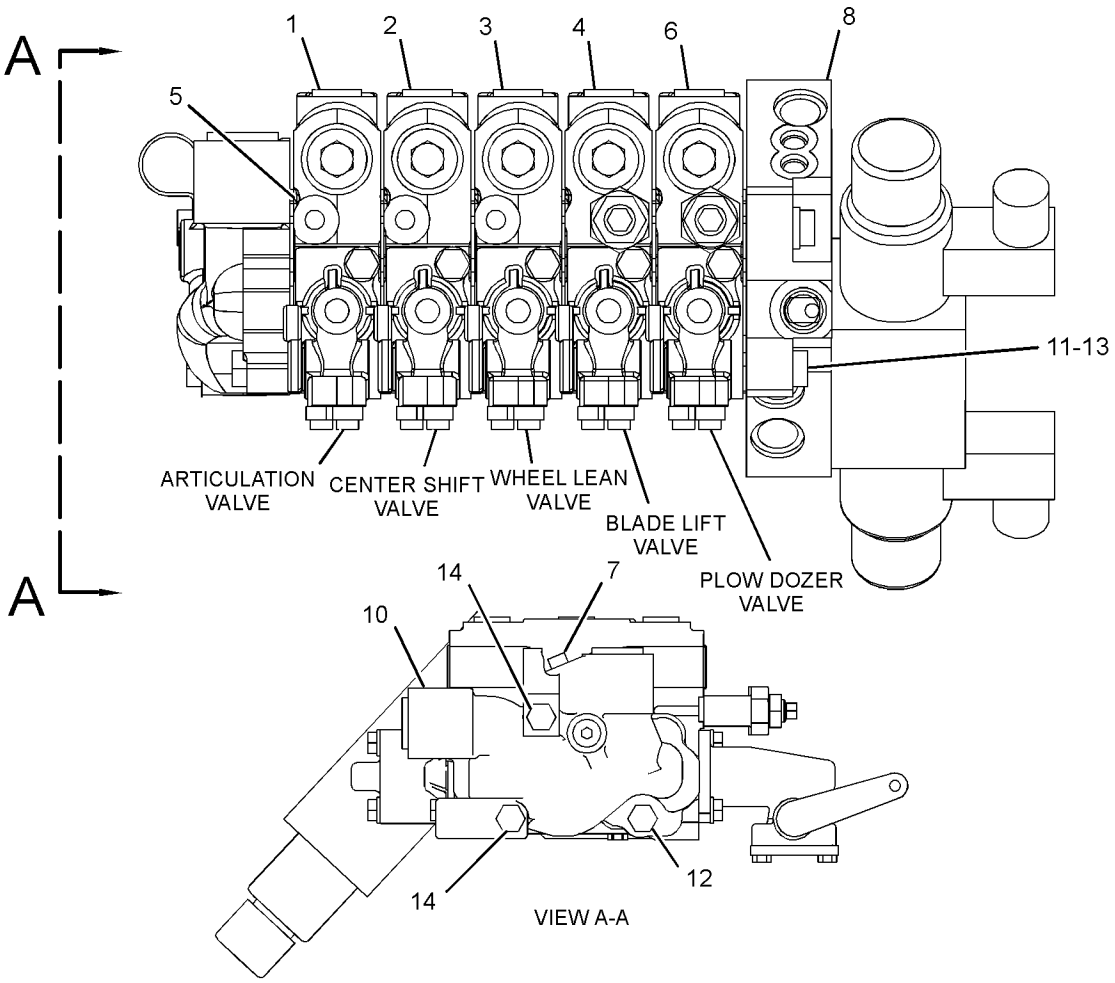


GRAPHIC #1 **<END>** g01248609

# 250-0549 VALVE GP-BANK 5–RH

**S/N: CCA1-UP**

**PART OF 250-0425, 250-0428, 250-0431, 250-0433, 250-0437, 250-0440 VALVE & LINKAGE GP**

**AN ATTACHMENT**

**SMCS-5051** **i02344315**

| NOTE | REF NO | GRAPHIC REF | PART NUMBER | QTY | PART NAME 1 2 3 4 5 6 (PRODUCT LEVEL) | SEE PAGE |
|---|---|---|---|---|---|---|
| Y | 1 | 1 | **6E-3028** | 1 | VALVE GP-CONTROL (ARTICULATION) | 974 |
| Y | 2 | 1 | **6E-3029** | 1 | VALVE GP-CONTROL (CENTERSHIFT) | 976 |
| Y | 3 | 1 | **6E-3030** | 1 | VALVE GP-CONTROL (WHEEL LEAN) | 978 |
| | 4 | 1 | **101-0509** | 6 | SEAL-INTEGRAL | |
| Y | 5 | 1 | **128-8647** | 1 | VALVE GP-CONTROL (BLADE LIFT) | 1002 |
| Y | 6 | 1 | **130-3111** | 1 | VALVE GP-CONTROL (PLOW, BULLDOZER LIFT) | 1006 |
| | 7 | 1 | *222-4737* | 1 | PLUG AS | |
| | | 1 | **4J-7533** | 1 | SEAL-O-RING | |
| | | 1 | **9S-4180** | 1 | PLUG | |
| | 8 | 1 | **239-9894** | 1 | MANIFOLD GP-CONTROL (RH) | |
| | 10 | 1 | **102-6238** | 1 | MANIFOLD | |
| M | 11 | 1 | **137-6719** | 3 | BOLT (M10X1.5X80-MM) | |
| M | 12 | 1 | **137-6720** | 1 | BOLT (M10X1.5X160-MM) | |
| | 13 | 1 | **3K-6113** | 3 | WASHER-HARD (12X18.5X3-MM THK) | |
| M | 14 | 1 | **7X-2546** | 2 | BOLT (M10X1.5X180-MM) | |

M-METRIC PART
Y-SEPARATE ILLUSTRATION

## 250-0549 VALVE GP-BANK 5 *(contd. )* i02344315

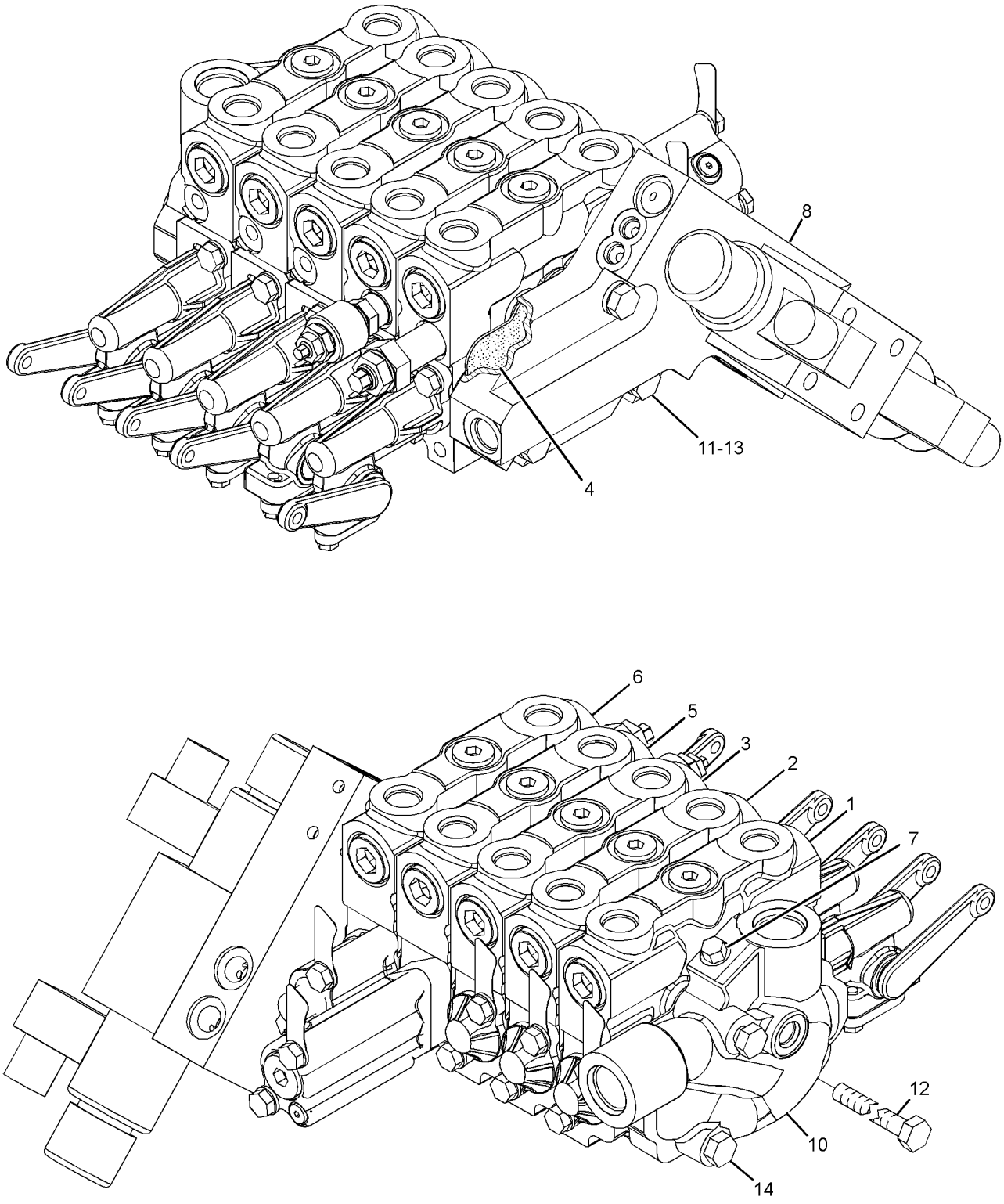


GRAPHIC #1 **<END>** g01150703

# 250-0550 VALVE GP-BANK 5–LH

**S/N: CCA1-UP**

**PART OF 250-0426, 250-0430, 250-0435 VALVE & LINKAGE GP**

**AN ATTACHMENT**

**SMCS-5051** **i02344369**

| NOTE | REF NO | GRAPHIC REF | PART NUMBER | QTY | PART NAME 1 2 3 4 5 6 (PRODUCT LEVEL) | SEE PAGE |
|---|---|---|---|---|---|---|
| Y | 1 | 1 | **6E-3034** | 1 | VALVE GP-CONTROL (BLADE TIP) | 982 |
| Y | 2 | 1 | **6E-3035** | 1 | VALVE GP-CONTROL (CIRCLE DRIVE) | 984 |
| Y | 3 | 1 | **6E-3036** | 1 | VALVE GP-CONTROL (SIDESHIFT) | 986 |
| Y | 4 | 1 | **6E-3037** | 1 | VALVE GP-CONTROL (BLADE LIFT) | 988 |
| | 5 | 1 | **101-0509** | 6 | SEAL-INTEGRAL | |
| | 6 | 1 | **102-8385** | 1 | MANIFOLD | |
| Y | 7 | 1 | **107-0545** | 1 | VALVE GP-CONTROL (RIPPER) | 992 |
| | 8 | 1 | *222-4737* | 1 | PLUG AS | |
| | | 1 | **9S-4180** | 1 | PLUG | |
| | | 1 | **4J-7533** | 1 | SEAL-O-RING | |
| Y | 9 | 1 | **239-9893** | 1 | MANIFOLD GP-CONTROL (LH) | 716 |
| M | 11 | 1 | **137-6719** | 3 | BOLT (M10X1.5X80-MM) | |
| M | 12 | 1 | **137-6720** | 1 | BOLT (M10X1.5X160-MM) | |
| | 13 | 1 | **3K-6113** | 3 | WASHER-HARD (12X18.5X3-MM THK) | |
| M | 14 | 1 | **7X-2546** | 2 | BOLT (M10X1.5X180-MM) | |

M-METRIC PART
Y-SEPARATE ILLUSTRATION

## 250-0550 VALVE GP-BANK 5 *(contd. )* i02344369

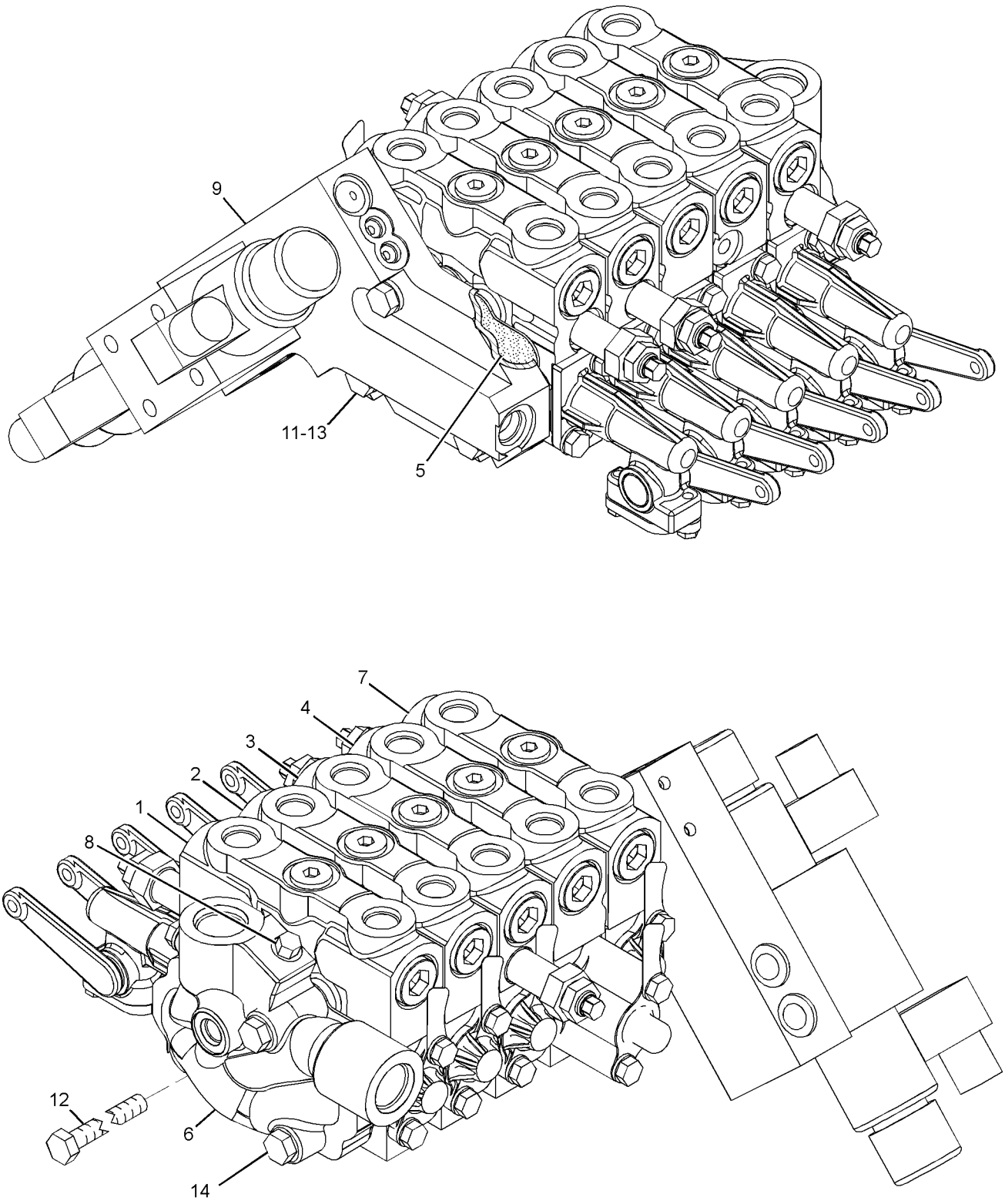


GRAPHIC #1 **<END>** g01228309

# 250-0551 VALVE GP-BANK 5–LH

**S/N: CCA1-UP**

**PART OF 250-0427, 250-0431 VALVE & LINKAGE GP**

**AN ATTACHMENT**

**SMCS-5051** **i02366646**

| NOTE | REF NO | GRAPHIC REF | PART NUMBER | QTY | PART NAME 1 2 3 4 5 6 (PRODUCT LEVEL) | SEE PAGE |
|---|---|---|---|---|---|---|
| Y | 1 | 1 | **6E-3034** | 1 | VALVE GP-CONTROL (BLADE TIP) | 982 |
| Y | 2 | 1 | **6E-3035** | 1 | VALVE GP-CONTROL (CIRCLE DRIVE) | 984 |
| Y | 3 | 1 | **6E-3036** | 1 | VALVE GP-CONTROL (SIDESHIFT) | 986 |
| | 4 | 1 | **101-0509** | 6 | SEAL-INTEGRAL | |
| | 5 | 1 | **102-8385** | 1 | MANIFOLD | |
| Y | 6 | 1 | **119-9550** | 1 | VALVE GP-CONTROL (RIPPER) | 1000 |
| Y | 7 | 1 | **130-3110** | 1 | VALVE GP-CONTROL (BLADE LIFT) | 1004 |
| | 8 | 1 | *222-4737* | 1 | PLUG AS | |
| | | 1 | **9S-4180** | 1 | PLUG | |
| | | 1 | **4J-7533** | 1 | SEAL-O-RING | |
| | 9 | 1 | **239-9893** | 1 | MANIFOLD GP-CONTROL (LH) | |
| M | 11 | 1 | **137-6719** | 3 | BOLT (M10X1.5X80-MM) | |
| M | 12 | 1 | **137-6720** | 1 | BOLT (M10X1.5X160-MM) | |
| | 13 | 1 | **3K-6113** | 3 | WASHER-HARD (12X18.5X3-MM THK) | |
| M | 14 | 1 | **7X-2546** | 2 | BOLT (M10X1.5X180-MM) | |

M-METRIC PART
Y-SEPARATE ILLUSTRATION

**250-0551 VALVE GP-BANK 5** *(contd. )* **i02366646**

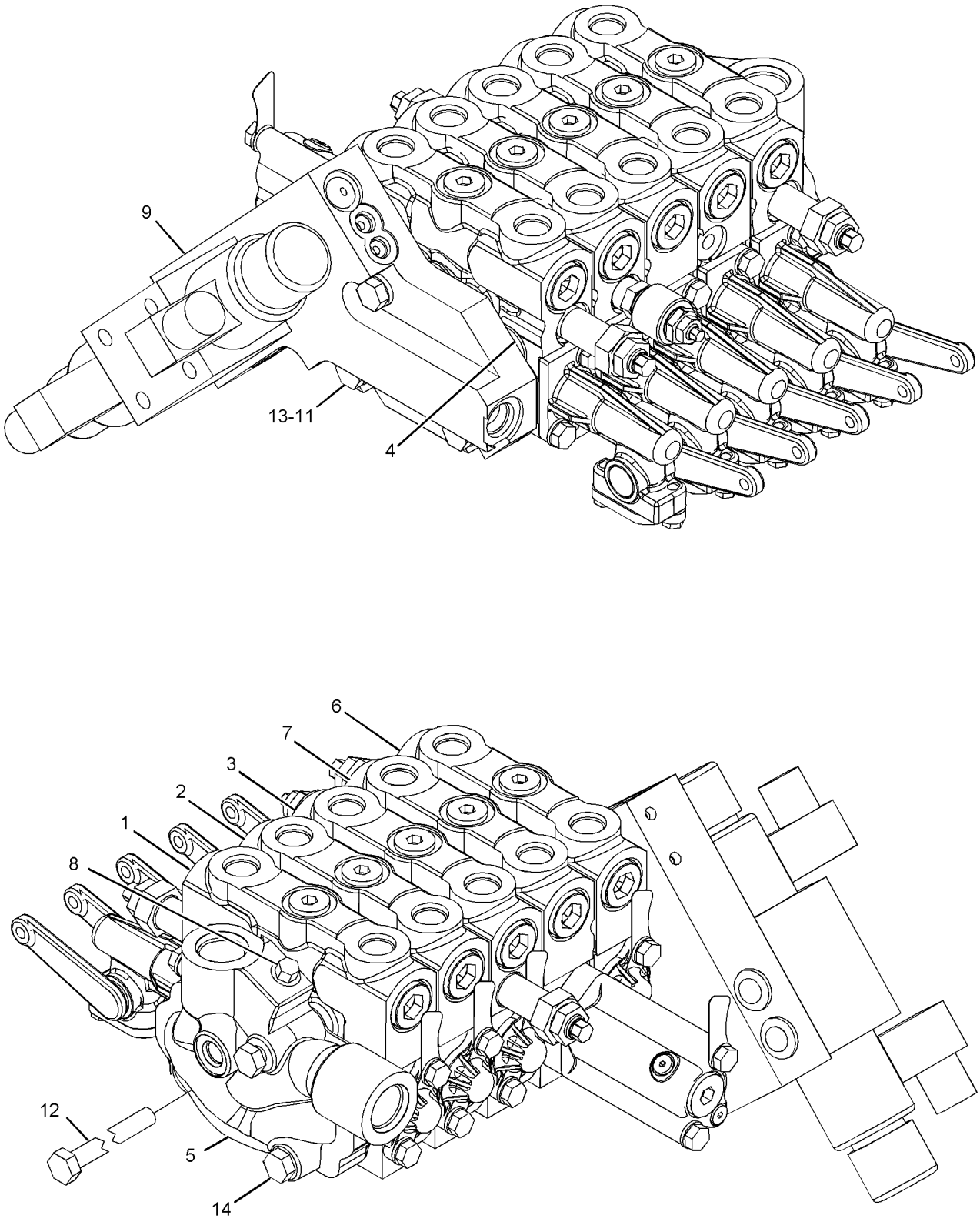


GRAPHIC #1 **<END>** g01149785

# *262-7291* VALVE GP-BANK 5–LH

**S/N: CCA1611-UP**
**PART OF 265-7814, 265-7815 VALVE & LINKAGE GP**
**AN ATTACHMENT**

**SMCS-5051** **i02386365**

| NOTE | REF NO | GRAPHIC REF | PART NUMBER | QTY | PART NAME 1 2 3 4 5 6 (PRODUCT LEVEL) | SEE PAGE |
|---|---|---|---|---|---|---|
| Y | 1 | 1 | **6E-3034** | 1 | VALVE GP-CONTROL (BLADE TIP) | 982 |
| Y | 2 | 1 | **6E-3035** | 1 | VALVE GP-CONTROL (CIRCLE DRIVE) | 984 |
| Y | 3 | 1 | **6E-3036** | 1 | VALVE GP-CONTROL (SIDESHIFT) | 986 |
| Y | 4 | 1 | **6E-3037** | 1 | VALVE GP-CONTROL (BLADE LIFT) | 988 |
| | 5 | 1 | **101-0509** | 6 | SEAL-INTEGRAL | |
| | 6 | 1 | **102-8385** | 1 | MANIFOLD | |
| Y | 7 | 1 | **107-0543** | 1 | VALVE GP-CONTROL (SCARIFIER) | 990 |
| | 8 | 1 | *222-4737* | 1 | PLUG AS | |
| | | 1 | **9S-4180** | 1 | PLUG | |
| | | 1 | **4J-7533** | 1 | SEAL-O-RING | |
| | 9 | 1 | **239-9893** | 1 | MANIFOLD GP-CONTROL (LH) | |
| M | 11 | 1 | **137-6719** | 3 | BOLT (M10X1.5X80-MM) | |
| M | 12 | 1 | **137-6720** | 1 | BOLT (M10X1.5X160-MM) | |
| | 13 | 1 | **3K-6113** | 3 | WASHER-HARD (12X18.5X3-MM THK) | |
| M | 14 | 1 | **7X-2546** | 2 | BOLT (M10X1.5X180-MM) | |

M-METRIC PART
Y-SEPARATE ILLUSTRATION

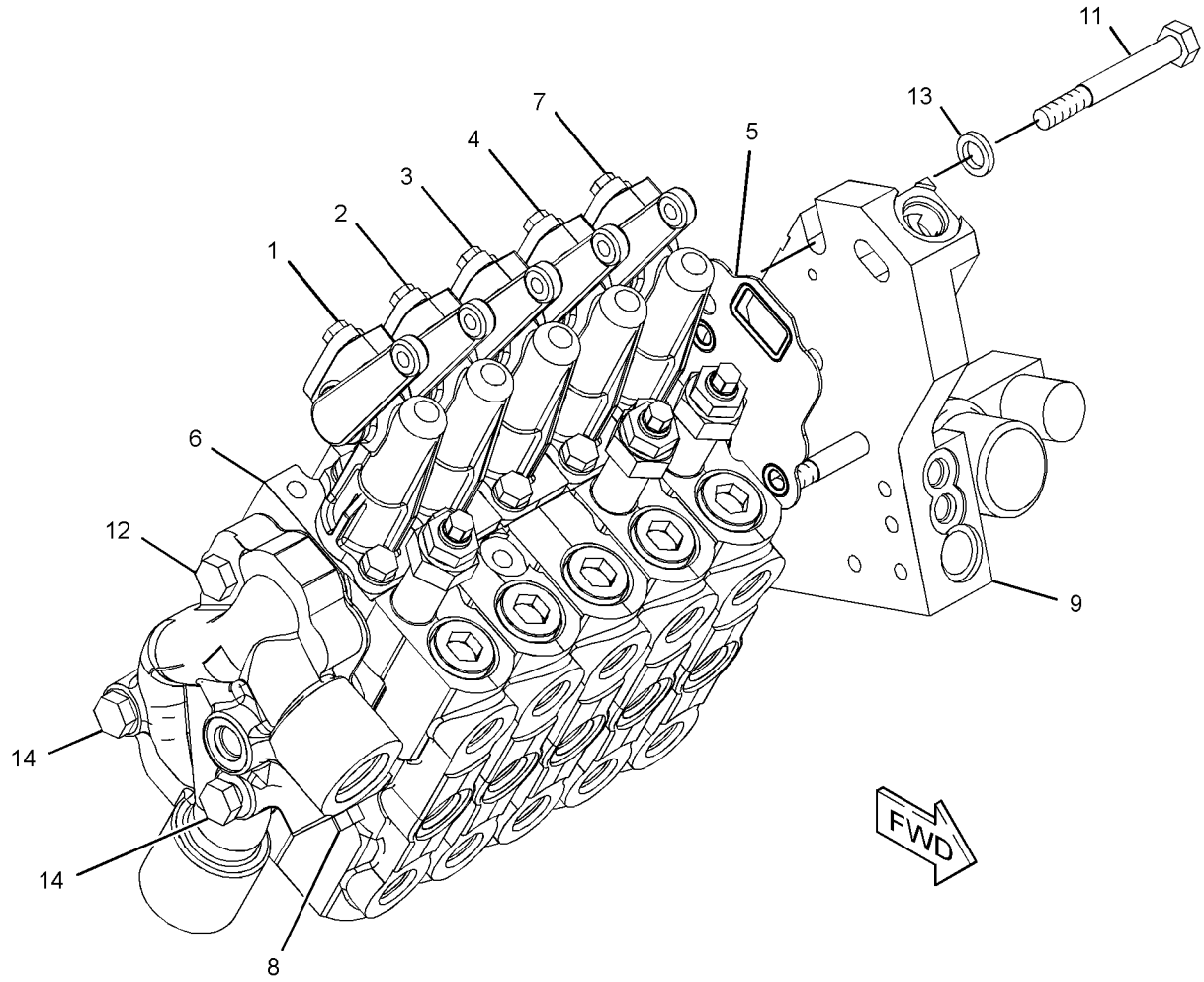


GRAPHIC #1 **<END>** g01246704

# HYDRAULIC SYSTEM

## 104-8648 VALVE GP-BANK 6–LH

**S/N: CCA1-UP**
**PART OF 115-0791, 7I-4623 VALVE & LINKAGE GP**
**AN ATTACHMENT**

**SMCS-5051** **i01191707**

| NOTE | REF NO | GRAPHIC REF | PART NUMBER | QTY | PART NAME 1 2 3 4 5 6 (PRODUCT LEVEL) | SEE PAGE |
|---|---|---|---|---|---|---|
| M | 1 | 1 | **7X-2546** | 2 | BOLT (M10X1.5X180-MM) | |
| CM | 2 | 1 | **137-6720** | 1 | BOLT (M10X1.5X160-MM) | |
| | 3 | 1 | **102-8385** | 1 | MANIFOLD | |
| | 4 | 1 | **101-0509** | 7 | SEAL-INTEGRAL | |
| Y | 5 | 1 | **6E-3034** | 1 | VALVE GP-CONTROL (BLADE TIP) | 982 |
| Y | 6 | 1 | **6E-3035** | 1 | VALVE GP-CONTROL (CIRCLE DRIVE) | 984 |
| Y | 7 | 1 | **6E-3036** | 1 | VALVE GP-CONTROL (SIDESHIFT) | 986 |
| Y | 8 | 1 | **6E-3037** | 1 | VALVE GP-CONTROL (BLADE LIFT) (BLADE LIFT) | 988 |
| YC | 9 | 1 | **137-8104** | 1 | VALVE GP-CONTROL (WING TILT) | 1008 |
| YC | 10 | 1 | **137-8106** | 1 | VALVE GP-CONTROL (WING LIFT) | 1010 |
| | 11 | 1 | **101-9346** | 1 | COVER | |
| | 12 | 1 | **9S-4180** | 1 | PLUG | |
| | 13 | 1 | **4J-7533** | 1 | SEAL-O-RING | |

C-CHANGE FROM PREVIOUS TYPE
M-METRIC PART
Y-SEPARATE ILLUSTRATION

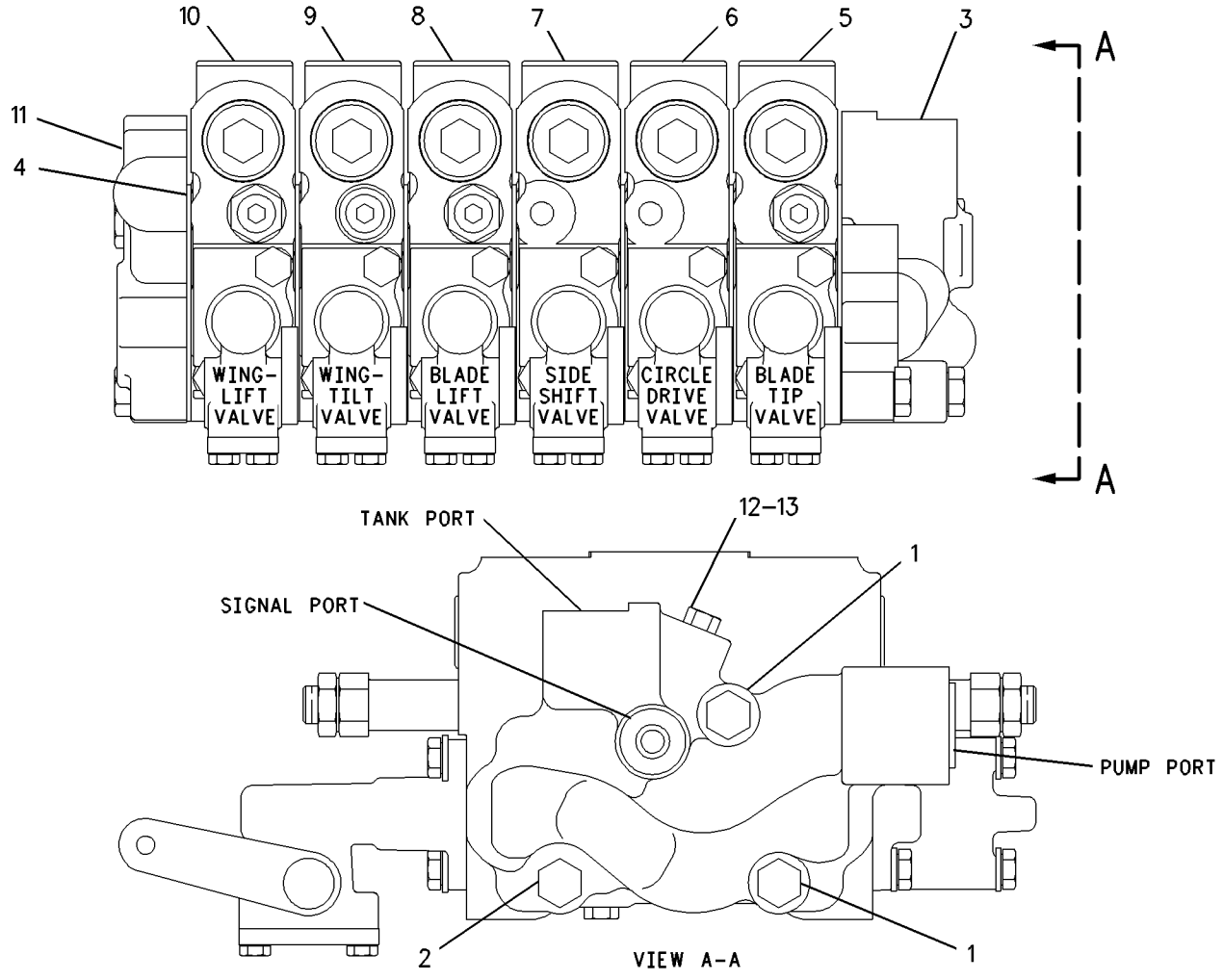


GRAPHIC #1 **<END>** g00637810

# 115-1008 VALVE GP-BANK 6–RH

**S/N: CCA1-UP**

**PART OF 115-0791, 115-0805, 132-6478 VALVE & LINKAGE GP**

**AN ATTACHMENT**

**SMCS-5051** **i02584693**

| NOTE | REF NO | GRAPHIC REF | PART NUMBER | QTY | PART NAME 1 2 3 4 5 6 (PRODUCT LEVEL) | SEE PAGE |
|---|---|---|---|---|---|---|
| M | 1 | 1 | **7X-2546** | 2 | BOLT (M10X1.5X180-MM) | |
| M | 2 | 1 | **137-6720** | 1 | BOLT (M10X1.5X160-MM) | |
| | 3 | 1 | **102-6238** | 1 | MANIFOLD | |
| | 4 | 1 | **101-0509** | 7 | SEAL-INTEGRAL | |
| Y | 5 | 1 | **6E-3028** | 1 | VALVE GP-CONTROL (ARTICULATION) | 974 |
| Y | 6 | 1 | **6E-3029** | 1 | VALVE GP-CONTROL (CENTERSHIFT) | 976 |
| Y | 7 | 1 | **6E-3030** | 1 | VALVE GP-CONTROL (WHEEL LEAN) | 978 |
| Y | 8 | 1 | **6E-3031** | 1 | VALVE GP-CONTROL (BLADE LIFT) | 980 |
| Y | 9 | 1 | **107-0547** | 1 | VALVE GP-CONTROL (PLOW, BULLDOZER LIFT) | 994 |
| | 10 | 1 | **101-9346** | 1 | COVER | |
| M | 11 | 1 | **134-8221** | 3 | BOLT (M10X1.5X120-MM) | |
| | 12 | 1 | **9S-4180** | 1 | PLUG | |
| | 13 | 1 | **4J-7533** | 1 | SEAL-O-RING | |
| Y | 14 | 1 | **115-1007** | 1 | VALVE GP-CONTROL (PLOW, BULLDOZER ANGLE) | 996 |

M-METRIC PART
Y-SEPARATE ILLUSTRATION

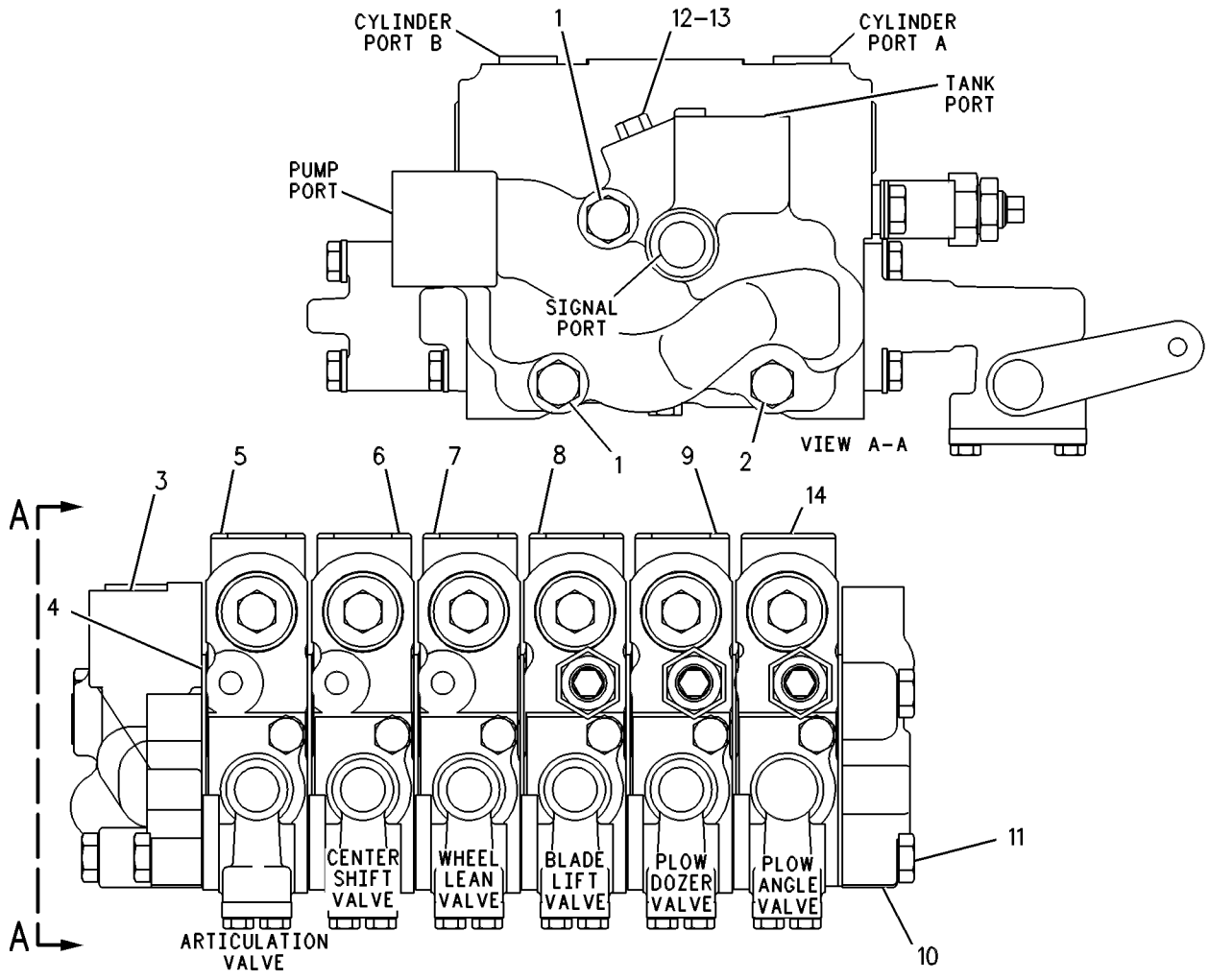


GRAPHIC #1 **<END>** g00108825

# HYDRAULIC SYSTEM

## 130-3121 VALVE GP-BANK 6–LH

**S/N: CCA1-UP**
**PART OF 121-4094, 121-4098 VALVE & LINKAGE GP**
**AN ATTACHMENT**

**SMCS-5051** **i02584735**

| NOTE | REF NO | GRAPHIC REF | PART NUMBER | QTY | PART NAME 1 2 3 4 5 6 (PRODUCT LEVEL) | SEE PAGE |
|---|---|---|---|---|---|---|
| M | 1 | 1 | **7X-2546** | 2 | BOLT (M10X1.5X180-MM) | |
| M | 2 | 1 | **137-6720** | 1 | BOLT (M10X1.5X160-MM) | |
| | 3 | 1 | **102-8385** | 1 | MANIFOLD | |
| | 4 | 1 | **101-0509** | 7 | SEAL-INTEGRAL | |
| Y | 5 | 1 | **6E-3034** | 1 | VALVE GP-CONTROL (BLADE TIP) | 982 |
| Y | 6 | 1 | **6E-3035** | 1 | VALVE GP-CONTROL (CIRCLE DRIVE) | 984 |
| Y | 7 | 1 | **6E-3036** | 1 | VALVE GP-CONTROL (SIDESHIFT) | 986 |
| M | 8 | 1 | **134-8221** | 3 | BOLT (M10X1.5X120-MM) | |
| Y | 9 | 1 | **137-8104** | 1 | VALVE GP-CONTROL (WING TILT) | 1008 |
| CY | 10 | 1 | **150-6649** | 1 | VALVE GP-CONTROL (WING LIFT) | 1012 |
| Y | 11 | 1 | **130-3110** | 1 | VALVE GP-CONTROL (BLADE LIFT) | 1004 |
| | 12 | 1 | **101-9346** | 1 | COVER | |
| | 13 | 1 | **9S-4180** | 1 | PLUG | |
| | 14 | 1 | **4J-7533** | 1 | SEAL-O-RING | |

C-CHANGE FROM PREVIOUS TYPE
M-METRIC PART
Y-SEPARATE ILLUSTRATION

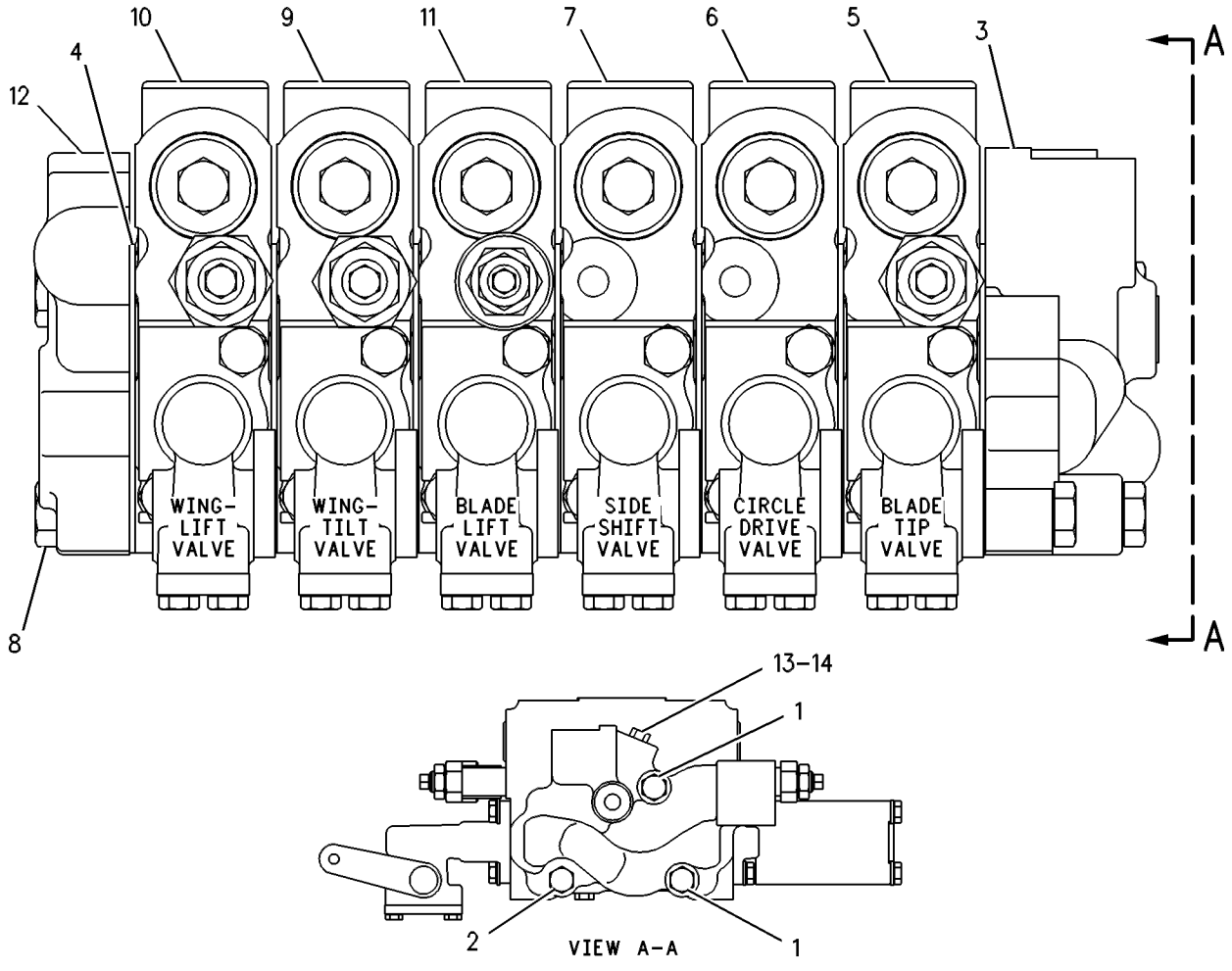


GRAPHIC #1 **<END>** g00277376

# 130-3124 VALVE GP-BANK 6–RH

**S/N: CCA1-UP**

**PART OF 121-4098, 121-4099 VALVE & LINKAGE GP**

**AN ATTACHMENT**

**SMCS-5051** **i02584791**

| NOTE | REF NO | GRAPHIC REF | PART NUMBER | QTY | PART NAME 1 2 3 4 5 6 (PRODUCT LEVEL) | SEE PAGE |
|---|---|---|---|---|---|---|
| M | 1 | 1 | **7X-2546** | 2 | BOLT (M10X1.5X180-MM) | |
| M | 2 | 1 | **137-6720** | 1 | BOLT (M10X1.5X160-MM) | |
| | 3 | 1 | **102-6238** | 1 | MANIFOLD | |
| | 4 | 1 | **101-0509** | 7 | SEAL-INTEGRAL | |
| Y | 5 | 1 | **6E-3028** | 1 | VALVE GP-CONTROL (ARTICULATION) | 974 |
| Y | 6 | 1 | **6E-3029** | 1 | VALVE GP-CONTROL (CENTERSHIFT) | 976 |
| Y | 7 | 1 | **6E-3030** | 1 | VALVE GP-CONTROL (WHEEL LEAN) | 978 |
| M | 8 | 1 | **134-8221** | 3 | BOLT (M10X1.5X120-MM) | |
| Y | 9 | 1 | **128-8647** | 1 | VALVE GP-CONTROL (BLADE LIFT) | 1002 |
| Y | 10 | 1 | **115-1007** | 1 | VALVE GP-CONTROL (PLOW, BULLDOZER ANGLE) | 996 |
| | 11 | 1 | **101-9346** | 1 | COVER | |
| | 12 | 1 | **9S-4180** | 1 | PLUG | |
| | 13 | 1 | **4J-7533** | 1 | SEAL-O-RING | |
| Y | 14 | 1 | **130-3111** | 1 | VALVE GP-CONTROL (PLOW, BULLDOZER LIFT) | 1006 |

M-METRIC PART
Y-SEPARATE ILLUSTRATION

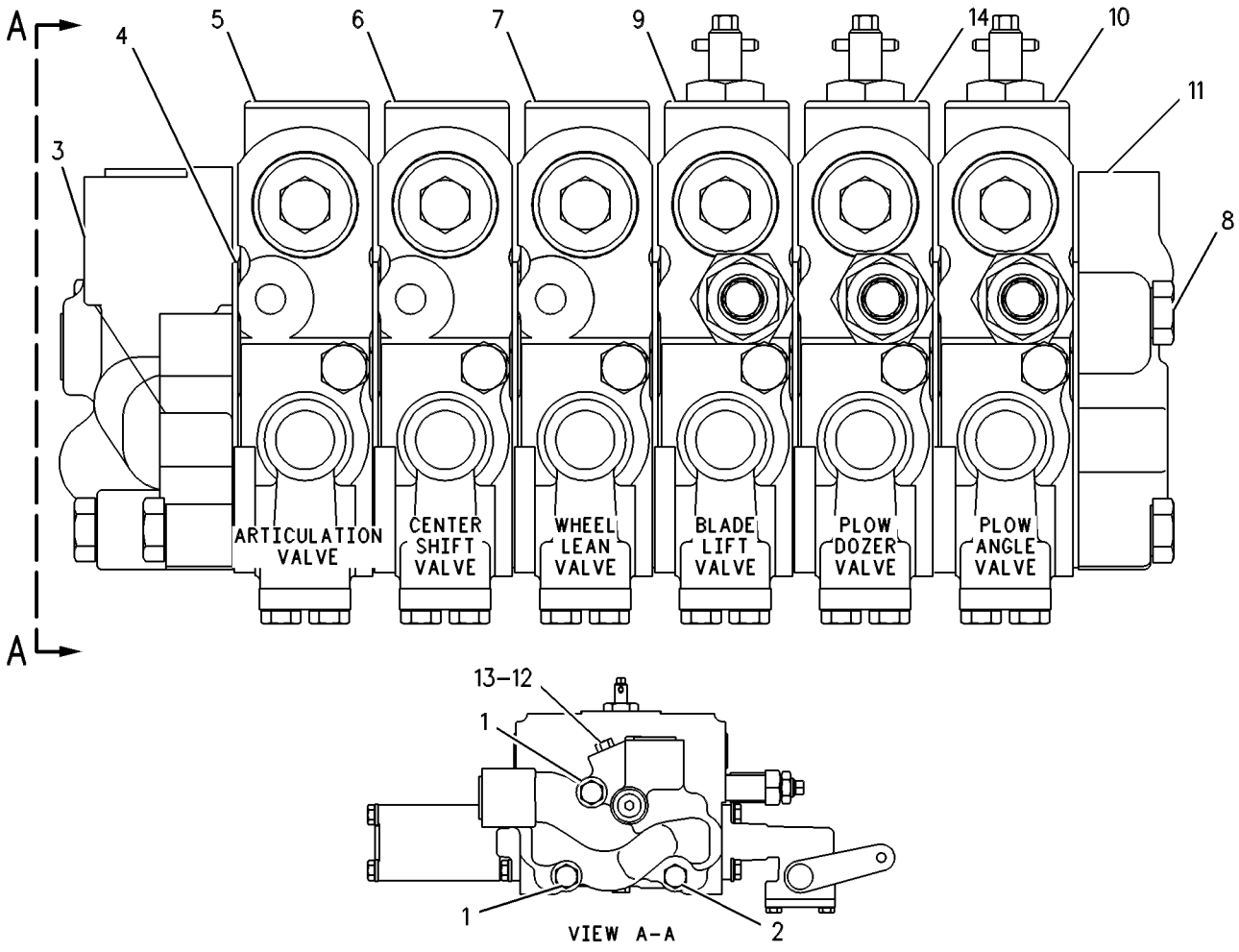


GRAPHIC #1 **<END>** g00109432

# HYDRAULIC SYSTEM

## 153-8910 VALVE GP-BANK 6–LH

**S/N: CCA1-UP**
**PART OF 153-7964 VALVE & LINKAGE GP**
**AN ATTACHMENT**

**SMCS-5051** **i02584827**

| NOTE | REF NO | GRAPHIC REF | PART NUMBER | QTY | PART NAME 1 2 3 4 5 6 (PRODUCT LEVEL) | SEE PAGE |
|---|---|---|---|---|---|---|
| M | 1 | 1 | **7X-2546** | 2 | BOLT (M10X1.5X180-MM) | |
| M | 2 | 1 | **137-6720** | 1 | BOLT (M10X1.5X160-MM) | |
| | 3 | 1 | **102-8385** | 1 | MANIFOLD | |
| | 4 | 1 | **101-0509** | 7 | SEAL-INTEGRAL | |
| Y | 5 | 1 | **6E-3034** | 1 | VALVE GP-CONTROL (BLADE TIP) | 982 |
| Y | 6 | 1 | **6E-3035** | 1 | VALVE GP-CONTROL (CIRCLE DRIVE) | 984 |
| Y | 7 | 1 | **6E-3036** | 1 | VALVE GP-CONTROL (SIDESHIFT) | 986 |
| Y | 8 | 1 | **6E-3037** | 1 | VALVE GP-CONTROL (BLADE LIFT) | 988 |
| Y | 9 | 1 | **107-0545** | 1 | VALVE GP-CONTROL (RIPPER) | 992 |
| Y | 11 | 1 | **153-8907** | 1 | VALVE GP-CONTROL (PLOW DOZER) | 1018 |
| | 12 | 1 | **101-9346** | 1 | COVER | |
| | 13 | 1 | **9S-4180** | 1 | PLUG | |
| | 14 | 1 | **4J-7533** | 1 | SEAL-O-RING | |
| M | 15 | 1 | **134-8221** | 3 | BOLT (M10X1.5X120-MM) | |

M-METRIC PART
Y-SEPARATE ILLUSTRATION

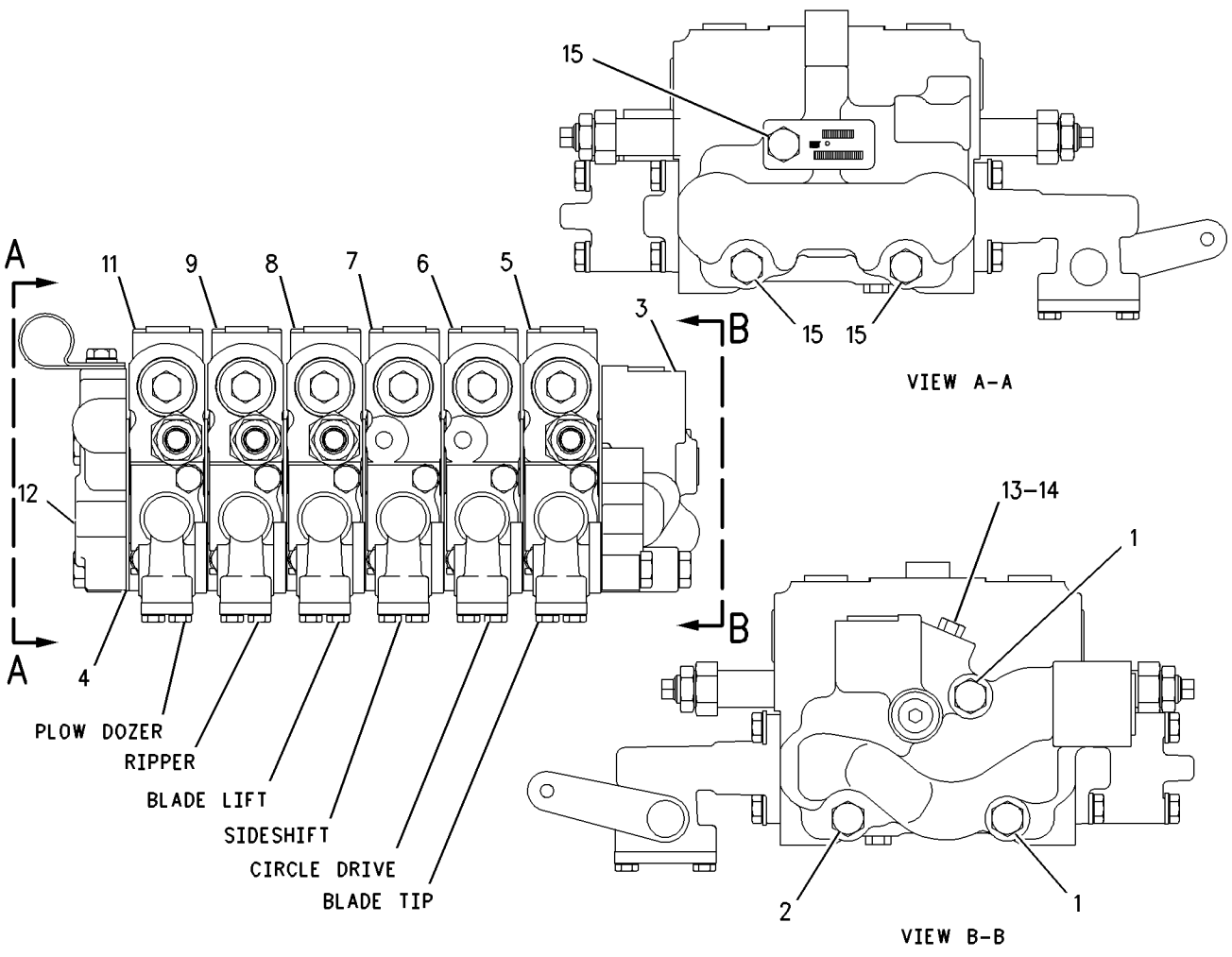


GRAPHIC #1 **<END>** g00898692

# 153-8911 VALVE GP-BANK 6–RH

**S/N: CCA1-UP**

**PART OF 153-7964, 153-7966 VALVE & LINKAGE GP**

**AN ATTACHMENT**

**SMCS-5051** **i01044453**

| NOTE | REF NO | GRAPHIC REF | PART NUMBER | QTY | PART NAME 1 2 3 4 5 6 (PRODUCT LEVEL) | SEE PAGE |
|---|---|---|---|---|---|---|
| M | 1 | 1 | **7X-2546** | 2 | BOLT (M10X1.5X180-MM) | |
| M | 2 | 1 | **137-6720** | 1 | BOLT (M10X1.5X160-MM) | |
| | 3 | 1 | **102-6238** | 1 | MANIFOLD | |
| | 4 | 1 | **101-0509** | 7 | SEAL-INTEGRAL | |
| Y | 5 | 1 | **6E-3028** | 1 | VALVE GP-CONTROL (ARTICULATION) | 974 |
| Y | 6 | 1 | **6E-3029** | 1 | VALVE GP-CONTROL (CENTERSHIFT) | 976 |
| Y | 7 | 1 | **6E-3030** | 1 | VALVE GP-CONTROL (WHEEL LEAN) | 978 |
| Y | 8 | 1 | **6E-3031** | 1 | VALVE GP-CONTROL (BLADE LIFT) (BLADE LIFT) | 980 |
| Y | 9 | 1 | **153-8906** | 1 | VALVE GP-CONTROL (WING TILT) | 1016 |
| | 10 | 1 | **101-9346** | 1 | COVER | |
| | 12 | 1 | **9S-4180** | 1 | PLUG | |
| | 13 | 1 | **4J-7533** | 1 | SEAL-O-RING | |
| Y | 14 | 1 | **153-8905** | 1 | VALVE GP-CONTROL (WING LIFT) | 1014 |
| M | 15 | 1 | **134-8221** | 3 | BOLT (M10X1.5X120-MM) | |

M-METRIC PART
Y-SEPARATE ILLUSTRATION

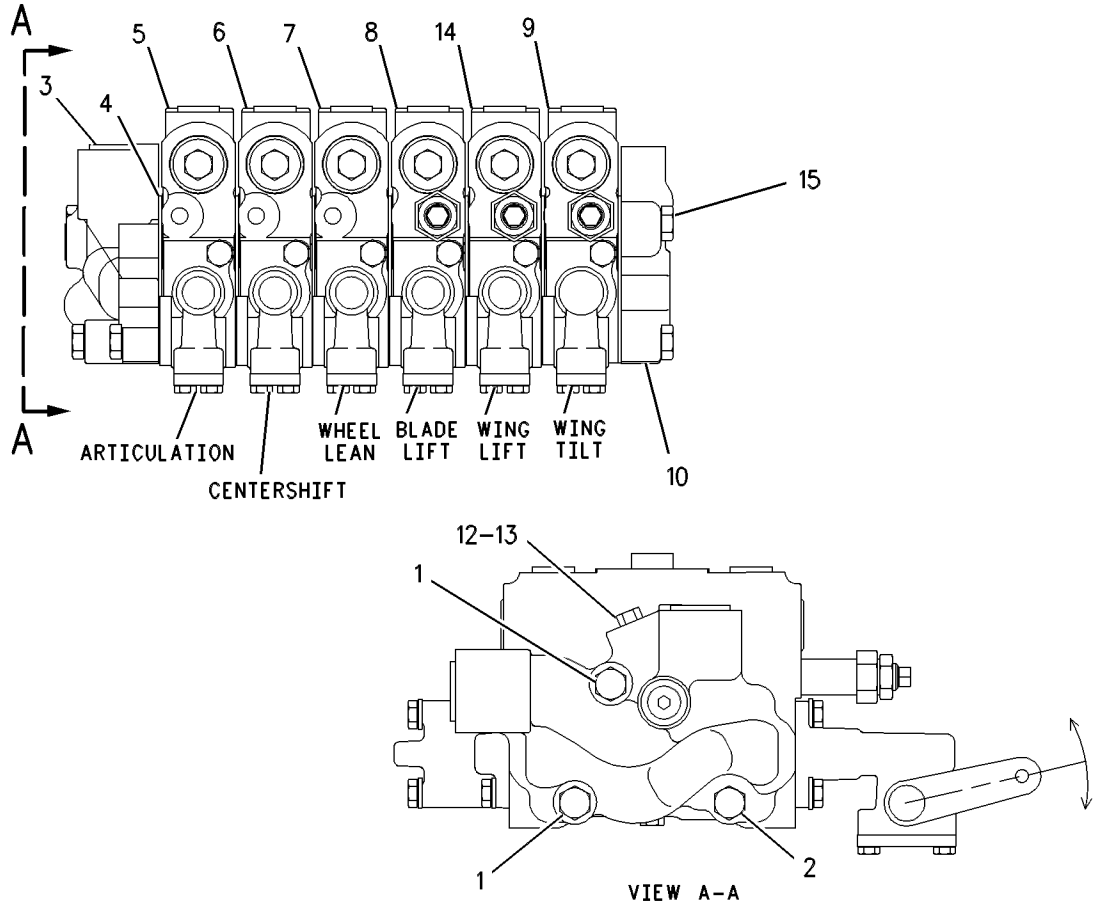


GRAPHIC #1 **<END>** g00544508

# HYDRAULIC SYSTEM

## *250-0552* VALVE GP-BANK 6–RH

**S/N: CCA1-UP**

**PART OF 250-0429, 250-0438, 250-0443 VALVE & LINKAGE GP**

**AN ATTACHMENT**

**SMCS-5051** **i02584865**

| NOTE | REF NO | GRAPHIC REF | PART NUMBER | QTY | PART NAME 1 2 3 4 5 6 (PRODUCT LEVEL) | SEE PAGE |
|---|---|---|---|---|---|---|
| Y | 1 | 1 | **6E-3028** | 1 | VALVE GP-CONTROL (ARTICULATION) | 974 |
| Y | 2 | 1 | **6E-3029** | 1 | VALVE GP-CONTROL (CENTERSHIFT) | 976 |
| Y | 3 | 1 | **6E-3030** | 1 | VALVE GP-CONTROL (WHEEL LEAN) | 978 |
| | 4 | 1 | **101-0509** | 7 | SEAL-INTEGRAL | |
| Y | 5 | 1 | **115-1007** | 1 | VALVE GP-CONTROL (PLOW, BULLDOZER ANGLE) | 996 |
| Y | 6 | 1 | **128-8647** | 1 | VALVE GP-CONTROL (BLADE LIFT) | 1002 |
| Y | 7 | 1 | **130-3111** | 1 | VALVE GP-CONTROL (PLOW, BULLDOZER LIFT) | 1006 |
| | 8 | 1 | *222-4737* | 1 | PLUG AS | |
| | | 1 | **9S-4180** | 1 | PLUG | |
| | | 1 | **4J-7533** | 1 | SEAL-O-RING | |
| Y | 9 | 1 | **239-9894** | 1 | MANIFOLD GP-CONTROL (RH) | 718 |
| | 11 | 1 | **102-6238** | 1 | MANIFOLD | |
| M | 12 | 1 | **134-8221** | 3 | BOLT (M10X1.5X120-MM) | |
| M | 13 | 1 | **137-6720** | 1 | BOLT (M10X1.5X160-MM) | |
| | 14 | 1 | **3K-6113** | 3 | WASHER-HARD (12X18.5X3-MM THK) | |
| M | 15 | 1 | **7X-2546** | 2 | BOLT (M10X1.5X180-MM) | |

M-METRIC PART
Y-SEPARATE ILLUSTRATION

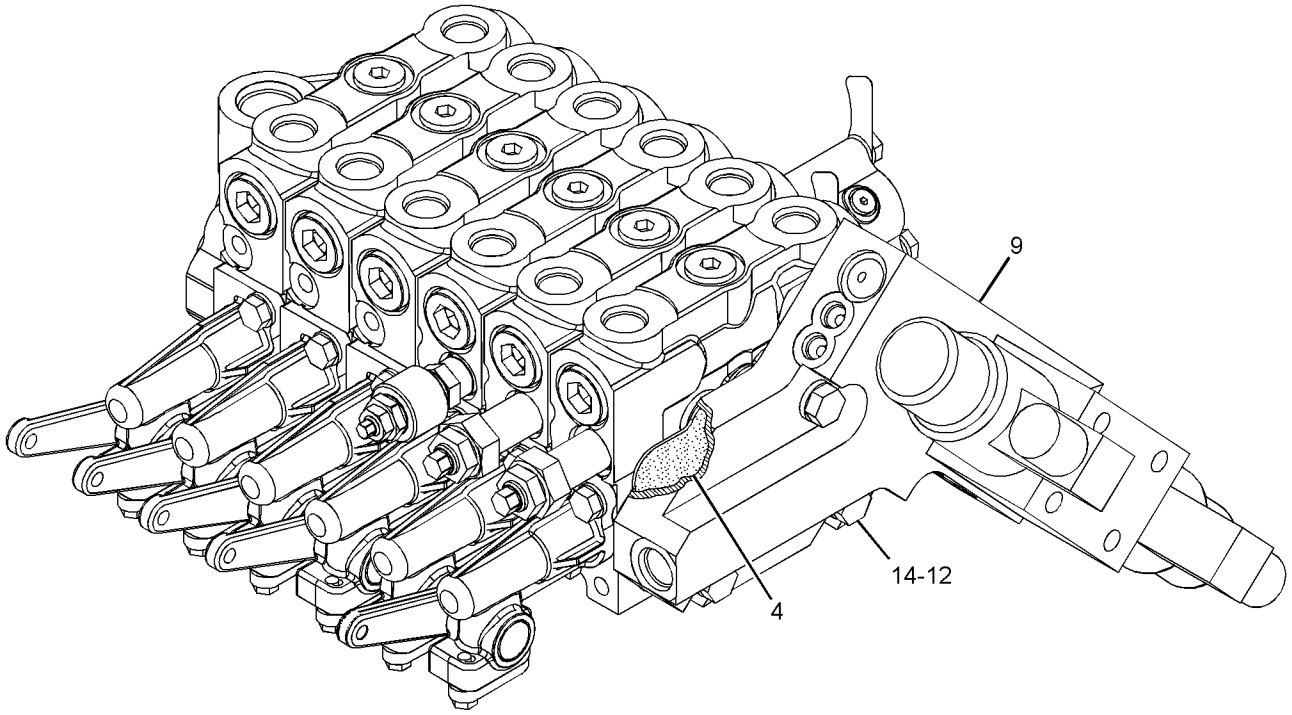


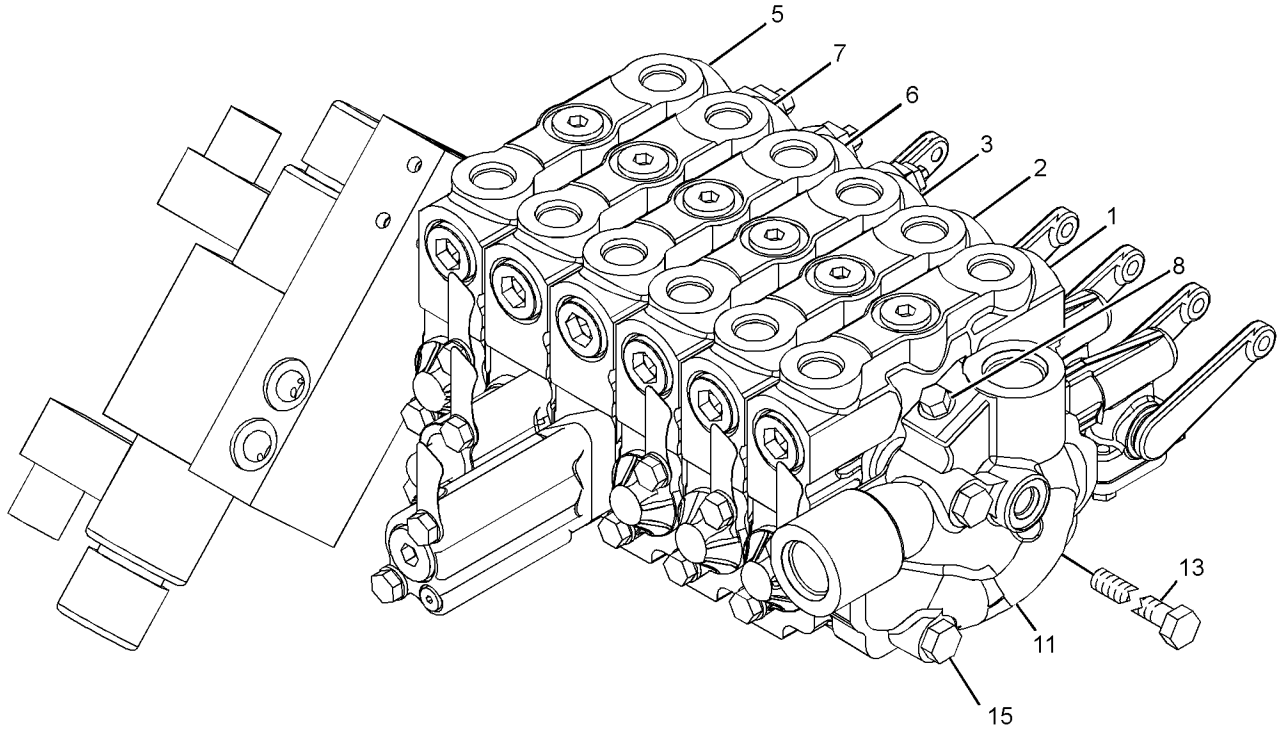


GRAPHIC #1 **<END>** g01228189

# HYDRAULIC SYSTEM

## 250-0565 VALVE GP-BANK 6–RH

**S/N: CCA1-UP**

**PART OF 250-0432, 250-0435, 250-0436, 250-0442 VALVE & LINKAGE GP**

**AN ATTACHMENT**

**SMCS-5051** **i02584909**

| NOTE | REF NO | GRAPHIC REF | PART NUMBER | QTY | PART NAME 1 2 3 4 5 6 (PRODUCT LEVEL) | SEE PAGE |
|---|---|---|---|---|---|---|
| Y | 1 | 1 | **6E-3028** | 1 | VALVE GP-CONTROL (ARTICULATION) | 974 |
| Y | 2 | 1 | **6E-3029** | 1 | VALVE GP-CONTROL (CENTERSHIFT) | 976 |
| Y | 3 | 1 | **6E-3030** | 1 | VALVE GP-CONTROL (WHEEL LEAN) | 978 |
| Y | 4 | 1 | **6E-3031** | 1 | VALVE GP-CONTROL (BLADE LIFT) | 980 |
| | 5 | 1 | **101-0509** | 7 | SEAL-INTEGRAL | |
| Y | 6 | 1 | **107-0547** | 1 | VALVE GP-CONTROL (PLOW, BULLDOZER LIFT) | 994 |
| Y | 7 | 1 | **115-1007** | 1 | VALVE GP-CONTROL (PLOW, BULLDOZER ANGLE) | 996 |
| | 8 | 1 | *222-4737* | 1 | PLUG AS | |
| | | 1 | **9S-4180** | 1 | PLUG | |
| | | 1 | **4J-7533** | 1 | SEAL-O-RING | |
| Y | 9 | 1 | **239-9894** | 1 | MANIFOLD GP-CONTROL (RH) | 718 |
| | 11 | 1 | **102-6238** | 1 | MANIFOLD | |
| M | 12 | 1 | **134-8221** | 3 | BOLT (M10X1.5X120-MM) | |
| M | 13 | 1 | **137-6720** | 1 | BOLT (M10X1.5X160-MM) | |
| | 14 | 1 | **3K-6113** | 3 | WASHER-HARD (12X18.5X3-MM THK) | |
| M | 15 | 1 | **7X-2546** | 2 | BOLT (M10X1.5X180-MM) | |

M-METRIC PART
Y-SEPARATE ILLUSTRATION

**250-0565 VALVE GP-BANK 6** *(contd. )* **i02584909**

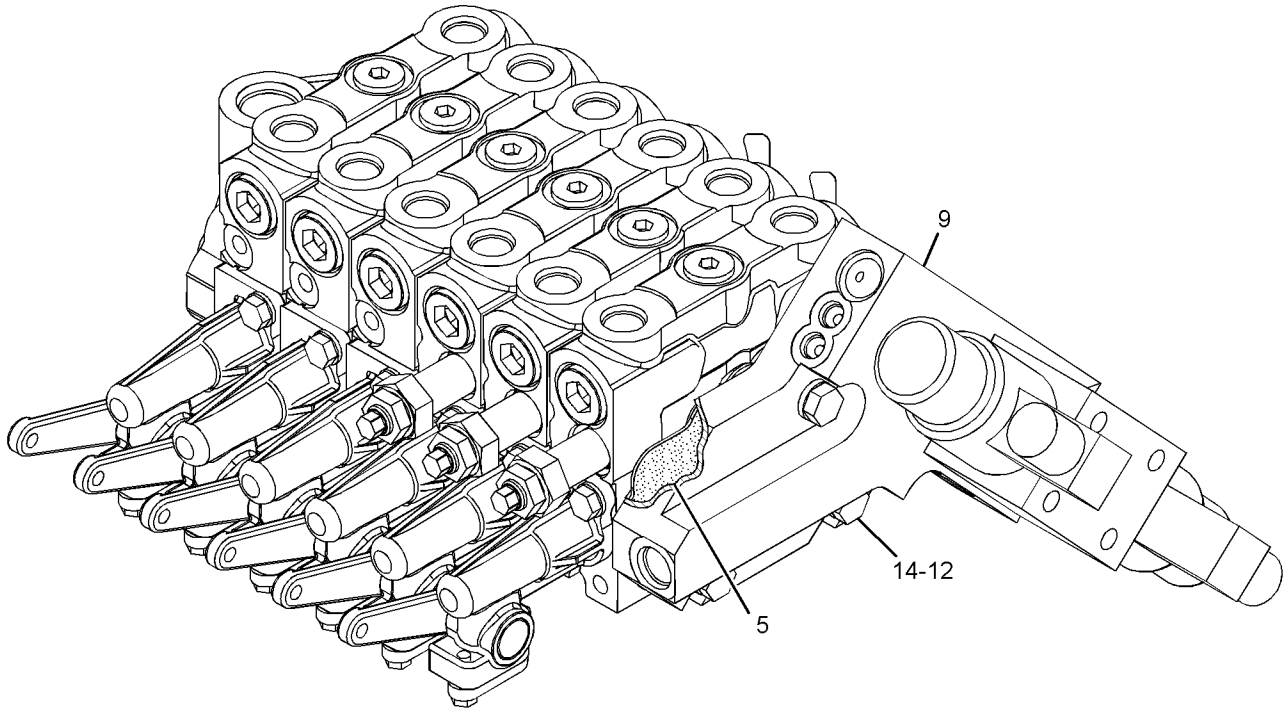


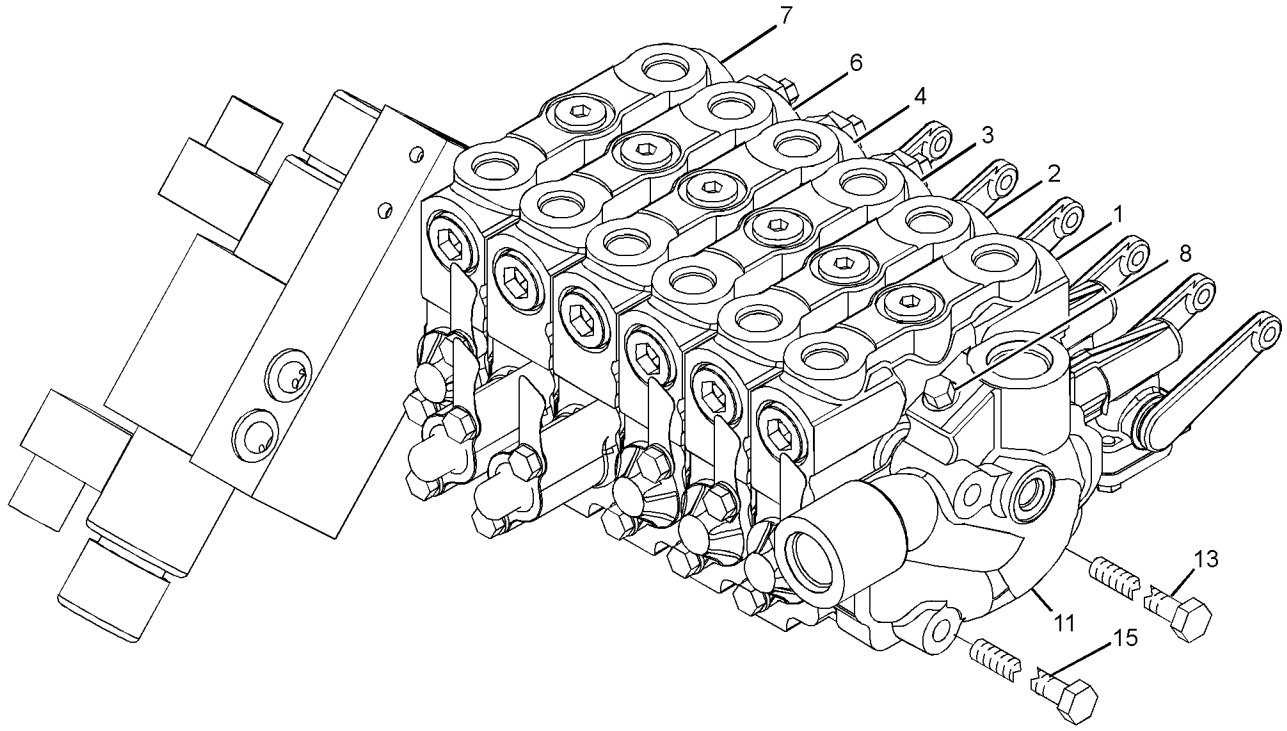


GRAPHIC #1 **<END>** g01191690

# HYDRAULIC SYSTEM

## 250-0566 VALVE GP-BANK 6—LH

**S/N: CCA1-UP**

**PART OF 250-0433, 250-0438 VALVE & LINKAGE GP**

**AN ATTACHMENT**

**SMCS-5051** **i02344350**

| NOTE | REF NO | GRAPHIC REF | PART NUMBER | QTY | PART NAME 1 2 3 4 5 6 (PRODUCT LEVEL) | SEE PAGE |
|---|---|---|---|---|---|---|
| Y | 1 | 1 | **6E-3034** | 1 | VALVE GP-CONTROL (BLADE TIP) | 982 |
| Y | 2 | 1 | **6E-3035** | 1 | VALVE GP-CONTROL (CIRCLE DRIVE) | 984 |
| Y | 3 | 1 | **6E-3036** | 1 | VALVE GP-CONTROL (SIDESHIFT) | 986 |
| | 4 | 1 | **101-0509** | 7 | SEAL-INTEGRAL | |
| | 5 | 1 | **102-8385** | 1 | MANIFOLD | |
| Y | 6 | 1 | **130-3110** | 1 | VALVE GP-CONTROL (BLADE LIFT) | 1004 |
| Y | 7 | 1 | **137-8104** | 1 | VALVE GP-CONTROL (WING TILT) | 1008 |
| Y | 8 | 1 | **150-6649** | 1 | VALVE GP-CONTROL (WING LIFT) | 1012 |
| | 9 | 1 | *222-4737* | 1 | PLUG AS | |
| | | 1 | **9S-4180** | 1 | PLUG | |
| | | 1 | **4J-7533** | 1 | SEAL-O-RING | |
| Y | 10 | 1 | **239-9893** | 1 | MANIFOLD GP-CONTROL (LH) | 716 |
| M | 12 | 1 | **134-8221** | 3 | BOLT (M10X1.5X120-MM) | |
| M | 13 | 1 | **137-6720** | 1 | BOLT (M10X1.5X160-MM) | |
| | 14 | 1 | **3K-6113** | 3 | WASHER-HARD (12X18.5X3-MM THK) | |
| M | 15 | 1 | **7X-2546** | 2 | BOLT (M10X1.5X180-MM) | |

M-METRIC PART
Y-SEPARATE ILLUSTRATION

**250-0566 VALVE GP-BANK 6** *(contd. )* **i02344350**

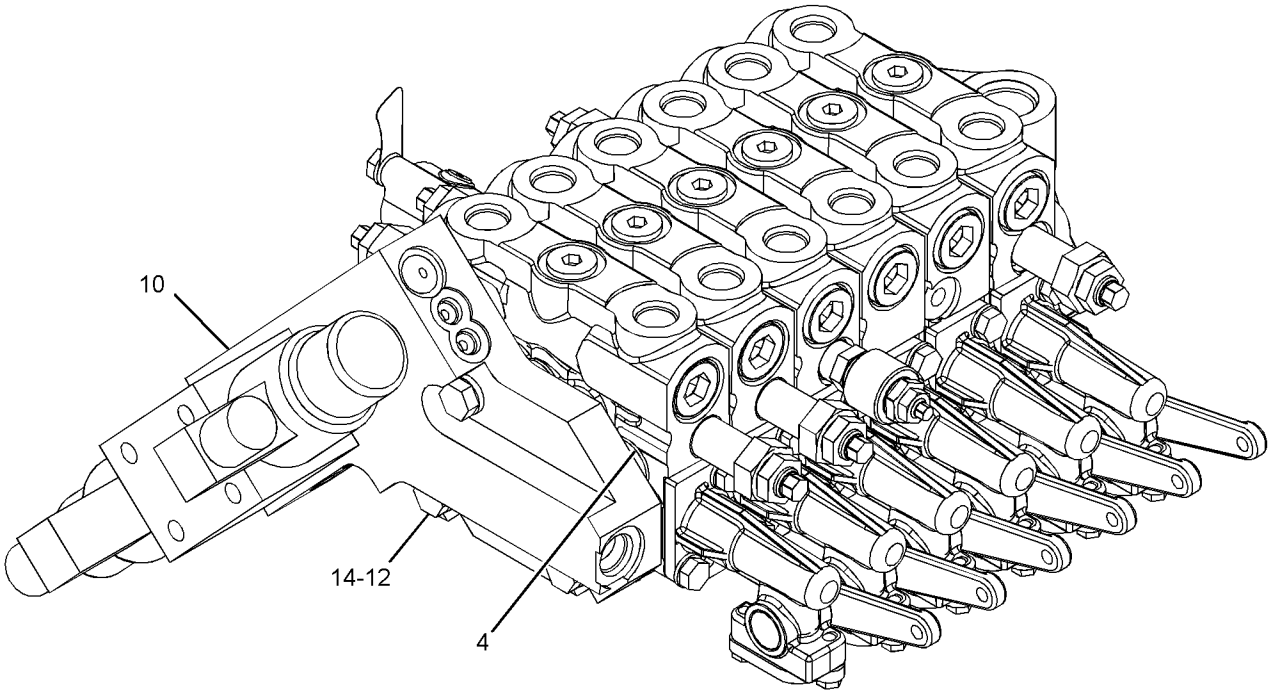


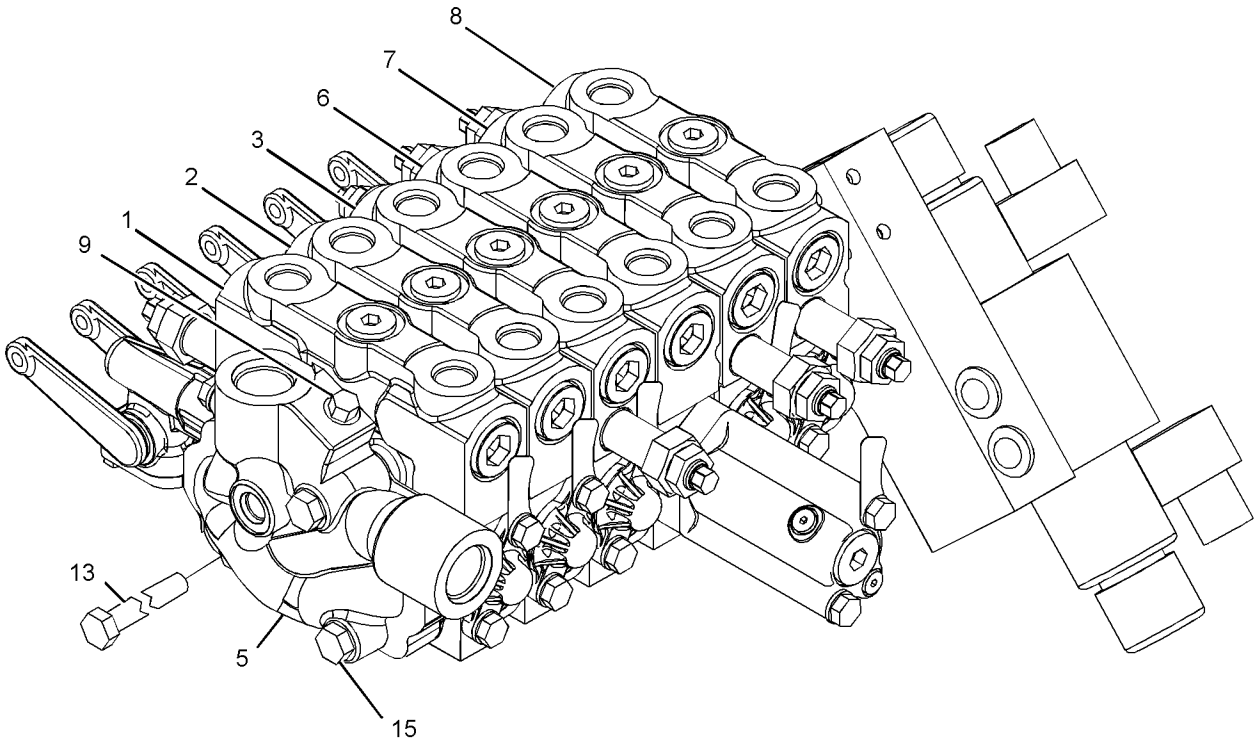


GRAPHIC #1 **<END>** g01228231

# HYDRAULIC SYSTEM

## 250-0567 VALVE GP-BANK 6—LH

**S/N: CCA1-UP**
**PART OF 250-0436, 265-7816 VALVE & LINKAGE GP**
**AN ATTACHMENT**

**SMCS-5051** **i02585147**

| NOTE | REF NO | GRAPHIC REF | PART NUMBER | QTY | PART NAME 1 2 3 4 5 6 (PRODUCT LEVEL) | SEE PAGE |
|---|---|---|---|---|---|---|
| Y | 1 | 1 | **6E-3034** | 1 | VALVE GP-CONTROL (BLADE TIP) | 982 |
| Y | 2 | 1 | **6E-3035** | 1 | VALVE GP-CONTROL (CIRCLE DRIVE) | 984 |
| Y | 3 | 1 | **6E-3036** | 1 | VALVE GP-CONTROL (SIDESHIFT) | 986 |
| Y | 4 | 1 | **6E-3037** | 1 | VALVE GP-CONTROL (BLADE LIFT) | 988 |
| | 5 | 1 | **101-0509** | 7 | SEAL-INTEGRAL | |
| | 6 | 1 | **102-8385** | 1 | MANIFOLD | |
| Y | 7 | 1 | **137-8104** | 1 | VALVE GP-CONTROL (WING TILT) | 1008 |
| Y | 8 | 1 | **137-8106** | 1 | VALVE GP-CONTROL (WING LIFT) | 1010 |
| | 9 | 1 | *222-4737* | 1 | PLUG AS | |
| | | 1 | **9S-4180** | 1 | PLUG | |
| | | 1 | **4J-7533** | 1 | SEAL-O-RING | |
| Y | 10 | 1 | **239-9893** | 1 | MANIFOLD GP-CONTROL (LH) | 716 |
| M | 12 | 1 | **134-8221** | 3 | BOLT (M10X1.5X120-MM) | |
| M | 13 | 1 | **137-6720** | 1 | BOLT (M10X1.5X160-MM) | |
| | 14 | 1 | **3K-6113** | 3 | WASHER-HARD (12X18.5X3-MM THK) | |
| M | 15 | 1 | **7X-2546** | 2 | BOLT (M10X1.5X180-MM) | |

M-METRIC PART
Y-SEPARATE ILLUSTRATION

**250-0567 VALVE GP-BANK 6** *(contd. )* **i02585147**

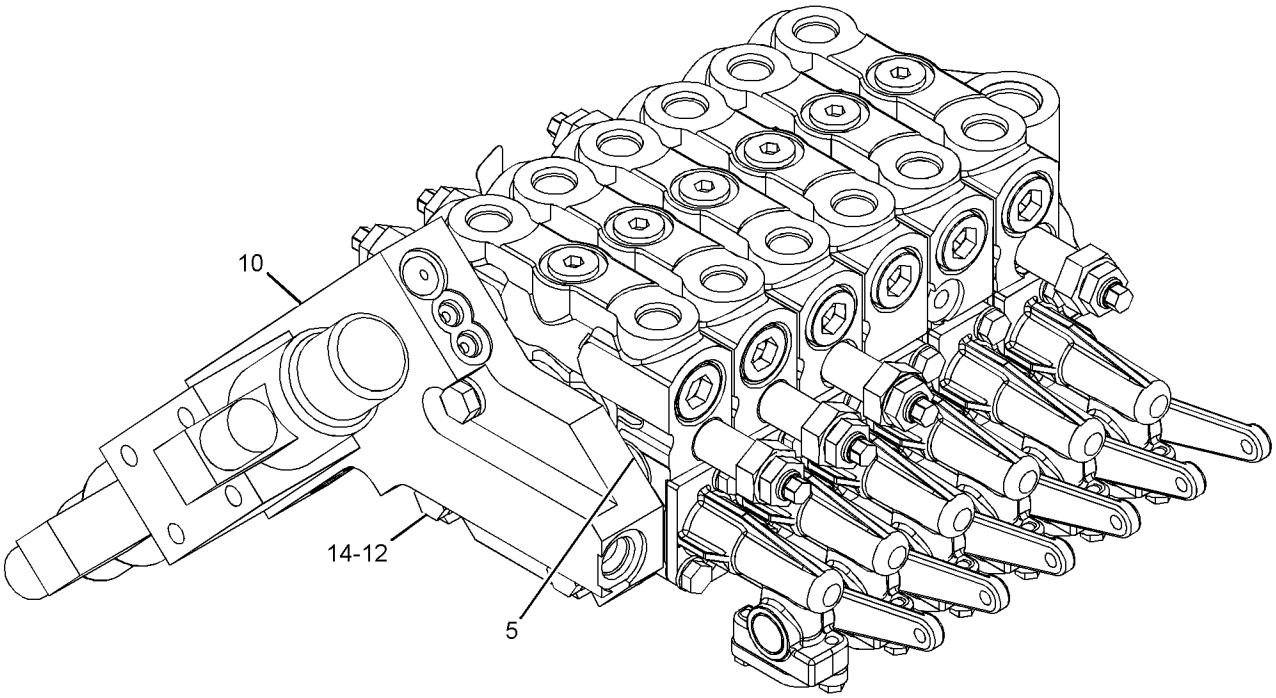


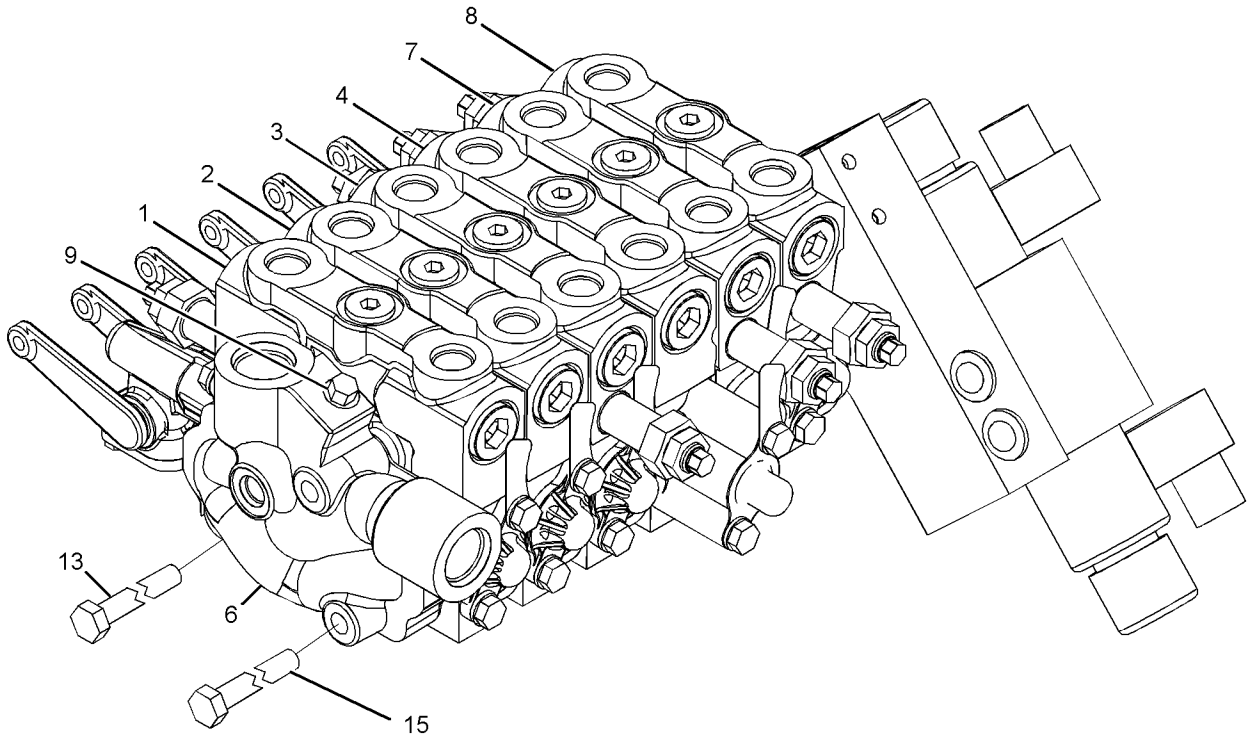


GRAPHIC #1 **<END>** g01185620

# HYDRAULIC SYSTEM

## 250-0573 VALVE GP-BANK 6—LH

**S/N: CCA1-UP**
**PART OF 250-0441 VALVE & LINKAGE GP**
**AN ATTACHMENT**

**SMCS-5051** **i02585002**

| NOTE | REF NO | GRAPHIC REF | PART NUMBER | QTY | PART NAME 1 2 3 4 5 6 (PRODUCT LEVEL) | SEE PAGE |
|---|---|---|---|---|---|---|
| Y | 1 | 1 | **6E-3034** | 1 | VALVE GP-CONTROL (BLADE TIP) | 982 |
| Y | 2 | 1 | **6E-3035** | 1 | VALVE GP-CONTROL (CIRCLE DRIVE) | 984 |
| Y | 3 | 1 | **6E-3036** | 1 | VALVE GP-CONTROL (SIDESHIFT) | 986 |
| Y | 4 | 1 | **6E-3037** | 1 | VALVE GP-CONTROL (BLADE LIFT) | 988 |
| | 5 | 1 | **101-0509** | 7 | SEAL-INTEGRAL | |
| | 6 | 1 | **102-8385** | 1 | MANIFOLD | |
| Y | 7 | 1 | **107-0545** | 1 | VALVE GP-CONTROL (RIPPER) | 992 |
| Y | 8 | 1 | **153-8907** | 1 | VALVE GP-CONTROL (PLOW, DOZER) | 1018 |
| | 9 | 1 | *222-4737* | 1 | PLUG AS | |
| | | 1 | **9S-4180** | 1 | PLUG | |
| | | 1 | **4J-7533** | 1 | SEAL-O-RING | |
| Y | 10 | 1 | **239-9893** | 1 | MANIFOLD GP-CONTROL (LH) | 716 |
| M | 12 | 1 | **134-8221** | 3 | BOLT (M10X1.5X120-MM) | |
| M | 13 | 1 | **137-6720** | 1 | BOLT (M10X1.5X160-MM) | |
| | 14 | 1 | **3K-6113** | 3 | WASHER-HARD (12X18.5X3-MM THK) | |
| M | 15 | 1 | **7X-2546** | 2 | BOLT (M10X1.5X180-MM) | |

M-METRIC PART
Y-SEPARATE ILLUSTRATION

**250-0573 VALVE GP-BANK 6** *(contd. )* **i02585002**

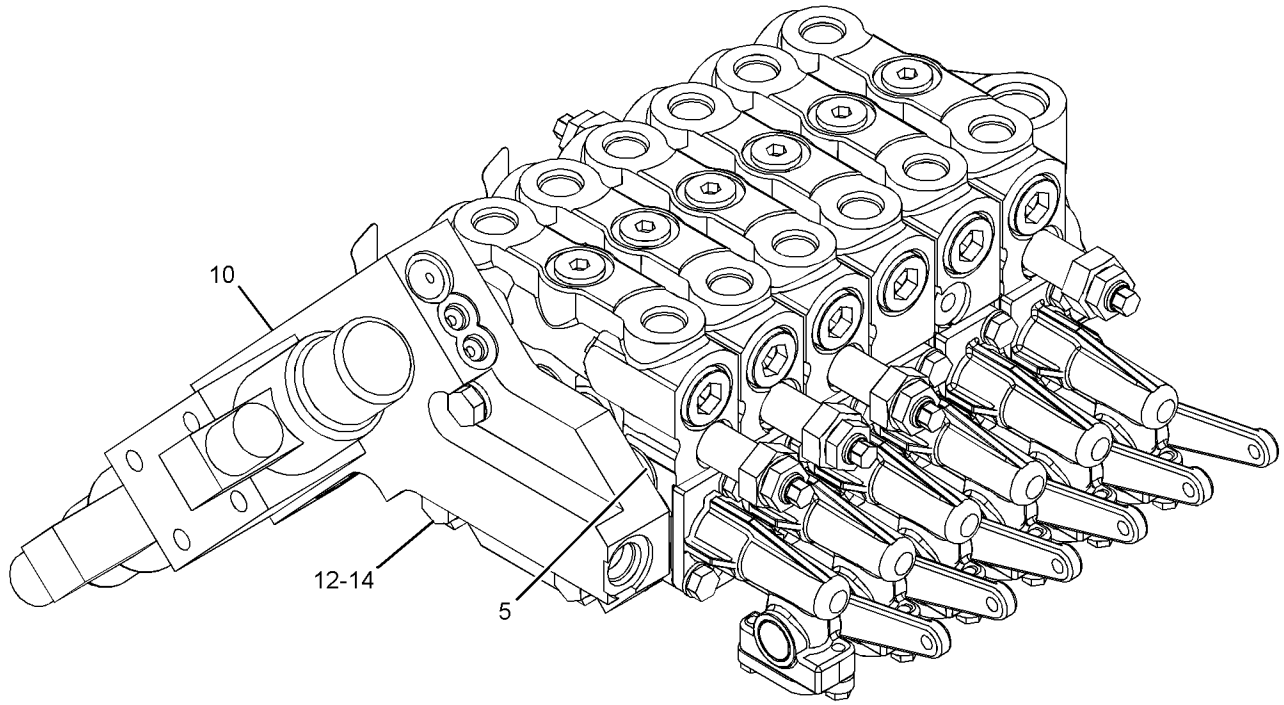


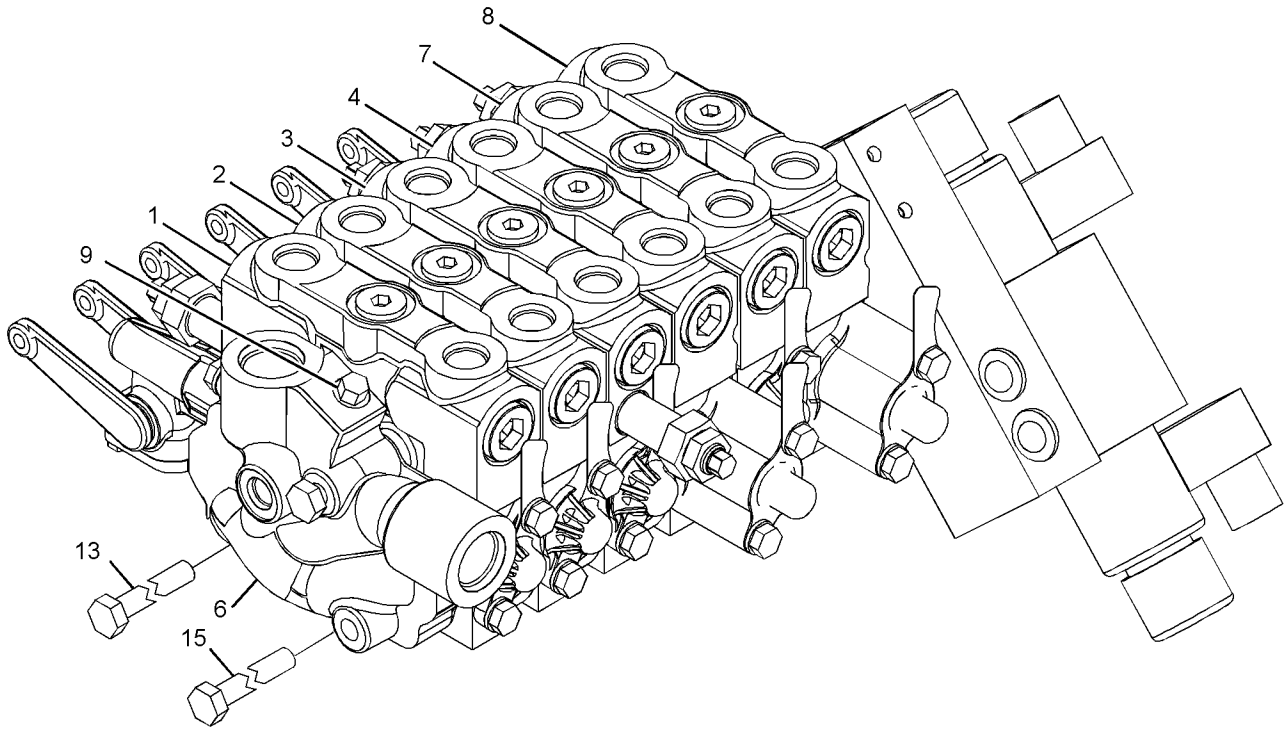


GRAPHIC #1 **<END>** g01185819

# HYDRAULIC SYSTEM

## 250-0574 VALVE GP-BANK 6–RH

**S/N: CCA1-UP**
**PART OF 250-0441, 265-7822 VALVE & LINKAGE GP**
**AN ATTACHMENT**

**SMCS-5051** **i02369607**

| NOTE | REF NO | GRAPHIC REF | PART NUMBER | QTY | PART NAME 1 2 3 4 5 6 (PRODUCT LEVEL) | SEE PAGE |
|---|---|---|---|---|---|---|
| Y | 1 | 1 | **6E-3028** | 1 | VALVE GP-CONTROL (ARTICULATION) | 974 |
| Y | 2 | 1 | **6E-3029** | 1 | VALVE GP-CONTROL (CENTERSHIFT) | 976 |
| Y | 3 | 1 | **6E-3030** | 1 | VALVE GP-CONTROL (WHEEL LEAN) | 978 |
| Y | 4 | 1 | **6E-3031** | 1 | VALVE GP-CONTROL (BLADE LIFT) | 980 |
| | 5 | 1 | **101-0509** | 7 | SEAL-INTEGRAL | |
| Y | 6 | 1 | **153-8905** | 1 | VALVE GP-CONTROL (WING LIFT) | 1014 |
| Y | 7 | 1 | **153-8906** | 1 | VALVE GP-CONTROL (WING TILT) | 1016 |
| | 8 | 1 | *222-4737* | 1 | PLUG AS | |
| | | 1 | **4J-7533** | 1 | SEAL-O-RING | |
| | | 1 | **9S-4180** | 1 | PLUG | |
| Y | 9 | 1 | **239-9894** | 1 | MANIFOLD GP-CONTROL (RH) | 718 |
| | 11 | 1 | **102-6238** | 1 | MANIFOLD | |
| M | 12 | 1 | **134-8221** | 3 | BOLT (M10X1.5X120-MM) | |
| M | 13 | 1 | **137-6720** | 1 | BOLT (M10X1.5X160-MM) | |
| | 14 | 1 | **3K-6113** | 3 | WASHER-HARD (12X18.5X3-MM THK) | |
| M | 15 | 1 | **7X-2546** | 2 | BOLT (M10X1.5X180-MM) | |

M-METRIC PART
Y-SEPARATE ILLUSTRATION

**250-0574 VALVE GP-BANK 6** *(contd. )* **i02369607**

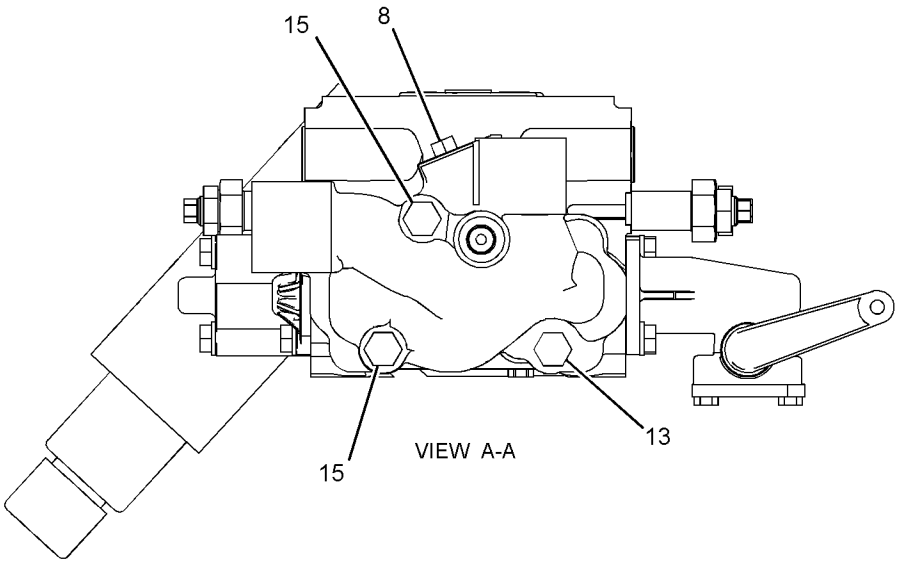


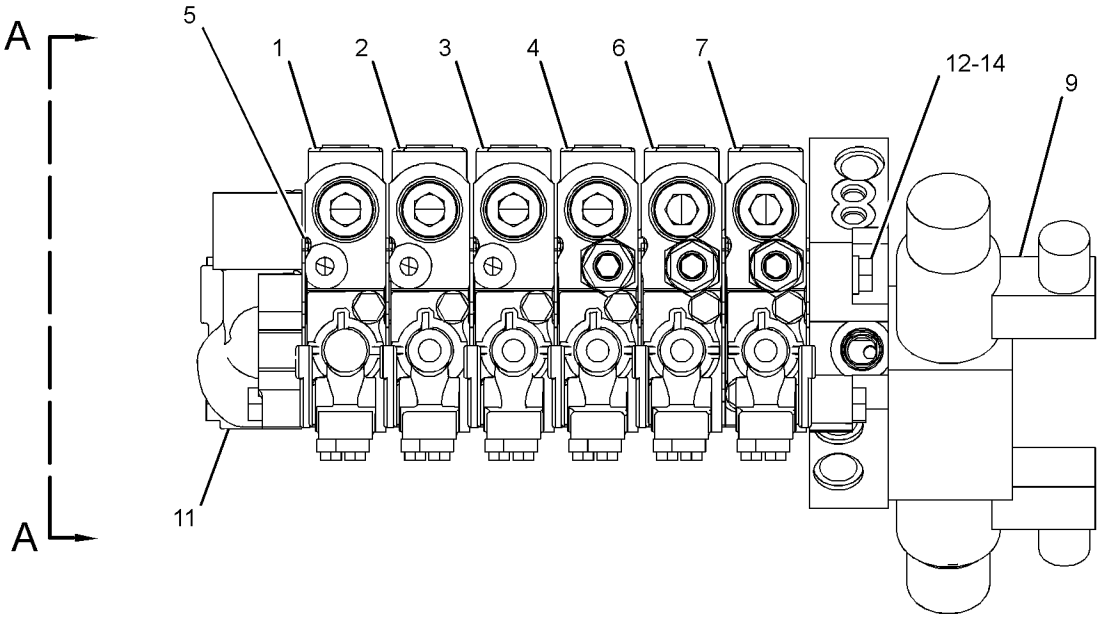


GRAPHIC #1 **<END>** g01240603

# HYDRAULIC SYSTEM

## 4Z-6267 VALVE GP-BANK 7–RH

**S/N: CCA1-UP**
**PART OF 125-2236 VALVE & LINKAGE GP**
**AN ATTACHMENT**

**SMCS-5051** **i02585075**

| NOTE | REF NO | GRAPHIC REF | PART NUMBER | QTY | PART NAME 1 2 3 4 5 6 (PRODUCT LEVEL) | SEE PAGE |
|---|---|---|---|---|---|---|
| M | 1 | 1 | **7X-2546** | 2 | BOLT (M10X1.5X180-MM) | |
| M | 2 | 1 | **137-6720** | 4 | BOLT (M10X1.5X160-MM) | |
| | 3 | 1 | **102-6238** | 1 | MANIFOLD | |
| | 4 | 1 | **101-0509** | 7 | SEAL-INTEGRAL | |
| Y | 5 | 1 | **6E-3028** | 1 | VALVE GP-CONTROL (ARTICULATION) | 974 |
| Y | 6 | 1 | **6E-3029** | 1 | VALVE GP-CONTROL (CENTERSHIFT) | 976 |
| Y | 7 | 1 | **6E-3030** | 1 | VALVE GP-CONTROL (WHEEL LEAN) | 978 |
| Y | 8 | 1 | **128-8647** | 1 | VALVE GP-CONTROL (BLADE LIFT) | 1002 |
| Y | 9 | 1 | **130-3111** | 1 | VALVE GP-CONTROL (PLOW, BULLDOZER LIFT) | 1006 |
| | 10 | 1 | **101-9346** | 1 | COVER | |
| | 12 | 1 | **9S-4180** | 1 | PLUG | |
| | 13 | 1 | **4J-7533** | 1 | SEAL-O-RING | |
| Y | 14 | 1 | **115-1007** | 2 | VALVE GP-CONTROL (PLOW, BULLDOZER ANGLE) | 996 |

M-METRIC PART
Y-SEPARATE ILLUSTRATION

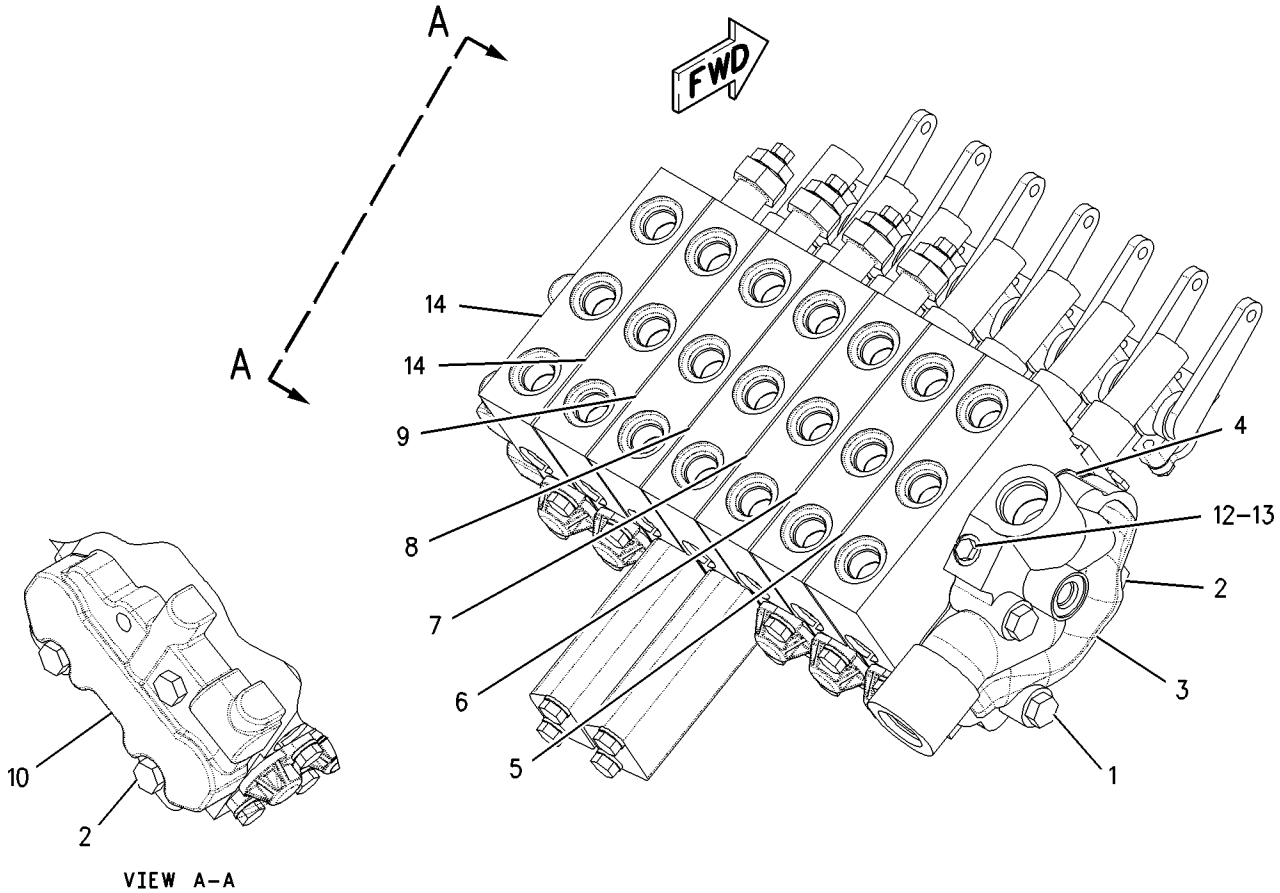


VIEW A–A

GRAPHIC #1 **<END>** g00793663

# HYDRAULIC SYSTEM

## 4Z-6346 VALVE GP-BANK 7–LH

**S/N: CCA1-UP**

**PART OF 143-8938 VALVE & LINKAGE GP**

**AN ATTACHMENT**

**SMCS-5051** **i02585078**

| NOTE | REF NO | GRAPHIC REF | PART NUMBER | QTY | PART NAME 1 2 3 4 5 6 (PRODUCT LEVEL) | SEE PAGE |
|---|---|---|---|---|---|---|
| M | 1 | 1 | **7X-2546** | 2 | BOLT (M10X1.5X180-MM) | |
| M | 2 | 1 | **137-6720** | 4 | BOLT (M10X1.5X160-MM) | |
| | 3 | 1 | **102-8385** | 1 | MANIFOLD | |
| | 4 | 1 | **101-0509** | 8 | SEAL-INTEGRAL | |
| Y | 5 | 1 | **6E-3034** | 1 | VALVE GP-CONTROL (BLADE TIP) | 982 |
| Y | 6 | 1 | **6E-3035** | 1 | VALVE GP-CONTROL (CIRCLE DRIVE) (LH) | 984 |
| Y | 7 | 1 | **6E-3036** | 1 | VALVE GP-CONTROL (SIDESHIFT) | 986 |
| Y | 8 | 1 | **6E-3037** | 1 | VALVE GP-CONTROL (BLADE LIFT) | 988 |
| Y | 9 | 1 | **107-0545** | 1 | VALVE GP-CONTROL (RIPPER) | 992 |
| Y | 10 | 1 | **153-8907** | 1 | VALVE GP-CONTROL (PLOW, BULLDOZER LIFT) | 1018 |
| Y | 11 | 1 | **137-8106** | 1 | VALVE GP-CONTROL (WING LIFT) | 1010 |
| | 12 | 1 | **101-9346** | 1 | COVER | |
| | 14 | 1 | **9S-4180** | 1 | PLUG | |
| | 15 | 1 | **4J-7533** | 1 | SEAL-O-RING | |

M-METRIC PART
Y-SEPARATE ILLUSTRATION

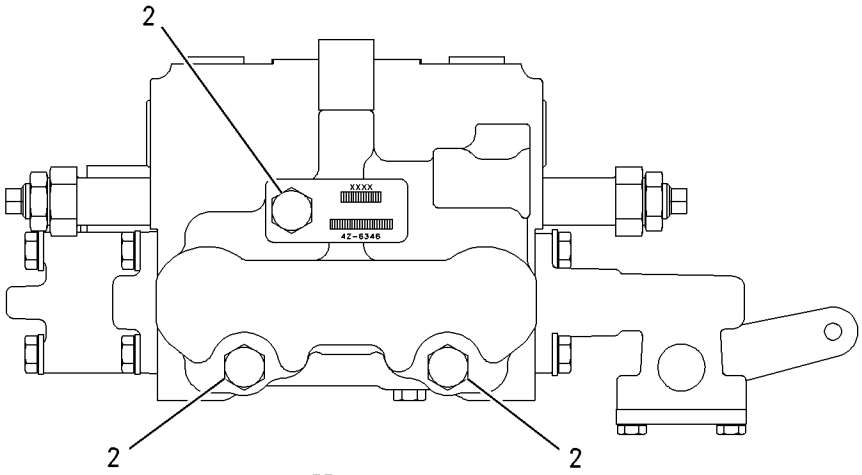


VIEW A-A

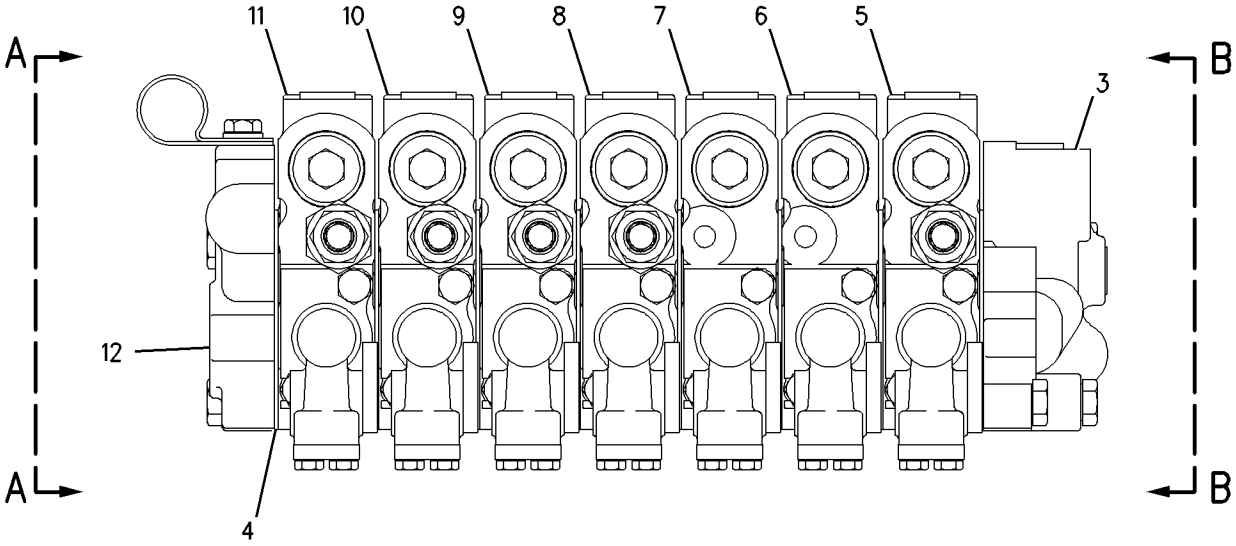


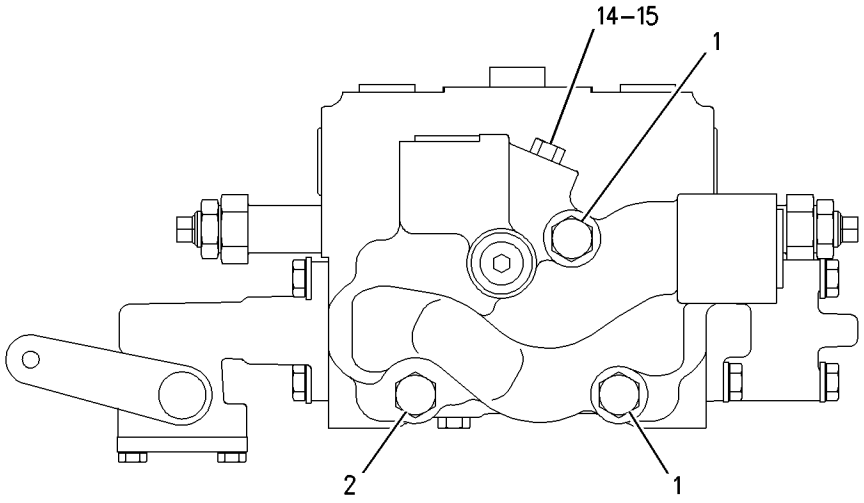


VIEW B-B

GRAPHIC #1 **<END>** g00845031

# HYDRAULIC SYSTEM

## 104-8647 VALVE GP-BANK 7–LH

**S/N: CCA1-UP**
**PART OF 8X-4280 VALVE & LINKAGE GP**
**AN ATTACHMENT**

**SMCS-5051** **i02592689**

| NOTE | REF NO | GRAPHIC REF | PART NUMBER | QTY | PART NAME 1 2 3 4 5 6 (PRODUCT LEVEL) | SEE PAGE |
|---|---|---|---|---|---|---|
| M | 1 | 1 | **7X-2546** | 2 | BOLT (M10X1.5X180-MM) | |
| CM | 2 | 1 | **137-6720** | 4 | BOLT (M10X1.5X160-MM) | |
| | 3 | 1 | **102-8385** | 1 | MANIFOLD | |
| | 4 | 1 | **101-0509** | 8 | SEAL-INTEGRAL | |
| Y | 5 | 1 | **6E-3034** | 1 | VALVE GP-CONTROL (BLADE TIP) | 982 |
| Y | 6 | 1 | **6E-3035** | 1 | VALVE GP-CONTROL (CIRCLE DRIVE) | 984 |
| Y | 7 | 1 | **6E-3036** | 1 | VALVE GP-CONTROL (SIDESHIFT) | 986 |
| Y | 8 | 1 | **6E-3037** | 1 | VALVE GP-CONTROL (BLADE LIFT) | 988 |
| Y | 9 | 1 | **107-0543** | 1 | VALVE GP-CONTROL (SCARIFIER) | 990 |
| YC | 10 | 1 | **137-8104** | 1 | VALVE GP-CONTROL (WING TILT) | 1008 |
| YC | 11 | 1 | **137-8106** | 1 | VALVE GP-CONTROL (WING LIFT) | 1010 |
| | 12 | 1 | **101-9346** | 1 | COVER | |
| | 13 | 1 | **4J-7533** | 1 | SEAL-O-RING | |
| | 14 | 1 | **9S-4180** | 1 | PLUG | |

C-CHANGE FROM PREVIOUS TYPE
M-METRIC PART
Y-SEPARATE ILLUSTRATION

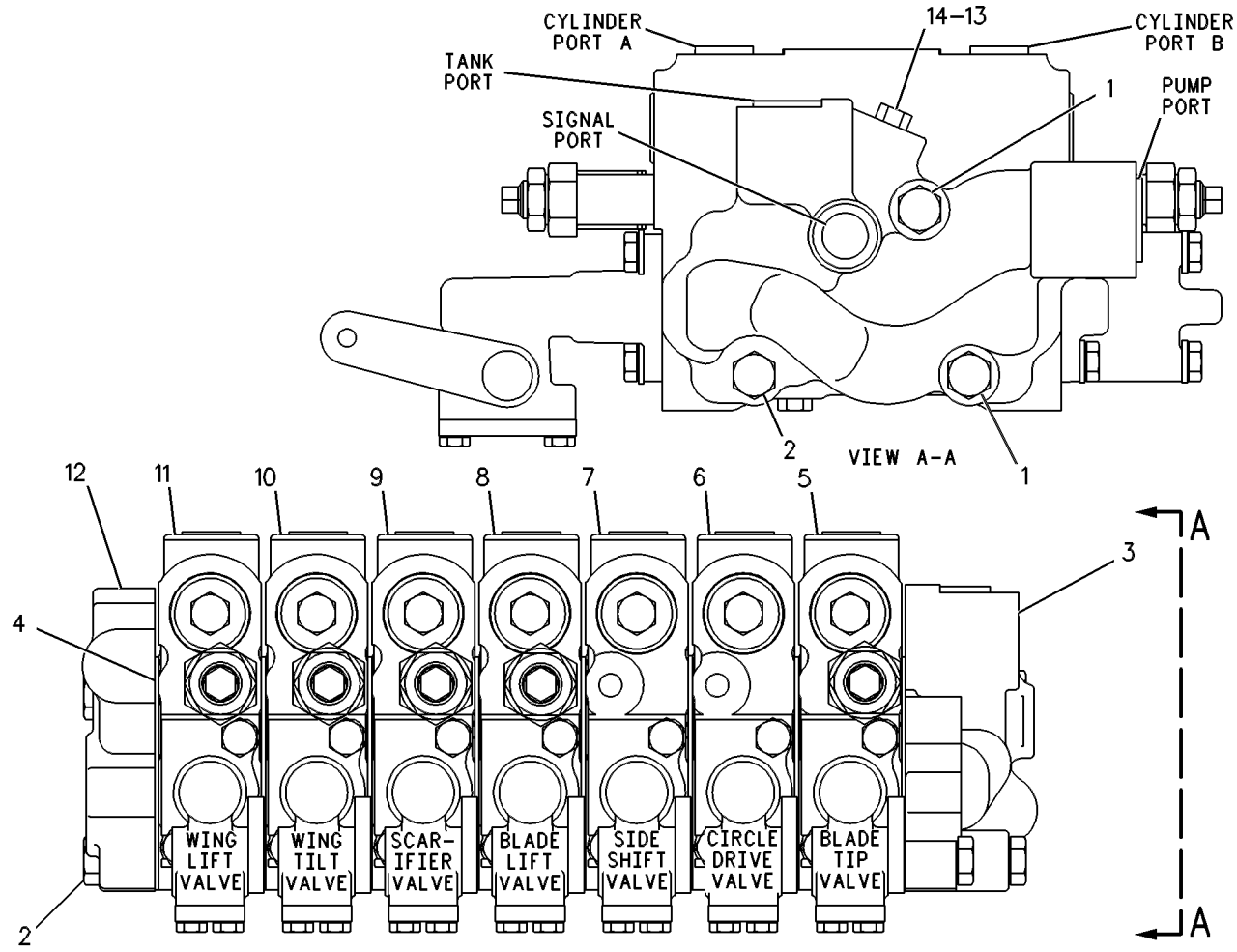


GRAPHIC #1 **<END>** g00273400

# HYDRAULIC SYSTEM

## 104-8651 VALVE GP-BANK 7–LH

**S/N: CCA1-UP**
**PART OF 107-3856, 115-0805 VALVE & LINKAGE GP**
**AN ATTACHMENT**

**SMCS-5051** **i02592692**

| NOTE | REF NO | GRAPHIC REF | PART NUMBER | QTY | PART NAME 1 2 3 4 5 6 (PRODUCT LEVEL) | SEE PAGE |
|---|---|---|---|---|---|---|
| M | 1 | 1 | **7X-2546** | 2 | BOLT (M10X1.5X180-MM) | |
| CM | 2 | 1 | **137-6720** | 4 | BOLT (M10X1.5X160-MM) | |
| | 3 | 1 | **102-8385** | 1 | MANIFOLD | |
| | 4 | 1 | **101-0509** | 8 | SEAL-INTEGRAL | |
| Y | 5 | 1 | **6E-3034** | 1 | VALVE GP-CONTROL (BLADE TIP) | 982 |
| Y | 6 | 1 | **6E-3035** | 1 | VALVE GP-CONTROL (CIRCLE DRIVE) | 984 |
| Y | 7 | 1 | **6E-3036** | 1 | VALVE GP-CONTROL (SIDESHIFT) | 986 |
| Y | 8 | 1 | **6E-3037** | 1 | VALVE GP-CONTROL (BLADE LIFT) | 988 |
| Y | 9 | 1 | **107-0545** | 1 | VALVE GP-CONTROL (RIPPER) | 992 |
| CY | 10 | 1 | **137-8104** | 1 | VALVE GP-CONTROL (WING TILT) | 1008 |
| CY | 11 | 1 | **137-8106** | 1 | VALVE GP-CONTROL (WING LIFT) | 1010 |
| | 12 | 1 | **101-9346** | 1 | COVER | |
| | 13 | 1 | **4J-7533** | 1 | SEAL-O-RING | |
| | 14 | 1 | **9S-4180** | 1 | PLUG | |

C-CHANGE FROM PREVIOUS TYPE
M-METRIC PART
Y-SEPARATE ILLUSTRATION

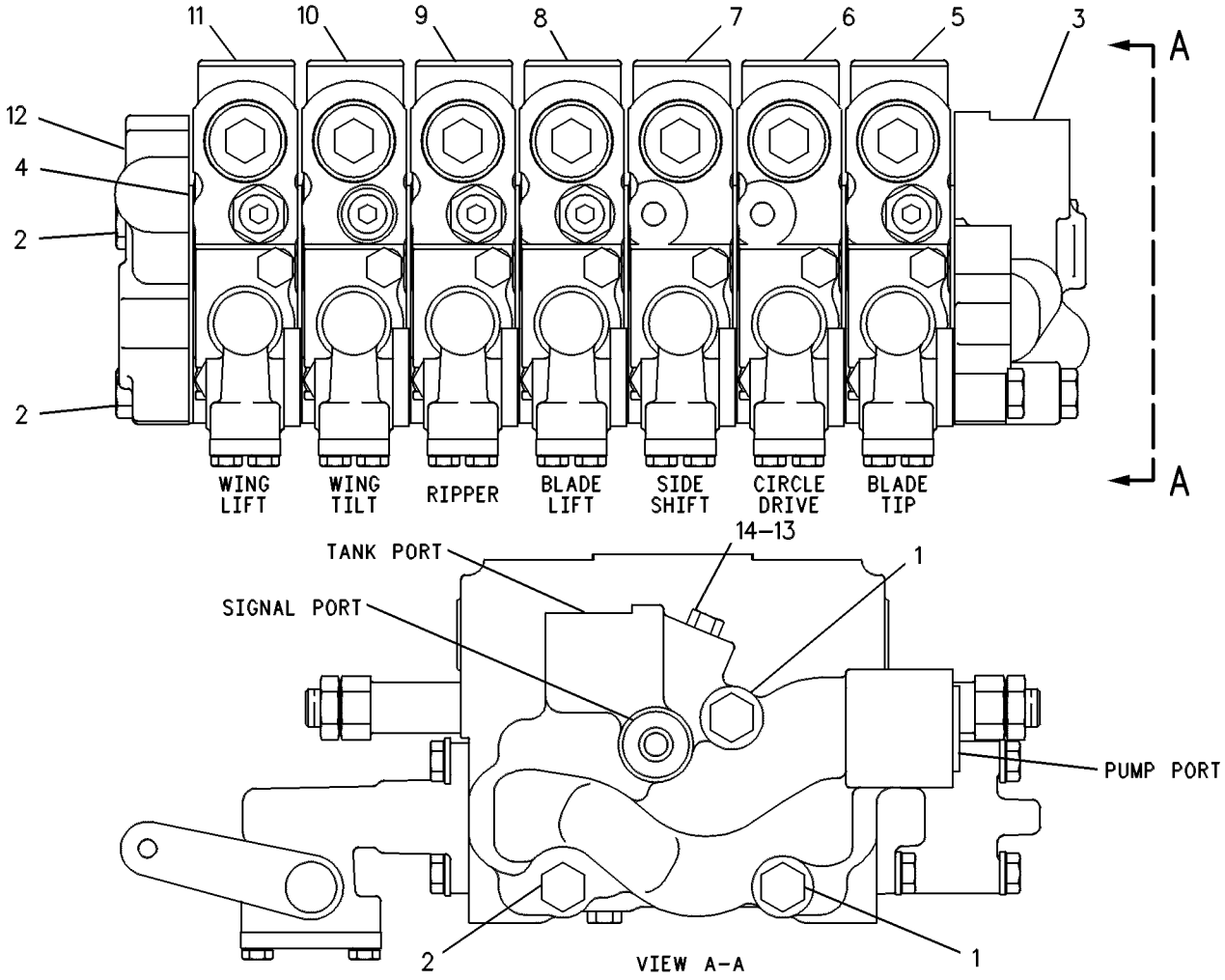


GRAPHIC #1 **<END>** g00108748

# HYDRAULIC SYSTEM

## 130-3120 VALVE GP-BANK 7–LH

**S/N: CCA1-UP**

**PART OF 121-4084 VALVE & LINKAGE GP**

**AN ATTACHMENT**

**SMCS-5051** **i00992161**

| NOTE | REF NO | GRAPHIC REF | PART NUMBER | QTY | PART NAME 1 2 3 4 5 6 (PRODUCT LEVEL) | SEE PAGE |
|---|---|---|---|---|---|---|
| M | 1 | 1 | **7X-2546** | 2 | BOLT (M10X1.5X180-MM) | |
| M | 2 | 1 | **137-6720** | 4 | BOLT (M10X1.5X160-MM) | |
| | 3 | 1 | **102-8385** | 1 | MANIFOLD | |
| | 4 | 1 | **101-0509** | 8 | SEAL-INTEGRAL | |
| Y | 5 | 1 | **6E-3034** | 1 | VALVE GP-CONTROL (BLADE TIP) | 982 |
| Y | 6 | 1 | **6E-3035** | 1 | VALVE GP-CONTROL (CIRCLE DRIVE) | 984 |
| Y | 7 | 1 | **6E-3036** | 1 | VALVE GP-CONTROL (SIDESHIFT) | 986 |
| | 8 | 1 | **4J-7533** | 1 | SEAL-O-RING | |
| Y | 9 | 1 | **119-9549** | 1 | VALVE GP-CONTROL (SCARIFIER) | 998 |
| Y | 10 | 1 | **137-8104** | 1 | VALVE GP-CONTROL (WING TILT) | 1008 |
| CY | 11 | 1 | **150-6649** | 1 | VALVE GP-CONTROL (WING LIFT) | 1012 |
| Y | 12 | 1 | **130-3110** | 1 | VALVE GP-CONTROL (BLADE LIFT) | 1004 |
| | 13 | 1 | **101-9346** | 1 | COVER | |
| | 14 | 1 | **9S-4180** | 1 | PLUG | |

C-CHANGE FROM PREVIOUS TYPE
M-METRIC PART
Y-SEPARATE ILLUSTRATION

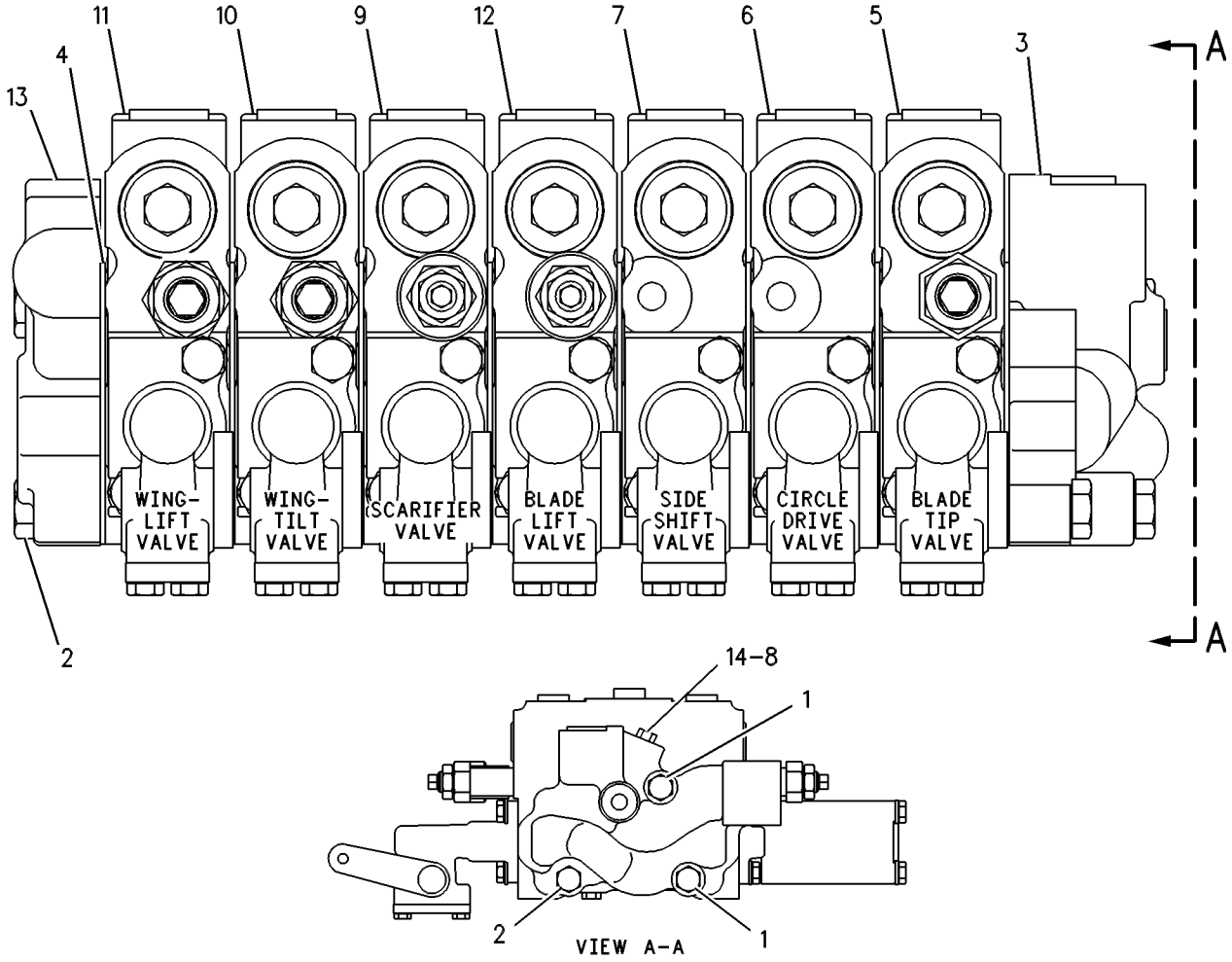


GRAPHIC #1 **<END>** g00272173

# HYDRAULIC SYSTEM

## 130-3122 VALVE GP-BANK 7–LH

**S/N: CCA1-UP**

**PART OF 121-4096, 121-4099, 125-2235, 125-2236 VALVE & LINKAGE GP**

**AN ATTACHMENT**

**SMCS-5051** **i01028300**

| NOTE | REF NO | GRAPHIC REF | PART NUMBER | QTY | PART NAME 1 2 3 4 5 6 (PRODUCT LEVEL) | SEE PAGE |
|---|---|---|---|---|---|---|
| M | 1 | 1 | **7X-2546** | 2 | BOLT (M10X1.5X180-MM) | |
| M | 2 | 1 | **137-6720** | 4 | BOLT (M10X1.5X160-MM) | |
| | 3 | 1 | **102-8385** | 1 | MANIFOLD | |
| | 4 | 1 | **101-0509** | 8 | SEAL-INTEGRAL | |
| Y | 5 | 1 | **6E-3034** | 1 | VALVE GP-CONTROL (BLADE TIP) | 982 |
| Y | 6 | 1 | **6E-3035** | 1 | VALVE GP-CONTROL (CIRCLE DRIVE) | 984 |
| Y | 7 | 1 | **6E-3036** | 1 | VALVE GP-CONTROL (SIDESHIFT) | 986 |
| | 8 | 1 | **4J-7533** | 1 | SEAL-O-RING | |
| Y | 9 | 1 | **119-9550** | 1 | VALVE GP-CONTROL (RIPPER) | 1000 |
| Y | 10 | 1 | **137-8104** | 1 | VALVE GP-CONTROL (WING TILT) | 1008 |
| CY | 11 | 1 | **150-6649** | 1 | VALVE GP-CONTROL (WING LIFT) | 1012 |
| Y | 12 | 1 | **130-3110** | 1 | VALVE GP-CONTROL (BLADE LIFT) | 1004 |
| | 13 | 1 | **101-9346** | 1 | COVER | |
| | 14 | 1 | **9S-4180** | 1 | PLUG | |

C-CHANGE FROM PREVIOUS TYPE
M-METRIC PART
Y-SEPARATE ILLUSTRATION

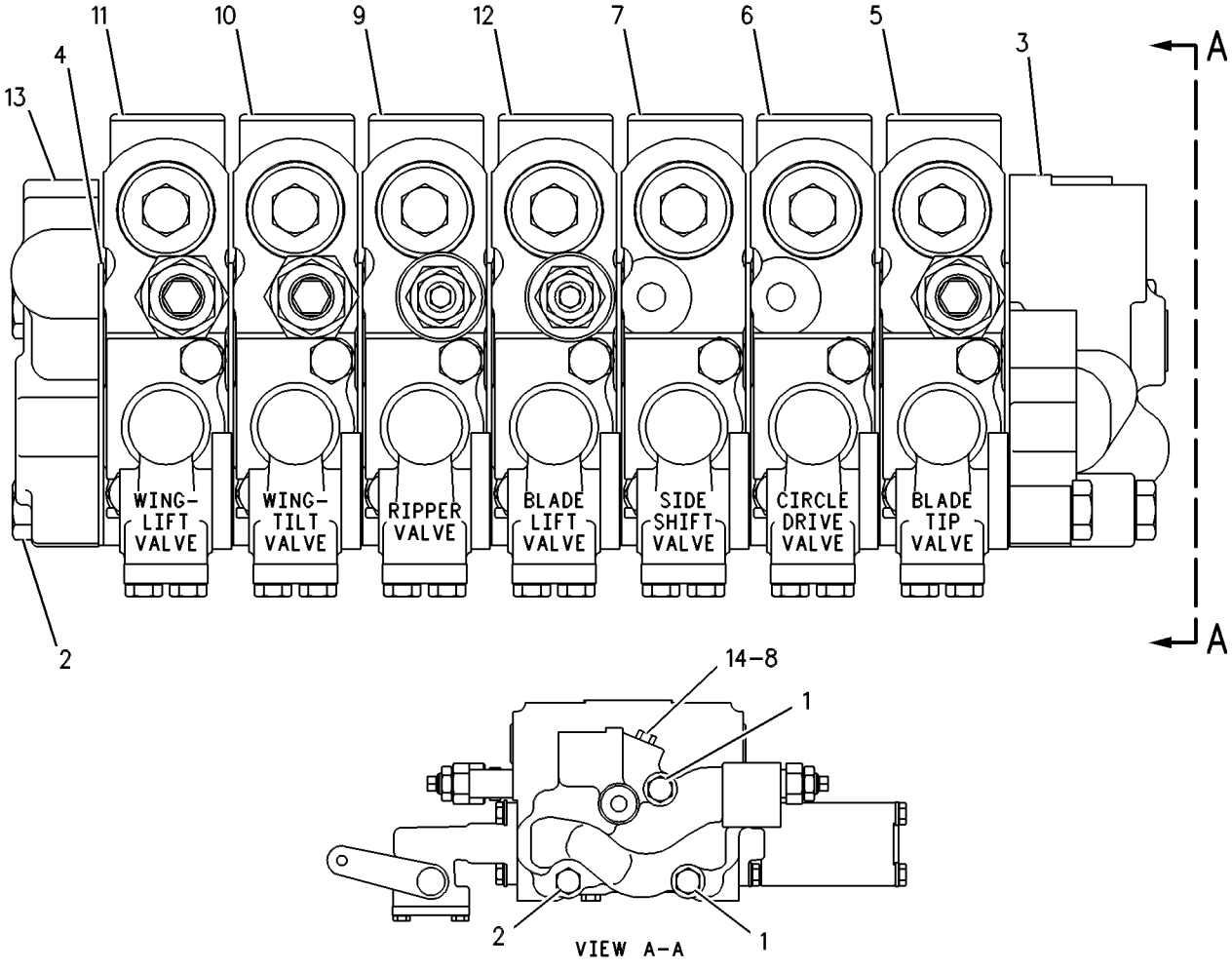


GRAPHIC #1 **<END>** g00109744

# 153-8912 VALVE GP-BANK 7–LH

**S/N: CCA1-UP**
**PART OF 153-7966 VALVE & LINKAGE GP**
**AN ATTACHMENT**

**SMCS-5051** **i02585088**

| NOTE | REF NO | GRAPHIC REF | PART NUMBER | QTY | PART NAME 1 2 3 4 5 6 (PRODUCT LEVEL) | SEE PAGE |
|---|---|---|---|---|---|---|
| M | 1 | 1 | **7X-2546** | 2 | BOLT (M10X1.5X180-MM) | |
| M | 2 | 1 | **137-6720** | 4 | BOLT (M10X1.5X160-MM) | |
| | 3 | 1 | **102-8385** | 1 | MANIFOLD | |
| | 4 | 1 | **101-0509** | 8 | SEAL-INTEGRAL | |
| Y | 5 | 1 | **6E-3034** | 1 | VALVE GP-CONTROL (BLADE TIP) | 982 |
| Y | 6 | 1 | **6E-3035** | 1 | VALVE GP-CONTROL (CIRCLE DRIVE) | 984 |
| Y | 7 | 1 | **6E-3036** | 1 | VALVE GP-CONTROL (SIDESHIFT) | 986 |
| Y | 8 | 1 | **6E-3037** | 1 | VALVE GP-CONTROL (BLADE LIFT) | 988 |
| Y | 10 | 1 | **153-8907** | 1 | VALVE GP-CONTROL (PLOW, DOZER) | 1018 |
| Y | 11 | 1 | **107-0545** | 1 | VALVE GP-CONTROL (RIPPER) | 992 |
| | 12 | 1 | **101-9346** | 1 | COVER | |
| Y | 13 | 1 | **153-8908** | 1 | VALVE GP-CONTROL (PLOW ANGLE) | 1020 |
| | 14 | 1 | **9S-4180** | 1 | PLUG | |
| | 15 | 1 | **4J-7533** | 1 | SEAL-O-RING | |

M-METRIC PART
Y-SEPARATE ILLUSTRATION

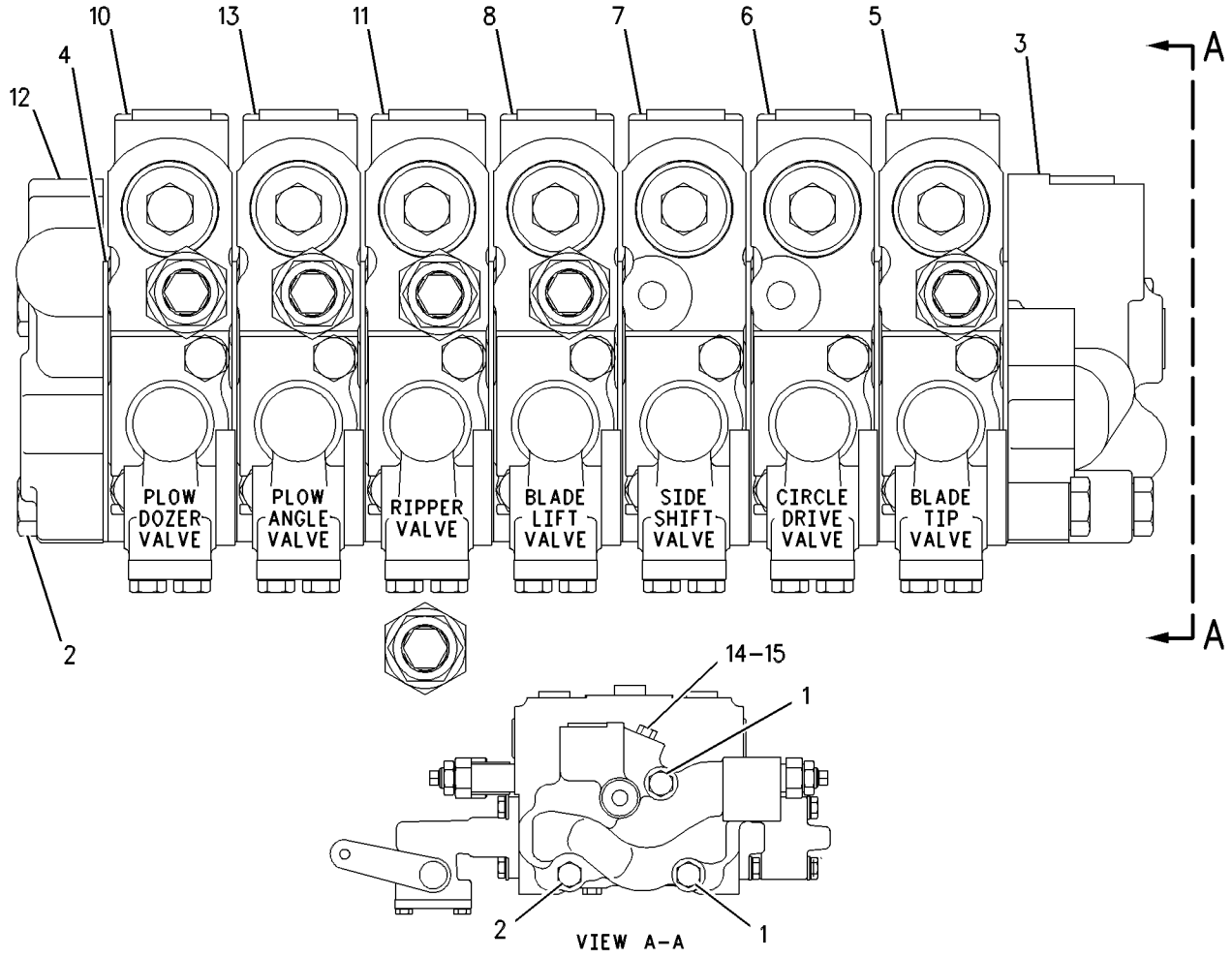


GRAPHIC #1 **<END>** g00544069

# HYDRAULIC SYSTEM

## 250-0568 VALVE GP-BANK 7–LH

**S/N: CCA1-UP**
**PART OF 250-0437 VALVE & LINKAGE GP**
**AN ATTACHMENT**

**SMCS-5051** **i02344357**

| NOTE | REF NO | GRAPHIC REF | PART NUMBER | QTY | PART NAME 1 2 3 4 5 6 (PRODUCT LEVEL) | SEE PAGE |
|---|---|---|---|---|---|---|
| Y | 1 | 1 | **6E-3034** | 1 | VALVE GP-CONTROL (BLADE TIP) | 982 |
| Y | 2 | 1 | **6E-3035** | 1 | VALVE GP-CONTROL (CIRCLE DRIVE) | 984 |
| Y | 3 | 1 | **6E-3036** | 1 | VALVE GP-CONTROL (SIDESHIFT) | 986 |
| | 4 | 1 | **101-0509** | 8 | SEAL-INTEGRAL | |
| | 5 | 1 | **102-8385** | 1 | MANIFOLD | |
| Y | 6 | 1 | **119-9549** | 1 | VALVE GP-CONTROL (SCARIFIER) | 998 |
| Y | 7 | 1 | **130-3110** | 1 | VALVE GP-CONTROL (BLADE LIFT) | 1004 |
| Y | 8 | 1 | **137-8104** | 1 | VALVE GP-CONTROL (WING TILT) | 1008 |
| Y | 9 | 1 | **150-6649** | 1 | VALVE GP-CONTROL (WING LIFT) | 1012 |
| | 10 | 1 | *222-4737* | 1 | PLUG AS | |
| | | 1 | **9S-4180** | 1 | PLUG | |
| | | 1 | **4J-7533** | 1 | SEAL-O-RING | |
| Y | 11 | 1 | **239-9893** | 1 | MANIFOLD GP-CONTROL (LH) | 716 |
| M | 13 | 1 | **137-6720** | 4 | BOLT (M10X1.5X160-MM) | |
| | 14 | 1 | **3K-6113** | 3 | WASHER-HARD (12X18.5X3-MM THK) | |
| M | 15 | 1 | **7X-2546** | 2 | BOLT (M10X1.5X180-MM) | |

M-METRIC PART
Y-SEPARATE ILLUSTRATION

**250-0568 VALVE GP-BANK 7** *(contd. )* **i02344357**

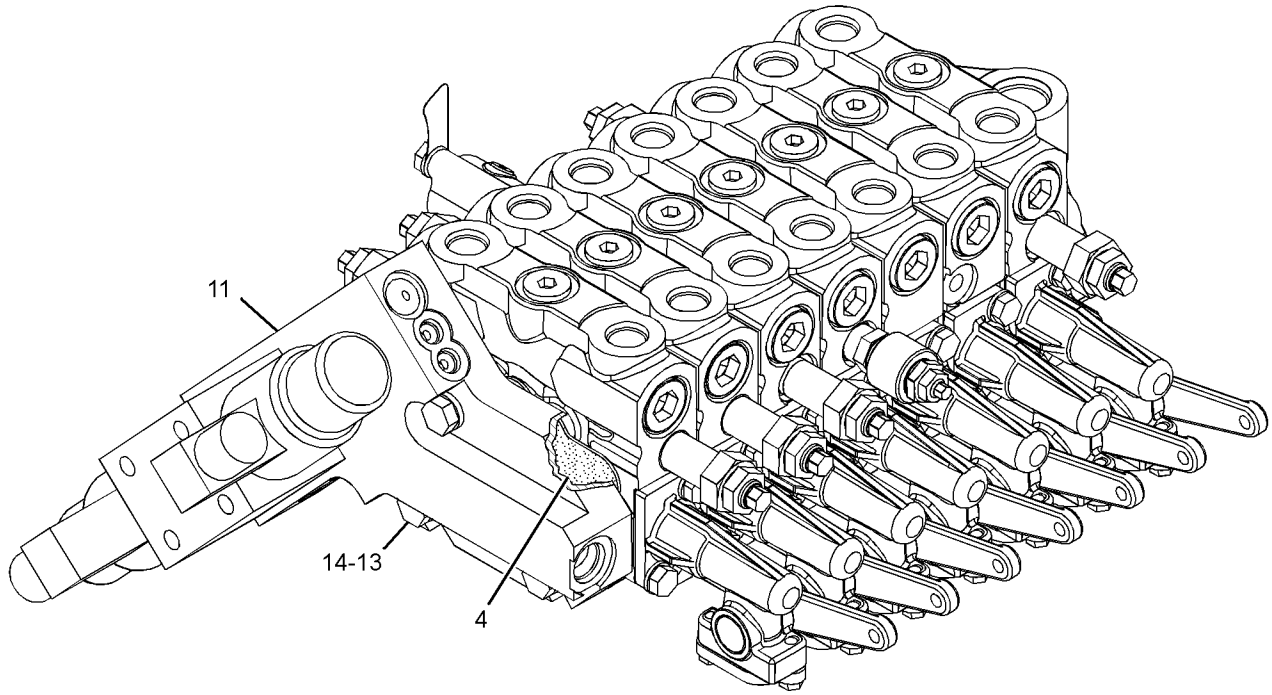


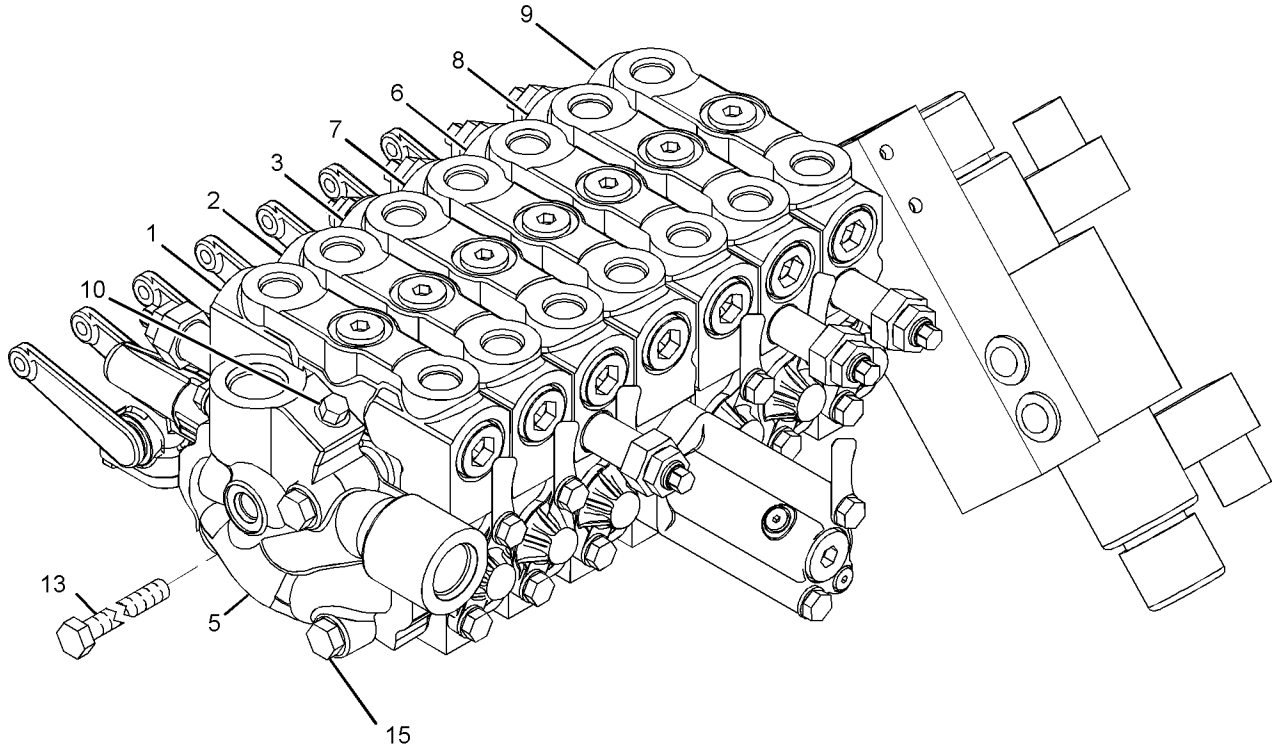


GRAPHIC #1 **<END>** g01228144

# HYDRAULIC SYSTEM

## 250-0571 VALVE GP-BANK 7–LH

**S/N: CCA1-UP**
**PART OF 250-0439, 250-0442 VALVE & LINKAGE GP**
**AN ATTACHMENT**

**SMCS-5051** **i02585286**

| NOTE | REF NO | GRAPHIC REF | PART NUMBER | QTY | PART NAME 1 2 3 4 5 6 (PRODUCT LEVEL) | SEE PAGE |
|---|---|---|---|---|---|---|
| Y | 1 | 1 | **6E-3034** | 1 | VALVE GP-CONTROL (BLADE TIP) | 982 |
| Y | 2 | 1 | **6E-3035** | 1 | VALVE GP-CONTROL (CIRCLE DRIVE) | 984 |
| Y | 3 | 1 | **6E-3036** | 1 | VALVE GP-CONTROL (SIDESHIFT) | 986 |
| Y | 4 | 1 | **6E-3037** | 1 | VALVE GP-CONTROL (BLADE LIFT) | 988 |
| | 5 | 1 | **101-0509** | 8 | SEAL-INTEGRAL | |
| | 6 | 1 | **102-8385** | 1 | MANIFOLD | |
| Y | 7 | 1 | **107-0545** | 1 | VALVE GP-CONTROL | 992 |
| Y | 8 | 1 | **137-8104** | 1 | VALVE GP-CONTROL (WING TILT) | 1008 |
| Y | 9 | 1 | **137-8106** | 1 | VALVE GP-CONTROL (WING LIFT) | 1010 |
| | 10 | 1 | *222-4737* | 1 | PLUG AS | |
| | | 1 | **9S-4180** | 1 | PLUG | |
| | | 1 | **4J-7533** | 1 | SEAL-O-RING | |
| Y | 11 | 1 | **239-9893** | 1 | MANIFOLD GP-CONTROL (LH) | 716 |
| M | 13 | 1 | **137-6720** | 4 | BOLT (M10X1.5X160-MM) | |
| | 14 | 1 | **3K-6113** | 3 | WASHER-HARD (12X18.5X3-MM THK) | |
| M | 15 | 1 | **7X-2546** | 2 | BOLT (M10X1.5X180-MM) | |

M-METRIC PART
Y-SEPARATE ILLUSTRATION

**250-0571 VALVE GP-BANK 7** *(contd. )* **i02585286**

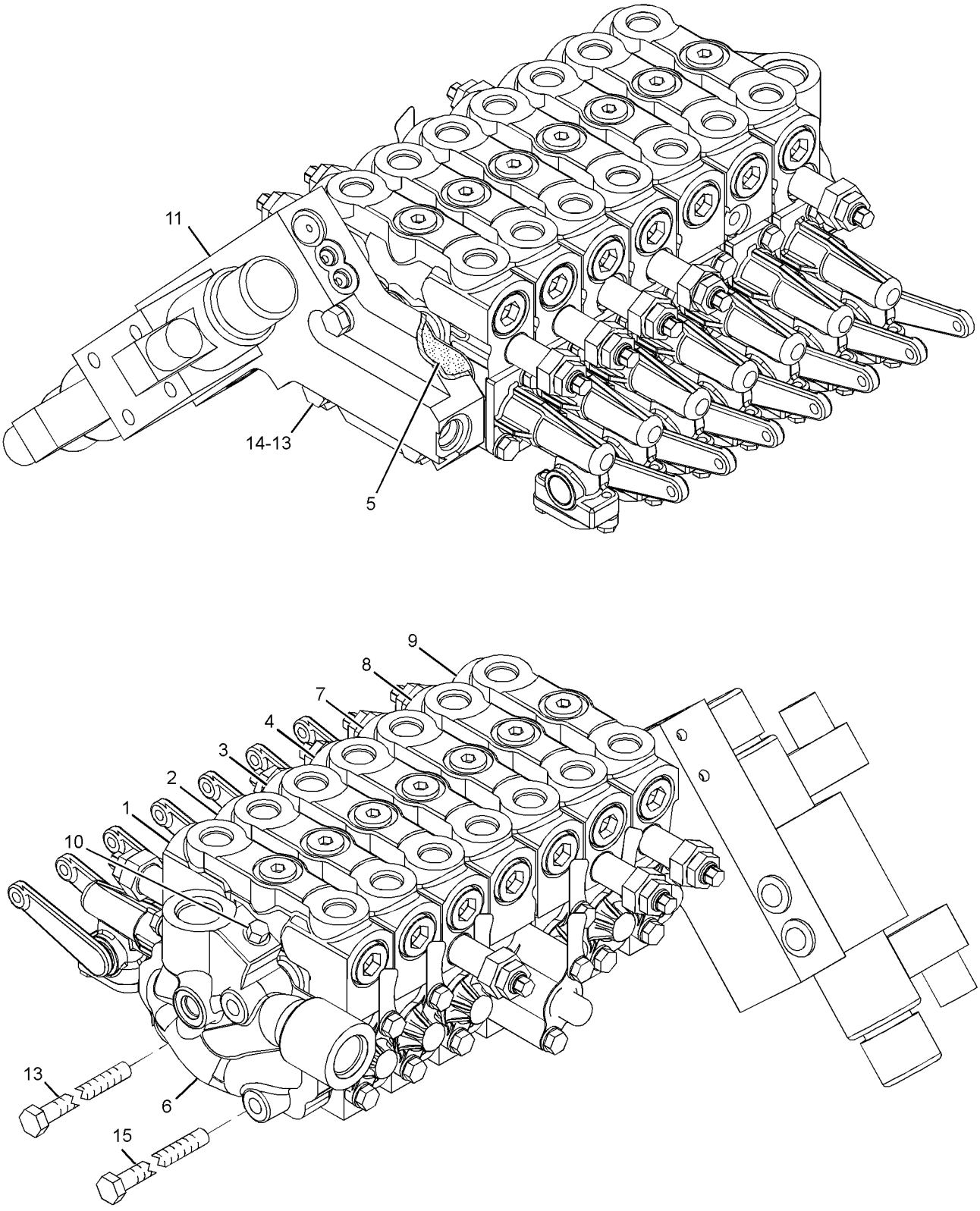


GRAPHIC #1 **<END>** g01185764

# HYDRAULIC SYSTEM

## 250-0572 VALVE GP-BANK 7–LH

**S/N: CCA1-UP**

**PART OF 250-0440, 250-0443, 250-0444 VALVE & LINKAGE GP**

**AN ATTACHMENT**

**SMCS-5051** **i02585287**

| NOTE | REF NO | GRAPHIC REF | PART NUMBER | QTY | PART NAME 1 2 3 4 5 6 (PRODUCT LEVEL) | SEE PAGE |
|---|---|---|---|---|---|---|
| Y | 1 | 1 | **6E-3034** | 1 | VALVE GP-CONTROL (BLADE TIP) | 982 |
| Y | 2 | 1 | **6E-3035** | 1 | VALVE GP-CONTROL (CIRCLE DRIVE) | 984 |
| Y | 3 | 1 | **6E-3036** | 1 | VALVE GP-CONTROL (SIDESHIFT) | 986 |
| | 4 | 1 | **101-0509** | 8 | SEAL-INTEGRAL | |
| | 5 | 1 | **102-8385** | 1 | MANIFOLD | |
| Y | 6 | 1 | **119-9550** | 1 | VALVE GP-CONTROL (RIPPER) | 1000 |
| Y | 7 | 1 | **130-3110** | 1 | VALVE GP-CONTROL (BLADE LIFT) | 1004 |
| Y | 8 | 1 | **137-8104** | 1 | VALVE GP-CONTROL (WING TILT) | 1008 |
| Y | 9 | 1 | **150-6649** | 1 | VALVE GP-CONTROL (WING LIFT) | 1012 |
| | 10 | 1 | *222-4737* | 1 | PLUG AS | |
| | | 1 | **9S-4180** | 1 | PLUG | |
| | | 1 | **4J-7533** | 1 | SEAL-O-RING | |
| Y | 11 | 1 | **239-9893** | 1 | MANIFOLD GP-CONTROL (LH) | 716 |
| M | 13 | 1 | **137-6720** | 4 | BOLT (M10X1.5X160-MM) | |
| | 14 | 1 | **3K-6113** | 3 | WASHER-HARD (12X18.5X3-MM THK) | |
| M | 15 | 1 | **7X-2546** | 2 | BOLT (M10X1.5X180-MM) | |

M-METRIC PART
Y-SEPARATE ILLUSTRATION

**250-0572 VALVE GP-BANK 7** ***(contd. )*** **i02585287**

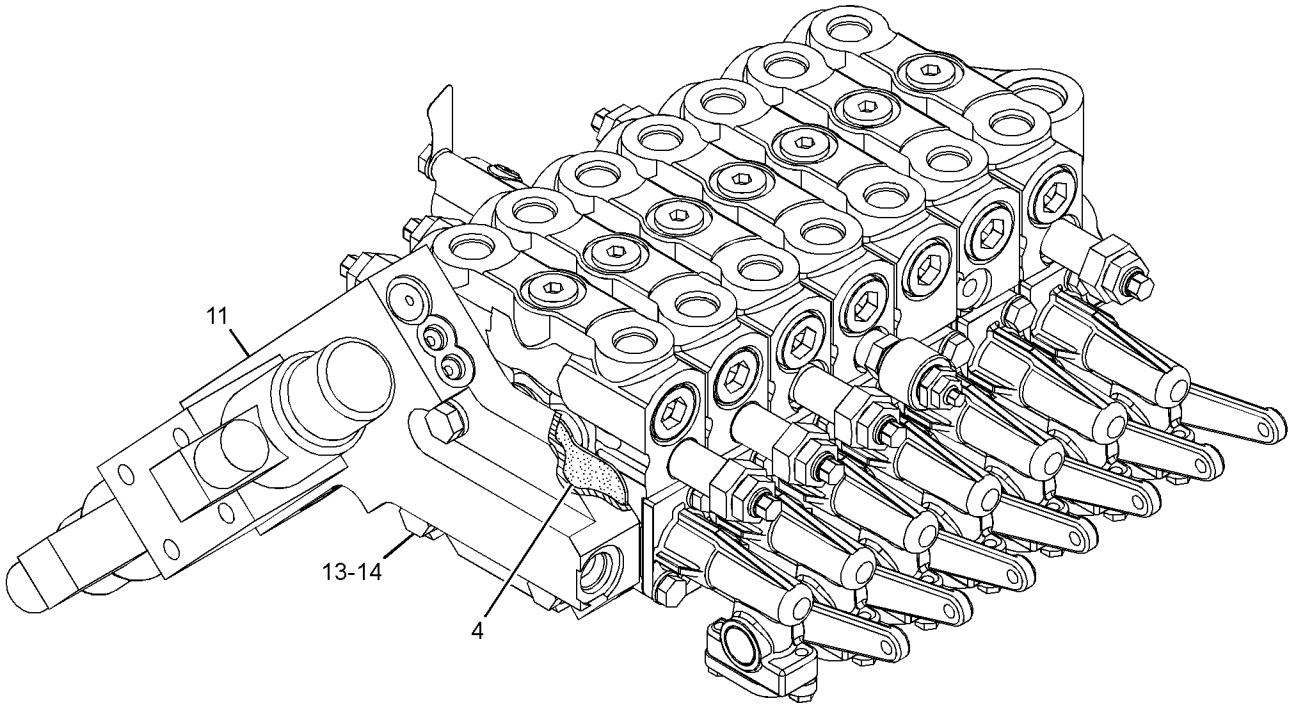


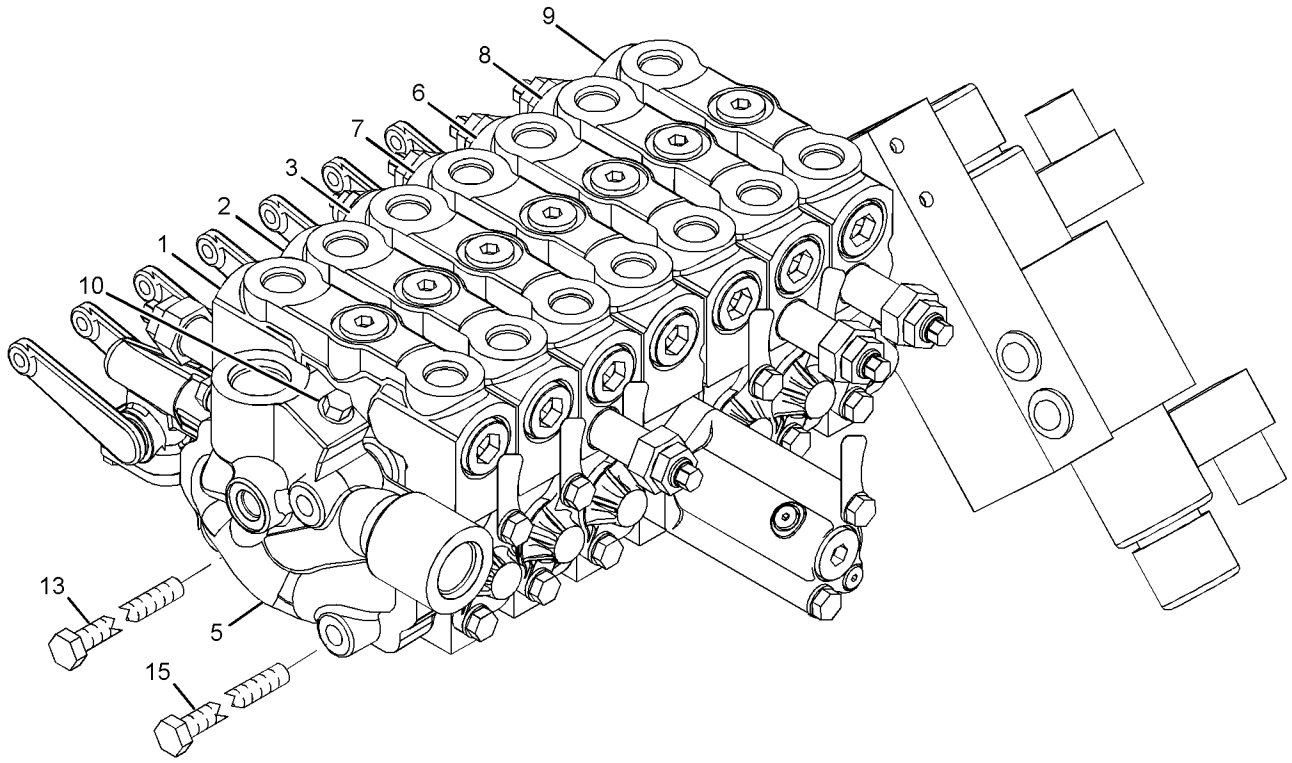


GRAPHIC #1 **<END>** g01186878

# HYDRAULIC SYSTEM

## *250-0576* VALVE GP-BANK 7–RH

**S/N: CCA1-UP**
**PART OF 250-0444 VALVE & LINKAGE GP**
**AN ATTACHMENT**

**SMCS-5051** **i02369461**

| NOTE | REF NO | GRAPHIC REF | PART NUMBER | QTY | PART NAME 1 2 3 4 5 6 (PRODUCT LEVEL) | SEE PAGE |
|---|---|---|---|---|---|---|
| Y | 1 | 1 | **6E-3028** | 1 | VALVE GP-CONTROL (ARTICULATION) | 974 |
| Y | 2 | 1 | **6E-3029** | 1 | VALVE GP-CONTROL (CENTERSHIFT) | 976 |
| Y | 3 | 1 | **6E-3030** | 1 | VALVE GP-CONTROL (WHEEL LEAN) | 978 |
| | 4 | 1 | **101-0509** | 8 | SEAL-INTEGRAL | |
| Y | 5 | 1 | **115-1007** | 2 | VALVE GP-CONTROL (PLOW ANGLE) | 996 |
| Y | 6 | 1 | **128-8647** | 1 | VALVE GP-CONTROL (BLADE LIFT) | 1002 |
| Y | 7 | 1 | **130-3111** | 1 | VALVE GP-CONTROL (PLOW, BULLDOZER LIFT) | 1006 |
| | 8 | 1 | *222-4737* | 1 | PLUG AS | |
| | | 1 | **4J-7533** | 1 | SEAL-O-RING | |
| | | 1 | **9S-4180** | 1 | PLUG | |
| Y | 9 | 1 | **239-9894** | 1 | MANIFOLD GP-CONTROL (RH) | 718 |
| | 11 | 1 | **102-6238** | 1 | MANIFOLD | |
| M | 12 | 1 | **137-6720** | 4 | BOLT (M10X1.5X160-MM) | |
| | 13 | 1 | **3K-6113** | 3 | WASHER-HARD (12X18.5X3-MM THK) | |
| M | 14 | 1 | **7X-2546** | 2 | BOLT (M10X1.5X180-MM) | |

M-METRIC PART
Y-SEPARATE ILLUSTRATION

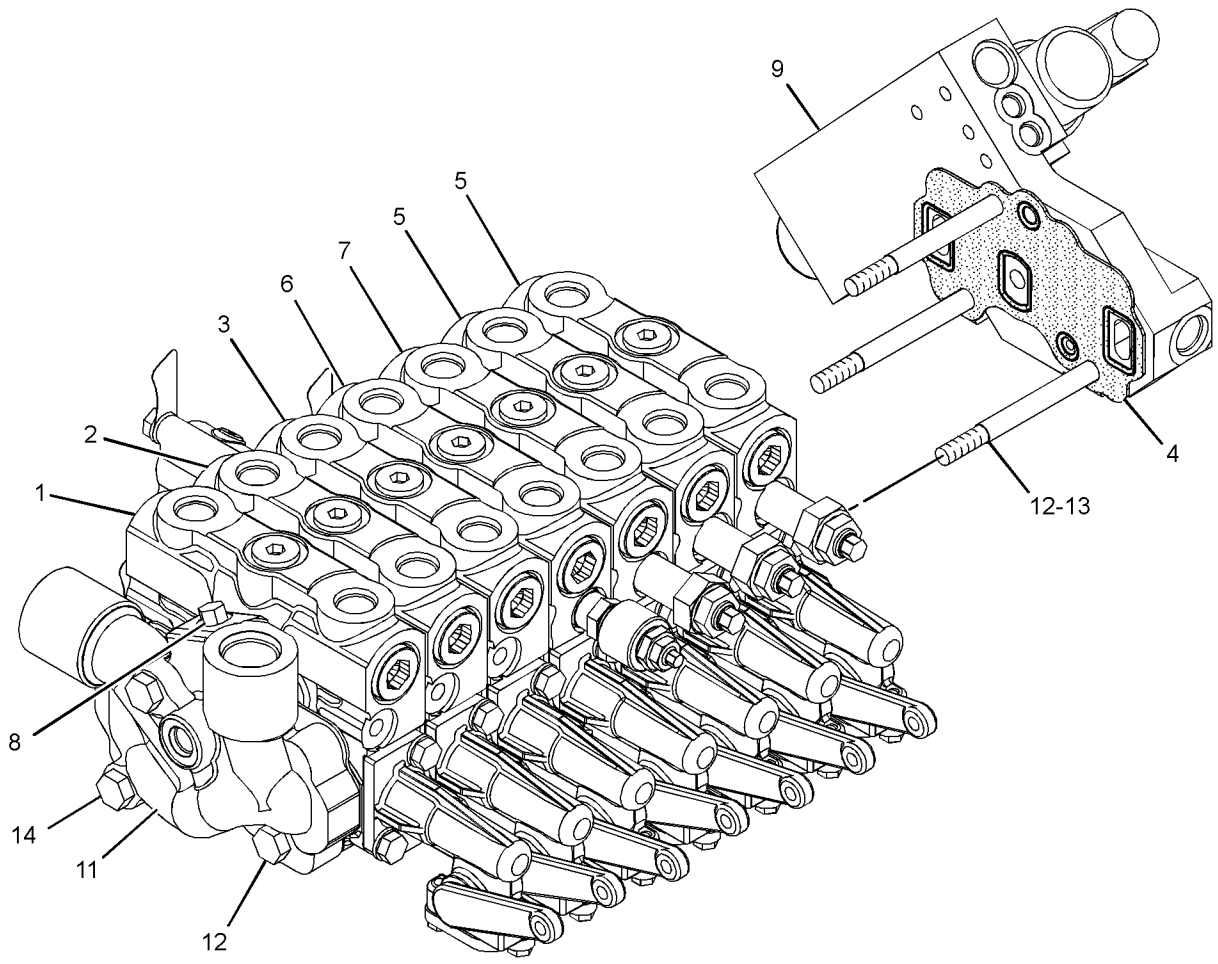


GRAPHIC #1 **<END>** g01167382

# *263-6435* VALVE GP-BANK 7–LH

**S/N: CCA1-UP**
**PART OF 265-7817 VALVE & LINKAGE GP**
**AN ATTACHMENT**

**SMCS-5051** **i02453852**

| NOTE | REF NO | GRAPHIC REF | PART NUMBER | QTY | PART NAME 1 2 3 4 5 6 (PRODUCT LEVEL) | SEE PAGE |
|---|---|---|---|---|---|---|
| Y | 1 | 1 | **6E-3034** | 1 | VALVE GP-CONTROL (BLADE TIP) | 982 |
| Y | 2 | 1 | **6E-3035** | 1 | VALVE GP-CONTROL (CIRCLE DRIVE) | 984 |
| Y | 3 | 1 | **6E-3036** | 1 | VALVE GP-CONTROL (SIDESHIFT) | 986 |
| Y | 4 | 1 | **6E-3037** | 1 | VALVE GP-CONTROL (BLADE LIFT) | 988 |
| | 5 | 1 | **101-0509** | 8 | SEAL-INTEGRAL | |
| | 6 | 1 | **102-8385** | 1 | MANIFOLD | |
| Y | 7 | 1 | **107-0543** | 1 | VALVE GP-CONTROL (SCARIFIER) | 990 |
| Y | 8 | 1 | **137-8104** | 1 | VALVE GP-CONTROL (WING TILT) | 1008 |
| Y | 9 | 1 | **137-8106** | 1 | VALVE GP-CONTROL (WING LIFT) | 1010 |
| | 10 | 1 | *222-4737* | 1 | PLUG AS | |
| | | 1 | **4J-7533** | 1 | SEAL-O-RING | |
| | | 1 | **9S-4180** | 1 | PLUG | |
| Y | 11 | 1 | **239-9893** | 1 | MANIFOLD GP-CONTROL (LH) | 716 |
| M | 13 | 1 | **137-6720** | 4 | BOLT (M10X1.5X160-MM) | |
| | 14 | 1 | **3K-6113** | 3 | WASHER-HARD (12X18.5X3-MM THK) | |
| M | 15 | 1 | **7X-2546** | 2 | BOLT (M10X1.5X180-MM) | |

M-METRIC PART
Y-SEPARATE ILLUSTRATION

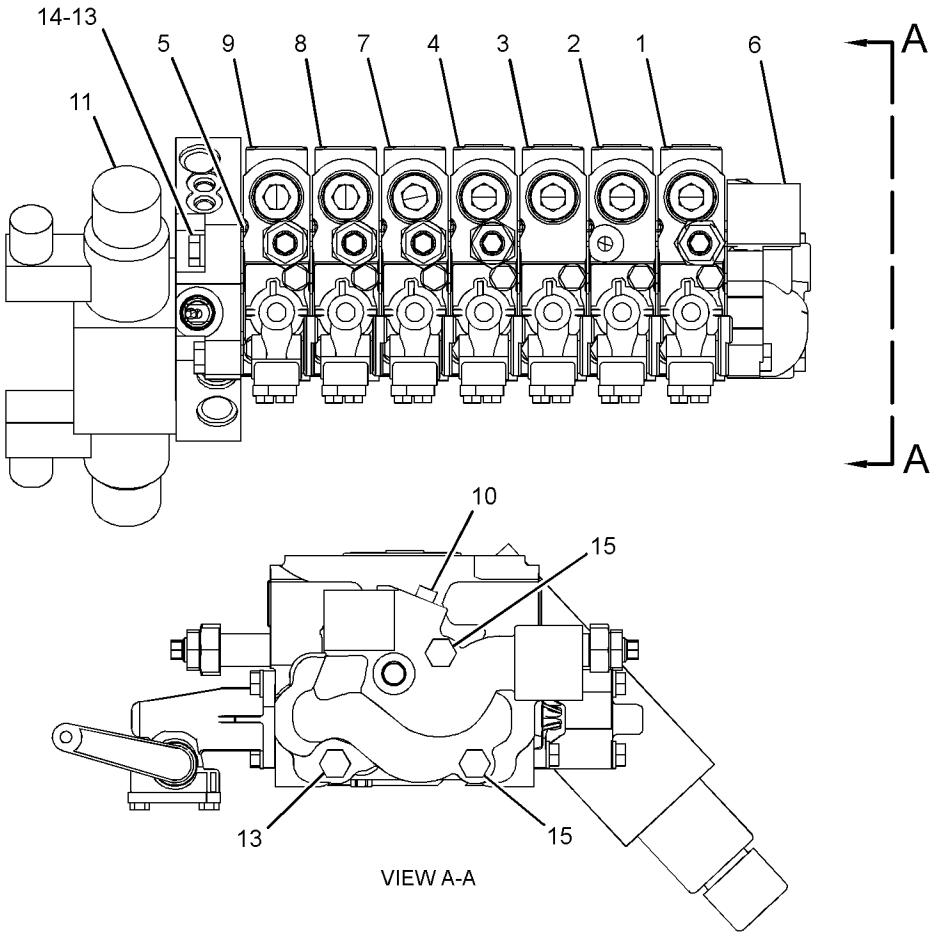


GRAPHIC #1 **<END>** g01246529

# HYDRAULIC SYSTEM

## *263-6436* VALVE GP-BANK 7

**S/N: CCA1-UP**
**PART OF 265-7819 VALVE & LINKAGE GP**
**AN ATTACHMENT**

**SMCS-5051** **i02326811**

| NOTE | REF NO | GRAPHIC REF | PART NUMBER | QTY | PART NAME 1 2 3 4 5 6 (PRODUCT LEVEL) | SEE PAGE |
|---|---|---|---|---|---|---|
| Y | 1 | 1 | **6E-3034** | 1 | VALVE GP-CONTROL (BLADE TIP) | 982 |
| Y | 2 | 1 | **6E-3035** | 1 | VALVE GP-CONTROL (CIRCLE DRIVE) | 984 |
| Y | 3 | 1 | **6E-3036** | 1 | VALVE GP-CONTROL (SIDESHIFT) | 986 |
| Y | 4 | 1 | **6E-3037** | 1 | VALVE GP-CONTROL (BLADE LIFT) | 988 |
| | 5 | 1 | **101-0509** | 8 | SEAL-INTEGRAL | |
| | 6 | 1 | **102-8385** | 1 | MANIFOLD | |
| Y | 7 | 1 | **107-0545** | 1 | VALVE GP-CONTROL (RIPPER) | 992 |
| Y | 8 | 1 | **137-8106** | 1 | VALVE GP-CONTROL (WING LIFT) | 1010 |
| Y | 9 | 1 | **153-8907** | 1 | VALVE GP-CONTROL (PLOW, DOZER) | 1018 |
| | 10 | 1 | *222-4737* | 1 | PLUG AS | |
| | | 1 | **9S-4180** | 1 | PLUG | |
| | | 1 | **4J-7533** | 1 | SEAL-O-RING | |
| | 11 | 1 | **239-9893** | 1 | MANIFOLD GP-CONTROL (LH) | |
| M | 13 | 1 | **137-6720** | 4 | BOLT (M10X1.5X160-MM) | |
| | 14 | 1 | **3K-6113** | 3 | WASHER-HARD (12X18.5X3-MM THK) | |
| M | 15 | 1 | **7X-2546** | 2 | BOLT (M10X1.5X180-MM) | |

M-METRIC PART
Y-SEPARATE ILLUSTRATION

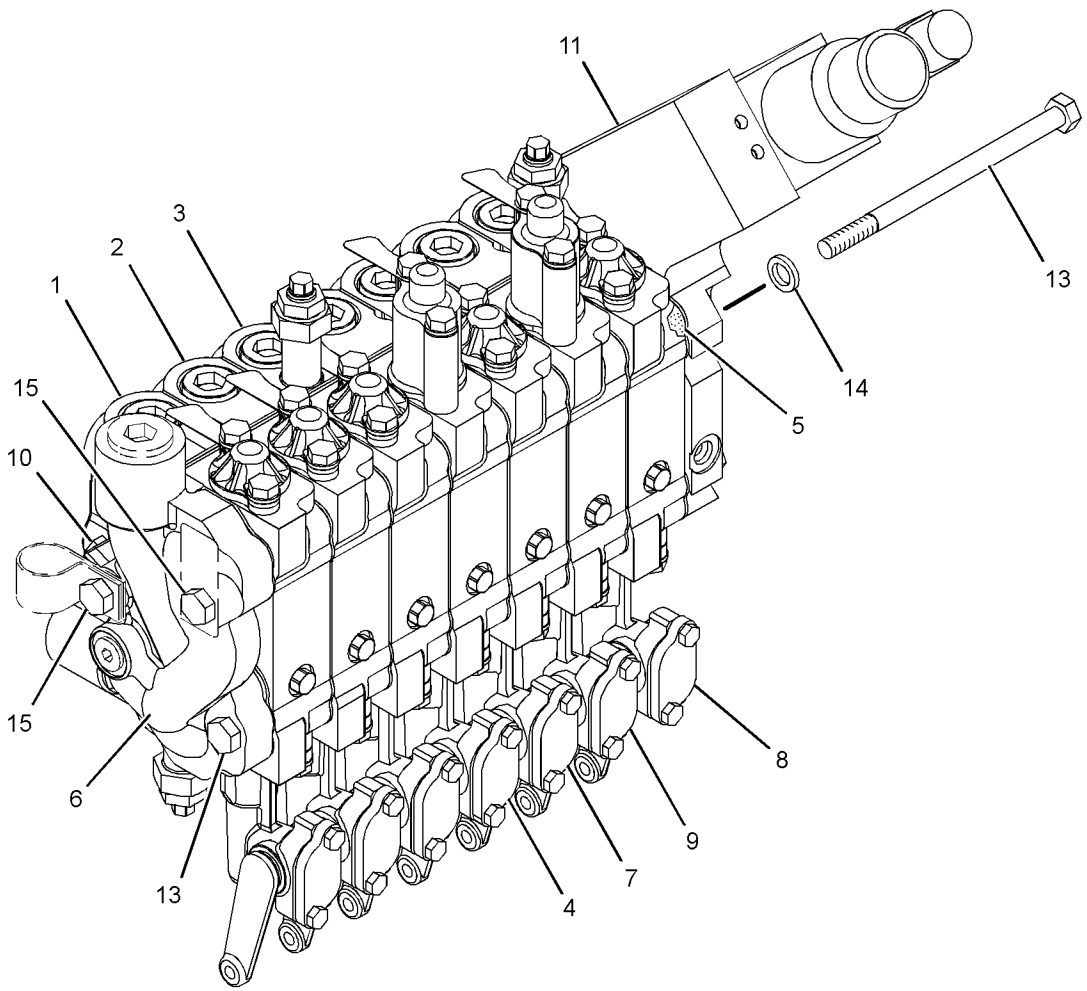


GRAPHIC #1 **<END>** g01240635

# 263-6437 VALVE GP-BANK 7–LH

**S/N: CCA1-UP**
**PART OF 265-7822 VALVE & LINKAGE GP**
**AN ATTACHMENT**

**SMCS-5051** **i02369711**

| NOTE | REF NO | GRAPHIC REF | PART NUMBER | QTY | PART NAME 1 2 3 4 5 6 (PRODUCT LEVEL) | SEE PAGE |
|---|---|---|---|---|---|---|
| Y | 1 | 1 | **6E-3034** | 1 | VALVE GP-CONTROL (BLADE TIP) | 982 |
| Y | 2 | 1 | **6E-3035** | 1 | VALVE GP-CONTROL (CIRCLE DRIVE) | 984 |
| Y | 3 | 1 | **6E-3036** | 1 | VALVE GP-CONTROL (SIDESHIFT) | 986 |
| Y | 4 | 1 | **6E-3037** | 1 | VALVE GP-CONTROL (BLADE LIFT) | 988 |
| | 5 | 1 | **101-0509** | 8 | SEAL-INTEGRAL | |
| | 6 | 1 | **102-8385** | 1 | MANIFOLD | |
| Y | 7 | 1 | **107-0545** | 1 | VALVE GP-CONTROL (RIPPER) | 992 |
| Y | 8 | 1 | **153-8907** | 1 | VALVE GP-CONTROL (PLOW, DOZER) | 1018 |
| Y | 9 | 1 | **153-8908** | 1 | VALVE GP-CONTROL (PLOW ANGLE) | 1020 |
| | 10 | 1 | *222-4737* | 1 | PLUG AS | |
| | | 1 | **4J-7533** | 1 | SEAL-O-RING | |
| | | 1 | **9S-4180** | 1 | PLUG | |
| | 11 | 1 | **239-9893** | 1 | MANIFOLD GP-CONTROL (LH) | |
| M | 13 | 1 | **137-6720** | 4 | BOLT (M10X1.5X160-MM) | |
| | 14 | 1 | **3K-6113** | 3 | WASHER-HARD (12X18.5X3-MM THK) | |
| M | 15 | 1 | **7X-2546** | 2 | BOLT (M10X1.5X180-MM) | |

M-METRIC PART
Y-SEPARATE ILLUSTRATION

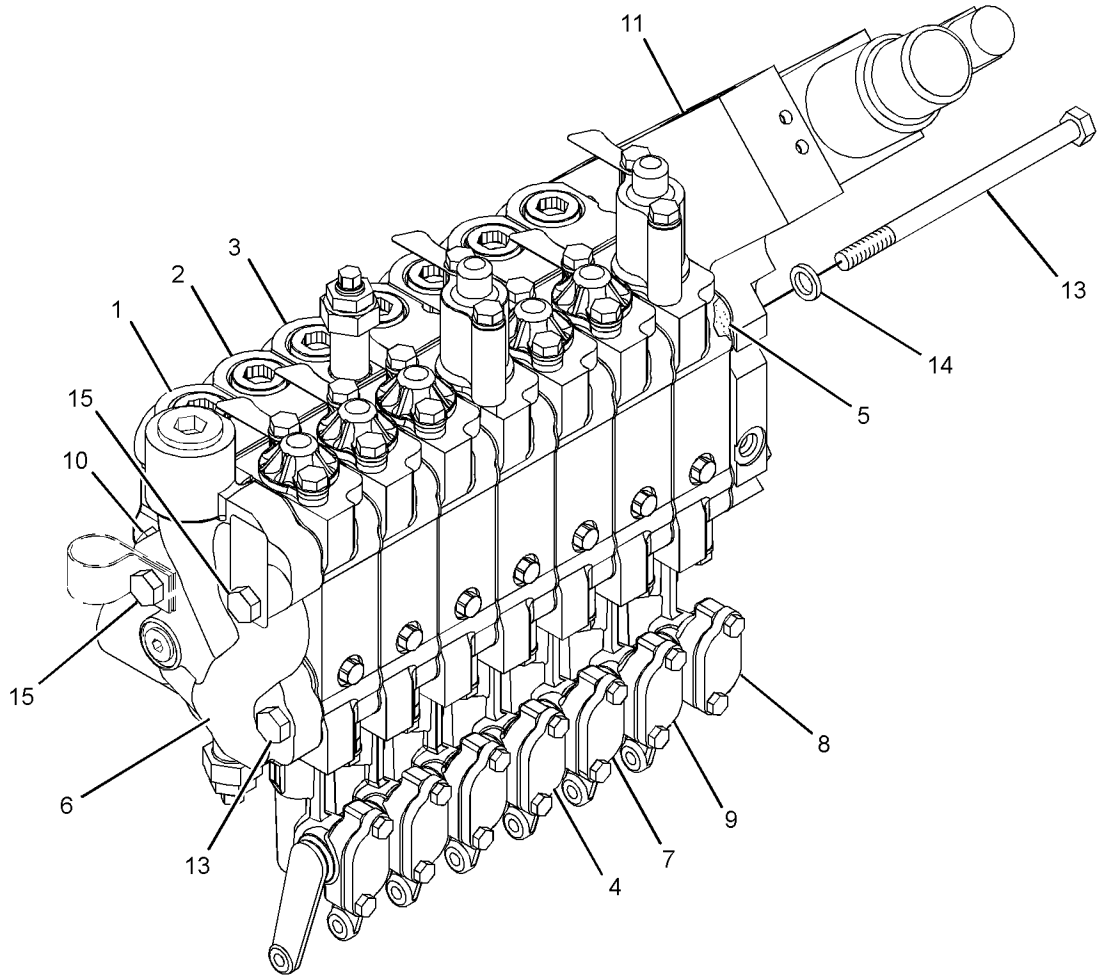


GRAPHIC #1 **<END>** g01240590

# HYDRAULIC SYSTEM

## 9T-5957 VALVE GP-COMBINATION

**S/N: CCA1-UP**

**PART OF 160-9178 LINES GP-PUMP**

**SMCS-5064** **i02592376**

| NOTE | REF NO | GRAPHIC REF | PART NUMBER | QTY | PART NAME 1 2 3 4 5 6 (PRODUCT LEVEL) | SEE PAGE |
|---|---|---|---|---|---|---|
| C | 1 | 1 | **9T-5935** | 1 | BODY | |
| Y | 2 | 1 | **100-6021** | 1 | VALVE GP-RELIEF (STEERING) | 1031 |
| | 3 | 1 | *3J-3679* | 1 | PLUG AS | |
| | | 1 | **1J-9671** | 1 | SEAL-O-RING | |
| | | 1 | **9S-8003** | 1 | PLUG | |
| | 4 | 1 | **3T-8236** | 1 | SPRING | |
| M | 5 | 1 | **6V-5230** | 2 | BOLT (M10X1.5X60-MM) | |
| | 6 | 1 | **6V-3965** | 1 | FITTING AS (QUICK DISCONNECT, MALE) | |
| | 7 | 1 | **3J-1907** | 1 | SEAL-O-RING | |
| | 8 | 1 | **6V-8647** | 2 | CONNECTOR | |
| | 9 | 1 | **3J-7354** | 2 | SEAL-O-RING | |
| | 10 | 1 | **6E-1923** | 1 | TUBE AS | |
| | 11 | 1 | **4J-5477** | 2 | SEAL-O-RING | |
| Y | 12 | 1 | **4T-4935** | 1 | VALVE GP-RELIEF (MAIN) | 1028 |
| | 13 | 1 | **8T-8987** | 1 | ELBOW | |
| | 14 | 1 | **2M-9780** | 1 | SEAL-O-RING | |
| | 15 | 1 | **1H-0337** | 1 | VALVE | |
| | 16 | 1 | **9F-6705** | 1 | SPRING | |
| | 17 | 1 | **9S-4189** | 1 | PLUG | |
| | 18 | 1 | **6E-1924** | 1 | SPRING (OUTER) | |
| | 19 | 1 | **6E-1925** | 1 | SPRING (INNER) | |
| | 20 | 1 | **5M-2057** | 1 | SEAL-O-RING | |
| | 21 | 1 | **8M-3175** | 2 | WASHER-HARD (10.2X16X3-MM THK) | |
| | 22 | 1 | **6V-0852** | 1 | CAP-DUST | |
| Y | 23 | 1 | **6E-4703** | 1 | VALVE GP-RELIEF (IMPLEMENT SIGNAL) | 1030 |
| C | 24 | 1 | **3K-0360** | 1 | SEAL-O-RING | |
| | 25 | 1 | **173-3993** | 2 | PLUG AS | |
| | | | | | (EACH INCLUDES) | |
| | | 1 | **4J-7533** | 1 | SEAL-O-RING | |
| | | 1 | **9S-8001** | 1 | PLUG | |
| Y | 27 | 1 | **4T-1860** | 1 | VALVE GP-SHUTTLE (SIGNAL) | 1043 |
| | 30 | 1 | **2S-4078** | 1 | SEAL-O-RING | |
| | 31 | 1 | *3R-2437* | 1 | PLUG AS | |
| | | 1 | **4K-1388** | 1 | SEAL-O-RING | |
| | | 1 | **9S-8009** | 1 | PLUG | |
| C | 32 | 1 | **6V-8398** | 1 | SEAL-O-RING | |
| C | 33 | 1 | **7X-4776** | 2 | RING-BACKUP | |
| | 34 | 1 | *183-7263* | 1 | PLUG AS | |
| | | 1 | **3J-7354** | 1 | SEAL-O-RING | |
| | | 1 | **9S-8002** | 1 | PLUG | |
| CY | 35 | 1 | **131-8350** | 1 | VALVE GP-PURGE (IMPLEMENT SIGNAL) | 1027 |
| C | 36 | 1 | **3P-9498** | 1 | PLUG-ORIFICE | |
| C | 37 | 1 | **9T-5934** | 1 | VALVE | |
| C | 38 | 1 | **8J-6815** | 2 | PLUG-ORIFICE | |
| | 39 | 1 | *148-8408* | 3 | PLUG AS | |
| | | | | | (EACH INCLUDES) | |
| | | 1 | **9S-4183** | 1 | PLUG-O RING | |
| | | 1 | **3D-2824** | 1 | SEAL-O-RING | |

C-CHANGE FROM PREVIOUS TYPE
M-METRIC PART
Y-SEPARATE ILLUSTRATION

## 9T-5957 VALVE GP-COMBINATION *(contd. )*

i02592376

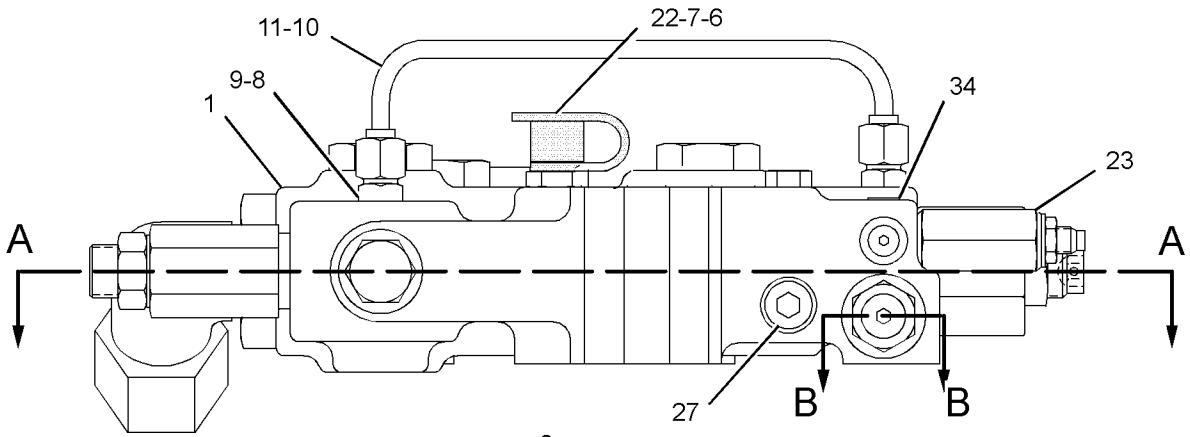


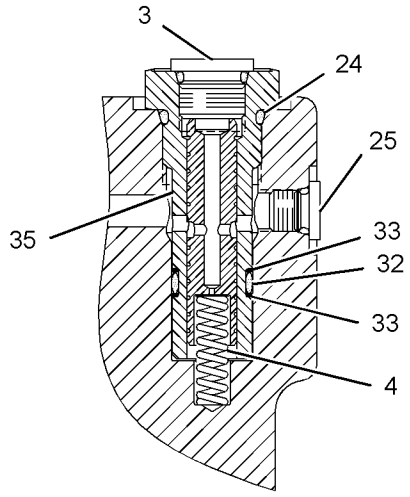


SECTION B-B

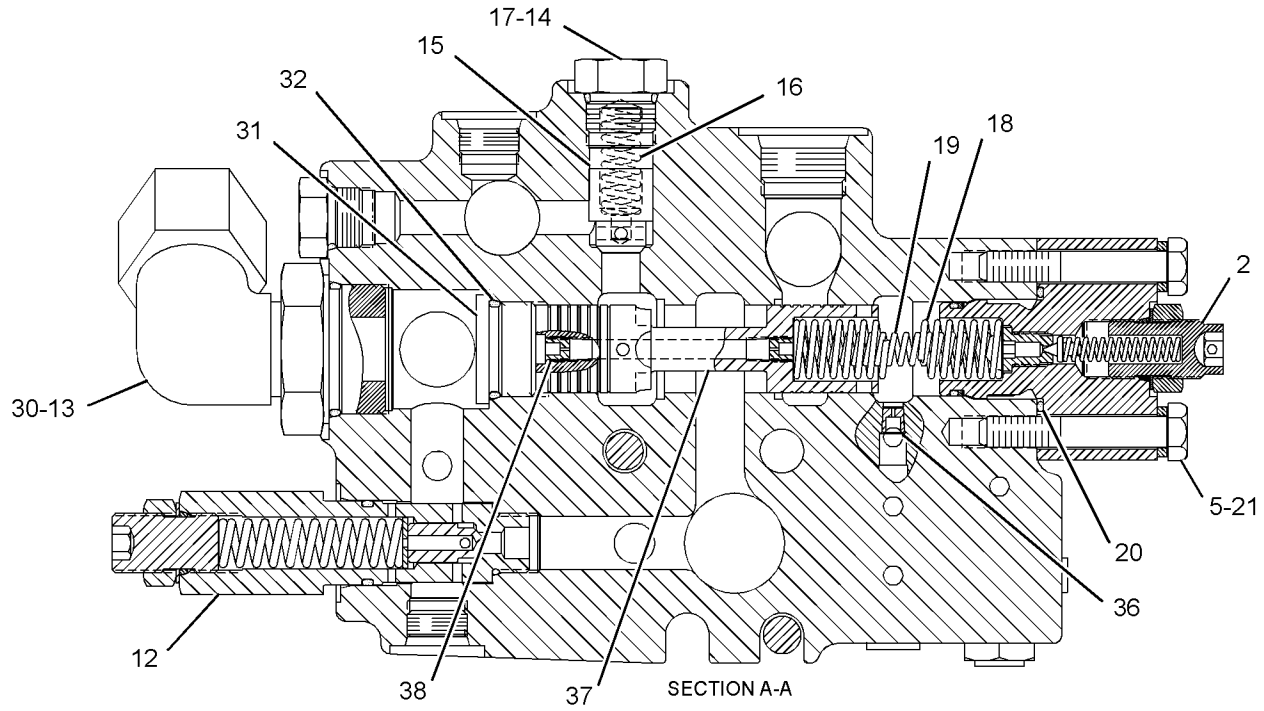


SECTION A-A

GRAPHIC #1 **<END>** g01297579

# HYDRAULIC SYSTEM

## *229-7155* VALVE GP-COMBINATION

**S/N: CCA1-UP**

**PART OF 160-9178 LINES GP-PUMP**

**SMCS-5064** **i01928752**

| NOTE | REF NO | GRAPHIC REF | PART NUMBER | QTY | PART NAME 1 2 3 4 5 6 (PRODUCT LEVEL) | SEE PAGE |
|---|---|---|---|---|---|---|
| Z | 1 | 1 | | 1 | BODY | |
| Y | 2 | 1 | **100-6021** | 1 | VALVE GP-RELIEF (STEERING) | 1031 |
| | 3 | 1 | **9S-8003** | 1 | PLUG | |
| | 4 | 1 | **3T-8236** | 1 | SPRING | |
| M | 5 | 1 | **6V-5230** | 2 | BOLT (M10X1.5X60-MM) | |
| | 6 | 1 | **6V-3965** | 1 | FITTING AS (QUICK DISCONNECT, MALE) (DIAGNOSTIC) | |
| | 7 | 1 | **3J-1907** | 1 | SEAL-O-RING | |
| | 8 | 1 | **6V-8647** | 2 | CONNECTOR | |
| | 9 | 1 | **3J-7354** | 3 | SEAL-O-RING | |
| | 10 | 1 | **6E-1923** | 1 | TUBE AS | |
| | 11 | 1 | **4J-5477** | 2 | SEAL-O-RING | |
| Y | 12 | 1 | **4T-4935** | 1 | VALVE GP-RELIEF (MAIN) | 1028 |
| | 13 | 1 | **8T-8987** | 1 | ELBOW | |
| | 14 | 1 | **2M-9780** | 1 | SEAL-O-RING | |
| | 15 | 1 | **1H-0337** | 1 | VALVE | |
| | 16 | 1 | **9F-6705** | 1 | SPRING | |
| | 17 | 1 | **9S-4189** | 1 | PLUG | |
| | 18 | 1 | **3S-6925** | 1 | SPRING | |
| | 19 | 1 | **4T-4207** | 1 | PLUG-ORIFICE | |
| | 20 | 1 | **5M-2057** | 1 | SEAL-O-RING | |
| | 21 | 1 | **8M-3175** | 2 | WASHER-HARD (10.2X16X3-MM THK) | |
| | 22 | 1 | **6V-0852** | 1 | CAP-DUST | |
| Y | 23 | 1 | **6E-4703** | 1 | VALVE GP-RELIEF (IMPLEMENT SIGNAL) | 1030 |
| | 24 | 1 | **3K-0360** | 1 | SEAL-O-RING | |
| | 25 | 1 | **9S-8001** | 2 | PLUG | |
| | 26 | 1 | **4J-7533** | 2 | SEAL-O-RING | |
| Y | 27 | 1 | **4T-1860** | 1 | VALVE GP-SHUTTLE (SIGNAL) | 1043 |
| | 30 | 1 | **2S-4078** | 1 | SEAL-O-RING | |
| | 31 | 1 | **9S-8009** | 1 | PLUG | |
| | 32 | 1 | **4K-1388** | 1 | SEAL-O-RING | |
| | 33 | 1 | **6V-8398** | 1 | SEAL-O-RING | |
| | 34 | 1 | **7X-4776** | 2 | RING-BACKUP | |
| | 35 | 1 | **9S-8002** | 1 | PLUG | |
| Y | 36 | 1 | **131-8350** | 1 | VALVE GP-PURGE (IMPLEMENT SIGNAL) | 1027 |
| | 37 | 1 | **3P-9498** | 1 | PLUG-ORIFICE | |
| Z | 38 | 1 | | 1 | VALVE | |
| | 39 | 1 | **6V-7418** | 1 | PLUG-PIPE | |
| | 40 | 1 | **1J-9671** | 1 | SEAL-O-RING | |
| | 41 | 1 | **9S-4183** | 3 | PLUG-O RING | |
| | 42 | 1 | **3D-2824** | 3 | SEAL-O-RING | |

M-METRIC PART
Y-SEPARATE ILLUSTRATION
Z-NOT SERVICED SEPARATELY

*229-7155* **VALVE GP-COMBINATION** *(contd. )* **i01928752**

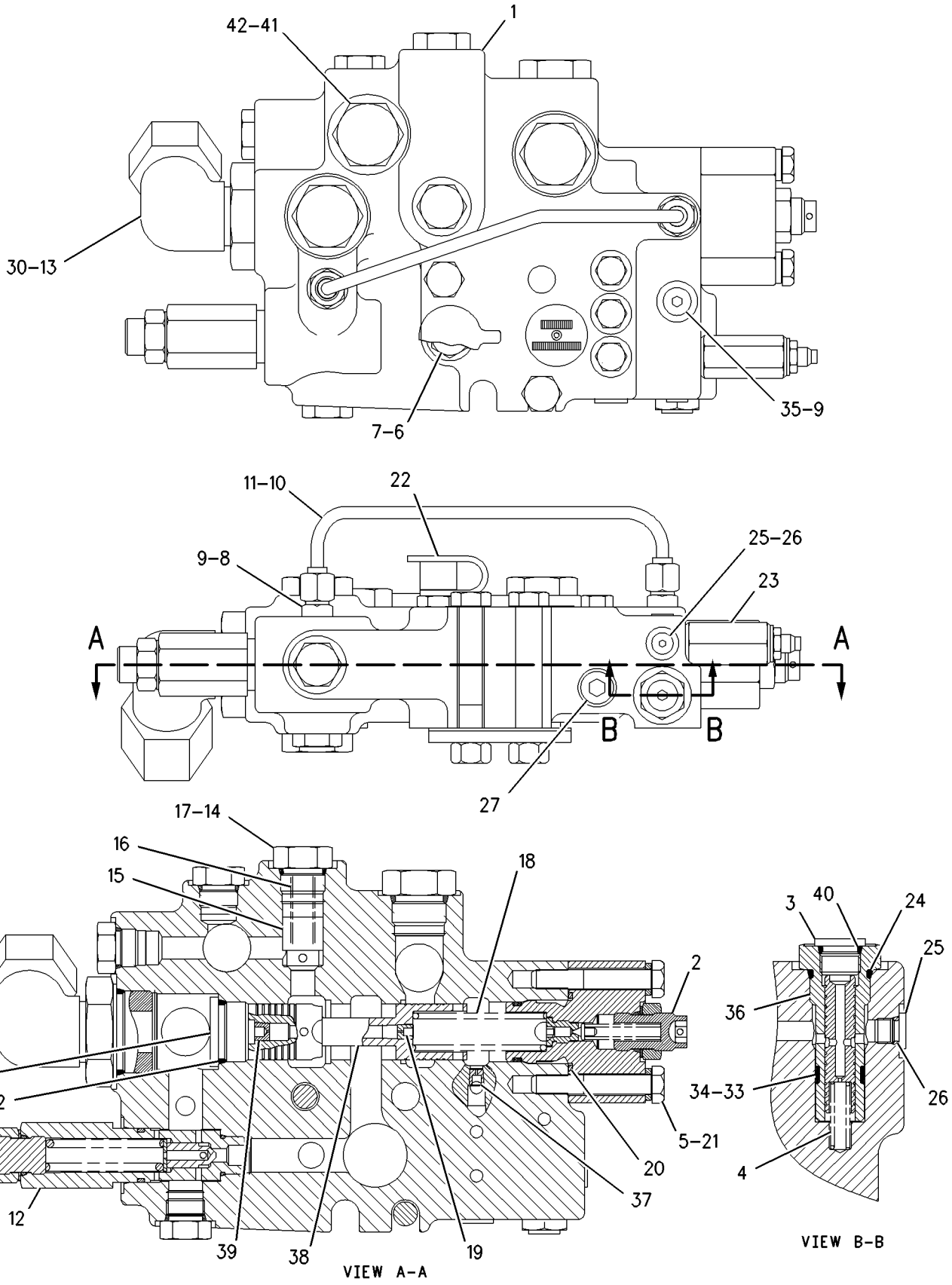


GRAPHIC #1 **<END>** g00979039

# HYDRAULIC SYSTEM

## 6E-3028 VALVE GP-CONTROL—ARTICULATION

**S/N: CCA1-UP**

**PART OF 130-3116, 250-0544, 250-0546, 6E-3032 VALVE GP-BANK 4, 104-8671, 130-3123, 250-0548, 250-0549 VALVE GP-BANK 5, 115-1008, 130-3124, 153-8911, 250-0552, 250-0565, 250-0574 VALVE GP-BANK 6, 250-0576, 4Z-6267 VALVE GP-BANK 7**

**ALSO AN ATTACHMENT**

**SMCS-5051** **i01052769**

| NOTE | REF NO | GRAPHIC REF | PART NUMBER | QTY | PART NAME 1 2 3 4 5 6 (PRODUCT LEVEL) | SEE PAGE |
|---|---|---|---|---|---|---|
| | 1 | 1 | **6E-3044** | 1 | BODY | |
| | 2 | 1 | **101-1148** | 1 | STEM | |
| | 3 | 1 | **101-1978** | 1 | COVER | |
| | 4 | 1 | **2K-8199** | 2 | SEAL-O-RING | |
| M | 5 | 1 | **8T-4189** | 4 | BOLT (M8X1.25X20-MM) | |
| | 6 | 1 | **8T-4224** | 4 | WASHER-HARD (8.8X16X2-MM THK) | |
| | 7 | 1 | **101-1984** | 1 | BODY | |
| | 8 | 1 | **102-7412** | 1 | SPRING | |
| | 9 | 1 | **101-1973** | 4 | RETAINER | |
| | 10 | 1 | **101-1971** | 1 | LEVER | |
| | 11 | 1 | **101-1970** | 1 | LEVER AS | |
| | 12 | 1 | **8M-4437** | 2 | SEAL-O-RING | |
| | 13 | 1 | **101-1983** | 2 | RING-BACKUP (14.65-MM ID) | |
| | 14 | 1 | **4D-9986** | 1 | SEAL-O-RING | |
| | 15 | 1 | **101-2480** | 1 | COVER | |
| M | 16 | 1 | **8T-4138** | 2 | BOLT (M6X1X20-MM) | |
| | 17 | 1 | **5B-9318** | 1 | BALL | |
| | 18 | 1 | **6E-3007** | 1 | SPRING | |
| | 19 | 1 | **6E-4502** | 1 | PLUG | |
| | 20 | 1 | **4J-7533** | 1 | SEAL-O-RING | |
| | 21 | 1 | **6E-3019** | 1 | VALVE | |
| | 22 | 1 | **6E-5153** | 1 | SPRING | |
| | 23 | 1 | **108-2187** | 1 | PLUG-PIPE | |
| | 24 | 1 | **9S-8005** | 1 | PLUG-O RING | |
| | 25 | 1 | **3K-0360** | 3 | SEAL-O-RING | |
| | 26 | 1 | **106-3659** | 1 | PISTON | |
| | 27 | 1 | **6E-3013** | 2 | SEAT | |
| | 28 | 1 | **106-3658** | 2 | VALVE | |
| | 29 | 1 | **9J-0403** | 2 | SPRING | |
| | 30 | 1 | **9J-0404** | 2 | PLUG | |
| | 31 | 1 | **7J-9933** | 2 | SEAL-O-RING | |
| | 33 | 1 | **111-8233** | 1 | SPRING | |

M-METRIC PART

**6E-3028 VALVE GP-CONTROL** *(contd. )* **i01052769**

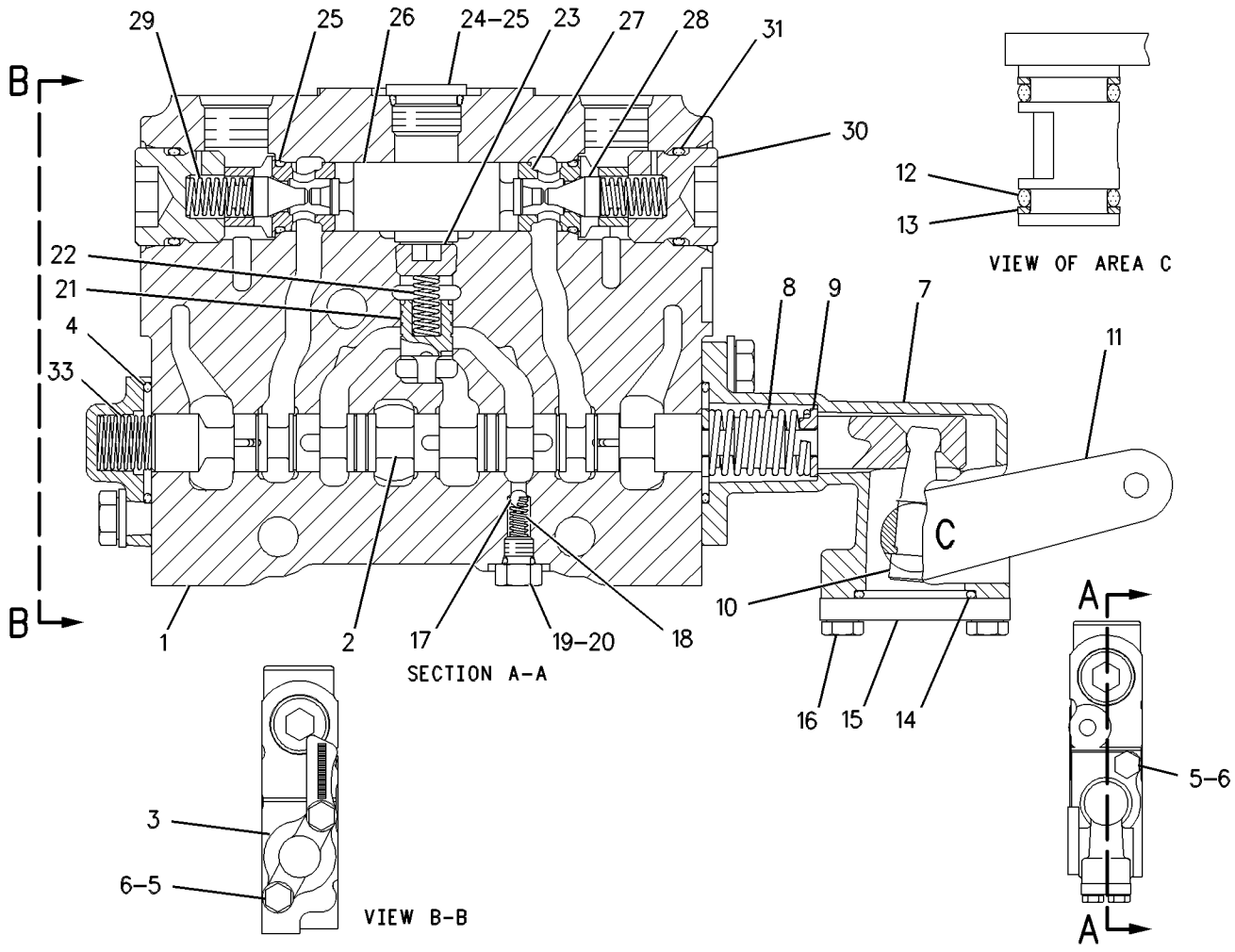


GRAPHIC #1 **<END>** g00546074

# HYDRAULIC SYSTEM

## 6E-3029 VALVE GP-CONTROL—CENTERSHIFT

**S/N: CCA1-UP**

**PART OF 130-3116, 250-0544, 250-0546, 6E-3032 VALVE GP-BANK 4, 104-8671, 130-3123, 250-0548, 250-0549 VALVE GP-BANK 5, 115-1008, 130-3124, 153-8911, 250-0552, 250-0565, 250-0574 VALVE GP-BANK 6, 250-0576, 4Z-6267 VALVE GP-BANK 7**

**ALSO AN ATTACHMENT**

**SMCS-5051** **i01052813**

| NOTE | REF NO | GRAPHIC REF | PART NUMBER | QTY | PART NAME 1 2 3 4 5 6 (PRODUCT LEVEL) | SEE PAGE |
|---|---|---|---|---|---|---|
| | 1 | 1 | **6E-3044** | 1 | BODY | |
| | 2 | 1 | **101-1149** | 1 | STEM | |
| | 3 | 1 | **101-1978** | 1 | COVER | |
| | 4 | 1 | **2K-8199** | 2 | SEAL-O-RING | |
| M | 5 | 1 | **8T-4189** | 4 | BOLT (M8X1.25X20-MM) | |
| | 6 | 1 | **8T-4224** | 4 | WASHER-HARD (8.8X16X2-MM THK) | |
| | 7 | 1 | **101-1984** | 1 | BODY | |
| | 8 | 1 | **102-7412** | 1 | SPRING | |
| | 9 | 1 | **101-1973** | 4 | RETAINER | |
| | 10 | 1 | **101-1971** | 1 | LEVER | |
| | 11 | 1 | **101-1970** | 1 | LEVER AS | |
| | 12 | 1 | **8M-4437** | 2 | SEAL-O-RING | |
| | 13 | 1 | **101-1983** | 2 | RING-BACKUP (14.65-MM ID) | |
| | 14 | 1 | **4D-9986** | 1 | SEAL-O-RING | |
| | 15 | 1 | **101-2480** | 1 | COVER | |
| M | 16 | 1 | **8T-4138** | 2 | BOLT (M6X1X20-MM) | |
| | 17 | 1 | **5B-9318** | 1 | BALL | |
| | 18 | 1 | **6E-3007** | 1 | SPRING | |
| | 19 | 1 | **6E-4502** | 1 | PLUG | |
| | 20 | 1 | **4J-7533** | 1 | SEAL-O-RING | |
| | 21 | 1 | **6E-3019** | 1 | VALVE | |
| | 22 | 1 | **6E-5153** | 1 | SPRING | |
| | 23 | 1 | **108-2187** | 1 | PLUG-PIPE | |
| | 24 | 1 | **9S-8005** | 1 | PLUG-O RING | |
| | 25 | 1 | **3K-0360** | 3 | SEAL-O-RING | |
| | 26 | 1 | **106-3659** | 1 | PISTON | |
| | 27 | 1 | **6E-3013** | 2 | SEAT | |
| | 28 | 1 | **106-3658** | 2 | VALVE | |
| | 29 | 1 | **9J-0403** | 2 | SPRING | |
| | 30 | 1 | **9J-0404** | 2 | PLUG | |
| | 31 | 1 | **7J-9933** | 2 | SEAL-O-RING | |
| | 33 | 1 | **111-8233** | 1 | SPRING | |

M-METRIC PART

## 6E-3029 VALVE GP-CONTROL *(contd. )* i01052813

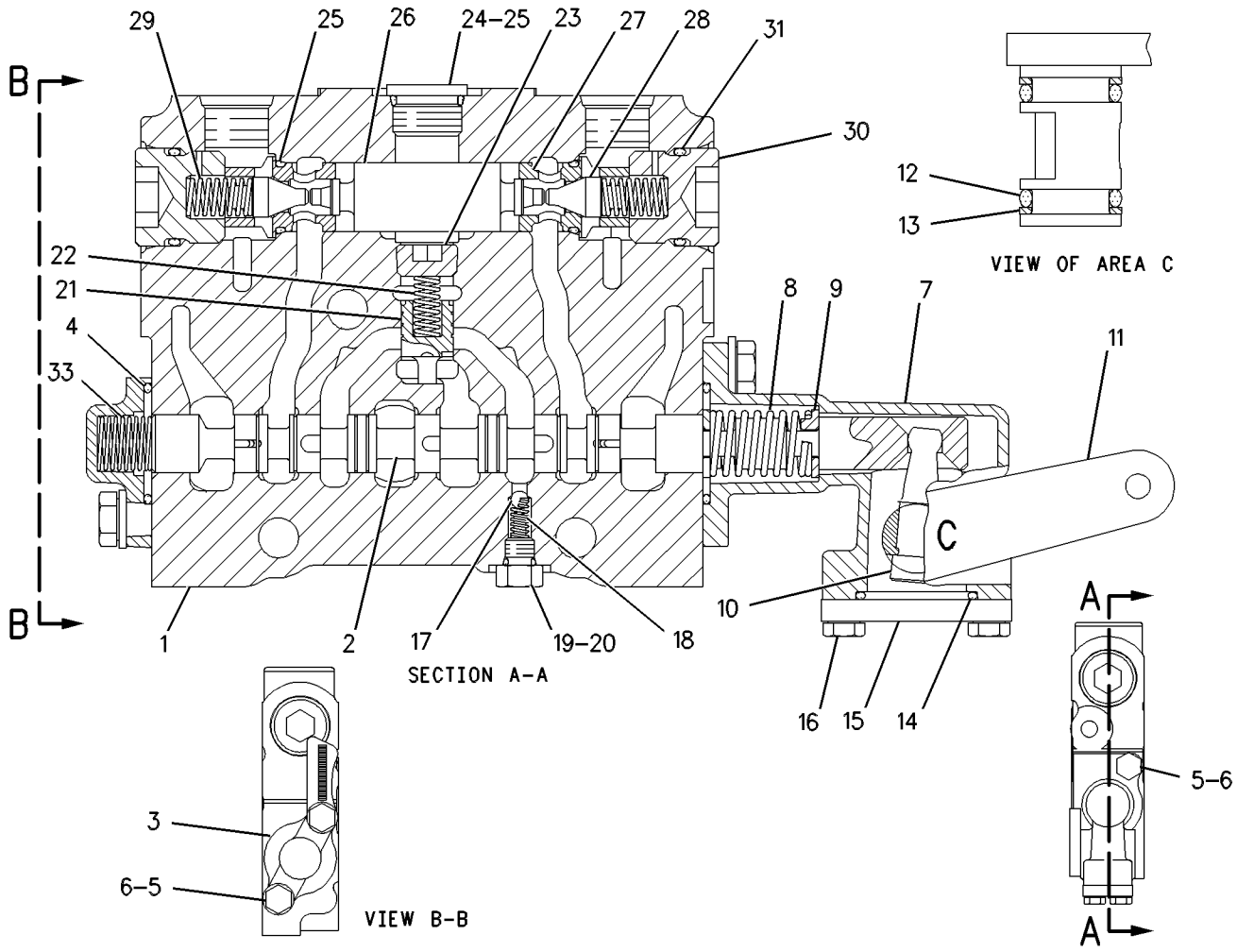


GRAPHIC #1 **<END>** g00546075

# HYDRAULIC SYSTEM

## 6E-3030 VALVE GP-CONTROL—WHEEL LEAN

**S/N: CCA1-UP**

**PART OF 130-3116, 250-0544, 250-0546, 6E-3032 VALVE GP-BANK 4, 104-8671, 130-3123, 250-0548, 250-0549 VALVE GP-BANK 5, 115-1008, 130-3124, 153-8911, 250-0552, 250-0565, 250-0574 VALVE GP-BANK 6, 250-0576, 4Z-6267 VALVE GP-BANK 7**

**ALSO AN ATTACHMENT**

**SMCS-5051** **i01052815**

| NOTE | REF NO | GRAPHIC REF | PART NUMBER | QTY | PART NAME 1 2 3 4 5 6 (PRODUCT LEVEL) | SEE PAGE |
|---|---|---|---|---|---|---|
| | 1 | 1 | **6E-3044** | 1 | BODY | |
| | 2 | 1 | **101-1154** | 1 | STEM | |
| | 3 | 1 | **101-1978** | 1 | COVER | |
| | 4 | 1 | **2K-8199** | 2 | SEAL-O-RING | |
| M | 5 | 1 | **8T-4189** | 4 | BOLT (M8X1.25X20-MM) | |
| | 6 | 1 | **8T-4224** | 4 | WASHER-HARD (8.8X16X2-MM THK) | |
| | 7 | 1 | **101-1984** | 1 | BODY | |
| | 8 | 1 | **102-7412** | 1 | SPRING | |
| | 9 | 1 | **101-1973** | 4 | RETAINER | |
| | 10 | 1 | **101-1971** | 1 | LEVER | |
| | 11 | 1 | **101-1970** | 1 | LEVER AS | |
| | 12 | 1 | **8M-4437** | 2 | SEAL-O-RING | |
| | 13 | 1 | **101-1983** | 2 | RING-BACKUP (14.65-MM ID) | |
| | 14 | 1 | **4D-9986** | 1 | SEAL-O-RING | |
| | 15 | 1 | **101-2480** | 1 | COVER | |
| M | 16 | 1 | **8T-4138** | 2 | BOLT (M6X1X20-MM) | |
| | 17 | 1 | **5B-9318** | 1 | BALL | |
| | 18 | 1 | **6E-3007** | 1 | SPRING | |
| | 19 | 1 | **6E-4502** | 1 | PLUG | |
| | 20 | 1 | **4J-7533** | 1 | SEAL-O-RING | |
| | 21 | 1 | **6E-3019** | 1 | VALVE | |
| | 22 | 1 | **6E-5153** | 1 | SPRING | |
| | 23 | 1 | **108-2187** | 1 | PLUG-PIPE | |
| | 24 | 1 | **9S-8005** | 1 | PLUG-O RING | |
| | 25 | 1 | **3K-0360** | 3 | SEAL-O-RING | |
| | 26 | 1 | **106-3659** | 1 | PISTON | |
| | 27 | 1 | **6E-3013** | 2 | SEAT | |
| | 28 | 1 | **106-3658** | 2 | VALVE | |
| | 29 | 1 | **9J-0403** | 2 | SPRING | |
| | 30 | 1 | **9J-0404** | 2 | PLUG | |
| | 31 | 1 | **7J-9933** | 2 | SEAL-O-RING | |
| | 33 | 1 | **111-8233** | 1 | SPRING | |

M-METRIC PART

## 6E-3030 VALVE GP-CONTROL *(contd. )* i01052815

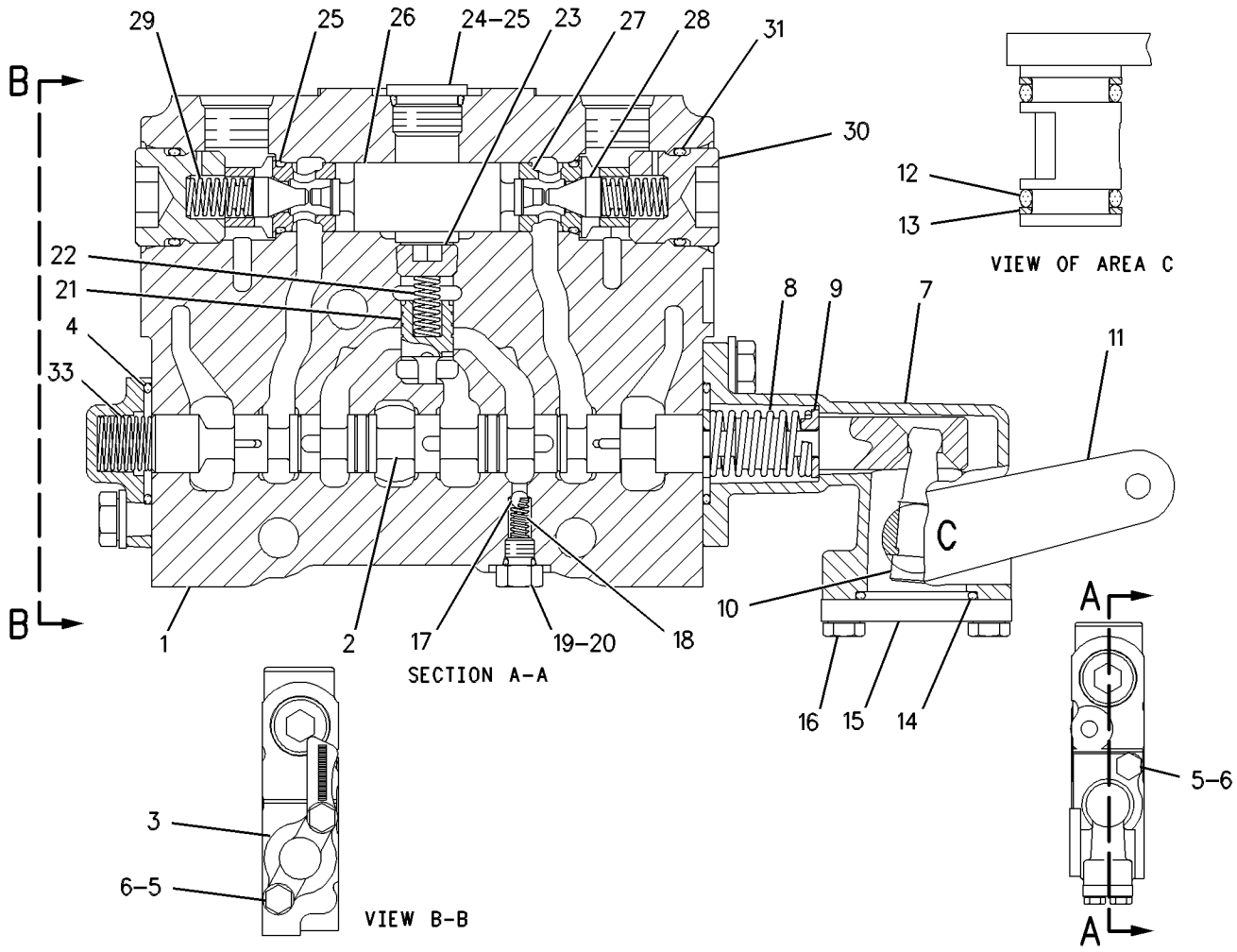


GRAPHIC #1 **<END>** g00546077

# HYDRAULIC SYSTEM

## 6E-3031 VALVE GP-CONTROL—BLADE LIFT

**S/N: CCA1-UP**

**PART OF 250-0544, 6E-3032 VALVE GP-BANK 4, 104-8671, 250-0548 VALVE GP-BANK 5, 115-1008, 153-8911, 250-0565, 250-0574 VALVE GP-BANK 6**

**ALSO AN ATTACHMENT**

**SMCS-5051** **i01459258**

| NOTE | REF NO | GRAPHIC REF | PART NUMBER | QTY | PART NAME 1 2 3 4 5 6 (PRODUCT LEVEL) | SEE PAGE |
|---|---|---|---|---|---|---|
| | 1 | 1 | **6E-3043** | 1 | BODY | |
| | 2 | 1 | **101-1150** | 1 | STEM | |
| | 3 | 1 | **101-1980** | 1 | HOUSING | |
| | 4 | 1 | **101-1972** | 1 | DETENT | |
| | 5 | 1 | **5B-9318** | 1 | BALL | |
| M | 6 | 1 | **8T-6869** | 2 | BOLT (M8X1.25X60-MM) | |
| | 7 | 1 | **2K-8199** | 2 | SEAL-O-RING | |
| M | 8 | 1 | **8T-4189** | 2 | BOLT (M8X1.25X20-MM) | |
| | 9 | 1 | **8T-4224** | 4 | WASHER-HARD (8.8X16X2-MM THK) | |
| | 10 | 1 | **101-1984** | 1 | BODY | |
| | 11 | 1 | **102-7412** | 1 | SPRING | |
| | 12 | 1 | **101-1973** | 4 | RETAINER | |
| | 13 | 1 | **101-1971** | 1 | LEVER | |
| | 14 | 1 | **101-1970** | 1 | LEVER AS | |
| | 15 | 1 | **8M-4437** | 2 | SEAL-O-RING | |
| | 16 | 1 | **101-1983** | 2 | RING-BACKUP (14.65-MM ID) | |
| | 17 | 1 | **4D-9986** | 1 | SEAL-O-RING | |
| | 18 | 1 | **101-2480** | 1 | COVER | |
| M | 19 | 1 | **8T-4138** | 2 | BOLT (M6X1X20-MM) | |
| | 20 | 1 | **6E-3007** | 1 | SPRING | |
| | 21 | 1 | **6E-4502** | 1 | PLUG | |
| | 22 | 1 | **4J-7533** | 1 | SEAL-O-RING | |
| | 23 | 1 | **6E-3019** | 1 | VALVE | |
| | 24 | 1 | **6E-5153** | 1 | SPRING | |
| | 25 | 1 | **108-2187** | 1 | PLUG-PIPE | |
| | 26 | 1 | **9S-8005** | 1 | PLUG-O RING | |
| | 27 | 1 | **3K-0360** | 3 | SEAL-O-RING | |
| | 28 | 1 | **106-3660** | 2 | PISTON | |
| | 29 | 1 | **6E-3013** | 2 | SEAT | |
| | 30 | 1 | **106-3658** | 2 | VALVE | |
| | 31 | 1 | **9J-0403** | 2 | SPRING | |
| | 32 | 1 | **9J-0404** | 2 | PLUG | |
| | 33 | 1 | **7J-9933** | 2 | SEAL-O-RING | |
| Y | 34 | 1 | ***6E-3033*** | 1 | VALVE GP-RELIEF (BLADE LIFT) | 1029 |
| | 35 | 1 | **107-0516** | 1 | PLATE-IDENTIFICATION | |
| Y | 36 | 1 | **108-4916** | 1 | DETENT GP-CONTROL VALVE | 664 |
| | 37 | 1 | **111-8234** | 1 | SPRING | |

M-METRIC PART
Y-SEPARATE ILLUSTRATION

**6E-3031 VALVE GP-CONTROL** *(contd. )* **i01459258**

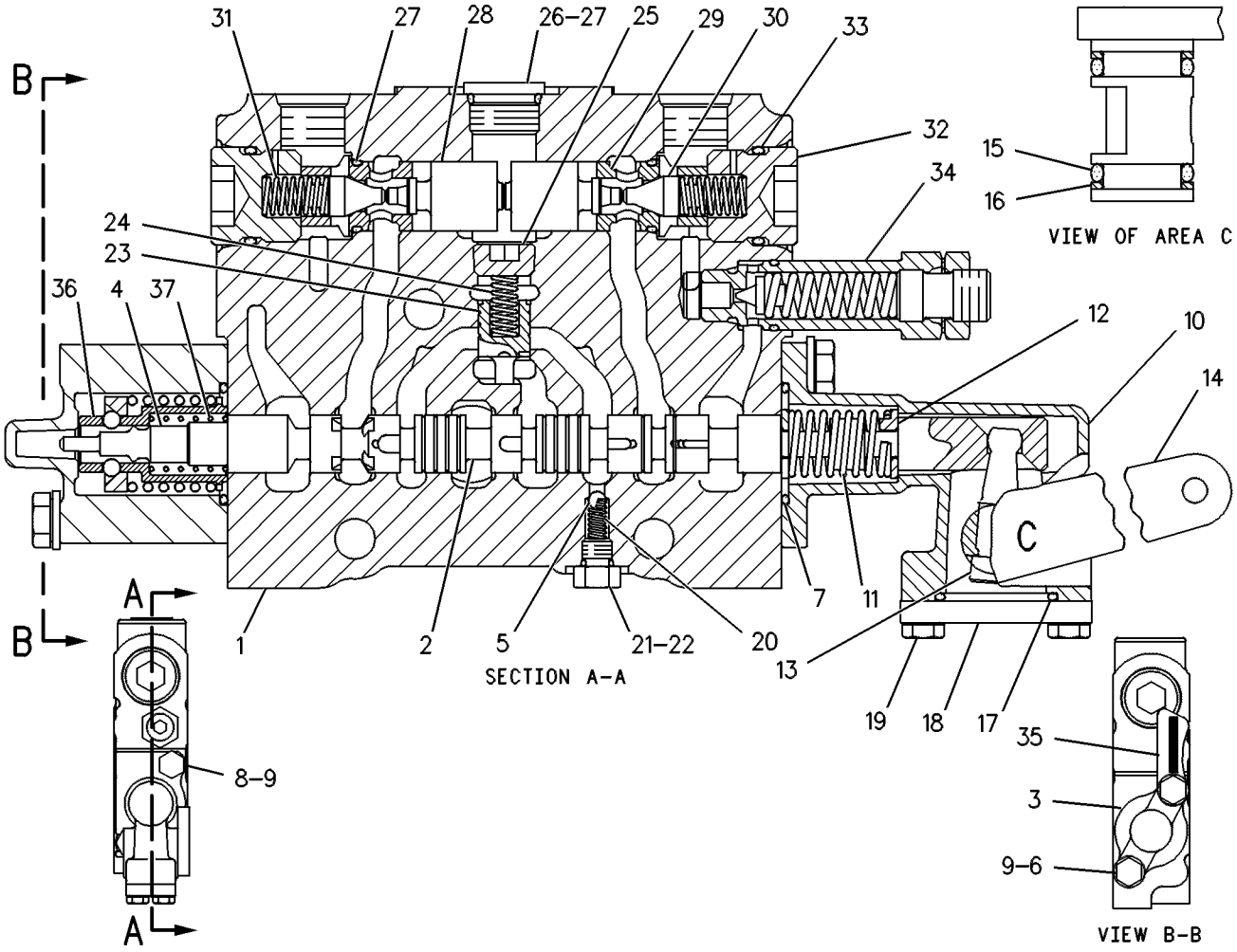


GRAPHIC #1 **<END>** g00108533

# HYDRAULIC SYSTEM

## 6E-3034 VALVE GP-CONTROL—BLADE TIP

**S/N: CCA1-UP**

**PART OF 130-3117, 250-0543, 250-0545, 6E-3038 VALVE GP-BANK 4, 104-8645, 104-8646, 130-3118, 130-3119, 250-0547, 250-0550, 250-0551, 262-7291 VALVE GP-BANK 5, 104-8648, 130-3121, 153-8910, 250-0566, 250-0567, 250-0573 VALVE GP-BANK 6, 104-8647, 104-8651, 130-3120, 130-3122, 153-8912, 250-0568, 250-0571, 250-0572, 263-6435, 263-6436, 263-6437, 4Z-6346 VALVE GP-BANK 7**

**ALSO AN ATTACHMENT**

**SMCS-5051** **i02585289**

| NOTE | REF NO | GRAPHIC REF | PART NUMBER | QTY | PART NAME 1 2 3 4 5 6 (PRODUCT LEVEL) | SEE PAGE |
|---|---|---|---|---|---|---|
| | 1 | 1 | **6E-4599** | 1 | BODY | |
| | 2 | 1 | **101-1155** | 1 | STEM | |
| | 3 | 1 | **101-1978** | 1 | COVER | |
| | 4 | 1 | **2K-8199** | 2 | SEAL-O-RING | |
| M | 5 | 1 | **8T-4189** | 4 | BOLT (M8X1.25X20-MM) | |
| | 6 | 1 | **8T-4224** | 4 | WASHER-HARD (8.8X16X2-MM THK) | |
| | 7 | 1 | **101-1984** | 1 | BODY | |
| | 8 | 1 | **7J-9933** | 2 | SEAL-O-RING | |
| CY | 9 | 1 | **139-8472** | 1 | VALVE GP-RELIEF (BLADE TIP) | 1038 |
| | 11 | 1 | **102-7412** | 1 | SPRING | |
| | 12 | 1 | **101-1973** | 4 | RETAINER | |
| | 13 | 1 | **101-1971** | 1 | LEVER | |
| | 14 | 1 | **101-1982** | 1 | LEVER AS | |
| | 15 | 1 | **8M-4437** | 2 | SEAL-O-RING | |
| | 16 | 1 | **101-1983** | 2 | RING-BACKUP (14.65-MM ID) | |
| | 17 | 1 | **4D-9986** | 1 | SEAL-O-RING | |
| | 18 | 1 | **101-2480** | 1 | COVER | |
| M | 19 | 1 | **8T-4138** | 2 | BOLT (M6X1X20-MM) | |
| | 20 | 1 | **5B-9318** | 1 | BALL | |
| | 21 | 1 | **6E-3007** | 1 | SPRING | |
| | 22 | 1 | **6E-4502** | 1 | PLUG | |
| | 23 | 1 | **4J-7533** | 1 | SEAL-O-RING | |
| | 24 | 1 | **6E-3019** | 1 | VALVE | |
| | 25 | 1 | **6E-5153** | 1 | SPRING | |
| | 26 | 1 | **108-2187** | 1 | PLUG-PIPE | |
| | 27 | 1 | **9J-0403** | 2 | SPRING | |
| | 28 | 1 | **9J-0404** | 2 | PLUG | |
| | 29 | 1 | *148-8395* | 1 | PLUG AS | |
| | | 1 | **9S-8005** | 1 | PLUG-O RING (HEX HEAD) | |
| | | 1 | **3K-0360** | 1 | SEAL-O-RING | |
| | 30 | 1 | **3K-0360** | 2 | SEAL-O-RING | |
| C | 31 | 1 | **106-3659** | 1 | PISTON | |
| | 32 | 1 | **6E-3013** | 2 | SEAT | |
| | 33 | 1 | **106-3658** | 2 | VALVE | |
| | 34 | 1 | **111-8233** | 1 | SPRING | |

C-CHANGE FROM PREVIOUS TYPE
M-METRIC PART
Y-SEPARATE ILLUSTRATION

## 6E-3034 VALVE GP-CONTROL *(contd. )*

i02585289

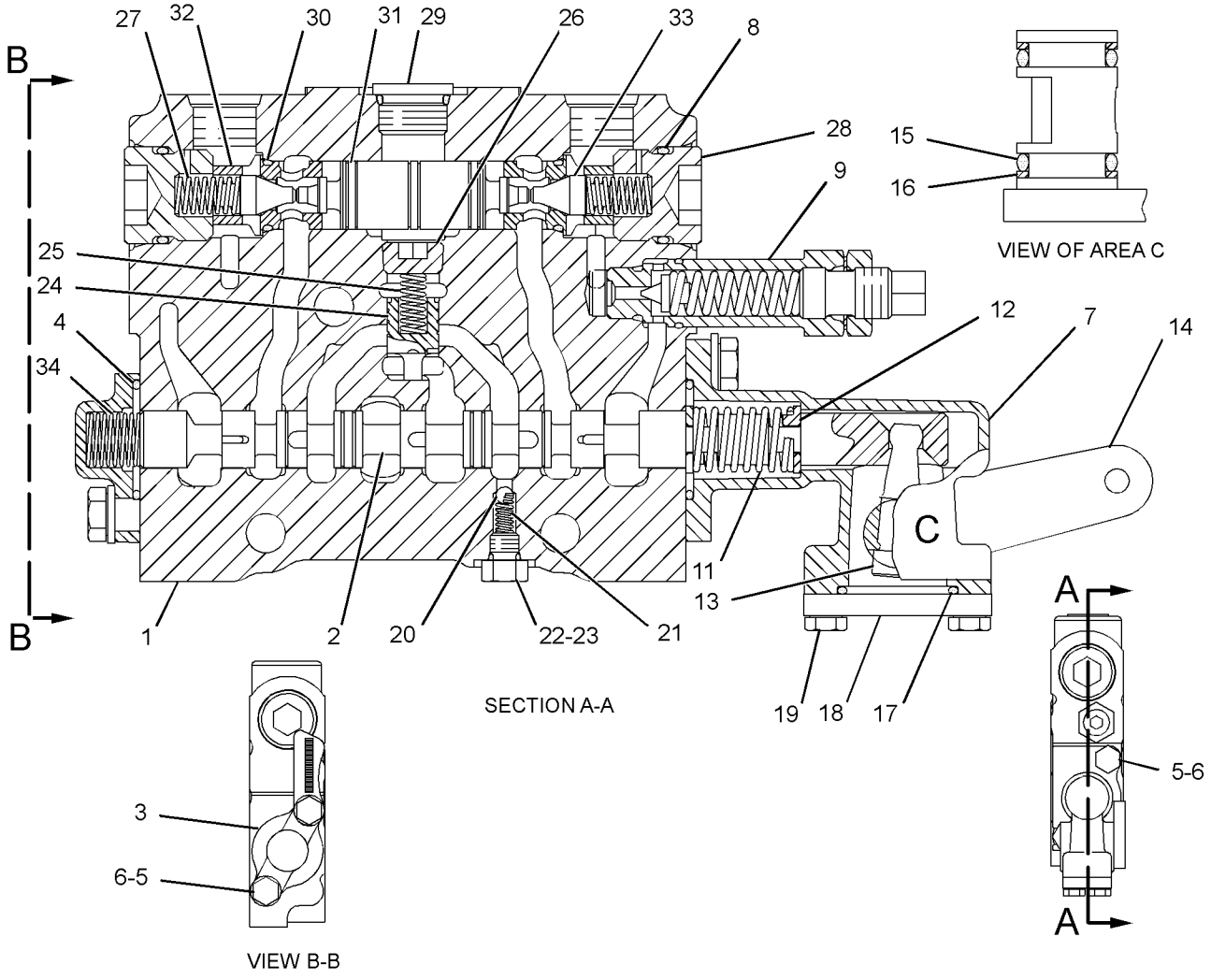


GRAPHIC #1

**<END>**

g01294323

# HYDRAULIC SYSTEM

## 6E-3035 VALVE GP-CONTROL—CIRCLE DRIVE

**S/N: CCA1-UP**

**PART OF 130-3117, 250-0543, 250-0545, 6E-3038 VALVE GP-BANK 4, 104-8645, 104-8646, 130-3118, 130-3119, 250-0547, 250-0550, 250-0551, 262-7291 VALVE GP-BANK 5, 104-8648, 130-3121, 153-8910, 250-0566, 250-0567, 250-0573 VALVE GP-BANK 6, 104-8647, 104-8651, 130-3120, 130-3122, 153-8912, 250-0568, 250-0571, 250-0572, 263-6435, 263-6436, 263-6437, 4Z-6346 VALVE GP-BANK 7**

**ALSO AN ATTACHMENT**

**SMCS-5051** **i01052829**

| NOTE | REF NO | GRAPHIC REF | PART NUMBER | QTY | PART NAME 1 2 3 4 5 6 (PRODUCT LEVEL) | SEE PAGE |
|---|---|---|---|---|---|---|
| | 1 | 1 | **6E-3044** | 1 | BODY | |
| | 2 | 1 | **101-1151** | 1 | STEM | |
| | 3 | 1 | **101-1978** | 1 | COVER | |
| | 4 | 1 | **2K-8199** | 2 | SEAL-O-RING | |
| M | 5 | 1 | **8T-4189** | 4 | BOLT (M8X1.25X20-MM) | |
| | 6 | 1 | **8T-4224** | 4 | WASHER-HARD (8.8X16X2-MM THK) | |
| | 7 | 1 | **101-1984** | 1 | BODY | |
| | 8 | 1 | **102-7412** | 1 | SPRING | |
| | 9 | 1 | **101-1973** | 4 | RETAINER | |
| | 10 | 1 | **101-1971** | 1 | LEVER | |
| | 11 | 1 | **101-1982** | 1 | LEVER AS | |
| | 12 | 1 | **8M-4437** | 2 | SEAL-O-RING | |
| | 13 | 1 | **101-1983** | 2 | RING-BACKUP (14.65-MM ID) | |
| | 14 | 1 | **4D-9986** | 1 | SEAL-O-RING | |
| | 15 | 1 | **101-2480** | 1 | COVER | |
| M | 16 | 1 | **8T-4138** | 2 | BOLT (M6X1X20-MM) | |
| | 17 | 1 | **5B-9318** | 1 | BALL | |
| | 18 | 1 | **6E-3007** | 1 | SPRING | |
| | 19 | 1 | **6E-4502** | 1 | PLUG | |
| | 20 | 1 | **4J-7533** | 1 | SEAL-O-RING | |
| | 21 | 1 | **6E-3019** | 1 | VALVE | |
| | 22 | 1 | **6E-5153** | 1 | SPRING | |
| | 23 | 1 | **108-2187** | 1 | PLUG-PIPE | |
| | 24 | 1 | **9S-8005** | 1 | PLUG-O RING | |
| | 25 | 1 | **3K-0360** | 3 | SEAL-O-RING | |
| | 26 | 1 | **106-3659** | 1 | PISTON | |
| | 27 | 1 | **6E-3013** | 2 | SEAT | |
| | 28 | 1 | **106-3658** | 2 | VALVE | |
| | 29 | 1 | **9J-0403** | 2 | SPRING | |
| | 30 | 1 | **9J-0404** | 2 | PLUG | |
| | 31 | 1 | **7J-9933** | 2 | SEAL-O-RING | |
| | 33 | 1 | **111-8233** | 1 | SPRING | |

M-METRIC PART

## 6E-3035 VALVE GP-CONTROL *(contd. )* i01052829

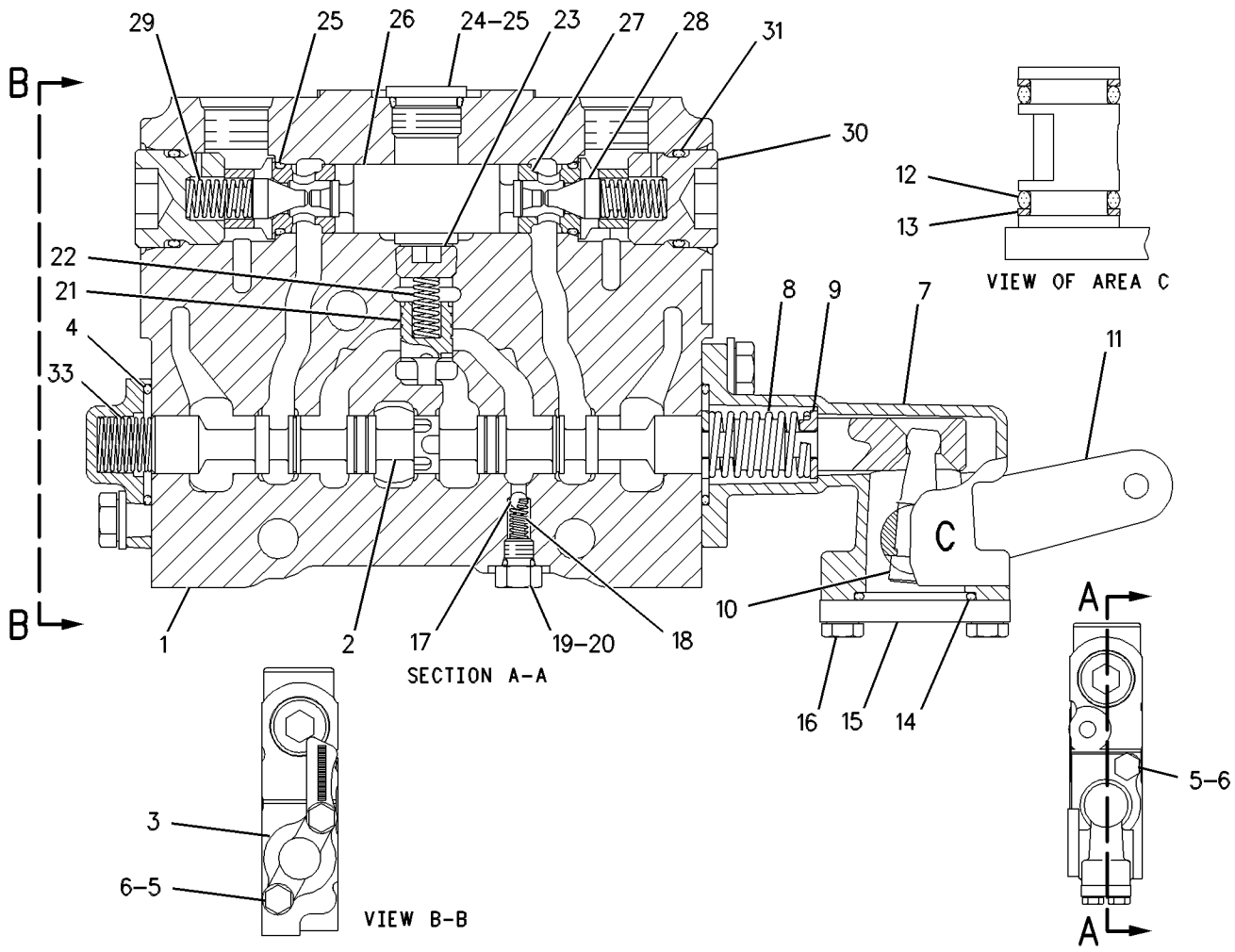


GRAPHIC #1 **<END>** g00546080

# HYDRAULIC SYSTEM

## *6E-3036* VALVE GP-CONTROL—SIDESHIFT

**S/N: CCA1-UP**

**PART OF 130-3117, 250-0543, 250-0545, 6E-3038 VALVE GP-BANK 4, 104-8645, 104-8646, 130-3118, 130-3119, 250-0547, 250-0550, 250-0551, 262-7291 VALVE GP-BANK 5, 104-8648, 130-3121, 153-8910, 250-0566, 250-0567, 250-0573 VALVE GP-BANK 6, 104-8647, 104-8651, 130-3120, 130-3122, 153-8912, 250-0568, 250-0571, 250-0572, 263-6435, 263-6436, 263-6437, 4Z-6346 VALVE GP-BANK 7**

**ALSO AN ATTACHMENT**

**SMCS-5051** **i01457313**

| NOTE | REF NO | GRAPHIC REF | PART NUMBER | QTY | PART NAME 1 2 3 4 5 6 (PRODUCT LEVEL) | SEE PAGE |
|---|---|---|---|---|---|---|
| | 1 | 1 | **6E-3058** | 1 | BODY | |
| | 2 | 1 | **101-1153** | 1 | STEM | |
| | 3 | 1 | **101-1978** | 1 | COVER | |
| | 4 | 1 | **2K-8199** | 2 | SEAL-O-RING | |
| M | 5 | 1 | **8T-4189** | 4 | BOLT (M8X1.25X20-MM) | |
| | 6 | 1 | **8T-4224** | 4 | WASHER-HARD (8.8X16X2-MM THK) | |
| | 7 | 1 | **101-1984** | 1 | BODY | |
| | 8 | 1 | **7J-9933** | 2 | SEAL-O-RING | |
| Y | 9 | 1 | **101-4147** | 1 | VALVE GP-RELIEF (SIDESHIFT) | 1032 |
| | 11 | 1 | **102-7412** | 1 | SPRING | |
| | 12 | 1 | **101-1973** | 4 | RETAINER | |
| | 13 | 1 | **101-1971** | 1 | LEVER | |
| | 14 | 1 | **101-1982** | 1 | LEVER AS | |
| | 15 | 1 | **8M-4437** | 2 | SEAL-O-RING | |
| | 16 | 1 | **101-1983** | 2 | RING-BACKUP (14.65-MM ID) | |
| | 17 | 1 | **4D-9986** | 1 | SEAL-O-RING | |
| | 18 | 1 | **101-2480** | 1 | COVER | |
| M | 19 | 1 | **8T-4138** | 2 | BOLT (M6X1X20-MM) | |
| | 20 | 1 | **5B-9318** | 1 | BALL | |
| | 21 | 1 | **6E-3007** | 1 | SPRING | |
| | 22 | 1 | **6E-4502** | 1 | PLUG | |
| | 23 | 1 | **4J-7533** | 1 | SEAL-O-RING | |
| | 24 | 1 | **6E-3019** | 1 | VALVE | |
| | 25 | 1 | **6E-5153** | 1 | SPRING | |
| | 26 | 1 | **108-2187** | 1 | PLUG-PIPE | |
| | 27 | 1 | **9J-0403** | 2 | SPRING | |
| | 28 | 1 | **9J-0404** | 2 | PLUG | |
| | 29 | 1 | **9S-8005** | 1 | PLUG-O RING | |
| | 30 | 1 | **3K-0360** | 3 | SEAL-O-RING | |
| | 31 | 1 | **106-3659** | 1 | PISTON | |
| | 32 | 1 | **6E-3013** | 2 | SEAT | |
| | 33 | 1 | **106-3658** | 2 | VALVE | |
| | 34 | 1 | **111-8233** | 1 | SPRING | |

M-METRIC PART
Y-SEPARATE ILLUSTRATION

*6E-3036* **VALVE GP-CONTROL** *(contd.)* **i01457313**

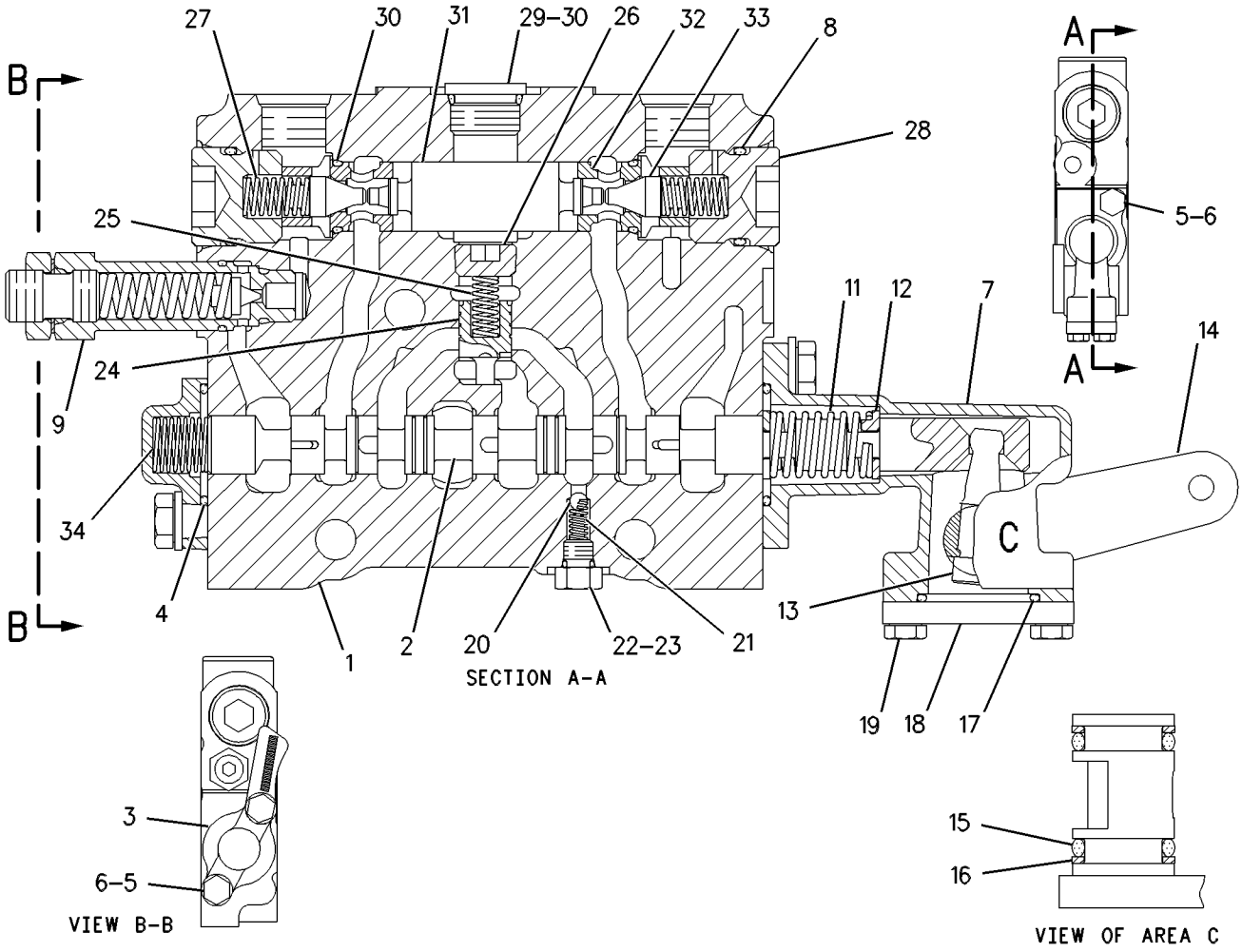


GRAPHIC #1 **<END>** g00546111

# HYDRAULIC SYSTEM

## *6E-3037* VALVE GP-CONTROL—BLADE LIFT

**S/N: CCA1-UP**

**PART OF 250-0543, 6E-3038 VALVE GP-BANK 4, 104-8645, 104-8646, 250-0550, 262-7291 VALVE GP-BANK 5, 104-8648, 153-8910, 250-0567, 250-0573 VALVE GP-BANK 6, 104-8647, 104-8651, 153-8912, 250-0571, 263-6435, 263-6436, 263-6437, 4Z-6346 VALVE GP-BANK 7**

**ALSO AN ATTACHMENT**

**SMCS-5051** **i02592446**

| NOTE | REF NO | GRAPHIC REF | PART NUMBER | QTY | PART NAME 1 2 3 4 5 6 (PRODUCT LEVEL) | SEE PAGE |
|---|---|---|---|---|---|---|
| | 1 | 1 | **6E-3043** | 1 | BODY | |
| | 2 | 1 | **101-1150** | 1 | STEM | |
| | 3 | 1 | **101-1980** | 1 | HOUSING | |
| | 4 | 1 | **101-1972** | 1 | DETENT | |
| | 5 | 1 | **5B-9318** | 1 | BALL | |
| M | 6 | 1 | **8T-6869** | 2 | BOLT (M8X1.25X60-MM) | |
| | 7 | 1 | **2K-8199** | 2 | SEAL-O-RING | |
| M | 8 | 1 | **8T-4189** | 2 | BOLT (M8X1.25X20-MM) | |
| | 9 | 1 | **8T-4224** | 4 | WASHER-HARD (8.8X16X2-MM THK) | |
| | 10 | 1 | **101-1984** | 1 | BODY | |
| | 11 | 1 | **102-7412** | 1 | SPRING | |
| | 12 | 1 | **101-1973** | 4 | RETAINER | |
| | 13 | 1 | **101-1971** | 1 | LEVER | |
| | 14 | 1 | **101-1982** | 1 | LEVER AS | |
| | 15 | 1 | **8M-4437** | 2 | SEAL-O-RING | |
| | 16 | 1 | **101-1983** | 2 | RING-BACKUP (14.65-MM ID) | |
| | 17 | 1 | **4D-9986** | 1 | SEAL-O-RING | |
| | 18 | 1 | **101-2480** | 1 | COVER | |
| M | 19 | 1 | **8T-4138** | 2 | BOLT (M6X1X20-MM) | |
| | 20 | 1 | **6E-3007** | 1 | SPRING | |
| | 21 | 1 | **6E-4502** | 1 | PLUG | |
| | 22 | 1 | **4J-7533** | 1 | SEAL-O-RING | |
| | 23 | 1 | **6E-3019** | 1 | VALVE | |
| | 24 | 1 | **6E-5153** | 1 | SPRING | |
| | 25 | 1 | **108-2187** | 1 | PLUG-PIPE | |
| | 26 | 1 | **9S-8005** | 1 | PLUG-O RING | |
| | 27 | 1 | **3K-0360** | 3 | SEAL-O-RING | |
| | 28 | 1 | **106-3660** | 2 | PISTON | |
| | 29 | 1 | **6E-3013** | 2 | SEAT | |
| | 30 | 1 | **106-3658** | 2 | VALVE | |
| | 31 | 1 | **9J-0403** | 2 | SPRING | |
| | 32 | 1 | **9J-0404** | 2 | PLUG | |
| | 33 | 1 | **7J-9933** | 2 | SEAL-O-RING | |
| Y | 34 | 1 | *6E-3033* | 1 | VALVE GP-RELIEF (BLADE LIFT) | 1029 |
| | 35 | 1 | **107-0520** | 1 | PLATE-IDENTIFICATION | |
| Y | 36 | 1 | **108-4916** | 1 | DETENT GP-CONTROL VALVE | 664 |
| | 37 | 1 | **111-8234** | 1 | SPRING | |

M-METRIC PART
Y-SEPARATE ILLUSTRATION

*6E-3037* **VALVE GP-CONTROL** *(contd.)* **i02592446**

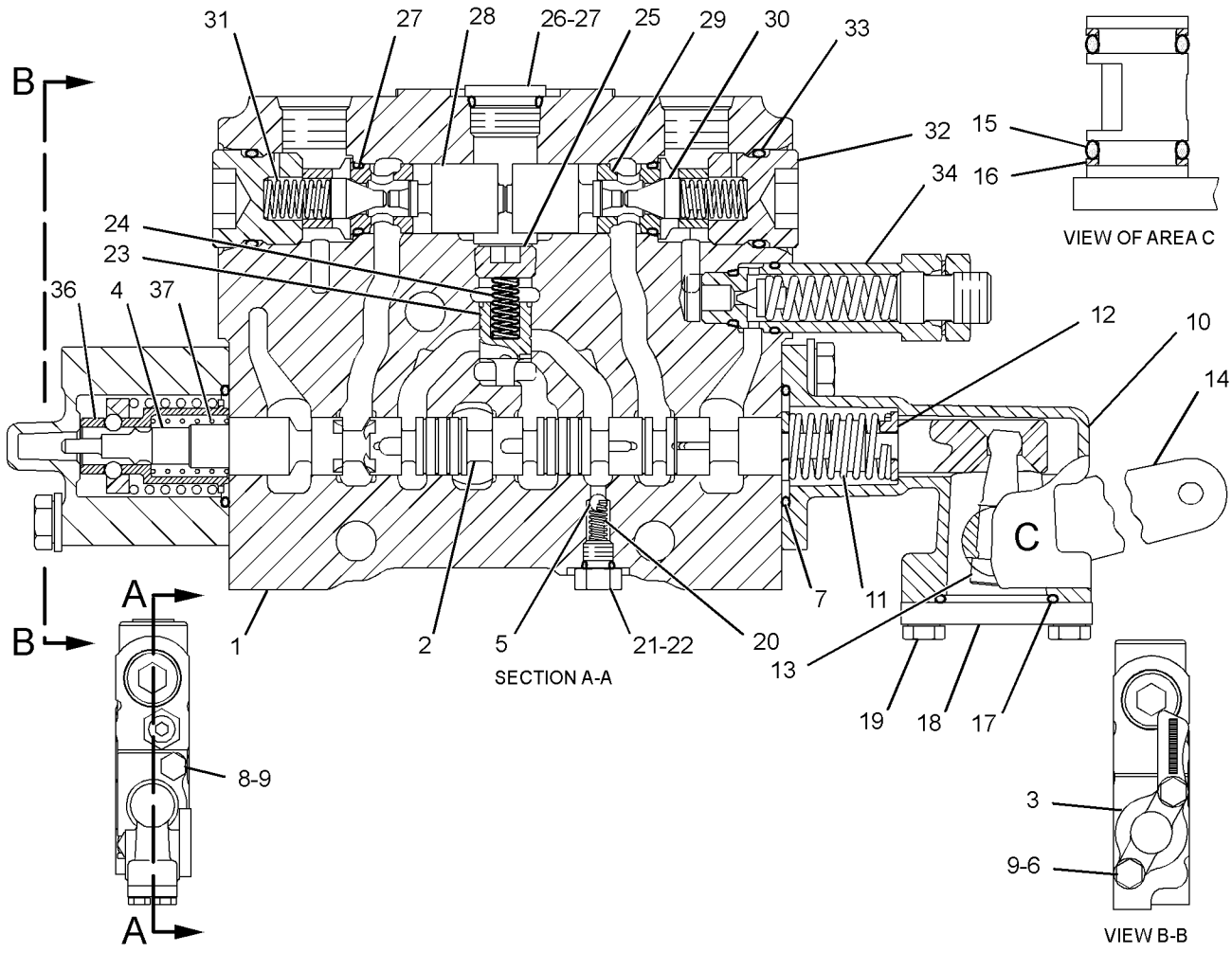


GRAPHIC #1 **<END>** g01297588

# HYDRAULIC SYSTEM

## 107-0543 VALVE GP-CONTROL—SCARIFIER

**S/N: CCA1-UP**

**PART OF 104-8646, 262-7291 VALVE GP-BANK 5, 104-8647, 263-6435 VALVE GP-BANK 7**

**AN ATTACHMENT**

**SMCS-5051** **i02592685**

| NOTE | REF NO | GRAPHIC REF | PART NUMBER | QTY | PART NAME 1 2 3 4 5 6 (PRODUCT LEVEL) | SEE PAGE |
|---|---|---|---|---|---|---|
| | 1 | 1 | **6E-4599** | 1 | BODY | |
| | 2 | 1 | **101-1148** | 1 | STEM | |
| | 3 | 1 | **101-1978** | 1 | COVER | |
| | 4 | 1 | **2K-8199** | 2 | SEAL-O-RING | |
| M | 5 | 1 | **8T-4189** | 4 | BOLT (M8X1.25X20-MM) | |
| | 6 | 1 | **8T-4224** | 4 | WASHER-HARD (8.8X16X2-MM THK) | |
| | 7 | 1 | **101-1984** | 1 | BODY | |
| | 8 | 1 | **7J-9933** | 2 | SEAL-O-RING | |
| | 9 | 1 | **111-8233** | 1 | SPRING | |
| Y | 10 | 1 | **139-8473** | 1 | VALVE GP-RELIEF (SCARIFIER) | 1039 |
| | 11 | 1 | **102-7412** | 1 | SPRING | |
| | 12 | 1 | **101-1973** | 4 | RETAINER | |
| | 13 | 1 | **101-1971** | 1 | LEVER | |
| | 14 | 1 | **101-1982** | 1 | LEVER AS | |
| | 15 | 1 | **8M-4437** | 2 | SEAL-O-RING | |
| | 16 | 1 | **101-1983** | 2 | RING-BACKUP (14.65-MM ID) | |
| | 17 | 1 | **4D-9986** | 1 | SEAL-O-RING | |
| | 18 | 1 | **101-2480** | 1 | COVER | |
| M | 19 | 1 | **8T-4138** | 2 | BOLT (M6X1X20-MM) | |
| | 20 | 1 | **5B-9318** | 1 | BALL | |
| | 21 | 1 | **6E-3007** | 1 | SPRING | |
| | 22 | 1 | **6E-4502** | 1 | PLUG | |
| | 23 | 1 | **4J-7533** | 1 | SEAL-O-RING | |
| | 24 | 1 | **6E-3019** | 1 | VALVE | |
| | 25 | 1 | **6E-5153** | 1 | SPRING | |
| | 26 | 1 | **108-2187** | 1 | PLUG-PIPE | |
| | 27 | 1 | **9J-0403** | 2 | SPRING | |
| | 28 | 1 | **9J-0404** | 2 | PLUG | |
| | 29 | 1 | *148-8395* | 1 | PLUG AS | |
| | | 1 | **3K-0360** | 1 | SEAL-O-RING | |
| | | 1 | **9S-8005** | 1 | PLUG-O RING | |
| | 30 | 1 | **3K-0360** | 2 | SEAL-O-RING | |
| | 31 | 1 | **106-3659** | 1 | PISTON | |
| | 32 | 1 | **6E-3013** | 2 | SEAT | |
| | 33 | 1 | **106-3658** | 2 | VALVE | |

M-METRIC PART
Y-SEPARATE ILLUSTRATION

**107-0543 VALVE GP-CONTROL** *(contd. )* **i02592685**

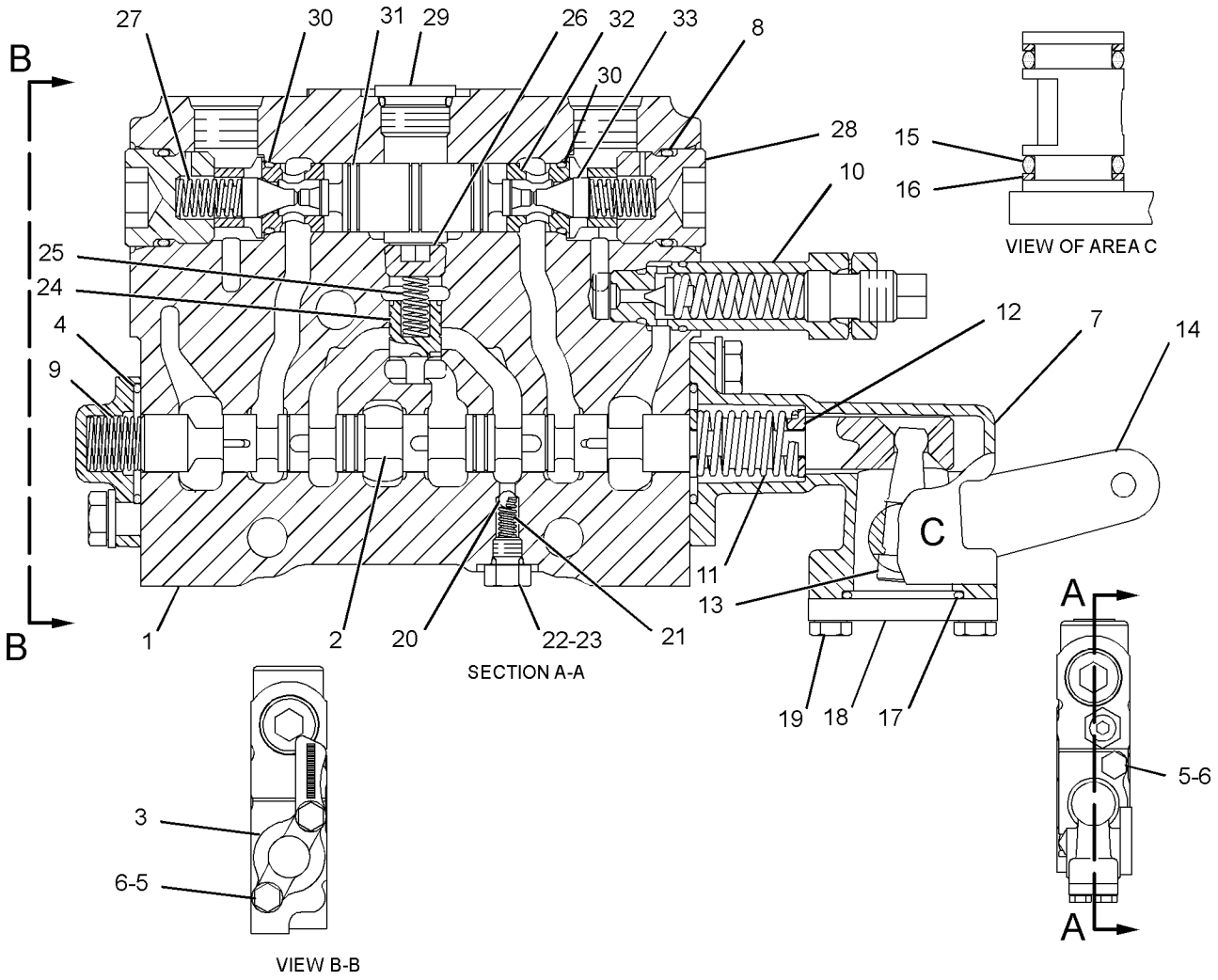


GRAPHIC #1 **<END>** g01297597

# HYDRAULIC SYSTEM

## 107-0545 VALVE GP-CONTROL—RIPPER

**S/N: CCA1-UP**

**PART OF 104-8645, 250-0550 VALVE GP-BANK 5, 153-8910, 250-0573 VALVE GP-BANK 6, 104-8651, 153-8912, 250-0571, 263-6436, 263-6437, 4Z-6346 VALVE GP-BANK 7 AN ATTACHMENT**

**SMCS-5051** **i02592706**

| NOTE | REF NO | GRAPHIC REF | PART NUMBER | QTY | PART NAME 1 2 3 4 5 6 (PRODUCT LEVEL) | SEE PAGE |
|---|---|---|---|---|---|---|
| | 1 | 1 | **6E-4599** | 1 | BODY | |
| | 2 | 1 | **101-1148** | 1 | STEM | |
| | 3 | 1 | **101-1978** | 1 | COVER | |
| | 4 | 1 | **2K-8199** | 2 | SEAL-O-RING | |
| M | 5 | 1 | **8T-4189** | 4 | BOLT (M8X1.25X20-MM) | |
| | 6 | 1 | **8T-4224** | 4 | WASHER-HARD (8.8X16X2-MM THK) | |
| | 7 | 1 | **101-1984** | 1 | BODY | |
| | 8 | 1 | **7J-9933** | 2 | SEAL-O-RING | |
| CY | 9 | 1 | **139-8472** | 1 | VALVE GP-RELIEF (DIRECT OPERATED) (RIPPER) | 1038 |
| | 11 | 1 | **102-7412** | 1 | SPRING | |
| | 12 | 1 | **101-1973** | 4 | RETAINER | |
| | 13 | 1 | **101-1971** | 1 | LEVER | |
| | 14 | 1 | **101-1982** | 1 | LEVER AS | |
| | 15 | 1 | **8M-4437** | 2 | SEAL-O-RING | |
| | 16 | 1 | **101-1983** | 2 | RING-BACKUP (14.65-MM ID) | |
| | 17 | 1 | **4D-9986** | 1 | SEAL-O-RING | |
| | 18 | 1 | **101-2480** | 1 | COVER | |
| M | 19 | 1 | **8T-4138** | 2 | BOLT (M6X1X20-MM) | |
| | 20 | 1 | **5B-9318** | 1 | BALL | |
| | 21 | 1 | **6E-3007** | 1 | SPRING | |
| | 22 | 1 | **6E-4502** | 1 | PLUG | |
| | 23 | 1 | **4J-7533** | 1 | SEAL-O-RING | |
| | 24 | 1 | **6E-3019** | 1 | VALVE | |
| | 25 | 1 | **6E-5153** | 1 | SPRING | |
| | 26 | 1 | **108-2187** | 1 | PLUG-PIPE | |
| | 27 | 1 | **9J-0403** | 2 | SPRING | |
| | 28 | 1 | **9J-0404** | 2 | PLUG | |
| | 29 | 1 | *148-8395* | 1 | PLUG AS | |
| | | 1 | **3K-0360** | 1 | SEAL-O-RING | |
| | | 1 | **9S-8005** | 1 | PLUG-O RING | |
| | 30 | 1 | **3K-0360** | 2 | SEAL-O-RING | |
| C | 31 | 1 | **106-3659** | 1 | PISTON | |
| | 32 | 1 | **6E-3013** | 2 | SEAT | |
| | 33 | 1 | **106-3658** | 2 | VALVE | |
| | 34 | 1 | **111-8233** | 1 | SPRING | |

C-CHANGE FROM PREVIOUS TYPE
M-METRIC PART
Y-SEPARATE ILLUSTRATION

**107-0545 VALVE GP-CONTROL** *(contd. )* **i02592706**

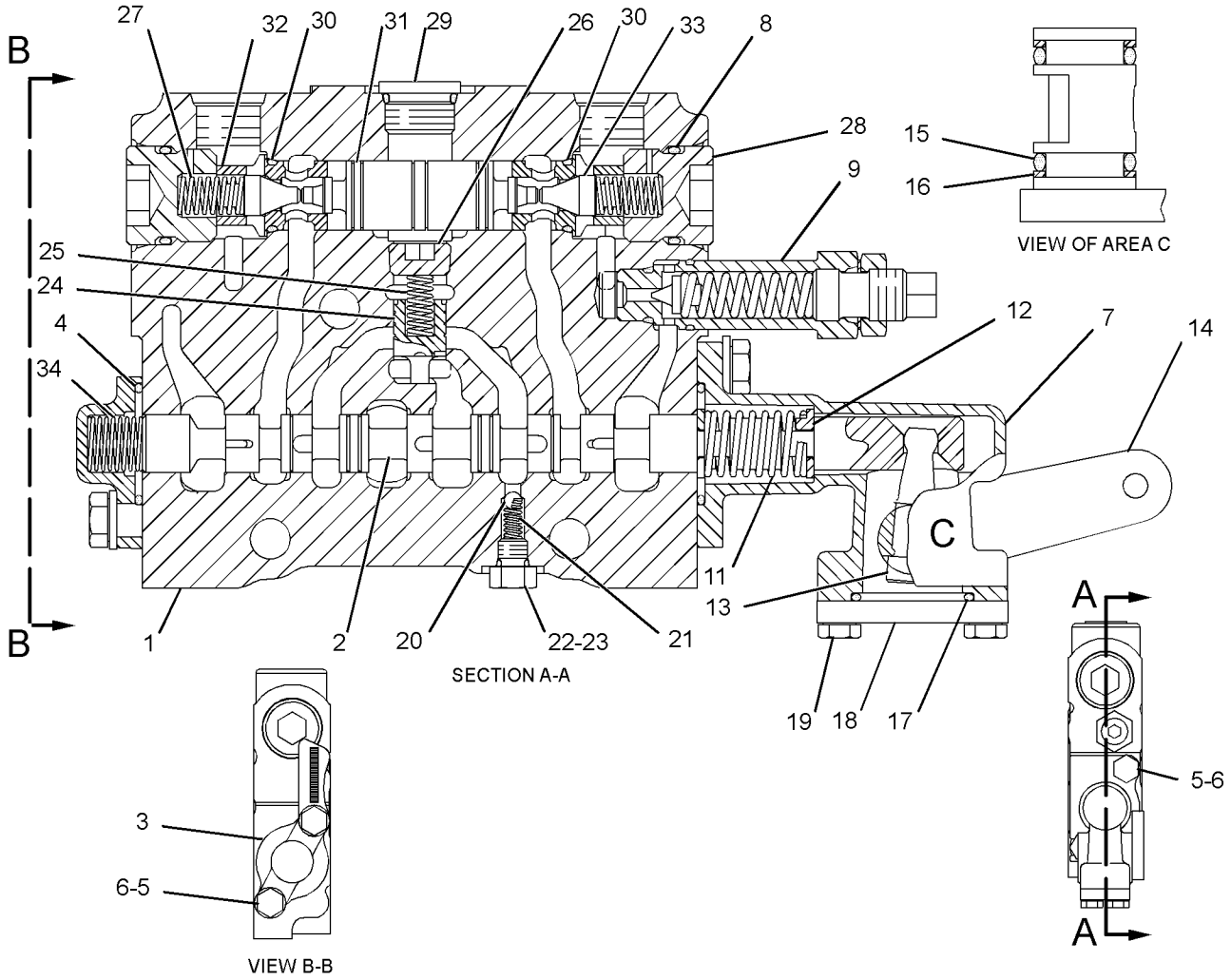


GRAPHIC #1 **<END>** g01294333

# HYDRAULIC SYSTEM

## 107-0547 VALVE GP-CONTROL—DOZER LIFT, PLOW

**S/N: CCA1-UP**

**PART OF 104-8671, 250-0548 VALVE GP-BANK 5, 115-1008, 250-0565 VALVE GP-BANK 6**

**AN ATTACHMENT**

**SMCS-5051** **i02585303**

| NOTE | REF NO | GRAPHIC REF | PART NUMBER | QTY | PART NAME 1 2 3 4 5 6 (PRODUCT LEVEL) | SEE PAGE |
|---|---|---|---|---|---|---|
| | 1 | 1 | **6E-3059** | 1 | BODY | |
| | 2 | 1 | **221-3678** | 1 | STEM | |
| | 3 | 1 | **101-1980** | 1 | HOUSING | |
| Y | 5 | 1 | **108-4916** | 1 | DETENT GP-CONTROL VALVE (PLOW, BULLDOZER LIFT) | 664 |
| | 6 | 1 | **5B-9318** | 1 | BALL | |
| M | 7 | 1 | **8T-6869** | 2 | BOLT (M8X1.25X60-MM) | |
| | 8 | 1 | **2K-8199** | 2 | SEAL-O-RING | |
| M | 9 | 1 | **8T-4189** | 2 | BOLT (M8X1.25X20-MM) | |
| | 10 | 1 | **8T-4224** | 4 | WASHER-HARD (8.8X16X2-MM THK) | |
| | 11 | 1 | **101-1984** | 1 | BODY | |
| | 12 | 1 | **102-7412** | 1 | SPRING | |
| | 13 | 1 | **101-1973** | 4 | RETAINER | |
| | 14 | 1 | **101-1971** | 1 | LEVER | |
| | 15 | 1 | **101-1970** | 1 | LEVER AS | |
| | 16 | 1 | **8M-4437** | 2 | SEAL-O-RING | |
| | 17 | 1 | **101-1983** | 2 | RING-BACKUP (14.65-MM ID) | |
| | 18 | 1 | **4D-9986** | 1 | SEAL-O-RING | |
| | 19 | 1 | **101-2480** | 1 | COVER | |
| M | 20 | 1 | **8T-4138** | 2 | BOLT (M6X1X20-MM) | |
| | 21 | 1 | **6E-3007** | 1 | SPRING | |
| | 22 | 1 | **6E-4502** | 1 | PLUG | |
| | 23 | 1 | **4J-7533** | 1 | SEAL-O-RING | |
| | 24 | 1 | **6E-3019** | 1 | VALVE | |
| | 25 | 1 | **6E-5153** | 1 | SPRING | |
| | 26 | 1 | **108-2187** | 1 | PLUG-PIPE | |
| | 28 | 1 | **3K-0360** | 2 | SEAL-O-RING | |
| | 29 | 1 | **106-3660** | 2 | PISTON | |
| | 30 | 1 | **6E-3013** | 2 | SEAT | |
| | 31 | 1 | **106-3658** | 2 | VALVE | |
| | 32 | 1 | **9J-0403** | 2 | SPRING | |
| | 33 | 1 | **9J-0404** | 2 | PLUG | |
| | 34 | 1 | **7J-9933** | 2 | SEAL-O-RING | |
| CY | 35 | 1 | **222-7774** | 1 | VALVE GP-RELIEF (PLOW, BULLDOZER LIFT) | 1042 |
| | 36 | 1 | **111-8234** | 1 | SPRING | |
| | 37 | 1 | *148-8395* | 1 | PLUG AS | |
| | | 1 | **9S-8005** | 1 | PLUG-O RING | |
| | | 1 | **3K-0360** | 1 | SEAL-O-RING | |

C-CHANGE FROM PREVIOUS TYPE
M-METRIC PART
Y-SEPARATE ILLUSTRATION

**107-0547 VALVE GP-CONTROL** *(contd. )* **i02585303**

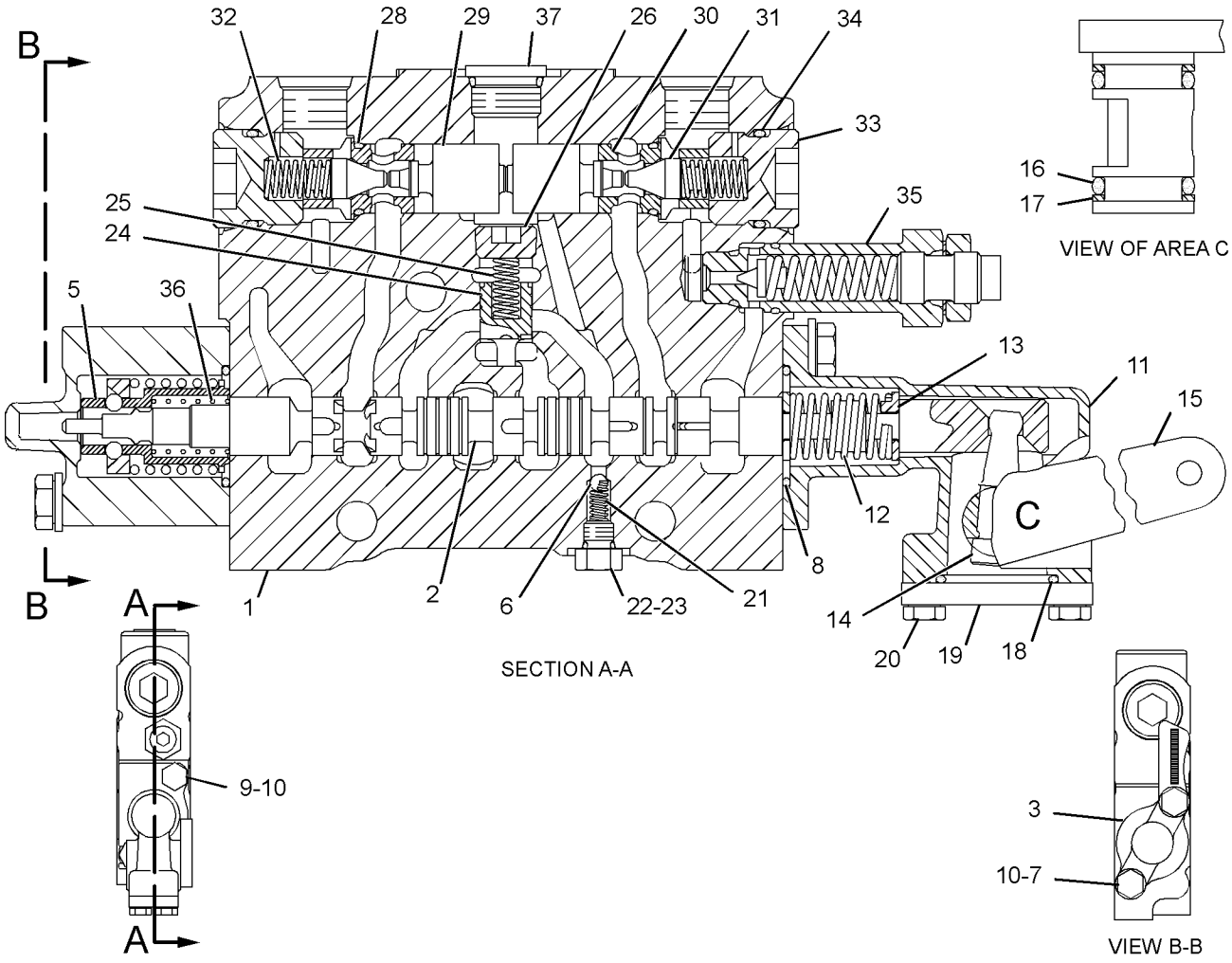


GRAPHIC #1 **<END>** g01294335

# HYDRAULIC SYSTEM

## 115-1007 VALVE GP-CONTROL

**S/N: CCA1-UP**

**PART OF 115-1008, 130-3124, 250-0552, 250-0565 VALVE GP-BANK 6, 250-0576, 4Z-6267 VALVE GP-BANK 7**

**AN ATTACHMENT**

**SMCS-5051** **i02592754**

| NOTE | REF NO | GRAPHIC REF | PART NUMBER | QTY | PART NAME 1 2 3 4 5 6 (PRODUCT LEVEL) | SEE PAGE |
|---|---|---|---|---|---|---|
| | 1 | 1 | **6E-4599** | 1 | BODY | |
| | 2 | 1 | **102-4578** | 1 | STEM | |
| | 3 | 1 | **101-1978** | 1 | COVER | |
| | 4 | 1 | **2K-8199** | 2 | SEAL-O-RING | |
| M | 5 | 1 | **8T-4189** | 4 | BOLT (M8X1.25X20-MM) | |
| | 6 | 1 | **8T-4224** | 4 | WASHER-HARD (8.8X16X2-MM THK) | |
| | 7 | 1 | **101-1984** | 1 | BODY | |
| | 8 | 1 | **7J-9933** | 2 | SEAL-O-RING | |
| Y | 9 | 1 | **101-4147** | 1 | VALVE GP-RELIEF (PLOW, BULLDOZER ANGLE) | 1032 |
| | 10 | 1 | **111-8233** | 1 | SPRING | |
| | 11 | 1 | **102-7412** | 1 | SPRING | |
| | 12 | 1 | **101-1973** | 4 | RETAINER | |
| | 13 | 1 | **101-1971** | 1 | LEVER | |
| | 14 | 1 | **101-1970** | 1 | LEVER AS | |
| | 15 | 1 | **8M-4437** | 2 | SEAL-O-RING | |
| | 16 | 1 | **101-1983** | 2 | RING-BACKUP (14.65-MM ID) | |
| | 17 | 1 | **4D-9986** | 1 | SEAL-O-RING | |
| | 18 | 1 | **101-2480** | 1 | COVER | |
| M | 19 | 1 | **8T-4138** | 2 | BOLT (M6X1X20-MM) | |
| | 20 | 1 | **5B-9318** | 1 | BALL | |
| | 21 | 1 | **6E-3007** | 1 | SPRING | |
| | 22 | 1 | **6E-4502** | 1 | PLUG | |
| | 23 | 1 | **4J-7533** | 1 | SEAL-O-RING | |
| | 24 | 1 | **6E-3019** | 1 | VALVE | |
| | 25 | 1 | **6E-5153** | 1 | SPRING | |
| | 26 | 1 | **108-2187** | 1 | PLUG-PIPE | |
| | 27 | 1 | **9J-0403** | 2 | SPRING | |
| | 28 | 1 | **9J-0404** | 2 | PLUG | |
| | 29 | 1 | **9S-8005** | 1 | PLUG-O RING | |
| | 30 | 1 | **3K-0360** | 3 | SEAL-O-RING | |
| | 31 | 1 | **106-3659** | 1 | PISTON | |
| | 32 | 1 | **6E-3013** | 2 | SEAT | |
| | 33 | 1 | **106-3658** | 2 | VALVE | |

M-METRIC PART
Y-SEPARATE ILLUSTRATION

**115-1007 VALVE GP-CONTROL** *(contd. )* **i02592754**

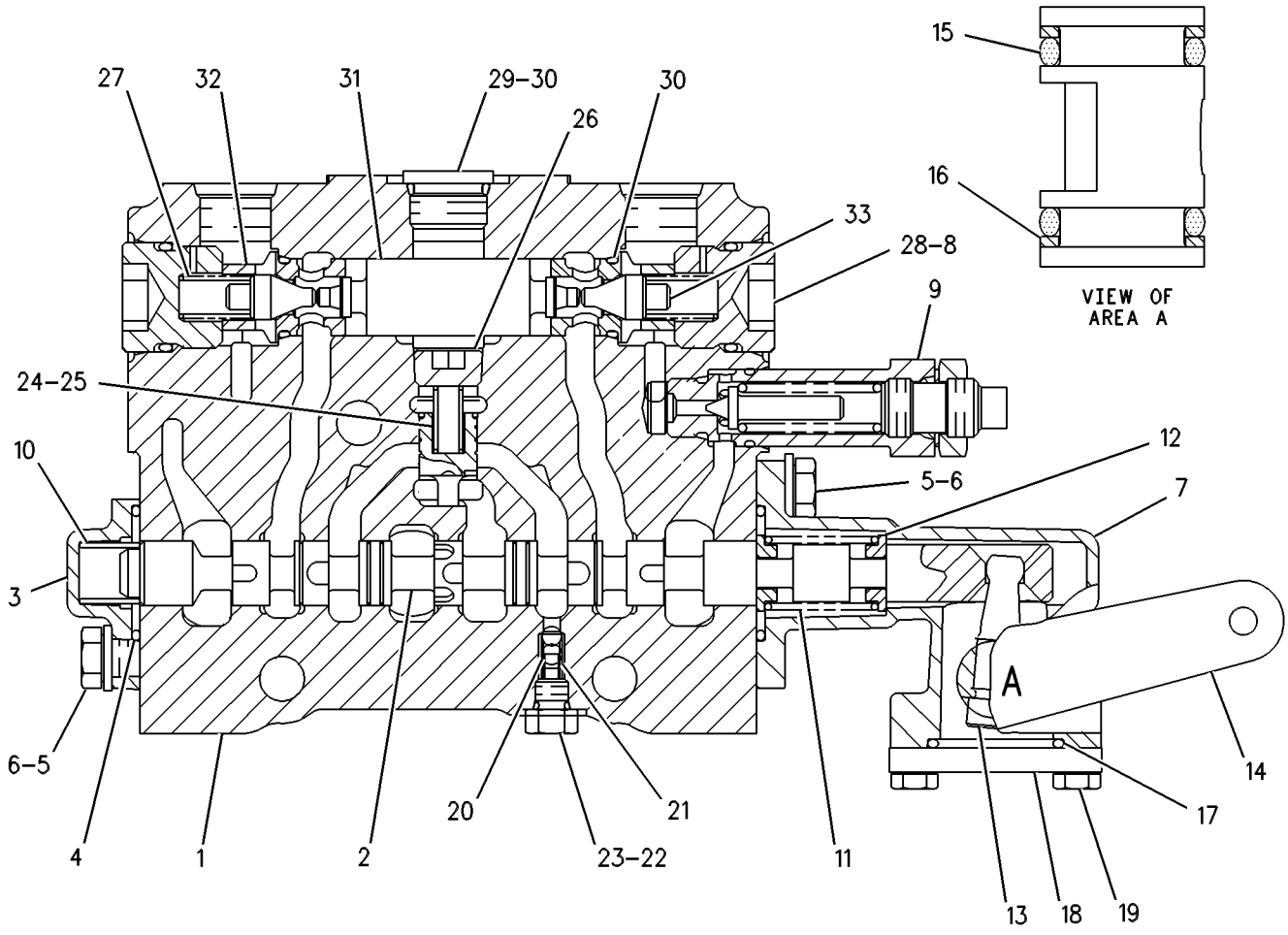


GRAPHIC #1 **<END>** g00108832

# HYDRAULIC SYSTEM

## 119-9549 VALVE GP-CONTROL–SCARIFIER

**S/N: CCA1-UP**

**PART OF 130-3119, 250-0547 VALVE GP-BANK 5, 130-3120, 250-0568 VALVE GP-BANK 7**

**AN ATTACHMENT**

**SMCS-5051** **i02592775**

| NOTE | REF NO | GRAPHIC REF | PART NUMBER | QTY | PART NAME 1 2 3 4 5 6 (PRODUCT LEVEL) | SEE PAGE |
|---|---|---|---|---|---|---|
| | 1 | 1 | **6E-4599** | 1 | BODY | |
| | 2 | 1 | **128-2972** | 1 | STEM | |
| | 3 | 1 | **101-1978** | 1 | COVER | |
| | 4 | 1 | **2K-8199** | 2 | SEAL-O-RING | |
| M | 5 | 1 | **8T-4189** | 4 | BOLT (M8X1.25X20-MM) | |
| | 6 | 1 | **8T-4224** | 4 | WASHER-HARD (8.8X16X2-MM THK) | |
| | 7 | 1 | **101-1984** | 1 | BODY | |
| | 8 | 1 | **7J-9933** | 2 | SEAL-O-RING | |
| | 9 | 1 | **111-8233** | 1 | SPRING | |
| CY | 10 | 1 | **139-8476** | 1 | VALVE GP-RELIEF (SCARIFIER, WING LIFT) | 1041 |
| | 11 | 1 | **102-7412** | 1 | SPRING | |
| | 12 | 1 | **101-1973** | 4 | RETAINER | |
| | 13 | 1 | **101-1971** | 1 | LEVER | |
| | 14 | 1 | **101-1982** | 1 | LEVER AS | |
| | 15 | 1 | **8M-4437** | 2 | SEAL-O-RING | |
| | 16 | 1 | **101-1983** | 2 | RING-BACKUP (14.65-MM ID) | |
| | 17 | 1 | **4D-9986** | 1 | SEAL-O-RING | |
| | 18 | 1 | **101-2480** | 1 | COVER | |
| M | 19 | 1 | **8T-4138** | 2 | BOLT (M6X1X20-MM) | |
| | 20 | 1 | **5B-9318** | 1 | BALL | |
| | 21 | 1 | **6E-3007** | 1 | SPRING | |
| | 22 | 1 | **6E-4502** | 1 | PLUG | |
| | 23 | 1 | **4J-7533** | 1 | SEAL-O-RING | |
| | 24 | 1 | **6E-3019** | 1 | VALVE | |
| | 25 | 1 | **6E-5153** | 1 | SPRING | |
| | 26 | 1 | **108-2187** | 1 | PLUG-PIPE | |
| | 27 | 1 | **9J-0403** | 2 | SPRING | |
| | 28 | 1 | **9J-0404** | 2 | PLUG | |
| | 29 | 1 | **9S-8005** | 1 | PLUG-O RING | |
| | 30 | 1 | **3K-0360** | 3 | SEAL-O-RING | |
| | 31 | 1 | **106-3659** | 1 | PISTON | |
| | 32 | 1 | **6E-3013** | 2 | SEAT | |
| | 33 | 1 | **106-3658** | 2 | VALVE | |

C-CHANGE FROM PREVIOUS TYPE
M-METRIC PART
Y-SEPARATE ILLUSTRATION

**119-9549 VALVE GP-CONTROL** *(contd. )* **i02592775**

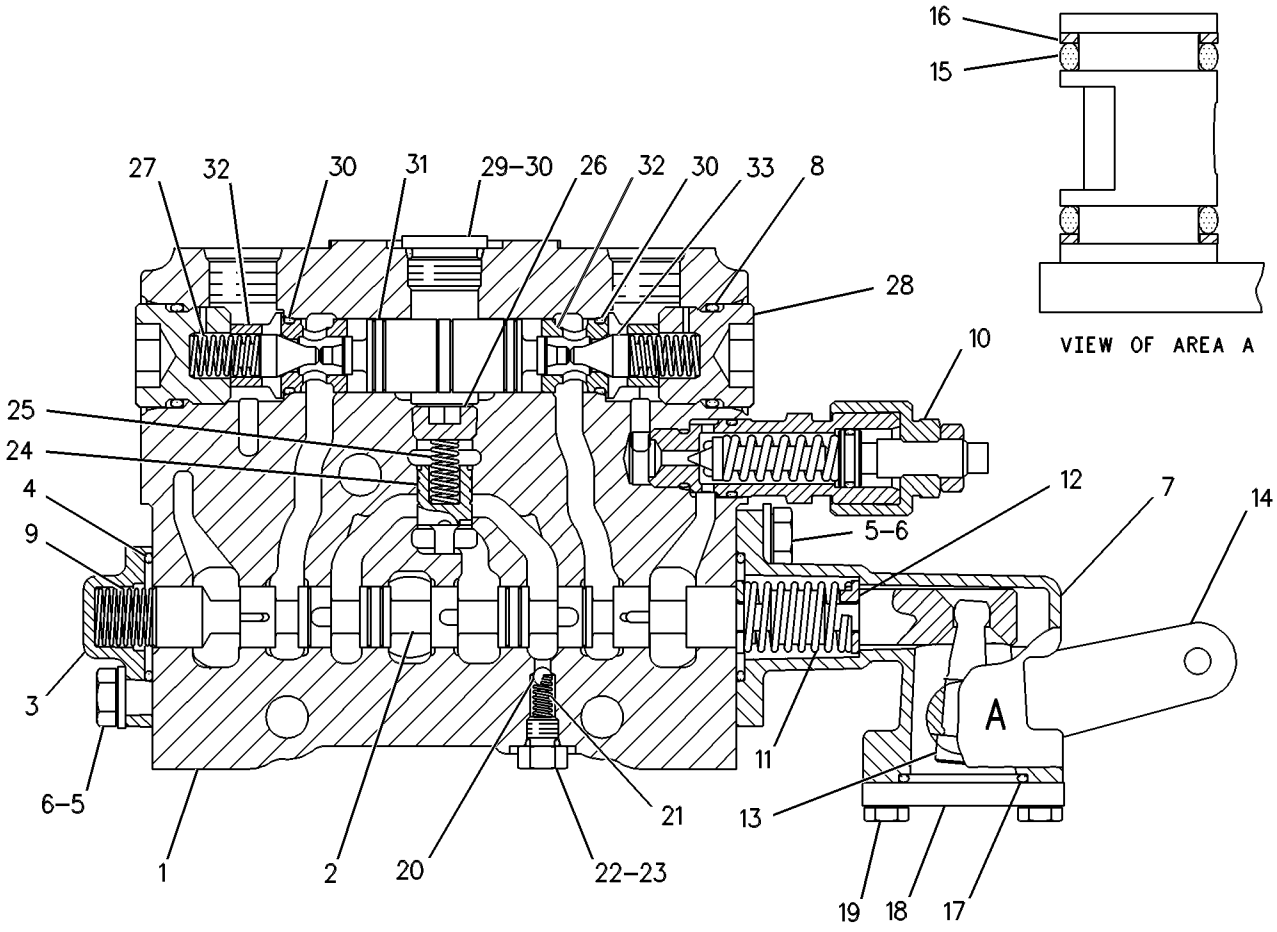


GRAPHIC #1 **<END>** g00277255

# HYDRAULIC SYSTEM

## 119-9550 VALVE GP-CONTROL–RIPPER

**S/N: CCA1-UP**

**PART OF 130-3118, 250-0551 VALVE GP-BANK 5, 130-3122, 250-0572 VALVE GP-BANK 7**

**AN ATTACHMENT**

**SMCS-5051** **i01668214**

| NOTE | REF NO | GRAPHIC REF | PART NUMBER | QTY | PART NAME 1 2 3 4 5 6 (PRODUCT LEVEL) | SEE PAGE |
|---|---|---|---|---|---|---|
| | 1 | 1 | **6E-4599** | 1 | BODY | |
| | 2 | 1 | **101-1152** | 1 | STEM | |
| | 3 | 1 | **101-1978** | 1 | COVER | |
| | 4 | 1 | **2K-8199** | 2 | SEAL-O-RING | |
| M | 5 | 1 | **8T-4189** | 4 | BOLT (M8X1.25X20-MM) | |
| | 6 | 1 | **8T-4224** | 4 | WASHER-HARD (8.8X16X2-MM THK) | |
| | 7 | 1 | **101-1984** | 1 | BODY | |
| | 8 | 1 | **7J-9933** | 2 | SEAL-O-RING | |
| | 9 | 1 | **111-8233** | 1 | SPRING | |
| Y | 10 | 1 | *116-0374* | 1 | VALVE GP-RELIEF (RIPPER) | 1037 |
| | 11 | 1 | **102-7412** | 1 | SPRING | |
| | 12 | 1 | **101-1973** | 4 | RETAINER | |
| | 13 | 1 | **101-1971** | 1 | LEVER | |
| | 14 | 1 | **101-1982** | 1 | LEVER AS | |
| | 15 | 1 | **8M-4437** | 2 | SEAL-O-RING | |
| | 16 | 1 | **101-1983** | 2 | RING-BACKUP (14.65-MM ID) | |
| | 17 | 1 | **4D-9986** | 1 | SEAL-O-RING | |
| | 18 | 1 | **101-2480** | 1 | COVER | |
| M | 19 | 1 | **8T-4138** | 2 | BOLT (M6X1X20-MM) | |
| | 20 | 1 | **5B-9318** | 1 | BALL | |
| | 21 | 1 | **6E-3007** | 1 | SPRING | |
| | 22 | 1 | **6E-4502** | 1 | PLUG | |
| | 23 | 1 | **4J-7533** | 1 | SEAL-O-RING | |
| | 24 | 1 | **6E-3019** | 1 | VALVE (SEQUENCE) | |
| | 25 | 1 | **6E-5153** | 1 | SPRING | |
| | 26 | 1 | **108-2187** | 1 | PLUG-PIPE | |
| | 27 | 1 | **9J-0403** | 2 | SPRING | |
| | 28 | 1 | **9J-0404** | 2 | PLUG | |
| | 29 | 1 | **9S-8005** | 1 | PLUG-O RING | |
| | 30 | 1 | **3K-0360** | 3 | SEAL-O-RING | |
| | 31 | 1 | **106-3659** | 1 | PISTON | |
| | 32 | 1 | **6E-3013** | 2 | SEAT | |
| | 33 | 1 | **106-3658** | 2 | VALVE (LOCK VALVE POPPET) | |

M-METRIC PART
Y-SEPARATE ILLUSTRATION

**119-9550 VALVE GP-CONTROL** *(contd. )* **i01668214**

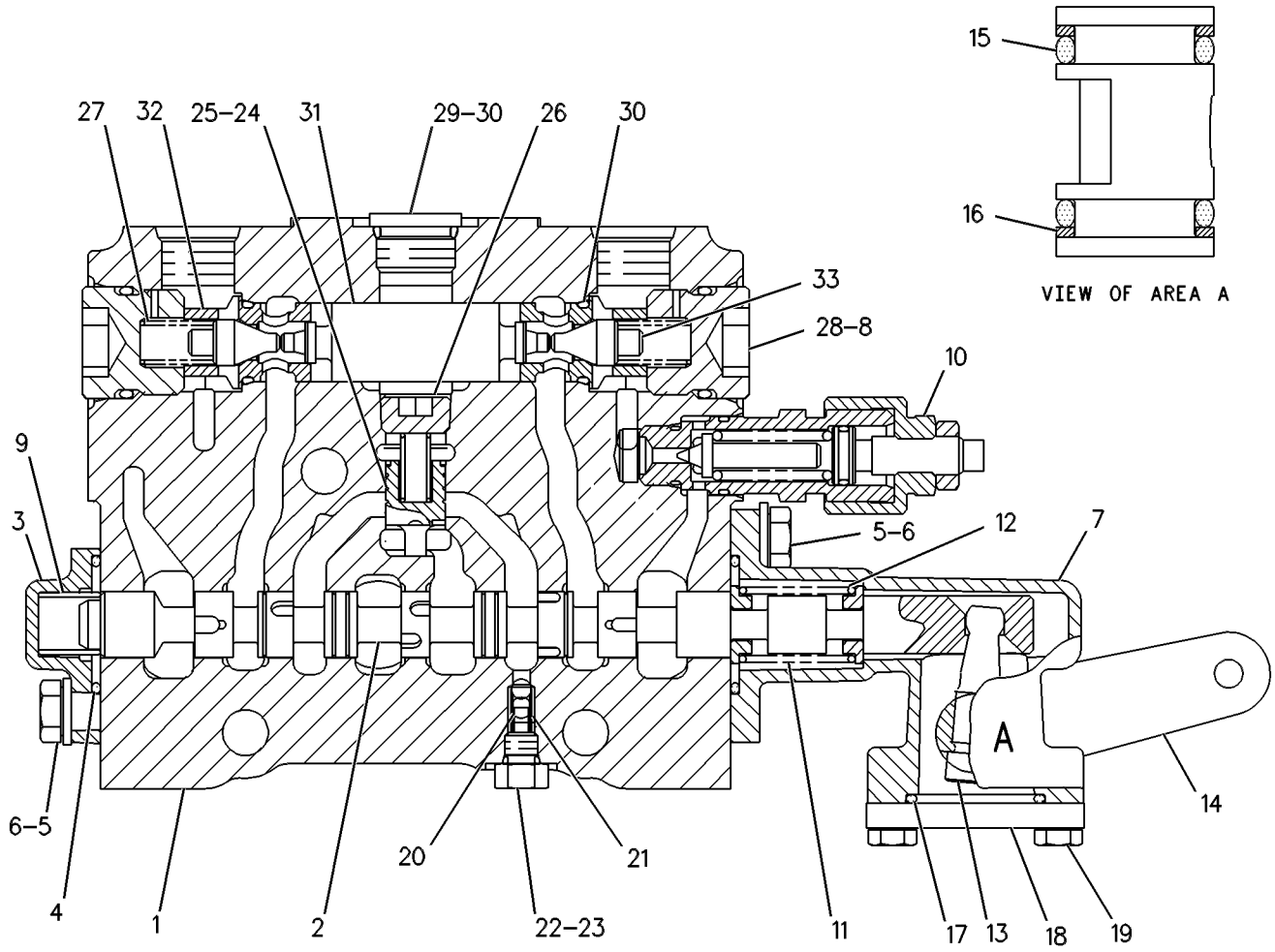


GRAPHIC #1 **<END>** g00108897

# HYDRAULIC SYSTEM

## 128-8647 VALVE GP-CONTROL–BLADE LIFT

**S/N: CCA1-UP**

**PART OF 130-3116, 250-0546 VALVE GP-BANK 4, 130-3123, 250-0549 VALVE GP-BANK 5, 130-3124, 250-0552 VALVE GP-BANK 6, 250-0576, 4Z-6267 VALVE GP-BANK 7 AN ATTACHMENT**

**SMCS-5051** **i02592797**

| NOTE | REF NO | GRAPHIC REF | PART NUMBER | QTY | PART NAME 1 2 3 4 5 6 (PRODUCT LEVEL) | SEE PAGE |
|---|---|---|---|---|---|---|
| | 1 | 1 | **128-8645** | 1 | BODY | |
| | 2 | 1 | **101-1150** | 1 | STEM | |
| | 3 | 1 | **9S-8001** | 1 | PLUG | |
| | 4 | 1 | **101-1972** | 1 | DETENT | |
| Y | 5 | 1 | **130-3535** | 1 | DETENT GP-CONTROL VALVE (BLADE LIFT, RH) | 665 |
| | 6 | 1 | **5B-9318** | 1 | BALL | |
| | 7 | 1 | **2K-8199** | 1 | SEAL-O-RING | |
| M | 8 | 1 | **8T-4189** | 2 | BOLT (M8X1.25X20-MM) | |
| | 9 | 1 | **8T-4224** | 2 | WASHER-HARD (8.8X16X2-MM THK) | |
| | 10 | 1 | **101-1984** | 1 | BODY | |
| | 11 | 1 | **102-7412** | 1 | SPRING | |
| | 12 | 1 | **101-1973** | 4 | RETAINER | |
| | 13 | 1 | **101-1971** | 1 | LEVER | |
| | 14 | 1 | **101-1970** | 1 | LEVER AS | |
| | 15 | 1 | **8M-4437** | 2 | SEAL-O-RING | |
| | 16 | 1 | **101-1983** | 2 | RING-BACKUP (14.65-MM ID) | |
| | 17 | 1 | **4D-9986** | 1 | SEAL-O-RING | |
| | 18 | 1 | **101-2480** | 1 | COVER | |
| M | 19 | 1 | **8T-4138** | 2 | BOLT (M6X1X20-MM) | |
| | 20 | 1 | **6E-3007** | 1 | SPRING | |
| | 21 | 1 | **6E-4502** | 1 | PLUG | |
| | 22 | 1 | **4J-7533** | 2 | SEAL-O-RING | |
| | 23 | 1 | **6E-3019** | 1 | VALVE | |
| | 24 | 1 | **6E-5153** | 1 | SPRING | |
| | 25 | 1 | **108-2187** | 1 | PLUG-PIPE | |
| Y | 26 | 1 | *129-1054* | 1 | VALVE GP-PURGE | 1026 |
| | 27 | 1 | **3K-0360** | 2 | SEAL-O-RING | |
| | 28 | 1 | **106-3660** | 2 | PISTON | |
| | 29 | 1 | **6E-3013** | 2 | SEAT | |
| | 30 | 1 | **106-3658** | 2 | VALVE | |
| | 31 | 1 | **9J-0403** | 2 | SPRING | |
| | 32 | 1 | **9J-0404** | 2 | PLUG | |
| | 33 | 1 | **7J-9933** | 2 | SEAL-O-RING | |
| Y | 34 | 1 | *6E-3033* | 1 | VALVE GP-RELIEF (DOZER LIFT, PLOW) | 1029 |
| | 35 | 1 | **111-8234** | 1 | SPRING | |

M-METRIC PART
Y-SEPARATE ILLUSTRATION

**128-8647 VALVE GP-CONTROL** *(contd. )* **i02592797**

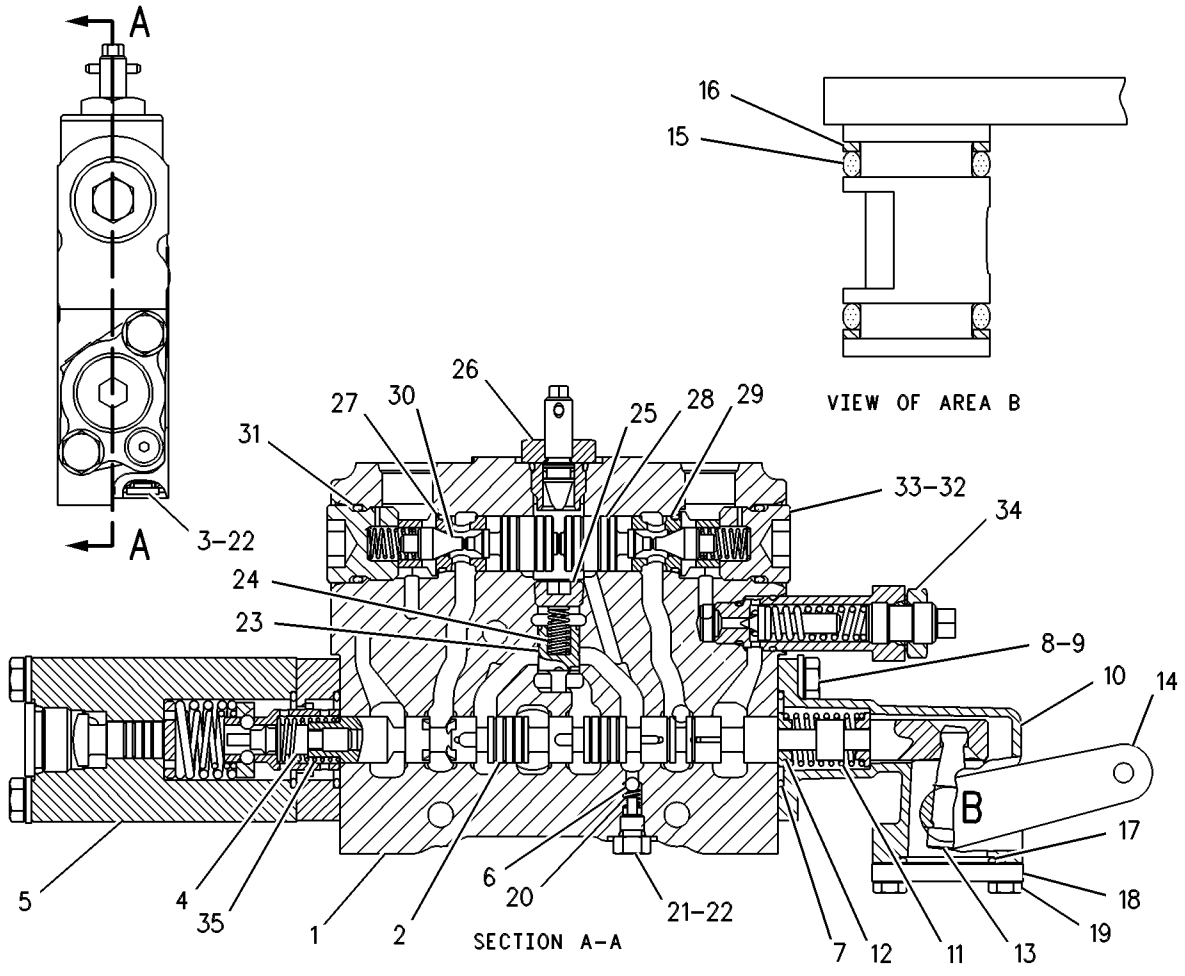


GRAPHIC #1 **<END>** g00109439

# HYDRAULIC SYSTEM

## 130-3110 VALVE GP-CONTROL–BLADE LIFT

**S/N: CCA1-UP**

**PART OF 130-3117, 250-0545 VALVE GP-BANK 4, 130-3118, 130-3119, 250-0547, 250-0551 VALVE GP-BANK 5, 130-3121, 250-0566 VALVE GP-BANK 6, 130-3120, 130-3122, 250-0568, 250-0572 VALVE GP-BANK 7**

**AN ATTACHMENT**

**SMCS-5051** **i02592946**

| NOTE | REF NO | GRAPHIC REF | PART NUMBER | QTY | PART NAME 1 2 3 4 5 6 (PRODUCT LEVEL) | SEE PAGE |
|---|---|---|---|---|---|---|
| | 1 | 1 | **128-8645** | 1 | BODY | |
| | 2 | 1 | **101-1150** | 1 | STEM | |
| | 3 | 1 | **9S-8001** | 1 | PLUG | |
| | 4 | 1 | **101-1972** | 1 | DETENT | |
| Y | 5 | 1 | **130-3535** | 1 | DETENT GP-CONTROL VALVE (BLADE LIFT) | 665 |
| | 6 | 1 | **5B-9318** | 1 | BALL | |
| | 7 | 1 | **2K-8199** | 1 | SEAL-O-RING | |
| M | 8 | 1 | **8T-4189** | 2 | BOLT (M8X1.25X20-MM) | |
| | 9 | 1 | **8T-4224** | 2 | WASHER-HARD (8.8X16X2-MM THK) | |
| | 10 | 1 | **101-1984** | 1 | BODY | |
| | 11 | 1 | **102-7412** | 1 | SPRING | |
| | 12 | 1 | **101-1973** | 4 | RETAINER | |
| | 13 | 1 | **101-1971** | 1 | LEVER | |
| | 14 | 1 | **101-1982** | 1 | LEVER AS | |
| | 15 | 1 | **8M-4437** | 2 | SEAL-O-RING | |
| | 16 | 1 | **101-1983** | 2 | RING-BACKUP (14.65-MM ID) | |
| | 17 | 1 | **4D-9986** | 1 | SEAL-O-RING | |
| | 18 | 1 | **101-2480** | 1 | COVER | |
| M | 19 | 1 | **8T-4138** | 2 | BOLT (M6X1X20-MM) | |
| | 20 | 1 | **6E-3007** | 1 | SPRING | |
| | 21 | 1 | **6E-4502** | 1 | PLUG | |
| | 22 | 1 | **4J-7533** | 2 | SEAL-O-RING | |
| | 23 | 1 | **6E-3019** | 1 | VALVE | |
| | 24 | 1 | **6E-5153** | 1 | SPRING | |
| | 25 | 1 | **108-2187** | 1 | PLUG-PIPE | |
| Y | 26 | 1 | *129-1054* | 1 | VALVE GP-PURGE (3/4-16 THD) | 1026 |
| | 27 | 1 | **3K-0360** | 2 | SEAL-O-RING | |
| | 28 | 1 | **106-3660** | 2 | PISTON | |
| | 29 | 1 | **6E-3013** | 2 | SEAT | |
| | 30 | 1 | **106-3658** | 2 | VALVE | |
| | 31 | 1 | **9J-0403** | 2 | SPRING | |
| | 32 | 1 | **9J-0404** | 2 | PLUG | |
| | 33 | 1 | **7J-9933** | 2 | SEAL-O-RING | |
| Y | 34 | 1 | *6E-3033* | 1 | VALVE GP-RELIEF (DOZER LIFT, PLOW) | 1029 |
| | 35 | 1 | **111-8234** | 1 | SPRING | |

M-METRIC PART
Y-SEPARATE ILLUSTRATION

## 130-3110 VALVE GP-CONTROL *(contd. )* i02592946

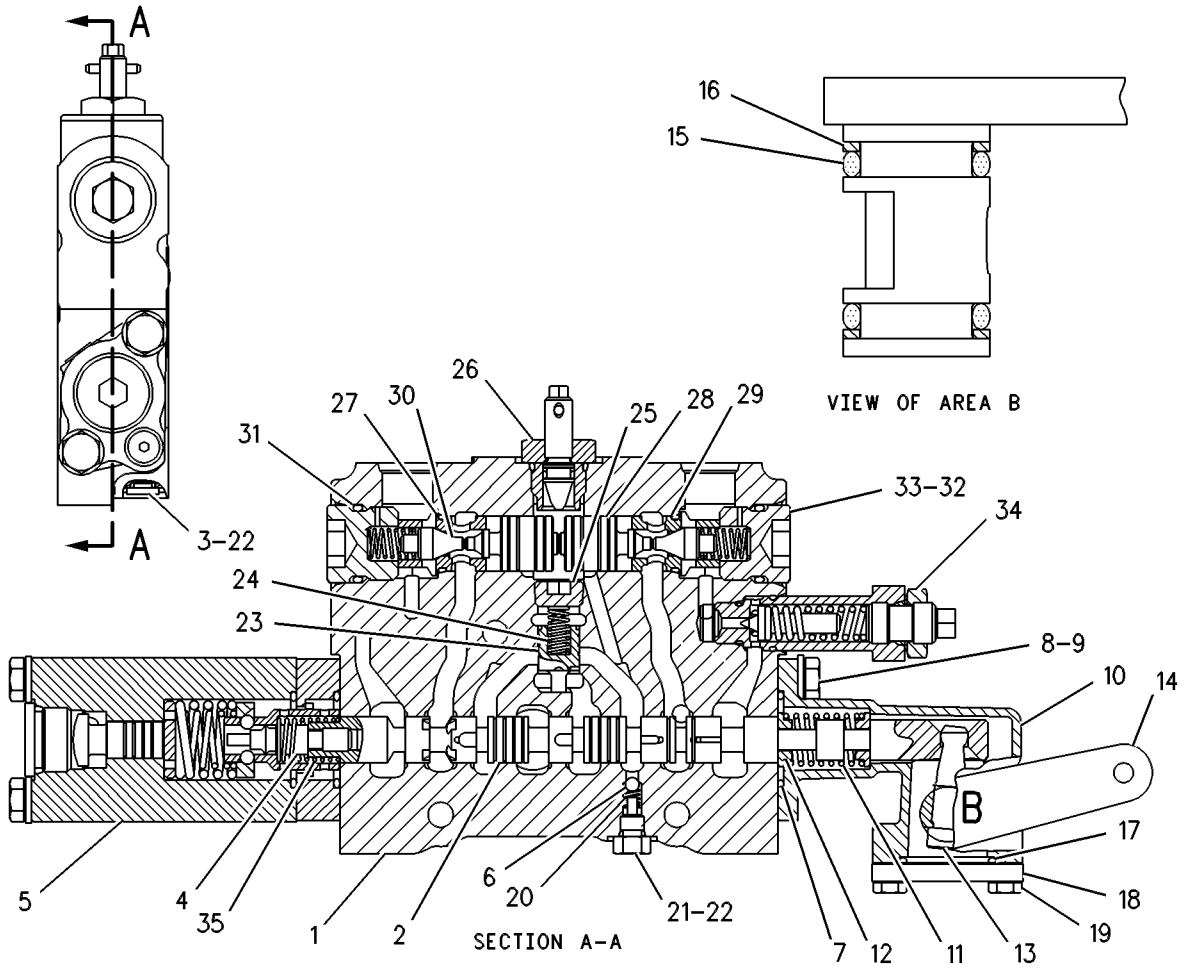


GRAPHIC #1 **<END>** g00109438

# 130-3111 VALVE GP-CONTROL—DOZER LIFT, PLOW

**S/N: CCA1-UP**

**PART OF 130-3123, 250-0549 VALVE GP-BANK 5, 130-3124, 250-0552 VALVE GP-BANK 6, 250-0576, 4Z-6267 VALVE GP-BANK 7 AN ATTACHMENT**

**SMCS-5051** **i01624205**

| NOTE | REF NO | GRAPHIC REF | PART NUMBER | QTY | PART NAME 1 2 3 4 5 6 (PRODUCT LEVEL) | SEE PAGE |
|---|---|---|---|---|---|---|
| | 1 | 1 | **128-8646** | 1 | BODY | |
| | 2 | 1 | **101-1147** | 1 | STEM | |
| | 3 | 1 | **9S-8001** | 1 | PLUG | |
| | 4 | 1 | **101-1972** | 1 | DETENT | |
| Y | 5 | 1 | **130-3535** | 1 | DETENT GP-CONTROL VALVE (PLOW & BULLDOZER LIFT) | 665 |
| | 6 | 1 | **5B-9318** | 1 | BALL | |
| | 7 | 1 | **2K-8199** | 1 | SEAL-O-RING | |
| M | 8 | 1 | **8T-4189** | 2 | BOLT (M8X1.25X20-MM) | |
| | 9 | 1 | **8T-4224** | 2 | WASHER-HARD (8.8X16X2-MM THK) | |
| | 10 | 1 | **101-1984** | 1 | BODY | |
| | 11 | 1 | **102-7412** | 1 | SPRING | |
| | 12 | 1 | **101-1973** | 4 | RETAINER | |
| | 13 | 1 | **101-1971** | 1 | LEVER | |
| | 14 | 1 | **101-1970** | 1 | LEVER AS | |
| | 15 | 1 | **8M-4437** | 2 | SEAL-O-RING | |
| | 16 | 1 | **101-1983** | 2 | RING-BACKUP (14.65-MM ID) | |
| | 17 | 1 | **4D-9986** | 1 | SEAL-O-RING | |
| | 18 | 1 | **101-2480** | 1 | COVER | |
| M | 19 | 1 | **8T-4138** | 2 | BOLT (M6X1X20-MM) | |
| | 20 | 1 | **6E-3007** | 1 | SPRING | |
| | 21 | 1 | **6E-4502** | 1 | PLUG | |
| | 22 | 1 | **4J-7533** | 2 | SEAL-O-RING | |
| | 23 | 1 | **6E-3019** | 1 | VALVE | |
| | 24 | 1 | **6E-5153** | 1 | SPRING | |
| | 25 | 1 | **108-2187** | 1 | PLUG-PIPE | |
| Y | 26 | 1 | *129-1054* | 1 | VALVE GP-PURGE | 1026 |
| | 27 | 1 | **3K-0360** | 2 | SEAL-O-RING | |
| | 28 | 1 | **106-3660** | 2 | PISTON | |
| | 29 | 1 | **6E-3013** | 2 | SEAT | |
| | 30 | 1 | **106-3658** | 2 | VALVE | |
| | 31 | 1 | **9J-0403** | 2 | SPRING | |
| | 32 | 1 | **9J-0404** | 2 | PLUG | |
| | 33 | 1 | **7J-9933** | 2 | SEAL-O-RING | |
| Y | 34 | 1 | *6E-3033* | 1 | VALVE GP-RELIEF (PLOW & BULLDOZER LIFT) | 1029 |
| | 35 | 1 | **111-8234** | 1 | SPRING | |

M-METRIC PART
Y-SEPARATE ILLUSTRATION

**130-3111 VALVE GP-CONTROL** *(contd. )* **i01624205**

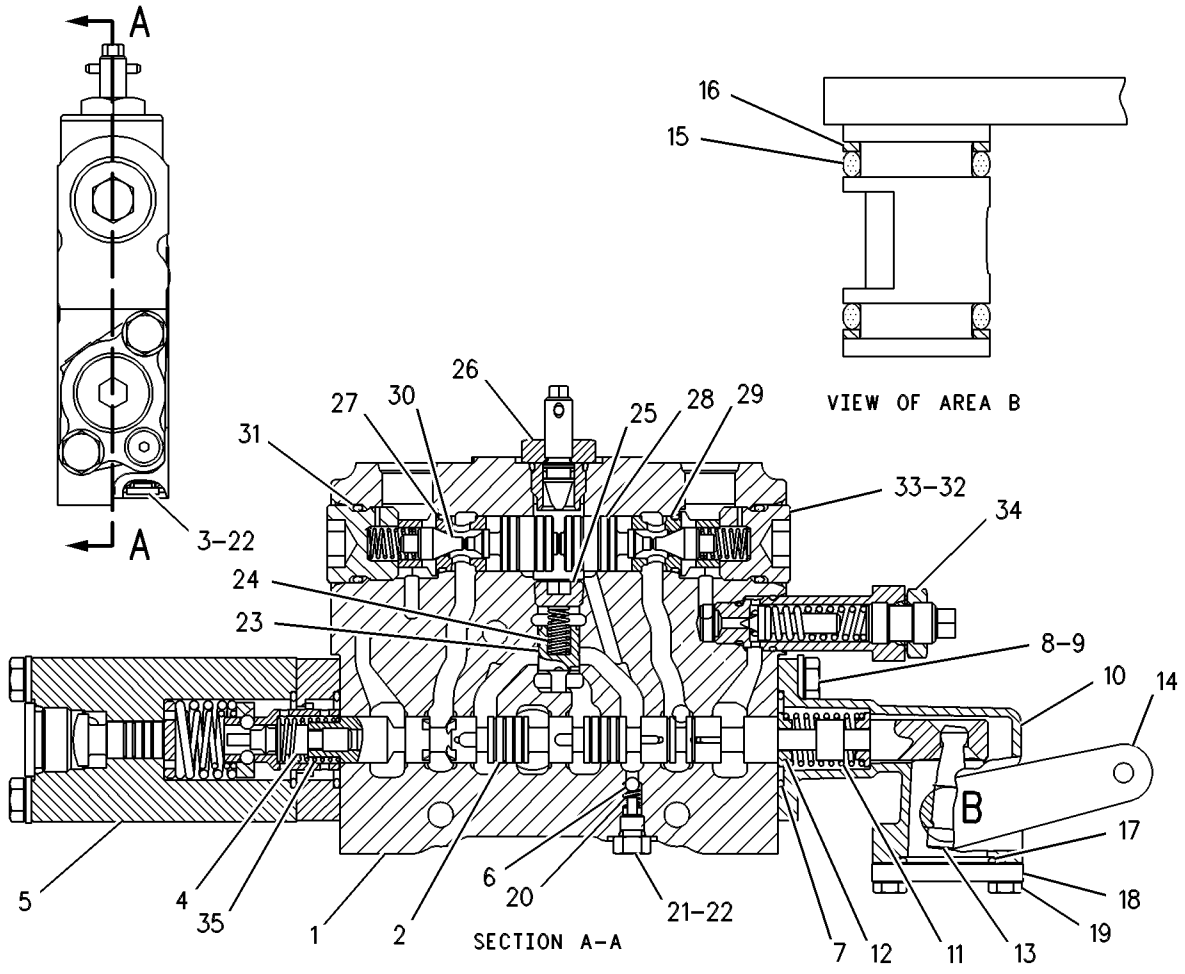


GRAPHIC #1 **<END>** g00109441

# HYDRAULIC SYSTEM

## 137-8104 VALVE GP-CONTROL—WING TILT

**S/N: CCA1-UP**

**PART OF 104-8648, 130-3121, 250-0566, 250-0567 VALVE GP-BANK 6, 104-8647, 104-8651, 130-3120, 130-3122, 250-0568, 250-0571, 250-0572, 263-6435 VALVE GP-BANK 7**

**AN ATTACHMENT**

**SMCS-5051** **i02592945**

| NOTE | REF NO | GRAPHIC REF | PART NUMBER | QTY | PART NAME 1 2 3 4 5 6 (PRODUCT LEVEL) | SEE PAGE |
|---|---|---|---|---|---|---|
| | 1 | 1 | **111-8233** | 1 | SPRING | |
| | 2 | 1 | **102-4577** | 1 | STEM | |
| | 3 | 1 | **101-1978** | 1 | COVER | |
| | 4 | 1 | **2K-8199** | 2 | SEAL-O-RING | |
| M | 5 | 1 | **8T-4189** | 4 | BOLT (M8X1.25X20-MM) | |
| | 6 | 1 | **8T-4224** | 4 | WASHER-HARD (8.8X16X2-MM THK) | |
| | 7 | 1 | **101-1984** | 1 | BODY | |
| | 8 | 1 | **7J-9933** | 2 | SEAL-O-RING | |
| | 9 | 1 | **106-3659** | 1 | PISTON | |
| | 10 | 1 | **4D-2297** | 1 | SEAL-O-RING | |
| | 11 | 1 | **102-7412** | 1 | SPRING | |
| | 12 | 1 | **101-1973** | 4 | RETAINER | |
| | 13 | 1 | **101-1971** | 1 | LEVER | |
| | 14 | 1 | **101-1982** | 1 | LEVER AS | |
| | 15 | 1 | **8M-4437** | 2 | SEAL-O-RING | |
| | 16 | 1 | **101-1983** | 2 | RING-BACKUP (14.65-MM ID) | |
| | 17 | 1 | **4D-9986** | 1 | SEAL-O-RING | |
| | 18 | 1 | **101-2480** | 1 | COVER | |
| M | 19 | 1 | **8T-4138** | 2 | BOLT (M6X1X20-MM) | |
| | 20 | 1 | **5B-9318** | 1 | BALL | |
| | 21 | 1 | **6E-3007** | 1 | SPRING | |
| | 22 | 1 | **6E-4502** | 1 | PLUG | |
| | 23 | 1 | **4J-7533** | 1 | SEAL-O-RING | |
| | 24 | 1 | **6E-3019** | 1 | VALVE | |
| | 25 | 1 | **6E-5153** | 1 | SPRING | |
| | 26 | 1 | **108-2187** | 1 | PLUG-PIPE | |
| | 27 | 1 | **9J-0404** | 2 | PLUG | |
| | 28 | 1 | **9S-8005** | 1 | PLUG-O RING | |
| | 29 | 1 | **3K-0360** | 1 | SEAL-O-RING | |
| Y | 30 | 1 | **139-8472** | 2 | VALVE GP-RELIEF (DIRECT OPERATED) | 1038 |
| | 31 | 1 | **6E-3013** | 2 | SEAT | |

M-METRIC PART
Y-SEPARATE ILLUSTRATION

**137-8104 VALVE GP-CONTROL** *(contd. )* **i02592945**

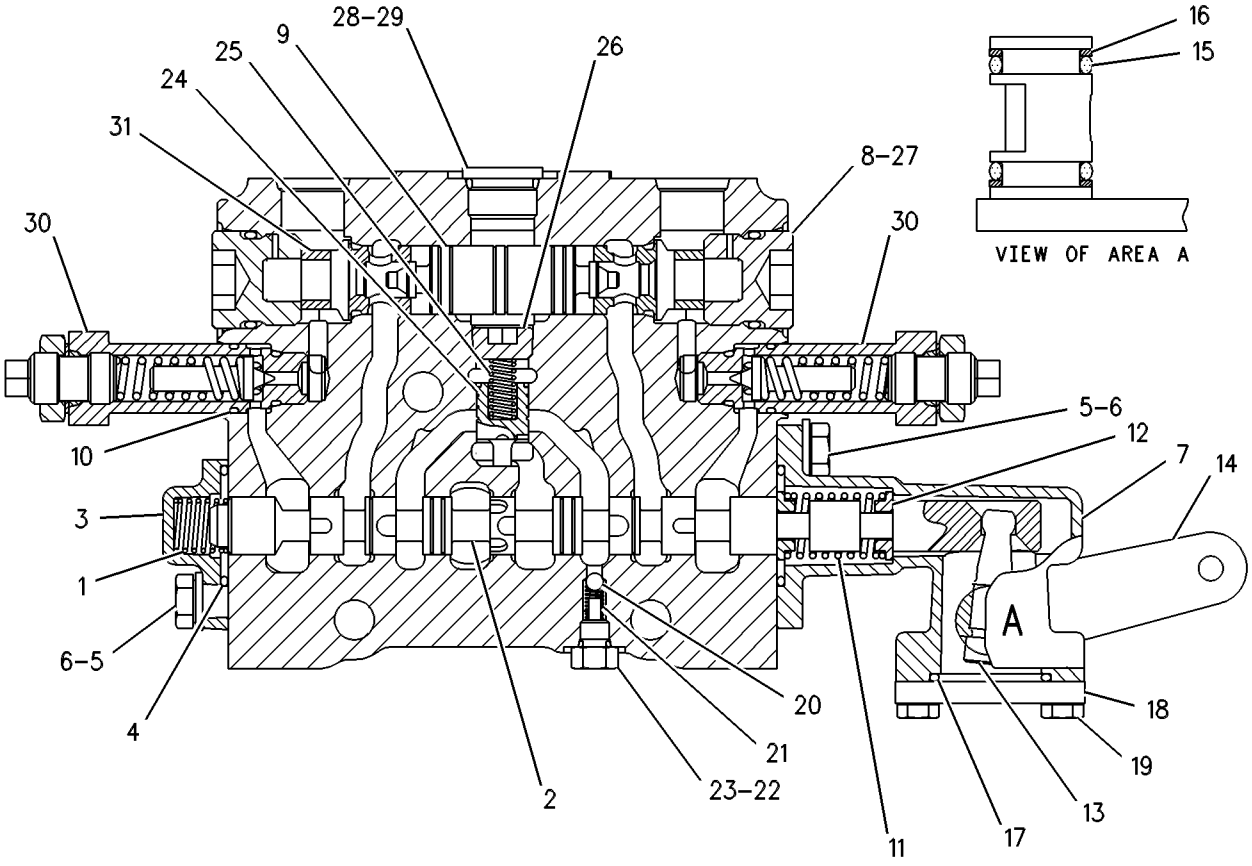


GRAPHIC #1 **<END>** g00109738

# HYDRAULIC SYSTEM

## 137-8106 VALVE GP-CONTROL—WING LIFT

**S/N: CCA1-UP**

**PART OF 104-8648, 250-0567 VALVE GP-BANK 6, 104-8647, 104-8651, 250-0571, 263-6435, 263-6436, 4Z-6346 VALVE GP-BANK 7**

**AN ATTACHMENT**

**SMCS-5051** **i02592944**

| NOTE | REF NO | GRAPHIC REF | PART NUMBER | QTY | PART NAME 1 2 3 4 5 6 (PRODUCT LEVEL) | SEE PAGE |
|---|---|---|---|---|---|---|
| | 1 | 1 | **6E-3013** | 2 | SEAT | |
| | 2 | 1 | **102-4578** | 1 | STEM | |
| | 3 | 1 | **101-1978** | 1 | COVER | |
| | 4 | 1 | **2K-8199** | 2 | SEAL-O-RING | |
| M | 5 | 1 | **8T-4189** | 4 | BOLT (M8X1.25X20-MM) | |
| | 6 | 1 | **8T-4224** | 4 | WASHER-HARD (8.8X16X2-MM THK) | |
| | 7 | 1 | **101-1984** | 1 | BODY | |
| | 8 | 1 | **7J-9933** | 2 | SEAL-O-RING | |
| | 9 | 1 | **106-3659** | 1 | PISTON | |
| | 10 | 1 | **111-8233** | 1 | SPRING | |
| | 11 | 1 | **102-7412** | 1 | SPRING | |
| | 12 | 1 | **101-1973** | 4 | RETAINER | |
| | 13 | 1 | **101-1971** | 1 | LEVER | |
| | 14 | 1 | **101-1982** | 1 | LEVER AS | |
| | 15 | 1 | **8M-4437** | 2 | SEAL-O-RING | |
| | 16 | 1 | **101-1983** | 2 | RING-BACKUP (14.65-MM ID) | |
| | 17 | 1 | **4D-9986** | 1 | SEAL-O-RING | |
| | 18 | 1 | **101-2480** | 1 | COVER | |
| M | 19 | 1 | **8T-4138** | 2 | BOLT (M6X1X20-MM) | |
| | 20 | 1 | **5B-9318** | 1 | BALL | |
| | 21 | 1 | **6E-3007** | 1 | SPRING | |
| | 22 | 1 | **6E-4502** | 1 | PLUG | |
| | 23 | 1 | **4J-7533** | 1 | SEAL-O-RING | |
| | 24 | 1 | **6E-3019** | 1 | VALVE | |
| | 25 | 1 | **6E-5153** | 1 | SPRING | |
| | 26 | 1 | **108-2187** | 1 | PLUG-PIPE | |
| | 27 | 1 | **9J-0404** | 2 | PLUG | |
| | 28 | 1 | **9S-8005** | 1 | PLUG-O RING | |
| | 29 | 1 | **3K-0360** | 1 | SEAL-O-RING | |
| Y | 30 | 1 | **139-8472** | 2 | VALVE GP-RELIEF (DIRECT OPERATED) | 1038 |

M-METRIC PART
Y-SEPARATE ILLUSTRATION

**137-8106 VALVE GP-CONTROL** *(contd. )* **i02592944**

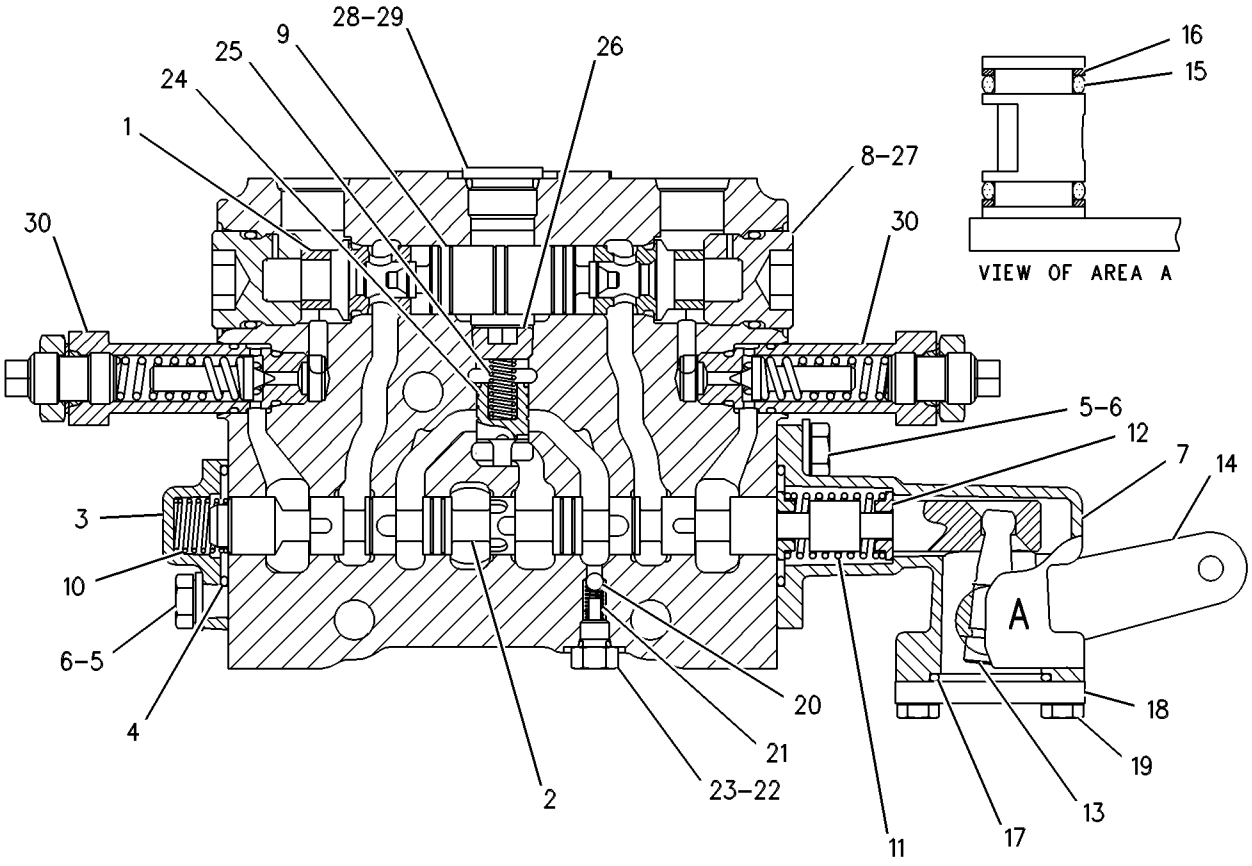


GRAPHIC #1 **<END>** g00109739

# HYDRAULIC SYSTEM

## 150-6649 VALVE GP-CONTROL—WING LIFT

**S/N: CCA1-UP**

**PART OF 130-3121, 250-0566 VALVE GP-BANK 6, 130-3120, 130-3122, 250-0568, 250-0572 VALVE GP-BANK 7**

**AN ATTACHMENT**

**SMCS-5051** **i02592856**

| NOTE | REF NO | GRAPHIC REF | PART NUMBER | QTY | PART NAME 1 2 3 4 5 6 (PRODUCT LEVEL) | SEE PAGE |
|---|---|---|---|---|---|---|
| | 1 | 1 | **137-8107** | 1 | BODY | |
| | 2 | 1 | **102-4578** | 1 | STEM | |
| | 3 | 1 | **101-1978** | 1 | COVER | |
| | 4 | 1 | **2K-8199** | 2 | SEAL-O-RING | |
| M | 5 | 1 | **8T-4189** | 4 | BOLT (M8X1.25X20-MM) | |
| | 6 | 1 | **8T-4224** | 4 | WASHER-HARD (8.8X16X2-MM THK) | |
| | 7 | 1 | **101-1984** | 1 | BODY | |
| | 8 | 1 | **7J-9933** | 2 | SEAL-O-RING | |
| | 9 | 1 | **106-3659** | 1 | PISTON | |
| | 10 | 1 | *150-8006* | 1 | PLATE-IDENTIFICATION | |
| | 11 | 1 | **102-7412** | 1 | SPRING | |
| | 12 | 1 | **101-1973** | 4 | RETAINER | |
| | 13 | 1 | **101-1971** | 1 | LEVER | |
| | 14 | 1 | **101-1982** | 1 | LEVER AS | |
| | 15 | 1 | **8M-4437** | 2 | SEAL-O-RING | |
| | 16 | 1 | **101-1983** | 2 | RING-BACKUP (14.65-MM ID) | |
| | 17 | 1 | **4D-9986** | 1 | SEAL-O-RING | |
| | 18 | 1 | **101-2480** | 1 | COVER | |
| M | 19 | 1 | **8T-4138** | 2 | BOLT (M6X1X20-MM) | |
| | 20 | 1 | **5B-9318** | 1 | BALL | |
| | 21 | 1 | **6E-3007** | 1 | SPRING | |
| | 22 | 1 | **6E-4502** | 1 | PLUG | |
| | 23 | 1 | **4J-7533** | 1 | SEAL-O-RING | |
| | 24 | 1 | **6E-3019** | 1 | VALVE | |
| | 25 | 1 | **6E-5153** | 1 | SPRING | |
| | 26 | 1 | **108-2187** | 1 | PLUG-PIPE | |
| | 27 | 1 | **9J-0404** | 2 | PLUG | |
| | 28 | 1 | **9S-8005** | 1 | PLUG-O RING | |
| | 29 | 1 | **3K-0360** | 3 | SEAL-O-RING | |
| | 30 | 1 | **6E-3013** | 2 | SEAT | |
| | 31 | 1 | **111-8233** | 1 | SPRING | |
| | 32 | 1 | **9J-0403** | 2 | SPRING | |
| | 33 | 1 | **106-3658** | 2 | VALVE | |
| Y | 34 | 1 | **139-8476** | 2 | VALVE GP-RELIEF (DIRECT OPERATED) | 1041 |

M-METRIC PART
Y-SEPARATE ILLUSTRATION

**150-6649 VALVE GP-CONTROL** *(contd. )* **i02592856**

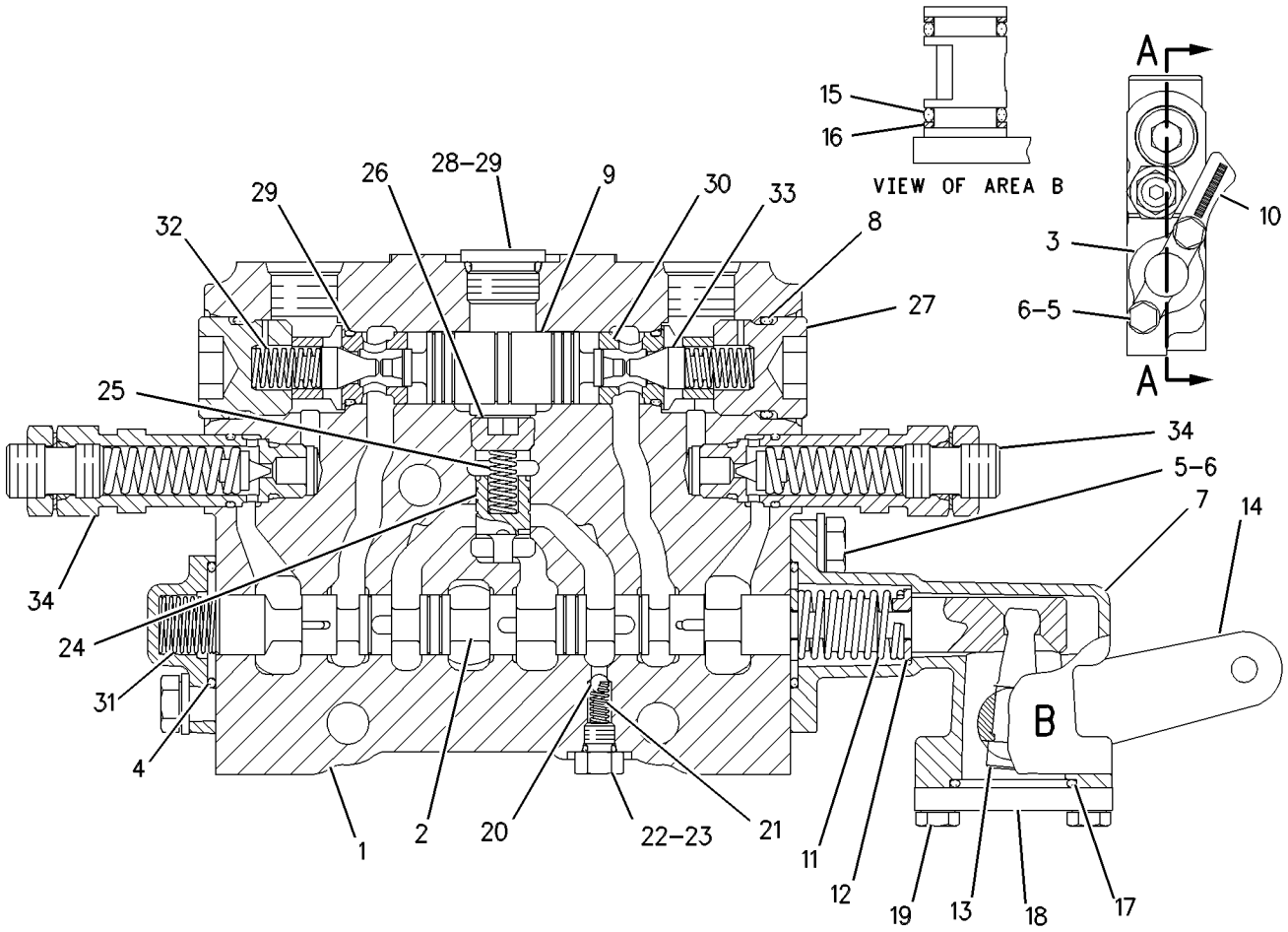


SECTION A-A

GRAPHIC #1 **<END>** g00381273

# HYDRAULIC SYSTEM

## 153-8905 VALVE GP-CONTROL—WING LIFT

**S/N: CCA1-UP**
**PART OF 153-8911, 250-0574 VALVE GP-BANK 6**
**AN ATTACHMENT**

**SMCS-5051** **i02592854**

| NOTE | REF NO | GRAPHIC REF | PART NUMBER | QTY | PART NAME 1 2 3 4 5 6 (PRODUCT LEVEL) | SEE PAGE |
|---|---|---|---|---|---|---|
| | 1 | 1 | **137-8107** | 1 | BODY | |
| | 2 | 1 | **102-4578** | 1 | STEM | |
| | 3 | 1 | **101-1978** | 1 | COVER | |
| | 4 | 1 | **2K-8199** | 2 | SEAL-O-RING | |
| M | 5 | 1 | **8T-4189** | 4 | BOLT (M8X1.25X20-MM) | |
| | 6 | 1 | **8T-4224** | 4 | WASHER-HARD (8.8X16X2-MM THK) | |
| | 7 | 1 | **101-1984** | 1 | BODY | |
| | 8 | 1 | **7J-9933** | 2 | SEAL-O-RING | |
| | 9 | 1 | **106-3659** | 1 | PISTON | |
| | 11 | 1 | **102-7412** | 1 | SPRING | |
| | 12 | 1 | **101-1973** | 4 | RETAINER | |
| | 13 | 1 | **101-1971** | 1 | LEVER | |
| | 14 | 1 | **101-1970** | 1 | LEVER AS | |
| | 15 | 1 | **8M-4437** | 2 | SEAL-O-RING | |
| | 16 | 1 | **101-1983** | 2 | RING-BACKUP (14.65-MM ID) | |
| | 17 | 1 | **4D-9986** | 1 | SEAL-O-RING | |
| | 18 | 1 | **101-2480** | 1 | COVER | |
| M | 19 | 1 | **8T-4138** | 2 | BOLT (M6X1X20-MM) | |
| | 20 | 1 | **5B-9318** | 1 | BALL | |
| | 21 | 1 | **6E-3007** | 1 | SPRING | |
| | 22 | 1 | **6E-4502** | 1 | PLUG | |
| | 23 | 1 | **4J-7533** | 1 | SEAL-O-RING | |
| | 24 | 1 | **6E-3019** | 1 | VALVE | |
| | 25 | 1 | **6E-5153** | 1 | SPRING | |
| | 26 | 1 | **108-2187** | 1 | PLUG-PIPE | |
| | 27 | 1 | **9J-0404** | 2 | PLUG | |
| | 28 | 1 | **9S-8005** | 1 | PLUG-O RING | |
| | 29 | 1 | **3K-0360** | 3 | SEAL-O-RING | |
| Y | 30 | 1 | **139-8472** | 2 | VALVE GP-RELIEF (DIRECT OPERATED) | 1038 |
| | 31 | 1 | **6E-3013** | 2 | SEAT | |
| | 32 | 1 | **111-8233** | 1 | SPRING | |
| | 33 | 1 | **9J-0403** | 2 | SPRING | |
| | 34 | 1 | **106-3658** | 2 | VALVE | |

M-METRIC PART
Y-SEPARATE ILLUSTRATION

**153-8905 VALVE GP-CONTROL** *(contd. )* **i02592854**

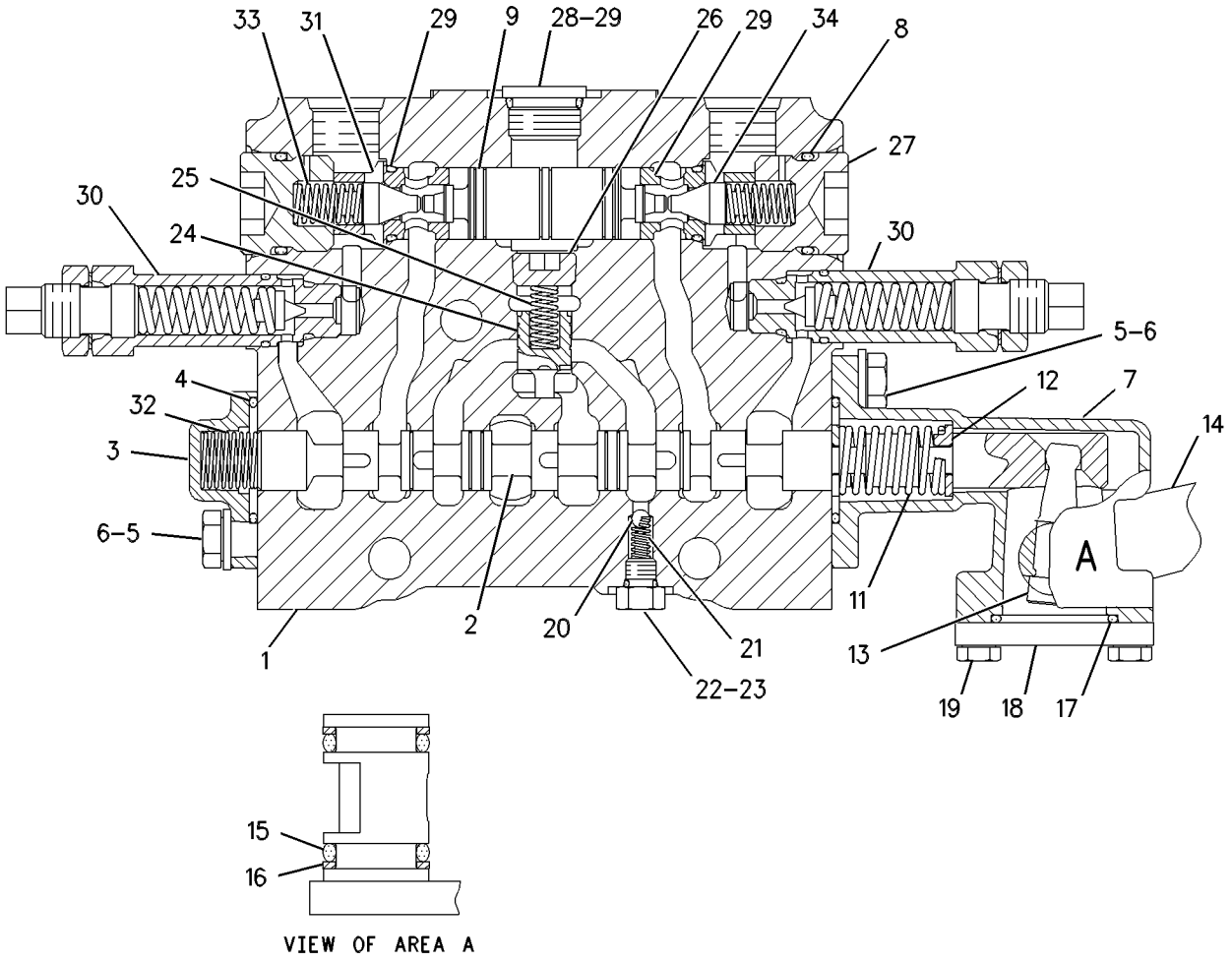


GRAPHIC #1 **<END>** g00545370

# HYDRAULIC SYSTEM

## 153-8906 VALVE GP-CONTROL—WING TILT

**S/N: CCA1-UP**
**PART OF 153-8911, 250-0574 VALVE GP-BANK 6**
**AN ATTACHMENT**

**SMCS-5051** **i02592852**

| NOTE | REF NO | GRAPHIC REF | PART NUMBER | QTY | PART NAME 1 2 3 4 5 6 (PRODUCT LEVEL) | SEE PAGE |
|---|---|---|---|---|---|---|
| | 1 | 1 | **137-8107** | 1 | BODY | |
| | 2 | 1 | **102-4577** | 1 | STEM | |
| | 3 | 1 | **101-1978** | 1 | COVER | |
| | 4 | 1 | **2K-8199** | 2 | SEAL-O-RING | |
| M | 5 | 1 | **8T-4189** | 4 | BOLT (M8X1.25X20-MM) | |
| | 6 | 1 | **8T-4224** | 4 | WASHER-HARD (8.8X16X2-MM THK) | |
| | 7 | 1 | **101-1984** | 1 | BODY | |
| | 8 | 1 | **7J-9933** | 2 | SEAL-O-RING | |
| | 9 | 1 | **106-3659** | 1 | PISTON | |
| | 11 | 1 | **102-7412** | 1 | SPRING | |
| | 12 | 1 | **101-1973** | 4 | RETAINER | |
| | 13 | 1 | **101-1971** | 1 | LEVER | |
| | 14 | 1 | **101-1970** | 1 | LEVER AS | |
| | 15 | 1 | **8M-4437** | 2 | SEAL-O-RING | |
| | 16 | 1 | **101-1983** | 2 | RING-BACKUP (14.65-MM ID) | |
| | 17 | 1 | **4D-9986** | 1 | SEAL-O-RING | |
| | 18 | 1 | **101-2480** | 1 | COVER | |
| M | 19 | 1 | **8T-4138** | 2 | BOLT (M6X1X20-MM) | |
| | 20 | 1 | **5B-9318** | 1 | BALL | |
| | 21 | 1 | **6E-3007** | 1 | SPRING | |
| | 22 | 1 | **6E-4502** | 1 | PLUG | |
| | 23 | 1 | **4J-7533** | 1 | SEAL-O-RING | |
| | 24 | 1 | **6E-3019** | 1 | VALVE | |
| | 25 | 1 | **6E-5153** | 1 | SPRING | |
| | 26 | 1 | **108-2187** | 1 | PLUG-PIPE | |
| | 27 | 1 | **9J-0404** | 2 | PLUG | |
| | 28 | 1 | **9S-8005** | 1 | PLUG-O RING | |
| | 29 | 1 | **3K-0360** | 3 | SEAL-O-RING | |
| Y | 30 | 1 | **139-8472** | 2 | VALVE GP-RELIEF (DIRECT OPERATED) | 1038 |
| | 31 | 1 | **6E-3013** | 2 | SEAT | |
| | 32 | 1 | **111-8233** | 1 | SPRING | |
| | 33 | 1 | **106-3658** | 2 | VALVE | |
| | 34 | 1 | **9J-0403** | 2 | SPRING | |

M-METRIC PART
Y-SEPARATE ILLUSTRATION

**153-8906 VALVE GP-CONTROL** *(contd. )* **i02592852**

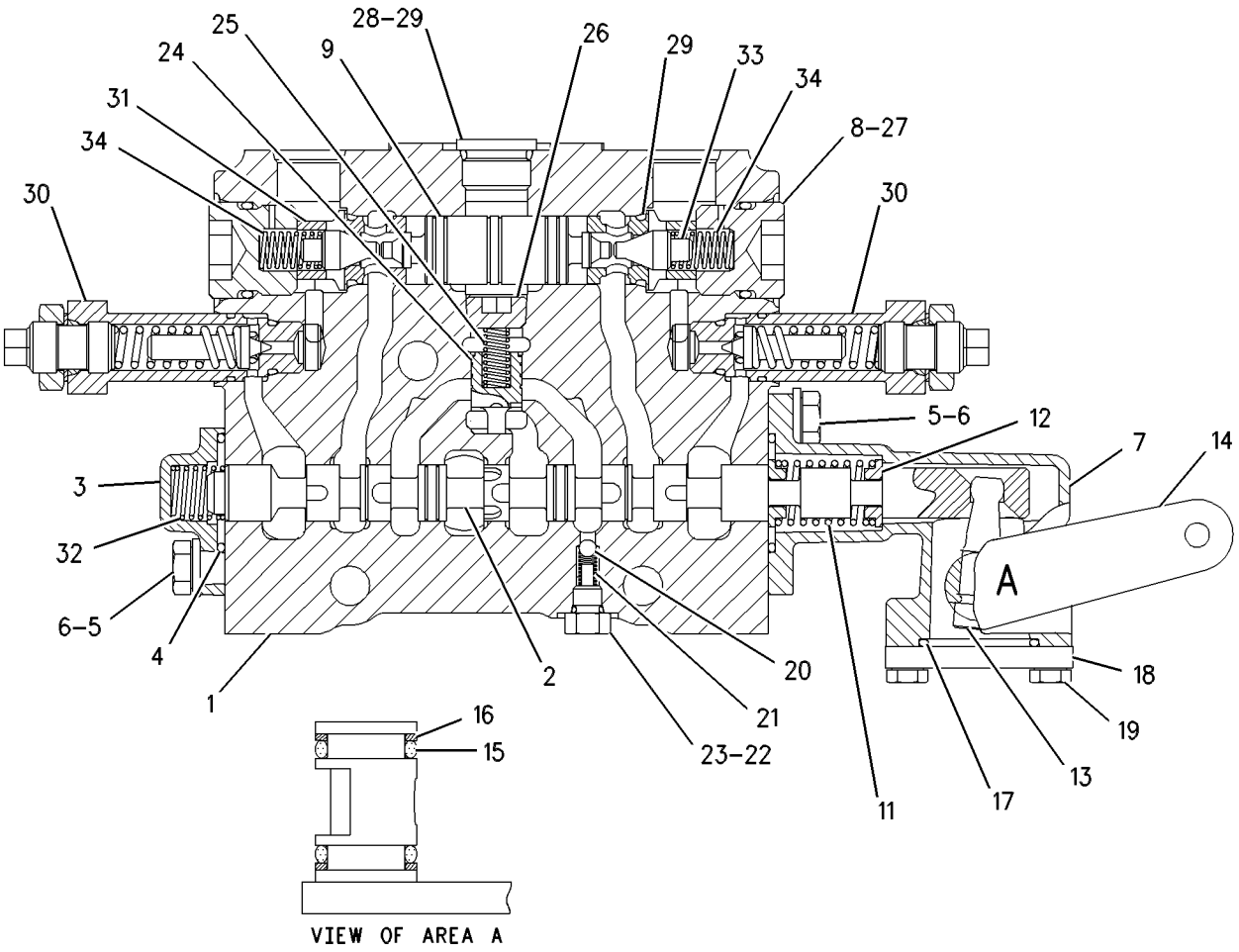


GRAPHIC #1 **<END>** g00544133

# HYDRAULIC SYSTEM

## 153-8907 VALVE GP-CONTROL—DOZER LIFT, PLOW

**S/N: CCA1-UP**

**PART OF 153-8910, 250-0573 VALVE GP-BANK 6, 153-8912, 263-6436, 263-6437, 4Z-6346 VALVE GP-BANK 7**

**AN ATTACHMENT**

**SMCS-5051** **i02592833**

| NOTE | REF NO | GRAPHIC REF | PART NUMBER | QTY | PART NAME 1 2 3 4 5 6 (PRODUCT LEVEL) | SEE PAGE |
|---|---|---|---|---|---|---|
| | 1 | 1 | **6E-3059** | 1 | BODY | |
| | 2 | 1 | **101-1147** | 1 | STEM | |
| | 3 | 1 | **101-1980** | 1 | HOUSING | |
| | 4 | 1 | **101-1972** | 1 | DETENT | |
| Y | 5 | 1 | **108-4916** | 1 | DETENT GP-CONTROL VALVE | 664 |
| | 6 | 1 | **5B-9318** | 1 | BALL | |
| M | 7 | 1 | **8T-6869** | 2 | BOLT (M8X1.25X60-MM) | |
| | 8 | 1 | **2K-8199** | 2 | SEAL-O-RING | |
| M | 9 | 1 | **8T-4189** | 2 | BOLT (M8X1.25X20-MM) | |
| | 10 | 1 | **8T-4224** | 4 | WASHER-HARD (8.8X16X2-MM THK) | |
| | 11 | 1 | **101-1984** | 1 | BODY | |
| | 12 | 1 | **102-7412** | 1 | SPRING | |
| | 13 | 1 | **101-1973** | 4 | RETAINER | |
| | 14 | 1 | **101-1971** | 1 | LEVER | |
| | 16 | 1 | **8M-4437** | 2 | SEAL-O-RING | |
| | 17 | 1 | **101-1983** | 2 | RING-BACKUP (14.65-MM ID) | |
| | 18 | 1 | **4D-9986** | 1 | SEAL-O-RING | |
| | 19 | 1 | **101-2480** | 1 | COVER | |
| M | 20 | 1 | **8T-4138** | 2 | BOLT (M6X1X20-MM) | |
| | 21 | 1 | **6E-3007** | 1 | SPRING | |
| | 22 | 1 | **6E-4502** | 1 | PLUG | |
| | 23 | 1 | **4J-7533** | 1 | SEAL-O-RING | |
| | 24 | 1 | **6E-3019** | 1 | VALVE | |
| | 25 | 1 | **6E-5153** | 1 | SPRING | |
| | 26 | 1 | **108-2187** | 1 | PLUG-PIPE | |
| | 27 | 1 | **9S-8005** | 1 | PLUG-O RING | |
| | 28 | 1 | **3K-0360** | 3 | SEAL-O-RING | |
| | 29 | 1 | **106-3660** | 2 | PISTON | |
| | 30 | 1 | **6E-3013** | 2 | SEAT | |
| | 31 | 1 | **106-3658** | 2 | VALVE | |
| | 32 | 1 | **9J-0403** | 2 | SPRING | |
| | 33 | 1 | **9J-0404** | 2 | PLUG | |
| | 34 | 1 | **7J-9933** | 2 | SEAL-O-RING | |
| Y | 35 | 1 | **139-8474** | 1 | VALVE GP-RELIEF (DIRECT OPERATED) | 1040 |
| | 36 | 1 | **101-1982** | 1 | LEVER AS | |
| | 37 | 1 | **111-8234** | 1 | SPRING | |

M-METRIC PART
Y-SEPARATE ILLUSTRATION

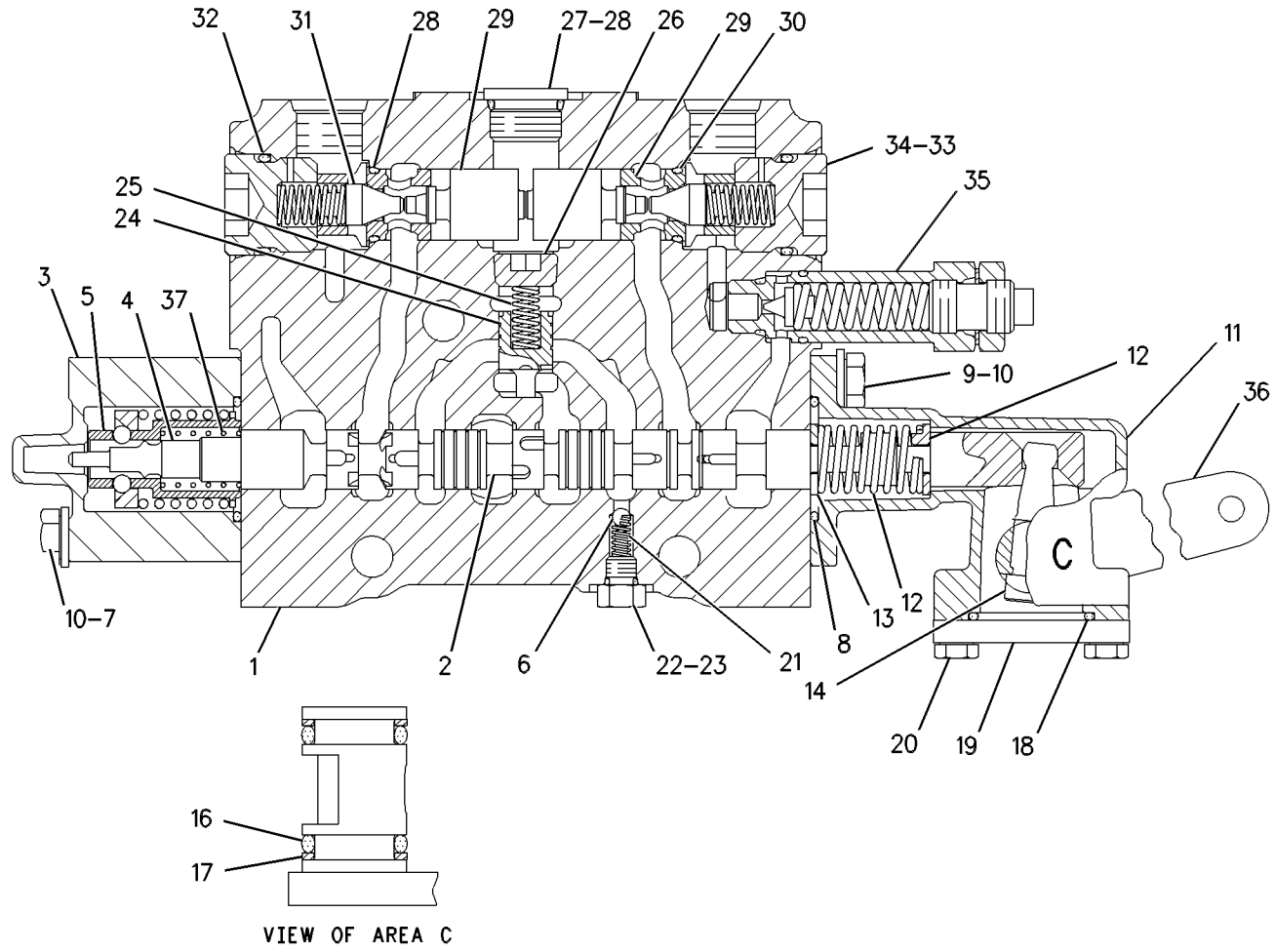


GRAPHIC #1 **<END>** g00544770

# HYDRAULIC SYSTEM

## 153-8908 VALVE GP-CONTROL—PLOW ANGLE

**S/N: CCA1-UP**

**PART OF 153-8912, 263-6437 VALVE GP-BANK 7**

**AN ATTACHMENT**

**SMCS-5051** **i02592809**

| NOTE | REF NO | GRAPHIC REF | PART NUMBER | QTY | PART NAME 1 2 3 4 5 6 (PRODUCT LEVEL) | SEE PAGE |
|---|---|---|---|---|---|---|
| | 1 | 1 | **6E-4599** | 1 | BODY | |
| | 2 | 1 | **102-4578** | 1 | STEM | |
| | 3 | 1 | **101-1978** | 1 | COVER | |
| | 4 | 1 | **2K-8199** | 2 | SEAL-O-RING | |
| M | 5 | 1 | **8T-4189** | 4 | BOLT (M8X1.25X20-MM) | |
| | 6 | 1 | **8T-4224** | 4 | WASHER-HARD (8.8X16X2-MM THK) | |
| | 7 | 1 | **101-1984** | 1 | BODY | |
| | 8 | 1 | **7J-9933** | 2 | SEAL-O-RING | |
| Y | 9 | 1 | **139-8472** | 1 | VALVE GP-RELIEF (DIRECT OPERATED) | 1038 |
| | 11 | 1 | **102-7412** | 1 | SPRING | |
| | 12 | 1 | **101-1973** | 4 | RETAINER | |
| | 13 | 1 | **101-1971** | 1 | LEVER | |
| | 14 | 1 | **101-1982** | 1 | LEVER AS | |
| | 15 | 1 | **8M-4437** | 2 | SEAL-O-RING | |
| | 16 | 1 | **101-1983** | 2 | RING-BACKUP (14.65-MM ID) | |
| | 17 | 1 | **4D-9986** | 1 | SEAL-O-RING | |
| | 18 | 1 | **101-2480** | 1 | COVER | |
| M | 19 | 1 | **8T-4138** | 2 | BOLT (M6X1X20-MM) | |
| | 20 | 1 | **5B-9318** | 1 | BALL | |
| | 21 | 1 | **6E-3007** | 1 | SPRING | |
| | 22 | 1 | **6E-4502** | 1 | PLUG | |
| | 23 | 1 | **4J-7533** | 1 | SEAL-O-RING | |
| | 24 | 1 | **6E-3019** | 1 | VALVE | |
| | 25 | 1 | **6E-5153** | 1 | SPRING | |
| | 26 | 1 | **108-2187** | 1 | PLUG-PIPE | |
| | 27 | 1 | **9J-0403** | 2 | SPRING | |
| | 28 | 1 | **9J-0404** | 2 | PLUG | |
| | 29 | 1 | **9S-8005** | 1 | PLUG-O RING | |
| | 30 | 1 | **3K-0360** | 3 | SEAL-O-RING | |
| | 31 | 1 | **106-3659** | 1 | PISTON | |
| | 32 | 1 | **6E-3013** | 2 | SEAT | |
| | 33 | 1 | **106-3658** | 2 | VALVE | |
| | 34 | 1 | **111-8233** | 1 | SPRING | |

M-METRIC PART
Y-SEPARATE ILLUSTRATION

**153-8908 VALVE GP-CONTROL** *(contd. )* **i02592809**

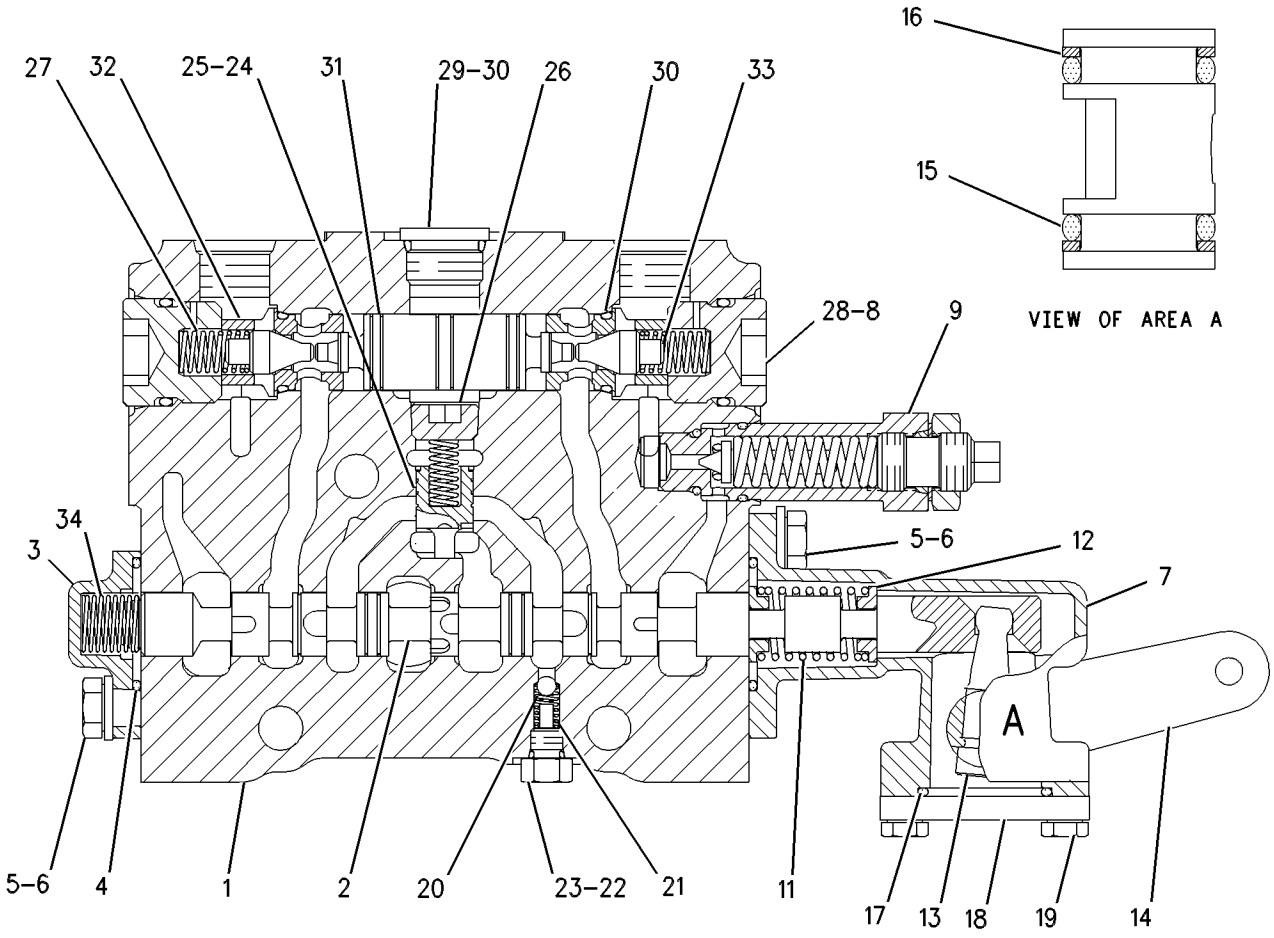


GRAPHIC #1 **<END>** g00473686

# HYDRAULIC SYSTEM

## 104-3122 VALVE GP-PUMP CONTROL—HYDRAULIC STEERING

**S/N: CCA1-UP**

**PART OF 169-4882 PUMP GP-PISTON**

**SMCS-5455** **i00130963**

| NOTE | REF NO | GRAPHIC REF | PART NUMBER | QTY | PART NAME 1 2 3 4 5 6 (PRODUCT LEVEL) | SEE PAGE |
|---|---|---|---|---|---|---|
| | 1 | 1 | **108-4814** | 1 | BODY-COMPENSATOR | |
| | 2 | 1 | **9S-4191** | 1 | PLUG-O RING | |
| | 3 | 1 | **3J-1907** | 3 | SEAL-O-RING | |
| | 4 | 1 | **108-4815** | 1 | SPOOL-MARGIN | |
| | 5 | 1 | **9T-2186** | 2 | PLUG | |
| | 6 | 1 | **6E-4239** | 1 | SPOOL-CUTOFF | |
| | 7 | 1 | **6E-4230** | 2 | GUIDE-SPRING | |
| | 8 | 1 | **6E-4228** | 1 | SPRING | |
| | 9 | 1 | **6E-6140** | 1 | PLUG-COMPENSATOR | |
| | 10 | 1 | **033-6036** | 1 | SEAL-O-RING | |
| | 11 | 1 | **6E-6141** | 2 | LOCKNUT-SEALING | |
| M | 12 | 1 | **129-7632** | 2 | SCREW-ADJUSTMENT | |
| | 13 | 1 | **6E-6142** | 1 | PLUG-MARGIN | |
| | 14 | 1 | **033-6027** | 1 | SEAL-O-RING | |
| | 15 | 1 | **9T-7750** | 1 | SPRING | |
| | 16 | 1 | **108-4816** | 1 | PIN-SPRING STOP | |
| | 17 | 1 | **9T-1857** | 2 | GUIDE | |
| | 18 | 1 | **6E-6420** | 1 | VALVE-NEEDLE | |
| | 19 | 1 | **6E-6419** | 1 | RING | |
| | 20 | 1 | **9X-7680** | 1 | SEAL-O-RING | |

M-METRIC PART

## 104-3122 VALVE GP-PUMP CONTROL *(contd. )* i00130963

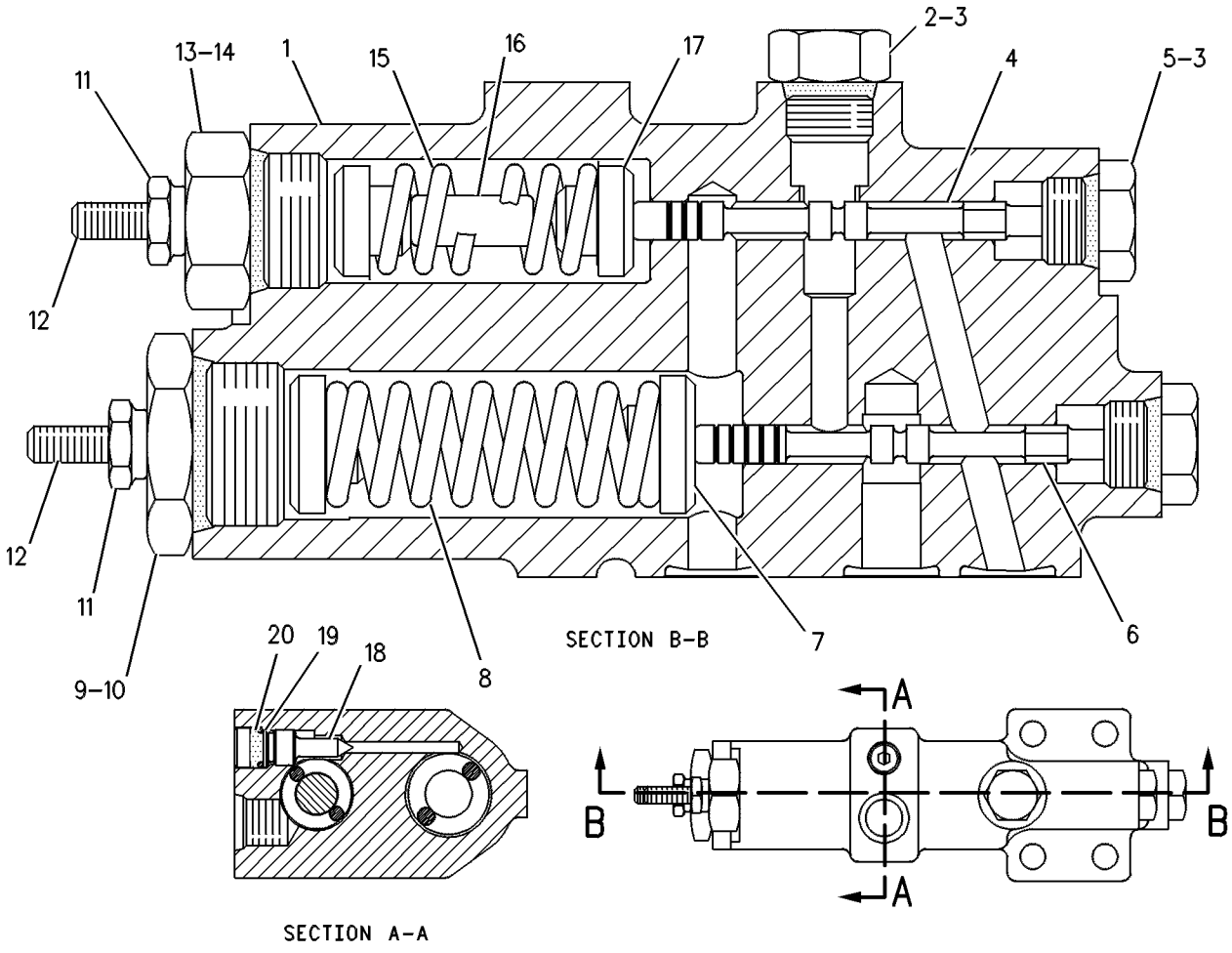


GRAPHIC #1 **<END>** g00084774

# HYDRAULIC SYSTEM

## *195-9639* VALVE GP-PUMP CONTROL—HYDRAULIC FAN

**S/N: CCA1-UP**

**PART OF 169-4883 PUMP GP-PISTON**

**SMCS-5455** **i01694072**

| NOTE | REF NO | GRAPHIC REF | PART NUMBER | QTY | PART NAME 1 2 3 4 5 6 (PRODUCT LEVEL) | SEE PAGE |
|---|---|---|---|---|---|---|
| | 1 | 1 | **6E-6528** | 6 | SEAL | |
| | 2 | 1 | **6E-6527** | 2 | PLUG | |
| | 3 | 1 | **6E-3268** | 1 | RETAINER-SPRING | |
| | 4 | 1 | **6E-3275** | 1 | SPRING (INSIDE) | |
| | 5 | 1 | **6E-3274** | 1 | SPRING (OUTSIDE) | |
| | 6 | 1 | **033-6043** | 1 | SEAL-O-RING | |
| | 7 | 1 | **6E-3272** | 1 | SEAT | |
| | 8 | 1 | **6E-6540** | 1 | PLUG | |
| M | 9 | 1 | **6E-6538** | 2 | NUT-ADJUSTMENT (M8X1-THD) | |
| M | 10 | 1 | **6E-6537** | 2 | SCREW-ADJUSTMENT (M8X1X28-MM) | |
| M | 11 | 1 | **6E-6539** | 2 | NUT-CAP (M8X1-THD) | |
| | 12 | 1 | **6E-3273** | 1 | SEAT | |
| | 13 | 1 | **6E-6536** | 1 | PLUG | |
| | 14 | 1 | **6V-8352** | 1 | SEAL-O-RING | |
| | 15 | 1 | **9S-8002** | 1 | PLUG | |
| | 16 | 1 | **3J-7354** | 1 | SEAL-O-RING | |
| | 17 | 1 | **193-1036** | 1 | SPRING (INSIDE) | |
| | 18 | 1 | **6E-3276** | 1 | SPRING (OUTSIDE) | |
| | 19 | 1 | **6E-3269** | 1 | RETAINER-SPRING | |
| | 20 | 1 | **105-2145** | 1 | VALVE-ORIFICE | |
| | 21 | 1 | **5P-9262** | 1 | SEAL-O-RING | |

M-METRIC PART

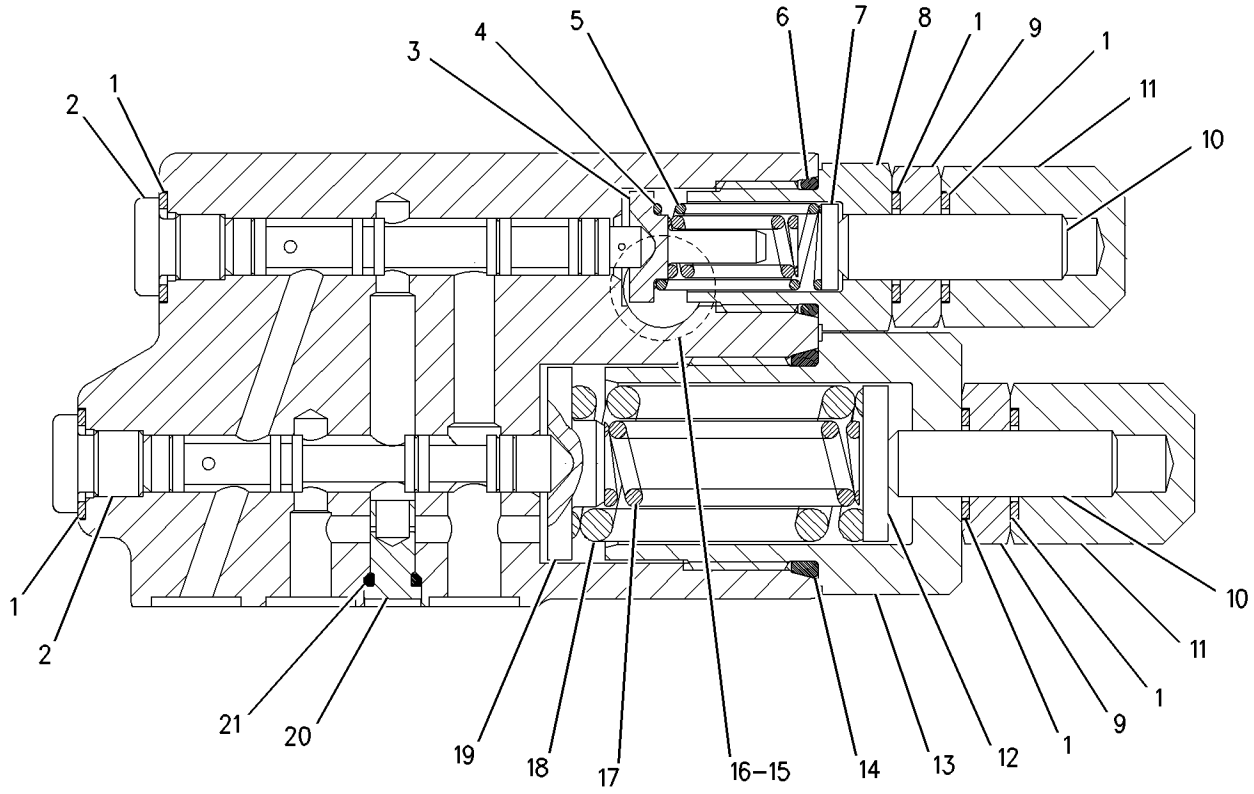


GRAPHIC #1 **<END>** g00795717

# HYDRAULIC SYSTEM

## *129-1054* VALVE GP-PURGE

**S/N: CCA1-UP**

**PART OF 128-8647, 130-3110, 130-3111 VALVE GP-CONTROL**

**AN ATTACHMENT**

**SMCS-4293** **i00881598**

| NOTE | REF NO | GRAPHIC REF | PART NUMBER | QTY | PART NAME 1 2 3 4 5 6 (PRODUCT LEVEL) | SEE PAGE |
|---|---|---|---|---|---|---|
| | 1 | 1 | **129-1047** | 1 | PLUG | |
| | 2 | 1 | **3K-4897** | 1 | PIN-SPRING | |
| | 3 | 1 | **129-1052** | 1 | VALVE | |
| | 4 | 1 | **3K-0360** | 1 | SEAL-O-RING | |
| | 5 | 1 | **8C-3085** | 1 | SEAL-O-RING | |
| | 6 | 1 | **3E-6017** | 1 | RING-BACKUP | |

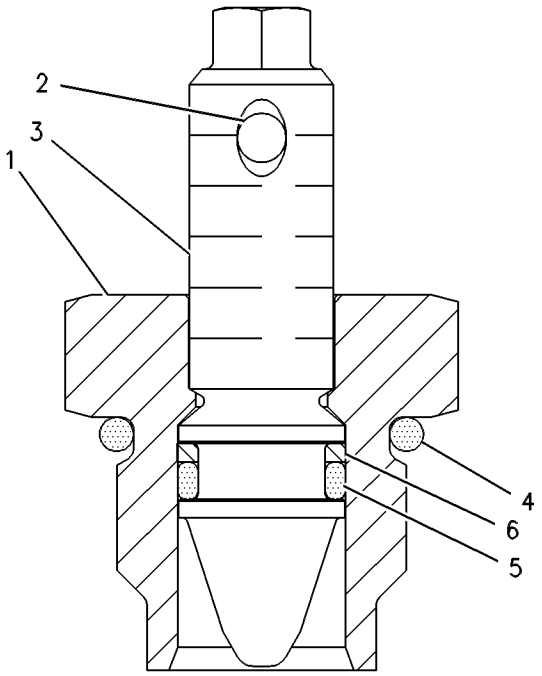


GRAPHIC #1 **<END>** g00109443

# 131-8350 VALVE GP-PURGE–IMPLEMENT SIGNAL

**S/N: CCA1-UP**

**PART OF 229-7155, 9T-5957 VALVE GP-COMBINATION**

**SMCS-4293** **i00139150**

| NOTE | REF NO | GRAPHIC REF | PART NUMBER | QTY | PART NAME 1 2 3 4 5 6 (PRODUCT LEVEL) | SEE PAGE |
|---|---|---|---|---|---|---|
| | 1 | 1 | **109-1144** | 1 | VALVE | |
| | 2 | 1 | **130-5770** | 1 | SLEEVE | |

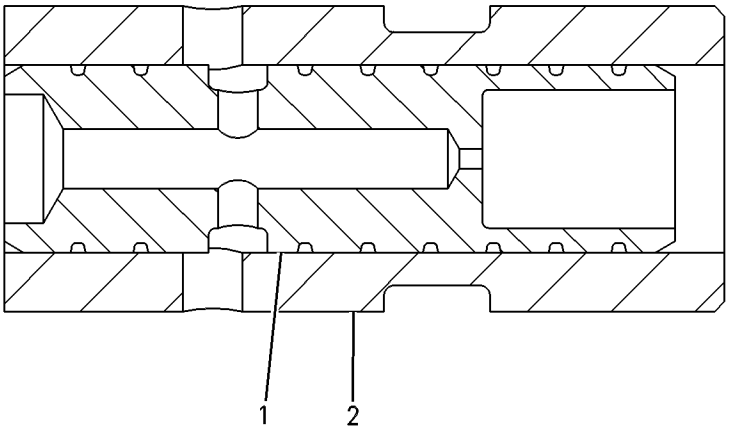


GRAPHIC #1 **<END>** g00087876

# HYDRAULIC SYSTEM

## 4T-4935 VALVE GP-RELIEF–MAIN

**S/N: CCA1-UP**

**PART OF 229-7155, 9T-5957 VALVE GP-COMBINATION**

**SMCS-4322, 5069, 5072, 5117** **i00131002**

| NOTE | REF NO | GRAPHIC REF | PART NUMBER | QTY | PART NAME 1 2 3 4 5 6 (PRODUCT LEVEL) | SEE PAGE |
|---|---|---|---|---|---|---|
| | 1 | 1 | **6E-1835** | 1 | RETAINER AS | |
| | 2 | 1 | **9X-6395** | 1 | NUT (3/4-16-THD) | |
| | 3 | 1 | **7J-9933** | 1 | SEAL-O-RING | |
| | 4 | 1 | **4T-7571** | 1 | PLATE | |
| | 5 | 1 | **6J-6439** | 1 | VALVE-POPPET | |
| | 6 | 1 | **3K-0360** | 2 | SEAL-O-RING | |
| | 7 | 1 | **4T-4942** | 1 | SPRING | |

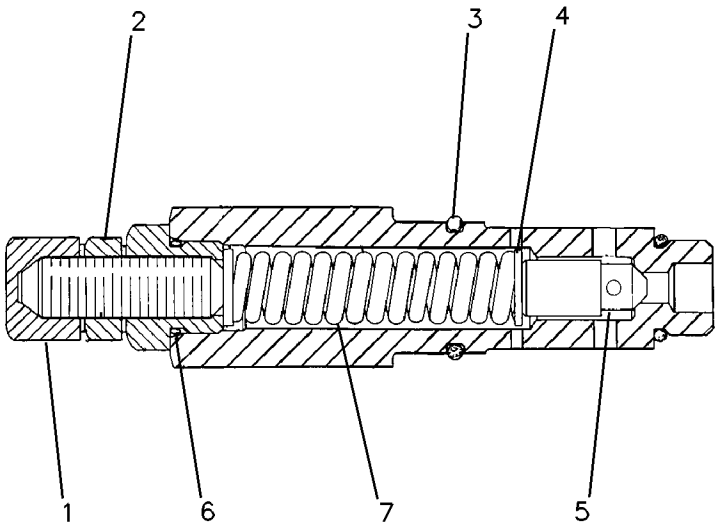


GRAPHIC #1 **<END>** g00082648

## *6E-3033* VALVE GP-RELIEF—BLADE LIFT—DOZER LIFT, PLOW

**S/N: CCA1-UP**

**PART OF 128-8647, 130-3110, 130-3111, 6E-3031, 6E-3037 VALVE GP-CONTROL**

**ALSO AN ATTACHMENT**

**SMCS-4322, 5069, 5072, 5117** **i01862903**

| NOTE | PART NUMBER | QTY | PART NAME 1 2 3 4 5 6 (PRODUCT LEVEL) | SEE PAGE |
|---|---|---|---|---|
| Y | *106-7390* | 1 | VALVE GP-RELIEF (HYDRAULIC) | 1035 |
| | | | —OR— | |
| | *6E-4704* | 1 | VALVE GP-RELIEF (HYDRAULIC) | |
| | **3G-3726** | 1 | NUT (3/8-40-THD) | |
| | **3J-1907** | 1 | SEAL-O-RING | |
| | **4D-2297** | 1 | SEAL-O-RING | |

Y-SEPARATE ILLUSTRATION

**<END>**

# HYDRAULIC SYSTEM

## 6E-4703 VALVE GP-RELIEF–IMPLEMENT SIGNAL

**S/N: CCA1-UP**

**PART OF 229-7155, 9T-5957 VALVE GP-COMBINATION**

**SMCS-4322, 5069, 5072, 5117** **i00131105**

| NOTE | REF NO | GRAPHIC REF | PART NUMBER | QTY | PART NAME 1 2 3 4 5 6 (PRODUCT LEVEL) | SEE PAGE |
|---|---|---|---|---|---|---|
| | 1 | 1 | **4D-2297** | 1 | SEAL-O-RING | |
| | 2 | 1 | **3J-1907** | 1 | SEAL-O-RING | |
| | 3 | 1 | **3G-3726** | 1 | NUT (3/8-40-THD) | |

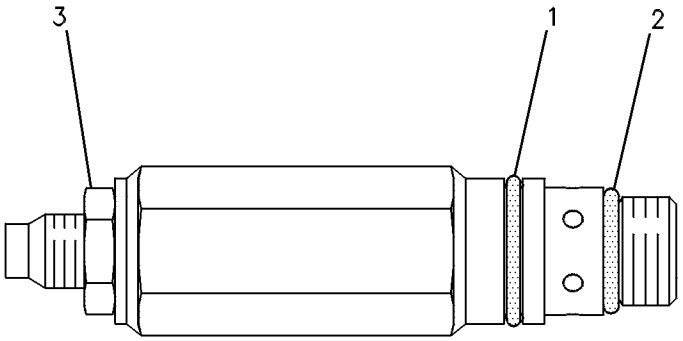


GRAPHIC #1 **<END>** g00084814

# 100-6021 VALVE GP-RELIEF–STEERING

**S/N: CCA1-UP**

**PART OF 229-7155, 9T-5957 VALVE GP-COMBINATION**

**SMCS-4322, 5069, 5072, 5117** **i01853030**

| NOTE | REF NO | GRAPHIC REF | PART NUMBER | QTY | PART NAME 1 2 3 4 5 6 (PRODUCT LEVEL) | SEE PAGE |
|---|---|---|---|---|---|---|
| | 1 | 1 | **4T-1700** | 1 | SPRING | |
| | 2 | 1 | **4T-4509** | 1 | SEAT | |
| | 3 | 1 | **4T-5074** | 1 | RING-BACKUP | |
| | 4 | 1 | **6E-5200** | 1 | RETAINER AS | |
| | 5 | 1 | **123-6661** | 1 | HOUSING | |
| | 6 | 1 | **108-5157** | 1 | VALVE | |
| | 7 | 1 | **3J-7354** | 1 | SEAL-O-RING | |
| | 8 | 1 | **3K-0360** | 1 | SEAL-O-RING | |
| | 9 | 1 | **6V-5556** | 1 | SEAL-O-RING | |
| | 10 | 1 | **9X-6395** | 1 | NUT (3/4-16-THD) | |

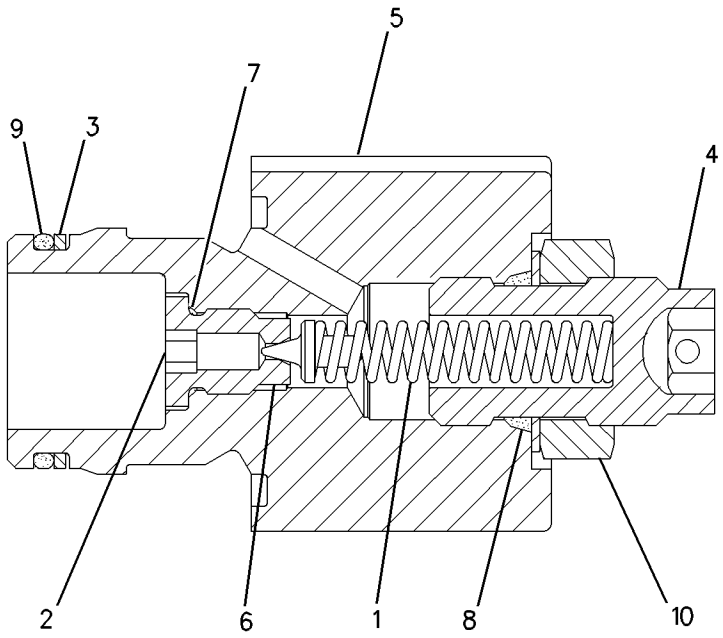


GRAPHIC #1 **<END>** g00949717

# HYDRAULIC SYSTEM

## 101-4147 VALVE GP-RELIEF–BLADE TIP–SIDESHIFT

**S/N: CCA1-UP**

**PART OF 115-1007, 6E-3036 VALVE GP-CONTROL**

**FIELD REPLACEMENT FOR 101-4148–PAGE 1033, 106-7389–PAGE 1034**

**ALSO AN ATTACHMENT**

**SMCS-4322, 5069, 5072, 5117** **i01457309**

| NOTE | PART NUMBER | QTY | PART NAME 1 2 3 4 5 6 (PRODUCT LEVEL) | SEE PAGE |
|---|---|---|---|---|
| Y | *101-4148* | 1 | VALVE GP-RELIEF (HYDRAULIC) | 1033 |
| | | | –OR– | |
| Y | *106-7389* | 1 | VALVE GP-RELIEF (HYDRAULIC) | 1034 |
| Y-SEPARATE ILLUSTRATION | | | | |

**<END>**

# *101-4148* VALVE GP-RELIEF–HYDRAULIC

**S/N: CCA1-UP**
**PART OF 101-4147 VALVE GP-RELIEF**
**FIELD REPLACEMENT ORDER 101-4147–PAGE 1032**
**ALSO AN ATTACHMENT**

**SMCS-4322, 5069, 5072, 5117** **i00130985**

| NOTE | REF NO | GRAPHIC REF | PART NUMBER | QTY | PART NAME 1 2 3 4 5 6 (PRODUCT LEVEL) | SEE PAGE |
|---|---|---|---|---|---|---|
| | 1 | 1 | **4D-2297** | 1 | SEAL-O-RING | |
| | 2 | 1 | **3J-1907** | 1 | SEAL-O-RING | |
| | 3 | 1 | **3G-3726** | 1 | NUT (3/8-40-THD) | |

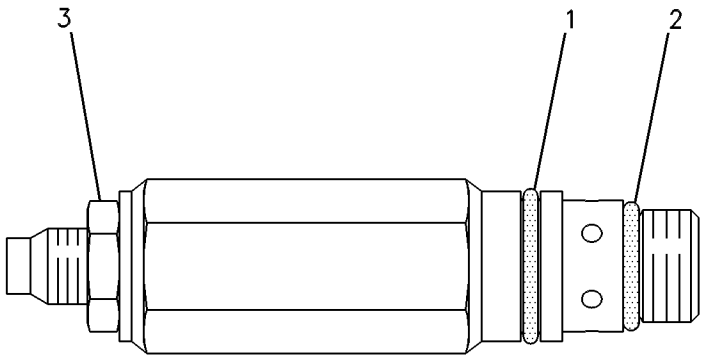


GRAPHIC #1 **<END>** g00084716

# *106-7389* VALVE GP-RELIEF—HYDRAULIC

**S/N: CCA1-UP**
**PART OF 101-4147 VALVE GP-RELIEF**
**FIELD REPLACEMENT ORDER 101-4147—PAGE 1032**
**ALSO AN ATTACHMENT**

**SMCS-4322, 5069, 5072, 5117** **i00131229**

| NOTE | REF NO | GRAPHIC REF | PART NUMBER | QTY | PART NAME 1 2 3 4 5 6 (PRODUCT LEVEL) | SEE PAGE |
|---|---|---|---|---|---|---|
| | 1 | 1 | **114-6635** | 1 | RETAINER AS | |
| | 2 | 1 | **2P-1279** | 1 | LOCKNUT (9/16-18-THD) | |
| | 3 | 1 | **3J-1907** | 2 | SEAL-O-RING | |
| | 4 | 1 | **2J-6089** | 1 | SPRING | |
| | 5 | 1 | **6E-3006** | 1 | BODY | |
| | 6 | 1 | **111-5754** | 1 | VALVE | |
| | 7 | 1 | **4D-2297** | 1 | SEAL-O-RING | |
| B | 8 | 1 | **2A-3211** | 1 | WASHER (5.5X12.3X0.8-MM THK) | |

B-USE AS REQUIRED

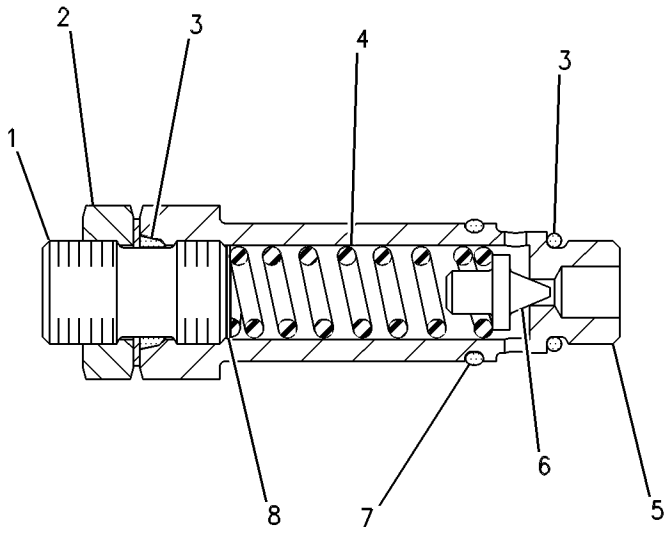


GRAPHIC #1 **<END>** g00108790

# *106-7390* VALVE GP-RELIEF—HYDRAULIC

**S/N: CCA1-UP**
**PART OF 6E-3033 VALVE GP-RELIEF**
**FIELD REPLACEMENT ORDER 6E-3033—PAGE 1029**
**ALSO AN ATTACHMENT**
**TYPE 1**

**SMCS-4322, 5069, 5072, 5117** **i01197997**

| NOTE | REF NO | GRAPHIC REF | PART NUMBER | QTY | PART NAME 1 2 3 4 5 6 (PRODUCT LEVEL) | SEE PAGE |
|---|---|---|---|---|---|---|
| | 1 | 1 | **114-6635** | 1 | RETAINER AS | |
| | 2 | 1 | **2P-1279** | 1 | LOCKNUT (9/16-18-THD) | |
| | 3 | 1 | **3J-1907** | 2 | SEAL-O-RING | |
| | 4 | 1 | **2J-6089** | 1 | SPRING | |
| | 6 | 1 | **111-5754** | 1 | VALVE | |
| | 7 | 1 | **4D-2297** | 1 | SEAL-O-RING | |

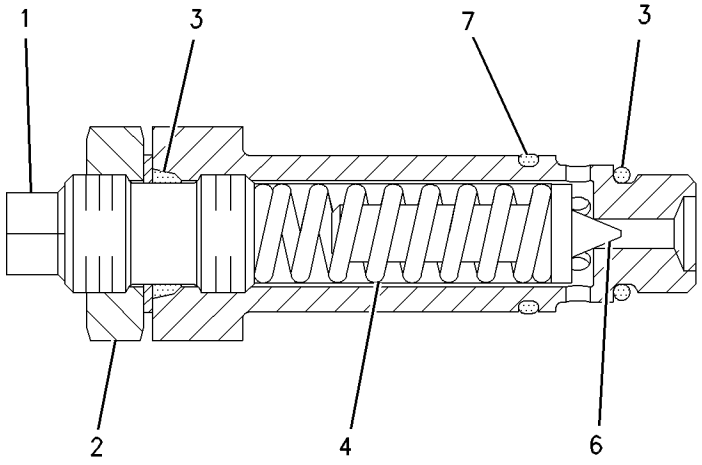


GRAPHIC #1 **<END>** g00638990

# *106-7390* VALVE GP-RELIEF—HYDRAULIC

**S/N: CCA1-UP**
**PART OF 6E-3033 VALVE GP-RELIEF**
**FIELD REPLACEMENT ORDER 6E-3033—PAGE 1029**
**AN ATTACHMENT**
**TYPE 2**

**SMCS-4322, 5069, 5072, 5117** **i00131256**

| NOTE | REF NO | GRAPHIC REF | PART NUMBER | QTY | PART NAME 1 2 3 4 5 6 (PRODUCT LEVEL) | SEE PAGE |
|---|---|---|---|---|---|---|
| | 1 | 1 | **114-6635** | 1 | RETAINER AS | |
| | 2 | 1 | **2P-1279** | 1 | LOCKNUT (9/16-18-THD) | |
| | 3 | 1 | **3J-1907** | 2 | SEAL-O-RING | |
| | 4 | 1 | **2J-6089** | 1 | SPRING | |
| | 5 | 1 | **6E-3006** | 1 | BODY | |
| | 6 | 1 | **111-5754** | 1 | VALVE | |
| | 7 | 1 | **4D-2297** | 1 | SEAL-O-RING | |
| B | 8 | 1 | **2A-3211** | 1 | WASHER (5.5X12.3X0.8-MM THK) | |

B-USE AS REQUIRED

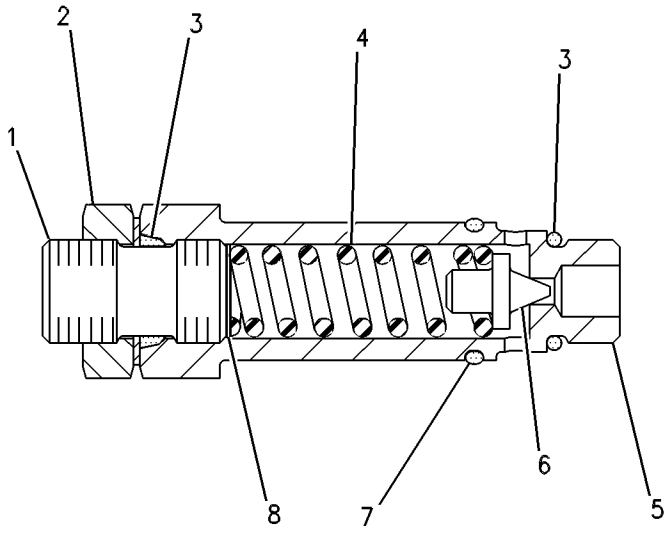


GRAPHIC #1 **<END>** g00108790

# *116-0374* VALVE GP-RELIEF–RIPPER

**S/N: CCA1-UP**
**PART OF 119-9550 VALVE GP-CONTROL**
**AN ATTACHMENT**

**SMCS-4322, 5069, 5072, 5117** **i00138690**

| NOTE | REF NO | GRAPHIC REF | PART NUMBER | QTY | PART NAME 1 2 3 4 5 6 (PRODUCT LEVEL) | SEE PAGE |
|---|---|---|---|---|---|---|
| | 1 | 1 | **4D-2297** | 1 | SEAL-O-RING | |
| | 2 | 1 | **9T-2659** | 1 | SPRING | |
| | 3 | 1 | **3J-1907** | 1 | SEAL-O-RING | |
| | 4 | 1 | **6M-5062** | 1 | SEAL-O-RING | |
| | 5 | 1 | **5B-9079** | 1 | NUT-JAM (3/8-24-THD) | |
| | 6 | 1 | **131-8777** | 1 | VALVE | |

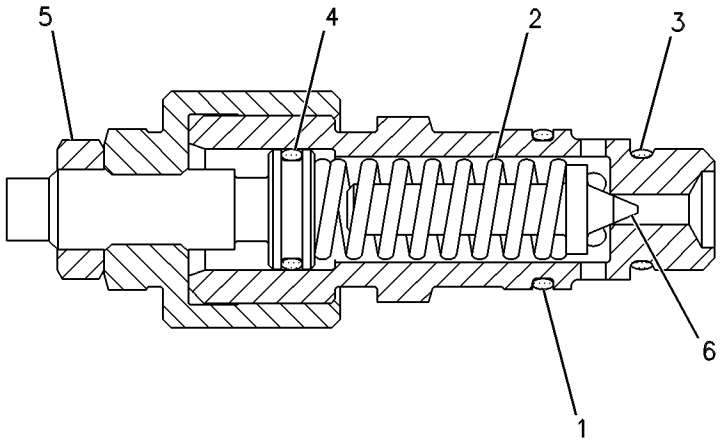


GRAPHIC #1 **<END>** g00108898

# *139-8472* VALVE GP-RELIEF–PLOW ANGLE–PLOW, BULLDOZER ANGLE–RIPPER–WING LIFT–WING TILT

**S/N: CCA1-UP**

**PART OF 107-0545, 137-8104, 137-8106, 153-8905, 153-8906, 153-8908, 6E-3034 VALVE GP-CONTROL**

**ALSO AN ATTACHMENT**

**SMCS-4322, 5069, 5072, 5117** **i01048867**

| NOTE | REF NO | GRAPHIC REF | PART NUMBER | QTY | PART NAME 1 2 3 4 5 6 (PRODUCT LEVEL) | SEE PAGE |
|---|---|---|---|---|---|---|
| | 1 | 1 | **114-6635** | 1 | RETAINER AS | |
| | 2 | 1 | **2P-1279** | 1 | LOCKNUT (9/16-18-THD) | |
| | 3 | 1 | **3J-1907** | 2 | SEAL-O-RING | |
| | 4 | 1 | **2J-6089** | 1 | SPRING | |
| | 5 | 1 | **6E-3006** | 1 | BODY | |
| | 6 | 1 | **131-8777** | 1 | VALVE | |
| | 7 | 1 | **4D-2297** | 1 | SEAL-O-RING | |
| | 8 | 1 | **2A-3211** | 1 | WASHER (5.5X12.3X0.8-MM THK) | |

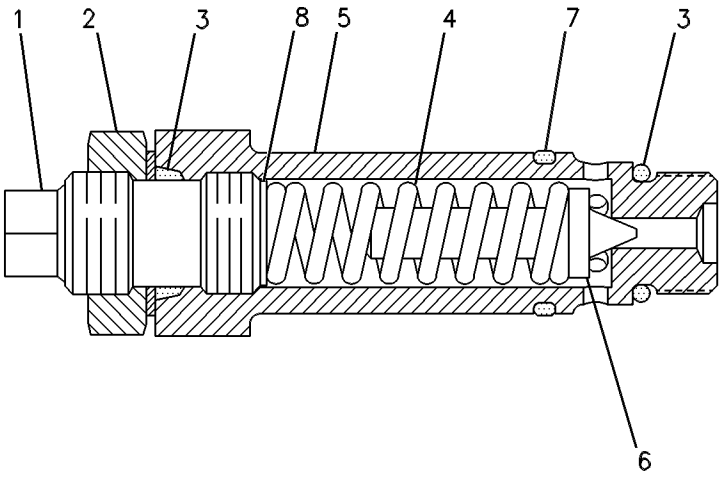


GRAPHIC #1 **<END>** g00109400

# HYDRAULIC SYSTEM

## *139-8473* VALVE GP-RELIEF–SCARIFIER

**S/N: CCA1-UP**

**PART OF 107-0543 VALVE GP-CONTROL**

**AN ATTACHMENT**

**SMCS-4322, 5069, 5072, 5117** **i02428521**

| NOTE | REF NO | GRAPHIC REF | PART NUMBER | QTY | PART NAME 1 2 3 4 5 6 (PRODUCT LEVEL) | SEE PAGE |
|---|---|---|---|---|---|---|
| | 1 | 1 | **114-6635** | 1 | RETAINER AS | |
| | 2 | 1 | **2P-1279** | 1 | LOCKNUT (9/16-18-THD) | |
| | 3 | 1 | **3J-1907** | 2 | SEAL-O-RING | |
| | 4 | 1 | **9T-2659** | 1 | SPRING | |
| | 5 | 1 | **2A-3211** | 1 | WASHER (5.5X12.3X0.8-MM THK) | |
| | 6 | 1 | **131-8777** | 1 | VALVE | |
| | 7 | 1 | **4D-2297** | 1 | SEAL-O-RING | |

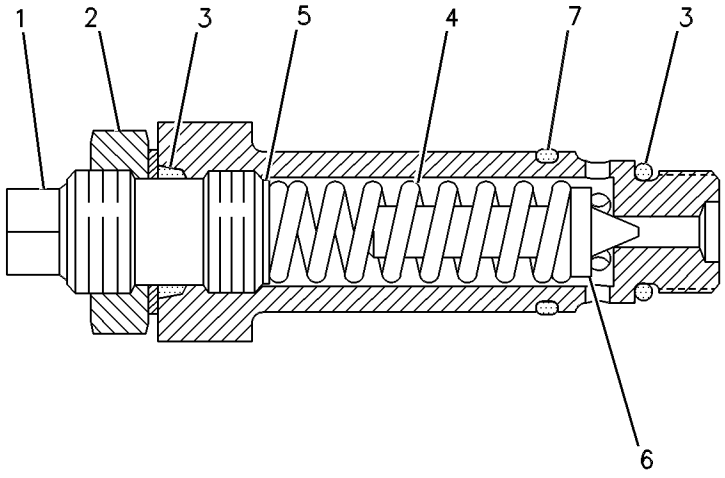


GRAPHIC #1 **<END>** g00109670

# 139-8474 VALVE GP-RELIEF–LIFT

**S/N: CCA1-UP**
**PART OF 153-8907 VALVE GP-CONTROL**
**AN ATTACHMENT**

**SMCS-4322, 5069, 5072, 5117** **i00606809**

| NOTE | REF NO | GRAPHIC REF | PART NUMBER | QTY | PART NAME 1 2 3 4 5 6 (PRODUCT LEVEL) | SEE PAGE |
|---|---|---|---|---|---|---|
| | 1 | 1 | **114-6635** | 1 | RETAINER AS | |
| | 2 | 1 | **2P-1279** | 1 | LOCKNUT (9/16-18-THD) | |
| | 3 | 1 | **3J-1907** | 2 | SEAL-O-RING | |
| | 4 | 1 | **2J-6089** | 1 | SPRING | |
| | 5 | 1 | **2A-3211** | 1 | WASHER (5.5X12.3X0.8-MM THK) | |
| | 6 | 1 | **131-8777** | 1 | VALVE | |
| | 7 | 1 | **4D-2297** | 1 | SEAL-O-RING | |

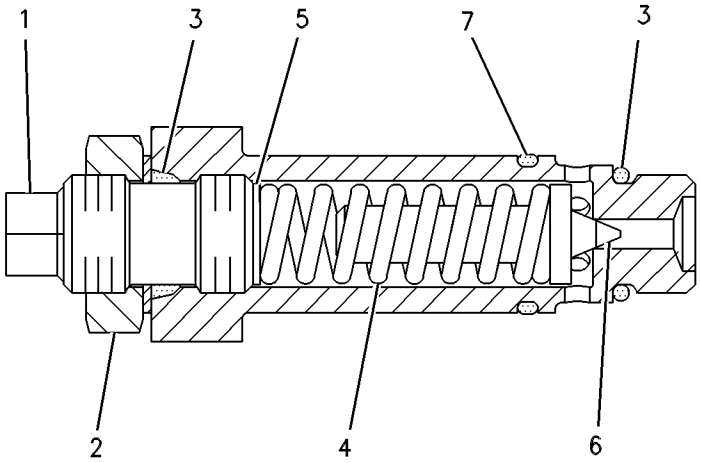


GRAPHIC #1 **<END>** g00089282

# 139-8476 VALVE GP-RELIEF–SCARIFIER–WING LIFT

**S/N: CCA1-UP**

**PART OF 119-9549, 150-6649 VALVE GP-CONTROL**

**AN ATTACHMENT**

**SMCS-4322, 5069, 5072, 5117** **i00611518**

| NOTE | REF NO | GRAPHIC REF | PART NUMBER | QTY | PART NAME 1 2 3 4 5 6 (PRODUCT LEVEL) | SEE PAGE |
|---|---|---|---|---|---|---|
| | 1 | 1 | **5B-9079** | 1 | NUT-JAM (3/8-24-THD) | |
| | 2 | 1 | **9T-2659** | 1 | SPRING | |
| | 3 | 1 | **3J-1907** | 1 | SEAL-O-RING | |
| | 4 | 1 | **6M-5062** | 1 | SEAL-O-RING | |
| | 5 | 1 | **4D-2297** | 1 | SEAL-O-RING | |
| | 6 | 1 | **131-8777** | 1 | VALVE | |

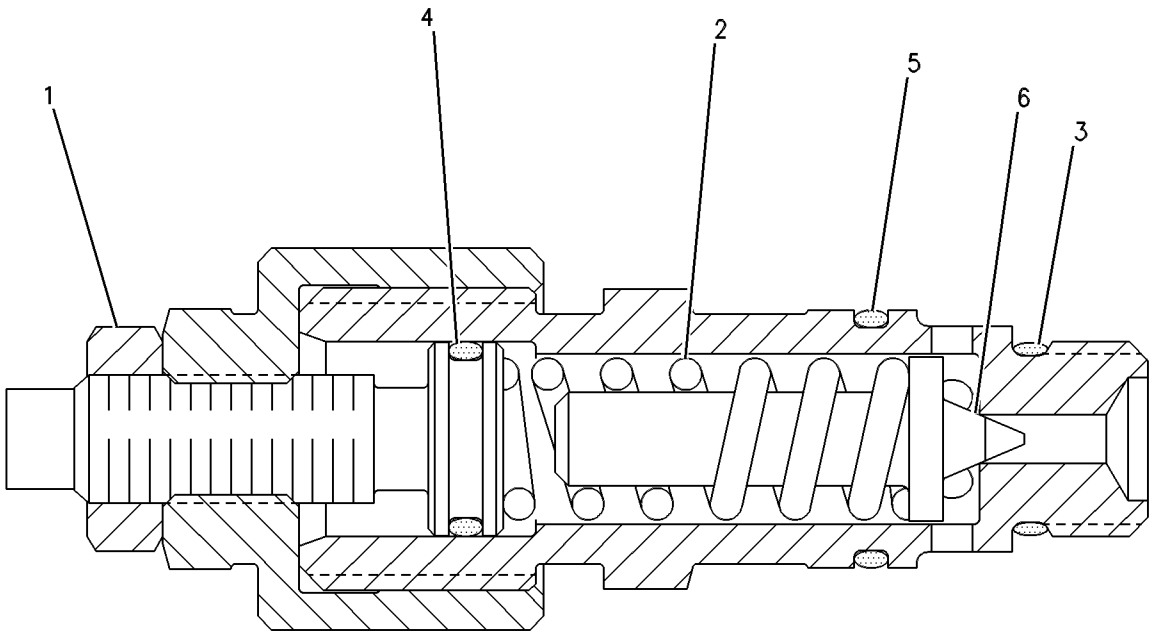


GRAPHIC #1 **<END>** g00109725

# HYDRAULIC SYSTEM

## *222-7774* VALVE GP-RELIEF—PLOW, DOZER LIFT

**S/N: CCA1-UP**
**PART OF 107-0547 VALVE GP-CONTROL**
**AN ATTACHMENT**

**SMCS-4322, 5069, 5072, 5117** **i02585752**

| NOTE | REF NO | GRAPHIC REF | PART NUMBER | QTY | PART NAME 1 2 3 4 5 6 (PRODUCT LEVEL) | SEE PAGE |
|---|---|---|---|---|---|---|
| | 1 | 1 | **2J-6089** | 1 | SPRING | |
| | 2 | 1 | **114-6635** | 1 | RETAINER AS | |
| | 3 | 1 | **131-8777** | 1 | VALVE | |
| | 5 | 1 | **2A-3211** | 1 | WASHER (5.5X12.3X0.8-MM THK) | |
| | 6 | 1 | **2P-1279** | 1 | LOCKNUT (9/16-18-THD) | |
| | 7 | 1 | **3J-1907** | 2 | SEAL-O-RING | |
| | 8 | 1 | **4D-2297** | 1 | SEAL-O-RING | |

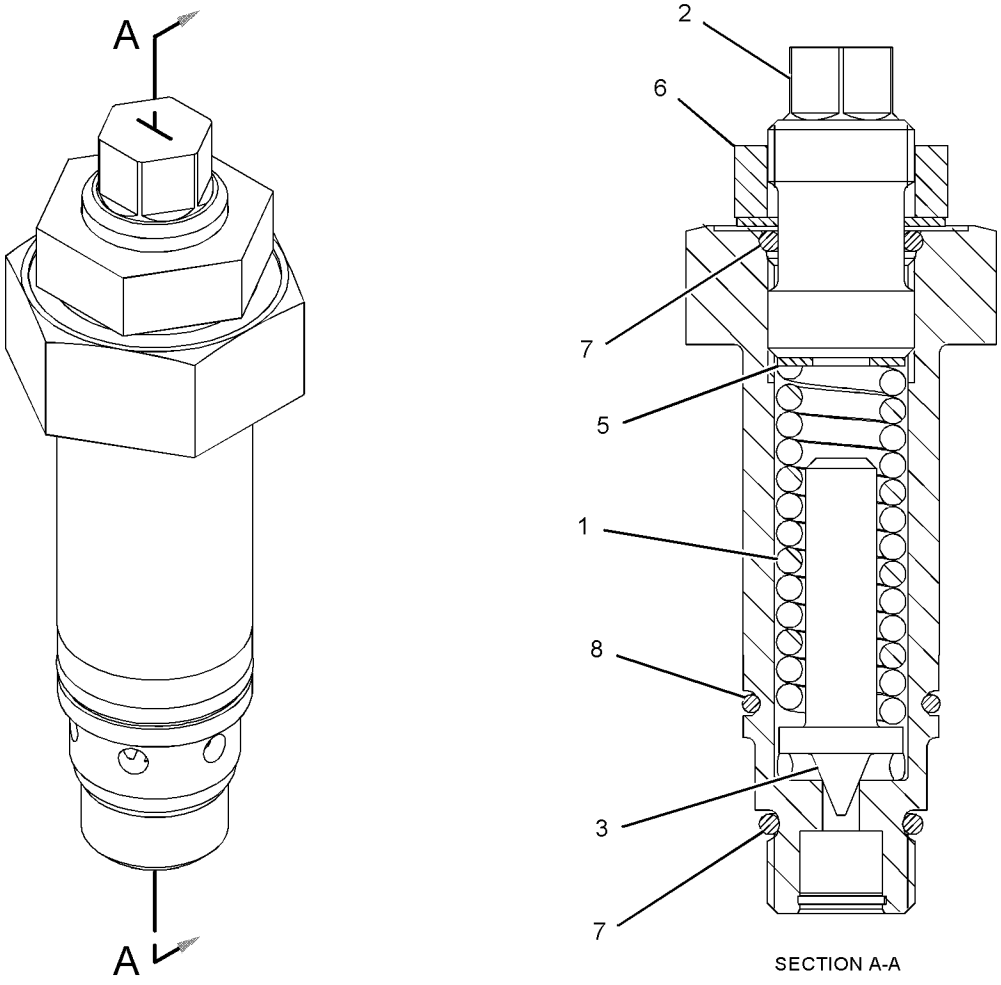


GRAPHIC #1 **<END>** g01060048

# 4T-1860 VALVE GP-SHUTTLE–SIGNAL

**S/N: CCA1-UP**

**PART OF 229-7155, 9T-5957 VALVE GP-COMBINATION**

**SMCS-5079** **i02400665**

| NOTE | REF NO | GRAPHIC REF | PART NUMBER | QTY | PART NAME 1 2 3 4 5 6 (PRODUCT LEVEL) | SEE PAGE |
|---|---|---|---|---|---|---|
| Z | 1 | 1 | | 1 | SEAT | |
| | 2 | 1 | **1M-6718** | 1 | BALL | |
| Z | 3 | 1 | | 1 | VALVE | |
| | 4 | 1 | **6V-5324** | 1 | SEAL-O-RING | |
| | 5 | 1 | **147-6603** | 1 | SEAL-O-RING | |
| | 6 | 1 | **3J-1907** | 1 | SEAL-O-RING | |
| | 7 | 1 | **147-6604** | 2 | RING-BACKUP | |
| | 8 | 1 | **147-6605** | 2 | RING-BACKUP | |

Z-NOT SERVICED SEPARATELY

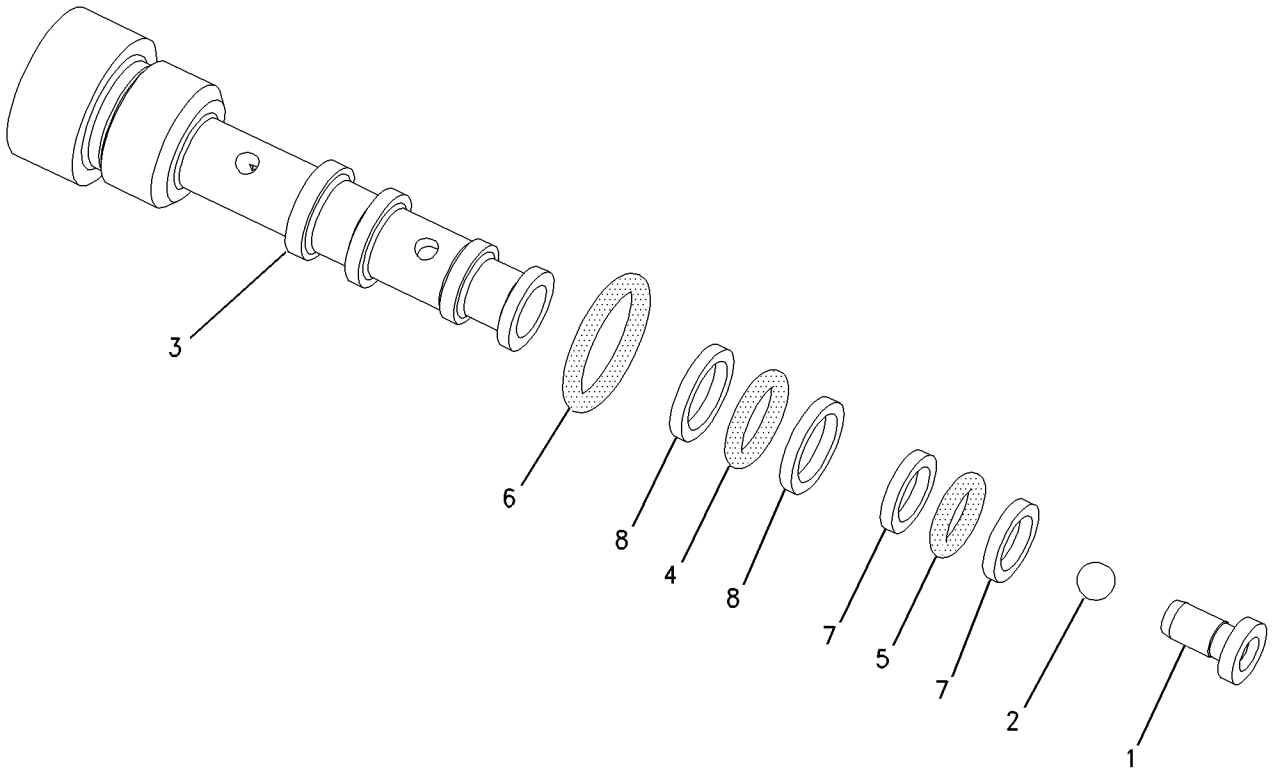


GRAPHIC #1 **<END>** g00775006

# HYDRAULIC SYSTEM

## 131-0753 VALVE GP-SHUTTLE

**S/N: CCA1-UP**

**PART OF 160-9178 LINES GP-PUMP**

**SMCS-5079** **i01966039**

| NOTE | REF NO | GRAPHIC REF | PART NUMBER | QTY | PART NAME 1 2 3 4 5 6 (PRODUCT LEVEL) | SEE PAGE |
|---|---|---|---|---|---|---|
| | 1 | 1 | **6V-8936** | 1 | REDUCER | |
| | 2 | 1 | **6V-8398** | 1 | SEAL-O-RING | |
| | 3 | 1 | **123-5799** | 1 | SEAT | |
| | 4 | 1 | **131-0752** | 1 | VALVE | |
| | 5 | 1 | **123-5798** | 1 | SEAT | |
| | 6 | 1 | **131-0749** | 1 | CONNECTOR | |
| | 7 | 1 | **6V-8397** | 1 | SEAL-O-RING | |
| | 8 | 1 | **3J-1907** | 1 | SEAL-O-RING | |

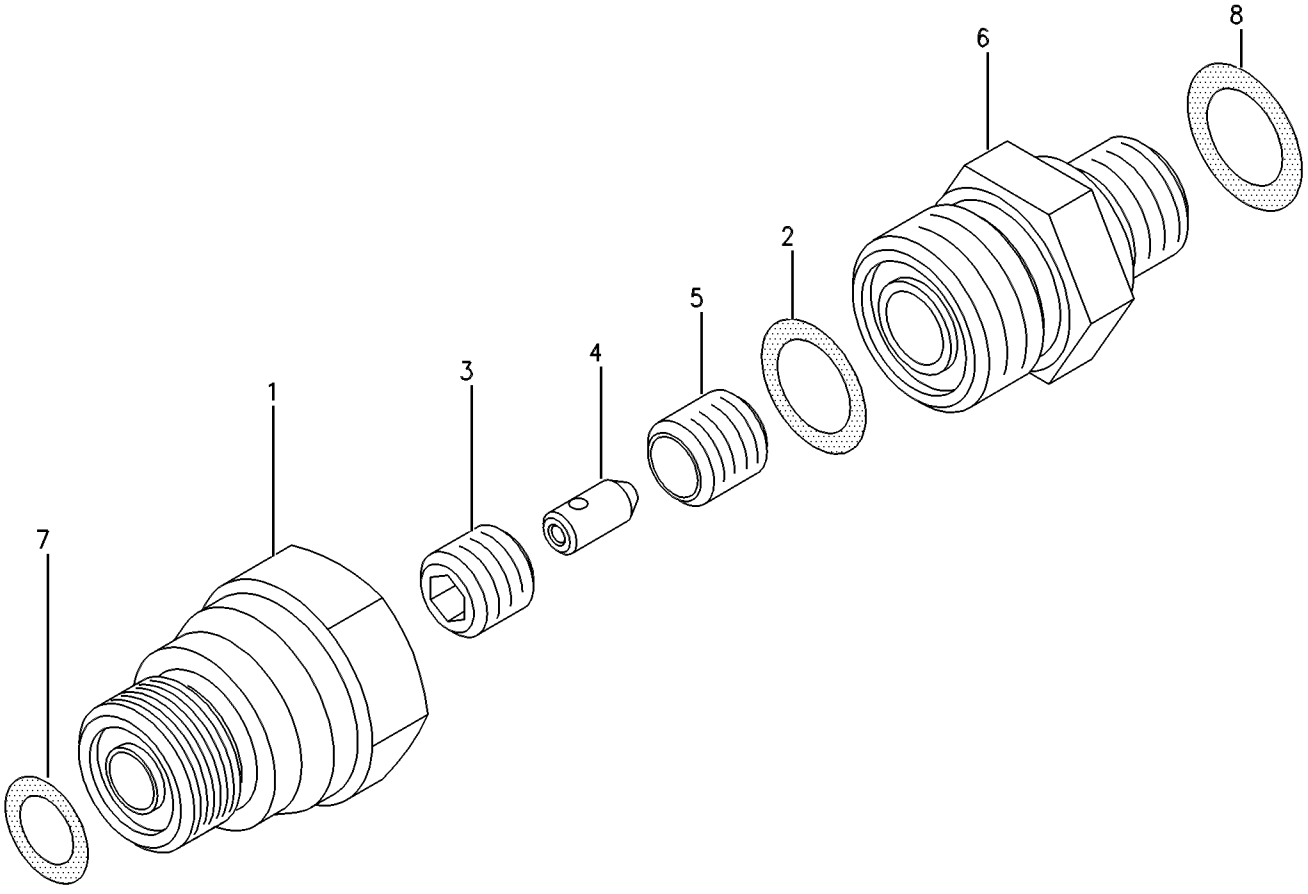


GRAPHIC #1 **<END>** g00269817

# 149-2610 VALVE GP-SOLENOID–BLADE CUSHION

**S/N: CCA1-UP**
**24 VOLT**
**PART OF 112-2240 MANIFOLD GP-CONTROL**
**AN ATTACHMENT**

**SMCS-5479** **i01755293**

| NOTE | REF NO | GRAPHIC REF | PART NUMBER | QTY | PART NAME 1 2 3 4 5 6 (PRODUCT LEVEL) | SEE PAGE |
|---|---|---|---|---|---|---|
| | 1 | 1 | **149-2611** | 1 | CARTRIDGE AS | |
| | | 1 | **8C-9987** | 1 | WASHER (8.3X28X2.5-MM THK) | |
| | 2 | 1 | **111-0343** | 1 | LOCKNUT (5/16-18-THD) | |
| | 3 | 1 | **141-6787** | 1 | COIL AS | |
| | | 1 | **1S-9593** | 2 | STRAP-CABLE | |
| | | 1 | **3E-3365** | 1 | WEDGE-RECEPTACLE LOCK (2-PIN) | |
| | | 1 | **186-3735** | 2 | PIN-CONNECTOR (16-GA TO 18-GA) | |
| | | 1 | **102-8802** | 2 | KIT-RECEPTACLE (2-PIN) | |
| | | | | | (INCLUDES RECEPTACLE AS AND WEDGE) | |
| | 4 | 1 | **8C-9987** | 1 | WASHER (8.3X28X2.5-MM THK) | |
| | | 1 | **111-0343** | 1 | LOCKNUT (5/16-18-THD) | |
| | | | | | AVAILABLE REPAIR KIT(S): | |
| | | | **3G-8175** | 1 | KIT-SEAL | |
| | | | | | (INCLUDES O-RINGS & BACK-UP RINGS) | |

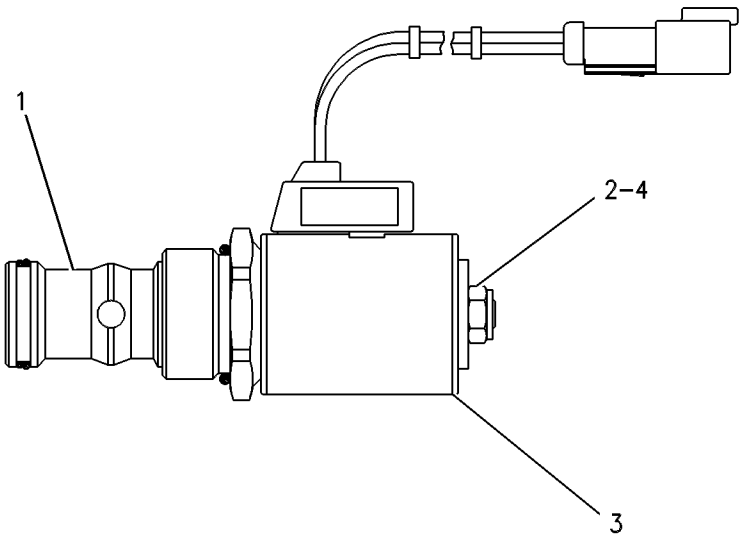


GRAPHIC #1 **<END>** g00308949

# *152-8346* VALVE GP-SOLENOID–CENTERSHIFT LOCK

**S/N: CCA1-UP**

**PART OF 164-8462 LOCK GP-CENTERSHIFT**

**SMCS-5479** **i01861563**

| NOTE | REF NO | GRAPHIC REF | PART NUMBER | QTY | PART NAME 1 2 3 4 5 6 (PRODUCT LEVEL) | SEE PAGE |
|---|---|---|---|---|---|---|
| | 1 | 1 | **141-6787** | 1 | COIL AS | |
| | 2 | 1 | **102-8802** | 1 | KIT-RECEPTACLE (2-PIN) | |
| | | | | | (INCLUDES RECEPTACLE AS AND WEDGE) | |
| | 3 | 1 | **3E-3365** | 1 | WEDGE-RECEPTACLE LOCK (2-PIN) | |
| | 4 | 1 | **8T-8729** | 2 | PIN-CONNECTOR | |
| | 5 | 1 | **1S-9593** | 2 | STRAP-CABLE | |
| | 6 | 1 | **152-8352** | 1 | SPOOL AS-VALVE | |
| | 7 | 1 | **111-0343** | 1 | LOCKNUT (5/16-18-THD) | |
| | 8 | 1 | **8C-9987** | 1 | WASHER (8.3X28X2.5-MM THK) | |
| | | | | | AVAILABLE REPAIR KIT(S): | |
| | | | **109-3036** | 1 | KIT-SEAL | |
| | | | | | (INCLUDES SEALS & RINGS) | |

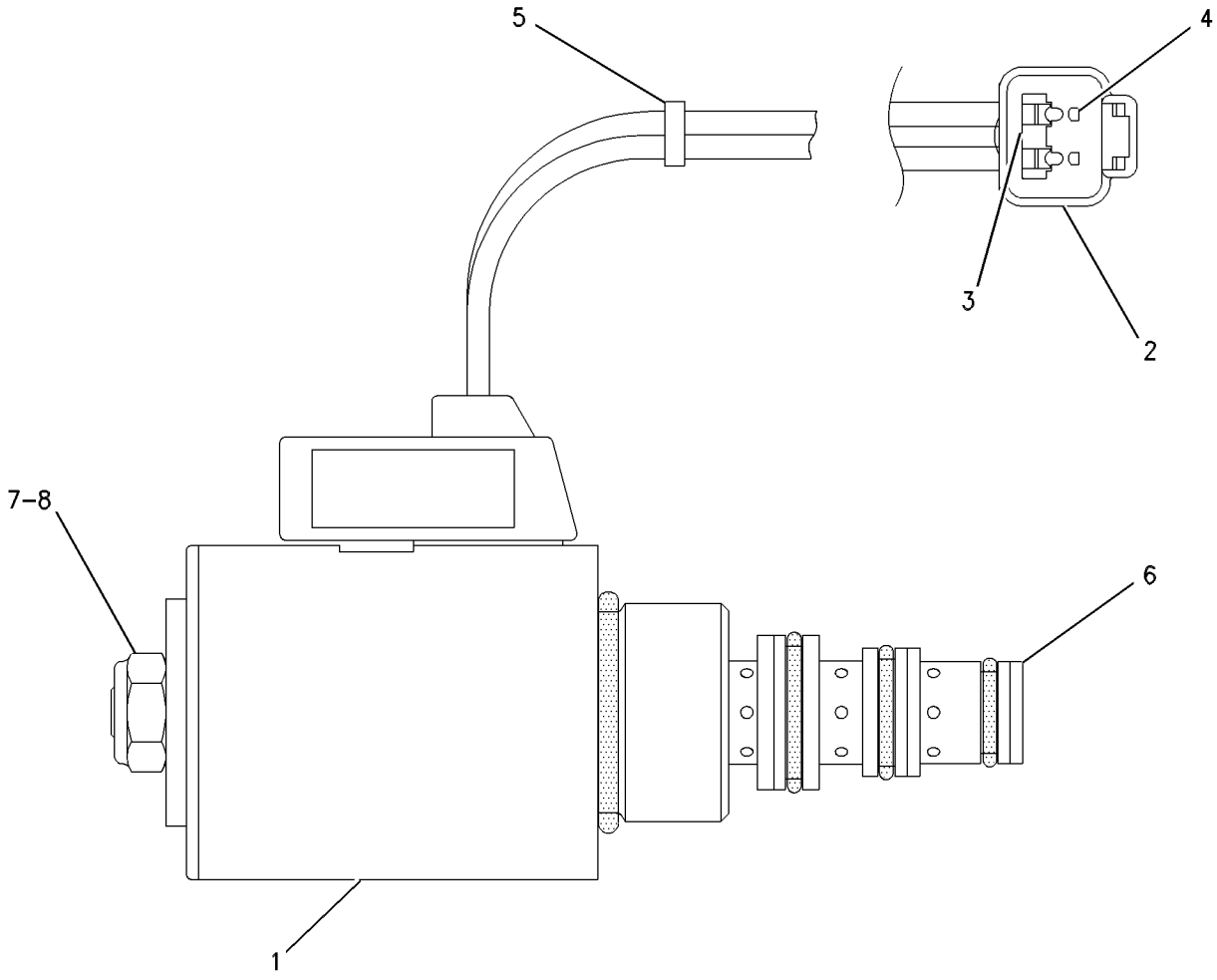


GRAPHIC #1 **<END>** g00482067

# *112-7486* CIRCLE GP

**S/N: CCA1-UP**

**PART OF 159-4615 GENERAL AR**

**SMCS-6152, 6154, 6155** **i02291588**

| NOTE | REF NO | GRAPHIC REF | PART NUMBER | QTY | PART NAME 1 2 3 4 5 6 (PRODUCT LEVEL) | SEE PAGE |
|---|---|---|---|---|---|---|
| | 1 | 1 | **1D-0503** | 2 | WASHER (45.25X76.2X6.35-MM THK) | |
| B | 2 | 1 | **2G-3219** | 4 | SHIM (0.8-MM THK) | |
| B | 3 | 1 | **2G-3221** | 4 | SHIM (1.6-MM THK) | |
| | 4 | 1 | **2K-0419** | 4 | WASHER (0.766X3.5X0.065-IN THK) | |
| | 5 | 1 | **5D-6644** | 10 | SHIM (0.762-MM THK) | |
| | 6 | 1 | **5T-8366** | 4 | STRIP-WEAR | |
| | 7 | 1 | **8D-5949** | 1 | BAR-SPREADER | |
| | 8 | 1 | **8W-1749** | 10 | PLATE | |
| B | 9 | 1 | **102-4139** | 8 | SPACER (18.85X26.67X78-MM THK) | |
| | 10 | 1 | **112-5060** | 1 | BRACKET AS | |
| | | 1 | **104-8655** | 1 | BEARING-SLEEVE | |
| | 11 | 1 | **112-5061** | 1 | BRACKET AS | |
| | | 1 | **104-8655** | 1 | BEARING-SLEEVE | |
| C | 12 | 1 | **153-3580** | 1 | SHAFT | |
| CY | 13 | 1 | **153-9360** | 1 | CIRCLE GP | 1049 |
| | 14 | 1 | **159-8127** | 1 | BRACKET AS | |
| | 14A | 1 | **9X-8881** | 2 | BOLT (5/8-11X2.25-IN) | |
| | 14B | 1 | **5P-8247** | 4 | WASHER-HARD (17X32X3.5-MM THK) | |
| | 14C | 1 | **9X-8883** | 2 | BOLT (5/8-11X2.75-IN) | |
| | 15 | 1 | **163-4720** | 1 | GUARD | |
| | 16 | 1 | **163-4721** | 1 | GUARD | |
| B | 17 | 1 | **163-6074** | 2 | SHIM (0.381-MM THK) | |
| | 18 | 1 | **178-1685** | 1 | STRIP-WEAR | |
| B | 19 | 1 | **178-1686** | 1 | SHIM (0.8-MM THK) | |
| B | 20 | 1 | **178-1688** | 1 | SHIM (1.8-MM THK) | |
| B | 21 | 1 | **178-8455** | 1 | SHIM (0.4-MM THK) | |
| | 22 | 1 | **105-2080** | 4 | BRACKET AS | |
| | | | | | (EACH INCLUDES) | |
| | 22A | 1 | **1F-0748** | 2 | NUT-WELD (1/2-13-THD) | |
| | 23 | 1 | **2B-2673** | 2 | NUT (1-3/4-5-THD) (1 3/4-5 THD) | |
| | 24 | 1 | **3B-5320** | 2 | PIN-COTTER | |
| | 25 | 1 | **5P-8245** | 30 | WASHER-HARD (13.5X25.5X3-MM THK) | |
| | 26 | 1 | **6H-1717** | 30 | BOLT (1/2-13X1.125-IN) | |
| | 27 | 1 | **7X-0334** | 8 | BOLT (1/2-13X5-IN) | |
| | 28 | 1 | **7X-0452** | 4 | NUT-FULL (1-1/2-6-THD) | |
| | 29 | 1 | **7X-0550** | 8 | WASHER-HARD (13.5X32X5-MM THK) | |
| | 30 | 1 | **2A-7089** | 2 | BEARING-SLEEVE | |

B-USE AS REQUIRED
C-CHANGE FROM PREVIOUS TYPE
Y-SEPARATE ILLUSTRATION

*112-7486* **CIRCLE GP** *(contd.)* **i02291588**

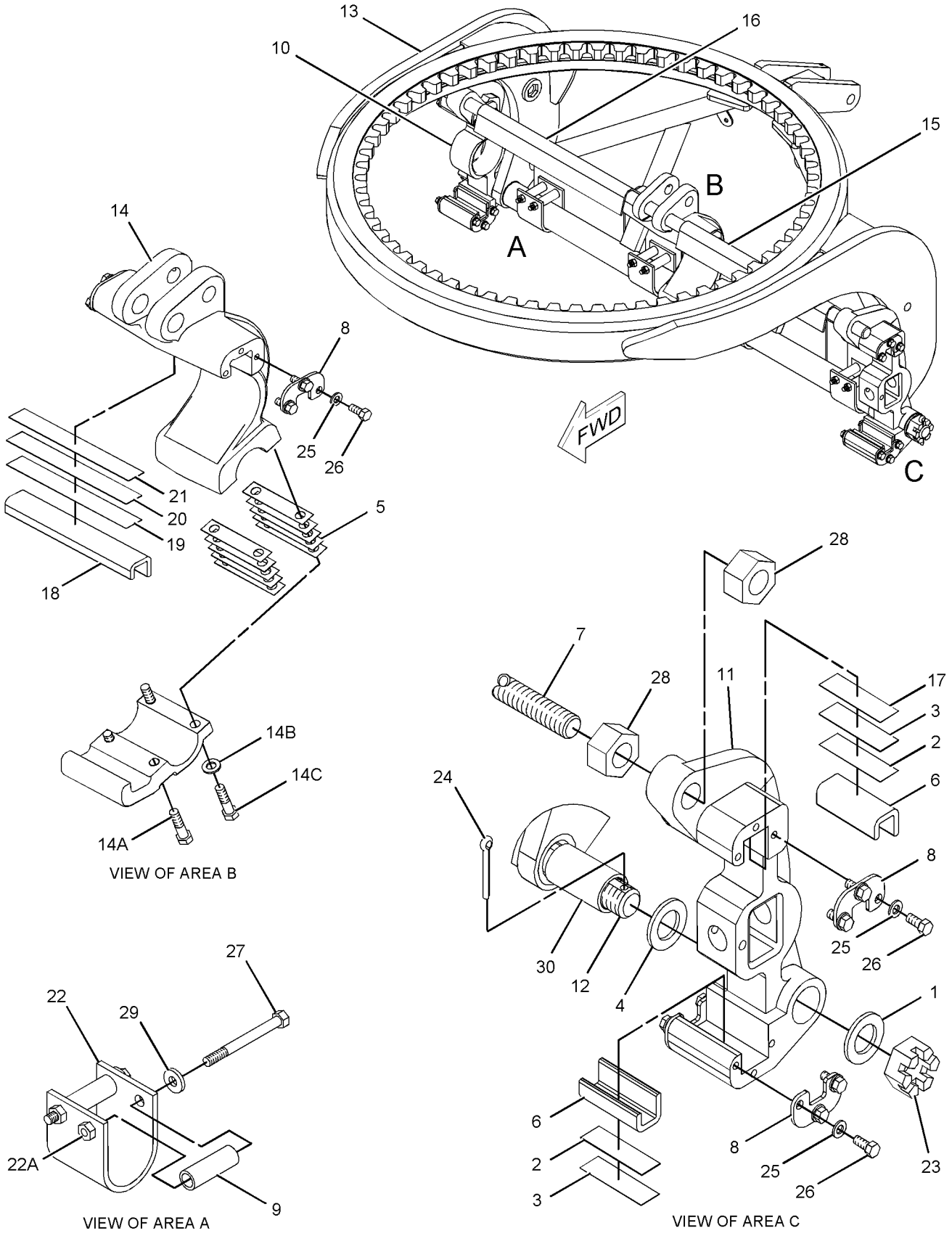


GRAPHIC #1 **<END>** g01149615

# 153-9360 CIRCLE GP

**S/N: CCA1-UP**

**PART OF 112-7486 CIRCLE GP, 254-5960 MOUNTING GP-GRADE CONTROL**

**ALSO AN ATTACHMENT**

**SMCS-6152, 6154, 6155** **i02075546**

| NOTE | REF NO | GRAPHIC REF | PART NUMBER | QTY | PART NAME 1 2 3 4 5 6 (PRODUCT LEVEL) | SEE PAGE |
|---|---|---|---|---|---|---|
| | 1 | 1 | **2G-3971** | 1 | BRACKET AS | |
| | 2 | 1 | **4D-4375** | 2 | LUG | |
| | 3 | 1 | **5T-3889** | 1 | BRACE | |
| | 4 | 1 | **5T-3890** | 1 | BRACE | |
| | 5 | 1 | **6G-2946** | 2 | STOP | |
| | 7 | 1 | **8D-9882** | 2 | BLOCK-FILLER | |
| | 8 | 1 | **8D-9886** | 1 | BRACE | |
| | 9 | 1 | **8D-9887** | 1 | BRACE | |
| | 11 | 1 | **132-1340** | 1 | BRACE AS | |
| | | 1 | **2A-7089** | 2 | BEARING-SLEEVE | |
| | 12 | 1 | **147-6143** | 1 | PLATE-LH | |
| | 13 | 1 | **147-6144** | 1 | PLATE-RH | |
| | 14 | 1 | **153-0185** | 1 | BEAM-BLADE | |
| | 15 | 1 | **153-0187** | 1 | BEAM-BLADE | |
| | | | | | | |
| AF | | 1 | **5T-4267** | | SEGMENT-CIRCLE | |
| | | | | | (4 TEETH) SERVICE REPAIR FOR WORN OR DAMAGED TEETH | |

A-NOT PART OF THIS GROUP
F-NOT SHOWN

**153-9360 CIRCLE GP** *(contd.)* **i02075546**

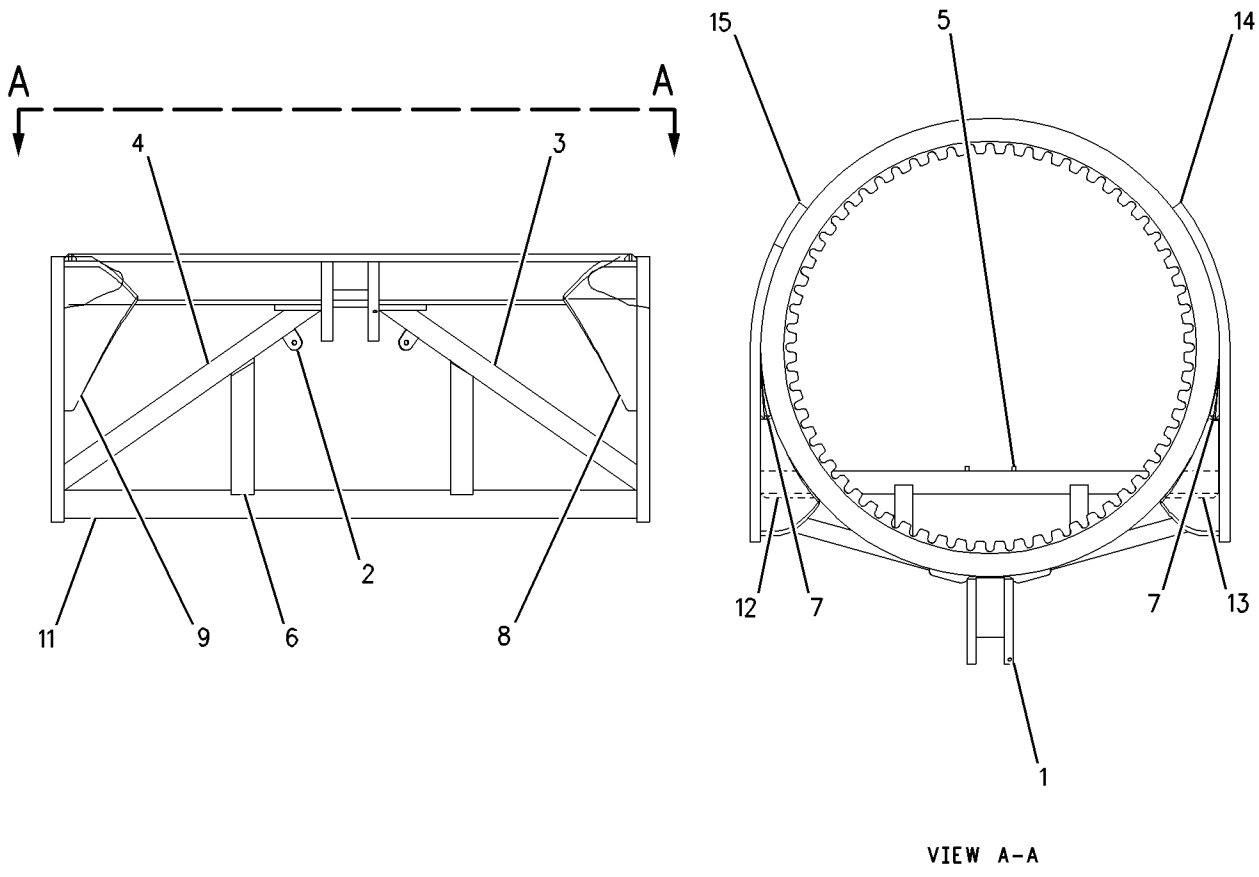


VIEW A-A

GRAPHIC #1 **<END>** g00665278

# *8X-1960* DRAWBAR GP

**S/N: CCA1-UP**

**PART OF 159-4615 GENERAL AR**

**SMCS-6153** **i02046324**

| NOTE | REF NO | GRAPHIC REF | PART NUMBER | QTY | PART NAME 1 2 3 4 5 6 (PRODUCT LEVEL) | SEE PAGE |
|---|---|---|---|---|---|---|
| | 1 | 1 | **9S-1322** | 4 | BOLT (7/8-9X6-IN) | |
| B | 2 | 1 | **6G-1915** | 36 | SHIM (0.25-MM THK) | |
| | 3 | 1 | **8X-7951** | 1 | DRAWBAR & YOKE AS | |
| | 3A | 1 | **5T-6775** | 2 | REINFORCEMENT | |
| | 3B | 1 | **178-3086** | 3 | STUD-BALL | |
| | 3C | 1 | **8X-7956** | 1 | SHAFT AS | |
| | 3D | 1 | **8F-9836** | 12 | BOSS-THREADED | |
| | 3E | 1 | **123-7707** | 2 | PLATE | |
| | 4 | 1 | **6G-5442** | 1 | BALL | |
| | 5 | 1 | **8X-8406** | 1 | CAP | |
| B | 6 | 1 | **8X-8409** | 4 | SHIM (0.8-MM THK) | |
| B | 7 | 1 | **8X-8408** | 6 | SHIM (0.25-MM THK) | |
| | 8 | 1 | **8X-8407** | 1 | ADAPTER | |
| | 9 | 1 | **5P-8291** | 5 | BOLT (3/4-16X2-IN) | |
| | 10 | 1 | **2H-3764** | 2 | BOLT-SOCKET HEAD (1/4-20X1.5-IN) | |
| | 11 | 1 | **9H-1031** | 4 | WASHER-HARD (24X41.5X6-MM THK) | |
| | 12 | 1 | **3B-8489** | 1 | FITTING-GREASE (DRAWBAR) | |
| | 13 | 1 | **6G-4526** | 6 | SHOE-CIRCLE GUIDE | |
| | 14 | 1 | **4B-3604** | 12 | SETSCREW-SQUARE HEAD (3/4-10X2.5-IN) | |
| | 15 | 1 | **1D-5119** | 12 | NUT (3/4-10-THD) | |
| B | 16 | 1 | **6G-1914** | 54 | SHIM (0.76-MM THK) | |
| | 17 | 1 | **128-9654** | 11 | STRIP-WEAR | |
| | 18 | 1 | **128-9656** | 6 | STRIP-WEAR | |
| | 19 | 1 | **5P-6652** | 18 | WASHER (20X44.5X6-MM THK) | |
| | 20 | 1 | **3B-6753** | 18 | BOLT (3/4-10X4.75-IN) | |
| B | 21 | 1 | **153-7383** | 1 | SHIM (0.12-MM THK) | |

B-USE AS REQUIRED

*8X-1960* **DRAWBAR GP** ***(contd.)*** **i02046324**

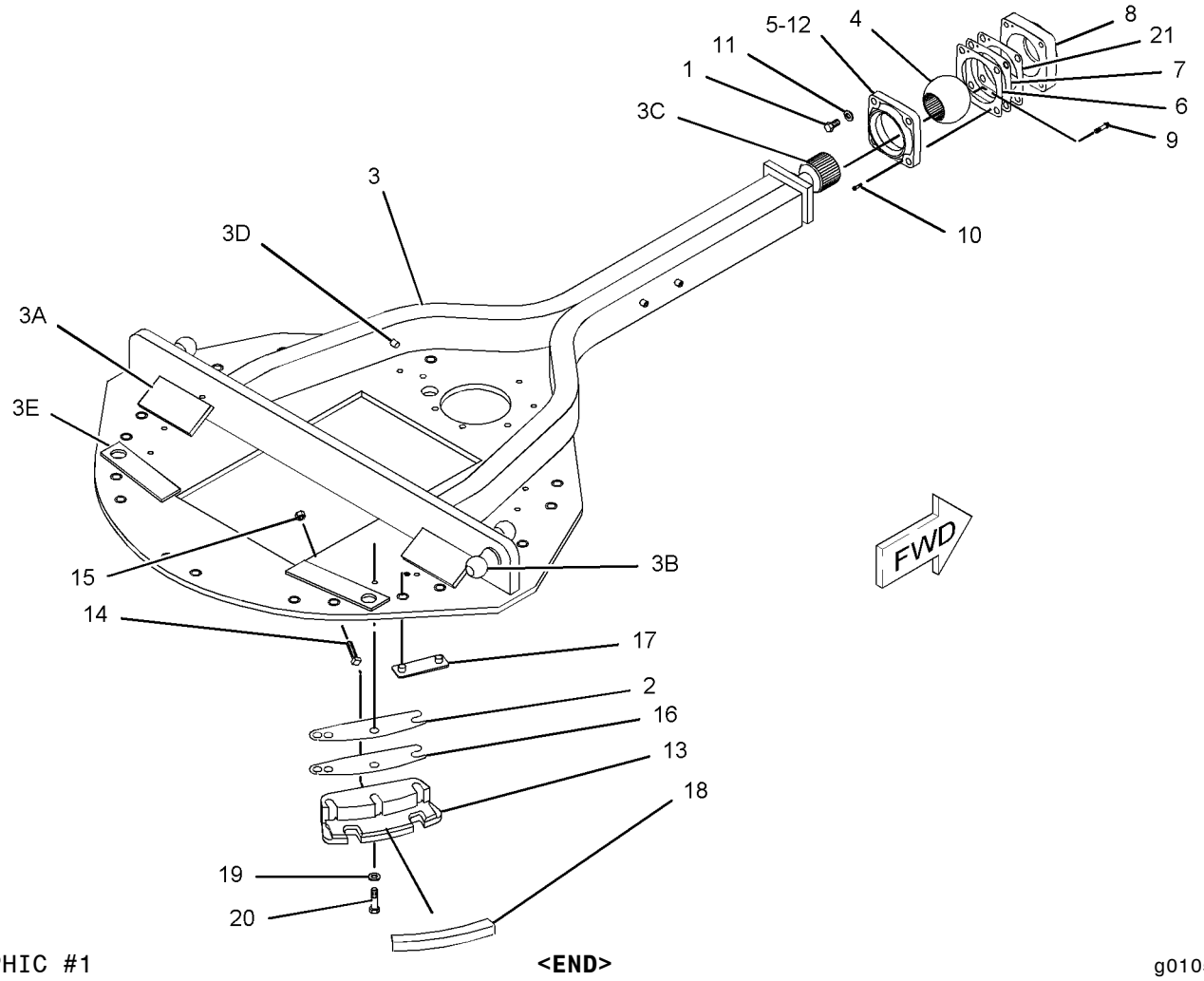


GRAPHIC #1 **<END>** g01050407

# *254-5960* MOUNTING GP-GRADE CONTROL

**S/N: CCA1-UP**
**AN ATTACHMENT**

**SMCS-6154, 7220** **i02457278**

| NOTE | REF NO | GRAPHIC REF | PART NUMBER | QTY | PART NAME 1 2 3 4 5 6 (PRODUCT LEVEL) | SEE PAGE |
|---|---|---|---|---|---|---|
| | 1 | 1 | **187-7738** | 2 | WASHER-HARD (21X36.5X3.5-MM THK) | |
| | 2 | 1 | **236-1927** | 1 | BRACKET AS | |
| | 3 | 1 | **251-2382** | 1 | BOSS | |
| | 4 | 1 | **9C-8895** | 1 | BOSS-TAPPED (M10X1.5-THD) | |
| Y | 5 | 1 | **153-9360** | 1 | CIRCLE GP | 1049 |

Y-SEPARATE ILLUSTRATION

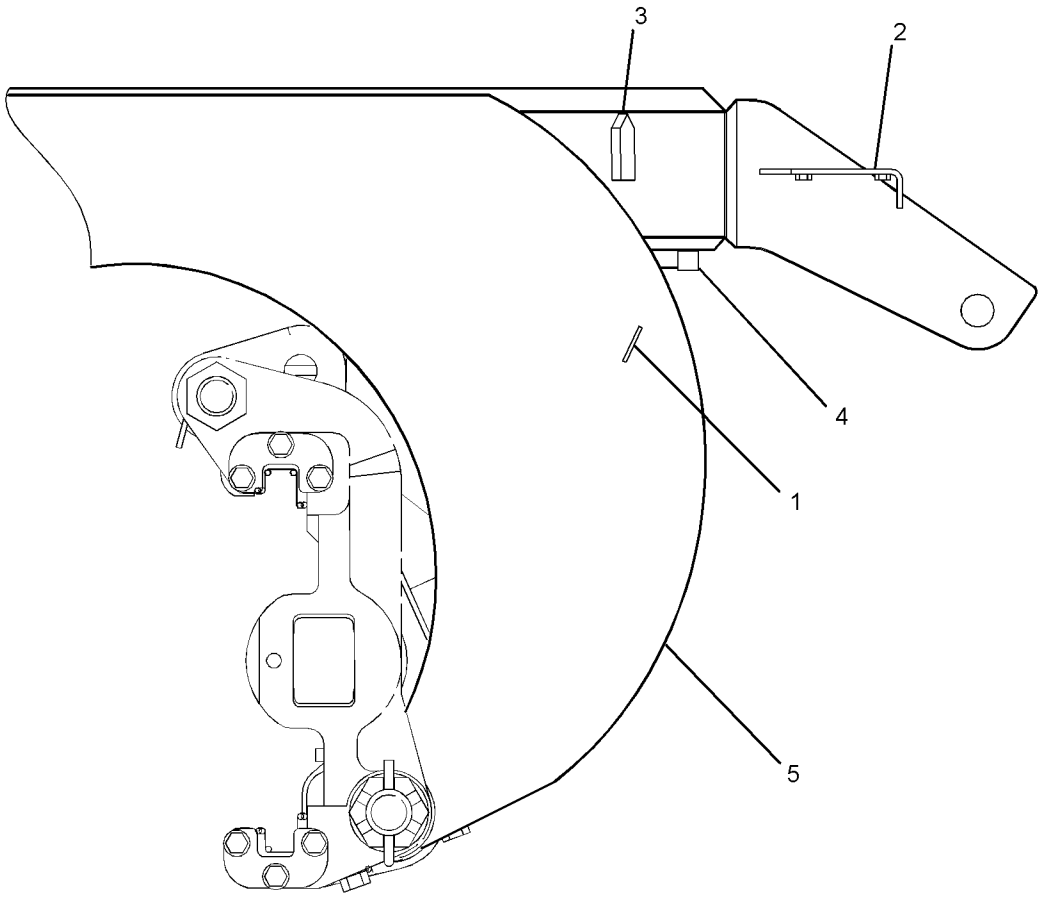


LEFT SIDE VIEW

GRAPHIC #1 **<END>** g01241625

# IMPLEMENTS

## *8X-2349* PLATE GP-PUSH

**S/N: CCA1-UP**

**AN ATTACHMENT**

**SMCS-6077** **i02205353**

| NOTE | REF NO | GRAPHIC REF | PART NUMBER | QTY | PART NAME 1 2 3 4 5 6 (PRODUCT LEVEL) | SEE PAGE |
|---|---|---|---|---|---|---|
| | 1 | 1 | **8X-2366** | 1 | PLATE AS-PUSH | |
| | 2 | 1 | **5J-7333** | 2 | HOOK | |
| | 3 | 1 | **112-5853** | 1 | PLATE | |
| BD | 4 | 1 | **5P-5923** | | SEAL | |
| | 5 | 1 | **112-5855** | 1 | BRACKET AS | |
| | 6 | 1 | **9F-2978** | 2 | NUT-WELD (3/8-16-THD) | |
| | 7 | 1 | **5P-6652** | 8 | WASHER (20X44.5X6-MM THK) | |
| | 8 | 1 | **5M-3062** | 6 | BOLT (3/8-16X0.75-IN) | |
| | 9 | 1 | **5P-1075** | 8 | WASHER-HARD (10.2X22.5X3-MM THK) | |
| | 10 | 1 | **8T-8917** | 2 | BOLT (1/2-13X1.25-IN) | |
| | 11 | 1 | **8T-4223** | 2 | WASHER-HARD (13.5X25.5X3-MM THK) | |
| | 12 | 1 | **5S-7379** | 2 | BOLT (3/8-16X0.875-IN) | |
| | 13 | 1 | **112-5852** | 1 | PLATE AS | |
| | 14 | 1 | **9F-2978** | 4 | NUT-WELD (3/8-16-THD) | |
| | 15 | 1 | **8C-6857** | 8 | BOLT (3/4-10X2.75-IN) | |
| | 16 | 1 | **9D-6164** | 2 | BOSS (3/8-16-THD) | |

B-USE AS REQUIRED
D-ORDER BY THE METER

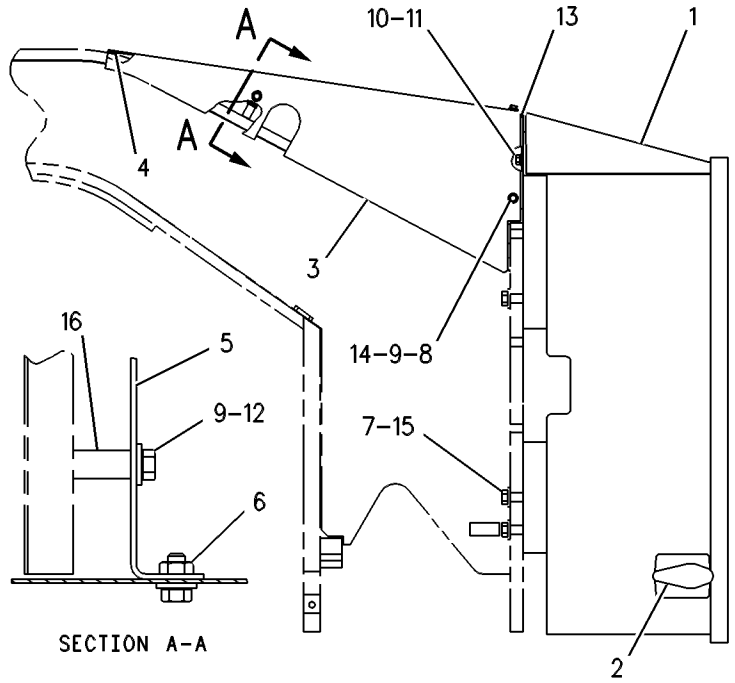


RIGHT SIDE VIEW

GRAPHIC #1 **<END>** g00108774

# *261-0852* PLATE GP-PUSH

**S/N: CCA1-UP**
**PART OF 259-5738 CONVERSION AR-MACHINE**
**AN ATTACHMENT**

**SMCS-6077** **i02252296**

| NOTE | REF NO | GRAPHIC REF | PART NUMBER | QTY | PART NAME 1 2 3 4 5 6 (PRODUCT LEVEL) | SEE PAGE |
|---|---|---|---|---|---|---|
| | 1 | 1 | **8X-2366** | 1 | PLATE AS-PUSH | |
| | | 1 | **5J-7333** | 2 | HOOK | |
| | 2 | 1 | **112-5852** | 1 | PLATE AS | |
| | 3 | 1 | **112-5855** | 1 | BRACKET AS | |
| | 4 | 1 | **134-2042** | 1 | PLATE | |
| | 5 | 1 | **261-0853** | 1 | PLATE | |
| | 6 | 1 | **2K-4973** | 2 | LOCKNUT (3/8-16-THD) | |
| | 7 | 1 | **5M-3062** | 6 | BOLT (3/8-16X0.75-IN) | |
| | 8 | 1 | **5P-1075** | 12 | WASHER-HARD (10.2X22.5X3-MM THK) | |
| | 9 | 1 | **5P-6652** | 8 | WASHER (20X44.5X6-MM THK) | |
| | 10 | 1 | **5S-7379** | 4 | BOLT (3/8-16X0.875-IN) | |
| | 11 | 1 | **8C-6857** | 8 | BOLT (3/4-10X2.75-IN) | |
| | 12 | 1 | **8T-4223** | 2 | WASHER-HARD (13.5X25.5X3-MM THK) | |
| | 13 | 1 | **8T-8917** | 2 | BOLT (1/2-13X1.25-IN) | |
| | 14 | 1 | **9D-6164** | 2 | BOSS (3/8-16-THD) | |
| D | 15 | 1 | **5P-5923** | | SEAL (0.4-M) | |

D-ORDER BY THE METER

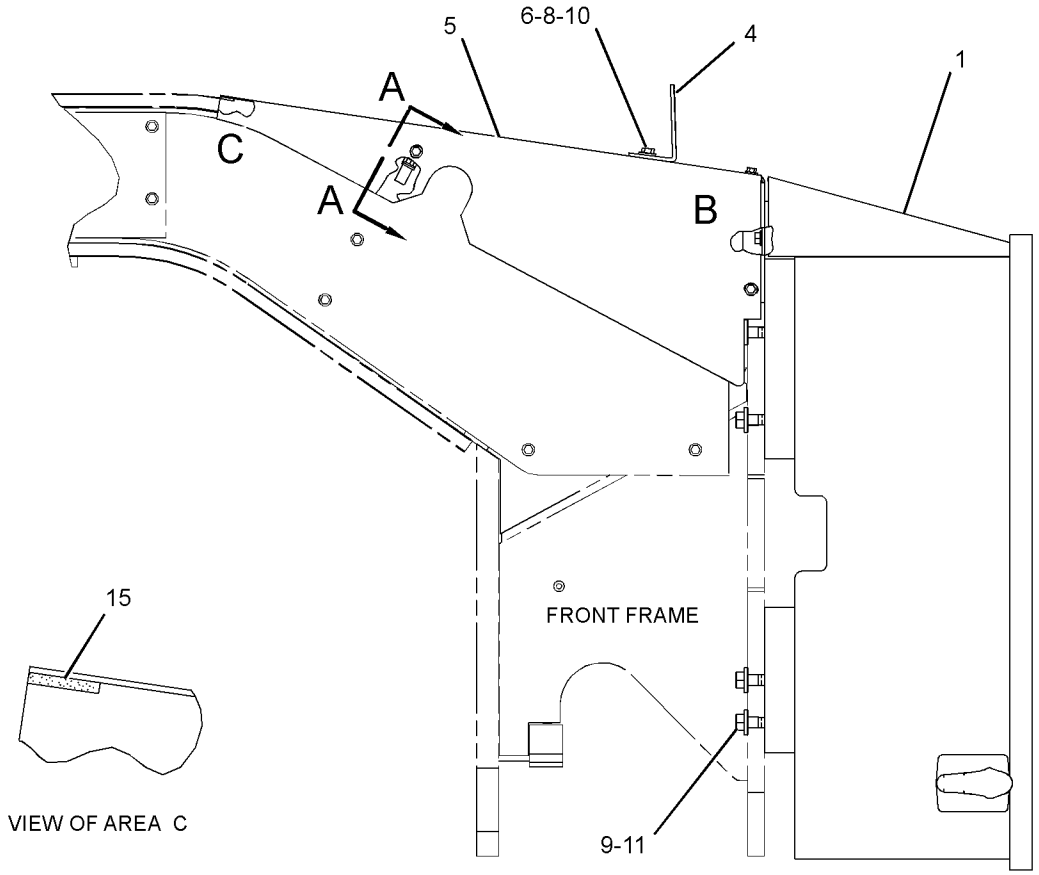


RIGHT SIDE VIEW

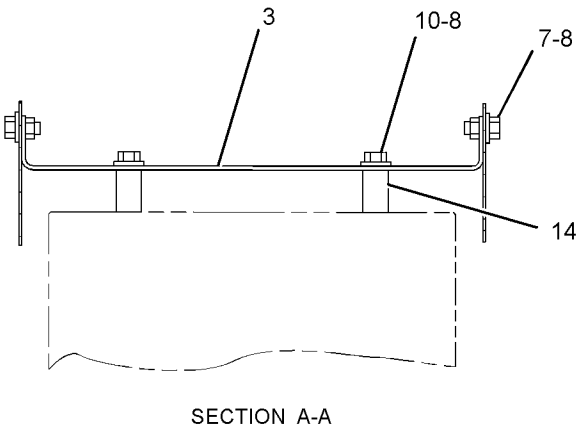


SECTION A-A

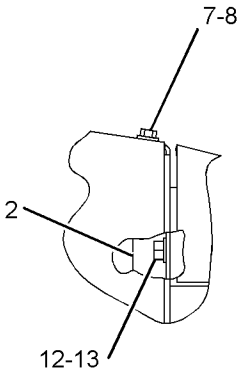


VIEW OF AREA B

GRAPHIC #1 **<END>** g01239188

# WORK TOOLS

## *107-3417* BIT GP

**S/N: CCA1-UP**
**(12 FT. 60 PEN. BITS)**
**AN ATTACHMENT**

**SMCS-6804** **i01535455**

| NOTE | REF NO | GRAPHIC REF | PART NUMBER | QTY | PART NAME 1 2 3 4 5 6 (PRODUCT LEVEL) | SEE PAGE |
|---|---|---|---|---|---|---|
| | 1 | 1 | **105-5180** | 60 | BIT AS | |
| | | | | | (EACH INCLUDES) | |
| | | 1 | **068-4860** | 1 | RING-RETAINING | |
| | 2 | 1 | **159-0311** | 4 | ADAPTER | |

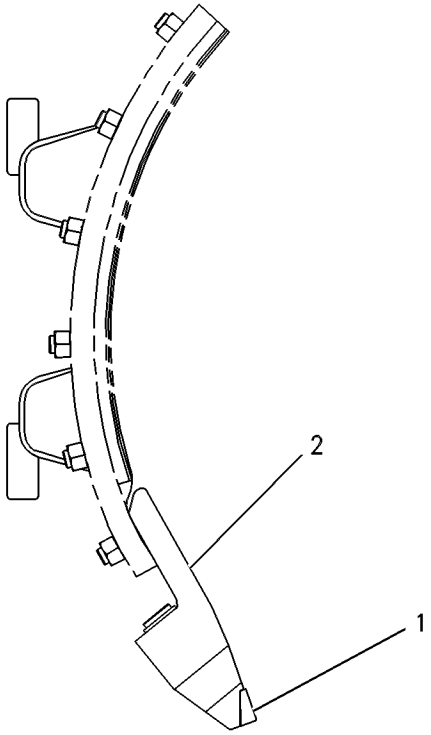


GRAPHIC #1 **<END>** g00108840

# WORK TOOLS

## *107-3418* BIT GP

**S/N: CCA1-UP**
**(14 FT. 70 PEN. BITS)**
**AN ATTACHMENT**

**SMCS-6804** **i01531836**

| NOTE | REF NO | GRAPHIC REF | PART NUMBER | QTY | PART NAME 1 2 3 4 5 6 (PRODUCT LEVEL) | SEE PAGE |
|---|---|---|---|---|---|---|
| | 1 | 1 | **105-5180** | 70 | BIT AS | |
| | | | | | (EACH INCLUDES) | |
| | | 1 | **068-4860** | 1 | RING-RETAINING | |
| | 2 | 1 | **159-0312** | 2 | ADAPTER (OUTSIDE) | |
| | 3 | 1 | **159-0311** | 2 | ADAPTER (INSIDE) | |

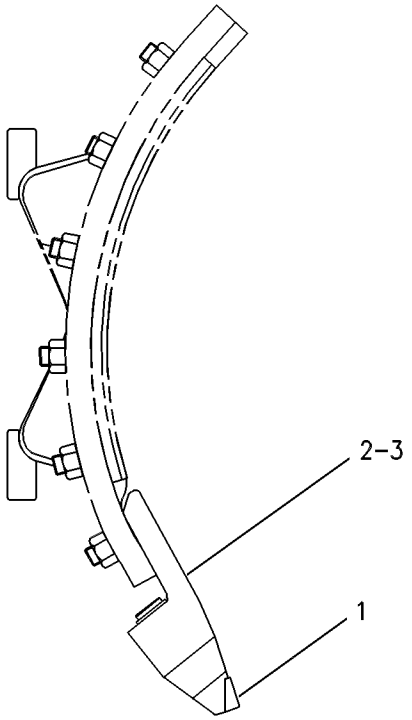


GRAPHIC #1 **<END>** g00108839

# WORK TOOLS

## *107-3419* BIT GP

**S/N: CCA1-UP**
**(12 FT. 48 PEN. BITS)**
**AN ATTACHMENT**

**SMCS-6804** **i01531843**

| NOTE | REF NO | GRAPHIC REF | PART NUMBER | QTY | PART NAME 1 2 3 4 5 6 (PRODUCT LEVEL) | SEE PAGE |
|---|---|---|---|---|---|---|
| | 1 | 1 | **105-5180** | 48 | BIT AS | |
| | | | | | (EACH INCLUDES) | |
| | | 1 | **068-4860** | 1 | RING-RETAINING | |
| | 2 | 1 | **159-0313** | 4 | ADAPTER | |

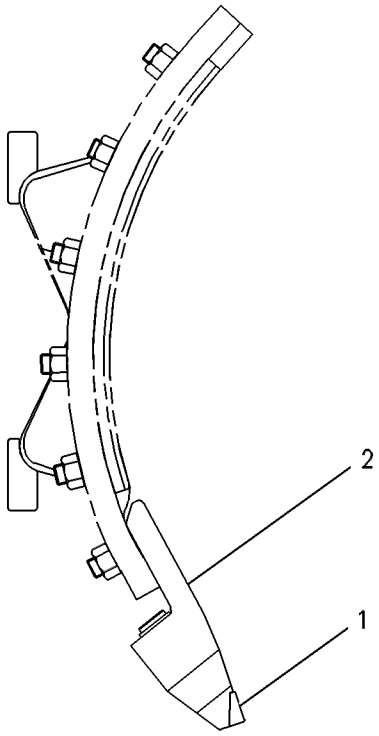


GRAPHIC #1 **<END>** g00108841

# WORK TOOLS

## *107-3420* BIT GP

**S/N: CCA1-UP**
**(14 FT. 56 PEN. BITS)**
**AN ATTACHMENT**

**SMCS-6804** **i01535456**

| NOTE | REF NO | GRAPHIC REF | PART NUMBER | QTY | PART NAME 1 2 3 4 5 6 (PRODUCT LEVEL) | SEE PAGE |
|---|---|---|---|---|---|---|
| | 1 | 1 | **105-5180** | 56 | BIT AS | |
| | | | | | (EACH INCLUDES) | |
| | | 1 | **068-4860** | 1 | RING-RETAINING | |
| | 2 | 1 | **159-0314** | 2 | ADAPTER (OUTSIDE) | |
| | 3 | 1 | **159-0313** | 2 | ADAPTER (INSIDE) | |

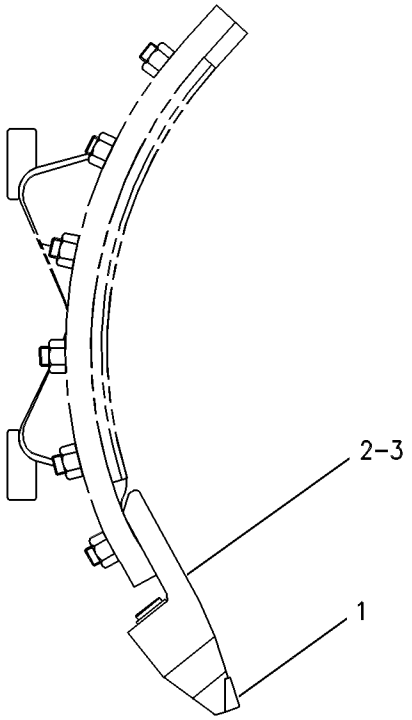


GRAPHIC #1 **<END>** g00108839

# WORK TOOLS

## *7D-6671* BIT GP-END

**S/N: CCA1-UP**
**AN ATTACHMENT**

**SMCS-6804** **i00611332**

| NOTE | PART NUMBER | QTY | PART NAME 1 2 3 4 5 6 (PRODUCT LEVEL) | SEE PAGE |
|---|---|---|---|---|
| | **9W-1767** | 2 | BIT-END | |
| | **4F-3657** | 10 | BOLT-PLOW | |

**<END>**

## *107-3395* BIT GP-END

**S/N: CCA1-UP**
**PART OF 259-5738 CONVERSION AR-MACHINE**
**AN ATTACHMENT**

**SMCS-6804** **i00609607**

| NOTE | PART NUMBER | QTY | PART NAME 1 2 3 4 5 6 (PRODUCT LEVEL) | SEE PAGE |
|---|---|---|---|---|
| | **9W-1768** | 2 | BIT-END | |
| | **4F-3658** | 4 | BOLT-PLOW (5/8-11X3.0IN) | |
| | **4F-3657** | 6 | BOLT-PLOW | |

**<END>**

## *107-3398* BIT GP-END

**S/N: CCA1-UP**
**AN ATTACHMENT**

**SMCS-6804** **i00609519**

| NOTE | PART NUMBER | QTY | PART NAME 1 2 3 4 5 6 (PRODUCT LEVEL) | SEE PAGE |
|---|---|---|---|---|
| | **6Y-2805** | 2 | BIT-END | |
| | **1J-6762** | 10 | BOLT-PLOW | |

**<END>**

# WORK TOOLS

## *8X-8011* BLADE GP–12 FT

**S/N: CCA1-UP**

**PART OF 159-4615 GENERAL AR**

**SMCS-6151** **i00134831**

| NOTE | REF NO | GRAPHIC REF | PART NUMBER | QTY | PART NAME 1 2 3 4 5 6 (PRODUCT LEVEL) | SEE PAGE |
|---|---|---|---|---|---|---|
| | 1 | 1 | **8W-2768** | 1 | MOLDBOARD AS | |
| | | 1 | **112-1813** | 1 | RAIL-MOLDBOARD | |
| | 2 | 1 | **5D-9553** | 2 | EDGE-CUTTING | |
| | 3 | 1 | **3F-5108** | 36 | BOLT-PLOW | |
| | 4 | 1 | **4K-0367** | 36 | NUT (5/8-11 THD) | |
| | 5 | 1 | **8E-5531** | 2 | BIT-END | |

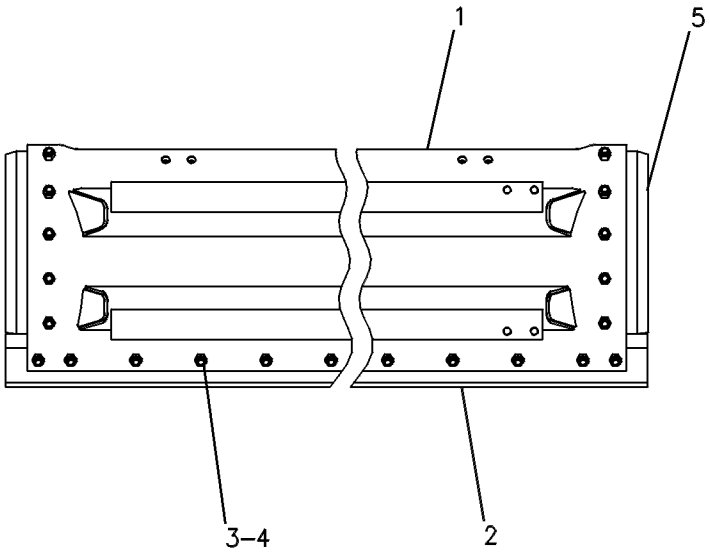


GRAPHIC #1 **<END>** g00108660

# WORK TOOLS

## *8X-8016* BLADE GP–14 FT

**S/N: CCA1-UP**

**AN ATTACHMENT**

**SMCS-6151** **i00135705**

| NOTE | REF NO | GRAPHIC REF | PART NUMBER | QTY | PART NAME 1 2 3 4 5 6 (PRODUCT LEVEL) | SEE PAGE |
|---|---|---|---|---|---|---|
| | 1 | 1 | **8W-2761** | 1 | MOLDBOARD AS | |
| | | 1 | **112-1814** | 2 | RAIL-MOLDBOARD | |
| | 2 | 1 | **5D-9554** | 2 | EDGE-CUTTING | |
| | 3 | 1 | **3F-5108** | 40 | BOLT-PLOW | |
| | 4 | 1 | **4K-0367** | 40 | NUT (5/8-11 THD) | |
| | 5 | 1 | **8E-5531** | 2 | BIT-END | |

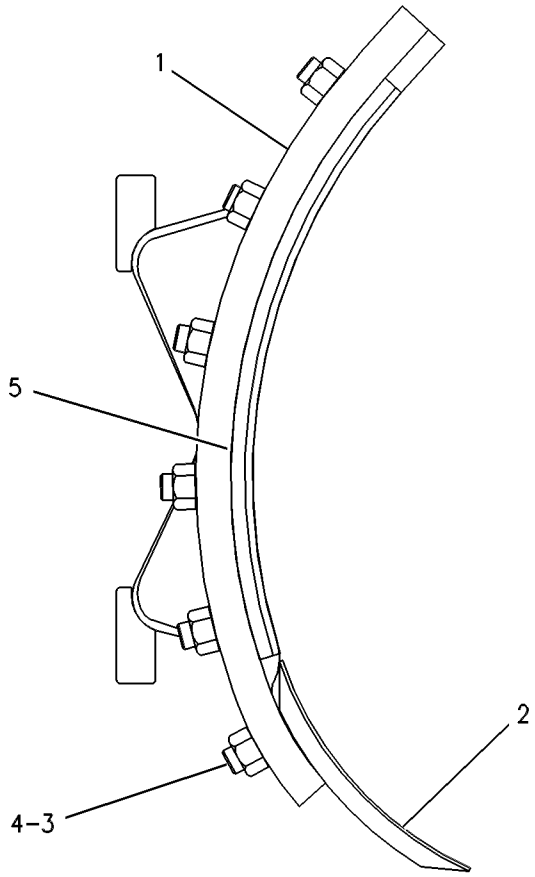


GRAPHIC #1 **<END>** g00108846

# WORK TOOLS

## *112-4521* BLADE GP–14 FT

**S/N: CCA1-UP**

**AN ATTACHMENT**

**SMCS-6151** **i00913729**

| NOTE | REF NO | GRAPHIC REF | PART NUMBER | QTY | PART NAME 1 2 3 4 5 6 (PRODUCT LEVEL) | SEE PAGE |
|---|---|---|---|---|---|---|
| | 1 | 1 | **8W-7324** | 1 | MOLDBOARD AS | |
| | | 1 | **112-1814** | 1 | RAIL-MOLDBOARD | |
| | 2 | 1 | **8E-5529** | 2 | BIT-END | |
| | 3 | 1 | **7D-1158** | 2 | EDGE-CUTTING | |
| | 4 | 1 | **5J-4773** | 40 | BOLT-PLOW (3/4-10X2.5-IN) | |
| | 5 | 1 | **2J-3506** | 40 | NUT-FULL (3/4-10-THD) | |

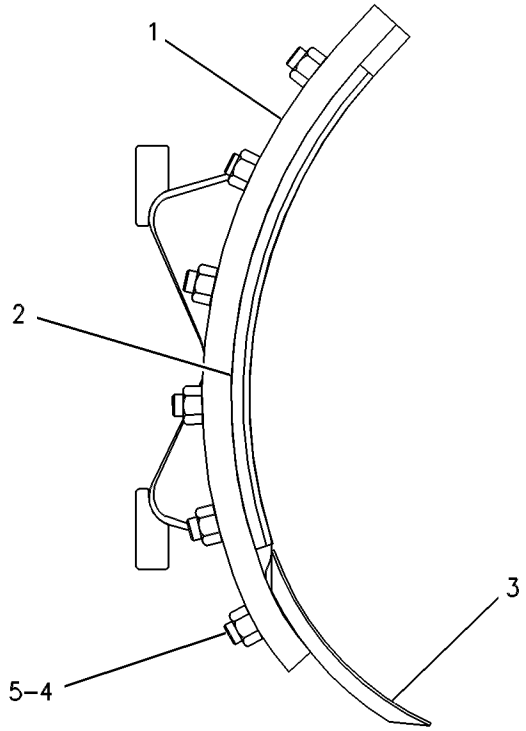


GRAPHIC #1 **<END>** g00108842

# WORK TOOLS

## *151-5969* BLADE GP–14 FT

**S/N: CCA1-UP**
**PART OF 259-5738 CONVERSION AR-MACHINE**
**AN ATTACHMENT**

**SMCS-6151** **i01061682**

| NOTE | REF NO | GRAPHIC REF | PART NUMBER | QTY | PART NAME 1 2 3 4 5 6 (PRODUCT LEVEL) | SEE PAGE |
|---|---|---|---|---|---|---|
| | 1 | 1 | **5D-9561** | 2 | EDGE-CUTTING | |
| | 2 | 1 | **151-5968** | 1 | MOLDBOARD AS | |
| | | 1 | **112-1814** | 1 | RAIL-MOLDBOARD | |
| | 3 | 1 | **3F-5108** | 40 | BOLT-PLOW | |
| | 4 | 1 | **4K-0367** | 40 | NUT (5/8-11 THD) | |
| | 5 | 1 | **8E-5531** | 2 | BIT-END | |

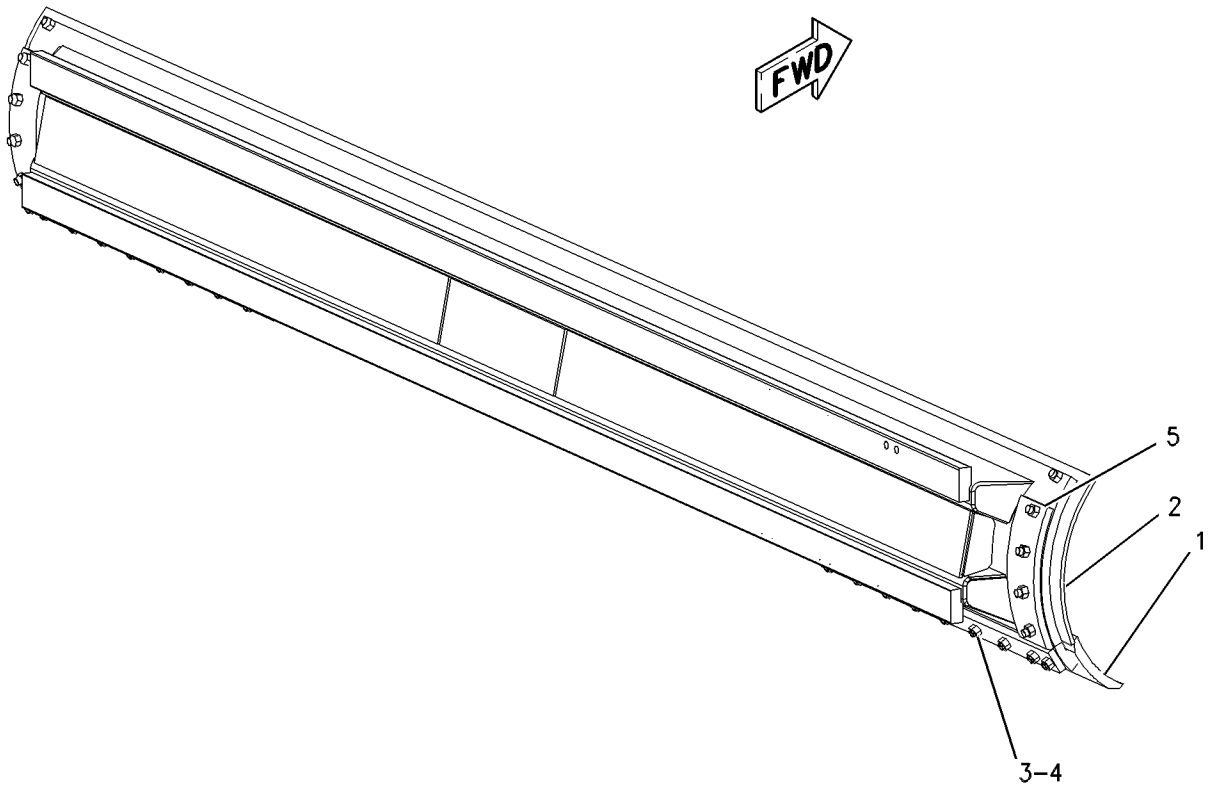


GRAPHIC #1 **<END>** g00353172

# WORK TOOLS

## *116-0379* BRACKET GP-SCARIFIER

**S/N: CCA1-UP**
**PART OF 108-1104, 113-0704 SCARIFIER AR**
**AN ATTACHMENT**

**SMCS-6162** **i01066613**

| NOTE | REF NO | GRAPHIC REF | PART NUMBER | QTY | PART NAME 1 2 3 4 5 6 (PRODUCT LEVEL) | SEE PAGE |
|---|---|---|---|---|---|---|
| | 1 | 1 | **8W-0684** | 1 | BRACKET AS | |
| | 2 | 1 | **8W-0681** | 1 | PLATE | |

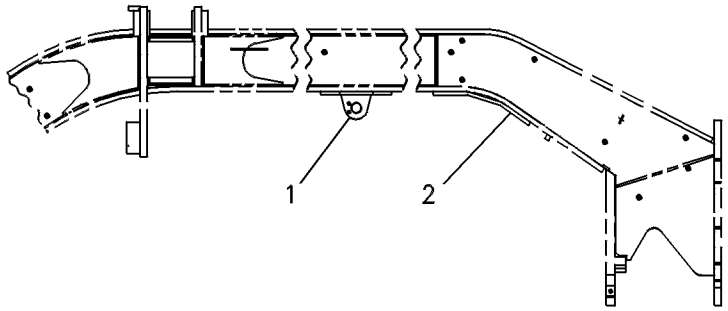


GRAPHIC #1 **<END>** g00108689

# WORK TOOLS

## *107-3392* EDGE GP-CUTTING–6 FT

**S/N: CCA1-UP**
**AN ATTACHMENT**

**SMCS-6801** **i00136035**

| NOTE | PART NUMBER | QTY | PART NAME 1 2 3 4 5 6 (PRODUCT LEVEL) | SEE PAGE |
|---|---|---|---|---|
| | 5D-9558 | 2 | EDGE-CUTTING | |

**<END>**

## *107-3393* EDGE GP-CUTTING–7 FT

**S/N: CCA1-UP**
**AN ATTACHMENT**

**SMCS-6801** **i00136054**

| NOTE | PART NUMBER | QTY | PART NAME 1 2 3 4 5 6 (PRODUCT LEVEL) | SEE PAGE |
|---|---|---|---|---|
| | 5D-9559 | 2 | EDGE-CUTTING | |

**<END>**

## *107-3396* EDGE GP-CUTTING–6 FT

**S/N: CCA1-UP**
**AN ATTACHMENT**

**SMCS-6801** **i00136039**

| NOTE | PART NUMBER | QTY | PART NAME 1 2 3 4 5 6 (PRODUCT LEVEL) | SEE PAGE |
|---|---|---|---|---|
| | 7D-1576 | 2 | EDGE-CUTTING | |

**<END>**

## *107-3397* EDGE GP-CUTTING–7 FT

**S/N: CCA1-UP**
**AN ATTACHMENT**

**SMCS-6801** **i00136042**

| NOTE | PART NUMBER | QTY | PART NAME 1 2 3 4 5 6 (PRODUCT LEVEL) | SEE PAGE |
|---|---|---|---|---|
| | 7D-1577 | 2 | EDGE-CUTTING | |

**<END>**

## *107-3425* EDGE GP-CUTTING–6 FT

**S/N: CCA1-UP**
**AN ATTACHMENT**

**SMCS-6801** **i00136068**

| NOTE | PART NUMBER | QTY | PART NAME 1 2 3 4 5 6 (PRODUCT LEVEL) | SEE PAGE |
|---|---|---|---|---|
| | 5D-9562 | 2 | EDGE-CUTTING | |

**<END>**

# WORK TOOLS

## *107-3426* EDGE GP-CUTTING–7 FT

**S/N: CCA1-UP**

**AN ATTACHMENT**

**SMCS-6801** **i00609615**

| NOTE | PART NUMBER | QTY | PART NAME 1 2 3 4 5 6 (PRODUCT LEVEL) | SEE PAGE |
|---|---|---|---|---|
| | **5D-9561** | 2 | EDGE-CUTTING | |

**<END>**

# WORK TOOLS

## *8W-3330* EXTENSION GP-BLADE—RH—2 FT

**S/N: CCA1-UP**

**AN ATTACHMENT**

**SMCS-6173** **i01358528**

| NOTE | REF NO | GRAPHIC REF | PART NUMBER | QTY | PART NAME 1 2 3 4 5 6 (PRODUCT LEVEL) | SEE PAGE |
|---|---|---|---|---|---|---|
| | 1 | 1 | **3F-5108** | 6 | BOLT-PLOW (5/8-11X2.25-IN) | |
| | 2 | 1 | **4K-0367** | 16 | NUT-FULL (5/8-11-THD) | |
| | 3 | 1 | **176-5641** | 1 | PLATE AS | |
| | 4 | 1 | **4F-3658** | 10 | BOLT-PLOW (5/8-11X3-IN) | |
| | 5 | 1 | **8W-2214** | 1 | EXTENSION | |
| | 6 | 1 | **9W-1835** | 1 | EDGE-CUTTING | |
| | 7 | 1 | **9B-1565** | 2 | SPACER (3-MM THK) | |
| | 8 | 1 | **6D-7563** | 1 | ANGLE AS | |
| | 9 | 1 | **9X-8880** | 2 | BOLT (5/8-11X2-IN) | |
| | 10 | 1 | **5P-8247** | 2 | WASHER-HARD (17X32X3.5-MM THK) | |
| B | 11 | 1 | **176-5642** | 1 | SPACER (2-MM THK) | |
| B | 12 | 1 | **176-5643** | 2 | SPACER (1-MM THK) | |

B-USE AS REQUIRED

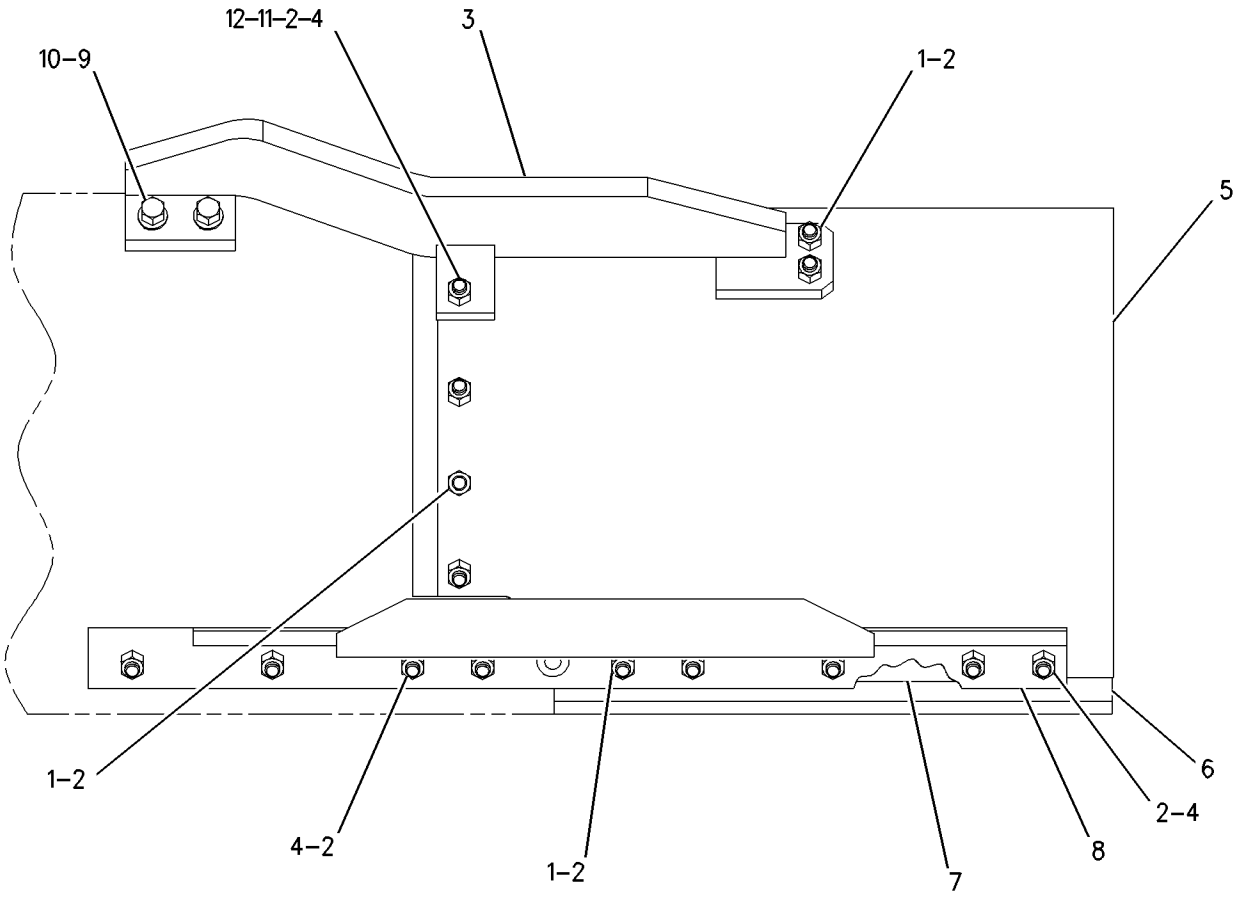


GRAPHIC #1 **<END>** g00716937

# WORK TOOLS

## *8W-3332* EXTENSION GP-BLADE—LH—2 FT

**S/N: CCA1-UP**

**AN ATTACHMENT**

**SMCS-6173** **i01358334**

| NOTE | REF NO | GRAPHIC REF | PART NUMBER | QTY | PART NAME 1 2 3 4 5 6 (PRODUCT LEVEL) | SEE PAGE |
|---|---|---|---|---|---|---|
| | 1 | 1 | **3F-5108** | 6 | BOLT-PLOW (5/8-11X2.25-IN) | |
| | 2 | 1 | **4K-0367** | 16 | NUT-FULL (5/8-11-THD) | |
| | 3 | 1 | **176-5640** | 1 | PLATE AS | |
| C | 4 | 1 | **4F-3658** | 10 | BOLT-PLOW (5/8-11X3-IN) | |
| | 5 | 1 | **8W-2213** | 1 | EXTENSION | |
| C | 6 | 1 | **9W-1835** | 1 | EDGE-CUTTING | |
| | 7 | 1 | **9B-1565** | 2 | SPACER (3-MM THK) | |
| | 8 | 1 | **6D-7564** | 1 | ANGLE AS | |
| | 9 | 1 | **9X-8880** | 2 | BOLT (5/8-11X2-IN) | |
| | 10 | 1 | **5P-8247** | 2 | WASHER-HARD (17X32X3.5-MM THK) | |
| | 11 | 1 | **176-5643** | 2 | SPACER (1-MM THK) | |
| | 12 | 1 | **176-5642** | 1 | SPACER (2-MM THK) | |

C-CHANGE FROM PREVIOUS TYPE

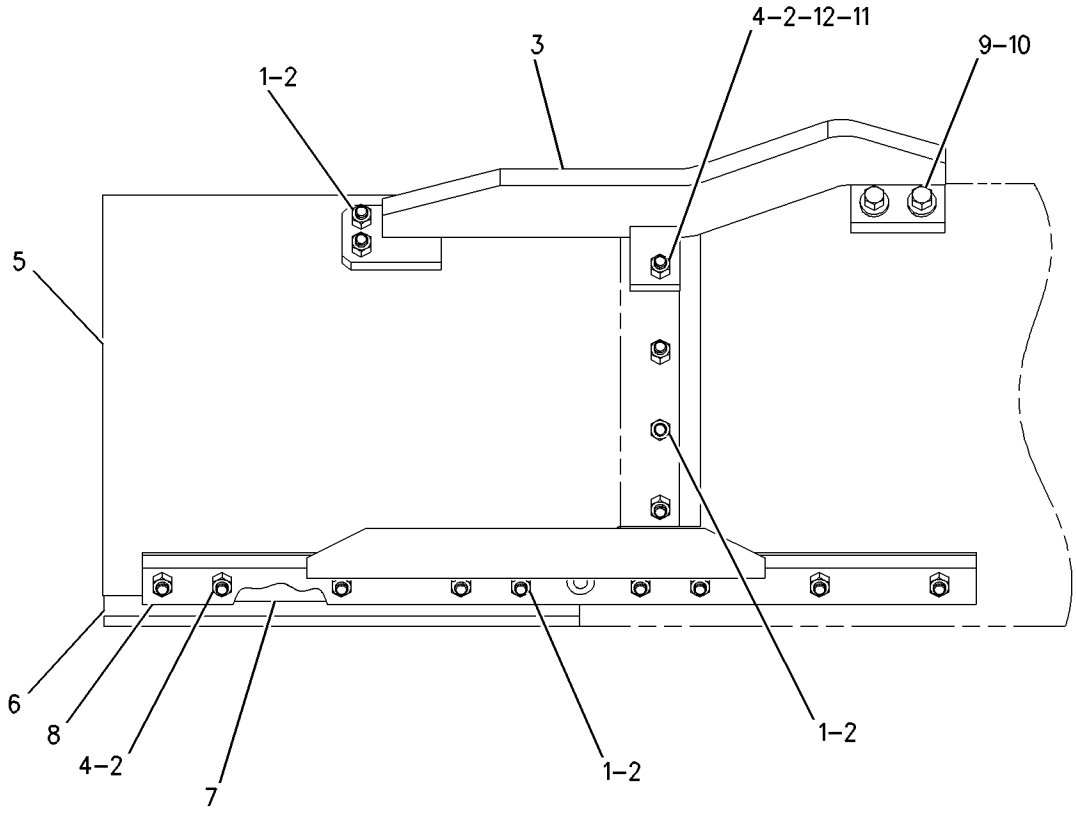


GRAPHIC #1 **<END>** g00716883

# WORK TOOLS

## *110-5326* EXTENSION GP-BLADE–RH–2 FT

**S/N: CCA1-UP**

**AN ATTACHMENT**

**SMCS-6173** **i01230874**

| NOTE | REF NO | GRAPHIC REF | PART NUMBER | QTY | PART NAME 1 2 3 4 5 6 (PRODUCT LEVEL) | SEE PAGE |
|---|---|---|---|---|---|---|
| | 1 | 1 | **5J-4773** | 6 | BOLT-PLOW (3/4-10X2.5-IN) | |
| | 2 | 1 | **2J-3506** | 16 | NUT-FULL (3/4-10-THD) | |
| | 3 | 1 | **176-5639** | 1 | PLATE AS | |
| | 4 | 1 | **5F-8933** | 10 | BOLT-PLOW (3/4-10X3.75-IN) | |
| | 5 | 1 | **110-5336** | 1 | ANGLE AS | |
| | 6 | 1 | **110-5334** | 3 | SPACER (3-MM THK) | |
| | 7 | 1 | **3G-2165** | 1 | EDGE-CUTTING | |
| | 8 | 1 | **133-7523** | 1 | EXTENSION-RH | |
| | 9 | 1 | **9X-8885** | 2 | BOLT (3/4-10X2.25-IN) | |
| | 10 | 1 | **2S-0115** | 2 | WASHER-HARD (20X36.5X5-MM THK) | |
| B | 11 | 1 | **176-5642** | 1 | SPACER (2-MM THK) | |
| B | 12 | 1 | **176-5643** | 2 | SPACER (1-MM THK) | |

B-USE AS REQUIRED

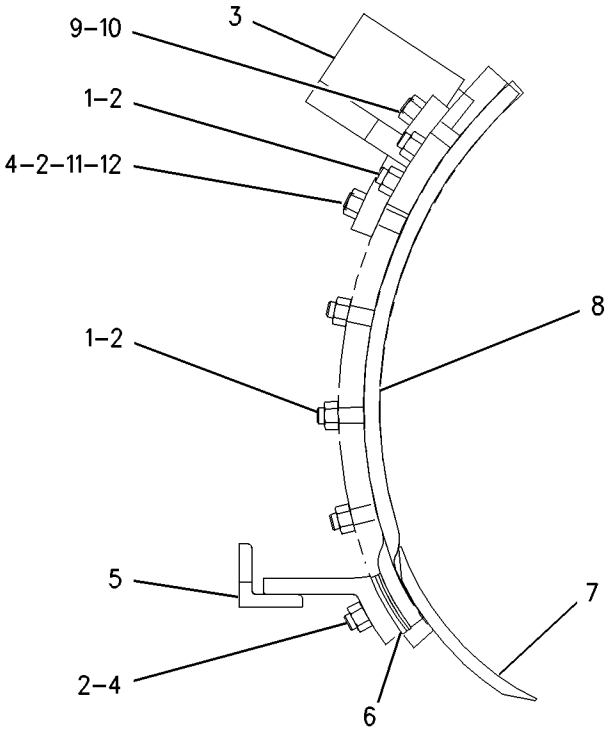


GRAPHIC #1 **<END>** g00638547

# WORK TOOLS

## *110-5327* EXTENSION GP-BLADE—LH—2 FT

**S/N: CCA1-UP**

**AN ATTACHMENT**

**SMCS-6173** **i01230922**

| NOTE | REF NO | GRAPHIC REF | PART NUMBER | QTY | PART NAME 1 2 3 4 5 6 (PRODUCT LEVEL) | SEE PAGE |
|---|---|---|---|---|---|---|
| | 1 | 1 | **133-7524** | 1 | EXTENSION-LH | |
| | 2 | 1 | **3G-2165** | 1 | EDGE-CUTTING | |
| | 3 | 1 | **176-5638** | 1 | PLATE AS | |
| | 4 | 1 | **110-5334** | 3 | SPACER (3-MM THK) | |
| | 5 | 1 | **110-5335** | 1 | ANGLE AS | |
| | 6 | 1 | **5F-8933** | 10 | BOLT-PLOW (3/4-10X3.75-IN) | |
| | 7 | 1 | **2J-3506** | 16 | NUT-FULL (3/4-10-THD) | |
| | 8 | 1 | **5J-4773** | 6 | BOLT-PLOW (3/4-10X2.5-IN) | |
| | 9 | 1 | **9X-8885** | 2 | BOLT (3/4-10X2.25-IN) | |
| | 10 | 1 | **2S-0115** | 2 | WASHER-HARD (20X36.5X5-MM THK) | |
| B | 11 | 1 | **176-5642** | 1 | SPACER (2-MM THK) | |
| B | 12 | 1 | **176-5643** | 2 | SPACER (1-MM THK) | |

B-USE AS REQUIRED

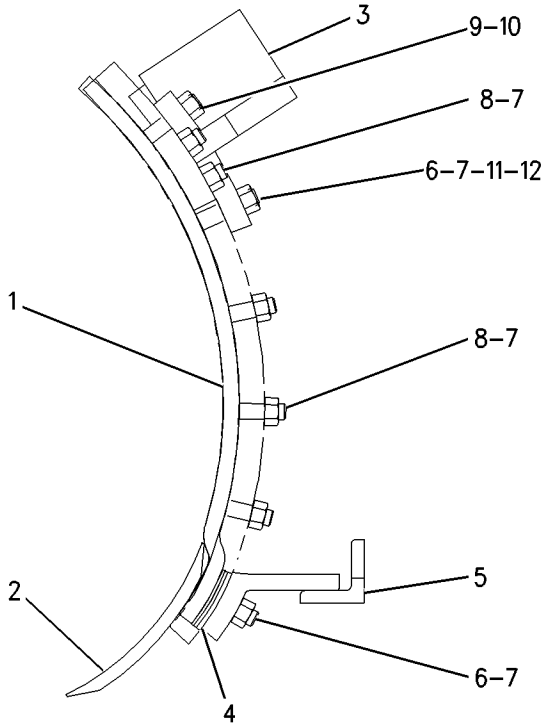


GRAPHIC #1 **<END>** g00638560

# 203-8466 EXTENSION GP-BLADE–2 FT WITH 5/8 INCH BOLT–LH

**S/N: CCA1-UP**

**AN ATTACHMENT**

**SMCS-6173** **i01834334**

| NOTE | REF NO | GRAPHIC REF | PART NUMBER | QTY | PART NAME 1 2 3 4 5 6 (PRODUCT LEVEL) | SEE PAGE |
|---|---|---|---|---|---|---|
| | 1 | 1 | **6D-7564** | 1 | ANGLE AS | |
| | 2 | 1 | **6G-8623** | 1 | EDGE-CUTTING | |
| | 3 | 1 | **9B-1565** | 2 | SPACER (3-MM THK) | |
| | 4 | 1 | **145-3261** | 1 | EXTENSION | |
| | 5 | 1 | **176-5640** | 1 | PLATE AS | |
| B | 6 | 1 | **176-5642** | 1 | SPACER (2-MM THK) | |
| B | 7 | 1 | **176-5643** | 2 | SPACER (1-MM THK) | |
| | 8 | 1 | **3F-5108** | 5 | BOLT-PLOW (5/8-11X2.25-IN) | |
| | 9 | 1 | **4F-3658** | 10 | BOLT-PLOW (5/8-11X3-IN) | |
| | 10 | 1 | **4K-0367** | 15 | NUT-FULL (5/8-11-THD) | |
| | 11 | 1 | **5P-8247** | 2 | WASHER-HARD (17X32X3.5-MM THK) | |
| | 12 | 1 | **9X-8880** | 2 | BOLT (5/8-11X2-IN) | |

B-USE AS REQUIRED

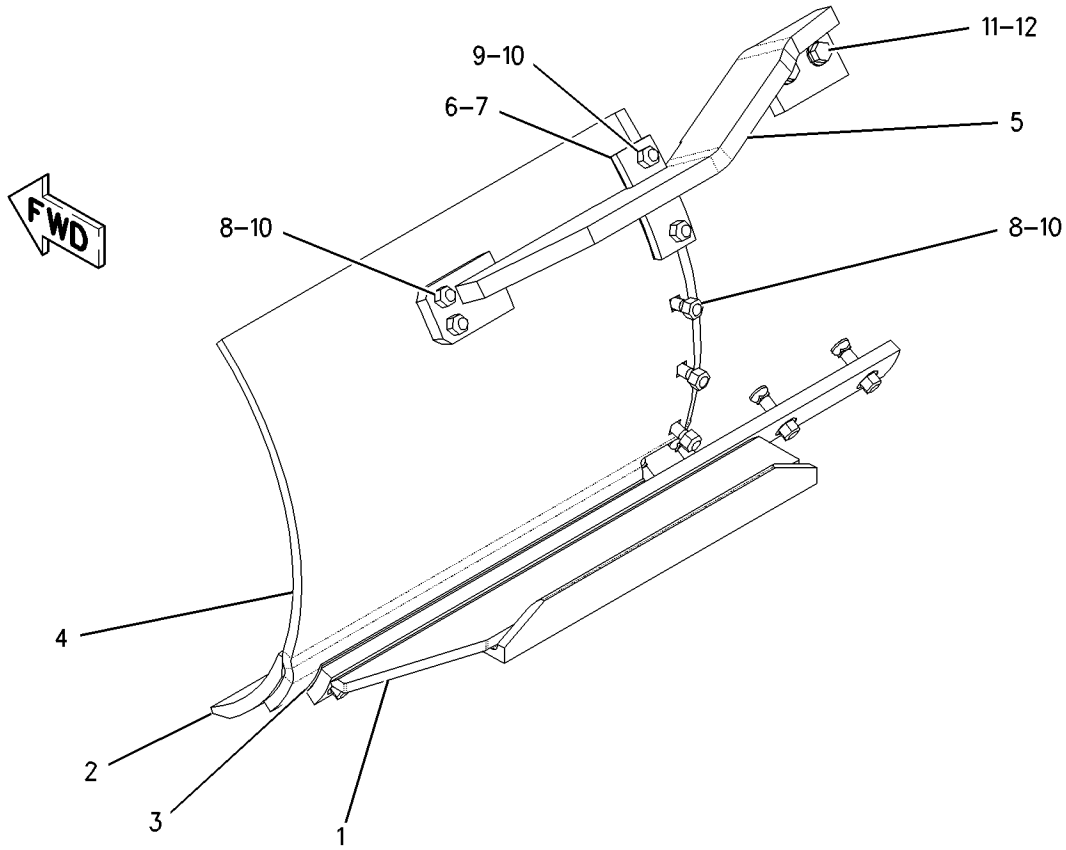


GRAPHIC #1 **<END>** g00796677

# *203-8467* EXTENSION GP-BLADE–2 FT WITH 5/8 IN BOLT–RH

**S/N: CCA1-UP**

**AN ATTACHMENT**

**SMCS-6173** **i01834339**

| NOTE | REF NO | GRAPHIC REF | PART NUMBER | QTY | PART NAME 1 2 3 4 5 6 (PRODUCT LEVEL) | SEE PAGE |
|---|---|---|---|---|---|---|
| | 1 | 1 | **6D-7563** | 1 | ANGLE AS | |
| | 2 | 1 | **6G-8623** | 1 | EDGE-CUTTING | |
| | 3 | 1 | **9B-1565** | 2 | SPACER (3-MM THK) | |
| | 4 | 1 | **145-4953** | 1 | EXTENSION | |
| | 5 | 1 | **176-5641** | 1 | PLATE AS | |
| B | 6 | 1 | **176-5642** | 1 | SPACER (2-MM THK) | |
| B | 7 | 1 | **176-5643** | 2 | SPACER (1-MM THK) | |
| | 8 | 1 | **3F-5108** | 5 | BOLT-PLOW (5/8-11X2.25-IN) | |
| | 9 | 1 | **4F-3658** | 10 | BOLT-PLOW (5/8-11X3-IN) | |
| | 10 | 1 | **4K-0367** | 15 | NUT-FULL (5/8-11-THD) | |
| | 11 | 1 | **5P-8247** | 2 | WASHER-HARD (17X32X3.5-MM THK) | |
| | 12 | 1 | **9X-8880** | 2 | BOLT (5/8-11X2-IN) | |

B-USE AS REQUIRED

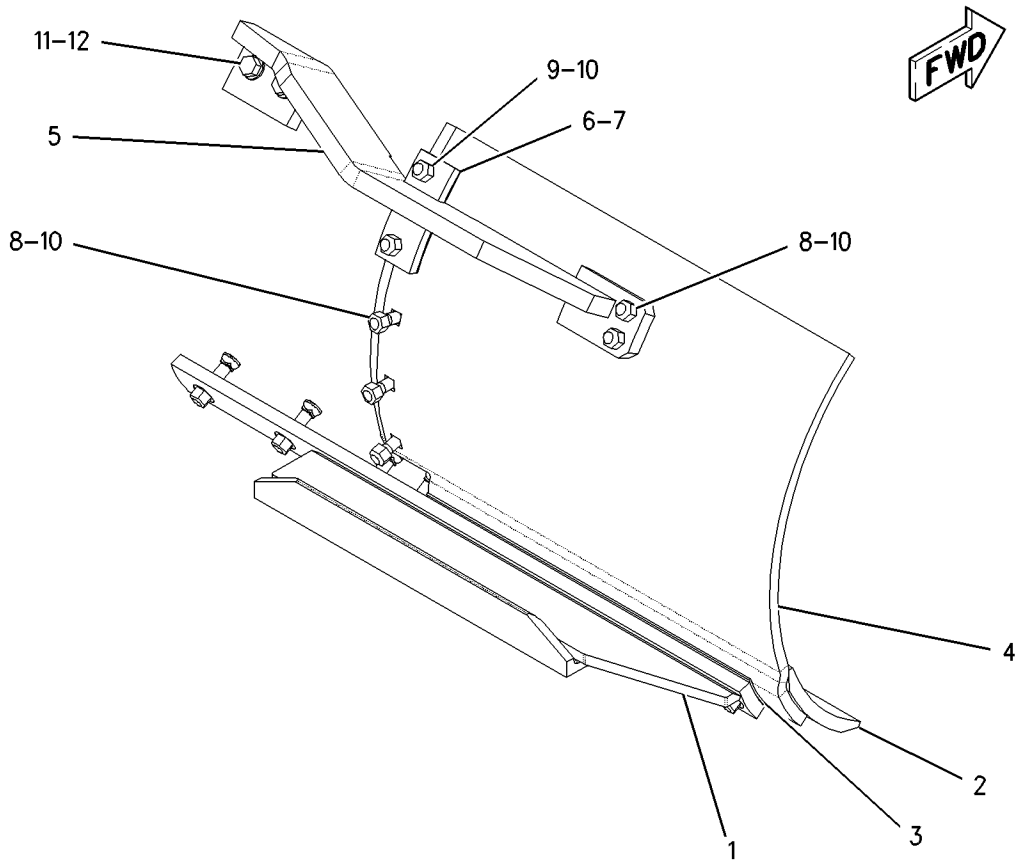


GRAPHIC #1 **<END>** g00796692

# WORK TOOLS

## *8X-1935* LIFT GP-BLADE

**S/N: CCA1-UP**

**PART OF 159-4615 GENERAL AR**

**SMCS-6151** **i00136062**

| NOTE | REF NO | GRAPHIC REF | PART NUMBER | QTY | PART NAME 1 2 3 4 5 6 (PRODUCT LEVEL) | SEE PAGE |
|---|---|---|---|---|---|---|
| | 1 | 1 | **8T-4223** | 4 | WASHER-HARD (13.5X25.5X3-MM THK) | |
| | 2 | 1 | **8T-8919** | 4 | BOLT (1/2-13X1.75-IN) | |
| | 3 | 1 | **7D-8891** | 2 | RETAINER | |
| | 4 | 1 | **8X-3616** | 1 | ARM AS (RH) | |
| | 5 | 1 | **7D-8889** | 1 | BEARING (76.35-MM ID) | |
| | 6 | 1 | **8D-8168** | 1 | BEARING (63.65-MM ID) | |
| | 7 | 1 | **2J-3506** | 6 | NUT-FULL (3/4-10-THD) | |
| | | 1 | **3B-6753** | 6 | BOLT (3/4-10X4.75-IN) | |
| | 8 | 1 | **5P-8248** | 16 | WASHER-HARD (20X36.5X3.5-MM THK) | |
| | 9 | 1 | **8X-5106** | 1 | STUD-BALL | |
| | 10 | 1 | **8D-4332** | 2 | PIN | |
| | 11 | 1 | **8X-5110** | 2 | YOKE AS | |
| | | 1 | **2G-8233** | 1 | RING | |
| | 12 | 1 | **2M-0849** | 1 | WASHER-HARD (13.5X25.5X5-MM THK) | |
| | | 1 | **9S-1366** | 1 | BOLT (1/2-13X2.5-IN) | |
| | 13 | 1 | **8X-5109** | 1 | BAR AS | |
| | 14 | 1 | **8X-5108** | 2 | BEARING-SLEEVE | |
| | 15 | 1 | **9D-1377** | 5 | BUSHING-TERMINAL | |
| | 16 | 1 | **0S-1756** | 4 | BOLT (3/4-10X4.25-IN) | |
| | 17 | 1 | **9D-3583** | 2 | LOCK | |
| | 18 | 1 | **7H-2444** | 2 | SEAL | |
| | 19 | 1 | **7D-8878** | 4 | WASHER-THRUST (3.015X4.22X0.075-IN THK) | |
| | 20 | 1 | **7D-8877** | 2 | WASHER-THRUST (77.77X107.19X2.39-MM THK) | |
| B | 21 | 1 | **7D-8879** | 8 | SHIM (0.127-MM THK) | |
| B | 22 | 1 | **7D-8881** | 6 | SHIM (0.254-MM THK) | |
| B | 23 | 1 | **7D-8882** | 2 | SHIM (0.508-MM THK) | |
| | 24 | 1 | **7D-8875** | 4 | WASHER-THRUST (2.515X3.62X0.075-IN THK) | |
| | 25 | 1 | **5F-0149** | 2 | SEAL-O-RING | |
| | 26 | 1 | **7D-8883** | 2 | SEAL | |
| | 27 | 1 | **8X-5107** | 1 | PIN | |
| | 28 | 1 | **3P-1461** | 4 | SEAL-LIP TYPE | |
| | 29 | 1 | **7D-8876** | 2 | WASHER-THRUST (65.07X92.08X2.39-MM THK) | |
| | 30 | 1 | **8X-5111** | 2 | LOCK | |
| | 31 | 1 | **7D-8884** | 2 | SEAL | |
| | 32 | 1 | **8X-3615** | 1 | ARM AS (LH) | |
| | | 1 | **8D-8168** | 1 | BEARING (63.65-MM ID) | |
| | | 1 | **7D-8889** | 1 | BEARING (76.35-MM ID) | |
| | 33 | 1 | **124-0435** | 1 | PLATE | |
| B | 34 | 1 | **8D-4336** | 2 | WASHER-THRUST (3.02X5.75X0.08-MM THK) | |
| B | 35 | 1 | **123-8187** | 2 | WASHER-THRUST (76.6X146X1-MM THK) (.100 THK) | |

B-USE AS REQUIRED

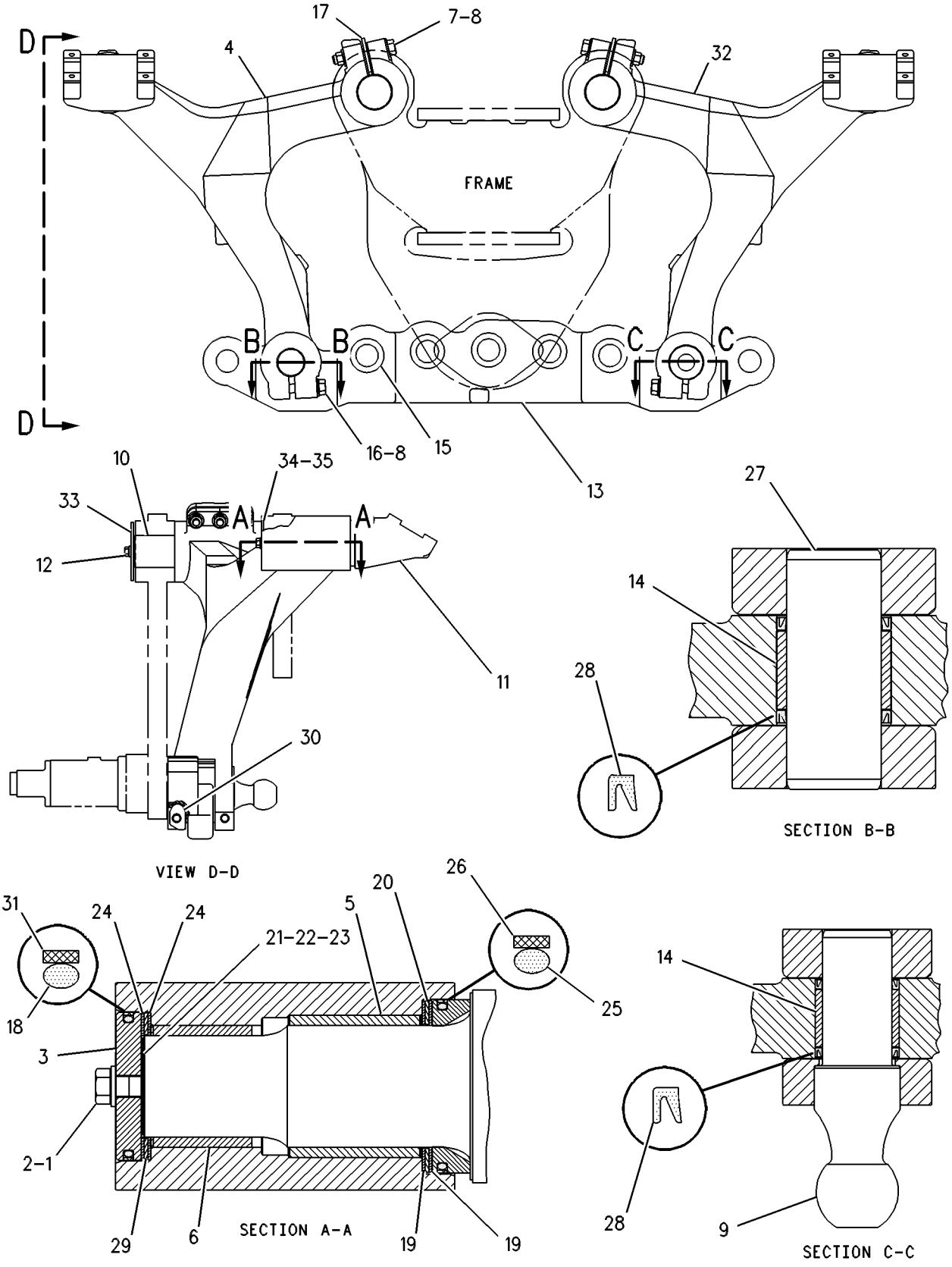


GRAPHIC #1 **<END>** g00108787

# WORK TOOLS

## *247-6449* MOUNTING GP-GRADE CONTROL

**S/N: CCA1611-UP**
**PART OF 247-6453 GRADE CONTROL AR**
**AN ATTACHMENT**

**SMCS-6151, 7220** **i02389804**

| NOTE | PART NUMBER | QTY | PART NAME 1 2 3 4 5 6 (PRODUCT LEVEL) | SEE PAGE |
|---|---|---|---|---|
| | **269-9322** | 1 | DRAWBAR AS | |
| | **8X-7951** | 1 | DRAWBAR & YOKE AS | |
| | **5T-6775** | 2 | REINFORCEMENT | |
| | **8F-9836** | 12 | BOSS-THREADED | |
| | **8X-7956** | 1 | SHAFT AS | |

**<END>**

# WORK TOOLS

## 177-6821 MOUNTING GP-RIPPER

**S/N: CCA1-UP**
**PART OF 175-2559 RIPPER AR**
**AN ATTACHMENT**

**SMCS-6165, 6324** **i02585380**

| NOTE | REF NO | GRAPHIC REF | PART NUMBER | QTY | PART NAME 1 2 3 4 5 6 (PRODUCT LEVEL) | SEE PAGE |
|---|---|---|---|---|---|---|
| | 1 | 1 | **3W-7254** | 2 | SPACER (47X80X20-MM THK) | |
| | 2 | 1 | **3W-7256** | 2 | SPACER (47X80X16-MM THK) | |
| | 3 | 1 | **6P-5647** | 2 | BOSS | |
| | 4 | 1 | **8E-6130** | 2 | LINK AS | |
| | | | | | (EACH INCLUDES) | |
| | | 1 | **2K-4233** | 1 | BOSS | |
| | 5 | 1 | **104-4523** | 2 | CAM AS | |
| | 6 | 1 | **177-6822** | 1 | PLATE AS | |
| | 7 | 1 | **109-6776** | 2 | PIN | |
| | 8 | 1 | **1K-6872** | 2 | LOCKNUT (1/2-13-THD) | |
| | 9 | 1 | **2K-4973** | 4 | LOCKNUT (3/8-16-THD) | |
| | 10 | 1 | **7X-0292** | 4 | BOLT (3/8-16X4.5-IN) | |
| | 11 | 1 | **7X-0333** | 2 | BOLT (1/2-13X4.75-IN) | |
| | 12 | 1 | **7X-0403** | 10 | BOLT (1-8X2.25-IN) | |
| | 13 | 1 | **8T-5361** | 10 | WASHER-HARD (28X49X5-MM THK) | |
| | 14 | 1 | **9W-7469** | 2 | PIN | |
| | 15 | 1 | **9W-7470** | 2 | PIN | |

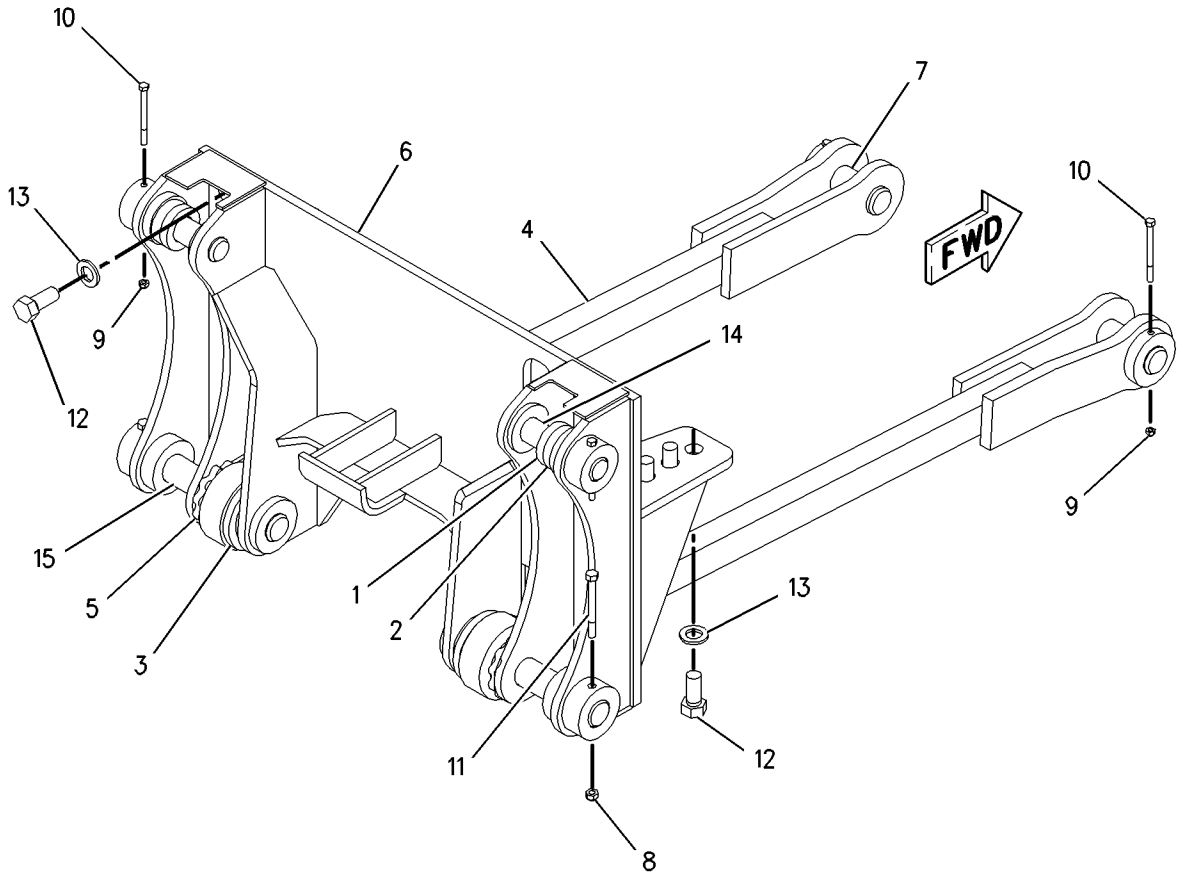


GRAPHIC #1 **<END>** g00846345

# WORK TOOLS

## *180-1679* MOUNTING GP-SNOW WING

**S/N: CCA1-UP**

**AN ATTACHMENT**

**SMCS-6158** **i01873004**

| NOTE | REF NO | GRAPHIC REF | PART NUMBER | QTY | PART NAME 1 2 3 4 5 6 (PRODUCT LEVEL) | SEE PAGE |
|---|---|---|---|---|---|---|
| | 1 | 1 | **122-9867** | 1 | PLATE-MOUNTING | |
| | 2 | 1 | **122-9868** | 1 | PLATE (BRACE) | |
| | 3 | 1 | **122-9869** | 1 | PLATE AS | |

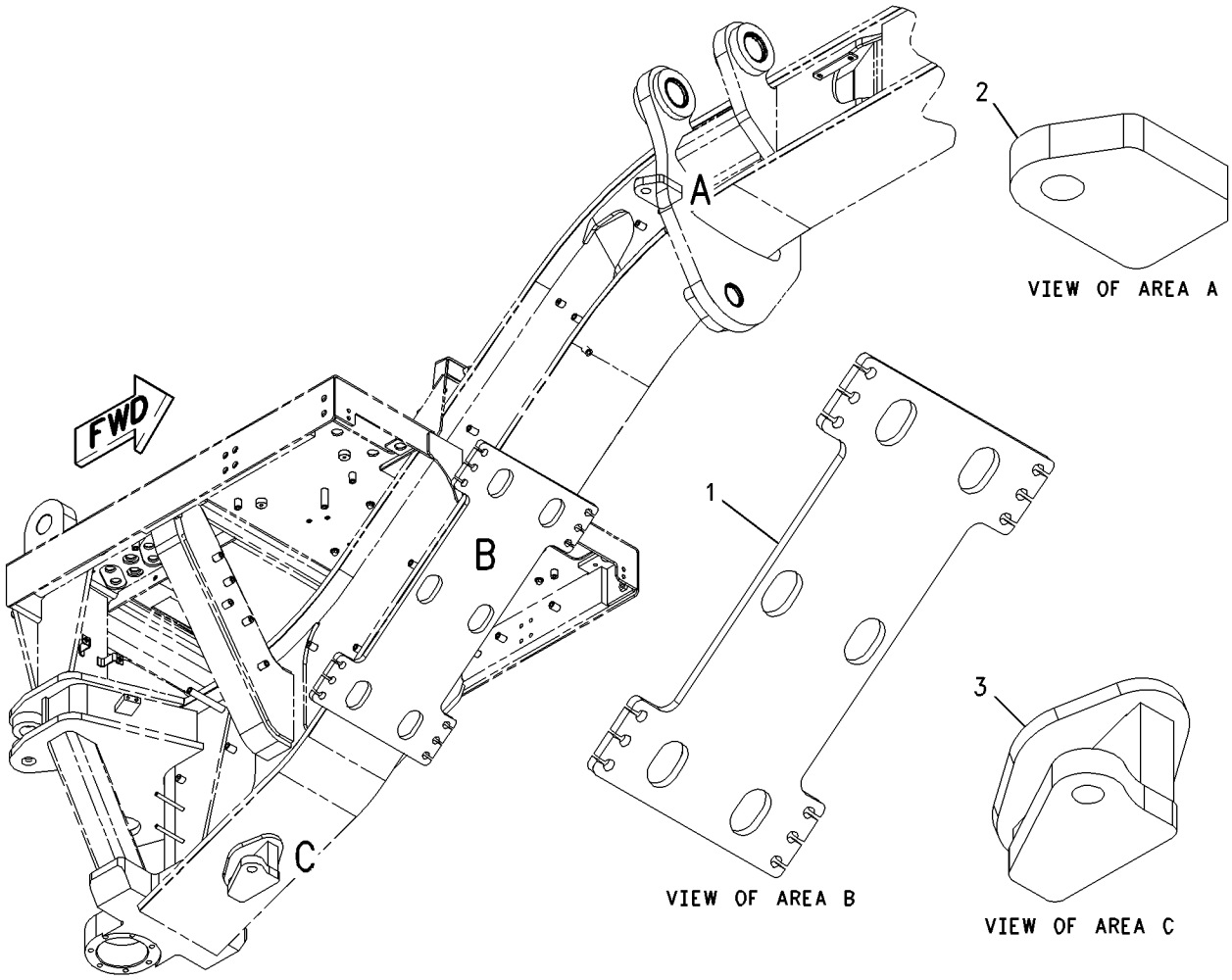


GRAPHIC #1 **<END>** g00845746

# WORK TOOLS

## *175-2559* RIPPER AR

**S/N: CCA1-UP**

**AN ATTACHMENT**

**SMCS-6325** **i02585370**

| NOTE | PART NUMBER | QTY | PART NAME 1 2 3 4 5 6 (PRODUCT LEVEL) | SEE PAGE |
|---|---|---|---|---|
| Y | **113-7754** | 1 | CYLINDER GP-RIPPER | 657 |
| Y | *174-2339* | 1 | LINES GP-RIPPER | 707 |
| Y | *177-6821* | 1 | MOUNTING GP-RIPPER | 1078 |
| Y | *8T-4009* | 1 | PLATE & FILM GP | 1291 |
| Y | *8J-7024* | 1 | RIPPER GP | 1081 |

Y-SEPARATE ILLUSTRATION

**<END>**

# WORK TOOLS

## *8J-7024* RIPPER GP

**S/N: CCA1-UP**
**PART OF 175-2559 RIPPER AR**
**AN ATTACHMENT**

**SMCS-6325** **i02200409**

| NOTE | REF NO | GRAPHIC REF | PART NUMBER | QTY | PART NAME 1 2 3 4 5 6 (PRODUCT LEVEL) | SEE PAGE |
|---|---|---|---|---|---|---|
| | 2 | 1 | **2K-0120** | 1 | PIN | |
| | 3 | 1 | **2K-0703** | 1 | BAR | |
| | 4 | 1 | **3B-8489** | 3 | FITTING-GREASE (RIPPER CYLINDER BEARING) | |
| | 5 | 1 | **4K-3004** | 2 | BEARING-TRUNNION SUPPLEMENTARY | |
| | 6 | 1 | **4K-3150** | 2 | PIN | |
| | 7 | 1 | **190-5386** | 2 | FILM-IDENTIFICATION (ROUND RED REFLECTIVE) | |
| Y | 8 | 1 | *8J-1434* | 3 | TOOTH GP-RIPPER | 1091 |
| | 9 | 1 | **9J-0096** | 2 | LINK AS-UPPER | |
| | | | | | (EACH INCLUDES) | |
| | 9A | 1 | **3G-2581** | 2 | BEARING | |
| | 10 | 1 | **9W-3155** | 1 | CARRIAGE AS | |
| | 11 | 1 | **187-0953** | 1 | LINK AS-LOWER | |
| | 11A | 1 | **3G-2579** | 4 | BEARING | |
| | 12 | 1 | **1K-6872** | 10 | LOCKNUT (1/2-13-THD) | |
| | 13 | 1 | **2D-0626** | 8 | SEAL | |
| | 14 | 1 | **2K-4973** | 2 | LOCKNUT (3/8-16-THD) | |
| | 15 | 1 | **5P-2228** | 2 | BOLT (1/2-13X1-IN) | |
| | 16 | 1 | **5P-2424** | 8 | BOLT (1/2-13X2.25-IN) | |
| | 17 | 1 | **7K-9203** | 8 | SEAL-LIP TYPE | |
| | 18 | 1 | **7X-0333** | 2 | BOLT (1/2-13X4.75-IN) | |
| | 19 | 1 | **8J-7008** | 2 | PIN | |
| | 20 | 1 | **8T-9378** | 2 | BOLT (3/8-16X4-IN) | |

Y-SEPARATE ILLUSTRATION

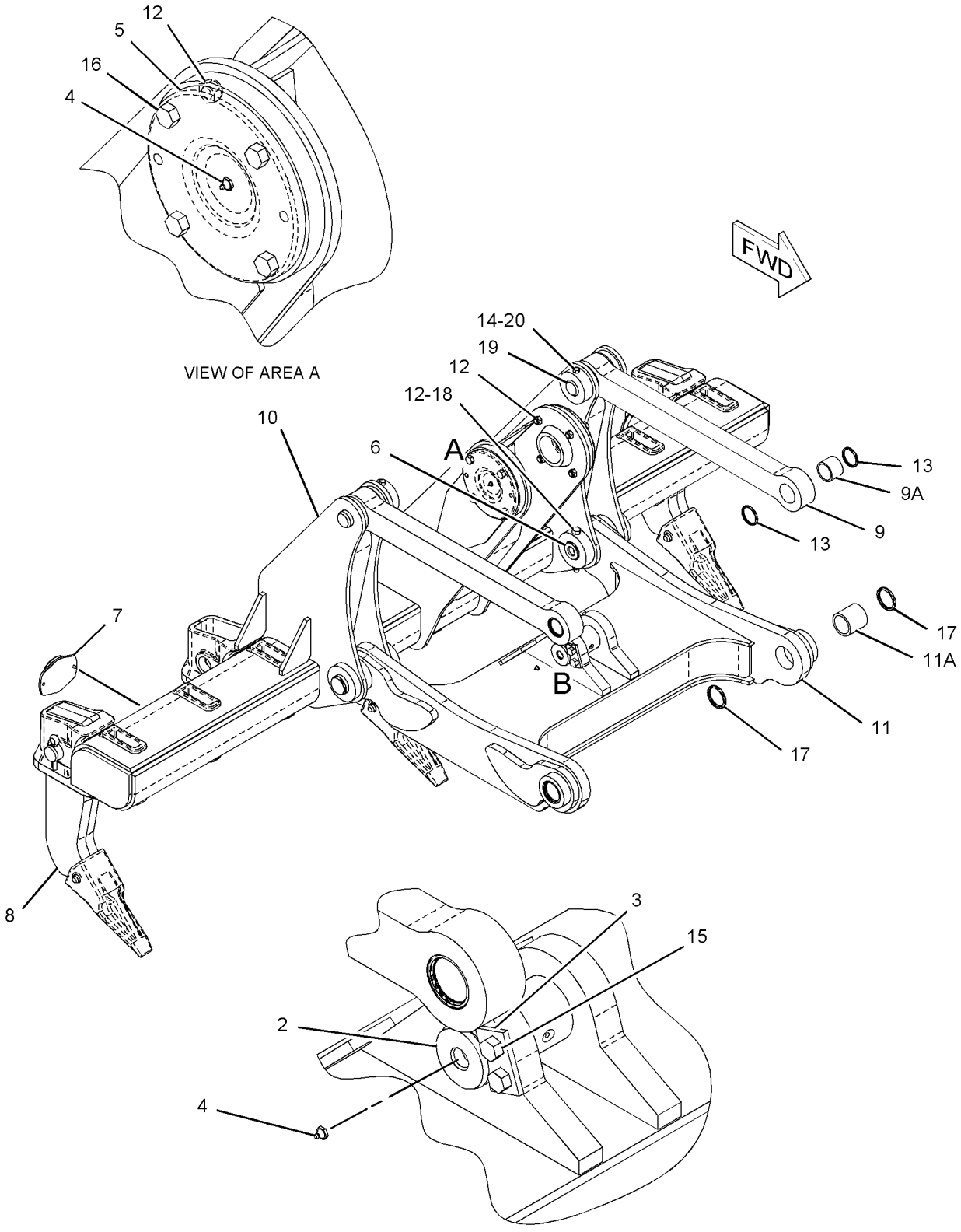


GRAPHIC #1

**<END>**

g01068995

## *108-1104* SCARIFIER AR—VEE TYPE

**S/N: CCA1-UP**
**AN ATTACHMENT**

**SMCS-6162, 6325, 6811** **i02592949**

| NOTE | PART NUMBER | QTY | PART NAME 1 2 3 4 5 6 (PRODUCT LEVEL) | SEE PAGE |
|---|---|---|---|---|
| Y | *116-0379* | 1 | BRACKET GP-SCARIFIER | 1066 |
| Y | *8W-2913* | 1 | CYLINDER & MTG GP-SCARIFIER | 647 |
| Y | *8X-6070* | 1 | LINES GP-HYDRAULIC (SCARIFIER) | 674 |
| Y | *8X-6080* | 1 | SCARIFIER GP (VEE TYPE) | 1084 |

Y-SEPARATE ILLUSTRATION

**<END>**

## *113-0704* SCARIFIER AR—STRAIGHT

**S/N: CCA1-UP**
**AN ATTACHMENT**

**SMCS-6162, 6325, 6811** **i02592798**

| NOTE | PART NUMBER | QTY | PART NAME 1 2 3 4 5 6 (PRODUCT LEVEL) | SEE PAGE |
|---|---|---|---|---|
| Y | *116-0379* | 1 | BRACKET GP-SCARIFIER | 1066 |
| Y | *8W-2913* | 1 | CYLINDER & MTG GP-SCARIFIER | 647 |
| Y | *8X-6070* | 1 | LINES GP-HYDRAULIC (SCARIFIER) | 674 |
| Y | *111-3883* | 1 | SCARIFIER GP (STRAIGHT TYPE) (STRAIGHT) | 1088 |

Y-SEPARATE ILLUSTRATION

**<END>**

# WORK TOOLS

## *8X-6080* SCARIFIER GP—VEE TYPE

**S/N: CCA1-UP**
**PART OF 108-1104 SCARIFIER AR**
**AN ATTACHMENT**

**SMCS-6162, 6325, 6811** **i02568052**

| NOTE | REF NO | GRAPHIC REF | PART NUMBER | QTY | PART NAME 1 2 3 4 5 6 (PRODUCT LEVEL) | SEE PAGE |
|---|---|---|---|---|---|---|
| | 1 | 1 | **2H-3746** | 4 | BOLT (1-14X5-IN) | |
| | 2 | 1 | **5P-8250** | 8 | WASHER (28X49X5-MM THK) | |
| | 3 | 1 | **2K-7471** | 4 | LOCKNUT (1-14-THD) | |
| | 4 | 2 | **1A-8063** | 8 | BOLT (3/4-10X2.5-IN) | |
| | 5 | 2 | **5P-8248** | 8 | WASHER-HARD (20X36.5X3.5-MM THK) | |
| | 6 | 2 | **6F-6992** | 4 | CAP-BALL SOCKET | |
| B | 7 | 2 | **7F-1327** | 32 | SHIM (0.03-IN THK) | |
| | 8 | 2 | **3B-8489** | 4 | FITTING-GREASE (SCARIFIER LIFT LINK SOCKET) | |
| | 9 | 2 | **195-7218** | 11 | SHANK | |
| | 10 | 2 | **6Y-5230** | 11 | TOOTH-SCARIFIER | |
| | 11 | 1 | **1D-4612** | 4 | BOLT (3/4-10X4-IN) | |
| | 12 | 1 | **8X-3663** | 8 | WASHER (20X45X12-MM THK) | |
| | 13 | 1 | **2J-3506** | 4 | NUT-FULL (3/4-10-THD) | |
| | 14 | 1 | **8X-6075** | 1 | BOLSTER AS | |
| | 15 | 1 | **9D-5516** | 2 | LINK AS-LIFT | |
| | | | | | (EACH INCLUDES) | |
| | | 1 | **7D-2135** | 1 | SOCKET-BALL | |
| | 16 | 1 | **7D-2196** | 2 | SLEEVE AS-LINK | |
| | | | | | (EACH INCLUDES) | |
| | | 1 | **7D-2136** | 1 | SOCKET-BALL | |
| | 17 | 1 | **5D-8161** | 2 | PIN | |
| | 18 | 1 | **5D-8159** | 2 | PIN AS | |
| | 19 | 1 | **118-7880** | 1 | DRAWBAR AS | |
| | 19A | 1 | **8W-5597** | 1 | STUD-BALL | |
| | 19B | 1 | **2G-7728** | 2 | COLLAR | |
| | 20 | 1 | **118-7881** | 1 | DRAWBAR AS | |
| | 20A | 1 | **8W-5597** | 1 | STUD-BALL | |
| | 20B | 1 | **2G-7728** | 2 | COLLAR | |
| | 21 | 1 | **2G-7309** | 1 | SHAFT | |
| | 22 | 1 | **9X-8875** | 2 | BOLT (1/2-13X3.5-IN) | |
| | 23 | 2 | **5P-8245** | 2 | WASHER-HARD (13.5X25.5X3-MM THK) | |
| | 24 | 2 | **1F-7958** | 2 | NUT-FULL (1/2-13-THD) | |
| | 25 | 1 | **5B-0577** | 2 | COLLAR | |
| | 26 | 1 | **8H-4040** | 4 | BOLT (1-1/8-12X4.5-IN) | |
| | 27 | 1 | **3S-1349** | 4 | WASHER-HARD (31X52.5X6-MM THK) | |
| | 28 | 1 | **3D-4904** | 4 | LOCKNUT (1-1/8-12-THD) | |
| | 29 | 1 | **1A-0224** | 2 | BOLT (7/8-14X3.5-IN) | |
| | 30 | 1 | **1B-4208** | 2 | NUT-FULL (7/8-14-THD) | |
| | 31 | 2 | **8D-1268** | 2 | ARM AS-LIFT | |
| | | | | | (EACH INCLUDES) | |
| | | 2 | **7D-8245** | 1 | STUD-BALL | |
| | 32 | 2 | **7X-0390** | 4 | BOLT (7/8-9X5-IN) | |
| | 33 | 2 | **8C-6913** | 4 | WASHER-HARD (24X41.5X4-MM THK) | |
| | 34 | 2 | **6K-0545** | 4 | LOCKNUT (7/8X19-THD) | |
| | 35 | 2 | **4D-6086** | 2 | KEY | |
| | 36 | 1 | **107-8375** | 1 | SHAFT AS | |
| | 37 | 1 | **8W-0663** | 2 | BRACKET AS | |
| | | | | | (EACH INCLUDES) | |
| | | 1 | **3B-8489** | 1 | FITTING-GREASE (SCARIFIER) | |
| | | 1 | **107-8374** | 2 | BEARING | |
| | 38 | 1 | **6B-3260** | 1 | TOOL | |
| | 39 | 1 | **2G-4332** | 1 | BLOCK AS-SCARIFIER | |
| | | 1 | **7D-8825** | 11 | SPACER | |
| | | 1 | **7D-8826** | 11 | SPACER | |
| | 40 | 1 | **5K-1458** | 11 | GROMMET | |

## *8X-6080* **SCARIFIER GP** *(contd.)* **i02568052**

| NOTE | REF NO | GRAPHIC REF | PART NUMBER | QTY | PART NAME 1 2 3 4 5 6 (PRODUCT LEVEL) | SEE PAGE |
|---|---|---|---|---|---|---|
| | 41 | 1 | **5K-1459** | 11 | LOCK PIN | |
| B | 42 | 1 | **198-9812** | 2 | SPACER (83X145X2-MM THK) | |
| B | 43 | 1 | **198-9811** | 2 | SPACER (83X145X3-MM THK) | |

B-USE AS REQUIRED

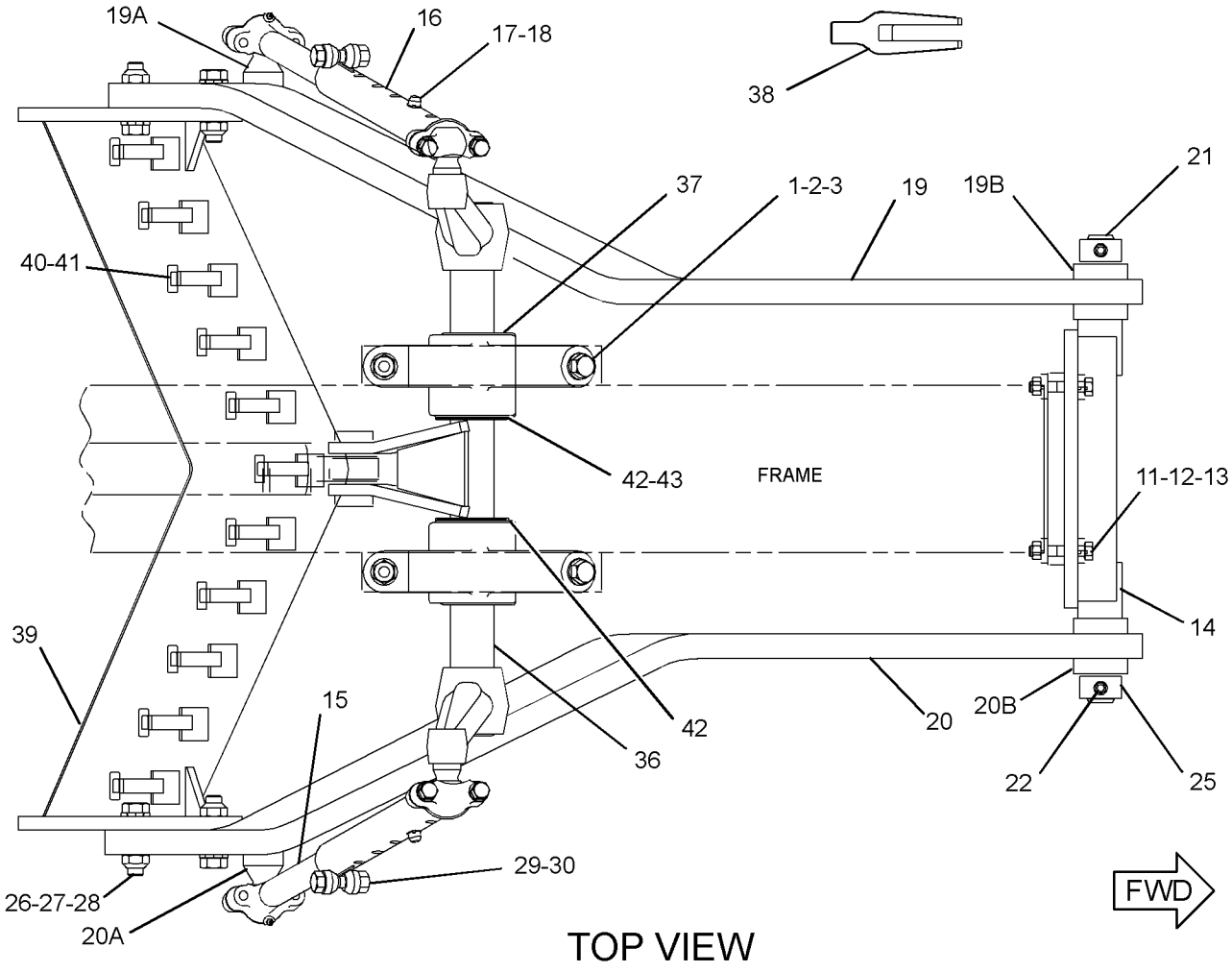


GRAPHIC #1 g01291378

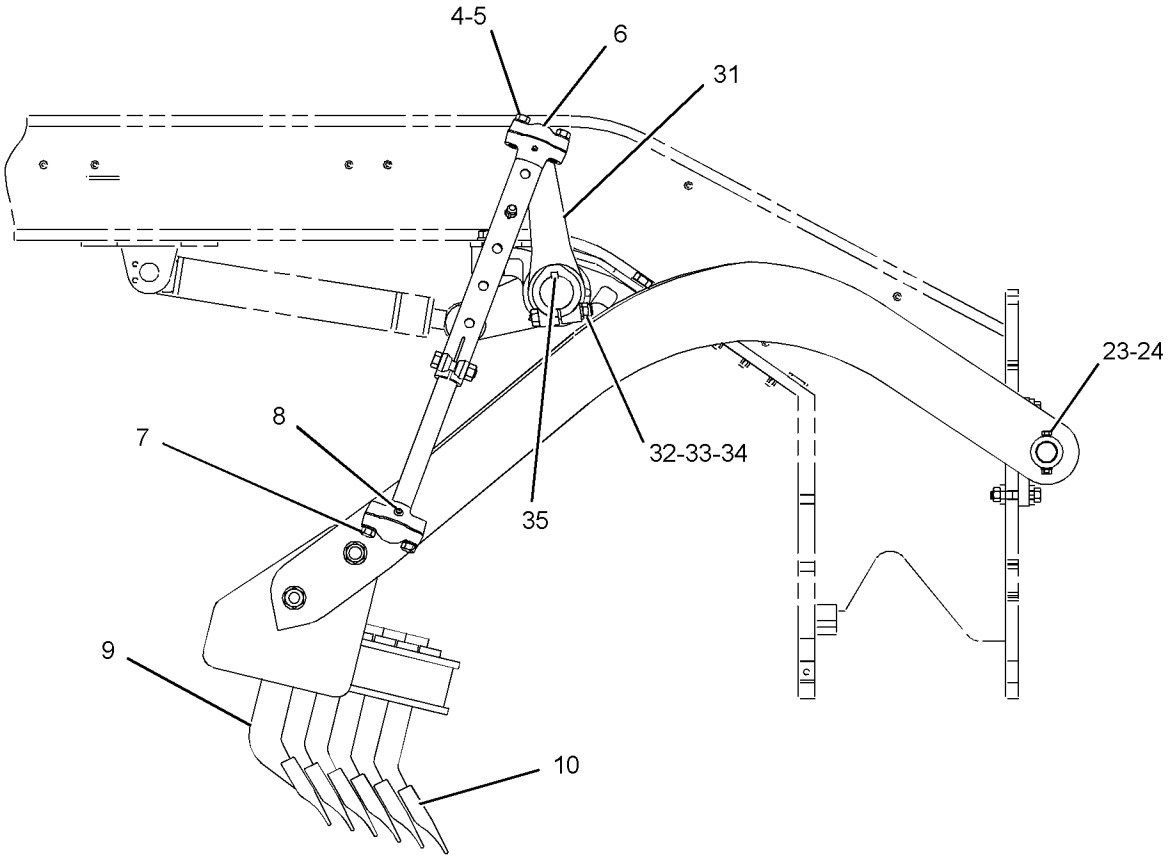


RIGHT SIDE VIEW

GRAPHIC #2 **<END>** g01291379

# WORK TOOLS

## *111-3883* SCARIFIER GP—STRAIGHT

**S/N: CCA1-UP**
**PART OF 113-0704 SCARIFIER AR**
**AN ATTACHMENT**

**SMCS-6162, 6325, 6811** **i01899398**

| NOTE | REF NO | GRAPHIC REF | PART NUMBER | QTY | PART NAME 1 2 3 4 5 6 (PRODUCT LEVEL) | SEE PAGE |
|---|---|---|---|---|---|---|
| | 1 | 1 | **9D-5516** | 2 | LINK AS-LIFT | |
| | | | | | (EACH INCLUDES) | |
| | | 1 | **7D-2135** | 1 | SOCKET-BALL | |
| | 2 | 1 | **7D-2196** | 2 | SLEEVE AS-LINK | |
| | | | | | (EACH INCLUDES) | |
| | | 1 | **7D-2136** | 1 | SOCKET-BALL | |
| | 3 | 1 | **5D-8161** | 2 | PIN | |
| | | 1 | **5D-8159** | 2 | PIN AS | |
| | 4 | 1 | **107-8375** | 1 | SHAFT AS | |
| | 5 | 1 | **118-7880** | 1 | DRAWBAR AS | |
| | 6 | 1 | **8W-5597** | 1 | STUD-BALL | |
| | 7 | 1 | **2G-7728** | 2 | COLLAR | |
| | 8 | 1 | **2G-7309** | 1 | SHAFT | |
| | 9 | 1 | **8X-6075** | 1 | BOLSTER AS | |
| | 10 | 1 | **1D-4612** | 4 | BOLT (3/4-10X4-IN) | |
| | | 1 | **2J-3506** | 4 | NUT-FULL (3/4-10-THD) | |
| | | 1 | **8X-3663** | 8 | WASHER (20X45X12-MM THK) | |
| | 11 | 1 | **5B-0577** | 2 | COLLAR | |
| | 12 | 1 | **9X-8875** | 2 | BOLT (1/2-13X3.5-IN) | |
| | | 1 | **1F-7958** | 2 | NUT-FULL (1/2-13-THD) | |
| | | 1 | **5P-8245** | 2 | WASHER-HARD (13.5X25.5X3-MM THK) | |
| | 13 | 1 | **5K-1458** | 11 | GROMMET | |
| | 14 | 1 | **8W-0663** | 2 | BRACKET AS | |
| | | | | | (EACH INCLUDES) | |
| | | 1 | **3B-8489** | 1 | FITTING-GREASE (TRUNNION) | |
| | | 1 | **107-8374** | 2 | BEARING | |
| | 15 | 1 | **118-7881** | 1 | DRAWBAR AS | |
| | 16 | 1 | **8W-5597** | 1 | STUD-BALL | |
| | 17 | 1 | **2G-7728** | 2 | COLLAR | |
| | 18 | 1 | **1A-0224** | 2 | BOLT (7/8-14X3.5-IN) | |
| | | 1 | **1B-4208** | 2 | NUT-FULL (7/8-14-THD) | |
| | 19 | 1 | **8H-4040** | 4 | BOLT (1-1/8-12X4.5-IN) | |
| | | 1 | **3D-4904** | 4 | LOCKNUT (1-1/8-12-THD) (1-1/8-12 THD) | |
| | | 1 | **3S-1349** | 4 | WASHER-HARD (31X52.5X6-MM THK) | |
| | 20 | 1 | **5K-1459** | 11 | LOCK PIN | |
| | 21 | 1 | **2G-7149** | 1 | BLOCK AS | |
| | 22 | 1 | **6B-3260** | 1 | TOOL | |
| | 23 | 1 | **2H-3746** | 4 | BOLT (1-14X5-IN) | |
| | | 1 | **2K-7471** | 4 | LOCKNUT (1-14-THD) | |
| | | 1 | **5P-8250** | 8 | WASHER (28X49X5-MM THK) | |
| | 24 | 2 | **3B-8489** | 4 | FITTING-GREASE (SCARIFIER LIFT LINK SOCKET) | |
| | 25 | 2 | **4D-6086** | 2 | KEY | |
| | 26 | 2 | **6F-6992** | 4 | CAP-BALL SOCKET | |
| B | | 2 | **7F-1327** | 32 | SHIM (0.03-IN THK) | |
| | 27 | 2 | **6Y-5230** | 11 | TOOTH-SCARIFIER | |
| | 28 | 2 | **6K-0545** | 4 | LOCKNUT (7/8X19-THD) | |
| | 29 | 2 | **7X-0390** | 4 | BOLT (7/8-9X5-IN) | |
| | | 2 | **8C-6913** | 4 | WASHER-HARD (24X41.5X4-MM THK) | |
| | 30 | 2 | **195-7219** | 17 | SHANK | |
| | 31 | 2 | **1A-8063** | 8 | BOLT (3/4-10X2.5-IN) | |
| | 32 | 2 | **5P-8248** | 8 | WASHER-HARD (20X36.5X3.5-MM THK) | |
| | 33 | 2 | **8D-1268** | 2 | ARM AS-LIFT | |
| | | | | | (EACH INCLUDES) | |
| | | 2 | **7D-8245** | 1 | STUD-BALL | |
| B | 34 | 1 | **198-9811** | 2 | SPACER (83X145X3-MM THK) | |

*111-3883* **SCARIFIER GP** *(contd.)* **i01899398**

| NOTE | REF NO | GRAPHIC REF | PART NUMBER | QTY | PART NAME 1 2 3 4 5 6 (PRODUCT LEVEL) | SEE PAGE |
|---|---|---|---|---|---|---|
| B | 35 | 1 | **198-9812** | 2 | SPACER (83X145X2-MM THK) | |

B-USE AS REQUIRED

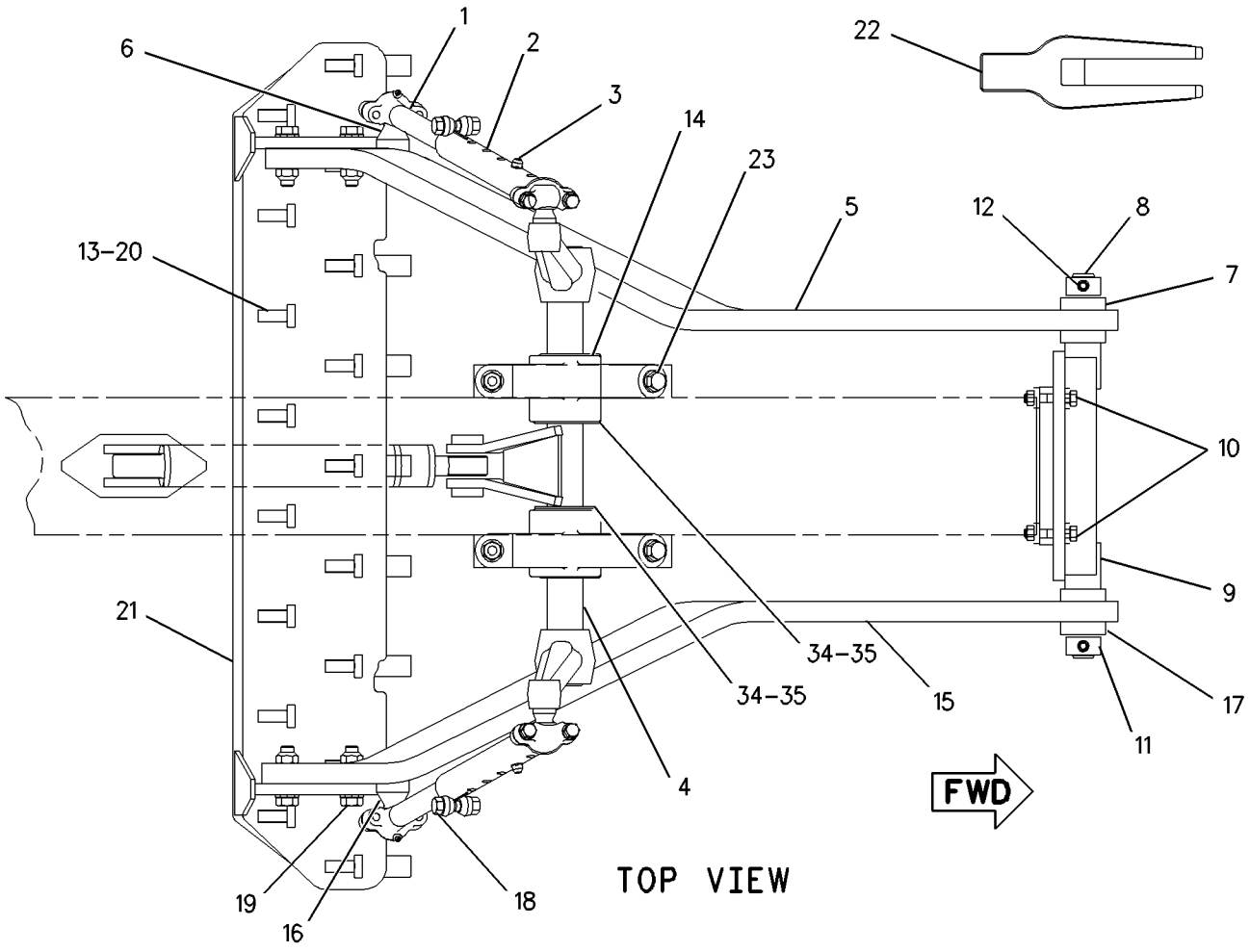


GRAPHIC #1 g00772503

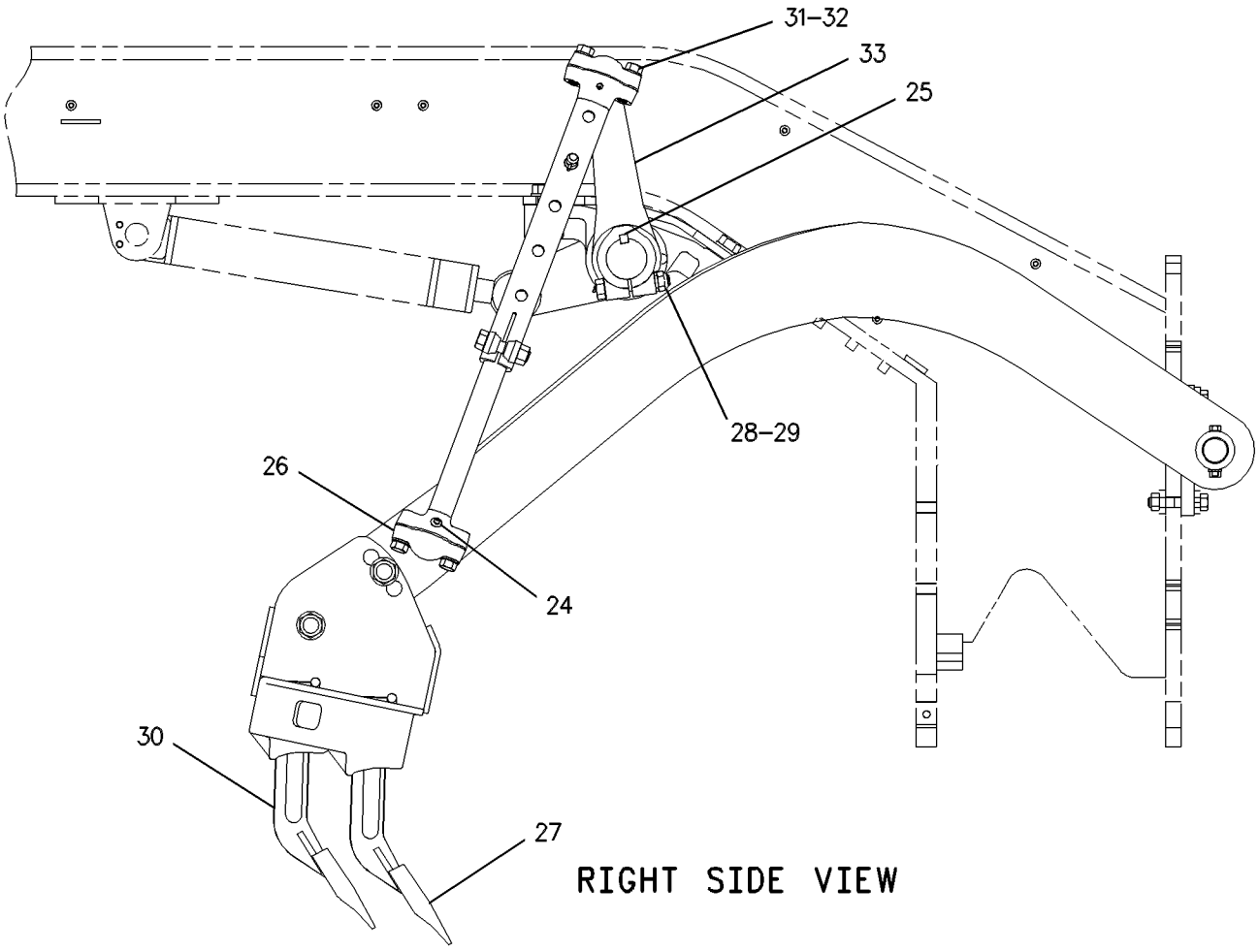


RIGHT SIDE VIEW

GRAPHIC #2 **<END>** g00304036

# WORK TOOLS

## *8J-1434* TOOTH GP-RIPPER

**S/N: CCA1-UP**
**PART OF 8J-7024 RIPPER GP**
**AN ATTACHMENT**

**SMCS-6808** **i01533771**

| NOTE | REF NO | GRAPHIC REF | PART NUMBER | QTY | PART NAME 1 2 3 4 5 6 (PRODUCT LEVEL) | SEE PAGE |
|---|---|---|---|---|---|---|
| | 1 | 1 | **3B-5325** | 1 | PIN-COTTER (PIN) | |
| | 2 | 1 | **2K-6413** | 1 | PIN | |
| | 3 | 1 | **9J-6586** | 1 | SHANK | |
| | 4 | 1 | **136-8308** | 1 | PIN | |
| | 5 | 1 | **6Y-0309** | 1 | TIP-RIPPER (PENETRATION) | |
| | 6 | 1 | **114-0359** | 1 | RETAINER AS (G.E.T.) | |

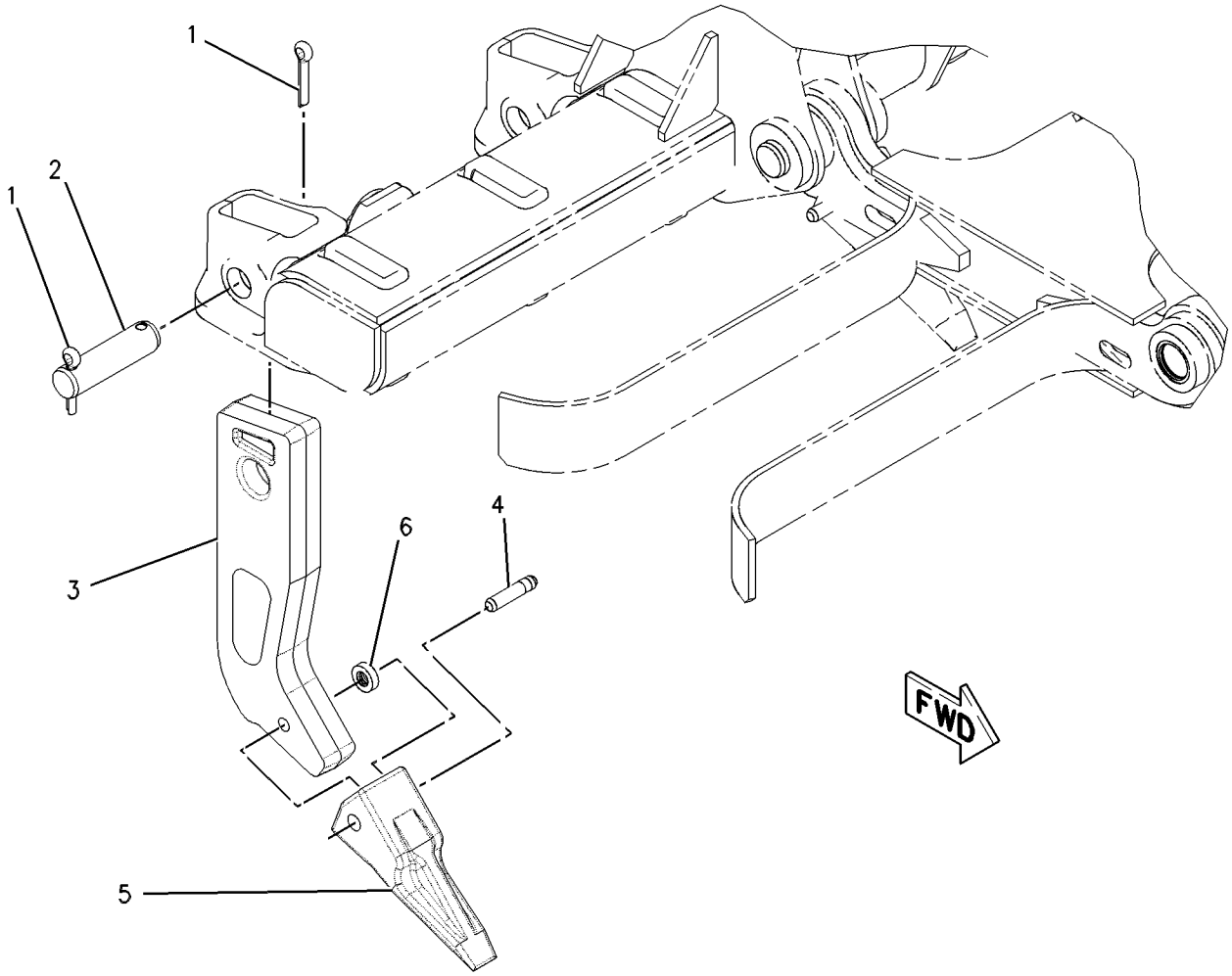


GRAPHIC #1 **<END>** g00632727

# WORK TOOLS

## *4K-3330* TOOTH GP-SCARIFIER

**S/N: CCA1-UP**
**9 TEETH**
**AN ATTACHMENT**

**SMCS-6807** **i01723061**

| NOTE | REF NO | GRAPHIC REF | PART NUMBER | QTY | PART NAME 1 2 3 4 5 6 (PRODUCT LEVEL) | SEE PAGE |
|---|---|---|---|---|---|---|
| | 1 | 1 | **5K-1459** | 9 | LOCK PIN | |
| | 2 | 1 | **5K-1458** | 9 | GROMMET | |
| | 3 | 1 | **195-7218** | 9 | SHANK | |
| | 4 | 1 | **6Y-5230** | 9 | TOOTH-SCARIFIER | |
| F | | | **6B-3260** | 1 | TOOL | |

F-NOT SHOWN

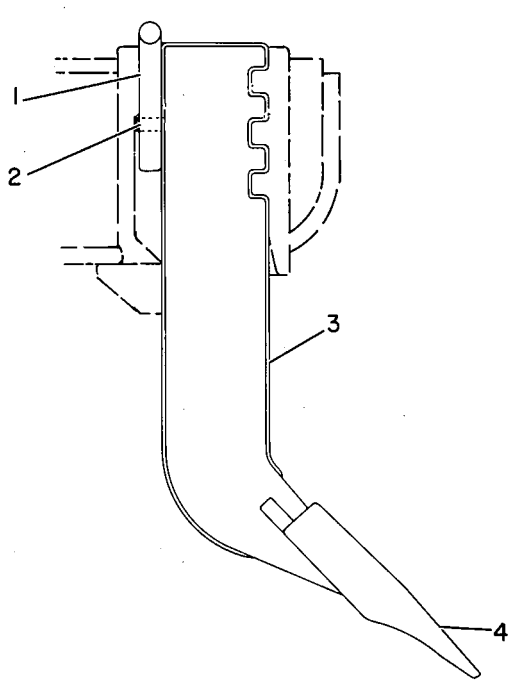


GRAPHIC #1 **<END>** g00108148

# OPERATOR STATION

## *171-7185* ACCESSORY GP-CAB–LOW PROFILE

**S/N: CCA1-UP**
**12-VOLT**
**PART OF 161-0776 CONVERTER AR-ELECTRICAL**
**AN ATTACHMENT**

**SMCS-1408, 1421** **i01683341**

| NOTE | REF NO | GRAPHIC REF | PART NUMBER | QTY | PART NAME 1 2 3 4 5 6 (PRODUCT LEVEL) | SEE PAGE |
|---|---|---|---|---|---|---|
| | 1 | 1 | **117-2311** | 1 | RECEPTACLE AS-POWER (12-VOLT) | |
| | 2 | 1 | **138-7065** | 1 | PLATE | |
| | 3 | 1 | **169-3264** | 1 | HARNESS AS-CAB | |
| | | 1 | **102-8802** | 1 | KIT-RECEPTACLE (2-PIN) (12V POWER PORT) | |
| M | 4 | 1 | **129-3178** | 2 | LOCKNUT (M6X1-THD) | |
| | 5 | 1 | **6P-0205** | 2 | SPACER (0.269X0.405X0.656-IN THK) | |
| | 6 | 1 | **9X-8256** | 2 | WASHER (6.6X12X2-MM THK) | |

M-METRIC PART

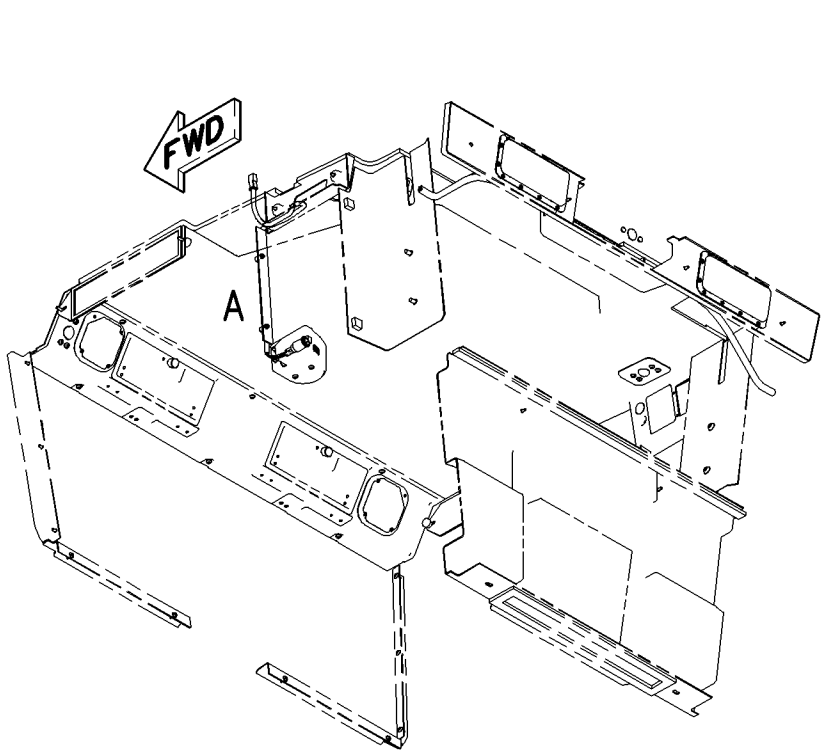


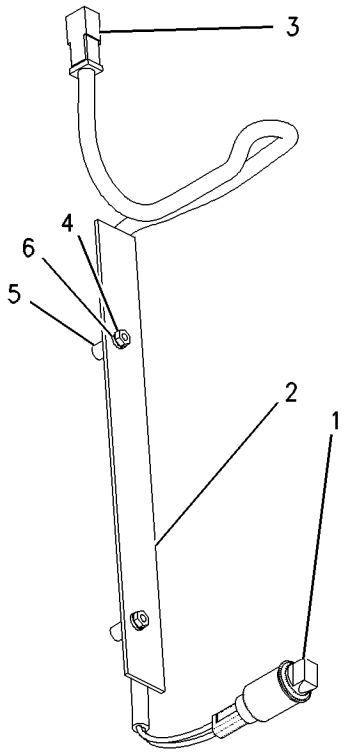


VIEW OF AREA A

GRAPHIC #1 **<END>** g00808417

# OPERATOR STATION

## *171-7186* ACCESSORY GP-CAB–HIGH PROFILE

**S/N: CCA1-UP**
**12-VOLT**
**PART OF 161-0777 CONVERTER AR-ELECTRICAL**
**AN ATTACHMENT**

**SMCS-1408, 1421** **i01689402**

| NOTE | REF NO | GRAPHIC REF | PART NUMBER | QTY | PART NAME 1 2 3 4 5 6 (PRODUCT LEVEL) | SEE PAGE |
|---|---|---|---|---|---|---|
| | 1 | 1 | **117-2311** | 1 | RECEPTACLE AS-POWER (12-VOLT) | |
| | 2 | 1 | **169-3264** | 1 | HARNESS AS-CAB | |
| | | 1 | **102-8802** | 1 | KIT-RECEPTACLE (2-PIN) (12V POWER PORT) | |
| | | | | | (INCLUDES RECEPTACLE AS & WEDGE) | |
| M | 3 | 1 | **129-3178** | 2 | LOCKNUT (M6X1-THD) | |
| | 4 | 1 | **139-1153** | 1 | PLATE | |
| | 5 | 1 | **6P-0205** | 2 | SPACER (0.269X0.405X0.656-IN THK) | |
| | 6 | 1 | **9X-8256** | 2 | WASHER (6.6X12X2-MM THK) | |

M-METRIC PART

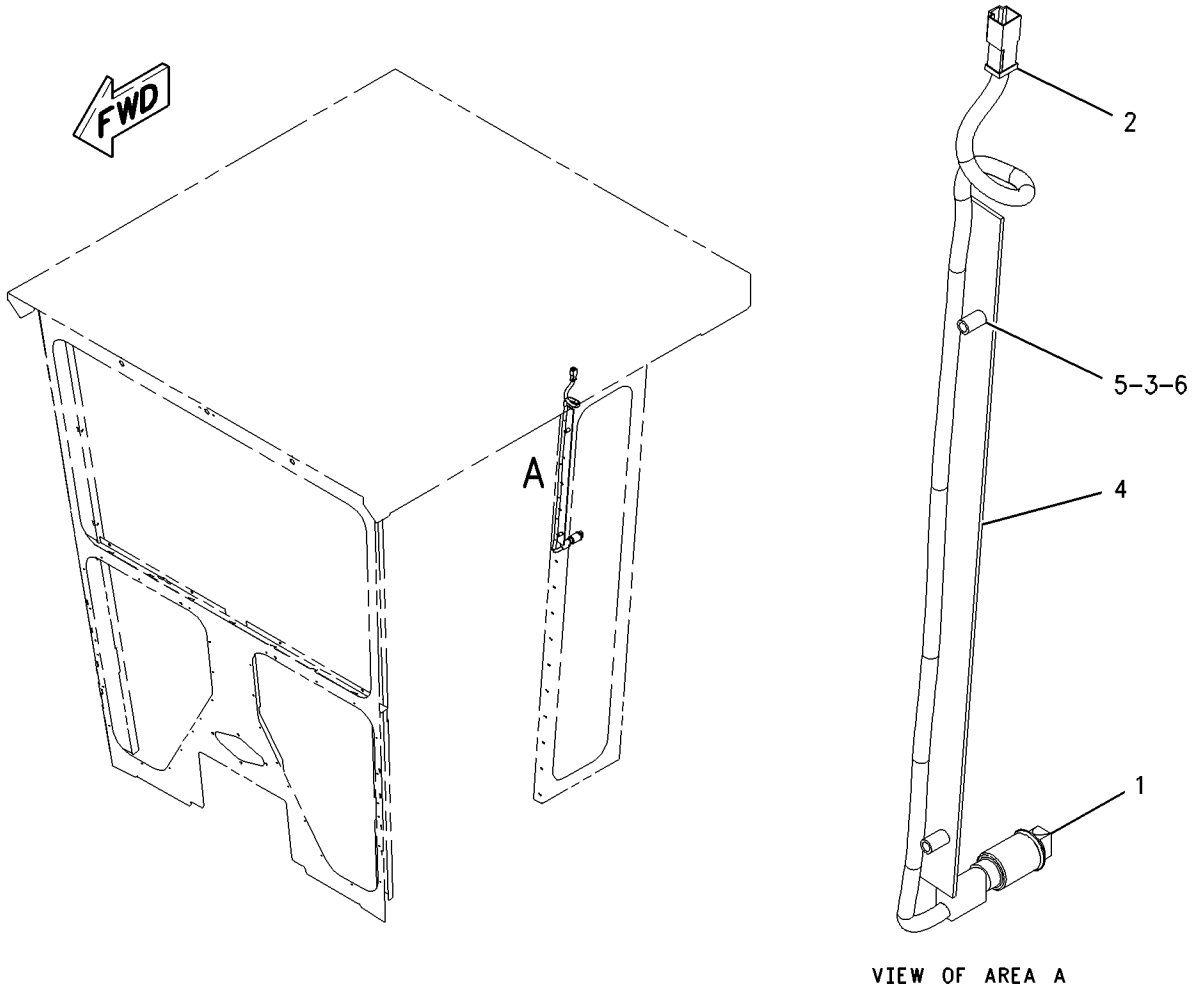


VIEW OF AREA A

GRAPHIC #1 **<END>** g00890902

# OPERATOR STATION

## *173-5313* AIR CONDITIONER & MOUNTING GP

**S/N: CCA1-UP**
**PART OF 167-8067 AIR CONDITIONER AR**
**AN ATTACHMENT**

**SMCS-7320** **i01755303**

| NOTE | PART NUMBER | QTY | PART NAME 1 2 3 4 5 6 (PRODUCT LEVEL) | SEE PAGE |
|---|---|---|---|---|
| Y | **174-4548** | 1 | AIR CONDITIONER GP | 1096 |
| | **5M-3062** | 1 | BOLT (3/8-16X0.75-IN) | |
| | **8M-2773** | 2 | CLIP | |
| | **9W-1441** | 1 | FUSE (15-AMPERE) (AIR CONDITIONER) | |
| | **123-0872** | 1 | PAD | |
| | **191-5236** | 1 | PAD | |
| | **8T-4896** | 1 | WASHER-HARD (10.2X18.5X2.5-MM THK) | |

Y-SEPARATE ILLUSTRATION

**<END>**

## *167-8067* AIR CONDITIONER AR

**S/N: CCA1-UP**
**PART OF 210-2044 CONVERSION AR-CERTIFICATION, 259-5738 CONVERSION AR-MACHINE, 197-5955, 236-3948 SNOW AR-MOTOR GRADER**
**AN ATTACHMENT**

**SMCS-7320** **i02592805**

| NOTE | PART NUMBER | QTY | PART NAME 1 2 3 4 5 6 (PRODUCT LEVEL) | SEE PAGE |
|---|---|---|---|---|
| Y | *173-5313* | 1 | AIR CONDITIONER & MOUNTING GP | 1095 |
| Y | *197-4568* | 1 | COMPRESSOR & MTG GP-REFRIG | 1104 |
| Y | *197-7659* | 1 | CONDENSER & MTG GP-REFRIGERANT | 1106 |
| Y | *177-7891* | 1 | DUCT & CONTROL GP (HEATER, AC SELECT) | 1133 |
| Y | *7I-5015* | 1 | DUCT GP | 1134 |
| Y | **8X-2925** | 1 | FILTER GP-CAB AIR | 1142 |
| Y | *167-8102* | 1 | LINES GP-AIR CONDITIONER | 1183 |
| Y | *167-8398* | 1 | LINES GP-HEATER | 1185 |
| | | | | |
| | **174-9690** | 1 | BELT-SERPENTINE (ALTERNATOR AND AIR CONDITIONER) | |

Y-SEPARATE ILLUSTRATION

**<END>**

# OPERATOR STATION

## 174-4548 AIR CONDITIONER GP

**S/N: CCA1-UP**

**PART OF 173-5313 AIR CONDITIONER & MOUNTING GP**

**AN ATTACHMENT**

**SMCS-7320** **i02209885**

| NOTE | REF NO | GRAPHIC REF | PART NUMBER | QTY | PART NAME 1 2 3 4 5 6 (PRODUCT LEVEL) | SEE PAGE |
|---|---|---|---|---|---|---|
| | 1 | 1 | **2P-4339** | 1 | NUT-JAM (7/16-28-THD) | |
| | 2 | 1 | **2V-0099** | 1 | KNOB-CONTROL (FAN SPEED) | |
| | 2A | 1 | **2V-0099** | 1 | KNOB-CONTROL (TEMPERATURE CONTROL) | |
| | 3 | 1 | **3E-0400** | 2 | BLOWER AS | |
| | | | | | (EACH INCLUDES) | |
| | | 1 | **037-4838** | 1 | CLAMP | |
| | 4 | 1 | **3E-3890** | 1 | FILM-CONTROL (HEATER & A/C) | |
| | 5 | 1 | **3E-5464** | 1 | SWITCH AS-TEMPERATURE (REFRIGERANT) | |
| | 6 | 1 | **3S-2093** | 2 | STRAP-CABLE | |
| | 7 | 1 | **3T-3197** | 1 | GROMMET | |
| | 8 | 1 | **3T-3198** | 1 | GROMMET | |
| | 9 | 2 | **5P-7803** | 2 | PLUG-BUTTON | |
| | 10 | 1 | **6P-3236** | 1 | SWITCH AS-ROTARY (FAN SPEED) | |
| | | 1 | **6V-8362** | 5 | SCREW-MACHINE (8-32X0.31-IN) | |
| | | 1 | **9B-7233** | 5 | LOCKWASHER | |
| | 11 | 1 | **6T-5345** | 1 | BUSHING-TERMINAL | |
| | 12 | 1 | **6T-6708** | 2 | WASHER (7X28.6X4.1-MM THK) | |
| | 13 | 1 | **7G-4824** | 1 | STRAP | |
| | 14 | 1 | **7T-9793** | 2 | VALVE (CHECK) (EVAPORATOR DRAIN) | |
| | 15 | 2 | **8C-3756** | 1 | FILM-IDENTIFICATION (GROUP NUMBER) (AIR CONDITIONER) | |
| | 16 | 1 | **8C-4586** | 2 | CLAMP | |
| | 17 | 1 | **8D-1429** | 1 | LAMP (24-VOLT) | |
| | 18 | 1 | **8E-7791** | 1 | STRAP | |
| | 19 | 1 | **8P-5141** | 2 | PLATE-ORIFICE | |
| | 20 | 1 | **8X-5536** | 1 | COVER | |
| | 21 | 2 | **8X-5538** | 1 | COVER AS | |
| M | | 2 | **8T-3490** | 4 | NUT-WELD (M10X1.5-THD) | |
| | 22 | 1 | **8X-5540** | 1 | COVER | |
| I | 23 | 1 | **8X-7152** | 1 | HOSE AS | |
| I | 24 | 1 | **8X-7153** | 1 | HOSE AS | |
| | 25 | 2 | **8Y-6388** | 4 | LOUVER AS | |
| | 26 | 1 | **9G-1950** | 1 | RESISTOR | |
| | 27 | 1 | **9X-2185** | 4 | SCREW (8-15X11.11-MM) | |
| | 28 | 1 | **9X-2488** | 4 | CLAMP-HOSE | |
| | 29 | 1 | **9X-9653** | 1 | COIL AS-EVAPORATOR | |
| | 30 | 2 | **110-6393** | 1 | PLATE-INSTRUCTION (AIR CONDITIONER) | |
| | 31 | 1 | **123-4618** | 1 | COVER | |
| | 32 | 2 | **123-4701** | 1 | SEAL | |
| | 33 | 1 | **124-1431** | 1 | BRACKET | |
| | 34 | 1 | **124-1432** | 1 | HOUSING AS | |
| | | 1 | **7T-1099** | 1 | LINK | |
| | | 1 | **8P-5141** | 2 | PLATE-ORIFICE | |
| | 35 | 1 | **124-3137** | 1 | BRACKET | |
| | 36 | 1 | **124-3138** | 1 | SEAL | |
| | 37 | 1 | **124-9006** | 1 | SHAFT | |
| | 38 | 1 | **124-9007** | 1 | SHAFT AS | |
| | | 1 | **4L-5966** | 2 | SETSCREW (NO 10X0.19-IN) | |
| | 39 | 1 | **125-0438** | 1 | GASKET | |
| | 40 | 1 | **129-4935** | 1 | SEAL | |
| | 41 | 1 | **142-4940** | 1 | PLATE AS | |
| | 42 | 1 | **174-1494** | 1 | MOTOR AS-BLOWER (24-VOLT, A/C, HEATER) | |
| | | 1 | **3E-3365** | 1 | WEDGE-RECEPTACLE LOCK (2-PIN) | |
| | | 1 | **9W-0852** | 2 | PIN-CONNECTOR (14-GA) | |

## 174-4548 AIR CONDITIONER GP *(contd.)* i02209885

| NOTE | REF NO | GRAPHIC REF | PART NUMBER | QTY | PART NAME 1 2 3 4 5 6 (PRODUCT LEVEL) | SEE PAGE |
|---|---|---|---|---|---|---|
| | | 1 | **102-8802** | 1 | KIT-RECEPTACLE (2-PIN) | |
| | | | | | (INCLUDES RECEPTACLE AS AND WEDGE) | |
| | 43 | 2 | **174-4492** | 1 | COVER | |
| | 44 | 1 | **174-4971** | 1 | SUPPORT AS | |
| | 45 | 1 | **174-6353** | 1 | PLATE | |
| | 46 | 1 | **176-5507** | 1 | PAD | |
| | 47 | 1 | **177-7858** | 1 | HARNESS AS-HEATER & AIR COND | |
| | | 1 | **155-2270** | 1 | KIT-CONNECTING PLUG (2-PIN) | |
| | | | | | (INCLUDES PLUG AS AND WEDGE) | |
| | | 1 | **102-8805** | 1 | KIT-RECEPTACLE (6-PIN) | |
| | | | | | (INCLUDES RECEPTACLE AS AND WEDGE) | |
| | 48 | 2 | **191-0027** | 1 | PAD | |
| | 49 | 1 | **204-4376** | 1 | CAP-PROTECTIVE | |
| | 50 | 1 | **238-0415** | 1 | VALVE AS-WATER | |
| | 51 | 1 | **238-0417** | 1 | CORE AS-HEATER | |
| | 52 | 1 | **248-6772** | 4 | SCREW-MACHINE (8-16X7.75-IN) | |
| | 53 | 2 | **255-6261** | 2 | PLATE | |
| | 54 | 2 | **104-2091** | 8 | SCREW-FLAT HEAD (6-20X0.5-IN) | |
| M | 55 | 1 | **129-3178** | 4 | LOCKNUT (M6X1-THD) | |
| | 56 | 1 | **130-5300** | 1 | CLIP | |
| M | 57 | 1 | **141-9784** | 1 | BOLT (M6X1X190-MM) | |
| | 58 | 1 | **3B-4501** | 2 | LOCKWASHER | |
| | 59 | 1 | **3H-2900** | 1 | GROMMET | |
| | 60 | 2 | **3S-9557** | 8 | SCREW-PAN HEAD (4-40X0.5-IN) | |
| | 61 | 1 | **4M-6582** | 1 | SEAL-O-RING | |
| M | 62 | 1 | **5C-2890** | 7 | NUT (M6X1-THD) | |
| | 63 | 1,2 | **5P-1075** | 13 | WASHER-HARD (10.2X22.5X3-MM THK) | |
| | 64 | 1 | **5P-9135** | 1 | GROMMET | |
| | 65 | 1 | **6V-1668** | 2 | WASHER (6.5X29.1X3-MM THK) | |
| M | 66 | 1 | **6V-7728** | 1 | BOLT (M6X1X45-MM) | |
| | 67 | 1,2 | **6V-8801** | 13 | NUT (3/8-16-THD) | |
| | 68 | 1 | **7X-0591** | 2 | WASHER-HARD (17X29X3-MM THK) | |
| M | 69 | 1 | **8T-4171** | 2 | BOLT (M6X1X12-MM) | |
| | 70 | 1 | **8T-4205** | 15 | WASHER-HARD (7.2X14.5X2-MM THK) | |
| | 71 | 1 | **8T-6631** | 2 | SCREW-MACHINE (8-32X0.5-IN) | |
| | 72 | 1 | **9M-8406** | 1 | CLIP | |
| M | 73 | 1 | **9X-2040** | 4 | SCREW-TRUSS HEAD (M10X1.5X25-MM) | |
| M | 74 | 1 | **9X-2041** | 5 | SCREW-TRUSS HEAD (M10X1.5X20-MM) | |
| M | 75 | 2 | **9X-2045** | 6 | SCREW-TRUSS HEAD (M6X1X20-MM) | |
| | 76 | 1 | **9X-7381** | 1 | SEAL-O-RING | |
| | 77 | 1 | **9X-7382** | 1 | SEAL-O-RING | |
| E | 78 | 1 | **136-1953** | | HOSE (17-CM EACH) | |
| BD | 79 | 1 | **5P-5908** | | SEAL | |
| BD | 80 | 1 | **5P-5637** | | SEAL | |
| BE | 81 | 1 | **9X-2126** | | SEAL | |
| BD | 82 | 1 | **5P-6129** | | TUBE | |

B-USE AS REQUIRED
D-ORDER BY THE METER
E-ORDER BY THE CENTIMETER
I-REFER TO HYDRAULIC INFORMATION SYSTEM
M-METRIC PART

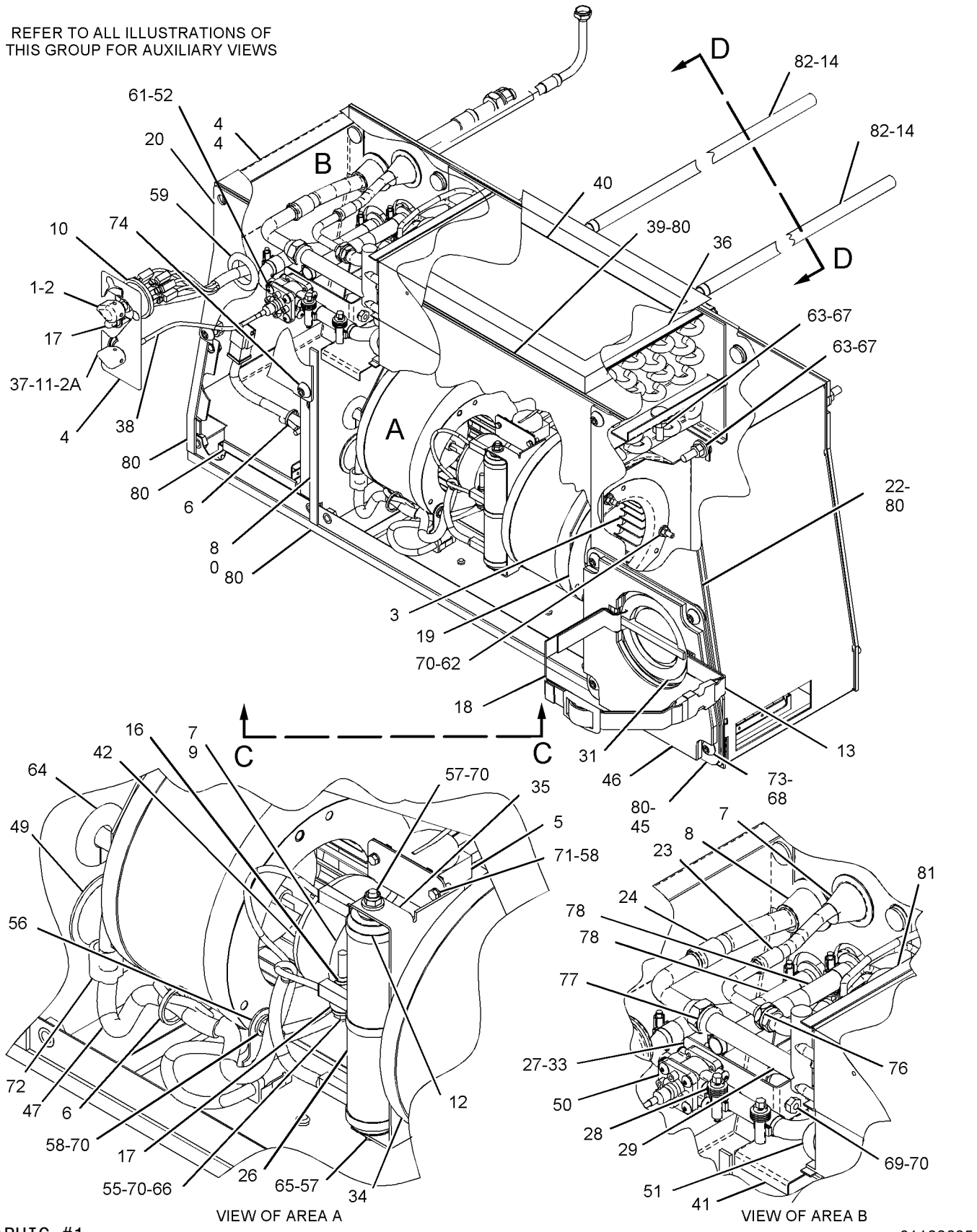


GRAPHIC #1

g01123685

**174-4548 AIR CONDITIONER GP** *(contd. )* **i02209885**

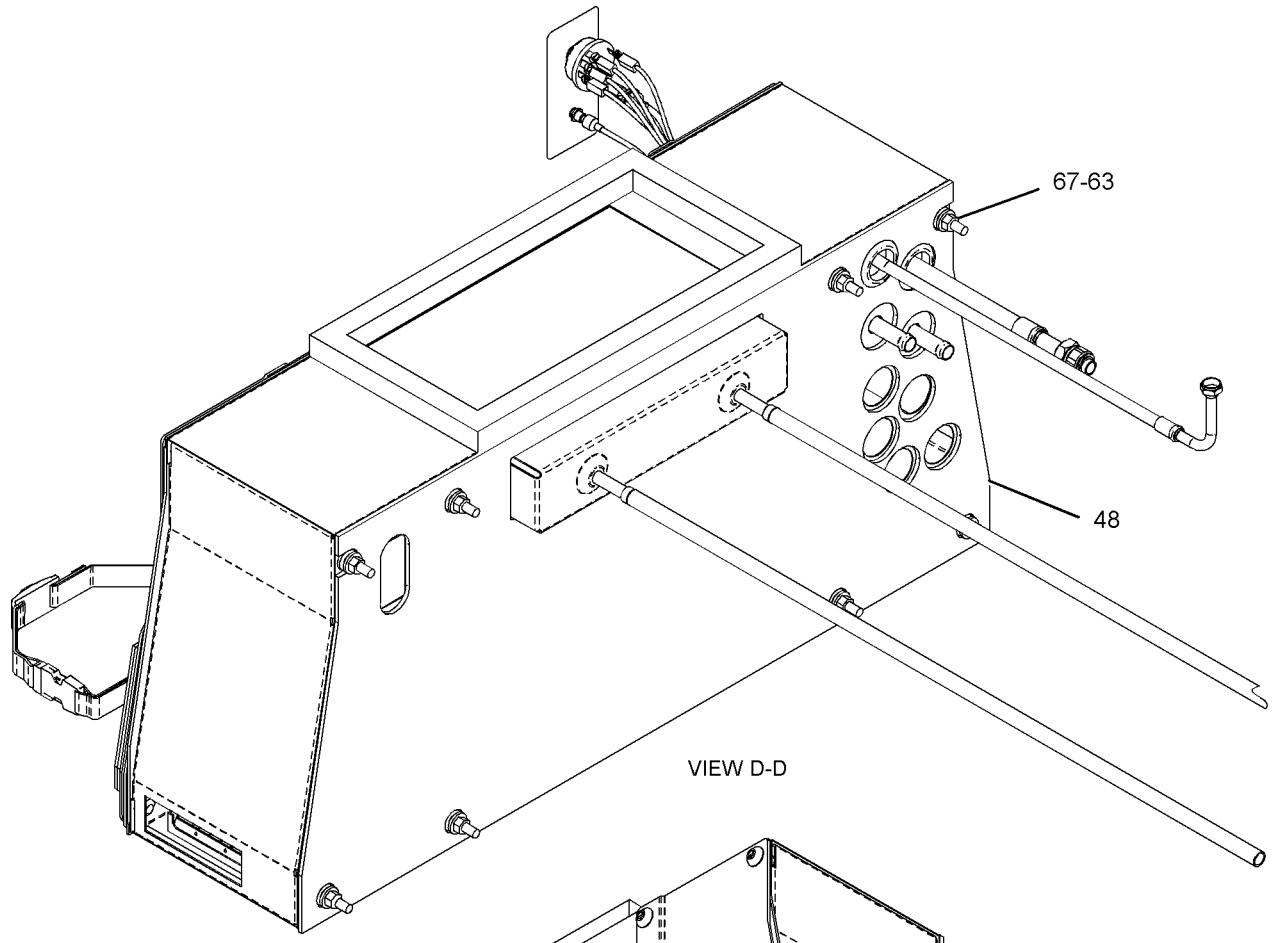


VIEW D-D

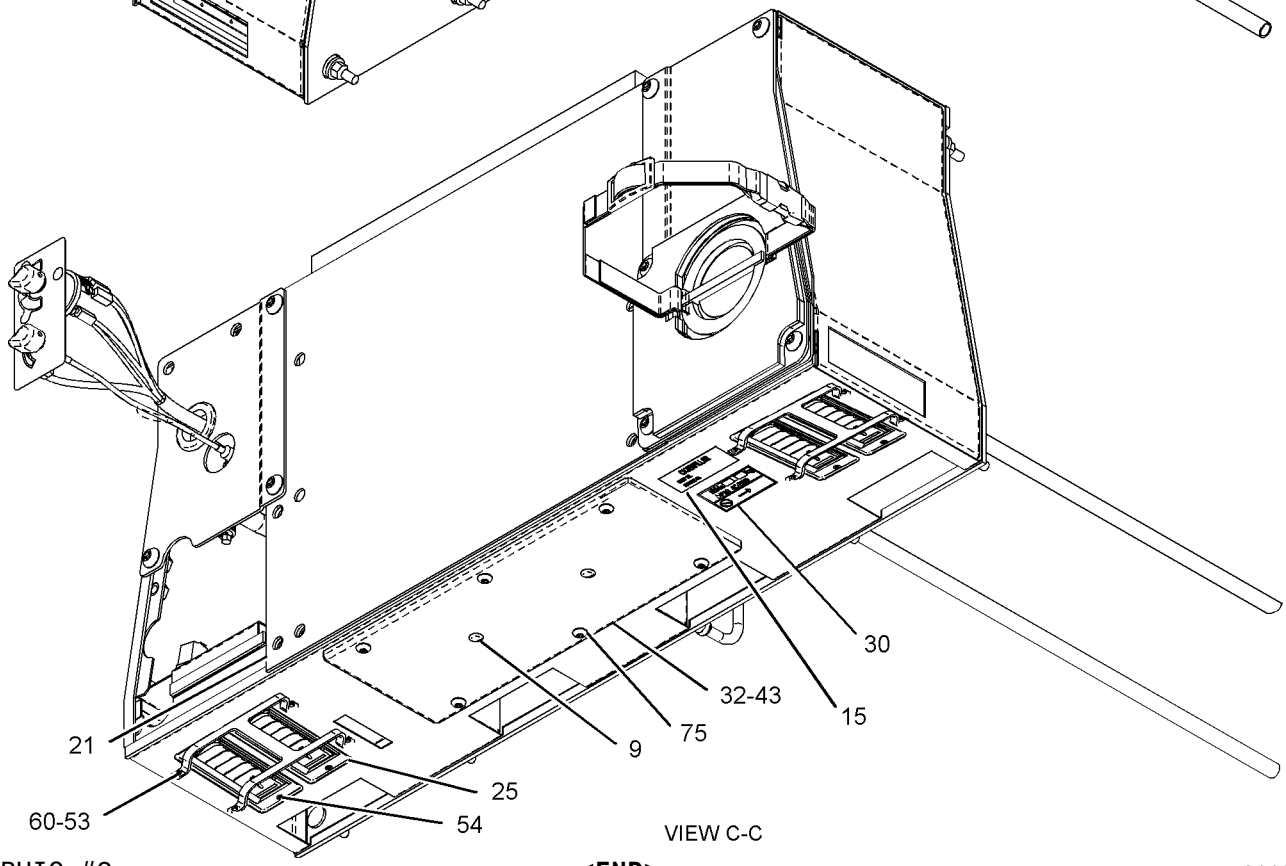


VIEW C-C

GRAPHIC #2 **<END>** g01122963

# OPERATOR STATION

## 113-4242 ARMREST GP–LH

**S/N: CCA1-UP**

**PART OF 112-9104, 112-9105, 155-5958 SEAT GP-SUSPENSION**

**ALSO AN ATTACHMENT**

**SMCS-7307** **i00136232**

| NOTE | REF NO | GRAPHIC REF | PART NUMBER | QTY | PART NAME 1 2 3 4 5 6 (PRODUCT LEVEL) | SEE PAGE |
|---|---|---|---|---|---|---|
| | 1 | 1 | **9V-7447** | 1 | PAD AS | |
| | | 1 | **9F-2978** | 1 | NUT-WELD (3/8-16 THD) | |
| | 2 | 1 | **113-4240** | 1 | BRACKET AS-LH | |
| | 3 | 1 | **7X-0456** | 1 | BOLT (7/16-14X4.5IN) | |
| | 4 | 1 | **0S-1594** | 1 | BOLT (3/8-16X1IN) | |
| | 5 | 1 | **5V-1498** | 1 | LOCKNUT (3/8-16 THD) | |
| | 6 | 1 | **2K-4973** | 1 | LOCKNUT (3/8-16 THD) | |
| | 7 | 1 | **5S-7383** | 1 | BOLT (3/8-16X1.75IN) | |
| | 8 | 1 | **8Y-6277** | 2 | SPACER | |
| | 9 | 1 | **2K-6061** | 1 | SCREW-MACHINE | |

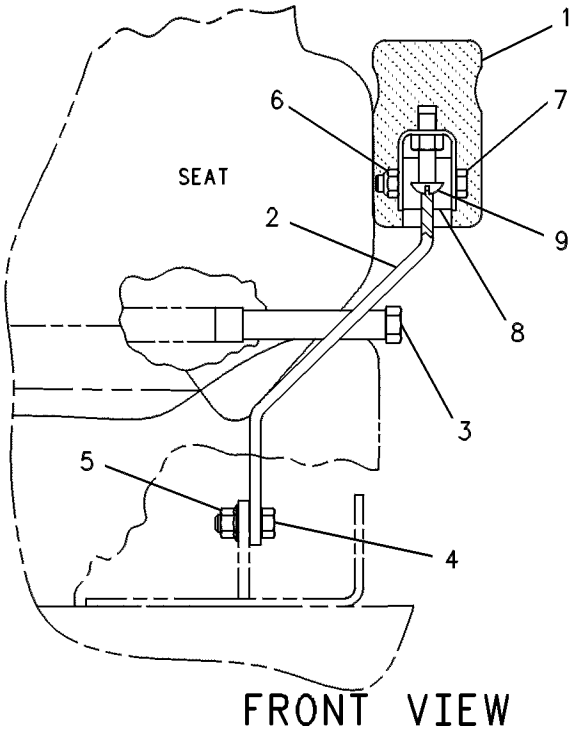


FRONT VIEW

GRAPHIC #1 **<END>** g00108710

# OPERATOR STATION

## 113-4245 ARMREST GP–RH

**S/N: CCA1-UP**

**PART OF 112-9104, 112-9105, 155-5958 SEAT GP-SUSPENSION**

**ALSO AN ATTACHMENT**

**SMCS-7307** **i00136247**

| NOTE | REF NO | GRAPHIC REF | PART NUMBER | QTY | PART NAME 1 2 3 4 5 6 (PRODUCT LEVEL) | SEE PAGE |
|---|---|---|---|---|---|---|
| | 1 | 1 | **9V-7447** | 1 | PAD AS | |
| | | 1 | **9F-2978** | 1 | NUT-WELD (3/8-16 THD) | |
| | 2 | 1 | **113-4243** | 1 | BRACKET AS-RH | |
| | 3 | 1 | **7X-0456** | 1 | BOLT (7/16-14X4.5IN) | |
| | 4 | 1 | **0S-1594** | 1 | BOLT (3/8-16X1IN) | |
| | 5 | 1 | **5V-1498** | 1 | LOCKNUT (3/8-16 THD) | |
| | 6 | 1 | **5S-7383** | 1 | BOLT (3/8-16X1.75IN) | |
| | 7 | 1 | **2K-4973** | 1 | LOCKNUT (3/8-16 THD) | |
| | 8 | 1 | **8Y-6277** | 2 | SPACER | |
| | 9 | 1 | **2K-6061** | 1 | SCREW-MACHINE | |

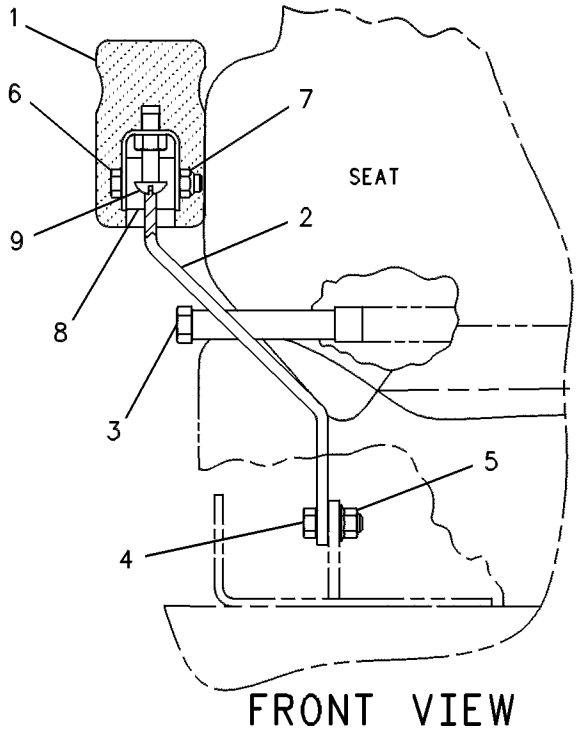


GRAPHIC #1 **<END>** g00108709

# OPERATOR STATION

## *225-3174* CAB AR—HIGH PROFILE

**S/N: CCA1-UP**

**AN ATTACHMENT**

**SMCS-7301** **i02585383**

| NOTE | PART NUMBER | QTY | PART NAME 1 2 3 4 5 6 (PRODUCT LEVEL) | SEE PAGE |
|---|---|---|---|---|
| Y | *223-3937* | 1 | CAB GP (HIGH PROFILE) | 1103 |
| Y | *172-5378* | 1 | INSULATION GP-WEATHER | 1166 |
| Y | *125-4344* | 1 | MOUNTING GP-CAB (NON-ROPS) (ENCLOSED) | 1206 |
| Y | *8Y-4951* | 1 | SEAT GP-SUSPENSION (VINYL) | 1239 |
| Y | *125-4342* | 1 | WASHER GP-WINDOW (FRONT) | 1255 |
| | | | | |
| | **171-7626** | 1 | FILM (COVER) | |
| | **246-2641** | 1 | PADLOCK GP | |
| | **5P-8500** | 1 | KEY | |
| | **170-6570** | 1 | PLATE AS | |
| M | **6V-9632** | 2 | NUT-WELD (M6X1-THD) | |

M-METRIC PART
Y-SEPARATE ILLUSTRATION

**<END>**

## *211-4906* CAB AR-NON-ROPS

**S/N: CCA1-UP**

**AN ATTACHMENT**

**SMCS-7301** **i01861343**

| NOTE | PART NUMBER | QTY | PART NAME 1 2 3 4 5 6 (PRODUCT LEVEL) | SEE PAGE |
|---|---|---|---|---|
| Y | *211-4907* | 1 | CAB GP (HIGH PROFILE) | 1102 |
| Y | *172-5378* | 1 | INSULATION GP-WEATHER | 1166 |
| Y | **8X-2795** | 1 | MIRROR GP-REAR VIEW (INSIDE DUAL) | 1195 |
| Y | *125-4344* | 1 | MOUNTING GP-CAB (NON-ROPS)(ENCLOSED) | 1206 |
| Y | *125-4342* | 1 | WASHER GP-WINDOW (FRONT) | 1255 |

Y-SEPARATE ILLUSTRATION

**<END>**

## *211-4907* CAB GP—HIGH PROFILE

**S/N: CCA1-UP**

**PART OF 211-4906 CAB AR-NON-ROPS**

**AN ATTACHMENT**

**SMCS-7301** **i02585392**

| NOTE | PART NUMBER | QTY | PART NAME 1 2 3 4 5 6 (PRODUCT LEVEL) | SEE PAGE |
|---|---|---|---|---|
| Y | *8X-4413* | 1 | DOOR GP-CAB (HIGH PROFILE) | 1125 |
| Y | *211-4912* | 1 | LINER GP-CAB (ENCLOSED) (HIGH PROFILE) | 1181 |
| Y | *8X-2385* | 1 | PANEL GP-CAB (HIGH PROFILE) | 1214 |
| Y | *211-4913* | 1 | WIPER GP-WINDOW (FRONT) (HIGH PROFILE) | 1285 |
| | | | | |
| | **211-4908** | 1 | CAB AS (NON-ROPS) (HIGH PROFILE) | |

Y-SEPARATE ILLUSTRATION

**<END>**

# OPERATOR STATION

## *223-3937* CAB GP—HIGH PROFILE

**S/N: CCA1-UP**
**PART OF 225-3174 CAB AR**
**AN ATTACHMENT**

**SMCS-7301** **i02585382**

| NOTE | PART NUMBER | QTY | PART NAME 1 2 3 4 5 6 (PRODUCT LEVEL) | SEE PAGE |
|---|---|---|---|---|
| Y | *129-4618* | 1 | LINER GP-CAB (HIGH PROFILE) | 1168 |
| Y | *129-8614* | 1 | PANEL GP-CAB (HIGH PROFILE) | 1215 |
| Y | *223-3936* | 1 | WIPER GP-WINDOW (HIGH PROFILE) (FRONT) | 1287 |
| Y | *223-3941* | 1 | WIRING GP-CAB | 315 |
| | | | | |
| | **223-3935** | 1 | CAB AS | |

Y-SEPARATE ILLUSTRATION

**<END>**

# OPERATOR STATION

## *197-4568* COMPRESSOR & MTG GP-REFRIG

**S/N: CCA1-UP**
**PART OF 167-8067 AIR CONDITIONER AR**
**AN ATTACHMENT**

**SMCS-1802** **i01930484**

| NOTE | REF NO | GRAPHIC REF | PART NUMBER | QTY | PART NAME 1 2 3 4 5 6 (PRODUCT LEVEL) | SEE PAGE |
|---|---|---|---|---|---|---|
| Y | 1 | 1 | **163-0872** | 1 | COMPRESSOR GP-REFRIGERANT | 1105 |
| | 2 | 1 | **194-5141** | 1 | GUARD (AIR CONDITIONER COMPR PULLEY) | |
| | 3 | 1 | **197-4569** | 1 | BRACKET-MOUNTING | |
| M | 4 | 1 | **6V-5696** | 2 | BOLT (M12X1.75X80-MM) | |
| M | 5 | 1 | **7X-2538** | 3 | BOLT (M8X1.25X100-MM) | |
| M | 6 | 1 | **7X-2539** | 1 | BOLT (M8X1.25X110-MM) | |
| | 7 | 1 | **7X-7729** | 2 | WASHER (11X25X3-MM THK) | |
| M | 8 | 1 | **8T-4136** | 2 | BOLT (M10X1.5X25-MM) | |
| | 9 | 1 | **8T-4223** | 4 | WASHER-HARD (13.5X25.5X3-MM THK) | |
| | 10 | 1 | **8T-4224** | 4 | WASHER-HARD (8.8X16X2-MM THK) | |
| M | 11 | 1 | **8T-4244** | 2 | NUT (M12X1.75-THD) | |

M-METRIC PART
Y-SEPARATE ILLUSTRATION

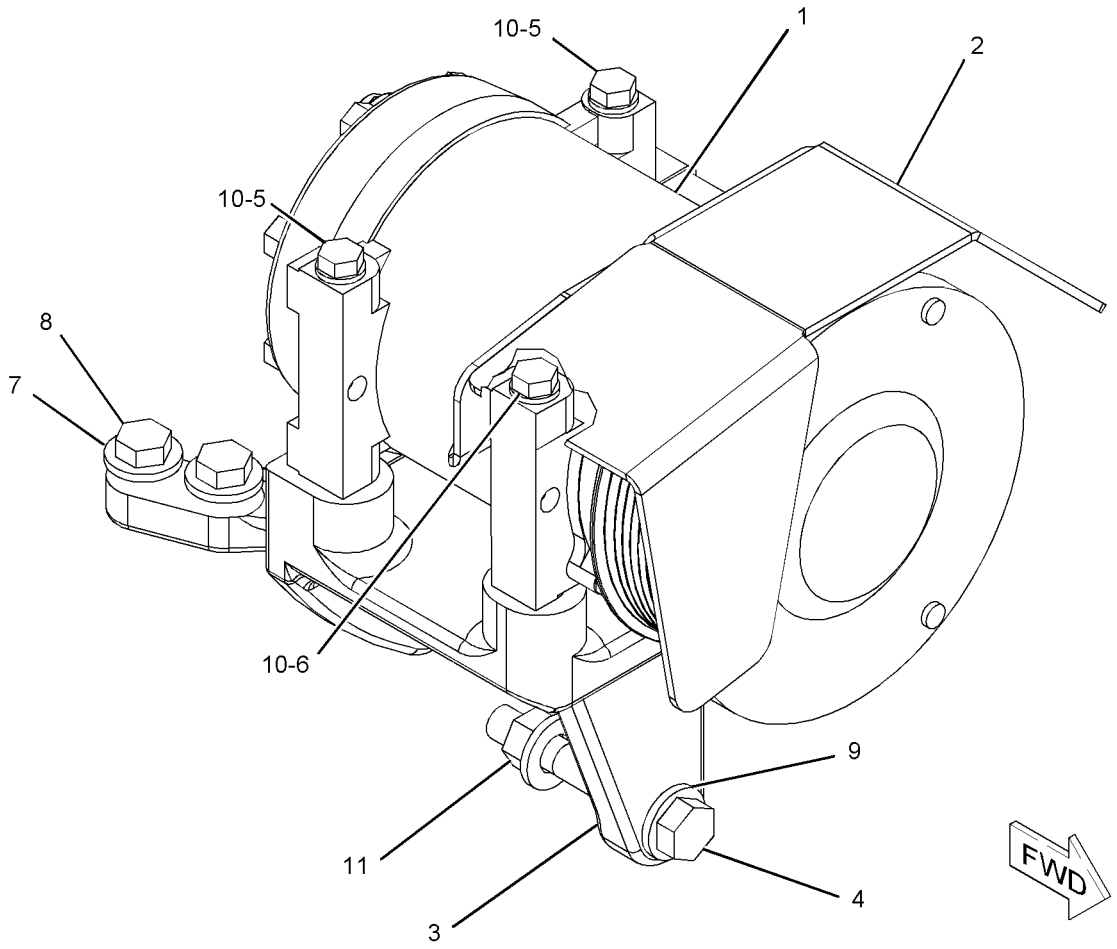


GRAPHIC #1 **<END>** g01069001

# OPERATOR STATION

## 163-0872 COMPRESSOR GP-REFRIGERANT

**S/N: CCA1-UP**

**PART OF 197-4568 COMPRESSOR & MTG GP-REFRIG**

**AN ATTACHMENT**

**SMCS-1802** **i02421639**

| NOTE | REF NO | GRAPHIC REF | PART NUMBER | QTY | PART NAME 1 2 3 4 5 6 (PRODUCT LEVEL) | SEE PAGE |
|---|---|---|---|---|---|---|
| | 1 | 1 | **102-8802** | 1 | KIT-RECEPTACLE (2-PIN) | |
| | | | | | (INCLUDES RECEPTACLE AS AND WEDGE) | |
| | 2 | 1 | **114-3469** | 1 | VALVE GP-RELIEF (REFRIGERANT COMPRESSOR) | |
| | | 1 | **9X-7378** | 1 | SEAL-O-RING | |
| | 3 | 1 | **7T-4532** | 1 | PLUG AS | |
| | 4 | 1 | **9X-7385** | 2 | SEAL-O-RING | |
| B | 5 | 1 | **4C-2959** | | OIL-AIR CONDITIONER | |

B-USE AS REQUIRED

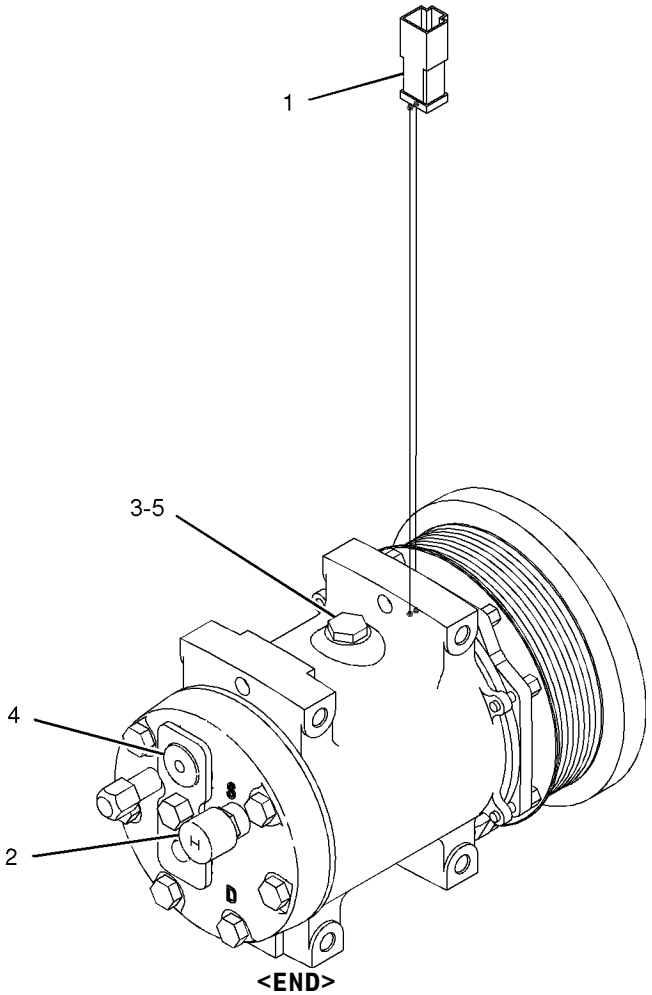


GRAPHIC #1

**<END>**

g01054441

# OPERATOR STATION

## *197-7659* CONDENSER & MTG GP-REFRIGERANT

**S/N: CCA1-UP**
**PART OF 167-8067 AIR CONDITIONER AR**
**AN ATTACHMENT**

**SMCS-1805** **i02134872**

| NOTE | REF NO | GRAPHIC REF | PART NUMBER | QTY | PART NAME 1 2 3 4 5 6 (PRODUCT LEVEL) | SEE PAGE |
|---|---|---|---|---|---|---|
| | 1 | 1 | **251-3179** | 1 | CORE AS-CONDENSER (AIR CONDITIONER) | |
| M | 2 | 1 | **6V-4248** | 4 | BOLT (M10X1.5X25-MM) | |
| | 3 | 1 | **6V-5839** | 4 | WASHER (11X21X2.5-MM THK) | |

M-METRIC PART

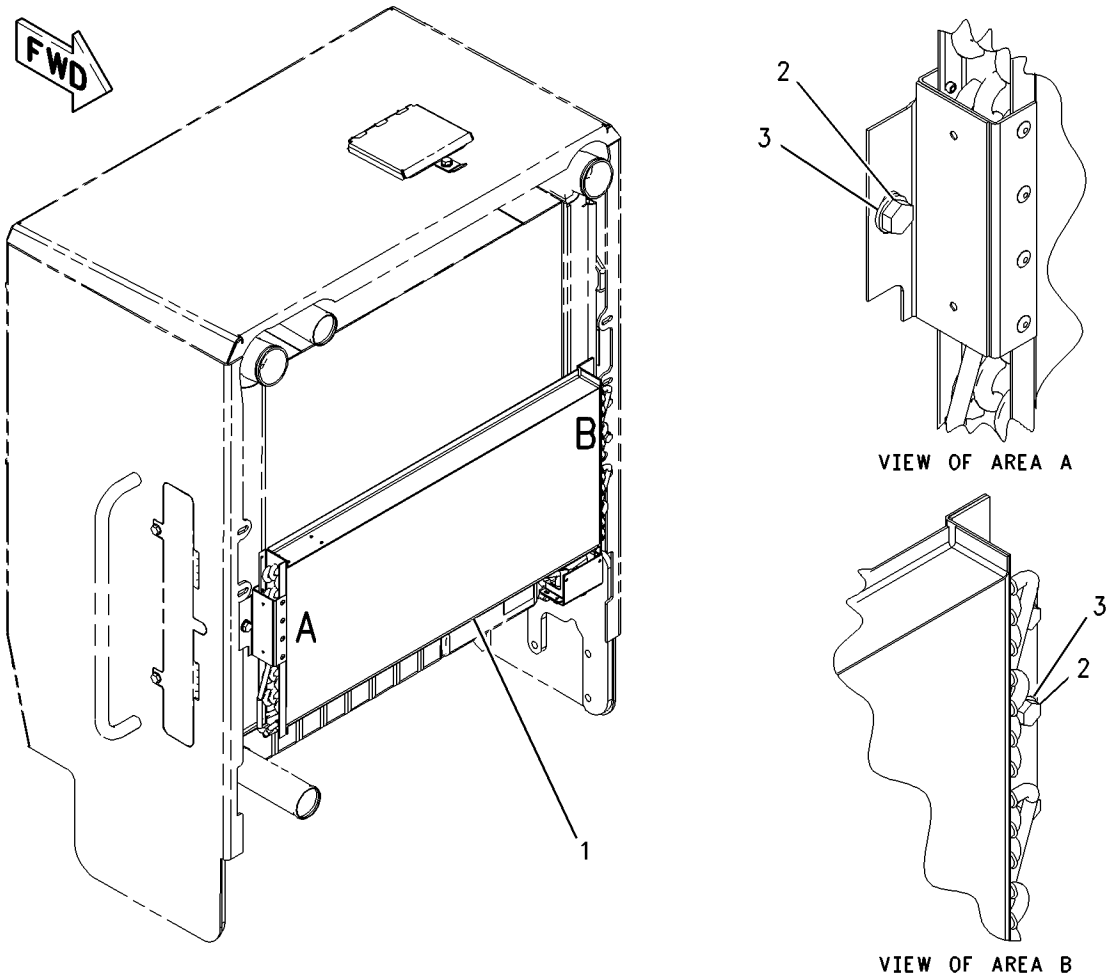


GRAPHIC #1 **<END>** g00861756

# OPERATOR STATION

## *167-8053* CONSOLE GP-OPERATOR

**S/N: CCA1-UP**

**PART OF 159-4615 GENERAL AR**

**SMCS-5258** **i02585402**

| NOTE | REF NO | GRAPHIC REF | PART NUMBER | QTY | PART NAME 1 2 3 4 5 6 (PRODUCT LEVEL) | SEE PAGE |
|---|---|---|---|---|---|---|
| | 1 | 1,2 | **2G-8572** | 8 | WASHER-SPECIAL (10X27.81X2.54-MM THK) | |
| | 2 | 1,2 | **2G-8573** | 8 | CAP | |
| | 3 | 2 | **2K-5830** | 2 | BEARING AS-NEEDLE | |
| | 4 | 1 | **3B-4607** | 2 | PIN-COTTER | |
| | 5 | 1 | **3E-9865** | 1 | LOCKNUT (1/4-20-THD) | |
| | 6 | 1 | **3Y-2806** | 1 | SPRING | |
| | 7 | 1 | **4B-4314** | 1 | RIVET | |
| | 8 | 1 | **6G-2914** | 1 | LATCH | |
| | 9 | 1 | **6G-8814** | 2 | BRACKET | |
| | 10 | 1 | **7I-4890** | 1 | PLATE AS | |
| | 11 | 1 | **8C-3442** | 1 | SPRING-COIL | |
| B | 12 | 2 | **8D-5641** | 14 | BEARING | |
| | 13 | 1 | **8D-7960** | 2 | PLATE | |
| | 14 | 1 | **8L-7905** | 2 | RIVET-POP | |
| M | 15 | 1 | **8T-9006** | 2 | BOLT-SOCKET HEAD (M3X0.5X20-MM) | |
| | 16 | 1 | **8X-1904** | 1 | SPACER (20X35X26-MM THK) | |
| | 17 | 1 | **8X-1908** | 1 | PANEL | |
| | 18 | 1 | **8X-1911** | 1 | PANEL | |
| | 19 | 2 | **8X-1913** | 6 | SPACER (10.5X32X19.5-MM THK) | |
| | 20 | 2 | **8X-1914** | 1 | SHAFT | |
| | 21 | 1 | **8X-1921** | 1 | HOOD | |
| | 22 | 1 | **8X-2160** | 1 | LEVER (STEERING WHEEL TILT CONTROL) | |
| | 23 | 1 | **8X-2161** | 1 | LEVER (STEERING COLUMN TILT CONTROL) | |
| | 24 | 1,2 | **8X-2893** | 10 | NUT (M4X0.7-THD) | |
| | 25 | 1 | **8X-3789** | 1 | PANEL | |
| | 26 | 1 | **8X-3951** | 1 | PANEL | |
| | 27 | 1 | **8X-3965** | 1 | RATCHET | |
| | 28 | 2 | **8X-5123** | 1 | RETAINER | |
| | 29 | 1 | **031-2666** | 1 | ROD | |
| | 30 | 1 | **034-1994** | 1 | PIN | |
| | 31 | 1 | **110-6241** | 1 | BRACKET | |
| | 32 | 1 | **177-7448** | 1 | CHANNEL AS | |
| M | | 1 | **6V-9632** | 6 | NUT-WELD (M6X1-THD) | |
| | | 1 | **7T-1099** | 6 | LINK | |
| | 33 | 1 | **183-1425** | 1 | BASE | |
| | 34 | 1 | **204-6488** | 1 | CHANNEL AS | |
| M | | 1 | **6V-9632** | 6 | NUT-WELD (M6X1-THD) | |
| | | 1 | **7T-1099** | 3 | LINK | |
| | 35 | 1 | **206-9651** | 2 | PLATE | |
| | 36 | 2 | **230-9138** | 8 | PLUG | |
| | 37 | 2 | **236-0737** | 1 | CYLINDER | |
| | 38 | 1 | **2A-7184** | 2 | PLATE | |
| | 39 | 1 | **030-8535** | 1 | BOLT-LOCKING (3/8-16X0.875-IN) | |
| | 40 | 1 | **096-6166** | 6 | WASHER-HARD (4.5X9X1-MM THK) | |
| M | 41 | 1 | **174-8131** | 2 | SCREW-TRUSS HEAD (M4X0.7X12-MM) | |
| | 42 | 1,2 | **2K-7979** | 13 | BEARING-SLEEVE | |
| | 43 | 1 | **6J-0488** | 4 | SCREW-BUTTON HEAD (3/8-16X0.875-IN) | |
| | 44 | 1 | **3F-7514** | 4 | PIN | |
| | 45 | 2 | **3K-6060** | 6 | LOCKNUT (3/8-16-THD) | |
| M | 46 | 1 | **5C-8312** | 6 | NUT (M4X0.7-THD) | |
| | 47 | 1 | **5M-8500** | 1 | KNOB (STEERING WHEEL TILT CONTROL) | |
| | 48 | 2 | **5P-1075** | 8 | WASHER-HARD (10.2X22.5X3-MM THK) | |
| | 49 | 1 | **5P-8167** | 2 | BOLT (3/8-16X0.625-IN) | |
| | 50 | 2 | **5S-7379** | 4 | BOLT (3/8-16X0.875-IN) | |
| | 51 | 2 | **5S-7383** | 6 | BOLT (3/8-16X1.75-IN) | |
| | 52 | 1 | **6V-8183** | 1 | NUT-FULL (3/8-24-THD) | |

*167-8053* **CONSOLE GP-OPERATOR** *(contd.)* **i02585402**

| NOTE | REF NO | GRAPHIC REF | PART NUMBER | QTY | PART NAME 1 2 3 4 5 6 (PRODUCT LEVEL) | SEE PAGE |
|---|---|---|---|---|---|---|
| | 53 | 2 | **8T-1174** | 4 | SEAL-LIP TYPE | |
| | 54 | 1,2 | **8T-2561** | 11 | WASHER-HARD (10.5X28.5X5-MM THK) | |
| M | 55 | 2 | **8T-4133** | 1 | NUT (M10X1.5-THD) | |
| | 56 | 1 | **8X-1907** | 1 | SHAFT | |
| | 57 | 2 | **9M-5590** | 1 | BALL | |
| M | 58 | 1 | **9X-2042** | 12 | SCREW-TRUSS HEAD (M6X1X12-MM) | |
| D | 59 | 1 | **5P-5637** | | SEAL (0.2-M) | |
| D | 59A | 1 | **5P-5637** | | SEAL (1-M) | |
| D | 60 | 1 | **5P-5639** | | SEAL (0.4-M) | |
| M | 61 | 1,2 | **9X-1046** | 14 | SCREW (M4X0.7X18-MM) | |
| | 62 | 1 | **6L-1962** | 1 | NUT-JAM (3/8-24-THD) | |

B-USE AS REQUIRED
D-ORDER BY THE METER
M-METRIC PART

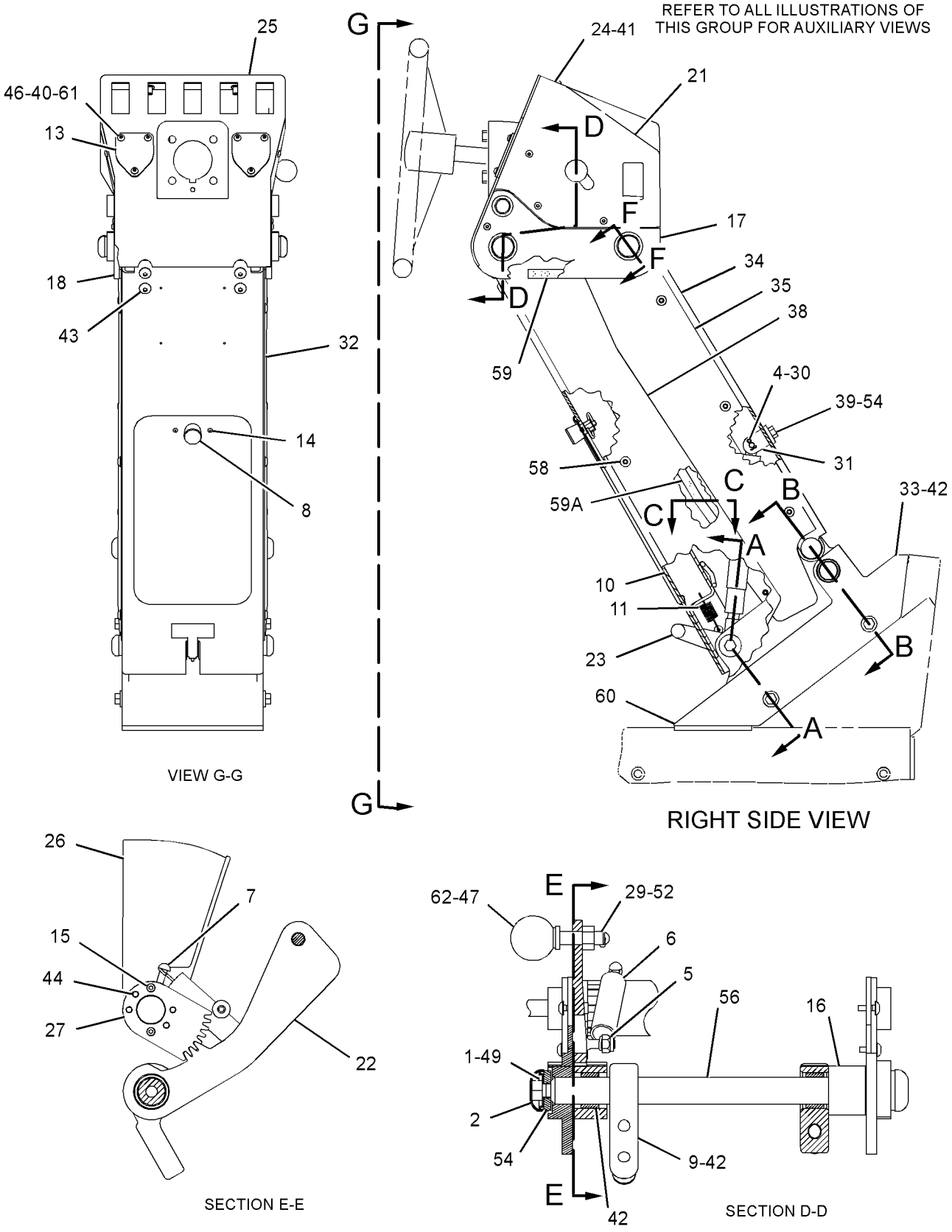


GRAPHIC #1

g01294379

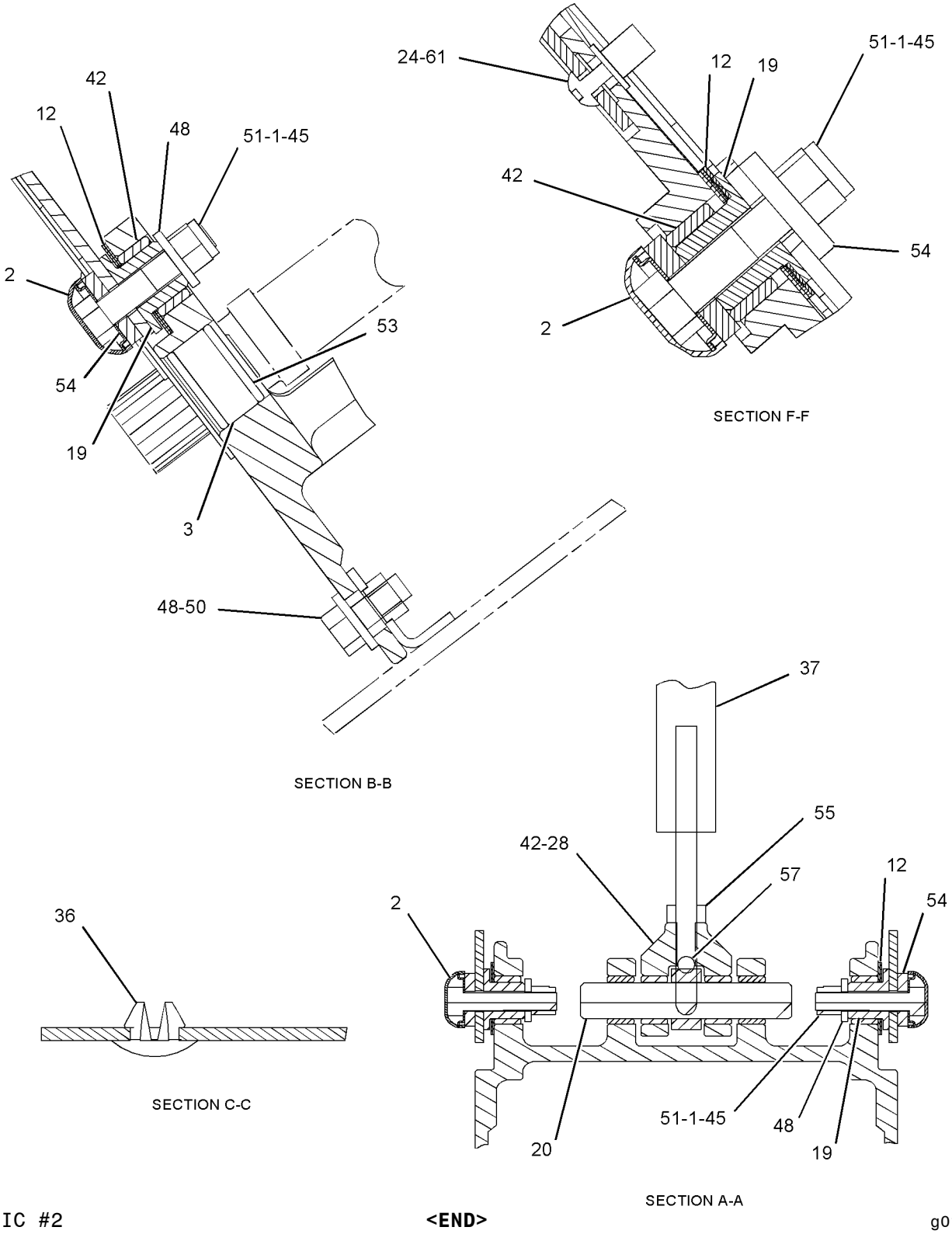


GRAPHIC #2 **<END>** g01067129

# OPERATOR STATION

## *159-5933* CONTROL GP-CLUTCH

**S/N: CCA1-UP**

**PART OF 159-4615 GENERAL AR**

**SMCS-5157** **i02200300**

| NOTE | REF NO | GRAPHIC REF | PART NUMBER | QTY | PART NAME 1 2 3 4 5 6 (PRODUCT LEVEL) | SEE PAGE |
|---|---|---|---|---|---|---|
| | 1 | 1 | **1B-2578** | 1 | NUT (3/8-16-THD) | |
| | 2 | 1 | **1F-4622** | 2 | BEARING AS-NEEDLE | |
| | 3 | 1 | **5P-9209** | 2 | BEARING AS-NEEDLE | |
| | 4 | 1 | **7V-0446** | 2 | CLIP | |
| | 5 | 1 | **9J-8783** | 1 | SHIM (0.508-MM THK) | |
| | 6 | 1 | **116-5710** | 1 | GROMMET | |
| | 7 | 1 | **149-2065** | 1 | SPRING | |
| | 8 | 1 | **161-7062** | 1 | HOUSING | |
| | 9 | 1 | **161-7063** | 1 | SHAFT | |
| | 10 | 1 | **162-8218** | 1 | GASKET | |
| | 11 | 1 | **162-8219** | 1 | COVER | |
| | 12 | 1 | **169-0921** | 1 | ROD END (INTERNAL THREAD) | |
| | 13 | 1 | **169-0922** | 1 | ROD | |
| | 14 | 1 | **172-4211** | 1 | SPACER (10.5X22X50.8-MM THK) | |
| | 15 | 1 | **180-4027** | 1 | CAM | |
| | 16 | 1 | **180-7147** | 1 | LEVER | |
| | 17 | 1 | **190-3043** | 1 | BRACKET AS | |
| | 18 | 1 | **206-3599** | 1 | LEVER | |
| | 19 | 1 | **207-4922** | 1 | PEDAL-CLUTCH | |
| CY | 20 | 1 | **214-4863** | 1 | SENSOR GP-POSITION (ROTARY) (CLUTCH) | 278 |
| | 21 | 1 | **129-3173** | 1 | BOLT-12 POINT HEAD (3/8-16X1.25-IN) | |
| | 22 | 1 | **130-5300** | 1 | CLIP | |
| | 23 | 1 | **1B-0676** | 1 | PIN | |
| | 24 | 1 | **1B-8704** | 1 | KEY-WOODRUFF | |
| | 25 | 1 | **3H-8538** | 1 | PIN | |
| | 26 | 1 | **3S-2713** | 1 | NUT-FULL (3/8-24-THD) | |
| | 27 | 1 | **4B-6060** | 1 | SETSCREW-SOCKET (1/4-20X0.375-IN) | |
| | 28 | 1 | **4J-8922** | 1 | ROD END | |
| | 29 | 1 | **5P-1075** | 2 | WASHER-HARD (10.2X22.5X3-MM THK) | |
| | 30 | 1 | **5S-7382** | 2 | BOLT (3/8-16X1.375-IN) | |
| C | 31 | 1 | **6V-0894** | 1 | SEAL-O-RING | |
| M | 32 | 1 | **6V-2313** | 2 | BOLT (M5X0.8X30-MM) | |
| | 33 | 1 | **8T-0328** | 2 | WASHER-HARD (5.5X10X1-MM THK) | |
| | 34 | 1 | **8T-4121** | 5 | WASHER-HARD (11X21X2.5-MM THK) | |
| M | 35 | 1 | **8T-4133** | 1 | NUT (M10X1.5-THD) | |
| M | 36 | 1 | **8T-4136** | 3 | BOLT (M10X1.5X25-MM) | |
| M | 37 | 1 | **8T-4182** | 1 | BOLT (M10X1.5X45-MM) | |
| M | 38 | 1 | **8T-4195** | 2 | BOLT (M10X1.5X30-MM) | |
| | 39 | 1 | **8T-4226** | 1 | WASHER-PLATED (10.5X45X3-MM THK) | |
| | 40 | 1 | **8T-4896** | 1 | WASHER-HARD (10.2X18.5X2.5-MM THK) | |
| | 41 | 1 | **8T-5390** | 1 | BOLT (3/8-16X3.5-IN) | |

C-CHANGE FROM PREVIOUS TYPE
M-METRIC PART
Y-SEPARATE ILLUSTRATION

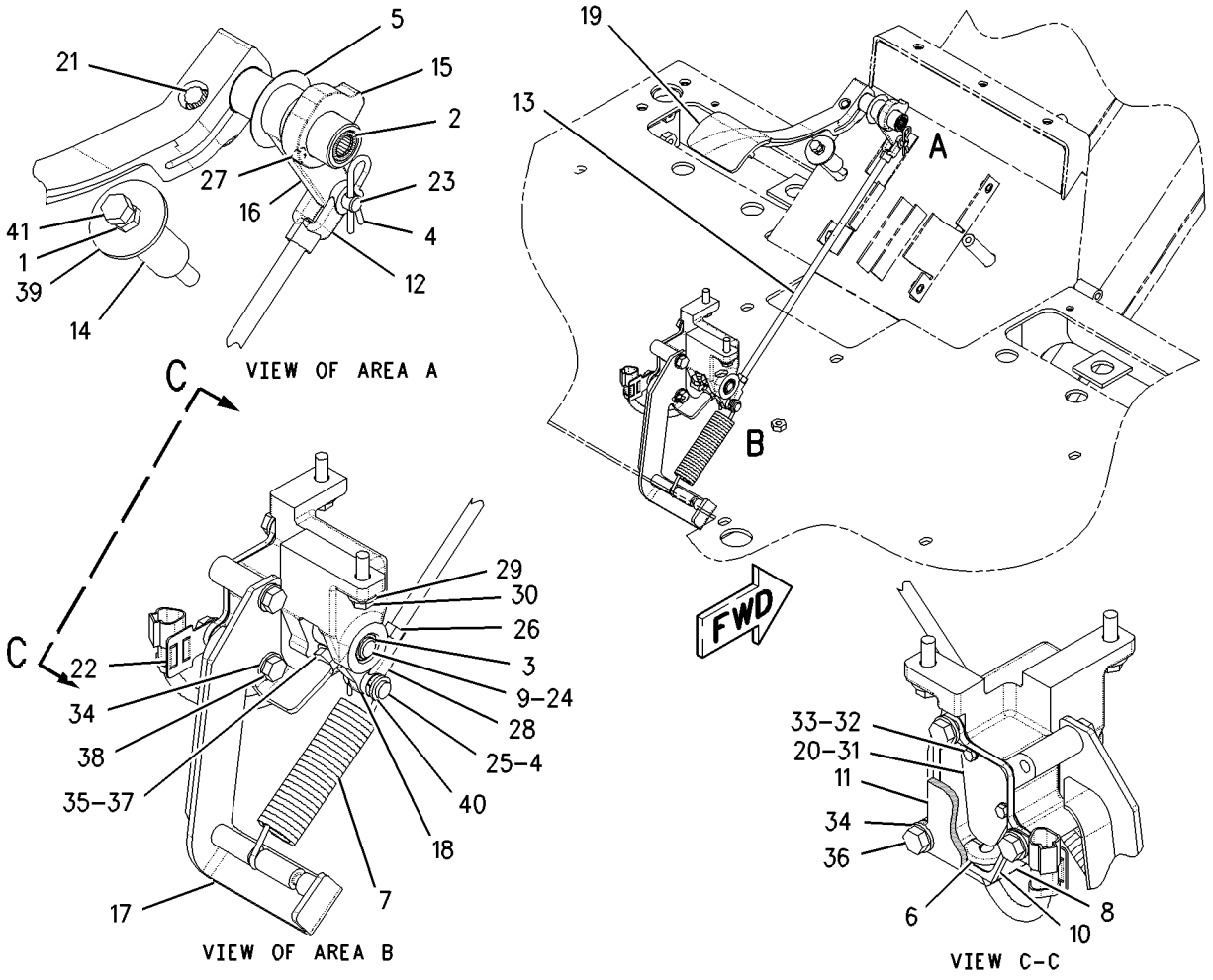


GRAPHIC #1 **<END>** g00921402

# OPERATOR STATION

## *7I-4718* CONTROL GP-STEERING

**S/N: CCA1-UP**

**PART OF 159-4615 GENERAL AR**

**SMCS-4309, 4310, 4338, 4343** **i02237701**

| NOTE | REF NO | GRAPHIC REF | PART NUMBER | QTY | PART NAME 1 2 3 4 5 6 (PRODUCT LEVEL) | SEE PAGE |
|---|---|---|---|---|---|---|
| CJ | 1 | 1 | **222-3769** | 1 | PUMP GP-METERING (HMU) | |
| | 2 | 1 | **092-3200** | 1 | STEERING WHEEL | |
| | 3 | 1 | **144-6695** | 1 | NUT (13/16-20-THD) | |
| | 4 | 1 | **118-9573** | 4 | BOLT-12 POINT HEAD (M10X1.15-THD) | |
| | | | | | AVAILABLE REPAIR KIT(S): | |
| J | | | **257-8471** | 1 | KIT-SEAL (METERING PUMP, STEERING) | |
| | | | | | (INCLUDES SEALS & INSTALLATION TOOL) | |

C-CHANGE FROM PREVIOUS TYPE
J-KIT MARKED J SERVICES PART MARKED J

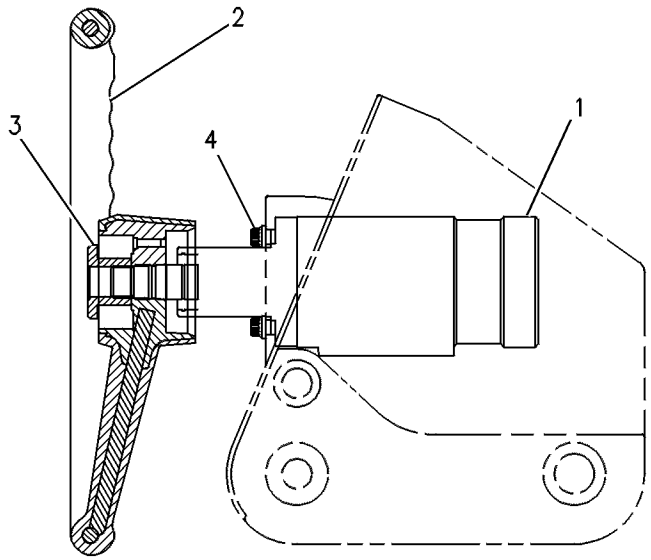


GRAPHIC #1 **<END>** g00108618

# OPERATOR STATION

## *167-9002* CONTROL GP-TRANSMISSION

**S/N: CCA1-1637**

**PART OF 159-4615 GENERAL AR**

**SMCS-3065** **i02204739**

| NOTE | REF NO | GRAPHIC REF | PART NUMBER | QTY | PART NAME 1 2 3 4 5 6 (PRODUCT LEVEL) | SEE PAGE |
|---|---|---|---|---|---|---|
| | 1 | 1 | **7M-0706** | 1 | KNOB (TRANSMISSION CONTROL) | |
| | 2 | 1 | **8X-4879** | 2 | BRACKET AS | |
| M | | 1 | **6V-9632** | 1 | NUT-WELD (M6X1-THD) | |
| | 3 | 1 | **8X-8096** | 1 | FILM-COVER (BLACK BACKGROUND) (COVER BLACK) | |
| | 4 | 1 | **143-9290** | 1 | PLATE AS | |
| M | | 1 | **6V-9632** | 2 | NUT-WELD (M6X1-THD) | |
| | 5 | 1 | **169-2621** | 1 | GATE AS | |
| | 6 | 1 | **169-3380** | 1 | PLATE AS | |
| | 7 | 1 | **180-3531** | 1 | CONTROL GP-TRANSMISSION | |
| | 8 | 1 | **171-2122** | 1 | COVER | |
| | 9 | 1 | **172-7105** | 1 | FILM-PANEL (TRANSMISSION INDICATOR PANEL) | |
| | 10 | 1 | **172-7106** | 1 | FILM-PANEL (SPEED SELECT) | |
| | 11 | 1 | **185-2274** | 1 | FILM-INFORMATION (ENGINE, HIGH IDLE, HOLD) | |
| | 12 | 1 | **185-2287** | 1 | FILM-INFORMATION (ENGINE, LOW IDLE, HOLD) | |
| | 13 | 1 | **187-0491** | 1 | COVER | |
| M | 14 | 1 | **9X-2041** | 10 | SCREW-TRUSS HEAD (M10X1.5X20-MM) | |
| M | 15 | 1 | **9X-2042** | 2 | SCREW-TRUSS HEAD (M6X1X12-MM) | |
| M | 16 | 1 | **9X-2043** | 10 | SCREW-TRUSS HEAD (M6X1X14-MM) | |
| M | 17 | 1 | **9X-2045** | 4 | SCREW-TRUSS HEAD (M6X1X20-MM) | |

M-METRIC PART

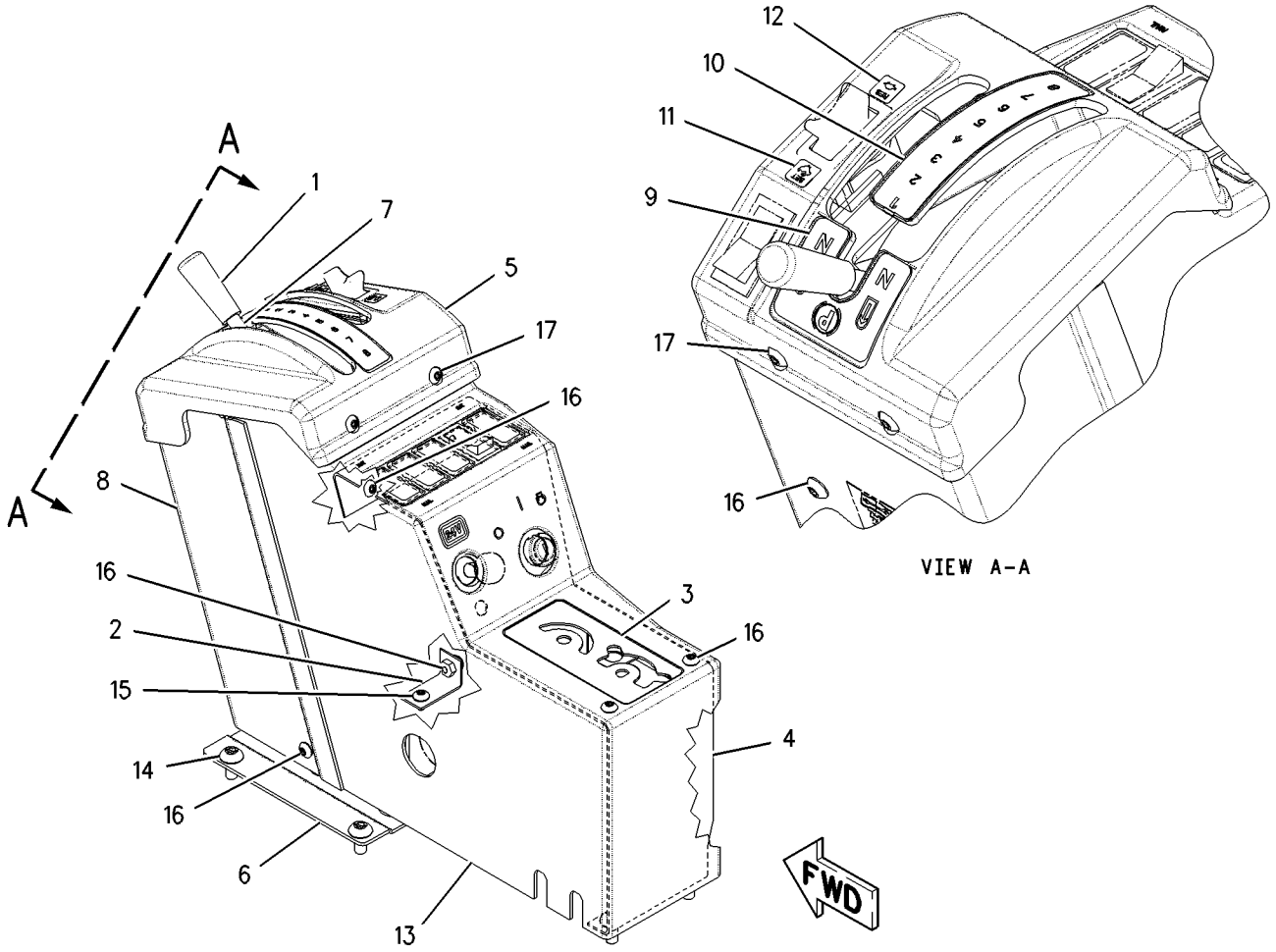


GRAPHIC #1 **<END>** g00937652

# OPERATOR STATION

## *167-9002* CONTROL GP-TRANSMISSION

**S/N: CCA1638-UP**

**PART OF 159-4615 GENERAL AR**

**SMCS-3065** **i02360739**

| NOTE | REF NO | GRAPHIC REF | PART NUMBER | QTY | PART NAME 1 2 3 4 5 6 (PRODUCT LEVEL) | SEE PAGE |
|---|---|---|---|---|---|---|
| | 1 | 1 | **7M-0706** | 1 | KNOB (TRANSMISSION DIRECTION, SPEED) | |
| | 2 | 1 | **8X-4879** | 2 | BRACKET AS | |
| | | | | | (EACH INCLUDES) | |
| M | | 1 | **6V-9632** | 1 | NUT-WELD (M6X1-THD) | |
| | 3 | 1 | **8X-8096** | 1 | FILM-COVER (BLACK BACKGROUND) (COVER BLACK) | |
| | 4 | 1 | **143-9290** | 1 | PLATE AS | |
| | 5 | 1 | **169-2621** | 1 | GATE AS | |
| | 6 | 1 | **169-3380** | 1 | PLATE AS | |
| C | 7 | 1 | **253-4019** | 1 | CONTROL GP-TRANSMISSION | |
| | 8 | 1 | **171-2122** | 1 | COVER | |
| | 9 | 1 | **172-7105** | 1 | FILM-PANEL (TRANSMISSION, PARKING BRAKE) | |
| | 10 | 1 | **172-7106** | 1 | FILM-PANEL (SPEED CONTROL) | |
| | 11 | 1 | **185-2274** | 1 | FILM-INFORMATION (ENGINE, HIGH IDLE, HOLD) | |
| | 12 | 1 | **185-2287** | 1 | FILM-INFORMATION (ENGINE, LOW IDLE, HOLD) | |
| | 13 | 1 | **187-0491** | 1 | COVER | |
| M | 14 | 1 | **9X-2041** | 10 | SCREW-TRUSS HEAD (M10X1.5X20-MM) | |
| M | 15 | 1 | **9X-2042** | 2 | SCREW-TRUSS HEAD (M6X1X12-MM) | |
| M | 16 | 1 | **9X-2043** | 10 | SCREW-TRUSS HEAD (M6X1X14-MM) | |
| M | 17 | 1 | **9X-2045** | 4 | SCREW-TRUSS HEAD (M6X1X20-MM) | |

C-CHANGE FROM PREVIOUS TYPE
M-METRIC PART

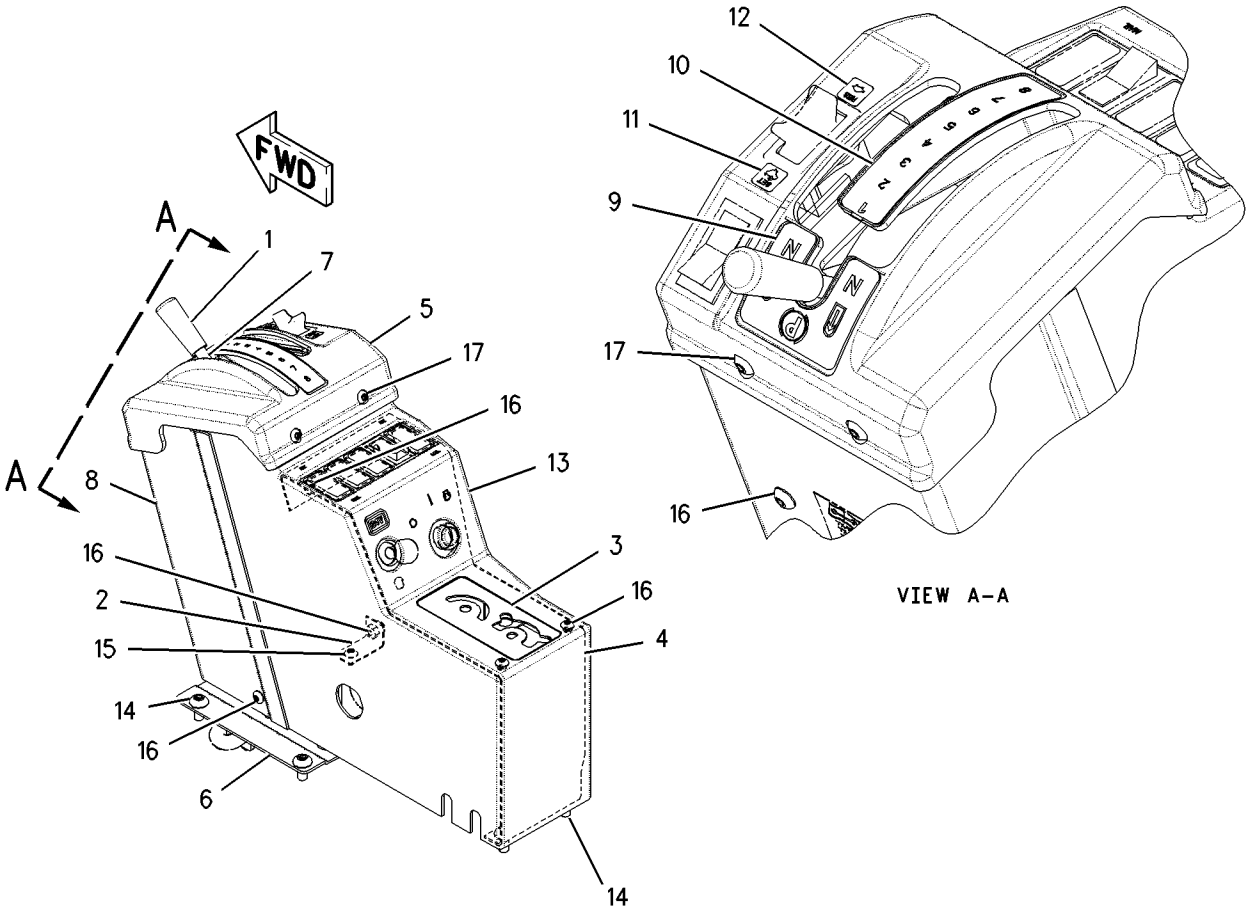


GRAPHIC #1 **<END>** g00882073

# OPERATOR STATION

## 160-6567 CONTROL GP-UNPRGMED MONITOR

**S/N: CCA1-UP**

**PART OF 159-5812, 178-3030, 196-4909 PANEL GP-INSTRUMENT**

**ALSO AN ATTACHMENT**

**SMCS-7610** **i02580196**

| NOTE | REF NO | GRAPHIC REF | PART NUMBER | QTY | PART NAME 1 2 3 4 5 6 (PRODUCT LEVEL) | SEE PAGE |
|---|---|---|---|---|---|---|
| | | | | | (NO SERVICED PARTS) | |

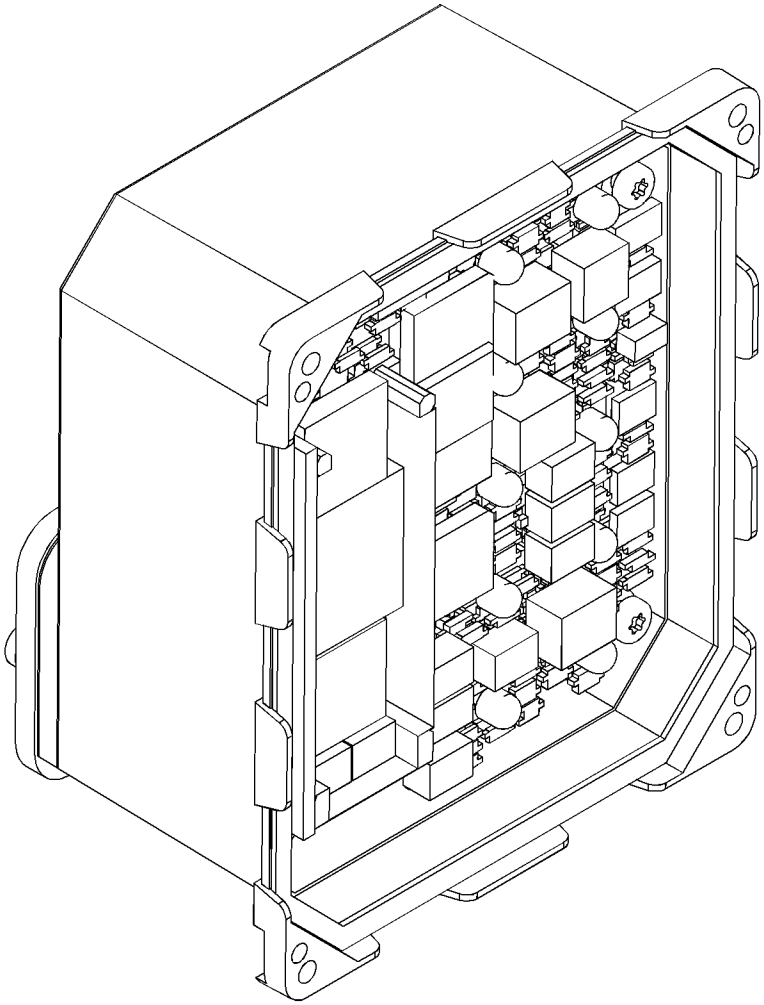

GRAPHIC #1

**<END>**

g01293436

# OPERATOR STATION

## *183-3018* CONVERSION AR-NON-ROPS—OPEN

**S/N: CCA1-UP**

**AN ATTACHMENT**

**SMCS-7323** **i02585414**

| NOTE | REF NO | GRAPHIC REF | PART NUMBER | QTY | PART NAME 1 2 3 4 5 6 (PRODUCT LEVEL) | SEE PAGE |
|---|---|---|---|---|---|---|
| | 1 | 1 | **246-2641** | 1 | PADLOCK GP (LITERATURE COMPARTMENT) | |
| | | 1 | **5P-8500** | 1 | KEY (LITERATURE COMPARTMENT) | |
| | 2 | 1 | **8T-1191** | 1 | PLATE-WARNING (HAZARD, READ OMM) | |
| Y | 3 | 1 | *8Y-4951* | 1 | SEAT GP-SUSPENSION (VINYL) | 1239 |
| Y | 4 | 1 | *166-7065* | 1 | GUARD GP-PLATFORM | 584 |
| Y | 5 | 1 | *178-3030* | 1 | PANEL GP-INSTRUMENT (HIGH PROFILE) | 1219 |
| | 6 | 1 | **9R-2620** | 1 | PLUG | |

Y-SEPARATE ILLUSTRATION

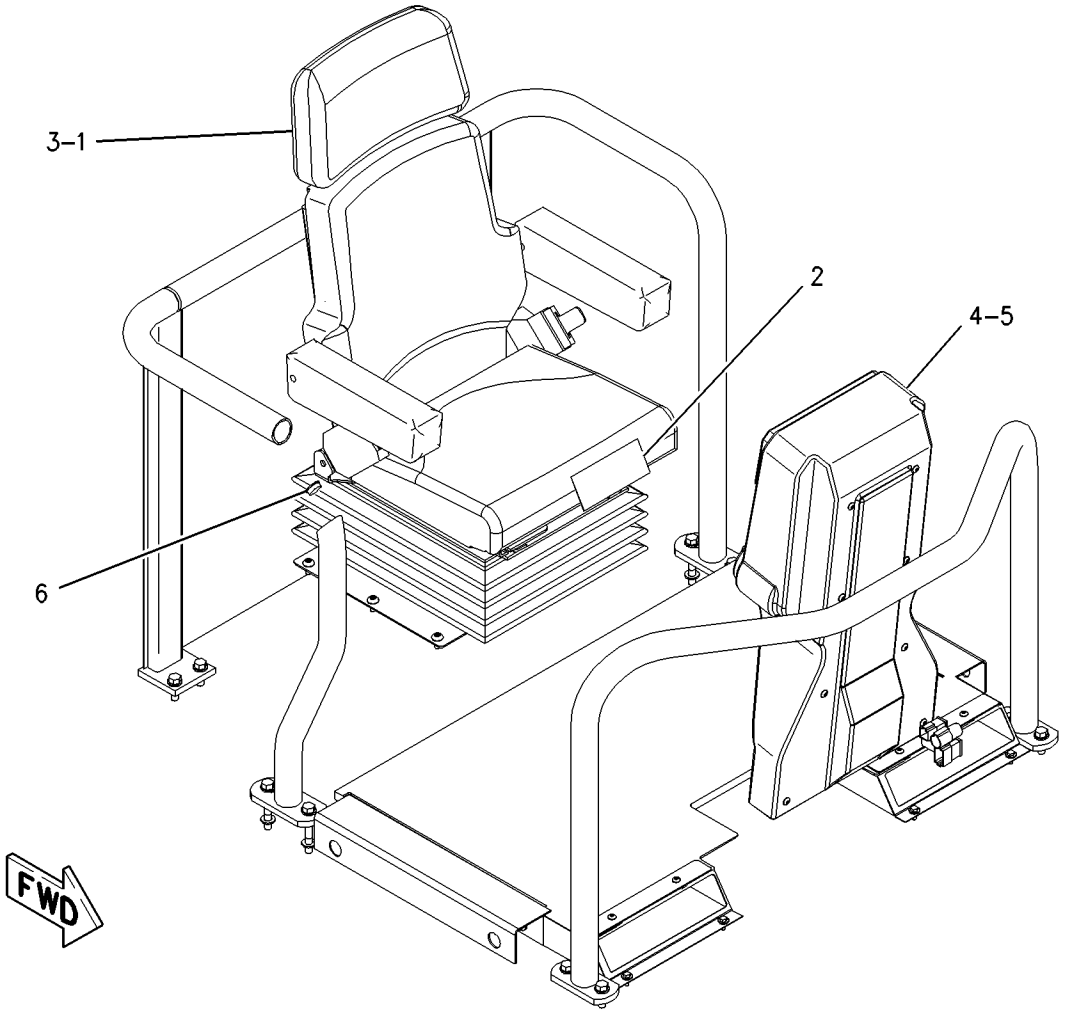


GRAPHIC #1 **<END>** g00941314

# OPERATOR STATION

## 8X-4317 DOOR GP-CAB—HIGH PROFILE—RH

**S/N: CCA1-UP**

**PART OF 8X-4413 DOOR GP-CAB**

**AN ATTACHMENT**

**SMCS-7308** **i02158613**

| NOTE | REF NO | GRAPHIC REF | PART NUMBER | QTY | PART NAME 1 2 3 4 5 6 (PRODUCT LEVEL) | SEE PAGE |
|---|---|---|---|---|---|---|
| | 1 | 1 | **199-2677** | 1 | LINK (RELEASE) | |
| | 2 | 1 | **1H-3338** | 1 | LOCKWASHER | |
| | 3 | 1 | **5T-7486** | 1 | RETAINER-SPRING | |
| | 4 | 2 | **6D-6581** | 16 | RIVET-POP | |
| | 5 | 1 | **6V-2773** | 2 | PLUG | |
| | 6 | 1 | **6V-7636** | 4 | PIN AS-SPRING | |
| | 7 | 2 | **8X-3806** | 1 | HINGE | |
| | 8 | 1 | **8X-4243** | 1 | COVER | |
| | 9 | 1 | **8X-4262** | 1 | COVER | |
| | 10 | 1 | **8X-3938** | 1 | GLASS (UPPER) | |
| | 11 | 1 | **8X-4448** | 1 | GLASS (LOWER) | |
| | 12 | 1 | **8Y-4398** | 1 | LINK-CONNECTING | |
| | 13 | 1 | **8Y-4400** | 1 | LATCH AS-DOOR | |
| | 14 | 1 | **8Y-4401** | 1 | HANDLE AS (INSIDE) | |
| | 15 | 2 | **8Y-4619** | 1 | HANDLE AS (OUTSIDE) | |
| | 16 | 1 | **8Y-4620** | 1 | LINK-CONNECTING | |
| J | 17 | 2 | **8Y-4801** | 1 | LOCK AS-CYLINDER | |
| | | 2 | **226-0295** | 1 | LOCK AS | |
| | | 2 | **226-0342** | 1 | CAM | |
| M | 18 | 1,2 | **9X-2546** | 4 | BOLT (M6X1X20-MM) | |
| | 19 | 2 | **107-9641** | 1 | PLATE AS | |
| | 20 | 2 | **108-5950** | 1 | LATCH AS-RH | |
| | 21 | 1 | **108-5952** | 1 | LINK (RH) | |
| | 22 | 1 | **114-9190** | 1 | SEAL | |
| | 23 | 1 | **128-0037** | 1 | KNOB-BALL | |
| | 24 | 1 | **199-2712** | 1 | HANDLE | |
| | 25 | 1 | **199-2739** | 1 | DOOR AS (RH) (HIGH PROFILE) | |
| M | | 1 | **6V-9632** | 8 | NUT-WELD (M6X1-THD) | |
| M | | 1 | **8T-3490** | 2 | NUT-WELD (M10X1.5-THD) | |
| | 26 | 2 | **8T-4121** | 2 | WASHER-HARD (11X21X2.5-MM THK) | |
| M | 27 | 2 | **8T-4137** | 2 | BOLT (M10X1.5X20-MM) | |
| M | 28 | 1 | **8T-4181** | 6 | BOLT (M6X1X20-MM) | |
| | 29 | 1 | **8X-4245** | 1 | BOSS (M6X18-MM) | |
| M | 30 | 1 | **9X-2042** | 7 | SCREW-TRUSS HEAD (M6X1X12-MM) | |
| | 31 | 1 | **9X-8256** | 2 | WASHER (6.6X12X2-MM THK) | |
| BD | 32 | 1 | **5P-5678** | | SEAL | |
| M | 33 | 2 | **9X-2045** | 4 | SCREW-TRUSS HEAD (M6X1X20-MM) | |

B-USE AS REQUIRED
D-ORDER BY THE METER
J-REQUIRES 5P8500 KEY
M-METRIC PART

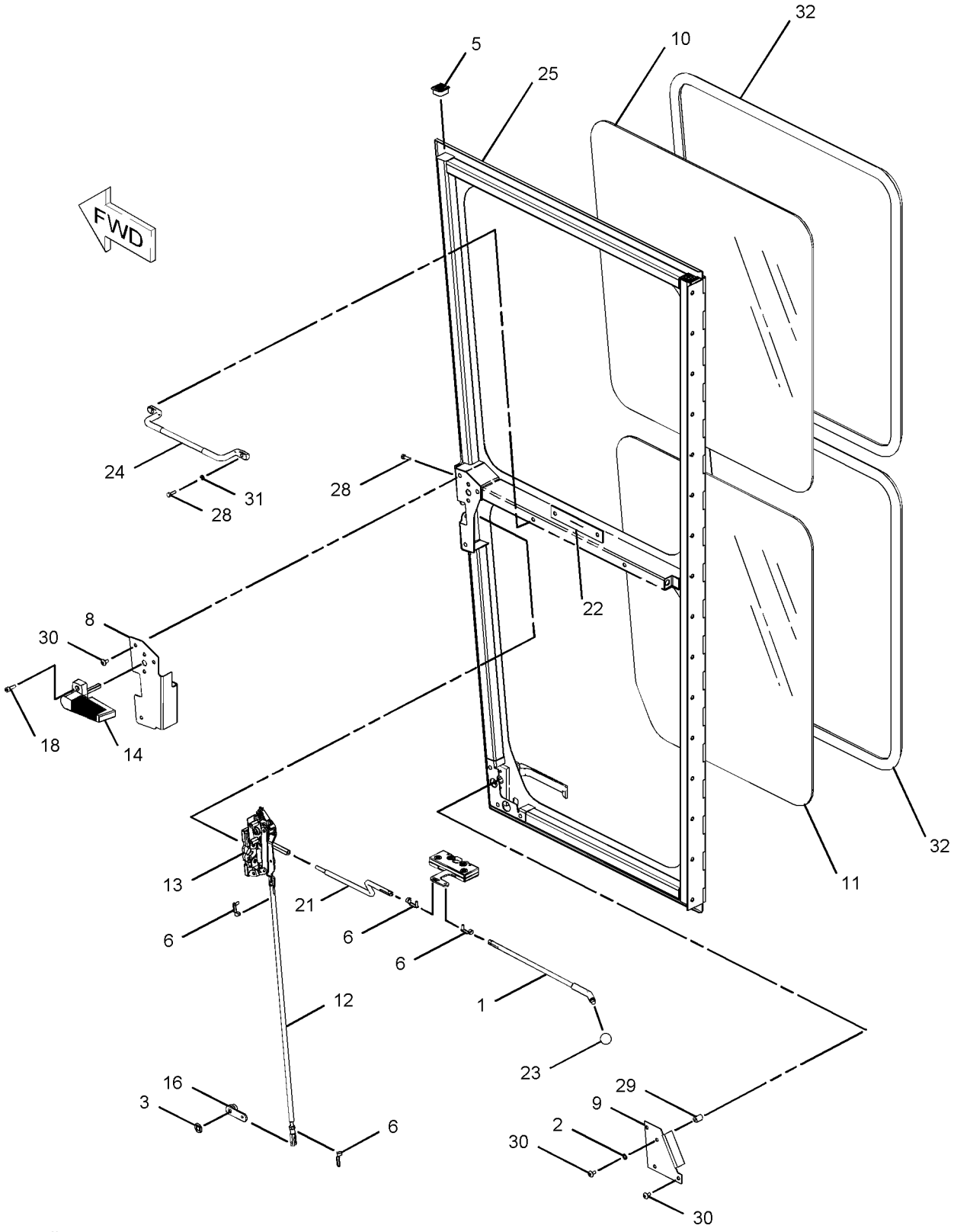


GRAPHIC #1 g01071777

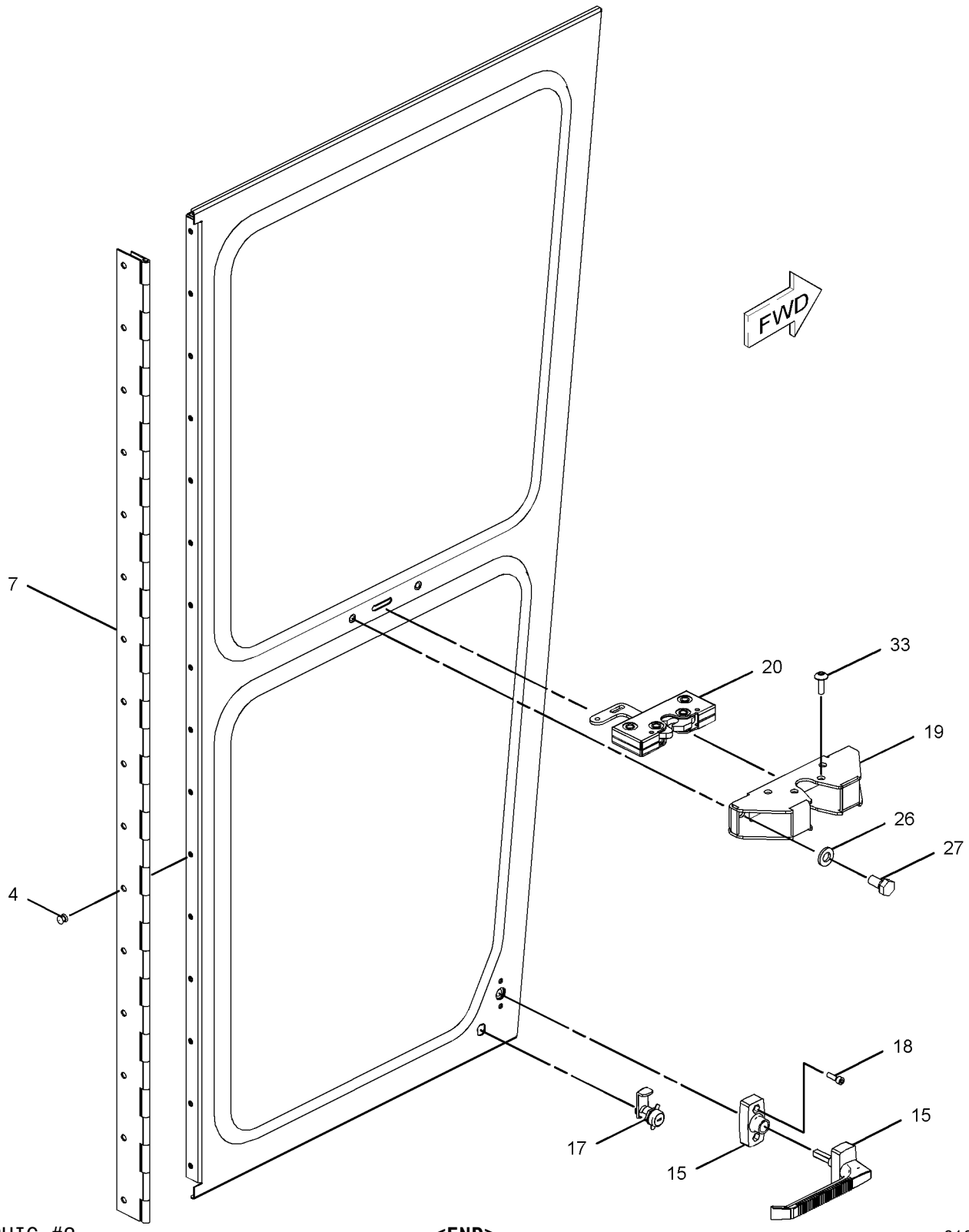


GRAPHIC #2 **<END>** g01071781

# OPERATOR STATION

## 8X-4318 DOOR GP-CAB—HIGH PROFILE—LH

**S/N: CCA1-UP**

**PART OF 8X-4413 DOOR GP-CAB**

**AN ATTACHMENT**

**SMCS-7308** **i02158611**

| NOTE | REF NO | GRAPHIC REF | PART NUMBER | QTY | PART NAME 1 2 3 4 5 6 (PRODUCT LEVEL) | SEE PAGE |
|---|---|---|---|---|---|---|
| | 1 | 1 | **199-2677** | 1 | LINK (RELEASE) | |
| | 2 | 1 | **1H-3338** | 1 | LOCKWASHER | |
| | 3 | 1 | **5T-7486** | 1 | RETAINER-SPRING | |
| | 4 | 1 | **6D-6581** | 16 | RIVET-POP | |
| | 5 | 1 | **6V-2773** | 2 | PLUG | |
| | 6 | 1 | **6V-7636** | 4 | PIN AS-SPRING | |
| | 7 | 1 | **8X-3806** | 1 | HINGE | |
| | 8 | 1 | **8X-4244** | 1 | COVER | |
| | 9 | 1 | **8X-4263** | 1 | COVER | |
| | 10 | 1 | **8X-3938** | 1 | GLASS (UPPER) | |
| | 11 | 1 | **8X-4448** | 1 | GLASS (LOWER) | |
| | 12 | 1 | **8Y-4398** | 1 | LINK-CONNECTING | |
| | 13 | 1 | **8Y-4399** | 1 | LATCH AS-DOOR | |
| | 14 | 1 | **8Y-4401** | 1 | HANDLE AS (INSIDE) | |
| | 15 | 1 | **8Y-4619** | 1 | HANDLE AS (OUTSIDE) | |
| | 16 | 1 | **8Y-4620** | 1 | LINK-CONNECTING | |
| J | 17 | 1 | **8Y-4801** | 1 | LOCK AS-CYLINDER | |
| | | 1 | **226-0295** | 1 | LOCK AS | |
| | | 1 | **226-0342** | 1 | CAM | |
| M | 18 | 1 | **9X-2546** | 4 | BOLT (M6X1X20-MM) | |
| | 19 | 1 | **107-9641** | 1 | PLATE AS | |
| | 20 | 1 | **108-5949** | 1 | LATCH AS-LH | |
| | 21 | 1 | **108-5951** | 1 | LINK (LH) | |
| | 22 | 1 | **114-9190** | 1 | SEAL | |
| | 23 | 1 | **128-0037** | 1 | KNOB-BALL | |
| | 24 | 1 | **199-2712** | 1 | HANDLE | |
| | 25 | 1 | **199-2740** | 1 | DOOR AS (LH) (HIGH PROFILE) | |
| | 26 | 1 | **8T-4121** | 2 | WASHER-HARD (11X21X2.5-MM THK) | |
| M | 27 | 1 | **8T-4137** | 2 | BOLT (M10X1.5X20-MM) | |
| M | 28 | 1 | **8T-4181** | 6 | BOLT (M6X1X20-MM) | |
| | 29 | 1 | **8X-4245** | 1 | BOSS (M6X18-MM) | |
| M | 30 | 1 | **9X-2042** | 7 | SCREW-TRUSS HEAD (M6X1X12-MM) | |
| M | 31 | 1 | **9X-2045** | 4 | SCREW-TRUSS HEAD (M6X1X20-MM) | |
| | 32 | 1 | **9X-8256** | 2 | WASHER (6.6X12X2-MM THK) | |
| BD | 33 | 1 | **5P-5768** | | SEAL | |

B-USE AS REQUIRED
D-ORDER BY THE METER
J-REQUIRES 5P8500 KEY
M-METRIC PART

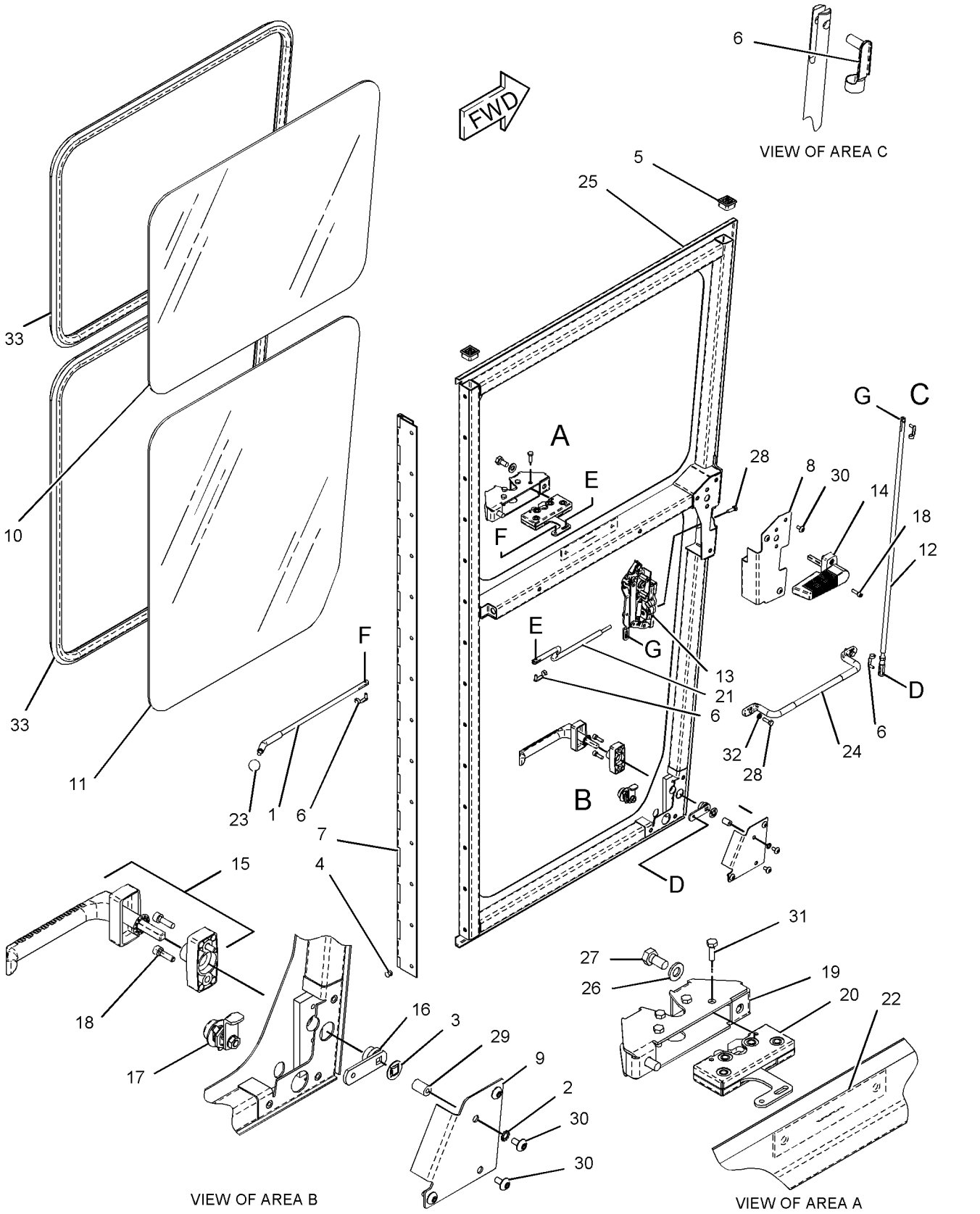


GRAPHIC #1

**<END>**

g01097693

# OPERATOR STATION

## *8X-4413* DOOR GP-CAB—HIGH PROFILE

**S/N: CCA1-UP**

**PART OF 211-4907 CAB GP, 177-8779, 218-4759 ROPS GP-ENCLOSED**

**AN ATTACHMENT**

**SMCS-7308** **i02207748**

| NOTE | REF NO | GRAPHIC REF | PART NUMBER | QTY | PART NAME 1 2 3 4 5 6 (PRODUCT LEVEL) | SEE PAGE |
|---|---|---|---|---|---|---|
| B | 1 | 1 | **4J-3915** | 8 | SHIM (1.52-MM THK) | |
| | 2 | 1 | **6V-5158** | 2 | STRIKER AS-BODY | |
| Y | 3 | 1 | **8X-4317** | 1 | DOOR GP-CAB (HIGH PROFILE, RH) | 1120 |
| Y | 4 | 1 | **8X-4318** | 1 | DOOR GP-CAB (HIGH PROFILE, LH) | 1123 |
| | 5 | 1 | **106-6553** | 4 | BUMPER-CONICAL | |
| | 6 | 1 | **107-6813** | 2 | PLATE AS | |
| | 7 | 1 | **124-8843** | 2 | PLATE AS | |
| | 8 | 1 | **126-4966** | 2 | PLATE | |
| M | 9 | 1 | **129-3178** | 32 | LOCKNUT (M6X1-THD) | |
| M | 10 | 1 | **138-4054** | 5 | SCREW-FLAT HEAD (M6X1X45-MM) | |
| | 11 | 1 | **5M-3062** | 4 | BOLT (3/8-16X0.75-IN) | |
| | 12 | 1 | **5P-1075** | 4 | WASHER-HARD (10.2X22.5X3-MM THK) | |
| M | 13 | 1 | **8C-8454** | 27 | SCREW-MACHINE (M6X1X20-MM) | |
| | 14 | 1 | **8T-4121** | 4 | WASHER-HARD (11X21X2.5-MM THK) | |
| M | 15 | 1 | **8T-4133** | 4 | NUT (M10X1.5-THD) | |
| M | 16 | 1 | **8T-4195** | 4 | BOLT (M10X1.5X30-MM) | |
| M | 17 | 1 | **9X-2045** | 4 | SCREW-TRUSS HEAD (M6X1X20-MM) | |
| | 18 | 1 | **9X-8256** | 32 | WASHER (6.6X12X2-MM THK) | |
| BE | 19 | 1 | **122-2228** | | SEAL | |
| BD | 20 | 1 | **5P-5969** | | SEAL | |
| BE | 21 | 1 | **178-8894** | | SEAL | |

B-USE AS REQUIRED
D-ORDER BY THE METER
E-ORDER BY THE CENTIMETER
M-METRIC PART
Y-SEPARATE ILLUSTRATION

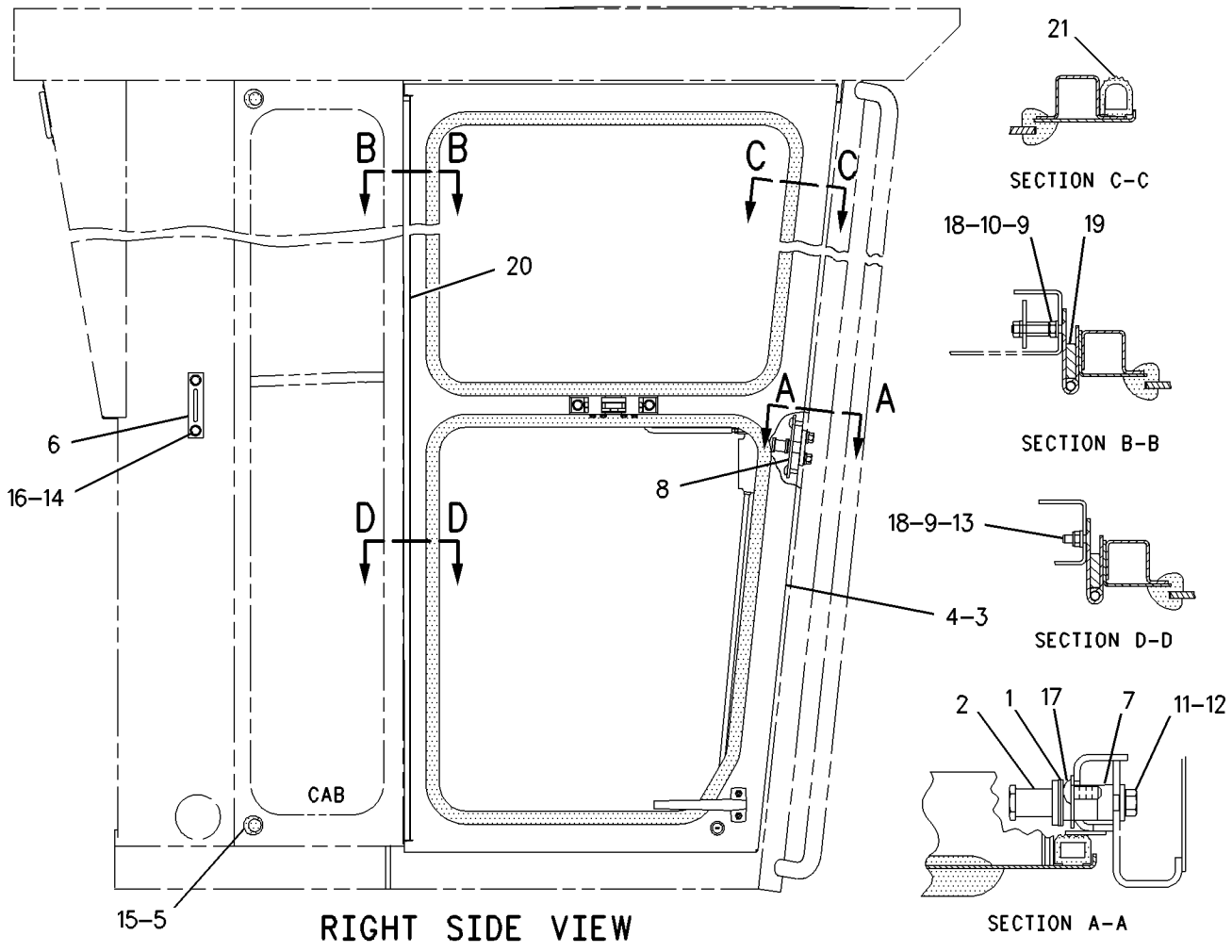


GRAPHIC #1 **<END>** g01000802

# OPERATOR STATION

## *8X-4525* DOOR GP-CAB—RH

**S/N: CCA1-UP**
**PART OF 8X-4527 DOOR GP-CAB**
**ALSO AN ATTACHMENT**

**SMCS-7308** **i02158610**

| NOTE | REF NO | GRAPHIC REF | PART NUMBER | QTY | PART NAME 1 2 3 4 5 6 (PRODUCT LEVEL) | SEE PAGE |
|---|---|---|---|---|---|---|
| | 1 | 1 | **199-2677** | 1 | LINK (RELEASE) | |
| | 2 | 1 | **1H-3338** | 1 | LOCKWASHER | |
| | 3 | 1 | **5T-7486** | 1 | RETAINER-SPRING | |
| | 4 | 1 | **6D-6581** | 14 | RIVET-POP | |
| | 5 | 1 | **6V-2773** | 2 | PLUG | |
| | 6 | 1 | **6V-7636** | 4 | PIN AS-SPRING | |
| | 7 | 1 | **8X-4066** | 1 | HINGE | |
| | 8 | 1 | **8X-4243** | 1 | COVER | |
| | 9 | 1 | **8X-4262** | 1 | COVER | |
| | 10 | 1 | **8X-4446** | 1 | GLASS (UPPER) | |
| | 11 | 1 | **8X-4448** | 1 | GLASS (LOWER) | |
| | 12 | 1 | **8Y-4398** | 1 | LINK-CONNECTING | |
| | 13 | 1 | **8Y-4400** | 1 | LATCH AS-DOOR | |
| | 14 | 1 | **8Y-4401** | 1 | HANDLE AS (INSIDE) | |
| | 15 | 1 | **8Y-4619** | 1 | HANDLE AS (OUTSIDE) | |
| | 16 | 1 | **8Y-4620** | 1 | LINK-CONNECTING | |
| J | 17 | 1 | **8Y-4801** | 1 | LOCK AS-CYLINDER | |
| | | 1 | **226-0295** | 1 | LOCK AS | |
| | | 1 | **226-0342** | 1 | CAM | |
| M | 18 | 1 | **9X-2546** | 4 | BOLT (M6X1X20-MM) | |
| | 19 | 1 | **107-9641** | 1 | PLATE AS | |
| | 20 | 1 | **108-5950** | 1 | LATCH AS-RH | |
| | 21 | 1 | **108-5952** | 1 | LINK (RH) | |
| | 22 | 1 | **114-9190** | 1 | SEAL | |
| | 23 | 1 | **128-0037** | 1 | KNOB-BALL | |
| | 24 | 1 | **199-2712** | 1 | HANDLE (GRAB) | |
| | 25 | 1 | **199-2737** | 1 | DOOR AS (RH) | |
| M | | 1 | **6V-9632** | 8 | NUT-WELD (M6X1-THD) | |
| M | | 1 | **8T-3490** | 2 | NUT-WELD (M10X1.5-THD) | |
| | 26 | 1 | **8T-4121** | 2 | WASHER-HARD (11X21X2.5-MM THK) | |
| M | 27 | 1 | **8T-4137** | 2 | BOLT (M10X1.5X20-MM) | |
| M | 28 | 1 | **8T-4181** | 6 | BOLT (M6X1X20-MM) | |
| | 29 | 1 | **8X-4245** | 1 | BOSS (M6X18-MM) | |
| M | 30 | 1 | **9X-2042** | 7 | SCREW-TRUSS HEAD (M6X1X12-MM) | |
| | 31 | 1 | **9X-8256** | 2 | WASHER (6.6X12X2-MM THK) | |
| BD | 32 | 1 | **5P-5768** | | SEAL | |
| M | 33 | 1 | **9X-2045** | 4 | SCREW-TRUSS HEAD (M6X1X20-MM) | |

B-USE AS REQUIRED
D-ORDER BY THE METER
J-REQUIRES 5P8500 KEY
M-METRIC PART

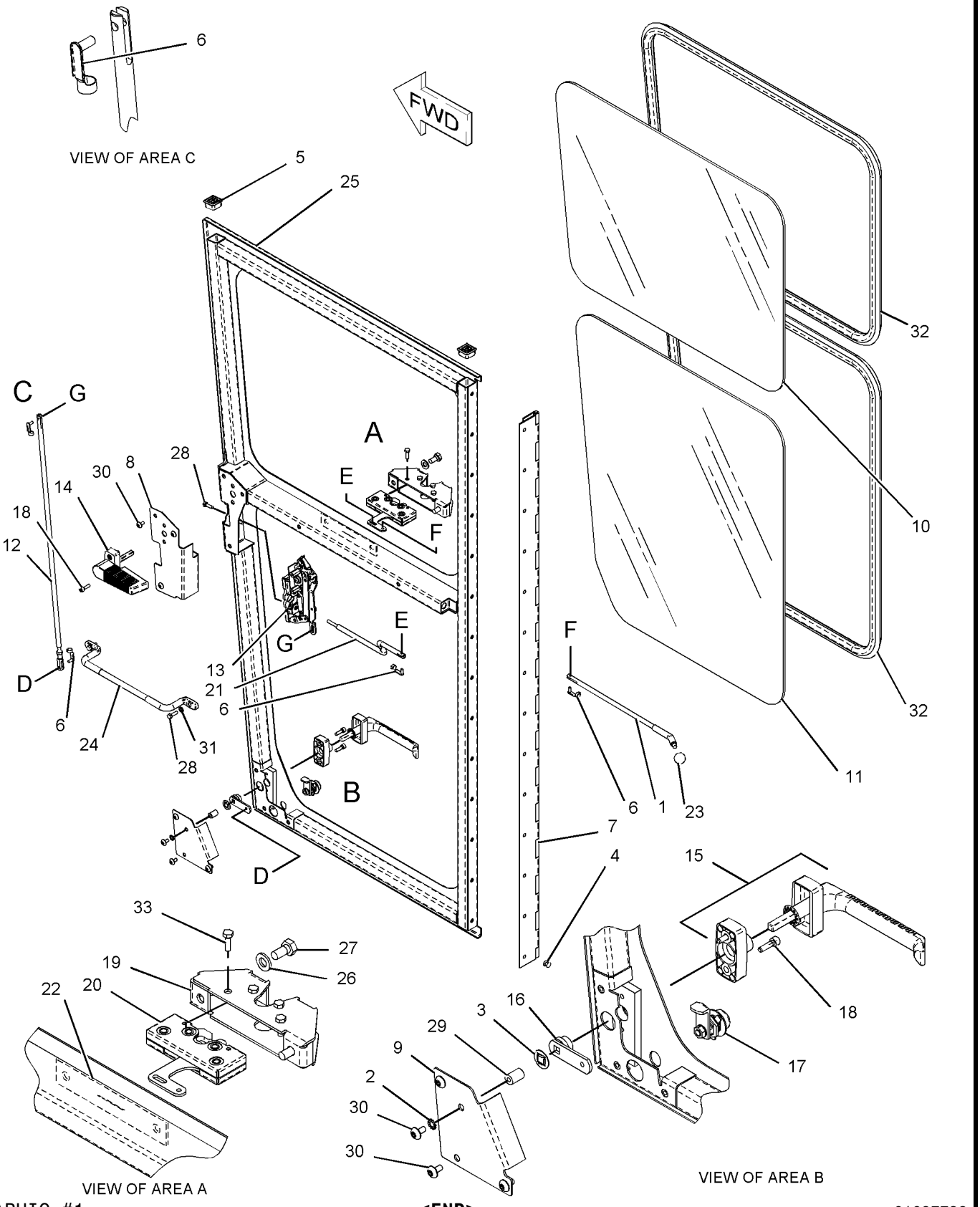


GRAPHIC #1

**<END>**

g01097738

# OPERATOR STATION

## *8X-4526* DOOR GP-CAB—LH

**S/N: CCA1-UP**
**PART OF 8X-4527 DOOR GP-CAB**
**ALSO AN ATTACHMENT**

**SMCS-7308** **i02158608**

| NOTE | REF NO | GRAPHIC REF | PART NUMBER | QTY | PART NAME 1 2 3 4 5 6 (PRODUCT LEVEL) | SEE PAGE |
|---|---|---|---|---|---|---|
| | 1 | 1 | **1H-3338** | 1 | LOCKWASHER | |
| | 2 | 1 | **5T-7486** | 1 | RETAINER-SPRING | |
| | 3 | 1 | **6D-6581** | 14 | RIVET-POP | |
| | 4 | 1 | **6V-2773** | 2 | PLUG | |
| | 5 | 1 | **6V-7636** | 4 | PIN AS-SPRING | |
| | 6 | 1 | **8X-4066** | 1 | HINGE | |
| | 7 | 1 | **8X-4244** | 1 | COVER | |
| | 8 | 1 | **8X-4263** | 1 | COVER | |
| | 9 | 1 | **8X-4446** | 1 | GLASS (UPPER) | |
| | 10 | 1 | **8X-4448** | 1 | GLASS (LOWER) | |
| | 11 | 1 | **8Y-4398** | 1 | LINK-CONNECTING | |
| | 12 | 1 | **8Y-4399** | 1 | LATCH AS-DOOR | |
| | 13 | 1 | **8Y-4401** | 1 | HANDLE AS (INSIDE) | |
| | 14 | 1 | **8Y-4619** | 1 | HANDLE AS (OUTSIDE) | |
| | 15 | 1 | **8Y-4620** | 1 | LINK-CONNECTING | |
| J | 16 | 1 | **8Y-4801** | 1 | LOCK AS-CYLINDER | |
| | | 1 | **226-0295** | 1 | LOCK AS | |
| | | 1 | **226-0342** | 1 | CAM | |
| M | 17 | 1 | **9X-2546** | 4 | BOLT (M6X1X20-MM) | |
| | 18 | 1 | **107-9641** | 1 | PLATE AS | |
| | 19 | 1 | **108-5949** | 1 | LATCH AS-LH | |
| | 20 | 1 | **108-5951** | 1 | LINK (LH) | |
| | 21 | 1 | **114-9190** | 1 | SEAL | |
| | 22 | 1 | **128-0037** | 1 | KNOB-BALL | |
| | 23 | 1 | **199-2677** | 1 | LINK (RELEASE) | |
| | 24 | 1 | **199-2712** | 1 | HANDLE (GRAB) | |
| | 25 | 1 | **199-2738** | 1 | DOOR AS (LH) | |
| | 26 | 1 | **8T-4121** | 2 | WASHER-HARD (11X21X2.5-MM THK) | |
| M | 27 | 1 | **8T-4137** | 2 | BOLT (M10X1.5X20-MM) | |
| M | 28 | 1 | **8T-4181** | 6 | BOLT (M6X1X20-MM) | |
| | 29 | 1 | **8X-4245** | 1 | BOSS (M6X18-MM) | |
| M | 30 | 1 | **9X-2042** | 7 | SCREW-TRUSS HEAD (M6X1X12-MM) | |
| M | 31 | 1 | **9X-2045** | 4 | SCREW-TRUSS HEAD (M6X1X20-MM) | |
| | 32 | 1 | **9X-8256** | 2 | WASHER (6.6X12X2-MM THK) | |
| BD | 33 | 1 | **5P-5768** | | SEAL | |

B-USE AS REQUIRED
D-ORDER BY THE METER
J-REQUIRES 5P8500 KEY
M-METRIC PART

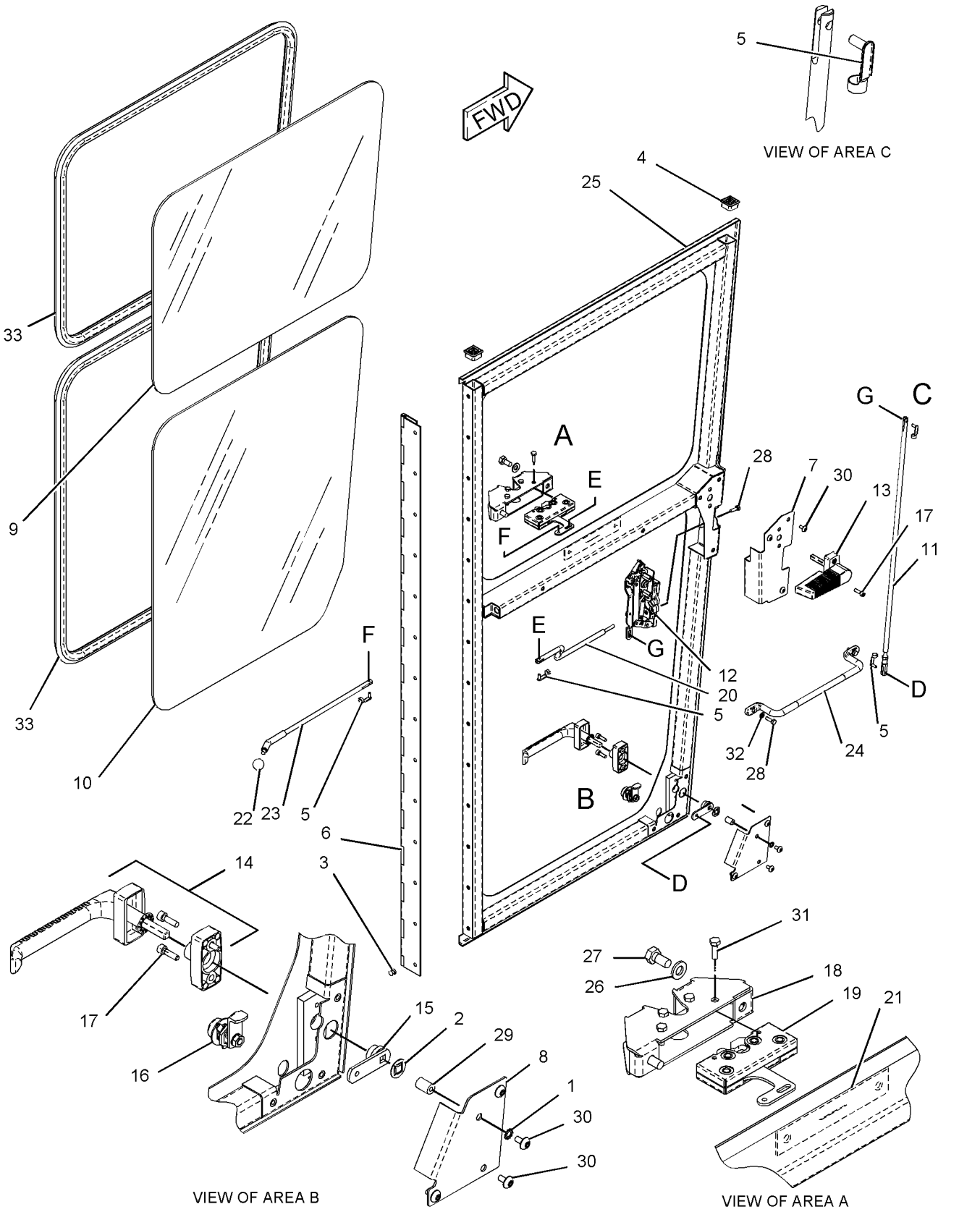


GRAPHIC #1

**<END>**

g01097750

# OPERATOR STATION

## *8X-4527* DOOR GP-CAB—LOW PROFILE

**S/N: CCA1-UP**

**PART OF 172-5377, 260-1745 ROPS GP-ENCLOSED**

**ALSO AN ATTACHMENT**

**SMCS-7308** **i02207763**

| NOTE | REF NO | GRAPHIC REF | PART NUMBER | QTY | PART NAME 1 2 3 4 5 6 (PRODUCT LEVEL) | SEE PAGE |
|---|---|---|---|---|---|---|
| B | 1 | 1 | **4J-3915** | 8 | SHIM (1.52-MM THK) | |
| | 2 | 1 | **6V-5158** | 2 | STRIKER AS-BODY | |
| Y | 3 | 1 | *8X-4525* | 1 | DOOR GP-CAB (RH) | 1127 |
| Y | 4 | 1 | *8X-4526* | 1 | DOOR GP-CAB (LH) | 1129 |
| | 5 | 1 | **106-6553** | 4 | BUMPER-CONICAL | |
| | 6 | 1 | **107-6813** | 2 | PLATE AS | |
| | 7 | 1 | **124-8843** | 2 | PLATE AS | |
| | 8 | 1 | **126-4966** | 2 | PLATE | |
| M | 9 | 1 | **129-3178** | 28 | LOCKNUT (M6X1-THD) | |
| M | 10 | 1 | **138-4054** | 5 | SCREW-FLAT HEAD (M6X1X45-MM) | |
| | 11 | 1 | **5M-3062** | 4 | BOLT (3/8-16X0.75-IN) | |
| | 12 | 1 | **5P-1075** | 4 | WASHER-HARD (10.2X22.5X3-MM THK) | |
| M | 13 | 1 | **8C-8454** | 23 | SCREW-MACHINE (M6X1X20-MM) | |
| | 14 | 1 | **8T-4121** | 4 | WASHER-HARD (11X21X2.5-MM THK) | |
| M | 15 | 1 | **8T-4133** | 4 | NUT (M10X1.5-THD) | |
| M | 16 | 1 | **8T-4195** | 4 | BOLT (M10X1.5X30-MM) | |
| M | 17 | 1 | **9X-2045** | 4 | SCREW-TRUSS HEAD (M6X1X20-MM) | |
| | 18 | 1 | **9X-8256** | 28 | WASHER (6.6X12X2-MM THK) | |
| BD | 19 | 1 | **5P-5969** | | SEAL | |
| BE | 20 | 1 | **122-2228** | | SEAL | |
| BE | 21 | 1 | **178-8894** | | SEAL | |

B-USE AS REQUIRED
D-ORDER BY THE METER
E-ORDER BY THE CENTIMETER
M-METRIC PART
Y-SEPARATE ILLUSTRATION

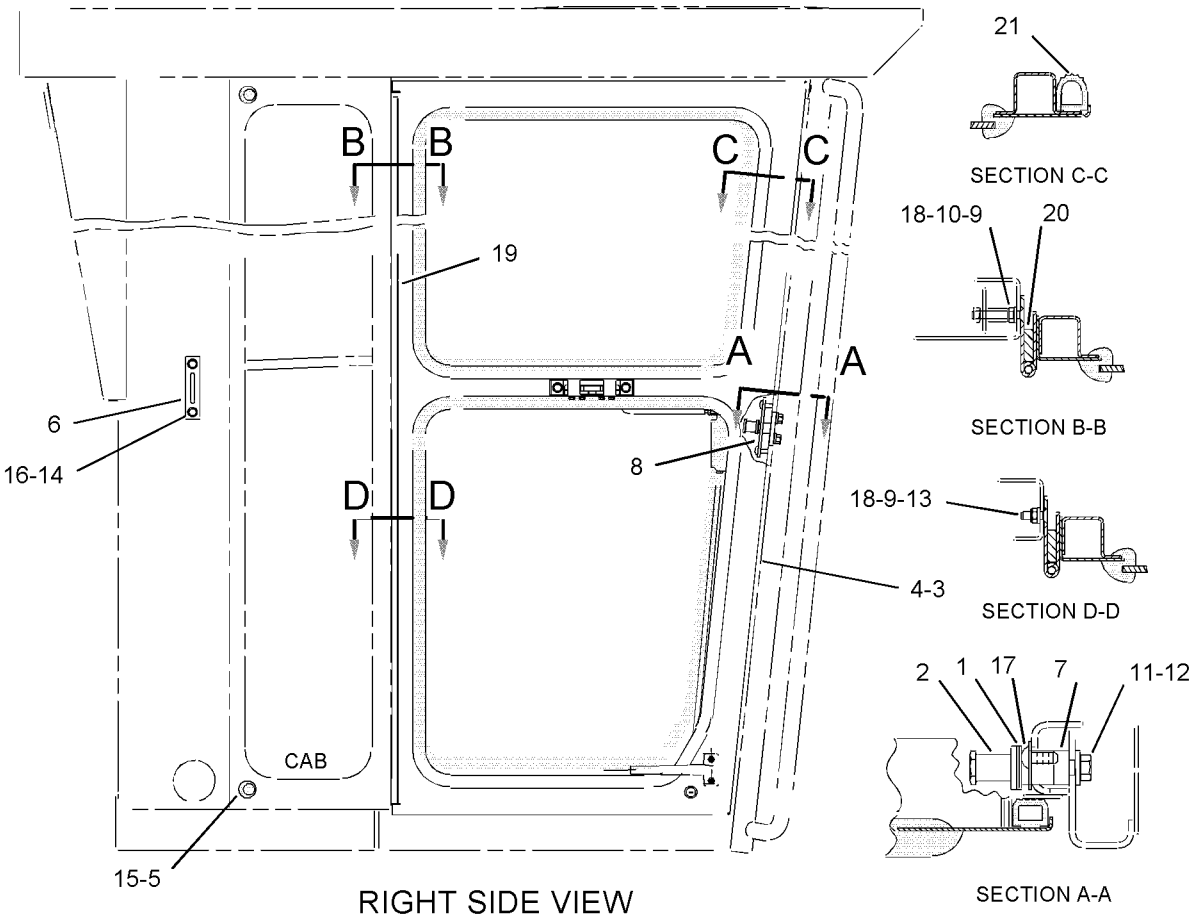


GRAPHIC #1

**<END>**

g01044148

# *177-7891* DUCT & CONTROL GP–HEATER–AIR CONDITIONER

**S/N: CCA1-UP**

**PART OF 167-8067 AIR CONDITIONER AR, 167-8390 HEATER AR-CAB**

**AN ATTACHMENT**

**SMCS-7337, 734D** **i01679811**

| NOTE | REF NO | GRAPHIC REF | PART NUMBER | QTY | PART NAME 1 2 3 4 5 6 (PRODUCT LEVEL) | SEE PAGE |
|---|---|---|---|---|---|---|
| | 1 | 1 | **8Y-6388** | 6 | LOUVER AS | |
| | 2 | 1 | **139-3595** | 1 | PANEL AS | |
| | | 1 | **7K-4201** | 2 | NUT-SPEED | |
| | | 1 | **8S-7566** | 4 | RIVET-POP | |
| | 3 | 1 | **164-8474** | 2 | LOUVER AS | |
| M | 4 | 1 | **9X-2043** | 2 | SCREW-TRUSS HEAD | |

M-METRIC PART

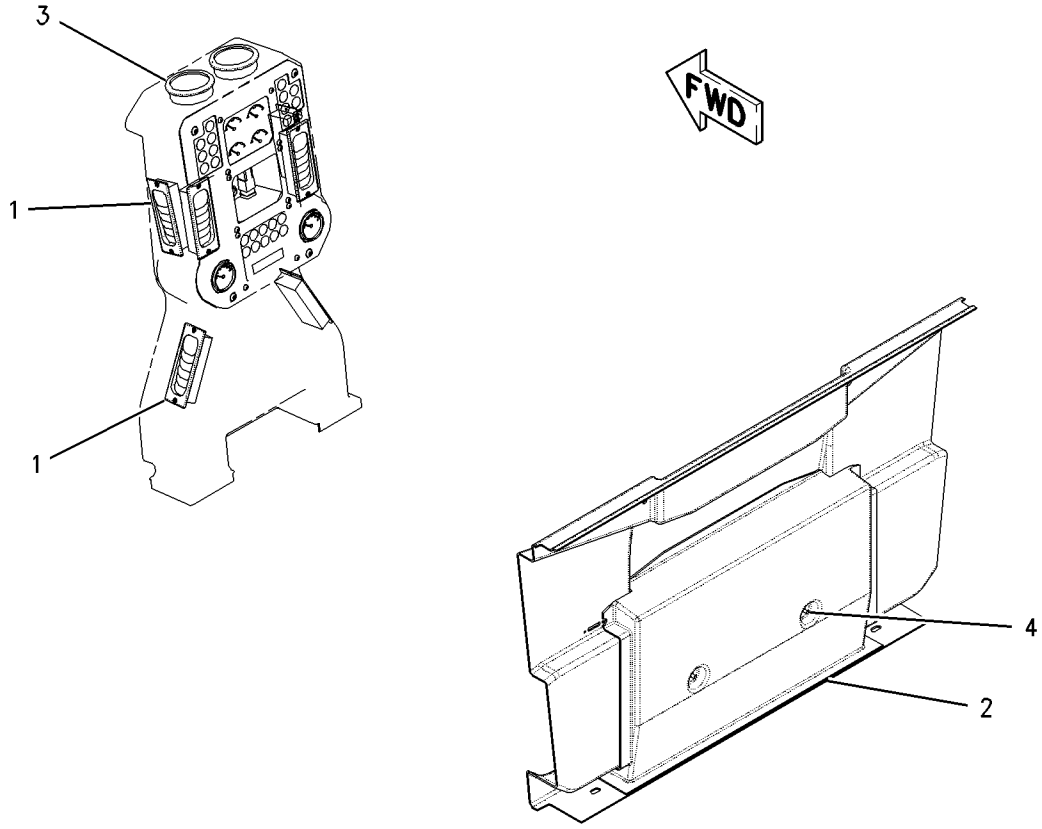


GRAPHIC #1 **<END>** g00796998

# OPERATOR STATION

## *7I-5015* DUCT GP

**S/N: CCA1-UP**
**PART OF 167-8067 AIR CONDITIONER AR, 167-8390 HEATER AR-CAB**
**AN ATTACHMENT**

**SMCS-734D** **i00135943**

| NOTE | REF NO | GRAPHIC REF | PART NUMBER | QTY | PART NAME 1 2 3 4 5 6 (PRODUCT LEVEL) | SEE PAGE |
|---|---|---|---|---|---|---|
| | 1 | 1 | **104-2091** | 8 | SCREW-FLAT HEAD (6-20X0.5-IN) | |
| | 2 | 1 | **106-4496** | 6 | BRACKET AS | |
| | | | | | (EACH INCLUDES) | |
| M | 3 | 1 | **6V-9632** | 1 | NUT-WELD (M6X1-THD) | |
| | 4 | 1 | **8X-5102** | 2 | SEAL | |
| | 5 | 1 | **8Y-6388** | 4 | LOUVER AS | |
| | 6 | 1 | **122-8155** | 1 | DUCT | |
| | 7 | 1 | **122-8154** | 1 | DUCT | |
| M | 8 | 1 | **9X-2043** | 8 | SCREW-TRUSS HEAD (M6X1X14-MM) | |
| | 9 | 1 | **8T-4205** | 2 | WASHER-HARD (7.2X14.5X2-MM THK) | |
| M | 10 | 1 | **5C-2890** | 2 | NUT (M6X1-THD) | |

M-METRIC PART

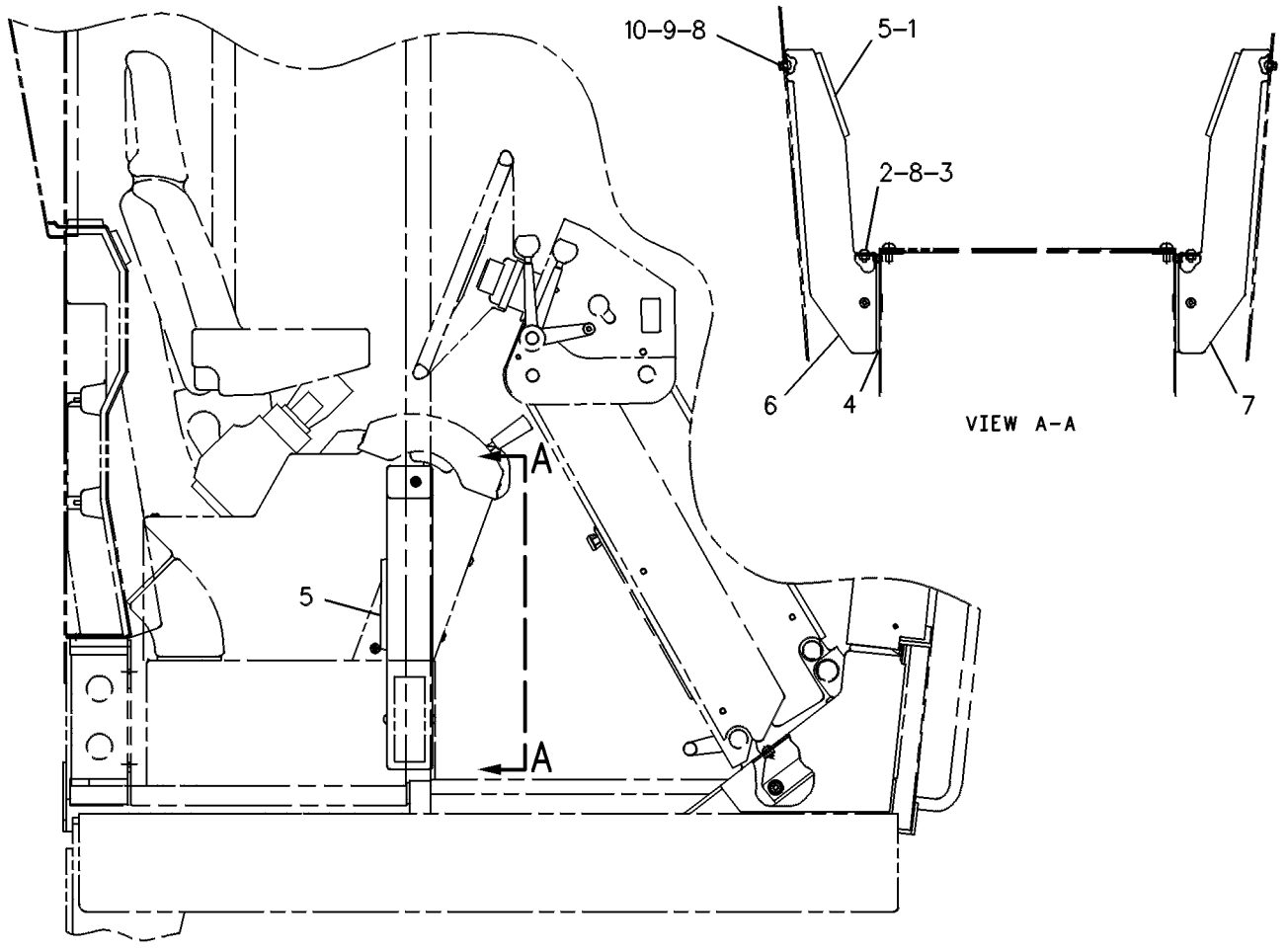


RIGHT SIDE VIEW

GRAPHIC #1 **<END>** g00108768

# OPERATOR STATION

## 8Y-5874 EXTENSION GP-BACKREST—CLOTH

**S/N: CCA1-UP**

**PART OF 112-9104, 155-5958 SEAT GP-SUSPENSION**

**ALSO AN ATTACHMENT**

**SMCS-7312** **i01861569**

| NOTE | REF NO | GRAPHIC REF | PART NUMBER | QTY | PART NAME 1 2 3 4 5 6 (PRODUCT LEVEL) | SEE PAGE |
|---|---|---|---|---|---|---|
| | 1 | 1 | **8Y-5877** | 1 | PAN AS-EXTENSION | |
| J | 2 | 1 | **8Y-5947** | 2 | FASTENER | |
| J | 3 | 1 | | 1 | CUSHION AS-BACKREST | |
| | | | | | AVAILABLE REPAIR KIT(S): | |
| J | | | **8Y-5943** | 1 | KIT-CUSHION | |
| | | | | | (INCLUDES CUSHION AS AND FASTENERS) | |

J-PARTS MARKED J SERVICED BY KIT MARKED J

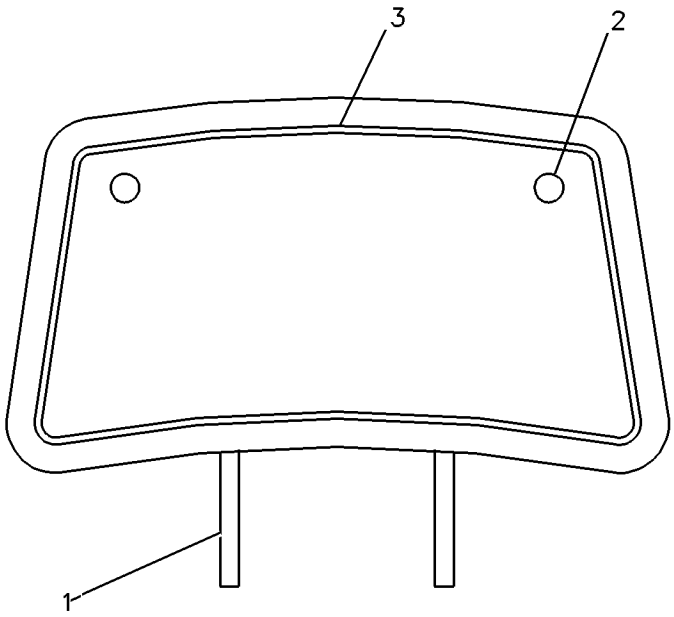


GRAPHIC #1 **<END>** g00949157

# OPERATOR STATION

## 8Y-5959 EXTENSION GP-BACKREST–VINYL

**S/N: CCA1-UP**
**PART OF 112-9105 SEAT GP-SUSPENSION**
**AN ATTACHMENT**

**SMCS-7312** **i00733739**

| NOTE | REF NO | GRAPHIC REF | PART NUMBER | QTY | PART NAME 1 2 3 4 5 6 (PRODUCT LEVEL) | SEE PAGE |
|---|---|---|---|---|---|---|
| | 1 | 1 | **8Y-5877** | 1 | PAN AS-EXTENSION | |
| J | 2 | 1 | **8Y-5947** | 2 | FASTENER | |
| JZ | 3 | 1 | | 1 | CUSHION AS | |
| | | | | | AVAILABLE REPAIR KIT(S): | |
| J | | | **8Y-5960** | 1 | KIT-CUSHION | |

J-KIT MARKED J INCLUDES PART(S) MARKED J
Z-NOT SERVICED SEPARATELY

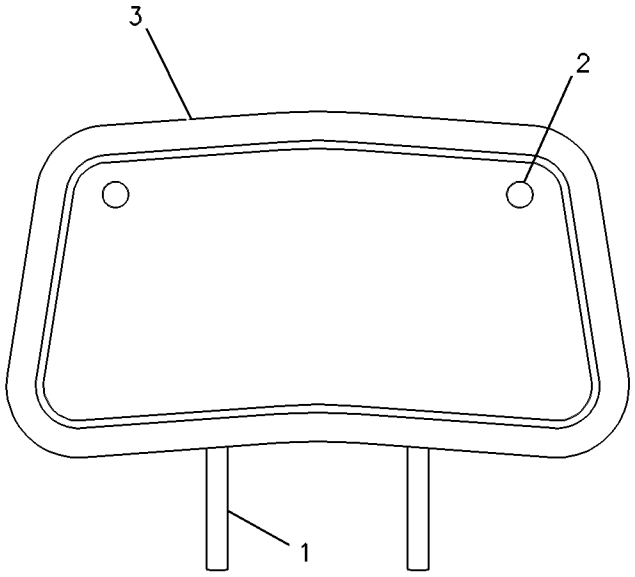


GRAPHIC #1 **<END>** g00326278

# OPERATOR STATION

## *172-6834* FAN GP-CIRCULATING—FRONT DEFROSTER

**S/N: CCA1-UP**

**PART OF 197-5955, 236-3948 SNOW AR-MOTOR GRADER**

**AN ATTACHMENT**

**SMCS-7316** **i01680042**

| NOTE | REF NO | GRAPHIC REF | PART NUMBER | QTY | PART NAME 1 2 3 4 5 6 (PRODUCT LEVEL) | SEE PAGE |
|---|---|---|---|---|---|---|
| | 1 | 1 | **7T-4003** | 1 | RESISTOR | |
| | 2 | 1 | **9W-1442** | 1 | FUSE (10-AMPERE) (FRONT DEFROSTER) | |
| Y | 3 | 1 | *170-5334* | 1 | FAN GP-DEFROSTER (FRONT) | 1140 |
| M | 4 | 1 | **9X-1046** | 2 | SCREW (M4X0.7X18-MM) | |
| | 5 | 1 | **3E-9330** | 1 | SWITCH AS (FRONT DEFROSTER) | |
| | | 1 | **3E-8821** | 1 | ACTUATOR-ROCKER | |
| | | 1 | **3E-8825** | 1 | LAMP (24-VOLT) (FRONT DEFROSTER) | |

M-METRIC PART
Y-SEPARATE ILLUSTRATION

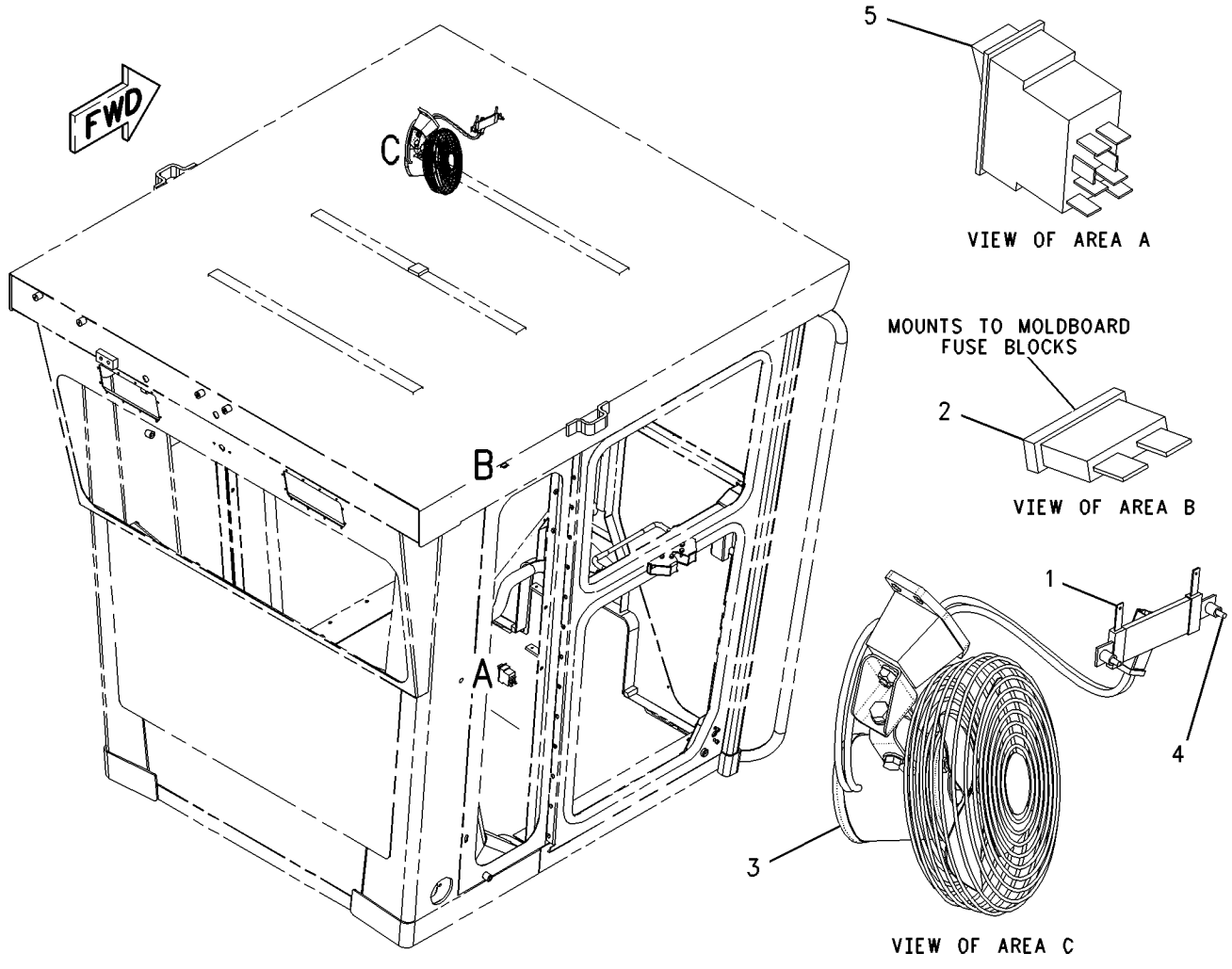


GRAPHIC #1 **<END>** g00846757

# OPERATOR STATION

## *172-6835* FAN GP-CIRCULATING–REAR DEFROSTER

**S/N: CCA1-UP**
**PART OF 197-5955, 236-3948 SNOW AR-MOTOR GRADER**
**AN ATTACHMENT**

**SMCS-7316** **i01680056**

| NOTE | REF NO | GRAPHIC REF | PART NUMBER | QTY | PART NAME 1 2 3 4 5 6 (PRODUCT LEVEL) | SEE PAGE |
|---|---|---|---|---|---|---|
| | 1 | 1 | **7T-4003** | 1 | RESISTOR | |
| | 2 | 1 | **9W-1442** | 1 | FUSE (10-AMPERE) (REAR DEFROSTER) | |
| Y | 3 | 1 | *170-4820* | 1 | FAN GP-DEFROSTER (REAR) | 1139 |
| | 4 | 1 | **5P-8525** | 1 | GROMMET | |
| M | 5 | 1 | **9X-1046** | 2 | SCREW (M4X0.7X18-MM) | |
| M | 6 | 1 | **9X-2045** | 4 | SCREW-TRUSS HEAD (M6X1X20-MM) | |
| | 7 | 1 | **3E-9330** | 1 | SWITCH AS (REAR DEFROSTER) | |
| | | 1 | **3E-8821** | 1 | ACTUATOR-ROCKER | |
| | | 1 | **3E-8825** | 1 | LAMP (24-VOLT) (REAR DEFROSTER) | |

M-METRIC PART
Y-SEPARATE ILLUSTRATION

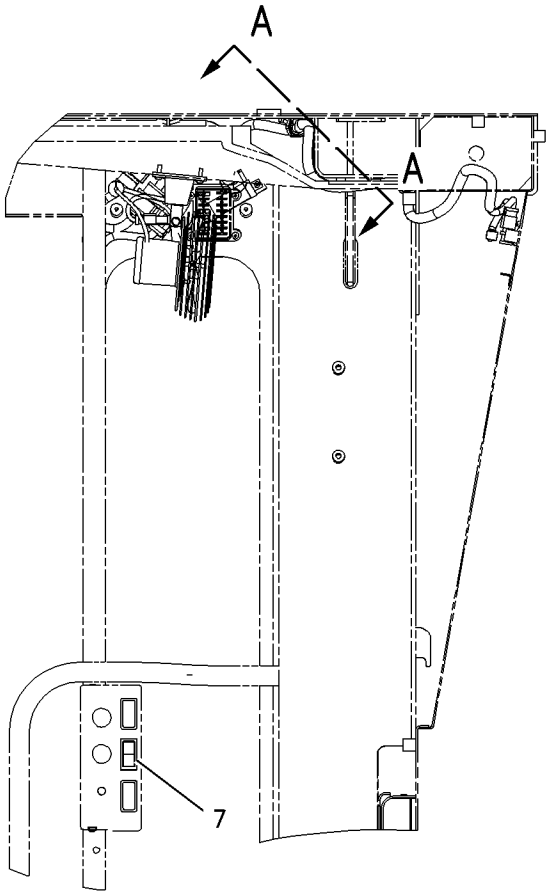


LEFT SIDE VIEW

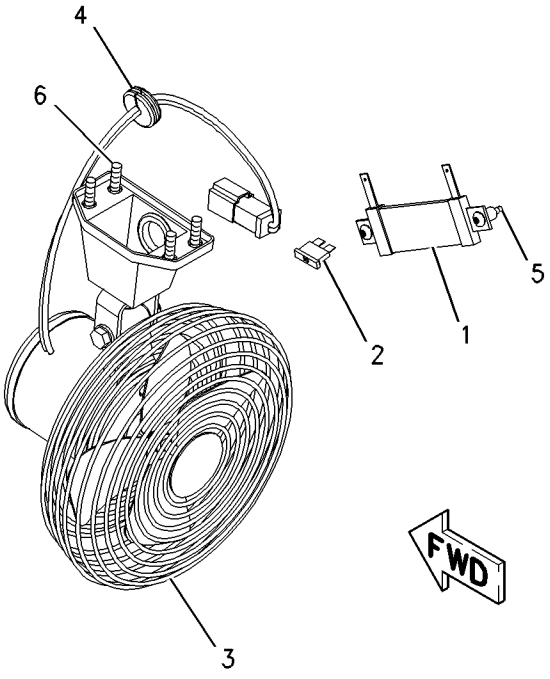


VIEW A-A

GRAPHIC #1 **<END>** g00846366

# OPERATOR STATION

## 170-4820 FAN GP-DEFROSTER–REAR

**S/N: CCA1-UP**
**24 VOLT**
**PART OF 172-6835 FAN GP-CIRCULATING**
**AN ATTACHMENT**

**SMCS-7316** **i02399267**

| NOTE | REF NO | GRAPHIC REF | PART NUMBER | QTY | PART NAME 1 2 3 4 5 6 (PRODUCT LEVEL) | SEE PAGE |
|---|---|---|---|---|---|---|
| | 1 | 1 | **1M-1230** | 2 | NUT & LOCK AS (10-32-THD) | |
| | 2 | 1 | **3D-8747** | 1 | BRACKET | |
| | 3 | 1 | **3D-8748** | 1 | FAN AS (4-BLADE) | |
| | 4 | 1 | **3D-8749** | 1 | GUARD | |
| | 5 | 1 | **3T-6774** | 1 | GROMMET | |
| | 6 | 1 | **9X-9689** | 1 | BASE-FAN | |
| Y | 7 | 1 | **170-5335** | 1 | MOTOR GP-ELECTRIC (CIRCULATING FAN) | 276 |
| | 8 | 1 | **1B-2713** | 1 | BOLT (1/4-20X1.75-IN) | |
| | 9 | 1 | **2D-6235** | 1 | LOCKNUT (1/4-20-THD) | |
| | 10 | 1 | **3D-8752** | 1 | LOCKNUT (5/16-24-THD) | |
| | 11 | 1 | **5P-0537** | 4 | WASHER-HARD (7.2X14.5X2-MM THK) | |
| | 12 | 1 | **6G-5987** | 1 | BRACKET | |
| | 13 | 1 | **7L-8316** | 1 | SETSCREW-SOCKET (10-32X2.54-IN) | |
| | 14 | 1 | **7T-0582** | 1 | BOLT | |
| | 15 | 1 | **9M-1974** | 2 | WASHER-HARD (8.8X16X2-MM THK) | |

Y-SEPARATE ILLUSTRATION

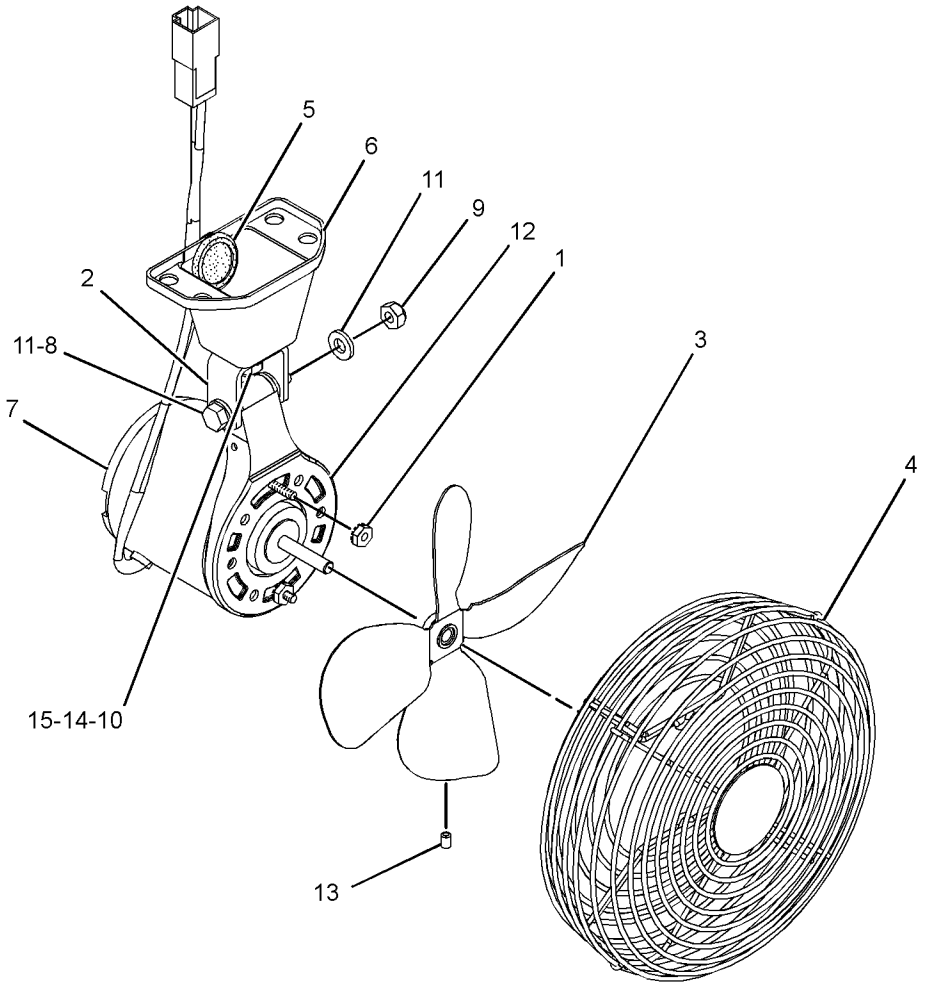


GRAPHIC #1 **<END>** g01256496

# OPERATOR STATION

## 170-5334 FAN GP-DEFROSTER–FRONT

**S/N: CCA1-UP**
**24 VOLT**
**PART OF 172-6834 FAN GP-CIRCULATING**
**AN ATTACHMENT**

**SMCS-7316** **i02590546**

| NOTE | REF NO | GRAPHIC REF | PART NUMBER | QTY | PART NAME 1 2 3 4 5 6 (PRODUCT LEVEL) | SEE PAGE |
|---|---|---|---|---|---|---|
| | 1 | 1 | **3D-8747** | 1 | BRACKET | |
| | 2 | 1 | **3D-8748** | 1 | FAN AS (4-BLADE) | |
| | 3 | 1 | **3D-8749** | 1 | GUARD | |
| | 4 | 1 | **3T-6774** | 1 | GROMMET | |
| | 5 | 1 | **9X-9689** | 1 | BASE-FAN | |
| | 6 | 1 | **135-1979** | 1 | BRACKET | |
| Y | 7 | 1 | **170-5335** | 1 | MOTOR GP-ELECTRIC (DEFROSTER FAN) | 276 |
| | 8 | 1 | **031-4155** | 1 | LOCKNUT (5/16-18-THD) | |
| | 9 | 1 | **1B-2713** | 1 | BOLT (1/4-20X1.75-IN) | |
| | 10 | 1 | **1M-1230** | 2 | NUT & LOCK AS (10-32-THD) | |
| | 11 | 1 | **2D-6235** | 1 | LOCKNUT (1/4-20-THD) | |
| | 12 | 1 | **3D-8752** | 1 | LOCKNUT (5/16-24-THD) | |
| | 13 | 1 | **4M-0061** | 1 | BOLT (5/16-18X0.75-IN) | |
| | 14 | 1 | **5P-0537** | 4 | WASHER-HARD (7.2X14.5X2-MM THK) | |
| | 15 | 1 | **6G-5987** | 1 | BRACKET | |
| | 16 | 1 | **7L-8316** | 1 | SETSCREW-SOCKET (10-32X2.54-IN) | |
| | 17 | 1 | **7T-0582** | 1 | BOLT | |
| | 18 | 1 | **9M-1974** | 3 | WASHER-HARD (8.8X16X2-MM THK) | |
| | 19 | 1 | **9T-5241** | 2 | WASHER (9.53X18X1-MM THK) | |

Y-SEPARATE ILLUSTRATION

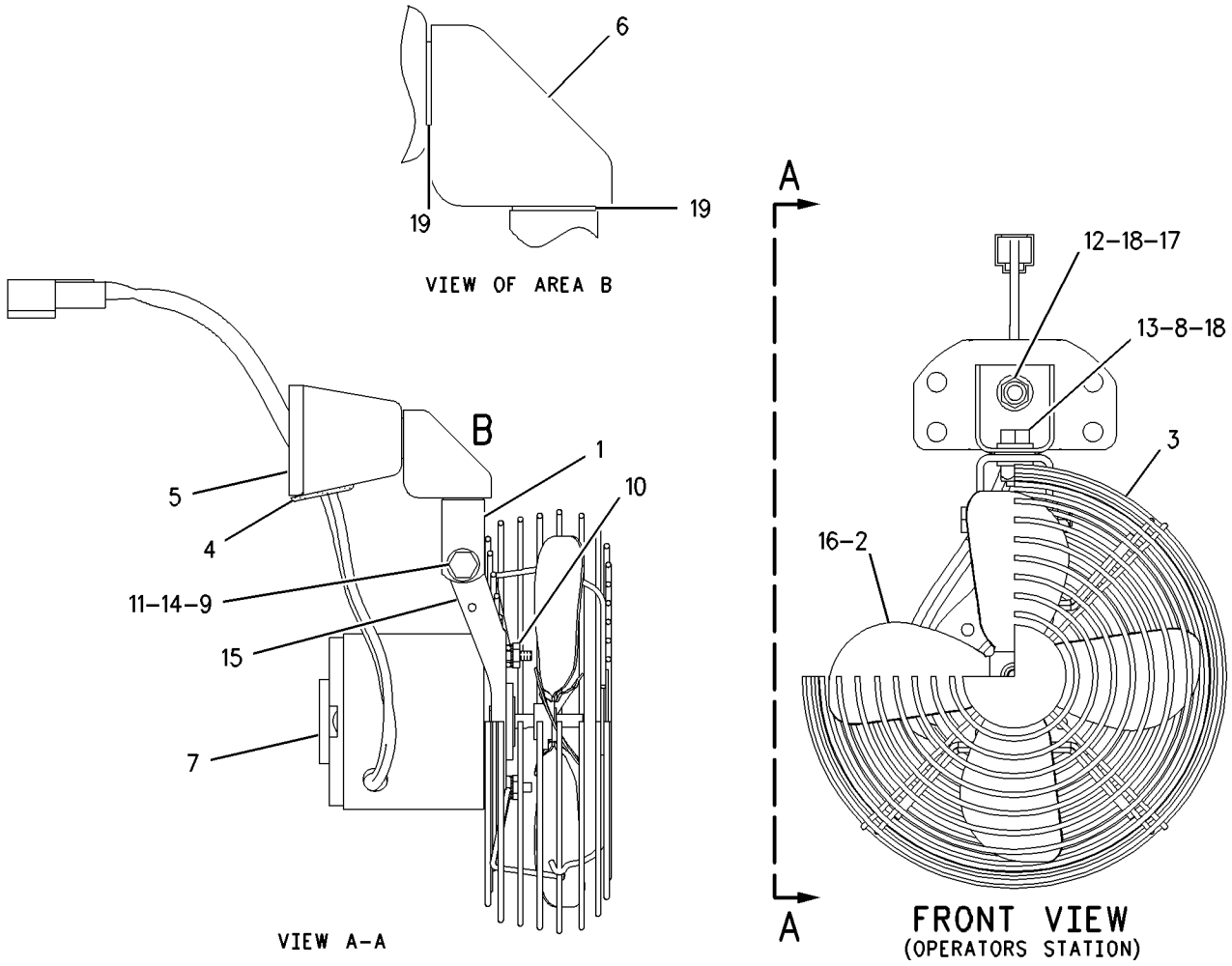


GRAPHIC #1 **<END>** g00761361

# OPERATOR STATION

## 8X-2925 FILTER GP-CAB AIR

**S/N: CCA1-UP**
**PART OF 167-8067 AIR CONDITIONER AR, 167-8390 HEATER AR-CAB**
**AN ATTACHMENT**

**SMCS-7342** **i02200120**

| NOTE | REF NO | GRAPHIC REF | PART NUMBER | QTY | PART NAME 1 2 3 4 5 6 (PRODUCT LEVEL) | SEE PAGE |
|---|---|---|---|---|---|---|
| | 1 | 1 | **7T-7358** | 1 | FILTER-AIR (CAB) | |
| | 2 | 1 | **9X-8122** | 1 | PLATE AS | |
| | | 1 | **7K-4199** | 2 | THUMBSCREW | |
| | | 1 | **8R-1778** | 1 | COVER-FILTER | |
| | | 1 | **131-5492** | 2 | RETAINER-CAPTIVE | |
| | 3 | 1 | **112-9555** | 4 | SPRING-FILTER | |
| | 4 | 1 | *231-4487* | 2 | FILTER AS-AIR (CAB) | |
| | | | | | (EACH INCLUDES) | |
| | | 1 | **231-4486** | 1 | FILTER-AIR (CAB) | |
| | | 1 | **232-1732** | 1 | FILTER-AIR (CAB) | |

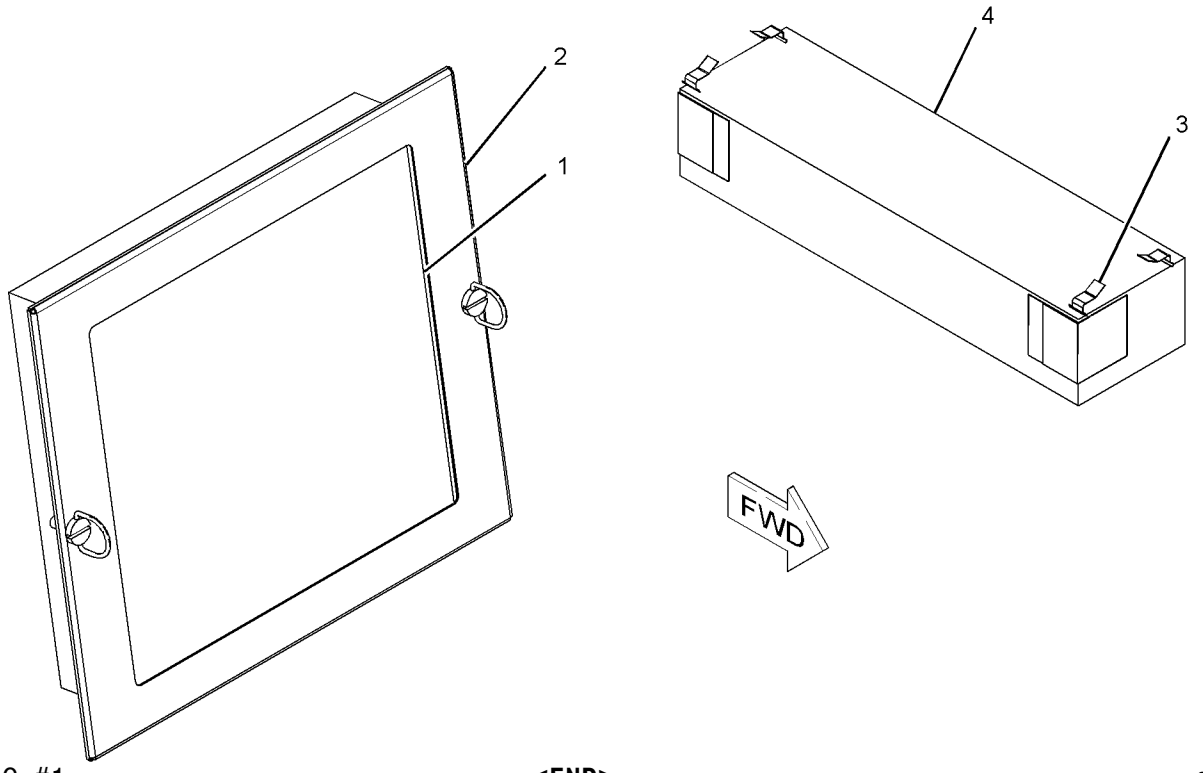


GRAPHIC #1 **<END>** g01070812

# OPERATOR STATION

## *199-2585* HAMMER & MOUNTING GP–LOW PROFILE

**S/N: CCA1-UP**
**AN ATTACHMENT**

**SMCS-0606, 7310** **i01862259**

| NOTE | REF NO | GRAPHIC REF | PART NUMBER | QTY | PART NAME 1 2 3 4 5 6 (PRODUCT LEVEL) | SEE PAGE |
|---|---|---|---|---|---|---|
| | 1 | 1 | **8Y-6379** | 1 | KIT-HAMMER | |
| | 2 | 1 | **100-5612** | 1 | FILM-INSTRUCTION (ALTERNATE EXIT, REMOVE WINDOW) | |
| | 3 | 1 | **199-2586** | 1 | COVER AS | |
| M | 4 | 1 | **155-4098** | 4 | SCREW-BUTTON HEAD (M3X0.5X1-MM) | |
| B | 5 | 1 | **6V-0505** | | SEAL | |

B-USE AS REQUIRED
M-METRIC PART

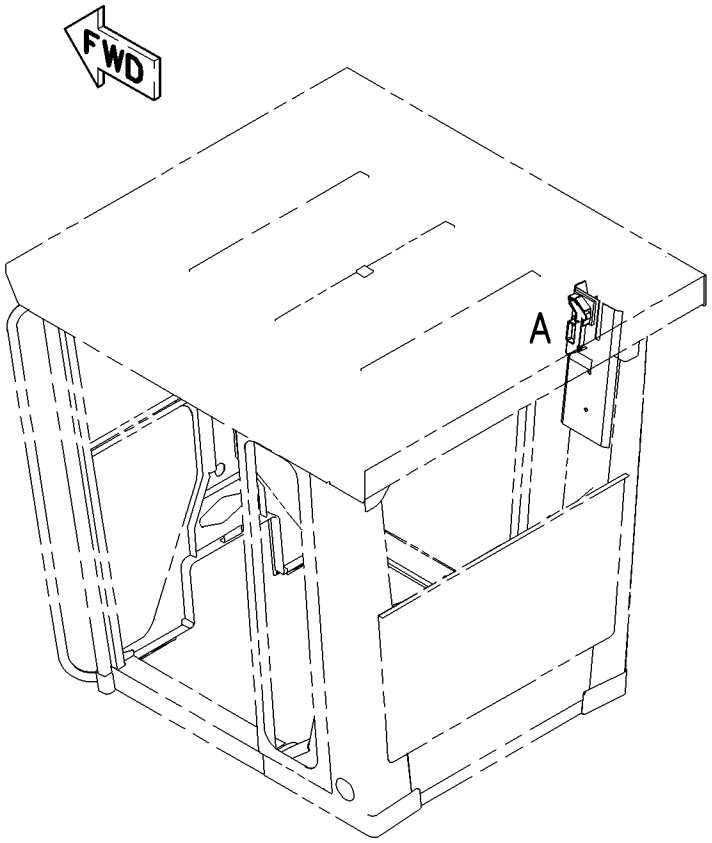


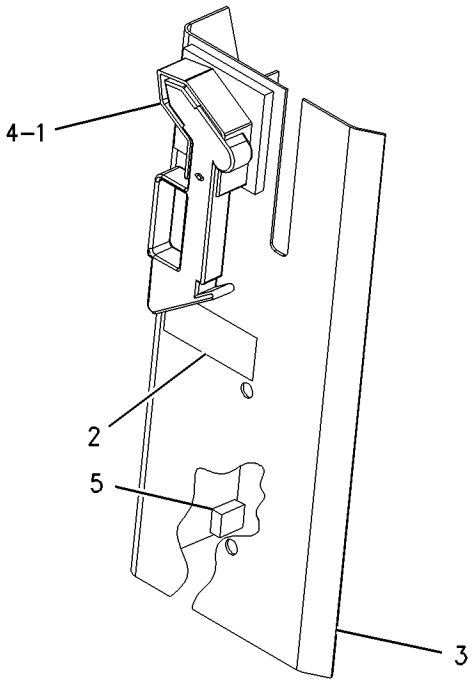


VIEW OF AREA A

GRAPHIC #1 **<END>** g00891876

# OPERATOR STATION

## *200-7934* HAMMER & MOUNTING GP—HIGH PROFILE

**S/N: CCA1-UP**

**AN ATTACHMENT**

**SMCS-0606, 7310** **i01862256**

| NOTE | REF NO | GRAPHIC REF | PART NUMBER | QTY | PART NAME 1 2 3 4 5 6 (PRODUCT LEVEL) | SEE PAGE |
|---|---|---|---|---|---|---|
| | 1 | 1 | **8Y-6379** | 1 | KIT-HAMMER | |
| | 2 | 1 | **100-5612** | 1 | FILM-INSTRUCTION (ALTERNATE EXIT, REMOVE WINDOW) | |
| | 3 | 1 | **200-7933** | 1 | COVER AS | |
| M | 4 | 1 | **155-4098** | 4 | SCREW-BUTTON HEAD (M3X0.5X1-MM) | |
| B | 5 | 1 | **6V-0505** | | SEAL | |

B-USE AS REQUIRED
M-METRIC PART

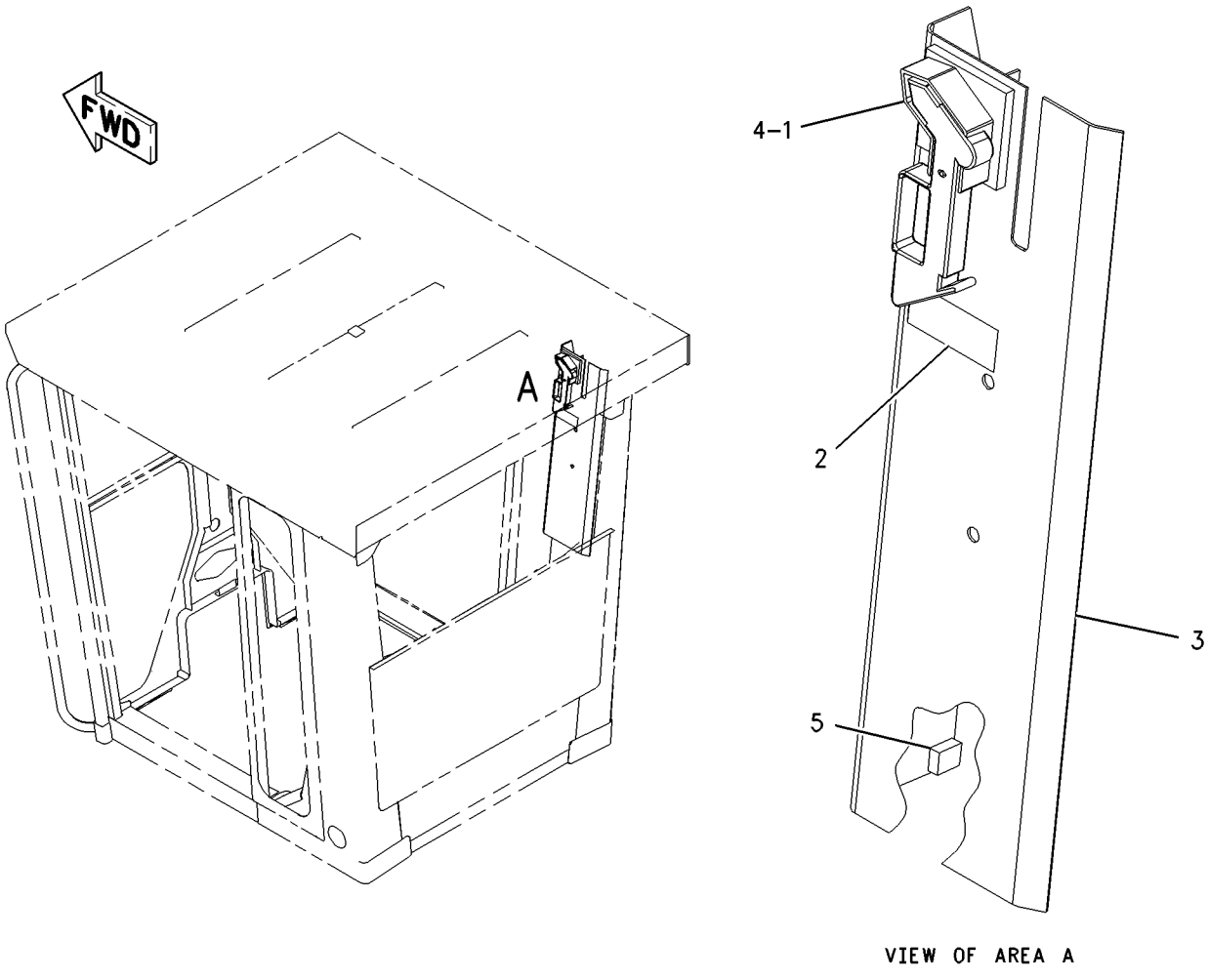


VIEW OF AREA A

GRAPHIC #1 **<END>** g00891310

# OPERATOR STATION

## *173-5360* HEATER & MTG GP-CAB

**S/N: CCA1-UP**
**PART OF 167-8423 HEATER AR-CAB**
**AN ATTACHMENT**

**SMCS-7304** **i02592140**

| NOTE | PART NUMBER | QTY | PART NAME 1 2 3 4 5 6 (PRODUCT LEVEL) | SEE PAGE |
|---|---|---|---|---|
| Y | *174-4547* | 1 | HEATER GP-CAB (LIGHT-DUTY) | 1151 |
| | | | | |
| | **9W-1441** | 1 | FUSE (15-AMPERE) (HEATER) | |
| Y-SEPARATE ILLUSTRATION | | | | |

**<END>**

## *174-4552* HEATER & MTG GP-CAB

**S/N: CCA1-UP**
**PART OF 167-8390 HEATER AR-CAB**
**AN ATTACHMENT**

**SMCS-7304** **i02592188**

| NOTE | PART NUMBER | QTY | PART NAME 1 2 3 4 5 6 (PRODUCT LEVEL) | SEE PAGE |
|---|---|---|---|---|
| Y | **173-5322** | 1 | HEATER GP-CAB (BASIC) | 1147 |
| | | | | |
| | **9W-1441** | 1 | FUSE (15-AMPERE) (HEATER) | |
| | **123-0872** | 1 | PAD | |
| | **191-5236** | 1 | PAD | |
| Y-SEPARATE ILLUSTRATION | | | | |

**<END>**

## *167-8390* HEATER AR-CAB

**S/N: CCA1-UP**
**PART OF 207-4453 CONVERSION AR-CERTIFICATION, 236-3948 SNOW AR-MOTOR GRADER**
**AN ATTACHMENT**

**SMCS-7304** **i02592230**

| NOTE | PART NUMBER | QTY | PART NAME 1 2 3 4 5 6 (PRODUCT LEVEL) | SEE PAGE |
|---|---|---|---|---|
| Y | *177-7891* | 1 | DUCT & CONTROL GP (HEATER, AC SELECT) | 1133 |
| Y | *7I-5015* | 1 | DUCT GP | 1134 |
| Y | **8X-2925** | 1 | FILTER GP-CAB AIR | 1142 |
| Y | *174-4552* | 1 | HEATER & MTG GP-CAB | 1145 |
| Y | *167-8398* | 1 | LINES GP-HEATER | 1185 |
| Y-SEPARATE ILLUSTRATION | | | | |

**<END>**

# OPERATOR STATION

## *167-8423* HEATER AR-CAB

**S/N: CCA1-UP**

**AN ATTACHMENT**

**SMCS-7304** **i01838452**

| NOTE | REF NO | GRAPHIC REF | PART NUMBER | QTY | PART NAME 1 2 3 4 5 6 (PRODUCT LEVEL) | SEE PAGE |
|---|---|---|---|---|---|---|
| Y | 1 | 1 | *167-8398* | 1 | LINES GP-HEATER | 1185 |
| Y | 2 | 1 | *178-8603* | 1 | LOUVER GP-CAB | 1190 |
| Y | 3 | 1 | *173-5360* | 1 | HEATER & MTG GP-CAB | 1145 |

Y-SEPARATE ILLUSTRATION

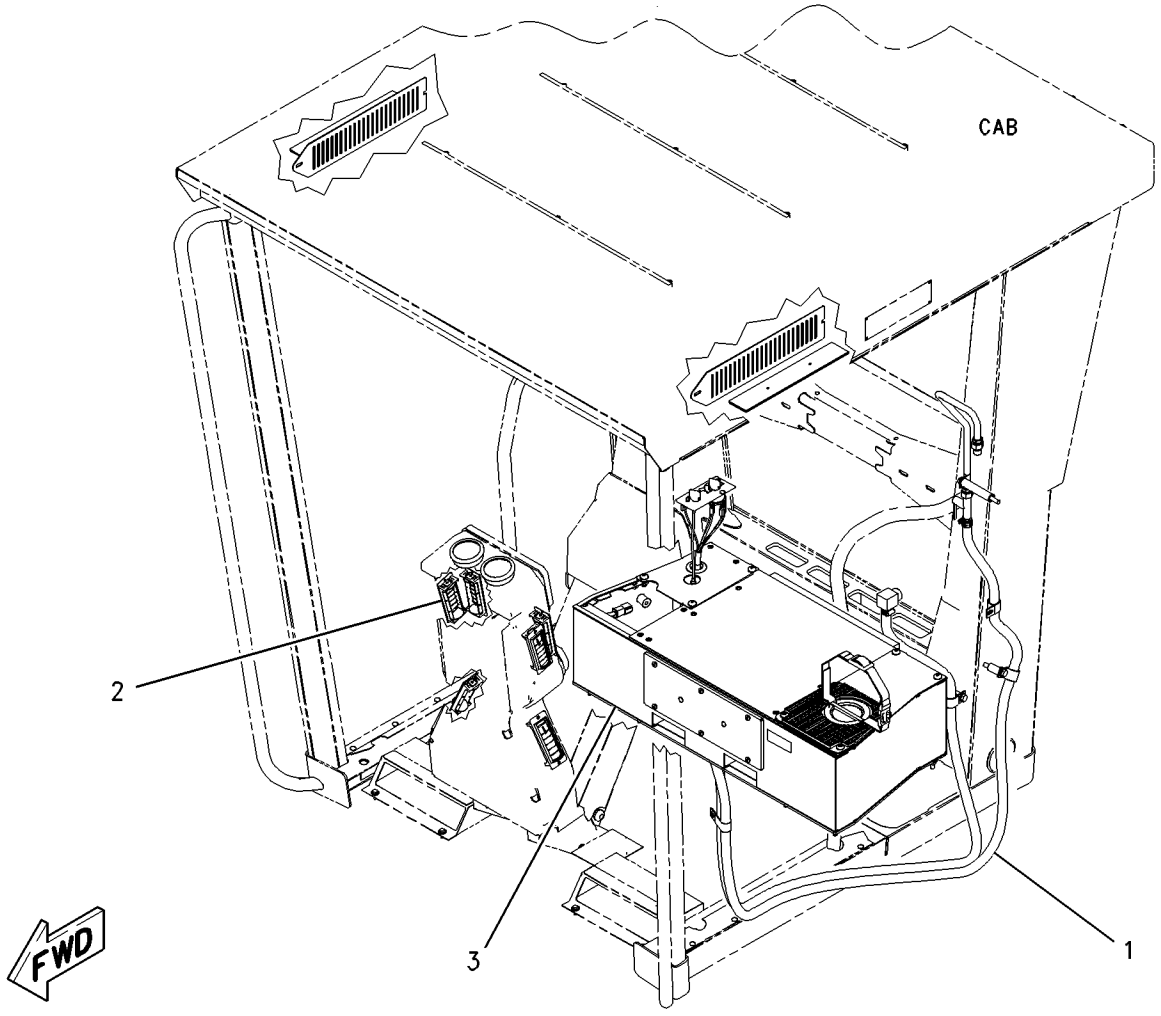


GRAPHIC #1 **<END>** g00954766

# OPERATOR STATION

## 173-5322 HEATER GP-CAB–BASIC

**S/N: CCA1-UP**

**PART OF 174-4552 HEATER & MTG GP-CAB**

**AN ATTACHMENT**

**SMCS-7304** **i02585428**

| NOTE | REF NO | GRAPHIC REF | PART NUMBER | QTY | PART NAME 1 2 3 4 5 6 (PRODUCT LEVEL) | SEE PAGE |
|---|---|---|---|---|---|---|
| | 1 | 2 | **2P-4339** | 1 | NUT-JAM (7/16-28-THD) | |
| | 2 | 2 | **2V-0099** | 1 | KNOB-CONTROL (TEMPERATURE) | |
| | 2A | 2 | **2V-0099** | 1 | KNOB-CONTROL (FAN SPEED) | |
| | 3 | 2 | **3E-0400** | 2 | BLOWER AS | |
| | | 2 | **037-4838** | 1 | CLAMP | |
| | 4 | 2 | **3E-3890** | 1 | FILM-CONTROL (FAN SPEED, TEMPERATURE) | |
| | 5 | 1 | **3S-2093** | 2 | STRAP-CABLE | |
| | 6 | 1 | **5P-7803** | 2 | PLUG-BUTTON | |
| | 7 | 1 | **5P-9135** | 1 | GROMMET | |
| | 8 | 2 | **6P-3236** | 1 | SWITCH AS-ROTARY (FAN SPEED) | |
| | | 2 | **6V-8362** | 5 | SCREW-MACHINE (8-32X0.31-IN) | |
| | | 2 | **9B-7233** | 5 | LOCKWASHER | |
| | 9 | 2 | **6T-5345** | 1 | BUSHING-TERMINAL | |
| | 10 | 2 | **6T-6708** | 2 | WASHER (7X28.6X4.1-MM THK) | |
| | 11 | 1 | **7G-4824** | 1 | STRAP | |
| | 12 | 1 | **8C-3756** | 1 | FILM-IDENTIFICATION (GROUP NUMBER) | |
| | 13 | 2 | **8C-4586** | 2 | CLAMP | |
| | 14 | 2 | **8D-1429** | 1 | LAMP (24-VOLT) | |
| | 15 | 1 | **8E-7791** | 1 | STRAP | |
| | 16 | 1 | **8P-5141** | 2 | PLATE-ORIFICE | |
| | 17 | 2 | **8X-5536** | 1 | COVER | |
| | 18 | 1 | **8X-5538** | 1 | COVER AS | |
| M | | 1 | **8T-3490** | 4 | NUT-WELD (M10X1.5-THD) | |
| | 19 | 1 | **8X-5540** | 1 | COVER | |
| | 20 | 1 | **8Y-6388** | 4 | LOUVER AS | |
| | 21 | 2 | **9G-1950** | 1 | RESISTOR | |
| | 22 | 2 | **9X-2185** | 4 | SCREW (8-15X11.11-MM) | |
| | 23 | 2 | **9X-2488** | 4 | CLAMP-HOSE | |
| | 24 | 1 | **123-4618** | 1 | COVER | |
| | 25 | 1 | **123-4701** | 1 | SEAL | |
| | 26 | 2 | **124-1431** | 1 | BRACKET | |
| | 27 | 1 | **124-1432** | 1 | HOUSING AS | |
| | | 1 | **7T-1099** | 1 | LINK | |
| | | 1 | **8P-5141** | 2 | PLATE-ORIFICE | |
| | 28 | 2 | **124-3137** | 1 | BRACKET | |
| | 29 | 1 | **124-3138** | 1 | SEAL | |
| | 30 | 2 | **124-9006** | 1 | SHAFT | |
| | 31 | 2 | **124-9007** | 1 | SHAFT AS | |
| | | 2 | **4L-5966** | 2 | SETSCREW (NO 10X0.19-IN) | |
| | 32 | 1 | **125-0439** | 1 | GASKET | |
| | 33 | 1 | **125-0442** | 1 | PLATE | |
| | 34 | 2 | **129-4935** | 1 | SEAL | |
| | 35 | 1 | **142-4940** | 1 | PLATE AS | |
| | 36 | 2 | **174-1494** | 1 | MOTOR AS-BLOWER (24-VOLT, A/C, HEATER) | |
| | | 2 | **100-3426** | 2 | WHEEL AS-BLOWER | |
| | | 2 | **037-4838** | 2 | CLAMP | |
| | | 2 | **9W-0852** | 2 | PIN-CONNECTOR (14-GA) | |
| | | 2 | **102-8802** | 1 | KIT-RECEPTACLE (2-PIN) | |
| | | | | | (INCLUDES RECEPTACLE AS & WEDGE) | |
| | 37 | 1 | **174-4492** | 1 | COVER | |
| | 38 | 1 | **174-4971** | 1 | SUPPORT AS | |
| | 39 | 1 | **174-6353** | 1 | PLATE | |
| | 40 | 1 | **176-5507** | 1 | PAD | |
| | 41 | 1 | **177-7858** | 1 | HARNESS AS-HEATER & AIR COND | |

## 173-5322 HEATER GP-CAB *(contd. )* i02585428

| NOTE | REF NO | GRAPHIC REF | PART NUMBER | QTY | PART NAME 1 2 3 4 5 6 (PRODUCT LEVEL) | SEE PAGE |
|---|---|---|---|---|---|---|
| | | 1 | **155-2270** | 1 | KIT-CONNECTING PLUG (2-PIN) | |
| | | | | | (INCLUDES PLUG AS, WEDGE, & INTERFACE SEAL) | |
| | | 1 | **102-8805** | 1 | KIT-RECEPTACLE (6-PIN) | |
| | | | | | (INCLUDES RECEPTACLE AS & WEDGE) | |
| | 42 | 1 | **191-0027** | 1 | PAD | |
| | 43 | 1 | **204-4376** | 1 | CAP-PROTECTIVE | |
| | 44 | 1 | **238-0415** | 1 | VALVE AS-WATER | |
| | 45 | 1 | **238-0417** | 1 | CORE AS-HEATER | |
| | 46 | 1 | **248-6772** | 4 | SCREW-MACHINE (8-16X7.75-IN) | |
| | 47 | 1 | **255-6261** | 2 | PLATE | |
| | 48 | 1 | **104-2091** | 8 | SCREW-FLAT HEAD (6-20X0.5-IN) | |
| M | 49 | 2 | **129-3178** | 4 | LOCKNUT (M6X1-THD) | |
| | 50 | 2 | **130-5300** | 1 | CLIP | |
| M | 51 | 2 | **141-9784** | 1 | BOLT (M6X1X190-MM) | |
| | 52 | 2 | **3H-2900** | 1 | GROMMET | |
| | 53 | 1 | **3S-9557** | 8 | SCREW-PAN HEAD (4-40X0.5-IN) | |
| | 54 | 1 | **4M-6582** | 1 | SEAL-O-RING | |
| M | 55 | 1,2 | **5C-2890** | 7 | NUT (M6X1-THD) | |
| | 56 | 1 | **5P-1075** | 13 | WASHER-HARD (10.2X22.5X3-MM THK) | |
| | 57 | 2 | **6V-1668** | 2 | WASHER (6.5X29.1X3-MM THK) | |
| M | 58 | 2 | **6V-7728** | 1 | BOLT (M6X1X45-MM) | |
| | 59 | 1 | **6V-8801** | 13 | NUT (3/8-16-THD) | |
| | 60 | 1 | **7X-0591** | 2 | WASHER-HARD (17X29X3-MM THK) | |
| M | 61 | 2 | **8T-4171** | 2 | BOLT (M6X1X12-MM) | |
| | 62 | 1,2 | **8T-4205** | 15 | WASHER-HARD (7.2X14.5X2-MM THK) | |
| | 63 | 1 | **9M-8406** | 1 | CLIP | |
| M | 64 | 1 | **9X-2040** | 4 | SCREW-TRUSS HEAD (M10X1.5X25-MM) | |
| M | 65 | 1,2 | **9X-2041** | 5 | SCREW-TRUSS HEAD (M10X1.5X20-MM) | |
| M | 66 | 1 | **9X-2045** | 6 | SCREW-TRUSS HEAD (M6X1X20-MM) | |
| E | 67 | 2 | **136-1953** | | HOSE (17-CM EACH) | |
| D | 68 | 2 | **5P-5908** | | SEAL (0.4-M) | |
| D | 69 | 1 | **5P-5637** | | SEAL | |
| D | 69A | 1 | **5P-5637** | | SEAL (0.85-M) | |
| D | 69B | 1 | **5P-5637** | | SEAL (0.43-M) | |
| D | 69C | 1 | **5P-5637** | | SEAL (0.4-M) | |
| D | 69D | 1 | **5P-5637** | | SEAL (0.25-M) | |
| D | 69E | 1 | **5P-5637** | | SEAL (0.16-M) | |
| D | 69F | 1 | **5P-5637** | | SEAL (0.13-M) | |
| E | 70 | 1 | **9X-2126** | | SEAL (35-CM) | |
| E | 70A | 1 | **9X-2126** | | SEAL (21-CM EACH) | |
| E | 70B | 2 | **9X-2126** | | SEAL (30-CM EACH) | |

D-ORDER BY THE METER
E-ORDER BY THE CENTIMETER
M-METRIC PART

## 173-5322 HEATER GP-CAB *(contd.)* i02585428

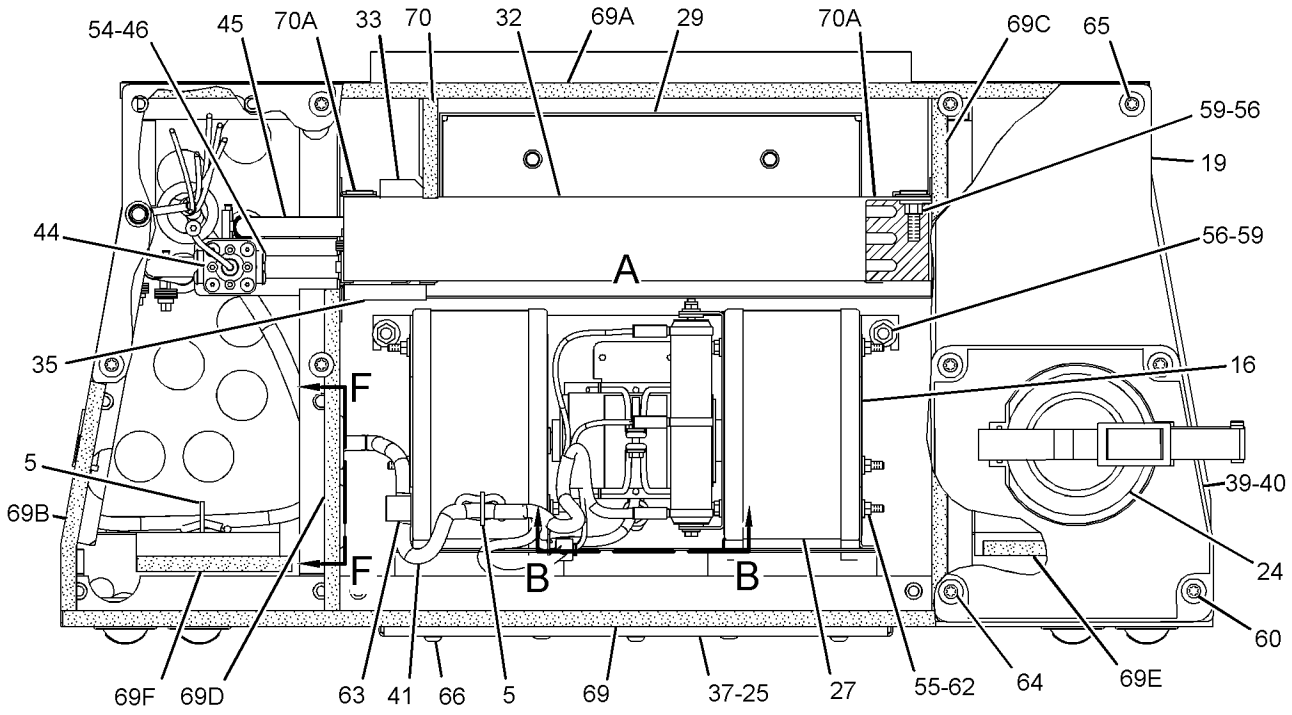


TOP VIEW

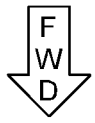


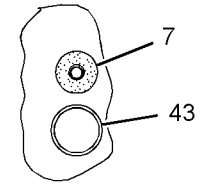


SECTION F-F

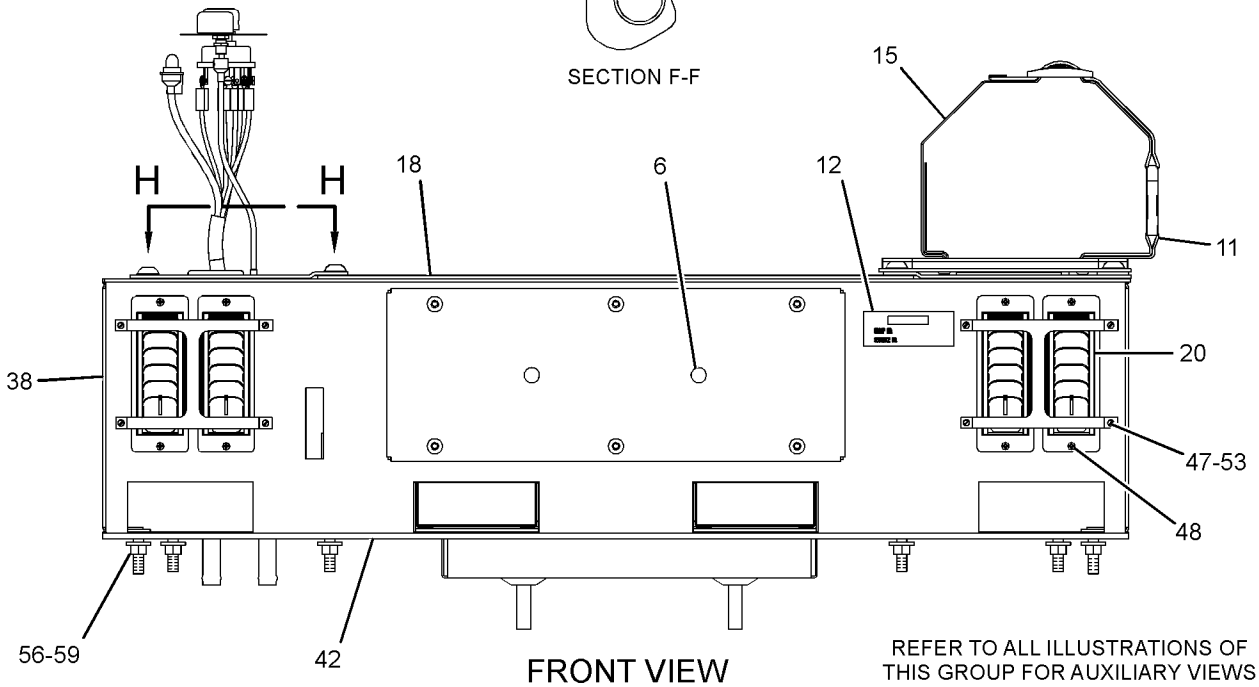


FRONT VIEW

REFER TO ALL ILLUSTRATIONS OF THIS GROUP FOR AUXILIARY VIEWS

GRAPHIC #1

g01280639

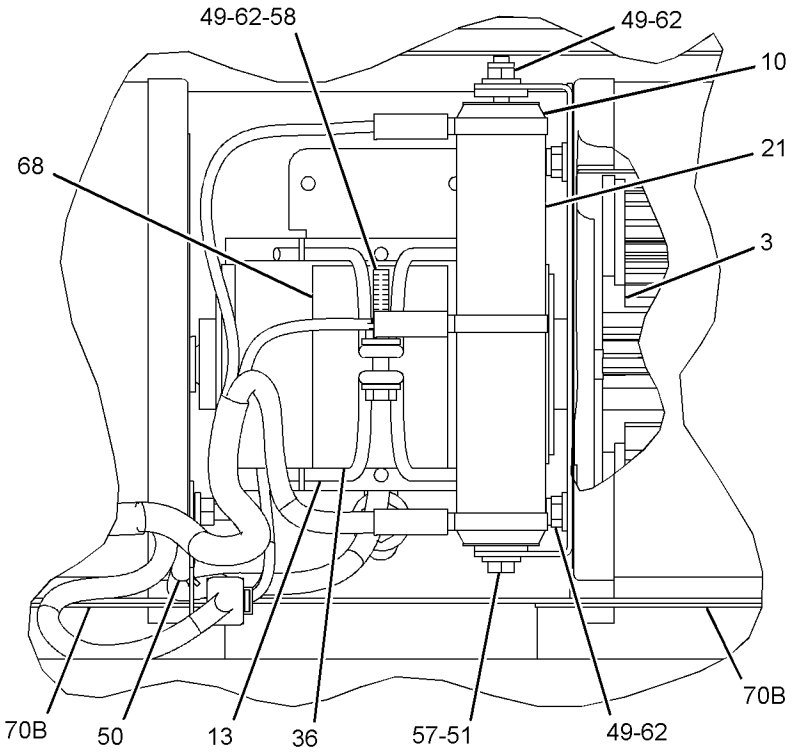


VIEW OF AREA A

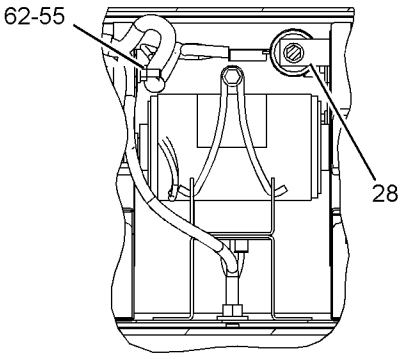


SECTION B-B

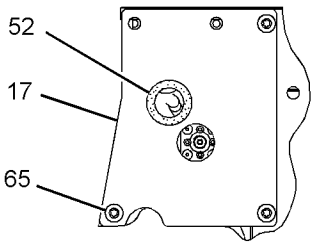


SECTION H-H

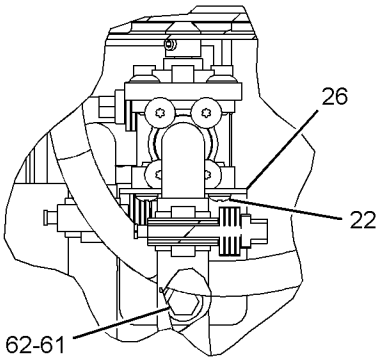


VIEW OF AREA C

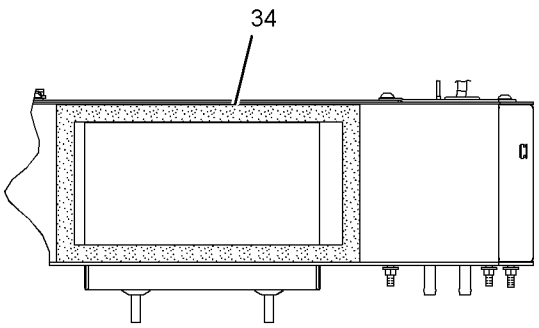


VIEW D-D

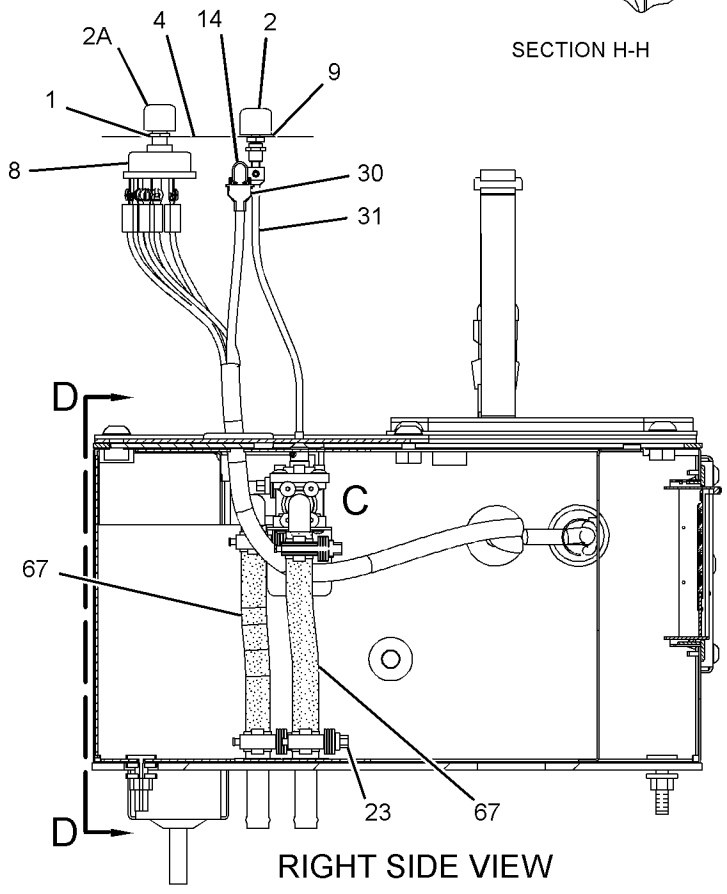


RIGHT SIDE VIEW

GRAPHIC #2

**<END>**

g01280641

# OPERATOR STATION

## *174-4547* HEATER GP-CAB—LIGHT DUTY

**S/N: CCA1-UP**

**PART OF 173-5360 HEATER & MTG GP-CAB**

**AN ATTACHMENT**

**SMCS-7304** **i02592491**

| NOTE | REF NO | GRAPHIC REF | PART NUMBER | QTY | PART NAME 1 2 3 4 5 6 (PRODUCT LEVEL) | SEE PAGE |
|---|---|---|---|---|---|---|
| | 1 | 2 | **2P-4339** | 1 | NUT-JAM (7/16-28-THD) | |
| | 2 | 2 | **2V-0099** | 1 | KNOB-CONTROL (FAN SPEED) | |
| | 2A | 2 | **2V-0099** | 1 | KNOB-CONTROL (TEMPERATURE) | |
| | 3 | 2 | **3E-0400** | 2 | BLOWER AS | |
| | 4 | 2 | **3E-3890** | 1 | FILM-CONTROL (FAN SPEED, TEMPERATURE) | |
| | 5 | 2 | **3H-2900** | 1 | GROMMET | |
| | 6 | 1 | **3S-2093** | 1 | STRAP-CABLE | |
| | 7 | 1 | **5P-7803** | 2 | PLUG-BUTTON | |
| | 8 | 2 | **5P-9135** | 1 | GROMMET | |
| | 9 | 2 | **6P-3236** | 1 | SWITCH AS-ROTARY (FAN SPEED) | |
| | 10 | 2 | **6T-5345** | 1 | BUSHING-TERMINAL | |
| | 11 | 2 | **6T-6708** | 2 | WASHER (7X28.6X4.1-MM THK) | |
| | 12 | 1 | **7G-4824** | 1 | STRAP | |
| Z | 13 | 1 | | 1 | FILM-IDENTIFICATION (GROUP NUMBER) (HEATER) | |
| | 14 | 2 | **8C-4586** | 2 | CLAMP | |
| | 15 | 1 | **8D-1429** | 1 | LAMP (24-VOLT) | |
| | 16 | 1 | **8E-7791** | 1 | STRAP | |
| | 17 | 1 | **8P-5141** | 2 | PLATE-ORIFICE | |
| | 18 | 2 | **8X-5536** | 1 | COVER | |
| | 19 | 1 | **8X-5538** | 1 | COVER AS | |
| M | | 1 | **8T-3490** | 4 | NUT-WELD (M10X1.5-THD) | |
| | 20 | 1 | **8X-5540** | 1 | COVER | |
| | 21 | 2 | **9G-1950** | 1 | RESISTOR | |
| M | 22 | 1,2 | **9X-2041** | 5 | SCREW-TRUSS HEAD (M10X1.5X20-MM) | |
| | 23 | 2 | **9X-2185** | 4 | SCREW (8-15X11.11-MM) | |
| | 24 | 1,2 | **9X-2488** | 4 | CLAMP-HOSE | |
| | 25 | 1 | **123-4618** | 1 | COVER | |
| | 26 | 1 | **123-4701** | 1 | SEAL | |
| | 27 | 2 | **124-1431** | 1 | BRACKET | |
| | 28 | 1 | **124-1432** | 1 | HOUSING AS | |
| | | 1 | **7T-1099** | 1 | LINK | |
| | | 1 | **8P-5141** | 2 | PLATE-ORIFICE | |
| | 29 | 2 | **124-3137** | 1 | BRACKET | |
| | 30 | 1 | **124-3138** | 1 | SEAL | |
| | 31 | 2 | **124-9006** | 1 | SHAFT | |
| | 32 | 2 | **124-9007** | 1 | SHAFT AS | |
| | | 2 | **4L-5966** | 2 | SETSCREW (NO 10X0.19-IN) | |
| | 33 | 1 | **125-0439** | 1 | GASKET | |
| | 34 | 1 | **125-0442** | 1 | PLATE | |
| | 35 | 2 | **129-4935** | 1 | SEAL | |
| | 36 | 2 | **130-5300** | 1 | CLIP | |
| | 37 | 1 | **142-4940** | 1 | PLATE AS | |
| | 38 | 2 | **174-1494** | 1 | MOTOR AS-BLOWER (24-VOLT, A/C, HEATER) (LIGHT DUTY) | |
| | | 2 | **3E-3365** | 1 | WEDGE-RECEPTACLE LOCK (2-PIN) | |
| | | 2 | **9W-0852** | 2 | PIN-CONNECTOR (14-GA) | |
| | | 2 | **102-8802** | 1 | KIT-RECEPTACLE (2-PIN) (INCLUDES RECEPTACLE AS & WEDGE) | |
| | 39 | 1 | **174-4492** | 1 | COVER | |
| | 40 | 1 | **174-6051** | 1 | SUPPORT AS | |
| | 41 | 1 | **174-6353** | 1 | PLATE | |
| | 42 | 1 | **176-5507** | 1 | PAD | |
| | 43 | 1 | **177-7858** | 1 | HARNESS AS-HEATER & AIR COND | |
| | | 1 | **155-2270** | 1 | KIT-CONNECTING PLUG (2-PIN) (INCLUDES PLUG AS & WEDGE) | |

*174-4547* **HEATER GP-CAB** *(contd.)* **i02592491**

| NOTE | REF NO | GRAPHIC REF | PART NUMBER | QTY | PART NAME 1 2 3 4 5 6 (PRODUCT LEVEL) | SEE PAGE |
|---|---|---|---|---|---|---|
| | | 1 | **102-8805** | 1 | KIT-RECEPTACLE (6-PIN) | |
| | | | | | (INCLUDES RECEPTACLE AS & WEDGE) | |
| | 44 | 1 | **191-0027** | 1 | PAD | |
| | 45 | 2 | **204-4376** | 1 | CAP-PROTECTIVE | |
| | 46 | 2 | **238-0415** | 1 | VALVE AS-WATER | |
| | 47 | 1 | **238-0417** | 1 | CORE AS-HEATER | |
| | 48 | 1 | **248-6772** | 4 | SCREW-MACHINE (8-16X7.75-IN) | |
| M | 49 | 2 | **129-3178** | 4 | LOCKNUT (M6X1-THD) | |
| M | 50 | 2 | **141-9784** | 1 | BOLT (M6X1X190-MM) | |
| | 51 | 1 | **4M-6582** | 1 | SEAL-O-RING | |
| M | 52 | 1,2 | **5C-2890** | 7 | NUT (M6X1-THD) | |
| | 53 | 1 | **5P-1075** | 13 | WASHER-HARD (10.2X22.5X3-MM THK) | |
| | 54 | 2 | **6V-1668** | 2 | WASHER (6.5X29.1X3-MM THK) | |
| M | 55 | 2 | **6V-7728** | 1 | BOLT (M6X1X45-MM) | |
| | 56 | 1 | **6V-8801** | 13 | NUT (3/8-16-THD) | |
| | 57 | 2 | **7X-0591** | 2 | WASHER-HARD (17X29X3-MM THK) | |
| M | 58 | 2 | **8T-4171** | 2 | BOLT (M6X1X12-MM) | |
| | 59 | 1,2 | **8T-4205** | 15 | WASHER-HARD (7.2X14.5X2-MM THK) | |
| | 60 | 1 | **9M-8406** | 1 | CLIP | |
| M | 61 | 1 | **9X-2040** | 4 | SCREW-TRUSS HEAD (M10X1.5X25-MM) | |
| M | 62 | 1 | **9X-2045** | 6 | SCREW-TRUSS HEAD (M6X1X20-MM) | |
| E | 63 | 2 | **136-1953** | | HOSE (17-CM) | |
| E | 63A | 2 | **136-1953** | | HOSE (17-CM) | |
| BD | 64 | 2 | **5P-5908** | | SEAL | |
| BD | 65 | 1 | **9X-2126** | | SEAL | |
| BD | 66 | 1,2 | **5P-5637** | | SEAL | |

B-USE AS REQUIRED
D-ORDER BY THE METER
E-ORDER BY THE CENTIMETER
M-METRIC PART
Z-NOT SERVICED SEPARATELY

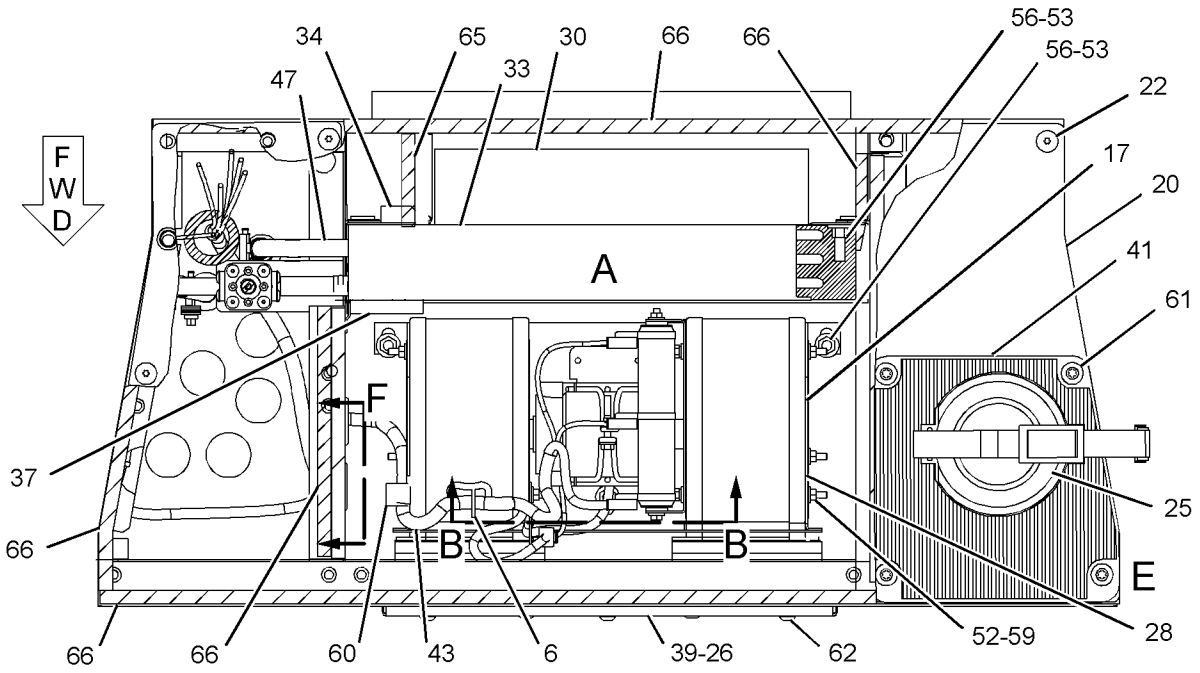


TOP VIEW

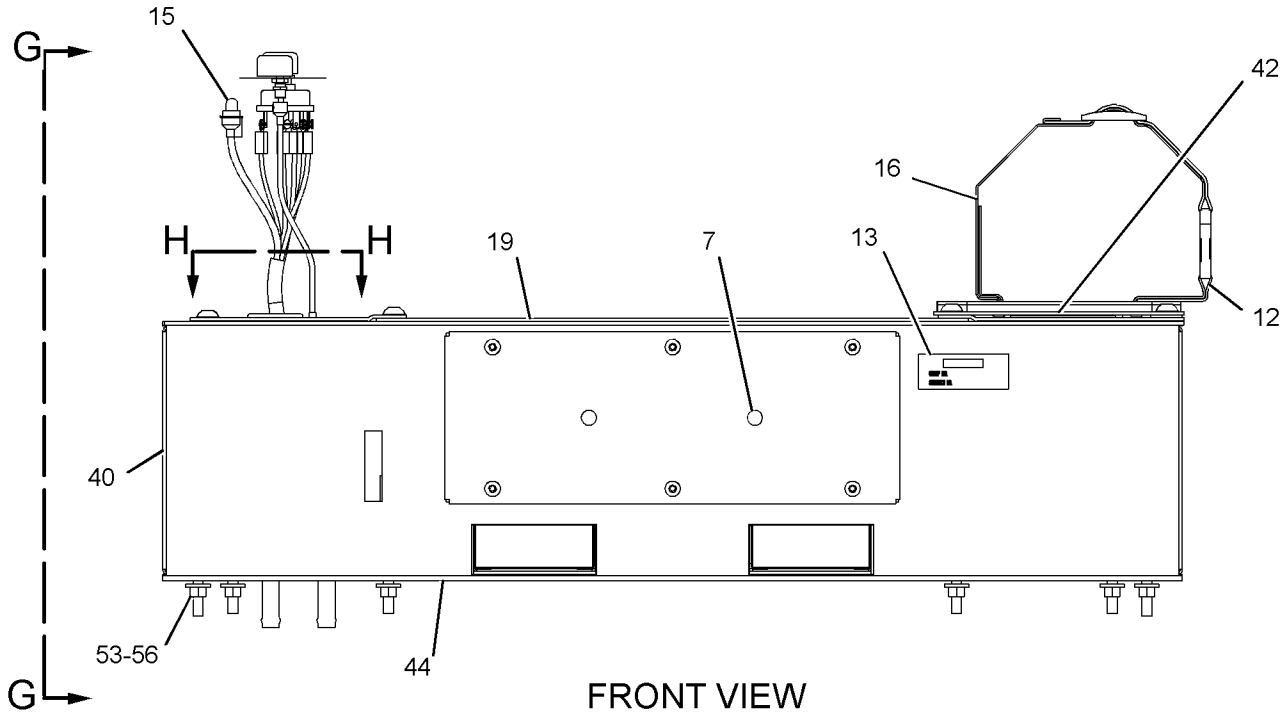


FRONT VIEW

REFER TO ALL ILLUSTRATIONS OF
THIS GROUP FOR AUXILIARY VIEWS

GRAPHIC #1

g01297587

*174-4547* **HEATER GP-CAB** *(contd.)* **i02592491**

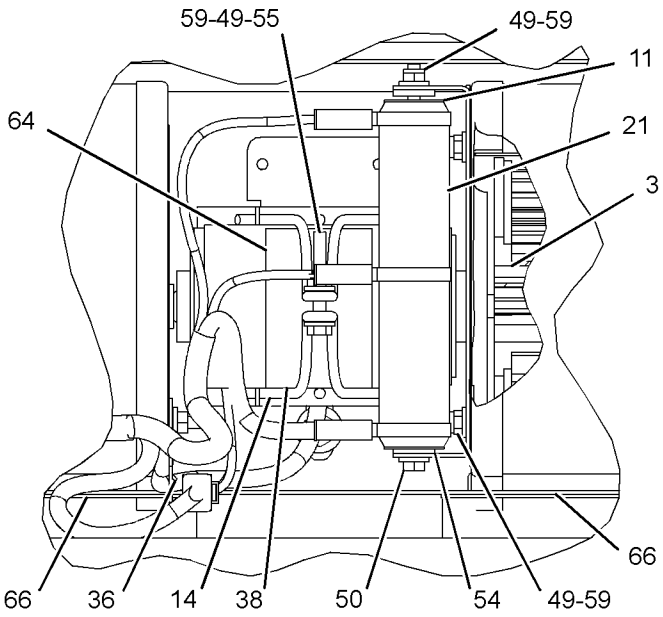


VIEW OF AREA A

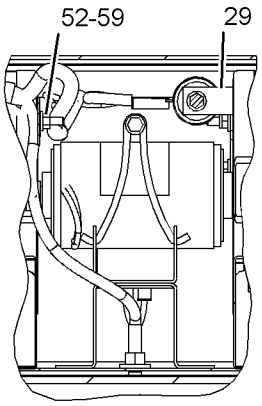


SECTION B-B

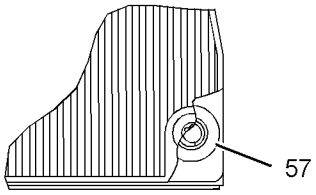


VIEW OF AREA E

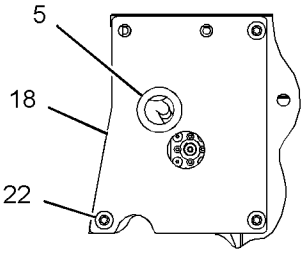


SECTION H-H

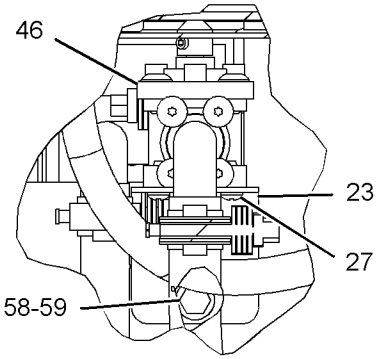


VIEW OF AREA C

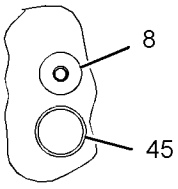


SECTION F

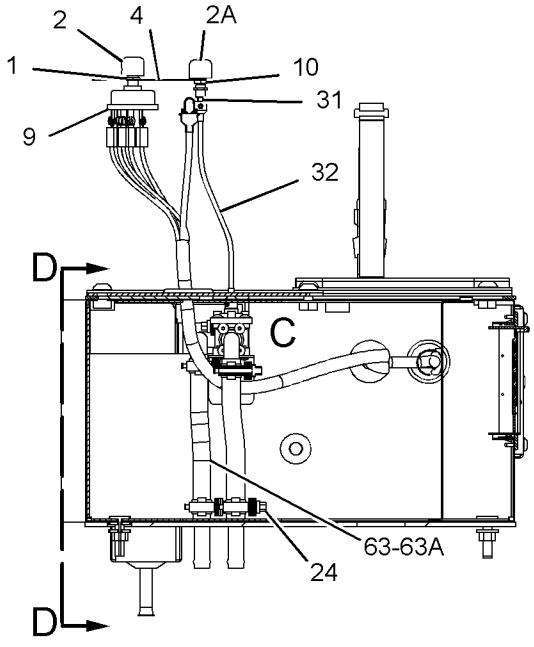


VIEW G-G

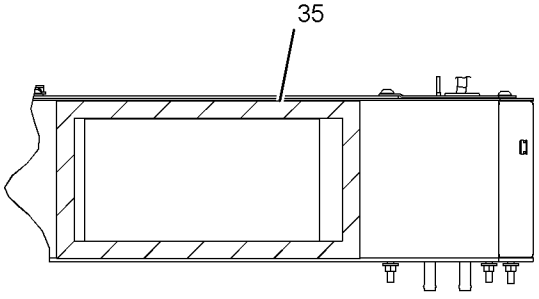


SECTION D-D

GRAPHIC #2 **<END>** g01297589

# OPERATOR STATION

## 5D-6998 HORN GP-AIR

**S/N: CCA1-UP**

**PART OF 160-7758 HORN GP-AIR**

**SMCS-7402** **i01757140**

| NOTE | REF NO | GRAPHIC REF | PART NUMBER | QTY | PART NAME 1 2 3 4 5 6 (PRODUCT LEVEL) | SEE PAGE |
|---|---|---|---|---|---|---|
| | 1 | 1 | **5D-6994** | 1 | HORN (LH) | |
| | 2 | 1 | **5D-6993** | 1 | HORN (RH) | |
| | 3 | 1 | **5D-6997** | 1 | PAD | |
| | 4 | 1 | **4B-5275** | 1 | WASHER (17.5X44.4X3.5-MM THK) | |
| | 5 | 1 | **5D-6996** | 1 | ADAPTER | |
| | 6 | 1 | **9S-1354** | 1 | NUT (5/8-18-THD) | |
| | 7 | 1 | **6F-0253** | 1 | LOCKWASHER | |
| | | | | | AVAILABLE REPAIR KIT(S): | |
| | | | **2G-6664** | 2 | KIT-DIAPHRAGM | |
| | | | | | (EACH INCLUDES DIAPHRAGM,SEAL, DECAL, SCREWS,NUTS, GASKET & INST SHEET) | |

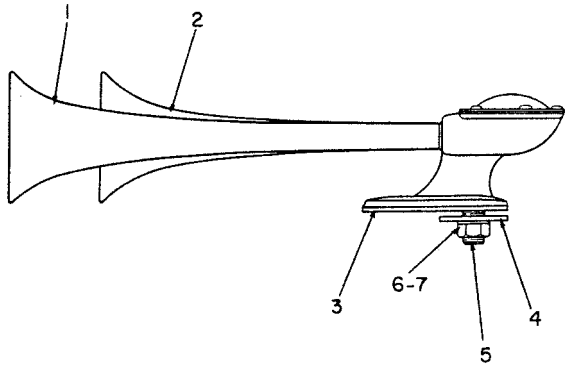


GRAPHIC #1 **<END>** g00081628

# OPERATOR STATION

## *160-7758* HORN GP-AIR

**S/N: CCA1-681, 711-719**
**PART OF 159-4615 GENERAL AR**

**SMCS-7402** **i01757144**

| NOTE | REF NO | GRAPHIC REF | PART NUMBER | QTY | PART NAME 1 2 3 4 5 6 (PRODUCT LEVEL) | SEE PAGE |
|---|---|---|---|---|---|---|
| | 1 | 1 | **3G-1701** | 1 | SPRING | |
| Y | 2 | 1 | **5D-6998** | 1 | HORN GP-AIR | 1155 |
| | 3 | 1 | **5T-4030** | 1 | BRACKET | |
| I | 4 | 1 | **6D-9718** | 1 | HOSE AS | |
| | 5 | 1 | **7I-4696** | 1 | RETAINER | |
| | 6 | 1 | **7I-4698** | 1 | RING | |
| | 7 | 1 | **7I-4699** | 1 | INSULATOR | |
| | 8 | 1 | **8X-9387** | 1 | PLATE | |
| | 9 | 1 | **009-4184** | 4 | SPRING-HORN | |
| | 10 | 1 | **009-4185** | 4 | BRUSH-HORN | |
| | 11 | 1 | **091-9071** | 1 | SEAL-HORN BUTTON | |
| | 12 | 1 | **098-7467** | 1 | BUTTON (AIR HORN) | |
| | 13 | 1 | **169-3145** | 1 | WIRE AS | |
| | | 1 | **102-8802** | 1 | KIT-RECEPTACLE (2-PIN) | |
| | | | | | (INCLUDES RECEPTACLE ASSEMBLY AND WEDGE) | |
| | | 1 | **3E-3365** | 1 | WEDGE-RECEPTACLE LOCK (2-PIN) | |
| | | 1 | **6D-4161** | 1 | CONTACT | |
| | | 1 | **186-3735** | 1 | PIN-CONNECTOR (16-GA TO 18-GA) | |
| | | 1 | **9G-3695** | 1 | PLUG (GROMMET SEALING) | |
| | 14 | 1 | **179-4814** | 3 | PIN | |
| Y | 15 | 1 | **188-9250** | 1 | VALVE GP-SOLENOID (AIR HORN) | 627 |
| | 16 | 1 | **4B-3388** | 1 | BOLT (5/16-18X1.125-IN) | |
| | 17 | 1 | **4L-6454** | 3 | BOLT (3/8-16X1-IN) | |
| | 18 | 1 | **5H-4778** | 2 | ELBOW | |
| | 19 | 1 | **5K-2408** | 1 | FITTING | |
| | 20 | 1 | **5S-0003** | 1 | NUT (5/16-18-THD) | |
| | 21 | 1 | **6V-3342** | 1 | ELBOW-PIPE | |
| | 22 | 1 | **8T-4896** | 3 | WASHER-HARD (10.2X18.5X2.5-MM THK) | |
| | 23 | 1 | **9M-1974** | 1 | WASHER-HARD (8.8X16X2-MM THK) | |

I-REFER TO HYDRAULIC INFORMATION SYSTEM
Y-SEPARATE ILLUSTRATION

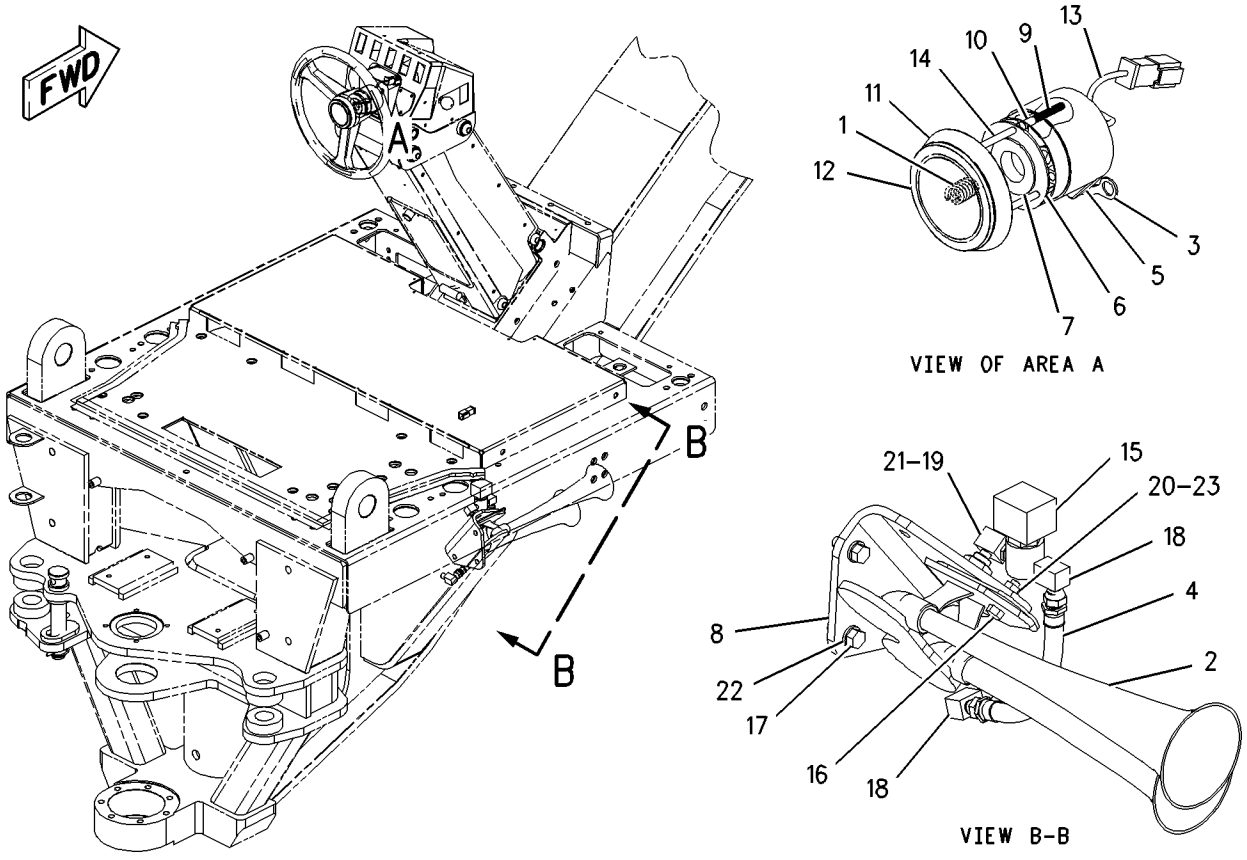


GRAPHIC #1 **<END>** g00865365

# OPERATOR STATION

## *160-7758* HORN GP-AIR

**S/N: CCA682-710, 720-UP**
**PART OF 159-4615 GENERAL AR**

**SMCS-7402** **i02592610**

| NOTE | REF NO | GRAPHIC REF | PART NUMBER | QTY | PART NAME 1 2 3 4 5 6 (PRODUCT LEVEL) | SEE PAGE |
|---|---|---|---|---|---|---|
| CI | 1 | 1 | **3D-6399** | 1 | HOSE AS | |
| | 2 | 1 | **3G-1701** | 1 | SPRING | |
| Y | 3 | 1 | **5D-6998** | 1 | HORN GP-AIR | 1155 |
| | 4 | 1 | **5T-4030** | 1 | BRACKET | |
| | 5 | 1 | **7I-4696** | 1 | RETAINER | |
| | 6 | 1 | **7I-4698** | 1 | RING | |
| | 7 | 1 | **7I-4699** | 1 | INSULATOR | |
| | 8 | 1 | **8X-9387** | 1 | PLATE | |
| | 9 | 1 | **009-4184** | 4 | SPRING-HORN | |
| | 10 | 1 | **009-4185** | 4 | BRUSH-HORN | |
| | 11 | 1 | **091-9071** | 1 | SEAL-HORN BUTTON | |
| | 12 | 1 | **098-7467** | 1 | BUTTON | |
| | 13 | 1 | **169-3145** | 1 | WIRE AS | |
| | 14 | 1 | **179-4814** | 3 | PIN | |
| CY | 15 | 1 | **185-0008** | 1 | VALVE GP-SOLENOID (AIR HORN) | 626 |
| | 16 | 1 | **4B-3388** | 1 | BOLT (5/16-18X1.125-IN) | |
| | 17 | 1 | **4L-6454** | 3 | BOLT (3/8-16X1-IN) | |
| | 18 | 1 | **5H-4778** | 2 | ELBOW | |
| | 19 | 1 | **5K-2408** | 1 | FITTING | |
| | 20 | 1 | **5S-0003** | 1 | NUT (5/16-18-THD) | |
| | 21 | 1 | **6V-3342** | 1 | ELBOW-PIPE | |
| | 22 | 1 | **8T-4896** | 3 | WASHER-HARD (10.2X18.5X2.5-MM THK) | |
| | 23 | 1 | **9M-1974** | 1 | WASHER-HARD (8.8X16X2-MM THK) | |

C-CHANGE FROM PREVIOUS TYPE
I-REFER TO HYDRAULIC INFORMATION SYSTEM
Y-SEPARATE ILLUSTRATION

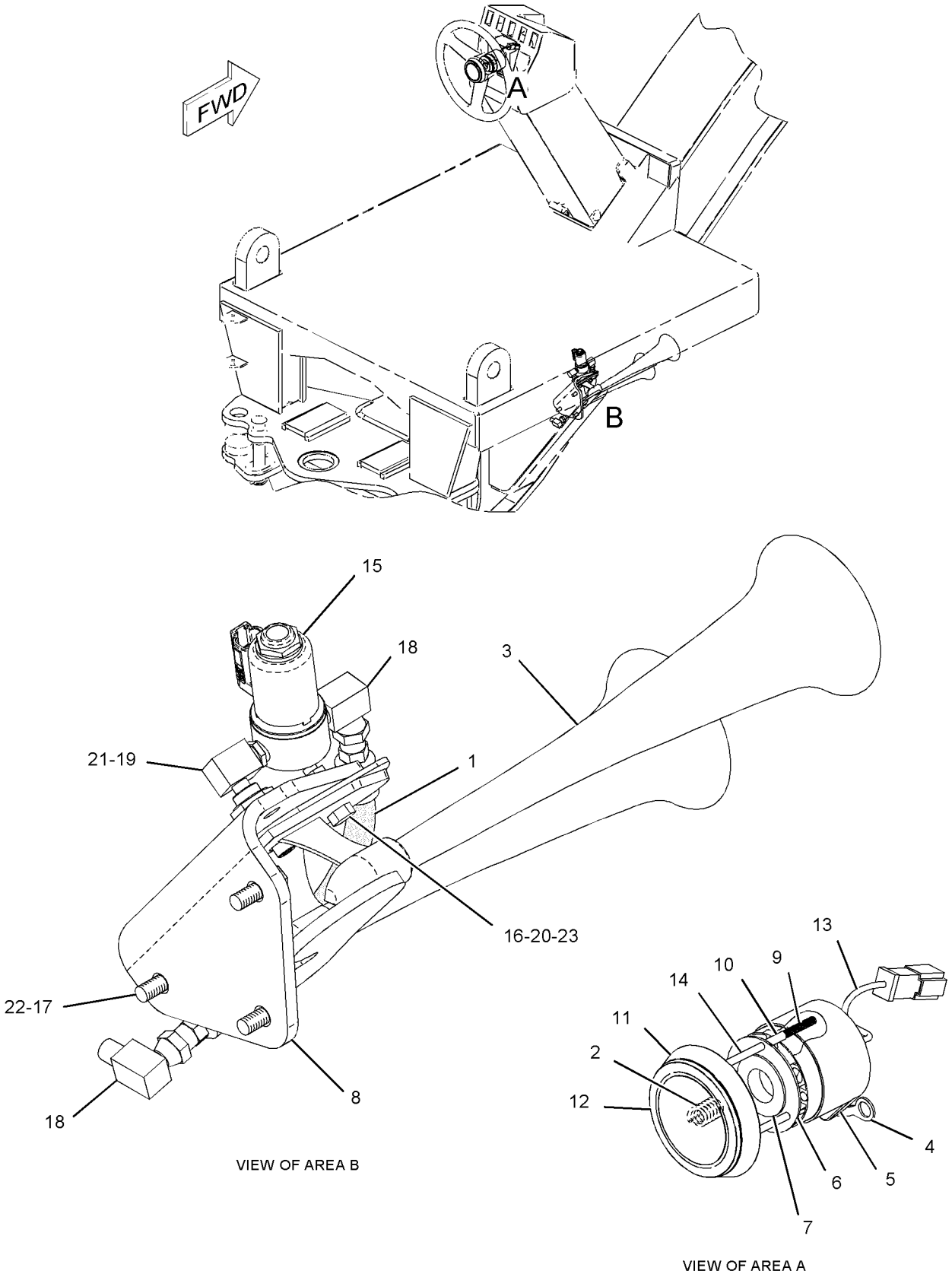


GRAPHIC #1 **<END>** g01074157

# OPERATOR STATION

## 113-5808 HOUSING GP-SEAT SUSPENSION

**S/N: CCA1-UP**
**PART OF 113-5800 SUSPENSION GP-SEAT**
**ALSO AN ATTACHMENT**

**SMCS-7321, 7324** **i02592659**

| NOTE | REF NO | GRAPHIC REF | PART NUMBER | QTY | PART NAME 1 2 3 4 5 6 (PRODUCT LEVEL) | SEE PAGE |
|---|---|---|---|---|---|---|
| | 1 | 1 | **8Y-6044** | 1 | SHAFT | |
| | 2 | 1 | **8Y-6066** | 1 | SPRING | |
| | 3 | 1 | **8Y-6069** | 1 | ADJUSTER AS | |
| | 4 | 1 | **8Y-6068** | 1 | NUT (3/8X16-THD) | |
| | 5 | 1 | **113-5801** | 1 | HOUSING AS-UPPER | |
| | 6 | 1 | **8Y-6047** | 2 | PIN | |
| | 7 | 1 | **2M-7819** | 4 | RING-RETAINING | |
| | 8 | 1 | **8Y-6041** | 1 | ARM AS | |
| | 9 | 1 | **8Y-6045** | 1 | CAM | |
| | 10 | 1 | **8Y-6046** | 1 | PIN | |
| | 11 | 1 | **8S-7803** | 4 | RING-RETAINING | |
| | 12 | 1 | **095-0878** | 1 | PIN-SPRING | |
| | 13 | 1 | **7M-7219** | 1 | BEARING-THRUST | |
| | 14 | 1 | **4N-2927** | 2 | RACE-THRUST BEARING | |
| | 15 | 1 | **1Y-7927** | 1 | PIN | |
| | 16 | 1 | **8Y-6060** | 2 | ROLLER | |
| | 17 | 1 | **5V-0770** | 2 | BOLT-CARRIAGE (1/4-20X0.74-IN) | |
| | | 1 | **2D-6235** | 2 | LOCKNUT (1/4-20-THD) | |
| | 18 | 1 | **113-5806** | 1 | ROD | |
| | 19 | 1 | **8Y-6063** | 1 | LINK-ACTUATOR | |
| | 20 | 1 | **131-5167** | 1 | KNOB AS-ADJUSTMENT | |
| | | 1 | **4V-7875** | 1 | HANDLE | |
| | | 1 | **4V-7877** | 1 | SPRING | |
| | | 1 | **6V-3259** | 1 | PIN-SPRING | |
| | | 1 | **149-7226** | 1 | SCREW-PAN HEAD (10-16X0.625-IN) | |
| | 21 | 1 | **8Y-6062** | 1 | LINK-ACTUATOR | |
| | 22 | 1 | **113-5805** | 1 | KEY | |
| | 23 | 1 | **4B-5059** | 6 | WASHER (15X29.5X2.5-MM THK) | |
| | 24 | 1 | **8Y-6064** | 2 | ROLLER-SLIDER | |
| | 25 | 1 | **7V-5191** | 2 | SPACER (28X10X7.1-MM THK) | |
| | 26 | 1 | **5D-4822** | 2 | RING-RETAINING | |
| | 27 | 1 | **5P-8445** | 6 | RING-RETAINING | |
| | 28 | 1 | **5V-1497** | 2 | RETAINER | |
| | 29 | 1 | **5V-1474** | 1 | SCREW-FORMING (10-16X0.625-IN) | |
| | 30 | 1 | **113-5807** | 1 | KNOB | |
| | 31 | 1 | **8Y-6067** | 1 | SPACER (10.54-MM THK) | |
| | 32 | 1 | **131-4242** | 1 | BOLT (3/8-16X5.18-IN) | |
| JZ | 33 | 1 | | 1 | PIN | |
| JZ | 34 | 1 | | 1 | FOLLOWER | |
| Z | 35 | 1 | | 2 | SPRING | |
| Z | 36 | 1 | | 2 | BUSHING | |
| NZ | 37 | 1 | | 2 | ROD AS | |
| NZ | 38 | 1 | | 2 | SPRING | |
| NZ | 39 | 1 | | 2 | SPACER | |
| NZ | 40 | 1 | | 2 | BUSHING | |
| QZ | 41 | 1 | | 1 | GUIDE | |
| QZ | 42 | 1 | | 1 | RIVET | |
| QZ | 43 | 1 | | 1 | TAPE | |
| Z | 44 | 1 | | 1 | FOLLOWER | |
| Z | 45 | 1 | | 1 | PIN | |
| SZ | 46 | 1 | | 3 | BUMPER | |
| | | | | | AVAILABLE REPAIR KIT(S): | |
| J | | | **108-4087** | 1 | KIT-FOLLOWER | |

## 113-5808 HOUSING GP-SEAT SUSPENSION *(contd. )* i02592659

| NOTE | REF NO | GRAPHIC REF | PART NUMBER | QTY | PART NAME 1 2 3 4 5 6 (PRODUCT LEVEL) | SEE PAGE |
|---|---|---|---|---|---|---|
| | | | **108-4103** | 1 | KIT-BEARING | |
| | | | | | (INCLUDES 3-ROLLERS AS) | |
| | | | **8Y-6859** | 1 | KIT-SPRING | |
| N | | | **8Y-6860** | 1 | KIT-SPRING (HEIGHT ADJUSTMENT) | |
| Q | | | **100-3224** | 1 | KIT-INDICATOR (WEIGHT ADJUSTMENT) | |
| | | | | | (INCLUDES STRAP) | |
| | | | **108-4086** | 1 | KIT-FOLLOWER | |
| S | | | **100-5179** | 1 | KIT-BUMPER (WEIGHT ADJUSTMENT) | |

J-KIT MARKED J INCLUDES PART(S) MARKED J
N-KIT MARKED N INCLUDES PART(S) MARKED N
Q-KIT MARKED Q INCLUDES PART(S) MARKED Q
S-KIT MARKED S INCLUDES PART(S) MARKED S
Z-NOT SERVICED SEPARATELY

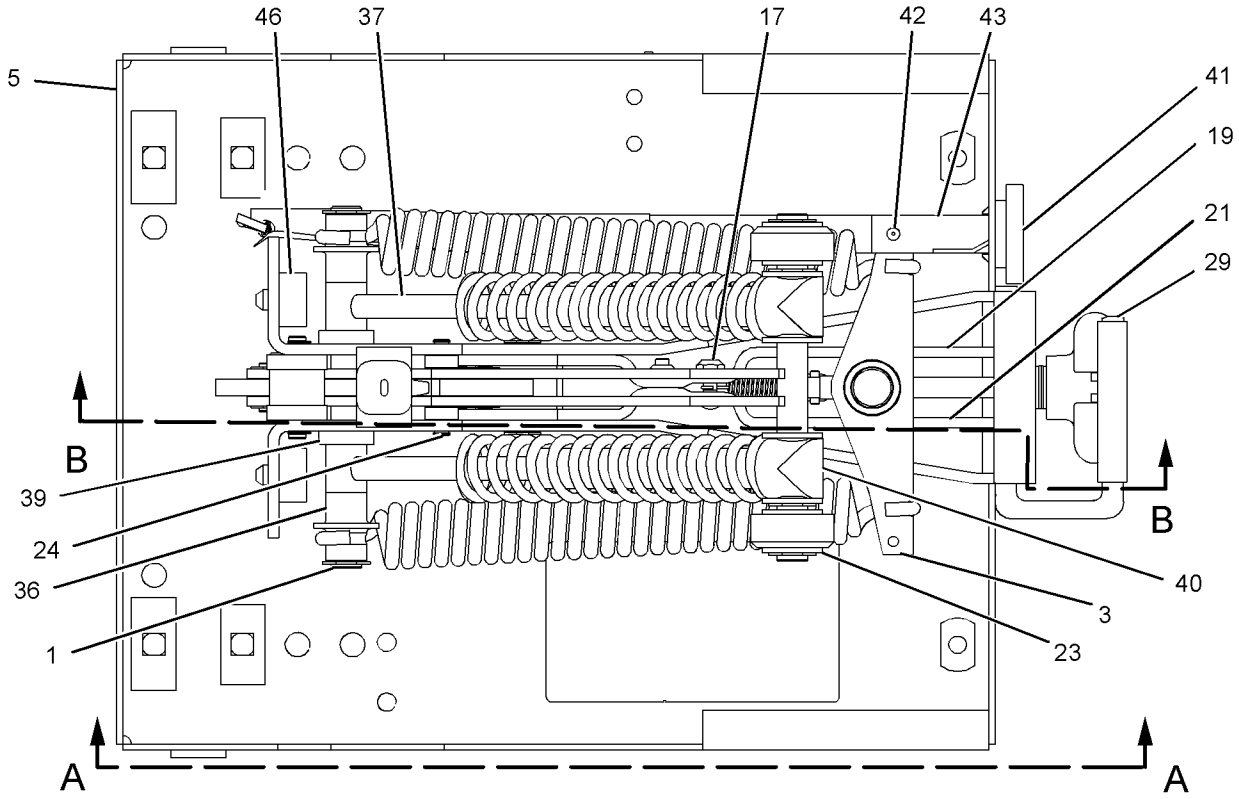


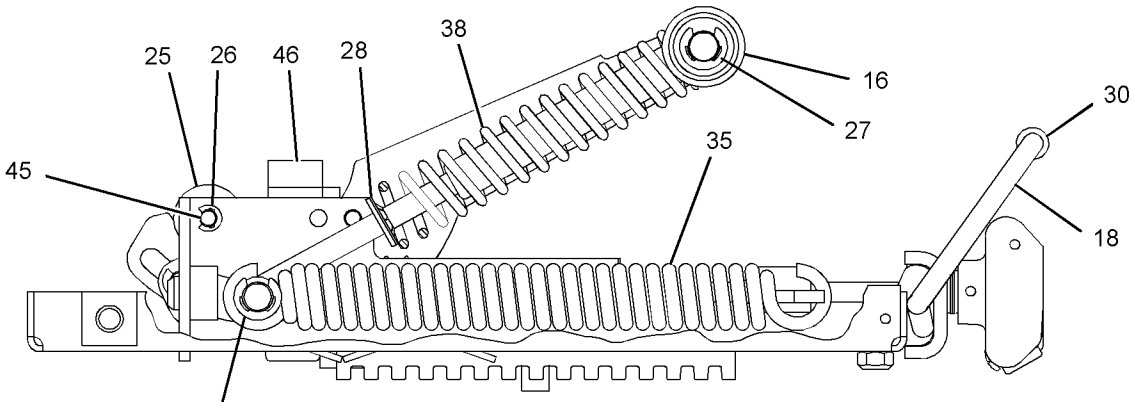


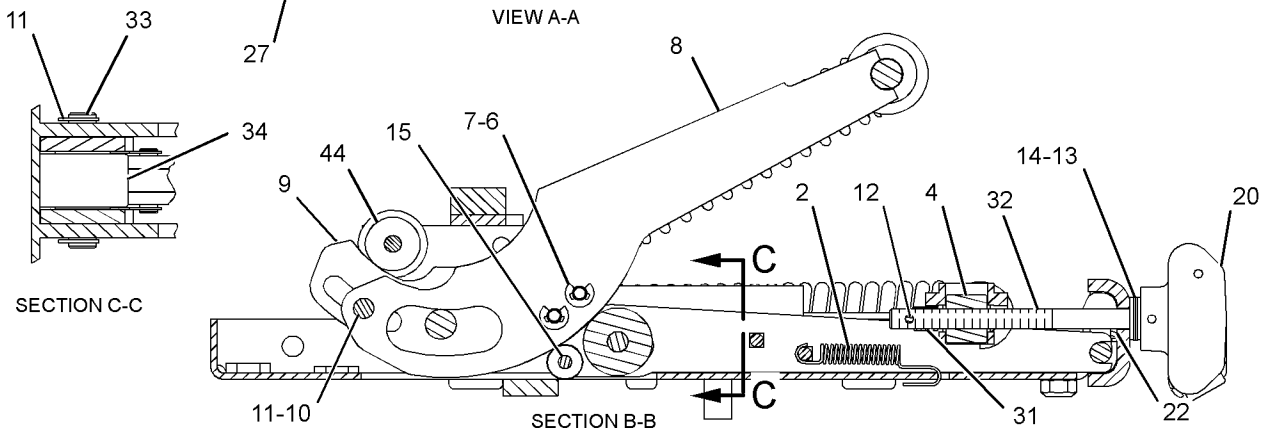


GRAPHIC #1 **<END>** g01297596

# *145-1300* INSTALLATION AR-RADIO

**S/N: CCA1-UP**
**PART OF 259-5738 CONVERSION AR-MACHINE**
**AN ATTACHMENT**

**SMCS-7338** **i00609526**

| NOTE | PART NUMBER | QTY | PART NAME 1 2 3 4 5 6 (PRODUCT LEVEL) | SEE PAGE |
|---|---|---|---|---|
| Y | *145-1297* | 1 | CONVERTER GP-ELECTRICAL | 164 |
| Y | *130-9432* | 1 | INSTALLATION GP-RADIO | 1164 |

Y-SEPARATE ILLUSTRATION

**<END>**

# OPERATOR STATION

## *130-9432* INSTALLATION GP-RADIO

**S/N: CCA1-UP**

**PART OF 145-1300 INSTALLATION AR-RADIO**

**AN ATTACHMENT**

**SMCS-7338** **i02252891**

| NOTE | REF NO | GRAPHIC REF | PART NUMBER | QTY | PART NAME 1 2 3 4 5 6 (PRODUCT LEVEL) | SEE PAGE |
|---|---|---|---|---|---|---|
| | 1 | 1 | **2G-8767** | 1 | WASHER (10.5X60X3-MM THK) | |
| | 2 | 1 | **9U-8263** | 1 | COVER | |
| | 3 | 1 | **2A-6684** | 1 | BRACKET | |
| | 4 | 1 | **3S-2093** | 2 | STRAP-CABLE | |
| | 5 | 1 | **6T-7695** | 2 | SPEAKER AS-RADIO | |
| | 6 | 1 | **8E-1118** | 1 | ANTENNA AS | |
| | 7 | 1 | **8X-9884** | 1 | BRACKET AS | |
| | 8 | 1 | **9W-3073** | 1 | CABLE AS-COAXIAL | |
| | 9 | 1 | **5P-8525** | 1 | GROMMET | |
| | 10 | 1 | **6V-5834** | 3 | SCREW-HEAD (10-14X0.75-IN) | |
| | 11 | 1 | **8T-4121** | 2 | WASHER-HARD (11X21X2.5-MM THK) | |
| M | 12 | 1 | **8T-4137** | 2 | BOLT (M10X1.5X20-MM) | |
| | 13 | 1 | **9X-8256** | 6 | WASHER (6.6X12X2-MM THK) | |

M-METRIC PART

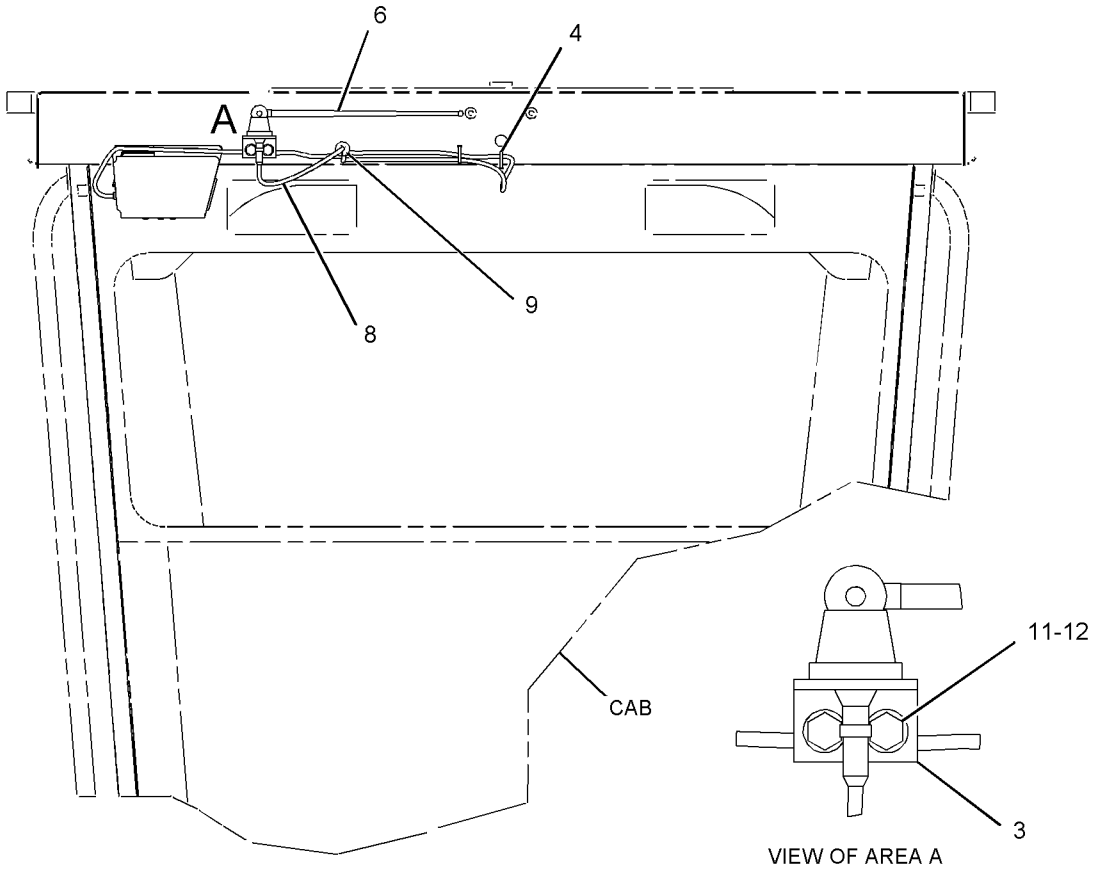


REAR VIEW

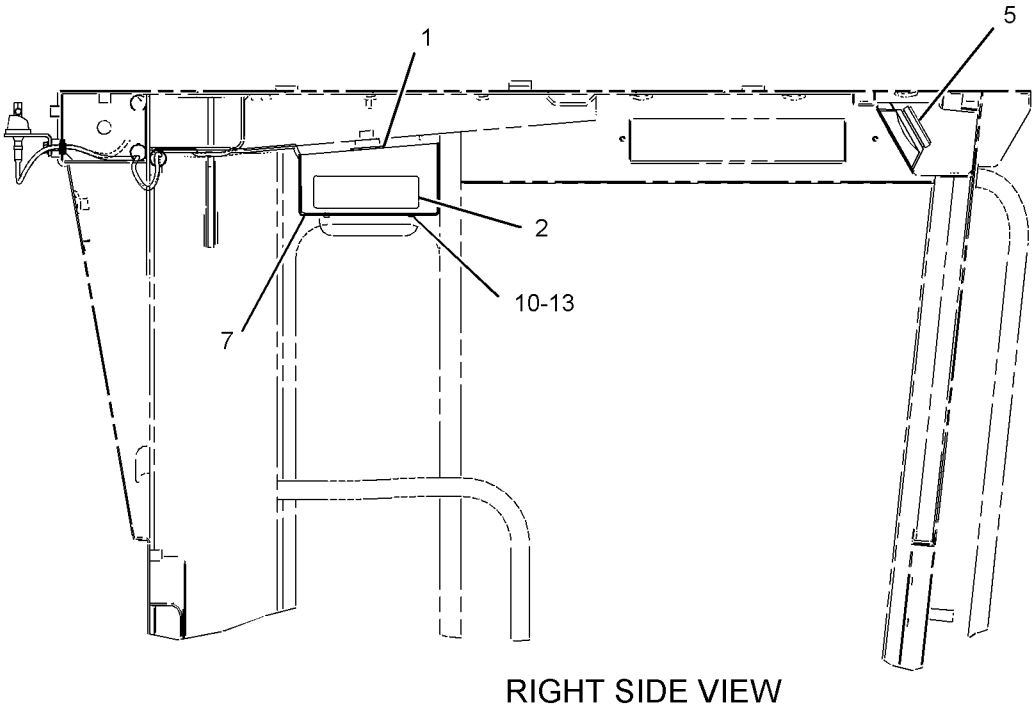


RIGHT SIDE VIEW

GRAPHIC #1 **<END>** g01134741

# OPERATOR STATION

## *172-5378* INSULATION GP-WEATHER

**S/N: CCA1-UP**
**PART OF 225-3174 CAB AR, 211-4906 CAB AR-NON-ROPS, 161-1141, 179-3581, 218-4758 ROPS AR-ENCLOSED**
**ALSO AN ATTACHMENT**

**SMCS-7329** **i02205461**

| NOTE | REF NO | GRAPHIC REF | PART NUMBER | QTY | PART NAME 1 2 3 4 5 6 (PRODUCT LEVEL) | SEE PAGE |
|---|---|---|---|---|---|---|
| | 1 | 1 | **8X-2226** | 2 | PLATE | |
| | 2 | 1 | **8X-2913** | 2 | COVER AS | |
| | | | | | (EACH INCLUDES) | |
| M | | 1 | **6V-9632** | 2 | NUT-WELD (M6X1-THD) | |
| B | 3 | 1 | **8X-8055** | 6 | PLUG | |
| | 4 | 1 | **8X-8351** | 2 | PLATE AS | |
| | 5 | 1 | **8W-6061** | 1 | FLOOR MAT (CAB) | |
| | 6 | 1 | **171-6165** | 2 | DUCT | |
| | 7 | 1 | **178-4190** | 2 | SEAL | |
| | 8 | 1 | **179-2138** | 2 | SEAL | |
| | 9 | 1 | **179-2139** | 1 | FOAM (RH) | |
| | 10 | 1 | **179-2140** | 1 | FOAM (LH) | |
| | 11 | 1 | **4M-5281** | 4 | BOLT (1/4-20X0.75-IN) | |
| | 12 | 1 | **5P-4115** | 4 | WASHER-HARD (7.2X19X2-MM THK) | |
| M | 13 | 1 | **9X-2043** | 14 | SCREW-TRUSS HEAD (M6X1X14-MM) | |
| BD | 14 | 1 | **5P-6882** | | SEAL | |
| BD | 15 | 1 | **5P-5969** | | SEAL | |
| | 16 | 1 | **112-9164** | 8 | BOOT | |

B-USE AS REQUIRED
D-ORDER BY THE METER
M-METRIC PART

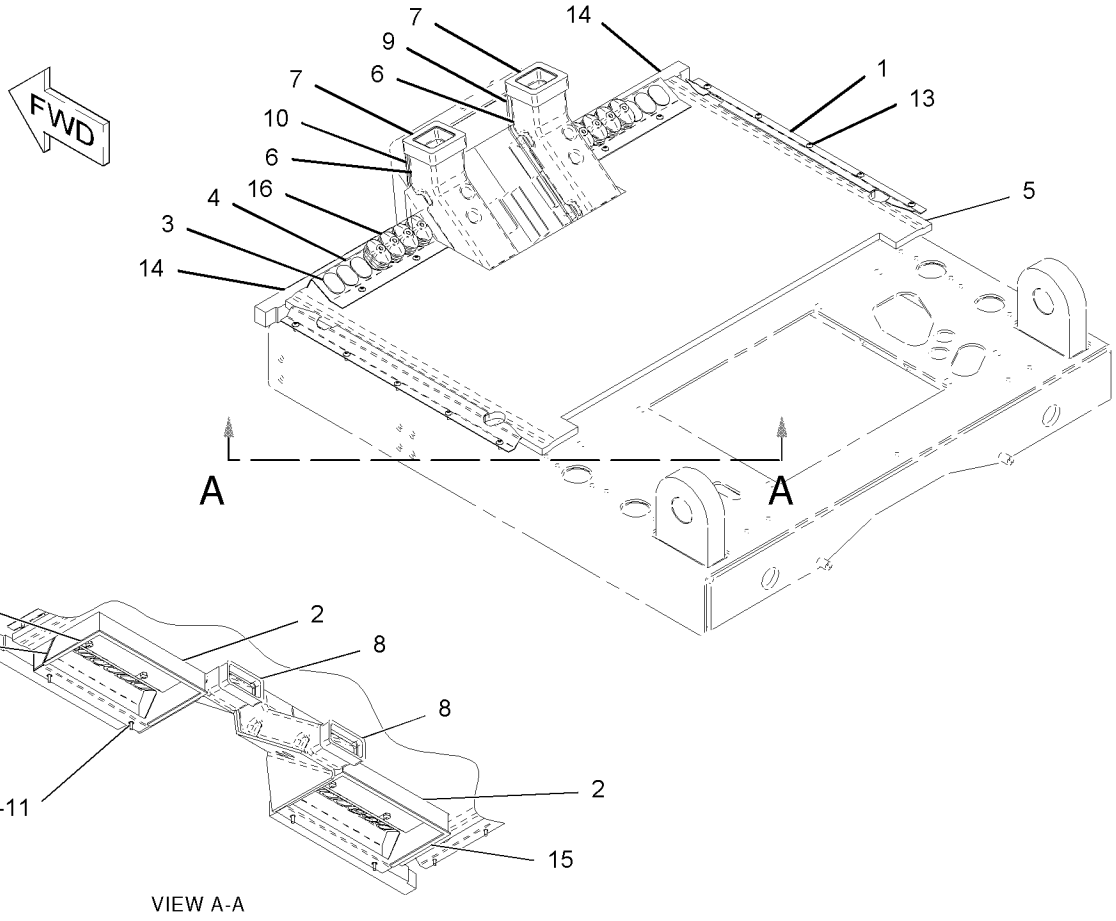





VIEW A-A

GRAPHIC #1 **<END>** g01024335

# OPERATOR STATION

## *129-4618* LINER GP-CAB—HIGH PROFILE

**S/N: CCA1-UP**

**PART OF 223-3937 CAB GP**

**AN ATTACHMENT**

**SMCS-7329** **i00606553**

| NOTE | REF NO | GRAPHIC REF | PART NUMBER | QTY | PART NAME 1 2 3 4 5 6 (PRODUCT LEVEL) | SEE PAGE |
|---|---|---|---|---|---|---|
| M | 1 | 1 | **9X-2043** | 12 | SCREW-TRUSS HEAD (M6X1X14-MM) | |
| M | 2 | 1 | **9X-2045** | 3 | SCREW-TRUSS HEAD (M6X1X20-MM) | |
| | 3 | 1 | **129-4622** | 1 | PANEL-CAB | |
| | 4 | 1 | **129-4645** | 1 | INSULATION | |
| | 5 | 1 | **6V-3928** | 2 | PLUG-BUTTON | |
| | 6 | 1 | **129-4646** | 1 | INSULATION | |
| | 7 | 1 | **134-6474** | 1 | PLATE | |
| | 8 | 1 | **115-6804** | 1 | DUCT-RH | |
| | 9 | 1 | **115-6805** | 1 | DUCT-LH | |

M-METRIC PART

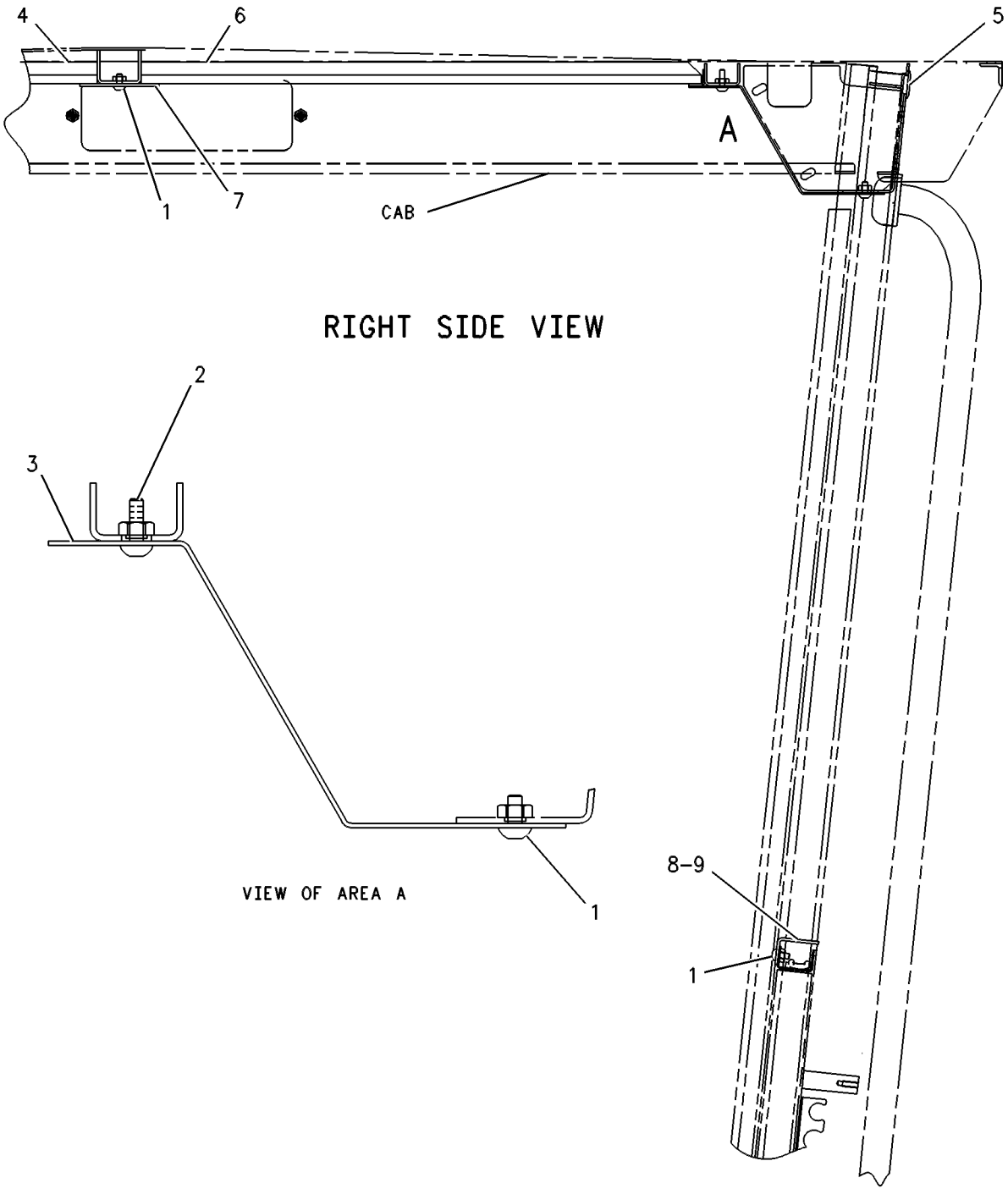


GRAPHIC #1 **<END>** g00109332

# OPERATOR STATION

## *172-5376* LINER GP-CAB—LOW PROFILE

**S/N: CCA1-UP**

**PART OF 172-5377, 260-1745 ROPS GP-ENCLOSED**

**ALSO AN ATTACHMENT**

**SMCS-7329** **i02578232**

| NOTE | REF NO | GRAPHIC REF | PART NUMBER | QTY | PART NAME 1 2 3 4 5 6 (PRODUCT LEVEL) | SEE PAGE |
|---|---|---|---|---|---|---|
| | 1 | 1 | **2G-8572** | 2 | WASHER-SPECIAL (10X27.81X2.54-MM THK) | |
| | 2 | 1 | **2G-8573** | 2 | CAP | |
| | 3 | 1 | **2G-8767** | 1 | WASHER (10.5X60X3-MM THK) | |
| | 4 | 2 | **3G-3265** | 24 | RIVET | |
| | 5 | 1 | **5P-5454** | 1 | ASHTRAY | |
| | 6 | 1 | **5P-5824** | 1 | HOLDER | |
| | 7 | 1 | **5P-7803** | 8 | PLUG-BUTTON | |
| | 8 | 2 | **6G-2395** | 2 | DOOR GP (AIR VENTED) | |
| | | | | | (EACH INCLUDES) | |
| | | 2 | **6G-7222** | 2 | ROLLER | |
| | 9 | 2 | **6G-2396** | 2 | GASKET | |
| | 10 | 2 | **6G-2751** | 4 | HINGE | |
| | 11 | 2 | **6G-2914** | 2 | LATCH | |
| | 12 | 2 | **6K-3273** | 4 | RIVET-POP | |
| | 13 | 1 | **6P-0205** | 3 | SPACER (0.269X0.405X0.656-IN THK) | |
| | 14 | 1 | **6V-3928** | 7 | PLUG-BUTTON | |
| | 15 | 2 | **6V-8928** | 1 | HOOK-COAT | |
| | 16 | 2 | **7G-4824** | 1 | STRAP | |
| | 17 | 2 | **8E-7791** | 1 | STRAP | |
| | 18 | 1 | **8F-0492** | 1 | SPACER (0.531X1.125X0.625-IN THK) | |
| | 19 | 1 | **8T-5401** | 2 | PLUG-BUTTON | |
| | 20 | 1 | **8X-5414** | 1 | PLATE | |
| | 21 | 1 | **8X-6998** | 1 | INSULATION | |
| | 22 | 1 | **8X-7845** | 2 | COVER | |
| | 23 | 2 | **9N-1995** | 20 | RIVET-POP | |
| | 24 | 2 | **101-3055** | 2 | COVER-SPEAKER | |
| | 25 | 1 | **107-5014** | 4 | KNOB | |
| | 26 | 2 | **109-2804** | 2 | DOOR | |
| | 27 | 1 | **115-6807** | 1 | PLATE | |
| | 28 | 2 | **115-9923** | 1 | COVER | |
| | 29 | 2 | **122-8677** | 1 | PANEL | |
| | 30 | 2 | **122-8795** | 2 | PLATE | |
| | 31 | 1 | **137-6783** | 1 | HOLDER | |
| | 32 | 1 | **137-8065** | 1 | COVER | |
| | 33 | 1 | **138-7026** | 1 | PLATE | |
| | 34 | 1 | **138-9910** | 1 | PLATE AS | |
| | 35 | 1 | **139-1117** | 1 | PLATE | |
| | 36 | 2 | **139-3593** | 1 | PANEL | |
| | 37 | 1 | **144-4107** | 2 | FASTENER | |
| | 38 | 1 | **172-1239** | 1 | COVER (RH) | |
| | 39 | 2 | **174-4141** | 1 | PANEL | |
| | 40 | 1 | **179-2173** | 1 | COVER (RH) | |
| | 41 | 2 | **179-2177** | 1 | COVER AS (LH) | |
| | 42 | 1 | **197-8611** | 1 | COVER (RH) | |
| | 43 | 1 | **197-8624** | 1 | COVER (LH) | |
| | 44 | 1 | **197-8627** | 1 | COVER (RH) | |
| | 45 | 1 | **197-8628** | 1 | COVER (LH) | |
| | 46 | 2 | **200-8623** | 8 | NUT-RETAINER | |
| | 47 | 2 | **103-9425** | 8 | SCREW-MACHINE (8-32X1-IN) | |
| M | 48 | 1 | **129-3178** | 3 | LOCKNUT (M6X1-THD) | |
| | 49 | 2 | **131-6009** | 2 | PIN | |
| | 50 | 1 | **5P-4115** | 2 | WASHER-HARD (7.2X19X2-MM THK) | |
| | 51 | 2 | **6V-0292** | 1 | PLUG | |
| | 52 | 1 | **8T-4121** | 1 | WASHER-HARD (11X21X2.5-MM THK) | |
| M | 53 | 1 | **8T-4182** | 2 | BOLT (M10X1.5X45-MM) | |

*172-5376* **LINER GP-CAB** *(contd.)* **i02578232**

| NOTE | REF NO | GRAPHIC REF | PART NUMBER | QTY | PART NAME 1 2 3 4 5 6 (PRODUCT LEVEL) | SEE PAGE |
|---|---|---|---|---|---|---|
| M | 54 | 1 | **8T-4195** | 1 | BOLT (M10X1.5X30-MM) | |
| | 55 | 1 | **9R-2620** | 1 | PLUG | |
| M | 56 | 1,2 | **9X-2041** | 4 | SCREW-TRUSS HEAD (M10X1.5X20-MM) | |
| M | 57 | 1 | **9X-2042** | 4 | SCREW-TRUSS HEAD (M6X1X12-MM) | |
| M | 58 | 1,2 | **9X-2043** | 29 | SCREW-TRUSS HEAD (M6X1X14-MM) | |
| M | 59 | 1,2 | **9X-2045** | 6 | SCREW-TRUSS HEAD (M6X1X20-MM) | |
| M | 60 | 2 | **9X-2046** | 4 | SCREW-TRUSS HEAD (M6X1X35-MM) | |
| | 61 | 1 | **9X-8256** | 3 | WASHER (6.6X12X2-MM THK) | |
| D | 62 | 1,2 | **8T-3426** | | CHANNEL-TRIM (0.55-M) | |
| D | 62A | 2 | **8T-3426** | | CHANNEL-TRIM (1.35-M) | |
| D | 63 | 1 | **6V-0505** | | SEAL (0.05-M EACH) | |
| D | 64 | 1 | **5P-5969** | | SEAL (1-M EACH) | |
| D | 65 | 2 | **6V-5163** | | SEAL (1.3-M) | |
| D | 65A | 2 | **6V-5163** | | SEAL (1.2-M) | |
| | 66 | 1 | **8T-4896** | 1 | WASHER-HARD (10.2X18.5X2.5-MM THK) | |

D-ORDER BY THE METER
M-METRIC PART

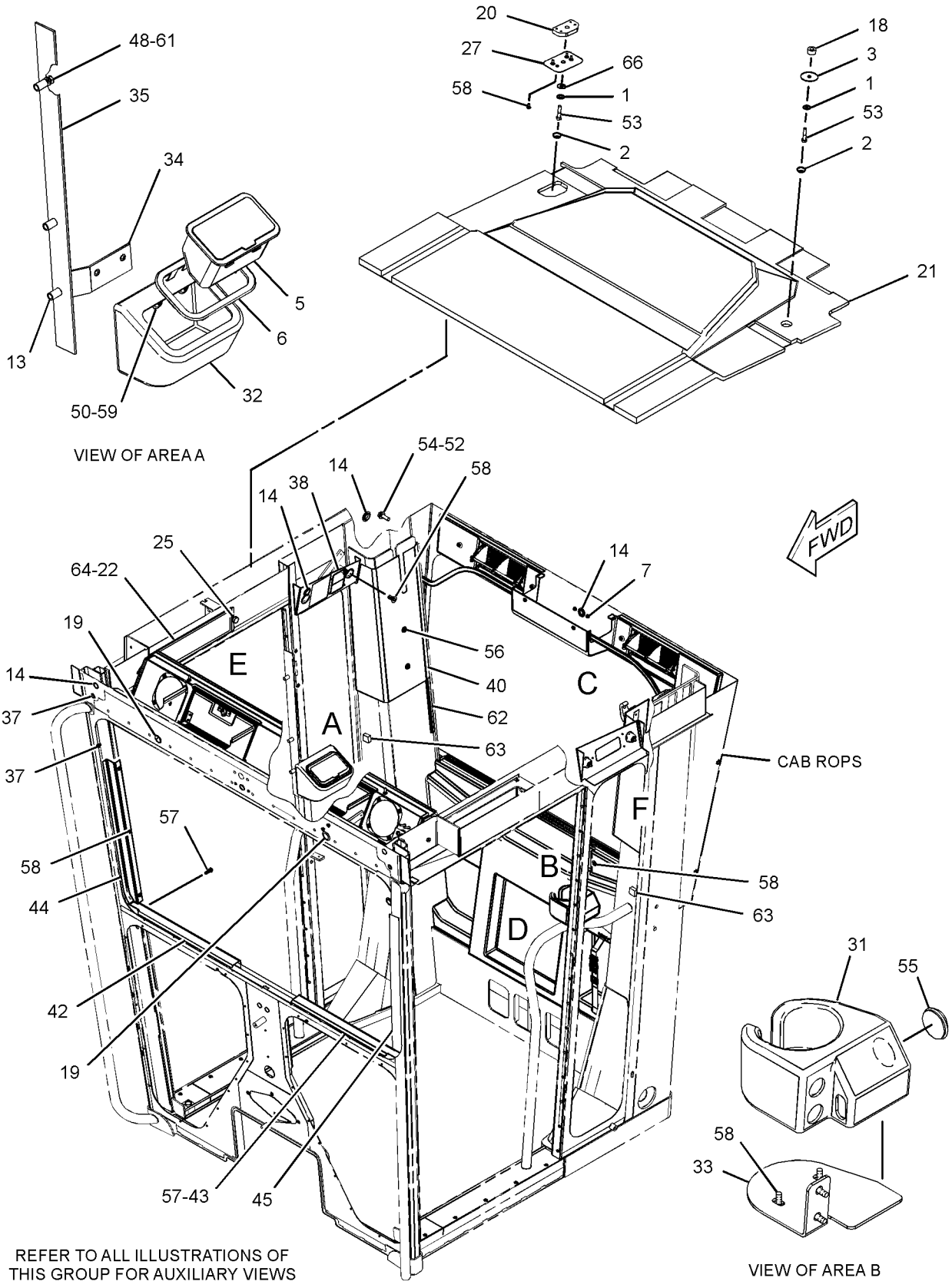


GRAPHIC #1 g01293671

*172-5376* **LINER GP-CAB** *(contd.)* **i02578232**

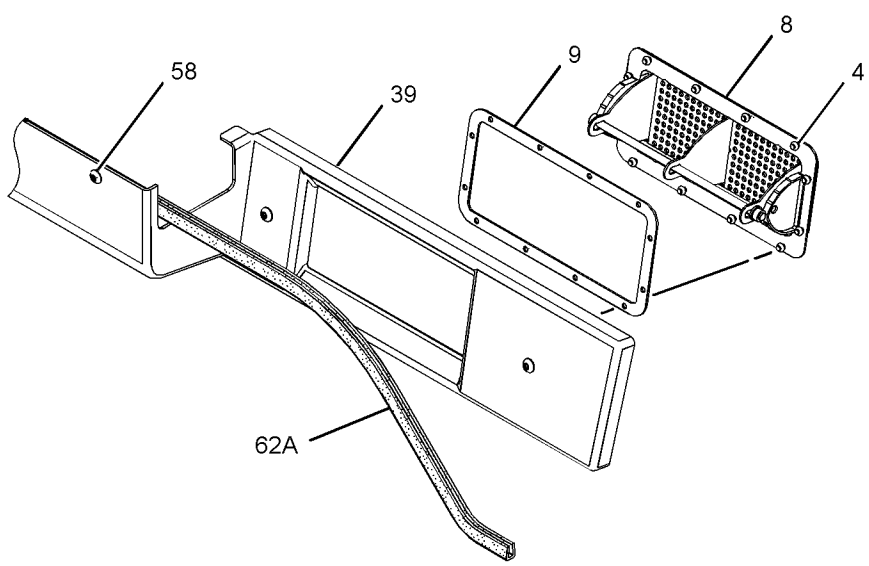


VIEW OF AREA C

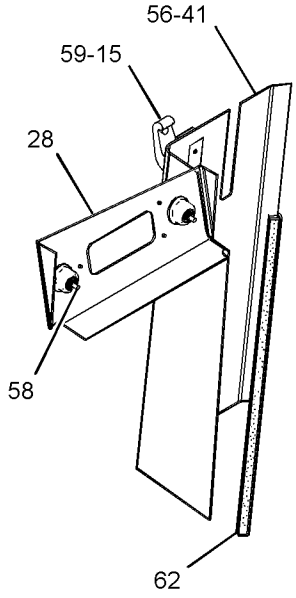


VIEW OF AREA F

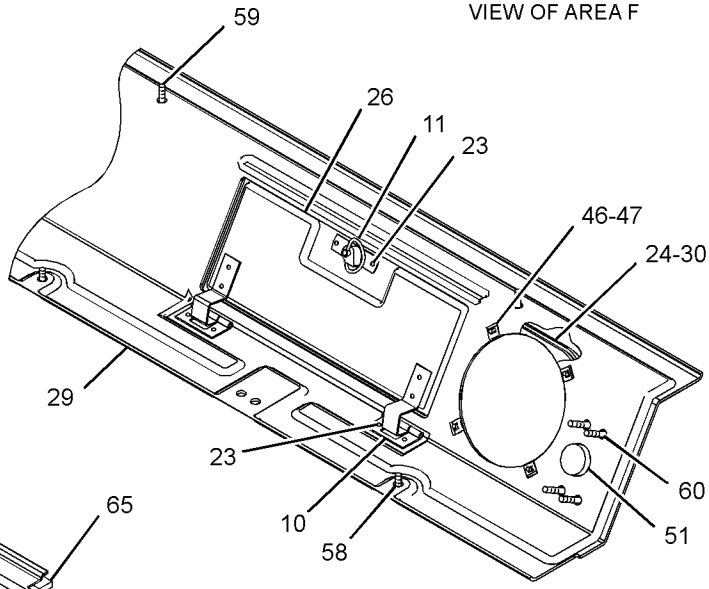


VIEW OF AREA E

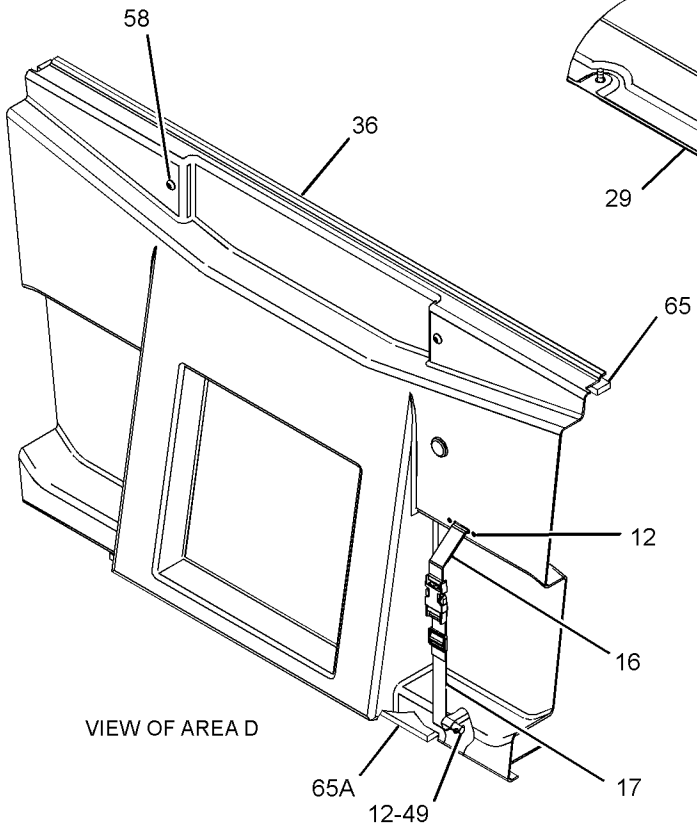


VIEW OF AREA D




GRAPHIC #2 **<END>** g01189853

# OPERATOR STATION

## *177-8781* LINER GP-CAB—ENCLOSED —HIGH PROFILE

**S/N: CCA1-UP**

**PART OF 177-8779, 218-4759 ROPS GP-ENCLOSED**

**AN ATTACHMENT**

**SMCS-7329** **i02578239**

| NOTE | REF NO | GRAPHIC REF | PART NUMBER | QTY | PART NAME 1 2 3 4 5 6 (PRODUCT LEVEL) | SEE PAGE |
|---|---|---|---|---|---|---|
| | 1 | 2 | **2G-8572** | 2 | WASHER-SPECIAL (10X27.81X2.54-MM THK) | |
| | 2 | 2 | **2G-8573** | 2 | CAP | |
| | 3 | 2 | **2G-8767** | 1 | WASHER (10.5X60X3-MM THK) | |
| | 4 | 2 | **3G-3265** | 24 | RIVET | |
| | 5 | 3 | **5P-5454** | 1 | ASHTRAY | |
| | 6 | 3 | **5P-5824** | 1 | HOLDER | |
| | 7 | 2 | **5P-7803** | 2 | PLUG-BUTTON | |
| | 8 | 1 | **6G-2395** | 2 | DOOR GP (AIR VENTED) | |
| | 9 | 1 | **6G-2396** | 2 | GASKET | |
| | 10 | 1 | **6G-2751** | 4 | HINGE | |
| | 11 | 1 | **6G-2914** | 2 | LATCH | |
| | 12 | 3 | **6K-3273** | 4 | RIVET-POP | |
| | 13 | 1 | **6P-0205** | 3 | SPACER (0.269X0.405X0.656-IN THK) | |
| | 14 | 1,2 | **6V-3928** | 7 | PLUG-BUTTON | |
| | 15 | 2 | **6V-8928** | 1 | HOOK-COAT | |
| | 16 | 3 | **7G-4824** | 1 | STRAP | |
| | 17 | 3 | **8E-7791** | 1 | STRAP | |
| | 18 | 2 | **8F-0492** | 1 | SPACER (0.531X1.125X0.625-IN THK) | |
| | 19 | 2 | **8T-5401** | 2 | PLUG-BUTTON | |
| | 20 | 2 | **8X-5414** | 1 | PLATE | |
| | 21 | 1 | **8X-6999** | 1 | INSULATION | |
| | 22 | 1 | **8X-7845** | 2 | COVER | |
| | 23 | 3 | **9N-1995** | 20 | RIVET-POP | |
| | 24 | 3 | **101-3055** | 2 | COVER-SPEAKER | |
| | 25 | 1 | **107-5014** | 4 | KNOB (AIR FILTER) | |
| | 26 | 3 | **109-2804** | 2 | DOOR | |
| | 27 | 2 | **115-6807** | 1 | PLATE | |
| | 28 | 1 | **115-9923** | 1 | COVER | |
| | 29 | 1 | **118-2558** | 1 | PANEL | |
| | 30 | 3 | **122-8795** | 2 | PLATE | |
| | 31 | 3 | **137-6783** | 1 | HOLDER | |
| | 32 | 3 | **137-8065** | 1 | COVER | |
| | 33 | 3 | **138-7026** | 1 | PLATE | |
| | 34 | 3 | **138-9910** | 1 | PLATE AS | |
| | 35 | 1 | **139-1118** | 1 | PLATE | |
| | 36 | 1 | **139-3593** | 1 | PANEL | |
| | 37 | 2 | **144-4107** | 2 | FASTENER | |
| | 38 | 1 | **172-1239** | 1 | COVER (RH) | |
| | 39 | 1 | **174-4140** | 1 | PANEL | |
| | 40 | 1 | **179-2176** | 1 | COVER | |
| | 41 | 1 | **179-2179** | 1 | PLATE AS | |
| | 42 | 1 | **197-8611** | 1 | COVER (RH) | |
| | 43 | 1 | **197-8624** | 1 | COVER (LH) | |
| | 44 | 2 | **197-8629** | 1 | COVER (RH) | |
| | 45 | 2 | **197-8630** | 1 | COVER (LH) | |
| | 46 | 2 | **200-8623** | 8 | NUT-RETAINER | |
| | 47 | 3 | **103-9425** | 8 | SCREW-MACHINE (8-32X1-IN) | |
| M | 48 | 1 | **129-3178** | 3 | LOCKNUT (M6X1-THD) | |
| | 49 | 3 | **131-6009** | 2 | PIN | |
| | 50 | 3 | **5P-4115** | 2 | WASHER-HARD (7.2X19X2-MM THK) | |
| | 51 | 3 | **6V-0292** | 1 | PLUG | |
| | 52 | 1 | **8T-4121** | 1 | WASHER-HARD (11X21X2.5-MM THK) | |
| M | 53 | 2 | **8T-4182** | 2 | BOLT (M10X1.5X45-MM) | |
| M | 54 | 1 | **8T-4195** | 1 | BOLT (M10X1.5X30-MM) | |
| | 55 | 3 | **9R-2620** | 1 | PLUG | |

*177-8781* **LINER GP-CAB** ***(contd.)*** **i02578239**

| NOTE | REF NO | GRAPHIC REF | PART NUMBER | QTY | PART NAME 1 2 3 4 5 6 (PRODUCT LEVEL) | SEE PAGE |
|---|---|---|---|---|---|---|
| M | 56 | 2 | **9X-2041** | 4 | SCREW-TRUSS HEAD (M10X1.5X20-MM) | |
| M | 57 | 1,3 | **9X-2043** | 29 | SCREW-TRUSS HEAD (M6X1X14-MM) | |
| M | 58 | 1,2,3 | **9X-2045** | 6 | SCREW-TRUSS HEAD (M6X1X20-MM) | |
| M | 59 | 3 | **9X-2046** | 4 | SCREW-TRUSS HEAD (M6X1X35-MM) | |
| | 60 | 1 | **9X-8256** | 3 | WASHER (6.6X12X2-MM THK) | |
| D | 61 | 2 | **8T-3426** | | CHANNEL-TRIM (1.4-M) | |
| D | 61A | 2 | **8T-3426** | | CHANNEL-TRIM (0.8-M EACH) | |
| D | 62 | 1 | **6V-0505** | | SEAL (1.4-M) | |
| D | 62A | 2 | **6V-0505** | | SEAL (0.03-M EACH) | |
| D | 63 | 1 | **5P-5969** | | SEAL (1.0-M) | |
| D | 63A | 1 | **5P-5969** | | SEAL (0.8-M EACH) | |
| D | 64 | 2 | **6V-5163** | | SEAL | |
| M | 65 | 1 | **9X-2042** | 4 | SCREW-TRUSS HEAD (M6X1X12-MM) | |
| | 66 | 2 | **8T-4896** | 1 | WASHER-HARD (10.2X18.5X2.5-MM THK) | |

D-ORDER BY THE METER
M-METRIC PART

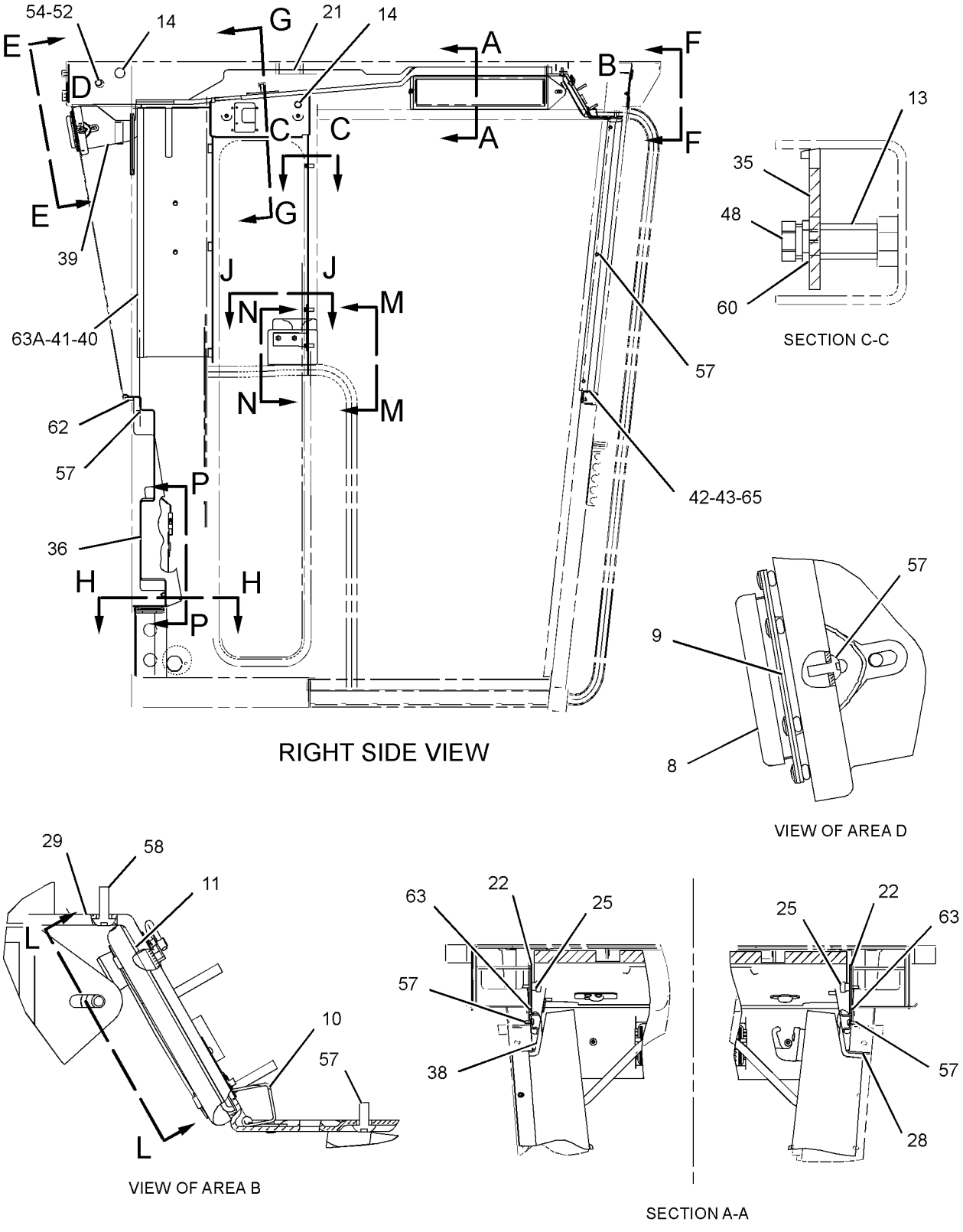


GRAPHIC #1

g01294607

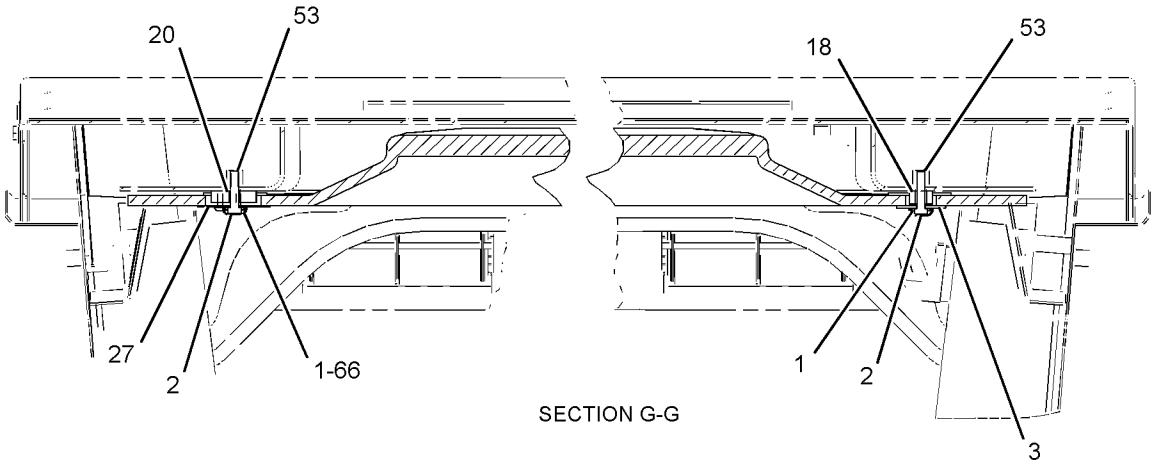


SECTION G-G

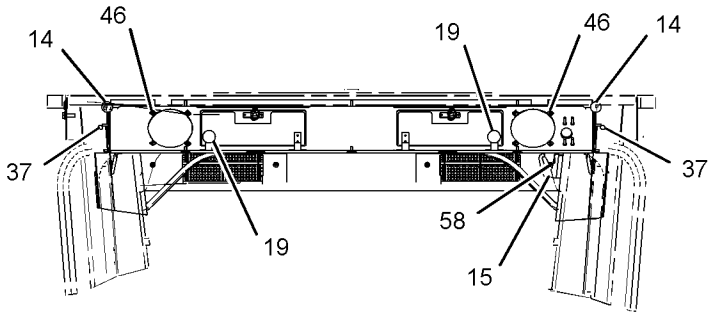


VIEW F-F

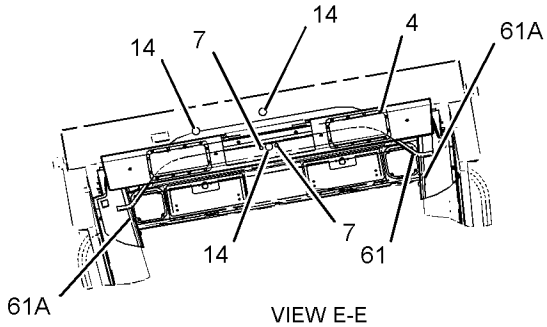


VIEW E-E

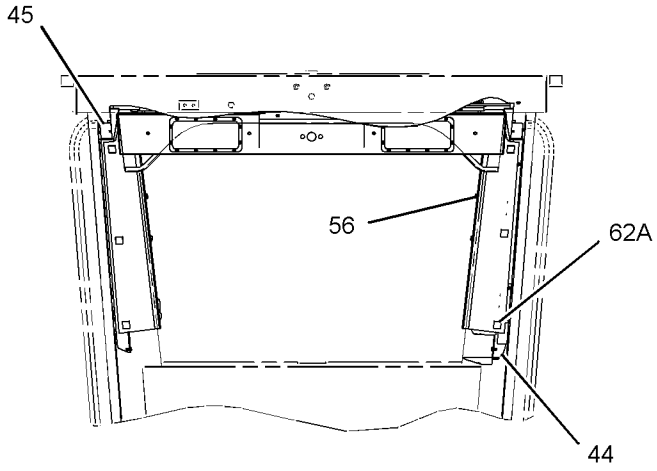


REAR VIEW

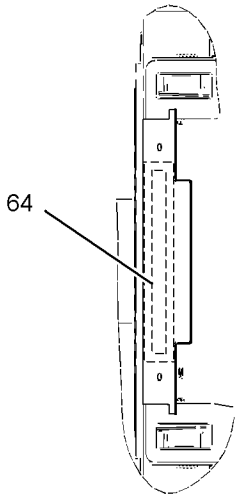


SECTION H-H

GRAPHIC #2 g01293386

REFER TO ALL ILLUSTRATIONS OF
THIS GROUP FOR AUXILIARY VIEWS

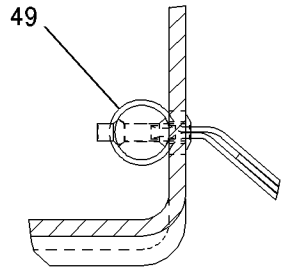


VIEW K-K




VIEW L-L




VIEW P-P

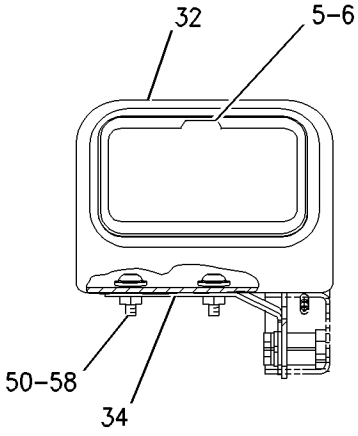


SECTION J-J

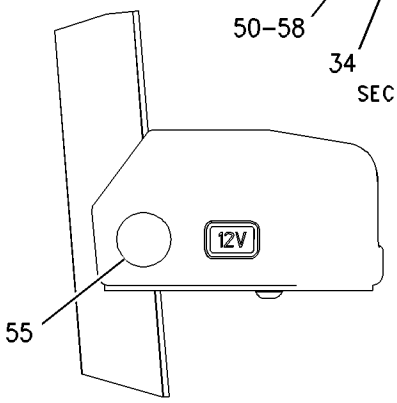


SECTION N-N

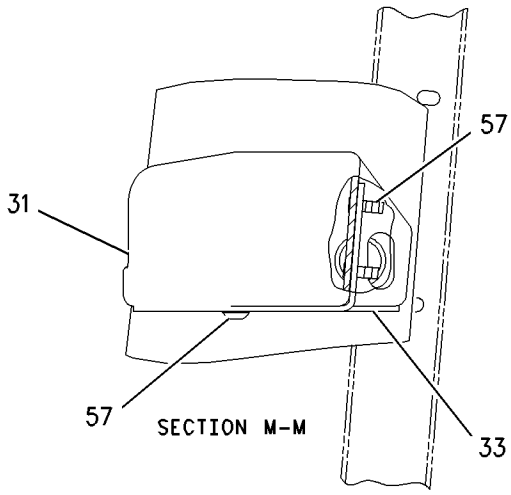


SECTION M-M

GRAPHIC #3 **<END>** g00846122

# OPERATOR STATION

## *191-8695* LINER GP-CAB—OPEN—HIGH PROFILE

**S/N: CCA1-UP**

**PART OF 173-2751 ROPS GP-OPEN**

**AN ATTACHMENT**

**SMCS-7329** **i02578242**

| NOTE | REF NO | GRAPHIC REF | PART NUMBER | QTY | PART NAME 1 2 3 4 5 6 (PRODUCT LEVEL) | SEE PAGE |
|---|---|---|---|---|---|---|
| | 1 | 1 | **2G-8572** | 2 | WASHER-SPECIAL (10X27.81X2.54-MM THK) | |
| | 2 | 1 | **2G-8573** | 2 | CAP | |
| | 3 | 1 | **2G-8767** | 1 | WASHER (10.5X60X3-MM THK) | |
| | 4 | 1 | **3E-0109** | 1 | PLUG | |
| | 5 | 1 | **3G-3265** | 24 | RIVET | |
| | 6 | 1 | **3V-4694** | 1 | PLUG-BUTTON | |
| | 7 | 1 | **5P-7803** | 2 | PLUG-BUTTON | |
| | 8 | 1 | **6G-2395** | 2 | DOOR GP (AIR VENTED) | |
| | | 1 | **6G-7222** | 2 | ROLLER | |
| | 9 | 1 | **6G-2396** | 2 | GASKET | |
| | 10 | 1 | **6K-3273** | 4 | RIVET-POP | |
| | 11 | 1 | **6V-3928** | 4 | PLUG-BUTTON | |
| | 12 | 1 | **6V-8928** | 1 | HOOK-COAT | |
| | 13 | 1 | **7G-4824** | 1 | STRAP | |
| | 15 | 1 | **8E-7791** | 1 | STRAP | |
| | 16 | 1 | **8F-0492** | 1 | SPACER (0.531X1.125X0.625-IN THK) | |
| | 17 | 1 | **8X-5414** | 1 | PLATE | |
| | 18 | 1 | **8X-6999** | 1 | INSULATION | |
| | 19 | 1 | **115-6807** | 1 | PLATE | |
| | 20 | 1 | **117-8810** | 1 | INSULATION | |
| | 21 | 1 | **139-3593** | 1 | PANEL | |
| | 22 | 1 | **145-7214** | 1 | BLOCK | |
| | 23 | 1 | **145-7217** | 1 | PLATE AS | |
| | 24 | 1 | **156-8352** | 1 | HOLDER | |
| | 25 | 1 | **179-2176** | 1 | COVER | |
| | 26 | 1 | **179-2179** | 1 | PLATE AS | |
| | 27 | 1 | **201-5894** | 1 | PANEL | |
| | 28 | 1 | **131-6009** | 2 | PIN | |
| | 29 | 1 | **8T-4121** | 3 | WASHER-HARD (11X21X2.5-MM THK) | |
| M | 30 | 1 | **8T-4182** | 4 | BOLT (M10X1.5X45-MM) | |
| M | 31 | 1 | **8T-4195** | 1 | BOLT (M10X1.5X30-MM) | |
| | 32 | 1 | **8T-4896** | 1 | WASHER-HARD (10.2X18.5X2.5-MM THK) | |
| M | 33 | 1 | **9X-2041** | 4 | SCREW-TRUSS HEAD (M10X1.5X20-MM) | |
| M | 34 | 1 | **9X-2043** | 13 | SCREW-TRUSS HEAD (M6X1X14-MM) | |
| M | 35 | 1 | **9X-2045** | 1 | SCREW-TRUSS HEAD (M6X1X20-MM) | |
| D | 36 | 1 | **8T-3426** | | CHANNEL-TRIM (0.8-M EACH) | |
| D | 36A | 1 | **8T-3426** | | CHANNEL-TRIM (1.4-M) | |
| D | 37 | 1 | **6V-0505** | | SEAL (1.4-M) | |
| D | 37A | 1 | **6V-0505** | | SEAL (0.03-M EACH) | |
| D | 38 | 1 | **6V-5163** | | SEAL (2.7-M) | |

D-ORDER BY THE METER
M-METRIC PART

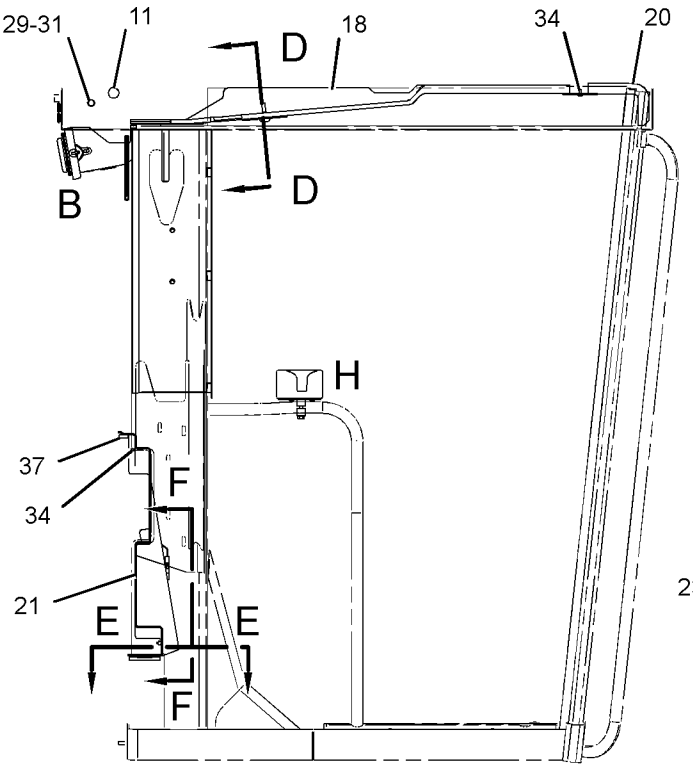


RIGHT SIDE VIEW

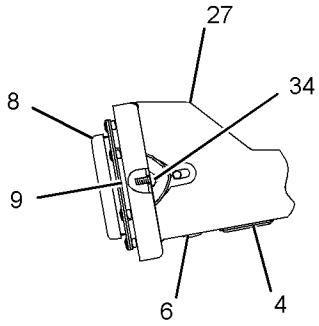


VIEW OF AREA B

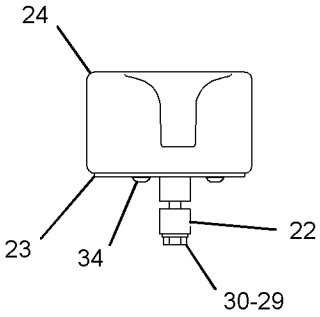


VIEW OF AREA H

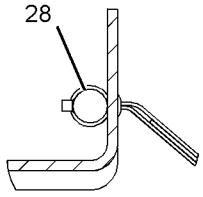


VIEW G-G

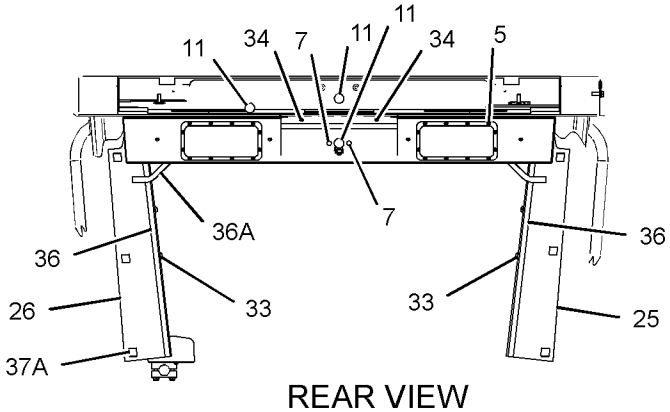


REAR VIEW

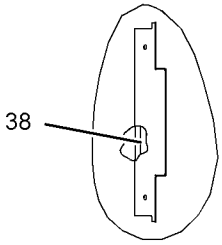


VIEW E-E

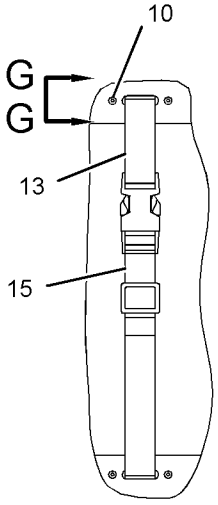


VIEW F-F

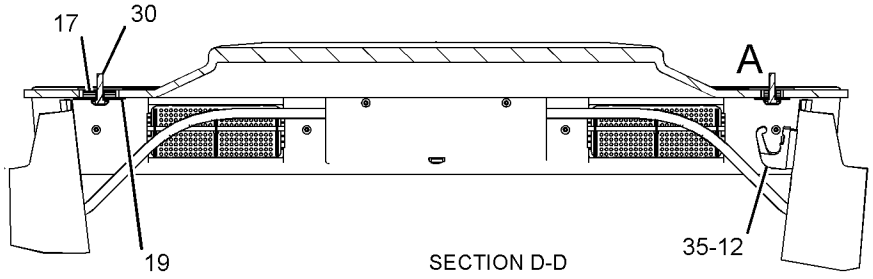


SECTION D-D

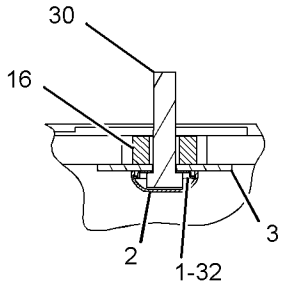


VIEW OF AREA A

GRAPHIC #1 **<END>** g01293389

# OPERATOR STATION

## *211-4912* LINER GP-CAB—ENCLOSED—HIGH PROFILE

**S/N: CCA1-UP**

**PART OF 211-4907 CAB GP**

**AN ATTACHMENT**

**SMCS-7329** **i01861352**

| NOTE | REF NO | GRAPHIC REF | PART NUMBER | QTY | PART NAME 1 2 3 4 5 6 (PRODUCT LEVEL) | SEE PAGE |
|---|---|---|---|---|---|---|
| M | 1 | 1 | **9X-2043** | 20 | SCREW-TRUSS HEAD (M6X1X14-MM) | |
| | 2 | 1 | **6G-5214** | 5 | WASHER (7.5X40X3-MM THK) | |
| M | 3 | 1 | **9X-2045** | 7 | SCREW-TRUSS HEAD (M6X1X20-MM) | |
| | 4 | 1 | **125-5520** | 1 | PANEL AS-CAB | |
| M | | 1 | **6V-9632** | 4 | NUT-WELD (M6X1-THD) | |
| | 5 | 1 | **125-9596** | 1 | COVER | |
| | 6 | 1 | **5P-5969** | 1 | SEAL | |
| | 7 | 1 | **125-6482** | 1 | COVER AS (RH) | |
| M | | 1 | **6V-9632** | 4 | NUT-WELD (M6X1-THD) | |
| | 8 | 1 | **125-4389** | 1 | INSULATION | |
| | 9 | 1 | **125-4388** | 1 | INSULATION | |
| | 10 | 1 | **6V-3928** | 3 | PLUG-BUTTON | |
| | 11 | 1 | **8X-7845** | 2 | COVER | |
| | 12 | 1 | **125-9584** | 1 | INSULATION | |
| | 13 | 1 | **125-6483** | 1 | PLATE | |
| | 14 | 1 | **197-8624** | 1 | COVER (LH) | |
| | 15 | 1 | **197-8611** | 1 | COVER (RH) | |
| | 16 | 1 | **107-5014** | 4 | KNOB | |
| | 17 | 1 | **6V-0292** | 2 | PLUG | |
| | 18 | 1 | **8X-8790** | 1 | PLATE | |
| | 19 | 1 | **6P-0205** | 2 | SPACER (0.269X0.405X0.656-IN THK) | |
| M | 20 | 1 | **099-0492** | 2 | LOCKNUT (M6X1 THD) | |
| | 21 | 1 | **9X-8256** | 2 | WASHER (6.6X12X2-MM THK) | |
| | 22 | 1 | **5P-7803** | 2 | PLUG-BUTTON | |
| | 23 | 1 | **6G-2396** | 2 | GASKET | |
| | 24 | 1 | **3G-3265** | 24 | RIVET | |
| | 25 | 1 | **6G-2395** | 2 | DOOR GP (AIR VENTED) | |
| | | | | | (EACH INCLUDES) | |
| | | 1 | **6G-7222** | | ROLLER | |

M-METRIC PART

*211-4912* **LINER GP-CAB** *(contd.)* **i01861352**

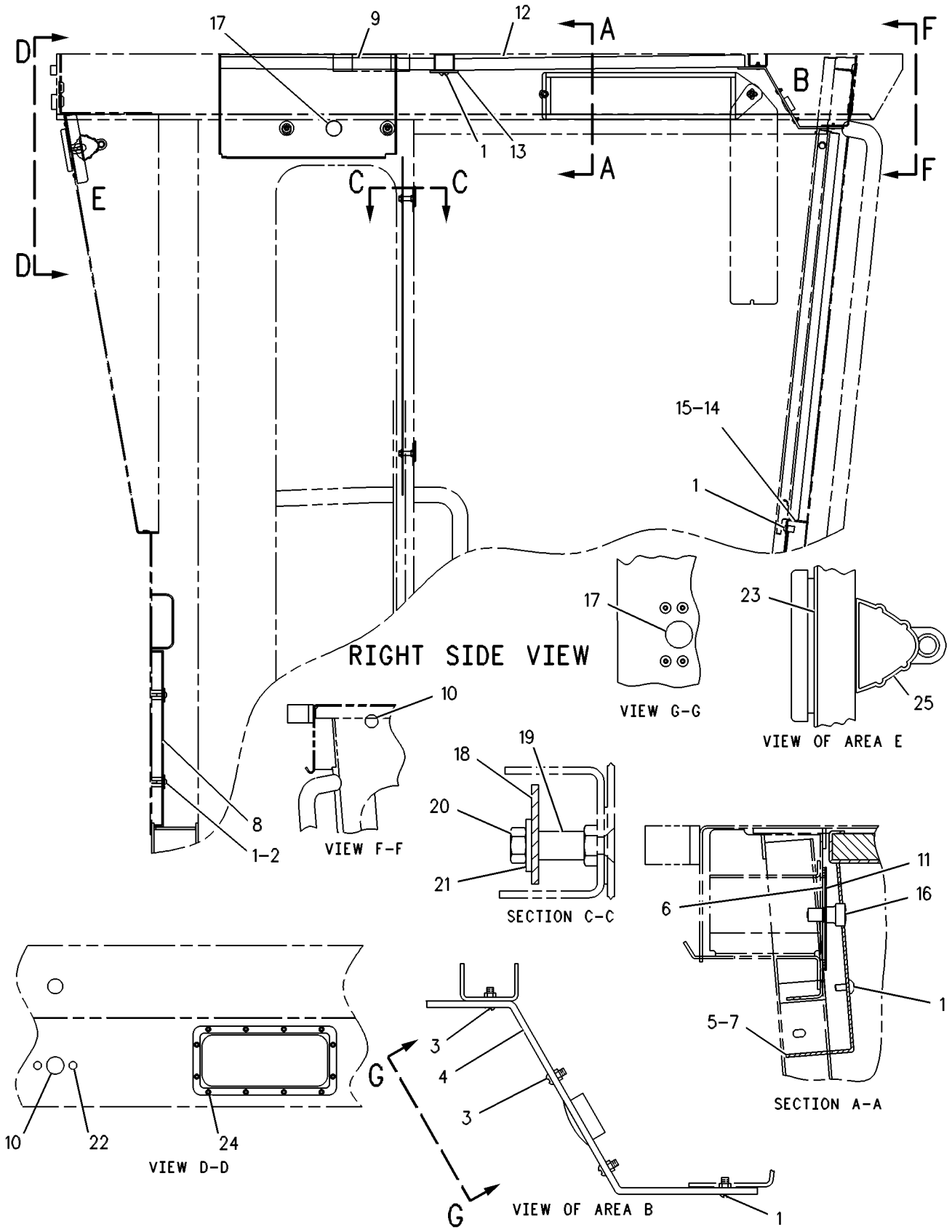


GRAPHIC #1 **<END>** g00109333

# OPERATOR STATION

## *167-8102* LINES GP-AIR CONDITIONER

**S/N: CCA1-UP**

**PART OF 167-8067 AIR CONDITIONER AR**

**AN ATTACHMENT**

**SMCS-1808, 7320** **i02200125**

| NOTE | REF NO | GRAPHIC REF | PART NUMBER | QTY | PART NAME 1 2 3 4 5 6 (PRODUCT LEVEL) | SEE PAGE |
|---|---|---|---|---|---|---|
| | 1 | 1 | **1P-6356** | 1 | PLATE | |
| | 2 | 1 | **3E-3535** | 1 | RECEIVER-DRYER (REFRIGERANT) | |
| | | 1 | **7X-2049** | 1 | TUBE AS-REFRIGERANT ORIFICE | |
| | 3 | 1 | **3S-2093** | 3 | STRAP-CABLE | |
| | 4 | 1 | **3T-0050** | 2 | CLIP | |
| | 5 | 1 | **8W-8527** | 5 | SLEEVE | |
| | 6 | 1 | **8W-8528** | 4 | SLEEVE | |
| | 7 | 1 | **103-6100** | 2 | FITTING AS-AIR CONDITIONER (QUICK DISCONNECT) | |
| | | 1 | **9X-7382** | 2 | SEAL-O-RING | |
| | 8 | 1 | **106-8704** | 1 | SUPPRESSOR AS-ARC | |
| | | 1 | **102-8802** | 1 | KIT-RECEPTACLE (2-PIN) | |
| | | | | | (INCLUDES RECEPTACLE AS & WEDGE) | |
| | | 1 | **186-3735** | 2 | PIN-CONNECTOR (16-GA TO 18-GA) | |
| | 9 | 1 | **114-9223** | 1 | SPACER (11.13X19.05X19-MM THK) | |
| I | 10 | 1 | **179-3275** | 1 | HOSE AS | |
| I | 11 | 1 | **179-3276** | 1 | HOSE AS | |
| I | 12 | 1 | **179-3277** | 1 | HOSE AS | |
| | 13 | 1 | **180-5462** | 1 | SWITCH AS-PRESSURE (A/C HIGH/LOW) | |
| | | 1 | **155-2270** | 1 | KIT-CONNECTING PLUG (2-PIN) | |
| | | | | | (INCLUDES PLUG AS & WEDGE) | |
| | 14 | 1 | **188-0576** | 1 | HARNESS AS-HEATER & AIR COND | |
| | | 1 | **155-2270** | 3 | KIT-CONNECTING PLUG (2-PIN) | |
| | | | | | (INCLUDES PLUG AS & WEDGE) | |
| | | 1 | **102-8802** | 1 | KIT-RECEPTACLE (2-PIN) | |
| | | | | | (INCLUDES RECEPTACLE AS & WEDGE) | |
| | 15 | 1 | **197-6218** | 1 | ACCUMULATOR GP-REFRIGERANT | |
| | 16 | 1 | **213-4558** | 1 | TUBE AS | |
| | 17 | 1 | **214-1102** | 1 | FITTING AS | |
| M | 18 | 1 | **085-8091** | 1 | BOLT (M10X1.5X55-MM) | |
| | 19 | 1 | **128-5924** | 1 | CLAMP | |
| | 20 | 1 | **132-5789** | 2 | CLIP | |
| | 21 | 1 | **4D-4839** | 1 | PIPE | |
| | 22 | 1 | **4D-7794** | 1 | CLIP | |
| | 23 | 1 | **4S-1962** | 2 | CLIP | |
| | 24 | 1 | **5M-3062** | 2 | BOLT (3/8-16X0.75-IN) | |
| | 25 | 1 | **5P-1075** | 4 | WASHER-HARD (10.2X22.5X3-MM THK) | |
| | 26 | 1 | **6K-8178** | 1 | CLIP | |
| | 27 | 1 | **8R-3393** | 1 | STRAP | |
| | 28 | 1 | **8S-6109** | 1 | CLIP (SLOT) | |
| | 29 | 1 | **8S-6110** | 1 | CLIP (TAB) | |
| | 30 | 1 | **8T-4121** | 3 | WASHER-HARD (11X21X2.5-MM THK) | |
| M | 31 | 1 | **8T-4137** | 1 | BOLT (M10X1.5X20-MM) | |
| M | 32 | 1 | **8T-4185** | 1 | BOLT (M10X1.5X50-MM) | |
| M | 33 | 1 | **8T-4186** | 1 | BOLT (M10X1.5X40-MM) | |
| | 34 | 1 | **9B-7237** | 1 | BOLT (3/8-16X1.25-IN) | |
| | 35 | 1 | **9X-7378** | 1 | SEAL-O-RING | |
| | 36 | 1 | **9X-7380** | 3 | SEAL-O-RING | |
| | 37 | 1 | **9X-7381** | 2 | SEAL-O-RING | |
| | 38 | 1 | **9X-7382** | 1 | SEAL-O-RING | |
| | 39 | 1 | **9X-7383** | 2 | SEAL-O-RING | |
| | 40 | 1 | **9X-7385** | 2 | SEAL-O-RING | |
| | 41 | 1 | **8M-2770** | 1 | CLIP | |

I-REFER TO HYDRAULIC INFORMATION SYSTEM
M-METRIC PART

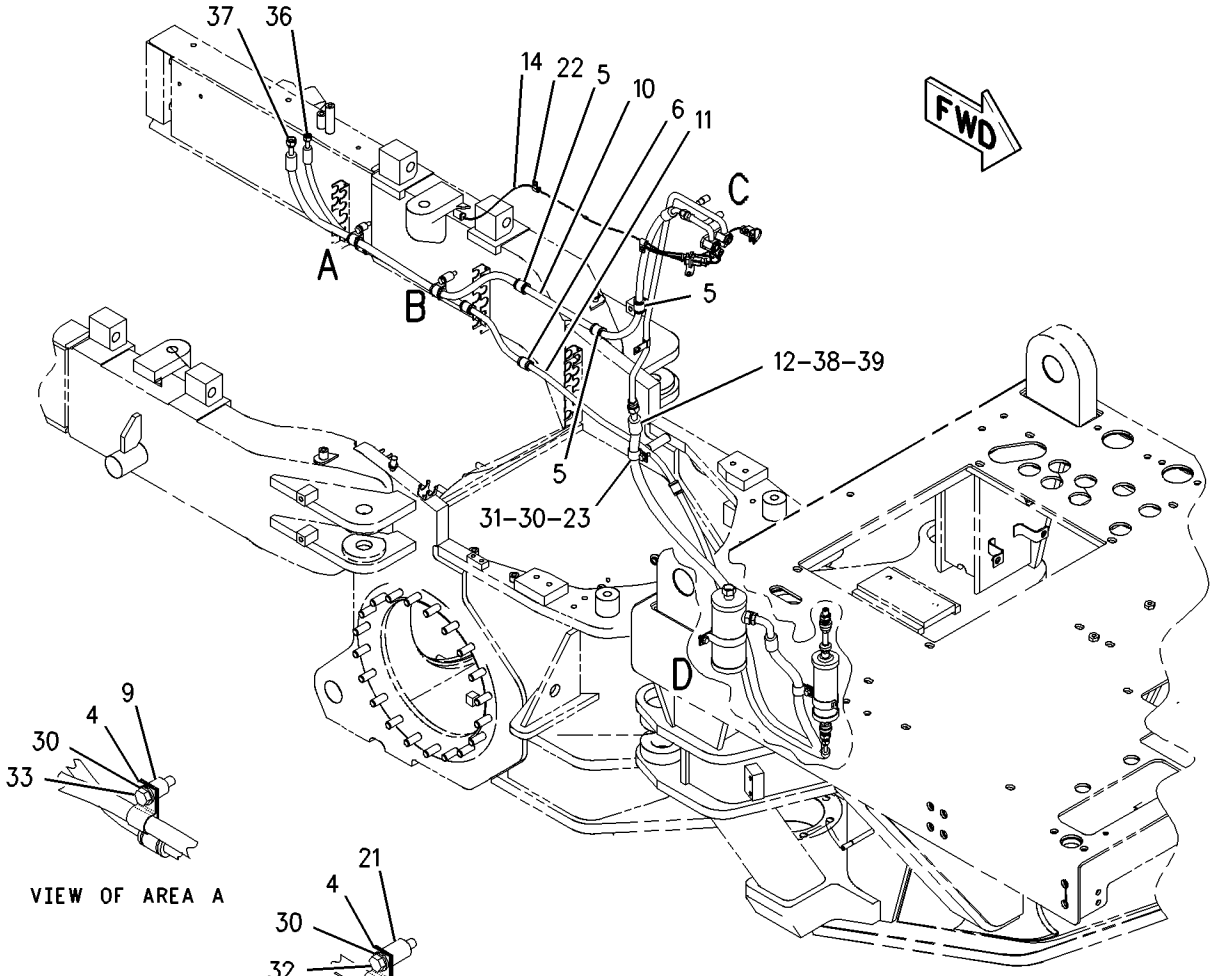





VIEW OF AREA A




VIEW OF AREA B

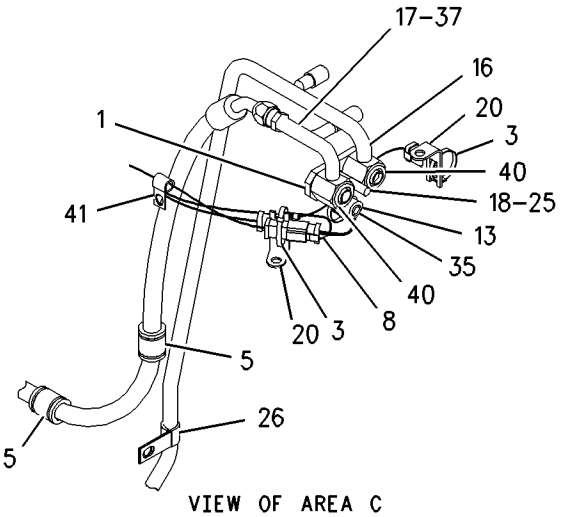


VIEW OF AREA C

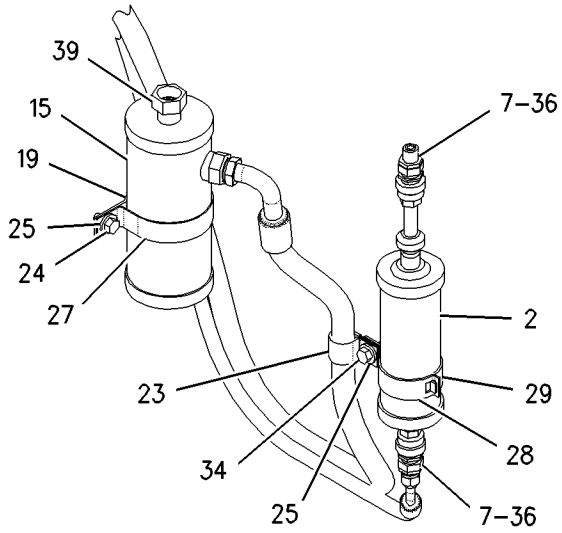


VIEW OF AREA D

GRAPHIC #1 **<END>** g00938914

# OPERATOR STATION

## *167-8398* LINES GP-HEATER

**S/N: CCA1-1474**

**PART OF 167-8067 AIR CONDITIONER AR, 167-8390, 167-8423 HEATER AR-CAB**

**AN ATTACHMENT**

**SMCS-1812, 7304** **i02205478**

| NOTE | REF NO | GRAPHIC REF | PART NUMBER | QTY | PART NAME 1 2 3 4 5 6 (PRODUCT LEVEL) | SEE PAGE |
|---|---|---|---|---|---|---|
| | 1 | 1 | **4W-7627** | 2 | SPACER (11X19X37-MM THK) | |
| | 2 | 1 | **5D-1026** | 4 | CLAMP-HOSE | |
| | 3 | 1 | **5P-1064** | 1 | CONNECTOR | |
| | 4 | 1 | **6K-8079** | 1 | CONNECTOR | |
| | 5 | 1 | **7D-7026** | 1 | CONNECTOR-HOSE | |
| | 7 | 1 | **132-9496** | 1 | VALVE-BALL (WATER SHUT-OFF) | |
| | 8 | 1 | **185-3632** | 1 | TUBE AS | |
| | 10 | 1 | **170-1564** | 1 | CONNECTOR | |
| | 11 | 1 | **1K-3113** | 1 | SPACER | |
| | 12 | 1 | **4B-9302** | 1 | CLIP | |
| | 13 | 1 | **4S-1962** | 3 | CLIP | |
| | 15 | 1 | **6D-1641** | 1 | CLIP | |
| | 16 | 1 | **8T-4121** | 3 | WASHER-HARD (11X21X2.5-MM THK) | |
| M | 17 | 1 | **8T-5436** | 1 | BOLT (M10X1.5X130-MM) | |
| M | 18 | 1 | **8T-6466** | 2 | BOLT (M10X1.5X60-MM) | |
| E | 19 | 1 | **5P-0767** | | HOSE (260-CM) | |
| E | 19A | 1 | **5P-0767** | | HOSE (230-CM) | |

E-ORDER BY THE CENTIMETER
M-METRIC PART

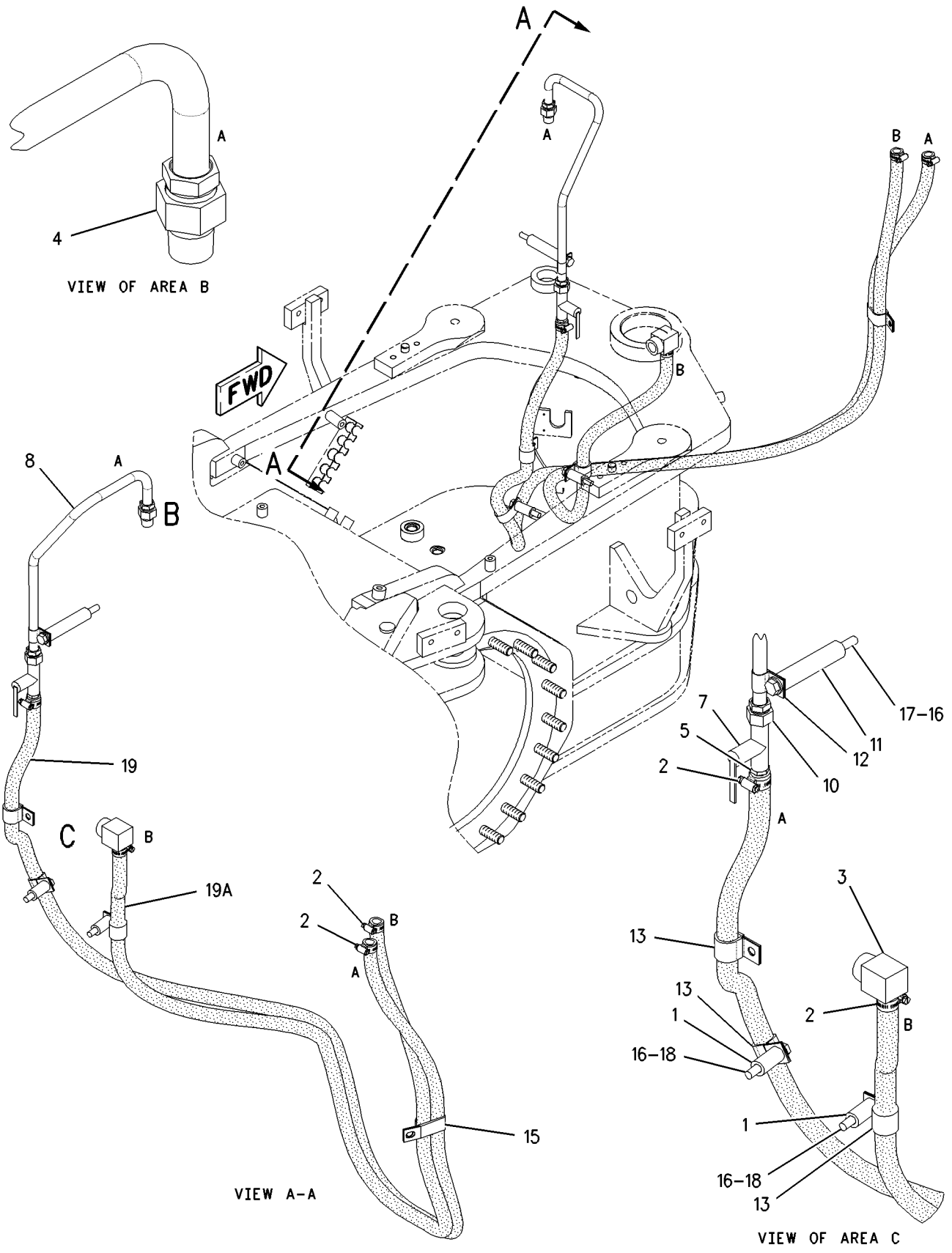


GRAPHIC #1 **<END>** g00840010

# OPERATOR STATION

## *167-8398* LINES GP-HEATER

**S/N: CCA1475-UP**

**PART OF 167-8067 AIR CONDITIONER AR, 167-8390, 167-8423 HEATER AR-CAB AN ATTACHMENT**

**SMCS-1812, 7304** **i02576037**

| NOTE | REF NO | GRAPHIC REF | PART NUMBER | QTY | PART NAME 1 2 3 4 5 6 (PRODUCT LEVEL) | SEE PAGE |
|---|---|---|---|---|---|---|
| | 1 | 1 | **4W-7627** | 2 | SPACER (11X19X37-MM THK) | |
| | 2 | 1 | **5D-1026** | 4 | CLAMP-HOSE | |
| | 3 | 1 | **6K-8079** | 1 | CONNECTOR | |
| | 4 | 1 | **7D-7026** | 1 | CONNECTOR-HOSE | |
| | 5 | 1 | **090-0744** | 1 | ELBOW | |
| | 6 | 1 | **110-8330** | 1 | SPACER (11.3X19.05X90-MM THK) | |
| | 7 | 1 | **132-9496** | 1 | VALVE-BALL (WATER SHUT-OFF) | |
| | 8 | 1 | **185-3632** | 1 | TUBE AS | |
| | 9 | 1 | *205-9103* | 1 | ADAPTER AS | |
| | | 1 | **198-0961** | 1 | ADAPTER-PIPE | |
| | | 1 | **3K-0360** | 1 | SEAL-O-RING | |
| | 10 | 1 | **170-1564** | 1 | CONNECTOR | |
| | 11 | 1 | **2T-2317** | 1 | PLATE | |
| | 12 | 1 | **3D-2824** | 1 | SEAL-O-RING | |
| | 13 | 1 | **4S-1962** | 3 | CLIP | |
| | 14 | 1 | **6D-1641** | 1 | CLIP | |
| | 15 | 1 | **6K-8178** | 1 | CLIP | |
| | 16 | 1 | **8T-4121** | 5 | WASHER-HARD (11X21X2.5-MM THK) | |
| M | 17 | 1 | **8T-4133** | 1 | NUT (M10X1.5-THD) | |
| M | 18 | 1 | **8T-4195** | 1 | BOLT (M10X1.5X30-MM) | |
| M | 19 | 1 | **8T-5436** | 1 | BOLT (M10X1.5X130-MM) | |
| M | 20 | 1 | **8T-6466** | 2 | BOLT (M10X1.5X60-MM) | |
| E | 21 | 1 | **5P-0767** | | HOSE (260-CM) | |
| E | 21A | 1 | **5P-0767** | | HOSE (230-CM) | |

E-ORDER BY THE CENTIMETER
M-METRIC PART

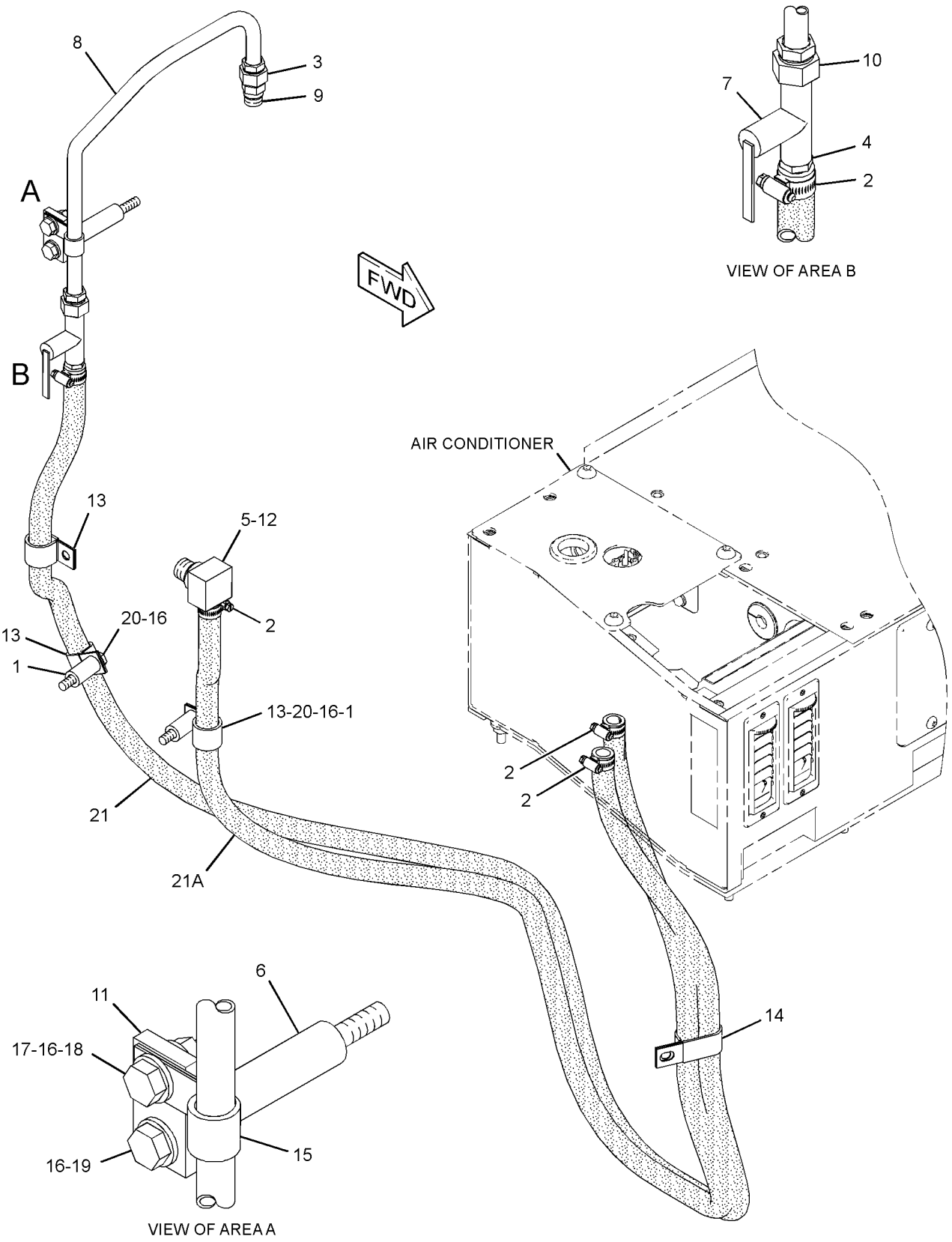


GRAPHIC #1 **<END>** g01293086

# OPERATOR STATION

## *6V-1970* LITERATURE GP

**S/N: CCA1208-UP**

**PART OF 159-4615 GENERAL AR**

**SMCS-0375** **i00607038**

| NOTE | PART NUMBER | QTY | PART NAME 1 2 3 4 5 6 (PRODUCT LEVEL) | SEE PAGE |
|---|---|---|---|---|
| | **5P-8500** | 2 | KEY | |
| | **2Y-3209** | 2 | SEAL-WIRE | |

**<END>**

# OPERATOR STATION

## *178-8603* LOUVER GP-CAB

**S/N: CCA1-UP**
**PART OF 167-8423 HEATER AR-CAB**
**AN ATTACHMENT**

**SMCS-7301** **i01778669**

| NOTE | REF NO | GRAPHIC REF | PART NUMBER | QTY | PART NAME 1 2 3 4 5 6 (PRODUCT LEVEL) | SEE PAGE |
|---|---|---|---|---|---|---|
| | 1 | 1 | **8Y-6388** | 6 | LOUVER AS | |
| | 2 | 1 | **164-8474** | 2 | LOUVER AS | |
| | 3 | 1 | **126-1135** | 2 | PLATE | |
| | 4 | 1 | **126-1136** | 2 | PLATE | |
| | 5 | 1 | **6V-2687** | 4 | SCREW-PAN HEAD | |
| BD | 6 | 1 | **5P-5969** | | SEAL | |

B-USE AS REQUIRED
D-ORDER BY THE METER

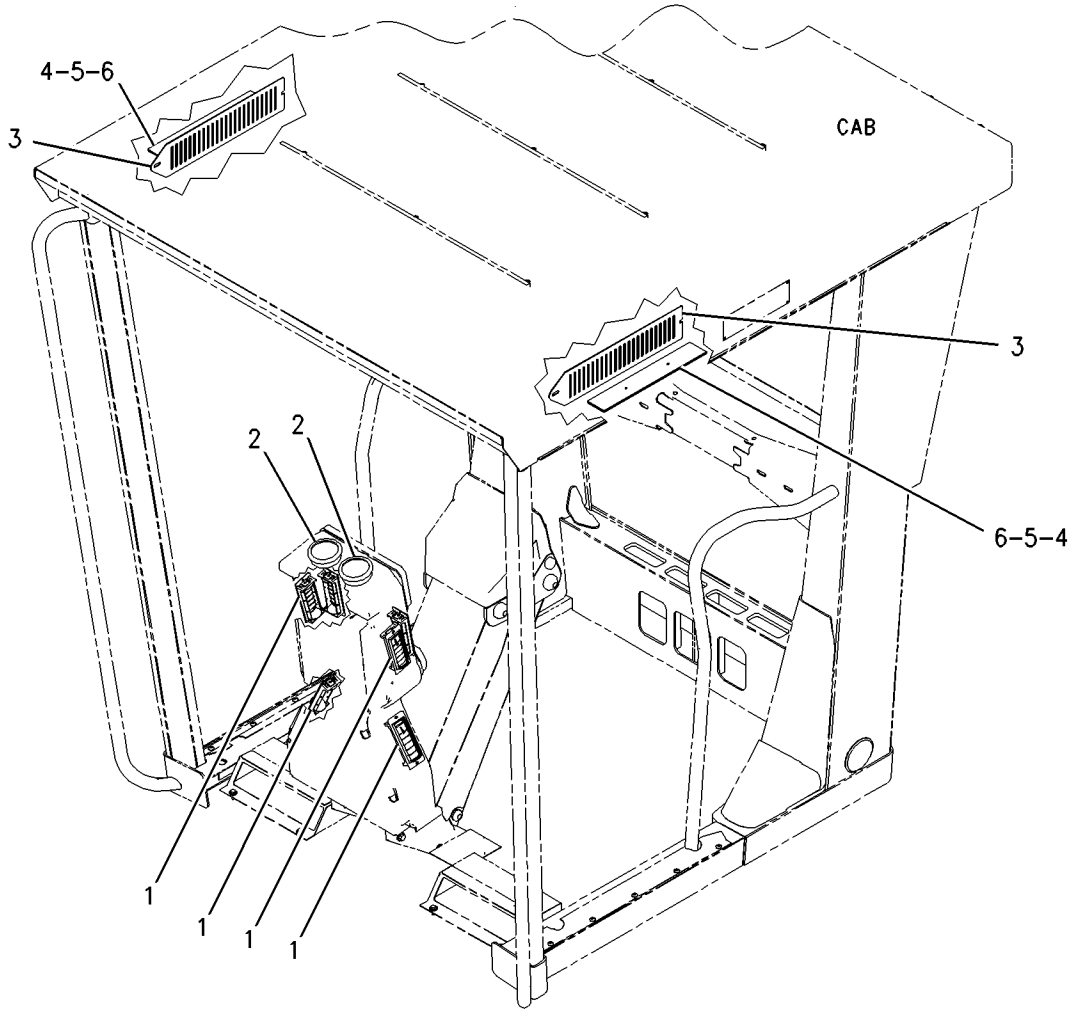


GRAPHIC #1 **<END>** g00940703

# OPERATOR STATION

## 2C-8478 MIRROR GP-REAR VIEW—INSIDE

**S/N: CCA1-UP**
**PART OF 259-5738 CONVERSION AR-MACHINE**
**AN ATTACHMENT**

**SMCS-7319** **i02229816**

| NOTE | REF NO | GRAPHIC REF | PART NUMBER | QTY | PART NAME 1 2 3 4 5 6 (PRODUCT LEVEL) | SEE PAGE |
|---|---|---|---|---|---|---|
| | 1 | 1 | **1P-2378** | 2 | CAP | |
| M | 2 | 1 | **9X-2046** | 4 | SCREW-TRUSS HEAD (M6X1X35-MM) | |
| | 3 | 1 | **2G-8242** | 2 | ARM | |
| | 4 | 1 | **5P-6877** | 1 | MIRROR AS | |
| | 5 | 1 | **5P-9865** | 2 | SPACER (10X25.4X17.5-MM THK) | |
| | 6 | 1 | **5P-1075** | 2 | WASHER-HARD (10.2X22.5X3-MM THK) | |
| | 7 | 1 | **6V-2286** | 2 | NUT-ACORN (3/8-16-THD) | |
| | 8 | 1 | **2G-8241** | 2 | CLAMP | |

M-METRIC PART

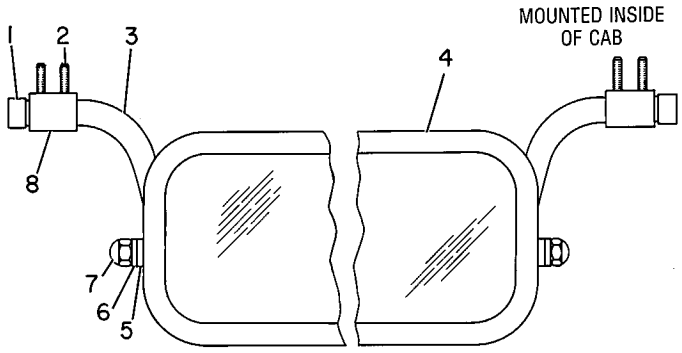


GRAPHIC #1 **<END>** g00112168

# OPERATOR STATION

## 2C-8820 MIRROR GP-REAR VIEW

**S/N: CCA1-UP**

**AN ATTACHMENT**

**SMCS-7319** **i02227970**

| NOTE | REF NO | GRAPHIC REF | PART NUMBER | QTY | PART NAME 1 2 3 4 5 6 (PRODUCT LEVEL) | SEE PAGE |
|---|---|---|---|---|---|---|
| | 1 | 1 | **2C-8827** | 1 | MIRROR AS | |
| | 2 | 1 | **2G-8242** | 2 | ARM | |
| | 3 | 1 | **2G-8241** | 2 | CLAMP | |
| M | 4 | 1 | **9X-2046** | 4 | SCREW-TRUSS HEAD (M6X1X35-MM) | |
| | 6 | 1 | **5P-9865** | 2 | SPACER (10X25.4X17.5MM THK) | |
| | 7 | 1 | **5P-1075** | 2 | WASHER-HARD (10.2X22.5X3-MM THK) | |
| | 8 | 1 | **5V-1498** | 2 | LOCKNUT (3/8-16-THD) | |
| | 9 | 1 | **1P-2378** | 2 | CAP | |

M-METRIC PART

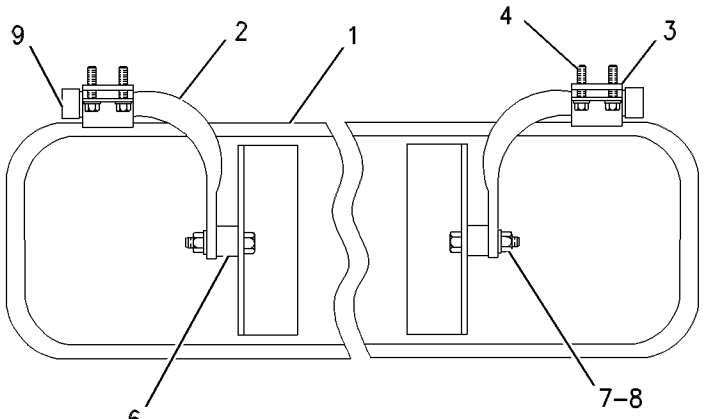


FRONT VIEW

GRAPHIC #1 **<END>** g00290692

# OPERATOR STATION

## *2C-9688* MIRROR GP-REAR VIEW

**S/N: CCA1-UP**
**AN ATTACHMENT**

**SMCS-7319** **i02207699**

| NOTE | REF NO | GRAPHIC REF | PART NUMBER | QTY | PART NAME 1 2 3 4 5 6 (PRODUCT LEVEL) | SEE PAGE |
|---|---|---|---|---|---|---|
| M | 1 | 1 | **8T-4133** | 1 | NUT (M10X1.5-THD) | |
| | 2 | 1 | **4L-6454** | 1 | BOLT (3/8-16X1-IN) | |
| | 3 | 1 | **8T-4121** | 18 | WASHER-HARD (11X21X2.5-MM THK) | |
| | 4 | 1 | **6G-8831** | 1 | CLAMP | |
| | 5 | 1 | **5P-6877** | 2 | MIRROR AS | |
| | | | | | (EACH INCLUDES) | |
| | | 1 | **6V-2286** | 2 | NUT-ACORN (3/8-16-THD) | |
| | | 1 | **5P-9865** | 2 | SPACER (10X25.4X17.5-MM THK) | |
| | | 1 | **5P-1075** | 2 | WASHER-HARD (10.2X22.5X3-MM THK) | |
| | 6 | 1 | **113-8218** | 2 | ARM | |
| | 7 | 1 | **123-4586** | 4 | BLOCK | |
| | 8 | 1 | **123-4587** | 4 | BRACKET | |
| M | 9 | 1 | **8T-4182** | 8 | BOLT (M10X1.5X45-MM) | |
| M | 10 | 1 | **8T-4186** | 4 | BOLT (M10X1.5X40-MM) | |
| M | 11 | 1 | **6V-7744** | 4 | LOCKNUT (M10X1.15-THD) | |
| | 12 | 1 | **9C-5928** | 12 | SPACER (10X19X5.15-MM THK) | |
| | 13 | 1 | **6G-8829** | 3 | CLAMP | |
| | 14 | 1 | **097-8516** | 3 | CAM | |

M-METRIC PART

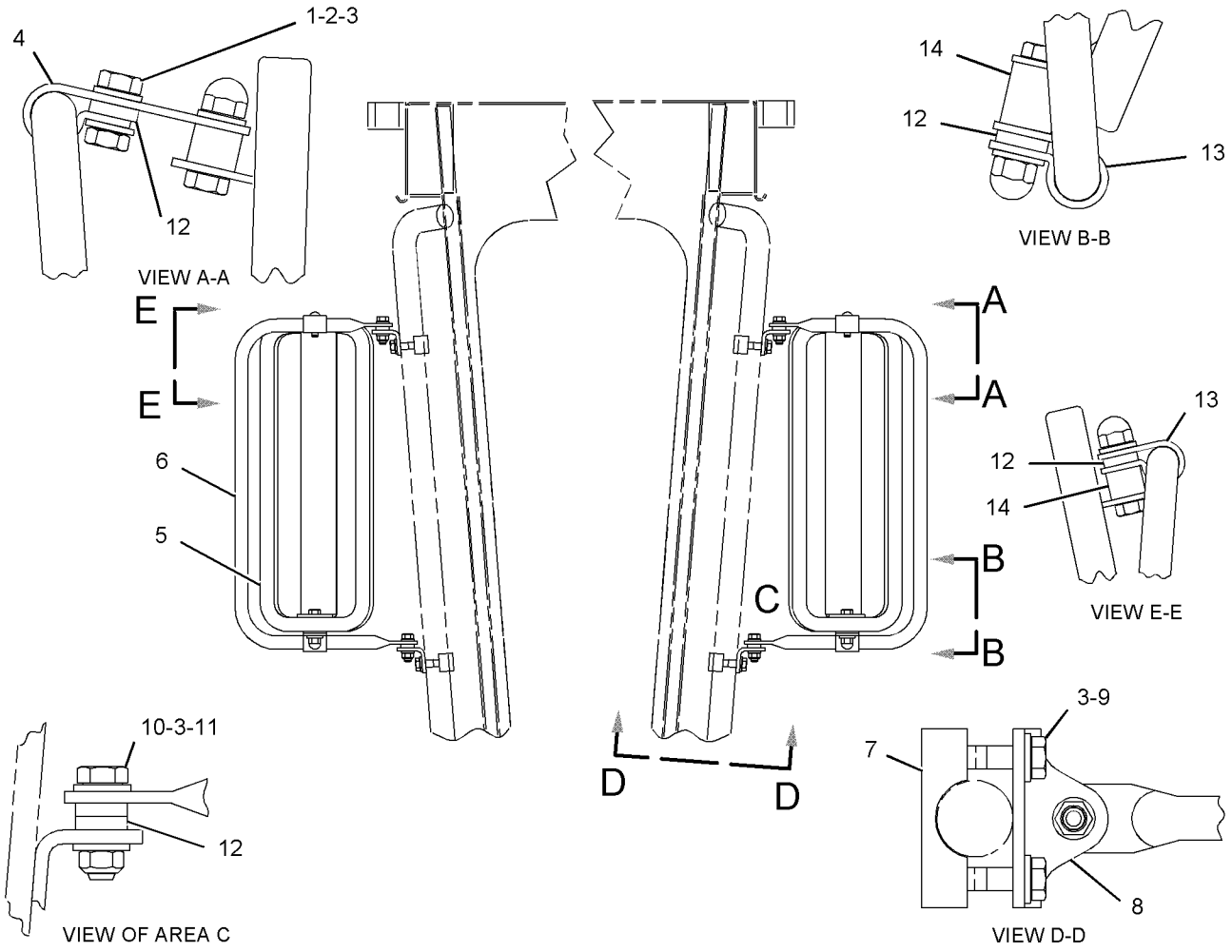


GRAPHIC #1 **<END>** g01122199

# OPERATOR STATION

## 2C-9689 MIRROR GP-REAR VIEW—DUAL INSIDE

**S/N: CCA1-UP**

**AN ATTACHMENT**

**SMCS-7319** **i02236687**

| NOTE | REF NO | GRAPHIC REF | PART NUMBER | QTY | PART NAME 1 2 3 4 5 6 (PRODUCT LEVEL) | SEE PAGE |
|---|---|---|---|---|---|---|
| | 1 | 1 | **5P-6872** | 2 | MIRROR AS | |
| | | | | | (EACH INCLUDES) | |
| | | 1 | **3K-6060** | 1 | LOCKNUT (3/8-16-THD) | |
| | 2 | 1 | **2G-8241** | 2 | CLAMP | |
| M | 3 | 1 | **099-1196** | 4 | BOLT-SOCKET HEAD (M61X1X65-MM) | |
| | 4 | 1 | **2G-8572** | 2 | WASHER-SPECIAL (10X27.81X2.54-MM THK) | |
| | 5 | 1 | **2G-8573** | 2 | CAP | |
| | 6 | 1 | **2G-8242** | 2 | ARM | |
| | 7 | 1 | **5P-1075** | 2 | WASHER-HARD (10.2X22.5X3-MM THK) | |
| | 8 | 1 | **140-6418** | 2 | BRACKET AS | |
| | 9 | 1 | **5S-7379** | 2 | BOLT (3/8-16X0.875-IN) | |
| | 10 | 1 | **1P-2378** | 2 | CAP | |
| | 11 | 1 | **9X-8267** | 4 | WASHER (6.6X12X2-MM THK) | |
| | 12 | 1 | **9C-5928** | 12 | SPACER (10X19X5.15-MM THK) | |

M-METRIC PART

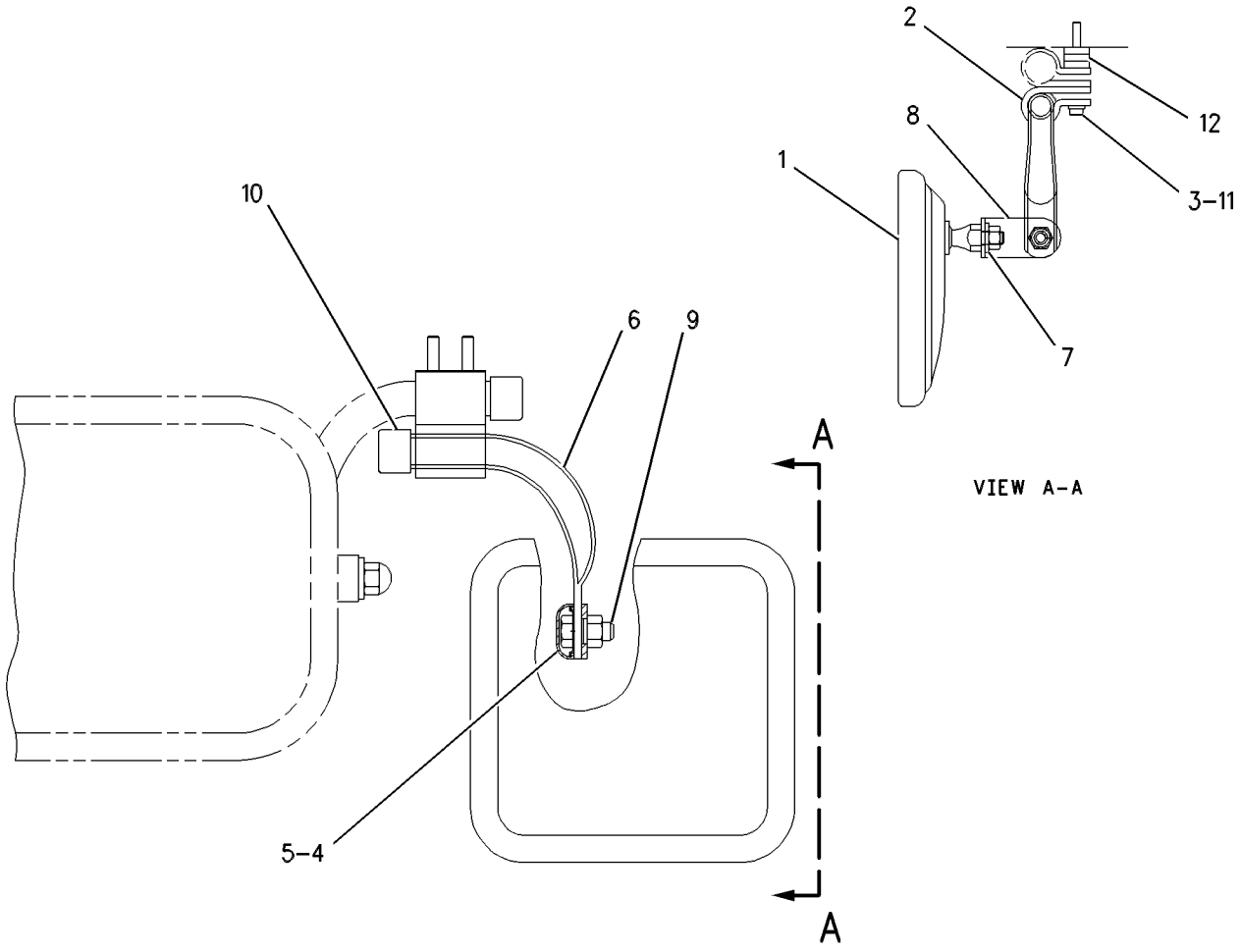


GRAPHIC #1 **<END>** g00291687

# OPERATOR STATION

## 8X-2795 MIRROR GP-REAR VIEW—DUAL INSIDE

**S/N: CCA1-UP**

**PART OF 211-4906 CAB AR-NON-ROPS, 159-4615 GENERAL AR**

**ALSO AN ATTACHMENT**

**SMCS-7319** **i02585443**

| NOTE | REF NO | GRAPHIC REF | PART NUMBER | QTY | PART NAME 1 2 3 4 5 6 (PRODUCT LEVEL) | SEE PAGE |
|---|---|---|---|---|---|---|
| | 1 | 1 | **8Y-4512** | 1 | MIRROR | |
| | 2 | 1 | **2G-8241** | 2 | CLAMP | |
| M | 3 | 1 | **9X-2046** | 4 | SCREW-TRUSS HEAD (M6X1X35-MM) | |
| | 4 | 1 | **2G-8572** | 2 | WASHER-SPECIAL (10X27.81X2.54-MM THK) | |
| | 5 | 1 | **2G-8573** | 2 | CAP | |
| | 6 | 1 | **2G-8242** | 2 | ARM | |
| | 7 | 1 | **5P-1075** | 2 | WASHER-HARD (10.2X22.5X3-MM THK) | |
| | 8 | 1 | **8H-1728** | 2 | NUT-ACORN (3/8-16-THD) | |
| | 9 | 1 | **5S-7379** | 2 | BOLT (3/8-16X0.875-IN) | |
| | 10 | 1 | **1P-2378** | 2 | CAP | |

M-METRIC PART

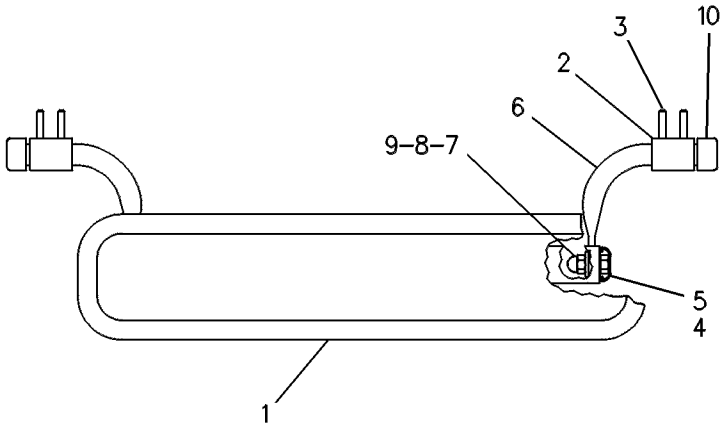


GRAPHIC #1 **<END>** g00084778

# OPERATOR STATION

## *123-4358* MIRROR GP-REAR VIEW—HEATED, OUTSIDE

**S/N: CCA1-UP**

**AN ATTACHMENT**

**SMCS-7319** **i00130904**

| NOTE | REF NO | GRAPHIC REF | PART NUMBER | QTY | PART NAME 1 2 3 4 5 6 (PRODUCT LEVEL) | SEE PAGE |
|---|---|---|---|---|---|---|
| M | 1 | 1 | **8T-4133** | 8 | NUT (M10X1.5-THD) | |
| M | 2 | 1 | **8T-4137** | 8 | BOLT (M10X1.5X20-MM) | |
| | 3 | 1 | **8T-4121** | 24 | WASHER-HARD (11X21X2.5-MM THK) | |
| | 4 | 1 | **6G-8831** | 4 | CLAMP | |
| | 5 | 1 | **5P-6871** | 2 | MIRROR | |
| | 6 | 1 | **113-8218** | 2 | ARM | |
| | 7 | 1 | **123-4586** | 4 | BLOCK | |
| | 8 | 1 | **123-4587** | 4 | BRACKET | |
| M | 9 | 1 | **8T-4182** | 8 | BOLT (M10X1.5X45-MM) | |
| M | 10 | 1 | **8T-4195** | 4 | BOLT (M10X1.5X30-MM) | |
| M | 11 | 1 | **6V-7744** | 4 | LOCKNUT (M10X1.15-THD) | |
| | 12 | 1 | **9C-5928** | 4 | SPACER (10X19X5.15-MM THK) | |

M-METRIC PART

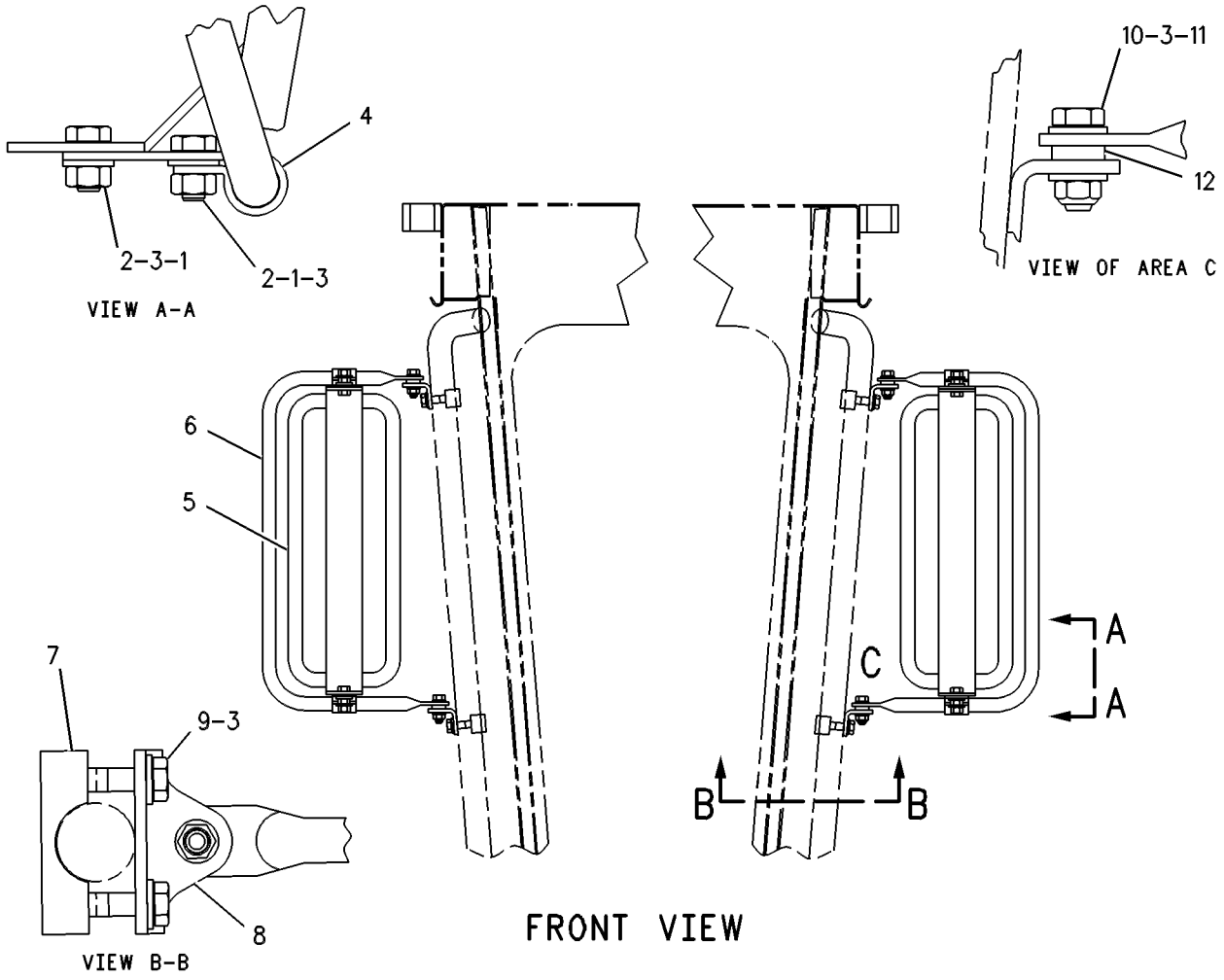


GRAPHIC #1 **<END>** g00109253

# OPERATOR STATION

## *140-8127* MIRROR GP-REAR VIEW—DUAL INSIDE

**S/N: CCA1-UP**
**AN ATTACHMENT**

**SMCS-7319** **i01375335**

| NOTE | REF NO | GRAPHIC REF | PART NUMBER | QTY | PART NAME 1 2 3 4 5 6 (PRODUCT LEVEL) | SEE PAGE |
|---|---|---|---|---|---|---|
| | 1 | 1 | **5P-6872** | 2 | MIRROR AS | |
| | 2 | 1 | **2G-8241** | 2 | CLAMP | |
| M | 3 | 1 | **9X-2046** | 4 | SCREW-TRUSS HEAD (M6X1X35-MM) | |
| | 4 | 1 | **2G-8572** | 2 | WASHER-SPECIAL (10X27.81X2.54-MM THK) | |
| | 5 | 1 | **2G-8573** | 2 | CAP | |
| | 6 | 1 | **2G-8242** | 2 | ARM | |
| | 7 | 1 | **5P-1075** | 2 | WASHER-HARD (10.2X22.5X3-MM THK) | |
| | 8 | 1 | **140-6418** | 2 | BRACKET AS | |
| | | | | | (EACH INCLUDES) | |
| | | 1 | **1F-0750** | 1 | NUT-WELD (3/8-16-THD) | |
| | 9 | 1 | **5S-7379** | 2 | BOLT (3/8-16X0.875-IN) | |
| | 10 | 1 | **1P-2378** | 2 | CAP | |

M-METRIC PART

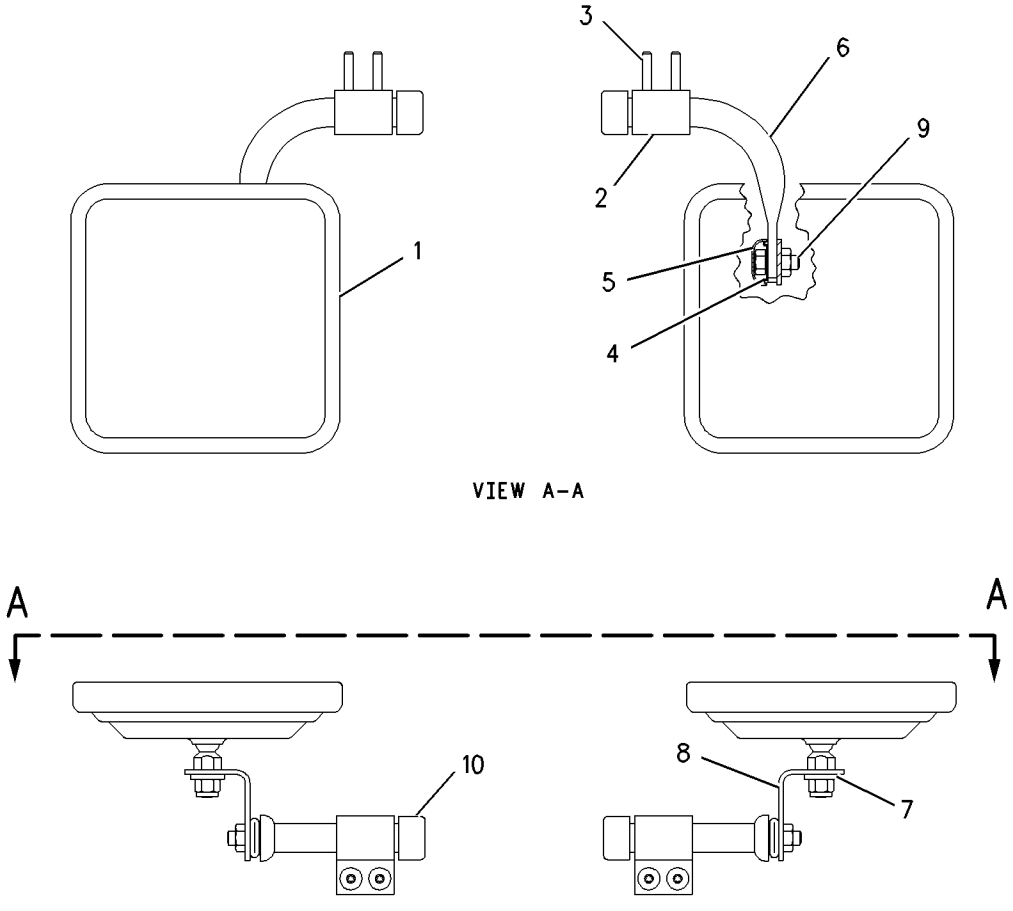


GRAPHIC #1 **<END>** g00699923

# OPERATOR STATION

## *193-8212* MIRROR GP-REAR VIEW—OUTSIDE—HEATED—EU

**S/N: CCA1-UP**

**AN ATTACHMENT**

**SMCS-7319** **i02305136**

| NOTE | REF NO | GRAPHIC REF | PART NUMBER | QTY | PART NAME 1 2 3 4 5 6 (PRODUCT LEVEL) | SEE PAGE |
|---|---|---|---|---|---|---|
| | 1 | 1 | **3E-0109** | 5 | PLUG | |
| | 2 | 1 | **3S-2093** | 8 | STRAP-CABLE | |
| | 3 | 1 | **9W-1442** | 1 | FUSE (10-AMPERE) | |
| | 4 | 1 | **113-8218** | 2 | ARM | |
| | 5 | 1 | **123-4586** | 4 | BLOCK | |
| | 6 | 1 | **123-4587** | 4 | BRACKET | |
| | 7 | 1 | **145-3350** | 1 | PLATE | |
| B | 8 | 1 | **153-2147** | 1 | PLATE | |
| | 9 | 1 | **172-6556** | 1 | PANEL | |
| | 10 | 1 | **188-3862** | 1 | BRACKET AS | |
| | 11 | 1 | **196-8557** | 1 | HARNESS AS-CAB | |
| | | 1 | **155-2255** | 1 | KIT-CONNECTING PLUG (12-PIN) | |
| | | 1 | **155-2265** | 4 | KIT-CONNECTING PLUG (8-PIN) | |
| | | 1 | **155-2270** | 1 | KIT-CONNECTING PLUG (2-PIN) | |
| | | 1 | **155-2271** | 1 | KIT-CONNECTING PLUG (4-PIN) | |
| | | | | | (EACH INCLUDES PLUG AS & WEDGE) | |
| | | 1 | **102-8802** | 1 | KIT-RECEPTACLE (2-PIN) | |
| | | 1 | **102-8804** | 2 | KIT-RECEPTACLE (4-PIN) | |
| | | 1 | **102-8806** | 1 | KIT-RECEPTACLE (8-PIN) | |
| | | 1 | **102-8801** | 1 | KIT-RECEPTACLE (12-PIN) | |
| | | | | | (EACH INCLUDES RECEPTACLE AS & WEDGE) | |
| | 12 | 1 | **202-8649** | 2 | MIRROR AS (HEATED) | |
| | | | | | (EACH INCLUDES) | |
| | | 1 | **186-3735** | 2 | PIN-CONNECTOR (16-GA TO 18-GA) | |
| | | 1 | **102-8802** | 1 | KIT-RECEPTACLE (2-PIN) | |
| | | | | | (INCLUDES RECEPTACLE AS & WEDGE) | |
| | 13 | 1 | **3E-8766** | 1 | SWITCH AS (24-VOLT) (HEATED MIRRORS) | |
| | | | **3E-8825** | 1 | LAMP (24-VOLT) | |
| | | | **123-5857** | 1 | ACTUATOR-ROCKER | |
| | 14 | 1 | **130-5300** | 2 | CLIP | |
| | 15 | 1 | **9D-3768** | 2 | GROMMET | |
| | 16 | 1 | **6G-8831** | 4 | CLAMP | |
| M | 17 | 1 | **6V-7744** | 4 | LOCKNUT (M10X1.15-THD) | |
| | 18 | 1 | **8T-4121** | 27 | WASHER-HARD (11X21X2.5-MM THK) | |
| M | 19 | 1 | **8T-4133** | 8 | NUT (M10X1.5-THD) | |
| M | 20 | 1 | **8T-4137** | 8 | BOLT (M10X1.5X20-MM) | |
| M | 21 | 1 | **8T-4182** | 8 | BOLT (M10X1.5X45-MM) | |
| M | 22 | 1 | **8T-4186** | 4 | BOLT (M10X1.5X40-MM) | |
| M | 23 | 1 | **8T-4191** | 2 | BOLT (M10X1.5X16-MM) | |
| | 24 | 1 | **9C-5928** | 8 | SPACER (10X19X5.15-MM THK) | |
| M | 25 | 1 | **9X-2043** | 6 | SCREW-TRUSS HEAD (M6X1X14-MM) | |

B-USE AS REQUIRED
M-METRIC PART

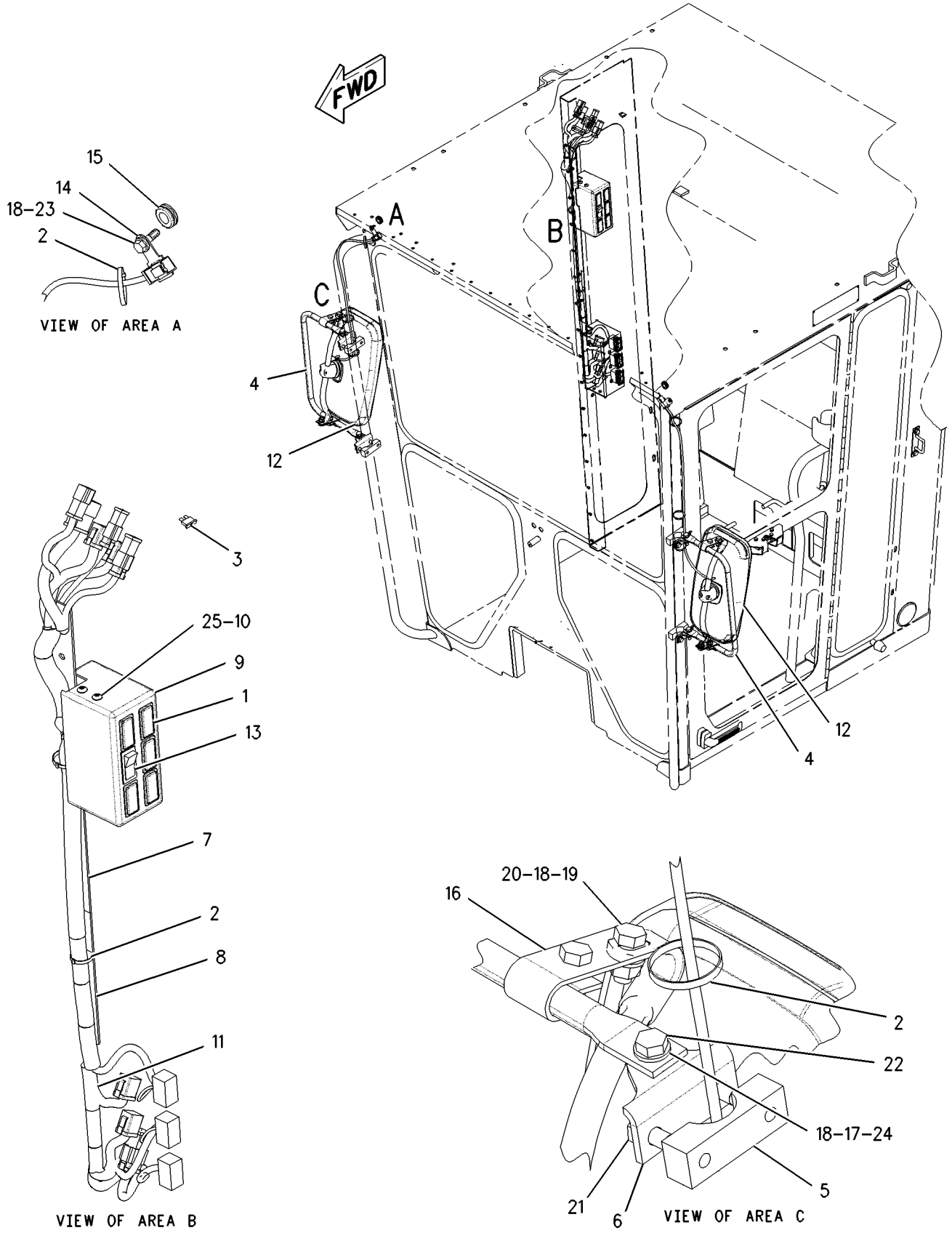


GRAPHIC #1 **<END>** g00893860

# OPERATOR STATION

## 197-2064 MIRROR GP-REAR VIEW—CLOSED

**S/N: CCA1-UP**

**PART OF 197-5572 ROADING AR**

**AN ATTACHMENT**

**SMCS-7319** **i01682193**

| NOTE | PART NUMBER | QTY | PART NAME 1 2 3 4 5 6 (PRODUCT LEVEL) | SEE PAGE |
|---|---|---|---|---|
| | **113-8218** | 2 | ARM | |
| | **123-4586** | 4 | BLOCK | |
| M | **8T-4137** | 8 | BOLT (M10X1.5X20-MM) | |
| M | **8T-4182** | 8 | BOLT (M10X1.5X45-MM) | |
| M | **8T-4186** | 4 | BOLT (M10X1.5X40-MM) | |
| | **123-4587** | 4 | BRACKET | |
| | **6G-8831** | 4 | CLAMP | |
| M | **6V-7744** | 4 | LOCKNUT (M10X1.15-THD) | |
| | **197-2055** | 2 | MIRROR AS | |
| M | **8T-4133** | 8 | NUT (M10X1.5-THD) | |
| | **9C-5928** | 8 | SPACER (10X19X5.15-MM THK) | |
| | **8T-4121** | 24 | WASHER-HARD (11X21X2.5-MM THK) | |

M-METRIC PART

**<END>**

# OPERATOR STATION

## 197-2066 MIRROR GP-REAR VIEW–INSIDE–DUAL–EU

**S/N: CCA1-UP**

**PART OF 207-4453, 210-2044 CONVERSION AR-CERTIFICATION**

**AN ATTACHMENT**

**SMCS-7319** **i02304669**

| NOTE | REF NO | GRAPHIC REF | PART NUMBER | QTY | PART NAME 1 2 3 4 5 6 (PRODUCT LEVEL) | SEE PAGE |
|---|---|---|---|---|---|---|
| | 1 | 1 | **1P-2378** | 4 | CAP | |
| | 2 | 1 | **2G-8241** | 2 | CLAMP | |
| | 3 | 1 | **232-6114** | 2 | MIRROR AS (RH, LH) | |
| | | | | | (EACH INCLUDES) | |
| | | 1 | **203-0780** | 1 | MIRROR | |
| M | 4 | 1 | **9X-2046** | 4 | SCREW-TRUSS HEAD (M6X1X35-MM) | |

M-METRIC PART

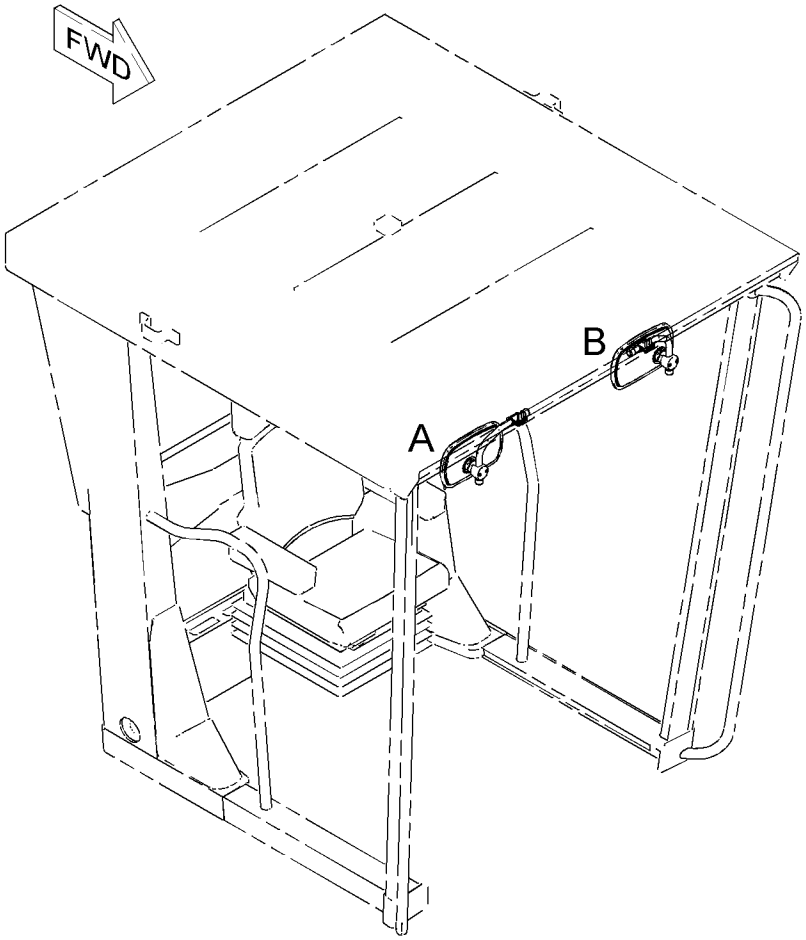


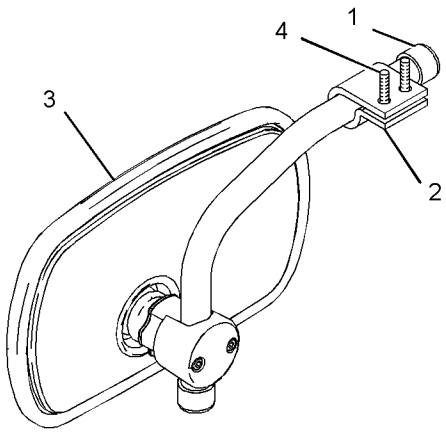


VIEW OF AREA A

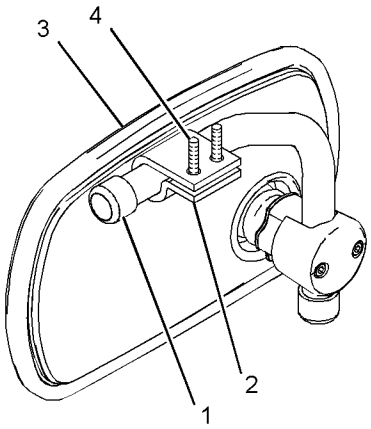


VIEW OF AREA B

GRAPHIC #1 **<END>** g01118616

# OPERATOR STATION

## *231-6524* MIRROR GP-REAR VIEW—OUTSIDE—HEATED

**S/N: CCA1-UP**
**PART OF 197-5955, 236-3948 SNOW AR-MOTOR GRADER**
**AN ATTACHMENT**

**SMCS-7319** **i02304685**

| NOTE | REF NO | GRAPHIC REF | PART NUMBER | QTY | PART NAME 1 2 3 4 5 6 (PRODUCT LEVEL) | SEE PAGE |
|---|---|---|---|---|---|---|
| | 1 | 1 | **3E-0109** | 5 | PLUG | |
| B | 2 | 1 | **3S-2093** | 8 | STRAP-CABLE | |
| | 3 | 1 | **9W-1442** | 1 | FUSE (10-AMPERE) | |
| | 4 | 1 | **113-8218** | 2 | ARM | |
| | 5 | 1 | **123-4586** | 4 | BLOCK | |
| | 6 | 1 | **123-4587** | 4 | BRACKET | |
| | 7 | 1 | **145-3350** | 1 | PLATE | |
| | 8 | 1 | **153-2147** | 1 | PLATE | |
| | 9 | 1 | **168-8243** | 1 | HARNESS AS-PANEL (SWITCH) | |
| | | 1 | **102-8802** | 1 | KIT-RECEPTACLE (2-PIN) | |
| | | 1 | **102-8804** | 1 | KIT-RECEPTACLE (4-PIN) | |
| | | 1 | **102-8806** | 1 | KIT-RECEPTACLE (8-PIN) | |
| | | 1 | **102-8801** | 1 | KIT-RECEPTACLE (12-PIN) | |
| | | | | | (EACH INCLUDES RECEPTACLE AS & WEDGE) | |
| | | 1 | **155-2255** | 1 | KIT-CONNECTING PLUG (12-PIN) | |
| | | 1 | **155-2265** | 4 | KIT-CONNECTING PLUG (8-PIN) | |
| | | 1 | **155-2270** | 1 | KIT-CONNECTING PLUG (2-PIN) | |
| | | 1 | **155-2271** | 1 | KIT-CONNECTING PLUG (4-PIN) | |
| | | | | | (EACH INCLUDES PLUG AS & WEDGE) | |
| | | 1 | **155-2272** | 1 | PLUG AS-CONNECTOR (4-PIN) | |
| | 10 | 1 | **172-6556** | 1 | PANEL | |
| | 11 | 1 | **188-3862** | 1 | BRACKET AS | |
| | 12 | 1 | **202-8649** | 2 | MIRROR AS (HEATED) | |
| | | | | | (EACH INCLUDES) | |
| | | 1 | **200-1173** | 1 | MIRROR AS | |
| | | 1 | **186-3735** | 2 | PIN-CONNECTOR (16-GA TO 18-GA) | |
| | | 1 | **102-8802** | 1 | KIT-RECEPTACLE (2-PIN) | |
| | | | | | (INCLUDES RECEPTACLE AS & WEDGE) | |
| | 13 | 1 | **3E-8766** | 1 | SWITCH AS (24-VOLT) (HEATED MIRRORS) | |
| | | | **3E-8825** | 1 | LAMP (24-VOLT) | |
| | | | **123-5857** | 1 | ACTUATOR-ROCKER | |
| | 14 | 1 | **130-5300** | 2 | CLIP | |
| | 15 | 1 | **9D-3768** | 2 | GROMMET | |
| | 16 | 1 | **6G-8831** | 4 | CLAMP | |
| M | 17 | 1 | **6V-7744** | 4 | LOCKNUT (M10X1.15-THD) | |
| | 18 | 1 | **8T-4121** | 27 | WASHER-HARD (11X21X2.5-MM THK) | |
| M | 19 | 1 | **8T-4133** | 8 | NUT (M10X1.5-THD) | |
| M | 20 | 1 | **8T-4137** | 8 | BOLT (M10X1.5X20-MM) | |
| M | 21 | 1 | **8T-4182** | 8 | BOLT (M10X1.5X45-MM) | |
| M | 22 | 1 | **8T-4186** | 4 | BOLT (M10X1.5X40-MM) | |
| M | 23 | 1 | **8T-4191** | 2 | BOLT (M10X1.5X16-MM) | |
| | 24 | 1 | **9C-5928** | 8 | SPACER (10X19X5.15-MM THK) | |
| M | 25 | 1 | **9X-2043** | 6 | SCREW-TRUSS HEAD (M6X1X14-MM) | |

B-USE AS REQUIRED
M-METRIC PART

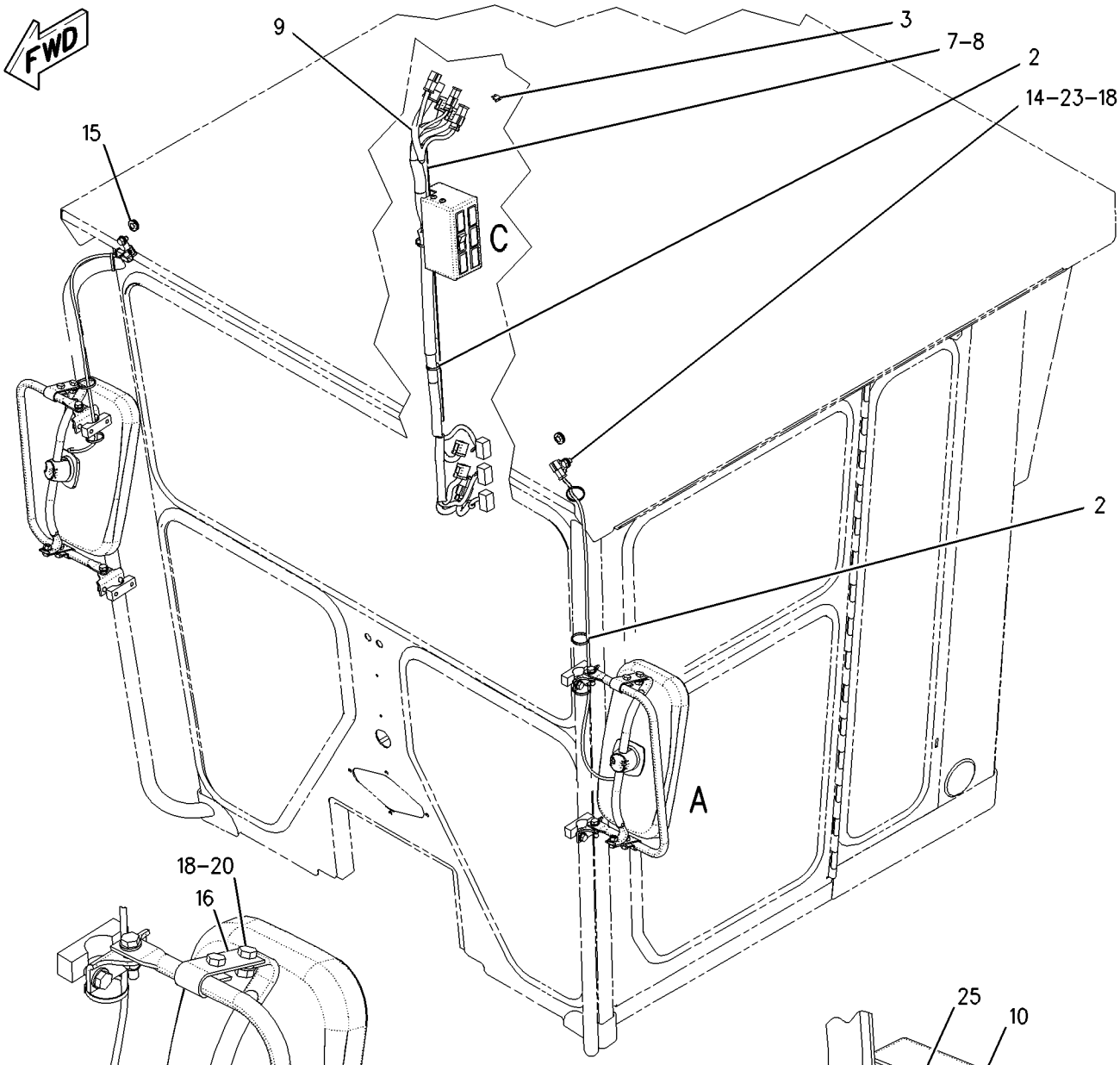


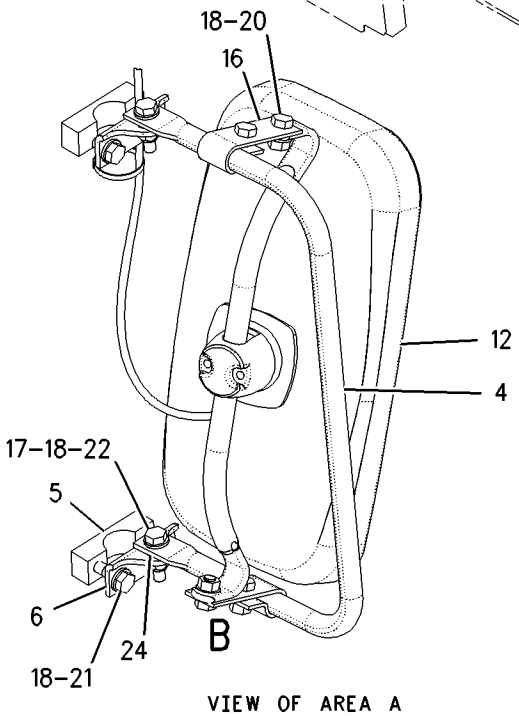


VIEW OF AREA A

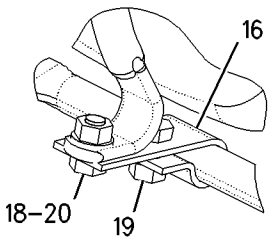


VIEW OF AREA B

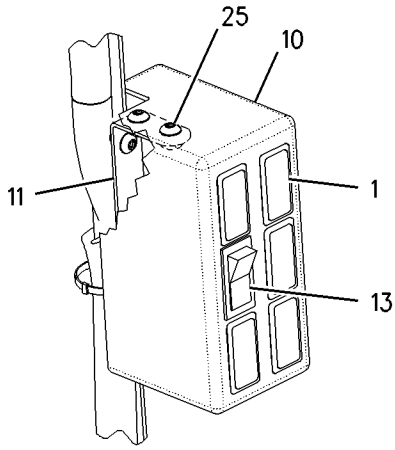


VIEW OF AREA C

GRAPHIC #1 **<END>** g00955728

# OPERATOR STATION

## *180-9285* MODULE GP-QUAD GAUGE

**S/N: CCA1-UP**

**PART OF 159-5812, 178-3030, 196-4909 PANEL GP-INSTRUMENT**

**ALSO AN ATTACHMENT**

**SMCS-7451, 7490** **i01676197**

| NOTE | REF NO | GRAPHIC REF | PART NUMBER | QTY | PART NAME 1 2 3 4 5 6 (PRODUCT LEVEL) | SEE PAGE |
|---|---|---|---|---|---|---|
| | 1 | 1 | **102-8805** | 1 | KIT-RECEPTACLE (6-PIN) (QUAD GAGE MODULE) | |
| | | | | | (INCLUDES RECEPTACLE ASSEMBLY AND WEDGE) | |
| | 2 | 1 | **186-3735** | 6 | PIN-CONNECTOR (16-GA TO 18-GA) | |
| | 3 | 1 | **3E-3383** | 1 | WEDGE-RECEPTACLE LOCK (6-PIN) | |

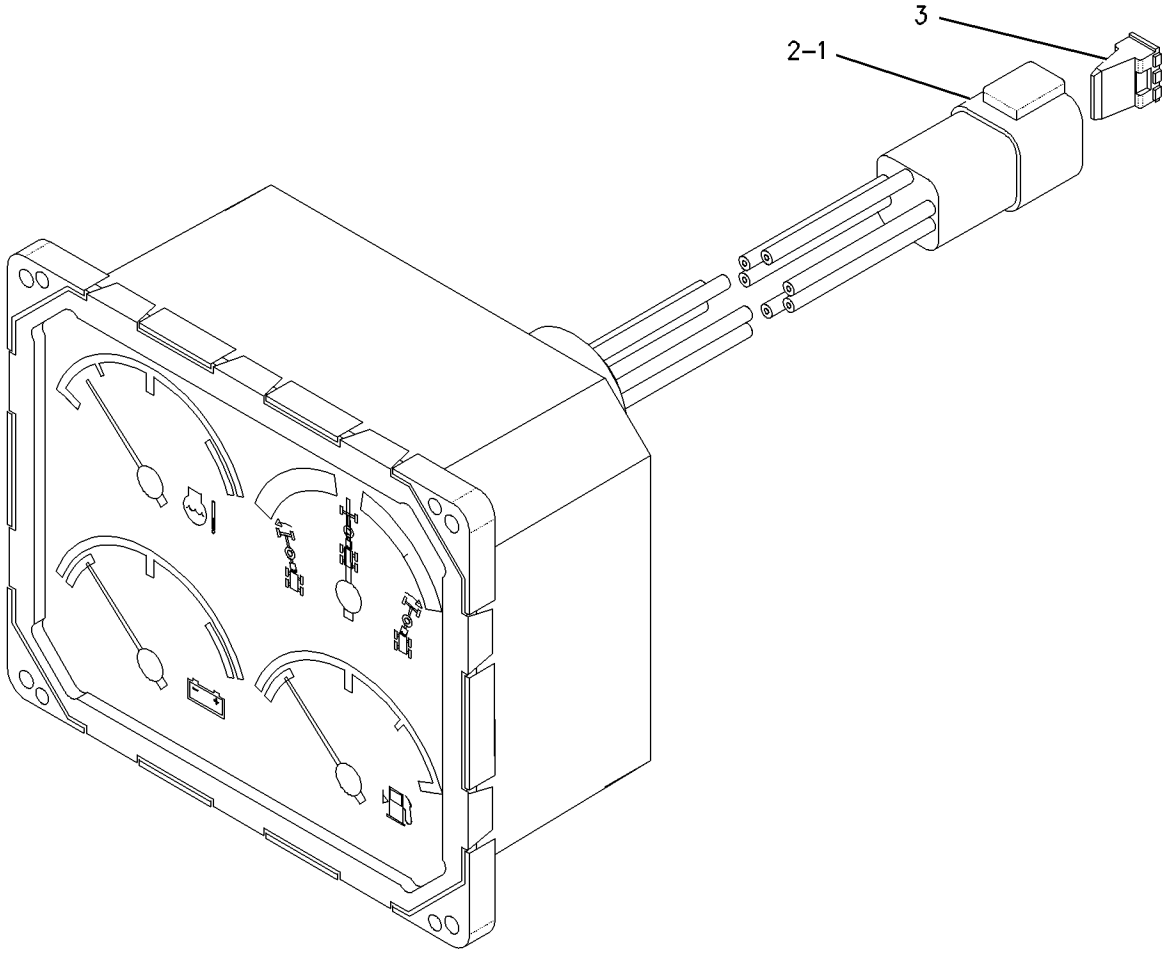


GRAPHIC #1 **<END>** g00877962

# OPERATOR STATION

## *177-9741* MODULE GP-SPEEDOMETER & TACH–SNOW

**S/N: CCA1-UP**

**PART OF 259-5738 CONVERSION AR-MACHINE, 197-5955, 236-3948 SNOW AR-MOTOR GRADER**

**AN ATTACHMENT**

**SMCS-7451, 7462, 7463, 7490** **i02200404**

| NOTE | REF NO | GRAPHIC REF | PART NUMBER | QTY | PART NAME 1 2 3 4 5 6 (PRODUCT LEVEL) | SEE PAGE |
|---|---|---|---|---|---|---|
| | 1 | 1 | **7N-5876** | 2 | LAMP (24-VOLT) | |
| | 2 | 1 | **190-3482** | 1 | MODULE GP-SPEEDOMETER & TACH | |
| | | 1 | **3E-3383** | 1 | WEDGE-RECEPTACLE LOCK (6-PIN) | |
| | | 1 | **186-3735** | 6 | PIN-CONNECTOR (16-GA TO 18-GA) | |
| | | 1 | **102-8805** | 1 | KIT-RECEPTACLE (6-PIN) | |

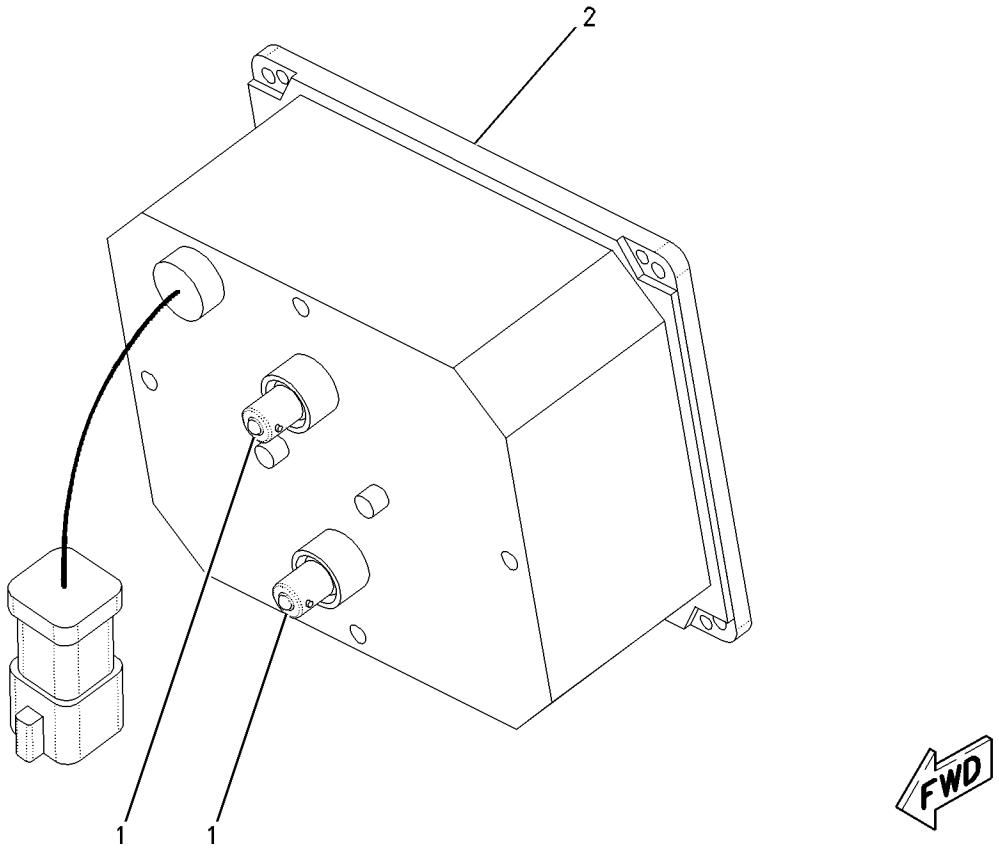


GRAPHIC #1 **<END>** g00845776

# OPERATOR STATION

## *125-4344* MOUNTING GP-CAB—NON-ROPS, ENCLOSED

**S/N: CCA1-UP**
**PART OF 225-3174 CAB AR, 211-4906 CAB AR-NON-ROPS**
**AN ATTACHMENT**

**SMCS-7301** **i02327863**

| NOTE | REF NO | GRAPHIC REF | PART NUMBER | QTY | PART NAME 1 2 3 4 5 6 (PRODUCT LEVEL) | SEE PAGE |
|---|---|---|---|---|---|---|
| | 1 | 1 | **103-5515** | 1 | PAD-RH | |
| | 2 | 1 | **103-5516** | 1 | PAD-LH | |
| | 3 | 1 | **103-4953** | 4 | MOUNTING | |
| | 4 | 1 | **7X-0375** | 4 | BOLT (3/4-10X5-IN) | |
| | 5 | 1 | **8X-0674** | 4 | WASHER (22X100X10-MM THK) | |
| | 6 | 1 | **3V-9244** | 2 | WASHER (16.5X50X5-MM THK) | |
| | 7 | 1 | **4K-0367** | 2 | NUT-FULL (5/8-11-THD) | |
| | 8 | 1 | **7X-0354** | 2 | BOLT (5/8-11X4.5-IN) | |
| | 9 | 1 | **8T-4122** | 2 | WASHER-HARD (17X32X3.5-MM THK) | |
| | 10 | 1 | **8X-6131** | 2 | SEAL | |
| | 11 | 1 | **164-2465** | 2 | PAD | |
| | 12 | 1 | **9D-1589** | 2 | MOUNTING | |
| | 13 | 1 | **2G-7098** | 2 | PAD | |
| | 14 | 1 | **2G-7097** | 1 | PAD | |
| E | 15 | 1 | **123-6806** | | SEAL (87-CM) | |

E-ORDER BY THE CENTIMETER

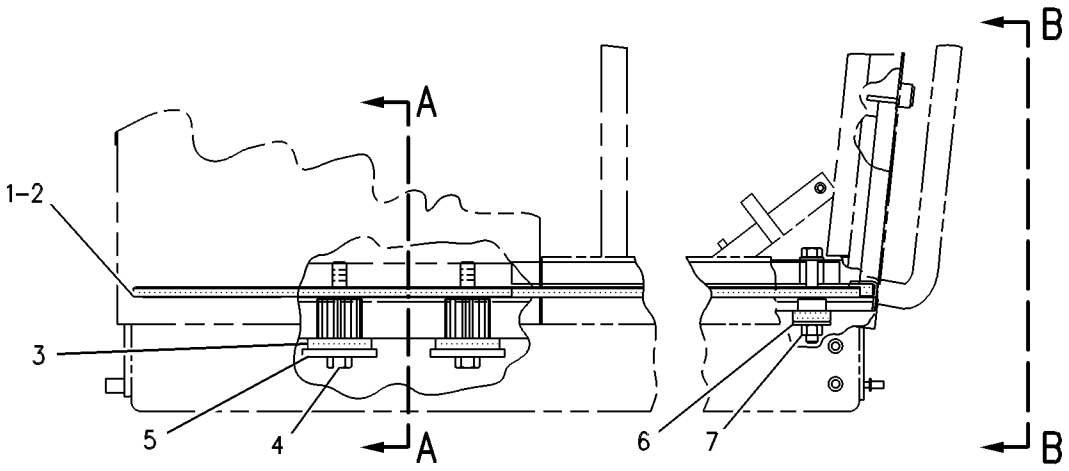


RIGHT SIDE VIEW

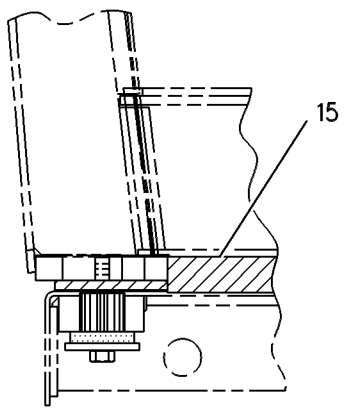


SECTION A-A

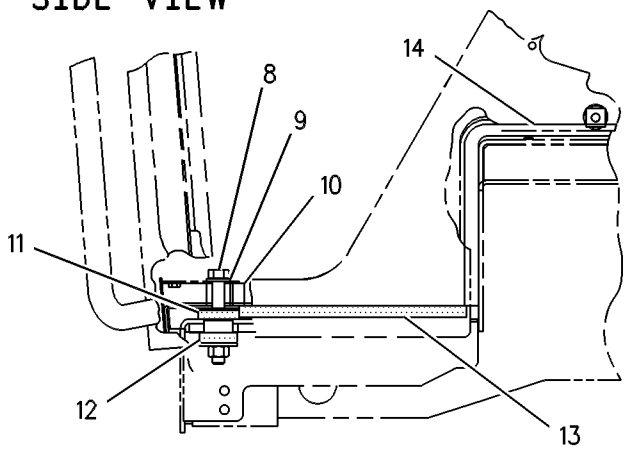


VIEW B-B

GRAPHIC #1 **<END>** g00109328

# OPERATOR STATION

## *2A-6985* MOUNTING GP-ROPS

**S/N: CCA1-UP**
**PART OF 218-4758 ROPS AR-ENCLOSED, 172-5377, 177-8779, 260-1745 ROPS GP-ENCLOSED**
**ALSO AN ATTACHMENT**

**SMCS-7266** **i01938112**

| NOTE | REF NO | GRAPHIC REF | PART NUMBER | QTY | PART NAME 1 2 3 4 5 6 (PRODUCT LEVEL) | SEE PAGE |
|---|---|---|---|---|---|---|
| | 1 | 1 | **3E-4048** | 2 | CAP-PLUG | |
| | 2 | 1 | **103-5515** | 1 | PAD-RH | |
| | 3 | 1 | **103-5516** | 1 | PAD-LH | |
| | 4 | 1 | **103-4953** | 4 | MOUNTING | |
| | 5 | 1 | **7X-0375** | 4 | BOLT (3/4-10X5-IN) | |
| | 6 | 1 | **8X-0674** | 4 | WASHER (22X100X10-MM THK) | |
| | 7 | 1 | **3V-9244** | 2 | WASHER (16.5X50X5-MM THK) | |
| | 8 | 1 | **4K-0367** | 2 | NUT-FULL (5/8-11-THD) | |
| | 9 | 1 | **7X-0354** | 2 | BOLT (5/8-11X4.5-IN) | |
| | 10 | 1 | **8T-4122** | 4 | WASHER-HARD (17X32X3.5-MM THK) | |
| | 11 | 1 | **8X-6131** | 2 | SEAL | |
| | 12 | 1 | **164-2465** | 2 | PAD | |
| | 13 | 1 | **9D-1589** | 2 | MOUNTING | |
| | 14 | 1 | **2G-7098** | 2 | PAD | |
| | 15 | 1 | **2G-7097** | 1 | PAD | |
| | 16 | 1 | **103-4771** | 2 | PIN AS | |
| | 17 | 1 | **030-8535** | 2 | BOLT-LOCKING (3/8-16X0.875-IN) | |
| | 18 | 1 | **8T-4896** | 2 | WASHER-HARD (10.2X18.5X2.5-MM THK) | |
| B | 19 | 1 | **166-1999** | 2 | SHIM (2.28-MM THK) | |
| BE | 20 | 1 | **123-6806** | | SEAL (87-CM) | |
| B | 21 | 1 | **166-1997** | 2 | SHIM (1.2-MM THK) | |

B-USE AS REQUIRED
E-ORDER BY THE CENTIMETER

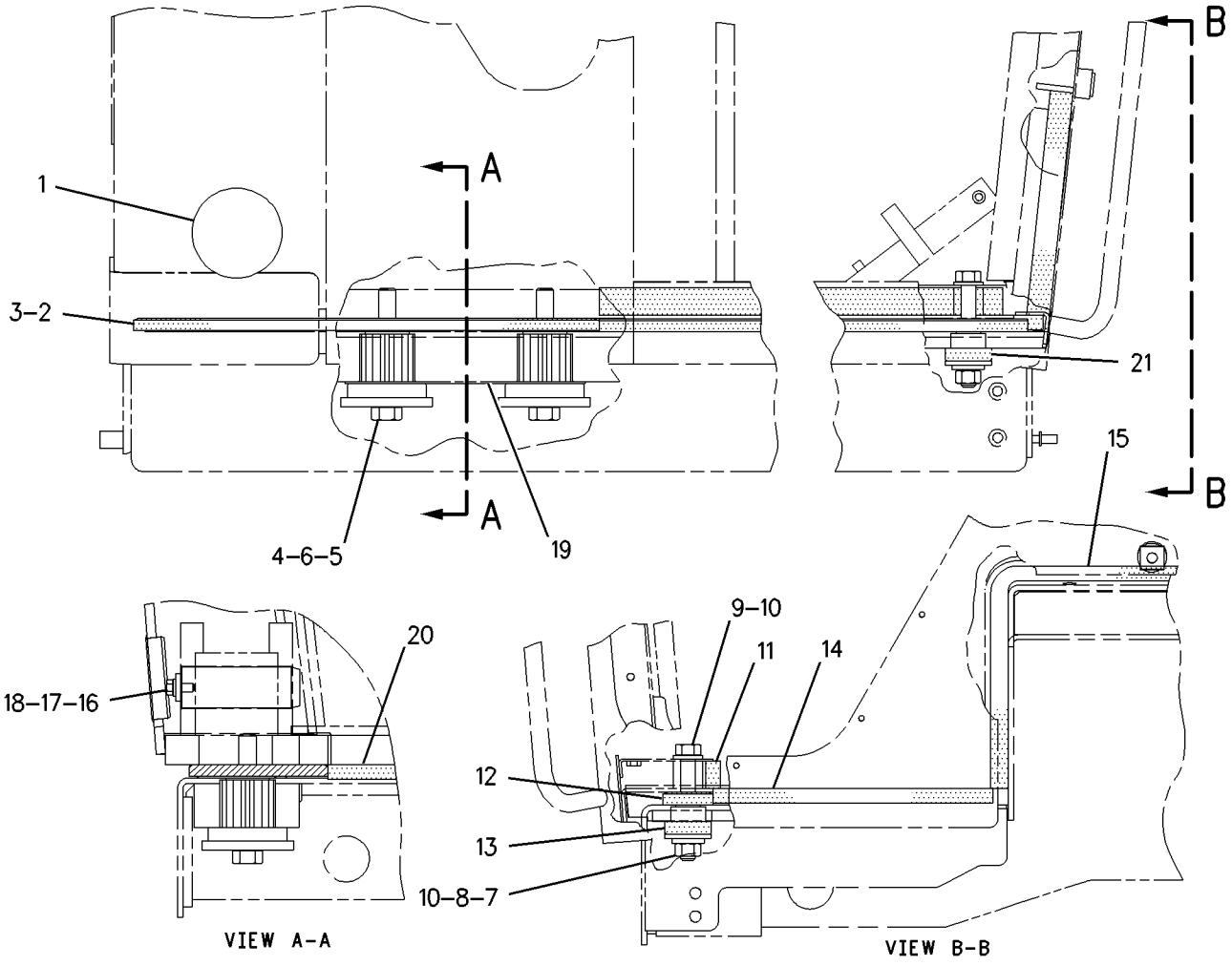


GRAPHIC #1 **<END>** g00752004

# OPERATOR STATION

## *191-8692* MOUNTING GP-ROPS–OPEN–HIGH PROFILE

**S/N: CCA1-UP**
**PART OF 173-2751 ROPS GP-OPEN**
**AN ATTACHMENT**

**SMCS-7266** **i01683445**

| NOTE | REF NO | GRAPHIC REF | PART NUMBER | QTY | PART NAME 1 2 3 4 5 6 (PRODUCT LEVEL) | SEE PAGE |
|---|---|---|---|---|---|---|
| | 1 | 1 | **3E-4048** | 2 | CAP-PLUG | |
| | 2 | 1 | **8T-4122** | 4 | WASHER-HARD (17X32X3.5-MM THK) | |
| | 3 | 1 | **9D-1589** | 2 | MOUNTING | |
| | 4 | 1 | **103-4771** | 2 | PIN AS | |
| | 5 | 1 | **103-4953** | 4 | MOUNTING | |
| | 6 | 1 | **103-5515** | 1 | PAD-RH | |
| | 7 | 1 | **103-5516** | 1 | PAD-LH | |
| | 8 | 1 | **164-2465** | 2 | PAD | |
| | 9 | 1 | **166-1997** | 2 | SHIM (1.2-MM THK) | |
| | 10 | 1 | **166-1999** | 2 | SHIM (2.28-MM THK) | |
| | 11 | 1 | **030-8535** | 2 | BOLT-LOCKING (3/8-16X0.875-IN) | |
| | 12 | 1 | **3V-9244** | 2 | WASHER (16.5X50X5-MM THK) | |
| | 13 | 1 | **4K-0367** | 2 | NUT-FULL (5/8-11-THD) | |
| | 14 | 1 | **7X-0354** | 2 | BOLT (5/8-11X4.5-IN) | |
| | 15 | 1 | **7X-0375** | 4 | BOLT (3/4-10X5-IN) | |
| | 16 | 1 | **8T-4896** | 2 | WASHER-HARD (10.2X18.5X2.5-MM THK) | |
| | 17 | 1 | **8X-0674** | 4 | WASHER (22X100X10-MM THK) | |

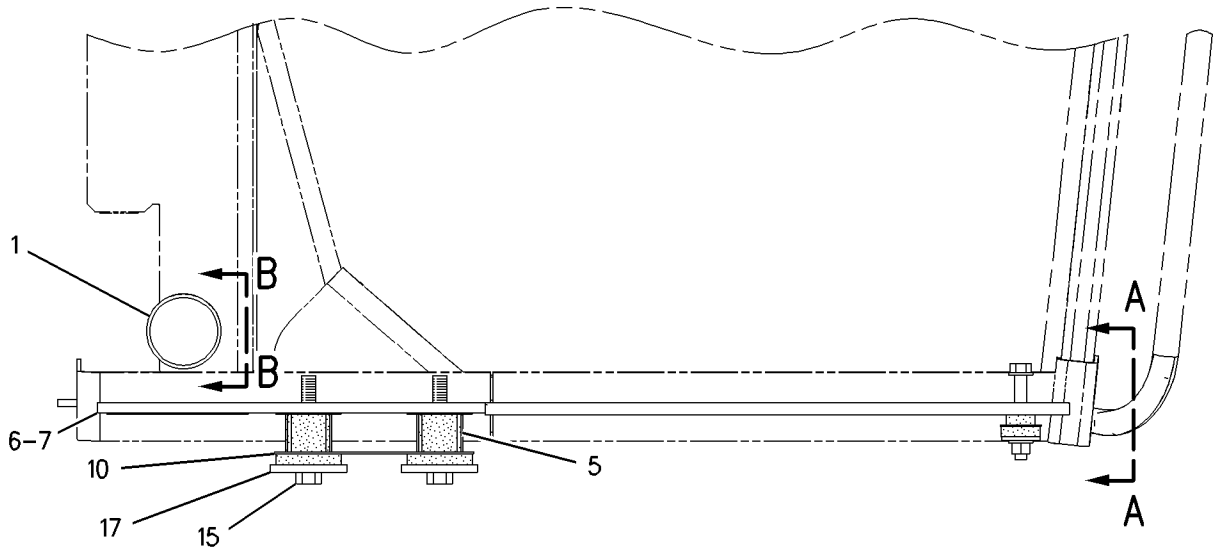


RIGHT SIDE VIEW

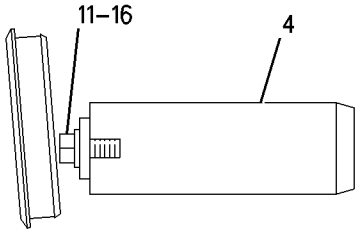


VIEW B-B

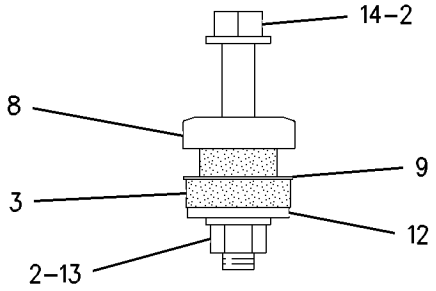


VIEW A-A

GRAPHIC #1 **<END>** g00846778

# OPERATOR STATION

## *108-8421* PAN GP-BACKREST–LUMBAR

**S/N: CCA1-UP**
**PART OF 114-1183, 114-1185 SEAT GP**
**ALSO AN ATTACHMENT**

**SMCS-7312** **i02205486**

| NOTE | REF NO | GRAPHIC REF | PART NUMBER | QTY | PART NAME 1 2 3 4 5 6 (PRODUCT LEVEL) | SEE PAGE |
|---|---|---|---|---|---|---|
| | 1 | 1 | **9M-5733** | 2 | RIVET-POP | |
| | 2 | 1 | **8Y-6006** | 1 | LID AS | |
| | 3 | 1 | **8Y-6010** | 1 | LANYARD | |
| | 4 | 1 | **4S-8287** | 8 | RIVET-POP | |
| | 5 | 1 | **8Y-5972** | 1 | LATCH | |
| | 6 | 1 | **108-8423** | 1 | SHAFT AS-LUMBAR | |
| | 7 | 1 | **3E-4336** | 1 | STUD-BALL | |
| | 8 | 1 | **3E-4335** | 1 | CLIP | |
| | 9 | 1 | **2F-7306** | 1 | SCREW-MACHINE (6-32X0.25-IN) | |
| | 10 | 1 | **8F-1462** | 1 | WASHER-PLATED | |
| BE | 11 | 1 | **3E-6575** | | SEAL | |
| | 12 | 1 | **108-8424** | 1 | PAN-LUMBAR | |
| | 13 | 1 | **8Y-5903** | 2 | CAM | |
| | 14 | 1 | **3E-4362** | 2 | PIN-SPRING | |

B-USE AS REQUIRED
E-ORDER BY THE CENTIMETER

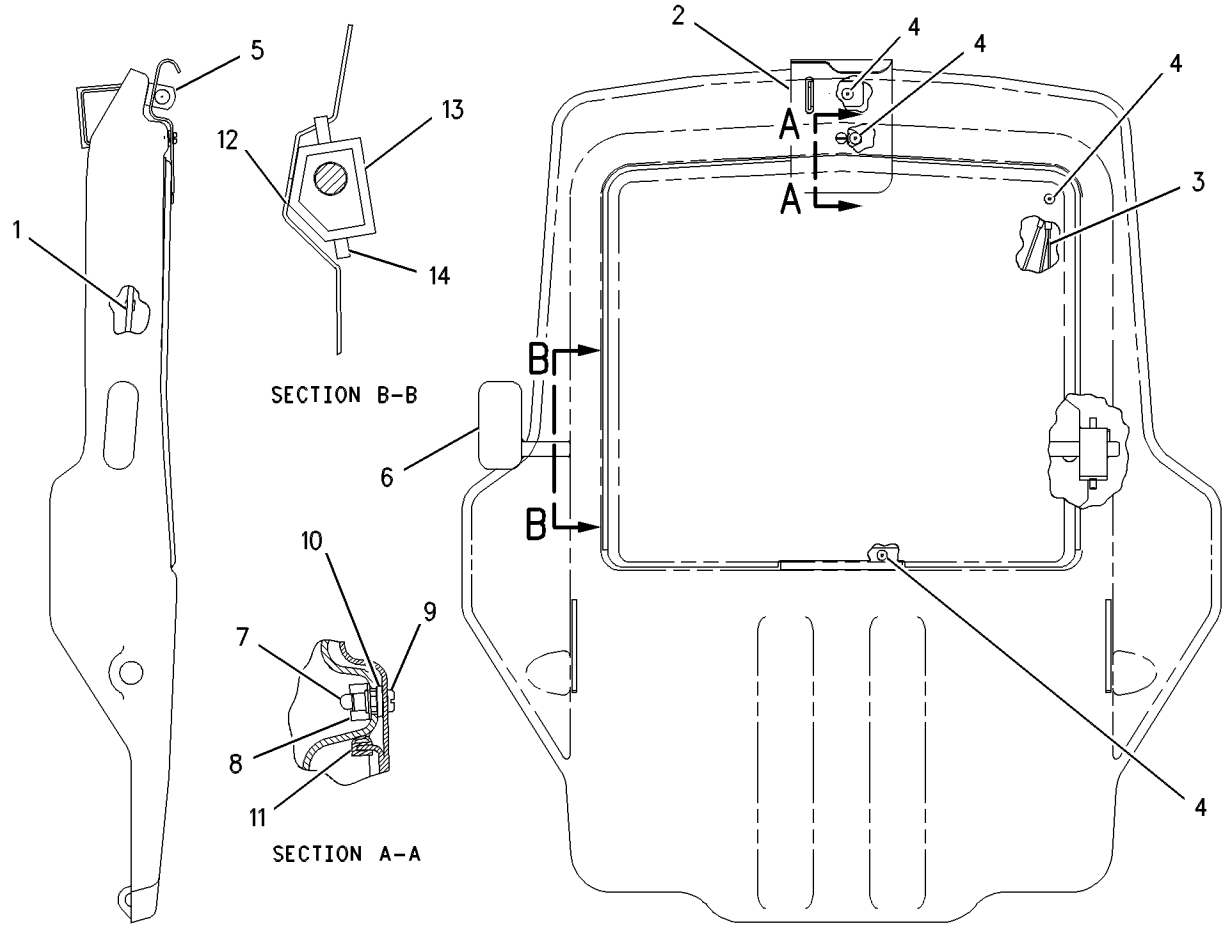


GRAPHIC #1 **<END>** g00383446

# OPERATOR STATION

## *113-5810* PAN GP-SEAT

**S/N: CCA1-UP**
**PART OF 114-1183, 114-1185 SEAT GP**
**ALSO AN ATTACHMENT**

**SMCS-7312** **i02200407**

| NOTE | REF NO | GRAPHIC REF | PART NUMBER | QTY | PART NAME 1 2 3 4 5 6 (PRODUCT LEVEL) | SEE PAGE |
|---|---|---|---|---|---|---|
| | 1 | 1 | **113-5809** | 1 | PAN AS-SEAT | |
| JZ | 2 | 1 | | 1 | ROD AS | |
| HJNZ | 3 | 1 | | 3 | SPRING | |
| | 4 | 1 | **3K-4897** | 10 | PIN-SPRING | |
| HZ | 5 | 1 | | 1 | ROD | |
| HZ | 6 | 1 | | 1 | ROD AS | |
| | 7 | 1 | **9M-5733** | 1 | RIVET-POP | |
| | 8 | 1 | **114-1083** | 1 | KNOB-BACK TILT | |
| PZ | 9 | 1 | | 1 | CABLE AS | |
| | 10 | 1 | **009-3681** | 2 | RING-RETAINING | |
| PZ | 11 | 1 | | 1 | PIN | |
| PZ | 12 | 1 | | 1 | ADJUSTER AS | |
| | 13 | 1 | **114-1082** | 1 | KNOB-SLIDE | |
| | 14 | 1 | **114-1081** | 1 | KNOB-SEAT TILT | |
| | 15 | 1 | **114-1070** | 1 | BRACKET | |
| | | | | | AVAILABLE REPAIR KIT(S): | |
| J | | | **114-1068** | 1 | KIT-SEAT TILT | |
| N | | | **114-1067** | 1 | KIT-BACK TILT | |
| P | | | **8Y-5999** | 1 | KIT-ADJUSTER | |
| H | | | **114-1069** | 1 | KIT-ROD | |

H-KIT MARKED H INCLUDES PART(S) MARKED H
J-KIT MARKED J INCLUDES PART(S) MARKED J
N-KIT MARKED N INCLUDES PART(S) MARKED N
P-KIT MARKED P INCLUDES PART(S) MARKED P
Z-NOT SERVICED SEPARATELY

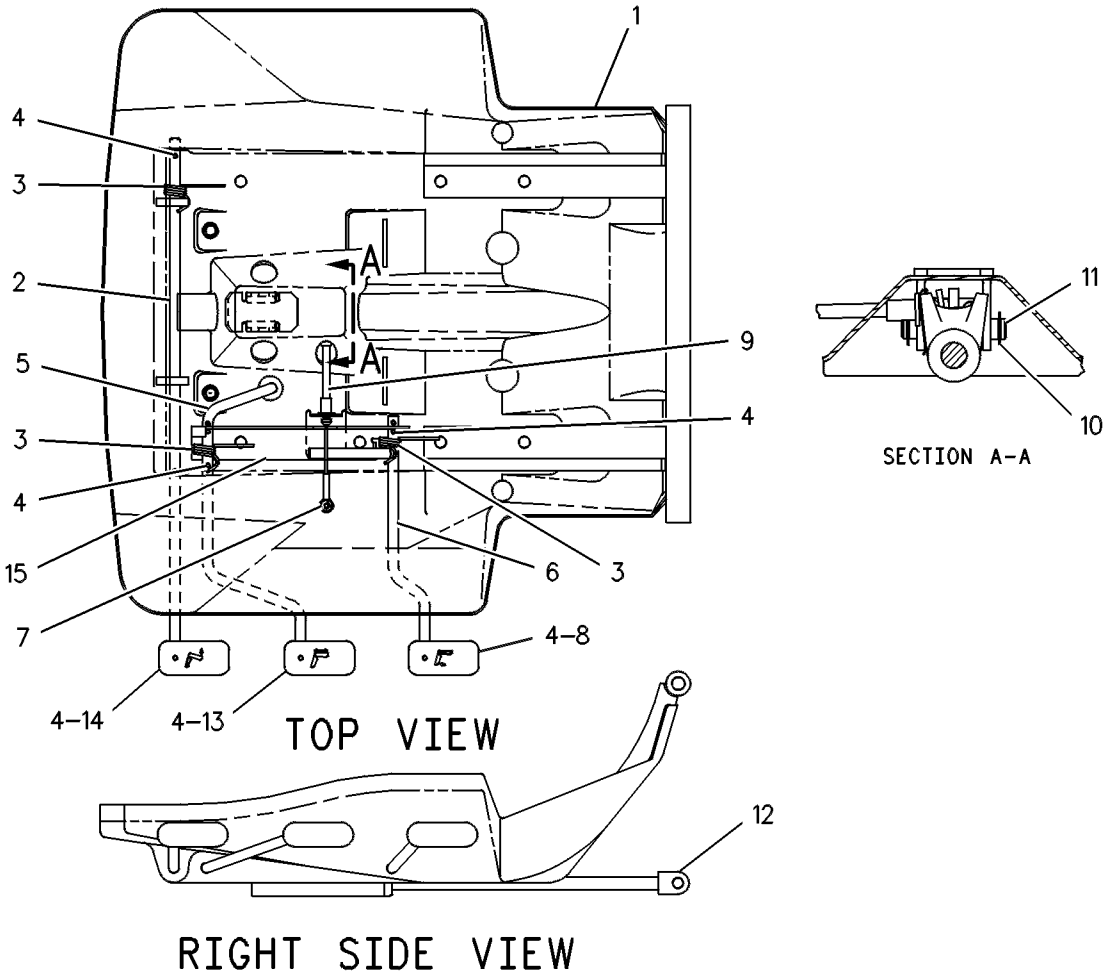


GRAPHIC #1 **<END>** g00108701

# OPERATOR STATION

## *8X-2375* PANEL GP-CAB—LOW PROFILE

**S/N: CCA1-UP**

**PART OF 172-5377, 260-1745 ROPS GP-ENCLOSED**

**ALSO AN ATTACHMENT**

**SMCS-7301** **i02205494**

| NOTE | REF NO | GRAPHIC REF | PART NUMBER | QTY | PART NAME 1 2 3 4 5 6 (PRODUCT LEVEL) | SEE PAGE |
|---|---|---|---|---|---|---|
| | 1 | 1 | **8X-5456** | 1 | GLASS-FRONT | |
| | 2 | 1 | **102-9381** | 1 | GLASS (REAR) | |
| | 3 | 1 | **118-2557** | 2 | GLASS (SIDE) | |
| | 4 | 1 | **149-3409** | 2 | GLASS | |
| | 5 | 1 | **166-2829** | 1 | FILM (SUNSHADE-CATERPILLAR) | |
| BD | 6 | 1 | **5P-5768** | | SEAL | |
| BE | 7 | 1 | **3E-9413** | | SEAL | |

B-USE AS REQUIRED
D-ORDER BY THE METER
E-ORDER BY THE CENTIMETER

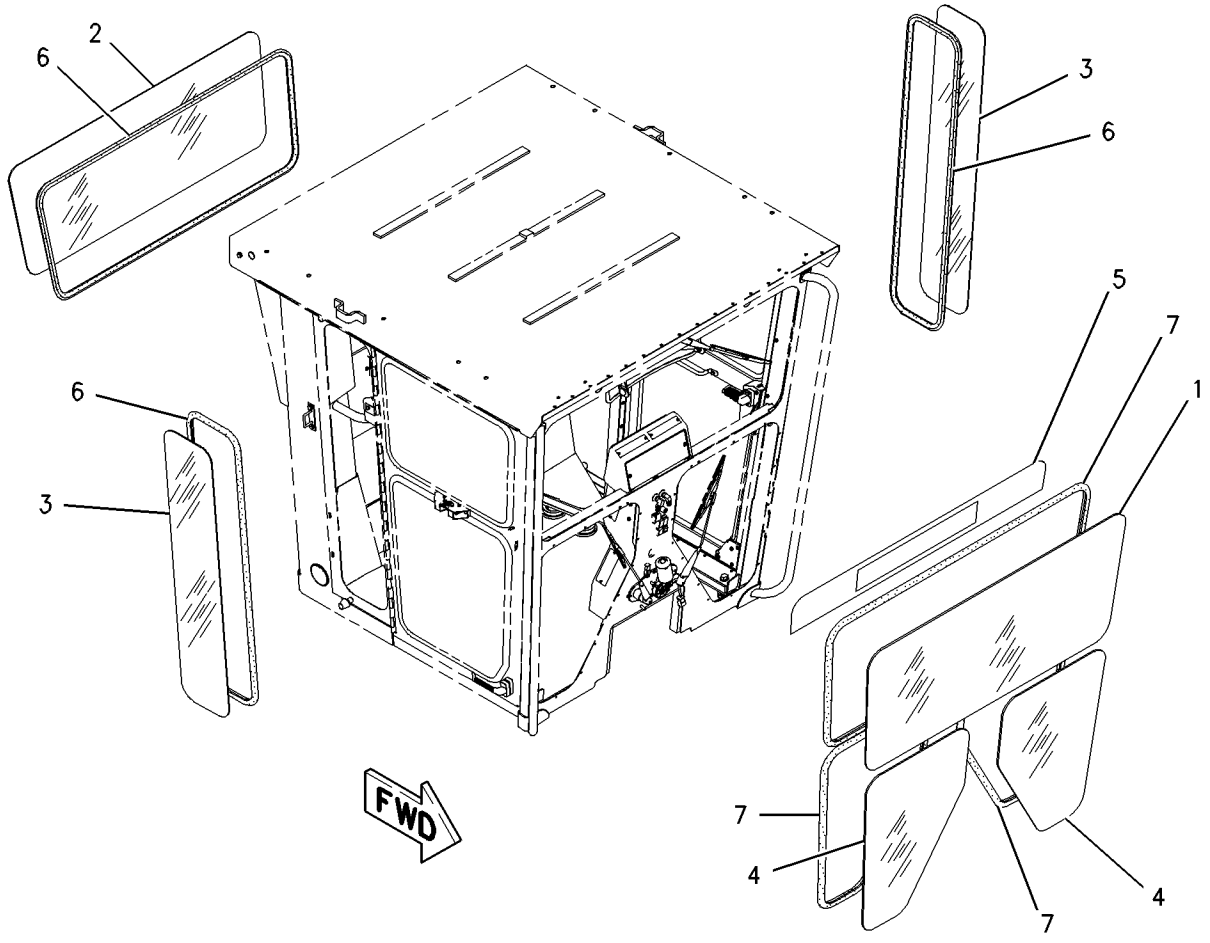


GRAPHIC #1 **<END>** g00720880

# OPERATOR STATION

## *8X-2385* PANEL GP-CAB—HIGH PROFILE

**S/N: CCA1-UP**

**PART OF 211-4907 CAB GP, 177-8779, 218-4759 ROPS GP-ENCLOSED**

**AN ATTACHMENT**

**SMCS-7301** **i02585483**

| NOTE | REF NO | GRAPHIC REF | PART NUMBER | QTY | PART NAME 1 2 3 4 5 6 (PRODUCT LEVEL) | SEE PAGE |
|---|---|---|---|---|---|---|
| | 1 | 1 | **115-6806** | 2 | GLASS (SIDE) | |
| | 2 | 1 | **8X-2228** | 1 | GLASS-FRONT | |
| D | 3 | 1 | **5P-5768** | | SEAL (11.9-M) | |
| | 4 | 1 | **102-9372** | 1 | GLASS (REAR) | |
| | 5 | 1 | **149-3409** | 2 | GLASS | |
| E | 6 | 1 | **3E-9413** | | SEAL (963-CM) | |
| | 7 | 1 | **166-2830** | 1 | FILM (SUNSHADE-CATERPILLAR) | |

D-ORDER BY THE METER
E-ORDER BY THE CENTIMETER

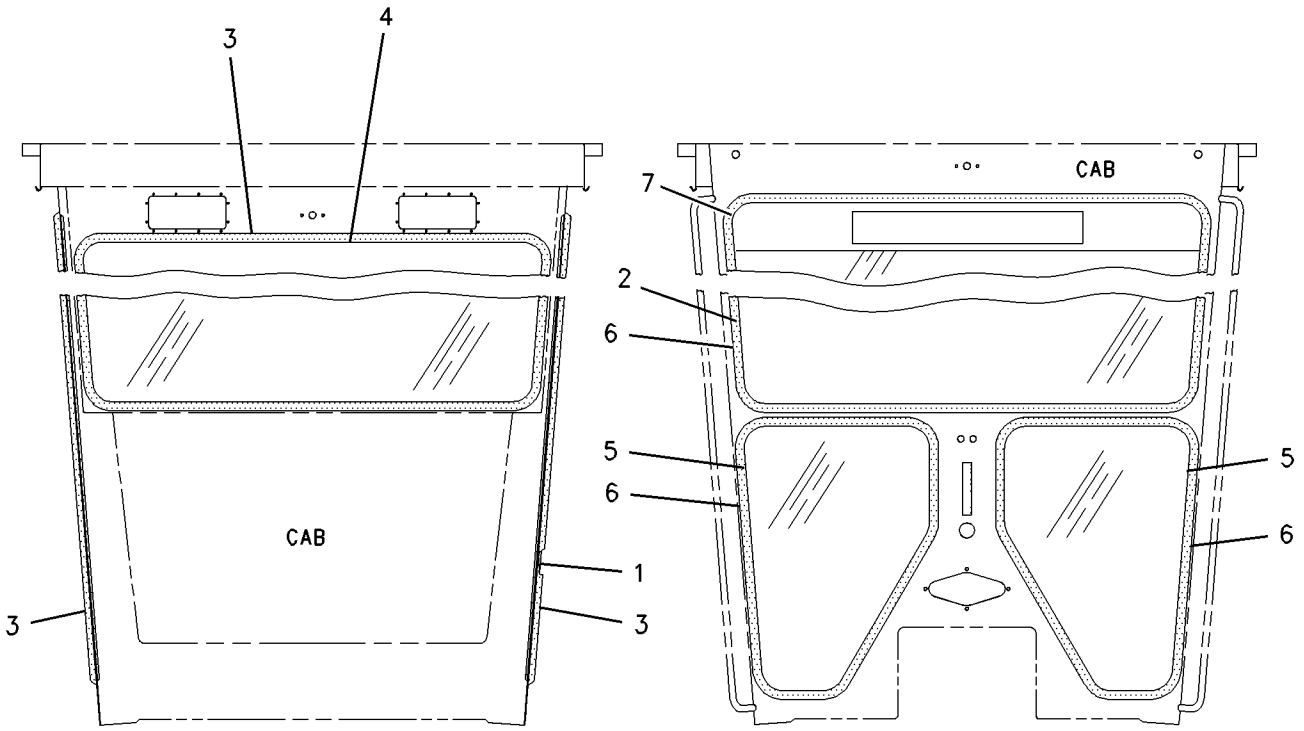


REAR VIEW FRONT VIEW

GRAPHIC #1 **<END>** g00693201

# OPERATOR STATION

## *129-8614* PANEL GP-CAB–HIGH PROFILE

**S/N: CCA1-UP**
**PART OF 223-3937 CAB GP**
**AN ATTACHMENT**

**SMCS-7301** **i02585507**

| NOTE | REF NO | GRAPHIC REF | PART NUMBER | QTY | PART NAME 1 2 3 4 5 6 (PRODUCT LEVEL) | SEE PAGE |
|---|---|---|---|---|---|---|
| | 1 | 1 | **8X-2228** | 1 | GLASS-FRONT | |
| D | 2 | 1 | **5P-5768** | | SEAL (4.3-M) | |
| | 3 | 1 | **102-9372** | 1 | GLASS (REAR) | |
| | 4 | 1 | **149-3409** | 2 | GLASS | |
| D | 5 | 1 | **3E-9413** | | SEAL (97-DM) | |

D-ORDER BY THE METER

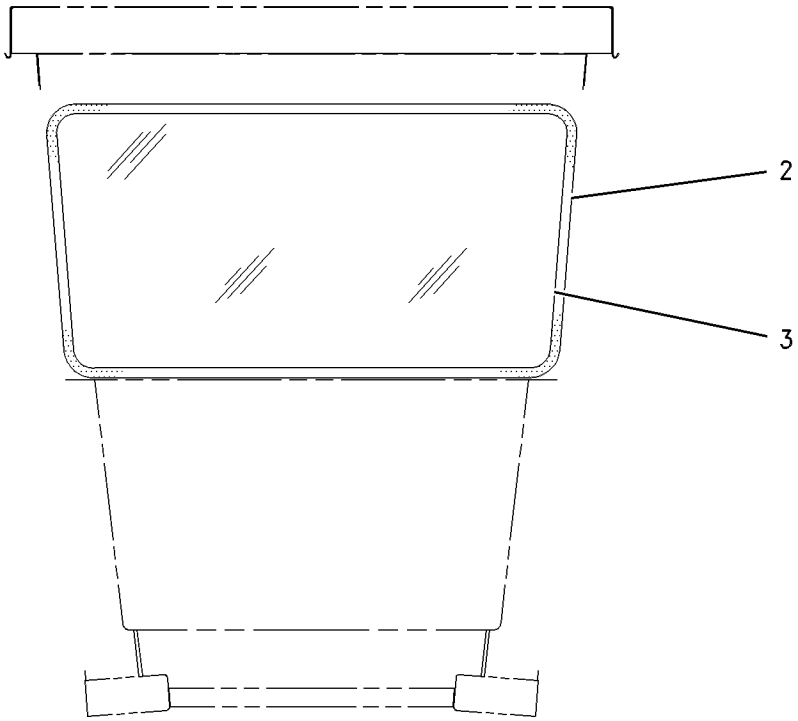


REAR VIEW

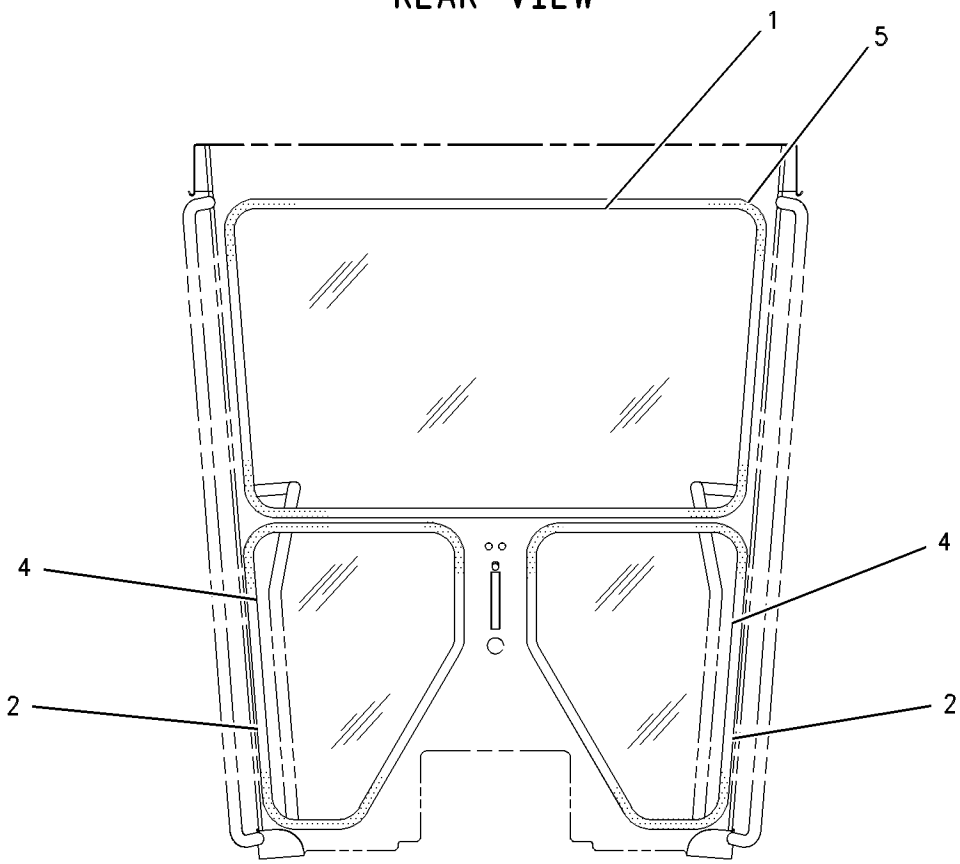


FRONT VIEW

GRAPHIC #1 **<END>** g00294475

# OPERATOR STATION

## *159-5812* PANEL GP-INSTRUMENT

**S/N: CCA1-UP**

**PART OF 159-4615 GENERAL AR**

**SMCS-7450, 7451** **i02202931**

| NOTE | REF NO | GRAPHIC REF | PART NUMBER | QTY | PART NAME 1 2 3 4 5 6 (PRODUCT LEVEL) | SEE PAGE |
|---|---|---|---|---|---|---|
| | 1 | 1 | **5D-0269** | 2 | ELBOW | |
| | 2 | 1 | **5K-7577** | 2 | HOSE AS | |
| | 3 | 1 | **7N-5876** | 2 | LAMP (24-VOLT) (QUAD GAUGE MODULE) | |
| | 3A | 1 | **7N-5876** | 2 | LAMP (24-VOLT) (AIR PRESSURE GAUGE) | |
| | 4 | 1 | **9M-8662** | 2 | COUPLING | |
| | 5 | 1 | **9X-9688** | 1 | SWITCH AS-PUSH BUTTON (OPERATOR MODE) | |
| | | 1 | **3E-3365** | 1 | WEDGE-RECEPTACLE LOCK (2-PIN) | |
| | | 1 | **3K-0835** | 1 | NUT (5/8-24-THD) | |
| | | 1 | **6F-0253** | 1 | LOCKWASHER | |
| | | 1 | **8T-8729** | 2 | PIN-CONNECTOR | |
| | | 1 | **8T-8748** | 1 | ADAPTER-MOUNT | |
| | | 1 | **102-8802** | 1 | KIT-RECEPTACLE (2-PIN) | |
| | | | | | (INCLUDES RECEPTACLE AS & WEDGE) | |
| | 6 | 1 | **107-1983** | 1 | LAMP (24-VOLT) (EMS MASTER ACTION INDICATOR) | |
| | 7 | 1 | **115-1748** | 9 | LAMP (24-VOLT, 3-WATT) (INSTRUMENT PANEL) | |
| | 8 | 1 | **117-9966** | 2 | PLUG | |
| | 9 | 1 | **122-7045** | 6 | COVER | |
| | 10 | 1 | **122-8146** | 2 | PLATE AS | |
| | | | | | (EACH INCLUDES) | |
| M | | 1 | **6V-9632** | 2 | NUT-WELD (M6X1-THD) | |
| | 11 | 1 | **169-3263** | 1 | HARNESS AS-PANEL | |
| | | 1 | **8T-9834** | 1 | PLUG AS-CONNECTOR (40-PIN) | |
| | | 1 | **155-2255** | 1 | KIT-CONNECTING PLUG (12-PIN) | |
| | | 1 | **155-2270** | 1 | KIT-CONNECTING PLUG (2-PIN) | |
| | | 1 | **155-2274** | 2 | KIT-CONNECTING PLUG (6-PIN) | |
| | | | | | (EACH INCLUDES PLUG AS & WEDGE) | |
| | | 1 | **102-8805** | 1 | KIT-RECEPTACLE (6-PIN) | |
| | | 1 | **102-8806** | 2 | KIT-RECEPTACLE (8-PIN) | |
| | | 1 | **102-8801** | 1 | KIT-RECEPTACLE (12-PIN) | |
| | | | | | (EACH INCLUDES RECEPTACLE AS & WEDGE) | |
| | 12 | 1 | **175-1343** | 1 | PANEL | |
| Y | 13 | 1 | **180-9285** | 1 | MODULE GP-QUAD GAUGE | 1204 |
| | 14 | 1 | **184-4322** | 1 | FILM-MONITOR (CATERPILLAR MONITORING SYSTEM) | |
| | 15 | 1 | **185-6362** | 1 | PAD | |
| | 16 | 1 | **196-0180** | 1 | PANEL | |
| | 17 | 1 | **196-4150** | 1 | PANEL | |
| | 18 | 1 | **197-5964** | 1 | FILM-PANEL (LH ACTION INDICATORS) | |
| Y | 19 | 1 | **160-6567** | 1 | CONTROL GP-UNPRGMED MONITOR (CATERPILLAR MONITORING SYSTEM) | 1118 |
| | 20 | 1 | **202-1138** | 4 | ELBOW | |
| | 21 | 1 | **241-4943** | 1 | GAUGE GP-AIR PRESSURE (LH) | |
| | 21A | 1 | **241-4943** | 1 | GAUGE GP-AIR PRESSURE (RH) | |
| | | | | | (EACH INCLUDES) | |
| | | 1 | **4B-2049** | 2 | NUT (10-32-THD) | |
| | | 1 | **8F-1434** | 2 | LOCKWASHER | |
| | 22 | 1 | **249-2843** | 1 | FILM-PANEL (RH ACTION INDICATORS) | |
| | 23 | 1 | **104-2091** | 12 | SCREW-FLAT HEAD (6-20X0.5-IN) | |
| | 24 | 1 | **2H-3922** | 2 | LOCKWASHER | |
| M | 25 | 1 | **3E-8020** | 10 | SCREW-TRUSS HEAD (M6X1X25-MM) | |
| M | 26 | 1 | **7Y-7388** | 12 | SCREW-BUTTON HEAD (M5X0.8X12-MM) | |
| M | 27 | 1 | **9X-2043** | 4 | SCREW-TRUSS HEAD (M6X1X14-MM) | |
| | 28 | 1 | **110-2079** | 1 | LAMP (24-VOLT) (DIFFERENTIAL LOCK) | |

M-METRIC PART
Y-SEPARATE ILLUSTRATION

*159-5812* **PANEL GP-INSTRUMENT** *(contd. )* **i02202931**

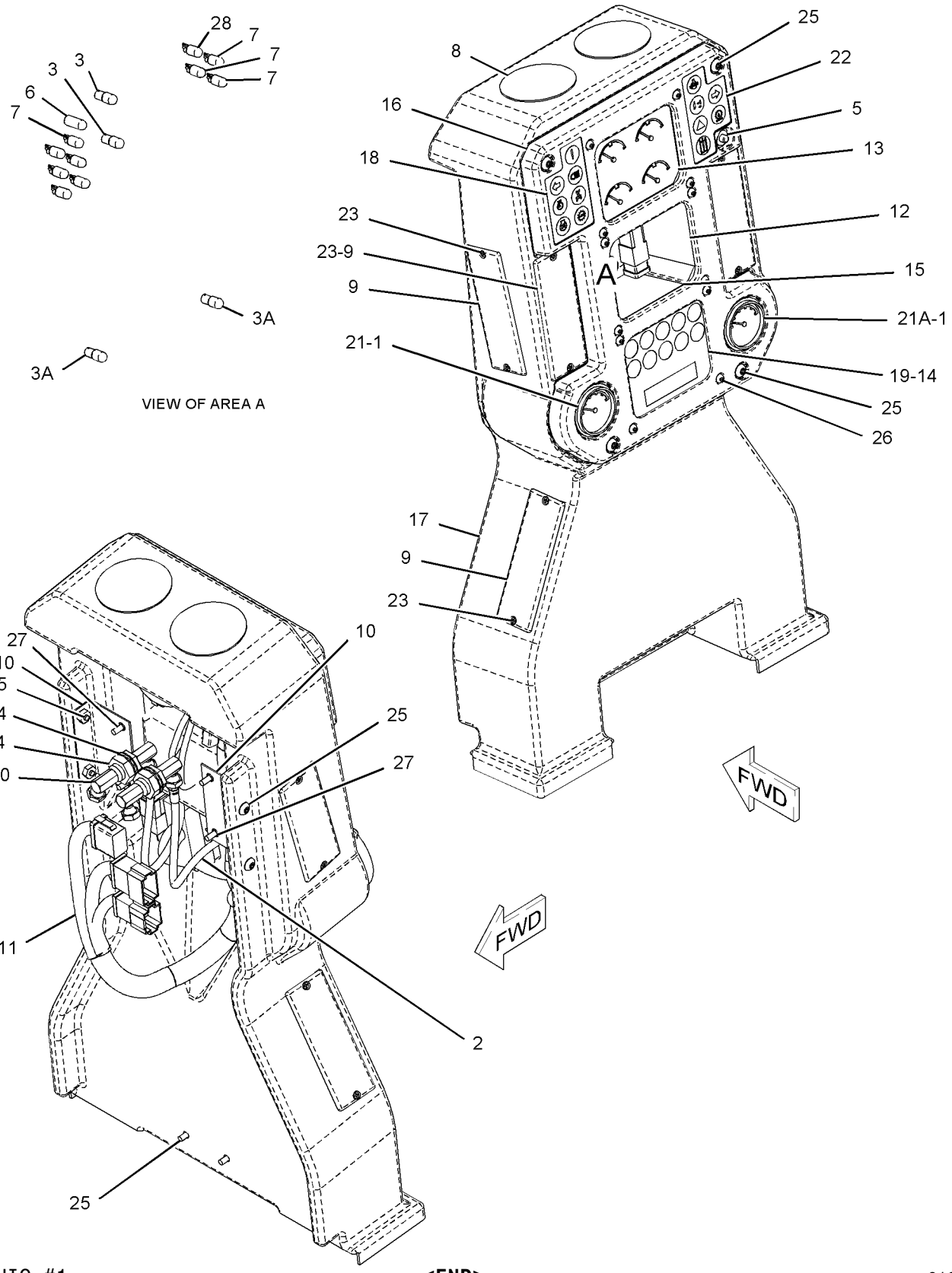


GRAPHIC #1 **<END>** g01098112

# OPERATOR STATION

## *178-3030* PANEL GP-INSTRUMENT—HIGH PROFILE

**S/N: CCA1-UP**

**PART OF 183-3018 CONVERSION AR-NON-ROPS, 177-8778 ROPS AR-OPEN AN ATTACHMENT**

**SMCS-7450, 7451** **i02236655**

| NOTE | REF NO | GRAPHIC REF | PART NUMBER | QTY | PART NAME 1 2 3 4 5 6 (PRODUCT LEVEL) | SEE PAGE |
|---|---|---|---|---|---|---|
| | 1 | 1 | **5D-0269** | 2 | ELBOW | |
| | 2 | 1 | **7N-5876** | 4 | LAMP (24-VOLT) | |
| | 3 | 1 | **9X-9688** | 1 | SWITCH AS-PUSH BUTTON (DISPLAY MODES) | |
| | | 1 | **3E-3365** | 1 | WEDGE-RECEPTACLE LOCK (2-PIN) | |
| | | 1 | **3K-0835** | 1 | NUT (5/8-24-THD) | |
| | | 1 | **6F-0253** | 1 | LOCKWASHER | |
| | | 1 | **186-3735** | 2 | PIN-CONNECTOR (16-GA TO 18-GA) | |
| | | 1 | **8T-8748** | 1 | ADAPTER-MOUNT | |
| | | 1 | **102-8802** | 1 | KIT-RECEPTACLE (2-PIN) | |
| | | | | | (INCLUDES RECEPTACLE AS & WEDGE) | |
| | 4 | 1 | **107-1983** | 1 | LAMP (24-VOLT) | |
| | 5 | 1 | **110-2079** | 1 | LAMP (24-VOLT) | |
| | 6 | 1 | **115-1748** | 9 | LAMP (24-VOLT, 3-WATT) | |
| | 7 | 1 | **169-3263** | 1 | HARNESS AS-PANEL | |
| | | 1 | **8T-9834** | 1 | PLUG AS-CONNECTOR (40-PIN) | |
| | | 1 | **155-2255** | 1 | KIT-CONNECTING PLUG (12-PIN) | |
| | | 1 | **155-2270** | 1 | KIT-CONNECTING PLUG (2-PIN) | |
| | | 1 | **155-2274** | 2 | KIT-CONNECTING PLUG (6-PIN) | |
| | | | | | (EACH INCLUDES PLUG AS & WEDGE) | |
| | | 1 | **102-8805** | 1 | KIT-RECEPTACLE (6-PIN) | |
| | | 1 | **102-8806** | 1 | KIT-RECEPTACLE (8-PIN) | |
| | | 1 | **102-8801** | 1 | KIT-RECEPTACLE (12-PIN) | |
| | | | | | (EACH INCLUDES RECEPTACLE AS & WEDGE) | |
| | 8 | 1 | **175-1343** | 1 | PANEL | |
| Y | 9 | 1 | **180-9285** | 1 | MODULE GP-QUAD GAUGE | 1204 |
| | 10 | 1 | **184-4322** | 1 | FILM-MONITOR (QUAD GAUGE MODULE) | |
| | 11 | 1 | **185-6362** | 1 | PAD | |
| | 12 | 1 | **196-0180** | 1 | PANEL | |
| | 13 | 1 | **197-5964** | 1 | FILM-PANEL (INDICATOR PANEL, LH) | |
| Y | 14 | 1 | **160-6567** | 1 | CONTROL GP-UNPRGMED MONITOR (CATERPILLAR MONITORING SYSTEM) | 1118 |
| | 15 | 1 | **241-4943** | 1 | GAUGE GP-AIR PRESSURE (RH) | |
| | 15A | 1 | **241-4943** | 1 | GAUGE GP-AIR PRESSURE (LH) | |
| | | | | | (EACH INCLUDES) | |
| | | 1 | **4B-2049** | 2 | NUT (10-32-THD) | |
| | | 1 | **8F-1434** | 2 | LOCKWASHER | |
| | 16 | 1 | **249-2843** | 1 | FILM-PANEL (INDICATOR PANEL, RH) | |
| M | 17 | 1 | **3E-8020** | 4 | SCREW-TRUSS HEAD (M6X1X25-MM) | |
| M | 18 | 1 | **7Y-7388** | 12 | SCREW-BUTTON HEAD (M5X0.8X12-MM) | |

M-METRIC PART
Y-SEPARATE ILLUSTRATION

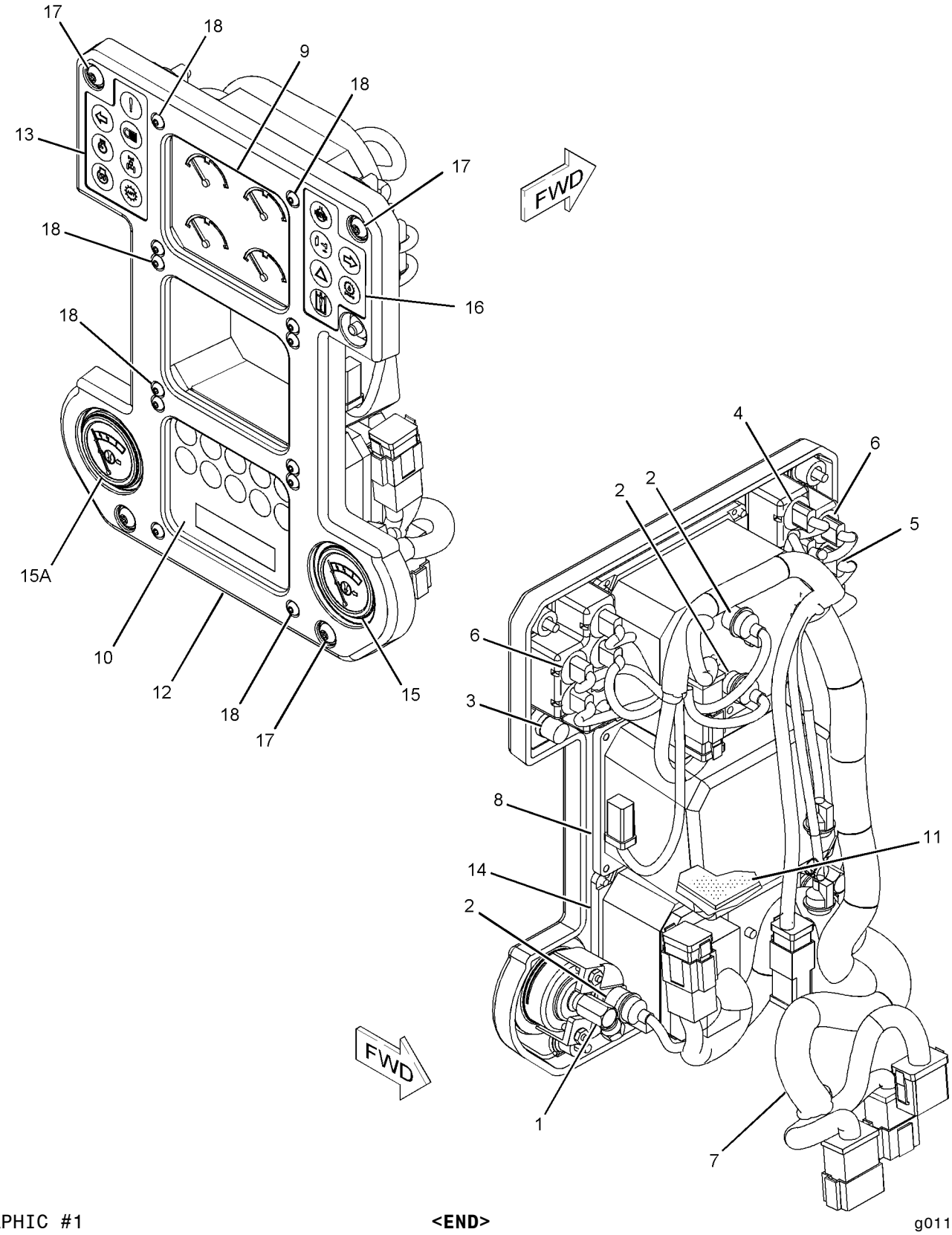


GRAPHIC #1 **<END>** g01121959

# OPERATOR STATION

## *196-4909* PANEL GP-INSTRUMENT–EU

**S/N: CCA1-UP**

**PART OF 207-4453, 210-2044 CONVERSION AR-CERTIFICATION**

**AN ATTACHMENT**

**SMCS-7450, 7451** **i02585511**

| NOTE | REF NO | GRAPHIC REF | PART NUMBER | QTY | PART NAME 1 2 3 4 5 6 (PRODUCT LEVEL) | SEE PAGE |
|---|---|---|---|---|---|---|
| | 1 | 1 | **3S-2093** | 2 | STRAP-CABLE | |
| | 2 | 1 | **5D-0269** | 2 | ELBOW | |
| | 3 | 1 | **5K-7577** | 2 | HOSE AS | |
| | 4 | 1 | **7N-5876** | 6 | LAMP (24-VOLT) | |
| | 5 | 1 | **9M-8662** | 2 | COUPLING | |
| | 6 | 1 | **9X-9688** | 1 | SWITCH AS-PUSH BUTTON (DISPLAY MODES) | |
| | | 1 | **3E-3365** | 1 | WEDGE-RECEPTACLE LOCK (2-PIN) | |
| | | 1 | **3K-0835** | 1 | NUT (5/8-24-THD) | |
| | | 1 | **6F-0253** | 1 | LOCKWASHER | |
| | | 1 | **186-3735** | 2 | PIN-CONNECTOR (16-GA TO 18-GA) | |
| | | 1 | **8T-8748** | 1 | ADAPTER-MOUNT | |
| | | 1 | **102-8802** | 1 | KIT-RECEPTACLE (2-PIN) | |
| | | | | | (INCLUDES RECEPTACLE AS & WEDGE) | |
| | 7 | 1 | **106-8704** | 2 | SUPPRESSOR AS-ARC | |
| | | | | | (EACH INCLUDES) | |
| | | 1 | **186-3735** | 2 | PIN-CONNECTOR (16-GA TO 18-GA) | |
| | | 1 | **3E-3365** | 1 | WEDGE-RECEPTACLE LOCK (2-PIN) | |
| | | 1 | **102-8802** | 1 | KIT-RECEPTACLE (2-PIN) | |
| | | | | | (INCLUDES RECEPTACLE AS & WEDGE) | |
| | 8 | 1 | **107-1983** | 1 | LAMP (24-VOLT) | |
| | 9 | 1 | **115-1748** | 10 | LAMP (24-VOLT, 3-WATT) | |
| | 10 | 1 | **117-9966** | 2 | PLUG | |
| | 11 | 1 | **122-7045** | 6 | COVER | |
| | 12 | 1 | **122-8146** | 2 | PLATE AS | |
| | | | | | (EACH INCLUDES) | |
| M | | 1 | **6V-9632** | 2 | NUT-WELD (M6X1-THD) | |
| | 13 | 1 | **190-3482** | 1 | MODULE GP-SPEEDOMETER & TACH (INSTRUMENT PANEL) | |
| | | 1 | **3E-3383** | 1 | WEDGE-RECEPTACLE LOCK (6-PIN) | |
| | | 1 | **186-3735** | 6 | PIN-CONNECTOR (16-GA TO 18-GA) | |
| | | 1 | **102-8805** | 1 | KIT-RECEPTACLE (6-PIN) | |
| | | | | | (INCLUDES RECEPTACLE AS & WEDGE) | |
| Y | 14 | 1 | **180-9285** | 1 | MODULE GP-QUAD GAUGE | 1204 |
| | 15 | 1 | **184-4322** | 1 | FILM-MONITOR (QUAD GAUGE MODULE) | |
| | 16 | 1 | **196-0180** | 1 | PANEL | |
| | 17 | 1 | **196-4150** | 1 | PANEL | |
| | 18 | 1 | **196-4622** | 1 | HARNESS AS-DASH (PANEL BACKLIGHTS) | |
| | | 1 | **102-8802** | 1 | KIT-RECEPTACLE (2-PIN) | |
| | | 1 | **102-8805** | 1 | KIT-RECEPTACLE (6-PIN) | |
| | | 1 | **102-8806** | 1 | KIT-RECEPTACLE (8-PIN) | |
| | | 1 | **102-8801** | 1 | KIT-RECEPTACLE (12-PIN) | |
| | | | | | (EACH INCLUDES RECEPTACLE AS & WEDGE) | |
| | | 1 | **155-2255** | 1 | KIT-CONNECTING PLUG (12-PIN) | |
| | | 1 | **155-2270** | 7 | KIT-CONNECTING PLUG (2-PIN) | |
| | | | | | (EACH INCLUDES PLUG AS & WEDGE) | |
| | | 1 | **8T-9834** | 1 | PLUG AS-CONNECTOR (40-PIN) | |
| | | 1 | **3T-3158** | 6 | SOCKET-LAMP | |
| | | 1 | **107-1984** | 23 | SOCKET-LAMP | |
| | 19 | 1 | **197-5964** | 1 | FILM-PANEL (INDICATOR PANEL, LH) | |
| Y | 20 | 1 | **160-6567** | 1 | CONTROL GP-UNPRGMED MONITOR (CATERPILLAR MONITORING SYSTEM) | 1118 |
| | 21 | 1 | **202-1138** | 4 | ELBOW | |
| | 22 | 1 | **241-4943** | 1 | GAUGE GP-AIR PRESSURE (RIGHT AIR TANK) | |
| | 22A | 1 | **241-4943** | 1 | GAUGE GP-AIR PRESSURE (LEFT AIR TANK) | |
| | | | | | (EACH INCLUDES) | |

## *196-4909* **PANEL GP-INSTRUMENT** *(contd.)* **i02585511**

| NOTE | REF NO | GRAPHIC REF | PART NUMBER | QTY | PART NAME 1 2 3 4 5 6 (PRODUCT LEVEL) | SEE PAGE |
|---|---|---|---|---|---|---|
| | | 1 | **4B-2049** | 2 | NUT (10-32-THD) | |
| | | 1 | **8F-1434** | 2 | LOCKWASHER | |
| | 23 | 1 | **249-2843** | 1 | FILM-PANEL (INDICATOR PANEL, RH) | |
| | 24 | 1 | **104-2091** | 12 | SCREW-FLAT HEAD (6-20X0.5-IN) | |
| | 25 | 1 | **2H-3922** | 4 | LOCKWASHER | |
| M | 26 | 1 | **3E-8020** | 10 | SCREW-TRUSS HEAD (M6X1X25-MM) | |
| M | 27 | 1 | **7Y-7388** | 12 | SCREW-BUTTON HEAD (M5X0.8X12-MM) | |
| M | 28 | 1 | **9X-2043** | 4 | SCREW-TRUSS HEAD (M6X1X14-MM) | |
| | 29 | 1 | **110-2079** | 1 | LAMP (24-VOLT) | |

M-METRIC PART
Y-SEPARATE ILLUSTRATION

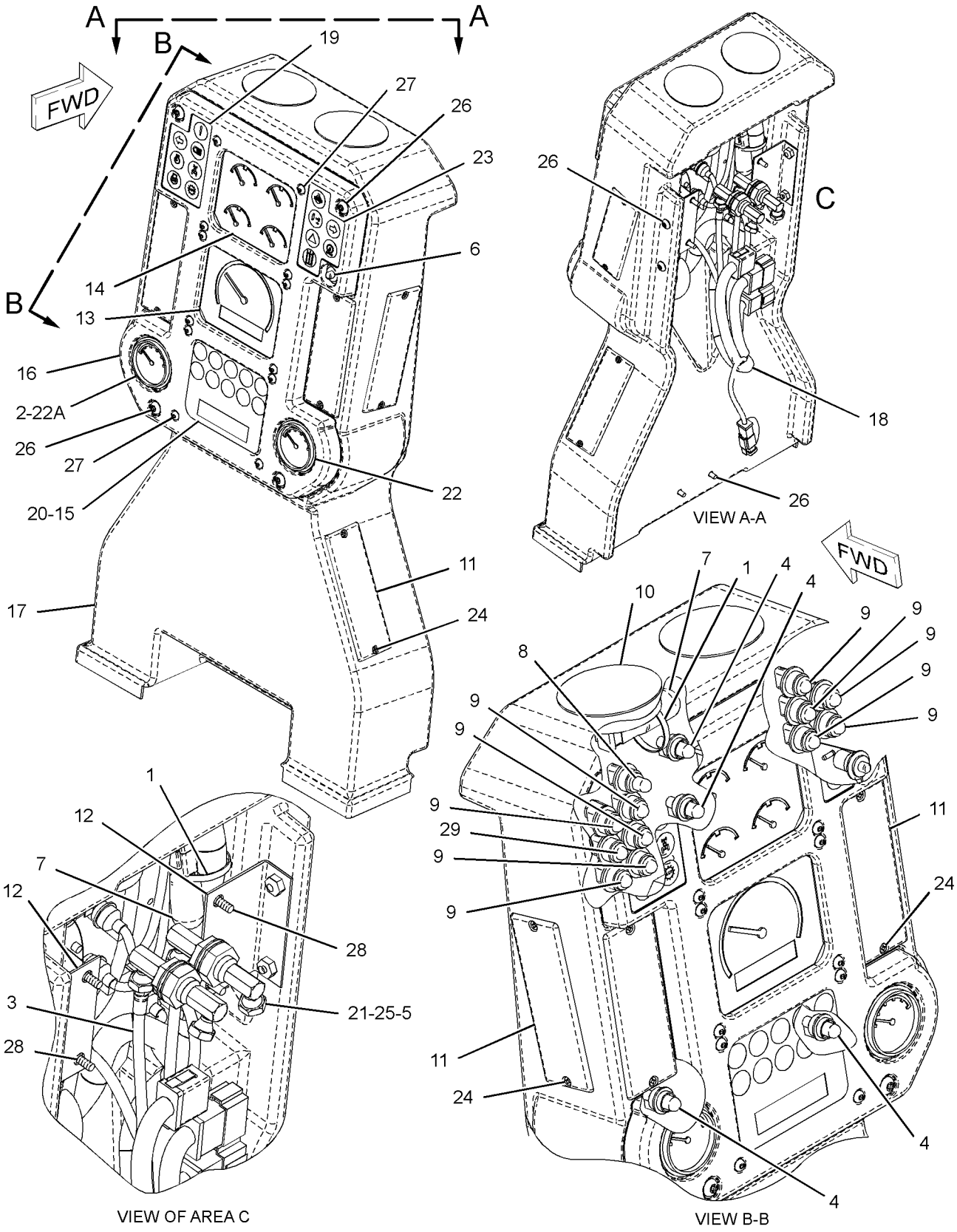


GRAPHIC #1 **<END>** g01294433

# OPERATOR STATION

## *250-3799* RADIO GP

**S/N: CCA1-UP**
**CANNOT BE USED WITH CANOPY**
**AN ATTACHMENT**

**SMCS-7338** **i02128164**

| NOTE | PART NUMBER | QTY | PART NAME 1 2 3 4 5 6 (PRODUCT LEVEL) | SEE PAGE |
|---|---|---|---|---|
| | **137-8165** | 1 | BUMPER | |
| | **200-5728** | 1 | HARNESS AS-RADIO | |
| | **160-3518** | 1 | KIT-RECEPTACLE (8-PIN) | |
| | | | (INCLUDES RECEPTACLE AS & WEDGE) | |
| | **169-6324** | 1 | RADIO GP (AM/FM CASSETTE) | |
| | **142-9681** | 1 | KNOB-SELECT | |
| | **192-7054** | 1 | SLEEVE | |

**<END>**

## *161-1141* ROPS AR-ENCLOSED—HIGH PROFILE

**S/N: CCA1-UP**
**AN ATTACHMENT**

**SMCS-7323** **i02592744**

| NOTE | PART NUMBER | QTY | PART NAME 1 2 3 4 5 6 (PRODUCT LEVEL) | SEE PAGE |
|---|---|---|---|---|
| Y | *172-5378* | 1 | INSULATION GP-WEATHER | 1166 |
| Y | *177-8779* | 1 | ROPS GP-ENCLOSED (LOW PROFILE) | 1227 |
| Y | *8X-9675* | 1 | WASHER GP-WINDOW (FRONT) | 1252 |

Y-SEPARATE ILLUSTRATION

**<END>**

## *179-3581* ROPS AR-ENCLOSED—LOW PROFILE

**S/N: CCA1-UP**
**PART OF 159-4615 GENERAL AR**

**SMCS-7323** **i02592751**

| NOTE | PART NUMBER | QTY | PART NAME 1 2 3 4 5 6 (PRODUCT LEVEL) | SEE PAGE |
|---|---|---|---|---|
| Y | *172-5378* | 1 | INSULATION GP-WEATHER | 1166 |
| Y | *172-5377* | 1 | ROPS GP-ENCLOSED (HIGH PROFILE) | 1227 |
| Y | *8X-9675* | 1 | WASHER GP-WINDOW (FRONT) | 1252 |

Y-SEPARATE ILLUSTRATION

**<END>**

# OPERATOR STATION

## *218-4758* ROPS AR-ENCLOSED—HIGH PROFILE—EU

**S/N: CCA1-UP**

**AN ATTACHMENT**

**SMCS-7323** **i02592756**

| NOTE | PART NUMBER | QTY | PART NAME 1 2 3 4 5 6 (PRODUCT LEVEL) | SEE PAGE |
|---|---|---|---|---|
| Y | *172-5378* | 1 | INSULATION GP-WEATHER | 1166 |
| Y | *2A-6985* | 1 | MOUNTING GP-ROPS | 1207 |
| Y | *218-4759* | 1 | ROPS GP-ENCLOSED (LOW PROFILE) | 1228 |
| Y | *8X-9675* | 1 | WASHER GP-WINDOW (FRONT) | 1252 |
| | | | | |
| | **159-3759** | 1 | FILM-INSTRUCTION (DO NOT DRILL, WELD ROPS) | |

Y-SEPARATE ILLUSTRATION

**<END>**

# OPERATOR STATION

## *177-8778* ROPS AR-OPEN—HIGH PROFILE

**S/N: CCA1-UP**

**AN ATTACHMENT**

**SMCS-7323** **i02592764**

| NOTE | REF NO | GRAPHIC REF | PART NUMBER | QTY | PART NAME 1 2 3 4 5 6 (PRODUCT LEVEL) | SEE PAGE |
|---|---|---|---|---|---|---|
| | 1 | 1 | **8T-1191** | 1 | PLATE-WARNING (HAZARD, READ OMM) | |
| Y | 2 | 1 | *8Y-4951* | 1 | SEAT GP-SUSPENSION (VINYL) | 1239 |
| Y | 3 | 1 | *166-7064* | 1 | GUARD GP-PLATFORM (HIGH PROFILE) | 582 |
| Y | 4 | 1 | *173-2751* | 1 | ROPS GP-OPEN (HIGH PROFILE) | 1230 |
| Y | 5 | 1 | *178-3030* | 1 | PANEL GP-INSTRUMENT (HIGH PROFILE) | 1219 |
| | 6 | 1 | **246-2641** | 1 | PADLOCK GP (ROPS) | |
| | | 1 | **5P-8500** | 1 | KEY (ROPS) | |
| | 7 | 1 | **9R-2620** | 1 | PLUG | |

Y-SEPARATE ILLUSTRATION

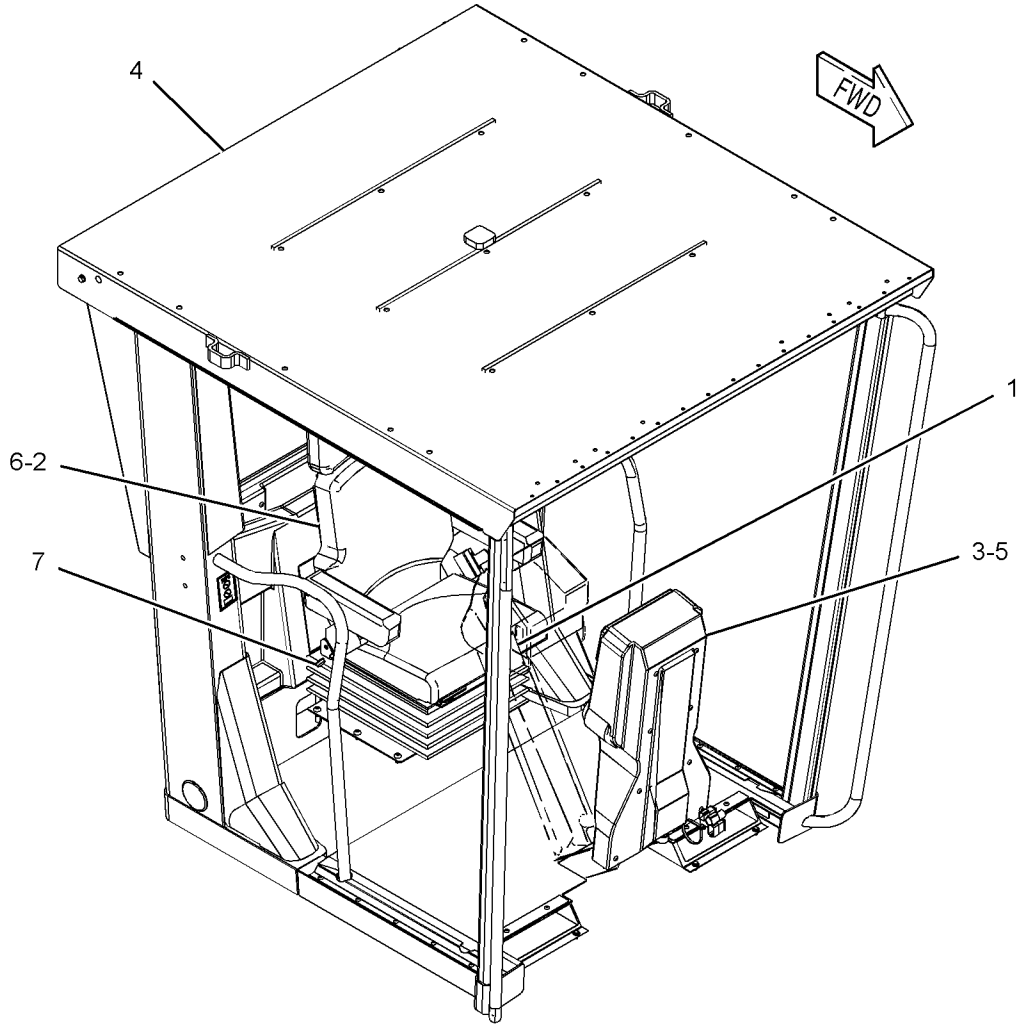


GRAPHIC #1 **<END>** g01039070

# OPERATOR STATION

## *172-5377* ROPS GP-ENCLOSED—LOW PROFILE

**S/N: CCA1-UP**

**PART OF 179-3581 ROPS AR-ENCLOSED, 269-8082 ROPS GP-ENCLOSED**

**ALSO AN ATTACHMENT**

**SMCS-7301** **i02585522**

| NOTE | PART NUMBER | QTY | PART NAME 1 2 3 4 5 6 (PRODUCT LEVEL) | SEE PAGE |
|---|---|---|---|---|
| Y | *8X-4527* | 1 | DOOR GP-CAB (LOW PROFILE) | 1131 |
| Y | *172-5376* | 1 | LINER GP-CAB (LOW PROFILE) | 1170 |
| Y | *2A-6985* | 1 | MOUNTING GP-ROPS (ENCLOSED) | 1207 |
| Y | *8X-2375* | 1 | PANEL GP-CAB (LOW PROFILE) | 1213 |
| Y | *172-6830* | 1 | WIPER GP-WINDOW (LOW PROFILE) (FRONT) | 1268 |
| | | | | |
| | **159-3759** | 2 | FILM-INSTRUCTION (DO NOT DRILL, WELD ROPS) | |

Y-SEPARATE ILLUSTRATION

**<END>**

## *173-6756* ROPS GP-ENCLOSED—HIGH PROFILE

**S/N: CCA1-UP**

**PART OF 177-8779 ROPS GP-ENCLOSED**

**AN ATTACHMENT**

**SMCS-7301** **i01684242**

| NOTE | PART NUMBER | QTY | PART NAME 1 2 3 4 5 6 (PRODUCT LEVEL) | SEE PAGE |
|---|---|---|---|---|
| | | | (NO SERVICED PARTS) | |

**<END>**

## *177-8779* ROPS GP-ENCLOSED—HIGH PROFILE

**S/N: CCA1-UP**

**PART OF 161-1141 ROPS AR-ENCLOSED, 269-8080 ROPS GP-ENCLOSED**

**AN ATTACHMENT**

**SMCS-7301** **i02585527**

| NOTE | PART NUMBER | QTY | PART NAME 1 2 3 4 5 6 (PRODUCT LEVEL) | SEE PAGE |
|---|---|---|---|---|
| Y | *8X-4413* | 1 | DOOR GP-CAB (HIGH PROFILE) | 1125 |
| Y | *177-8781* | 1 | LINER GP-CAB (HIGH PROFILE) (ENCLOSED) | 1174 |
| Y | *2A-6985* | 1 | MOUNTING GP-ROPS (ENCLOSED) | 1207 |
| Y | *8X-2385* | 1 | PANEL GP-CAB (HIGH PROFILE) | 1214 |
| Y | **173-6756** | 1 | ROPS GP-ENCLOSED (HIGH PROFILE) | 1227 |
| Y | *172-6831* | 1 | WIPER GP-WINDOW (HIGH PROFILE) (FRONT) | 1272 |
| | | | | |
| | **159-3759** | 2 | FILM-INSTRUCTION (DO NOT DRILL, WELD ROPS) | |

Y-SEPARATE ILLUSTRATION

**<END>**

# OPERATOR STATION

## *218-4759* ROPS GP-ENCLOSED—HIGH PROFILE—EU

**S/N: CCA1-UP**
**PART OF 218-4758 ROPS AR-ENCLOSED**
**AN ATTACHMENT**

**SMCS-7301** **i02585533**

| NOTE | PART NUMBER | QTY | PART NAME 1 2 3 4 5 6 (PRODUCT LEVEL) | SEE PAGE |
|---|---|---|---|---|
| Y | *8X-4413* | 1 | DOOR GP-CAB | 1125 |
| Y | *177-8781* | 1 | LINER GP-CAB (HIGH PROFILE) | 1174 |
| Y | *8X-2385* | 1 | PANEL GP-CAB (HIGH PROFILE) | 1214 |
| Y | *172-6831* | 1 | WIPER GP-WINDOW (HIGH PROFILE) (FRONT) | 1272 |
| Y | *193-7359* | 1 | WIRING GP-CAB (HIGH PROFILE) | 309 |
| | | | | |
| | *169-5937* | 1 | ROPS AS-ENCLOSED | |
| Y-SEPARATE ILLUSTRATION | | | | |

**<END>**

## *260-1745* ROPS GP-ENCLOSED

**S/N: CCA1-UP**
**PART OF 259-5738 CONVERSION AR-MACHINE**
**AN ATTACHMENT**

**SMCS-7301** **i02592791**

| NOTE | PART NUMBER | QTY | PART NAME 1 2 3 4 5 6 (PRODUCT LEVEL) | SEE PAGE |
|---|---|---|---|---|
| Y | *8X-4527* | 1 | DOOR GP-CAB | 1131 |
| Y | *172-5376* | 1 | LINER GP-CAB | 1170 |
| Y | *2A-6985* | 1 | MOUNTING GP-ROPS (ENCLOSED) | 1207 |
| Y | *8X-2375* | 1 | PANEL GP-CAB (LOW PROFILE) | 1213 |
| Y | *172-6830* | 1 | WIPER GP-WINDOW (LOW PROFILE) (FRONT) | 1268 |
| | | | | |
| | **159-3759** | 2 | FILM-INSTRUCTION (DO NOT DRILL, WELD ROPS) | |
| | **260-1744** | 1 | ROPS AS-ENCLOSED | |
| Y-SEPARATE ILLUSTRATION | | | | |

**<END>**

## *269-8080* ROPS GP-ENCLOSED—HIGH PROFILE

**S/N: CCA1-UP**
**PART OF 269-8081 ROPS GP-ENCLOSED**
**AN ATTACHMENT**

**SMCS-7301** **i02592800**

| NOTE | PART NUMBER | QTY | PART NAME 1 2 3 4 5 6 (PRODUCT LEVEL) | SEE PAGE |
|---|---|---|---|---|
| Y | *177-8779* | 1 | ROPS GP-ENCLOSED (HIGH PROFILE) | 1227 |
| | **247-4816** | 1 | CAB AS | |
| Y-SEPARATE ILLUSTRATION | | | | |

**<END>**

# OPERATOR STATION

## *269-8081* ROPS GP-ENCLOSED—HIGH PROFILE

**S/N: CCA1-UP**
**AN ATTACHMENT**

**SMCS-7301** **i02592826**

| NOTE | PART NUMBER | QTY | PART NAME 1 2 3 4 5 6 (PRODUCT LEVEL) | SEE PAGE |
|---|---|---|---|---|
| Y | *269-8080* | 1 | ROPS GP-ENCLOSED (HIGH PROFILE) | 1228 |
| Y-SEPARATE ILLUSTRATION | | | | |

**<END>**

## *269-8082* ROPS GP-ENCLOSED—LOW PROFILE

**S/N: CCA1-UP**
**PART OF 269-8083 ROPS GP-ENCLOSED**
**AN ATTACHMENT**

**SMCS-7301** **i02585539**

| NOTE | PART NUMBER | QTY | PART NAME 1 2 3 4 5 6 (PRODUCT LEVEL) | SEE PAGE |
|---|---|---|---|---|
| Y | *172-5377* | 1 | ROPS GP-ENCLOSED (HIGH PROFILE) | 1227 |
| | | | | |
| | **247-4816** | 1 | CAB AS | |
| Y-SEPARATE ILLUSTRATION | | | | |

**<END>**

## *269-8083* ROPS GP-ENCLOSED—LOW PROFILE

**S/N: CCA1-UP**
**AN ATTACHMENT**

**SMCS-7301** **i02585540**

| NOTE | PART NUMBER | QTY | PART NAME 1 2 3 4 5 6 (PRODUCT LEVEL) | SEE PAGE |
|---|---|---|---|---|
| Y | *269-8082* | 1 | ROPS GP-ENCLOSED (HIGH PROFILE) | 1229 |
| Y-SEPARATE ILLUSTRATION | | | | |

**<END>**

# OPERATOR STATION

## *173-2751* ROPS GP-OPEN—HIGH PROFILE

**S/N: CCA1-UP**
**PART OF 177-8778 ROPS AR-OPEN**
**AN ATTACHMENT**

**SMCS-7301** **i02592807**

| NOTE | REF NO | GRAPHIC REF | PART NUMBER | QTY | PART NAME 1 2 3 4 5 6 (PRODUCT LEVEL) | SEE PAGE |
|---|---|---|---|---|---|---|
| | 1 | 1 | **159-3759** | 2 | FILM-INSTRUCTION (DO NOT DRILL, WELD ROPS) | |
| | 2 | 1 | **117-4698** | 1 | ROPS GP-OPEN | |
| Y | 4 | 1 | *191-8692* | 1 | MOUNTING GP-ROPS (OPEN) | 1209 |
| Y | 5 | 1 | *191-8695* | 1 | LINER GP-CAB (OPEN) | 1179 |
| | 6 | 1 | *194-3845* | 1 | WINDOW GP | |
| BD | | 1 | **5P-5768** | | SEAL | |
| | | 1 | **102-9372** | 1 | GLASS (REAR) (HIGH PROFILE) | |

B-USE AS REQUIRED
D-ORDER BY THE METER
Y-SEPARATE ILLUSTRATION

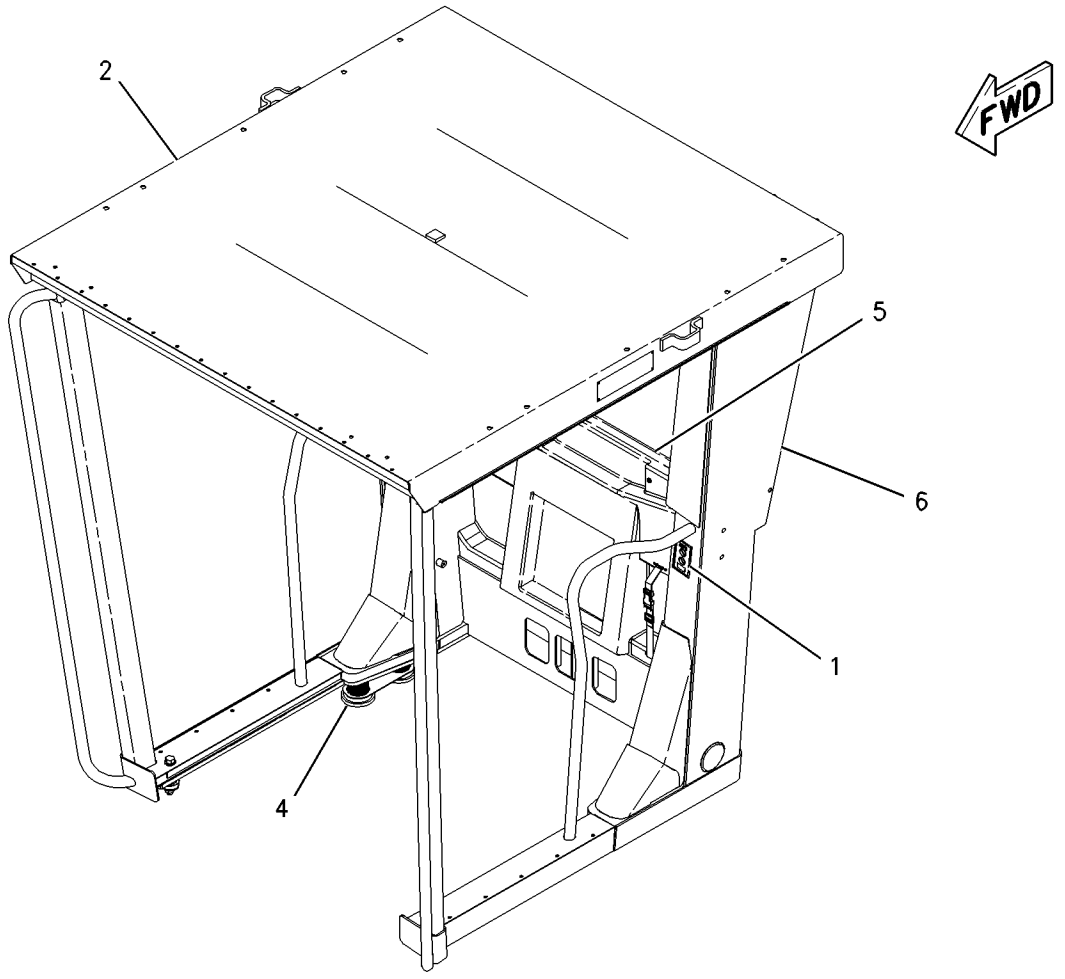


GRAPHIC #1 **<END>** g00846632

# OPERATOR STATION

## *139-4612* SCREEN GP-SUN

**S/N: CCA1-UP**
**AN ATTACHMENT**

**SMCS-7165** **i02200406**

| NOTE | REF NO | GRAPHIC REF | PART NUMBER | QTY | PART NAME 1 2 3 4 5 6 (PRODUCT LEVEL) | SEE PAGE |
|---|---|---|---|---|---|---|
| BJ | 1 | 1 | **6V-5164** | | SEAL | |
| | 2 | 1 | **137-5503** | 1 | SCREEN GP-SUN | |
| | 3 | 1 | **139-4605** | 1 | PLATE AS | |
| M | | 1 | **6V-9632** | 4 | NUT-WELD (M6X1-THD) | |
| M | 4 | 1 | **5C-9553** | 4 | BOLT (M6X1X16-MM) | |
| | 5 | 1 | **9X-8256** | 4 | WASHER (6.6X12X2-MM THK) | |

B-USE AS REQUIRED
J-SOLD BY THE DECIMETER
M-METRIC PART

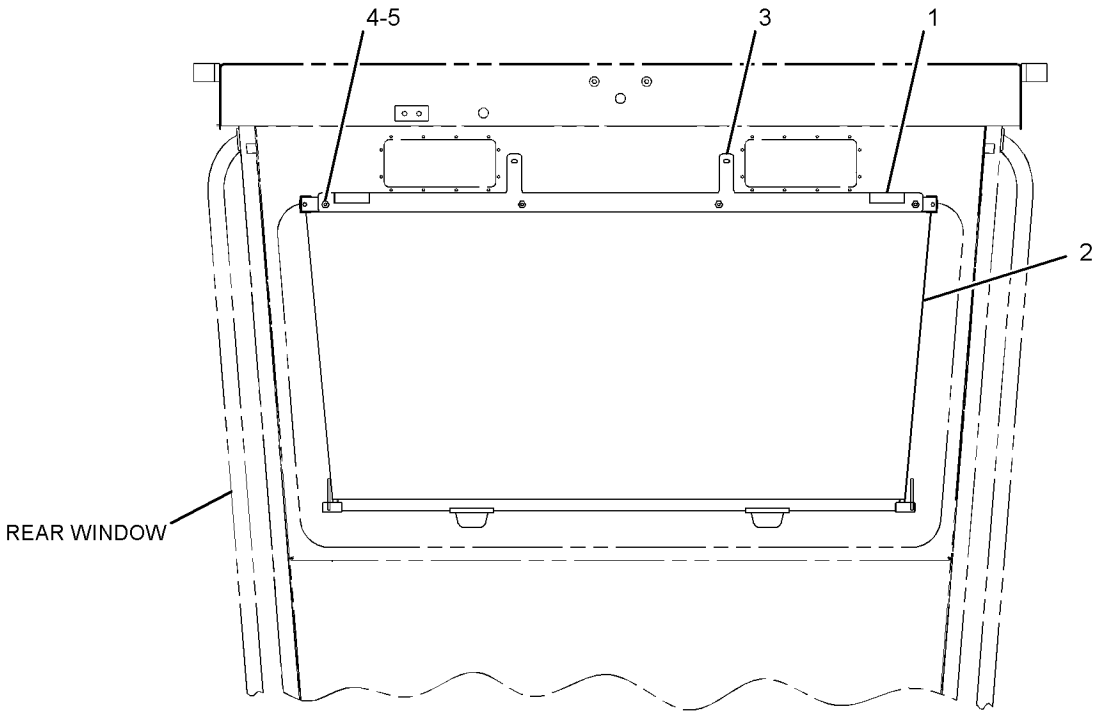


REAR VIEW

GRAPHIC #1

**<END>**

g01070840

# OPERATOR STATION

## *122-4617* SEAT BELT GP–RETRACTABLE

**S/N: CCA1-UP**
**PART OF 112-9105 SEAT GP-SUSPENSION**
**AN ATTACHMENT**

**SMCS-7327** **i01094807**

| NOTE | REF NO | GRAPHIC REF | PART NUMBER | QTY | PART NAME 1 2 3 4 5 6 (PRODUCT LEVEL) | SEE PAGE |
|---|---|---|---|---|---|---|
| | 1 | 1 | **4D-6432** | 1 | LOCKNUT (7/16-20-THD) | |
| | 2 | 1 | **8T-5360** | 1 | WASHER (12X22.5X2.5-MM THK) | |
| | 3 | 1 | **8Y-5953** | 1 | BOLT (7/16-20X1.5-IN) | |
| | 4 | 1 | **1A-4350** | 1 | BOLT (7/16-20X1.75-IN) | |

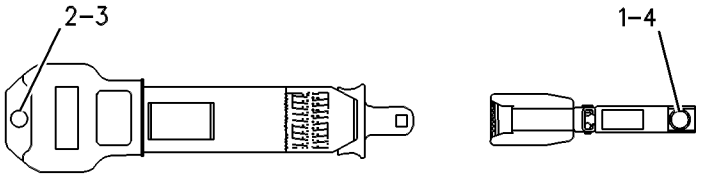


GRAPHIC #1 **<END>** g00086974

# OPERATOR STATION

## *156-1148* SEAT BELT GP

**S/N: CCA1-UP**
**PART OF 112-9104, 155-5958 SEAT GP-SUSPENSION**
**ALSO AN ATTACHMENT**

**SMCS-7327** **i01204029**

| NOTE | REF NO | GRAPHIC REF | PART NUMBER | QTY | PART NAME 1 2 3 4 5 6 (PRODUCT LEVEL) | SEE PAGE |
|---|---|---|---|---|---|---|
| | 1 | 1 | **8Y-5953** | 1 | BOLT (7/16-20X1.5-IN) | |
| | 2 | 1 | **8T-5360** | 1 | WASHER (12X22.5X2.5-MM THK) | |
| | 3 | 1 | **1A-4350** | 1 | BOLT (7/16-20X1.75-IN) | |
| | 4 | 1 | **4D-6432** | 1 | LOCKNUT (7/16-20-THD) | |

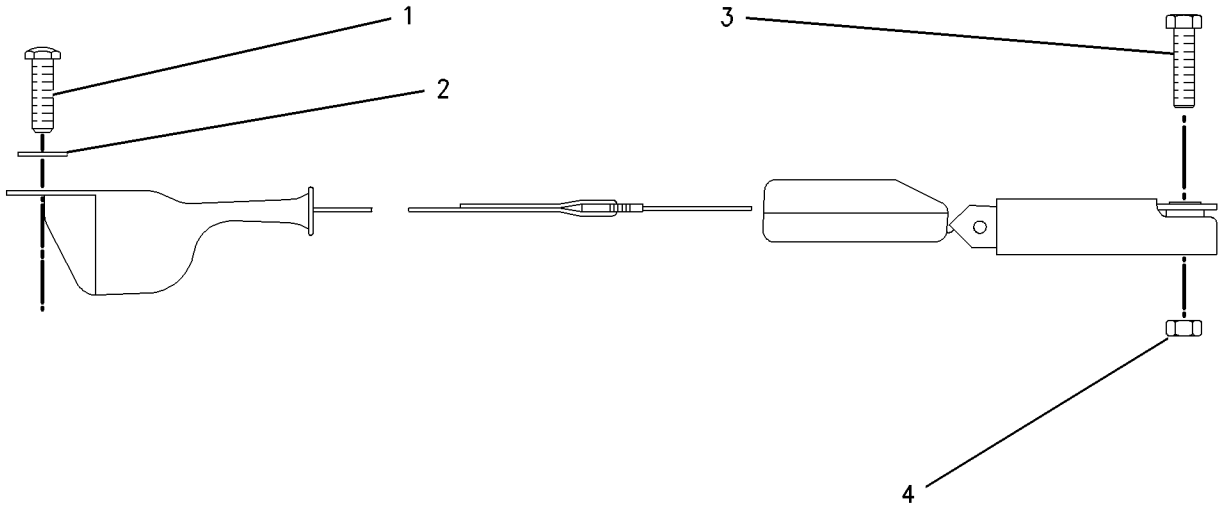


GRAPHIC #1 **<END>** g00643863

# OPERATOR STATION

## 114-1183 SEAT GP–CLOTH, LUMBAR

**S/N: CCA1-UP**

**PART OF 112-9104, 155-5958 SEAT GP-SUSPENSION**

**ALSO AN ATTACHMENT**

**SMCS-7312** **i02205496**

| NOTE | REF NO | GRAPHIC REF | PART NUMBER | QTY | PART NAME 1 2 3 4 5 6 (PRODUCT LEVEL) | SEE PAGE |
|---|---|---|---|---|---|---|
| | 1 | 1 | **9L-7469** | 2 | LOCK PIN | |
| Y | 2 | 1 | *113-5810* | 1 | PAN GP-SEAT | 1211 |
| | 3 | 1 | **8Y-5890** | 1 | CUSHION AS-SEAT | |
| | 4 | 1 | **108-8426** | 1 | CUSHION AS-BACK | |
| | 5 | 1 | **8Y-5878** | 1 | PAN AS | |
| | 6 | 1 | **8Y-5929** | 1 | PLATE AS-SLIDE | |
| | | 1 | **4K-9097** | 7 | NUT-WELD (5/16-18-THD) | |
| | 7 | 1 | **8Y-5932** | 1 | LATCH AS | |
| | 8 | 1 | **8Y-5936** | 1 | SPRING | |
| | 9 | 1 | **095-0878** | 1 | PIN-SPRING | |
| | 10 | 1 | **8Y-5937** | 1 | BRACKET AS (RH) | |
| | 11 | 1 | **8Y-5938** | 1 | BRACKET AS (LH) | |
| | | 1 | **4D-6432** | 1 | LOCKNUT (7/16-20-THD) | |
| B | 12 | 1 | **7U-4998** | 6 | SHIM | |
| | 13 | 1 | **2K-4973** | 6 | LOCKNUT (3/8-16-THD) | |
| | 14 | 1 | **8Y-5979** | 1 | PIN | |
| | 15 | 1 | **009-3681** | 2 | RING-RETAINING | |
| | 16 | 1 | **8Y-5947** | 4 | FASTENER | |
| | 17 | 1 | **8Y-6833** | 1 | SPRING (LH) | |
| | 18 | 1 | **8Y-6834** | 1 | SPRING (RH) | |
| | 19 | 1 | **1C-0569** | 3 | BOLT (5/16-18X0.5-IN) | |
| | 20 | 1 | **2B-2695** | 4 | BOLT (5/16-18X0.875-IN) | |
| | 21 | 1 | **8Y-5928** | 2 | SPRING | |
| | 22 | 1 | **8Y-5981** | 2 | BUSHING-BACKREST | |
| | 23 | 1 | **7B-7525** | 2 | BOLT-SOCKET HEAD (7/16-14X1.25-IN) | |
| | 24 | 1 | **8Y-6051** | 2 | SPACER (11.19X14.21X14.24-MM THK) | |
| Y | 25 | 1 | **108-8421** | 1 | PAN GP-BACKREST | 1210 |
| | | | | | AVAILABLE REPAIR KIT(S): | |
| | | | **8Y-6933** | | KIT-TILT PAN | |
| | | | | | (INCLUDES FASTENERS, PINS) | |
| | | | **8Y-5891** | | KIT-SEAT CUSHION | |
| | | | | | (INCLUDES FASTENERS) | |
| A | | | **5P-7958** | | SLEEVE-CABLE SPLICE (2.38-GA) | |

A-NOT PART OF THIS GROUP
B-USE AS REQUIRED
Y-SEPARATE ILLUSTRATION

**114-1183 SEAT GP** *(contd. )* **i02205496**

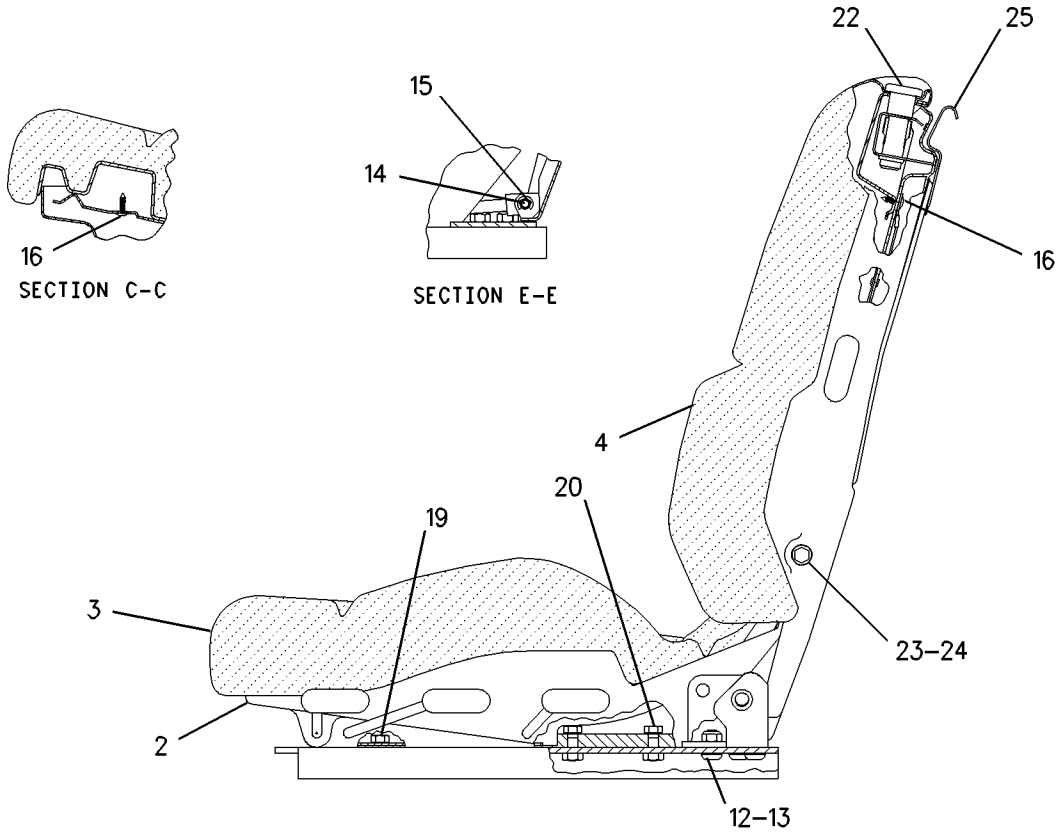


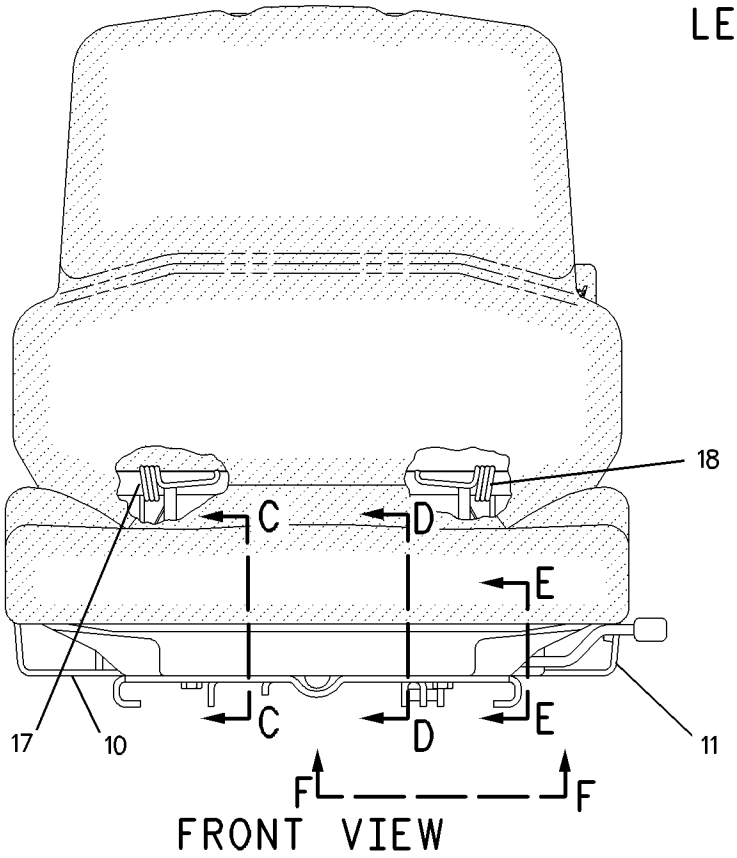


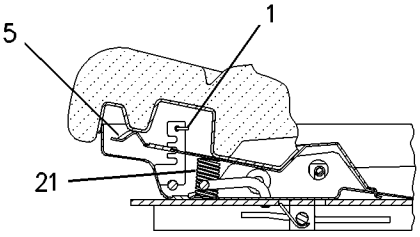


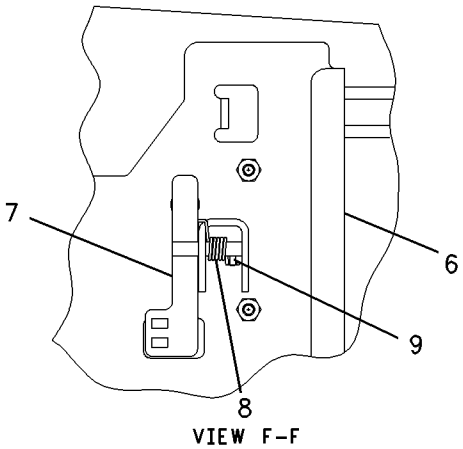


GRAPHIC #1 **<END>** g00898771

# OPERATOR STATION

## 114-1185 SEAT GP–VINYL, LUMBAR

**S/N: CCA1-UP**

**PART OF 112-9105 SEAT GP-SUSPENSION**

**AN ATTACHMENT**

**SMCS-7312** **i02585545**

| NOTE | REF NO | GRAPHIC REF | PART NUMBER | QTY | PART NAME 1 2 3 4 5 6 (PRODUCT LEVEL) | SEE PAGE |
|---|---|---|---|---|---|---|
| | 1 | 1 | **9L-7469** | 2 | LOCK PIN | |
| Y | 2 | 1 | *113-5810* | 1 | PAN GP-SEAT | 1211 |
| | 3 | 1 | **9M-5733** | 2 | RIVET-POP | |
| | 4 | 1 | **108-8425** | 1 | CUSHION AS-BACK | |
| | 5 | 1 | **8Y-6051** | 2 | SPACER (11.19X14.21X14.24-MM THK) | |
| | 6 | 1 | **8Y-5929** | 1 | PLATE AS-SLIDE | |
| | | 1 | **4K-9097** | 7 | NUT-WELD (5/16-18-THD) | |
| | 7 | 1 | **8Y-5932** | 1 | LATCH AS | |
| | 8 | 1 | **8Y-5936** | 1 | SPRING | |
| | 9 | 1 | **095-0878** | 1 | PIN-SPRING | |
| | 10 | 1 | **8Y-5937** | 1 | BRACKET AS (RH) | |
| | 11 | 1 | **8Y-5938** | 1 | BRACKET AS (LH) | |
| | | 1 | **4D-6432** | 1 | LOCKNUT (7/16-20-THD) | |
| | 12 | 1 | **7U-4898** | 6 | SCREW (3/8-16X0.75-IN) | |
| | 13 | 1 | **2K-4973** | 6 | LOCKNUT (3/8-16-THD) | |
| | 14 | 1 | **8Y-5979** | 1 | PIN | |
| | 15 | 1 | **009-3681** | 2 | RING-RETAINING | |
| | 16 | 1 | **8Y-5947** | 4 | FASTENER | |
| | 17 | 1 | **8Y-6833** | 1 | SPRING (LH) | |
| | 18 | 1 | **8Y-6834** | 1 | SPRING (RH) | |
| | 19 | 1 | **1C-0569** | 3 | BOLT (5/16-18X0.5-IN) | |
| | 20 | 1 | **2B-2695** | 4 | BOLT (5/16-18X0.875-IN) | |
| | 21 | 1 | **8Y-5928** | 2 | SPRING | |
| | 22 | 1 | **8Y-5981** | 2 | BUSHING-BACKREST | |
| | 23 | 1 | **7B-7525** | 2 | BOLT-SOCKET HEAD (7/16-14X1.25-IN) | |
| Y | 24 | 1 | **108-8421** | 1 | PAN GP-BACKREST (LUMBAR) | 1210 |
| | | | | | AVAILABLE REPAIR KIT(S): | |
| | | | **8Y-6933** | | KIT-TILT PAN | |
| | | | | | (INCLUDES FASTENERS, PINS) | |
| | | | **8Y-5957** | | KIT-SEAT CUSHION (VINYL) | |
| | | | | | (INCLUDES CUSHION, & FASTENERS) | |

Y-SEPARATE ILLUSTRATION

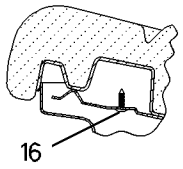


SECTION C-C

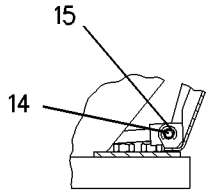


SECTION E-E




LEFT SIDE VIEW

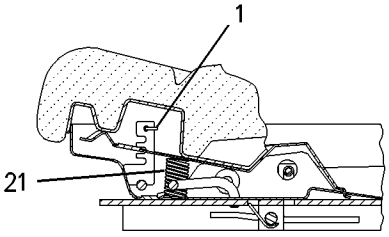


SECTION D-D

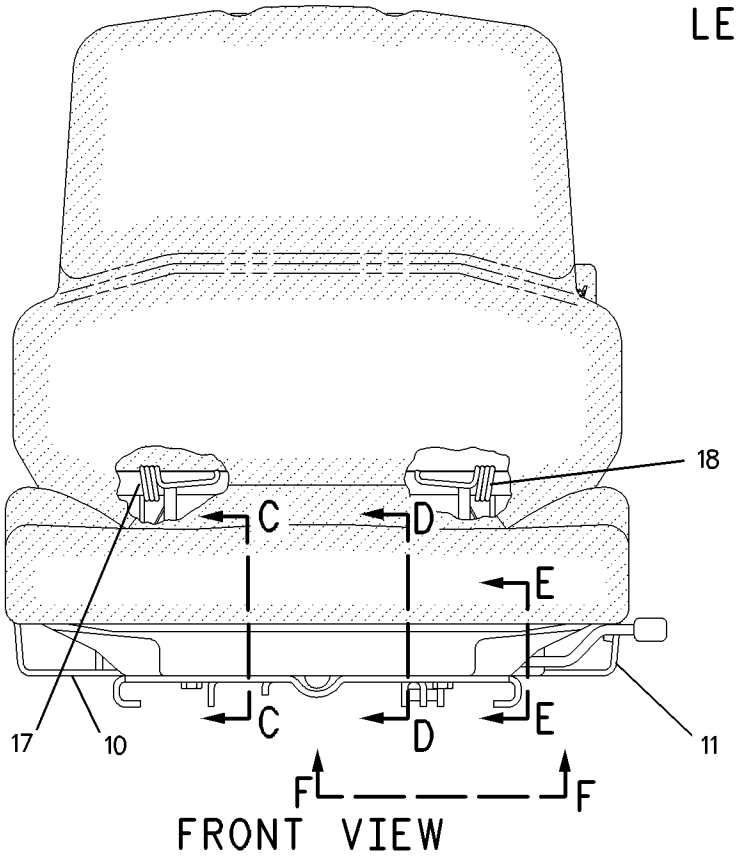


FRONT VIEW

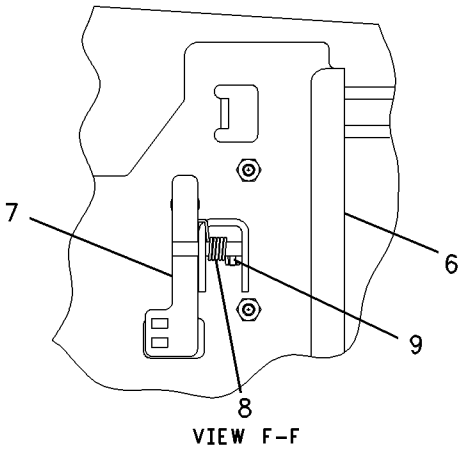


VIEW F-F

GRAPHIC #1 **<END>** g00898774

# OPERATOR STATION

## *8Y-4194* SEAT GP-SUSPENSION

**S/N: CCA1-UP**

**PART OF 159-4615 GENERAL AR**

**SMCS-7312** **i02592823**

| NOTE | REF NO | GRAPHIC REF | PART NUMBER | QTY | PART NAME 1 2 3 4 5 6 (PRODUCT LEVEL) | SEE PAGE |
|---|---|---|---|---|---|---|
| Y | 1 | 1 | **112-9104** | 1 | SEAT GP-SUSPENSION (CLOTH) | 1240 |
| M | 2 | 1 | **9X-2041** | 6 | SCREW-TRUSS HEAD (M10X1.5X20-MM) | |

M-METRIC PART
Y-SEPARATE ILLUSTRATION

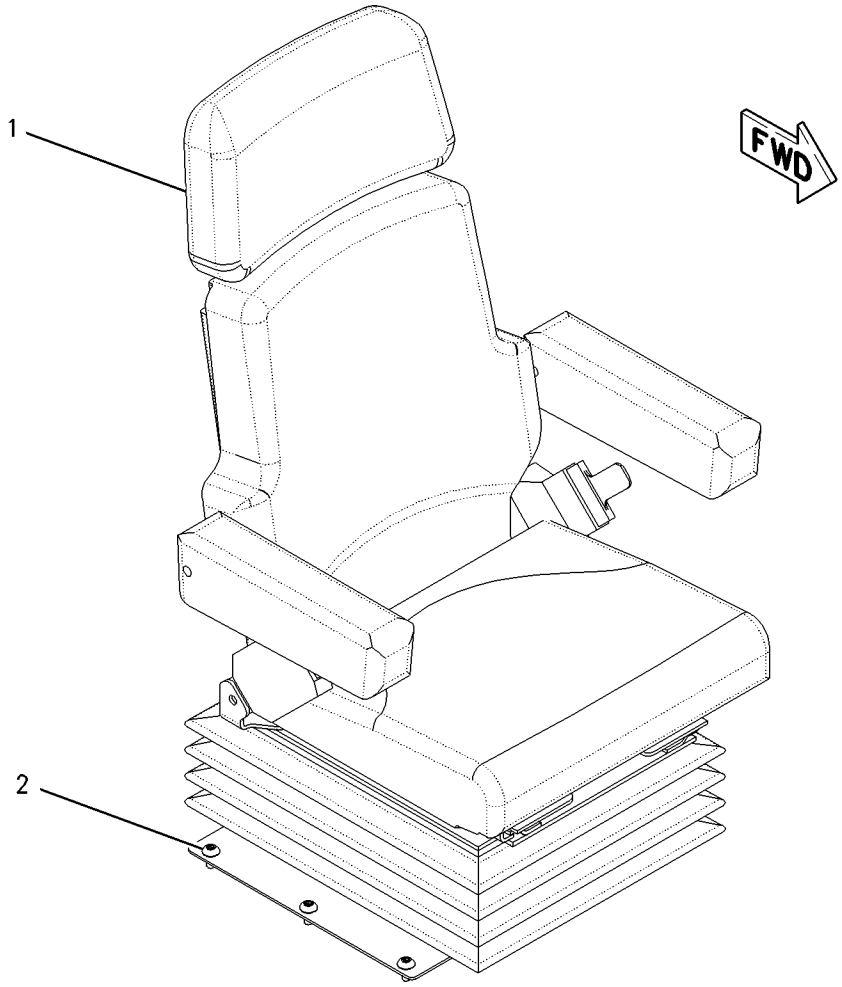


GRAPHIC #1 **<END>** g00906703

# OPERATOR STATION

## *8Y-4951* SEAT GP-SUSPENSION—VINYL

**S/N: CCA1-UP**
**PART OF 225-3174 CAB AR, 183-3018 CONVERSION AR-NON-ROPS, 177-8778 ROPS AR-OPEN**
**AN ATTACHMENT**

**SMCS-7312** **i02585556**

| NOTE | PART NUMBER | QTY | PART NAME 1 2 3 4 5 6 (PRODUCT LEVEL) | SEE PAGE |
|---|---|---|---|---|
| Y | **112-9105** | 1 | SEAT GP-SUSPENSION (VINYL, LUMBAR) | 1241 |
| | | | | |
| M | **9X-2041** | 6 | SCREW-TRUSS HEAD (M10X1.5X20-MM) | |

M-METRIC PART
Y-SEPARATE ILLUSTRATION

**<END>**

# OPERATOR STATION

## *112-9104* SEAT GP-SUSPENSION—CLOTH

**S/N: CCA1-UP**

**PART OF 8Y-4194 SEAT GP-SUSPENSION**

**SMCS-7312** **i02592773**

| NOTE | REF NO | GRAPHIC REF | PART NUMBER | QTY | PART NAME 1 2 3 4 5 6 (PRODUCT LEVEL) | SEE PAGE |
|---|---|---|---|---|---|---|
| Y | 1 | 1 | **8Y-5874** | 1 | EXTENSION GP-BACKREST (CLOTH) | 1135 |
| Y | 2 | 1 | **114-1183** | 1 | SEAT GP (CLOTH, LUMBAR) | 1234 |
| Y | 3 | 1 | **113-4245** | 1 | ARMREST GP (RH) | 1101 |
| Y | 4 | 1 | **113-4242** | 1 | ARMREST GP (LH) | 1100 |
| Y | 5 | 1 | **113-5800** | 1 | SUSPENSION GP-SEAT | 1248 |
| CY | 6 | 1 | **156-1148** | 1 | SEAT BELT GP | 1233 |
| | 7 | 1 | **4F-4879** | 1 | BOLT (3/8-16X0.5-IN) | |
| | | | | | AVAILABLE REPAIR KIT(S): | |
| | | | **149-4745** | 1 | KIT-SLIDER BLOCK (SUSPENSION SEAT) | |
| | | | | | (INCLUDES BLOCKS AND BOLT) | |

C-CHANGE FROM PREVIOUS TYPE
Y-SEPARATE ILLUSTRATION

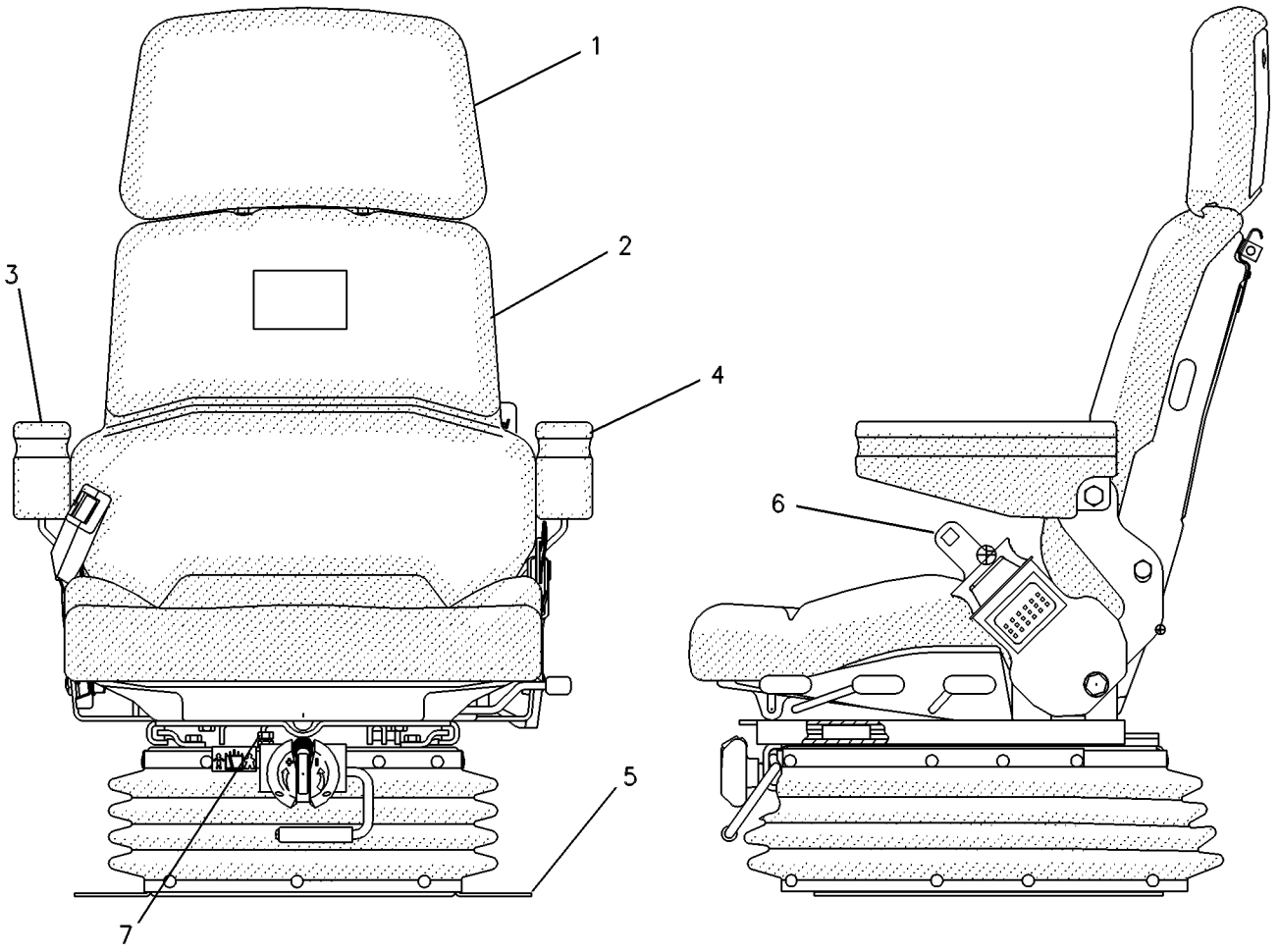


GRAPHIC #1 **<END>** g00109695

# OPERATOR STATION

## 112-9105 SEAT GP-SUSPENSION–VINYL

**S/N: CCA1-UP**
**PART OF 8Y-4951 SEAT GP-SUSPENSION**
**AN ATTACHMENT**

**SMCS-7312** **i02585557**

| NOTE | REF NO | GRAPHIC REF | PART NUMBER | QTY | PART NAME 1 2 3 4 5 6 (PRODUCT LEVEL) | SEE PAGE |
|---|---|---|---|---|---|---|
| Y | 1 | 1 | **8Y-5959** | 1 | EXTENSION GP-BACKREST (VINYL) | 1136 |
| Y | 2 | 1 | **114-1185** | 1 | SEAT GP (VINYL, LUMBAR) | 1236 |
| Y | 3 | 1 | **113-4245** | 1 | ARMREST GP (RH) | 1101 |
| Y | 4 | 1 | **113-4242** | 1 | ARMREST GP (LH) | 1100 |
| Y | 5 | 1 | **113-5800** | 1 | SUSPENSION GP-SEAT | 1248 |
| CY | 6 | 1 | *122-4617* | 1 | SEAT BELT GP (RETRACTABLE) | 1232 |
| J | 7 | 1 | **4F-4879** | 1 | BOLT (3/8-16X0.5-IN) | |
| | | | | | AVAILABLE REPAIR KIT(S): | |
| J | | | **149-4745** | 1 | KIT-SLIDER BLOCK (SUSPENSION SEAT) | |
| | | | | | (INCLUDES 4 BLOCKS) | |

C-CHANGE FROM PREVIOUS TYPE
J-KIT MARKED J INCLUDES PART MARKED J
Y-SEPARATE ILLUSTRATION

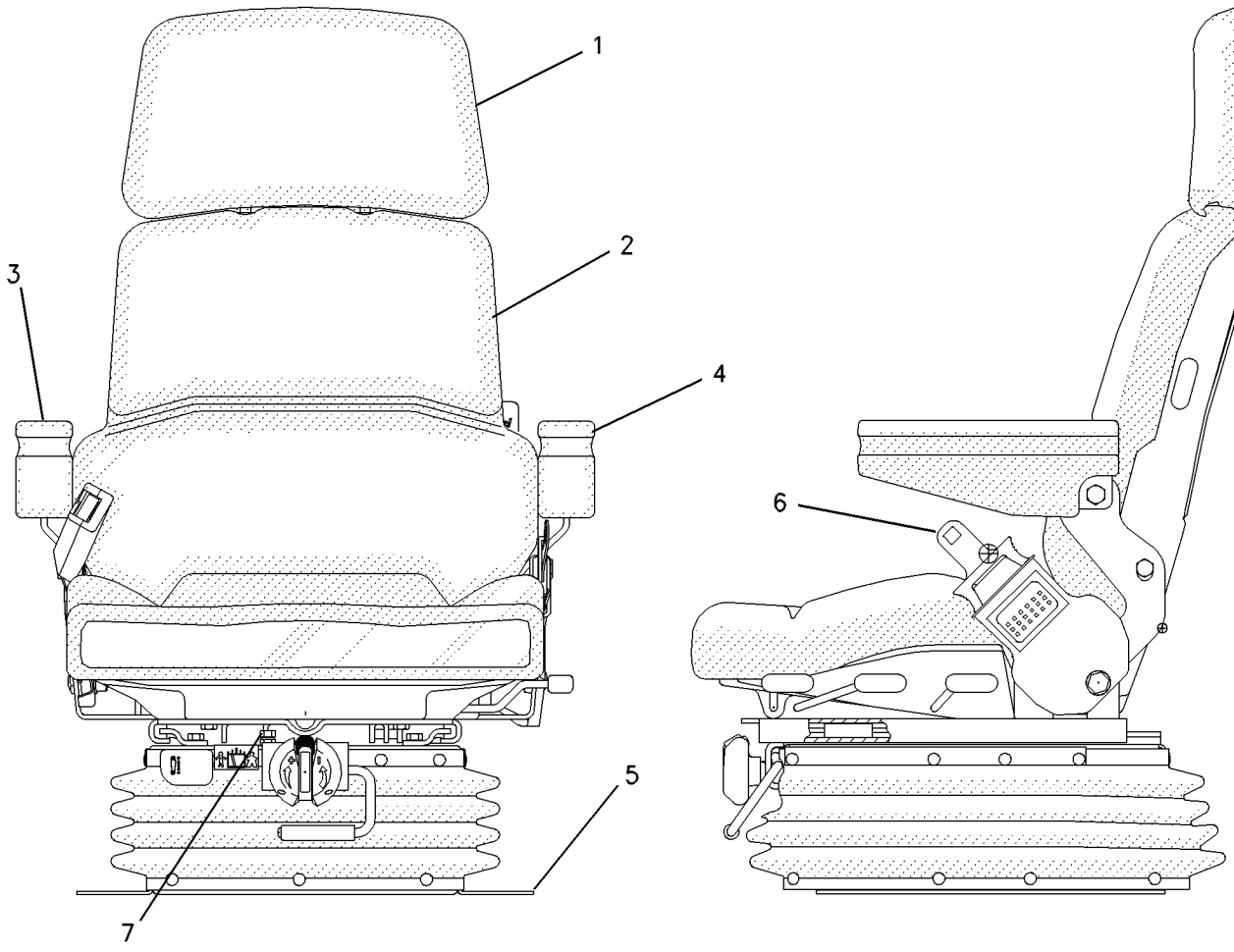


GRAPHIC #1 **<END>** g00285098

# OPERATOR STATION

## *154-5732* SEAT GP-SUSPENSION—CLOTH

**S/N: CCA1-UP**
**PART OF 156-7778 SEAT GP-SUSPENSION**
**AN ATTACHMENT**

**SMCS-7312** **i02585558**

| NOTE | REF NO | GRAPHIC REF | PART NUMBER | QTY | PART NAME 1 2 3 4 5 6 (PRODUCT LEVEL) | SEE PAGE |
|---|---|---|---|---|---|---|
| Y | 1 | 1 | **155-5959** | 1 | SUSPENSION GP-SEAT (AIR) | 1250 |
| Y | 2 | 1 | **155-5958** | 1 | SEAT GP-SUSPENSION (CLOTH, LUMBAR) | 1243 |
| | 3 | 1 | **4F-4879** | 1 | BOLT (3/8-16X0.5-IN) | |
| | | | | | AVAILABLE REPAIR KIT(S): | |
| | | | **166-7225** | 1 | KIT-SLIDER BLOCK (SEAT) | |
| | | | | | (INCLUDES BOLT, SETSCREW, & SLIDER BLOCK) | |

Y-SEPARATE ILLUSTRATION

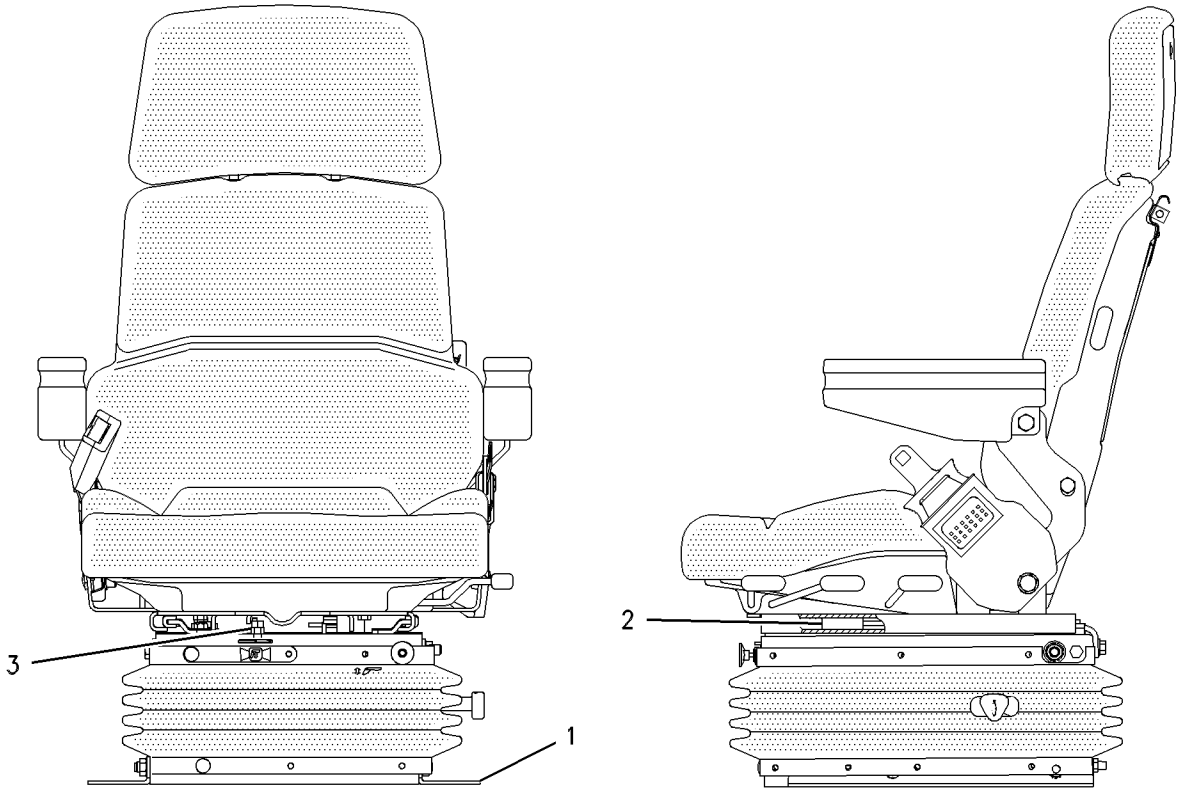


GRAPHIC #1 **<END>** g00593643

# 155-5958 SEAT GP-SUSPENSION—CLOTH, LUMBAR

**S/N: CCA1-UP**

**PART OF 154-5732 SEAT GP-SUSPENSION**

**AN ATTACHMENT**

**SMCS-7312** **i02592783**

| NOTE | REF NO | GRAPHIC REF | PART NUMBER | QTY | PART NAME 1 2 3 4 5 6 (PRODUCT LEVEL) | SEE PAGE |
|---|---|---|---|---|---|---|
| Y | 1 | 1 | **8Y-5874** | 1 | EXTENSION GP-BACKREST (CLOTH) | 1135 |
| Y | 2 | 1 | **114-1183** | 1 | SEAT GP (CLOTH, LUMBAR) | 1234 |
| Y | 3 | 1 | **113-4242** | 1 | ARMREST GP (LH) | 1100 |
| Y | 4 | 1 | **113-4245** | 1 | ARMREST GP (RH) | 1101 |
| Y | 5 | 1 | **156-1148** | 1 | SEAT BELT GP | 1233 |

Y-SEPARATE ILLUSTRATION

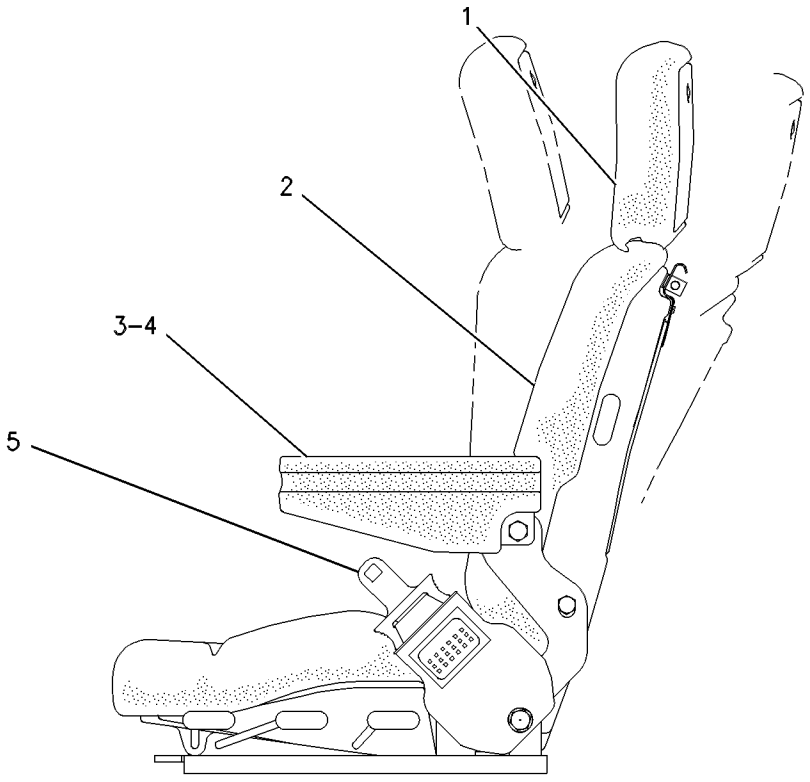


GRAPHIC #1 **<END>** g00513814

# OPERATOR STATION

## *156-7778* SEAT GP-SUSPENSION—CLOTH, LUMBAR

**S/N: CCA1-UP**

**AN ATTACHMENT**

**SMCS-7312** **i02592785**

| NOTE | REF NO | GRAPHIC REF | PART NUMBER | QTY | PART NAME 1 2 3 4 5 6 (PRODUCT LEVEL) | SEE PAGE |
|---|---|---|---|---|---|---|
| B | 1 | 1 | **1F-1651** | 1 | TEE-PIPE | |
| | 2 | 1 | **2R-1922** | 1 | CONNECTOR | |
| | 3 | 1 | **3D-9253** | 1 | CONNECTOR-PIPE | |
| | 4 | 1 | **3G-7875** | 1 | HOSE AS | |
| | 5 | 1 | **3S-2093** | 3 | STRAP-CABLE | |
| | 6 | 1 | **5D-0269** | 1 | ELBOW | |
| | 7 | 1 | **5K-2408** | 1 | FITTING | |
| | 8 | 1 | **091-0081** | 1 | SPACER (10.5X20X10-MM THK) | |
| Y | 9 | 1 | *154-5732* | 1 | SEAT GP-SUSPENSION (CLOTH) | 1242 |
| | 10 | 1 | **157-6129** | 1 | GROMMET | |
| | 11 | 1 | **160-2353** | 1 | HOSE AS | |
| | 12 | 1 | **161-2444** | 1 | VALVE AS | |
| | 13 | 1 | **161-2445** | 1 | VALVE AS-FILTER | |
| | 14 | 1 | **4D-7794** | 1 | CLIP | |
| | 15 | 1 | **5H-8936** | 1 | ADAPTER | |
| B | 16 | 1 | **7J-8611** | 1 | ELBOW | |
| M | 17 | 1 | **9X-2039** | 1 | SCREW-TRUSS HEAD (M10X1.5X35-MM) | |
| M | 18 | 1 | **9X-2041** | 6 | SCREW-TRUSS HEAD (M10X1.5X20-MM) | |

B-USE AS REQUIRED
M-METRIC PART
Y-SEPARATE ILLUSTRATION

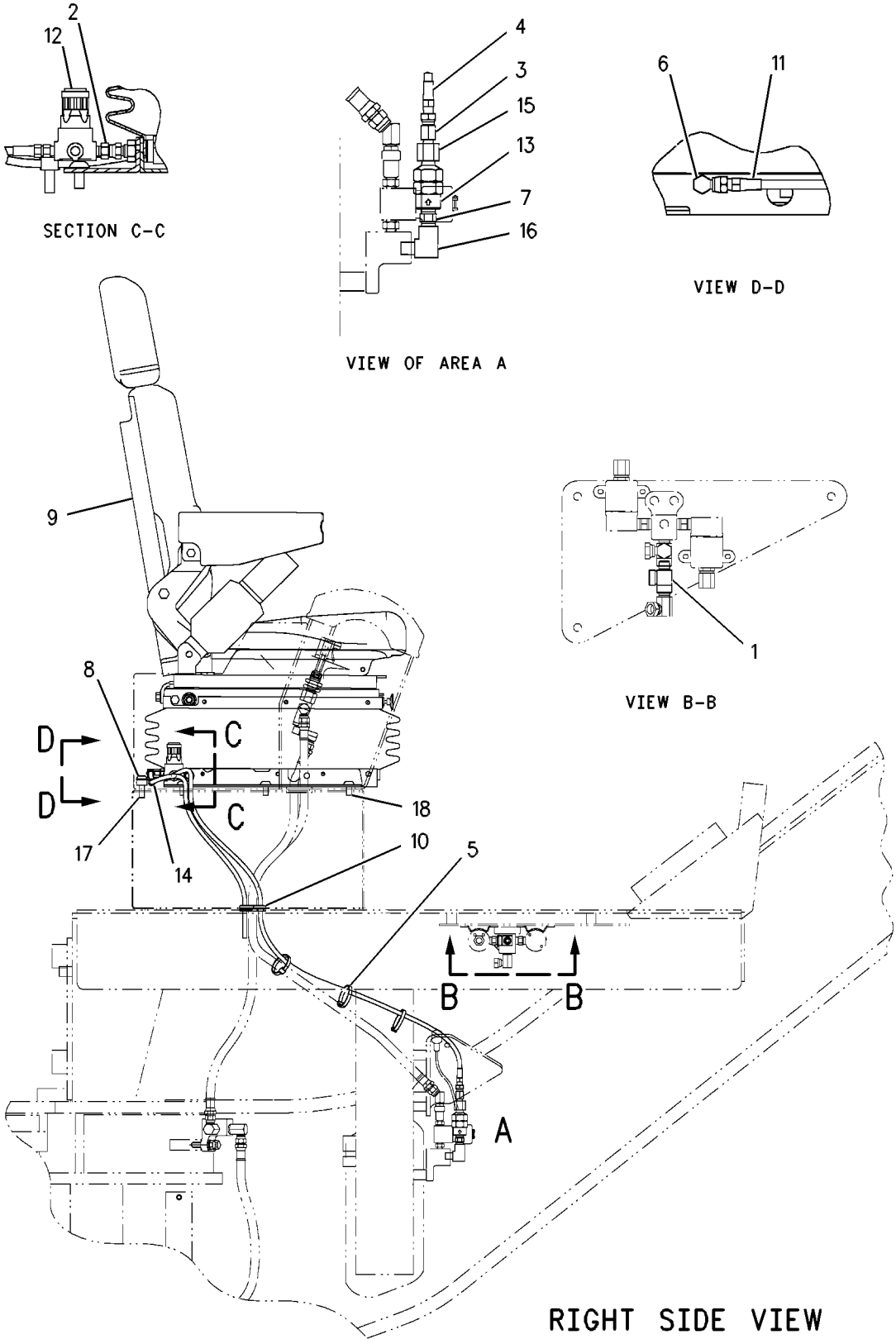


GRAPHIC #1 **<END>** g00618801

# OPERATOR STATION

## *174-4546* SUPPORT GP-SEAT

**S/N: CCA1-UP**

**PART OF 159-4615 GENERAL AR**

**SMCS-7321** **i01674709**

| NOTE | REF NO | GRAPHIC REF | PART NUMBER | QTY | PART NAME 1 2 3 4 5 6 (PRODUCT LEVEL) | SEE PAGE |
|---|---|---|---|---|---|---|
| | 1 | 1 | **5P-7803** | 2 | PLUG-BUTTON | |
| | 2 | 1 | **7G-4824** | 1 | STRAP | |
| | 4 | 1 | **8E-7791** | 1 | STRAP | |
| | 5 | 1 | **8X-5536** | 1 | COVER | |
| | 6 | 1 | **8X-5538** | 1 | COVER AS | |
| M | | 1 | **8T-3490** | 4 | NUT-WELD (M10X1.5-THD) | |
| | 7 | 1 | **8X-5540** | 1 | COVER | |
| | 8 | 1 | **123-4618** | 1 | COVER | |
| | 9 | 1 | **123-4701** | 1 | SEAL | |
| | 10 | 1 | **174-4492** | 1 | COVER | |
| | 11 | 1 | **174-6051** | 1 | SUPPORT AS | |
| | | 1 | **5P-1075** | 8 | WASHER-HARD (10.2X22.5X3-MM THK) | |
| M | | 1 | **6V-9632** | 6 | NUT-WELD (M6X1-THD) | |
| M | | 1 | **8T-3490** | 13 | NUT-WELD (M10X1.5-THD) | |
| M | | 1 | **9T-6001** | 2 | BOSS-THREADED | |
| | | 1 | **123-8408** | 2 | TUBE AS | |
| | 12 | 1 | **174-6353** | 1 | PLATE | |
| | 13 | 1 | **176-5507** | 1 | PAD | |
| | 14 | 1 | **191-0027** | 1 | PAD | |
| | 15 | 1 | **5P-1075** | 8 | WASHER-HARD (10.2X22.5X3-MM THK) | |
| | 16 | 1 | **6V-8801** | 8 | NUT (3/8-16-THD) | |
| | 17 | 1 | **7X-0591** | 2 | WASHER-HARD (17X29X3-MM THK) | |
| M | 18 | 1 | **9X-2040** | 4 | SCREW-TRUSS HEAD (M10X1.5X25-MM) | |
| M | 19 | 1 | **9X-2041** | 5 | SCREW-TRUSS HEAD (M10X1.5X20-MM) | |
| M | 20 | 1 | **9X-2045** | 6 | SCREW-TRUSS HEAD (M6X1X20-MM) | |

M-METRIC PART

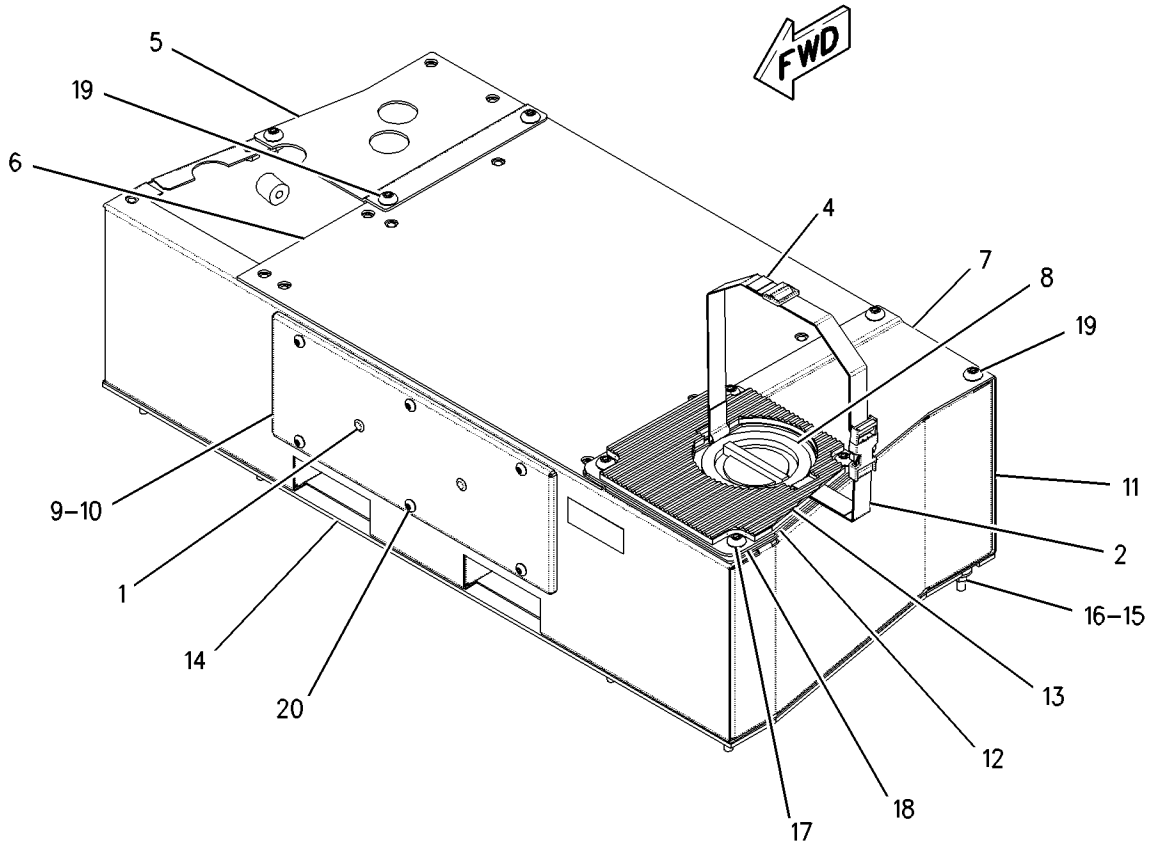


GRAPHIC #1 **<END>** g00865561

# OPERATOR STATION

## 113-5800 SUSPENSION GP-SEAT

**S/N: CCA1-UP**
**PART OF 112-9104, 112-9105 SEAT GP-SUSPENSION**
**ALSO AN ATTACHMENT**

**SMCS-7324** **i00136249**

| NOTE | REF NO | GRAPHIC REF | PART NUMBER | QTY | PART NAME 1 2 3 4 5 6 (PRODUCT LEVEL) | SEE PAGE |
|---|---|---|---|---|---|---|
| | 1 | 1 | **8Y-6022** | 1 | PLATE-SLIDE | |
| | 2 | 1 | **8Y-6023** | 1 | PLATE-SLIDE | |
| | 3 | 1 | **5M-3062** | 2 | BOLT (3/8-16X.750IN) | |
| | 4 | 1 | **5P-1075** | 4 | WASHER-HARD (3MM THK) | |
| | 5 | 1 | **2K-4973** | 6 | LOCKNUT (3/8-16 THD) | |
| | 6 | 1 | **113-5804** | 1 | HOUSING AS-LOWER | |
| Y | 7 | 1 | **113-5808** | 1 | HOUSING GP-SEAT SUSPENSION | 1160 |
| | 8 | 1 | **8Y-6012** | 1 | ARM AS-SUSPENSION | |
| | 9 | 1 | **1D-4677** | 4 | BOLT-ROUND HEAD | |
| J | 10 | 1 | **101-0003** | 23 | FASTENER | |
| J | 11 | 1 | **111-5042** | 3 | FASTENER | |
| J | 12 | 1 | **108-4878** | 3 | NUT-PUSH | |
| | 13 | 1 | **5V-1497** | 1 | RETAINER | |
| | 14 | 1 | **4V-7884** | 2 | BEARING | |
| | 15 | 1 | **4V-8577** | 4 | BEARING | |
| | 16 | 1 | **8Y-6024** | 2 | SHAFT AS | |
| | 17 | 1 | **124-0507** | 1 | ABSORBER-SHOCK | |
| JZ | 18 | 1 | | 1 | BOOT | |
| JZ | 19 | 1 | | 2 | RETAINER | |
| Z | 20 | 1 | | 2 | BELT | |
| NZ | 21 | 1 | | 4 | ROLLER | |
| | | | | | AVAILABLE REPAIR KIT(S): | |
| | | | **101-4194** | 1 | KIT-BELT TETHER | |
| J | | | **8Y-5944** | 1 | KIT-SUSPENSION BOOT | |
| N | | | **101-4195** | | KIT-SUSPENSION ROLLER | |

J-KIT MARKED J INCLUDES PART(S) MARKED J
N-KIT MARKED N INCLUDES PART MARKED N
Y-SEPARATE ILLUSTRATION
Z-NOT SERVICED SEPARATELY

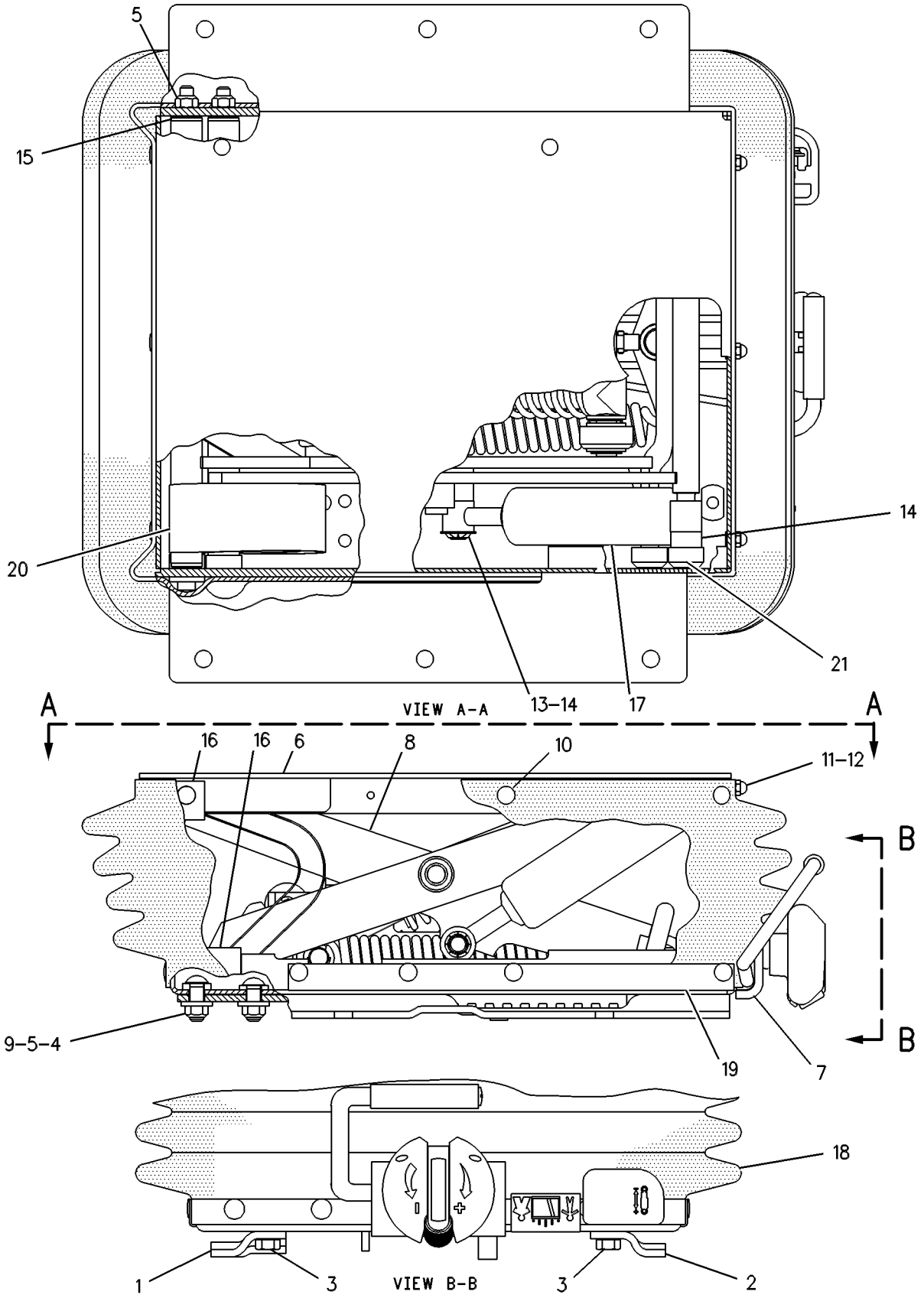


GRAPHIC #1 **<END>** g00108834

# OPERATOR STATION

## 155-5959 SUSPENSION GP-SEAT—AIR

**S/N: CCA1-UP**
**PART OF 154-5732 SEAT GP-SUSPENSION**
**AN ATTACHMENT**

**SMCS-7324** **i01605093**

| NOTE | REF NO | GRAPHIC REF | PART NUMBER | QTY | PART NAME 1 2 3 4 5 6 (PRODUCT LEVEL) | SEE PAGE |
|---|---|---|---|---|---|---|
| | 1 | 1 | **3J-4818** | 4 | LOCKWASHER | |
| | 2 | 1 | **102-6317** | 4 | BUMPER | |
| | 3 | 1 | **123-8157** | 2 | SHAFT | |
| | 4 | 1 | **128-0686** | 2 | SPACER (9.78X15.88X27.8-MM THK) | |
| | 5 | 1 | **128-5082** | 1 | BOOT | |
| | 6 | 1 | **128-5084** | 1 | ABSORBER AS-SHOCK | |
| | 7 | 1 | **128-5085** | 1 | KNOB-DAMPER (SEAT) | |
| | 8 | 1 | **147-4549** | 2 | FITTING-ELBOW | |
| | 9 | 1 | **147-6522** | 1 | SPRING | |
| | 10 | 1 | **148-3749** | 1 | SCISSORS AS | |
| | 11 | 1 | **149-2400** | 1 | FITTING | |
| | 12 | 1 | **149-2402** | 1 | VALVE AS (SEAT) | |
| | 13 | 1 | **158-3198** | 1 | HOUSING AS | |
| | 14 | 1 | **160-3662** | 2 | FITTING-BULKHEAD | |
| B | 15 | 1 | **160-7765** | 1 | WASHER (16.26X22.23X1.97-MM THK) | |
| B | 16 | 1 | **160-7766** | 6 | WASHER (16.26X22.23X0.51-MM THK) | |
| B | 17 | 1 | **160-7767** | 6 | WASHER (3.68X12.57X0.51-MM THK) | |
| | 18 | 1 | **166-7224** | 1 | HOUSING AS | |
| | 19 | 1 | **1B-4430** | 4 | NUT-JAM (1/2-20-THD) | |
| | 20 | 1 | **2K-4973** | 3 | LOCKNUT (3/8-16-THD) | |
| | 21 | 1 | **4V-7884** | 2 | BEARING | |
| | 22 | 1 | **4V-8556** | 1 | BOLT (3/8-16X2.20-IN) | |
| | 23 | 1 | **5P-8167** | 1 | BOLT (3/8-16X0.625-IN) | |
| | 24 | 1 | **8L-8413** | 3 | STRAP-CABLE | |
| | 25 | 1 | **7X-7739** | 1 | WASHER (9.7X25.4 X4-MM THK) | |
| | 26 | 1 | **8M-3267** | 1 | SCREW-HEX SOCKET (3/8-16X0.75-IN) | |
| | 27 | 1 | **8T-2501** | 2 | BOLT (3/8-16X2-IN) | |
| BE | 28 | 1 | **147-6541** | | TUBE | |
| | 29 | 1 | **145-0326** | 1 | FILM-INSTRUCTION (SEAT ADJUSTMENT) | |
| | | | | | | |
| F | | 1 | **4F-4879** | 1 | BOLT (3/8-16X0.5-IN) | |
| | | | | | AVAILABLE REPAIR KIT(S): | |
| | | | **8Y-6928** | 1 | KIT-FASTENER (SEAT) | |
| | | | | | (INCLUDES CLIPS-RACHET) | |
| | | | **123-9128** | 1 | KIT-ROLLER (SEAT) | |
| | | | | | (INCLUDES BEARINGS, ROLLERS, TIE WRAP) | |
| | | | **128-0613** | 1 | KIT-TETHER (SEAT) | |
| | | | | | (INCLUDES TETHERS) | |
| | | | **132-3439** | 1 | KIT-INDICATOR (SEAT) | |
| | | | | | (INCLUDES MAGNET, CAM, INDICATOR, NUT, SPRING, LABEL) | |

B-USE AS REQUIRED
E-ORDER BY THE CENTIMETER
F-NOT SHOWN

## 155-5959 SUSPENSION GP-SEAT *(contd. )* i01605093

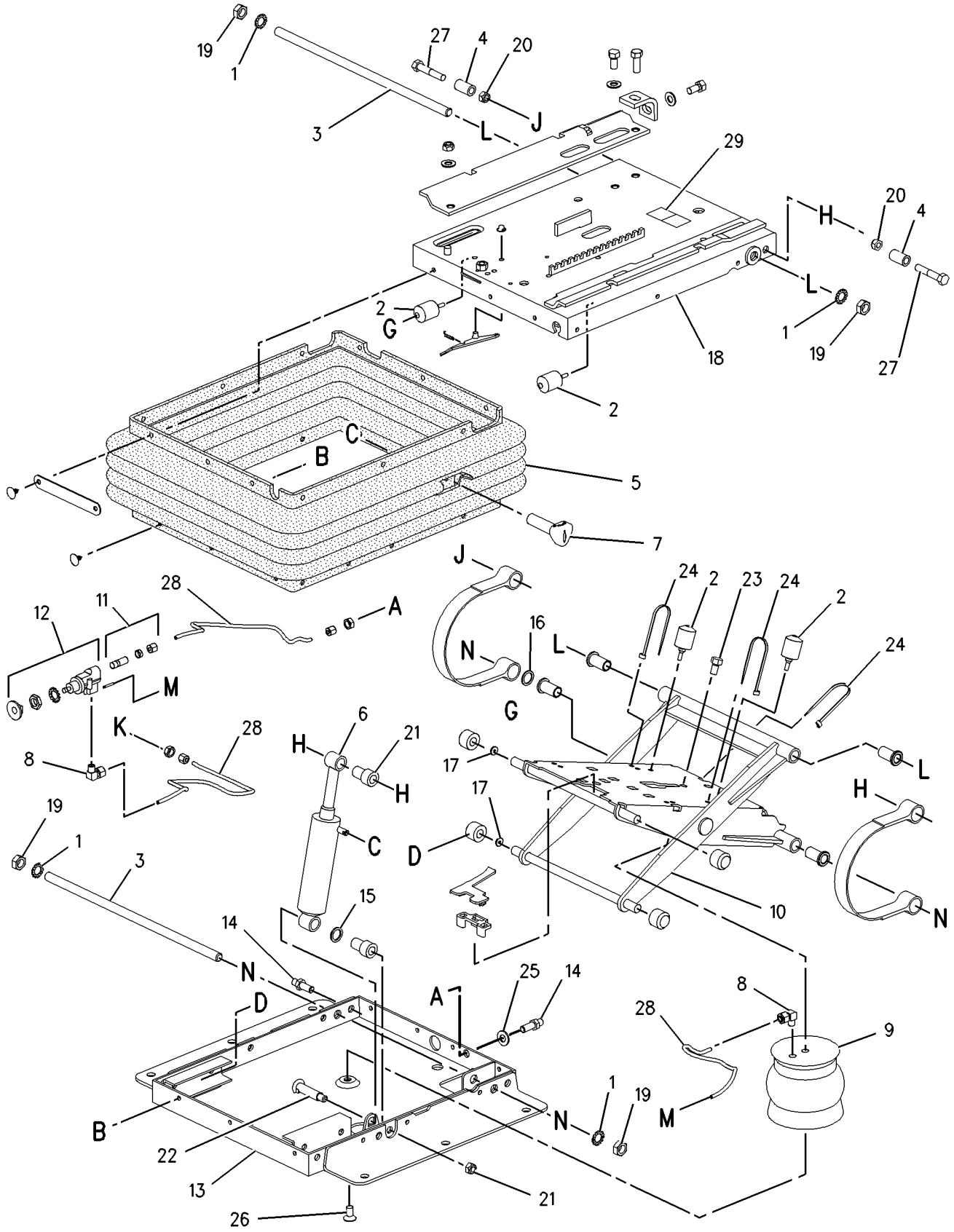


GRAPHIC #1 **<END>** g00795577

# OPERATOR STATION

## *8X-9675* WASHER GP-WINDOW—FRONT

**S/N: CCA1-UP**

**PART OF 161-1141, 179-3581, 218-4758 ROPS AR-ENCLOSED**

**ALSO AN ATTACHMENT**

**SMCS-7306** **i01193188**

| NOTE | REF NO | GRAPHIC REF | PART NUMBER | QTY | PART NAME 1 2 3 4 5 6 (PRODUCT LEVEL) | SEE PAGE |
|---|---|---|---|---|---|---|
| BE | 1 | 1 | **144-0195** | | HOSE | |
| | 2 | 1 | **8W-0935** | 1 | GASKET | |
| | 3 | 1 | **8W-0934** | 1 | BRACKET | |
| | 4 | 1 | **9P-2369** | 1 | JET AS-WASHER | |
| | | 1 | **8Y-4408** | 1 | NOZZLE AS-JET | |
| | 5 | 1 | **8T-2901** | 1 | NOZZLE AS | |
| | | 1 | **8Y-4409** | 1 | NOZZLE AS-JET | |
| M | 7 | 1 | **5C-2890** | 2 | NUT (M6X1-THD) | |
| | 8 | 1 | **5P-4115** | 2 | WASHER-HARD (7.2X19X2-MM THK) | |
| | 9 | 1 | **3S-2093** | 3 | STRAP-CABLE | |
| | 10 | 1 | **102-3645** | 1 | COVER | |
| M | 11 | 1 | **9X-2045** | 5 | SCREW-TRUSS HEAD (M6X1X20-MM) | |
| | 12 | 1 | **4D-7388** | 2 | CLIP | |
| | 13 | 1 | **5M-3062** | 1 | BOLT (3/8-16X0.75-IN) | |
| | 14 | 1 | **8T-4896** | 2 | WASHER-HARD (10.2X18.5X2.5-MM THK) | |
| | 15 | 1 | **7T-8891** | 2 | PUMP AS-WASHER | |
| | 16 | 1 | **8X-9405** | 1 | RESERVOIR AS | |
| | 17 | 1 | **8X-5280** | 2 | CONNECTOR | |
| | 18 | 1 | **6W-5698** | 2 | GROMMET | |
| | 19 | 1 | **7T-1961** | 1 | CAP | |
| | 20 | 1 | **8X-1135** | 1 | GASKET | |
| | 21 | 1 | **8X-9349** | 1 | PAD | |
| | 22 | 1 | **107-4865** | 1 | PAD | |
| | 24 | 1 | **4L-6454** | 1 | BOLT (3/8-16X1-IN) | |
| | 25 | 1 | **6V-8801** | 1 | NUT (3/8-16-THD) | |
| | 26 | 1 | **7G-4326** | 1 | PLATE | |

B-USE AS REQUIRED
E-ORDER BY THE CENTIMETER
M-METRIC PART

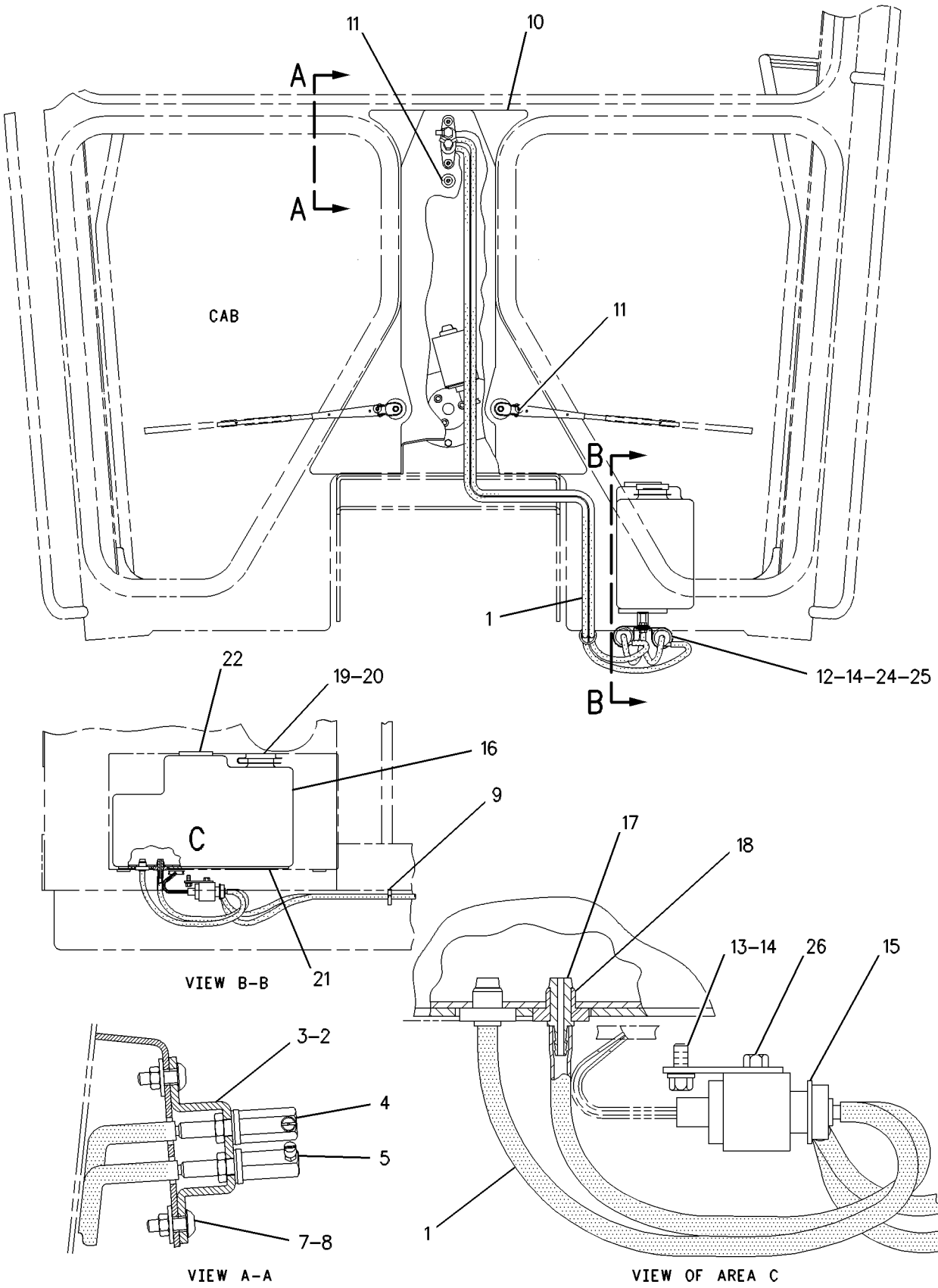


GRAPHIC #1 **<END>** g00638869

# OPERATOR STATION

## *8X-9680* WASHER GP-WINDOW—REAR

**S/N: CCA1-UP**

**PART OF 177-8830, 177-8831 WIPER AR-WINDOW**

**AN ATTACHMENT**

**SMCS-7306** **i02380619**

| NOTE | REF NO | GRAPHIC REF | PART NUMBER | QTY | PART NAME 1 2 3 4 5 6 (PRODUCT LEVEL) | SEE PAGE |
|---|---|---|---|---|---|---|
| | 1 | 1 | **3V-3816** | 1 | NOZZLE AS | |
| | 2 | 1 | **7T-8891** | 1 | PUMP AS-WASHER | |
| | 3 | 1 | **4D-7388** | 1 | CLIP | |
| | 4 | 1 | **4D-7794** | 4 | CLIP | |
| | 5 | 1 | **5P-8167** | 2 | BOLT (3/8-16X0.625-IN) | |
| | 6 | 1 | **6K-9632** | 1 | TEE | |
| | 7 | 1 | **8T-4121** | 3 | WASHER-HARD (11X21X2.5-MM THK) | |
| M | 8 | 1 | **8T-4191** | 3 | BOLT (M10X1.5X16-MM) | |
| | 9 | 1 | **8T-4896** | 2 | WASHER-HARD (10.2X18.5X2.5-MM THK) | |
| E | 10 | 1 | **144-0195** | | HOSE (188-CM) | |
| E | 10A | 1 | **144-0195** | | HOSE (20-CM) | |
| E | 10B | 1 | **144-0195** | | HOSE (10-CM) | |

E-ORDER BY THE CENTIMETER
M-METRIC PART

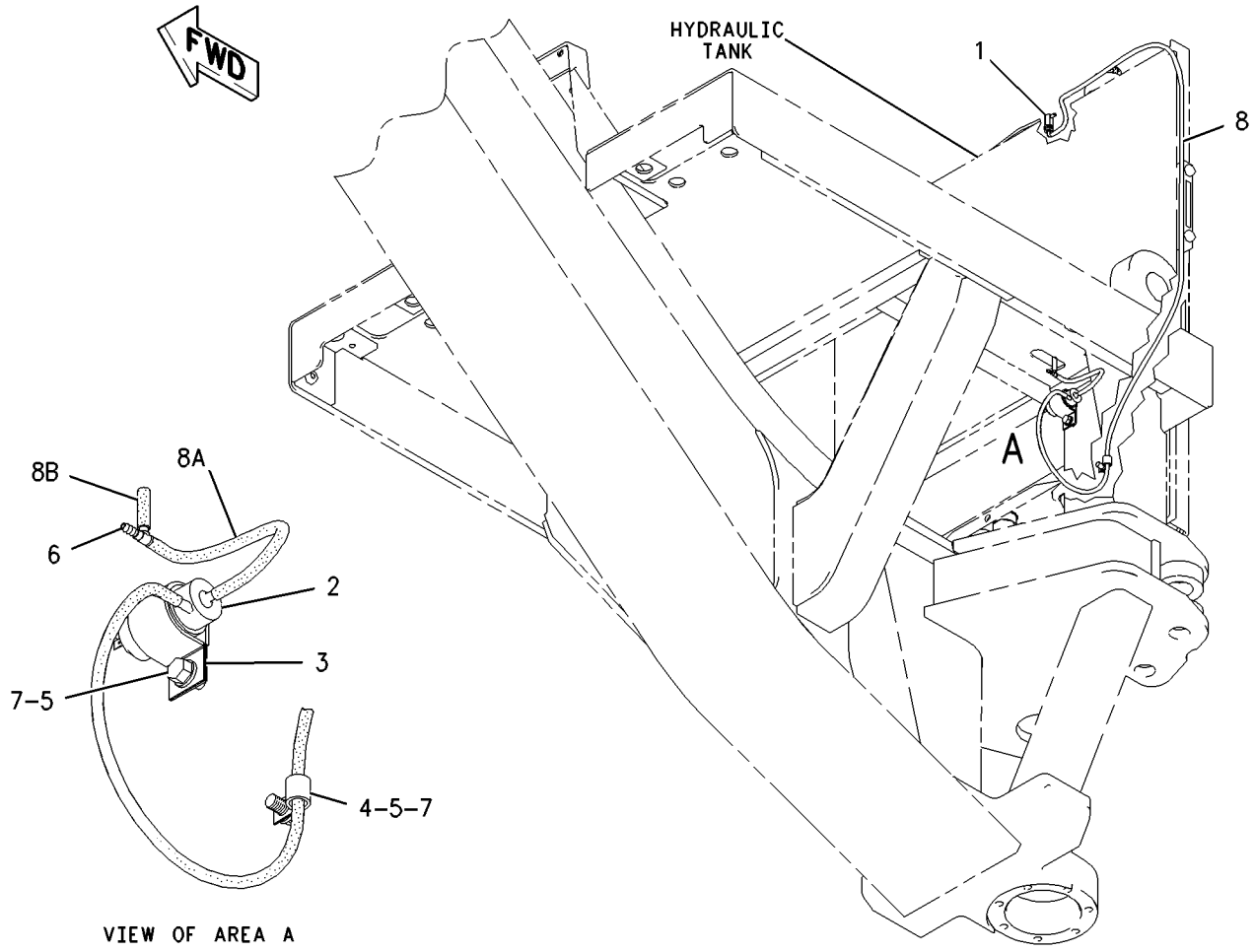


GRAPHIC #1 **<END>** g00898012

# OPERATOR STATION

## *125-4342* WASHER GP-WINDOW—FRONT

**S/N: CCA1-UP**
**PART OF 225-3174 CAB AR, 211-4906 CAB AR-NON-ROPS**
**AN ATTACHMENT**

**SMCS-7306** **i01193196**

| NOTE | REF NO | GRAPHIC REF | PART NUMBER | QTY | PART NAME 1 2 3 4 5 6 (PRODUCT LEVEL) | SEE PAGE |
|---|---|---|---|---|---|---|
| | 1 | 1 | **8X-9405** | 1 | RESERVOIR AS | |
| | | 1 | **6W-5698** | 2 | GROMMET | |
| | | 1 | **7T-1961** | 1 | CAP | |
| | | 1 | **8X-1135** | 1 | GASKET | |
| | | 1 | **8X-5280** | 2 | CONNECTOR | |
| | | 1 | **8X-9349** | 1 | PAD (RECTANGULAR) | |
| | | 1 | **107-4865** | 1 | PAD (ROUND) | |
| | 2 | 1 | **8W-0935** | 1 | GASKET | |
| | 3 | 1 | **8W-0934** | 1 | BRACKET | |
| | 4 | 1 | **9P-2369** | 1 | JET AS-WASHER | |
| | | 1 | **8Y-4408** | 1 | NOZZLE AS-JET | |
| M | 5 | 1 | **9X-2042** | 2 | SCREW-TRUSS HEAD (M6X1X12-MM) | |
| M | 6 | 1 | **5C-2890** | 2 | NUT (M6X1-THD) | |
| | 7 | 1 | **5P-4115** | 2 | WASHER-HARD (7.2X19X2-MM THK) | |
| | 8 | 1 | **3S-2093** | 3 | STRAP-CABLE | |
| | 9 | 1 | **102-3645** | 1 | COVER | |
| M | 10 | 1 | **9X-2045** | 3 | SCREW-TRUSS HEAD (M6X1X20-MM) | |
| | 11 | 1 | **4D-7388** | 1 | CLIP | |
| | 12 | 1 | **5M-3062** | 1 | BOLT (3/8-16X0.75-IN) | |
| | 13 | 1 | **6K-9632** | 1 | TEE | |
| | 14 | 1 | **7T-8891** | 1 | PUMP AS-WASHER | |
| BE | 15 | 1 | **144-0195** | | HOSE | |
| | 16 | 1 | **6V-6467** | 2 | PLUG | |
| | 17 | 1 | **8T-4896** | 2 | WASHER-HARD (10.2X18.5X2.5-MM THK) | |

B-USE AS REQUIRED
E-ORDER BY THE CENTIMETER
M-METRIC PART

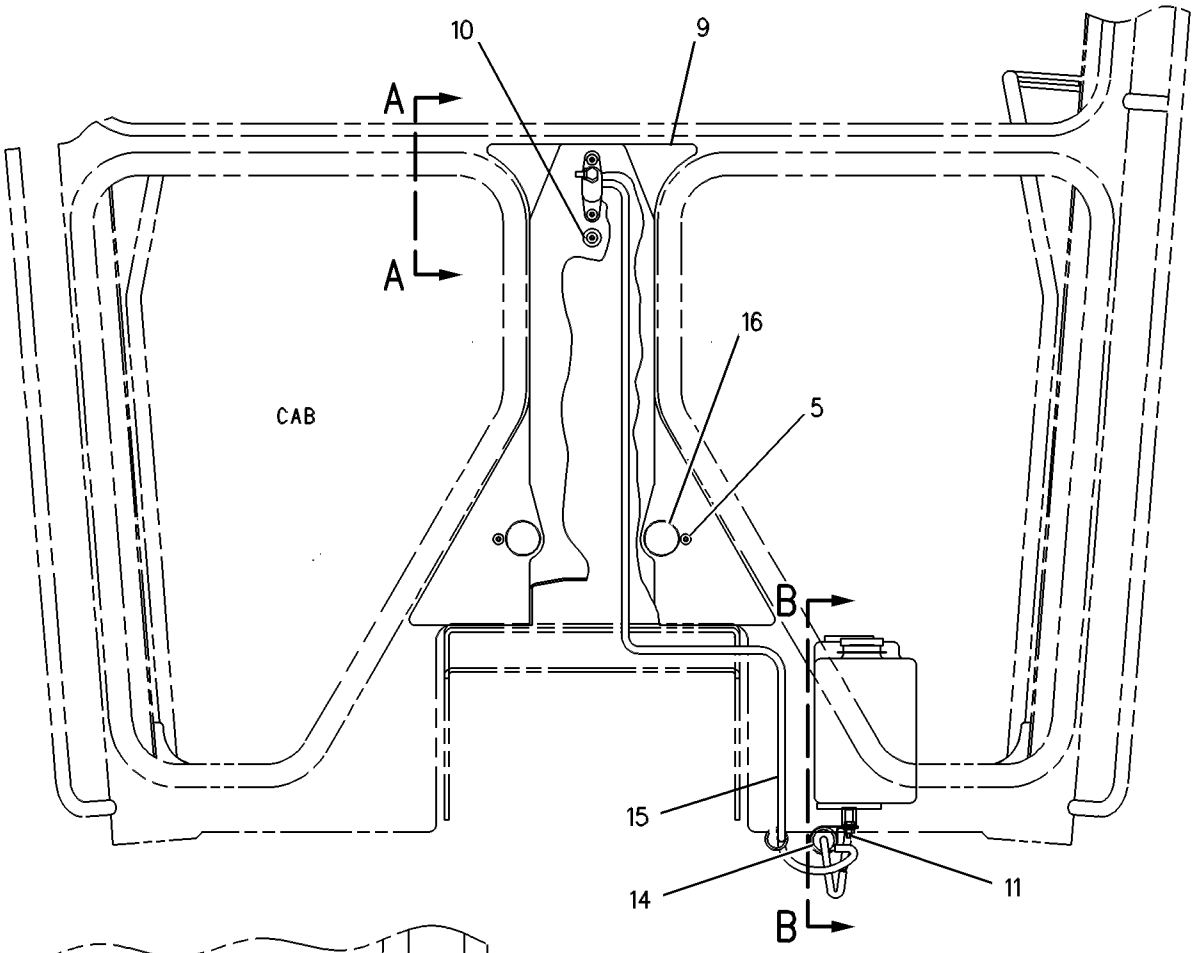


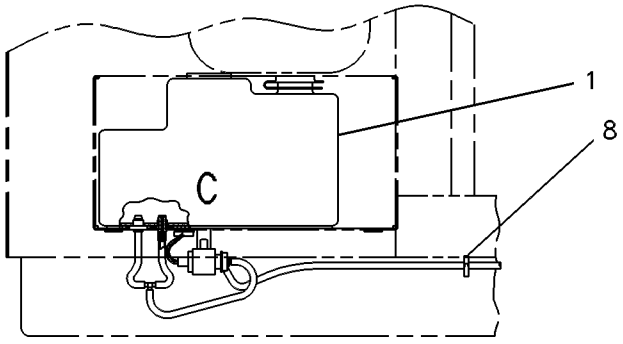


VIEW B-B

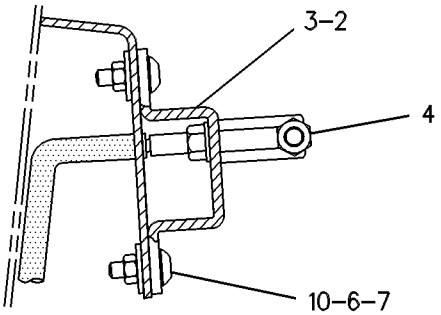


VIEW A-A

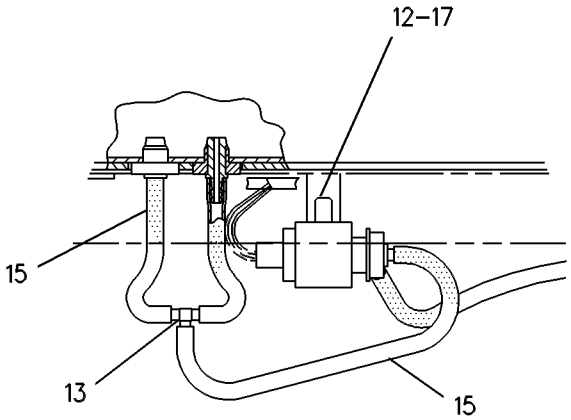


VIEW OF AREA C

GRAPHIC #1 **<END>** g00286150

# OPERATOR STATION

## *126-0961* WINDOW GP–VENT–CAB

**S/N: CCA1-UP**
**AN ATTACHMENT**

**SMCS-7310, 7340** **i02205608**

| NOTE | REF NO | GRAPHIC REF | PART NUMBER | QTY | PART NAME 1 2 3 4 5 6 (PRODUCT LEVEL) | SEE PAGE |
|---|---|---|---|---|---|---|
| CY | 1 | 1 | **150-5106** | 1 | WINDOW GP-CAB (RH) | 1262 |
| CY | 2 | 1 | **150-5107** | 1 | WINDOW GP-CAB (LH) | 1264 |
| | 3 | 1 | **5T-3093** | 2 | HANDLE | |
| BD | 4 | 1 | **5P-5969** | | SEAL | |
| M | 5 | 1 | **8T-0352** | 4 | BOLT (M5X0.8X45-MM) | |
| | 6 | 1 | **8T-0328** | 56 | WASHER-HARD (5.5X10X1-MM THK) | |
| M | 7 | 1 | **7Y-5226** | 28 | NUT (M5X0.8-THD) | |
| M | 8 | 1 | **8T-0335** | 24 | BOLT (M5X0.8X40-MM) | |
| | 9 | 1 | **6V-8255** | 2 | BLADE AS-WIPER | |

B-USE AS REQUIRED
C-CHANGE FROM PREVIOUS TYPE
D-ORDER BY THE METER
M-METRIC PART
Y-SEPARATE ILLUSTRATION

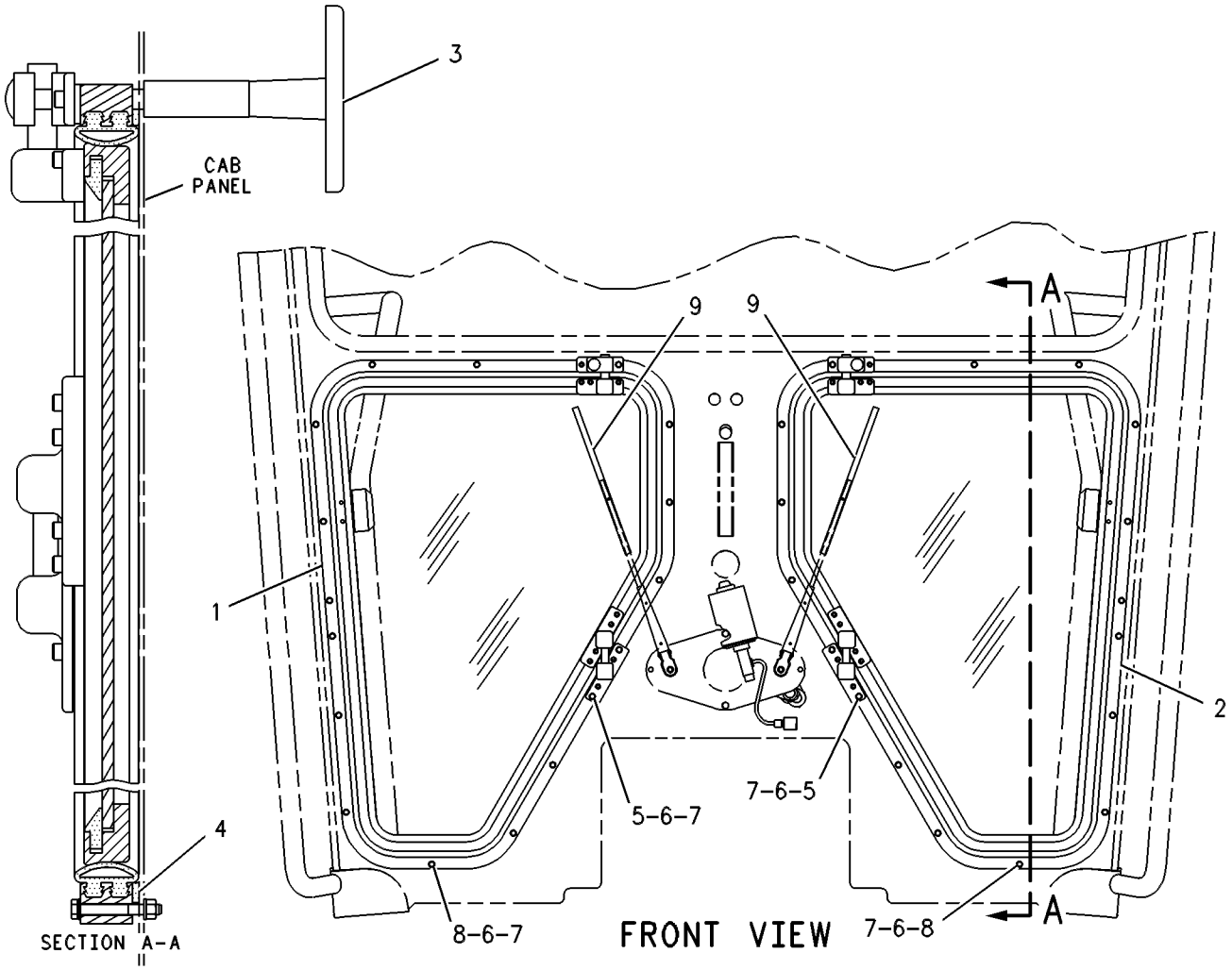


GRAPHIC #1 **<END>** g00108855

# OPERATOR STATION

## 134-8232 WINDOW GP–SIDE SLIDING–HIGH PROFILE

**S/N: CCA1-UP**
**PART OF 139-6129 WINDOW GP**
**AN ATTACHMENT**

**SMCS-7310, 7340** **i02205497**

| NOTE | REF NO | GRAPHIC REF | PART NUMBER | QTY | PART NAME 1 2 3 4 5 6 (PRODUCT LEVEL) | SEE PAGE |
|---|---|---|---|---|---|---|
| | 1 | 1 | **5M-9695** | 4 | SCREW (6-32X0.312-IN) | |
| | 2 | 1 | **5P-7162** | 2 | SCREW-MACHINE (10-32X0.5-IN) | |
| | 3 | 1 | **8C-6738** | 2 | SCREW-PAN HEAD (6-20X1-IN) | |
| | 4 | 1 | **9X-6019** | 4 | SCREW-LOCK (6-32-THD) | |
| | 5 | 1 | **104-5958** | 2 | NUT (10X32-MM) | |
| | 6 | 1 | **109-0146** | 2 | STOP-SLIDE | |
| | 7 | 1 | **139-9132** | 1 | LATCH AS | |
| | 8 | 1 | **139-9138** | 1 | GLASS-SLIDING | |
| | 9 | 1 | **139-9134** | 1 | POST-CENTER | |
| | 10 | 1 | **139-9135** | 1 | GLASS-FIXED | |
| | 11 | 1 | **139-9137** | 1 | CATCH | |
| BE | 12 | 1 | **8Y-6981** | | SEAL | |
| BE | 13 | 1 | **139-9136** | | SEAL-WEATHER | |
| BD | 14 | 1 | **5P-5627** | | SEAL | |
| BE | 15 | 1 | **8Y-6982** | | SEAL | |

B-USE AS REQUIRED
D-ORDER BY THE METER
E-ORDER BY THE CENTIMETER

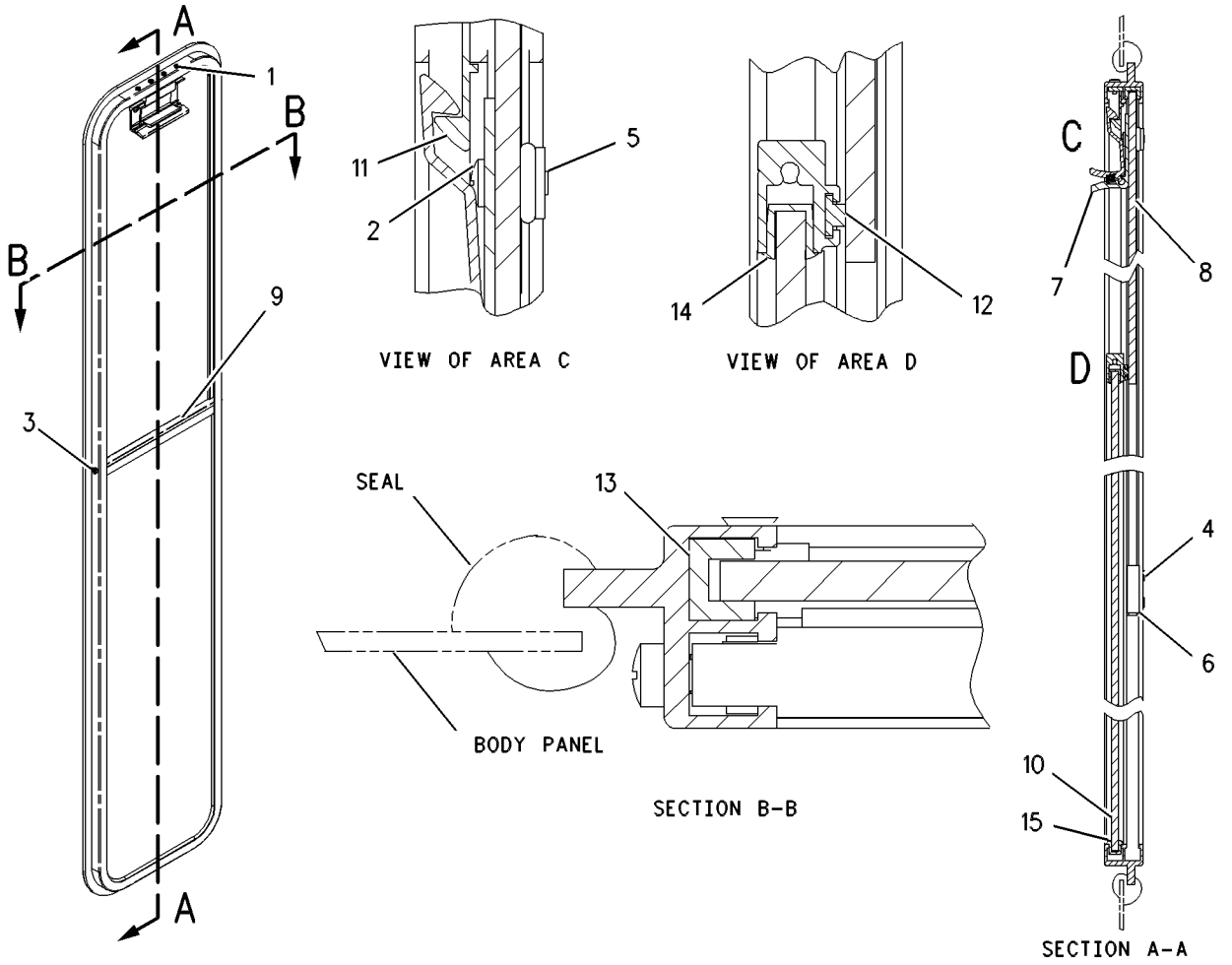


GRAPHIC #1 **<END>** g00545825

# OPERATOR STATION

## *139-6128* WINDOW GP—SIDE SLIDING—LOW PROFILE

**S/N: CCA1-UP**

**AN ATTACHMENT**

**SMCS-7310, 7340** **i01668204**

| NOTE | REF NO | GRAPHIC REF | PART NUMBER | QTY | PART NAME 1 2 3 4 5 6 (PRODUCT LEVEL) | SEE PAGE |
|---|---|---|---|---|---|---|
| Y | 1 | 1 | **134-8233** | 2 | WINDOW GP-CAB (SIDE SLIDING)(LP) | 1261 |

Y-SEPARATE ILLUSTRATION

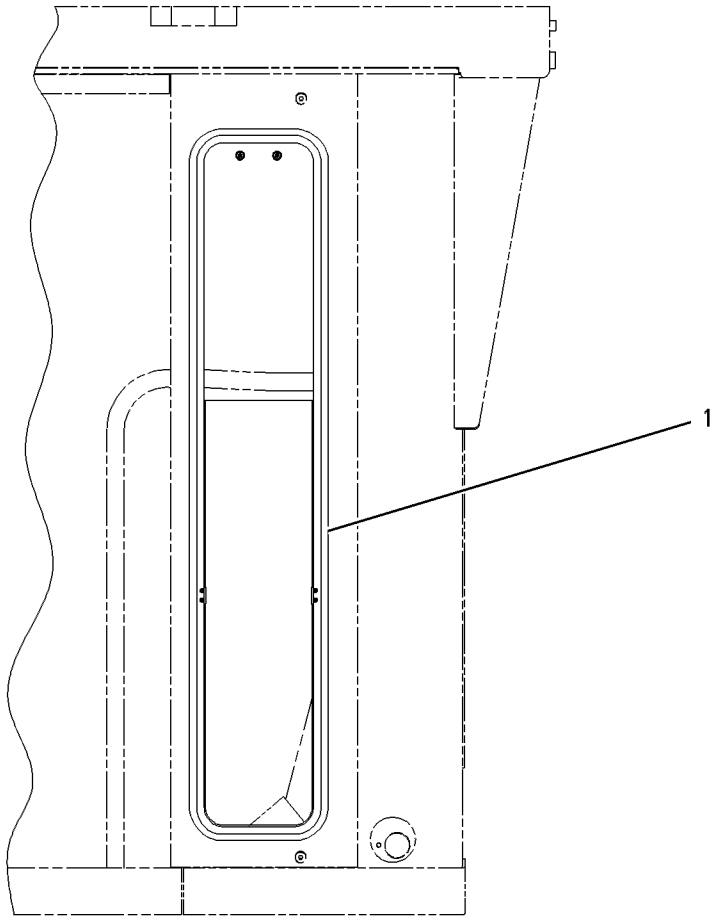


GRAPHIC #1 **<END>** g00301642

# OPERATOR STATION

## *139-6129* WINDOW GP—SIDE SLIDING HIGH PROFILE

**S/N: CCA1-UP**

**AN ATTACHMENT**

**SMCS-7310, 7340** **i01668211**

| NOTE | REF NO | GRAPHIC REF | PART NUMBER | QTY | PART NAME 1 2 3 4 5 6 (PRODUCT LEVEL) | SEE PAGE |
|---|---|---|---|---|---|---|
| Y | 1 | 1 | **134-8232** | 2 | WINDOW GP (SIDE SLIDING)(HP) | 1258 |

Y-SEPARATE ILLUSTRATION

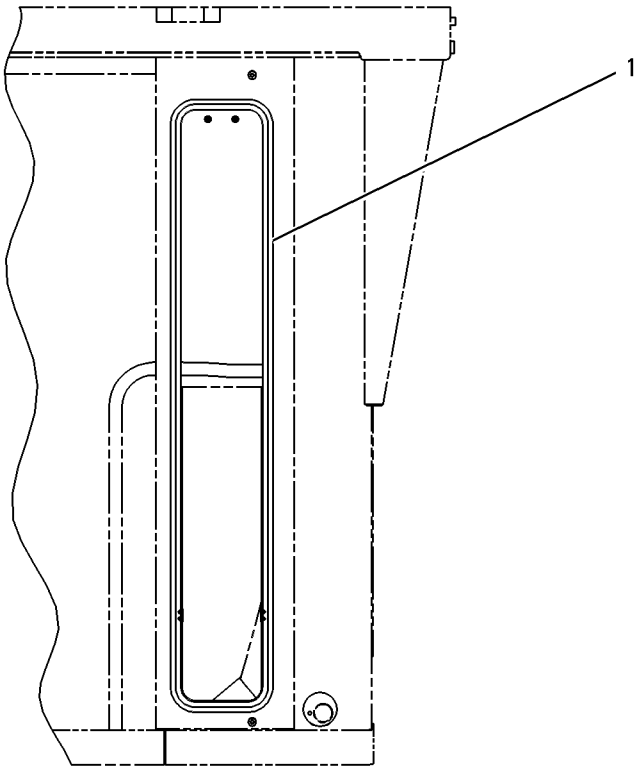


LEFT SIDE VIEW

GRAPHIC #1 **<END>** g00301585

## *134-8233* WINDOW GP-CAB–SIDE SLIDING–LOW PROFILE

**S/N: CCA1-UP**

**PART OF 139-6128 WINDOW GP**

**AN ATTACHMENT**

**SMCS-7310** **i02205498**

| NOTE | REF NO | GRAPHIC REF | PART NUMBER | QTY | PART NAME 1 2 3 4 5 6 (PRODUCT LEVEL) | SEE PAGE |
|---|---|---|---|---|---|---|
| | 1 | 1 | **5M-9695** | 4 | SCREW (6-32X0.312-IN) | |
| | 2 | 1 | **5P-7162** | 2 | SCREW-MACHINE (10-32X0.5-IN) | |
| | 3 | 1 | **8C-6738** | 2 | SCREW-PAN HEAD (6-20X1-IN) | |
| | 4 | 1 | **9X-6019** | 4 | SCREW-LOCK (6-32-THD) | |
| | 5 | 1 | **104-5958** | 2 | NUT (10X32-MM) | |
| | 6 | 1 | **109-0146** | 2 | STOP-SLIDE | |
| | 7 | 1 | **139-9132** | 1 | LATCH AS | |
| | 8 | 1 | **139-9133** | 1 | GLASS-SLIDING | |
| | 9 | 1 | **139-9134** | 1 | POST-CENTER | |
| | 10 | 1 | **139-9135** | 1 | GLASS-FIXED | |
| | 11 | 1 | **139-9137** | 1 | CATCH | |
| BE | 12 | 1 | **8Y-6981** | | SEAL | |
| BE | 13 | 1 | **139-9136** | | SEAL-WEATHER | |
| BD | 14 | 1 | **5P-5627** | | SEAL | |
| BE | 15 | 1 | **8Y-6982** | | SEAL | |

B-USE AS REQUIRED
D-ORDER BY THE METER
E-ORDER BY THE CENTIMETER

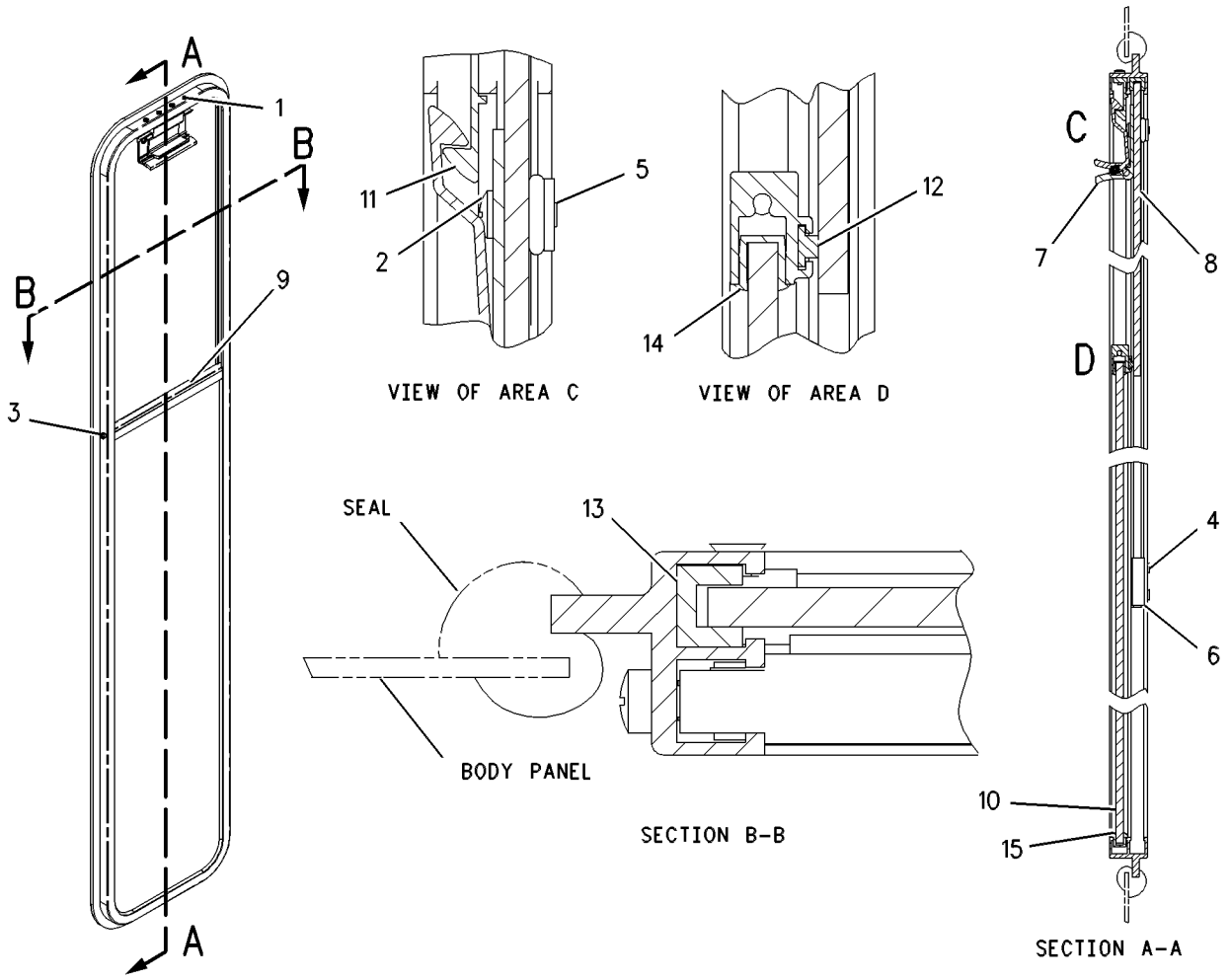


GRAPHIC #1 **<END>** g00548221

# OPERATOR STATION

## 150-5106 WINDOW GP-CAB–RH

**S/N: CCA1-UP**
**PART OF 126-0961 WINDOW GP**
**AN ATTACHMENT**

**SMCS-7310** **i02592720**

| NOTE | REF NO | GRAPHIC REF | PART NUMBER | QTY | PART NAME 1 2 3 4 5 6 (PRODUCT LEVEL) | SEE PAGE |
|---|---|---|---|---|---|---|
| J | 1 | 1 | **5T-1958** | 1 | IDLER AS | |
| | | 1 | **5T-3144** | 1 | PIVOT AS-IDLER | |
| | 2 | 1 | **1H-3340** | 12 | BOLT (M10X24X25.4-MM) | |
| | 3 | 1 | **8W-1028** | 1 | HINGE AS | |
| | 4 | 1 | **126-1167** | 1 | BOLT (3/8-24X5.375-IN) | |
| | 5 | 1 | **126-0228** | 1 | CATCH-STOP | |
| | 6 | 1 | **5T-1969** | 1 | HANDLE | |
| | 7 | 1 | **1H-8456** | 2 | SCREW-MACHINE (10-24X0.884-IN) | |
| BD | 8 | 1 | **5T-5994** | | SEAL | |
| | 9 | 1 | **150-5105** | 1 | GLASS | |
| | 10 | 1 | **126-1539** | 1 | HANDLE-PULL | |
| | 11 | 1 | **5T-1964** | 1 | SEAL | |
| | 13 | 1 | **126-0208** | 1 | SPACER (10.31X17.45X50.8-MM THK) | |
| | 14 | 1 | **126-0209** | 1 | PLATE | |
| | 15 | 1 | **126-0210** | 1 | PLATE | |
| | 16 | 1 | **5T-1972** | 14 | INSERT-SCREW (10-24-THD) | |
| M | 17 | 1 | **8T-0352** | 3 | BOLT (M5X0.8X45-MM) | |
| | 18 | 1 | **8T-0328** | 6 | WASHER-HARD (5.5X10X1-MM THK) | |
| M | 19 | 1 | **7Y-5226** | 3 | NUT (M5X0.8-THD) | |
| | | | | | AVAILABLE REPAIR KIT(S): | |
| J | | | **5T-3146** | 1 | KIT-IDLER HOUSING-RH (WINDOW) | |
| | | | | | (INCLUDES HOUSING, BEARING, & WASHER) | |

B-USE AS REQUIRED
D-ORDER BY THE METER
J-KIT MARKED J SERVICES PARTS MARKED J
M-METRIC PART

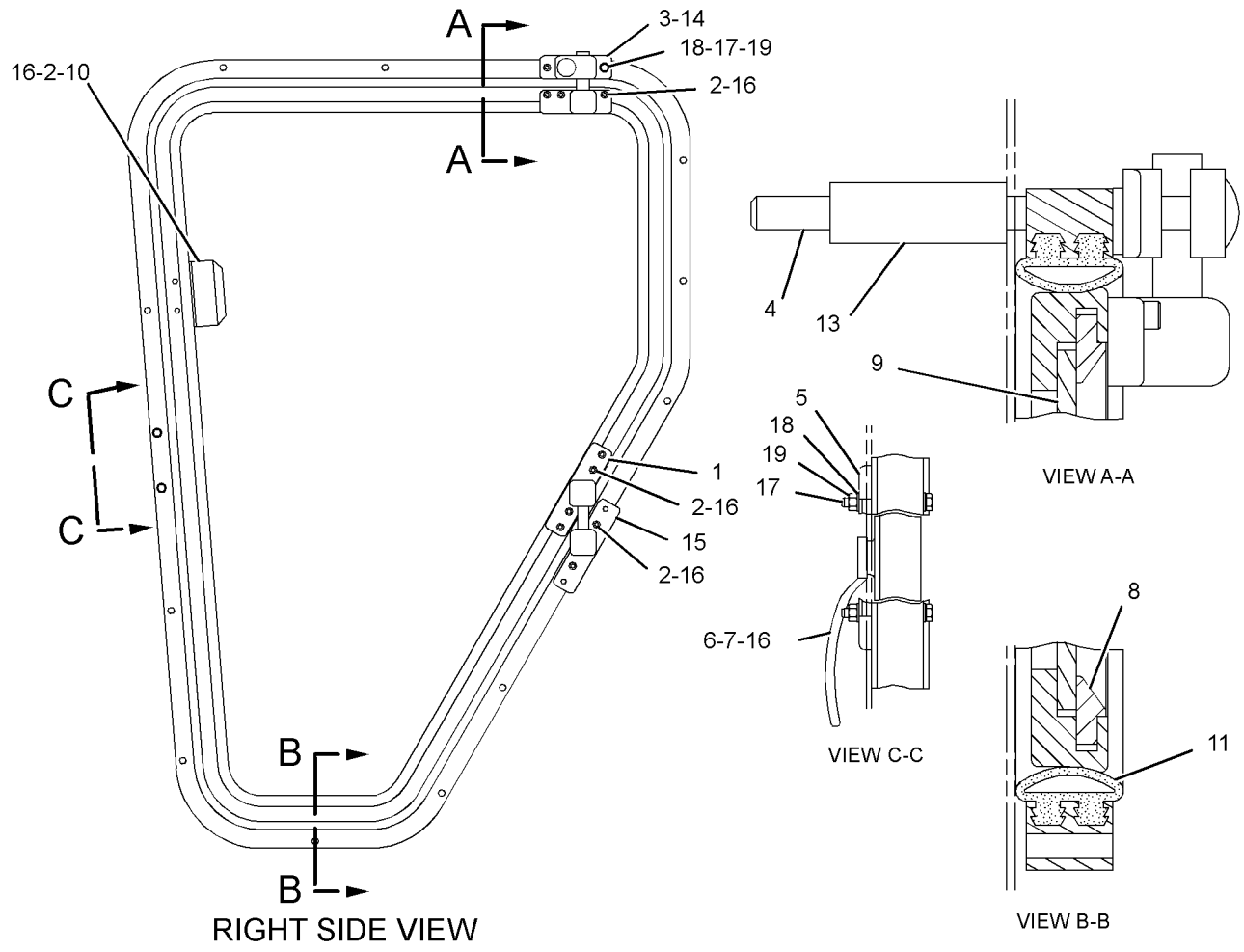


GRAPHIC #1 **<END>** g01297610

# OPERATOR STATION

## 150-5107 WINDOW GP-CAB–LH

**S/N: CCA1-UP**
**PART OF 126-0961 WINDOW GP**
**AN ATTACHMENT**

**SMCS-7310** **i02592731**

| NOTE | REF NO | GRAPHIC REF | PART NUMBER | QTY | PART NAME 1 2 3 4 5 6 (PRODUCT LEVEL) | SEE PAGE |
|---|---|---|---|---|---|---|
| J | 1 | 1 | **5T-1959** | 1 | IDLER AS | |
| | | 1 | **5T-3145** | 1 | PIVOT AS-IDLER | |
| | 2 | 1 | **1H-3340** | 12 | BOLT (M10X24X25.4-MM) | |
| | 3 | 1 | **8W-1029** | 1 | HINGE AS | |
| | 4 | 1 | **126-1167** | 1 | BOLT (3/8-24X5.375-IN) | |
| | 5 | 1 | **126-0228** | 1 | CATCH-STOP | |
| | 6 | 1 | **6G-2959** | 1 | HANDLE | |
| | 7 | 1 | **1H-8456** | 2 | SCREW-MACHINE (10-24X0.884-IN) | |
| | 8 | 1 | **5T-5994** | 1 | SEAL | |
| | 9 | 1 | **150-5105** | 1 | GLASS | |
| | 10 | 1 | **126-1539** | 1 | HANDLE-PULL | |
| | 11 | 1 | **5T-1964** | 1 | SEAL | |
| | 13 | 1 | **126-0208** | 1 | SPACER (10.31X17.45X50.8-MM THK) | |
| | 14 | 1 | **126-0209** | 1 | PLATE | |
| | 15 | 1 | **126-0210** | 1 | PLATE | |
| | 16 | 1 | **5T-1972** | 14 | INSERT-SCREW (10-24-THD) | |
| M | 17 | 1 | **8T-0352** | 3 | BOLT (M5X0.8X45-MM) | |
| | 18 | 1 | **8T-0328** | 6 | WASHER-HARD (5.5X10X1-MM THK) | |
| M | 19 | 1 | **7Y-5226** | 3 | NUT (M5X0.8-THD) | |
| | | | | | AVAILABLE REPAIR KIT(S): | |
| J | | | **5T-3147** | 1 | KIT-IDLER HOUSING-LH (WINDOW) | |
| | | | | | (INCLUDES HOUSING, BEARING, & WASHER) | |

J-KIT MARKED J SERVICES PART MARKED J
M-METRIC PART

**150-5107 WINDOW GP-CAB** *(contd.)* **i02592731**

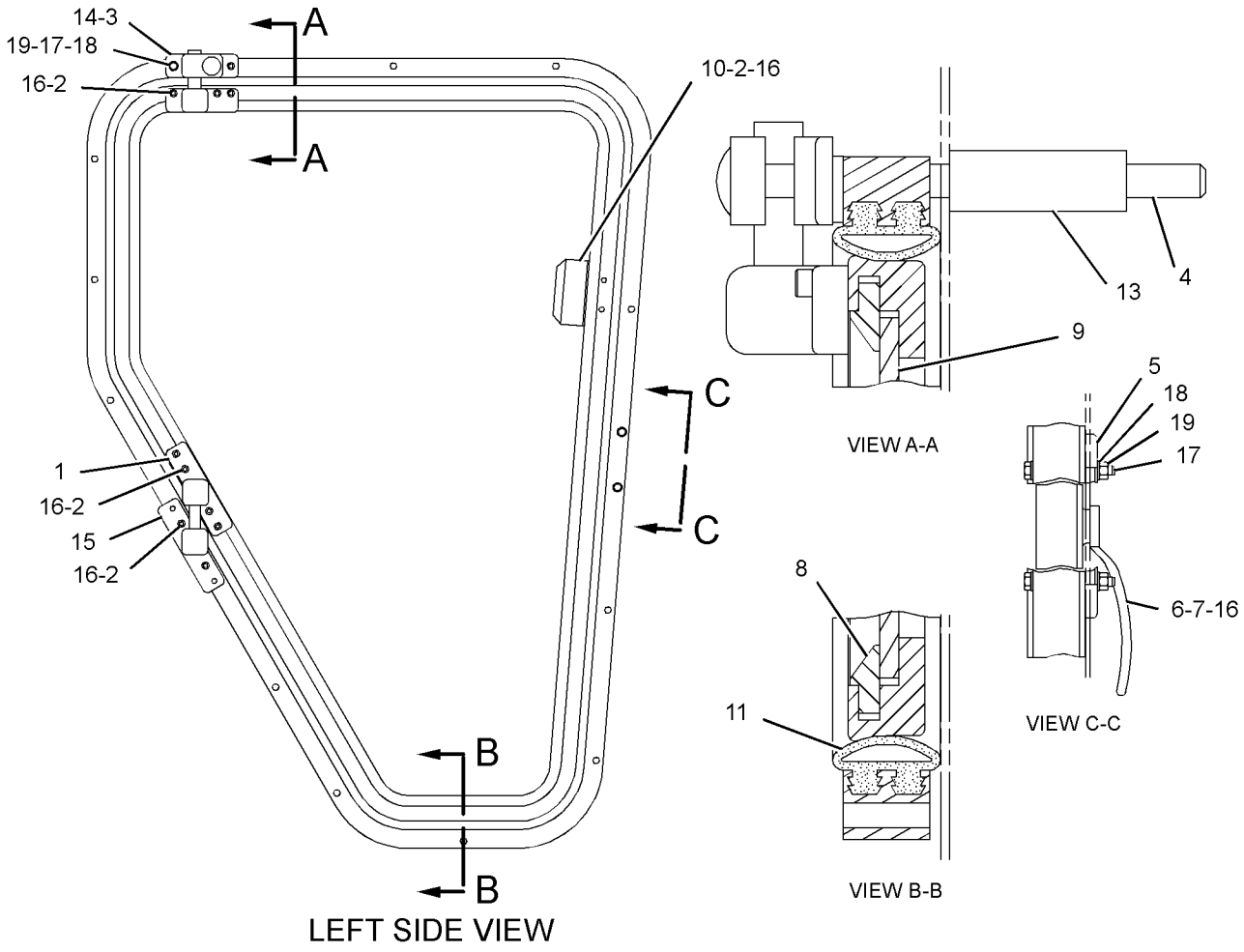


GRAPHIC #1 **<END>** g01297612

# OPERATOR STATION

## *177-8830* WIPER AR-WINDOW—REAR—LOW PROFILE

**S/N: CCA1-UP**
**PART OF 259-5738 CONVERSION AR-MACHINE**
**AN ATTACHMENT**

**SMCS-7305, 7306** **i02585579**

| NOTE | PART NUMBER | QTY | PART NAME 1 2 3 4 5 6 (PRODUCT LEVEL) | SEE PAGE |
|---|---|---|---|---|
| Y | *8X-9680* | 1 | WASHER GP-WINDOW (REAR) | 1254 |
| Y | *173-5320* | 1 | WIPER GP-WINDOW (LOW PROFILE) (REAR) | 1276 |
| Y-SEPARATE ILLUSTRATION | | | | |

**<END>**

## *177-8831* WIPER AR-WINDOW—REAR—HIGH PROFILE

**S/N: CCA1-UP**
**AN ATTACHMENT**

**SMCS-7305, 7306** **i02585580**

| NOTE | PART NUMBER | QTY | PART NAME 1 2 3 4 5 6 (PRODUCT LEVEL) | SEE PAGE |
|---|---|---|---|---|
| Y | *8X-9680* | 1 | WASHER GP-WINDOW (REAR) | 1254 |
| Y | *173-5321* | 1 | WIPER GP-WINDOW (HIGH PROFILE) (REAR) | 1280 |
| Y-SEPARATE ILLUSTRATION | | | | |

**<END>**

# *114-6685* WIPER GP-WINDOW—FRONT, UPPER

**S/N: CCA1-UP**
**24-VOLT**
**PART OF 172-6830, 172-6831, 173-5320, 173-5321, 211-4913 WIPER GP-WINDOW**
**ALSO AN ATTACHMENT**

**SMCS-7305** **i01988980**

| NOTE | REF NO | GRAPHIC REF | PART NUMBER | QTY | PART NAME 1 2 3 4 5 6 (PRODUCT LEVEL) | SEE PAGE |
|---|---|---|---|---|---|---|
| | 1 | 1 | **3T-7059** | 1 | BRACKET | |
| M | 2 | 1 | **5C-9553** | 3 | BOLT (M6X1X16-MM) | |
| | 3 | 1 | **3T-7086** | 1 | CRANK AS | |
| M | 4 | 1 | **6V-6889** | 2 | NUT (M8X1.25-THD) | |
| | 5 | 1 | **6V-6888** | 1 | WASHER-SPRING (8.31X15.54X1.07-MM THK) | |
| | 6 | 1 | **6V-6219** | 1 | LINK-CONNECTING | |
| M | 7 | 1 | **3C-1884** | 4 | SCREW-MACHINE (M5X0.8 BG-THD) | |
| | 8 | 1 | **6T-2770** | 1 | SHAFT AS-DRIVE | |
| | 9 | 1 | **6V-6209** | 1 | CAP-WIPER | |
| M | 10 | 1 | **6V-6213** | 1 | NUT (M20X1-THD) | |
| | 11 | 1 | **6V-6214** | 1 | WASHER (20.15X29.6X1-MM THK) | |
| | 12 | 1 | **5P-0537** | 3 | WASHER-HARD (7.2X14.5X2-MM THK) | |
| | 13 | 1 | **6A-9718** | 1 | WASHER (8.1X12.5X1-MM THK) | |
| | 14 | 1 | **135-0611** | 1 | MOTOR GP-WINDOW WIPER (24-VOLT, 2-SPEED) | |
| | | 1 | **9G-3695** | 1 | PLUG (GROMMET SEALING) | |
| | | 1 | **102-8805** | 1 | KIT-RECEPTACLE (6-PIN) | |
| | | | | | (INCLUDES RECEPTACLE AS & WEDGE) | |
| | | 1 | **186-3735** | 5 | PIN-CONNECTOR (16-GA TO 18-GA) | |

M-METRIC PART

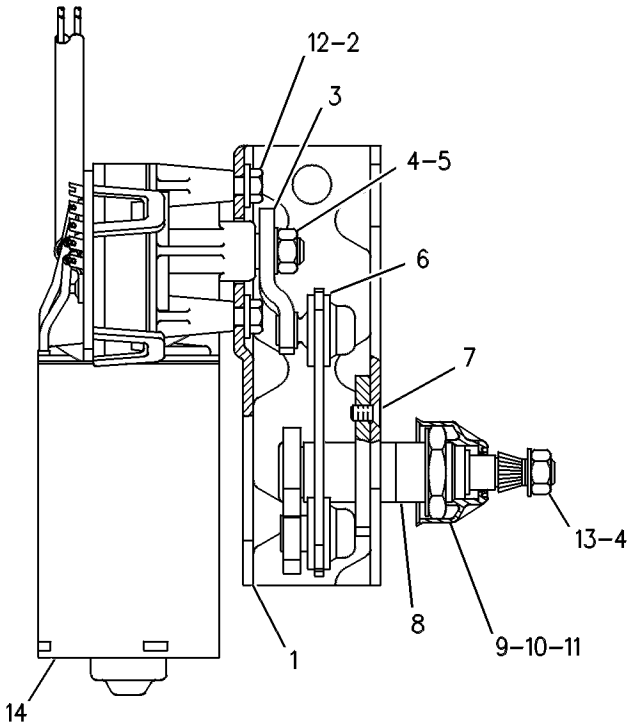


GRAPHIC #1 **<END>** g00245521

# OPERATOR STATION

## *172-6830* WIPER GP-WINDOW—FRONT—LOW PROFILE

**S/N: CCA1-UP**

**PART OF 172-5377 ROPS GP-ENCLOSED**

**TYPE 1**

**SMCS-7305** **i01997157**

| NOTE | REF NO | GRAPHIC REF | PART NUMBER | QTY | PART NAME 1 2 3 4 5 6 (PRODUCT LEVEL) | SEE PAGE |
|---|---|---|---|---|---|---|
| | 1 | 1 | **2A-6926** | 1 | LEVER AS | |
| | 2 | 1 | **2A-6928** | 1 | LINK | |
| | 3 | 1 | **2A-6929** | 1 | LINK | |
| | 4 | 1 | **3E-6388** | 1 | MOTOR AS-WINDOW WIPER (FRONT LOWER) | |
| | | 1 | **8T-8737** | 1 | PLUG-SEAL | |
| | | 1 | **186-3735** | 5 | PIN-CONNECTOR (16-GA TO 18-GA) | |
| | | 1 | **102-8805** | 1 | KIT-RECEPTACLE (6-PIN) | |
| | | | | | (INCLUDES RECEPTACLE AS & WEDGE) | |
| B | 5 | 1 | **4B-4283** | | WASHER (20.6X37.5X3.5-MM THK) | |
| | 6 | 1 | **6V-5853** | 1 | BLADE AS-WIPER (LOW PROFILE FRONT UPPER) | |
| | 7 | 1 | **6V-6888** | 1 | WASHER-SPRING (8.31X15.54X1.07-MM THK) | |
| M | 8 | 1 | **6V-6889** | 1 | NUT (M8X1.25-THD) | |
| | 9 | 1 | **6V-8258** | 1 | ARM AS-WIPER (FRONT UPPER) | |
| | 10 | 1 | **8X-2556** | 1 | FLANGE | |
| | 11 | 1 | **8X-2663** | 1 | GASKET | |
| Y | 12 | 1 | **114-6685** | 1 | WIPER GP-WINDOW (FRONT UPPER) | 1267 |
| | 13 | 1 | **123-4354** | 2 | ARM AS-WIPER (FRONT LOWER) | |
| | 14 | 1 | **123-4355** | 2 | BLADE AS-WIPER (FRONT LOWER) | |
| | 15 | 1 | **125-7003** | 1 | SHAFT AS (RH) | |
| | 16 | 1 | **125-7004** | 1 | SHAFT AS (LH) | |
| M | 17 | 1 | **5C-7423** | 3 | SCREW (M6X1X16-MM) | |
| | 18 | 1 | **5P-4115** | 2 | WASHER-HARD (7.2X19X2-MM THK) | |
| | 19 | 1 | **7X-3182** | 2 | BOLT (1/4-28X0.5-IN) | |
| M | 20 | 1 | **8T-4138** | 2 | BOLT (M6X1X20-MM) | |

B-USE AS REQUIRED
M-METRIC PART
Y-SEPARATE ILLUSTRATION

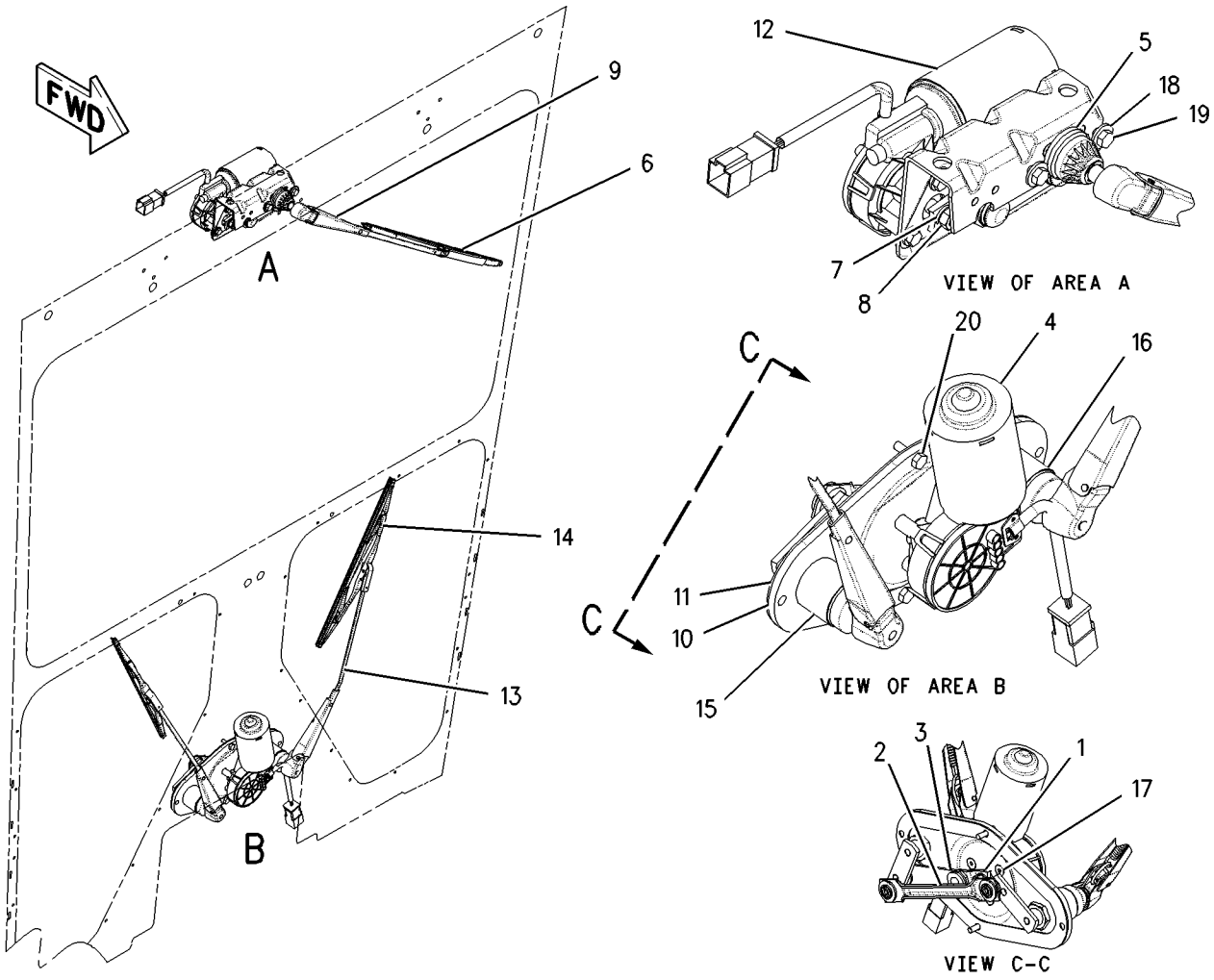


GRAPHIC #1 **<END>** g00913514

# OPERATOR STATION

## *172-6830* WIPER GP-WINDOW—FRONT—LOW PROFILE

**S/N: CCA1-UP**
**PART OF 172-5377, 260-1745 ROPS GP-ENCLOSED**
**ALSO AN ATTACHMENT**
**TYPE 2**

**SMCS-7305** **i02550215**

| NOTE | REF NO | GRAPHIC REF | PART NUMBER | QTY | PART NAME 1 2 3 4 5 6 (PRODUCT LEVEL) | SEE PAGE |
|---|---|---|---|---|---|---|
| | 1 | 1 | **2A-6926** | 1 | LEVER AS | |
| | 2 | 1 | **2A-6928** | 1 | LINK | |
| | 3 | 1 | **2A-6929** | 1 | LINK | |
| B | 4 | 1 | **4B-4283** | 2 | WASHER (20.6X37.5X3.5-MM THK) | |
| | 5 | 1 | **6V-5853** | 1 | BLADE AS-WIPER (FRONT UPPER) | |
| | 6 | 1 | **6V-6888** | 1 | WASHER-SPRING (8.31X15.54X1.07-MM THK) | |
| M | 7 | 1 | **6V-6889** | 1 | NUT (M8X1.25-THD) | |
| | 8 | 1 | **6V-8258** | 1 | ARM AS-WIPER (FRONT UPPER) | |
| | 9 | 1 | **8X-2556** | 1 | FLANGE | |
| | 10 | 1 | **8X-2663** | 1 | GASKET | |
| | 11 | 1 | **123-4354** | 2 | ARM AS-WIPER (FRONT LOWER) | |
| | 12 | 1 | **123-4355** | 2 | BLADE AS-WIPER (FRONT LOWER) | |
| | 13 | 1 | **125-7003** | 1 | SHAFT AS (RH) | |
| | | 1 | **3F-9556** | 1 | LOCKWASHER | |
| M | | 1 | **5C-7261** | 1 | NUT (M8X1.25-THD) | |
| | | 1 | **206-5823** | 1 | CAP (WIPER) | |
| | 14 | 1 | **125-7004** | 1 | SHAFT AS (LH) | |
| | | 1 | **3F-9556** | 1 | LOCKWASHER | |
| M | | 1 | **5C-7261** | 1 | NUT (M8X1.25-THD) | |
| | | 1 | **206-5823** | 1 | CAP (WIPER) | |
| | 15 | 1 | **135-0611** | 1 | MOTOR GP-WINDOW WIPER (24-VOLT, 2-SPEED) (FRONT LOWER) | |
| | | 1 | **8T-8737** | 1 | PLUG-SEAL | |
| | | 1 | **186-3735** | 5 | PIN-CONNECTOR (16-GA TO 18-GA) | |
| | | 1 | **102-8805** | 1 | KIT-RECEPTACLE (6-PIN) | |
| | | | | | (INCLUDES RECEPTACLE AS & WEDGE) | |
| | 16 | 1 | **203-1124** | 1 | MOTOR GP-WINDOW WIPER (FRONT UPPER) | |
| | | 1 | **3F-9556** | 1 | LOCKWASHER | |
| M | | 1 | **5C-7261** | 1 | NUT (M8X1.25-THD) | |
| | | 1 | **135-0611** | 1 | MOTOR GP-WINDOW WIPER (24-VOLT, 2-SPEED) | |
| | | 1 | **8T-8737** | 1 | PLUG-SEAL | |
| | | 1 | **186-3735** | 5 | PIN-CONNECTOR (16-GA TO 18-GA) | |
| | | 1 | **102-8805** | 1 | KIT-RECEPTACLE (6-PIN) | |
| | | | | | (INCLUDES RECEPTACLE AS & WEDGE) | |
| | | 1 | **206-5823** | 1 | CAP (WIPER) | |
| M | 17 | 1 | **5C-7423** | 3 | SCREW (M6X1X16-MM) | |
| | 18 | 1 | **5P-4115** | 2 | WASHER-HARD (7.2X19X2-MM THK) | |
| M | 19 | 1 | **8T-4138** | 2 | BOLT (M6X1X20-MM) | |
| M | 20 | 1 | **8T-4171** | 2 | BOLT (M6X1X12-MM) | |

B-USE AS REQUIRED
M-METRIC PART

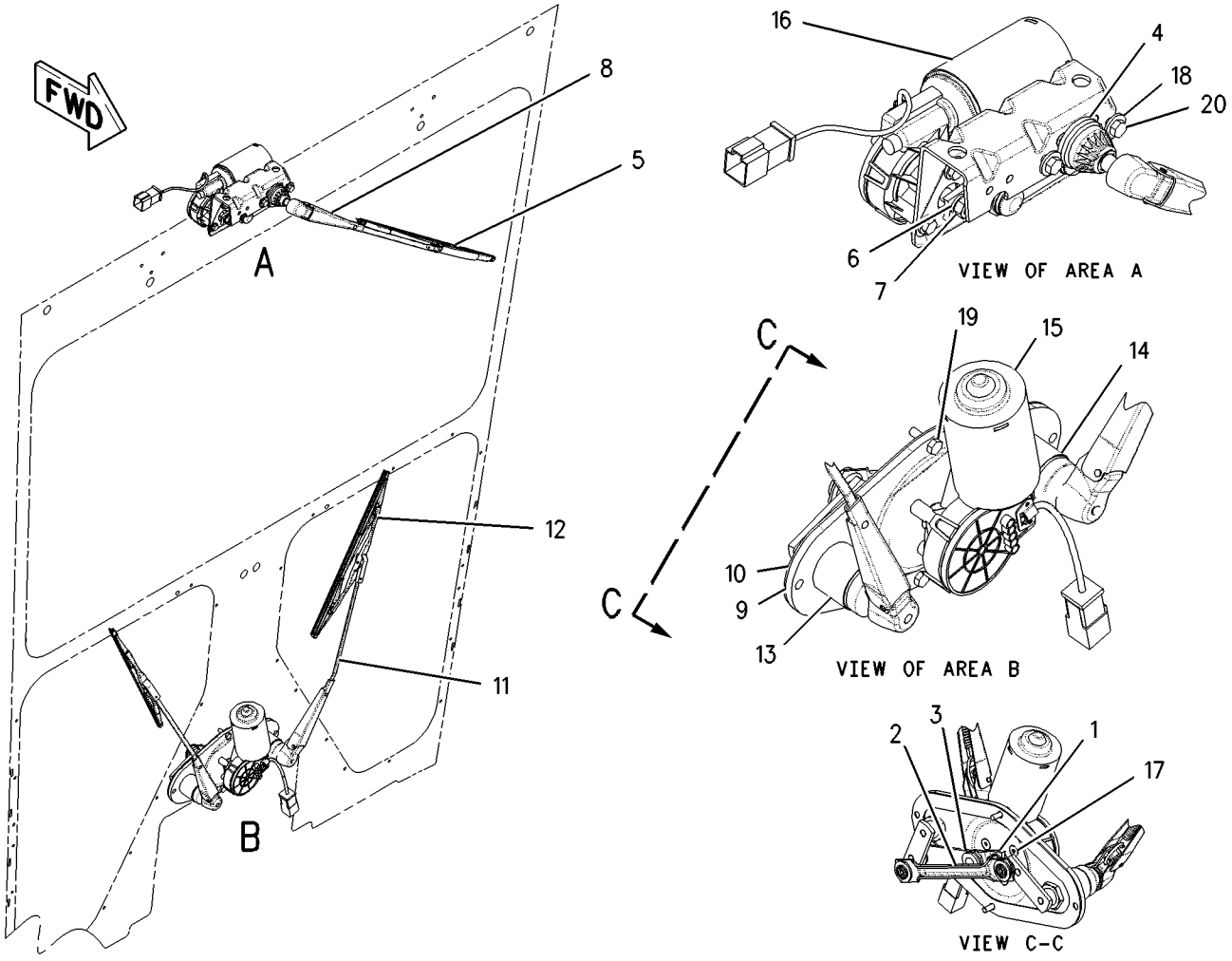


GRAPHIC #1 **<END>** g00985831

# OPERATOR STATION

## *172-6831* WIPER GP-WINDOW—FRONT—HIGH PROFILE

**S/N: CCA1-UP**
**PART OF 177-8779, 218-4759 ROPS GP-ENCLOSED**
**AN ATTACHMENT**
**TYPE 1**

**SMCS-7305** **i02200126**

| NOTE | REF NO | GRAPHIC REF | PART NUMBER | QTY | PART NAME 1 2 3 4 5 6 (PRODUCT LEVEL) | SEE PAGE |
|---|---|---|---|---|---|---|
| | 1 | 1 | **2A-6926** | 1 | LEVER AS | |
| | 2 | 1 | **2A-6928** | 1 | LINK | |
| | 3 | 1 | **2A-6929** | 1 | LINK | |
| | 4 | 1 | **3E-6388** | 1 | MOTOR AS-WINDOW WIPER (FRONT LOWER) | |
| | | 1 | **3E-3383** | 1 | WEDGE-RECEPTACLE LOCK (6-PIN) | |
| | | 1 | **186-3735** | 5 | PIN-CONNECTOR (16-GA TO 18-GA) | |
| | | 1 | **8T-8737** | 1 | PLUG-SEAL | |
| | | 1 | **102-8805** | 1 | KIT-RECEPTACLE (6-PIN) | |
| | | | | | (INCLUDES RECEPTACLE AS & WEDGE) | |
| B | 5 | 1 | **4B-4283** | 2 | WASHER (20.6X37.5X3.5-MM THK) | |
| | 6 | 1 | **6V-5853** | 1 | BLADE AS-WIPER (HIGH PROFILE FRONT UPPER) | |
| | 7 | 1 | **6V-6888** | 1 | WASHER-SPRING (8.31X15.54X1.07-MM THK) | |
| M | 8 | 1 | **6V-6889** | 1 | NUT (M8X1.25-THD) | |
| | 9 | 1 | **6V-8259** | 1 | ARM AS-WIPER (UPPER) | |
| | 10 | 1 | **8X-2556** | 1 | FLANGE | |
| | 11 | 1 | **8X-2663** | 1 | GASKET | |
| Y | 12 | 1 | **114-6685** | 1 | WIPER GP-WINDOW (FRONT UPPER) | 1267 |
| | 13 | 1 | **123-4354** | 2 | ARM AS-WIPER (LOWER) | |
| | 14 | 1 | **123-4355** | 2 | BLADE AS-WIPER (HIGH PROFILE FRONT LOWER) | |
| | 15 | 1 | **125-7003** | 1 | SHAFT AS (WIPER LOWER RH) | |
| | 16 | 1 | **125-7004** | 1 | SHAFT AS (WIPER LOWER LH) | |
| M | 17 | 1 | **5C-7423** | 3 | SCREW (M6X1X16-MM) | |
| | 18 | 1 | **5P-4115** | 2 | WASHER-HARD (7.2X19X2-MM THK) | |
| | 19 | 1 | **7X-3182** | 2 | BOLT (1/4-28X0.5-IN) | |
| M | 20 | 1 | **8T-4138** | 2 | BOLT (M6X1X20-MM) | |

B-USE AS REQUIRED
M-METRIC PART
Y-SEPARATE ILLUSTRATION

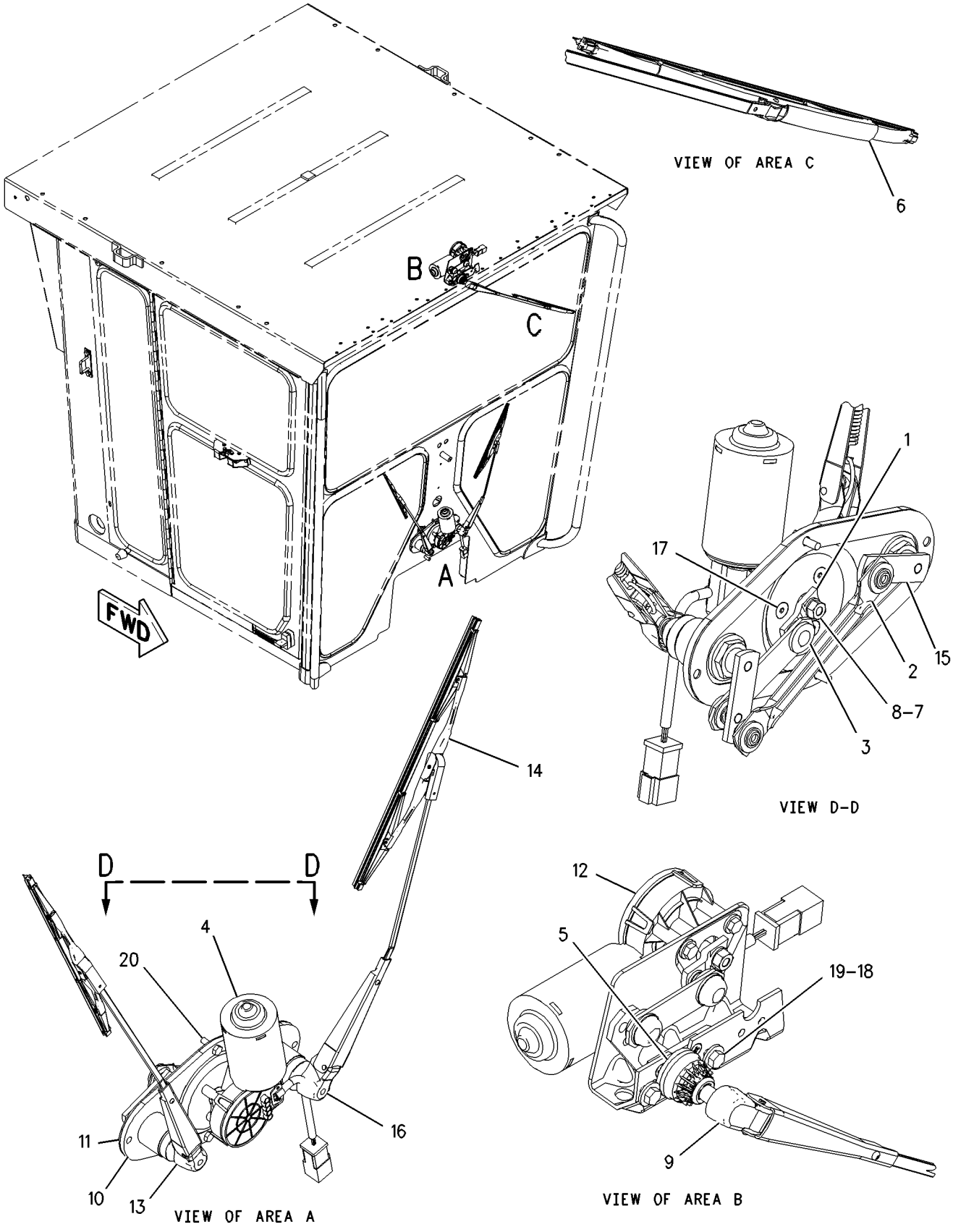


GRAPHIC #1 **<END>** g00913478

# OPERATOR STATION

## *172-6831* WIPER GP-WINDOW—FRONT—HIGH PROFILE

**S/N: CCA1-UP**
**PART OF 177-8779, 218-4759 ROPS GP-ENCLOSED**
**AN ATTACHMENT**
**TYPE 2**

**SMCS-7305** **i02558327**

| NOTE | REF NO | GRAPHIC REF | PART NUMBER | QTY | PART NAME 1 2 3 4 5 6 (PRODUCT LEVEL) | SEE PAGE |
|---|---|---|---|---|---|---|
| | 1 | 1 | **2A-6926** | 1 | LEVER AS | |
| | 2 | 1 | **2A-6928** | 1 | LINK | |
| | 3 | 1 | **2A-6929** | 1 | LINK | |
| C | 4 | 1 | **135-0611** | 1 | MOTOR GP-WINDOW WIPER (24-VOLT, 2-SPEED) (FRONT, LOWER) | |
| | | 1 | **8T-8737** | 1 | PLUG-SEAL | |
| | | 1 | **186-3735** | 5 | PIN-CONNECTOR (16-GA TO 18-GA) | |
| | | 1 | **102-8805** | 1 | KIT-RECEPTACLE (6-PIN) | |
| | | | | | (INCLUDES RECEPTACLE AS & WEDGE) | |
| B | 5 | 1 | **4B-4283** | 2 | WASHER (20.6X37.5X3.5-MM THK) | |
| | 6 | 1 | **6V-5853** | 1 | BLADE AS-WIPER (FRONT) | |
| | 7 | 1 | **6V-6888** | 1 | WASHER-SPRING (8.31X15.54X1.07-MM THK) | |
| M | 8 | 1 | **6V-6889** | 1 | NUT (M8X1.25-THD) | |
| | 9 | 1 | **6V-8259** | 1 | ARM AS-WIPER (UPPER) | |
| | 10 | 1 | **8X-2556** | 1 | FLANGE | |
| | 11 | 1 | **8X-2663** | 1 | GASKET | |
| C | 12 | 1 | **203-1124** | 1 | MOTOR GP-WINDOW WIPER (FRONT UPPER) | |
| | | 1 | **3F-9556** | 1 | LOCKWASHER | |
| M | | 1 | **5C-7261** | 1 | NUT (M8X1.25-THD) | |
| | | 1 | **135-0611** | 1 | MOTOR GP-WINDOW WIPER (24-VOLT, 2-SPEED) | |
| | | 1 | **8T-8737** | 1 | PLUG-SEAL | |
| | | 1 | **186-3735** | 5 | PIN-CONNECTOR (16-GA TO 18-GA) | |
| | | 1 | **102-8805** | 1 | KIT-RECEPTACLE (6-PIN) | |
| | | | | | (INCLUDES RECEPTACLE AS & WEDGE) | |
| | | 1 | **206-5823** | 1 | CAP (WIPER) | |
| | 13 | 1 | **123-4354** | 2 | ARM AS-WIPER (LOWER) | |
| | 14 | 1 | **123-4355** | 2 | BLADE AS-WIPER (FRONT, LOWER) | |
| | 15 | 1 | **125-7003** | 1 | SHAFT AS | |
| | | 1 | **3F-9556** | 1 | LOCKWASHER | |
| M | | 1 | **5C-7261** | 1 | NUT (M8X1.25-THD) | |
| | | 1 | **206-5823** | 1 | CAP (WIPER) | |
| | 16 | 1 | **125-7004** | 1 | SHAFT AS | |
| | | 1 | **3F-9556** | 1 | LOCKWASHER | |
| M | | 1 | **5C-7261** | 1 | NUT (M8X1.25-THD) | |
| | | 1 | **206-5823** | 1 | CAP (WIPER) | |
| M | 17 | 1 | **5C-7423** | 3 | SCREW (M6X1X16-MM) | |
| | 18 | 1 | **5P-4115** | 2 | WASHER-HARD (7.2X19X2-MM THK) | |
| CM | 19 | 1 | **8T-4171** | 2 | BOLT (M6X1X12-MM) | |
| M | 20 | 1 | **8T-4138** | 2 | BOLT (M6X1X20-MM) | |

B-USE AS REQUIRED
C-CHANGE FROM PREVIOUS TYPE
M-METRIC PART

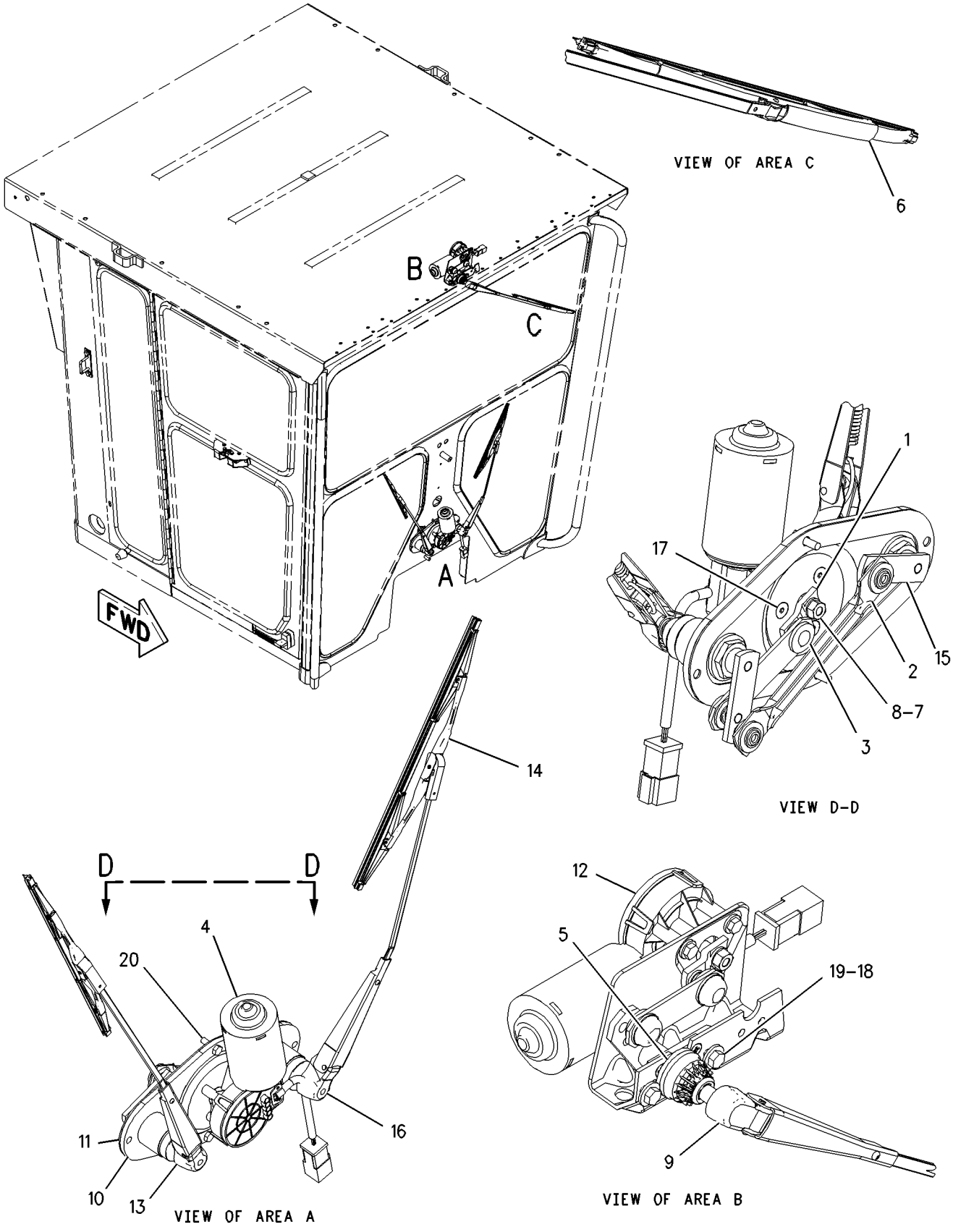


GRAPHIC #1 **<END>** g00913478

# OPERATOR STATION

## *173-5320* WIPER GP-WINDOW—REAR—LOW PROFILE

**S/N: CCA1-UP**
**PART OF 177-8830 WIPER AR-WINDOW**
**AN ATTACHMENT**
**TYPE 1**

**SMCS-7305** **i02592748**

| NOTE | REF NO | GRAPHIC REF | PART NUMBER | QTY | PART NAME 1 2 3 4 5 6 (PRODUCT LEVEL) | SEE PAGE |
|---|---|---|---|---|---|---|
| B | 1 | 1 | **4B-4283** | 2 | WASHER (20.6X37.5X3.5-MM THK) | |
| | 2 | 1 | **6V-5849** | 1 | BLADE AS-WIPER (REAR) | |
| | | 1 | **8C-5060** | 1 | KIT-WIPER BLADE (REAR) | |
| | 3 | 1 | **6V-8258** | 1 | ARM AS-WIPER | |
| | 4 | 1 | **9W-1442** | 1 | FUSE (10-AMPERE) | |
| | 5 | 1 | **110-7885** | 1 | KNOB (WIPER, WASHER, REAR) | |
| | 6 | 1 | **110-7886** | 1 | SWITCH AS-WIPER (24-VOLT) (REAR) | |
| | | 1 | **186-3735** | 3 | PIN-CONNECTOR (16-GA TO 18-GA) | |
| | | 1 | **2H-3920** | 1 | LOCKWASHER | |
| | | 1 | **6V-8369** | 1 | NUT (7/16-28-THD) | |
| | | 1 | **8T-8737** | 1 | PLUG-SEAL | |
| | | 1 | **9W-0852** | 4 | PIN-CONNECTOR (14-GA) | |
| | | 1 | **102-8806** | 1 | KIT-RECEPTACLE (8-PIN) | |
| | | | | | (INCLUDES RECEPTACLE AS & WEDGE) | |
| Y | 7 | 1 | **114-6685** | 1 | WIPER GP-WINDOW (FRONT, UPPER) | 1267 |
| | 8 | 1 | **5P-4115** | 2 | WASHER-HARD (7.2X19X2-MM THK) | |
| | 9 | 1 | **7X-3182** | 2 | BOLT (1/4-28X0.5-IN) | |

B-USE AS REQUIRED
Y-SEPARATE ILLUSTRATION

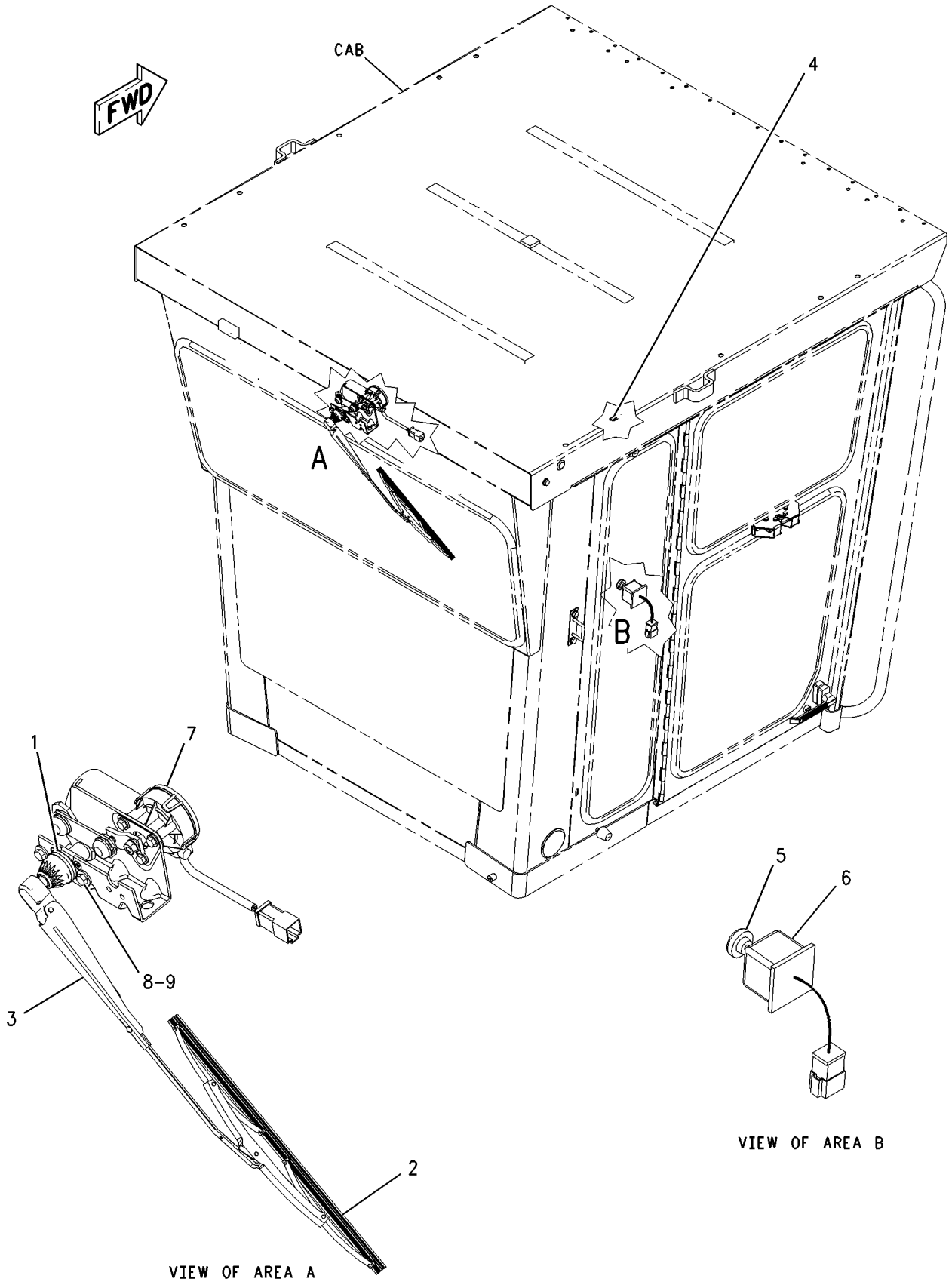


GRAPHIC #1 **<END>** g00937321

# OPERATOR STATION

## *173-5320* WIPER GP-WINDOW—REAR—LOW PROFILE

**S/N: CCA1-UP**
**PART OF 177-8830 WIPER AR-WINDOW**
**AN ATTACHMENT**
**TYPE 2**

**SMCS-7305** **i02585584**

| NOTE | REF NO | GRAPHIC REF | PART NUMBER | QTY | PART NAME 1 2 3 4 5 6 (PRODUCT LEVEL) | SEE PAGE |
|---|---|---|---|---|---|---|
| B | 1 | 1 | **4B-4283** | 2 | WASHER (20.6X37.5X3.5-MM THK) | |
| | 2 | 1 | **6V-5849** | 1 | BLADE AS-WIPER (REAR) | |
| | | 1 | **8C-5060** | 1 | KIT-WIPER BLADE (REAR) | |
| C | 3 | 1 | **6V-8257** | 1 | ARM AS-WIPER | |
| | 4 | 1 | **9W-1442** | 1 | FUSE (10-AMPERE) (WIPER) | |
| | 5 | 1 | **110-7885** | 1 | KNOB (WIPER, WASHER, REAR) | |
| | 6 | 1 | **110-7886** | 1 | SWITCH AS-WIPER (24-VOLT) (REAR) | |
| | | 1 | **186-3735** | 3 | PIN-CONNECTOR (16-GA TO 18-GA) | |
| | | 1 | **2H-3920** | 1 | LOCKWASHER | |
| | | 1 | **3E-3389** | 1 | WEDGE-RECEPTACLE LOCK | |
| | | 1 | **6V-8369** | 1 | NUT (7/16-28-THD) | |
| | | 1 | **8T-8737** | 1 | PLUG-SEAL | |
| | | 1 | **9W-0852** | 4 | PIN-CONNECTOR (14-GA) | |
| | | 1 | **102-8806** | 1 | KIT-RECEPTACLE (8-PIN) | |
| | | | | | (INCLUDES RECEPTACLE AS & WEDGE) | |
| C | 7 | 1 | **203-1124** | 1 | MOTOR GP-WINDOW WIPER (REAR) | |
| | 8 | 1 | **5P-4115** | 2 | WASHER-HARD (7.2X19X2-MM THK) | |
| CM | 9 | 1 | **8T-4171** | 2 | BOLT (M6X1X12-MM) | |

B-USE AS REQUIRED
C-CHANGE FROM PREVIOUS TYPE
M-METRIC PART

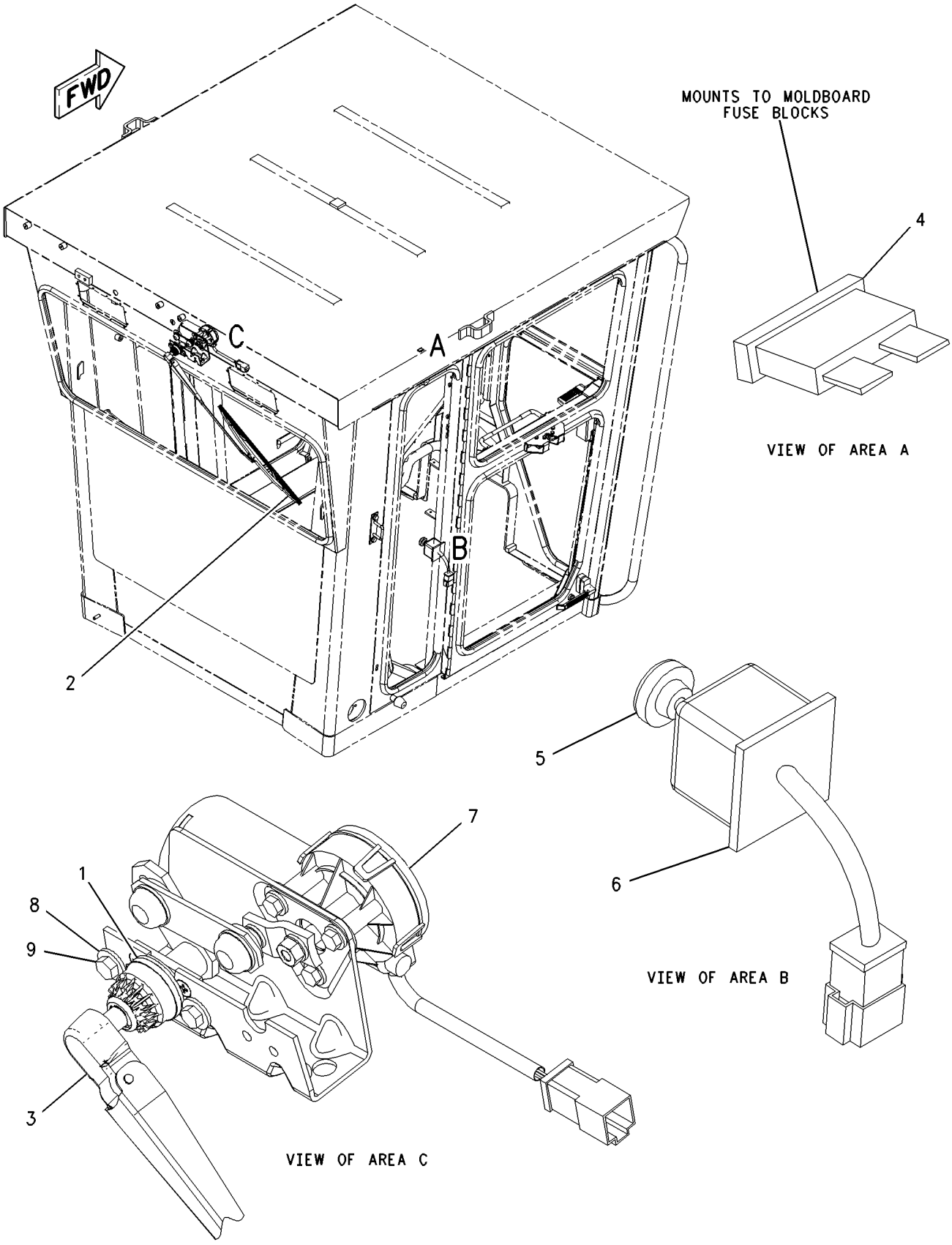


GRAPHIC #1 **<END>** g00846638

# OPERATOR STATION

## *173-5321* WIPER GP-WINDOW—REAR—HIGH PROFILE

**S/N: CCA1-UP**
**PART OF 177-8831 WIPER AR-WINDOW**
**AN ATTACHMENT**
**TYPE 1**

**SMCS-7305** **i02585596**

| NOTE | REF NO | GRAPHIC REF | PART NUMBER | QTY | PART NAME 1 2 3 4 5 6 (PRODUCT LEVEL) | SEE PAGE |
|---|---|---|---|---|---|---|
| B | 1 | 1 | **4B-4283** | 2 | WASHER (20.6X37.5X3.5-MM THK) | |
| | 2 | 1 | **6V-5853** | 1 | BLADE AS-WIPER (REAR) | |
| | 3 | 1 | **6V-8258** | 1 | ARM AS-WIPER | |
| | 4 | 1 | **9W-1442** | 1 | FUSE (10-AMPERE) (WIPER) | |
| | 5 | 1 | **110-7885** | 1 | KNOB (WIPER, WASHER, REAR) | |
| | 6 | 1 | **110-7886** | 1 | SWITCH AS-WIPER (24-VOLT) (REAR) | |
| | | 1 | **2H-3920** | 1 | LOCKWASHER | |
| | | 1 | **3E-3389** | 1 | WEDGE-RECEPTACLE LOCK | |
| | | 1 | **6V-8369** | 1 | NUT (7/16-28-THD) | |
| | | 1 | **186-3735** | 3 | PIN-CONNECTOR (16-GA TO 18-GA) | |
| | | 1 | **8T-8737** | 1 | PLUG-SEAL | |
| | | 1 | **9W-0852** | 4 | PIN-CONNECTOR (14-GA) | |
| | | 1 | **102-8806** | 1 | KIT-RECEPTACLE (8-PIN) | |
| | | | | | (INCLUDES RECEPTACLE AS & WEDGE) | |
| Y | 7 | 1 | **114-6685** | 1 | WIPER GP-WINDOW (REAR) | 1267 |
| | 8 | 1 | **5P-4115** | 2 | WASHER-HARD (7.2X19X2-MM THK) | |
| | 9 | 1 | **7X-3182** | 2 | BOLT (1/4-28X0.5-IN) | |

B-USE AS REQUIRED
Y-SEPARATE ILLUSTRATION

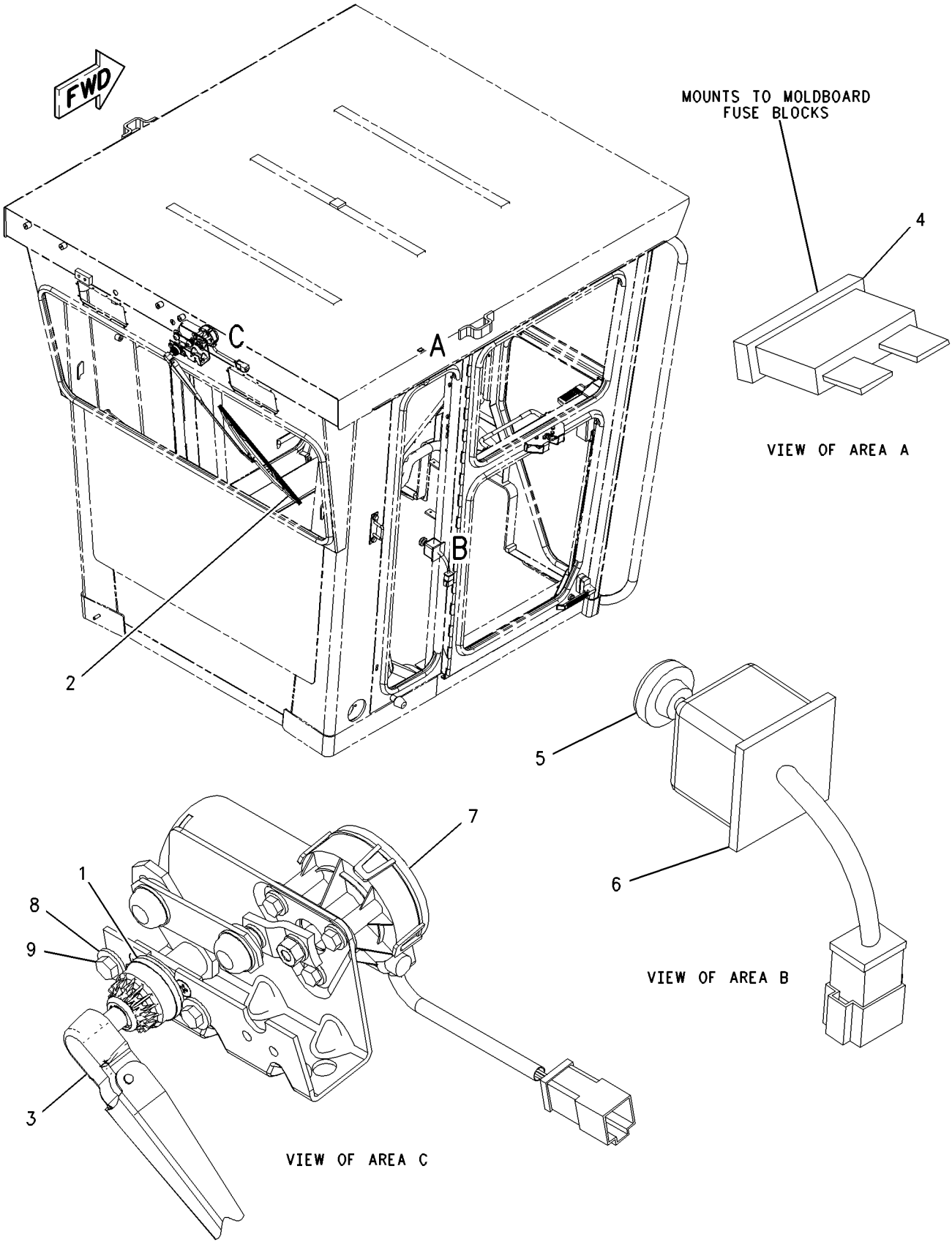


GRAPHIC #1 **<END>** g00846638

# OPERATOR STATION

## *173-5321* WIPER GP-WINDOW—REAR—HIGH PROFILE

**S/N: CCA1-UP**
**PART OF 177-8831 WIPER AR-WINDOW**
**AN ATTACHMENT**
**TYPE 2**

**SMCS-7305** **i02585595**

| NOTE | REF NO | GRAPHIC REF | PART NUMBER | QTY | PART NAME 1 2 3 4 5 6 (PRODUCT LEVEL) | SEE PAGE |
|---|---|---|---|---|---|---|
| B | 1 | 1 | **4B-4283** | 2 | WASHER (20.6X37.5X3.5-MM THK) | |
| | 2 | 1 | **6V-5853** | 1 | BLADE AS-WIPER (REAR) | |
| | 3 | 1 | **6V-8258** | 1 | ARM AS-WIPER | |
| | 4 | 1 | **9W-1442** | 1 | FUSE (10-AMPERE) (WIPER) | |
| | 5 | 1 | **110-7885** | 1 | KNOB (WIPER, WASHER, REAR) | |
| | | 1 | **014-0816** | 1 | SETSCREW (8-32X0.5-IN) | |
| | 6 | 1 | **110-7886** | 1 | SWITCH AS-WIPER (24-VOLT) (REAR) | |
| | | 1 | **2H-3920** | 1 | LOCKWASHER | |
| | | 1 | **3E-3389** | 1 | WEDGE-RECEPTACLE LOCK | |
| | | 1 | **6V-8369** | 1 | NUT (7/16-28-THD) | |
| | | 1 | **186-3735** | 3 | PIN-CONNECTOR (16-GA TO 18-GA) | |
| | | 1 | **8T-8737** | 1 | PLUG-SEAL | |
| | | 1 | **9W-0852** | 4 | PIN-CONNECTOR (14-GA) | |
| | | 1 | **102-8806** | 1 | KIT-RECEPTACLE (8-PIN) | |
| | | | | | (INCLUDES RECEPTACLE AS & WEDGE) | |
| C | 7 | 1 | **203-1124** | 1 | MOTOR GP-WINDOW WIPER (REAR) | |
| | 8 | 1 | **5P-4115** | 2 | WASHER-HARD (7.2X19X2-MM THK) | |
| CM | 9 | 1 | **8T-4171** | 2 | BOLT (M6X1X12-MM) | |

B-USE AS REQUIRED
C-CHANGE FROM PREVIOUS TYPE
M-METRIC PART

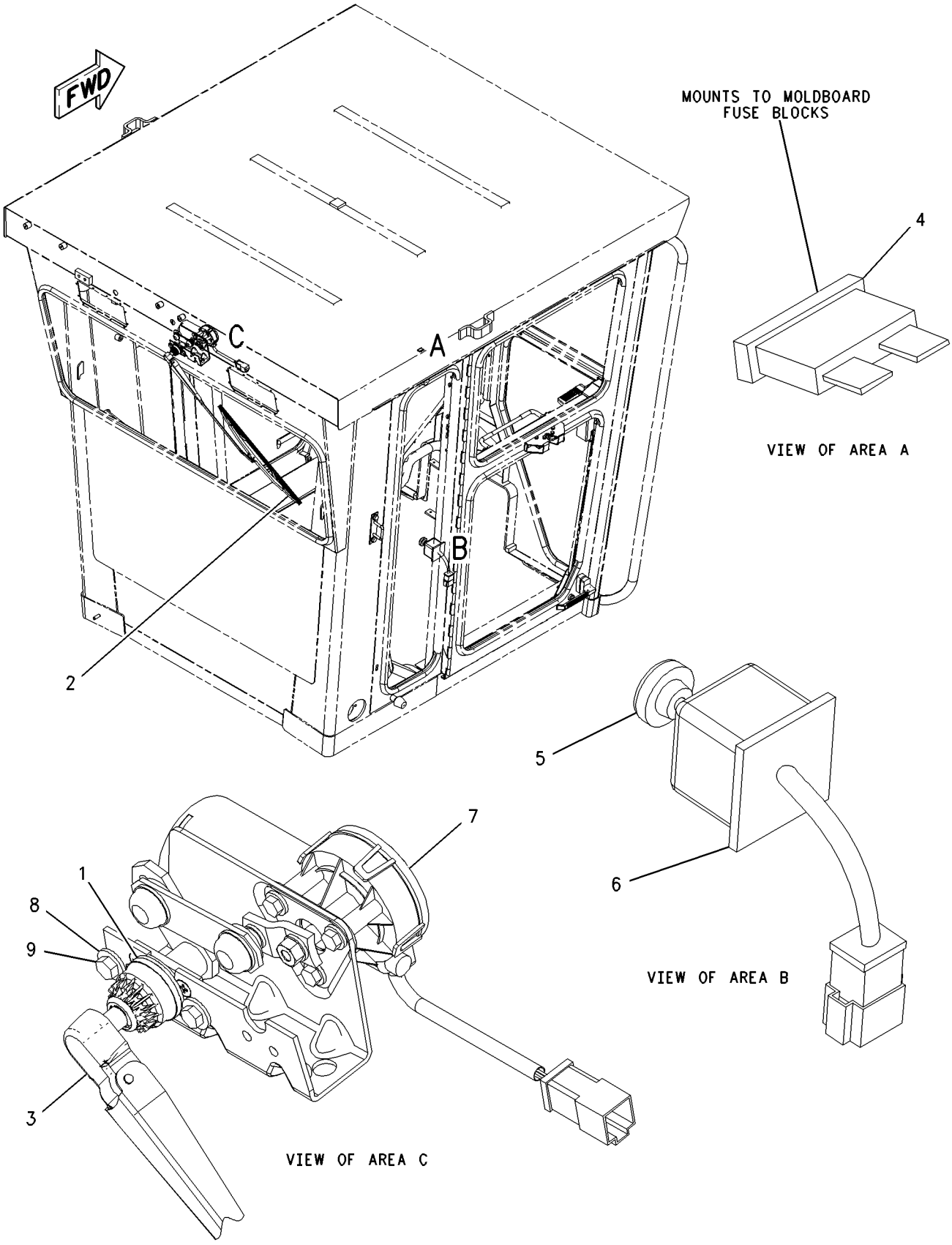


GRAPHIC #1 **<END>** g00846638

# OPERATOR STATION

## *177-8784* WIPER GP-WINDOW—FRONT

**S/N: CCA1-UP**
**PART OF 197-5955, 236-3948 SNOW AR-MOTOR GRADER**
**AN ATTACHMENT**

**SMCS-7305** **i02585598**

| NOTE | REF NO | GRAPHIC REF | PART NUMBER | QTY | PART NAME 1 2 3 4 5 6 (PRODUCT LEVEL) | SEE PAGE |
|---|---|---|---|---|---|---|
| Y | 1 | 1 | **3E-0155** | 2 | SWITCH GP-WIPER (24-VOLT, INTERMITTENT) | 303 |

Y-SEPARATE ILLUSTRATION

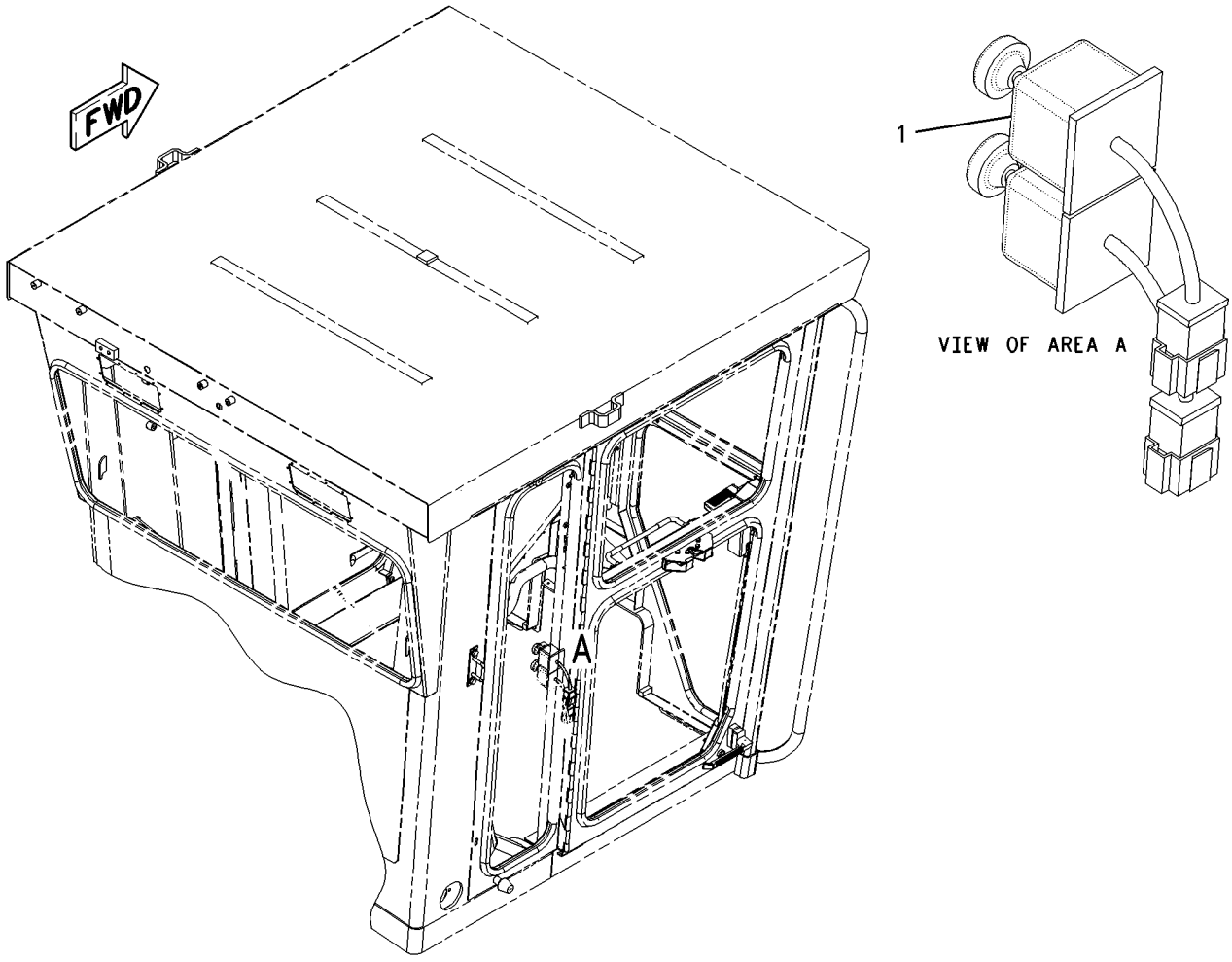


GRAPHIC #1 **<END>** g00847324

# *211-4913* WIPER GP-WINDOW—FRONT—HIGH PROFILE

**S/N: CCA1-UP**
**PART OF 211-4907 CAB GP**
**AN ATTACHMENT**
**TYPE 1**

**SMCS-7305** **i01861359**

| NOTE | REF NO | GRAPHIC REF | PART NUMBER | QTY | PART NAME 1 2 3 4 5 6 (PRODUCT LEVEL) | SEE PAGE |
|---|---|---|---|---|---|---|
| Y | 1 | 1 | **114-6685** | 1 | WIPER GP-WINDOW | 1267 |
| M | 2 | 1 | **8T-4171** | 2 | BOLT (M6X1X12-MM) | |
| | 3 | 1 | **5P-4115** | 2 | WASHER-HARD (7.2X19X2-MM THK) | |
| | 4 | 1 | **6V-8259** | 1 | ARM AS-WIPER | |
| | 5 | 1 | **6V-5853** | 1 | BLADE AS-WIPER | |
| | 6 | 1 | **4B-4283** | 2 | WASHER (20.6X37.5X3.5-MM THK) | |

M-METRIC PART
Y-SEPARATE ILLUSTRATION

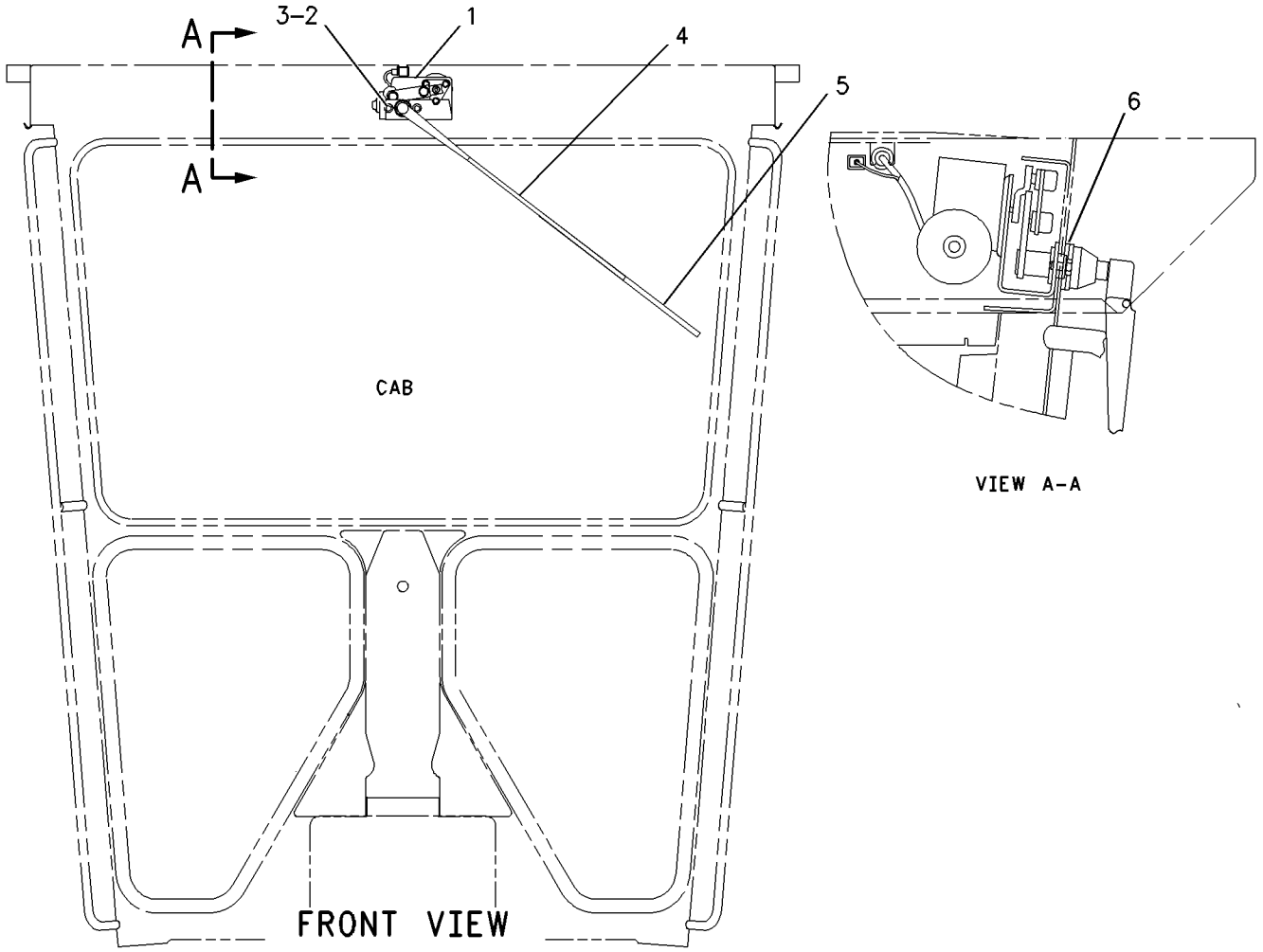


GRAPHIC #1 **<END>** g00949975

# OPERATOR STATION

## *211-4913* WIPER GP-WINDOW—FRONT—HIGH PROFILE

**S/N: CCA1-UP**
**PART OF 211-4907 CAB GP**
**AN ATTACHMENT**
**TYPE 2**

**SMCS-7305** **i02426669**

| NOTE | REF NO | GRAPHIC REF | PART NUMBER | QTY | PART NAME 1 2 3 4 5 6 (PRODUCT LEVEL) | SEE PAGE |
|---|---|---|---|---|---|---|
| | 1 | 1 | **203-1124** | 1 | MOTOR GP-WINDOW WIPER (FRONT) | |
| | | 1 | **3F-9556** | 1 | LOCKWASHER | |
| M | | 1 | **5C-7261** | 1 | NUT (M8X1.25-THD) | |
| | | 1 | **135-0611** | 1 | MOTOR GP-WINDOW WIPER (24-VOLT, 2-SPEED) | |
| | | 1 | **8T-8737** | 1 | PLUG-SEAL | |
| | | 1 | **186-3735** | 5 | PIN-CONNECTOR (16-GA TO 18-GA) | |
| | | 1 | **102-8805** | 1 | KIT-RECEPTACLE (6-PIN) | |
| | | | | | (INCLUDES RECEPTACLE AS & WEDGE) | |
| | | 1 | **206-5823** | 1 | CAP (WIPER) | |
| M | 2 | 1 | **8T-4171** | 2 | BOLT (M6X1X12-MM) | |
| | 3 | 1 | **5P-4115** | 2 | WASHER-HARD (7.2X19X2-MM THK) | |
| | 4 | 1 | **6V-8259** | 1 | ARM AS-WIPER (FRONT) | |
| | 5 | 1 | **6V-5853** | 1 | BLADE AS-WIPER (FRONT) | |
| | 6 | 1 | **4B-4283** | 2 | WASHER (20.6X37.5X3.5-MM THK) | |

M-METRIC PART

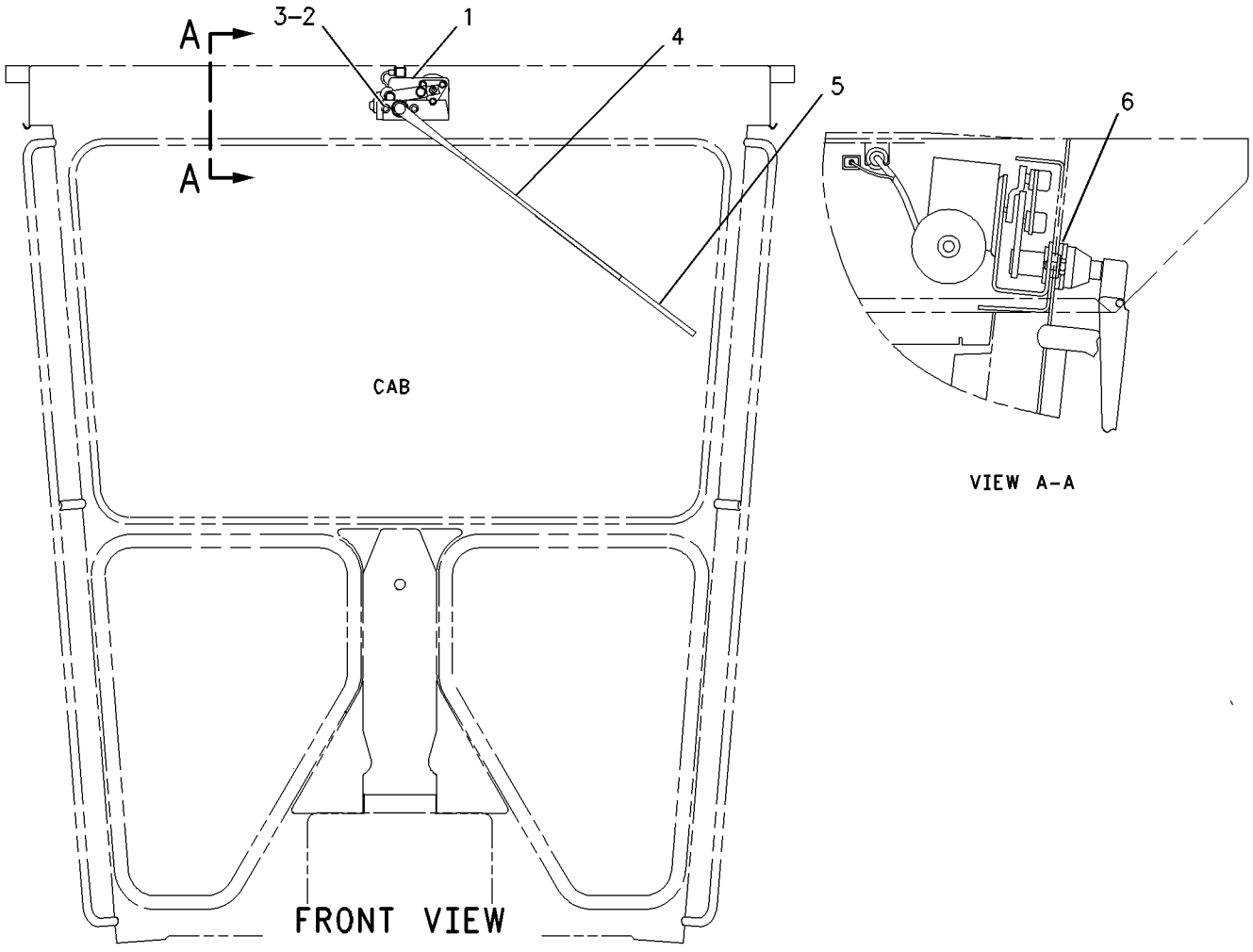


GRAPHIC #1 **<END>** g00949975

# OPERATOR STATION

## *223-3936* WIPER GP-WINDOW—HIGH PROFILE

**S/N: CCA1-UP**
**PART OF 223-3937 CAB GP**
**AN ATTACHMENT**

**SMCS-7305** **i02578220**

| NOTE | REF NO | GRAPHIC REF | PART NUMBER | QTY | PART NAME 1 2 3 4 5 6 (PRODUCT LEVEL) | SEE PAGE |
|---|---|---|---|---|---|---|
| B | 1 | 1 | **4B-4283** | 2 | WASHER (20.6X37.5X3.5-MM THK) | |
| | 2 | 1 | **6V-5853** | 1 | BLADE AS-WIPER (FRONT) | |
| | 3 | 1 | **6V-8259** | 1 | ARM AS-WIPER (FRONT, UPPER) | |
| | 4 | 1 | **203-1124** | 1 | MOTOR GP-WINDOW WIPER (FRONT, UPPER) | |
| | | 1 | **206-5823** | 1 | CAP (WIPER) | |
| | | 1 | **3F-9556** | 1 | LOCKWASHER | |
| M | | 1 | **5C-7261** | 1 | NUT (M8X1.25-THD) | |
| | | 1 | **135-0611** | 1 | MOTOR GP-WINDOW WIPER (24-VOLT, 2-SPEED) | |
| | | 1 | **8T-8737** | 1 | PLUG-SEAL | |
| | | 1 | **186-3735** | 5 | PIN-CONNECTOR (16-GA TO 18-GA) | |
| | | 1 | **102-8805** | 1 | KIT-RECEPTACLE (6-PIN) | |
| | | | | | (INCLUDES RECEPTACLE AS AND WEDGE) | |
| | 5 | 1 | **5P-4115** | 2 | WASHER-HARD (7.2X19X2-MM THK) | |
| M | 6 | 1 | **8T-4171** | 2 | BOLT (M6X1X12-MM) | |

B-USE AS REQUIRED
M-METRIC PART

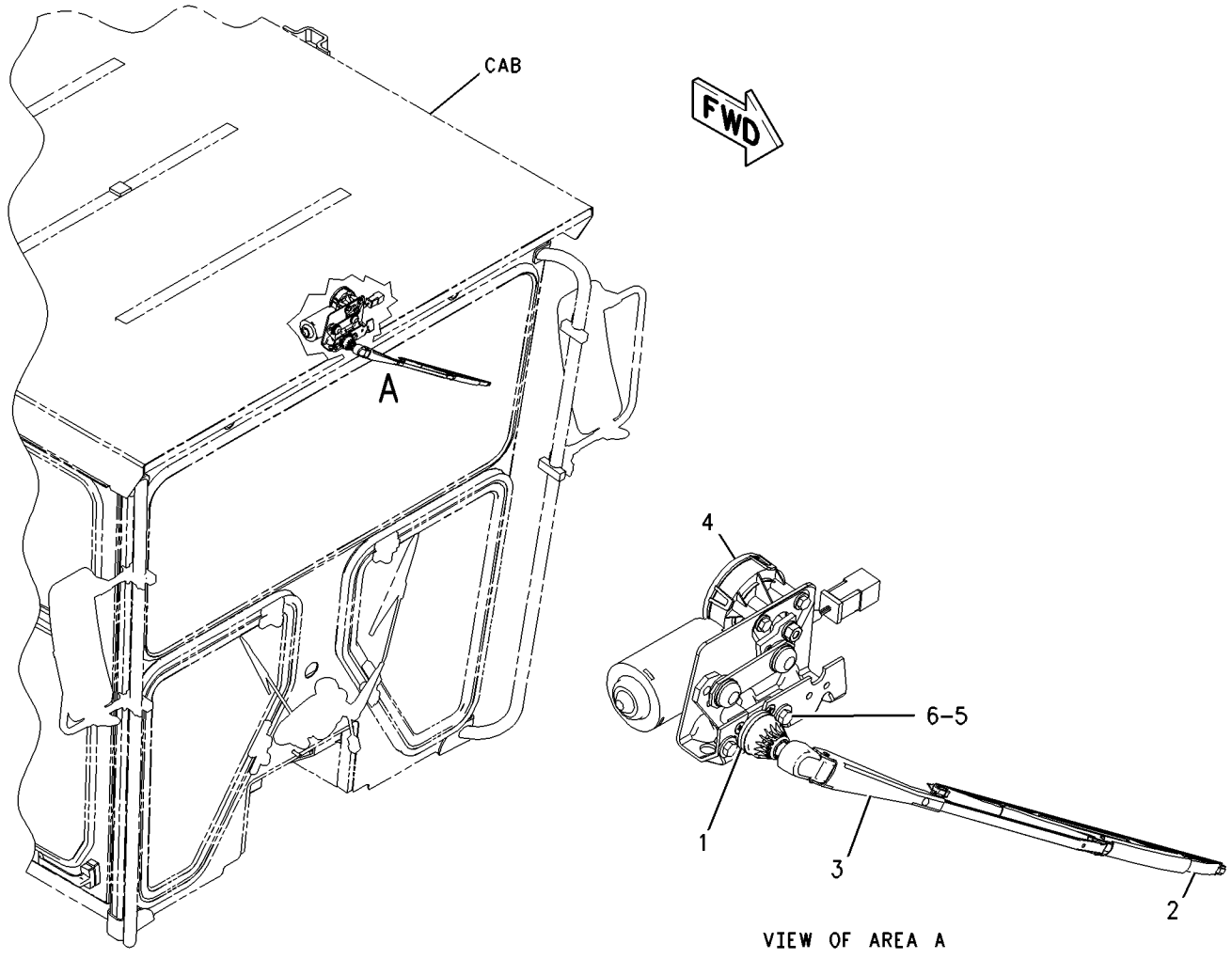


GRAPHIC #1 **<END>** g00937371

# SERVICE EQUIPMENT AND SUPPLIES

## *111-1719* BOX GP-TOOL

**S/N: CCA1-UP**

**PART OF 159-4615 GENERAL AR**

**SMCS-7259** **i01449464**

| NOTE | REF NO | GRAPHIC REF | PART NUMBER | QTY | PART NAME 1 2 3 4 5 6 (PRODUCT LEVEL) | SEE PAGE |
|---|---|---|---|---|---|---|
| | 1 | 1 | **129-7249** | 1 | TOOL BOX | |
| | 2 | 1 | **5P-8502** | 1 | PADLOCK GP (TOOL BOX) | |
| A | | 1 | **5P-8500** | 1 | KEY (TOOL BOX) | |
| A | | 1 | **8Y-6364** | 1 | SLEEVE | |
| | 3 | 1 | **5K-9107** | 4 | BOLT-LOCKING (3/8-16X0.75-IN) | |
| | 4 | 1 | **5P-1075** | 4 | WASHER-HARD (10.2X22.5X3-MM THK) | |

A-NOT PART OF THIS GROUP

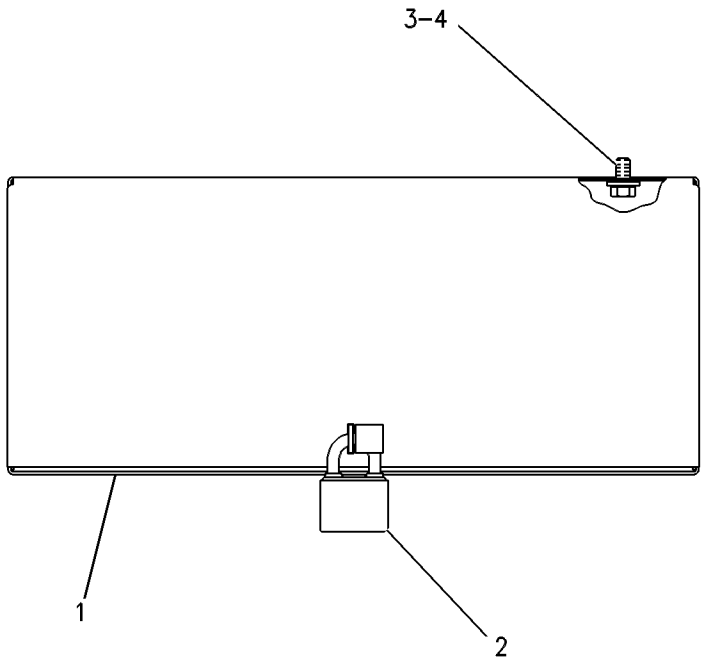


GRAPHIC #1 **<END>** g00109173

# SERVICE EQUIPMENT AND SUPPLIES

## *183-5806* FILM GP

**S/N: CCA1-UP**

**PART OF 171-5831 PLATE & FILM GP**

**SMCS-0375, 7000, 7405, 7557** **i01928279**

| NOTE | REF NO | GRAPHIC REF | PART NUMBER | QTY | PART NAME 1 2 3 4 5 6 (PRODUCT LEVEL) | SEE PAGE |
|---|---|---|---|---|---|---|
| | 1 | 1 | **115-0788** | 2 | FILM-STRIPE (140H) | |
| | 2 | 1 | **184-5073** | 2 | FILM-STRIPE (CAT) | |
| | 3 | 1 | **184-5076** | 2 | FILM-STRIPE | |
| | 4 | 1 | **201-1055** | 1 | FILM-IDENTIFICATION (CATERPILLAR) | |
| E | 5 | 1 | **229-0119** | | STRIPE (71CM EACH) | |

E-ORDER BY THE CENTIMETER

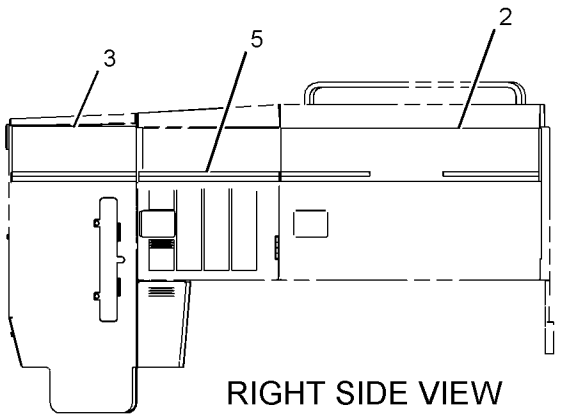


RIGHT SIDE VIEW

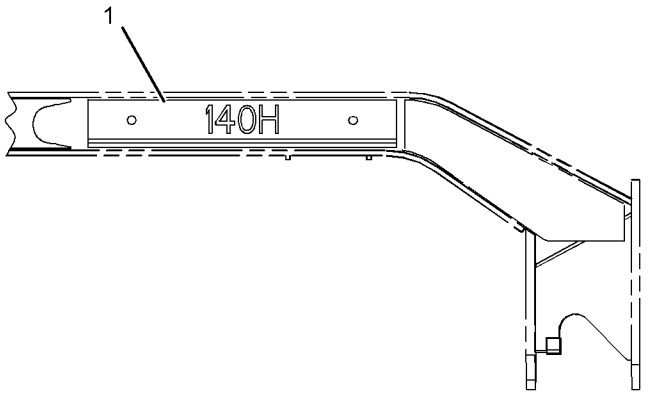


RIGHT SIDE VIEW
(FRONT FRAME)

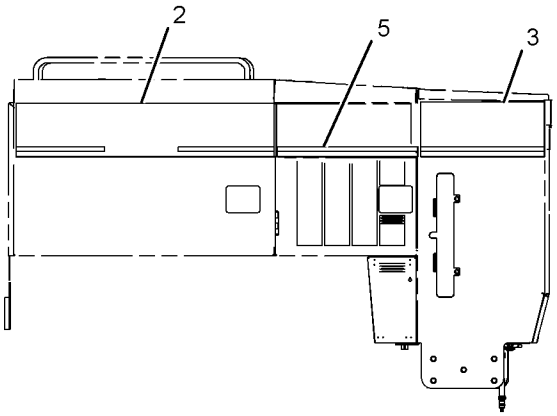


LEFT SIDE VIEW

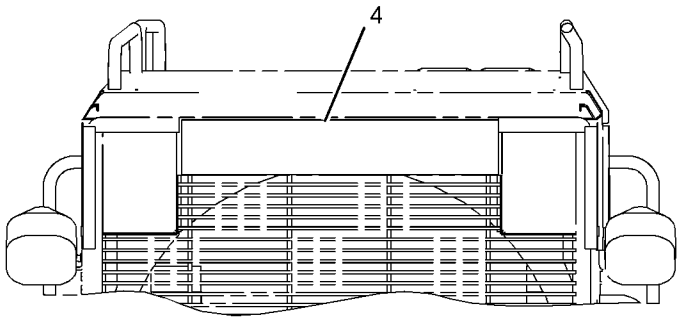


REAR VIEW

GRAPHIC #1 **<END>** g01026311

# SERVICE EQUIPMENT AND SUPPLIES

## *197-6437* FILM GP—VHP PLUS

**S/N: CCA1-UP**
**PART OF 197-5955, 236-3948 SNOW AR-MOTOR GRADER**
**AN ATTACHMENT**

**SMCS-0375, 7000, 7405, 7557** **i02549975**

| NOTE | PART NUMBER | QTY | PART NAME 1 2 3 4 5 6 (PRODUCT LEVEL) | SEE PAGE |
|---|---|---|---|---|
| Y | **115-5852** | 1 | PLATE & FILM GP (ENGINE) | 1291 |
| | | | ON LEFT SIDE OF CYL BLOCK TOWARDS REAR ON VERTICAL SURFACE BELOW FUEL RAIL TO THE RIGHT OF THE FUEL FILTERS | |
| | | | | |
| A | **3N-3790** | 1 | PLATE-SERIAL NUMBER (ENGINE) | |
| | | | ON RH SIDE OF CYLINDER BLOCK READABLE FROM FRONT OF ENGINE | |
| | | | | |
| | **204-0795** | 2 | FILM (VHP PLUS) | |
| | | | ON BOTH SIDES OF THE PLATFORM ON THE OUTSIDE SURFACE | |
| | **238-9422** | 1 | SOFTWARE GP-ENGINE (VARIABLE HORSEPOWER) | |

A-NOT PART OF THIS GROUP
Y-SEPARATE ILLUSTRATION

**<END>**

## *203-7627* FILM GP—VHP

**S/N: CCA1-UP**
**AN ATTACHMENT**

**SMCS-0375, 7000, 7405, 7557** **i02592768**

| NOTE | PART NUMBER | QTY | PART NAME 1 2 3 4 5 6 (PRODUCT LEVEL) | SEE PAGE |
|---|---|---|---|---|
| Y | **115-5852** | 1 | PLATE & FILM GP (ENGINE) | 1291 |
| | | | (ON LEFT SIDE OF CYLINDER BLOCK TOWARDS REAR ON VERTICAL SURFACE BELOW FUEL RAIL TO THE RIGHT OF THE FUEL FILTERS) | |
| | | | | |
| | **114-5224** | 2 | FILM (VARIABLE HORSEPOWER) | |
| | | | (ON BOTH SIDES OF THE PLATFORM ON THE OUTSIDE SURFACE) | |
| | **238-9421** | 1 | SOFTWARE GP-ENGINE (VARIABLE HORSEPOWER) | |

Y-SEPARATE ILLUSTRATION

**<END>**

## *8T-5255* JACK-HYDRAULIC

**S/N: CCA1-UP**
**AN ATTACHMENT**

**SMCS-0599, 0699, 0700** **i01757229**

| NOTE | PART NUMBER | QTY | PART NAME 1 2 3 4 5 6 (PRODUCT LEVEL) | SEE PAGE |
|---|---|---|---|---|
| | | | (NO SERVICED PARTS) | |

**<END>**

# SERVICE EQUIPMENT AND SUPPLIES

## *8T-4009* PLATE & FILM GP

**S/N: CCA1-UP**
**PART OF 175-2559 RIPPER AR**
**AN ATTACHMENT**

**SMCS-7405, 7557** **i01367605**

| NOTE | PART NUMBER | QTY | PART NAME 1 2 3 4 5 6 (PRODUCT LEVEL) | SEE PAGE |
|---|---|---|---|---|
| | | | (NO SERVICED PARTS) | |

**<END>**

## 115-5852 PLATE & FILM GP

**S/N: CCA1-UP**
**PART OF 197-6437, 203-7627 FILM GP**
**AN ATTACHMENT**

**SMCS-7405, 7557** **i01999862**

| NOTE | PART NUMBER | QTY | PART NAME 1 2 3 4 5 6 (PRODUCT LEVEL) | SEE PAGE |
|---|---|---|---|---|
| | **122-9760** | 1 | FILM-INFORMATION (SILVER ULTRAPLATE) (ENGINE) | |
| | | | (INSTALL VERTICALLY ON RH REAR VALVE COVER IN FRONT OF RECESS OR BOSS, READABLE FROM REAR OF ENGINE) | |
| | **122-9761** | 1 | FILM-INFORMATION (LAMINATE) (ENGINE) | |
| | | | (APPLY LAMINANT OVER SILVER FILM) | |

**<END>**

# SERVICE EQUIPMENT AND SUPPLIES

## *171-5831* PLATE & FILM GP

**S/N: CCA1-UP**

**PART OF 159-4615 GENERAL AR**

**SMCS-7405, 7557** **i02309612**

| NOTE | REF NO | GRAPHIC REF | PART NUMBER | QTY | PART NAME 1 2 3 4 5 6 (PRODUCT LEVEL) | SEE PAGE |
|---|---|---|---|---|---|---|
| | 1 | 1 | **8C-5897** | 1 | FILM-IDENTIFICATION (SIGHT GAUGE) | |
| | 2 | 1 | **1P-2807** | 2 | FILM-INFORMATION (LIFT EYE LOCATION) | |
| | 3 | 1 | **5P-1175** | 1 | FILM-IDENTIFICATION (ENGINE OIL FILL) | |
| Y | 4 | 1,2 | *183-5806* | 1 | FILM GP | 1289 |
| | 5 | 1 | **225-4150** | 1 | PLATE-SERVICE INFORMATION (MACHINE) | |
| | 6 | 1 | **9X-8355** | 1 | FILM-INDICATOR (BLADE CENTERSHIFT) | |
| | 7 | 1 | **190-5386** | 2 | FILM-IDENTIFICATION (ROUND RED REFLECTIVE) | |
| | 8 | 1 | **224-6637** | 1 | FILM-NOTICE (FAST FILL SYSTEM) | |
| | 9 | 1 | **129-7679** | 1 | FILM-INSTRUCTION (ENGINE OIL DRAIN) | |
| | 10 | 2 | **9X-8372** | 1 | FILM-INSTRUCTION (WASHER FILL) | |
| | 11 | 1 | **209-5776** | 1 | FILM-INFORMATION (ENGINE COOLANT) | |
| | 12 | 1 | **7X-3229** | 2 | FILM-INSTRUCTION (LIFT EYE, TIE-DOWN LOCATION) | |
| | 13 | 1 | **8C-8923** | 1 | FILM-NOTICE (SHIPPING, LIFTING, TIE-DOWN) | |
| | 14 | 1 | **7X-7644** | 2 | FILM-INFORMATION (TIE-DOWN) | |
| | 15 | 1 | **5P-3999** | 1 | PLATE-MAIN FRAME (DO NOT DRILL OR WELD) | |
| | 16 | 2 | **190-2938** | 1 | FILM-WARNING (ENG COOLANT PRESSURE, READ OMM) | |
| | 17 | 2 | **5P-4077** | 1 | FILM-WARNING (HAZARD, READ OMM) | |
| | 18 | 1 | **212-2162** | 1 | FILM-WARNING (JUMP START, READ OMM) | |
| | 19 | 1 | **243-3769** | 1 | FILM-VALVE (AIR DRAIN) | |
| | 20 | 1 | **239-6989** | 1 | PLATE-SERIAL NUMBER (MACHINE) | |
| | 21 | 1 | **201-7603** | 2 | PLATE-WARNING (CRUSH HAZARD) | |
| | 22 | 2 | **8T-1191** | 1 | PLATE-WARNING (HAZARD, READ OMM) | |
| | 23 | 2 | **239-4990** | 1 | FILM-WARNING (HIGH PRESSURE CYLINDER) | |
| | 24 | 2 | **215-5648** | 1 | FILM (TILT STEERING WHEEL CONTROL) | |
| | 25 | 1 | **8T-9530** | 4 | TACK-FASTENER | |
| | 26 | 1 | **202-9824** | 1 | FILM-INFORMATION (BRAZIL) | |
| | 27 | 1 | **5P-1174** | 1 | FILM-TRANSMISSION OIL (FILLER CAP) | |
| | | | | | | |
| AF | | | **3N-3790** | 1 | PLATE-SERIAL NUMBER (ENGINE) | |
| | | | | | ON RIGHT SIDE OF CYLINDER BLOCK READABLE FROM FRONT OF ENGINE | |

A-NOT PART OF THIS GROUP
F-NOT SHOWN
Y-SEPARATE ILLUSTRATION

REFER TO ALL ILLUSTRATIONS OF
THIS GROUP FOR AUXILIARY VIEWS

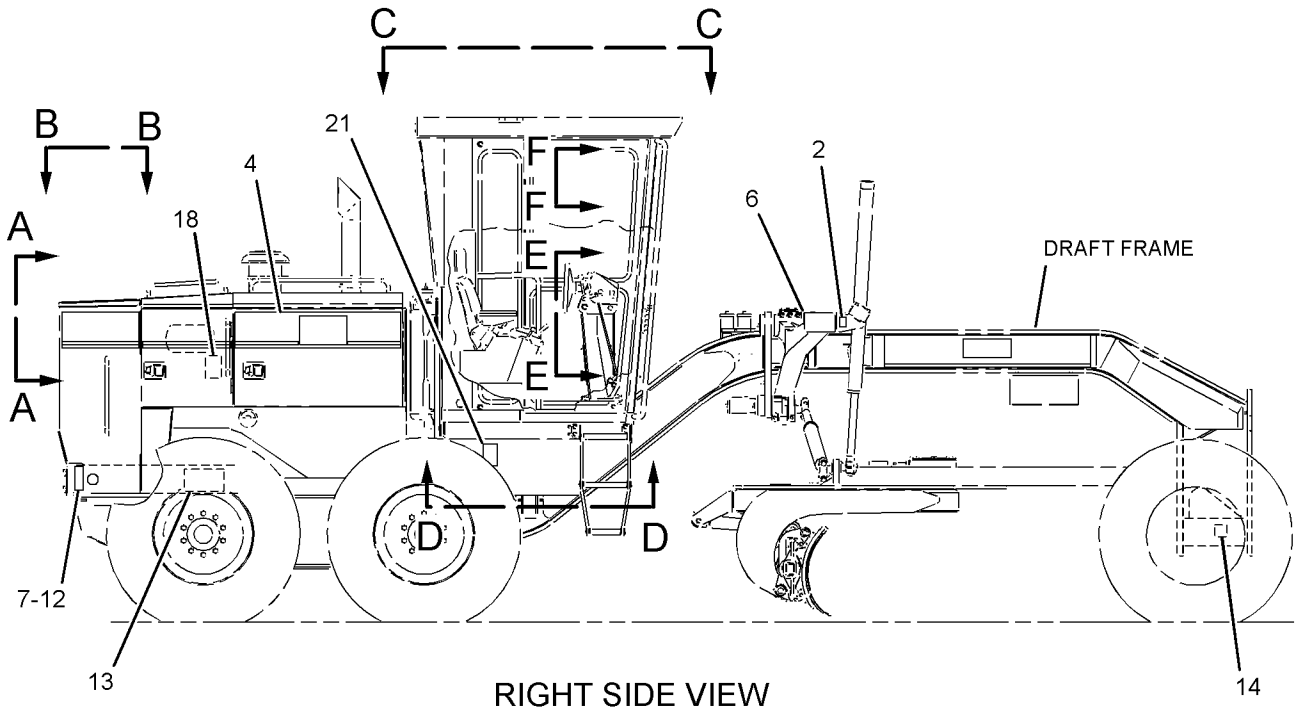


RIGHT SIDE VIEW

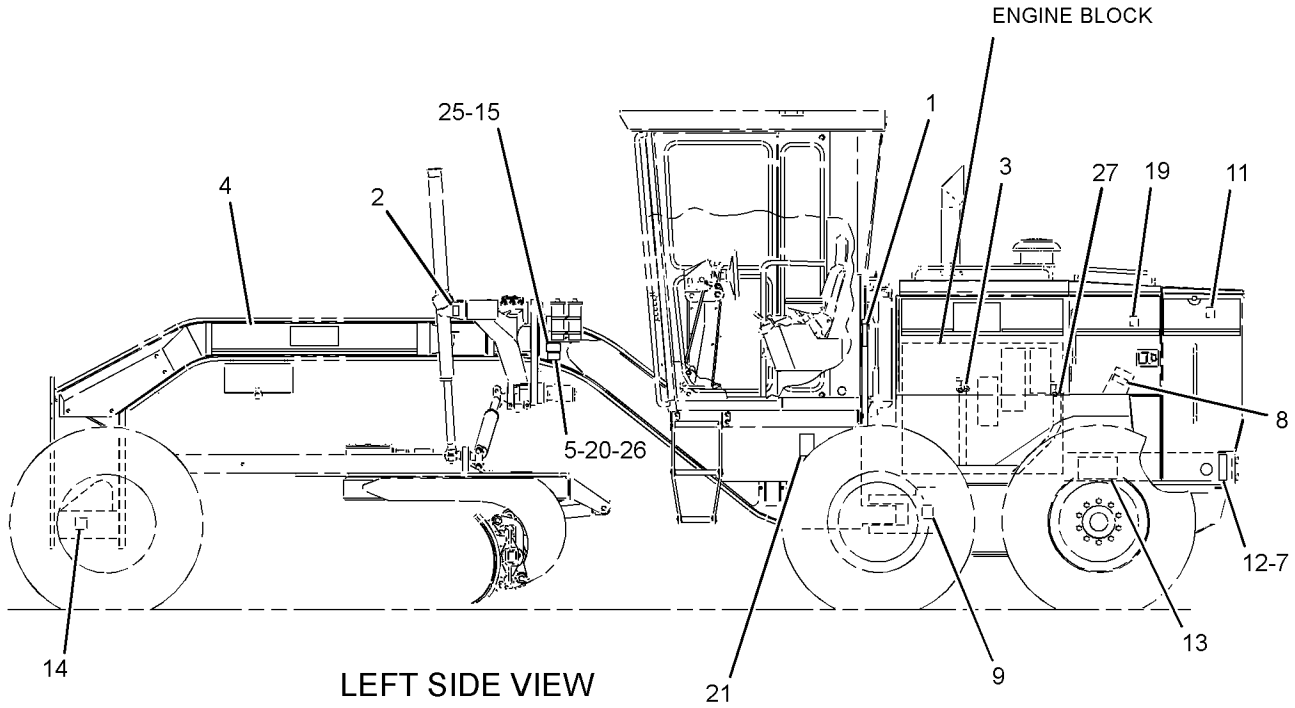


LEFT SIDE VIEW

GRAPHIC #1 g01160935

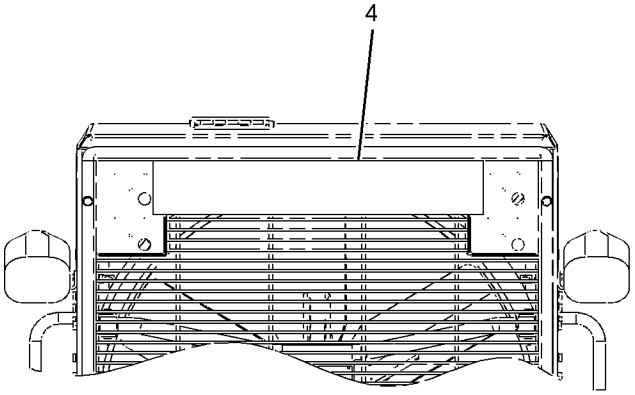


VIEW A-A

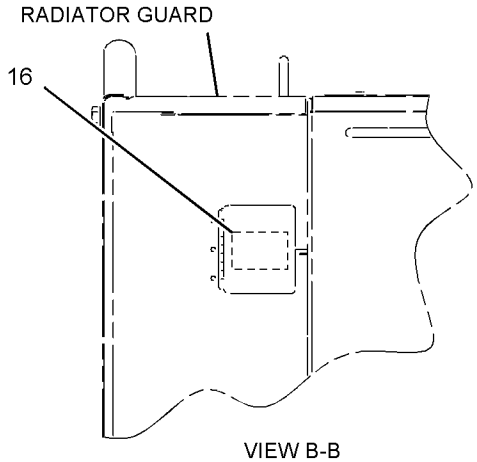


VIEW B-B

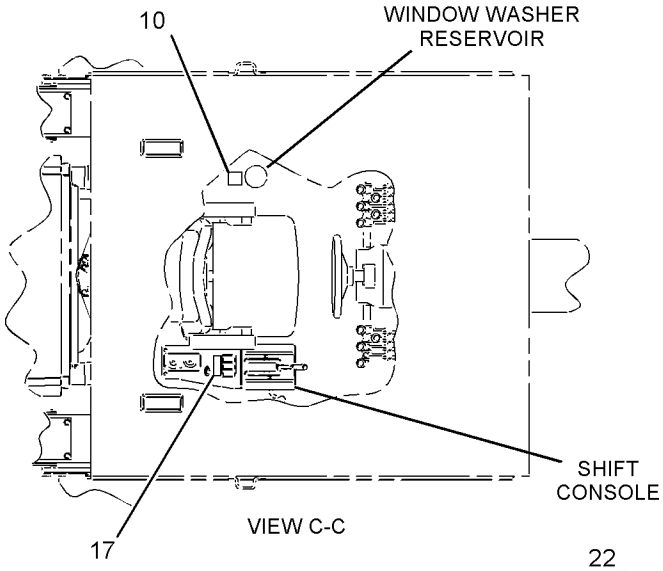


VIEW C-C

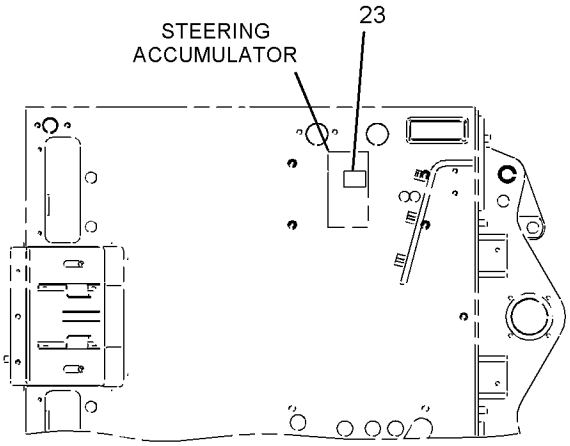


VIEW D-D

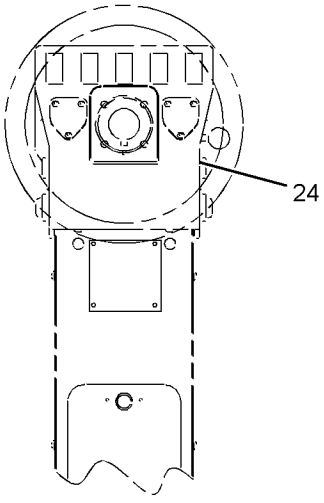


VIEW E-E

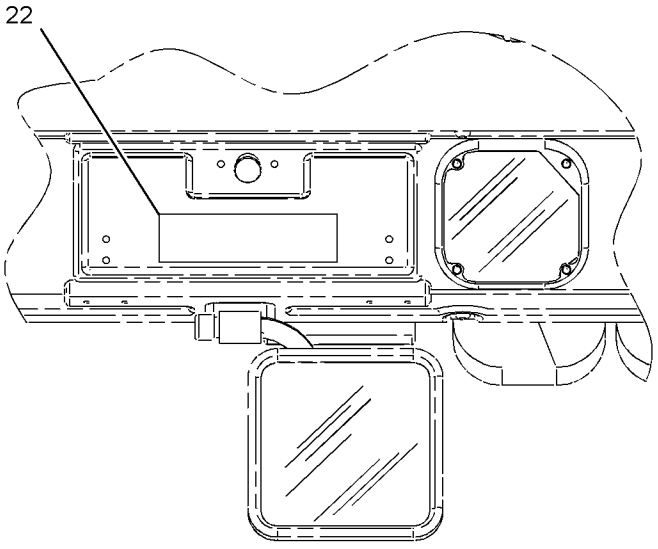


VIEW F-F

GRAPHIC #2 **<END>** g01093376

# *192-1434* PLATE & FILM GP–REFLECTOR–EU

**S/N: CCA1-UP**

**PART OF 207-4453, 210-2044 CONVERSION AR-CERTIFICATION**

**AN ATTACHMENT**

**SMCS-7405, 7557** **i01684449**

| NOTE | REF NO | GRAPHIC REF | PART NUMBER | QTY | PART NAME 1 2 3 4 5 6 (PRODUCT LEVEL) | SEE PAGE |
|---|---|---|---|---|---|---|
| | 1 | 1 | **190-5386** | 2 | FILM-IDENTIFICATION (ROUND RED REFLECTIVE) | |
| | 2 | 1 | **195-2274** | 6 | FILM-REFLECTOR (YELLOW) | |
| | 3 | 1 | **197-5867** | 2 | PLATE | |

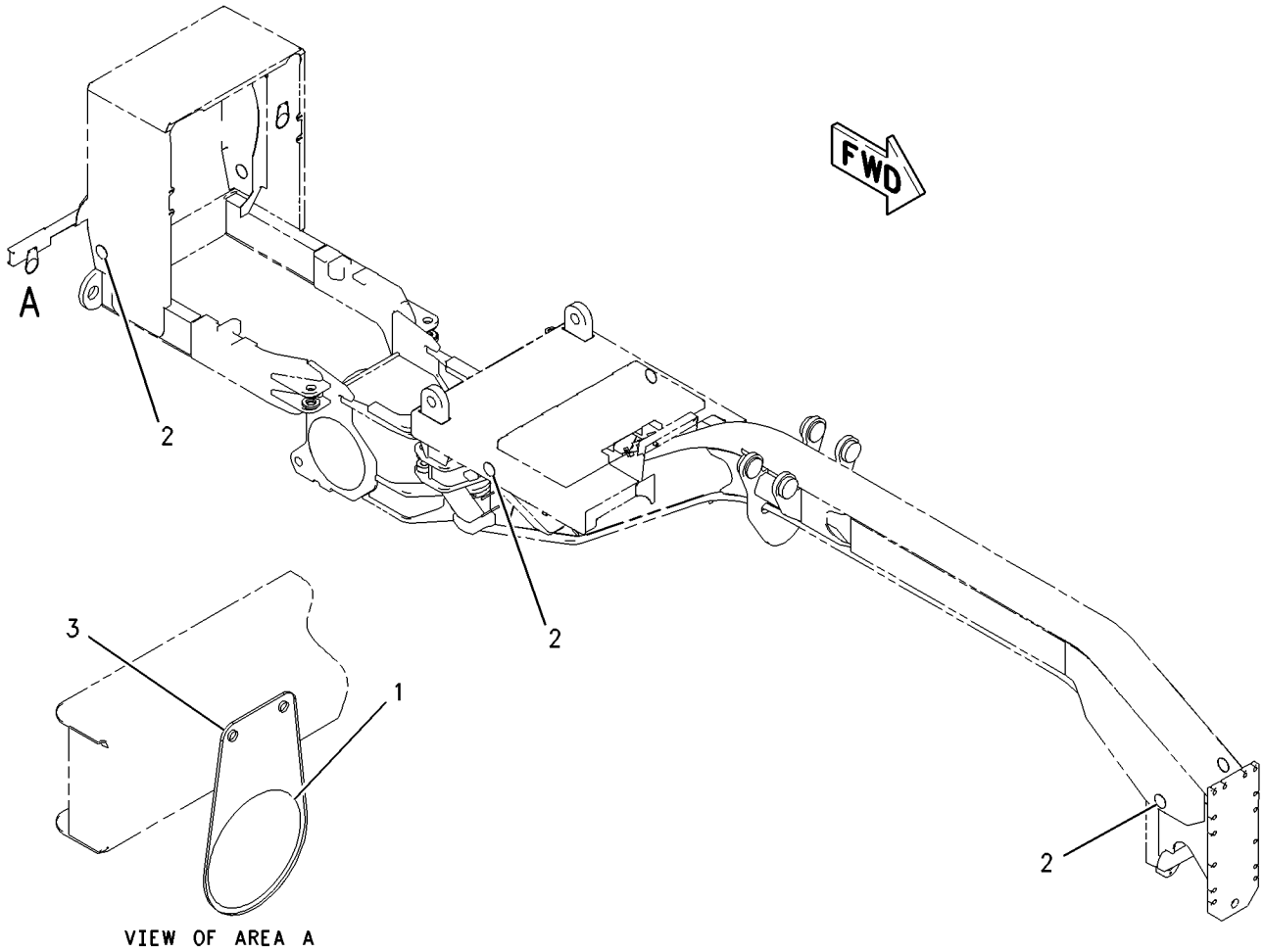


GRAPHIC #1 **<END>** g00940853

## *202-4322* PLATE & FILM GP—FRENCH

**S/N: CCA1-UP**
**AN ATTACHMENT**

**SMCS-7405, 7557** **i02210569**

| NOTE | PART NUMBER | QTY | PART NAME 1 2 3 4 5 6 (PRODUCT LEVEL) | SEE PAGE |
|---|---|---|---|---|
| | **5P-4000** | 1 | PLATE-MAIN FRAME (DO NOT DRILL OR WELD) | |
| | | | ON LH SIDE OF FRONT FRAME IN FRONT OF LIFT CYLINDER BRACKET | |
| | **156-7320** | 1 | PLATE-ROPS/FOPS | |
| | | | ON LH SIDE OF CAB UNDER ROOF EDGE | |
| | **8T-1192** | 1 | PLATE-WARNING (MACHINE OPERATION) | |
| | | | ON RH GLOVE BOX DOOR | |
| | **201-7626** | 2 | PLATE-WARNING (NO CLEARANCE) | |
| | | | ON RH & LH REAR PLATFORM SUPPORTS | |
| | | | | |
| | **224-6958** | 1 | FILM (FAST FILL FUEL) | |
| | | | LOCATE ON FILL NECK OF LH FUEL TANK | |
| | **213-0430** | 1 | FILM-WARNING (CABLE CONNECTION) | |
| | | | ON SERVICE CENTER ACCESS DOOR BETWEEN LOUVERS | |

**<END>**

## *202-4323* PLATE & FILM GP—SPANISH

**S/N: CCA1-UP**
**AN ATTACHMENT**

**SMCS-7405, 7557** **i02210566**

| NOTE | PART NUMBER | QTY | PART NAME 1 2 3 4 5 6 (PRODUCT LEVEL) | SEE PAGE |
|---|---|---|---|---|
| | **5P-4001** | 1 | PLATE-MAIN FRAME (DO NOT DRILL OR WELD) | |
| | | | ON LH SIDE OF FRONT FRAME IN FRONT OF LIFT CYLINDER BRACKET | |
| | **156-7326** | 1 | PLATE-WARNING-ROPS/FOPS | |
| | | | ON LH SIDE OF CAB UNDER ROOF EDGE | |
| | **8T-1193** | 1 | PLATE-WARNING (MACHINE OPERATION) | |
| | | | ON RH GLOVE BOX DOOR | |
| | **201-7633** | 2 | PLATE-WARNING (NO CLEARANCE) | |
| | | | ON RH AND LH REAR PLATFORM SUPPORTS | |
| | | | | |
| | **224-6965** | 1 | FILM (FAST FILL) | |
| | | | ON FILL NECK OF LH FUEL TANK | |
| | **213-0437** | 2 | FILM-WARNING (CABLE CONNECTION) | |
| | | | ON SERVICE CENTER ACCESS DOOR BETWEEN LOUVERS | |

**<END>**

# SERVICE EQUIPMENT AND SUPPLIES

## *202-4324* PLATE & FILM GP—PORTUGUESE

**S/N: CCA1-UP**

**AN ATTACHMENT**

**SMCS-7405, 7557** **i02210565**

| NOTE | PART NUMBER | QTY | PART NAME 1 2 3 4 5 6 (PRODUCT LEVEL) | SEE PAGE |
|---|---|---|---|---|
| | **5P-4002** | 1 | PLATE-MAIN FRAME (DO NOT DRILL OR WELD) | |
| | | | LOCATE ON LH SIDE OF FRONT FRAME IN FRONT OF LIFT CYLINDER BRACKET | |
| | **156-7324** | 1 | PLATE-ROPS/FOPS | |
| | | | ON LH SIDE OF CAB UNDER ROOF EDGE | |
| | **8T-1194** | 1 | PLATE-WARNING (MACHINE OPERATION) | |
| | | | LOCATE ON RH GLOVE BOX DOOR | |
| | **201-7631** | 2 | PLATE-WARNING (NO CLEARANCE) | |
| | | | LOCATE ON RH AND LH REAR PLATFORM SUPPORTS | |
| | | | | |
| | **224-6963** | 1 | FILM (FAST FILL) | |
| | | | LOCATE ON FILL NECK OF LH FUEL TANK | |
| | **213-0435** | 1 | FILM-WARNING (CABLE CONNECTION) | |
| | | | LOCATE ON SERVICE CENTER ACCESS DOOR BETWEEN LOUVERS | |
| | **5P-4086** | 1 | FILM-WARNING (GROUND BLADE) | |
| | | | LOCATE ON THE SHIFT CONSOLE BELOW THE CS PIN PULLER SWITCH | |

**<END>**

## *203-2268* PLATE & FILM GP—GERMAN

**S/N: CCA1-UP**

**AN ATTACHMENT**

**SMCS-7405, 7557** **i02210563**

| NOTE | PART NUMBER | QTY | PART NAME 1 2 3 4 5 6 (PRODUCT LEVEL) | SEE PAGE |
|---|---|---|---|---|
| | **5P-4003** | 1 | PLATE-MAIN FRAME (DO NOT DRILL OR WELD) | |
| | | | LOCATE ON LH SIDE OF FRONT FRAME BEHIND LIFT CYLINDER BRACKET | |
| | **156-6312** | 1 | PLATE-ROPS/FOPS | |
| | | | ON LH SIDE OF CAB UNDER ROOF EDGE | |
| | **8T-1195** | 1 | PLATE-WARNING (MACHINE OPERATION) | |
| | | | LOCATE ON RH GLOVE BOX DOOR | |
| | **201-7627** | 2 | PLATE-WARNING (NO CLEARANCE) | |
| | | | LOCATE ON RH & LH REAR PLATFORM SUPPORTS | |
| | | | | |
| | **224-6959** | 1 | FILM (FAST FILL) | |
| | | | ON FILL NECK OF LH FUEL TANK | |
| | **213-0431** | 1 | FILM-WARNING (JUMPER CABLES) | |
| | | | LOCATE ON SERVICE CENTER ACCESS DOOR BETWEEN LOUVERS | |

**<END>**

# SERVICE EQUIPMENT AND SUPPLIES

## *219-8543* PLATE & FILM GP—PORTUGUESE

**S/N: CCA1-UP**

**AN ATTACHMENT**

**SMCS-7405, 7557** **i01773777**

| NOTE | PART NUMBER | QTY | PART NAME 1 2 3 4 5 6 (PRODUCT LEVEL) | SEE PAGE |
|---|---|---|---|---|
| | **224-6963** | 1 | FILM (FAST FILL FUEL) | |
| | | | (LOCATE ON FILL NECK OF LH FUEL TANK) | |
| | **5P-4086** | 1 | FILM-WARNING (GROUND BLADE) | |
| | | | (LOCATE ON SHIFT CONSOLE BELOW THE CENTERSHIFT PIN PULLER SWITCH) | |
| | **213-0435** | 1 | FILM-WARNING (CABLE CONNECTION) | |
| | | | (LOCATE ON SERVICE CENTER ACCESS DOOR BETWEEN LOUVERS) | |
| | **117-3302** | 1 | GAUGE AS-DIPSTICK (POWER TRAIN OIL) | |
| | **8T-1194** | 1 | PLATE-WARNING (MACHINE OPERATION) | |
| | | | (LOCATE ON RH GLOVE BOX DOOR) | |
| | **201-7631** | 2 | PLATE-WARNING (NO CLEARANCE) | |
| | | | (LOCATE ON RH & LH REAR PLATFORM SUPPORTS) | |

**<END>**

## *294-0529* PLATE & FILM GP

**S/N: CCA1-UP**

**AN ATTACHMENT**

**SMCS-7405, 7557** **i02570378**

| NOTE | PART NUMBER | QTY | PART NAME 1 2 3 4 5 6 (PRODUCT LEVEL) | SEE PAGE |
|---|---|---|---|---|
| | **249-7742** | 1 | FILM-IDENTIFICATION (FAST FUEL FILL, READ OMM) | |
| | **224-0554** | 1 | FILM-WARNING (UNIVERSAL, READ OMM) | |
| | **225-0312** | 1 | FILM-WARNING (JUMP START, READ OMM, INTL) | |
| | **226-1240** | 2 | FILM-WARNING (CRUSH HAZARD, STAY BACK) | |
| | | | (ONE ON RIGHT SIDE OF HYDRAULIC TANK) | |
| | | | (ONE ON LEFT SIDE OF HYDRAULIC TANK) | |
| | **226-1274** | 2 | FILM-WARNING (CRUSH HAZARD, READ OMM) | |
| | | | (ONE ON RIGHT SIDE OF HYDRAULIC TANK) | |
| | | | (ONE ON LEFT SIDE OF HYDRAULIC TANK) | |
| | **239-4991** | 1 | FILM-WARNING (HIGH PRESSURE CYLINDER) | |
| | **249-8575** | 1 | FILM-WARNING (NO DRILL, WELD, READ OMM) | |

**<END>**

# PART NUMBER INDEX


| Part | Page |
|---|---|
| **0** | |
| 0A-3721 | 606 |
| 0L-0478 | 731 |
| 0L-1026 | 43 |
| 0L-1178 | 570 |
| 0L-1352 | 12 |
| 0S-1566 | 611 |
| 0S-1571 | 731 |
| 0S-1573 | 644 |
| 0S-1579 | 476 |
| 0S-1585 | 543 |
| | 546 |
| | 586 |
| | 667 |
| 0S-1587 | 586 |
| 0S-1589 | 586 |
| 0S-1591 | 106 |
| 0S-1592 | 543 |
| | 546 |
| | 651 |
| 0S-1594 | 1100 |
| | 1101 |
| 0S-1604 | 468 |
| 0S-1617 | 12 |
| 0S-1621 | 647 |
| 0S-1756 | 438 |
| | 1075 |
| 0S-1973 | 464 |
| 0T-0065 | 103 |
| 0V-0375 | 543 |
| | 546 |
| **1** | |
| 1A-0224 | 1084 |
| | 1088 |
| 1A-1415 | 667 |
| 1A-1460 | 586 |
| 1A-2170 | 62 |
| 1A-2209 | 722 |
| 1A-4350 | 1232 |
| | 1233 |
| 1A-5822 | 723 |
| 1A-8063 | 1084 |
| | 1088 |
| 1B-0676 | 109 |
| | 615 |
| | 1111 |
| 1B-2578 | 109 |
| | 615 |
| | 1111 |
| 1B-2713 | 1139 |
| | 1140 |
| 1B-2886 | 648 |
| 1B-3867 | 92 |
| 1B-4038 | 667 |
| 1B-4046 | 667 |
| 1B-4208 | 1084 |
| | 1088 |
| 1B-4367 | 591 |
| | 592 |
| 1B-4430 | 1250 |
| 1B-5174 | 410 |
| 1B-5355 | 103 |
| 1B-7182 | 125 |
| | 126 |
| 1B-8704 | 109 |
| | 1111 |
| 1B-8705 | 22 |
| 1B-8737 | 731 |
| 1C-0569 | 1234 |
| | 1236 |
| 1D-0503 | 1047 |
| 1D-4569 | 586 |
| 1D-4612 | 1084 |
| | 1088 |
| 1D-4627 | 543 |
| | 546 |
| 1D-4628 | 644 |
| | 646 |
| 1D-4677 | 1248 |
| 1D-4689 | 596 |
| 1D-5117 | 259 |
| 1D-5119 | 1051 |
| 1D-5120 | 731 |
| 1F-0748 | 740 |
| | 742 |
| | 744 |
| | 746 |
| | 748 |
| | 755 |
| | 757 |
| | 759 |
| | 761 |
| | 767 |
| | 769 |
| | 771 |
| | 773 |
| | 775 |
| | 777 |
| | 779 |
| | 782 |
| | 784 |
| | 788 |
| | 790 |
| | 794 |
| | 796 |
| | 799 |
| | 803 |
| | 807 |
| | 811 |
| | 815 |
| | 819 |
| | 822 |
| | 825 |
| | 829 |
| | 833 |
| | 837 |
| | 845 |
| | 849 |
| | 853 |
| | 857 |
| | 860 |
| | 864 |
| | 867 |
| | 870 |
| | 874 |
| | 877 |
| | 880 |
| | 884 |
| | 888 |
| | 892 |
| | 896 |
| | 900 |
| | 904 |
| | 1047 |
| 1F-0750 | 570 |
| | 1197 |
| 1F-1651 | 1244 |
| 1F-4622 | 615 |
| | 1111 |
| 1F-5339 | 575 |
| | 576 |
| | 579 |
| 1F-7854 | 118 |
| 1F-7958 | 667 |
| | 1084 |
| | 1088 |
| 1F-8488 | 470 |
| 1H-0337 | 970 |
| | 972 |
| 1H-2629 | 294 |
| 1H-3244 | 141 |
| | 144 |
| | 349 |
| 1H-3338 | 1120 |
| | 1123 |
| | 1127 |
| | 1129 |
| 1H-3340 | 1262 |
| | 1264 |
| 1H-3937 | 733 |
| 1H-5728 | 39 |
| 1H-7339 | 23 |
| | 667 |
| 1H-7724 | 616 |
| 1H-8456 | 1262 |
| | 1264 |
| 1J-2860 | 438 |
| 1J-4757 | 438 |
| 1J-5929 | 45 |
| 1J-6762 | 1061 |
| 1J-9671 | 631 |
| | 634 |
| | 970 |
| | 972 |
| 1K-3113 | 1185 |
| 1K-6870 | 330 |
| 1K-6872 | 596 |
| | 648 |
| | 1078 |
| | 1081 |
| 1L-0509 | 452 |
| | 456 |
| | 460 |
| 1L-5072 | 737 |
| 1M-1230 | 1139 |
| | 1140 |
| 1M-3780 | 465 |
| 1M-4095 | 469 |
| 1M-4543 | 620 |
| | 622 |
| 1M-6119 | 147 |
| | 148 |
| | 149 |
| | 349 |
| | 354 |
| | 359 |
| | 360 |
| 1M-6120 | 147 |
| | 148 |
| | 149 |
| | 349 |
| | 354 |
| | 359 |
| | 360 |
| 1M-6718 | 1043 |
| 1N-4403 | 98 |
| 1N-5999 | 29 |
| | 660 |
| | 661 |
| 1P-0436 | 125 |
| | 126 |
| 1P-0451 | 107 |
| 1P-0604 | 424 |
| | 426 |
| 1P-2378 | 1191 |
| | 1192 |
| | 1194 |
| | 1195 |
| | 1197 |
| | 1201 |
| 1P-2636 | 438 |
| 1P-2662 | 438 |
| 1P-2807 | 1292 |
| 1P-3700 | 734 |
| | 735 |
| 1P-4278 | 118 |
| | 620 |
| | 622 |
| 1P-4577 | 452 |
| | 456 |
| | 460 |
| 1P-4578 | 452 |
| | 456 |
| | 460 |
| 1P-4693 | 450 |
| | 611 |
| 1P-4694 | 450 |
| 1P-6356 | 1183 |
| 1P-7297 | 83 |
| 1P-7521 | 609 |
| 1P-9328 | 620 |
| | 622 |
| 1R-0716 | 66 |
| 1R-0762 | 113 |
| 1R-0774 | 737 |
| 1R-1809 | 449 |
| | 461 |
| 1S-0994 | 330 |
| | 340 |
| | 345 |
| | 350 |
| | 355 |
| | 360 |
| | 367 |


► **PRIMARY REFERENCE**

# PART NUMBER INDEX


| Part | Page | Part | Page | Part | Page | Part | Page |
|---|---|---|---|---|---|---|---|
| | 372 | | 1038 | | 517 | | 518 |
| | 681 | | 1039 | | 519 | | 519 |
| | 684 | | 1040 | | 520 | | 520 |
| | 687 | | 1042 | | 521 | | 521 |
| | 703 | 2A-3348 . . . . . | 41 | | 522 | | 522 |
| | 705 | 2A-3398 . . . . . | 551 | | 523 | | 523 |
| 1S-0996 . . . . . | 340 | | 552 | | 524 | | 524 |
| | 345 | 2A-4429 . . . . . | 34 | | 525 | | 525 |
| | 367 | 2A-6684 . . . . . | 1164 | | 526 | | 526 |
| | 372 | 2A-6926 . . . . . | 1268 | | 527 | | 527 |
| 1S-1015 . . . . . | 350 | | 1270 | | 528 | | 528 |
| | 355 | | 1272 | | 529 | | 529 |
| | 360 | | 1274 | | 530 | | 530 |
| 1S-2342 . . . . . | 321 | 2A-6928 . . . . . | 1268 | | 531 | | 531 |
| | 325 | | 1270 | | 532 | | 532 |
| 1S-3618 . . . . . | 707 | | 1272 | | 534 | | 533 |
| 1S-7251 . . . . . | 339 | | 1274 | | 535 | | 534 |
| | 344 | 2A-6929 . . . . . | 1268 | | 536 | | 535 |
| | 349 | | 1270 | | 539 | | 536 |
| | 350 | | 1272 | | 540 | | 539 |
| | 354 | | 1274 | | 541 | | 540 |
| | 355 | 2A-6938 . . . . . | 470 | | 542 | | 541 |
| | 359 | | 471 | 2D-2508 . . . . . | 508 | | 542 |
| | 366 | 2A-6985 . . . . . | ▶1207 | | 509 | 2D-2511 . . . . . | 508 |
| | 371 | | 1225 | | 510 | | 509 |
| 1S-7252 . . . . . | 349 | | 1227 | | 511 | | 510 |
| | 354 | | 1228 | | 512 | | 511 |
| | 359 | 2A-7081 . . . . . | 680 | | 513 | | 512 |
| | 367 | | 683 | | 514 | | 513 |
| | 372 | 2A-7089 . . . . . | 1047 | | 515 | | 514 |
| | 385 | | 1049 | | 516 | | 515 |
| 1S-9110 . . . . . | 450 | 2A-7184 . . . . . | 1107 | | 517 | | 516 |
| 1S-9593 . . . . . | 161 | 2B-0941 . . . . . | 674 | | 518 | | 533 |
| | 399 | | 680 | | 519 | | 539 |
| | 487 | | 683 | | 520 | 2D-2565 . . . . . | 508 |
| | 488 | | 686 | | 521 | | 509 |
| | 1045 | 2B-0947 . . . . . | 440 | | 522 | | 510 |
| | 1046 | 2B-2673 . . . . . | 1047 | | 523 | | 511 |
| 1T-0738 . . . . . | 430 | 2B-2695 . . . . . | 14 | | 524 | | 512 |
| | 431 | | 16 | | 525 | | 513 |
| | 490 | | 1234 | | 526 | | 514 |
| | 492 | | 1236 | | 527 | | 515 |
| 1U-3998 . . . . . | 660 | 2B-3147 . . . . . | 470 | | 528 | | 516 |
| | 661 | | 471 | | 529 | | 517 |
| 1U-8846 . . . . . | 39 | 2B-3148 . . . . . | 470 | | 530 | | 518 |
| | 409 | | 471 | | 531 | | 528 |
| | 413 | 2B-7410 . . . . . | 667 | | 532 | | 529 |
| 1V-6688 . . . . . | 350 | 2B-9373 . . . . . | 465 | | 533 | | 532 |
| | 355 | 2C-8469 . . . . . | 259 | | 534 | | 534 |
| | 360 | 2C-8478 . . . . . | 3 | | 535 | | 536 |
| 1V-7368 . . . . . | 170 | | ▶1191 | | 536 | | 540 |
| 1V-8230 . . . . . | 47 | 2C-8820 . . . . . | ▶1192 | | 539 | | 542 |
| 1W-0428 . . . . . | 14 | 2C-8827 . . . . . | 1192 | | 540 | 2D-2654 . . . . . | 539 |
| | 16 | 2C-9688 . . . . . | ▶1193 | | 541 | 2D-4202 . . . . . | 737 |
| 1W-2431 . . . . . | 103 | 2C-9689 . . . . . | ▶1194 | | 542 | 2D-6006 . . . . . | 624 |
| 1W-3011 . . . . . | 575 | 2D-0626 . . . . . | 1081 | 2D-2509 . . . . . | 508 | 2D-6235 . . . . . | 1139 |
| 1Y-7927 . . . . . | 1160 | 2D-2507 . . . . . | 508 | | 509 | | 1140 |
| | | | 509 | | 510 | | 1160 |
| | | | 510 | | 511 | 2D-6642 . . . . . | 55 |
| **2** | | | 511 | | 512 | | 438 |
| | | | 512 | | 513 | | 440 |
| 2A-1538 . . . . . | 648 | | 513 | | 514 | 2D-7325 . . . . . | 615 |
| 2A-3034 . . . . . | 99 | | 514 | | 515 | 2D-8009 . . . . . | 465 |
| 2A-3211 . . . . . | 1034 | | 515 | | 516 | 2D-8154 . . . . . | 667 |
| | 1036 | | 516 | | 517 | 2D-8652 . . . . . | 653 |


▶ PRIMARY REFERENCE

# PART NUMBER INDEX


| Part | Page | Part | Page | Part | Page | Part | Page |
|---|---|---|---|---|---|---|---|
| 2D-8822 . . . . . | 551 | | 536 | | 811 | | 841 |
| | 552 | | 540 | | 815 | | 846 |
| 2F-7306 . . . . . | 1210 | | 541 | | 819 | | 850 |
| 2F-8057 . . . . . | 591 | | 542 | | 822 | | 853 |
| | 592 | 2G-6664 . . . . . | 1155 | | 825 | | 858 |
| | 650 | 2G-6684 . . . . . | 270 | | 829 | | 861 |
| 2F-8509 . . . . . | 725 | 2G-6695 . . . . . | 667 | | 834 | | 864 |
| 2G-0478 . . . . . | 667 | 2G-6740 . . . . . | 742 | | 838 | | 868 |
| 2G-0617 . . . . . | 223 | | 752 | | 841 | | 871 |
| | 226 | | 755 | | 845 | | 875 |
| | 229 | | 759 | | 850 | | 877 |
| | 232 | | 767 | | 853 | | 881 |
| | 239 | | 773 | | 857 | | 884 |
| | 242 | | 775 | | 861 | | 888 |
| | 259 | | 779 | | 864 | | 893 |
| | 325 | | 786 | | 868 | | 896 |
| 2G-0659 . . . . . | 239 | | 788 | | 871 | | 901 |
| | 242 | | 790 | | 875 | | 905 |
| | 259 | | 792 | | 877 | 2G-6749 . . . . . | 740 |
| 2G-0988 . . . . . | 223 | | 794 | | 881 | | 742 |
| | 226 | | 796 | | 884 | | 744 |
| | 229 | | 819 | | 888 | | 746 |
| | 232 | | 822 | | 892 | | 748 |
| | 239 | | 833 | | 896 | | 750 |
| | 242 | | 837 | | 901 | | 752 |
| | 259 | | 850 | | 905 | | 755 |
| | 325 | | 864 | 2G-6748 . . . . . | 740 | | 757 |
| 2G-1034 . . . . . | 620 | | 868 | | 742 | | 759 |
| | 622 | | 871 | | 744 | | 761 |
| 2G-3219 . . . . . | 1047 | | 874 | | 746 | | 763 |
| 2G-3221 . . . . . | 1047 | | 877 | | 748 | | 765 |
| 2G-3865 . . . . . | 543 | | 881 | | 750 | | 767 |
| | 546 | | 901 | | 752 | | 769 |
| 2G-3967 . . . . . | 645 | | 905 | | 755 | | 771 |
| 2G-3971 . . . . . | 1049 | 2G-6747 . . . . . | 740 | | 757 | | 773 |
| 2G-4332 . . . . . | 1084 | | 742 | | 759 | | 775 |
| 2G-5493 . . . . . | 680 | | 744 | | 761 | | 777 |
| | 683 | | 746 | | 763 | | 779 |
| | 686 | | 748 | | 765 | | 782 |
| 2G-5667 . . . . . | 543 | | 750 | | 767 | | 784 |
| | 546 | | 752 | | 769 | | 786 |
| | 651 | | 755 | | 771 | | 788 |
| 2G-5673 . . . . . | 543 | | 757 | | 773 | | 790 |
| | 546 | | 759 | | 775 | | 792 |
| 2G-6285 . . . . . | 624 | | 761 | | 777 | | 794 |
| 2G-6337 . . . . . | 611 | | 763 | | 779 | | 796 |
| 2G-6595 . . . . . | ►489 | | 765 | | 782 | | 799 |
| | 518 | | 767 | | 784 | | 803 |
| | 519 | | 769 | | 786 | | 807 |
| | 520 | | 771 | | 788 | | 811 |
| | 521 | | 773 | | 790 | | 815 |
| | 522 | | 775 | | 792 | | 820 |
| | 523 | | 777 | | 794 | | 823 |
| | 524 | | 779 | | 796 | | 826 |
| | 525 | | 782 | | 799 | | 830 |
| | 526 | | 784 | | 803 | | 834 |
| | 527 | | 786 | | 807 | | 838 |
| | 528 | | 788 | | 811 | | 841 |
| | 529 | | 790 | | 815 | | 846 |
| | 530 | | 792 | | 820 | | 850 |
| | 531 | | 794 | | 823 | | 853 |
| | 532 | | 796 | | 825 | | 858 |
| | 533 | | 799 | | 830 | | 861 |
| | 534 | | 803 | | 834 | | 864 |
| | 535 | | 807 | | 838 | | 868 |


► **PRIMARY REFERENCE**

# PART NUMBER INDEX


| Part | Page | Part | Page | Part | Page | Part | Page |
|---|---|---|---|---|---|---|---|
| | 871 | | 901 | | 808 | | 771 |
| | 875 | | 905 | | 826 | | 773 |
| | 877 | 2G-6752 . . . . . | 740 | | 858 | | 775 |
| | 881 | | 742 | | 885 | | 777 |
| | 884 | | 744 | | 888 | | 779 |
| | 888 | | 746 | | 896 | | 782 |
| | 893 | | 748 | 2G-6754 . . . . . | 740 | | 784 |
| | 896 | | 750 | | 744 | | 786 |
| | 901 | | 752 | | 750 | | 788 |
| | 905 | | 755 | | 752 | | 790 |
| 2G-6751 . . . . . | 740 | | 757 | | 755 | | 792 |
| | 742 | | 759 | | 757 | | 794 |
| | 744 | | 761 | | 759 | | 796 |
| | 746 | | 763 | | 763 | | 800 |
| | 748 | | 765 | | 765 | | 804 |
| | 750 | | 767 | | 769 | | 808 |
| | 752 | | 769 | | 773 | | 812 |
| | 755 | | 771 | | 775 | | 816 |
| | 757 | | 773 | | 777 | | 820 |
| | 759 | | 775 | | 779 | | 823 |
| | 761 | | 777 | | 782 | | 826 |
| | 763 | | 779 | | 784 | | 830 |
| | 765 | | 782 | | 788 | | 834 |
| | 767 | | 784 | | 790 | | 838 |
| | 769 | | 786 | | 792 | | 841 |
| | 771 | | 788 | | 794 | | 846 |
| | 773 | | 790 | | 796 | | 850 |
| | 775 | | 792 | | 812 | | 854 |
| | 777 | | 794 | | 816 | | 858 |
| | 779 | | 796 | | 826 | | 861 |
| | 782 | | 800 | | 830 | | 865 |
| | 784 | | 804 | | 834 | | 868 |
| | 786 | | 808 | | 838 | | 871 |
| | 788 | | 812 | | 841 | | 875 |
| | 790 | | 816 | | 846 | | 878 |
| | 792 | | 820 | | 850 | | 881 |
| | 794 | | 823 | | 854 | | 885 |
| | 796 | | 826 | | 858 | | 889 |
| | 799 | | 830 | | 861 | | 893 |
| | 803 | | 834 | | 865 | | 897 |
| | 807 | | 838 | | 868 | | 901 |
| | 811 | | 841 | | 871 | | 905 |
| | 815 | | 846 | | 875 | 2G-6756 . . . . . | 740 |
| | 820 | | 850 | | 878 | | 742 |
| | 823 | | 854 | | 881 | | 744 |
| | 826 | | 858 | | 888 | | 746 |
| | 830 | | 861 | | 893 | | 748 |
| | 834 | | 865 | | 897 | | 750 |
| | 838 | | 868 | | 901 | | 752 |
| | 841 | | 871 | | 905 | | 755 |
| | 846 | | 875 | 2G-6755 . . . . . | 740 | | 757 |
| | 850 | | 878 | | 742 | | 759 |
| | 853 | | 881 | | 744 | | 761 |
| | 858 | | 885 | | 746 | | 763 |
| | 861 | | 888 | | 748 | | 765 |
| | 865 | | 893 | | 750 | | 767 |
| | 868 | | 896 | | 752 | | 769 |
| | 871 | | 901 | | 755 | | 771 |
| | 875 | | 905 | | 757 | | 773 |
| | 877 | 2G-6753 . . . . . | 740 | | 759 | | 775 |
| | 881 | | 746 | | 761 | | 777 |
| | 884 | | 750 | | 763 | | 779 |
| | 888 | | 763 | | 765 | | 782 |
| | 893 | | 765 | | 767 | | 784 |
| | 896 | | 771 | | 769 | | 786 |

# PART NUMBER INDEX


| Part | Page | Part | Page | Part | Page | Part | Page |
|---|---|---|---|---|---|---|---|
| | 788 | | 812 | | 769 | | 546 |
| | 790 | | 816 | | 773 | 2G-8741 . . . . . | 543 |
| | 792 | | 820 | | 777 | | 546 |
| | 794 | | 823 | | 779 | 2G-8742 . . . . . | 543 |
| | 796 | | 826 | | 786 | | 546 |
| | 800 | | 830 | | 788 | 2G-8767 . . . . . | 1164 |
| | 804 | | 834 | | 792 | | 1170 |
| | 808 | | 838 | | 794 | | 1174 |
| | 812 | | 841 | | 796 | | 1179 |
| | 816 | | 846 | | 846 | 2G-8768 . . . . . | 543 |
| | 820 | | 850 | | 854 | | 546 |
| | 823 | | 854 | | 858 | 2G-8777 . . . . . | 543 |
| | 826 | | 858 | | 861 | | 546 |
| | 830 | | 861 | | 865 | 2G-9098 . . . . . | 644 |
| | 834 | | 865 | | 868 | | 646 |
| | 838 | | 868 | | 871 | 2G-9103 . . . . . | 644 |
| | 841 | | 871 | | 875 | | 646 |
| | 846 | | 875 | | 878 | 2G-9791 . . . . . | 470 |
| | 850 | | 878 | | 881 | | 471 |
| | 854 | | 881 | | 893 | 2H-3740 . . . . . | 543 |
| | 858 | | 885 | | 897 | | 546 |
| | 861 | | 889 | | 901 | 2H-3746 . . . . . | 1084 |
| | 865 | | 893 | | 905 | | 1088 |
| | 868 | | 897 | 2G-7149 . . . . . | 1088 | 2H-3764 . . . . . | 1051 |
| | 871 | | 901 | 2G-7309 . . . . . | 1084 | 2H-3786 . . . . . | 650 |
| | 875 | | 905 | | 1088 | 2H-3920 . . . . . | 303 |
| | 878 | 2G-7097 . . . . . | 1206 | 2G-7728 . . . . . | 1084 | | 306 |
| | 881 | | 1207 | | 1088 | | 315 |
| | 885 | 2G-7098 . . . . . | 1206 | 2G-8233 . . . . . | 1075 | | 1276 |
| | 889 | | 1207 | 2G-8241 . . . . . | 1191 | | 1278 |
| | 893 | 2G-7107 . . . . . | 744 | | 1192 | | 1280 |
| | 897 | | 750 | | 1194 | | 1282 |
| | 901 | | 752 | | 1195 | 2H-3922 . . . . . | 298 |
| | 905 | | 757 | | 1197 | | 1217 |
| 2G-6757 . . . . . | 740 | | 759 | | 1201 | | 1222 |
| | 742 | | 763 | 2G-8242 . . . . . | 1191 | 2H-3928 . . . . . | 734 |
| | 744 | | 769 | | 1192 | | 735 |
| | 746 | | 773 | | 1194 | 2H-3931 . . . . . | 713 |
| | 748 | | 777 | | 1195 | 2H-3934 . . . . . | 12 |
| | 750 | | 779 | | 1197 | 2H-3940 . . . . . | 100 |
| | 752 | | 786 | 2G-8572 . . . . . | 1107 | 2H-5001 . . . . . | 438 |
| | 755 | | 788 | | 1170 | 2H-5549 . . . . . | 41 |
| | 757 | | 792 | | 1174 | 2H-6489 . . . . . | 409 |
| | 759 | | 794 | | 1179 | | 413 |
| | 761 | | 796 | | 1194 | 2H-6490 . . . . . | 469 |
| | 763 | | 846 | | 1195 | 2H-9091 . . . . . | 620 |
| | 765 | | 854 | | 1197 | | 622 |
| | 767 | | 858 | 2G-8573 . . . . . | 1107 | 2H-9247 . . . . . | 667 |
| | 769 | | 861 | | 1170 | 2H-9889 . . . . . | 681 |
| | 771 | | 865 | | 1174 | | 684 |
| | 773 | | 868 | | 1179 | | 687 |
| | 775 | | 871 | | 1194 | 2J-0157 . . . . . | 409 |
| | 777 | | 875 | | 1195 | | 413 |
| | 779 | | 878 | | 1197 | 2J-3505 . . . . . | 543 |
| | 782 | | 881 | 2G-8609 . . . . . | 651 | | 546 |
| | 784 | | 893 | 2G-8615 . . . . . | 543 | 2J-3506 . . . . . | 450 |
| | 786 | | 897 | | 546 | | 667 |
| | 788 | | 901 | 2G-8624 . . . . . | 543 | | 1064 |
| | 790 | | 905 | | 546 | | 1071 |
| | 792 | 2G-7108 . . . . . | 744 | 2G-8626 . . . . . | 543 | | 1072 |
| | 794 | | 750 | | 546 | | 1075 |
| | 796 | | 752 | 2G-8631 . . . . . | 543 | | 1084 |
| | 800 | | 757 | | 546 | | 1088 |
| | 804 | | 759 | | 663 | 2J-6089 . . . . . | 1034 |
| | 808 | | 763 | 2G-8633 . . . . . | 543 | | 1035 |


► **PRIMARY REFERENCE**

# PART NUMBER INDEX


| Part | Page | Part | Page | Part | Page | Part | Page |
|---|---|---|---|---|---|---|---|
| | 1036 | | 385 | | 697 | | 651 |
| | 1038 | 2L-3331 | 615 | | 700 | | 1051 |
| | 1040 | 2L-6267 | 109 | | 970 | | 1081 |
| | 1042 | 2L-8050 | 349 | | 972 | | 1084 |
| 2J-6274 | 609 | | 350 | 2S-5100 | 737 | | 1088 |
| 2J-7761 | 737 | | 355 | 2S-5658 | 36 | 3B-8822 | 613 |
| 2J-8163 | 543 | | 360 | 2S-8439 | 447 | 3B-8921 | 418 |
| | 546 | 2L-8058 | 350 | 2T-2317 | 1187 | | 421 |
| 2K-0120 | 1081 | | 355 | 2V-0099 | 1096 | 3C-1884 | 1267 |
| 2K-0419 | 1047 | | 360 | | 1147 | 3C-6969 | 399 |
| 2K-0420 | 643 | 2M-0849 | 644 | | 1151 | | 402 |
| 2K-0703 | 1081 | | 1075 | 2V-3216 | 319 | 3D-2239 | 533 |
| 2K-4233 | 1078 | 2M-4779 | 628 | | 378 | 3D-2824 | 47 |
| 2K-4821 | 144 | | 633 | | 381 | | 49 |
| 2K-4973 | 737 | 2M-7077 | 317 | | 407 | | 64 |
| | 1055 | | 319 | 2V-4331 | 586 | | 69 |
| | 1078 | 2M-7819 | 1160 | 2V-8259 | 387 | | 76 |
| | 1081 | 2M-9780 | 118 | | 392 | | 297 |
| | 1100 | | 409 | | 396 | | 672 |
| | 1101 | | 413 | 2Y-1834 | 331 | | 692 |
| | 1234 | | 470 | 2Y-3209 | 1189 | | 694 |
| | 1236 | | 471 | 2Y-5828 | 722 | | 695 |
| | 1248 | | 609 | 2Y-5829 | 55 | | 697 |
| | 1250 | | 665 | | 73 | | 698 |
| 2K-5106 | 438 | | 680 | | 75 | | 700 |
| 2K-5109 | 438 | | 683 | | 90 | | 701 |
| 2K-5830 | 1107 | | 970 | | | | 708 |
| 2K-5986 | 556 | | 972 | | | | 711 |
| | 559 | 2N-0475 | 432 | **3** | | | 725 |
| 2K-6061 | 1100 | | 434 | | | | 911 |
| | 1101 | 2N-6005 | 62 | 3B-0623 | 29 | | 970 |
| 2K-6413 | 1091 | 2N-8037 | 83 | | 31 | | 972 |
| 2K-6830 | 657 | | 85 | | 53 | | 1187 |
| 2K-7471 | 1084 | 2N-9421 | 109 | | 62 | 3D-2981 | 470 |
| | 1088 | 2P-1279 | 1034 | 3B-4501 | 1097 | | 471 |
| 2K-7979 | 1107 | | 1035 | 3B-4505 | 12 | 3D-4245 | 478 |
| 2K-8199 | 665 | | 1036 | 3B-4607 | 624 | | 481 |
| | 974 | | 1038 | | 1107 | | 484 |
| | 976 | | 1039 | 3B-4610 | 624 | 3D-4904 | 1084 |
| | 978 | | 1040 | | 737 | | 1088 |
| | 980 | | 1042 | 3B-4615 | 127 | 3D-6399 | 1158 |
| | 982 | 2P-4304 | 62 | 3B-4618 | 543 | 3D-6509 | 440 |
| | 984 | | 66 | | 546 | 3D-6689 | 476 |
| | 986 | 2P-4339 | 1096 | | 650 | 3D-7587 | 622 |
| | 988 | | 1147 | 3B-4628 | 681 | 3D-8317 | 481 |
| | 990 | | 1151 | | 684 | | 484 |
| | 992 | 2R-0694 | 624 | 3B-4647 | 648 | 3D-8747 | 1139 |
| | 994 | 2R-0719 | 624 | 3B-5301 | 378 | | 1140 |
| | 996 | 2R-0724 | 624 | | 381 | 3D-8748 | 1139 |
| | 998 | 2R-1600 | 551 | 3B-5320 | 1047 | | 1140 |
| | 1000 | | 552 | 3B-5325 | 1091 | 3D-8749 | 1139 |
| | 1002 | 2R-1922 | 1244 | 3B-5329 | 645 | | 1140 |
| | 1004 | 2R-6806 | 123 | 3B-6753 | 1051 | 3D-8752 | 1139 |
| | 1006 | 2S-0115 | 1071 | | 1075 | | 1140 |
| | 1008 | | 1072 | 3B-6769 | 590 | 3D-8884 | 613 |
| | 1010 | 2S-2053 | 14 | 3B-7721 | 616 | 3D-9253 | 1244 |
| | 1012 | | 16 | 3B-7732 | 452 | 3E-0109 | 204 |
| | 1014 | | 69 | | 456 | | 206 |
| | 1016 | 2S-2923 | 620 | | 460 | | 208 |
| | 1018 | | 622 | 3B-7733 | 590 | | 235 |
| | 1020 | 2S-3029 | 409 | 3B-8485 | 644 | | 237 |
| 2L-0273 | 325 | | 413 | | 646 | | 252 |
| | 349 | 2S-3440 | 606 | 3B-8489 | 543 | | 254 |
| | 354 | 2S-4078 | 64 | | 546 | | 306 |
| | 359 | | 694 | | 590 | | 309 |

# PART NUMBER INDEX


| Part | Page | Part | Page | Part | Page | Part | Page |
|---|---|---|---|---|---|---|---|
| | 311 | | 1205 | | 399 | | 237 |
| | 313 | | 1221 | | 402 | | 252 |
| | 387 | | 1272 | 3E-6575 . . . . . | 1210 | | 254 |
| | 389 | 3E-3389 . . . . . | 303 | 3E-6754 . . . . . | 385 | | 311 |
| | 392 | | 306 | | 392 | | 313 |
| | 396 | | 315 | | 396 | 3E-8783 . . . . . | 399 |
| | 399 | | 1278 | 3E-7417 . . . . . | 725 | | 402 |
| | 400 | | 1280 | 3E-7448 . . . . . | 317 | 3E-8784 . . . . . | 408 |
| | 402 | | 1282 | | 319 | 3E-8812 . . . . . | 304 |
| | 1179 | 3E-3535 . . . . . | 1183 | 3E-7842 . . . . . | 366 | 3E-8814 . . . . . | 229 |
| | 1198 | 3E-3636 . . . . . | 321 | | 371 | | 232 |
| | 1202 | | 325 | | 385 | | 240 |
| 3E-0154 . . . . . | ▶301 | 3E-3890 . . . . . | 1096 | 3E-8005 . . . . . | 430 | | 242 |
| | 367 | | 1147 | | 431 | 3E-8815 . . . . . | 217 |
| | 372 | | 1151 | 3E-8006 . . . . . | 490 | | 218 |
| | 385 | 3E-4039 . . . . . | 23 | | 492 | | 220 |
| 3E-0155 . . . . . | ▶303 | 3E-4048 . . . . . | 1207 | 3E-8016 . . . . . | 41 | | 222 |
| | 309 | | 1209 | | 47 | 3E-8816 . . . . . | 385 |
| | 1284 | 3E-4302 . . . . . | 725 | | 49 | | 393 |
| 3E-0400 . . . . . | 1096 | 3E-4307 . . . . . | 450 | | 71 | | 397 |
| | 1147 | 3E-4335 . . . . . | 1210 | 3E-8017 . . . . . | 101 | 3E-8817 . . . . . | 387 |
| | 1151 | 3E-4336 . . . . . | 1210 | | 107 | | 389 |
| 3E-2026 . . . . . | 321 | 3E-4352 . . . . . | 51 | 3E-8020 . . . . . | 1217 | | 393 |
| | 325 | | 60 | | 1219 | | 397 |
| 3E-3365 . . . . . | 179 | | 68 | | 1222 | 3E-8821 . . . . . | 1137 |
| | 194 | | 71 | 3E-8320 . . . . . | 349 | | 1138 |
| | 199 | | 81 | | 354 | 3E-8822 . . . . . | 175 |
| | 220 | | 432 | | 359 | | 268 |
| | 222 | | 434 | 3E-8557 . . . . . | 331 | | 269 |
| | 257 | 3E-4353 . . . . . | 14 | 3E-8646 . . . . . | 167 | | 270 |
| | 284 | | 16 | 3E-8700 . . . . . | ▶287 | | 273 |
| | 290 | | 20 | | 410 | 3E-8825 . . . . . | 175 |
| | 297 | | 143 | | 414 | | 204 |
| | 339 | | 317 | 3E-8763 . . . . . | 304 | | 206 |
| | 340 | | 319 | | 399 | | 208 |
| | 344 | 3E-4356 . . . . . | 561 | | 408 | | 217 |
| | 345 | 3E-4362 . . . . . | 1210 | 3E-8765 . . . . . | 385 | | 218 |
| | 366 | 3E-4367 . . . . . | 331 | | 397 | | 220 |
| | 367 | 3E-5169 . . . . . | 340 | 3E-8766 . . . . . | 208 | | 222 |
| | 371 | | 345 | | 235 | | 223 |
| | 372 | | 367 | | 237 | | 226 |
| | 487 | | 372 | | 252 | | 229 |
| | 488 | 3E-5180 . . . . . | 161 | | 254 | | 232 |
| | 627 | 3E-5239 . . . . . | 204 | | 311 | | 235 |
| | 1045 | | 206 | | 313 | | 237 |
| | 1046 | | 208 | | 1198 | | 239 |
| | 1096 | | 290 | | 1202 | | 240 |
| | 1151 | 3E-5464 . . . . . | 1096 | 3E-8768 . . . . . | 293 | | 242 |
| | 1156 | 3E-6017 . . . . . | 1026 | 3E-8770 . . . . . | 206 | | 252 |
| | 1217 | 3E-6328 . . . . . | ▶139 | 3E-8772 . . . . . | 217 | | 254 |
| | 1219 | | 387 | | 218 | | 259 |
| | 1221 | | 389 | | 220 | | 268 |
| 3E-3368 . . . . . | 279 | | 392 | | 222 | | 269 |
| | 280 | | 396 | | 223 | | 270 |
| | 287 | 3E-6332 . . . . . | 290 | | 226 | | 273 |
| 3E-3371 . . . . . | 212 | 3E-6388 . . . . . | 1268 | | 229 | | 293 |
| | 277 | | 1272 | | 232 | | 299 |
| | 278 | 3E-6389 . . . . . | ▶177 | | 239 | | 304 |
| 3E-3377 . . . . . | 387 | | 306 | | 242 | | 311 |
| | 392 | | 309 | | 259 | | 313 |
| 3E-3383 . . . . . | 186 | | 315 | | 299 | | 385 |
| | 188 | 3E-6450 . . . . . | 325 | | 402 | | 387 |
| | 190 | | 385 | 3E-8776 . . . . . | 293 | | 389 |
| | 192 | 3E-6477 . . . . . | 220 | 3E-8782 . . . . . | 208 | | 392 |
| | 1204 | | 222 | | 235 | | 393 |


▶ **PRIMARY REFERENCE**

# PART NUMBER INDEX


| Part | Page | Part | Page | Part | Page | Part | Page |
|---|---|---|---|---|---|---|---|
| | 396 | | 786 | 3J-1907 . . . . . | 52 | | 970 |
| | 397 | | 788 | | 53 | | 972 |
| | 399 | | 790 | | 102 | | 1022 |
| | 402 | | 792 | | 116 | | 1029 |
| | 408 | | 794 | | 118 | | 1030 |
| | 1137 | | 796 | | 121 | | 1033 |
| | 1138 | | 799 | | 123 | | 1034 |
| | 1198 | | 803 | | 321 | | 1035 |
| | 1202 | | 807 | | 326 | | 1036 |
| 3E-9317 . . . . . | 226 | | 811 | | 409 | | 1037 |
| 3E-9323 . . . . . | 399 | | 815 | | 413 | | 1038 |
| 3E-9324 . . . . . | 399 | | 819 | | 428 | | 1039 |
| | 402 | | 822 | | 443 | | 1040 |
| 3E-9326 . . . . . | 223 | | 825 | | 445 | | 1041 |
| | 226 | | 829 | | 447 | | 1042 |
| | 229 | | 833 | | 449 | | 1043 |
| | 232 | | 837 | | 452 | | 1044 |
| | 239 | | 841 | | 456 | 3J-3679 . . . . . | 970 |
| | 242 | | 845 | | 460 | 3J-4818 . . . . . | 1250 |
| | 259 | | 849 | | 478 | 3J-5389 . . . . . | 470 |
| | 299 | | 853 | | 481 | | 471 |
| | 402 | | 857 | | 484 | 3J-5390 . . . . . | 606 |
| 3E-9327 . . . . . | 387 | | 860 | | 490 | | 611 |
| | 389 | | 864 | | 492 | | 619 |
| | 393 | | 867 | | 620 | 3J-6956 . . . . . | 490 |
| | 397 | | 870 | | 622 | | 492 |
| 3E-9330 . . . . . | 1137 | | 874 | | 678 | 3J-7354 . . . . . | 66 |
| | 1138 | | 877 | | 690 | | 85 |
| 3E-9413 . . . . . | 1213 | | 880 | | 694 | | 428 |
| | 1214 | | 884 | | 695 | | 443 |
| | 1215 | | 888 | | 697 | | 445 |
| 3E-9865 . . . . . | 1107 | | 892 | | 698 | | 449 |
| 3F-0379 . . . . . | 294 | | 896 | | 700 | | 481 |
| 3F-1547 . . . . . | 737 | | 900 | | 701 | | 484 |
| 3F-5108 . . . . . | 1062 | | 904 | | 708 | | 609 |
| | 1063 | | 1270 | | 710 | | 634 |
| | 1065 | | 1274 | | 800 | | 678 |
| | 1069 | | 1286 | | 804 | | 690 |
| | 1070 | | 1287 | | 808 | | 694 |
| | 1073 | 3G-0361 . . . . . | 737 | | 812 | | 697 |
| | 1074 | 3G-1701 . . . . . | 1156 | | 816 | | 700 |
| 3F-7514 . . . . . | 1107 | | 1158 | | 820 | | 708 |
| 3F-9556 . . . . . | 144 | 3G-2165 . . . . . | 1071 | | 823 | | 710 |
| | 740 | | 1072 | | 826 | | 716 |
| | 742 | 3G-2579 . . . . . | 1081 | | 830 | | 718 |
| | 744 | 3G-2581 . . . . . | 1081 | | 834 | | 727 |
| | 746 | 3G-3265 . . . . . | 1170 | | 838 | | 970 |
| | 748 | | 1174 | | 842 | | 972 |
| | 750 | | 1179 | | 846 | | 1024 |
| | 752 | | 1181 | | 850 | | 1031 |
| | 755 | 3G-3726 . . . . . | 1029 | | 854 | 3J-8500 . . . . . | 729 |
| | 757 | | 1030 | | 858 | 3K-0196 . . . . . | 468 |
| | 759 | | 1033 | | 861 | 3K-0360 . . . . . | 39 |
| | 761 | 3G-6659 . . . . . | 590 | | 865 | | 53 |
| | 763 | 3G-7875 . . . . . | 1244 | | 868 | | 85 |
| | 765 | 3G-8175 . . . . . | 1045 | | 871 | | 118 |
| | 767 | 3H-2900 . . . . . | 387 | | 875 | | 321 |
| | 769 | | 389 | | 878 | | 325 |
| | 771 | | 392 | | 881 | | 326 |
| | 773 | | 396 | | 885 | | 385 |
| | 775 | | 1097 | | 889 | | 409 |
| | 777 | | 1148 | | 893 | | 413 |
| | 779 | | 1151 | | 897 | | 443 |
| | 782 | 3H-7654 . . . . . | 41 | | 901 | | 470 |
| | 784 | 3H-8538 . . . . . | 1111 | | 905 | | 471 |

# PART NUMBER INDEX


| Part | Page | Part | Page | Part | Page | Part | Page |
|---|---|---|---|---|---|---|---|
| | 674 | | 1008 | 3N-3790 . . . . . | 1290 | | 385 |
| | 676 | | 1010 | | 1292 | | 387 |
| | 677 | | 1012 | 3P-0337 . . . . . | 421 | | 389 |
| | 680 | | 1014 | 3P-0647 . . . . . | 68 | | 392 |
| | 683 | | 1016 | 3P-1461 . . . . . | 1075 | | 396 |
| | 686 | | 1018 | 3P-1896 . . . . . | 62 | | 399 |
| | 689 | | 1020 | 3P-1932 . . . . . | 690 | | 402 |
| | 690 | | 1026 | 3P-3839 . . . . . | 582 | | 406 |
| | 695 | | 1028 | | 584 | | 593 |
| | 698 | | 1031 | 3P-9498 . . . . . | 970 | | 594 |
| | 700 | | 1187 | | 972 | | 615 |
| | 703 | 3K-0835 . . . . . | 1217 | 3P-9900 . . . . . | 556 | | 686 |
| | 705 | | 1219 | | 559 | | 710 |
| | 707 | | 1221 | 3R-2437 . . . . . | 970 | | 1096 |
| | 708 | 3K-0986 . . . . . | 468 | 3R-9965 . . . . . | 330 | | 1147 |
| | 710 | 3K-2889 . . . . . | 591 | 3S-0004 . . . . . | 465 | | 1151 |
| | 711 | | 592 | 3S-0391 . . . . . | 615 | | 1164 |
| | 799 | 3K-4897 . . . . . | 1026 | 3S-1349 . . . . . | 1084 | | 1183 |
| | 803 | | 1211 | | 1088 | | 1198 |
| | 807 | 3K-6060 . . . . . | 616 | 3S-2093 . . . . . | 103 | | 1202 |
| | 811 | | 1107 | | 116 | | 1221 |
| | 815 | | 1194 | | 167 | | 1244 |
| | 819 | 3K-6113 . . . . . | 911 | | 170 | | 1252 |
| | 822 | | 913 | | 204 | | 1255 |
| | 825 | | 915 | | 206 | 3S-2713 . . . . . | 615 |
| | 829 | | 917 | | 208 | | 1111 |
| | 833 | | 924 | | 223 | 3S-6049 . . . . . | 349 |
| | 837 | | 926 | | 226 | | 354 |
| | 841 | | 927 | | 229 | | 359 |
| | 845 | | 929 | | 232 | 3S-6050 . . . . . | 349 |
| | 849 | | 931 | | 235 | | 354 |
| | 853 | | 933 | | 237 | | 359 |
| | 857 | | 940 | | 239 | 3S-6605 . . . . . | 55 |
| | 860 | | 942 | | 242 | 3S-6925 . . . . . | 972 |
| | 864 | | 944 | | 252 | 3S-7023 . . . . . | 654 |
| | 867 | | 946 | | 254 | | 656 |
| | 870 | | 948 | | 259 | | 657 |
| | 874 | | 950 | | 268 | 3S-8652 . . . . . | 447 |
| | 877 | | 960 | | 269 | 3S-8665 . . . . . | 118 |
| | 880 | | 962 | | 270 | 3S-9557 . . . . . | 1097 |
| | 884 | | 964 | | 272 | | 1148 |
| | 888 | | 966 | | 273 | 3S-9643 . . . . . | 79 |
| | 892 | | 967 | | 290 | | 80 |
| | 896 | | 968 | | 304 | 3T-0049 . . . . . | 65 |
| | 900 | | 969 | | 306 | 3T-0050 . . . . . | 615 |
| | 904 | 3K-6116 . . . . . | 478 | | 309 | | 1183 |
| | 970 | 3K-8106 . . . . . | 152 | | 311 | 3T-2662 . . . . . | 152 |
| | 972 | | 153 | | 313 | | 153 |
| | 974 | | 350 | | 315 | 3T-3158 . . . . . | 1221 |
| | 976 | | 355 | | 317 | 3T-3197 . . . . . | 1096 |
| | 978 | | 360 | | 319 | 3T-3198 . . . . . | 1096 |
| | 980 | 3K-8280 . . . . . | 616 | | 321 | 3T-3422 . . . . . | 294 |
| | 982 | 3K-8460 . . . . . | 39 | | 325 | 3T-3434 . . . . . | 294 |
| | 984 | 3K-8782 . . . . . | 315 | | 330 | 3T-4377 . . . . . | 469 |
| | 986 | 3K-9520 . . . . . | 223 | | 339 | 3T-4965 . . . . . | 695 |
| | 988 | | 226 | | 344 | | 698 |
| | 990 | | 229 | | 349 | | 700 |
| | 992 | | 232 | | 354 | 3T-5760 . . . . . | 150 |
| | 994 | | 239 | | 359 | 3T-6354 . . . . . | 141 |
| | 996 | | 242 | | 364 | 3T-6774 . . . . . | 1139 |
| | 998 | | 259 | | 366 | | 1140 |
| | 1000 | | 325 | | 371 | 3T-6848 . . . . . | 707 |
| | 1002 | 3L-8187 . . . . . | 399 | | 376 | 3T-7059 . . . . . | 1267 |
| | 1004 | | 402 | | 378 | 3T-7086 . . . . . | 1267 |
| | 1006 | 3L-8855 . . . . . | 66 | | 381 | 3T-8236 . . . . . | 970 |


► **PRIMARY REFERENCE**

# PART NUMBER INDEX


| Part | Page |
|---|---|
| | 972 |
| 3T-9549 | 64 |
| 3V-0409 | 100 |
| 3V-3816 | 1254 |
| 3V-4694 | 315 |
| | 1179 |
| 3V-9244 | 1206 |
| | 1207 |
| | 1209 |
| 3W-6485 | 642 |
| 3W-7254 | 1078 |
| 3W-7256 | 1078 |
| 3Y-2806 | 1107 |
| **4** | |
| 4B-0418 | 68 |
| | 118 |
| 4B-1281 | 399 |
| | 402 |
| 4B-2047 | 141 |
| | 402 |
| 4B-2049 | 1217 |
| | 1219 |
| | 1222 |
| 4B-2913 | 737 |
| 4B-3388 | 1156 |
| | 1158 |
| 4B-3604 | 1051 |
| 4B-4274 | 350 |
| | 355 |
| | 360 |
| | 399 |
| | 403 |
| 4B-4283 | 1268 |
| | 1270 |
| | 1272 |
| | 1274 |
| | 1276 |
| | 1278 |
| | 1280 |
| | 1282 |
| | 1285 |
| | 1286 |
| | 1287 |
| 4B-4314 | 1107 |
| 4B-4845 | 469 |
| 4B-4863 | 128 |
| | 129 |
| | 130 |
| | 132 |
| | 350 |
| | 355 |
| | 360 |
| | 376 |
| 4B-4909 | 556 |
| | 559 |
| 4B-5059 | 1160 |
| 4B-5275 | 1155 |
| 4B-6060 | 616 |
| | 1111 |
| 4B-7270 | 611 |
| 4B-9302 | 1185 |
| 4B-9880 | 481 |
| | 484 |
| 4C-2959 | 1105 |
| 4D-0577 | 616 |
| 4D-0582 | 616 |
| 4D-1212 | 399 |
| | 403 |
| 4D-1322 | 490 |
| | 492 |
| 4D-1326 | 301 |
| 4D-1432 | 340 |
| | 345 |
| | 367 |
| | 372 |
| 4D-2297 | 1008 |
| | 1029 |
| | 1030 |
| | 1033 |
| | 1034 |
| | 1035 |
| | 1036 |
| | 1037 |
| | 1038 |
| | 1039 |
| | 1040 |
| | 1041 |
| | 1042 |
| 4D-2560 | 100 |
| 4D-2886 | 707 |
| 4D-3704 | 450 |
| | 543 |
| | 546 |
| | 562 |
| | 611 |
| | 651 |
| 4D-4064 | 109 |
| 4D-4375 | 1049 |
| 4D-4839 | 1183 |
| 4D-5292 | 438 |
| 4D-5497 | 611 |
| 4D-6086 | 1084 |
| | 1088 |
| 4D-6432 | 1232 |
| | 1233 |
| | 1234 |
| | 1236 |
| 4D-6585 | 613 |
| 4D-6695 | 450 |
| | 490 |
| | 492 |
| 4D-6885 | 615 |
| 4D-7388 | 321 |
| | 340 |
| | 345 |
| | 367 |
| | 372 |
| | 1252 |
| | 1254 |
| | 1255 |
| 4D-7733 | 678 |
| 4D-7735 | 118 |
| | 620 |
| 4D-7794 | 223 |
| | 226 |
| | 229 |
| | 232 |
| | 290 |
| | 317 |
| | 319 |
| | 321 |
| | 326 |
| | 331 |
| | 340 |
| | 345 |
| | 350 |
| | 355 |
| | 360 |
| | 367 |
| | 372 |
| | 376 |
| | 387 |
| | 389 |
| | 392 |
| | 396 |
| | 590 |
| | 1183 |
| | 1244 |
| | 1254 |
| 4D-8148 | 551 |
| | 552 |
| 4D-8948 | 350 |
| | 355 |
| | 360 |
| 4D-9517 | 249 |
| | 331 |
| 4D-9986 | 974 |
| | 976 |
| | 978 |
| | 980 |
| | 982 |
| | 984 |
| | 986 |
| | 988 |
| | 990 |
| | 992 |
| | 994 |
| | 996 |
| | 998 |
| | 1000 |
| | 1002 |
| | 1004 |
| | 1006 |
| | 1008 |
| | 1010 |
| | 1012 |
| | 1014 |
| | 1016 |
| | 1018 |
| | 1020 |
| 4E-2392 | 710 |
| 4E-6867 | 708 |
| 4E-9628 | 692 |
| 4F-2294 | 302 |
| 4F-2609 | 409 |
| 4F-3657 | 1061 |
| 4F-3658 | 1061 |
| | 1069 |
| | 1070 |
| | 1073 |
| | 1074 |
| 4F-4097 | 725 |
| 4F-4879 | 1240 |
| | 1241 |
| | 1242 |
| | 1250 |
| 4F-5695 | 28 |
| 4F-7389 | 452 |
| | 456 |
| | 460 |
| 4F-7390 | 609 |
| 4F-7952 | 65 |
| | 466 |
| 4F-9653 | 667 |
| 4G-4972 | 29 |
| 4H-2558 | 290 |
| | 350 |
| | 355 |
| | 360 |
| | 622 |
| 4H-2633 | 93 |
| | 94 |
| 4H-6112 | 471 |
| 4H-6147 | 613 |
| 4H-6520 | 438 |
| 4H-6996 | 667 |
| 4H-9105 | 609 |
| 4J-0520 | 452 |
| | 456 |
| | 460 |
| 4J-0521 | 695 |
| | 698 |
| | 701 |
| 4J-0522 | 452 |
| | 456 |
| | 460 |
| 4J-0523 | 695 |
| | 698 |
| | 701 |
| 4J-2506 | 428 |
| | 478 |
| | 481 |
| | 484 |
| 4J-3914 | 616 |
| 4J-3915 | 1125 |
| | 1131 |
| 4J-5267 | 690 |
| 4J-5468 | 674 |
| | 680 |
| | 683 |
| | 686 |
| | 710 |
| 4J-5477 | 428 |
| | 690 |
| | 694 |
| | 695 |
| | 697 |
| | 698 |
| | 700 |
| | 701 |
| | 708 |
| | 710 |
| | 970 |
| | 972 |
| 4J-7533 | 478 |
| | 481 |
| | 484 |


► **PRIMARY REFERENCE**

# PART NUMBER INDEX


| Part | Page | Part | Page | Part | Page | Part | Page |
|---|---|---|---|---|---|---|---|
| | 665 | | 1002 | | 317 | | 878 |
| | 716 | | 1004 | | 321 | | 881 |
| | 718 | | 1006 | | 326 | | 889 |
| | 907 | | 1008 | | 340 | | 893 |
| | 908 | | 1010 | | 345 | | 897 |
| | 909 | | 1012 | | 367 | | 901 |
| | 910 | | 1014 | | 372 | | 905 |
| | 911 | | 1016 | 4K-9097 . . . . . | 594 | 4M-0061 . . . . . | 1140 |
| | 913 | | 1018 | | 1234 | 4M-1751 . . . . . | 478 |
| | 915 | | 1020 | | 1236 | | 481 |
| | 917 | 4J-8922 . . . . . | 616 | 4K-9841 . . . . . | 22 | | 484 |
| | 918 | | 1111 | 4L-5966 . . . . . | 1096 | 4M-1831 . . . . . | 294 |
| | 919 | 4J-9224 . . . . . | 663 | | 1147 | 4M-2381 . . . . . | 481 |
| | 920 | 4J-9225 . . . . . | 653 | | 1151 | | 484 |
| | 921 | | 660 | 4L-6454 . . . . . | 50 | 4M-5281 . . . . . | 582 |
| | 922 | | 661 | | 223 | | 584 |
| | 923 | 4J-9964 . . . . . | 734 | | 226 | | 1166 |
| | 924 | | 735 | | 229 | 4M-6107 . . . . . | 424 |
| | 926 | 4K-0367 . . . . . | 438 | | 232 | | 426 |
| | 927 | | 1062 | | 259 | 4M-6108 . . . . . | 409 |
| | 929 | | 1063 | | 322 | | 413 |
| | 931 | | 1065 | | 326 | 4M-6425 . . . . . | 616 |
| | 933 | | 1069 | | 387 | 4M-6582 . . . . . | 1097 |
| | 934 | | 1070 | | 389 | | 1148 |
| | 935 | | 1073 | | 392 | | 1152 |
| | 936 | | 1074 | | 396 | 4M-6921 . . . . . | 737 |
| | 937 | | 1206 | | 445 | 4M-6953 . . . . . | 464 |
| | 938 | | 1207 | | 565 | 4N-1059 . . . . . | 296 |
| | 939 | | 1209 | | 571 | 4N-2927 . . . . . | 1160 |
| | 940 | 4K-1388 . . . . . | 970 | | 575 | 4N-5091 . . . . . | 628 |
| | 942 | | 972 | | 582 | | 633 |
| | 944 | 4K-2039 . . . . . | 478 | | 584 | 4N-7431 . . . . . | 83 |
| | 946 | | 481 | | 616 | | 85 |
| | 948 | | 484 | | 687 | 4N-8150 . . . . . | 62 |
| | 950 | 4K-3004 . . . . . | 1081 | | 707 | 4P-0659 . . . . . | 103 |
| | 952 | 4K-3150 . . . . . | 1081 | | 711 | 4P-1650 . . . . . | 23 |
| | 953 | 4K-3330 . . . . . | ▶1092 | | 1156 | 4P-1659 . . . . . | 51 |
| | 955 | 4K-4879 . . . . . | 518 | | 1158 | 4P-3966 . . . . . | 12 |
| | 956 | | 520 | | 1193 | 4P-3977 . . . . . | 12 |
| | 957 | | 521 | | 1252 | 4P-4369 . . . . . | 101 |
| | 958 | | 522 | 4L-6459 . . . . . | 304 | 4P-5524 . . . . . | 98 |
| | 959 | | 523 | | 740 | 4P-5918 . . . . . | 317 |
| | 960 | | 524 | | 744 | | 319 |
| | 962 | | 526 | | 750 | 4P-6587 . . . . . | 23 |
| | 964 | | 527 | | 752 | 4P-7581 . . . . . | 319 |
| | 966 | | 528 | | 755 | | 331 |
| | 967 | | 531 | | 757 | | 387 |
| | 968 | | 533 | | 765 | | 389 |
| | 969 | | 535 | | 769 | | 392 |
| | 970 | | 536 | | 775 | | 396 |
| | 972 | | 541 | | 779 | | 410 |
| | 974 | | 542 | | 786 | | 414 |
| | 976 | 4K-4881 . . . . . | 539 | | 788 | 4P-8134 . . . . . | 116 |
| | 978 | | 540 | | 790 | | 317 |
| | 980 | 4K-5122 . . . . . | 315 | | 792 | | 319 |
| | 982 | 4K-5824 . . . . . | 70 | | 794 | | 322 |
| | 984 | 4K-6781 . . . . . | 586 | | 796 | | 326 |
| | 986 | 4K-7463 . . . . . | 586 | | 826 | | 428 |
| | 988 | 4K-7464 . . . . . | 586 | | 830 | 4P-8279 . . . . . | 101 |
| | 990 | 4K-8603 . . . . . | 409 | | 834 | 4P-8280 . . . . . | 101 |
| | 992 | | 413 | | 838 | 4P-8525 . . . . . | 124 |
| | 994 | 4K-8659 . . . . . | 586 | | 842 | 4P-9485 . . . . . | 79 |
| | 996 | 4K-8864 . . . . . | 223 | | 846 | 4P-9537 . . . . . | 407 |
| | 998 | | 226 | | 850 | 4S-1962 . . . . . | 83 |
| | 1000 | | 259 | | 875 | | 1183 |


▶ **PRIMARY REFERENCE**

# PART NUMBER INDEX


| Part | Page |
|---|---|
| | 1185 |
| | 1187 |
| 4S-4455 | 322 |
| | 326 |
| | 340 |
| | 345 |
| | 367 |
| | 372 |
| 4S-5838 | 609 |
| 4S-5879 | 430 |
| | 431 |
| | 611 |
| 4S-7529 | 613 |
| 4S-7606 | 613 |
| | 620 |
| | 622 |
| 4S-8287 | 1210 |
| 4S-9191 | 95 |
| | 567 |
| 4T-1700 | 1031 |
| 4T-1860 | 970 |
| | 972 |
| | ▶1043 |
| 4T-4207 | 972 |
| 4T-4509 | 1031 |
| 4T-4935 | 970 |
| | 972 |
| | ▶1028 |
| 4T-4942 | 1028 |
| 4T-5074 | 1031 |
| 4T-5613 | 654 |
| | 656 |
| | 657 |
| | 663 |
| 4T-6779 | 652 |
| 4T-6780 | 653 |
| 4T-6907 | 658 |
| | 659 |
| 4T-7571 | 1028 |
| 4T-8050 | 576 |
| | 579 |
| 4T-8054 | 663 |
| | 713 |
| 4V-0015 | 586 |
| 4V-7875 | 1160 |
| 4V-7877 | 1160 |
| 4V-7884 | 1248 |
| | 1250 |
| 4V-8116 | 378 |
| | 381 |
| 4V-8556 | 1250 |
| 4V-8577 | 1248 |
| 4V-9803 | 596 |
| 4V-9804 | 596 |
| 4V-9809 | 596 |
| 4W-4813 | 551 |
| | 552 |
| 4W-7356 | 719 |
| 4W-7627 | 1185 |
| | 1187 |
| 4Y-9736 | 686 |
| 4Z-6267 | 788 |
| | ▶952 |
| 4Z-6346 | 792 |
| | ▶953 |

## 5

| Part | Page |
|---|---|
| 5B-0577 | 1084 |
| | 1088 |
| 5B-0841 | 440 |
| 5B-8978 | 708 |
| 5B-9079 | 1037 |
| | 1041 |
| 5B-9318 | 664 |
| | 665 |
| | 974 |
| | 976 |
| | 978 |
| | 980 |
| | 982 |
| | 984 |
| | 986 |
| | 988 |
| | 990 |
| | 992 |
| | 994 |
| | 996 |
| | 998 |
| | 1000 |
| | 1002 |
| | 1004 |
| | 1006 |
| | 1008 |
| | 1010 |
| | 1012 |
| | 1014 |
| | 1016 |
| | 1018 |
| | 1020 |
| 5C-2874 | 195 |
| | 262 |
| 5C-2890 | 212 |
| | 214 |
| | 223 |
| | 226 |
| | 229 |
| | 232 |
| | 239 |
| | 242 |
| | 259 |
| | 263 |
| | 264 |
| | 299 |
| | 364 |
| | 378 |
| | 381 |
| | 385 |
| | 392 |
| | 396 |
| | 399 |
| | 403 |
| | 616 |
| | 1097 |
| | 1134 |
| | 1148 |
| | 1152 |
| | 1252 |
| | 1255 |
| 5C-6565 | 595 |
| 5C-7261 | 116 |

| Part | Page |
|---|---|
| | 179 |
| | 210 |
| | 212 |
| | 217 |
| | 220 |
| | 223 |
| | 229 |
| | 239 |
| | 245 |
| | 249 |
| | 331 |
| | 378 |
| | 381 |
| | 453 |
| | 457 |
| | 461 |
| | 1270 |
| | 1274 |
| | 1286 |
| | 1287 |
| 5C-7423 | 424 |
| | 426 |
| | 1268 |
| | 1270 |
| | 1272 |
| | 1274 |
| 5C-8312 | 306 |
| | 309 |
| | 315 |
| | 399 |
| | 403 |
| | 1107 |
| 5C-9553 | 132 |
| | 290 |
| | 331 |
| | 350 |
| | 355 |
| | 399 |
| | 403 |
| | 692 |
| | 1231 |
| | 1267 |
| 5C-9563 | 378 |
| | 381 |
| 5C-9583 | 195 |
| 5C-9584 | 378 |
| | 381 |
| 5C-9930 | 378 |
| | 381 |
| 5C-9931 | 378 |
| | 381 |
| 5D-0269 | 1217 |
| | 1219 |
| | 1221 |
| | 1244 |
| 5D-0353 | 450 |
| | 543 |
| | 546 |
| 5D-0768 | 624 |
| 5D-1026 | 83 |
| | 452 |
| | 456 |
| | 460 |
| | 567 |
| | 1185 |

| Part | Page |
|---|---|
| | 1187 |
| 5D-1911 | 737 |
| 5D-2645 | 680 |
| | 683 |
| | 686 |
| 5D-3636 | 624 |
| 5D-4822 | 1160 |
| 5D-4988 | 686 |
| 5D-6644 | 1047 |
| 5D-6993 | 1155 |
| 5D-6994 | 1155 |
| 5D-6996 | 1155 |
| 5D-6997 | 1155 |
| 5D-6998 | ▶1155 |
| | 1156 |
| | 1158 |
| 5D-8159 | 1084 |
| | 1088 |
| 5D-8161 | 1084 |
| | 1088 |
| 5D-9344 | 39 |
| 5D-9553 | 1062 |
| 5D-9554 | 1063 |
| 5D-9558 | 1067 |
| 5D-9559 | 1067 |
| 5D-9561 | 1065 |
| | 1068 |
| 5D-9562 | 1067 |
| 5D-9844 | 438 |
| 5F-0149 | 1075 |
| 5F-1678 | 410 |
| | 414 |
| 5F-5434 | 620 |
| | 622 |
| 5F-8000 | 467 |
| 5F-8933 | 1071 |
| | 1072 |
| 5F-9144 | 478 |
| | 481 |
| | 484 |
| 5H-4778 | 613 |
| | 616 |
| | 620 |
| | 622 |
| | 1156 |
| | 1158 |
| 5H-4909 | 667 |
| 5H-7826 | 590 |
| 5H-8848 | 695 |
| | 698 |
| | 701 |
| 5H-8936 | 1244 |
| 5H-8985 | 418 |
| | 421 |
| | 424 |
| | 426 |
| 5J-1036 | 478 |
| | 481 |
| | 484 |
| 5J-1086 | 609 |
| 5J-1246 | 734 |
| | 735 |
| 5J-2974 | 737 |
| 5J-4773 | 1064 |
| | 1071 |


▶ **PRIMARY REFERENCE**

# PART NUMBER INDEX


| Part | Page | Part | Page | Part | Page | Part | Page |
|---|---|---|---|---|---|---|---|
| | 1072 | | 259 | | 407 | | 761 |
| 5J-5402 . . . . . | 657 | | 299 | | 478 | | 763 |
| 5J-7010 . . . . . | 653 | | 402 | | 481 | | 765 |
| 5J-7333 . . . . . | 1054 | 5M-2057 . . . . . | 970 | | 484 | | 767 |
| | 1055 | | 972 | | 1139 | | 769 |
| 5K-0871 . . . . . | 586 | 5M-2894 . . . . . | 103 | | 1140 | | 771 |
| 5K-0906 . . . . . | 594 | | 326 | | 1267 | | 773 |
| 5K-0983 . . . . . | 586 | | 437 | 5P-0599 . . . . . | 686 | | 775 |
| 5K-0984 . . . . . | 586 | | 438 | 5P-0747 . . . . . | 339 | | 777 |
| 5K-0985 . . . . . | 586 | | 450 | | 344 | | 779 |
| 5K-0987 . . . . . | 586 | 5M-3062 . . . . . | 223 | | 349 | | 782 |
| 5K-0988 . . . . . | 586 | | 226 | | 354 | | 784 |
| 5K-0989 . . . . . | 586 | | 229 | | 359 | | 786 |
| 5K-0991 . . . . . | 586 | | 232 | | 366 | | 788 |
| 5K-1094 . . . . . | 613 | | 239 | | 371 | | 790 |
| 5K-1458 . . . . . | 1084 | | 242 | | 385 | | 792 |
| | 1088 | | 259 | 5P-0761 . . . . . | 147 | | 794 |
| | 1092 | | 322 | | 148 | | 796 |
| 5K-1459 . . . . . | 1085 | | 326 | | 149 | | 800 |
| | 1088 | | 331 | | 150 | | 804 |
| | 1092 | | 340 | | 349 | | 808 |
| 5K-2408 . . . . . | 613 | | 345 | | 350 | | 812 |
| | 1156 | | 367 | | 354 | | 816 |
| | 1158 | | 372 | | 355 | | 820 |
| | 1244 | | 385 | | 359 | | 823 |
| 5K-3294 . . . . . | 245 | | 387 | | 366 | | 826 |
| | 247 | | 389 | | 367 | | 830 |
| | 258 | | 392 | | 372 | | 834 |
| 5K-5068 . . . . . | 96 | | 396 | | 385 | | 838 |
| 5K-5129 . . . . . | 546 | | 443 | 5P-0765 . . . . . | 453 | | 842 |
| | 611 | | 565 | | 457 | | 846 |
| | 667 | | 575 | | 461 | | 850 |
| 5K-5288 . . . . . | 543 | | 576 | 5P-0767 . . . . . | 83 | | 854 |
| | 546 | | 579 | | 567 | | 858 |
| | 611 | | 613 | | 616 | | 861 |
| | 667 | | 616 | | 1185 | | 865 |
| 5K-5552 . . . . . | 645 | | 631 | | 1187 | | 868 |
| 5K-7577 . . . . . | 1217 | | 703 | 5P-1064 . . . . . | 1185 | | 871 |
| | 1221 | | 705 | 5P-1075 . . . . . | 109 | | 875 |
| 5K-8454 . . . . . | 667 | | 1054 | | 340 | | 878 |
| 5K-9090 . . . . . | 443 | | 1055 | | 345 | | 881 |
| | 445 | | 1095 | | 367 | | 885 |
| | 452 | | 1125 | | 372 | | 889 |
| | 456 | | 1131 | | 543 | | 893 |
| | 460 | | 1183 | | 546 | | 897 |
| | 694 | | 1248 | | 565 | | 901 |
| | 695 | | 1252 | | 575 | | 905 |
| | 697 | | 1255 | | 576 | | 1054 |
| | 698 | 5M-6200 . . . . . | 409 | | 579 | | 1055 |
| | 700 | | 413 | | 582 | | 1097 |
| | 701 | 5M-6213 . . . . . | 613 | | 584 | | 1107 |
| 5K-9107 . . . . . | 1288 | | 616 | | 595 | | 1111 |
| 5K-9238 . . . . . | 615 | 5M-6725 . . . . . | 378 | | 616 | | 1125 |
| 5L-2030 . . . . . | 438 | 5M-6755 . . . . . | 403 | | 707 | | 1131 |
| 5L-2031 . . . . . | 438 | 5M-7087 . . . . . | 66 | | 711 | | 1148 |
| 5L-2952 . . . . . | 65 | | 103 | | 740 | | 1152 |
| 5L-4507 . . . . . | 350 | 5M-8500 . . . . . | 1107 | | 742 | | 1183 |
| | 355 | 5M-9695 . . . . . | 1258 | | 744 | | 1191 |
| | 360 | | 1261 | | 746 | | 1192 |
| 5L-7200 . . . . . | 223 | 5P-0537 . . . . . | 41 | | 748 | | 1193 |
| | 226 | | 57 | | 750 | | 1194 |
| | 229 | | 125 | | 752 | | 1195 |
| | 232 | | 126 | | 755 | | 1197 |
| | 239 | | 199 | | 757 | | 1246 |
| | 242 | | 200 | | 759 | | 1248 |


► **PRIMARY REFERENCE**

# PART NUMBER INDEX


| Part | Page | Part | Page | Part | Page | Part | Page |
|---|---|---|---|---|---|---|---|
| | 1288 | | 905 | | 889 | | 372 |
| 5P-1076 . . . . . | 76 | 5P-1174 . . . . . | 1292 | | 893 | | 381 |
| | 109 | 5P-1175 . . . . . | 1292 | | 897 | | 432 |
| | 111 | 5P-1262 . . . . . | 85 | | 901 | | 434 |
| | 381 | 5P-1291 . . . . . | 127 | | 905 | | 453 |
| | 556 | | 694 | | 1081 | | 457 |
| | 559 | | 697 | 5P-2503 . . . . . | 438 | | 461 |
| | 596 | | 700 | 5P-2566 . . . . . | 584 | | 562 |
| | 600 | 5P-1295 . . . . . | 694 | | 606 | | 593 |
| | 740 | | 697 | | 734 | 5P-4135 . . . . . | 331 |
| | 742 | 5P-1465 . . . . . | 620 | | 735 | 5P-4295 . . . . . | 356 |
| | 744 | | 622 | 5P-2817 . . . . . | 96 | | 360 |
| | 746 | 5P-2228 . . . . . | 1081 | 5P-3454 . . . . . | 350 | 5P-4401 . . . . . | 606 |
| | 748 | 5P-2424 . . . . . | 740 | | 355 | 5P-4405 . . . . . | 96 |
| | 750 | | 742 | | 360 | 5P-4423 . . . . . | 96 |
| | 752 | | 744 | 5P-3456 . . . . . | 116 | 5P-4424 . . . . . | 606 |
| | 755 | | 746 | | 121 | 5P-4426 . . . . . | 606 |
| | 757 | | 748 | 5P-3490 . . . . . | 450 | 5P-4483 . . . . . | 409 |
| | 759 | | 750 | 5P-3863 . . . . . | 409 | | 413 |
| | 761 | | 752 | | 413 | 5P-4868 . . . . . | 694 |
| | 763 | | 755 | | 467 | | 697 |
| | 765 | | 757 | 5P-3924 . . . . . | 409 | | 700 |
| | 767 | | 759 | | 413 | 5P-4961 . . . . . | 443 |
| | 769 | | 761 | 5P-3999 . . . . . | 1292 | | 445 |
| | 771 | | 763 | 5P-4000 . . . . . | 1296 | 5P-5454 . . . . . | 1170 |
| | 773 | | 765 | 5P-4001 . . . . . | 1296 | | 1174 |
| | 775 | | 767 | 5P-4002 . . . . . | 1297 | 5P-5623 . . . . . | 364 |
| | 777 | | 769 | 5P-4003 . . . . . | 1297 | 5P-5627 . . . . . | 1258 |
| | 779 | | 771 | 5P-4077 . . . . . | 1292 | | 1261 |
| | 782 | | 773 | 5P-4086 . . . . . | 1297 | 5P-5637 . . . . . | 1097 |
| | 784 | | 775 | | 1298 | | 1108 |
| | 786 | | 777 | 5P-4115 . . . . . | 46 | | 1148 |
| | 788 | | 779 | | 66 | | 1152 |
| | 790 | | 782 | | 317 | 5P-5639 . . . . . | 1108 |
| | 792 | | 784 | | 319 | 5P-5675 . . . . . | 354 |
| | 794 | | 786 | | 399 | | 360 |
| | 796 | | 788 | | 403 | 5P-5677 . . . . . | 140 |
| | 800 | | 790 | | 582 | | 366 |
| | 804 | | 792 | | 584 | | 371 |
| | 808 | | 794 | | 594 | 5P-5678 . . . . . | 46 |
| | 812 | | 796 | | 1166 | | 1120 |
| | 816 | | 800 | | 1170 | 5P-5689 . . . . . | 350 |
| | 820 | | 804 | | 1174 | | 355 |
| | 823 | | 808 | | 1252 | | 360 |
| | 826 | | 812 | | 1255 | 5P-5768 . . . . . | 1123 |
| | 830 | | 816 | | 1268 | | 1127 |
| | 834 | | 820 | | 1270 | | 1129 |
| | 838 | | 823 | | 1272 | | 1213 |
| | 842 | | 826 | | 1274 | | 1214 |
| | 846 | | 830 | | 1276 | | 1215 |
| | 850 | | 834 | | 1278 | | 1230 |
| | 854 | | 838 | | 1280 | 5P-5813 . . . . . | 438 |
| | 858 | | 842 | | 1282 | 5P-5824 . . . . . | 1170 |
| | 861 | | 846 | | 1285 | | 1174 |
| | 865 | | 850 | | 1286 | 5P-5908 . . . . . | 1097 |
| | 868 | | 854 | | 1287 | | 1148 |
| | 871 | | 858 | 5P-4116 . . . . . | 66 | | 1152 |
| | 875 | | 861 | | 118 | 5P-5923 . . . . . | 556 |
| | 878 | | 865 | | 340 | | 559 |
| | 881 | | 868 | | 345 | | 1054 |
| | 885 | | 871 | | 350 | | 1055 |
| | 889 | | 875 | | 355 | 5P-5931 . . . . . | 681 |
| | 893 | | 878 | | 360 | | 684 |
| | 897 | | 881 | | 364 | | 687 |
| | 901 | | 885 | | 367 | 5P-5969 . . . . . | 565 |

# PART NUMBER INDEX


| Part | Page | Part | Page | Part | Page | Part | Page |
|---|---|---|---|---|---|---|---|
| | 642 | | 47 | | 270 | | 687 |
| | 1125 | | 49 | | 273 | | 689 |
| | 1131 | | 58 | | 1138 | | 690 |
| | 1166 | | 76 | | 1164 | | 711 |
| | 1171 | | 259 | 5P-8842 . . . . . | 543 | | 1054 |
| | 1175 | | 432 | | 546 | | 1055 |
| | 1181 | | 434 | | 651 | | 1107 |
| | 1190 | | 440 | 5P-8843 . . . . . | 543 | | 1194 |
| | 1257 | | 470 | | 546 | | 1195 |
| 5P-6008 . . . . . | 399 | | 471 | 5P-8890 . . . . . | 543 | | 1197 |
| 5P-6011 . . . . . | 96 | | 586 | | 546 | 5S-7382 . . . . . | 45 |
| 5P-6129 . . . . . | 1097 | | 647 | 5P-9085 . . . . . | 582 | | 109 |
| 5P-6652 . . . . . | 570 | | 651 | | 584 | | 452 |
| | 1051 | | 667 | 5P-9118 . . . . . | 611 | | 456 |
| | 1054 | | 719 | 5P-9135 . . . . . | 1097 | | 460 |
| | 1055 | | 723 | | 1147 | | 576 |
| 5P-6871 . . . . . | 1196 | | 1047 | | 1151 | | 579 |
| 5P-6872 . . . . . | 1194 | | 1084 | 5P-9209 . . . . . | 109 | | 1111 |
| | 1197 | | 1088 | | 1111 | 5S-7383 . . . . . | 687 |
| 5P-6877 . . . . . | 1191 | 5P-8246 . . . . . | 39 | 5P-9262 . . . . . | 1024 | | 1100 |
| | 1193 | 5P-8247 . . . . . | 27 | 5P-9297 . . . . . | 123 | | 1101 |
| 5P-6882 . . . . . | 1166 | | 35 | | 331 | | 1107 |
| 5P-7162 . . . . . | 1258 | | 37 | 5P-9299 . . . . . | 331 | 5S-9134 . . . . . | 23 |
| | 1261 | | 144 | | 410 | 5T-0570 . . . . . | 4 |
| 5P-7213 . . . . . | 468 | | 438 | | 414 | | ▶667 |
| 5P-7701 . . . . . | 66 | | 440 | | 620 | 5T-0906 . . . . . | 543 |
| 5P-7803 . . . . . | 1096 | | 586 | | 622 | | 546 |
| | 1147 | | 1047 | 5P-9617 . . . . . | 445 | 5T-1362 . . . . . | 731 |
| | 1151 | | 1069 | | 710 | 5T-1958 . . . . . | 1262 |
| | 1170 | | 1070 | 5P-9810 . . . . . | 672 | 5T-1959 . . . . . | 1264 |
| | 1174 | | 1073 | 5P-9865 . . . . . | 1191 | 5T-1964 . . . . . | 1262 |
| | 1179 | | 1074 | | 1192 | | 1264 |
| | 1181 | 5P-8248 . . . . . | 438 | | 1193 | 5T-1969 . . . . . | 1262 |
| | 1246 | | 450 | 5R-2557 . . . . . | 259 | 5T-1972 . . . . . | 1262 |
| 5P-7813 . . . . . | 29 | | 648 | 5R-4787 . . . . . | 723 | | 1264 |
| 5P-7814 . . . . . | 39 | | 667 | 5R-7137 . . . . . | 18 | 5T-3093 . . . . . | 1257 |
| 5P-7854 . . . . . | 65 | | 731 | | 20 | 5T-3144 . . . . . | 1262 |
| | 690 | | 1075 | 5S-0003 . . . . . | 14 | 5T-3145 . . . . . | 1264 |
| | 711 | | 1084 | | 16 | 5T-3146 . . . . . | 1262 |
| 5P-7958 . . . . . | 1234 | | 1088 | | 1156 | 5T-3147 . . . . . | 1264 |
| 5P-7970 . . . . . | 23 | 5P-8249 . . . . . | 644 | | 1158 | 5T-3889 . . . . . | 1049 |
| | 70 | | 646 | 5S-4246 . . . . . | 387 | 5T-3890 . . . . . | 1049 |
| | 432 | 5P-8250 . . . . . | 1084 | | 389 | 5T-4030 . . . . . | 1156 |
| | 434 | | 1088 | | 392 | | 1158 |
| 5P-8066 . . . . . | 70 | 5P-8291 . . . . . | 1051 | | 396 | 5T-4267 . . . . . | 1049 |
| 5P-8068 . . . . . | 71 | 5P-8347 . . . . . | 87 | 5S-4385 . . . . . | 465 | 5T-5295 . . . . . | 648 |
| 5P-8167 . . . . . | 249 | | 88 | 5S-7349 . . . . . | 141 | 5T-5994 . . . . . | 1262 |
| | 250 | | 155 | | 144 | | 1264 |
| | 304 | 5P-8439 . . . . . | 127 | | 294 | 5T-6775 . . . . . | 1051 |
| | 340 | | 252 | 5S-7379 . . . . . | 223 | | 1077 |
| | 345 | | 254 | | 226 | 5T-7129 . . . . . | 450 |
| | 367 | 5P-8445 . . . . . | 1160 | | 229 | 5T-7486 . . . . . | 1120 |
| | 372 | 5P-8500 . . . . . | 5 | | 232 | | 1123 |
| | 565 | | 739 | | 250 | | 1127 |
| | 1107 | | 1102 | | 322 | | 1129 |
| | 1250 | | 1119 | | 326 | 5T-8285 . . . . . | 613 |
| | 1254 | | 1189 | | 331 | | 615 |
| 5P-8211 . . . . . | 47 | | 1226 | | 543 | 5T-8366 . . . . . | 1047 |
| | 49 | | 1288 | | 546 | 5T-8417 . . . . . | 648 |
| 5P-8244 . . . . . | 611 | 5P-8502 . . . . . | 1288 | | 595 | 5T-9313 . . . . . | 223 |
| 5P-8245 . . . . . | 14 | 5P-8525 . . . . . | 175 | | 650 | | 226 |
| | 16 | | 235 | | 667 | | 229 |
| | 18 | | 237 | | 678 | | 232 |
| | 20 | | 268 | | 681 | 5T-9903 . . . . . | 710 |
| | 44 | | 269 | | 684 | 5T-9986 . . . . . | 680 |


▶ **PRIMARY REFERENCE**

# PART NUMBER INDEX


| Part | Page |
|---|---|
| | 683 |
| 5V-0770 | 1160 |
| 5V-1474 | 1160 |
| 5V-1497 | 1160 |
| | 1248 |
| 5V-1498 | 1100 |
| | 1101 |
| | 1192 |
| 5Y-0158 | 489 |
| **6** | |
| 6A-5591 | 49 |
| | 432 |
| | 434 |
| 6A-9718 | 1267 |
| 6B-0933 | 740 |
| | 742 |
| | 744 |
| | 746 |
| | 748 |
| | 750 |
| | 752 |
| | 755 |
| | 757 |
| | 759 |
| | 761 |
| | 763 |
| | 765 |
| | 767 |
| | 769 |
| | 771 |
| | 773 |
| | 775 |
| | 777 |
| | 779 |
| | 782 |
| | 784 |
| | 786 |
| | 788 |
| | 790 |
| | 792 |
| | 794 |
| | 796 |
| | 799 |
| | 803 |
| | 807 |
| | 811 |
| | 815 |
| | 819 |
| | 822 |
| | 825 |
| | 829 |
| | 833 |
| | 837 |
| | 841 |
| | 845 |
| | 849 |
| | 853 |
| | 857 |
| | 860 |
| | 864 |
| | 867 |
| | 870 |
| | 874 |
| | 877 |
| | 880 |
| | 884 |
| | 888 |
| | 892 |
| | 896 |
| | 900 |
| | 904 |
| 6B-3260 | 1084 |
| | 1088 |
| | 1092 |
| 6B-4540 | 387 |
| | 389 |
| | 392 |
| | 396 |
| 6B-5072 | 470 |
| | 471 |
| 6B-6684 | 76 |
| | 468 |
| | 719 |
| 6C-0109 | 378 |
| | 381 |
| 6C-0110 | 378 |
| | 381 |
| 6C-3246 | 523 |
| 6C-3248 | 518 |
| 6C-5233 | 378 |
| | 381 |
| 6C-5234 | 378 |
| | 381 |
| 6C-7366 | 522 |
| 6D-0580 | 428 |
| 6D-1432 | 613 |
| 6D-1641 | 689 |
| | 1185 |
| | 1187 |
| 6D-3479 | 350 |
| | 355 |
| | 360 |
| 6D-4161 | 1156 |
| 6D-4244 | 14 |
| | 16 |
| | 340 |
| | 345 |
| | 367 |
| | 372 |
| | 400 |
| | 403 |
| | 575 |
| | 672 |
| | 681 |
| | 684 |
| | 687 |
| | 689 |
| | 711 |
| 6D-4246 | 322 |
| | 326 |
| | 340 |
| | 345 |
| | 367 |
| | 372 |
| 6D-4247 | 674 |
| | 687 |
| | 703 |
| | 705 |
| 6D-5257 | 330 |
| 6D-6489 | 620 |
| | 622 |
| 6D-6581 | 1120 |
| | 1123 |
| | 1127 |
| | 1129 |
| 6D-7146 | 72 |
| | 723 |
| 6D-7563 | 1069 |
| | 1074 |
| 6D-7564 | 1070 |
| | 1073 |
| 6D-9718 | 1156 |
| 6D-9855 | 615 |
| 6E-0123 | 652 |
| 6E-0775 | 657 |
| 6E-1131 | 654 |
| | 656 |
| 6E-1343 | 646 |
| | ▶654 |
| 6E-1344 | 654 |
| 6E-1346 | 654 |
| 6E-1436 | 725 |
| 6E-1835 | 1028 |
| 6E-1923 | 970 |
| | 972 |
| 6E-1924 | 970 |
| 6E-1925 | 970 |
| 6E-1926 | 694 |
| | 697 |
| | 700 |
| 6E-3006 | 1034 |
| | 1036 |
| | 1038 |
| 6E-3007 | 974 |
| | 976 |
| | 978 |
| | 980 |
| | 982 |
| | 984 |
| | 986 |
| | 988 |
| | 990 |
| | 992 |
| | 994 |
| | 996 |
| | 998 |
| | 1000 |
| | 1002 |
| | 1004 |
| | 1006 |
| | 1008 |
| | 1010 |
| | 1012 |
| | 1014 |
| | 1016 |
| | 1018 |
| | 1020 |
| 6E-3013 | 974 |
| | 976 |
| | 978 |
| | 980 |
| | 982 |
| | 984 |
| | 986 |
| | 988 |
| | 990 |
| | 992 |
| | 994 |
| | 996 |
| | 998 |
| | 1000 |
| | 1002 |
| | 1004 |
| | 1006 |
| | 1008 |
| | 1010 |
| | 1012 |
| | 1014 |
| | 1016 |
| | 1018 |
| | 1020 |
| 6E-3019 | 974 |
| | 976 |
| | 978 |
| | 980 |
| | 982 |
| | 984 |
| | 986 |
| | 988 |
| | 990 |
| | 992 |
| | 994 |
| | 996 |
| | 998 |
| | 1000 |
| | 1002 |
| | 1004 |
| | 1006 |
| | 1008 |
| | 1010 |
| | 1012 |
| | 1014 |
| | 1016 |
| | 1018 |
| | 1020 |
| 6E-3028 | 907 |
| | 909 |
| | 913 |
| | 917 |
| | 920 |
| | 923 |
| | 926 |
| | 927 |
| | 935 |
| | 937 |
| | 939 |
| | 940 |
| | 942 |
| | 950 |
| | 952 |
| | 966 |
| | ▶974 |
| 6E-3029 | 907 |
| | 909 |
| | 913 |
| | 917 |
| | 920 |


▶ **PRIMARY REFERENCE**

# PART NUMBER INDEX


| Part | Page | Part | Page | Part | Page | Part | Page |
|---|---|---|---|---|---|---|---|
| | 923 | | 948 | | 956 | | 998 |
| | 926 | | 953 | | 957 | | 1000 |
| | 927 | | 955 | | 958 | | 1002 |
| | 935 | | 956 | | 959 | | 1004 |
| | 937 | | 957 | | 960 | | 1006 |
| | 939 | | 958 | | 962 | | 1008 |
| | 940 | | 959 | | 964 | | 1010 |
| | 942 | | 960 | | 967 | | 1012 |
| | 950 | | 962 | | 968 | | 1014 |
| | 952 | | 964 | | 969 | | 1016 |
| | 966 | | 967 | | ▶986 | | 1018 |
| | ▶976 | | 968 | 6E-3037 . . . . . | 908 | | 1020 |
| 6E-3030 . . . . . | 907 | | 969 | | 911 | 6E-4599 . . . . . | 982 |
| | 909 | | ▶982 | | 918 | | 990 |
| | 913 | 6E-3035 . . . . . | 908 | | 919 | | 992 |
| | 917 | | 910 | | 929 | | 996 |
| | 920 | | 911 | | 933 | | 998 |
| | 923 | | 915 | | 934 | | 1000 |
| | 926 | | 918 | | 938 | | 1020 |
| | 927 | | 919 | | 946 | 6E-4703 . . . . . | 970 |
| | 935 | | 921 | | 948 | | 972 |
| | 937 | | 922 | | 953 | | ▶1030 |
| | 939 | | 924 | | 955 | 6E-4704 . . . . . | 1029 |
| | 940 | | 929 | | 956 | 6E-4940 . . . . . | 653 |
| | 942 | | 931 | | 959 | 6E-4974 . . . . . | 663 |
| | 950 | | 933 | | 962 | 6E-5047 . . . . . | 470 |
| | 952 | | 934 | | 967 | | 471 |
| | 966 | | 936 | | 968 | 6E-5153 . . . . . | 974 |
| | ▶978 | | 938 | | 969 | | 976 |
| 6E-3031 . . . . . | 907 | | 944 | | ▶988 | | 978 |
| | 913 | | 946 | 6E-3038 . . . . . | 748 | | 980 |
| | 920 | | 948 | | 782 | | 982 |
| | 926 | | 953 | | ▶908 | | 984 |
| | 935 | | 955 | 6E-3043 . . . . . | 980 | | 986 |
| | 939 | | 956 | | 988 | | 988 |
| | 942 | | 957 | 6E-3044 . . . . . | 974 | | 990 |
| | 950 | | 958 | | 976 | | 992 |
| | ▶980 | | 959 | | 978 | | 994 |
| 6E-3032 . . . . . | 742 | | 960 | | 984 | | 996 |
| | 746 | | 962 | 6E-3058 . . . . . | 986 | | 998 |
| | 748 | | 964 | 6E-3059 . . . . . | 994 | | 1000 |
| | ▶907 | | 967 | | 1018 | | 1002 |
| 6E-3033 . . . . . | 980 | | 968 | 6E-3268 . . . . . | 1024 | | 1004 |
| | 988 | | 969 | 6E-3269 . . . . . | 1024 | | 1006 |
| | 1002 | | ▶984 | 6E-3272 . . . . . | 1024 | | 1008 |
| | 1004 | 6E-3036 . . . . . | 908 | 6E-3273 . . . . . | 1024 | | 1010 |
| | 1006 | | 910 | 6E-3274 . . . . . | 1024 | | 1012 |
| | ▶1029 | | 911 | 6E-3275 . . . . . | 1024 | | 1014 |
| 6E-3034 . . . . . | 908 | | 915 | 6E-3276 . . . . . | 1024 | | 1016 |
| | 910 | | 918 | 6E-4224 . . . . . | 725 | | 1018 |
| | 911 | | 919 | 6E-4228 . . . . . | 1022 | | 1020 |
| | 915 | | 921 | 6E-4230 . . . . . | 1022 | 6E-5200 . . . . . | 1031 |
| | 918 | | 922 | 6E-4239 . . . . . | 1022 | 6E-6140 . . . . . | 1022 |
| | 919 | | 924 | 6E-4502 . . . . . | 974 | 6E-6141 . . . . . | 1022 |
| | 921 | | 929 | | 976 | 6E-6142 . . . . . | 1022 |
| | 922 | | 931 | | 978 | 6E-6419 . . . . . | 1022 |
| | 924 | | 933 | | 980 | 6E-6420 . . . . . | 1022 |
| | 929 | | 934 | | 982 | 6E-6527 . . . . . | 1024 |
| | 931 | | 936 | | 984 | 6E-6528 . . . . . | 1024 |
| | 933 | | 938 | | 986 | 6E-6536 . . . . . | 1024 |
| | 934 | | 944 | | 988 | 6E-6537 . . . . . | 1024 |
| | 936 | | 946 | | 990 | 6E-6538 . . . . . | 1024 |
| | 938 | | 948 | | 992 | 6E-6539 . . . . . | 1024 |
| | 944 | | 953 | | 994 | 6E-6540 . . . . . | 1024 |
| | 946 | | 955 | | 996 | 6F-0253 . . . . . | 1155 |


▶ **PRIMARY REFERENCE**

# PART NUMBER INDEX


| Part | Page | Part | Page | Part | Page | Part | Page |
|---|---|---|---|---|---|---|---|
| | 1217 | 6G-2914 . . . . . | 1107 | | 426 | | 779 |
| | 1219 | | 1170 | 6I-9395 . . . . . | 490 | | 782 |
| | 1221 | | 1174 | | 492 | | 784 |
| 6F-0698 . . . . . | 438 | 6G-2946 . . . . . | 1049 | 6I-9502 . . . . . | 421 | | 786 |
| 6F-3930 . . . . . | 508 | 6G-2959 . . . . . | 1264 | 6J-0488 . . . . . | 400 | | 788 |
| | 509 | 6G-3206 . . . . . | 450 | | 403 | | 790 |
| | 510 | 6G-3212 . . . . . | 450 | | 1107 | | 792 |
| | 511 | 6G-3378 . . . . . | 611 | 6J-0789 . . . . . | 652 | | 794 |
| | 512 | 6G-4526 . . . . . | 1051 | 6J-0790 . . . . . | 652 | | 796 |
| | 513 | 6G-4701 . . . . . | 438 | 6J-0793 . . . . . | 652 | | 799 |
| | 514 | 6G-4703 . . . . . | 438 | 6J-1381 . . . . . | 652 | | 803 |
| | 515 | 6G-5214 . . . . . | 1181 | 6J-1972 . . . . . | 654 | | 807 |
| | 516 | 6G-5442 . . . . . | 1051 | | 656 | | 811 |
| | 517 | 6G-5532 . . . . . | 667 | | 658 | | 815 |
| | 518 | 6G-5533 . . . . . | 667 | | 659 | | 819 |
| | 519 | 6G-5534 . . . . . | 667 | 6J-2797 . . . . . | 657 | | 822 |
| | 520 | 6G-5537 . . . . . | 667 | 6J-5731 . . . . . | 654 | | 825 |
| | 521 | 6G-5538 . . . . . | 667 | | 656 | | 829 |
| | 522 | 6G-5539 . . . . . | 667 | | 658 | | 833 |
| | 523 | 6G-5542 . . . . . | 667 | | 659 | | 837 |
| | 524 | 6G-5543 . . . . . | 667 | 6J-5733 . . . . . | 654 | | 841 |
| | 525 | 6G-5544 . . . . . | 667 | | 656 | | 845 |
| | 526 | 6G-5547 . . . . . | 667 | | 658 | | 849 |
| | 527 | 6G-5548 . . . . . | 667 | | 659 | | 853 |
| | 528 | 6G-5979 . . . . . | 477 | 6J-6439 . . . . . | 1028 | | 857 |
| | 529 | | 487 | 6K-0545 . . . . . | 1084 | | 860 |
| | 530 | 6G-5987 . . . . . | 1139 | | 1088 | | 864 |
| | 531 | | 1140 | 6K-3273 . . . . . | 1170 | | 867 |
| | 532 | 6G-6122 . . . . . | 667 | | 1174 | | 870 |
| | 533 | 6G-7187 . . . . . | 647 | | 1179 | | 874 |
| | 534 | | 651 | 6K-4076 . . . . . | 565 | | 877 |
| | 535 | 6G-7222 . . . . . | 1170 | 6K-6826 . . . . . | 615 | | 880 |
| | 536 | | 1179 | 6K-8079 . . . . . | 1185 | | 884 |
| | 539 | | 1181 | | 1187 | | 888 |
| | 540 | 6G-8623 . . . . . | 1073 | 6K-8178 . . . . . | 118 | | 892 |
| | 541 | | 1074 | | 350 | | 896 |
| | 542 | 6G-8814 . . . . . | 1107 | | 355 | | 900 |
| 6F-4855 . . . . . | 478 | 6G-8829 . . . . . | 1193 | | 360 | | 904 |
| | 481 | 6G-8831 . . . . . | 1193 | | 606 | | 1108 |
| | 484 | | 1196 | | 1183 | 6L-2609 . . . . . | 65 |
| 6F-6405 . . . . . | 103 | | 1198 | | 1187 | 6L-8617 . . . . . | 93 |
| 6F-6992 . . . . . | 1084 | | 1200 | 6K-9034 . . . . . | 700 | | 94 |
| | 1088 | | 1202 | 6K-9632 . . . . . | 1254 | 6M-5062 . . . . . | 631 |
| 6F-7045 . . . . . | 298 | 6H-0211 . . . . . | 648 | | 1255 | | 1037 |
| 6G-0417 . . . . . | 586 | 6H-1717 . . . . . | 651 | 6L-1650 . . . . . | 409 | | 1041 |
| 6G-0905 . . . . . | 611 | | 667 | | 413 | 6M-7476 . . . . . | 14 |
| 6G-1527 . . . . . | 540 | | 1047 | 6L-1962 . . . . . | 740 | | 16 |
| 6G-1528 . . . . . | 539 | 6I-0273 . . . . . | 98 | | 742 | 6M-9537 . . . . . | 615 |
| 6G-1631 . . . . . | 417 | 6I-0274 . . . . . | 98 | | 744 | 6N-6033 . . . . . | 70 |
| 6G-1633 . . . . . | 417 | 6I-0275 . . . . . | 98 | | 746 | 6N-8863 . . . . . | 47 |
| 6G-1755 . . . . . | 3 | 6I-1418 . . . . . | 155 | | 748 | | 49 |
| | ▶417 | | 156 | | 750 | 6P-0205 . . . . . | 1093 |
| 6G-1908 . . . . . | 667 | | 321 | | 752 | | 1094 |
| 6G-1914 . . . . . | 1051 | | 325 | | 755 | | 1170 |
| 6G-1915 . . . . . | 1051 | 6I-1638 . . . . . | 34 | | 757 | | 1174 |
| 6G-2395 . . . . . | 1170 | 6I-2662 . . . . . | 34 | | 759 | | 1181 |
| | 1174 | 6I-2663 . . . . . | 34 | | 761 | 6P-3236 . . . . . | 1096 |
| | 1179 | 6I-2720 . . . . . | 51 | | 763 | | 1147 |
| | 1181 | 6I-8641 . . . . . | 418 | | 765 | | 1151 |
| 6G-2396 . . . . . | 1170 | 6I-8642 . . . . . | 409 | | 767 | 6P-5647 . . . . . | 1078 |
| | 1174 | | 413 | | 769 | 6P-6641 . . . . . | 606 |
| | 1179 | 6I-8911 . . . . . | 424 | | 771 | 6T-2770 . . . . . | 1267 |
| | 1181 | 6I-8912 . . . . . | 418 | | 773 | 6T-3610 . . . . . | 366 |
| 6G-2751 . . . . . | 1170 | | 421 | | 775 | | 371 |
| | 1174 | | 424 | | 777 | | 385 |


▶ **PRIMARY REFERENCE**

# PART NUMBER INDEX


| Part | Page | Part | Page | Part | Page | Part | Page |
|---|---|---|---|---|---|---|---|
| 6T-3631 | 344 | | 143 | | 41 | | 283 |
| 6T-3632 | 344 | | 409 | 6V-3668 | 609 | | 317 |
| 6T-3633 | 344 | | 413 | 6V-3821 | 87 | | 319 |
| 6T-3643 | 350 | | 466 | | 88 | 6V-5049 | 53 |
| | 355 | | 567 | 6V-3822 | 20 | | 116 |
| | 360 | 6V-1889 | 321 | | 65 | | 281 |
| 6T-3644 | 376 | | 326 | | 143 | | 317 |
| 6T-5345 | 1096 | | 331 | 6V-3831 | 66 | | 319 |
| | 1147 | | 452 | 6V-3834 | 71 | 6V-5063 | 14 |
| | 1151 | | 456 | 6V-3908 | 66 | | 16 |
| 6T-6708 | 1096 | | 460 | 6V-3918 | 81 | | 89 |
| | 1147 | | 576 | | 82 | | 434 |
| | 1151 | | 579 | | 89 | 6V-5064 | 434 |
| 6T-7695 | 1164 | | 690 | | 430 | 6V-5134 | 71 |
| 6T-8115 | 315 | 6V-1911 | 468 | | 431 | 6V-5158 | 1125 |
| 6T-9222 | 447 | 6V-1970 | 5 | | 432 | | 1131 |
| 6V-0292 | 1170 | | ▶1189 | | 434 | 6V-5163 | 1171 |
| | 1174 | 6V-2286 | 1191 | 6V-3928 | 1168 | | 1175 |
| | 1181 | | 1193 | | 1170 | | 1179 |
| 6V-0371 | 296 | 6V-2313 | 109 | | 1174 | 6V-5164 | 1231 |
| 6V-0467 | 711 | | 1111 | | 1179 | 6V-5192 | 47 |
| 6V-0505 | 1143 | 6V-2315 | 46 | | 1181 | | 49 |
| | 1144 | 6V-2317 | 23 | 6V-3940 | 41 | | 729 |
| | 1171 | | 71 | | 62 | 6V-5215 | 68 |
| | 1175 | | 72 | | 70 | | 317 |
| | 1179 | | 99 | | 92 | | 319 |
| 6V-0852 | 53 | | 125 | | 409 | | 414 |
| | 428 | | 126 | | 413 | 6V-5217 | 22 |
| | 447 | | 410 | 6V-3964 | 322 | | 23 |
| | 449 | | 414 | | 326 | | 60 |
| | 490 | | 432 | 6V-3965 | 53 | | 409 |
| | 492 | | 434 | | 428 | | 413 |
| | 620 | 6V-2369 | 355 | | 447 | | 430 |
| | 622 | | 360 | | 449 | | 431 |
| | 690 | 6V-2480 | 387 | | 490 | | 490 |
| | 694 | | 389 | | 492 | | 492 |
| | 697 | | 392 | | 620 | 6V-5218 | 66 |
| | 700 | | 396 | | 622 | | 70 |
| | 970 | 6V-2610 | 606 | | 690 | | 116 |
| | 972 | 6V-2686 | 290 | | 694 | | 121 |
| 6V-0894 | 109 | | 293 | | 697 | | 432 |
| | 1111 | 6V-2687 | 582 | | 701 | | 434 |
| 6V-1250 | 23 | | 584 | | 970 | 6V-5219 | 41 |
| 6V-1322 | 367 | | 1190 | | 972 | | 410 |
| | 372 | 6V-2722 | 151 | 6V-4245 | 616 | | 414 |
| | 385 | | 366 | 6V-4248 | 14 | | 467 |
| 6V-1572 | 115 | | 371 | | 16 | 6V-5221 | 71 |
| 6V-1573 | 115 | 6V-2773 | 1120 | | 73 | | 91 |
| 6V-1581 | 83 | | 1123 | | 75 | 6V-5230 | 47 |
| | 85 | | 1127 | | 90 | | 970 |
| 6V-1582 | 83 | | 1129 | | 409 | | 972 |
| | 85 | 6V-3250 | 434 | | 413 | 6V-5324 | 1043 |
| 6V-1668 | 1097 | 6V-3251 | 14 | | 1106 | 6V-5556 | 1031 |
| | 1148 | | 16 | 6V-4249 | 49 | 6V-5645 | 306 |
| | 1152 | 6V-3259 | 1160 | 6V-4283 | 349 | | 309 |
| 6V-1720 | 409 | 6V-3265 | 245 | | 354 | 6V-5683 | 478 |
| | 413 | | 247 | | 359 | 6V-5696 | 695 |
| 6V-1722 | 711 | | 258 | 6V-4367 | 62 | | 698 |
| 6V-1819 | 418 | | 322 | 6V-4369 | 319 | | 701 |
| | 421 | | 326 | 6V-4589 | 53 | | 1104 |
| | 424 | 6V-3342 | 1156 | | 121 | 6V-5722 | 665 |
| | 426 | | 1158 | | 137 | 6V-5834 | 1164 |
| 6V-1820 | 20 | 6V-3536 | 25 | 6V-5048 | 29 | 6V-5839 | 14 |
| | 23 | 6V-3537 | 43 | | 52 | | 16 |
| | 95 | 6V-3538 | 29 | | 282 | | 18 |


▶ **PRIMARY REFERENCE**

# PART NUMBER INDEX


| Part | Page |
|---|---|
| | 20 |
| | 23 |
| | 35 |
| | 65 |
| | 66 |
| | 68 |
| | 73 |
| | 75 |
| | 90 |
| | 101 |
| | 102 |
| | 123 |
| | 317 |
| | 319 |
| | 457 |
| | 461 |
| | 609 |
| | 690 |
| | 1106 |
| 6V-5842 | 35 |
| | 102 |
| | 609 |
| 6V-5849 | 1276 |
| | 1278 |
| 6V-5853 | 1268 |
| | 1270 |
| | 1272 |
| | 1274 |
| | 1280 |
| | 1282 |
| | 1285 |
| | 1286 |
| | 1287 |
| 6V-6209 | 1267 |
| 6V-6213 | 1267 |
| 6V-6214 | 1267 |
| 6V-6219 | 1267 |
| 6V-6317 | 65 |
| | 123 |
| | 317 |
| | 319 |
| 6V-6467 | 1255 |
| 6V-6578 | 306 |
| | 309 |
| | 315 |
| 6V-6609 | 14 |
| | 16 |
| | 52 |
| | 80 |
| | 289 |
| 6V-6703 | 162 |
| 6V-6888 | 1267 |
| | 1268 |
| | 1270 |
| | 1272 |
| | 1274 |
| 6V-6889 | 1267 |
| | 1268 |
| | 1270 |
| | 1272 |
| | 1274 |
| 6V-6893 | 340 |
| | 345 |
| | 367 |
| | 372 |
| 6V-6923 | 136 |
| | 138 |
| 6V-6959 | 128 |
| | 129 |
| | 130 |
| | 132 |
| 6V-7350 | 91 |
| 6V-7357 | 270 |
| | 350 |
| | 355 |
| | 360 |
| | 616 |
| 6V-7418 | 972 |
| 6V-7571 | 105 |
| 6V-7604 | 31 |
| 6V-7636 | 1120 |
| | 1123 |
| | 1127 |
| | 1129 |
| 6V-7673 | 725 |
| 6V-7687 | 76 |
| 6V-7728 | 1097 |
| | 1148 |
| | 1152 |
| 6V-7742 | 14 |
| | 16 |
| 6V-7744 | 1193 |
| | 1196 |
| | 1198 |
| | 1200 |
| | 1202 |
| 6V-7981 | 102 |
| | 317 |
| | 319 |
| 6V-8004 | 18 |
| | 20 |
| 6V-8077 | 445 |
| | 708 |
| 6V-8149 | 18 |
| | 20 |
| 6V-8183 | 1107 |
| 6V-8185 | 270 |
| | 400 |
| | 403 |
| 6V-8186 | 302 |
| | 740 |
| | 742 |
| | 744 |
| | 746 |
| | 748 |
| | 755 |
| | 757 |
| | 759 |
| | 761 |
| | 763 |
| | 765 |
| | 767 |
| | 769 |
| | 771 |
| | 773 |
| | 775 |
| | 777 |
| | 779 |
| | 782 |
| | 784 |
| | 786 |
| | 788 |
| | 790 |
| | 792 |
| | 794 |
| | 796 |
| | 800 |
| | 804 |
| | 808 |
| | 812 |
| | 816 |
| | 820 |
| | 823 |
| | 826 |
| | 830 |
| | 834 |
| | 838 |
| | 842 |
| | 846 |
| | 850 |
| | 854 |
| | 858 |
| | 861 |
| | 865 |
| | 868 |
| | 871 |
| | 875 |
| | 878 |
| | 881 |
| | 885 |
| | 889 |
| | 893 |
| | 897 |
| | 901 |
| | 905 |
| | 904 |
| 6V-8187 | 141 |
| | 154 |
| | 349 |
| | 354 |
| | 359 |
| 6V-8188 | 294 |
| | 584 |
| | 740 |
| | 742 |
| | 744 |
| | 746 |
| | 748 |
| | 750 |
| | 752 |
| | 755 |
| | 757 |
| | 759 |
| | 761 |
| | 763 |
| | 765 |
| | 767 |
| | 769 |
| | 771 |
| | 773 |
| | 775 |
| | 777 |
| | 779 |
| | 782 |
| | 784 |
| | 786 |
| | 788 |
| | 790 |
| | 792 |
| | 794 |
| | 796 |
| | 800 |
| | 804 |
| | 808 |
| | 812 |
| | 816 |
| | 820 |
| | 823 |
| | 826 |
| | 830 |
| | 834 |
| | 838 |
| | 842 |
| | 846 |
| | 850 |
| | 854 |
| | 858 |
| | 861 |
| | 865 |
| | 868 |
| | 871 |
| | 875 |
| | 878 |
| | 881 |
| | 885 |
| | 889 |
| | 893 |
| | 897 |
| | 901 |
| | 905 |
| 6V-8189 | 144 |
| | 616 |
| 6V-8197 | 14 |
| | 16 |
| | 44 |
| | 47 |
| 6V-8202 | 410 |
| | 414 |
| 6V-8212 | 409 |
| | 413 |
| 6V-8214 | 317 |
| | 319 |
| | 407 |
| | 567 |
| 6V-8225 | 41 |
| | 199 |
| | 200 |
| 6V-8237 | 658 |
| 6V-8255 | 1257 |
| 6V-8257 | 1278 |
| 6V-8258 | 1268 |
| | 1270 |
| | 1276 |
| | 1280 |
| | 1282 |
| 6V-8259 | 1272 |
| | 1274 |
| | 1285 |
| | 1286 |


► **PRIMARY REFERENCE**

# PART NUMBER INDEX


| Part | Page | Part | Page | Part | Page | Part | Page |
|---|---|---|---|---|---|---|---|
| | 1287 | | 841 | | 860 | | 877 |
| 6V-8336 . . . . . | 58 | | 842 | | 864 | | 880 |
| | 76 | | 845 | | 867 | | 884 |
| | 725 | | 846 | | 870 | | 888 |
| 6V-8337 . . . . . | 725 | | 849 | | 874 | | 892 |
| 6V-8352 . . . . . | 1024 | | 850 | | 877 | | 896 |
| 6V-8359 . . . . . | 62 | | 853 | | 880 | | 900 |
| 6V-8362 . . . . . | 1096 | | 854 | | 881 | | 904 |
| | 1147 | | 857 | | 884 | 6V-8635 . . . . . | 452 |
| 6V-8369 . . . . . | 303 | | 858 | | 888 | | 456 |
| | 306 | | 860 | | 892 | | 460 |
| | 315 | | 861 | | 896 | 6V-8636 . . . . . | 678 |
| | 1276 | | 864 | | 900 | 6V-8637 . . . . . | 69 |
| | 1278 | | 865 | | 904 | | 692 |
| | 1280 | | 867 | | 905 | | 700 |
| | 1282 | | 868 | | 970 | 6V-8639 . . . . . | 118 |
| 6V-8376 . . . . . | 152 | | 870 | | 972 | | 680 |
| | 153 | | 871 | | 1044 | | 683 |
| | 350 | | 874 | 6V-8624 . . . . . | 118 | | 689 |
| | 355 | | 875 | | 680 | | 710 |
| | 360 | | 877 | | 683 | 6V-8647 . . . . . | 428 |
| | 376 | | 878 | 6V-8625 . . . . . | 680 | | 694 |
| | 399 | | 880 | | 683 | | 697 |
| | 402 | | 881 | | 686 | | 700 |
| | 403 | | 884 | | 695 | | 710 |
| 6V-8378 . . . . . | 294 | | 885 | | 697 | | 970 |
| | 301 | | 888 | | 700 | | 972 |
| 6V-8397 . . . . . | 53 | | 889 | | 708 | 6V-8675 . . . . . | 723 |
| | 118 | | 892 | | 710 | 6V-8676 . . . . . | 116 |
| | 674 | | 893 | 6V-8627 . . . . . | 428 | | 121 |
| | 676 | | 896 | | 690 | 6V-8716 . . . . . | 443 |
| | 677 | | 897 | | 694 | | 445 |
| | 678 | | 900 | | 697 | | 452 |
| | 680 | | 901 | | 701 | | 456 |
| | 681 | | 904 | 6V-8628 . . . . . | 428 | | 460 |
| | 683 | | 905 | | 690 | 6V-8723 . . . . . | 118 |
| | 684 | | 1044 | 6V-8633 . . . . . | 672 | | 674 |
| | 686 | 6V-8398 . . . . . | 118 | 6V-8634 . . . . . | 118 | | 680 |
| | 687 | | 672 | | 674 | | 683 |
| | 690 | | 680 | | 676 | | 686 |
| | 703 | | 683 | | 677 | | 703 |
| | 705 | | 686 | | 680 | | 705 |
| | 707 | | 689 | | 683 | | 707 |
| | 799 | | 695 | | 686 | 6V-8724 . . . . . | 678 |
| | 800 | | 698 | | 799 | 6V-8731 . . . . . | 118 |
| | 803 | | 700 | | 803 | 6V-8765 . . . . . | 723 |
| | 804 | | 708 | | 807 | 6V-8777 . . . . . | 695 |
| | 807 | | 710 | | 811 | | 698 |
| | 808 | | 711 | | 815 | | 701 |
| | 811 | | 799 | | 819 | 6V-8801 . . . . . | 106 |
| | 812 | | 803 | | 822 | | 109 |
| | 815 | | 807 | | 825 | | 167 |
| | 816 | | 811 | | 829 | | 208 |
| | 819 | | 815 | | 833 | | 223 |
| | 820 | | 819 | | 837 | | 226 |
| | 822 | | 822 | | 841 | | 229 |
| | 823 | | 825 | | 845 | | 232 |
| | 825 | | 829 | | 849 | | 259 |
| | 826 | | 833 | | 853 | | 275 |
| | 829 | | 837 | | 857 | | 301 |
| | 830 | | 841 | | 860 | | 304 |
| | 833 | | 845 | | 864 | | 306 |
| | 834 | | 849 | | 867 | | 309 |
| | 837 | | 853 | | 870 | | 315 |
| | 838 | | 857 | | 874 | | 322 |


► **PRIMARY REFERENCE**

# PART NUMBER INDEX


| Part | Page |
|---|---|
| | 326 |
| | 331 |
| | 340 |
| | 345 |
| | 367 |
| | 372 |
| | 385 |
| | 387 |
| | 389 |
| | 392 |
| | 396 |
| | 400 |
| | 403 |
| | 575 |
| | 576 |
| | 579 |
| | 613 |
| | 616 |
| | 628 |
| | 633 |
| | 681 |
| | 684 |
| | 687 |
| | 707 |
| | 711 |
| | 1097 |
| | 1148 |
| | 1152 |
| | 1246 |
| | 1252 |
| 6V-8837 . . . . . | 317 |
| | 319 |
| | 725 |
| 6V-8918 . . . . . | 616 |
| 6V-8928 . . . . . | 1170 |
| | 1174 |
| | 1179 |
| 6V-8936 . . . . . | 1044 |
| 6V-9001 . . . . . | 690 |
| 6V-9002 . . . . . | 118 |
| | 710 |
| 6V-9004 . . . . . | 76 |
| | 695 |
| | 698 |
| | 701 |
| 6V-9005 . . . . . | 66 |
| 6V-9007 . . . . . | 694 |
| | 697 |
| | 700 |
| 6V-9008 . . . . . | 66 |
| | 443 |
| | 445 |
| 6V-9027 . . . . . | 80 |
| | 432 |
| | 434 |
| 6V-9168 . . . . . | 703 |
| | 705 |
| 6V-9189 . . . . . | 235 |
| | 252 |
| 6V-9607 . . . . . | 33 |
| 6V-9632 . . . . . | 582 |
| | 584 |
| | 1102 |
| | 1107 |
| | 1114 |
| | 1116 |
| | 1120 |
| | 1127 |
| | 1134 |
| | 1166 |
| | 1181 |
| | 1217 |
| | 1221 |
| | 1231 |
| | 1246 |
| 6V-9746 . . . . . | 69 |
| | 76 |
| | 443 |
| | 445 |
| | 452 |
| | 456 |
| | 460 |
| | 690 |
| | 692 |
| | 694 |
| | 695 |
| | 697 |
| | 698 |
| | 700 |
| | 701 |
| | 710 |
| 6V-9829 . . . . . | 703 |
| 6V-9835 . . . . . | 695 |
| | 698 |
| | 701 |
| 6V-9836 . . . . . | 687 |
| | 800 |
| | 804 |
| | 808 |
| | 812 |
| | 816 |
| | 820 |
| | 823 |
| | 826 |
| | 830 |
| | 834 |
| | 838 |
| | 842 |
| | 846 |
| | 850 |
| | 854 |
| | 858 |
| | 861 |
| | 865 |
| | 868 |
| | 871 |
| | 875 |
| | 878 |
| | 881 |
| | 885 |
| | 889 |
| | 893 |
| | 897 |
| | 901 |
| | 905 |
| 6V-9837 . . . . . | 672 |
| | 710 |
| 6V-9839 . . . . . | 692 |
| 6V-9840 . . . . . | 695 |
| | 698 |
| | 701 |
| 6V-9844 . . . . . | 708 |
| 6V-9849 . . . . . | 708 |
| | 710 |
| 6V-9850 . . . . . | 678 |
| 6V-9851 . . . . . | 672 |
| 6V-9853 . . . . . | 443 |
| | 445 |
| | 452 |
| | 456 |
| | 460 |
| | 690 |
| 6V-9872 . . . . . | 690 |
| 6V-9873 . . . . . | 708 |
| 6V-9875 . . . . . | 694 |
| | 697 |
| | 700 |
| 6V-9876 . . . . . | 680 |
| | 683 |
| | 686 |
| 6W-5698 . . . . . | 1252 |
| | 1255 |
| 6W-5817 . . . . . | 615 |
| 6Y-0309 . . . . . | 1091 |
| 6Y-0590 . . . . . | 469 |
| 6Y-0591 . . . . . | 469 |
| 6Y-0976 . . . . . | 426 |
| 6Y-0982 . . . . . | 418 |
| 6Y-1000 . . . . . | 418 |
| 6Y-1007 . . . . . | 413 |
| 6Y-1114 . . . . . | 418 |
| | 421 |
| | 426 |
| 6Y-1115 . . . . . | 418 |
| | 421 |
| | 424 |
| | 426 |
| 6Y-1116 . . . . . | 424 |
| 6Y-1119 . . . . . | 424 |
| | 426 |
| 6Y-1864 . . . . . | 421 |
| 6Y-1878 . . . . . | 418 |
| 6Y-1887 . . . . . | 418 |
| | 421 |
| | 426 |
| 6Y-1888 . . . . . | 426 |
| 6Y-1890 . . . . . | 421 |
| 6Y-1891 . . . . . | 418 |
| | 426 |
| 6Y-1895 . . . . . | 418 |
| | 426 |
| 6Y-2303 . . . . . | ▶418 |
| | 472 |
| | 474 |
| 6Y-2307 . . . . . | 426 |
| 6Y-2312 . . . . . | 418 |
| | 421 |
| 6Y-2419 . . . . . | 418 |
| 6Y-2425 . . . . . | 418 |
| | 421 |
| 6Y-2428 . . . . . | 421 |
| 6Y-2429 . . . . . | 421 |
| 6Y-2584 . . . . . | 490 |
| | 492 |
| 6Y-2805 . . . . . | 1061 |
| 6Y-2932 . . . . . | 720 |
| 6Y-2933 . . . . . | 720 |
| 6Y-2934 . . . . . | 720 |
| 6Y-2935 . . . . . | 720 |
| 6Y-3849 . . . . . | 609 |
| 6Y-3850 . . . . . | 609 |
| 6Y-3852 . . . . . | 609 |
| 6Y-3855 . . . . . | 426 |
| 6Y-3860 . . . . . | 467 |
| 6Y-3861 . . . . . | 467 |
| 6Y-4280 . . . . . | 725 |
| 6Y-4638 . . . . . | 478 |
| | 481 |
| | 484 |
| 6Y-5010 . . . . . | 465 |
| 6Y-5230 . . . . . | 1084 |
| | 1088 |
| | 1092 |
| 6Y-5352 . . . . . | 609 |
| 6Y-5728 . . . . . | 409 |
| | 413 |
| 6Y-7916 . . . . . | 611 |
| 6Y-7953 . . . . . | 667 |
| 6Y-7954 . . . . . | 440 |
| 6Y-7981 . . . . . | 421 |
| 6Y-8285 . . . . . | 418 |
| 6Y-8764 . . . . . | ▶465 |
| | 466 |
| 6Y-8765 . . . . . | ▶466 |
| | 472 |
| | 474 |
| 6Y-9763 . . . . . | 409 |
| | 413 |
| 7B-7525 . . . . . | 1234 |
| | 1236 |
| 7B-9323 . . . . . | 624 |
| 7C-1445 . . . . . | 23 |
| 7C-1583 . . . . . | 57 |
| 7C-1728 . . . . . | 57 |
| 7C-1798 . . . . . | 55 |
| 7C-1821 . . . . . | 71 |
| 7C-1822 . . . . . | 71 |
| 7C-2891 . . . . . | 62 |
| 7C-3081 . . . . . | 62 |
| 7C-3082 . . . . . | 62 |
| 7C-3083 . . . . . | 62 |
| 7C-3095 . . . . . | 79 |
| 7C-3954 . . . . . | 62 |
| 7C-4354 . . . . . | 322 |
| | 326 |
| | 331 |
| | 340 |
| | 345 |
| | 367 |
| | 372 |
| | 387 |
| | 389 |
| | 392 |
| | 396 |
| 7C-4993 . . . . . | 125 |
| | 126 |


7

▶ PRIMARY REFERENCE

# PART NUMBER INDEX


| Part | Page | Part | Page | Part | Page | Part | Page |
|---|---|---|---|---|---|---|---|
| 7C-5736 | 44 | | 471 | 7F-7685 | 152 | | 822 |
| 7C-6178 | 12 | 7D-6671 | ▶1061 | 7F-8268 | 466 | | 825 |
| 7C-6921 | 68 | 7D-7026 | 83 | 7F-9223 | 556 | | 829 |
| 7C-7851 | 38 | | 1185 | | 559 | | 833 |
| 7C-7852 | 38 | | 1187 | 7G-0437 | 609 | | 837 |
| 7C-8292 | 60 | 7D-7233 | 322 | 7G-1060 | 339 | | 841 |
| 7C-8296 | 47 | | 326 | | 344 | | 845 |
| 7C-8581 | 34 | 7D-7496 | 570 | 7G-4326 | 1252 | | 849 |
| 7C-8639 | 51 | 7D-7889 | 450 | 7G-4822 | 418 | | 853 |
| 7C-8851 | 124 | 7D-8185 | 440 | | 421 | | 857 |
| 7C-9532 | 108 | 7D-8225 | 440 | | 424 | | 860 |
| 7C-9538 | 108 | 7D-8226 | 440 | | 426 | | 864 |
| 7C-9542 | 23 | 7D-8245 | 1084 | 7G-4824 | 1096 | | 867 |
| 7D-0035 | 450 | | 1088 | | 1147 | | 870 |
| 7D-0215 | 606 | 7D-8347 | 438 | | 1151 | | 874 |
| 7D-1158 | 1064 | 7D-8354 | 611 | | 1170 | | 877 |
| 7D-1195 | 737 | 7D-8362 | 611 | | 1174 | | 880 |
| 7D-1576 | 1067 | 7D-8434 | 611 | | 1179 | | 884 |
| 7D-1577 | 1067 | 7D-8436 | 611 | | 1246 | | 888 |
| 7D-1649 | 543 | 7D-8437 | 611 | 7G-4998 | 64 | | 892 |
| | 546 | 7D-8439 | 611 | 7G-5453 | 481 | | 896 |
| 7D-2135 | 1084 | 7D-8440 | 3 | | 484 | | 904 |
| | 1088 | | ▶611 | 7G-7053 | 381 | 7I-4610 | 4 |
| 7D-2136 | 1084 | 7D-8441 | 611 | | 387 | | ▶590 |
| | 1088 | 7D-8636 | 543 | | 389 | 7I-4621 | ▶740 |
| 7D-2196 | 1084 | | 546 | | 392 | 7I-4622 | 635 |
| | 1088 | 7D-8637 | 543 | | 396 | | ▶742 |
| 7D-3504 | 667 | | 546 | 7G-7920 | 582 | 7I-4623 | ▶744 |
| 7D-3963 | 613 | 7D-8643 | 543 | | 584 | 7I-4624 | ▶746 |
| 7D-4903 | 606 | | 546 | 7H-1447 | 737 | 7I-4696 | 1156 |
| 7D-5252 | 489 | 7D-8825 | 1084 | 7H-2423 | 660 | | 1158 |
| | 508 | 7D-8826 | 1084 | | 661 | 7I-4698 | 1156 |
| | 509 | 7D-8875 | 1075 | 7H-2444 | 1075 | | 1158 |
| | 510 | 7D-8876 | 1075 | 7H-3641 | 740 | 7I-4699 | 1156 |
| | 511 | 7D-8877 | 1075 | | 742 | | 1158 |
| | 512 | 7D-8878 | 1075 | | 744 | 7I-4718 | 3 |
| | 513 | 7D-8879 | 1075 | | 746 | | ▶1113 |
| | 514 | 7D-8881 | 1075 | | 748 | 7I-4890 | 1107 |
| | 515 | 7D-8882 | 1075 | | 755 | 7I-5015 | 1095 |
| | 516 | 7D-8883 | 1075 | | 757 | | ▶1134 |
| | 517 | 7D-8884 | 1075 | | 759 | | 1145 |
| | 518 | 7D-8889 | 1075 | | 761 | 7I-5412 | 707 |
| | 519 | 7D-8891 | 1075 | | 763 | 7J-0204 | 660 |
| | 520 | 7D-8912 | 543 | | 765 | | 661 |
| | 521 | | ▶591 | | 767 | | 692 |
| | 522 | 7D-8983 | 667 | | 769 | 7J-5606 | 293 |
| | 523 | 7D-8984 | 667 | | 771 | 7J-8611 | 442 |
| | 524 | 7D-9267 | 731 | | 773 | | 606 |
| | 525 | 7E-3369 | 47 | | 775 | | 620 |
| | 526 | 7E-5555 | 81 | | 777 | | 622 |
| | 527 | 7E-6508 | 407 | | 779 | | 1244 |
| | 528 | 7E-7912 | 79 | | 782 | 7J-9885 | 663 |
| | 529 | | 80 | | 784 | 7J-9933 | 974 |
| | 530 | 7E-8629 | 99 | | 786 | | 976 |
| | 531 | 7E-8923 | 12 | | 788 | | 978 |
| | 532 | 7E-8925 | 12 | | 790 | | 980 |
| | 533 | 7E-8926 | 12 | | 792 | | 982 |
| | 534 | 7E-8928 | 12 | | 794 | | 984 |
| | 535 | 7E-9578 | 34 | | 796 | | 986 |
| | 536 | 7F-0192 | 109 | | 799 | | 988 |
| | 539 | 7F-0560 | 151 | | 803 | | 990 |
| | 540 | 7F-1327 | 1084 | | 807 | | 992 |
| | 541 | | 1088 | | 811 | | 994 |
| | 542 | 7F-4617 | 703 | | 815 | | 996 |
| 7D-6567 | 470 | | 705 | | 819 | | 998 |


▶ **PRIMARY REFERENCE**

# PART NUMBER INDEX


| Part | Page | Part | Page | Part | Page | Part | Page |
|---|---|---|---|---|---|---|---|
| | 1000 | | 350 | 7T-6496 . . . . . | 409 | | 460 |
| | 1002 | | 355 | | 413 | 7X-0346 . . . . . | 643 |
| | 1004 | | 360 | 7T-6799 . . . . . | 387 | | 713 |
| | 1006 | 7N-2059 . . . . . | 290 | | 389 | 7X-0354 . . . . . | 1206 |
| | 1008 | 7N-3718 . . . . . | 350 | | 392 | | 1207 |
| | 1010 | | 355 | | 396 | | 1209 |
| | 1012 | | 360 | 7T-7358 . . . . . | 1142 | 7X-0375 . . . . . | 1206 |
| | 1014 | 7N-3725 . . . . . | 293 | 7T-8891 . . . . . | 1252 | | 1207 |
| | 1016 | | 452 | | 1254 | | 1209 |
| | 1018 | | 456 | | 1255 | 7X-0390 . . . . . | 1084 |
| | 1020 | | 460 | 7T-9302 . . . . . | 303 | | 1088 |
| | 1028 | 7N-5274 . . . . . | 349 | | 306 | 7X-0399 . . . . . | 551 |
| 7K-1181 . . . . . | 83 | | 354 | | 315 | | 552 |
| | 85 | | 359 | 7T-9755 . . . . . | 725 | 7X-0403 . . . . . | 588 |
| | 259 | 7N-5683 . . . . . | 29 | 7T-9793 . . . . . | 1096 | | 1078 |
| | 319 | 7N-5876 . . . . . | 387 | 7U-4898 . . . . . | 1236 | 7X-0404 . . . . . | 589 |
| | 321 | | 389 | 7U-4998 . . . . . | 1234 | 7X-0440 . . . . . | 322 |
| | 325 | | 392 | 7V-0446 . . . . . | 109 | | 326 |
| | 330 | | 396 | | 615 | 7X-0452 . . . . . | 1047 |
| | 331 | | 1205 | | 1111 | 7X-0456 . . . . . | 1100 |
| | 339 | | 1217 | 7V-5191 . . . . . | 1160 | | 1101 |
| | 344 | | 1219 | 7V-7835 . . . . . | 378 | 7X-0550 . . . . . | 331 |
| | 366 | | 1221 | | 381 | | 1047 |
| | 371 | 7N-7688 . . . . . | 83 | 7V-7838 . . . . . | 378 | 7X-0562 . . . . . | 294 |
| | 410 | | 85 | | 381 | 7X-0579 . . . . . | 128 |
| | 414 | 7N-9801 . . . . . | 290 | 7V-9275 . . . . . | 349 | | 129 |
| | 582 | 7N-9943 . . . . . | 177 | | 354 | | 130 |
| | 584 | 7S-0530 . . . . . | 911 | | 359 | | 132 |
| 7K-4129 . . . . . | 116 | 7S-4571 . . . . . | 450 | 7W-5164 . . . . . | 102 | | 331 |
| 7K-4199 . . . . . | 1142 | 7S-9396 . . . . . | 96 | 7W-5499 . . . . . | 14 | 7X-0591 . . . . . | 1097 |
| 7K-4201 . . . . . | 1133 | | ▶106 | | 16 | | 1148 |
| 7K-4743 . . . . . | 349 | 7T-0020 . . . . . | 177 | 7W-5672 . . . . . | 680 | | 1152 |
| 7K-6117 . . . . . | 643 | 7T-0570 . . . . . | 478 | | 683 | | 1246 |
| 7K-9202 . . . . . | 643 | | 481 | | 686 | 7X-0608 . . . . . | 275 |
| | 647 | | 484 | 7W-5844 . . . . . | 51 | | 301 |
| 7K-9203 . . . . . | 1081 | 7T-0582 . . . . . | 1139 | 7W-6390 . . . . . | 62 | 7X-0619 . . . . . | 331 |
| 7L-0811 . . . . . | 339 | | 1140 | 7W-7235 . . . . . | 55 | 7X-0620 . . . . . | 301 |
| | 344 | 7T-1099 . . . . . | 1096 | 7W-7381 . . . . . | 445 | 7X-0632 . . . . . | 556 |
| | 366 | | 1107 | 7X-0288 . . . . . | 681 | | 559 |
| | 371 | | 1147 | | 684 | 7X-0838 . . . . . | 678 |
| 7L-2894 . . . . . | 294 | | 1151 | | 687 | 7X-0871 . . . . . | 710 |
| 7L-6580 . . . . . | 81 | 7T-1159 . . . . . | 428 | 7X-0289 . . . . . | 672 | 7X-0909 . . . . . | 46 |
| 7L-8316 . . . . . | 1139 | 7T-1961 . . . . . | 1252 | | 674 | 7X-1387 . . . . . | 127 |
| | 1140 | | 1255 | | 687 | 7X-2049 . . . . . | 1183 |
| 7L-9061 . . . . . | 725 | 7T-3267 . . . . . | 294 | | 711 | 7X-2393 . . . . . | 378 |
| 7M-0706 . . . . . | 1114 | 7T-3268 . . . . . | 294 | 7X-0291 . . . . . | 575 | | 381 |
| | 1116 | 7T-3271 . . . . . | 294 | | 750 | 7X-2468 . . . . . | 407 |
| 7M-1297 . . . . . | 64 | 7T-3276 . . . . . | 294 | | 752 | 7X-2533 . . . . . | 46 |
| 7M-2360 . . . . . | 667 | 7T-3277 . . . . . | 294 | | 757 | 7X-2537 . . . . . | 340 |
| 7M-7219 . . . . . | 1160 | 7T-3278 . . . . . | 294 | | 759 | | 345 |
| 7M-7410 . . . . . | 616 | 7T-3279 . . . . . | 294 | | 792 | | 367 |
| 7M-8485 . . . . . | 174 | 7T-3451 . . . . . | 294 | | 794 | | 372 |
| | 409 | 7T-3454 . . . . . | 294 | | 897 | 7X-2538 . . . . . | 1104 |
| | 413 | 7T-3973 . . . . . | 294 | | 901 | 7X-2539 . . . . . | 1104 |
| | 414 | 7T-3974 . . . . . | 294 | 7X-0292 . . . . . | 1078 | 7X-2540 . . . . . | 665 |
| | 443 | 7T-4003 . . . . . | 1137 | 7X-0325 . . . . . | 331 | 7X-2546 . . . . . | 907 |
| | 445 | | 1138 | | 739 | | 908 |
| | 452 | 7T-4369 . . . . . | 355 | 7X-0328 . . . . . | 584 | | 909 |
| | 456 | | 360 | 7X-0333 . . . . . | 628 | | 910 |
| | 460 | 7T-4515 . . . . . | 488 | | 633 | | 911 |
| | 478 | 7T-4532 . . . . . | 1105 | | 1078 | | 913 |
| | 481 | 7T-4897 . . . . . | 418 | | 1081 | | 915 |
| | 484 | | 421 | 7X-0334 . . . . . | 1047 | | 917 |
| 7N-0296 . . . . . | 290 | | 424 | 7X-0342 . . . . . | 452 | | 918 |
| 7N-0718 . . . . . | ▶298 | | 426 | | 456 | | 919 |


▶ **PRIMARY REFERENCE**

# PART NUMBER INDEX


| Part | Page | Part | Page | Part | Page | Part | Page |
|---|---|---|---|---|---|---|---|
| | 920 | | 372 | | 1278 | | 746 |
| | 921 | | 452 | 8C-5230 . . . . . | 66 | | 748 |
| | 922 | | 456 | 8C-5897 . . . . . | 1292 | | 750 |
| | 923 | | 460 | 8C-5917 . . . . . | 147 | | 752 |
| | 924 | | 556 | | 148 | | 755 |
| | 926 | | 559 | | 149 | | 757 |
| | 927 | | 567 | 8C-5918 . . . . . | 150 | | 759 |
| | 929 | | 573 | 8C-6162 . . . . . | 714 | | 761 |
| | 931 | | 1104 | 8C-6354 . . . . . | 387 | | 763 |
| | 933 | 7X-7731 . . . . . | 82 | | 389 | | 765 |
| | 934 | | 92 | | 392 | | 767 |
| | 935 | | 432 | | 396 | | 769 |
| | 936 | | 543 | 8C-6358 . . . . . | 151 | | 771 |
| | 937 | | 546 | 8C-6512 . . . . . | 716 | | 773 |
| | 938 | 7X-7732 . . . . . | 79 | | 718 | | 775 |
| | 939 | 7X-7739 . . . . . | 1250 | 8C-6738 . . . . . | 1258 | | 777 |
| | 940 | 7X-7877 . . . . . | 167 | | 1261 | | 779 |
| | 942 | | 306 | 8C-6857 . . . . . | 1054 | | 782 |
| | 944 | | 309 | | 1055 | | 784 |
| | 946 | | 315 | 8C-6913 . . . . . | 1084 | | 786 |
| | 948 | | 567 | | 1088 | | 788 |
| | 950 | 7X-7958 . . . . . | 69 | 8C-6921 . . . . . | 151 | | 790 |
| | 952 | 7Y-5226 . . . . . | 1257 | 8C-6959 . . . . . | 119 | | 792 |
| | 953 | | 1262 | 8C-6965 . . . . . | 478 | | 794 |
| | 955 | | 1264 | | 481 | | 796 |
| | 956 | 7Y-7388 . . . . . | 1217 | | 484 | | 799 |
| | 957 | | 1219 | 8C-7325 . . . . . | 85 | | 803 |
| | 958 | | 1222 | 8C-7508 . . . . . | 400 | | 807 |
| | 959 | 7Y-8169 . . . . . | 350 | | 403 | | 811 |
| | 960 | | 355 | 8C-8451 . . . . . | 350 | | 815 |
| | 962 | | 360 | | 355 | | 819 |
| | 964 | | | | 360 | | 822 |
| | 966 | | | 8C-8454 . . . . . | 1125 | | 825 |
| | 967 | **8** | | | 1131 | | 829 |
| | 968 | | | 8C-8923 . . . . . | 1292 | | 833 |
| | 969 | 8B-1615 . . . . . | 442 | 8C-9987 . . . . . | 487 | | 837 |
| 7X-2552 . . . . . | 452 | 8C-2926 . . . . . | 465 | | 1045 | | 841 |
| | 456 | 8C-3085 . . . . . | 1026 | | 1046 | | 845 |
| | 460 | 8C-3089 . . . . . | 99 | 8D-1268 . . . . . | 1084 | | 849 |
| 7X-2607 . . . . . | 725 | | 725 | | 1088 | | 853 |
| 7X-3182 . . . . . | 1268 | 8C-3100 . . . . . | 92 | 8D-1429 . . . . . | 1096 | | 857 |
| | 1272 | 8C-3205 . . . . . | 690 | | 1147 | | 860 |
| | 1276 | 8C-3309 . . . . . | 694 | | 1151 | | 864 |
| | 1280 | | 700 | 8D-1470 . . . . . | 606 | | 867 |
| 7X-3229 . . . . . | 1292 | 8C-3334 . . . . . | 399 | 8D-2429 . . . . . | 650 | | 870 |
| 7X-3373 . . . . . | 294 | 8C-3425 . . . . . | 723 | 8D-2638 . . . . . | 650 | | 874 |
| 7X-4736 . . . . . | 613 | 8C-3442 . . . . . | 1107 | 8D-2811 . . . . . | 543 | | 877 |
| 7X-4776 . . . . . | 970 | 8C-3445 . . . . . | 66 | | 546 | | 880 |
| | 972 | 8C-3446 . . . . . | 66 | | 650 | | 884 |
| 7X-6222 . . . . . | 387 | | 443 | 8D-3540 . . . . . | 450 | | 888 |
| | 389 | | 449 | 8D-3591 . . . . . | 450 | | 892 |
| | 392 | | 710 | 8D-3743 . . . . . | 450 | | 896 |
| | 396 | 8C-3447 . . . . . | 443 | 8D-3791 . . . . . | 565 | | 900 |
| 7X-6312 . . . . . | 172 | | 449 | 8D-3885 . . . . . | 450 | | 904 |
| | 174 | 8C-3451 . . . . . | 710 | 8D-3886 . . . . . | 450 | 8D-5633 . . . . . | 740 |
| 7X-6315 . . . . . | 157 | 8C-3655 . . . . . | 294 | 8D-3902 . . . . . | 450 | | 742 |
| | 160 | 8C-3756 . . . . . | 1096 | 8D-4064 . . . . . | 440 | | 744 |
| | 162 | | 1147 | 8D-4282 . . . . . | 440 | | 746 |
| 7X-7644 . . . . . | 3 | 8C-4403 . . . . . | 29 | 8D-4291 . . . . . | 440 | | 748 |
| | 1292 | 8C-4586 . . . . . | 1096 | 8D-4332 . . . . . | 1075 | | 750 |
| 7X-7729 . . . . . | 95 | | 1147 | 8D-4336 . . . . . | 1075 | | 752 |
| | 96 | | 1151 | 8D-4766 . . . . . | 643 | | 755 |
| | 99 | 8C-4984 . . . . . | 430 | 8D-5632 . . . . . | 740 | | 757 |
| | 103 | | 431 | | 742 | | 759 |
| | 367 | 8C-5060 . . . . . | 1276 | | 744 | | 761 |


► **PRIMARY REFERENCE**

# PART NUMBER INDEX


| Part | Page | Part | Page | Part | Page | Part | Page |
|---|---|---|---|---|---|---|---|
| | 763 | | 779 | | 796 | | 825 |
| | 765 | | 782 | | 799 | | 829 |
| | 767 | | 784 | | 803 | | 833 |
| | 769 | | 786 | | 807 | | 837 |
| | 771 | | 788 | | 811 | | 841 |
| | 773 | | 790 | | 815 | | 845 |
| | 775 | | 792 | | 819 | | 849 |
| | 777 | | 794 | | 822 | | 853 |
| | 779 | | 796 | | 825 | | 857 |
| | 782 | | 799 | | 829 | | 860 |
| | 784 | | 803 | | 833 | | 864 |
| | 786 | | 807 | | 837 | | 867 |
| | 788 | | 811 | | 841 | | 870 |
| | 790 | | 815 | | 845 | | 874 |
| | 792 | | 819 | | 849 | | 877 |
| | 794 | | 822 | | 853 | | 880 |
| | 796 | | 825 | | 857 | | 884 |
| | 799 | | 829 | | 860 | | 888 |
| | 803 | | 833 | | 864 | | 892 |
| | 807 | | 837 | | 867 | | 896 |
| | 811 | | 841 | | 870 | | 900 |
| | 815 | | 845 | | 874 | | 904 |
| | 819 | | 849 | | 877 | 8D-5640 . . . . . | 740 |
| | 822 | | 853 | | 880 | | 742 |
| | 825 | | 857 | | 884 | | 744 |
| | 829 | | 860 | | 888 | | 746 |
| | 833 | | 864 | | 892 | | 748 |
| | 837 | | 867 | | 896 | | 750 |
| | 841 | | 870 | | 900 | | 752 |
| | 845 | | 874 | | 904 | | 755 |
| | 849 | | 877 | 8D-5637 . . . . . | 740 | | 757 |
| | 853 | | 880 | | 742 | | 759 |
| | 857 | | 884 | | 744 | | 761 |
| | 860 | | 888 | | 746 | | 763 |
| | 864 | | 892 | | 748 | | 765 |
| | 867 | | 896 | | 750 | | 767 |
| | 870 | | 900 | | 752 | | 769 |
| | 874 | | 904 | | 755 | | 771 |
| | 877 | 8D-5636 . . . . . | 740 | | 757 | | 773 |
| | 880 | | 742 | | 759 | | 775 |
| | 884 | | 744 | | 761 | | 777 |
| | 888 | | 746 | | 763 | | 779 |
| | 892 | | 748 | | 765 | | 782 |
| | 896 | | 750 | | 767 | | 784 |
| | 900 | | 752 | | 769 | | 786 |
| | 904 | | 755 | | 771 | | 788 |
| 8D-5634 . . . . . | 740 | | 757 | | 773 | | 790 |
| | 742 | | 759 | | 775 | | 792 |
| | 744 | | 761 | | 777 | | 794 |
| | 746 | | 763 | | 779 | | 796 |
| | 748 | | 765 | | 782 | | 799 |
| | 750 | | 767 | | 784 | | 803 |
| | 752 | | 769 | | 786 | | 807 |
| | 755 | | 771 | | 788 | | 811 |
| | 757 | | 773 | | 790 | | 815 |
| | 759 | | 775 | | 792 | | 819 |
| | 761 | | 777 | | 794 | | 822 |
| | 763 | | 779 | | 796 | | 825 |
| | 765 | | 782 | | 799 | | 829 |
| | 767 | | 784 | | 803 | | 833 |
| | 769 | | 786 | | 807 | | 837 |
| | 771 | | 788 | | 811 | | 841 |
| | 773 | | 790 | | 815 | | 845 |
| | 775 | | 792 | | 819 | | 849 |
| | 777 | | 794 | | 822 | | 853 |


► PRIMARY REFERENCE

# PART NUMBER INDEX


| Part | Page | Part | Page | Part | Page | Part | Page |
|---|---|---|---|---|---|---|---|
| | 857 | | 877 | 8E-7713 . . . . . | 481 | | 763 |
| | 860 | | 880 | | 484 | | 765 |
| | 864 | | 884 | 8E-7714 . . . . . | 481 | | 767 |
| | 867 | | 888 | | 484 | | 769 |
| | 870 | | 892 | 8E-7791 . . . . . | 1096 | | 771 |
| | 874 | | 896 | | 1147 | | 773 |
| | 877 | | 900 | | 1151 | | 775 |
| | 880 | | 904 | | 1170 | | 777 |
| | 884 | | 1107 | | 1174 | | 779 |
| | 888 | 8D-5949 . . . . . | 1047 | | 1179 | | 782 |
| | 892 | 8D-6687 . . . . . | 645 | | 1246 | | 784 |
| | 896 | 8D-7026 . . . . . | 615 | 8E-8319 . . . . . | 418 | | 786 |
| | 900 | 8D-7086 . . . . . | 643 | | 421 | | 788 |
| | 904 | | 647 | | 424 | | 790 |
| 8D-5641 . . . . . | 378 | 8D-7225 . . . . . | 647 | | 426 | | 792 |
| | 381 | 8D-7423 . . . . . | 667 | 8E-9316 . . . . . | ▶421 | | 794 |
| | 740 | 8D-7424 . . . . . | 667 | | 472 | | 796 |
| | 742 | 8D-7425 . . . . . | 667 | | 474 | | 800 |
| | 744 | 8D-7426 . . . . . | 667 | 8E-9474 . . . . . | 490 | | 804 |
| | 746 | 8D-7678 . . . . . | 645 | | 492 | | 808 |
| | 748 | 8D-7960 . . . . . | 1107 | 8E-9893 . . . . . | 481 | | 812 |
| | 750 | 8D-7996 . . . . . | 644 | | 484 | | 816 |
| | 752 | 8D-8168 . . . . . | 1075 | 8E-9894 . . . . . | 478 | | 820 |
| | 755 | 8D-8197 . . . . . | 438 | | 481 | | 823 |
| | 757 | 8D-9092 . . . . . | 681 | | 484 | | 826 |
| | 759 | | 684 | 8E-9895 . . . . . | 478 | | 830 |
| | 761 | 8D-9159 . . . . . | 565 | | 481 | | 834 |
| | 763 | 8D-9671 . . . . . | 340 | | 484 | | 838 |
| | 765 | | 345 | 8E-9896 . . . . . | 478 | | 842 |
| | 767 | | 367 | | 481 | | 846 |
| | 769 | | 372 | | 484 | | 850 |
| | 771 | 8D-9784 . . . . . | 438 | 8E-9897 . . . . . | 481 | | 854 |
| | 773 | 8D-9804 . . . . . | 667 | | 484 | | 858 |
| | 775 | 8D-9882 . . . . . | 1049 | 8F-0492 . . . . . | 1170 | | 861 |
| | 777 | 8D-9886 . . . . . | 1049 | | 1174 | | 865 |
| | 779 | 8D-9887 . . . . . | 1049 | | 1179 | | 868 |
| | 782 | 8E-1118 . . . . . | 1164 | 8F-1434 . . . . . | 141 | | 871 |
| | 784 | 8E-1133 . . . . . | 409 | | 195 | | 875 |
| | 786 | | 413 | | 294 | | 878 |
| | 788 | 8E-1143 . . . . . | 481 | | 301 | | 881 |
| | 790 | | 484 | | 1217 | | 885 |
| | 792 | 8E-1161 . . . . . | 421 | | 1219 | | 889 |
| | 794 | 8E-1263 . . . . . | 424 | | 1222 | | 893 |
| | 796 | | 426 | 8F-1462 . . . . . | 1210 | | 897 |
| | 799 | 8E-1908 . . . . . | 426 | 8F-1974 . . . . . | 322 | | 901 |
| | 803 | 8E-1909 . . . . . | 418 | | 326 | | 905 |
| | 807 | 8E-1910 . . . . . | 418 | 8F-3469 . . . . . | 418 | 8F-8151 . . . . . | 567 |
| | 811 | 8E-1913 . . . . . | 421 | | 421 | 8F-9836 . . . . . | 1051 |
| | 815 | 8E-3366 . . . . . | 3 | | 424 | | 1077 |
| | 819 | | ▶437 | | 426 | 8H-1141 . . . . . | 294 |
| | 822 | 8E-5529 . . . . . | 1064 | 8F-4102 . . . . . | 645 | 8H-1728 . . . . . | 1195 |
| | 825 | 8E-5531 . . . . . | 1062 | 8F-6230 . . . . . | 490 | 8H-3481 . . . . . | 194 |
| | 829 | | 1063 | | 492 | 8H-4040 . . . . . | 1084 |
| | 833 | | 1065 | 8F-6437 . . . . . | 567 | | 1088 |
| | 837 | 8E-5734 . . . . . | 418 | | 740 | 8H-5303 . . . . . | 298 |
| | 841 | | 421 | | 742 | 8H-5306 . . . . . | 298 |
| | 845 | | 426 | | 744 | 8H-9789 . . . . . | 41 |
| | 849 | 8E-5736 . . . . . | 421 | | 746 | 8I-1362 . . . . . | 606 |
| | 853 | 8E-5742 . . . . . | 418 | | 748 | 8J-0112 . . . . . | 653 |
| | 857 | | 421 | | 750 | 8J-1256 . . . . . | 317 |
| | 860 | | 424 | | 752 | | 319 |
| | 864 | | 426 | | 755 | 8J-1434 . . . . . | 1081 |
| | 867 | 8E-6130 . . . . . | 1078 | | 757 | | ▶1091 |
| | 870 | 8E-6570 . . . . . | 481 | | 759 | 8J-2331 . . . . . | 734 |
| | 874 | | 484 | | 761 | | 735 |


▶ **PRIMARY REFERENCE**

# PART NUMBER INDEX


| Part | Page |
|---|---|
| 8J-4351 | 71 |
| 8J-6273 | 719 |
| 8J-6371 | 652 |
| 8J-6384 | 656 |
| 8J-6815 | 970 |
| 8J-7008 | 1081 |
| 8J-7024 | 1080 |
| | ▶1081 |
| 8J-9910 | 657 |
| 8J-9911 | 657 |
| 8K-0530 | 570 |
| 8L-2777 | 55 |
| 8L-2786 | 62 |
| | 70 |
| | 288 |
| 8L-5008 | 100 |
| 8L-5828 | 378 |
| 8L-6005 | 615 |
| | 619 |
| 8L-6521 | 400 |
| | 403 |
| 8L-6557 | 14 |
| | 16 |
| 8L-7905 | 1107 |
| 8L-8413 | 149 |
| | 1250 |
| 8L-8598 | 763 |
| | 765 |
| | 767 |
| | 769 |
| | 771 |
| | 773 |
| | 775 |
| | 777 |
| | 779 |
| | 784 |
| | 786 |
| | 788 |
| | 790 |
| | 792 |
| | 794 |
| | 796 |
| | 799 |
| | 803 |
| | 807 |
| | 811 |
| | 815 |
| | 819 |
| | 822 |
| | 825 |
| | 829 |
| | 833 |
| | 837 |
| | 841 |
| | 845 |
| | 849 |
| | 853 |
| | 857 |
| | 860 |
| | 864 |
| | 867 |
| | 870 |
| | 874 |
| | 877 |
| | 880 |
| | 884 |
| | 888 |
| | 892 |
| | 896 |
| | 900 |
| | 904 |
| 8M-0505 | 70 |
| 8M-2770 | 14 |
| | 16 |
| | 239 |
| | 242 |
| | 249 |
| | 259 |
| | 317 |
| | 322 |
| | 326 |
| | 387 |
| | 389 |
| | 392 |
| | 396 |
| | 1183 |
| 8M-2771 | 317 |
| | 319 |
| 8M-2772 | 350 |
| | 355 |
| | 360 |
| 8M-2773 | 116 |
| | 121 |
| | 319 |
| | 322 |
| | 326 |
| | 340 |
| | 345 |
| | 367 |
| | 373 |
| | 678 |
| | 690 |
| | 1095 |
| 8M-3175 | 970 |
| | 972 |
| 8M-3267 | 1250 |
| 8M-3837 | 551 |
| | 552 |
| 8M-4295 | 421 |
| 8M-4437 | 974 |
| | 976 |
| | 978 |
| | 980 |
| | 982 |
| | 984 |
| | 986 |
| | 988 |
| | 990 |
| | 992 |
| | 994 |
| | 996 |
| | 998 |
| | 1000 |
| | 1002 |
| | 1004 |
| | 1006 |
| | 1008 |
| | 1010 |
| | 1012 |
| | 1014 |
| | 1016 |
| | 1018 |
| | 1020 |
| 8M-4438 | 428 |
| 8M-6393 | 447 |
| 8M-6521 | 409 |
| | 413 |
| 8M-7065 | 14 |
| | 16 |
| 8M-8489 | 465 |
| 8N-0869 | 349 |
| | 350 |
| | 354 |
| | 355 |
| | 359 |
| | 367 |
| | 372 |
| | 385 |
| 8N-1546 | 350 |
| | 355 |
| | 360 |
| 8N-1548 | 350 |
| | 360 |
| 8N-1725 | 349 |
| | 354 |
| | 359 |
| 8N-2694 | 96 |
| 8N-4617 | 98 |
| 8N-6854 | 47 |
| | 49 |
| 8N-8846 | 93 |
| | 94 |
| 8N-9071 | 83 |
| 8N-9072 | 83 |
| 8P-5141 | 1096 |
| | 1147 |
| | 1151 |
| 8R-1778 | 1142 |
| 8R-3393 | 1183 |
| 8S-1162 | 116 |
| 8S-6109 | 1183 |
| 8S-6110 | 1183 |
| 8S-7566 | 1133 |
| 8S-7803 | 1160 |
| 8S-9092 | 450 |
| 8S-9129 | 409 |
| | 413 |
| | 467 |
| 8S-9130 | 409 |
| | 413 |
| | 467 |
| 8T-0075 | 118 |
| 8T-0076 | 118 |
| | 674 |
| | 676 |
| | 677 |
| | 680 |
| | 683 |
| | 686 |
| 8T-0077 | 689 |
| 8T-0100 | 51 |
| | 60 |
| 8T-0119 | 325 |
| | 385 |
| 8T-0249 | 708 |
| 8T-0275 | 60 |
| 8T-0276 | 70 |
| | 116 |
| | 121 |
| | 155 |
| | 156 |
| 8T-0281 | 38 |
| 8T-0285 | 164 |
| | 166 |
| 8T-0292 | 79 |
| | 80 |
| 8T-0293 | 350 |
| | 355 |
| | 360 |
| 8T-0328 | 109 |
| | 141 |
| | 294 |
| | 1111 |
| | 1257 |
| | 1262 |
| | 1264 |
| 8T-0335 | 1257 |
| 8T-0336 | 667 |
| 8T-0343 | 41 |
| 8T-0352 | 1257 |
| | 1262 |
| | 1264 |
| 8T-0355 | 467 |
| 8T-0358 | 35 |
| 8T-0372 | 609 |
| | 725 |
| 8T-0389 | 147 |
| | 148 |
| | 149 |
| | 150 |
| | 181 |
| | 183 |
| | 186 |
| | 188 |
| | 190 |
| | 192 |
| | 556 |
| | 559 |
| | 573 |
| 8T-0639 | 406 |
| | 430 |
| | 431 |
| 8T-0640 | 57 |
| | 125 |
| | 126 |
| 8T-0642 | 317 |
| | 319 |
| 8T-0643 | 18 |
| | 20 |
| | 143 |
| 8T-0646 | 695 |
| | 698 |
| | 701 |
| 8T-0667 | 659 |
| 8T-0722 | 452 |
| 8T-1159 | 123 |
| 8T-1174 | 1108 |
| 8T-1191 | 1119 |
| | 1226 |
| | 1292 |


▶ PRIMARY REFERENCE

# PART NUMBER INDEX


| Part | Page | Part | Page | Part | Page | Part | Page |
|---|---|---|---|---|---|---|---|
| 8T-1192 . . . . . | 1296 | | 1175 | | 250 | | 769 |
| 8T-1193 . . . . . | 1296 | | 1179 | | 254 | | 771 |
| 8T-1194 . . . . . | 1297 | 8T-3490 . . . . . | 65 | | 258 | | 773 |
| | 1298 | | 66 | | 262 | | 775 |
| 8T-1195 . . . . . | 1297 | | 96 | | 268 | | 777 |
| 8T-1296 . . . . . | 681 | | 214 | | 269 | | 779 |
| | 684 | | 223 | | 270 | | 782 |
| | 686 | | 381 | | 273 | | 784 |
| 8T-1683 . . . . . | 686 | | 567 | | 290 | | 786 |
| | 703 | | 582 | | 293 | | 788 |
| | 705 | | 584 | | 322 | | 790 |
| 8T-1687 . . . . . | 680 | | 1096 | | 326 | | 792 |
| | 683 | | 1120 | | 331 | | 794 |
| | 686 | | 1127 | | 340 | | 796 |
| | 799 | | 1147 | | 345 | | 800 |
| | 803 | | 1151 | | 350 | | 804 |
| | 807 | | 1246 | | 355 | | 808 |
| | 811 | 8T-3518 . . . . . | 151 | | 360 | | 812 |
| | 815 | 8T-3519 . . . . . | 151 | | 368 | | 816 |
| | 819 | 8T-3597 . . . . . | 468 | | 373 | | 820 |
| | 822 | 8T-3647 . . . . . | 293 | | 378 | | 823 |
| | 825 | 8T-3957 . . . . . | 695 | | 381 | | 826 |
| | 829 | | 698 | | 385 | | 830 |
| | 833 | | 701 | | 387 | | 834 |
| | 837 | 8T-4009 . . . . . | 1080 | | 389 | | 838 |
| | 841 | | ▶1291 | | 392 | | 842 |
| | 845 | 8T-4121 . . . . . | 18 | | 396 | | 846 |
| | 849 | | 66 | | 409 | | 850 |
| | 853 | | 69 | | 413 | | 854 |
| | 857 | | 76 | | 442 | | 858 |
| | 860 | | 83 | | 452 | | 861 |
| | 864 | | 85 | | 456 | | 865 |
| | 867 | | 100 | | 460 | | 868 |
| | 870 | | 103 | | 556 | | 871 |
| | 874 | | 109 | | 559 | | 875 |
| | 877 | | 115 | | 567 | | 878 |
| | 880 | | 116 | | 572 | | 881 |
| | 884 | | 119 | | 582 | | 885 |
| | 888 | | 121 | | 584 | | 889 |
| | 892 | | 143 | | 606 | | 893 |
| | 896 | | 145 | | 616 | | 897 |
| | 900 | | 147 | | 620 | | 901 |
| | 904 | | 148 | | 622 | | 905 |
| 8T-1698 . . . . . | 720 | | 149 | | 678 | | 1111 |
| 8T-2275 . . . . . | 737 | | 150 | | 690 | | 1120 |
| 8T-2353 . . . . . | 445 | | 167 | | 695 | | 1123 |
| 8T-2501 . . . . . | 164 | | 175 | | 698 | | 1125 |
| | 166 | | 181 | | 701 | | 1127 |
| | 428 | | 183 | | 703 | | 1129 |
| | 681 | | 208 | | 705 | | 1131 |
| | 684 | | 210 | | 737 | | 1164 |
| | 687 | | 211 | | 740 | | 1170 |
| | 1250 | | 212 | | 742 | | 1174 |
| 8T-2502 . . . . . | 613 | | 214 | | 744 | | 1179 |
| | 616 | | 218 | | 746 | | 1183 |
| | 681 | | 222 | | 748 | | 1185 |
| | 684 | | 223 | | 750 | | 1187 |
| 8T-2561 . . . . . | 1108 | | 226 | | 752 | | 1193 |
| 8T-2901 . . . . . | 1252 | | 229 | | 755 | | 1196 |
| 8T-3282 . . . . . | 14 | | 232 | | 757 | | 1198 |
| | 16 | | 237 | | 759 | | 1200 |
| | 653 | | 239 | | 761 | | 1202 |
| | 660 | | 242 | | 763 | | 1254 |
| | 661 | | 245 | | 765 | 8T-4122 . . . . . | 378 |
| 8T-3426 . . . . . | 1171 | | 247 | | 767 | | 381 |


▶ **PRIMARY REFERENCE**

# PART NUMBER INDEX


| Part | Page |
|---|---|
| | 643 |
| | 713 |
| | 1206 |
| | 1207 |
| | 1209 |
| 8T-4123 . . . . . | 45 |
| 8T-4133 . . . . . | 109 |
| | 147 |
| | 148 |
| | 149 |
| | 180 |
| | 182 |
| | 239 |
| | 242 |
| | 293 |
| | 322 |
| | 326 |
| | 340 |
| | 345 |
| | 350 |
| | 355 |
| | 368 |
| | 373 |
| | 378 |
| | 381 |
| | 385 |
| | 410 |
| | 414 |
| | 452 |
| | 456 |
| | 460 |
| | 556 |
| | 559 |
| | 701 |
| | 703 |
| | 705 |
| | 1108 |
| | 1111 |
| | 1125 |
| | 1131 |
| | 1187 |
| | 1193 |
| | 1196 |
| | 1198 |
| | 1200 |
| | 1202 |
| 8T-4136 . . . . . | 78 |
| | 109 |
| | 119 |
| | 147 |
| | 148 |
| | 149 |
| | 175 |
| | 223 |
| | 229 |
| | 239 |
| | 242 |
| | 245 |
| | 268 |
| | 269 |
| | 270 |
| | 273 |
| | 290 |
| | 340 |
| | 345 |
| | 350 |
| | 355 |
| | 360 |
| | 368 |
| | 373 |
| | 378 |
| | 381 |
| | 556 |
| | 559 |
| | 567 |
| | 740 |
| | 742 |
| | 744 |
| | 746 |
| | 748 |
| | 750 |
| | 752 |
| | 755 |
| | 757 |
| | 759 |
| | 761 |
| | 763 |
| | 765 |
| | 767 |
| | 769 |
| | 771 |
| | 773 |
| | 775 |
| | 777 |
| | 779 |
| | 782 |
| | 784 |
| | 786 |
| | 788 |
| | 790 |
| | 792 |
| | 794 |
| | 796 |
| | 800 |
| | 804 |
| | 808 |
| | 812 |
| | 816 |
| | 820 |
| | 823 |
| | 826 |
| | 830 |
| | 834 |
| | 838 |
| | 842 |
| | 846 |
| | 850 |
| | 854 |
| | 858 |
| | 861 |
| | 865 |
| | 868 |
| | 871 |
| | 875 |
| | 878 |
| | 881 |
| | 885 |
| | 889 |
| | 893 |
| | 897 |
| | 901 |
| | 905 |
| | 1104 |
| | 1111 |
| 8T-4137 . . . . . | 69 |
| | 83 |
| | 85 |
| | 119 |
| | 150 |
| | 167 |
| | 210 |
| | 212 |
| | 214 |
| | 245 |
| | 247 |
| | 258 |
| | 262 |
| | 293 |
| | 322 |
| | 326 |
| | 340 |
| | 345 |
| | 350 |
| | 355 |
| | 361 |
| | 368 |
| | 373 |
| | 385 |
| | 387 |
| | 389 |
| | 392 |
| | 396 |
| | 409 |
| | 413 |
| | 572 |
| | 573 |
| | 582 |
| | 584 |
| | 606 |
| | 616 |
| | 620 |
| | 622 |
| | 678 |
| | 690 |
| | 701 |
| | 1120 |
| | 1123 |
| | 1127 |
| | 1129 |
| | 1164 |
| | 1183 |
| | 1196 |
| | 1198 |
| | 1200 |
| | 1202 |
| 8T-4138 . . . . . | 66 |
| | 350 |
| | 356 |
| | 361 |
| | 974 |
| | 976 |
| | 978 |
| | 980 |
| | 982 |
| | 984 |
| | 986 |
| | 988 |
| | 990 |
| | 992 |
| | 994 |
| | 996 |
| | 998 |
| | 1000 |
| | 1002 |
| | 1004 |
| | 1006 |
| | 1008 |
| | 1010 |
| | 1012 |
| | 1014 |
| | 1016 |
| | 1018 |
| | 1020 |
| | 1268 |
| | 1270 |
| | 1272 |
| | 1274 |
| 8T-4139 . . . . . | 111 |
| | 112 |
| | 381 |
| | 556 |
| | 559 |
| | 600 |
| | 601 |
| 8T-4140 . . . . . | 561 |
| | 603 |
| 8T-4171 . . . . . | 378 |
| | 381 |
| | 1097 |
| | 1148 |
| | 1152 |
| | 1270 |
| | 1274 |
| | 1278 |
| | 1282 |
| | 1285 |
| | 1286 |
| | 1287 |
| 8T-4172 . . . . . | 695 |
| | 698 |
| | 701 |
| 8T-4173 . . . . . | 378 |
| | 381 |
| 8T-4178 . . . . . | 73 |
| | 75 |
| | 90 |
| 8T-4179 . . . . . | 340 |
| | 345 |
| | 368 |
| | 373 |
| | 468 |
| | 556 |
| | 559 |
| 8T-4181 . . . . . | 1120 |
| | 1123 |
| | 1127 |
| | 1129 |
| 8T-4182 . . . . . | 109 |
| | 147 |
| | 148 |


► PRIMARY REFERENCE

# PART NUMBER INDEX


| Part | Page | Part | Page | Part | Page | Part | Page |
|---|---|---|---|---|---|---|---|
| | 149 | | 990 | | 767 | 8T-4198 . . . . . | 143 |
| | 150 | | 992 | | 769 | | 145 |
| | 452 | | 994 | | 771 | | 378 |
| | 456 | | 996 | | 773 | 8T-4200 . . . . . | 340 |
| | 460 | | 998 | | 775 | | 345 |
| | 556 | | 1000 | | 777 | | 368 |
| | 559 | | 1002 | | 779 | | 373 |
| | 1111 | | 1004 | | 782 | 8T-4205 . . . . . | 141 |
| | 1170 | | 1006 | | 784 | | 144 |
| | 1174 | | 1008 | | 786 | | 154 |
| | 1179 | | 1010 | | 788 | | 214 |
| | 1193 | | 1012 | | 790 | | 223 |
| | 1196 | | 1014 | | 792 | | 226 |
| | 1198 | | 1016 | | 794 | | 229 |
| | 1200 | | 1018 | | 796 | | 232 |
| | 1202 | | 1020 | | 800 | | 239 |
| 8T-4183 . . . . . | 76 | 8T-4191 . . . . . | 290 | | 804 | | 242 |
| 8T-4185 . . . . . | 68 | | 331 | | 808 | | 259 |
| | 100 | | 340 | | 812 | | 262 |
| | 340 | | 345 | | 816 | | 270 |
| | 345 | | 350 | | 820 | | 294 |
| | 368 | | 356 | | 823 | | 340 |
| | 373 | | 361 | | 826 | | 345 |
| | 573 | | 368 | | 830 | | 349 |
| | 620 | | 373 | | 834 | | 350 |
| | 622 | | 567 | | 838 | | 354 |
| | 1183 | | 620 | | 842 | | 356 |
| 8T-4186 . . . . . | 66 | | 622 | | 846 | | 359 |
| | 83 | | 1198 | | 850 | | 361 |
| | 85 | | 1202 | | 854 | | 368 |
| | 103 | | 1254 | | 858 | | 373 |
| | 116 | 8T-4192 . . . . . | 468 | | 861 | | 378 |
| | 121 | 8T-4195 . . . . . | 66 | | 865 | | 382 |
| | 907 | | 76 | | 868 | | 385 |
| | 908 | | 83 | | 871 | | 400 |
| | 909 | | 85 | | 875 | | 403 |
| | 910 | | 96 | | 878 | | 1097 |
| | 911 | | 103 | | 881 | | 1134 |
| | 913 | | 115 | | 885 | | 1148 |
| | 915 | | 322 | | 889 | | 1152 |
| | 917 | | 326 | | 893 | 8T-4222 . . . . . | 73 |
| | 1183 | | 340 | | 897 | | 75 |
| | 1193 | | 345 | | 901 | | 90 |
| | 1198 | | 368 | | 905 | 8T-4223 . . . . . | 76 |
| | 1200 | | 373 | | 1111 | | 78 |
| | 1202 | | 452 | | 1125 | | 111 |
| 8T-4189 . . . . . | 128 | | 456 | | 1131 | | 112 |
| | 129 | | 460 | | 1171 | | 239 |
| | 130 | | 556 | | 1174 | | 242 |
| | 132 | | 559 | | 1179 | | 340 |
| | 290 | | 567 | | 1187 | | 345 |
| | 350 | | 737 | | 1196 | | 351 |
| | 356 | | 740 | 8T-4196 . . . . . | 96 | | 356 |
| | 361 | | 742 | | 99 | | 361 |
| | 364 | | 744 | | 103 | | 368 |
| | 381 | | 746 | | 340 | | 373 |
| | 562 | | 748 | | 345 | | 378 |
| | 974 | | 750 | | 368 | | 382 |
| | 976 | | 752 | | 373 | | 468 |
| | 978 | | 755 | | 452 | | 478 |
| | 980 | | 757 | | 456 | | 481 |
| | 982 | | 759 | | 460 | | 484 |
| | 984 | | 761 | | 556 | | 567 |
| | 986 | | 763 | | 559 | | 570 |
| | 988 | | 765 | | 567 | | 584 |


► **PRIMARY REFERENCE**

# PART NUMBER INDEX


| Part | Page | Part | Page | Part | Page | Part | Page |
|---|---|---|---|---|---|---|---|
| | 596 | | 994 | | 403 | | 559 |
| | 600 | | 996 | | 428 | 8T-5005 . . . . . | 18 |
| | 601 | | 998 | | 443 | | 119 |
| | 606 | | 1000 | | 445 | | 186 |
| | 628 | | 1002 | | 452 | | 188 |
| | 633 | | 1004 | | 456 | | 190 |
| | 681 | | 1006 | | 460 | | 192 |
| | 684 | | 1008 | | 565 | 8T-5030 . . . . . | 465 |
| | 695 | | 1010 | | 571 | 8T-5082 . . . . . | 710 |
| | 698 | | 1012 | | 613 | 8T-5255 . . . . . | ▶1290 |
| | 701 | | 1014 | | 616 | 8T-5360 . . . . . | 1232 |
| | 713 | | 1016 | | 628 | | 1233 |
| | 734 | | 1018 | | 633 | 8T-5361 . . . . . | 45 |
| | 735 | | 1020 | | 650 | | 551 |
| | 739 | | 1104 | | 667 | | 552 |
| | 1054 | 8T-4226 . . . . . | 109 | | 672 | | 588 |
| | 1055 | | 340 | | 674 | | 589 |
| | 1075 | | 345 | | 678 | | 1078 |
| | 1104 | | 368 | | 681 | 8T-5372 . . . . . | 105 |
| 8T-4224 . . . . . | 39 | | 373 | | 684 | 8T-5390 . . . . . | 109 |
| | 116 | | 616 | | 687 | | 616 |
| | 132 | | 1111 | | 689 | | 1111 |
| | 144 | 8T-4244 . . . . . | 239 | | 690 | 8T-5401 . . . . . | 1170 |
| | 156 | | 242 | | 703 | | 1174 |
| | 179 | | 567 | | 705 | 8T-5412 . . . . . | 239 |
| | 210 | | 1104 | | 711 | | 242 |
| | 212 | 8T-4647 . . . . . | 322 | | 1095 | 8T-5429 . . . . . | 708 |
| | 217 | | 326 | | 1111 | 8T-5436 . . . . . | 95 |
| | 220 | 8T-4648 . . . . . | 684 | | 1156 | | 409 |
| | 223 | 8T-4750 . . . . . | 725 | | 1158 | | 413 |
| | 229 | 8T-4778 . . . . . | 378 | | 1171 | | 1185 |
| | 235 | | 382 | | 1175 | | 1187 |
| | 239 | 8T-4835 . . . . . | 331 | | 1179 | 8T-5890 . . . . . | 703 |
| | 245 | 8T-4896 . . . . . | 45 | | 1207 | | 705 |
| | 249 | | 164 | | 1209 | 8T-6430 . . . . . | 45 |
| | 252 | | 166 | | 1252 | 8T-6466 . . . . . | 66 |
| | 263 | | 167 | | 1254 | | 452 |
| | 264 | | 170 | | 1255 | | 456 |
| | 290 | | 208 | 8T-4897 . . . . . | 50 | | 460 |
| | 293 | | 223 | 8T-4908 . . . . . | 562 | | 620 |
| | 331 | | 226 | | 593 | | 622 |
| | 340 | | 229 | 8T-4910 . . . . . | 78 | | 1185 |
| | 345 | | 232 | | 111 | | 1187 |
| | 351 | | 239 | 8T-4956 . . . . . | 111 | 8T-6468 . . . . . | 470 |
| | 356 | | 242 | | 600 | | 471 |
| | 364 | | 249 | | 695 | 8T-6472 . . . . . | 611 |
| | 368 | | 250 | | 698 | 8T-6473 . . . . . | 562 |
| | 373 | | 259 | | 701 | | 611 |
| | 378 | | 304 | 8T-4971 . . . . . | 400 | 8T-6631 . . . . . | 1097 |
| | 382 | | 306 | | 403 | 8T-6685 . . . . . | 695 |
| | 562 | | 309 | 8T-4983 . . . . . | 452 | | 698 |
| | 594 | | 315 | | 456 | | 701 |
| | 606 | | 322 | | 460 | 8T-6703 . . . . . | 127 |
| | 616 | | 326 | 8T-4984 . . . . . | 83 | 8T-6757 . . . . . | 79 |
| | 665 | | 331 | | 85 | | 620 |
| | 974 | | 340 | | 115 | | 622 |
| | 976 | | 346 | | 432 | 8T-6761 . . . . . | 47 |
| | 978 | | 368 | | 434 | | 432 |
| | 980 | | 373 | 8T-4994 . . . . . | 45 | 8T-6762 . . . . . | 12 |
| | 982 | | 385 | | 556 | | 52 |
| | 984 | | 387 | | 559 | | 79 |
| | 986 | | 389 | | 589 | | 92 |
| | 988 | | 392 | | 681 | 8T-6763 . . . . . | 39 |
| | 990 | | 397 | | 684 | 8T-6764 . . . . . | 12 |
| | 992 | | 400 | 8T-5004 . . . . . | 556 | 8T-6765 . . . . . | 99 |


▶ **PRIMARY REFERENCE**

# PART NUMBER INDEX


| Part | Page | Part | Page | Part | Page | Part | Page |
|---|---|---|---|---|---|---|---|
| | 102 | | 306 | | 742 | 8T-9515 . . . . . | 92 |
| | 409 | | 315 | | 744 | 8T-9530 . . . . . | 1292 |
| | 413 | | 317 | | 746 | 8T-9597 . . . . . | 727 |
| 8T-6766 . . . . . | 79 | | 331 | | 748 | 8T-9598 . . . . . | 92 |
| 8T-6767 . . . . . | 79 | | 582 | | 750 | 8T-9636 . . . . . | 167 |
| | 102 | | 584 | | 752 | 8T-9655 . . . . . | 155 |
| | 432 | | 1268 | | 755 | | 156 |
| 8T-6868 . . . . . | 567 | | 1270 | | 757 | | 321 |
| 8T-6869 . . . . . | 210 | | 1272 | | 759 | | 325 |
| | 212 | | 1274 | | 761 | | 330 |
| | 217 | | 1276 | | 763 | 8T-9658 . . . . . | 331 |
| | 220 | | 1278 | | 765 | 8T-9756 . . . . . | 150 |
| | 223 | | 1280 | | 767 | 8T-9757 . . . . . | 147 |
| | 229 | | 1282 | | 769 | | 148 |
| | 235 | | 1286 | | 771 | | 149 |
| | 239 | | 1287 | | 773 | 8T-9834 . . . . . | 1217 |
| | 245 | 8T-8748 . . . . . | 1217 | | 775 | | 1219 |
| | 249 | | 1219 | | 777 | | 1221 |
| | 252 | | 1221 | | 779 | 8T-9884 . . . . . | 294 |
| | 331 | 8T-8827 . . . . . | 340 | | 782 | 8U-6457 . . . . . | 727 |
| | 980 | 8T-8883 . . . . . | 438 | | 784 | 8V-0622 . . . . . | 147 |
| | 988 | 8T-8908 . . . . . | 270 | | 786 | | 148 |
| | 994 | 8T-8915 . . . . . | 575 | | 788 | | 149 |
| | 1018 | | 576 | | 790 | 8V-8082 . . . . . | 700 |
| 8T-6870 . . . . . | 340 | | 579 | | 792 | 8W-0206 . . . . . | 703 |
| | 346 | 8T-8917 . . . . . | 713 | | 794 | | 705 |
| | 368 | | 1054 | | 796 | 8W-0225 . . . . . | 710 |
| | 373 | | 1055 | | 800 | 8W-0302 . . . . . | 686 |
| 8T-6871 . . . . . | 643 | 8T-8919 . . . . . | 570 | | 804 | 8W-0456 . . . . . | 740 |
| 8T-6912 . . . . . | 179 | | 596 | | 808 | | 744 |
| 8T-6974 . . . . . | 620 | | 1075 | | 812 | | 750 |
| | 622 | 8T-8924 . . . . . | 589 | | 816 | | 752 |
| 8T-7008 . . . . . | 681 | 8T-8987 . . . . . | 970 | | 820 | | 755 |
| | 684 | | 972 | | 823 | | 757 |
| 8T-7044 . . . . . | 101 | 8T-9006 . . . . . | 1107 | | 826 | | 759 |
| 8T-7547 . . . . . | 119 | 8T-9041 . . . . . | 800 | | 830 | | 765 |
| | 452 | | 804 | | 834 | | 769 |
| | 456 | | 808 | | 838 | | 775 |
| | 460 | | 812 | | 842 | | 779 |
| | 606 | | 816 | | 846 | | 786 |
| 8T-7876 . . . . . | 725 | | 820 | | 850 | | 788 |
| 8T-7971 . . . . . | 331 | | 823 | | 854 | | 790 |
| | 595 | | 826 | | 858 | | 792 |
| 8T-8442 . . . . . | 478 | | 830 | | 861 | | 794 |
| | 481 | | 834 | | 865 | | 796 |
| | 484 | | 838 | | 868 | | 825 |
| | 727 | | 842 | | 871 | | 829 |
| 8T-8569 . . . . . | 294 | | 846 | | 875 | | 833 |
| 8T-8729 . . . . . | 190 | | 850 | | 878 | | 837 |
| | 195 | | 854 | | 881 | | 841 |
| | 277 | | 858 | | 885 | | 845 |
| | 303 | | 861 | | 889 | | 849 |
| | 396 | | 865 | | 893 | | 874 |
| | 627 | | 868 | | 897 | | 877 |
| | 1046 | | 871 | | 901 | | 880 |
| | 1217 | | 875 | | 905 | | 888 |
| 8T-8730 . . . . . | 287 | | 878 | 8T-9056 . . . . . | 616 | | 892 |
| | 302 | | 881 | 8T-9107 . . . . . | 697 | | 896 |
| 8T-8737 . . . . . | 161 | | 885 | 8T-9311 . . . . . | 45 | | 900 |
| | 170 | | 889 | 8T-9364 . . . . . | 340 | | 904 |
| | 186 | | 893 | | 346 | 8W-0663 . . . . . | 1084 |
| | 188 | | 897 | | 368 | | 1088 |
| | 190 | | 901 | | 373 | 8W-0681 . . . . . | 1066 |
| | 192 | | 905 | 8T-9378 . . . . . | 1081 | 8W-0684 . . . . . | 1066 |
| | 303 | 8T-9043 . . . . . | 740 | 8T-9389 . . . . . | 681 | 8W-0934 . . . . . | 1252 |


► **PRIMARY REFERENCE**

# PART NUMBER INDEX


| Part | Page |
|---|---|
| | 1255 |
| 8W-0935 | 1252 |
| | 1255 |
| 8W-1028 | 1262 |
| 8W-1029 | 1264 |
| 8W-1592 | 468 |
| 8W-1614 | 100 |
| 8W-1749 | 1047 |
| 8W-2213 | 1070 |
| 8W-2214 | 1069 |
| 8W-2290 | 4 |
| | ▶650 |
| 8W-2308 | 450 |
| 8W-2624 | 694 |
| | 697 |
| 8W-2737 | 4 |
| | ▶651 |
| 8W-2761 | 1063 |
| 8W-2768 | 1062 |
| 8W-2842 | 644 |
| 8W-2913 | ▶647 |
| | 1083 |
| 8W-2948 | 686 |
| 8W-3166 | 694 |
| | 697 |
| | 700 |
| 8W-3330 | ▶1069 |
| 8W-3332 | ▶1070 |
| 8W-3642 | 339 |
| | 344 |
| | 366 |
| | 371 |
| 8W-3902 | 584 |
| 8W-4141 | 450 |
| 8W-4142 | 450 |
| 8W-4193 | 680 |
| | 683 |
| 8W-4194 | 680 |
| | 683 |
| 8W-4368 | 4 |
| | ▶450 |
| 8W-4652 | 543 |
| | 546 |
| 8W-4653 | 543 |
| | 546 |
| 8W-5111 | 438 |
| 8W-5279 | 438 |
| 8W-5293 | 543 |
| | 546 |
| 8W-5394 | 4 |
| | ▶468 |
| 8W-5430 | 4 |
| | ▶438 |
| 8W-5597 | 1084 |
| | 1088 |
| 8W-5643 | 686 |
| 8W-5651 | 624 |
| 8W-5870 | 4 |
| | ▶595 |
| 8W-6061 | 1166 |
| 8W-6476 | 543 |
| | 547 |
| 8W-6497 | 544 |
| | 547 |
| 8W-6590 | 723 |
| 8W-6626 | 570 |
| 8W-6627 | 570 |
| 8W-7324 | 1064 |
| 8W-7957 | 518 |
| 8W-8124 | 611 |
| 8W-8317 | 450 |
| 8W-8412 | 570 |
| 8W-8527 | 118 |
| | 339 |
| | 344 |
| | 366 |
| | 371 |
| | 615 |
| | 703 |
| | 705 |
| | 1183 |
| 8W-8528 | 100 |
| | 339 |
| | 344 |
| | 366 |
| | 371 |
| | 613 |
| | 1183 |
| 8W-8532 | 615 |
| 8W-8903 | 615 |
| 8W-8909 | 341 |
| | 346 |
| | 368 |
| | 373 |
| 8W-9227 | 50 |
| 8W-9228 | 50 |
| 8W-9566 | 539 |
| 8W-9582 | 540 |
| 8W-9594 | 539 |
| 8X-0674 | 1206 |
| | 1207 |
| | 1209 |
| 8X-1030 | 4 |
| | ▶596 |
| 8X-1032 | 596 |
| 8X-1135 | 1252 |
| | 1255 |
| 8X-1160 | 519 |
| | 520 |
| | 522 |
| | 523 |
| | 524 |
| | 525 |
| | 526 |
| | 529 |
| | 530 |
| | 531 |
| | 534 |
| | 535 |
| | 540 |
| 8X-1853 | 164 |
| | 166 |
| 8X-1904 | 1107 |
| 8X-1907 | 1108 |
| 8X-1908 | 1107 |
| 8X-1911 | 1107 |
| 8X-1913 | 1107 |
| 8X-1914 | 1107 |
| 8X-1921 | 1107 |
| 8X-1935 | 4 |
| | ▶1075 |
| 8X-1943 | 3 |
| | ▶645 |
| 8X-1944 | 3 |
| | ▶646 |
| 8X-1947 | 3 |
| | ▶644 |
| 8X-1949 | 5 |
| | ▶748 |
| 8X-1960 | 4 |
| | ▶1051 |
| 8X-2160 | 1107 |
| 8X-2161 | 1107 |
| 8X-2226 | 582 |
| | 1166 |
| 8X-2228 | 1214 |
| | 1215 |
| 8X-2308 | 438 |
| 8X-2349 | ▶1054 |
| 8X-2366 | 1054 |
| | 1055 |
| 8X-2375 | ▶1213 |
| | 1227 |
| | 1228 |
| 8X-2385 | 1102 |
| | ▶1214 |
| | 1227 |
| | 1228 |
| 8X-2528 | 440 |
| 8X-2534 | 438 |
| 8X-2556 | 1268 |
| | 1270 |
| | 1272 |
| | 1274 |
| 8X-2646 | 624 |
| 8X-2650 | 615 |
| | ▶624 |
| 8X-2663 | 1268 |
| | 1270 |
| | 1272 |
| | 1274 |
| 8X-2680 | 615 |
| 8X-2795 | 4 |
| | 1102 |
| | ▶1195 |
| 8X-2893 | 1107 |
| 8X-2913 | 582 |
| | 584 |
| | 1166 |
| 8X-2925 | 1095 |
| | ▶1142 |
| | 1145 |
| 8X-3200 | 565 |
| 8X-3261 | 109 |
| 8X-3434 | 543 |
| | 546 |
| 8X-3435 | 543 |
| | 547 |
| 8X-3615 | 1075 |
| 8X-3616 | 1075 |
| 8X-3663 | 1084 |
| | 1088 |
| 8X-3749 | 713 |
| 8X-3789 | 1107 |
| 8X-3806 | 1120 |
| 8X-3938 | 1120 |
| | 1123 |
| 8X-3951 | 1107 |
| 8X-3965 | 1107 |
| 8X-4066 | 1127 |
| | 1129 |
| 8X-4243 | 1120 |
| | 1127 |
| 8X-4244 | 1123 |
| | 1129 |
| 8X-4245 | 1120 |
| | 1123 |
| | 1127 |
| 8X-4262 | 1120 |
| | 1127 |
| 8X-4263 | 1123 |
| | 1129 |
| 8X-4271 | 442 |
| 8X-4276 | 740 |
| | 742 |
| | 744 |
| | 746 |
| | 748 |
| | 755 |
| | 757 |
| | 759 |
| | 761 |
| | 782 |
| 8X-4277 | 750 |
| | 752 |
| | 763 |
| | 765 |
| | 790 |
| | 792 |
| | 799 |
| | 803 |
| | 807 |
| | 811 |
| | 815 |
| | 819 |
| | 822 |
| | 825 |
| | 829 |
| | 833 |
| | 837 |
| | 841 |
| | 845 |
| | 849 |
| | 853 |
| | 857 |
| | 860 |
| | 864 |
| | 867 |
| | 870 |
| | 874 |
| | 877 |
| | 884 |
| | 888 |
| | 892 |
| | 896 |
| | 900 |
| | 904 |
| 8X-4280 | ▶750 |


▶ PRIMARY REFERENCE

# PART NUMBER INDEX


| Part | Page |
|---|---|
| 8X-4317 | ▶1120 |
| | 1125 |
| 8X-4318 | ▶1123 |
| | 1125 |
| 8X-4413 | 1102 |
| | ▶1125 |
| | 1227 |
| | 1228 |
| 8X-4446 | 1127 |
| | 1129 |
| 8X-4448 | 1120 |
| | 1123 |
| | 1127 |
| | 1129 |
| 8X-4467 | 723 |
| 8X-4525 | ▶1127 |
| | 1131 |
| 8X-4526 | ▶1129 |
| | 1131 |
| 8X-4527 | ▶1131 |
| | 1227 |
| | 1228 |
| 8X-4641 | 440 |
| 8X-4741 | 644 |
| | 646 |
| 8X-4879 | 1114 |
| | 1116 |
| 8X-5005 | 468 |
| | ▶476 |
| 8X-5102 | 1134 |
| 8X-5106 | 1075 |
| 8X-5107 | 1075 |
| 8X-5108 | 1075 |
| 8X-5109 | 1075 |
| 8X-5110 | 1075 |
| 8X-5111 | 1075 |
| 8X-5121 | 452 |
| | 456 |
| | 460 |
| 8X-5123 | 1107 |
| 8X-5153 | 223 |
| | 226 |
| | 229 |
| | 232 |
| | 239 |
| | 242 |
| | 259 |
| | 299 |
| | 402 |
| 8X-5154 | 223 |
| | 226 |
| | 229 |
| | 232 |
| | 239 |
| | 242 |
| | 259 |
| | 299 |
| | 402 |
| 8X-5160 | 613 |
| 8X-5280 | 1252 |
| | 1255 |
| 8X-5395 | 100 |
| 8X-5414 | 1170 |
| | 1174 |
| | 1179 |
| 8X-5456 | 1213 |
| 8X-5489 | 341 |
| | 346 |
| | 368 |
| | 373 |
| | 428 |
| | 443 |
| | 445 |
| 8X-5498 | 748 |
| | 761 |
| | 799 |
| | 803 |
| 8X-5499 | 740 |
| | 742 |
| | 744 |
| | 746 |
| | 750 |
| | 752 |
| | 755 |
| | 757 |
| | 759 |
| | 763 |
| | 765 |
| | 767 |
| | 769 |
| | 771 |
| | 773 |
| | 775 |
| | 777 |
| | 779 |
| | 782 |
| | 784 |
| | 786 |
| | 788 |
| | 790 |
| | 792 |
| | 794 |
| | 796 |
| | 807 |
| | 811 |
| | 815 |
| | 819 |
| | 822 |
| | 825 |
| | 829 |
| | 833 |
| | 837 |
| | 841 |
| | 845 |
| | 849 |
| | 853 |
| | 857 |
| | 860 |
| | 864 |
| | 867 |
| | 870 |
| | 874 |
| | 877 |
| | 880 |
| | 884 |
| | 888 |
| | 892 |
| | 896 |
| | 900 |
| | 904 |
| 8X-5536 | 1096 |
| | 1147 |
| | 1151 |
| | 1246 |
| 8X-5538 | 1096 |
| | 1147 |
| | 1151 |
| | 1246 |
| 8X-5540 | 1096 |
| | 1147 |
| | 1151 |
| | 1246 |
| 8X-5620 | 468 |
| 8X-5816 | 620 |
| 8X-6070 | ▶674 |
| | 1083 |
| 8X-6075 | 1084 |
| | 1088 |
| 8X-6080 | 1083 |
| | ▶1084 |
| 8X-6131 | 1206 |
| | 1207 |
| 8X-6296 | 223 |
| | 226 |
| | 229 |
| | 232 |
| | 239 |
| | 242 |
| | 259 |
| | 299 |
| | 403 |
| 8X-6419 | 584 |
| 8X-6475 | 582 |
| | 584 |
| 8X-6998 | 1170 |
| 8X-6999 | 1174 |
| | 1179 |
| 8X-7152 | 1096 |
| 8X-7153 | 1096 |
| 8X-7317 | 452 |
| | 456 |
| | 460 |
| 8X-7603 | 615 |
| 8X-7820 | 694 |
| | 697 |
| | 700 |
| 8X-7845 | 1170 |
| | 1174 |
| | 1181 |
| 8X-7951 | 1051 |
| | 1077 |
| 8X-7956 | 1051 |
| | 1077 |
| 8X-7973 | 694 |
| | 697 |
| | 700 |
| 8X-7974 | 694 |
| | 697 |
| | 700 |
| 8X-8011 | 3 |
| | ▶1062 |
| 8X-8016 | ▶1063 |
| 8X-8055 | 1166 |
| 8X-8096 | 1114 |
| | 1116 |
| 8X-8351 | 1166 |
| 8X-8377 | 450 |
| 8X-8406 | 1051 |
| 8X-8407 | 1051 |
| 8X-8408 | 1051 |
| 8X-8409 | 1051 |
| 8X-8450 | 616 |
| 8X-8451 | 615 |
| 8X-8505 | 582 |
| | 584 |
| 8X-8790 | 1181 |
| 8X-8813 | 694 |
| | 697 |
| | 700 |
| 8X-8916 | 452 |
| | 456 |
| | 460 |
| 8X-9349 | 1252 |
| | 1255 |
| 8X-9387 | 1156 |
| | 1158 |
| 8X-9405 | 1252 |
| | 1255 |
| 8X-9464 | 584 |
| 8X-9675 | 1224 |
| | 1225 |
| | ▶1252 |
| 8X-9680 | ▶1254 |
| | 1266 |
| 8X-9751 | 1 |
| | 2 |
| | ▶724 |
| | 732 |
| 8X-9884 | 1164 |
| 8Y-4194 | 4 |
| | ▶1238 |
| 8Y-4398 | 1120 |
| | 1123 |
| | 1127 |
| | 1129 |
| 8Y-4399 | 1123 |
| | 1129 |
| 8Y-4400 | 1120 |
| | 1127 |
| 8Y-4401 | 1120 |
| | 1123 |
| | 1127 |
| | 1129 |
| 8Y-4408 | 1252 |
| | 1255 |
| 8Y-4409 | 1252 |
| 8Y-4512 | 1195 |
| 8Y-4619 | 1120 |
| | 1123 |
| | 1127 |
| | 1129 |
| 8Y-4620 | 1120 |
| | 1123 |
| | 1127 |
| | 1129 |
| 8Y-4801 | 1120 |
| | 1123 |
| | 1127 |
| | 1129 |
| 8Y-4951 | 1102 |


▶ **PRIMARY REFERENCE**

# PART NUMBER INDEX


| Part | Page |
|---|---|
| | 1119 |
| | 1226 |
| | ▶1239 |
| 8Y-5874 . . . . . | ▶1135 |
| | 1240 |
| | 1243 |
| 8Y-5877 . . . . . | 1135 |
| | 1136 |
| 8Y-5878 . . . . . | 1234 |
| 8Y-5890 . . . . . | 1234 |
| 8Y-5891 . . . . . | 1234 |
| 8Y-5903 . . . . . | 1210 |
| 8Y-5928 . . . . . | 1234 |
| | 1236 |
| 8Y-5929 . . . . . | 1234 |
| | 1236 |
| 8Y-5932 . . . . . | 1234 |
| | 1236 |
| 8Y-5936 . . . . . | 1234 |
| | 1236 |
| 8Y-5937 . . . . . | 1234 |
| | 1236 |
| 8Y-5938 . . . . . | 1234 |
| | 1236 |
| 8Y-5943 . . . . . | 1135 |
| 8Y-5944 . . . . . | 1248 |
| 8Y-5947 . . . . . | 1135 |
| | 1136 |
| | 1234 |
| | 1236 |
| 8Y-5953 . . . . . | 1232 |
| | 1233 |
| 8Y-5957 . . . . . | 1236 |
| 8Y-5959 . . . . . | ▶1136 |
| | 1241 |
| 8Y-5960 . . . . . | 1136 |
| 8Y-5972 . . . . . | 1210 |
| 8Y-5979 . . . . . | 1234 |
| | 1236 |
| 8Y-5981 . . . . . | 1234 |
| | 1236 |
| 8Y-5999 . . . . . | 1211 |
| 8Y-6006 . . . . . | 1210 |
| 8Y-6010 . . . . . | 1210 |
| 8Y-6012 . . . . . | 1248 |
| 8Y-6022 . . . . . | 1248 |
| 8Y-6023 . . . . . | 1248 |
| 8Y-6024 . . . . . | 1248 |
| 8Y-6041 . . . . . | 1160 |
| 8Y-6044 . . . . . | 1160 |
| 8Y-6045 . . . . . | 1160 |
| 8Y-6046 . . . . . | 1160 |
| 8Y-6047 . . . . . | 1160 |
| 8Y-6051 . . . . . | 1234 |
| | 1236 |
| 8Y-6060 . . . . . | 1160 |
| 8Y-6062 . . . . . | 1160 |
| 8Y-6063 . . . . . | 1160 |
| 8Y-6064 . . . . . | 1160 |
| 8Y-6066 . . . . . | 1160 |
| 8Y-6067 . . . . . | 1160 |
| 8Y-6068 . . . . . | 1160 |
| 8Y-6069 . . . . . | 1160 |
| 8Y-6277 . . . . . | 1100 |
| | 1101 |
| 8Y-6364 . . . . . | 1288 |
| 8Y-6379 . . . . . | 1143 |
| | 1144 |
| 8Y-6388 . . . . . | 1096 |
| | 1133 |
| | 1134 |
| | 1147 |
| | 1190 |
| 8Y-6833 . . . . . | 1234 |
| | 1236 |
| 8Y-6834 . . . . . | 1234 |
| | 1236 |
| 8Y-6859 . . . . . | 1161 |
| 8Y-6860 . . . . . | 1161 |
| 8Y-6928 . . . . . | 1250 |
| 8Y-6933 . . . . . | 1234 |
| | 1236 |
| 8Y-6981 . . . . . | 1258 |
| | 1261 |
| 8Y-6982 . . . . . | 1258 |
| | 1261 |
| | |
| | |
| **9** | |
| | |
| 9B-0143 . . . . . | 438 |
| 9B-1565 . . . . . | 1069 |
| | 1070 |
| | 1073 |
| | 1074 |
| 9B-2596 . . . . . | 98 |
| 9B-2923 . . . . . | 270 |
| 9B-4179 . . . . . | 83 |
| 9B-7233 . . . . . | 152 |
| | 153 |
| | 223 |
| | 226 |
| | 229 |
| | 232 |
| | 239 |
| | 242 |
| | 259 |
| | 299 |
| | 350 |
| | 355 |
| | 360 |
| | 376 |
| | 399 |
| | 402 |
| | 403 |
| | 1096 |
| | 1147 |
| 9B-7237 . . . . . | 616 |
| | 687 |
| | 740 |
| | 742 |
| | 746 |
| | 748 |
| | 755 |
| | 761 |
| | 763 |
| | 765 |
| | 767 |
| | 771 |
| | 773 |
| | 775 |
| | 777 |
| | 779 |
| | 782 |
| | 784 |
| | 796 |
| | 800 |
| | 804 |
| | 808 |
| | 812 |
| | 816 |
| | 820 |
| | 823 |
| | 826 |
| | 830 |
| | 834 |
| | 838 |
| | 842 |
| | 854 |
| | 858 |
| | 861 |
| | 865 |
| | 868 |
| | 871 |
| | 875 |
| | 878 |
| | 885 |
| | 889 |
| | 905 |
| | 1183 |
| 9C-5344 . . . . . | 66 |
| | 116 |
| | 121 |
| | 452 |
| | 456 |
| | 460 |
| 9C-5928 . . . . . | 1193 |
| | 1194 |
| | 1196 |
| | 1198 |
| | 1200 |
| | 1202 |
| 9C-8895 . . . . . | 1053 |
| 9C-9467 . . . . . | 452 |
| | 456 |
| | 460 |
| 9D-0953 . . . . . | 672 |
| | 680 |
| | 683 |
| | 710 |
| 9D-1142 . . . . . | 667 |
| 9D-1377 . . . . . | 1075 |
| 9D-1491 . . . . . | 667 |
| 9D-1589 . . . . . | 1206 |
| | 1207 |
| | 1209 |
| 9D-3075 . . . . . | 611 |
| 9D-3311 . . . . . | 565 |
| 9D-3523 . . . . . | 544 |
| | 547 |
| 9D-3583 . . . . . | 1075 |
| 9D-3767 . . . . . | 567 |
| 9D-3768 . . . . . | 208 |
| | 210 |
| | 211 |
| 9D-5516 . . . . . | 1084 |
| | 1088 |
| 9D-5659 . . . . . | 575 |
| 9D-6164 . . . . . | 223 |
| | 226 |
| | 229 |
| | 232 |
| | 326 |
| | 1054 |
| | 1055 |
| 9D-6584 . . . . . | 565 |
| | 713 |
| 9D-6589 . . . . . | 565 |
| 9D-6677 . . . . . | 620 |
| 9D-7047 . . . . . | 611 |
| 9D-8121 . . . . . | 624 |
| 9D-8508 . . . . . | 273 |
| 9D-9257 . . . . . | 565 |
| 9D-9797 . . . . . | 543 |
| | 546 |
| 9F-2247 . . . . . | 450 |
| 9F-2978 . . . . . | 595 |
| | 1054 |
| | 1100 |
| | 1101 |
| 9F-5644 . . . . . | 298 |
| 9F-6580 . . . . . | 125 |
| | 126 |
| 9F-6705 . . . . . | 970 |
| | 972 |
| 9G-0002 . . . . . | 150 |
| 9G-0003 . . . . . | 147 |
| | 148 |
| | 149 |
| 9G-0004 . . . . . | 147 |
| | 148 |
| | 149 |
| 9G-0005 . . . . . | 150 |
| 9G-1307 . . . . . | 214 |
| 9G-1950 . . . . . | 1096 |
| | 1147 |
| | 1151 |
| 9G-2991 . . . . . | 438 |
| 9G-3695 . . . . . | 1156 |
| | 1267 |
| 9G-4343 . . . . . | 350 |
| | 355 |
| | 360 |
| 9G-5127 . . . . . | 442 |
| 9G-5211 . . . . . | 543 |
| | 546 |
| 9G-7132 . . . . . | 478 |
| | 481 |
| | 484 |
| 9G-8140 . . . . . | 615 |
| 9G-8661 . . . . . | 70 |
| 9G-8909 . . . . . | 339 |
| | 344 |
| | 366 |
| | 371 |
| 9G-9154 . . . . . | 428 |


▶ **PRIMARY REFERENCE**

# PART NUMBER INDEX


| Part | Page | Part | Page | Part | Page | Part | Page |
|---|---|---|---|---|---|---|---|
| | 445 | | 515 | | 757 | | 88 |
| 9H-1031 . . . . . | 1051 | | 516 | | 759 | | 89 |
| 9H-6454 . . . . . | 737 | | 517 | | 761 | | 91 |
| 9J-0096 . . . . . | 1081 | | 518 | | 763 | | 92 |
| 9J-0403 . . . . . | 974 | | 519 | | 765 | | 99 |
| | 976 | | 520 | | 767 | | 116 |
| | 978 | | 521 | | 769 | | 121 |
| | 980 | | 522 | | 771 | | 125 |
| | 982 | | 523 | | 773 | | 126 |
| | 984 | | 524 | | 775 | | 155 |
| | 986 | | 525 | | 777 | | 317 |
| | 988 | | 526 | | 779 | | 319 |
| | 990 | | 527 | | 782 | | 414 |
| | 992 | | 528 | | 784 | | 432 |
| | 994 | | 529 | | 786 | | 434 |
| | 996 | | 530 | | 788 | | 1139 |
| | 998 | | 531 | | 790 | | 1140 |
| | 1000 | | 532 | | 792 | | 1156 |
| | 1002 | | 533 | | 794 | | 1158 |
| | 1004 | | 534 | | 796 | 9M-2042 . . . . . | 409 |
| | 1006 | | 535 | | 799 | | 413 |
| | 1012 | | 536 | | 803 | 9M-2092 . . . . . | 543 |
| | 1014 | | 539 | | 807 | | 546 |
| | 1016 | | 540 | | 811 | 9M-2904 . . . . . | 14 |
| | 1018 | | 541 | | 815 | | 16 |
| | 1020 | | 542 | | 819 | | 96 |
| 9J-0404 . . . . . | 974 | 9L-1566 . . . . . | 237 | | 822 | 9M-4335 . . . . . | 609 |
| | 976 | | 250 | | 825 | 9M-4594 . . . . . | 339 |
| | 978 | | 254 | | 829 | | 344 |
| | 980 | | 321 | | 833 | | 366 |
| | 982 | | 325 | | 837 | | 371 |
| | 984 | | 330 | | 841 | 9M-4704 . . . . . | 376 |
| | 986 | | 339 | | 845 | 9M-5501 . . . . . | 619 |
| | 988 | | 344 | | 849 | 9M-5590 . . . . . | 83 |
| | 990 | | 349 | | 853 | | 85 |
| | 992 | | 354 | | 857 | | 1108 |
| | 994 | | 366 | | 860 | 9M-5733 . . . . . | 1210 |
| | 996 | | 371 | | 864 | | 1211 |
| | 998 | | 385 | | 867 | | 1236 |
| | 1000 | 9L-3059 . . . . . | 339 | | 870 | 9M-5870 . . . . . | 378 |
| | 1002 | | 344 | | 874 | 9M-7394 . . . . . | 737 |
| | 1004 | | 366 | | 877 | 9M-8406 . . . . . | 331 |
| | 1006 | | 371 | | 880 | | 620 |
| | 1008 | 9L-6331 . . . . . | 321 | | 884 | | 622 |
| | 1010 | | 325 | | 888 | | 1097 |
| | 1012 | 9L-6770 . . . . . | 141 | | 892 | | 1148 |
| | 1014 | | 144 | | 896 | | 1152 |
| | 1016 | 9L-7469 . . . . . | 1234 | | 900 | 9M-8662 . . . . . | 1217 |
| | 1018 | | 1236 | | 904 | | 1221 |
| | 1020 | 9L-9068 . . . . . | 490 | 9M-1974 . . . . . | 14 | 9N-0869 . . . . . | 14 |
| 9J-1979 . . . . . | 737 | | 492 | | 16 | | 16 |
| 9J-3047 . . . . . | 737 | 9M-0164 . . . . . | 694 | | 22 | | 155 |
| 9J-4963 . . . . . | 720 | | 697 | | 23 | | 156 |
| 9J-5498 . . . . . | 611 | | 700 | | 41 | 9N-1995 . . . . . | 553 |
| 9J-6586 . . . . . | 1091 | 9M-0402 . . . . . | 620 | | 47 | | 555 |
| 9J-8783 . . . . . | 615 | | 622 | | 49 | | 1170 |
| | 1111 | 9M-0853 . . . . . | 62 | | 60 | | 1174 |
| 9K-7951 . . . . . | 489 | 9M-1853 . . . . . | 740 | | 62 | 9N-4156 . . . . . | 465 |
| | 508 | | 742 | | 70 | 9N-4158 . . . . . | 465 |
| | 509 | | 744 | | 71 | 9N-4159 . . . . . | 465 |
| | 510 | | 746 | | 72 | 9N-4161 . . . . . | 465 |
| | 511 | | 748 | | 79 | 9N-4162 . . . . . | 465 |
| | 512 | | 750 | | 80 | 9N-4163 . . . . . | 465 |
| | 513 | | 752 | | 82 | 9N-4498 . . . . . | 481 |
| | 514 | | 755 | | 87 | | 484 |


► **PRIMARY REFERENCE**

# PART NUMBER INDEX


| Part | Page |
|---|---|
| 9N-4500 | 481 |
| | 484 |
| 9N-6152 | 609 |
| 9P-0356 | 476 |
| 9P-2369 | 1252 |
| | 1255 |
| 9P-2553 | 400 |
| | 403 |
| 9P-9150 | 430 |
| | 431 |
| | 490 |
| | 492 |
| 9R-1183 | 680 |
| | 683 |
| 9R-2620 | 1119 |
| | 1171 |
| | 1174 |
| | 1226 |
| 9R-3141 | 567 |
| 9R-5008 | 99 |
| 9R-6414 | 147 |
| | 148 |
| | 149 |
| | 150 |
| 9R-7240 | 128 |
| | 129 |
| 9R-8870 | 686 |
| 9S-1302 | 615 |
| 9S-1316 | 378 |
| | 381 |
| 9S-1322 | 1051 |
| 9S-1354 | 1155 |
| 9S-1366 | 1075 |
| 9S-2302 | 141 |
| 9S-2390 | 141 |
| 9S-2544 | 594 |
| 9S-4167 | 116 |
| | 121 |
| 9S-4180 | 907 |
| | 908 |
| | 909 |
| | 910 |
| | 911 |
| | 913 |
| | 915 |
| | 917 |
| | 918 |
| | 919 |
| | 920 |
| | 921 |
| | 922 |
| | 923 |
| | 924 |
| | 926 |
| | 927 |
| | 929 |
| | 931 |
| | 933 |
| | 934 |
| | 935 |
| | 936 |
| | 937 |
| | 938 |
| | 939 |
| | 940 |
| | 942 |
| | 944 |
| | 946 |
| | 948 |
| | 950 |
| | 952 |
| | 953 |
| | 955 |
| | 956 |
| | 957 |
| | 958 |
| | 959 |
| | 960 |
| | 962 |
| | 964 |
| | 966 |
| | 967 |
| | 968 |
| | 969 |
| 9S-4181 | 410 |
| | 414 |
| 9S-4182 | 52 |
| | 80 |
| | 432 |
| | 434 |
| | 609 |
| 9S-4183 | 47 |
| | 49 |
| | 89 |
| | 695 |
| | 698 |
| | 701 |
| | 725 |
| | 970 |
| | 972 |
| 9S-4185 | 39 |
| | 62 |
| | 80 |
| | 118 |
| | 409 |
| | 413 |
| 9S-4189 | 970 |
| | 972 |
| 9S-4190 | 409 |
| | 413 |
| | 470 |
| | 471 |
| 9S-4191 | 52 |
| | 53 |
| | 102 |
| | 116 |
| | 121 |
| | 317 |
| | 319 |
| | 409 |
| | 413 |
| | 452 |
| | 456 |
| | 460 |
| | 490 |
| | 492 |
| | 695 |
| | 698 |
| | 701 |
| | 1022 |
| 9S-7706 | 615 |
| 9S-8001 | 665 |
| | 716 |
| | 718 |
| | 970 |
| | 972 |
| | 1002 |
| | 1004 |
| | 1006 |
| 9S-8002 | 29 |
| | 481 |
| | 484 |
| | 727 |
| | 970 |
| | 972 |
| | 1024 |
| 9S-8003 | 716 |
| | 718 |
| | 970 |
| | 972 |
| 9S-8004 | 116 |
| | 121 |
| | 434 |
| | 449 |
| | 478 |
| | 481 |
| | 484 |
| 9S-8005 | 52 |
| | 80 |
| | 409 |
| | 413 |
| | 443 |
| | 974 |
| | 976 |
| | 978 |
| | 980 |
| | 982 |
| | 984 |
| | 986 |
| | 988 |
| | 990 |
| | 992 |
| | 994 |
| | 996 |
| | 998 |
| | 1000 |
| | 1008 |
| | 1010 |
| | 1012 |
| | 1014 |
| | 1016 |
| | 1018 |
| | 1020 |
| 9S-8006 | 53 |
| | 409 |
| | 413 |
| | 665 |
| 9S-8008 | 64 |
| | 434 |
| | 911 |
| 9S-8009 | 970 |
| | 972 |
| 9S-9334 | 434 |
| 9T-1013 | 708 |
| 9T-1636 | 725 |
| 9T-1652 | 725 |
| 9T-1699 | 725 |
| 9T-1710 | 725 |
| 9T-1857 | 1022 |
| 9T-2186 | 1022 |
| 9T-2388 | 660 |
| | 661 |
| 9T-2457 | 653 |
| 9T-2482 | 659 |
| 9T-2659 | 1037 |
| | 1039 |
| | 1041 |
| 9T-3133 | 657 |
| 9T-3727 | 660 |
| | 661 |
| 9T-4211 | 658 |
| | 659 |
| 9T-5241 | 1140 |
| 9T-5603 | 734 |
| 9T-5934 | 970 |
| 9T-5935 | 970 |
| 9T-5957 | 694 |
| | 700 |
| | ▶970 |
| 9T-6001 | 1246 |
| 9T-6146 | 708 |
| 9T-7750 | 1022 |
| 9T-7765 | 729 |
| 9T-7767 | 729 |
| 9T-7769 | 729 |
| 9T-7771 | 729 |
| 9T-7773 | 729 |
| 9T-7774 | 729 |
| 9T-7775 | 725 |
| 9T-8051 | 720 |
| 9T-8053 | 720 |
| 9T-8054 | 720 |
| 9T-8056 | 720 |
| 9T-8058 | 720 |
| 9T-8059 | 720 |
| 9T-8061 | 720 |
| 9T-8063 | 720 |
| 9T-8065 | 720 |
| 9T-8067 | 720 |
| 9T-8069 | 720 |
| 9T-8070 | 720 |
| 9T-8071 | 708 |
| 9T-8326 | 447 |
| 9T-8958 | 657 |
| 9T-9040 | 663 |
| 9T-9071 | 720 |
| 9T-9072 | 720 |
| 9U-2277 | 339 |
| | 344 |
| | 366 |
| | 371 |
| 9U-8067 | 478 |
| | 481 |
| | 484 |
| 9U-8068 | 478 |
| | 481 |
| | 484 |
| 9U-8069 | 478 |
| | 481 |
| | 484 |


▶ PRIMARY REFERENCE

# PART NUMBER INDEX


| Part | Page | Part | Page | Part | Page | Part | Page |
|---|---|---|---|---|---|---|---|
| 9U-8263 | 1164 | | 242 | 9X-0141 | 331 | | 1171 |
| 9U-8620 | 478 | | 252 | | 339 | | 1175 |
| | 481 | | 254 | | 344 | | 1255 |
| | 484 | | 259 | | 366 | 9X-2043 | 204 |
| 9U-8668 | 481 | | 265 | | 371 | | 206 |
| | 484 | | 266 | 9X-0262 | 317 | | 208 |
| 9U-8669 | 481 | | 270 | | 319 | | 223 |
| | 484 | | 299 | 9X-1046 | 306 | | 226 |
| 9U-8815 | 424 | | 308 | | 309 | | 229 |
| | 426 | | 311 | | 315 | | 232 |
| 9U-9282 | 478 | | 313 | | 400 | | 235 |
| | 481 | | 385 | | 403 | | 237 |
| | 484 | | 399 | | 1108 | | 239 |
| 9U-9316 | 478 | | 402 | | 1137 | | 242 |
| | 481 | | 605 | | 1138 | | 252 |
| | 484 | | 1137 | 9X-1054 | 204 | | 254 |
| 9U-9595 | 481 | | 1138 | | 206 | | 259 |
| | 484 | | 1198 | | 208 | | 273 |
| 9U-9995 | 424 | | 1202 | | 290 | | 299 |
| 9V-7447 | 1100 | | 1276 | 9X-1343 | 321 | | 311 |
| | 1101 | | 1278 | | 325 | | 313 |
| 9W-0335 | 387 | | 1280 | | 330 | | 315 |
| | 389 | | 1282 | 9X-1813 | 140 | | 582 |
| | 392 | 9W-1454 | 409 | | 279 | | 584 |
| | 397 | | 413 | | 280 | | 642 |
| 9W-0742 | ▶151 | 9W-1767 | 1061 | | 284 | | 1114 |
| | 351 | 9W-1768 | 1061 | | 287 | | 1116 |
| | 356 | 9W-1835 | 1069 | | 297 | | 1133 |
| | 361 | | 1070 | | 340 | | 1134 |
| 9W-0852 | 276 | 9W-2029 | 424 | | 345 | | 1166 |
| | 303 | | 426 | | 364 | | 1168 |
| | 1096 | 9W-3073 | 1164 | | 367 | | 1171 |
| | 1147 | 9W-3155 | 1081 | | 372 | | 1175 |
| | 1151 | 9W-4430 | 609 | 9X-2023 | 443 | | 1179 |
| | 1276 | 9W-4431 | 609 | | 445 | | 1181 |
| | 1278 | 9W-4452 | 609 | 9X-2027 | 35 | | 1198 |
| | 1280 | 9W-4453 | 609 | 9X-2039 | 1244 | | 1202 |
| | 1282 | 9W-5132 | 472 | 9X-2040 | 1097 | | 1217 |
| 9W-0898 | 481 | | 474 | | 1148 | | 1222 |
| | 484 | | ▶609 | | 1152 | 9X-2045 | 385 |
| 9W-1441 | 165 | 9W-5134 | ▶467 | | 1246 | | 392 |
| | 220 | | 472 | 9X-2041 | 1097 | | 397 |
| | 222 | | 474 | | 1114 | | 1097 |
| | 306 | 9W-6465 | 409 | | 1116 | | 1114 |
| | 309 | | 413 | | 1148 | | 1116 |
| | 399 | 9W-6467 | 421 | | 1151 | | 1120 |
| | 402 | 9W-6582 | 45 | | 1171 | | 1123 |
| | 1095 | 9W-6584 | 45 | | 1175 | | 1125 |
| | 1145 | 9W-7038 | 409 | | 1179 | | 1127 |
| 9W-1442 | 164 | | 413 | | 1238 | | 1129 |
| | 166 | 9W-7385 | 45 | | 1239 | | 1131 |
| | 204 | 9W-7388 | 45 | | 1244 | | 1138 |
| | 206 | 9W-7410 | 481 | | 1246 | | 1148 |
| | 208 | | 484 | 9X-2042 | 167 | | 1152 |
| | 217 | 9W-7412 | 478 | | 306 | | 1168 |
| | 218 | | 481 | | 309 | | 1171 |
| | 220 | | 484 | | 400 | | 1175 |
| | 222 | 9W-7469 | 1078 | | 403 | | 1179 |
| | 223 | 9W-7470 | 1078 | | 1108 | | 1181 |
| | 226 | 9W-9371 | 424 | | 1114 | | 1246 |
| | 229 | | 426 | | 1116 | | 1252 |
| | 232 | 9W-9905 | 418 | | 1120 | | 1255 |
| | 235 | | 421 | | 1123 | 9X-2046 | 1171 |
| | 237 | | 424 | | 1127 | | 1175 |
| | 239 | | 426 | | 1129 | | 1191 |


▶ **PRIMARY REFERENCE**

# PART NUMBER INDEX


| Part | Page |
|---|---|
| | 1192 |
| | 1195 |
| | 1197 |
| | 1201 |
| 9X-2097 | 23 |
| | 62 |
| 9X-2098 | 156 |
| 9X-2126 | 1097 |
| | 1148 |
| | 1152 |
| 9X-2185 | 1096 |
| | 1147 |
| | 1151 |
| 9X-2388 | 93 |
| | 94 |
| 9X-2488 | 1096 |
| | 1147 |
| | 1151 |
| 9X-2532 | 105 |
| 9X-2546 | 1120 |
| | 1123 |
| | 1127 |
| | 1129 |
| 9X-3463 | 178 |
| | 179 |
| | 180 |
| | 181 |
| | 182 |
| | 183 |
| | 184 |
| | 185 |
| | 212 |
| 9X-3465 | 186 |
| | 188 |
| | 190 |
| | 192 |
| 9X-3490 | 331 |
| 9X-4244 | 179 |
| | 180 |
| | 181 |
| | 182 |
| | 183 |
| | 186 |
| | 188 |
| | 190 |
| | 192 |
| 9X-4385 | 330 |
| 9X-4493 | 186 |
| | 188 |
| | 190 |
| | 192 |
| 9X-4494 | 194 |
| 9X-4609 | 409 |
| | 413 |
| 9X-4824 | 294 |
| 9X-6019 | 1258 |
| | 1261 |
| 9X-6032 | 727 |
| 9X-6395 | 1028 |
| | 1031 |
| 9X-6650 | 53 |
| 9X-6772 | 428 |
| 9X-6932 | 367 |
| | 372 |
| | 385 |
| 9X-7317 | 124 |
| 9X-7378 | 1105 |
| | 1183 |
| 9X-7380 | 1183 |
| 9X-7381 | 1097 |
| | 1183 |
| 9X-7382 | 1097 |
| | 1183 |
| 9X-7383 | 1183 |
| 9X-7384 | 478 |
| 9X-7385 | 1105 |
| | 1183 |
| 9X-7680 | 727 |
| | 1022 |
| 9X-7743 | 609 |
| 9X-7849 | 199 |
| | 200 |
| 9X-8121 | 199 |
| 9X-8122 | 1142 |
| 9X-8139 | 199 |
| | 200 |
| 9X-8256 | 46 |
| | 132 |
| | 204 |
| | 206 |
| | 208 |
| | 212 |
| | 223 |
| | 299 |
| | 331 |
| | 385 |
| | 393 |
| | 397 |
| | 400 |
| | 403 |
| | 556 |
| | 559 |
| | 616 |
| | 620 |
| | 622 |
| | 692 |
| | 1093 |
| | 1094 |
| | 1120 |
| | 1123 |
| | 1125 |
| | 1127 |
| | 1129 |
| | 1131 |
| | 1164 |
| | 1171 |
| | 1175 |
| | 1181 |
| | 1231 |
| 9X-8257 | 453 |
| | 456 |
| | 460 |
| | 603 |
| 9X-8267 | 60 |
| | 317 |
| | 319 |
| | 567 |
| | 1194 |
| 9X-8355 | 1292 |
| 9X-8372 | 1292 |
| 9X-8399 | 652 |
| | 663 |
| 9X-8600 | 130 |
| | 132 |
| 9X-8606 | 615 |
| 9X-8875 | 1084 |
| | 1088 |
| 9X-8880 | 438 |
| | 1069 |
| | 1070 |
| | 1073 |
| | 1074 |
| 9X-8881 | 1047 |
| 9X-8883 | 1047 |
| 9X-8885 | 1071 |
| | 1072 |
| 9X-8887 | 667 |
| 9X-8979 | 727 |
| 9X-9365 | 245 |
| | 247 |
| 9X-9631 | 229 |
| | 232 |
| | 240 |
| | 242 |
| 9X-9633 | 393 |
| 9X-9639 | 175 |
| | 270 |
| 9X-9653 | 1096 |
| 9X-9688 | 1217 |
| | 1219 |
| | 1221 |
| 9X-9689 | 1139 |
| | 1140 |
| 9X-9825 | 367 |
| | 372 |
| | 385 |
| 9X-9865 | 186 |
| | 188 |
| | 190 |
| | 192 |
| 9Y-0810 | 25 |
| 9Y-0821 | 25 |
| 9Y-1116 | 14 |
| | 16 |
| 9Y-1758 | 60 |
| 9Y-3513 | 92 |
| 9Y-3520 | 38 |
| 9Y-4357 | 60 |
| 9Y-4580 | 46 |
| 9Y-5631 | 18 |
| | 20 |
| 9Y-7215 | 60 |
| 9Y-8075 | 72 |
| 9Y-8076 | 72 |
| 9Y-9236 | 93 |
| | 94 |
| **0** | |
| 001-7043 | 14 |
| | 16 |
| 002-1212 | 725 |
| 002-6453 | 470 |
| | 471 |
| 002-6454 | 128 |
| | 130 |
| | 134 |
| | 135 |
| 003-9514 | 83 |
| 005-0658 | 14 |
| | 16 |
| 005-7898 | 452 |
| | 456 |
| | 460 |
| 005-8639 | 661 |
| 006-8663 | 725 |
| 009-0008 | 109 |
| 009-2062 | 551 |
| | 552 |
| 009-3681 | 1211 |
| | 1234 |
| | 1236 |
| 009-4184 | 1156 |
| | 1158 |
| 009-4185 | 1156 |
| | 1158 |
| 014-0816 | 303 |
| | 315 |
| | 1282 |
| 030-0060 | 543 |
| | 546 |
| 030-0061 | 543 |
| | 546 |
| 030-7947 | 116 |
| | 121 |
| 030-8535 | 438 |
| | 450 |
| | 1107 |
| | 1207 |
| | 1209 |
| 031-2666 | 1107 |
| 031-4155 | 1140 |
| 032-3631 | 14 |
| | 16 |
| 033-6027 | 1022 |
| 033-6033 | 136 |
| | 138 |
| 033-6036 | 725 |
| | 1022 |
| 033-6043 | 1024 |
| 033-8248 | 249 |
| | 250 |
| | 290 |
| | 304 |
| | 330 |
| | 340 |
| | 345 |
| | 350 |
| | 355 |
| | 360 |
| | 367 |
| | 372 |
| 034-1994 | 1107 |
| 034-3557 | 438 |
| 036-9823 | 294 |
| 037-4838 | 1096 |
| | 1147 |


► **PRIMARY REFERENCE**

# PART NUMBER INDEX


| Part | Page |
|---|---|
| 061-7539 | 126 |
| 061-7540 | 432 |
| | 434 |
| 061-7661 | 339 |
| | 344 |
| | 366 |
| | 371 |
| 061-8561 | 71 |
| 061-9455 | 23 |
| 068-4860 | 1057 |
| | 1058 |
| | 1059 |
| | 1060 |
| 085-7356 | 445 |
| 085-8091 | 1183 |
| 086-0507 | 737 |
| 089-7960 | 402 |
| 090-0744 | 1187 |
| 090-8635 | 14 |
| | 16 |
| 091-0081 | 1244 |
| 091-9071 | 1156 |
| | 1158 |
| 092-2570 | 123 |
| 092-3200 | 1113 |
| 092-7385 | 700 |
| 095-0878 | 1160 |
| | 1234 |
| | 1236 |
| 095-0888 | 725 |
| 095-1207 | 478 |
| | 481 |
| | 484 |
| 095-1260 | 642 |
| 096-0014 | 55 |
| 096-6166 | 164 |
| | 166 |
| | 306 |
| | 309 |
| | 315 |
| | 321 |
| | 326 |
| | 1107 |
| 097-8516 | 1193 |
| 098-7467 | 1156 |
| | 1158 |
| 099-0492 | 1181 |
| 099-1196 | 1194 |
| 099-3095 | 719 |
| 099-3649 | 39 |
| | 562 |

## 1

| Part | Page |
|---|---|
| 100-3224 | 1161 |
| 100-3245 | 186 |
| | 188 |
| | 190 |
| | 192 |
| 100-3248 | 190 |
| | 192 |
| 100-3249 | 186 |
| | 188 |
| 100-3250 | 186 |
| | 188 |
| | 190 |
| | 192 |
| 100-3251 | 186 |
| | 188 |
| | 190 |
| | 192 |
| 100-3253 | 186 |
| | 188 |
| | 190 |
| | 192 |
| 100-3254 | 186 |
| | 188 |
| | 190 |
| | 192 |
| 100-3255 | 186 |
| | 188 |
| | 190 |
| | 192 |
| 100-3402 | 725 |
| 100-3404 | 725 |
| 100-3405 | 725 |
| 100-3407 | 725 |
| 100-3408 | 725 |
| 100-3409 | 725 |
| 100-3410 | 729 |
| 100-3411 | 729 |
| 100-3412 | 725 |
| | ▶729 |
| 100-3413 | 725 |
| 100-3415 | 725 |
| 100-3426 | 1147 |
| 100-4318 | 715 |
| 100-4336 | 686 |
| 100-5179 | 1161 |
| 100-5612 | 1143 |
| | 1144 |
| 100-6021 | 970 |
| | 972 |
| | ▶1031 |
| 100-6531 | 141 |
| 100-8150 | 34 |
| 100-8525 | 432 |
| | 434 |
| 101-0003 | 1248 |
| 101-0509 | 907 |
| | 908 |
| | 909 |
| | 910 |
| | 911 |
| | 913 |
| | 915 |
| | 917 |
| | 918 |
| | 919 |
| | 920 |
| | 921 |
| | 922 |
| | 923 |
| | 924 |
| | 926 |
| | 927 |
| | 929 |
| | 931 |
| | 933 |
| | 934 |
| | 935 |
| | 936 |
| | 937 |
| | 938 |
| | 939 |
| | 940 |
| | 942 |
| | 944 |
| | 946 |
| | 948 |
| | 950 |
| | 952 |
| | 953 |
| | 955 |
| | 956 |
| | 957 |
| | 958 |
| | 959 |
| | 960 |
| | 962 |
| | 964 |
| | 966 |
| | 967 |
| | 968 |
| | 969 |
| 101-0852 | 162 |
| 101-1147 | 1006 |
| | 1018 |
| 101-1148 | 974 |
| | 990 |
| | 992 |
| 101-1149 | 976 |
| 101-1150 | 980 |
| | 988 |
| | 1002 |
| 101-1151 | 984 |
| 101-1152 | 1000 |
| 101-1153 | 986 |
| 101-1154 | 978 |
| 101-1155 | 982 |
| 101-1635 | 82 |
| | 89 |
| 101-1970 | 974 |
| | 976 |
| | 978 |
| | 980 |
| | 994 |
| | 996 |
| | 1002 |
| | 1006 |
| | 1014 |
| | 1016 |
| 101-1971 | 974 |
| | 976 |
| | 978 |
| | 980 |
| | 982 |
| | 984 |
| | 986 |
| | 988 |
| | 990 |
| | 992 |
| | 994 |
| | 996 |
| | 998 |
| | 1000 |
| | 1002 |
| | 1004 |
| | 1006 |
| | 1008 |
| | 1010 |
| | 1012 |
| | 1014 |
| | 1016 |
| | 1018 |
| | 1020 |
| 101-1972 | 980 |
| | 988 |
| | 1002 |
| | 1004 |
| | 1006 |
| | 1018 |
| 101-1973 | 974 |
| | 976 |
| | 978 |
| | 980 |
| | 982 |
| | 984 |
| | 986 |
| | 988 |
| | 990 |
| | 992 |
| | 994 |
| | 996 |
| | 998 |
| | 1000 |
| | 1002 |
| | 1004 |
| | 1006 |
| | 1008 |
| | 1010 |
| | 1012 |
| | 1014 |
| | 1016 |
| | 1018 |
| | 1020 |
| 101-1974 | 664 |
| | 665 |
| 101-1975 | 664 |
| 101-1978 | 974 |
| | 976 |
| | 978 |
| | 982 |
| | 984 |
| | 986 |
| | 990 |
| | 992 |
| | 996 |
| | 998 |
| | 1000 |
| | 1008 |
| | 1010 |
| | 1012 |
| | 1014 |
| | 1016 |
| | 1020 |
| 101-1980 | 980 |
| | 988 |


▶ **PRIMARY REFERENCE**

# PART NUMBER INDEX


| Part | Page |
|---|---|
| | 994 |
| | 1018 |
| 101-1982 . . . . . | 982 |
| | 984 |
| | 986 |
| | 988 |
| | 990 |
| | 992 |
| | 998 |
| | 1000 |
| | 1004 |
| | 1008 |
| | 1010 |
| | 1012 |
| | 1018 |
| | 1020 |
| 101-1983 . . . . . | 974 |
| | 976 |
| | 978 |
| | 980 |
| | 982 |
| | 984 |
| | 986 |
| | 988 |
| | 990 |
| | 992 |
| | 994 |
| | 996 |
| | 998 |
| | 1000 |
| | 1002 |
| | 1004 |
| | 1006 |
| | 1008 |
| | 1010 |
| | 1012 |
| | 1014 |
| | 1016 |
| | 1018 |
| | 1020 |
| 101-1984 . . . . . | 974 |
| | 976 |
| | 978 |
| | 980 |
| | 982 |
| | 984 |
| | 986 |
| | 988 |
| | 990 |
| | 992 |
| | 994 |
| | 996 |
| | 998 |
| | 1000 |
| | 1002 |
| | 1004 |
| | 1006 |
| | 1008 |
| | 1010 |
| | 1012 |
| | 1014 |
| | 1016 |
| | 1018 |
| | 1020 |
| 101-2042 . . . . . | 51 |
| 101-2457 . . . . . | 740 |
| | 742 |
| | 744 |
| | 746 |
| | 748 |
| | 750 |
| | 752 |
| | 755 |
| | 757 |
| | 759 |
| | 761 |
| | 763 |
| | 765 |
| | 767 |
| | 769 |
| | 771 |
| | 773 |
| | 775 |
| | 777 |
| | 779 |
| | 782 |
| | 784 |
| | 786 |
| | 788 |
| | 790 |
| | 792 |
| | 794 |
| | 796 |
| | 799 |
| | 803 |
| | 807 |
| | 811 |
| | 815 |
| | 819 |
| | 822 |
| | 825 |
| | 829 |
| | 833 |
| | 837 |
| | 841 |
| | 845 |
| | 849 |
| | 853 |
| | 857 |
| | 860 |
| | 864 |
| | 867 |
| | 870 |
| | 874 |
| | 877 |
| | 880 |
| | 884 |
| | 888 |
| | 892 |
| | 896 |
| | 900 |
| | 904 |
| 101-2458 . . . . . | 740 |
| | 742 |
| | 744 |
| | 746 |
| | 748 |
| | 750 |
| | 752 |
| | 755 |
| | 757 |
| | 759 |
| | 761 |
| | 763 |
| | 765 |
| | 767 |
| | 769 |
| | 771 |
| | 773 |
| | 775 |
| | 777 |
| | 779 |
| | 782 |
| | 784 |
| | 786 |
| | 788 |
| | 790 |
| | 792 |
| | 794 |
| | 796 |
| | 799 |
| | 803 |
| | 807 |
| | 811 |
| | 815 |
| | 819 |
| | 822 |
| | 825 |
| | 829 |
| | 833 |
| | 837 |
| | 841 |
| | 845 |
| | 849 |
| | 853 |
| | 857 |
| | 860 |
| | 864 |
| | 867 |
| | 870 |
| | 874 |
| | 877 |
| | 880 |
| | 884 |
| | 888 |
| | 892 |
| | 896 |
| | 900 |
| | 904 |
| 101-2480 . . . . . | 974 |
| | 976 |
| | 978 |
| | 980 |
| | 982 |
| | 984 |
| | 986 |
| | 988 |
| | 990 |
| | 992 |
| | 994 |
| | 996 |
| | 998 |
| | 1000 |
| | 1002 |
| | 1004 |
| | 1006 |
| | 1008 |
| | 1010 |
| | 1012 |
| | 1014 |
| | 1016 |
| | 1018 |
| | 1020 |
| 101-2850 . . . . . | 98 |
| 101-3055 . . . . . | 1170 |
| | 1174 |
| 101-3125 . . . . . | 99 |
| 101-4147 . . . . . | 986 |
| | 996 |
| | ▶1032 |
| 101-4148 . . . . . | 1032 |
| | ▶1033 |
| 101-4194 . . . . . | 1248 |
| 101-4195 . . . . . | 1248 |
| 101-9346 . . . . . | 907 |
| | 908 |
| | 909 |
| | 910 |
| | 918 |
| | 919 |
| | 920 |
| | 921 |
| | 922 |
| | 923 |
| | 934 |
| | 935 |
| | 936 |
| | 937 |
| | 938 |
| | 939 |
| | 952 |
| | 953 |
| | 955 |
| | 956 |
| | 957 |
| | 958 |
| | 959 |
| 101-9754 . . . . . | 478 |
| | 481 |
| | 484 |
| 102-3645 . . . . . | 1252 |
| | 1255 |
| 102-4108 . . . . . | 725 |
| 102-4139 . . . . . | 1047 |
| 102-4577 . . . . . | 1008 |
| | 1016 |
| 102-4578 . . . . . | 996 |
| | 1010 |
| | 1012 |
| | 1014 |
| | 1020 |
| 102-5828 . . . . . | 66 |
| 102-5829 . . . . . | 66 |
| 102-5842 . . . . . | 60 |
| 102-5881 . . . . . | 418 |
| | 421 |
| | 426 |
| 102-6238 . . . . . | 907 |
| | 909 |
| | 913 |


▶ PRIMARY REFERENCE

# PART NUMBER INDEX


| Part | Page | Part | Page | Part | Page | Part | Page |
|---|---|---|---|---|---|---|---|
| | 917 | | 964 | | 206 | 102-8803 . . . . . | 177 |
| | 920 | | 967 | | 208 | | 196 |
| | 923 | | 968 | | 220 | | 197 |
| | 926 | | 969 | | 222 | | 212 |
| | 927 | 102-8785 . . . . . | 82 | | 235 | | 249 |
| | 935 | 102-8801 . . . . . | 161 | | 237 | | 250 |
| | 937 | | 204 | | 245 | | 277 |
| | 939 | | 206 | | 247 | | 278 |
| | 940 | | 208 | | 249 | | 304 |
| | 942 | | 223 | | 250 | | 306 |
| | 950 | | 226 | | 252 | | 317 |
| | 952 | | 229 | | 254 | | 319 |
| | 966 | | 232 | | 257 | | 321 |
| 102-6317 . . . . . | 1250 | | 235 | | 258 | | 325 |
| 102-7412 . . . . . | 974 | | 237 | | 276 | | 326 |
| | 976 | | 239 | | 284 | | 339 |
| | 978 | | 242 | | 290 | | 344 |
| | 980 | | 252 | | 297 | | 366 |
| | 982 | | 254 | | 304 | | 371 |
| | 984 | | 259 | | 306 | | 385 |
| | 986 | | 306 | | 309 | | 402 |
| | 988 | | 309 | | 311 | | 594 |
| | 990 | | 311 | | 313 | 102-8804 . . . . . | 170 |
| | 992 | | 313 | | 317 | | 204 |
| | 994 | | 315 | | 319 | | 206 |
| | 996 | | 321 | | 321 | | 208 |
| | 998 | | 325 | | 322 | | 235 |
| | 1000 | | 326 | | 325 | | 237 |
| | 1002 | | 330 | | 326 | | 252 |
| | 1004 | | 339 | | 330 | | 254 |
| | 1006 | | 344 | | 339 | | 273 |
| | 1008 | | 349 | | 340 | | 290 |
| | 1010 | | 354 | | 344 | | 306 |
| | 1012 | | 359 | | 345 | | 309 |
| | 1014 | | 364 | | 349 | | 311 |
| | 1016 | | 366 | | 354 | | 313 |
| | 1018 | | 371 | | 359 | | 321 |
| | 1020 | | 378 | | 364 | | 325 |
| 102-7423 . . . . . | 664 | | 381 | | 366 | | 330 |
| 102-8385 . . . . . | 908 | | 387 | | 367 | | 331 |
| | 910 | | 389 | | 371 | | 349 |
| | 911 | | 392 | | 372 | | 354 |
| | 915 | | 396 | | 378 | | 359 |
| | 918 | | 399 | | 381 | | 379 |
| | 919 | | 402 | | 385 | | 381 |
| | 921 | | 406 | | 399 | | 387 |
| | 922 | | 430 | | 402 | | 389 |
| | 924 | | 582 | | 487 | | 392 |
| | 929 | | 584 | | 488 | | 396 |
| | 931 | | 1198 | | 627 | | 399 |
| | 933 | | 1202 | | 1045 | | 402 |
| | 934 | | 1217 | | 1046 | | 1198 |
| | 936 | | 1219 | | 1093 | | 1202 |
| | 938 | | 1221 | | 1094 | 102-8805 . . . . . | 186 |
| | 944 | 102-8802 . . . . . | 139 | | 1097 | | 188 |
| | 946 | | 140 | | 1105 | | 190 |
| | 948 | | 167 | | 1147 | | 192 |
| | 953 | | 179 | | 1151 | | 306 |
| | 955 | | 194 | | 1156 | | 309 |
| | 956 | | 195 | | 1183 | | 321 |
| | 957 | | 198 | | 1198 | | 326 |
| | 958 | | 199 | | 1202 | | 339 |
| | 959 | | 200 | | 1217 | | 340 |
| | 960 | | 202 | | 1219 | | 344 |
| | 962 | | 204 | | 1221 | | 345 |


► **PRIMARY REFERENCE**

# PART NUMBER INDEX


| Part | Page |
|---|---|
| | 349 |
| | 354 |
| | 359 |
| | 366 |
| | 367 |
| | 371 |
| | 372 |
| | 387 |
| | 389 |
| | 392 |
| | 396 |
| | 582 |
| | 584 |
| | 1097 |
| | 1148 |
| | 1152 |
| | 1204 |
| | 1205 |
| | 1217 |
| | 1219 |
| | 1221 |
| | 1267 |
| | 1268 |
| | 1270 |
| | 1272 |
| | 1274 |
| | 1286 |
| | 1287 |
| 102-8806 . . . . . | 204 |
| | 206 |
| | 208 |
| | 235 |
| | 237 |
| | 252 |
| | 254 |
| | 303 |
| | 306 |
| | 309 |
| | 311 |
| | 313 |
| | 315 |
| | 1198 |
| | 1202 |
| | 1217 |
| | 1219 |
| | 1221 |
| | 1276 |
| | 1278 |
| | 1280 |
| | 1282 |
| 102-8808 . . . . . | 287 |
| 102-8813 . . . . . | 287 |
| 102-9372 . . . . . | 1214 |
| | 1215 |
| | 1230 |
| 102-9381 . . . . . | 1213 |
| 102-9383 . . . . . | 399 |
| | 402 |
| 102-9862 . . . . . | 175 |
| | 268 |
| | 269 |
| | 270 |
| | 273 |
| 103-1592 . . . . . | 223 |
| | 226 |
| 103-1597 . . . . . | 744 |
| | 750 |
| | 752 |
| | 757 |
| | 759 |
| | 763 |
| | 769 |
| | 773 |
| | 777 |
| | 779 |
| | 786 |
| | 788 |
| | 790 |
| | 792 |
| | 794 |
| | 796 |
| | 829 |
| | 841 |
| | 845 |
| | 849 |
| | 853 |
| | 857 |
| | 860 |
| | 864 |
| | 867 |
| | 870 |
| | 874 |
| | 877 |
| | 880 |
| | 892 |
| | 896 |
| | 900 |
| | 904 |
| 103-2006 . . . . . | 130 |
| | 132 |
| 103-4660 . . . . . | 118 |
| 103-4771 . . . . . | 1207 |
| | 1209 |
| 103-4953 . . . . . | 1206 |
| | 1207 |
| | 1209 |
| 103-5417 . . . . . | 595 |
| 103-5419 . . . . . | 595 |
| 103-5515 . . . . . | 1206 |
| | 1207 |
| | 1209 |
| 103-5516 . . . . . | 1206 |
| | 1207 |
| | 1209 |
| 103-5678 . . . . . | 223 |
| | 226 |
| | 229 |
| | 232 |
| | 239 |
| | 242 |
| | 259 |
| | 299 |
| | 402 |
| 103-6100 . . . . . | 1183 |
| 103-6216 . . . . . | 12 |
| 103-9125 . . . . . | 543 |
| | 546 |
| 103-9425 . . . . . | 1170 |
| | 1174 |
| 104-2091 . . . . . | 1097 |
| | 1134 |
| | 1148 |
| | 1217 |
| | 1222 |
| 104-3122 . . . . . | 725 |
| | ▶1022 |
| 104-3124 . . . . . | 725 |
| 104-3560 . . . . . | 28 |
| 104-3567 . . . . . | 60 |
| 104-3568 . . . . . | 60 |
| 104-3601 . . . . . | 194 |
| 104-3947 . . . . . | 488 |
| 104-4286 . . . . . | 694 |
| | 697 |
| | 700 |
| 104-4523 . . . . . | 1078 |
| 104-5958 . . . . . | 1258 |
| | 1261 |
| 104-7419 . . . . . | 740 |
| | 742 |
| | 744 |
| | 746 |
| | 748 |
| | 750 |
| | 752 |
| | 755 |
| | 757 |
| | 759 |
| | 761 |
| | 763 |
| | 765 |
| | 767 |
| | 769 |
| | 771 |
| | 773 |
| | 775 |
| | 777 |
| | 779 |
| | 782 |
| | 784 |
| | 786 |
| | 788 |
| | 790 |
| | 792 |
| | 794 |
| | 796 |
| | 799 |
| | 803 |
| | 807 |
| | 811 |
| | 815 |
| | 819 |
| | 822 |
| | 825 |
| | 829 |
| | 833 |
| | 837 |
| | 841 |
| | 845 |
| | 849 |
| | 853 |
| | 857 |
| | 860 |
| | 864 |
| | 867 |
| 104-7429 . . . . . | 740 |
| | 742 |
| | 744 |
| | 746 |
| | 748 |
| | 750 |
| | 752 |
| | 755 |
| | 757 |
| | 759 |
| | 761 |
| | 763 |
| | 765 |
| | 767 |
| | 769 |
| | 771 |
| | 773 |
| | 775 |
| | 777 |
| | 779 |
| | 782 |
| | 784 |
| | 786 |
| | 788 |
| | 790 |
| | 792 |
| | 794 |
| | 796 |
| | 799 |
| | 803 |
| | 807 |
| | 811 |
| | 815 |
| | 819 |
| | 822 |
| | 825 |
| | 829 |
| | 833 |
| | 837 |
| | 841 |
| | 845 |
| | 849 |
| | 853 |
| | 857 |
| | 860 |
| | 864 |
| | 867 |
| | 870 |
| | 874 |
| | 877 |
| | 880 |
| | 884 |
| | 888 |
| | 892 |
| | 896 |
| | 900 |
| | 904 |
| | 740 |
| | 742 |
| | 744 |
| | 746 |
| | 748 |
| | 750 |
| | 752 |
| | 755 |
| | 757 |
| | 759 |
| | 761 |
| | 763 |
| | 765 |
| | 767 |
| | 769 |
| | 771 |
| | 773 |
| | 775 |
| | 777 |
| | 779 |
| | 782 |
| | 784 |
| | 786 |
| | 788 |
| | 790 |
| | 792 |
| | 794 |
| | 796 |
| | 799 |
| | 803 |
| | 807 |
| | 811 |
| | 815 |
| | 819 |
| | 822 |
| | 825 |
| | 829 |
| | 833 |
| | 837 |
| | 841 |
| | 845 |
| | 849 |
| | 853 |
| | 857 |
| | 860 |
| | 864 |
| | 867 |
| | 870 |
| | 874 |
| | 877 |
| | 880 |
| | 884 |
| | 888 |
| | 892 |
| | 896 |
| | 900 |
| | 904 |


▶ PRIMARY REFERENCE

# PART NUMBER INDEX


| Part | Page | Part | Page | Part | Page | Part | Page |
|---|---|---|---|---|---|---|---|
| | 900 | | 746 | | 978 | | 942 |
| | 904 | | ▶919 | | 982 | | ▶994 |
| 104-7740 . . . . . | 740 | 104-8647 . . . . . | 750 | | 984 | 107-1983 . . . . . | 1217 |
| | 742 | | ▶955 | | 986 | | 1219 |
| | 744 | 104-8648 . . . . . | 744 | | 990 | | 1221 |
| | 746 | | 757 | | 992 | 107-1984 . . . . . | 1221 |
| | 748 | | ▶934 | | 996 | 107-3392 . . . . . | ▶1067 |
| | 750 | 104-8651 . . . . . | 752 | | 998 | 107-3393 . . . . . | ▶1067 |
| | 752 | | 759 | | 1000 | 107-3395 . . . . . | 3 |
| | 755 | | ▶956 | | 1008 | | ▶1061 |
| | 757 | 104-8655 . . . . . | 1047 | | 1010 | 107-3396 . . . . . | ▶1067 |
| | 759 | 104-8671 . . . . . | 740 | | 1012 | 107-3397 . . . . . | ▶1067 |
| | 761 | | 744 | | 1014 | 107-3398 . . . . . | ▶1061 |
| | 763 | | 750 | | 1016 | 107-3417 . . . . . | ▶1057 |
| | 765 | | 752 | | 1020 | 107-3418 . . . . . | ▶1058 |
| | 767 | | 755 | 106-3660 . . . . . | 980 | 107-3419 . . . . . | ▶1059 |
| | 769 | | 782 | | 988 | 107-3420 . . . . . | ▶1060 |
| | 771 | | 792 | | 994 | 107-3425 . . . . . | ▶1067 |
| | 773 | | ▶920 | | 1002 | 107-3426 . . . . . | ▶1068 |
| | 775 | 105-2080 . . . . . | 1047 | | 1004 | 107-3856 . . . . . | 635 |
| | 777 | 105-2145 . . . . . | 1024 | | 1006 | | ▶752 |
| | 779 | 105-2508 . . . . . | 125 | | 1018 | 107-4865 . . . . . | 1252 |
| | 782 | 105-3196 . . . . . | 667 | 106-4496 . . . . . | 1134 | | 1255 |
| | 784 | | ▶720 | 106-4835 . . . . . | 524 | 107-4932 . . . . . | 175 |
| | 786 | 105-3249 . . . . . | 528 | 106-4884 . . . . . | 4 | | 268 |
| | 788 | | 530 | | ▶586 | | 269 |
| | 790 | 105-3484 . . . . . | 76 | 106-6553 . . . . . | 1125 | | 273 |
| | 792 | 105-4208 . . . . . | 81 | | 1131 | 107-5014 . . . . . | 642 |
| | 794 | 105-4210 . . . . . | 92 | 106-7389 . . . . . | 1032 | | 1170 |
| | 796 | 105-4728 . . . . . | 296 | | ▶1034 | | 1174 |
| | 799 | 105-4849 . . . . . | ▶190 | 106-7390 . . . . . | 1029 | | 1181 |
| | 803 | | 325 | | ▶1035 | 107-5795 . . . . . | 81 |
| | 807 | 105-4850 . . . . . | ▶192 | | ▶1036 | 107-6280 . . . . . | 57 |
| | 811 | | 325 | 106-8704 . . . . . | 202 | 107-6813 . . . . . | 1125 |
| | 815 | 105-5180 . . . . . | 1057 | | 220 | | 1131 |
| | 819 | | 1058 | | 222 | 107-8143 . . . . . | 680 |
| | 822 | | 1059 | | 257 | | 683 |
| | 825 | | 1060 | | 339 | 107-8144 . . . . . | 680 |
| | 829 | 105-7167 . . . . . | 703 | | 344 | | 683 |
| | 833 | | 705 | | 366 | 107-8147 . . . . . | 686 |
| | 837 | 106-1567 . . . . . | 515 | | 371 | 107-8148 . . . . . | 686 |
| | 841 | 106-3658 . . . . . | 974 | | 1183 | 107-8149 . . . . . | 680 |
| | 845 | | 976 | | 1221 | | 683 |
| | 849 | | 978 | 106-9586 . . . . . | 66 | 107-8150 . . . . . | 680 |
| | 853 | | 980 | 107-0516 . . . . . | 980 | | 683 |
| | 857 | | 982 | 107-0520 . . . . . | 988 | | 686 |
| | 860 | | 984 | 107-0543 . . . . . | 919 | 107-8374 . . . . . | 1084 |
| | 864 | | 986 | | 933 | | 1088 |
| | 867 | | 988 | | 955 | 107-8375 . . . . . | 1084 |
| | 870 | | 990 | | 967 | | 1088 |
| | 874 | | 992 | | ▶990 | 107-9641 . . . . . | 1120 |
| | 877 | | 994 | 107-0545 . . . . . | 918 | | 1123 |
| | 880 | | 996 | | 929 | | 1127 |
| | 884 | | 998 | | 938 | | 1129 |
| | 888 | | 1000 | | 948 | 108-0358 . . . . . | 223 |
| | 892 | | 1002 | | 953 | | 226 |
| | 896 | | 1004 | | 956 | | 229 |
| | 900 | | 1006 | | 959 | | 232 |
| | 904 | | 1012 | | 962 | | 239 |
| 104-7995 . . . . . | 66 | | 1014 | | 968 | | 242 |
| 104-8645 . . . . . | 742 | | 1016 | | 969 | | 259 |
| | 755 | | 1018 | | ▶992 | | 299 |
| | 790 | | 1020 | 107-0547 . . . . . | 920 | 108-0702 . . . . . | 710 |
| | ▶918 | 106-3659 . . . . . | 974 | | 926 | 108-0706 . . . . . | 672 |
| 104-8646 . . . . . | 740 | | 976 | | 935 | 108-0713 . . . . . | 708 |


▶ **PRIMARY REFERENCE**

# PART NUMBER INDEX


| Part | Page |
|---|---|
| 108-0714 | 710 |
| 108-1104 | ▶1083 |
| 108-1610 | 680 |
| | 683 |
| | 686 |
| | 710 |
| 108-2187 | 974 |
| | 976 |
| | 978 |
| | 980 |
| | 982 |
| | 984 |
| | 986 |
| | 988 |
| | 990 |
| | 992 |
| | 994 |
| | 996 |
| | 998 |
| | 1000 |
| | 1002 |
| | 1004 |
| | 1006 |
| | 1008 |
| | 1010 |
| | 1012 |
| | 1014 |
| | 1016 |
| | 1018 |
| | 1020 |
| 108-3129 | 482 |
| | 485 |
| 108-3519 | 223 |
| | 226 |
| | 229 |
| | 232 |
| | 326 |
| 108-4086 | 1161 |
| 108-4087 | 1160 |
| 108-4103 | 1161 |
| 108-4814 | 1022 |
| 108-4815 | 1022 |
| 108-4816 | 1022 |
| 108-4878 | 1248 |
| 108-4916 | ▶664 |
| | 980 |
| | 988 |
| | 994 |
| | 1018 |
| 108-5157 | 1031 |
| 108-5751 | 424 |
| 108-5949 | 1123 |
| | 1129 |
| 108-5950 | 1120 |
| | 1127 |
| 108-5951 | 1123 |
| | 1129 |
| 108-5952 | 1120 |
| | 1127 |
| 108-6523 | 478 |
| | 481 |
| | 484 |
| 108-8421 | ▶1210 |
| | 1234 |
| | 1236 |
| 108-8423 | 1210 |
| 108-8424 | 1210 |
| 108-8425 | 1236 |
| 108-8426 | 1234 |
| 109-0146 | 1258 |
| | 1261 |
| 109-0361 | 340 |
| | 345 |
| | 367 |
| | 372 |
| 109-1144 | 1027 |
| 109-2804 | 1170 |
| | 1174 |
| 109-3036 | 1046 |
| 109-3204 | 725 |
| 109-4582 | 440 |
| 109-4583 | 440 |
| 109-5308 | 47 |
| 109-5309 | 60 |
| 109-5313 | 101 |
| 109-5319 | 51 |
| 109-6776 | 1078 |
| 109-8176 | 108 |
| 110-2079 | 1217 |
| | 1219 |
| | 1222 |
| 110-2445 | 128 |
| | 130 |
| | 134 |
| | 135 |
| 110-3003 | 686 |
| 110-3326 | 615 |
| 110-4213 | 508 |
| | 509 |
| | 510 |
| | 511 |
| | 512 |
| | 513 |
| | 514 |
| | 515 |
| | 516 |
| | 517 |
| | 518 |
| | 528 |
| | 529 |
| | 532 |
| | 534 |
| | 536 |
| | 540 |
| | 542 |
| 110-5158 | 481 |
| 110-5161 | 490 |
| | 492 |
| 110-5326 | ▶1071 |
| 110-5327 | ▶1072 |
| 110-5334 | 1071 |
| | 1072 |
| 110-5335 | 1072 |
| 110-5336 | 1071 |
| 110-6241 | 1107 |
| 110-6393 | 1096 |
| 110-6846 | 339 |
| | 344 |
| | 366 |
| | 371 |
| 110-6848 | 339 |
| | 344 |
| | 371 |
| 110-7723 | 418 |
| | 424 |
| | 426 |
| 110-7885 | 1276 |
| | 1278 |
| | 1280 |
| | 1282 |
| 110-7886 | 1276 |
| | 1278 |
| | 1280 |
| | 1282 |
| 110-7887 | 387 |
| | 389 |
| | 392 |
| | 396 |
| 110-8330 | 1187 |
| 111-0343 | 487 |
| | 1045 |
| | 1046 |
| 111-1719 | 3 |
| | ▶1288 |
| 111-2645 | 62 |
| 111-3883 | 1083 |
| | ▶1088 |
| 111-3945 | 565 |
| 111-4871 | 330 |
| 111-5042 | 1248 |
| 111-5754 | 1034 |
| | 1035 |
| | 1036 |
| 111-7978 | 150 |
| 111-8233 | 974 |
| | 976 |
| | 978 |
| | 982 |
| | 984 |
| | 986 |
| | 990 |
| | 992 |
| | 996 |
| | 998 |
| | 1000 |
| | 1008 |
| | 1010 |
| 111-8234 | 980 |
| | 988 |
| | 994 |
| | 1002 |
| | 1004 |
| | 1006 |
| | 1018 |
| 111-9110 | 631 |
| 112-1813 | 1062 |
| 112-1814 | 1063 |
| | 1064 |
| | 1065 |
| 112-2240 | 672 |
| | ▶714 |
| 112-3199 | 674 |
| 112-3200 | 674 |
| 112-4428 | 349 |
| | 354 |
| | 359 |
| 112-4521 | ▶1064 |
| 112-4834 | 613 |
| 112-5060 | 1047 |
| 112-5061 | 1047 |
| 112-5499 | 635 |
| | ▶755 |
| 112-5555 | 378 |
| | 381 |
| 112-5575 | 648 |
| | ▶659 |
| 112-5852 | 1054 |
| | 1055 |
| 112-5853 | 1054 |
| 112-5855 | 1054 |
| | 1055 |
| 112-6174 | 306 |
| | 315 |
| 112-6175 | 399 |
| | 402 |
| | 403 |
| 112-7462 | 648 |
| 112-7463 | 3 |
| | ▶648 |
| 112-7486 | 3 |
| | ▶1047 |
| 112-9035 | 659 |
| 112-9104 | 1238 |
| | ▶1240 |
| 112-9105 | 1239 |
| | ▶1241 |
| 112-9164 | 1166 |
| 112-9555 | 1142 |
| 112-9813 | 513 |
| 113-0704 | ▶1083 |
| 113-4240 | 1100 |
| 113-4242 | ▶1100 |
| | 1240 |
| | 1241 |
| | 1243 |
| 113-4243 | 1101 |
| 113-4245 | ▶1101 |
| | 1240 |


▶ **PRIMARY REFERENCE**

# PART NUMBER INDEX


| Part | Page |
|---|---|
| | 1241 |
| | 1243 |
| 113-5800 | 1240 |
| | 1241 |
| | ▶1248 |
| 113-5801 | 1160 |
| 113-5804 | 1248 |
| 113-5805 | 1160 |
| 113-5806 | 1160 |
| 113-5807 | 1160 |
| 113-5808 | ▶1160 |
| | 1248 |
| 113-5809 | 1211 |
| 113-5810 | ▶1211 |
| | 1234 |
| | 1236 |
| 113-7745 | 410 |
| | 414 |
| 113-7754 | ▶657 |
| | 1080 |
| 113-7755 | 657 |
| 113-7756 | 657 |
| 113-8218 | 1193 |
| | 1196 |
| | 1198 |
| | 1200 |
| | 1202 |
| 113-8457 | 127 |
| 113-9005 | 44 |
| 113-9048 | 452 |
| | 456 |
| | 460 |
| 113-9533 | 694 |
| | 697 |
| | 700 |
| 114-0025 | ▶676 |
| 114-0026 | 677 |
| 114-0027 | 676 |
| 114-0359 | 1091 |
| 114-1067 | 1211 |
| 114-1068 | 1211 |
| 114-1069 | 1211 |
| 114-1070 | 1211 |
| 114-1081 | 1211 |
| 114-1082 | 1211 |
| 114-1083 | 1211 |
| 114-1183 | ▶1234 |
| | 1240 |
| | 1243 |
| 114-1185 | ▶1236 |
| | 1241 |
| 114-2687 | 70 |
| 114-2886 | 689 |
| 114-3469 | 1105 |
| 114-5224 | 1290 |
| 114-6635 | 1034 |
| | 1035 |
| | 1036 |
| | 1038 |
| | 1039 |
| | 1040 |
| | 1042 |
| 114-6685 | ▶1267 |
| | 1268 |
| | 1272 |
| | 1276 |
| | 1280 |
| | 1285 |
| 114-8843 | 355 |
| | 360 |
| 114-9190 | 1120 |
| | 1123 |
| | 1127 |
| | 1129 |
| 114-9223 | 1183 |
| 114-9281 | 321 |
| | 322 |
| | 325 |
| 115-0540 | 713 |
| 115-0541 | 713 |
| 115-0788 | 1289 |
| 115-0791 | ▶757 |
| 115-0805 | 635 |
| | ▶759 |
| 115-1007 | 935 |
| | 937 |
| | 940 |
| | 942 |
| | 952 |
| | 966 |
| | ▶996 |
| 115-1008 | 757 |
| | 759 |
| | 790 |
| | ▶935 |
| 115-1748 | 338 |
| | 1217 |
| | 1219 |
| | 1221 |
| 115-3003 | 71 |
| 115-3070 | 273 |
| 115-3072 | 582 |
| | 584 |
| 115-3073 | 340 |
| | 345 |
| | 367 |
| | 372 |
| 115-4517 | 432 |
| | 434 |
| 115-5593 | 349 |
| | 354 |
| | 359 |
| 115-5852 | 1290 |
| | ▶1291 |
| 115-6804 | 1168 |
| 115-6805 | 1168 |
| 115-6806 | 1214 |
| 115-6807 | 1170 |
| | 1174 |
| | 1179 |
| 115-9397 | ▶55 |
| | 60 |
| 115-9398 | 55 |
| 115-9399 | 55 |
| 115-9400 | 55 |
| 115-9402 | 55 |
| 115-9403 | 55 |
| 115-9424 | 41 |
| 115-9923 | 1170 |
| | 1174 |
| 116-0374 | 1000 |
| | ▶1037 |
| 116-0379 | ▶1066 |
| | 1083 |
| 116-0405 | 105 |
| 116-1083 | ▶36 |
| | 46 |
| 116-1085 | 7 |
| | 10 |
| | ▶33 |
| 116-1091 | 7 |
| | 10 |
| | ▶57 |
| 116-1102 | 31 |
| 116-3211 | 694 |
| | 697 |
| | 700 |
| 116-3715 | 101 |
| | 703 |
| | 705 |
| 116-5405 | 7 |
| | 10 |
| | ▶102 |
| 116-5406 | 102 |
| 116-5408 | 7 |
| | 10 |
| | ▶46 |
| 116-5416 | 121 |
| 116-5418 | 121 |
| 116-5428 | 7 |
| | 10 |
| | ▶123 |
| 116-5435 | 53 |
| 116-5436 | 7 |
| | 10 |
| | ▶113 |
| 116-5438 | 7 |
| | 10 |
| | ▶125 |
| 116-5460 | 7 |
| | 10 |
| | ▶81 |
| 116-5710 | 109 |
| | 212 |
| | 235 |
| | 237 |
| | 245 |
| | 247 |
| | 252 |
| | 254 |
| | 258 |
| | 1111 |
| 117-0166 | 27 |
| 117-0221 | 14 |
| | 16 |
| 117-0228 | 101 |
| 117-0291 | 620 |
| | 622 |
| 117-0472 | 757 |
| | 759 |
| | 777 |
| | 779 |
| | 788 |
| | 790 |
| | 796 |
| | 829 |
| | 841 |
| | 849 |
| | 853 |
| | 860 |
| | 874 |
| | 877 |
| | 880 |
| | 904 |
| 117-1385 | 414 |
| 117-2311 | 1093 |
| | 1094 |
| 117-2674 | 7 |
| | 10 |
| | ▶91 |
| 117-2746 | 7 |
| | 10 |
| | ▶71 |
| 117-2748 | 7 |
| | 10 |
| | ▶44 |
| 117-2749 | 7 |
| | 11 |
| | ▶60 |
| 117-2750 | 7 |
| | 10 |
| | ▶38 |
| 117-2760 | 7 |
| | 11 |
| | ▶407 |
| 117-3036 | 432 |
| | 434 |
| 117-3302 | 1298 |
| 117-3915 | ▶275 |
| | 722 |
| 117-4698 | 1230 |
| 117-8319 | ▶195 |
| | 593 |
| | 594 |
| 117-8810 | 1179 |
| 117-9966 | 1217 |
| | 1221 |
| 118-0459 | 22 |
| 118-2557 | 1213 |
| 118-2558 | 1174 |
| 118-2797 | 87 |
| | 88 |
| 118-2800 | 79 |
| 118-2808 | 7 |
| | 10 |
| | ▶82 |
| 118-3534 | 349 |
| | 354 |
| | 359 |
| 118-4728 | 14 |
| | 16 |
| 118-7809 | 366 |
| | 371 |
| | 385 |
| 118-7880 | 1084 |
| | 1088 |
| 118-7881 | 1084 |
| | 1088 |
| 118-9573 | 1113 |
| 119-2942 | 70 |


▶ **PRIMARY REFERENCE**

# PART NUMBER INDEX


| Part | Page | Part | Page | Part | Page | Part | Page |
|---|---|---|---|---|---|---|---|
| 119-5708 | 217 | 123-0872 | 1095 | | 1246 | 125-4342 | 1102 |
| | 218 | | 1145 | 123-5798 | 1044 | | ▶1255 |
| | 220 | 123-1076 | 663 | 123-5799 | 1044 | 125-4344 | 1102 |
| | 222 | 123-3178 | 514 | 123-5857 | 1198 | | ▶1206 |
| 119-7997 | 689 | 123-3420 | 508 | | 1202 | 125-4388 | 1181 |
| 119-8784 | 124 | | 509 | 123-5861 | 399 | 125-4389 | 1181 |
| 119-9549 | 922 | | 510 | | 402 | 125-5321 | 624 |
| | 924 | | 511 | 123-6449 | ▶140 | 125-5520 | 1181 |
| | 957 | | 512 | | 378 | 125-6390 | 349 |
| | 960 | | 513 | 123-6661 | 1031 | | 354 |
| | ▶998 | | 514 | 123-6806 | 1206 | | 359 |
| 119-9550 | 921 | | 515 | | 1207 | | 376 |
| | 931 | | 516 | 123-7707 | 1051 | 125-6482 | 1181 |
| | 958 | | 533 | 123-8157 | 1250 | 125-6483 | 1181 |
| | 964 | | 539 | 123-8187 | 1075 | 125-7003 | 1268 |
| | ▶1000 | 123-3688 | 339 | 123-8408 | 1246 | | 1270 |
| 121-4083 | 1 | | 344 | 123-8866 | 722 | | 1272 |
| | 2 | | 366 | 123-8867 | ▶722 | | 1274 |
| | ▶761 | | 371 | | 724 | 125-7004 | 1268 |
| 121-4084 | ▶763 | 123-3689 | 339 | 123-9128 | 1250 | | 1270 |
| 121-4086 | ▶765 | | 344 | 124-0311 | ▶782 | | 1272 |
| 121-4090 | 636 | | 366 | 124-0435 | 1075 | | 1274 |
| | ▶767 | | 371 | 124-0507 | 1248 | 125-9487 | 694 |
| 121-4094 | ▶769 | 123-3692 | 339 | 124-1431 | 1096 | | 697 |
| 121-4095 | ▶771 | | 344 | | 1147 | | 700 |
| 121-4096 | 636 | | 366 | | 1151 | 125-9584 | 1181 |
| | ▶773 | | 371 | 124-1432 | 1096 | 125-9596 | 1181 |
| 121-4097 | 636 | 123-3695 | 339 | | 1147 | 126-0146 | 14 |
| | ▶775 | | 344 | | 1151 | | 16 |
| 121-4098 | ▶777 | | 366 | 124-2456 | 573 | 126-0179 | 116 |
| 121-4099 | 636 | | 371 | 124-2655 | 47 | | 121 |
| | ▶779 | 123-3698 | 596 | | 49 | 126-0208 | 1262 |
| 121-7137 | 18 | 123-3699 | 596 | 124-2887 | 665 | | 1264 |
| | 20 | 123-3793 | 656 | 124-2888 | 665 | 126-0209 | 1262 |
| 121-9242 | 651 | 123-3827 | 95 | 124-2889 | 665 | | 1264 |
| | ▶663 | | 567 | 124-2890 | 665 | 126-0210 | 1262 |
| 121-9245 | 663 | 123-4003 | 438 | 124-2891 | 665 | | 1264 |
| 121-9870 | 170 | 123-4354 | 1268 | 124-3137 | 1096 | 126-0228 | 1262 |
| 122-0760 | 71 | | 1270 | | 1147 | | 1264 |
| 122-0763 | 432 | | 1272 | | 1151 | 126-0961 | ▶1257 |
| | 434 | | 1274 | 124-3138 | 1096 | 126-1135 | 1190 |
| 122-2228 | 1125 | 123-4355 | 1268 | | 1147 | 126-1136 | 1190 |
| | 1131 | | 1270 | | 1151 | 126-1167 | 1262 |
| 122-3606 | 85 | | 1272 | 124-3240 | 586 | | 1264 |
| 122-4617 | ▶1232 | | 1274 | 124-3771 | ▶784 | 126-1539 | 1262 |
| | 1241 | 123-4358 | ▶1196 | 124-5043 | 432 | | 1264 |
| 122-7045 | 1217 | 123-4511 | 79 | | 434 | 126-1774 | 330 |
| | 1221 | | 80 | 124-5572 | 12 | | 339 |
| 122-8146 | 1217 | 123-4586 | 1193 | 124-8843 | 1125 | | 344 |
| | 1221 | | 1196 | | 1131 | | 371 |
| 122-8154 | 1134 | | 1198 | 124-9006 | 1096 | 126-2729 | 438 |
| 122-8155 | 1134 | | 1200 | | 1147 | 126-4966 | 1125 |
| 122-8358 | 686 | | 1202 | | 1151 | | 1131 |
| 122-8677 | 1170 | 123-4587 | 1193 | 124-9007 | 1096 | 126-6929 | 575 |
| 122-8795 | 1170 | | 1196 | | 1147 | 126-6930 | 575 |
| | 1174 | | 1198 | | 1151 | 126-6933 | 1 |
| 122-9760 | 1291 | | 1200 | 125-0438 | 1096 | | 2 |
| 122-9761 | 1291 | | 1202 | 125-0439 | 1147 | | 170 |
| 122-9867 | 1079 | 123-4618 | 1096 | | 1151 | | ▶575 |
| 122-9868 | 1079 | | 1147 | 125-0442 | 1147 | | ▶576 |
| 122-9869 | 1079 | | 1151 | | 1151 | | ▶579 |
| 123-0764 | 18 | | 1246 | 125-2235 | 638 | 126-7168 | 556 |
| | 20 | 123-4701 | 1096 | | ▶786 | | 559 |
| 123-0790 | 18 | | 1147 | 125-2236 | 638 | 127-0929 | 99 |
| | 145 | | 1151 | | ▶788 | 127-4038 | 556 |


▶ PRIMARY REFERENCE

# PART NUMBER INDEX


| Part | Page | Part | Page | Part | Page | Part | Page |
|---|---|---|---|---|---|---|---|
| | 559 | | 697 | 129-7679 . . . . . | 1292 | 130-5300 . . . . . | 109 |
| 127-5483 . . . . . | 321 | | 701 | 129-8614 . . . . . | 1103 | | 170 |
| | 325 | 128-8643 . . . . . | 665 | | ▶1215 | | 175 |
| | 340 | 128-8644 . . . . . | 665 | 130-0229 . . . . . | 449 | | 212 |
| | 345 | 128-8645 . . . . . | 1002 | 130-3110 . . . . . | 910 | | 214 |
| | 367 | | 1004 | | 915 | | 223 |
| | 372 | 128-8646 . . . . . | 1006 | | 921 | | 226 |
| | 399 | 128-8647 . . . . . | 909 | | 922 | | 262 |
| | 402 | | 917 | | 924 | | 268 |
| 127-5484 . . . . . | 309 | | 923 | | 931 | | 269 |
| | 315 | | 927 | | 936 | | 270 |
| | 321 | | 937 | | 944 | | 273 |
| | 340 | | 940 | | 957 | | 290 |
| | 349 | | 952 | | 958 | | 304 |
| | 350 | | 966 | | 960 | | 321 |
| | 354 | | ▶1002 | | 964 | | 326 |
| | 355 | 128-9654 . . . . . | 1051 | | ▶1004 | | 330 |
| | 359 | 128-9656 . . . . . | 1051 | 130-3111 . . . . . | 923 | | 340 |
| | 360 | 129-0375 . . . . . | 114 | | 927 | | 345 |
| | 399 | 129-1047 . . . . . | 1026 | | 937 | | 350 |
| | 402 | 129-1052 . . . . . | 1026 | | 940 | | 355 |
| | 582 | 129-1054 . . . . . | 1002 | | 952 | | 360 |
| | 584 | | 1004 | | 966 | | 364 |
| 127-5485 . . . . . | 321 | | 1006 | | ▶1006 | | 367 |
| | 340 | | ▶1026 | 130-3116 . . . . . | 761 | | 372 |
| | 345 | 129-2181 . . . . . | 14 | | 767 | | 378 |
| | 367 | | 16 | | 771 | | 381 |
| | 372 | 129-2381 . . . . . | 450 | | 786 | | 385 |
| 127-5486 . . . . . | 321 | 129-2861 . . . . . | 432 | | ▶909 | | 387 |
| | 349 | | 434 | 130-3117 . . . . . | 761 | | 389 |
| | 354 | 129-2893 . . . . . | 43 | | 784 | | 392 |
| | 359 | 129-3173 . . . . . | 109 | | ▶910 | | 396 |
| 127-8609 . . . . . | 173 | | 615 | 130-3118 . . . . . | 767 | | 399 |
| 128-0037 . . . . . | 1120 | | 1111 | | 775 | | 402 |
| | 1123 | 129-3178 . . . . . | 556 | | ▶921 | | 410 |
| | 1127 | | 559 | 130-3119 . . . . . | 765 | | 428 |
| | 1129 | | 1093 | | 771 | | 593 |
| 128-0314 . . . . . | 150 | | 1094 | | ▶922 | | 594 |
| 128-0331 . . . . . | 14 | | 1097 | 130-3120 . . . . . | 763 | | 613 |
| | 16 | | 1125 | | ▶957 | | 1097 |
| 128-0382 . . . . . | 25 | | 1131 | 130-3121 . . . . . | 769 | | 1111 |
| 128-0383 . . . . . | 25 | | 1148 | | 777 | | 1148 |
| 128-0384 . . . . . | 25 | | 1152 | | ▶936 | | 1151 |
| 128-0385 . . . . . | 25 | | 1170 | 130-3122 . . . . . | 773 | | 1198 |
| 128-0400 . . . . . | 25 | | 1174 | | 779 | | 1202 |
| 128-0401 . . . . . | 25 | 129-3184 . . . . . | 36 | | 786 | 130-5301 . . . . . | 340 |
| 128-0402 . . . . . | 25 | 129-4618 . . . . . | 1103 | | 788 | | 345 |
| 128-0403 . . . . . | 25 | | ▶1168 | | ▶958 | | 367 |
| 128-0411 . . . . . | 22 | 129-4622 . . . . . | 1168 | 130-3123 . . . . . | 763 | | 372 |
| 128-0420 . . . . . | 14 | 129-4645 . . . . . | 1168 | | 765 | 130-5770 . . . . . | 1027 |
| | 16 | 129-4646 . . . . . | 1168 | | 769 | 130-5997 . . . . . | 12 |
| 128-0613 . . . . . | 1250 | 129-4647 . . . . . | 315 | | 773 | 130-9041 . . . . . | 650 |
| 128-0686 . . . . . | 1250 | 129-4935 . . . . . | 1096 | | 775 | | ▶660 |
| 128-2972 . . . . . | 998 | | 1147 | | 784 | 130-9042 . . . . . | 650 |
| 128-5082 . . . . . | 1250 | | 1151 | | ▶923 | | ▶661 |
| 128-5084 . . . . . | 1250 | 129-5049 . . . . . | 575 | 130-3124 . . . . . | 777 | 130-9044 . . . . . | 660 |
| 128-5085 . . . . . | 1250 | | 576 | | 779 | 130-9045 . . . . . | 661 |
| 128-5450 . . . . . | 519 | | 579 | | ▶937 | 130-9432 . . . . . | 1163 |
| | 520 | 129-5454 . . . . . | 516 | 130-3280 . . . . . | 105 | | ▶1164 |
| 128-5451 . . . . . | 525 | 129-6400 . . . . . | 99 | 130-3535 . . . . . | ▶665 | 130-9811 . . . . . | 288 |
| | 526 | 129-7163 . . . . . | 321 | | 1002 | | 289 |
| 128-5924 . . . . . | 1183 | | 330 | | 1004 | 131-0353 . . . . . | 432 |
| 128-6983 . . . . . | ▶199 | 129-7164 . . . . . | 321 | | 1006 | | 434 |
| | 268 | 129-7249 . . . . . | 1288 | 130-3595 . . . . . | 543 | 131-0749 . . . . . | 1044 |
| 128-7625 . . . . . | 694 | 129-7632 . . . . . | 1022 | | 546 | 131-0752 . . . . . | 1044 |


▶ **PRIMARY REFERENCE**

# PART NUMBER INDEX


| Part | Page |
|---|---|
| 131-0753 | 698 |
| | ▶1044 |
| 131-2171 | 14 |
| | 16 |
| 131-3736 | 650 |
| 131-3737 | 591 |
| | 592 |
| 131-3738 | 591 |
| | 592 |
| 131-3739 | 591 |
| | 592 |
| 131-3740 | 546 |
| | ▶592 |
| 131-3919 | 421 |
| | 424 |
| | 426 |
| 131-4135 | 321 |
| | 325 |
| 131-4242 | 1160 |
| 131-4428 | 543 |
| | 546 |
| 131-5167 | 1160 |
| 131-5171 | 306 |
| | 309 |
| | 567 |
| 131-5492 | 1142 |
| 131-6009 | 1170 |
| | 1174 |
| | 1179 |
| 131-6645 | 432 |
| | 434 |
| 131-6679 | ▶12 |
| | 14 |
| | 16 |
| 131-7191 | 645 |
| | ▶653 |
| 131-7194 | 653 |
| 131-7195 | 653 |
| 131-8126 | 6 |
| | ▶172 |
| 131-8350 | 970 |
| | 972 |
| | ▶1027 |
| 131-8627 | 172 |
| 131-8777 | 1037 |
| | 1038 |
| | 1039 |
| | 1040 |
| | 1041 |
| | 1042 |
| 132-1143 | 591 |
| | 592 |
| | 650 |
| 132-1144 | 591 |
| | 592 |
| 132-1340 | 1049 |
| 132-2906 | 694 |
| | 700 |
| 132-3203 | 7 |
| | 10 |
| | ▶51 |
| 132-3210 | 7 |
| | 10 |
| | ▶25 |
| 132-3439 | 1250 |
| 132-4354 | 556 |
| | 559 |
| 132-4928 | 656 |
| 132-4929 | 644 |
| | ▶656 |
| 132-5789 | 103 |
| | 330 |
| | 376 |
| | 1183 |
| 132-6478 | 637 |
| | ▶790 |
| 132-6640 | ▶161 |
| | 385 |
| | 392 |
| | 396 |
| 132-6938 | 350 |
| 132-8487 | 330 |
| 132-8875 | 447 |
| | 452 |
| | 457 |
| 132-9496 | 1185 |
| | 1187 |
| 132-9625 | 424 |
| 132-9635 | 421 |
| 133-1278 | 447 |
| 133-1288 | 447 |
| 133-2198 | 64 |
| 133-2199 | 447 |
| 133-5631 | 410 |
| | 414 |
| 133-5671 | ▶114 |
| | 118 |
| 133-5673 | 114 |
| 133-6517 | 172 |
| | 173 |
| | 174 |
| 133-7029 | 34 |
| 133-7031 | 7 |
| | ▶14 |
| 133-7068 | 22 |
| 133-7075 | 7 |
| | 10 |
| | ▶41 |
| 133-7083 | 38 |
| 133-7086 | 38 |
| 133-7098 | 51 |
| 133-7100 | 22 |
| 133-7523 | 1071 |
| 133-7524 | 1072 |
| 134-0744 | 672 |
| 134-0746 | 672 |
| 134-0747 | 680 |
| | 683 |
| | 686 |
| 134-1080 | 3 |
| | ▶543 |
| | ▶546 |
| 134-1081 | 543 |
| | 546 |
| 134-2042 | 1055 |
| 134-2540 | 330 |
| 134-3355 | 366 |
| | 371 |
| | 385 |
| 134-4126 | 162 |
| 134-5245 | 66 |
| | 442 |
| | 456 |
| | 460 |
| 134-6474 | 1168 |
| 134-6749 | 195 |
| 134-6751 | 195 |
| 134-8221 | 935 |
| | 936 |
| | 937 |
| | 938 |
| | 939 |
| | 940 |
| | 942 |
| | 944 |
| | 946 |
| | 948 |
| | 950 |
| 134-8232 | ▶1258 |
| | 1260 |
| 134-8233 | 1259 |
| | ▶1261 |
| 135-0426 | ▶196 |
| | 364 |
| 135-0427 | ▶197 |
| | 212 |
| | 214 |
| | 223 |
| | 226 |
| | 263 |
| 135-0450 | 686 |
| 135-0451 | 680 |
| | 683 |
| 135-0452 | 680 |
| | 683 |
| 135-0453 | 686 |
| 135-0611 | 1267 |
| | 1270 |
| | 1274 |
| | 1286 |
| | 1287 |
| 135-1979 | 1140 |
| 135-3894 | 584 |
| 135-7123 | 631 |
| 135-9941 | 428 |
| 136-1953 | 1097 |
| | 1148 |
| | 1152 |
| 136-3845 | 186 |
| | 190 |
| 136-3846 | 188 |
| | 192 |
| 136-3848 | 186 |
| | 188 |
| | 190 |
| | 192 |
| 136-4183 | 35 |
| 136-6330 | 710 |
| 136-6331 | 710 |
| 136-8308 | 1091 |
| 136-8423 | 727 |
| 137-4367 | 114 |
| 137-4515 | 740 |
| | 742 |
| | 744 |
| | 746 |
| | 748 |
| | 750 |
| | 752 |
| | 755 |
| | 757 |
| | 759 |
| | 761 |
| | 763 |
| | 765 |
| | 767 |
| | 769 |
| | 771 |
| | 773 |
| | 775 |
| | 777 |
| | 779 |
| | 782 |
| | 784 |
| | 786 |
| | 788 |
| | 790 |
| | 792 |
| | 794 |
| | 796 |
| | 799 |
| | 803 |
| | 807 |
| | 811 |
| | 815 |
| | 819 |
| | 822 |
| | 825 |
| | 829 |
| | 833 |
| | 837 |
| | 841 |
| | 845 |
| | 849 |
| | 853 |
| | 857 |
| | 860 |
| | 864 |
| | 867 |
| | 870 |
| | 874 |
| | 877 |
| | 880 |
| | 884 |
| | 888 |
| | 892 |
| | 896 |
| | 900 |
| | 904 |
| 137-4516 | 740 |
| | 742 |
| | 744 |
| | 746 |
| | 748 |
| | 750 |
| | 752 |
| | 755 |
| | 757 |
| | 759 |
| | 761 |


▶ PRIMARY REFERENCE

# PART NUMBER INDEX


| Part | Page | Part | Page | Part | Page | Part | Page |
|---|---|---|---|---|---|---|---|
| | 765 | | 913 | | 967 | 139-8473 . . . . . | 990 |
| | 767 | | 915 | | 968 | | ▶1039 |
| | 769 | | 917 | | ▶1010 | 139-8474 . . . . . | 1018 |
| | 771 | | 918 | 137-8107 . . . . . | 1012 | | ▶1040 |
| | 775 | | 919 | | 1014 | 139-8476 . . . . . | 998 |
| | 782 | | 920 | | 1016 | | 1012 |
| | 784 | | 921 | 137-8130 . . . . . | 652 | | ▶1041 |
| | 786 | | 922 | 137-8165 . . . . . | 1224 | 139-9132 . . . . . | 1258 |
| | 790 | | 923 | 137-9410 . . . . . | 223 | | 1261 |
| | 792 | | 924 | | 226 | 139-9133 . . . . . | 1261 |
| | 794 | | 926 | | 229 | 139-9134 . . . . . | 1258 |
| | 799 | | 927 | | 232 | | 1261 |
| | 803 | | 929 | | 239 | 139-9135 . . . . . | 1258 |
| | 807 | | 931 | | 242 | | 1261 |
| | 811 | | 933 | | 259 | 139-9136 . . . . . | 1258 |
| | 815 | | 934 | | 325 | | 1261 |
| | 819 | | 935 | 138-2006 . . . . . | 31 | 139-9137 . . . . . | 1258 |
| | 822 | | 936 | 138-2028 . . . . . | 7 | | 1261 |
| | 825 | | 937 | | 10 | 139-9138 . . . . . | 1258 |
| | 829 | | 938 | | ▶52 | 140-0174 . . . . . | 457 |
| | 833 | | 939 | 138-4054 . . . . . | 1125 | | 461 |
| | 837 | | 940 | | 1131 | 140-1336 . . . . . | 710 |
| | 841 | | 942 | 138-7026 . . . . . | 1170 | 140-3607 . . . . . | 517 |
| | 845 | | 944 | | 1174 | 140-6418 . . . . . | 1194 |
| | 849 | | 946 | 138-7065 . . . . . | 1093 | | 1197 |
| | 884 | | 948 | 138-9910 . . . . . | 1170 | 140-8127 . . . . . | ▶1197 |
| | 888 | | 950 | | 1174 | 140-8864 . . . . . | 325 |
| | 892 | | 952 | 139-0178 . . . . . | 315 | | 385 |
| | 896 | | 953 | 139-1117 . . . . . | 1170 | 141-0284 . . . . . | 114 |
| | 900 | | 955 | 139-1118 . . . . . | 1174 | 141-0360 . . . . . | 517 |
| 137-4517 . . . . . | 763 | | 956 | 139-1153 . . . . . | 1094 | 141-1480 . . . . . | 103 |
| | 773 | | 957 | 139-2116 . . . . . | 339 | 141-2325 . . . . . | 206 |
| | 777 | | 958 | | 344 | 141-6343 . . . . . | 109 |
| | 779 | | 959 | | 366 | 141-6787 . . . . . | 1045 |
| | 788 | | 960 | | 371 | | 1046 |
| | 796 | | 962 | 139-2120 . . . . . | 399 | 141-6968 . . . . . | 671 |
| | 853 | | 964 | | 402 | 141-9661 . . . . . | 737 |
| | 857 | | 966 | 139-2944 . . . . . | 556 | 141-9784 . . . . . | 1097 |
| | 860 | | 967 | | 559 | | 1148 |
| | 864 | | 968 | 139-3593 . . . . . | 1170 | | 1152 |
| | 867 | | 969 | | 1174 | 142-0308 . . . . . | 661 |
| | 870 | 137-6783 . . . . . | 1170 | | 1179 | 142-0350 . . . . . | 487 |
| | 874 | | 1174 | 139-3595 . . . . . | 1133 | 142-1767 . . . . . | 490 |
| | 877 | 137-6791 . . . . . | 652 | 139-4605 . . . . . | 1231 | | 492 |
| | 880 | 137-8065 . . . . . | 1170 | 139-4612 . . . . . | ▶1231 | 142-2011 . . . . . | 18 |
| | 904 | | 1174 | 139-6122 . . . . . | 339 | | 20 |
| 137-5503 . . . . . | 1231 | 137-8104 . . . . . | 934 | | 344 | 142-4940 . . . . . | 1096 |
| 137-5541 . . . . . | 126 | | 936 | | 366 | | 1147 |
| 137-6719 . . . . . | 918 | | 944 | | 371 | | 1151 |
| | 919 | | 946 | | 620 | 142-5787 . . . . . | 713 |
| | 920 | | 955 | | 622 | 142-6170 . . . . . | 508 |
| | 921 | | 956 | 139-6128 . . . . . | ▶1259 | 142-6171 . . . . . | 509 |
| | 922 | | 957 | 139-6129 . . . . . | ▶1260 | 142-6172 . . . . . | 537 |
| | 923 | | 958 | 139-6857 . . . . . | 340 | | ▶539 |
| | 924 | | 960 | | 345 | 142-6173 . . . . . | 510 |
| | 926 | | 962 | | 368 | 142-6174 . . . . . | 511 |
| | 927 | | 964 | | 373 | 142-6175 . . . . . | 512 |
| | 929 | | 967 | 139-8472 . . . . . | 982 | 142-6183 . . . . . | 519 |
| | 931 | | ▶1008 | | 992 | | 521 |
| | 933 | 137-8106 . . . . . | 934 | | 1008 | 142-6184 . . . . . | 520 |
| 137-6720 . . . . . | 907 | | 946 | | 1010 | | 521 |
| | 908 | | 953 | | 1014 | 142-6186 . . . . . | 525 |
| | 909 | | 955 | | 1016 | | 527 |
| | 910 | | 956 | | 1020 | 142-6187 . . . . . | 526 |
| | 911 | | 962 | | ▶1038 | | 527 |


▶ **PRIMARY REFERENCE**

# PART NUMBER INDEX


| Part | Page | Part | Page | Part | Page | Part | Page |
|---|---|---|---|---|---|---|---|
| 142-6203 | 4 | 142-6316 | 496 | 142-6455 | ▶495 | | 777 |
| | ▶464 | | ▶513 | 142-6457 | ▶495 | | 779 |
| 142-6226 | 508 | 142-6318 | 497 | 142-6458 | ▶495 | | 784 |
| | 509 | | ▶514 | 142-6460 | ▶496 | | 786 |
| | 510 | 142-6319 | 497 | 142-6461 | ▶496 | | 788 |
| | 511 | | ▶514 | 142-6463 | ▶496 | | 792 |
| | 512 | 142-6321 | 497 | 142-6464 | ▶496 | | 794 |
| | 513 | | ▶515 | 142-6466 | ▶497 | | 796 |
| | 514 | 142-6322 | 497 | 142-6467 | ▶497 | | 799 |
| | 515 | | ▶515 | 142-6469 | ▶497 | | 803 |
| | 516 | 142-6324 | 498 | 142-6470 | ▶497 | | 807 |
| | 517 | | ▶516 | 142-6472 | ▶498 | | 811 |
| | 518 | 142-6325 | 498 | 142-6474 | ▶498 | | 815 |
| | 528 | | ▶516 | 142-6477 | ▶498 | | 819 |
| | 529 | 142-6328 | 498 | 142-6479 | ▶498 | | 822 |
| | 532 | | ▶517 | 142-9681 | 1224 | | 825 |
| | 534 | 142-6330 | 498 | 143-5373 | 410 | | 829 |
| | 536 | | ▶517 | | 414 | | 833 |
| | ▶539 | 142-6332 | 499 | 143-8938 | 637 | | 837 |
| | 540 | | ▶518 | | ▶792 | | 845 |
| | 542 | 142-6348 | 499 | 143-9290 | 1114 | | 849 |
| 142-6229 | 520 | | ▶518 | | 1116 | | 853 |
| | 521 | 142-6353 | 499 | 144-0195 | 1252 | | 857 |
| | 522 | | ▶519 | | 1254 | | 860 |
| | 523 | 142-6354 | 501 | | 1255 | | 864 |
| | 524 | | ▶519 | 144-2161 | 565 | | 867 |
| | 526 | 142-6355 | 501 | 144-4107 | 1170 | | 870 |
| | 527 | | ▶520 | | 1174 | | 874 |
| | 528 | 142-6356 | 502 | 144-5611 | 18 | | 877 |
| | 531 | | ▶520 | | 20 | | 880 |
| | 532 | 142-6357 | 503 | 144-6695 | 1113 | | 884 |
| | 533 | | ▶521 | 144-7620 | 565 | | 888 |
| | 535 | 142-6358 | 504 | 145-0326 | 1250 | | 892 |
| | 536 | | ▶521 | 145-1144 | 478 | | 896 |
| | ▶539 | 142-6360 | 500 | 145-1297 | ▶164 | | 900 |
| | 541 | | ▶522 | | 1163 | | 904 |
| | 542 | 142-6361 | 502 | 145-1300 | 3 | 146-0835 | 12 |
| 142-6230 | 518 | | ▶522 | | ▶1163 | 146-1842 | 543 |
| | ▶540 | 142-6363 | 500 | 145-1780 | 121 | | 544 |
| 142-6297 | 494 | | ▶523 | 145-3261 | 1073 | | 546 |
| | ▶508 | 142-6364 | 502 | 145-3350 | 204 | | 547 |
| 142-6298 | 494 | | ▶523 | | 206 | 146-1843 | 543 |
| | ▶508 | 142-6366 | 500 | | 208 | | 544 |
| 142-6300 | 494 | | ▶524 | | 235 | | 546 |
| | ▶509 | 142-6367 | 502 | | 237 | | 547 |
| 142-6301 | 494 | | ▶524 | | 252 | 146-7453 | 69 |
| | ▶509 | 142-6371 | 500 | | 254 | 147-0385 | 250 |
| 142-6303 | ▶537 | | ▶525 | | 311 | | 304 |
| 142-6304 | 537 | 142-6372 | 501 | | 313 | 147-1445 | 330 |
| | ▶540 | | ▶525 | | 1198 | 147-1446 | 330 |
| 142-6305 | ▶537 | 142-6373 | 501 | | 1202 | 147-3310 | 611 |
| 142-6306 | 495 | | ▶526 | 145-4953 | 1074 | 147-3400 | 543 |
| | ▶510 | 142-6374 | 503 | 145-5968 | 565 | | 546 |
| 142-6307 | 495 | | ▶526 | 145-5969 | 565 | 147-4549 | 1250 |
| | ▶510 | 142-6375 | 503 | 145-7214 | 1179 | 147-5088 | 92 |
| 142-6309 | 495 | | ▶527 | 145-7217 | 1179 | 147-6143 | 1049 |
| | ▶511 | 142-6376 | 504 | 145-8039 | 410 | 147-6144 | 1049 |
| 142-6310 | 495 | | ▶527 | | 414 | 147-6522 | 1250 |
| | ▶511 | 142-6385 | 503 | 146-0705 | 763 | 147-6541 | 1250 |
| 142-6312 | 496 | | ▶528 | | 765 | 147-6603 | 1043 |
| | ▶512 | 142-6445 | ▶494 | | 767 | 147-6604 | 1043 |
| 142-6313 | 496 | 142-6446 | ▶494 | | 769 | 147-6605 | 1043 |
| | ▶512 | 142-6448 | ▶494 | | 771 | 148-1925 | 409 |
| 142-6315 | 496 | 142-6449 | ▶494 | | 773 | | 413 |
| | ▶513 | 142-6454 | ▶495 | | 775 | 148-2063 | ▶43 |


▶ PRIMARY REFERENCE

# PART NUMBER INDEX


| Part | Page | Part | Page | Part | Page | Part | Page |
|---|---|---|---|---|---|---|---|
| | 60 | | 697 | 148-8381 . . . . . | 708 | | 701 |
| 148-2064 . . . . . | 43 | | 700 | 148-8383 . . . . . | 686 | 150-6649 . . . . . | 936 |
| 148-2065 . . . . . | 43 | 148-8326 . . . . . | 690 | | 703 | | 944 |
| 148-2125 . . . . . | 28 | 148-8327 . . . . . | 69 | | 705 | | 957 |
| 148-2149 . . . . . | 33 | | 692 | 148-8392 . . . . . | 443 | | 958 |
| | ▶34 | | 700 | | 445 | | 960 |
| 148-2404 . . . . . | 537 | 148-8328 . . . . . | 672 | | 452 | | 964 |
| | ▶540 | 148-8335 . . . . . | 452 | | 456 | | ▶1012 |
| 148-2405 . . . . . | ▶537 | | 456 | | 460 | 150-7955 . . . . . | 528 |
| 148-2408 . . . . . | 537 | | 460 | | 690 | 150-7956 . . . . . | 529 |
| | ▶541 | 148-8336 . . . . . | 678 | 148-8395 . . . . . | 982 | 150-8006 . . . . . | 1012 |
| 148-2409 . . . . . | ▶537 | 148-8338 . . . . . | 118 | | 990 | 151-0334 . . . . . | ▶499 |
| 148-2516 . . . . . | 477 | 148-8339 . . . . . | 443 | | 992 | 151-0361 . . . . . | ▶499 |
| 148-2592 . . . . . | 660 | | 445 | | 994 | 151-0362 . . . . . | ▶499 |
| 148-2593 . . . . . | 654 | | 452 | 148-8407 . . . . . | 447 | 151-0364 . . . . . | ▶499 |
| | 656 | | 456 | | 452 | 151-0365 . . . . . | ▶500 |
| 148-3749 . . . . . | 1250 | | 460 | | 456 | 151-0366 . . . . . | ▶500 |
| 148-7027 . . . . . | 678 | 148-8340 . . . . . | 118 | | 460 | 151-0367 . . . . . | ▶500 |
| 148-8305 . . . . . | 445 | | 680 | | 695 | 151-0368 . . . . . | ▶500 |
| | 710 | | 683 | | 698 | 151-0370 . . . . . | ▶538 |
| 148-8312 . . . . . | 695 | | 689 | | 701 | 151-0371 . . . . . | ▶501 |
| | 698 | | 710 | 148-8408 . . . . . | 695 | 151-0372 . . . . . | ▶501 |
| | 700 | 148-8347 . . . . . | 692 | | 698 | 151-0374 . . . . . | ▶501 |
| 148-8316 . . . . . | 428 | | 694 | | 701 | 151-0375 . . . . . | ▶501 |
| | 694 | | 697 | | 970 | 151-0378 . . . . . | ▶502 |
| | 697 | | 700 | 148-8409 . . . . . | 911 | 151-0379 . . . . . | ▶502 |
| | 700 | 148-8351 . . . . . | 708 | 148-8411 . . . . . | 118 | 151-0380 . . . . . | ▶502 |
| | 710 | | 710 | 148-8429 . . . . . | 695 | 151-0381 . . . . . | ▶502 |
| 148-8318 . . . . . | 118 | 148-8353 . . . . . | 690 | | 698 | 151-0382 . . . . . | ▶503 |
| | 674 | 148-8354 . . . . . | 118 | | 701 | 151-0385 . . . . . | ▶503 |
| | 676 | | 710 | 148-8433 . . . . . | 687 | 151-0388 . . . . . | ▶503 |
| | 677 | 148-8357 . . . . . | 443 | 148-8444 . . . . . | 672 | 151-0389 . . . . . | ▶503 |
| | 680 | | 445 | | 710 | 151-0392 . . . . . | ▶504 |
| | 683 | 148-8358 . . . . . | 118 | 148-8449 . . . . . | 692 | 151-0393 . . . . . | ▶504 |
| | 686 | | 680 | 149-2065 . . . . . | 1111 | 151-2900 . . . . . | 18 |
| | 799 | | 683 | 149-2400 . . . . . | 1250 | | 20 |
| | 803 | 148-8363 . . . . . | 680 | 149-2402 . . . . . | 1250 | 151-4957 . . . . . | 399 |
| | 807 | | 683 | 149-2610 . . . . . | 714 | | 402 |
| | 811 | | 686 | | ▶1045 | 151-5968 . . . . . | 1065 |
| | 815 | 148-8364 . . . . . | 680 | 149-2611 . . . . . | 1045 | 151-5969 . . . . . | 3 |
| | 819 | | 683 | 149-3409 . . . . . | 1213 | | ▶1065 |
| | 822 | | 686 | | 1214 | 151-6187 . . . . . | 330 |
| | 825 | | 694 | | 1215 | 151-9849 . . . . . | 672 |
| | 829 | | 697 | 149-4745 . . . . . | 1240 | 152-3001 . . . . . | 124 |
| | 833 | | 700 | | 1241 | 152-5430 . . . . . | 642 |
| | 837 | | 708 | 149-7226 . . . . . | 1160 | 152-5431 . . . . . | 642 |
| | 841 | | 710 | 150-1280 . . . . . | 659 | 152-5436 . . . . . | 642 |
| | 845 | 148-8367 . . . . . | 678 | 150-4035 . . . . . | 697 | 152-6824 . . . . . | 170 |
| | 849 | 148-8368 . . . . . | 428 | 150-4037 . . . . . | 708 | 152-6825 . . . . . | 170 |
| | 853 | | 690 | 150-4043 . . . . . | 708 | 152-7903 . . . . . | 1 |
| | 857 | | 694 | 150-4047 . . . . . | 445 | | 2 |
| | 860 | | 697 | 150-4467 . . . . . | 499 | | ▶642 |
| | 864 | | 700 | | ▶528 | 152-8346 . . . . . | 713 |
| | 867 | 148-8369 . . . . . | 428 | 150-4482 . . . . . | ▶529 | | ▶1046 |
| | 870 | | 690 | | 538 | 152-8352 . . . . . | 1046 |
| | 874 | 148-8370 . . . . . | 672 | 150-4868 . . . . . | 710 | 153-0185 . . . . . | 1049 |
| | 877 | 148-8374 . . . . . | 118 | 150-5105 . . . . . | 1262 | 153-0187 . . . . . | 1049 |
| | 880 | | 674 | | 1264 | 153-1818 . . . . . | 799 |
| | 884 | | 680 | 150-5106 . . . . . | 1257 | | 803 |
| | 888 | | 683 | | ▶1262 | | 807 |
| | 892 | | 686 | 150-5107 . . . . . | 1257 | | 819 |
| | 896 | | 703 | | ▶1264 | | 822 |
| | 900 | | 705 | 150-5146 . . . . . | 12 | | 884 |
| | 904 | | 707 | 150-5968 . . . . . | 695 | 153-2073 . . . . . | ▶178 |
| 148-8323 . . . . . | 694 | 148-8378 . . . . . | 678 | | 698 | | 210 |


▶ **PRIMARY REFERENCE**

# PART NUMBER INDEX


| Part | Page | Part | Page | Part | Page | Part | Page |
|---|---|---|---|---|---|---|---|
| | 217 | 153-8911 . . . . . | 794 | | 392 | | 254 |
| | 220 | | 796 | | 396 | | 258 |
| | 235 | | ▶939 | | 399 | | 273 |
| | 239 | 153-8912 . . . . . | 796 | | 402 | | 290 |
| | 245 | | ▶959 | | 409 | | 302 |
| | 249 | 153-9360 . . . . . | 1047 | | 413 | | 304 |
| | 252 | | ▶1049 | | 582 | | 306 |
| 153-2147 . . . . . | 204 | | 1053 | | 584 | | 309 |
| | 206 | 154-0051 . . . . . | 531 | | 1198 | | 311 |
| | 208 | 154-2687 . . . . . | 438 | | 1202 | | 313 |
| | 235 | 154-2688 . . . . . | 438 | | 1217 | | 317 |
| | 237 | | ▶440 | | 1219 | | 319 |
| | 252 | 154-2689 . . . . . | 440 | | 1221 | | 321 |
| | 254 | 154-2692 . . . . . | 440 | 155-2256 . . . . . | 330 | | 326 |
| | 311 | 154-2881 . . . . . | 173 | 155-2260 . . . . . | 223 | | 330 |
| | 313 | 154-3064 . . . . . | 477 | | 226 | | 339 |
| | 1198 | | ▶487 | | 279 | | 340 |
| | 1202 | 154-5732 . . . . . | ▶1242 | | 280 | | 344 |
| 153-3580 . . . . . | 1047 | | 1244 | | 306 | | 345 |
| 153-5425 . . . . . | 529 | 154-6306 . . . . . | 490 | | 309 | | 349 |
| 153-5427 . . . . . | 530 | | 492 | | 315 | | 354 |
| 153-5459 . . . . . | 504 | 154-6307 . . . . . | 490 | | 317 | | 359 |
| | ▶529 | | 492 | | 319 | | 364 |
| 153-5460 . . . . . | ▶504 | 154-6309 . . . . . | 478 | | 321 | | 366 |
| 153-5463 . . . . . | 504 | 154-6579 . . . . . | 660 | | 326 | | 367 |
| | ▶530 | | 661 | | 339 | | 371 |
| 153-5464 . . . . . | ▶504 | 154-7172 . . . . . | 478 | | 344 | | 372 |
| 153-5467 . . . . . | 505 | 154-7175 . . . . . | 478 | | 364 | | 378 |
| | ▶530 | 154-7176 . . . . . | 478 | | 366 | | 381 |
| 153-5468 . . . . . | ▶505 | 154-7177 . . . . . | 478 | | 371 | | 387 |
| 153-5700 . . . . . | 147 | 154-7246 . . . . . | ▶173 | | 399 | | 389 |
| | 149 | 154-9025 . . . . . | 83 | | 402 | | 392 |
| 153-5710 . . . . . | 148 | | 85 | | 594 | | 396 |
| 153-6237 . . . . . | 76 | 155-2255 . . . . . | 204 | 155-2261 . . . . . | 302 | | 399 |
| | 695 | | 206 | 155-2265 . . . . . | 204 | | 402 |
| | 698 | | 208 | | 206 | | 406 |
| | 701 | | 229 | | 208 | | 409 |
| 153-6259 . . . . . | 695 | | 232 | | 235 | | 413 |
| | 698 | | 235 | | 237 | | 430 |
| | 701 | | 237 | | 252 | | 593 |
| 153-7062 . . . . . | 14 | | 239 | | 254 | | 594 |
| | 16 | | 242 | | 306 | | 1097 |
| 153-7383 . . . . . | 1051 | | 252 | | 309 | | 1148 |
| 153-7964 . . . . . | 637 | | 254 | | 311 | | 1151 |
| | ▶794 | | 259 | | 313 | | 1183 |
| 153-7966 . . . . . | 637 | | 306 | | 315 | | 1198 |
| | ▶796 | | 309 | | 321 | | 1202 |
| 153-8905 . . . . . | 939 | | 311 | | 326 | | 1217 |
| | 950 | | 313 | | 1198 | | 1219 |
| | ▶1014 | | 317 | | 1202 | | 1221 |
| 153-8906 . . . . . | 939 | | 319 | 155-2270 . . . . . | 204 | 155-2271 . . . . . | 204 |
| | 950 | | 321 | | 206 | | 206 |
| | ▶1016 | | 325 | | 208 | | 235 |
| 153-8907 . . . . . | 938 | | 326 | | 223 | | 237 |
| | 948 | | 330 | | 226 | | 252 |
| | 953 | | 339 | | 229 | | 254 |
| | 959 | | 340 | | 232 | | 309 |
| | 968 | | 344 | | 235 | | 311 |
| | 969 | | 345 | | 237 | | 313 |
| | ▶1018 | | 366 | | 239 | | 321 |
| 153-8908 . . . . . | 959 | | 367 | | 242 | | 326 |
| | 969 | | 371 | | 245 | | 339 |
| | ▶1020 | | 372 | | 247 | | 349 |
| 153-8910 . . . . . | 794 | | 387 | | 250 | | 354 |
| | ▶938 | | 389 | | 252 | | 381 |


▶ PRIMARY REFERENCE

# PART NUMBER INDEX


| Part | Page | Part | Page | Part | Page | Part | Page |
|---|---|---|---|---|---|---|---|
| | 387 | | ▶101 | | ▶680 | | ▶474 |
| | 389 | 156-4281 . . . . . | 678 | | ▶683 | 160-2323 . . . . . | 57 |
| | 392 | 156-5783 . . . . . | 121 | 159-4731 . . . . . | 4 | 160-2353 . . . . . | 1244 |
| | 396 | | ▶136 | | ▶686 | 160-2443 . . . . . | 109 |
| | 399 | 156-5970 . . . . . | 626 | 159-5436 . . . . . | 4 | | ▶277 |
| | 402 | 156-6312 . . . . . | 1297 | | ▶45 | 160-3518 . . . . . | 1224 |
| | 1198 | 156-7320 . . . . . | 1296 | 159-5439 . . . . . | 4 | 160-3662 . . . . . | 1250 |
| | 1202 | 156-7324 . . . . . | 1297 | | ▶83 | 160-5101 . . . . . | 4 |
| 155-2272 . . . . . | 208 | 156-7326 . . . . . | 1296 | | ▶85 | | ▶7 |
| | 330 | 156-7778 . . . . . | ▶1244 | 159-5812 . . . . . | 4 | | ▶10 |
| | 359 | 156-8352 . . . . . | 1179 | | ▶1217 | 160-6382 . . . . . | 306 |
| | 366 | 157-0305 . . . . . | 212 | 159-5839 . . . . . | 5 | | 309 |
| | 1202 | 157-0670 . . . . . | 83 | | ▶387 | | 582 |
| 155-2274 . . . . . | 259 | | 85 | | ▶389 | | 584 |
| | 306 | 157-1206 . . . . . | 114 | 159-5841 . . . . . | 1 | 160-6567 . . . . . | ▶1118 |
| | 309 | 157-2528 . . . . . | 350 | | 2 | | 1217 |
| | 315 | | 355 | | ▶392 | | 1219 |
| | 321 | | 360 | | ▶396 | | 1221 |
| | 326 | 157-6129 . . . . . | 1244 | 159-5845 . . . . . | 5 | 160-7681 . . . . . | 4 |
| | 330 | 158-0248 . . . . . | 178 | | ▶399 | | ▶565 |
| | 339 | 158-0249 . . . . . | 185 | 159-5853 . . . . . | 1 | 160-7689 . . . . . | 339 |
| | 344 | | 212 | | 2 | | 344 |
| | 349 | 158-0250 . . . . . | 178 | | ▶402 | | 366 |
| | 354 | | 184 | 159-5856 . . . . . | 5 | | 371 |
| | 359 | | 185 | | ▶321 | 160-7690 . . . . . | 317 |
| | 366 | | 212 | 159-5865 . . . . . | 1 | | 319 |
| | 371 | 158-0252 . . . . . | 178 | | 2 | 160-7753 . . . . . | 3 |
| | 387 | | 184 | | ▶325 | | ▶613 |
| | 389 | | 185 | 159-5877 . . . . . | 5 | 160-7754 . . . . . | 3 |
| | 392 | | 212 | | ▶339 | | ▶615 |
| | 396 | 158-3198 . . . . . | 1250 | | ▶344 | 160-7756 . . . . . | 3 |
| | 402 | 159-0308 . . . . . | 424 | 159-5878 . . . . . | 5 | | ▶428 |
| | 1217 | | 426 | | ▶306 | 160-7758 . . . . . | 4 |
| | 1219 | 159-0311 . . . . . | 1057 | 159-5933 . . . . . | 3 | | ▶1156 |
| 155-2283 . . . . . | 440 | | 1058 | | ▶1111 | | ▶1158 |
| 155-2629 . . . . . | 114 | 159-0312 . . . . . | 1058 | 159-5935 . . . . . | 3 | 160-7759 . . . . . | 4 |
| 155-4077 . . . . . | ▶677 | 159-0313 . . . . . | 1059 | | ▶109 | | ▶118 |
| 155-4098 . . . . . | 1143 | | 1060 | 159-6173 . . . . . | 4 | 160-7760 . . . . . | 6 |
| | 1144 | 159-0314 . . . . . | 1060 | | ▶442 | | ▶605 |
| 155-5958 . . . . . | 1242 | 159-0927 . . . . . | 424 | 159-6174 . . . . . | 4 | 160-7765 . . . . . | 1250 |
| | ▶1243 | | 426 | | ▶452 | 160-7766 . . . . . | 1250 |
| 155-5959 . . . . . | 1242 | 159-1782 . . . . . | ▶505 | | ▶456 | 160-7767 . . . . . | 1250 |
| | ▶1250 | 159-1785 . . . . . | 505 | | ▶460 | 160-8185 . . . . . | 37 |
| 155-6629 . . . . . | 51 | | ▶531 | 159-7342 . . . . . | 5 | 160-9177 . . . . . | 3 |
| 155-7970 . . . . . | 432 | 159-3759 . . . . . | 1225 | 159-7364 . . . . . | 3 | | ▶643 |
| 155-9112 . . . . . | 730 | | 1227 | | ▶96 | 160-9178 . . . . . | 4 |
| 155-9115 . . . . . | 730 | | 1228 | 159-7368 . . . . . | 4 | | ▶694 |
| 155-9116 . . . . . | 730 | | 1230 | | ▶103 | | ▶697 |
| 155-9117 . . . . . | 730 | 159-3923 . . . . . | 4 | 159-8127 . . . . . | 1047 | | ▶700 |
| 155-9125 . . . . . | 727 | | ▶556 | 159-9169 . . . . . | 128 | 160-9179 . . . . . | 4 |
| 155-9127 . . . . . | 727 | | ▶559 | 159-9170 . . . . . | 130 | | ▶710 |
| 155-9129 . . . . . | 727 | 159-3924 . . . . . | 597 | 159-9228 . . . . . | ▶424 | 160-9180 . . . . . | 4 |
| 155-9134 . . . . . | 727 | | ▶603 | | 472 | | ▶723 |
| 155-9136 . . . . . | 730 | 159-3928 . . . . . | 3 | | 474 | 161-0764 . . . . . | 1 |
| 155-9139 . . . . . | 727 | | ▶551 | 159-9229 . . . . . | ▶426 | | 2 |
| 155-9141 . . . . . | 727 | | ▶552 | | 472 | | 3 |
| 155-9142 . . . . . | 727 | 159-3931 . . . . . | 5 | | 474 | | 6 |
| 155-9143 . . . . . | 727 | | ▶127 | 159-9258 . . . . . | 424 | | ▶408 |
| 156-0283 . . . . . | 378 | 159-3934 . . . . . | 551 | | 426 | 161-0768 . . . . . | ▶201 |
| | 381 | | 552 | 159-9322 . . . . . | 317 | 161-0769 . . . . . | 201 |
| 156-1148 . . . . . | ▶1233 | 159-3959 . . . . . | 325 | | 319 | | ▶210 |
| | 1240 | 159-4615 . . . . . | ▶3 | 160-1744 . . . . . | 378 | | ▶211 |
| | 1243 | 159-4729 . . . . . | 4 | | 381 | 161-0770 . . . . . | ▶203 |
| 156-3680 . . . . . | 7 | | ▶678 | 160-2196 . . . . . | 5 | 161-0771 . . . . . | ▶203 |
| | 10 | 159-4730 . . . . . | 4 | | ▶472 | 161-0772 . . . . . | 203 |


▶ **PRIMARY REFERENCE**

# PART NUMBER INDEX


| Part | Page |
|---|---|
| | ▶212 |
| | ▶214 |
| 161-0773 | ▶265 |
| 161-0774 | ▶266 |
| 161-0776 | ▶163 |
| 161-0777 | ▶163 |
| 161-0778 | 201 |
| | ▶217 |
| | ▶218 |
| 161-0779 | 201 |
| | ▶220 |
| | ▶222 |
| 161-0908 | 212 |
| 161-1015 | 201 |
| | ▶223 |
| | ▶226 |
| 161-1016 | ▶169 |
| 161-1017 | 203 |
| | ▶229 |
| | ▶232 |
| 161-1018 | 203 |
| | ▶299 |
| 161-1020 | ▶385 |
| | 732 |
| 161-1021 | 6 |
| | ▶235 |
| | ▶237 |
| 161-1022 | ▶304 |
| | 629 |
| 161-1141 | ▶1224 |
| 161-1417 | 204 |
| 161-1418 | 204 |
| 161-1703 | 281 |
| 161-1705 | 282 |
| 161-1921 | 6 |
| | ▶308 |
| 161-2444 | 1244 |
| 161-2445 | 1244 |
| 161-3509 | ▶184 |
| | 223 |
| | 229 |
| 161-6713 | 424 |
| | 426 |
| 161-7055 | 484 |
| 161-7062 | 109 |
| | 1111 |
| 161-7063 | 1111 |
| 162-2077 | 184 |
| | 212 |
| 162-2776 | 37 |
| 162-6448 | 660 |
| | 661 |
| 162-7449 | 628 |
| | 633 |
| 162-7450 | 628 |
| | 629 |
| | ▶631 |
| 162-7451 | ▶628 |
| | 629 |
| 162-8218 | 109 |
| | 1111 |
| 162-8219 | 109 |
| | 1111 |
| 162-9523 | 115 |
| 163-0310 | 73 |
| | 74 |
| | 75 |
| | ▶95 |
| 163-0319 | 99 |
| 163-0375 | ▶505 |
| 163-0376 | 505 |
| | ▶531 |
| 163-0872 | 1104 |
| | ▶1105 |
| 163-4720 | 1047 |
| 163-4721 | 1047 |
| 163-6074 | 1047 |
| 163-9322 | 7 |
| | 10 |
| | ▶432 |
| 164-2108 | 478 |
| | 626 |
| 164-2465 | 1206 |
| | 1207 |
| | 1209 |
| 164-2490 | 7 |
| | 10 |
| | ▶66 |
| 164-4180 | 414 |
| 164-4858 | 130 |
| | 132 |
| 164-5567 | 428 |
| | 620 |
| | 622 |
| | 690 |
| | 694 |
| | 697 |
| | 701 |
| 164-5572 | 118 |
| 164-5586 | 710 |
| 164-5590 | 443 |
| | 710 |
| 164-5605 | 118 |
| | 674 |
| | 676 |
| | 677 |
| | 680 |
| | 683 |
| | 686 |
| 164-5608 | 680 |
| | 683 |
| | 686 |
| | 799 |
| | 803 |
| | 807 |
| | 811 |
| | 815 |
| | 819 |
| | 822 |
| | 825 |
| | 829 |
| | 833 |
| | 837 |
| | 841 |
| | 845 |
| | 849 |
| | 853 |
| | 857 |
| | 860 |
| | 864 |
| | 867 |
| | 870 |
| | 874 |
| | 877 |
| | 880 |
| | 884 |
| | 888 |
| | 892 |
| | 896 |
| | 900 |
| | 904 |
| 164-5641 | 694 |
| | 697 |
| | 701 |
| 164-6874 | 445 |
| 164-7556 | 179 |
| | 180 |
| | 181 |
| | 182 |
| | 183 |
| 164-7577 | 64 |
| | ▶297 |
| | 447 |
| 164-8462 | 4 |
| | ▶713 |
| 164-8474 | 1133 |
| | 1190 |
| 164-8908 | 689 |
| 164-9609 | 317 |
| | 319 |
| 165-2510 | 647 |
| | ▶658 |
| 165-3928 | 437 |
| 165-4619 | ▶294 |
| | 296 |
| 165-4632 | 690 |
| 165-4931 | 445 |
| | 708 |
| 165-5674 | 268 |
| | 269 |
| 165-6365 | 445 |
| 165-6762 | 4 |
| | ▶99 |
| 165-7014 | 694 |
| | 700 |
| 165-9928 | 428 |
| 166-0939 | 567 |
| 166-1328 | 62 |
| 166-1329 | ▶62 |
| | 66 |
| 166-1997 | 1207 |
| | 1209 |
| 166-1999 | 1207 |
| | 1209 |
| 166-2829 | 1213 |
| 166-2830 | 1214 |
| 166-3302 | ▶732 |
| 166-3305 | ▶635 |
| 166-3308 | 635 |
| | 636 |
| | 637 |
| | 638 |
| | 639 |
| | 640 |
| | 641 |
| | ▶703 |
| | ▶705 |
| 166-3336 | 629 |
| | ▶672 |
| 166-3337 | ▶629 |
| 166-6352 | 14 |
| | 16 |
| 166-6358 | 18 |
| | 20 |
| 166-6368 | 16 |
| 166-7064 | ▶582 |
| | 1226 |
| 166-7065 | ▶584 |
| | 1119 |
| 166-7224 | 1250 |
| 166-7225 | 1242 |
| 167-0017 | 7 |
| | ▶18 |
| 167-0138 | ▶302 |
| | 349 |
| | 354 |
| | 359 |
| 167-0566 | 478 |
| 167-1709 | ▶279 |
| | 692 |
| 167-1776 | 603 |
| 167-1801 | 733 |
| 167-2186 | 653 |
| | 660 |
| | 661 |
| 167-2190 | 658 |
| | 659 |
| 167-2192 | 652 |
| 167-2195 | 654 |
| | 656 |
| | 657 |
| | 663 |
| 167-2294 | 653 |
| | 660 |
| | 661 |
| 167-2300 | 658 |
| | 659 |
| 167-2302 | 652 |
| 167-2304 | 654 |
| | 656 |
| | 657 |
| | 663 |
| 167-2307 | 713 |
| 167-3911 | 95 |
| 167-7504 | 306 |
| | 309 |
| 167-7505 | 306 |
| | 309 |
| 167-7506 | 387 |
| | 389 |
| | 392 |
| | 396 |
| 167-7536 | 387 |
| | 392 |
| 167-8053 | 3 |
| | ▶1107 |
| 167-8067 | 2 |
| | 3 |
| | 6 |
| | ▶1095 |


▶ PRIMARY REFERENCE

# PART NUMBER INDEX


| Part | Page |
|---|---|
| 167-8102 | 1095 |
| | ▶1183 |
| 167-8125 | 35 |
| 167-8382 | 3 |
| | ▶165 |
| 167-8390 | 1 |
| | ▶1145 |
| 167-8398 | 1095 |
| | 1145 |
| | 1146 |
| | ▶1185 |
| | ▶1187 |
| 167-8423 | ▶1146 |
| 167-9002 | 3 |
| | ▶1114 |
| | ▶1116 |
| 167-9524 | 478 |
| 167-9671 | 108 |
| 168-4490 | 7 |
| | ▶155 |
| 168-4594 | 155 |
| 168-7212 | 51 |
| 168-7276 | 51 |
| 168-7408 | 564 |
| | 565 |
| 168-7960 | ▶588 |
| 168-8233 | 167 |
| 168-8235 | 167 |
| 168-8243 | 204 |
| | 208 |
| | 235 |
| | 237 |
| | 311 |
| | 1202 |
| 168-8248 | 306 |
| 168-8683 | 109 |
| 168-8758 | 628 |
| | 633 |
| 168-9108 | 658 |
| 168-9110 | 658 |
| 169-0921 | 109 |
| | 615 |
| | 1111 |
| 169-0922 | 109 |
| | 1111 |
| 169-1548 | 438 |
| 169-1549 | 440 |
| 169-2621 | 1114 |
| | 1116 |
| 169-3145 | 1156 |
| | 1158 |
| 169-3147 | 249 |
| | 250 |
| | 304 |
| 169-3176 | 223 |
| | 226 |
| 169-3181 | 229 |
| | 232 |
| 169-3230 | 273 |
| 169-3263 | 1217 |
| | 1219 |
| 169-3264 | 1093 |
| | 1094 |
| 169-3290 | 725 |
| | ▶733 |
| 169-3292 | 339 |
| | 366 |
| 169-3380 | 1114 |
| | 1116 |
| 169-3502 | 339 |
| | 344 |
| 169-3520 | 245 |
| | 247 |
| | 258 |
| 169-3523 | 167 |
| 169-3651 | 4 |
| | ▶443 |
| | 597 |
| 169-4166 | 41 |
| 169-4170 | 41 |
| 169-4189 | 25 |
| 169-4657 | 20 |
| | 143 |
| 169-4882 | 723 |
| | ▶725 |
| 169-4883 | 723 |
| | ▶727 |
| 169-5414 | 321 |
| | 325 |
| | 330 |
| | 339 |
| | 345 |
| | 349 |
| | 354 |
| | 359 |
| | 366 |
| | 371 |
| | 387 |
| | 389 |
| | 392 |
| | 396 |
| | 582 |
| | 584 |
| 169-5937 | 1228 |
| 169-6324 | 1224 |
| 169-7262 | 349 |
| | 354 |
| | 359 |
| 169-7263 | 349 |
| | 354 |
| | 359 |
| 169-7397 | 690 |
| 169-8938 | 306 |
| | 309 |
| | 315 |
| 170-0432 | 535 |
| | 541 |
| 170-0436 | 538 |
| | ▶541 |
| 170-0493 | 630 |
| | 631 |
| | 632 |
| 170-0503 | 631 |
| 170-1564 | 1185 |
| | 1187 |
| 170-4820 | 1138 |
| | ▶1139 |
| 170-5334 | 1137 |
| | ▶1140 |
| 170-5335 | ▶276 |
| | 1139 |
| | 1140 |
| 170-6570 | 1102 |
| 170-9051 | 694 |
| | 697 |
| | 700 |
| 171-1103 | 7 |
| | 11 |
| | ▶317 |
| | ▶319 |
| 171-2122 | 1114 |
| | 1116 |
| 171-2210 | 349 |
| | 354 |
| | 359 |
| 171-2212 | 154 |
| 171-3062 | 7 |
| | 10 |
| | ▶22 |
| 171-3063 | 22 |
| 171-5349 | 284 |
| 171-5831 | 4 |
| | ▶1292 |
| 171-5941 | ▶169 |
| | 321 |
| | 325 |
| 171-6165 | 1166 |
| 171-6175 | 235 |
| | 237 |
| | 252 |
| | 254 |
| 171-6458 | 1 |
| | 2 |
| | ▶708 |
| | 732 |
| 171-6466 | 672 |
| 171-6467 | 710 |
| 171-6470 | 708 |
| 171-6561 | 315 |
| 171-6700 | 1 |
| | 2 |
| | ▶597 |
| | ▶598 |
| 171-6728 | 708 |
| 171-7091 | 424 |
| 171-7093 | 424 |
| | 426 |
| 171-7095 | 426 |
| 171-7096 | ▶204 |
| 171-7185 | 163 |
| | ▶1093 |
| 171-7186 | 163 |
| | ▶1094 |
| 171-7626 | 1102 |
| 171-8077 | ▶573 |
| 172-0165 | 109 |
| 172-1239 | 1170 |
| | 1174 |
| 172-4211 | 109 |
| | 615 |
| | 1111 |
| 172-4702 | 14 |
| | 16 |
| 172-5376 | ▶1170 |
| | 1227 |
| 172-5377 | 1224 |
| | ▶1227 |
| | 1229 |
| 172-5378 | 1102 |
| | ▶1166 |
| | 1224 |
| | 1225 |
| 172-6540 | 108 |
| 172-6555 | 306 |
| | 309 |
| 172-6556 | 204 |
| | 206 |
| | 208 |
| | 235 |
| | 237 |
| | 252 |
| | 254 |
| | 311 |
| | 313 |
| | 1198 |
| | 1202 |
| 172-6830 | 1227 |
| | 1228 |
| | ▶1268 |
| | ▶1270 |
| 172-6831 | 1227 |
| | 1228 |
| | ▶1272 |
| | ▶1274 |
| 172-6834 | 6 |
| | ▶1137 |
| 172-6835 | 6 |
| | ▶1138 |
| 172-7105 | 1114 |
| | 1116 |
| 172-7106 | 1114 |
| | 1116 |
| 172-8641 | 306 |
| | 309 |
| 172-9316 | 306 |
| | 309 |
| 172-9389 | ▶162 |
| | 169 |
| | 321 |
| | 325 |
| 173-1007 | 734 |
| | 735 |
| 173-1008 | 734 |
| | 735 |
| 173-1009 | 734 |
| | 735 |
| 173-1011 | 680 |
| | ▶734 |
| 173-1498 | 18 |
| | 20 |
| 173-1500 | 18 |
| | 20 |
| 173-1885 | 273 |
| 173-2018 | 130 |
| | 132 |
| 173-2087 | 452 |
| | 456 |
| | 460 |
| 173-2751 | 1226 |


▶ **PRIMARY REFERENCE**

# PART NUMBER INDEX


| Part | Page | Part | Page | Part | Page | Part | Page |
|---|---|---|---|---|---|---|---|
| | ▶1230 | 174-1579 . . . . . | 7 | 174-4552 . . . . . | 1145 | | 658 |
| 173-3064 . . . . . | 223 | | 10 | 174-4971 . . . . . | 1097 | | 659 |
| | 226 | | ▶65 | | 1147 | 175-7897 . . . . . | 652 |
| | 229 | 174-1580 . . . . . | 65 | 174-5415 . . . . . | 105 | 175-7898 . . . . . | 663 |
| | 232 | 174-1581 . . . . . | 7 | 174-5635 . . . . . | 83 | 175-7900 . . . . . | 657 |
| | 239 | | 10 | 174-5636 . . . . . | 290 | 176-0209 . . . . . | 719 |
| | 242 | | ▶37 | 174-5692 . . . . . | 111 | 176-1378 . . . . . | 727 |
| | 259 | 174-1584 . . . . . | 7 | 174-5907 . . . . . | 147 | 176-2918 . . . . . | 556 |
| | 299 | | 10 | | 148 | | 559 |
| | 402 | | ▶39 | | 149 | 176-2922 . . . . . | 556 |
| 173-3882 . . . . . | 567 | 174-1586 . . . . . | 39 | | 229 | | 559 |
| 173-3924 . . . . . | 567 | 174-1591 . . . . . | 7 | | 232 | 176-2945 . . . . . | 615 |
| 173-3942 . . . . . | 567 | | 10 | | 239 | 176-3896 . . . . . | 690 |
| 173-3993 . . . . . | 970 | | ▶35 | | 242 | 176-4168 . . . . . | 46 |
| 173-4490 . . . . . | 402 | 174-1592 . . . . . | 35 | | 322 | 176-5507 . . . . . | 1097 |
| 173-5304 . . . . . | ▶290 | 174-1593 . . . . . | 35 | | 326 | | 1147 |
| | 292 | 174-1602 . . . . . | 99 | | 340 | | 1151 |
| 173-5313 . . . . . | ▶1095 | 174-1604 . . . . . | 7 | | 345 | | 1246 |
| 173-5320 . . . . . | 1266 | | 10 | | 350 | 176-5638 . . . . . | 1072 |
| | ▶1276 | | ▶107 | | 355 | 176-5639 . . . . . | 1071 |
| | ▶1278 | 174-1610 . . . . . | 96 | | 360 | 176-5640 . . . . . | 1070 |
| 173-5321 . . . . . | 1266 | 174-1612 . . . . . | 96 | | 367 | | 1073 |
| | ▶1280 | | ▶98 | | 372 | 176-5641 . . . . . | 1069 |
| | ▶1282 | 174-1613 . . . . . | 96 | | 385 | | 1074 |
| 173-5322 . . . . . | 1145 | 174-1627 . . . . . | 7 | 174-6051 . . . . . | 1151 | 176-5642 . . . . . | 1069 |
| | ▶1147 | | 10 | | 1246 | | 1070 |
| 173-5360 . . . . . | ▶1145 | | ▶58 | 174-6353 . . . . . | 1097 | | 1071 |
| | 1146 | 174-1628 . . . . . | 58 | | 1147 | | 1072 |
| 173-5981 . . . . . | 643 | 174-1637 . . . . . | 432 | | 1151 | | 1073 |
| | ▶652 | 174-1644 . . . . . | 107 | | 1246 | | 1074 |
| 173-5990 . . . . . | 652 | | ▶108 | 174-6819 . . . . . | 440 | 176-5643 . . . . . | 1069 |
| 173-6756 . . . . . | ▶1227 | 174-1760 . . . . . | 7 | 174-7507 . . . . . | ▶538 | | 1070 |
| 173-7813 . . . . . | 505 | | 10 | 174-8131 . . . . . | 399 | | 1071 |
| | ▶532 | | ▶53 | | 402 | | 1072 |
| 173-7830 . . . . . | 532 | 174-1762 . . . . . | 7 | | 1107 | | 1073 |
| 173-8290 . . . . . | 694 | | 10 | 174-8961 . . . . . | 690 | | 1074 |
| | 697 | | ▶23 | 174-9527 . . . . . | 45 | 176-5760 . . . . . | 556 |
| | 700 | 174-2104 . . . . . | 76 | 174-9529 . . . . . | 45 | | 559 |
| 173-9683 . . . . . | 652 | 174-2253 . . . . . | 694 | 174-9690 . . . . . | 1095 | 176-5765 . . . . . | 556 |
| | 654 | | 697 | 175-0447 . . . . . | 692 | | 559 |
| | 656 | | 700 | 175-0454 . . . . . | 27 | 176-5767 . . . . . | 556 |
| | 657 | 174-2304 . . . . . | ▶505 | 175-1343 . . . . . | 1217 | | 559 |
| | 663 | 174-2339 . . . . . | ▶707 | | 1219 | 176-5768 . . . . . | 556 |
| 173-9685 . . . . . | 653 | | 1080 | 175-1367 . . . . . | 293 | | 559 |
| | 660 | 174-2475 . . . . . | 41 | 175-2559 . . . . . | ▶1080 | 176-5770 . . . . . | 556 |
| | 661 | 174-2863 . . . . . | 567 | 175-3893 . . . . . | 478 | | 559 |
| 173-9779 . . . . . | 658 | 174-2952 . . . . . | 45 | 175-4291 . . . . . | 179 | 176-5775 . . . . . | 556 |
| 174-0503 . . . . . | 330 | 174-2953 . . . . . | 45 | 175-5480 . . . . . | 556 | | 559 |
| 174-0620 . . . . . | 7 | 174-3705 . . . . . | 428 | | 559 | 176-6391 . . . . . | 293 |
| | 10 | | ▶477 | 175-6978 . . . . . | 4 | 176-6464 . . . . . | 469 |
| | ▶296 | 174-3897 . . . . . | 350 | | ▶690 | 176-6465 . . . . . | ▶469 |
| 174-1494 . . . . . | 1096 | | 355 | 175-6981 . . . . . | 73 | | 472 |
| | 1147 | | 359 | | 74 | | 474 |
| | 1151 | 174-4140 . . . . . | 1174 | | 75 | 176-6994 . . . . . | 92 |
| 174-1541 . . . . . | 7 | 174-4141 . . . . . | 1170 | | ▶692 | 176-6995 . . . . . | 92 |
| | 10 | 174-4492 . . . . . | 1097 | 175-7049 . . . . . | 692 | 176-6997 . . . . . | 92 |
| 174-1574 . . . . . | 7 | | 1147 | 175-7314 . . . . . | 35 | 176-6998 . . . . . | 92 |
| | 10 | | 1151 | 175-7453 . . . . . | 432 | 176-6999 . . . . . | 92 |
| | ▶47 | | 1246 | | 434 | 176-7000 . . . . . | 91 |
| 174-1575 . . . . . | 47 | 174-4546 . . . . . | 5 | 175-7698 . . . . . | 588 | | ▶92 |
| 174-1576 . . . . . | 7 | | ▶1246 | 175-7895 . . . . . | 653 | 176-9747 . . . . . | 452 |
| | 10 | 174-4547 . . . . . | 1145 | | 660 | | 456 |
| | ▶68 | | ▶1151 | | 661 | 177-0279 . . . . . | 606 |
| 174-1577 . . . . . | 68 | 174-4548 . . . . . | 1095 | 175-7896 . . . . . | 654 | | 620 |
| 174-1578 . . . . . | 68 | | ▶1096 | | 656 | | 622 |


▶ PRIMARY REFERENCE

# PART NUMBER INDEX


| Part | Page |
|---|---|
| 177-0581 | 99 |
| 177-1633 | 452 |
| | 456 |
| | 460 |
| 177-1677 | 452 |
| | 456 |
| | 460 |
| 177-1713 | 615 |
| 177-2202 | 99 |
| 177-2932 | 556 |
| | 559 |
| 177-3582 | 615 |
| 177-4118 | 556 |
| | 559 |
| 177-4119 | 567 |
| 177-4120 | 556 |
| | 559 |
| 177-4142 | 100 |
| 177-4255 | 719 |
| 177-4292 | 118 |
| 177-4311 | 66 |
| 177-4394 | 118 |
| 177-5303 | 76 |
| 177-6821 | ▶1078 |
| | 1080 |
| 177-6822 | 1078 |
| 177-7448 | 1107 |
| 177-7858 | 1097 |
| | 1147 |
| | 1151 |
| 177-7891 | 1095 |
| | ▶1133 |
| | 1145 |
| 177-8778 | ▶1226 |
| 177-8779 | 1224 |
| | ▶1227 |
| | 1228 |
| 177-8781 | ▶1174 |
| | 1227 |
| | 1228 |
| 177-8784 | 6 |
| | ▶1284 |
| 177-8802 | 349 |
| | 354 |
| | 359 |
| 177-8830 | 3 |
| | ▶1266 |
| 177-8831 | ▶1266 |
| 177-9548 | ▶147 |
| 177-9549 | 6 |
| | ▶148 |
| 177-9615 | 99 |
| 177-9645 | 167 |
| 177-9648 | 167 |
| 177-9741 | 3 |
| | 6 |
| | ▶1205 |
| 177-9812 | 290 |
| 177-9813 | 349 |
| | 354 |
| | 360 |
| 177-9814 | 350 |
| | 355 |
| | 360 |
| 178-0101 | 366 |
| | 371 |
| | 385 |
| 178-0102 | 367 |
| | 372 |
| | 385 |
| 178-0131 | 556 |
| | 559 |
| 178-0160 | 350 |
| | 355 |
| | 360 |
| 178-0162 | 350 |
| | 355 |
| | 360 |
| 178-0163 | ▶349 |
| | ▶354 |
| | ▶359 |
| | 597 |
| | 598 |
| | 599 |
| 178-0555 | 350 |
| | 355 |
| | 360 |
| 178-1685 | 1047 |
| 178-1686 | 1047 |
| 178-1688 | 1047 |
| 178-3030 | 1119 |
| | ▶1219 |
| | 1226 |
| 178-3086 | 1051 |
| 178-3643 | 22 |
| 178-3695 | 452 |
| | 456 |
| | 460 |
| 178-4190 | 1166 |
| 178-4626 | 605 |
| 178-4875 | 18 |
| | 20 |
| 178-5252 | 18 |
| 178-5253 | 18 |
| 178-6267 | 204 |
| | 206 |
| | 208 |
| 178-6327 | 83 |
| | 85 |
| 178-7983 | 731 |
| 178-7985 | 731 |
| 178-8067 | 217 |
| | 220 |
| | 223 |
| | 229 |
| | 239 |
| | 245 |
| 178-8455 | 1047 |
| 178-8481 | 145 |
| 178-8603 | 1146 |
| | ▶1190 |
| 178-8894 | 1125 |
| | 1131 |
| 178-8993 | 76 |
| 178-9158 | 409 |
| | 413 |
| 178-9527 | 1 |
| | 2 |
| | ▶59 |
| 178-9582 | 4 |
| | ▶731 |
| 178-9962 | 678 |
| 179-0092 | 35 |
| 179-1298 | 478 |
| 179-1548 | ▶203 |
| 179-1549 | 239 |
| | 242 |
| 179-1550 | 239 |
| | 242 |
| 179-2138 | 1166 |
| 179-2139 | 1166 |
| 179-2140 | 1166 |
| 179-2173 | 1170 |
| 179-2176 | 1174 |
| | 1179 |
| 179-2177 | 1170 |
| 179-2179 | 1174 |
| | 1179 |
| 179-2187 | 339 |
| | 345 |
| | 367 |
| | 372 |
| 179-2426 | 83 |
| | 85 |
| 179-2509 | 76 |
| 179-2966 | 83 |
| | 85 |
| 179-3261 | 73 |
| | 74 |
| | 75 |
| | ▶76 |
| 179-3275 | 1183 |
| 179-3276 | 1183 |
| 179-3277 | 1183 |
| 179-3581 | 4 |
| | ▶1224 |
| 179-4356 | ▶635 |
| 179-4814 | 1156 |
| | 1158 |
| 179-5776 | ▶553 |
| 179-5777 | ▶555 |
| 179-6063 | 430 |
| | ▶490 |
| 179-6064 | ▶430 |
| | 472 |
| 179-6588 | ▶50 |
| 179-6851 | 18 |
| | 20 |
| 179-6852 | 18 |
| | 20 |
| 179-6853 | 18 |
| | 20 |
| 179-8700 | 223 |
| | 226 |
| | 229 |
| | 232 |
| | 239 |
| | 242 |
| 179-8701 | 239 |
| | 242 |
| 179-9398 | ▶629 |
| 179-9453 | 31 |
| 179-9459 | ▶31 |
| | 34 |
| 179-9563 | 70 |
| 179-9564 | 70 |
| 179-9565 | 7 |
| | 10 |
| | ▶70 |
| 180-1300 | ▶185 |
| | 223 |
| 180-1538 | 55 |
| 180-1679 | ▶1079 |
| 180-3531 | 1114 |
| 180-4027 | 615 |
| | 1111 |
| 180-4028 | 399 |
| | 402 |
| 180-4643 | 163 |
| | ▶166 |
| 180-5462 | 1183 |
| 180-6662 | 7 |
| | 10 |
| | ▶29 |
| 180-7004 | 73 |
| | 75 |
| | ▶93 |
| 180-7033 | 399 |
| | 402 |
| 180-7147 | 615 |
| | 1111 |
| 180-9146 | ▶409 |
| | ▶413 |
| | 472 |
| | 474 |
| 180-9285 | ▶1204 |
| | 1217 |
| | 1219 |
| | 1221 |
| 180-9322 | 430 |
| 180-9324 | ▶406 |
| | 431 |
| 180-9327 | 478 |
| 180-9340 | 280 |
| 180-9852 | 533 |
| | 534 |
| 180-9853 | 532 |
| 180-9867 | 615 |
| 180-9933 | 428 |
| 183-1156 | 690 |
| 183-1406 | 452 |
| | 456 |
| | 460 |
| 183-1415 | 506 |
| | ▶532 |
| 183-1416 | ▶506 |
| 183-1417 | ▶506 |
| 183-1418 | 506 |
| | ▶533 |
| 183-1425 | 1107 |
| 183-2136 | 387 |
| | 389 |
| | 392 |
| | 396 |
| 183-2302 | 59 |
| 183-2303 | 59 |
| 183-2304 | 59 |
| 183-2306 | 59 |
| 183-3018 | ▶1119 |


▶ **PRIMARY REFERENCE**

# PART NUMBER INDEX


| Part | Page | Part | Page | Part | Page | Part | Page |
|---|---|---|---|---|---|---|---|
| 183-3072 | 118 | 184-7307 | ▶636 | | 197 | | 345 |
| 183-3408 | 116 | 184-7308 | ▶636 | | 198 | | 367 |
| 183-4069 | 203 | 184-7315 | ▶637 | | 199 | | 372 |
| | ▶239 | 184-7317 | ▶637 | | 200 | 187-2019 | 535 |
| | ▶242 | 184-9843 | 658 | | 202 | 187-2034 | 141 |
| 183-4365 | 55 | | 659 | | 212 | 187-3307 | 33 |
| 183-4386 | 118 | 184-9854 | 65 | | 220 | 187-7738 | 1053 |
| 183-4403 | 319 | 185-0008 | 613 | | 222 | 187-8028 | ▶149 |
| 183-4691 | 615 | | ▶626 | | 257 | | 597 |
| 183-5504 | 4 | | 1158 | | 278 | | 598 |
| | ▶69 | 185-1122 | 615 | | 284 | 187-8972 | 25 |
| 183-5806 | ▶1289 | 185-1542 | 3 | | 290 | 187-9380 | 387 |
| | 1292 | | ▶73 | | 297 | 188-0576 | 1183 |
| 183-6633 | 573 | | ▶74 | | 306 | 188-3862 | 204 |
| 183-6638 | 573 | 185-1717 | 66 | | 315 | | 206 |
| 183-6774 | 478 | 185-1718 | 66 | | 321 | | 208 |
| 183-6775 | 478 | 185-2042 | 573 | | 322 | | 235 |
| 183-6933 | 567 | 185-2049 | 573 | | 325 | | 237 |
| 183-7263 | 970 | 185-2197 | 389 | | 339 | | 252 |
| 183-7595 | 715 | | 392 | | 340 | | 254 |
| 183-7913 | 567 | | 396 | | 344 | | 311 |
| 183-8597 | ▶284 | 185-2274 | 1114 | | 345 | | 313 |
| | 409 | | 1116 | | 364 | | 1198 |
| | 410 | 185-2287 | 1114 | | 366 | | 1202 |
| | 413 | | 1116 | | 367 | 188-3951 | ▶150 |
| 183-9606 | 249 | 185-2638 | 144 | | 371 | | 599 |
| 184-0871 | 73 | 185-2639 | 144 | | 372 | 188-3959 | 150 |
| | 75 | 185-2644 | 144 | | 385 | 188-6126 | 70 |
| | 90 | 185-2647 | 144 | | 387 | 188-7511 | 285 |
| 184-0874 | 73 | 185-2648 | 144 | | 389 | 188-8849 | 178 |
| | 74 | 185-2650 | 144 | | 392 | | 184 |
| | ▶90 | 185-2654 | 144 | | 399 | | 185 |
| 184-0903 | 210 | 185-2655 | 144 | | 487 | | 212 |
| | 212 | 185-2658 | 144 | | 488 | 188-9250 | ▶627 |
| 184-1130 | ▶478 | 185-3143 | 4 | | 1045 | | 1156 |
| | 490 | | ▶599 | | 1156 | 188-9321 | 6 |
| | 492 | 185-3632 | 1185 | | 1183 | | ▶201 |
| 184-1132 | ▶481 | | 1187 | | 1198 | 188-9324 | 201 |
| | 490 | 185-4076 | 321 | | 1202 | | ▶245 |
| 184-1299 | 5 | 185-4461 | 55 | | 1204 | | ▶247 |
| | ▶364 | 185-6362 | 1217 | | 1205 | 188-9328 | ▶201 |
| 184-1681 | 533 | | 1219 | | 1219 | 188-9331 | 201 |
| | 534 | 185-6596 | 653 | | 1221 | | 203 |
| 184-2309 | 539 | 185-7025 | 658 | | 1267 | | 259 |
| 184-2346 | 506 | 186-1526 | 478 | | 1268 | | ▶263 |
| | ▶533 | | 481 | | 1270 | | ▶264 |
| 184-2347 | 506 | | 484 | | 1272 | 188-9390 | 631 |
| | ▶534 | | ▶488 | | 1274 | 188-9694 | 378 |
| 184-2362 | ▶506 | 186-1714 | 399 | | 1276 | 188-9695 | 378 |
| 184-2363 | ▶506 | 186-1715 | 399 | | 1278 | 189-0108 | 350 |
| 184-2472 | 157 | | 402 | | 1280 | | 355 |
| | 160 | 186-2508 | 259 | | 1282 | | 360 |
| 184-2524 | 23 | 186-3696 | 542 | | 1286 | 189-0146 | 147 |
| 184-4322 | 1217 | 186-3705 | 66 | | 1287 | | 148 |
| | 1219 | 186-3735 | 139 | 186-4460 | 538 | | 149 |
| | 1221 | | 140 | | ▶542 | 189-0189 | 487 |
| 184-5073 | 1289 | | 161 | 186-4461 | ▶538 | 189-9801 | 286 |
| 184-5076 | 1289 | | 170 | 186-6098 | 103 | 190-0370 | 387 |
| 184-5394 | 83 | | 177 | 187-0491 | 1114 | 190-0649 | 18 |
| 184-6665 | 615 | | 179 | | 1116 | | 20 |
| 184-6964 | 294 | | 186 | 187-0745 | 615 | 190-1680 | 235 |
| 184-7303 | ▶635 | | 188 | 187-0953 | 1081 | | 252 |
| 184-7304 | ▶635 | | 192 | 187-0976 | 556 | 190-1684 | 409 |
| 184-7305 | ▶636 | | 194 | | 559 | | 413 |
| 184-7306 | ▶636 | | 196 | 187-1008 | 340 | 190-1688 | 5 |


▶ PRIMARY REFERENCE

# PART NUMBER INDEX


| Part | Page | Part | Page | Part | Page | Part | Page |
|---|---|---|---|---|---|---|---|
| | ▶470 | | 559 | 194-9481 | 730 | 197-1459 | 367 |
| | ▶471 | 192-6492 | 103 | 195-0434 | 367 | | 372 |
| 190-1690 | 470 | 192-7054 | 1224 | | 372 | | 385 |
| | 471 | 192-7135 | 66 | | 385 | 197-1708 | 128 |
| 190-1691 | 470 | 193-1036 | 1024 | 195-0852 | 118 | 197-1744 | ▶206 |
| | 471 | 193-1728 | 600 | 195-2097 | 152 | 197-1801 | 573 |
| 190-1697 | ▶572 | 193-1729 | 600 | 195-2274 | 562 | 197-1988 | 326 |
| 190-1699 | 572 | 193-1758 | 96 | | 1295 | 197-2055 | 1200 |
| 190-1700 | 572 | 193-3982 | 123 | 195-4990 | 350 | 197-2064 | 5 |
| 190-2938 | 1292 | 193-7359 | 1 | | 355 | | ▶1200 |
| 190-3043 | 1111 | | 2 | | 360 | 197-2066 | 1 |
| 190-3482 | 1205 | | ▶309 | 195-7218 | 1084 | | 2 |
| | 1221 | | 1228 | | 1092 | | ▶1201 |
| 190-3850 | 630 | 193-7416 | 212 | 195-7219 | 1088 | 197-3616 | 47 |
| | 631 | | 214 | 195-9634 | 727 | | 49 |
| | 632 | 193-8212 | ▶1198 | 195-9639 | 727 | 197-4568 | 1095 |
| 190-5212 | 410 | 193-8253 | 1 | | ▶1024 | | ▶1104 |
| | 414 | | 2 | 196-0180 | 1217 | 197-4569 | 1104 |
| 190-5386 | 1081 | | 75 | | 1219 | 197-4637 | 115 |
| | 1292 | | ▶378 | | 1221 | 197-4638 | 115 |
| | 1295 | | ▶381 | 196-1867 | 723 | 197-5453 | 402 |
| 190-6017 | 7 | 193-8257 | 4 | 196-2970 | 367 | 197-5572 | ▶5 |
| | 10 | | ▶600 | | 372 | 197-5867 | 1295 |
| | ▶124 | 193-8570 | 294 | 196-4150 | 1217 | 197-5955 | ▶6 |
| 190-6535 | 130 | 193-9147 | 600 | | 1221 | 197-5964 | 1217 |
| 190-7614 | 330 | | 601 | 196-4226 | 325 | | 1219 |
| 190-9775 | 130 | 194-1854 | 350 | 196-4609 | 378 | | 1221 |
| | 132 | | 355 | | 381 | 197-6218 | 1183 |
| 191-0027 | 1097 | | 360 | 196-4622 | 1221 | 197-6437 | 6 |
| | 1148 | 194-2612 | 128 | 196-4909 | 1 | | ▶1290 |
| | 1152 | | 130 | | 2 | 197-7659 | 1095 |
| | 1246 | | 134 | | ▶1221 | | ▶1106 |
| 191-2314 | 620 | | 135 | 196-7268 | 387 | 197-8391 | ▶288 |
| | 622 | 194-2903 | 325 | | 389 | | 317 |
| 191-3645 | 606 | | 385 | | 392 | | 319 |
| 191-3680 | 409 | 194-3200 | 1 | | 396 | 197-8392 | ▶289 |
| 191-5236 | 1095 | | 2 | 196-8532 | 201 | | 317 |
| | 1145 | | ▶366 | | 202 | | 319 |
| 191-5292 | 690 | | ▶371 | | ▶249 | 197-8393 | ▶281 |
| | ▶715 | 194-3845 | 1230 | | ▶250 | | 317 |
| 191-5293 | 565 | 194-4019 | ▶638 | 196-8557 | 206 | | 319 |
| 191-5973 | 450 | 194-4020 | ▶638 | | 252 | 197-8394 | ▶282 |
| 191-7581 | 727 | 194-4181 | 399 | | 254 | | 317 |
| 191-7582 | 727 | | 402 | | 313 | | 319 |
| 191-7583 | 727 | 194-4679 | 600 | | 1198 | 197-8395 | ▶283 |
| 191-7584 | 727 | | 601 | 196-8559 | ▶252 | | 317 |
| 191-8303 | 414 | 194-4863 | 567 | | ▶254 | | 319 |
| 191-8692 | ▶1209 | 194-4939 | 556 | | 257 | 197-8396 | ▶285 |
| | 1230 | | 559 | 196-9295 | 600 | | 317 |
| 191-8695 | ▶1179 | 194-5141 | 1104 | | 601 | | 319 |
| | 1230 | 194-5226 | 279 | 196-9373 | 309 | 197-8397 | ▶286 |
| 191-9256 | 409 | 194-5227 | 279 | 196-9521 | 25 | | 317 |
| | 413 | 194-6158 | 559 | 197-0002 | ▶562 | | 319 |
| 191-9260 | 1 | 194-6523 | 130 | 197-0579 | 6 | 197-8611 | 1170 |
| | ▶75 | | 132 | | ▶292 | | 1174 |
| 192-1434 | 1 | 194-6724 | ▶280 | 197-0580 | 292 | | 1181 |
| | 2 | | 283 | | ▶293 | 197-8624 | 1170 |
| | ▶1295 | 194-7987 | 556 | 197-0949 | 115 | | 1174 |
| 192-4699 | ▶689 | 194-8535 | 130 | 197-0951 | 115 | | 1181 |
| 192-4969 | ▶637 | | 132 | 197-1351 | 573 | 197-8627 | 1170 |
| 192-4970 | ▶637 | 194-9453 | 727 | 197-1444 | 567 | 197-8628 | 1170 |
| 192-5490 | 715 | | ▶730 | 197-1448 | 73 | 197-8629 | 1174 |
| 192-5629 | 556 | 194-9478 | 730 | | 74 | 197-8630 | 1174 |
| | 559 | 194-9479 | 730 | | 75 | 197-9377 | 51 |
| 192-5638 | 556 | 194-9480 | 730 | | ▶567 | 198-0151 | 69 |


▶ **PRIMARY REFERENCE**

# PART NUMBER INDEX


| Part | Page |
|---|---|
| 198-0961 | 1187 |
| 198-4768 | 450 |
| 198-4777 | 103 |
| 198-5438 | 615 |
| 198-5439 | 615 |
| 198-5440 | 615 |
| 198-6068 | 70 |
| 198-6565 | ▶507 |
| 198-6572 | 507 |
| | ▶534 |
| 198-7332 | ▶169 |
| | 322 |
| | 326 |
| 198-7379 | 596 |
| 198-7380 | 596 |
| 198-7657 | 430 |
| | 431 |
| 198-8588 | 582 |
| | 584 |
| 198-9298 | 551 |
| 198-9811 | 1085 |
| | 1088 |
| 198-9812 | 1085 |
| | 1089 |
| 198-9942 | 567 |
| 199-2585 | ▶1143 |
| 199-2586 | 1143 |
| 199-2625 | 572 |
| 199-2626 | 572 |
| 199-2677 | 1120 |
| | 1123 |
| | 1127 |
| | 1129 |
| 199-2711 | 73 |
| | 75 |
| | 90 |
| | 95 |
| 199-2712 | 1120 |
| | 1123 |
| | 1127 |
| | 1129 |
| 199-2737 | 1127 |
| 199-2738 | 1129 |
| 199-2739 | 1120 |
| 199-2740 | 1123 |
| 199-2756 | 567 |
| 199-3368 | ▶198 |
| | 264 |
| 199-4051 | 39 |
| 199-4317 | 719 |
| 199-4318 | 553 |
| | 555 |
| 199-4320 | 719 |
| 199-4321 | 719 |
| 199-4322 | 719 |
| 199-7111 | 553 |
| 199-7113 | 553 |
| 199-7118 | 553 |
| | 555 |
| 199-7119 | 553 |
| | 555 |
| 199-7891 | 144 |
| 199-8382 | 389 |
| | 396 |
| 199-8436 | 144 |
| 199-9731 | 128 |
| 199-9732 | 130 |
| 199-9907 | 127 |
| | 130 |
| | 132 |
| 199-9912 | 127 |
| | ▶128 |
| | ▶129 |
| 199-9913 | 127 |
| | ▶130 |
| | ▶132 |
| 199-9959 | 143 |
| | 145 |
| 199-9983 | 556 |
| | 559 |
| 199-9984 | 132 |
| 199-9985 | 132 |
| | 2 |
| 200-1173 | 1202 |
| 200-2056 | 27 |
| 200-2057 | ▶27 |
| | 28 |
| 200-2232 | ▶141 |
| | 143 |
| | 145 |
| 200-3967 | 582 |
| | 584 |
| 200-5728 | 1224 |
| 200-5924 | 442 |
| 200-7929 | 450 |
| 200-7933 | 1144 |
| 200-7934 | ▶1144 |
| 200-8623 | 1170 |
| | 1174 |
| 201-0387 | 410 |
| | 414 |
| 201-1036 | ▶152 |
| | 203 |
| | 597 |
| | 598 |
| 201-1038 | 3 |
| | ▶153 |
| | 201 |
| | 203 |
| 201-1055 | 1289 |
| 201-5244 | 321 |
| | 326 |
| 201-5894 | 1179 |
| 201-7603 | 575 |
| | 576 |
| | 1292 |
| 201-7626 | 1296 |
| 201-7627 | 1297 |
| 201-7631 | 1297 |
| | 1298 |
| 201-7633 | 1296 |
| 201-8327 | 725 |
| 201-8328 | 723 |
| 201-8424 | 152 |
| | 153 |
| 201-8430 | 694 |
| | 697 |
| | 700 |
| 202-1138 | 1217 |
| | 1221 |
| 202-2703 | 141 |
| 202-2708 | 141 |
| 202-2783 | 141 |
| 202-2784 | 141 |
| 202-2785 | 141 |
| 202-2786 | 141 |
| 202-2787 | 141 |
| 202-4322 | ▶1296 |
| 202-4323 | ▶1296 |
| 202-4324 | ▶1297 |
| 202-6611 | 179 |
| | 181 |
| | 183 |
| 202-6614 | 180 |
| | 182 |
| 202-7475 | 43 |
| 202-7711 | 141 |
| 202-7713 | 141 |
| 202-8647 | 141 |
| 202-8649 | 1198 |
| | 1202 |
| 202-9824 | 1292 |
| 202-9897 | 141 |
| 203-0780 | 1201 |
| 203-1124 | 1270 |
| | 1274 |
| | 1278 |
| | 1282 |
| | 1286 |
| | 1287 |
| 203-2260 | 1 |
| | 2 |
| | ▶570 |
| 203-2268 | ▶1297 |
| 203-2389 | 608 |
| 203-2390 | 608 |
| 203-2391 | 608 |
| 203-2423 | 608 |
| 203-3175 | 725 |
| 203-3337 | 615 |
| 203-3340 | 615 |
| 203-3341 | 615 |
| 203-3342 | 615 |
| 203-3940 | 285 |
| | 286 |
| 203-5957 | 609 |
| 203-5958 | 609 |
| 203-6016 | 452 |
| | 456 |
| 203-6018 | 452 |
| | 456 |
| | 460 |
| 203-6019 | 452 |
| | 456 |
| | 460 |
| 203-6061 | 4 |
| 203-6536 | ▶201 |
| 203-6551 | 201 |
| | ▶311 |
| 203-7620 | ▶256 |
| 203-7625 | ▶186 |
| | 256 |
| | 259 |
| 203-7626 | ▶188 |
| | 256 |
| | 259 |
| 203-7627 | ▶1290 |
| 203-8466 | ▶1073 |
| 203-8467 | ▶1074 |
| 203-9177 | 259 |
| 203-9807 | 132 |
| 203-9808 | 132 |
| 204-0638 | 7 |
| | ▶121 |
| 204-0712 | 41 |
| 204-0795 | 1290 |
| 204-3451 | ▶28 |
| | 29 |
| 204-4376 | 1097 |
| | 1148 |
| | 1152 |
| 204-6109 | ▶202 |
| 204-6127 | 202 |
| | ▶313 |
| 204-6488 | 1107 |
| 204-8785 | 507 |
| | ▶535 |
| 204-8786 | ▶507 |
| 204-9840 | 567 |
| 205-0626 | 144 |
| 205-4285 | 164 |
| | 166 |
| 205-7187 | 620 |
| | 622 |
| 205-8839 | 406 |
| 205-8847 | 406 |
| 205-9103 | 1187 |
| 206-3599 | 109 |
| | 1111 |
| 206-3600 | 109 |
| 206-3713 | 410 |
| | 414 |
| 206-3714 | 410 |
| | 414 |
| 206-4669 | 69 |
| 206-5122 | 799 |
| | 803 |
| | 811 |
| | 815 |
| | 819 |
| | 822 |
| | 825 |
| | 829 |
| | 833 |
| | 837 |
| | 841 |
| | 845 |
| | 857 |
| | 860 |
| | 867 |
| | 870 |
| | 880 |
| | 884 |
| | 888 |
| | 892 |
| | 896 |
| | 900 |


▶ PRIMARY REFERENCE

# PART NUMBER INDEX


| Part | Page | Part | Page | Part | Page | Part | Page |
|---|---|---|---|---|---|---|---|
| | 904 | 208-6678 . . . . . | 620 | 212-9511 . . . . . | 556 | 216-6804 . . . . . | 562 |
| 206-5123 . . . . . | 799 | | 622 | | 559 | 216-6806 . . . . . | 562 |
| | 803 | 208-7448 . . . . . | 99 | 213-0430 . . . . . | 1296 | 216-6809 . . . . . | 562 |
| | 807 | 208-7782 . . . . . | 164 | 213-0431 . . . . . | 1297 | 216-6810 . . . . . | 562 |
| | 811 | | 166 | 213-0435 . . . . . | 1297 | 216-6811 . . . . . | 562 |
| | 815 | 208-7933 . . . . . | 378 | | 1298 | 216-6812 . . . . . | 562 |
| | 819 | | 381 | 213-0437 . . . . . | 1296 | 216-7435 . . . . . | 536 |
| | 822 | 208-9160 . . . . . | 124 | 213-1413 . . . . . | 379 | 216-7437 . . . . . | 542 |
| | 825 | 209-1743 . . . . . | 432 | | 381 | 216-7443 . . . . . | 507 |
| | 829 | | 434 | 213-1414 . . . . . | 379 | | ▶536 |
| | 833 | 209-3332 . . . . . | 103 | | 381 | 216-7444 . . . . . | ▶507 |
| | 837 | 209-3334 . . . . . | 103 | 213-2264 . . . . . | 103 | 216-7445 . . . . . | 538 |
| | 841 | 209-4578 . . . . . | 99 | 213-3733 . . . . . | 593 | | ▶542 |
| | 845 | 209-5776 . . . . . | 1292 | 213-4099 . . . . . | 593 | 216-7446 . . . . . | ▶538 |
| | 849 | 209-7309 . . . . . | 68 | 213-4558 . . . . . | 1183 | 217-0577 . . . . . | 51 |
| | 853 | 209-7389 . . . . . | 432 | 213-9100 . . . . . | 364 | 217-2661 . . . . . | 737 |
| | 857 | | 434 | | 381 | 217-3673 . . . . . | 49 |
| | 860 | 209-7827 . . . . . | 4 | 213-9842 . . . . . | 406 | 217-3674 . . . . . | 49 |
| | 864 | | ▶100 | 214-0586 . . . . . | 34 | 218-2971 . . . . . | 608 |
| | 867 | 209-9587 . . . . . | ▶157 | 214-1102 . . . . . | 1183 | 218-3339 . . . . . | 421 |
| | 870 | | 158 | 214-2242 . . . . . | 615 | 218-4406 . . . . . | 450 |
| | 874 | 209-9588 . . . . . | 156 | 214-2466 . . . . . | 615 | 218-4758 . . . . . | ▶1225 |
| | 877 | | ▶158 | 214-4863 . . . . . | ▶278 | 218-4759 . . . . . | 1225 |
| | 880 | 209-9985 . . . . . | 620 | | 1111 | | ▶1228 |
| | 884 | | 622 | 214-6277 . . . . . | 39 | 219-4458 . . . . . | 51 |
| | 888 | 209-9986 . . . . . | 597 | 214-6278 . . . . . | 39 | 219-6701 . . . . . | 589 |
| | 892 | | 598 | 214-6598 . . . . . | 128 | 219-7258 . . . . . | ▶632 |
| | 896 | | 599 | | 130 | 219-7265 . . . . . | ▶630 |
| | 900 | | ▶620 | 214-6867 . . . . . | 567 | | 633 |
| | 904 | | ▶622 | 215-2062 . . . . . | ▶79 | 219-8543 . . . . . | ▶1298 |
| 206-5823 . . . . . | 1270 | 210-0849 . . . . . | 155 | | 87 | 220-0768 . . . . . | 4 |
| | 1274 | | ▶159 | 215-2063 . . . . . | 7 | | ▶115 |
| | 1286 | 210-2044 . . . . . | ▶2 | | 10 | 220-1922 . . . . . | 575 |
| | 1287 | 211-0587 . . . . . | 25 | | ▶87 | 220-3373 . . . . . | 41 |
| 206-7515 . . . . . | 105 | 211-0588 . . . . . | 25 | | ▶88 | 221-0319 . . . . . | 132 |
| 206-9651 . . . . . | 1107 | 211-1519 . . . . . | 5 | 215-2409 . . . . . | 553 | 221-2801 . . . . . | 629 |
| 207-2409 . . . . . | 5 | | ▶593 | 215-2410 . . . . . | 553 | | ▶633 |
| | ▶739 | 211-1520 . . . . . | 5 | 215-2412 . . . . . | 553 | 221-2961 . . . . . | ▶629 |
| 207-2410 . . . . . | ▶737 | | ▶262 | 215-2413 . . . . . | 553 | 221-3678 . . . . . | 994 |
| | 739 | 211-4906 . . . . . | ▶1102 | | 555 | 221-5368 . . . . . | ▶257 |
| 207-2411 . . . . . | 737 | 211-4907 . . . . . | ▶1102 | 215-2414 . . . . . | 553 | 222-2060 . . . . . | 123 |
| 207-3819 . . . . . | 443 | 211-4908 . . . . . | 1102 | | 555 | 222-2367 . . . . . | 630 |
| | ▶447 | 211-4912 . . . . . | 1102 | 215-2415 . . . . . | 553 | | 632 |
| 207-4453 . . . . . | ▶1 | | ▶1181 | | 555 | 222-3769 . . . . . | 1113 |
| 207-4922 . . . . . | 1111 | 211-4913 . . . . . | 1102 | 215-2430 . . . . . | 553 | 222-4086 . . . . . | 317 |
| 207-4924 . . . . . | 615 | | ▶1285 | 215-2431 . . . . . | 553 | | 319 |
| 207-4927 . . . . . | 109 | | ▶1286 | | 555 | 222-4737 . . . . . | 907 |
| 207-6034 . . . . . | 406 | 212-0443 . . . . . | 294 | 215-3005 . . . . . | 606 | | 911 |
| 207-9193 . . . . . | 3 | 212-0615 . . . . . | 7 | | ▶608 | | 913 |
| | ▶259 | | ▶143 | 215-3198 . . . . . | 124 | | 915 |
| 207-9235 . . . . . | ▶574 | 212-2162 . . . . . | 1292 | 215-5648 . . . . . | 1292 | | 917 |
| 207-9236 . . . . . | 574 | 212-3266 . . . . . | 83 | 215-6425 . . . . . | 737 | | 918 |
| 207-9237 . . . . . | 574 | | 85 | 215-7224 . . . . . | 562 | | 919 |
| 207-9269 . . . . . | 3 | 212-3590 . . . . . | 556 | 215-7225 . . . . . | 562 | | 920 |
| | ▶619 | 212-3591 . . . . . | 556 | 216-5583 . . . . . | 27 | | 924 |
| 207-9861 . . . . . | 507 | | 559 | 216-5584 . . . . . | 27 | | 926 |
| | ▶535 | 212-3924 . . . . . | ▶194 | 216-5585 . . . . . | 27 | | 927 |
| 207-9862 . . . . . | ▶507 | | 262 | 216-6791 . . . . . | 562 | | 929 |
| 208-0014 . . . . . | 605 | 212-4174 . . . . . | 69 | 216-6797 . . . . . | 562 | | 931 |
| | ▶606 | 212-6961 . . . . . | 103 | 216-6798 . . . . . | 562 | | 933 |
| 208-0520 . . . . . | 620 | 212-6962 . . . . . | 103 | 216-6799 . . . . . | 562 | | 940 |
| | 622 | 212-7431 . . . . . | 556 | 216-6800 . . . . . | 562 | | 942 |
| 208-0800 . . . . . | 130 | 212-7432 . . . . . | 556 | 216-6801 . . . . . | 562 | | 944 |
| | 132 | 212-9510 . . . . . | 556 | 216-6802 . . . . . | 562 | | 946 |
| 208-1512 . . . . . | 606 | | 559 | 216-6803 . . . . . | 562 | | 948 |


▶ **PRIMARY REFERENCE**

# PART NUMBER INDEX


| Part | Page | Part | Page | Part | Page | Part | Page |
|---|---|---|---|---|---|---|---|
| | 950 | | 413 | | ▶1202 | 236-3948 . . . . . | ▶6 |
| | 960 | 226-7683 . . . . . | ▶144 | 232-1732 . . . . . | 1142 | 236-5498 . . . . . | 146 |
| | 962 | | 146 | 232-5990 . . . . . | 10 | | ▶154 |
| | 964 | 226-8202 . . . . . | 653 | | ▶156 | 236-7724 . . . . . | 450 |
| | 966 | | 660 | 232-6114 . . . . . | 1201 | 236-7755 . . . . . | 601 |
| | 967 | | 661 | 233-0712 . . . . . | 3 | 236-7756 . . . . . | 601 |
| | 968 | 226-9637 . . . . . | 626 | | ▶145 | 236-7757 . . . . . | 4 |
| | 969 | 226-9996 . . . . . | 567 | 233-0713 . . . . . | ▶146 | | ▶601 |
| 222-7774 . . . . . | 994 | 227-0169 . . . . . | 179 | 233-4253 . . . . . | 265 | 237-0226 . . . . . | 96 |
| | ▶1042 | 227-1143 . . . . . | 652 | | ▶268 | 238-0415 . . . . . | 1097 |
| 223-0580 . . . . . | 734 | 227-2517 . . . . . | 98 | | ▶269 | | 1148 |
| | 735 | 227-4676 . . . . . | 98 | 233-4439 . . . . . | 562 | | 1152 |
| 223-3935 . . . . . | 1103 | 227-6672 . . . . . | 129 | 233-4440 . . . . . | 562 | 238-0417 . . . . . | 1097 |
| 223-3936 . . . . . | 1103 | | 132 | 233-4441 . . . . . | 562 | | 1148 |
| | ▶1287 | 228-5009 . . . . . | 399 | 233-4626 . . . . . | 330 | | 1152 |
| 223-3937 . . . . . | 1102 | | 402 | 233-5220 . . . . . | 71 | 238-1029 . . . . . | ▶64 |
| | ▶1103 | 228-7559 . . . . . | 4 | | ▶72 | | 449 |
| 223-3939 . . . . . | 315 | | ▶589 | 233-6659 . . . . . | 165 | 238-4462 . . . . . | 654 |
| 223-3940 . . . . . | 315 | 228-9265 . . . . . | ▶508 | | ▶167 | 238-6780 . . . . . | 116 |
| 223-3941 . . . . . | ▶315 | 228-9655 . . . . . | 144 | 233-6663 . . . . . | 10 | 238-9421 . . . . . | 1290 |
| | 1103 | 228-9656 . . . . . | 144 | | ▶116 | 238-9422 . . . . . | 1290 |
| 224-0554 . . . . . | 1298 | 228-9657 . . . . . | 144 | 233-6742 . . . . . | 116 | 239-4990 . . . . . | 1292 |
| 224-2821 . . . . . | 593 | 229-0119 . . . . . | 1289 | | ▶137 | 239-4991 . . . . . | 1298 |
| 224-3240 . . . . . | 37 | 229-0674 . . . . . | 147 | 233-9523 . . . . . | 710 | 239-6989 . . . . . | 1292 |
| 224-4441 . . . . . | 34 | | 148 | 234-2412 . . . . . | 10 | 239-7342 . . . . . | 174 |
| 224-5132 . . . . . | 634 | | 149 | | ▶20 | 239-8335 . . . . . | 399 |
| 224-5152 . . . . . | 634 | | 150 | 234-2413 . . . . . | 10 | 239-8336 . . . . . | 402 |
| 224-5844 . . . . . | 576 | 229-3218 . . . . . | 126 | | ▶16 | 239-9354 . . . . . | 266 |
| 224-5845 . . . . . | 576 | 229-5815 . . . . . | 132 | 234-4323 . . . . . | ▶180 | | ▶273 |
| 224-5912 . . . . . | 576 | | ▶134 | | 218 | 239-9362 . . . . . | ▶175 |
| | 579 | 229-5816 . . . . . | 129 | | 222 | | 308 |
| 224-6637 . . . . . | 1292 | | ▶135 | | 226 | 239-9893 . . . . . | ▶716 |
| 224-6958 . . . . . | 1296 | 229-7155 . . . . . | 697 | | 232 | | 911 |
| 224-6959 . . . . . | 1297 | | ▶972 | | 237 | | 915 |
| 224-6963 . . . . . | 1297 | 229-8906 . . . . . | 141 | | 242 | | 924 |
| | 1298 | 229-9382 . . . . . | 654 | | 247 | | 929 |
| 224-6965 . . . . . | 1296 | | 656 | | 254 | | 931 |
| 224-7040 . . . . . | 76 | | 657 | 234-4324 . . . . . | ▶181 | | 933 |
| | ▶719 | | 663 | | 226 | | 944 |
| 225-0312 . . . . . | 1298 | 230-4171 . . . . . | 20 | 234-4325 . . . . . | ▶182 | | 946 |
| 225-3109 . . . . . | 330 | 230-4477 . . . . . | 134 | | 211 | | 948 |
| 225-3174 . . . . . | ▶1102 | | 135 | | 214 | | 960 |
| 225-4150 . . . . . | 1292 | 230-4617 . . . . . | 4 | | 250 | | 962 |
| 225-5075 . . . . . | ▶179 | | ▶111 | 234-4326 . . . . . | ▶183 | | 964 |
| | 208 | 230-4672 . . . . . | 129 | | 214 | | 967 |
| 225-5182 . . . . . | 600 | 230-5839 . . . . . | 4 | 234-6666 . . . . . | 488 | | 968 |
| | 601 | | ▶78 | 234-7730 . . . . . | 180 | | 969 |
| 226-0295 . . . . . | 1120 | 230-7279 . . . . . | 169 | | 181 | 239-9894 . . . . . | ▶718 |
| | 1123 | 230-7280 . . . . . | 169 | | 182 | | 913 |
| | 1127 | 230-7570 . . . . . | 4 | | 183 | | 917 |
| | 1129 | | ▶561 | 234-7731 . . . . . | 180 | | 926 |
| 226-0342 . . . . . | 1120 | 230-8089 . . . . . | 697 | | 181 | | 927 |
| | 1123 | 230-9138 . . . . . | 1107 | | 182 | | 940 |
| | 1127 | 231-0221 . . . . . | 134 | | 183 | | 942 |
| | 1129 | | 135 | 235-1122 . . . . . | 559 | | 950 |
| 226-0733 . . . . . | 536 | 231-3539 . . . . . | 658 | 235-1123 . . . . . | 559 | | 966 |
| 226-0735 . . . . . | 508 | | 659 | 235-3937 . . . . . | ▶200 | 240-5304 . . . . . | 159 |
| | ▶536 | 231-4486 . . . . . | 1142 | | 269 | | ▶160 |
| 226-1187 . . . . . | ▶105 | 231-4487 . . . . . | 1142 | | 270 | 240-5919 . . . . . | 103 |
| 226-1240 . . . . . | 579 | 231-4527 . . . . . | 364 | | 272 | 240-6822 . . . . . | 488 |
| | 1298 | 231-5251 . . . . . | 576 | | 273 | 241-3013 . . . . . | ▶671 |
| 226-1274 . . . . . | 1298 | | 579 | 235-5812 . . . . . | 445 | 241-3352 . . . . . | 449 |
| 226-2870 . . . . . | 737 | 231-6133 . . . . . | 141 | | ▶449 | 241-4943 . . . . . | 1217 |
| 226-2871 . . . . . | 737 | 231-6134 . . . . . | 141 | 236-0737 . . . . . | 1107 | | 1219 |
| 226-6621 . . . . . | 409 | 231-6524 . . . . . | 6 | 236-1927 . . . . . | 1053 | | 1221 |


▶ PRIMARY REFERENCE

# PART NUMBER INDEX


| Part | Page |
|---|---|
| 241-5889 | 716 |
| | 718 |
| 241-6949 | 74 |
| | ▶94 |
| 242-0407 | 443 |
| | 445 |
| 242-3633 | 78 |
| 242-9245 | 615 |
| 243-3769 | 1292 |
| 243-5466 | 708 |
| 244-1899 | 330 |
| 244-1900 | 549 |
| 244-2584 | 799 |
| | 803 |
| | 811 |
| | 815 |
| | 829 |
| | 841 |
| 244-2585 | 807 |
| | 819 |
| | 822 |
| | 825 |
| | 833 |
| | 837 |
| | 849 |
| | 884 |
| | 888 |
| 244-2586 | 845 |
| | 853 |
| | 860 |
| | 870 |
| | 892 |
| 244-2587 | 857 |
| | 864 |
| | 867 |
| | 874 |
| | 877 |
| | 880 |
| | 896 |
| | 900 |
| | 904 |
| 244-2588 | 799 |
| | 803 |
| | 811 |
| | 815 |
| | 829 |
| | 841 |
| 244-2589 | 807 |
| | 819 |
| | 822 |
| | 825 |
| | 833 |
| | 837 |
| | 849 |
| | 884 |
| | 888 |
| 244-2590 | 845 |
| | 853 |
| | 860 |
| | 870 |
| | 892 |
| 244-2591 | 857 |
| | 864 |
| | 867 |
| | 874 |
| 244-2592 | 799 |
| 244-2593 | 811 |
| 244-2594 | 829 |
| | 841 |
| | 849 |
| 244-2595 | 880 |
| 244-2596 | 799 |
| | 803 |
| | 807 |
| | 819 |
| | 822 |
| | 884 |
| 244-2597 | 811 |
| | 815 |
| | 825 |
| | 833 |
| | 837 |
| | 849 |
| 244-2598 | 829 |
| | 841 |
| | 849 |
| | 853 |
| | 860 |
| | 870 |
| | 874 |
| | 877 |
| | 880 |
| | 896 |
| | 900 |
| | 904 |
| 244-2599 | 880 |
| 244-5873 | 330 |
| 244-5880 | 330 |
| 244-5889 | 330 |
| 245-3930 | 579 |
| 245-3933 | 579 |
| 245-6095 | 55 |
| 245-7403 | 330 |
| 245-9129 | 43 |
| 246-1682 | 376 |
| 246-2591 | 118 |
| 246-2596 | 118 |
| 246-2641 | 5 |
| | 739 |
| | 1102 |
| | 1119 |
| | 1226 |
| 246-3144 | 25 |
| 246-4964 | 3 |
| | ▶258 |
| 246-6561 | 170 |
| 246-6562 | 170 |
| 247-2731 | 678 |
| 247-4816 | 1228 |
| | 1229 |
| 247-6433 | 170 |
| | ▶330 |
| 247-6449 | 170 |
| | ▶1077 |
| 247-6453 | ▶170 |
| 247-6457 | 338 |
| 247-7133 | 80 |
| 248-1377 | 471 |
| 248-2046 | 413 |
| 248-6251 | ▶634 |
| | 710 |
| 248-6772 | 1097 |
| | 1148 |
| | 1152 |
| 248-6919 | 49 |
| 249-2460 | 4 |
| | ▶112 |
| 249-2843 | 1217 |
| | 1219 |
| | 1222 |
| 249-3251 | 716 |
| | 718 |
| 249-4364 | 354 |
| | 360 |
| 249-5516 | 6 |
| | ▶174 |
| 249-7742 | 1298 |
| 249-8575 | 1298 |
| 250-0421 | ▶799 |
| 250-0422 | ▶803 |
| 250-0423 | ▶807 |
| 250-0424 | ▶811 |
| 250-0425 | ▶815 |
| 250-0426 | 638 |
| | ▶819 |
| 250-0427 | 638 |
| | ▶822 |
| 250-0428 | ▶825 |
| 250-0429 | ▶829 |
| 250-0430 | 639 |
| | ▶833 |
| 250-0431 | 639 |
| | ▶837 |
| 250-0432 | ▶841 |
| 250-0433 | ▶845 |
| 250-0435 | 639 |
| | ▶849 |
| 250-0436 | ▶853 |
| 250-0437 | ▶857 |
| 250-0438 | ▶860 |
| 250-0439 | 639 |
| | ▶864 |
| 250-0440 | 640 |
| | ▶867 |
| 250-0441 | 640 |
| | ▶870 |
| 250-0442 | 640 |
| | ▶874 |
| 250-0443 | 640 |
| | ▶877 |
| 250-0444 | 641 |
| | ▶880 |
| 250-0445 | ▶638 |
| 250-0446 | ▶638 |
| 250-0447 | ▶639 |
| 250-0448 | ▶639 |
| 250-0450 | ▶639 |
| 250-0451 | ▶639 |
| 250-0452 | ▶640 |
| 250-0453 | ▶640 |
| 250-0454 | ▶640 |
| 250-0455 | ▶640 |
| 250-0456 | ▶641 |
| 250-0471 | 4 |
| | ▶445 |
| 250-0543 | 799 |
| | 811 |
| | 841 |
| | ▶911 |
| 250-0544 | 799 |
| | 819 |
| | 884 |
| | ▶913 |
| 250-0545 | 803 |
| | 815 |
| | 829 |
| | ▶915 |
| 250-0546 | 803 |
| | 807 |
| | 822 |
| | ▶917 |
| 250-0547 | 807 |
| | 825 |
| | ▶924 |
| 250-0548 | 811 |
| | 833 |
| | 864 |
| | 888 |
| | 892 |
| | 896 |
| | 900 |
| | ▶926 |
| 250-0549 | 815 |
| | 825 |
| | 837 |
| | 845 |
| | 857 |
| | 867 |


▶ **PRIMARY REFERENCE**

# PART NUMBER INDEX


| Part | Page |
|---|---|
| | ▶927 |
| 250-0550 . . . . . | 819 |
| | 833 |
| | 849 |
| | ▶929 |
| 250-0551 . . . . . | 822 |
| | 837 |
| | ▶931 |
| 250-0552 . . . . . | 829 |
| | 860 |
| | 877 |
| | ▶940 |
| 250-0565 . . . . . | 841 |
| | 849 |
| | 853 |
| | 874 |
| | ▶942 |
| 250-0566 . . . . . | 845 |
| | 860 |
| | ▶944 |
| 250-0567 . . . . . | 853 |
| | 892 |
| | ▶946 |
| 250-0568 . . . . . | 857 |
| | ▶960 |
| 250-0571 . . . . . | 864 |
| | 874 |
| | ▶962 |
| 250-0572 . . . . . | 867 |
| | 877 |
| | 880 |
| | ▶964 |
| 250-0573 . . . . . | 870 |
| | ▶948 |
| 250-0574 . . . . . | 870 |
| | 904 |
| | ▶950 |
| 250-0576 . . . . . | 880 |
| | ▶966 |
| 250-1128 . . . . . | 428 |
| 250-3799 . . . . . | ▶1224 |
| 250-7695 . . . . . | 118 |
| 251-1005 . . . . . | 43 |
| 251-1080 . . . . . | 170 |
| | ▶376 |
| 251-1730 . . . . . | 85 |
| 251-2382 . . . . . | 1053 |
| 251-3179 . . . . . | 1106 |
| 252-4503 . . . . . | 169 |
| 252-5709 . . . . . | 170 |
| | ▶338 |
| 252-8692 . . . . . | 10 |
| | ▶49 |
| 252-9685 . . . . . | 123 |
| 253-2111 . . . . . | 154 |
| | 354 |
| | 359 |
| 253-4019 . . . . . | 1116 |
| 253-4347 . . . . . | 613 |
| 253-5331 . . . . . | 549 |
| 254-0083 . . . . . | ▶549 |
| 254-0084 . . . . . | ▶549 |
| 254-5960 . . . . . | ▶1053 |
| 254-9162 . . . . . | 80 |
| 254-9166 . . . . . | 434 |
| 254-9177 . . . . . | 89 |
| 254-9181 . . . . . | 434 |
| 254-9243 . . . . . | 344 |
| | 371 |
| 254-9249 . . . . . | 389 |
| | 396 |
| 255-5307 . . . . . | 10 |
| | ▶89 |
| 255-5310 . . . . . | 80 |
| 255-6261 . . . . . | 1097 |
| | 1148 |
| 257-8471 . . . . . | 1113 |
| 258-0696 . . . . . | 330 |
| 258-6468 . . . . . | 460 |
| 258-6469 . . . . . | 460 |
| 258-6599 . . . . . | 598 |
| | 599 |
| 259-2977 . . . . . | 330 |
| 259-5738 . . . . . | ▶3 |
| 260-1744 . . . . . | 1228 |
| 260-1745 . . . . . | 3 |
| | ▶1228 |
| 260-6501 . . . . . | 735 |
| 260-6502 . . . . . | 683 |
| | ▶735 |
| 260-7647 . . . . . | 330 |
| | ▶408 |
| 260-9133 . . . . . | 606 |
| 260-9194 . . . . . | 606 |
| 261-0852 . . . . . | 3 |
| | ▶1055 |
| 261-0853 . . . . . | 1055 |
| 261-8100 . . . . . | 270 |
| 261-8101 . . . . . | 3 |
| | ▶270 |
| 261-8553 . . . . . | 667 |
| 261-9231 . . . . . | 594 |
| 261-9261 . . . . . | 3 |
| | ▶594 |
| 261-9262 . . . . . | 594 |
| 262-0896 . . . . . | ▶208 |
| 262-1408 . . . . . | 408 |
| 262-2068 . . . . . | 594 |
| 262-4932 . . . . . | ▶272 |
| 262-7131 . . . . . | 41 |
| 262-7138 . . . . . | 10 |
| | ▶434 |
| 262-7139 . . . . . | ▶80 |
| | 88 |
| 262-7291 . . . . . | 884 |
| | 888 |
| | ▶933 |
| 262-8382 . . . . . | 41 |
| 263-6435 . . . . . | 896 |
| | ▶967 |
| 263-6436 . . . . . | 900 |
| | ▶968 |
| 263-6437 . . . . . | 905 |
| | ▶969 |
| 263-8506 . . . . . | 10 |
| | ▶126 |
| 263-9458 . . . . . | 376 |
| 264-1433 . . . . . | 700 |
| 264-6077 . . . . . | 169 |
| 264-6078 . . . . . | 169 |
| 265-3855 . . . . . | 10 |
| | ▶52 |
| 265-7814 . . . . . | ▶884 |
| 265-7815 . . . . . | ▶888 |
| 265-7816 . . . . . | ▶892 |
| 265-7817 . . . . . | ▶896 |
| 265-7818 . . . . . | ▶641 |
| 265-7819 . . . . . | 641 |
| | ▶900 |
| 265-7820 . . . . . | ▶641 |
| 265-7822 . . . . . | 641 |
| | ▶904 |
| 265-9125 . . . . . | 450 |
| 266-1598 . . . . . | 718 |
| 266-1599 . . . . . | 716 |
| | 718 |
| 266-1600 . . . . . | 716 |
| 267-2547 . . . . . | 208 |
| 267-6695 . . . . . | 170 |
| | ▶550 |
| 267-6699 . . . . . | 550 |
| 267-9437 . . . . . | 571 |
| 268-3456 . . . . . | 606 |
| 269-1000 . . . . . | 571 |
| 269-1002 . . . . . | ▶571 |
| 269-7892 . . . . . | 622 |
| 269-8080 . . . . . | ▶1228 |
| | 1229 |
| 269-8081 . . . . . | ▶1229 |
| 269-8082 . . . . . | 1229 |
| 269-8083 . . . . . | ▶1229 |
| 269-9317 . . . . . | 564 |
| 269-9318 . . . . . | ▶564 |
| 269-9322 . . . . . | 1077 |
| 272-9800 . . . . . | 200 |
| 273-5573 . . . . . | 3 |
| 275-9638 . . . . . | 716 |
| | 718 |
| 276-1326 . . . . . | 103 |
| 280-9021 . . . . . | 85 |
| 281-0226 . . . . . | 85 |
| 281-2725 . . . . . | 137 |
| | ▶138 |
| 281-3160 . . . . . | ▶484 |
| | 492 |
| 281-3163 . . . . . | 431 |
| | ▶492 |
| 281-3165 . . . . . | ▶431 |
| | 474 |
| 282-4350 . . . . . | 450 |
| 283-1099 . . . . . | 437 |
| 284-0815 . . . . . | 716 |
| | 718 |
| 284-3045 . . . . . | 716 |
| | 718 |
| 288-3803 . . . . . | 62 |
| 290-4752 . . . . . | 331 |
| 294-0529 . . . . . | ▶1298 |
| 294-6007 . . . . . | 57 |


▶ PRIMARY REFERENCE



© 2006 Caterpillar
All Rights Reserved

Printed in U.S.A.