CATERPILLAR®

SEBP3684-11
September 2004

RUTHZIL TRATOR COMERCIAL DE PEÇAS LTDA 11 97083-6812 ROLANDO CITRANGULO

VOLUME I
Pages 1-454

1983
2262

Parts Manual

SIS

See "General Information" for New Parts Manual Features.

140H Motor Grader

CCA1-Up (Machine)
3PD1-Up (Engine)
BJN1-Up (Transmission)

Powered By 3176C Engine
This Parts Manual is also Available in .PDF Format on Compact Disc (CD-ROM) - Caterpillar Form No. SERP3684

Product and Dealer Information

Note: For product identification plate locations, see the section "Product Identification Information" in the Operation and Maintenance Manual.

Delivery Date: _____

Product Information

Model: _____

Product Identification Number: _____

Engine Serial Number: _____

Transmission Serial Number: _____

Generator Serial Number: _____

Attachment Serial Numbers: _____

Attachment Information: _____

Customer Equipment Number: _____

Dealer Equipment Number: _____

Dealer Information

Name: _____ Branch: _____

Address: _____

_____

_____

	Dealer Contact	Phone Number	Hours
Sales:	_____	_____	_____
Parts:	_____	_____	_____
Service:	_____	_____	_____

Informations produit et concessionnaire

Nota: Voir l'emplacement de la plaque signalétique du produit au chapitre "Informations produit" du guide d'utilisation et d'entretien.

Date de livraison: _____

Informations produit

Modèle: _____

Numéro d'identification produit: _____

Numéro de série du moteur: _____

Numéro de série de la boîte de vitesses: _____

Numéro de série de l'alternateur: _____

Numéros de série d'équipement: _____

Informations sur l'équipement: _____

Numéro matériel client: _____

Numéro matériel concessionnaire: _____

Informations concessionnaire

Nom: _____ Agence: _____

Adresse: _____

_____

_____

	Contact concessionnaire	Numéro de téléphone	Heures
Ventes:	_____	_____	_____
Pièces:	_____	_____	_____
Service:	_____	_____	_____

Información del Producto/Distribuidor

Nota: Para saber la ubicación de las placas de identificación del producto, ver la sección "Información sobre identificación del producto" en el Manual de Operación y Mantenimiento.

Fecha de entrega: _____

Información del producto

Modelo: _____

Número de identificación del producto: _____

Número de serie del motor: _____

Número de serie de la transmisión: _____

Número de serie del generador: _____

Números de serie de los accesorios: _____

Información sobre los accesorios: _____

Número del equipo del cliente: _____

Número del equipo del distribuidor: _____

Información del distribuidor

Nombre: _____ Sucursal: _____

Dirección: _____

_____

_____

	Comunicación con el distribuidor	Número de teléfono	Horas
Ventas:	_____	_____	_____
Piezas:	_____	_____	_____
Servicio:	_____	_____	_____

Informações Sobre Produto e Revendedor

Nota: Para localizações da placa de identificação do produto, consulte a seção, "Informações Sobre Identificação do Produto" no Manual de Operação e Manutenção.

Data de Entrega: _____

Informações Sobre o Produto

Modelo: _____

Número de Identificação do Produto: _____

Número de Série do Motor: _____

Número de Série da Transmissão: _____

Número de Série do Gerador: _____

Números de Série de Acessórios: _____

Informações Sobre Acessórios: _____

Número do Equipamento do Cliente: _____

Número do Equipamento do Revendedor: _____

Informações Sobre o Revendedor

Nome: _____ Filial: _____

Endereço: _____

_____

_____

	Contato do Revendedor	Telefone	Horas
Vendas:	_____	_____	_____
Peças:	_____	_____	_____
Serviço:	_____	_____	_____

Produkt- und Händlerinformation

Anmerkung: Für die Lage der Produkt-Identnummer und Seriennummern siehe Abschnitt "Produkt-Identinformation" im Betriebs- und Wartungshandbuch.

Lieferdatum: _____

Produkt-Identinformation

Modell: _____

Produkt-Identnummer: _____

Seriennummer des Motors: _____

Seriennummer des Getriebes: _____

Seriennummer des Generators: _____

Seriennummern der Arbeitsgeräte: _____

Arbeitsgeräteinformation: _____

Kundennummer: _____

Händlernummer: _____

Händlerinformation

Name: _____ Niederlassung: _____

Adresse: _____

_____

_____

	Kontaktperson beim Händler	Telefon	Dienststunden
Verkauf:	_____	_____	_____
Ersatzteile:	_____	_____	_____
Service:	_____	_____	_____

TABLE OF CONTENTS

Name	Page
GENERAL INFORMATION	A24
REPAIR ALTERNATIVES	A43
SUPPLEMENTAL COOLANT ADDITIVES	A48
ENGLISH-PORTUGUESE PARTS NOMENCLATURE	A53
MAINTENANCE PARTS	A61
INDEX	A102
MACHINE ARRANGEMENT	1
CONVERSION AR-CERTIFICATION	1
GENERAL AR	2
ROADING AR	4
SNOW AR-MOTOR GRADER	4
ENGINE ARRANGEMENT	6
ENGINE AR	6
BASIC ENGINE	10
AIR COMPRESSOR GP	10
BELT TENSIONER GP	16
CAMSHAFT GP	20
COVER GP-CYLINDER BLOCK	21
CRANKSHAFT GP	23
CYLINDER BLOCK AS	25
CYLINDER BLOCK GP	27
CYLINDER HEAD AS	29
CYLINDER HEAD GP	31
DRIVE GP-ACCESSORY	33
FASTENER GP-CYLINDER HEAD	34
FLYWHEEL GP	35
GEAR GP-FRONT	36
HOUSING GP-FLYWHEEL	37
HOUSING GP-FRONT	39
LIFTER GP-VALVE	41
LIFTING GP-ENGINE	42
MOUNTING GP-ENGINE & TMSN	43
MOUNTING GP-VALVE MECHANISM	44
PAN GP-OIL	45
PANEL GP-SOUND SUPPRESSION	48
PISTON & ROD GP	49
PLUG GP-CYLINDER BLOCK	50
PLUG GP-ENGINE	51
ROCKER ARM GP	53
SEAL GP-CRANKSHAFT	55
SUPPORT GP-ENGINE	56
SUPPRESSION GP-SOUND	57
VALVE MECHANISM GP	58
LUBRICATION SYSTEM	60
BASE GP-OIL FILTER	60
FILLER GP-ENGINE OIL	62
FILTER GP-ENGINE OIL	63
GAUGE GP-OIL LEVEL (DIPSTICK)	65
LINES GP-ENGINE OIL DRAIN	66
LINES GP-TURBOCHARGER OIL	67
PUMP GP-ENGINE OIL	68
COOLING SYSTEM	70
COOLING AR	70
FAN & MOTOR GP	73
FASTENER GP-RADIATOR	75
HOUSING & REGULATOR GP	76
LINES GP-WATER	77
PLATE GP-RADIATOR	82
PUMP GP-WATER	83
RADIATOR GP	85
AIR INLET AND EXHAUST SYSTEM	87
AFTERCOOLER & MOUNTING GP	87
AIR CLEANER GP	88
LINES GP-AIR	91
MANIFOLD GP-EXHAUST	93
MANIFOLD GP-INLET	94
MUFFLER GP	95
PRECLEANER GP	97
TURBOCHARGER GP	98
FUEL SYSTEM	100
CONTROL GP-GOVERNOR	100
FASTENER GP-FUEL TANK	102
FILTER GP-FUEL	103
FILTER GP-WATER SEP & FUEL	104
LINES GP-FUEL	105
LINES GP-FUEL FILTER	108
LINES GP-FUEL INJECTION	111
PUMP & MTG GP-FUEL TRANSFER	113
PUMP GP-FUEL INJECTION	114
PUMP GP-FUEL PRIMING	115
TANK GP-FUEL	116
VALVE GP-CHECK	125
ELECTRICAL AND STARTING SYSTEM	128
ALARM GP	128
ALTERNATOR GP-CHARGING	130
BATTERY GP	136
BLOCK GP-JUNCTION	140
CIRCUIT BREAKER GP	141
CONTROL & MTG GP-ENGINE ELEK	144
CONTROL GP-ENGINE ELECTRONIC	146
CONTROL GP-SECONDARY STEERING	150
CONTROL GP-UNPROGRAMMED	151
CONVERTER AR-ELECTRICAL	153

TABLE OF CONTENTS

Name	Page
CONVERTER GP-ELECTRICAL	154
ELECTRONICS GP-MONITOR	159
ELECTRONICS GP-POWER TRAIN	159
HEATER GP-JACKET WATER	161
INSTALLATION GP-WARNING BEACON	163
LAMP GP-DOME	165
LAMP GP-FLOOD	166
LAMP GP-HEAD	171
LAMP GP-HEAD & SIGNAL	177
LAMP GP-MARKER	181
LAMP GP-REGISTRATION PLATE	182
LAMP GP-SIGNAL	183
LAMP GP-WARNING BEACON	186
LIGHTING AR-FLOOD	188
LIGHTING AR-FLOOD & SIGNAL	190
LIGHTING GP-BACKUP	191
LIGHTING GP-FLOOD	195
LIGHTING GP-ROADING	241
LIGHTING GP-SIGNAL	242
LIGHTING GP-WARNING	244
LIGHTING GP-WARNING BEACON	249
MOTOR GP-ELECTRIC	251
SENSOR GP-POSITION	252
SENSOR GP-PRESSURE	254
SENSOR GP-SPEED	259
SENSOR GP-TEMPERATURE	262
STARTING AID GP-ETHER	265
STARTING MOTOR GP-ELECTRIC	270
SWITCH GP-BYPASS	273
SWITCH GP-DISCONNECT	274
SWITCH GP-LIGHT	275
SWITCH GP-MAGNETIC	277
SWITCH GP-WIPER	279
WIRING GP-BLADE CUSHION	280
WIRING GP-CAB	282
WIRING GP-ENGINE	293
WIRING GP-FRONT	296
WIRING GP-REAR	305
WIRING GP-SECONDARY STEERING	329
WIRING GP-SHIFT CONSOLE	331
WIRING GP-STEERING CONSOLE	337
WIRING GP-UNIT INJECTOR	344
POWER TRAIN	345
AUTOSHIFT AR	345
CASE & PARTS GP-TRANSMISSION	346
CHAIN GP-DRIVE	350
CLUTCH GP-TRANSMISSION	351
CONTROL GP-CLUTCH	361
CONTROL GP-DIFFERENTIAL LOCK	363
CONTROL GP-TRANSMISSION	365
CONTROL GP-TRANSMISSION HYD	367
COOLER GP-TRANSMISSION OIL	368
COUPLING GP-TORSIONAL	370
DIFFERENTIAL & BEVEL GEAR GP	371
DIFFERENTIAL GP	373
FILLER GP-POWER TRAIN OIL	375
FILTER & MTG GP-OIL	376
FILTER GP-OIL	378
FINAL DRIVE GP	379
LINES GP-TRANSMISSION OIL	381
MOUNTING GP-WHEEL	385
PUMP GP-GEAR	386
SCREEN GP-MAGNETIC	388
SHAFT GP-DRIVE	389
SHAFT GP-INPUT	390
TANDEM & COVER GP	391
TRANSMISSION AR	392
UNIVERSAL JOINT GP	394
VALVE & MTG GP-DIFF LOCK	395
VALVE GP-SELECTOR & PRESS CONT	396
VALVE GP-SOLENOID	402
VALVE GP-TRANSMISSION CONTROL	404
WHEEL & TIRE AR	406
WHEEL & TIRE GP	420
WHEEL AR	448
WHEEL GP	450
FRAME AND BODY	455
AXLE GP-FRONT	455
CASE & FRAME GP	458
COVER GP-ACCESS	459
COVER GP-PROTECTION	462
ENCLOSURE GP-ENGINE	466
FASTENER GP	471
FRAME GP-FRONT	472
GUARD & SUPPORT GP-RADIATOR	474
GUARD GP-BOTTOM	477
GUARD GP-BRAKE LINES	478
GUARD GP-FUEL TANK	479
GUARD GP-PLATFORM	480
HITCH GP-ARTICULATING	484
HITCH GP-TOWING	486
LINES GP-GREASE	488
LINK GP-STEERING	489
MOUNTING GP-REGISTRATION	490
SHIELD GP-DRIVE SHAFT	491
STEP GP	492
SUPPORT AR-REAR CHASSIS	493
SUPPORT GP-FUEL TANK	496
SUPPORT GP-PLATFORM	497
BRAKING SYSTEM	498
AIR DRYER GP	498
BRAKE GP-PARKING	502
BRAKE GP-SERVICE	504
CONTROL GP-PARKING BRAKE	506

TABLE OF CONTENTS

Name	Page
CONTROL GP-SERVICE BRAKE	508
TANK GP-AIR	512
VALVE GP-AIR CONTROL	514
VALVE GP-SOLENOID	517
HYDRAULIC SYSTEM	519
ACCUMULATOR & MTG GP-HYDRAULIC	519
ACCUMULATOR AR-BLADE CUSHION	520
ACCUMULATOR GP	520
ACCUMULATOR GP-HYDRAULIC	522
CONTROL AR-HYDRAULIC	525
CONTROL GP-HYDRAULIC LOCKOUT	529
CONTROL GP-STEERING	530
CYLINDER & MTG GP-ARTICULATION	531
CYLINDER & MTG GP-BLADE LIFT	532
CYLINDER & MTG GP-BLADE TIP	533
CYLINDER & MTG GP-CENTERSHIFT	534
CYLINDER & MTG GP-SCARIFIER	535
CYLINDER & MTG GP-SIDESHIFT	536
CYLINDER & MTG GP-STEERING	537
CYLINDER & MTG GP-WHEEL LEAN	538
CYLINDER GP-ARTICULATION	539
CYLINDER GP-BLADE TIP	540
CYLINDER GP-CENTERSHIFT	541
CYLINDER GP-LIFT	543
CYLINDER GP-RIPPER	544
CYLINDER GP-SCARIFIER	545
CYLINDER GP-SIDESHIFT	546
CYLINDER GP-STEERING	547
CYLINDER GP-WHEEL LEAN	550
DETENT GP-CONTROL VALVE	551
DRIVE GP-CIRCLE	554
HYDRAULIC AR	557
LINES GP-ACCUMULATOR	558
LINES GP-HYDRAULIC	560
LINES GP-HYDRAULIC FAN	572
LINES GP-PUMP	576
LINES GP-RIPPER	585
LINES GP-SECONDARY STEERING	590
LINES GP-STEERING	592
LOCK GP-CENTERSHIFT	595
MOTOR GP-GEAR	596
MOTOR GP-GEROTOR	597
PUMP & MOTOR GP-SEC STEERING	599
PUMP & MTG GP-PISTON	600
PUMP & MTG GP-SECONDARY STEER	601
PUMP GP-PISTON	602
ROTATING GP-PUMP	606
SHAFT GP-PUMP DRIVE	608
STEERING AR-SECONDARY	609
SWASHPLATE GP	610
SWIVEL GP	611
TANK & FILTER GP-HYDRAULIC	612
TANK & MTG GP-HYDRAULIC	614
VALVE & LINKAGE GP	615
VALVE GP-BANK 4	673
VALVE GP-BANK 5	677
VALVE GP-BANK 6	683
VALVE GP-BANK 7	689
VALVE GP-COMBINATION	697
VALVE GP-CONTROL	701
VALVE GP-PUMP CONTROL	749
VALVE GP-PURGE	753
VALVE GP-RELIEF	755
VALVE GP-SHUTTLE	769
VALVE GP-SOLENOID	771
VALVE GP-SOLENOID & MANIFOLD	773
IMPLEMENTS	775
CIRCLE GP	775
DRAWBAR GP	779
PLATE GP-PUSH	781
WORK TOOLS	782
BIT GP	782
BIT GP-END	786
BLADE GP	787
BRACKET GP-SCARIFIER	791
EDGE GP-CUTTING	792
EXTENSION GP-BLADE	794
LIFT GP-BLADE	800
MOUNTING GP-RIPPER	802
MOUNTING GP-SNOW WING	803
RIPPER AR	804
RIPPER GP	805
SCARIFIER AR	807
SCARIFIER GP	808
TOOTH GP-SCARIFIER	814
OPERATOR STATION	816
ACCESSORY GP-CAB	816
AIR CONDITIONER & MOUNTING GP	818
AIR CONDITIONER AR	818
AIR CONDITIONER GP	819
ARMREST GP	823
CAB AR	825
CAB AR-NON-ROPS	825
CAB GP	825
COMPRESSOR & MTG GP-REFRIG	827
COMPRESSOR GP-REFRIGERANT	828
CONDENSER & MTG GP-REFRIGERANT	829
CONSOLE GP-OPERATOR	830
CONVERSION AR-NON-ROPS	834
DOOR GP	835

TABLE OF CONTENTS

Name	Page	Name	Page
DOOR GP-CAB	840		
DUCT & CONTROL GP	848		
DUCT GP	849		
EXTENSION GP-BACKREST	850		
FAN GP-CIRCULATING	852		
FILTER GP-CAB AIR	858		
HAMMER & MOUNTING GP	859		
HEATER & MTG GP-CAB	861		
HEATER AR-CAB	861		
HEATER GP-CAB	863		
HORN GP-AIR	871		
HOUSING GP-SEAT SUSPENSION	876		
INSTALLATION AR-RADIO	879		
INSTALLATION GP-RADIO	880		
INSULATION GP-WEATHER	882		
LINER GP-CAB	884		
LINES GP-AIR CONDITIONER	898		
LINES GP-HEATER	900		
LOUVER GP-CAB	902		
MIRROR GP-REAR VIEW	903		
MODULE GP-QUAD GAUGE	912		
MODULE GP-SPEEDOMETER & TACH	913		
MOUNTING GP-CAB	914		
MOUNTING GP-ROPS	915		
PAN GP-BACKREST	918		
PAN GP-SEAT	919		
PANEL GP-CAB	921		
PANEL GP-INSTRUMENT	925		
ROPS AR-ENCLOSED	932		
ROPS AR-OPEN	934		
ROPS GP-ENCLOSED	935		
ROPS GP-OPEN	937		
SCREEN GP-SUN	938		
SEAT BELT GP	939		
SEAT GP	941		
SEAT GP-SUSPENSION	945		
SUPPORT GP-SEAT	953		
SUSPENSION GP-SEAT	955		
WASHER GP-WINDOW	959		
WINDOW GP	964		
WINDOW GP-CAB	968		
WIPER AR-WINDOW	973		
WIPER GP-WINDOW	974		
SERVICE EQUIPMENT AND SUPPLIES	995		
BOX GP-TOOL	995		
FILM GP	996		
JACK-HYDRAULIC	997		
PLATE & FILM GP	998		
PART NUMBER INDEX	B1		

TABLE DES MATIÈRES

Désignation	Page
GÉNÉRALITÉS	A27
OPTIONS DE RÉPARATION	A44
ADDITIFS POUR LIQUIDE DE REFROIDISSEMENT	A49
PIÈCES DE RECHANGE	A68
INDEX	A118
VERSION DE MACHINE	1
VERSION DE TRANSFORMATION - HOMOLOGATION	1
VUE DU MODÈLE	2
ÉQUIPEMENT POUR DÉPLACEMENT ROUTIER (VERSION)	4
VERSION NEIGE - NIVELEUSE	4
MOTEUR COMPLET	6
MOTEUR (VERSION)	6
MOTEUR STANDARD	10
COMPRESSEUR D'AIR (ASS)	10
TENDEUR DE COURROIE (ASS)	16
ARBRE A CAMES (ASS)	20
BLOC-CYLINDRES - COUVERCLE (ASS)	21
VILEBREQUIN (ASS)	23
BLOC-CYLINDRES (ENS)	25
BLOC-CYLINDRES (ASS)	27
CULASSE (ENS)	29
CULASSE (ASS)	31
ENTRAÎNEMENT AUXILIAIRE (ASS)	33
BOULONNERIE DE LA CULASSE (ASS)	34
VOLANT MOTEUR (ASS)	35
PIGNONNERIE AV (ASS)	36
CARTER DE VOLANT (ASS)	37
CARTER AV (ASS)	39
POUSSOIR DE SOUPAPE (ASS)	41
OEILLETONS DE LEVAGE MOTEUR (ASS)	42
MONTAGE DE MOTEUR ET BOÎTE (ASS)	43
MONTAGE DE CULBUTERIE (ASS)	44
HUILE MOTEUR - CARTER (ASS)	45
PANNEAU D'INSONORISATION (ASS)	48
PISTON ET BIELLE (ASS)	49
BOUCHON DE BLOC-CYLINDRES (ASS)	50
BOUCHON DE MOTEUR (ASS)	51
AXE DE CULBUTEUR (ASS)	53
JOINT DE VILEBREQUIN (ASS)	55
SUPPORT DE MOTEUR (ASS)	56
INSONORISATION (ASS)	57
CULBUTERIE (ASS)	58
CIRCUIT DE GRAISSAGE	60
SUPPORT DE FILTRE À HUILE (ASS)	60
BOUCHON DE REMPLISSAGE D'HUILE MOTEUR (ASS)	62
FILTRE À HUILE MOTEUR (ASS)	63
JAUGE D'HUILE MOTEUR (BAIONNETTE) (ASS)	65
CANALISATIONS-VIDANGE D'HUILE DE MOTEUR (ASS)	66
CANALISATIONS D'HUILE DE TURBOCOMPRESSEUR (ASS)	67
POMPE A HUILE MOTEUR (ASS)	68
CIRCUIT DE REFROIDISSEMENT	70
REFROIDISSEMENT (VERSION)	70
MOTEUR ET VENTILATEUR (ASS)	73
BOULONNERIE DU RADIATEUR (ASS)	75
THERMOSTAT ET BOITIER (ASS)	76
CANALISATIONS D'EAU (ASS)	77
PLAQUE DE RADIATEUR (ASS)	82
POMPE A EAU (ASS)	83
RADIATEUR (ASS)	85
CIRCUIT D'ADMISSION D'AIR ET D'ÉCHAPPEMENT	87
REFROIDISSEUR D'ADMISSION ET MONTAGE (ASS)	87
FILTRE A AIR (ASS)	88
CANALISATIONS D'AIR (ASS)	91
COLLECTEUR D'ÉCHAPPEMENT (ASS)	93
COLLECTEUR D'ADMISSION (ASS)	94
SILENCIEUX (ASS)	95
PREFILTRE (ASS)	97
TURBOCOMPRESSEUR (ASS)	98
CIRCUIT DE CARBURANT	100
COMMANDE DE RÉGULATEUR (ASS)	100
RÉSERVOIR DE CARBURANT - BOULONNERIE (ASS)	102
FILTRE A CARBURANT (ASS)	103
FILTRE DE SÉPARATEUR D'EAU ET DE CARBURANT (ASS)	104
CANALISATIONS DE CARBURANT (ASS)	105
CANALISATIONS DU FILTRE A CARBURANT (ASS)	108

* TRADUCTION NON DISPONIBLE AU MOMENT DE LA PUBLICATION

TABLE DES MATIÈRES

Désignation	Page
CANALISATIONS D'INJECTION DE CARBURANT (ASS)	111
POMPE D'ALIMENTATION ET MONTAGE (ASS)	113
POMPE D'INJECTION DE CARBURANT (ASS)	114
POMPE D'AMORÇAGE DE CARBURANT (ASS)	115
RÉSERVOIR DE CARBURANT (ASS)	116
CLAPET DE RETENUE (ENS)	125
CIRCUIT ÉLECTRIQUE ET DE DÉMARRAGE	128
AVERTISSEUR (ASS)	128
ALTERNATEUR DE CHARGE (ASS)	130
BATTERIE (ASS)	136
BLOC DE BRANCHEMENT (ASS)	140
DISJONCTEUR (ASS)	141
COMMANDE ET MONTAGE - MOTEUR	144
COMMANDE ELECTRONIQUE DE MOTEUR (ASS)	146
COMMANDE DE DIRECTION SECONDAIRE (ASS)	150
*CONTROL GP-UNPROGRAMMED	151
COMMANDE NON PROGRAMMEE (ASS)	152
TRANSFORMATION ÉLECTRIQUE (VERSION)	153
TRANSFORMATION ELECTRIQUE (ASS)	154
ÉLECTRONIQUE-MONITEUR (ASS)	159
ÉLECTRONIQUE DE TRANSMISSION (ASS)	159
EAU DES CHEMISES - RECHAUFFEUR (ASS)	161
MONTAGE - GYROPHARE (ASS)	163
PLAFONNIER (ASS)	165
LAMPE - PHARE (ASS)	166
PHARE AV (ASS)	171
LAMPE - PHARE ET CLIGNOTANT	177
REPÈRE DE LAMPE (ASS)	181
LAMPE-PLAQUE D'IMMATRICULATION (ASS)	182
LAMPE - CLIGNOTANT DE DIRECTION (ASS)	183
LAMPE - GYROPHARE (ASS)	186
ÉCLAIRAGE-PROJECTEURS (VERSION)	188
ÉCLAIRAGE (VERSION)-PROJECTEUR & SIGNAL	190
ECLAIRAGE AR (ASS)	191
ÉCLAIRAGE - PROJECTEURS (ASS)	195
ÉCLAIRAGE - FEUX DE ROUTE (ASS)	241
ÉCLAIRAGE CLIGNOTANT	242
ÉCLAIRAGE - AVERTISSEUR (ASS)	244
ÉCLAIRAGE - GYROPHARE (ASS)	249
MOTEUR ELECTRIQUE (ASS)	251
SONDE - CIRCUIT DE CARBURANT	252
CAPTEUR DE PRESSION (ASS)	254
CAPTEUR DE VITESSE (ASS)	259
CAPTEUR DE TEMPERATURE (ASS)	262
AUXILIAIRE DE DÉMARRAGE À L'ÉTHER	265
DÉMARREUR ÉLECTRIQUE (ASS)	270
INTERRUPTEUR - DÉRIVATION (ASS)	273
ROBINET DE BATTERIE (ASS)	274
INTERRUPTEUR D'ÉCLAIRAGE (ASS)	275
CONTACTEUR MAGNETIQUE (ASS)	277
INTERRUPTEUR D'ESSUIE-GLACE (ASS)	279
CÂBLE D'AMORTISSEUR DE LAME (ASS)	280
CABLAGE DE CABINE (ASS)	282
CABLAGE DE MOTEUR (ASS)	293
CABLAGE AV (ASS)	296
CABLAGE AR (ASS)	305
CABLAGE DE DIRECTION AUXILIAIRE (ASS)	329
CABLAGE DE LA CONSOLE DE CHANGEMENTS DE VITESSE	331
CABLAGE DE LA CONSOLE DE DIRECTION	337
CABLAGE D'INJECTEUR	344
TRANSMISSION	345
CHANGEMENT DE VITESSES AUTOMATIQUE (VERSION)	345
CARTER ET PIECES DE BOITE (ASS)	346
ENTRAÎNEMENT DE CHAÎNE (ASS)	350
EMBRAYAGE DE BOÎTE DE VITESSES (ASS)	351
COMMANDE D'EMBRAYAGE (ASS)	361
COMMANDE DE DIFFÉRENTIEL - VERROUILLAGE (ASS)	363
COMMANDE DE BOITE DE VITESSES (ASS)	365
COMMANDE HYDRAULIQUE DE BOÎTE (ASS)	367
REFROIDISSEUR D'HUILE DE BOÎTE (ASS)	368
ACCOUPLEMENT DE TORSION (ASS)	370
COURONNE ET DIFFERENTIEL (ASS)	371

* TRADUCTION NON DISPONIBLE AU MOMENT DE LA PUBLICATION

TABLE DES MATIÈRES

Désignation	Page
DIFFERENTIEL (ASS)	373
GOULOTTE DE REMPLISSAGE D'HUILE DE TRANSMISSION	375
FILTRE À HUILE ET MONTAGE (ASS)	376
FILTRE A HUILE (ASS)	378
RÉDUCTEURS (ASS)	379
CANALISATIONS D'HUILE DE BOÎTE (ASS)	381
ROUE - GROUPE DE MONTAGE	385
POMPE A ENGRENAGES (ASS)	386
ÉCRAN MAGNÉTIQUE (ASS)	388
ARBRE D'ENTRAÎNEMENT (ASS)	389
ARBRE D'ENTRÉE (ASS)	390
TANDEM ET CARTER (ASS)	391
BOÎTE DE VITESSES (VERSION)	392
JOINT UNIVERSEL (ASS)	394
SOUPAPE ET MONTAGE DE VERROUILLAGE DE DIF. (ASS)	395
SOUPAPE SELECTRICE ET REGULATRICE DE PRESSION	396
SOUPAPE - SOLÉNOÏDE (ASS)	402
DISTRIBUTEUR DE BOITE (ASS)	404
ROUE ET PNEU (VERSION)	406
ROUE ET PNEU (ASS)	420
ROUE (VERSION)	448
JANTE (ASS)	450
CHÂSSIS ET BENNE	455
ESSIEU AV (ASS)	455
CHÂSSIS ET CARTER (ASS)	458
COUVERCLE DE VISITE (ASS)	459
COUVERCLE DE PROTECTION (ASS)	462
CARENAGE DE MOTEUR (ASS)	466
BOULONNERIE (ASS)	471
CHÂSSIS AV (ASS)	472
PROTÈGE-RADIATEUR ET SUPPORT (ASS)	474
BLINDAGE INFÉRIEUR (ASS)	477
BLINDAGE DES CANALISATIONS DES FREINS	478
PROTECTION DU RÉSERVOIR DE CARBURANT (ASS)	479
PROTECTION DE PLATE-FORME (ASS)	480
ATTELAGE D'ARTICULATION (ASS)	484
ATTELAGE-REMORQUAGE (ASS)	486
CANALISATIONS DE GRAISSAGE (ASS)	488
ARTICULATION DE DIRECTION (ASS)	489
MONTAGE - IMMATRICULATION (ASS)	490
ÉCRAN D'ARBRE MOTEUR (ASS)	491
MARCHEPIED (ASS)	492
VERSION DE SUPPORT DE CHÂSSIS ARRIÈRE	493
SUPPORT DU RESERVOIR DE CARBURANT (ASS)	496
PLATE-FORME - SUPPORT (ASS)	497
CIRCUIT DE FREINAGE	498
DESHYDRATEUR (ASS)	498
FREIN DE STATIONNEMENT (ASS)	502
FREIN DE MANOEUVRE (ASS)	504
COMMANDE DE FREIN DE STATIONNEMENT (ASS)	506
FREIN DE MANOEUVRE - COMMANDE (ASS)	508
RÉSERVOIR PNEUMATIQUE (ASS)	512
DISTRIBUTEUR D'AIR (ASS)	514
SOUPAPE - SOLÉNOÏDE (ASS)	517
CIRCUIT HYDRAULIQUE	519
ACCUMULATEUR ET MONTAGE - HYDRAULIQUE (ASS)	519
ACCUMULATEUR - AMORTISSEUR DE LAME (VERSION)	520
ACCUMULATEUR (ASS)	520
ACCUMULATEUR HYDRAULIQUE (ASS)	522
COMMANDE HYDRAULIQUE (VERSION)	525
*CONTROL GP-HYDRAULIC LOCKOUT	529
COMMANDE DE DIRECTION (ASS)	530
VÉRIN D'ARTICULATION ET MONTAGE (ASS)	531
VÉRIN DE RELEVAGE DE LAME ET MONTAGE (ASS)	532
VÉRIN D'INCLINAISON DE LAME ET MONTAGE (ASS)	533
VÉRIN DE DÉPORT DE CERCLE ET MONTAGE (ASS)	534
VÉRIN DE SCARIFICATEUR ET MONTAGE (ASS)	535
VÉRIN DE DÉPORT DE LAME (ASS)	536
VERIN DE DIRECTION ET MONTAGE (ASS)	537
VÉRIN D'INCLINAISON DE ROUE ET MONTAGE (ASS)	538
VÉRIN D'ARTICULATION (ASS)	539
VÉRIN D'INCIDENCE DE LAME (ASS)	540
VÉRIN DE DÉPORT DE CERCLE (ASS)	541
VÉRIN DE LEVAGE (ASS)	543
VERIN DE RIPPER (ASS)	544
VÉRIN DE SCARIFICATEUR (ASS)	545

* TRADUCTION NON DISPONIBLE AU MOMENT DE LA PUBLICATION

TABLE DES MATIÈRES

Désignation	Page
VÉRIN DE DÉPORT DE LAME (ASS)	546
VERIN DE DIRECTION (ASS)	547
VÉRIN D'INCLINAISON DE ROUE (ASS)	550
DISPOSITIF D'ARRÊT DE DISTRIBUTEUR (ASS)	551
ENTRAÎNEMENT DE CERCLE (ASS)	554
VERSION HYDRAULIQUE	557
CANALISATIONS D'ACCUMULATEUR (ASS)	558
CANALISATIONS HYDRAULIQUES (ASS)	560
CANALISATIONS HYDRAULIQUES DE VENTILATEUR (ASS)	572
CANALISATIONS DE POMPE (ASS)	576
CANALISATIONS DU RIPPER (ASS)	585
CANALISATION DE DIRECTION AUXILIAIRE	590
CANALISATIONS DE DIRECTION (ASS)	592
VERROUILLAGE DE DÉPORT DE CERCLE (ASS)	595
MOTEUR À ENGRENAGES (ASS)	596
MOTEUR HYDRAULIQUE (ASS)	597
POMPE DE DIRECTION AUXILIAIRE ET MONTAGE (ASS)	599
POMPE ET MONTAGE - PISTON (ASS)	600
POMPE DE DIRECTION AUXILIAIRE ET MONTAGE (ASS)	601
POMPE A PISTONS (ASS)	602
GROUPE DE ROTATION DE POMPE	606
ARBRE D'ENTRAÎNEMENT DE POMPE (ASS)	608
DIRECTION AUXILIAIRE (VERSION)	609
PLATEAU OSCILLANT (ASS)	610
GROUPE D'ORIENTATION	611
RÉSERVOIR HYDRAULIQUE ET FILTRE (ASS)	612
RÉSERVOIR HYDRAULIQUE ET MONTAGE (ASS)	614
SOUPAPE ET TIMONERIE (ASS)	615
DISTRIBUTEUR 4 ÉLÉMENTS (ASS)	673
DISTRIBUTEUR 5 ÉLÉMENTS (ASS)	677
DISTRIBUTEUR 6 ÉLÉMENTS (ASS)	683
DISTRIBUTEUR 7 ÉLÉMENTS (ASS)	689
SOUPAPE DE COMBINAISON (ASS)	697
DISTRIBUTEUR (ASS)	701
*VALVE GP-PUMP CONTROL	749
SOUPAPE DE PURGE (ASS)	753
CLAPET DE DECHARGE (ASS)	755
VANNE PILOTE (ASS)	769
SOUPAPE - SOLÉNOÏDE (ASS)	771
SOUPAGE - SOLÉNOIDE ET COLLECTEUR	773
ÉQUIPEMENTS	775
CERCLE (ASS)	775
BARRE D'ATTELAGE (ASS)	779
PLAQUE DE POUSSÉE (ASS)	781
OUTILS DE TRAVAIL	782
EMBOUT (ASS)	782
EMBOUT D'EXTRÉMITÉ (ASS)	786
LAME (ASS)	787
SUPPORT DE SCARIFICATEUR (ASS)	791
LAME DE COUPE (ASS)	792
RALLONGE DE LAME (ASS)	794
LEVAGE - LAME (ASS)	800
MONTAGE DE RIPPER (ASS)	802
MONTAGE D'AILERON CHASSE-NEIGE (ASS)	803
RIPPER (VERSION)	804
RIPPER (ASS)	805
SCARIFICATEUR (VERSION)	807
SCARIFICATEUR (ASS)	808
DENT DE SCARIFICATEUR (ASS)	814
POSTE DE CONDUITE	816
VISIÈRE - GROUPE AUXILIAIRE	816
CLIMATISEUR ET MONTAGE (ASS)	818
CLIMATISEUR (VERSION)	818
CLIMATISEUR (ASS)	819
ACCOUDOIR (ASS)	823
CABINE (VERSION)	825
CABINE SANS ROPS (VERSION)	825
CABINE (ASS)	825
COMPRESSEUR ET MONTAGE - RÉFRIGÉRANT (ASS)	827
COMPRESSEUR DE REFRIGERANT (ASS)	828
CONDENSATEUR ET MONTAGE (RÉFRIGÉRANT)	829
CONSOLE DE CONDUITE (ASS)	830
VERSION DE TRANSFORMATION - SANS ROPS	834
PORTE (ASS)	835
PORTIÈRE DE CABINE (ASS)	840
CONDUIT ET COMMANDE (ASS)	848
CONDUIT (ASS)	849
RALLONGE DU DOSSIER DE SIEGE	850
VENTILATEUR DE CABINE (ASS)	852
FILTRE À AIR DE CABINE (ASS)	858
MARTEAU ET MONTAGE (ASS)	859
CHAUFFAGE ET MONTAGE - CABINE (ASS)	861

* TRADUCTION NON DISPONIBLE AU MOMENT DE LA PUBLICATION

TABLE DES MATIÈRES

Désignation	Page
CHAUFFAGE DE CABINE (VERSION)	861
CHAUFFAGE DE CABINE (ASS)	863
KLAXON PNEUMATIQUE (ASS)	871
SUSPENSION DE SIEGE - CARTER (ASS)	876
MONTAGE DE RADIO (VERSION)	879
MONTAGE DE RADIO (ASS)	880
ISOLATION DE CABINE (ASS)	882
CABINE - REVÊTEMENT (ASS)	884
CANALISATIONS DE CLIMATISEUR (ASS)	898
CANALISATIONS DE CHAUFFAGE (ASS)	900
VOLET - CABINE (ASS)	902
RÉTROVISEUR (ASS)	903
MODULE - QUATRE INSTRUMENTS (ASS)	912
MODULE D'INDICATEUR DE VITESSE ET COMPTE-TOURS (ASS)	913
MONTAGE DE CABINE (ASS)	914
MONTAGE DU TOIT ROPS (ASS)	915
COUVERCLE INFÉRIEUR-DOSSIER (ASS)	918
SIEGE - COUVERCLE INFERIEUR (ASS)	919
TABLEAU DE BORD (ASS)	921
TOIT ROPS FERME (VERSION)	932
ROPS OUVERTE (VERSION)	934
CABINE ROPS FERMÉE (ASS)	935
TOIT ROPS - OUVERT (ASS)	937
PARE-SOLEIL (ASS)	938
CEINTURE DE SECURITE (ASS)	939
SIÈGE (ASS)	941
SIÈGE AVEC SUSPENSION (ASS)	945
SUPPORT DE SIÈGE (ASS)	953
SIÈGE AVEC SUSPENSION (ASS)	955
LAVE-GLACE - VITRE (ASS)	959
VITRE (ASS)	964
VITRE DE CABINE (ASS)	968
ESSUIE-GLACE (VERSION)	973
ESSUIE-GLACE (ASS)	974
MATÉRIEL ET FOURNITURES D'ENTRETIEN	995
*BOX GP-TOOL	995
PLAQUE SIGNALÉTIQUE (ASS)	996
CRIC - HYDRAULIQUE	997
PLAQUES SIGNALETIQUES ET AUTOCOLLANTS (ASS)	998
INDEX DE NUMÉROS DE PIÈCES	B1

* TRADUCTION NON DISPONIBLE AU MOMENT DE LA PUBLICATION

CONTENIDO

Nombre	Página
INFORMACIÓN GENERAL	A31
ALTERNATIVAS DE REPARACIÓN	A45
ADITIVOS DE REFRIGERANTE SUPLEMENTARIOS	A50
PIEZAS DE MANTENIMIENTO	A76
INDICE	A136
CONFIGURACIÓN DE MÁQUINA	1
CONFIGURACIÓN DE TRANSFORMACIÓN PARA CERTIFICACIÓN	1
CONFIGURACIÓN GENERAL	2
CONFIGURACIÓN PARA CARRETERA	4
MOTONIVELADORA PARA LA NIEVE (CONFIG)	4
CONFIGURACIÓN DE MOTOR	6
CONFIGURACIÓN DE MOTORES	6
MOTOR BÁSICO	10
COMPRESOR DE AIRE (GR)	10
TENSOR DE CORREA (GR)	16
ÁRBOL DE LEVAS (GR)	20
TAPA DEL BLOQUE MOTOR (GR)	21
CIGÜEÑAL (GR)	23
BLOQUE MOTOR (CONJ)	25
BLOQUE MOTOR (GR)	27
CULATA DE CILINDROS (CONJ)	29
CULATA DE CILINDROS (GR)	31
ACCESORIOS - IMPULSOR DE (GR)	33
CULATA DE CILINDROS - TORNILLERÍA DE LA (GR)	34
VOLANTE (GR)	35
ENGRANAJE DELANTERO (GR)	36
VOLANTE - CAJA DE (GR)	37
CAJA DELANTERA (GR)	39
VÁLVULA DE LEVANTAMIENTO (GR)	41
CÁNCAMOS DE LEVANTAMIENTO DEL MOTOR (GR)	42
MONTAJE DEL MOTOR Y LA TRANSMISIÓN (GR)	43
MECANISMO DE LA VÁLVULA - MONTAJE DEL (GR)	44
CÁRTER - COLECTOR DEL (GR)	45
PANEL DE INSONORIZACIÓN (GR)	48
PISTÓN Y BIELA (GR)	49
TAPÓN DEL BLOQUE MOTOR (GR)	50
TAPÓN DEL MOTOR (GR)	51
BALANCÍN (GR)	53
SELLO DE CIGÜEÑAL (GR)	55
MOTOR - SOPORTE DEL (GR)	56
INSONORIZADOR (GR)	57
MECANISMO DE VÁLVULAS (GR)	58
SISTEMA DE LUBRICACIÓN	60
FILTRO DE ACEITE - BASE DEL (GR)	60
TUBO DE LLENADO DE ACEITE (GR)	62
FILTRO DE ACEITE DEL MOTOR (GR)	63
INDICADOR DEL NIVEL DE ACEITE (VARILLA) (GR)	65
TUBERIAS DE DRENAJE DE ACEITE DE MOTOR (GR)	66
TURBOCOMPRESOR - TUBERÍAS DE ACEITE DEL (GR)	67
BOMBA DE ACEITE DEL MOTOR (GR)	68
SISTEMA DE ENFRIAMIENTO	70
CONFIGURACIÓN DE ENFRIAMIENTO	70
MOTOR Y VENTILADOR (GR)	73
TORNILLERIA DEL RADIADOR	75
REGULADOR Y CAJA (GR)	76
TUBERÍAS DEL AGUA (GR)	77
*PLATE GP-RADIATOR	82
BOMBA DE AGUA (GR)	83
RADIADOR (GR)	85
SISTEMA DE ADMISIÓN Y ESCAPE DE AIRE	87
GRUPO DE POSTENFRIAMIENTO Y MONTAJE	87
FILTRO DE AIRE (GR)	88
AIRE - TUBERÍAS DE (GR)	91
MÚLTIPLE DE ESCAPE (GR)	93
MÚLTIPLE DE ADMISIÓN (GR)	94
SILENCIADOR (GR)	95
ANTEFILTRO (GR)	97
TURBOCOMPRESOR (GR)	98
SISTEMA DE COMBUSTIBLE	100
CONTROL DE REGULADOR (GR)	100
TORNILLERÍA DEL TANQUE DE COMBUSTIBLE	102
FILTRO DE COMBUSTIBLE (GR)	103
FILTRO DE COMBUSTIBLE Y SEPARADOR DE AGUA (GR)	104
TUBERÍAS DE COMBUSTIBLE (GR)	105
TUBERÍAS DEL FILTRO DE COMBUSTIBLE	108
TUBERÍAS DE INYECCIÓN DE COMBUSTIBLE (GR)	111

* NO HAY TRADUCCION DISPONIBLE EN EL MOMENTO DE LA IMPRESION

CONTENIDO

Nombre	Página
BOMBA DE TRANSFERENCIA DE COMBUSTIBLE Y MONTAJE (GR)	113
BOMBA DE INYECCIÓN DE COMBUSTIBLE (GR)	114
BOMBA DE CEBADO DE COMBUSTIBLE (GR)	115
COMBUSTIBLE - TANQUE DE (GR)	116
VÁLVULA DE RETENCIÓN (GR)	125
SISTEMA ELÉCTRICO Y DE ARRANQUE	128
ALARMA (GR)	128
CARGA - ALTERNADOR DE (GR)	130
BATERÍA (GR)	136
BLOQUE DE EMPALME (GR)	140
DISYUNTOR DE CIRCUITO (GR)	141
CONTROL ELECTRÓNICO DEL MOTOR Y MONTAJE	144
CONTROL ELECTRÓNICO DEL MOTOR (GR)	146
CONTROL DE LA DIRECCION SECUNDARIA (GR)	150
*CONTROL GP-UNPROGRAMMED	151
CONTROL NO PROGRAMADO (GR)	152
CONVERTIDOR ELÉCTRICO (CONFIG)	153
CONVERTIDOR ELÉCTRICO (GR)	154
ELECTRONICA DE MONITOR (GR)	159
TREN DE FUERZA-GRUPO ELECTRÓNICO	159
AGUA DE LAS CAMISAS - CALENTADOR DEL (GR)	161
BALIZA DE ADVERTENCIA (GR) - INSTALACIÓN	163
LÁMPARA DEL TECHO (GR)	165
REFLECTOR (GR)	166
LÁMPARA DE FARO DELANTERO (GR)	171
LÁMPARA DE LUZ DELANTERA Y DE SEÑAL (GR)	177
LAMPARA MARCADORA (GR)	181
LAMPARA DE PLACA DE REGISTRO (GR)	182
LUZ DE SEÑAL DE GIRO (GR)	183
LÁMPARA DE BALIZA DE ADVERTENCIA (GR)	186
REFLECTORES (CONFIG)	188
LUCES DE REFLECTOR Y SEÑAL (CONFIG)	190
LUCES DE RETROCESO (GR)	191
LUCES DE REFLECTOR (GR)	195
LUCES DE DESPLAZAMIENTO (GR)	241
LUCES DE GIRO (GR)	242
LUCES DE ADVERTENCIA (GR)	244
LUZ DE BALIZA (GR)	249
MOTOR ELÉCTRICO (GR)	251
DETECTOR DE POSICIÓN (SISTEMA DE COMBUST.) (GR)	252
SENSOR DE PRESIÓN (GR)	254
SENSOR DE VELOCIDAD (GR)	259
SENSOR DE TEMPERATURA (GR)	262
AUXILIAR DE ARRANQUE CON ÉTER (GR)	265
MOTOR DE ARRANQUE ELÉCTRICO (GR)	270
INTERRUPTOR DE DERIVACIÓN	273
DISYUNTOR (GR)	274
INTERRUPTOR DE LUZ (GR)	275
INTERRUPTOR MAGNÉTICO (GR)	277
INTERRUPTOR DEL LIMPIADOR (GR)	279
GRUPO DE CABLES, HOJA AMORTIGUADORA	280
CABLES DE LA CABINA (GR)	282
CABLES DEL MOTOR (GR)	293
CABLES DELANTEROS (GR)	296
CABLES POSTERIORES (GR)	305
CABLES DE LA DIRECCIÓN SECUNDARIA	329
CABLES DE LA CONSOLA DE CAMBIOS (GR)	331
CABLES DE LA CONSOLA DE DIRECCIÓN (GR)	337
CABLES DE INYECTOR (GR)	344
TREN DE FUERZA	345
CAMBIO AUTOMÁTICO DE VELOCIDADES (CONFIG)	345
CAJA Y PIEZAS DE LA TRANSMISIÓN (GR)	346
CADENA DE IMPULSIÓN (GR)	350
EMBRAGUE DE LA TRANSMISIÓN (GR)	351
CONTROL DEL EMBRAGUE (GR)	361
CONTROL DE TRABA DEL DIFERENCIAL (GR)	363
CONTROL DE LA TRANSMISIÓN (GR)	365
CONTROL HIDRÁULICO DE LA TRANSMISIÓN (GR)	367
ENFRIADOR DE ACEITE DE LA TRANSMISIÓN (GR)	368
ACOPLAMIENTO TORSIONAL (GR)	370
DIFERENCIAL Y CORONA (GR)	371
DIFERENCIAL (GR)	373
TUBO DE LLENADO DE ACEITE DE LA TRANSMISIÓN (GR)	375
FILTRO DE ACEITE Y MONTAJE (GR)	376

* NO HAY TRADUCCION DISPONIBLE EN EL MOMENTO DE LA IMPRESION

CONTENIDO

Nombre	Página
FILTRO DE ACEITE (GR)	378
MANDO FINAL (GR)	379
TUBERÍAS DE ACEITE DE LA TRANSMISIÓN (GR)	381
MONTAJE DE RUEDA (GR)	385
BOMBA DE ENGRANAJES (GR)	386
REJILLA MAGNÉTICA (GR)	388
EJE DE MANDO (GR)	389
EJE DE ENTRADA (GR)	390
TÁNDEM Y CUBIERTA (GR)	391
TRANSMISION (CONFIG)	392
JUNTA UNIVERSAL (GR)	394
VÁLVULA DE LA TRABA DEL DIFERENCIAL Y MONTAJE (GR)	395
VÁLVULA SELECTORA Y DE CONTROL DE PRESIÓN (GR)	396
VÁLVULA DE SOLENOIDE (GR)	402
VÁLVULA DE CONTROL DE LA TRANSMISIÓN (GR)	404
RUEDA Y LLANTA (CONFIG)	406
RUEDA Y NEUMÁTICO (GR)	420
RUEDA (CONFIG)	448
RUEDA (GR)	450
BASTIDOR Y CAJA	455
EJE DELANTERO (GR)	455
CAJA Y BASTIDOR (GR)	458
GRUPO DE TAPA, ACCESO	459
CUBIERTA PROTECTORA (GR)	462
COMPARTIMIENTO DEL MOTOR (GR)	466
TORNILLERÍA (GR)	471
BASTIDOR DELANTERO (GR)	472
PROTECTOR Y SOPORTE DEL RADIADOR (GR)	474
PROTECTOR INFERIOR (GR)	477
PROTECTOR DE LAS TUBERÍAS DE LOS FRENOS (GR)	478
PROTECTOR DEL TANQUE DE COMBUSTIBLE (GR)	479
PROTECTOR DE LA PLATAFORMA (GR)	480
ENGANCHE ARTICULADO (GR)	484
ENGANCHE DE REMOLQUE (GR)	486
TUBERÍAS DE ENGRASE (GR)	488
TIRANTE DE DIRECCIÓN (GR)	489
MONTAJE-REGISTRO (GR)	490
PROTECTOR TÉRMICO DEL EJE DE MANDO (GR)	491
ESTRIBO DEL OPERADOR (GR)	492
CONFIGURACIÓN DE SOPORTE DE CHASIS TRASERO	493
SOPORTE DEL TANQUE DE COMBUSTIBLE (GR)	496
SOPORTE DE PLATAFORMA (GR)	497
SISTEMA DE FRENOS	498
DESHIDRATADOR (GR)	498
FRENO DE ESTACIONAMIENTO (GR)	502
FRENO DE SERVICIO (GR)	504
CONTROL DEL FRENO DE ESTACIONAMIENTO	506
FRENO DE SERVICIO - CONTROL (GR)	508
TANQUE DE AIRE (GR)	512
CONTROL DE AIRE-VÁLVULA	514
VÁLVULA DE SOLENOIDE (GR)	517
SISTEMA HIDRÁULICO	519
ACUMULADOR HIDRAULICO Y MONTAJE (GR)	519
ACUMULADOR DE AMORTIGUACIÓN DE LA HOJA (CONFIG)	520
ACUMULADOR (GR)	520
ACUMULADOR HIDRAULICO (GR)	522
CONTROL HIDRÁULICO (CONFIG)	525
*CONTROL GP-HYDRAULIC LOCKOUT	529
CONTROL DE DIRECCIÓN (GR)	530
CILINDRO DE ARTICULACIÓN Y MONTAJE (GR)	531
CILINDRO DE LEVANTAMIENTO DE HOJA Y MONTAJE (GR)	532
CILINDRO DE LA PUNTA DE LA HOJA Y MONTAJE (GR)	533
CILINDRO DE DESPLAZAMIENTO DEL CÍRCULO Y MONTAJE (GR)	534
CILINDRO DE ESCARIFICADOR Y MONTAJE (GR)	535
CILINDRO DE DESPLAZAMIENTO LATERAL Y MONTAJE (GR)	536
CILINDRO DE DIRECCIÓN Y MONTAJE (GR)	537
CILINDRO DE INCLINACIÓN DE RUEDA Y MONTAJE (GR)	538
ARTICULACIÓN DE CILINDRO (GR)	539
CILINDRO DE INCLINACIÓN DE LA HOJA (GR)	540
CILINDRO DE DESPLAZAMIENTO DEL CÍRCULO (GR)	541
CILINDRO DE LEVANTAMIENTO (GR)	543
CILINDRO DE DESGARRADOR (GR)	544
CILINDRO DE ESCARIFICADOR (GR)	545
CILINDRO DE DESPLAZAMIENTO LATERAL (GR)	546

* NO HAY TRADUCCION DISPONIBLE EN EL MOMENTO DE LA IMPRESION

CONTENIDO

Nombre	Página
CILINDRO DE DIRECCIÓN (GR)	547
CILINDRO DE INCLINACIÓN DE LAS RUEDAS (GR)	550
TOPE DE VÁLVULA DE CONTROL (GR)	551
MANDO DEL CIRCULO (GR)	554
HIDRÁULICA (CONFIG)	557
TUBERÍAS DEL ACUMULADOR (GR)	558
TUBERÍAS HIDRÁULICAS (GR)	560
TUBERÍAS HIDRÁULICAS DEL VENTILADOR (GR)	572
BOMBA - TUBERÍAS DE (GR)	576
TUBERÍAS DEL DESGARRADOR (GR)	585
TUBERÍAS DE LA DIRECCIÓN SECUNDARIA (GR)	590
TUBERÍAS DE DIRECCIÓN (GR)	592
TRABA DE DESPLAZAMIENTO DEL CIRCULO (GR)	595
MOTOR DE ENGRANAJES (GR)	596
MOTOR HIDRÁULICO DE ENGRANAJES (GR)	597
BOMBA Y MOTOR DE DIRECCION SECUNDARIA (GR)	599
BOMBA Y MONTAJE DEL PISTÓN (GR)	600
BOMBA Y MONTAJE DE LA DIRECCIÓN SECUNDARIA (GR)	601
BOMBA DE PISTONES (GR)	602
GRUPO GIRATORIO DE BOMBA	606
EJE DE MANDO DE LA BOMBA (GR)	608
DIRECCIÓN SECUNDARIA (CONFIG)	609
PLATO OSCILANTE (GR)	610
UNIÓN GIRATORIA (GR)	611
TANQUE Y FILTRO HIDRÁULICOS (GR)	612
TANQUE HIDRÁULICO Y MONTAJE (GR)	614
VÁLVULA Y VARILLAJE (GR)	615
GRUPO DE 4 VÁLVULAS HIDRÁULICAS	673
BANCADA 5 (GR)	677
VÁLVULAS HIDRÁULICAS - GRUPO DE 6	683
VÁLVULAS HIDRÁULICAS - GRUPO DE 7	689
VÁLVULA DE COMBINACIÓN (GR)	697
VÁLVULA DE CONTROL (GR)	701
*VALVE GP-PUMP CONTROL	749
VALVULA DE PURGA (GR)	753
VÁLVULA DE ALIVIO (GR)	755
VÁLVULA DE LANZADERA (GR)	769
VÁLVULA DE SOLENOIDE (GR)	771
VÁLVULA DE SOLENOIDE Y MÚLTIPLE (GR)	773
IMPLEMENTOS	775
CÍRCULO (GR)	775
BARRA DE TIRO (GR)	779
PLANCHA DE EMPUJE (GR)	781
HERRAMIENTAS	782
CANTONERA (GR)	782
CANTONERA DE EXTREMO (GR)	786
HOJA (GR)	787
SOPORTE DEL ESCARIFICADOR (GR)	791
CUCHILLA (GR)	792
EXTENSIÓN DE LA HOJA (GR)	794
LEVANTAMIENTO - HOJA DE (GR)	800
MONTAJE DEL DESGARRADOR (GR)	802
GRUPO DE MONTAJE DE ALA PARA NIEVE	803
DESGARRADOR (CONFIG)	804
DESGARRADOR (GR)	805
ESCARIFICADOR (CONFIG)	807
GRUPO ESCARIFICADOR	808
DIENTE DE ESCARIFICADOR (GR)	814
PUESTO DEL OPERADOR	816
ACCESORIOS DE LA CABINA (GR)	816
ACONDICIONADOR DE AIRE Y MONTAJE (GR)	818
ACONDICIONADOR DE AIRE (CONFIG)	818
ACONDICIONADOR DE AIRE (GR)	819
POSABRAZOS (GR)	823
CABINA (CONFIG)	825
CABINA SIN ROPS (CONFIG)	825
CABINA (GR)	825
COMPRESOR DE REFRIGERANTE Y GRUPO DE MONTAJE	827
COMPRESOR DE REFRIGERANTE (GR)	828
CONDENSADOR DEL REFRIGERANTE Y MONTAJE (GR)	829
CONSOLA DEL OPERADOR (GR)	830
CONJUNTO DE MODIFICACIÓN (SIN ROPS)	834
PUERTA (GR)	835
PUERTA DE CABINA	840
CONDUCTO Y CONTROL (GR)	848
CONDUCTO (GR)	849
EXTENSIÓN DEL RESPALDO (GR)	850
VENTILADOR DE CIRCULACION	852
FILTRO DE AIRE DE LA CABINA (GR)	858

* NO HAY TRADUCCION DISPONIBLE EN EL MOMENTO DE LA IMPRESION

CONTENIDO

Nombre	Página
MARTILLO Y MONTAJE (GR)	859
CALEFACCIÓN Y MONTAJE DE LA CABINA (GR)	861
CALEFACCIÓN DE LA CABINA (CONFIG)	861
CALEFACCIÓN DE LA CABINA (GR)	863
BOCINA DE AIRE (GR)	871
CAJA DE LA SUSPENSIÓN DEL ASIENTO (GR)	876
INSTALACIÓN DE RADIO (CONFIG)	879
INSTALACIÓN DE RADIO (GR)	880
GRUPO DE AISLAMIENTO DE LA CABINA	882
REVESTIMIENTO DE LA CABINA (GR)	884
TUBERÍAS DE ACONDICIONADOR DE AIRE (GR)	898
TUBERÍAS DE LA CALEFACCIÓN (GR)	900
PERSIANAS DE LA CABINA (GR)	902
RETROVISOR (GR)	903
MODULO ELECTRÓNICO DE CUATRO INDICADORES (GR)	912
MÓDULO DEL TACÓMETRO Y DEL VELOCÍMETRO (GR)	913
GRUPO DE MONTAJE DE LA CABINA	914
MONTAJE DE LA ESTRUCTURA ROPS (GR)	915
GRUPO DE SOPORTE DEL RESPALDO	918
CUBIERTA INFERIOR DEL ASIENTO DEL OPERADOR (GR)	919
PANEL DE LA CABINA (GR)	921
TABLERO DE INSTRUMENTOS (GR)	925
INCLUYE ROPS (CONFIG)	932
ESTRUCTURA ROPS ABIERTA	934
CABINA ROPS CERRADA (GR)	935
ESTRUCTURA ROPS ABIERTA (GR)	937
PERSIANA PARA EL SOL (GR)	938
CINTURÓN DE SEGURIDAD (GR)	939
ASIENTO (GR)	941
SUSPENSIÓN - ASIENTO CON (GR)	945
SOPORTE DEL ASIENTO (GR)	953
ASIENTO CON SUSPENSIÓN (GR)	955
LAVAPARABRISAS DE LA VENTANA (GR)	959
VENTANA (GR)	964
VENTANA DE LA CABINA (GR)	968
LIMPIAPARABRISAS (CONFIG)	973
LIMPIAPARABRISAS DE LA VENTANA (GR)	974
EQUIPO Y SUMINISTRO DE SERVICIOS	995
*BOX GP-TOOL	995
ETIQUETA DE ADVERTENCIA (GR)	996
GATO HIDRÁULICO	997
CALCOMANÍAS Y PLACAS DE IDENTIFICACIÓN (GR)	998
INDICE DE NUMEROS DE PIEZA	B1

* NO HAY TRADUCCION DISPONIBLE EN EL MOMENTO DE LA IMPRESION

ÍNDICE

Designação	Página
INFORMAÇÃO GERAL	A35
ALTERNATIVAS DE REPARO	A46
ADITIVOS SUPLEMENTARES DO LÍQUIDO ARREFECEDOR	A51
NOMENCLATURA DE PEÇAS INGLÊS-PORTUGUÊS	A53
PEÇAS DE MANUTENÇÃO	A85
ÍNDICE	A155
MÁQUINA - ARRANJO	1
GR. DE CONVERSÃO - CERTIFICADO	1
ARRANJO GERAL	2
ARRANJO RODOVIÁRIO	4
AR. PARA NEVE - MOTONIVELADORA	4
MOTOR - ARRANJO	6
MOTOR	6
MOTOR BÁSICO	10
COMPRESSOR DE AR	10
TENSOR DA CORREIA	16
EIXO-COMANDO DE VÁLVULA	20
TAMPA - BLOCO DO MOTOR	21
VIRABREQUIM	23
BLOCO DO MOTOR	25
CABEÇOTE DO MOTOR	29
COMANDO DE ACESSÓRIOS	33
FIXADORES - CABEÇOTE DO MOTOR	34
VOLANTE DO MOTOR	35
ENGRENAGENS DE DISTRIBUIÇÃO	36
CAIXA DO VOLANTE DO MOTOR	37
CAIXA DIANTEIRA	39
TUCHO DA VÁLVULA	41
LEVANTAMENTO DO MOTOR	42
MONTAGEM - MOTOR E TRANSMISSÃO	43
MONTAGEM - MECANISMO DAS VÁLVULAS	44
CÁRTER DO ÓLEO DO MOTOR	45
PAINEL- REDUÇÃO DE RUÍDO	48
PISTÃO E BIELA	49
BUJÃO DO BLOCO DO CILINDRO	50
BUJÃO DO MOTOR	51
BALANCIM	53
RETENTOR DO VIRABREQUIM	55
SUPORTE DO MOTOR	56
REDUÇÃO DE RUÍDO	57
MECANISMO DAS VÁLVULAS	58
SISTEMA DE LUBRIFICAÇÃO	60
BASE DO FILTRO DE ÓLEO	60
BOCAL DE ENCHIMENTO DE ÓLEO DO MOTOR	62
FILTRO - ÓLEO DO MOTOR	63
INDICADOR - NÍVEL DO ÓLEO (VARETA)	65
TUBULAÇÕES - DRENAGEM DE ÓLEO DO MOTOR	66
TUBOS - ÓLEO DO TURBOALIMENTADOR	67
BOMBA DE ÓLEO - MOTOR	68
SISTEMA DE ARREFECIMENTO	70
ARREFECIMENTO	70
MOTOR E VENTILADOR	73
FIXADORES - RADIADOR	75
TERMOSTATO / REGULADOR DE TEMPERATURA	76
TUBOS - ÁGUA	77
PLACA-RADIADOR	82
BOMBA DE ÁGUA	83
RADIADOR	85
SISTEMA DE ADMISSÃO DE AR E DE ESCAPE	87
PÓS-ARREFECEDOR E MONTAGEM	87
PURIFICADOR DE AR	88
TUBOS - AR	91
COLETOR DE ESCAPE	93
COLETOR DE ADMISSÃO	94
SILENCIADOR	95
PRÉ-PURIFICADOR	97
TURBOALIMENTADOR	98
SISTEMA DE COMBUSTÍVEL	100
CONTROLE DO GOVERNADOR	100
FIXADORES - TANQUE DE COMBUSTÍVEL	102
FILTRO - COMBUSTÍVEL	103
FILTRO DE COMBUSTÍVEL E SEPARADOR DE ÁGUA	104
TUBOS - COMBUSTÍVEL	105
TUBOS - FILTRO DO COMBUSTÍVEL	108
TUBOS - INJEÇÃO DO COMBUSTÍVEL	111
BOMBA E MONTAGEM - TRANSFERÊNCIA DE COMBUSTÍVEL	113
BOMBA DE INJEÇÃO DO COMBUSTÍVEL	114

* TRADUÇÃO NÃO DISPONÍVEL NO MOMENTO DA IMPRESSÃO

ÍNDICE

Designação	Página
BOMBA DE ESCORVA DO COMBUSTÍVEL	115
TANQUE DE COMBUSTÍVEL	116
VÁLVULA DE RETENÇÃO	125
SISTEMA ELÉTRICO E DE PARTIDA	128
ALARME	128
ALTERNADOR DE CORRENTE	130
BATERIA	136
BLOCO DE JUNÇÃO	140
INTERRUPTOR - CIRCUITO	141
CONTROLE ELETRÔNICO E MONTAGEM - MOTOR	144
CONTROLE ELETRÔNICO - MOTOR	146
CONTROLE DA DIREÇÃO SECUNDÁRIA	150
*CONTROL GP-UNPROGRAMMED	151
CONTROLE - NÃO PROGRAMADO	152
CONVERSOR ELÉTRICO	153
SISTEMA ELETRÔNICO - MONITOR	159
SISTEMA ELETRÔNICO - TREM DE FORÇA	159
AQUECEDOR DA ÁGUA DO MOTOR	161
INSTALAÇÃO DO PISCA-PISCA DE ADVERTÊNCIA	163
LÂMPADA - TETO	165
LÂMPADA - FAROL	166
FAROL DIANTEIRO	171
LÂMPADA DIANTEIRA E DE SINAL	177
LÀMPADA - MARCADORA	181
LAMPADA-PLACA DE REGISTRO	182
LÂMPADA - SINALIZAÇÃO	183
LUZ GIRATÓRIA DE ALARME	186
SISTEMA DE ILUMINAÇÃO - FARÓIS	188
ILUMINAÇÃO - FAROL E SINALIZAÇÃO	190
ILUMINAÇÃO - MARCHA A RÉ	191
SISTEMA DE ILUMINAÇÃO - FARÓIS	195
ILUMINAÇÃO - RODOVIÁRIA	241
ILUMINAÇÃO - SINALIZAÇÃO	242
SISTEMA DE ILUMINAÇÃO - ADVERTÊNCIA	244
SIST. DE ILUMINAÇÃO - PISCA-PISCA GIRATÓRIO DE ADVERTÊNCIA	249
MOTOR ELÉTRICO	251
EMISSOR - POSIÇÃO	252
SENSOR - PRESSÃO	254
SENSOR DE VELOCIDADE	259
SENSOR - TEMPERATURA	262
AUXILIAR DE PARTIDA A ÉTER	265
MOTOR ELÉTRICO DE PARTIDA	270
INTERRUPTOR DE DERIVAÇÃO	273
CHAVE GERAL	274
INTERRUPTOR - LUZES	275
INTERRUPTOR - MAGNÉTICO	277
INTERRUPTOR - LIMPADOR DO PÁRA-BRISA	279
FIAÇÃO - AMORTECEDOR DA LÂMINA	280
CABOS/FIOS ELÉTRICOS - CABINE	282
CABOS/FIOS ELÉTRICOS - MOTOR	293
CABOS/FIOS ELÉTRICOS - DIANTEIROS	296
CABOS/FIOS ELÉTRICOS - TRASEIROS	305
CABOS/FIOS ELÉTRICOS - DIREÇÃO SECUNDÁRIA	329
CABOS/FIOS ELÉTRICOS - CONSOLE DA TRANSMISSÃO	331
CABOS/FIOS ELÉTRICOS - CONSOLE DA DIREÇÃO	337
CABOS/FIOS ELÉTRICOS - INJETOR	344
TREM DE FORÇA	345
CONTROLE ELÉTRICO DAS MARCHAS	345
CAIXA E COMPONENTES - TRANSMISSÃO	346
CORRENTE - COMANDO	350
EMBREAGEM DA TRANSMISSÃO	351
CONTROLE DA EMBREAGEM	361
CONTROLE DA TRAVA DO DIFERENCIAL	363
CONTROLE DA TRANSMISSÃO	365
CONTROLE HIDRÁULICO DA TRANSMISSÃO	367
ARREFECEDOR DE ÓLEO DA TRANSMISSÃO	368
ACOPLAMENTO TORSIONAL	370
DIFERENCIAL E COROA	371
DIFERENCIAL	373
BOCAL DE ENCHIMENTO DE ÓLEO DO TREM DE FORÇA	375
FILTRO DO ÓLEO E MONTAGEM	376
FILTRO - ÓLEO	378
COMANDO FINAL	379
TUBOS - ÓLEO DA TRANSMISSÃO	381
MONTAGEM - RODA	385
BOMBA DE ENGRENAGENS	386
FILTRO - MAGNÉTICO	388
EIXO DE TRANSMISSÃO	389
EIXO DE ENTRADA	390
TANDEM E TAMPA	391
TRANSMISSÃO	392
JUNTA UNIVERSAL	394

* TRADUÇÃO NÃO DISPONÍVEL NO MOMENTO DA IMPRESSÃO

ÍNDICE

Designação	Página
VÁLVULA E MONTAGEM - TRAVA DO DIFERENCIAL	395
VÁLVULA SELETORA E CONTROLE DE PRESSÃO	396
VÁLVULA SOLENÓIDE	402
VÁLVULA DE CONTROLE - TRANSMISSÃO	404
RODA E PNEU	406
RODA	448
CHASSI E CARROCERIA	455
EIXO DIANTEIRO	455
CAIXA E CHASSI	458
TAMPA - ACESSO	459
TAMPA - PROTEÇÃO	462
COBERTURA DO MOTOR	466
FIXADORES	471
CHASSI DIANTEIRO	472
PROTETOR E SUPORTE DO RADIADOR	474
PROTETOR INFERIOR	477
PROTETOR - TUBOS DO FREIO	478
PROTETOR - TANQUE DE COMBUSTÍVEL	479
PROTETOR - PLATAFORMA	480
ENGATE - ARTICULAÇÃO	484
ENGATE DO REBOQUE	486
TUBOS - GRAXA	488
ELO - DIREÇÃO	489
MONTAGEM DA PLACA DE REGISTRO	490
BLINDAGEM DO EIXO DA TRANSMISSÃO	491
DEGRAU	492
SUPORTE - CHASSI TRASEIRO	493
SUPORTE DO TANQUE DE COMBUSTÍVEL	496
SUPORTE - PLATAFORMA	497
SISTEMA DE FREIO	498
SECADOR DE AR	498
FREIO DE ESTACIONAMENTO	502
FREIO DE SERVIÇO	504
CONTROLE DO FREIO DE ESTACIONAMENTO	506
CONTROLE DO FREIO DE SERVIÇO	508
TANQUE DE AR	512
VÁLVULA DE CONTROLE DO AR	514
VÁLVULA SOLENÓIDE	517
SISTEMA HIDRÁULICO	519
ACUMULADOR HIDRÁULICO E MONTAGEM	519
ACUMULADOR DO AMORTECEDOR DA LÂMINA	520
ACUMULADOR	520
ACUMULADOR HIDRÁULICO	522
CONTROLE HIDRÁULICO	525
*CONTROL GP-HYDRAULIC LOCKOUT	529
CONTROLE DE DIREÇÃO	530
CILINDRO E MONTAGEM - ARTICULAÇÃO	531
CILINDRO E MONTAGEM - LEVANTAMENTO DA LÂMINA	532
CILINDRO E MONTAGEM - TOMBAMENTO DA LÂMINA	533
CILINDRO E MONTAGEM - DESLOCAMENTO DO CÍRCULO	534
CILINDRO E MONTAGEM - ESCARIFICADOR	535
CILINDRO E MONTAGEM - DESLOCAMENTO DA LÂMINA	536
CILINDRO DE DIREÇÃO E MONTAGEM	537
CILINDRO E MONTAGEM - INCLINAÇÃO DAS RODAS	538
CILINDRO DE ARTICULAÇÃO	539
CILINDRO DE TOMBAMENTO DA LÂMINA	540
CILINDRO DE DESLOCAMENTO LATERAL	541
CILINDRO DE LEVANTAMENTO	543
CILINDRO DO RÍPER	544
CILINDRO DO ESCARIFICADOR	545
CILINDRO DE DESLIZAMENTO LONGITUDINAL	546
CILINDRO DA DIREÇÃO	547
CILINDRO DE INCLINAÇÃO LATERAL DAS RODAS	550
RETEM DA VÁLVULA DE CONTROLE	551
MOTOR DE REVERSÃO DO CÍRCULO	554
COMANDO HIDRÁULICO	557
TUBOS - ACUMULADOR	558
TUBOS - ÓLEO HIDRÁULICO	560
TUBOS - VENTILADOR HIDRÁULICOS	572
TUBOS - BOMBA	576
TUBOS - RIPER	585
TUBOS - DIREÇÃO SECUNDÁRIA	590
TUBOS - DIREÇÃO	592
TRAVA - DESLOCAMENTO LATERAL	595
MOTOR - ENGRENAGENS	596
MOTOR HIDRÁULICO DO GEROTOR	597
BOMBA DE DIREÇÃO SECUNDÁRIA E MOTOR	599

* TRADUÇÃO NÃO DISPONÍVEL NO MOMENTO DA IMPRESSÃO

ÍNDICE

Designação	Página
BOMBA E MONTAGEM - PISTÃO	600
BOMBA DA DIREÇÃO SECUNDÁRIA E MONTAGEM	601
BOMBA DE PISTÃO	602
GRUPO ROTATIVO DA BOMBA	606
EIXO DE COMANDO DA BOMBA	608
DIREÇÃO SECUNDÁRIA	609
PLACA BASCULANTE	610
ARTICULAÇÃO GIRATÓRIA	611
TANQUE HIDRÁULICO E FILTRO	612
TANQUE DE ÓLEO HIDRÁULICO E MONTAGEM	614
VÁLVULA E ARTICULAÇÕES	615
GRUPO DE VÁLVULAS DE CONTROLE - QUÁDRUPLO	673
GRUPO DE VÁLVULAS DE CONTROLE - CINCO	677
GRUPO DE VÁLVULAS DE CONTROLE - SEIS	683
GRUPO DE VÁLVULAS DE CONTROLE - SETE	689
VÁLVULA COMBINADA	697
VÁLVULA DE CONTROLE	701
*VALVE GP-PUMP CONTROL	749
VÁLVULA DE PURIFICAÇÃO	753
VÁLVULA DE ALÍVIO	755
VÁLVULA DE SEPARAÇÃO	769
VÁLVULA SOLENÓIDE	771
VÁLVULA - COLETOR E SOLENÓIDE	773
ACESSÓRIOS	775
CÍRCULO	775
BARRA DE TRAÇÃO	779
CHAPA DE EMPUXO	781
FERRAMENTAS DE TRABALHO	782
CANTO DE LÂMINA	782
LÂMINA	787
SUPORTE DO ESCARIFICADOR	791
BORDA CORTANTE	792
EXTENSÃO DA LÂMINA	794
LEVANTAMENTO DA LÂMINA	800
MONTAGEM - RIPER	802
MONTAGEM - REMOVEDOR DE NEVE	803
RIPER	804
ESCARIFICADOR	807
DENTE DO ESCARIFICADOR	814
ESTAÇÃO DO OPERADOR	816
ACESSÓRIO - CABINE	816
CONDICIONADOR DE AR E MONTAGEM	818
CONDICIONADOR DE AR	818
BRAÇO DO ASSENTO	823
CABINE	825
CABINE OPERADOR - SEM ROPS	825
CABINE	825
COMPRESSOR DE REFRIGERANTE E MONTAGEM	827
COMPRESSOR DE REFRIGERANTE	828
CONDENSADOR DO REFRIGERANTE E MONTAGEM	829
CONSOLE DO OPERADOR	830
CONVERSÃO PARA ESTRUTURA NÃO ROPS	834
PORTA	835
PORTA DA CABINE	840
DUCTO E CONTROLE	848
DUCTO	849
EXTENSÃO - ENCOSTO	850
VENTILADOR DE CIRCULAÇÃO DE AR DA CABINE	852
FILTRO - AR DA CABINE	858
MARTELO E MONTAGEM	859
AQUECEDOR DA CABINE E MONTAGEM	861
AQUECEDOR DA CABINE	861
BUZINA DE AR	871
CAIXA - SUSPENSÃO DO ASSENTO	876
INSTALAÇÃO DO RÁDIO - ARRANJO	879
INSTALAÇÃO DO RÁDIO	880
ISOLADOR - TEMPO	882
REVESTIMENTO DA CABINE	884
TUBOS - AR CONDICIONADO	898
TUBOS - AQUECEDOR	900
PERSIANA	902
ESPELHO RETROVISOR	903
MÓDULO ELETRÔNICO DE QUATRO INDICADORES	912
MÓDULO - VELOCÍMETRO E TACÔMETRO	913
MONTAGEM - CABINE	914
MONTAGEM - ESTRUTURA ROPS	915
FUNDO - ENCOSTO	918
ASSENTO - FUNDO	919
PAINEL - CABINE	921
PAINEL DE INSTRUMENTOS	925
ESTRUTURA ROPS FECHADA	932
ESTRUTURA ROPS ABERTA	934
ROPS FECHADA	935
ROPS ABERTA	937
TELA PÁRA-SOL	938
CINTO DE SEGURANÇA	939
ASSENTO	941
ASSENTO COM SUSPENSÃO	945

* TRADUÇÃO NÃO DISPONÍVEL NO MOMENTO DA IMPRESSÃO

ÍNDICE

Designação	Página	Designação	Página
SUPORTE - ASSENTO	953		
SUSPENSÃO - ASSENTO	955		
LAVADOR DO VIDRO	959		
VIDRO	964		
JANELA DA CABINE	968		
LIMPADOR DO VIDRO	973		
EQUIPAMENTOS DE SERVIÇO E SUPRIMENTOS	995		
*BOX GP-TOOL	995		
DECALQUE	996		
CILINDRO HIDRÁULICO - MACACO	997		
PLACA E DECALQUE	998		
ÍNDICE DE NÚMERO DE PEÇA	B1		

* TRADUÇÃO NÃO DISPONÍVEL NO MOMENTO DA IMPRESSÃO

INHALTSVERZEICHNIS

Bezeichnung	Seite
ALLGEMEINE HINWEISE	A39
REPARATURALTERNATIVEN	A47
KÜHLMITTELZUSATZ	A52
WARTUNGSTEILE	A94
STICHWORTVERZEICHNIS	A172
MASCHINE	1
UMBAUSATZ - ZULASSUNG	1
GRUNDAUSFÜHRUNG	2
AUSRÜSTUNG FÜR STRASSEN-FAHRT	4
SCHNEERÄUMVORRICHTUNG	4
MOTOR	6
MOTORAUSFÜHRUNG	6
MOTOR - GRUNDAUSFÜHRUNG	10
LUFTKOMPRESSOR	10
RIEMENSPANNER	16
NOCKENWELLE	20
MOTORBLOCKDECKEL	21
KURBELWELLE	23
MOTORBLOCK	25
ZYLINDERKOPF	29
NEBENANTRIEB	33
ZYLINDERKOPF-HALTETEILE	34
SCHWUNGRAD	35
STIRNRAD	36
SCHWUNGRADGEHÄUSE	37
STIRNRADGEHÄUSE	39
HUBVENTIL	41
MOTORHUBÖSE	42
MOTOR- UND GETRIEBEAUFLAGER	43
VENTILMECHANISMUSAUFHÄNGUNG	44
ÖLWANNE	45
SCHALLDÄMPFUNG	48
PLEUELSTANGE UND KOLBEN	49
ZYLINDERBLOCKSCHRAUBE	50
MOTORSTOPFEN	51
VENTILKIPPHEBEL	53
KURBELWELLENDICHTUNG	55
MOTORAUFHÄNGUNG	56
SCHALLDÄMPFUNG	57
VENTILSTEUERUNG	58
SCHMIERSYSTEM	60
ÖLFILTERSOCKEL	60
MOTORÖLEINFÜLLSTUTZEN	62
ÖLFILTER	63
ÖLMESSSTAB	65
MOTORÖLABLASSLEITUNGEN	66
TURBOLADERÖLLEITUNGEN	67
SCHMIERPUMPE	68
KÜHLSYSTEM	70
KÜHLSYSTEM	70
MOTOR UND LÜFTER	73
KUEHLER-HALTETEILE	75
KÜHLWASSER-TEMPERATURREGLER UND GEHÄUSE	76
KÜHLWASSERLEITUNGEN	77
*PLATE GP-RADIATOR	82
KÜHLWASSERPUMPE	83
KÜHLER	85
LUFTANSAUG- UND ABGASSYSTEM	87
LADELUFTKÜHLER U. BEFESTIGUNG	87
LUFTREINIGER	88
DRUCKLUFTLEITUNGEN	91
AUSPUFFKRÜMMER	93
ANSAUGKRÜMMER	94
SCHALLDÄMPFER	95
VORREINIGER	97
TURBOLADER	98
KRAFTSTOFFSYSTEM	100
REGLERSTEUERUNG	100
KRAFTSTOFFTANK-HALTETEILE	102
KRAFTSTOFFILTER	103
WASSERABSCHEIDER- U. KRAFTSTOFFILTER	104
KRAFTSTOFFLEITUNGEN	105
KRAFTSTOFFILTERLEITUNGEN	108
KRAFTSTOFFEINSPRITZLEITUNGEN	111
KRAFTSTOFFÖRDERPUMPE UND BEFESTIGUNGSTEILE	113
KRAFTSTOFFEINSPRITZPUMPE	114
KRAFTSTOFF-ENTLÜFTUNGSPUMPE	115
KRAFTSTOFFTANK	116
SPERRVENTIL	125
ELEKTRISCHE ANLAGE UND STARTSYSTEM	128
WARNVORRICHTUNG	128
DREHSTROMGENERATOR	130
BATTERIE	136
KLEMMLEISTE	140
UNTERBRECHER	141

* ÜBERSETZUNG ZUM ZEITPUNKT DER DRUCKLEGUNG NICHT VORHANDEN

INHALTSVERZEICHNIS

Bezeichnung	Seite
STEUERUNGSEINHEIT, ELEKTRON. FÜR MOTOR UND BEFEST.	144
MOTORSTEUERUNG, ELEKTRON.	146
NOTLENKUNGSSTEUERUNG	150
*CONTROL GP-UNPROGRAMMED	151
STEUERUNG - NICHT PROGRAMMIERT	152
UMFORMER, ELEKTR.	153
ELEKTR. UMFORMER	154
ELEKTRONIK - MONITOR	159
KRAFTÜBERTRAGUNGSELEKTRONIK	159
UMLAUFKÜHLWASSERHEIZUNG	161
RUNDUMWARNLEUCHTE - EINBAUSATZ	163
FAHRERHAUSBELEUCHTUNG	165
ARBEITSLEUCHTEN	166
FRONTSCHEINWERFER	171
SCHEINWERFER U. RICHTUNGSLEUCHTE	177
MARKIERUNGSLEUCHTE	181
ZULASSUNGSSCHILDLEUCHTE	182
BLINKLEUCHTE	183
RUNDUM-KENNLEUCHTE	186
ARBEITSLEUCHTEN	188
ARBEITS- U. SIGNALBELEUCHTUNG	190
SCHEINWERFER, HINTEN	191
ARBEITSLEUCHTEN	195
BELEUCHTUNGSANLAGE (STRASSENAUSRÜSTUNG)	241
BLINKERLEUCHTEN	242
WARNLEUCHTEN	244
RUNDUM-KENNLEUCHTE	249
MOTOR, ELEKTR.	251
STELLUNGSSENSOR	252
DRUCKSENSOR	254
DREHZAHLSENSOR	259
TEMPERATURSENSOR	262
ÄTHERSTARTHILFE	265
STARTERMOTOR	270
UMGEHUNGSSCHALTER	273
TRENNSCHALTER	274
LICHTSCHALTER	275
MAGNETSCHALTER	277
SCHEIBENWISCHERSCHALTER	279
VERDRAHTUNG - SCHARDÄMPFUNG	280
FAHRERHAUSVERDRAHTUNG	282
MOTORVERDRAHTUNG	293
VERDRAHTUNG, VORNE	296
VERDRAHTUNG, HINTEN	305
NOTLENKUNGSVERDRAHTUNG	329
SCHALTKONSOLENVERDRAHTUNG	331
LENKKONSOLENVERDRAHTUNG	337
VERDRAHTUNG (EINSPRITZEINHEIT)	344
KRAFTÜBERTRAGUNG	345
SCHALTAUTOMATIK	345
GETRIEBEGEHÄUSE UND TEILE	346
ANTRIEBSKETTE	350
GETRIEBEKUPPLUNG	351
KUPPLUNGSGESTÄNGE	361
DIFFERENTIALSPERRENGESTÄNGE	363
GETRIEBESTEUERUNG	365
GETRIEBEHYDRAULIK	367
GETRIEBEÖLKÜHLER	368
TORSIONSKUPPLUNG	370
DIFFERENTIAL UND TELLERRAD	371
DIFFERENTIAL	373
GETRIEBEÖLFÜLLSTUTZEN	375
ÖLFILTER U. BEFESTIGUNGSTEILE	376
ÖLFILTER	378
SEITENANTRIEB	379
GETRIEBEÖLLEITUNGEN	381
RADAUFHAENGUNG	385
ZAHNRADPUMPE	386
MAGNETSIEB	388
ANTRIEBSWELLE	389
TANDEMGEHÄUSE UND DECKEL	391
GETRIEBE	392
KREUZGELENK	394
DIFFERENTIALSPERRE - VENTIL UND BEFESTIGUNGSTEILE	395
VENTIL - SCHALT- UND DRUCKSTEUERUNG	396
MAGNETVENTIL	402
GETRIEBESTEUERVENTIL	404
RAD UND REIFEN	406
RADSATZ	448
RAHMEN UND AUFBAU	455
VORDERACHSE	455
RAHMEN UND GEHÄUSE	458
ZUGANGSKLAPPE	459
SCHUTZABDECKUNG	462
MOTORVERKLEIDUNG	466
HALTETEILE	471
VORDERRAHMEN	472
VERKLEIDUNG UND BEFESTIGUNG - KÜHLER	474
PANZERWANNE	477
BREMSLEITUNGSVERKLEIDUNG	478
KRAFTSTOFFTANKVERKLEIDUNG	479
FAHRERPLATTFORMVERKLEIDUNG	480

* ÜBERSETZUNG ZUM ZEITPUNKT DER DRUCKLEGUNG NICHT VORHANDEN

INHALTSVERZEICHNIS

Bezeichnung	Seite
KNICKGELENK-ANHÄNGUNG	484
ANHÄNGEVORRICHTUNG	486
SCHMIERLEITUNGEN	488
LENKGESTÄNGE	489
TYPENSCHILDBEFESTIGUNG	490
ANTRIEBSWELLENSCHUTZ	491
STEIGLEITER	492
AUFHÄNGUNG - HINTERES FAHRWERK	493
KRAFTSTOFFTANKABSTÜTZUNG	496
PLATTFORMUNTERBAU	497
BREMSSYSTEM	498
LUFTTROCKNER	498
FESTSTELLBREMSE	502
BETRIEBSBREMSE	504
FESTSTELLBREMSGESTÄNGE	506
BREMSGESTÄNGE	508
DRUCKLUFTBEHÄLTER	512
DRUCKLUFT-STEUERVENTIL	514
MAGNETVENTIL	517
HYDRAULIKSYSTEM	519
HYDRAULIKDRUCKSPEICHER U. BEFESTIGUNG	519
SCHARDRUCKSPEICHER	520
DRUCKSPEICHER	520
HYDRAULIKDRUCKSPEICHER	522
HYDRAULIKSTEUERUNG	525
*CONTROL GP-HYDRAULIC LOCKOUT	529
LENKBETÄTIGUNG	530
GELENKZYLINDER UND BEFESTIGUNGS-TEILE	531
SCHARHUBZYLINDER UND BEFESTIGUNGSTEILE	532
SCHARKIPPZYLINDER UND BEFESTIGUNGSTEILE	533
SEITENSCHUBZYLINDER UND BEFESTIGUNGSTEILE	534
AUFREISSERZYLINDER UND BEFESTIGUNGSTEILE	535
SEITENSCHIEBERZYLINDER UND BEFESTIGUNGSTEILE	536
LENKZYLINDER UND AUFHÄNGUNG	537
RADSTURZZYLINDER UND BEFESTIGUNGSTEILE	538
KNICKLENKZYLINDER	539
SCHARNEIGEZYLINDER	540
SEITENSCHUBZYLINDER	541
HUBZYLINDER	543
AUFREISSERZYLINDER	544
FRONTAUFREISSERZYLINDER	545
SEITENSCHUBZYLINDER	546
LENKZYLINDER	547
RADSTURZZYLINDER	550
STEUERVENTILSPERRE	551
SCHARDREHWERK	554
HYDRAULIKSYSTEM	557
DRUCKSPEICHERLEITUNGEN	558
HYDRAULIKLEITUNGEN	560
HYDRAULIKLÜFTERLEITUNGEN	572
HYDRAULIKPUMPE UND LEITUN-GEN	576
AUFREISSERLEITUNGEN	585
NOTLENKUNGSLEITUNGEN	590
LENKÖLLEITUNGEN	592
SEITENSCHUBSPERRE	595
MOTORANTRIEB	596
ZAHNRADANTRIEB	597
NOTLENKUNGSPUMPE UND -MOTOR	599
KOLBENPUMPE UND BEFESTIGUNG	600
NOTLENKUNGSPUMPE UND BEFESTIGUNGSTEILE	601
KOLBENPUMPE	602
KOLBENPUMPENUMLAUFSATZ	606
PUMPENANTRIEBSWELLE	608
NOTLENKUNG	609
SCHWENKSCHEIBE	610
SCHWENKBLOCK	611
HYDRAULIKTANK UND SCHMIERFIL-TER	612
HYDRAULIKTANK UND BEFESTIGUNGS-TEILE	614
VENTIL UND GESTÄNGE	615
VENTILSATZ (4-VENTIL)	673
VENTILSATZ (5-VENTIL)	677
VENTILSATZ (6-VENTIL)	683
VENTILSATZ (7-VENTIL)	689
SAMMELVENTIL	697
STEUERVENTIL	701
*VALVE GP-PUMP CONTROL	749
ENTLEERVENTIL	753
ÜBERDRUCKVENTIL	755
PENDELVENTIL	769
MAGNETVENTIL	771
VENTILSOLENOID U. -KRÜMMER	773
ARBEITSGERÄTE	775
SCHARDREHWERK	775
ZUGHAKEN	779
SCHUBPLATTE	781
ARBEITSGERÄTE	782
ECKMESSER	782

* ÜBERSETZUNG ZUM ZEITPUNKT DER DRUCKLEGUNG NICHT VORHANDEN

INHALTSVERZEICHNIS

Bezeichnung	Seite
ENDMESSER	786
SCHAR	787
AUFREISSERTRÄGER	791
SCHNEIDMESSER	792
SCHARVERLÄNGERUNG	794
SCHILDHUB	800
AUFREISSERBEFESTIGUNG	802
SCHNEEFLÜGEL-BEFESTIGUNG	803
AUFREISSER	804
FRONTAUFREISSER	807
FRONTAUFREISSERZAHN	814
FAHRERHAUS	816
FAHRERHAUSZUBEHÖR	816
KLIMAANLAGE UND AUFHÄNGUNG	818
KLIMAANLAGE	818
ARMLEHNE	823
FAHRERHAUS	825
FAHRERHAUS (OHNE ÜBERROLL-SCHUTZ)	825
FAHRERHAUS	825
KÄLTEMITTELKOMPRESSOR U. BEFESTIGUNG	827
KÄLTEMITTELKOMPRESSOR	828
KÄLTEMITTELKONDENSATOR U. BEFESTIGUNGSTEILE	829
STEUERKONSOLE	830
UMBAUSATZ - OHNE ÜBERROLL-SCHUTZ	834
FAHRERHAUSTÜR	835
LUFTKANAL UND REGULIERUNG	848
LUFTKANAL	849
RÜCKLEHNENVERLÄNGERUNG	850
UMLAUFLÜFTER	852
FAHRERHAUSLUFTFILTER	858
HAMMER UND BEFESTIGUNG	859
FAHRERHAUSHEIZUNG U. BEFESTI-GUNGSTEILE	861
FAHRERHAUSHEIZUNG	861
DRUCKLUFTHUPE	871
FAHRERSITZFEDERUNGSGEHÄUSE	876
RADIOEINBAUSATZ	879
WÄRMEISOLIERUNG	882
FAHRERHAUSAUSKLEIDUNG	884
KLIMAANLAGENLEITUNGEN	898
HEIZUNGSLEITUNGEN	900
FAHRERHAUSLUFTSCHLITZE	902
RÜCKSPIEGEL	903
MODUL - VIER ELEKTRON. ANZEIGEN	912
GESCHWINDIGKEITS- U. DREHZAHLMES-SERMODUL	913
FAHRERHAUSANBAUSATZ	914
ÜBERROLLSCHUTZAUFLAGER	915
SCHALE - RÜCKENLEHNE	918
FAHRERSITZVERKLEIDUNG	919
VERKLEIDUNG - FAHRERHAUS	921
INSTRUMENTENTAFEL	925
ÜBERROLLSCHUTZKABINE	932
ÜBERROLLSCHUTZDACH	934
ÜBERROLL-SCHUTZKABINE	935
ÜBERROLL-SCHUTZDACH	937
SONNENBLENDE	938
SICHERHEITSGURT	939
FAHRERSITZ	941
SCHWINGSITZ	945
SITZUNTERBAU	953
FAHRERSITZFEDERUNG	955
SCHEIBENWASCHANLAGE	959
FAHRERHAUSFENSTER	964
SCHEIBENWISCHER	973
WARTUNGSAUSRÜSTUNG	995
*BOX GP-TOOL	995
AUFKLEBER	996
WAGENHEBER, HYDRAULISCH	997
SCHILD UND AUFKLEBER	998
ERSATZTEILNUMMERNINDEX	B1

* ÜBERSETZUNG ZUM ZEITPUNKT DER DRUCKLEGUNG NICHT VORHANDEN

GENERAL INFORMATION

1. MACHINE IDENTIFICATION

Caterpillar machines are identified by Product Identification Numbers (PIN). Some components included in a machine may be identified by Serial Numbers (S/N). Typical components that will be serialized include engines, transmissions, bulldozers, and rippers. The machine and engine are further identified by arrangement numbers and in some cases modification numbers. These numbers are shown on the product identification plate(s) and on the master plate in the operator's compartment.

Caterpillar dealers need all of these numbers to determine accurate parts identification.

SIS *New Feature*

Effective First Quarter 2001 the Caterpillar Product Identification Number (PIN) changed from 8 to 17 characters. In an effort to provide uniform equipment identification, Caterpillar and other construction equipment manufacturers are moving to comply with the latest version of the product identification numbering standard. Non-road machine PINs are defined by ISO 10261. The new PIN format will apply to all Caterpillar machines and generator sets. The PIN plates and frame marking will display the 17 character PIN. The new format will look like the following:

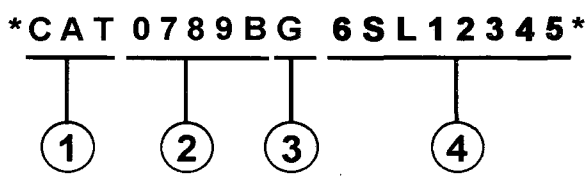

Where:

1. Caterpillar's World Manufacturing Code (characters 1-3)

2. Machine Descriptor (characters 4-8)

3. Check Character (character 9)

4. Machine Indicator Section (MIS) or Product Sequence Number (characters 10-17). These were previously referred to as the Serial Number.

Machines and generator sets produced before First Quarter 2001 will maintain their 8 character PIN format.

Components such as engines, transmissions, axles, etc. and work tools will continue to use an 8 character Serial Number (S/N).

2. ORDERING PARTS

⚠ WARNING

When replacement parts are required for this product Caterpillar recommends using Caterpillar replacement parts or parts with equivalent specifications including, but not limited to, physical dimensions, type, strength and material.

Failure to heed this warning can lead to premature failures, product damage, personal injury or death.

Quality Caterpillar replacement parts are available from Caterpillar dealers throughout the world. Their parts inventories are up to date and include all parts normally required to protect your investment in Caterpillar machines. Dealers may offer repair kits or remanufactured parts to allow selection of the most effective repair alternative for a particular situation. When ordering parts, your order should specify the quantity, part number, part name, and the serial number/product identification number of the machine for which the parts are needed.

3. PARTS MANUAL ORGANIZATION

Product information in this manual is presented as "information elements" that represent all of the components for the specific model. Engine Arrangement and Seat Group are examples of information elements. The information elements are organized alphabetically by part name and secondarily by part number within each major section of the manual.

4. TABLE OF CONTENTS

A table of contents (TOC) is found at the beginning of the manual. The TOC lists each section of the manual with a complete list of all information elements organized as they appear in the manual. Page numbers are provided for quick reference to detailed parts identification illustrations and serviceable consist lists.

5. MAINTENANCE PARTS INDEX

The Maintenance Parts Index, located near the beginning of the manual, references most frequently used maintenance part numbers, providing description, quantity, usage and page number. This information is organized alphabetically by part description.

6. INDEX

The index located near the front of the manual is an alphabetical listing of all information elements included in the manual. Page numbers are provided for quick reference to detailed parts identification illustrations and serviceable consist lists.

7. PART NUMBER INDEX

A numerical index listing all part numbers and the corresponding page number(s) appears at the back of the manual.

8. CAPTIONS

Captions located at the beginning of each information element identify the part number and part name along with additional descriptive information. PIN and S/N information found in each caption should be used to select correct information for a specific machine. Field replacement options, identification of optional attachment components, and where used ("part of") information is also provided.

The first line of a caption is shown in larger type font to indicate the beginning of an information element. Captions for additional pages that may be required to illustrate an information element will be shown in standard type font and will include the term *(contd.)* .

9. NON-SERVICED PARTS

In some instances it is necessary to display non-serviced parts that are a link to a lower level serviceable consist lists. These non-serviced part numbers are shown in *italic* type indicating that they are not available.

10. PARTS LIST REFERENCE NUMBERS

Numbers shown in the Ref No column correspond to numbers used in the associated graphic(s). An alphabetic suffix may be added to a reference number to identify lower level consist items. Numbers shown in the Graphic Ref column refer to the graphic number identifier displayed in the lower left corner of each illustration. The Graphic Ref number may be used in combination with the item Ref No to determine the correct part number. There may be intentional omission of a Ref No in a consist list as information is updated to reflect the latest serviceable part numbers.

11. INDENTED PART NAMES

When a part name is indented in a parts list, it is part of (included in) the group or assembly under which it is indented.

12. ILLUSTRATION REFERENCE LETTERS

When necessary, illustrations contain reference letters (A, B, C etc.) that are intended to track lines and harnesses from one point to another. They are also used to show where to reconnect illustrations that have been separated.

13. ABBREVIATIONS AND SYMBOLS

O.D. – Outside Diameter
I.D. – Inside Diameter
A – Not Part Of This Group
B – Use As Required
C – Change From Previous Type
D – Order By The Meter
E – Order By The Centimeter
F – Not Shown
G – Order By The Inch
I – Refer To Hydraulic Information System
M – Metric Part
R – Remfg Part May Be Available
Y – Separate Illustration
Z – Not Serviced Separately

SIS *New Feature*

14.<END>

This symbol indicates the end of an information element.

NOTE:

Continuing improvement and advancement of product design may cause changes to your machine which may not be included in this publication. Whenever a question arises regarding your caterpillar product or this publication, please consult your caterpillar dealer for the latest available information.

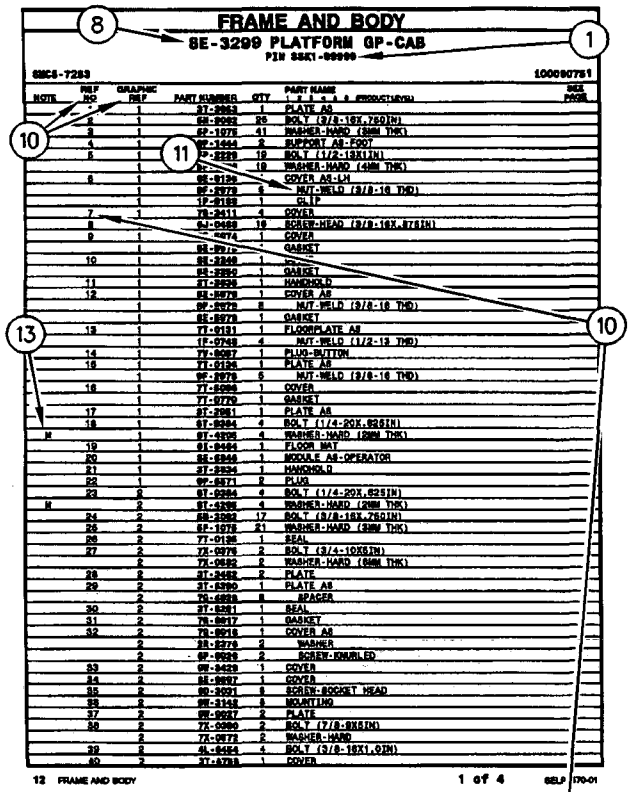

FRAME AND BODY
8E-3299 PLATFORM GP-CAB
PIN SSK1-00000
SSCS-7283 100090751

NOTE	REF NO	GRAPHIC REF	PART NUMBER	QTY	PART NAME	SEE PAGE
	1		8T-3953	1	PLATE AS	
	2		6B-8082	26	BOLT (3/8-16X.75IN)	
	3		6P-1078	41	WASHER-HARD (9MM THK)	
	4		8F-1444	2	SUPPORT AS-FOOT	
	5		6P-2329	12	BOLT (1/2-13X1IN)	
			8C-	18	WASHER-HARD (4MM THK)	
	6		8E-8126		COVER AS-LH	
			8F-8778	6	NUT-WELD (3/8-16 THD)	
			1P-8188	1	CLIP	
	7	1	7S-2411	4	COVER	
	8		6J-0468	10	SCREW-HEAD (3/8-16X.875IN)	
	9		8E-8974	1	COVER	
			8E-8973	1	GASKET	
	10		8E-3948	1		
			8E-3950	1	GASKET	
	11		8T-3939	1	HANDHOLD	
	12		8E-8979	1	COVER AS	
			8F-8978	8	NUT-WELD (3/8-16 THD)	
			8E-8978	1	GASKET	
	13		7T-0181	1	FLOORPLATE AS	
			1P-0748	4	NUT-WELD (1/2-13 THD)	
	14		7V-8087	1	PLUG-BUTTON	
	15		7T-0126	1	PLATE AS	
			8F-8978	6	NUT-WELD (3/8-16 THD)	
	16		7T-8088	1	COVER	
			7T-0770	1	GASKET	
	17		8T-3961	1	PLATE AS	
	18		8T-8984	4	BOLT (1/4-20X.625IN)	
M			8T-4196	4	WASHER-HARD (8MM THK)	
	19		8T-8454	1	FLOOR MAT	
	20		8E-8948	1	MODULE AS-OPERATOR	
	21		8T-3934	1	HANDHOLD	
	22		8F-8871	2	PLUG	
	23	2	8T-8984	4	BOLT (1/4-20X.625IN)	
M		2	8T-4196	4	WASHER-HARD (8MM THK)	
	24	2	6B-8082	17	BOLT (3/8-16X.75IN)	
	25	2	6P-1078	21	WASHER-HARD (9MM THK)	
	26	2	7T-0126	1	SEAL	
	27	2	7S-0978	2	BOLT (3/4-10X6IN)	
		2	7K-0682	2	WASHER-HARD (6MM THK)	
	28	2	8T-3462	2	PLATE	
	29	2	8T-8990	1	PLATE AS	
		2	7S-8838	8	SPACER	
	30	2	8T-8961	1	SEAL	
	31	2	7K-8817	1	GASKET	
	32	2	7S-8816	1	COVER AS	
		2	8B-8278	2	WASHER	
		2	6F-8035	2	SCREW-KNURLED	
	33	2	8M-8439	1	COVER	
	34	2	8E-8987	1	COVER	
	35	2	6D-3931	8	SCREW-SOCKET HEAD	
	36	2	8M-3148	8	MOUNTING	
	37	2	8M-8927	2	PLATE	
	38	2	7T-0080	2	BOLT (7/8-9X6IN)	
		2	7K-0678	2	WASHER-HARD	
	39	2	6L-8464	4	BOLT (3/8-16X1.0IN)	
	40	2	8T-8788	1	COVER	

12 FRAME AND BODY 1 of 4 SELP4570-01

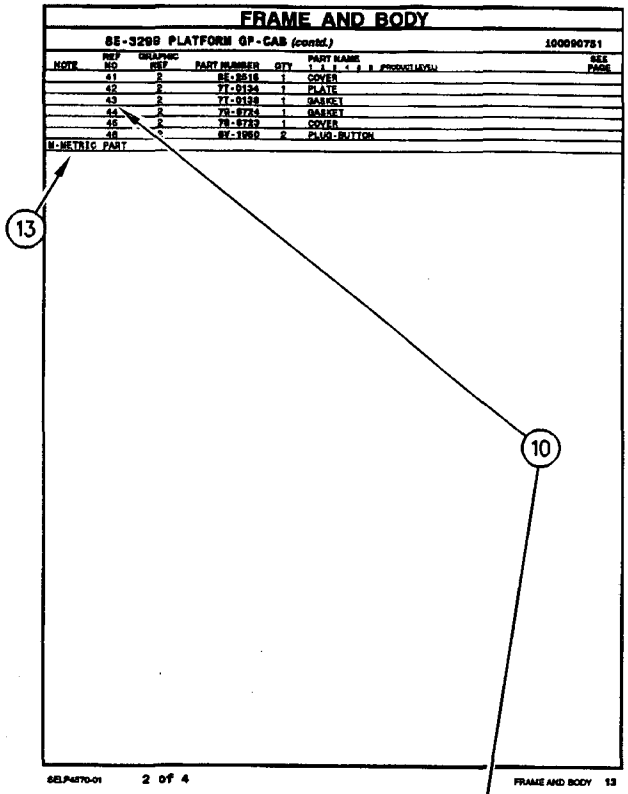

FRAME AND BODY
8E-3299 PLATFORM GP-CAB (contd.) 100090751

NOTE	REF NO	GRAPHIC REF	PART NUMBER	QTY	PART NAME	SEE PAGE
	41	2	8E-3516	1	COVER	
	42	2	7T-0134	1	PLATE	
	43	2	7T-0138	1	GASKET	
	44	2	7S-8784	1	GASKET	
	45	2	7S-8782	1	COVER	
	46	6	6V-3980	2	PLUG-BUTTON	

M-METRIC PART

SELP4570-01 2 of 4 FRAME AND BODY 13

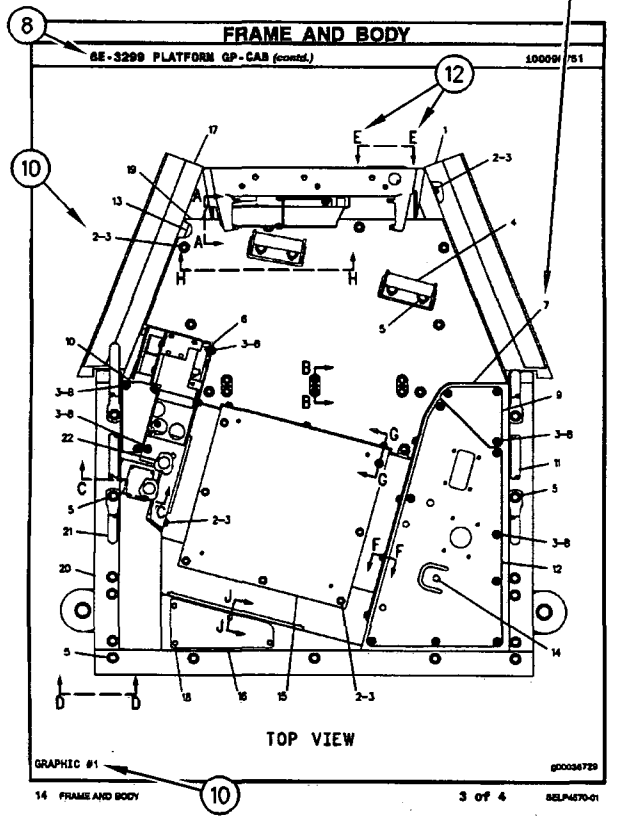

14 FRAME AND BODY 3 of 4 SELP4570-01

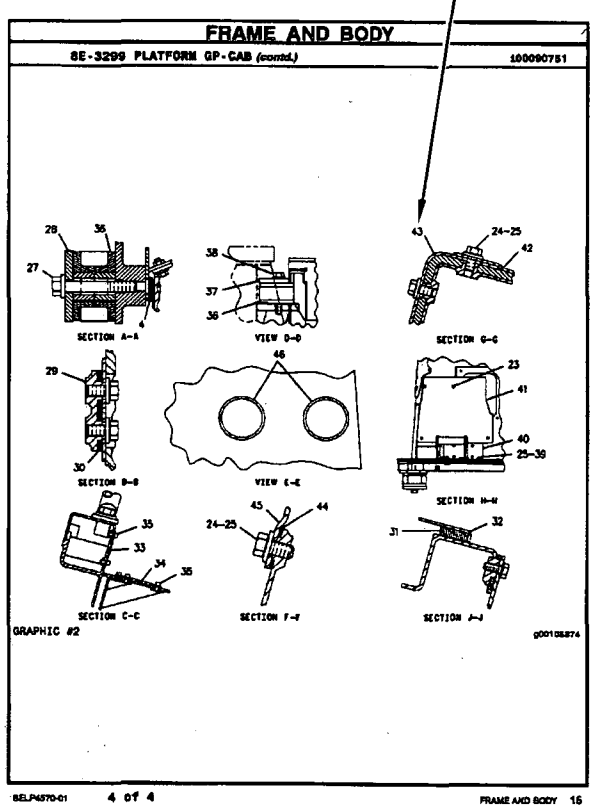

SELP4570-01 4 of 4 FRAME AND BODY 15

1. IDENTIFICATION DE LA MACHINE

Toutes les machines Caterpillar portent un numéro d'identification (PIN). Certains composants des machines peuvent porter des numéros de série (S/N). En général, parmi les composants qui portent des numéros de série il y a les moteurs, les transmissions, les bulldozers et les rippers. En plus, la machine et le moteur peuvent recevoir des numéros de version, et dans certains cas, de modification. Ces numéros figurent sur les plaques de numéro de série et sur la plaque signalétique principale qui se trouve dans le poste de conduite.

Les concessionnaires Caterpillar doivent connaître tous ces numéros pour identifier correctement les pièces.

SIS *Nouvelle Caractéristique*

À partir du premier trimestre 2001, le numéro d'identification produit (PIN) Caterpillar passe de 8 à 17 caractères. Afin de permettre une identification uniforme des matériels, Caterpillar et d'autres constructeurs de machines de travaux publics s'efforcent de se conformer à la norme la plus récente portant sur les numéros d'identification des produits. Les numéros d'identification (PIN) de machines de chantier sont définis par la norme ISO 10261. Le nouveau format du numéro d'identification est valable pour toutes les machines et tous les groupes électrogènes Caterpillar. Le numéro d'identification produit (PIN) figurant sur la plaque et sur le châssis se composera de 17 caractères. Le nouveau format ressemblera à ceci:

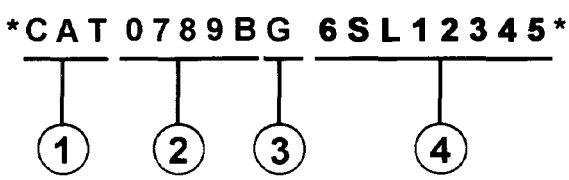

Il se décomposera de la façon suivante:

1. Code international de fabrication de Caterpillar (caractères 1 à 3)

2. Descriptif de la machine (caractères 4 à 8)

3. Contrôle (caractère 9)

4. Indicateur machine (MIS) ou numéro de séquence produit (caractères 10 à 17). Ceux-ci étaient auparavant désignés sous le terme de numéro de série.

Les machines et les groupes électrogènes construits avant le premier trimestre 2001 garderont le format à 8 caractères du numéro d'identification produit (PIN).

Les organes tels que les moteurs, les boîtes de vitesses, les essieux, etc., continueront d'être désignés par un numéro de série (S/N) à 8 caractères.

2. COMMANDE DE PIÈCES

⚠ DANGER

Lorsqu'il faut remplacer des pièces de rechange pour ce produit Caterpillar recommande d'utiliser les pièces de rechange Caterpillar ou les pièces qui ont des spécifications équivalentes dont les dimensions physiques, le type, la force et le matériau. Ces équivalences ne se limitent pas à l'énoncé précédent.

L'inobservation de cette mise en garde peut entraîner des défaillances prématurées, des dommages au produit, des blessures ou même la mort.

Les concessionnaires Caterpillar fournissent dans le monde entier des pièces de rechange de qualité Caterpillar. Leurs stocks de pièces sont constamment réapprovisionnés et comptent toutes les pièces nécessaires pour assurer la bonne marche de vos machines Caterpillar. Certains concessionnaires proposent également des kits de réparation ou des pièces rénovées, ce qui permet de choisir la solution la plus économique dans une situation donnée. Lors des commandes de pièces, mentionner la quantité, le numéro et la désignation des pièces ainsi que le numéro de série ou le numéro d'identification (PIN) de la machine pour laquelle ces pièces sont requises.

3. ORGANISATION DU CATALOGUE DE PIÈCES

Les renseignements sur les produits sont présentés sous forme de "Information element" (élément d'information) représentant tous les composants d'un modèle donné. "Engine Arrangement" (version de moteur) et "Seat Group" (assemblage de siège)" sont des exemples d'éléments d'information. Les éléments d'information sont classés par ordre alphabétique par la désignation standard des pièces et par numéros de pièces dans chaque partie importante du manuel.

4. TABLE DES MATIÈRES

Nouvelle Caractéristique

La table des matières se trouve au début du manuel. La table des matières fournit la liste de tous les chapitres du manuel avec une liste complète de tous les éléments d'information classés par ordre d'apparition dans le manuel. Les numéros de page sont fournis afin que l'utilisateur puisse trouver rapidement les illustrations détaillées concernant l'identification des pièces et les listes des pièces d'entretien.

5. INDEX DES PIÈCES D'ENTRETIEN

La rubrique "Index des pièces d'entretien" qui se trouve au début du manuel renvoie aux pièces d'entretien les plus fréquemment utilisées en précisant la désignation, la quantité, là où la pièce est utilisée et le numéro de page. Ces pièces sont classés par ordre alphabétique.

6. INDEX

L'index qui se trouve vers le début du manuel est une liste alphabétique de tous les éléments d'information du manuel. Les numéros de page sont fournis afin que l'utilisateur puisse trouver rapidement les illustrations détaillées concernant l'identification des pièces et les listes des pièces d'entretien.

7. INDEX DES NUMÉROS DE PIÈCES

Une liste numérique de tous les numéros de pièces et des pages correspondantes se trouve à la fin du manuel.

8. LÉGENDES

Les légendes qui se trouvent en haut de chaque page de chaque élément d'information fournissent le numéro de pièce, la désignation ainsi que des renseignements supplémentaires sur les pièces. Les renseignements concernant les numéros de série (S/N) qui se trouvent dans chaque légende doivent être utilisés pour sélectionner les informations correctes pour un moteur donné. Les informations concernant les options de remplacement sur le chantier, l'identification des composants des équipements offerts en option et les lieux d'application sont aussi fournies.

Nouvelle Caractéristique

Les lettres de la première ligne d'une légende sont présentées en police plus grande afin d'indiquer le début d'une unité d'information. Les légendes qui pourraient être requises pour des pages supplémentaires afin d'illustrer une unité d'information seront présentées en police standard et comprendront le terme (à suivre).

9. PIÈCES NON FOURNIES

Nouvelle Caractéristique

Dans certains cas, il est nécessaire d'indiquer les pièces non fournies qui sont en aval de la liste des pièces d'entretien. Les numéros des pièces non fournies dans la liste des pièces et les légendes seront en italique pour signaler qu'ils ne sont pas disponibles.

10. NUMÉROS DE RÉFÉRENCE DE LA LISTE DES PIÈCES

Nouvelle Caractéristique

Les numéros indiqués dans la colonne des numéros de références correspondent aux numéros utilisés dans les illustrations auxquelles ils sont associés. Un suffixe alphabétique peut être ajouté à un numéro de référence pour identifier la liste des articles en aval. Les numéros indiqués dans la colonne de référence de l'illustration renvoient à l'identification du numéro affiché dans le coin inférieur gauche de chaque illustration. Le numéro de référence de l'illustration pourrait être utilisé avec le numéro de référence de l'article pour déterminer le numéro de pièce correct. Il peut y avoir une omission intentionnelle d'un numéro de référence dans une liste de pièces suite à la mise à jour des informations en vue de refléter les numéros de pièces les plus récentes.

11. DÉSIGNATIONS DE PIÈCES EN RETRAIT

Lorsqu'une désignation de pièce est en retrait, cela veut dire que l'article en regard fait partie de l'ensemble sous lequel il figure.

12. LETTRES DE RÉFÉRENCE DES ILLUSTRATIONS

Quand cela est nécessaire, les illustrations comportent des lettres de référence (A, B, C, etc.) pour montrer le trajet des canalisations et faisceaux de câbles d'un point à l'autre. Elles sont utilisées également pour indiquer où relier les illustrations séparées auparavant.

13. ABRÉVIATIONS ET SYMBOLES

O.D. – Diamètre extérieur
I.D. – Diamètre intérieur
A – Ne fait pas partie de ce groupe
B – Utiliser selon besoin
C – Modification
D – Commander par mètre
E – Commander par centimètre
F – Non représenté
G – Commander par pouce
I – Voir "Hydraulic Information System"
M – Pièce métrique
R – Pièce rénovée éventuellement disponible
Y – Illustration séparée
Z – Non fourni séparément

NOTA:

En raison du progrès technique et des améliorations continuelles apportées au matériel, votre machine comporte peut-être des modifications qui n'apparaissent pas dans la présente publication. En cas de doute sur un détail de votre machine Caterpillar ou sur le texte de la présente publication, adressez-vous à votre concessionnaire Caterpillar.

FRAME AND BODY

8E-3299 PLATFORM GP-CAB

PIN 8SK1-UP

8MC5-7283 — 100090751

NOTE	REF NO	GRAPHIC REF	PART NUMBER	QTY	PART NAME (1 2 3 4 5 6 PRODUCT LEVEL)	SEE PAGE
	*	1	8T-2663	1	PLATE AS	
	2	1	8S-2092	26	BOLT (3/8-16X.760IN)	
	3	1	8P-1078	41	WASHER-HARD (38MM THK)	
	4	1	9F-1944	2	SUPPORT AS-FOOT	
	5	1	7T-2329	18	BOLT (1/2-13X1IN)	
		1	8C-[illegible]	10	WASHER-HARD (40MM THK)	
	6	1	8S-8194		COVER AS-LH	
		1	9F-8978	6	NUT-WELD (3/8-16 THD)	
		1	1P-8188	1	CLIP	
	7	1	7S-3411	4	COVER	
	8	1	9J-0868	18	SCREW-HEAD (3/8-16X.87SIN)	
	9	1	9474	1	COVER	
		1	8S-8976		GASKET	
	10	1	8S-2348	1	KIT	
		1	8S-7290	1	GASKET	
	11	1	8T-2638	1	HANDHOLD	
	12	1	8S-8978	1	COVER AS	
		1	9F-8978	8	NUT-WELD (3/8-16 THD)	
		1	8S-8978	1	GASKET	
	13	1	7T-0131	1	FLOORPLATE AS	
		1	1F-0748	4	NUT-WELD (1/2-13 THD)	
	14	1	7T-0267	1	PLUG-BUTTON	
	15	1	7T-0135	1	PLATE AS	
		1	9F-8978	6	NUT-WELD (3/8-16 THD)	
	16	1	7T-8266	1	COVER	
		1	7T-0779	1	GASKET	
	17	1	8T-2661	1	PLATE AS	
	18	1	8T-8284	4	BOLT (1/4-20X.826IN)	
H		1	8T-0336	4	WASHER-HARD (28MM THK)	
	19	1	8T-8469	1	FLOOR MAT	
	20	1	8S-8948	1	MODULE AS-OPERATOR	
	21	1	8T-2634	1	HANDHOLD	
	22	1	9F-8971	2	PLUG	
	23	2	8T-0264	4	BOLT (1/4-20X.625IN)	
H		2	8T-0339	4	WASHER-HARD (28MM THK)	
	24	2	8S-2083	17	BOLT (3/8-16X.760IN)	
	25	2	8P-1078	21	WASHER-HARD (38MM THK)	
	26	2	7T-0135	1	SEAL	
	27	2	7X-0978	2	BOLT (3/4-10X5IN)	
		2	7X-0982	2	WASHER-HARD (68MM THK)	
	28	2	8T-2482	2	PLATE	
	29	2	8T-2290	1	PLATE AS	
		2	7S-8828	6	SPACER	
	30	2	8T-8281	1	SEAL	
	31	2	7S-8917	1	GASKET	
	32	2	7S-8916	1	COVER AS	
		2	3S-8378	2	WASHER	
		2	8P-8826	2	SCREW-KNURLED	
	33	2	9S-8439	1	COVER	
	34	2	8S-8887	1	COVER	
	35	2	8D-3091	6	SCREW-SOCKET HEAD	
	36	2	9S-3143	6	MOUNTING	
	37	2	9S-8937	2	PLATE	
	38	2	7X-0980	2	BOLT (7/8-9X5IN)	
		2	7X-0972	2	WASHER-HARD	
	39	2	4L-0484	4	BOLT (3/8-16X1.0IN)	
	40	2	8T-4788	1	COVER	

FRAME AND BODY

8E-3299 PLATFORM GP-CAB (contd.)

100090751

NOTE	REF NO	GRAPHIC REF	PART NUMBER	QTY	PART NAME (1 2 3 4 5 6 PRODUCT LEVEL)	SEE PAGE
	41	2	8E-2918	1	COVER	
	42	2	7T-0134	1	PLATE	
	43	2	7T-0128	1	GASKET	
	44	2	7S-8724	1	GASKET	
	45	2	7S-8723	1	COVER	
	46	*	6V-1960	2	PLUG-BUTTON	

M-METRIC PART

FRAME AND BODY

8E-3299 PLATFORM GP-CAB (contd.)

100090751

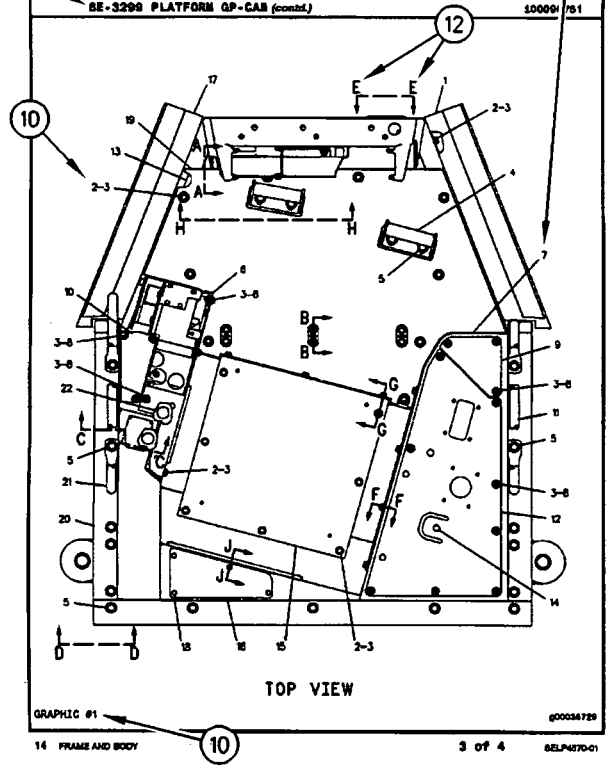

FRAME AND BODY

8E-3299 PLATFORM GP-CAB (contd.)

100090751

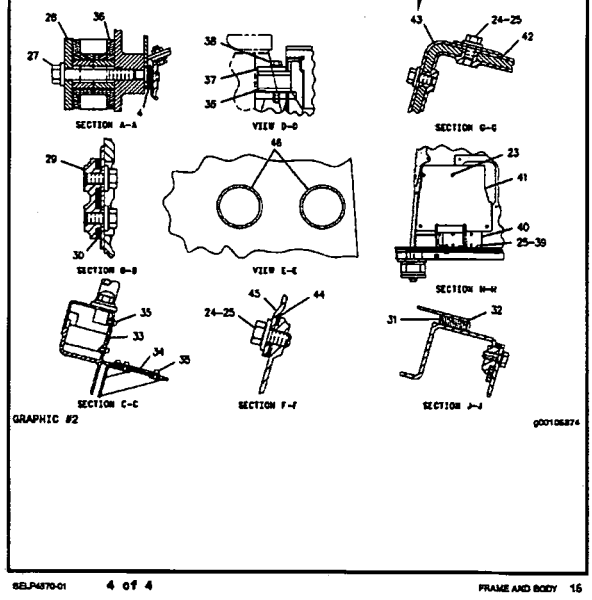

INFORMACIÓN GENERAL

1. MÁQUINAS

Las máquinas Caterpillar se identifican con Números de Identificación del Producto (PIN). Algunos componentes incluídos en la máquina pueden estar identificados con Números de Serie (N/S). Los componentes que tienen típicamente esta identificación incluyen motores, transmisiones, hojas topadoras y desgarradores. La máquina y el motor se identifican además con Números de Configuración y en algunos casos, Números de Modificación. Estos números están en las placas de identificación del producto o en la placa principal en la cabina del operador.

Los distribuidores Caterpillar necesitan estos números para identificar con exactitud los números de piezas de repuesto.

Nueva Característica

A partir del primer trimestre del 2001, el Número de Identificación de Producto (PIN) de Caterpillar cambió de 8 a 17 caracteres. Para hacer más uniforme el método de identificación de equipos, Caterpillar y otros fabricantes de equipo de construcción han tomado medidas para cumplir con la versión más reciente de la norma de numeración de identificación de productos. Los Números de Identificación de Producto para máquinas que no se operan en carreteras son definidos por la norma ISO 10261. El nuevo formato PIN corresponderá a todas las máquinas y grupos electrógenos Caterpillar. Las placas y los caracteres PIN estampados en el bastidor mostrarán el PIN de 17 caracteres. El nuevo formato tendrá la apariencia siguiente:

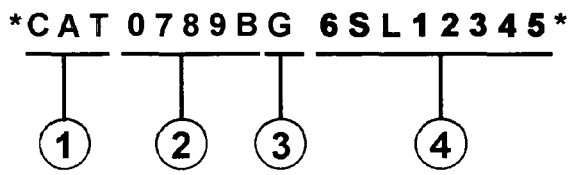

Significado de los caracteres:

1. Código de Fabricación Mundial de Caterpillar (caracteres 1-3)

2. Sección Descriptor de la Máquina (caracteres 4-8)

3. Carácter de Verificación (carácter 9)

4. Sección Indicador de la Máquina (MIS) o Número de Secuencia de Producto (caracteres 10-17). Anteriormente, estos caracteres constituían el Número de Serie.

Las máquinas y grupos electrógenos producidos antes del primer semestre del 2001 mantendrán su formato PIN de 8 caracteres.

Los componentes como motores, transmisiones, ejes, herramientas de trabajo, etc., continuarán usando un Número de Serie (S/N) de 8 caracteres.

2. COMO PEDIR REPUESTOS

⚠ ADVERTENCIA

Cuando se necesiten piezas de repuesto para este producto, Caterpillar recomienda usar piezas de repuesto Caterpillar o piezas que tengan especificaciones equivalentes incluyendo, pero sin estar limitadas a, dimensiones físicas, tipo, fortaleza y material.

El no hacer caso de esta advertencia puede llevar a fallas prematuras, daños al producto y lesiones graves o mortales.

Las piezas de repuesto Caterpillar de calidad están a la disposición de los distribuidores Caterpillar en todo el mundo. Sus existencias actualizadas incluyen todas las piezas normalmente requeridas para proteger su inversión en máquinas Caterpillar. Los distribuidores pueden tener juegos de reparación o piezas remanufacturadas para permitir la selección de la mejor alternativa de reparación en un caso en particular. Al pedir piezas de repuesto, especifique en su pedido la cantidad, el número de pieza, el nombre de la pieza y el número de serie/número de identificación del producto, de la máquina para la cual se necesitan estas piezas.

3. ORGANIZACION DEL MANUAL DE PIEZAS

La información sobre el producto, se presenta en este manual, como "elementos de información" que representan todos los componentes de un modelo específico. Las configuraciones de motores y los grupos de asientos son ejemplos de elementos de información. Los elementos de información están organizados primeramente por nombres de piezas en orden alfabético y en segundo lugar, por el número de pieza dentro de cada sección principal del manual.

4. CONTENIDO

La página de Contenido se encuentra al principio del manual. El Contenido indica cada sección del manual con una lista completa de todos los elementos de información organizados en el orden que aparecen en el manual. Los números de página proporcionan una referencia rápida a las ilustraciones detalladas de identificación de piezas y a las listas de componentes de repuesto de dichas piezas.

5. ÍNDICE DE PIEZAS DE MANTENIMIENTO

Al principio de este catálogo se encuentra un índice de los números de piezas utilizadas más frecuentemente para el mantenimiento, que incluye descripción, cantidad necesaria, lugar de utilización y número de página. Esta información está organizada alfabéticamente, por descripción de la pieza.

6. ÍNDICE

El Índice, ubicado cerca del principio del manual, es una lista en orden alfabético de todos los elementos de información incluídos en el manual. Los números de página proporcionan una referencia rápida a las ilustraciones detalladas de identificación de piezas y a las listas de componentes de repuesto de dichas piezas.

7. INDICE NUMÉRICO DE PIEZAS

Un índice numérico de piezas con el correspondiente número de página aparece al final de este catálogo.

8. TÍTULOS

Los títulos ubicados al principio de cada elemento de información identifican el número y el nombre de la pieza junto con información descriptiva. Se debe usar información sobre los Números de Identificación de Pieza (PIN) y los números de serie (S/N) para seleccionar la información que corresponda a una máquina en particular. También se suministra información sobre las opciones de reparación en el campo, la identificación de componentes de accesorios optativos y el lugar de ubicación de la pieza ("es parte de").

La primera línea del título se muestra con un tipo de letra más grande para indicar el comienzo de un elemento de información. Si se requieren páginas adicionales para ilustrar un elemento de información, los títulos se muestran con un tipo de letra normal y la continuación se indica entre paréntesis.

9. PIEZAS QUE NO SE SUMINISTRAN COMO REPUESTO

En algunos casos es necesario indicar piezas que no se suministran como repuesto pero que pueden estar conectadas a listas de componentes de otras piezas de repuesto. En tal caso, dichas piezas se muestran en cursiva para indicar que no son piezas disponibles.

10. NÚMEROS DE REFERENCIA

Los números en la columna de No. de Referencia corresponden a los números indicados en la ilustración que pertenece a ese número de pieza. Los números que tienen un sufijo alfabético identifican artículos de las listas de componentes de piezas. Los números en la columna de Referencia de la ilustración se identifican en la esquina inferior izquierda de cada ilustración. Para determinar el número de pieza correcto se puede utilizar tanto el No. de Referencia de la ilustración como el No. de Referencia del artículo. A medida que se actualiza la información para indicar los más recientes números de piezas de repuesto, puede omitirse intencionalmente un No. de Referencia en una lista de componentes de piezas.

11. NOMBRES DE PIEZA SANGRADOS

Cuando el nombre de una pieza está sangrado en una lista, significa que esta pieza forma parte del grupo o conjunto del renglón inmediatamente superior.

12. LETRAS DE REFERENCIA DE ILUSTRACIONES

Las ilustraciones contienen algunas veces letras de referencia (A, B, C etc.) cuyo propósito es seguir el trayecto de líneas y mazos de cables de un punto a otro. También se utilizan para mostrar dónde volver a unir ilustraciones que se habían separado.

13. ABREVIATURAS Y SIMBOLOS

O.D. – Diámetro exterior
I.D. – Diámetro interior
A – No es pieza de este grupo
B – Utilizado según la demanda
C – Indica cambio
D – Se pide por metro
E – Se pide por centímetro
F – No se muestra
G – Se pide por pulgada
I – Consulte el sistema de información hidráulica
M – Pieza métrica
R – Puede estar disponible como pieza remanufacturada
Y – Ilustración separada
Z – No se suministra por separado

SIS *Nueva Característica*

14.<END>

Este símbolo indica el final de un elemento de información.

NOTA:

Las contínuas mejoras y adelantos en diseño podrían originar cambios a su máquina que no se incluyen en esta publicación. Cuando tenga alguna pregunta acerca de su producto Caterpillar o de esta publicación, consulte al distribuidor Caterpillar para obtener la información más reciente.

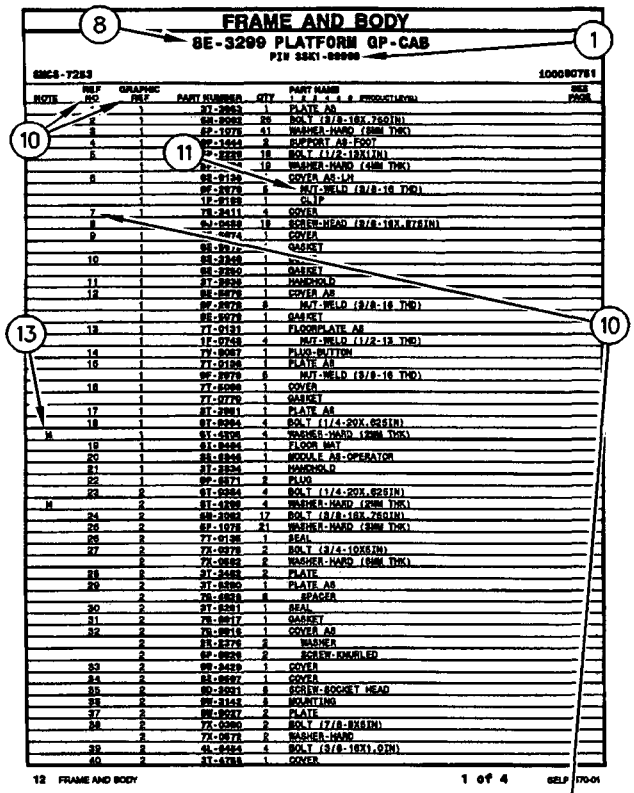
FRAME AND BODY
8E-3299 PLATFORM GP-CAB
PIN SSK1-88888
8BC8-7283
100090751
NOTE | REF NO | GRAPHIC REF | PART NUMBER | QTY | PART NAME | SEE PAGE
1 | 1 | 1 | 3T-3963 | 1 | PLATE AS
2 | 1 | | 6M-8082 | 20 | BOLT (3/8-16X.750IN)
3 | 1 | | 8P-1078 | 41 | WASHER-HARD (38MM THK)
4 | 1 | | 9F-1443 | 8 | SUPPORT AS-FOOT
5 | 1 | | 9X-2229 | 18 | BOLT (1/2-13X1IN)
| 1 | | 9X-[illegible] | 19 | WASHER-HARD (44MM THK)
6 | 1 | | 6S-0134 | | COVER AS-LH
| 1 | | 8F-8978 | 6 | NUT-WELD (3/8-16 THD)
| 1 | | 1P-0189 | 1 | CLIP
7 | 1 | | 7S-3411 | 4 | COVER
8 | 1 | | 6J-0488 | 19 | SCREW-HEAD (3/8-16X.878IN)
9 | 1 | | [illegible]4974 | 1 | COVER
| 1 | | 6S-99[illegible] | | GASKET
10 | 1 | | 8S-3348 | 1 | [illegible]
| 1 | | 6S-2290 | 1 | GASKET
11 | 1 | | 3T-3838 | 1 | HANDHOLD
12 | 1 | | 8E-8978 | 1 | COVER AS
| 1 | | 8F-8978 | 6 | NUT-WELD (3/8-16 THD)
| 1 | | 8E-8978 | 1 | GASKET
13 | 1 | | 7T-0131 | 1 | FLOORPLATE AS
| 1 | | 1P-0748 | 4 | NUT-WELD (1/2-13 THD)
14 | 1 | | 7T-8087 | 1 | PLUG-BUTTON
15 | 1 | | 7T-0106 | 1 | PLATE AS
| 1 | | 8F-8978 | 6 | NUT-WELD (3/8-16 THD)
16 | 1 | | 7T-8086 | 1 | COVER
| 1 | | 7T-0770 | 1 | GASKET
17 | 1 | | 3T-2981 | 1 | PLATE AS
18 | 1 | | 6T-0364 | 4 | BOLT (1/4-20X.625IN)
M | 1 | | 6V-0708 | 4 | WASHER-HARD (38MM THK)
19 | 1 | | 6I-8486 | 1 | FLOOR MAT
20 | 1 | | 8S-8946 | 1 | MODULE AS-OPERATOR
21 | 1 | | 3T-3934 | 1 | HANDHOLD
22 | 1 | | 8F-8971 | 2 | PLUG
23 | 2 | | 6T-0364 | 4 | BOLT (1/4-20X.625IN)
M | 2 | | 6T-0700 | 4 | WASHER-HARD (20MM THK)
24 | 2 | | 6M-3082 | 17 | BOLT (3/8-16X.750IN)
25 | 2 | | 8P-1078 | 21 | WASHER-HARD (38MM THK)
26 | 2 | | 7T-0138 | 1 | SEAL
27 | 2 | | 7X-0378 | 2 | BOLT (3/4-10X5IN)
| 2 | | 7X-0883 | 2 | WASHER-HARD (64MM THK)
28 | 2 | | 3T-3483 | 2 | PLATE
29 | 2 | | 3T-8980 | 1 | PLATE AS
| 2 | | 7S-8828 | 8 | SPACER
30 | 2 | | 3T-3381 | 1 | SEAL
31 | 2 | | 7S-8817 | 1 | GASKET
32 | 2 | | 7S-8816 | 1 | COVER AS
| 2 | | 5S-2376 | 2 | WASHER
| 2 | | 8P-8826 | 2 | SCREW-KNURLED
33 | 2 | | 6M-3429 | 1 | COVER
34 | 2 | | 8S-8697 | 1 | COVER
35 | 2 | | 6D-3931 | 8 | SCREW-ROCKET HEAD
36 | 2 | | 6M-3143 | 8 | MOUNTING
37 | 2 | | 8E-8927 | 2 | PLATE
38 | 2 | | 7X-0380 | 2 | BOLT (7/8-9X5IN)
| 2 | | 7X-0878 | 2 | WASHER-HARD
39 | 2 | | 4L-0484 | 4 | BOLT (3/8-16X1.0IN)
40 | 2 | | 3T-4788 | 1 | COVER
12 FRAME AND BODY
1 of 4
SELP4570-01

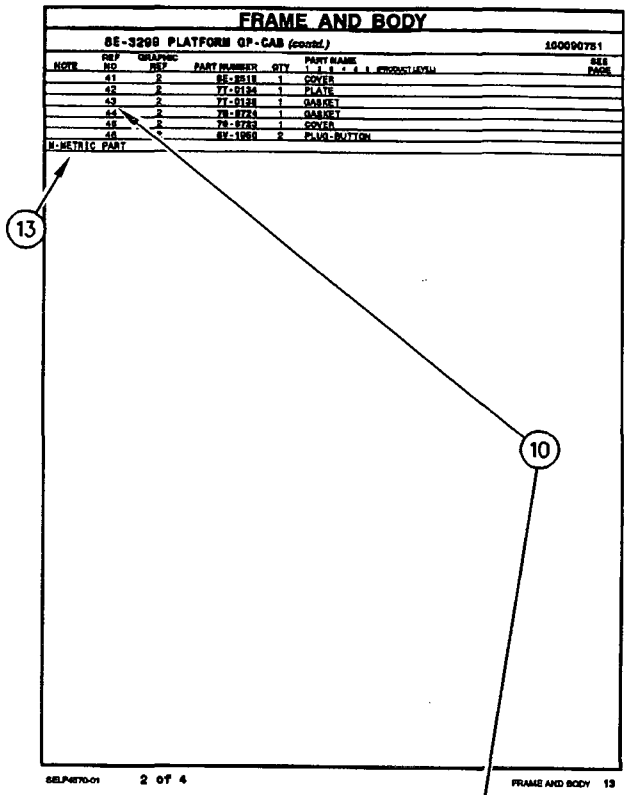
FRAME AND BODY
8E-3299 PLATFORM GP-CAB (contd.)
100090751
NOTE | REF NO | GRAPHIC REF | PART NUMBER | QTY | PART NAME | SEE PAGE
41 | 2 | | 8E-8518 | 1 | COVER
42 | 2 | | 7T-0134 | 1 | PLATE
43 | 2 | | 7T-0128 | 1 | GASKET
44 | 2 | | 7S-8724 | 1 | GASKET
45 | 2 | | 7S-8723 | 1 | COVER
46 | * | | 6V-1958 | 2 | PLUG-BUTTON
M-METRIC PART
SELP4570-01
2 of 4
FRAME AND BODY 13

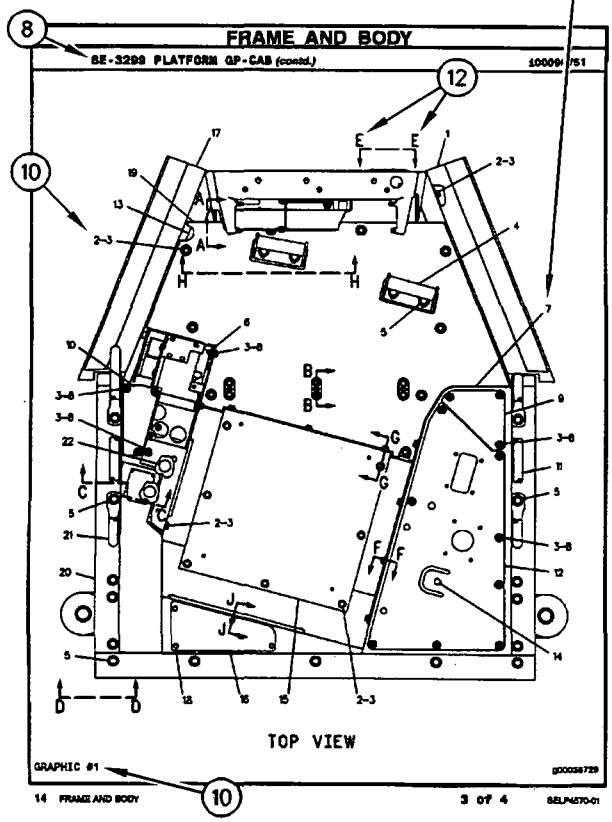
FRAME AND BODY
8E-3299 PLATFORM GP-CAB (contd.)
100090751
TOP VIEW
GRAPHIC #1
g00036729
14 FRAME AND BODY
3 of 4
SELP4570-01

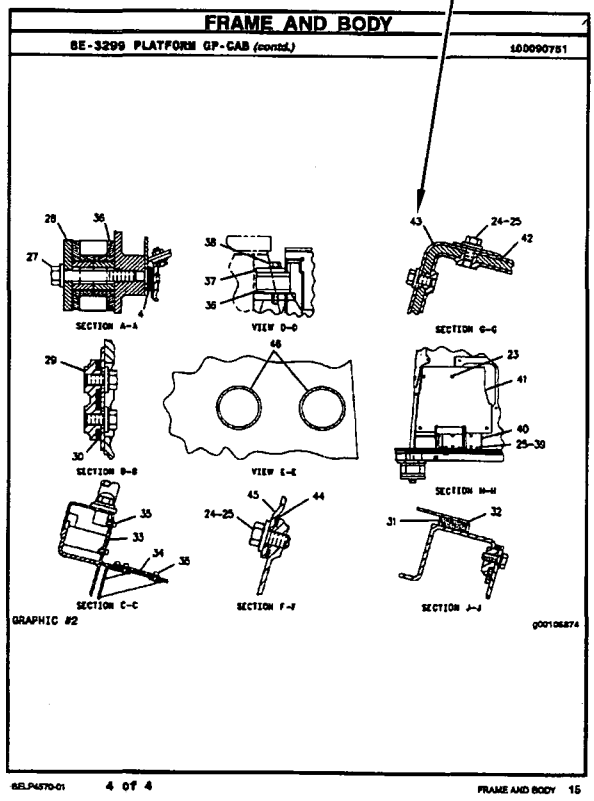
FRAME AND BODY
8E-3299 PLATFORM GP-CAB (contd.)
100090751
SECTION A-A
VIEW D-D
SECTION G-G
SECTION B-B
VIEW E-E
SECTION M-M
SECTION C-C
SECTION F-F
SECTION J-J
GRAPHIC #2
g00106874
SELP4570-01
4 of 4
FRAME AND BODY 15

INFORMAÇÃO GERAL

1. IDENTIFICAÇÃO DA MÁQUINA

As máquinas Caterpillar são identificadas pelos Números de Informação do Produto (PIN). Alguns componentes incluídos numa máquina podem ser identificados por Números de Série (S/N). Componentes típicos que serão enumerados com números de série incluem motores, transmissões, lâminas e ríperes. Além do número de série, a máquina e o motor são ainda identificados por números de arranjo e, em alguns casos, números de modificações. Tais números encontram-se na(s) placa(s) de identificação do produto e na placa mestre no compartimento do operador.

Novidades

A partir do primeiro trimestre de 2001 o Número de Identificação de Produto da Caterpillar (PIN) precisa ser mudado de 8 para 17 caracteres. Esforçando-se para fornecer uma identificação uniforme de equipamentos, a Caterpillar e outros fabricantes de equipamento de construção estão mudando para atender a versão mais atualizada do padrão de identificação de produtos. Os números de PIN para produtos de aplicações não rodoviárias são definidos pela ISO 10261. O novo formato de número PIN será adotado em todas as máquinas e grupos geradores Caterpillar. As placas e as marcações do chassi mostrarão os 17 dígitos de PIN. O novo formato terá a seguinte disposição:

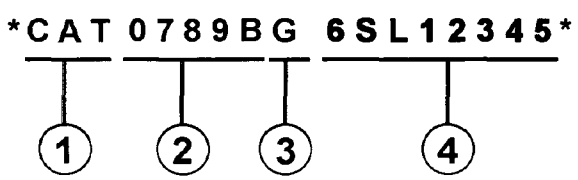

Onde:

1. Código de Fabricação Mundial da Caterpillar (dígitos 1-3)

2. Descrição da Máquina (dígitos 4-8)

3. Dígito de Verificação (dígito 9)

4. Seção de Indicador da Máquina (MIS) ou Número de Seqüência de Produto (dígitos 10-17). Estes eram anteriormente chamados de Número de Série.

Máquinas e grupos geradores produzidos antes do primeiro trimestre de 2001 manterão o formato de 8 caracteres de PIN.

Componentes como motores, transmissões, eixos, ferramentas de trabalho, etc. continuarão a usar Número de Série (S/N) com oito caracteres.

2. COMO OBTER PEÇAS

⚠ CUIDADO

Quando peças de substituição são exigidas para este produto, a Caterpillar recomenda a utilização de peças de substituição Caterpillar ou peças com as especificações equivalentes incluindo, mas não limitadas, à dimensões físicas, tipos, resistência e materiais.

A inobservância desta advertência poderá resultar em falhas prematuras, danos ao produto, ferimentos ou morte.

As Peças de Reposição de Qualidade Caterpillar encontram-se disponíveis nos revendedores Caterpillar no mundo inteiro. Seus estoques de peças são atualizados e incluem todas as peças normalmente necessárias para proteger seu investimento em máquinas Caterpillar. Alguns revendedores podem oferecer jogos de reparo ou peças de troca/remanufaturadas disponíveis como uma opção da alternativa de reparo mais eficaz para uma situação específica. Ao encomendar peças, seu pedido deve especificar a quantidade, o número e o nome da peça e o número de série/número de identificação do produto referentes à máquina para a qual as peças se destinam.

3. ORGANIZAÇÃO DO MANUAL DE PEÇAS

A informação do produto neste manual é apresentada em forma de "elementos de informação" que representam todos os componentes para o modelo específico. Arranjo de Motor e Grupo de Assento são exemplos de elementos de informação. Os elementos de informação são organizados em ordem alfabética por nome de peça ou secundariamente, por número de peça incluído em cada seção principal do manual.

4. LISTA DE CONTEÚDOS

A Lista de Conteúdos (TOC) se encontra no princípio do manual. A Lista de Conteúdos (TOC) relaciona em cada seção do manual uma lista completa com todos os elementos de informação organizados conforme aparecem no manual. Números de página são fornecidos para que se tenha referência rápida de ilustrações de peças detalhadas e listas de conteúdos que podem receber serviço de manutenção.

5. ÍNDICE DE PEÇAS DE MANUTENÇÃO

O Índice de Peças de Manutenção, localizado perto do princípio do manual, faz referência aos números de peça de manutenção usados com maior frequência, fornecendo uma descrição, a quantidade, o uso e o número de página. Esta informação é organizada com a descrição da peça em ordem alfabética.

6. ÍNDICE

O Índice localizado perto do princípio do manual, consiste de uma lista em ordem alfabética de todos os elementos de informação incluídos no manual. Números de página são fornecidos para que se tenha referência rápida de ilustrações de peças detalhadas e listas de conteúdos,que podem receber serviço de manutenção.

7. ÍNDICE DE NÚMERO DE PEÇA

Um índice numérico relacionando todos os números de peça e a(s) página(s) correspondentes, aparece no final do manual.

8. LEGENDAS

As legendas localizadas no início de cada elemento de informação identificam o número e o nome de peça, juntamente com informação descritiva adicional. Informações sobre o Número de Informação do Produto (PIN) e o Número de Série (S/N) encontradas em cada legenda devem ser usadas para selecionar a informação correta sobre uma máquina específica. Opções de substituição no campo, identificação de componentes de acessórios opcionais e informações sobre onde são utilizados ("parte de") são também fornecidas.

A primeira linha de uma legenda é indicada em tipo maior para indicar o princípio de um elemento de informação. Legendas para páginas adicionais que podem ser necessárias para ilustrar um elemento de informação serão apresentadas em tipo padrão e incluirão o termo *(continua)* .

9. NÃO DISPONÍVEL SEPARADAMENTE

Em alguns casos, é necessário mostrar peças não disponíveis separadamente que têm uma ligação com listas de conteúdos de nível inferior que podem receber serviço de manutenção. Os números de peça destes componentes não disponíveis aparecerão em *itálico* , a fim de indicar que não estão disponíveis.

10. NÙMEROS DE REFERÊNCIA À LISTA DE PEÇAS

Os números indicados na coluna Ref No (No. de Referência) correspondem-se aos números usados no(s) gráfico(s) correspondente(s). Um sufixo com letras pode ser acrescentado a um número de referência para identificar itens de conteúdo de nível inferior. Os números indicados na coluna Graphic Ref (Referência de Gráfico) referem-se ao identificador de número de gráfico presente no canto esquerdo inferior de cada ilustração. O número de Referência de Gráfico pode ser usado em combinação com o item Ref No para determinar-se o número de peça correto. Poderá haver omissão intencional de um número de referência (Ref No) de uma lista de conteúdos uma vez que as informações são atualizadas para refletir os números de peça mais recentes que podem receber serviço de manutenção.

11. NOMES DE PEÇAS DESALINHADOS

Quando um nome de peça encontra-se desalinhado numa lista de peças, significa que tal item faz parte do (está incluído no) grupo ou conjunto sob o qual está relacionado.

12. LETRAS DE REFERÊNCIA NAS ILUSTRAÇÕES

Quando necessário, as ilustrações contêm letras de referência (A, B, C, etc.) que são utilizadas para seguir tubulações e cabos elétricos de um ponto a outro. Também foram utilizadas para indicar onde se pode reconectar as ilustrações que foram separadas.

13. ABREVIAÇÕES E SÍMBOLOS

O.D. – "Outside Diameter" (Diâmetro Externo)
I.D. – "Inside Diameter" (Diâmetro Interno)
A – Não faz parte deste grupo
B – Use conforme necessário
C – Indica modificação
D – Vendido por metro
E – Vendido por centímetro
F – Não ilustrado
G – Vendido por polegada
I – Consultar o Sistema de Informações Hidráulicas
M – Peça métrica
R – Peça remanufaturada pode estar disponível; consulte o seu revendedor Cat
Y – Ilustração separada
Z – Não disponível separadamente

SIS *Novidades*

14. <END>

Este símbolo indica o final de um elemento de informação.

NOTA:

Os contínuos aperfeiçoamentos e avanços no projeto do produto podem ocasionar modificações em sua máquina que talvez ainda não estejam incluídas nesta publicação. Sempre que surgirem dúvidas quanto a um produto Caterpillar ou quanto à presente publicação, consulte o seu revendedor Caterpillar para obter as informações mais recentes disponíveis.

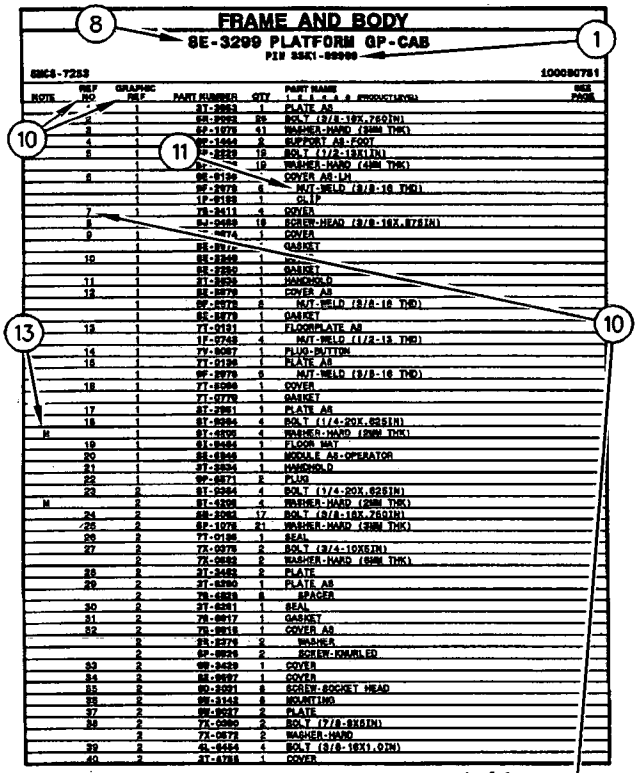

FRAME AND BODY

8E-3299 PLATFORM GP-CAB

PIN 8SK1-88988

SMCS-7258 100090751

NOTE	REF NO	GRAPHIC REF	PART NUMBER	QTY	PART NAME (1 2 3 4 5 6 #PRODUCTIVE%)	SEE PAGE
	1	1	8T-2963	1	PLATE AS	
	2	1	8R-2953	88	BOLT (3/8-16X.760IN)	
	3	1	8P-1078	41	WASHER-HARD (8MM THK)	
	4	1	8E-1444	2	SUPPORT AS-FOOT	
	5	1	8P-2332	18	BOLT (1/2-13X1IN)	
		1		18	WASHER-HARD (40M THK)	
	6	1	8E-9199		COVER AS-LH	
		1	8F-2979	6	NUT-WELD (3/8-16 THD)	
		1	1F-9188	1	CLIP	
	7	1	7E-8411	4	COVER	
	8	1	5J-5488	18	SCREW-HEAD (3/8-16X.875IN)	
	9	1	4674	1	COVER	
		1	8E-8972	1	GASKET	
	10	1	8E-2348	1	[illegible]	
		1	8E-2350	1	GASKET	
	11	1	8T-2930	1	HANDHOLD	
	12	1	8E-8979	1	COVER AS	
		1	8F-2972	6	NUT-WELD (5/8-18 THD)	
		1	8E-8978	1	GASKET	
	13	1	7T-9191	1	FLOORPLATE AS	
		1	1F-9748	4	NUT-WELD (1/2-13 THD)	
	14	1	7V-8067	1	PLUG-BUTTON	
	15	1	7T-9190	1	PLATE AS	
		1	8F-2978	6	NUT-WELD (5/8-18 THD)	
	16	1	7T-8998	1	COVER	
		1	7T-8778	1	GASKET	
	17	1	8T-2951	1	PLATE AS	
	18	1	8T-8994	4	BOLT (1/4-20X.625IN)	
M		1	8T-8308	4	WASHER-HARD (8MM THK)	
	19	1	8T-8484	1	FLOOR MAT	
	20	1	8E-8948	1	MODULE AS-OPERATOR	
	21	1	8T-2934	1	HANDHOLD	
	22	1	8P-8871	2	PLUG	
	23	2	8T-8964	4	BOLT (1/4-20X.625IN)	
M		2	8T-8308	4	WASHER-HARD (8MM THK)	
	24	2	8R-2962	17	BOLT (3/8-16X.760IN)	
	25	2	8P-1078	21	WASHER-HARD (8MM THK)	
	26	2	7T-9196	1	SEAL	
	27	2	7X-8978	2	BOLT (3/4-10X6IN)	
		2	7X-8982	2	WASHER-HARD (58MM THK)	
	28	2	8T-2952	2	PLATE	
	29	2	8T-8960	1	PLATE AS	
		2	7E-8828	8	SPACER	
	30	2	8T-8961	1	SEAL	
	31	2	7E-8817	1	GASKET	
	32	2	7E-8816	1	COVER AS	
		2	8R-2276	2	WASHER	
		2	8P-8826	2	SCREW-KNURLED	
	33	2	8E-9439	1	COVER	
	34	2	8E-8997	1	COVER	
	35	2	8D-2991	8	SCREW-SOCKET HEAD	
	36	2	8E-3143	8	MOUNTING	
	37	2	8E-8937	2	PLATE	
	38	2	7X-8980	2	BOLT (7/8-9X6IN)	
		2	7X-8979	2	WASHER-HARD	
	39	2	4L-8464	4	BOLT (3/8-16X1.0IN)	
	40	2	8T-8788	1	COVER	

12 FRAME AND BODY 1 of 4 SELP4570-01

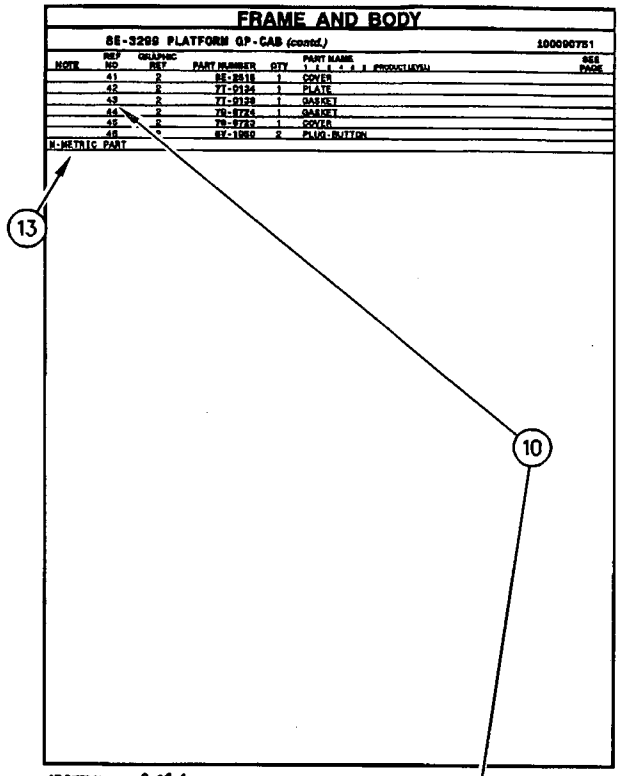

FRAME AND BODY

8E-3299 PLATFORM GP-CAB (contd.) 100090751

NOTE	REF NO	GRAPHIC REF	PART NUMBER	QTY	PART NAME (1 2 3 4 5 6 #PRODUCTIVE%)	SEE PAGE
	41	2	8E-2818	1	COVER	
	42	2	7T-9134	1	PLATE	
	43	2	7T-9128	1	GASKET	
	44	2	7E-8724	1	GASKET	
	45	2	7E-8733	1	COVER	
	46	*	6V-1960	2	PLUG-BUTTON	

M-METRIC PART

SELP4570-01 2 of 4 FRAME AND BODY 13

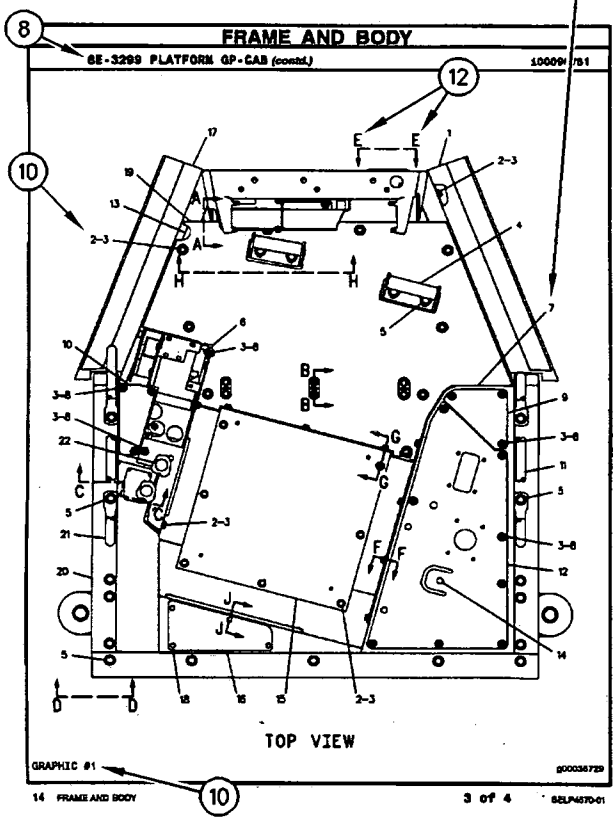

FRAME AND BODY

8E-3299 PLATFORM GP-CAB (contd.) 100090751

14 FRAME AND BODY 3 of 4 SELP4570-01

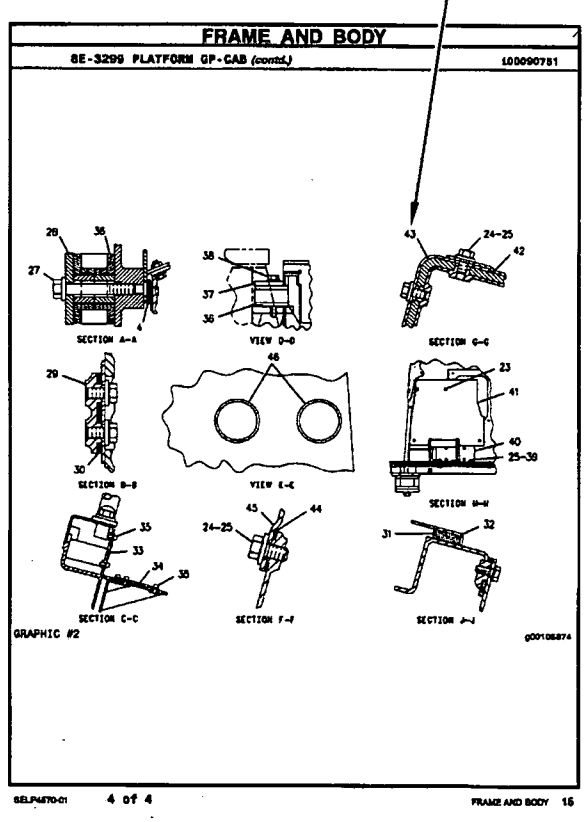

FRAME AND BODY

8E-3299 PLATFORM GP-CAB (contd.) 100090751

SELP4570-01 4 of 4 FRAME AND BODY 15

ALLGEMEINE HINWEISE

1. MASCHINENKENNZEICHNUNG

Caterpillar-Maschinen sind mit PRODUCT IDENTIFICATION NUMBERS (PIN) (Produkt-Identnummern) gekennzeichnet. Einige Baugruppen, z.B. Motoren, Getriebe, Planierschilde und Aufreißer, sind mit SERIAL NUMBERS (S/N) (Seriennummern) gekennzeichnet. An der Maschine und am Motor befinden sich außerdem ARRANGEMENT NUMBERS (Ausrüstungsnummern) sowie in einigen Fällen MODIFICATION NUMBERS (Änderungsnummern). Sie befinden sich auf den PIN-Schildern und auf dem Typenschild im Fahrerhaus.

Bei Ersatzteilbestellungen müssen dem Händler alle diese Nummern zur Verfügung gestellt werden.

SIS *Neu im Parts Manual*

Vom ersten Quartal 2001 ab wurde die Caterpillar Produkt-Identnummer (PIN) von 8 auf 17 Zeichen geändert. Um zur Standardisierung der Produkt-Identnummer beizutragen, sind Caterpillar und andere Baumaschinenhersteller bestrebt, die aktuellste Norm zur Produkt-Identnummerierung einzuführen. Produkt-Identnummern für Baumaschinen sind durch ISO 10261 definiert. Das neue Format der Produkt-Identnummern gilt für alle Caterpillar-Maschinen und -Stromaggregate. Die Produkt-Identschilder und -Identrahmenmarkierung enthalten die aus 17 Zeichen bestehende Identnummer. Das neue Format hat folgende Abschnitte:

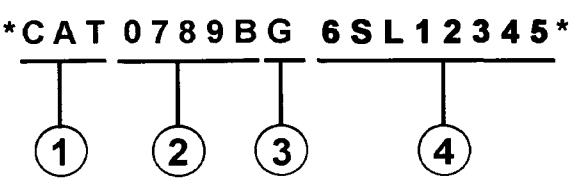

Abschnitte:

1. Caterpillars weltweiter Herstellungscode (Zeichen 1-3)

2. Modell (Zeichen 4-8)

3. Kontrollzeichen (Zeichen 9)

4. Maschinenspezifische Kennung (MIS) oder Produktsequenznummer (Zeichen 10-17). Diese wurde früher als Seriennummer bezeichnet.

Für vor dem ersten Quartal 2001 hergestellte Maschinen und Stromaggregate wird das aus 8 Zeichen bestehende PIN-Format beibehalten.

Bauteile wie z.B. Motoren, Getriebe, Achsen sowie Arbeitsgeräte werden weiterhin eine aus 8 Zeichen bestehende Seriennummer (S/N) aufweisen.

2. BESTELLEN VON ERSATZTEILEN

⚠ WARNUNG

Wenn für diese Maschine Ersatzteile benötigt werden, empfiehlt Caterpillar, ausschließlich Caterpillar-Ersatzteile oder solche zu verwenden, die die gleichen technischen Merkmale hinsichtlich Typ, Festigkeit, Werkzeugeigenschaften und die gleichen Maße aufweisen.

Bei Nichtbeachtung dieser Warnung besteht Verletzungs- oder sogar Lebensgefahr! Ferner kann Nichtbeachtung vorzeitige Ausfälle der Teile und Beschädigung der Maschine zur Folge haben.

Original Caterpillar-Ersatzteile können weltweit bei jedem Caterpillar-Händlern bestellt werden. Die umfangreichen Händlerlager enthalten normalerweise alle Teile, die Sie für Ihre Caterpillar-Maschine benötigen. Einige Händler bieten Reparatursätze, Austausch- oder werküberholte Teile an, so daß Sie eine Auswahl unter verschiedenen Reparaturmöglichkeiten treffen können. Ihre Bestellung muß folgende Angaben enthalten: Anzahl der benötigten Teile, Bestellnummer, Bezeichnung des Teils, Serien-Nr./Produkt-Ident-Nr., Ausrüstungs-Nr. und Änderungs-Nr. der Maschine, für die diese Teile benötigt werden.

3. AUFBAU DES PARTS MANUAL

Die Produktinformationen für alle Komponenten eines bestimmten Modells sind in INFORMATION ELEMENTS (Informationseinheiten) gegliedert. ENGINE ARRANGEMENT (Motorausführung) und SEAT GROUP (Fahrersitz) sind Beispiele für solche Informationseinheiten. Sie sind innerhalb jeder Gruppe alphabetisch, entsprechend der Ersatzteilbezeichnung, und zusätzlich numerisch, entsprechend der Ersatzteilnummer, geordnet.

4. INHALTSVERZEICHNIS

Das Inhaltsverzeichnis befindet sich am Anfang des Buches. Im Inhaltsverzeichnis werden die einzelnen Abschnitte des Buches aufgeführt. Die Abschnitte enthalten eine vollständige Aufstellung aller Informationseinheiten. Diese sind entsprechend ihrem Erscheinen im Buch geordnet. Das Inhaltsverzeichnis enthält Seitenangaben für Schnellverweise auf detaillierte Abbildungen und Teillisten.

5. INDEX FÜR WARTUNGSTEILE

Der Index für Wartungsteile vorn im Buch enthält die Bestellnummern, Seitenangaben, Mengenangaben und Informationen über den Einsatzbereich für die am häufigsten benötigten Ersatzteile. Die Angaben sind alphabetisch entsprechend der Teilebezeichnung geordnet.

6. INDEX

Der Index vorn im Buch enthält eine alphabetische Liste aller Informationseinheiten. Er enthält Seitenangaben für Schnellverweise auf detaillierte Abbildungen und Teillisten.

7. INDEX FÜR BESTELLNUMMERN

Hinten im Buch befindet sich ein numerischer Index, mit allen Bestellnummern und dem Hinweis auf die Seite, auf der sich die betreffende Abbildung befindet.

8. ÜBERSCHRIFTEN

Die Überschriften, die sich am Anfang jeder der Informationseinheiten befinden, enthalten Bestellnummern, Ersatzteilbezeichnungen und zusätzliche beschreibende Informationen. Produkt-Ident- und Seriennummern in den Überschriften sollten zur Auswahl der richtigen Informationen für die betreffende Maschine verwendet werden. Die Überschriften enthalten außerdem Informationen über möglichen Außendienstersatz, mögliche Baugerätekomponenten und die Baugruppe, zu der das Teil gehört.

Die erste Zeile einer Überschrift erscheint in einer größeren Schriftart, um den Anfang einer Informationseinheit zu kennzeichnen. Überschriften für zusätzliche Seiten, die zur Erläuterung einer Informationseinheit notwendig sind, erscheinen in normaler Schriftart und enthalten den Begriff "(contd.)".

9. NICHT EINZELN LIEFERBARE TEILE

In einigen Fällen ist es notwendig nicht lieferbare Teile, die selbst mit einer eigenen Teilliste im Buch vertreten sind, aufzuführen. Die Bestellnummern dieser nicht einzeln lieferbaren Teile erscheinen kursiv, wodurch angezeigt wird, daß sie nur in Verbindung mit anderen Teilen lieferbar sind.

10. REFERENZNUMMER FÜR ERSATZTEILE

Die Zahlen, die in der Spalte "Ref No" aufgeführt sind, stimmen mit den Zahlen in den beigefügten Abbildungen überein. Ein Buchstaben-Suffix kann zu einer Referenznummer hinzugefügt werden, um zu kennzeichnen, daß das Teil mit einer eigenen Teilliste im Buch aufgeführt ist. Die in der Spalte "Graphic Ref" angeführten Zahlen verweisen auf die Identifikationsnummer der Abbildung, die sich in der linken unteren Ecke der Abbildung befindet. Diese Nummer kann zusammen mit der Referenznummer des Teils angegeben werden, um die richtige Ersatzteilnummer zu ermitteln. Referenznummern können absichtlich weggelassen werden, da die Nummern der lieferbaren Ersatzteile ständig aktualisiert werden.

11. EINGERÜCKTE BEZEICHNUNGEN

Wenn eine Bezeichnung eingerückt ist, wird dadurch angezeigt, daß das Teil zu einer Baugruppe gehört, unter deren Bezeichnung es eingerückt ist.

12. REFERENZBUCHSTABEN

Falls erforderlich sind in den Abbildungen Referenzbuchstaben enthalten (z.B. A, B, C, usw.), die Leitungen und Kabelbäume von einem Punkt zum anderen verfolgen. Außerdem geben sie die Stelle an, an der getrennte Abbildungen fortgesetzt werden.

13. ABKÜRZUNGEN UND SYMBOLE

O.D. – Außendurchmesser
I.D. – Innendurchmesser
A – kein Teil dieser Gruppe
B – nach Bedarf verwenden
C – Hinweis auf eine Änderung
D – in Meter-Länge bestellen
E – in Zentimeter-Länge bestellen
F – nicht gezeigt
G – in Zoll-Länge bestellen
I – siehe Hydraulikinformationssystem
M – metrisches Teil
R – werküberholtes Teil unter Umständen lieferbar
Y – separate Abbildung
Z – nicht einzeln lieferbar

SIS *Neu im Parts Manual*

14. <END>

Dieses Symbol zeigt das Ende eines Informationselements an.

ANMERKUNG:

Ständig vorgenommene Verbesserungen und Weiterentwicklungen an Ihrer Maschine können Änderungen verursachen, die in der vorliegenden Ausgabe noch nicht berücksichtigt sind. Fragen zu Ihrer Caterpillar-Maschine oder diesem Ersatzteilbuch beantwortet Ihr Caterpillar-Händler.

FRAME AND BODY

8E-3299 PLATFORM GP-CAB

PIN SSKY-00999

SMCS-7253 — 100090751

NOTE	REF NO	GRAPHIC REF	PART NUMBER	QTY	PART NAME (1 2 3 4 5 6 #PRODUCT LEVEL)	SEE PAGE
	1	1	8T-3662	1	PLATE AS	
	2	1	8H-3093	20	BOLT (3/8-16X.75GIN)	
	3	1	8P-1075	41	WASHER-HARD (8MM THK)	
	4	1	9W-1443	2	SUPPORT AS-FOOT	
	5	1	8P-2393	18	BOLT (1/2-13X1IN)	
		1	8J-[illegible]	19	WASHER-HARD (44M THK)	
	6	1	8E-8196	1	COVER AS-LH	
		1	8P-2079	6	NUT-WELD (3/8-16 THD)	
		1	1P-0199	1	CLIP	
	7	1	7X-3411	4	COVER	
	8	1	8J-0468	19	SCREW-HEAD (3/8-16X.875IN)	
	9	1	[illegible]-4674	1	COVER	
		1	8E-8172	1	GASKET	
	10	1	8E-8368	1	[illegible]	
		1	8E-8360	1	GASKET	
	11	1	8T-8826	1	HANDHOLD	
	12	1	8E-8870	1	COVER AS	
		1	8P-2079	6	NUT-WELD (3/8-16 THD)	
		1	8E-8878	1	GASKET	
	13	1	7T-8181	1	FLOORPLATE AS	
		1	1P-0748	4	NUT-WELD (1/2-13 THD)	
	14	1	7Y-8067	1	PLUG-BUTTON	
	15	1	7T-8136	1	PLATE AS	
		1	8P-2079	6	NUT-WELD (3/8-16 THD)	
	16	1	7T-8066	1	COVER	
		1	7T-8779	1	GASKET	
	17	1	8T-8861	1	PLATE AS	
	18	1	8T-8864	4	BOLT (1/4-20X.625IN)	
M		1	8T-4206	4	WASHER-HARD (8MM THK)	
	19	1	8T-8484	1	FLOOR MAT	
	20	1	8E-8848	1	MODULE AS-OPERATOR	
	21	1	8T-8834	1	HANDHOLD	
	22	1	8P-8871	2	PLUG	
	23	2	8T-8364	4	BOLT (1/4-20X.625IN)	
M		2	8T-4208	4	WASHER-HARD (8MM THK)	
	24	2	8H-3092	17	BOLT (3/8-16X.75GIN)	
	25	2	8P-1076	21	WASHER-HARD (8MM THK)	
	26	2	7T-8136	1	SEAL	
	27	2	7X-8878	2	BOLT (3/4-10X6IN)	
		2	7X-8882	2	WASHER-HARD (84M THK)	
	28	2	8T-8483	2	PLATE	
	29	2	8T-8890	1	PLATE AS	
		2	7X-8888	6	SPACER	
	30	2	8T-8861	1	SEAL	
	31	2	7X-8817	1	GASKET	
	32	2	7X-8816	1	COVER AS	
		2	2X-2279	2	WASHER	
		2	8P-8838	2	SCREW-KNURLED	
	33	2	8W-3428	1	COVER	
	34	2	8E-8897	1	COVER	
	35	2	8D-2081	8	SCREW-SOCKET HEAD	
	36	2	8W-3148	8	MOUNTING	
	37	2	8E-8827	2	PLATE	
	38	2	7X-8880	2	BOLT (7/8-9X6IN)	
		2	7X-8872	2	WASHER-HARD	
	39	2	6L-8484	4	BOLT (3/8-16X1.0IN)	
	40	2	8T-8788	1	COVER	

12 FRAME AND BODY — 1 of 4 — SELP4570-01

FRAME AND BODY

8E-3299 PLATFORM GP-CAB (contd.)

100090751

NOTE	REF NO	GRAPHIC REF	PART NUMBER	QTY	PART NAME (1 2 3 4 5 6 #PRODUCT LEVEL)	SEE PAGE
	41	2	8E-8518	1	COVER	
	42	2	7T-8134	1	PLATE	
	43	2	7T-8128	1	GASKET	
	44	2	7X-8724	1	GASKET	
	45	2	7X-8722	1	COVER	
	46	*	6V-1960	2	PLUG-BUTTON	

M-METRIC PART

SELP4570-01 — 2 of 4 — FRAME AND BODY 13

FRAME AND BODY

8E-3299 PLATFORM GP-CAB (contd.)

100090751

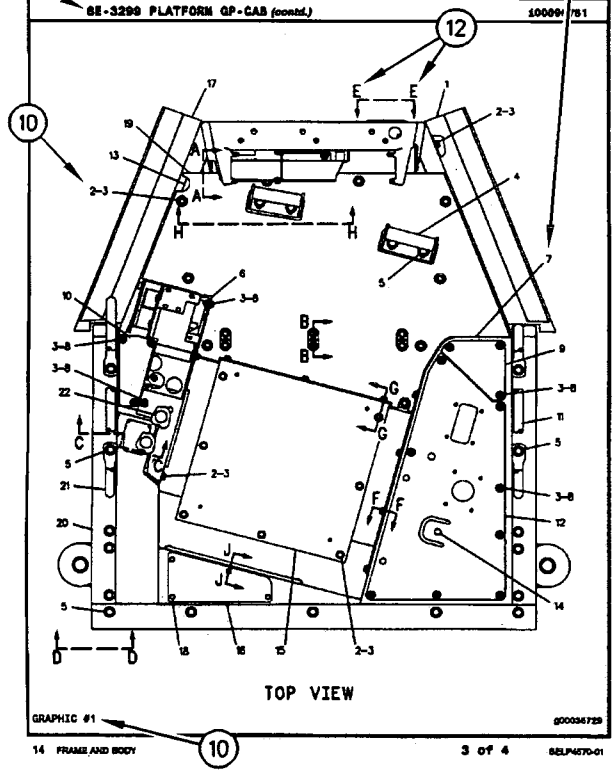

14 FRAME AND BODY — 3 of 4 — SELP4570-01

FRAME AND BODY

8E-3299 PLATFORM GP-CAB (contd.)

100090751

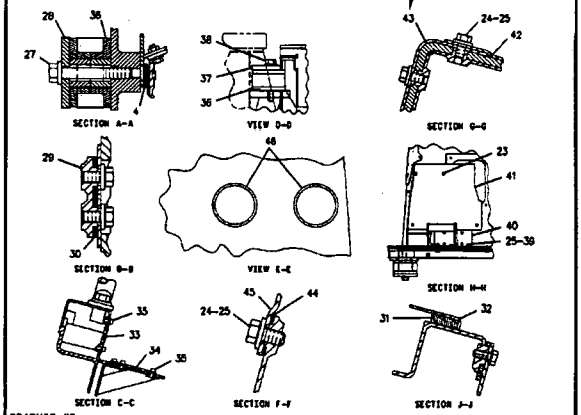

SELP4570-01 — 4 of 4 — FRAME AND BODY 15

REMANUFACTURED COMPONENTS

As an option when making repairs consider Caterpillar Remanufactured Components. Components that are available through the Caterpillar Remanufactured Program are identified three ways in the parts book:

- with the letter R in the note field of the parts list
- with an R* at the beginning of the first line of the caption
- with an *R at the end of the first line of the caption

Typical components included in the Remanufacturing Program include:

ALTERNATORS
CONNECTING RODS
CRANKSHAFTS - UNDERSIZE
CRANKSHAFTS - UPGRADE TO NEW
CYLINDER HEADS
ELECTRONIC CONTROL MODULES (ECM)
ELECTRONIC SENSORS
FUEL INJECTORS
FUEL NOZZLES
FUEL PUMPS
GOVERNORS
OIL PUMPS
PISTONS
SHORT BLOCKS
STARTERS
TURBOCHARGERS - COMPLETE
TURBOCHARGER CARTRIDGES
WATER PUMPS

Caterpillar Remanufactured engines for many engine arrangements are also available.

OPTIONS DE RÉPARATION

COMPOSANTS RÉNOVÉS

Comme option de réparation, considérer les composants rénovés Caterpillar. Les composants disponibles dans le cadre du programme Caterpillar de composants rénovés sont identifiés de trois façons dans le catalogue de pièces:

- avec la lettre "R" dans l'espace note de la liste des pièces
- avec R* au début de la première ligne des légendes
- avec *R à la fin de la première ligne des légendes

Les composants suivants figurent parmi les composants typiques du programme de rénovation:

ALTERNATEURS
BIELLES
VILEBREQUINS - SOUS-DIMENSIONNÉS
VILEBREQUINS - REMIS À NEUF
CULASSES
MODULES DE COMMANDE ÉLECTRONIQUE (ECM)
CAPTEURS ÉLECTRONIQUES
INJECTEURS
TÊTES D'INJECTEURS
POMPES À CARBURANT
RÉGULATEURS
POMPES À HUILE
PISTONS
BLOCS EMBIELLÉS
DÉMARREURS
TURBOCOMPRESSEURS - COMPLETS
CARTOUCHES DE TURBOCOMPRESSEUR
POMPES À EAU

Des moteurs rénovés sont aussi disponibles pour plusieurs versions de moteur.

COMPONENTES REMANUFACTURADOS

Al hacer reparaciones, tenga en cuenta la opción de Componentes Remanufacturados Caterpillar. Los componentes que están disponibles por medio del programa de Productos Remanufacturados Caterpillar se identifican de tres maneras en el manual de piezas:

- con la letra R en el espacio de Nota de la lista de piezas
- con una R* al comienzo de la primera línea de la leyenda
- con una *R al final de la primera línea de la leyenda

Los componentes que se incluyen típicamente en el Programa de Productos Remanufacturados son:

ALTERNADORES
BIELAS
CIGÜEÑALES - BAJOMEDIDA
CIGÜEÑALES - REMANUFACTURADOS A NUEVO
CULATAS
MÓDULOS DE CONTROL ELECTRÓNICO (ECM)
SENSORES ELECTRONICOS
INYECTORES
BOQUILLAS
BOMBAS DE COMBUSTIBLE
REGULADORES
BOMBAS DE ACEITE
PISTONES
MONOBLOQUES
MOTORES DE ARRANQUE
TURBOCOMPRESORES - COMPLETOS
NÚCLEOS DE TURBOCOMPRESOR
BOMBAS DE AGUA

También hay disponibles motores Remanufacturados Caterpillar para muchas de las configuraciones de motores.

COMPONENTES REMANUFATURADOS

Considere o uso de Componentes Remanufaturados Caterpillar ao efetuar reparos. Os componentes disponíveis através do Programa de Remanufatura Caterpillar são identificados de três formas no manual de peças:

- com um R na área da nota da lista de peças
- com um R* no princípio da primeira linha da legenda
- com um *R no final da primeira linha da legenda

Os componentes típicos que constam no Programa de Remanufatura incluem:

ALTERNADORES
BIELAS
VIRABREQUINS - SUBMEDIDAS
VIRABREQUINS - ATUALIZAÇÃO
CABEÇOTES
MÓDULOS DE CONTROLE ELETRÔNICO (ECM)
SENSORES ELETRÔNICOS
INJETORES DE COMBUSTÍVEL
BICOS DE ABASTECIMENTO DE COMBUSTÍVEL
BOMBAS DE COMBUSTÍVEL
GOVERNADORES
BOMBAS DE ÓLEO
PISTÕES
BLOCOS BÁSICOS DO MOTOR
MOTORES DE PARTIDA
TURBOALIMENTADORES - COMPLETOS
CARTUCHOS DE TURBOALIMENTADORES
BOMBAS D'ÁGUA

Motores Remanufaturados Caterpillar também encontram-se disponíveis para diversos arranjos de motor.

WERKÜBERHOLTE AT-PRODUKTE

Bei Reparaturen sollten werküberholte AT-Produkte von Caterpillar in Betracht gezogen werden. Die durch das AT-Programm von Caterpillar erhältlichen Teile sind im Parts Book auf drei verschiedene Arten gekennzeichnet:

- mit dem Buchstaben R in der Spalte NOTE der Ersatzteilliste
- mit einem R* am Anfang der ersten Zeile der Überschrift
- mit einem *R am Ende der ersten Zeile der Überschrift

Das AT-Programm umfaßt u.a. folgende Produkte:

DREHSTROMGENERATOREN
PLEUELSTANGEN
KURBELWELLEN - MIT UNTERMASS
KURBELWELLEN - MIT ORIGINALMASS
ZYLINDERKÖPFE
ELEKTRONISCHE STEUEREINHEITEN (EMC)
ELEKTRONISCHE SENSOREN
PUMPENDÜSEN
EINSPRITZDÜSEN
KRAFTSTOFFPUMPEN
DREHZAHLREGLER
ÖLPUMPEN
KOLBEN
TEILMOTOREN
ANLASSER
TURBOLADER - KOMPLETT
TURBOLADERLAUFZEUGE
KÜHLWASSERPUMPEN

Viele Motoren können durch werküberholte AT-Motoren von Caterpillar ersetzt werden.

SUPPLEMENTAL COOLANT ADDITIVES

CUSTOMER BENEFITS:

Protects against cavitation, foam, erosion, corrosion, and scale buildup in cooling systems.

- Provides measured coolant conditioner.

DESCRIPTION:

Additives deplete from the coolant with normal operation. For this reason, Supplemental Coolant Additives (SCA) must be added to all heavy duty coolants at regular intervals. In addition, when not using a fully formulated, pre-charged antifreeze, like Caterpillar's DEAC, an initial charge of SCA must be added to the cooling system. The amount of SCA added to the system is dependent on the capacity of the system.

The SCA for initial fill is provided as a liquid. SCA's for maintenance intervals are available in liquid form and as a spin-on element. (No Spin-on available for 3600 Family of Engines)

NOTE:

The amount of SCA added at initial fill is not the same as the amount added at maintenance intervals.

The coolant additive elements can be used with any ethylene or propylene glycol type antifreeze which meets ASTM D4985 or ASTM D5345 Specifications.

NOTE:

For use with standard heavy duty coolant only, not for use with Extended Life Coolant.

PARTS NEEDED:

Cooling System Capacity		Liquid SCA at Initial Fill	Liquid SCA at Maintenance*	Spin-on SCA Maintenance Element*
Liters	Gallons			
22-30	(6-8)	3P-2044 (1)	6V-3542 (1)	111-2370 (1)
30-38	(8-10)	3P-2044 (1) 6V-3542 (1)	111-2372 (1)	111-2369 (1)
38-49	(10-13)	3P-2044 (1) 8T-1589 (1)	111-2372 (1)	111-2369 (1)
49-64	(13-17)	3P-2044 (2)	8T-1589 (1)	9N-3368 (1)
64-83	(17-22)	3P-2044 (2) 8T-1589 (1)	111-2372 (1) 6V-3542 (1)	111-2371 (1)
83-114	(22-30)	3P-2044 (3) 8T-1589 (1)	3P-2044 (1)	9N-3718 (1)
114-163	(30-43)	3P-2044 (5)	3P-2044 (1) 6V-3542 (1)	111-2371 (2)
163-242	(43-64)	3P-2044 (8)	3P-2044 (2)	9N-3718 (2)

** Normal maintenance period is 250 hrs. See your Operation and Maintenance Manual for complete coolant maintenance instructions.*

( ) Indicates quantity required.

ADDITIFS POUR LIQUIDE DE REFROIDISSEMENT

AVANTAGES POUR LE CLIENT

L'additif protège contre la cavitation, la mousse, l'érosion, la corrosion et l'accumulation de dépôts dans le circuit de refroidissement.

- L'additif complémentaire fournit une quantité mesurée d'additif.

DESCRIPTION:

Les additifs s'épuisent pendant l'utilisation du moteur. C'est pourquoi l'on doit ajouter de l'additif au liquide de refroidissement/antigel pour moteurs diesel à intervalles réguliers. En plus, si l'on n'utilise pas de l'antigel entièrement formulé et pré-chargé comme le liquide de refroidissement/antigel Caterpillar pour moteurs diesel, une quantité initiale d'additif doit être ajoutée au circuit de refroidissement. La quantité d'additif à ajouter au circuit dépend de la contenance du circuit.

L'additif pour le remplissage initial est fourni sous forme liquide. L'additif pour l'entretien ultérieur est disponible sous forme liquide et sous forme d'élément à visser. (Il n'y a pas d'élément à visser pour les moteurs de la famille 3600).

NOTA:

La quantité d'additif à ajouter au remplissage initial diffère de la quantité à ajouter aux intervalles d'entretien.

Les éléments d'additif peuvent être utilisés avec tout antigel de type éthylène ou propylène-glycol conforme à la norme ASTM D4985 ou ASTM D5345.

NOTA:

A utiliser uniquement avec du liquide de refroidissement pour moteurs diesel et non avec le liquide de refroidissement longue durée.

PIÈCES NÉCESSAIRES:

Contenance du circuit de refroidissement		Additif liquide au remplissage initial	Additif liquide aux intervalles d'entretien*	Elément d'additif à visser aux intervalles d'entretien*
Litres	Gallons U.S.			
22-30	(6-8)	3P-2044 (1)	6V-3542 (1)	111-2370 (1)
30-38	(8-10)	3P-2044 (1) 6V-3542 (1)	111-2372 (1)	111-2369 (1)
38-49	(10-13)	3P-2044 (1) 8T-1589 (1)	111-2372 (1)	111-2369 (1)
49-64	(13-17)	3P-2044 (2)	8T-1589 (1)	9N-3368 (1)
64-83	(17-22)	3P-2044 (2) 8T-1589 (1)	111-2372 (1) 6V-3542 (1)	111-2371 (1)
83-114	(22-30)	3P-2044 (3) 8T-1589 (1)	3P-2044 (1)	9N-3718 (1)
114-163	(30-43)	3P-2044 (5)	3P-2044 (1) 6V-3542 (1)	111-2371 (2)
163-242	(43-64)	3P-2044 (8)	3P-2044 (2)	9N-3718 (2)

** L'intervalle d'entretien normal est de 250 heures-service. Voir le Guide d'utilisation et d'entretien pour de plus amples renseignements concernant l'entretien du circuit de refroidissement.*

( ) Indique la quantité exigée.

ADITIVOS DE REFRIGERANTE SUPLEMENTARIOS

VENTAJAS PARA EL USUARIO:

Protegen contra la cavitación, la formación de espuma, la corrosión y la acumulación de escamas en los sistemas de enfriamiento.

- Suministra un acondicionador dosificado de refrigerante.

DESCRIPCIÓN:

Los aditivos en el refrigerante se agotan con la operación normal. Por esta razón, se debe agregar Aditivo de refrigerante suplementario (SCA) a todos los refrigerantes para servicio pesado, a intervalos regulares. Además, cuando no se usa un anticongelante de precarga completo, tal como el DEAC de Caterpillar, es necesario agregar una cantidad de aditivo de refrigerante suplementario inicial al sistema de enfriamiento. La cantidad de aditivo que se debe agregar depende de la capacidad del sistema.

El SCA de llenado inicial es líquido. El que se usa para el mantenimiento está disponible tanto en líquido como en un elemento enroscable. (No hay elemento enroscable disponible para la Familia de Motores 3600).

NOTA:

La cantidad de aditivo de llenado inicial no es la misma que se agrega en los intervalos de mantenimiento.

Los elementos de aditivo de refrigerante se pueden usar con cualquier anticongelante de tipo glicol etilénico o propílico que esté de acuerdo con las especificaciones de las normas ASTM D4985 o ASTM D5345.

NOTA:

Se debe utilizar únicamente con refrigerante estándar para servicio pesado; no se debe usar con Refrigerante de Larga Duración.

PIEZAS NECESARIAS:

Capacidad del Sistema de Enfriamiento		SCA líquido de llenado inicial	SCA líquido de mantenimiento*	Elemento de mantenimiento enroscable*
litros	gal EE.UU.			
22-30	6-8	3P-2044 (1)	6V-3542 (1)	111-2370 (1)
30-38	8-10	3P-2044 (1) 6V-3542 (1)	111-2372 (1)	111-2369 (1)
38-49	10-13	3P-2044 (1) 8T-1589 (1)	111-2372 (1)	111-2369 (1)
49-64	13-17	3P-2044 (2)	8T-1589 (1)	9N-3368 (1)
64-83	17-22	3P-2044 (2) 8T-1589 (1)	111-2372 (1) 6V-3542 (1)	111-2371 (1)
83-114	22-30	3P-2044 (3) 8T-1589 (1)	3P-2044 (1)	9N-3718 (1)
114-163	30-43	3P-2044 (5)	3P-2044 (1) 6V-3542 (1)	111-2371 (2)
163-242	43-64	3P-2044 (8)	3P-2044 (2)	9N-3718 (2)

** El período normal de mantenimiento es de 250 horas. Para ver las instrucciones completas sobre el mantenimiento del refrigerante, consulte el Manual de Operación y Mantenimiento.*

( ) Indica la cantidad necesaria.

ADITIVOS SUPLEMENTARES DO LÍQUIDO ARREFECEDOR

BENEFÍCIOS PARA O CLIENTE:

Protege contra cavitação, espuma, erosão, corrosão e acúmulo de crostas nos sistemas de arrefecimento.

- Fornece uma quantidade pré-determinada de condicionador de arrefecimento.

DESCRIÇÃO:

Com a operação normal, os aditivos se esgotam do líquido arrefecedor. Por isso, Aditivos Suplementares do Líquido Arrefecedor (SCA) devem ser acrescentados a todos os líquidos arrefecedores para serviço pesado em intervalos regulares. Além disso, quando um anticongelante pré-carregado, totalmente formulado não for usado, como o DEAC Caterpillar, uma carga inicial de SCA deve ser acrescentada ao sistema de arrefecimento. A quantidade de SCA acrescentada ao sistema depende da capacidade do sistema.

O SCA para abastecimento inicial é fornecido em forma de líquido. Os aditivos suplementares (SCA) para intervalos de manutenção estão à disposição em forma líquida e como um elemento com roscas. (Exceto os Motores da Família 3600)

NOTA:

A quantidade de SCA adicionada no abastecimento inicial não é a mesma que a acrescentada nos intervalos de manutenção.

Os elementos do aditivo do líquido arrefecedor podem ser usados com qualquer tipo de anticongelante etileno ou propileno que satisfaz as Especificações ASTM D4985 ou ASTM D5345.

NOTA:

Para uso apenas com líquido arrefecedor para serviço pesado padrão, não deve ser usado com Líquido Arrefecedor de Vida Longa.

PEÇAS NECESSÁRIAS:

Capacidade do Sistema de Arrefecimento		Líquido SCA Durante Abastecimento Inicial	Líquido SCA Durante Manutenção*	Elemento de Manutenção de SCA com Roscas*
Litros	Galões			
22-30	6-8	3P-2044 (1)	6V-3542 (1)	111-2370 (1)
30-38	8-10	3P-2044 (1) 6V-3542 (1)	111-2372 (1)	111-2369 (1)
38-49	10-13	3P-2044 (1) 8T-1589 (1)	111-2372 (1)	111-2369 (1)
49-64	13-17	3P-2044 (2)	8T-1589 (1)	9N-3368 (1)
64-83	17-22	3P-2044 (2) 8T-1589 (1)	111-2372 (1) 6V-3542 (1)	111-2371 (1)
83-114	22-30	3P-2044 (3) 8T-1589 (1)	3P-2044 (1)	9N-3718 (1)
114-163	30-43	3P-2044 (5)	3P-2044 (1) 6V-3542 (1)	111-2371 (2)
163-242	43-64	3P-2044 (8)	3P-2044 (2)	9N-3718 (2)

** O período normal de manutenção é de 250 horas. Consulte o Manual de Operação e Manutenção para obter instruções completas quanto à manutenção do líquido arrefecedor.*

( ) Indica a quantidade exigida.

KÜHLMITTELZUSATZ

VORTEILE FÜR DEN KUNDEN:

Schutz gegen Kavitation, Schaumbildung, Erosion, Korrosion und Kesselsteinbildung in Kühlsystemen.

- Richtig dosierter Kühlmittelzusatz

BESCHREIBUNG:

Additive erschöpfen sich während des Motorbetriebs. Deshalb muß allen HD-Kühlmitteln regelmäßig Kühlmittelzusatz beigefügt werden. Wenn bei Erstfüllung kein vollwertiges Fertigkühlmittel, wie das Frostschutz- und Kühlmittel für Dieselmotoren von Caterpiller (DEAC), verwendet wird, muß bei Erstfüllung Kühlmittelzusatz beigefügt werden. Wieviel Kühlmittelzusatz beigefügt werden muß, hängt vom Inhalt des Kühlsystems ab.

Für Erstfüllung ist Kühlmittelzusatz nur in flüssiger Form erhältlich. Für Wartungsintervalle ist Kühlmittelzusatz in flüssiger Form und als Zusatzelement erhältlich. (Für die Motorbaureihe 3600 sind keine Zusatzelemente erhältlich.)

ANMERKUNG:

Die Kühlmittelmenge bei Erstfüllung ist nicht die gleiche Menge, die bei Wartungsintervallen beigefügt werden muß.

Die Kühlmittelzusatzelemente können mit allen Frostschutzmitteln auf Ethylen- oder Propylenglykolbasis verwendet werden, die den Standards nach ASTM D4985 oder ASTM D5345 entsprechen.

ANMERKUNG:

Den Kühlmittelzusatz nicht mit Langzeitkühlmittel (ELC) von Caterpillar verwenden. Der Kühlmittelzusatz ist nur für HD-Kühlmittel bestimmt.

TEILEBEZEICHNUNG:

Kühlsysteminhalt		Kühlmittelzusatz bei Erstfüllung	Flüssiger Kühlmittelzusatz bei Wartung*	Kühlmittelzusatzelement bei Wartung*
Liter	US-Gall.			
22-30	(6-8)	3P-2044 (1)	6V-3542 (1)	111-2370 (1)
30-38	(8-10)	3P-2044 (1) 6V-3542 (1)	111-2372 (1)	111-2369 (1)
38-49	(10-13)	3P-2044 (1) 8T-1589 (1)	111-2372 (1)	111-2369 (1)
49-64	(13-17)	3P-2044 (2)	8T-1589 (1)	9N-3368 (1)
64-83	(17-22)	3P-2044 (2) 8T-1589 (1)	111-2372 (1) 6V-3542 (1)	111-2371 (1)
83-114	(22-30)	3P-2044 (3) 8T-1589 (1)	3P-2044 (1)	9N-3718 (1)
114-163	(30-43)	3P-2044 (5)	3P-2044 (1) 6V-3542 (1)	111-2371 (2)
163-242	(43-64)	3P-2044 (8)	3P-2044 (2)	9N-3718 (2)

* *Der normale Wartungsintervall beträgt 250 Betriebsstunden. Für vollständige Anweisungen zur Wartung des Kühlsystems, siehe Betriebs- und Wartungshandbuch.*

( ) Erforderliche Anzahl

NOMENCLATURA DE PEÇAS INGLÊS-PORTUGUÊS

INGLÊS	PORTUGUÊS
ABOVE	Acima
ABSORBER	Amortecedor
ACCESSORY	Acessório
ACTUATOR	Acionador
ADAPTER	Adaptador
ADHESIVE	Adesivo
ADJUSTER	Adjustador
AFTERCOOLER	Pós-resfriador
AIR	Ar
AIR CLEANER	Purificador de ar
AIR SYSTEM	Sistema de ar
ALARM	Alarme
ALTERNATOR	Alternador
AMMETER	Amperímetro
ANCHOR	Âncora, fixador
ANGLE	Ângulo, canto
ANVIL A.	Bigorna conj.
ARBOR	Mandril, eixo
ARM	Braço
ARMATURE	Armadura, Induzida
ARM REST	Apoio para braço
ARRESTER	Detentor
ASSEM. = ASSEMBLY	Conjunto
ATTACHMENT	Acessório
AVAILABLE	Disponível
AXLE	Eixo
AXLE SHAFT	Semi-eixo, ponta
BACK-UP ALARM	Alarme de marcha à ré
BACK-UP LIGHT	Luz da marcha à ré
BACK-UP SWITCH	Interruptor de marcha à ré
BACKBOARD	Prancha traseira
BACK CUSHION	Encosto
BACKHOE	Retroescavadeira
BAFFLE	Defletor
BAG	Saco, sacola
BAIL	Alça
BALANCER	Balanceador
BALL	Esfera
BALLCHECK ASSEMBLY	Conjunto de (válvula) de esfera de retenção
BALL JOINT	Junta esférica
BALLSTUD	Munhão esférica
BAND	Banda, cinta, tira
BAND & LINING	Banda e revestimento
BAR	Barra
BARREL	Cilindro
BARRIER	Barreira
BASE	Base
BASIN	Bacia, coletor
BATTERY	Bateria
BEAM	Barra, viga, trave
BEARING	Mancal, rolamento
BEARING BALL	Rolamento de esferas
BEARING-SLEEVE	Mancal tipo luva
BEARING-NEEDLE	Rolamento de agulha
BEARING-ROLLER	Rolamento tipo roletes
BELL	Campânula
BELLCRANK	Alavanca angular
BELLOWS	Fole
BELOW	Abaixo
BELT	Correia, cinto
BELT TIGHTENER	Ajustador de correia
BEVEL GEAR	Coroa
BIT-CUTTER	Broca, fresa
BLACK	Preto
BLADE	Lâmina
BLEEDER	Sangrador
BLOCK	Bloco, calço
BLOWER	Ventilador
BLUE	Azul
BOARD	Prancha, tábua
BODY	Corpo
BOLT	Parafuso
BONNET	Tampa
BOOM	Lança
BOOSTER	Reforçador
BOOT	Protetor contra poeira
BORE	Furo
BOSS	Ressalto
BOTH	Ambos (as)
BOTTOM	Fundo
BOWL	Caçamba
BOX	Caixa
BRACE	Tirante
BRACKET	Suporte
BRAKE	Freio
BREAKER	Interruptor
BREATHER	Respiro
BRIDGE	Braço
BROWN	Marrom
BRUSH	Escova
BUCKET	Caçamba
BULB	Bulbo
BULLDOZER	Bulldozer
BUMPER	Pára-choque
BUSHING	Bucha
BUTTON	Botão
BUZZER WARNING	Alarme sonoro
C = CHANGE	Alteração
CAB	Cabina
CABINET	Gabinete
CABLE	Cabo
CAGE	Alojamento
CALIPER	Calibrador
CAM	Excêntrico, ressalto
CAMSHAFT	Eixo-comando-de-válvulas
CANOPY	Coberta, toldo

NOMENCLATURA DE PEÇAS INGLÊS-PORTUGUÊS

INGLÊS	PORTUGUÊS
CAP	Tampa
CAPACITOR	Capacitor, condensador
CARBURETOR	Caburador
CARCASS	Carcaça
CARRIER	Suporte
CARTON	Caixa de papelão
CARTRIDGE	Cartucho
CASE	Caixa, alojamento
CASING	Invólucro, revestimento
CASTER	Rolete, roldana
CAST IRON	Ferro fundido
CATWALK	Passadiço
CENTER	Centro
CHAIN	Corrente
CHAMBER	Câmara
CHANGEOVER	Modificação
CHANNEL	Canal
CHASSIS	Chassi, armação
CHECK-VALVE	Válvula de retenção
CIRCUIT	Circuito
CIRCUIT BREAKER	Interruptor de circuito
CLAMP	Braçadeira
CLASP	Fecho, grampo
CLEANER	Purificador
CLEVIS	Forquilha, garfo
CLIP	Clipe, presilha, grampo
CLOSURE	Fecho
CLUTCH	Embreagem
COARSE	Grosso, áspero
COATING	Capa, revestimento
COCK	Torneira
COIL	Bobina, serpentina
COLLAR	Colar
COLLECTOR	Coletor
COLLET	Mandril
COLUMN	Coluna
COMPACTOR	Compactador
COMPARTMENT	Compartimento
COMPLETE	Completo
COMPOUND	Composto
COMPRESSOR	Compressor
CONCAVE	Côncavo
CONDITIONER	Condicionador
CONDUIT	Conduite, eletroduto
CONE	Cone
CONNECTING	Ligação
CONNECTED ROD	Biela
CONNECTION	Conexão
CONNECTOR	Conetor
CONSISTS OF	Consiste de
CONSOLE	Consolo
CONTACT	Contato, platinado
CONTACTOR	Contactador
CONTINUED FROM	Continuação de
CONTROL	Controle
CONVERSION	Conversão
CONVERTER	Conversor
COOLER	Arrefecedor
COOLING	Arrefecimento
CORK	Cortiça
CORE	Núcleo
CORNER	Canto
COTTER PIN	Contrapino
COUNTER	Contador, tacômetro
COUNTERWEIGHT	Contrapeso
COUPLER	Acoplador, engate
COUPLING	Acoplamento, conexão
COVER	Tampa
COWL	Capota
COWLING	Capota
CRADLE	Armação, suporte
CRANK	Manivela
CRANKCASE	Cárter
CRANKSHAFT	Virabrequim
CROSS UNION	Junta transversal
CROSSBAR	Barra transversal
CUP	Capa, anel externa
CURTAIN	Cortina
CUSHION	Almofada, amortecedor
CUTTER	Fresa, cortador
CUTTING EDGE	Borda cortante
CYLINDER	Cilindro
CYLINDER BLOCK	Bloco do motor
CYLINDER HEAD	Cabeçote
DAMPER	Amortecedor
DARK GREEN	Verde escuro
DASH	Painel
DASH PANEL	Painel de Instrumento
DECELERATOR	Desacelerador
DEFLECTOR	Defletor
DETENT	Retém, pino de trava
DIAGRAM-WIRING	Diagrama dos circuitos elétricos
DIAL	Medidor de dial
DIAPHRAGM	Diafragma
DIESEL ENGINE COMPLETE	Motor diesel completo
DIFFERENTIAL	Diferencial
DIFFUSER	Difusor
DIMMER	Redutor de luminosidade
DIODE	Diodo
DIRECTOR	Diretor
DISC	Disco
DISCONNECT	Desligar
DISPOSABLE	Disponível, substituível
DISSIPATOR	Dissipador de calor
DISTRIBUTOR	Distribuidor
DM = DECIMETER	dm = decímetro

NOMENCLATURA DE PEÇAS INGLÊS-PORTUGUÊS

INGLÊS	PORTUGUÊS
DOME LIGHT	Lâmpada do teto
DOOR	Porta
DOWEL	Pino-guia, cavilha
DOWNSHIFT	Mudança para marcha mais baixa
DOZER	Bulldozer (lâmina)
DRAIN	Dreno
DRAWBAR	Barra de tração
DRILL	Broca
DRILLED	Broqueado, perturado
DRIVE	Comando, acionamento, propulsão
DRIVER	Acionador, mecanismo propulsor
DRIVESHAFT	Eixo acionador, eixo de transmissão
DRUM	Tambor
DUCT	Conduto, canal
EACH	Cada
EDGE	Borda, canto
EFFECTIVE WITH	Efetivo a partir de
EJECTOR	Ejetor
ELBOW	Cotovelo
ELEMENT	Elemento
ENCLOSURE	Cobertura
END	Extremidade
END BIT	Canto de lâmina
END VIEW	Vista traseira
ENGINE	Motor
ENGINE ARRANGEMENT	Arranjo do motor
EXCEPT	Exceto
EXHAUST	Escape
EXHAUST PIPE	Cano de escape
EXPANDER	Expansor
EXPANSION PLUG	Bujão de expansão
EXTENSION	Extensão
EXTINGUISHER	Extintor
EXTRACTOR	Extrator
EYE	Olhal
EYEBOLT	Parafuso de olhal
FABRIC	Tecido, tela textura
FACING	Revestimento, forro
FAN	Ventilador
FASTENED	Fixo, preso
FASTENER	Fixador, prendedor
FENDER	Pára-lamas
FERRULE	Virola
FIELD COIL	Bobina indutora, ou de campo
FIELD REPLACEMENT	Reposicão ou substituicão no campo
FILLER	Bocal de enchimento
FILM	Película
FILTER	Filtro
FINAL DRIVE	Comando final
FINGER	Dedo
FIREWALL	Parede contra fogo
FITTING	Graxeira, conexão
FIXTURE	Dispositivo, Aparelho
FLANGE	Flange
FLASHER	Luz intermitente
FLOAT	Flutuar, livre
FLOOD-LAMP	Farol
FLOOR	Piso
FLOORMAT	Tapete
FLOORPLATE	Chapa do piso
FLYWEIGHT	Peso volante
FLYWHEEL	Volante
FOLLOWER	Seguidor
FOOT	Pé
FORK	Garfo
FOR USE WITH	Para usar com
FOUNDATION	Assentamento, alicerce
FRAME	Armacão, chassi
FRONT	Frente, dianteiro
FT = FOOT	Pé
FUEL INJECTION	Injecão de combustível
FUEL PUMP	Bomba de combustível
FUEL RATIO	Limitador de combustível
FUEL SYSTEM	Sistema do combustível
FUEL TANK	Tanque do combustível
FUMES DISPOSAL	Eliminação de vapores do cárter
FUSE	Fusível
G = GROUP	Grupo
GAGE	Indicador, manômetro
GAP	Folga, lacuna, intervalo
GASKET	Junta
GASKET KIT	Jogo de junta
GATE	Entrada, trava
GAUGE	Indicador, manômetro
GEAR	Engrenagem, marcha
GEAR BOX	Caixa de engrenagem
GEAR PUMP	Bomba de engrenagem
GENERATOR	Gerador
GLAND	Junta, gaxeta, vedacão sobreposta
GLASS	Vidro
GLOW PLUG	Vela incandescente
GOVERNOR	Governador
GRAB IRON	Balaústre corrimão
GRATE	Grade, grelha
GRAY	Cinza
GRID	Grade, grelha
GRILL	Grade, grelha
GRIP	Pega, garra, cabo

NOMENCLATURA DE PEÇAS INGLÊS-PORTUGUÊS

INGLÊS	PORTUGUÊS
GROMMET	Ilhós
GROUND BRUSH	Escova-terra
GROUND (ELECTRIC)	Terra (eletricidade)
GROUSER	Garra (de sapata)
GUARD	Protetor
GUIDE	Guia
GUSSET	Cantoneira
HACKSAW	Serra para metais
HALF	Metade, meio (a)
HALF LINK	Semi-elo
HAMMER	Martelo
HAND CONTROL	Controle manual
HANDLE	Cabo, alça
HANDRAIL	Corrimão, balaústre
HANGER	Suporte, dispositivo de suspensão
HARDWARE	Ferragem
HARDWARE KIT	Jogo de ferragem
HARNESS	Chicote
HEAD = HD	Cabeça
HEADER	Coletor
HEADLAMP	Farol dianteiro
HEADLIGHT	Farol dianteiro
HEAT SINK	Difusor de calor
HEATER	Aquecedor
HIGH-IDLE	Marcha acelerada em vazio
HINGE	Dobradiça, articulacão
HITCH	Engate
HOIST	Guincho, talha
HOLD	Suporte, fixador
HOLD DOWN	Fixar, reter, manter abaixado
HOLDER	Fixador, suporte
HOLE	Furo, buraco
HOOD	Capô
HOOD & DASH	Capô e painel
HOOK	Gancho
HORN	Buzina
HOSE	Mangueira
HOUSING	Alojamento
HUB	Cubo
HYDRAULIC	Hidráulico
ID = INSIDE DIAMETER	Diâmetro interno
IDLER	Roda-guia
IDLER & SHAFT	Roda-guia e eixo
IDLER GEAR	Engrenagem intermediária
IDLER PULLEY	Polia intermediária
IMPELLER	Impulsor, rotor
IN = INCH	Polegada
INCLUDES	Inclui
INDICATE	Indicam
INDICATOR	Indicador
INLAY	Incrustação
INLET	Admissão, entrada
INPUT	Entrada
INSERT	Inserção
INSTALLATION	Instalação
INSTALLED ON MODEL	Instalação no modelo
INSTRUCTION	Instrução
INSTRUMENT	Instrumento
INSULATED BRUSH	Escova isolada
INSULATION	Isolação, isolamento
INSULATOR	Isolante, isolador
INTAKE	Admissão
INTERLOCK	Trava interna
INTERMEDIATE	Intermediário
INTERNAL	Interno
INVERTER	Inversor
IRON	Ferro
JACK	Macaco
JAW	Mandíbula, garra
JET	Jato, vaporizador
JOINT	Junta, articulação
JUNCTION	Junção
KEY	Chaveta
KINGBOLT	Pino de engate
KNIFE	Faca, lâmina
KNOB	Maçaneta, botão
LADDER	Escada
LAMP	Lâmpada
LARGE	Grande
LATCH	Trinco, lingüeta
LEAD	Condutor, cabo
LEG	Perna
LENS	Lente
LEVEL	Nível
LEVER	Alavanca
L.H. = LEFT HAND	Lado esquerdo
LID	Placa, tampa
LIFT	Levantar
LIFT CYLINDER	Cilindro de levantamento
LIFTER	Tucho
LIFTING EYE	Olhal de levantamento
LIGHT GREEN	Verde claro
LIGHTING	Sistema de iluminação
LINE	Tubulação
LINER	Camisa
LINES & PUMP	Tubulação e bomba
LINES & VALVE	Tubulação e válvula
LINING	Revestimento, lona
LINK	Elo
LINKAGE	Articulação
LIP	Lábio, borda
LISTED	Relacionamento
LITERATURE	Literatura
LOCATED	Localizado

NOMENCLATURA DE PEÇAS INGLÊS-PORTUGUÊS

INGLÊS	PORTUGUÊS
LOCATOR	Localizador
LOCK	Trava
LOCKNUT	Contraporca
LOCKWASHER	Arruela de pressão
LOCKWIRE	Arame de trava
LONG	Longo
LOOM	Tubo isolador
LOW IDLE	Marcha lenta
LOUVER	Persiana
LOWER	Abaixar, inferior
LUBRICANT	Lubrificante
LUG	Ressalto, orelha
MACHINE SCREW	Parafuso de fenda
MAGNET	Imã magneto
MAIN	Principal
MAINTENANCE	Manutenção
MANIFOLD	Coletor
MARKED	Marcado (a)
MARKER	Marcador
MASTER PIN	Pino mestre
MAT	Capacho, esteira
METER	Medidor, contador
MINOR	Menor
MIRROR	Espelho
MISCELLANEOUS	Miscelânea
MODIFICATION	Modificação
MOLDBOARD	Armação da lâmina
MOTOR	Motor
MOULDING	Moldura
MOUNT	Montar
MOUNTED	Montado (a)
MOUNTING	Montagem
MUFFLER	Silenciador
NAMEPLATE	Plaqueta de identificação
N.C. (THREAD)	Rosca grossa
NEEDLE	Agulha
N.F. (THREAD)	Rosca fina
NIB	Ponta, bico
NIPPLE	Conexão
NONE	Nenhum (a)
NORMALIZING	Normalização
NOT PART OF	Não faz parte de
NOZZLE	Bocal, bico injetor
N/S = NOT SERVICED	Não vendável
NUMBER (No)	Número (No)
NUT	Porca
NUT-WING	Porca borboleta
NUT-CASTLE	Porca acastelada
NUT-WELD	Porca-soldada
NUT-CAP	Porca cega
NUT-HEX	Porca sextavada
NUT-LOCK	Contraporca
NUT-IMPERIAL	Porca imperial
NUT-JAM	Porca de trava, contraporca
NUT-LOW CROWN	Porca de meia coroa
NUT-RETAINING	Porca de retenção
NUT-SELF LOCK	Porca de autotravamento
NUT-SLOTTED	Porca fendada
NUT-SPANNER	Porca para chaves
O.D. = OUTSIDE DIAMETER	Diâmetro externo
O-RING	Anel "O"
OIL	Óleo
OILPAN	Cárter
OIL PUMP	Bomba de óleo
OIL SYSTEM	Sistema de lubrificação
OILER	Almotolia, lubrificador
ORANGE	Laranja
TO ORDER	Para pedir
ORIFICE	Orifício
OUTER	Externo
OUTER RACE	Anel externo
OUTPUT	Saída
OVERALL	Geral, total
OVERHAUL	Revisão
OVER SIZE	Sobremedida
PACKING	Embalagem, gaxeta
PAD	Coxim, calço
PADLOCK	Cadeado
PAINT	Pintura
PAN	Cárter
PANEL	Painel
PARKING BRAKE	Freio de estacionamento
PARTITION	Separacão
PARTS G	Grupo de peças
PARTS OF	Peça de
PARTS OF ALL ENGINE ARRANGEMENTS	Peças de todos os arranjos do motor exceto
PAWL	Garra
PEDAL	Pedal
PEDESTAL	Pedestal
PERFORMANCE	Desempenho
PILOT	Piloto
PIN	Pino
PIN & BUSHING	Pino e bucha
PIN-COTTER	Contrapino
PINCH BAR	Pé de cabra
PINION	Pinhão
PIPE	Tubo
PISTON	Pistão
PIVOT	Articulação, pivô
PLANETARY	Planetário
PLATE	Placa
PLATFORM	Plataforma
PLUG	Bujão
PLUNGER	Pistão, êmbolo

NOMENCLATURA DE PEÇAS INGLÊS-PORTUGUÊS

INGLÊS	PORTUGUÊS
POINT	Ponta, ponto
POINTER	Ponteiro
POLE & COIL	Polo e bobina
POLE	Polo, lança, vara
POPPET	Gatilho
POST	Poste, coluna
POTENTIOMETER	Potenciômetro
POWER TAKE OFF	Tomada de força
POWER TRAIN	Trem de força
PRE-SCREENER	Tela protetora
PRECHAMBER	Câmara de pré-combustão
PRECLEANER	Pré-purificador
PRECOMBUSTION	Pré-combustão
PRESS	Prensa
PRESS = PRESSURE	Pressão
PREVIOUS	Prévio, anterior
PRIMARY	Primário, principal
PROBE	Prova
PROJECTOR	Projeter
PROTECTION	Proteção
PROTECTOR	Proteter
PULLER	Extrator, sacador
PULLEY	Polia
PUMP	Bomba
PURPLE	Roxo
PUSHROD	Haste de empuxo
QTY = QUANTITY	Quantidade
RACE	Pista
RACE & ROLLER	Pista e rolete
RACK	Cremalheira
RADIATOR	Radiador
RAIL	Trilho, guia
RANGE TRANSM	Transmissão manual
RATCHET	Catraca
REAR	Traseiro (a)
REBORED	Escareado, alargado
REBUILD KIT	Jogo de recondicionamento
RECEPTACLE	Recipiente
RECTIFIER	Retificador
RED	Vermelho
REDUCER	Redutor
REFER	Referir
REGULATOR	Regulador
RELATED REPAIR ITEMS	Itens de reparos relacionados
RELAY	Relé
RELIEF VALVE	Válvula de alívio
REPAIR G	Grupo de reparo
REPAIR KIT	Jogo de reparo
REPAIR ITEMS	Itens de reparo
REPLACEMENT	Reposição, substituição
REQUIRED	Necessário
RESERVOIR A	Reservatório
RESIN	Resina
RESISTOR	Resistência
RETAINER	Fixador
RETARDER	Retardador
REVERSIBLE	Reversível
R.H. = RIGHT HAND	Lado direito
RIM	Aro
RIM & TIRE	Aro e pneu
RING	Anel
RIVET	Rebite
ROCKET	Balancim
ROD	Haste
ROD END	Extremidade da haste
ROLLER	Rolete
ROPE-STARTING	Partida à corda
ROTATOR	Girador
ROTOCHAMBER	Càmara pneumática
ROTOCOIL	Girador de válvula
ROTOR	Rotor
RUST INHIBITOR	Antioxidante
SADDLE	Sela, assento
SAFETY	Segurança
SAFETY TREAD	Tiras antiderrapante
SCRAPER	Tampa
SCREEN	Tela
SCREW	Parafuso
SCREW-HEX HD	Parafuso de cabeça hexagonal
SCREW-KIT	Jogos de parafuso
SCREW-MACHINE	Parafuso de fenda
SCREW-ROUND HD	Parafuso de cabeça redonda
SCREW-FLANGED	Parafuso com flange
SCREW-LOCKING	Parafuso de trava
SCREW-THUMB	Parafuso de orelhas
SCREWDRIVER	Chave de fenda
SEAL	Retentor
SEALED UNIT	Unidade vedada
SEALER	Vedador isolante
SEAT	Assento
SECONDARY	Secundário
SECTION	Seção
SEGMENT	Segmento
SENDER	Emissor
SENSOR	Sensor
SEPARATE	Separar, separado
SEPARATOR	Separador
SERIAL NUMBER PLATE	Placa de número de série
SERVICE	Serviço, manutenção
SERVICE KIT	Jogo de manutenção
SERVICE METER	Horômetro
SETSCREW	Parafuso de fixação
SHACKLE	Grilheto, anel, manilha
SHAFT	Eixo

NOMENCLATURA DE PEÇAS INGLÊS-PORTUGUÊS

INGLÊS	PORTUGUÊS
SHANK	Porta-ponta do escarificador
SHEAVE	Polia, roldana
SHEET	Folha, lâmina
SHELL	Invólucro, cápsula, casquilho
SHIELD	Blindagem, protetor
SHIFT	Mudança
SHIM	Calço
SHIPPING	Embarque
SHOCK ABSORBER	Amortecedor de choques
SHOCKMOUNT	Montagem a prova de choques
SHOE	Sapata
SHORT	Curto
SHOWN	Ilustrado, mostrado
SHROUD	Tampa de proteção
SHUNT	Derivação
SHUT OFF	Desligar, parada
SHUTTLE	Pistão de vaivém
SIDE	Lateral
SIDE VIEW	Vista lateral
SILICONE	Silicone
SINK	Absorvente de calor
SKIVING	Desbaste
SLACK ADJUSTER	Adjustador de folga
SLEEVE	Luva, manga, camisa
SLIDER	Cursor, deslizador
SLIDE RAIL	Trilho deslizante
SLING	Cabos, amarras, linga
SLINGER	Defletor
SLUG	Pistão de reação, pistãozinho
SMALL	Pequeno
SNAP RING	Anel de retenção, anel de pressão
SNUBBER	Amortecedor
SOCKET	Soquete, tomada
SOLENOID	Solenóide
SPACER	Espaçador
SPARE	Sobressalente
SPARK PLUG	Vela de ignição
SPECIAL	Especial
SPEEDOMETER	Velocimetro
SPIDER	Cruzeta
SPINDLE	Ponta de eixo
SPLINE	Estria
SPOOL	Carretel
SPOUT	Calha, tubo
SPRING	Mola
SPROCKET	Roda motriz, roda dentada
STABILIZER	Estabilizador
STACK	Chaminé, cano de escapamento
STAND	Suporte, cavalete
STANDPIPE	Suporte vertical de sucção
STAPLE	Grampo
STARTER	Arranque motor de partida
STATOR	Estator
STEERING	Direção
STEM	Haste
STEP	Degrau
STICK	Vareta
STOP	Parar
STORAGE	Armazenagem
STRAINER	Tela filtrante
STRAP	Tira, cinta, suporte de fixação
STREET ELL	Conexão cotovelo
STRIP	Tira, fita, listra
STROKE	Curso do pistão
STUD	Prisioneiro
SUMP	Tanque, reservatório
SUPPLY VALVE	Válvula de suprimento
SUPPORT	Suporte
SUSPENSION	Suspensão
SWITCH	Interruptor
SWIVEL	Articulação giratória
TAB	Tira, aba, lingüeta
TABLE	Mesa
TACHOGRAPH	Tacógrafo
TACHOMETER	Tacômetro
TAG	Etiqueta
TAIL LAMP	Farol traseiro
TAN	Castanho
TANG	Lingüeta
TANK	Tanque
TAP	Macho
TAPE	Fita
TAPPET	Tucho
TEE	Conexão em "T"
TEMP. = TEMPERATURE	Temperatura
TERMINAL	Terminal
TEST UNIT	Unidade de teste
TESTER	Aparelho de teste
THERMISTOR	Termistor
THERMOCOUPLE	Termopar
THERMOMETER	Termômetro
THERMOSTAT	Termostato
THERMOSWITCH	Interruptor térmico
THICK	Grosso (a) espesso (a)
TIE	Ligação, tirante
THREAD (OF NUT)	Rosca (de porca)
THROTTLE	Acelerador de
THROWER	Defletor
THRU = THROUGH	Através de
TIGHTENER	Tensor
TILT CYLINDER	Cilindro de inclinação
TIMING	Sincronização, Distribuição

NOMENCLATURA DE PEÇAS INGLÊS-PORTUGUÊS

INGLÊS	PORTUGUÊS
TIP	Ponta
TIRE	Pneu
TIRE & RIM	Pneu e aro
TONGUE	Língua, lingueta
TOOL	Ferramenta
TOOLCABINET	Armário para ferramenta
TOOTH/TEETH	Dente/dentes
TOP	Topo, parte superior
TORQUE	Torque
TORQ. CONV.	Conversor de torque
TORQ. DIVIDER	Divisor de torque
TOWER	Torre
TRACK	Esteira
TRACK PIN	Pino de esteira
TRACTOR	Trator
TRAILING UNIT	Unidade rebocada
TRANSFER	Decalcomania
TRANSFORMER	Transformador
TRANSISTOR	Transistor
TRANSMISSION	Transmissão
TRANSMISSION OVERHAUL	Revisão da transmissão
TREAD	Piso, banda de rodagem
TREADLE	Pedal
TROLLY	Carrinho
TRUCK	Caminhão
TRUNNION	Munhão
TUBE	Tubo, cano
TUBING	Tubulagem canalização
TURBINE	Turbina
TURBOCHARGER	Turboalimentador
U-BOLT	Parafuso em "U"
U-JOINT	Junta universal
UNDERSIZE	Submedida
UNION	União
UPPER	Superior
USE AS REQUIRED	Usar conforme necessitar
VALUE	Valor
VALVE	Válvula
VALVE GRINDING	Retificação das válvulas
VEE BELT	Correia "V"
VEE BELT SET	Jogo de correia em "V"
VENT	Respiro
VIEW	Vista
VISE	Morsa, torno
VISOR	Pára-sol
WALKWAY	Passadiço, corredor
WARNING G.	Grupo de alarma
WASHER	Arruela
WATER PUMP	Bomba d'água
WEARPLATE	Placa de desgaste
WEDGE	Cunha
WEIGHT	Peso
WELD	Solda
WELDNUT	Porca soldada
WHEEL	Roda
WHITE	Branco
WICK	Mecha, pavio
WINCH	Guincho
WINDOW	Janela
WINDSHIELD	Pára-brisa
WIPER	Limpador
WIRE	Fio
WIRING	Sistema elétrico
WIRING DIAGRAM	Diagrama do sistema elétrico
WITH	Com
WRAPPER	Invólucro, envoltório
WRENCH	Chave
YELLOW	Amarelo
YOKE	Garfo

MAINTENANCE PARTS

DESCRIPTION	PART NUMBER	QTY	WHERE USED	PAGE
AIR INLET AND EXHAUST SYSTEM				
ELEMENT AS-PRIMARY	6I-0273	1	AIR CLEANER GP	90
ELEMENT AS-SECONDARY	6I-0274	1	AIR CLEANER GP	90
BASIC ENGINE				
BREATHER AS	9Y-4357	1	VALVE MECHANISM GP	58
GASKET	9Y-1758	1	VALVE MECHANISM GP	58
	109-5309	1	VALVE MECHANISM GP	58
HOSE-FUMES DISPOSAL	126-0146	1	AIR COMPRESSOR GP	12
		1	AIR COMPRESSOR GP	14
BRAKING SYSTEM				
AIR DRYER GP (AIR DRYER)(24 VOLT)	203-2423	1	AIR DRYER GP	501
CARTRIDGE AS-DESICCANT (AIR DRYER)	203-2389	1	AIR DRYER GP	501
FUSE (10-AMPERE) (AIR DRYER)	9W-1442	1	AIR DRYER GP	498
COOLING SYSTEM				
CAP-RADIATOR (7-PSI)	6L-8617	1	RADIATOR GP	85
		1	RADIATOR GP	86
GASKET	7E-7912	1	HOUSING & REGULATOR GP	76
REGULATOR-TEMPERATURE (98-DEG C)	7C-3095	1	HOUSING & REGULATOR GP	76
SEAL-LIP TYPE	3S-9643	1	HOUSING & REGULATOR GP	76
ELECTRICAL AND STARTING SYSTEM				
BATTERY GP (12-VOLT)	153-5700	2	BATTERY GP	138
BATTERY GP (12-VOLT) (1100 AMPS)	153-5700	2	BATTERY GP	136
BATTERY (12-VOLT) (WET)	153-5710	2	BATTERY GP	137
BATTERY (12-VOLT, 750-AMPERE)	3T-5760	2	BATTERY GP	139
BELT	215-6673	1	LAMP GP-WARNING BEACON	187
BELT-DRIVE (WARNING BEACON)	9X-8139	1	LAMP GP-WARNING BEACON	186
BELT-SERPENTINE (ALTERNATOR WITHOUT A/C)	178-8481	1	ALTERNATOR GP-CHARGING	134
CIRCUIT BREAKER AS (105-AMPERE) (ALTERNATOR)	171-2212	1	CIRCUIT BREAKER GP	143
CIRCUIT BREAKER AS (15-AMPERE) (ENGINE CONTROL)	6T-3643	1	WIRING GP-REAR	311
CIRCUIT BREAKER AS (15-AMPERE) (HEADLAMPS)	3T-2662	1	CIRCUIT BREAKER GP	141
		1	CIRCUIT BREAKER GP	142
CIRCUIT BREAKER AS (15-AMPERE) (LIGHTBAR WORKLAMPS)	3T-2662	1	CIRCUIT BREAKER GP	141
CIRCUIT BREAKER AS (80-AMPERE) (ALTERNATOR)	171-2210	1	WIRING GP-REAR	310
CIRCUIT BREAKER AS (80-AMPERE) (MAIN)	171-2210	1	WIRING GP-REAR	310
ELEMENT AS-HEATER (240-VOLT, 1250-WATT)	154-2881	1	HEATER GP-JACKET WATER	162
ELEMENT AS-JACKET WATER HEATER (120-VOLT, 1250-WATT)	131-8627	1	HEATER GP-JACKET WATER	161
FLASHER AS (12/24-VOLT) (TURN SIGNAL, HAZARD)	108-0358	1	LIGHTING GP-FLOOD	206
		1	LIGHTING GP-FLOOD	212

MAINTENANCE PARTS

DESCRIPTION	PART NUMBER	QTY	WHERE USED	PAGE
		1	LIGHTING GP-FLOOD	215
		1	LIGHTING GP-FLOOD	222
		1	LIGHTING GP-FLOOD	225
		1	SWITCH GP-LIGHT	275
		1	LIGHTING GP-FLOOD	209
FUSE (10-AMPERE)	3K-8782	1	WIRING GP-CAB	291
	9W-1442	1	LIGHTING GP-FLOOD	215
		1	LIGHTING GP-FLOOD	225
		1	LIGHTING GP-FLOOD	235
		1	LIGHTING GP-FLOOD	237
		1	LIGHTING GP-WARNING	244
		1	SWITCH GP-LIGHT	275
		1	WIRING GP-CAB	287
		1	WIRING GP-CAB	289
		2	WIRING GP-SECONDARY STEERING	329
		1	LIGHTING GP-FLOOD	206
		1	LIGHTING GP-FLOOD	212
		1	LIGHTING GP-FLOOD	222
		11	WIRING GP-STEERING CONSOLE	337
		12	WIRING GP-STEERING CONSOLE	340
FUSE (10-AMPERE) (AUXILIARY BACK-UP ALARM)	9W-1442	1	LIGHTING GP-BACKUP	193
FUSE (10-AMPERE) (BACKUP LAMP)	9W-1442	1	LIGHTING GP-BACKUP	191
FUSE (10-AMPERE) (BLADE LAMP)	9W-1442	2	LIGHTING GP-FLOOD	202
FUSE (10-AMPERE) (BLADE/FRONT FLOODLAMP)	9W-1442	2	LIGHTING GP-FLOOD	201
FUSE (10-AMPERE) (CONVERTER)	9W-1442	1	CONVERTER GP-ELECTRICAL	154
FUSE (10-AMPERE) (FLOODLAMP RH)	9W-1442	1	LIGHTING GP-FLOOD	218
		1	LIGHTING GP-FLOOD	220
FUSE (10-AMPERE) (POWER CONVERTER)	9W-1442	1	CONVERTER GP-ELECTRICAL	156
FUSE (10-AMPERE) (TURN SIGNAL, HAZARD)	9W-1442	1	LIGHTING GP-FLOOD	209
FUSE (10-AMPERE) (WARNING BEACON)	9W-1442	1	LIGHTING GP-WARNING	245
		1	WIRING GP-CAB	284
FUSE (10-AMPERE) (WORK LIGHTS)	9W-1442	2	LIGHTING GP-FLOOD	204
		2	LIGHTING GP-FLOOD	205
FUSE (15-AMPERE)	9W-1441	1	WIRING GP-CAB	282
		1	WIRING GP-CAB	285
		1	WIRING GP-STEERING CONSOLE	337
		1	WIRING GP-STEERING CONSOLE	340
FUSE (15-AMPERE) (CAB FLOOD LIGHTS)	9W-1441	1	LIGHTING GP-FLOOD	204
		1	LIGHTING GP-FLOOD	205
FUSE (15-AMPERE) (CONVERTER-POWER)	9W-1441	1	CONVERTER GP-ELECTRICAL	155
FUSE (30-AMPERE)	8T-9636	2	CONVERTER GP-ELECTRICAL	157
HOLDER AS-BRUSH	7T-3278	1	STARTING MOTOR GP-ELECTRIC	270
KEY (BATTERY DISCONNECT)	8H-5306	1	SWITCH GP-DISCONNECT	274
LAMP AS	6C-0109	1	WIRING GP-REAR	317
		1	WIRING GP-REAR	320
	6C-0110	1	WIRING GP-REAR	317
		1	WIRING GP-REAR	320

MAINTENANCE PARTS

DESCRIPTION	PART NUMBER	QTY	WHERE USED	PAGE
LAMP GP-DOME (24-VOLT, WITH SWITCH)	3E-6389	1	WIRING GP-CAB	285
		1	WIRING GP-CAB	282
		1	WIRING GP-CAB	291
LAMP-HALOGEN (24-VOLT, 65-WATT)	9X-3463	1	LAMP GP-FLOOD	168
LAMP-HALOGEN (24-VOLT, 65-WATT) (BLADE)	9X-3463	1	LAMP GP-FLOOD	170
LAMP-HALOGEN (24-VOLT, 65-WATT) (FLOOD)	9X-3463	1	LAMP GP-FLOOD	166
LAMP-HALOGEN (24-VOLT, 65-WATT) (FLOODLIGHT)	9X-3463	1	LAMP GP-FLOOD	169
		1	LAMP GP-FLOOD	167
LAMP-HALOGEN (24-VOLT, 65-WATT) (HIGH BEAM)	9X-3463	1	LAMP GP-HEAD	172
		1	LIGHTING GP-FLOOD	197
LAMP-HALOGEN (24-VOLT, 65-WATT) (LOW BEAM)	9X-3463	1	LIGHTING GP-FLOOD	197
		1	LAMP GP-HEAD	171
LAMP-LED (LED)	165-5674	1	LIGHTING GP-WARNING	247
		1	LIGHTING GP-WARNING	248
LAMP (24-VOLT)	3E-8825	1	INSTALLATION GP-WARNING BEACON	163
		1	LIGHTING GP-FLOOD	235
		1	LIGHTING GP-FLOOD	237
		1	LIGHTING GP-WARNING	247
		1	LIGHTING GP-WARNING	248
		1	LIGHTING GP-WARNING BEACON	249
		1	STARTING AID GP-ETHER	268
		1	WIRING GP-CAB	287
		1	WIRING GP-CAB	289
		2	WIRING GP-SECONDARY STEERING	329
		2	WIRING GP-SHIFT CONSOLE	331
		2	WIRING GP-SHIFT CONSOLE	333
		1	WIRING GP-SHIFT CONSOLE	334
		1	WIRING GP-STEERING CONSOLE	337
		2	WIRING GP-STEERING CONSOLE	340
	7N-5876	1	WIRING GP-SHIFT CONSOLE	331
		1	WIRING GP-SHIFT CONSOLE	333
	9X-3465	1	LAMP GP-HEAD & SIGNAL	177
	100-3245	2	LAMP GP-HEAD & SIGNAL	177
	3E-8825	2	LIGHTING GP-FLOOD	206
		2	LIGHTING GP-FLOOD	212
		1	LIGHTING GP-FLOOD	215
		1	LIGHTING GP-FLOOD	222
		1	LIGHTING GP-FLOOD	223
		1	LIGHTING GP-FLOOD	225
		2	SWITCH GP-LIGHT	275
LAMP (24-VOLT) (AUXILIARY BACK-UP ALARM)	3E-8825	1	LIGHTING GP-BACKUP	193
LAMP (24-VOLT) (AUXILIARY BACKUP LAMP)	3E-8825	2	LIGHTING GP-BACKUP	191
LAMP (24-VOLT) (BLADE CUSHION SWITCH)	3E-8825	1	WIRING GP-BLADE CUSHION	280
LAMP (24-VOLT) (BLADE FLOOD)	3E-8825	2	LIGHTING GP-FLOOD	204

MAINTENANCE PARTS

DESCRIPTION	PART NUMBER	QTY	WHERE USED	PAGE
		2	LIGHTING GP-FLOOD	205
LAMP (24-VOLT) (BLADE LAMP)	3E-8825	2	LIGHTING GP-FLOOD	202
LAMP (24-VOLT) (BLADE)(FRONT FLOODLAMP)	3E-8825	2	LIGHTING GP-FLOOD	201
LAMP (24 VOLT) (CAB POSITION)	9X-4494	1	LAMP GP-MARKER	181
LAMP (24-VOLT) (DOME)	7N-9943	1	LAMP GP-DOME	165
LAMP (24-VOLT) (FLOODLAMP RH)	3E-8825	1	LIGHTING GP-FLOOD	218
		1	LIGHTING GP-FLOOD	220
LAMP (24-VOLT) (HEAD)	9X-3465	1	LAMP GP-HEAD & SIGNAL	179
LAMP (24-VOLT) (HEADLIGHTS, TAIL LIGHTS)	3E-8825	2	LIGHTING GP-FLOOD	209
LAMP (24-VOLT) (HIGH/LOW BEAM)	9X-3465	1	LAMP GP-HEAD	173
		1	LAMP GP-HEAD	175
LAMP (24-VOLT) (NG)	3E-8825	2	WIRING GP-SHIFT CONSOLE	334
LAMP (24-VOLT) (POSITION)	100-3245	1	LAMP GP-HEAD	173
		1	LAMP GP-HEAD	175
LAMP (24 VOLT) (REGISTRATION PLATE)	5C-9583	1	LAMP GP-REGISTRATION PLATE	182
LAMP (24-VOLT) (SIGNAL)	100-3245	2	LAMP GP-HEAD & SIGNAL	179
LAMP (24-VOLT) (TURN)	100-3245	1	LAMP GP-HEAD	173
		1	LAMP GP-HEAD	175
LAMP (24-VOLT, 21-WATT)	5C-9584	2	WIRING GP-REAR	317
		2	WIRING GP-REAR	320
LAMP (24-VOLT, 21-WATT) (SIGNAL)	9X-4493	1	LAMP GP-HEAD & SIGNAL	177
		1	LAMP GP-HEAD & SIGNAL	179
LAMP (24-VOLT, 21-WATT) (TURN)	9X-4493	1	LAMP GP-HEAD	173
		1	LAMP GP-HEAD	175
LAMP (24-VOLT, 5-WATT)	4V-8116	1	WIRING GP-REAR	317
		1	WIRING GP-REAR	317
		1	WIRING GP-REAR	320
LAMP (24-VOLT, 70-WATT)	9X-7849	1	LAMP GP-WARNING BEACON	187
LAMP (24-VOLT, 70-WATT) (WARNING BEACON)	9X-7849	1	LAMP GP-WARNING BEACON	186
LENS	7T-0020	1	LAMP GP-DOME	165
LENS (AMBER) (SIGNAL)	100-3250	1	LAMP GP-HEAD & SIGNAL	177
		1	LAMP GP-HEAD & SIGNAL	179
LENS (AMBER) (TURN)	100-3250	1	LAMP GP-HEAD	173
		1	LAMP GP-HEAD	175
LENS (AMBER, WARNING BEACON)	9X-8121	1	LAMP GP-WARNING BEACON	186
LENS-AMBER (WARNING BEACON)	215-6672	1	LAMP GP-WARNING BEACON	187
LENS AS (AMBER) (SIGNAL)	136-3848	1	LAMP GP-HEAD & SIGNAL	179
		1	LAMP GP-HEAD & SIGNAL	177
LENS AS (AMBER) (TURN)	136-3848	1	LAMP GP-HEAD	173
		1	LAMP GP-HEAD	175
LENS AS (FLOODLIGHT)	202-6611	1	LAMP GP-FLOOD	168
		1	LAMP GP-FLOOD	170
	202-6614	1	LAMP GP-FLOOD	167
		1	LAMP GP-FLOOD	169
LENS AS (HEAD)	100-3249	1	LAMP GP-HEAD	173
		1	LAMP GP-HEAD	175
LENS AS (HEADLAMP)(LOW BEAM)	162-2077	1	LAMP GP-HEAD	171
LENS AS (HEADLIGHT)	100-3248	1	LAMP GP-HEAD & SIGNAL	177
		1	LAMP GP-HEAD & SIGNAL	179
LENS AS (LOW BEAM)	162-2077	1	LIGHTING GP-FLOOD	197

MAINTENANCE PARTS

DESCRIPTION	PART NUMBER	QTY	WHERE USED	PAGE
LENS (REGISTRATION PLATE)	134-6751	1	LAMP GP-REGISTRATION PLATE	182
SWITCH AS (AUXILIARY BACKUP)	161-1418	1	LIGHTING GP-BACKUP	191
FRAME AND BODY				
BATTERY GP	188-3951	1	SUPPORT AR-REAR CHASSIS	495
PLUG-MAGNETIC (CASE DRAIN)	8M-3837	1	CASE & FRAME GP	458
FUEL SYSTEM				
CAP GP-FUEL FILLER (EXTREME SERVICE, LOCKABLE)	164-4858	1	TANK GP-FUEL	119
		1	TANK GP-FUEL	121
ELEMENT-FILTER (FUEL, WATER SEPARATOR) (PRIMARY)	133-5673	1	FILTER GP-WATER SEP & FUEL	104
FILTER AS-FUEL	1R-0762	1	FILTER GP-FUEL	103
GASKET	9R-7240	1	TANK GP-FUEL	117
		1	TANK GP-FUEL	118
STRAINER-FUEL	199-9907	1	TANK GP-FUEL	119
		1	TANK GP-FUEL	121
HYDRAULIC SYSTEM				
CAP-DUST (HYDRAULIC OIL)	8C-3451	1	LINES GP-STEERING	592
CAP-FILLER (HYDRAULIC OIL TANK)	7H-1447	1	TANK & FILTER GP-HYDRAULIC	612
FILTER ELEMENT AS-OIL (HYDRAULIC) (STANDARD EFFICIENCY)	1R-0774	1	TANK & FILTER GP-HYDRAULIC	612
FITTING-GREASE (CENTERSHIFT CYLINDER SOCKET)	3B-8485	2	CYLINDER & MTG GP-CENTERSHIFT	534
PADLOCK GP	5P-8502	1	TANK & MTG GP-HYDRAULIC	614
STRAINER (FILLER) (HYDRAULIC OIL TANK)	9J-3047	1	TANK & FILTER GP-HYDRAULIC	612
LUBRICATION SYSTEM				
CAP AS-OIL FILLER	5L-2952	1	FILLER GP-ENGINE OIL	62
FILTER AS-ENGINE OIL	1R-0716	1	FILTER GP-ENGINE OIL	63
OPERATOR STATION				
ACCUMULATOR	197-6218	1	LINES GP-AIR CONDITIONER	898
BELT-SERPENTINE (ALTERNATOR AND AIR CONDITIONER)	174-9690	1	AIR CONDITIONER AR	818
BLADE AS-WIPER	6V-5853	1	WIPER GP-WINDOW	992
		1	WIPER GP-WINDOW	993
		1	WIPER GP-WINDOW	994
	6V-8255	2	WINDOW GP	964
BLADE AS-WIPER (FRONT LOWER)	123-4355	2	WIPER GP-WINDOW	975
		2	WIPER GP-WINDOW	977
BLADE AS-WIPER (FRONT UPPER)	6V-5853	1	WIPER GP-WINDOW	977
BLADE AS-WIPER (HIGH PROFILE FRONT LOWER)	123-4355	2	WIPER GP-WINDOW	979
		2	WIPER GP-WINDOW	981
BLADE AS-WIPER (HIGH PROFILE FRONT UPPER)	6V-5853	1	WIPER GP-WINDOW	979
		1	WIPER GP-WINDOW	981
BLADE AS-WIPER (HIGH PROFILE REAR)	6V-5853	1	WIPER GP-WINDOW	987

MAINTENANCE PARTS

DESCRIPTION	PART NUMBER	QTY	WHERE USED	PAGE
BLADE AS-WIPER (LOW PROFILE FRONT UPPER)	6V-5853	1	WIPER GP-WINDOW	975
BLADE AS-WIPER (LOW PROFILE REAR)	6V-5849	1	WIPER GP-WINDOW	983
		1	WIPER GP-WINDOW	985
BLADE AS-WIPER (REAR)	6V-5853	1	WIPER GP-WINDOW	989
FILTER-AIR (CAB)	7T-7358	1	FILTER GP-CAB AIR	858
	231-4486	1	FILTER GP-CAB AIR	858
	232-1732	1	FILTER GP-CAB AIR	858
FUSE (10-AMPERE) (FRONT DEFROSTER)	9W-1442	1	FAN GP-CIRCULATING	856
FUSE (10-AMPERE) (HEATED MIRRORS)	9W-1442	1	MIRROR GP-REAR VIEW	906
		1	MIRROR GP-REAR VIEW	910
FUSE (10-AMPERE) (REAR DEFROSTER)	9W-1442	1	FAN GP-CIRCULATING	857
FUSE (10-AMPERE) (WIPER)	9W-1442	1	WIPER GP-WINDOW	983
		1	WIPER GP-WINDOW	985
		1	WIPER GP-WINDOW	987
		1	WIPER GP-WINDOW	989
FUSE (15 AMP) (AIR CONDITIONER)	9W-1441	1	AIR CONDITIONER & MOUNTING GP	818
FUSE (15 AMP) (HEATER)	9W-1441	1	HEATER & MTG GP-CAB	861
LAMP (24-VOLT)	7N-5876	2	MODULE GP-SPEEDOMETER & TACH	913
	8D-1429	1	AIR CONDITIONER GP	819
		1	HEATER GP-CAB	863
LAMP (24-VOLT) (ACTION)	107-1983	1	PANEL GP-INSTRUMENT	929
LAMP (24-VOLT) (AIR PRESSURE GAUGE)	7N-5876	2	PANEL GP-INSTRUMENT	925
		2	PANEL GP-INSTRUMENT	927
		2	PANEL GP-INSTRUMENT	929
LAMP (24-VOLT) (DIFFERENTIAL LOCK)	110-2079	1	PANEL GP-INSTRUMENT	925
		1	PANEL GP-INSTRUMENT	927
LAMP (24-VOLT) (EMS MASTER ACTION INDICATOR)	107-1983	1	PANEL GP-INSTRUMENT	925
LAMP (24-VOLT) (FAN SPEED, TEMPERATURE)	8D-1429	1	HEATER GP-CAB	867
LAMP (24-VOLT) (FRONT DEFROSTER)	3E-8825	1	FAN GP-CIRCULATING	856
LAMP (24-VOLT) (HEATED MIRRORS)	3E-8825	1	MIRROR GP-REAR VIEW	906
		1	MIRROR GP-REAR VIEW	910
LAMP (24-VOLT) (MASTER ACTION INDICATOR)	107-1983	1	PANEL GP-INSTRUMENT	927
LAMP (24-VOLT) (QUAD GAUGE)	7N-5876	2	PANEL GP-INSTRUMENT	927
LAMP (24-VOLT) (QUAD GAUGE MODULE)	7N-5876	2	PANEL GP-INSTRUMENT	925
		4	PANEL GP-INSTRUMENT	929
LAMP (24-VOLT) (REAR DEFROSTER)	3E-8825	1	FAN GP-CIRCULATING	857
LAMP (24-VOLT, 3-WATT) (INDICATOR LIGHT)	115-1748	11	PANEL GP-INSTRUMENT	929
LAMP (24-VOLT, 3-WATT) (INSTRUMENT PANEL)	115-1748	9	PANEL GP-INSTRUMENT	925
		9	PANEL GP-INSTRUMENT	927
PADLOCK GP	5P-8502	1	CONVERSION AR-NON-ROPS	834
	246-2641	1	CAB AR	825
PADLOCK GP (ROPS)	5P-8502	1	ROPS AR-OPEN	934

MAINTENANCE PARTS

DESCRIPTION	PART NUMBER	QTY	WHERE USED	PAGE
RECEIVER-DRYER	3E-3535	1	LINES GP-AIR CONDITIONER	898
POWER TRAIN				
BREATHER AS (POWER TRAIN OIL FILLER)	9G-5127	1	FILLER GP-POWER TRAIN OIL	375
BREATHER AS (TANDEM)	1F-8488	2	TANDEM & COVER GP	391
CAP-VALVE (STEM)	9K-7951	1	WHEEL & TIRE GP	446
FILTER ELEMENT AS-OIL (HIGH EFFICIENCY) (TRANSMISSION)	132-8875	1	FILTER GP-OIL	378
		1	LINES GP-TRANSMISSION OIL	381
FILTER-MAGNETIC (TRANSMISSION)	8S-9129	1	SCREEN GP-MAGNETIC	388
FILTER-MAGNETIC (TRANSMISSION OIL)	8S-9129	1	CASE & PARTS GP-TRANSMISSION	346
LAMP (24-VOLT) (AUTOSHIFT)	3E-8825	1	AUTOSHIFT AR	345
SCREEN-SUCTION (TRANSMISSION)	8S-9130	1	SCREEN GP-MAGNETIC	388
		1	CASE & PARTS GP-TRANSMISSION	346
SCREEN (TRANSMISSION CONTROL VALVE)	6I-9395	1	VALVE GP-TRANSMISSION CONTROL	404
SERVICE EQUIPMENT AND SUPPLIES				
PADLOCK GP (TOOL BOX)	5P-8502	1	BOX GP-TOOL	995

PIÈCES DE RECHANGE

DESCRIPTION	NUMÉRO DE PIECES	QTÉ	DOMAINE D'APPLICATION	PAGE
CHÂSSIS ET BENNE				
BATTERIE (ASS)	188-3951	1	VERSION DE SUPPORT DE CHÂSSIS ARRIÈRE	495
BOUCHON AIMANTÉ (RETOUR AU CARTER)	8M-3837	1	CHÂSSIS ET CARTER (ASS)	458
CIRCUIT D'ADMISSION D'AIR ET D'ÉCHAPPEMENT				
ÉLÉMENT PRINCIPAL (ENS)	6I-0273	1	FILTRE A AIR (ASS)	90
ÉLÉMENT SECONDAIRE (ENS)	6I-0274	1	FILTRE A AIR (ASS)	90
CIRCUIT DE CARBURANT				
BOUCHON DE GOULOTTE DE CARBURANT (ASS) (SERVICE INTENSIF, VERROUILLABLE)	164-4858	1	RÉSERVOIR DE CARBURANT (ASS)	119
		1	RÉSERVOIR DE CARBURANT (ASS)	121
ÉLÉMENT DE FILTRE (SÉPARATEUR D'EAU) (PRINCIPAL)	133-5673	1	FILTRE DE SÉPARATEUR D'EAU ET DE CARBURANT (ASS)	104
FILTRE À CARBURANT	199-9907	1	RÉSERVOIR DE CARBURANT (ASS)	119
		1	RÉSERVOIR DE CARBURANT (ASS)	121
FILTRE A CARBURANT (ENS)	1R-0762	1	FILTRE A CARBURANT (ASS)	103
JOINT PLAT	9R-7240	1	RÉSERVOIR DE CARBURANT (ASS)	117
		1	RÉSERVOIR DE CARBURANT (ASS)	118
CIRCUIT DE FREINAGE				
*CARTRIDGE AS-DESICCANT (DÉSHYDRATEUR)	203-2389	1	DESHYDRATEUR (ASS)	501
DESHYDRATEUR (ASS) (DÉSHYDRATEUR)(24 VOLTS)	203-2423	1	DESHYDRATEUR (ASS)	501
FUSIBLE (10A) (DÉSHYDRATEUR)	9W-1442	1	DESHYDRATEUR (ASS)	498
CIRCUIT DE GRAISSAGE				
BOUCHON DE GOULOTTE DE REMPLISSAGE D'HUILE MOTEUR	5L-2952	1	BOUCHON DE REMPLISSAGE D'HUILE MOTEUR (ASS)	62
FILTRE A HUILE MOTEUR (ENS)	1R-0716	1	FILTRE À HUILE MOTEUR (ASS)	63
CIRCUIT DE REFROIDISSEMENT				
CHAPEAU - RADIATEUR (*7-PSI)	6L-8617	1	RADIATEUR (ASS)	85
		1	RADIATEUR (ASS)	86
JOINT PLAT	7E-7912	1	THERMOSTAT ET BOITIER (ASS)	76
*SEAL-LIP TYPE	3S-9643	1	THERMOSTAT ET BOITIER (ASS)	76
THERMOSTAT (*98-DEG C)	7C-3095	1	THERMOSTAT ET BOITIER (ASS)	76
CIRCUIT ÉLECTRIQUE ET DE DÉMARRAGE				
AMPOULE (*24-VOLT) (CLIGNOTANT)	100-3245	1	PHARE AV (ASS)	173
		1	PHARE AV (ASS)	175
AMPOULE (*24-VOLT) (FEUX DE ROUTE/FEUX DE CROISEMENT)	9X-3465	1	PHARE AV (ASS)	173
		1	PHARE AV (ASS)	175
AMPOULE (*24-VOLT) (LAME)(PROJECTEUR AVANT)	3E-8825	2	ÉCLAIRAGE - PROJECTEURS (ASS)	201
AMPOULE (*24-VOLT) (PLAFONNIER)	7N-9943	1	PLAFONNIER (ASS)	165
AMPOULE (*24-VOLT) (POSITION)	100-3245	1	PHARE AV (ASS)	173

* TRADUCTION NON DISPONIBLE AU MOMENT DE LA PUBLICATION

PIÈCES DE RECHANGE

DESCRIPTION	NUMÉRO DE PIECÈS	QTÉ	DOMAINE D'APPLICATION	PAGE
		1	PHARE AV (ASS)	175
AMPOULE (*24-VOLT, 21-WATT) (CLIGNOTANT)	9X-4493	1	PHARE AV (ASS)	173
		1	PHARE AV (ASS)	175
AMPOULE (24 VOLTS)	3E-8825	1	AUXILIAIRE DE DÉMARRAGE À L'ÉTHER	268
		1	ÉCLAIRAGE - AVERTISSEUR (ASS)	247
		1	ÉCLAIRAGE - AVERTISSEUR (ASS)	248
		1	ÉCLAIRAGE - GYROPHARE (ASS)	249
		1	MONTAGE - GYROPHARE (ASS)	163
		1	CABLAGE DE CABINE (ASS)	287
		1	CABLAGE DE CABINE (ASS)	289
		2	ÉCLAIRAGE - PROJECTEURS (ASS)	206
		1	ÉCLAIRAGE - PROJECTEURS (ASS)	212
		2	ÉCLAIRAGE - PROJECTEURS (ASS)	215
		1	ÉCLAIRAGE - PROJECTEURS (ASS)	222
		1	ÉCLAIRAGE - PROJECTEURS (ASS)	223
		1	ÉCLAIRAGE - PROJECTEURS (ASS)	225
		1	ÉCLAIRAGE - PROJECTEURS (ASS)	235
		1	ÉCLAIRAGE - PROJECTEURS (ASS)	237
		2	INTERRUPTEUR D'ÉCLAIRAGE (ASS)	275
		2	CABLAGE DE DIRECTION AUXILIAIRE (ASS)	329
		2	CABLAGE DE LA CONSOLE DE CHANGEMENTS DE VITESSE	331
		2	CABLAGE DE LA CONSOLE DE CHANGEMENTS DE VITESSE	333
		1	CABLAGE DE LA CONSOLE DE CHANGEMENTS DE VITESSE	334
		1	CABLAGE DE LA CONSOLE DE DIRECTION	337
		2	CABLAGE DE LA CONSOLE DE DIRECTION	340
	7N-5876	1	CABLAGE DE LA CONSOLE DE CHANGEMENTS DE VITESSE	331
		1	CABLAGE DE LA CONSOLE DE CHANGEMENTS DE VITESSE	333
	9X-3465	1	LAMPE - PHARE ET CLIGNOTANT	177
	100-3245	2	LAMPE - PHARE ET CLIGNOTANT	177
AMPOULE (24 VOLTS) (*AUXILIARY BACK-UP ALARM)	3E-8825	1	ECLAIRAGE AR (ASS)	193
AMPOULE (24 VOLTS) (CONTACTEUR D'AMORTISSEUR DE LAME)	3E-8825	1	CÂBLE D'AMORTISSEUR DE LAME (ASS)	280
AMPOULE (24 VOLTS) (LAMPE D'APPOINT AUXILIAIRE)	3E-8825	2	ECLAIRAGE AR (ASS)	191
AMPOULE (24 VOLTS) (*NG)	3E-8825	2	CABLAGE DE LA CONSOLE DE CHANGEMENTS DE VITESSE	334
AMPOULE (24 VOLTS) (PHARES AVANT, FEUX ARRIÈRE)	3E-8825	2	ÉCLAIRAGE - PROJECTEURS (ASS)	209
AMPOULE (24 VOLTS) (PLAQUE D'IMMATRICULATION)	5C-9583	1	LAMPE-PLAQUE D'IMMATRICULATION (ASS)	182

* TRADUCTION NON DISPONIBLE AU MOMENT DE LA PUBLICATION

PIÈCES DE RECHANGE

DESCRIPTION	NUMÉRO DE PIECÈS	QTÉ	DOMAINE D'APPLICATION	PAGE
AMPOULE (24 VOLTS) (POSITION DE CABINE)	9X-4494	1	REPÈRE DE LAMPE (ASS)	181
AMPOULE (24 VOLTS) (PROJECTEUR DE LAME)	3E-8825	2	ÉCLAIRAGE - PROJECTEURS (ASS)	202
AMPOULE (24 VOLTS) (PROJECTEUR DROIT)	3E-8825	1	ÉCLAIRAGE - PROJECTEURS (ASS)	218
		1	ÉCLAIRAGE - PROJECTEURS (ASS)	220
AMPOULE (24 VOLTS) (PROJECTEUR SUR LAME)	3E-8825	2	ÉCLAIRAGE - PROJECTEURS (ASS)	204
		2	ÉCLAIRAGE - PROJECTEURS (ASS)	205
AMPOULE (24 VOLTS) (SIGNAL)	100-3245	2	LAMPE - PHARE ET CLIGNOTANT	179
AMPOULE (24 VOLTS) (TÊTE)	9X-3465	1	LAMPE - PHARE ET CLIGNOTANT	179
AMPOULE (24V, 21W)	5C-9584	2	CABLAGE AR (ASS)	317
		2	CABLAGE AR (ASS)	320
AMPOULE (24V, 21W) (SIGNAL)	9X-4493	1	LAMPE - PHARE ET CLIGNOTANT	177
		1	LAMPE - PHARE ET CLIGNOTANT	179
AMPOULE (24V, 5W)	4V-8116	1	CABLAGE AR (ASS)	317
		1	CABLAGE AR (ASS)	317
		1	CABLAGE AR (ASS)	320
AMPOULE (24V, 70W)	9X-7849	1	LAMPE - GYROPHARE (ASS)	187
AMPOULE (24V, 70W) (GYROPHARE)	9X-7849	1	LAMPE - GYROPHARE (ASS)	186
BATTERIE (ASS) (12 VOLTS)	153-5700	2	BATTERIE (ASS)	138
BATTERIE (ASS) (12 VOLTS) (1100A)	153-5700	2	BATTERIE (ASS)	136
BATTERIE (12 VOLTS) (HUMIDE)	153-5710	2	BATTERIE (ASS)	137
BATTERIE (12V, 750A)	3T-5760	2	BATTERIE (ASS)	139
CLÉ (COUPE-BATTERIE)	8H-5306	1	ROBINET DE BATTERIE (ASS)	274
CLIGNOTANT (ENS) (12/24V) (CLIGNOTANT, FEUX DE DÉTRESSE)	108-0358	1	ÉCLAIRAGE - PROJECTEURS (ASS)	206
		1	ÉCLAIRAGE - PROJECTEURS (ASS)	209
		1	ÉCLAIRAGE - PROJECTEURS (ASS)	212
		1	ÉCLAIRAGE - PROJECTEURS (ASS)	215
		1	ÉCLAIRAGE - PROJECTEURS (ASS)	222
		1	ÉCLAIRAGE - PROJECTEURS (ASS)	225
		1	INTERRUPTEUR D'ÉCLAIRAGE (ASS)	275
CONTACTEUR (ENS) (*AUXILIARY BACKUP)	161-1418	1	ECLAIRAGE AR (ASS)	191
COURROIE	215-6673	1	LAMPE - GYROPHARE (ASS)	187
COURROIE MULTIPLE (ALTERNATEUR SANS CLIMATISEUR)	178-8481	1	ALTERNATEUR DE CHARGE (ASS)	134
DIODE (LED)	165-5674	1	ÉCLAIRAGE - AVERTISSEUR (ASS)	247
		1	ÉCLAIRAGE - AVERTISSEUR (ASS)	248
DISJONCTEUR (ENS) (105A) (ALTERNATEUR)	171-2212	1	DISJONCTEUR (ASS)	143
DISJONCTEUR (ENS) (15A) (COMMANDE DU MOTEUR)	6T-3643	1	CABLAGE AR (ASS)	311
DISJONCTEUR (ENS) (15A) (PHARES AVANT)	3T-2662	1	DISJONCTEUR (ASS)	141
		1	DISJONCTEUR (ASS)	142
DISJONCTEUR (ENS) (15A) (PROJECTEURS DE TRAVAIL AVEC BARRE LUMINEUSE)	3T-2662	1	DISJONCTEUR (ASS)	141

* TRADUCTION NON DISPONIBLE AU MOMENT DE LA PUBLICATION

PIÈCES DE RECHANGE

DESCRIPTION	NUMÉRO DE PIECÈS	QTÉ	DOMAINE D'APPLICATION	PAGE
DISJONCTEUR (ENS) (80A) (ALTERNATEUR)	171-2210	1	CABLAGE AR (ASS)	310
DISJONCTEUR (ENS) (80A) (PRINCIPAL)	171-2210	1	CABLAGE AR (ASS)	310
ÉLÉMENT DE RÉCHAUFFEUR (ENS) (240V, 1250W)	154-2881	1	EAU DES CHEMISES - RECHAUFFEUR (ASS)	162
ÉLÉMENT DU RÉCHAUFFEUR D'EAU DES CHEMISES (ENS) (*120-VOLT, 1250-WATT)	131-8627	1	EAU DES CHEMISES - RECHAUFFEUR (ASS)	161
ENTRAÎNEMENT POUR COURROIE (GYROPHARE)	9X-8139	1	LAMPE - GYROPHARE (ASS)	186
FUSIBLE (*10-AMPERE) (LAME/ PROJECTEUR AVANT)	9W-1442	2	ÉCLAIRAGE - PROJECTEURS (ASS)	201
FUSIBLE (10A)	3K-8782	1	CABLAGE DE CABINE (ASS)	291
	9W-1442	1	CABLAGE DE CABINE (ASS)	287
		1	CABLAGE DE CABINE (ASS)	289
		2	CABLAGE DE DIRECTION AUXILIAIRE (ASS)	329
		11	CABLAGE DE LA CONSOLE DE DIRECTION	337
		12	CABLAGE DE LA CONSOLE DE DIRECTION	340
		1	ÉCLAIRAGE - AVERTISSEUR (ASS)	244
		1	ÉCLAIRAGE - PROJECTEURS (ASS)	206
		1	ÉCLAIRAGE - PROJECTEURS (ASS)	212
		1	ÉCLAIRAGE - PROJECTEURS (ASS)	215
		1	ÉCLAIRAGE - PROJECTEURS (ASS)	222
		1	ÉCLAIRAGE - PROJECTEURS (ASS)	225
		1	ÉCLAIRAGE - PROJECTEURS (ASS)	235
		1	ÉCLAIRAGE - PROJECTEURS (ASS)	237
		1	INTERRUPTEUR D'ÉCLAIRAGE (ASS)	275
FUSIBLE (10A) (*AUXILIARY BACK-UP ALARM)	9W-1442	1	ECLAIRAGE AR (ASS)	193
FUSIBLE (10A) (CLIGNOTANT, FEUX DE DÉTRESSE)	9W-1442	1	ÉCLAIRAGE - PROJECTEURS (ASS)	209
FUSIBLE (10A) (CONVERTISSEUR)	9W-1442	1	TRANSFORMATION ELECTRIQUE (ASS)	154
FUSIBLE (10A) (DÉVOLTEUR POUR COURANT)	9W-1442	1	TRANSFORMATION ELECTRIQUE (ASS)	156
FUSIBLE (10A) (GYROPHARE)	9W-1442	1	CABLAGE DE CABINE (ASS)	284
		1	ÉCLAIRAGE - AVERTISSEUR (ASS)	245
FUSIBLE (10A) (LAMPE D'APPOINT)	9W-1442	1	ECLAIRAGE AR (ASS)	191
FUSIBLE (10A) (PROJECTEUR DE LAME)	9W-1442	2	ÉCLAIRAGE - PROJECTEURS (ASS)	202
FUSIBLE (10A) (PROJECTEUR DROIT)	9W-1442	1	ÉCLAIRAGE - PROJECTEURS (ASS)	218
		1	ÉCLAIRAGE - PROJECTEURS (ASS)	220
FUSIBLE (10A) (PROJECTEURS)	9W-1442	2	ÉCLAIRAGE - PROJECTEURS (ASS)	204
		2	ÉCLAIRAGE - PROJECTEURS (ASS)	205
FUSIBLE (15A)	9W-1441	1	CABLAGE DE CABINE (ASS)	282
		1	CABLAGE DE CABINE (ASS)	285
		1	CABLAGE DE LA CONSOLE DE DIRECTION	337

* TRADUCTION NON DISPONIBLE AU MOMENT DE LA PUBLICATION

PIÈCES DE RECHANGE

DESCRIPTION	NUMÉRO DE PIECES	QTÉ	DOMAINE D'APPLICATION	PAGE
		1	CABLAGE DE LA CONSOLE DE DIRECTION	340
FUSIBLE (15A) (CONVERTISSEUR DE PUISSANCE)	9W-1441	1	TRANSFORMATION ELECTRIQUE (ASS)	155
FUSIBLE (15A) (PROJECTEURS DE CABINE)	9W-1441	1	ÉCLAIRAGE - PROJECTEURS (ASS)	204
		1	ÉCLAIRAGE - PROJECTEURS (ASS)	205
FUSIBLE (30A)	8T-9636	2	TRANSFORMATION ELECTRIQUE (ASS)	157
*LAMP-HALOGEN (*24-VOLT, 65-WATT) (FEUX DE CROISEMENT)	9X-3463	1	PHARE AV (ASS)	171
*LAMP-HALOGEN (*24-VOLT, 65-WATT) (PROJECTEUR)	9X-3463	1	LAMPE - PHARE (ASS)	166
LAMPE (ENS)	6C-0109	1	CABLAGE AR (ASS)	317
		1	CABLAGE AR (ASS)	320
	6C-0110	1	CABLAGE AR (ASS)	317
		1	CABLAGE AR (ASS)	320
LAMPE HALOGÈNE (24V, 65W)	9X-3463	1	LAMPE - PHARE (ASS)	168
LAMPE HALOGÈNE (24V, 65W) (FEUX DE CROISEMENT)	9X-3463	1	ÉCLAIRAGE - PROJECTEURS (ASS)	197
LAMPE HALOGÈNE (24V, 65W) (FEUX DE ROUTE)	9X-3463	1	PHARE AV (ASS)	172
		1	ÉCLAIRAGE - PROJECTEURS (ASS)	197
LAMPE HALOGÈNE (24V, 65W) (LAME)	9X-3463	1	LAMPE - PHARE (ASS)	170
LAMPE HALOGÈNE (24V, 65W) (PROJECTEUR)	9X-3463	1	LAMPE - PHARE (ASS)	167
		1	LAMPE - PHARE (ASS)	169
LENTILLE	7T-0020	1	PLAFONNIER (ASS)	165
LENTILLE (ENS) (FEUX DE CROISEMENT)	162-2077	1	ÉCLAIRAGE - PROJECTEURS (ASS)	197
LENTILLE (ENS) (*HEAD)	100-3249	1	PHARE AV (ASS)	175
		1	PHARE AV (ASS)	173
LENTILLE (ENS) (JAUNE) (CLIGNOTANT)	136-3848	1	PHARE AV (ASS)	173
		1	PHARE AV (ASS)	175
LENTILLE (ENS) (JAUNE) (SIGNAL)	136-3848	1	LAMPE - PHARE ET CLIGNOTANT	177
		1	LAMPE - PHARE ET CLIGNOTANT	179
LENTILLE (ENS) (PHARE AVANT)	100-3248	1	LAMPE - PHARE ET CLIGNOTANT	179
		1	LAMPE - PHARE ET CLIGNOTANT	177
LENTILLE (ENS) (PHARE AVANT)(FEUX DE CROISEMENT)	162-2077	1	PHARE AV (ASS)	171
LENTILLE (ENS) (PLAFONNIER)	202-6611	1	LAMPE - PHARE (ASS)	168
		1	LAMPE - PHARE (ASS)	170
	202-6614	1	LAMPE - PHARE (ASS)	167
		1	LAMPE - PHARE (ASS)	169
LENTILLE (GYROPHARE JAUNE)	9X-8121	1	LAMPE - GYROPHARE (ASS)	186
LENTILLE (JAUNE) (CLIGNOTANT)	100-3250	1	PHARE AV (ASS)	173
		1	PHARE AV (ASS)	175
LENTILLE (JAUNE) (SIGNAL)	100-3250	1	LAMPE - PHARE ET CLIGNOTANT	177
		1	LAMPE - PHARE ET CLIGNOTANT	179
LENTILLE ORANGE (GYROPHARE)	215-6672	1	LAMPE - GYROPHARE (ASS)	187

* TRADUCTION NON DISPONIBLE AU MOMENT DE LA PUBLICATION

PIÈCES DE RECHANGE

DESCRIPTION	NUMÉRO DE PIECÈS	QTÉ	DOMAINE D'APPLICATION	PAGE
LENTILLE (PLAQUE D'IMMATRICULATION)	134-6751	1	LAMPE-PLAQUE D'IMMATRICULATION (ASS)	182
PLAFONNIER (ASS) (24V, AVEC CONTACTEUR)	3E-6389	1	CABLAGE DE CABINE (ASS)	282
		1	CABLAGE DE CABINE (ASS)	285
		1	CABLAGE DE CABINE (ASS)	291
PORTE-BALAIS (ENS)	7T-3278	1	DÉMARREUR ÉLECTRIQUE (ASS)	270
CIRCUIT HYDRAULIQUE				
BOUCHON DE GOULOTTE DE REMPLISSAGE (RÉSERVOIR D'HUILE HYDRAULIQUE)	7H-1447	1	RÉSERVOIR HYDRAULIQUE ET FILTRE (ASS)	612
CREPINE (GOULOTTE DE REMPLISSAGE) (RÉSERVOIR D'HUILE HYDRAULIQUE)	9J-3047	1	RÉSERVOIR HYDRAULIQUE ET FILTRE (ASS)	612
ÉLÉMENT DE FILTRE À HUILE (ENS) (HYDRAULIQUE) (EFFICACITÉ NORMALE)	1R-0774	1	RÉSERVOIR HYDRAULIQUE ET FILTRE (ASS)	612
GRAISSEUR (CHAPE D'ANCRAGE DU VÉRIN DE DÉPORT DE CERCLE)	3B-8485	2	VÉRIN DE DÉPORT DE CERCLE ET MONTAGE (ASS)	534
*PADLOCK GP	5P-8502	1	RÉSERVOIR HYDRAULIQUE ET MONTAGE (ASS)	614
PARE-POUSSIERE (HUILE HYDRAULIQUE)	8C-3451	1	CANALISATIONS DE DIRECTION (ASS)	592
MATÉRIEL ET FOURNITURES D'ENTRETIEN				
CADENAS (ASS) (BOÎTE À OUTILS)	5P-8502	1	*BOX GP-TOOL	995
MOTEUR STANDARD				
FLEXIBLE D'ÉVACUATION DES VAPEURS	126-0146	1	COMPRESSEUR D'AIR (ASS)	12
		1	COMPRESSEUR D'AIR (ASS)	14
*GASKET	9Y-1758	1	CULBUTERIE (ASS)	58
	109-5309	1	CULBUTERIE (ASS)	58
RENIFLARD (ENS)	9Y-4357	1	CULBUTERIE (ASS)	58
POSTE DE CONDUITE				
ACCUMULATEUR	197-6218	1	CANALISATIONS DE CLIMATISEUR (ASS)	898
AMPOULE (*24-VOLT) (DÉGIVREUR ARRIÈRE)	3E-8825	1	VENTILATEUR DE CABINE (ASS)	857
AMPOULE (*24-VOLT) (DÉGIVREUR AVANT)	3E-8825	1	VENTILATEUR DE CABINE (ASS)	856
AMPOULE (24 VOLTS)	7N-5876	2	MODULE D'INDICATEUR DE VITESSE ET COMPTE-TOURS (ASS)	913
	8D-1429	1	CHAUFFAGE DE CABINE (ASS)	863
		1	CLIMATISEUR (ASS)	819
AMPOULE (24 VOLTS) (MANOMÈTRE)	7N-5876	2	TABLEAU DE BORD (ASS)	925
		2	TABLEAU DE BORD (ASS)	927
		2	TABLEAU DE BORD (ASS)	929
AMPOULE (24 VOLTS) (MODULE QUATRE INSTRUMENTS)	7N-5876	2	TABLEAU DE BORD (ASS)	925

* TRADUCTION NON DISPONIBLE AU MOMENT DE LA PUBLICATION

PIÈCES DE RECHANGE

DESCRIPTION	NUMÉRO DE PIECÈS	QTÉ	DOMAINE D'APPLICATION	PAGE
		4	TABLEAU DE BORD (ASS)	929
AMPOULE (24 VOLTS) (QUATRE INSTRUMENTS)	7N-5876	2	TABLEAU DE BORD (ASS)	927
AMPOULE (24 VOLTS) (RÉTROVISEURS À CHAUFFAGE INTÉGRÉ)	3E-8825	1	RÉTROVISEUR (ASS)	906
		1	RÉTROVISEUR (ASS)	910
AMPOULE (24 VOLTS) (TÉMOIN D'ACTION PRINCIPAL)	107-1983	1	TABLEAU DE BORD (ASS)	927
AMPOULE (24 VOLTS) (TÉMOIN D'ACTIONNEMENT)	107-1983	1	TABLEAU DE BORD (ASS)	929
AMPOULE (24 VOLTS) (TÉMOIN PRINCIPAL DE MISE EN GARDE EMS)	107-1983	1	TABLEAU DE BORD (ASS)	925
AMPOULE (24 VOLTS) (TEMPÉRATURE, VITESSE DE VENTILATEUR)	8D-1429	1	CHAUFFAGE DE CABINE (ASS)	867
AMPOULE (24 VOLTS) (VERROUILLAGE DE DIFFÉRENTIEL)	110-2079	1	TABLEAU DE BORD (ASS)	925
		1	TABLEAU DE BORD (ASS)	927
AMPOULE (24V, 3W) (TABLEAU DE BORD)	115-1748	9	TABLEAU DE BORD (ASS)	925
		9	TABLEAU DE BORD (ASS)	927
AMPOULE (24V, 3W) (TÉMOIN LUMINEUX)	115-1748	11	TABLEAU DE BORD (ASS)	929
BALAI D'ESSUIE-GLACE (ENS)	6V-5853	1	ESSUIE-GLACE (ASS)	992
		1	ESSUIE-GLACE (ASS)	993
		1	ESSUIE-GLACE (ASS)	994
	6V-8255	2	VITRE (ASS)	964
BALAI D'ESSUIE-GLACE (ENS) (ARRIÈRE)	6V-5853	1	ESSUIE-GLACE (ASS)	989
BALAI D'ESSUIE-GLACE (ENS) (INFÉRIEUR AVANT)	123-4355	2	ESSUIE-GLACE (ASS)	975
		2	ESSUIE-GLACE (ASS)	977
BALAI D'ESSUIE-GLACE (ENS) (PROFIL BAS ARRIÈRE)	6V-5849	1	ESSUIE-GLACE (ASS)	983
		1	ESSUIE-GLACE (ASS)	985
BALAI D'ESSUIE-GLACE (ENS) (PROFIL ÉLEVÉ ARRIÈRE)	6V-5853	1	ESSUIE-GLACE (ASS)	987
BALAI D'ESSUIE-GLACE (ENS) (PROFIL ÉLEVÉ AVANT INFÉRIEUR)	123-4355	2	ESSUIE-GLACE (ASS)	979
		2	ESSUIE-GLACE (ASS)	981
BALAI D'ESSUIE-GLACE (ENS) (PROFIL ÉLEVÉ SUPÉRIEUR AVANT)	6V-5853	1	ESSUIE-GLACE (ASS)	979
		1	ESSUIE-GLACE (ASS)	981
BALAI D'ESSUIE-GLACE (ENS) (SUPÉRIEUR AVANT)	6V-5853	1	ESSUIE-GLACE (ASS)	977
BALAI D'ESSUIE-GLACE (ENS) (SURBAISSÉ, AVANT SUPÉRIEUR)	6V-5853	1	ESSUIE-GLACE (ASS)	975
CADENAS (ASS)	5P-8502	1	VERSION DE TRANSFORMATION - SANS ROPS	834
	246-2641	1	CABINE (VERSION)	825
CADENAS (ASS) (ROPS)	5P-8502	1	ROPS OUVERTE (VERSION)	934

* TRADUCTION NON DISPONIBLE AU MOMENT DE LA PUBLICATION

PIÈCES DE RECHANGE

DESCRIPTION	NUMÉRO DE PIECÈS	QTÉ	DOMAINE D'APPLICATION	PAGE
COURROIE MULTIPLE (ALTERNATEUR ET CLIMATISEUR)	174-9690	1	CLIMATISEUR (VERSION)	818
FILTRE À AIR (CABINE)	7T-7358	1	FILTRE À AIR DE CABINE (ASS)	858
	231-4486	1	FILTRE À AIR DE CABINE (ASS)	858
	232-1732	1	FILTRE À AIR DE CABINE (ASS)	858
FUSIBLE (*10-AMPERE) (DÉGIVREUR ARRIÈRE)	9W-1442	1	VENTILATEUR DE CABINE (ASS)	857
FUSIBLE (*10-AMPERE) (DÉGIVREUR AVANT)	9W-1442	1	VENTILATEUR DE CABINE (ASS)	856
FUSIBLE (10A) (ESSUIE-GLACE)	9W-1442	1	ESSUIE-GLACE (ASS)	983
		1	ESSUIE-GLACE (ASS)	985
		1	ESSUIE-GLACE (ASS)	987
		1	ESSUIE-GLACE (ASS)	989
FUSIBLE (10A) (RÉTROVISEURS À CHAUFFAGE INTÉGRÉ)	9W-1442	1	RÉTROVISEUR (ASS)	906
		1	RÉTROVISEUR (ASS)	910
FUSIBLE (15A) (CLIMATISEUR)	9W-1441	1	CLIMATISEUR ET MONTAGE (ASS)	818
FUSIBLE (15A) (RÉCHAUFFEUR)	9W-1441	1	CHAUFFAGE ET MONTAGE - CABINE (ASS)	861
RÉSERVOIR DÉSHYDRATEUR	3E-3535	1	CANALISATIONS DE CLIMATISEUR (ASS)	898
TRANSMISSION				
AMPOULE (*24-VOLT) (CHANG. AUTOMATIQUE VITESSE)	3E-8825	1	CHANGEMENT DE VITESSES AUTOMATIQUE (VERSION)	345
*BREATHER AS (REMPLISSAGE D'HUILE DE TRANSMISSION)	9G-5127	1	GOULOTTE DE REMPLISSAGE D'HUILE DE TRANSMISSION	375
CHAPEAU DE VALVE (TIGE)	9K-7951	1	ROUE ET PNEU (ASS)	446
ÉCRAN (DISTRIBUTEUR DE BOÎTE DE VITESSES)	6I-9395	1	DISTRIBUTEUR DE BOITE (ASS)	404
ÉCRAN MAGNÉTIQUE (BOÎTE DE VITESSES)	8S-9129	1	ÉCRAN MAGNÉTIQUE (ASS)	388
ÉCRAN MAGNÉTIQUE (HUILE DE BOÎTE)	8S-9129	1	CARTER ET PIECES DE BOITE (ASS)	346
ÉLÉMENT DE FILTRE À HUILE (ENS) (GRANDE EFFICACITÉ) (BOÎTE DE VITESSES)	132-8875	1	CANALISATIONS D'HUILE DE BOÎTE (ASS)	381
		1	FILTRE A HUILE (ASS)	378
RENIFLARD (ENS) (TANDEM)	1F-8488	2	TANDEM ET CARTER (ASS)	391
TAMIS D'ASPIRATION (BOÎTE DE VITESSES)	8S-9130	1	CARTER ET PIECES DE BOITE (ASS)	346
		1	ÉCRAN MAGNÉTIQUE (ASS)	388

* TRADUCTION NON DISPONIBLE AU MOMENT DE LA PUBLICATION

PIEZAS DE MANTENIMIENTO

DESCRIPCION	NUMERO DE PIEZA	CANT	SE UTILIZA EN	PAGINA
BASTIDOR Y CAJA				
BATERÍA (GR)	188-3951	1	CONFIGURACIÓN DE SOPORTE DE CHASIS TRASERO	495
TAPÓN MAGNÉTICO (DRENAJE DE LA CAJA)	8M-3837	1	CAJA Y BASTIDOR (GR)	458
EQUIPO Y SUMINISTRO DE SERVICIOS				
CANDADO (GR) (CAJA DE HERRAMIENTAS)	5P-8502	1	*BOX GP-TOOL	995
MOTOR BÁSICO				
*GASKET	9Y-1758	1	MECANISMO DE VÁLVULAS (GR)	58
	109-5309	1	MECANISMO DE VÁLVULAS (GR)	58
MANGUERA DE ESCAPE DE GASES	126-0146	1	COMPRESOR DE AIRE (GR)	12
		1	COMPRESOR DE AIRE (GR)	14
RESPIRADERO (CONJ)	9Y-4357	1	MECANISMO DE VÁLVULAS (GR)	58
PUESTO DEL OPERADOR				
ACUMULADOR	197-6218	1	TUBERÍAS DE ACONDICIONADOR DE AIRE (GR)	898
CANDADO (GR)	5P-8502	1	CONJUNTO DE MODIFICACIÓN (SIN ROPS)	834
	246-2641	1	CABINA (CONFIG)	825
CANDADO (GR) (ROPS)	5P-8502	1	ESTRUCTURA ROPS ABIERTA	934
CORREA-SERPENTIN (*ALTERNATOR AND AIR CONDITIONER)	174-9690	1	ACONDICIONADOR DE AIRE (CONFIG)	818
FILTRO DE AIRE (CABINA)	7T-7358	1	FILTRO DE AIRE DE LA CABINA (GR)	858
	231-4486	1	FILTRO DE AIRE DE LA CABINA (GR)	858
	232-1732	1	FILTRO DE AIRE DE LA CABINA (GR)	858
FUSIBLE (*10-AMPERE) (DESCONGELADOR DELANTERO)	9W-1442	1	VENTILADOR DE CIRCULACION	856
FUSIBLE (*10-AMPERE) (DESCONGELADOR TRASERO)	9W-1442	1	VENTILADOR DE CIRCULACION	857
FUSIBLE (10-AMPERIOS) (*HEATED MIRRORS)	9W-1442	1	RETROVISOR (GR)	906
		1	RETROVISOR (GR)	910
FUSIBLE (10-AMPERIOS) (LIMPIADOR)	9W-1442	1	LIMPIAPARABRISAS DE LA VENTANA (GR)	983
		1	LIMPIAPARABRISAS DE LA VENTANA (GR)	985
		1	LIMPIAPARABRISAS DE LA VENTANA (GR)	987
		1	LIMPIAPARABRISAS DE LA VENTANA (GR)	989
FUSIBLE (15 A) (AIRE ACONDICIONADO)	9W-1441	1	ACONDICIONADOR DE AIRE Y MONTAJE (GR)	818
FUSIBLE (15 A) (CALEFACTOR)	9W-1441	1	CALEFACCIÓN Y MONTAJE DE LA CABINA (GR)	861
HOJA DE LIMPIAPARABRISAS (CONJ)	6V-5853	1	LIMPIAPARABRISAS DE LA VENTANA (GR)	992
		1	LIMPIAPARABRISAS DE LA VENTANA (GR)	993

* NO HAY TRADUCCION DISPONIBLE EN EL MOMENTO DE LA IMPRESION

PIEZAS DE MANTENIMIENTO

DESCRIPCION	NUMERO DE PIEZA	CANT	SE UTILIZA EN	PAGINA
		1	LIMPIAPARABRISAS DE LA VENTANA (GR)	994
	6V-8255	2	VENTANA (GR)	964
HOJA DE LIMPIAPARABRISAS (CONJ) (DELANTERO DE ALTO PERFIL)	123-4355	2	LIMPIAPARABRISAS DE LA VENTANA (GR)	979
		2	LIMPIAPARABRISAS DE LA VENTANA (GR)	981
HOJA DE LIMPIAPARABRISAS (CONJ) (DELANTERO SUPERIOR DE ALTO PERFIL)	6V-5853	1	LIMPIAPARABRISAS DE LA VENTANA (GR)	979
		1	LIMPIAPARABRISAS DE LA VENTANA (GR)	981
HOJA DE LIMPIAPARABRISAS (CONJ) (*FRONT LOWER)	123-4355	2	LIMPIAPARABRISAS DE LA VENTANA (GR)	975
		2	LIMPIAPARABRISAS DE LA VENTANA (GR)	977
HOJA DE LIMPIAPARABRISAS (CONJ) (*LOW PROFILE FRONT UPPER)	6V-5853	1	LIMPIAPARABRISAS DE LA VENTANA (GR)	975
HOJA DE LIMPIAPARABRISAS (CONJ) (PARTE TRASERA)	6V-5853	1	LIMPIAPARABRISAS DE LA VENTANA (GR)	989
HOJA DE LIMPIAPARABRISAS (CONJ) (POSICION DELANTERA / SUPERIOR)	6V-5853	1	LIMPIAPARABRISAS DE LA VENTANA (GR)	977
HOJA DE LIMPIAPARABRISAS (CONJ) (TRASERO DE ALTO PARFIL)	6V-5853	1	LIMPIAPARABRISAS DE LA VENTANA (GR)	987
HOJA DE LIMPIAPARABRISAS (CONJ) (TRSERO DE BAJO PERFIL)	6V-5849	1	LIMPIAPARABRISAS DE LA VENTANA (GR)	983
		1	LIMPIAPARABRISAS DE LA VENTANA (GR)	985
LÁMPARA (*24-VOLT) (DESCONGELADOR DELANTERO)	3E-8825	1	VENTILADOR DE CIRCULACION	856
LÁMPARA (*24-VOLT) (DESCONGELADOR TRASERO)	3E-8825	1	VENTILADOR DE CIRCULACION	857
LÁMPARA (24 VOLTIOS)	8D-1429	1	ACONDICIONADOR DE AIRE (GR)	819
		1	CALEFACCIÓN DE LA CABINA (GR)	863
	7N-5876	2	MÓDULO DEL TACÓMETRO Y DEL VELOCÍMETRO (GR)	913
LÁMPARA (24 VOLTIOS) (ACCIONAMIENTO)	107-1983	1	TABLERO DE INSTRUMENTOS (GR)	929
LÁMPARA (24 VOLTIOS) (*AIR PRESSURE GAUGE)	7N-5876	2	TABLERO DE INSTRUMENTOS (GR)	929
		2	TABLERO DE INSTRUMENTOS (GR)	927
		2	TABLERO DE INSTRUMENTOS (GR)	925
LÁMPARA (24 VOLTIOS) (DE CUATRO MEDIDORES)	7N-5876	2	TABLERO DE INSTRUMENTOS (GR)	927
LÁMPARA (24 VOLTIOS) (*FAN SPEED, TEMPERATURE)	8D-1429	1	CALEFACCIÓN DE LA CABINA (GR)	867
LÁMPARA (24 VOLTIOS) (*HEATED MIRRORS)	3E-8825	1	RETROVISOR (GR)	906
		1	RETROVISOR (GR)	910
LÁMPARA (24 VOLTIOS) (LUZ DE INDICADOR DE ACCCIÓN MAESTRA)	107-1983	1	TABLERO DE INSTRUMENTOS (GR)	927

* NO HAY TRADUCCION DISPONIBLE EN EL MOMENTO DE LA IMPRESION

PIEZAS DE MANTENIMIENTO

DESCRIPCION	NUMERO DE PIEZA	CANT	SE UTILIZA EN	PAGINA
LÁMPARA (24 VOLTIOS) (LUZ INDIC. DE ACCION MAESTRA DE EMS)	107-1983	1	TABLERO DE INSTRUMENTOS (GR)	925
LÁMPARA (24 VOLTIOS) (MÓDULO DE CUATRO MEDIDORES)	7N-5876	4	TABLERO DE INSTRUMENTOS (GR)	929
		2	TABLERO DE INSTRUMENTOS (GR)	925
LÁMPARA (24 VOLTIOS) (TRABA DE DIFERENCIAL)	110-2079	1	TABLERO DE INSTRUMENTOS (GR)	925
		1	TABLERO DE INSTRUMENTOS (GR)	927
LÁMPARA (24-VOLTIOS, 3-VATIOS) (LUZ INDICADORA)	115-1748	11	TABLERO DE INSTRUMENTOS (GR)	929
LÁMPARA (24-VOLTIOS, 3-VATIOS) (TABLERO DE INSTRUMENTOS)	115-1748	9	TABLERO DE INSTRUMENTOS (GR)	925
		9	TABLERO DE INSTRUMENTOS (GR)	927
RECEPTOR-SECADOR	3E-3535	1	TUBERÍAS DE ACONDICIONADOR DE AIRE (GR)	898
SISTEMA DE ADMISIÓN Y ESCAPE DE AIRE				
ELEMENTO PRIMARIO (CONJ)	6I-0273	1	FILTRO DE AIRE (GR)	90
ELEMENTO SECUNDARIO (CONJ)	6I-0274	1	FILTRO DE AIRE (GR)	90
SISTEMA DE COMBUSTIBLE				
COLADOR DE COMBUSTIBLE	199-9907	1	COMBUSTIBLE - TANQUE DE (GR)	119
		1	COMBUSTIBLE - TANQUE DE (GR)	121
ELEMENTO DE FILTRO (SEPARADOR DE COMBUSTIBLE, AGUA) (PRIMARIO)	133-5673	1	FILTRO DE COMBUSTIBLE Y SEPARADOR DE AGUA (GR)	104
EMPAQUETADURA	9R-7240	1	COMBUSTIBLE - TANQUE DE (GR)	117
		1	COMBUSTIBLE - TANQUE DE (GR)	118
FILTRO DE COMBUSTIBLE (CONJ)	1R-0762	1	FILTRO DE COMBUSTIBLE (GR)	103
TAPA DEL TUBO DE LLENADO DE COMBUSTIBLE (GR) (SERVICIO PESADO, TRABABLE)	164-4858	1	COMBUSTIBLE - TANQUE DE (GR)	119
		1	COMBUSTIBLE - TANQUE DE (GR)	121
SISTEMA DE ENFRIAMIENTO				
EMPAQUETADURA	7E-7912	1	REGULADOR Y CAJA (GR)	76
REGULADOR DE TEMPERATURA (TERMOSTATO) (*98-DEG C)	7C-3095	1	REGULADOR Y CAJA (GR)	76
*SEAL-LIP TYPE	3S-9643	1	REGULADOR Y CAJA (GR)	76
TAPA DEL RADIADOR (*7-PSI)	6L-8617	1	RADIADOR (GR)	85
		1	RADIADOR (GR)	86
SISTEMA DE FRENOS				
*CARTRIDGE AS-DESICCANT (SECADOR DE AIRE)	203-2389	1	DESHIDRATADOR (GR)	501
DESHIDRATADOR (GR) (SECADOR DE AIRE, 24 VOLTIOS)	203-2423	1	DESHIDRATADOR (GR)	501
FUSIBLE (10-AMPERIOS) (SECADOR DE AIRE)	9W-1442	1	DESHIDRATADOR (GR)	498

* NO HAY TRADUCCION DISPONIBLE EN EL MOMENTO DE LA IMPRESION

PIEZAS DE MANTENIMIENTO

DESCRIPCION	NUMERO DE PIEZA	CANT	SE UTILIZA EN	PAGINA
SISTEMA DE LUBRICACIÓN				
FILTRO DE ACEITE DEL MOTOR (CONJ)	1R-0716	1	FILTRO DE ACEITE DEL MOTOR (GR)	63
TAPA DEL TUBO DE LLENADO DE ACEITE (CONJ)	5L-2952	1	TUBO DE LLENADO DE ACEITE (GR)	62
SISTEMA ELÉCTRICO Y DE ARRANQUE				
BATERÍA (GR) (12 VOLTIOS)	153-5700	2	BATERÍA (GR)	138
BATERÍA (GR) (12 VOLTIOS) (*1100 AMPS)	153-5700	2	BATERÍA (GR)	136
BATERÍA (12 VOLTIOS) (HUMEDO)	153-5710	2	BATERÍA (GR)	137
BATERÍA (12-VOLTIOS, 750-AMPERIOS)	3T-5760	2	BATERÍA (GR)	139
CINTURON DE SEGURIDAD	215-6673	1	LÁMPARA DE BALIZA DE ADVERTENCIA (GR)	187
CONJUNTO DE DESTELLADOR (12/24 VOLTIOS) (*TURN SIGNAL, HAZARD)	108-0358	1	LUCES DE REFLECTOR (GR)	206
		1	LUCES DE REFLECTOR (GR)	209
		1	LUCES DE REFLECTOR (GR)	212
		1	LUCES DE REFLECTOR (GR)	215
		1	LUCES DE REFLECTOR (GR)	222
		1	LUCES DE REFLECTOR (GR)	225
		1	INTERRUPTOR DE LUZ (GR)	275
CONJUNTO DE ELEMENTO DE CALEFACCION (240 VOLTIOS, 1250 VATIOS)	154-2881	1	AGUA DE LAS CAMISAS - CALENTADOR DEL (GR)	162
CORREA-SERPENTIN (*ALTERNATOR WITHOUT A/C)	178-8481	1	CARGA - ALTERNADOR DE (GR)	134
CRISTAL	7T-0020	1	LÁMPARA DEL TECHO (GR)	165
CRISTAL (AMBAR, BALIZA DE ADVERTENCIA)	9X-8121	1	LÁMPARA DE BALIZA DE ADVERTENCIA (GR)	186
CRISTAL (AMBAR) (DE GIRO)	100-3250	1	LÁMPARA DE FARO DELANTERO (GR)	173
		1	LÁMPARA DE FARO DELANTERO (GR)	175
CRISTAL (AMBAR) (SEÑAL)	100-3250	1	LÁMPARA DE LUZ DELANTERA Y DE SEÑAL (GR)	177
		1	LÁMPARA DE LUZ DELANTERA Y DE SEÑAL (GR)	179
CRISTAL (PLACA DE REGISTRACIÓN)	134-6751	1	LAMPARA DE PLACA DE REGISTRO (GR)	182
DISYUNTOR (CONJ) (105 AMPERIOS) (ALTERNADOR)	171-2212	1	DISYUNTOR DE CIRCUITO (GR)	143
DISYUNTOR (CONJ) (15 AMPERIOS) (BARRA DE LUCES DE TRABAJO)	3T-2662	1	DISYUNTOR DE CIRCUITO (GR)	141
DISYUNTOR (CONJ) (15 AMPERIOS) (CONTROL DEL MOTOR)	6T-3643	1	CABLES POSTERIORES (GR)	311
DISYUNTOR (CONJ) (15 AMPERIOS) (FAROS)	3T-2662	1	DISYUNTOR DE CIRCUITO (GR)	141
		1	DISYUNTOR DE CIRCUITO (GR)	142
DISYUNTOR (CONJ) (80 AMPERIOS) (ALTERNADOR)	171-2210	1	CABLES POSTERIORES (GR)	310
DISYUNTOR (CONJ) (80 AMPERIOS) (PRINCIPAL)	171-2210	1	CABLES POSTERIORES (GR)	310

* NO HAY TRADUCCION DISPONIBLE EN EL MOMENTO DE LA IMPRESION

PIEZAS DE MANTENIMIENTO

DESCRIPCION	NUMERO DE PIEZA	CANT	SE UTILIZA EN	PAGINA
ELEMENTO DEL CALENTADOR DEL AGUA DE LAS CAMISAS (*120-VOLT, 1250-WATT)	131-8627	1	AGUA DE LAS CAMISAS - CALENTADOR DEL (GR)	161
FUSIBLE (*10-AMPERE) (HOJA/FARO DELANTERO)	9W-1442	2	LUCES DE REFLECTOR (GR)	201
FUSIBLE (10-AMPERIOS)	9W-1442	11	CABLES DE LA CONSOLA DE DIRECCIÓN (GR)	337
		12	CABLES DE LA CONSOLA DE DIRECCIÓN (GR)	340
		2	CABLES DE LA DIRECCIÓN SECUNDARIA	329
		1	INTERRUPTOR DE LUZ (GR)	275
		1	LUCES DE ADVERTENCIA (GR)	244
		1	LUCES DE REFLECTOR (GR)	206
		1	LUCES DE REFLECTOR (GR)	212
		1	LUCES DE REFLECTOR (GR)	215
		1	LUCES DE REFLECTOR (GR)	222
		1	LUCES DE REFLECTOR (GR)	225
		1	LUCES DE REFLECTOR (GR)	235
		1	LUCES DE REFLECTOR (GR)	237
	3K-8782	1	CABLES DE LA CABINA (GR)	291
	9W-1442	1	CABLES DE LA CABINA (GR)	287
		1	CABLES DE LA CABINA (GR)	289
FUSIBLE (10-AMPERIOS) (*AUXILIARY BACK-UP ALARM)	9W-1442	1	LUCES DE RETROCESO (GR)	193
FUSIBLE (10-AMPERIOS) (BALIZA GIRATORIA DE ADVERTENCIA)	9W-1442	1	LUCES DE ADVERTENCIA (GR)	245
		1	CABLES DE LA CABINA (GR)	284
FUSIBLE (10-AMPERIOS) (CONVERTIDOR)	9W-1442	1	CONVERTIDOR ELÉCTRICO (GR)	154
FUSIBLE (10-AMPERIOS) (LAMPARA DE RETROCESO)	9W-1442	1	LUCES DE RETROCESO (GR)	191
FUSIBLE (10-AMPERIOS) (LUCES DE TRABAJO)	9W-1442	2	LUCES DE REFLECTOR (GR)	204
		2	LUCES DE REFLECTOR (GR)	205
FUSIBLE (10-AMPERIOS) (LUZ DE LA HOJA)	9W-1442	2	LUCES DE REFLECTOR (GR)	202
FUSIBLE (10-AMPERIOS) (REFLECTORES DEL LADO DERECHO)	9W-1442	1	LUCES DE REFLECTOR (GR)	218
		1	LUCES DE REFLECTOR (GR)	220
FUSIBLE (10-AMPERIOS) (TRANSFORMADOR DE CORRIENTE)	9W-1442	1	CONVERTIDOR ELÉCTRICO (GR)	156
FUSIBLE (10-AMPERIOS) (*TURN SIGNAL, HAZARD)	9W-1442	1	LUCES DE REFLECTOR (GR)	209
FUSIBLE (15 AMPERIOS)	9W-1441	1	CABLES DE LA CONSOLA DE DIRECCIÓN (GR)	337
		1	CABLES DE LA CONSOLA DE DIRECCIÓN (GR)	340
		1	CABLES DE LA CABINA (GR)	282
		1	CABLES DE LA CABINA (GR)	285

* NO HAY TRADUCCION DISPONIBLE EN EL MOMENTO DE LA IMPRESION

PIEZAS DE MANTENIMIENTO

DESCRIPCION	NUMERO DE PIEZA	CANT	SE UTILIZA EN	PAGINA
FUSIBLE (15 AMPERIOS) (*CAB FLOOD LIGHTS)	9W-1441	1	LUCES DE REFLECTOR (GR)	204
		1	LUCES DE REFLECTOR (GR)	205
FUSIBLE (15 AMPERIOS) (TRANSFORMADOR DE CORRIENTE)	9W-1441	1	CONVERTIDOR ELÉCTRICO (GR)	155
FUSIBLE (30-AMPERIOS)	8T-9636	2	CONVERTIDOR ELÉCTRICO (GR)	157
INTERRUPTOR (CONJ) (*AUXILIARY BACKUP)	161-1418	1	LUCES DE RETROCESO (GR)	191
*LAMP-HALOGEN (*24-VOLT, 65-WATT) (LUZ BAJA)	9X-3463	1	LÁMPARA DE FARO DELANTERO (GR)	171
*LAMP-HALOGEN (*24-VOLT, 65-WATT) (REFLECTOR)	9X-3463	1	REFLECTOR (GR)	166
LÁMPARA (CONJ)	6C-0109	1	CABLES POSTERIORES (GR)	317
		1	CABLES POSTERIORES (GR)	320
	6C-0110	1	CABLES POSTERIORES (GR)	317
		1	CABLES POSTERIORES (GR)	320
LÁMPARA DEL TECHO (GR) (24 VOLTIOS, CON INTERRUPTOR)	3E-6389	1	CABLES DE LA CABINA (GR)	285
		1	CABLES DE LA CABINA (GR)	291
		1	CABLES DE LA CABINA (GR)	282
LAMPARA-LED (LED)	165-5674	1	LUCES DE ADVERTENCIA (GR)	247
		1	LUCES DE ADVERTENCIA (GR)	248
LÁMPARA (*24-VOLT) (CÚPULA)	7N-9943	1	LÁMPARA DEL TECHO (GR)	165
LÁMPARA (*24-VOLT) (DE GIRO)	100-3245	1	LÁMPARA DE FARO DELANTERO (GR)	173
		1	LÁMPARA DE FARO DELANTERO (GR)	175
LÁMPARA (*24-VOLT) (HOJA)(FARO DELANTERO)	3E-8825	2	LUCES DE REFLECTOR (GR)	201
LÁMPARA (*24-VOLT) (LUZ ALTA/BAJA)	9X-3465	1	LÁMPARA DE FARO DELANTERO (GR)	173
		1	LÁMPARA DE FARO DELANTERO (GR)	175
LÁMPARA (*24-VOLT) (POSICION)	100-3245	1	LÁMPARA DE FARO DELANTERO (GR)	173
		1	LÁMPARA DE FARO DELANTERO (GR)	175
LÁMPARA (*24-VOLT, 21-WATT) (DE GIRO)	9X-4493	1	LÁMPARA DE FARO DELANTERO (GR)	173
		1	LÁMPARA DE FARO DELANTERO (GR)	175
LÁMPARA (24 VOLTIOS)	3E-8825	1	BALIZA DE ADVERTENCIA (GR) - INSTALACIÓN	163
		2	INTERRUPTOR DE LUZ (GR)	275
		2	LUCES DE REFLECTOR (GR)	206
		2	LUCES DE REFLECTOR (GR)	212
		1	LUCES DE REFLECTOR (GR)	215
		1	LUCES DE REFLECTOR (GR)	222
		1	LUCES DE REFLECTOR (GR)	223
		1	LUCES DE REFLECTOR (GR)	225
	9X-3465	1	LÁMPARA DE LUZ DELANTERA Y DE SEÑAL (GR)	177
	100-3245	2	LÁMPARA DE LUZ DELANTERA Y DE SEÑAL (GR)	177
	3E-8825	1	AUXILIAR DE ARRANQUE CON ÉTER (GR)	268
		1	CABLES DE LA CABINA (GR)	287
		1	CABLES DE LA CABINA (GR)	289

* NO HAY TRADUCCION DISPONIBLE EN EL MOMENTO DE LA IMPRESION

PIEZAS DE MANTENIMIENTO

DESCRIPCION	NUMERO DE PIEZA	CANT	SE UTILIZA EN	PAGINA
		2	CABLES DE LA CONSOLA DE CAMBIOS (GR)	331
		2	CABLES DE LA CONSOLA DE CAMBIOS (GR)	333
		1	CABLES DE LA CONSOLA DE CAMBIOS (GR)	334
		1	CABLES DE LA CONSOLA DE DIRECCIÓN (GR)	337
		2	CABLES DE LA CONSOLA DE DIRECCIÓN (GR)	340
		2	CABLES DE LA DIRECCIÓN SECUNDARIA	329
		1	LUCES DE ADVERTENCIA (GR)	247
		1	LUCES DE ADVERTENCIA (GR)	248
		1	LUCES DE REFLECTOR (GR)	235
		1	LUCES DE REFLECTOR (GR)	237
		1	LUZ DE BALIZA (GR)	249
	7N-5876	1	CABLES DE LA CONSOLA DE CAMBIOS (GR)	331
		1	CABLES DE LA CONSOLA DE CAMBIOS (GR)	333
LÁMPARA (24 VOLTIOS) (*AUXILIARY BACK-UP ALARM)	3E-8825	1	LUCES DE RETROCESO (GR)	193
LÁMPARA (24 VOLTIOS) (DELANTERA)	9X-3465	1	LÁMPARA DE LUZ DELANTERA Y DE SEÑAL (GR)	179
LÁMPARA (24 VOLTIOS) (*HEADLIGHTS, TAIL LIGHTS)	3E-8825	2	LUCES DE REFLECTOR (GR)	209
LÁMPARA (24 VOLTIOS) (INTERRUPTOR DEL AMORTIGUADOR DE LA HOJA)	3E-8825	1	GRUPO DE CABLES, HOJA AMORTIGUADORA	280
LÁMPARA (24 VOLTIOS) (LUZ AUXILIAR DE RETROCESO)	3E-8825	2	LUCES DE RETROCESO (GR)	191
LÁMPARA (24 VOLTIOS) (LUZ DE LA HOJA)	3E-8825	2	LUCES DE REFLECTOR (GR)	202
LÁMPARA (24 VOLTIOS) (*NG)	3E-8825	2	CABLES DE LA CONSOLA DE CAMBIOS (GR)	334
LÁMPARA (24 VOLTIOS) (PLACA DE REGISTRACIÓN)	5C-9583	1	LAMPARA DE PLACA DE REGISTRO (GR)	182
LÁMPARA (24 VOLTIOS) (POSICIÓN DE LA CABINA)	9X-4494	1	LAMPARA MARCADORA (GR)	181
LÁMPARA (24 VOLTIOS) (REFLECTOR DE LA HOJA)	3E-8825	2	LUCES DE REFLECTOR (GR)	204
		2	LUCES DE REFLECTOR (GR)	205
LÁMPARA (24 VOLTIOS) (REFLECTORES DEL LADO DERECHO)	3E-8825	1	LUCES DE REFLECTOR (GR)	218
		1	LUCES DE REFLECTOR (GR)	220
LÁMPARA (24 VOLTIOS) (SEÑAL)	100-3245	2	LÁMPARA DE LUZ DELANTERA Y DE SEÑAL (GR)	179
LÁMPARA (24-VOLTIOS, 21 VATIOS)	5C-9584	2	CABLES POSTERIORES (GR)	317
		2	CABLES POSTERIORES (GR)	320

* NO HAY TRADUCCION DISPONIBLE EN EL MOMENTO DE LA IMPRESION

PIEZAS DE MANTENIMIENTO

DESCRIPCION	NUMERO DE PIEZA	CANT	SE UTILIZA EN	PAGINA
LÁMPARA (24-VOLTIOS, 21 VATIOS) (SEÑAL)	9X-4493	1	LÁMPARA DE LUZ DELANTERA Y DE SEÑAL (GR)	177
		1	LÁMPARA DE LUZ DELANTERA Y DE SEÑAL (GR)	179
LÁMPARA (24 VOLTIOS, 5 VATIOS)	4V-8116	1	CABLES POSTERIORES (GR)	317
		1	CABLES POSTERIORES (GR)	320
LÁMPARA (24-VOLTIOS, 70-VATIOS)	9X-7849	1	LÁMPARA DE BALIZA DE ADVERTENCIA (GR)	187
LÁMPARA (24-VOLTIOS, 70-VATIOS) (BALIZA GIRATORIA DE ADVERTENCIA)	9X-7849	1	LÁMPARA DE BALIZA DE ADVERTENCIA (GR)	186
LENTE AMBAR (BALIZA GIRATORIA DE ADVERTENCIA)	215-6672	1	LÁMPARA DE BALIZA DE ADVERTENCIA (GR)	187
LLAVE (DESCONECTAR BATERIA)	8H-5306	1	DISYUNTOR (GR)	274
LUCES DE ALÓGENO (24 VOLTIOS, 65 VATIOS)	9X-3463	1	REFLECTOR (GR)	168
LUCES DE ALÓGENO (24 VOLTIOS, 65 VATIOS) (HOJA)	9X-3463	1	REFLECTOR (GR)	170
LUCES DE ALÓGENO (24 VOLTIOS, 65 VATIOS) (LUZ BAJA)	9X-3463	1	LUCES DE REFLECTOR (GR)	197
LUCES DE ALÓGENO (24 VOLTIOS, 65 VATIOS) (REFLECTOR)	9X-3463	1	REFLECTOR (GR)	167
		1	REFLECTOR (GR)	169
LUCES DE ALÓGENO (24 VOLTIOS, 65 VATIOS) (VIGA ALTA)	9X-3463	1	LUCES DE REFLECTOR (GR)	197
		1	LÁMPARA DE FARO DELANTERO (GR)	172
MANDO DE CORREA (BALIZA DE ADVERTENCIA)	9X-8139	1	LÁMPARA DE BALIZA DE ADVERTENCIA (GR)	186
PORTAESCOBILLAS (CONJ)	7T-3278	1	MOTOR DE ARRANQUE ELÉCTRICO (GR)	270
VIDRIO (CONJ) (AMBAR) (DE GIRO)	136-3848	1	LÁMPARA DE FARO DELANTERO (GR)	173
		1	LÁMPARA DE FARO DELANTERO (GR)	175
VIDRIO (CONJ) (AMBAR) (SEÑAL)	136-3848	1	LÁMPARA DE LUZ DELANTERA Y DE SEÑAL (GR)	177
		1	LÁMPARA DE LUZ DELANTERA Y DE SEÑAL (GR)	179
VIDRIO (CONJ) (FARO DELANTERO)	100-3248	1	LÁMPARA DE LUZ DELANTERA Y DE SEÑAL (GR)	177
		1	LÁMPARA DE LUZ DELANTERA Y DE SEÑAL (GR)	179
VIDRIO (CONJ) (*HEAD)	100-3249	1	LÁMPARA DE FARO DELANTERO (GR)	173
		1	LÁMPARA DE FARO DELANTERO (GR)	175
VIDRIO (CONJ) (LAMPARA-LUZ BAJA)	162-2077	1	LÁMPARA DE FARO DELANTERO (GR)	171
VIDRIO (CONJ) (LUZ BAJA)	162-2077	1	LUCES DE REFLECTOR (GR)	197
VIDRIO (CONJ) (REFLECTOR)	202-6611	1	REFLECTOR (GR)	168
		1	REFLECTOR (GR)	170
	202-6614	1	REFLECTOR (GR)	167
		1	REFLECTOR (GR)	169

* NO HAY TRADUCCION DISPONIBLE EN EL MOMENTO DE LA IMPRESION

PIEZAS DE MANTENIMIENTO

DESCRIPCION	NUMERO DE PIEZA	CANT	SE UTILIZA EN	PAGINA
SISTEMA HIDRÁULICO				
COLADOR (*FILLER) (TANQUE DE ACEITE HIDRÁULICO)	9J-3047	1	TANQUE Y FILTRO HIDRÁULICOS (GR)	612
CONEXIÓN DE ENGRASE (RECEPTACULO DE CILINDRO DE DESPLAZADOR CENTRAL)	3B-8485	2	CILINDRO DE DESPLAZAMIENTO DEL CÍRCULO Y MONTAJE (GR)	534
ELEMENTO DE FILTRO DE ACEITE (CONJ) (HIDRAULICO) (EFICIENCIA ESTANDAR)	1R-0774	1	TANQUE Y FILTRO HIDRÁULICOS (GR)	612
*PADLOCK GP	5P-8502	1	TANQUE HIDRÁULICO Y MONTAJE (GR)	614
TAPA CONTRA EL POLVO (ACEITE HIDRÁULICO)	8C-3451	1	TUBERÍAS DE DIRECCIÓN (GR)	592
TAPA DEL TUBO DE LLENADO (TANQUE DE ACEITE HIDRÁULICO)	7H-1447	1	TANQUE Y FILTRO HIDRÁULICOS (GR)	612
TREN DE FUERZA				
*BREATHER AS (TUBO DE LLENADO DE TREN DE FUERZA)	9G-5127	1	TUBO DE LLENADO DE ACEITE DE LA TRANSMISIÓN (GR)	375
ELEMENTO DE FILTRO DE ACEITE (CONJ) (ALTA EFICIENCIA) (TRANSMISION)	132-8875	1	FILTRO DE ACEITE (GR)	378
		1	TUBERÍAS DE ACEITE DE LA TRANSMISIÓN (GR)	381
FILTRO MAGNÉTICO (ACEITE DE LA TRANSMISIÓN)	8S-9129	1	CAJA Y PIEZAS DE LA TRANSMISIÓN (GR)	346
FILTRO MAGNÉTICO (TRANSMISION)	8S-9129	1	REJILLA MAGNÉTICA (GR)	388
LÁMPARA (*24-VOLT) (CAMBIO AUTOMÁTICO)	3E-8825	1	CAMBIO AUTOMÁTICO DE VELOCIDADES (CONFIG)	345
REJILLA DE SUCCIÓN (TRANSMISION)	8S-9130	1	CAJA Y PIEZAS DE LA TRANSMISIÓN (GR)	346
		1	REJILLA MAGNÉTICA (GR)	388
REJILLA (VALVULA DE CONTROL DE TRANSMISION)	6I-9395	1	VÁLVULA DE CONTROL DE LA TRANSMISIÓN (GR)	404
RESPIRADERO (CONJ) (TANDEM)	1F-8488	2	TÁNDEM Y CUBIERTA (GR)	391
TAPA (VASTAGO)	9K-7951	1	RUEDA Y NEUMÁTICO (GR)	446

* NO HAY TRADUCCION DISPONIBLE EN EL MOMENTO DE LA IMPRESION

PEÇAS DE MANUTENÇÃO

DESCRIÇÃO	NÚMERO DE PEÇA	QUANT	UTILIZADA EM	PÁGINA
CHASSI E CARROCERIA				
BATERIA	188-3951	1	SUPORTE - CHASSI TRASEIRO	495
BUJÃO MAGNÉTICO (CAIXA DE DRENAGEM)	8M-3837	1	CAIXA E CHASSI	458
EQUIPAMENTOS DE SERVIÇO E SUPRIMENTOS				
CADEADO (CAIXA DE FERRAMENTAS)	5P-8502	1	*BOX GP-TOOL	995
ESTAÇÃO DO OPERADOR				
ACUMULADOR	197-6218	1	TUBOS - AR CONDICIONADO	898
CADEADO	5P-8502	1	CONVERSÃO PARA ESTRUTURA NÃO ROPS	834
	246-2641	1	CABINE	825
CADEADO (ROPS)	5P-8502	1	ESTRUTURA ROPS ABERTA	934
CORREIA- SERPENTINA (ALTERNADOR E CONDICIONADOR DE AR)	174-9690	1	CONDICIONADOR DE AR	818
FILTRO - AR (CABINE)	7T-7358	1	FILTRO - AR DA CABINE	858
	231-4486	1	FILTRO - AR DA CABINE	858
	232-1732	1	FILTRO - AR DA CABINE	858
FUSÍVEL (*10-AMPERE) (DESCONGELADOR DIANTEIRO)	9W-1442	1	VENTILADOR DE CIRCULAÇÃO DE AR DA CABINE	856
FUSÍVEL (*10-AMPERE) (DESCONGELADOR TRASEIRO)	9W-1442	1	VENTILADOR DE CIRCULAÇÃO DE AR DA CABINE	857
FUSÍVEL (10 AMPERES) (AQUECIMENTO DOS ESPELHOS)	9W-1442	1	ESPELHO RETROVISOR	906
		1	ESPELHO RETROVISOR	910
FUSÍVEL (10 AMPERES) (LIMPADOR)	9W-1442	1	LIMPADOR DO VIDRO	983
		1	LIMPADOR DO VIDRO	985
		1	LIMPADOR DO VIDRO	987
		1	LIMPADOR DO VIDRO	989
FUSÍVEL (15 A) (AQUECEDOR)	9W-1441	1	AQUECEDOR DA CABINE E MONTAGEM	861
FUSÍVEL (15 A) (AR CONDICIONADO)	9W-1441	1	CONDICIONADOR DE AR E MONTAGEM	818
LÂMINA DO LIMPADOR DE PÁRA-BRISA	6V-5853	1	LIMPADOR DO VIDRO	992
		1	LIMPADOR DO VIDRO	993
		1	LIMPADOR DO VIDRO	994
	6V-8255	2	VIDRO	964
LÂMINA DO LIMPADOR DE PÁRA-BRISA (ALTO PERFIL DIANTEIRO SUPERIOR)	6V-5853	1	LIMPADOR DO VIDRO	979
		1	LIMPADOR DO VIDRO	981
LÂMINA DO LIMPADOR DE PÁRA-BRISA (DIANTEIRO SUPERIOR)	6V-5853	1	LIMPADOR DO VIDRO	977
LÂMINA DO LIMPADOR DE PÁRA-BRISA (INFERIOR DIANTEIRO)	123-4355	2	LIMPADOR DO VIDRO	975
		2	LIMPADOR DO VIDRO	977
LÂMINA DO LIMPADOR DE PÁRA-BRISA (PERFIL ALTO - INFERIOR DIANTEIRO)	123-4355	2	LIMPADOR DO VIDRO	979
		2	LIMPADOR DO VIDRO	981

* TRADUÇÃO NÃO DISPONÍVEL NO MOMENTO DA IMPRESSÃO

PEÇAS DE MANUTENÇÃO

DESCRIÇÃO	NÚMERO DE PEÇA	QUANT	UTILIZADA EM	PÁGINA
LÂMINA DO LIMPADOR DE PÁRA-BRISA (PERFIL ALTO - TRASEIRO)	6V-5853	1	LIMPADOR DO VIDRO	987
LÂMINA DO LIMPADOR DE PÁRA-BRISA (PERFIL BAIXO - DIANTEIRO SUPERIOR)	6V-5853	1	LIMPADOR DO VIDRO	975
LÂMINA DO LIMPADOR DE PÁRA-BRISA (PERFIL BAIXO - TRASEIRO)	6V-5849	1	LIMPADOR DO VIDRO	983
		1	LIMPADOR DO VIDRO	985
LÂMINA DO LIMPADOR DE PÁRA-BRISA (TRASEIRO)	6V-5853	1	LIMPADOR DO VIDRO	989
LÂMPADA (*24-VOLT) (DESCONGELADOR DIANTEIRO)	3E-8825	1	VENTILADOR DE CIRCULAÇÃO DE AR DA CABINE	856
LÂMPADA (*24-VOLT) (DESCONGELADOR TRASEIRO)	3E-8825	1	VENTILADOR DE CIRCULAÇÃO DE AR DA CABINE	857
LÂMPADA (24 VOLTS)	7N-5876	2	MÓDULO - VELOCÍMETRO E TACÔMETRO	913
	8D-1429	1	AQUECEDOR DA CABINE	863
		1	CONDICIONADOR DE AR	819
LÂMPADA (24 VOLTS) (AÇÃO)	107-1983	1	PAINEL DE INSTRUMENTOS	929
LÂMPADA (24 VOLTS) (AQUECIMENTO DOS ESPELHOS)	3E-8825	1	ESPELHO RETROVISOR	906
		1	ESPELHO RETROVISOR	910
LÂMPADA (24 VOLTS) (GRUPO DE QUATRO MEDIDORES)	7N-5876	2	PAINEL DE INSTRUMENTOS	927
LÂMPADA (24 VOLTS) (INDICADOR DA AÇÃO PRINCIPAL DO EMS)	107-1983	1	PAINEL DE INSTRUMENTOS	925
LÂMPADA (24 VOLTS) (INDICADOR DE AÇÃO MESTRE)	107-1983	1	PAINEL DE INSTRUMENTOS	927
LÂMPADA (24 VOLTS) (INDICDOR DA PRESSÃO DO AR)	7N-5876	2	PAINEL DE INSTRUMENTOS	927
		2	PAINEL DE INSTRUMENTOS	925
		2	PAINEL DE INSTRUMENTOS	929
LÂMPADA (24 VOLTS) (MÓDULO DE QUATRO MEDIDORES)	7N-5876	2	PAINEL DE INSTRUMENTOS	925
		4	PAINEL DE INSTRUMENTOS	929
LÂMPADA (24 VOLTS) (TRAVA DO DIFERENCIAL)	110-2079	1	PAINEL DE INSTRUMENTOS	925
		1	PAINEL DE INSTRUMENTOS	927
LÂMPADA (24 VOLTS) (VELOCIDADE DO VENTILADOR, TEMPERATURA)	8D-1429	1	AQUECEDOR DA CABINE	867
LÂMPADA (24 VOLTS, 3 WATTS) (LUZ INDICADORA)	115-1748	11	PAINEL DE INSTRUMENTOS	929
LÂMPADA (24 VOLTS, 3 WATTS) (PAINEL DE INSTRUMENTOS)	115-1748	9	PAINEL DE INSTRUMENTOS	925
		9	PAINEL DE INSTRUMENTOS	927
RECEPTOR-SECADOR	3E-3535	1	TUBOS - AR CONDICIONADO	898

* TRADUÇÃO NÃO DISPONÍVEL NO MOMENTO DA IMPRESSÃO

PEÇAS DE MANUTENÇÃO

DESCRIÇÃO	NÚMERO DE PEÇA	QUANT	UTILIZADA EM	PÁGINA
MOTOR BÁSICO				
*GASKET	9Y-1758	1	MECANISMO DAS VÁLVULAS	58
	109-5309	1	MECANISMO DAS VÁLVULAS	58
MANGUEIRA - ELIMINAÇÃO DE VAPORES	126-0146	1	COMPRESSOR DE AR	12
		1	COMPRESSOR DE AR	14
RESPIRO	9Y-4357	1	MECANISMO DAS VÁLVULAS	58
SISTEMA DE ADMISSÃO DE AR E DE ESCAPE				
ELEMENTO - PRIMÁRIO	6I-0273	1	PURIFICADOR DE AR	90
ELEMENTO - SECUNDÁRIO	6I-0274	1	PURIFICADOR DE AR	90
SISTEMA DE ARREFECIMENTO				
JUNTA	7E-7912	1	TERMOSTATO / REGULADOR DE TEMPERATURA	76
REGULADOR DE TEMPERATURA/TERMOSTATO (*98-DEG C)	7C-3095	1	TERMOSTATO / REGULADOR DE TEMPERATURA	76
*SEAL-LIP TYPE	3S-9643	1	TERMOSTATO / REGULADOR DE TEMPERATURA	76
TAMPA - RADIADOR (*7-PSI)	6L-8617	1	RADIADOR	85
		1	RADIADOR	86
SISTEMA DE COMBUSTÍVEL				
ELEMENTO - FILTRANTE (SEPARADOR DE ÁGUA E COMBUSTÍVEL) (PRIMÁRIO)	133-5673	1	FILTRO DE COMBUSTÍVEL E SEPARADOR DE ÁGUA	104
FILTRO - COMBUSTÍVEL	1R-0762	1	FILTRO - COMBUSTÍVEL	103
	199-9907	1	TANQUE DE COMBUSTÍVEL	119
		1	TANQUE DE COMBUSTÍVEL	121
JUNTA	9R-7240	1	TANQUE DE COMBUSTÍVEL	117
		1	TANQUE DE COMBUSTÍVEL	118
TAMPA - BOCAL DE ENCHIMENTO DE COMBUSTÍVEL (SERVIÇO PESADO, TRAVÁVEL)	164-4858	1	TANQUE DE COMBUSTÍVEL	119
		1	TANQUE DE COMBUSTÍVEL	121
SISTEMA DE FREIO				
*CARTRIDGE AS-DESICCANT (SECADOR A AR)	203-2389	1	SECADOR DE AR	501
FUSÍVEL (10 AMPERES) (SECADOR A AR)	9W-1442	1	SECADOR DE AR	498
SECADOR DE AR (SECADOR DE AR)(24 VOLTS)	203-2423	1	SECADOR DE AR	501
SISTEMA DE LUBRIFICAÇÃO				
FILTRO - ÓLEO DO MOTOR	1R-0716	1	FILTRO - ÓLEO DO MOTOR	63
TAMPA - BOCAL DE ENCHIMENTO DE ÓLEO	5L-2952	1	BOCAL DE ENCHIMENTO DE ÓLEO DO MOTOR	62
SISTEMA ELÉTRICO E DE PARTIDA				
BATERIA (12-VOLTS)	153-5700	2	BATERIA	138

* TRADUÇÃO NÃO DISPONÍVEL NO MOMENTO DA IMPRESSÃO

PEÇAS DE MANUTENÇÃO

DESCRIÇÃO	NÚMERO DE PEÇA	QUANT	UTILIZADA EM	PÁGINA
BATERIA (12-VOLTS) (MOLHADO)	153-5710	2	BATERIA	137
BATERIA (12-VOLTS) (1.100 AMPS)	153-5700	2	BATERIA	136
BATERIA (12 VOLTS, 750 AMPERES)	3T-5760	2	BATERIA	139
CHAVE (DESCONECTAR A BATERIA)	8H-5306	1	CHAVE GERAL	274
CORREIA	215-6673	1	LUZ GIRATÓRIA DE ALARME	187
CORREIA- SERPENTINA (ALTERNADOR SEM CONDICIONADOR DE AR)	178-8481	1	ALTERNADOR DE CORRENTE	134
CORREIA DE COMANDO (PISCA-ALERTA)	9X-8139	1	LUZ GIRATÓRIA DE ALARME	186
DISJUNTOR AUTOMÁTICO DE CIRCUITO (105 AMPERES) (ALTERNADOR)	171-2212	1	INTERRUPTOR - CIRCUITO	143
DISJUNTOR AUTOMÁTICO DE CIRCUITO (15 AMPERES) (CONTROLE DO MOTOR)	6T-3643	1	CABOS/FIOS ELÉTRICOS - TRASEIROS	311
DISJUNTOR AUTOMÁTICO DE CIRCUITO (15 AMPERES) (FARÓIS)	3T-2662	1	INTERRUPTOR - CIRCUITO	141
		1	INTERRUPTOR - CIRCUITO	142
DISJUNTOR AUTOMÁTICO DE CIRCUITO (15 AMPERES) (LÂMPADAS DE TRABALHO - BARRA)	3T-2662	1	INTERRUPTOR - CIRCUITO	141
DISJUNTOR AUTOMÁTICO DE CIRCUITO (80 AMPERES) (ALTERNADOR)	171-2210	1	CABOS/FIOS ELÉTRICOS - TRASEIROS	310
DISJUNTOR AUTOMÁTICO DE CIRCUITO (80 AMPERES) (PRINCIPAL)	171-2210	1	CABOS/FIOS ELÉTRICOS - TRASEIROS	310
ELEMENTO - AQUECEDOR DE ÁGUA DA CAMISA (*120-VOLT, 1250-WATT)	131-8627	1	AQUECEDOR DA ÁGUA DO MOTOR	161
ELEMENTO - AQUECEDOR (240 VOLTS, 1250 WATTS)	154-2881	1	AQUECEDOR DA ÁGUA DO MOTOR	162
FUSÍVEL (*10-AMPERE) (FAROL DA LÂMINA - DIANTEIRO)	9W-1442	2	SISTEMA DE ILUMINAÇÃO - FARÓIS	201
FUSÍVEL (10 AMPERES)	3K-8782	1	CABOS/FIOS ELÉTRICOS - CABINE	291
	9W-1442	1	CABOS/FIOS ELÉTRICOS - CABINE	287
		1	CABOS/FIOS ELÉTRICOS - CABINE	289
		2	CABOS/FIOS ELÉTRICOS - DIREÇÃO SECUNDÁRIA	329
		1	INTERRUPTOR - LUZES	275
		11	CABOS/FIOS ELÉTRICOS - CONSOLE DA DIREÇÃO	337
		12	CABOS/FIOS ELÉTRICOS - CONSOLE DA DIREÇÃO	340
		1	SISTEMA DE ILUMINAÇÃO - FARÓIS	206
		1	SISTEMA DE ILUMINAÇÃO - FARÓIS	212
		1	SISTEMA DE ILUMINAÇÃO - FARÓIS	222
		1	SISTEMA DE ILUMINAÇÃO - ADVERTÊNCIA	244
		1	SISTEMA DE ILUMINAÇÃO - FARÓIS	215
		1	SISTEMA DE ILUMINAÇÃO - FARÓIS	225
		1	SISTEMA DE ILUMINAÇÃO - FARÓIS	235
		1	SISTEMA DE ILUMINAÇÃO - FARÓIS	237

* TRADUÇÃO NÃO DISPONÍVEL NO MOMENTO DA IMPRESSÃO

PEÇAS DE MANUTENÇÃO

DESCRIÇÃO	NÚMERO DE PEÇA	QUANT	UTILIZADA EM	PÁGINA
FUSÍVEL (10 AMPERES) (*AUXILIARY BACK-UP ALARM)	9W-1442	1	ILUMINAÇÃO - MARCHA A RÉ	193
FUSÍVEL (10 AMPERES) (CONVERSOR)	9W-1442	1	CONVERSOR ELÉTRICO	154
FUSÍVEL (10 AMPERES) (CONVERSOR DE ENERGIA)	9W-1442	1	CONVERSOR ELÉTRICO	156
FUSÍVEL (10 AMPERES) (FAROL DO LADO DIREITO)	9W-1442	1	SISTEMA DE ILUMINAÇÃO - FARÓIS	220
		1	SISTEMA DE ILUMINAÇÃO - FARÓIS	218
FUSÍVEL (10 AMPERES) (LÂMPADA DA LÂMINA)	9W-1442	2	SISTEMA DE ILUMINAÇÃO - FARÓIS	202
FUSÍVEL (10 AMPERES) (LUZ DE MARCHA À RÉ)	9W-1442	1	ILUMINAÇÃO - MARCHA A RÉ	191
FUSÍVEL (10 AMPERES) (LUZES DE TRABALHO)	9W-1442	2	SISTEMA DE ILUMINAÇÃO - FARÓIS	204
		2	SISTEMA DE ILUMINAÇÃO - FARÓIS	205
FUSÍVEL (10 AMPERES) (PISCA-PISCA DE ADVERTÊNCIA)	9W-1442	1	CABOS/FIOS ELÉTRICOS - CABINE	284
		1	SISTEMA DE ILUMINAÇÃO - ADVERTÊNCIA	245
FUSÍVEL (10 AMPERES) (PISCA-PISCA, PISCA-ALERTA)	9W-1442	1	SISTEMA DE ILUMINAÇÃO - FARÓIS	209
FUSÍVEL (15 AMPERES)	9W-1441	1	CABOS/FIOS ELÉTRICOS - CABINE	282
		1	CABOS/FIOS ELÉTRICOS - CABINE	285
		1	CABOS/FIOS ELÉTRICOS - CONSOLE DA DIREÇÃO	337
		1	CABOS/FIOS ELÉTRICOS - CONSOLE DA DIREÇÃO	340
FUSÍVEL (15 AMPERES) (CONVERSOR - FORÇA)	9W-1441	1	CONVERSOR ELÉTRICO	155
FUSÍVEL (15 AMPERES) (HOLOFOTES - CABINE)	9W-1441	1	SISTEMA DE ILUMINAÇÃO - FARÓIS	204
		1	SISTEMA DE ILUMINAÇÃO - FARÓIS	205
FUSÍVEL (30 AMPERES)	8T-9636	2	CONVERSOR ELÉTRICO	157
INTERRUPTOR (*AUXILIARY BACKUP)	161-1418	1	ILUMINAÇÃO - MARCHA A RÉ	191
*LAMP-HALOGEN (*24-VOLT, 65-WATT) (FAROL)	9X-3463	1	LÂMPADA - FAROL	166
*LAMP-HALOGEN (*24-VOLT, 65-WATT) (FAROL BAIXO)	9X-3463	1	FAROL DIANTEIRO	171
LÂMPADA	6C-0109	1	CABOS/FIOS ELÉTRICOS - TRASEIROS	317
		1	CABOS/FIOS ELÉTRICOS - TRASEIROS	320
	6C-0110	1	CABOS/FIOS ELÉTRICOS - TRASEIROS	317
		1	CABOS/FIOS ELÉTRICOS - TRASEIROS	320
LÂMPADA - HALOGÊNEO (24 VOLTS, 65 WATTS)	9X-3463	1	LÂMPADA - FAROL	168
LÂMPADA - HALOGÊNEO (24 VOLTS, 65 WATTS) (FAROL)	9X-3463	1	LÂMPADA - FAROL	167
		1	LÂMPADA - FAROL	169

* TRADUÇÃO NÃO DISPONÍVEL NO MOMENTO DA IMPRESSÃO

PEÇAS DE MANUTENÇÃO

DESCRIÇÃO	NÚMERO DE PEÇA	QUANT	UTILIZADA EM	PÁGINA
LÂMPADA - HALOGÊNEO (24 VOLTS, 65 WATTS) (FAROL BAIXO)	9X-3463	1	SISTEMA DE ILUMINAÇÃO - FARÓIS	197
LÂMPADA - HALOGÊNEO (24 VOLTS, 65 WATTS) (LÂMINA)	9X-3463	1	LÂMPADA - FAROL	170
LÂMPADA - HALOGÊNEO (24 VOLTS, 65 WATTS) (LUZ ALTA)	9X-3463	1	FAROL DIANTEIRO	172
		1	SISTEMA DE ILUMINAÇÃO - FARÓIS	197
LÂMPADA - LED (VISOR LED)	165-5674	1	SISTEMA DE ILUMINAÇÃO - ADVERTÊNCIA	247
		1	SISTEMA DE ILUMINAÇÃO - ADVERTÊNCIA	248
LÂMPADA - TETO (24 VOLTS, COM INTERRUPTOR)	3E-6389	1	CABOS/FIOS ELÉTRICOS - CABINE	282
		1	CABOS/FIOS ELÉTRICOS - CABINE	285
		1	CABOS/FIOS ELÉTRICOS - CABINE	291
LÂMPADA (24 V) (PLACA DE REGISTRO)	5C-9583	1	LAMPADA-PLACA DE REGISTRO	182
LÂMPADA (24 V) (POSIÇÃO DA CABINE)	9X-4494	1	LÂMPADA - MARCADORA	181
LÂMPADA (*24-VOLT) (LÂMINA)(LÂMPADA DIANTEIRA)	3E-8825	2	SISTEMA DE ILUMINAÇÃO - FARÓIS	201
LÂMPADA (*24-VOLT) (LUZ ALTA/BAIXA)	9X-3465	1	FAROL DIANTEIRO	173
		1	FAROL DIANTEIRO	175
LÂMPADA (*24-VOLT) (POSIÇÃO)	100-3245	1	FAROL DIANTEIRO	173
		1	FAROL DIANTEIRO	175
LÂMPADA (*24-VOLT) (TETO)	7N-9943	1	LÂMPADA - TETO	165
LÂMPADA (*24-VOLT) (VIRADA)	100-3245	1	FAROL DIANTEIRO	173
		1	FAROL DIANTEIRO	175
LÂMPADA (*24-VOLT, 21-WATT) (VIRADA)	9X-4493	1	FAROL DIANTEIRO	173
		1	FAROL DIANTEIRO	175
LÂMPADA (24 VOLTS)	3E-8825	1	AUXILIAR DE PARTIDA A ÉTER	268
		1	CABOS/FIOS ELÉTRICOS - CABINE	287
		1	CABOS/FIOS ELÉTRICOS - CABINE	289
		2	CABOS/FIOS ELÉTRICOS - CONSOLE DA DIREÇÃO	337
		2	CABOS/FIOS ELÉTRICOS - CONSOLE DA DIREÇÃO	340
		1	CABOS/FIOS ELÉTRICOS - CONSOLE DA TRANSMISSÃO	331
		2	CABOS/FIOS ELÉTRICOS - CONSOLE DA TRANSMISSÃO	333
		1	CABOS/FIOS ELÉTRICOS - CONSOLE DA TRANSMISSÃO	334
		2	CABOS/FIOS ELÉTRICOS - DIREÇÃO SECUNDÁRIA	329
		1	INSTALAÇÃO DO PISCA-PISCA DE ADVERTÊNCIA	163
		2	INTERRUPTOR - LUZES	275
		1	SIST. DE ILUMINAÇÃO - PISCA-PISCA GIRATÓRIO DE ADVERTÊNCIA	249
		1	SISTEMA DE ILUMINAÇÃO - ADVERTÊNCIA	247

* TRADUÇÃO NÃO DISPONÍVEL NO MOMENTO DA IMPRESSÃO

PEÇAS DE MANUTENÇÃO

DESCRIÇÃO	NÚMERO DE PEÇA	QUANT	UTILIZADA EM	PÁGINA
		1	SISTEMA DE ILUMINAÇÃO - ADVERTÊNCIA	248
		2	SISTEMA DE ILUMINAÇÃO - FARÓIS	206
		1	SISTEMA DE ILUMINAÇÃO - FARÓIS	212
		1	SISTEMA DE ILUMINAÇÃO - FARÓIS	215
		1	SISTEMA DE ILUMINAÇÃO - FARÓIS	222
		1	SISTEMA DE ILUMINAÇÃO - FARÓIS	223
		1	SISTEMA DE ILUMINAÇÃO - FARÓIS	225
		1	SISTEMA DE ILUMINAÇÃO - FARÓIS	235
		1	SISTEMA DE ILUMINAÇÃO - FARÓIS	237
	7N-5876	1	CABOS/FIOS ELÉTRICOS - CONSOLE DA TRANSMISSÃO	331
		1	CABOS/FIOS ELÉTRICOS - CONSOLE DA TRANSMISSÃO	333
	9X-3465	1	LÂMPADA DIANTEIRA E DE SINAL	177
	100-3245	2	LÂMPADA DIANTEIRA E DE SINAL	177
LÂMPADA (24 VOLTS) (*AUXILIARY BACK-UP ALARM)	3E-8825	1	ILUMINAÇÃO - MARCHA A RÉ	193
LÂMPADA (24 VOLTS) (CABEÇA)	9X-3465	1	LÂMPADA DIANTEIRA E DE SINAL	179
LÂMPADA (24 VOLTS) (FARÓIS DIANTEIROS, LUZES TRASEIRAS)	3E-8825	2	SISTEMA DE ILUMINAÇÃO - FARÓIS	209
LÂMPADA (24 VOLTS) (FAROL DA LÂMINA)	3E-8825	2	SISTEMA DE ILUMINAÇÃO - FARÓIS	204
		2	SISTEMA DE ILUMINAÇÃO - FARÓIS	205
LÂMPADA (24 VOLTS) (FAROL DO LADO DIREITO)	3E-8825	1	SISTEMA DE ILUMINAÇÃO - FARÓIS	218
		1	SISTEMA DE ILUMINAÇÃO - FARÓIS	220
LÂMPADA (24 VOLTS) (INTERRUPTOR DO AMORTECEDOR DA LÂMINA)	3E-8825	1	FIAÇÃO - AMORTECEDOR DA LÂMINA	280
LÂMPADA (24 VOLTS) (LÂMPADA DA LÂMINA)	3E-8825	2	SISTEMA DE ILUMINAÇÃO - FARÓIS	202
LÂMPADA (24 VOLTS) (LÂMPADA DE MARCHA À RÉ AUXILIAR)	3E-8825	2	ILUMINAÇÃO - MARCHA A RÉ	191
LÂMPADA (24 VOLTS) (*NG)	3E-8825	2	CABOS/FIOS ELÉTRICOS - CONSOLE DA TRANSMISSÃO	334
LÂMPADA (24 VOLTS) (SINAL)	100-3245	2	LÂMPADA DIANTEIRA E DE SINAL	179
LÂMPADA (24 VOLTS, 21 WATTS)	5C-9584	2	CABOS/FIOS ELÉTRICOS - TRASEIROS	317
		2	CABOS/FIOS ELÉTRICOS - TRASEIROS	320
LÂMPADA (24 VOLTS, 21 WATTS) (SINAL)	9X-4493	1	LÂMPADA DIANTEIRA E DE SINAL	177
		1	LÂMPADA DIANTEIRA E DE SINAL	179
LÂMPADA (24 VOLTS, 5 WATTS)	4V-8116	1	CABOS/FIOS ELÉTRICOS - TRASEIROS	317
		1	CABOS/FIOS ELÉTRICOS - TRASEIROS	317
		1	CABOS/FIOS ELÉTRICOS - TRASEIROS	320
LÂMPADA (24 VOLTS, 70 WATTS)	9X-7849	1	LUZ GIRATÓRIA DE ALARME	187
LÂMPADA (24 VOLTS, 70 WATTS) (PISCA-PISCA DE ADVERTÊNCIA)	9X-7849	1	LUZ GIRATÓRIA DE ALARME	186

* TRADUÇÃO NÃO DISPONÍVEL NO MOMENTO DA IMPRESSÃO

PEÇAS DE MANUTENÇÃO

DESCRIÇÃO	NÚMERO DE PEÇA	QUANT	UTILIZADA EM	PÁGINA
LENTE	7T-0020	1	LÂMPADA - TETO	165
LENTE (ÂMBAR, PISCA-ALERTA)	9X-8121	1	LUZ GIRATÓRIA DE ALARME	186
LENTE ÂMBAR (PISCA-PISCA DE ADVERTÊNCIA)	215-6672	1	LUZ GIRATÓRIA DE ALARME	187
LENTE (ÂMBER) (SINAL)	100-3250	1	LÂMPADA DIANTEIRA E DE SINAL	177
		1	LÂMPADA DIANTEIRA E DE SINAL	179
	136-3848	1	LÂMPADA DIANTEIRA E DE SINAL	179
		1	LÂMPADA DIANTEIRA E DE SINAL	177
LENTE (ÂMBER) (VIRADA)	136-3848	1	FAROL DIANTEIRO	173
		1	FAROL DIANTEIRO	175
	100-3250	1	FAROL DIANTEIRO	173
		1	FAROL DIANTEIRO	175
LENTE (FAROL BAIXO)	162-2077	1	SISTEMA DE ILUMINAÇÃO - FARÓIS	197
LENTE (FAROL) (FAIXA BAIXA)	162-2077	1	FAROL DIANTEIRO	171
LENTE (*HEAD)	100-3249	1	FAROL DIANTEIRO	173
		1	FAROL DIANTEIRO	175
LENTE (HOLOFOTE)	202-6611	1	LÂMPADA - FAROL	168
		1	LÂMPADA - FAROL	170
	202-6614	1	LÂMPADA - FAROL	167
		1	LÂMPADA - FAROL	169
LENTE (LUZES DIANTEIRAS)	100-3248	1	LÂMPADA DIANTEIRA E DE SINAL	177
		1	LÂMPADA DIANTEIRA E DE SINAL	179
LENTE (PLACA DE REGISTRO)	134-6751	1	LAMPADA-PLACA DE REGISTRO	182
LUZ INTERMITENTE (12/24 VOLTS) (PISCA-PISCA, PISCA-ALERTA)	108-0358	1	INTERRUPTOR - LUZES	275
		1	SISTEMA DE ILUMINAÇÃO - FARÓIS	206
		1	SISTEMA DE ILUMINAÇÃO - FARÓIS	209
		1	SISTEMA DE ILUMINAÇÃO - FARÓIS	212
		1	SISTEMA DE ILUMINAÇÃO - FARÓIS	215
		1	SISTEMA DE ILUMINAÇÃO - FARÓIS	222
		1	SISTEMA DE ILUMINAÇÃO - FARÓIS	225
SUPORTE - ESCOVA	7T-3278	1	MOTOR ELÉTRICO DE PARTIDA	270
SISTEMA HIDRÁULICO				
ELEMENTO FILTRANTE - ÓLEO (HIDRÁULICO) (EFICIÊNCIA PADRÃO)	1R-0774	1	TANQUE HIDRÁULICO E FILTRO	612
GRAXEIRA (SOQUETE DO CILINDRO DE DESLOCAMENTO LATERAL)	3B-8485	2	CILINDRO E MONTAGEM - DESLOCAMENTO DO CÍRCULO	534
*PADLOCK GP	5P-8502	1	TANQUE DE ÓLEO HIDRÁULICO E MONTAGEM	614
TAMPA - BOCAL DE ENCHIMENTO (TANQUE DE ÓLEO HIDRÁULICO)	7H-1447	1	TANQUE HIDRÁULICO E FILTRO	612
TAMPA CONTRA POEIRA (ÓLEO HIDRÁULICO)	8C-3451	1	TUBOS - DIREÇÃO	592
TELA FILTRANTE (BOCAL DE ENCHIMENTO) (TANQUE DE ÓLEO HIDRÁULICO)	9J-3047	1	TANQUE HIDRÁULICO E FILTRO	612

* TRADUÇÃO NÃO DISPONÍVEL NO MOMENTO DA IMPRESSÃO

PEÇAS DE MANUTENÇÃO

DESCRIÇÃO	NÚMERO DE PEÇA	QUANT	UTILIZADA EM	PÁGINA
TREM DE FORÇA				
*BREATHER AS (BOCAL DE ENCHIMENTO DE ÓLEO DE TREM DE FORÇA)	9G-5127	1	BOCAL DE ENCHIMENTO DE ÓLEO DO TREM DE FORÇA	375
ELEMENTO FILTRANTE - ÓLEO (ALTA EFICIÊNCIA) (TRANSMISSÃO)	132-8875	1	FILTRO - ÓLEO	378
		1	TUBOS - ÓLEO DA TRANSMISSÃO	381
FILTRO - MAGNÉTICO (ÓLEO DA TRANSMISSÃO)	8S-9129	1	CAIXA E COMPONENTES - TRANSMISSÃO	346
FILTRO - MAGNÉTICO (TRANSMISSÃO)	8S-9129	1	FILTRO - MAGNÉTICO	388
LÂMPADA (*24-VOLT) (MUDANÇA AUTOMÁTICA)	3E-8825	1	CONTROLE ELÉTRICO DAS MARCHAS	345
RESPIRO (TANDEM)	1F-8488	2	TANDEM E TAMPA	391
TAMPA DA VÁLVULA (HASTE)	9K-7951	1	RODA E PNEU	446
TELA DE SUCÇÃO (TRANSMISSÃO)	8S-9130	1	CAIXA E COMPONENTES - TRANSMISSÃO	346
		1	FILTRO - MAGNÉTICO	388
TELA FILTRANTE (VÁLVULA DE CONTROLE DE TRANSMISSÃO)	6I-9395	1	VÁLVULA DE CONTROLE - TRANSMISSÃO	404

* TRADUÇÃO NÃO DISPONÍVEL NO MOMENTO DA IMPRESSÃO

WARTUNGSTEILE

BESCHREIBUNG	ERSATZTEIL-NUMMER	MENGE	VERWENDET IN	SEITE
BREMSSYSTEM				
*CARTRIDGE AS-DESICCANT (LUFTTROCKNER)	203-2389	1	LUFTTROCKNER	501
LUFTTROCKNER (LUFTTROCKNER)(24 VOLT)	203-2423	1	LUFTTROCKNER	501
SICHERUNG (10 A) (LUFTTROCKNER)	9W-1442	1	LUFTTROCKNER	498
ELEKTRISCHE ANLAGE UND STARTSYSTEM				
ABDECKGLAS	7T-0020	1	FAHRERHAUSBELEUCHTUNG	165
ABDECKGLAS (ABBLENDLICHT)	162-2077	1	ARBEITSLEUCHTEN	197
ABDECKGLAS (ARBEITSSCHEIN-WERFER)	202-6611	1	ARBEITSLEUCHTEN	168
		1	ARBEITSLEUCHTEN	170
	202-6614	1	ARBEITSLEUCHTEN	167
		1	ARBEITSLEUCHTEN	169
ABDECKGLAS (FRONTSCHEINWER-FER)	100-3248	1	SCHEINWERFER U. RICHTUNGSLEUCHTE	177
		1	SCHEINWERFER U. RICHTUNGSLEUCHTE	179
ABDECKGLAS (FRONTSCHEINWER-FER)(ABBLENDLICHT)	162-2077	1	FRONTSCHEINWERFER	171
ABDECKGLAS (GELB) (RECHTS- U. LINKSWENDUNG)	100-3250	1	FRONTSCHEINWERFER	173
		1	FRONTSCHEINWERFER	175
	136-3848	1	FRONTSCHEINWERFER	175
		1	FRONTSCHEINWERFER	173
ABDECKGLAS (GELB) (RUNDUM-KENNLEUCHTE)	215-6672	1	RUNDUM-KENNLEUCHTE	187
ABDECKGLAS (GELB, RUNDUM-KENNLEUCHTE)	9X-8121	1	RUNDUM-KENNLEUCHTE	186
ABDECKGLAS (GELB) (SIGNAL)	100-3250	1	SCHEINWERFER U. RICHTUNGSLEUCHTE	177
		1	SCHEINWERFER U. RICHTUNGSLEUCHTE	179
	136-3848	1	SCHEINWERFER U. RICHTUNGSLEUCHTE	177
		1	SCHEINWERFER U. RICHTUNGSLEUCHTE	179
ABDECKGLAS (*HEAD)	100-3249	1	FRONTSCHEINWERFER	173
		1	FRONTSCHEINWERFER	175
ABDECKGLAS (KENNZEICHEN)	134-6751	1	ZULASSUNGSSCHILDLEUCHTE	182
BATTERIE (12 V)	153-5700	2	BATTERIE	138
BATTERIE (12 V) (NASS)	153-5710	2	BATTERIE	137
BATTERIE (12 V) (*1100 AMPS)	153-5700	2	BATTERIE	136
BATTERIE (12V, 750 A)	3T-5760	2	BATTERIE	139
BELEUCHTUNGSANLAGE	6C-0109	1	VERDRAHTUNG, HINTEN	317
		1	VERDRAHTUNG, HINTEN	320
	6C-0110	1	VERDRAHTUNG, HINTEN	317
		1	VERDRAHTUNG, HINTEN	320
BLINKER (12/24 VOLT) (RICHTUNGSBLINKER, WARNLEUCHTE)	108-0358	1	ARBEITSLEUCHTEN	206

* ÜBERSETZUNG ZUM ZEITPUNKT DER DRUCKLEGUNG NICHT VORHANDEN

WARTUNGSTEILE

BESCHREIBUNG	ERSATZTEIL-NUMMER	MENGE	VERWENDET IN	SEITE
		1	ARBEITSLEUCHTEN	209
		1	ARBEITSLEUCHTEN	222
		1	ARBEITSLEUCHTEN	225
		1	ARBEITSLEUCHTEN	212
		1	ARBEITSLEUCHTEN	215
		1	LICHTSCHALTER	275
BÜRSTENHALTER	7T-3278	1	STARTERMOTOR	270
FAHRERHAUSBELEUCHTUNG (24 V, MIT SCHALTER)	3E-6389	1	FAHRERHAUSVERDRAHTUNG	282
		1	FAHRERHAUSVERDRAHTUNG	285
		1	FAHRERHAUSVERDRAHTUNG	291
HALOGENSCHINWERFER (24V)(65W)	9X-3463	1	ARBEITSLEUCHTEN	168
HALOGENSCHINWERFER (24V)(65W) (ABBLENDLICHT)	9X-3463	1	ARBEITSLEUCHTEN	197
HALOGENSCHINWERFER (24V)(65W) (ARBEITSSCHEINWERFER)	9X-3463	1	ARBEITSLEUCHTEN	167
		1	ARBEITSLEUCHTEN	169
HALOGENSCHINWERFER (24V)(65W) (FERNLICHT)	9X-3463	1	ARBEITSLEUCHTEN	197
		1	FRONTSCHEINWERFER	172
HALOGENSCHINWERFER (24V)(65W) (SCHILD)	9X-3463	1	ARBEITSLEUCHTEN	170
HEIZUNGSELEMENT (240 V, 1250 W)	154-2881	1	UMLAUFKÜHLWASSERHEIZUNG	162
KEILRIEMEN	215-6673	1	RUNDUM-KENNLEUCHTE	187
*LAMP-HALOGEN (*24-VOLT, 65-WATT) (ABBLENDLICHT)	9X-3463	1	FRONTSCHEINWERFER	171
*LAMP-HALOGEN (*24-VOLT, 65-WATT) (ARBEITSSCHEINWERFER)	9X-3463	1	ARBEITSLEUCHTEN	166
LAUFBAND UND ANTRIEB (RUNDUM-KENNLEUCHTE)	9X-8139	1	RUNDUM-KENNLEUCHTE	186
LEUCHTE, ROT (LED)	165-5674	1	WARNLEUCHTEN	247
		1	WARNLEUCHTEN	248
LEUCHTE (24 V)	3E-8825	2	ARBEITSLEUCHTEN	206
		1	ARBEITSLEUCHTEN	212
		2	ARBEITSLEUCHTEN	215
		1	ARBEITSLEUCHTEN	222
		1	ARBEITSLEUCHTEN	223
		1	ARBEITSLEUCHTEN	225
		1	ARBEITSLEUCHTEN	235
		1	ARBEITSLEUCHTEN	237
		1	ÄTHERSTARTHILFE	268
		1	FAHRERHAUSVERDRAHTUNG	287
		1	FAHRERHAUSVERDRAHTUNG	289
		1	LENKKONSOLENVERDRAHTUNG	337
		2	LENKKONSOLENVERDRAHTUNG	340
		2	LICHTSCHALTER	275
		2	NOTLENKUNGSVERDRAHTUNG	329
		1	RUNDUM-KENNLEUCHTE	249
		1	RUNDUMWARNLEUCHTE - EINBAUSATZ	163
		1	SCHALTKONSOLENVERDRAHTUNG	331
		2	SCHALTKONSOLENVERDRAHTUNG	333

* ÜBERSETZUNG ZUM ZEITPUNKT DER DRUCKLEGUNG NICHT VORHANDEN

WARTUNGSTEILE

BESCHREIBUNG	ERSATZTEIL-NUMMER	MENGE	VERWENDET IN	SEITE
		1	SCHALTKONSOLENVERDRAHTUNG	334
		1	WARNLEUCHTEN	247
		1	WARNLEUCHTEN	248
	7N-5876	1	SCHALTKONSOLENVERDRAHTUNG	331
		1	SCHALTKONSOLENVERDRAHTUNG	333
	9X-3465	1	SCHEINWERFER U. RICHTUNGSLEUCHTE	177
	100-3245	2	SCHEINWERFER U. RICHTUNGSLEUCHTE	177
LEUCHTE (24 V) (ARBEITSSCHEINWERFER, RECHTS)	3E-8825	1	ARBEITSLEUCHTEN	218
		1	ARBEITSLEUCHTEN	220
LEUCHTE (24 V) (AUSFALLSCHUTZ-RÜCKFAHRLEUCHTE)	3E-8825	2	SCHEINWERFER, HINTEN	191
LEUCHTE (24 V) (*AUXILIARY BACK-UP ALARM)	3E-8825	1	SCHEINWERFER, HINTEN	193
LEUCHTE (24 V) (FAHRERHAUSSTELLUNG)	9X-4494	1	MARKIERUNGSLEUCHTE	181
LEUCHTE (24 V) (FRONTSCHEINWERFER)	9X-3465	1	SCHEINWERFER U. RICHTUNGSLEUCHTE	179
LEUCHTE (24 V) (*HEADLIGHTS, TAIL LIGHTS)	3E-8825	2	ARBEITSLEUCHTEN	209
LEUCHTE (24 V) (KENNZEICHEN)	5C-9583	1	ZULASSUNGSSCHILDLEUCHTE	182
LEUCHTE (24 V) (*NG)	3E-8825	2	SCHALTKONSOLENVERDRAHTUNG	334
LEUCHTE (24 V) (SCHAR-ARBEITSSCHEINWERFER)	3E-8825	2	ARBEITSLEUCHTEN	204
		2	ARBEITSLEUCHTEN	205
LEUCHTE (24 V) (SCHARDÄMPFUNGSCHALTER)	3E-8825	1	VERDRAHTUNG - SCHARDÄMPFUNG	280
LEUCHTE (24 V) (SCHARLEUCHTE)	3E-8825	2	ARBEITSLEUCHTEN	202
LEUCHTE (24 V) (SIGNAL)	100-3245	2	SCHEINWERFER U. RICHTUNGSLEUCHTE	179
LEUCHTE (24 V, 5 W)	4V-8116	1	VERDRAHTUNG, HINTEN	317
		1	VERDRAHTUNG, HINTEN	320
LEUCHTE (24 V, 70 W)	9X-7849	1	RUNDUM-KENNLEUCHTE	187
LEUCHTE (24 V, 70 W) (RUNDUM-KENNLEUCHTE)	9X-7849	1	RUNDUM-KENNLEUCHTE	186
LEUCHTE (*24-VOLT) (FAHRERHAUSDACH)	7N-9943	1	FAHRERHAUSBELEUCHTUNG	165
LEUCHTE (*24-VOLT) (FERNLICHT/ABBLENDLICHT)	9X-3465	1	FRONTSCHEINWERFER	175
		1	FRONTSCHEINWERFER	173
LEUCHTE (*24-VOLT) (RECHTS- U. LINKSWENDUNG)	100-3245	1	FRONTSCHEINWERFER	175
		1	FRONTSCHEINWERFER	173
LEUCHTE (*24-VOLT) (SCHAR)(VORDERER ARBEITSSCHEINWERFER)	3E-8825	2	ARBEITSLEUCHTEN	201
LEUCHTE (*24-VOLT) (STELLUNG)	100-3245	1	FRONTSCHEINWERFER	173
		1	FRONTSCHEINWERFER	175
LEUCHTE (*24-VOLT, 21-WATT) (RECHTS- U. LINKSWENDUNG)	9X-4493	1	FRONTSCHEINWERFER	173

* ÜBERSETZUNG ZUM ZEITPUNKT DER DRUCKLEGUNG NICHT VORHANDEN

WARTUNGSTEILE

BESCHREIBUNG	ERSATZTEIL-NUMMER	MENGE	VERWENDET IN	SEITE
		1	FRONTSCHEINWERFER	175
LEUCHTE (24V, 21W)	5C-9584	2	VERDRAHTUNG, HINTEN	317
		2	VERDRAHTUNG, HINTEN	320
LEUCHTE (24V, 21W) (SIGNAL)	9X-4493	1	SCHEINWERFER U. RICHTUNGSLEUCHTE	179
		1	SCHEINWERFER U. RICHTUNGSLEUCHTE	177
SCHALTER (*AUXILIARY BACKUP)	161-1418	1	SCHEINWERFER, HINTEN	191
SCHLÜSSEL (HAUPTSCHALTER)	8H-5306	1	TRENNSCHALTER	274
SERPENTINENFÖRMIGER RIEMEN (*ALTERNATOR WITHOUT A/C)	178-8481	1	DREHSTROMGENERATOR	134
SICHERUNG (10 A)	3K-8782	1	FAHRERHAUSVERDRAHTUNG	291
	9W-1442	1	ARBEITSLEUCHTEN	215
		1	ARBEITSLEUCHTEN	225
		1	ARBEITSLEUCHTEN	235
		1	ARBEITSLEUCHTEN	237
		1	FAHRERHAUSVERDRAHTUNG	287
		1	FAHRERHAUSVERDRAHTUNG	289
		1	LICHTSCHALTER	275
		2	NOTLENKUNGSVERDRAHTUNG	329
		1	WARNLEUCHTEN	244
		1	ARBEITSLEUCHTEN	206
		1	ARBEITSLEUCHTEN	212
		1	ARBEITSLEUCHTEN	222
		11	LENKKONSOLENVERDRAHTUNG	337
		12	LENKKONSOLENVERDRAHTUNG	340
SICHERUNG (10 A) (ARBEITSSCHEINWERFER)	9W-1442	2	ARBEITSLEUCHTEN	204
		2	ARBEITSLEUCHTEN	205
SICHERUNG (10 A) (ARBEITSSCHEINWERFER, RECHTS)	9W-1442	1	ARBEITSLEUCHTEN	218
		1	ARBEITSLEUCHTEN	220
SICHERUNG (10 A) (*AUXILIARY BACK-UP ALARM)	9W-1442	1	SCHEINWERFER, HINTEN	193
SICHERUNG (10 A) (RICHTUNGSBLINKER, WARNLEUCHTE)	9W-1442	1	ARBEITSLEUCHTEN	209
SICHERUNG (10 A) (RÜCKFAHRLEUCHTE)	9W-1442	1	SCHEINWERFER, HINTEN	191
SICHERUNG (10 A) (RUNDUM-KENNLEUCHTE)	9W-1442	1	FAHRERHAUSVERDRAHTUNG	284
		1	WARNLEUCHTEN	245
SICHERUNG (10 A) (SCHARLEUCHTE)	9W-1442	2	ARBEITSLEUCHTEN	202
SICHERUNG (10 A) (UMFORMER)	9W-1442	1	ELEKTR. UMFORMER	156
SICHERUNG (10 A) (WANDLER)	9W-1442	1	ELEKTR. UMFORMER	154
SICHERUNG (*10-AMPERE) (SCHAR/VORDER ARBEITSSCHEINWERFER)	9W-1442	2	ARBEITSLEUCHTEN	201
SICHERUNG (15 A)	9W-1441	1	FAHRERHAUSVERDRAHTUNG	282
		1	FAHRERHAUSVERDRAHTUNG	285
		1	LENKKONSOLENVERDRAHTUNG	337
		1	LENKKONSOLENVERDRAHTUNG	340

* ÜBERSETZUNG ZUM ZEITPUNKT DER DRUCKLEGUNG NICHT VORHANDEN

WARTUNGSTEILE

BESCHREIBUNG	ERSATZTEIL-NUMMER	MENGE	VERWENDET IN	SEITE
SICHERUNG (15 A) (*CAB FLOOD LIGHTS)	9W-1441	1	ARBEITSLEUCHTEN	204
		1	ARBEITSLEUCHTEN	205
SICHERUNG (15 A) (UMFORMER)	9W-1441	1	ELEKTR. UMFORMER	155
SICHERUNG (30 A)	8T-9636	2	ELEKTR. UMFORMER	157
UMLAUFKÜHLWASSERHEIZUNGS-ELEMENT (*120-VOLT, 1250-WATT)	131-8627	1	UMLAUFKÜHLWASSERHEIZUNG	161
UNTERBRECHER (105 A) (DREHSTROMGENERATOR)	171-2212	1	UNTERBRECHER	143
UNTERBRECHER (15 A) (FRONTSCHEINWERFER)	3T-2662	1	UNTERBRECHER	141
		1	UNTERBRECHER	142
UNTERBRECHER (15 A) (LICHTBALKEN - ARBEITSCHEINWERFER)	3T-2662	1	UNTERBRECHER	141
UNTERBRECHER (15 A) (MOTORSTEUERUNG)	6T-3643	1	VERDRAHTUNG, HINTEN	311
UNTERBRECHER (80 A) (DREHSTROMGENERATOR)	171-2210	1	VERDRAHTUNG, HINTEN	310
UNTERBRECHER (80 A) (HAUPTUNTERBRECHER)	171-2210	1	VERDRAHTUNG, HINTEN	310
FAHRERHAUS				
DRUCKSPEICHER	197-6218	1	KLIMAANLAGENLEITUNGEN	898
KÄLTEMITTELTROCKNER	3E-3535	1	KLIMAANLAGENLEITUNGEN	898
LEUCHTE (24 V)	7N-5876	2	GESCHWINDIGKEITS- U. DREHZAHLMESSERMODUL	913
	8D-1429	1	FAHRERHAUSHEIZUNG	863
		1	KLIMAANLAGE	819
LEUCHTE (24 V) (*AIR PRESSURE GAUGE)	7N-5876	2	INSTRUMENTENTAFEL	925
		2	INSTRUMENTENTAFEL	927
		2	INSTRUMENTENTAFEL	929
LEUCHTE (24 V) (DIFFERENTIALSPERRE)	110-2079	1	INSTRUMENTENTAFEL	925
		1	INSTRUMENTENTAFEL	927
LEUCHTE (24 V) (*FAN SPEED, TEMPERATURE)	8D-1429	1	FAHRERHAUSHEIZUNG	867
LEUCHTE (24 V) (HAUPTANZEIGE)	107-1983	1	INSTRUMENTENTAFEL	927
LEUCHTE (24 V) (HAUPTFUNKTIONSLEUCHTE DES ELEKTRON. ÜBERWACHUNGSSYSTEMS)	107-1983	1	INSTRUMENTENTAFEL	925
LEUCHTE (24 V) (*HEATED MIRRORS)	3E-8825	1	RÜCKSPIEGEL	906
		1	RÜCKSPIEGEL	910
LEUCHTE (24 V) (VIERFACHANZEIGE)	7N-5876	2	INSTRUMENTENTAFEL	927
LEUCHTE (24 V) (VIERFACHANZEIGENMODUL)	7N-5876	2	INSTRUMENTENTAFEL	925
		4	INSTRUMENTENTAFEL	929
LEUCHTE (24 V) (WARNVORRICHTUNG)	107-1983	1	INSTRUMENTENTAFEL	929
LEUCHTE (24 V, 3 W) (INSTRUMENTENTAFEL)	115-1748	9	INSTRUMENTENTAFEL	925

* ÜBERSETZUNG ZUM ZEITPUNKT DER DRUCKLEGUNG NICHT VORHANDEN

WARTUNGSTEILE

BESCHREIBUNG	ERSATZTEIL-NUMMER	MENGE	VERWENDET IN	SEITE
		9	INSTRUMENTENTAFEL	927
LEUCHTE (24 V, 3 W) (KONTROLLEUCHTE)	115-1748	11	INSTRUMENTENTAFEL	929
LEUCHTE (*24-VOLT) (ENTFROSTER, HINTEN)	3E-8825	1	UMLAUFLÜFTER	857
LEUCHTE (*24-VOLT) (VORDERER ENTFROSTER)	3E-8825	1	UMLAUFLÜFTER	856
LUFTFILTER (FAHRERHAUS)	7T-7358	1	FAHRERHAUSLUFTFILTER	858
	231-4486	1	FAHRERHAUSLUFTFILTER	858
	232-1732	1	FAHRERHAUSLUFTFILTER	858
SCHEIBENWISCHERBLATT	6V-5853	1	SCHEIBENWISCHER	992
		1	SCHEIBENWISCHER	993
		1	SCHEIBENWISCHER	994
	6V-8255	2	FAHRERHAUSFENSTER	964
SCHEIBENWISCHERBLATT (HINTEN)	6V-5853	1	SCHEIBENWISCHER	989
SCHEIBENWISCHERBLATT (HOCHPROFIL VORNE OBEN)	6V-5853	1	SCHEIBENWISCHER	979
		1	SCHEIBENWISCHER	981
SCHEIBENWISCHERBLATT (HOHES PROFIL, HINTEN)	6V-5853	1	SCHEIBENWISCHER	987
SCHEIBENWISCHERBLATT (HOHES PROFIL, VORNE, UNTEN)	123-4355	2	SCHEIBENWISCHER	979
		2	SCHEIBENWISCHER	981
SCHEIBENWISCHERBLATT (*LOW PROFILE FRONT UPPER)	6V-5853	1	SCHEIBENWISCHER	975
SCHEIBENWISCHERBLATT (NIEDRIGES PROFIL, HINTEN)	6V-5849	1	SCHEIBENWISCHER	983
		1	SCHEIBENWISCHER	985
SCHEIBENWISCHERBLATT (VORNE OBEN)	6V-5853	1	SCHEIBENWISCHER	977
SCHEIBENWISCHERBLATT (VORNE UNTEN)	123-4355	2	SCHEIBENWISCHER	975
		2	SCHEIBENWISCHER	977
SERPENTINENFÖRMIGER RIEMEN (*ALTERNATOR AND AIR CONDITIONER)	174-9690	1	KLIMAANLAGE	818
SICHERUNG (10 A) (*HEATED MIRRORS)	9W-1442	1	RÜCKSPIEGEL	906
		1	RÜCKSPIEGEL	910
SICHERUNG (10 A) (SCHEIBENWISCHER)	9W-1442	1	SCHEIBENWISCHER	983
		1	SCHEIBENWISCHER	985
		1	SCHEIBENWISCHER	987
		1	SCHEIBENWISCHER	989
SICHERUNG (*10-AMPERE) (ENTFROSTER, HINTEN)	9W-1442	1	UMLAUFLÜFTER	857
SICHERUNG (*10-AMPERE) (VORDERER ENTFROSTER)	9W-1442	1	UMLAUFLÜFTER	856
SICHERUNG (15 A) (HEIZUNG)	9W-1441	1	FAHRERHAUSHEIZUNG U. BEFESTIGUNGSTEILE	861
SICHERUNG (15 A) (KLIMAANLAGE)	9W-1441	1	KLIMAANLAGE UND AUFHÄNGUNG	818

* ÜBERSETZUNG ZUM ZEITPUNKT DER DRUCKLEGUNG NICHT VORHANDEN

WARTUNGSTEILE

BESCHREIBUNG	ERSATZTEIL-NUMMER	MENGE	VERWENDET IN	SEITE
VORHÄNGESCHLOSS	5P-8502	1	UMBAUSATZ - OHNE ÜBERROLLSCHUTZ	834
	246-2641	1	FAHRERHAUS	825
VORHÄNGESCHLOSS (ÜBERROLLSCHUTZ)	5P-8502	1	ÜBERROLLSCHUTZDACH	934
HYDRAULIKSYSTEM				
EINFÜLLSTUTZENKAPPE (HYDRAULIKÖLTANK)	7H-1447	1	HYDRAULIKTANK UND SCHMIERFILTER	612
ÖLFILTERELEMENT (HYDRAULISCH) (STANDARD EFFIZIENZ)	1R-0774	1	HYDRAULIKTANK UND SCHMIERFILTER	612
*PADLOCK GP	5P-8502	1	HYDRAULIKTANK UND BEFESTIGUNGSTEILE	614
SCHMIERNIPPEL (SCHARSCHWENKWERK - ZYLINDERANSCHLUSS)	3B-8485	2	SEITENSCHUBZYLINDER UND BEFESTIGUNGSTEILE	534
SIEB (FÜLLER) (HYDRAULIKÖLTANK)	9J-3047	1	HYDRAULIKTANK UND SCHMIERFILTER	612
STAUBKAPPE (HYDRAULIKÖL)	8C-3451	1	LENKÖLLEITUNGEN	592
KRAFTSTOFFSYSTEM				
DICHTUNG	9R-7240	1	KRAFTSTOFFTANK	117
		1	KRAFTSTOFFTANK	118
FILTER (KRAFTSTOFF, WASSERABSCHEIDER) (HAUPTELEMENT)	133-5673	1	WASSERABSCHEIDER- U. KRAFTSTOFFILTER	104
KRAFTSTOFFFILTERKAPPE (SCHWEREINSATZ, SPERRBAR)	164-4858	1	KRAFTSTOFFTANK	119
		1	KRAFTSTOFFTANK	121
KRAFTSTOFFILTER	1R-0762	1	KRAFTSTOFFILTER	103
KRAFTSTOFFSIEB	199-9907	1	KRAFTSTOFFTANK	119
		1	KRAFTSTOFFTANK	121
KRAFTÜBERTRAGUNG				
ANSAUGSIEB (GETRIEBE)	8S-9130	1	GETRIEBEGEHÄUSE UND TEILE	346
		1	MAGNETSIEB	388
*BREATHER AS (KRAFTSÜBERTRAGUNG - ÖLEINFÜLLUNG)	9G-5127	1	GETRIEBEÖLFÜLLSTUTZEN	375
ENTLÜFTER (TANDEM)	1F-8488	2	TANDEMGEHÄUSE UND DECKEL	391
LEUCHTE (*24-VOLT) (AUTOMATIKSCHALTUNG)	3E-8825	1	SCHALTAUTOMATIK	345
MAGNETFILTER (GETRIEBE)	8S-9129	1	MAGNETSIEB	388
MAGNETFILTER (GETRIEBEÖL)	8S-9129	1	GETRIEBEGEHÄUSE UND TEILE	346
ÖLFILTERELEMENT (HOCHLEISTUNG) (GETRIEBE)	132-8875	1	GETRIEBEÖLLEITUNGEN	381
		1	ÖLFILTER	378
SCREEN (GETRIEBESTEUERVENTIL)	6I-9395	1	GETRIEBESTEUERVENTIL	404
VENTILKAPPE (SCHAFT)	9K-7951	1	RAD UND REIFEN	446

* ÜBERSETZUNG ZUM ZEITPUNKT DER DRUCKLEGUNG NICHT VORHANDEN

WARTUNGSTEILE

BESCHREIBUNG	ERSATZTEIL-NUMMER	MENGE	VERWENDET IN	SEITE
KÜHLSYSTEM				
DICHTUNG	7E-7912	1	KÜHLWASSER-TEMPERATURREGLER UND GEHÄUSE	76
KÜHLERKAPPE (*7-PSI)	6L-8617	1	KÜHLER	85
		1	KÜHLER	86
*SEAL-LIP TYPE	3S-9643	1	KÜHLWASSER-TEMPERATURREGLER UND GEHÄUSE	76
TEMPERATURREGLER (*98-DEG C)	7C-3095	1	KÜHLWASSER-TEMPERATURREGLER UND GEHÄUSE	76
LUFTANSAUG- UND ABGASSYSTEM				
HAUPTFILTER	6I-0273	1	LUFTREINIGER	90
SICHERHEITSFILTER	6I-0274	1	LUFTREINIGER	90
MOTOR - GRUNDAUSFÜHRUNG				
ENTDUNSTERSCHLAUCH	126-0146	1	LUFTKOMPRESSOR	12
		1	LUFTKOMPRESSOR	14
ENTLÜFTER	9Y-4357	1	VENTILSTEUERUNG	58
*GASKET	9Y-1758	1	VENTILSTEUERUNG	58
	109-5309	1	VENTILSTEUERUNG	58
RAHMEN UND AUFBAU				
BATTERIE	188-3951	1	AUFHÄNGUNG - HINTERES FAHRWERK	495
MAGNETSTOPFEN (GEHÄUSEABLASS)	8M-3837	1	RAHMEN UND GEHÄUSE	458
SCHMIERSYSTEM				
ÖLEINFÜLLSTUTZEN	5L-2952	1	MOTORÖLEINFÜLLSTUTZEN	62
ÖLFILTER	1R-0716	1	ÖLFILTER	63
WARTUNGSAUSRÜSTUNG				
VORHÄNGESCHLOSS (WERKZEUGKASTEN)	5P-8502	1	*BOX GP-TOOL	995

* ÜBERSETZUNG ZUM ZEITPUNKT DER DRUCKLEGUNG NICHT VORHANDEN

INDEX

Name	Page
A	
ACCESSORY GP-CAB–HIGH PROFILE	817
ACCESSORY GP-CAB–LOW PROFILE	816
ACCUMULATOR	898
ACCUMULATOR & MTG GP-HYDRAULIC	519
ACCUMULATOR AR-BLADE CUSHION	520
ACCUMULATOR AS (STEERING)	592
ACCUMULATOR GP	520
ACCUMULATOR GP–BLADE CUSHION	521
ACCUMULATOR GP-HYDRAULIC	522
	524
ACCUMULATOR GP-HYDRAULIC–BLADE CUSHION	523
ADAPTER GP-AIR CLEANER	97
AFTERCOOLER & MOUNTING GP	87
AIR CLEANER GP	88
	90
AIR COMPRESSOR GP	10
	12
	14
AIR CONDITIONER & MOUNTING GP	818
AIR CONDITIONER AR	818
AIR CONDITIONER GP	819
AIR DRYER GP	499
	501
AIR DRYER GP–SNOW	498
AIR DRYER GP (AIR DRYER)(24 VOLT)	501
ALARM GP	129
ALARM GP–ACTION	128
ALTERNATOR GP-CHARGING	130
	132
	133
	134
	135
ANTI-REACTION VALVE GP	759
ARMREST GP–LH	823
ARMREST GP–RH	824
ASHTRAY	886
	889
ATOMIZER AS-ETHER	268
AUTOSHIFT AR–TRANSMISSION	345
AXLE GP-FRONT	455
B	
BASE GP-OIL FILTER	60
BATTERY GP	495
BATTERY GP–EU	138
BATTERY GP–HEAVY DUTY	136
	137
BATTERY GP–MAINTENANCE FREE	139
BATTERY GP (12-VOLT)	138
BATTERY GP (12-VOLT) (1100 AMPS)	136
BATTERY (12-VOLT) (WET)	137
BATTERY (12-VOLT, 750-AMPERE)	139
BEARING GP-MAIN (CRANKSHAFT)	23
BELT	187
BELT-DRIVE (WARNING BEACON)	186
BELT-SERPENTINE (ALTERNATOR AND AIR CONDITIONER)	818
BELT-SERPENTINE (ALTERNATOR WITHOUT A/C)	134
BELT TENSIONER GP	16
	18
BIT GP	782
	783
	784
	785
BIT GP-END	786
BLADE AS-WIPER	964
	992
	993
	994
BLADE AS-WIPER (FRONT LOWER)	975
	977
BLADE AS-WIPER (FRONT UPPER)	977
BLADE AS-WIPER (HIGH PROFILE FRONT LOWER)	979
	981
BLADE AS-WIPER (HIGH PROFILE FRONT UPPER)	979
	981
BLADE AS-WIPER (HIGH PROFILE REAR)	987
BLADE AS-WIPER (LOW PROFILE FRONT UPPER)	975
BLADE AS-WIPER (LOW PROFILE REAR)	983
	985
BLADE AS-WIPER (REAR)	989
BLADE GP–12 FT	787
BLADE GP–14 FT	788
	789
	790
BLOCK GP-JUNCTION	140
BODY AS-GAUGE	85
BODY AS-GAUGE (COOLANT LEVEL)	86
BOX GP-TOOL	995
BRACKET GP-SCARIFIER	791
BRAKE GP-PARKING	502
BRAKE GP-SERVICE	504
BREATHER AS	58
BREATHER AS (POWER TRAIN OIL FILLER)	375
BREATHER AS (TANDEM)	391
C	
CAB AR–HIGH PROFILE	825
CAB AR-NON-ROPS	825
CAB GP	826
CAB GP–HIGH PROFILE	825

INDEX

Name	Page
CAMSHAFT GP	20
CAP AS-OIL FILLER	62
CAP-DUST (HYDRAULIC OIL)	592
CAP-FILLER (HYDRAULIC OIL TANK)	612
CAP GP-FUEL FILLER (EXTREME SERVICE, LOCKABLE)	119
	121
CAP-RADIATOR (7-PSI)	85
	86
CAP-VALVE (STEM)	446
CARTRIDGE AS-DESICCANT (AIR DRYER)	501
CARTRIDGE GP-TURBOCHARGER	99
CASE & FRAME GP	458
CASE & PARTS GP-TRANSMISSION	346
CHAIN GP	350
CHAIN GP-DRIVE	350
CIRCLE GP	775
	777
CIRCUIT BREAKER AS (105-AMPERE) (ALTERNATOR)	143
CIRCUIT BREAKER AS (15-AMPERE) (ENGINE CONTROL)	311
CIRCUIT BREAKER AS (15-AMPERE) (HEADLAMPS)	141
	142
CIRCUIT BREAKER AS (15-AMPERE) (LIGHTBAR WORKLAMPS)	141
CIRCUIT BREAKER AS (80-AMPERE) (ALTERNATOR)	310
CIRCUIT BREAKER AS (80-AMPERE) (MAIN)	310
CIRCUIT BREAKER GP	143
CIRCUIT BREAKER GP–DUAL	141
CIRCUIT BREAKER GP–SINGLE	142
CLUTCH GP-TRANSMISSION–FORWARD	357
CLUTCH GP-TRANSMISSION–HI & LO	354
CLUTCH GP-TRANSMISSION–REVERSE & 2ND	359
CLUTCH GP-TRANSMISSION–1ST & 3RD	351
COMPRESSOR & MTG GP-REFRIG	827
COMPRESSOR GP-REFRIGERANT	828
CONDENSER & MTG GP-REFRIGERANT	829
CONSOLE GP-OPERATOR	830
CONTROL & MTG GP-ENGINE ELEK	144
	145
CONTROL AR-HYDRAULIC	525
	526
	527
	528
CONTROL AR-HYDRAULIC–EU	526
CONTROL GP-CLUTCH	361
CONTROL GP-DIFFERENTIAL LOCK	363
CONTROL GP-ENGINE ELECTRONIC	146
	147
	148
	149
CONTROL GP-GOVERNOR	100
CONTROL GP-HYDRAULIC LOCKOUT	529
CONTROL GP-PARKING BRAKE	506
CONTROL GP-SECONDARY STEERING	150
CONTROL GP-SERVICE BRAKE	508
CONTROL GP-STEERING	530
CONTROL GP-TRANSMISSION	365
CONTROL GP-TRANSMISSION HYD	367
CONTROL GP-UNPROGRAMMED	151
CONTROL GP-UNPROGRAMMED–POWER TRAIN	152
CONVERSION AR-CERTIFICATION	2
CONVERSION AR-CERTIFICATION–EU	1
CONVERSION AR-NON-ROPS	834
CONVERTER AR-ELECTRICAL–12V POWER PORT–HIGH	153
CONVERTER AR-ELECTRICAL–12V POWER PORT–LOW	153
CONVERTER GP-ELECTRICAL	157
CONVERTER GP-ELECTRICAL–12V POWER PORT	156
CONVERTER GP-ELECTRICAL–25 AMP	155
CONVERTER GP-ELECTRICAL–5/7.5 AMP	154
CONVERTER GP-ELECTRICAL (24-VOLT TO 12-VOLT)	154
	156
CONVERTER-POWER (24-VOLT TO 12-VOLT, 25-AMPERE)	157
COOLANT HEATER LINES	900
COOLER GP-TRANSMISSION OIL	368
COOLING AR	70
	71
	72
CORE AS	368
CORE AS-CONDENSER (AIR CONDITIONER)	829
CORE AS-ENGINE OIL COOLER	368
COUPLING GP-TORSIONAL	370
COVER GP-ACCESS	459
	461
COVER GP-CYLINDER BLOCK	21
COVER GP-PROTECTION–PLATFORM	462
	463
CRANKSHAFT GP	23
CYLINDER & MTG GP-ARTICULATION	531
CYLINDER & MTG GP-BLADE LIFT	532
CYLINDER & MTG GP-BLADE TIP	533
CYLINDER & MTG GP-CENTERSHIFT	534
CYLINDER & MTG GP-SCARIFIER	535
CYLINDER & MTG GP-SIDESHIFT	536
CYLINDER & MTG GP-STEERING	537
CYLINDER & MTG GP-WHEEL LEAN	538
CYLINDER AS-ETHER	265
	268
CYLINDER BLOCK AS	25

INDEX

Name	Page
	26
CYLINDER BLOCK GP	27
CYLINDER GP-ARTICULATION	539
CYLINDER GP-BLADE TIP	540
CYLINDER GP-CENTERSHIFT	541
CYLINDER GP-LIFT	543
CYLINDER GP-RIPPER	544
CYLINDER GP-SCARIFIER	545
CYLINDER GP-SIDESHIFT	546
CYLINDER GP-STEERING–LH	547
CYLINDER GP-STEERING–RH	548
CYLINDER GP-WHEEL LEAN	550
CYLINDER HEAD AS	29
CYLINDER HEAD GP	31
	32

D

DETENT GP-CONTROL VALVE	551
	552
DIFFERENTIAL & BEVEL GEAR GP	371
DIFFERENTIAL GP	373
DOOR GP–HIGH PROFILE–LH	838
DOOR GP–HIGH PROFILE–RH	835
DOOR GP (AIR VENT)	886
	889
	894
	896
DOOR GP-CAB–HIGH PROFILE	840
DOOR GP-CAB–LH	844
DOOR GP-CAB–LOW PROFILE	846
DOOR GP-CAB–RH	842
DRAWBAR GP	779
DRIVE GP-ACCESSORY	33
DRIVE GP-CIRCLE	554
DUCT & CONTROL GP–HEATER–AIR CONDITIONER	848
DUCT GP	849

E

EDGE GP-CUTTING–6 FT	792
EDGE GP-CUTTING–7 FT	792
	793
ELECTRONICS GP-MONITOR	159
ELECTRONICS GP-POWER TRAIN–LIMITED ROAD SPEED–MOTOR GRADER	159
ELECTRONICS GP-POWER TRAIN–MOTOR GRADER	160
ELEMENT AS-HEATER (240-VOLT, 1250-WATT)	162
ELEMENT AS-JACKET WATER HEATER (120-VOLT, 1250-WATT)	161
ELEMENT AS-PRIMARY	90
ELEMENT AS-SECONDARY	90
ELEMENT-FILTER (FUEL, WATER SEPARATOR) (PRIMARY)	104
ENCLOSURE GP-ENGINE	466
	469
ENGINE AR	6
	9
EXTENSION GP-BACKREST	947
EXTENSION GP-BACKREST–CLOTH	850
EXTENSION GP-BACKREST–VINYL	851
EXTENSION GP-BLADE–LH–2 FT	795
	797
EXTENSION GP-BLADE–RH–2 FT	794
	796
EXTENSION GP-BLADE–2 FT WITH 5/8 IN BOLT–RH	799
EXTENSION GP-BLADE–2 FT WITH 5/8 INCH BOLT–LH	798

F

FAN & MOTOR GP	73
FAN GP-CIRCULATING–FRONT	854
FAN GP-CIRCULATING–FRONT DEFROSTER	856
FAN GP-CIRCULATING–REAR	852
FAN GP-CIRCULATING–REAR DEFROSTER	857
FASTENER GP	471
FASTENER GP-CYLINDER HEAD	34
FASTENER GP-FUEL TANK	102
FASTENER GP-RADIATOR	75
FILLER GP-ENGINE OIL	62
FILLER GP-POWER TRAIN OIL	375
FILM-CONTROL (FAN SPEED, TEMPERATURE)	863
	867
FILM-CONTROL (HEATER & A/C)	819
FILM (COVER BLACK)	365
FILM-FACE (HEADLIGHTS HIGH, LOW BEAM)	206
	209
	212
	215
	222
	225
	275
	340
FILM-FACE (TURN SIGNAL, HAZARD)	206
	209
	212
	215
	222
	225
	340
FILM-FACE (TURN SIGNAL, HAZARD)	275

INDEX

Name	Page
FILM-FUSE	285
FILM-FUSE (LH)	337
FILM-FUSE (LH)	340
FILM-FUSE (LIGHTS, WASHER, WIPER, DEFROST)	282
FILM-FUSE (RH)	337
FILM GP	996
FILM GP–VHP	997
FILM GP–VHP PLUS	997
FILM-IDENTIFICATION (BIODEGRADABLE HYDRAULIC OIL)	557
FILM-IDENTIFICATION (GROUP NUMBER) (AIR CONDITIONER)	819
FILM-INDICATOR (BLADE CENTERSHIFT)	999
FILM-INFORMATION (AIR CLEANER)	90
FILM-INFORMATION (ENGINE, HIGH IDLE, HOLD)	365
FILM-INFORMATION (ENGINE, LOW IDLE, HOLD)	365
FILM-INSTRUCTION (ALT EXIT/REMOVE WINDOW)	859
	860
FILM-INSTRUCTION (DO NOT DRILL, WELD ROPS)	935
FILM-INSTRUCTION (DO NOT DRILL/WELD ROPS)	932
	933
FILM-INSTRUCTION (DO NOT DRILL/WELD ROPS)	935
FILM-INSTRUCTION (ENGINE SHUTDOWN)	306
	325
FILM-INSTRUCTION (NO STEP)	479
FILM-INSTRUCTION (SEAT ADJUSTMENT)	957
FILM-MONITOR (CATERPILLAR MONITORING SYSTEM)	925
	929
FILM-MONITOR (QUAD GAUGE MODULE)	927
FILM (NO-STEP)	117
	119
FILM-PANEL (INDICATOR PANEL, LH)	927
FILM-PANEL (INDICATOR PANEL, LH)	929
FILM-PANEL (INDICATOR PANEL, RH)	927
FILM-PANEL (INDICATOR PANEL, RH)	930
FILM-PANEL (LH ACTION INDICATORS)	925
FILM-PANEL (RH ACTION INDICATORS)	925
FILM-PANEL (SPEED SELECT)	365
FILM-PANEL (TRANSMISSION INDICATOR PANEL)	365
FILM (PLATE-NAME) (ACCUMULATOR)	522
	592
FILM-REFLECTOR (YELLOW)	1002
FILM (SUNSHADE-CATERPILLAR)	921
	922
FILM (VHP PLUS)	997
FILM-WARNING (CABLE CONNECTION)	999
FILM-WARNING (HIGH PRESSURE CYLINDER)	999
FILM-WARNING (NO-STEP)	119
FILM (WINDOW WASHER)	291
FILTER & MTG GP-OIL	376
FILTER-AIR (CAB)	858
FILTER AS-ENGINE OIL	63
FILTER AS-FUEL	103
FILTER ELEMENT AS-OIL (HIGH EFFICIENCY) (TRANSMISSION)	378
	381
FILTER ELEMENT AS-OIL (HYDRAULIC) (STANDARD EFFICIENCY)	612
FILTER GP-CAB AIR	858
FILTER GP-ENGINE OIL	63
FILTER GP-FUEL	103
FILTER GP-OIL–TRANSMISSION	378
FILTER GP-WATER SEP & FUEL	104
FILTER-MAGNETIC (TRANSMISSION)	388
FILTER-MAGNETIC (TRANSMISSION OIL)	346
FINAL DRIVE GP	379
FITTING-GREASE (CENTERSHIFT CYLINDER SOCKET)	534
FLASHER AS (12/24-VOLT) (TURN SIGNAL, HAZARD)	275
FLASHER AS (12/24-VOLT) (TURN SIGNAL, HAZARD)	206
	212
	215
	222
	225
FLASHER AS (12/24-VOLT) (TURN SIGNAL, HAZARD)	209
FLASHER AS (24 VOLT)	340
FLOOR MAT (CAB)	882
FLYWHEEL GP	35
FRAME GP-FRONT	472
FUSE (10-AMPERE)	206
	212
	215
	222
	225
	235
	237
	244
	275
	287
	289
	291
	329
	337
	340
FUSE (10-AMPERE) (AIR DRYER)	498
FUSE (10-AMPERE) (AUXILIARY BACK-UP ALARM)	193

INDEX

Name	Page
FUSE (10-AMPERE) (BACKUP LAMP)	191
FUSE (10-AMPERE) (BLADE LAMP)	202
FUSE (10-AMPERE) (BLADE/FRONT FLOODLAMP)	201
FUSE (10-AMPERE) (CONVERTER)	154
FUSE (10-AMPERE) (FLOODLAMP RH)	218 220
FUSE (10-AMPERE) (FRONT DEFROSTER)	856
FUSE (10-AMPERE) (HEATED MIRRORS)	906 910
FUSE (10-AMPERE) (POWER CONVERTER)	156
FUSE (10-AMPERE) (REAR DEFROSTER)	857
FUSE (10-AMPERE) (TURN SIGNAL, HAZARD)	209
FUSE (10-AMPERE) (WARNING BEACON)	245 284
FUSE (10-AMPERE) (WIPER)	983 985 987 989
FUSE (10-AMPERE) (WORK LIGHTS)	204 205
FUSE (15 AMP) (AIR CONDITIONER)	818
FUSE (15 AMP) (HEATER)	861
FUSE (15-AMPERE)	282 285 337 340
FUSE (15-AMPERE) (CAB FLOOD LIGHTS)	204 205
FUSE (15-AMPERE) (CONVERTER-POWER)	155
FUSE (30-AMPERE)	157

G

Name	Page
GASKET	58 76 117 118
GAUGE GP-AIR PRESSURE (LH)	925 927 929
GAUGE GP-AIR PRESSURE (RH)	925 927 929
GAUGE GP-OIL LEVEL (DIPSTICK)	65
GAUGE-SIGHT (HYDRAULIC OIL)	612
GEAR GP-FRONT	36
GENERAL AR	2
GUARD & SUPPORT GP-RADIATOR	474
GUARD GP-BOTTOM	477
GUARD GP-BRAKE LINES	478
GUARD GP-FUEL TANK	479
GUARD GP-PLATFORM–NON-ROPS	482
GUARD GP-PLATFORM–OPEN–HIGH PROFILE	480

H

Name	Page
HAMMER & MOUNTING GP–HIGH PROFILE	860
HAMMER & MOUNTING GP–LOW PROFILE	859
HARNESS AS-CAB	193 235 237 289 906
HARNESS AS-CAB (FRONT)	285
HARNESS AS-CAB (REAR)	282
HARNESS AS-CAB (REAR)	285
HARNESS AS-CAB (SWITCH PANEL)	282
HARNESS AS-CAB (SWITCH PANEL)	285
HARNESS AS-CHASSIS	232 280
HARNESS AS-CHASSIS (MOLDBOARD)	233
HARNESS AS (CONSOLE)	340
HARNESS AS-CONSOLE	331 333
HARNESS AS-CONSOLE (STEERING)	337
HARNESS AS-DASH (PANEL BACKLIGHTS)	929
HARNESS AS (ENGINE ELECTRONIC)	293
HARNESS AS-FRONT CHASSIS	206 209 212 215 300
HARNESS AS-FRONT CHASSIS (BOLSTER LIGHT BAR)	222
HARNESS AS-FRONT CHASSIS (WORK LIGHTS, FRONT)	225
HARNESS AS-FRONT LIGHTING	218 220 235 237 249 301
HARNESS AS-FRONT LIGHTING (ELEVATED LIGHT BAR)	222
HARNESS AS-FRONT LIGHTING (WORK LIGHTS)	225
HARNESS AS-HEATER & AIR COND	820 863 898
HARNESS AS-INSTRUMENT PANEL	925 927
HARNESS AS-LIGHTING	212 215
HARNESS AS-PANEL	191 287
HARNESS AS-PLATFORM	296

INDEX

Name	Page
HARNESS AS-REAR	300 310
HARNESS AS-REAR CHASSIS	305 306 325
HARNESS AS-REAR LIGHTING	228 230 317 320 325
HARNESS AS-REAR LIGHTING (LH)	318 320
HARNESS AS-REAR LIGHTING (RH)	317 320
HARNESS AS-SENSOR (14-GA WIRE)	254
HARNESS AS-STARTING AID	265
HARNESS AS-TRANSMISSION	305 324 346 367
HARNESS AS-WINDOW WIPER (CONTROL)	291
HARNESS AS-WINDOW WIPER (FUSE BOX)	291
HARNESS AS-WIRING (UNIT INJECTOR)	344
HEATER & MTG GP-CAB	861
HEATER AR-CAB	861 862
HEATER GP-CAB	863
HEATER GP-CAB–LIGHT DUTY	867
HEATER GP-FUEL (WATER SEPARATOR, 12-VOLT)	104
HEATER GP-JACKET WATER	162
HEATER GP-JACKET WATER–120 VOLT	161
HITCH GP-ARTICULATING	484
HITCH GP-TOWING	486 487
HOLDER AS-BRUSH	270
HORN GP-AIR	871 872 874
HOSE-FUMES DISPOSAL	12 14
HOUSING & REGULATOR GP	76
HOUSING GP-FLYWHEEL	37
HOUSING GP-FRONT	39
HOUSING GP-SEAT SUSPENSION	876
HYDRAULIC AR	557

I

INDICATOR GP-AIR FILTER CHANGE	88
INJECTOR GP-FUEL	114
INSTALLATION AR-RADIO	879
INSTALLATION GP-RADIO	880
INSTALLATION GP-WARNING BEACON	163
INSULATION GP-WEATHER	882

J

JACK-HYDRAULIC	997

K

KEY (BATTERY DISCONNECT)	274
KIT-ADJUSTER	919
KIT-AIR CLEANER CLAMP	90
KIT-AIR CONTROL VALVE	515
KIT-ALTERNATOR TERMINAL	130
KIT-BACK TILT	919
KIT-BEARING	877
KIT-BEARING (ALTERNATOR)	133
KIT-BELT TETHER	955
KIT-BIAS PISTON	602
KIT-BRUSH (STARTING MOTOR)	270
KIT-BUMPER (WEIGHT ADJUSTMENT)	877
KIT-BUSHING (STARTING MOTOR)	270
KIT-CONTROL PISTON	602
KIT-CRANKSHAFT BEARING (AIR COMPRESSOR)	10
KIT-CUSHION	850 851
KIT-CYLINDER HEAD (AIR COMPRESSOR)	10
KIT-DIAPHRAGM	871
KIT-FASTENER (SEAT)	957
KIT-FOLLOWER	876 877
KIT-FUEL FILTER & WATER SEP	104
KIT-GOVERNOR OVERHAUL (AIR COMPRESSOR)	512
KIT-HAMMER	859 860
KIT-HARDWARE	130
KIT-HARDWARE (ALTERNATOR)	133
KIT-INDICATOR (SEAT)	957
KIT-INDICATOR (WEIGHT ADJUSTMENT)	877
KIT-INSULATOR (STARTING MOTOR)	270
KIT-LEVER (STARTING MOTOR)	270
KIT-RECEPTACLE (2 PIN)	189 240 771
KIT-RECEPTACLE (2 PIN)	181
KIT-RECEPTACLE (2 PIN) (REGISTRATION PLATE LAMP)	182
KIT-RECEPTACLE (2 PIN) (SOLENOID VALVE)	518
KIT-RECEPTACLE (2 PIN) (12V POWER PORT)	816 817
KIT-RECEPTACLE (6-PIN)	975
KIT-RECTIFIER	130
KIT-RETAINING BOLT (M5X0.8X53.24-MM)	160

INDEX

Name	Page
KIT-RETAINING BOLT (M5X0.8X53.24-MM) (CONTROL GP)	152
KIT-ROD	919
KIT-ROLLER (SEAT)	957
KIT-SEAL	521
	523
	530
	540
	545
	771
	772
	774
KIT-SEAL (BLADE CUSHION ACCUMULATOR)	522
KIT-SEAL (DIFFERENTIAL LOCK)	395
KIT-SEAL (DIFFERENTIAL LOCK VALVE)	402
KIT-SEAL (TRANSMISSION SOLENOID)	403
KIT-SEAT CUSHION	941
KIT-SEAT CUSHION (VINYL)	943
KIT-SEAT TILT	919
KIT-SENSOR (FUEL LEVEL)	119
	121
KIT-SHIM (INCLUDES 17 SHIMS)	602
KIT-SLIDER BLOCK	949
KIT-SLIDER BLOCK (INCLUDES BLOCKS AND BOLT)	947
KIT-SLIDER BLOCK (INCLUDES 4 BLOCKS)	948
KIT-SPRING	877
KIT-SPRING (HEIGHT ADJUSTMENT)	877
KIT-STANDARD RING (AIR COMPRESSOR)	10
KIT-SUSPENSION BOOT	955
KIT-SUSPENSION ROLLER	955
KIT-TERMINAL (ALTERNATOR)	133
KIT-TETHER (SEAT)	957
KIT-TILT PAN	941
	943
KIT-UNLOADER (AIR COMPRESSOR)	10
KIT-WIPER BLADE (LOW PROFILE REAR)	983
KIT-WIPER BLADE (REAR)	985
KNOB AS-WEIGHT	876
KNOB-DAMPER (SEAT)	957

L

Name	Page
LAMP AS	317
	320
LAMP GP-DOME	165
LAMP GP-DOME (24-VOLT, WITH SWITCH)	285
LAMP GP-DOME (24-VOLT, WITH SWITCH)	282
	291
LAMP GP-FLOOD	168
	169
	170
LAMP GP-FLOOD–VERTICAL	166
LAMP GP-FLOOD–VERTICAL MOUNT	167
LAMP GP-FLOOD (24-VOLT, VERTICAL MOUNT)	222
	228
	232
LAMP GP-FLOOD (24-VOLT, VERTICAL MOUNT) (BLADE)	201
	204
LAMP GP-FLOOD (24-VOLT, VERTICAL MOUNT) (CAB)	195
LAMP GP-FLOOD (24-VOLT, VERTICAL MOUNT) (CAB-RH)	235
LAMP GP-FLOOD (24-VOLT, VERTICAL MOUNT) (RH)	218
LAMP GP-HEAD–HIGH BEAM	172
LAMP GP-HEAD–LH–EU	173
LAMP GP-HEAD–LOW BEAM	171
LAMP GP-HEAD–RH–EU	175
LAMP GP-HEAD & SIGNAL–LH	177
LAMP GP-HEAD & SIGNAL–RH	179
LAMP GP-MARKER	181
LAMP GP-REGISTRATION PLATE–EU	182
LAMP GP-SIGNAL	185
LAMP GP-SIGNAL–STOP/TAIL	183
LAMP GP-SIGNAL–TURN/PARK	184
LAMP GP (STOP, TAIL, TURN, LH)	317
	320
LAMP GP (STOP, TURN, TAIL, RH)	317
	320
LAMP GP-WARNING BEACON	186
	187
LAMP-HALOGEN (24-VOLT, 65-WATT)	168
LAMP-HALOGEN (24-VOLT, 65-WATT) (BLADE)	170
LAMP-HALOGEN (24-VOLT, 65-WATT) (FLOOD)	166
LAMP-HALOGEN (24-VOLT, 65-WATT) (FLOODLIGHT)	167
	169
LAMP-HALOGEN (24-VOLT, 65-WATT) (HIGH BEAM)	197
LAMP-HALOGEN (24-VOLT, 65-WATT) (HIGH BEAM)	172
LAMP-HALOGEN (24-VOLT, 65-WATT) (LOW BEAM)	197
LAMP-HALOGEN (24-VOLT, 65-WATT) (LOW BEAM)	171
LAMP-LED (LED)	247
	248
LAMP (24-VOLT)	163
	177
	206
	212
	215
	222
	223

INDEX

Name	Page
	225
	235
	237
	247
	248
	249
	268
	275
	287
	289
	329
	331
	333
	334
	337
	340
	819
	863
	913
LAMP (24-VOLT)	177
LAMP (24-VOLT) (ACTION)	929
LAMP (24-VOLT) (AIR PRESSURE GAUGE)	927
	929
LAMP (24-VOLT) (AIR PRESSURE GAUGE)	925
LAMP (24-VOLT) (AUTOSHIFT)	345
LAMP (24-VOLT) (AUXILIARY BACK-UP ALARM)	193
LAMP (24-VOLT) (AUXILIARY BACKUP LAMP)	191
LAMP (24-VOLT) (BLADE CUSHION SWITCH)	280
LAMP (24-VOLT) (BLADE FLOOD)	204
	205
LAMP (24-VOLT) (BLADE LAMP)	202
LAMP (24-VOLT) (BLADE)(FRONT FLOODLAMP)	201
LAMP (24 VOLT) (CAB POSITION)	181
LAMP (24-VOLT) (DIFFERENTIAL LOCK)	925
	927
LAMP (24-VOLT) (DOME)	165
LAMP (24-VOLT) (EMS MASTER ACTION INDICATOR)	925
LAMP (24-VOLT) (FAN SPEED, TEMPERATURE)	867
LAMP (24-VOLT) (FLOODLAMP RH)	218
	220
LAMP (24-VOLT) (FRONT DEFROSTER)	856
LAMP (24-VOLT) (HEAD)	179
LAMP (24-VOLT) (HEADLIGHTS, TAIL LIGHTS)	209
LAMP (24-VOLT) (HEATED MIRRORS)	906
	910
LAMP (24-VOLT) (HIGH/LOW BEAM)	173
LAMP (24-VOLT) (HIGH/LOW BEAM)	175
LAMP (24-VOLT) (MASTER ACTION INDICATOR)	927
LAMP (24-VOLT) (NG)	334
LAMP (24-VOLT) (POSITION)	173
	175
LAMP (24-VOLT) (QUAD GAUGE)	927
LAMP (24-VOLT) (QUAD GAUGE MODULE)	925
	929
LAMP (24-VOLT) (REAR DEFROSTER)	857
LAMP (24 VOLT) (REGISTRATION PLATE)	182
LAMP (24-VOLT) (SIGNAL)	179
LAMP (24-VOLT) (TURN)	173
	175
LAMP (24-VOLT, 21-WATT)	317
	320
LAMP (24-VOLT, 21-WATT) (SIGNAL)	177
LAMP (24-VOLT, 21-WATT) (SIGNAL)	179
LAMP (24-VOLT, 21-WATT) (TURN)	173
	175
LAMP (24-VOLT, 3-WATT) (INDICATOR LIGHT)	929
LAMP (24-VOLT, 3-WATT) (INSTRUMENT PANEL)	925
	927
LAMP (24-VOLT, 5-WATT)	317
	320
LAMP (24-VOLT, 70-WATT)	187
LAMP (24-VOLT, 70-WATT) (WARNING BEACON)	186
LENS	165
LENS (AMBER) (SIGNAL)	177
	179
LENS (AMBER) (TURN)	173
	175
LENS (AMBER, WARNING BEACON)	186
LENS-AMBER (WARNING BEACON)	187
LENS AS (AMBER) (SIGNAL)	179
LENS AS (AMBER) (SIGNAL)	177
LENS AS (AMBER) (TURN)	173
	175
LENS AS (FLOODLIGHT)	167
	168
	169
	170
LENS AS (HEAD)	173
	175
LENS AS (HEADLAMP)(LOW BEAM)	171
LENS AS (HEADLIGHT)	177
	179
LENS AS (LOW BEAM)	197
LENS (REGISTRATION PLATE)	182
LIFT GP-BLADE	800
LIFTER GP-VALVE	41
LIFTING GP-ENGINE	42
LIGHTER AS (CIGAR, 24-VOLT)	331

INDEX

Name	Page
	333
LIGHTING AR-FLOOD	188
LIGHTING AR-FLOOD–BOLSTER–TURN	188
LIGHTING AR-FLOOD–FRONT & REAR	188
LIGHTING AR-FLOOD–MOLDBOARD	188
LIGHTING AR-FLOOD–MOLDBOARD–EU	189
LIGHTING AR-FLOOD & SIGNAL–EXTENDED BOLSTER	190
LIGHTING AR-FLOOD & SIGNAL–HEAD–TURN	190
LIGHTING AR-FLOOD & SIGNAL–HEAD–TURN–BOLSTER	190
LIGHTING GP-BACKUP	191
LIGHTING GP-BACKUP–EU	193
LIGHTING GP-FLOOD–BLADE	201
	202
	204
	205
LIGHTING GP-FLOOD–BOLSTER	212
	215
	239
LIGHTING GP-FLOOD–BOLSTER–DOUBLE WORKLAMPS	206
	209
LIGHTING GP-FLOOD–CAB	195
	196
	240
LIGHTING GP-FLOOD–CAB–SNOW–RH	218
	220
	235
	237
LIGHTING GP-FLOOD–CAB–TURN	197
	199
LIGHTING GP-FLOOD–EXTENDED BOLSTER	222
	225
LIGHTING GP-FLOOD–MOLDBOARD	232
	233
LIGHTING GP-FLOOD–SNOW–REAR	228
	230
LIGHTING GP-ROADING–CAB POSITION LAMP–EU	241
LIGHTING GP-SIGNAL–REAR TURN LAMPS	242
	243
LIGHTING GP-WARNING	247
	248
LIGHTING GP-WARNING–ROTATING	244
	245
LIGHTING GP-WARNING BEACON	249
LINER GP-CAB–ENCLOSED – HIGH PROFILE	889
LINER GP-CAB–ENCLOSED–HIGH PROFILE	896
LINER GP-CAB–HIGH PROFILE	884
LINER GP-CAB–LOW PROFILE	886
LINER GP-CAB–OPEN–HIGH PROFILE	894
LINES GP-ACCUMULATOR	558
LINES GP-AIR–AFTERCOOLER	91
LINES GP-AIR–TANK	92
LINES GP-AIR CONDITIONER	898
LINES GP-ENGINE OIL DRAIN	66
LINES GP-FUEL	106
LINES GP-FUEL–REAR	105
LINES GP-FUEL FILTER	108
LINES GP-FUEL INJECTION	111
LINES GP-GREASE	488
LINES GP-HEATER	900
LINES GP-HYDRAULIC–CENTERSHIFT LOCK	564
LINES GP-HYDRAULIC–LH BANK	566
LINES GP-HYDRAULIC–PLOW/DOZER ANGLE–RH	571
LINES GP-HYDRAULIC–PLOW/DOZER LIFT–LH	563
LINES GP-HYDRAULIC–PLOW/DOZER LIFT–PLOW, BULLDOZER LIFT	562
LINES GP-HYDRAULIC–RH BANK	569
LINES GP-HYDRAULIC–SCARIFIER	560
LINES GP-HYDRAULIC FAN	572
LINES GP-HYDRAULIC FAN–RADIATOR	574
LINES GP-PUMP	576
	579
	582
LINES GP-RIPPER	585
	587
	589
LINES GP-SECONDARY STEERING	590
LINES GP-STEERING	592
LINES GP-TRANSMISSION OIL	381
LINES GP-TURBOCHARGER OIL	67
LINES GP-WATER	77
	78
	79
	81
LINK GP-STEERING	489
LOCK GP-CENTERSHIFT	595
LOUVER GP-CAB	902

M

MANIFOLD GP-EXHAUST	93
MANIFOLD GP-INLET	94
MIRROR GP-REAR VIEW	905
MIRROR GP-REAR VIEW–INSIDE	903
MIRROR GP-REAR VIEW–INSIDE–DUAL–EU	909
MIRROR GP-REAR VIEW–OUTSIDE	904
MIRROR GP-REAR VIEW–OUTSIDE–EU	908
MIRROR GP-REAR VIEW–OUTSIDE–HEATED	910

INDEX

Name	Page
MIRROR GP-REAR VIEW–OUTSIDE–HEATED–EU	906
MODULE GP-QUAD GAUGE	912
MODULE GP-SPEEDOMETER & TACH	913
MODULE GP-SPEEDOMETER & TACH–SNOW	913
MODULE GP-SPEEDOMETER & TACH (INSTRUMENT PANEL)	929
MOTOR GP-ELECTRIC	251
	852
MOTOR GP-ELECTRIC (DEFROSTER FAN)	854
MOTOR GP-GEAR–HYDRAULIC FAN	596
MOTOR GP-GEROTOR–CIRCLE DRIVE	597
MOTOR GP-WINDOW WIPER	994
MOTOR GP-WINDOW WIPER (FRONT)	993
MOTOR GP-WINDOW WIPER (FRONT UPPER)	977
	981
MOTOR GP-WINDOW WIPER (REAR)	985
	989
MOTOR GP-WINDOW WIPER (24-VOLT)	974
MOTOR GP-WINDOW WIPER (24-VOLT) (FRONT LOWER)	977
MOTOR GP-WINDOW WIPER (24-VOLT) (LOWER)	981
MOUNTING GP-ALTERNATOR	133
MOUNTING GP-CAB–NON-ROPS, ENCLOSED	914
MOUNTING GP-ENGINE & TMSN	43
MOUNTING GP-REGISTRATION–EU	490
MOUNTING GP-RIPPER	802
MOUNTING GP-ROPS	915
MOUNTING GP-ROPS–OPEN–HIGH PROFILE	917
MOUNTING GP-SNOW WING	803
MOUNTING GP-VALVE MECHANISM	44
MOUNTING GP-WHEEL	385
MUFFLER GP	95

O

ORIFICE	396
	399

P

PADLOCK GP	614
	825
	834
PADLOCK GP (ROPS)	934
PADLOCK GP (TOOL BOX)	995
PAN GP-BACKREST	918
PAN GP-OIL	45
PAN GP-OIL–ENGINE	47
PAN GP-SEAT	919
PANEL GP-CAB–HIGH PROFILE	922
	923
PANEL GP-CAB–LOW PROFILE	921
PANEL GP-INSTRUMENT	925
PANEL GP-INSTRUMENT–EU	929
PANEL GP-INSTRUMENT–HIGH PROFILE	927
PANEL GP-SOUND SUPPRESSION	48
PISTON & ROD GP	49
PLATE & FILM GP	2
	998
	999
PLATE & FILM GP–FRENCH	1003
PLATE & FILM GP–GERMAN	1004
PLATE & FILM GP–PORTUGUESE	1004
	1005
PLATE & FILM GP–REFLECTOR–EU	1002
PLATE & FILM GP–SPANISH	1003
PLATE & FILM GP (REFLECTOR)	1
PLATE GP-PUSH	781
PLATE GP-RADIATOR	82
PLATE-IDENTIFICATION (ALTERNATOR)	310
PLATE-IDENTIFICATION (ENGINE)	310
PLATE-IDENTIFICATION (MAXIMUM WEIGHT)	4
PLATE-INFORMATION (AIR COMPRESSOR)	10
PLATE-INSTRUCTION (AIR CONDITIONER)	819
PLATE-INSTRUCTION (BATTERY)	310
PLATE-WARNING (NO CLEARANCE)	462
	463
	999
PLUG GP-CYLINDER BLOCK	50
PLUG GP-ENGINE	51
PLUG-MAGNETIC (CASE DRAIN)	458
PRECLEANER GP	97
PUMP & MOTOR GP-SEC STEERING	599
PUMP & MTG GP-FUEL TRANSFER	113
PUMP & MTG GP-PISTON	600
PUMP & MTG GP-SECONDARY STEER	601
PUMP GP-ENGINE OIL	68
	69
PUMP GP-FUEL INJECTION	114
PUMP GP-FUEL PRIMING	115
PUMP GP-FUEL TRANSFER	113
PUMP GP-GEAR–TRANSMISSION	386
	387
PUMP GP-PISTON–HYDRAULIC FAN	604
PUMP GP-PISTON–STEERING	602
PUMP GP-WATER	83
	84

R

RADIATOR GP	85
	86
RECEIVER-DRYER	898

INDEX

Name	Page
REGULATOR AS-VOLTAGE (24-VOLT)	130
REGULATOR AS-VOLTAGE (24-VOLT) (ALTERNATOR)	133
REGULATOR-TEMPERATURE (98-DEG C)	76
RELAY AS (24-VOLT)	193
RELAY AS (24-VOLT) (AUXILIARY BACKUP LAMP)	191
RELAY AS (24-VOLT) (ETHER STARTING AID)	265
RELAY AS (24-VOLT) (TAIL, PANEL LAMPS)	337
RELAY AS (24-VOLT) (TAIL,PANEL LAMPS)	340
RELAY AS (24-VOLT) (WORK LIGHTS)	204
RELAY AS (24-VOLT) (WORK LIGHTS)	205
RIPPER AR	804
RIPPER GP	805
ROADING AR	4
ROCKER ARM GP	53
ROPS AR-ENCLOSED–HIGH PROFILE	932
ROPS AR-ENCLOSED–HIGH PROFILE–EU	932
ROPS AR-ENCLOSED–LOW PROFILE	932
ROPS AR-ENCLOSED–LOW PROFILE–EU	933
ROPS AR-OPEN–HP	934
ROPS GP-ENCLOSED–HIGH PROFILE	935
ROPS GP-ENCLOSED–HIGH PROFILE–EU	936
ROPS GP-ENCLOSED–LOW PROFILE	935
ROPS GP-ENCLOSED–LOW PROFILE–EU	936
ROPS GP-OPEN–HIGH PROFILE	937
ROTATING GP-PUMP–HYDRAULIC FAN	607
ROTATING GP-PUMP–STEERING	606

S

Name	Page
SCARIFIER AR–STRAIGHT	807
SCARIFIER AR–VEE TYPE	807
SCARIFIER GP–STRAIGHT	811
SCARIFIER GP–VEE TYPE	808
SCREEN GP-MAGNETIC–TRANSMISSION	388
SCREEN GP-SUN	938
SCREEN-SUCTION (TRANSMISSION)	388
SCREEN-SUCTION (TRANSMISSION)	346
SCREEN (TRANSMISSION CONTROL VALVE)	404
SEAL GP-CRANKSHAFT	55
SEAL-LIP TYPE	76
SEAT BELT GP	939
	940
	950
SEAT BELT GP (RETRACTABLE)	947
SEAT GP–CLOTH	941
SEAT GP–VINYL	943
SEAT GP-SUSPENSION	945
SEAT GP-SUSPENSION–CLOTH	947
	949
	950
	951
SEAT GP-SUSPENSION–VINYL	946
	948
SEGMENT-CIRCLE	777
SENDER AS-FUEL LEVEL	119
	121
SENDER AS-POSITION (ARTICULATION)	306
SENDER AS-POSITION (ARTICULATION)	325
SENSOR GP-POSITION–CLUTCH	253
SENSOR GP-POSITION–THROTTLE	252
SENSOR GP-POSITION (ROTARY) (THROTTLE)	100
SENSOR GP-PRESSURE	256
	257
SENSOR GP-PRESSURE–ATMOSPHERIC AIR	256
SENSOR GP-PRESSURE–FUEL	257
SENSOR GP-PRESSURE–HYDRAULIC FAN	254
SENSOR GP-PRESSURE–INLET MANIFOLD	255
	258
SENSOR GP-PRESSURE (RADIATOR FAN)	574
SENSOR GP-SPEED	260
	261
SENSOR GP-SPEED–CAMSHAFT TIMING	261
SENSOR GP-SPEED–CRANKSHAFT TIMING	260
SENSOR GP-SPEED–TRANSMISSION OUTPUT–TRANSMISSION INPUT, OUTPUT	259
SENSOR GP-TEMPERATURE–COOLANT	264
SENSOR GP-TEMPERATURE–FUEL–INLET MANIFOLD	263
SENSOR GP-TEMPERATURE–TRANSMISSION OIL	262
SERVICE GP-POWER TRAIN (MOTOR GRADER)	160
SHAFT GP-DRIVE	389
SHAFT GP-INPUT	390
SHAFT GP-PUMP DRIVE	608
SHIELD GP-DRIVE SHAFT	491
SNOW AR-MOTOR GRADER	4
	5
SOFTWARE GP-ENGINE (VARIABLE HORSEPOWER)	997
SOFTWARE GP-POWER TRAIN	159
SOFTWARE GP-POWER TRAIN (MOTOR GRADER)	160
SOLENOID AS (24 VOLT)	270
STARTING AID GP-ETHER	265
	267
	268
STARTING MOTOR GP-ELECTRIC	270
	272
STEERING AR-SECONDARY	609
STEP GP	492
STRAINER (FILLER) (HYDRAULIC OIL TANK)	612

INDEX

Name	Page
STRAINER-FUEL	119
	121
SUPPORT AR-REAR CHASSIS	495
SUPPORT AR-REAR CHASSIS–EU	493
	494
SUPPORT GP-ENGINE	56
SUPPORT GP-FUEL TANK	496
SUPPORT GP-PLATFORM–REAR	497
SUPPORT GP-SEAT	953
SUPPRESSION GP-SOUND–ENGINE ENCLOSURE	57
SUSPENSION GP-SEAT	955
	957
SWASHPLATE GP–VARIABLE	610
SWITCH AS (AUTOSHIFT TRANSMISSION)	345
SWITCH AS (AUXILIARY BACKUP)	191
SWITCH AS-BALL (CENTERSHIFT INDICATOR)	296
	300
SWITCH AS (BLADE CUSHION)	280
SWITCH AS (CENTERSHIFT PIN PULLER)	334
SWITCH AS (CENTERSHIFT PIN PULLER)	331
SWITCH AS (DIFFERENTIAL LOCK)	337
	340
SWITCH AS (FRONT DEFROSTER)	856
SWITCH AS-LIMIT (BRAKE PEDAL)	341
SWITCH AS-LIMIT (INCHING PEDAL)	337
	340
SWITCH AS (PANEL BACKLIGHTS)	340
SWITCH AS (PANEL LAMP DIMMER)	337
SWITCH AS-PRESSURE (A/C HIGH/LOW)	898
SWITCH AS-PRESSURE (AIR BRAKES)	296
SWITCH AS-PRESSURE (PARKING BRAKE)	297
SWITCH AS-PRESSURE (PRIMARY STEERING)	300
SWITCH AS-PRESSURE (SECONDARY STEERING)	329
SWITCH AS-PRESSURE (STOP LAMP)	296
	300
SWITCH AS-PUSH BUTTON (DISPLAY MODES)	927
	929
SWITCH AS-PUSH BUTTON (OPERATOR MODE)	925
SWITCH AS (REAR DEFROSTER)	857
SWITCH AS-ROCKER (BLADE FLOOD LAMP)	204
	205
SWITCH AS-ROCKER (BLADE LAMP)	202
SWITCH AS-ROCKER (BLADE)(FRONT FLOODLAMP)	201
SWITCH AS-ROCKER (HEADLIGHTS, TAIL LIGHTS)	222
	225
SWITCH AS-ROCKER (HEADLIGHTS, TAIL LIGHTS)	340
SWITCH AS-ROCKER (HEADLIGHTS, TAIL LIGHTS)	206
	209
	212
	215
	275
SWITCH AS-ROCKER (LIGHTBAR LOW BEAM)	212
	215
	222
SWITCH AS-ROCKER (THROTTLE LOCK SET, RESET)	333
SWITCH AS-ROCKER (WARNING BEACON)	163
SWITCH AS-ROCKER (WORK LIGHTS, FRONT)	225
SWITCH AS-ROTARY (FAN SPEED)	819
	863
	867
SWITCH AS-ROTARY (HEADLIGHT DIMMER)	209
	212
	215
	222
	225
	340
SWITCH AS-ROTARY (HIGH, LOW BEAM)	206
SWITCH AS-ROTARY (TURN SIGNAL)	275
SWITCH AS-ROTARY (24-VOLT) (FRONT WIPER)	291
SWITCH AS-ROTARY (24-VOLT) (FRONT WIPER CONTROL)	282
SWITCH AS (TAIL LAMP)	337
SWITCH AS-TEMPERATURE (HYDRAULIC OIL)	296
	300
SWITCH AS-TEMPERATURE (REFRIGERANT)	819
SWITCH AS (THROTTLE HOLD MODE)	331
SWITCH AS (THROTTLE LOCK ENABLE)	333
SWITCH AS (THROTTLE SPEED SET)	331
SWITCH AS-TOGGLE (ENGINE SHUTDOWN)	324
SWITCH AS-TOGGLE (GROUND LEVEL ENGINE SHUTDOWN)	305
SWITCH AS (WARNING BEACON)	163
	247
	248
	249
SWITCH AS-WIPER (24-VOLT) (REAR)	983
	985
	987
	989

INDEX

Name	Page
SWITCH AS (24-VOLT) (AUXILIARY BACK-UP ALARM)	193
SWITCH AS (24-VOLT) (CAB-RH FLOOD)	235 237
SWITCH AS (24-VOLT) (ETHER STARTING AID)	268
SWITCH AS (24-VOLT) (FLOODLAMP RH)	218 220
SWITCH AS (24-VOLT) (HEATED MIRRORS)	906 910
SWITCH AS (24-VOLT) (MOLDBOARD)	287 289
SWITCH AS (24-VOLT) (SECONDARY STEERING)	329
SWITCH GP-BYPASS–OIL FILTER–TRANSMISSION OIL FILTER	273
SWITCH GP-DISCONNECT–BATTERY	274
SWITCH GP-LIGHT–TURN	275
SWITCH GP-MAGNETIC–MAIN RELAY	278
SWITCH GP-MAGNETIC–SECONDARY STEERING RELAY	277
SWITCH GP-MAGNETIC (24-VOLT) (CRANKING RELAY)	310
SWITCH GP-ROTARY (TURN SIGNAL, HAZARD)	206 209 212 215 222 225 275
SWITCH GP-ROTARY (TURN SIGNAL, HAZARD)	340
SWITCH GP-START (KEY)	331 333
SWITCH GP-WIPER	279 991
SWITCH GP-WIPER (24-VOLT) (FRONT INTERMITTENT)	285
SWIVEL GP	611

T

TANDEM & COVER GP	391
TANK & FILTER GP-HYDRAULIC	612
TANK & MTG GP-HYDRAULIC	614
TANK GP-AIR	512
TANK GP-FUEL	116
TANK GP-FUEL–LH	119 121 123
TANK GP-FUEL–RH	117 118 124
TIE ROD GP (STEERING)	537
TOOTH GP-SCARIFIER	814 815
TRANSMISSION AR	392
TURBOCHARGER GP	98 99

U

UNIVERSAL JOINT GP	394

V

VALVE & LINKAGE GP	641
VALVE & LINKAGE GP–BANK 4-LH – BANK 5-RH	658
VALVE & LINKAGE GP–BANK 4-LH–BANK 5-RH	656
VALVE & LINKAGE GP–BANK 4-LH,RH	623 635
VALVE & LINKAGE GP–BANK 4-RH–BANK 5-LH	617 621 645
VALVE & LINKAGE GP–BANK 4-RH–BANK 7-LH	660
VALVE & LINKAGE GP–BANK 5-LH–BANK 6-RH	664
VALVE & LINKAGE GP–BANK 5 LH-RH	615 639
VALVE & LINKAGE GP–BANK 5-LH,RH	629 649
VALVE & LINKAGE GP–BANK 5-RH–BANK 6-LH	619 643
VALVE & LINKAGE GP–BANK 5-RH–BANK 7-LH	625 627 637 666
VALVE & LINKAGE GP–BANK 5-RH, BANK 7-LH	647
VALVE & LINKAGE GP–BANK 6-LH,RH	631 651 668
VALVE & LINKAGE GP–BANK 6-RH–BANK 7-LH	633 670
VALVE & LINKAGE GP–BANK 6-RH, BANK 7-LH	653
VALVE & LINKAGE GP–BANK 7-LH,RH	662
VALVE & MTG GP-DIFF LOCK	395
VALVE-DRAIN (AIR TANK)	512
VALVE-DRAIN (ENGINE COOLANT)	79
VALVE-DRAIN (RADIATOR)	474
VALVE GP-AIR CONTROL–PARKING BRAKE	514

INDEX

Name	Page
VALVE GP-AIR CONTROL–SERVICE BRAKE	515
VALVE GP-BANK 4–LH	674
	676
VALVE GP-BANK 4–RH	673
	675
VALVE GP-BANK 5–LH	677
	680
	681
VALVE GP-BANK 5–RH	678
	679
	682
VALVE GP-BANK 6–LH	683
	685
	687
VALVE GP-BANK 6–RH	684
	686
	688
VALVE GP-BANK 7	694
VALVE GP-BANK 7–LH	690
	692
	693
	695
	696
VALVE GP-BANK 7–RH	689
VALVE GP-CHECK	125
	126
	127
VALVE GP-COMBINATION	697
	699
VALVE GP-CONTROL–ARTICULATION	701
VALVE GP-CONTROL–BLADE LIFT	707
	715
VALVE GP-CONTROL–BLADE LIFT (LH)	731
VALVE GP-CONTROL–BLADE LIFT (RH)	729
VALVE GP-CONTROL–BLADE TIP	709
VALVE GP-CONTROL–CENTERSHIFT	703
VALVE GP-CONTROL–CIRCLE DRIVE	711
VALVE GP-CONTROL–PLOW ANGLE	747
VALVE GP-CONTROL–PLOW DOZER	745
VALVE GP-CONTROL–PLOW/DOZER ANGLE	723
VALVE GP-CONTROL–PLOW/DOZER LIFT	721
	733
VALVE GP-CONTROL–RIPPER	719
	727
VALVE GP-CONTROL–SCARIFIER	717
	725
VALVE GP-CONTROL–SIDESHIFT	713
VALVE GP-CONTROL–WHEEL LEAN	705
VALVE GP-CONTROL–WING LIFT	737
	739
	741
VALVE GP-CONTROL–WING TILT	735
	743
VALVE GP-CONTROL (AIR)	515
VALVE GP-CONTROL (BLADE LIFT)	674
	677
	678
	683
	687
	690
	692
	693
	696
VALVE GP-CONTROL (BLADE TIP)	674
	676
	677
	681
	683
	687
	695
	696
VALVE GP-CONTROL (BLADE TIP)	678
	680
	685
	690
	692
	693
	694
VALVE GP-CONTROL (CIRCLE DRIVE)	674
	676
	677
	678
	680
	681
	683
	685
	687
	692
	693
	694
	695
	696
VALVE GP-CONTROL (CIRCLE DRIVE) (LH)	690
VALVE GP-CONTROL (SCARIFIER)	678
	692
VALVE GP-CONTROL (SIDESHIFT)	676
	677
	678
	680
	681
	683
	685
	687
	690
	692
	693
	694
	695
	696

INDEX

Name	Page
VALVE GP-CONTROL (SIDESHIFT)	674
VALVE GP-ETHER STARTING (24-VOLT)	265
VALVE GP-FLUID SAMPLING (STEERING)	592
VALVE GP-PUMP CONTROL	749
VALVE GP-PUMP CONTROL–HYDRAULIC FAN	751
VALVE GP-PURGE	753
VALVE GP-PURGE–IMPLEMENT SIGNAL	754
VALVE GP-RELIEF	828
VALVE GP-RELIEF–BLADE LIFT–PLOW, BULLDOZER LIFT	756
VALVE GP-RELIEF–BLADE TIP–SIDESHIFT	759
VALVE GP-RELIEF–HYDRAULIC	760
	761
	762
	763
VALVE GP-RELIEF–IMPLEMENT SIGNAL	757
VALVE GP-RELIEF–LIFT	767
VALVE GP-RELIEF–MAIN	755
VALVE GP-RELIEF–PLOW ANGLE–RIPPER–WING LIFT–WING TILT	765
VALVE GP-RELIEF–RIPPER	764
VALVE GP-RELIEF–SCARIFIER	766
VALVE GP-RELIEF–SCARIFIER–WING LIFT	768
VALVE GP-RELIEF–STEERING	758
VALVE GP-SELECTOR & PRESS CONT–DIRECTION & RANGE	396
VALVE GP-SELECTOR & PRESS CONT–SPEED & RANGE	399
VALVE GP-SHUTTLE	769
	770
VALVE GP-SOLENOID–AIR	518
VALVE GP-SOLENOID–AIR HORN	517
VALVE GP-SOLENOID–BLADE CUSHION	771
VALVE GP-SOLENOID–CENTERSHIFT LOCK	772
VALVE GP-SOLENOID–DIFFERENTIAL LOCK	402
VALVE GP-SOLENOID–DIRECTION–SPEED	403
VALVE GP-SOLENOID & MANIFOLD–BLADE CUSHION –BLADE CUSHION	773
VALVE GP-SOLENOID & MANIFOLD–FAN SPEED	774
VALVE GP-TIRE	420
	421
	422
	423
	424
	425
	426
	427
	428
	429
	430
	431
	432
	433
	434
	435
	436
	437
	438
	439
	440
	441
	442
	443
	444
	445
	446
	447
	450
	452
	453
	454
VALVE GP-TRANSMISSION CONTROL	404
VALVE MECHANISM GP	58
VALVE (PRESSURE RELIEF)	10

W

WASHER GP-WINDOW–FRONT	959
	962
WASHER GP-WINDOW–REAR	961
WHEEL & TIRE AR	406
	407
	408
	409
	410
	411
	412
	413
	414
	415
	416
	417
	418
	419
WHEEL & TIRE GP	420
	421
	422
	423
	424
	425
	426
	427
	428
	429
	430
	431

INDEX

Name	Page
	432
	433
	434
	435
	436
	437
	438
	439
	440
	441
	442
	443
	444
	445
	446
	447
	448
WHEEL AR	448
	449
	450
WHEEL GP	451
	453
	454
WHEEL GP–BAREFOOT	450
	452
	453
WINDOW GP–SIDE SLIDING–HIGH PROFILE	965
WINDOW GP–SIDE SLIDING–LOW PROFILE	966
WINDOW GP–SIDE SLIDING HP	967
WINDOW GP–VENT–CAB	964
WINDOW GP-CAB–LH	971
WINDOW GP-CAB–RH	969
WINDOW GP-CAB–SIDE SLIDING–LOW PROFILE	968
WIPER AR-WINDOW–REAR–HIGH PROFILE	973
WIPER AR-WINDOW–REAR–LOW PROFILE	973
WIPER GP-WINDOW	974
WIPER GP-WINDOW–FRONT	991
WIPER GP-WINDOW–FRONT–HIGH PROFILE	979
	981
	992
	993
WIPER GP-WINDOW–FRONT–LOW PROFILE	975
	977
WIPER GP-WINDOW–HIGH PROFILE	994
WIPER GP-WINDOW–REAR–HIGH PROFILE	987
	989
WIPER GP-WINDOW–REAR–LOW PROFILE	983
	985
WIRING GP-BLADE CUSHION	280
WIRING GP-CAB	282
	284
	291
WIRING GP-CAB–EU	285
WIRING GP-CAB–MOLDBOARD	287
	289
WIRING GP-ENGINE	293
WIRING GP-FRONT	296
WIRING GP-FRONT–EU	300
WIRING GP-REAR	305
	324
WIRING GP-REAR–BACKUP ALARM, LIGHTS	315
WIRING GP-REAR–BACKUP ALARM, LIGHTS, EU	320
WIRING GP-REAR–BACKUP ALARM, LIGHTS, EU	317
WIRING GP-REAR–SERVICE CENTER	310
WIRING GP-SECONDARY STEERING	329
WIRING GP-SHIFT CONSOLE	331
	333
WIRING GP-STEERING CONSOLE	337
WIRING GP-STEERING CONSOLE–EU	340
WIRING GP-UNIT INJECTOR	344

INDEX

Désignation	Page
A	
ACCOUDOIR (ASS)	823
	824
ACCOUPLEMENT DE TORSION (ASS)	370
ACCUMULATEUR	898
ACCUMULATEUR - AMORTISSEUR DE LAME (VERSION)	520
ACCUMULATEUR (ASS)	520
	521
ACCUMULATEUR (ENS) (DIRECTION)	592
ACCUMULATEUR ET MONTAGE - HYDRAULIQUE (ASS)	519
ACCUMULATEUR HYDRAULIQUE (ASS)	522
	523
	524
ADAPTATEUR DE FILTRE A AIR (ASS)	97
ALLUME-CIGARE (ENS) (CIGARE, 24V)	333
ALLUME-CIGARE (ENS) (CIGARE, 24V)	331
ALTERNATEUR DE CHARGE (ASS)	132
	133
	134
	135
ALTERNATEUR DE CHARGE (ASS)	130
AMPOULE (*24-VOLT) (CHANG. AUTOMATIQUE VITESSE)	345
AMPOULE (*24-VOLT) (CLIGNOTANT)	173
	175
AMPOULE (*24-VOLT) (DÉGIVREUR ARRIÈRE)	857
AMPOULE (*24-VOLT) (DÉGIVREUR AVANT)	856
AMPOULE (*24-VOLT) (FEUX DE ROUTE/FEUX DE CROISEMENT)	173
	175
AMPOULE (*24-VOLT) (LAME)(PROJECTEUR AVANT)	201
AMPOULE (*24-VOLT) (PLAFONNIER)	165
AMPOULE (*24-VOLT) (POSITION)	173
	175
AMPOULE (*24-VOLT, 21-WATT) (CLIGNOTANT)	173
	175
AMPOULE (24 VOLTS)	163
	206
	212
	215
	222
	223
	225
	275
	331
	333
	340
	819
	863
	913
AMPOULE (24 VOLTS)	235
	237
	247
	248
	249
	268
	287
	289
	329
	331
	333
	334
	337
	340
AMPOULE (24 VOLTS)	177
AMPOULE (24 VOLTS) (*AUXILIARY BACK-UP ALARM)	193
AMPOULE (24 VOLTS) (CONTACTEUR D'AMORTISSEUR DE LAME)	280
AMPOULE (24 VOLTS) (LAMPE D'APPOINT AUXILIAIRE)	191
AMPOULE (24 VOLTS) (MANOMÈTRE)	925
	927
	929
AMPOULE (24 VOLTS) (MODULE QUATRE INSTRUMENTS)	925
	929
AMPOULE (24 VOLTS) (*NG)	334
AMPOULE (24 VOLTS) (PHARES AVANT, FEUX ARRIÈRE)	209
AMPOULE (24 VOLTS) (PLAQUE D'IMMATRICULATION)	182
AMPOULE (24 VOLTS) (POSITION DE CABINE)	181
AMPOULE (24 VOLTS) (PROJECTEUR DE LAME)	202
AMPOULE (24 VOLTS) (PROJECTEUR DROIT)	218
	220
AMPOULE (24 VOLTS) (PROJECTEUR SUR LAME)	204
	205
AMPOULE (24 VOLTS) (QUATRE INSTRUMENTS)	927
AMPOULE (24 VOLTS) (RÉTROVISEURS À CHAUFFAGE INTÉGRÉ)	906
	910
AMPOULE (24 VOLTS) (SIGNAL)	179
AMPOULE (24 VOLTS) (TÉMOIN D'ACTION PRINCIPAL)	927

* TRADUCTION NON DISPONIBLE AU MOMENT DE LA PUBLICATION

INDEX

Désignation	Page
AMPOULE (24 VOLTS) (TÉMOIN D'ACTIONNEMENT)	929
AMPOULE (24 VOLTS) (TÉMOIN PRINCIPAL DE MISE EN GARDE EMS)	925
AMPOULE (24 VOLTS) (TEMPÉRATURE, VITESSE DE VENTILATEUR)	867
AMPOULE (24 VOLTS) (TÊTE)	179
AMPOULE (24 VOLTS) (VERROUILLAGE DE DIFFÉRENTIEL)	925 927
AMPOULE (24V, 21W)	317 320
AMPOULE (24V, 21W) (SIGNAL)	177 179
AMPOULE (24V, 3W) (TABLEAU DE BORD)	925 927
AMPOULE (24V, 3W) (TÉMOIN LUMINEUX)	929
AMPOULE (24V, 5W)	317 320
AMPOULE (24V, 70W)	187
AMPOULE (24V, 70W) (GYROPHARE)	186
ARBRE A CAMES (ASS)	20
ARBRE D'ENTRAÎNEMENT (ASS)	389
ARBRE D'ENTRAÎNEMENT DE POMPE (ASS)	608
ARBRE D'ENTRÉE (ASS)	390
ARTICULATION DE DIRECTION (ASS)	489
ATTELAGE D'ARTICULATION (ASS)	484
ATTELAGE-REMORQUAGE (ASS)	486 487
AUTOCOLLANT - FUSIBLE	285
AUTOCOLLANT - FUSIBLE (DROITE)	337
AUTOCOLLANT - FUSIBLE (GAUCHE)	337 340
AUTOCOLLANT - FUSIBLE (TÉMOINS, LAVE-GLACE, ESSUIE-GLACE, DÉGIVREUR)	282
AUTOCOLLANT-COMMANDE (CHAUFFAGE ET CLIMATISATION)	819
AUTOCOLLANT-COMMANDE (TEMPÉRATURE, VITESSE DE VENTILATEUR)	867
AUTOCOLLANT-COMMANDE (TEMPÉRATURE, VITESSE DE VENTILATEUR)	863
AUTOCOLLANT (COUVERCLE NOIR)	365
AUTOCOLLANT DE MISE EN GARDE (PAS DE MARCHEPIED)	119
AUTOCOLLANT DE MISE EN GARDE (RACCORD DE CÂBLE)	999
AUTOCOLLANT DE MISE EN GARDE (VÉRIN HAUTE PRESSION)	999
AUTOCOLLANT D'IDENTIFICATION (*BIODEGRADABLE HYDRAULIC OIL)	557
AUTOCOLLANT D'IDENTIFICATION (NUMÉRO D'ASSEMBLAGE) (CLIMATISEUR)	819
AUTOCOLLANT DU PANNEAU (PANNEAU DE TÉMOIN DE TRANSMISSION)	365
AUTOCOLLANT DU PANNEAU (PANNEAU DE TÉMOINS, DROITE)	927 930
AUTOCOLLANT DU PANNEAU (PANNEAU DE TÉMOINS, GAUCHE)	927 929
AUTOCOLLANT DU PANNEAU (SÉLECTEUR DE VITESSE)	365
AUTOCOLLANT DU PANNEAU (TÉMOINS PRINCIPAUX DE DROITE)	925
AUTOCOLLANT DU PANNEAU (TÉMOINS PRINCIPAUX DE GAUCHE)	925
AUTOCOLLANT-INFORMATION (*ENGINE, HIGH IDLE, HOLD)	365
AUTOCOLLANT-INFORMATION (*ENGINE, LOW IDLE, HOLD)	365
AUTOCOLLANT-INFORMATION (FILTRE À AIR)	90
AUTOCOLLANT (LAVE-VITRE)	291
AUTOCOLLANT (PAS DE MARCHEPIED)	119
AUTOCOLLANT (PAS DE MARCHEPIED)	117
AUTOCOLLANT (PLAQUE-NOM) (ACCUMULATEUR)	522
AUTOCOLLANT (PLAQUE-NOM) (ACCUMULATEUR)	592
AUTOCOLLANT-RÉFLECTEUR (JAUNE)	1002
AUTOCOLLANT (VISIÈRE CATERPILLAR)	921 922
AUXILIAIRE DE DÉMARRAGE À L'ÉTHER	267 268
AUXILIAIRE DE DÉMARRAGE À L'ÉTHER	265
AVERTISSEUR (ASS)	128 129
AXE DE CULBUTEUR (ASS)	53

B

BALAI D'ESSUIE-GLACE (ENS)	964 992
BALAI D'ESSUIE-GLACE (ENS)	994
BALAI D'ESSUIE-GLACE (ENS)	993
BALAI D'ESSUIE-GLACE (ENS) (ARRIÈRE)	989
BALAI D'ESSUIE-GLACE (ENS) (INFÉRIEUR AVANT)	975 977
BALAI D'ESSUIE-GLACE (ENS) (PROFIL BAS ARRIÈRE)	985

* TRADUCTION NON DISPONIBLE AU MOMENT DE LA PUBLICATION

INDEX

Désignation	Page
BALAI D'ESSUIE-GLACE (ENS) (PROFIL BAS ARRIÈRE)	983
BALAI D'ESSUIE-GLACE (ENS) (PROFIL ÉLEVÉ ARRIÈRE)	987
BALAI D'ESSUIE-GLACE (ENS) (PROFIL ÉLEVÉ AVANT INFÉRIEUR)	979
BALAI D'ESSUIE-GLACE (ENS) (PROFIL ÉLEVÉ AVANT INFÉRIEUR)	981
BALAI D'ESSUIE-GLACE (ENS) (PROFIL ÉLEVÉ SUPÉRIEUR AVANT)	979
BALAI D'ESSUIE-GLACE (ENS) (PROFIL ÉLEVÉ SUPÉRIEUR AVANT)	981
BALAI D'ESSUIE-GLACE (ENS) (SUPÉRIEUR AVANT)	977
BALAI D'ESSUIE-GLACE (ENS) (SURBAISSÉ, AVANT SUPÉRIEUR)	975
BARRE D'ACCOUPLEMENT (ASS) (DIRECTION)	537
BARRE D'ATTELAGE (ASS)	779
BATTERIE (ASS)	136
	137
	138
	139
	495
BATTERIE (ASS) (12 VOLTS)	138
BATTERIE (ASS) (12 VOLTS) (1100A)	136
BATTERIE (12 VOLTS) (HUMIDE)	137
BATTERIE (12V, 750A)	139
BLINDAGE DES CANALISATIONS DES FREINS	478
BLINDAGE INFÉRIEUR (ASS)	477
BLOC-CYLINDRES - COUVERCLE (ASS)	21
BLOC-CYLINDRES (ASS)	27
BLOC-CYLINDRES (ENS)	25
	26
BLOC DE BRANCHEMENT (ASS)	140
*BODY AS-GAUGE	85
BOÎTE DE VITESSES (VERSION)	392
BOUCHON AIMANTÉ (RETOUR AU CARTER)	458
BOUCHON DE BLOC-CYLINDRES (ASS)	50
BOUCHON DE GOULOTTE DE CARBURANT (ASS) (SERVICE INTENSIF, VERROUILLABLE)	119
	121
BOUCHON DE GOULOTTE DE REMPLISSAGE D'HUILE MOTEUR	62
BOUCHON DE GOULOTTE DE REMPLISSAGE (RÉSERVOIR D'HUILE HYDRAULIQUE)	612
BOUCHON DE MOTEUR (ASS)	51
BOUCHON DE REMPLISSAGE D'HUILE MOTEUR (ASS)	62
BOULONNERIE (ASS)	471
BOULONNERIE DE LA CULASSE (ASS)	34
BOULONNERIE DU RADIATEUR (ASS)	75
BOUTON D'AMORTISSEUR (SIÈGE)	957
BOUTON (ENS)-POIDS	876
*BOX GP-TOOL	995
*BREATHER AS (REMPLISSAGE D'HUILE DE TRANSMISSION)	375

C

Désignation	Page
CABINE - REVÊTEMENT (ASS)	884
	886
	889
	894
	896
CABINE (ASS)	825
	826
CABINE-FAISCEAU DE CÂBLES (ENS)	193
	235
	237
	906
CABINE-FAISCEAU DE CÂBLES (ENS)	289
CABINE-FAISCEAU DE CÂBLES (ENS) (ARRIÈRE)	282
	285
CABINE-FAISCEAU DE CÂBLES (ENS) (AVANT)	285
CABINE-FAISCEAU DE CÂBLES (ENS) (PANNEAU D'INTERRUPTEURS)	282
	285
CABINE ROPS FERMÉE (ASS)	935
	936
CABINE SANS ROPS (VERSION)	825
CABINE (VERSION)	825
CABLAGE AR (ASS)	305
	310
	320
	324
CABLAGE AR (ASS)	315
	317
CABLAGE AV (ASS)	296
CABLAGE AV (ASS)	300
CABLAGE DE CABINE (ASS)	284
	285
	287
CABLAGE DE CABINE (ASS)	282
	289
	291
CABLAGE DE DIRECTION AUXILIAIRE (ASS)	329
CABLAGE DE LA CONSOLE DE CHANGEMENTS DE VITESSE	331
	333

* TRADUCTION NON DISPONIBLE AU MOMENT DE LA PUBLICATION

INDEX

Désignation	Page
CABLAGE DE LA CONSOLE DE DIRECTION	337
	340
CABLAGE DE MOTEUR (ASS)	293
CABLAGE D'INJECTEUR	344
CÂBLE D'AMORTISSEUR DE LAME (ASS)	280
CADENAS (ASS)	825
	834
CADENAS (ASS) (BOÎTE À OUTILS)	995
CADENAS (ASS) (ROPS)	934
CANALISATION DE DIRECTION AUXILIAIRE	590
CANALISATIONS D'ACCUMULATEUR (ASS)	558
CANALISATIONS D'AIR (ASS)	91
	92
CANALISATIONS DE CARBURANT (ASS)	105
	106
CANALISATIONS DE CHAUFFAGE (ASS)	900
CANALISATIONS DE CLIMATISEUR (ASS)	898
CANALISATIONS DE DIRECTION (ASS)	592
CANALISATIONS DE GRAISSAGE (ASS)	488
CANALISATIONS DE POMPE (ASS)	576
	579
	582
CANALISATIONS DE RÉCHAUFFEUR DE LIQUIDE DE REFROIDISSEMENT	900
CANALISATIONS D'EAU (ASS)	81
CANALISATIONS D'EAU (ASS)	77
	78
	79
CANALISATIONS D'HUILE DE BOÎTE (ASS)	381
CANALISATIONS D'HUILE DE TURBOCOMPRESSEUR (ASS)	67
CANALISATIONS D'INJECTION DE CARBURANT (ASS)	111
CANALISATIONS DU FILTRE A CARBURANT (ASS)	108
CANALISATIONS DU RIPPER (ASS)	585
	587
	589
CANALISATIONS HYDRAULIQUES (ASS)	560
	562
	563
	564
	566
	569
	571
CANALISATIONS HYDRAULIQUES DE VENTILATEUR (ASS)	572
	574
CANALISATIONS-VIDANGE D'HUILE DE MOTEUR (ASS)	66
CAPTEUR DE PRESSION (ASS)	254
	255
	256
	257
	258
CAPTEUR DE PRESSION (ASS) (VENTILATEUR DE RADIATEUR)	574
CAPTEUR DE TEMPERATURE (ASS)	262
	263
	264
CAPTEUR DE VITESSE (ASS)	259
	260
	261
CARENAGE DE MOTEUR (ASS)	466
	469
CARTER AV (ASS)	39
CARTER DE VOLANT (ASS)	37
CARTER ET PIECES DE BOITE (ASS)	346
*CARTRIDGE AS-DESICCANT (DÉSHYDRATEUR)	501
CEINTURE DE SECURITE (ASS)	939
	940
CEINTURE DE SECURITE (ASS)	950
CEINTURE DE SECURITE (ASS) (RÉTRACTABLE)	947
CENDRIER	886
	889
CERCLE (ASS)	775
	777
CHAINES (ASS)	350
CHANGEMENT DE VITESSES AUTOMATIQUE (VERSION)	345
CHAPEAU - RADIATEUR (*7-PSI)	85
	86
CHAPEAU DE VALVE (TIGE)	446
CHÂSSIS AV (ASS)	472
CHÂSSIS ET CARTER (ASS)	458
CHAUFFAGE DE CABINE (ASS)	863
	867
CHAUFFAGE DE CABINE (VERSION)	861
	862
CHAUFFAGE ET MONTAGE - CABINE (ASS)	861
CLAPET DE DECHARGE (ASS)	755
	756
	757
	758
	759
	760
	761
	762
	763
	764
	765
	766
	767
	768

* TRADUCTION NON DISPONIBLE AU MOMENT DE LA PUBLICATION

INDEX

Désignation	Page
	828
CLAPET DE RETENUE (ENS)	125
	126
	127
CLÉ (COUPE-BATTERIE)	274
CLIGNOTANT (ENS) (12/24V) (CLIGNOTANT, FEUX DE DÉTRESSE)	206
	209
	212
	215
	222
	225
	275
CLIGNOTANT (ENS) (24 VOLTS)	340
CLIMATISEUR (ASS)	819
CLIMATISEUR ET MONTAGE (ASS)	818
CLIMATISEUR (VERSION)	818
COLLECTEUR D'ADMISSION (ASS)	94
COLLECTEUR D'ÉCHAPPEMENT (ASS)	93
COMMANDE DE BOITE DE VITESSES (ASS)	365
COMMANDE DE DIFFÉRENTIEL - VERROUILLAGE (ASS)	363
COMMANDE DE DIRECTION (ASS)	530
COMMANDE DE DIRECTION SECONDAIRE (ASS)	150
COMMANDE DE FREIN DE STATIONNEMENT (ASS)	506
COMMANDE DE RÉGULATEUR (ASS)	100
COMMANDE D'EMBRAYAGE (ASS)	361
COMMANDE ELECTRONIQUE DE MOTEUR (ASS)	146
	147
	148
	149
COMMANDE ET MONTAGE - MOTEUR	144
	145
COMMANDE HYDRAULIQUE DE BOÎTE (ASS)	367
COMMANDE HYDRAULIQUE (VERSION)	525
	526
	527
	528
COMMANDE NON PROGRAMMEE (ASS)	152
COMPRESSEUR D'AIR (ASS)	10
	12
	14
COMPRESSEUR DE REFRIGERANT (ASS)	828
COMPRESSEUR ET MONTAGE - RÉFRIGÉRANT (ASS)	827
CONDENSATEUR ET MONTAGE (RÉFRIGÉRANT)	829
CONDUIT (ASS)	849
CONDUIT ET COMMANDE (ASS)	848
CONSOLE DE CONDUITE (ASS)	830
CONSOLE DE FAISCEAU (ENS)	331
	333
CONSOLE DE FAISCEAU (ENS) (DIRECTION)	337
CONTACTEUR (ENS) (ACTIVATION DU VERROUILLAGE DU PAPILLON DES GAZ)	333
CONTACTEUR (ENS) (AMORTISSEUR DE LAME)	280
CONTACTEUR (ENS) (*AUXILIARY BACKUP)	191
CONTACTEUR (ENS) (BOÎTE AVEC PASSAGE AUTOMATIQUE DES VITESSES)	345
CONTACTEUR (ENS) (DÉGIVREUR ARRIÈRE)	857
CONTACTEUR (ENS) (DÉGIVREUR AVANT)	856
CONTACTEUR (ENS) (EXTRACTEUR DE BROCHE DE DÉPORT DE CERCLE)	334
CONTACTEUR (ENS) (EXTRACTEUR DE BROCHE DE DÉPORT DE CERCLE)	331
CONTACTEUR (ENS) (FEU ARRIÈRE)	337
CONTACTEUR (ENS) (GYROPHARE)	249
CONTACTEUR (ENS) (GYROPHARE)	163
CONTACTEUR (ENS) (GYROPHARE)	247
	248
CONTACTEUR (ENS) (INVERSEUR D'ÉCLAIRAGE DU PANNEAU)	337
CONTACTEUR (ENS) (MODE BLOCAGE DU PAPILLON DES GAZ)	331
CONTACTEUR (ENS) (RÉGLAGE DE VITESSE DU PAPILLON DES GAZ)	331
CONTACTEUR (ENS) (RÉTROÉCLAIRAGE DE PANNEAU)	340
CONTACTEUR (ENS) (VERROUILLAGE DE DIFFÉRENTIEL)	337
	340
CONTACTEUR (ENS) (24 VOLTS) (*AUXILIARY BACK-UP ALARM)	193
CONTACTEUR (ENS) (24 VOLTS) (BOUCLIER)	289
CONTACTEUR (ENS) (24 VOLTS) (BOUCLIER)	287
CONTACTEUR (ENS) (24 VOLTS) (CABINE-PROJECTEUR DROIT)	235
	237
CONTACTEUR (ENS) (24 VOLTS) (DÉMARRAGE À L'ÉTHER)	268
CONTACTEUR (ENS) (24 VOLTS) (DIRECTION AUXILIAIRE)	329
CONTACTEUR (ENS) (24 VOLTS) (PROJECTEUR DROIT)	218
	220

* TRADUCTION NON DISPONIBLE AU MOMENT DE LA PUBLICATION

INDEX

Désignation	Page
CONTACTEUR (ENS) (24 VOLTS) (RÉTROVISEURS À CHAUFFAGE INTÉGRÉ)	906
CONTACTEUR (ENS) (24 VOLTS) (RÉTROVISEURS À CHAUFFAGE INTÉGRÉ)	910
CONTACTEUR MAGNETIQUE (ASS)	277 278
CONTACTEUR MAGNETIQUE (ASS) (24 VOLTS) (RELAIS DE DÉMARRAGE)	310
CONTACTEUR ROTATIF (ASS) (CLIGNOTANTS, FEUX DE DÉTRESSE)	340
CONTACTEUR ROTATIF (ASS) (CLIGNOTANTS, FEUX DE DÉTRESSE)	206 209 212 215 222 225 275
*CONTROL GP-HYDRAULIC LOCKOUT	529
*CONTROL GP-UNPROGRAMMED	151
*CORE AS	368
*CORE AS-ENGINE OIL COOLER	368
CORPS D'INDICATEUR (NIVEAU DE LIQUIDE DE REFROIDISSEMENT)	86
COURONNE ET DIFFERENTIEL (ASS)	371
COURROIE	187
COURROIE MULTIPLE (ALTERNATEUR ET CLIMATISEUR)	818
COURROIE MULTIPLE (ALTERNATEUR SANS CLIMATISEUR)	134
COUVERCLE DE PROTECTION (ASS)	463
COUVERCLE DE PROTECTION (ASS)	462
COUVERCLE DE VISITE (ASS)	459 461
COUVERCLE INFÉRIEUR-DOSSIER (ASS)	918
CREPINE (GOULOTTE DE REMPLISSAGE) (RÉSERVOIR D'HUILE HYDRAULIQUE)	612
CRIC - HYDRAULIQUE	997
CULASSE (ASS)	31 32
CULASSE (ENS)	29
CULBUTERIE (ASS)	58
CYLINDRE D'ETHER (ENS)	265
CYLINDRE D'ETHER (ENS)	268

D

Désignation	Page
DÉMARREUR ÉLECTRIQUE (ASS)	270 272
DENT DE SCARIFICATEUR (ASS)	814 815
DESHYDRATEUR (ASS)	498 499 501
DESHYDRATEUR (ASS) (DÉSHYDRATEUR)(24 VOLTS)	501
DIFFERENTIEL (ASS)	373
DIODE (LED)	247 248
DIRECTION AUXILIAIRE (VERSION)	609
DISJONCTEUR (ASS)	141 142 143
DISJONCTEUR DE SECURITE (ENS) (PÉDALE D'APPROCHE LENTE)	340
DISJONCTEUR DE SECURITE (ENS) (PÉDALE D'APPROCHE LENTE)	337
DISJONCTEUR DE SECURITE (ENS) (PÉDALE DE FREIN)	341
DISJONCTEUR (ENS) (105A) (ALTERNATEUR)	143
DISJONCTEUR (ENS) (15A) (COMMANDE DU MOTEUR)	311
DISJONCTEUR (ENS) (15A) (PHARES AVANT)	141 142
DISJONCTEUR (ENS) (15A) (PROJECTEURS DE TRAVAIL AVEC BARRE LUMINEUSE)	141
DISJONCTEUR (ENS) (80A) (ALTERNATEUR)	310
DISJONCTEUR (ENS) (80A) (PRINCIPAL)	310
DISPOSITIF D'ARRÊT DE DISTRIBUTEUR (ASS)	551 552
DISTRIBUTEUR (ASS)	701 703 705 707 709 711 713 715 717 719 721 723 725 727 729 731 733 735 737 739

* TRADUCTION NON DISPONIBLE AU MOMENT DE LA PUBLICATION

INDEX

Désignation	Page
	741
	743
	745
	747
DISTRIBUTEUR (ASS) (AIR)	515
DISTRIBUTEUR (ASS) (DÉPORT LATÉRAL)	676
	677
	678
	680
	681
	683
	685
	687
	690
	692
	693
	694
	695
	696
DISTRIBUTEUR (ASS) (DÉPORT LATÉRAL)	674
DISTRIBUTEUR (ASS) (DEVERS DE LAME)	674
	676
	677
	678
	680
	681
	683
	685
	687
	690
	692
	693
	694
	695
	696
DISTRIBUTEUR (ASS) (ENTRAÎNEMENT DE CERCLE)	674
	676
	677
	678
	680
	681
	683
	685
	687
	692
	693
	694
	695
	696
DISTRIBUTEUR (ASS) (ENTRAÎNEMENT DE CERCLE) (GAUCHE)	690

Désignation	Page
DISTRIBUTEUR (ASS) (LEVAGE DE LAME)	677
	678
	683
	687
	690
	692
	693
	696
DISTRIBUTEUR (ASS) (LEVAGE DE LAME)	674
DISTRIBUTEUR (ASS) (SCARIFICATEUR)	678
	692
DISTRIBUTEUR D'AIR (ASS)	514
	515
DISTRIBUTEUR DE BOITE (ASS)	404
DISTRIBUTEUR 4 ÉLÉMENTS (ASS)	673
	674
	675
	676
DISTRIBUTEUR 5 ÉLÉMENTS (ASS)	677
	678
	679
	680
	681
	682
DISTRIBUTEUR 6 ÉLÉMENTS (ASS)	683
	684
	685
	686
	687
	688
DISTRIBUTEUR 7 ÉLÉMENTS (ASS)	689
	690
	692
	693
	694
	695
	696
*DOOR GP (*AIR VENT)	886
	889
	896

E

EAU DES CHEMISES - RECHAUFFEUR (ASS)	161
	162
ÉCLAIRAGE - AVERTISSEUR (ASS)	244
	245
	247
ÉCLAIRAGE - AVERTISSEUR (ASS)	248
ÉCLAIRAGE - FEUX DE ROUTE (ASS)	241
ÉCLAIRAGE - GYROPHARE (ASS)	249
ÉCLAIRAGE - PROJECTEURS (ASS)	195

* TRADUCTION NON DISPONIBLE AU MOMENT DE LA PUBLICATION

INDEX

Désignation	Page
	196
	197
	199
	201
	202
	204
	205
	206
	209
	212
	215
	218
	220
	222
	225
	228
	230
	233
	237
	239
	240
ÉCLAIRAGE - PROJECTEURS (ASS)	232
ÉCLAIRAGE - PROJECTEURS (ASS)	235
ECLAIRAGE AR (ASS)	193
ECLAIRAGE AR (ASS)	191
ÉCLAIRAGE CLIGNOTANT	242
	243
ÉCLAIRAGE-PROJECTEURS (VERSION)	188
	189
ÉCLAIRAGE (VERSION)-PROJECTEUR & SIGNAL	190
ÉCRAN D'ARBRE MOTEUR (ASS)	491
ÉCRAN (DISTRIBUTEUR DE BOÎTE DE VITESSES)	404
ÉCRAN MAGNÉTIQUE (ASS)	388
ÉCRAN MAGNÉTIQUE (BOÎTE DE VITESSES)	388
ÉCRAN MAGNÉTIQUE (HUILE DE BOÎTE)	346
ÉLECTRONIQUE DE TRANSMISSION (ASS)	159
	160
ÉLECTRONIQUE-MONITEUR (ASS)	159
ÉLÉMENT DE FILTRE À HUILE (ENS) (GRANDE EFFICACITÉ) (BOÎTE DE VITESSES)	381
ÉLÉMENT DE FILTRE À HUILE (ENS) (GRANDE EFFICACITÉ) (BOÎTE DE VITESSES)	378
ÉLÉMENT DE FILTRE À HUILE (ENS) (HYDRAULIQUE) (EFFICACITÉ NORMALE)	612
ÉLÉMENT DE FILTRE (SÉPARATEUR D'EAU) (PRINCIPAL)	104
ÉLÉMENT DE RÉCHAUFFEUR (ENS) (240V, 1250W)	162
ÉLÉMENT DU RÉCHAUFFEUR D'EAU DES CHEMISES (ENS) (*120-VOLT, 1250-WATT)	161
ÉLÉMENT PRINCIPAL (ENS)	90
ÉLÉMENT SECONDAIRE (ENS)	90
EMBOUT (ASS)	782
	783
	784
	785
EMBOUT D'EXTRÉMITÉ (ASS)	786
EMBRAYAGE DE BOÎTE DE VITESSES (ASS)	351
	354
	357
	359
ENTRAÎNEMENT AUXILIAIRE (ASS)	33
ENTRAÎNEMENT DE CERCLE (ASS)	554
ENTRAÎNEMENT DE CHAÎNE (ASS)	350
ENTRAÎNEMENT POUR COURROIE (GYROPHARE)	186
ENTRETIEN DE LA TRANSMISSION (ASS) (MOTOR GRADER)	160
ÉQUIPEMENT POUR DÉPLACEMENT ROUTIER (VERSION)	4
ESSIEU AV (ASS)	455
ESSUIE-GLACE (ASS)	974
	975
	977
	979
	981
	983
	987
	991
	993
	994
ESSUIE-GLACE (ASS)	985
	989
	992
ESSUIE-GLACE (VERSION)	973

F

FAISCEAU ARRIÈRE (ENS)	310
FAISCEAU-BOÎTE DE TRANSMISSION	305
	324
	346
	367
FAISCEAU D'AIDE AU DÉMARRAGE (ENS)	265
FAISCEAU DE CABLES - CAPTEUR (ENS) (FIL DE CALIBRE 14)	254

* TRADUCTION NON DISPONIBLE AU MOMENT DE LA PUBLICATION

INDEX

Désignation	Page
FAISCEAU DE CABLES - TABLEAU DE BORD (ENS)	925, 927
FAISCEAU DE CABLES DE LA PLATE-FORME	296, 300
FAISCEAU DE CABLES DU TABLEAU DE BORD (ENS) (RÉTROÉCLAIRAGE DE PANNEAU)	929
FAISCEAU DE CABLES (ENS) (CONSOLE)	340
FAISCEAU DE CABLES (ENS) (ÉLECTRONIQUE DE MOTEUR)	293
FAISCEAU DE CABLES (ENS) (INJECTEUR D'UNITÉ)	344
FAISCEAU DE CHÂSSIS ARRIÈRE	305, 306, 325
FAISCEAU DE CHÂSSIS AVANT (ENS)	300
FAISCEAU DE CHÂSSIS AVANT (ENS)	206, 209, 212, 215
FAISCEAU DE CHÂSSIS AVANT (ENS) (BARRE LUMINEUSE DU NEZ)	222
FAISCEAU DE CHÂSSIS AVANT (ENS) (PROJECTEURS AVANT)	225
FAISCEAU DE CHÂSSIS (ENS)	232, 280
FAISCEAU DE CHÂSSIS (ENS) (BOUCLIER)	233
FAISCEAU DE CHAUFFAGE ET CLIMATISATION	820, 863, 898
FAISCEAU DE CONDENSEUR (ENS) (CLIMATISEUR)	829
FAISCEAU D'ÉCLAIRAGE ARRIÈRE (ENS)	230
FAISCEAU D'ÉCLAIRAGE ARRIÈRE (ENS)	228
FAISCEAU D'ÉCLAIRAGE ARRIÈRE (ENS)	325
FAISCEAU D'ÉCLAIRAGE ARRIÈRE (ENS)	317, 320
FAISCEAU D'ÉCLAIRAGE ARRIÈRE (ENS) (DROITE)	317, 320
FAISCEAU D'ÉCLAIRAGE ARRIÈRE (ENS) (GAUCHE)	318, 320
FAISCEAU D'ÉCLAIRAGE AVANT (ENS)	249, 301
FAISCEAU D'ÉCLAIRAGE AVANT (ENS)	218, 220
FAISCEAU D'ÉCLAIRAGE AVANT (ENS)	235, 237
FAISCEAU D'ÉCLAIRAGE AVANT (ENS) (BARRE LUMINEUSE SURÉLEVÉE)	222
FAISCEAU D'ÉCLAIRAGE AVANT (ENS) (PROJECTEURS)	225
FAISCEAU D'ÉCLAIRAGE (ENS)	212, 215
FAISCEAU D'ESSUIE-GLACE (ENS) (BOÎTIER À FUSIBLES)	291
FAISCEAU D'ESSUIE-GLACE (ENS) (COMMANDE)	291
*FILM (*VHP PLUS)	997
FILTRE A AIR (ASS)	88, 90
FILTRE À AIR (CABINE)	858
FILTRE À AIR DE CABINE (ASS)	858
FILTRE À CARBURANT	119, 121
FILTRE A CARBURANT (ASS)	103
FILTRE A CARBURANT (ENS)	103
FILTRE A HUILE (ASS)	378
FILTRE À HUILE ET MONTAGE (ASS)	376
FILTRE À HUILE MOTEUR (ASS)	63
FILTRE A HUILE MOTEUR (ENS)	63
FILTRE DE SÉPARATEUR D'EAU ET DE CARBURANT (ASS)	104
FLEXIBLE D'ÉVACUATION DES VAPEURS	12, 14
FREIN DE MANOEUVRE - COMMANDE (ASS)	508
FREIN DE MANOEUVRE (ASS)	504
FREIN DE STATIONNEMENT (ASS)	502
FUSIBLE (*10-AMPERE) (DÉGIVREUR ARRIÈRE)	857
FUSIBLE (*10-AMPERE) (DÉGIVREUR AVANT)	856
FUSIBLE (*10-AMPERE) (LAME/ PROJECTEUR AVANT)	201
FUSIBLE (10A)	206, 212, 215, 222, 225, 235, 237, 244, 275, 287, 289, 291, 329, 337, 340
FUSIBLE (10A) (*AUXILIARY BACK-UP ALARM)	193

* TRADUCTION NON DISPONIBLE AU MOMENT DE LA PUBLICATION

INDEX

Désignation	Page
FUSIBLE (10A) (CLIGNOTANT, FEUX DE DÉTRESSE)	209
FUSIBLE (10A) (CONVERTISSEUR)	154
FUSIBLE (10A) (DÉSHYDRATEUR)	498
FUSIBLE (10A) (DÉVOLTEUR POUR COURANT)	156
FUSIBLE (10A) (ESSUIE-GLACE)	989
FUSIBLE (10A) (ESSUIE-GLACE)	987
FUSIBLE (10A) (ESSUIE-GLACE)	983, 985
FUSIBLE (10A) (GYROPHARE)	245, 284
FUSIBLE (10A) (LAMPE D'APPOINT)	191
FUSIBLE (10A) (PROJECTEUR DE LAME)	202
FUSIBLE (10A) (PROJECTEUR DROIT)	218, 220
FUSIBLE (10A) (PROJECTEURS)	204, 205
FUSIBLE (10A) (RÉTROVISEURS À CHAUFFAGE INTÉGRÉ)	906, 910
FUSIBLE (15A)	282, 285, 337, 340
FUSIBLE (15A) (CLIMATISEUR)	818
FUSIBLE (15A) (CONVERTISSEUR DE PUISSANCE)	155
FUSIBLE (15A) (PROJECTEURS DE CABINE)	204, 205
FUSIBLE (15A) (RÉCHAUFFEUR)	861
FUSIBLE (30A)	157

G

*GASKET	58
GICLEUR-ÉTHER (ENS)	268
GOULOTTE DE REMPLISSAGE D'HUILE DE TRANSMISSION	375
GRAISSEUR (CHAPE D'ANCRAGE DU VÉRIN DE DÉPORT DE CERCLE)	534
GROUPE DE ROTATION DE POMPE	606, 607
GROUPE D'ORIENTATION	611

H

HUILE MOTEUR - CARTER (ASS)	45, 47

I

INDICATEUR DE COLMATAGE DE FILTRE À AIR (ASS)	88
INJECTEUR DE CARBURANT (ASS)	114
INSONORISATION (ASS)	57
INTERRUPTEUR - BOUTON-POUSSOIR (ENS) (MODE DU CONDUCTEUR)	925
INTERRUPTEUR - BOUTON-POUSSOIR (ENS) (MODES D'AFFICHAGE)	927, 929
INTERRUPTEUR - DÉRIVATION (ASS)	273
INTERRUPTEUR À BASCULE (ENS) (ARRÊT DE MOTEUR À HAUTEUR D'HOMME)	305
INTERRUPTEUR À BASCULE (ENS) (ARRÊT DU MOTEUR)	324
INTERRUPTEUR BALANCIER (ENS) (GYROPHARE)	163
INTERRUPTEUR BALANCIER (ENS) (INTERRUPTEUR D'ÉCLAIRAGE - POTENCE)	212, 215, 222
INTERRUPTEUR BALANCIER (ENS) (LAME)(PROJECTEUR AVANT)	201
INTERRUPTEUR BALANCIER (ENS) (PHARES AVANT, FEUX ARRIÈRE)	206, 209, 212, 215, 225, 340
INTERRUPTEUR BALANCIER (ENS) (PHARES AVANT, FEUX ARRIÈRE)	222
INTERRUPTEUR BALANCIER (ENS) (PHARES AVANT, FEUX ARRIÈRE)	275
INTERRUPTEUR BALANCIER (ENS) (PROJECTEUR DE LAME)	202, 204
INTERRUPTEUR BALANCIER (ENS) (PROJECTEUR DE LAME)	205
INTERRUPTEUR BALANCIER (ENS) (PROJECTEURS AVANT)	225
INTERRUPTEUR BALANCIER (ENS) (*THROTTLE LOCK SET, RESET)	333
INTERRUPTEUR DE DÉMARRAGE (ASS) (CLAVETTE)	331, 333
INTERRUPTEUR D'ÉCLAIRAGE (ASS)	275
INTERRUPTEUR D'ESSUIE-GLACE (ASS)	279, 991
INTERRUPTEUR D'ESSUIE-GLACE (ASS) (24 VOLTS) (AV, INTERMITTENT)	285

* TRADUCTION NON DISPONIBLE AU MOMENT DE LA PUBLICATION

INDEX

Désignation	Page
INTERRUPTEUR D'ESSUIE-GLACE (24 VOLTS) (ARRIÈRE)	983, 985
INTERRUPTEUR D'ESSUIE-GLACE (24 VOLTS) (ARRIÈRE)	987, 989
INTERRUPTEUR ROTATIF (ENS) (CLIGNOTANT DE DIRECTION)	275
INTERRUPTEUR ROTATIF (ENS) (*HIGH, LOW BEAM)	206
INTERRUPTEUR ROTATIF (ENS) (INVERSEUR D'INTENSITÉ DE PHARES AVANT)	209, 212, 215, 222, 225
INTERRUPTEUR ROTATIF (ENS) (INVERSEUR D'INTENSITÉ DE PHARES AVANT)	340
INTERRUPTEUR ROTATIF (ENS) (VITESSE DU VENTILATEUR)	863, 867
INTERRUPTEUR ROTATIF (ENS) (VITESSE DU VENTILATEUR)	819
INTERRUPTEUR ROTATIF (ENS) (24 VOLTS) (ESSUIE-GLACE AVANT)	291
INTERRUPTEUR ROTATIF (ENS) (24 VOLTS) (*FRONT WIPER CONTROL)	282
INTERRUPTEUR SPHÉRIQUE (ENS) (INDICATEUR DE DÉPORT DE CERCLE)	296, 300
ISOLATION DE CABINE (ASS)	882

J

JANTE (ASS)	450, 451, 452, 453, 454
JAUGE D'HUILE MOTEUR (BAIONNETTE) (ASS)	65
JOINT DE VILEBREQUIN (ASS)	55
JOINT PLAT	76, 117, 118
JOINT UNIVERSEL (ASS)	394

K

KIT - COUSSIN	850, 851
KIT - DÉCHARGE (COMPRESSEUR D'AIR) (COMPRESSEUR D'AIR)	10
KIT D'ATTACHE DE CEINTURE DE SECURITE	955
KIT D'ATTACHE (SIÈGE)	957
KIT DE BAGUE (DÉMARREUR)	270
KIT DE BALAI D'ESSUIE-GLACE (ARRIÈRE)	985
KIT DE BALAI D'ESSUIE-GLACE (PROFIL BAS ARRIÈRE)	983
KIT DE BALAIS (DÉMARREUR)	270
KIT DE BLOC COULISSANT	949
KIT DE BLOC COULISSANT (COMPREND BLOCS ET BOULON)	947
KIT DE BLOC COULISSANT (COMPREND 4 BLOCS)	948
KIT DE BORNE (ALTERNATEUR)	133
KIT DE BORNE D'ALTERNATEUR	130
KIT DE BOULONNERIE	130
KIT DE BOULONNERIE (ALTERNATEUR)	133
KIT DE BOULONNERIE (SIÈGE)	957
KIT DE BRIDE DE FIXATION DE FILTRE A AIR	90
KIT DE CALES (COMPREND 17 CALES)	602
KIT DE CAPTEUR (NIVEAU DE CARBURANT)	119, 121
KIT DE COUSSIN DE SIEGE	941
KIT DE COUSSIN DE SIEGE (VINYLE)	943
KIT DE COUSSINET	877
KIT DE COUSSINET (ALTERNATEUR)	133
KIT DE COUSSINET DE VILEBREQUIN (COMPRESSEUR D'AIR)	10
KIT DE CULASSE (COMPRESSEUR D'AIR)	10
KIT DE DIAPHRAGME	871
KIT DE FILTRE DE SÉPARATEUR D'EAU ET DE CARBURANT	104
KIT DE GAINE	955
KIT DE JOINTS	521, 523, 530, 540, 545, 771, 772, 774
KIT DE JOINTS (ACCUMULATEUR D'AMORTISSEUR DE LAME)	522
KIT DE JOINTS (*DIFFERENTIAL LOCK VALVE)	402
KIT DE JOINTS (SOLÉNOÏDE DE BOÎTE DE VITESSES)	403
KIT DE JOINTS (VERROUILLAGE DE DIFFÉRENTIEL)	395
KIT DE LEVIER (DÉMARREUR)	270
KIT DE MARTEAU HYDRAULIQUE	859

* TRADUCTION NON DISPONIBLE AU MOMENT DE LA PUBLICATION

INDEX

Désignation	Page
	860
KIT DE PANNEAU DU DOSSIER DU SIEGE	941
	943
KIT DE PARE-CHOCS (RÉGLAGE DU POIDS)	877
KIT DE PISTON DE COMMANDE	602
KIT DE PISTON EXCENTRIQUE	602
KIT DE POUSSOIR	876
	877
KIT DE PRISE FEMELLE (2 BROCHES)	181
	771
KIT DE PRISE FEMELLE (2 BROCHES)	240
KIT DE PRISE FEMELLE (2 BROCHES)	189
KIT DE PRISE FEMELLE (2 BROCHES) (ÉLECTROVANNE)	518
KIT DE PRISE FEMELLE (2 BROCHES) (LAMPE DE PLAQUE D'IMMATRICULATION)	182
KIT DE PRISE FEMELLE (2 BROCHES) (ORIFICE DE PUISSANCE 12V)	816
	817
KIT DE PRISE FEMELLE (6 BROCHES)	975
KIT DE REDRESSEMENT	919
KIT DE REDRESSEUR	130
KIT DE REGLAGE	919
KIT DE REGLAGE DE SIEGE - INCLINAISON	919
KIT DE RESSORTS	877
KIT DE RESSORTS (REGLAGE DE HAUTEUR)	877
KIT DE ROULEAU	955
KIT DE ROULEAU (SIÈGE)	957
KIT DE SEGMENT STANDARD (COMPRESSEUR D'AIR)	10
KIT DE SOUPAPE DE COMMANDE D'AIR	515
KIT DE TIGE	919
KIT DE VERIFICATION DU REGULATEUR (COMPRESSEUR D'AIR)	512
KIT DE VIS DE RETENUE (M5X0,8X53,24-MM)	160
KIT DE VIS DE RETENUE (*M5X0.8X53.24-MM) (COMMANDE (ASS))	152
KIT D'INDICATEUR (RÉGLAGE DU POIDS)	877
KIT D'INDICATEUR (SIÈGE)	957
KIT D'ISOLANT (DÉMARREUR)	270
KLAXON PNEUMATIQUE (ASS)	871
	872
	874

L

LAME (ASS)	787
	788
	789
	790
LAME DE COUPE (ASS)	792
	793
*LAMP GP-FLOOD (*24-VOLT, VERTICAL MOUNT)	228
	232
*LAMP GP-FLOOD (*24-VOLT, VERTICAL MOUNT) (*BLADE)	201
*LAMP GP-FLOOD (*24-VOLT, VERTICAL MOUNT) (*BLADE)	204
*LAMP GP-FLOOD (*24-VOLT, VERTICAL MOUNT) (*CAB)	195
*LAMP GP-FLOOD (*24-VOLT, VERTICAL MOUNT) (*RH)	218
*LAMP-HALOGEN (*24-VOLT, 65-WATT) (FEUX DE CROISEMENT)	171
*LAMP-HALOGEN (*24-VOLT, 65-WATT) (PROJECTEUR)	166
LAMPE - CLIGNOTANT DE DIRECTION (ASS)	183
	184
	185
LAMPE - GYROPHARE (ASS)	186
	187
LAMPE - PHARE (ASS)	167
LAMPE - PHARE (ASS)	166
LAMPE - PHARE (ASS)	168
	169
	170
LAMPE - PHARE (ASS) (24V, SUPPORT VERTICAL)	222
LAMPE - PHARE (ASS) (24V, SUPPORT VERTICAL) (*CAB-RH)	235
LAMPE - PHARE ET CLIGNOTANT	177
	179
LAMPE (ENS)	317
	320
LAMPE HALOGÈNE (24V, 65W)	168
LAMPE HALOGÈNE (24V, 65W) (FEUX DE CROISEMENT)	197
LAMPE HALOGÈNE (24V, 65W) (FEUX DE ROUTE)	197
LAMPE HALOGÈNE (24V, 65W) (FEUX DE ROUTE)	172
LAMPE HALOGÈNE (24V, 65W) (LAME)	170
LAMPE HALOGÈNE (24V, 65W) (PROJECTEUR)	167
	169
LAMPE-PLAQUE D'IMMATRICULATION (ASS)	182
LAVE-GLACE - VITRE (ASS)	959
	961
	962
LENTILLE	165
LENTILLE (ENS) (FEUX DE CROISEMENT)	197

* TRADUCTION NON DISPONIBLE AU MOMENT DE LA PUBLICATION

INDEX

Désignation	Page
LENTILLE (ENS) (*HEAD)	175
LENTILLE (ENS) (*HEAD)	173
LENTILLE (ENS) (JAUNE) (CLIGNOTANT)	173
	175
LENTILLE (ENS) (JAUNE) (SIGNAL)	177
	179
LENTILLE (ENS) (PHARE AVANT)	179
LENTILLE (ENS) (PHARE AVANT)	177
LENTILLE (ENS) (PHARE AVANT)(FEUX DE CROISEMENT)	171
LENTILLE (ENS) (PLAFONNIER)	167
	168
	169
	170
LENTILLE (GYROPHARE JAUNE)	186
LENTILLE (JAUNE) (CLIGNOTANT)	173
	175
LENTILLE (JAUNE) (SIGNAL)	177
	179
LENTILLE ORANGE (GYROPHARE)	187
LENTILLE (PLAQUE D'IMMATRICULATION)	182
LEVAGE - LAME (ASS)	800
LOGICIEL - TRANSMISSION (ASS)	159
LOGICIEL - TRANSMISSION (ENS) (MOTOR GRADER)	160
LOGICIEL MOTEUR (ASS) (PUISSANCE VARIABLE)	997

M

MANOCONTACT (ENS) (*AIR BRAKES)	296
MANOCONTACT (ENS) (CLIMATISEUR - ÉLEVÉE/FAIBLE)	898
MANOCONTACT (ENS) (DIRECTION AUXILIAIRE)	329
MANOCONTACT (ENS) (DIRECTION PRINCIPALE)	300
MANOCONTACT (ENS) (FEU D'ARRÊT)	296
	300
MANOCONTACT (ENS) (FREIN DE STATIONNEMENT)	297
MANOMETRE D'AIR (ASS) (DROITE)	925
	927
	929
MANOMETRE D'AIR (ASS) (GAUCHE)	925
	927
	929
MARCHEPIED (ASS)	492
MARTEAU ET MONTAGE (ASS)	859
	860
MODULE - QUATRE INSTRUMENTS (ASS)	912
MODULE D'INDICATEUR DE VITESSE ET COMPTE-TOURS (ASS)	913
MODULE D'INDICATEUR DE VITESSE ET COMPTE-TOURS (ASS) (TABLEAU DE BORD)	929
MONTAGE - GYROPHARE (ASS)	163
MONTAGE - IMMATRICULATION (ASS)	490
MONTAGE D'AILERON CHASSE-NEIGE (ASS)	803
MONTAGE D'ALTERNATEUR (ASS)	133
MONTAGE DE CABINE (ASS)	914
MONTAGE DE CULBUTERIE (ASS)	44
MONTAGE DE MOTEUR ET BOÎTE (ASS)	43
MONTAGE DE RADIO (ASS)	880
MONTAGE DE RADIO (VERSION)	879
MONTAGE DE RIPPER (ASS)	802
MONTAGE DU TOIT ROPS (ASS)	915
	917
MOTEUR À ENGRENAGES (ASS)	596
MOTEUR D'ESSUIE-GLACE (ASS)	994
MOTEUR D'ESSUIE-GLACE (ASS) (ARRIÈRE)	985
	989
MOTEUR D'ESSUIE-GLACE (ASS) (AVANT)	993
MOTEUR D'ESSUIE-GLACE (ASS) (SUPÉRIEUR AVANT)	977
	981
MOTEUR D'ESSUIE-GLACE (ASS) (24 VOLTS)	974
MOTEUR D'ESSUIE-GLACE (ASS) (24 VOLTS) (INFÉRIEUR)	981
MOTEUR D'ESSUIE-GLACE (ASS) (24 VOLTS) (INFÉRIEUR AVANT)	977
MOTEUR ELECTRIQUE (ASS)	251
MOTEUR ET VENTILATEUR (ASS)	73
MOTEUR HYDRAULIQUE (ASS)	597
MOTEUR (VERSION)	6
	9
*MOTOR GP-ELECTRIC	852
*MOTOR GP-ELECTRIC (*DEFROSTER FAN)	854

O

OEILLETONS DE LEVAGE MOTEUR (ASS)	42
*ORIFICE	396
	399

P

*PADLOCK GP	614
PALIER PRINCIPAL (ASS) (VILEBREQUIN)	23
PANNEAU DE FAISCEAU (ENS)	191
PANNEAU DE FAISCEAU (ENS)	287
PANNEAU D'INSONORISATION (ASS)	48

* TRADUCTION NON DISPONIBLE AU MOMENT DE LA PUBLICATION

INDEX

Désignation	Page
PARE-POUSSIERE (HUILE HYDRAULIQUE)	592
PARE-SOLEIL (ASS)	938
PHARE AV (ASS)	172
	175
PHARE AV (ASS)	171
	173
PIGNONNERIE AV (ASS)	36
PISTON ET BIELLE (ASS)	49
PLAFONNIER (ASS)	165
PLAFONNIER (ASS) (24V, AVEC CONTACTEUR)	282
	285
	291
PLAQUE - AVERTISSEMENT (PAS DE DÉGAGEMENT)	999
PLAQUE - AVERTISSEMENT (PAS DE DÉGAGEMENT)	462
	463
PLAQUE DE POUSSÉE (ASS)	781
PLAQUE DE RADIATEUR (ASS)	82
PLAQUE D'INSTRUCTIONS (BATTERIE)	310
PLAQUE D'INSTRUCTIONS (CLIMATISEUR)	819
PLAQUE (IDENTIFICATION) (ALTERNATEUR)	310
PLAQUE (IDENTIFICATION) (MOTEUR)	310
PLAQUE SIGNALÉTIQUE (ASS)	996
	997
PLAQUE SIGNALÉTIQUE (ASS)	997
PLAQUE SIGNALETIQUE (*BLADE CENTERSHIFT)	999
PLAQUE SIGNALETIQUE (CLIGNOTANTS, FEUX DE DÉTRESSE)	206
	209
	212
	215
	222
	225
	275
	340
PLAQUE SIGNALÉTIQUE (COMPRESSEUR D'AIR)	10
PLAQUE SIGNALÉTIQUE DE CONTROLEUR (ÉLECTROMODULE DE SURVEILLANCE CATERPILLAR)	925
	929
PLAQUE SIGNALÉTIQUE DE CONTROLEUR (MODULE QUATRE INSTRUMENTS)	927
PLAQUE SIGNALETIQUE (FEUX DE ROUTE, FEUX DE CROISEMENT)	209
	212
	215
	222
	225
	340
PLAQUE SIGNALETIQUE (FEUX DE ROUTE, FEUX DE CROISEMENT)	206
	275
PLAQUES SIGNALETIQUES ET AUTOCOLLANTS (ASS)	2
	1002
	1003
	1004
	1005
PLAQUES SIGNALETIQUES ET AUTOCOLLANTS (ASS)	998
	999
PLAQUES SIGNALETIQUES ET AUTOCOLLANTS (ASS) (RÉFLECTEUR)	1
PLATE-FORME - SUPPORT (ASS)	497
*PLATE-IDENTIFICATION (*MAXIMUM WEIGHT)	4
PLATEAU OSCILLANT (ASS)	610
PNEU - GROUPE DE VALVE	420
	421
	422
	423
	424
	425
	426
	427
	428
	429
	430
	431
	432
	433
	434
	435
	436
	437
	438
	439
	440
	441
	442
	443
	444
	445
	446
	447
	450
	452
	453
	454
POMPE A EAU (ASS)	83
	84

* TRADUCTION NON DISPONIBLE AU MOMENT DE LA PUBLICATION

INDEX

Désignation	Page
POMPE A ENGRENAGES (ASS)	386, 387
POMPE A HUILE MOTEUR (ASS)	68, 69
POMPE A PISTONS (ASS)	602, 604
POMPE D'ALIMENTATION EN CARBURANT (ASS)	113
POMPE D'ALIMENTATION ET MONTAGE (ASS)	113
POMPE D'AMORÇAGE DE CARBURANT (ASS)	115
POMPE DE DIRECTION AUXILIAIRE ET MONTAGE (ASS)	599, 601
POMPE D'INJECTION DE CARBURANT (ASS)	114
POMPE ET MONTAGE - PISTON (ASS)	600
PORTE (ASS)	835, 838
PORTE (ASS) (PURGEUR D'AIR)	894
PORTE-BALAIS (ENS)	270
PORTIÈRE DE CABINE (ASS)	840, 842, 844, 846
POUSSOIR DE SOUPAPE (ASS)	41
PREFILTRE (ASS)	97
PROTECTION DE PLATE-FORME (ASS)	480, 482
PROTECTION DU RÉSERVOIR DE CARBURANT (ASS)	479
PROTÈGE-RADIATEUR ET SUPPORT (ASS)	474

R

Désignation	Page
RADIATEUR (ASS)	85, 86
RALLONGE DE LAME (ASS)	794, 795, 796, 797, 798, 799
RALLONGE DU DOSSIER DE SIEGE	850, 851, 947
RECHAUFFEUR DE CARBURANT (ASS) (SÉPARATEUR D'EAU, 12V)	104
RÉDUCTEURS (ASS)	379
REFROIDISSEMENT (VERSION)	70, 71, 72
REFROIDISSEUR D'ADMISSION ET MONTAGE (ASS)	87
REFROIDISSEUR D'HUILE DE BOÎTE (ASS)	368
REGARD DE NIVEAU (HUILE HYDRAULIQUE)	612
REGULATEUR DE LA TENSION (ENS) (24 VOLTS)	130
REGULATEUR DE LA TENSION (ENS) (24 VOLTS) (ALTERNATEUR)	133
RELAIS (ENS) (24 VOLTS)	193
RELAIS (ENS) (24 VOLTS) (DÉMARRAGE À L'ÉTHER)	265
RELAIS (ENS) (24 VOLTS) (LAMPE D'APPOINT AUXILIAIRE)	191
RELAIS (ENS) (24 VOLTS) (PROJECTEURS)	204
RELAIS (ENS) (24 VOLTS) (PROJECTEURS)	205
RELAIS (ENS) (24 VOLTS) (*TAIL, PANEL LAMPS)	337
RELAIS (ENS) (24 VOLTS) (TÉMOINS DE PANNEAU, ARRIÈRE)	340
RENIFLARD (ENS)	58
RENIFLARD (ENS) (TANDEM)	391
REPÈRE DE LAMPE (ASS)	181
RÉSERVOIR DE CARBURANT - BOULONNERIE (ASS)	102
RÉSERVOIR DE CARBURANT (ASS)	116, 117, 118, 119, 121, 123, 124
RÉSERVOIR DÉSHYDRATEUR	898
RÉSERVOIR HYDRAULIQUE ET FILTRE (ASS)	612
RÉSERVOIR HYDRAULIQUE ET MONTAGE (ASS)	614
RÉSERVOIR PNEUMATIQUE (ASS)	512
RÉTROVISEUR (ASS)	903, 904, 905, 906
RÉTROVISEUR (ASS)	908, 909, 910
RIPPER (ASS)	805
RIPPER (VERSION)	804
ROBINET DE BATTERIE (ASS)	274
ROBINET-PRÉLÈVEMENT D'ÉCHANTILLON DE LIQUIDE (ASS) (DIRECTION)	592
ROPS OUVERTE (VERSION)	934
ROTATION DE LA ROUE DU VENTILATEUR SOUFFLANT (ARRÊT MOTEUR)	325

* TRADUCTION NON DISPONIBLE AU MOMENT DE LA PUBLICATION

INDEX

Désignation	Page
ROTATION DE LA ROUE DU VENTILATEUR SOUFFLANT (ARRÊT MOTEUR)	306
ROTATION DE LA ROUE DU VENTILATEUR SOUFFLANT (*DO NOT DRILL, WELD ROPS)	935
ROTATION DE LA ROUE DU VENTILATEUR SOUFFLANT (ISSUE DE SECOURS/RETIRER VITRE)	859
	860
ROTATION DE LA ROUE DU VENTILATEUR SOUFFLANT (N. D'ÉTAPE)	479
ROTATION DE LA ROUE DU VENTILATEUR SOUFFLANT (NE PAS PERCER/SOUDER LE CADRE ROPS)	932
	933
	935
ROTATION DE LA ROUE DU VENTILATEUR SOUFFLANT (RÉGLAGE DU SIÈGE)	957
ROUE - GROUPE DE MONTAGE	385
ROUE ET PNEU (ASS)	420
	421
	422
	423
	424
	425
	426
	427
	428
	429
	430
	431
	432
	433
	434
	435
	436
	437
	438
	439
	440
	441
	442
	443
	444
	445
	446
	447
	448
ROUE ET PNEU (VERSION)	406
	407
	408
	409
	410
	411
	412
	413
	414
	415
	416
	417
	418
	419
ROUE (VERSION)	448
	449
	450

S

SCARIFICATEUR (ASS)	808
	811
SCARIFICATEUR (VERSION)	807
*SEAL-LIP TYPE	76
SEGMENT-CERCLE	777
*SENSOR GP-POSITION (*ROTARY) (*THROTTLE)	100
SIEGE - COUVERCLE INFERIEUR (ASS)	919
SIÈGE (ASS)	941
	943
SIÈGE AVEC SUSPENSION (ASS)	945
	946
	947
	951
	955
	957
SIÈGE AVEC SUSPENSION (ASS)	948
	949
	950
SILENCIEUX (ASS)	95
SOLÉNOÏDE (ENS) (24 VOLTS)	270
SONDE - CIRCUIT DE CARBURANT	252
	253
SONDE - NIVEAU DE CARBURANT (ENS)	119
	121
SONDE (ENS)-POSITION (ARTICULATION)	306
	325
SOUPAGE - SOLÉNOIDE ET COLLECTEUR	773
	774
SOUPAPE - SOLÉNOÏDE (ASS)	402
	403
	517
	518
	771
SOUPAPE - SOLÉNOÏDE (ASS)	772
SOUPAPE ANTI-RÉACTION (ASS)	759
SOUPAPE DE COMBINAISON (ASS)	697
	699

* TRADUCTION NON DISPONIBLE AU MOMENT DE LA PUBLICATION

INDEX

Désignation	Page
SOUPAPE DE DÉMARRAGE À L'ÉTHER (ASS) (24 VOLTS)	265
SOUPAPE DE PURGE (ASS)	753
	754
SOUPAPE DE VIDANGE (LIQUIDE DE REFROIDISSEMENT DU MOTEUR)	79
SOUPAPE DE VIDANGE (RADIATEUR)	474
SOUPAPE DE VIDANGE (RÉSERVOIR PNEUMATIQUE)	512
SOUPAPE ET MONTAGE DE VERROUILLAGE DE DIF. (ASS)	395
SOUPAPE ET TIMONERIE (ASS)	615
	617
	619
	621
	623
	625
	627
	629
	631
	633
	635
	637
	639
	641
	643
	645
	647
	649
	651
	653
	656
	658
	660
	662
	664
	666
	668
	670
SOUPAPE SELECTRICE ET REGULATRICE DE PRESSION	396
	399
SUPPORT DE FILTRE À HUILE (ASS)	60
SUPPORT DE MOTEUR (ASS)	56
SUPPORT DE SCARIFICATEUR (ASS)	791
SUPPORT DE SIÈGE (ASS)	953
SUPPORT DU RESERVOIR DE CARBURANT (ASS)	496
SUSPENSION DE SIEGE - CARTER (ASS)	876

T

TABLEAU DE BORD (ASS)	921
	922
	923
	925
	927
	929
TAMIS D'ASPIRATION (BOÎTE DE VITESSES)	346
	388
TANDEM ET CARTER (ASS)	391
TAPIS DE PLANCHER (CABINE)	882
TEMOINS (ASS) (*STOP, TAIL, TURN, LH)	317
TEMOINS (ASS) (*STOP, TAIL, TURN, LH)	320
TEMOINS (ASS) (*STOP, TURN, TAIL, RH)	320
TEMOINS (ASS) (*STOP, TURN, TAIL, RH)	317
TENDEUR DE COURROIE (ASS)	16
	18
THERMOCONTACT (ENS) (HUILE HYDRAULIQUE)	296
THERMOCONTACT (ENS) (HUILE HYDRAULIQUE)	300
THERMOCONTACT (ENS) (RÉFRIGÉRANT)	819
THERMOSTAT ET BOITIER (ASS)	76
THERMOSTAT (*98-DEG C)	76
TOIT ROPS - OUVERT (ASS)	937
TOIT ROPS FERME (VERSION)	932
	933
TRANSFORMATEUR DE PUISSANCE (24V À 12V, 25A)	157
TRANSFORMATION ELECTRIQUE (ASS)	154
	155
	156
	157
TRANSFORMATION ELECTRIQUE (ASS) (24-VOLTS À 12-VOLTS)	156
TRANSFORMATION ELECTRIQUE (ASS) (24-VOLTS À 12-VOLTS)	154
TRANSFORMATION ÉLECTRIQUE (VERSION)	153
TURBOCOMPRESSEUR - CARTOUCHE (ASS)	99
TURBOCOMPRESSEUR (ASS)	98
	99

V

*VALVE GP-PUMP CONTROL	749
	751
*VALVE (*PRESSURE RELIEF)	10
VANNE PILOTE (ASS)	769
	770
VENTILATEUR DE CABINE (ASS)	852
	854
	856

* TRADUCTION NON DISPONIBLE AU MOMENT DE LA PUBLICATION

INDEX

Désignation	Page
	857
VÉRIN D'ARTICULATION (ASS)	539
VÉRIN D'ARTICULATION ET MONTAGE (ASS)	531
VÉRIN DE DÉPORT DE CERCLE (ASS)	541
VÉRIN DE DÉPORT DE CERCLE ET MONTAGE (ASS)	534
VÉRIN DE DÉPORT DE LAME (ASS)	536
	546
VERIN DE DIRECTION (ASS)	547
	548
VERIN DE DIRECTION ET MONTAGE (ASS)	537
VÉRIN DE LEVAGE (ASS)	543
VÉRIN DE RELEVAGE DE LAME ET MONTAGE (ASS)	532
VERIN DE RIPPER (ASS)	544
VÉRIN DE SCARIFICATEUR (ASS)	545
VÉRIN DE SCARIFICATEUR ET MONTAGE (ASS)	535
VÉRIN D'INCIDENCE DE LAME (ASS)	540
VÉRIN D'INCLINAISON DE LAME ET MONTAGE (ASS)	533
VÉRIN D'INCLINAISON DE ROUE (ASS)	550
VÉRIN D'INCLINAISON DE ROUE ET MONTAGE (ASS)	538
VERROUILLAGE DE DÉPORT DE CERCLE (ASS)	595
VERSION DE SUPPORT DE CHÂSSIS ARRIÈRE	493
	494
	495
VERSION DE TRANSFORMATION - HOMOLOGATION	1
	2
VERSION DE TRANSFORMATION - SANS ROPS	834
VERSION HYDRAULIQUE	557
VERSION NEIGE - NIVELEUSE	4
	5
VILEBREQUIN (ASS)	23
VISIÈRE - GROUPE AUXILIAIRE	816
	817
VITRE (ASS)	964
VITRE (ASS)	965
	966
	967
VITRE DE CABINE (ASS)	968
	969
	971
VOLANT MOTEUR (ASS)	35
VOLET - CABINE (ASS)	902
VUE DU MODÈLE	2

* TRADUCTION NON DISPONIBLE AU MOMENT DE LA PUBLICATION

INDICE

Nombre	Página
A	
ACCESORIOS - IMPULSOR DE (GR)	33
ACCESORIOS DE LA CABINA (GR)	816
	817
ACONDICIONADOR DE AIRE (CONFIG)	818
ACONDICIONADOR DE AIRE (GR)	819
ACONDICIONADOR DE AIRE Y MONTAJE (GR)	818
ACOPLAMIENTO TORSIONAL (GR)	370
ACUMULADOR	898
ACUMULADOR (CONJ) (DIRECCIÓN)	592
ACUMULADOR DE AMORTIGUACIÓN DE LA HOJA (CONFIG)	520
ACUMULADOR (GR)	520
	521
ACUMULADOR HIDRAULICO (GR)	522
ACUMULADOR HIDRAULICO (GR)	523
	524
ACUMULADOR HIDRAULICO Y MONTAJE (GR)	519
ADAPTADOR DEL FILTRO DE AIRE (GR)	97
AGUA DE LAS CAMISAS - CALENTADOR DEL (GR)	161
	162
AIRE - TUBERÍAS DE (GR)	91
	92
ALARMA (GR)	128
	129
ALFOMBRILLA DEL PISO (CABINA)	882
ANTEFILTRO (GR)	97
ÁRBOL DE LEVAS (GR)	20
ARRANQUE - INTERRUPTOR DE (GR) (LLAVE)	331
	333
ARTICULACIÓN DE CILINDRO (GR)	539
ASIENTO CON SUSPENSIÓN (GR)	957
ASIENTO CON SUSPENSIÓN (GR)	955
ASIENTO (GR)	941
	943
ATOMIZADOR DE ETER (CONJ)	268
AUXILIAR DE ARRANQUE CON ÉTER (GR)	267
	268
AUXILIAR DE ARRANQUE CON ÉTER (GR)	265
B	
BALANCÍN (GR)	53
BALIZA DE ADVERTENCIA (GR) - INSTALACIÓN	163
BANCADA 5 (GR)	677
	678
	679
	680
	681
	682
BARRA DE TIRO (GR)	779
BASTIDOR DELANTERO (GR)	472
BATERÍA (GR)	136
	137
	138
	139
	495
BATERÍA (GR) (12 VOLTIOS)	138
BATERÍA (GR) (12 VOLTIOS) (*1100 AMPS)	136
BATERÍA (12 VOLTIOS) (HUMEDO)	137
BATERÍA (12-VOLTIOS, 750-AMPERIOS)	139
BLOQUE DE EMPALME (GR)	140
BLOQUE DESLIZANTE-JUEGO	949
BLOQUE DESLIZANTE-JUEGO (INCLUYE BLOQUES Y PERNO)	947
BLOQUE DESLIZANTE-JUEGO (INCLUYE 4 BLOQUES)	948
BLOQUE MOTOR (CONJ)	25
	26
BLOQUE MOTOR (GR)	27
BOCINA DE AIRE (GR)	871
	872
	874
*BODY AS-GAUGE	85
BOMBA - TUBERÍAS DE (GR)	576
	579
	582
BOMBA DE ACEITE DEL MOTOR (GR)	68
	69
BOMBA DE AGUA (GR)	83
	84
BOMBA DE CEBADO DE COMBUSTIBLE (GR)	115
BOMBA DE ENGRANAJES (GR)	386
	387
BOMBA DE INYECCIÓN DE COMBUSTIBLE (GR)	114
BOMBA DE PISTONES (GR)	602
	604
BOMBA DE TRANSFERENCIA DE COMBUSTIBLE (GR)	113
BOMBA DE TRANSFERENCIA DE COMBUSTIBLE Y MONTAJE (GR)	113
BOMBA Y MONTAJE DE LA DIRECCIÓN SECUNDARIA (GR)	601
BOMBA Y MONTAJE DEL PISTÓN (GR)	600
BOMBA Y MOTOR DE DIRECCION SECUNDARIA (GR)	599
*BOX GP-TOOL	995
*BREATHER AS (TUBO DE LLENADO DE TREN DE FUERZA)	375

* NO HAY TRADUCCION DISPONIBLE EN EL MOMENTO DE LA IMPRESION

INDICE

Nombre	Página
C	
CABINA - MAZO DE CABLES DE LA	193, 235, 237, 289, 906
CABINA - MAZO DE CABLES DE LA (FRENTE)	285
CABINA - MAZO DE CABLES DE LA (PARTE TRASERA)	282, 285
CABINA - MAZO DE CABLES DE LA (TABLERO DE INTERRUPTOR)	282
CABINA - MAZO DE CABLES DE LA (TABLERO DE INTERRUPTOR)	285
CABINA (CONFIG)	825
CABINA (GR)	825, 826
CABINA ROPS CERRADA (GR)	935, 936
CABINA ROPS CERRADA (GR)	935
CABINA SIN ROPS (CONFIG)	825
CABLES CONJ. -LIMPIADOR DE VENTANAS (CAJA DE FUSIBLES)	291
CABLES CONJ. -LIMPIADOR DE VENTANAS (CONTROL)	291
CABLES DE INYECTOR (GR)	344
CABLES DE LA CABINA (GR)	284, 287
CABLES DE LA CABINA (GR)	282, 289, 291
CABLES DE LA CABINA (GR)	285
CABLES DE LA CONSOLA DE CAMBIOS (GR)	333
CABLES DE LA CONSOLA DE CAMBIOS (GR)	331
CABLES DE LA CONSOLA DE DIRECCIÓN (GR)	337, 340
CABLES DE LA DIRECCIÓN SECUNDARIA	329
CABLES DEL MOTOR (GR)	293
CABLES DELANTEROS (GR)	296
CABLES DELANTEROS (GR)	300
CABLES POSTERIORES (GR)	305, 310, 315, 317, 320, 324
CADENA DE IMPULSIÓN (GR)	350
CADENAS (GR)	350
CAJA DE LA SUSPENSIÓN DEL ASIENTO (GR)	876
CAJA DELANTERA (GR)	39
CAJA Y BASTIDOR (GR)	458
CAJA Y PIEZAS DE LA TRANSMISIÓN (GR)	346
CALCOMANÍA (CUBIERTA NEGRA)	365
CALCOMANÍA DE ADVERTENCIA (ASIENTO AJUSTABLE)	957
CALCOMANÍA DE ADVERTENCIA (CILINDRO PARA ALTA PRESION)	999
CALCOMANÍA DE ADVERTENCIA (CONEXION DE CABLE)	999
CALCOMANÍA DE ADVERTENCIA (*DO NOT DRILL, WELD ROPS)	935
CALCOMANÍA DE ADVERTENCIA (NO PISAR)	479
CALCOMANÍA DE ADVERTENCIA (NO TALADRE/SUELDE ROPS)	932, 933, 935
CALCOMANÍA DE ADVERTENCIA (NO USAR COMO ESCALON)	119
CALCOMANÍA DE ADVERTENCIA (PARADA DE MOTOR)	306, 325
CALCOMANÍA DE ADVERTENCIA (SALIDA ALTERNATIVA/QUITE VENTANA)	859, 860
CALCOMANIA DE FUSIBLE	285
CALCOMANIA DE FUSIBLE (LADO DERECHO)	337
CALCOMANIA DE FUSIBLE (LADO IZQUIERDO)	337, 340
CALCOMANIA DE FUSIBLE (LUCES, ARANDELA, LIMPIAPARABRISAS, DESCONGELADOR)	282
CALCOMANÍA DE IDENTIFICACIÓN (*BIODEGRADABLE HYDRAULIC OIL)	557
CALCOMANÍA DE IDENTIFICACIÓN (*GROUP NUMBER) (AIRE ACONDICIONADO)	819
CALCOMANIA DEL TABLERO DE INSTRUMENTOS (*HEADLIGHTS HIGH, LOW BEAM)	275, 340
CALCOMANIA DEL TABLERO DE INSTRUMENTOS (*HEADLIGHTS HIGH, LOW BEAM)	206, 209, 212, 215, 222, 225

* NO HAY TRADUCCION DISPONIBLE EN EL MOMENTO DE LA IMPRESION

INDICE

Nombre	Página
CALCOMANIA DEL TABLERO DE INSTRUMENTOS (LUZ DE GIRO, PELIGRO)	206
	209
	212
	215
	225
	275
CALCOMANIA DEL TABLERO DE INSTRUMENTOS (LUZ DE GIRO, PELIGRO)	340
CALCOMANIA DEL TABLERO DE INSTRUMENTOS (LUZ DE GIRO, PELIGRO)	222
CALCOMANÍA (LAVAPARABRISAS)	291
CALCOMANÍA (NO USAR COMO ESCALON)	117
	119
CALCOMANÍA (PLACA, NOMBRE) (ACUMULADOR)	522
CALCOMANÍA (PLACA, NOMBRE) (ACUMULADOR)	592
CALCOMANÍA (VISERA CATERPILLAR)	921
	922
CALCOMANÍAS Y PLACAS DE IDENTIFICACIÓN (GR)	2
	1002
	1003
	1004
	1005
CALCOMANÍAS Y PLACAS DE IDENTIFICACIÓN (GR)	998
	999
CALCOMANÍAS Y PLACAS DE IDENTIFICACIÓN (GR) (REFLECTOR)	1
CALEFACCIÓN DE LA CABINA (CONFIG)	861
	862
CALEFACCIÓN DE LA CABINA (GR)	863
	867
CALEFACCIÓN Y MONTAJE DE LA CABINA (GR)	861
CALENTADOR DEL COMBUSTIBLE (GR) (SEPARADOR DE AGUA, 12-VOLTIOS)	104
CAMBIO AUTOMÁTICO DE VELOCIDADES (CONFIG)	345
CÁNCAMOS DE LEVANTAMIENTO DEL MOTOR (GR)	42
CANDADO (GR)	825
	834
CANDADO (GR) (CAJA DE HERRAMIENTAS)	995
CANDADO (GR) (ROPS)	934
CANTONERA DE EXTREMO (GR)	786
CANTONERA (GR)	782
	783
	784
	785
CARGA - ALTERNADOR DE (GR)	130
	132
	133
	134
	135
CÁRTER - COLECTOR DEL (GR)	45
	47
*CARTRIDGE AS-DESICCANT (SECADOR DE AIRE)	501
CENICERO	886
	889
CIGÜEÑAL (GR)	23
CILINDRO DE ARTICULACIÓN Y MONTAJE (GR)	531
CILINDRO DE DESGARRADOR (GR)	544
CILINDRO DE DESPLAZAMIENTO DEL CÍRCULO (GR)	541
CILINDRO DE DESPLAZAMIENTO DEL CÍRCULO Y MONTAJE (GR)	534
CILINDRO DE DESPLAZAMIENTO LATERAL (GR)	546
CILINDRO DE DESPLAZAMIENTO LATERAL Y MONTAJE (GR)	536
CILINDRO DE DIRECCIÓN (GR)	547
	548
CILINDRO DE DIRECCIÓN Y MONTAJE (GR)	537
CILINDRO DE ESCARIFICADOR (GR)	545
CILINDRO DE ESCARIFICADOR Y MONTAJE (GR)	535
CILINDRO DE ÉTER (CONJ)	265
	268
CILINDRO DE INCLINACIÓN DE LA HOJA (GR)	540
CILINDRO DE INCLINACIÓN DE LAS RUEDAS (GR)	550
CILINDRO DE INCLINACIÓN DE RUEDA Y MONTAJE (GR)	538
CILINDRO DE LA PUNTA DE LA HOJA Y MONTAJE (GR)	533
CILINDRO DE LEVANTAMIENTO DE HOJA Y MONTAJE (GR)	532
CILINDRO DE LEVANTAMIENTO (GR)	543
CINTURON DE SEGURIDAD	187
CINTURÓN DE SEGURIDAD (GR)	939
	940
	950
CINTURÓN DE SEGURIDAD (GR) (RETRACTIL)	947
CÍRCULO (GR)	775
	777
COLADOR DE COMBUSTIBLE	119

* NO HAY TRADUCCION DISPONIBLE EN EL MOMENTO DE LA IMPRESION

INDICE

Nombre	Página
	121
COLADOR (*FILLER) (TANQUE DE ACEITE HIDRÁULICO)	612
COMBUSTIBLE - TANQUE DE (GR)	116
	117
	118
	119
	121
	123
	124
COMPARTIMIENTO DEL MOTOR (GR)	466
	469
COMPRESOR DE AIRE (GR)	10
	12
	14
COMPRESOR DE REFRIGERANTE (GR)	828
COMPRESOR DE REFRIGERANTE Y GRUPO DE MONTAJE	827
CONDENSADOR DEL REFRIGERANTE Y MONTAJE (GR)	829
CONDUCTO (GR)	849
CONDUCTO Y CONTROL (GR)	848
CONEXIÓN DE ENGRASE (RECEPTACULO DE CILINDRO DE DESPLAZADOR CENTRAL)	534
(CONFIG) CABLERIA, CHASIS DELANTERO	206
	209
	212
	215
	300
(CONFIG) CABLERIA, CHASIS DELANTERO (*BOLSTER LIGHT BAR)	222
(CONFIG) CABLERIA, CHASIS DELANTERO (LUCES DE TRABAJO, DELANTERAS)	225
CONFIGURACIÓN DE CABLERIA, CALENTADOR Y ACONDICIONADOR DE AIRE	820
	863
	898
CONFIGURACIÓN DE ENFRIAMIENTO	70
	71
	72
CONFIGURACIÓN DE MOTORES	6
	9
CONFIGURACIÓN DE SOPORTE DE CHASIS TRASERO	493
	494
	495
CONFIGURACIÓN DE TRANSFORMACIÓN PARA CERTIFICACIÓN	1
	2
CONFIGURACIÓN GENERAL	2
CONFIGURACIÓN PARA CARRETERA	4
CONJUNTO DE CABLERIA, ARRANQUE ASISTIDO	265
CONJUNTO DE CABLERIA, CHASIS TRASERO	305
	306
	325
CONJUNTO DE DESTELLADOR (12/24 VOLTIOS) (*TURN SIGNAL, HAZARD)	206
	209
	212
	215
	222
	225
	275
CONJUNTO DE DESTELLADOR (24 VOLTIOS)	340
CONJUNTO DE ELEMENTO DE CALEFACCION (240 VOLTIOS, 1250 VATIOS)	162
CONJUNTO DE MAZO DE CABLES DE LA CONSOLA	331
	333
CONJUNTO DE MAZO DE CABLES DE LA CONSOLA (DIRECCIÓN)	337
CONJUNTO DE MODIFICACIÓN (SIN ROPS)	834
CONJUNTO, MAZO DE CABLES, LUCES DELANTERAS	218
	220
	249
	301
CONJUNTO, MAZO DE CABLES, LUCES DELANTERAS	235
CONJUNTO, MAZO DE CABLES, LUCES DELANTERAS	237
CONJUNTO, MAZO DE CABLES, LUCES DELANTERAS (*ELEVATED LIGHT BAR)	222
CONJUNTO, MAZO DE CABLES, LUCES DELANTERAS (LUCES DE TRABAJO)	225
CONSOLA DEL OPERADOR (GR)	830
CONTROL DE AIRE-VÁLVULA	514
	515
CONTROL DE DIRECCIÓN (GR)	530
CONTROL DE LA DIRECCION SECUNDARIA (GR)	150
CONTROL DE LA TRANSMISIÓN (GR)	365
CONTROL DE REGULADOR (GR)	100
CONTROL DE TRABA DEL DIFERENCIAL (GR)	363
CONTROL DEL EMBRAGUE (GR)	361
CONTROL DEL FRENO DE ESTACIONAMIENTO	506
CONTROL ELECTRÓNICO DEL MOTOR (GR)	146

* NO HAY TRADUCCION DISPONIBLE EN EL MOMENTO DE LA IMPRESION

INDICE

Nombre	Página
	147
	148
	149
CONTROL ELECTRÓNICO DEL MOTOR Y MONTAJE	144
	145
*CONTROL GP-HYDRAULIC LOCKOUT	529
*CONTROL GP-UNPROGRAMMED	151
CONTROL HIDRÁULICO (CONFIG)	525
	526
	527
	528
CONTROL HIDRÁULICO DE LA TRANSMISIÓN (GR)	367
CONTROL NO PROGRAMADO (GR)	152
CONVERTIDOR DE VOLTAJE (24 VOLTIS A 12 VOLTIOS, 25 AMPERIOS)	157
CONVERTIDOR ELÉCTRICO (CONFIG)	153
CONVERTIDOR ELÉCTRICO (GR)	154
	155
	156
	157
CONVERTIDOR ELÉCTRICO (GR) (24 VOLTIOS A 12 VOLTIOS)	154
	156
*CORE AS	368
*CORE AS-CONDENSER (AIRE ACONDICIONADO)	829
*CORE AS-ENGINE OIL COOLER	368
CORREA-SERPENTIN (*ALTERNATOR AND AIR CONDITIONER)	818
CORREA-SERPENTIN (*ALTERNATOR WITHOUT A/C)	134
CRISTAL	165
CRISTAL (AMBAR, BALIZA DE ADVERTENCIA)	186
CRISTAL (AMBAR) (DE GIRO)	173
	175
CRISTAL (AMBAR) (SEÑAL)	177
	179
CRISTAL (PLACA DE REGISTRACIÓN)	182
CUBIERTA INFERIOR DEL ASIENTO DEL OPERADOR (GR)	919
CUBIERTA PROTECTORA (GR)	462
CUBIERTA PROTECTORA (GR)	463
CUCHILLA (GR)	792
	793
CUERPO DEL MEDIDOR (CONJ) (NIVEL DE REFRIGERANTE)	86
CULATA DE CILINDROS - TORNILLERÍA DE LA (GR)	34
CULATA DE CILINDROS (CONJ)	29
CULATA DE CILINDROS (GR)	31
	32

D

DESGARRADOR (CONFIG)	804
DESGARRADOR (GR)	805
DESHIDRATADOR (GR)	498
	499
	501
DESHIDRATADOR (GR) (SECADOR DE AIRE, 24 VOLTIOS)	501
DETECTOR DE NIVEL DEL COMBUSTIBLE	119
	121
DETECTOR DE POSICIÓN (SISTEMA DE COMBUST.) (GR)	252
	253
DIENTE DE ESCARIFICADOR (GR)	814
	815
DIFERENCIAL (GR)	373
DIFERENCIAL Y CORONA (GR)	371
DIRECCIÓN SECUNDARIA (CONFIG)	609
DISYUNTOR (CONJ) (105 AMPERIOS) (ALTERNADOR)	143
DISYUNTOR (CONJ) (15 AMPERIOS) (BARRA DE LUCES DE TRABAJO)	141
DISYUNTOR (CONJ) (15 AMPERIOS) (CONTROL DEL MOTOR)	311
DISYUNTOR (CONJ) (15 AMPERIOS) (FAROS)	141
	142
DISYUNTOR (CONJ) (80 AMPERIOS) (ALTERNADOR)	310
DISYUNTOR (CONJ) (80 AMPERIOS) (PRINCIPAL)	310
DISYUNTOR DE CIRCUITO (GR)	141
	142
	143
DISYUNTOR (GR)	274
*DOOR GP (*AIR VENT)	886
	889
	896

E

EJE DE ENTRADA (GR)	390
EJE DE MANDO DE LA BOMBA (GR)	608
EJE DE MANDO (GR)	389
EJE DELANTERO (GR)	455
ELECTRONICA DE MONITOR (GR)	159
ELEMENTO DE FILTRO DE ACEITE (CONJ) (ALTA EFICIENCIA) (TRANSMISION)	378
	381

* NO HAY TRADUCCION DISPONIBLE EN EL MOMENTO DE LA IMPRESION

INDICE

Nombre	Página
ELEMENTO DE FILTRO DE ACEITE (CONJ) (HIDRAULICO) (EFICIENCIA ESTANDAR)	612
ELEMENTO DE FILTRO (SEPARADOR DE COMBUSTIBLE, AGUA) (PRIMARIO)	104
ELEMENTO DEL CALENTADOR DEL AGUA DE LAS CAMISAS (*120-VOLT, 1250-WATT)	161
ELEMENTO PRIMARIO (CONJ)	90
ELEMENTO SECUNDARIO (CONJ)	90
EMBRAGUE DE LA TRANSMISIÓN (GR)	351
	354
	357
	359
EMISOR DE POSICION (CONJ) (ARTICULACIÓN)	306
	325
EMPAQUETADURA	76
	117
	118
ENCENDEDOR (CONJ) (ENCENDEDOR, 24 VOLTIOS)	333
ENCENDEDOR (CONJ) (ENCENDEDOR, 24 VOLTIOS)	331
ENFRIADOR DE ACEITE DE LA TRANSMISIÓN (GR)	368
ENGANCHE ARTICULADO (GR)	484
ENGANCHE DE REMOLQUE (GR)	486
	487
ENGRANAJE DELANTERO (GR)	36
ESCARIFICADOR (CONFIG)	807
ESTRIBO DEL OPERADOR (GR)	492
ESTRUCTURA ROPS ABIERTA	934
ESTRUCTURA ROPS ABIERTA (GR)	937
ETIQUETA DE ADVERTENCIA (GR)	996
	997
ETIQUETA REFLECTORA (AMARILLO)	1002
EXTENSIÓN DE LA HOJA (GR)	794
	795
	796
	797
	798
	799
EXTENSIÓN DEL RESPALDO (GR)	850
	851
	947

F

*FILM (*VHP PLUS)	997
FILTRO DE ACEITE - BASE DEL (GR)	60
FILTRO DE ACEITE DEL MOTOR (CONJ)	63
FILTRO DE ACEITE DEL MOTOR (GR)	63
FILTRO DE ACEITE (GR)	378
FILTRO DE ACEITE Y MONTAJE (GR)	376
FILTRO DE AIRE (CABINA)	858
FILTRO DE AIRE DE LA CABINA (GR)	858
FILTRO DE AIRE (GR)	88
	90
FILTRO DE COMBUSTIBLE (CONJ)	103
FILTRO DE COMBUSTIBLE (GR)	103
FILTRO DE COMBUSTIBLE Y SEPARADOR DE AGUA (GR)	104
FILTRO MAGNÉTICO (ACEITE DE LA TRANSMISIÓN)	346
FILTRO MAGNÉTICO (TRANSMISION)	388
FRENO DE ESTACIONAMIENTO (GR)	502
FRENO DE SERVICIO - CONTROL (GR)	508
FRENO DE SERVICIO (GR)	504
FUSIBLE (*10-AMPERE) (DESCONGELADOR DELANTERO)	856
FUSIBLE (*10-AMPERE) (DESCONGELADOR TRASERO)	857
FUSIBLE (*10-AMPERE) (HOJA/FARO DELANTERO)	201
FUSIBLE (10-AMPERIOS)	206
	212
	215
	222
	225
	235
	237
	244
	275
	287
	289
	291
	329
	337
	340
FUSIBLE (10-AMPERIOS) (*AUXILIARY BACK-UP ALARM)	193
FUSIBLE (10-AMPERIOS) (BALIZA GIRATORIA DE ADVERTENCIA)	284
FUSIBLE (10-AMPERIOS) (BALIZA GIRATORIA DE ADVERTENCIA)	245
FUSIBLE (10-AMPERIOS) (CONVERTIDOR)	154
FUSIBLE (10-AMPERIOS) (*HEATED MIRRORS)	906
	910
FUSIBLE (10-AMPERIOS) (LAMPARA DE RETROCESO)	191
FUSIBLE (10-AMPERIOS) (LIMPIADOR)	983
	985
FUSIBLE (10-AMPERIOS) (LIMPIADOR)	987
	989

* NO HAY TRADUCCION DISPONIBLE EN EL MOMENTO DE LA IMPRESION

INDICE

Nombre	Página
FUSIBLE (10-AMPERIOS) (LUCES DE TRABAJO)	204, 205
FUSIBLE (10-AMPERIOS) (LUZ DE LA HOJA)	202
FUSIBLE (10-AMPERIOS) (REFLECTORES DEL LADO DERECHO)	218, 220
FUSIBLE (10-AMPERIOS) (SECADOR DE AIRE)	498
FUSIBLE (10-AMPERIOS) (TRANSFORMADOR DE CORRIENTE)	156
FUSIBLE (10-AMPERIOS) (*TURN SIGNAL, HAZARD)	209
FUSIBLE (15 A) (AIRE ACONDICIONADO)	818
FUSIBLE (15 A) (CALEFACTOR)	861
FUSIBLE (15 AMPERIOS)	337, 340
FUSIBLE (15 AMPERIOS)	282, 285
FUSIBLE (15 AMPERIOS) (*CAB FLOOD LIGHTS)	204, 205
FUSIBLE (15 AMPERIOS) (TRANSFORMADOR DE CORRIENTE)	155
FUSIBLE (30-AMPERIOS)	157

G

*GASKET	58
GATO HIDRÁULICO	997
GRUPO DE AISLAMIENTO DE LA CABINA	882
GRUPO DE CABLES, HOJA AMORTIGUADORA	280
GRUPO DE COJINETES DE BANCADA (CIGÜEÑAL)	23
GRUPO DE MONTAJE DE ALA PARA NIEVE	803
GRUPO DE MONTAJE DE LA CABINA	914
GRUPO DE POSTENFRIAMIENTO Y MONTAJE	87
GRUPO DE SOPORTE DEL RESPALDO	918
GRUPO DE TAPA, ACCESO	459, 461
GRUPO DE VÁLVULA-ARRANQUE CON ÉTER (24 VOLTIOS)	265
GRUPO DE 4 VÁLVULAS HIDRÁULICAS	673, 674, 675, 676
GRUPO ESCARIFICADOR	808, 811
GRUPO GIRATORIO DE BOMBA	606, 607

H

*HARNESS AS-PLATFORM	296, 300
*HARNESS AS-REAR	310
HIDRÁULICA (CONFIG)	557
HOJA DE LIMPIAPARABRISAS (CONJ)	964, 992, 993, 994
HOJA DE LIMPIAPARABRISAS (CONJ) (DELANTERO DE ALTO PERFIL)	981
HOJA DE LIMPIAPARABRISAS (CONJ) (DELANTERO DE ALTO PERFIL)	979
HOJA DE LIMPIAPARABRISAS (CONJ) (DELANTERO SUPERIOR DE ALTO PERFIL)	981
HOJA DE LIMPIAPARABRISAS (CONJ) (DELANTERO SUPERIOR DE ALTO PERFIL)	979
HOJA DE LIMPIAPARABRISAS (CONJ) (*FRONT LOWER)	975, 977
HOJA DE LIMPIAPARABRISAS (CONJ) (*LOW PROFILE FRONT UPPER)	975
HOJA DE LIMPIAPARABRISAS (CONJ) (PARTE TRASERA)	989
HOJA DE LIMPIAPARABRISAS (CONJ) (POSICION DELANTERA / SUPERIOR)	977
HOJA DE LIMPIAPARABRISAS (CONJ) (TRASERO DE ALTO PARFIL)	987
HOJA DE LIMPIAPARABRISAS (CONJ) (TRSERO DE BAJO PERFIL)	983, 985
HOJA (GR)	787, 788, 789, 790

I

INCLUYE ROPS (CONFIG)	932, 933
INDICADOR DE CAMBIO DE FILTRO DE ACEITE (GR)	88
INDICADOR DE PRESION DE AIRE (GR) (LADO DERECHO)	927, 929
INDICADOR DE PRESION DE AIRE (GR) (LADO DERECHO)	925
INDICADOR DE PRESION DE AIRE (GR) (LADO IZQUIERDO)	927, 929

* NO HAY TRADUCCION DISPONIBLE EN EL MOMENTO DE LA IMPRESION

INDICE

Nombre	Página
INDICADOR DE PRESION DE AIRE (GR) (LADO IZQUIERDO)	925
INDICADOR DEL NIVEL DE ACEITE (VARILLA) (GR)	65
INSONORIZADOR (GR)	57
INSTALACIÓN DE RADIO (CONFIG)	879
INSTALACIÓN DE RADIO (GR)	880
INTERRUPTOR (CONJ) (AMORTIGUADOR DE LA HOJA)	280
INTERRUPTOR (CONJ) (*AUXILIARY BACKUP)	191
INTERRUPTOR (CONJ) (BALIZA GIRATORIA DE ADVERTENCIA)	163 247 248 249
INTERRUPTOR (CONJ) (DESCONGELADOR DELANTERO)	856
INTERRUPTOR (CONJ) (DESCONGELADOR TRASERO)	857
INTERRUPTOR (CONJ) (EXTRACTOR DE PASADOR DE DESPLAZADOR DEL CÍRCULO)	331 334
INTERRUPTOR (CONJ) (JUEGO DE ACELERACIÓN, VELOCIDAD)	331
INTERRUPTOR (CONJ) (LUZ DE COLA)	337
INTERRUPTOR (CONJ) (MÓDULO DE ACELERACIÓN)	331
INTERRUPTOR (CONJ) (REDUCTOR DE LUCES DEL TABLERO)	337
INTERRUPTOR (CONJ) (TABLERO DE LUCES TRASERAS)	340
INTERRUPTOR (CONJ) (TRABA DE ACTIVACION DEL ACELERADOR)	333
INTERRUPTOR (CONJ) (TRABA DE DIFERENCIAL)	340
INTERRUPTOR (CONJ) (TRABA DE DIFERENCIAL)	337
INTERRUPTOR (CONJ) (TRANSMISIÓN AUTOMÁTICA)	345
INTERRUPTOR (CONJ) (24 VOLTIOS) (AUXILIAR DE ARRANQUE CON ÉTER)	268
INTERRUPTOR (CONJ) (24 VOLTIOS) (*AUXILIARY BACK-UP ALARM)	193
INTERRUPTOR (CONJ) (24 VOLTIOS) (DIRECCIÓN SECUNDARIA)	329
INTERRUPTOR (CONJ) (24 VOLTIOS) (*HEATED MIRRORS)	906 910
INTERRUPTOR (CONJ) (24 VOLTIOS) (REFLECTOR LADO DERECHO, CABINA)	235 237
INTERRUPTOR (CONJ) (24 VOLTIOS) (REFLECTORES DEL LADO DERECHO)	218 220
INTERRUPTOR (CONJ) (24 VOLTIOS) (VERTEDERA)	287 289
INTERRUPTOR DE BOLA (CONJ) (INDICADOR DEL DESPLAZADOR DEL CÍRCULO)	296 300
INTERRUPTOR DE DERIVACIÓN	273
INTERRUPTOR DE LÍMITE (CONJ) (PEDAL DE FRENO)	341
INTERRUPTOR DE LÍMITE (CONJ) (PEDAL DE MOVIMIENTO ULTRALENTO)	340
INTERRUPTOR DE LÍMITE (CONJ) (PEDAL DE MOVIMIENTO ULTRALENTO)	337
INTERRUPTOR DE LUZ (GR)	275
INTERRUPTOR DE PRESIÓN (CONJ) (ACONDICIONADOR DE AIRE ALTO/BAJO)	898
INTERRUPTOR DE PRESIÓN (CONJ) (*AIR BRAKES)	296
INTERRUPTOR DE PRESIÓN (CONJ) (DIRECCION PRINCIPAL)	300
INTERRUPTOR DE PRESIÓN (CONJ) (DIRECCIÓN SECUNDARIA)	329
INTERRUPTOR DE PRESIÓN (CONJ) (FRENO DE ESTACIONAMIENTO)	297
INTERRUPTOR DE PRESIÓN (CONJ) (LUZ DE PARADA)	296
INTERRUPTOR DE PRESIÓN (CONJ) (LUZ DE PARADA)	300
INTERRUPTOR DE TEMPERATURA (CONJ) (ACEITE HIDRÁULICO)	296 300
INTERRUPTOR DE TEMPERATURA (CONJ) (REFRIGERANTE)	819
INTERRUPTOR DE VOLQUETE (CONJ) (BALIZA GIRATORIA DE ADVERTENCIA)	163
INTERRUPTOR DE VOLQUETE (CONJ) (*HEADLIGHTS, TAIL LIGHTS)	206 209 212 215 222 275 340
INTERRUPTOR DE VOLQUETE (CONJ) (*HEADLIGHTS, TAIL LIGHTS)	225
INTERRUPTOR DE VOLQUETE (CONJ) (HOJA)(FARO DELANTERO)	201
INTERRUPTOR DE VOLQUETE (CONJ) (LUCES DE TRABAJO, DELANTERAS)	225

* NO HAY TRADUCCION DISPONIBLE EN EL MOMENTO DE LA IMPRESION

INDICE

Nombre	Página
INTERRUPTOR DE VOLQUETE (CONJ) (LUZ BAJA DE BARRA DE LUCES)	212, 215, 222
INTERRUPTOR DE VOLQUETE (CONJ) (LUZ DE LA HOJA)	202
INTERRUPTOR DE VOLQUETE (CONJ) (PARADA DEL MOTOR)	324
INTERRUPTOR DE VOLQUETE (CONJ) (PARADA DEL MOTOR AL NIVEL DE PISO)	305
INTERRUPTOR DE VOLQUETE (CONJ) (REFLECTOR DE LA HOJA)	204, 205
INTERRUPTOR DE VOLQUETE (CONJ) (*THROTTLE LOCK SET, RESET)	333
INTERRUPTOR DEL LIMPIADOR (GR)	279
INTERRUPTOR DEL LIMPIADOR (GR)	991
INTERRUPTOR DEL LIMPIADOR (GR) (24 VOLTIOS) (INTERMITENTE DELANTERO)	285
INTERRUPTOR DEL LIMPIAPARABRISAS (CONJ) (24 VOLTIOS) (PARTE TRASERA)	983, 985
INTERRUPTOR DEL LIMPIAPARABRISAS (CONJ) (24 VOLTIOS) (PARTE TRASERA)	987, 989
INTERRUPTOR MAGNÉTICO (GR)	277, 278
INTERRUPTOR MAGNÉTICO (GR) (24 VOLTIOS) (RELE DE MOTOR DE ARRANQUE)	310
INTERRUPTOR PULSADOR (CONJ) (*DISPLAY MODES)	927, 929
INTERRUPTOR PULSADOR (CONJ) (MODALIDAD DE OPERADOR)	925
INTERRUPTOR ROTATIVO (CONJ) (*HIGH, LOW BEAM)	206
INTERRUPTOR ROTATIVO (CONJ) (INTERRUPTOR DE CAMBIO DE LUCES)	209, 212, 215, 222, 225
INTERRUPTOR ROTATIVO (CONJ) (INTERRUPTOR DE CAMBIO DE LUCES)	340
INTERRUPTOR ROTATIVO (CONJ) (SEÑAL DE VIRAJE)	275
INTERRUPTOR ROTATIVO (CONJ) (VELOCIDAD DEL VENTILADOR)	819
INTERRUPTOR ROTATIVO (CONJ) (VELOCIDAD DEL VENTILADOR)	863, 867
INTERRUPTOR ROTATIVO (CONJ) (24 VOLTIOS) (*FRONT WIPER CONTROL)	282
INTERRUPTOR ROTATIVO (CONJ) (24 VOLTIOS) (LIMPIAPARABRISAS DELANTERO)	291
INYECTOR DE COMBUSTIBLE (GR)	114

J

Nombre	Página
JUEGO (AISLADOR) (MOTOR DE ARRANQUE)	270
JUEGO DE ABRAZADERA DEL FILTRO DE AIRE	90
JUEGO DE AJUSTE DEL ASIENTO	919
JUEGO DE AMORTIGUADOR	850, 851
JUEGO DE ANILLO ESTANDAR (COMPRESOR DE AIRE)	10
JUEGO DE ATADURA (ASIENTO)	957
JUEGO DE BUJES (MOTOR DE ARRANQUE)	270
JUEGO DE CALCES (INCLUYE 17 CALCES)	602
JUEGO DE COJÍN DEL ASIENTO	941
JUEGO DE COJÍN DEL ASIENTO (VINILO)	943
JUEGO DE COJINETES	877
JUEGO DE COJINETES (ALTERNADOR)	133
JUEGO DE COJINETES DE BANCADA (COMPRESOR DE AIRE)	10
JUEGO DE CONTROL DE PISTÓN	602
JUEGO DE DESCARGADOR (COMPRESOR DE AIRE) (COMPRESOR DE AIRE)	10
JUEGO DE DIAFRAGMA	871
JUEGO DE ESCOBILLAS (MOTOR DE ARRANQUE)	270
JUEGO DE FILTRO DE COMBUSTIBLE Y SEPARADOR DE AGUA	104
JUEGO DE FUNDA DE LA SUSPENSIÓN DEL ASIENTO	955
JUEGO DE HOJA DE LIMPIAPARABRISAS (PARTE TRASERA)	985
JUEGO DE HOJA DE LIMPIAPARABRISAS (TRSERO DE BAJO PERFIL)	983
JUEGO DE INCLINACIÓN DE ASIENTO	919
JUEGO DE INCLINACIÓN TRASERA	919
JUEGO DE INDICADOR (AJUSTE DE PESO)	877
JUEGO DE INDICADOR (ASIENTO)	957
JUEGO DE LA CULATA DE CILINDROS (COMPRESOR DE AIRE)	10
JUEGO DE MARTILLO	859, 860
JUEGO DE PALANCA (MOTOR DE ARRANQUE)	270

* NO HAY TRADUCCION DISPONIBLE EN EL MOMENTO DE LA IMPRESION

INDICE

Nombre	Página
JUEGO DE PANEL DEL RESPALDO DEL ASIENTO	941
	943
JUEGO DE PARAGOLPES (AJUSTE DE PESO)	877
JUEGO DE PERNO RETENEDOR (M5X0.8X53.24 MM)	160
JUEGO DE PERNO RETENEDOR (*M5X0.8X53.24-MM) (GRUPO DE CONTROL)	152
JUEGO DE PISTÓN	602
JUEGO DE REACONDICIONAMIENTO DEL REGULADOR (COMPRESOR DE AIRE)	512
JUEGO DE RECEPTÁCULO (2 CLAVIJAS)	189
	240
JUEGO DE RECEPTÁCULO (2 CLAVIJAS)	181
	771
JUEGO DE RECEPTÁCULO (2 CLAVIJAS) (ENTRADA DE CORRIENTE DE 12 VOLTIOS)	816
	817
JUEGO DE RECEPTÁCULO (2 CLAVIJAS) (PLACA DE REGISTRACIÓN DE LAS LUCES)	182
JUEGO DE RECEPTÁCULO (2 CLAVIJAS) (VALVULA DE SOLENOIDE)	518
JUEGO DE RECEPTÁCULO (6-CLAVIJAS)	975
JUEGO DE RESORTES	877
JUEGO DE RESORTES (AJUSTE DE ALTURA)	877
JUEGO DE RESTRICCIÓN DEL CINTURÓN	955
JUEGO DE RODILLO	955
JUEGO DE RODILLO (ASIENTO)	957
JUEGO DE SEGUIDOR	876
	877
JUEGO DE SELLOS	521
	523
	530
	540
	545
	771
	772
	774
JUEGO DE SELLOS (ACUMULADOR DE AMORTIGUADOR DE LA HOJA)	522
JUEGO DE SELLOS (*DIFFERENTIAL LOCK VALVE)	402
JUEGO DE SELLOS (SOLENOIDE DE TRANSMISION)	403
JUEGO DE SELLOS (TRABA DE DIFERENCIAL)	395
JUEGO DE SENSOR (NIVEL DE COMB)	119
	121
JUEGO DE TERMINAL (ALTERNADOR)	133
JUEGO DE TERMINAL DE ALTERNADOR	130
JUEGO DE TORNILLERÍA	130
JUEGO DE TORNILLERÍA (ALTERNADOR)	133
JUEGO DE TORNILLERÍA (ASIENTO)	957
JUEGO DE VARILLA	919
JUNTA UNIVERSAL (GR)	394

K

*KIT-AIR CONTROL VALVE	515
*KIT-RECTIFIER	130

L

*LAMP GP-FLOOD (*24-VOLT, VERTICAL MOUNT)	228
	232
*LAMP GP-FLOOD (*24-VOLT, VERTICAL MOUNT) (*BLADE)	201
*LAMP GP-FLOOD (*24-VOLT, VERTICAL MOUNT) (*BLADE)	204
*LAMP GP-FLOOD (*24-VOLT, VERTICAL MOUNT) (*CAB)	195
*LAMP GP-FLOOD (*24-VOLT, VERTICAL MOUNT) (*RH)	218
*LAMP-HALOGEN (*24-VOLT, 65-WATT) (LUZ BAJA)	171
*LAMP-HALOGEN (*24-VOLT, 65-WATT) (REFLECTOR)	166
LÁMPARA (CONJ)	317
	320
LÁMPARA DE BALIZA DE ADVERTENCIA (GR)	186
	187
LÁMPARA DE FARO DELANTERO (GR)	172
	173
LÁMPARA DE FARO DELANTERO (GR)	171
	175
LÁMPARA DE LUZ DELANTERA Y DE SEÑAL (GR)	179
LÁMPARA DE LUZ DELANTERA Y DE SEÑAL (GR)	177
LAMPARA DE PLACA DE REGISTRO (GR)	182
LÁMPARA DEL TECHO (GR)	165
LÁMPARA DEL TECHO (GR) (24 VOLTIOS, CON INTERRUPTOR)	282
	291
LÁMPARA DEL TECHO (GR) (24 VOLTIOS, CON INTERRUPTOR)	285
LAMPARA-LED (LED)	247
	248
LAMPARA MARCADORA (GR)	181

* NO HAY TRADUCCION DISPONIBLE EN EL MOMENTO DE LA IMPRESION

INDICE

Nombre	Página
LÁMPARA (*24-VOLT) (CAMBIO AUTOMÁTICO)	345
LÁMPARA (*24-VOLT) (CÚPULA)	165
LÁMPARA (*24-VOLT) (DE GIRO)	173
	175
LÁMPARA (*24-VOLT) (DESCONGELADOR DELANTERO)	856
LÁMPARA (*24-VOLT) (DESCONGELADOR TRASERO)	857
LÁMPARA (*24-VOLT) (HOJA)(FARO DELANTERO)	201
LÁMPARA (*24-VOLT) (LUZ ALTA/BAJA)	173
	175
LÁMPARA (*24-VOLT) (POSICION)	173
	175
LÁMPARA (*24-VOLT, 21-WATT) (DE GIRO)	173
	175
LÁMPARA (24 VOLTIOS)	163
	177
	206
	212
	215
	222
	223
	225
	275
	331
	333
	340
	819
	913
LÁMPARA (24 VOLTIOS)	235
	237
	247
	248
	249
	268
	287
	289
	329
	331
	333
	334
	337
	340
	863
LÁMPARA (24 VOLTIOS) (ACCIONAMIENTO)	929
LÁMPARA (24 VOLTIOS) (*AIR PRESSURE GAUGE)	925
	929
LÁMPARA (24 VOLTIOS) (*AIR PRESSURE GAUGE)	927
LÁMPARA (24 VOLTIOS) (*AUXILIARY BACK-UP ALARM)	193
LÁMPARA (24 VOLTIOS) (DE CUATRO MEDIDORES)	927
LÁMPARA (24 VOLTIOS) (DELANTERA)	179
LÁMPARA (24 VOLTIOS) (*FAN SPEED, TEMPERATURE)	867
LÁMPARA (24 VOLTIOS) (*HEADLIGHTS, TAIL LIGHTS)	209
LÁMPARA (24 VOLTIOS) (*HEATED MIRRORS)	906
	910
LÁMPARA (24 VOLTIOS) (INTERRUPTOR DEL AMORTIGUADOR DE LA HOJA)	280
LÁMPARA (24 VOLTIOS) (LUZ AUXILIAR DE RETROCESO)	191
LÁMPARA (24 VOLTIOS) (LUZ DE INDICADOR DE ACCCIÓN MAESTRA)	927
LÁMPARA (24 VOLTIOS) (LUZ DE LA HOJA)	202
LÁMPARA (24 VOLTIOS) (LUZ INDIC. DE ACCION MAESTRA DE EMS)	925
LÁMPARA (24 VOLTIOS) (MÓDULO DE CUATRO MEDIDORES)	925
	929
LÁMPARA (24 VOLTIOS) (*NG)	334
LÁMPARA (24 VOLTIOS) (PLACA DE REGISTRACIÓN)	182
LÁMPARA (24 VOLTIOS) (POSICIÓN DE LA CABINA)	181
LÁMPARA (24 VOLTIOS) (REFLECTOR DE LA HOJA)	204
	205
LÁMPARA (24 VOLTIOS) (REFLECTORES DEL LADO DERECHO)	218
	220
LÁMPARA (24 VOLTIOS) (SEÑAL)	179
LÁMPARA (24 VOLTIOS) (TRABA DE DIFERENCIAL)	925
LÁMPARA (24 VOLTIOS) (TRABA DE DIFERENCIAL)	927
LÁMPARA (24-VOLTIOS, 21 VATIOS)	317
	320
LÁMPARA (24-VOLTIOS, 21 VATIOS) (SEÑAL)	177
	179
LÁMPARA (24-VOLTIOS, 3-VATIOS) (LUZ INDICADORA)	929
LÁMPARA (24-VOLTIOS, 3-VATIOS) (TABLERO DE INSTRUMENTOS)	925
LÁMPARA (24-VOLTIOS, 3-VATIOS) (TABLERO DE INSTRUMENTOS)	927
LÁMPARA (24 VOLTIOS, 5 VATIOS)	317
	320

* NO HAY TRADUCCION DISPONIBLE EN EL MOMENTO DE LA IMPRESION

INDICE

Nombre	Página
LÁMPARA (24-VOLTIOS, 70-VATIOS)	187
LÁMPARA (24-VOLTIOS, 70-VATIOS) (BALIZA GIRATORIA DE ADVERTENCIA)	186
LÁMPARAS (GR) (*STOP, TAIL, TURN, LH)	317
LÁMPARAS (GR) (*STOP, TAIL, TURN, LH)	320
LÁMPARAS (GR) (*STOP, TURN, TAIL, RH)	317
LÁMPARAS (GR) (*STOP, TURN, TAIL, RH)	320
LAVAPARABRISAS DE LA VENTANA (GR)	959
	961
	962
LENTE AMBAR (BALIZA GIRATORIA DE ADVERTENCIA)	187
LEVANTAMIENTO - HOJA DE (GR)	800
LIMPIAPARABRISAS (CONFIG)	973
LIMPIAPARABRISAS DE LA VENTANA (GR)	974
	975
	977
	979
	981
	983
	985
	987
	989
	991
	992
	993
	994
LLAVE (DESCONECTAR BATERIA)	274
LUCES DE ADVERTENCIA (GR)	244
	245
	247
	248
LUCES DE ALÓGENO (24 VOLTIOS, 65 VATIOS)	168
LUCES DE ALÓGENO (24 VOLTIOS, 65 VATIOS) (HOJA)	170
LUCES DE ALÓGENO (24 VOLTIOS, 65 VATIOS) (LUZ BAJA)	197
LUCES DE ALÓGENO (24 VOLTIOS, 65 VATIOS) (REFLECTOR)	167
	169
LUCES DE ALÓGENO (24 VOLTIOS, 65 VATIOS) (VIGA ALTA)	197
LUCES DE ALÓGENO (24 VOLTIOS, 65 VATIOS) (VIGA ALTA)	172
LUCES DE DESPLAZAMIENTO (GR)	241
LUCES DE GIRO (GR)	242
	243
LUCES DE REFLECTOR (GR)	196
	197
	199
	201
	220
	230
	232
	233
	235
	237
LUCES DE REFLECTOR (GR)	202
LUCES DE REFLECTOR (GR)	195
	222
	239
	240
LUCES DE REFLECTOR (GR)	204
	205
	206
	209
	212
	215
	218
	225
	228
LUCES DE REFLECTOR Y SEÑAL (CONFIG)	190
LUCES DE RETROCESO (GR)	191
LUCES DE RETROCESO (GR)	193
LUZ DE BALIZA (GR)	249
LUZ DE SEÑAL DE GIRO (GR)	183
	184
	185

M

MANDO DE CORREA (BALIZA DE ADVERTENCIA)	186
MANDO DEL CIRCULO (GR)	554
MANDO FINAL (GR)	379
MANGUERA DE ESCAPE DE GASES	12
	14
MARTILLO Y MONTAJE (GR)	859
	860
MAZO DE CABLES (CONJ) (BOMBA INYECTORA INDIVIDUAL)	344
MAZO DE CABLES (CONSOLA)	340
MAZO DE CABLES DE LA TRANSMISION	305
	324
	346
	367
MAZO DE CABLES DE LUCES TRASERAS (CONJ)	228
	317
	320
	325
MAZO DE CABLES DE LUCES TRASERAS (CONJ)	230
MAZO DE CABLES DE LUCES TRASERAS (CONJ) (LADO DERECHO)	317

* NO HAY TRADUCCION DISPONIBLE EN EL MOMENTO DE LA IMPRESION

INDICE

Nombre	Página
	320
MAZO DE CABLES DE LUCES TRASERAS (CONJ) (LADO IZQUIERDO)	318
	320
MAZO DE CABLES DE SENSOR (CONJ) (CABLE DE 14 GA)	254
MAZO DE CABLES DE TABLERO DE INSTRUMENTOS (CONJ)	925
	927
MAZO DE CABLES DEL CHASIS (CONJ)	280
MAZO DE CABLES DEL CHASIS (CONJ)	232
MAZO DE CABLES DEL CHASIS (CONJ) (VERTEDERA)	233
MAZO DE CABLES DEL TABLERO (CONJ)	191
	287
MAZO DE CABLES DEL TABLERO (CONJ) (TABLERO DE LUCES TRASERAS)	929
MAZO DE CABLES (ELECTRONICA DE MOTOR)	293
MAZO DE CABLES, LUCES	212
	215
MECANISMO DE LA VÁLVULA - MONTAJE DEL (GR)	44
MECANISMO DE VÁLVULAS (GR)	58
MIRILLA (ACEITE HIDRÁULICO)	612
MÓDULO DEL TACÓMETRO Y DEL VELOCÍMETRO (GR)	913
MÓDULO DEL TACÓMETRO Y DEL VELOCÍMETRO (GR) (TABLERO DE INSTRUMENTOS)	929
MODULO ELECTRÓNICO DE CUATRO INDICADORES (GR)	912
MONTAJE DE LA ESTRUCTURA ROPS (GR)	915
	917
MONTAJE DE RUEDA (GR)	385
MONTAJE DEL ALTERNADOR (GR)	133
MONTAJE DEL DESGARRADOR (GR)	802
MONTAJE DEL MOTOR Y LA TRANSMISIÓN (GR)	43
MONTAJE-REGISTRO (GR)	490
MOTONIVELADORA PARA LA NIEVE (CONFIG)	4
	5
MOTOR - SOPORTE DEL (GR)	56
MOTOR DE ARRANQUE ELÉCTRICO (GR)	272
MOTOR DE ARRANQUE ELÉCTRICO (GR)	270
MOTOR DE ENGRANAJES (GR)	596
MOTOR ELÉCTRICO (GR)	251
*MOTOR GP-ELECTRIC	852
*MOTOR GP-ELECTRIC (*DEFROSTER FAN)	854
MOTOR HIDRÁULICO DE ENGRANAJES (GR)	597
MOTOR-LIMPIAPARABRISAS (GR)	994
MOTOR-LIMPIAPARABRISAS (GR) (FRENTE)	993
MOTOR-LIMPIAPARABRISAS (GR) (PARTE TRASERA)	985
	989
MOTOR-LIMPIAPARABRISAS (GR) (POSICION DELANTERA / SUPERIOR)	977
	981
MOTOR-LIMPIAPARABRISAS (GR) (24 VOLTIOS)	974
MOTOR-LIMPIAPARABRISAS (GR) (24 VOLTIOS) (*FRONT LOWER)	977
MOTOR-LIMPIAPARABRISAS (GR) (24 VOLTIOS) (INFERIOR)	981
MOTOR Y VENTILADOR (GR)	73
MÚLTIPLE DE ADMISIÓN (GR)	94
MÚLTIPLE DE ESCAPE (GR)	93
N	
NÚCLEO DE TURBOCOMPRESOR (GR)	99
O	
*ORIFICE	396
	399
P	
*PADLOCK GP	614
PANEL DE INSONORIZACIÓN (GR)	48
PANEL DE LA CABINA (GR)	921
	922
	923
PERILLA DE AMORTIGUADOR (ASIENTO)	957
PERSIANA PARA EL SOL (GR)	938
PERSIANAS DE LA CABINA (GR)	902
PESO-PERILLA (CONJ)	876
PISTÓN Y BIELA (GR)	49
PLACA DE ADVERTENCIA (NO ESPACIO LIBRE)	462
	463
	999
PLACA DE CONTROL (CALENTADOR Y ACOND. DE AIRE)	819
PLACA DE CONTROL (*FAN SPEED, TEMPERATURE)	863
	867
PLACA DE CONTROL (MÓDULO DE CUATRO MEDIDORES)	927
PLACA DE CONTROL (SISTEMA MONITOR CATERPILLAR)	925

* NO HAY TRADUCCION DISPONIBLE EN EL MOMENTO DE LA IMPRESION

INDICE

Nombre	Página
	929
PLACA DE IDENTIFICACION (ALTERNADOR)	310
PLACA DE IDENTIFICACION (MOTOR)	310
PLACA DE INFORMACION (COMPRESOR DE AIRE)	10
PLACA DE INFORMACION (*ENGINE, HIGH IDLE, HOLD)	365
PLACA DE INFORMACION (*ENGINE, LOW IDLE, HOLD)	365
PLACA DE INFORMACION (FILTRO DE AIRE)	90
PLACA DE INSTRUCCIONES (ACONDICIONADOR DE AIRE)	819
PLACA DE INSTRUCCIONES (BATERÍA)	310
PLACA DEL TABLERO (*INDICATOR PANEL, LH)	927
PLACA DEL TABLERO (*INDICATOR PANEL, LH)	929
PLACA DEL TABLERO (*INDICATOR PANEL, RH)	927
	930
PLACA DEL TABLERO (SELECCIÓN DE VELOCIDAD)	365
PLACA DEL TABLERO (SEÑALES DE ACCIÓN, PARTE DERECHA)	925
PLACA DEL TABLERO (SEÑALES DE ACCIÓN, PARTE IZQUIERDA)	925
PLACA DEL TABLERO (*TRANSMISSION INDICATOR PANEL)	365
PLACA INDICADORA (*BLADE CENTERSHIFT)	999
PLANCHA DE EMPUJE (GR)	781
*PLATE GP-RADIATOR	82
*PLATE-IDENTIFICATION (*MAXIMUM WEIGHT)	4
PLATO OSCILANTE (GR)	610
PORTAESCOBILLAS (CONJ)	270
POSABRAZOS (GR)	823
	824
PROTECTOR DE LA PLATAFORMA (GR)	480
	482
PROTECTOR DE LAS TUBERÍAS DE LOS FRENOS (GR)	478
PROTECTOR DEL TANQUE DE COMBUSTIBLE (GR)	479
PROTECTOR INFERIOR (GR)	477
PROTECTOR TÉRMICO DEL EJE DE MANDO (GR)	491
PROTECTOR Y SOPORTE DEL RADIADOR (GR)	474
PUERTA DE CABINA	840
	842
	844
	846
PUERTA (GR)	835
	838
PUERTA (GR) (RESPIRADERO DE AIRE)	894

R

RADIADOR (GR)	86
RADIADOR (GR)	85
RECEPTOR-SECADOR	898
REFLECTOR (GR)	166
	167
	168
	169
	170
REFLECTOR (GR) (*24-VOLT, VERTICAL MOUNT)	222
REFLECTOR (GR) (*24-VOLT, VERTICAL MOUNT) (*CAB-RH)	235
REFLECTORES (CONFIG)	188
	189
REGULADOR DE TEMPERATURA (TERMOSTATO) (*98-DEG C)	76
REGULADOR DE VOLTAJE (24 VOLTIOS)	130
REGULADOR DE VOLTAJE (24 VOLTIOS) (ALTERNADOR)	133
REGULADOR Y CAJA (GR)	76
REJILLA DE SUCCIÓN (TRANSMISION)	346
	388
REJILLA MAGNÉTICA (GR)	388
REJILLA (VALVULA DE CONTROL DE TRANSMISION)	404
RELÉ (CONJ) (24 VOLTIOS)	193
RELÉ (CONJ) (24 VOLTIOS) (AUXILIAR DE ARRANQUE CON ÉTER)	265
RELÉ (CONJ) (24 VOLTIOS) (LUCES DE TRABAJO)	204
	205
RELÉ (CONJ) (24 VOLTIOS) (LUZ AUXILIAR DE RETROCESO)	191
RELÉ (CONJ) (24 VOLTIOS) (*TAIL, PANEL LAMPS)	337
RELÉ (CONJ) (24 VOLTIOS) (*TAIL,PANEL LAMPS)	340
RESPIRADERO (CONJ)	58
RESPIRADERO (CONJ) (TANDEM)	391
RETROVISOR (GR)	903
	904
	905
	906
	908
	909

* NO HAY TRADUCCION DISPONIBLE EN EL MOMENTO DE LA IMPRESION

INDICE

Nombre	Página
	910
REVESTIMIENTO DE LA CABINA (GR)	884
	886
	889
	894
	896
RUEDA (CONFIG)	448
	449
	450
RUEDA (GR)	450
	451
	452
	453
	454
RUEDA Y LLANTA (CONFIG)	406
	407
	408
	409
	410
	411
	412
	413
	414
	415
	416
	417
	418
	419
RUEDA Y NEUMÁTICO (GR)	420
	421
	422
	423
	424
	425
	426
	427
	428
	429
	430
	431
	432
	433
	434
	435
	436
	437
	438
	439
	440
	441
	442
	443
	444
	445
	446
	447
	448

S

*SEAL-LIP TYPE	76
SEGMENTO DE CIRCULO	777
SELLO DE CIGÜEÑAL (GR)	55
SENSOR DE PRESIÓN (GR)	254
	255
	256
	257
	258
SENSOR DE PRESIÓN (GR) (VENTILADOR DE REDIADOR)	574
SENSOR DE TEMPERATURA (GR)	262
	263
	264
SENSOR DE VELOCIDAD (GR)	259
	260
	261
*SENSOR GP-POSITION (*ROTARY) (*THROTTLE)	100
SERVICIO DE TREN DE FUERZA (GR) (MOTONIVELADORA)	160
SILENCIADOR (GR)	95
SOFTWARE DEL TREN DE FUERZA (GR)	159
SOFTWARE DEL TREN DE FUERZA (GR) (MOTONIVELADORA)	160
*SOFTWARE GP-ENGINE (*VARIABLE HORSEPOWER)	997
SOLENOIDE (CONJ) (24 VOLTIOS)	270
SOPORTE DE PLATAFORMA (GR)	497
SOPORTE DEL ASIENTO (GR)	953
SOPORTE DEL ESCARIFICADOR (GR)	791
SOPORTE DEL TANQUE DE COMBUSTIBLE (GR)	496
SUSPENSIÓN - ASIENTO CON (GR)	945
	946
	947
	948
	949
	950
SUSPENSIÓN - ASIENTO CON (GR)	951
*SWITCH GP-ROTARY (LUZ DE GIRO, PELIGRO)	206
	209
	212
	215
	222
	225

* NO HAY TRADUCCION DISPONIBLE EN EL MOMENTO DE LA IMPRESION

INDICE

Nombre	Página
	275
*SWITCH GP-ROTARY (LUZ DE GIRO, PELIGRO)	340

T

TABLERO DE INSTRUMENTOS (GR)	925 927 929
TÁNDEM Y CUBIERTA (GR)	391
TANQUE DE AIRE (GR)	512
TANQUE HIDRÁULICO Y MONTAJE (GR)	614
TANQUE Y FILTRO HIDRÁULICOS (GR)	612
TAPA CONTRA EL POLVO (ACEITE HIDRÁULICO)	592
TAPA DEL BLOQUE MOTOR (GR)	21
TAPA DEL RADIADOR (*7-PSI)	85 86
TAPA DEL TUBO DE LLENADO DE ACEITE (CONJ)	62
TAPA DEL TUBO DE LLENADO DE COMBUSTIBLE (GR) (SERVICIO PESADO, TRABABLE)	119 121
TAPA DEL TUBO DE LLENADO (TANQUE DE ACEITE HIDRÁULICO)	612
TAPA (VASTAGO)	446
TAPÓN DEL BLOQUE MOTOR (GR)	50
TAPÓN DEL MOTOR (GR)	51
TAPÓN MAGNÉTICO (DRENAJE DE LA CAJA)	458
TENSOR DE CORREA (GR)	16 18
TIRANTE DE DIRECCIÓN (GR)	489
TIRANTE (GR) (DIRECCIÓN)	537
TOPE DE VÁLVULA DE CONTROL (GR)	551 552
TORNILLERIA DEL RADIADOR	75
TORNILLERÍA DEL TANQUE DE COMBUSTIBLE	102
TORNILLERÍA (GR)	471
TRABA DE DESPLAZAMIENTO DEL CIRCULO (GR)	595
TRANSMISION (CONFIG)	392
TREN DE FUERZA-GRUPO ELECTRÓNICO	159 160
TUBERÍAS DE ACEITE DE LA TRANSMISIÓN (GR)	381
TUBERÍAS DE ACONDICIONADOR DE AIRE (GR)	898
TUBERIAS DE CALEFACCION	900
TUBERÍAS DE COMBUSTIBLE (GR)	105 106
TUBERÍAS DE DIRECCIÓN (GR)	592
TUBERIAS DE DRENAJE DE ACEITE DE MOTOR (GR)	66
TUBERÍAS DE ENGRASE (GR)	488
TUBERÍAS DE INYECCIÓN DE COMBUSTIBLE (GR)	111
TUBERÍAS DE LA CALEFACCIÓN (GR)	900
TUBERÍAS DE LA DIRECCIÓN SECUNDARIA (GR)	590
TUBERÍAS DEL ACUMULADOR (GR)	558
TUBERÍAS DEL AGUA (GR)	77 78 79
TUBERÍAS DEL AGUA (GR)	81
TUBERÍAS DEL DESGARRADOR (GR)	585 587 589
TUBERÍAS DEL FILTRO DE COMBUSTIBLE	108
TUBERÍAS HIDRÁULICAS DEL VENTILADOR (GR)	572 574
TUBERÍAS HIDRÁULICAS (GR)	560 562 563 564 566 569 571
TUBO DE LLENADO DE ACEITE DE LA TRANSMISIÓN (GR)	375
TUBO DE LLENADO DE ACEITE (GR)	62
TURBOCOMPRESOR - TUBERÍAS DE ACEITE DEL (GR)	67
TURBOCOMPRESOR (GR)	98 99

U

UNIÓN GIRATORIA (GR)	611

V

*VALVE GP-PUMP CONTROL	749 751
*VALVE (*PRESSURE RELIEF)	10
VALVULA ANTIREACCION (GR)	759
VÁLVULA DE ALIVIO (GR)	760 761 762 763 764 765 766

* NO HAY TRADUCCION DISPONIBLE EN EL MOMENTO DE LA IMPRESION

INDICE

Nombre	Página
	767
	768
	828
VÁLVULA DE ALIVIO (GR)	755
	756
	757
	758
	759
VÁLVULA DE COMBINACIÓN (GR)	697
	699
VÁLVULA DE CONTROL DE LA TRANSMISIÓN (GR)	404
VÁLVULA DE CONTROL (GR)	701
	703
	705
	707
	709
	711
	713
	715
	717
	719
	721
	723
	725
	727
	729
	731
	733
	735
	737
	739
	741
	743
	745
	747
VÁLVULA DE CONTROL (GR) (AIRE)	515
VÁLVULA DE CONTROL (GR) (DESPLAZADOR LATERAL)	674
	676
	677
	678
	680
	681
	683
	685
	687
	692
	693
	694
	695
	696

Nombre	Página
VÁLVULA DE CONTROL (GR) (DESPLAZADOR LATERAL)	690
VÁLVULA DE CONTROL (GR) (ESCARIFICADOR)	678
	692
VÁLVULA DE CONTROL (GR) (HOJA DE LEVANTAMIENTO)	683
	692
	693
	696
VÁLVULA DE CONTROL (GR) (LEVANTAMIENTO DE LA HOJA)	674
	677
	678
	687
	690
VÁLVULA DE CONTROL (GR) (MANDO DEL CÍRCULO)	674
	676
	677
	678
	680
	681
	683
	685
	687
	692
	693
	694
	695
	696
VÁLVULA DE CONTROL (GR) (MANDO DEL CÍRCULO) (LADO IZQUIERDO)	690
VÁLVULA DE CONTROL (GR) (PUNTA DE HOJA)	674
	676
	677
	678
	680
	681
	683
	685
	687
	690
	692
	693
	694
	695
	696
VÁLVULA DE DRENAJE (RADIADOR)	474
VÁLVULA DE DRENAJE (REFRIGERANTE DEL MOTOR)	79

* NO HAY TRADUCCION DISPONIBLE EN EL MOMENTO DE LA IMPRESION

INDICE

Nombre	Página
VÁLVULA DE DRENAJE (TANQUE DE AIRE)	512
VÁLVULA DE LA TRABA DEL DIFERENCIAL Y MONTAJE (GR)	395
VÁLVULA DE LANZADERA (GR)	769
	770
VÁLVULA DE LEVANTAMIENTO (GR)	41
VÁLVULA DE MUESTREO (GR) (DIRECCIÓN)	592
VALVULA DE PURGA (GR)	753
	754
VÁLVULA DE RETENCIÓN (GR)	125
	126
	127
VÁLVULA DE SOLENOIDE (GR)	402
	403
VÁLVULA DE SOLENOIDE (GR)	517
	518
VÁLVULA DE SOLENOIDE (GR)	771
	772
VÁLVULA DE SOLENOIDE Y MÚLTIPLE (GR)	773
	774
VÁLVULA DEL NEUMÁTICO (GR)	420
	421
	422
	423
	424
	425
	426
	427
	428
	429
	430
	431
	432
	433
	434
	435
	436
	437
	438
	439
	440
	441
	442
	443
	444
	445
	446
	447
	450
	452
	453
	454
VÁLVULA SELECTORA Y DE CONTROL DE PRESIÓN (GR)	396
	399
VÁLVULA Y VARILLAJE (GR)	615
	617
	619
	621
	623
	625
	627
	629
	631
	633
	635
	637
	639
	641
	643
	645
	647
	649
	651
	653
	656
	658
	660
	662
	664
	666
	668
	670
VÁLVULAS HIDRÁULICAS - GRUPO DE 6	683
	684
	685
	686
	687
	688
VÁLVULAS HIDRÁULICAS - GRUPO DE 7	689
	690
	692
	693
	694
	695
	696
VENTANA DE LA CABINA (GR)	968
	969
	971
VENTANA (GR)	964
	965
	966
	967
VENTILADOR DE CIRCULACION	852
	854

* NO HAY TRADUCCION DISPONIBLE EN EL MOMENTO DE LA IMPRESION

INDICE

Nombre	Página	Nombre	Página
	856		
	857		
VIDRIO (CONJ) (AMBAR) (DE GIRO)	173		
	175		
VIDRIO (CONJ) (AMBAR) (SEÑAL)	177		
VIDRIO (CONJ) (AMBAR) (SEÑAL)	179		
VIDRIO (CONJ) (FARO DELANTERO)	177		
	179		
VIDRIO (CONJ) (*HEAD)	173		
	175		
VIDRIO (CONJ) (LAMPARA-LUZ BAJA)	171		
VIDRIO (CONJ) (LUZ BAJA)	197		
VIDRIO (CONJ) (REFLECTOR)	167		
	168		
	169		
	170		
VOLANTE - CAJA DE (GR)	37		
VOLANTE (GR)	35		

* NO HAY TRADUCCION DISPONIBLE EN EL MOMENTO DE LA IMPRESION

ÍNDICE

Designação	Página
A	
ACENDEDOR (CIGARROS, 24 VOLTS)	331
	333
ACESSÓRIO - CABINE	816
	817
ACOPLAMENTO TORSIONAL	370
ACUMULADOR	520
	521
	898
ACUMULADOR (DIREÇÃO)	592
ACUMULADOR DO AMORTECEDOR DA LÂMINA	520
ACUMULADOR HIDRÁULICO	522
	523
	524
ACUMULADOR HIDRÁULICO E MONTAGEM	519
ADAPTADOR DO PURIFICADOR DE AR	97
ALARME	128
	129
ALTERNADOR DE CORRENTE	130
	132
	133
	134
	135
AQUECEDOR DA ÁGUA DO MOTOR	161
	162
AQUECEDOR DA CABINE	861
	862
	863
	867
AQUECEDOR DA CABINE E MONTAGEM	861
AQUECEDOR DO COMBUSTÍVEL (SEPARADOR DE ÁGUA, 12 VOLTS)	104
AR. PARA NEVE - MOTONIVELADORA	4
	5
ARRANJO GERAL	2
ARRANJO RODOVIÁRIO	4
ARREFECEDOR DE ÓLEO DA TRANSMISSÃO	368
ARREFECIMENTO	70
	71
	72
ARTICULAÇÃO GIRATÓRIA	611
ASSENTO	941
	943
ASSENTO - FUNDO	919
ASSENTO COM SUSPENSÃO	945
	946
	947
	948
	949
	950
	951
ATOMIZADOR - ÉTER	268
AUXILIAR DE PARTIDA A ÉTER	265
	267
	268
B	
BALANCIM	53
BARRA DE DIREÇÃO (DIREÇÃO)	537
BARRA DE TRAÇÃO	779
BASE DO FILTRO DE ÓLEO	60
BATERIA	136
	137
	138
	139
	495
BATERIA (12-VOLTS)	138
BATERIA (12-VOLTS) (MOLHADO)	137
BATERIA (12-VOLTS) (1.100 AMPS)	136
BATERIA (12 VOLTS, 750 AMPERES)	139
BLINDAGEM DO EIXO DA TRANSMISSÃO	491
BLOCO DE JUNÇÃO	140
BLOCO DO MOTOR	25
	26
	27
BOCAL DE ENCHIMENTO DE ÓLEO DO MOTOR	62
BOCAL DE ENCHIMENTO DE ÓLEO DO TREM DE FORÇA	375
*BODY AS-GAUGE	85
BOMBA DA DIREÇÃO SECUNDÁRIA E MONTAGEM	601
BOMBA DE ÁGUA	83
	84
BOMBA DE DIREÇÃO SECUNDÁRIA E MOTOR	599
BOMBA DE ENGRENAGENS	386
	387
BOMBA DE ESCORVA DO COMBUSTÍVEL	115
BOMBA DE INJEÇÃO DO COMBUSTÍVEL	114
BOMBA DE ÓLEO - MOTOR	68
	69
BOMBA DE PISTÃO	602
	604
BOMBA DE TRANSFERÊNCIA DO COMBUSTÍVEL	113
BOMBA E MONTAGEM - PISTÃO	600
BOMBA E MONTAGEM - TRANSFERÊNCIA DE COMBUSTÍVEL	113
BORDA CORTANTE	792
	793
BOTÃO - PESO	876
*BOX GP-TOOL	995

* TRADUÇÃO NÃO DISPONÍVEL NO MOMENTO DA IMPRESSÃO

ÍNDICE

Designação	Página
BRAÇO DO ASSENTO	823
	824
*BREATHER AS (BOCAL DE ENCHIMENTO DE ÓLEO DE TREM DE FORÇA)	375
BUJÃO DO BLOCO DO CILINDRO	50
BUJÃO DO MOTOR	51
BUJÃO MAGNÉTICO (CAIXA DE DRENAGEM)	458
BUZINA DE AR	871
	872
	874

C

CABEÇOTE DO MOTOR	29
	31
	32
CABINE	825
	826
CABINE OPERADOR - SEM ROPS	825
CABOS/FIOS ELÉTRICOS - CABINE	282
	284
	285
	287
	289
	291
CABOS/FIOS ELÉTRICOS - CONSOLE DA DIREÇÃO	337
	340
CABOS/FIOS ELÉTRICOS - CONSOLE DA TRANSMISSÃO	331
	333
CABOS/FIOS ELÉTRICOS - DIANTEIROS	296
	300
CABOS/FIOS ELÉTRICOS - DIREÇÃO SECUNDÁRIA	329
CABOS/FIOS ELÉTRICOS - INJETOR	344
CABOS/FIOS ELÉTRICOS - MOTOR	293
CABOS/FIOS ELÉTRICOS - TRASEIROS	305
	310
	315
	317
	320
	324
CADEADO	825
	834
CADEADO (CAIXA DE FERRAMENTAS)	995
CADEADO (ROPS)	934
CAIXA - SUSPENSÃO DO ASSENTO	876
CAIXA DIANTEIRA	39
CAIXA DO VOLANTE DO MOTOR	37
CAIXA E CHASSI	458
CAIXA E COMPONENTES - TRANSMISSÃO	346

Designação	Página
CANTO DE LÂMINA	782
	783
	784
	785
	786
CARCAÇA - INDICADOR (NÍVEL DO LÍQUIDO ARREFECEDOR)	86
CÁRTER DO ÓLEO DO MOTOR	45
	47
*CARTRIDGE AS-DESICCANT (SECADOR A AR)	501
CARTUCHO DO TURBOALIMENTADOR	99
CHAPA DE EMPUXO	781
CHASSI DIANTEIRO	472
CHAVE (DESCONECTAR A BATERIA)	274
CHAVE GERAL	274
CHICOTE - CABINE	193
	235
	237
	289
	906
CHICOTE - CABINE (DIANTEIRO)	285
CHICOTE - CABINE (PAINEL DE INSTRUMENTOS)	282
	285
CHICOTE - CABINE (TRASEIRO)	282
CHICOTE - CABINE (TRASEIRO)	285
CHICOTE - CABOS ELÉTRICOS (UNIDADE INJETORA)	344
CHICOTE - CHASSI	232
	280
CHICOTE - CHASSI (ARMAÇÃO DA LÂMINA)	233
CHICOTE - CONSOLE	331
	333
CHICOTE - CONSOLE (DIREÇÃO)	337
CHICOTE - ILUMINAÇÃO	212
	215
CHICOTE - PAINEL DE INSTRUMENTOS	925
	927
CHICOTE - PAINEL DE INSTRUMENTOS (LUZES TRASEIRAS DO PAINEL)	929
CHICOTE - PLATAFORMA	296
	300
CHICOTE - SENSOR (FIAÇÃO 14-GA)	254
CHICOTE - TRANSMISSÃO	305
	324
	346
	367
CHICOTE - TRASEIRO	310
CHICOTE-CHASSI DIANTEIRO	206
	209
	212
	215

* TRADUÇÃO NÃO DISPONÍVEL NO MOMENTO DA IMPRESSÃO

ÍNDICE

Designação	Página
	300
CHICOTE-CHASSI DIANTEIRO (BARRA DA LUZ DE REFORÇO)	222
CHICOTE-CHASSI DIANTEIRO (LUZES DE TRABALHO, DIANTEIRO)	225
CHICOTE-CHASSI TRASEIRO	305
	306
	325
CHICOTE (CONSOLE)	340
CHICOTE (SISTEMA ELETRÔNICO DO MOTOR)	293
CILINDRO DA DIREÇÃO	547
	548
CILINDRO DE ARTICULAÇÃO	539
CILINDRO DE DESLIZAMENTO LONGITUDINAL	546
CILINDRO DE DESLOCAMENTO LATERAL	541
CILINDRO DE DIREÇÃO E MONTAGEM	537
CILINDRO DE ÉTER	265
	268
CILINDRO DE INCLINAÇÃO LATERAL DAS RODAS	550
CILINDRO DE LEVANTAMENTO	543
CILINDRO DE TOMBAMENTO DA LÂMINA	540
CILINDRO DO ESCARIFICADOR	545
CILINDRO DO RÍPER	544
CILINDRO E MONTAGEM - ARTICULAÇÃO	531
CILINDRO E MONTAGEM - DESLOCAMENTO DA LÂMINA	536
CILINDRO E MONTAGEM - DESLOCAMENTO DO CÍRCULO	534
CILINDRO E MONTAGEM - ESCARIFICADOR	535
CILINDRO E MONTAGEM - INCLINAÇÃO DAS RODAS	538
CILINDRO E MONTAGEM - LEVANTAMENTO DA LÂMINA	532
CILINDRO E MONTAGEM - TOMBAMENTO DA LÂMINA	533
CILINDRO HIDRÁULICO - MACACO	997
CINTO DE SEGURANÇA	939
	940
	950
CINTO DE SEGURANÇA (RETRÁTIL)	947
CINZEIRO	886
	889
CÍRCULO	775
	777
COBERTURA DO MOTOR	466
	469
COLETOR DE ADMISSÃO	94
COLETOR DE ESCAPE	93
COLMEIA DO CONDENSADOR (AR CONDICIONADO)	829
COMANDO DE ACESSÓRIOS	33
COMANDO FINAL	379
COMANDO HIDRÁULICO	557
COMPRESSOR DE AR	10
	12
	14
COMPRESSOR DE REFRIGERANTE	828
COMPRESSOR DE REFRIGERANTE E MONTAGEM	827
CONDENSADOR DO REFRIGERANTE E MONTAGEM	829
CONDICIONADOR DE AR	818
	819
CONDICIONADOR DE AR E MONTAGEM	818
CONSOLE DO OPERADOR	830
*CONTROL GP-HYDRAULIC LOCKOUT	529
*CONTROL GP-UNPROGRAMMED	151
CONTROLE - NÃO PROGRAMADO	152
CONTROLE DA DIREÇÃO SECUNDÁRIA	150
CONTROLE DA EMBREAGEM	361
CONTROLE DA TRANSMISSÃO	365
CONTROLE DA TRAVA DO DIFERENCIAL	363
CONTROLE DE DIREÇÃO	530
CONTROLE DO FREIO DE ESTACIONAMENTO	506
CONTROLE DO FREIO DE SERVIÇO	508
CONTROLE DO GOVERNADOR	100
CONTROLE ELÉTRICO DAS MARCHAS	345
CONTROLE ELETRÔNICO - MOTOR	146
	147
	148
	149
CONTROLE ELETRÔNICO E MONTAGEM - MOTOR	144
	145
CONTROLE HIDRÁULICO	525
	526
	527
	528
CONTROLE HIDRÁULICO DA TRANSMISSÃO	367
CONVERSÃO PARA ESTRUTURA NÃO ROPS	834
CONVERSOR DE POTÊNCIA (24 VOLTS PARA 12 VOLTS, 25 AMPÈRES)	157
CONVERSOR ELÉTRICO	153
	154
	155
	156
	157
CONVERSOR ELÉTRICO (24-VOLTS A 12-VOLTS)	156

* TRADUÇÃO NÃO DISPONÍVEL NO MOMENTO DA IMPRESSÃO

ÍNDICE

Designação	Página
CONVERSOR ELÉTRICO (24-VOLTS A 12-VOLTS)	154
*CORE AS	368
*CORE AS-ENGINE OIL COOLER	368
CORREIA	187
CORREIA- SERPENTINA (ALTERNADOR E CONDICIONADOR DE AR)	818
CORREIA- SERPENTINA (ALTERNADOR SEM CONDICIONADOR DE AR)	134
CORREIA DE COMANDO (PISCA-ALERTA)	186
CORRENTE	350
CORRENTE - COMANDO	350
D	
DECALCOMANIA - FACIAL (FARÓIS, FACHO ALTO E BAIXO)	209
	212
	215
	222
	225
	275
	340
DECALCOMANIA - FACIAL (FARÓIS, FACHO ALTO E BAIXO)	206
DECALCOMANIA - FACIAL (PISCA-PISCA, PISCA-ALERTA)	206
	209
	212
	215
	222
	225
	275
	340
DECALQUE	996
	997
DECALQUE - ADVERTÊNCIA (CILINDRO DE ALTA PRESSÃO)	999
DECALQUE - ADVERTÊNCIA (CONEXÃO DE CABO)	999
DECALQUE - ADVERTÊNCIA (NÃO É DEGRAU)	119
DECALQUE - CONTROLE (AQUECEDOR & AR CONDITIONADO)	819
DECALQUE - CONTROLE (VELOCIDADE DO VENTILADOR, TEMPERATURA)	863
	867
DECALQUE - FUSÍVEL	285
DECALQUE - FUSÍVEL (DIREITO)	337
DECALQUE - FUSÍVEL (ESQUERDO)	337
	340
DECALQUE - FUSÍVEL (LUZES, LAVADOR, LIMPADOR, DESCONGELADOR)	282
DECALQUE - IDENTIFICAÇÃO (*BIODEGRADABLE HYDRAULIC OIL)	557
DECALQUE - IDENTIFICAÇÃO (NÚMERO DE GRUPO) (AR CONDICIONADO)	819
DECALQUE - INDICADOR (*BLADE CENTERSHIFT)	999
DECALQUE - INFORMAÇÕES (*ENGINE, HIGH IDLE, HOLD)	365
DECALQUE - INFORMAÇÕES (*ENGINE, LOW IDLE, HOLD)	365
DECALQUE - INFORMAÇÕES (PURIFICADOR DE AR)	90
DECALQUE - INSTRUÇÃO (AJUSTE DO ASSENTO)	957
DECALQUE - INSTRUÇÃO (*DO NOT DRILL, WELD ROPS)	935
DECALQUE - INSTRUÇÃO (NÃO FURE OU SOLDE A ESTRUTURA ROPS)	932
	933
	935
DECALQUE - INSTRUÇÃO (PARADA DO MOTOR)	306
	325
DECALQUE - INSTRUÇÃO (SEM DEGRAUS)	479
DECALQUE - INSTRUÇÃO (VIDRO DE SAÍDA EMERG./REMOVÍVEL)	859
	860
DECALQUE - PAINEL (INDICADORES DE AÇÃO DO LADO DIREITO)	925
DECALQUE - PAINEL (INDICADORES DE AÇÃO DO LADO ESQUERDO)	925
DECALQUE - PAINEL (PAINEL DE INDICADORES DA TRANSMISSÃO)	365
DECALQUE - PAINEL (PAINEL DE INDICADORES, DIREITO)	927
	930
DECALQUE - PAINEL (PAINEL DE INDICADORES, ESQUERDO)	927
	929
DECALQUE - PAINEL (SELECIONAR VELOCIDADE)	365
DECALQUE (LAVADOR DE VIDROS)	291
DECALQUE MONITOR (MÓDULO DE QUATRO MEDIDORES)	927
DECALQUE MONITOR (SISTEMA DE MONITORIZAÇÃO CATERPILLAR)	925
	929
DECALQUE (NÃO É DEGRAU)	117
	119
DECALQUE (PÁRA-SOL - CATERPILLAR)	921
	922

* TRADUÇÃO NÃO DISPONÍVEL NO MOMENTO DA IMPRESSÃO

ÍNDICE

Designação	Página
DECALQUE (PLACA - NOME) (ACUMULADOR)	522, 592
DECALQUE-REFLETOR (AMARELO)	1002
DECALQUE (TAMPA - PRETA)	365
DEGRAU	492
DENTE DO ESCARIFICADOR	814, 815
DIFERENCIAL	373
DIFERENCIAL E COROA	371
DIREÇÃO SECUNDÁRIA	609
DISJUNTOR AUTOMÁTICO DE CIRCUITO (105 AMPERES) (ALTERNADOR)	143
DISJUNTOR AUTOMÁTICO DE CIRCUITO (15 AMPERES) (CONTROLE DO MOTOR)	311
DISJUNTOR AUTOMÁTICO DE CIRCUITO (15 AMPERES) (FARÓIS)	141, 142
DISJUNTOR AUTOMÁTICO DE CIRCUITO (15 AMPERES) (LÂMPADAS DE TRABALHO - BARRA)	141
DISJUNTOR AUTOMÁTICO DE CIRCUITO (80 AMPERES) (ALTERNADOR)	310
DISJUNTOR AUTOMÁTICO DE CIRCUITO (80 AMPERES) (PRINCIPAL)	310
*DOOR GP (*AIR VENT)	886, 889, 896
DUCTO	849
DUCTO E CONTROLE	848

E

Designação	Página
EIXO-COMANDO DE VÁLVULA	20
EIXO DE COMANDO DA BOMBA	608
EIXO DE ENTRADA	390
EIXO DE TRANSMISSÃO	389
EIXO DIANTEIRO	455
ELEMENTO - AQUECEDOR DE ÁGUA DA CAMISA (*120-VOLT, 1250-WATT)	161
ELEMENTO - AQUECEDOR (240 VOLTS, 1250 WATTS)	162
ELEMENTO - FILTRANTE (SEPARADOR DE ÁGUA E COMBUSTÍVEL) (PRIMÁRIO)	104
ELEMENTO - PRIMÁRIO	90
ELEMENTO - SECUNDÁRIO	90
ELEMENTO FILTRANTE - ÓLEO (ALTA EFICIÊNCIA) (TRANSMISSÃO)	378, 381
ELEMENTO FILTRANTE - ÓLEO (HIDRÁULICO) (EFICIÊNCIA PADRÃO)	612
ELO - DIREÇÃO	489
EMBREAGEM DA TRANSMISSÃO	351, 354, 357, 359
EMISSOR - NÍVEL DO COMBUSTÍVEL	119, 121
EMISSOR - POSIÇÃO	252, 253
EMISSOR - POSIÇÃO (ARTICULAÇÃO)	306, 325
ENGATE - ARTICULAÇÃO	484
ENGATE DO REBOQUE	486, 487
ENGRENAGENS DE DISTRIBUIÇÃO	36
ESCARIFICADOR	807, 808, 811
ESPELHO RETROVISOR	903, 904, 905, 906, 908, 909, 910
ESTRUTURA ROPS ABERTA	934
ESTRUTURA ROPS FECHADA	932, 933
EXTENSÃO - ENCOSTO	850, 851, 947
EXTENSÃO DA LÂMINA	794, 795, 796, 797, 798, 799

F

Designação	Página
FAROL DIANTEIRO	171, 172, 173, 175
FIAÇÃO - AMORTECEDOR DA LÂMINA	280
FIAÇÃO - AQUECEDOR E AR CONDICIONADO	820, 863, 898
FIAÇÃO - AUXILIAR DE PARTIDA	265
FIAÇÃO - LUZES TRASEIRAS	228, 230, 317, 320

* TRADUÇÃO NÃO DISPONÍVEL NO MOMENTO DA IMPRESSÃO

ÍNDICE

Designação	Página
	325
FIAÇÃO - LUZES TRASEIRAS (DIREITO)	317
FIAÇÃO - LUZES TRASEIRAS (DIREITO)	320
FIAÇÃO - LUZES TRASEIRAS (ESQUERDO)	318
	320
FIAÇÃO - PAINEL	191
	287
FIAÇÃO -LUZES DIANTEIRAS	218
	220
	235
	237
	249
	301
FIAÇÃO -LUZES DIANTEIRAS (BARRA DA LUZ ELEVADA)	222
FIAÇÃO -LUZES DIANTEIRAS (LUZES DE TRABALHO)	225
FIAÇÃO-LIMPADOR DE VIDROS (CAIXA DE FUSÍVEIS)	291
FIAÇÃO-LIMPADOR DE VIDROS (CONTROLE)	291
*FILM (*VHP PLUS)	997
FILTRO - AR (CABINE)	858
FILTRO - AR DA CABINE	858
FILTRO - COMBUSTÍVEL	103
	119
	121
FILTRO - MAGNÉTICO	388
FILTRO - MAGNÉTICO (ÓLEO DA TRANSMISSÃO)	346
FILTRO - MAGNÉTICO (TRANSMISSÃO)	388
FILTRO - ÓLEO	378
FILTRO - ÓLEO DO MOTOR	63
FILTRO DE COMBUSTÍVEL E SEPARADOR DE ÁGUA	104
FILTRO DO ÓLEO E MONTAGEM	376
FIXADORES	471
FIXADORES - CABEÇOTE DO MOTOR	34
FIXADORES - RADIADOR	75
FIXADORES - TANQUE DE COMBUSTÍVEL	102
FREIO DE ESTACIONAMENTO	502
FREIO DE SERVIÇO	504
FUNDO - ENCOSTO	918
FUSÍVEL (*10-AMPERE) (DESCONGELADOR DIANTEIRO)	856
FUSÍVEL (*10-AMPERE) (DESCONGELADOR TRASEIRO)	857
FUSÍVEL (*10-AMPERE) (FAROL DA LÂMINA - DIANTEIRO)	201
FUSÍVEL (10 AMPERES)	206
	212
	215
	222
	225
	235
	237
	244
	275
	287
	289
	291
	329
	337
	340
FUSÍVEL (10 AMPERES) (AQUECIMENTO DOS ESPELHOS)	906
FUSÍVEL (10 AMPERES) (AQUECIMENTO DOS ESPELHOS)	910
FUSÍVEL (10 AMPERES) (*AUXILIARY BACK-UP ALARM)	193
FUSÍVEL (10 AMPERES) (CONVERSOR)	154
FUSÍVEL (10 AMPERES) (CONVERSOR DE ENERGIA)	156
FUSÍVEL (10 AMPERES) (FAROL DO LADO DIREITO)	218
FUSÍVEL (10 AMPERES) (FAROL DO LADO DIREITO)	220
FUSÍVEL (10 AMPERES) (LÂMPADA DA LÂMINA)	202
FUSÍVEL (10 AMPERES) (LIMPADOR)	983
	985
	987
	989
FUSÍVEL (10 AMPERES) (LUZ DE MARCHA À RÉ)	191
FUSÍVEL (10 AMPERES) (LUZES DE TRABALHO)	204
	205
FUSÍVEL (10 AMPERES) (PISCA-PISCA DE ADVERTÊNCIA)	245
	284
FUSÍVEL (10 AMPERES) (PISCA-PISCA, PISCA-ALERTA)	209
FUSÍVEL (10 AMPERES) (SECADOR A AR)	498
FUSÍVEL (15 A) (AQUECEDOR)	861
FUSÍVEL (15 A) (AR CONDICIONADO)	818
FUSÍVEL (15 AMPERES)	282
	285
	337
	340
FUSÍVEL (15 AMPERES) (CONVERSOR - FORÇA)	155
FUSÍVEL (15 AMPERES) (HOLOFOTES - CABINE)	204
	205
FUSÍVEL (30 AMPERES)	157

* TRADUÇÃO NÃO DISPONÍVEL NO MOMENTO DA IMPRESSÃO

ÍNDICE

Designação	Página
G	
*GASKET	58
GR. DE CONVERSÃO - CERTIFICADO	1
	2
GR. DE SERVICO - TREM DE FORÇA (MOTONIVELADORA)	160
GRAXEIRA (SOQUETE DO CILINDRO DE DESLOCAMENTO LATERAL)	534
GRUPO DE VÁLVULAS DE CONTROLE - CINCO	677
	678
	679
	680
	681
	682
GRUPO DE VÁLVULAS DE CONTROLE - QUÁDRUPLO	673
	674
	675
	676
GRUPO DE VÁLVULAS DE CONTROLE - SEIS	683
	684
	685
	686
	687
	688
GRUPO DE VÁLVULAS DE CONTROLE - SETE	689
	690
	692
	693
	694
	695
	696
GRUPO ROTATIVO DA BOMBA	606
	607
I	
ILUMINAÇÃO - FAROL E SINALIZAÇÃO	190
ILUMINAÇÃO - MARCHA A RÉ	191
	193
ILUMINAÇÃO - RODOVIÁRIA	241
ILUMINAÇÃO - SINALIZAÇÃO	242
	243
INDICADOR - NÍVEL DO ÓLEO (VARETA)	65
INDICADOR - PRESSÃO DO AR (DIREITO)	927
	929
INDICADOR - PRESSÃO DO AR (DIREITO)	925
INDICADOR - PRESSÃO DO AR (ESQUERDO)	925
	927
	929
INDICADOR - TROCA DO FILTRO DE AR	88
INJETOR DE COMBUSTÍVEL	114
INSTALAÇÃO DO PISCA-PISCA DE ADVERTÊNCIA	163
INSTALAÇÃO DO RÁDIO	880
INSTALAÇÃO DO RÁDIO - ARRANJO	879
INTERRUPTOR - BALANCIM (BARRA DE LUZ BAIXA)	212
	215
	222
INTERRUPTOR - BALANCIM (FARÓIS DA LÂMINA)	204
INTERRUPTOR - BALANCIM (FARÓIS DA LÂMINA)	205
INTERRUPTOR - BALANCIM (FARÓIS DIANTEIROS, LUZES TRASEIRAS)	206
	209
	212
	215
	222
	225
	275
	340
INTERRUPTOR - BALANCIM (LÂMINA)(LÂMPADA DIANTEIRA)	201
INTERRUPTOR - BALANCIM (LÂMPADA DA LÂMINA)	202
INTERRUPTOR - BALANCIM (LUZES DE TRABALHO, DIANTEIRO)	225
INTERRUPTOR - BALANCIM (PARADA DO MOTOR)	324
INTERRUPTOR - BALANCIM (PARADA DO MOTOR AO NÍVEL DO SOLO)	305
INTERRUPTOR - BALANCIM (PISCA-PISCA DE ADVERTÊNCIA)	163
INTERRUPTOR - BALANCIM (*THROTTLE LOCK SET, RESET)	333
INTERRUPTOR - BOTÃO (MODALIDADES DE VISUALIZAÇÃO)	927
	929
INTERRUPTOR - BOTÃO (MODO DO OPERADOR)	925
INTERRUPTOR - CIRCUITO	141
	142
	143
INTERRUPTOR - ESFERA (INDICADOR DE DESLOCAMENTO LATERAL)	296
	300
INTERRUPTOR - LIMITADOR (PEDAL - MOVIMENTO GRADUAL)	337
	340

* TRADUÇÃO NÃO DISPONÍVEL NO MOMENTO DA IMPRESSÃO

ÍNDICE

Designação	Página
INTERRUPTOR - LIMITADOR (PEDAL DO FREIO)	341
INTERRUPTOR - LIMPADOR DO PÁRA-BRISA	279 991
INTERRUPTOR - LIMPADOR DO PÁRA-BRISA (24 VOLTS) (PISCA-PISCA DIANTEIRA)	285
INTERRUPTOR - LIMPADOR (24 VOLTS) (TRASEIRO)	983 985 987 989
INTERRUPTOR - LUZES	275
INTERRUPTOR - MAGNÉTICO	277 278
INTERRUPTOR - MAGNÉTICO (24 VOLTS) (RELÉ DE ARRANQUE)	310
INTERRUPTOR - PARTIDA (CHAVE)	331 333
INTERRUPTOR - PRESSÃO (*AIR BRAKES)	296
INTERRUPTOR - PRESSÃO (AR CONDICIONADO - ALTO/BAIXO)	898
INTERRUPTOR - PRESSÃO (DIREÇÃO PRIMÁRIA)	300
INTERRUPTOR - PRESSÃO (DIREÇÃO SECUNDÁRIA)	329
INTERRUPTOR - PRESSÃO (FREIO DE ESTACIONAMENTO)	297
INTERRUPTOR - PRESSÃO (LUZ DO FREIO)	300
INTERRUPTOR - PRESSÃO (LUZ DO FREIO)	296
INTERRUPTOR - ROTATIVO (*HIGH, LOW BEAM)	206
INTERRUPTOR - ROTATIVO (REDUTOR DE LUMINOSIDADE - FAROL)	209 212 215 222 225 340
INTERRUPTOR - ROTATIVO (SETA DE DIREÇÃO)	275
INTERRUPTOR - ROTATIVO (VELOCIDADE DO VENTILADOR)	819 863 867
INTERRUPTOR - ROTATIVO (24 VOLTS) (*FRONT WIPER CONTROL)	282
INTERRUPTOR - ROTATIVO (24 VOLTS) (LIMPADOR DIANTEIRO)	291
INTERRUPTOR - TEMPERATURA (ÓLEO HIDRÁULICO)	296 300
INTERRUPTOR - TEMPERATURA (REFRIGERANTE)	819
INTERRUPTOR (ACIONADOR DE TRAVA DO ACELERADOR)	333
INTERRUPTOR (AJUSTE DE VELOCIDADE DO ACELERADOR)	331
INTERRUPTOR (AMORTECEDOR DA LÂMINA)	280
INTERRUPTOR (*AUXILIARY BACKUP)	191
INTERRUPTOR DE DERIVAÇÃO	273
INTERRUPTOR (DESCONGELADOR DIANTEIRO)	856
INTERRUPTOR (DESCONGELADOR TRASEIRO)	857
INTERRUPTOR GIRATÓRIO (PISCA-PISCA, PISCA-ALERTA)	206 209 212 215 222 225 275
INTERRUPTOR GIRATÓRIO (PISCA-PISCA, PISCA-ALERTA)	340
INTERRUPTOR (LUZ TRASEIRA)	337
INTERRUPTOR (LUZES TRASEIRAS DO PAINEL)	340
INTERRUPTOR (MODO DE RETENÇÃO DO ACLERADOR)	331
INTERRUPTOR (MUDANÇA AUTOMÁTICA DE MARCHA)	345
INTERRUPTOR (PISCA-PISCA DE ADVERTÊNCIA)	163 247 248 249
INTERRUPTOR (REDUTOR DE LUMINOSIDADE DO PAINEL)	337
INTERRUPTOR (SACA-PINO DE DESLOCAMENTO LATERAL)	334
INTERRUPTOR (SACA-PINO DE DESLOCAMENTO LATERAL)	331
INTERRUPTOR (TRAVA DO DIFERENCIAL)	337 340
INTERRUPTOR (24 VOLTS) (AQUECIMENTO DOS ESPELHOS)	906 910
INTERRUPTOR (24 VOLTS) (ARMAÇÃO DA LÂMINA)	287 289
INTERRUPTOR (24 VOLTS) (AUXILIAR DE PARTIDA A ÉTER)	268

* TRADUÇÃO NÃO DISPONÍVEL NO MOMENTO DA IMPRESSÃO

ÍNDICE

Designação	Página
INTERRUPTOR (24 VOLTS) (*AUXILIARY BACK-UP ALARM)	193
INTERRUPTOR (24 VOLTS) (CABINE - FAROL DO LADO DIREITO)	235
	237
INTERRUPTOR (24 VOLTS) (DIREÇÃO SECUNDÁRIA)	329
INTERRUPTOR (24 VOLTS) (FAROL DO LADO DIREITO)	218
	220
ISOLADOR - TEMPO	882
J	
JANELA DA CABINE	968
	969
	971
JOGO - SENSOR (NÍVEL DE COMBUSTÍVEL)	119
	121
JOGO DE ABRAÇADEIRA DO PURIFICADOR DE AR	90
JOGO DE AJUSTADOR	919
JOGO DE ALAVANCA (MOTOR DE PARTIDA)	270
JOGO DE ALMOFADA	850
	851
JOGO DE ALMOFADA DO ASSENTO	941
JOGO DE ALMOFADA DO ASSENTO (VINIL)	943
JOGO DE ANEL PADRÃO (COMPRESSOR DE AR)	10
JOGO DE BLOCO DESLIZADOR	949
JOGO DE BLOCO DESLIZADOR (INCLUI BLOCOS E PARARUSOS)	947
JOGO DE BLOCO DESLIZADOR (INCLUI 4 BLOCOS)	948
JOGO DE BUCHA (MOTOR DE PARTIDA)	270
JOGO DE CABEÇOTE (COMPRESSOR DE AR)	10
JOGO DE CALÇOS (INCLUI 17 CALÇOS)	602
JOGO DE CÁRTER DE INCLINAÇÃO	941
	943
JOGO DE COIFA DE SUSPENSÃO	955
JOGO DE CORDÃO (ASSENTO)	957
JOGO DE DESCARREGADOR (COMPRESSOR DE AR)	10
JOGO DE DIAFRAGMA	871
JOGO DE ESCOVA (MOTOR DE PARTIDA)	270
JOGO DE FILTRO DE COMBUSTÍVEL E SEPARADOR DE ÁGUA	104
JOGO DE FIXADOR DE CORREIA	955
JOGO DE FIXADORES	130
JOGO DE FIXADORES (ALTERNADOR)	133
JOGO DE FIXADORES (ASSENTO)	957
JOGO DE INCLINAÇÃO DO ASSENTO	919
JOGO DE INCLINAÇÃO TRASEIRA	919
JOGO DE INDICADOR (AJUSTAGEM DO PESO)	877
JOGO DE INDICADOR (ASSENTO)	957
JOGO DE ISOLADOR (MOTOR DE PARTIDA)	270
JOGO DE LÂMINA DO LIMPADOR DE PÁRA-BRISA (PERFIL BAIXO - TRASEIRO)	983
JOGO DE LÂMINA DO LIMPADOR DE PÁRA-BRISA (TRASEIRO)	985
JOGO DE MANCAL	877
JOGO DE MANCAL (ALTERNADOR)	133
JOGO DE MANCAL PRINCIPAL DO MOTOR (COMPRESSOR DE AR)	10
JOGO DE MARTELO	859
	860
JOGO DE MOLA	877
JOGO DE MOLA (AJUSTE DE ALTURA)	877
JOGO DE PÁRA-CHOQUE (AJUSTAGEM DO PESO)	877
JOGO DE PARAFUSO DE RETENÇÃO (*M5X0.8X53.24-MM) (CONTROLE)	152
JOGO DE PARAFUSO DE RETENÇÃO (M5X0,8X53,24MM)	160
JOGO DE PISTÃO	602
JOGO DE PISTÃO DE CONTROLE	602
JOGO DE RECEPTÁCULO (2 PINOS)	189
	240
	771
JOGO DE RECEPTÁCULO (2 PINOS)	181
JOGO DE RECEPTÁCULO (2 PINOS) (LÂMPADA DA PLACA DE REGISTRO)	182
JOGO DE RECEPTÁCULO (2 PINOS) (TOMADA DE FORÇA DE 12 VOLTS)	816
	817
JOGO DE RECEPTÁCULO (2 PINOS) (VÁLVULA SOLENÓIDE)	518
JOGO DE RECEPTÁCULO (6 PINOS)	975
JOGO DE RETENTOR	521
	523
	530
	540
	545
	771
	772
	774
JOGO DE RETENTOR (ACUMULADOR DA LÂMINA AMORTECEDORA)	522
JOGO DE RETENTOR (*DIFFERENTIAL LOCK VALVE)	402
JOGO DE RETENTOR (SOLENÓIDE DE TRANSMISSÃO)	403
JOGO DE RETENTOR (TRAVA DO DIFERENCIAL)	395

* TRADUÇÃO NÃO DISPONÍVEL NO MOMENTO DA IMPRESSÃO

ÍNDICE

Designação	Página
JOGO DE REVISÃO - GOVERNADOR (COMPRESSOR DE AR)	512
JOGO DE ROLETE DE SUSPENSÃO	955
JOGO DE ROLO (ASSENTO)	957
JOGO DE SEGUIDOR	876
	877
JOGO DE TERMINAL ALTERNADOR	130
JOGO DE TERMINAL (ALTERNADOR)	133
JOGO-HASTE	919
JOGO-RETIFICADOR	130
JOGO-VÁLVULA DE CONTROLE DO AR	515
JUNTA	76
	117
	118
JUNTA UNIVERSAL	394
L	
LÂMINA	787
	788
	789
	790
LÂMINA DO LIMPADOR DE PÁRA-BRISA	964
	992
	993
	994
LÂMINA DO LIMPADOR DE PÁRA-BRISA (ALTO PERFIL DIANTEIRO SUPERIOR)	979
	981
LÂMINA DO LIMPADOR DE PÁRA-BRISA (DIANTEIRO SUPERIOR)	977
LÂMINA DO LIMPADOR DE PÁRA-BRISA (INFERIOR DIANTEIRO)	975
	977
LÂMINA DO LIMPADOR DE PÁRA-BRISA (PERFIL ALTO - INFERIOR DIANTEIRO)	979
	981
LÂMINA DO LIMPADOR DE PÁRA-BRISA (PERFIL ALTO - TRASEIRO)	987
LÂMINA DO LIMPADOR DE PÁRA-BRISA (PERFIL BAIXO - DIANTEIRO SUPERIOR)	975
LÂMINA DO LIMPADOR DE PÁRA-BRISA (PERFIL BAIXO - TRASEIRO)	983
	985
LÂMINA DO LIMPADOR DE PÁRA-BRISA (TRASEIRO)	989
*LAMP GP-FLOOD (*24-VOLT, VERTICAL MOUNT)	228
	232
*LAMP GP-FLOOD (*24-VOLT, VERTICAL MOUNT) (*BLADE)	201
*LAMP GP-FLOOD (*24-VOLT, VERTICAL MOUNT) (*BLADE)	204
*LAMP GP-FLOOD (*24-VOLT, VERTICAL MOUNT) (*CAB)	195
*LAMP GP-FLOOD (*24-VOLT, VERTICAL MOUNT) (*RH)	218
*LAMP-HALOGEN (*24-VOLT, 65-WATT) (FAROL)	166
*LAMP-HALOGEN (*24-VOLT, 65-WATT) (FAROL BAIXO)	171
LÂMPADA	317
	320
LÂMPADA - FAROL	166
	167
	168
	169
	170
LÂMPADA - FAROL (24 VOLTS, MONTAGEM VERTICAL)	222
LÂMPADA - FAROL (24 VOLTS, MONTAGEM VERTICAL) (*CAB-RH)	235
LÂMPADA - HALOGÊNEO (24 VOLTS, 65 WATTS)	168
LÂMPADA - HALOGÊNEO (24 VOLTS, 65 WATTS) (FAROL)	167
	169
LÂMPADA - HALOGÊNEO (24 VOLTS, 65 WATTS) (FAROL BAIXO)	197
LÂMPADA - HALOGÊNEO (24 VOLTS, 65 WATTS) (LÂMINA)	170
LÂMPADA - HALOGÊNEO (24 VOLTS, 65 WATTS) (LUZ ALTA)	172
	197
LÂMPADA - LED (VISOR LED)	247
	248
LÀMPADA - MARCADORA	181
LÂMPADA - SINALIZAÇÃO	183
	184
	185
LÂMPADA - TETO	165
LÂMPADA - TETO (24 VOLTS, COM INTERRUPTOR)	282
	285
LÂMPADA - TETO (24 VOLTS, COM INTERRUPTOR)	291
LÂMPADA DIANTEIRA E DE SINAL	177
	179
LAMPADA-PLACA DE REGISTRO	182
LÂMPADA (*STOP, TAIL, TURN, LH)	320
LÂMPADA (*STOP, TAIL, TURN, LH)	317
LÂMPADA (*STOP, TURN, TAIL, RH)	320
LÂMPADA (*STOP, TURN, TAIL, RH)	317
LÂMPADA (24 V) (PLACA DE REGISTRO)	182
LÂMPADA (24 V) (POSIÇÃO DA CABINE)	181

* TRADUÇÃO NÃO DISPONÍVEL NO MOMENTO DA IMPRESSÃO

ÍNDICE

Designação	Página
LÂMPADA (*24-VOLT) (DESCONGELADOR DIANTEIRO)	856
LÂMPADA (*24-VOLT) (DESCONGELADOR TRASEIRO)	857
LÂMPADA (*24-VOLT) (LÂMINA)(LÂMPADA DIANTEIRA)	201
LÂMPADA (*24-VOLT) (LUZ ALTA/BAIXA)	173
LÂMPADA (*24-VOLT) (LUZ ALTA/BAIXA)	175
LÂMPADA (*24-VOLT) (MUDANÇA AUTOMÁTICA)	345
LÂMPADA (*24-VOLT) (POSIÇÃO)	173
	175
LÂMPADA (*24-VOLT) (TETO)	165
LÂMPADA (*24-VOLT) (VIRADA)	173
	175
LÂMPADA (*24-VOLT, 21-WATT) (VIRADA)	173
	175
LÂMPADA (24 VOLTS)	163
	177
	206
	212
	215
	222
	223
	225
	235
	237
	247
	248
	249
	268
	275
	287
	289
	329
	331
	333
	334
	337
	340
	819
	863
	913
LÂMPADA (24 VOLTS) (AÇÃO)	929
LÂMPADA (24 VOLTS) (AQUECIMENTO DOS ESPELHOS)	906
	910
LÂMPADA (24 VOLTS) (*AUXILIARY BACK-UP ALARM)	193
LÂMPADA (24 VOLTS) (CABEÇA)	179
LÂMPADA (24 VOLTS) (FARÓIS DIANTEIROS, LUZES TRASEIRAS)	209
LÂMPADA (24 VOLTS) (FAROL DA LÂMINA)	204
	205
LÂMPADA (24 VOLTS) (FAROL DO LADO DIREITO)	218
	220
LÂMPADA (24 VOLTS) (GRUPO DE QUATRO MEDIDORES)	927
LÂMPADA (24 VOLTS) (INDICADOR DA AÇÃO PRINCIPAL DO EMS)	925
LÂMPADA (24 VOLTS) (INDICADOR DE AÇÃO MESTRE)	927
LÂMPADA (24 VOLTS) (INDICDOR DA PRESSÃO DO AR)	927
LÂMPADA (24 VOLTS) (INDICDOR DA PRESSÃO DO AR)	925
	929
LÂMPADA (24 VOLTS) (INTERRUPTOR DO AMORTECEDOR DA LÂMINA)	280
LÂMPADA (24 VOLTS) (LÂMPADA DA LÂMINA)	202
LÂMPADA (24 VOLTS) (LÂMPADA DE MARCHA À RÉ AUXILIAR)	191
LÂMPADA (24 VOLTS) (MÓDULO DE QUATRO MEDIDORES)	925
	929
LÂMPADA (24 VOLTS) (*NG)	334
LÂMPADA (24 VOLTS) (SINAL)	179
LÂMPADA (24 VOLTS) (TRAVA DO DIFERENCIAL)	925
	927
LÂMPADA (24 VOLTS) (VELOCIDADE DO VENTILADOR, TEMPERATURA)	867
LÂMPADA (24 VOLTS, 21 WATTS)	317
	320
LÂMPADA (24 VOLTS, 21 WATTS) (SINAL)	177
	179
LÂMPADA (24 VOLTS, 3 WATTS) (LUZ INDICADORA)	929
LÂMPADA (24 VOLTS, 3 WATTS) (PAINEL DE INSTRUMENTOS)	925
LÂMPADA (24 VOLTS, 3 WATTS) (PAINEL DE INSTRUMENTOS)	927
LÂMPADA (24 VOLTS, 5 WATTS)	317
	320
LÂMPADA (24 VOLTS, 5 WATTS)	317
	320
LÂMPADA (24 VOLTS, 70 WATTS)	187
LÂMPADA (24 VOLTS, 70 WATTS) (PISCA-PISCA DE ADVERTÊNCIA)	186
LAVADOR DO VIDRO	959
	961
	962
LENTE	165
LENTE (ÂMBAR, PISCA-ALERTA)	186

* TRADUÇÃO NÃO DISPONÍVEL NO MOMENTO DA IMPRESSÃO

ÍNDICE

Designação	Página
LENTE ÂMBAR (PISCA-PISCA DE ADVERTÊNCIA)	187
LENTE (ÂMBER) (SINAL)	177, 179
LENTE (ÂMBER) (SINAL)	177
LENTE (ÂMBER) (VIRADA)	173, 175
LENTE (ÂMBER) (VIRADA)	173, 175
LENTE (FAROL BAIXO)	197
LENTE (FAROL) (FAIXA BAIXA)	171
LENTE (*HEAD)	173, 175
LENTE (HOLOFOTE)	167, 168, 169, 170
LENTE (LUZES DIANTEIRAS)	177, 179
LENTE (PLACA DE REGISTRO)	182
LEVANTAMENTO DA LÂMINA	800
LEVANTAMENTO DO MOTOR	42
LIMPADOR DO VIDRO	973, 974, 975, 977, 979, 981, 983, 985, 987, 989, 991, 992, 993, 994
LUZ GIRATÓRIA DE ALARME	186, 187
LUZ INTERMITENTE (12/24 VOLTS) (PISCA-PISCA, PISCA-ALERTA)	206, 209, 212, 215, 222, 225, 275
LUZ INTERMITENTE (24 VOLT)	340

M

MANCAL - PRINCIPAL (VIRABREQUIM)	23
MANGUEIRA - ELIMINAÇÃO DE VAPORES	12, 14
MARTELO E MONTAGEM	859, 860
MECANISMO DAS VÁLVULAS	58
MÓDULO - VELOCÍMETRO E TACÔMETRO	913
MÓDULO - VELOCÍMETRO E TACÔMETRO (PAINEL DE INSTRUMENTOS)	929
MÓDULO ELETRÔNICO DE QUATRO INDICADORES	912
MONTAGEM - ALTERNADOR	133
MONTAGEM - CABINE	914
MONTAGEM - ESTRUTURA ROPS	915, 917
MONTAGEM - MECANISMO DAS VÁLVULAS	44
MONTAGEM - MOTOR E TRANSMISSÃO	43
MONTAGEM - REMOVEDOR DE NEVE	803
MONTAGEM - RIPER	802
MONTAGEM - RODA	385
MONTAGEM DA PLACA DE REGISTRO	490
MOTOR	6, 9
MOTOR - ENGRENAGENS	596
MOTOR - LIMPADOR DO VIDRO	994
MOTOR - LIMPADOR DO VIDRO (DIANTEIRO)	993
MOTOR - LIMPADOR DO VIDRO (DIANTEIRO SUPERIOR)	977, 981
MOTOR - LIMPADOR DO VIDRO (TRASEIRO)	985, 989
MOTOR - LIMPADOR DO VIDRO (24 VOLTS)	974
MOTOR - LIMPADOR DO VIDRO (24 VOLTS) (INFERIOR)	981
MOTOR - LIMPADOR DO VIDRO (24 VOLTS) (INFERIOR DIANTEIRO)	977
MOTOR DE REVERSÃO DO CÍRCULO	554
MOTOR E VENTILADOR	73
MOTOR ELÉTRICO	251
MOTOR ELÉTRICO DE PARTIDA	270, 272
*MOTOR GP-ELECTRIC	852
*MOTOR GP-ELECTRIC (*DEFROSTER FAN)	854
MOTOR HIDRÁULICO DO GEROTOR	597

O

*ORIFICE	396, 399

P

*PADLOCK GP	614
PAINEL - CABINE	921

* TRADUÇÃO NÃO DISPONÍVEL NO MOMENTO DA IMPRESSÃO

ÍNDICE

Designação	Página
	922
	923
PAINEL- REDUÇÃO DE RUÍDO	48
PAINEL DE INSTRUMENTOS	925
	927
	929
PERSIANA	902
PISTÃO E BIELA	49
PLACA BASCULANTE	610
PLACA DE ADVERTÊNCIA (SEM ESPAÇO LIVRE)	462
	463
PLACA DE ADVERTÊNCIA (SEM ESPAÇO LIVRE)	999
PLACA DE IDENTIFICAÇÃO (ALTERNADOR)	310
PLACA DE IDENTIFICAÇÃO (MOTOR)	310
PLACA DE INFORMAÇÃO (COMPRESSOR DE AR)	10
PLACA DE INSTRUÇÃO (BATERIA)	310
PLACA DE INSTRUÇÃO (CONDICIONADOR DE AR)	819
PLACA E DECALQUE	2
	998
	999
	1002
	1003
	1004
	1005
PLACA E DECALQUE (REFLECTOR)	1
PLACA-RADIADOR	82
*PLATE-IDENTIFICATION (*MAXIMUM WEIGHT)	4
PORTA	835
	838
PORTA DA CABINE	840
	842
	844
	846
PORTA (RESPIRO DE AR)	894
PÓS-ARREFECEDOR E MONTAGEM	87
PRÉ-PURIFICADOR	97
PROTETOR - PLATAFORMA	480
	482
PROTETOR - TANQUE DE COMBUSTÍVEL	479
PROTETOR - TUBOS DO FREIO	478
PROTETOR E SUPORTE DO RADIADOR	474
PROTETOR INFERIOR	477
PURIFICADOR DE AR	88
	90
PUXADOR-AMORTECEDOR (ASSENTO)	957

R

Designação	Página
RADIADOR	85
	86
RECEPTOR-SECADOR	898
REDUÇÃO DE RUÍDO	57
REGULADOR DE TEMPERATURA/ TERMOSTATO (*98-DEG C)	76
REGULADOR DE VOLTAGEM (24 VOLTS)	130
REGULADOR DE VOLTAGEM (24 VOLTS) (ALTERNADOR)	133
RELÉ (CONJ) (24 VOLTS)	193
RELÉ (CONJ) (24 VOLTS) (AUXILIAR DE PARTIDA A ÉTER)	265
RELÉ (CONJ) (24 VOLTS) (LÂMPADA DE MARCHA À RÉ AUXILIAR)	191
RELÉ (CONJ) (24 VOLTS) (LUZES DE TRABALHO)	204
	205
RELÉ (CONJ) (24 VOLTS) (*TAIL, PANEL LAMPS)	337
RELÉ (CONJ) (24 VOLTS) (TRASEIROS, LÂMPADAS DO PAINEL)	340
RESPIRO	58
RESPIRO (TANDEM)	391
RETEM DA VÁLVULA DE CONTROLE	551
	552
RETENTOR DO VIRABREQUIM	55
REVESTIMENTO DA CABINE	884
	886
	889
	894
	896
RIPER	804
	805
RODA	448
	449
	450
	451
	452
	453
	454
RODA E PNEU	406
	407
	408
	409
	410
	411
	412
	413
	414
	415
	416
	417

* TRADUÇÃO NÃO DISPONÍVEL NO MOMENTO DA IMPRESSÃO

ÍNDICE

Designação	Página
	418
	419
	420
	421
	422
	423
	424
	425
	426
	427
	428
	429
	430
	431
	432
	433
	434
	435
	436
	437
	438
	439
	440
	441
	442
	443
	444
	445
	446
	447
	448
ROPS ABERTA	937
ROPS FECHADA	935
	936

S

*SEAL-LIP TYPE	76
SECADOR DE AR	498
	499
	501
SECADOR DE AR (SECADOR DE AR)(24 VOLTS)	501
SEGMENTO DO CÍRCULO	777
SENSOR - PRESSÃO	254
	255
	256
	257
	258
SENSOR - PRESSÃO (VENTILADOR DO RADIADOR)	574
SENSOR - TEMPERATURA	262
	263
	264
SENSOR DE VELOCIDADE	259
	260
	261
*SENSOR GP-POSITION (*ROTARY) (*THROTTLE)	100
SILENCIADOR	95
SIST. DE ILUMINAÇÃO - PISCA-PISCA GIRATÓRIO DE ADVERTÊNCIA	249
SISTEMA DE ILUMINAÇÃO - ADVERTÊNCIA	244
	245
	247
	248
SISTEMA DE ILUMINAÇÃO - FARÓIS	188
	189
	195
	196
	197
	199
	201
	202
	204
	205
	206
	209
	212
	215
	218
	220
	222
	225
	228
	230
	232
	233
	235
	237
	239
	240
SISTEMA ELETRÔNICO - MONITOR	159
SISTEMA ELETRÔNICO - TREM DE FORÇA	159
	160
SOFTWARE - TREM DE FORÇA	159
SOFTWARE - TREM DE FORÇA (MOTONIVELADORA)	160
SOFTWARE-MOTOR (POTÊNCIA HP VARIÁVEL)	997
SOLENÓIDE (24 V)	270
SUPORTE - ASSENTO	953
SUPORTE - CHASSI TRASEIRO	493
	494
	495
SUPORTE - ESCOVA	270

* TRADUÇÃO NÃO DISPONÍVEL NO MOMENTO DA IMPRESSÃO

ÍNDICE

Designação	Página
SUPORTE - PLATAFORMA	497
SUPORTE DO ESCARIFICADOR	791
SUPORTE DO MOTOR	56
SUPORTE DO TANQUE DE COMBUSTÍVEL	496
SUSPENSÃO - ASSENTO	955
	957

T

TAMPA - ACESSO	459
	461
TAMPA - BLOCO DO MOTOR	21
TAMPA - BOCAL DE ENCHIMENTO DE COMBUSTÍVEL (SERVIÇO PESADO, TRAVÁVEL)	119
	121
TAMPA - BOCAL DE ENCHIMENTO DE ÓLEO	62
TAMPA - BOCAL DE ENCHIMENTO (TANQUE DE ÓLEO HIDRÁULICO)	612
TAMPA - PROTEÇÃO	462
	463
TAMPA - RADIADOR (*7-PSI)	85
	86
TAMPA CONTRA POEIRA (ÓLEO HIDRÁULICO)	592
TAMPA DA VÁLVULA (HASTE)	446
TANDEM E TAMPA	391
TANQUE DE AR	512
TANQUE DE COMBUSTÍVEL	116
	117
	118
	119
	121
	123
	124
TANQUE DE ÓLEO HIDRÁULICO E MONTAGEM	614
TANQUE HIDRÁULICO E FILTRO	612
TAPETE (CABINE)	882
TELA DE SUCÇÃO (TRANSMISSÃO)	346
	388
TELA FILTRANTE (BOCAL DE ENCHIMENTO) (TANQUE DE ÓLEO HIDRÁULICO)	612
TELA FILTRANTE (VÁLVULA DE CONTROLE DE TRANSMISSÃO)	404
TELA PÁRA-SOL	938
TENSOR DA CORREIA	16
	18
TERMOSTATO / REGULADOR DE TEMPERATURA	76
TRANSMISSÃO	392
TRAVA - DESLOCAMENTO LATERAL	595
TUBOS - ACUMULADOR	558
TUBOS - ÁGUA	77
	78
	79
	81
TUBOS - AQUECEDOR	900
TUBOS - AR	91
	92
TUBOS - AR CONDICIONADO	898
TUBOS - BOMBA	576
	579
	582
TUBOS - COMBUSTÍVEL	105
	106
TUBOS - DIREÇÃO	592
TUBOS - DIREÇÃO SECUNDÁRIA	590
TUBOS - FILTRO DO COMBUSTÍVEL	108
TUBOS - GRAXA	488
TUBOS - INJEÇÃO DO COMBUSTÍVEL	111
TUBOS - ÓLEO DA TRANSMISSÃO	381
TUBOS - ÓLEO DO TURBOALIMENTADOR	67
TUBOS - ÓLEO HIDRÁULICO	560
	562
	563
	564
	566
	569
	571
TUBOS - RIPER	585
	587
	589
TUBOS - VENTILADOR HIDRÁULICOS	572
	574
TUBOS DO AQUECEDOR	900
TUBULAÇÕES - DRENAGEM DE ÓLEO DO MOTOR	66
TUCHO DA VÁLVULA	41
TURBOALIMENTADOR	98
	99

V

*VALVE GP-PUMP CONTROL	749
	751
*VALVE (*PRESSURE RELIEF)	10
VÁLVULA - COLETOR E SOLENÓIDE	773
	774
VALVULA - PARTIDA A ETER (24 VOLTS)	265
VÁLVULA ANTI-REAÇÃO	759
VÁLVULA COMBINADA	697
	699
VÁLVULA DE ALÍVIO	755
	756

* TRADUÇÃO NÃO DISPONÍVEL NO MOMENTO DA IMPRESSÃO

ÍNDICE

Designação	Página
	757
	758
	759
	760
	761
	762
	763
	764
	765
	766
	767
	768
	828
VÁLVULA DE CONTROLE	701
	703
	705
	707
	709
	711
	713
	715
	717
	719
	721
	723
	725
	727
	729
	731
	733
	735
	737
	739
	741
	743
	745
	747
VÁLVULA DE CONTROLE - TRANSMISSÃO	404
VÁLVULA DE CONTROLE (AR)	515
VÁLVULA DE CONTROLE (COMANDO DO CÍRCULO)	674
	676
	677
	678
	680
	681
	683
	685
	687
	692
	693
	694
	695
	696
VÁLVULA DE CONTROLE (COMANDO DO CÍRCULO) (ESQUERDO)	690
VÁLVULA DE CONTROLE (DESLOCAMENTO LATERAL)	674
	676
	677
	678
	680
	681
	683
	685
	687
	692
	693
	694
	695
	696
VÁLVULA DE CONTROLE (DESLOCAMENTO LATERAL)	690
VÁLVULA DE CONTROLE DO AR	514
	515
VÁLVULA DE CONTROLE (ESCARIFICADOR)	678
	692
VÁLVULA DE CONTROLE (LEVANTAMENTO DA LÂMINA)	674
	677
	678
	683
	687
	690
	692
	693
	696
VÁLVULA DE CONTROLE (TOMBAMENTO DA LÂMINA)	674
	676
	677
	678
	680
	681
	683
	685
	687
	690
	692
	693
	694
	695
	696
VÁLVULA DE DRENAGEM (LÍQUIDO ARREFECEDOR DO MOTOR)	79

* TRADUÇÃO NÃO DISPONÍVEL NO MOMENTO DA IMPRESSÃO

ÍNDICE

Designação	Página
VÁLVULA DE DRENAGEM (RADIADOR)	474
VÁLVULA DE DRENAGEM (TANQUE DE AR)	512
VÁLVULA DE PNEU	420
	421
	422
	423
	424
	425
	426
	427
	428
	429
	430
	431
	432
	433
	434
	435
	436
	437
	438
	439
	440
	441
	442
	443
	444
	445
	446
	447
	450
	452
	453
	454
VÁLVULA DE PURIFICAÇÃO	753
	754
VÁLVULA DE RETENÇÃO	125
	126
	127
VÁLVULA DE SEPARAÇÃO	769
	770
VÁLVULA E ARTICULAÇÕES	615
	617
	619
	621
	623
	625
	627
	629
	631
	633
	635
	637
	639
	641
	643
	645
	647
	649
	651
	653
	656
	658
	660
	662
	664
	666
	668
	670
VÁLVULA E MONTAGEM - TRAVA DO DIFERENCIAL	395
VÁLVULA PARA TIRAR AMOSTRAS DE FLUIDOS (DIREÇÃO)	592
VÁLVULA SELETORA E CONTROLE DE PRESSÃO	396
	399
VÁLVULA SOLENÓIDE	402
	403
	517
	518
	771
	772
VENTILADOR DE CIRCULAÇÃO DE AR DA CABINE	852
	854
	856
	857
VIDRO	964
	965
	966
	967
VIGIA (ÓLEO HIDRÁULICO)	612
VIRABREQUIM	23
VOLANTE DO MOTOR	35

* TRADUÇÃO NÃO DISPONÍVEL NO MOMENTO DA IMPRESSÃO

STICHWORTVERZEICHNIS

Bezeichnung	Seite
A	
ABDECKGLAS	165
ABDECKGLAS (ABBLENDLICHT)	197
ABDECKGLAS (ARBEITSSCHEINWERFER)	167
	168
	169
	170
ABDECKGLAS (FRONTSCHEINWERFER)	177
	179
ABDECKGLAS (FRONTSCHEINWERFER) (ABBLENDLICHT)	171
ABDECKGLAS (GELB) (RECHTS- U. LINKSWENDUNG)	173
	175
ABDECKGLAS (GELB) (RECHTS- U. LINKSWENDUNG)	173
ABDECKGLAS (GELB) (RUNDUM-KENNLEUCHTE)	187
ABDECKGLAS (GELB, RUNDUM-KENNLEUCHTE)	186
ABDECKGLAS (GELB) (SIGNAL)	177
	179
ABDECKGLAS (*HEAD)	173
	175
ABDECKGLAS (KENNZEICHEN)	182
ABLASSVENTIL (DRUCKLUFTTANK)	512
ABLASSVENTIL (KÜHLER)	474
ABLASSVENTIL (MOTORKÜHLMITTEL)	79
ANHÄNGEVORRICHTUNG	486
	487
ANSAUGKRÜMMER	94
ANSAUGSIEB (GETRIEBE)	346
	388
ANSCHLUSSKLEMMENSATZ (DREHSTROM-GENERATOR)	133
ANTRIEBSKETTE	350
ANTRIEBSSTRANG-WARTUNGSSATZ (MOTORGRADER)	160
ANTRIEBSWELLE	389
	390
ANTRIEBSWELLENSCHUTZ	491
ANZEIGEN-EINBAUSATZ (GEWICHTSEINSTEL-LUNG)	877
ANZEIGEN-EINBAUSATZ (SITZ)	957
ANZEIGENKÖRPER (KÜHLMITTELSTAND)	86
ANZUGSLEINE (SITZ)	957
ARBEITS- U. SIGNALBELEUCHTUNG	190
ARBEITSLEUCHTEN	166
	167
	168
	169
	170
	188
	189
	195
	196
	197
	199
	201
	202
	204
	205
	206
	209
	212
	215
	218
	220
	222
	225
	228
	230
	232
	233
	235
	237
	239
	240
ARBEITSLEUCHTEN (24 V, VERTIKALE AUFHÄNGUNG)	222
ARBEITSLEUCHTEN (24 V, VERTIKALE AUFHÄNGUNG) (*CAB-RH)	235
ARMLEHNE	823
	824
ASCHENBECHER	886
	889
ÄTHERSPRÜHGERÄT	268
ÄTHERSTARTHILFE	265
	267
	268
ÄTHERSTARTHILFEZYLINDER	265
	268
ÄTHERSTARTVENTIL (24 V)	265
AUFHÄNGUNG - HINTERES FAHRWERK	493
	494
	495
AUFKLEBER	996
	997
AUFKLEBER - ANZEIGE (*BLADE CENTERSHIFT)	999
AUFKLEBER - INFORMATION (*ENGINE, HIGH IDLE, HOLD)	365
AUFKLEBER - INFORMATION (*ENGINE, LOW IDLE, HOLD)	365
AUFKLEBER - INFORMATION (LUFTREINI-GER)	90

* ÜBERSETZUNG ZUM ZEITPUNKT DER DRUCKLEGUNG NICHT VORHANDEN

STICHWORTVERZEICHNIS

Bezeichnung	Seite
AUFKLEBER - MONITOR (CATERPILLAR ÜBERWACHUNGSSYSTEM)	925
AUFKLEBER - MONITOR (CATERPILLAR ÜBERWACHUNGSSYSTEM)	929
AUFKLEBER - MONITOR (VIERFACHANZEIGENMODUL)	927
AUFKLEBER - SICHERUNG	285
AUFKLEBER - SICHERUNG (BELEUCHTUNG, WASCHER, WISCHER, ENTFROSTER)	282
AUFKLEBER - SICHERUNG (LINKS)	340
AUFKLEBER - SICHERUNG (LINKS)	337
AUFKLEBER - SICHERUNG (RECHTS)	337
AUFKLEBER (ABDECKUNG - SCHWARZ)	365
AUFKLEBER (*HEADLIGHTS HIGH, LOW BEAM)	206
	209
	212
	215
	222
	225
	275
	340
AUFKLEBER (KEINE STUFE)	117
	119
AUFKLEBER (KONTROLLE) (*FAN SPEED, TEMPERATURE)	863
	867
AUFKLEBER (KONTROLLE) (HEIZUNG U. KLIMAANLAGE)	819
AUFKLEBER (NAMENSSCHILD) (DRUCKSPEICHER)	592
AUFKLEBER (NAMENSSCHILD) (DRUCKSPEICHER)	522
AUFKLEBER (RICHTUNGSBLINKER, WARNLEUCHTE)	206
	209
	215
	222
	225
	275
	340
AUFKLEBER (RICHTUNGSBLINKER, WARNLEUCHTE)	212
AUFKLEBER (SCHEIBENWASCHER)	291
AUFKLEBER (SONNENSCHUTZ - CATERPILLAR)	921
	922
AUFREISSER	804
	805
AUFREISSERBEFESTIGUNG	802
AUFREISSERLEITUNGEN	585
	587
	589
AUFREISSERTRÄGER	791
AUFREISSERZYLINDER	544
AUFREISSERZYLINDER UND BEFESTIGUNGSTEILE	535
AUSPUFFKRÜMMER	93
AUSRÜSTUNG FÜR STRASSENFAHRT	4

B

Bezeichnung	Seite
BATTERIE	136
	137
	138
	139
	495
BATTERIE (12 V)	138
BATTERIE (12 V) (NASS)	137
BATTERIE (12 V) (*1100 AMPS)	136
BATTERIE (12V, 750 A)	139
BEFESTIGUNGSSCHRAUBENSATZ (M5X0,8X3,24 MM)	160
BEFESTIGUNGSSCHRAUBENSATZ (*M5X0.8X53.24-MM) (STEUERUNG)	152
BEFESTIGUNGSTEILE	130
BEFESTIGUNGSTEILE (DREHSTROMGENERATOR)	133
BELEUCHTUNGSANLAGE	317
	320
BELEUCHTUNGSANLAGE (STRASSENAUSRÜSTUNG)	241
BELEUCHTUNGSKABELSTRANG	212
	215
BETRIEBSBREMSE	504
BLINKER (12/24 VOLT) (RICHTUNGSBLINKER, WARNLEUCHTE)	206
	209
	215
	222
	225
	275
BLINKER (12/24 VOLT) (RICHTUNGSBLINKER, WARNLEUCHTE)	212
BLINKER (24 V)	340
BLINKERLEUCHTEN	242
	243
BLINKLEUCHTE	183
	184
	185
*BODY AS-GAUGE	85
*BOX GP-TOOL	995
*BREATHER AS (KRAFTSÜBERTRAGUNG - ÖLEINFÜLLUNG)	375
BREMSGESTÄNGE	508
BREMSLEITUNGSVERKLEIDUNG	478

* ÜBERSETZUNG ZUM ZEITPUNKT DER DRUCKLEGUNG NICHT VORHANDEN

STICHWORTVERZEICHNIS

Bezeichnung	Seite
BUCHSEN-EINBAUSATZ (STARTERMOTOR)	270
BÜRSTEN-EINBAUSATZ (STARTERMOTOR)	270
BÜRSTENHALTER	270
C	
*CARTRIDGE AS-DESICCANT (LUFTTROCKNER)	501
*CONTROL GP-HYDRAULIC LOCKOUT	529
*CONTROL GP-UNPROGRAMMED	151
*CORE AS	368
*CORE AS-ENGINE OIL COOLER	368
D	
DÄMPFUNGSKNOPF (SITZ)	957
DICHTUNG	76
	117
	118
DICHTUNGSSATZ	521
	523
	530
	540
	545
	771
	772
	774
DICHTUNGSSATZ (*DIFFERENTIAL LOCK VALVE)	402
DICHTUNGSSATZ (DIFFERENTIALSPERRE)	395
DICHTUNGSSATZ (GETRIEBESOLENOID)	403
DICHTUNGSSATZ (SCHARDÄMPFUNGS-DRUCKSPEICHER)	522
DIFFERENTIAL	373
DIFFERENTIAL UND TELLERRAD	371
DIFFERENTIALSPERRE - VENTIL UND BEFESTIGUNGSTEILE	395
DIFFERENTIALSPERRENGESTÄNGE	363
*DOOR GP (*AIR VENT)	886
	889
	896
DREHKNOPFSCHALTER (FAHRTRICHTUNGS-ANZEIGER)	275
DREHKNOPFSCHALTER (GEBLÄSEGE-SCHWINDIGKEIT)	863
	867
DREHKNOPFSCHALTER (GEBLÄSEGE-SCHWINDIGKEIT)	819
DREHKNOPFSCHALTER (*HEADLIGHT DIMMER)	212
	215
	222
	225
	340
DREHKNOPFSCHALTER (*HEADLIGHT DIMMER)	209
DREHKNOPFSCHALTER (*HIGH, LOW BEAM)	206
DREHKNOPFSCHALTER (24 V) (*FRONT WIPER CONTROL)	282
DREHKNOPFSCHALTER (24 V) (VORDERER SCHEIBENWISCHER)	291
DREHSCHALTER (RICHTUNGSBLINKER, WARNLEUCHTE)	206
	209
	212
	215
	222
	225
	275
	340
DREHSCHALTER (SEITENSCHUBANZEIGE)	296
	300
DREHSTROMGENERATOR	130
	132
	133
	134
	135
DREHSTROMGENERATOR - ANSCHLUSSKLEMMENSATZ	130
DREHSTROMGENERATOR - BEFESTIGUNG	133
DREHZAHLSENSOR	259
	260
	261
DRUCKKNOPFSCHALTER (ANZEIGEMODI)	927
	929
DRUCKKNOPFSCHALTER (FAHREREINSTELLUNGSMODUS)	925
DRUCKLUFT-STEUERVENTIL	514
	515
DRUCKLUFTBEHÄLTER	512
DRUCKLUFTHUPE	871
	872
	874
DRUCKLUFTLEITUNGEN	91
	92
DRUCKSCHALTER (*AIR BRAKES)	296
DRUCKSCHALTER (BREMSLEUCHTE)	296
	300
DRUCKSCHALTER (FESTSTELLBREMSE)	297
DRUCKSCHALTER (HAUPTLENKUNG)	300
DRUCKSCHALTER (KLIMAANLAGE HOCH/NIEDRIG)	898
DRUCKSCHALTER (NOTLENKUNG)	329
DRUCKSENSOR	254
	255

* ÜBERSETZUNG ZUM ZEITPUNKT DER DRUCKLEGUNG NICHT VORHANDEN

STICHWORTVERZEICHNIS

Bezeichnung	Seite
	256
	257
	258
DRUCKSENSOR (KÜHLERLÜFTER)	574
DRUCKSPEICHER	520
	521
	898
DRUCKSPEICHER (LENKUNG)	592
DRUCKSPEICHERLEITUNGEN	558
E	
ECKMESSER	782
	783
	784
	785
EINBAUSATZ - KRAFTSTOFFILTER UND WASSERABSCHEIDER	104
EINFÜLLSTUTZENKAPPE (HYDRAULIKÖL-TANK)	612
EINSTELLER-EINBAUSATZ	919
ELEKTR. UMFORMER	154
	155
	156
	157
ELEKTR. UMFORMER (24 BIS 12 V, 25 A)	157
ELEKTR. UMFORMER (24V - 24V)	154
	156
ELEKTRONIK - MONITOR	159
ENDMESSER	786
ENDSCHALTER (BREMSPEDAL)	341
ENDSCHALTER (KRIECHGANGPEDAL)	337
	340
ENTDUNSTERSCHLAUCH	12
	14
ENTLASTUNGSVENTIL (LUFTKOMPRES-SOR)	10
ENTLEERVENTIL	753
	754
ENTLÜFTER	58
ENTLÜFTER (TANDEM)	391
F	
FAHRERHAUS	825
	826
FAHRERHAUS-KABELBAUM	193
	235
	237
	289
	906
FAHRERHAUS-KABELBAUM (HINTEN)	282
FAHRERHAUS-KABELBAUM (HINTEN)	285
FAHRERHAUS-KABELBAUM (SCHLTTAFEL)	282
FAHRERHAUS-KABELBAUM (SCHLTTAFEL)	285
FAHRERHAUS-KABELBAUM (VORNE)	285
FAHRERHAUS (OHNE ÜBERROLLSCHUTZ)	825
FAHRERHAUSANBAUSATZ	914
FAHRERHAUSAUSKLEIDUNG	884
	886
	889
	894
	896
FAHRERHAUSBELEUCHTUNG	165
FAHRERHAUSBELEUCHTUNG (24 V, MIT SCHALTER)	282
	285
	291
FAHRERHAUSFENSTER	964
	965
	966
	967
	968
	969
	971
FAHRERHAUSHEIZUNG	861
	862
	863
	867
FAHRERHAUSHEIZUNG U. BEFESTIGUNGS-TEILE	861
FAHRERHAUSLUFTFILTER	858
FAHRERHAUSLUFTSCHLITZE	902
FAHRERHAUSTÜR	835
	838
	840
	842
	844
	846
FAHRERHAUSTÜR (ENTLÜFTUNGSVORRICH-TUNG)	894
FAHRERHAUSVERDRAHTUNG	282
	284
	285
	287
	289
	291
FAHRERHAUSZUBEHÖR	816
	817
FAHRERPLATTFORM-KABELSTRANG	296
	300
FAHRERPLATTFORMVERKLEIDUNG	480
	482
FAHRERSITZ	941
	943
FAHRERSITZ, KIPPVORRICHTUNG	919

* ÜBERSETZUNG ZUM ZEITPUNKT DER DRUCKLEGUNG NICHT VORHANDEN

STICHWORTVERZEICHNIS

Bezeichnung	Seite
FAHRERSITZFEDERUNG	955
	957
FAHRERSITZFEDERUNGSGEHÄUSE	876
FAHRERSITZVERKLEIDUNG	919
FAHRWERK-KABELBAUM	232
	280
FAHRWERK-KABELBAUM (ABSTREIFSCHILD)	233
FEDER-EINBAUSATZ	877
FEDER-EINBAUSATZ (HÖHENEINSTELLUNG)	877
FEDERUNGS-EINBAUSATZ (MANSCHETTE)	955
FEDERUNGS-EINBAUSATZ (ROLLE)	955
FESTSTELLBREMSE	502
FESTSTELLBREMSGESTÄNGE	506
*FILM (*VHP PLUS)	997
FILTER (KRAFTSTOFF, WASSERABSCHEIDER) (HAUPTELEMENT)	104
FRONTAUFREISSER	807
	808
	811
FRONTAUFREISSERZAHN	814
	815
FRONTAUFREISSERZYLINDER	545
FRONTSCHEINWERFER	171
	172
	173
	175
FUSSMATTE (FAHRERHAUS)	882

G

*GASKET	58
GELENKZYLINDER UND BEFESTIGUNGSTEILE	531
GESCHWINDIGKEITS- U. DREHZAHLMESSER-MODUL	913
GESCHWINDIGKEITS- U. DREHZAHLMESSER-MODUL (INSTRUMENTENTAFEL)	929
GETRIEBE	392
GETRIEBE-KABELBAUM	305
	324
	346
	367
GETRIEBEGEHÄUSE UND TEILE	346
GETRIEBEHYDRAULIK	367
GETRIEBEKUPPLUNG	351
	354
	357
	359
GETRIEBEÖLFÜLLSTUTZEN	375
GETRIEBEÖLKÜHLER	368
GETRIEBEÖLLEITUNGEN	381
GETRIEBESTEUERUNG	365
GETRIEBESTEUERVENTIL	404
GLEICHRICHTER	130
GLEITSCHIENENBLOCK-EINBAUSATZ	949
GLEITSCHIENENBLOCK-EINBAUSATZ (EINSCHL. BLÖCKE U. SCHRAUBEN)	947
GLEITSCHIENENBLOCK-EINBAUSATZ (EINSCHL. 4 BLÖCKE)	948
GRUNDAUSFÜHRUNG	2

H

HALOGENSCHINWERFER (24V)(65W)	168
HALOGENSCHINWERFER (24V)(65W) (ABBLENDLICHT)	197
HALOGENSCHINWERFER (24V)(65W) (ARBEITSSCHEINWERFER)	167
	169
HALOGENSCHINWERFER (24V)(65W) (FERNLICHT)	197
HALOGENSCHINWERFER (24V)(65W) (FERNLICHT)	172
HALOGENSCHINWERFER (24V)(65W) (SCHILD)	170
HALTETEILE	471
HALTETEILESATZ (SITZ)	957
HAMMER UND BEFESTIGUNG	859
	860
HAUPTFILTER	90
HAUPTLAGER (KURBELWELLE)	23
HEBEL-EINBAUSATZ (STARTERMOTOR)	270
HEIZUNGSELEMENT (240 V, 1250 W)	162
HEIZUNGSLEITUNGEN	900
HINTERER KABELSTRANG	310
HUBVENTIL	41
HUBZYLINDER	543
HYDRAULIKDRUCKSPEICHER	522
	523
	524
HYDRAULIKDRUCKSPEICHER U. BEFESTIGUNG	519
HYDRAULIKHAMMER-EINBAUSATZ	859
	860
HYDRAULIKLEITUNGEN	560
	562
	563
	564
	566
	569
	571
HYDRAULIKLÜFTERLEITUNGEN	572
	574
HYDRAULIKPUMPE UND LEITUNGEN	576

* ÜBERSETZUNG ZUM ZEITPUNKT DER DRUCKLEGUNG NICHT VORHANDEN

STICHWORTVERZEICHNIS

Bezeichnung	Seite
	579
	582
HYDRAULIKSTEUERUNG	525
	526
	527
	528
HYDRAULIKSYSTEM	557
HYDRAULIKTANK UND BEFESTIGUNGSTEILE	614
HYDRAULIKTANK UND SCHMIERFILTER	612

I

IDENTIFIKATIONSSCHILD (DREHSTROMGENERATOR)	310
IDENTIFIKATIONSSCHILD (MOTOR)	310
IDENTIFIZIERUNGS-AUFKLEBER (*BIODEGRADABLE HYDRAULIC OIL)	557
IDENTIFIZIERUNGS-AUFKLEBER (GRUPPENNUMMER) (KLIMAANLAGE)	819
INFORMATIONSSCHILD (LUFTKOMPRESSOR)	10
INSTRUKTIONS-AUFKLEBER (AM ÜBERROLLSCHUTZ NICHT BOHREN/ SCHWEISSEN)	932
	933
	935
INSTRUKTIONS-AUFKLEBER (*DO NOT DRILL, WELD ROPS)	935
INSTRUKTIONS-AUFKLEBER (FÜR SITZVERSTELLUNG)	957
INSTRUKTIONS-AUFKLEBER (MOTORABSTELLUNG)	306
	325
INSTRUKTIONS-AUFKLEBER (NICHT BETRETEN)	479
INSTRUKTIONS-AUFKLEBER (NOTAUSGANG/ FENSTER ENTFERNEN)	859
	860
INSTRUKTONSSCHILD (BATTERIE)	310
INSTRUKTONSSCHILD (KLIMAANLAGE)	819
INSTRUMENTENBRETT-AUFKLEBER (GANGWAHL)	365
INSTRUMENTENBRETT-AUFKLEBER (GETRIEBEANZEIGETAFEL)	365
INSTRUMENTENBRETT-AUFKLEBER (*INDICATOR PANEL, LH)	927
	929
INSTRUMENTENBRETT-AUFKLEBER (*INDICATOR PANEL, RH)	927
	930
INSTRUMENTENBRETT-AUFKLEBER (LINKE KONTROLLLEUCHTEN)	925
INSTRUMENTENBRETT-AUFKLEBER (RECHTE KONTROLLLEUCHTEN)	925
INSTRUMENTENBRETT-KABELBAUM	925
	927
INSTRUMENTENTAFEL	925
	927
	929
INSTRUMENTENTAFEL-KABELSTRANG	191
	287
INTRUMENTENBRETTVERKABELSTRANG (TAFEL HINTERGRUNDBELEUCHTUNG)	929
ISOLATOR-EINBAUSATZ (STARTERMOTOR)	270

K

KABELSTRANG - HECKBELEUCHTUNG	228
	230
	317
	320
	325
KABELSTRANG - HECKBELEUCHTUNG (LINKS)	318
	320
KABELSTRANG - HECKBELEUCHTUNG (RECHTS)	317
	320
KABELSTRANG - HEIZUNG U. KLIMAANLAGE	820
	863
	898
KABELSTRANG - HINTERES FAHRWERK	305
	306
	325
KABELSTRANG - VORDERE BELEUCHTUNG	218
	220
	235
	237
	249
	301
KABELSTRANG - VORDERE BELEUCHTUNG (ARBEITSSCHEINWERFER)	225
KABELSTRANG - VORDERE BELEUCHTUNG (*ELEVATED LIGHT BAR)	222
KABELSTRANG - VORDERES FAHRWERK	206
	209
	212
	215
	300

* ÜBERSETZUNG ZUM ZEITPUNKT DER DRUCKLEGUNG NICHT VORHANDEN

STICHWORTVERZEICHNIS

Bezeichnung	Seite
KABELSTRANG - VORDERES FAHRWERK (ARBEITSSCHEINWERFER, VORN)	225
KABELSTRANG - VORDERES FAHRWERK (*BOLSTER LIGHT BAR)	222
KABELSTRANG (KONSOLE)	340
KABELSTRANG (MOTOR ELEKTRON.)	293
KABELSTRANG U. STARTHILFE	265
KÄLTEMITTELKOMPRESSOR	828
KÄLTEMITTELKOMPRESSOR U. BEFESTIGUNG	827
KÄLTEMITTELKONDENSATOR U. BEFESTIGUNGSTEILE	829
KÄLTEMITTELTROCKNER	898
KEILRIEMEN	187
KETTE	350
KIPPSCHALTER (ABBLENDSCHEINWERFER)	212 215 222
KIPPSCHALTER (ARBEITSSCHEINWERFER, VORN)	225
KIPPSCHALTER (*HEADLIGHTS, TAIL LIGHTS)	206 209 212 215 222 225 275
KIPPSCHALTER (*HEADLIGHTS, TAIL LIGHTS)	340
KIPPSCHALTER (MOTORABSTELLUNG)	324
KIPPSCHALTER (MOTORABSTELLUNG (STANDEBENE))	305
KIPPSCHALTER (RUNDUM-KENNLEUCHTE)	163
KIPPSCHALTER (SCHARARBEITSLEUCHTE)	205
KIPPSCHALTER (SCHARARBEITSLEUCHTE)	204
KIPPSCHALTER (SCHARLEUCHTE)	202
KIPPSCHALTER (SCHAR)(VORDERER ARBEITSSCHEINWERFER)	201
KIPPSCHALTER (*THROTTLE LOCK SET, RESET)	333
KIPPVORRICHTUNG NACH HINTEN, REPARATURSATZ	919
KIPPWANNENSATZ	941 943
*KIT-AIR CONTROL VALVE	515
KLEMMLEISTE	140
KLIMAANLAGE	818 819
KLIMAANLAGE UND AUFHÄNGUNG	818
KLIMAANLAGENLEITUNGEN	898
KNICKGELENK-ANHÄNGUNG	484
KNICKLENKZYLINDER	539
KNOPF- GEWICHTSEINSTELLUNG	876
KOLBENPUMPE	602 604
KOLBENPUMPE UND BEFESTIGUNG	600
KOLBENPUMPENUMLAUFSATZ	606 607
KONDENSATORBLOCK (KLIMAANLAGE)	829
KONSOLEN-VERDRAHTUNG	331 333
KONSOLEN-VERDRAHTUNG (LENKUNG)	337
KRAFTSTOFF-ENTLÜFTUNGSPUMPE	115
KRAFTSTOFFEINSPRITZDÜSE	114
KRAFTSTOFFEINSPRITZLEITUNGEN	111
KRAFTSTOFFEINSPRITZPUMPE	114
KRAFTSTOFFFILTERKAPPE (SCHWEREINSATZ, SPERRBAR)	121
KRAFTSTOFFFILTERKAPPE (SCHWEREINSATZ, SPERRBAR)	119
KRAFTSTOFFHEIZUNG (WASSERABSCHEIDER, 12 V)	104
KRAFTSTOFFILTER	103
KRAFTSTOFFILTERLEITUNGEN	108
KRAFTSTOFFLEITUNGEN	105 106
KRAFTSTOFFÖRDERPUMPE	113
KRAFTSTOFFÖRDERPUMPE UND BEFESTIGUNGSTEILE	113
KRAFTSTOFFSIEB	119 121
KRAFTSTOFFSTANDGEBER	119 121
KRAFTSTOFFTANK	116 117 118 119 121 123 124
KRAFTSTOFFTANK-HALTETEILE	102
KRAFTSTOFFTANKABSTÜTZUNG	496
KRAFTSTOFFTANKVERKLEIDUNG	479
KRAFTÜBERTRAGUNGSELEKTRONIK	159 160
KREISSEGMENT	777
KREUZGELENK	394
KUEHLER-HALTETEILE	75
KÜHLER	85 86
KÜHLERKAPPE (*7-PSI)	85

* ÜBERSETZUNG ZUM ZEITPUNKT DER DRUCKLEGUNG NICHT VORHANDEN

STICHWORTVERZEICHNIS

Bezeichnung	Seite
	86
KÜHLSYSTEM	70
	71
	72
KÜHLWASSER-TEMPERATURREGLER UND GEHÄUSE	76
KÜHLWASSERLEITUNGEN	77
	78
	79
	81
KÜHLWASSERPUMPE	83
	84
KUPPLUNGSGESTÄNGE	361
KURBELLAGER-EINBAUSATZ (LUFTKOMPRESSOR)	10
KURBELWELLE	23
KURBELWELLENDICHTUNG	55
L	
LADELUFTKÜHLER U. BEFESTIGUNG	87
LAGERSATZ	877
LAGERSATZ (DREHSTROMGENERATOR)	133
*LAMP GP-FLOOD (*24-VOLT, VERTICAL MOUNT)	228
	232
*LAMP GP-FLOOD (*24-VOLT, VERTICAL MOUNT) (*BLADE)	204
*LAMP GP-FLOOD (*24-VOLT, VERTICAL MOUNT) (*BLADE)	201
*LAMP GP-FLOOD (*24-VOLT, VERTICAL MOUNT) (*CAB)	195
*LAMP GP-FLOOD (*24-VOLT, VERTICAL MOUNT) (*RH)	218
*LAMP-HALOGEN (*24-VOLT, 65-WATT) (ABBLENDLICHT)	171
*LAMP-HALOGEN (*24-VOLT, 65-WATT) (ARBEITSSCHEINWERFER)	166
LAUFBAND UND ANTRIEB (RUNDUM-KENNLEUCHTE)	186
LENKBETÄTIGUNG	530
LENKGESTÄNGE	489
LENKKONSOLENVERDRAHTUNG	337
	340
LENKÖLLEITUNGEN	592
LENKZYLINDER	547
	548
LENKZYLINDER UND AUFHÄNGUNG	537
LEUCHTE, ROT (LED)	247
	248
LEUCHTE (*STOP, TAIL, TURN, LH)	320
LEUCHTE (*STOP, TAIL, TURN, LH)	317
LEUCHTE (*STOP, TURN, TAIL, RH)	320
LEUCHTE (*STOP, TURN, TAIL, RH)	317
LEUCHTE (24 V)	163
	177
	206
	212
	215
	222
	223
	225
	275
	331
	333
	340
	819
	863
	913
LEUCHTE (24 V)	247
	248
	249
	331
	333
	334
	337
	340
LEUCHTE (24 V)	235
	237
	268
	287
	289
	329
LEUCHTE (24 V) (*AIR PRESSURE GAUGE)	925
	927
	929
LEUCHTE (24 V) (ARBEITSSCHEINWERFER, RECHTS)	218
	220
LEUCHTE (24 V) (AUSFALLSCHUTZ-RÜCKFAHRLEUCHTE)	191
LEUCHTE (24 V) (*AUXILIARY BACK-UP ALARM)	193
LEUCHTE (24 V) (DIFFERENTIALSPERRE)	925
	927
LEUCHTE (24 V) (FAHRERHAUSSTELLUNG)	181
LEUCHTE (24 V) (*FAN SPEED, TEMPERATURE)	867
LEUCHTE (24 V) (FRONTSCHEINWERFER)	179
LEUCHTE (24 V) (HAUPTANZEIGE)	927
LEUCHTE (24 V) (HAUPTFUNKTIONSLEUCHTE DES ELEKTRON. ÜBERWACHUNGSSYSTEMS)	925
LEUCHTE (24 V) (*HEADLIGHTS, TAIL LIGHTS)	209
LEUCHTE (24 V) (*HEATED MIRRORS)	906

* ÜBERSETZUNG ZUM ZEITPUNKT DER DRUCKLEGUNG NICHT VORHANDEN

STICHWORTVERZEICHNIS

Bezeichnung	Seite
	910
LEUCHTE (24 V) (KENNZEICHEN)	182
LEUCHTE (24 V) (*NG)	334
LEUCHTE (24 V) (SCHAR-ARBEITSSCHEIN-WERFER)	204
	205
LEUCHTE (24 V) (SCHARDÄMPFUNGSCHAL-TER)	280
LEUCHTE (24 V) (SCHARLEUCHTE)	202
LEUCHTE (24 V) (SIGNAL)	179
LEUCHTE (24 V) (VIERFACHANZEIGE)	927
LEUCHTE (24 V) (VIERFACHANZEIGENMO-DUL)	925
	929
LEUCHTE (24 V) (WARNVORRICHTUNG)	929
LEUCHTE (24 V, 3 W) (INSTRUMENTENTA-FEL)	925
	927
LEUCHTE (24 V, 3 W) (KONTROLLEUCHTE)	929
LEUCHTE (24 V, 5 W)	317
	320
LEUCHTE (24 V, 70 W)	187
LEUCHTE (24 V, 70 W) (RUNDUM-KENNLEUCHTE)	186
LEUCHTE (*24-VOLT) (AUTOMATIKSCHAL-TUNG)	345
LEUCHTE (*24-VOLT) (ENTFROSTER, HINTEN)	857
LEUCHTE (*24-VOLT) (FAHRERHAUSDACH)	165
LEUCHTE (*24-VOLT) (FERNLICHT/ ABBLENDLICHT)	175
LEUCHTE (*24-VOLT) (FERNLICHT/ ABBLENDLICHT)	173
LEUCHTE (*24-VOLT) (RECHTS- U. LINKSWENDUNG)	175
LEUCHTE (*24-VOLT) (RECHTS- U. LINKSWENDUNG)	173
LEUCHTE (*24-VOLT) (SCHAR)(VORDERER ARBEITSSCHEINWERFER)	201
LEUCHTE (*24-VOLT) (STELLUNG)	173
	175
LEUCHTE (*24-VOLT) (VORDERER ENTFROSTER)	856
LEUCHTE (*24-VOLT, 21-WATT) (RECHTS- U. LINKSWENDUNG)	173
	175
LEUCHTE (24V, 21W)	317
	320
LEUCHTE (24V, 21W) (SIGNAL)	179
LEUCHTE (24V, 21W) (SIGNAL)	177
LICHTSCHALTER	275
LUFTDRUCKANZEIGE (LINKS)	925
LUFTDRUCKANZEIGE (LINKS)	927
	929
LUFTDRUCKANZEIGE (RECHTS)	925
	927
	929
LUFTFILTER (FAHRERHAUS)	858
LUFTFILTERWARTUNGSANZEIGE	88
LUFTKANAL	849
LUFTKANAL UND REGULIERUNG	848
LUFTKOMPRESSOR	10
	12
	14
LUFTREINIGER	88
	90
LUFTREINIGERANSCHLUSS	97
LUFTREINIGERKLEMMEN-EINBAUSATZ	90
LUFTTROCKNER	498
	499
	501
LUFTTROCKNER (LUFTTROCKNER)(24 VOLT)	501

M

MAGNETFILTER (GETRIEBE)	388
MAGNETFILTER (GETRIEBEÖL)	346
MAGNETSCHALTER	277
	278
MAGNETSCHALTER (24 V) (DURCHDREHRE-LAIS)	310
MAGNETSIEB	388
MAGNETSPULE (24 V)	270
MAGNETSTOPFEN (GEHÄUSEABLASS)	458
MAGNETVENTIL	402
	403
	517
	518
	771
	772
MARKIERUNGSLEUCHTE	181
MEMBRANESATZ	871
MODUL - VIER ELEKTRON. ANZEIGEN	912
MOTOR- UND GETRIEBEAUFLAGER	43
MOTOR, ELEKTR.	251
*MOTOR GP-ELECTRIC	852
*MOTOR GP-ELECTRIC (*DEFROSTER FAN)	854
MOTOR UND LÜFTER	73
MOTORANTRIEB	596
MOTORAUFHÄNGUNG	56
MOTORAUSFÜHRUNG	6
	9
MOTORBLOCK	25
	26

* ÜBERSETZUNG ZUM ZEITPUNKT DER DRUCKLEGUNG NICHT VORHANDEN

STICHWORTVERZEICHNIS

Bezeichnung	Seite
	27
MOTORBLOCKDECKEL	21
MOTORHUBÖSE	42
MOTORÖLABLASSLEITUNGEN	66
MOTORÖLEINFÜLLSTUTZEN	62
MOTORSTEUERUNG, ELEKTRON	146
	147
	148
	149
MOTORSTOPFEN	51
MOTORVERDRAHTUNG	293
MOTORVERKLEIDUNG	466
	469

N

NEBENANTRIEB	33
NOCKENWELLE	20
NOTLENKUNG	609
NOTLENKUNGSLEITUNGEN	590
NOTLENKUNGSPUMPE UND -MOTOR	599
NOTLENKUNGSPUMPE UND BEFESTIGUNGS-TEILE	601
NOTLENKUNGSSTEUERUNG	150
NOTLENKUNGSVERDRAHTUNG	329

O

ÖLEINFÜLLSTUTZEN	62
ÖLFILTER	63
	378
ÖLFILTER U. BEFESTIGUNGSTEILE	376
ÖLFILTERELEMENT (HOCHLEISTUNG) (GETRIEBE)	378
	381
ÖLFILTERELEMENT (HYDRAULISCH) (STANDARD EFFIZIENZ)	612
ÖLFILTERSOCKEL	60
ÖLMESSSTAB	65
ÖLWANNE	45
	47
*ORIFICE	396
	399

P

*PADLOCK GP	614
PANZERWANNE	477
PENDELVENTIL	769
	770
*PLATE GP-RADIATOR	82
*PLATE-IDENTIFICATION (*MAXIMUM WEIGHT)	4
PLATTFORMUNTERBAU	497
PLEUELSTANGE UND KOLBEN	49
POLSTEREINBAUSATZ	850
	851
PROBEENTNAHMEVENTIL (LENKUNG)	592
PUMPENANTRIEBSWELLE	608

R

RAD UND REIFEN	406
	407
	408
	409
	410
	411
	412
	413
	414
	415
	416
	417
	418
	419
	420
	421
	422
	423
	424
	425
	426
	427
	428
	429
	430
	431
	432
	433
	434
	435
	436
	437
	438
	439
	440
	441
	442
	443
	444
	445
	446
	447
	448
RADAUFHAENGUNG	385

* ÜBERSETZUNG ZUM ZEITPUNKT DER DRUCKLEGUNG NICHT VORHANDEN

STICHWORTVERZEICHNIS

Bezeichnung	Seite
RADIOEINBAUSATZ	879
	880
RADSATZ	448
	449
	450
	451
	452
	453
	454
RADSTURZZYLINDER	550
RADSTURZZYLINDER UND BEFESTIGUNGS-TEILE	538
RAHMEN UND GEHÄUSE	458
REFLEKTORAUFKLEBER (GELB)	1002
REGLEREINBAUSATZ (LUFTKOMPRESSOR)	512
REGLERSTEUERUNG	100
REIFENVENTIL	420
	421
	422
	423
	424
	425
	426
	427
	428
	429
	430
	431
	432
	433
	434
	435
	436
	437
	438
	439
	440
	441
	442
	443
	444
	445
	446
	447
	450
	452
	453
	454
RELAIS (24 V)	193
RELAIS (24 V) (ARBEITSSCHEINWERFER)	204
	205
RELAIS (24 V) (ÄTHERSTARTHILFE)	265
RELAIS (24 V) (AUSFALLSCHUTZ-RÜCKFAHRLEUCHTE)	191
RELAIS (24 V) (*TAIL, PANEL LAMPS)	337
RELAIS (24 V) (*TAIL,PANEL LAMPS)	340
RIEMENSPANNER	16
	18
ROLLENSATZ (SITZ)	957
RÜCKKOPPLUNGSVENTIL	759
RÜCKLEHNENVERLÄNGERUNG	850
	851
	947
RÜCKSPIEGEL	903
	904
	905
	906
	908
	909
	910
RUNDUM-KENNLEUCHTE	186
	187
	249
RUNDUMWARNLEUCHTE - EINBAUSATZ	163

S

SAMMELVENTIL	697
	699
SCHALE - RÜCKENLEHNE	918
SCHALLDÄMPFER	95
SCHALLDÄMPFUNG	48
	57
SCHALTAUTOMATIK	345
SCHALTER (AUTOM. SCHALTUNG AUTOSHIFT - GETRIEBE)	345
SCHALTER (*AUXILIARY BACKUP)	191
SCHALTER (DIFFERENTIALSPERRE)	340
SCHALTER (DIFFERENTIALSPERRE)	337
SCHALTER (ENTFROSTER, HINTEN)	857
SCHALTER (GASREGELSPERRE)	333
SCHALTER (GASREGELUNG - DREHZAHLEINSTELLUNG)	331
SCHALTER (GASREGELUNG - HALTEMODUS)	331
SCHALTER (HECKLEUCHTE)	337
SCHALTER (RUNDUM-KENNLEUCHTE)	163
	247
	248
	249
SCHALTER (SCHALTTAFEL-LICHTREGLER)	337
SCHALTER (SCHARDÄMPFUNG)	280
SCHALTER (SEITENSCHUB-BOLZENZIEHER)	331
	334

* ÜBERSETZUNG ZUM ZEITPUNKT DER DRUCKLEGUNG NICHT VORHANDEN

STICHWORTVERZEICHNIS

Bezeichnung	Seite
SCHALTER (TAFEL HINTERGRUNDBELEUCHTUNG)	340
SCHALTER (VORDERER ENTFROSTER)	856
SCHALTER (24 V) (ABSTREIFSCHILD)	287
	289
SCHALTER (24 V) (ARBEITSSCHEINWERFER, RECHTS)	218
	220
SCHALTER (24 V) (ÄTHERSTARTHILFE)	268
SCHALTER (24 V) (*AUXILIARY BACK-UP ALARM)	193
SCHALTER (24 V) (FAHRERHAUS - RECHTER ARBEITSSCHEINWERFER)	235
	237
SCHALTER (24 V) (*HEATED MIRRORS)	906
SCHALTER (24 V) (*HEATED MIRRORS)	910
SCHALTER (24 V) (NOTLENKUNG)	329
SCHALTKONSOLENVERDRAHTUNG	331
	333
SCHAR	787
	788
	789
	790
SCHARDREHWERK	554
	775
	777
SCHARDRUCKSPEICHER	520
SCHARHUBZYLINDER UND BEFESTIGUNGSTEILE	532
SCHARKIPPZYLINDER UND BEFESTIGUNGSTEILE	533
SCHARNEIGEZYLINDER	540
SCHARVERLÄNGERUNG	794
	795
	796
	797
	798
	799
SCHAUGLAS (HYDRAULIKÖL)	612
SCHEIBENWASCHANLAGE	959
	961
	962
SCHEIBENWISCHER	973
	974
	975
	977
	979
	981
	983
	985
	987
	989
	991
	992
	993
	994
SCHEIBENWISCHERBLATT	964
	992
	993
	994
SCHEIBENWISCHERBLATT (HINTEN)	989
SCHEIBENWISCHERBLATT (HOCHPROFIL VORNE OBEN)	979
	981
SCHEIBENWISCHERBLATT (HOHES PROFIL, HINTEN)	987
SCHEIBENWISCHERBLATT (HOHES PROFIL, VORNE, UNTEN)	979
	981
SCHEIBENWISCHERBLATT (*LOW PROFILE FRONT UPPER)	975
SCHEIBENWISCHERBLATT (NIEDRIGES PROFIL, HINTEN)	983
	985
SCHEIBENWISCHERBLATT (VORNE OBEN)	977
SCHEIBENWISCHERBLATT (VORNE UNTEN)	975
	977
SCHEIBENWISCHERBLATTSATZ (HINTEN)	985
SCHEIBENWISCHERBLATTSATZ (NIEDRIGES PROFIL, HINTEN)	983
SCHEIBENWISCHERKABELSTRANG (FÜR STEUERUNG)	291
SCHEIBENWISCHERKABELSTRANG (SICHERUNGSKASTEN)	291
SCHEIBENWISCHERMOTOR	994
SCHEIBENWISCHERMOTOR (HINTEN)	985
	989
SCHEIBENWISCHERMOTOR (VORNE)	993
SCHEIBENWISCHERMOTOR (VORNE OBEN)	977
	981
SCHEIBENWISCHERMOTOR (24 V)	974
SCHEIBENWISCHERMOTOR (24 V) (UNTEN)	981
SCHEIBENWISCHERMOTOR (24 V) (VORNE UNTEN)	977
SCHEIBENWISCHERSCHALTER	279
	991
SCHEIBENWISCHERSCHALTER (24 V) (HINTEN)	983
	985
	987
	989
SCHEIBENWISCHERSCHALTER (24 V) (VORN, INTERVALLSCHALTUNG)	285

* ÜBERSETZUNG ZUM ZEITPUNKT DER DRUCKLEGUNG NICHT VORHANDEN

STICHWORTVERZEICHNIS

Bezeichnung	Seite
SCHEINWERFER, HINTEN	191
	193
SCHEINWERFER U. RICHTUNGSLEUCHTE	177
	179
SCHILD UND AUFKLEBER	2
	998
	999
	1002
	1003
	1004
	1005
SCHILD UND AUFKLEBER (REFLEKTOR)	1
SCHILDHUB	800
SCHLÜSSEL (HAUPTSCHALTER)	274
SCHMIERLEITUNGEN	488
SCHMIERNIPPEL (SCHARSCHWENKWERK - ZYLINDERANSCHLUSS)	534
SCHMIERPUMPE	68
	69
SCHNEEFLÜGEL-BEFESTIGUNG	803
SCHNEERÄUMVORRICHTUNG	4
	5
SCHNEIDMESSER	792
	793
SCHRÄGKOLBEN-EINBAUSATZ	602
SCHUBPLATTE	781
SCHUTZABDECKUNG	462
	463
SCHWENKBLOCK	611
SCHWENKSCHEIBE	610
SCHWINGSITZ	945
	946
	947
	948
	949
	950
	951
SCHWUNGRAD	35
SCHWUNGRADGEHÄUSE	37
SCREEN (GETRIEBESTEUERVENTIL)	404
*SEAL-LIP TYPE	76
SEITENANTRIEB	379
SEITENSCHIEBERZYLINDER UND BEFESTIGUNGSTEILE	536
SEITENSCHUBSPERRE	595
SEITENSCHUBZYLINDER	541
	546
SEITENSCHUBZYLINDER UND BEFESTIGUNGSTEILE	534
SENSOR-EINBAUSATZ (KRAFTSTOFFS-TAND)	119
	121
*SENSOR GP-POSITION (*ROTARY) (*THROTTLE)	100
SENSOR, KABELSTRANG (STÄRKE 14)	254
SERPENTINENFÖRMIGER RIEMEN (*ALTERNATOR AND AIR CONDITIONER)	818
SERPENTINENFÖRMIGER RIEMEN (*ALTERNATOR WITHOUT A/C)	134
SICHERHEITSFILTER	90
SICHERHEITSGURT	939
	940
	950
SICHERHEITSGURT ((AUTOMATIKSICHERHEITSGURT))	947
SICHERUNG (10 A)	206
	212
	215
	222
	225
	235
	237
	244
	275
	287
	289
	291
	329
	337
	340
SICHERUNG (10 A) (ARBEITSSCHEINWERFER)	204
	205
SICHERUNG (10 A) (ARBEITSSCHEINWERFER, RECHTS)	218
	220
SICHERUNG (10 A) (*AUXILIARY BACK-UP ALARM)	193
SICHERUNG (10 A) (*HEATED MIRRORS)	906
SICHERUNG (10 A) (*HEATED MIRRORS)	910
SICHERUNG (10 A) (LUFTTROCKNER)	498
SICHERUNG (10 A) (RICHTUNGSBLINKER, WARNLEUCHTE)	209
SICHERUNG (10 A) (RÜCKFAHRLEUCHTE)	191
SICHERUNG (10 A) (RUNDUM-KENNLEUCHTE)	245
	284
SICHERUNG (10 A) (SCHARLEUCHTE)	202
SICHERUNG (10 A) (SCHEIBENWISCHER)	983
	985
	987
	989
SICHERUNG (10 A) (UMFORMER)	156
SICHERUNG (10 A) (WANDLER)	154

* ÜBERSETZUNG ZUM ZEITPUNKT DER DRUCKLEGUNG NICHT VORHANDEN

STICHWORTVERZEICHNIS

Bezeichnung	Seite
SICHERUNG (*10-AMPERE) (ENTFROSTER, HINTEN)	857
SICHERUNG (*10-AMPERE) (SCHAR/VORDER ARBEITSSCHEINWERFER)	201
SICHERUNG (*10-AMPERE) (VORDERER ENTFROSTER)	856
SICHERUNG (15 A)	282
	285
	337
	340
SICHERUNG (15 A) (*CAB FLOOD LIGHTS)	204
	205
SICHERUNG (15 A) (HEIZUNG)	861
SICHERUNG (15 A) (KLIMAANLAGE)	818
SICHERUNG (15 A) (UMFORMER)	155
SICHERUNG (30 A)	157
SIEB (FÜLLER) (HYDRAULIKÖLTANK)	612
SITZGURT-HALTESEIL	955
SITZKISSENEINBAUSATZ	941
SITZKISSENEINBAUSATZ (PVC)	943
SITZUNTERBAU	953
SOFTWARE - KRAFTÜBERTRAGUNG	159
SOFTWARE - KRAFTÜBERTRAGUNG (MOTORGRADER)	160
*SOFTWARE GP-ENGINE (*VARIABLE HORSEPOWER)	997
SONNENBLENDE	938
SPANNUNGSREGLER (24 V)	130
SPANNUNGSREGLER (24 V) (DREHSTROMGENERATOR)	133
SPERRVENTIL	125
	126
	127
SPURSTANGE (LENKUNG)	537
STANDARDRINGSATZ (LUFTKOMPRESSOR)	10
STANGENSATZ	919
STARTERMOTOR	270
	272
STARTSCHALTER (TASTE)	331
	333
STAUBKAPPE (HYDRAULIKÖL)	592
STECKDOSEN - EINBAUSATZ (2POLIG)	181
	189
	240
	771
STECKDOSEN - EINBAUSATZ (2POLIG) (KENNZEICHENBELEUCHTUNG)	182
STECKDOSEN - EINBAUSATZ (2POLIG) (SOLENOIDVENTIL)	518
STECKDOSEN - EINBAUSATZ (2POLIG) (12 V STROMANSCHLUSS)	816
	817
STECKDOSEN - EINBAUSATZ (6 STIFTE)	975
STEIGLEITER	492
STELLUNGSGEBER (KNICKGELENK)	306
	325
STELLUNGSSENSOR	252
	253
STEUERKOLBENSATZ	602
STEUERKONSOLE	830
STEUERUNG - NICHT PROGRAMMIERT	152
STEUERUNGSEINHEIT, ELEKTRON. FÜR MOTOR UND BEFEST.	144
	145
STEUERVENTIL	701
	703
	705
	707
	709
	711
	713
	715
	717
	719
	721
	723
	725
	727
	729
	731
	733
	735
	737
	739
	741
	743
	745
	747
STEUERVENTIL (AUFREISSER)	678
	692
STEUERVENTIL (DREHKRANZANTRIEB)	674
	676
	677
	678
	680
	681
	683
	685
	687
	692
	693
	694
	695
	696

* ÜBERSETZUNG ZUM ZEITPUNKT DER DRUCKLEGUNG NICHT VORHANDEN

STICHWORTVERZEICHNIS

Bezeichnung	Seite
STEUERVENTIL (DREHKRANZANTRIEB) (LINKS)	690
STEUERVENTIL (DRUCKLUFT)	515
STEUERVENTIL (SCHARHUB)	674
	677
	678
	683
	687
	690
	692
	693
	696
STEUERVENTIL (SCHARSTURZ)	674
	676
	677
STEUERVENTIL (SCHARSTURZ)	678
	680
	681
	683
	685
	687
	690
	692
	693
	694
	695
	696
STEUERVENTIL (SEITENSCHUB)	674
	676
	677
	678
	680
	681
	683
	685
	687
	690
	692
	693
	694
	695
	696
STEUERVENTILSPERRE	551
	552
STIRNRAD	36
STIRNRADGEHÄUSE	39
STOSSSTANGEN-EINBAUSATZ (GEWICHTSEINSTELLUNG)	877

T

TANDEMGEHÄUSE UND DECKEL	391
TEMPERATURREGLER (*98-DEG C)	76
TEMPERATURSCHALTER (HYDRAULIKÖL)	296
	300
TEMPERATURSCHALTER (KÜHLMITTEL)	819
TEMPERATURSENSOR	262
	263
	264
TORSIONSKUPPLUNG	370
TRENNSCHALTER	274
TURBOLADER	98
	99
TURBOLADEREINSATZ	99
TURBOLADERÖLLEITUNGEN	67
TYPENSCHILDBEFESTIGUNG	490

U

ÜBERDRUCKVENTIL	755
	756
	757
	758
	759
	760
	761
	762
	763
	764
	765
	766
	767
	768
	828
ÜBERROLL-SCHUTZDACH	937
ÜBERROLL-SCHUTZKABINE	935
	936
ÜBERROLLSCHUTZAUFLAGER	915
	917
ÜBERROLLSCHUTZDACH	934
ÜBERROLLSCHUTZKABINE	932
	933
UMBAUSATZ - OHNE ÜBERROLLSCHUTZ	834
UMBAUSATZ - ZULASSUNG	1
	2
UMFORMER, ELEKTR.	153
UMGEHUNGSSCHALTER	273
UMLAUFKÜHLWASSERHEIZUNG	161
	162
UMLAUFKÜHLWASSERHEIZUNGS-ELEMENT (*120-VOLT, 1250-WATT)	161
UMLAUFLÜFTER	852
	854
	856
	857
UNTERBRECHER	141

* ÜBERSETZUNG ZUM ZEITPUNKT DER DRUCKLEGUNG NICHT VORHANDEN

STICHWORTVERZEICHNIS

Bezeichnung	Seite
	142
	143
UNTERBRECHER (105 A) (DREHSTROMGENERATOR)	143
UNTERBRECHER (15 A) (FRONTSCHEINWERFER)	141
	142
UNTERBRECHER (15 A) (LICHTBALKEN - ARBEITSCHEINWERFER)	141
UNTERBRECHER (15 A) (MOTORSTEUERUNG)	311
UNTERBRECHER (80 A) (DREHSTROMGENERATOR)	310
UNTERBRECHER (80 A) (HAUPTUNTERBRECHER)	310
UNTERLEGSCHEIBE (EINSCHL. 17 BEILAGSCHEIBEN)	602

V

*VALVE GP-PUMP CONTROL	749
	751
*VALVE (*PRESSURE RELIEF)	10
VENTIL - SCHALT- UND DRUCKSTEUERUNG	396
	399
VENTIL UND GESTÄNGE	615
	617
	619
	621
	623
	625
	627
	629
	631
	633
	635
	637
	639
	641
	643
	645
	647
	649
	651
	653
	656
	658
	660
	662
	664
	666
	668
	670
VENTILKAPPE (SCHAFT)	446
VENTILKIPPHEBEL	53
VENTILMECHANISMUSAUFHÄNGUNG	44
VENTILSATZ (4-VENTIL)	673
	674
	675
	676
VENTILSATZ (5-VENTIL)	677
	678
	679
	680
	681
	682
VENTILSATZ (6-VENTIL)	683
	684
	685
	686
	687
	688
VENTILSATZ (7-VENTIL)	689
	690
	692
	693
	694
	695
	696
VENTILSOLENOID U. -KRÜMMER	773
	774
VENTILSTEUERUNG	58
VENTILSTÖSSELSATZ	876
	877
VERDRAHTUNG - SCHARDÄMPFUNG	280
VERDRAHTUNG (EINSPRITZEINHEIT)	344
VERDRAHTUNG, HINTEN	305
	310
	315
	317
	320
	324
VERDRAHTUNG, VORNE	300
VERDRAHTUNG, VORNE	296
VERDRAHTUNGSKABELBAUM (PUMPENDÜSE)	344
VERKLEIDUNG - FAHRERHAUS	921
	922
	923
VERKLEIDUNG UND BEFESTIGUNG - KÜHLER	474
VORDERACHSE	455
VORDERRAHMEN	472
VORHÄNGESCHLOSS	825
	834

* ÜBERSETZUNG ZUM ZEITPUNKT DER DRUCKLEGUNG NICHT VORHANDEN

STICHWORTVERZEICHNIS

Bezeichnung	Seite
VORHÄNGESCHLOSS (ÜBERROLL-SCHUTZ)	934
VORHÄNGESCHLOSS (WERKZEUGKASTEN)	995
VORREINIGER	97

W

Bezeichnung	Seite
WAGENHEBER, HYDRAULISCH	997
WÄRMEISOLIERUNG	882
WARNAUFKLEBER (HOCHDRUCKZYLINDER)	999
WARNAUFKLEBER (KABELVERBINDUNG)	999
WARNAUFKLEBER (KEINE STUFE)	119
WARNLEUCHTEN	244
	245
	247
	248
WARNSCHILD (QUETSCHGEFAHR)	462
	463
	999
WARNVORRICHTUNG	128
	129
WASSERABSCHEIDER- U. KRAFTSTOFFILTER	104

Z

Bezeichnung	Seite
ZAHNRADANTRIEB	597
ZAHNRADPUMPE	386
	387
ZIGARETTENANZÜNDER (ZIGARETENANZÜNDER, 24 V)	331
	333
ZUGANGSKLAPPE	459
	461
ZUGHAKEN	779
ZULASSUNGSSCHILDLEUCHTE	182
ZYLINDERBLOCKSCHRAUBE	50
ZYLINDERKOPF	29
	31
	32
ZYLINDERKOPF-EINBAUSATZ (LUFTKOMPRESSOR)	10
ZYLINDERKOPF-HALTETEILE	34

* ÜBERSETZUNG ZUM ZEITPUNKT DER DRUCKLEGUNG NICHT VORHANDEN

MACHINE ARRANGEMENT

207-4453 CONVERSION AR-CERTIFICATION–EU

S/N: CCA1-UP

AN ATTACHMENT

SMCS-7000 **i02023418**

NOTE	PART NUMBER	QTY	PART NAME 1 2 3 4 5 6 (PRODUCT LEVEL)	SEE PAGE
Y	*161-0764*	1	AUTOSHIFT AR	345
Y	*191-9260*	1	COOLING AR	72
Y	*126-6933*	1	COVER GP-PROTECTION (PLATFORM)	462
Y	*203-2260*	1	GUARD GP-BOTTOM	477
Y	*167-8390*	1	HEATER AR-CAB	861
Y	*171-6458*	1	LINES GP-SECONDARY STEERING	590
Y	*152-7903*	1	CONTROL GP-HYDRAULIC LOCKOUT	529
Y	**197-2066**	1	MIRROR GP-REAR VIEW (INSIDE DUAL)	909
Y	*196-4909*	1	PANEL GP-INSTRUMENT	929
Y	*192-1434*	1	PLATE & FILM GP (REFLECTOR)	1002
Y	*8X-9751*	1	PUMP & MTG GP-SECONDARY STEER	601
Y	*218-4760*	1	ROPS AR-ENCLOSED	933
Y	*171-6700*	1	SUPPORT AR-REAR CHASSIS	493
Y	*178-9527*	1	SUPPRESSION GP-SOUND	57
Y	*121-4083*	1	VALVE & LINKAGE GP	635
Y	*193-7359*	1	WIRING GP-CAB	285
Y	*159-5865*	1	WIRING GP-FRONT	300
Y	*194-3200*	1	WIRING GP-REAR	324
Y	*193-8253*	1	WIRING GP-REAR	317
Y	*159-5841*	1	WIRING GP-SHIFT CONSOLE	333
Y	*159-5853*	1	WIRING GP-STEERING CONSOLE	340

Y-SEPARATE ILLUSTRATION

<END>

MACHINE ARRANGEMENT

210-2044 CONVERSION AR-CERTIFICATION

S/N: CCA1-UP
EU
AN ATTACHMENT

SMCS-7000 **i02023909**

NOTE	PART NUMBER	QTY	PART NAME 1 2 3 4 5 6 (PRODUCT LEVEL)	SEE PAGE
Y	*167-8067*	1	AIR CONDITIONER AR	818
Y	*161-0764*	1	AUTOSHIFT AR (TRANS)	345
Y	*126-6933*	1	COVER GP-PROTECTION (PLATFORM)	462
Y	*203-2260*	1	GUARD GP-BOTTOM	477
Y	*171-6458*	1	LINES GP-SECONDARY STEERING	590
Y	*152-7903*	1	CONTROL GP-HYDRAULIC LOCKOUT	529
Y	**197-2066**	1	MIRROR GP-REAR VIEW (DUEL INSIDE)	909
Y	*196-4909*	1	PANEL GP-INSTRUMENT	929
Y	*192-1434*	1	PLATE & FILM GP	1002
Y	*8X-9751*	1	PUMP & MTG GP-SECONDARY STEER	601
Y	*218-4760*	1	ROPS AR-ENCLOSED	933
Y	*171-6700*	1	SUPPORT AR-REAR CHASSIS	493
Y	*178-9527*	1	SUPPRESSION GP-SOUND (ENGINE)	57
Y	*121-4083*	1	VALVE & LINKAGE GP	635
Y	*193-7359*	1	WIRING GP-CAB	285
Y	*159-5865*	1	WIRING GP-FRONT	300
Y	*194-3200*	1	WIRING GP-REAR	324
Y	*193-8253*	1	WIRING GP-REAR (EU)(RADIATOR)	317
Y	*159-5841*	1	WIRING GP-SHIFT CONSOLE	333
Y	*159-5853*	1	WIRING GP-STEERING CONSOLE	340

Y-SEPARATE ILLUSTRATION

<END>

159-4615 GENERAL AR

S/N: CCA1-UP

SMCS-7000 **i02126109**

NOTE	PART NUMBER	QTY	PART NAME 1 2 3 4 5 6 (PRODUCT LEVEL)	SEE PAGE
Y	*159-7364*	1	AIR CLEANER GP	88
Y	*233-0712*	1	ALTERNATOR GP-CHARGING	134
Y	*134-1080*	1	AXLE GP-FRONT	455
Y	*8X-8011*	1	BLADE GP	787
Y	*111-1719*	1	BOX GP-TOOL	995
Y	*7D-8440*	1	BRAKE GP-SERVICE	504
Y	*159-3928*	1	CASE & FRAME GP	458
Y	*6G-1755*	1	CHAIN GP-DRIVE	350
Y	*112-7486*	1	CIRCLE GP	775
Y	*167-8053*	1	CONSOLE GP-OPERATOR	830
Y	*159-5933*	1	CONTROL GP-CLUTCH	361
Y	*160-7756*	1	CONTROL GP-DIFFERENTIAL LOCK	363
Y	*159-5935*	1	CONTROL GP-GOVERNOR	100
Y	*160-7753*	1	CONTROL GP-PARKING BRAKE	506
Y	*160-7754*	1	CONTROL GP-SERVICE BRAKE	508
Y	*7I-4718*	1	CONTROL GP-STEERING	530
Y	*167-9002*	1	CONTROL GP-TRANSMISSION	365
Y	*185-1542*	1	COOLING AR	70
Y	*8E-3366*	1	COUPLING GP-TORSIONAL	370
Y	*160-9177*	1	CYLINDER & MTG GP-ARTICULATION	531
Y	*8X-1947*	1	CYLINDER & MTG GP-BLADE LIFT	532
Y	*8X-1943*	1	CYLINDER & MTG GP-BLADE TIP	533
Y	*8X-1944*	1	CYLINDER & MTG GP-CENTERSHIFT	534
Y	*112-7463*	1	CYLINDER & MTG GP-SIDESHIFT	536
Y	*8W-2290*	1	CYLINDER & MTG GP-STEERING	537

MACHINE ARRANGEMENT

159-4615 **GENERAL AR** *(contd.)* **i02126109**

NOTE	PART NUMBER	QTY	PART NAME 1 2 3 4 5 6 (PRODUCT LEVEL)	SEE PAGE
Y	*8W-2737*	1	CYLINDER & MTG GP-WHEEL LEAN	538
Y	*8W-5430*	1	DIFFERENTIAL & BEVEL GEAR GP	371
Y	*8X-1960*	1	DRAWBAR GP	779
Y	**5T-0570**	1	DRIVE GP-CIRCLE	554
Y	*178-9582*	1	SHAFT GP-PUMP DRIVE	608
Y	*159-3923*	1	ENCLOSURE GP-ENGINE	466
Y	**160-5101**	1	ENGINE AR	6
Y	*230-7570*	1	FASTENER GP (CENTRAL LUBRICATION MOUNTING)	471
Y	*230-4617*	1	FASTENER GP-FUEL TANK	102
Y	*230-5839*	1	FASTENER GP-RADIATOR	75
Y	*159-6173*	1	FILLER GP-POWER TRAIN OIL	375
Y	*169-3651*	1	FILTER & MTG GP-OIL (TRANSMISSION)	376
Y	*8W-4368*	1	FINAL DRIVE GP	379
Y	*160-7681*	1	FRAME GP-FRONT	472
Y	*106-4884*	1	HITCH GP-ARTICULATING	484
Y	*228-7559*	1	HITCH GP-TOWING	487
Y	*160-7758*	1	HORN GP-AIR	872
Y	*8X-1935*	1	LIFT GP-BLADE	800
Y	*165-6762*	1	LINES GP-AIR (AFTERCOOLER)	91
Y	*209-7827*	1	LINES GP-AIR (TANK)	92
Y	*183-5504*	1	LINES GP-ENGINE OIL DRAIN (ENGINE OIL)	66
Y	*220-0768*	1	LINES GP-FUEL (REAR CROSSOVER)	105
Y	*160-7759*	1	LINES GP-FUEL FILTER	108
Y	*7I-4610*	1	LINES GP-GREASE	488
Y	*159-4729*	1	LINES GP-HYDRAULIC (CENTERSHIFT LOCK)	564
Y	*159-4730*	1	LINES GP-HYDRAULIC (LH)	566
Y	*159-4731*	1	LINES GP-HYDRAULIC (RH)	569
Y	*175-6978*	1	LINES GP-HYDRAULIC FAN	572
Y	*160-9178*	1	LINES GP-PUMP (IMPLEMENT CONTROL)	576
Y	*160-9179*	1	LINES GP-STEERING	592
Y	*159-6174*	1	LINES GP-TRANSMISSION OIL	381
Y	*159-5439*	1	LINES GP-WATER	79
Y	*164-8462*	1	LOCK GP-CENTERSHIFT	595
Y	**8X-2795**	1	MIRROR GP-REAR VIEW (INSIDE)	903
Y	*159-5436*	1	MOUNTING GP-ENGINE & TMSN	43
Y	*142-6203*	1	MOUNTING GP-WHEEL	385
Y	*159-7368*	1	MUFFLER GP	95
Y	*159-5812*	1	PANEL GP-INSTRUMENT	925
Y	*171-5831*	1	PLATE & FILM GP	999
Y	*160-9180*	1	PUMP & MTG GP-PISTON	600
Y	*179-3581*	1	ROPS AR-ENCLOSED (LOW PROFILE)	932
Y	*8Y-4194*	1	SEAT GP-SUSPENSION (CLOTH)	945
Y	*8W-5394*	1	SHAFT GP-DRIVE	389
Y	*8W-5870*	1	SHIELD GP-DRIVE SHAFT	491
Y	*8X-1030*	1	STEP GP	492
Y	*185-3143*	1	SUPPORT AR-REAR CHASSIS	495
Y	*193-8257*	1	SUPPORT GP-FUEL TANK	496
Y	*174-4546*	1	SUPPORT GP-SEAT	953
Y	*190-1688*	1	TANDEM & COVER GP	391
Y	*207-2409*	1	TANK & MTG GP-HYDRAULIC	614
Y	*159-3931*	1	TANK GP-FUEL	116
Y	**160-2196**	1	TRANSMISSION AR	392
Y	*8X-1949*	1	VALVE & LINKAGE GP	623
Y	*159-5878*	1	WIRING GP-CAB	282
Y	*159-5856*	1	WIRING GP-FRONT	296
Y	*159-5877*	1	WIRING GP-REAR	305
Y	*184-1299*	1	WIRING GP-REAR (RADIATOR)	315
Y	*159-5839*	1	WIRING GP-SHIFT CONSOLE	331
Y	*159-5845*	1	WIRING GP-STEERING CONSOLE	337

159-4615 **GENERAL AR** ***(contd.)*** **i02126109**

NOTE	PART NUMBER	QTY	PART NAME 1 2 3 4 5 6 (PRODUCT LEVEL)	SEE PAGE
	203-6061	1	FILM GP	
	115-5852	1	PLATE & FILM GP	
			(LOCATE ON LEFT SIDE OF CYL BLOCK TOWARDS REAR OF VERTICAL SURFACE BELOW FUEL RAIL TO THE RIGHT OF THE FUEL FILTER)	
Y-SEPARATE ILLUSTRATION				

<END>

197-5572 ROADING AR

S/N: CCA1-UP

AN ATTACHMENT

SMCS-7000 **i01719342**

NOTE	PART NUMBER	QTY	PART NAME 1 2 3 4 5 6 (PRODUCT LEVEL)	SEE PAGE
Z		1	ELECTRONICS GP-POWER TRAIN (MOTOR GRADER) (ROAD SPEED LIMITING)	
Y	*211-1520*	1	LIGHTING GP-ROADING (CAB POSITION) (EU)	241
Y	**197-2064**	1	MIRROR GP-REAR VIEW (CLOSED ROPS OUTSIDE)	908
Y	*211-1519*	1	MOUNTING GP-REGISTRATION	490
	159-7342	1	PLATE-IDENTIFICATION (MAXIMUM WEIGHT)	
Y-SEPARATE ILLUSTRATION Z-NOT SERVICED SEPARATELY				

<END>

197-5955 SNOW AR-MOTOR GRADER

S/N: CCA1-UP

AN ATTACHMENT

SMCS-7000 **i01878333**

NOTE	PART NUMBER	QTY	PART NAME 1 2 3 4 5 6 (PRODUCT LEVEL)	SEE PAGE
Y	*167-8067*	1	AIR CONDITIONER AR	818
Y	*161-0764*	1	AUTOSHIFT AR	345
Y	*188-9321*	1	LIGHTING AR-FLOOD	188
Y	*160-7760*	1	AIR DRYER GP	498
Y	*177-9549*	1	BATTERY GP	137
Y	*172-6834*	1	FAN GP-CIRCULATING (FRONT)	856
Y	*172-6835*	1	FAN GP-CIRCULATING (REAR)	857
Y	*197-6437*	1	FILM GP (VHP PLUS)	997
Y	*131-8126*	1	HEATER GP-JACKET WATER	161
Y	*161-1921*	1	WIRING GP-CAB	284
Y	*161-1021*	1	LIGHTING GP-FLOOD (CAB)(RH)	218
Y	*231-6524*	1	MIRROR GP-REAR VIEW (OUTSIDE)(HEATED)	910
Y	*177-9741*	1	MODULE GP-SPEEDOMETER & TACH	913
Y	*197-0579*	1	STARTING AID GP-ETHER	267
Y	*177-8784*	1	WIPER GP-WINDOW (FRONT)	991
Y-SEPARATE ILLUSTRATION				

<END>

MACHINE ARRANGEMENT

236-3948 SNOW AR-MOTOR GRADER

S/N: CCA1-UP

AN ATTACHMENT

SMCS-7000 **i01999955**

NOTE	PART NUMBER	QTY	PART NAME 1 2 3 4 5 6 (PRODUCT LEVEL)	SEE PAGE
Y	*160-7760*	1	AIR DRYER GP	498
Y	*161-0764*	1	AUTOSHIFT AR	345
Y	*177-9549*	1	BATTERY GP	137
Y	*172-6834*	1	FAN GP-CIRCULATING	856
Y	*172-6835*	1	FAN GP-CIRCULATING	857
Y	*197-6437*	1	FILM GP	997
Y	*167-8390*	1	HEATER AR-CAB	861
Y	*131-8126*	1	HEATER GP-JACKET WATER	161
Y	*188-9321*	1	LIGHTING AR-FLOOD	188
Y	*161-1021*	1	LIGHTING GP-FLOOD	218
Y	*231-6524*	1	MIRROR GP-REAR VIEW	910
Y	*177-9741*	1	MODULE GP-SPEEDOMETER & TACH	913
Y	*197-0579*	1	STARTING AID GP-ETHER	267
Y	*177-8784*	1	WIPER GP-WINDOW	991
Y	*161-1921*	1	WIRING GP-CAB (WARNING BEACON)	284

Y-SEPARATE ILLUSTRATION

<END>

ENGINE ARRANGEMENT

160-5101 ENGINE AR

S/N: 3PD1-4380

PART OF 159-4615 GENERAL AR

SMCS-1000 **i01855142**

NOTE	REF NO	GRAPHIC REF	PART NUMBER	QTY	PART NAME 1 2 3 4 5 6 (PRODUCT LEVEL)	SEE PAGE
Y	1	2	*116-1085*	1	CYLINDER HEAD GP	31
Y	2	1	*116-5405*	1	MANIFOLD GP-INLET	94
Y	3	2	*116-5408*	1	MOUNTING GP-VALVE MECHANISM	44
Y	4	1	*116-5428*	1	PUMP & MTG GP-FUEL TRANSFER	113
Y	5	2	*116-5436*	1	FILTER GP-FUEL	103
Y	6	1	*116-5438*	1	PUMP GP-FUEL PRIMING	115
Y	7	2	*116-5460*	1	LINES GP-WATER	77
Y	8	1	*117-2674*	1	PUMP GP-WATER	83
Y	9	1	*117-2746*	1	PUMP GP-ENGINE OIL	68
Y	10	2	*117-2748*	1	LIFTING GP-ENGINE	42
Y	11	2	*117-2749*	1	VALVE MECHANISM GP	58
Y	12	1	*117-2750*	1	GEAR GP-FRONT	36
Y	13	2	*117-2760*	1	WIRING GP-UNIT INJECTOR	344
Y	15	2	*132-3203*	6	PISTON & ROD GP	49
Y	16	2	*132-3210*	1	CRANKSHAFT GP	23
Y	17	2	*133-7031*	1	AIR COMPRESSOR GP	12
Y	18	2	*138-2028*	1	PLUG GP-CYLINDER BLOCK	50
Y	19	1	*156-3680*	1	MANIFOLD GP-EXHAUST	93
Y	20	1	*163-9322*	1	COOLER GP-TRANSMISSION OIL	368
Y	21	1	*164-2490*	1	FILTER GP-ENGINE OIL	63
Y	22	1	*167-0017*	1	BELT TENSIONER GP	16
Y	23	2	*168-4490*	1	CONTROL & MTG GP-ENGINE ELEK	144
Y	25	2	*171-1103*	1	WIRING GP-ENGINE	293
Y	26	1	*174-0620*	1	STARTING MOTOR GP-ELECTRIC	272
Y	27	1	*174-1574*	1	PAN GP-OIL	45
Y	28	2	*174-1576*	1	GAUGE GP-OIL LEVEL (DIPSTICK)	65
Y	29	2	*174-1579*	1	FILLER GP-ENGINE OIL	62
Y	30	2	*174-1581*	1	FLYWHEEL GP	35
Y	31	2	*174-1584*	1	HOUSING GP-FLYWHEEL	37
Y	32	1	*174-1591*	1	DRIVE GP-ACCESSORY	33
Y	33	1	*174-1604*	1	TURBOCHARGER GP	98
Y	34	1	*174-1627*	1	SUPPORT GP-ENGINE	56
Y	35	1	*174-1760*	1	PLUG GP-ENGINE	51
Y	36	2	*174-1762*	1	COVER GP-CYLINDER BLOCK	21
Y	38	1	*179-9565*	1	LINES GP-TURBOCHARGER OIL	67
Y	39	2	*180-6662*	1	CYLINDER BLOCK GP	27
Y	40	2	*190-6017*	6	PUMP GP-FUEL INJECTION	114
Y	41	2	*204-0638*	1	LINES GP-FUEL INJECTION	111
Y	42	1	*212-0615*	1	ALTERNATOR GP-CHARGING	132
Y	43	2	*215-2063*	1	LINES GP-WATER	81
Y	44	2	*116-1091*	1	SEAL GP-CRANKSHAFT	55
Y	45	1	*118-2808*	1	LINES GP-WATER	78
Y	46	1	*133-7075*	1	HOUSING GP-FRONT	39
Y	47	2	*171-3062*	1	CAMSHAFT GP	20
	48	2	*174-1541*	1	ELECTRONICS GP	
					GASKET KITS WILL BE PROVIDED WHEN AVAILABLE	

Y-SEPARATE ILLUSTRATION

ENGINE ARRANGEMENT

160-5101 **ENGINE AR** *(contd.)* **i01855142**

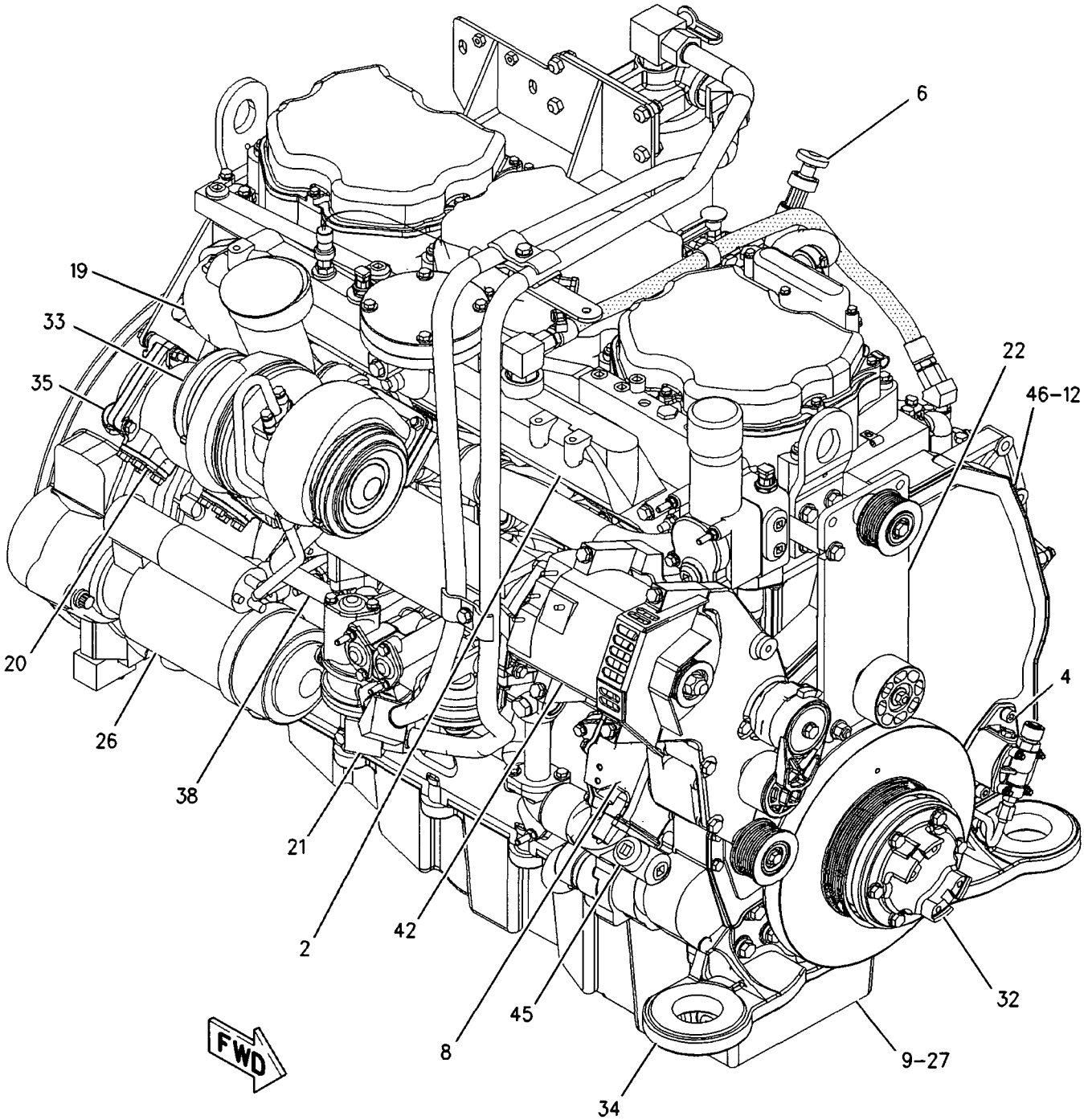

GRAPHIC #1 g00843090

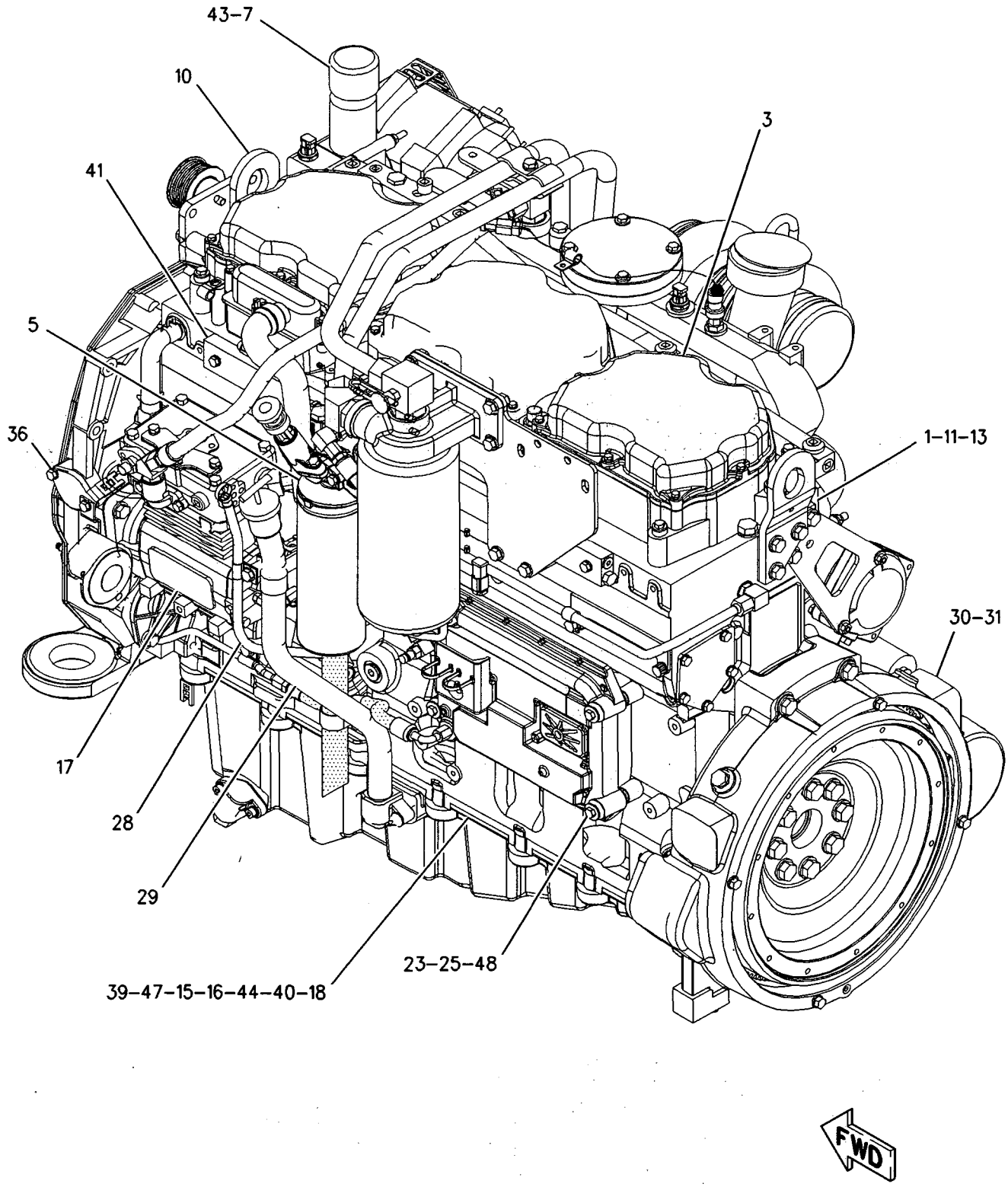

GRAPHIC #2 **<END>** g00892119

ENGINE ARRANGEMENT

160-5101 ENGINE AR

S/N: 3PD4381-UP

PART OF 159-4615 GENERAL AR

SMCS-1000 **i02203455**

NOTE	PART NUMBER	QTY	PART NAME 1 2 3 4 5 6 (PRODUCT LEVEL)	SEE PAGE
Y	*234-2413*	1	AIR COMPRESSOR GP	14
Y	*234-2412*	1	BELT TENSIONER GP	18
Y	*171-3062*	1	CAMSHAFT GP	20
Y	*232-5990*	1	CONTROL & MTG GP-ENGINE ELEK	145
Y	*163-9322*	1	COOLER GP-TRANSMISSION OIL	368
Y	*174-1762*	1	COVER GP-CYLINDER BLOCK	21
Y	*132-3210*	1	CRANKSHAFT GP	23
Y	*180-6662*	1	CYLINDER BLOCK GP	27
Y	*116-1085*	1	CYLINDER HEAD GP	31
Y	*174-1591*	1	DRIVE GP-ACCESSORY	33
	174-1541	1	ELECTRONICS GP	
Y	*174-1579*	1	FILLER GP-ENGINE OIL	62
Y	*164-2490*	1	FILTER GP-ENGINE OIL	63
Y	*116-5436*	1	FILTER GP-FUEL	103
Y	*174-1581*	1	FLYWHEEL GP	35
Y	*174-1576*	1	GAUGE GP-OIL LEVEL (DIPSTICK)	65
Y	*117-2750*	1	GEAR GP-FRONT	36
Y	*174-1584*	1	HOUSING GP-FLYWHEEL	37
Y	*133-7075*	1	HOUSING GP-FRONT	39
Y	*117-2748*	1	LIFTING GP-ENGINE	42
Y	*233-6663*	1	LINES GP-FUEL	106
Y	*179-9565*	1	LINES GP-TURBOCHARGER OIL	67
Y	*116-5460*	1	LINES GP-WATER (BYPASS)	77
Y	*215-2063*	1	LINES GP-WATER	81
Y	*118-2808*	1	LINES GP-WATER (INLET ELBOW)	78
Y	*156-3680*	1	MANIFOLD GP-EXHAUST	93
Y	*116-5405*	1	MANIFOLD GP-INLET	94
Y	*116-5408*	1	MOUNTING GP-VALVE MECHANISM	44
Y	*174-1574*	1	PAN GP-OIL	45
			S/N: 3PD4381-10191	
Y	*252-8692*	1	PAN GP-OIL	47
			S/N: 3PD10192-UP	
Y	*132-3203*	6	PISTON & ROD GP	49
Y	*138-2028*	1	PLUG GP-CYLINDER BLOCK	50
Y	*174-1760*	1	PLUG GP-ENGINE	51
Y	*116-5428*	1	PUMP & MTG GP-FUEL TRANSFER	113
Y	*117-2746*	1	PUMP GP-ENGINE OIL	68
Y	*190-6017*	6	PUMP GP-FUEL INJECTION	114
Y	*116-5438*	1	PUMP GP-FUEL PRIMING	115
Y	*117-2674*	1	PUMP GP-WATER	83
Y	*116-1091*	1	SEAL GP-CRANKSHAFT	55
Y	*174-0620*	1	STARTING MOTOR GP-ELECTRIC	272
Y	*174-1627*	1	SUPPORT GP-ENGINE	56
Y	*174-1604*	1	TURBOCHARGER GP	98
Y	*117-2749*	1	VALVE MECHANISM GP	58
Y	*171-1103*	1	WIRING GP-ENGINE	293
Y	*117-2760*	1	WIRING GP-UNIT INJECTOR	344
			GASKET KITS WILL BE PROVIDED WHEN AVAILABLE	

Y-SEPARATE ILLUSTRATION

BASIC ENGINE

131-6679 AIR COMPRESSOR GP*R

S/N: 3PD1-UP

PART OF 133-7031, 234-2413 AIR COMPRESSOR GP

SMCS-1803 **i01855609**

NOTE	REF NO	GRAPHIC REF	PART NUMBER	QTY	PART NAME 1 2 3 4 5 6 (PRODUCT LEVEL)	SEE PAGE
	1	1	**7C-6178**	2	BEARING-REAR	
	2	1	**7E-8928**	1	GASKET	
	3	1	**3B-4505**	4	LOCKWASHER (.097IN THK)	
	4	1	**4P-3977**	1	GASKET-CYLINDER HEAD	
	5	1	**0S-1617**	12	BOLT (5/16-18X0.75-IN)	
	6	1	**8T-6764**	2	PLUG-PIPE	
	7	1	**4P-3966**	2	PISTON & ROD AS	
	8	1	**8T-6762**	1	PLUG-PIPE	
	9	1	**0L-1352**	6	BOLT (3/8-16X3.25-IN)	
	10	1	**146-0835**	2	STUD	
	11	1	**2H-3934**	1	SEAL-O-RING	
	12	1	**103-6216**	1	KEY	
	13	1	**124-5572**	1	VALVE (PRESSURE RELIEF)	
	14	1	**130-5997**	1	PLATE-INFORMATION (AIR COMPRESSOR)	
					AVAILABLE REPAIR KIT(S):	
			7E-8923	1	KIT-CRANKSHAFT BEARING (AIR COMPRESSOR)	
					(INCLUDES SEALS, BEARINGS, INSERTS, GASKETS, AND WASHER)	
			7E-8925	1	KIT-STANDARD RING (AIR COMPRESSOR)	
					(INCLUDES RINGS)	
			7E-8926	1	KIT-CYLINDER HEAD (AIR COMPRESSOR)	
					(INCLUDES GASKETS, PISTONS, SPRINGS, VALVES, SEATS, AND O-RING)	
			150-5146	1	KIT-UNLOADER (AIR COMPRESSOR)	

131-6679 AIR COMPRESSOR GP *(contd.)* i01855609

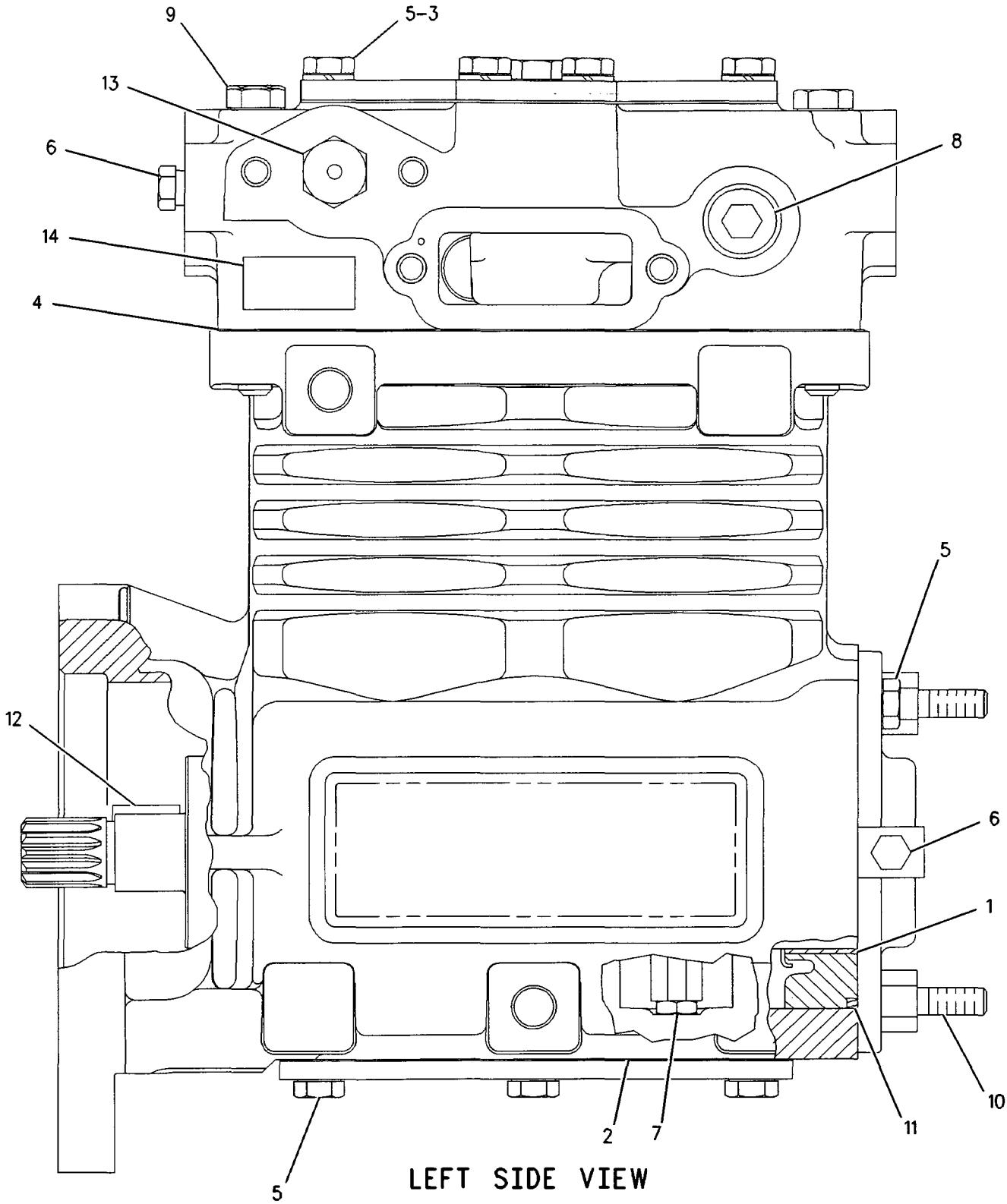

LEFT SIDE VIEW

GRAPHIC #1 **<END>** g00783724

BASIC ENGINE

133-7031 AIR COMPRESSOR GP

S/N: 3PD1-4380

13.2 CFM AT 1250 RPM, 1.14:1 RATIO. TWO CYLINDER, SINGLE STAGE

PART OF 160-5101 ENGINE AR

SMCS-1803 **i01855298**

NOTE	REF NO	GRAPHIC REF	PART NUMBER	QTY	PART NAME 1 2 3 4 5 6 (PRODUCT LEVEL)	SEE PAGE
I	1	1	**1W-0428**	1	HOSE AS	
	2	1	**7W-5499**	1	ELBOW	
M	3	1	**6V-8197**	3	BOLT (M12X1.75X40MM)	
	4	1	**8M-7065**	1	GASKET-AIR INLET	
	5	1	**9M-2904**	1	CLAMP-HOSE	
	6	1	**172-4702**	2	CLAMP	
I	7	1	**9Y-1116**	1	HOSE AS-END	
	8	1	**032-3631**	1	ELBOW	
	9	1	**090-8635**	1	SPACER (5MM THK)	
	10	1	**117-0221**	1	RING-PILOT	
	11	1	**126-0146**	1	HOSE-FUMES DISPOSAL	
	12	1	**128-0331**	1	HOSE	
	13	1	**128-0420**	1	GEAR (42 TEETH)	
	14	1	**129-2181**	1	SEAL-INTEGRAL	
	15	1	**131-2171**	1	CONNECTOR	
YR	16	1	**131-6679**	1	AIR COMPRESSOR GP	10
	17	1	**153-7062**	1	BRACKET	
	18	1	**166-6352**	1	TUBE AS (M10X1.50X25MM)	
	19	1	**005-0658**	1	ELBOW-FLARED	
	19A	1	**6V-5063**	1	SEAL-O-RING	
	20	1	**001-7043**	1	ELBOW (12.7MM ID)	
	21	1	**118-4728**	1	ELBOW	
	22	1	**2B-2695**	2	BOLT (5/16-18X0.875 IN)	
	23	1	**2S-2053**	1	CLIP	
	24	1	**3E-4353**	2	WASHER-HARD (11X25X3MM THK)	
	25	1	**5P-8245**	3	WASHER-HARD (13.5X25.5X3MM THK)	
	26	1	**5S-0003**	2	NUT (5/16-18 THD)	
	27	1	**6D-4244**	1	CLIP	
	28	1	**6M-7476**	1	ELBOW	
	29	1	**6V-3251**	2	SEAL-O-RING	
M	30	1	**6V-4248**	3	BOLT (M10X1.50X25MM)	
	31	1	**6V-5839**	1	WASHER (11X21X2.5MM THK)	
	32	1	**6V-6609**	1	SEAL-O-RING	
M	33	1	**6V-7742**	1	NUT-FULL (M20X2.50 THD)	
	34	1	**8L-6557**	1	CONNECTOR	
	35	1	**8M-2770**	1	CLIP	
	36	1	**8T-3282**	1	WASHER-HARD (22X35X3.5MM THK)	
	37	1	**9M-1974**	2	WASHER-HARD (8.8X16X2MM THK)	
	38	1	**9N-0869**	2	WASHER-HARD (8.8X25.5X2MM THK)	

I-SEE HOSE FABRICATION GUIDE
M-METRIC PART
R-REMFG PART MAY BE AVAILABLE
Y-SEPARATE ILLUSTRATION

133-7031 AIR COMPRESSOR GP (contd.) i01855298

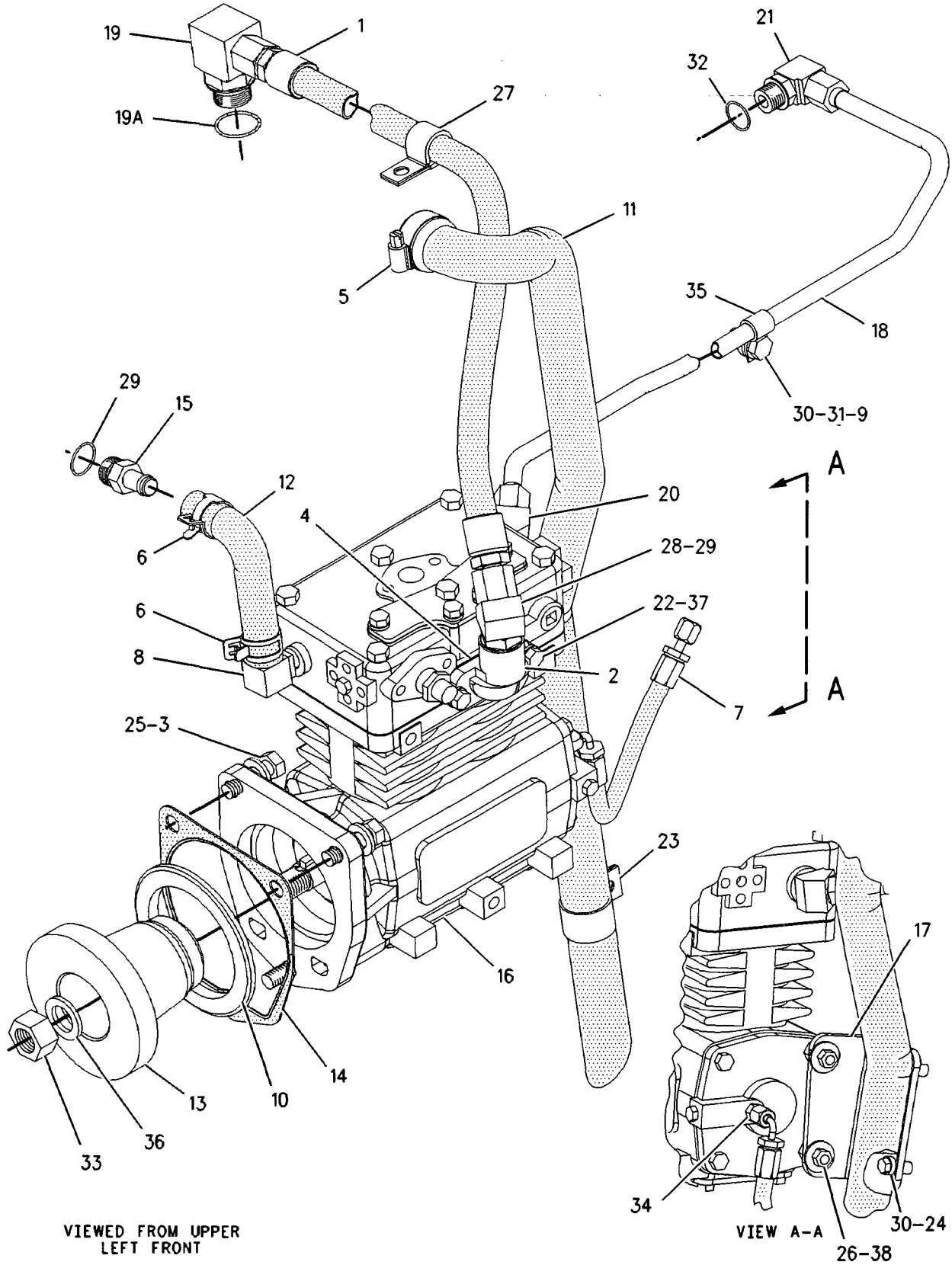

GRAPHIC #1 <END> g00911466

BASIC ENGINE

234-2413 AIR COMPRESSOR GP

S/N: 3PD4381-UP

PART OF 160-5101 ENGINE AR

SMCS-1803 **i01931666**

NOTE	REF NO	GRAPHIC REF	PART NUMBER	QTY	PART NAME 1 2 3 4 5 6 (PRODUCT LEVEL)	SEE PAGE
I	1	1	**1W-0428**	1	HOSE AS	
	2	1	**7W-5499**	1	ELBOW	
M	3	1	**6V-8197**	3	BOLT (M12X1.75X40MM)	
	4	1	**8M-7065**	1	GASKET	
	5	1	**9M-2904**	1	CLAMP-HOSE	
I	6	1	**9Y-1116**	1	HOSE AS-END	
	7	1	**032-3631**	1	ELBOW	
	8	1	**090-8635**	1	SPACER (5MM THK)	
	9	1	**117-0221**	1	RING-PILOT	
	10	1	**126-0146**	1	HOSE-FUMES DISPOSAL	
	11	1	**128-0331**	1	HOSE	
	12	1	**128-0420**	1	GEAR (42 TEETH)	
	13	1	**129-2181**	1	SEAL-INTEGRAL	
	14	1	**131-2171**	1	CONNECTOR	
YR	15	1	**131-6679**	1	AIR COMPRESSOR GP	10
	16	1	**153-7062**	1	BRACKET	
	17	1	**166-6352**	1	TUBE AS	
	18	1	*166-6368*	1	ELBOW AS	
	18A	1	**005-0658**	1	ELBOW-FLARED	
	18B	1	**6V-5063**	1	SEAL-O-RING	
	19	1	**172-4702**	2	CLAMP	
	20	1	**001-7043**	1	ELBOW	
	21	1	**118-4728**	1	ELBOW	
	22	1	**2B-2695**	2	BOLT (5/16-18X0.875 IN)	
	23	1	**2S-2053**	1	CLIP	
	24	1	**3E-4353**	2	WASHER-HARD (11X25X3MM THK)	
	25	1	**5P-8245**	3	WASHER-HARD (13.5X25.5X3MM THK)	
	26	1	**5S-0003**	2	NUT (5/16-18 THD)	
	27	1	**6D-4244**	1	CLIP	
	28	1	**6M-7476**	1	ELBOW	
	29	1	**6V-3251**	2	SEAL-O-RING	
M	30	1	**6V-4248**	3	BOLT (M10X1.50X25MM)	
	31	1	**6V-5839**	1	WASHER (11X21X2.5MM THK)	
	32	1	**6V-6609**	1	SEAL-O-RING	
M	33	1	**6V-7742**	1	NUT-FULL (M20X2.50 THD)	
	34	1	**8L-6557**	1	CONNECTOR	
	35	1	**8M-2770**	1	CLIP	
	36	1	**8T-3282**	1	WASHER-HARD (22X35X3.5MM THK)	
	37	1	**9M-1974**	2	WASHER-HARD (8.8X16X2MM THK)	
	38	1	**9N-0869**	2	WASHER-HARD (8.8X25.5X2.0MM THK)	

I-REFER TO HYDRAULIC INFORMATION SYSTEM
M-METRIC PART
R-REMFG PART MAY BE AVAILABLE
Y-SEPARATE ILLUSTRATION

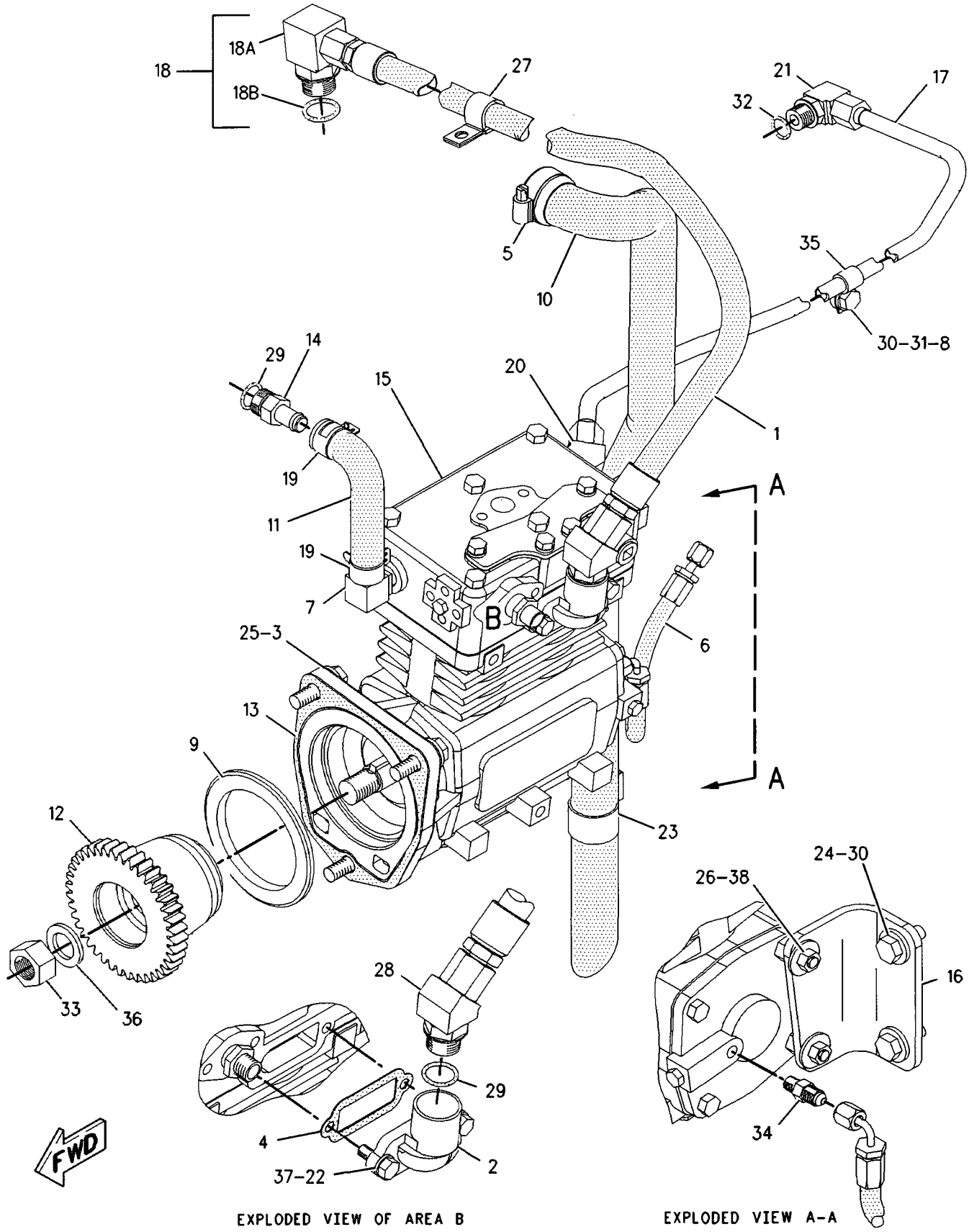

EXPLODED VIEW OF AREA B

EXPLODED VIEW A-A

GRAPHIC #1

<END>

g00998189

BASIC ENGINE

167-0017 BELT TENSIONER GP

S/N: 3PD1-4380

PART OF 160-5101 ENGINE AR

SMCS-1358 **i01855421**

NOTE	REF NO	GRAPHIC REF	PART NUMBER	QTY	PART NAME 1 2 3 4 5 6 (PRODUCT LEVEL)	SEE PAGE
	1	1	**9Y-5631**	2	SPACER (13X26X89.9-MM THK)	
	2	1	**123-0790**	1	PULLEY	
	3	1	**142-2011**	1	PULLEY GP-IDLER	
	3A	1	**121-7137**	1	SEAL-O-RING	
	3B	1	**144-5611**	1	PULLEY AS-IDLER	
	3C	1	**179-6851**	1	SPACER	
	3D	1	**179-6852**	1	COVER	
M	3E	1	**179-6853**	1	BOLT	
	4	1	**173-1498**	1	PULLEY AS-IDLER (8-GROOVE)	
	4A	1	**151-2900**	1	BOLT (M10X1.5X54.25-MM)	
	4B	1	**166-6358**	1	COVER-DUST	
	4C	1	**173-1500**	1	SPACER (10.4X45.1X1.8-MM THK)	
	5	1	**178-4875**	1	PLATE	
	6	1	**178-5252**	1	PULLEY AS-IDLER	
	6A	1	**8T-4121**	1	WASHER-HARD (11X21X2.5-MM THK)	
M	6B	1	**8T-5005**	1	BOLT (M10X1.5X70-MM)	
	6C	1	**121-7137**	1	SEAL-O-RING	
	6D	1	**166-6358**	1	COVER-DUST	
	6E	1	**178-5253**	1	SPACER	
M	7	1	**123-0764**	2	STUD (M12X1.75X86.3-MM OAL)	
	8	1	**190-0649**	1	TIGHTENER	
M	9	1	**5P-8245**	2	WASHER-HARD (13.5X25.5X3-MM THK)	
	10	1	**5R-7137**	2	WASHER-SEALING	
	11	1	**6V-5839**	1	WASHER (11X21X2.5-MM THK)	
M	12	1	**6V-8004**	2	BOLT (M12X1.75X120-MM)	
M	13	1	**6V-8149**	2	NUT (M12X1.75-THD)	
M	14	1	**8T-0643**	1	BOLT (M10X1.5X80-MM)	

M-METRIC PART

167-0017 BELT TENSIONER GP *(contd.)* i01855421

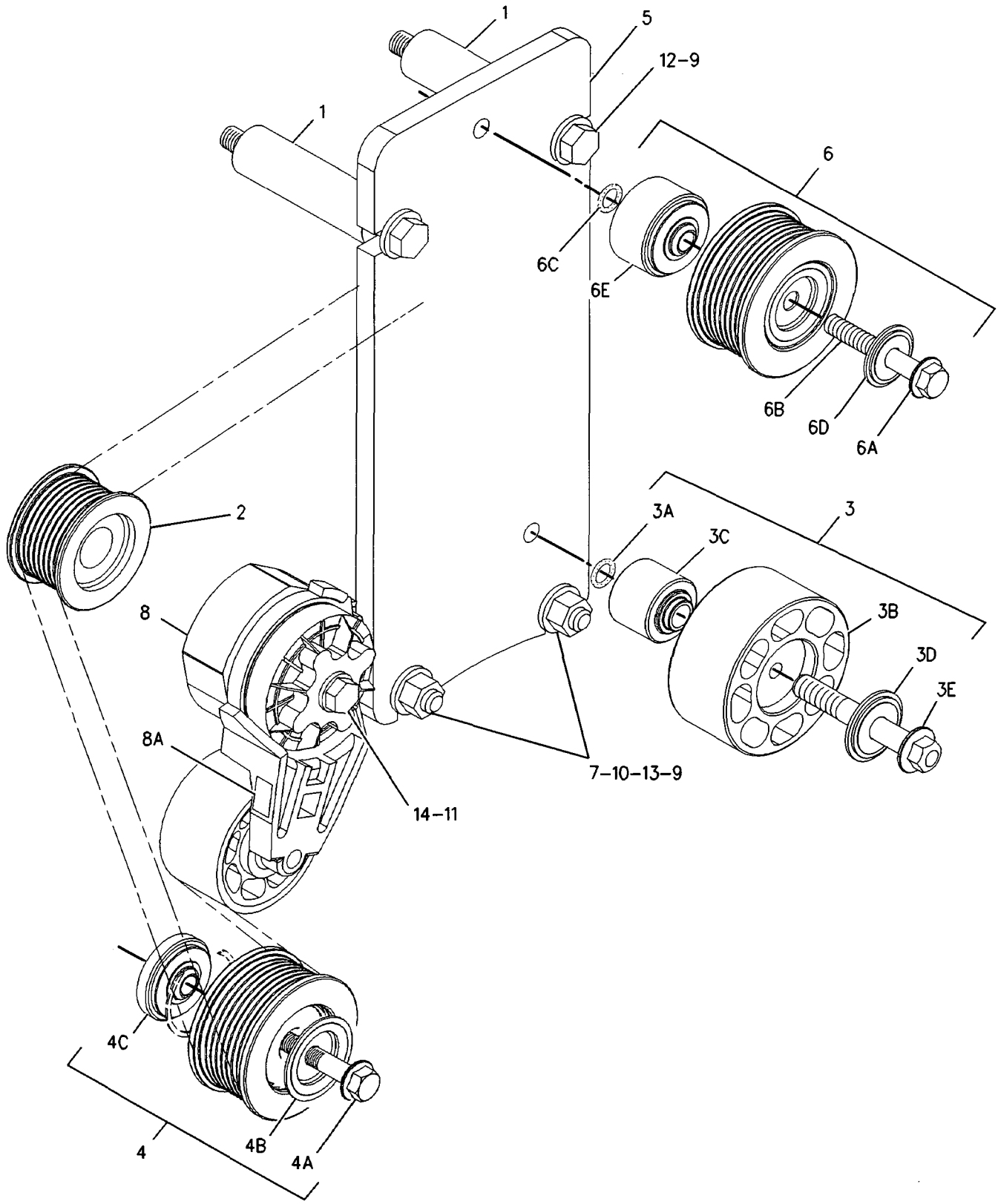

GRAPHIC #1 **<END>** g00673126

BASIC ENGINE

234-2412 BELT TENSIONER GP

S/N: 3PD4381-UP

PART OF 160-5101 ENGINE AR

SMCS-1358 **i01931604**

NOTE	REF NO	GRAPHIC REF	PART NUMBER	QTY	PART NAME 1 2 3 4 5 6 (PRODUCT LEVEL)	SEE PAGE
	1	1	**5R-7137**	2	WASHER-SEALING	
	2	1	**9Y-5631**	2	SPACER (13X26X89.9-MM THK)	
	3	1	**142-2011**	1	PULLEY GP-IDLER	
	3A	1	**121-7137**	1	SEAL-O-RING	
	3B	1	**144-5611**	1	PULLEY AS-IDLER	
	3C	1	**179-6851**	1	SPACER	
	3D	1	**179-6852**	1	COVER	
M	3E	1	**179-6853**	1	BOLT	
	4	1	**169-4657**	1	BRACKET	
	5	1	**173-1498**	1	PULLEY AS-IDLER (8-GROOVE)	
	5A	1	**151-2900**	1	BOLT (M10X1.5X54.25-MM)	
	5B	1	**166-6358**	1	COVER-DUST	
	5C	1	**173-1500**	1	SPACER (10.4X45.1X1.8-MM THK)	
	6	1	**178-4875**	1	PLATE	
	7	1	**190-0649**	1	TIGHTENER	
	8	1	**230-4171**	1	PULLEY AS-IDLER	
M	9	1	**123-0764**	2	STUD (M12X1.75X86.3-MM OAL)	
	10	1	**3E-4353**	3	WASHER-HARD (11X25X3-MM THK)	
M	11	1	**5P-8245**	4	WASHER-HARD (13.5X25.5X3-MM THK)	
M	12	1	**6V-1820**	3	BOLT (M10X1.5X30-MM)	
M	13	1	**6V-3822**	2	BOLT (M10X1.5X35-MM)	
	14	1	**6V-5839**	1	WASHER (11X21X2.5-MM THK)	
M	15	1	**6V-8004**	2	BOLT (M12X1.75X120-MM)	
M	16	1	**6V-8149**	2	NUT (M12X1.75-THD)	
M	17	1	**8T-0643**	3	BOLT (M10X1.5X80-MM)	

M-METRIC PART

234-2412 **BELT TENSIONER GP** *(contd.)* **i01931604**

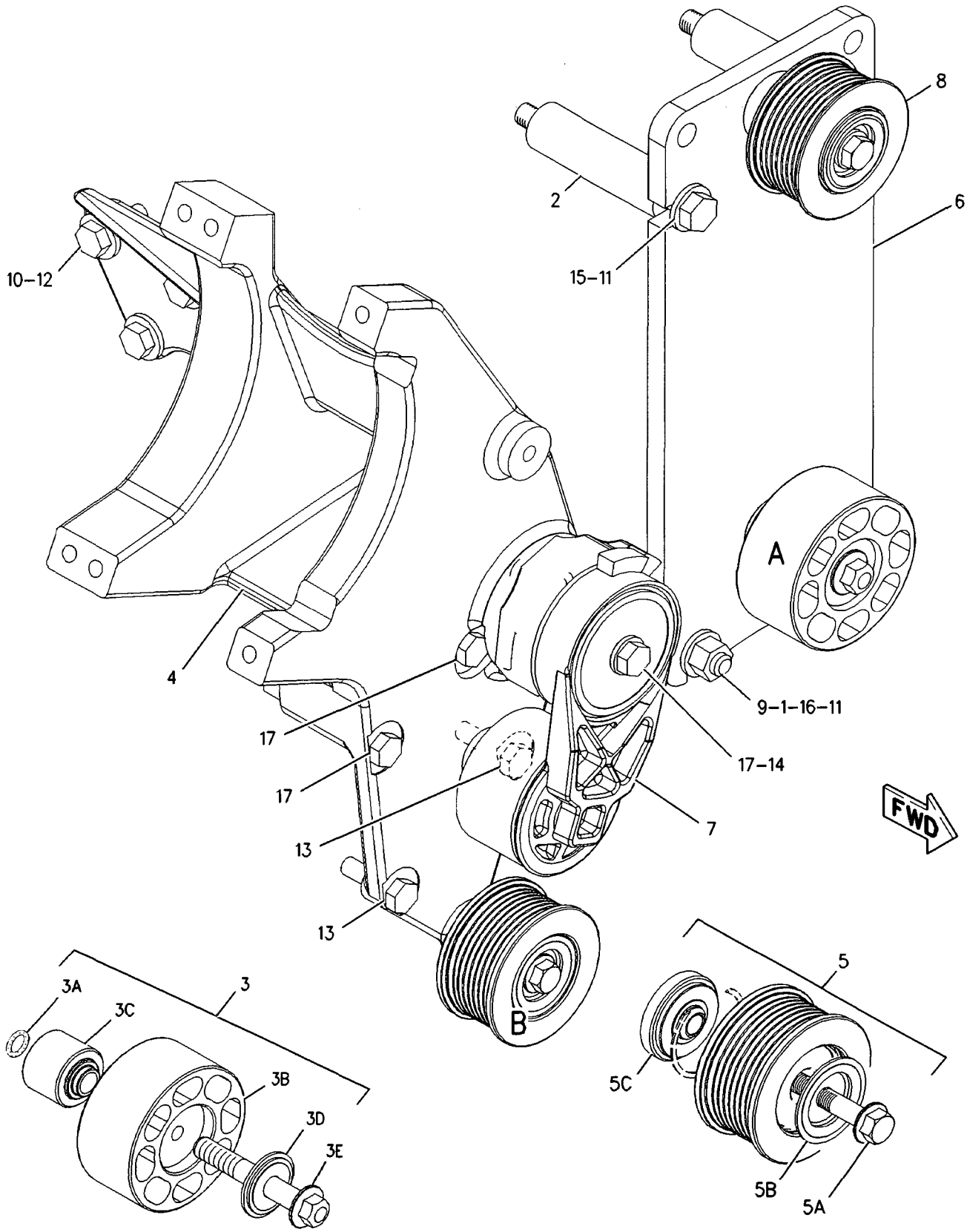

EXPLODED VIEW OF AREA A

EXPLODED VIEW OF AREA B

GRAPHIC #1 **<END>** g00998453

BASIC ENGINE

171-3062 CAMSHAFT GP

S/N: 3PD1-UP

PART OF 160-5101 ENGINE AR

SMCS-1210 **i02205137**

NOTE	REF NO	GRAPHIC REF	PART NUMBER	QTY	PART NAME 1 2 3 4 5 6 (PRODUCT LEVEL)	SEE PAGE
M	1	1	**6V-5217**	5	BOLT (M8X1.25X20-MM)	
	2	1	**9M-1974**	5	WASHER-HARD (8.8X16X2-MM THK)	
	3	1	**178-3643**	1	PIN-THRUST	
	4	1	**133-7068**	1	GASKET-CAMSHAFT COVER	
	5	1	**171-3063**	1	CAMSHAFT AS	
	5A	1	**1B-8705**	1	KEY-WOODRUFF	
	5B	1	**128-0411**	1	JOURNAL	
	5C	1	**133-7100**	1	GEAR-CAMSHAFT DRIVE (96-TEETH)	
	6	1	**4K-9841**	1	WASHER (0.406X0.75X0.064-IN THK)	
	7	1	**118-0459**	1	COVER	

M-METRIC PART

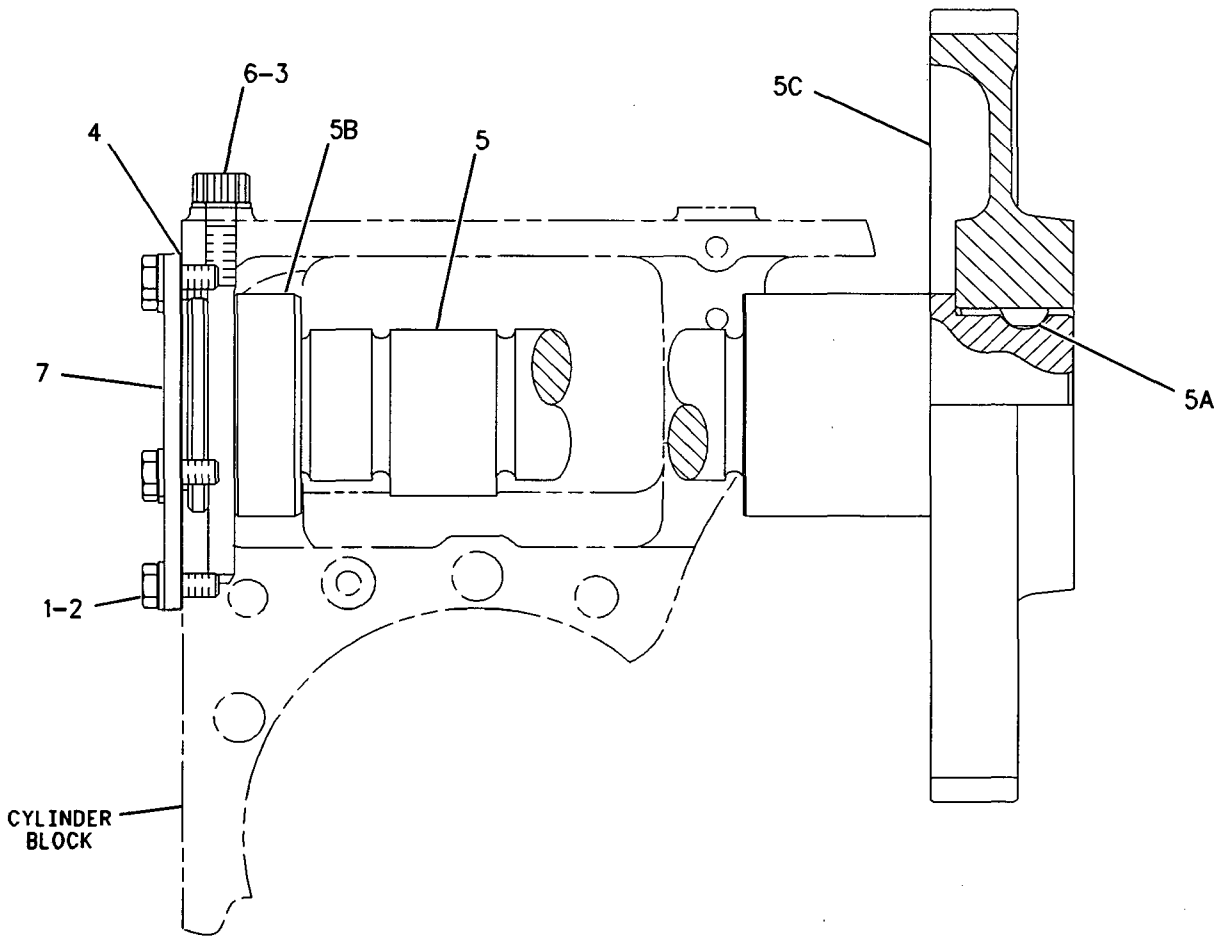

GRAPHIC #1 **<END>** g00674299

BASIC ENGINE

174-1762 COVER GP-CYLINDER BLOCK

S/N: 3PD1-UP

PART OF 160-5101 ENGINE AR

SMCS-1201 **i01855519**

NOTE	REF NO	GRAPHIC REF	PART NUMBER	QTY	PART NAME 1 2 3 4 5 6 (PRODUCT LEVEL)	SEE PAGE
	1	1	**3E-4039**	1	CAP	
	2	1	**7C-1445**	3	COVER	
M	3	1	**9X-2097**	2	STUDBOLT (M8X1.25 THD)	
	4	1	**184-2524**	1	BRACKET AS	
	5	1	**061-9455**	3	SEAL-O-RING	
	6	1	**1H-7339**	1	SEAL-O-RING	
	7	1	**4P-1650**	1	COVER	
	8	1	**4P-6587**	1	COVER	
M	9	1	**5P-7970**	1	NUT (M8X1.25 THD)	
	10	1	**5S-9134**	1	SEAL-O-RING	
	11	1	**6V-1250**	1	SEAL-O-RING	
M	12	1	**6V-1820**	2	BOLT (M10X1.50X30MM)	
M	13	1	**6V-2317**	1	BOLT (M8X1.25X30MM)	
M	14	1	**6V-5217**	5	BOLT (M8X1.25X20MM)	
	15	1	**6V-5839**	2	WASHER (11X21X2.5MM THK)	
	16	1	**7C-9542**	1	COVER-FILTER BASE	
	17	1	**9M-1974**	10	WASHER-HARD (8.8X16X2MM THK)	

M-METRIC PART

174-1762 COVER GP-CYLINDER BLOCK *(contd.)* i01855519

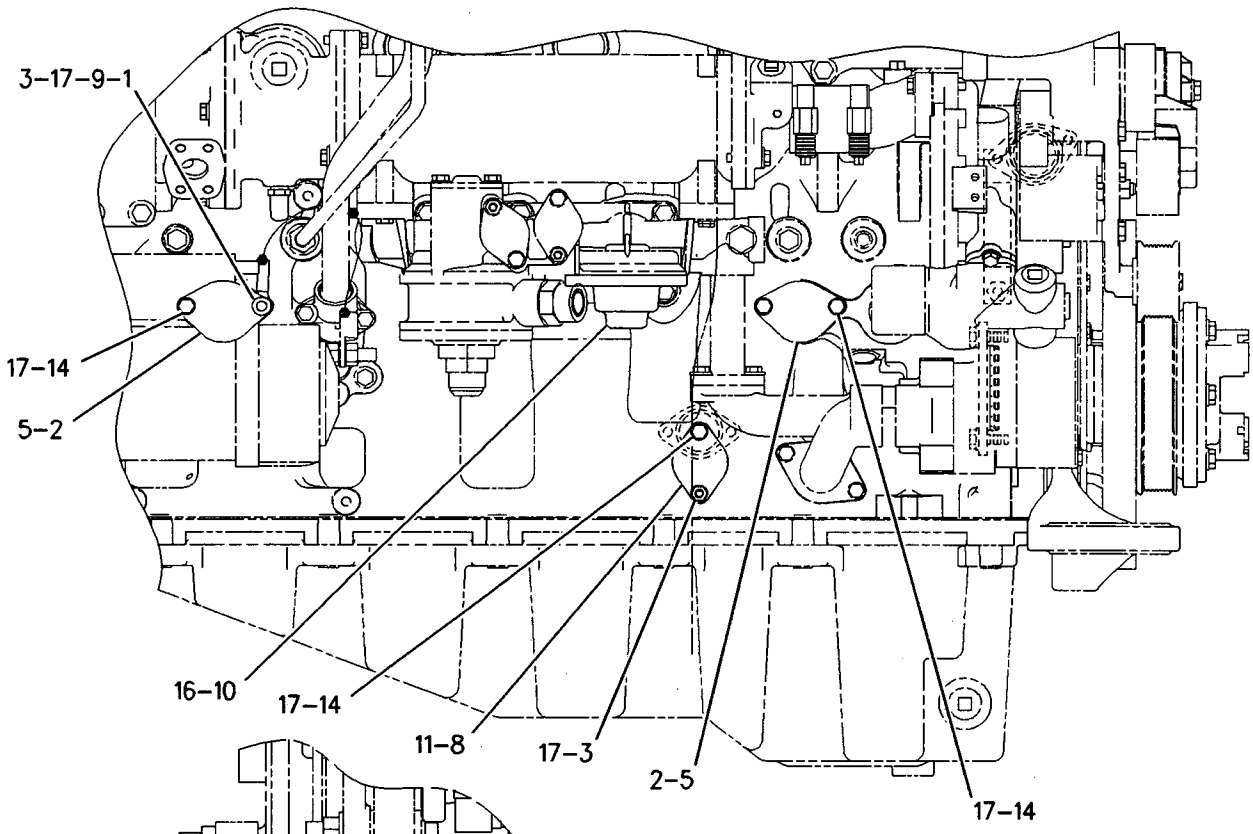

RIGHT SIDE VIEW

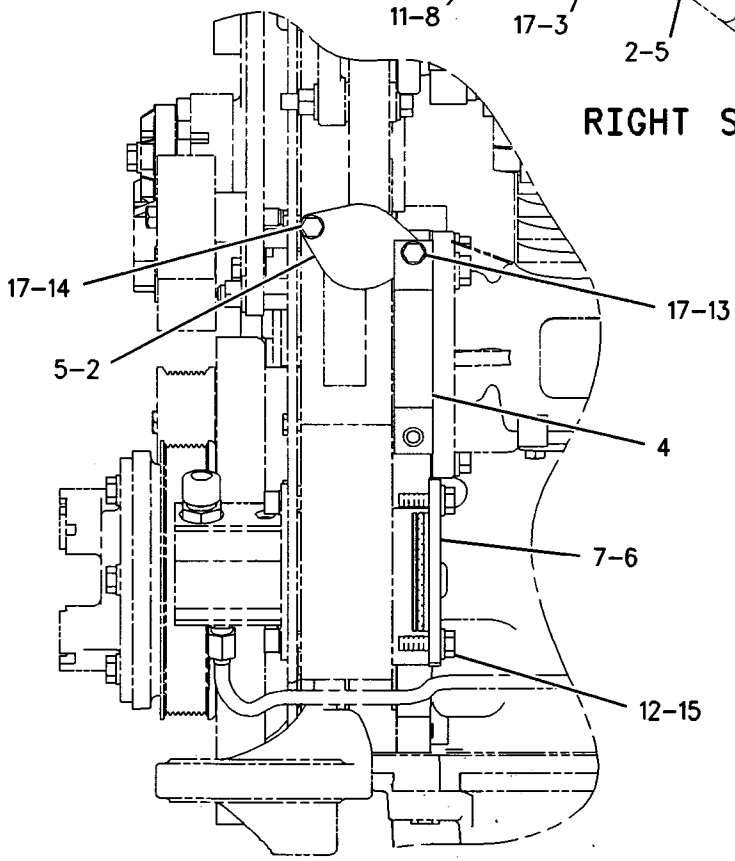

LEFT SIDE VIEW

GRAPHIC #1 **<END>** g00789291

BASIC ENGINE

132-3210 CRANKSHAFT GP

S/N: 3PD1-UP

PART OF 160-5101 ENGINE AR

SMCS-1202, 1203, 1204, 1232 **i02164904**

NOTE	REF NO	GRAPHIC REF	PART NUMBER	QTY	PART NAME 1 2 3 4 5 6 (PRODUCT LEVEL)	SEE PAGE
J	1	1	**211-0588**	3	BEARING-MAIN	
AB		1	**128-0382**	1	BEARING-MAIN (0.51-MM US)	
AB		1	**128-0383**	1	BEARING-MAIN (0.76-MM US)	
AB		1	**128-0384**	1	BEARING-MAIN (0.51-MM OS)	
AB		1	**128-0385**	1	BEARING-MAIN (0.51-MM US TO 0.51-MM OS)	
J	2	1	**246-3144**	2	PLATE-THRUST	
J	3	1	**211-0587**	4	BEARING-MAIN	
AB		1	**128-0400**	1	BEARING-MAIN (0.51-MM US)	
AB		1	**128-0401**	1	BEARING-MAIN (0.76-MM US)	
AB		1	**128-0402**	1	BEARING-MAIN (0.51-MM OS)	
AB		1	**128-0403**	1	BEARING-MAIN (0.51-MM US TO 0.51-MM OS)	
	4	1	**169-4187**	1	CRANKSHAFT AS	
	5	1	**155-6642**	1	GEAR-CRANKSHAFT (48-TEETH)	
F			**9Y-0821**	1	SLEEVE (FRONT SEAL)	
F			**9Y-0810**	1	SLEEVE (REAR SEAL)	
	6	1	**6V-3536**	1	DOWEL	
					AVAILABLE REPAIR KIT(S):	
J			**196-9521**		BEARING GP-MAIN (CRANKSHAFT)	
					(INCLUDES STANDARD MAIN BEARINGS AND THRUST PLATES)	

A-NOT PART OF THIS GROUP
B-USE AS REQUIRED
F-NOT SHOWN
J-KITS MARKED J INCLUDES PARTS MARKED J

132-3210 CRANKSHAFT GP *(contd.)* i02164904

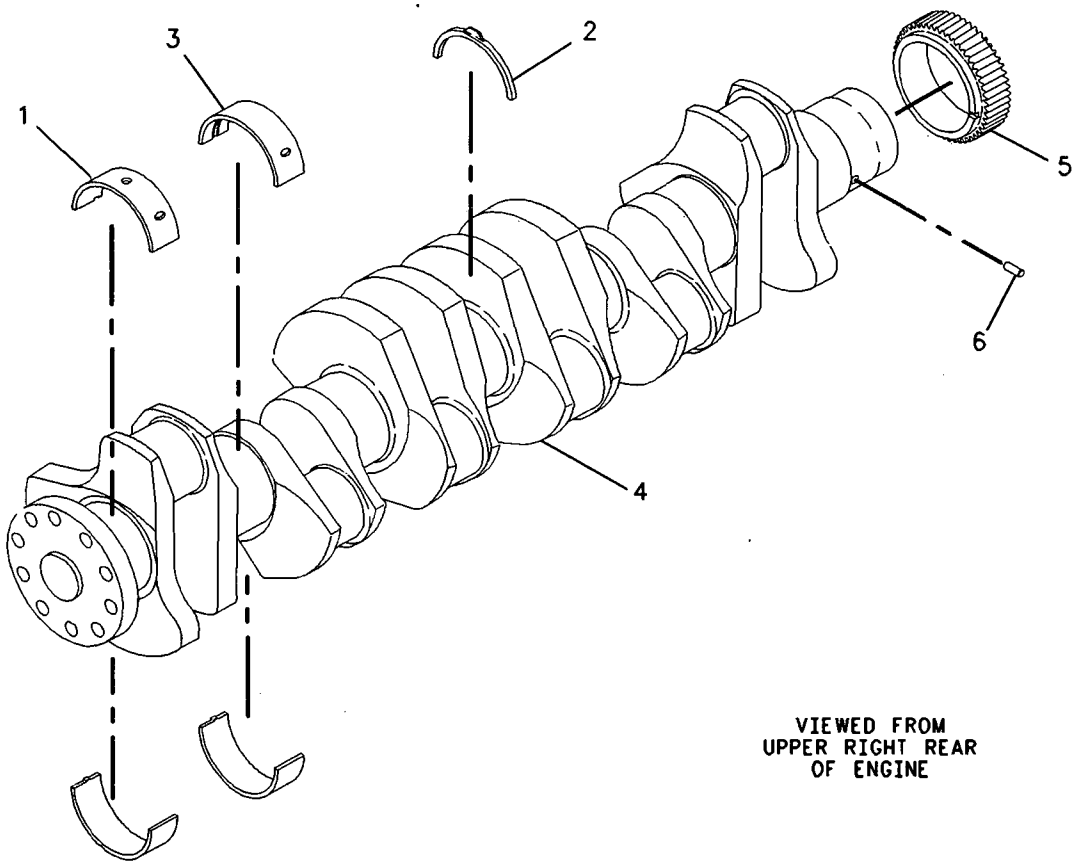

GRAPHIC #1 **<END>** g00635463

BASIC ENGINE

200-2057 CYLINDER BLOCK AS

S/N: 3PD1-UP

PART OF 204-3451 CYLINDER BLOCK AS

SMCS-1201 **i01855645**

NOTE	REF NO	GRAPHIC REF	PART NUMBER	QTY	PART NAME 1 2 3 4 5 6 (PRODUCT LEVEL)	SEE PAGE
	1	1	**216-5583**	5	BEARING-SLEEVE	
	2	1	**216-5585**	1	BEARING-SLEEVE	
	3	1	**216-5584**	1	BEARING-SLEEVE	
	4	1	**200-2056**	1	CYLINDER BLOCK AS	
	4A	1	**117-0166**	7	CAP-BEARING	
	4B	1	**5P-8247**	14	WASHER-HARD (17X32X3.5MM THK)	
M	4C	1	**175-0454**	14	BOLT-HEX HEAD	

M-METRIC PART

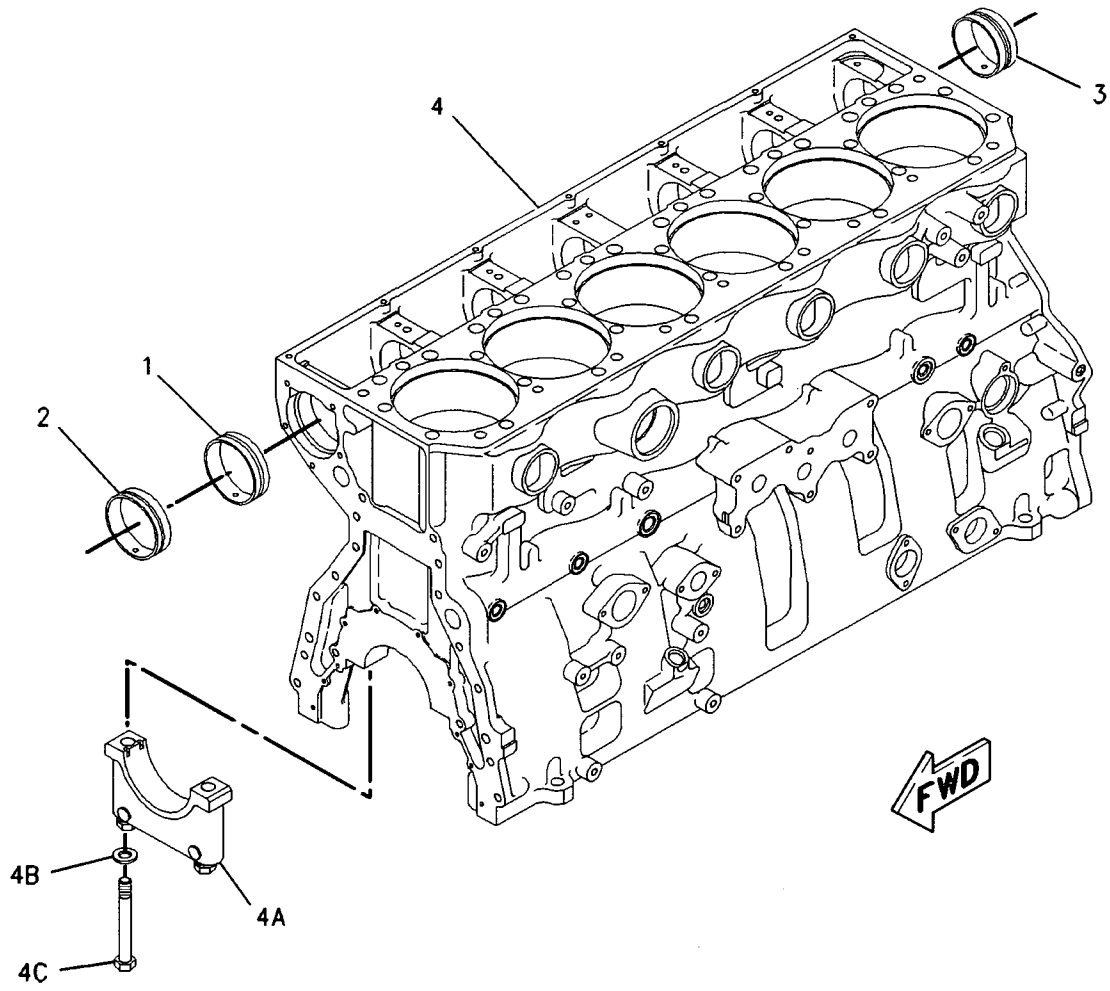

GRAPHIC #1 **<END>** g00821180

BASIC ENGINE

204-3451 CYLINDER BLOCK AS

S/N: 3PD1-UP

PART OF 180-6662 CYLINDER BLOCK GP

SMCS-1201 **i01855630**

NOTE	REF NO	GRAPHIC REF	PART NUMBER	QTY	PART NAME 1 2 3 4 5 6 (PRODUCT LEVEL)	SEE PAGE
Y	1	1	**200-2057**	1	CYLINDER BLOCK AS	25
	2	1	**148-2125**	6	LINER-CYLINDER	
	3	1	**104-3560**	6	SEAL-LINER	
	4	1	**4F-5695**	6	PLUG-CUP	

Y-SEPARATE ILLUSTRATION

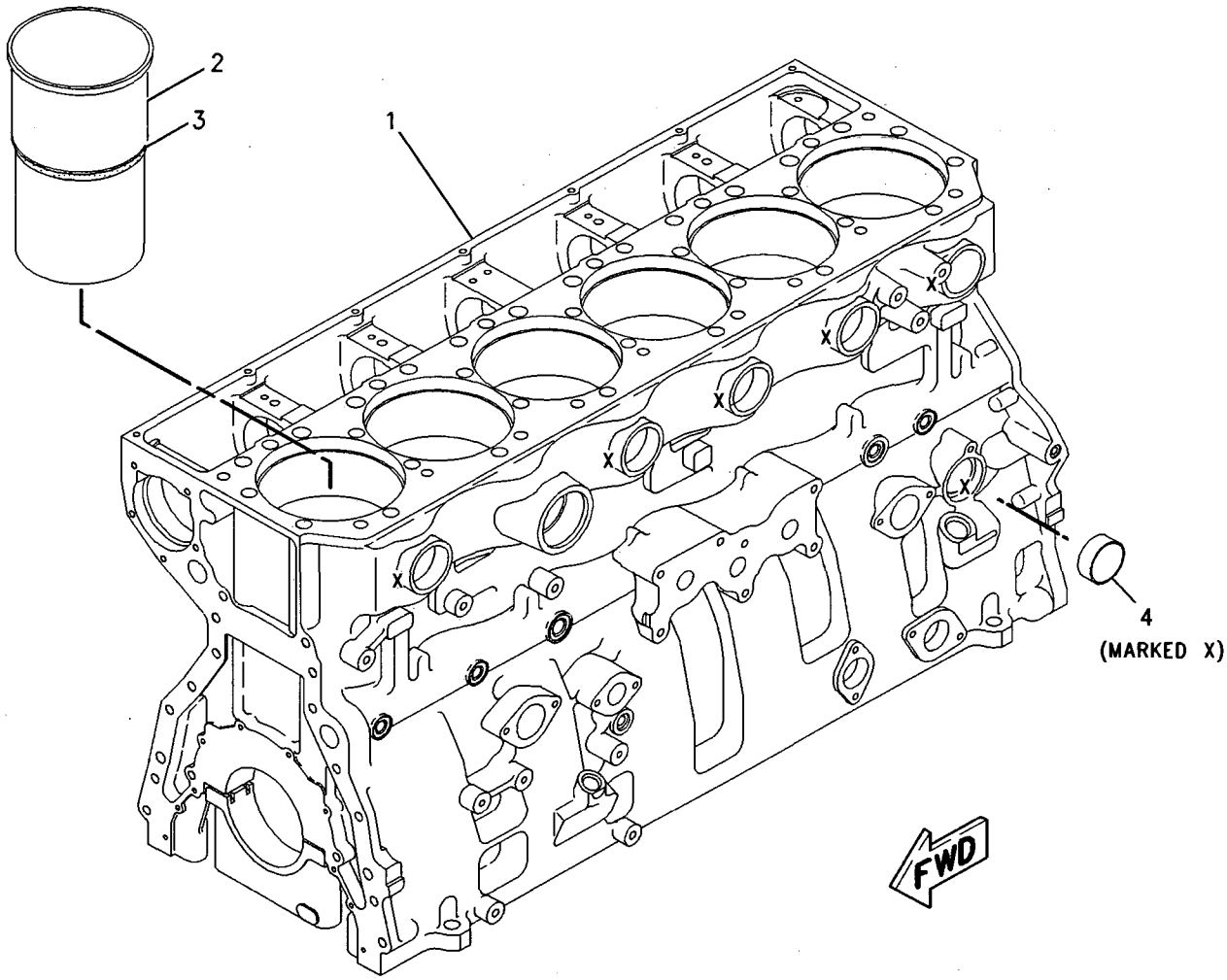

GRAPHIC #1 **<END>** g00820510

BASIC ENGINE

180-6662 CYLINDER BLOCK GP

S/N: 3PD1-UP

PART OF 160-5101 ENGINE AR

SMCS-1201 **i01920795**

NOTE	REF NO	GRAPHIC REF	PART NUMBER	QTY	PART NAME 1 2 3 4 5 6 (PRODUCT LEVEL)	SEE PAGE
Y	1	1	**204-3451**	1	CYLINDER BLOCK AS	26
	2	1	**7N-5683**	4	DOWEL	
	6	1	**6V-3538**	2	DOWEL	
	7	1	**1N-5999**	2	PLUG	
	8	1	**5P-7813**	2	SEAL-O-RING	
	9	1	**9S-8002**	1	PLUG	
	10	1	**6V-5048**	1	SEAL-O-RING	
	11	1	**3B-0623**	3	PLUG-CUP	
	12	1	**4G-4972**	6	SEAL-O-RING	
	13	1	**8C-4403**	2	DOWEL	

Y-SEPARATE ILLUSTRATION

180-6662 CYLINDER BLOCK GP *(contd.)* i01920795

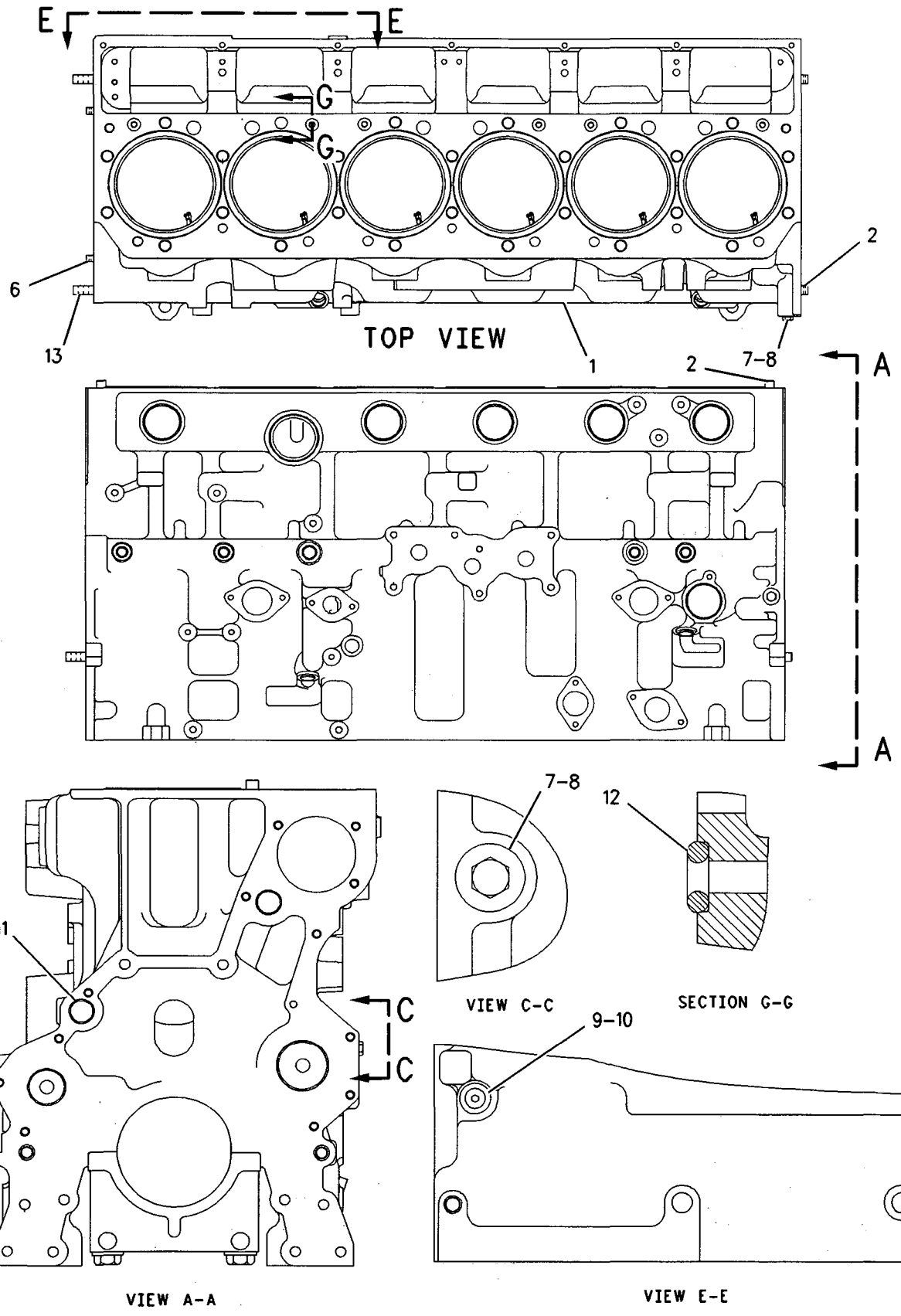

GRAPHIC #1 **<END>** g01005373

BASIC ENGINE

179-9459 CYLINDER HEAD AS

S/N: 3PD1-UP

PART OF 148-2149 CYLINDER HEAD GP

SMCS-1100 **i01911329**

NOTE	REF NO	GRAPHIC REF	PART NUMBER	QTY	PART NAME 1 2 3 4 5 6 (PRODUCT LEVEL)	SEE PAGE
Z	1	1		1	CYLINDER HEAD	
	2	1	**3B-0623**	8	PLUG-CUP	
	3	1	**179-9453**	12	INSERT-VALVE SEAT (EXHAUST)	
	4	1	**138-2006**	12	INSERT-VALVE SEAT (INLET)	
	5	1	**116-1102**	6	SLEEVE-INJECTOR	
	6	1	**6V-7604**	16	PLUG-CUP	

Z-NOT SERVICED SEPARATELY

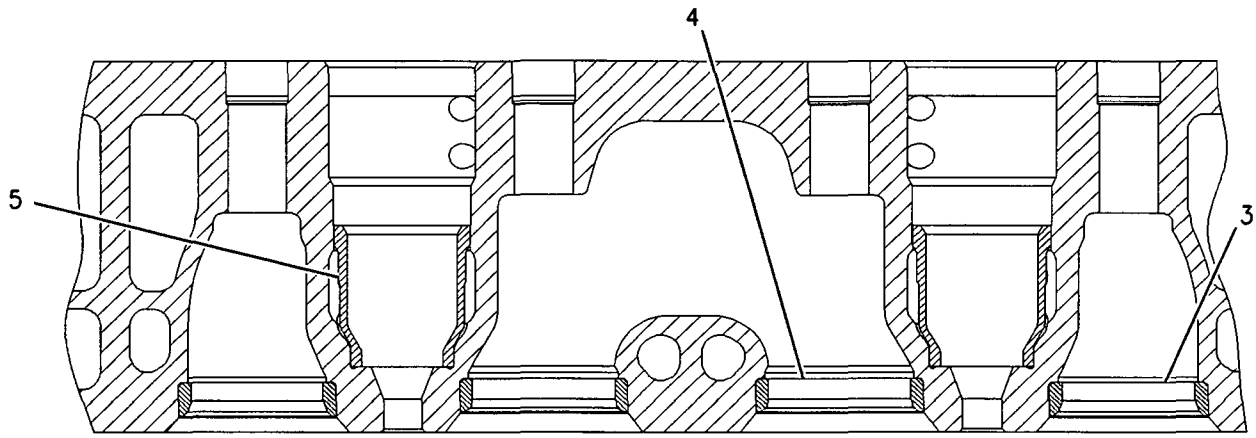

SECTION A-A

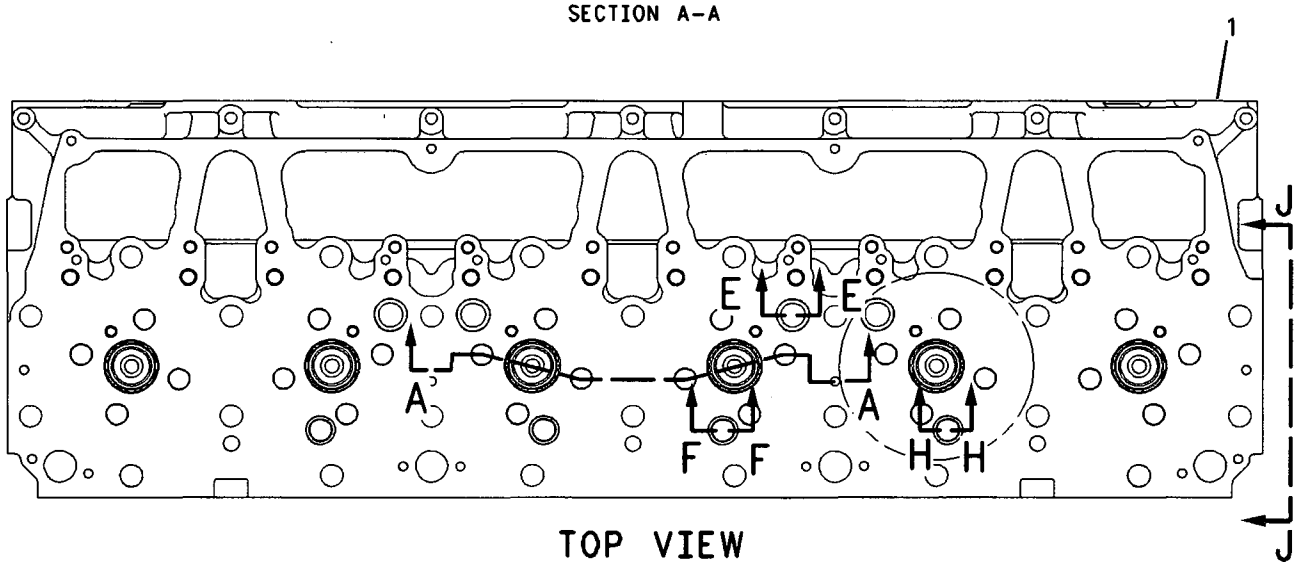

TOP VIEW

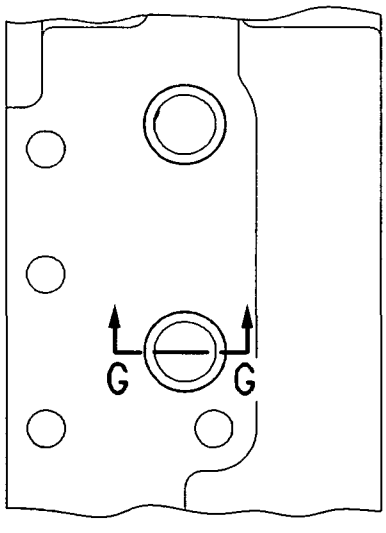

VIEW J-J

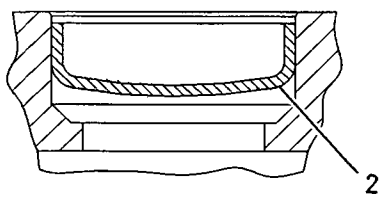

SECTION E-E

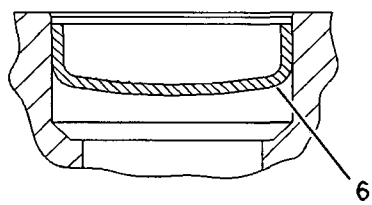

SECTION F-F

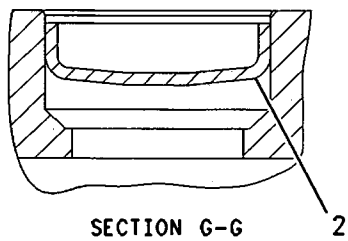

SECTION G-G

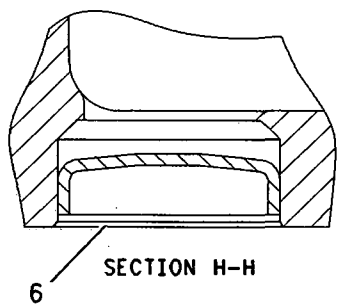

SECTION H-H

GRAPHIC #1 **<END>** g00706910

116-1085 CYLINDER HEAD GP

S/N: 3PD1-UP

PART OF 160-5101 ENGINE AR

SMCS-1100 i01855158

NOTE	REF NO	GRAPHIC REF	PART NUMBER	QTY	PART NAME 1 2 3 4 5 6 (PRODUCT LEVEL)	SEE PAGE
CYR	1	1	**148-2149**	1	CYLINDER HEAD GP	32
M	2	1	**6V-9607**	7	BOLT (M8X1.25X120MM)	
C	3	1	**187-3307**	1	GASKET AS-CYLINDER	

C-CHANGE FROM PREVIOUS TYPE
M-METRIC PART
R-REMFG PART MAY BE AVAILABLE
Y-SEPARATE ILLUSTRATION

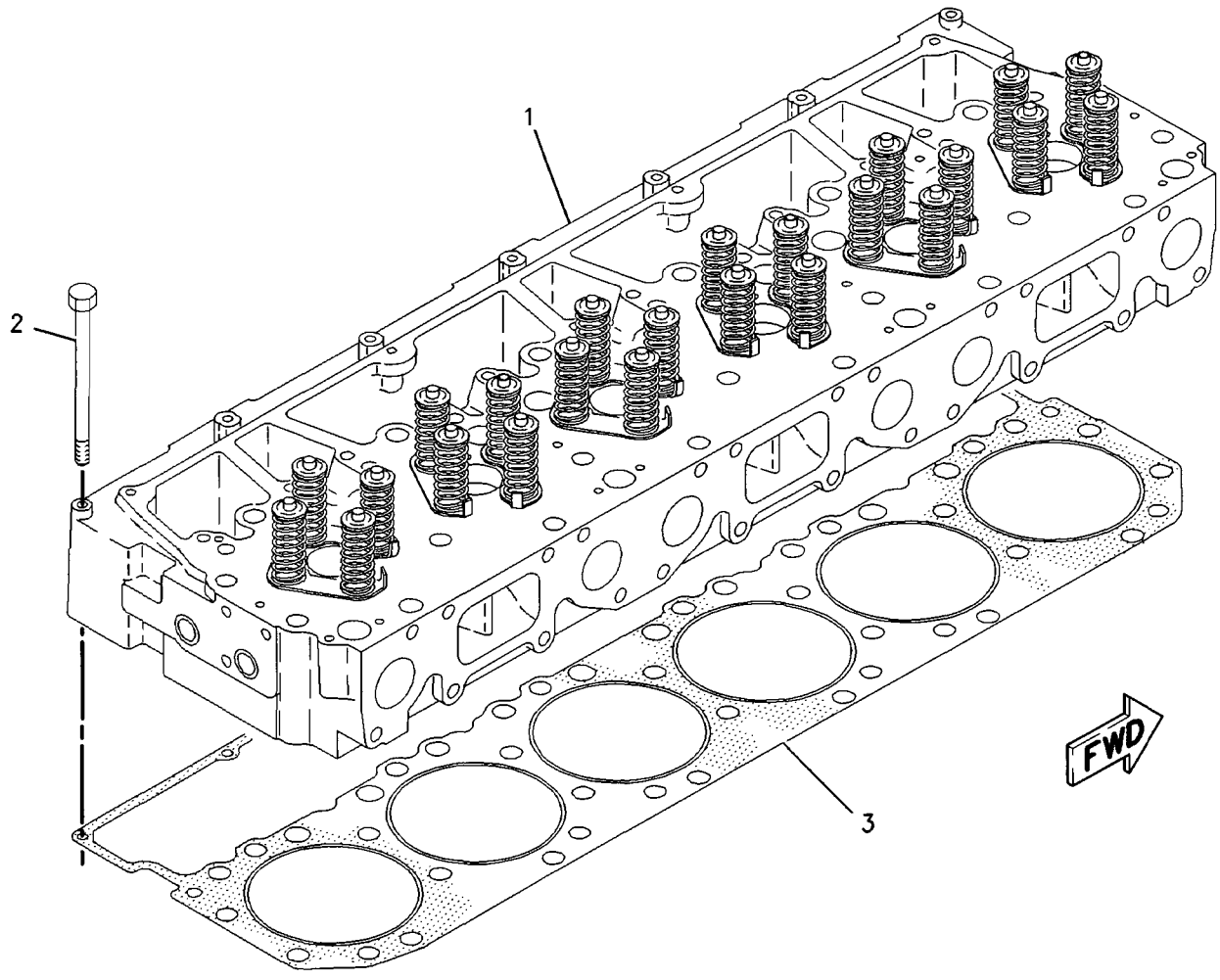

GRAPHIC #1 **<END>** g00783693

BASIC ENGINE

148-2149 CYLINDER HEAD GP*R

S/N: 3PD1-UP

PART OF 116-1085 CYLINDER HEAD GP

SMCS-1100 **i01855638**

NOTE	REF NO	GRAPHIC REF	PART NUMBER	QTY	PART NAME 1 2 3 4 5 6 (PRODUCT LEVEL)	SEE PAGE
Y	1	1	*179-9459*	1	CYLINDER HEAD AS	29
	2	1	**100-8150**	24	GUIDE-VALVE	
	3	1	**6I-1638**	12	BASE-INJECTOR POSITIONING	
	4	1	**2A-4429**	48	LOCK-RETAINER	
	5	1	**133-7029**	12	VALVE-EXHAUST	
	6	1	**7E-9578**	12	VALVE-INLET	
	7	1	**224-4441**	24	SPRING	
	8	1	**214-0586**	24	SPRING (VALVE)	
	9	1	**6I-2663**	24	ROTOCOIL AS	
					(EACH INCLUDES)	
		1	**6I-2662**	1	SHIELD	
		1	**7C-8581**	1	ROTOCOIL AS	

Y-SEPARATE ILLUSTRATION

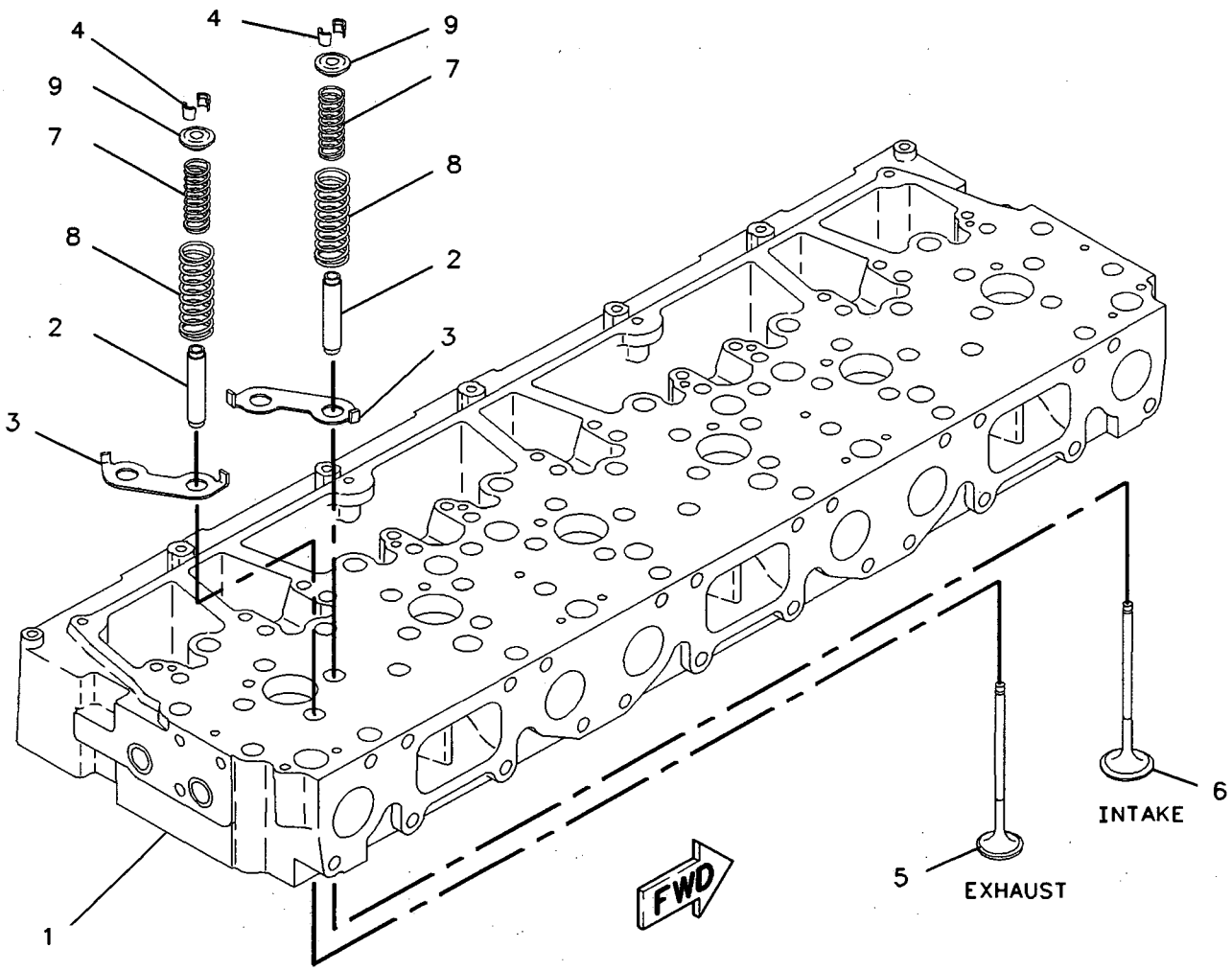

GRAPHIC #1 **<END>** g00783706

174-1591 DRIVE GP-ACCESSORY

S/N: 3PD1-UP

PART OF 160-5101 ENGINE AR

SMCS-1207 i01855493

NOTE	REF NO	GRAPHIC REF	PART NUMBER	QTY	PART NAME 1 2 3 4 5 6 (PRODUCT LEVEL)	SEE PAGE
	1	1	**167-8125**	1	DAMPER AS	
	2	1	**174-1592**	1	YOKE	
	3	1	**174-1593**	1	ADAPTER	
	4	1	**175-7314**	1	PULLEY	
	5	1	**179-0092**	1	ADAPTER	
M	6	1	**136-4183**	8	BOLT-12 POINT HEAD (M10X1.5X30MM)	
	7	1	**5P-8247**	6	WASHER-HARD (17X32X3.5MM THK)	
	8	1	**6V-5839**	6	WASHER (11X21X2.5MM THK)	
M	9	1	**6V-5842**	6	BOLT (M10X1.50X40MM)	
M	10	1	**8T-0358**	6	BOLT (M16X2.0X90MM)	
	11	1	**9X-2027**	8	WASHER (11X18X2MM THK)	

M-METRIC PART

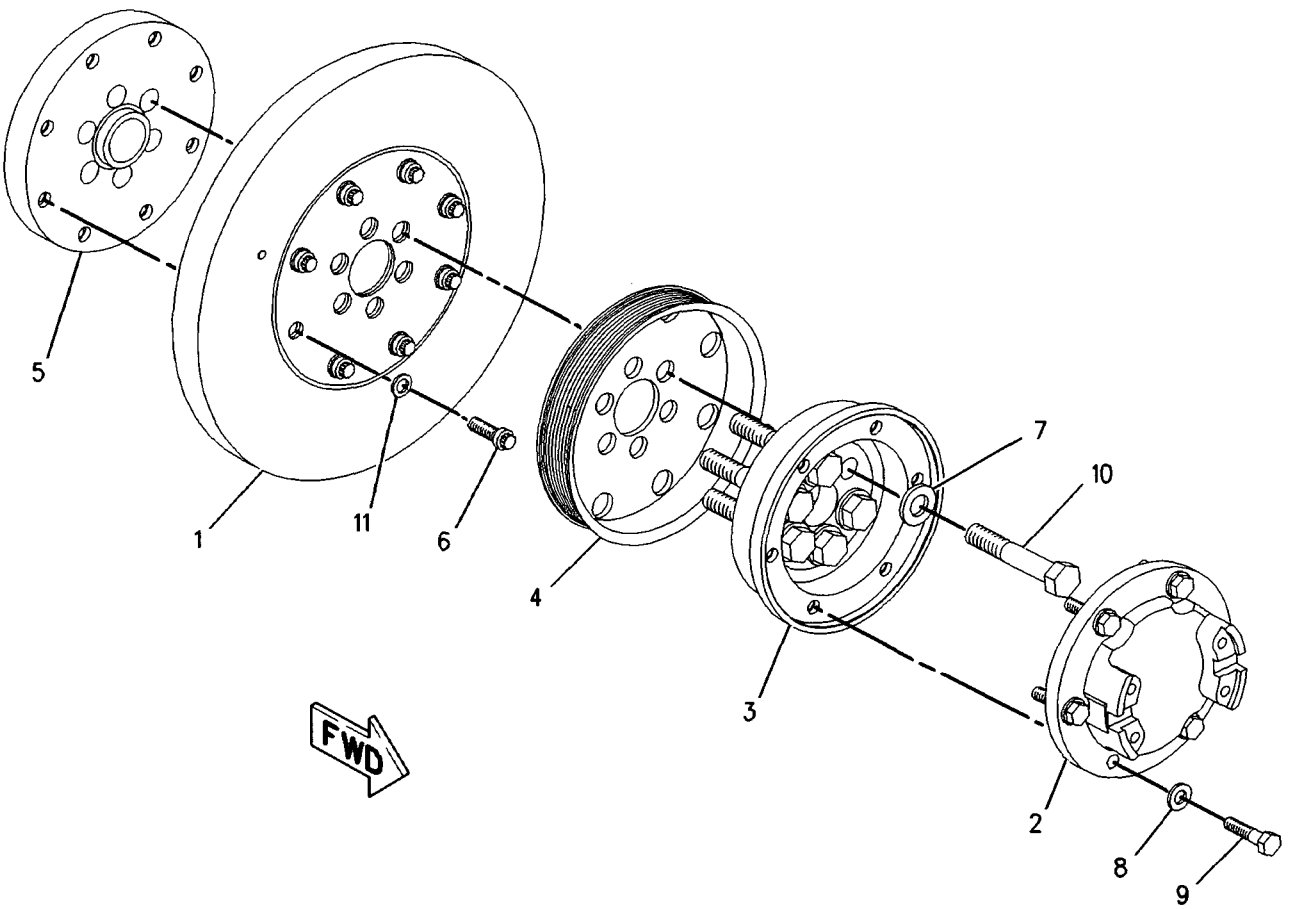

GRAPHIC #1 **<END>** g00786990

116-1083 FASTENER GP-CYLINDER HEAD

S/N: 3PD1-UP

PART OF 116-5408 MOUNTING GP-VALVE MECHANISM

SMCS-1100 i01855701

NOTE	REF NO	GRAPHIC REF	PART NUMBER	QTY	PART NAME 1 2 3 4 5 6 (PRODUCT LEVEL)	SEE PAGE
M	1	1	**129-3184**	26	BOLT-HEX HEAD (M16X2X160MM)	
	2	1	**2S-5658**	26	WASHER-HARD (17X29X3MM THK)	

M-METRIC PART

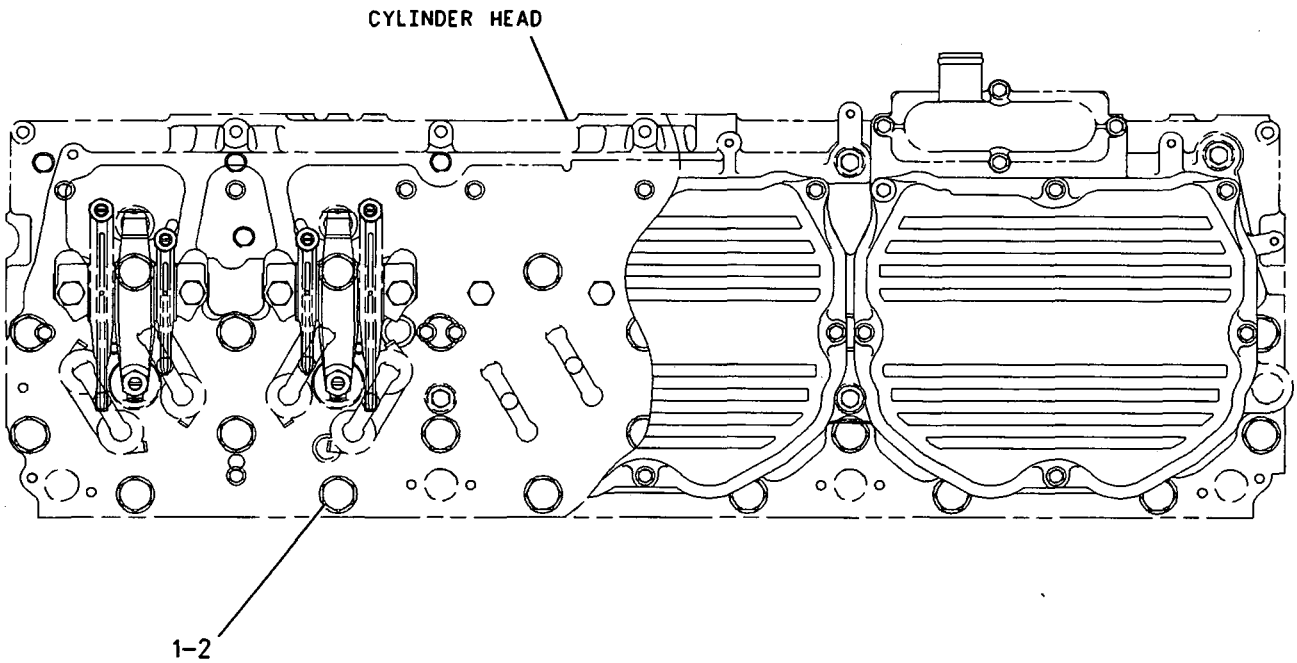

TOP VIEW

GRAPHIC #1 **<END>** g00799119

BASIC ENGINE

174-1581 FLYWHEEL GP

S/N: 3PD1-UP

PART OF 160-5101 ENGINE AR

SMCS-1156, 1158 **i01855484**

NOTE	REF NO	GRAPHIC REF	PART NUMBER	QTY	PART NAME 1 2 3 4 5 6 (PRODUCT LEVEL)	SEE PAGE
M	1	1	**162-2776**	8	BOLT-HEX HEAD (M16X2.0X55MM)	
	2	1	**224-3240**	1	FLYWHEEL AS	
	2A	1	**160-8185**	1	GEAR-FLYWHEEL (138 TEETH)	
	3	1	**5P-8247**	8	WASHER-HARD (17X32X3.5MM THK)	

M-METRIC PART

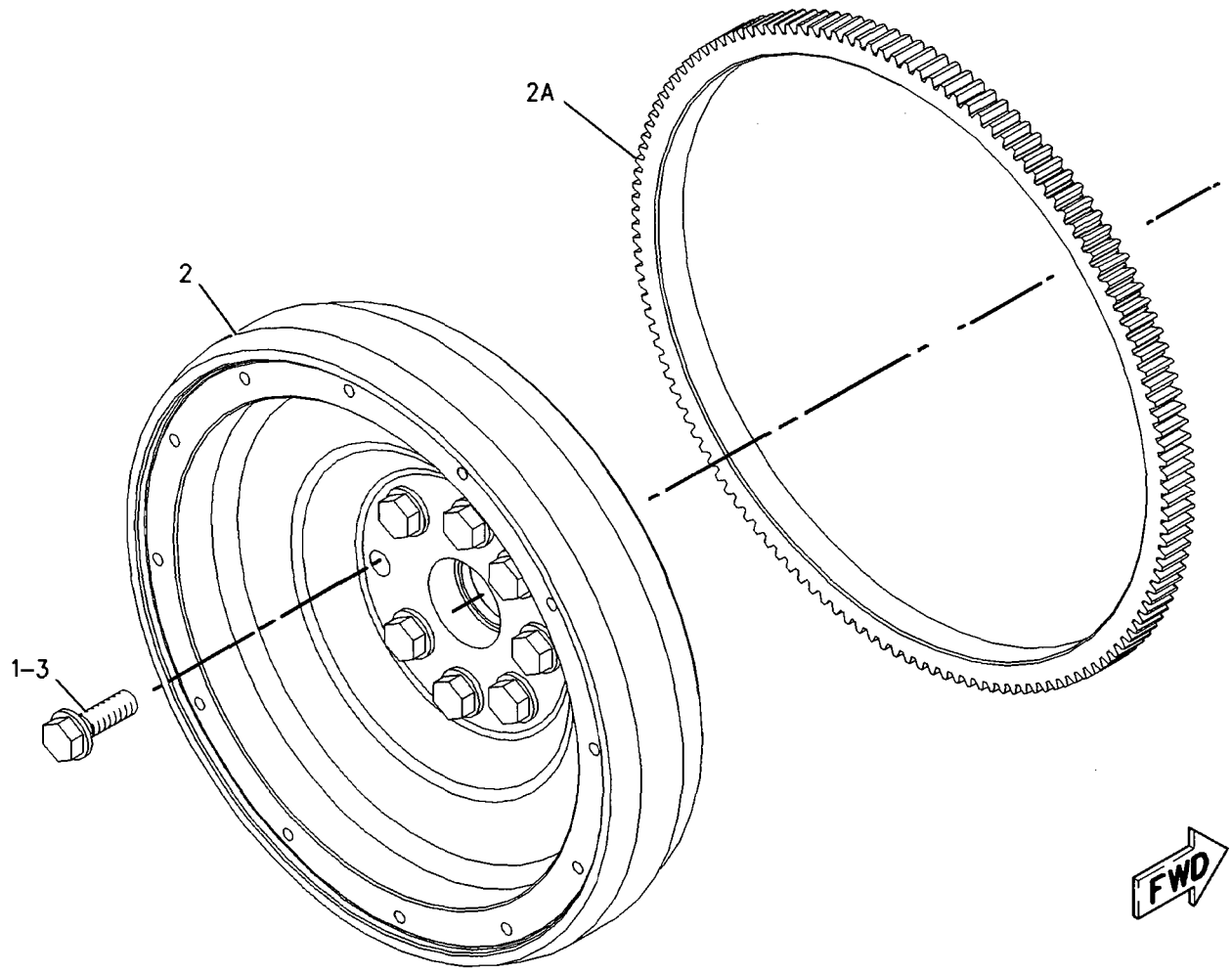

GRAPHIC #1 **<END>** g00915284

BASIC ENGINE

117-2750 GEAR GP-FRONT

S/N: 3PD1-UP

PART OF 160-5101 ENGINE AR

SMCS-1206 **i01855233**

NOTE	REF NO	GRAPHIC REF	PART NUMBER	QTY	PART NAME 1 2 3 4 5 6 (PRODUCT LEVEL)	SEE PAGE
	1	1	**9Y-3520**	1	GEAR AS (61 TEETH)	
	2	1	**7C-7852**	1	BEARING	
M	3	1	**8T-0281**	2	BOLT (M16X2X80MM)	
	4	1	**7C-7851**	1	SHAFT	
	5	1	**133-7086**	1	GEAR AS-IDLER (71 TEETH)	
	6	1	**133-7083**	1	SHAFT	

M-METRIC PART

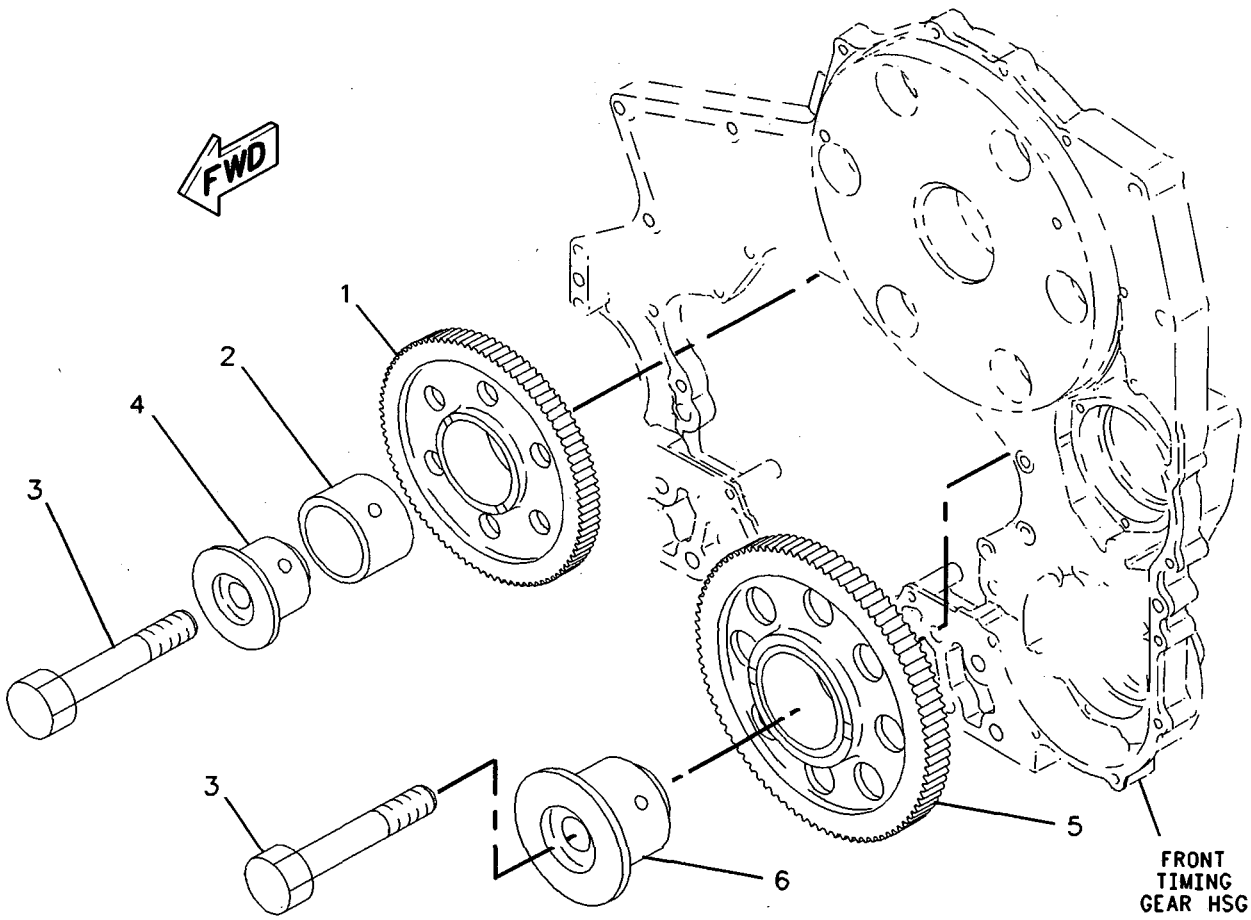

GRAPHIC #1 **<END>** g00783839

BASIC ENGINE

174-1584 HOUSING GP-FLYWHEEL

S/N: 3PD1-UP

PART OF 160-5101 ENGINE AR

SMCS-1157 **i01855490**

NOTE	REF NO	GRAPHIC REF	PART NUMBER	QTY	PART NAME 1 2 3 4 5 6 (PRODUCT LEVEL)	SEE PAGE
	1	1	**174-1586**	1	HOUSING-FLYWHEEL	
	2	1	**199-4051**	1	COVER (1/2-20)	
M	3	1	**099-3649**	2	BOLT (M8X1.25X40-MM)	
	4	1	**1H-5728**	1	SEAL-O-RING	
	5	1	**214-6277**	10	BOLT	
	6	1	**214-6278**	2	BOLT	
	7	1	**3K-0360**	1	SEAL-O-RING	
	8	1	**3K-8460**	1	PLUG	
	9	1	**5D-9344**	1	SEAL-O-RING	
	10	1	**5P-7814**	1	SEAL-O-RING	
	11	1	**5P-8246**	12	WASHER-HARD (15.5X29X3-MM THK)	
	12	1	**8T-4224**	2	WASHER-HARD (8.8X16X2-MM THK)	
	13	1	**8T-6763**	1	PLUG-PIPE	
	14	1	**9S-4185**	1	PLUG	
B	15	1	**1U-8846**		SEALANT-GASKET	

B-USE AS REQUIRED
M-METRIC PART

174-1584 HOUSING GP-FLYWHEEL *(contd.)* i01855490

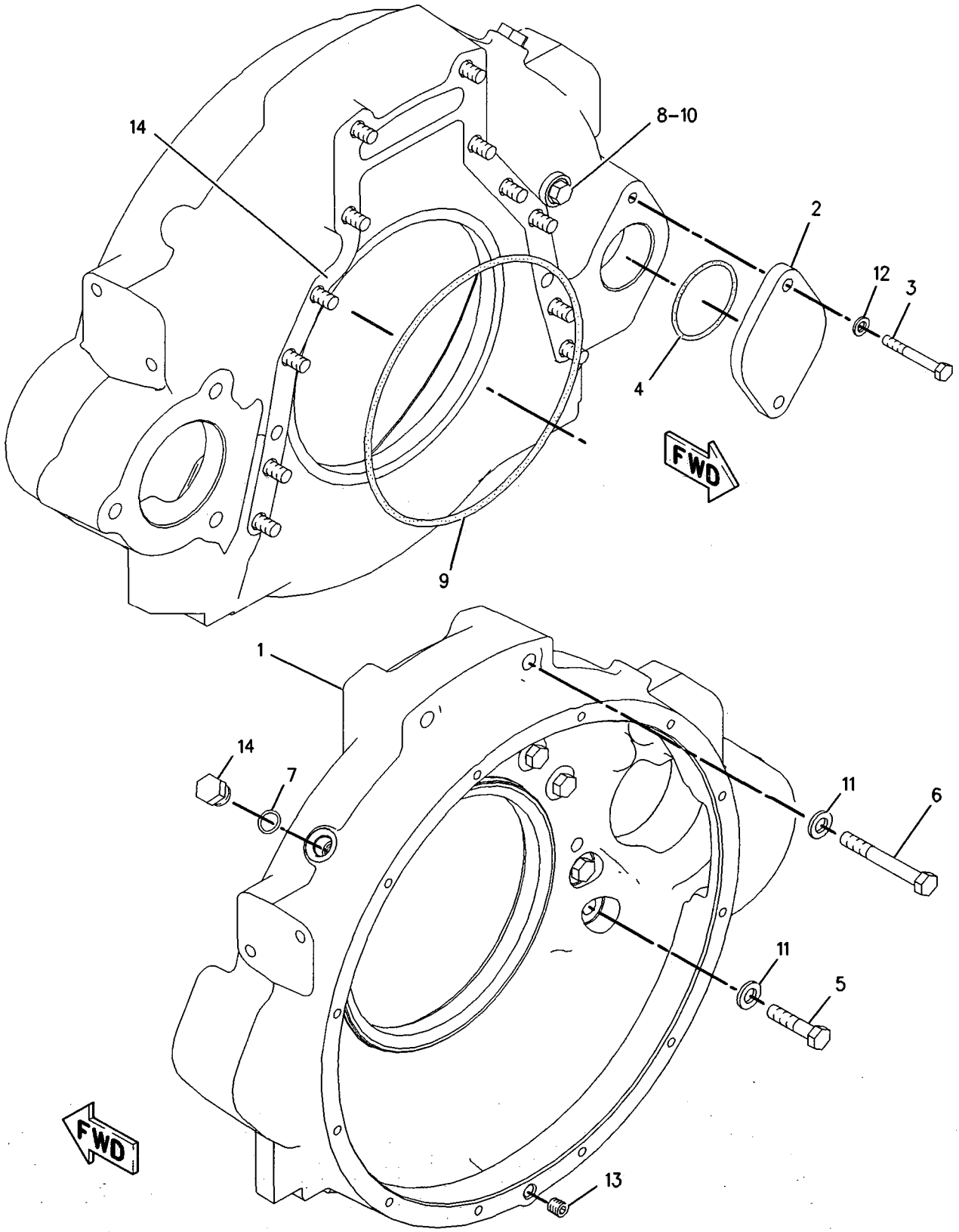

GRAPHIC #1 **<END>** g00842018

BASIC ENGINE

133-7075 HOUSING GP-FRONT

S/N: 3PD1-UP

PART OF 160-5101 ENGINE AR

SMCS-1151, 1162 **i01952142**

NOTE	REF NO	GRAPHIC REF	PART NUMBER	QTY	PART NAME 1 2 3 4 5 6 (PRODUCT LEVEL)	SEE PAGE
	1	1	**169-4170**	1	HOUSING AS-FRONT	
	1A	1	**2H-5549**	1	RING-RETAINING	
	1B	1	**8H-9789**	2	BALL BEARING	
	1C	1	**115-9424**	1	GEAR-PUMP DRIVE (34 TEETH)	
	1D	1	**2A-3348**	2	DOWEL	
	1E	1	**6V-3538**	2	DOWEL	
	1F	1	**3H-7654**	2	WASHER-HARD (13.5X22.5X3MM THK)	
M	1G	1	**8T-0343**	2	BOLT-SOCKET HEAD (M12X1.75X55MM)	
M	2	1	**204-0712**	13	BOLT (M8X1.25X30MM)	
					–OR–	
M		1	**6V-5219**	13	BOLT (M8X1.25X40MM)	
	3	1	**9M-1974**	33	WASHER-HARD (8.8X16X2MM THK)	
	4	1	**169-4172**	1	COVER AS	
	5	1	**174-2475**	1	SEAL-INTEGRAL	
	6	1	**211-2822**	1	GASKET	
	7	1	**169-4166**	1	SEAL GP-CRANKSHAFT	
	8	1	**220-3373**	1	SEAL-RING	
	9	1	**5P-0537**	5	WASHER-HARD (7.2X14.5X2MM THK)	
M	10	1	**6V-8225**	5	NUT (M6X1 THD)	
M	11	1	**6V-3940**	19	BOLT (M8X1.25X25MM)	
M	12	1	**3E-8016**	1	BOLT-LOCKING (M8X1.25X25MM)	

M-METRIC PART

133-7075 **HOUSING GP-FRONT** *(contd.)* **i01952142**

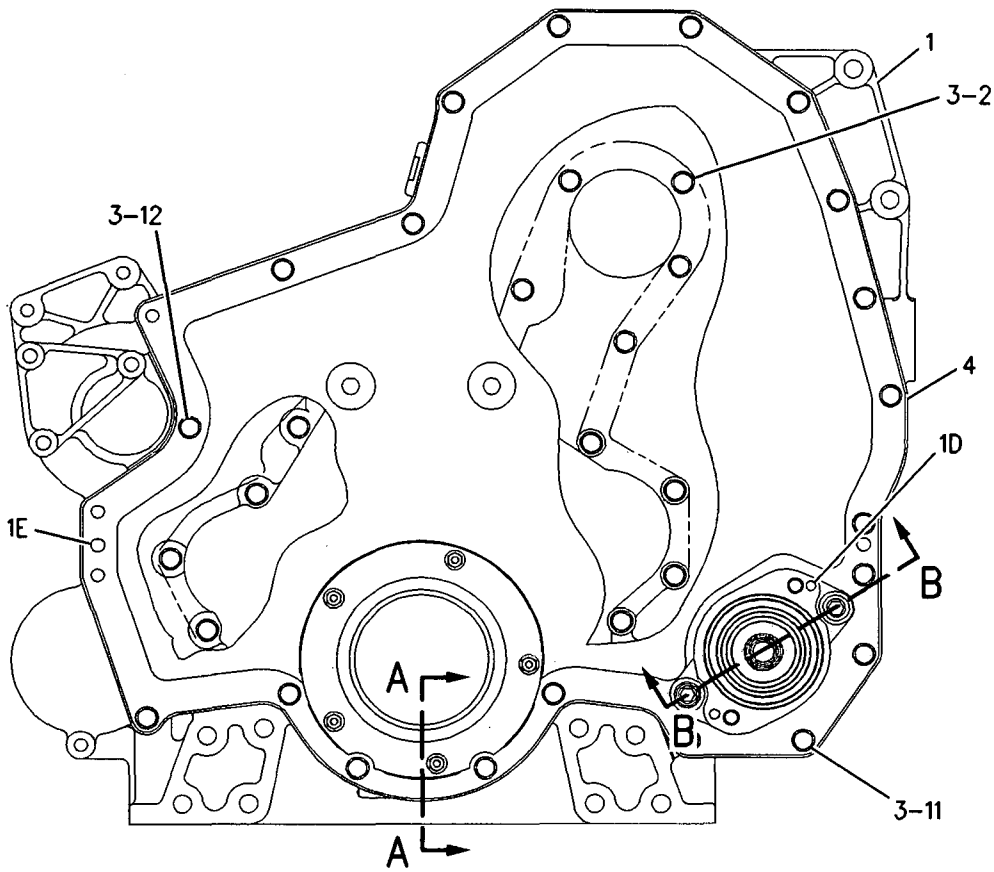

FRONT VIEW

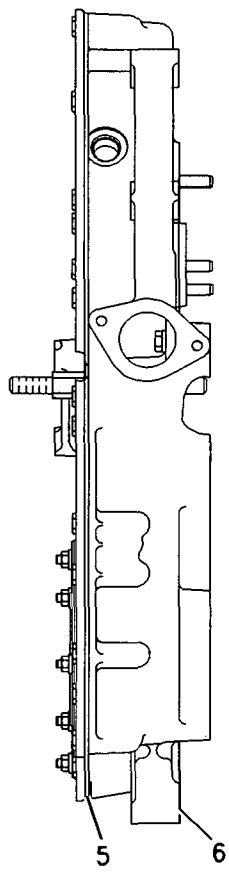

LEFT SIDE VIEW

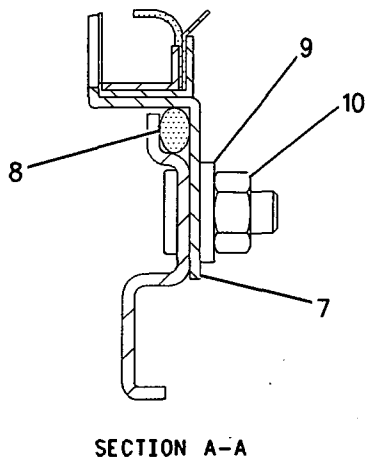

SECTION A-A

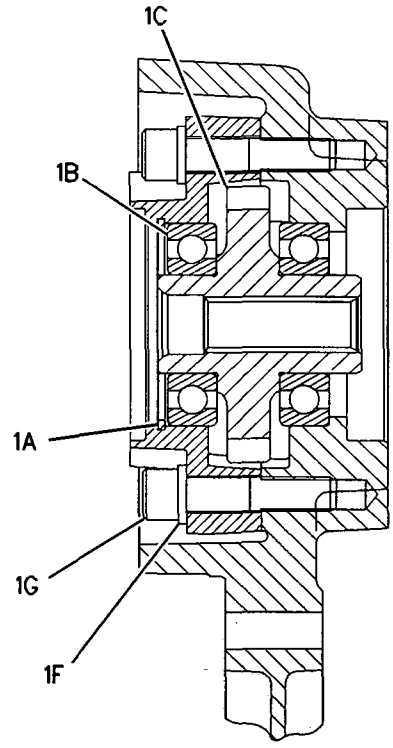

SECTION B-B

GRAPHIC #1 **<END>** g00797087

148-2063 LIFTER GP-VALVE

S/N: 3PD1-UP

PART OF 117-2749 VALVE MECHANISM GP

SMCS-1209 i02172312

NOTE	REF NO	GRAPHIC REF	PART NUMBER	QTY	PART NAME 1 2 3 4 5 6 (PRODUCT LEVEL)	SEE PAGE
	1	1	**251-1005**	6	LIFTER AS-VALVE	
	2	1	**148-2064**	1	BRACKET AS	
	2A	1	**6V-3537**	1	DOWEL	
	3	1	**148-2065**	1	BRACKET AS (OIL SUPPLY)	
	3A	1	**129-2893**	1	DOWEL	
	4	1	**245-9129**	1	SHAFT AS-LIFTER	
	4A	1	**0L-1026**	2	PLUG-CUP	
	5	1	**202-7475**	3	LIFTER AS	

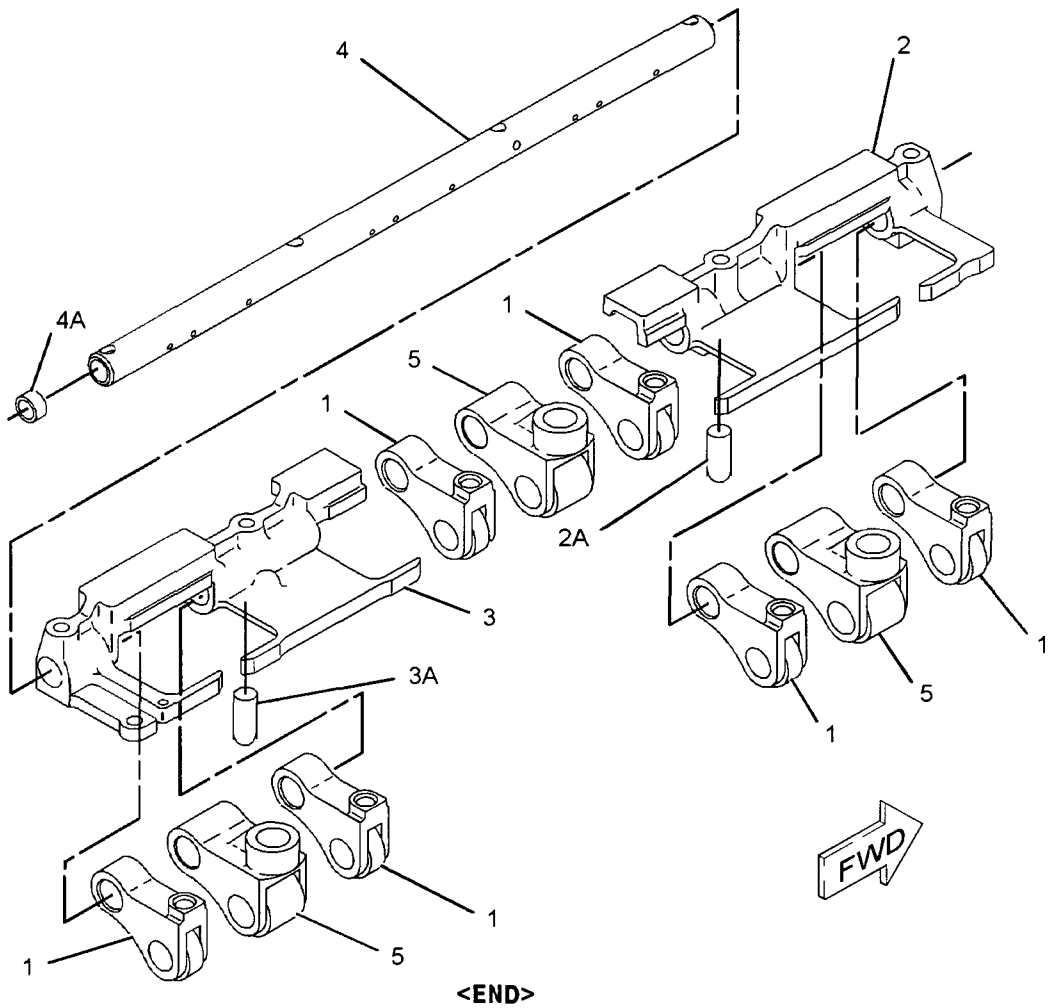

GRAPHIC #1 **<END>** g01103013

BASIC ENGINE

117-2748 LIFTING GP-ENGINE

S/N: 3PD1-UP

PART OF 160-5101 ENGINE AR

SMCS-1122 **i01855217**

NOTE	REF NO	GRAPHIC REF	PART NUMBER	QTY	PART NAME 1 2 3 4 5 6 (PRODUCT LEVEL)	SEE PAGE
	1	1	**113-9005**	2	PLATE-LIFTING EYE	
M	2	1	**6V-8197**	6	BOLT (M12X1.75X40MM)	
	3	1	**5P-8245**	6	WASHER-HARD (13.5X25.5X3MM THK)	
	4	1	**7C-5736**	2	PLATE-EYE SPACER	

M-METRIC PART

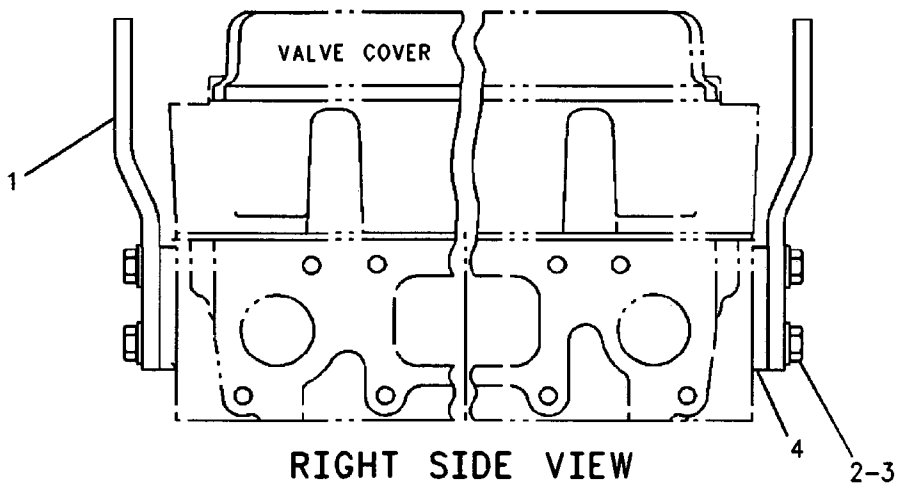

RIGHT SIDE VIEW

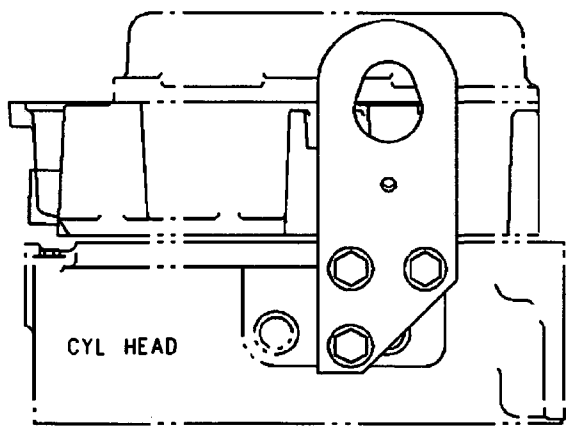

REAR VIEW

GRAPHIC #1 **<END>** g00869909

159-5436 MOUNTING GP-ENGINE & TMSN

S/N: CCA1-UP

PART OF 159-4615 GENERAL AR

SMCS-1152, 1153, 1154, 3082 i02205144

NOTE	REF NO	GRAPHIC REF	PART NUMBER	QTY	PART NAME 1 2 3 4 5 6 (PRODUCT LEVEL)	SEE PAGE
	1	1	174-2952	1	SUPPORT AS (RH)	
	2	1	174-2953	1	SUPPORT AS (LH)	
	3	1	174-9527	2	MOUNT AS	
					(EACH INCLUDES)	
		1	9W-6582	1	SLEEVE	
		1	9W-6584	1	WASHER (20.5X114X10-MM THK)	
	4	1	174-9529	2	MOUNT AS	
					(EACH INCLUDES)	
		1	9W-7385	1	SLEEVE	
		1	9W-7388	2	WASHER (26X144X12-MM THK)	
	5	1	1J-5929	2	BOLT (1-8X6-IN)	
	6	1	5S-7382	12	BOLT (3/8-16X1.375-IN)	
M	7	1	8T-4123	8	WASHER-PLATED (22X35X3.5-MM THK)	
	8	1	8T-4896	12	WASHER-HARD (10.2X18.5X2.5-MM THK)	
	9	1	8T-4994	2	WASHER-HARD (20X36.5X3.5-MM THK)	
	10	1	8T-5361	2	WASHER-HARD (28X49X5-MM THK)	
M	11	1	8T-6430	8	BOLT (M20X2.5X50-MM)	
	12	1	8T-9311	2	BOLT (3/4-10X4.5-IN)	

M-METRIC PART

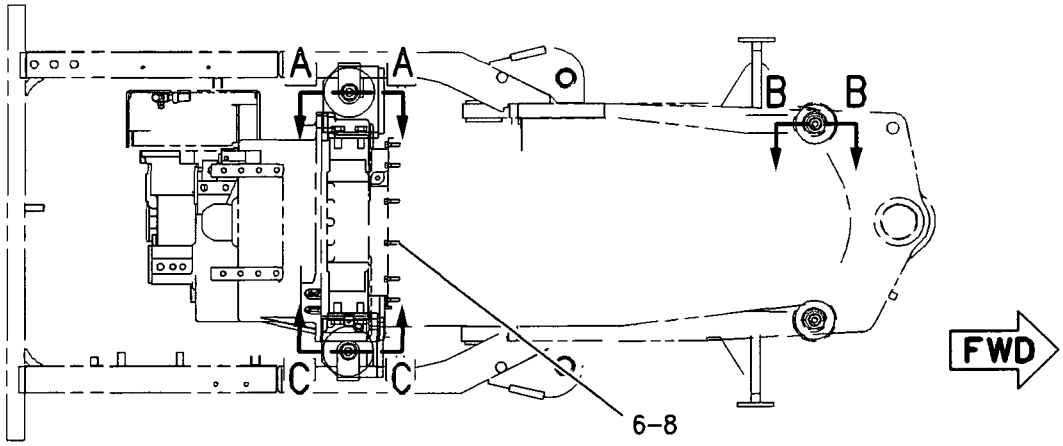

TOP VIEW

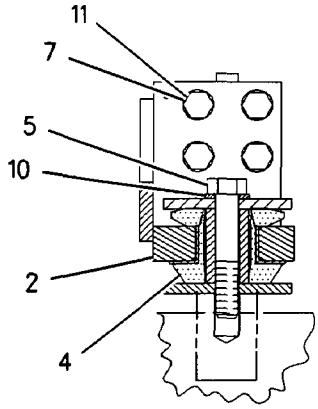

SECTION A-A

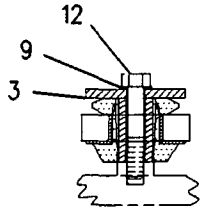

SECTION B-B

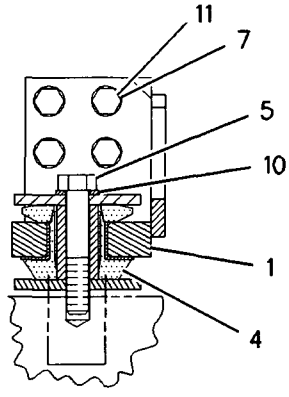

SECTION C-C

GRAPHIC #1 <END> g00796877

116-5408 MOUNTING GP-VALVE MECHANISM

S/N: 3PD1-UP

PART OF 160-5101 ENGINE AR

SMCS-1102, 1107, 1154 **i01855169**

NOTE	REF NO	GRAPHIC REF	PART NUMBER	QTY	PART NAME 1 2 3 4 5 6 (PRODUCT LEVEL)	SEE PAGE
	1	1	**176-4168**	12	BRIDGE AS-VALVE	
Y	2	1	*116-1083*	1	FASTENER GP-CYLINDER HEAD	34
M	3	1	**7X-0909**	12	BOLT (M12X1.75X140-MM)	
M	4	1	**6V-2315**	1	BOLT (M6X1X35-MM)	
M	5	1	**7X-2533**	17	BOLT (M6X1X35-MM)	
		1	**9X-8256**	17	WASHER (6.6X12X2-MM THK)	
	6	1	**5P-4115**	1	WASHER-HARD (7.2X19X2-MM THK)	
	7	1	**9Y-4580**	3	COVER AS-VALVE MECHANISM	
					(EACH INCLUDES)	
D		1	**5P-5678**		SEAL (1M)	

D-ORDER BY THE METER
M-METRIC PART
Y-SEPARATE ILLUSTRATION

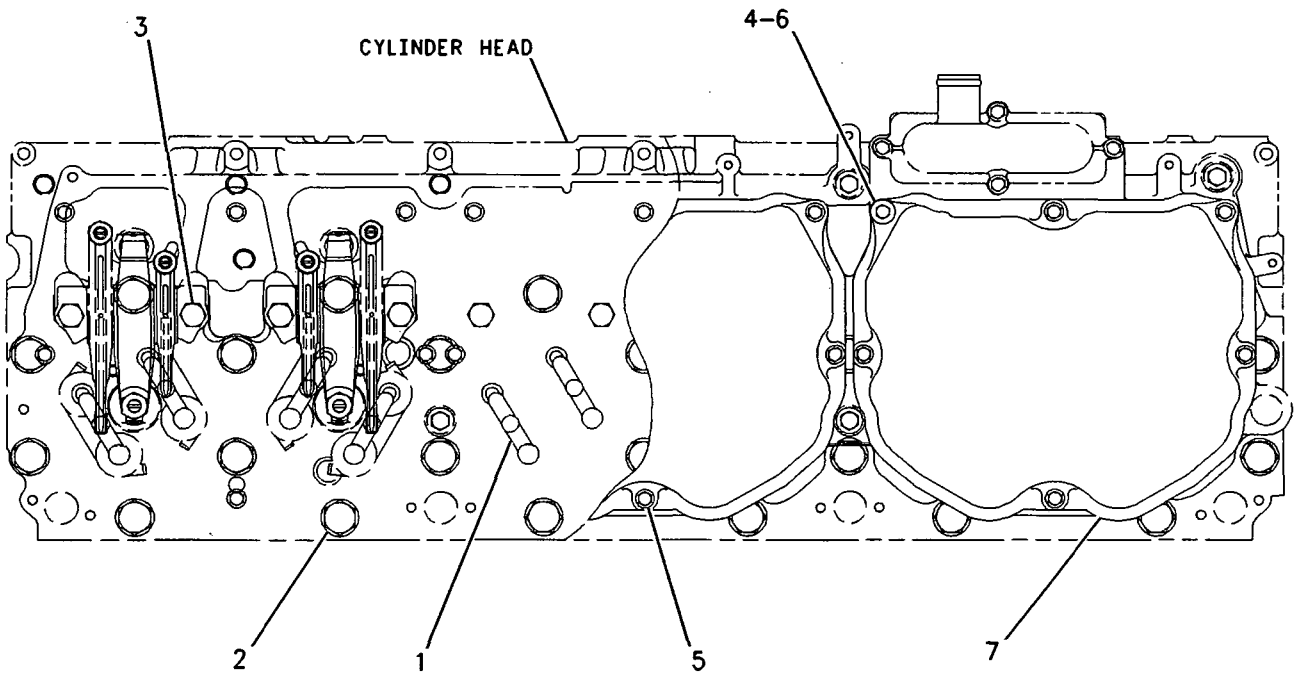

TOP VIEW

GRAPHIC #1 **<END>** g00568748

BASIC ENGINE

174-1574 PAN GP-OIL

S/N: 3PD1-UP

PART OF 160-5101 ENGINE AR

SMCS-1302 **i01855459**

NOTE	REF NO	GRAPHIC REF	PART NUMBER	QTY	PART NAME 1 2 3 4 5 6 (PRODUCT LEVEL)	SEE PAGE
	1	1	**1V-8230**	2	SPACER (0.53X1X0.57 IN THK)	
	2	1	**197-3616**	1	ADAPTER-DRAIN	
	3	1	**7E-3369**	14	SLEEVE-ISOLATOR	
	4	1	**8N-6854**	1	GASKET-ADAPTER	
	5	1	**109-5308**	1	GASKET-OIL PAN	
	7	1	**174-1575**	1	PAN-OIL	
	8	1	**124-2655**	1	BELL AS-SUCTION	
M	9	1	**3E-8016**	2	BOLT-LOCKING (M8X1.25X25MM)	
	10	1	**5P-8211**	1	SEAL-O-RING	
	11	1	**5P-8245**	2	WASHER-HARD (13.5X25.5X3MM THK)	
	12	1	**6N-8863**	14	WASHER (10.2X32X2.5MM THK)	
M	13	1	**6V-5192**	2	BOLT-SOCKET HEAD (M8X1.25X30MM)	
M	14	1	**6V-5230**	14	BOLT (M10X1.5X60MM)	
M	15	1	**6V-8197**	2	BOLT (M12X1.75X40MM)	
	16	1	**7C-8296**	14	ISOLATOR	
	17	1	**8T-6761**	1	PLUG-PIPE	
	18	1	**9M-1974**	4	WASHER-HARD (8.8X16X2MM THK)	
	19	1	**9S-4183**	1	PLUG	
	20	1	**3D-2824**	1	SEAL-O-RING	

M-METRIC PART

174-1574 **PAN GP-OIL** *(contd.)* **i01855459**

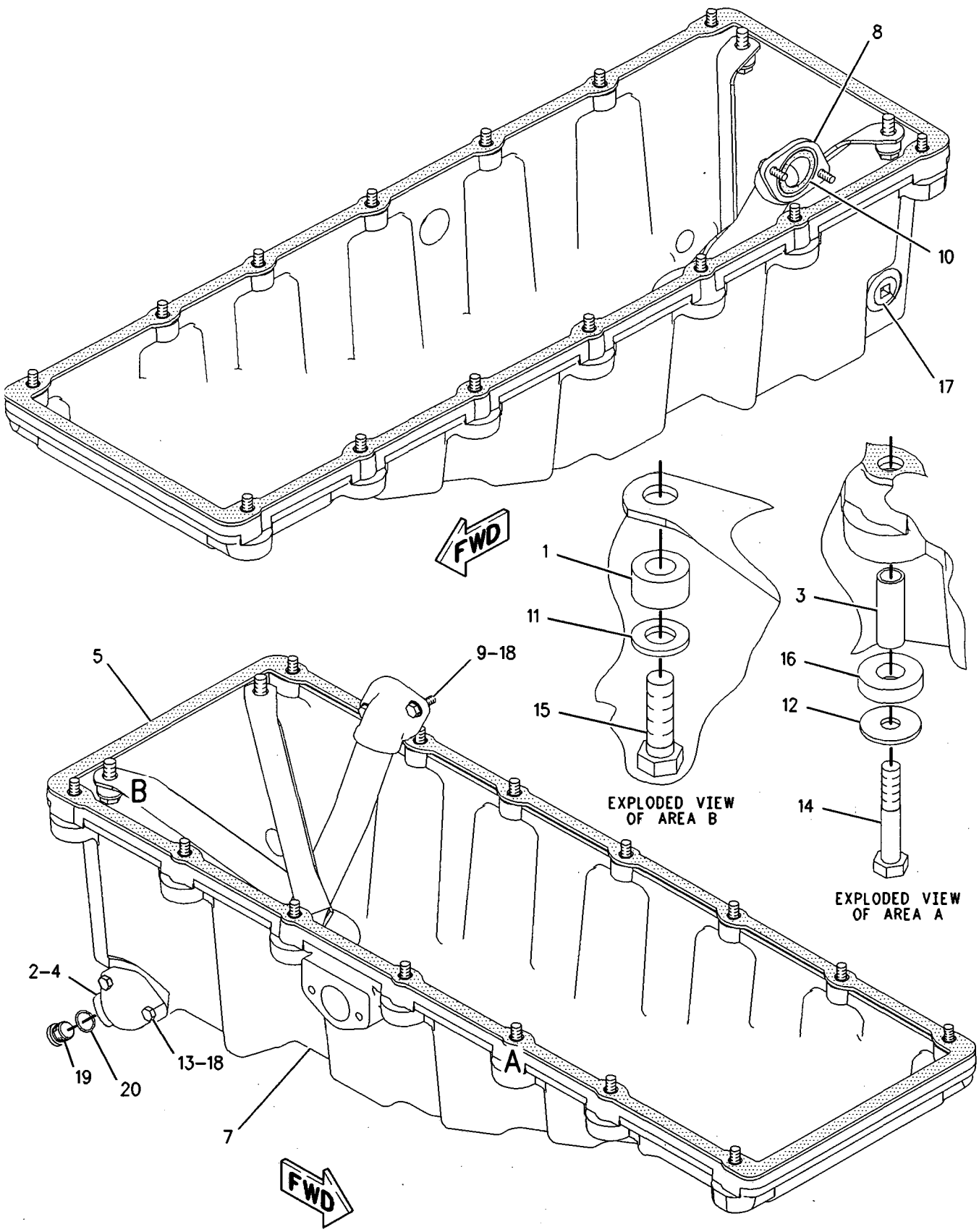

GRAPHIC #1 **<END>** g00840925

252-8692 PAN GP-OIL-ENGINE

S/N: 3PD10192-UP

PART OF 160-5101 ENGINE AR

SMCS-1302 i02203459

NOTE	REF NO	GRAPHIC REF	PART NUMBER	QTY	PART NAME 1 2 3 4 5 6 (PRODUCT LEVEL)	SEE PAGE
	1	1	8N-6854	1	GASKET	
	2	1	197-3616	1	ADAPTER-DRAIN	
	3	1	217-3673	1	SEAL-ISOLATION	
	4	1	248-6919	1	PAN-OIL (ENGINE)	
	5	1	124-2655	1	BELL AS-SUCTION	
	6	1	217-3674	14	FASTENER AS	
	7	1	3D-2824	1	SEAL-O-RING	
M	8	1	3E-8016	2	BOLT-SELF-LOCKING (M8X1.25X25-MM)	
	9	1	5P-8211	1	SEAL-O-RING	
M	10	1	5P-8245	2	WASHER-HARD (13.5X25.5X3-MM THK)	
M	11	1	6A-5591	2	BOLT (M12X1.75X25-MM)	
	12	1	6N-8863	14	WASHER (10.2X32X2.5-MM THK)	
M	13	1	6V-4249	14	BOLT (M10X1.5X50-MM)	
M	14	1	6V-5192	2	BOLT-SOCKET HEAD (M8X1.25X30-MM)	
	15	1	9M-1974	4	WASHER-HARD (8.8X16X2-MM THK)	
	16	1	9S-4183	1	PLUG	

M-METRIC PART

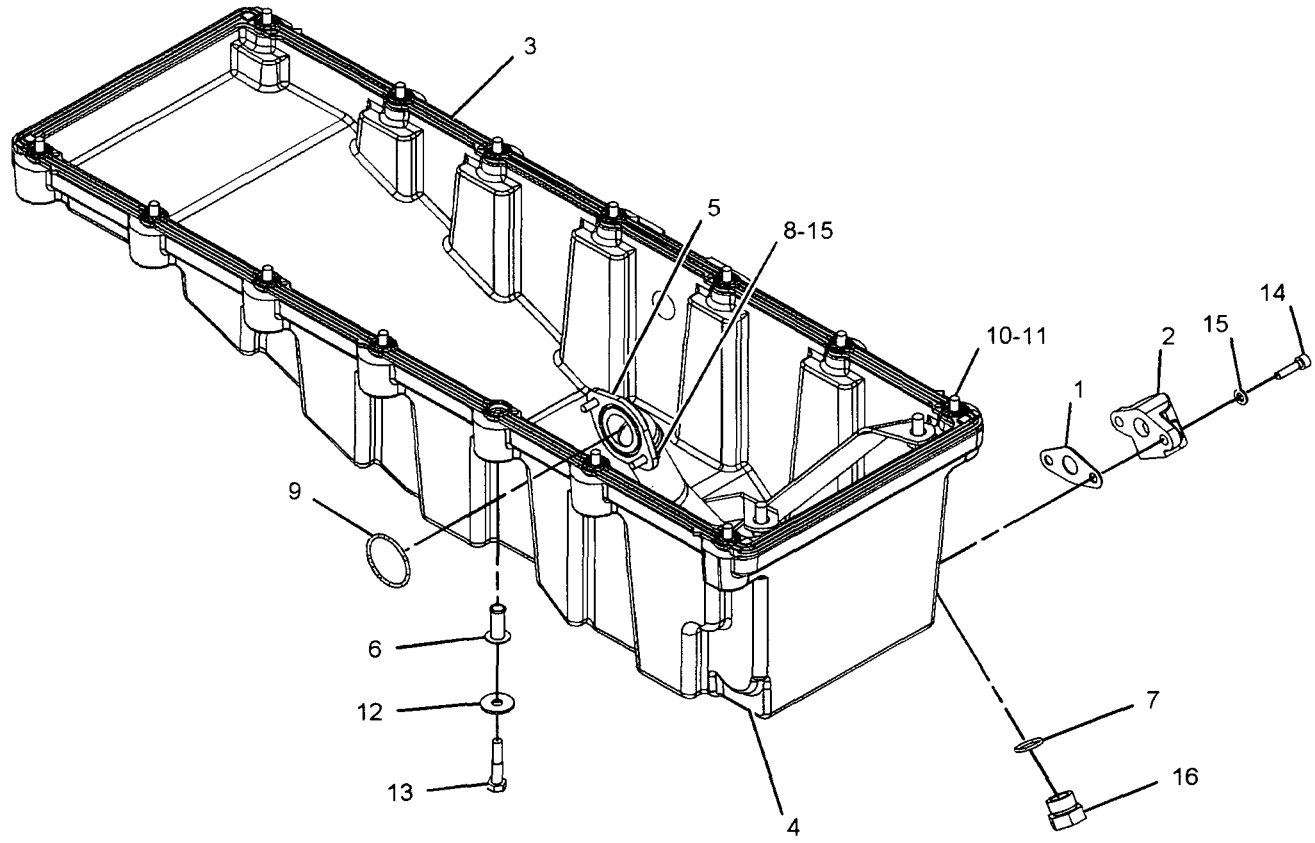

GRAPHIC #1 <END> g01096912

BASIC ENGINE

179-6588 PANEL GP-SOUND SUPPRESSION

S/N: CCA1-UP
AN ATTACHMENT

SMCS-1801 i01873002

NOTE	REF NO	GRAPHIC REF	PART NUMBER	QTY	PART NAME 1 2 3 4 5 6 (PRODUCT LEVEL)	SEE PAGE
	1	1	**8W-9227**	1	SHIELD (LH)	
	2	1	**8W-9228**	1	SHIELD (RH)	
	3	1	**4L-6454**	12	BOLT (3/8-16X1 IN)	
	4	1	**8T-4897**	12	WASHER (10.2X35X6MM THK)	

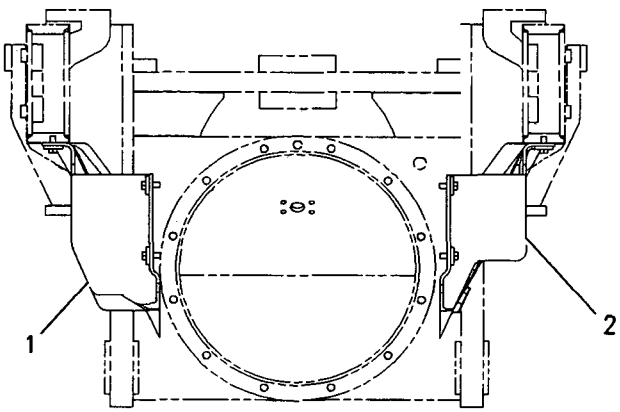

REAR VIEW

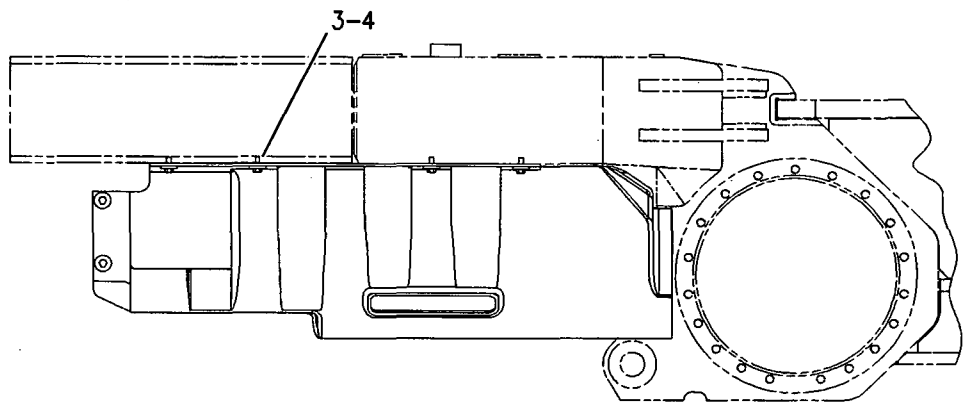

RIGHT SIDE VIEW

GRAPHIC #1

<END>

g00846002

BASIC ENGINE

132-3203 PISTON & ROD GP

S/N: 3PD1-UP
16:1 COMPRESSION RATIO
PART OF 160-5101 ENGINE AR

SMCS-1225 **i02111450**

NOTE	REF NO	GRAPHIC REF	PART NUMBER	QTY	PART NAME 1 2 3 4 5 6 (PRODUCT LEVEL)	SEE PAGE
R	1	1	**133-7098**	1	CROWN AS-PISTON	
	2	1	**6I-2720**	2	PLUG-PIN	
	3	1	**168-7276**	1	PIN-PISTON	
	4	1	**217-0577**	1	BEARING-CONNECTING ROD	
R	5	1	**155-6629**	1	ROD AS-CONNECTING	
	5A	1	**7W-5844**	1	BEARING	
	6	1	**219-4458**	2	PIN-DOWEL	
M	7	1	**7C-8639**	2	BOLT-CONNECTING ROD	
	8	1	**4P-1659**	1	RING-PISTON (OIL)	
	9	1	**101-2042**	1	SKIRT-PISTON	
	10	1	**168-7212**	1	RING-PISTON (TOP)	
	11	1	**109-5319**	1	RING-PISTON (INTERMEDIATE)	
M	12	1	**8T-0100**	1	BOLT (M8X1.25X60-MM)	
	13	1	**3E-4352**	1	WASHER-HARD (8.8X20.5X2.5-MM THK)	
	14	1	**197-9377**	1	JET AS-PISTON COOLING	

M-METRIC PART
R-REMFG PART MAY BE AVAILABLE

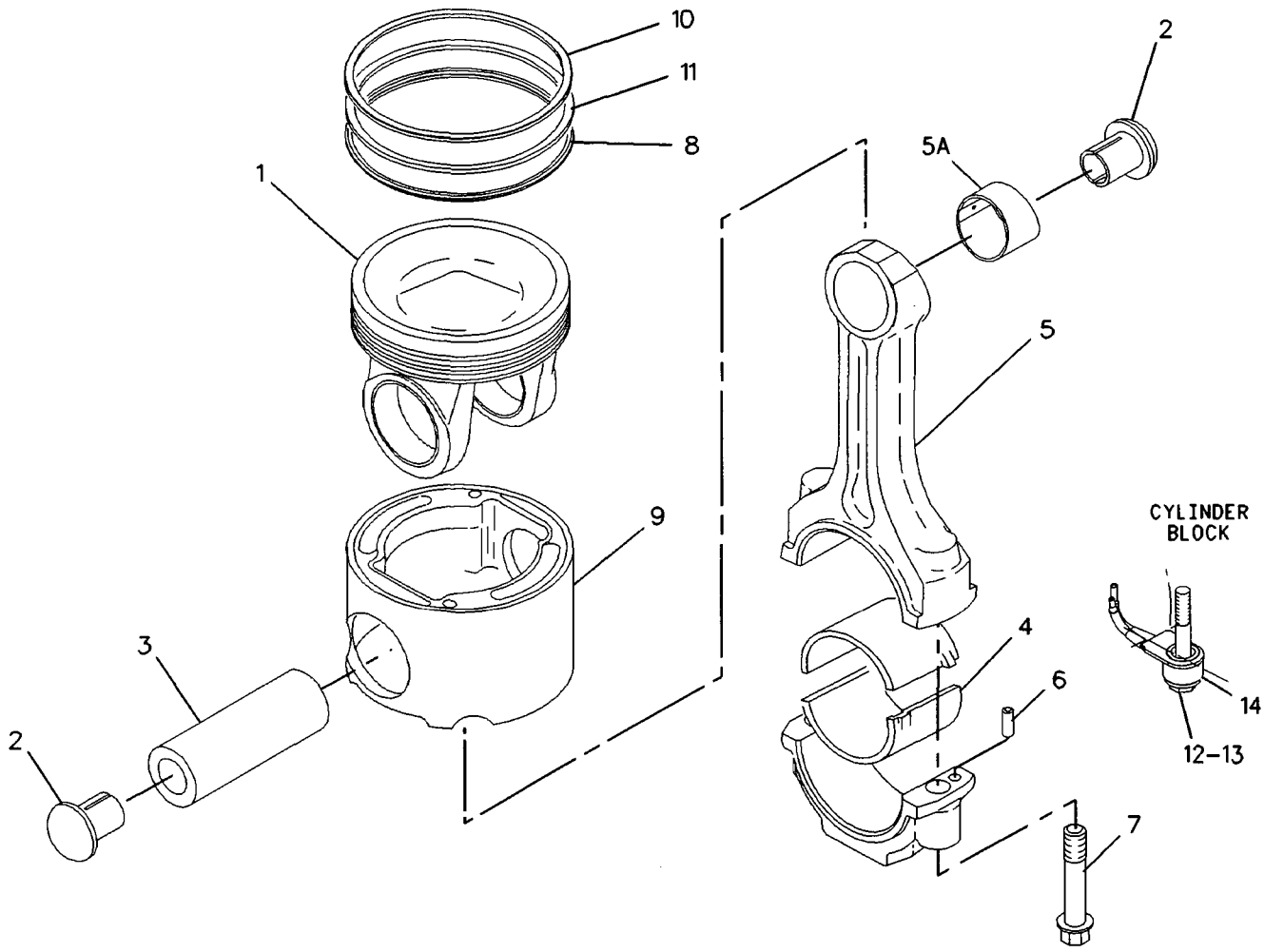

GRAPHIC #1 **<END>** g01001499

138-2028 PLUG GP-CYLINDER BLOCK

S/N: 3PD1-UP

PART OF 160-5101 ENGINE AR

SMCS-1201 i01855306

NOTE	PART NUMBER	QTY	PART NAME 1 2 3 4 5 6 (PRODUCT LEVEL)	SEE PAGE
	9S-4182	1	PLUG (7/16-20 THD)	
	9S-4191	1	PLUG (9/16-18 THD)	
	8T-6762	1	PLUG-PIPE (1/4-14NPTF THD)	
	3J-1907	1	SEAL-O-RING (11.89MM ID)	
	6V-5048	1	SEAL-O-RING (8.92MM ID)	

<END>

BASIC ENGINE

174-1760 PLUG GP-ENGINE

S/N: 3PD1-UP

PART OF 160-5101 ENGINE AR

SMCS-1000, 1201 **i02093055**

NOTE	REF NO	GRAPHIC REF	PART NUMBER	QTY	PART NAME 1 2 3 4 5 6 (PRODUCT LEVEL)	SEE PAGE
	1	1	**3B-0623**	1	PLUG-CUP	
	2	1	**116-5435**	1	CONNECTOR	
	3	1	**3J-1907**	2	SEAL-O-RING	
	4	1	**3K-0360**	1	SEAL-O-RING	
	5	1	**6V-0852**	1	CAP-DUST	
	6	1	**6V-3965**	1	FITTING AS (QUICK DISCONNECT)	
	7	1	**6V-4589**	1	SEAL-O-RING	
	8	1	**6V-5049**	3	SEAL-O-RING	
	9	1	**6V-8397**	1	SEAL-O-RING	
	11	1	**9S-4191**	3	PLUG	
	12	1	**9S-8006**	1	PLUG	
	13	1	**9X-6650**	1	CONNECTOR	

174-1760 **PLUG GP-ENGINE** *(contd.)* **i02093055**

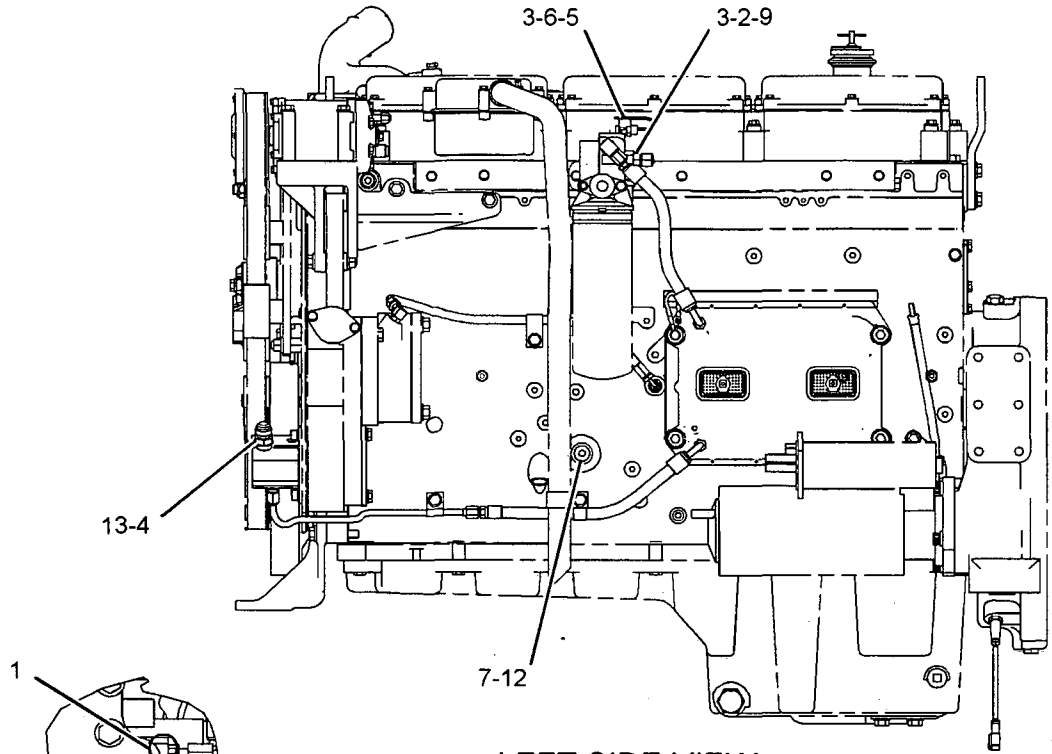

LEFT SIDE VIEW

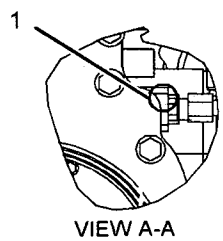

VIEW A-A

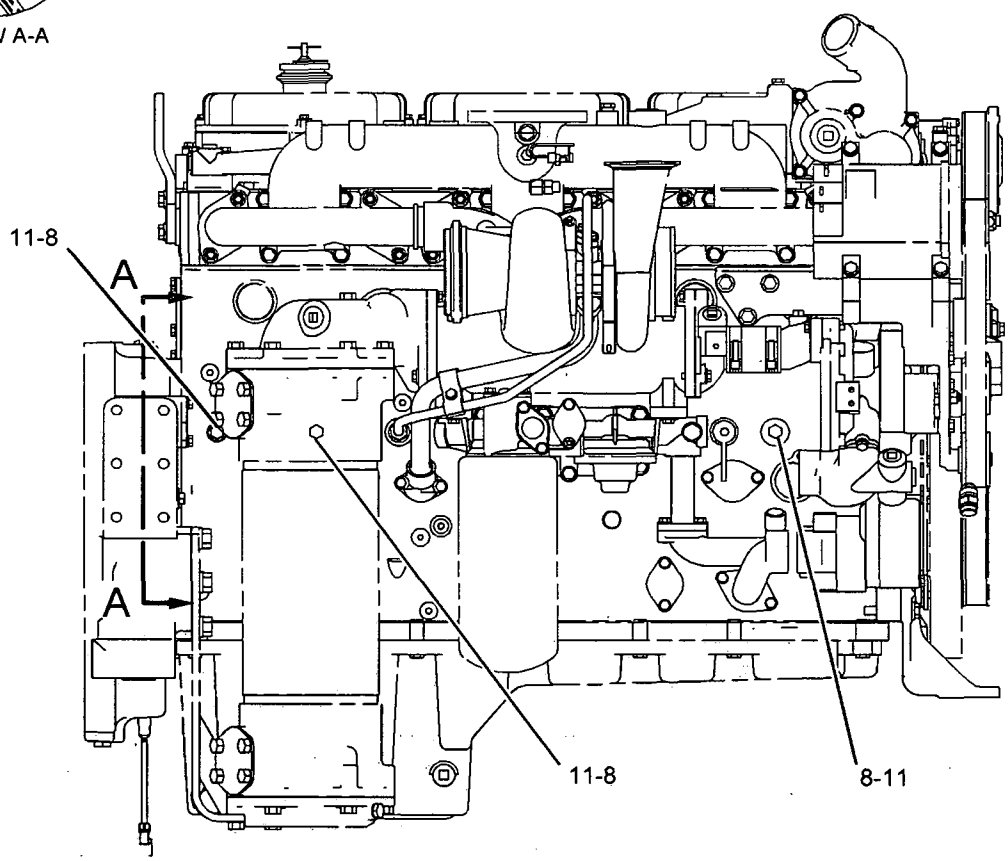

GRAPHIC #1

<END>

g01067138

BASIC ENGINE

115-9397 ROCKER ARM GP

S/N: 3PD1-UP

PART OF 117-2749 VALVE MECHANISM GP

SMCS-1102, 1123 **i02117650**

NOTE	REF NO	GRAPHIC REF	PART NUMBER	QTY	PART NAME 1 2 3 4 5 6 (PRODUCT LEVEL)	SEE PAGE
R	1	1	**115-9398**	2	ARM-VALVE ROCKER (EXHAUST)	
R	2	1	**115-9400**	2	ARM AS (UNIT INJECTION)	
					(EACH INCLUDES)	
		1	**2D-6642**	2	BALL	
		1	**115-9402**	1	BEARING	
R	3	1	**115-9399**	2	ARM-VALVE ROCKER (INLET)	
	4	1	**7C-1798**	2	SCREW-ARM ADJUSTMENT	
	5	1	**245-6095**	2	NUT-HEX THIN (CLASS 10, HEAT TREATED)	
	6	1	**7W-7235**	2	BUTTON	
	7	1	**8L-2777**	2	SEAL-O-RING	
	8	1	**115-9403**	2	SHAFT AS	
					(EACH INCLUDES)	
	9	1	**3S-6605**	1	PLUG-CUP	
	10	1	**096-0014**	1	PIN-SPRING	
	11	1	**185-4461**	2	SUPPORT AS	
					(EACH INCLUDES)	
	12	1	**180-1538**	2	DOWEL	
M	13	1	**183-4365**	4	SCREW-ADJUSTMENT (M10X1.5-THD)	
M	14	1	**2Y-5829**	4	NUT (M10X1.5-THD)	

M-METRIC PART
R-REMFG PART MAY BE AVAILABLE

115-9397 ROCKER ARM GP *(contd.)* i02117650

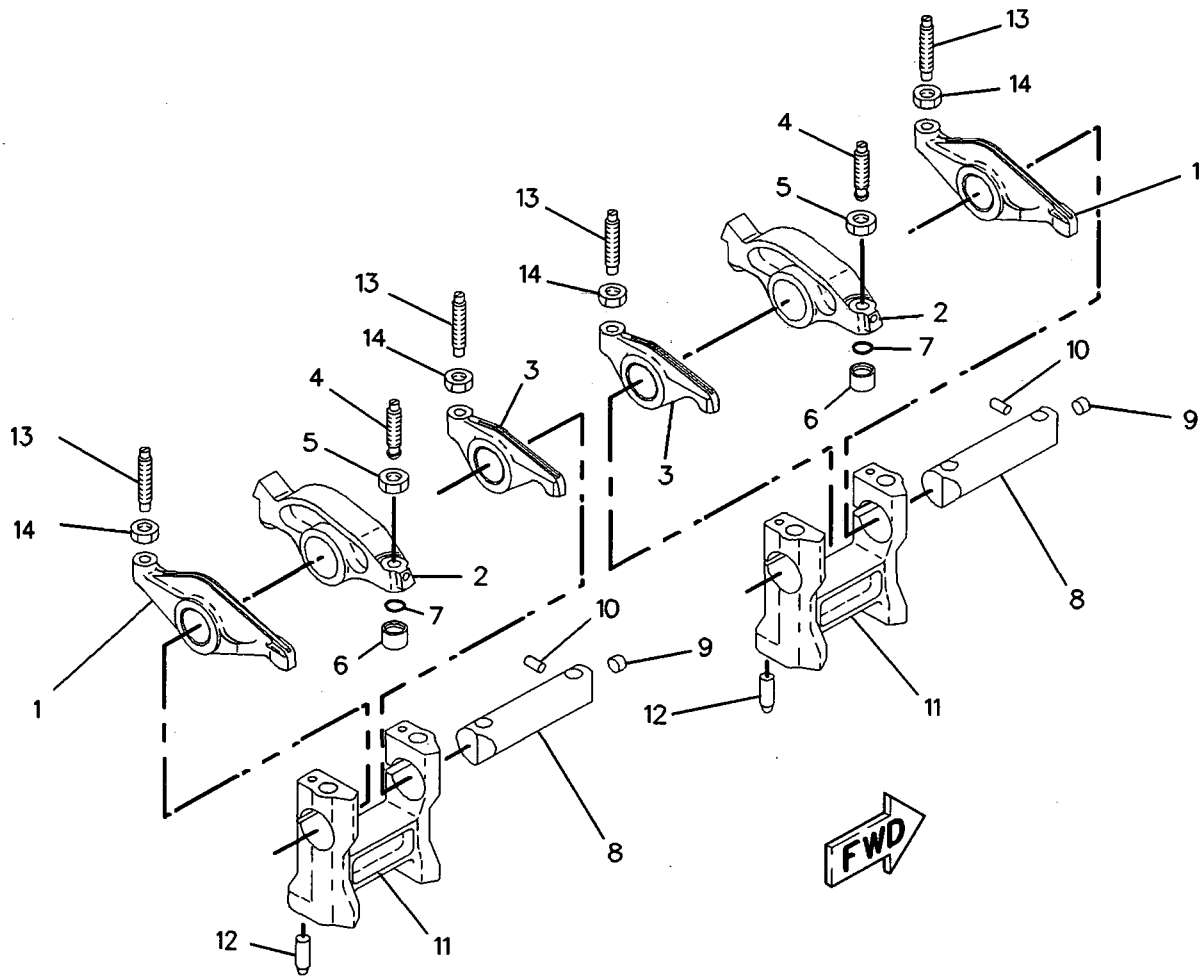

GRAPHIC #1 **<END>** g00785815

BASIC ENGINE

116-1091 SEAL GP-CRANKSHAFT

S/N: 3PD1-UP

PART OF 160-5101 ENGINE AR

SMCS-1160, 1161 i01921347

NOTE	REF NO	GRAPHIC REF	PART NUMBER	QTY	PART NAME 1 2 3 4 5 6 (PRODUCT LEVEL)	SEE PAGE
	1	1	**160-2323**	1	COVER	
M	2	1	**8T-0640**	6	BOLT (M6X1.0X30MM)	
	3	1	**5P-0537**	13	WASHER-HARD (7.2X14.5X2MM THK)	
M	4	1	**9X-2022**	7	BOLT-LOCKING	
	5	1	**7C-1583**	1	GASKET	
	6	1	**107-6280**	1	SEAL-O-RING	
	7	1	**7C-1728**	1	SEAL GP-CRANKSHAFT	

M-METRIC PART

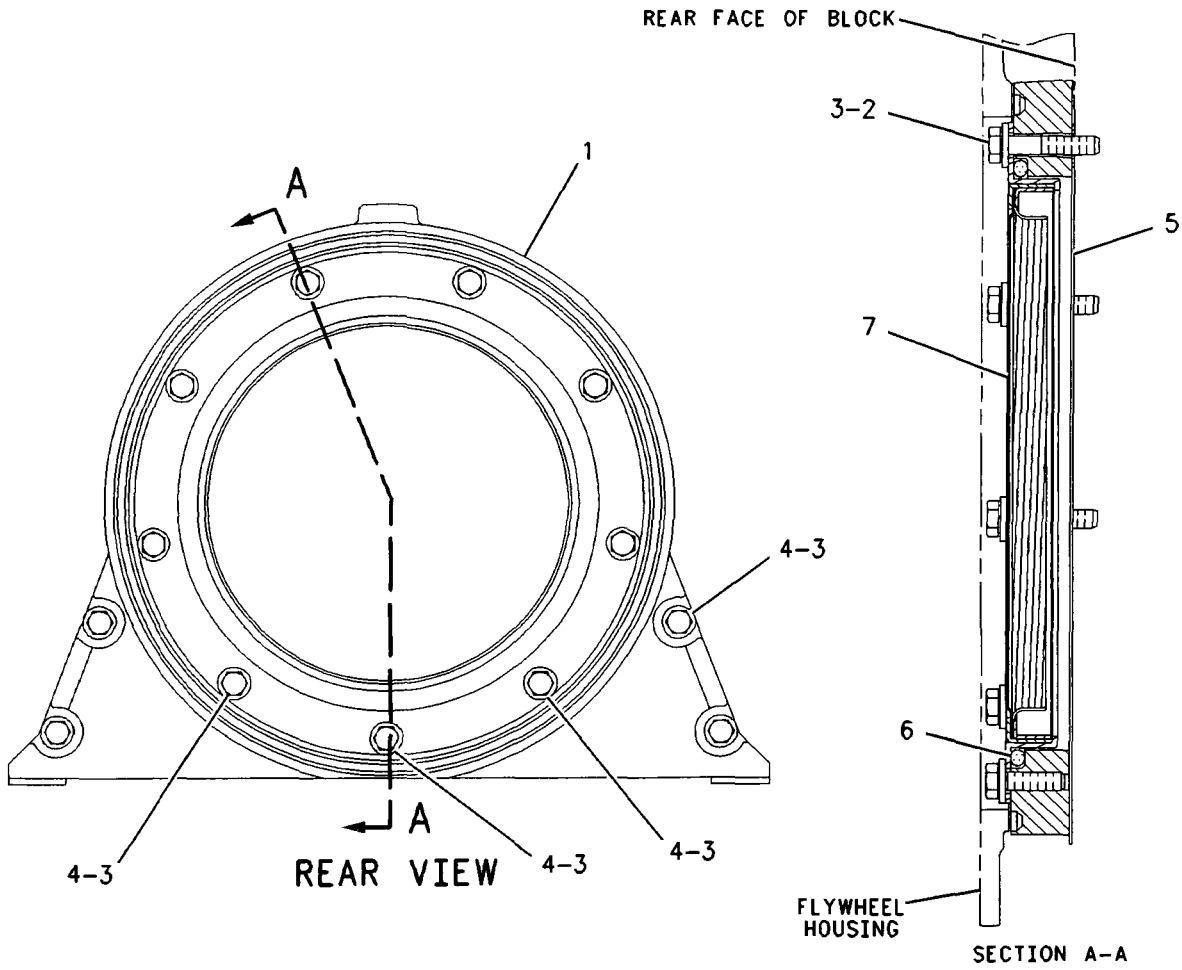

GRAPHIC #1 **<END>** g00785779

BASIC ENGINE

174-1627 SUPPORT GP-ENGINE

S/N: 3PD1-UP

PART OF 160-5101 ENGINE AR

SMCS-1154 **i01855510**

NOTE	REF NO	GRAPHIC REF	PART NUMBER	QTY	PART NAME 1 2 3 4 5 6 (PRODUCT LEVEL)	SEE PAGE
	1	1	**174-1628**	1	SUPPORT-FRONT	
	2	1	**5P-8245**	8	WASHER-HARD (13.5X25.5X3MM THK)	
M	3	1	**6V-8336**	8	BOLT (M12X1.75X70MM)	

M-METRIC PART

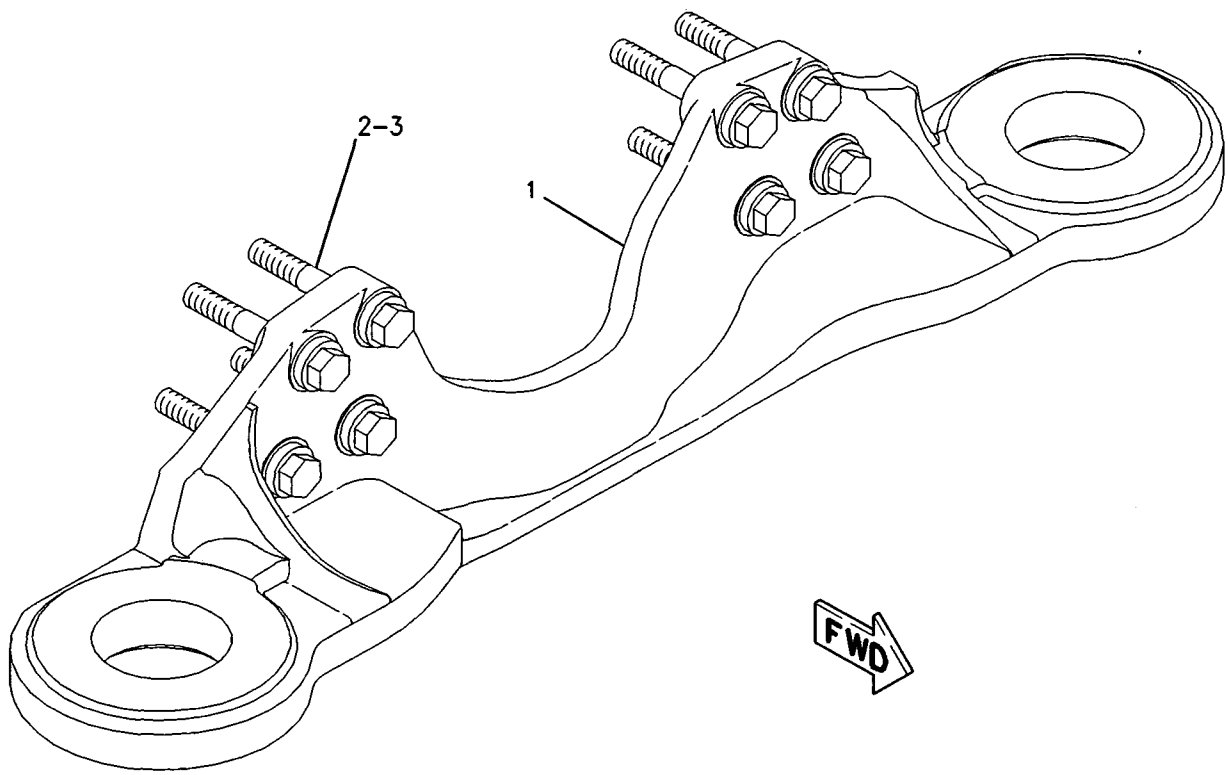

GRAPHIC #1 **<END>** g00787794

BASIC ENGINE

178-9527 SUPPRESSION GP-SOUND–ENGINE ENCLOSURE

S/N: CCA1-UP

PART OF 207-4453, 210-2044 CONVERSION AR-CERTIFICATION

AN ATTACHMENT

SMCS-1801 i02203371

NOTE	REF NO	GRAPHIC REF	PART NUMBER	QTY	PART NAME 1 2 3 4 5 6 (PRODUCT LEVEL)	SEE PAGE
	1	1	**183-2302**	1	INSULATION (RH)	
	2	1	**183-2303**	1	PANEL (LH)	
	3	1	**183-2304**	1	PANEL (FRONT)	
	4	1	**183-2306**	2	INSULATION (BLOCK)	

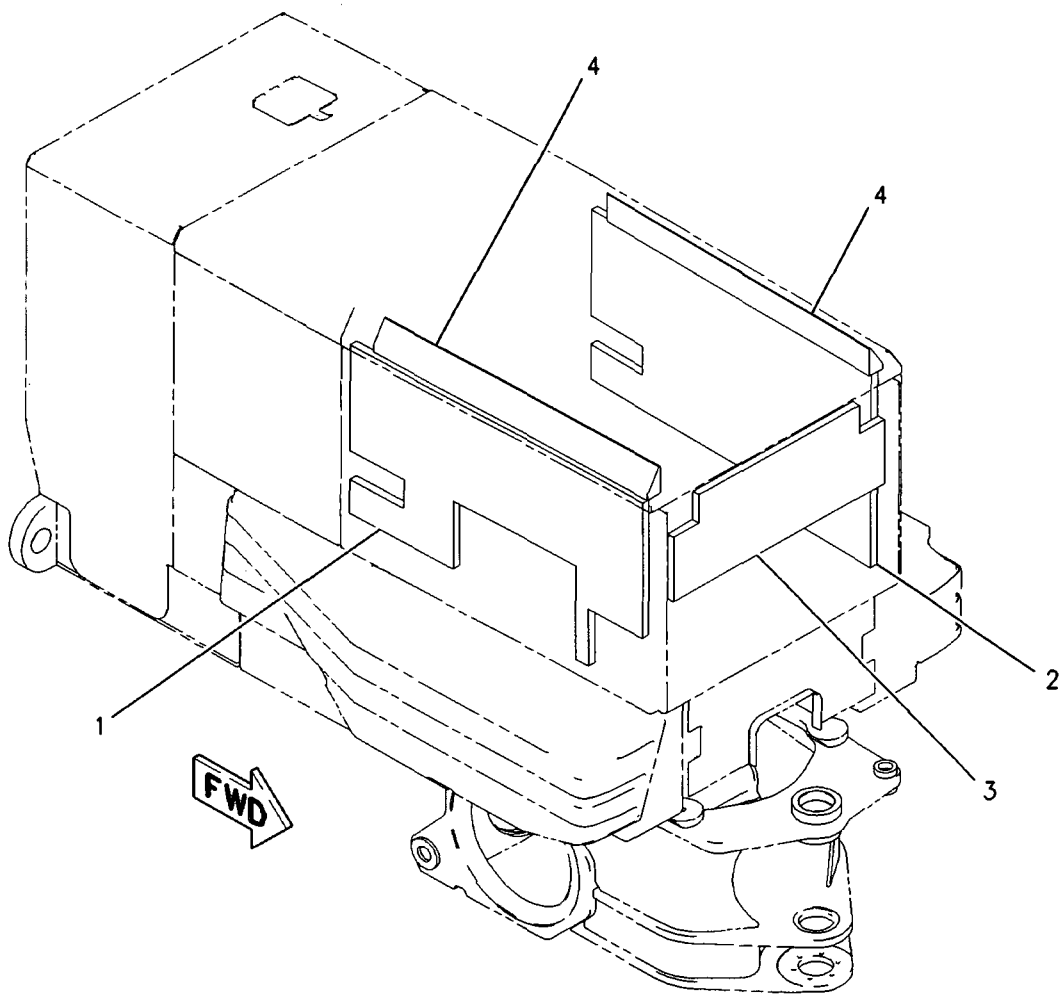

GRAPHIC #1 **<END>** g00907302

BASIC ENGINE

117-2749 VALVE MECHANISM GP

S/N: 3PD1-UP

PART OF 160-5101 ENGINE AR

SMCS-1102 **i01855226**

NOTE	REF NO	GRAPHIC REF	PART NUMBER	QTY	PART NAME 1 2 3 4 5 6 (PRODUCT LEVEL)	SEE PAGE
	1	1	**9X-8267**	4	WASHER (6.6X12X2-MM THK)	
M	2	1	**8T-0275**	4	BOLT (M6X1X50-MM)	
	3	1	**3E-4352**	8	WASHER-HARD (8.8X20.5X2.5-MM THK)	
M	4	1	**8T-0100**	16	BOLT (M8X1.25X60-MM)	
	5	1	**7C-8292**	8	ISOLATOR	
	6	1	**9Y-7215**	8	SLEEVE-ISOLATOR	
	7	1	**9Y-4357**	1	BREATHER AS	
	8	1	**9Y-1758**	1	GASKET	
	9	1	**102-5842**	1	BASE-VALVE COVER	
	10	1	**109-5309**	1	GASKET	
Y	11	1	*115-9397*	3	ROCKER ARM GP	53
Y	12	1	*148-2063*	2	LIFTER GP-VALVE	41
	13	1	**104-3567**	12	PUSHROD-VALVE	
	14	1	**104-3568**	6	PUSHROD	
	15	1	**9M-1974**	9	WASHER-HARD (8.8X16X2-MM THK)	
M	16	1	**6V-5217**	1	BOLT (M8X1.25X20-MM)	

M-METRIC PART
Y-SEPARATE ILLUSTRATION

117-2749 VALVE MECHANISM GP *(contd.)*

i01855226

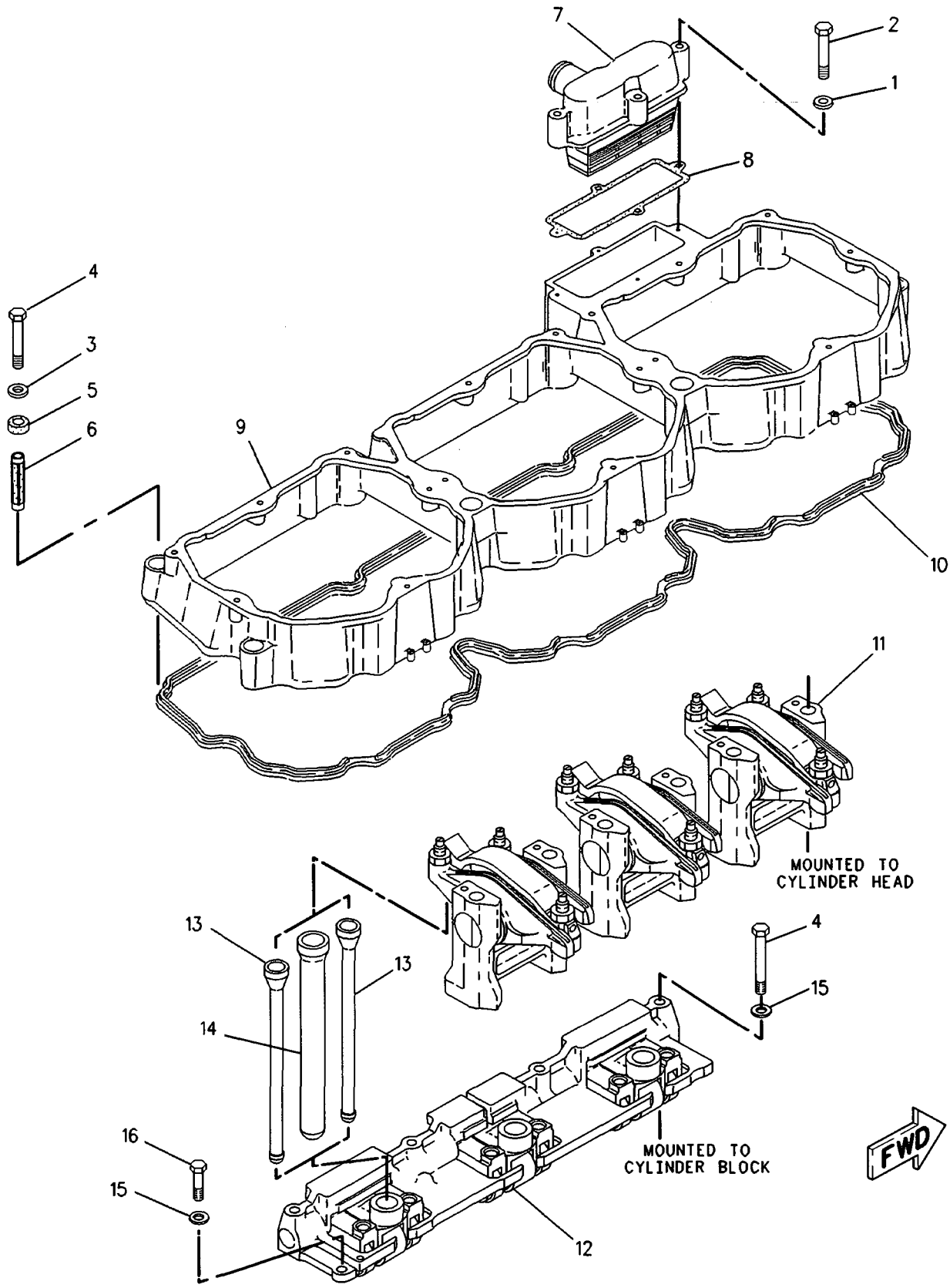

GRAPHIC #1

<END>

g00784176

LUBRICATION SYSTEM

166-1329 BASE GP-OIL FILTER

S/N: 3PD1-UP

PART OF 164-2490 FILTER GP-ENGINE OIL

SMCS-1306 **i01855657**

NOTE	REF NO	GRAPHIC REF	PART NUMBER	QTY	PART NAME 1 2 3 4 5 6 (PRODUCT LEVEL)	SEE PAGE
	1	1	**9M-1974**	6	WASHER-HARD (8.8X16X2-MM THK)	
	2	1	**166-1328**	1	BASE AS	
	2A	1	**2P-4304**	1	STUD-TAPERLOCK	
	2B	1	**3B-0623**	1	PLUG-CUP	
	2C	1	**3P-1896**	2	PLUG-CUP	
	2D	1	**7W-6390**	1	STUD-FILTER BASE	
	3	1	**6V-4367**	3	SEAL-O-RING	
M	4	1	**6V-3940**	3	BOLT (M8X1.25X25-MM)	
	5	1	**7C-2891**	3	COVER	
	6	1	**7C-3954**	1	SPRING AS	
	7	1	**111-2645**	1	VALVE-PUMP BYPASS	
M	8	1	**6V-8359**	1	BOLT (M6X1X70-MM)	
	9	1	**7C-3083**	1	SEAT-RELIEF VALVE SPRING	
	10	1	**7C-3082**	1	RETAINER	
	11	1	**7C-3081**	1	SPACER (6.88X9.53X50-MM THK)	
	12	1	**1A-2170**	1	SPRING-RETAINER	
	13	1	**9M-0853**	2	PLUNGER-VALVE	
	14	1	**7C-3953**	2	SPRING AS	
	15	1	**9S-4185**	1	PLUG	
	16	1	**8L-2786**	1	SEAL-O-RING	
M	17	1	**9X-2097**	3	STUD (M8X1.25-THD)	

M-METRIC PART

166-1329 **BASE GP-OIL FILTER** *(contd.)* **i01855657**

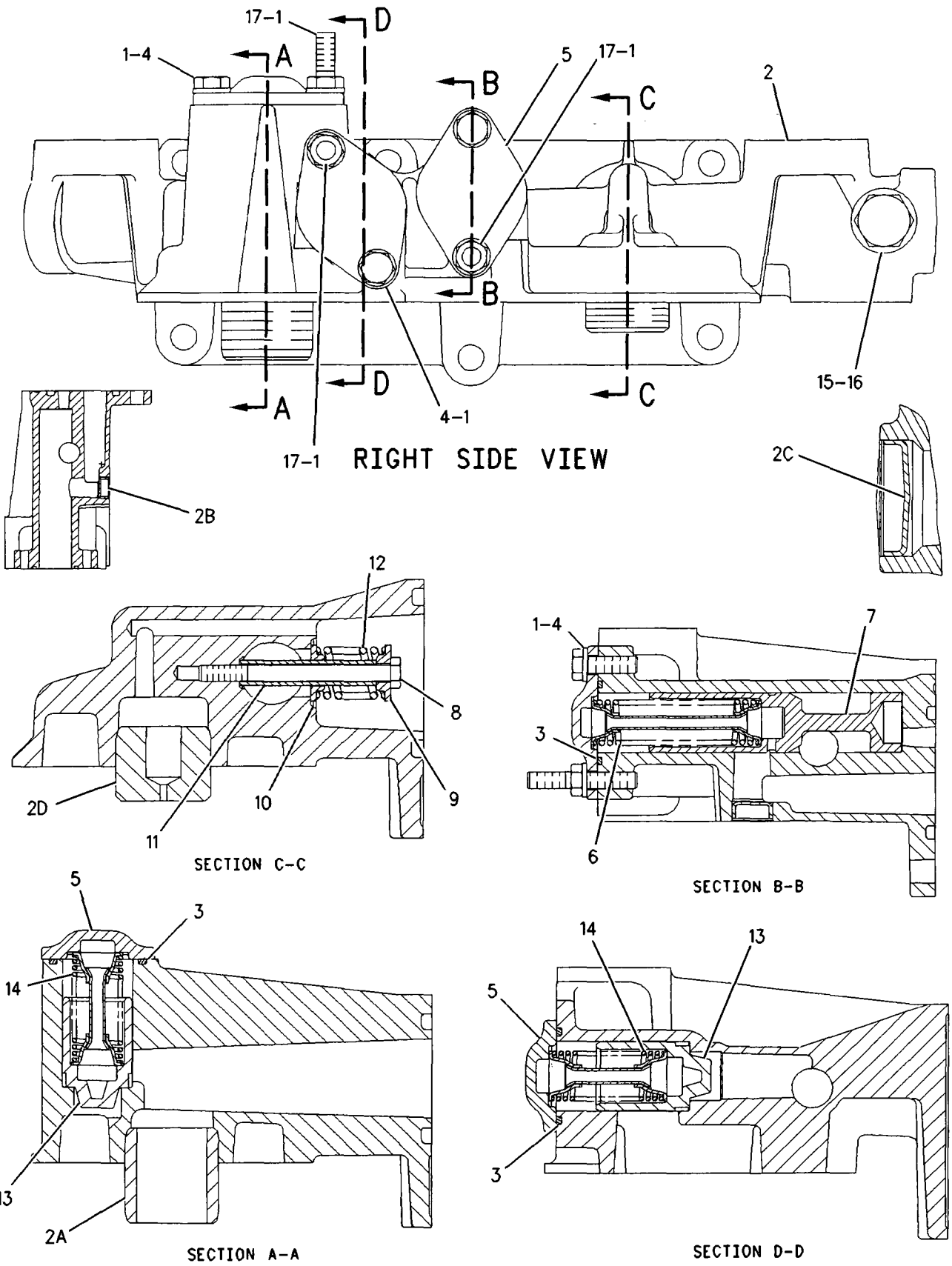

GRAPHIC #1 **<END>** g00933796

174-1579 FILLER GP-ENGINE OIL

S/N: 3PD1-UP

PART OF 160-5101 ENGINE AR

SMCS-1316 i01855476

NOTE	REF NO	GRAPHIC REF	PART NUMBER	QTY	PART NAME 1 2 3 4 5 6 (PRODUCT LEVEL)	SEE PAGE
	1	1	**5L-2952**	1	CAP AS-OIL FILLER	
		1	**6L-2609**	1	SEAL-RUBBER	
	2	1	**174-1580**	1	TUBE AS-FILLER	
	3	1	**184-9854**	1	BRACKET AS	
	3A	1	**3T-0049**	1	CLIP	
M	3B	1	**8T-3490**	2	NUT-WELD (M10X1.5 THD)	
	4	1	**4F-7952**	1	SEAL-O-RING	
	5	1	**5P-7854**	1	CLIP	
M	6	1	**6V-3822**	2	BOLT (M10X1.5X35MM)	
	7	1	**6V-5839**	3	WASHER (11X21X2.5MM THK)	
M	8	1	**6V-6317**	1	BOLT (M10X1.5X20MM)	

M-METRIC PART

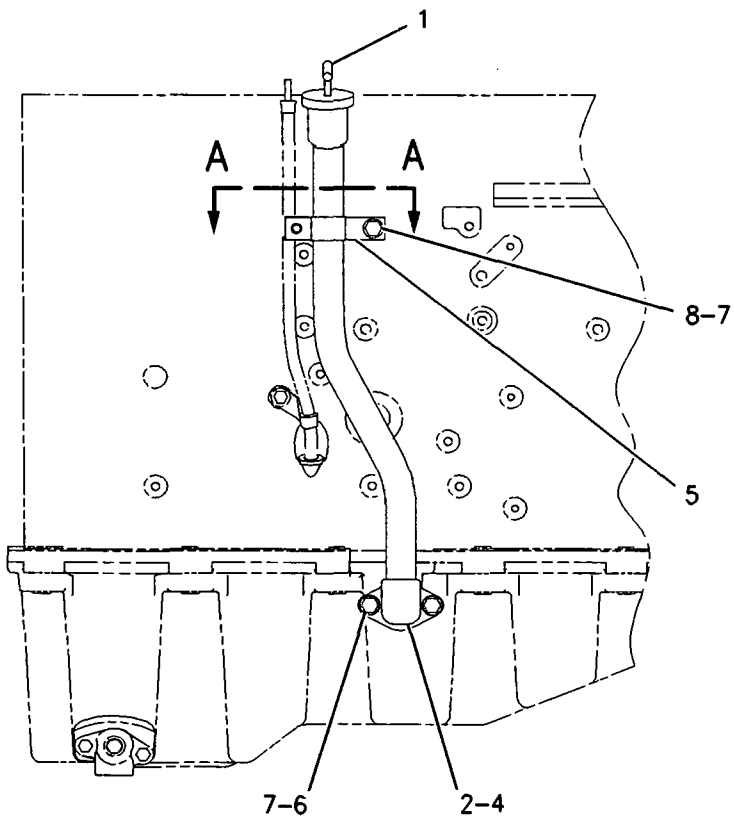

LEFT SIDE VIEW

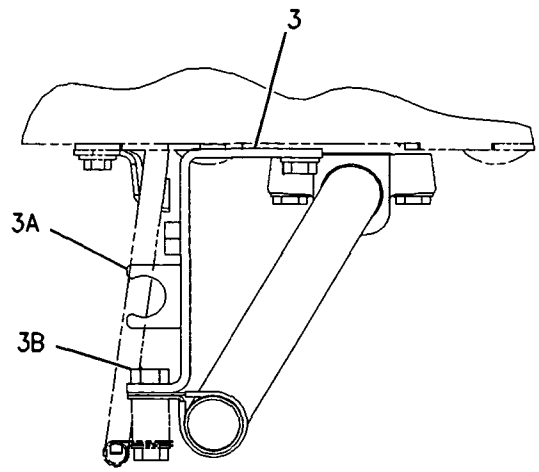

SECTION A-A

GRAPHIC #1 **<END>** g00786384

LUBRICATION SYSTEM

164-2490 FILTER GP-ENGINE OIL

S/N: 3PD1-UP

PART OF 160-5101 ENGINE AR

SMCS-1308 **i01855540**

NOTE	REF NO	GRAPHIC REF	PART NUMBER	QTY	PART NAME 1 2 3 4 5 6 (PRODUCT LEVEL)	SEE PAGE
	1	1	**1R-0716**	1	FILTER AS-ENGINE OIL	
	2	1	**3L-8855**	1	SPACER	
	3	1	**8C-3445**	1	CAP-DUST	
	4	1	**102-5828**	1	COVER	
	5	1	**102-5829**	1	ADAPTER	
	6	1	**104-7995**	1	BASE GP-OIL FILTER	
		1	**2P-4304**	1	STUD-TAPERLOCK	
M	7	1	**134-5245**	6	BOLT (M10X1.5X30)	
Y	8	1	*166-1329*	1	BASE GP-OIL FILTER (ENGINE)	60
	9	1	**177-4311**	1	BRACKET AS	
	10	1	**185-1717**	1	TUBE AS	
	11	1	**185-1718**	1	TUBE AS	
	12	1	**186-3705**	1	ELBOW	
	13	1	**192-6492**	1	CLIP AS	
	14	1	**192-7135**	1	CLIP AS	
	15	1	**106-9586**	4	SEAL-O-RING	
	16	1	**3J-7354**	1	SEAL-O-RING	
	17	1	**5M-7087**	3	CLAMP-TUBE	
	18	1	**5P-4116**	1	WASHER-HARD (8.8X20.5X2-MM THK)	
	19	1	**5P-7701**	4	SEAL-O-RING	
M	20	1	**6V-2317**	2	BOLT (M8X1.25X30-MM)	
	21	1	**6V-3831**	2	SEAL-O-RING	
	22	1	**6V-3908**	2	SEAL-O-RING	
M	23	1	**6V-5218**	1	BOLT (M8X1.25X35-MM)	
	24	1	**6V-5839**	10	WASHER (11X21X2.5-MM THK)	
	25	1	**6V-9005**	2	ELBOW	
	26	1	**6V-9008**	1	ELBOW	
	27	1	**8C-3446**	1	VALVE AS-FLUID SAMPLING	
	28	1	**8C-5230**	1	SEAL-O-RING	
	29	1	**8T-4121**	4	WASHER-HARD (11X21X2.5-MM THK)	
M	31	1	**8T-4138**	2	BOLT (M6X1X20-MM)	
M	32	1	**8T-4186**	2	BOLT (M10X1.5X40-MM)	
M	33	1	**8T-4195**	4	BOLT (M10X1.5X30-MM)	
M	34	1	**8T-6466**	2	BOLT (M10X1.5X60-MM)	
	35	1	**9M-1974**	2	WASHER-HARD (8.8X16X2-MM THK)	
	36	1	**9X-8256**	2	WASHER (6.6X12X2-MM THK)	
	37	1	**9C-5344**	1	SPACER (10.5X20X18-MM THK)	
	38	1	**6F-6405**	1	SPACER (0.44X0.75X0.37-IN THK)	

M-METRIC PART
Y-SEPARATE ILLUSTRATION

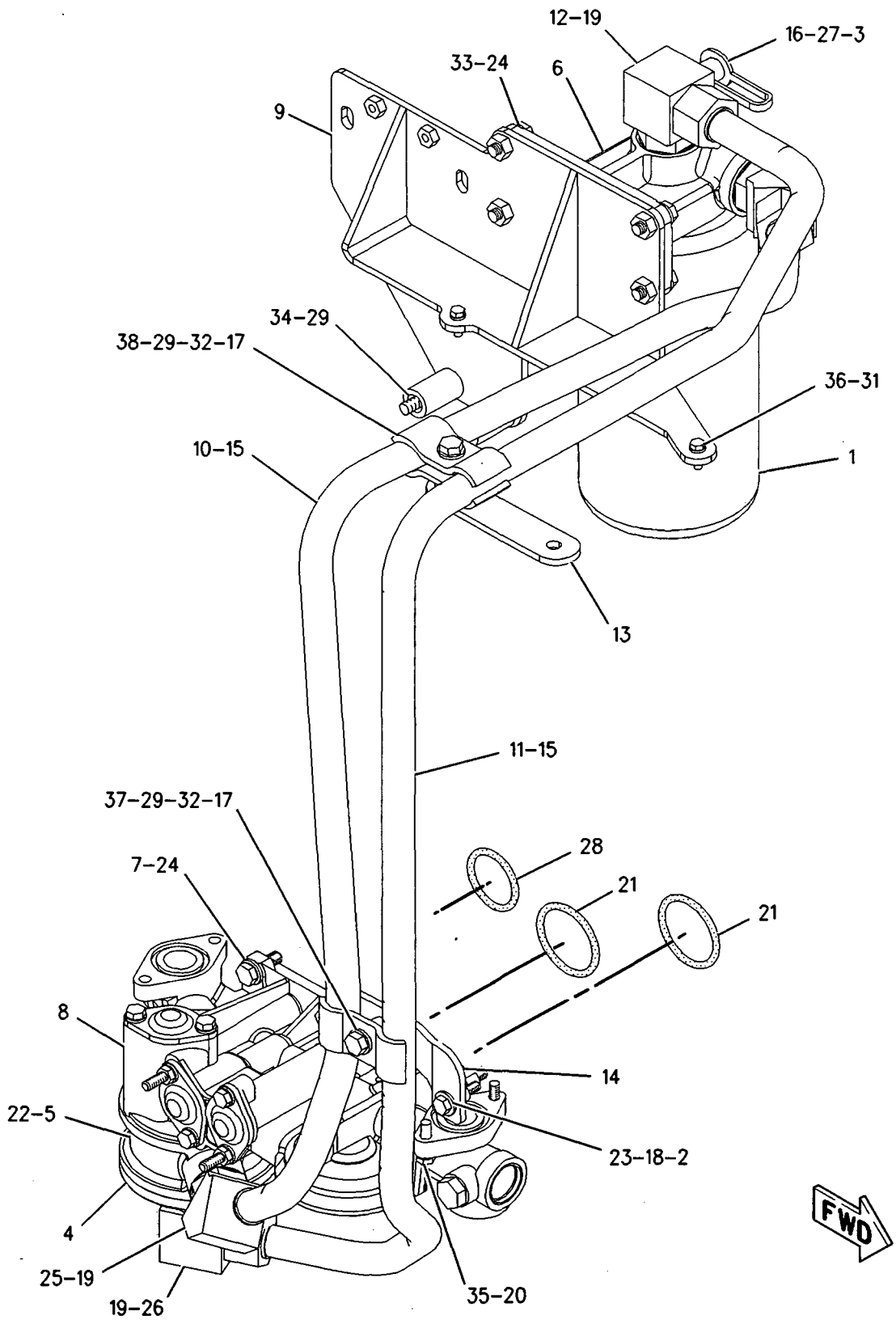

GRAPHIC #1 **<END>** g00842815

174-1576 GAUGE GP-OIL LEVEL (DIPSTICK)

S/N: 3PD1-UP

PART OF 160-5101 ENGINE AR

SMCS-1326 i01855468

NOTE	REF NO	GRAPHIC REF	PART NUMBER	QTY	PART NAME 1 2 3 4 5 6 (PRODUCT LEVEL)	SEE PAGE
	1	1	7C-6921	1	SPACER (11X20X22.8MM THK)	
	2	1	209-7309	3	PLUG	
	3	1	174-1577	1	GAUGE AS	
	4	1	174-1578	1	TUBE AS-OIL	
	5	1	3E-4352	1	WASHER-HARD (8.8X20.5X2.5MM THK)	
	6	1	3P-0647	1	SEAL-O-RING	
	7	1	4B-0418	1	CLIP	
M	8	1	6V-5215	1	BOLT (M8X1.25X16MM)	
	9	1	6V-5839	1	WASHER (11X21X2.5MM THK)	
M	10	1	8T-4185	1	BOLT (M10X1.5X50MM)	

M-METRIC PART

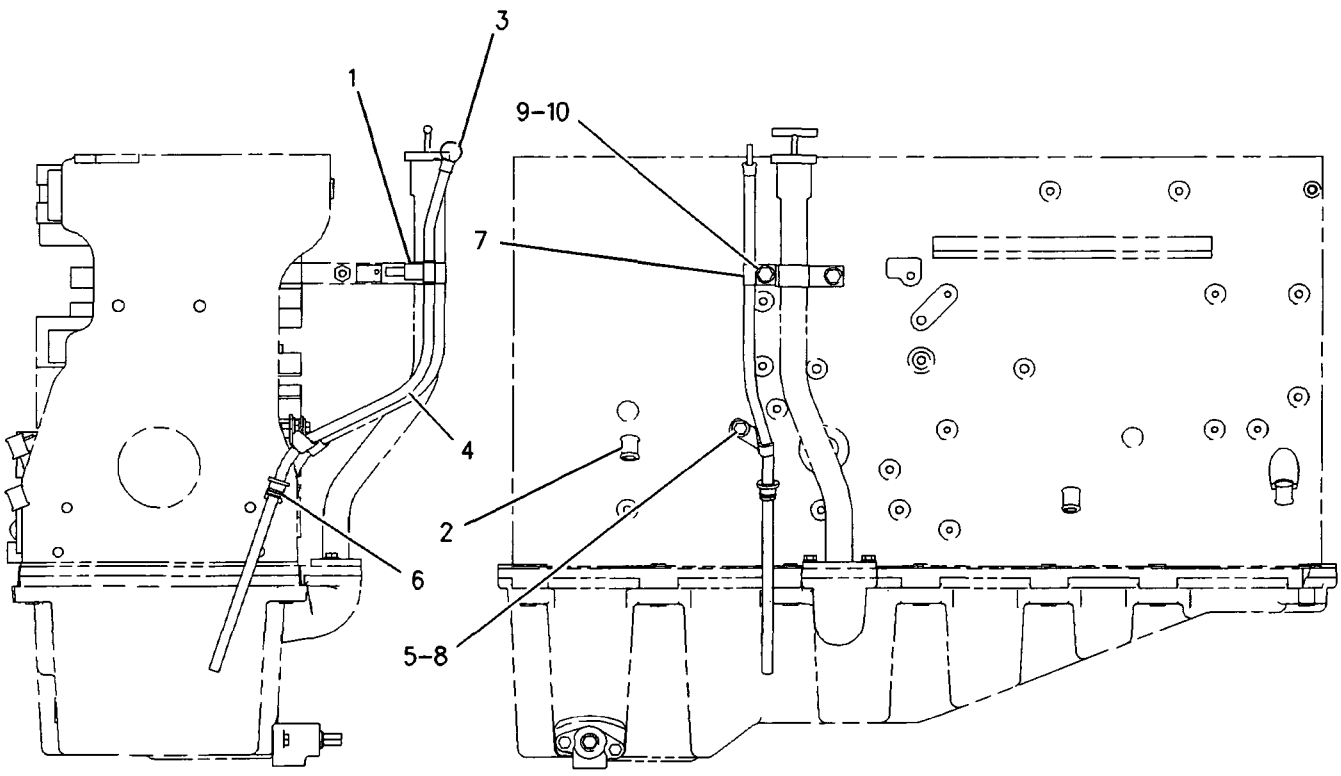

FRONT VIEW LEFT SIDE VIEW

GRAPHIC #1 <END> g00786545

LUBRICATION SYSTEM

183-5504 LINES GP-ENGINE OIL DRAIN

S/N: CCA1-UP

PART OF 159-4615 GENERAL AR

SMCS-1307 **i02203386**

NOTE	REF NO	GRAPHIC REF	PART NUMBER	QTY	PART NAME 1 2 3 4 5 6 (PRODUCT LEVEL)	SEE PAGE
	1	1	**7X-7958**	1	CLAMP-HOSE	
	3	1	**206-4669**	1	VALVE-DRAIN	
I	4	1	**198-0151**	1	HOSE AS	
	5	1	*148-8327*	1	CONNECTOR AS	
		1	**6V-8637**	1	CONNECTOR	
		1	**3D-2824**	1	SEAL-O-RING	
		1	**6V-9746**	1	SEAL-O-RING	
	6	1	**212-4174**	1	LOCKWASHER	
	8	1	**2S-2053**	1	CLIP	
	9	1	**8T-4121**	1	WASHER-HARD (11X21X2.5-MM THK)	
M	10	1	**8T-4137**	1	BOLT (M10X1.5X20-MM)	
E	11	1	**146-7453**		HOSE (36-CM)	

E-ORDER BY THE CENTIMETER
I-REFER TO HYDRAULIC INFORMATION SYSTEM
M-METRIC PART

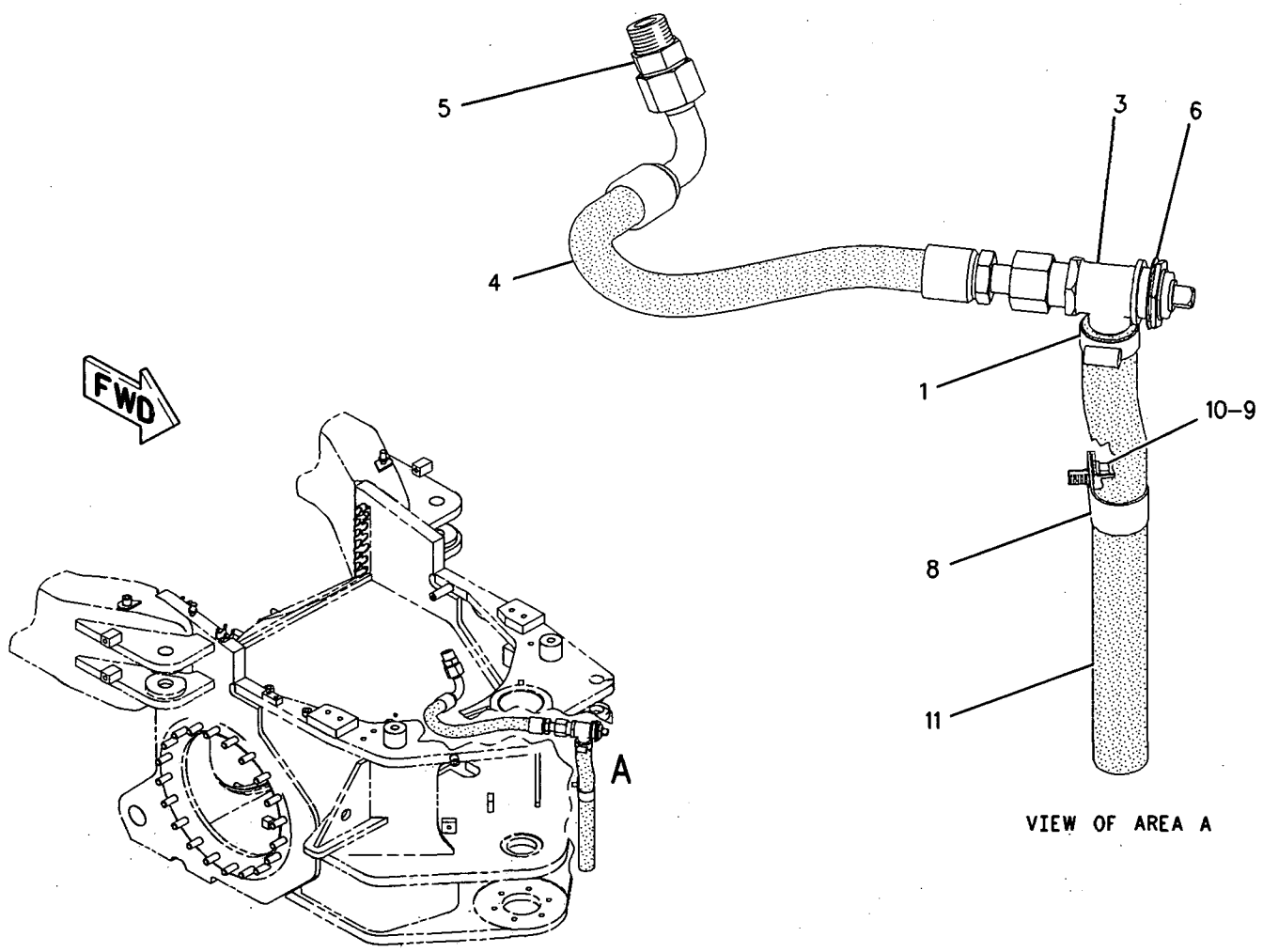

VIEW OF AREA A

GRAPHIC #1 **<END>** g00845067

LUBRICATION SYSTEM

179-9565 LINES GP-TURBOCHARGER OIL

S/N: 3PD1-UP

PART OF 160-5101 ENGINE AR

SMCS-1052, 1307 i01855535

NOTE	REF NO	GRAPHIC REF	PART NUMBER	QTY	PART NAME 1 2 3 4 5 6 (PRODUCT LEVEL)	SEE PAGE
	1	1	**6N-6033**	2	CLIP	
	2	1	**188-6126**	1	GASKET	
	3	1	**119-2942**	1	ADAPTER	
	4	1	**198-6068**	1	SEAL-INTEGRAL	
	5	1	**179-9563**	1	TUBE AS	
	6	1	**179-9564**	1	TUBE AS	
	7	1	**114-2687**	1	SEAL-O-RING	
M	8	1	**5P-7970**	1	NUT (M8X1.25 THD)	
	9	1	**5P-8066**	1	SEAL-O-RING	
M	10	1	**6V-3940**	1	BOLT (M8X1.25X25MM)	
M	11	1	**6V-5218**	4	BOLT (M8X1.25X35MM)	
	12	1	**8L-2786**	1	SEAL-O-RING	
	13	1	**8M-0505**	1	CONNECTOR	
	14	1	**9M-1974**	6	WASHER-HARD (8.8X16X2MM THK)	
	15	1	**9G-8661**	2	SPACER (10X16X20MM THK)	
M	16	1	**8T-0276**	2	BOLT (M8X1.25X45MM)	
	17	1	**4K-5824**	2	BOSS	

M-METRIC PART

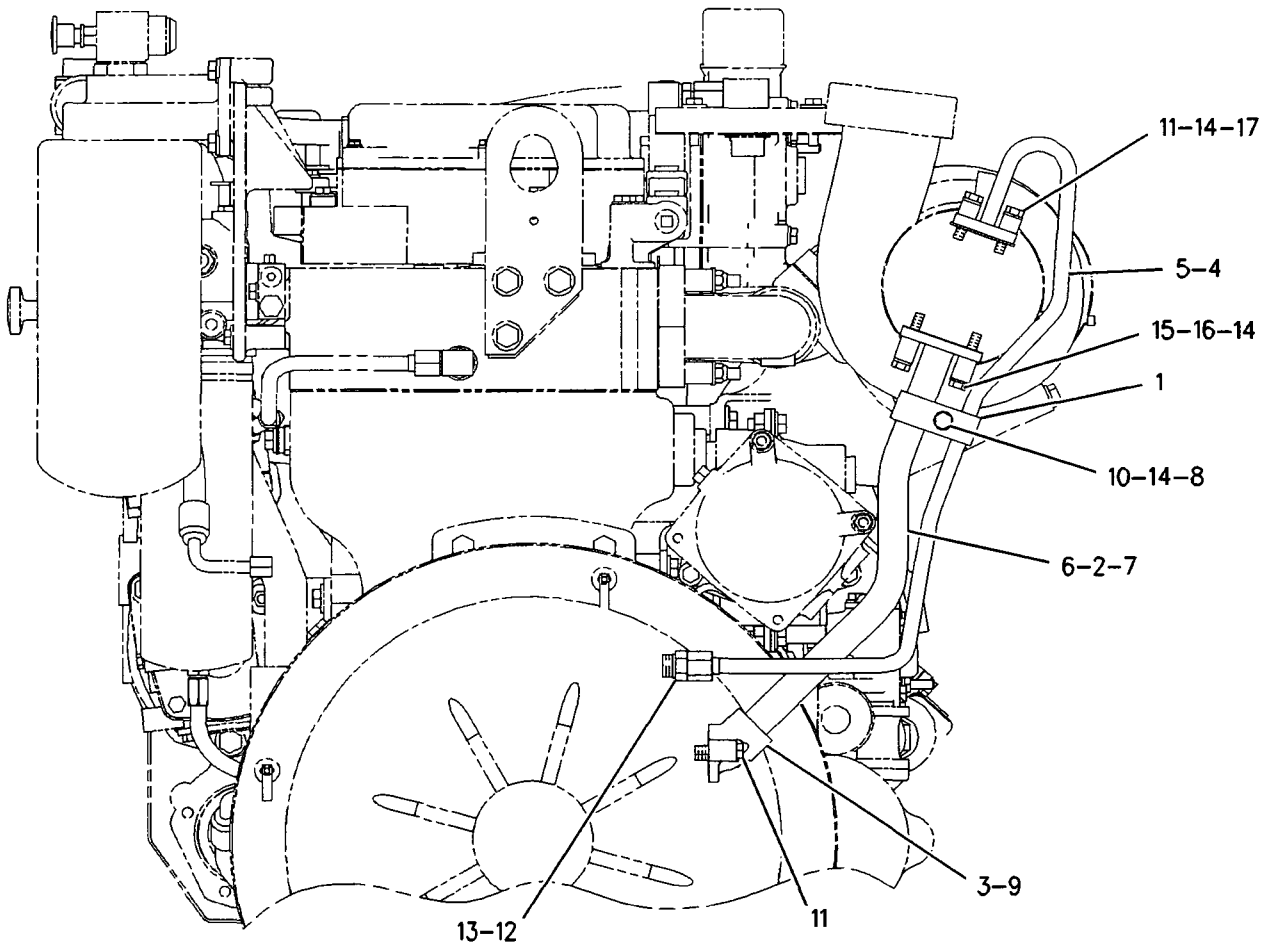

REAR VIEW

GRAPHIC #1 **<END>** g00829389

LUBRICATION SYSTEM

117-2746 PUMP GP-ENGINE OIL

S/N: 3PD1-UP

PART OF 160-5101 ENGINE AR

SMCS-1304, 1315 **i02010687**

NOTE	REF NO	GRAPHIC REF	PART NUMBER	QTY	PART NAME 1 2 3 4 5 6 (PRODUCT LEVEL)	SEE PAGE
	1	1	**8J-4351**	1	SEAL-O-RING	
	2	1	**9M-1974**	4	WASHER-HARD (8.8X16X2-MM THK)	
M	3	1	**3E-8016**	2	BOLT-SELF-LOCKING (M8X1.25X25-MM)	
M	4	1	**6V-2317**	2	BOLT (M8X1.25X30-MM)	
	5	1	**3E-4352**	2	WASHER-HARD (8.8X20.5X2.5-MM THK)	
	6	1	**115-3003**	1	TUBE AS	
	7	1	**6V-5134**	3	SEAL-O-RING	
	8	1	**061-8561**	1	SEAL-O-RING	
	9	1	**122-0760**	1	ELBOW-OIL PUMP	
	10	1	**7C-1821**	1	COUPLING	
	11	1	**7C-1822**	1	COUPLING	
	12	1	**5P-8068**	2	SEAL-O-RING	
M	13	1	**6V-5221**	2	BOLT (M8X1.25X80-MM)	
	14	1	**6V-3834**	1	SEAL-O-RING	
YR	15	1	**233-5220**	1	PUMP GP-ENGINE OIL	69

M-METRIC PART
R-REMFG PART MAY BE AVAILABLE
Y-SEPARATE ILLUSTRATION

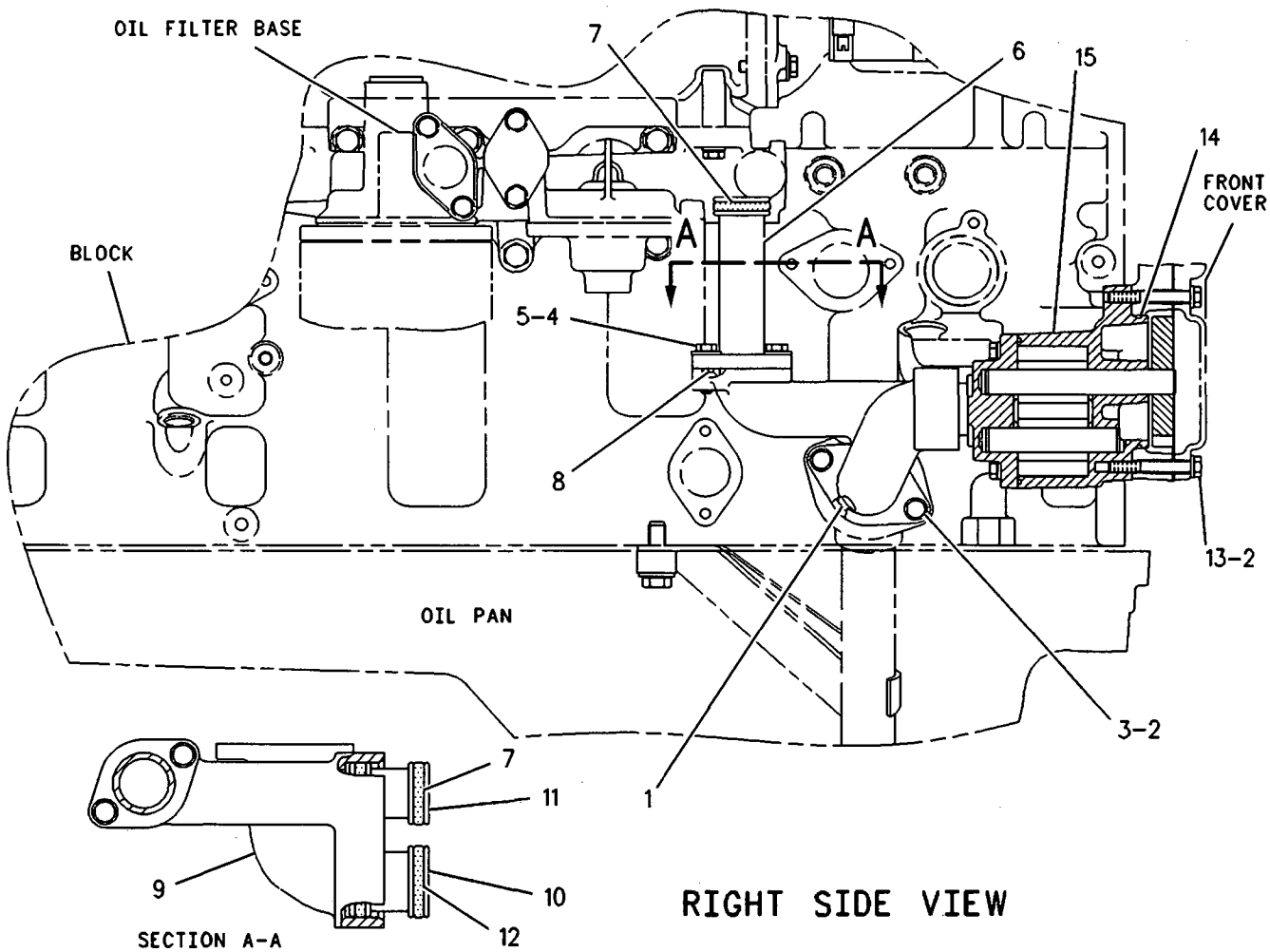

GRAPHIC #1 **<END>** g00251411

LUBRICATION SYSTEM

233-5220 PUMP GP-ENGINE OIL

S/N: 3PD1-UP

PART OF 117-2746 PUMP GP-ENGINE OIL

SMCS-1304, 1315 **i02010532**

NOTE	REF NO	GRAPHIC REF	PART NUMBER	QTY	PART NAME 1 2 3 4 5 6 (PRODUCT LEVEL)	SEE PAGE
	1	1	**9Y-8076**	1	SHAFT AS-OIL PUMP (8 TEETH)	
	2	1	**6D-7146**	1	SEAL-O-RING	
M	3	1	**6V-2317**	4	BOLT (M8X1.25X30MM)	
	4	1	**9M-1974**	4	WASHER-HARD (8.8X16X2MM THK)	
	5	1	**9Y-8075**	1	SHAFT AS-OIL PUMP (8 TEETH)	

M-METRIC PART

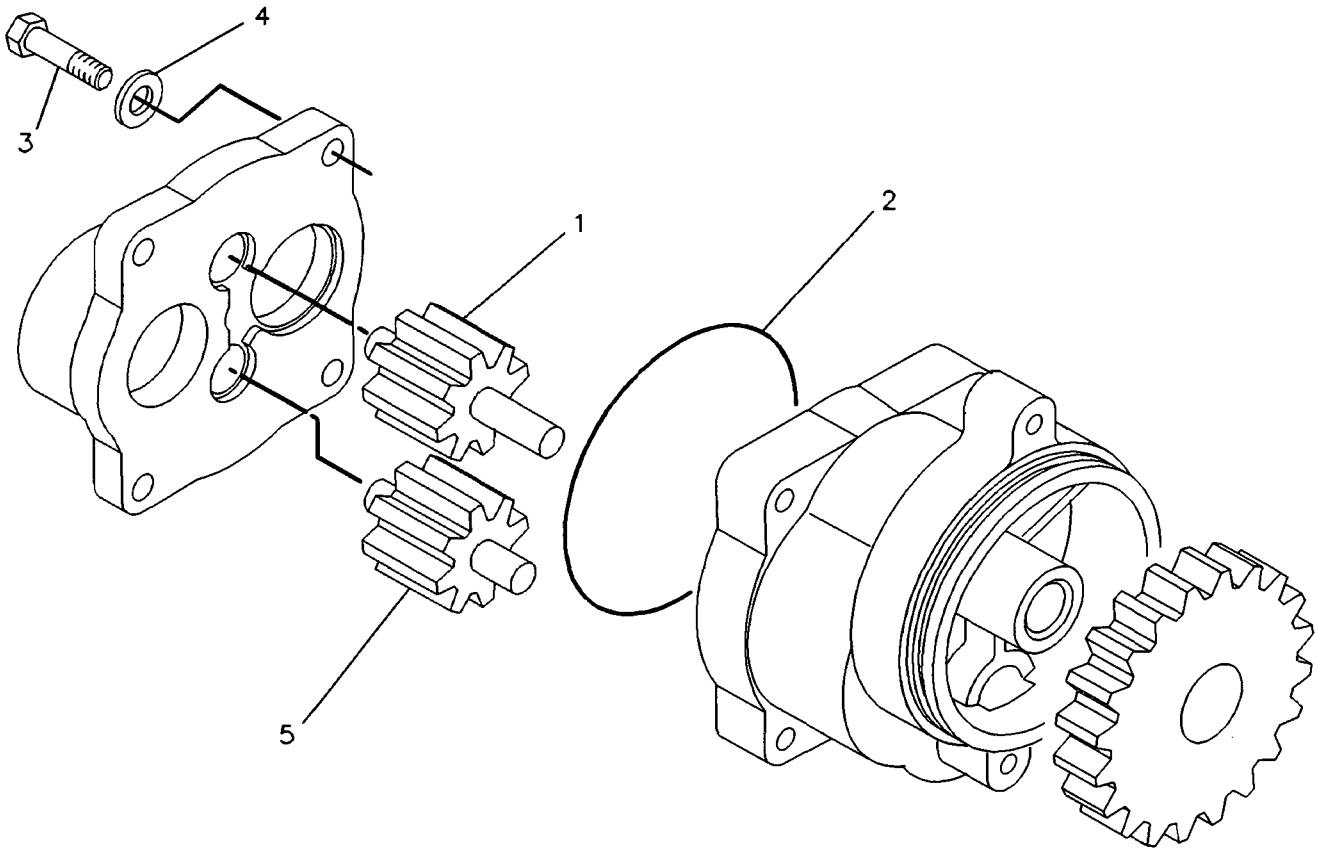

GRAPHIC #1 **<END>** g00228139

COOLING SYSTEM

185-1542 COOLING AR

S/N: CCA1-894

PART OF 159-4615 GENERAL AR

SMCS-1350 **i01879320**

NOTE	REF NO	GRAPHIC REF	PART NUMBER	QTY	PART NAME 1 2 3 4 5 6 (PRODUCT LEVEL)	SEE PAGE
Y	1	1	*163-0310*	1	AFTERCOOLER & MOUNTING GP	87
Y	2	1	*175-6981*	1	LINES GP-HYDRAULIC FAN	574
Y	3	1	*179-3261*	1	FAN & MOTOR GP	73
Y	4	1	**180-7004**	1	RADIATOR GP	85
	5	1	*184-0874*	1	PLATE GP-RADIATOR	
		1	**184-0871**	1	PLATE	
M	5A	1	**2Y-5829**	4	NUT (M10X1.5 THD)	
M	5B	1	**6V-4248**	4	BOLT (M10X1.50X25MM)	
	5C	1	**6V-5839**	8	WASHER (11X21X2.5MM THK)	
M	5D	1	**8T-4178**	2	BOLT (M10X1.5X90MM)	
	5E	1	**8T-4222**	2	WASHER-PLATED (11X32X2.5MM THK)	
	5F	1	**199-2711**	2	SPACER (7.82X26.67X75MM THK)	
Y	6	1	*197-1448*	1	GUARD & SUPPORT GP-RADIATOR	474

M-METRIC PART
Y-SEPARATE ILLUSTRATION

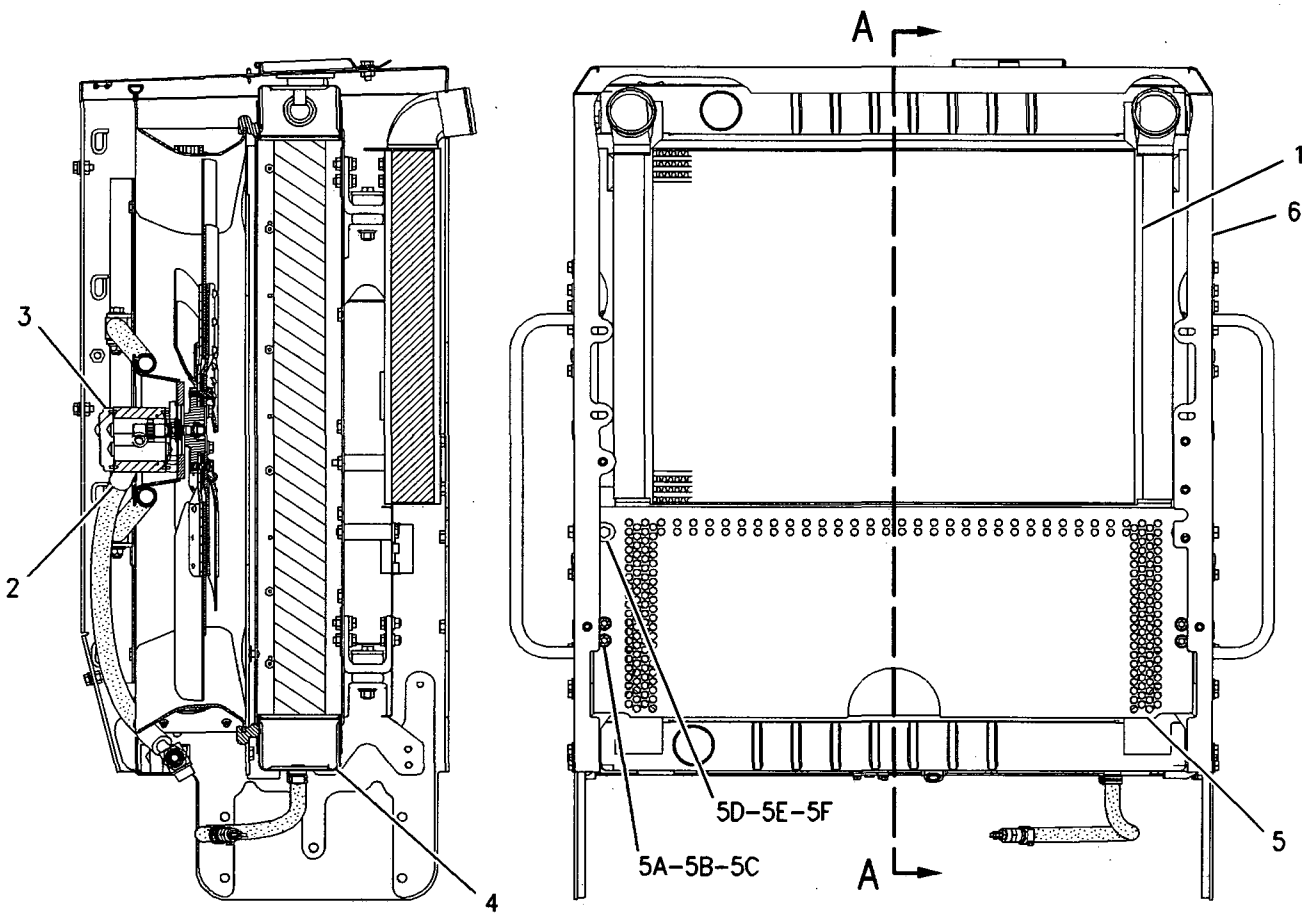

SECTION A-A

FRONT VIEW

GRAPHIC #1

<END>

g00940664

COOLING SYSTEM

185-1542 COOLING AR

S/N: CCA895-UP

PART OF 159-4615 GENERAL AR

SMCS-1350 **i02158759**

NOTE	REF NO	GRAPHIC REF	PART NUMBER	QTY	PART NAME 1 2 3 4 5 6 (PRODUCT LEVEL)	SEE PAGE
Y	1	1	*163-0310*	1	AFTERCOOLER & MOUNTING GP	87
Y	2	1	*175-6981*	1	LINES GP-HYDRAULIC FAN	574
Y	3	1	*179-3261*	1	FAN & MOTOR GP	73
CY	4	1	**241-6949**	1	RADIATOR GP	86
Y	5	1	*184-0874*	1	PLATE GP-RADIATOR	82
Y	6	1	*197-1448*	1	GUARD & SUPPORT GP-RADIATOR	474

C-CHANGE FROM PREVIOUS TYPE
Y-SEPARATE ILLUSTRATION

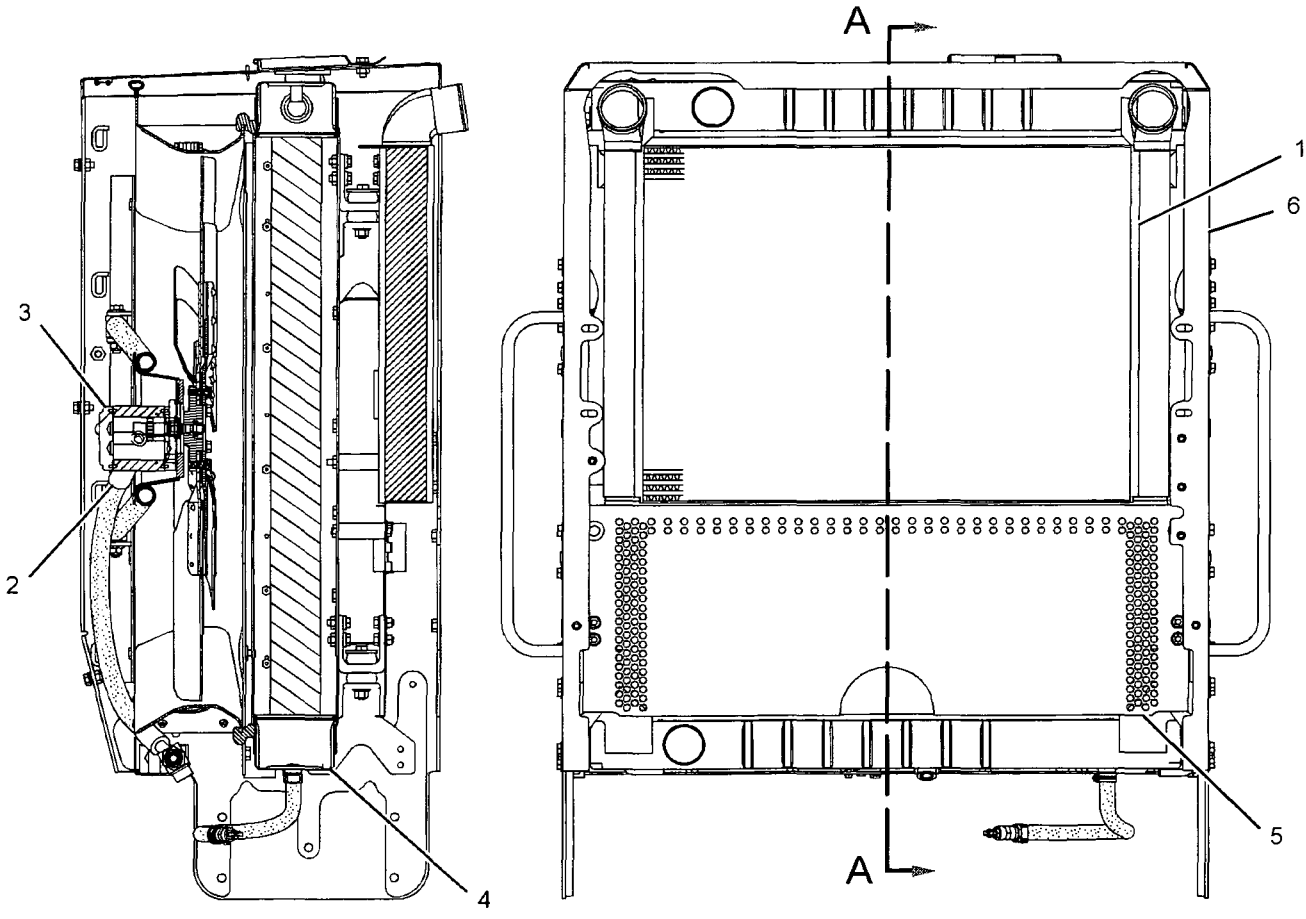

SECTION A-A

FRONT VIEW

GRAPHIC #1

<END>

g01099186

191-9260 COOLING AR

S/N: CCA1-UP

PART OF 207-4453 CONVERSION AR-CERTIFICATION AN ATTACHMENT

SMCS-1350 i01820189

NOTE	REF NO	GRAPHIC REF	PART NUMBER	QTY	PART NAME 1 2 3 4 5 6 (PRODUCT LEVEL)	SEE PAGE
Y	1	1	*163-0310*	1	AFTERCOOLER & MOUNTING GP	87
Y	2	1	*175-6981*	1	LINES GP-HYDRAULIC FAN	574
Y	3	1	*179-3261*	1	FAN & MOTOR GP	73
Y	4	1	**180-7004**	1	RADIATOR GP	85
	5	1	**184-0871**	1	PLATE	
	5A	1	**199-2711**	2	SPACER (7.82X26.67X75-MM THK)	
M	5B	1	**2Y-5829**	4	NUT (M10X1.5-THD)	
M	5C	1	**6V-4248**	4	BOLT (M10X1.5X25-MM)	
	5D	1	**6V-5839**	8	WASHER (11X21X2.5-MM THK)	
M	5E	1	**8T-4178**	2	BOLT (M10X1.5X90-MM)	
	5F	1	**8T-4222**	2	WASHER-PLATED (11X32X2.5-MM THK)	
Y	6	1	*193-8253*	1	WIRING GP-REAR	317
Y	7	1	*197-1448*	1	GUARD & SUPPORT GP-RADIATOR	474

M-METRIC PART
Y-SEPARATE ILLUSTRATION

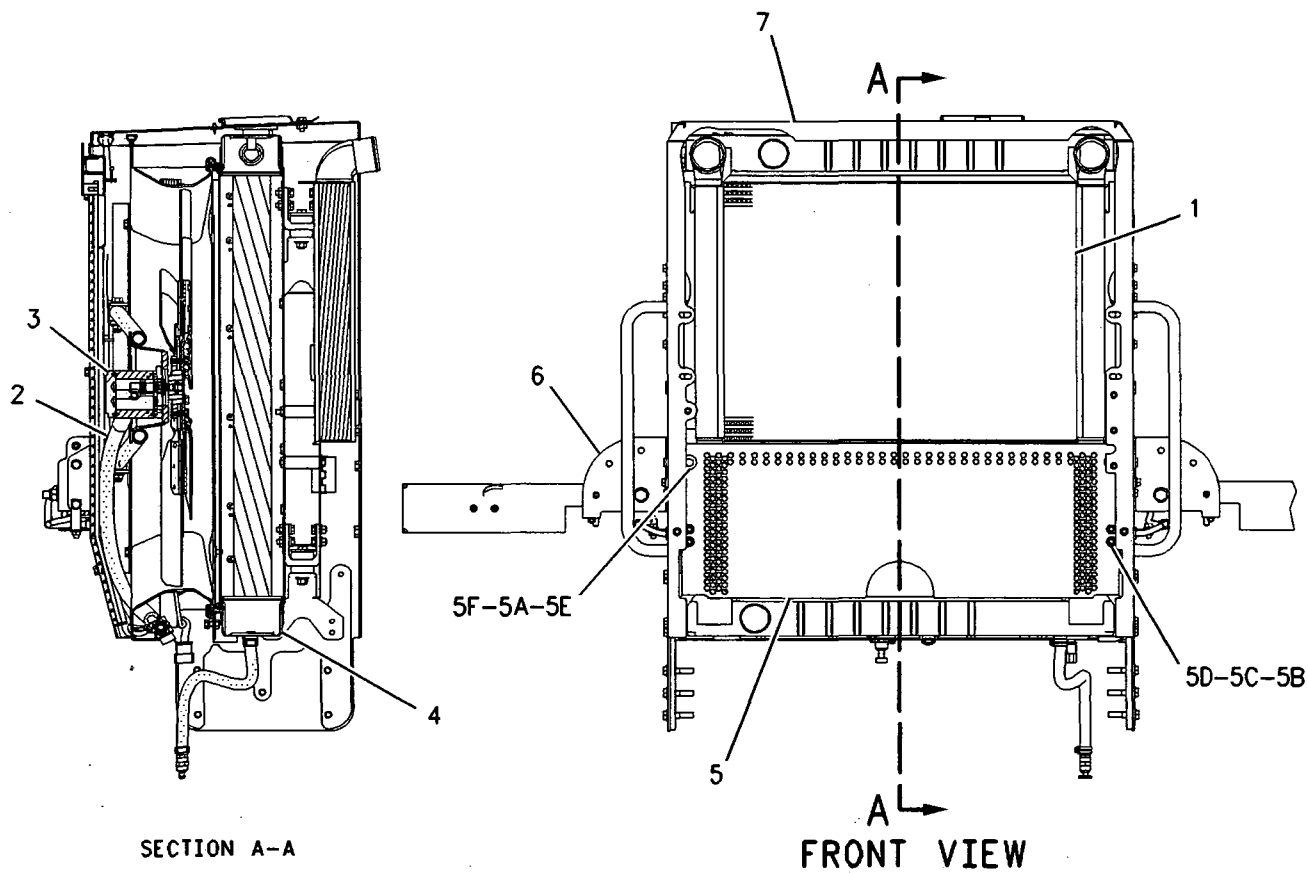

GRAPHIC #1 **<END>** g00954110

COOLING SYSTEM

179-3261 FAN & MOTOR GP

S/N: CCA1-UP

PART OF 185-1542, 191-9260 COOLING AR

ALSO AN ATTACHMENT

SMCS-1356, 1386 **i01815945**

NOTE	REF NO	GRAPHIC REF	PART NUMBER	QTY	PART NAME 1 2 3 4 5 6 (PRODUCT LEVEL)	SEE PAGE
Y	1	1	**224-7040**	1	MOTOR GP-GEAR	596
	2	1	**174-2104**	1	BRACKET AS	
	3	1	**177-5303**	1	SPIDER AS-FAN (6 BLADES)	
	4	1	**178-8993**	1	ADAPTER	
	5	1	**179-2509**	4	BRACKET AS	
M	6	1	**105-3484**	2	BOLT-SOCKET HEAD (M10X1.5X25-MM)	
	7	1	*153-6237*	2	ELBOW AS	
					(EACH INCLUDES)	
		1	**6V-9004**	1	ELBOW	
		1	**3D-2824**	1	SEAL-O-RING	
		1	**6V-9746**	1	SEAL-O-RING	
	8	1	**5P-1076**	4	WASHER-HARD (13.5X30X4-MM THK)	
M	9	1	**5P-8245**	1	WASHER-HARD (13.5X25.5X3-MM THK)	
	10	1	**6B-6684**	1	NUT-FULL (1/2-20-THD)	
M	11	1	**6V-7687**	4	LOCKNUT (M12X1.75-THD)	
M	12	1	**6V-8336**	4	BOLT (M12X1.75X70-MM)	
	13	1	**8T-4121**	8	WASHER-HARD (11X21X2.5-MM THK)	
M	14	1	**8T-4183**	4	BOLT (M12X1.75X40-MM)	
M	15	1	**8T-4195**	6	BOLT (M10X1.5X30-MM)	
M	16	1	**8T-4223**	8	WASHER-HARD (13.5X25.5X3-MM THK)	

M-METRIC PART
Y-SEPARATE ILLUSTRATION

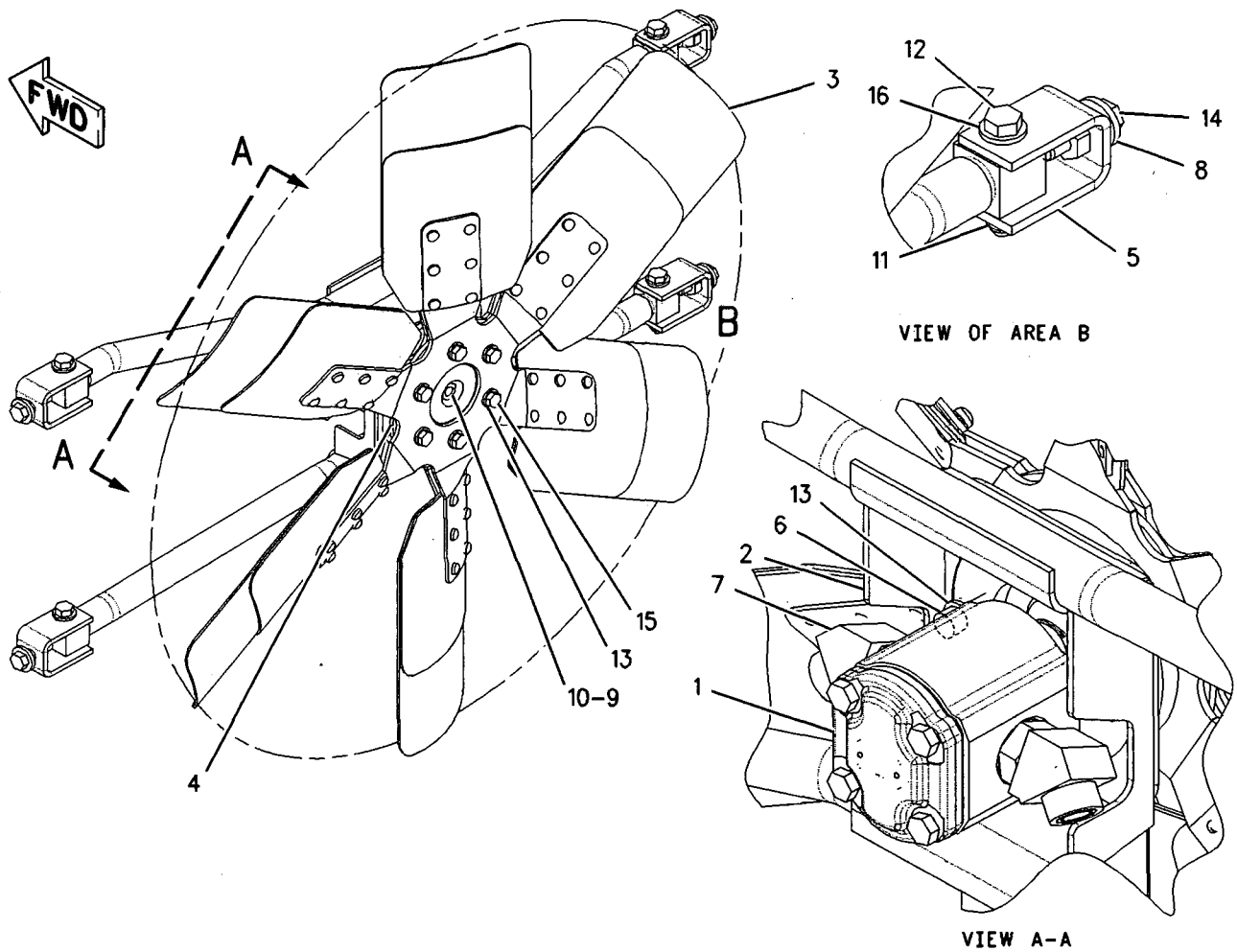

GRAPHIC #1 **<END>** g00788543

230-5839 FASTENER GP-RADIATOR

S/N: CCA1-UP

PART OF 159-4615 GENERAL AR

SMCS-1353 i02158817

NOTE	PART NUMBER	QTY	PART NAME 1 2 3 4 5 6 (PRODUCT LEVEL)	SEE PAGE
M	8T-4136	4	BOLT (M10X1.5X25-MM)	
M	8T-4910	10	BOLT (M12X1.75X60-MM)	
	242-3633	4	BOSS	
M	8T-4223	10	WASHER-HARD (13.5X25.5X3-MM THK)	

M-METRIC PART

<END>

215-2062 HOUSING & REGULATOR GP

S/N: 3PD1-UP

PART OF 215-2063 LINES GP-WATER

SMCS-1355, 1393 i01855698

NOTE	REF NO	GRAPHIC REF	PART NUMBER	QTY	PART NAME 1 2 3 4 5 6 (PRODUCT LEVEL)	SEE PAGE
	1	1	4P-9485	1	MANIFOLD	
	2	1	7C-3095	1	REGULATOR-TEMPERATURE (98-DEG C)	
	3	1	7E-7912	1	GASKET	
	4	1	118-2800	1	HOUSING AS-REGULATOR	
	4A	1	3S-9643	1	SEAL-LIP TYPE	
	4B	1	8T-6757	1	PLUG-PIPE	
M	5	1	123-4511	2	STUD	
	6	1	7X-7732	1	PLUG-PIPE	
M	7	1	8T-0292	2	BOLT (M8X1.25X90-MM)	
	8	1	8T-6762	9	PLUG-PIPE	
	9	1	8T-6766	1	PLUG-PIPE	
	10	1	8T-6767	1	PLUG-PIPE	
	11	1	9M-1974	4	WASHER-HARD (8.8X16X2-MM THK)	

M-METRIC PART

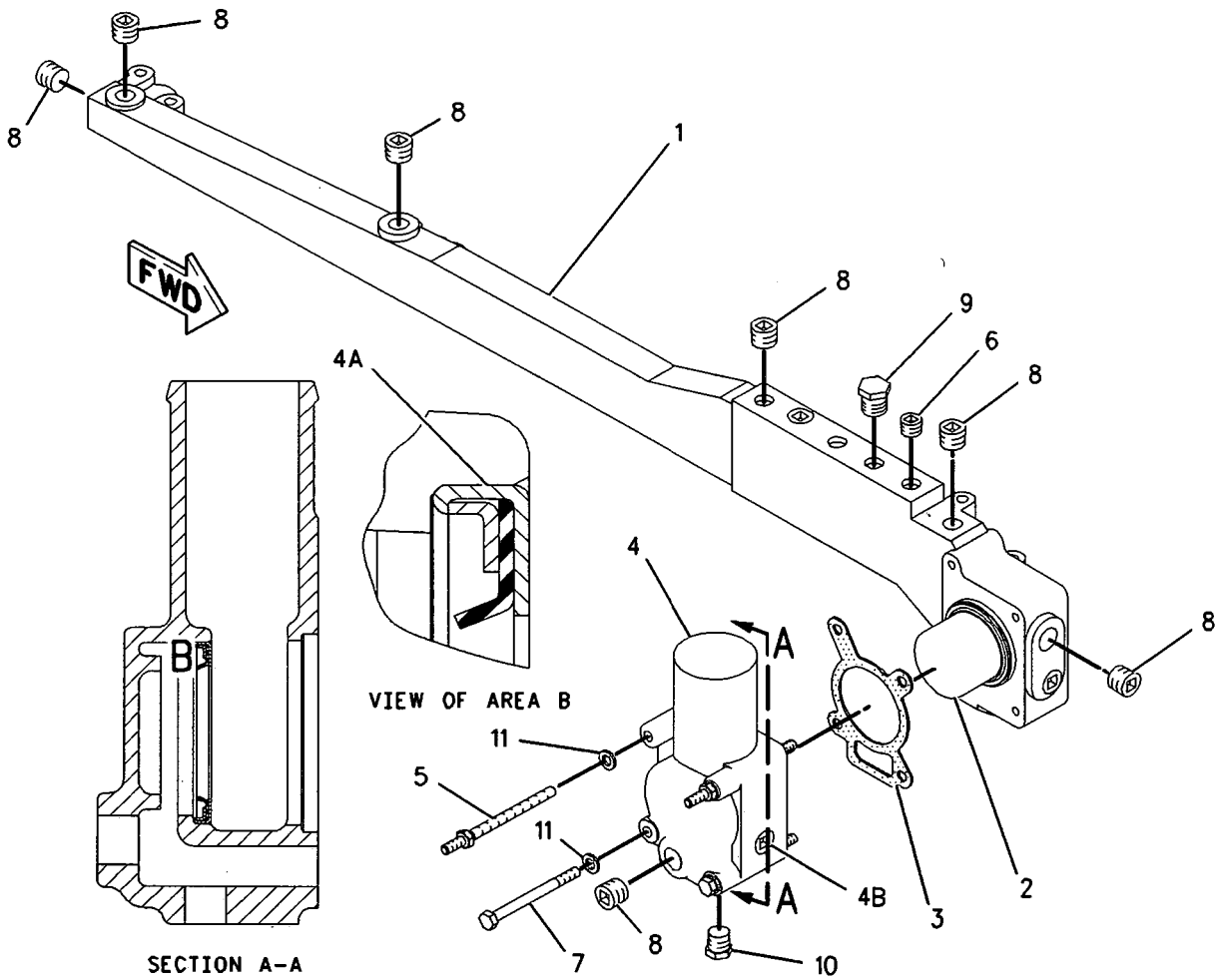

GRAPHIC #1 <END> g00841045

COOLING SYSTEM

116-5460 LINES GP-WATER

S/N: 3PD1-UP

PART OF 160-5101 ENGINE AR

SMCS-1355, 1380, 1393 **i01855196**

NOTE	REF NO	GRAPHIC REF	PART NUMBER	QTY	PART NAME 1 2 3 4 5 6 (PRODUCT LEVEL)	SEE PAGE
	1	1	**3E-4352**	2	WASHER-HARD (8.8X20.5X2.5MM THK)	
M	2	1	**6V-3918**	2	BOLT (M8X1.25X50MM)	
	3	1	**107-5795**	1	TUBE	
	4	1	**7L-6580**	2	SEAL-O-RING	
	5	1	**105-4208**	1	FLANGE	
	6	1	**7E-5555**	1	GASKET	

M-METRIC PART

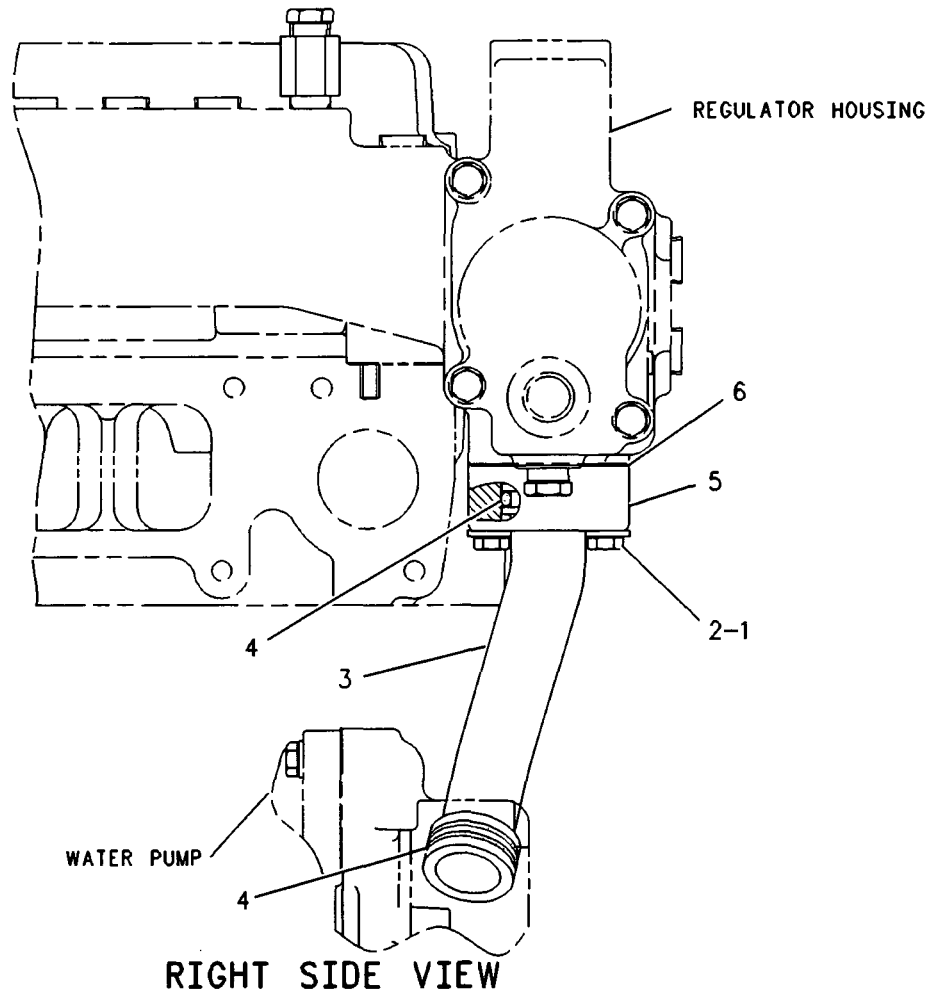

RIGHT SIDE VIEW

GRAPHIC #1 **<END>** g00251320

COOLING SYSTEM

118-2808 LINES GP-WATER

S/N: 3PD1-UP

PART OF 160-5101 ENGINE AR

SMCS-1355, 1380, 1393 **i01855586**

NOTE	REF NO	GRAPHIC REF	PART NUMBER	QTY	PART NAME 1 2 3 4 5 6 (PRODUCT LEVEL)	SEE PAGE
	1	1	**101-1635**	1	GASKET	
M	2	1	**6V-3918**	2	BOLT (M8X1.25X50MM)	
	3	1	**9M-1974**	1	WASHER-HARD (8.8X16X2MM THK)	
	4	1	**102-8785**	1	ELBOW-WATER PUMP	
	5	1	**7X-7731**	3	PLUG-PIPE	

M-METRIC PART

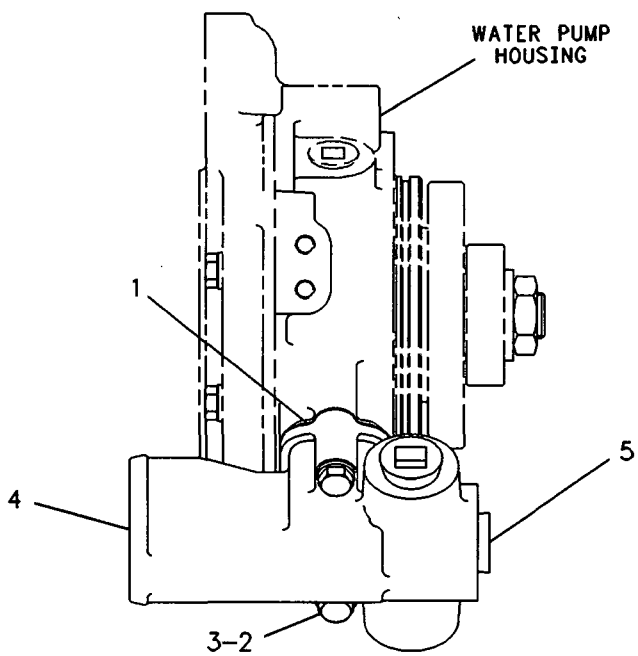

RIGHT SIDE VIEW

GRAPHIC #1 **<END>** g00232449

COOLING SYSTEM

159-5439 LINES GP-WATER

S/N: CCA1-UP

PART OF 159-4615 GENERAL AR

SMCS-1355, 1380, 1393 **i01979353**

NOTE	REF NO	GRAPHIC REF	PART NUMBER	QTY	PART NAME 1 2 3 4 5 6 (PRODUCT LEVEL)	SEE PAGE
	1	1	**1P-7297**	1	VALVE-DRAIN (ENGINE COOLANT)	
	2	1	**4N-7431**	1	HOSE-RADIATOR	
	3	1	**5D-1026**	2	CLAMP-HOSE	
	4	1	**157-0670**	1	CAP-DUST	
	5	1	**7D-7026**	2	CONNECTOR-HOSE	
	6	1	**7K-1181**	2	STRAP-CABLE	
	7	1	**8N-9071**	1	VALVE AS (ENGINE COOLANT)	
		1	**7N-7688**	1	FERRULE	
		1	**8N-9072**	1	BODY-VALVE	
		1	**9M-5590**	1	BALL	
	8	1	**8T-4984**	8	CLAMP-HOSE	
	9	1	**9B-4179**	2	HOSE	
	10	1	**174-5635**	1	TUBE AS	
	11	1	**178-6327**	1	HOSE	
	12	1	**179-2426**	1	BRACKET AS	
	13	1	**179-2966**	1	TUBE AS	
	14	1	**184-5394**	1	CLIP	
I	15	1	**212-3266**	1	HOSE AS	
	16	1	**003-9514**	1	COUPLING-PIPE	
	17	1	**154-9025**	1	VALVE-COOLANT SAMPLING (ENGINE)	
	18	1	**2N-8037**	1	ELBOW	
	19	1	**4S-1962**	1	CLIP	
	20	1	**6V-1581**	2	CLIP (SLOT)	
	21	1	**6V-1582**	2	CLIP (TAB)	
	22	1	**8T-4121**	4	WASHER-HARD (11X21X2.5-MM THK)	
M	23	1	**8T-4137**	2	BOLT (M10X1.5X20-MM)	
M	24	1	**8T-4186**	1	BOLT (M10X1.5X40-MM)	
M	25	1	**8T-4195**	1	BOLT (M10X1.5X30-MM)	
E	26	1	**5P-0767**		HOSE (48CM)	

E-ORDER BY THE CENTIMETER
I-REFER TO HYDRAULIC INFORMATION SYSTEM
M-METRIC PART

159-5439 **LINES GP-WATER** *(contd.)* **i01979353**

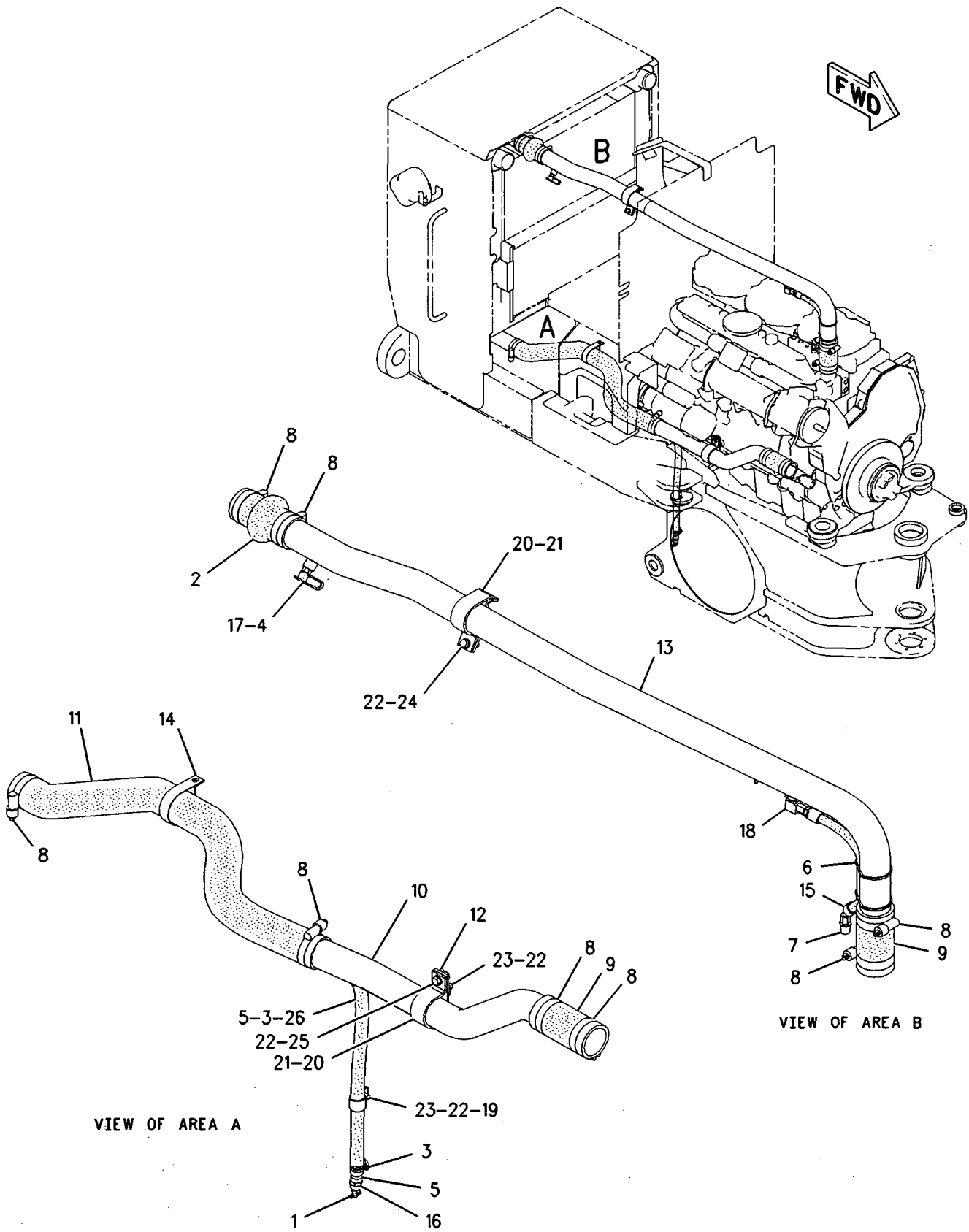

GRAPHIC #1 **<END>** g00985814

215-2063 LINES GP-WATER

S/N: 3PD1-UP

PART OF 160-5101 ENGINE AR

SMCS-1355, 1380, 1393 i01855571

NOTE	REF NO	GRAPHIC REF	PART NUMBER	QTY	PART NAME 1 2 3 4 5 6 (PRODUCT LEVEL)	SEE PAGE
Y	1	1	215-2062	1	HOUSING & REGULATOR GP	76
	2	1	118-2797	4	GASKET	
M	3	1	5P-8347	7	BOLT (M8X1.25X70MM)	
M	4	1	6V-3821	1	BOLT (M8X1.25X110MM)	
	5	1	9M-1974	8	WASHER-HARD (8.8X16X2MM THK)	

M-METRIC PART
Y-SEPARATE ILLUSTRATION

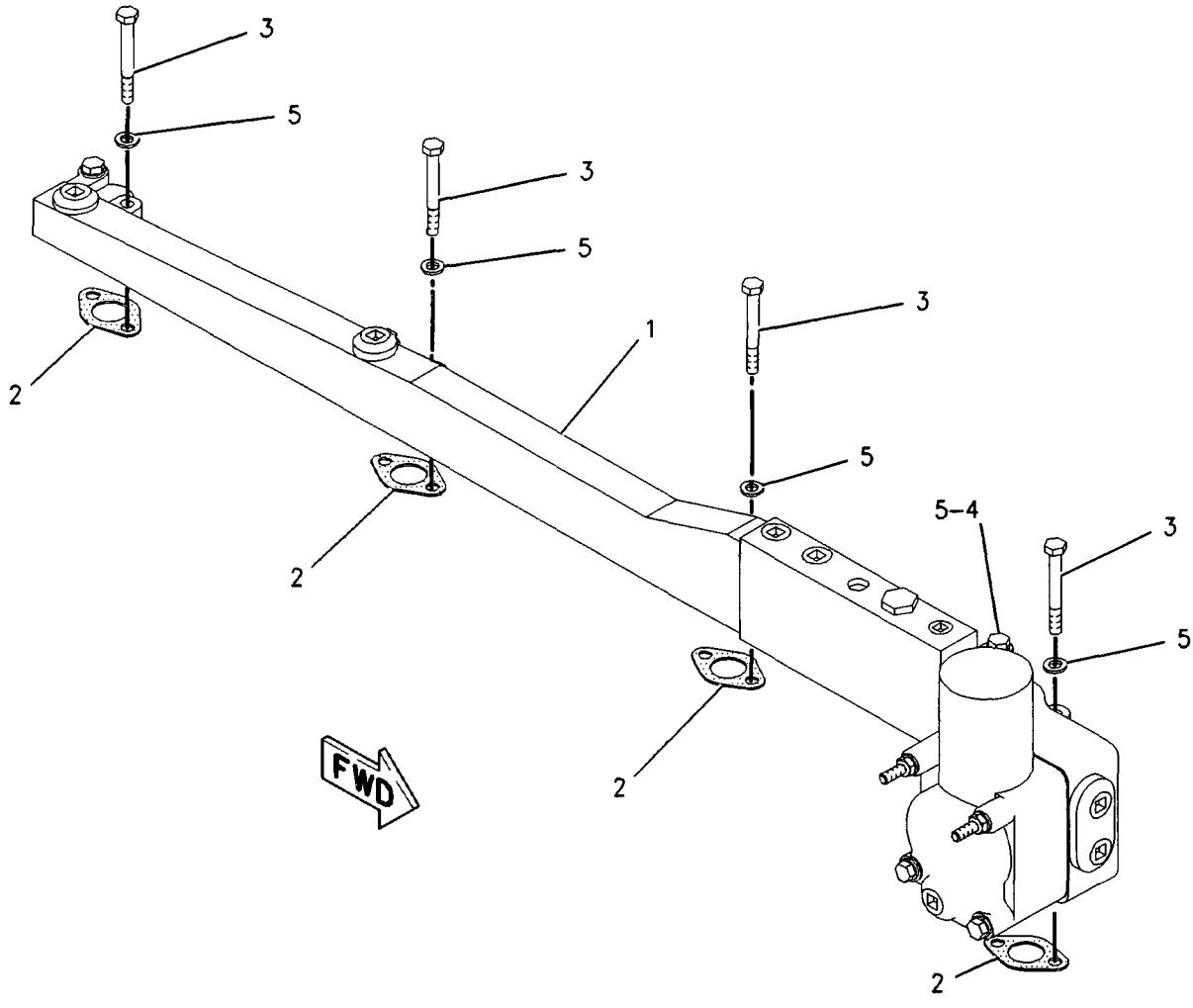

GRAPHIC #1 <END> g00840862

COOLING SYSTEM

184-0874 PLATE GP-RADIATOR

S/N: CCA895-UP

PART OF 185-1542 COOLING AR

SMCS-1353 **i02168705**

NOTE	REF NO	GRAPHIC REF	PART NUMBER	QTY	PART NAME 1 2 3 4 5 6 (PRODUCT LEVEL)	SEE PAGE
	1	1	**184-0871**	1	PLATE	
	2	1	**199-2711**	2	SPACER (7.82X26.67X75-MM THK)	
M	3	1	**2Y-5829**	4	NUT (M10X1.5-THD)	
M	4	1	**6V-4248**	4	BOLT (M10X1.5X25-MM)	
	5	1	**6V-5839**	8	WASHER (11X21X2.5-MM THK)	
M	6	1	**8T-4178**	2	BOLT (M10X1.5X90-MM)	
	7	1	**8T-4222**	2	WASHER-PLATED (11X32X2.5-MM THK)	

M-METRIC PART

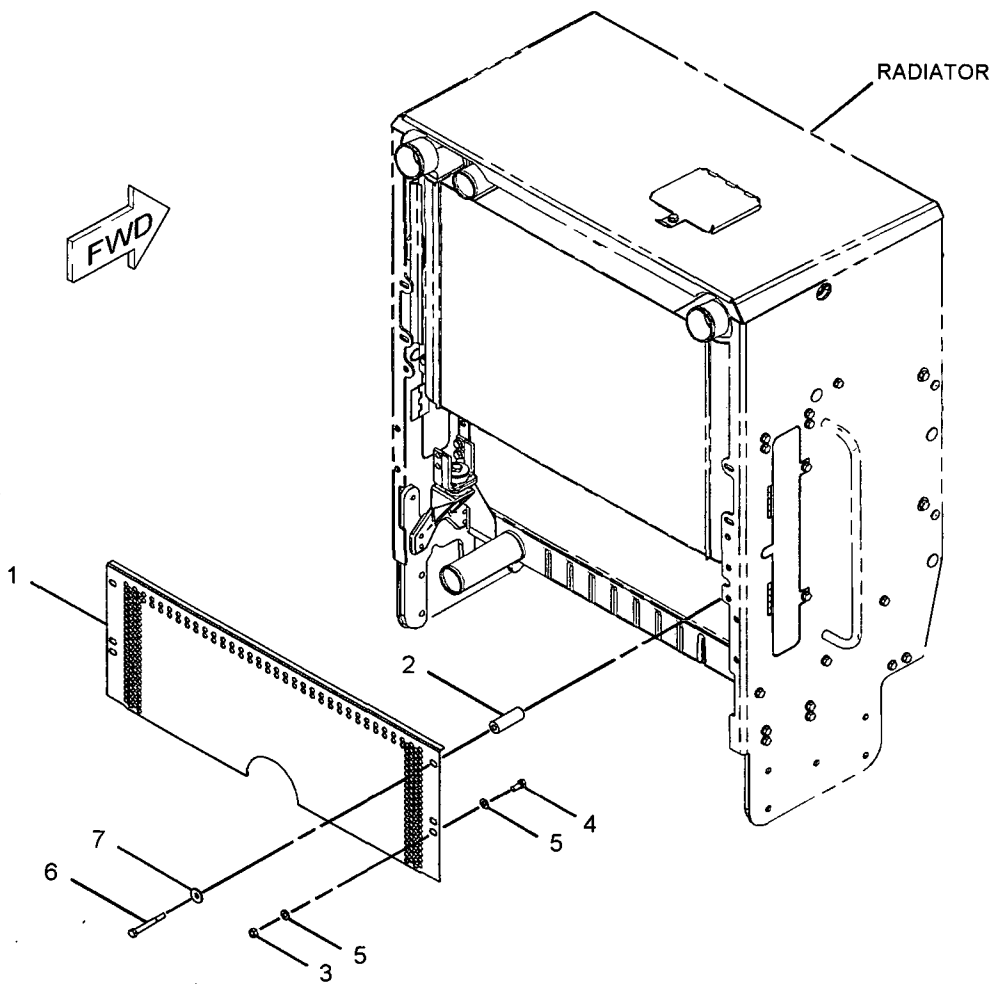

GRAPHIC #1 **<END>** g01074952

117-2674 PUMP GP-WATER

S/N: 3PD1-UP

PART OF 160-5101 ENGINE AR

SMCS-1361 i01855200

NOTE	REF NO	GRAPHIC REF	PART NUMBER	QTY	PART NAME 1 2 3 4 5 6 (PRODUCT LEVEL)	SEE PAGE
YR	1	1	**176-7000**	1	PUMP GP-WATER	84
M	2	1	**6V-5221**	2	BOLT (M8X1.25X80MM)	
	3	1	**9M-1974**	2	WASHER-HARD (8.8X16X2MM THK)	
	4	1	**6V-7350**	1	SEAL-O-RING	

M-METRIC PART
R-REMFG PART MAY BE AVAILABLE
Y-SEPARATE ILLUSTRATION

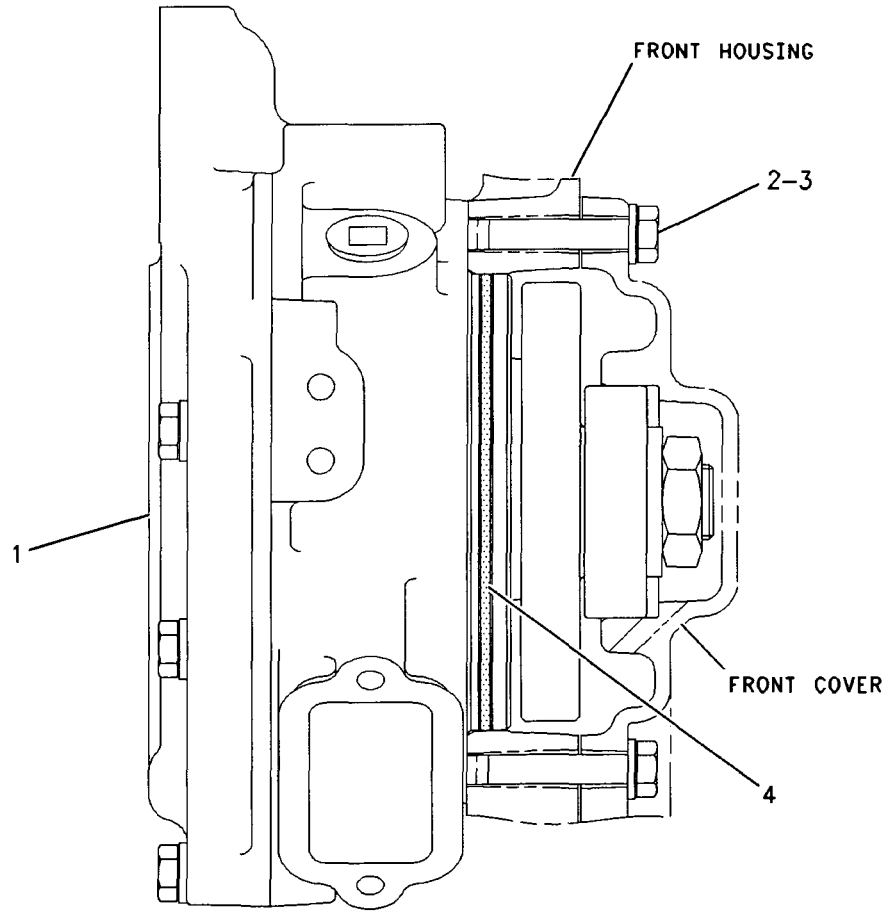

RIGHT SIDE VIEW

GRAPHIC #1 **<END>** g00796828

COOLING SYSTEM

176-7000 PUMP GP-WATER*R

S/N: 3PD1-UP

PART OF 117-2674 PUMP GP-WATER

SMCS-1361 **i01855709**

NOTE	REF NO	GRAPHIC REF	PART NUMBER	QTY	PART NAME 1 2 3 4 5 6 (PRODUCT LEVEL)	SEE PAGE
	1	1	**9Y-3513**	1	GEAR (41 TEETH)	
	2	1	**105-4210**	1	GASKET	
	3	1	**147-5088**	1	SEAL AS-WATER PUMP	
	4	1	**176-6994**	1	WASHER	
	5	1	**176-6995**	1	COVER-PUMP	
	6	1	**176-6997**	1	SHAFT	
	7	1	**176-6998**	1	IMPELLER-PUMP	
	8	1	**176-6999**	1	HOUSING AS-PUMP	
	9	1	**1B-3867**	2	BALL BEARING	
M	10	1	**6V-3940**	6	BOLT (M8X1.25X25MM)	
	11	1	**7X-7731**	1	PLUG-PIPE	
	12	1	**8C-3100**	1	SEAL-LIP	
	13	1	**8T-6762**	1	PLUG-PIPE	
M	14	1	**8T-9515**	1	BOLT-SOCKET HEAD (M10X1.5X40MM)	
	15	1	**8T-9598**	1	RING-RETAINING	
	16	1	**9M-1974**	6	WASHER-HARD (8.8X16X2MM THK)	

M-METRIC PART

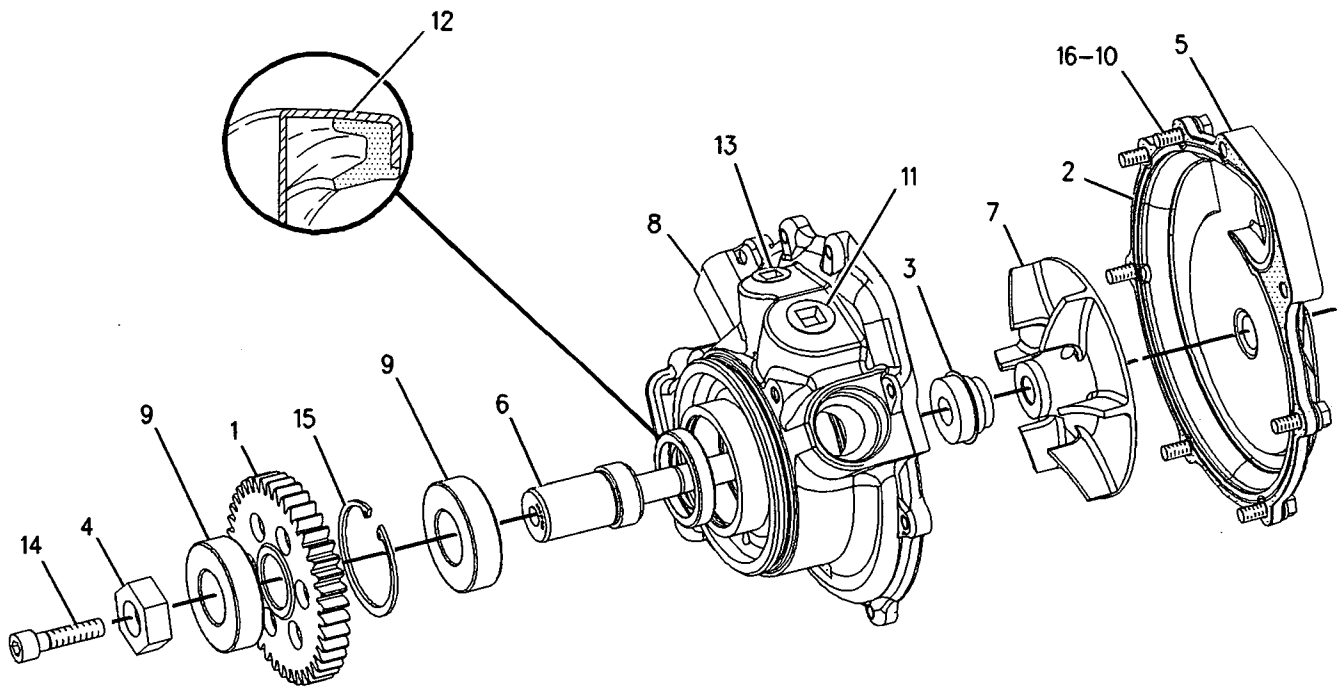

GRAPHIC #1 **<END>** g00713988

180-7004 RADIATOR GP

S/N: CCA1-894
PART OF 185-1542, 191-9260 COOLING AR
ALSO AN ATTACHMENT

SMCS-1353 i01857837

NOTE	REF NO	GRAPHIC REF	PART NUMBER	QTY	PART NAME 1 2 3 4 5 6 (PRODUCT LEVEL)	SEE PAGE
	1	1	4H-2633	4	CLIP	
	2	1	6L-8617	1	CAP-RADIATOR (7-PSI)	
	3	1	8N-8846	1	NECK-FILLER	
	4	1	9Y-9236	1	BODY AS-GAUGE	
G	5	1	9X-2388		HOSE (63 IN)	

G-ORDER BY THE INCH

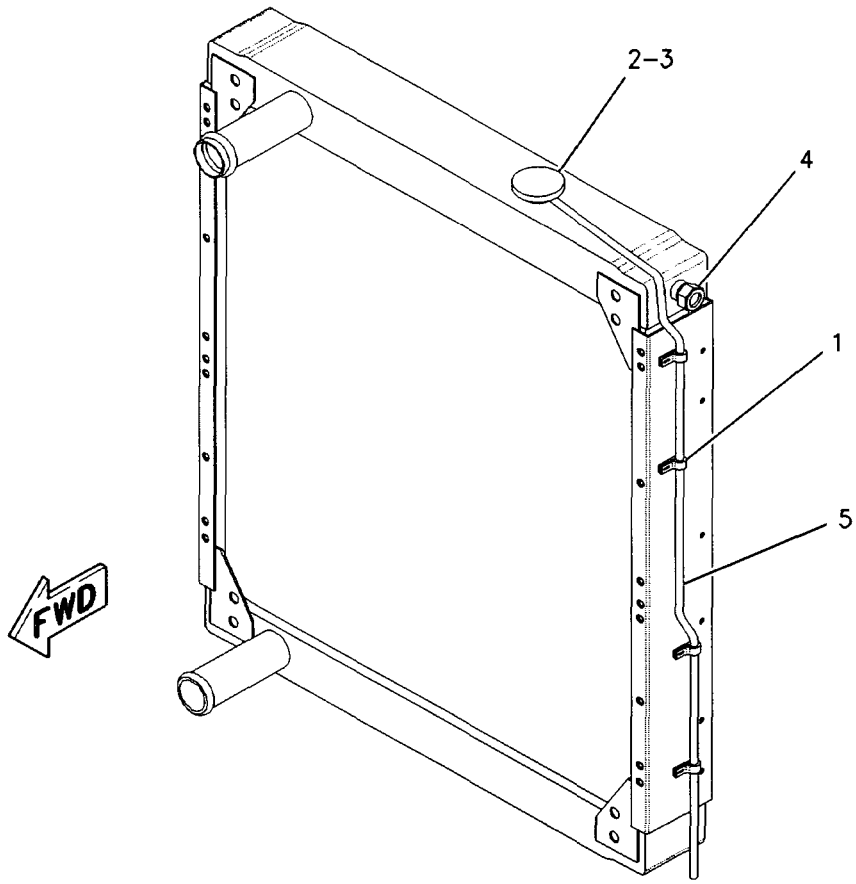

GRAPHIC #1 **<END>** g00954123

COOLING SYSTEM

241-6949 RADIATOR GP

S/N: CCA895-UP

PART OF 185-1542 COOLING AR

SMCS-1353 **i02158686**

NOTE	REF NO	GRAPHIC REF	PART NUMBER	QTY	PART NAME 1 2 3 4 5 6 (PRODUCT LEVEL)	SEE PAGE
	1	1	**4H-2633**	4	CLIP	
	2	1	**6L-8617**	1	CAP-RADIATOR (7-PSI)	
	3	1	**8N-8846**	1	NECK-FILLER	
	4	1	**9Y-9236**	1	BODY AS-GAUGE (COOLANT LEVEL)	
G	5	1	**9X-2388**		HOSE (63-IN)	

G-ORDER BY THE INCH

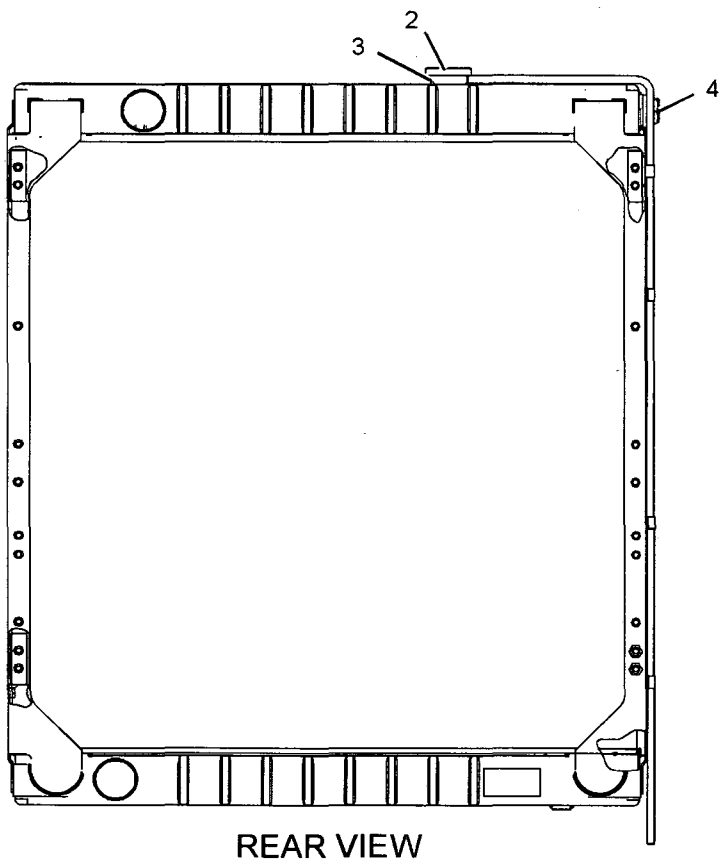

REAR VIEW

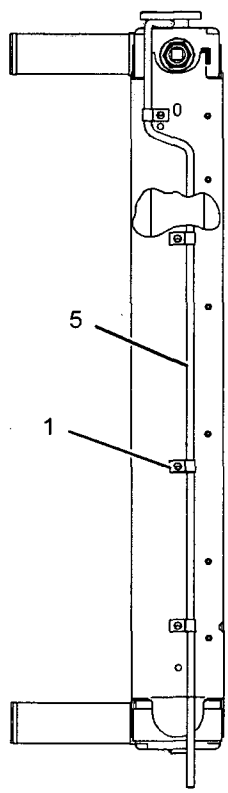

RIGHT SIDE VIEW

g01079093

GRAPHIC #1

<END>

AIR INLET AND EXHAUST SYSTEM

163-0310 AFTERCOOLER & MOUNTING GP

S/N: CCA1-UP
PART OF 185-1542, 191-9260 COOLING AR
ALSO AN ATTACHMENT

SMCS-1063 i02203528

NOTE	REF NO	GRAPHIC REF	PART NUMBER	QTY	PART NAME 1 2 3 4 5 6 (PRODUCT LEVEL)	SEE PAGE
	1	1	**167-3911**	1	CORE AS-AFTERCOOLER	
	2	1	**199-2711**	2	SPACER (7.82X26.67X75-MM THK)	
	3	1	**4S-9191**	4	WASHER (12X22.5X5-MM THK)	
M	4	1	**6V-1820**	4	BOLT (M10X1.5X30-MM)	
	5	1	**7X-7729**	2	WASHER (11X25X3-MM THK)	
M	6	1	**8T-5436**	2	BOLT (M10X1.5X130-MM)	
E	7	1	**123-3827**	2	SEAL (42-CM EACH)	

E-ORDER BY THE CENTIMETER
M-METRIC PART

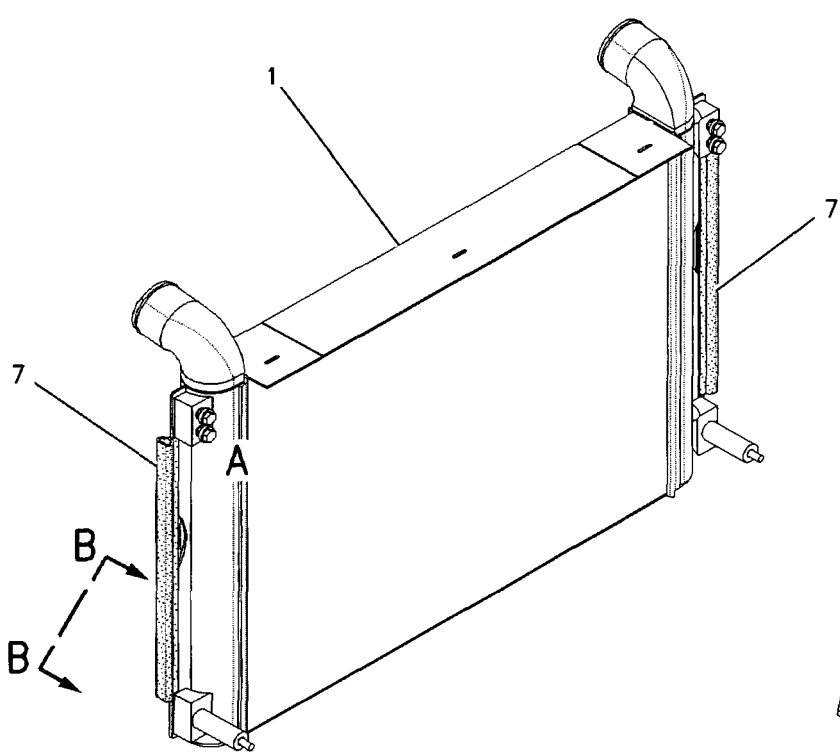

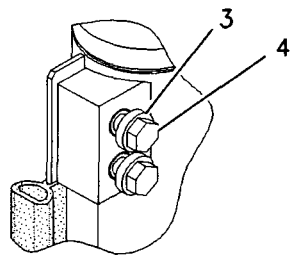

VIEW OF AREA A

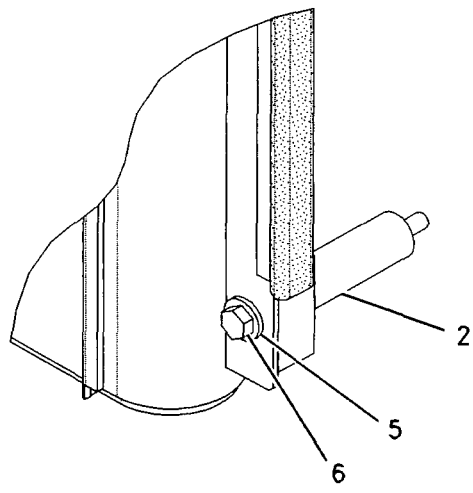

VIEW B-B

GRAPHIC #1 **<END>** g00954129

AIR INLET AND EXHAUST SYSTEM

159-7364 AIR CLEANER GP

S/N: CCA1-UP

PART OF 159-4615 GENERAL AR

SMCS-1051, 1054 **i02203531**

NOTE	REF NO	GRAPHIC REF	PART NUMBER	QTY	PART NAME 1 2 3 4 5 6 (PRODUCT LEVEL)	SEE PAGE
	1	1	**5P-4405**	1	CONNECTOR-AIR BRAKE	
	2	1	**7S-9396**	1	PRESCREENER AS	
		1	**0S-1591**	1	BOLT (3/8-16X1.5-IN)	
		1	**6V-8801**	1	NUT (3/8-16-THD)	
	3	1	**8N-2694**	1	INDICATOR GP-AIR FILTER CHANGE	
	4	1	**9M-0164**	2	CLAMP-HOSE	
	5	1	**174-1610**	1	HOSE	
Y	6	1	**174-1612**	1	AIR CLEANER GP	90
	7	1	**174-1613**	1	BRACKET AS	
M		1	**8T-3490**	2	NUT-WELD (M10X1.5-THD)	
	8	1	**193-1758**	1	BRACKET AS	
M		1	**8T-3490**	2	NUT-WELD (M10X1.5-THD)	
	9	1	**237-0226**	2	CLAMP	
	10	1	**5K-5068**	1	FITTING	
	11	1	**5P-4423**	1	ELBOW	
	12	1	**7X-7729**	10	WASHER (11X25X3-MM THK)	
M	13	1	**8T-4195**	8	BOLT (M10X1.5X30-MM)	
M	14	1	**8T-4196**	2	BOLT (M10X1.5X35-MM)	
E	15	1	**5P-2817**		HOSE (38-CM)	
BD	16	1	**5P-6011**		TUBE	

B-USE AS REQUIRED
D-ORDER BY THE METER
E-ORDER BY THE CENTIMETER
M-METRIC PART
Y-SEPARATE ILLUSTRATION

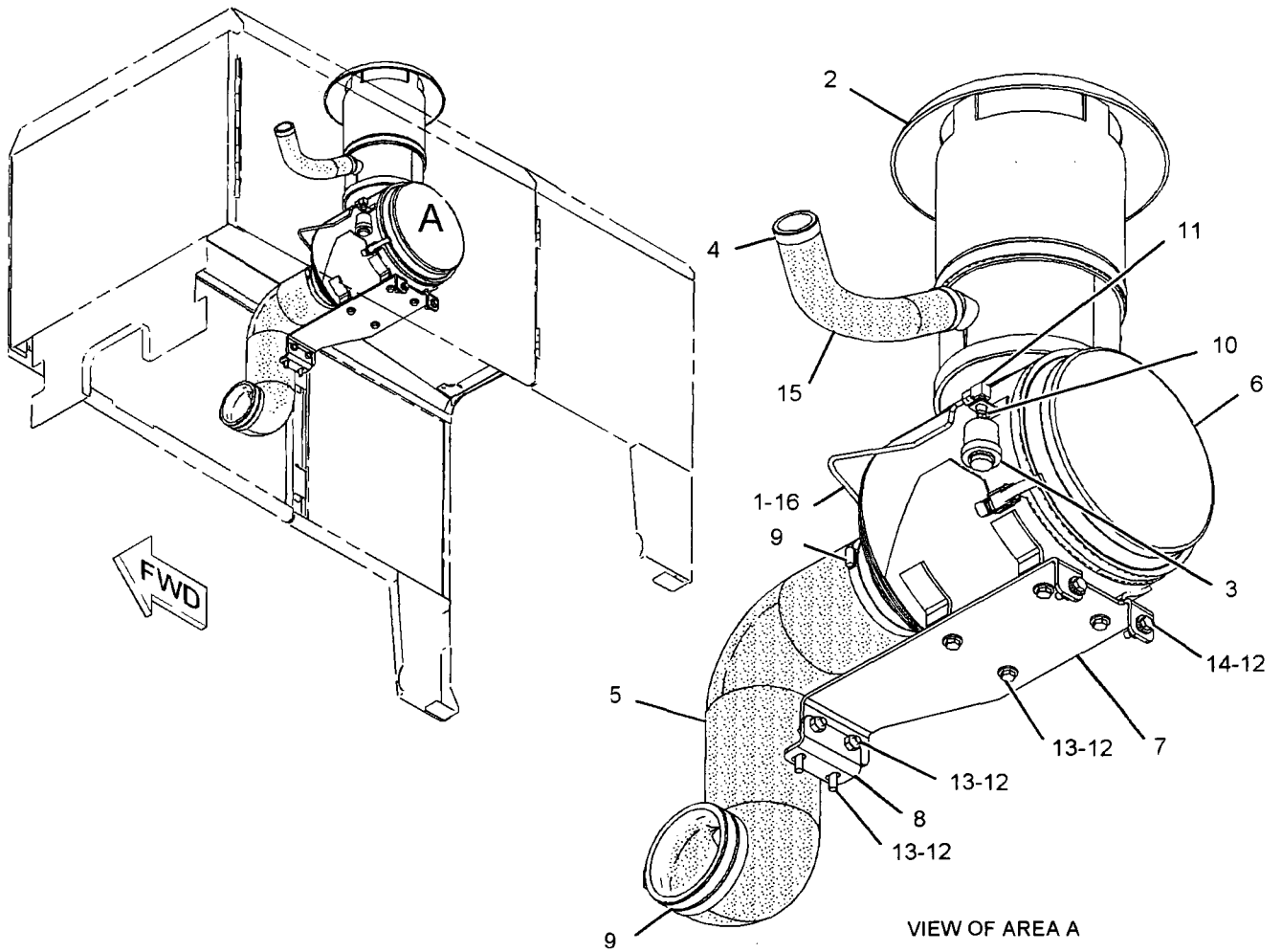

GRAPHIC #1

<END>

g01112745

AIR INLET AND EXHAUST SYSTEM

174-1612 AIR CLEANER GP

S/N: CCA1-UP

PART OF 159-7364 AIR CLEANER GP

SMCS-1051, 1054 **i02023644**

NOTE	REF NO	GRAPHIC REF	PART NUMBER	QTY	PART NAME 1 2 3 4 5 6 (PRODUCT LEVEL)	SEE PAGE
	1	1	**6I-0273**	1	ELEMENT AS-PRIMARY	
	2	1	**6I-0274**	1	ELEMENT AS-SECONDARY	
	3	1	**6I-0275**	1	COVER AS-AIR CLEANER	
		1	**4P-5524**	1	SEAL-O-RING	
		1	**101-2850**	1	FILM-INFORMATION (AIR CLEANER)	
	4	1	**8N-4617**	1	KIT-AIR CLEANER CLAMP	
		1	**1N-4403**	1	CLIP AS	
		1	**9B-2596**	1	RIVET	
	5	1	**227-2517**	1	PRECLEANER	
	6	1	**227-4676**	1	AIR CLEANER GP	

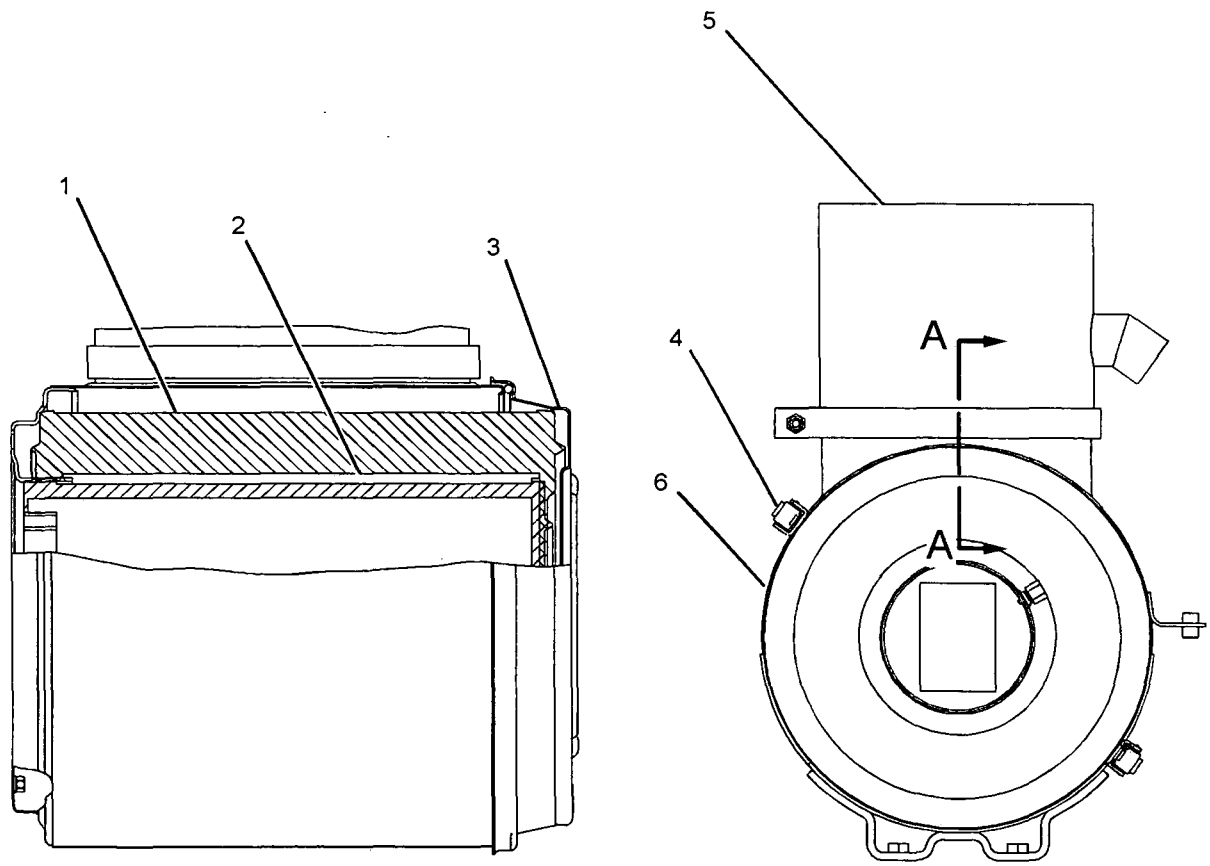

SECTION A-A

GRAPHIC #1 **<END>** g01049616

AIR INLET AND EXHAUST SYSTEM

165-6762 LINES GP-AIR–AFTERCOOLER

S/N: CCA1-UP

PART OF 159-4615 GENERAL AR

SMCS-1071 **i01891194**

NOTE	REF NO	GRAPHIC REF	PART NUMBER	QTY	PART NAME 1 2 3 4 5 6 (PRODUCT LEVEL)	SEE PAGE
	1	1	**7C-0752**	1	CLAMP	
	2	1	**7E-8629**	1	HOSE-REDUCER	
	3	1	**9R-5008**	2	SPACER (11X20X6-MM THK)	
	4	1	**163-0319**	1	TUBE	
	5	1	**177-0581**	3	HOSE	
	6	1	**177-0717**	1	TUBE	
	7	1	*177-2202*	1	ELBOW GP	
		1	**174-1602**	1	ELBOW	
M		1	**6V-2317**	4	BOLT (M8X1.25X30-MM)	
		1	**8T-6765**	1	PLUG-PIPE	
		1	**9M-1974**	4	WASHER-HARD (8.8X16X2-MM THK)	
		1	**101-3125**	1	GASKET (AIR INLET MANIFOLD)	
	8	1	**177-9615**	1	TUBE	
	9	1	**209-4578**	7	CLAMP	
	10	1	**208-7448**	1	CLAMP (M5X0.8-THD)	
	11	1	**2A-3034**	2	CLAMP-AIR CLEANER	
	12	1	**7X-7729**	2	WASHER (11X25X3-MM THK)	
M	13	1	**8T-4196**	2	BOLT (M10X1.5X35-MM)	

M-METRIC PART

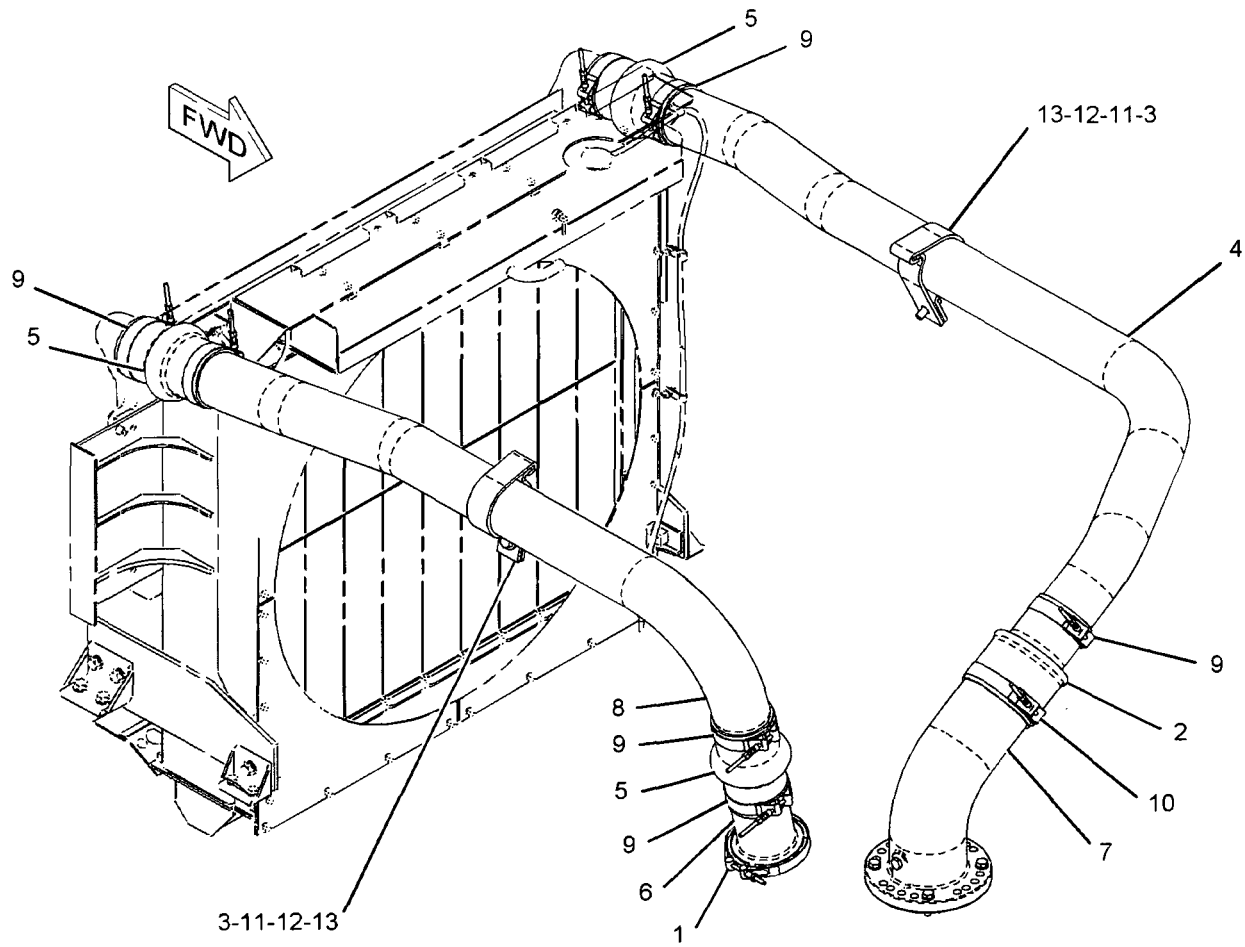

GRAPHIC #1 **<END>** g00984369

AIR INLET AND EXHAUST SYSTEM

209-7827 LINES GP-AIR–TANK

S/N: CCA1-UP

PART OF 159-4615 GENERAL AR

SMCS-1071 **i01814299**

NOTE	REF NO	GRAPHIC REF	PART NUMBER	QTY	PART NAME 1 2 3 4 5 6 (PRODUCT LEVEL)	SEE PAGE
	1	1	**2H-3940**	1	ELBOW	
	2	1	**8W-1614**	2	CLIP	
	3	1	**8W-8528**	4	SLEEVE	
I	4	1	**8X-5395**	1	HOSE AS	
	5	1	**177-4142**	1	HOSE AS	
	6	1	**3V-0409**	1	SPACER (0.423X.675X1.25-IN THK)	
	7	1	**4D-2560**	1	CONNECTOR-PIPE	
	8	1	**8L-5008**	1	ELBOW-PIPE	
	9	1	**8T-4121**	1	WASHER-HARD (11X21X2.5-MM THK)	
M	10	1	**8T-4185**	1	BOLT (M10X1.5X50-MM)	

I-REFER TO HYDRAULIC INFORMATION SYSTEM
M-METRIC PART

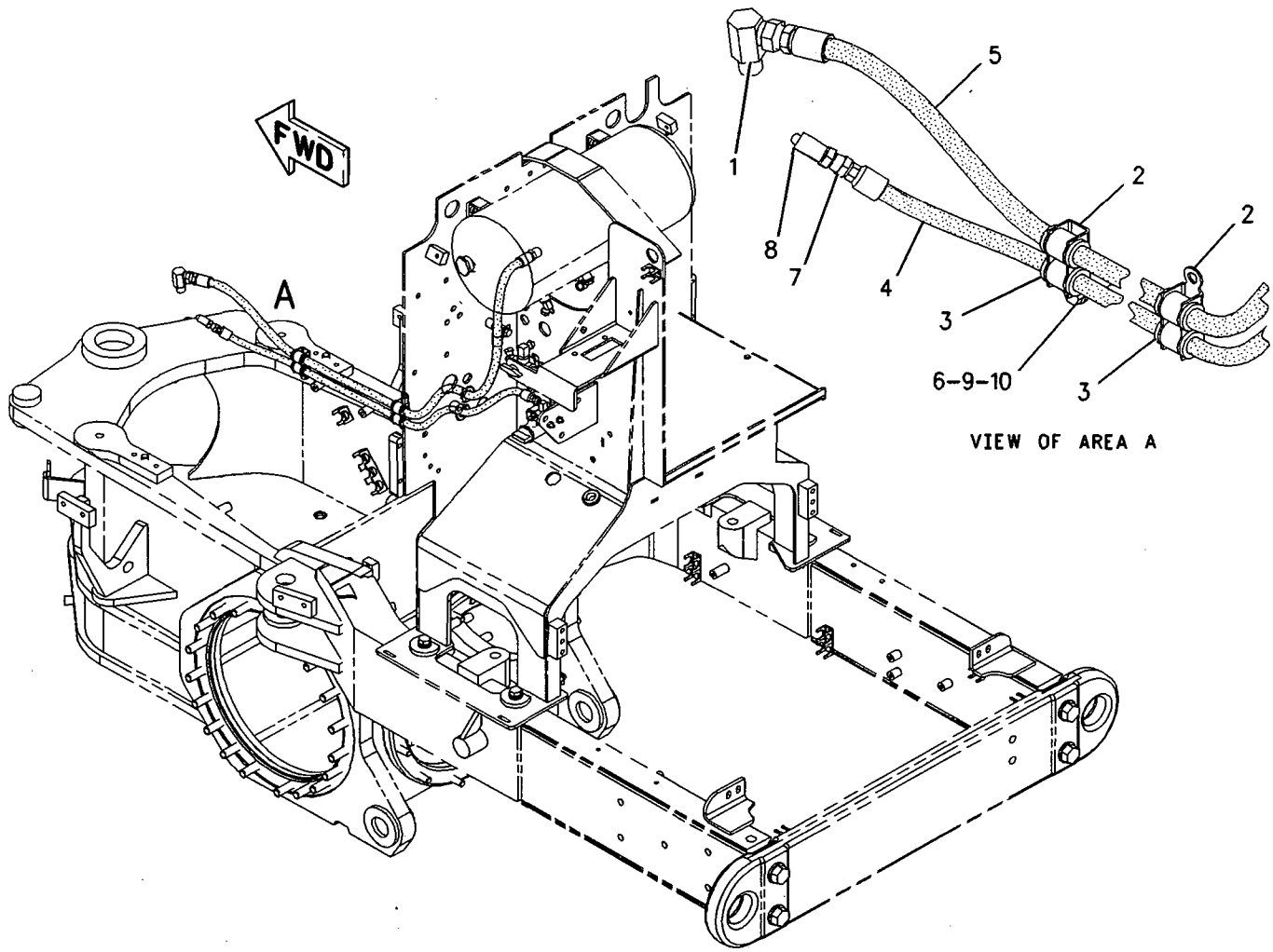

GRAPHIC #1 **<END>** g00831228

AIR INLET AND EXHAUST SYSTEM

156-3680 MANIFOLD GP-EXHAUST

S/N: 3PD1-UP

PART OF 160-5101 ENGINE AR

SMCS-1059 **i01855662**

NOTE	REF NO	GRAPHIC REF	PART NUMBER	QTY	PART NAME 1 2 3 4 5 6 (PRODUCT LEVEL)	SEE PAGE
	1	1	**4P-8279**	1	MANIFOLD-EXHAUST	
	2	1	**117-0228**	1	MANIFOLD-EXHAUST	
	3	1	**4P-8280**	1	MANIFOLD-EXHAUST	
	4	1	**109-5313**	6	GASKET	
	5	1	**4P-4369**	12	SPACER	
M	6	1	**116-3715**	12	STUD-TAPERLOCK	
M	7	1	**8T-7044**	4	STUD-TAPERLOCK	
M	8	1	**3E-8017**	12	LOCKNUT	
	9	1	**6V-5839**	12	WASHER (11X21X2.5MM THK)	

M-METRIC PART

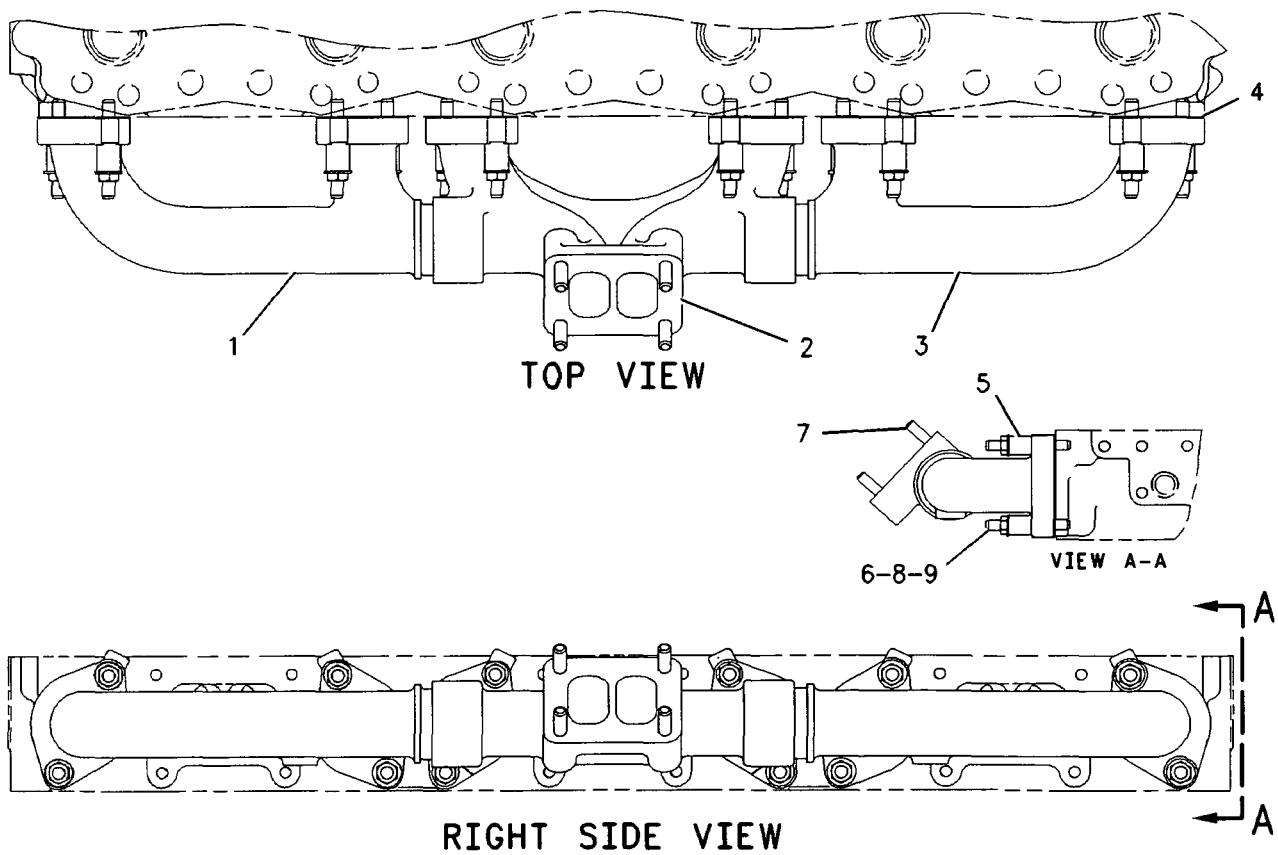

GRAPHIC #1 **<END>** g00784369

AIR INLET AND EXHAUST SYSTEM

116-5405 MANIFOLD GP-INLET

S/N: 3PD1-UP

PART OF 160-5101 ENGINE AR

SMCS-1058 **i01855163**

NOTE	REF NO	GRAPHIC REF	PART NUMBER	QTY	PART NAME 1 2 3 4 5 6 (PRODUCT LEVEL)	SEE PAGE
	1	1	**7W-5164**	3	GASKET	
	2	1	**6V-5839**	12	WASHER (11X21X2.5-MM THK)	
M	3	1	**6V-7981**	6	BOLT (M10X1.5X70-MM)	
M	4	1	**6V-5842**	6	BOLT (M10X1.5X40-MM)	
	5	1	**116-5406**	1	MANIFOLD-INLET	
	6	1	**8T-6767**	1	PLUG-PIPE	
	7	1	**8T-6765**	1	PLUG-PIPE	
	8	1	**9S-4191**	1	PLUG	
	9	1	**3J-1907**	1	SEAL-O-RING	

M-METRIC PART

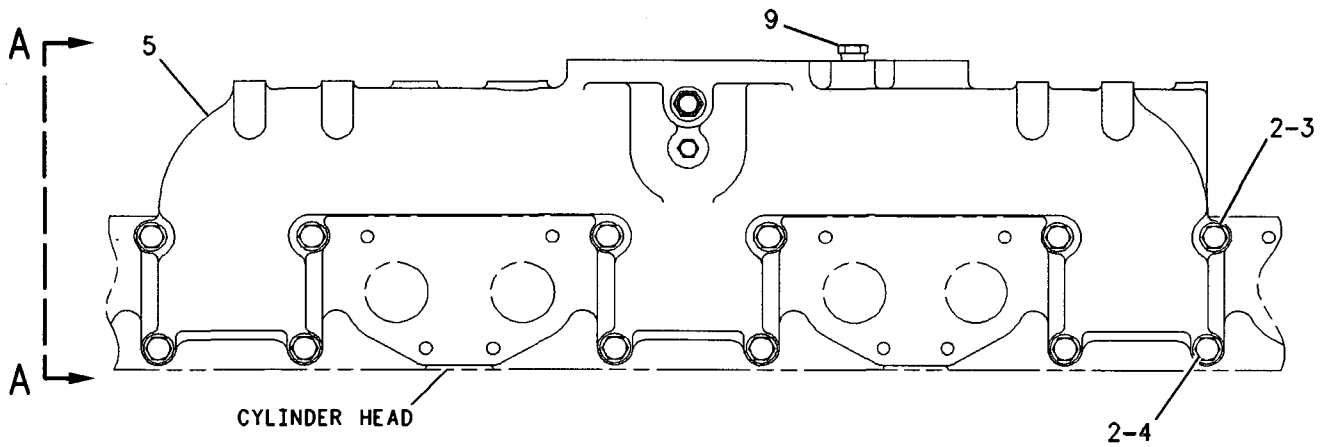

RIGHT SIDE VIEW

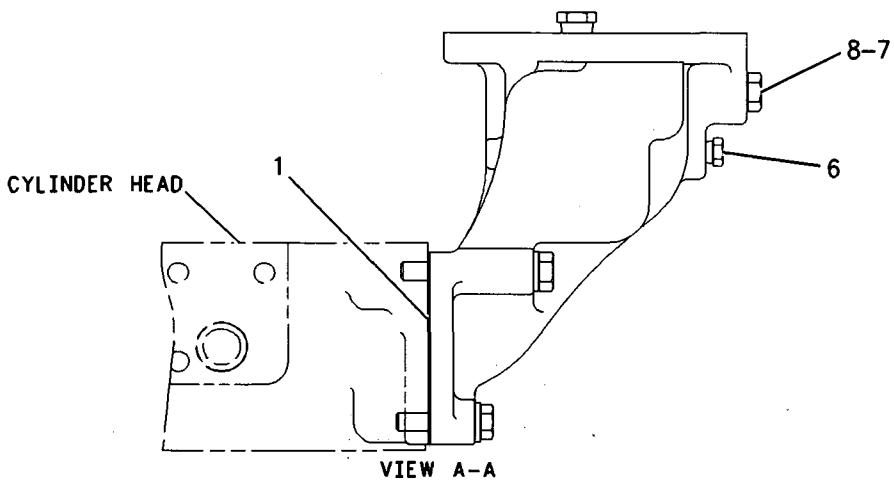

GRAPHIC #1 **<END>** g00796669

AIR INLET AND EXHAUST SYSTEM

159-7368 MUFFLER GP

S/N: CCA1-UP

PART OF 159-4615 GENERAL AR

SMCS-1062 **i02043836**

NOTE	REF NO	GRAPHIC REF	PART NUMBER	QTY	PART NAME 1 2 3 4 5 6 (PRODUCT LEVEL)	SEE PAGE
	1	1	**1W-2431**	1	CLAMP-BAND	
	2	1	**4P-0659**	1	CLAMP	
	3	1	**132-5789**	1	CLIP	
	4	1	**141-1480**	1	CLAMP AS	
	5	1	**186-6098**	1	EJECTOR AS	
	6	1	**240-5919**	1	SHIELD-HEAT	
	7	1	**209-3332**	1	PLATE AS	
	8	1	**209-3334**	1	PLATE AS	
M		1	**8T-3490**	2	NUT-WELD (M10X1.5-THD)	
	9	1	**212-6961**	1	MUFFLER AS	
	10	1	**212-6962**	1	PLATE AS	
M		1	**8T-3490**	3	NUT-WELD (M10X1.5-THD)	
	12	1	**213-2264**	1	TUBE AS	
M	13	1	**085-8091**	3	BOLT (M10X1.5X55-MM)	
	14	1	**0T-0065**	1	BOLT (3/8-16X3.5-IN)	
	15	1	**198-4777**	4	WASHER-HARD (11X25X10-MM THK)	
	16	1	**1B-5355**	1	NUT-FULL (3/8-16-THD)	
	17	1	**3S-2093**	1	STRAP-CABLE	
	18	1	**5M-2894**	2	WASHER-HARD (10.2X18.5X2.5-MM THK)	
	19	1	**7X-7729**	6	WASHER (11X25X3-MM THK)	
	20	1	**8T-4121**	4	WASHER-HARD (11X21X2.5-MM THK)	
M	21	1	**8T-4195**	7	BOLT (M10X1.5X30-MM)	
M	22	1	**8T-4196**	4	BOLT (M10X1.5X35-MM)	

M-METRIC PART

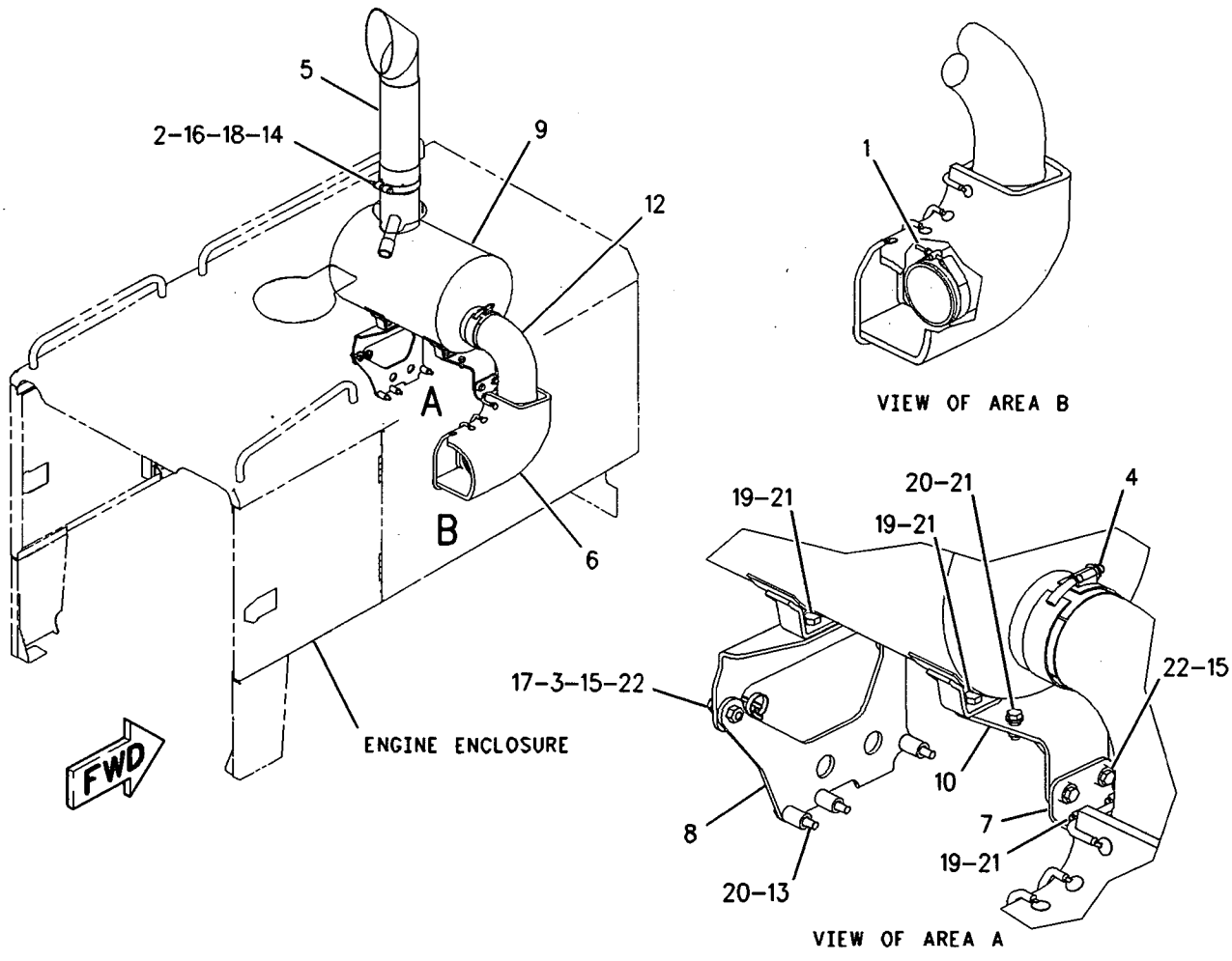

GRAPHIC #1 **<END>** g00954895

AIR INLET AND EXHAUST SYSTEM

226-1187 PRECLEANER GP

S/N: CCA1-UP

AN ATTACHMENT

SMCS-1055 **i02011461**

NOTE	REF NO	GRAPHIC REF	PART NUMBER	QTY	PART NAME 1 2 3 4 5 6 (PRODUCT LEVEL)	SEE PAGE
	1	1	**116-0405**	1	ADAPTER GP-AIR CLEANER	
	2	1	**130-3280**	1	PRECLEANER AS	
		1	**174-5415**	1	CLAMP	
B	3	1	**206-7515**	1	KIT-PRECLEANER	
					(INCLUDES DUST BOOT, EXTENSION ADAPTER, CLAMP, RUBBER INSERT, MUFFLER COVER, ALTERNATE MUFFLER COVER & MUFFLER PLUG)	
B	4	1	**6V-7571**	1	PLUG-CUP	
BD	5	1	**8T-5372**		SEAL	
BD	6	1	**9X-2532**		SEAL	

B-USE AS REQUIRED
D-ORDER BY THE METER

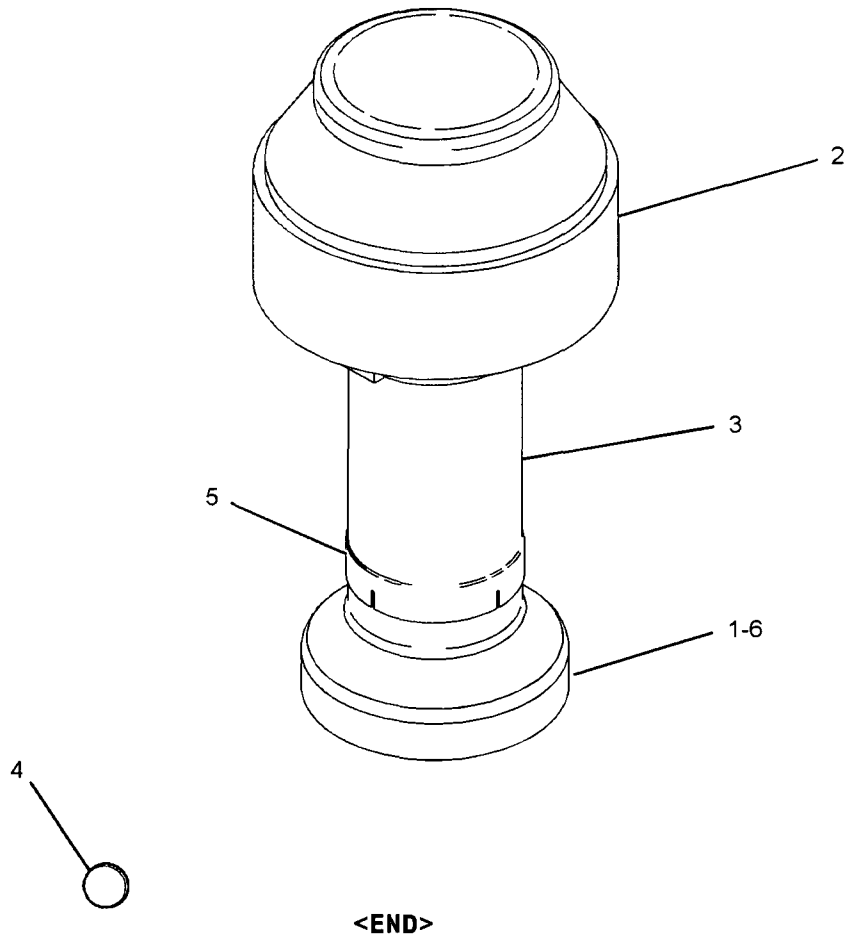

GRAPHIC #1 **<END>** g01070168

AIR INLET AND EXHAUST SYSTEM

174-1604 TURBOCHARGER GP

S/N: 3PD1-UP

PART OF 160-5101 ENGINE AR

SMCS-1052, 1053 **i01855503**

NOTE	REF NO	GRAPHIC REF	PART NUMBER	QTY	PART NAME 1 2 3 4 5 6 (PRODUCT LEVEL)	SEE PAGE
	1	1	**1P-0451**	1	GASKET - TURBOCHARGER	
YR	2	1	**174-1644**	1	TURBOCHARGER GP	99
M	3	1	**3E-8017**	4	LOCKNUT	

M-METRIC PART
R-REMFG PART MAY BE AVAILABLE
Y-SEPARATE ILLUSTRATION

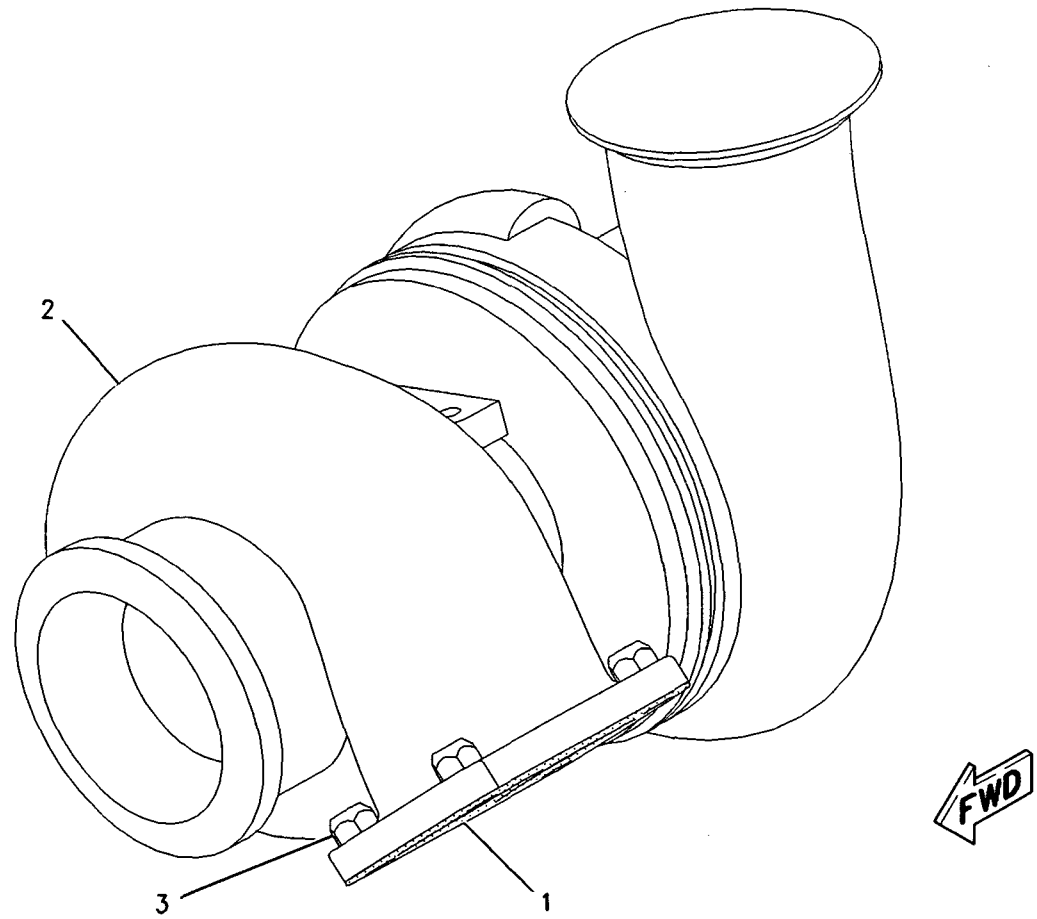

GRAPHIC #1 **<END>** g00786306

AIR INLET AND EXHAUST SYSTEM

174-1644 TURBOCHARGER GP*R

S/N: 3PD1-UP

PART OF 174-1604 TURBOCHARGER GP

SMCS-1052, 1053 **i01855722**

NOTE	REF NO	GRAPHIC REF	PART NUMBER	QTY	PART NAME 1 2 3 4 5 6 (PRODUCT LEVEL)	SEE PAGE
	1	1	**167-9671**	1	CARTRIDGE GP-TURBOCHARGER	
	2	1	**172-6540**	1	COVER-COMPRESSOR	
	3	1	**109-8176**	1	HOUSING-TURBINE	
	4	1	**7C-9532**	1	CLAMP AS (TURBINE)	
	5	1	**7C-9538**	1	CLAMP AS-COMPRESSOR	

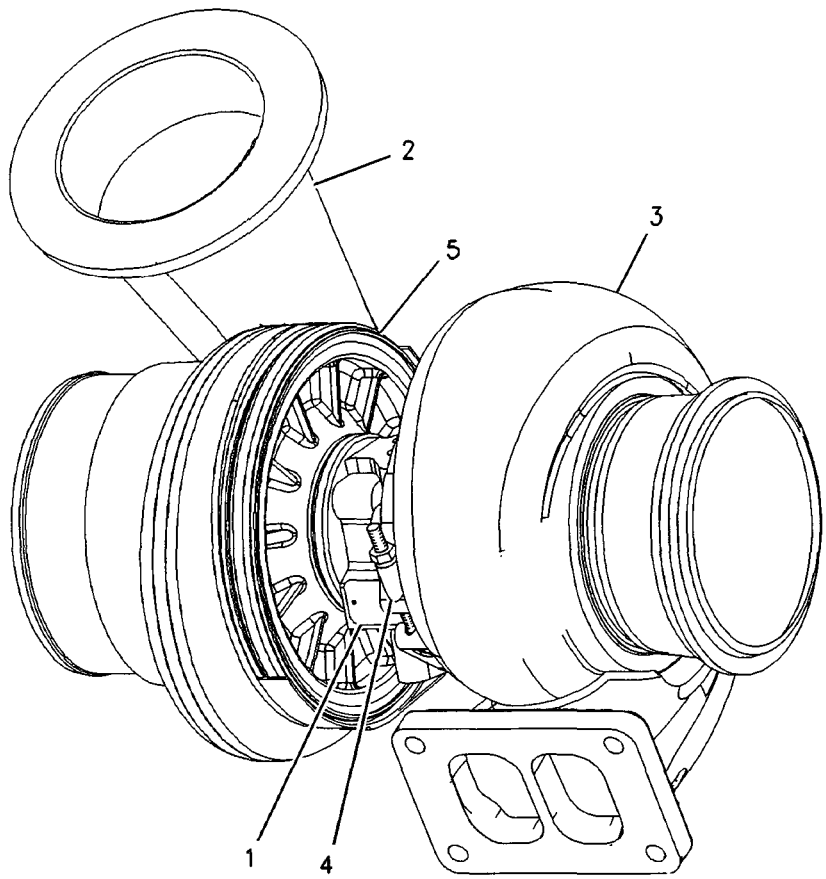

GRAPHIC #1 **<END>** g00786544

FUEL SYSTEM

159-5935 CONTROL GP-GOVERNOR

S/N: CCA1-UP

PART OF 159-4615 GENERAL AR

SMCS-1265, 1276 **i01673334**

NOTE	REF NO	GRAPHIC REF	PART NUMBER	QTY	PART NAME 1 2 3 4 5 6 (PRODUCT LEVEL)	SEE PAGE
	1	1	**1B-2578**	1	NUT (3/8-16-THD)	
	2	1	**141-6343**	1	SPRING	
	3	1	**4D-4064**	1	ROD END	
	4	1	**5P-9209**	2	BEARING AS-NEEDLE	
	5	1	**206-3599**	1	LEVER	
	6	1	**7F-0192**	1	BOLT (3/8-16X2-IN)	
	7	1	**7V-0446**	1	CLIP	
	8	1	**207-4927**	1	PEDAL-GOVERNOR CONTROL	
	9	1	**8X-3261**	1	LEVER	
	10	1	**116-5710**	1	GROMMET	
	11	1	**130-5300**	1	CLIP	
Y	12	1	**160-2443**	1	SENSOR GP-POSITION (ROTARY) (THROTTLE)	252
	13	1	**161-7062**	1	HOUSING	
	14	1	**162-8218**	1	GASKET	
	15	1	**162-8219**	1	COVER	
	16	1	**168-8683**	1	SHAFT	
	17	1	**169-0921**	1	ROD END (INTERNAL THREAD)	
	18	1	**169-0922**	1	ROD	
	19	1	**172-0165**	1	SHAFT	
	20	1	**172-4211**	1	SPACER (10.5X22X50.8-MM THK)	
	21	1	**009-0008**	1	SETSCREW-SOCKET (3/8-16X0.5-IN)	
	22	1	**206-3600**	1	LEVER	
	23	1	**129-3173**	1	BOLT-12 POINT HEAD (3/8-16X31.75-MM)	
	24	1	**1B-0676**	1	PIN	
	25	1	**1B-8704**	3	KEY-WOODRUFF	
B	26	1	**2N-9421**	2	SPRING-DISC	
	27	1	**5P-1075**	2	WASHER-HARD (10.2X22.5X3-MM THK)	
	28	1	**5P-1076**	1	WASHER-HARD (13.5X30X4-MM THK)	
	29	1	**5S-7382**	2	BOLT (3/8-16X1.375-IN)	
M	30	1	**6V-2313**	2	BOLT (M5X0.8X30-MM)	
	31	1	**6V-8801**	2	NUT (3/8-16-THD)	
	32	1	**8T-0328**	2	WASHER-HARD (5.5X10X1-MM THK)	
	33	1	**8T-4121**	3	WASHER-HARD (11X21X2.5-MM THK)	
M	34	1	**8T-4133**	2	NUT (M10X1.5-THD)	
M	35	1	**8T-4136**	3	BOLT (M10X1.5X25-MM)	
M	36	1	**8T-4182**	2	BOLT (M10X1.5X45-MM)	
	37	1	**8T-4226**	1	WASHER-PLATED (10.5X45X3-MM THK)	
	38	1	**8T-5390**	1	BOLT (3/8-16X3.5-IN)	
	39	1	**6V-0894**	1	SEAL-O-RING	
	40	1	**6V-8183**	1	NUT-FULL (3/8-24-THD)	

B-USE AS REQUIRED
M-METRIC PART
Y-SEPARATE ILLUSTRATION

159-5935 **CONTROL GP-GOVERNOR** *(contd.)* **i01673334**

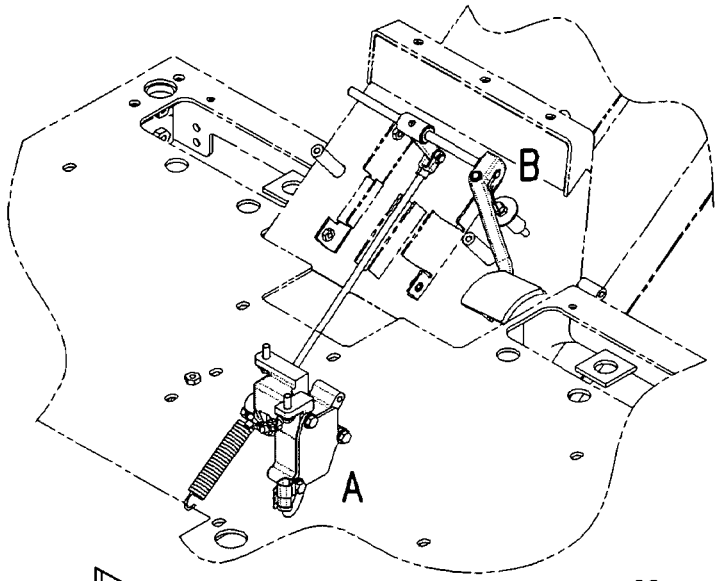

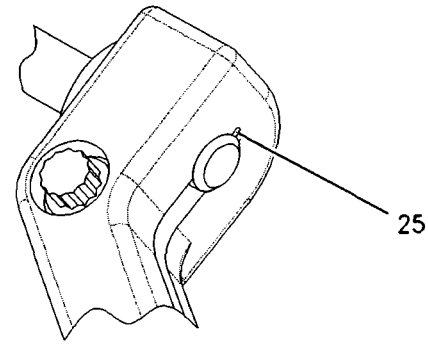

VIEW OF AREA B

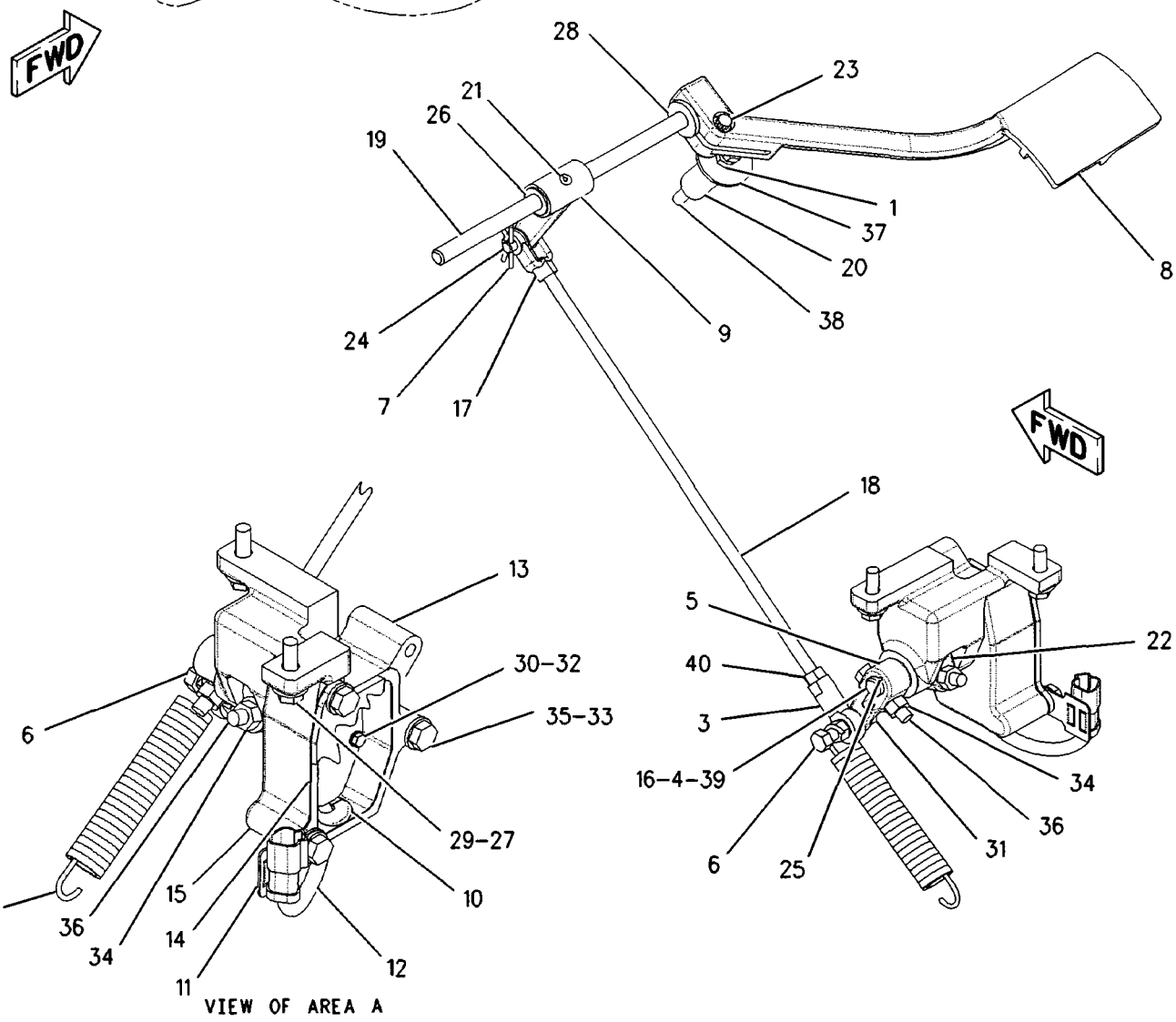

VIEW OF AREA A

GRAPHIC #1 **<END>** g00906785

FUEL SYSTEM

230-4617 FASTENER GP-FUEL TANK

S/N: CCA1-UP

PART OF 159-4615 GENERAL AR

SMCS-1273, 7553 **i01912811**

NOTE	REF NO	GRAPHIC REF	PART NUMBER	QTY	PART NAME 1 2 3 4 5 6 (PRODUCT LEVEL)	SEE PAGE
	1	1	**174-5692**	4	SPACER (13.87X21.33X28-MM THK)	
	2	1	**5P-1076**	12	WASHER-HARD (13.5X30X4-MM THK)	
M	3	1	**8T-4139**	14	BOLT (M12X1.75X30-MM)	
M	4	1	**8T-4223**	14	WASHER-HARD (13.5X25.5X3-MM THK)	
M	5	1	**8T-4910**	4	BOLT (M12X1.75X60-MM)	
M	6	1	**8T-4956**	8	BOLT (M12X1.75X35-MM)	

M-METRIC PART

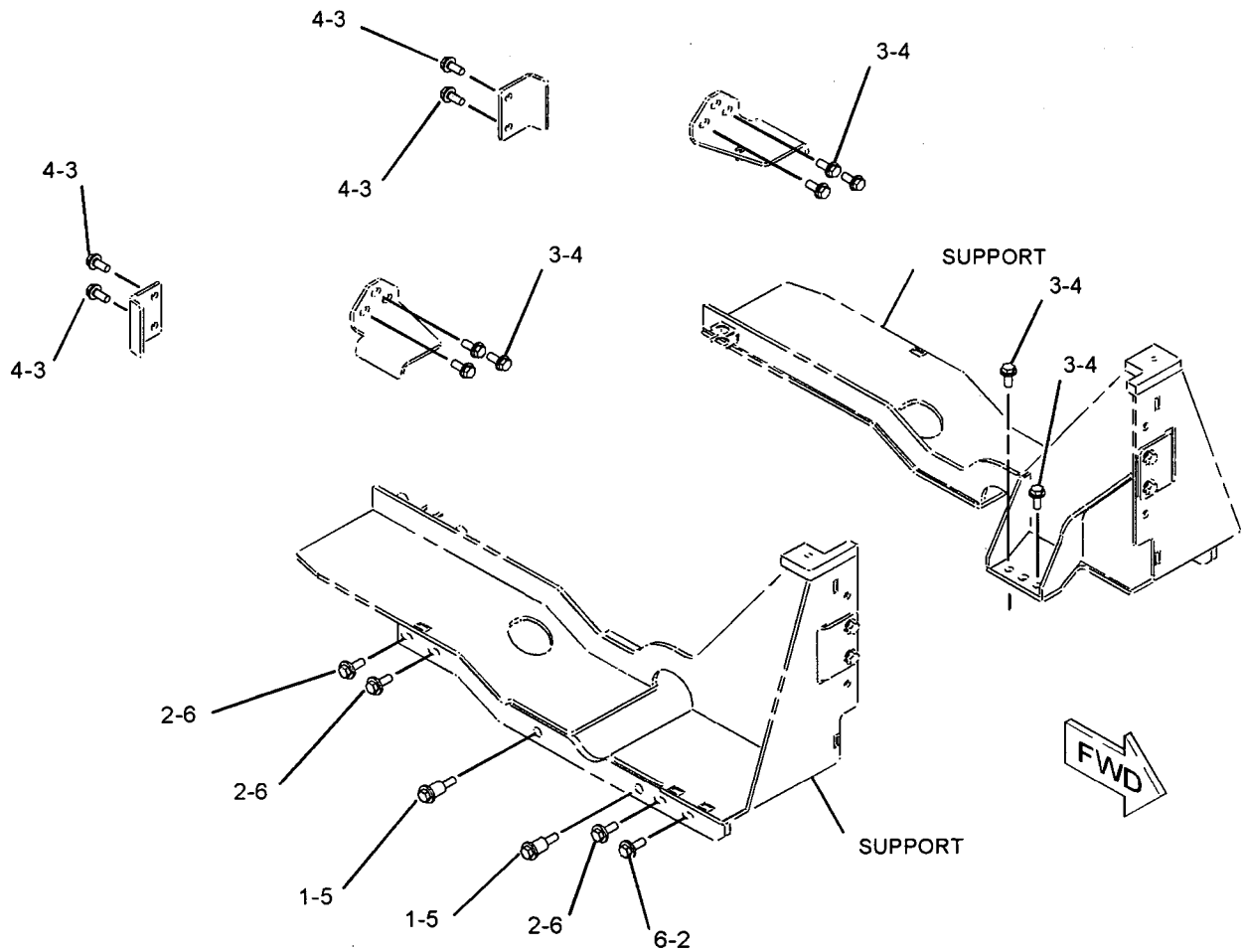

GRAPHIC #1

<END>

g01013497

116-5436 FILTER GP-FUEL

S/N: 3PD1-UP

PART OF 160-5101 ENGINE AR

SMCS-1261 i01855183

NOTE	REF NO	GRAPHIC REF	PART NUMBER	QTY	PART NAME 1 2 3 4 5 6 (PRODUCT LEVEL)	SEE PAGE
	1	1	1R-0762	1	FILTER AS-FUEL	

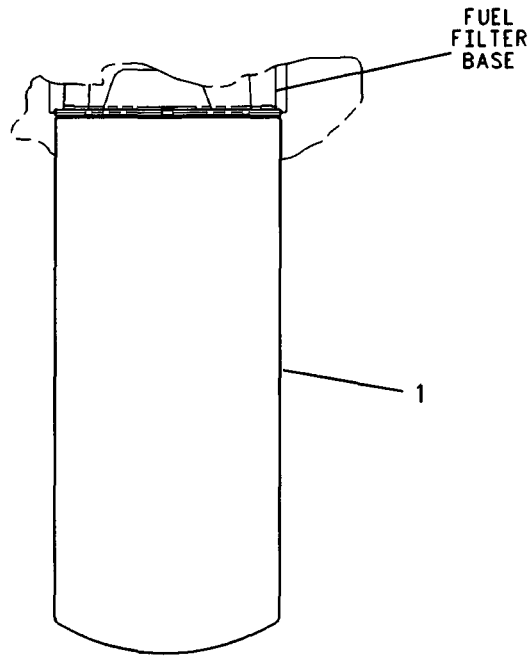

GRAPHIC #1 <END> g00269424

133-5671 FILTER GP-WATER SEP & FUEL

S/N: CCA1-UP

PART OF 160-7759 LINES GP-FUEL FILTER

SMCS-1261, 1263 **i02203540**

NOTE	REF NO	GRAPHIC REF	PART NUMBER	QTY	PART NAME 1 2 3 4 5 6 (PRODUCT LEVEL)	SEE PAGE
	1	1	**137-4367**	1	BASE AS	
	2	1	**133-5673**	1	ELEMENT-FILTER (FUEL, WATER SEPARATOR) (PRIMARY)	
	3	1	**129-0375**	1	BOWL AS-WATER COLLECTION	
					AVAILABLE REPLACEMENT PART(S):	
			141-0284	1	KIT-FUEL FILTER & WATER SEP	
					(THIS KIT PROVIDES REPLACEMENT SEALS FOR SEALS DAMAGED DURING INSTALLATION OF REPLACEMENT ELEMENT AND/OR BOWL)	
			155-2629	1	HEATER GP-FUEL (WATER SEPARATOR, 12-VOLT)	
			157-1206	1	BOWL AS-WATER COLLECTION (24-VOLT HEATER) (FUEL FILTER)	

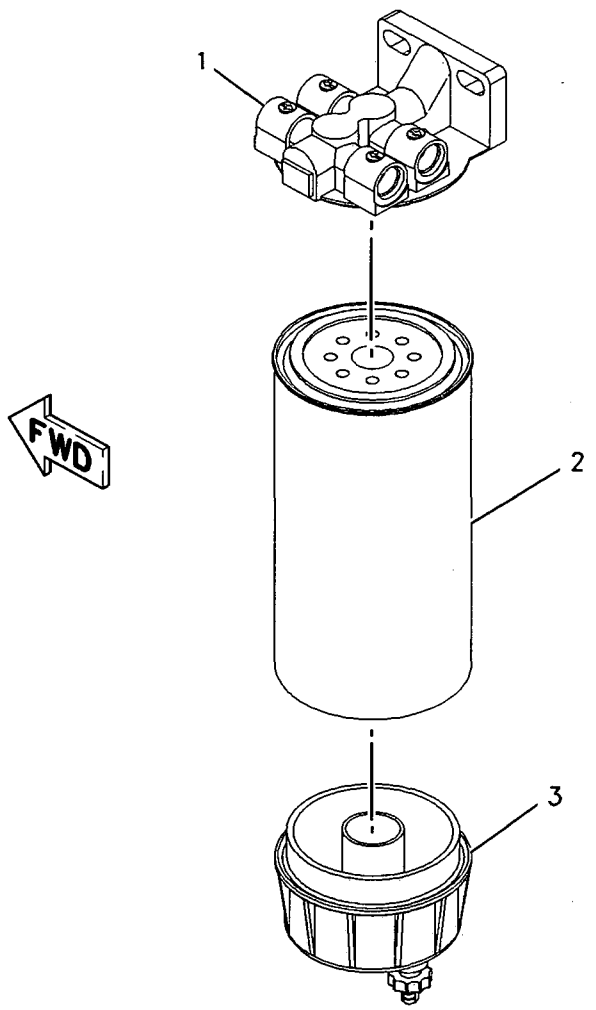

GRAPHIC #1 **<END>** g00986136

220-0768 LINES GP-FUEL-REAR

S/N: CCA1-UP

PART OF 159-4615 GENERAL AR

SMCS-1274 i01906064

NOTE	REF NO	GRAPHIC REF	PART NUMBER	QTY	PART NAME 1 2 3 4 5 6 (PRODUCT LEVEL)	SEE PAGE
	1	1	8T-4984	4	CLAMP-HOSE	
	2	1	197-0949	1	HOSE (RH)	
	3	1	197-0951	1	HOSE (LH)	
	4	1	197-4637	1	FITTING (QUICK)	
	5	1	197-4638	1	COUPLER (QUICK)	
	6	1	162-9523	2	GROMMET	
	7	1	6V-1572	2	CLIP (SLOT)	
	8	1	6V-1573	2	CLIP (TAB)	
	9	1	8T-4121	2	WASHER-HARD (11X21X2.5-MM THK)	
M	10	1	8T-4195	2	BOLT (M10X1.5X30-MM)	

M-METRIC PART

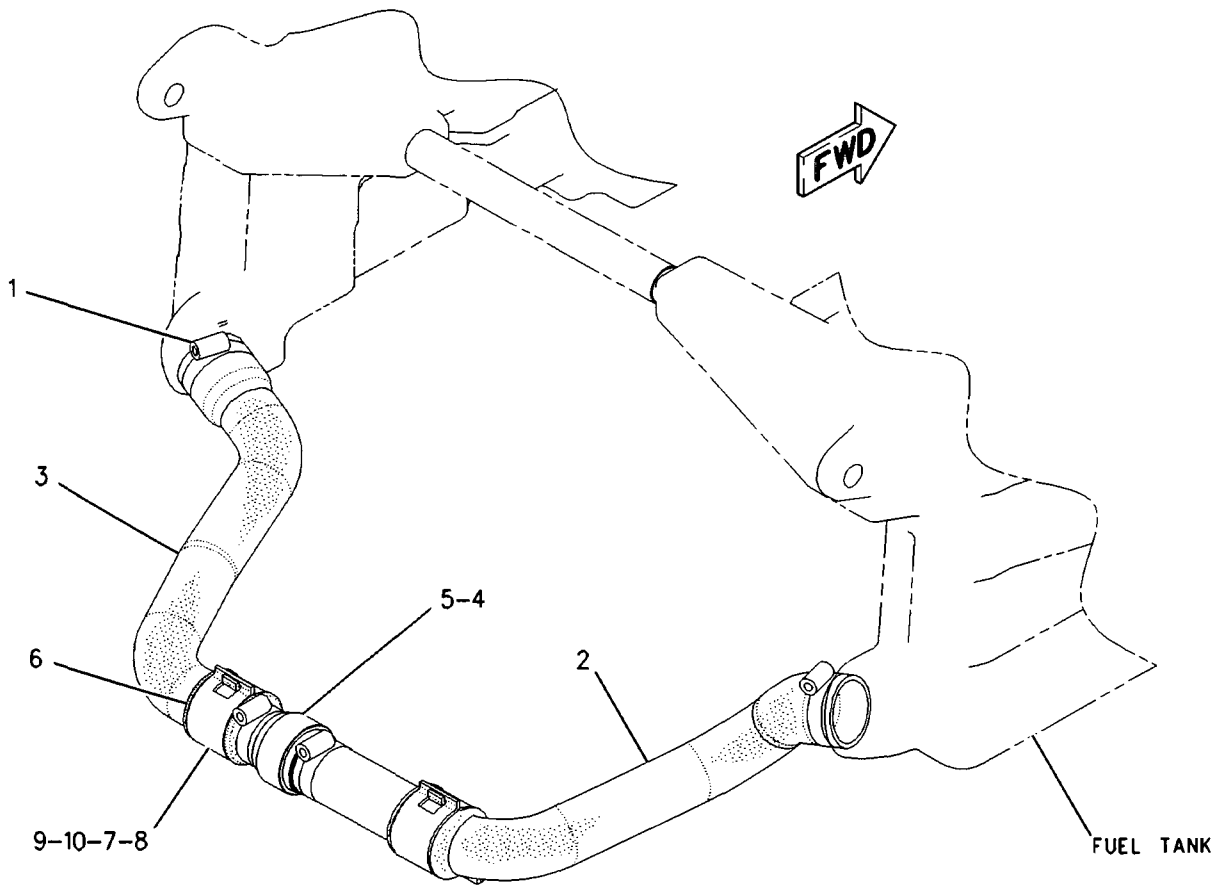

GRAPHIC #1 <END> g00876793

FUEL SYSTEM

233-6663 LINES GP-FUEL

S/N: 3PD4381-UP

PART OF 160-5101 ENGINE AR

SMCS-1274 **i02111495**

NOTE	REF NO	GRAPHIC REF	PART NUMBER	QTY	PART NAME 1 2 3 4 5 6 (PRODUCT LEVEL)	SEE PAGE
I	1	1	**8S-1162**	1	HOSE AS	
	2	1	**9C-5344**	1	SPACER (10.5X20X18-MM THK)	
	3	1	**126-0179**	1	MANIFOLD-FUEL	
Y	4	1	*233-6742*	1	VALVE GP-CHECK (FUEL)	126
	5	1	**238-6780**	1	BASE AS-FUEL FILTER	
		1	**9S-4167**	1	STUD-HOLLOW	
	6	1	**030-7947**	1	ELBOW	
	7	1	*183-3408*	3	PLUG AS	
					(EACH INCLUDES)	
	7A	1	**6V-5049**	1	SEAL-O-RING	
		1	**9S-8004**	1	PLUG	
	8	1	**3J-1907**	2	SEAL-O-RING	
	9	1	**3S-2093**	1	STRAP-CABLE	
	10	1	**4P-8134**	1	CLIP	
M	11	1	**5C-7261**	1	NUT (M8X1.25-THD)	
	12	1	**5P-3456**	6	SEAL-O-RING	
M	13	1	**6V-5218**	5	BOLT (M8X1.25X35-MM)	
	14	1	**6V-8676**	1	SEAL-O-RING	
	15	1	**7K-4129**	1	UNION-FLARED	
	16	1	**8M-2773**	1	CLIP	
M	17	1	**8T-0276**	2	BOLT (M8X1.25X45-MM)	
	18	1	**8T-4121**	1	WASHER-HARD (11X21X2.5-MM THK)	
M	19	1	**8T-4186**	1	BOLT (M10X1.5X40-MM)	
	20	1	**8T-4224**	1	WASHER-HARD (8.8X16X2-MM THK)	
	21	1	**9M-1974**	7	WASHER-HARD (8.8X16X2-MM THK)	
	22	1	**9S-4191**	1	PLUG	

I-REFER TO HYDRAULIC INFORMATION SYSTEM
M-METRIC PART
Y-SEPARATE ILLUSTRATION

233-6663 **LINES GP-FUEL** *(contd.)* **i02111495**

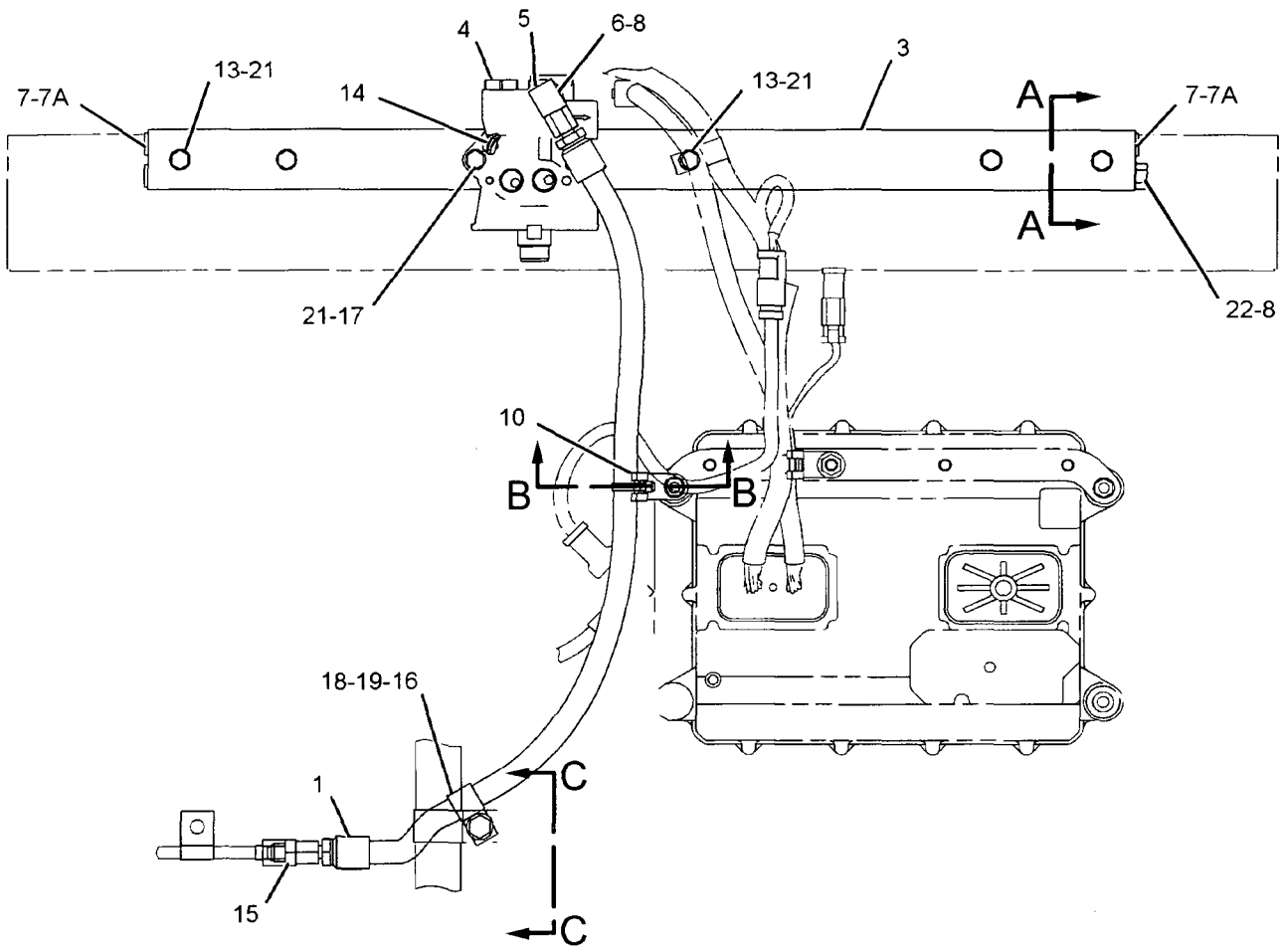

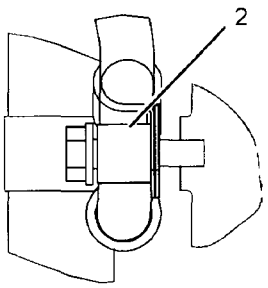

SECTION C-C

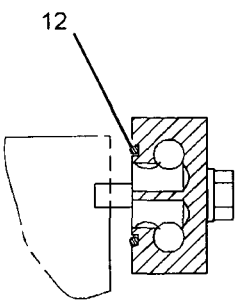

SECTION A-A

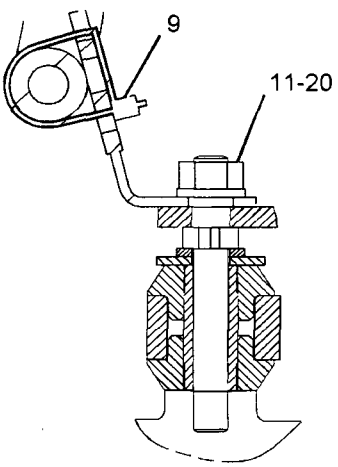

SECTION B-B

GRAPHIC #1

<END>

g01077102

FUEL SYSTEM

160-7759 LINES GP-FUEL FILTER

S/N: CCA1-UP

PART OF 159-4615 GENERAL AR

SMCS-1261, 1274 **i02203545**

NOTE	REF NO	GRAPHIC REF	PART NUMBER	QTY	PART NAME 1 2 3 4 5 6 (PRODUCT LEVEL)	SEE PAGE
	1	1	**1F-7854**	1	SPACER (11.01X19.05X49.21-MM THK)	
	2	1	**1P-4278**	1	CLAMP-HOSE	
	3	1	**8W-8527**	1	SLEEVE	
I	4	1	**103-4660**	2	HOSE AS	
Y	5	1	**133-5671**	1	FILTER GP-WATER SEP & FUEL	104
I	6	1	**246-2591**	1	HOSE AS	
	7	1	**177-4292**	1	CLIP AS	
	8	1	**177-4394**	1	CLIP AS	
I	9	1	**183-3072**	1	HOSE AS	
	10	1	**183-4386**	1	TUBE AS	
I	11	1	**246-2596**	1	HOSE AS	
	12	1	**250-7695**	2	FITTING (QUICK)	
	13	1	**195-0852**	1	HOSE AS	
	14	1	*148-8318*	1	CONNECTOR AS	
		1	**6V-8634**		CONNECTOR	
		1	**3K-0360**	1	SEAL-O-RING	
		1	**6V-8397**	1	SEAL-O-RING	
	15	1	*148-8340*	1	CONNECTOR AS	
		1	**6V-8639**	1	CONNECTOR	
		1	**3K-0360**	1	SEAL-O-RING	
		1	**6V-8398**	1	SEAL-O-RING	
	16	1	**148-8354**	3	ELBOW AS	
					(EACH INCLUDES)	
		1	**6V-9002**	1	ELBOW	
		1	**3K-0360**	1	SEAL-O-RING	
		1	**6V-8398**	1	SEAL-O-RING	
	17	1	*148-8358*	2	ELBOW AS	
					(EACH INCLUDES)	
		1	**6V-8624**	1	ELBOW	
		1	**6V-8398**	1	SEAL-O-RING	
		1	**2M-9780**	1	SEAL-O-RING	
	18	1	*148-8374*	1	ELBOW AS	
		1	**6V-8723**	1	ELBOW	
		1	**3K-0360**	1	SEAL-O-RING	
		1	**6V-8397**	1	SEAL-O-RING	
	19	1	**148-8411**	2	PLUG AS	
					(EACH INCLUDES)	
		1	**9S-4185**	1	PLUG	
		1	**3K-0360**	1	SEAL-O-RING	
	20	1	*148-8338*	1	CONNECTOR AS	
		1	**8T-0075**	1	CONNECTOR	
		1	**3J-1907**	1	SEAL-O-RING	
		1	**6V-8397**	1	SEAL-O-RING	
	21	1	*164-5572*	1	UNION AS	
		1	**6V-8731**	1	UNION	
		1	**6V-8398**	2	SEAL-O-RING	
	22	1	*164-5605*	2	CONNECTOR AS	
					(EACH INCLUDES)	
		1	**8T-0076**	1	CONNECTOR	
		1	**3K-0360**	1	SEAL-O-RING	
		1	**6V-8397**	1	SEAL-O-RING	
	23	1	**3S-8665**	7	CLIP	
	24	1	**4B-0418**	1	CLIP	
	25	1	**4D-7735**	1	CLIP	
	26	1	**5P-4116**	2	WASHER-HARD (8.8X20.5X2-MM THK)	
	27	1	**6K-8178**	1	CLIP	

160-7759 LINES GP-FUEL FILTER *(contd.)*

i02203545

NOTE	REF NO	GRAPHIC REF	PART NUMBER	QTY	PART NAME 1 2 3 4 5 6 (PRODUCT LEVEL)	SEE PAGE
	28	1	**8T-4121**	12	WASHER-HARD (11X21X2.5-MM THK)	
M	29	1	**8T-4136**	1	BOLT (M10X1.5X25-MM)	
M	30	1	**8T-4137**	10	BOLT (M10X1.5X20-MM)	
M	31	1	**8T-5005**	1	BOLT (M10X1.5X70-MM)	
M	32	1	**8T-7547**	2	BOLT (M8X1.25X30-MM)	
E	33	1	**8C-6959**		HOSE (60-CM)	

E-ORDER BY THE CENTIMETER
I-REFER TO HYDRAULIC INFORMATION SYSTEM
M-METRIC PART
Y-SEPARATE ILLUSTRATION

160-7759 LINES GP-FUEL FILTER (contd.) i02203545

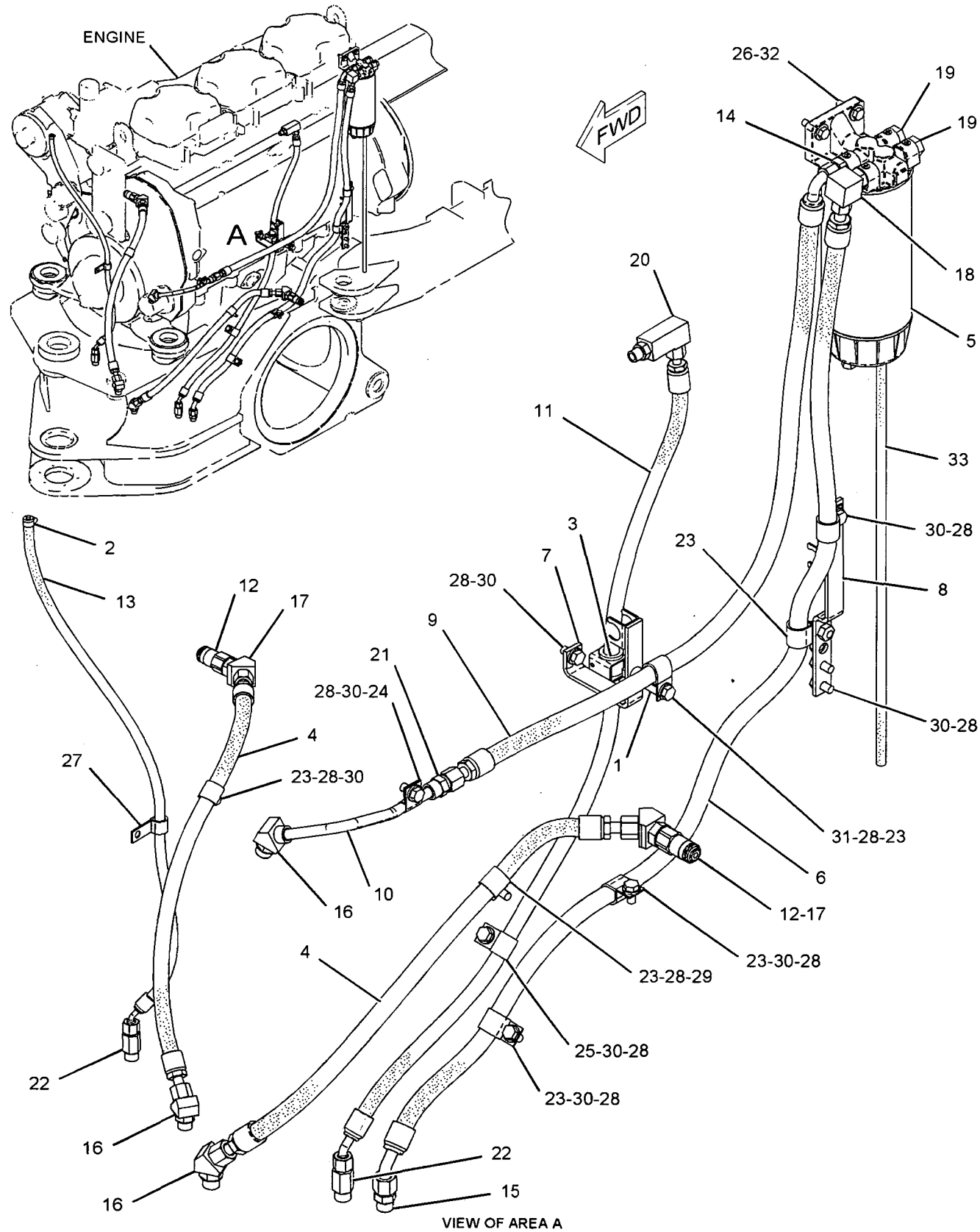

VIEW OF AREA A

GRAPHIC #1

<END>

g01073029

FUEL SYSTEM

204-0638 LINES GP-FUEL INJECTION

S/N: 3PD1-4380

PART OF 160-5101 ENGINE AR

SMCS-1252, 1254 **i01855558**

NOTE	REF NO	GRAPHIC REF	PART NUMBER	QTY	PART NAME 1 2 3 4 5 6 (PRODUCT LEVEL)	SEE PAGE
	1	1	**9C-5344**	1	SPACER (10.5X20X18-MM THK)	
I	2	1	**116-5416**	1	HOSE AS	
I	3	1	**116-5418**	1	HOSE AS	
	4	1	**126-0179**	1	MANIFOLD-FUEL	
	5	1	**145-1780**	1	BASE AS	
		1	**9S-4167**	1	STUD-HOLLOW	
Y	6	1	**156-5783**	1	VALVE GP-CHECK	125
	7	1	**030-7947**	1	ELBOW	
	8	1	**3J-1907**	5	SEAL-O-RING	
	9	1	**5P-3456**	6	SEAL-O-RING	
	10	1	**6V-4589**	1	SEAL-O-RING	
M	11	1	**6V-5218**	5	BOLT (M8X1.25X35-MM)	
	12	1	**6V-8676**	1	SEAL-O-RING	
	13	1	**8M-2773**	1	CLIP	
M	14	1	**8T-0276**	2	BOLT (M8X1.25X45-MM)	
	15	1	**8T-4121**	1	WASHER-HARD (11X21X2.5-MM THK)	
M	16	1	**8T-4186**	1	BOLT (M10X1.5X40-MM)	
	17	1	**9M-1974**	7	WASHER-HARD (8.8X16X2-MM THK)	
	18	1	**9S-4191**	1	PLUG	
	19	1	**9S-8004**	3	PLUG	

I-REFER TO HYDRAULIC INFORMATION SYSTEM
M-METRIC PART
Y-SEPARATE ILLUSTRATION

204-0638 LINES GP-FUEL INJECTION (contd.) i01855558

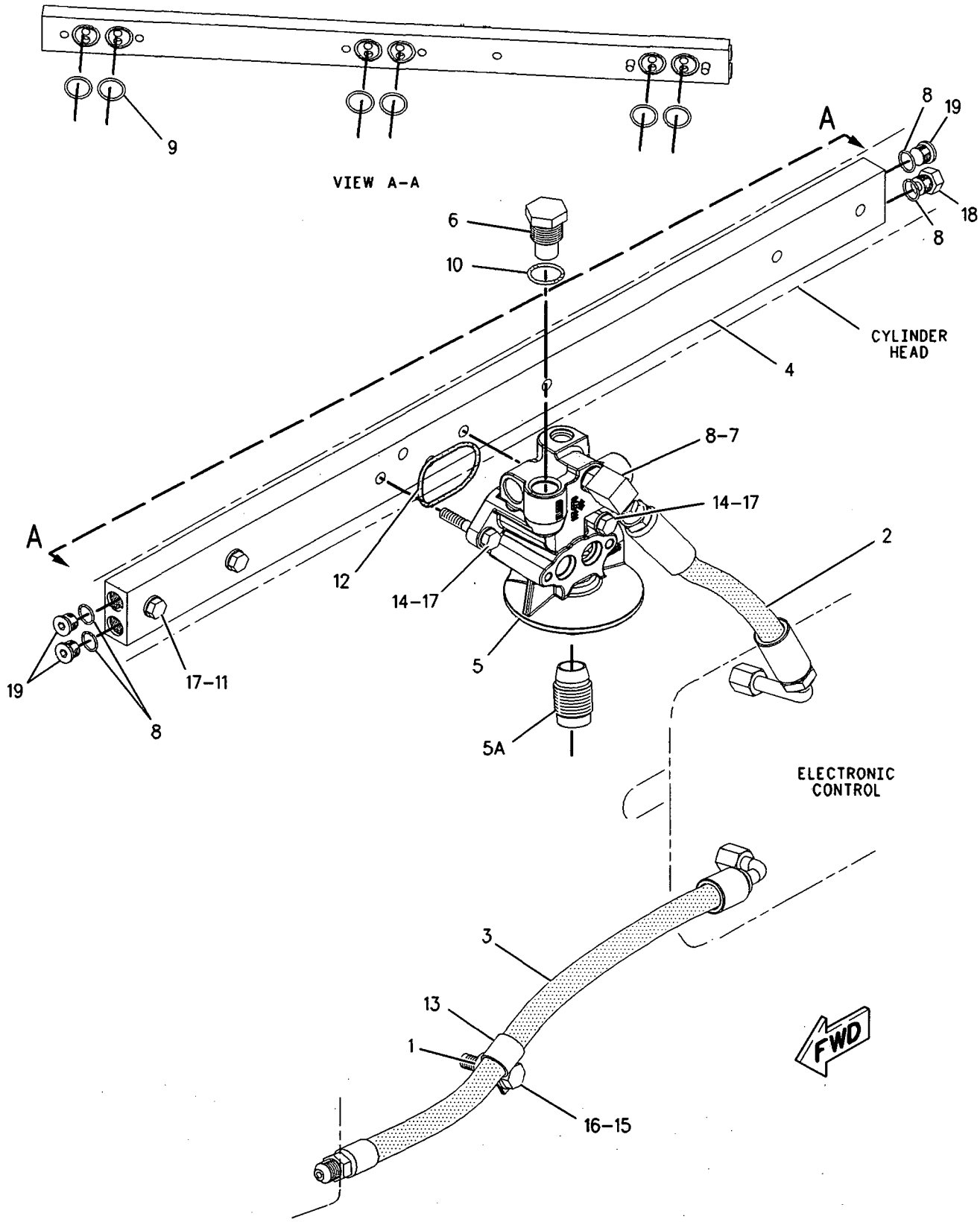

GRAPHIC #1 **<END>** g00785881

116-5428 PUMP & MTG GP-FUEL TRANSFER

S/N: 3PD1-UP

PART OF 160-5101 ENGINE AR

SMCS-1256 i02163627

NOTE	REF NO	GRAPHIC REF	PART NUMBER	QTY	PART NAME 1 2 3 4 5 6 (PRODUCT LEVEL)	SEE PAGE
	1	1	092-2570	2	WASHER-SEALING	
	2	1	222-2060	1	PUMP GP-FUEL TRANSFER	
	3	1	193-3982	1	TUBE AS	
	4	1	2R-6806	1	CONNECTOR	
	5	1	3J-1907	1	SEAL-O-RING	
	6	1	252-9685	1	GASKET	
	7	1	6V-5839	1	WASHER (11X21X2.5-MM THK)	
M	8	1	6V-6317	1	BOLT (M10X1.5X20-MM)	
	9	1	5P-9297	1	CLIP	
M	10	1	8T-1159	2	BOLT-SOCKET HEAD (M10X1.5X25-MM)	

M-METRIC PART

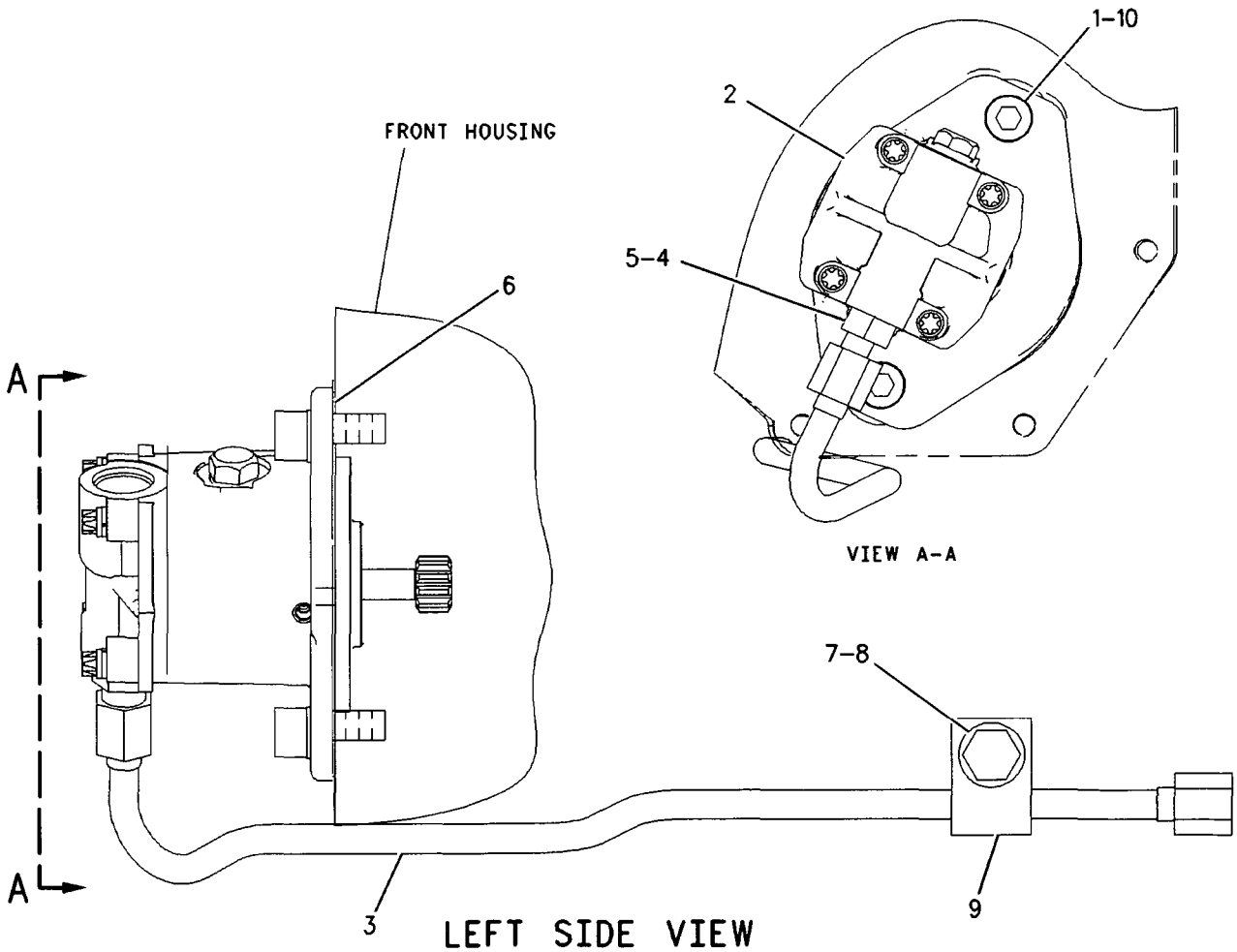

GRAPHIC #1

<END>

g00832171

FUEL SYSTEM

190-6017 PUMP GP-FUEL INJECTION

S/N: 3PD1-UP

PART OF 160-5101 ENGINE AR

SMCS-1251, 1290 **i02203549**

NOTE	REF NO	GRAPHIC REF	PART NUMBER	QTY	PART NAME 1 2 3 4 5 6 (PRODUCT LEVEL)	SEE PAGE
M	1	1	**152-3001**	1	BOLT (8X1.25X7-MM)	
R	2	1	**208-9160**	1	INJECTOR GP-FUEL	
	2A	1	**9X-7317**	1	SEAL-O-RING	
	2B	1	**119-8784**	1	SEAL-O-RING	
	2C	1	**215-3198**	1	SEAL-O-RING	
	3	1	**7C-8851**	1	CLAMP-INJECTOR	
	4	1	**4P-8525**	1	SPACER (9X16X30-MM THK)	

M-METRIC PART
R-REMFG PART MAY BE AVAILABLE

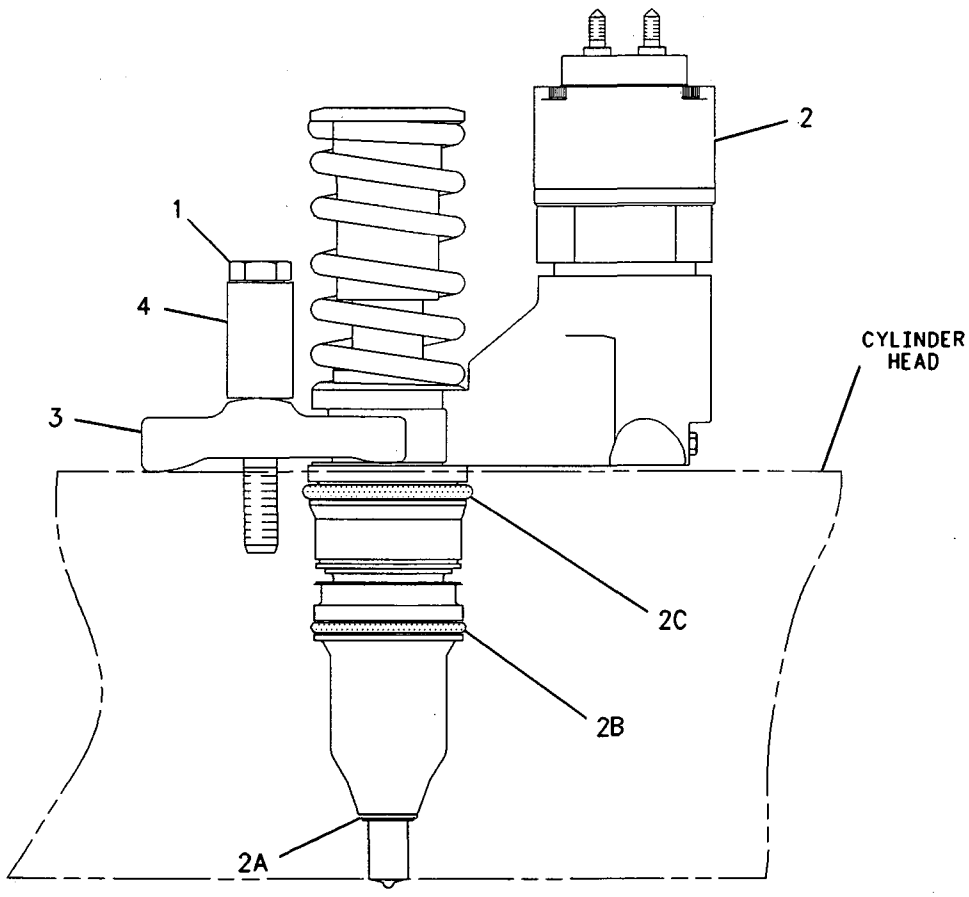

GRAPHIC #1 **<END>** g00933456

116-5438 PUMP GP-FUEL PRIMING

S/N: 3PD1-UP

PART OF 160-5101 ENGINE AR

SMCS-1258 i01855187

NOTE	REF NO	GRAPHIC REF	PART NUMBER	QTY	PART NAME 1 2 3 4 5 6 (PRODUCT LEVEL)	SEE PAGE
	1	1	**7C-4993**	1	ADAPTER-PRIMING PUMP	
	2	1	**1P-0436**	2	GASKET (FUEL PRIMING PUMP)	
M	3	1	**6V-2317**	1	BOLT (M8X1.25X30MM)	
	4	1	**9M-1974**	2	WASHER-HARD (8.8X16X2MM THK)	
M	5	1	**8T-0640**	1	BOLT (M6X1.0X30MM)	
	6	1	**5P-0537**	2	WASHER-HARD (7.2X14.5X2MM THK)	
	7	1	**1B-7182**	1	BOLT (5/16-18X1.25 IN)	
	8	1	**9F-6580**	1	BOLT (1/4-20X1.125 IN)	
	9	1	**105-2508**	1	PUMP AS-FUEL PRIMING	

M-METRIC PART

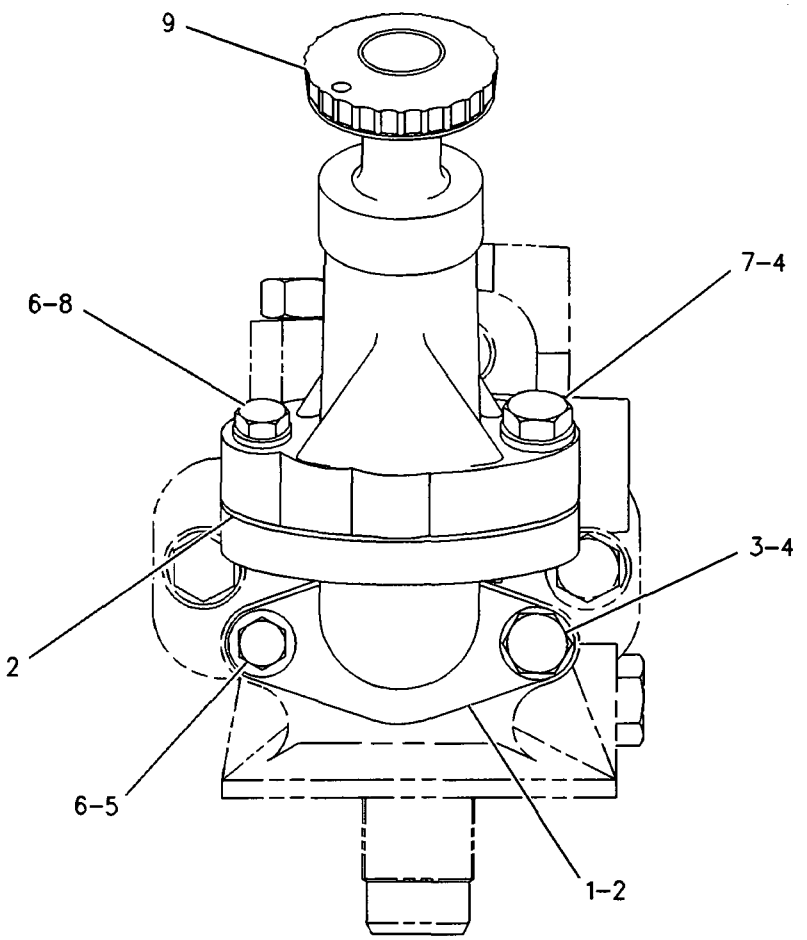

GRAPHIC #1 **<END>** g00273435

FUEL SYSTEM

159-3931 TANK GP-FUEL

S/N: CCA1-UP

PART OF 159-4615 GENERAL AR

SMCS-1273 **i01967277**

NOTE	REF NO	GRAPHIC REF	PART NUMBER	QTY	PART NAME 1 2 3 4 5 6 (PRODUCT LEVEL)	SEE PAGE
	1	1	**7X-1387**	4	WASHER (10.26X22.22X1.9-MM THK)	
	2	1	**8T-6703**	2	CLAMP-HOSE	
	3	1	**113-8457**	2	ROD	
Y	4	1	*199-9912*	1	TANK GP-FUEL (RH)	117
Y	5	1	*199-9913*	1	TANK GP-FUEL (LH)	119
	6	1	**3B-4615**	4	PIN-COTTER	
	7	1	**5P-8439**	2	GROMMET	
E	8	1	**5P-1291**		HOSE (34-CM)	

E-ORDER BY THE CENTIMETER
Y-SEPARATE ILLUSTRATION

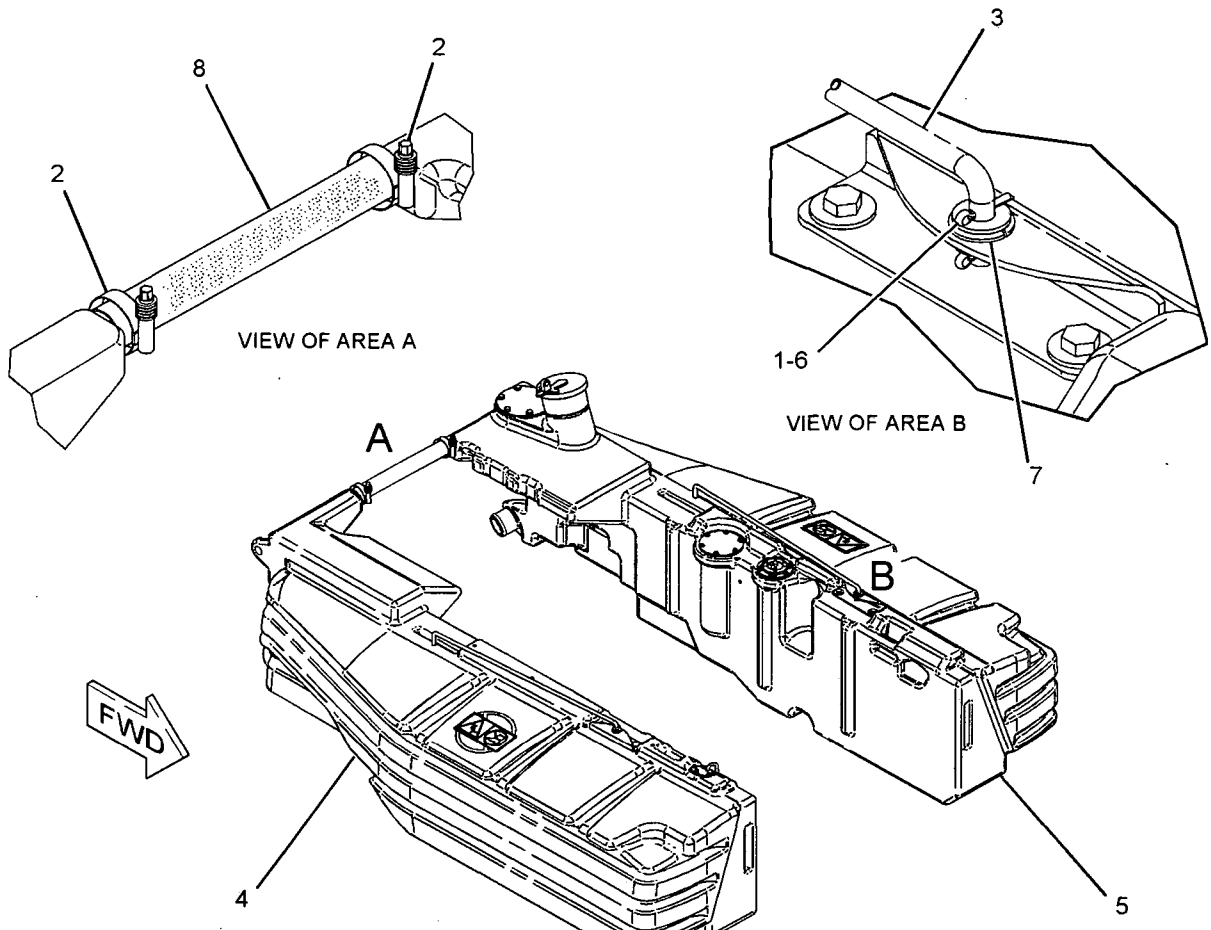

GRAPHIC #1

<END>

g01012659

199-9912 TANK GP-FUEL-RH

S/N: CCA1-UP
PART OF 159-3931 TANK GP-FUEL
TYPE 1

SMCS-1273 i02200099

NOTE	REF NO	GRAPHIC REF	PART NUMBER	QTY	PART NAME 1 2 3 4 5 6 (PRODUCT LEVEL)	SEE PAGE
	1	1	**6V-6959**	5	BOLT-SOCKET HEAD (8-32X0.625-IN)	
	2	1	**159-9169**	1	TANK AS-FUEL (RH)	
	2A	1	**002-6454**	1	NIPPLE-PIPE	
	2B	1	**110-2445**	1	CLAMP-HOSE	
	2C	1	**214-6598**	2	FILM (NO-STEP)	
	3	1	**194-2612**	1	COUPLER	
	4	1	**197-1708**	1	VENT AS	
	5	1	**199-9731**	1	BRACKET	
	6	1	**4B-4863**	5	WASHER (4.7X11X1.2-MM THK)	
	7	1	**7X-0579**	4	WASHER-HARD (8.8X25.5X2-MM THK)	
M	8	1	**8T-4189**	4	BOLT (M8X1.25X20-MM)	
	9	1	**9R-7240**	1	GASKET	

M-METRIC PART

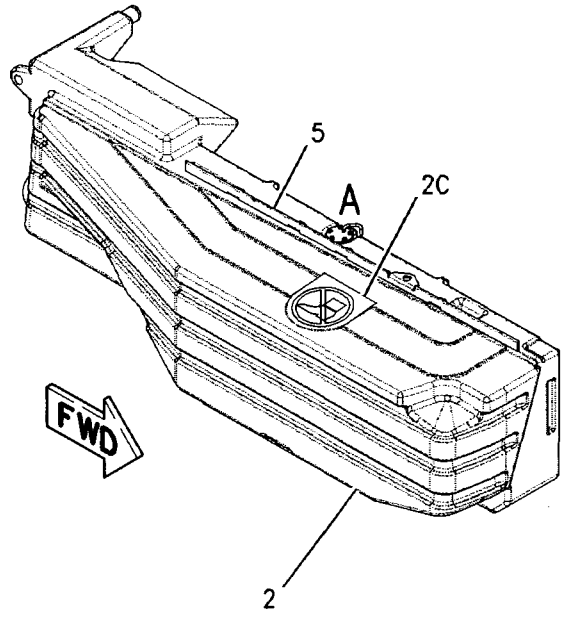

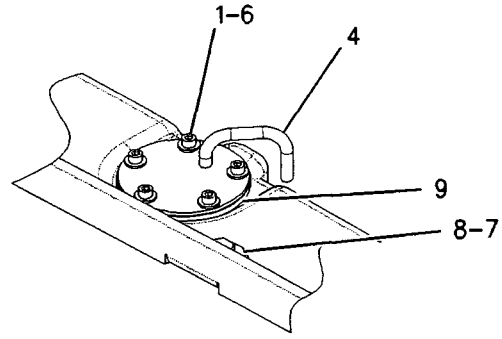

VIEW OF AREA A

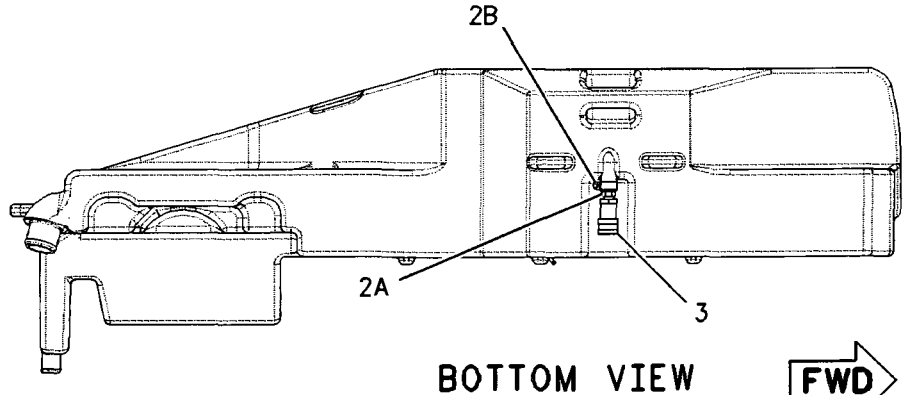

BOTTOM VIEW

GRAPHIC #1 **<END>** g00846501

FUEL SYSTEM

199-9912 TANK GP-FUEL–RH

S/N: CCA1-UP
PART OF 159-3931 TANK GP-FUEL
TYPE 2

SMCS-1273 **i02200098**

NOTE	REF NO	GRAPHIC REF	PART NUMBER	QTY	PART NAME 1 2 3 4 5 6 (PRODUCT LEVEL)	SEE PAGE
	1	1	**6V-6959**	5	BOLT-SOCKET HEAD (8-32X0.625-IN)	
C	2	1	**227-6672**	1	BRACKET	
CY	3	1	**229-5816**	1	TANK GP-FUEL (RH)	124
C	4	1	**230-4672**	1	VENT AS	
	5	1	**4B-4863**	5	WASHER (4.7X11X1.2-MM THK)	
C	6	1	**7X-0579**	2	WASHER-HARD (8.8X25.5X2-MM THK)	
CM	7	1	**8T-4189**	2	BOLT (M8X1.25X20-MM)	
	8	1	**9R-7240**	1	GASKET	

C-CHANGE FROM PREVIOUS TYPE
M-METRIC PART
Y-SEPARATE ILLUSTRATION

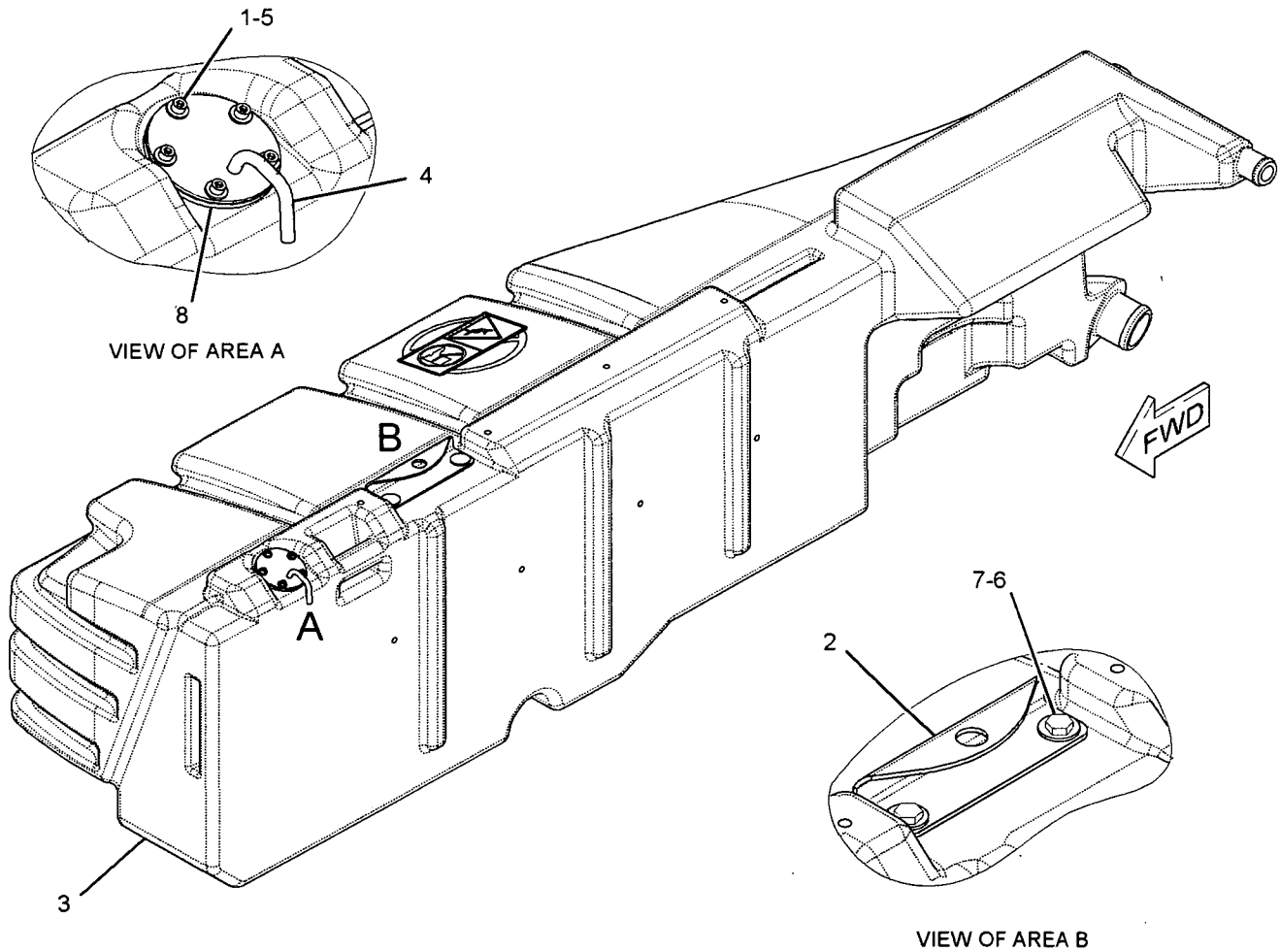

GRAPHIC #1 **<END>** g01013159

FUEL SYSTEM

199-9913 TANK GP-FUEL–LH

S/N: CCA1-UP

PART OF 159-3931 TANK GP-FUEL

TYPE 1

SMCS-1273 **i01943916**

NOTE	REF NO	GRAPHIC REF	PART NUMBER	QTY	PART NAME 1 2 3 4 5 6 (PRODUCT LEVEL)	SEE PAGE
	1	1	**6V-6959**	6	BOLT-SOCKET HEAD (8-32X0.625-IN)	
	2	1	**159-9170**	1	TANK AS-FUEL (LH)	
	2A	1	**002-6454**	1	NIPPLE-PIPE	
	2B	1	**110-2445**	1	CLAMP-HOSE	
	2C	1	**190-6535**	1	FILM-WARNING (NO-STEP)	
	2D	1	**214-6598**	1	FILM (NO-STEP)	
	3	1	**164-4858**	1	CAP GP-FUEL FILLER (EXTREME SERVICE, LOCKABLE)	
		1	**9X-8600**	1	SEAL-O-RING	
		1	**190-9775**	1	COVER AS-FILTER	
	4	1	**173-2018**	1	SENDER AS-FUEL LEVEL	
		1	**194-8535**	1	KIT-SENSOR (FUEL LEVEL)	
					(INCLUDES RECEPTACLE KIT, PINS, SCREWS & WEDGE)	
	5	1	**194-2612**	1	COUPLER	
	6	1	**199-9732**	1	BRACKET	
	7	1	**199-9907**	1	STRAINER-FUEL	
	8	1	**208-0800**	1	GASKET	
B	9	1	**103-2006**	1	SCREW-PAN HEAD	
	10	1	**194-6523**	1	ADAPTER (FUEL CAP)	
	11	1	**4B-4863**	6	WASHER (4.7X11X1.2-MM THK)	
	12	1	**7X-0579**	4	WASHER-HARD (8.8X25.5X2-MM THK)	
M	13	1	**8T-4189**	4	BOLT (M8X1.25X20-MM)	

B-USE AS REQUIRED
M-METRIC PART

199-9913 **TANK GP-FUEL** *(contd.)* **i01943916**

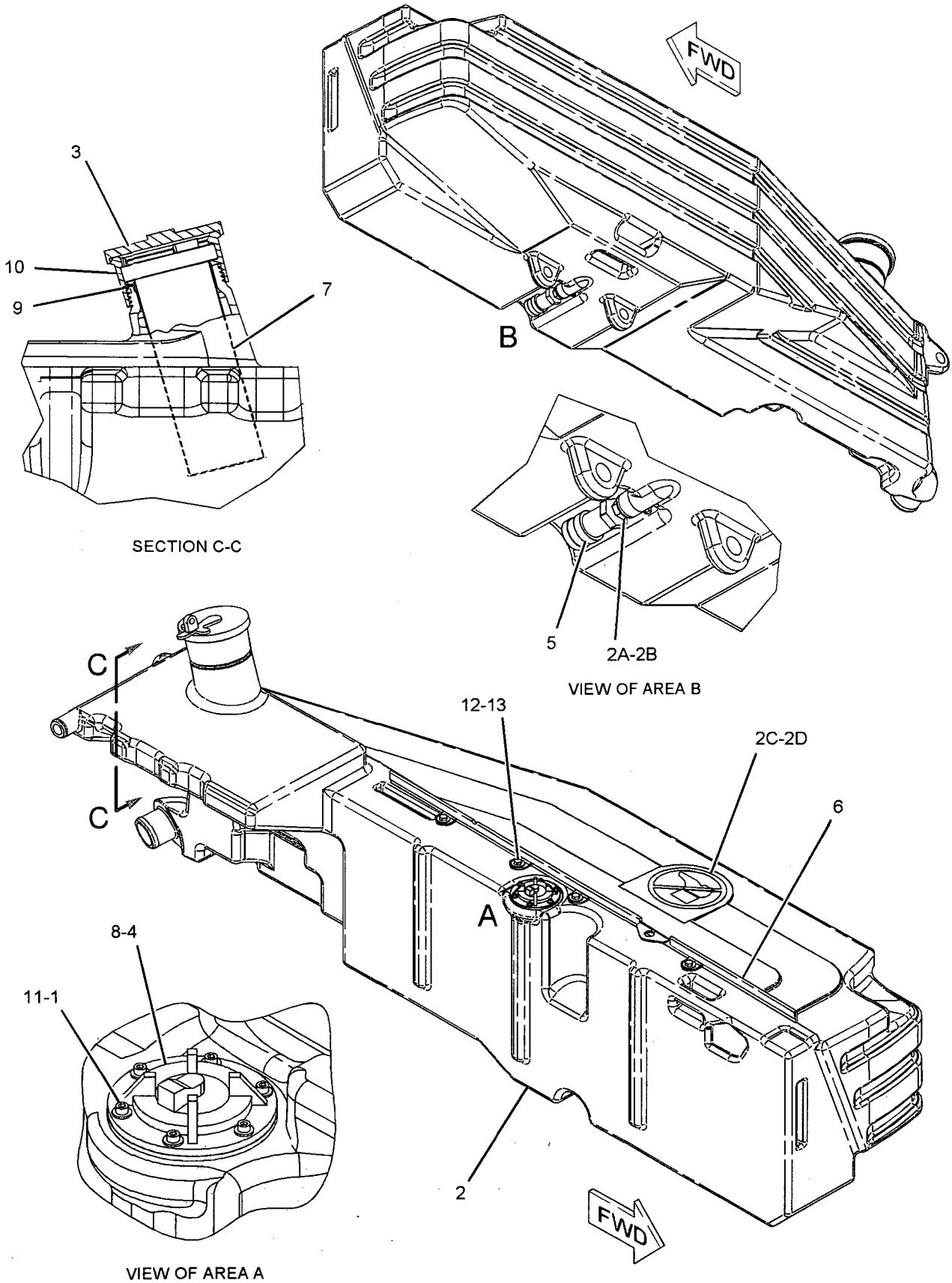

GRAPHIC #1

<END>

g01013037

FUEL SYSTEM

199-9913 TANK GP-FUEL–LH

S/N: CCA1-UP
PART OF 159-3931 TANK GP-FUEL
TYPE 2

SMCS-1273 **i01943911**

NOTE	REF NO	GRAPHIC REF	PART NUMBER	QTY	PART NAME 1 2 3 4 5 6 (PRODUCT LEVEL)	SEE PAGE
	1	1	**6V-6959**	12	BOLT-SOCKET HEAD (8-32X0.625-IN)	
	2	1	**164-4858**	1	CAP GP-FUEL FILLER (EXTREME SERVICE, LOCKABLE)	
		1	**9X-8600**	1	SEAL-O-RING	
		1	**190-9775**	1	COVER AS-FILTER	
	3	1	**173-2018**	1	SENDER AS-FUEL LEVEL	
		1	**194-8535**	1	KIT-SENSOR (FUEL LEVEL)	
					(INCLUDES RECEPTACLE KIT, PINS, SCREWS & WEDGE)	
	4	1	**199-9907**	1	STRAINER-FUEL	
	5	1	**199-9984**	1	PLATE	
	6	1	**199-9985**	1	PLATE	
	7	1	**203-9807**	1	GASKET	
	8	1	**203-9808**	1	GASKET	
	9	1	**208-0800**	1	GASKET	
	11	1	**221-0319**	1	GASKET	
C	12	1	**227-6672**	1	BRACKET	
CY	13	1	**229-5815**	1	TANK GP-FUEL (LH)	123
B	14	1	**103-2006**	1	SCREW-PAN HEAD	
	15	1	**194-6523**	1	ADAPTER (FUEL CAP)	
	16	1	**4B-4863**	12	WASHER (4.7X11X1.2-MM THK)	
M	17	1	**5C-9553**	4	BOLT (M6X1X16-MM)	
	18	1	**7X-0579**	2	WASHER-HARD (8.8X25.5X2-MM THK)	
M	19	1	**8T-4189**	8	BOLT (M8X1.25X20-MM)	
	20	1	**8T-4224**	6	WASHER-HARD (8.8X16X2-MM THK)	
	21	1	**9X-8256**	4	WASHER (6.6X12X2-MM THK)	

B-USE AS REQUIRED
C-CHANGE FROM PREVIOUS TYPE
M-METRIC PART
Y-SEPARATE ILLUSTRATION

199-9913 TANK GP-FUEL *(contd.)* i01943911

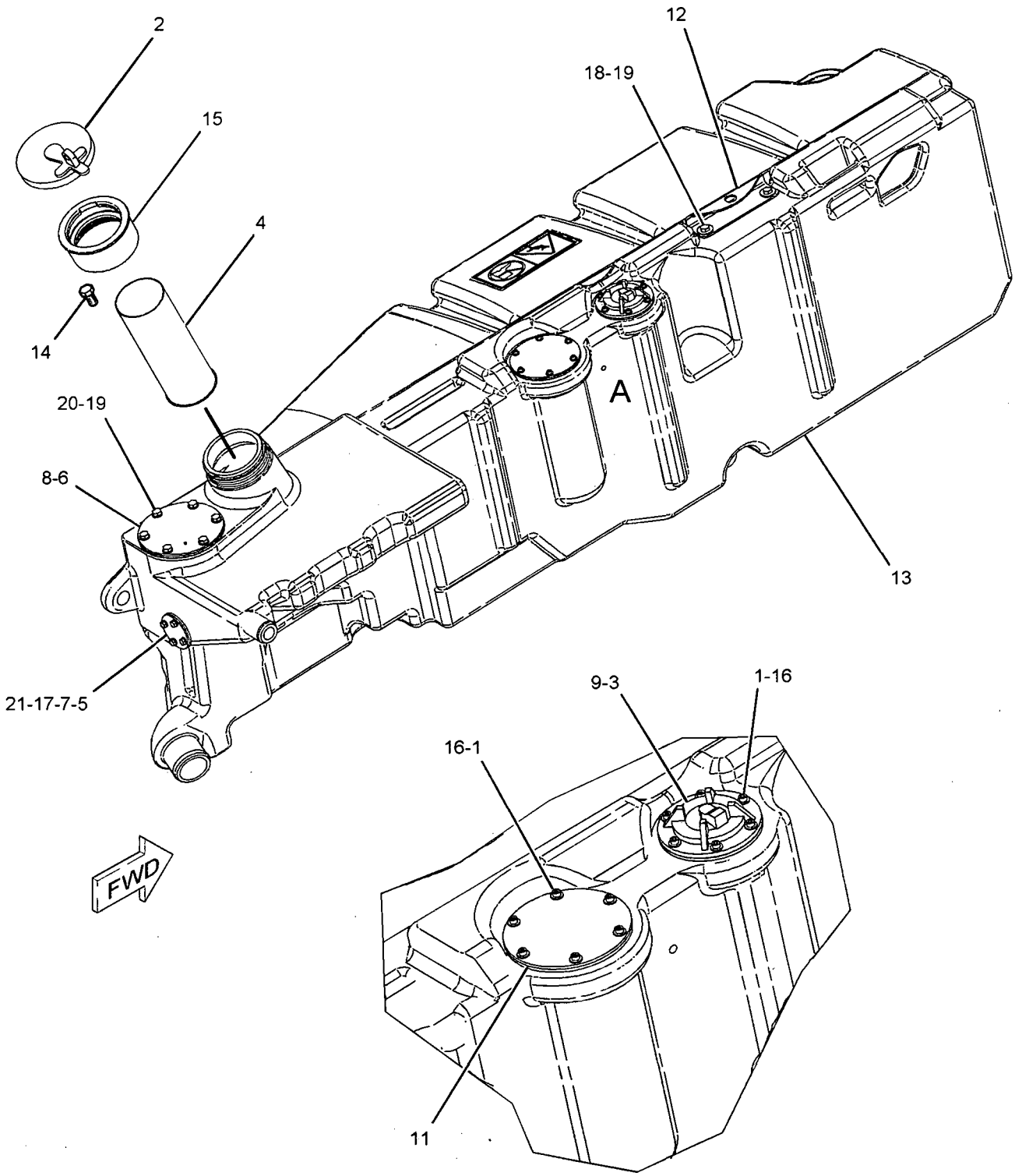

VIEW OF AREA A

GRAPHIC #1 **<END>** g01013261

229-5815 TANK GP-FUEL–LH

S/N: CCA1-UP

PART OF 199-9913 TANK GP-FUEL

SMCS-1273 i01943701

NOTE	REF NO	GRAPHIC REF	PART NUMBER	QTY	PART NAME 1 2 3 4 5 6 (PRODUCT LEVEL)	SEE PAGE
	2	1	110-2445	1	CLAMP-HOSE	
	3	1	194-2612	1	COUPLER	
	4	1	230-4477	1	FILM-WARNING (NO STEP)	
	5	1	231-0221	1	FILM-WARNING (NO STEP)	
	6	1	002-6454	1	NIPPLE-PIPE	

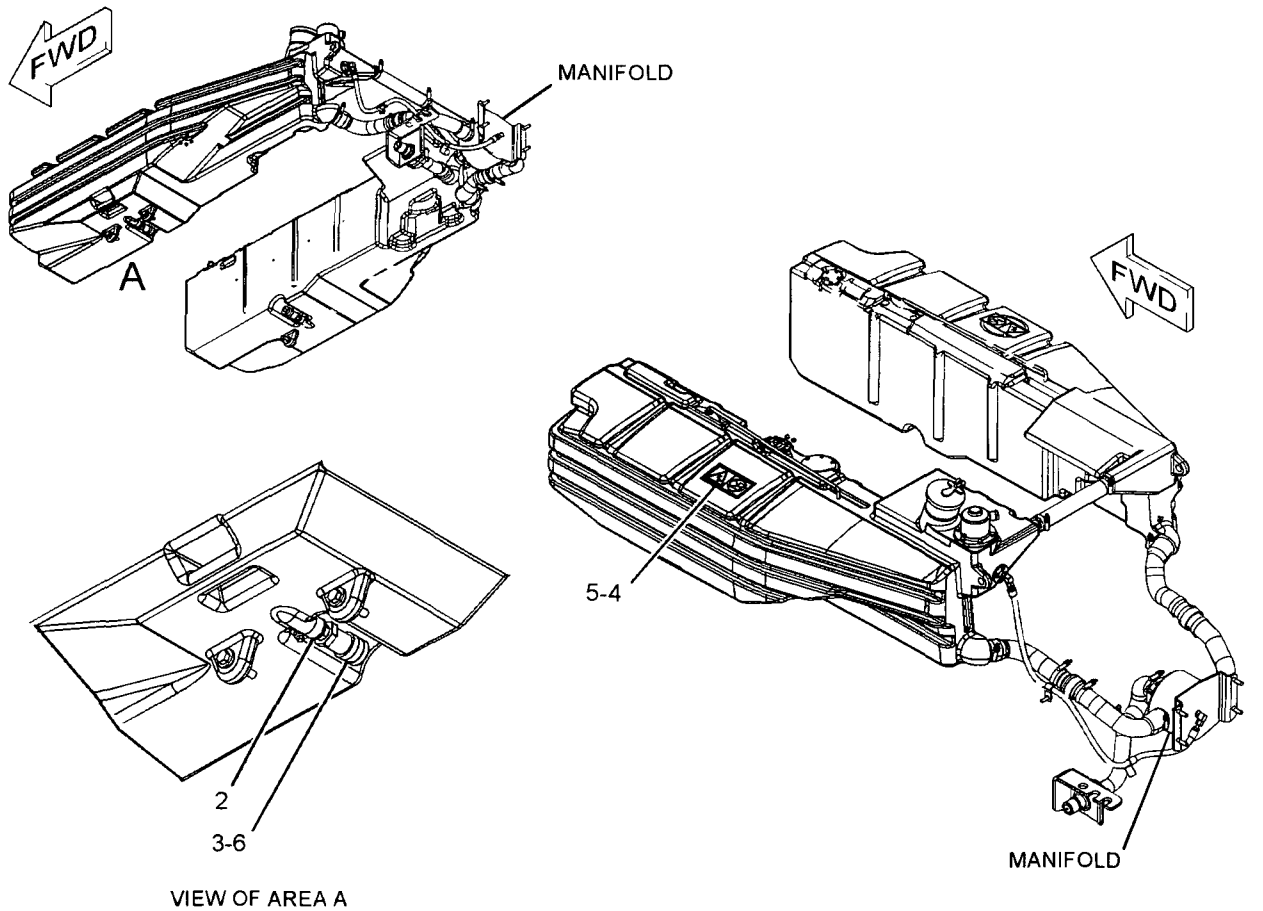

VIEW OF AREA A

GRAPHIC #1 **<END>** g01064295

FUEL SYSTEM

229-5816 TANK GP-FUEL–RH

S/N: CCA1-UP

PART OF 199-9912 TANK GP-FUEL

SMCS-1273 i01943704

NOTE	REF NO	GRAPHIC REF	PART NUMBER	QTY	PART NAME 1 2 3 4 5 6 (PRODUCT LEVEL)	SEE PAGE
	2	1	**110-2445**	1	CLAMP-HOSE	
	3	1	**194-2612**	1	COUPLER	
	4	1	**230-4477**	1	FILM-WARNING (NO STEP)	
	5	1	**231-0221**	1	FILM-WARNING (NO STEP)	
	6	1	**002-6454**	1	NIPPLE-PIPE	

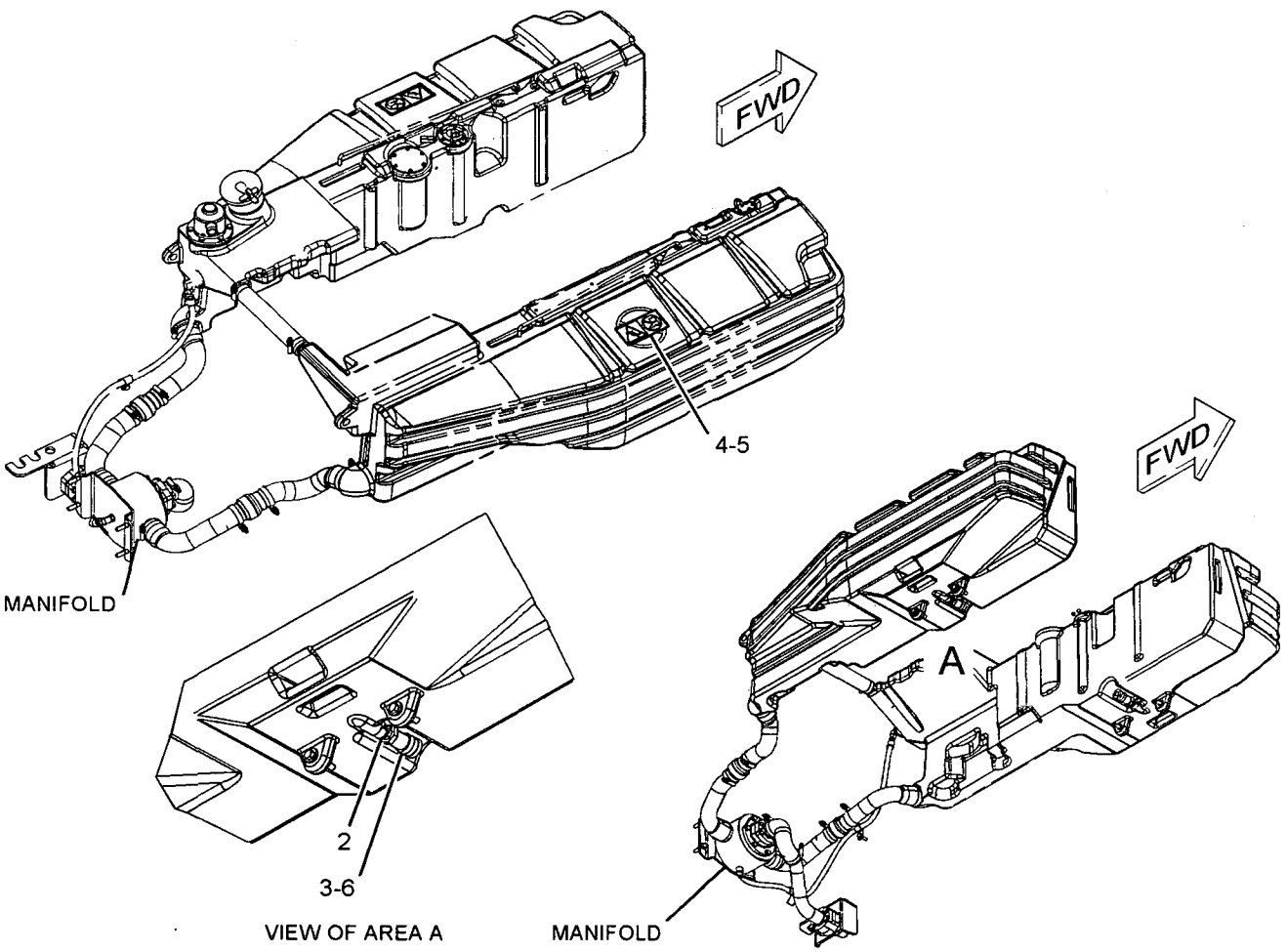

GRAPHIC #1

<END>

g01064308

156-5783 VALVE GP-CHECK

S/N: 3PD1-4380

PART OF 204-0638 LINES GP-FUEL INJECTION

SMCS-1250, 1274 i01672625

NOTE	REF NO	GRAPHIC REF	PART NUMBER	QTY	PART NAME 1 2 3 4 5 6 (PRODUCT LEVEL)	SEE PAGE
	1	1	6V-6923	1	RING-BACKUP (13.16MM ID)	
	2	1	033-6033	1	SEAL-O-RING (12.42MM ID)	

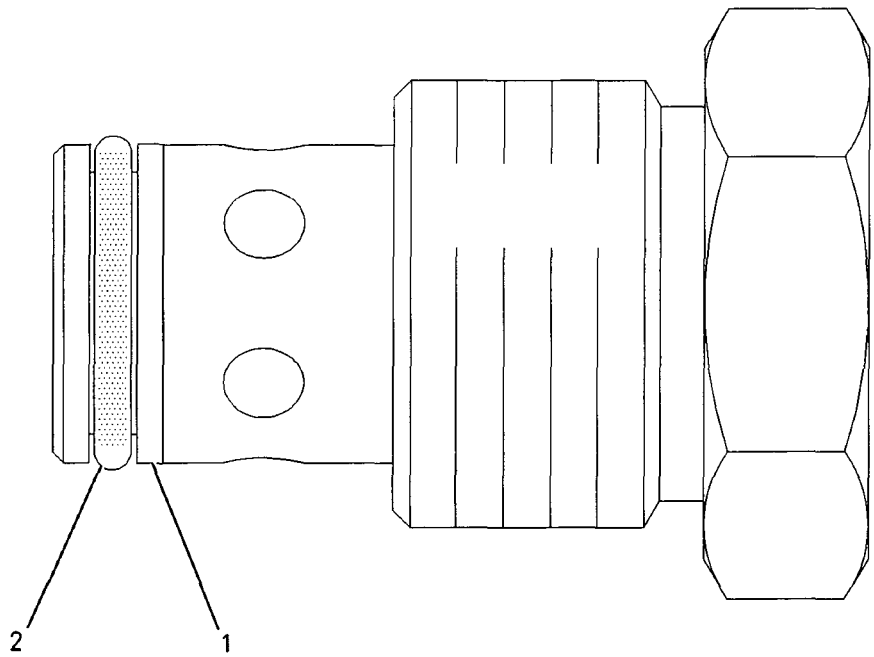

GRAPHIC #1

<END>

g00864141

233-6742 VALVE GP-CHECK

S/N: 3PD4381-UP

PART OF 233-6663 LINES GP-FUEL

SMCS-1250, 1274 **i02044646**

NOTE	REF NO	GRAPHIC REF	PART NUMBER	QTY	PART NAME 1 2 3 4 5 6 (PRODUCT LEVEL)	SEE PAGE
Y	1	1	**238-0296**	1	VALVE GP-CHECK (FUEL FILTER)	127
	2	1	**6V-4589**	1	SEAL-O-RING	

Y-SEPARATE ILLUSTRATION

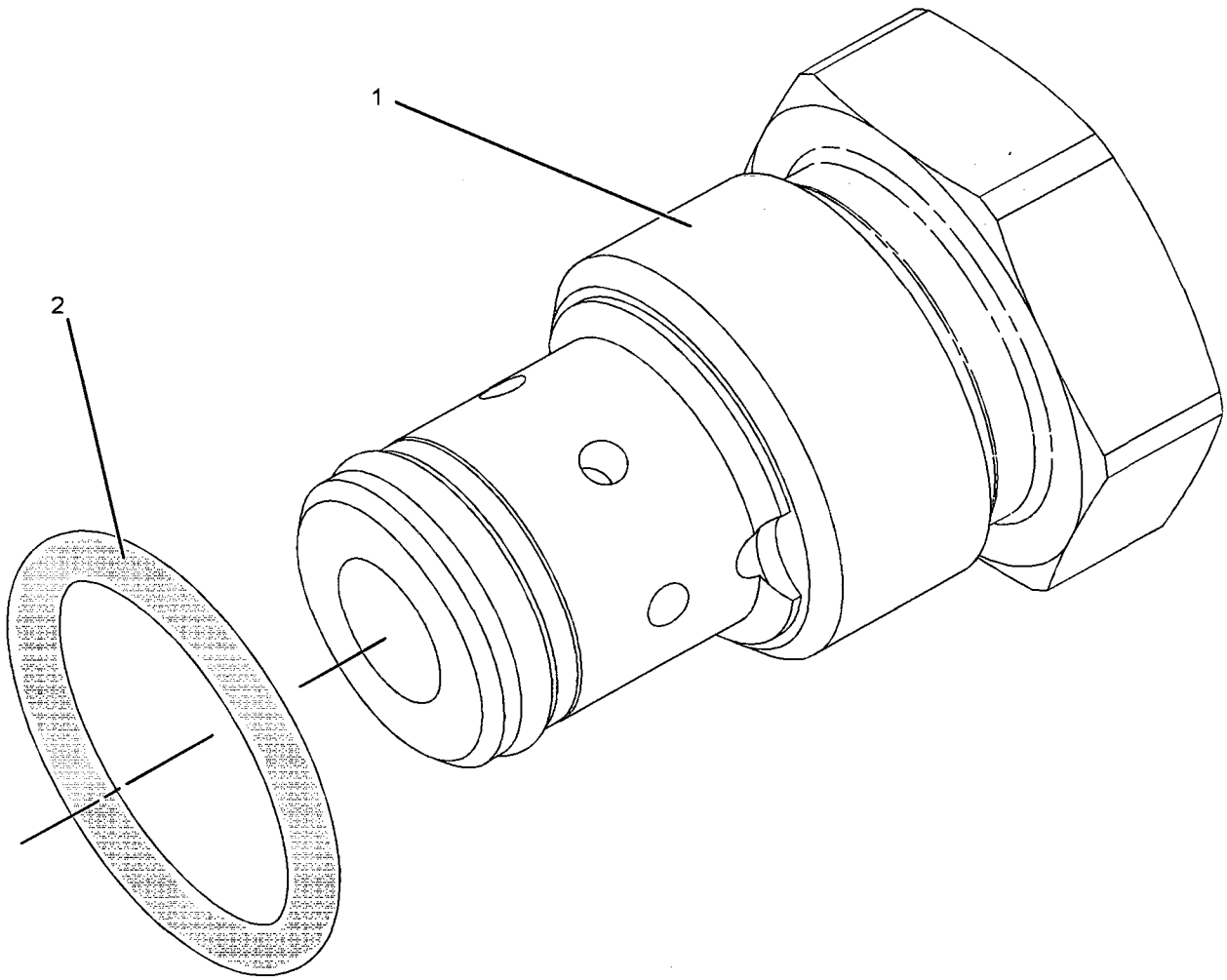

GRAPHIC #1 **<END>** g01031823

238-0296 VALVE GP-CHECK

S/N: 3PD4381-UP

PART OF 233-6742 VALVE GP-CHECK

SMCS-1250, 1274 i02044647

NOTE	REF NO	GRAPHIC REF	PART NUMBER	QTY	PART NAME 1 2 3 4 5 6 (PRODUCT LEVEL)	SEE PAGE
	1	1	6V-6923	1	RING-BACKUP (13.16MM ID)	
	2	1	033-6033	1	SEAL-O-RING (12.42MM ID)	

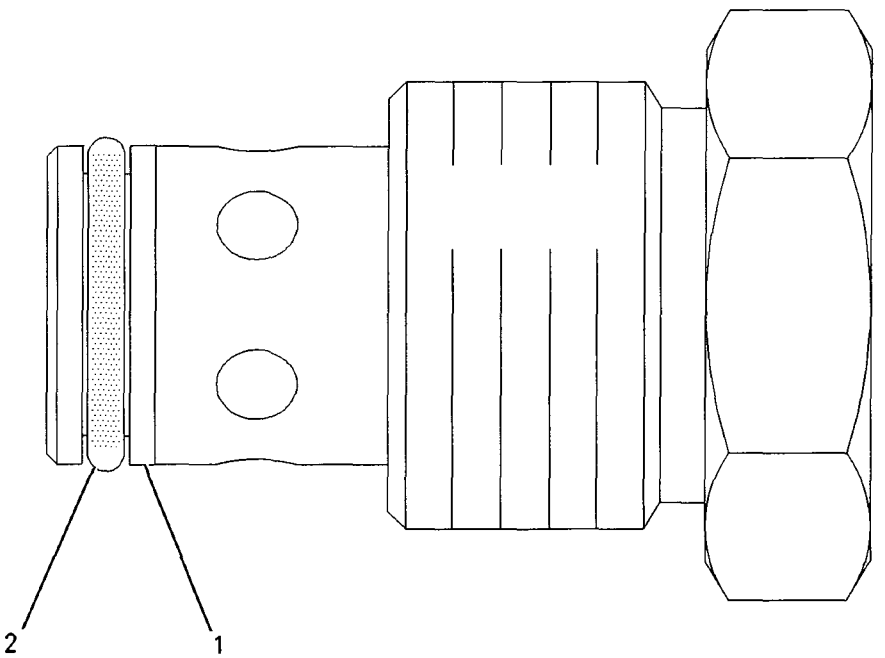

GRAPHIC #1 <END> g00864141

3E-6328 ALARM GP–ACTION

S/N: CCA1-UP
24 VOLT
PART OF 159-5839, 159-5841 WIRING GP-SHIFT CONSOLE
ALSO AN ATTACHMENT

SMCS-7400, 7402, 7407 i02021590

NOTE	REF NO	GRAPHIC REF	PART NUMBER	QTY	PART NAME 1 2 3 4 5 6 (PRODUCT LEVEL)	SEE PAGE
	1	1	102-8802	1	KIT-RECEPTACLE (2-PIN)	
					(INCLUDES RECEPTACLE AS & WEDGE)	
	2	1	186-3735	2	PIN-CONNECTOR	

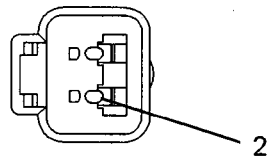

VIEW A–A

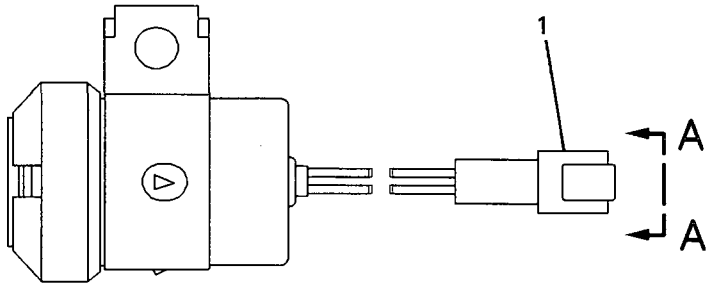

GRAPHIC #1 **<END>** g00697818

123-6449 ALARM GP

S/N: CCA1-UP

PART OF 193-8253 WIRING GP-REAR

AN ATTACHMENT

SMCS-7400, 7402, 7407 i02205173

NOTE	REF NO	GRAPHIC REF	PART NUMBER	QTY	PART NAME 1 2 3 4 5 6 (PRODUCT LEVEL)	SEE PAGE
	1	1	102-8802	1	KIT-RECEPTACLE (2-PIN) (BACK UP ALARM)	
					(INCLUDES RECEPTACLE AS & WEDGE)	
E	2	1	9X-1813		SLEEVE	
	3	1	186-3735	2	PIN-CONNECTOR	
B	4	1	5P-5677		WIRE (18-GA)	

B-USE AS REQUIRED
E-ORDER BY THE CENTIMETER

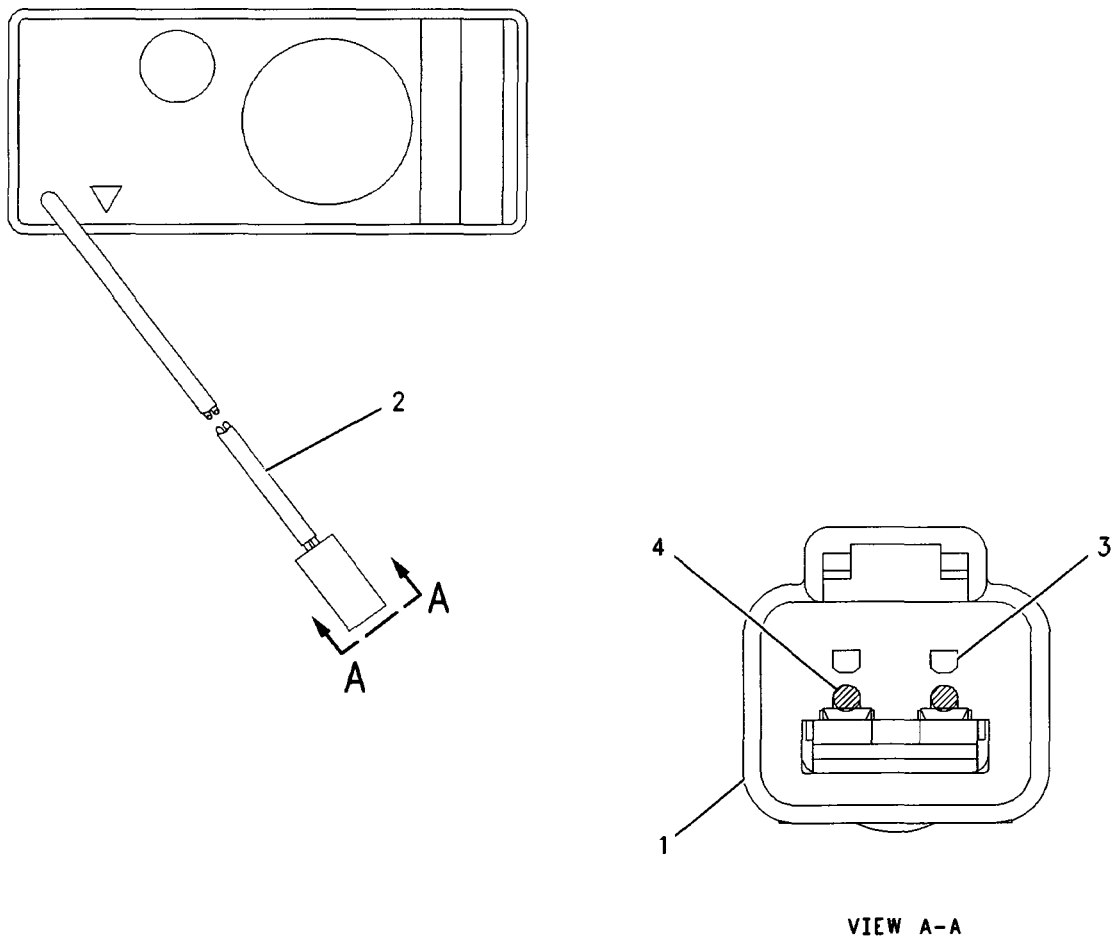

VIEW A-A

GRAPHIC #1 <END> g00942858

200-2232 ALTERNATOR GP-CHARGING*R

S/N: CCA1-UP; 3PD1-UP

PART OF 212-0615, 233-0712 ALTERNATOR GP-CHARGING

SMCS-1405 i02125262

NOTE	REF NO	GRAPHIC REF	PART NUMBER	QTY	PART NAME 1 2 3 4 5 6 (PRODUCT LEVEL)	SEE PAGE
	1	1	**8T-4205**	2	WASHER-HARD (7.2X14.5X2-MM THK)	
	2	1	**1H-3244**	2	LOCKWASHER	
	3	1	**6V-8187**	1	NUT (1/4-28-THD)	
	4	1	**5S-7349**	1	BOLT (1/4-20X0.5-IN)	
	5	1	**9L-6770**	1	CAP	
	6	1	**231-6133**	1	KIT-BEARING	
					(INCLUDES BEARING AS AND RACE)	
	7	1	**231-6134**	1	KIT-RECTIFIER	
	8	1	**202-2708**	1	DIODE AS	
	9	1	**3T-6354**	1	REGULATOR AS-VOLTAGE (24-VOLT)	
	10	1	**229-8906**	1	CAPACITOR AS	
	11	1	**202-9897**	1	BEARING-SPECIAL BALL	
	12	1	**100-6531**	1	FAN-ALTERNATOR (14-BLADE)	
	13	1	**187-2034**	1	NUT-FLANGE (5/8-18-THD)	
	14	1	**202-2783**	1	PLATE	
	15	1	**202-7711**	1	HOUSING AS	
	16	1	**202-7713**	1	FRAME AS	
	17	1	**202-8647**	1	STATOR AS	
	18	1	**202-2703**	1	COIL AS	
	19	1	**9S-2390**	1	RETAINER	
	20	1	**9S-2302**	1	ROTOR AS	
	21	1	**4B-2047**	1	NUT (10-24-THD)	
	22	1	**8T-0328**	1	WASHER-HARD (5.5X10X1-MM THK)	
	23	1	**8F-1434**	1	LOCKWASHER	
	24	1	**202-2784**	1	KIT-ALTERNATOR TERMINAL	
	25	1	**202-2785**	1	KIT-ALTERNATOR TERMINAL	
	26	1	**202-2786**	1	KIT-ALTERNATOR TERMINAL	
					AVAILABLE REPAIR KIT(S):	
			202-2787		KIT-HARDWARE	
					(INCLUDES BOLTS, NUTS, PLUGS, SCREWS, LOCKWASHER, CONNECTOR, COLLAR AND BOOT)	

200-2232 ALTERNATOR GP-CHARGING *(contd.)*

i02125262

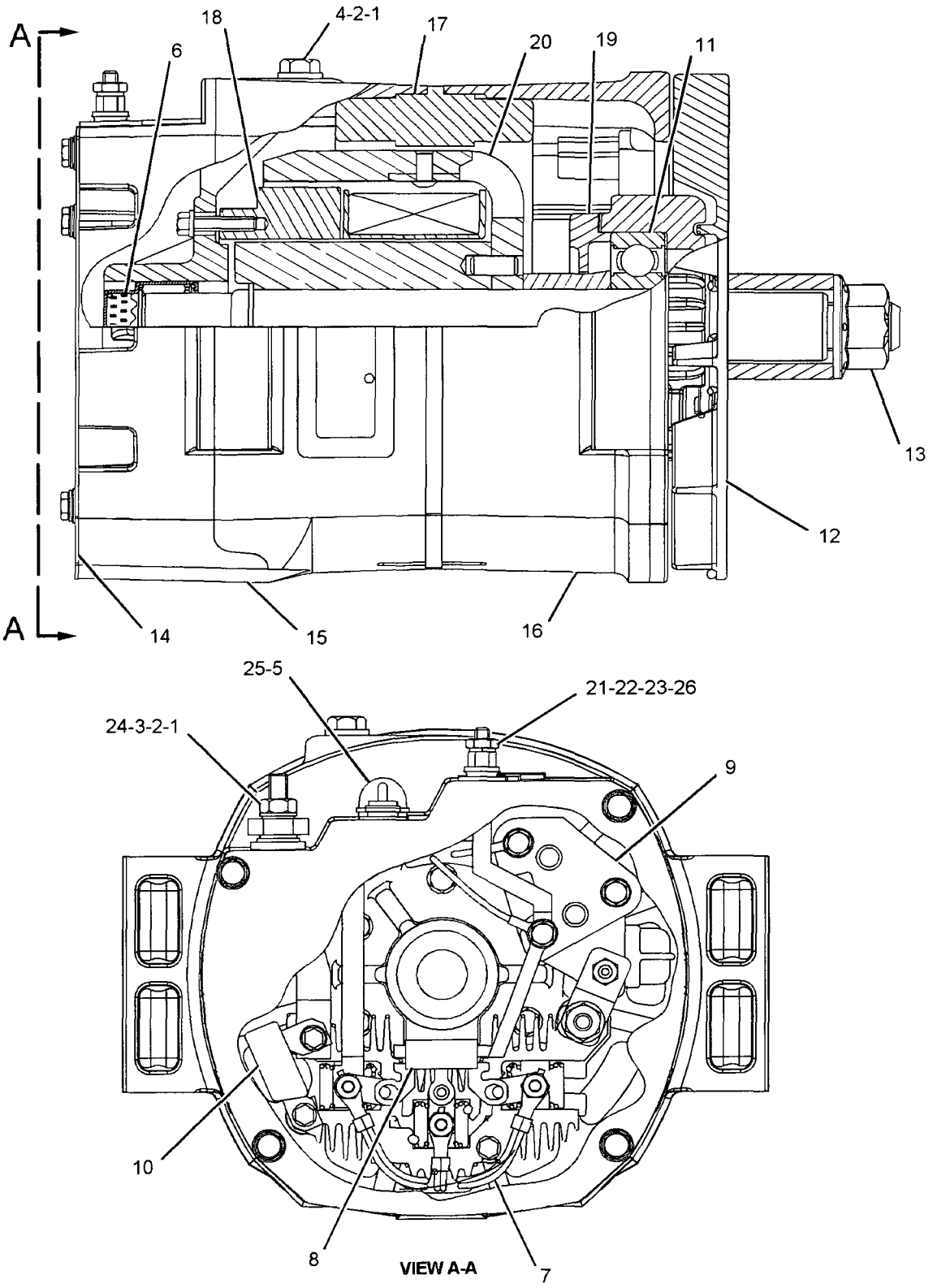

GRAPHIC #1

<END>

g01082788

ELECTRICAL AND STARTING SYSTEM

212-0615 ALTERNATOR GP-CHARGING

S/N: 3PD1-4380

PART OF 160-5101 ENGINE AR

SMCS-1405 **i01855562**

NOTE	REF NO	GRAPHIC REF	PART NUMBER	QTY	PART NAME 1 2 3 4 5 6 (PRODUCT LEVEL)	SEE PAGE
	1	1	**169-4657**	1	BRACKET	
	2	1	**199-9959**	1	GUARD AS	
YR	3	1	**200-2232**	1	ALTERNATOR GP-CHARGING	130
	4	1	**3E-4353**	3	WASHER-HARD (11X25X3-MM THK)	
M	5	1	**6V-1820**	3	BOLT (M10X1.50X30-MM)	
M	6	1	**8T-0643**	2	BOLT (M10X1.50X80-MM)	
	7	1	**8T-4121**	4	WASHER-HARD (11X21X2.5-MM THK)	
M	8	1	**8T-4198**	4	BOLT (M10X1.5X100-MM)	
M	9	1	**6V-3822**	2	BOLT (M10X1.5X35-MM)	

M-METRIC PART
R-REMFG PART MAY BE AVAILABLE
Y-SEPARATE ILLUSTRATION

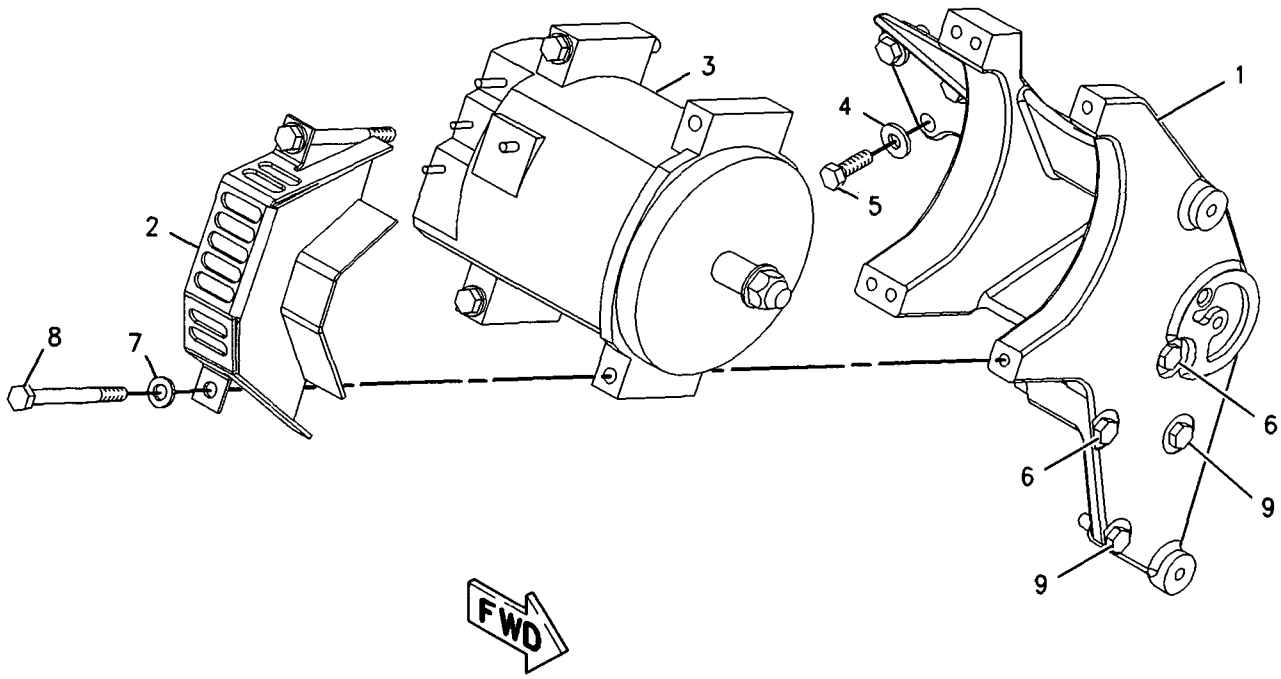

GRAPHIC #1 **<END>** g00906401

226-7683 ALTERNATOR GP-CHARGING

S/N: CCA1-UP
PART OF 233-0713 ALTERNATOR GP-CHARGING
AN ATTACHMENT

SMCS-1405 i02160631

NOTE	REF NO	GRAPHIC REF	PART NUMBER	QTY	PART NAME 1 2 3 4 5 6 (PRODUCT LEVEL)	SEE PAGE
	1	1	228-9656	1	MOUNTING GP-ALTERNATOR	
	2	1	5S-7349	1	BOLT (1/4-20X0.5-IN)	
	3	1	185-2639	1	FAN AS	
	4	1	1H-3244	1	LOCKWASHER	
	5	1	228-9655	1	MOUNTING GP-ALTERNATOR	
	6	1	2K-4821	1	LOCKNUT (5/8-18-THD)	
	7	1	5P-8247	1	WASHER-HARD (17X32X3.5-MM THK)	
	8	1	228-9657	1	COVER AS	
	9	1	8T-4205	1	WASHER-HARD (7.2X14.5X2-MM THK)	
	10	1	185-2647	1	GROMMET	
	11	1	9L-6770	1	CAP	
	12	1	205-0626	1	STATOR AS-ALTERNATOR	
	13	1	185-2638	2	COLLAR	
	14	1	185-2654	1	PLATE	
	15	1	185-2650	1	ROTOR AS	
	16	1	185-2644	1	COIL AS	
	17	1	185-2648	1	REGULATOR AS-VOLTAGE (24-VOLT) (ALTERNATOR)	
	18	1	6V-8189	1	NUT (5/16-18-THD)	
	19	1	8T-4224	1	WASHER-HARD (8.8X16X2-MM THK)	
	20	1	3F-9556	1	LOCKWASHER	
					AVAILABLE REPAIR KIT(S):	
			185-2655	1	KIT-BEARING (ALTERNATOR) (INCLUDES BEARINGS)	
			185-2658	1	KIT-HARDWARE (ALTERNATOR) (INCLUDES BOLTS)	
			199-8436	1	KIT-TERMINAL (ALTERNATOR) (INCLUDES HOLDER AS, PLATE, INSULATOR, PIN, BOLT KIT, GROMMET, AND NUT)	
			199-7891	1	KIT-TERMINAL (ALTERNATOR) (INCLUDES INSULATORS, WASHERS, NUT AND STEP NUT)	

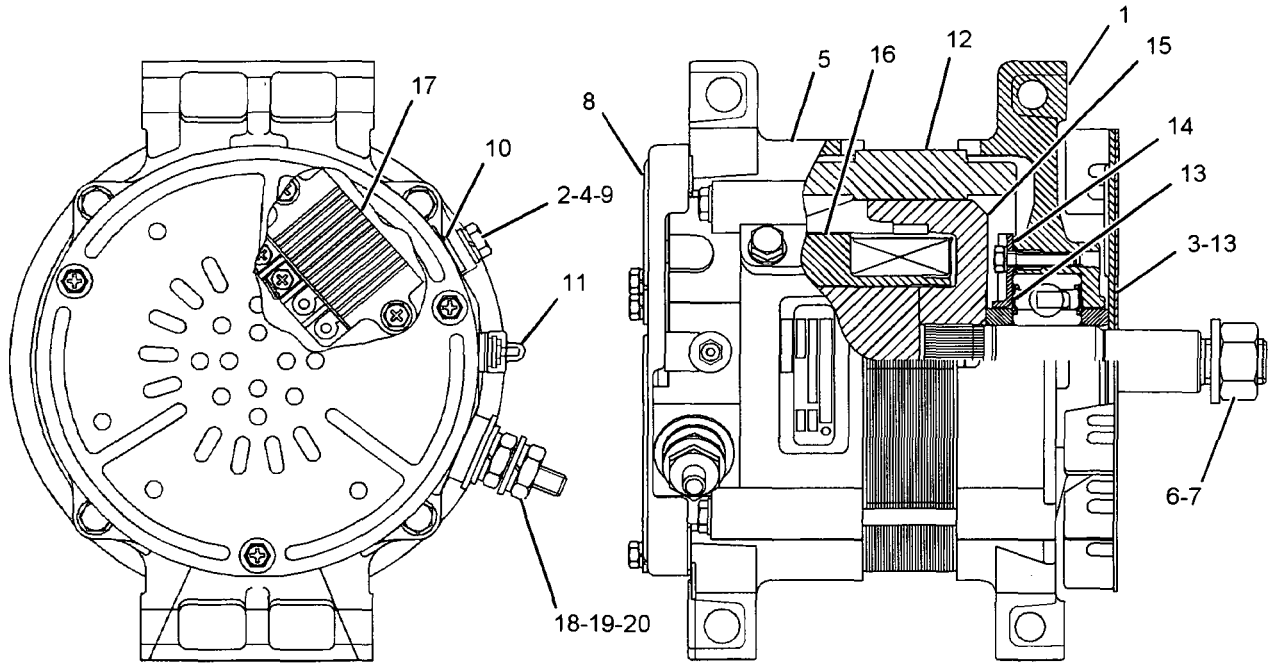

GRAPHIC #1 <END> g01088551

ELECTRICAL AND STARTING SYSTEM

233-0712 ALTERNATOR GP-CHARGING

S/N: CCA361-UP

PART OF 159-4615 GENERAL AR

SMCS-1405 **i01912820**

NOTE	REF NO	GRAPHIC REF	PART NUMBER	QTY	PART NAME 1 2 3 4 5 6 (PRODUCT LEVEL)	SEE PAGE
	1	1	**123-0790**	1	PULLEY	
	2	1	**178-8481**	1	BELT-SERPENTINE (ALTERNATOR WITHOUT A/C)	
	3	1	**199-9959**	1	GUARD AS	
YR	4	1	**200-2232**	1	ALTERNATOR GP-CHARGING	130
	5	1	**8T-4121**	4	WASHER-HARD (11X21X2.5-MM THK)	
M	6	1	**8T-4198**	4	BOLT (M10X1.5X100-MM)	

M-METRIC PART
R-REMFG PART MAY BE AVAILABLE
Y-SEPARATE ILLUSTRATION

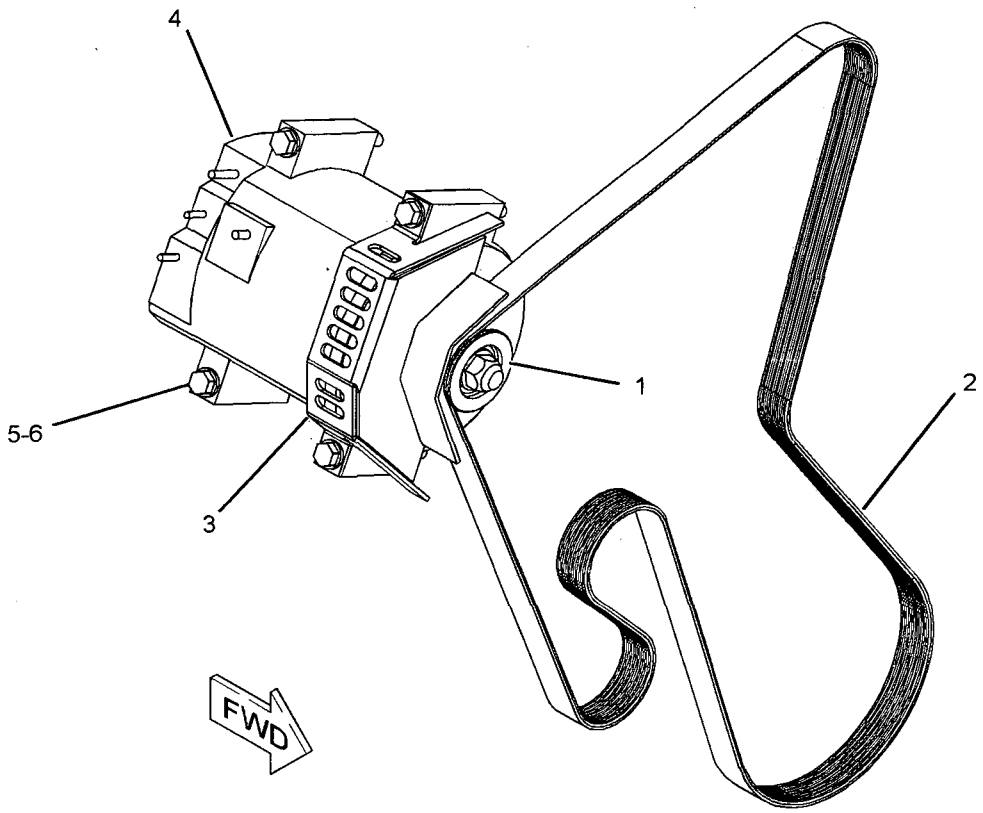

GRAPHIC #1 **<END>** g01032645

233-0713 ALTERNATOR GP-CHARGING

S/N: CCA1-UP
95-100 AMPERES
AN ATTACHMENT

SMCS-1405 i02160613

NOTE	PART NUMBER	QTY	PART NAME 1 2 3 4 5 6 (PRODUCT LEVEL)	SEE PAGE
Y	**226-7683**	1	ALTERNATOR GP-CHARGING	133
Y	*236-5498*	1	CIRCUIT BREAKER GP (ALTERNATOR)	143

Y-SEPARATE ILLUSTRATION

<END>

ELECTRICAL AND STARTING SYSTEM

177-9548 BATTERY GP–HEAVY DUTY

S/N: CCA1-UP
AN ATTACHMENT

SMCS-1401 **i02205175**

NOTE	REF NO	GRAPHIC REF	PART NUMBER	QTY	PART NAME 1 2 3 4 5 6 (PRODUCT LEVEL)	SEE PAGE
	1	1	**8V-0622**	1	CABLE AS	
		1	**8C-5917**	1	TERMINAL AS-BATTERY (POSITIVE)	
		1	**1M-6119**	2	BOLT (5/16-18X1.375-IN)	
		1	**1M-6120**	2	NUT (5/16-18-THD)	
E		1	**5P-0761**		CABLE (00-GA, RED) (14-CM)	
		1	**8T-9757**	1	TERMINAL AS-BATTERY (NEGATIVE)	
		1	**9G-0003**	1	COVER-TERMINAL (BLACK)	
		1	**9G-0004**	1	COVER-TERMINAL (RED)	
	2	1	**153-5700**	2	BATTERY GP (12-VOLT) (1100 AMPS)	
	3	1	**189-0146**	1	HOLD-DOWN	
	4	1	**229-0674**	1	BAR	
	5	1	**174-5907**	2	CLIP	
M	6	1	**8T-0389**	2	LOCKNUT (M10X1.5-THD)	
	7	1	**8T-4121**	5	WASHER-HARD (11X21X2.5-MM THK)	
M	8	1	**8T-4133**	1	NUT (M10X1.5-THD)	
M	9	1	**8T-4136**	1	BOLT (M10X1.5X25-MM)	
M	10	1	**8T-4182**	2	BOLT (M10X1.5X45-MM)	
	11	1	**9R-6414**	2	ROD	

E-ORDER BY THE CENTIMETER
M-METRIC PART

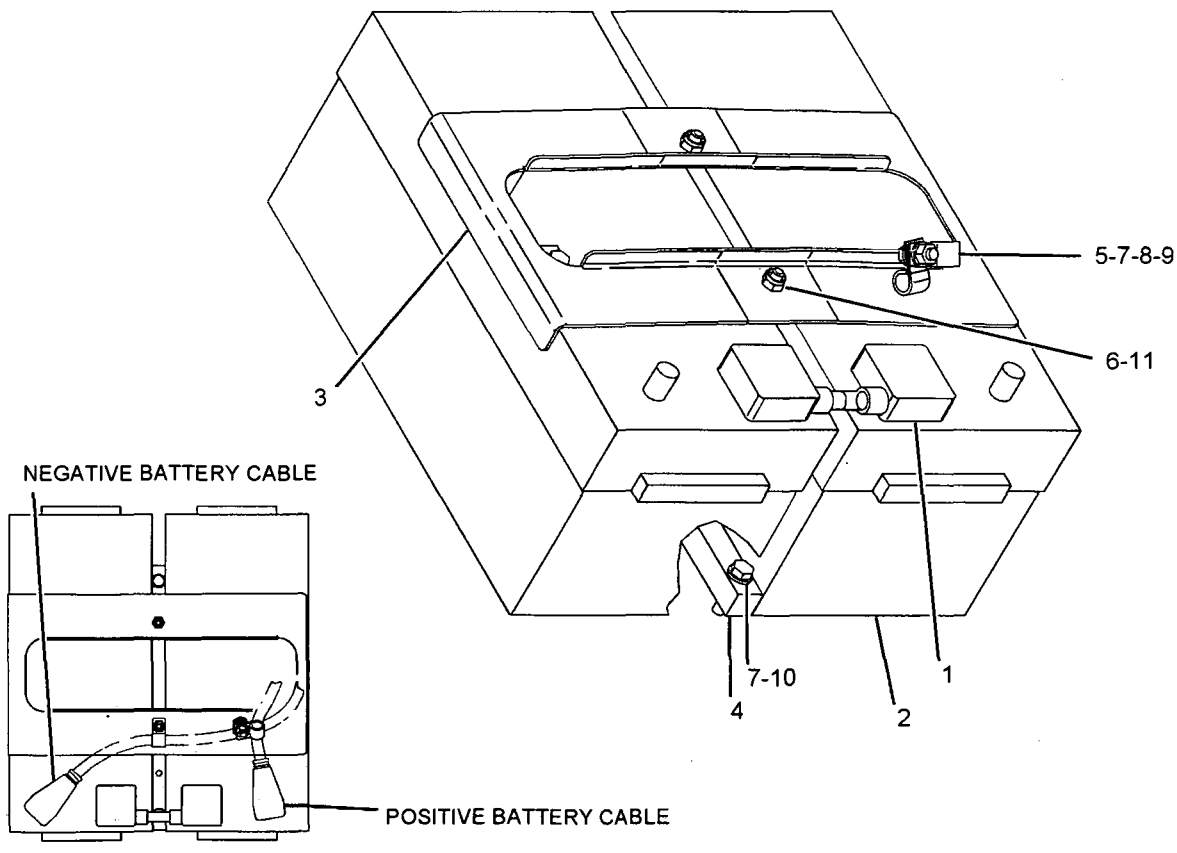

TOP VIEW

GRAPHIC #1 **<END>** g01064316

177-9549 BATTERY GP–HEAVY DUTY

S/N: CCA1-UP

PART OF 197-5955, 236-3948 SNOW AR-MOTOR GRADER AN ATTACHMENT

SMCS-1401 i02203568

NOTE	REF NO	GRAPHIC REF	PART NUMBER	QTY	PART NAME 1 2 3 4 5 6 (PRODUCT LEVEL)	SEE PAGE
	1	1	8V-0622	1	CABLE AS	
		1	1M-6119	2	BOLT (5/16-18X1.375-IN)	
E		1	5P-0761		CABLE (00-GA, RED) (14-CM)	
		1	9G-0003	1	COVER-TERMINAL (BLACK)	
		1	9G-0004	1	COVER-TERMINAL (RED)	
		1	1M-6120	2	NUT (5/16-18-THD)	
		1	8T-9757	1	TERMINAL AS-BATTERY (NEGATIVE)	
		1	8C-5917	1	TERMINAL AS-BATTERY (POSITIVE)	
	2	1	153-5710	2	BATTERY (12-VOLT) (WET)	
	3	1	189-0146	1	HOLD-DOWN	
	4	1	229-0674	1	BAR	
	5	1	174-5907	2	CLIP	
M	6	1	8T-0389	2	LOCKNUT (M10X1.5-THD)	
	7	1	8T-4121	5	WASHER-HARD (11X21X2.5-MM THK)	
M	8	1	8T-4133	1	NUT (M10X1.5-THD)	
M	9	1	8T-4136	1	BOLT (M10X1.5X25-MM)	
M	10	1	8T-4182	2	BOLT (M10X1.5X45-MM)	
	11	1	9R-6414	2	ROD	

E-ORDER BY THE CENTIMETER
M-METRIC PART

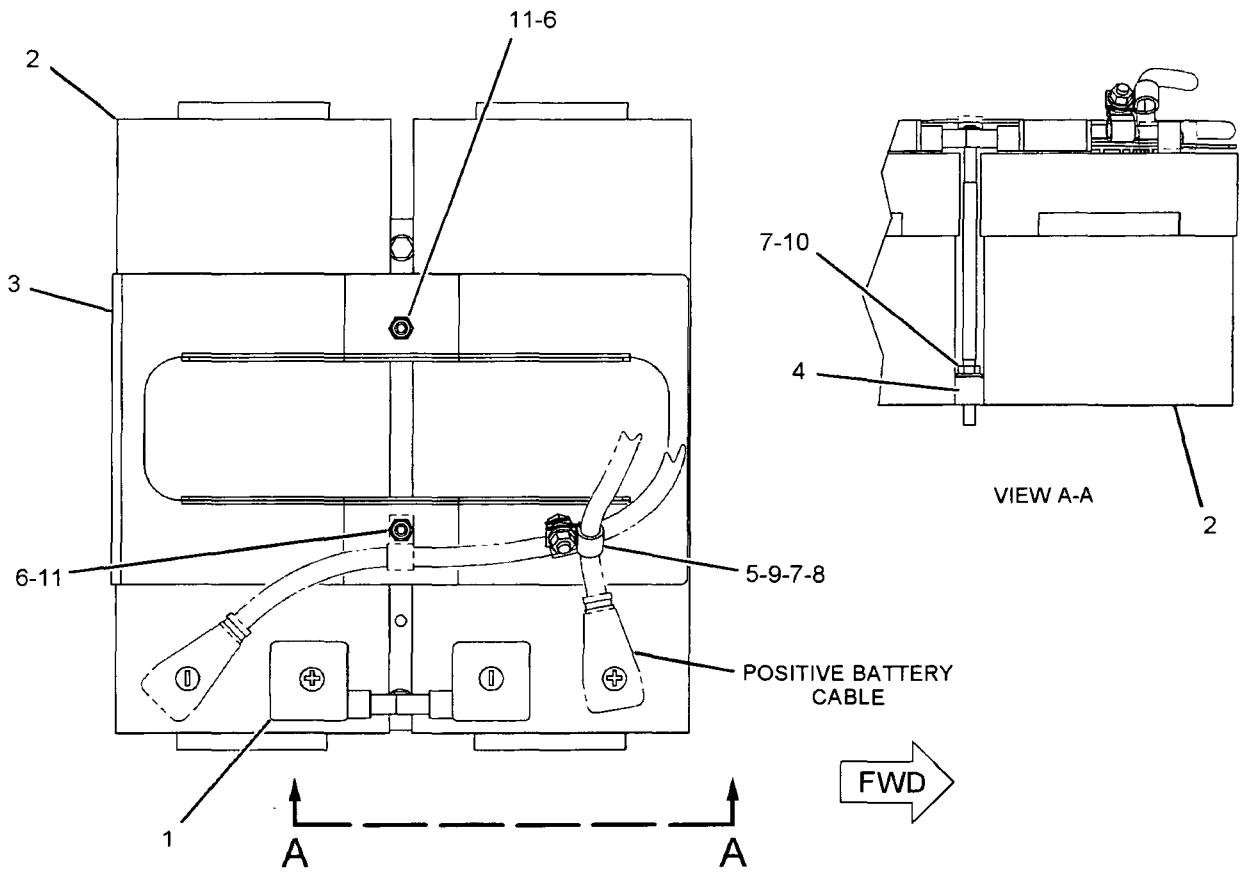

GRAPHIC #1 <END> g01038568

187-8028 BATTERY GP–EU

S/N: CCA1-UP

PART OF 171-6700 SUPPORT AR-REAR CHASSIS AN ATTACHMENT

SMCS-1401 **i02203569**

NOTE	REF NO	GRAPHIC REF	PART NUMBER	QTY	PART NAME 1 2 3 4 5 6 (PRODUCT LEVEL)	SEE PAGE
	1	1	**8V-0622**	1	CABLE AS	
E		1	**5P-0761**		CABLE (00-GA, RED) (14-CM)	
		1	**8C-5917**	1	TERMINAL AS-BATTERY (POSITIVE)	
		1	**1M-6119**	2	BOLT (5/16-18X1.375-IN)	
		1	**1M-6120**	2	NUT (5/16-18-THD)	
		1	**8T-9757**	1	TERMINAL AS-BATTERY (NEGATIVE)	
		1	**9G-0003**	1	COVER-TERMINAL (BLACK)	
		1	**8L-8413**	1	STRAP-CABLE	
		1	**9G-0004**	1	COVER-TERMINAL (RED)	
		1	**8L-8413**	1	STRAP-CABLE	
	2	1	**153-5700**	2	BATTERY GP.(12-VOLT)	
	3	1	**229-0674**	1	BAR	
	4	1	**189-0146**	1	HOLD-DOWN	
	5	1	**9R-6414**	2	ROD	
M	6	1	**8T-0389**	2	LOCKNUT (M10X1.5-THD)	
	7	1	**8T-4121**	5	WASHER-HARD (11X21X2.5-MM THK)	
M	8	1	**8T-4182**	2	BOLT (M10X1.5X45-MM)	
M	9	1	**8T-4133**	1	NUT (M10X1.5-THD)	
M	10	1	**8T-4136**	1	BOLT (M10X1.5X25-MM)	
	11	1	**174-5907**	2	CLIP	

E-ORDER BY THE CENTIMETER
M-METRIC PART

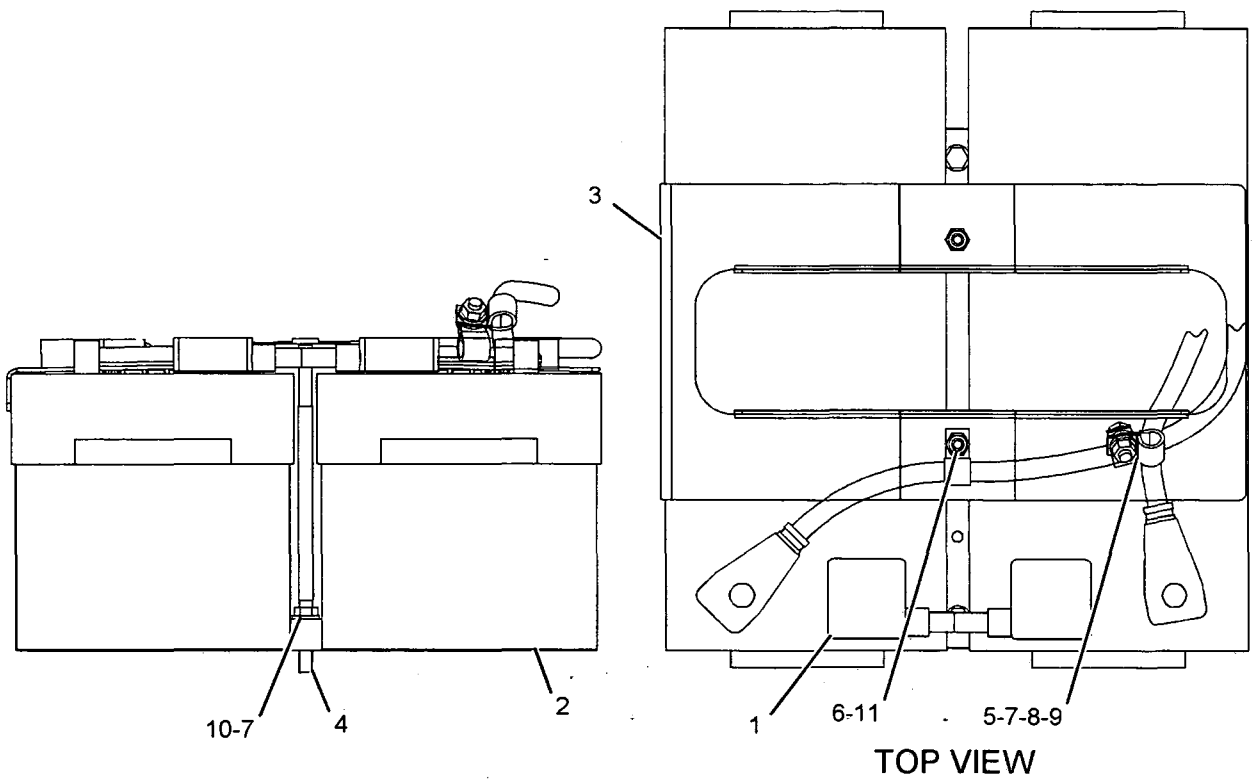

GRAPHIC #1

<END>

g01069127

188-3951 BATTERY GP–MAINTENANCE FREE

S/N: CCA1-UP

PART OF 185-3143 SUPPORT AR-REAR CHASSIS

SMCS-1401 i02089948

NOTE	REF NO	GRAPHIC REF	PART NUMBER	QTY	PART NAME 1 2 3 4 5 6 (PRODUCT LEVEL)	SEE PAGE
	1	1	111-7978	1	HOLD-DOWN AS	
	2	1	128-0314	1	CABLE AS	
		1	9G-0002	1	COVER-TERMINAL (RED) (LH POS)	
		1	9G-0005	1	COVER-TERMINAL (BLACK) (RH NEG)	
E		1	5P-0761		CABLE (00-GA, RED) (29-CM)	
		1	8C-5918	1	TERMINAL AS (NEG) (RH)	
		1	8T-9756	1	TERMINAL AS (POSITIVE) (LH)	
	3	1	188-3959	1	BRACKET	
	4	1	229-0674	1	BAR	
	5	1	3T-5760	2	BATTERY (12-VOLT, 750-AMPERE)	
M	6	1	8T-0389	2	LOCKNUT (M10X1.5-THD)	
	7	1	8T-4121	3	WASHER-HARD (11X21X2.5-MM THK)	
M	8	1	8T-4137	1	BOLT (M10X1.5X20-MM)	
M	9	1	8T-4182	2	BOLT (M10X1.5X45-MM)	
	10	1	9R-6414	2	ROD	

E-ORDER BY THE CENTIMETER
M-METRIC PART

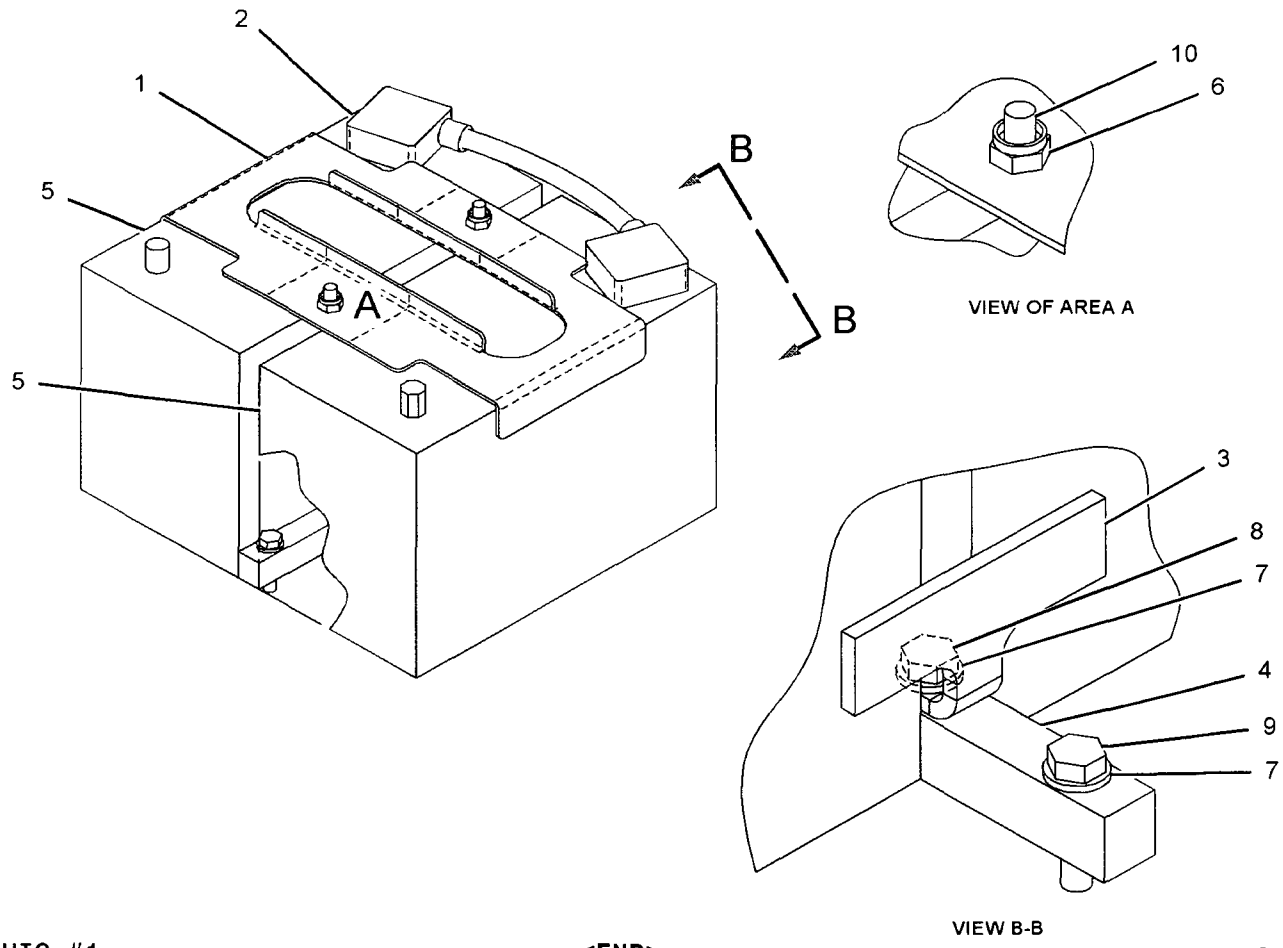

GRAPHIC #1 <END> g01066908

9W-0742 BLOCK GP-JUNCTION

S/N: CCA1-UP
PART OF 178-0163 WIRING GP-REAR
ALSO AN ATTACHMENT

SMCS-1408 **i02203621**

NOTE	REF NO	GRAPHIC REF	PART NUMBER	QTY	PART NAME 1 2 3 4 5 6 (PRODUCT LEVEL)	SEE PAGE
	1	1	**8C-6358**	1	JUNCTION BLOCK AS	
	2	1	**8T-3519**	3	BOLT-BRONZE (1/2-13X2-IN)	
	3	1	**8C-6921**	3	NUT-SPACER (1/2-13-THD)	
	4	1	**8T-3518**	6	NUT-FULL (1/2-13-THD)	
	5	1	**7F-0560**	6	WASHER (0.516X0.938X0.101-IN THK)	
BD	6	1	**6V-2722**		TUBE-HEAT SHRINK	

B-USE AS REQUIRED
D-ORDER BY THE METER

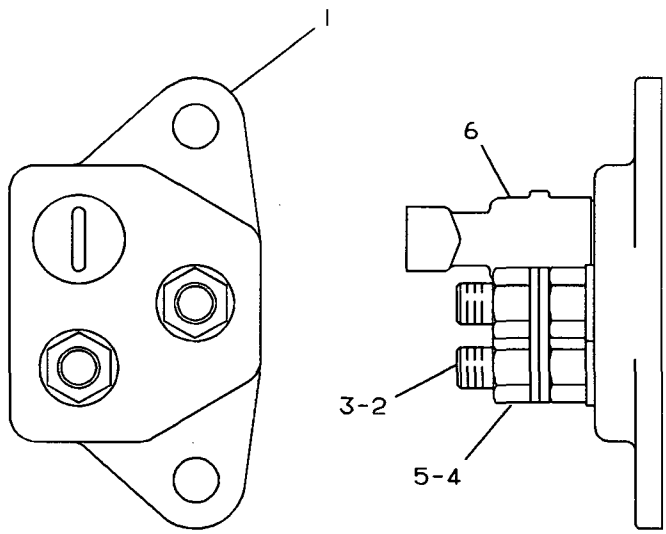

GRAPHIC #1 **<END>** g00082186

201-1036 CIRCUIT BREAKER GP–DUAL

S/N: CCA1-UP

PART OF 161-0771, 179-1548 LIGHTING AR-FLOOD & SIGNAL, 171-6700 SUPPORT AR-REAR CHASSIS AN ATTACHMENT

SMCS-1420 i02203625

NOTE	REF NO	GRAPHIC REF	PART NUMBER	QTY	PART NAME 1 2 3 4 5 6 (PRODUCT LEVEL)	SEE PAGE
	1	1	**195-2097**	1	WIRE AS	
	2	1	**201-8424**	1	STRAP	
	3	1	**3K-8106**	4	SCREW-MACHINE (8-32X1-IN)	
	4	1	**3T-2662**	1	CIRCUIT BREAKER AS (15-AMPERE) (LIGHTBAR WORKLAMPS)	
	4A	1	**3T-2662**	1	CIRCUIT BREAKER AS (15-AMPERE) (HEADLAMPS)	
					(EACH CIRCUIT BREAKER AS INCLUDES)	
		1	**6V-8376**	2	SCREW-MACHINE (8-32X0.25-IN)	
		1	**9B-7233**	2	LOCKWASHER	
	5	1	**7F-7685**	1	SCREW-MACHINE	
	6	1	**9B-7233**	4	LOCKWASHER	

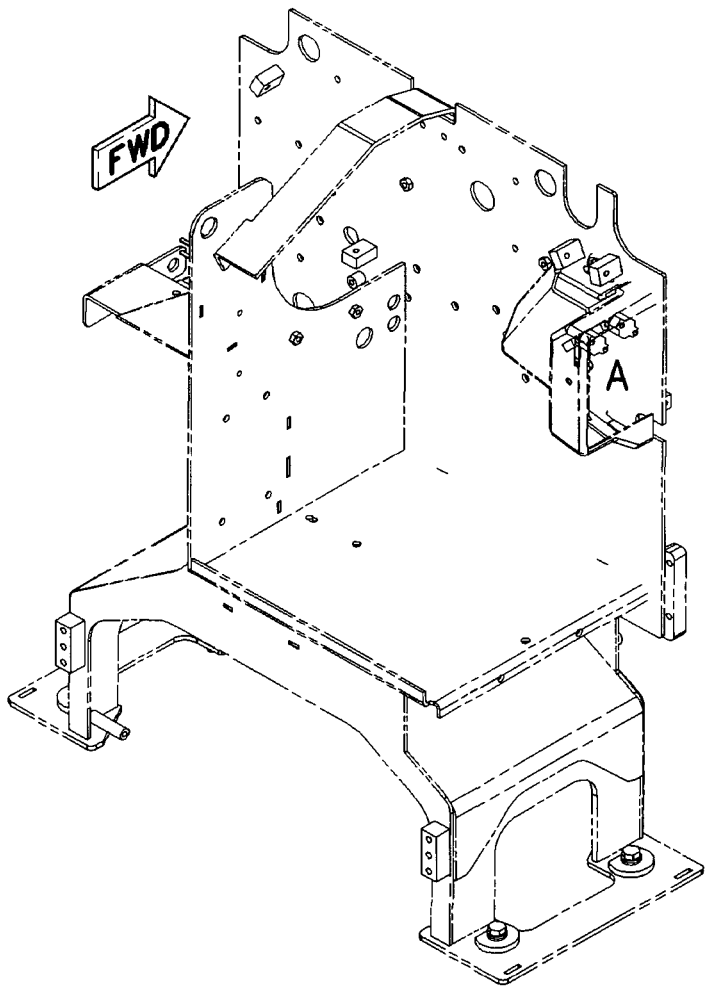

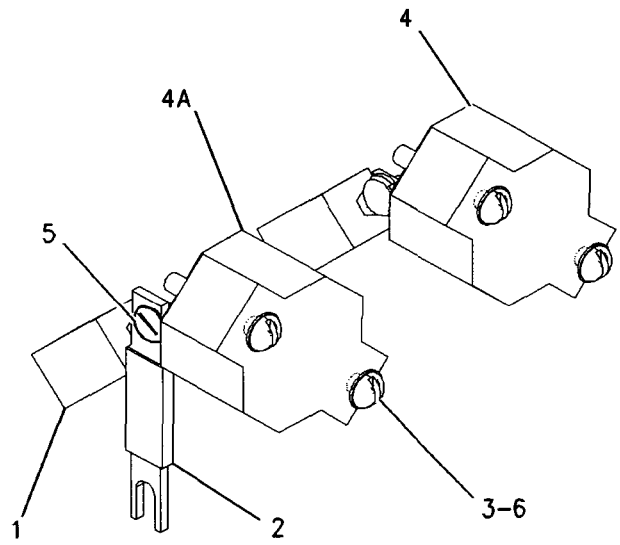

VIEW OF AREA A

GRAPHIC #1 **<END>** g00983765

201-1038 CIRCUIT BREAKER GP–SINGLE

S/N: CCA1-UP

PART OF 188-9328 LIGHTING AR-FLOOD, 161-0770 LIGHTING AR-FLOOD & SIGNAL AN ATTACHMENT

SMCS-1420 **i02203642**

NOTE	REF NO	GRAPHIC REF	PART NUMBER	QTY	PART NAME 1 2 3 4 5 6 (PRODUCT LEVEL)	SEE PAGE
	1	1	**201-8424**	1	STRAP	
	2	1	**3K-8106**	2	SCREW-MACHINE (8-32X1-IN)	
	3	1	**3T-2662**	1	CIRCUIT BREAKER AS (15-AMPERE) (HEADLAMPS)	
		1	**6V-8376**	2	SCREW-MACHINE (8-32X0.25-IN)	
		1	**9B-7233**	2	LOCKWASHER	
	4	1	**9B-7233**	2	LOCKWASHER	

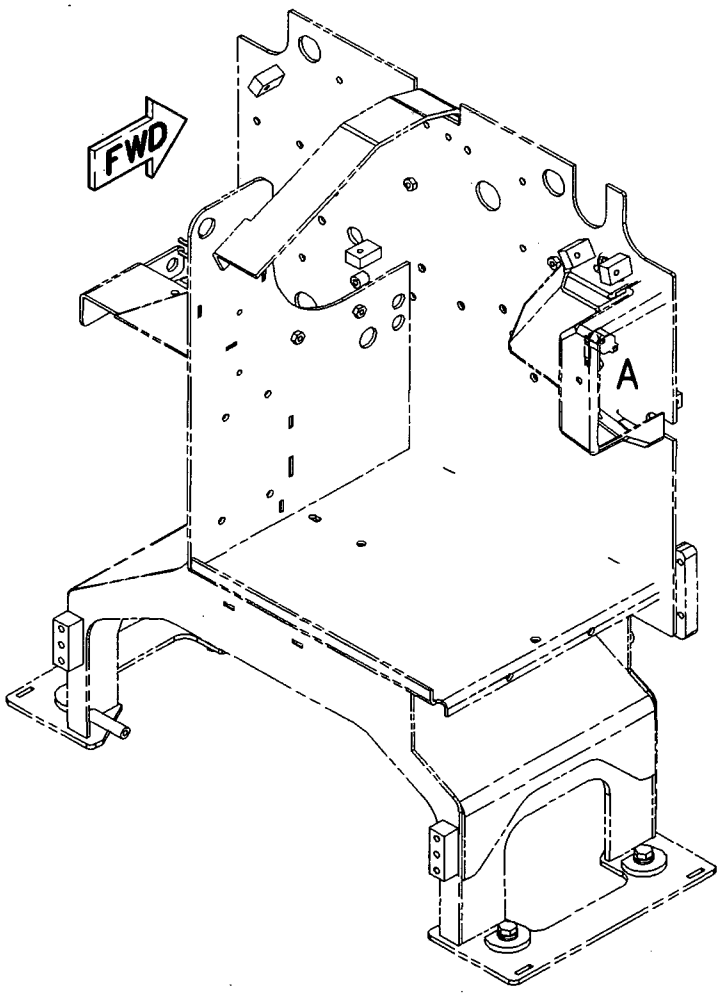

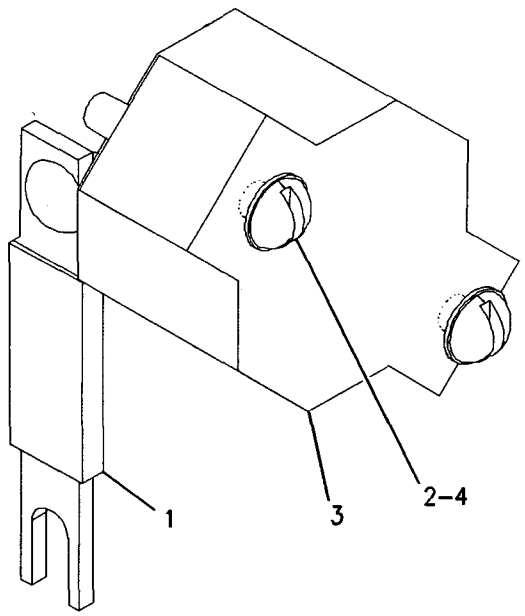

VIEW OF AREA A

GRAPHIC #1 **<END>** g00844652

236-5498 CIRCUIT BREAKER GP

S/N: CCA1-UP
105 AMPERE
PART OF 233-0713 ALTERNATOR GP-CHARGING
AN ATTACHMENT

SMCS-1420 i02160629

NOTE	PART NUMBER	QTY	PART NAME 1 2 3 4 5 6 (PRODUCT LEVEL)	SEE PAGE
	171-2212	1	CIRCUIT BREAKER AS (105-AMPERE) (ALTERNATOR)	
	6V-8187	2	NUT (1/4-28-THD)	
	8T-4205	2	WASHER-HARD (7.2X14.5X2-MM THK)	
	253-2111	2	LOCKWASHER	

<END>

ELECTRICAL AND STARTING SYSTEM

168-4490 CONTROL & MTG GP-ENGINE ELEK

S/N: 3PD1-4380

PART OF 160-5101 ENGINE AR

SMCS-1901 **i01855423**

NOTE	REF NO	GRAPHIC REF	PART NUMBER	QTY	PART NAME 1 2 3 4 5 6 (PRODUCT LEVEL)	SEE PAGE
	1	1	**6I-1418**	2	SPACER (8.2X12.7X28.7MM THK)	
	2	1	**8T-9655**	8	MOUNT (ISOLATION)	
	4	1	**168-4594**	2	SPACER	
Y	5	1	*210-0849*	1	CONTROL GP-ENGINE ELECTRONIC	148
M	6	1	**5P-8347**	2	BOLT (M8X1.25X70MM)	
M	7	1	**8T-0276**	2	BOLT (M8X1.25X45MM)	
	8	1	**9M-1974**	1	WASHER-HARD (8.8X16X2MM THK)	
	9	1	**9N-0869**	4	WASHER-HARD (8.8X25.5X2MM THK)	

M-METRIC PART
Y-SEPARATE ILLUSTRATION

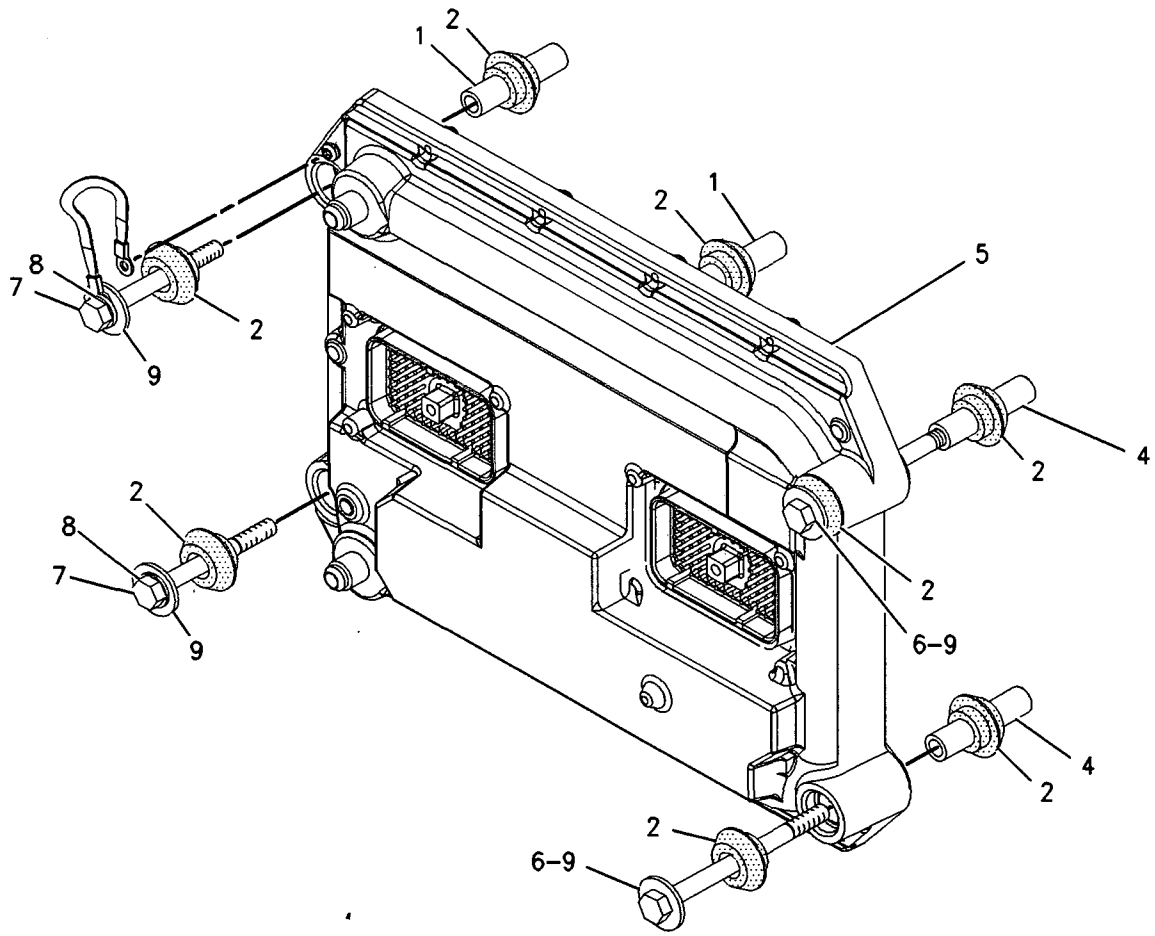

GRAPHIC #1 **<END>** g00673168

232-5990 CONTROL & MTG GP-ENGINE ELEK

S/N: 3PD4381-UP

PART OF 160-5101 ENGINE AR

SMCS-1901 i01931601

NOTE	REF NO	GRAPHIC REF	PART NUMBER	QTY	PART NAME 1 2 3 4 5 6 (PRODUCT LEVEL)	SEE PAGE
	1	1	**6I-1418**	4	SPACER (8.2X12.7X28.7MM THK)	
	2	1	**8T-9655**	8	MOUNT (ISOLATION)	
M	3	1	**9X-2098**	2	STUDBOLT (M8X1.25X67.75MM OAL)	
Y	5	1	*209-9588*	1	CONTROL GP-ENGINE ELECTRONIC	147
M	6	1	**8T-0276**	2	BOLT (M8X1.25X45MM)	
	7	1	**8T-4224**	2	WASHER-HARD (8.8X16X2MM THK)	
	8	1	**9N-0869**	4	WASHER-HARD (8.8X25.5X2.0MM THK)	

M-METRIC PART
Y-SEPARATE ILLUSTRATION

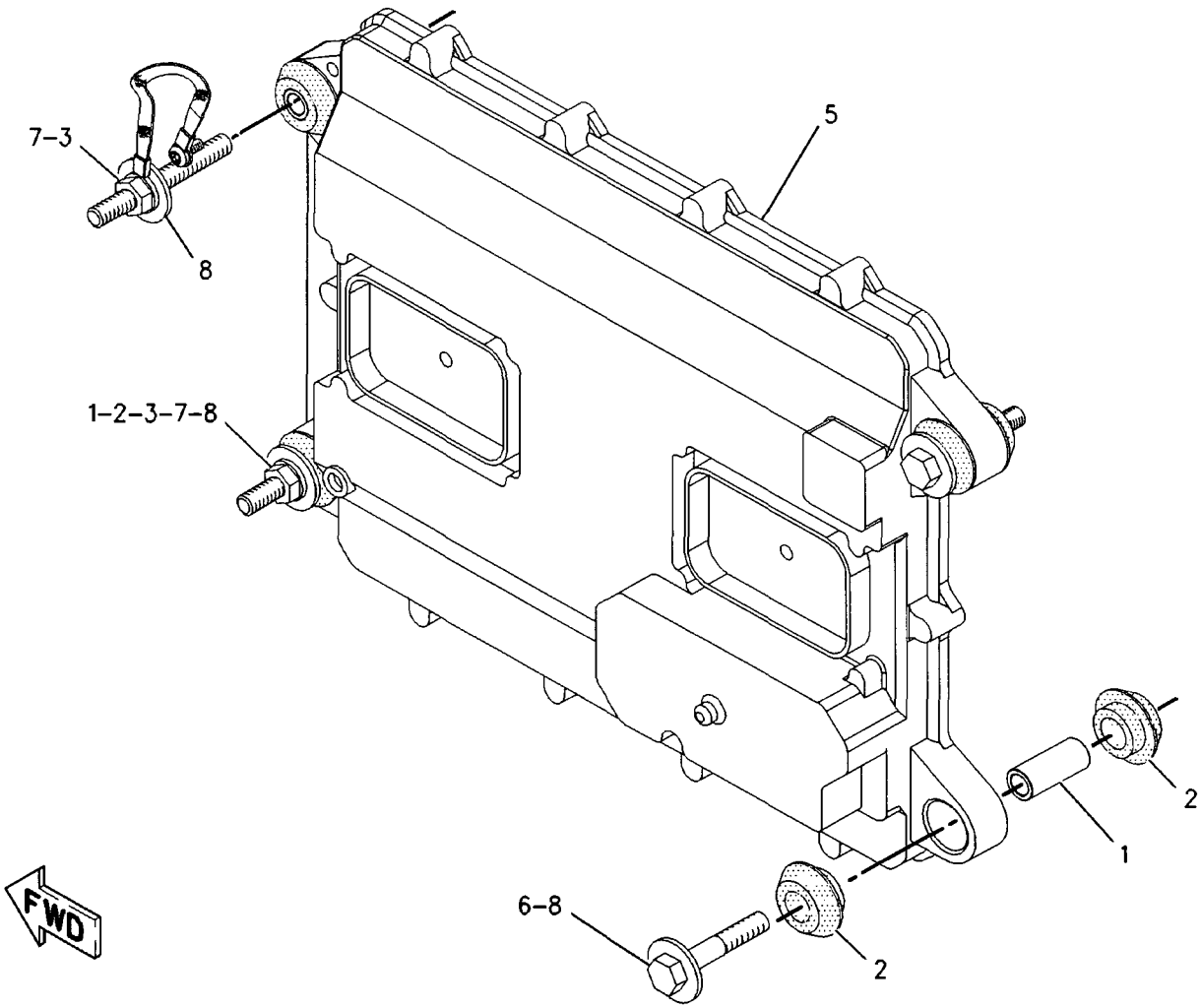

GRAPHIC #1

<END>

g00998301

209-9587 CONTROL GP-ENGINE ELECTRONIC

S/N: 3PD4381-UP

PART OF 209-9588 CONTROL GP-ENGINE ELECTRONIC

FIELD REPLACEMENT FOR 209-9588–PAGE 147

SMCS-1901 i01802523

NOTE	REF NO	GRAPHIC REF	PART NUMBER	QTY	PART NAME 1 2 3 4 5 6 (PRODUCT LEVEL)	SEE PAGE
	1	1	184-2472	1	SCREW-PAN HEAD (LUBRICATED)	
	2	1	7X-6315	1	STRAP AS-GROUND	

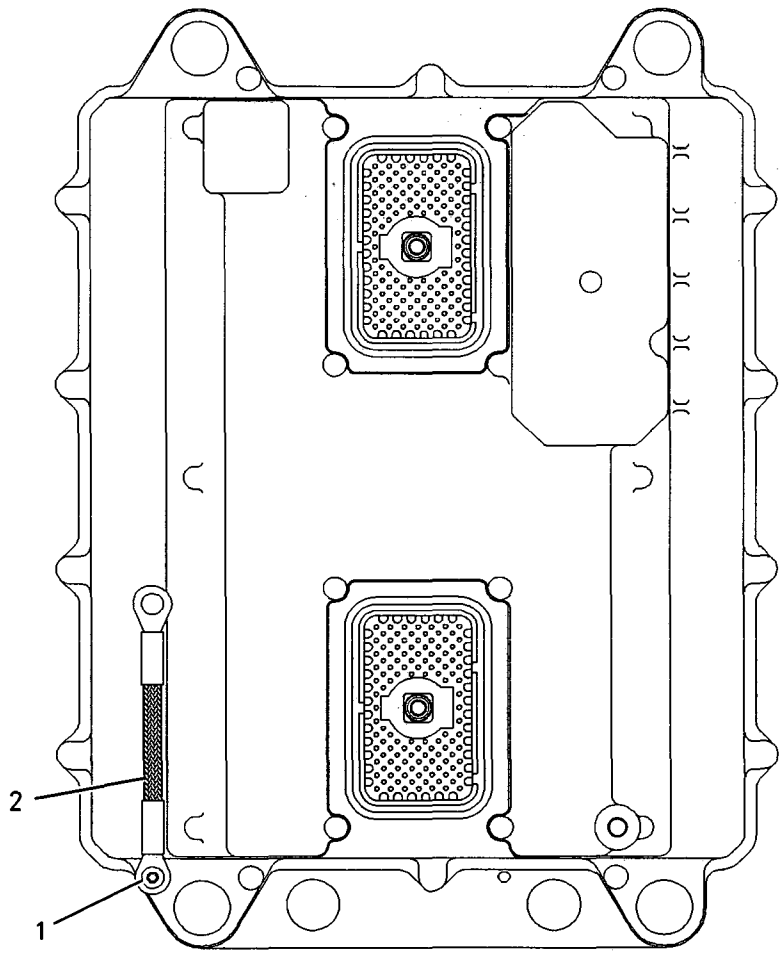

GRAPHIC #1

<END>

g00912273

209-9588 CONTROL GP-ENGINE ELECTRONIC

S/N: 3PD4381-UP

PART OF 232-5990 CONTROL & MTG GP-ENGINE ELEK

FIELD REPLACEMENT ORDER 209-9587–PAGE 146

SMCS-1901 **i01809422**

NOTE	REF NO	GRAPHIC REF	PART NUMBER	QTY	PART NAME 1 2 3 4 5 6 (PRODUCT LEVEL)	SEE PAGE
Y	1	1	**209-9587**	1	CONTROL GP-ENGINE ELECTRONIC	146

Y-SEPARATE ILLUSTRATION

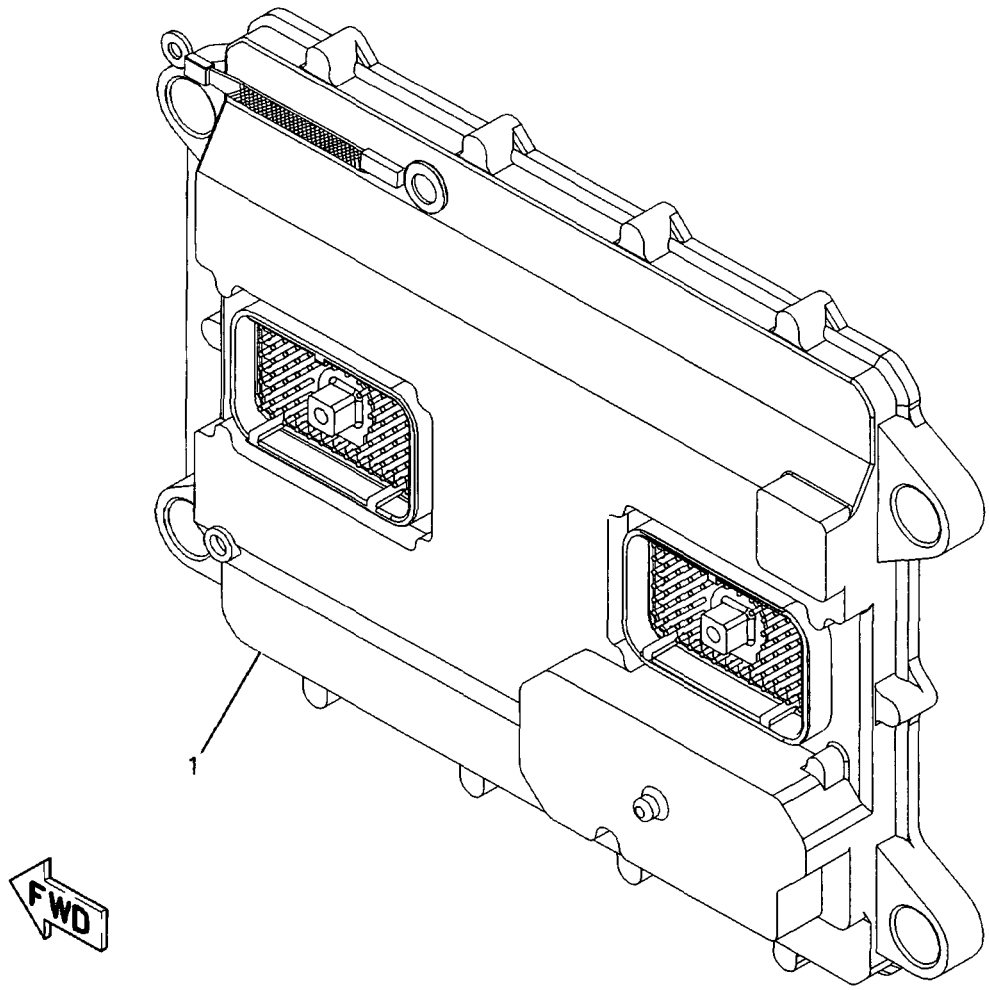

GRAPHIC #1 **<END>** g00913420

ELECTRICAL AND STARTING SYSTEM

210-0849 CONTROL GP-ENGINE ELECTRONIC

S/N: 3PD1-UP

PART OF 168-4490 CONTROL & MTG GP-ENGINE ELEK

SMCS-1901 **i02181352**

NOTE	REF NO	GRAPHIC REF	PART NUMBER	QTY	PART NAME 1 2 3 4 5 6 (PRODUCT LEVEL)	SEE PAGE
Y	1	1	**240-5304**	1	CONTROL GP-ENGINE ELECTRONIC	149

Y-SEPARATE ILLUSTRATION

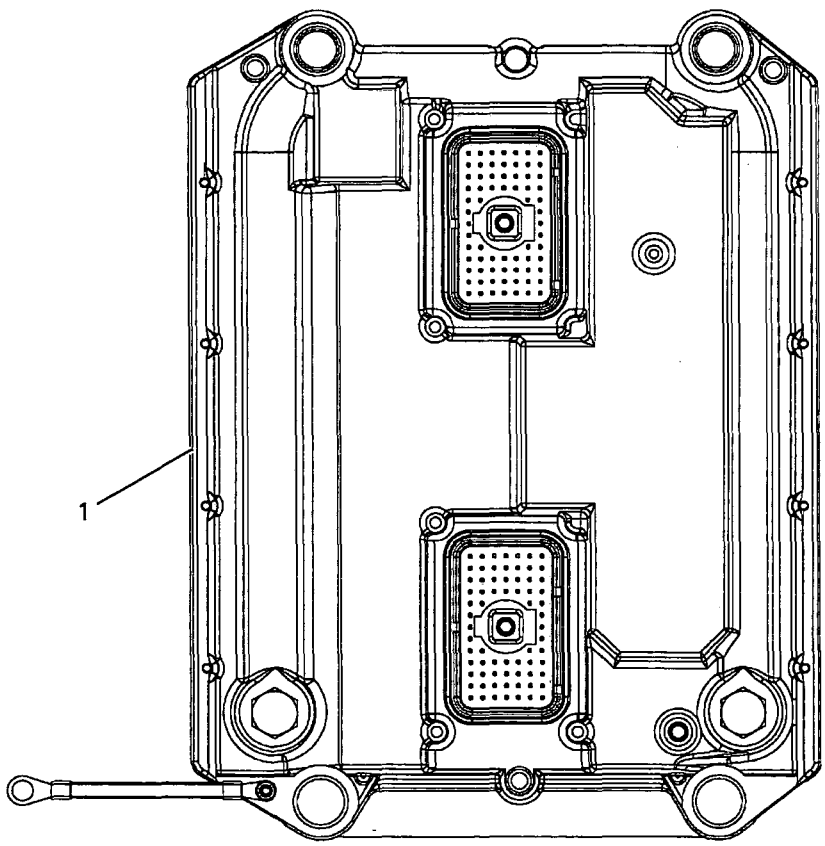

GRAPHIC #1 **<END>** g00907973

240-5304 CONTROL GP-ENGINE ELECTRONIC

S/N: 3PD1-UP

PART OF 210-0849 CONTROL GP-ENGINE ELECTRONIC

SMCS-1901 i02181925

NOTE	REF NO	GRAPHIC REF	PART NUMBER	QTY	PART NAME 1 2 3 4 5 6 (PRODUCT LEVEL)	SEE PAGE
	1	1	7X-6315	1	STRAP AS-GROUND	
	2	1	184-2472	1	SCREW-PAN HEAD (NO 0.8-32X9.52-MM)	

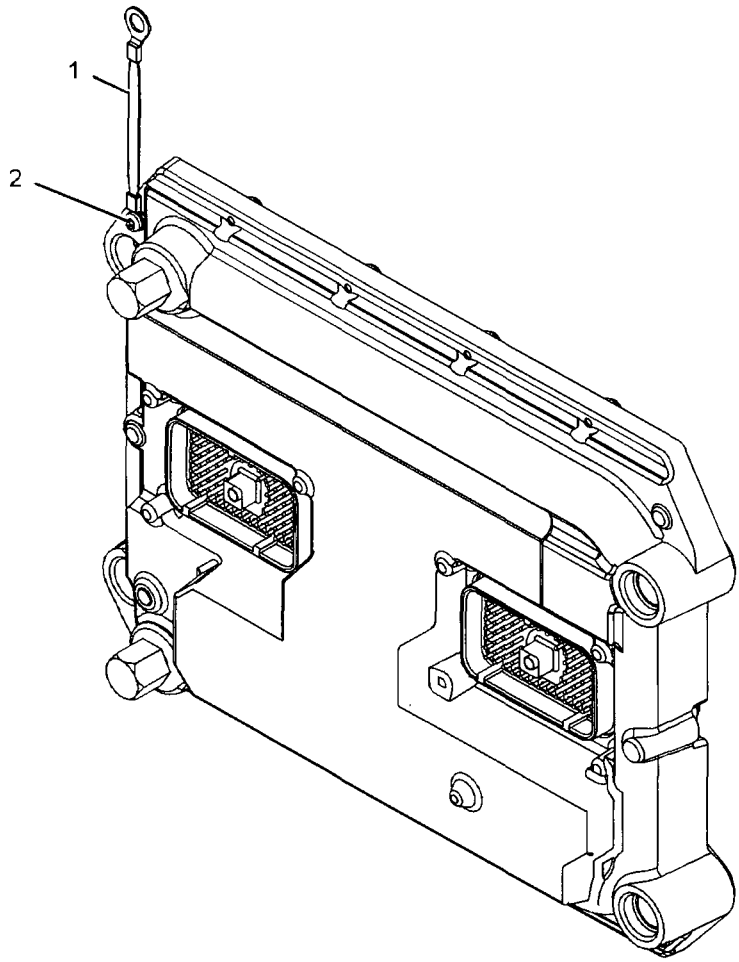

GRAPHIC #1 **<END>** g01055257

132-6640 CONTROL GP-SECONDARY STEERING

S/N: CCA1-UP

PART OF 161-1020 WIRING GP-SECONDARY STEERING, 159-5841 WIRING GP-SHIFT CONSOLE AN ATTACHMENT

SMCS-4343 i01701309

NOTE	REF NO	GRAPHIC REF	PART NUMBER	QTY	PART NAME 1 2 3 4 5 6 (PRODUCT LEVEL)	SEE PAGE
Z	1	1		1	CONTROL AS-STEERING	
	2	1	**102-8801**	1	KIT-RECEPTACLE (12-PIN) (INCLUDES RECEPTACLE AS & WEDGE)	
	3	1	**3E-5180**	1	WEDGE-RECEPTACLE LOCK (12-PIN)	
	4	1	**186-3735**	11	PIN-CONNECTOR	
	5	1	**8T-8737**	1	PLUG-SEAL	
	6	1	**1S-9593**	4	STRAP-CABLE	

Z-NOT SERVICED SEPARATELY

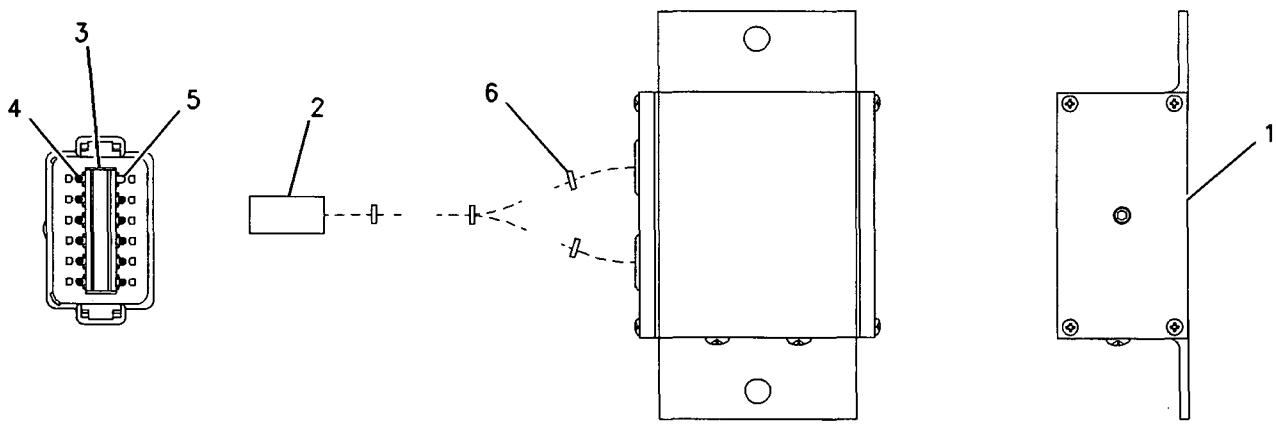

GRAPHIC #1 **<END>** g00672584

ELECTRICAL AND STARTING SYSTEM

160-6567 CONTROL GP-UNPROGRAMMED

S/N: CCA1-UP

PART OF 159-5812, 178-3030, 196-4909 PANEL GP-INSTRUMENT

ALSO AN ATTACHMENT

SMCS-7610 i02140959

NOTE	PART NUMBER	QTY	PART NAME 1 2 3 4 5 6 (PRODUCT LEVEL)	SEE PAGE
			(NO SERVICED PARTS)	

<END>

172-9389 CONTROL GP-UNPROGRAMMED–POWER TRAIN

S/N: CCA1-UP

PART OF 159-5856, 159-5865 WIRING GP-FRONT

ALSO AN ATTACHMENT

SMCS-7610 i01885436

NOTE	REF NO	GRAPHIC REF	PART NUMBER	QTY	PART NAME 1 2 3 4 5 6 (PRODUCT LEVEL)	SEE PAGE
	1	1	**7X-6315**	1	STRAP AS-GROUND	
	2	1	**101-0852**	1	SCREW-PAN HEAD (NO 8X3/8-IN)	
M	3	1	**6V-6703**	2	KIT-RETAINING BOLT (M5X0.8X53.24-MM) (CONTROL GP)	
					(EACH INCLUDES BOLT, RING, AND SEALS)	
	4	1	**134-4126**	1	WASHER (4.52X8.28X0.76-MM THK)	
					FOR SOFTWARE, SEE ELECTRONICS GP	

M-METRIC PART

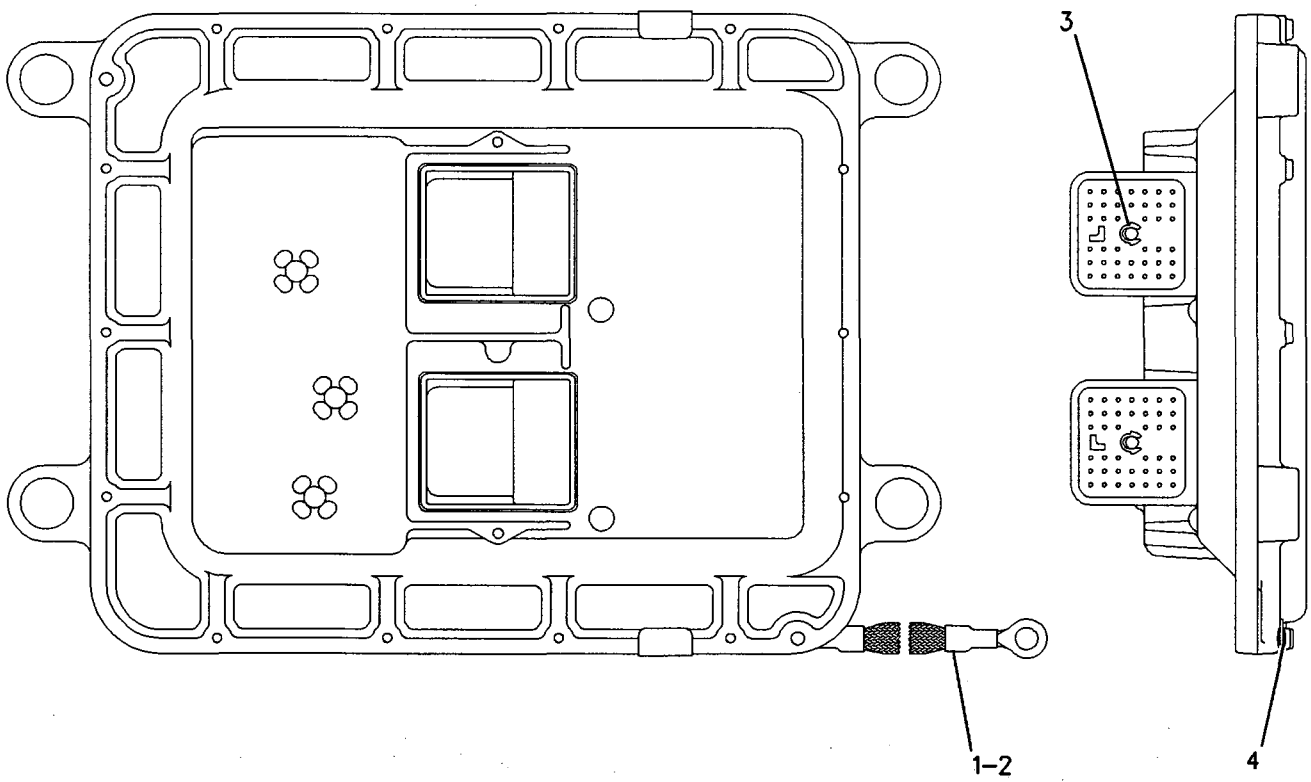

GRAPHIC #1 **<END>** g00951290

161-0776 CONVERTER AR-ELECTRICAL–12V POWER PORT–LOW

S/N: CCA1-UP
AN ATTACHMENT

SMCS-1421 i01825605

NOTE	PART NUMBER	QTY	PART NAME 1 2 3 4 5 6 (PRODUCT LEVEL)	SEE PAGE
Y	*171-7185*	1	ACCESSORY GP-CAB	816
Y	*180-4643*	1	CONVERTER GP-ELECTRICAL	156

Y-SEPARATE ILLUSTRATION

<END>

161-0777 CONVERTER AR-ELECTRICAL–12V POWER PORT–HIGH

S/N: CCA1-UP
AN ATTACHMENT

SMCS-1421 i01677940

NOTE	PART NUMBER	QTY	PART NAME 1 2 3 4 5 6 (PRODUCT LEVEL)	SEE PAGE
Y	*171-7186*	1	ACCESSORY GP-CAB	817
Y	*180-4643*	1	CONVERTER GP-ELECTRICAL	156

Y-SEPARATE ILLUSTRATION

<END>

145-1297 CONVERTER GP-ELECTRICAL–5/7.5 AMP

S/N: CCA1-UP
PART OF 145-1300 INSTALLATION AR-RADIO
AN ATTACHMENT

SMCS-1421 **i02203914**

NOTE	REF NO	GRAPHIC REF	PART NUMBER	QTY	PART NAME 1 2 3 4 5 6 (PRODUCT LEVEL)	SEE PAGE
	1	1	**8X-1853**	2	SPACER (13.1X15.9X30.4-MM THK) (10.3X15.9X30MM THK)	
	2	1	**9W-1442**	1	FUSE (10-AMPERE) (CONVERTER)	
	3	1	**205-4285**	1	CONVERTER GP-ELECTRICAL (24-VOLT TO 12-VOLT)	
	4	1	**208-7782**	1	PLATE AS	
	5	1	**096-6166**	2	WASHER-HARD (4.5X9X1-MM THK)	
M	6	1	**8T-0285**	2	SCREW-MACHINE (M4X0.7X12-MM)	
	7	1	**8T-2501**	2	BOLT (3/8-16X2-IN)	
	8	1	**8T-4896**	2	WASHER-HARD (10.2X18.5X2.5-MM THK)	

M-METRIC PART

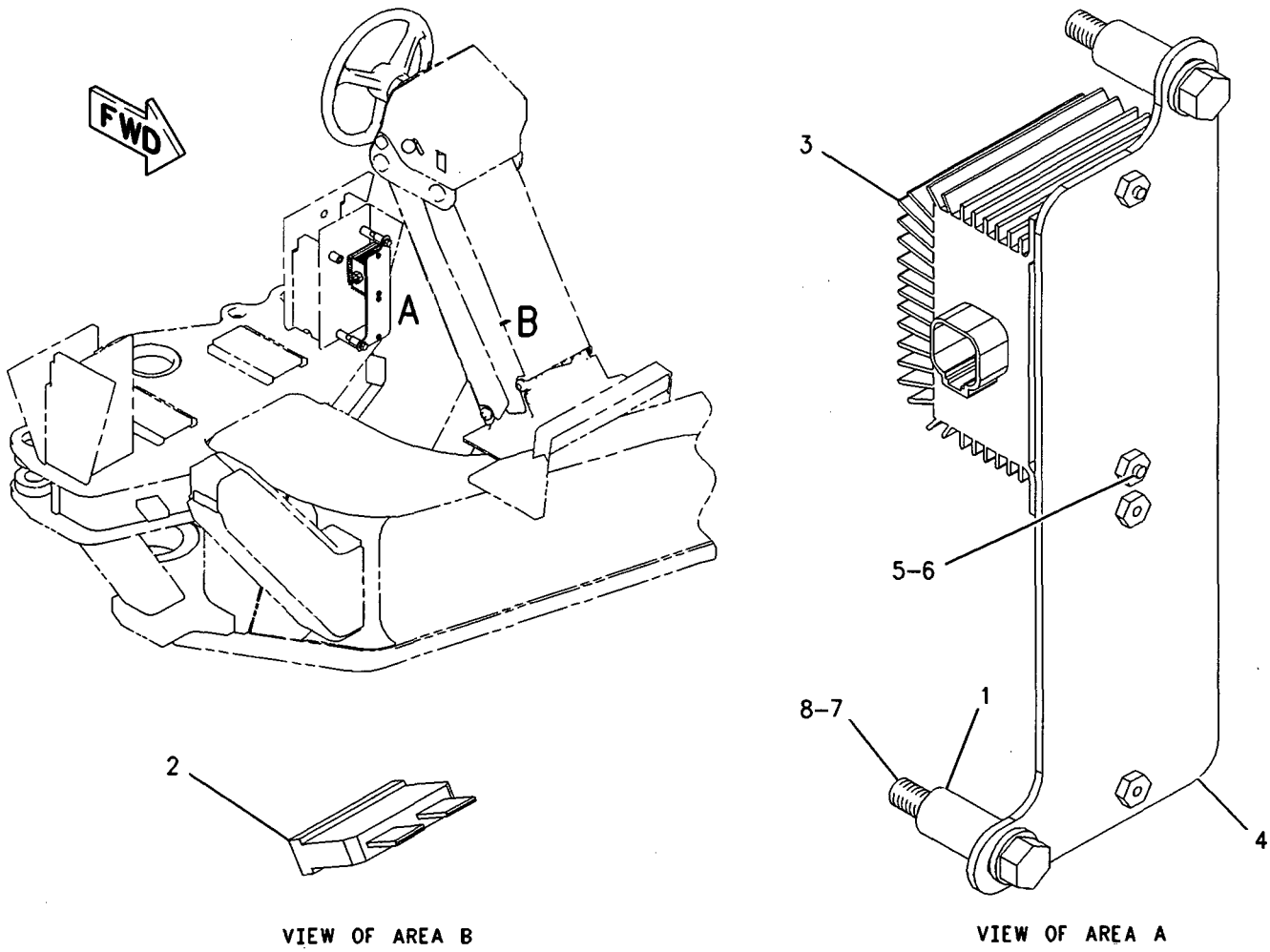

VIEW OF AREA B

VIEW OF AREA A

GRAPHIC #1 **<END>** g00918329

ELECTRICAL AND STARTING SYSTEM

167-8382 CONVERTER GP-ELECTRICAL–25 AMP

S/N: CCA1-UP

AN ATTACHMENT

SMCS-1421 i01991710

NOTE	REF NO	GRAPHIC REF	PART NUMBER	QTY	PART NAME 1 2 3 4 5 6 (PRODUCT LEVEL)	SEE PAGE
	1	1	**9W-1441**	1	FUSE (15-AMPERE) (CONVERTER-POWER)	
Y	2	1	*233-6659*	1	CONVERTER GP-ELECTRICAL	157

Y-SEPARATE ILLUSTRATION

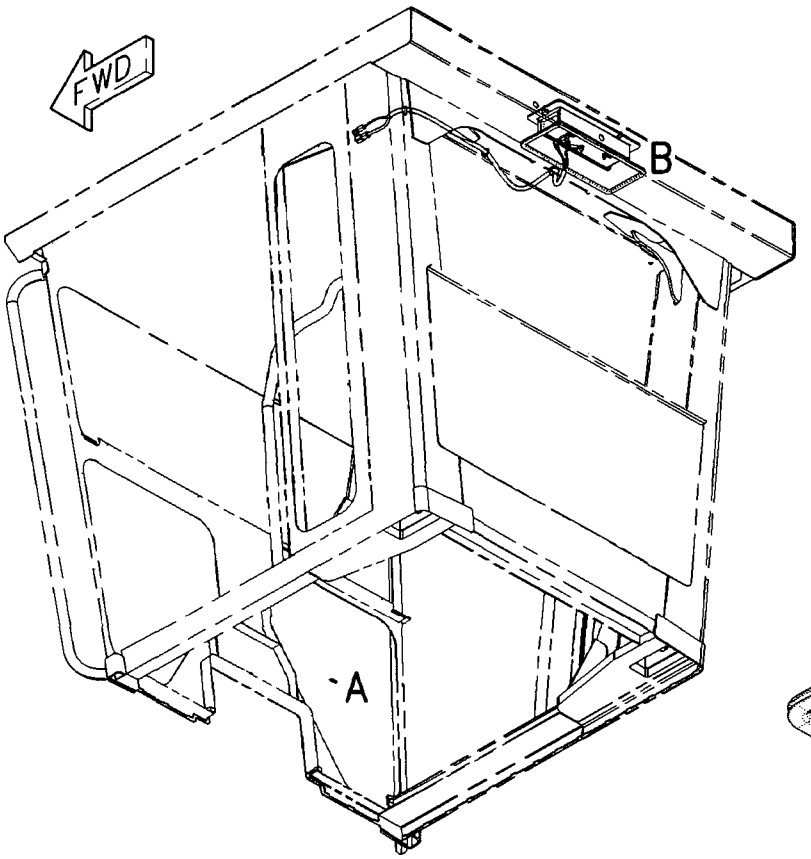

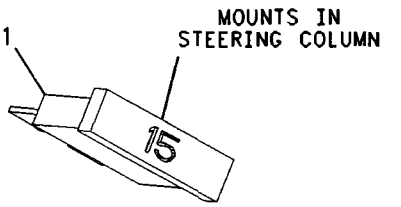

VIEW OF AREA A

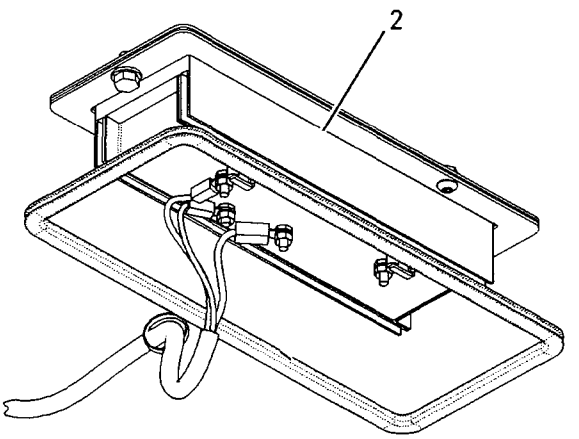

VIEW OF AREA B

GRAPHIC #1 **<END>** g00975196

180-4643 CONVERTER GP-ELECTRICAL–12V POWER PORT

S/N: CCA1-UP

PART OF 161-0776, 161-0777 CONVERTER AR-ELECTRICAL

AN ATTACHMENT

SMCS-1421 **i01936021**

NOTE	REF NO	GRAPHIC REF	PART NUMBER	QTY	PART NAME 1 2 3 4 5 6 (PRODUCT LEVEL)	SEE PAGE
	1	1	**9W-1442**	1	FUSE (10-AMPERE) (POWER CONVERTER)	
	2	1	**205-4285**	1	CONVERTER GP-ELECTRICAL (24-VOLT TO 12-VOLT)	
	3	1	**208-7782**	1	PLATE AS	
	4	1	**096-6166**	2	WASHER-HARD (4.5X9X1-MM THK)	
	5	1	**8T-2501**	2	BOLT (3/8-16X2-IN)	
M	6	1	**8T-0285**	2	SCREW-MACHINE (M4X0.7X12-MM)	
	7	1	**8T-4896**	2	WASHER-HARD (10.2X18.5X2.5-MM THK)	
	8	1	**8X-1853**	2	SPACER (13.1X15.9X30.4-MM THK)	

M-METRIC PART

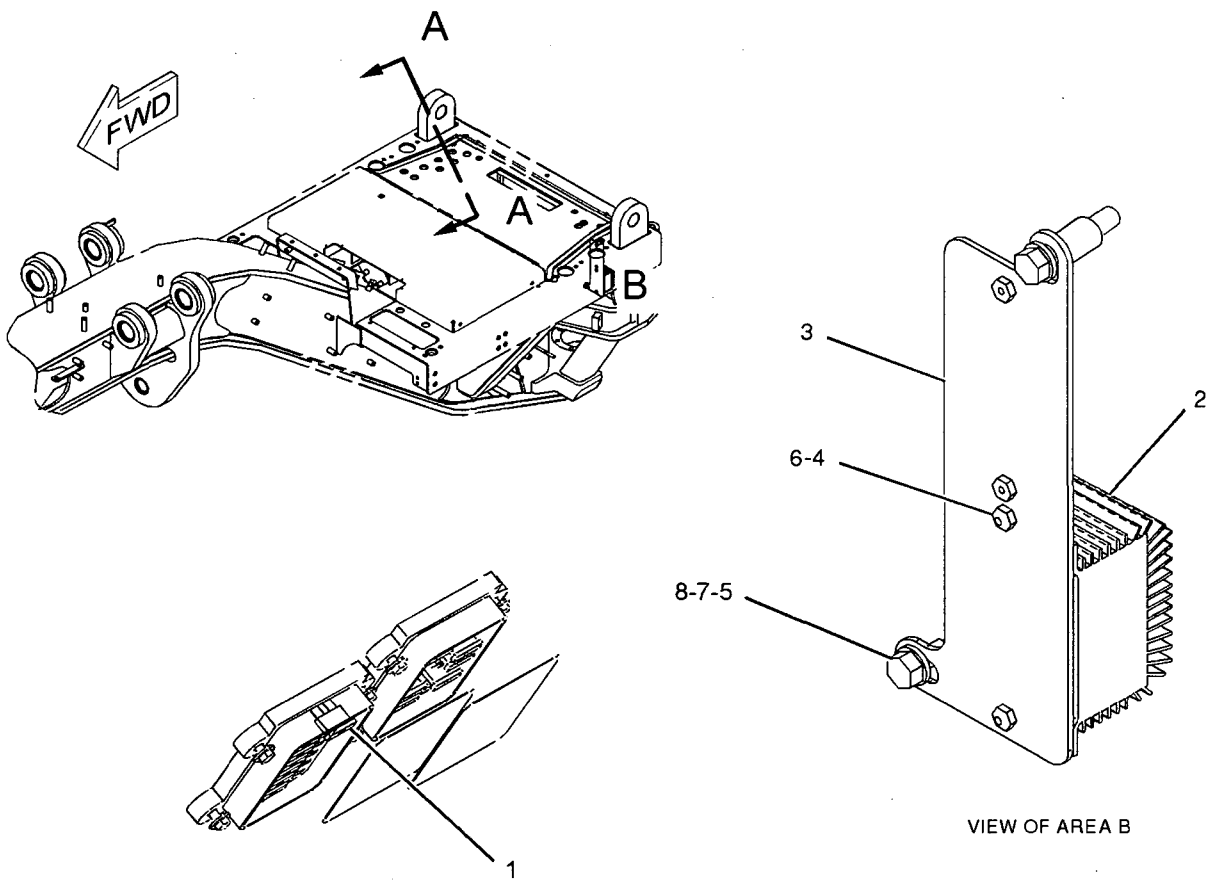

VIEW A-A

VIEW OF AREA B

GRAPHIC #1 **<END>** g01010434

233-6659 CONVERTER GP-ELECTRICAL

S/N: CCA1-UP
25-A
PART OF 167-8382 CONVERTER GP-ELECTRICAL
AN ATTACHMENT

SMCS-1421 **i02203916**

NOTE	REF NO	GRAPHIC REF	PART NUMBER	QTY	PART NAME 1 2 3 4 5 6 (PRODUCT LEVEL)	SEE PAGE
	1	1	**3E-8646**	1	CONVERTER-POWER (24-VOLT TO 12-VOLT, 25-AMPERE)	
		1	**8T-9636**	2	FUSE (30-AMPERE)	
	2	1	**3S-2093**	3	STRAP-CABLE	
	3	1	**168-8233**	1	PLATE	
	4	1	**168-8235**	1	PLATE AS	
M		1	**6V-9632**	2	NUT-WELD (M6X1-THD)	
	5	1	**169-3523**	1	HARNESS AS-RADIO	
		1	**102-8802**	1	KIT-RECEPTACLE (2-PIN)	
					(INCLUDES RECEPTACLE AS & WEDGE)	
	6	1	**6V-8801**	1	NUT (3/8-16-THD)	
	7	1	**8T-4121**	2	WASHER-HARD (11X21X2.5-MM THK)	
M	8	1	**8T-4137**	2	BOLT (M10X1.5X20-MM)	
	9	1	**8T-4896**	1	WASHER-HARD (10.2X18.5X2.5-MM THK)	
M	10	1	**9X-2042**	2	SCREW-TRUSS HEAD (M6X1X12-MM)	
E	11	1	**7X-7877**		STRIP-EDGING (106-CM)	

E-ORDER BY THE CENTIMETER
M-METRIC PART

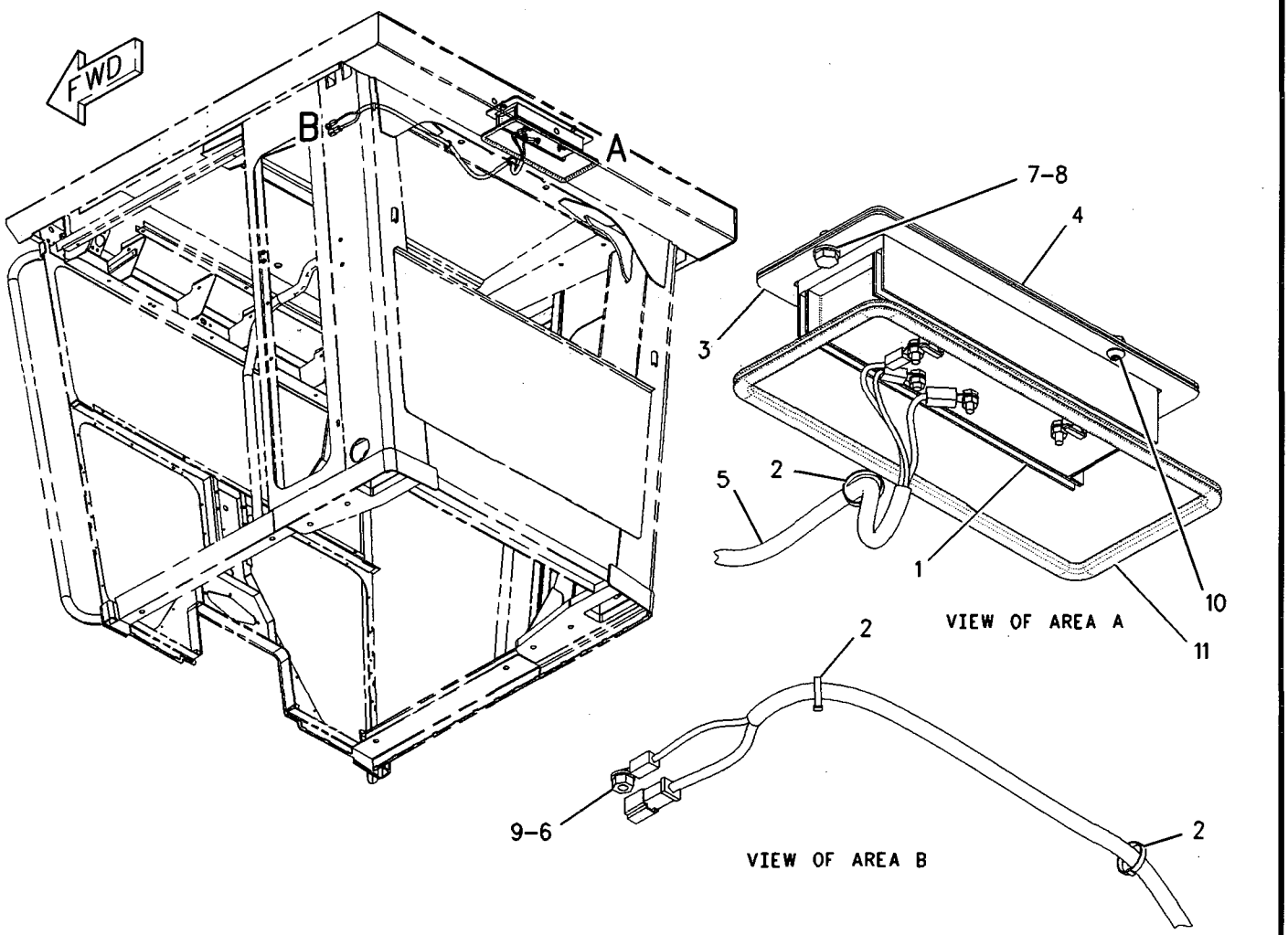

GRAPHIC #1 **<END>** g00847577

198-7332 ELECTRONICS GP-MONITOR

S/N: CCA1-UP
PART OF 159-5856, 159-5865 WIRING GP-FRONT
ALSO AN ATTACHMENT

SMCS-7490, 7610, 7620 i01880479

NOTE	PART NUMBER	QTY	PART NAME 1 2 3 4 5 6 (PRODUCT LEVEL)	SEE PAGE
	222-6457	1	SOFTWARE GP-MONITOR (CATERPILLAR MONITORING SYSTEM)	
			- OR-	
			(OPTIONAL SERVICE REPLACEMENT)	
	222-6458	1	SERVICE GP-MONITOR (CATERPILLAR MONITORING SYSTEM)	

<END>

161-1016 ELECTRONICS GP-POWER TRAIN-LIMITED ROAD SPEED-MOTOR GRADER

S/N: CCA1-UP
AN ATTACHMENT

SMCS-4800, 4808, 7610, 7620 i01678619

NOTE	PART NUMBER	QTY	PART NAME 1 2 3 4 5 6 (PRODUCT LEVEL)	SEE PAGE
			DO NOT SHOW - THIS IE AND CHILDREN ARE NOT SERVICED	

<END>

171-5941 ELECTRONICS GP-POWER TRAIN–MOTOR GRADER

S/N: CCA1-UP

PART OF 159-5856, 159-5865 WIRING GP-FRONT

ALSO AN ATTACHMENT

SMCS-4800, 4808, 7610, 7620 i02203086

NOTE	REF NO	GRAPHIC REF	PART NUMBER	QTY	PART NAME 1 2 3 4 5 6 (PRODUCT LEVEL)	SEE PAGE
	1	1	**225-5404**	1	SOFTWARE GP-POWER TRAIN (MOTOR GRADER)	
					–OR–	
	2	1	**225-5405**	1	SERVICE GP-POWER TRAIN (MOTOR GRADER)	
					(OPTIONAL SERVICE REPLACEMENT)	
		1	**225-5404**	1	SOFTWARE GP-POWER TRAIN (MOTOR GRADER)	
		1	**172-9389**	1	CONTROL GP-UNPROGRAMMED (POWER TRAIN)	
	2A	1	**101-0852**	1	SCREW-PAN HEAD (NO 8X3/8-IN)	
	2B	1	**7X-6315**	1	STRAP AS-GROUND	
M	2C	1	**6V-6703**	2	KIT-RETAINING BOLT (M5X0.8X53.24-MM)	
					(EACH INCLUDES BOLT, RING, AND SEAL)	

M-METRIC PART

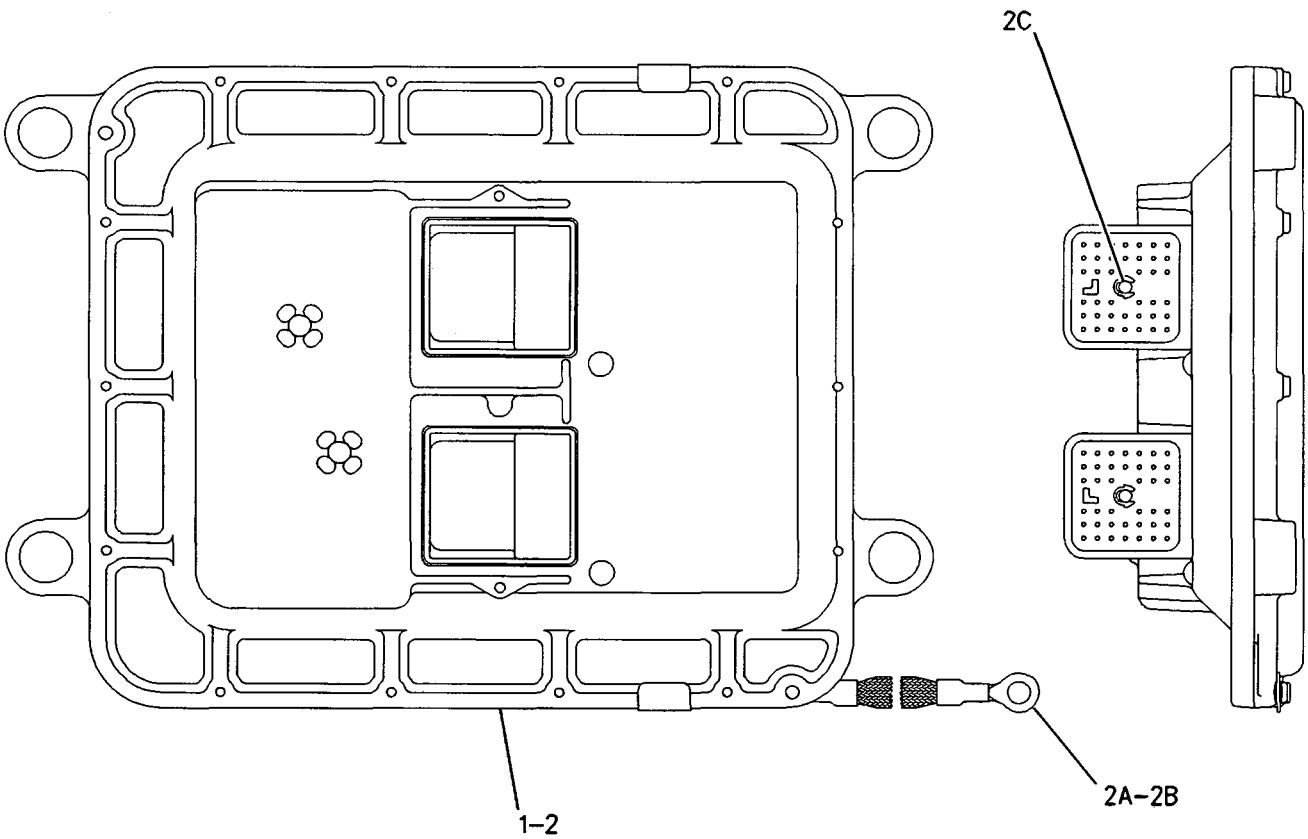

GRAPHIC #1 **<END>** g00914782

131-8126 HEATER GP-JACKET WATER–120 VOLT

S/N: CCA1-UP

PART OF 197-5955, 236-3948 SNOW AR-MOTOR GRADER AN ATTACHMENT

SMCS-1383 i02203921

NOTE	REF NO	GRAPHIC REF	PART NUMBER	QTY	PART NAME 1 2 3 4 5 6 (PRODUCT LEVEL)	SEE PAGE
	1	1	**131-8627**	1	ELEMENT AS-JACKET WATER HEATER (120-VOLT, 1250-WATT)	
B	2	1	**133-6517**	1	CAP AS-DUST	
	3	1	**7X-6312**	1	CORD AS-JACKET WATER HEATER	

B-USE AS REQUIRED

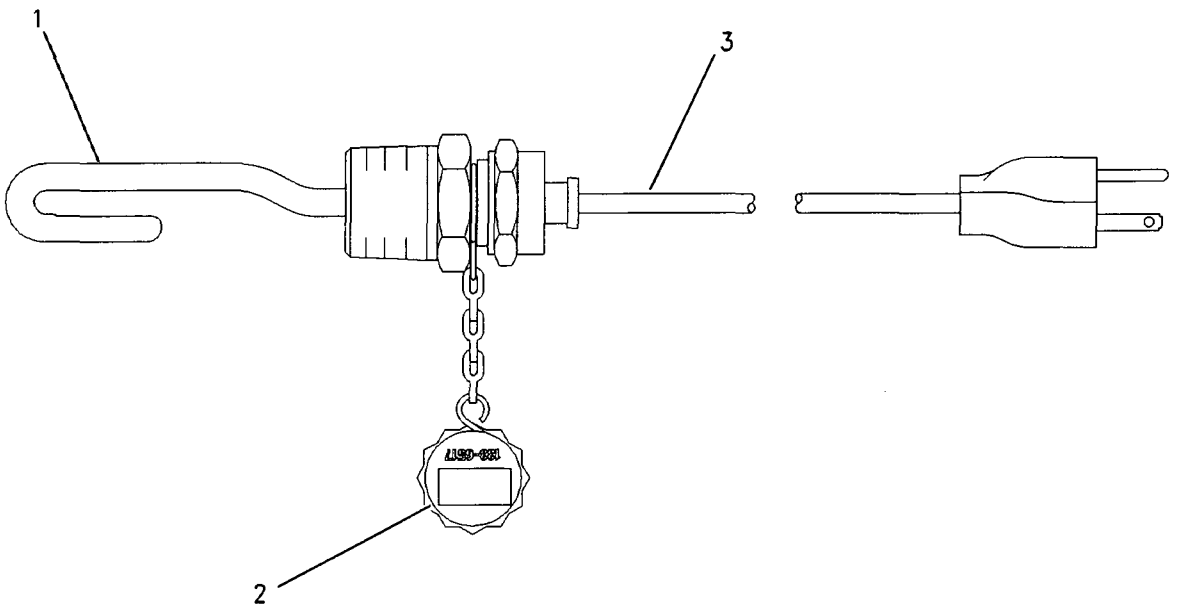

GRAPHIC #1 **<END>** g00832252

ELECTRICAL AND STARTING SYSTEM

154-7246 HEATER GP-JACKET WATER

S/N: CCA1-UP
240V/1250W
AN ATTACHMENT

SMCS-1383 **i02204071**

NOTE	REF NO	GRAPHIC REF	PART NUMBER	QTY	PART NAME 1 2 3 4 5 6 (PRODUCT LEVEL)	SEE PAGE
	1	1	**154-2881**	1	ELEMENT AS-HEATER (240-VOLT, 1250-WATT)	
	1A	1	**133-6517**	1	CAP AS-DUST	
	2	1	**127-8609**	1	CORD AS-JACKET WATER HEATER	

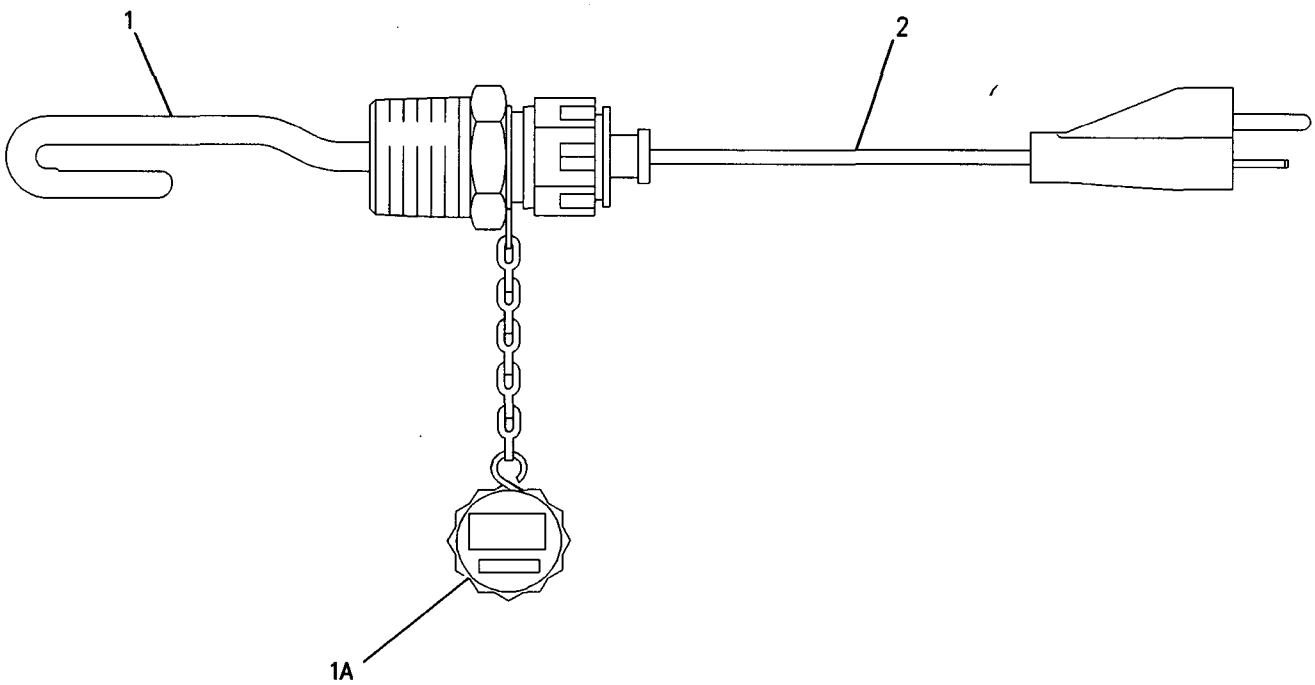

GRAPHIC #1 **<END>** g00508489

239-9362 INSTALLATION GP-WARNING BEACON

S/N: CCA1-UP

PART OF 161-1921 WIRING GP-CAB

AN ATTACHMENT

SMCS-1408, 1431 i02013135

NOTE	REF NO	GRAPHIC REF	PART NUMBER	QTY	PART NAME 1 2 3 4 5 6 (PRODUCT LEVEL)	SEE PAGE
	1	1	**107-4932**	1	PLATE AS	
	2	1	**130-5300**	1	CLIP	
	3	1	**5P-8525**	1	GROMMET	
	4	1	**8T-4121**	2	WASHER-HARD (11X21X2.5-MM THK)	
M	5	1	**8T-4136**	2	BOLT (M10X1.5X25-MM)	
	6	1	*9X-9639*	1	SWITCH AS-ROCKER (WARNING BEACON)	
		1	**3E-8822**	1	ACTUATOR-ROCKER	
		1	**3E-8825**	1	LAMP (24-VOLT)	
		1	**102-9862**	1	SWITCH AS (WARNING BEACON)	

M-METRIC PART

239-9362 **INSTALLATION GP-WARNING BEACON** *(contd.)* i02013135

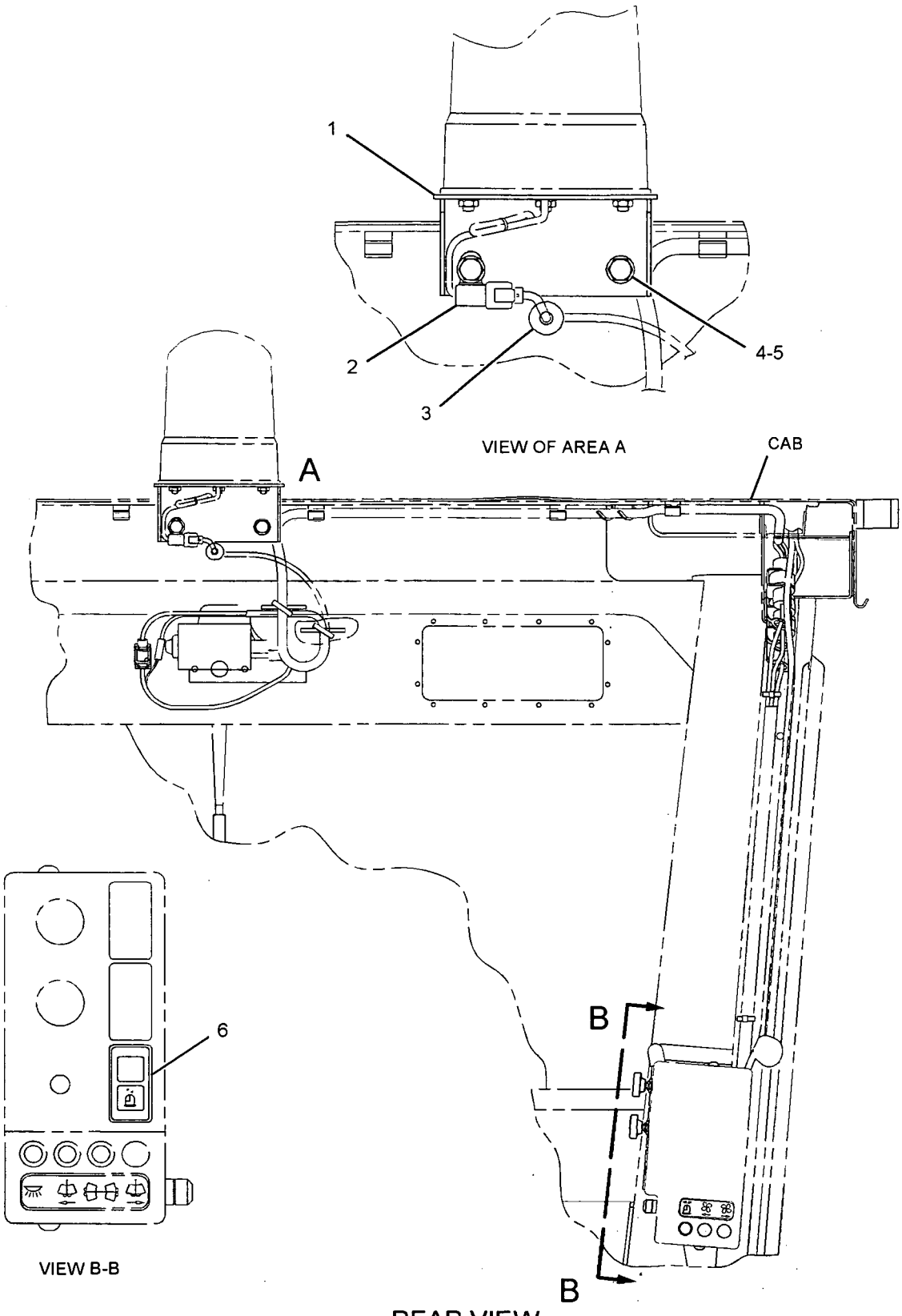

GRAPHIC #1

<END>

g01069654

3E-6389 LAMP GP-DOME

S/N: CCA1-UP
24 VOLT. WITH SWITCH
PART OF 159-5878, 193-7359, 223-3941 WIRING GP-CAB
ALSO AN ATTACHMENT

SMCS-1433 i01855896

NOTE	REF NO	GRAPHIC REF	PART NUMBER	QTY	PART NAME 1 2 3 4 5 6 (PRODUCT LEVEL)	SEE PAGE
	1	1	**7N-9943**	1	LAMP (24-VOLT) (DOME)	
	2	1	**102-8803**	1	KIT-RECEPTACLE (3-PIN)	
					(INCLUDES RECEPTACLE AS & WEDGE)	
		1	**3E-3371**	1	WEDGE-RECEPTACLE LOCK (3-PIN)	
		1	**8T-8729**	3	PIN-CONNECTOR	
	3	1	**7T-0020**	1	LENS	

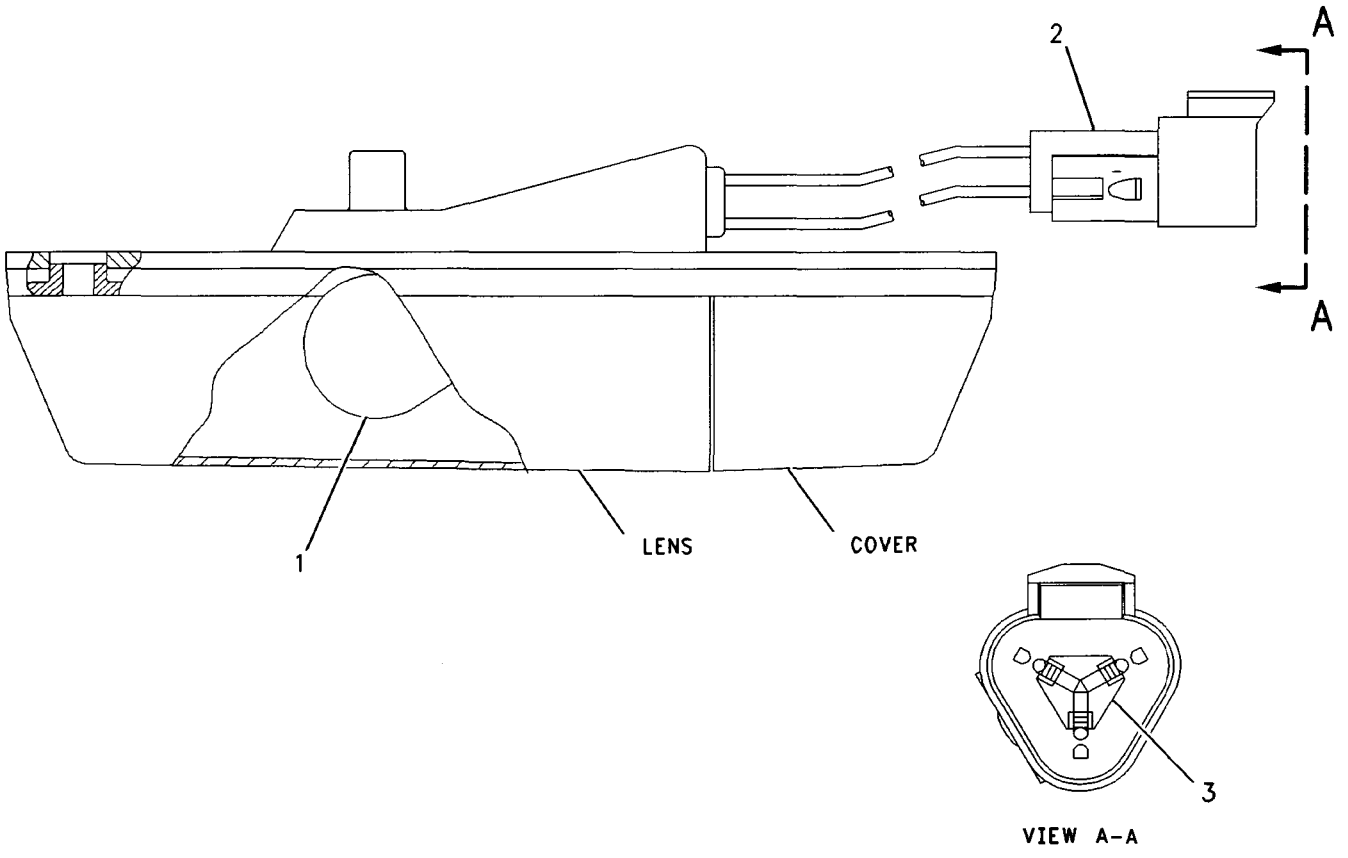

GRAPHIC #1 **<END>** g00892785

153-2073 LAMP GP-FLOOD–VERTICAL

S/N: CCA1-UP
24 VOLT
PART OF 161-0769, 161-0778, 161-0779, 161-1021, 183-4069, 188-9324, 196-8532, 196-8559 LIGHTING GP-FLOOD
AN ATTACHMENT

SMCS-1434 i01447088

NOTE	REF NO	GRAPHIC REF	PART NUMBER	QTY	PART NAME 1 2 3 4 5 6 (PRODUCT LEVEL)	SEE PAGE
	1	1	**9X-3463**	1	LAMP-HALOGEN (24-VOLT, 65-WATT) (FLOOD)	
	2	1	**158-0250**	1	BODY AS-LAMP	
	3	1	**158-0248**	1	LENS AS	
	4	1	**158-0252**	1	BEZEL	
	5	1	**188-8849**	2	CLAMP	

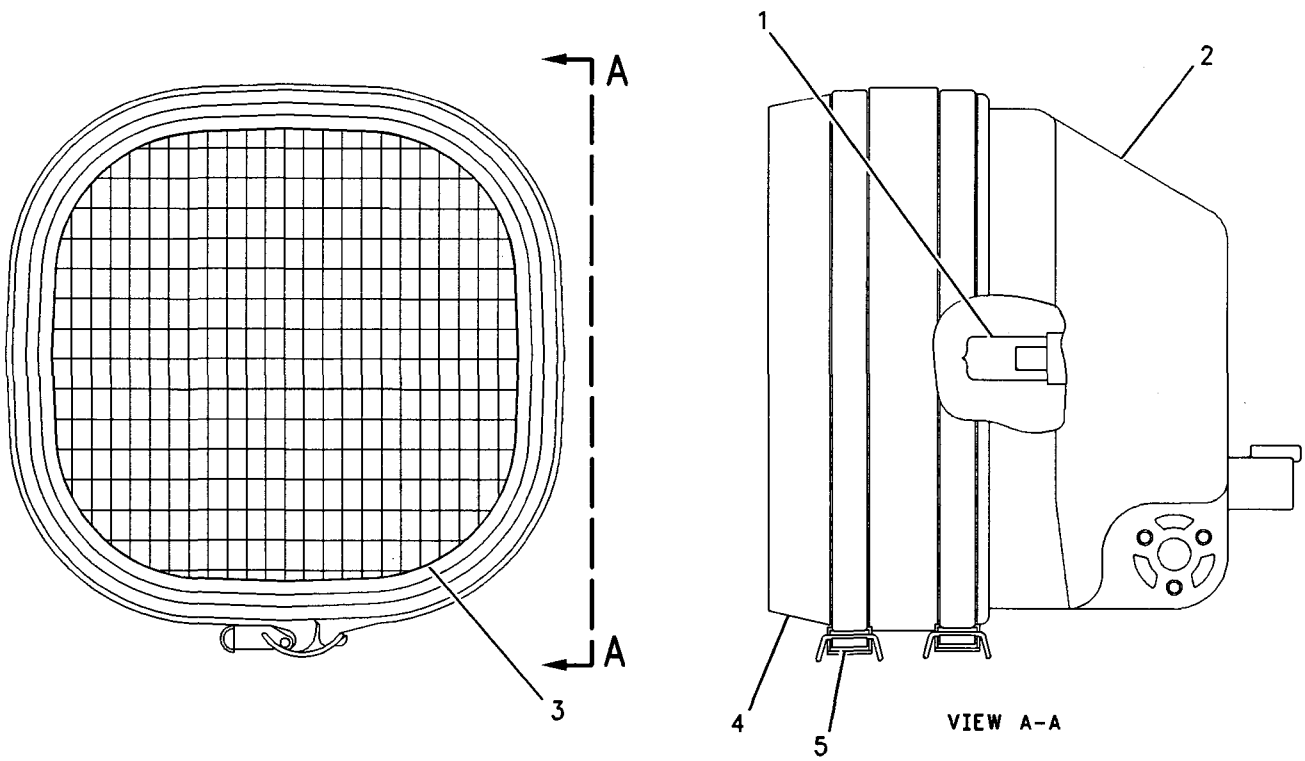

GRAPHIC #1 **<END>** g00449633

234-4323 LAMP GP-FLOOD–VERTICAL MOUNT

S/N: CCA1-UP
24-VOLT
PART OF 161-0778, 161-0779, 161-1015, 161-1017, 161-1021, 183-4069, 188-9324, 196-8559 LIGHTING GP-FLOOD
AN ATTACHMENT

SMCS-1434 i02013814

NOTE	REF NO	GRAPHIC REF	PART NUMBER	QTY	PART NAME 1 2 3 4 5 6 (PRODUCT LEVEL)	SEE PAGE
	1	1	9X-3463	1	LAMP-HALOGEN (24-VOLT, 65-WATT) (FLOODLIGHT)	
	2	1	9X-4244	2	SCREW	
	3	1	202-6614	1	LENS AS (FLOODLIGHT)	
	4	1	234-7730	1	BODY AS	
	5	1	164-7556	1	CLIP	
M	6	1	8T-4133	1	NUT (M10X1.5-THD)	
	7	1	234-7731	1	BRACKET AS	

M-METRIC PART

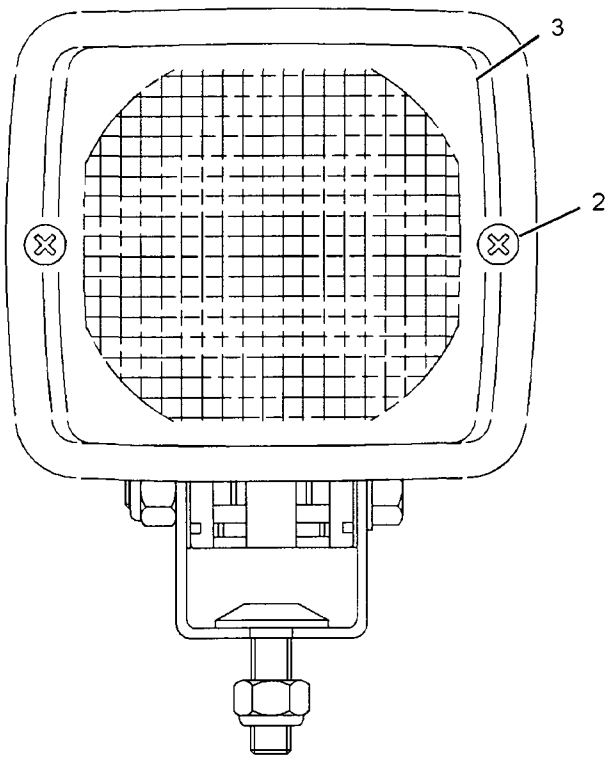

FRONT VIEW

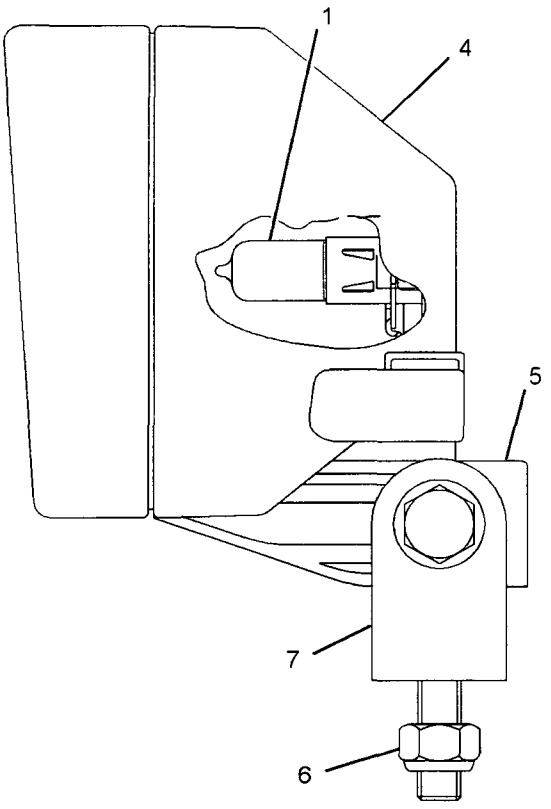

LEFT SIDE VIEW

GRAPHIC #1 <END> g01023946

234-4324 LAMP GP-FLOOD

S/N: CCA1-UP
PART OF 161-1015 LIGHTING GP-FLOOD
AN ATTACHMENT

SMCS-1434 **i02101291**

NOTE	REF NO	GRAPHIC REF	PART NUMBER	QTY	PART NAME 1 2 3 4 5 6 (PRODUCT LEVEL)	SEE PAGE
	1	1	**9X-3463**	1	LAMP-HALOGEN (24-VOLT, 65-WATT)	
	2	1	**9X-4244**	2	SCREW	
	3	1	**202-6611**	1	LENS AS (FLOODLIGHT)	
	4	1	**234-7730**	1	BODY AS	
	5	1	**164-7556**	1	CLIP	
M	6	1	**8T-4133**	1	NUT (M10X1.5-THD)	
	7	1	**234-7731**	1	BRACKET AS	

M-METRIC PART

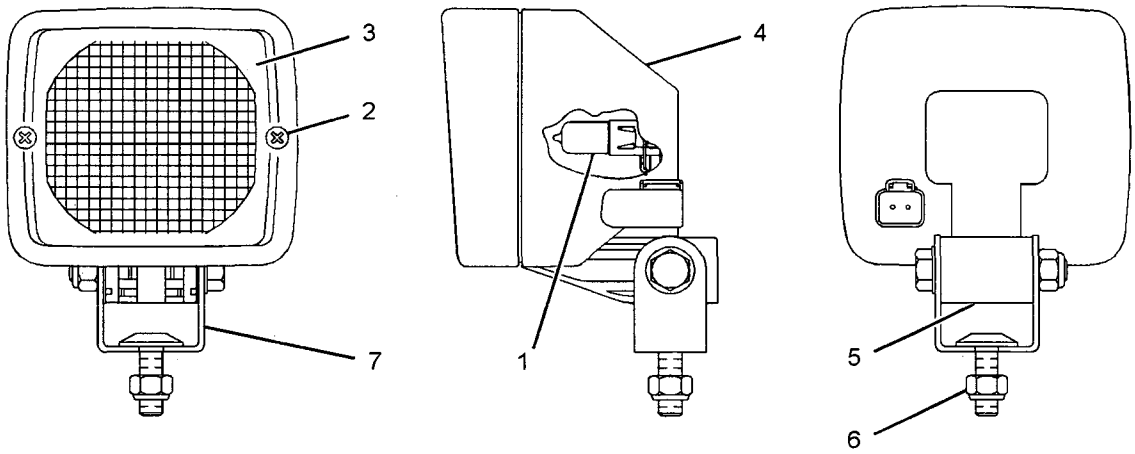

GRAPHIC #1 **<END>** g01091127

234-4325 LAMP GP-FLOOD

S/N: CCA1-UP

PART OF 161-0769, 161-0772, 196-8532 LIGHTING GP-FLOOD

AN ATTACHMENT

SMCS-1434 **i02011383**

NOTE	REF NO	GRAPHIC REF	PART NUMBER	QTY	PART NAME 1 2 3 4 5 6 (PRODUCT LEVEL)	SEE PAGE
	1	1	**9X-3463**	1	LAMP-HALOGEN (24-VOLT, 65-WATT) (FLOODLIGHT)	
M	2	1	**8T-4133**	1	NUT (M10X1.5-THD)	
	3	1	**9X-4244**	2	SCREW	
	4	1	**202-6614**	1	LENS AS (FLOODLIGHT)	
	5	1	**234-7730**	1	BODY AS	
	6	1	**164-7556**	1	CLIP	
	7	1	**234-7731**	1	BRACKET AS	

M-METRIC PART

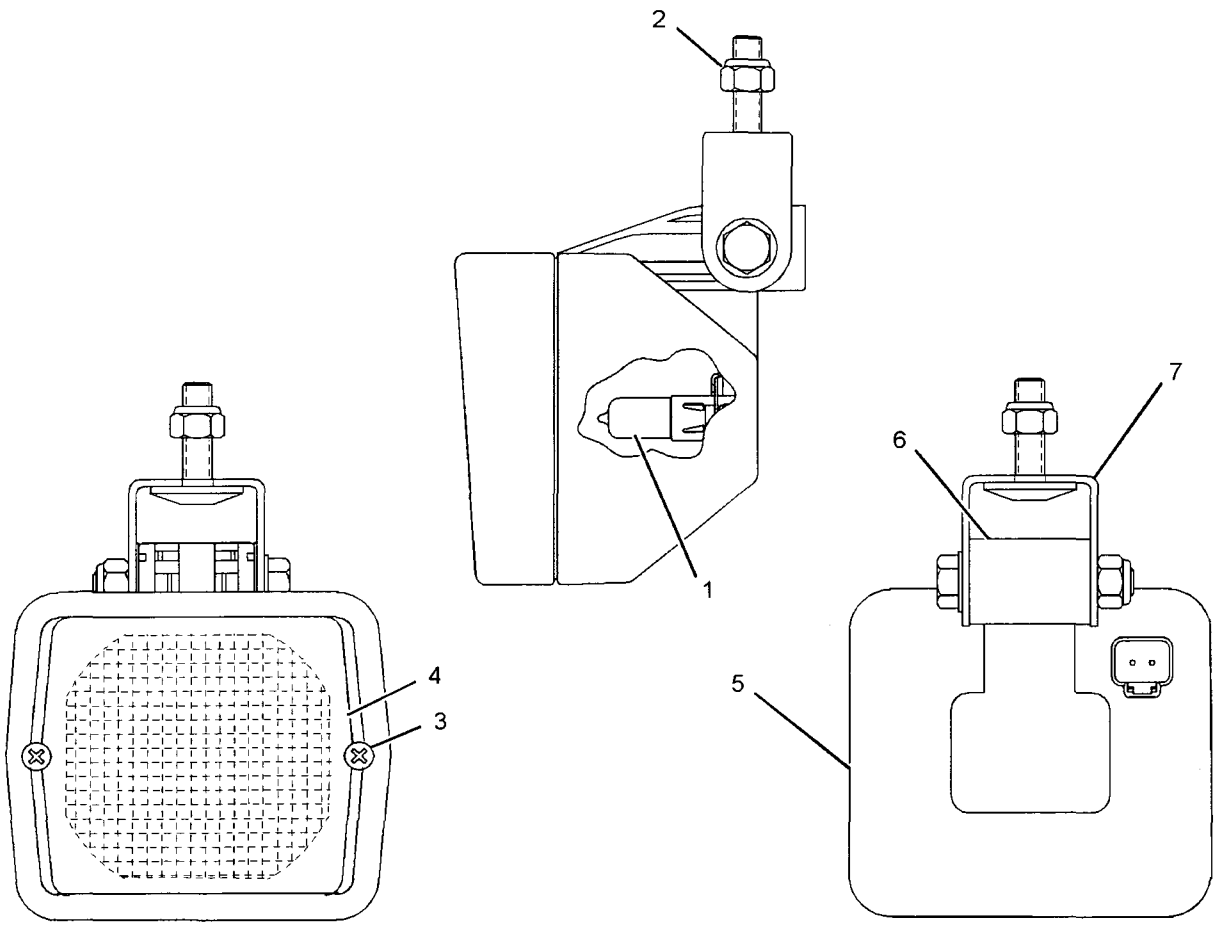

GRAPHIC #1 **<END>** g01026923

234-4326 LAMP GP-FLOOD

S/N: CCA1-UP

PART OF 161-0772 LIGHTING GP-FLOOD

AN ATTACHMENT

SMCS-1434 i02028424

NOTE	REF NO	GRAPHIC REF	PART NUMBER	QTY	PART NAME 1 2 3 4 5 6 (PRODUCT LEVEL)	SEE PAGE
	1	1	**9X-3463**	1	LAMP-HALOGEN (24-VOLT, 65-WATT) (BLADE)	
M	2	1	**8T-4133**	1	NUT (M10X1.5-THD)	
	3	1	**9X-4244**	2	SCREW	
	4	1	**202-6611**	1	LENS AS (FLOODLIGHT)	
	5	1	**234-7730**	1	BODY AS	
	6	1	**164-7556**	1	CLIP	
	7	1	**234-7731**	1	BRACKET AS	

M-METRIC PART

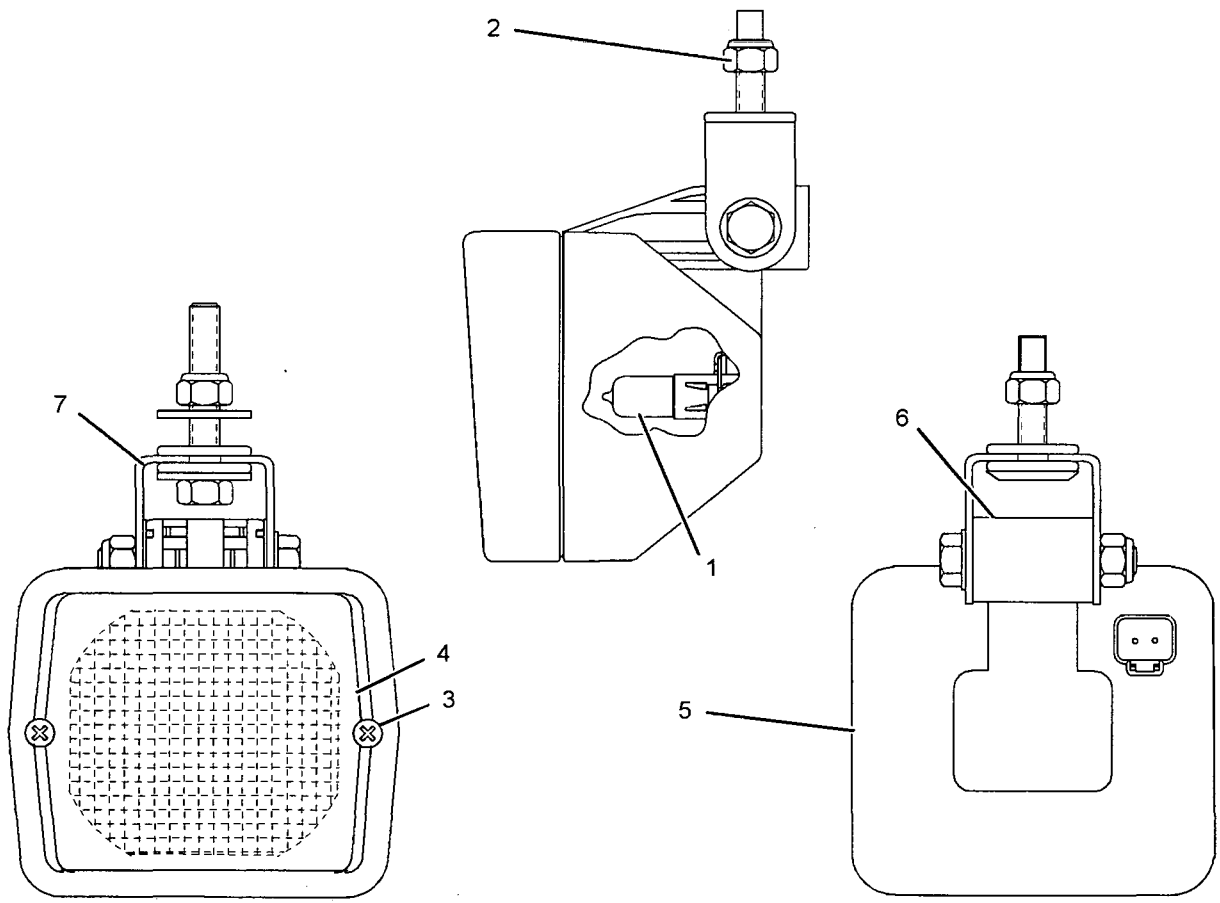

GRAPHIC #1

<END>

g01044247

161-3509 LAMP GP-HEAD–LOW BEAM

S/N: CCA1-UP

PART OF 161-1015, 161-1017 LIGHTING GP-FLOOD

AN ATTACHMENT

SMCS-1429 i01755148

NOTE	REF NO	GRAPHIC REF	PART NUMBER	QTY	PART NAME 1 2 3 4 5 6 (PRODUCT LEVEL)	SEE PAGE
	1	1	**9X-3463**	1	LAMP-HALOGEN (24-VOLT, 65-WATT) (LOW BEAM)	
	2	1	**158-0250**	1	BODY AS-LAMP	
	3	1	**162-2077**	1	LENS AS (HEADLAMP)(LOW BEAM)	
	4	1	**158-0252**	1	BEZEL	
	5	1	**188-8849**	2	CLAMP	

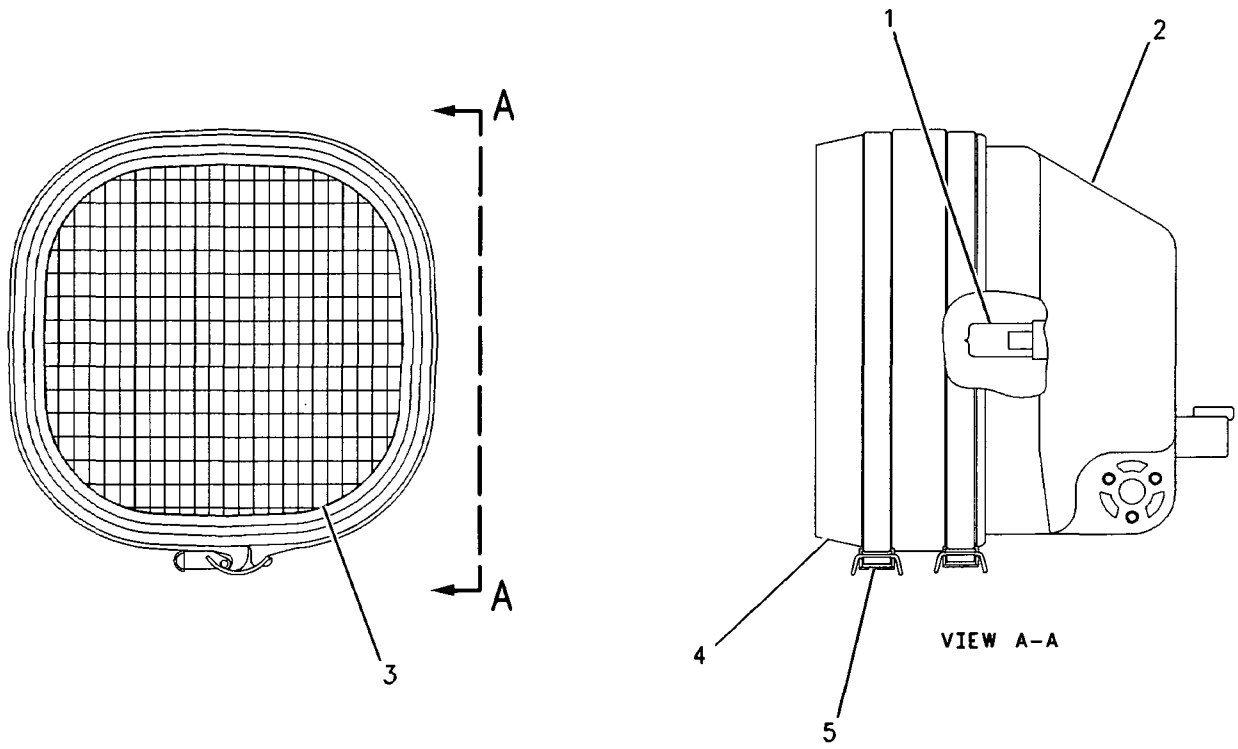

GRAPHIC #1 **<END>** g00514339

180-1300 LAMP GP-HEAD–HIGH BEAM

S/N: CCA1-UP
PART OF 161-1015 LIGHTING GP-FLOOD
AN ATTACHMENT

SMCS-1429 i02204073

NOTE	REF NO	GRAPHIC REF	PART NUMBER	QTY	PART NAME 1 2 3 4 5 6 (PRODUCT LEVEL)	SEE PAGE
	1	1	**9X-3463**	1	LAMP-HALOGEN (24-VOLT, 65-WATT) (HIGH BEAM)	
	2	1	**158-0250**	1	BODY AS-LAMP	
	3	1	**158-0249**	1	LENS AS (HIGH BEAM)	
	4	1	**158-0252**	1	BEZEL	
	5	1	**188-8849**	2	CLAMP	

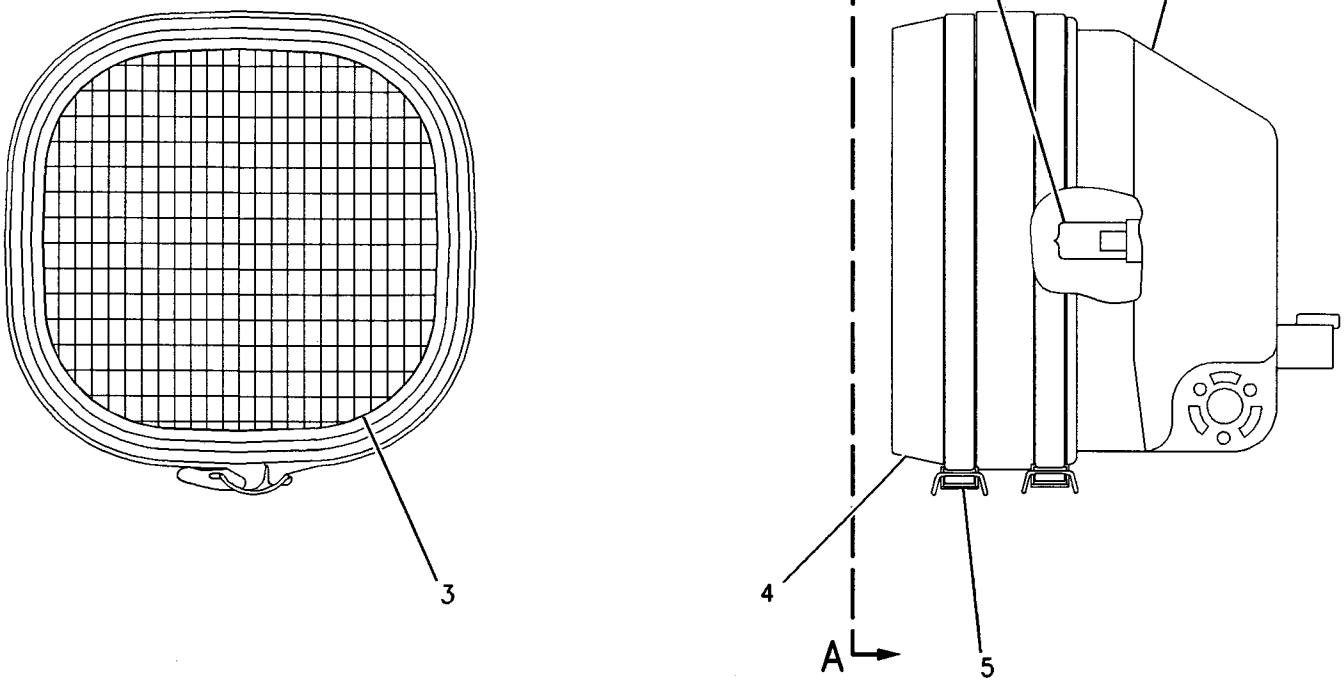

VIEW A-A

GRAPHIC #1 **<END>** g00703486

203-7625 LAMP GP-HEAD-LH-EU

S/N: CCA1-UP
24 VOLT
PART OF 203-7620 LIGHTING GP-FLOOD
AN ATTACHMENT

SMCS-1429 i01862078

NOTE	REF NO	GRAPHIC REF	PART NUMBER	QTY	PART NAME 1 2 3 4 5 6 (PRODUCT LEVEL)	SEE PAGE
	1	1	**9X-4244**	4	SCREW	
	2	1	**100-3251**	2	SCREW-LENS	
	3	1	**9X-9865**	1	SEAL	
	4	1	**100-3249**	1	LENS AS (HEAD)	
	5	1	**9X-3465**	1	LAMP (24-VOLT) (HIGH/LOW BEAM)	
	6	1	**136-3848**	1	LENS AS (AMBER) (TURN)	
M	7	1	**8T-5005**	1	BOLT (M10X1.50X70-MM)	
M	8	1	**8T-0389**	1	LOCKNUT (M10X1.5-THD)	
	9	1	**100-3253**	1	SPACER	
	10	1	**100-3254**	1	SPACER	
	11	1	**100-3255**	1	WASHER	
	12	1	**102-8805**	1	KIT-RECEPTACLE (6-PIN) (INCLUDES RECEPTACLE AS & WEDGE)	
	13	1	**186-3735**	5	PIN-CONNECTOR	
	14	1	**3E-3383**	1	WEDGE-RECEPTACLE LOCK (6-PIN)	
	15	1	**8T-8737**	1	PLUG-SEAL	
	16	1	**100-3245**	1	LAMP (24-VOLT) (POSITION)	
	16A	1	**100-3245**	1	LAMP (24-VOLT) (TURN)	
	17	1	**9X-4493**	1	LAMP (24-VOLT, 21-WATT) (TURN)	
	18	1	**100-3250**	1	LENS (AMBER) (TURN)	
	19	1	**136-3845**	1	BODY AS-LAMP	

M-METRIC PART

203-7625 LAMP GP-HEAD *(contd.)* i01862078

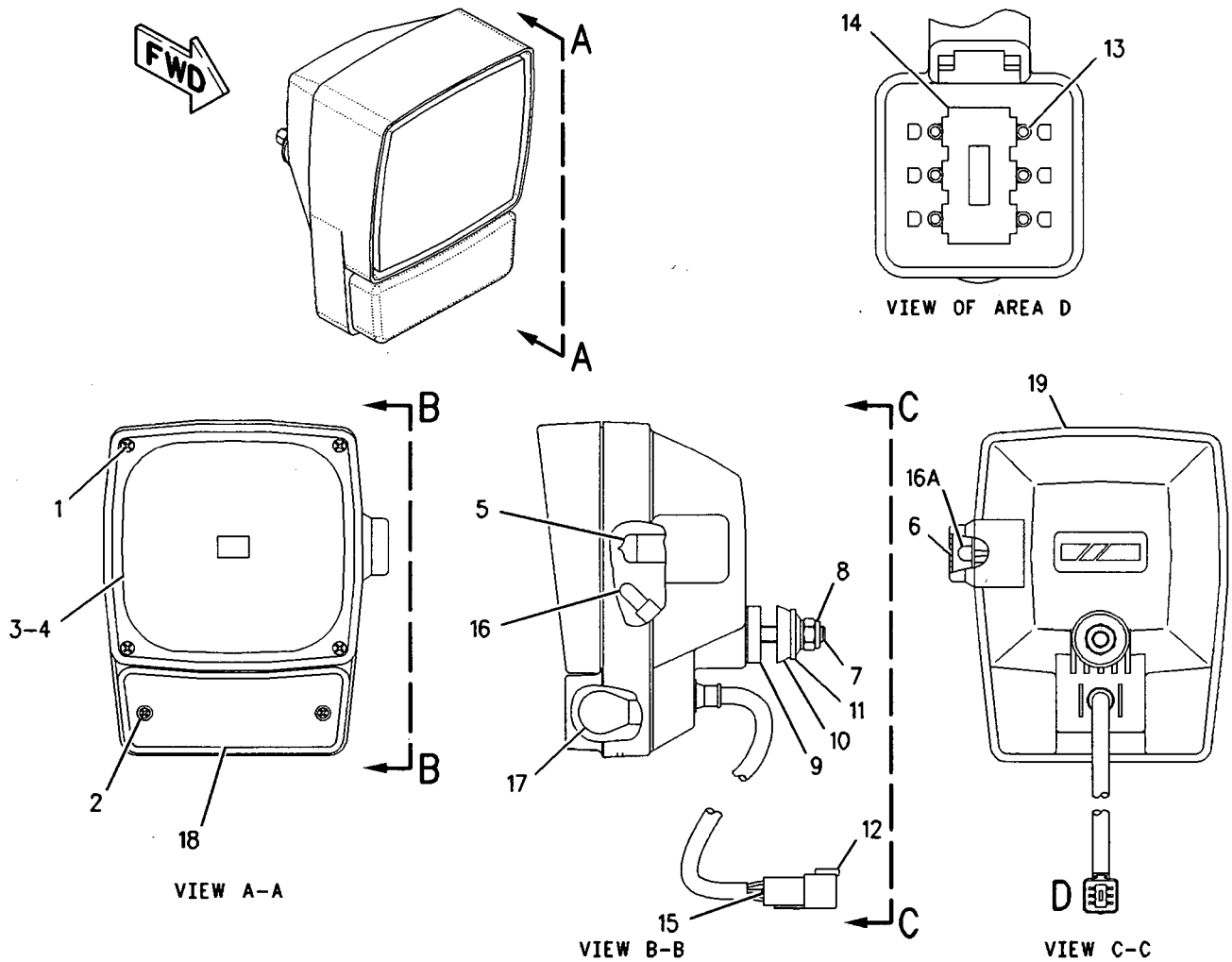

GRAPHIC #1

<END>

g00892357

203-7626 LAMP GP-HEAD–RH–EU

S/N: CCA1-UP
24 VOLT
PART OF 203-7620 LIGHTING GP-FLOOD
AN ATTACHMENT

SMCS-1429 i01862084

NOTE	REF NO	GRAPHIC REF	PART NUMBER	QTY	PART NAME 1 2 3 4 5 6 (PRODUCT LEVEL)	SEE PAGE
	1	1	**9X-4244**	4	SCREW	
	2	1	**100-3251**	2	SCREW-LENS	
	3	1	**9X-9865**	1	SEAL	
	4	1	**100-3249**	1	LENS AS (HEAD)	
	5	1	**9X-3465**	1	LAMP (24-VOLT) (HIGH/LOW BEAM)	
	6	1	**136-3848**	1	LENS AS (AMBER) (TURN)	
M	7	1	**8T-5005**	1	BOLT (M10X1.50X70-MM)	
M	8	1	**8T-0389**	1	LOCKNUT (M10X1.5-THD)	
	9	1	**100-3253**	1	SPACER	
	10	1	**100-3254**	1	SPACER	
	11	1	**100-3255**	1	WASHER	
	12	1	**102-8805**	1	KIT-RECEPTACLE (6-PIN) (INCLUDES RECEPTACLE AS & WEDGE)	
	13	1	**186-3735**	5	PIN-CONNECTOR	
	14	1	**3E-3383**	1	WEDGE-RECEPTACLE LOCK (6-PIN)	
	15	1	**8T-8737**	1	PLUG-SEAL	
	16	1	**100-3245**	1	LAMP (24-VOLT) (POSITION)	
	16A	1	**100-3245**	1	LAMP (24-VOLT) (TURN)	
	17	1	**9X-4493**	1	LAMP (24-VOLT, 21-WATT) (TURN)	
	18	1	**100-3250**	1	LENS (AMBER) (TURN)	
	19	1	**136-3846**	1	BODY AS-LAMP	

M-METRIC PART

203-7626 LAMP GP-HEAD *(contd.)* i01862084

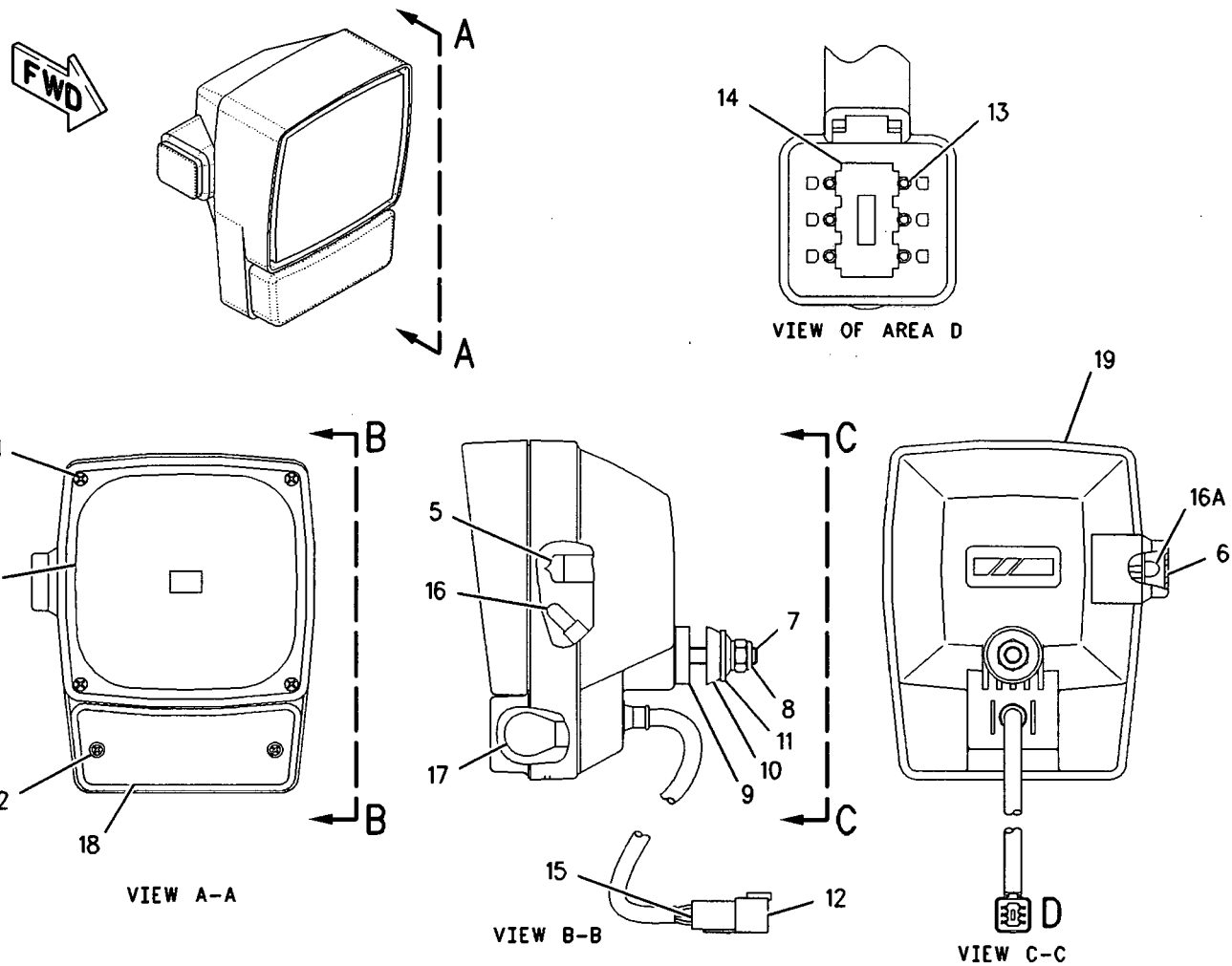

GRAPHIC #1

<END>

g00892432

ELECTRICAL AND STARTING SYSTEM

105-4849 LAMP GP-HEAD & SIGNAL-LH

S/N: CCA1-UP
PART OF 159-5865 WIRING GP-FRONT
AN ATTACHMENT

SMCS-1429, 1430 i02205177

NOTE	REF NO	GRAPHIC REF	PART NUMBER	QTY	PART NAME 1 2 3 4 5 6 (PRODUCT LEVEL)	SEE PAGE
	1	1	**9X-4244**	4	SCREW	
	2	1	**100-3251**	2	SCREW-LENS	
	3	1	**9X-9865**	1	SEAL	
	4	1	**100-3248**	1	LENS AS (HEADLIGHT)	
	5	1	**9X-3465**	1	LAMP (24-VOLT)	
	6	1	**136-3848**	1	LENS AS (AMBER) (SIGNAL)	
M	7	1	**8T-5005**	1	BOLT (M10X1.5X70-MM)	
M	8	1	**8T-0389**	1	LOCKNUT (M10X1.5-THD)	
	9	1	**100-3253**	1	SPACER	
	10	1	**100-3254**	1	SPACER	
	11	1	**100-3255**	1	WASHER	
	13	1	**8T-8729**	5	PIN-CONNECTOR	
	14	1	**3E-3383**	1	WEDGE-RECEPTACLE LOCK (6-PIN)	
	15	1	**8T-8737**	1	PLUG-SEAL	
	16	1	**100-3245**	2	LAMP (24-VOLT)	
	17	1	**9X-4493**	1	LAMP (24-VOLT, 21-WATT) (SIGNAL)	
	18	1	**100-3250**	1	LENS (AMBER) (SIGNAL)	
	19	1	**136-3845**	1	BODY AS-LAMP	
	20	1	**102-8805**	1	KIT-RECEPTACLE (6-PIN) (INCLUDES RECEPTACLE AS & WEDGE)	

M-METRIC PART

105-4849 LAMP GP-HEAD & SIGNAL *(contd.)*

i02205177

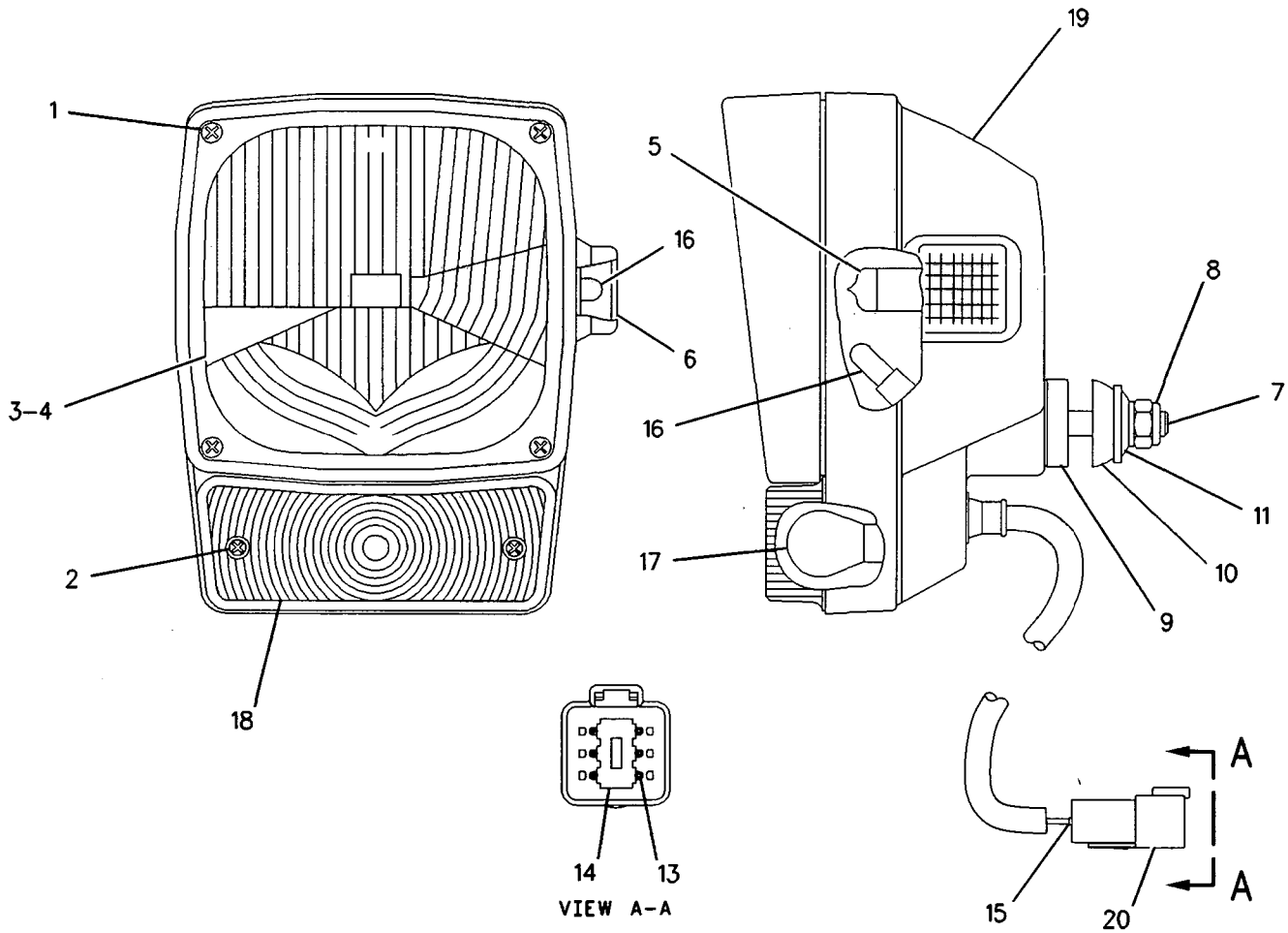

GRAPHIC #1

<END>

g00661265

105-4850 LAMP GP-HEAD & SIGNAL-RH

S/N: CCA1-UP
PART OF 159-5865 WIRING GP-FRONT
AN ATTACHMENT

SMCS-1429, 1430 i02205178

NOTE	REF NO	GRAPHIC REF	PART NUMBER	QTY	PART NAME 1 2 3 4 5 6 (PRODUCT LEVEL)	SEE PAGE
	1	1	**9X-4244**	4	SCREW	
	2	1	**100-3251**	2	SCREW-LENS	
	3	1	**9X-9865**	1	SEAL	
	4	1	**100-3248**	1	LENS AS (HEADLIGHT)	
	5	1	**9X-3465**	1	LAMP (24-VOLT) (HEAD)	
	6	1	**136-3848**	1	LENS AS (AMBER) (SIGNAL)	
M	7	1	**8T-5005**	1	BOLT (M10X1.5X70-MM)	
M	8	1	**8T-0389**	1	LOCKNUT (M10X1.5-THD)	
	9	1	**100-3253**	1	SPACER	
	10	1	**100-3254**	1	SPACER	
	11	1	**100-3255**	1	WASHER	
	12	1	**102-8805**	1	KIT-RECEPTACLE (6-PIN)	
					(INCLUDES RECEPTACLE AS & WEDGE)	
	13	1	**186-3735**	5	PIN-CONNECTOR	
	14	1	**3E-3383**	1	WEDGE-RECEPTACLE LOCK (6-PIN)	
	15	1	**8T-8737**	1	PLUG-SEAL	
	16	1	**100-3245**	2	LAMP (24-VOLT) (SIGNAL)	
	17	1	**9X-4493**	1	LAMP (24-VOLT, 21-WATT) (SIGNAL)	
	18	1	**100-3250**	1	LENS (AMBER) (SIGNAL)	
	19	1	**136-3846**	1	BODY AS-LAMP	

M-METRIC PART

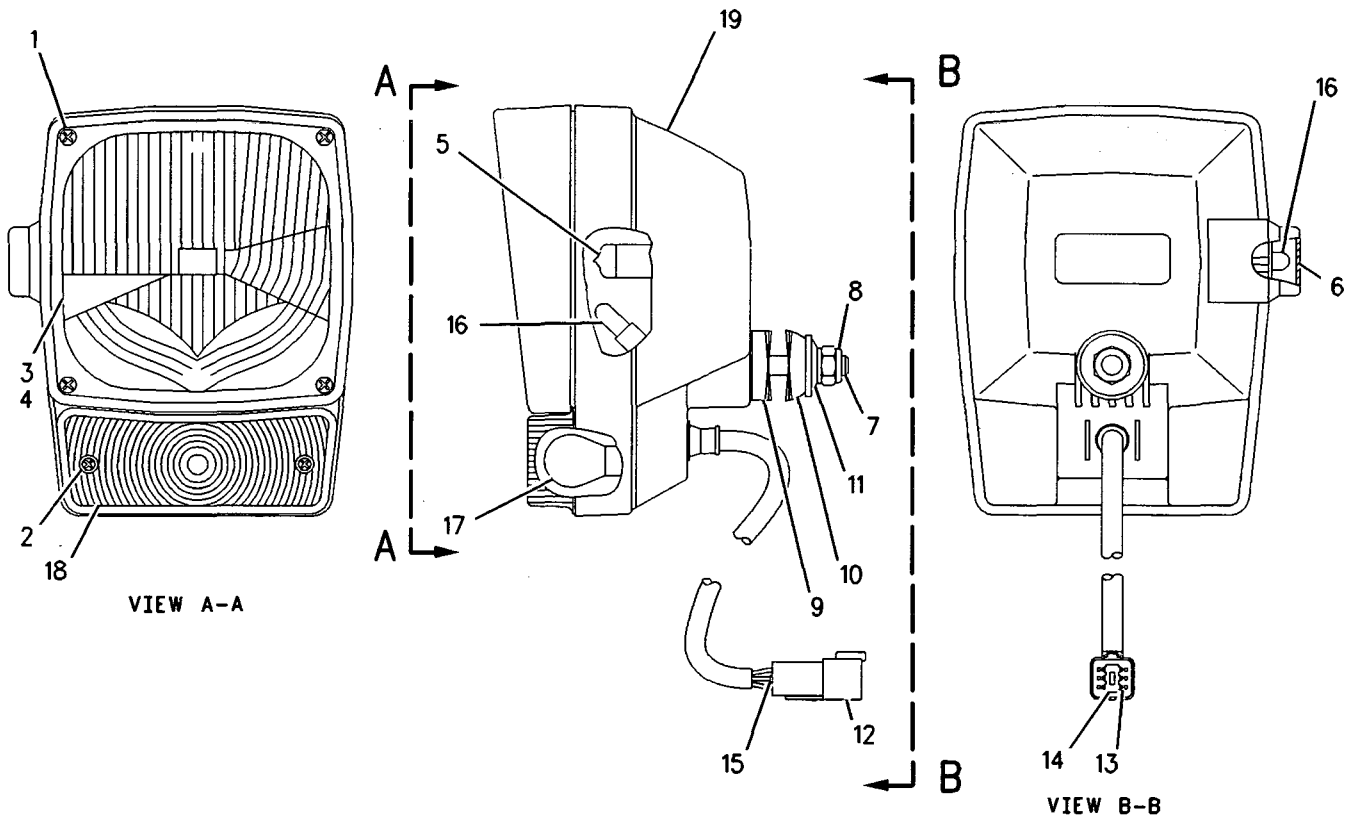

GRAPHIC #1 **<END>** g00610742

212-3924 LAMP GP-MARKER

S/N: CCA1-UP

PART OF 211-1520 LIGHTING GP-ROADING

AN ATTACHMENT

SMCS-1429 i01745446

NOTE	REF NO	GRAPHIC REF	PART NUMBER	QTY	PART NAME 1 2 3 4 5 6 (PRODUCT LEVEL)	SEE PAGE
	1	1	**102-8802**	1	KIT-RECEPTACLE (2 PIN)	
					(INCLUDES RECEPTACLE AS. & WEDGE)	
	2	1	**3E-3365**	1	WEDGE-RECEPTACLE LOCK (2 PIN)	
	3	1	**186-3735**	2	PIN-CONNECTOR	
	4	1	**9X-4494**	1	LAMP (24 VOLT) (CAB POSITION)	
M	5	1	**104-3601**	2	SCREW-MACHINE (M5X0.8X25MM)	
	6	1	**8H-3481**	2	LOCKWASHER	

M-METRIC PART

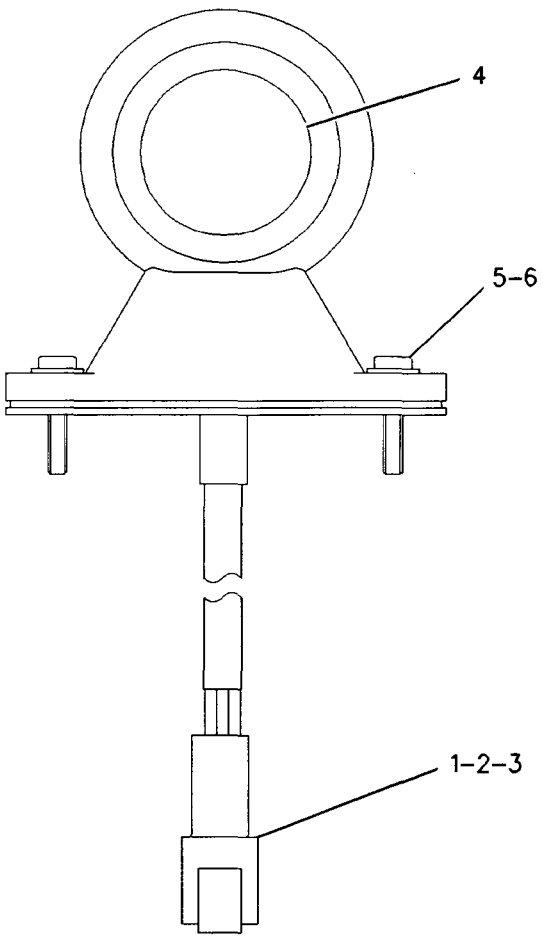

GRAPHIC #1 **<END>** g00939448

117-8319 LAMP GP-REGISTRATION PLATE-EU

S/N: CCA1-UP

PART OF 211-1519 MOUNTING GP-REGISTRATION AN ATTACHMENT

SMCS-1429 i01879060

NOTE	REF NO	GRAPHIC REF	PART NUMBER	QTY	PART NAME 1 2 3 4 5 6 (PRODUCT LEVEL)	SEE PAGE
	1	1	**8T-8729**	2	PIN-CONNECTOR	
	2	1	**102-8802**	1	KIT-RECEPTACLE (2 PIN) (REGISTRATION PLATE LAMP)	
	3	1	**5C-9583**	1	LAMP (24 VOLT) (REGISTRATION PLATE)	
	4	1	**134-6751**	1	LENS (REGISTRATION PLATE)	
M	5	1	**5C-2874**	2	NUT (M5X.8 THD)	
	6	1	**8F-1434**	2	LOCKWASHER	
	7	1	**134-6749**	2	SCREW-LENS	

M-METRIC PART

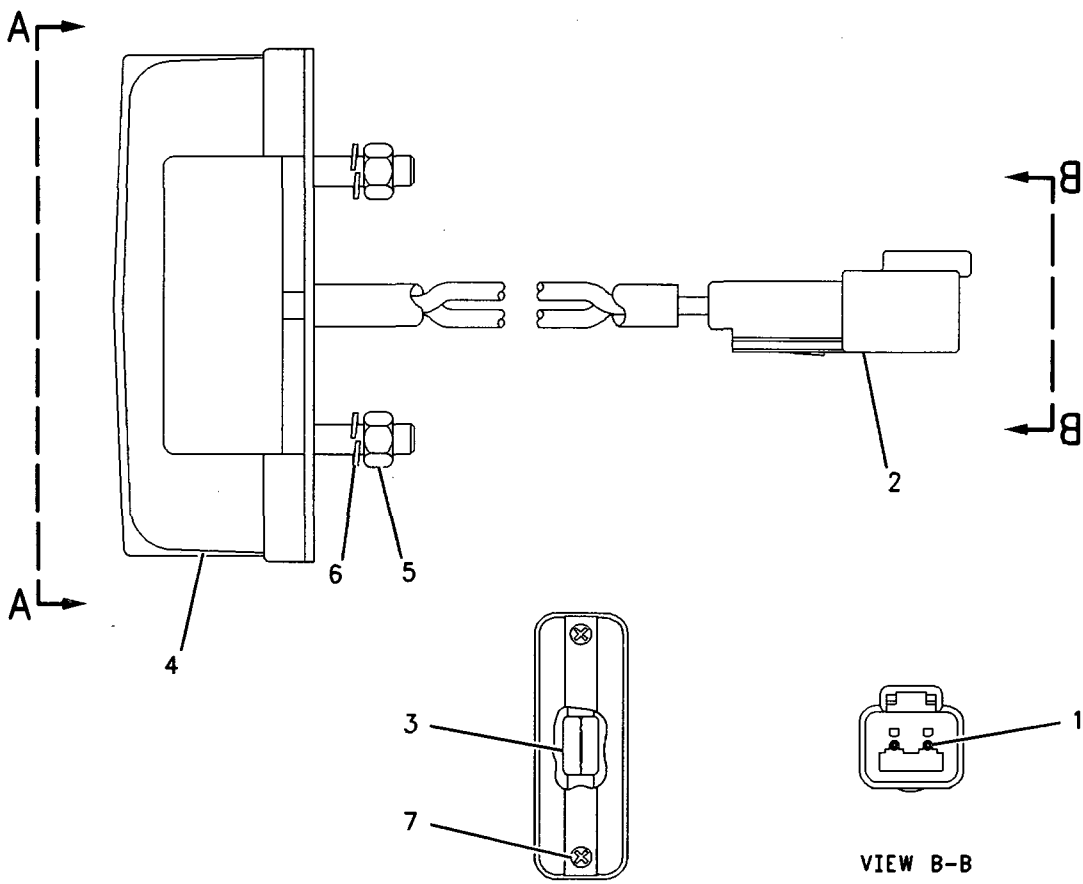

VIEW A-A

VIEW B-B

GRAPHIC #1 **<END>** g00711234

135-0426 LAMP GP-SIGNAL–STOP/TAIL

S/N: CCA1-UP
24 VOLT
PART OF 184-1299 WIRING GP-REAR

SMCS-1430 i01638052

NOTE	REF NO	GRAPHIC REF	PART NUMBER	QTY	PART NAME 1 2 3 4 5 6 (PRODUCT LEVEL)	SEE PAGE
	1	1	**102-8803**	1	KIT-RECEPTACLE (3-PIN) (STOP/TAIL LAMP)	
	2	1	**3E-3371**	1	WEDGE-RECEPTACLE LOCK (3-PIN)	
	3	1	**186-3735**	3	PIN-CONNECTOR	

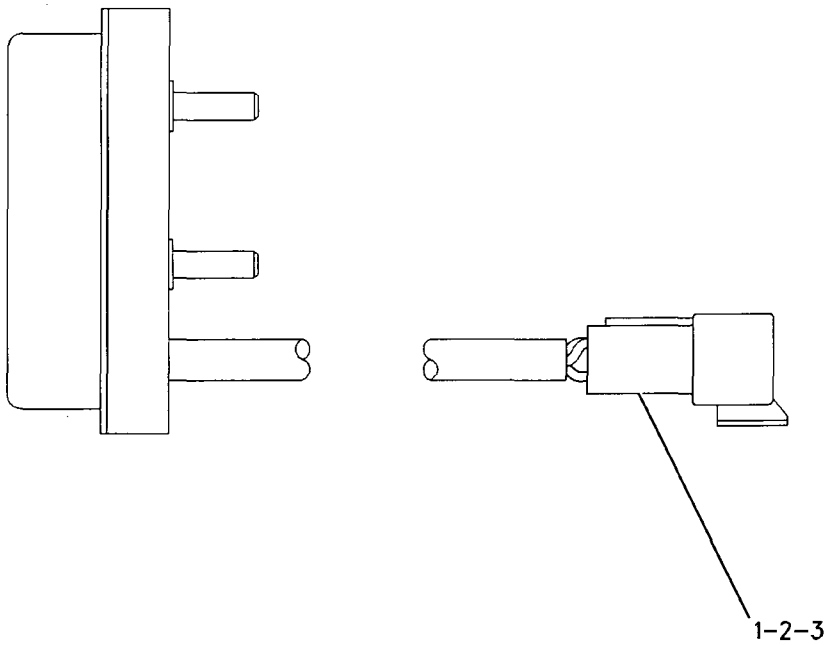

GRAPHIC #1 **<END>** g00305543

135-0427 LAMP GP-SIGNAL–TURN/PARK

S/N: CCA1-UP

PART OF 161-0772, 161-1015 LIGHTING GP-FLOOD, 188-9331 LIGHTING GP-SIGNAL AN ATTACHMENT

SMCS-1430 i01687561

NOTE	REF NO	GRAPHIC REF	PART NUMBER	QTY	PART NAME 1 2 3 4 5 6 (PRODUCT LEVEL)	SEE PAGE
	1	1	**102-8803**	1	KIT-RECEPTACLE (3-PIN)	
					(INCLUDES RECEPTACLE AS & WEDGE)	
	2	1	**3E-3371**	1	WEDGE-RECEPTACLE LOCK (3-PIN)	
	3	1	**186-3735**	3	PIN-CONNECTOR	

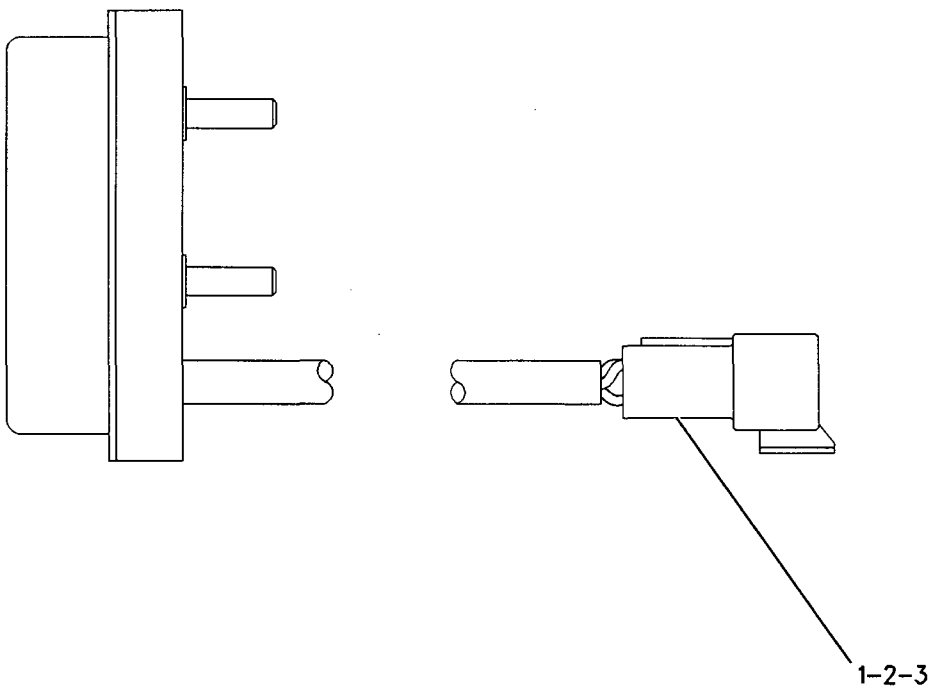

GRAPHIC #1 **<END>** g00305583

199-3368 LAMP GP-SIGNAL

S/N: CCA214-UP
PART OF 188-9331 LIGHTING GP-SIGNAL
AN ATTACHMENT

SMCS-1430 i01930296

NOTE	REF NO	GRAPHIC REF	PART NUMBER	QTY	PART NAME 1 2 3 4 5 6 (PRODUCT LEVEL)	SEE PAGE
	1	1	102-8802	1	KIT-RECEPTACLE (2-PIN)	
					(INCLUDES RECEPTACLE AS & WEDGE)	
	2	1	3E-3365	1	WEDGE-RECEPTACLE LOCK (2-PIN)	
	3	1	186-3735	2	PIN-CONNECTOR	

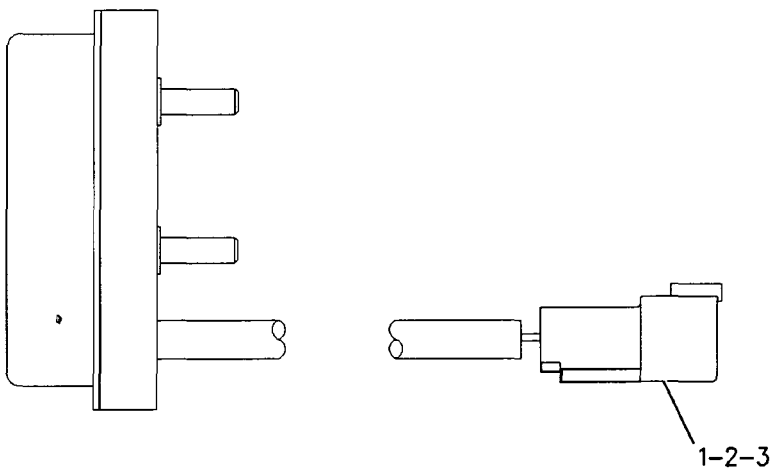

GRAPHIC #1 <END> g00777463

128-6983 LAMP GP-WARNING BEACON

S/N: CCA1-UP
24 VOLT
PART OF 233-4253 LIGHTING GP-WARNING, 239-9354 LIGHTING GP-WARNING BEACON AN ATTACHMENT

SMCS-1431 **i02200122**

NOTE	REF NO	GRAPHIC REF	PART NUMBER	QTY	PART NAME 1 2 3 4 5 6 (PRODUCT LEVEL)	SEE PAGE
	1	1	**9X-8121**	1	LENS (AMBER, WARNING BEACON)	
	2	1	**9X-7849**	1	LAMP (24-VOLT, 70-WATT) (WARNING BEACON)	
	3	1	**9X-8139**	1	BELT-DRIVE (WARNING BEACON)	
M	4	1	**6V-8225**	3	NUT (M6X1-THD)	
	5	1	**5P-0537**	3	WASHER-HARD (7.2X14.5X2-MM THK)	
	6	1	**102-8802**	1	KIT-RECEPTACLE (2-PIN)	
					(INCLUDES RECEPTACLE AS AND WEDGE)	
	7	1	**3E-3365**	1	WEDGE-RECEPTACLE LOCK (2-PIN)	
	8	1	**186-3735**	2	PIN-CONNECTOR	

M-METRIC PART

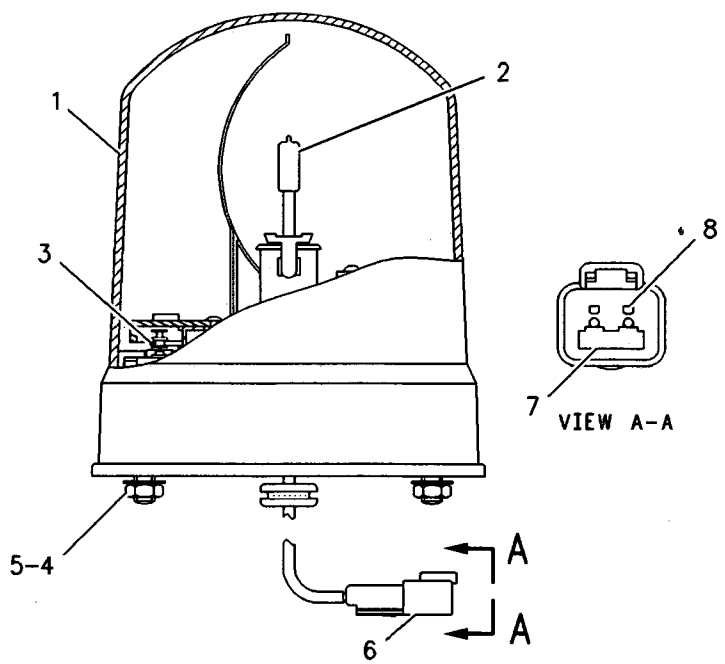

GRAPHIC #1 **<END>** g00109215

235-3937 LAMP GP-WARNING BEACON

S/N: CCA1-UP
24-VOLT
PART OF 233-4253 LIGHTING GP-WARNING
AN ATTACHMENT

SMCS-1431 i02011370

NOTE	REF NO	GRAPHIC REF	PART NUMBER	QTY	PART NAME 1 2 3 4 5 6 (PRODUCT LEVEL)	SEE PAGE
	1	1	215-6672	1	LENS-AMBER (WARNING BEACON)	
	2	1	9X-7849	1	LAMP (24-VOLT, 70-WATT)	
	3	1	215-6673	1	BELT	
	4	1	215-6674	1	CLIP	
M	5	1	6V-8225	3	NUT (M6X1-THD)	
	6	1	5P-0537	3	WASHER-HARD (7.2X14.5X2-MM THK)	
	7	1	102-8802	1	KIT-RECEPTACLE (2-PIN)	
					(KIT INCLUDES RECEPTACLE AS & WEDGE)	
	8	1	3E-3365	1	WEDGE-RECEPTACLE LOCK (2-PIN)	
	9	1	186-3735	2	PIN-CONNECTOR	

M-METRIC PART

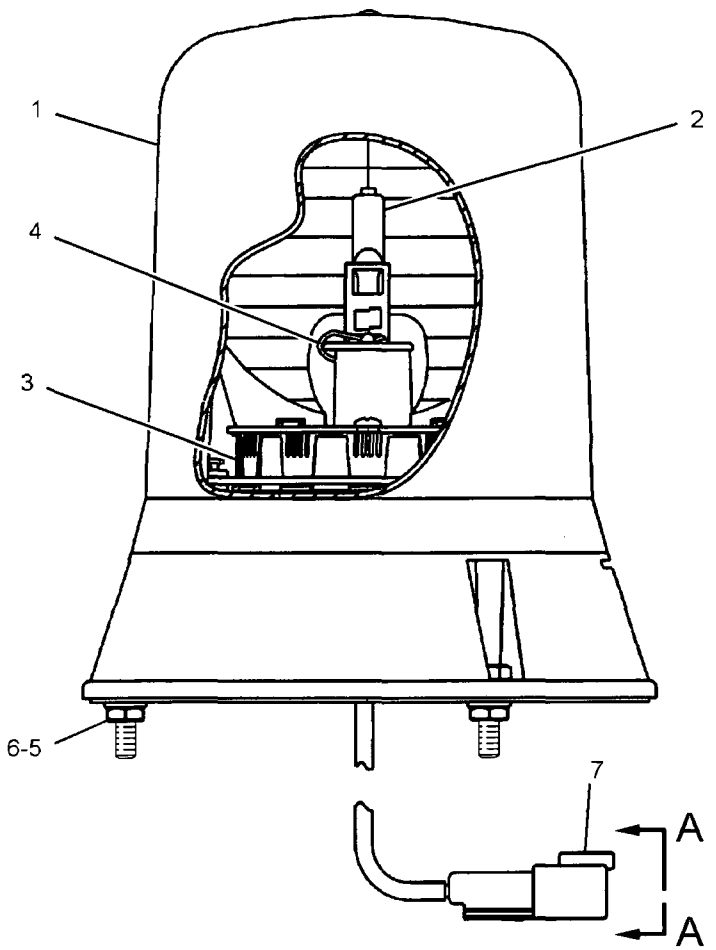

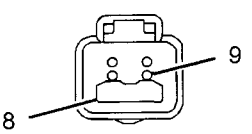

VIEW A-A

GRAPHIC #1 **<END>** g01047107

161-0768 LIGHTING AR-FLOOD

S/N: CCA1-UP
AN ATTACHMENT

SMCS-1434 i01917159

NOTE	PART NUMBER	QTY	PART NAME 1 2 3 4 5 6 (PRODUCT LEVEL)	SEE PAGE
Y	*161-0769*	1	LIGHTING GP-FLOOD (CAB)	195
Y	*161-0779*	1	LIGHTING GP-FLOOD (BLADE)	204
Y	*188-9324*	1	LIGHTING GP-FLOOD (REAR)	228

Y-SEPARATE ILLUSTRATION

<END>

188-9321 LIGHTING AR-FLOOD–FRONT & REAR

S/N: CCA1-UP
PART OF 197-5955, 236-3948 SNOW AR-MOTOR GRADER
AN ATTACHMENT

SMCS-1434 i01861307

NOTE	PART NUMBER	QTY	PART NAME 1 2 3 4 5 6 (PRODUCT LEVEL)	SEE PAGE
Y	*161-0778*	1	LIGHTING GP-FLOOD (BLADE)	201
Y	*188-9324*	1	LIGHTING GP-FLOOD (REAR)	228

Y-SEPARATE ILLUSTRATION

<END>

188-9328 LIGHTING AR-FLOOD–BOLSTER–TURN

S/N: CCA1-UP
AN ATTACHMENT

SMCS-1434 i01861309

NOTE	PART NUMBER	QTY	PART NAME 1 2 3 4 5 6 (PRODUCT LEVEL)	SEE PAGE
Y	*201-1038*	1	CIRCUIT BREAKER GP (SINGLE)	142
Y	*161-1015*	1	LIGHTING GP-FLOOD (DOUBLE BOLSTER)	206
Y	*188-9331*	1	LIGHTING GP-SIGNAL (TURN)	242

Y-SEPARATE ILLUSTRATION

<END>

203-6536 LIGHTING AR-FLOOD–MOLDBOARD

S/N: CCA1-UP
AN ATTACHMENT

SMCS-1434 i01683936

NOTE	PART NUMBER	QTY	PART NAME 1 2 3 4 5 6 (PRODUCT LEVEL)	SEE PAGE
Y	*196-8532*	1	LIGHTING GP-FLOOD (MOLDBOARD)	232
Y	*203-6551*	1	WIRING GP-CAB (MOLDBOARD)	287

Y-SEPARATE ILLUSTRATION

<END>

204-6109 LIGHTING AR-FLOOD–MOLDBOARD–EU

S/N: CCA1-UP

AN ATTACHMENT

SMCS-1434 i01880922

NOTE	REF NO	GRAPHIC REF	PART NUMBER	QTY	PART NAME 1 2 3 4 5 6 (PRODUCT LEVEL)	SEE PAGE
	1	1	**106-8704**	1	SUPPRESSOR AS-ARC	
		1	**186-3735**	2	PIN-CONNECTOR	
		1	**102-8802**	1	KIT-RECEPTACLE (2 PIN)	
					(INCLUDES RECEPTACLE AS & WEDGE)	
Y	2	1	*196-8532*	1	LIGHTING GP-FLOOD (MOLDBOARD)	232
Y	3	1	*204-6127*	1	WIRING GP-CAB (MOLDBOARD)	289

Y-SEPARATE ILLUSTRATION

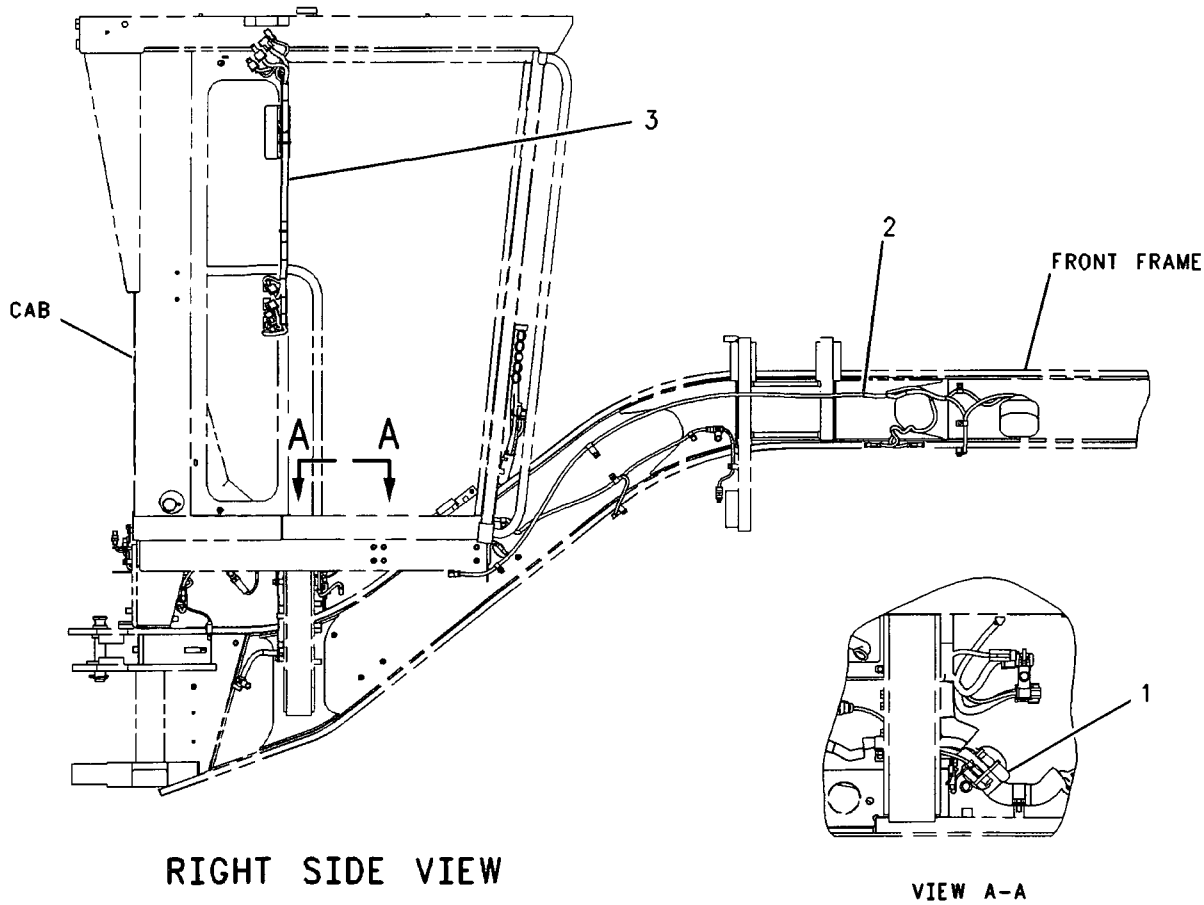

RIGHT SIDE VIEW

VIEW A-A

GRAPHIC #1 **<END>** g00938077

161-0770 LIGHTING AR-FLOOD & SIGNAL–HEAD–TURN

S/N: CCA1-UP
AN ATTACHMENT

SMCS-1430, 1434 i01861314

NOTE	PART NUMBER	QTY	PART NAME 1 2 3 4 5 6 (PRODUCT LEVEL)	SEE PAGE
Y	*201-1038*	1	CIRCUIT BREAKER GP (SINGLE)	142
Y	*161-0772*	1	LIGHTING GP-FLOOD (FRONT)(TURN)	197
Y	*188-9331*	1	LIGHTING GP-SIGNAL (REAR)	242
Y	*161-1018*	1	SWITCH GP-LIGHT (TURN)	275

Y-SEPARATE ILLUSTRATION

<END>

161-0771 LIGHTING AR-FLOOD & SIGNAL–HEAD–TURN–BOLSTER

S/N: CCA1-UP
AN ATTACHMENT

SMCS-1430, 1434 i01861316

NOTE	PART NUMBER	QTY	PART NAME 1 2 3 4 5 6 (PRODUCT LEVEL)	SEE PAGE
Y	*201-1036*	1	CIRCUIT BREAKER GP (DUEL)	141
Y	*161-0772*	1	LIGHTING GP-FLOOD (FRONT)	197
Y	*161-1017*	1	LIGHTING GP-FLOOD (BOLSTER)	212
Y	*188-9331*	1	LIGHTING GP-SIGNAL (REAR)	242

Y-SEPARATE ILLUSTRATION

<END>

179-1548 LIGHTING AR-FLOOD & SIGNAL–EXTENDED BOLSTER

S/N: CCA1-UP
AN ATTACHMENT

SMCS-1430, 1434 i01861330

NOTE	PART NUMBER	QTY	PART NAME 1 2 3 4 5 6 (PRODUCT LEVEL)	SEE PAGE
Y	*201-1036*	1	CIRCUIT BREAKER GP (DUEL)	141
Y	*161-0772*	1	LIGHTING GP-FLOOD (TURN)	197
Y	*183-4069*	1	LIGHTING GP-FLOOD (BOLSTER AND TURN)(ELEVATED)	222
Y	*188-9331*	1	LIGHTING GP-SIGNAL (TURN)	242

Y-SEPARATE ILLUSTRATION

<END>

ELECTRICAL AND STARTING SYSTEM

171-7096 LIGHTING GP-BACKUP

S/N: CCA1-UP

AN ATTACHMENT

SMCS-1408 **i02205181**

NOTE	REF NO	GRAPHIC REF	PART NUMBER	QTY	PART NAME 1 2 3 4 5 6 (PRODUCT LEVEL)	SEE PAGE
	1	1	**3E-0109**	5	PLUG (ROCKER SWITCH)	
	2	1	**3E-5239**	1	RELAY AS (24-VOLT) (AUXILIARY BACKUP LAMP)	
	3	1	**3S-2093**	5	STRAP-CABLE	
	4	1	**9W-1442**	1	FUSE (10-AMPERE) (BACKUP LAMP)	
	5	1	**145-3350**	1	PLATE	
	6	1	**153-2147**	1	PLATE	
	7	1	**168-8243**	1	HARNESS AS-PANEL	
		1	**102-8802**	1	KIT-RECEPTACLE (2-PIN)	
		1	**102-8804**	2	KIT-RECEPTACLE (4-PIN)	
		1	**102-8806**	1	KIT-RECEPTACLE (8-PIN)	
		1	**102-8801**	1	KIT-RECEPTACLE (12-PIN)	
					(INCLUDES RECEPTACLE AS & WEDGE)	
		1	**155-2255**	1	KIT-CONNECTING PLUG (12-PIN)	
		1	**155-2265**	4	KIT-CONNECTING PLUG (8-PIN)	
		1	**155-2270**	1	KIT-CONNECTING PLUG (2-PIN)	
		1	**155-2271**	1	KIT-CONNECTING PLUG (4-PIN)	
					(INCLUDES PLUG AS & WEDGE)	
	8	1	**172-6556**	1	PANEL (UPPER SWITCH)	
	9	1	**178-6267**	1	HARNESS AS-ALARM	
		1	**102-8804**	1	KIT-RECEPTACLE (4-PIN)	
					(INCLUDES RECEPTACLE AS & WEDGE)	
		1	**9X-1054**	1	PLUG AS-CONNECTOR (4-PIN)	
	10	1	**188-3862**	1	BRACKET AS	
	11	1	**161-1418**	1	SWITCH AS (AUXILIARY BACKUP)	
		1	**3E-8825**	2	LAMP (24-VOLT) (AUXILIARY BACKUP LAMP)	
		1	**161-1417**	1	ACTUATOR-ROCKER	
M	12	1	**9X-2043**	7	SCREW-TRUSS HEAD (M6X1X14-MM)	
	13	1	**9X-8256**	1	WASHER (6.6X12X2-MM THK)	

M-METRIC PART

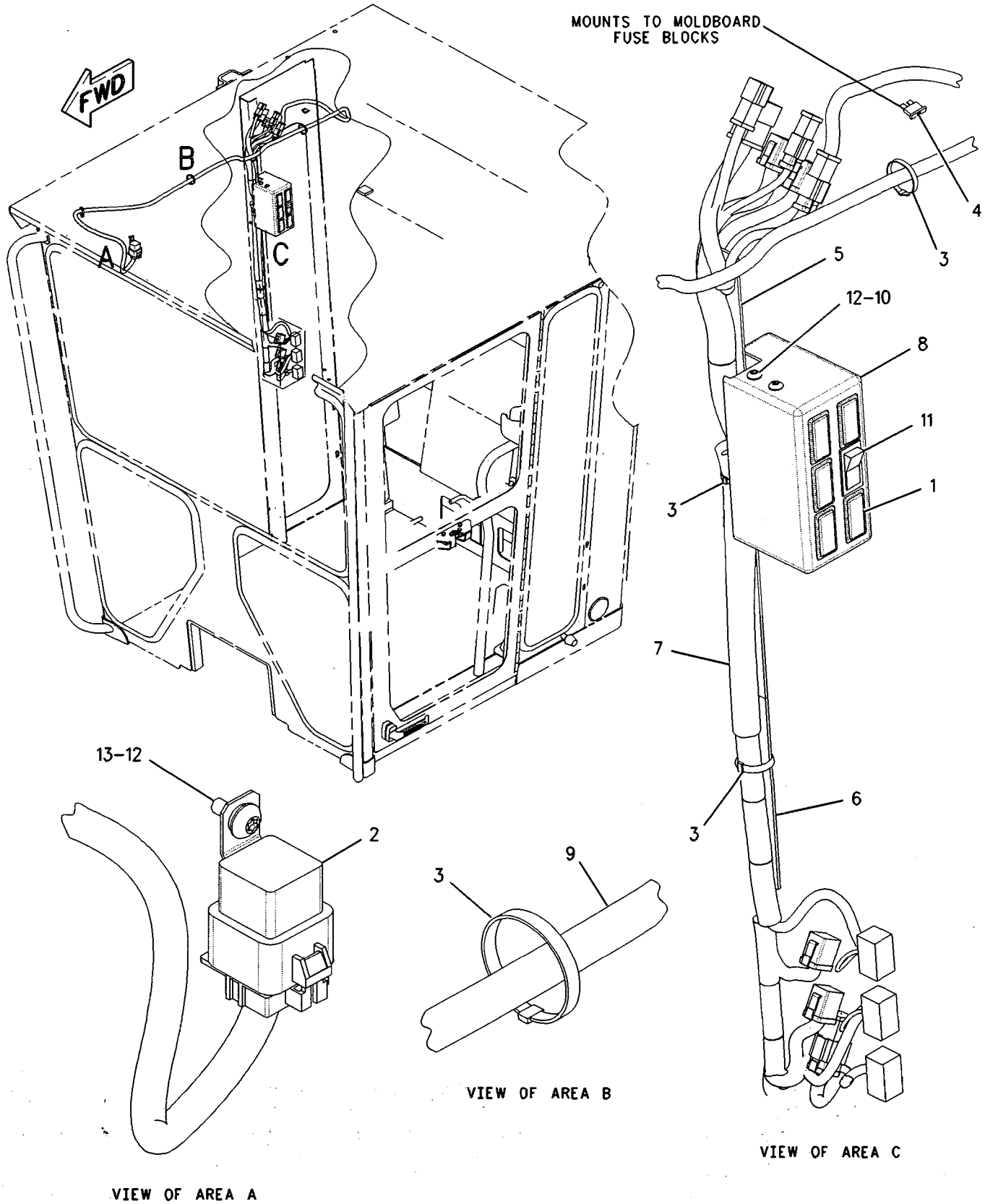

GRAPHIC #1 **<END>** g00846331

197-1744 LIGHTING GP-BACKUP–EU

S/N: CCA1-UP

AN ATTACHMENT

SMCS-1408 i02205184

NOTE	REF NO	GRAPHIC REF	PART NUMBER	QTY	PART NAME 1 2 3 4 5 6 (PRODUCT LEVEL)	SEE PAGE
	1	1	**3E-0109**	5	PLUG (ROCKER SWITCH)	
	2	1	**3E-5239**	1	RELAY AS (24-VOLT)	
	3	1	**3S-2093**	5	STRAP-CABLE	
	4	1	**9W-1442**	1	FUSE (10-AMPERE) (AUXILIARY BACK-UP ALARM)	
	5	1	**145-3350**	1	PLATE	
	6	1	**153-2147**	1	PLATE	
	7	1	**172-6556**	1	PANEL	
	8	1	**178-6267**	1	HARNESS AS-ALARM	
		1	**9X-1054**	1	PLUG AS-CONNECTOR (4-PIN)	
		1	**102-8804**	1	KIT-RECEPTACLE (4-PIN)	
	9	1	**188-3862**	1	BRACKET AS	
	10	1	**196-8557**	1	HARNESS AS-CAB	
		1	**155-2255**	1	KIT-CONNECTING PLUG (12-PIN)	
		1	**155-2265**	4	KIT-CONNECTING PLUG (8-PIN)	
		1	**155-2270**	1	KIT-CONNECTING PLUG (2-PIN) (SIDE FLOOD LAMP)	
		1	**155-2271**	1	KIT-CONNECTING PLUG (4-PIN)	
		1	**102-8802**	1	KIT-RECEPTACLE (2-PIN)	
		1	**102-8804**	2	KIT-RECEPTACLE (4-PIN)	
		1	**102-8806**	1	KIT-RECEPTACLE (8-PIN)	
		1	**102-8801**	1	KIT-RECEPTACLE (12-PIN)	
	11	1	**3E-8770**	1	SWITCH AS (24-VOLT) (AUXILIARY BACK-UP ALARM)	
		1	**141-2325**	1	ACTUATOR-ROCKER	
		1	**3E-8825**	1	LAMP (24-VOLT) (AUXILIARY BACK-UP ALARM)	
M	12	1	**9X-2043**	7	SCREW-TRUSS HEAD (M6X1X14-MM)	
	13	1	**9X-8256**	1	WASHER (6.6X12X2-MM THK)	

M-METRIC PART

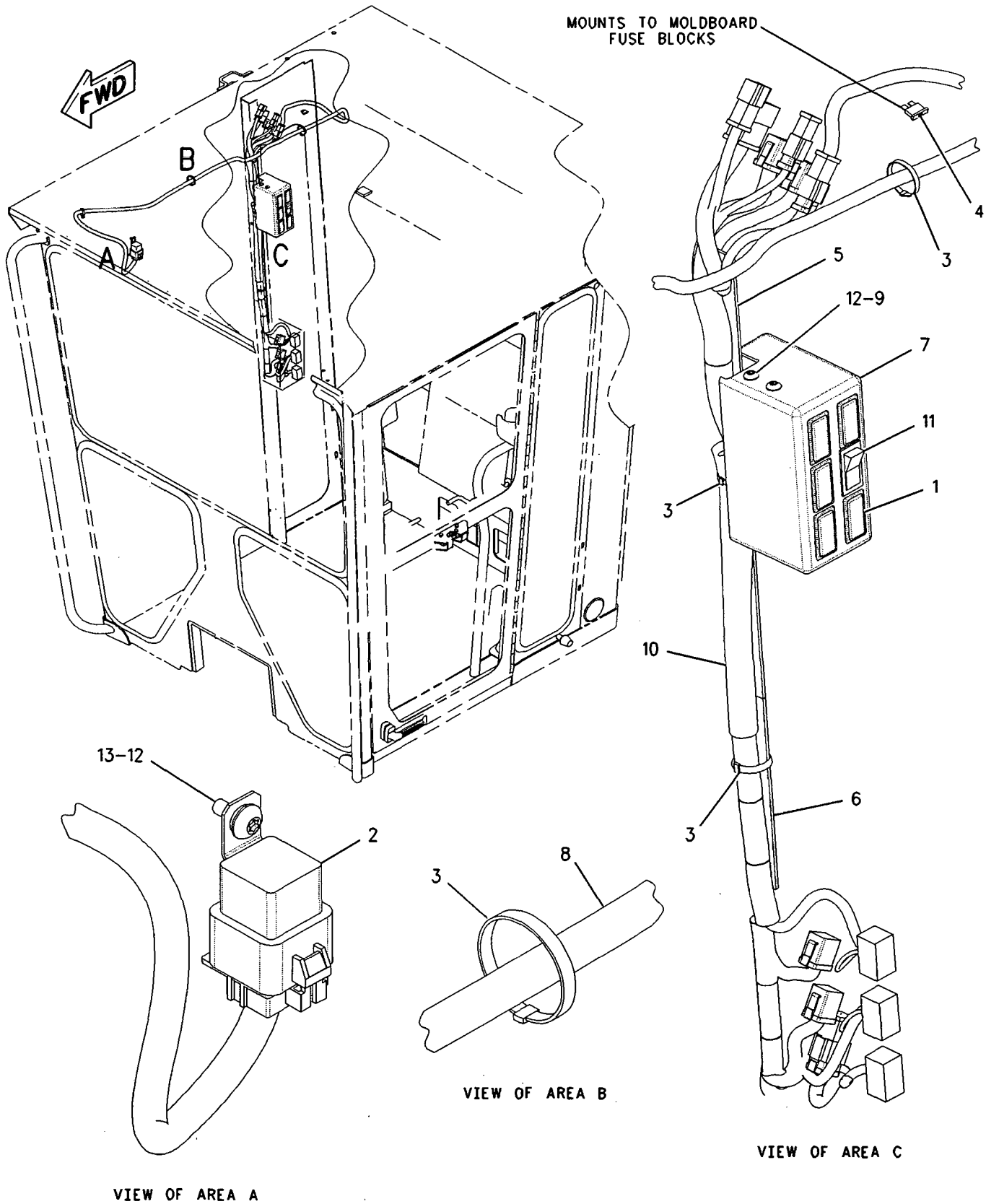

GRAPHIC #1 **<END>** g00849513

161-0769 LIGHTING GP-FLOOD–CAB

S/N: CCA1-UP
PART OF 161-0768 LIGHTING AR-FLOOD
AN ATTACHMENT
TYPE 1

SMCS-1434 i01930235

NOTE	REF NO	GRAPHIC REF	PART NUMBER	QTY	PART NAME 1 2 3 4 5 6 (PRODUCT LEVEL)	SEE PAGE
	1	1	**184-0903**	4	BRACKET AS	
Y	2	1	**153-2073**	4	LAMP GP-FLOOD (24-VOLT, VERTICAL MOUNT) (CAB)	166
	3	1	**9D-3768**	2	GROMMET	
M	4	1	**5C-7261**	4	NUT (M8X1.25-THD)	
	5	1	**8T-4121**	4	WASHER-HARD (11X21X2.5-MM THK)	
M	6	1	**8T-4137**	4	BOLT (M10X1.5X20-MM)	
	7	1	**8T-4224**	4	WASHER-HARD (8.8X16X2-MM THK)	
M	8	1	**8T-6869**	4	BOLT (M8X1.25X60-MM)	

M-METRIC PART
Y-SEPARATE ILLUSTRATION

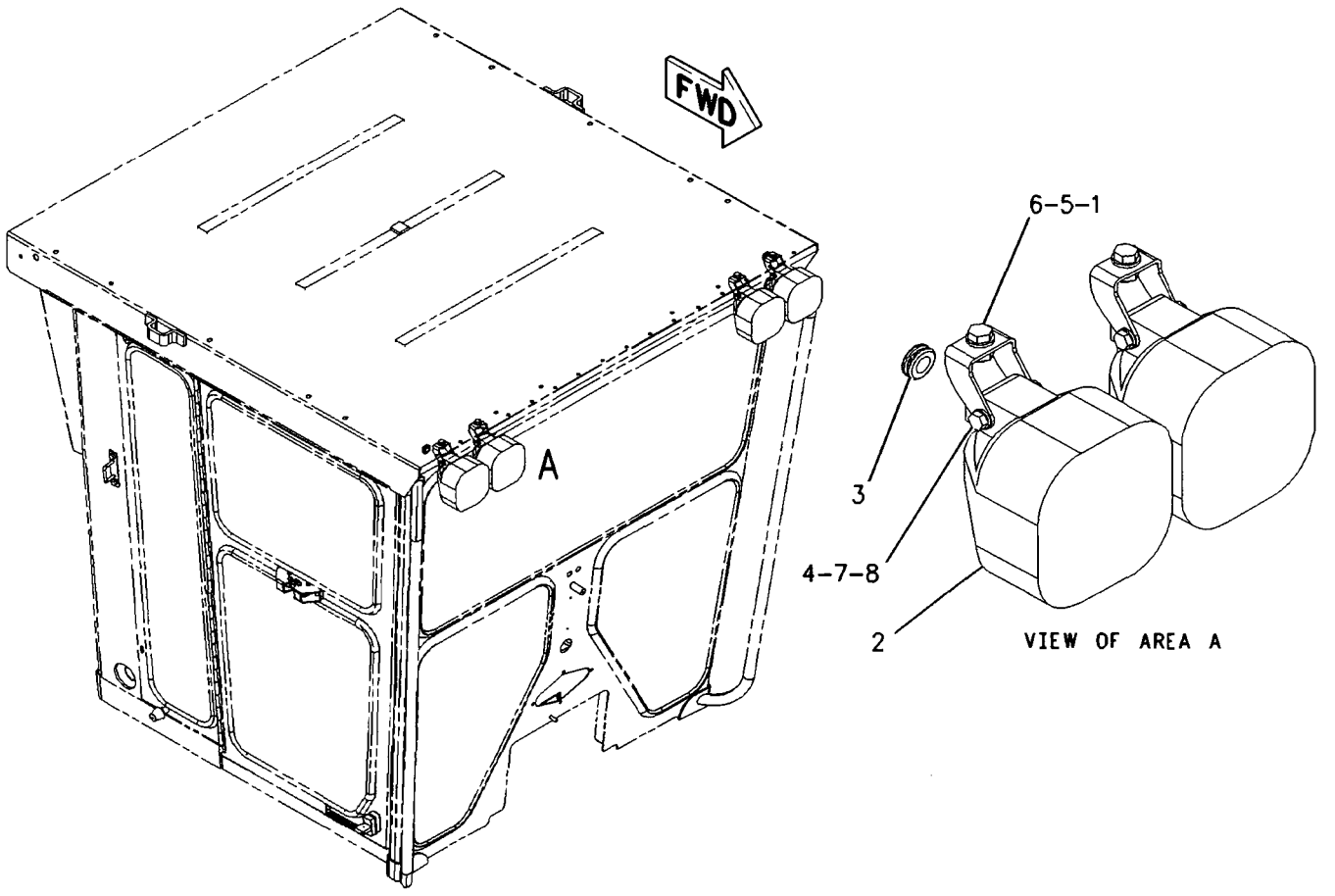

GRAPHIC #1 **<END>** g00843667

161-0769 LIGHTING GP-FLOOD–CAB

S/N: CCA1-UP
PART OF 161-0768 LIGHTING AR-FLOOD
AN ATTACHMENT
TYPE 2

SMCS-1434 i02011377

NOTE	REF NO	GRAPHIC REF	PART NUMBER	QTY	PART NAME 1 2 3 4 5 6 (PRODUCT LEVEL)	SEE PAGE
CY	1	1	**234-4325**	4	LAMP GP-FLOOD (24-VOLT, SUSPENDED MOUNT) (CAB)	169
	2	1	**8T-4121**	4	WASHER-HARD (11X21X2.5-MM THK)	
	3	1	**9D-3768**	2	GROMMET	

C-CHANGE FROM PREVIOUS TYPE
Y-SEPARATE ILLUSTRATION

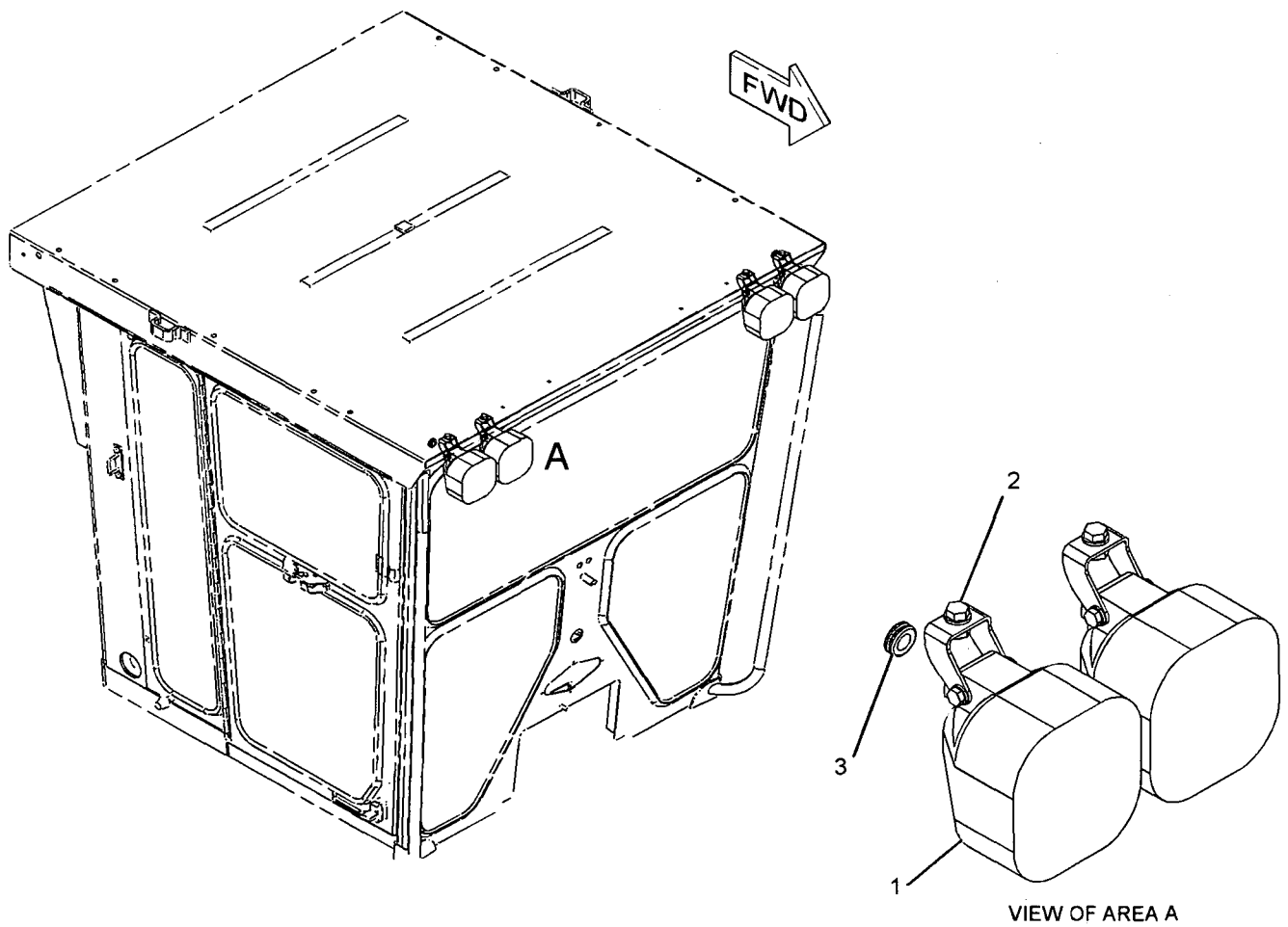

VIEW OF AREA A

GRAPHIC #1 **<END>** g01046640

161-0772 LIGHTING GP-FLOOD–CAB–TURN

S/N: CCA1-UP

PART OF 161-0770, 161-0771, 179-1548 LIGHTING AR-FLOOD & SIGNAL AN ATTACHMENT

TYPE 1

SMCS-1434 i01930488

NOTE	REF NO	GRAPHIC REF	PART NUMBER	QTY	PART NAME 1 2 3 4 5 6 (PRODUCT LEVEL)	SEE PAGE
	1	1	**116-5710**	2	GROMMET	
	2	1	**135-0427**	1	LAMP GP-SIGNAL (24-VOLT) (LH)	
	2A	1	**135-0427**	1	LAMP GP-SIGNAL (24-VOLT) (RH)	
					(EACH LAMP GP INCLUDES)	
		1	**102-8803**	1	KIT-RECEPTACLE (3-PIN)	
					(INCLUDES RECEPTACLE AS & WEDGE)	
		1	**3E-3371**	1	WEDGE-RECEPTACLE LOCK (3-PIN)	
		1	**186-3735**	3	PIN-CONNECTOR	
	3	1	**184-0903**	4	BRACKET AS	
	4	1	**193-7416**	2	PLATE AS	
	5	1	**130-5300**	2	CLIP	
	6	1	**157-0305**	2	LAMP GP-FLOOD (24-VOLT) (HIGH BEAM)	
					(EACH INCLUDES)	
		1	**158-0249**	1	LENS AS (HIGH BEAM)	
		1	**158-0250**	1	BODY AS-LAMP	
		1	**158-0252**	1	BEZEL	
		1	**9X-3463**	1	LAMP-HALOGEN (24-VOLT, 65-WATT) (HIGH BEAM)	
		1	**188-8849**	2	CLAMP	
	7	1	**161-0908**	2	LAMP GP-HEAD (24-VOLT) (LOW BEAM)	
					(EACH INCLUDES)	
		1	**162-2077**	1	LENS AS (LOW BEAM)	
		1	**158-0250**	1	BODY AS-LAMP	
		1	**158-0252**	1	BEZEL	
		1	**9X-3463**	1	LAMP-HALOGEN (24-VOLT, 65-WATT) (LOW BEAM)	
		1	**188-8849**	2	CLAMP	
	8	1	**9D-3768**	2	GROMMET	
M	9	1	**5C-2890**	6	NUT (M6X1-THD)	
M	10	1	**5C-7261**	4	NUT (M8X1.25-THD)	
	11	1	**8T-4121**	8	WASHER-HARD (11X21X2.5-MM THK)	
M	12	1	**8T-4137**	8	BOLT (M10X1.5X20-MM)	
	13	1	**8T-4224**	8	WASHER-HARD (8.8X16X2-MM THK)	
M	14	1	**8T-6869**	4	BOLT (M8X1.25X60-MM)	
	15	1	**9X-8256**	6	WASHER (6.6X12X2-MM THK)	

M-METRIC PART

161-0772 LIGHTING GP-FLOOD *(contd.)* i01930488

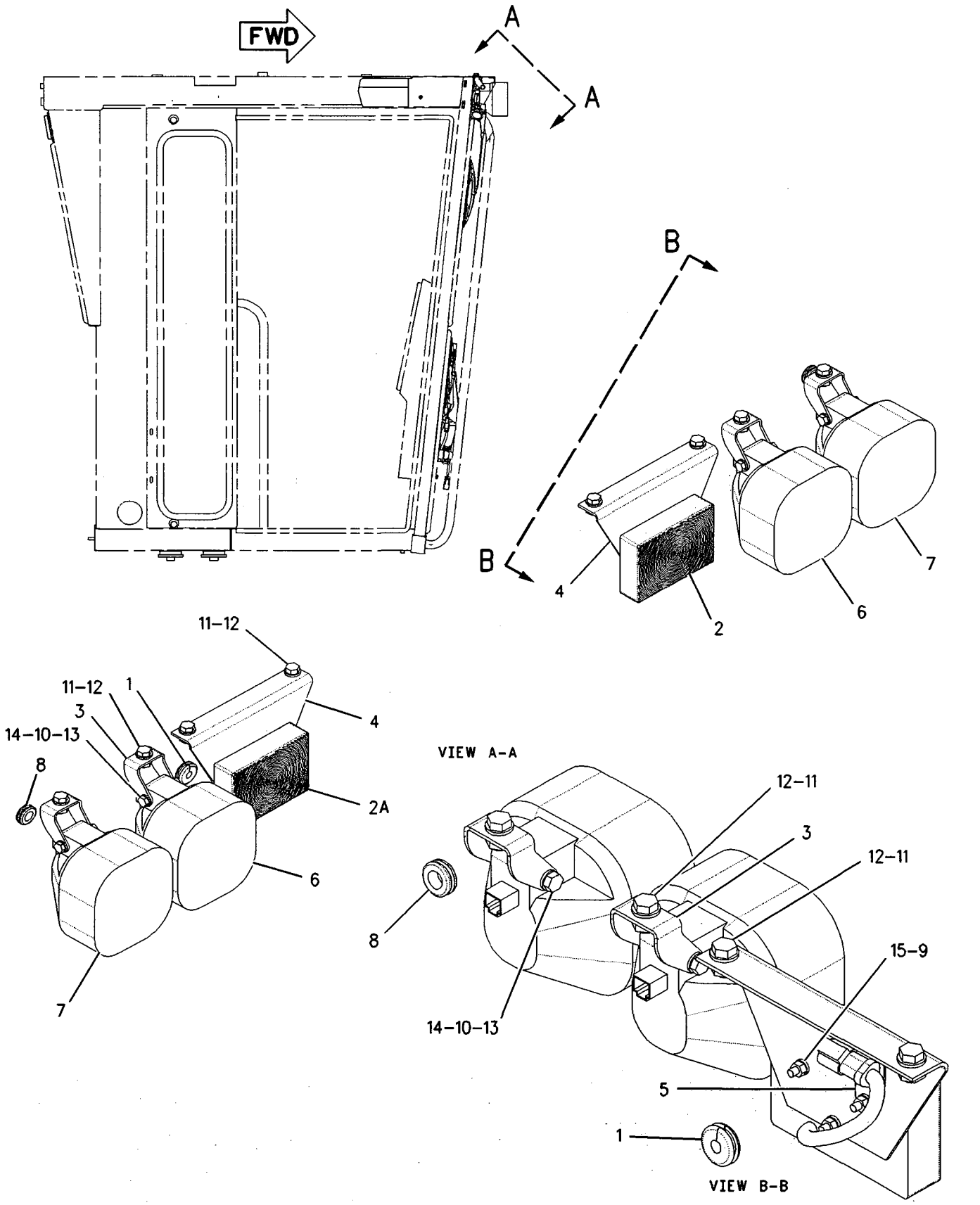

GRAPHIC #1 **<END>** g00844108

161-0772 LIGHTING GP-FLOOD–CAB–TURN

S/N: CCA1-UP

PART OF 161-0770, 161-0771, 179-1548 LIGHTING AR-FLOOD & SIGNAL

AN ATTACHMENT

TYPE 2

SMCS-1434 i02108878

NOTE	REF NO	GRAPHIC REF	PART NUMBER	QTY	PART NAME 1 2 3 4 5 6 (PRODUCT LEVEL)	SEE PAGE
	1	1	**116-5710**	2	GROMMET	
Y	2	1	**135-0427**	1	LAMP GP-SIGNAL (24-VOLT) (TURN LEFT, RIGHT)	184
	3	1	**193-7416**	2	PLATE AS	
					(EACH INCLUDES)	
M		1	**8T-3490**	2	NUT-WELD (M10X1.5-THD)	
CY	4	1	**234-4325**	2	LAMP GP-FLOOD (24-VOLT, SUSPENDED MOUNT) (LOW BEAM)	169
CY	5	1	**234-4326**	2	LAMP GP-FLOOD (HIGH BEAM)	170
	6	1	**130-5300**	2	CLIP	
M	7	1	**5C-2890**	6	NUT (M6X1-THD)	
	8	1	**8T-4121**	8	WASHER-HARD (11X21X2.5-MM THK)	
CM	9	1	**8T-4137**	4	BOLT (M10X1.5X20-MM)	
	10	1	**8T-4205**	6	WASHER-HARD (7.2X14.5X2-MM THK)	
	11	1	**9D-3768**	2	GROMMET	

C-CHANGE FROM PREVIOUS TYPE
M-METRIC PART
Y-SEPARATE ILLUSTRATION

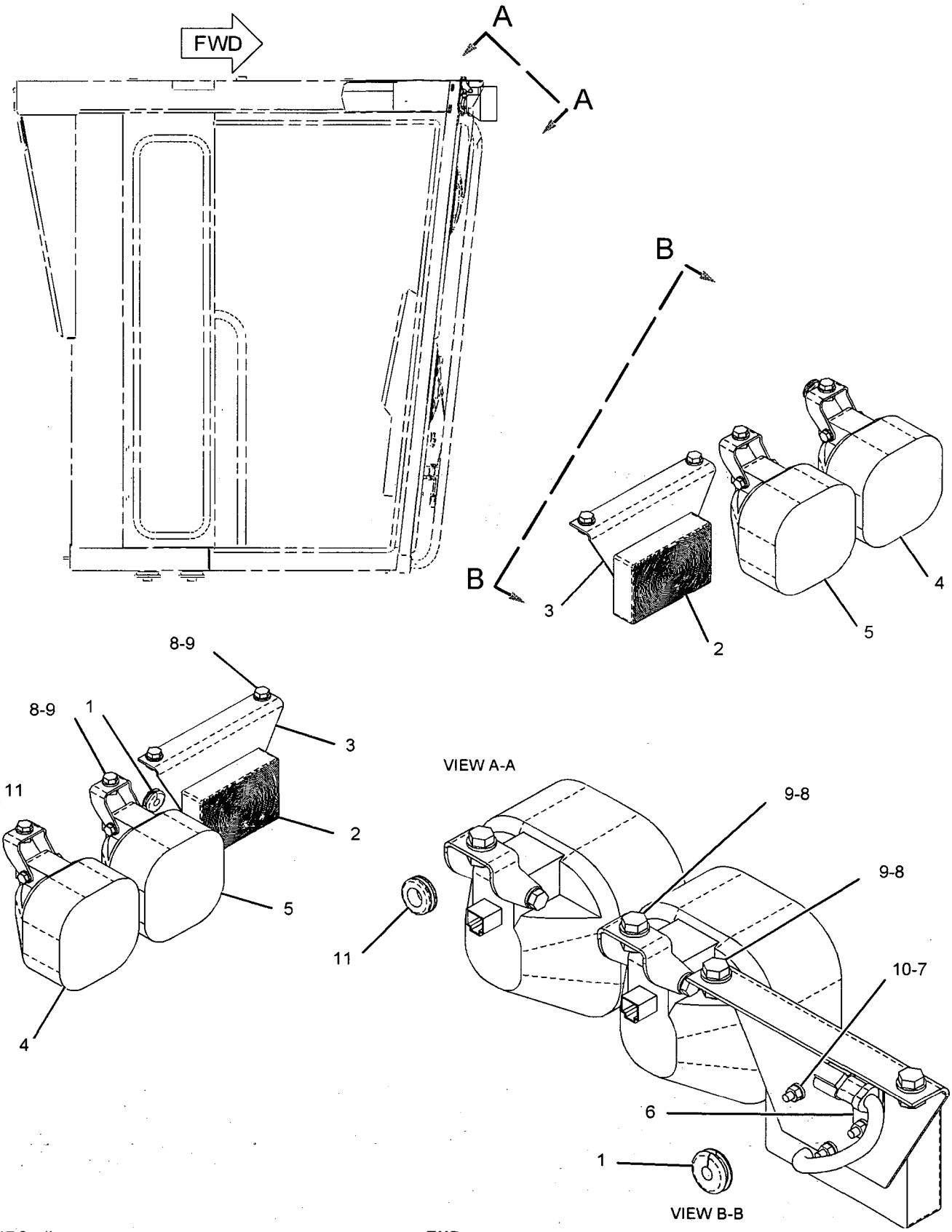

GRAPHIC #1

<END>

g01083816

161-0778 LIGHTING GP-FLOOD–BLADE

S/N: CCA1-UP
PART OF 188-9321 LIGHTING AR-FLOOD
AN ATTACHMENT
TYPE 1

SMCS-1434 i01825015

NOTE	REF NO	GRAPHIC REF	PART NUMBER	QTY	PART NAME 1 2 3 4 5 6 (PRODUCT LEVEL)	SEE PAGE
	1	1	**9W-1442**	2	FUSE (10-AMPERE) (BLADE/FRONT FLOODLAMP)	
	2	1	**178-8067**	2	BRACKET AS	
Y	3	1	**153-2073**	2	LAMP GP-FLOOD (24-VOLT, VERTICAL MOUNT) (BLADE)	166
M	4	1	**5C-7261**	2	NUT (M8X1.25-THD)	
	5	1	**119-5708**	2	CLIP	
	8	1	**8T-4224**	2	WASHER-HARD (8.8X16X2-MM THK)	
M	9	1	**8T-6869**	2	BOLT (M8X1.25X60-MM)	
	10	1	**3E-8772**	1	SWITCH AS-ROCKER (BLADE)(FRONT FLOODLAMP)	
		1	**3E-8815**	1	ACTUATOR-ROCKER	
		1	**3E-8825**	2	LAMP (24-VOLT) (BLADE)(FRONT FLOODLAMP)	

M-METRIC PART
Y-SEPARATE ILLUSTRATION

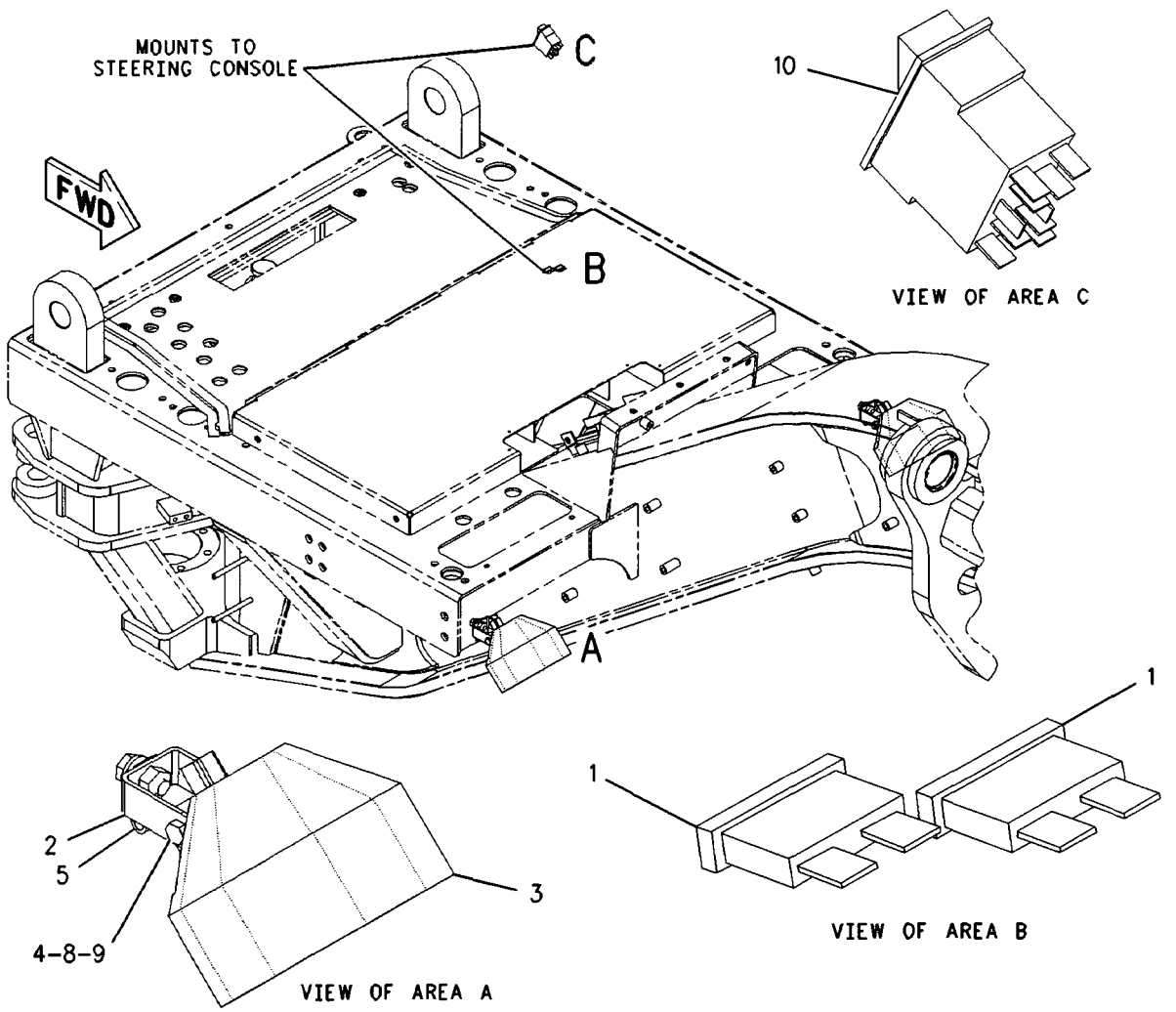

GRAPHIC #1 <END> g00931705

161-0778 LIGHTING GP-FLOOD–BLADE

S/N: CCA1-UP
PART OF 188-9321 LIGHTING AR-FLOOD
AN ATTACHMENT
TYPE 2

SMCS-1434 i02034207

NOTE	REF NO	GRAPHIC REF	PART NUMBER	QTY	PART NAME 1 2 3 4 5 6 (PRODUCT LEVEL)	SEE PAGE
	1	1	**9W-1442**	2	FUSE (10-AMPERE) (BLADE LAMP)	
CY	2	1	**234-4323**	2	LAMP GP-FLOOD (24-VOLT, VERTICAL MOUNT)	167
	3	1	**119-5708**	2	CLIP	
C	4	1	**8T-4121**	2	WASHER-HARD (11X21X2.5-MM THK)	
	5	1	**3E-8772**	1	SWITCH AS-ROCKER (BLADE LAMP)	
			3E-8815	1	ACTUATOR-ROCKER	
			3E-8825	2	LAMP (24-VOLT) (BLADE LAMP)	

C-CHANGE FROM PREVIOUS TYPE
Y-SEPARATE ILLUSTRATION

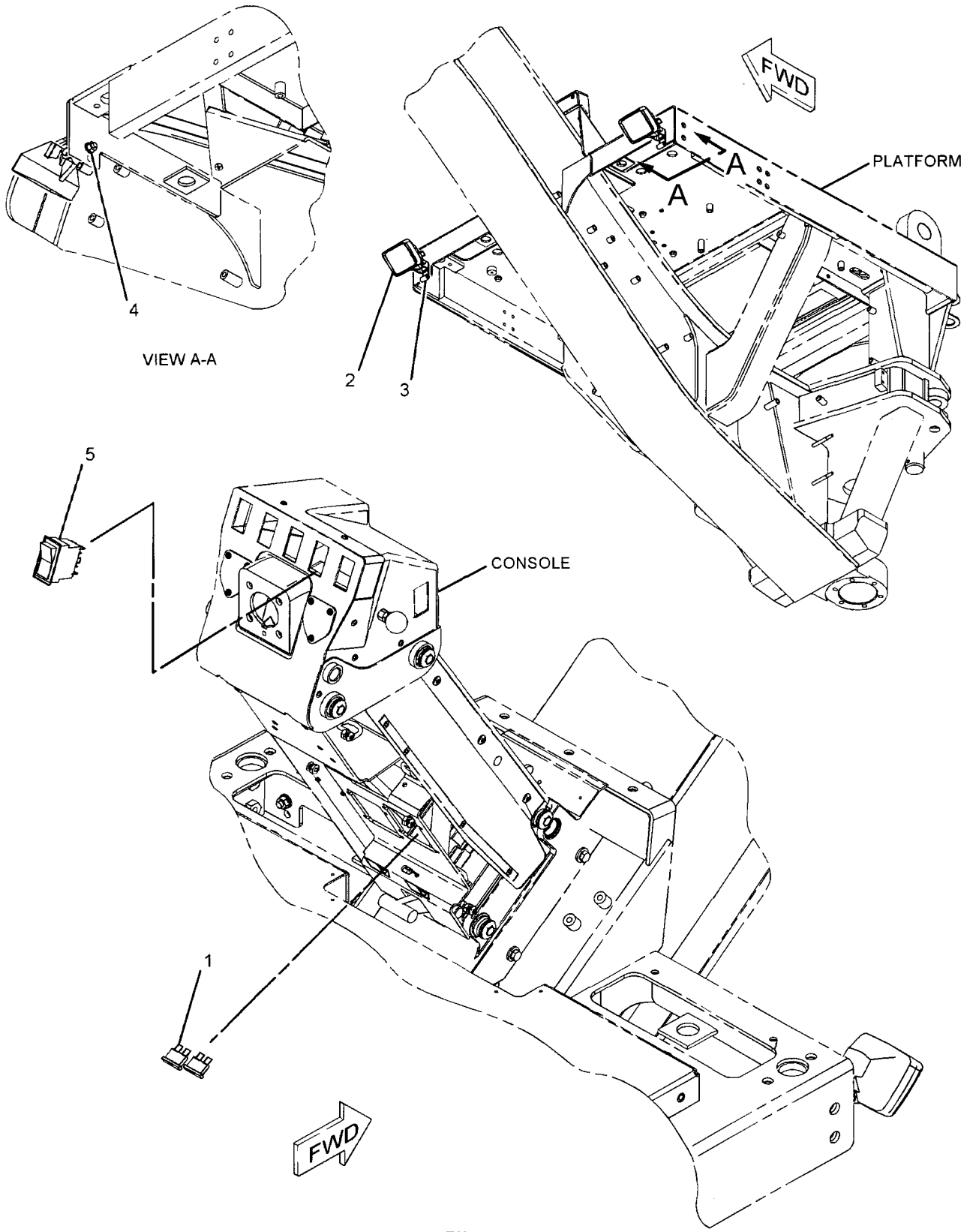

GRAPHIC #1

<END>

g01072592

161-0779 LIGHTING GP-FLOOD–BLADE

S/N: CCA1-UP
PART OF 161-0768 LIGHTING AR-FLOOD
AN ATTACHMENT
TYPE 1

SMCS-1434 i02038748

NOTE	REF NO	GRAPHIC REF	PART NUMBER	QTY	PART NAME 1 2 3 4 5 6 (PRODUCT LEVEL)	SEE PAGE
	1	1	3E-6477	1	RELAY AS (24-VOLT) (WORK LIGHTS)	
	2	1	9W-1441	1	FUSE (15-AMPERE) (CAB FLOOD LIGHTS)	
	3	1	9W-1442	2	FUSE (10-AMPERE) (WORK LIGHTS)	
	4	1	106-8704	1	SUPPRESSOR AS-ARC	
		1	102-8802	1	KIT-RECEPTACLE (2-PIN)	
					(INCLUDES RECEPTACLE AS & WEDGE)	
		1	3E-3365	1	WEDGE-RECEPTACLE LOCK (2-PIN)	
		1	186-3735	2	PIN-CONNECTOR	
	5	1	178-8067	1	BRACKET AS	
	6	1	119-5708	2	CLIP	
Y	7	1	153-2073	2	LAMP GP-FLOOD (24-VOLT, VERTICAL MOUNT) (BLADE)	166
M	8	1	5C-7261	2	NUT (M8X1.25-THD)	
	9	1	8T-4224	2	WASHER-HARD (8.8X16X2-MM THK)	
M	10	1	8T-6869	2	BOLT (M8X1.25X60-MM)	
	11	1	3E-8772	1	SWITCH AS-ROCKER (BLADE FLOOD LAMP)	
			3E-8815	1	ACTUATOR-ROCKER	
			3E-8825	2	LAMP (24-VOLT) (BLADE FLOOD)	

M-METRIC PART
Y-SEPARATE ILLUSTRATION

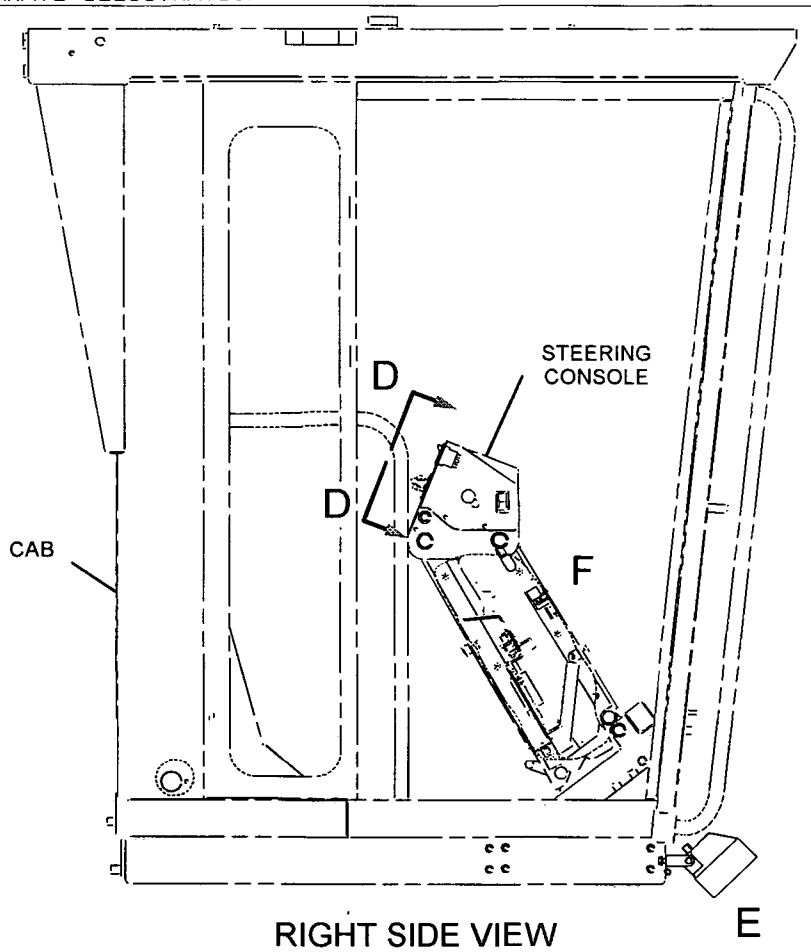

RIGHT SIDE VIEW

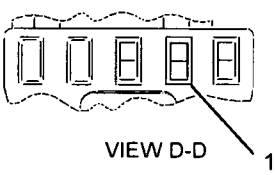

VIEW D-D

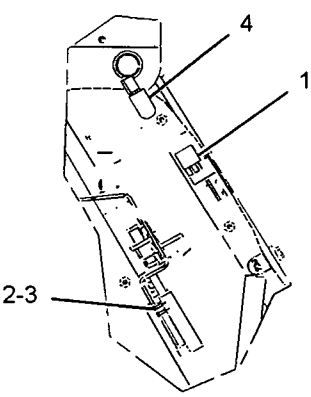

VIEW OF AREA F

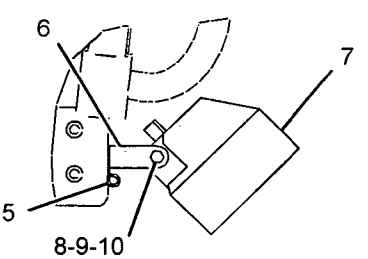

VIEW OF AREA E

GRAPHIC #1 <END> g01078050

161-0779 LIGHTING GP-FLOOD–BLADE

S/N: CCA1-UP
PART OF 161-0768 LIGHTING AR-FLOOD
AN ATTACHMENT
TYPE 2

SMCS-1434 i02115091

NOTE	REF NO	GRAPHIC REF	PART NUMBER	QTY	PART NAME 1 2 3 4 5 6 (PRODUCT LEVEL)	SEE PAGE
	1	1	3E-6477	1	RELAY AS (24-VOLT) (WORK LIGHTS)	
	2	1	9W-1441	1	FUSE (15-AMPERE) (CAB FLOOD LIGHTS)	
	3	1	9W-1442	2	FUSE (10-AMPERE) (WORK LIGHTS)	
	4	1	106-8704	1	SUPPRESSOR AS-ARC	
		1	102-8802	1	KIT-RECEPTACLE (2-PIN)	
					(INCLUDES RECEPTACLE AS & WEDGE)	
		1	3E-3365	1	WEDGE-RECEPTACLE LOCK (2-PIN)	
		1	186-3735	2	PIN-CONNECTOR	
CY	5	1	234-4323	2	LAMP GP-FLOOD (24-VOLT, VERTICAL MOUNT) (BLADE)	167
	6	1	119-5708	2	CLIP	
C	7	1	8T-4121	2	WASHER-HARD (11X21X2.5-MM THK)	
	8	1	3E-8772	1	SWITCH AS-ROCKER (BLADE FLOOD LAMP)	
			3E-8815	1	ACTUATOR-ROCKER	
			3E-8825	2	LAMP (24-VOLT) (BLADE FLOOD)	

C-CHANGE FROM PREVIOUS TYPE
Y-SEPARATE ILLUSTRATION

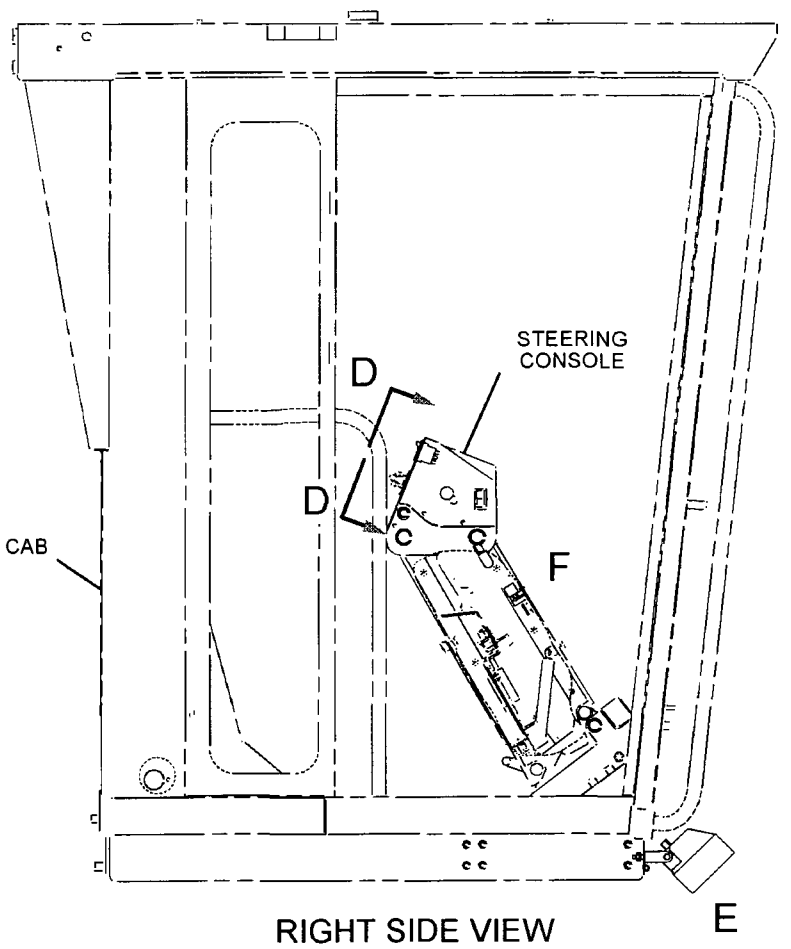

RIGHT SIDE VIEW

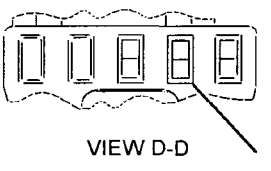

VIEW D-D

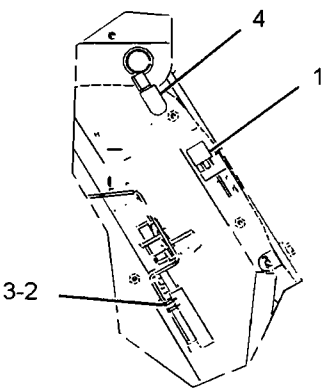

VIEW OF AREA F

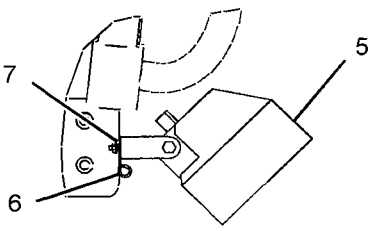

VIEW OF AREA E

GRAPHIC #1

<END>

g01067851

ELECTRICAL AND STARTING SYSTEM

161-1015 LIGHTING GP-FLOOD–BOLSTER–DOUBLE WORKLAMPS

S/N: CCA1-UP
PART OF 188-9328 LIGHTING AR-FLOOD
AN ATTACHMENT
TYPE 1

SMCS-1434 i02204072

NOTE	REF NO	GRAPHIC REF	PART NUMBER	QTY	PART NAME 1 2 3 4 5 6 (PRODUCT LEVEL)	SEE PAGE
	1	1	2G-0617	4	CLAMP	
	2	1	2G-0988	2	CAP	
	3	1	3K-9520	3	GROMMET	
	4	1	3S-2093	4	STRAP-CABLE	
	5	1	5T-9313	1	TUBE	
	6	1	8X-5153	1	FILM-FACE (TURN SIGNAL, HAZARD)	
	7	1	8X-5154	1	FILM-FACE (HEADLIGHTS HIGH, LOW BEAM)	
	8	1	9W-1442	1	FUSE (10-AMPERE)	
	9	1	103-1592	2	PLATE	
	10	1	103-5678	1	SWITCH AS-ROTARY (HIGH, LOW BEAM)	
		1	5L-7200	1	SCREW (8-32X0.375-IN)	
		1	9B-7233	1	LOCKWASHER	
	11	1	108-0358	1	FLASHER AS (12/24-VOLT) (TURN SIGNAL, HAZARD)	
Y	12	1	135-0427	2	LAMP GP-SIGNAL (24-VOLT) (PARK, TURN)	184
	13	1	137-9410	4	CLAMP	
	14	1	169-3176	1	HARNESS AS-LIGHTING	
		1	155-2260	2	KIT-CONNECTING PLUG (3-PIN) (TURN SIGNAL)	
		1	155-2270	4	KIT-CONNECTING PLUG (2-PIN) (HEADLAMP)	
		1	102-8801	1	KIT-RECEPTACLE (12-PIN)	
	15	1	173-3064	1	SWITCH GP-ROTARY (TURN SIGNAL, HAZARD)	
		1	5L-7200	1	SCREW (8-32X0.375-IN)	
		1	9B-7233	1	LOCKWASHER	
	16	1	178-8067	4	BRACKET AS	
					(EACH INCLUDES)	
M		1	8T-3490	1	NUT-WELD (M10X1.5-THD)	
	17	1	179-8700	1	HARNESS AS-FRONT CHASSIS	
		1	155-2270	2	KIT-CONNECTING PLUG (2-PIN)	
		1	102-8801	1	KIT-RECEPTACLE (12-PIN)	
Y	18	1	180-1300	2	LAMP GP-HEAD (24-VOLT) (HIGH BEAM)	172
	19	1	108-3519	4	CLAMP	
	20	1	130-5300	2	CLIP	
Y	21	1	161-3509	2	LAMP GP-HEAD (24-VOLT. LOW BEAM, VERT MOUNT)	171
	22	1	3E-8772	1	SWITCH AS-ROCKER (HEADLIGHTS, TAIL LIGHTS)	
		1	3E-8825	2	LAMP (24-VOLT)	
		1	3E-9326	1	ACTUATOR-ROCKER	
	23	1	4D-7794	4	CLIP	
	24	1	4K-8864	2	CLIP	
	25	1	4L-6454	4	BOLT (3/8-16X1-IN)	
M	26	1	5C-2890	8	NUT (M6X1-THD)	
M	27	1	5C-7261	4	NUT (M8X1.25-THD)	
	28	1	5M-3062	1	BOLT (3/8-16X0.75-IN)	
	29	1	5S-7379	4	BOLT (3/8-16X0.875-IN)	
	30	1	6V-8801	4	NUT (3/8-16-THD)	
	31	1	8T-4121	4	WASHER-HARD (11X21X2.5-MM THK)	
M	32	1	8T-4136	4	BOLT (M10X1.5X25-MM)	
	33	1	8T-4205	2	WASHER-HARD (7.2X14.5X2-MM THK)	
	34	1	8T-4224	4	WASHER-HARD (8.8X16X2-MM THK)	
	35	1	8T-4896	9	WASHER-HARD (10.2X18.5X2.5-MM THK)	
M	36	1	8T-6869	4	BOLT (M8X1.25X60-MM)	
	37	1	8X-6296	1	LEVER (HEADLIGHT DIMMER)	
	37A	1	8X-6296	1	LEVER (TURN SIGNAL)	
	38	1	9D-6164	4	BOSS (3/8-16-THD)	
M	39	1	9X-2043	2	SCREW-TRUSS HEAD (M6X1X14-MM)	
	40	1	9X-8256	6	WASHER (6.6X12X2-MM THK)	

161-1015 LIGHTING GP-FLOOD *(contd.)* i02204072

M-METRIC PART
Y-SEPARATE ILLUSTRATION

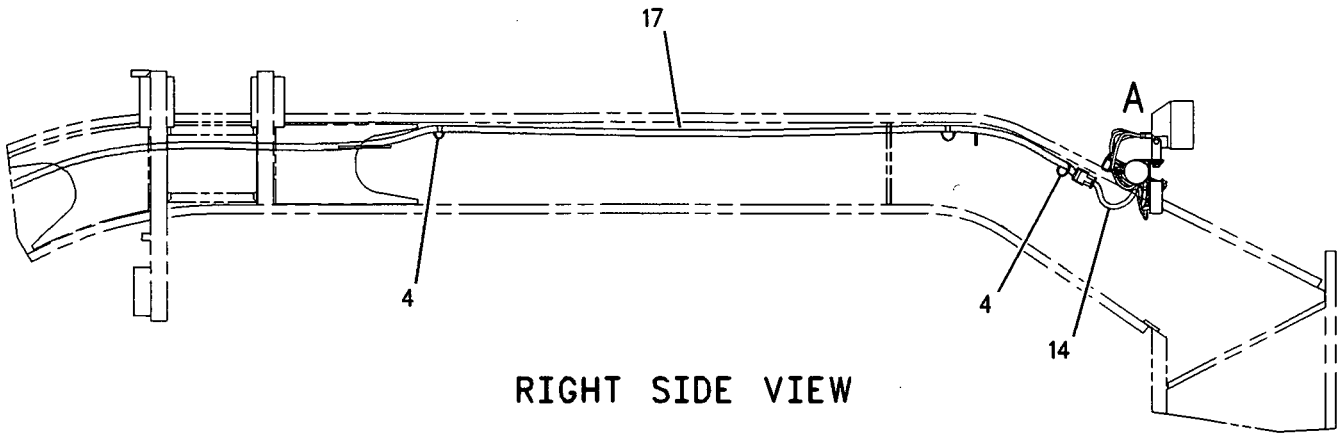

RIGHT SIDE VIEW

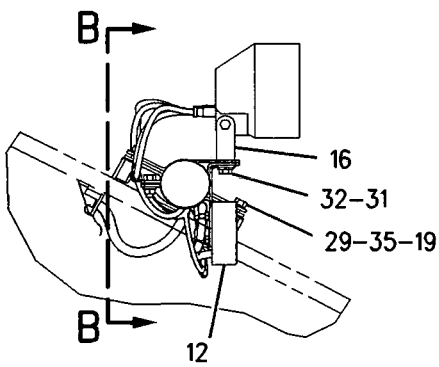

VIEW OF AREA A

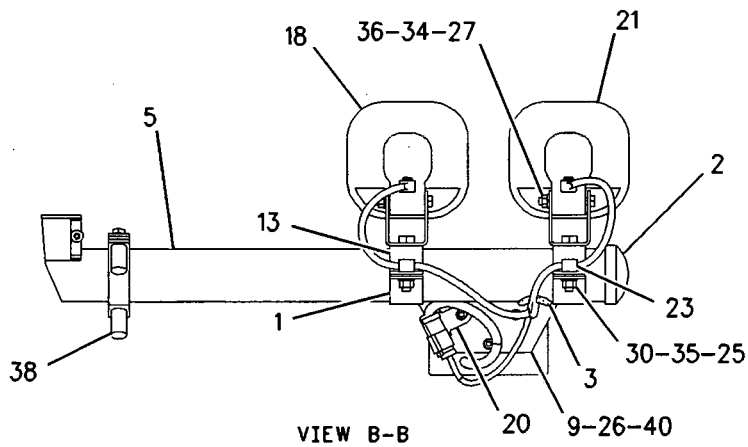

VIEW B-B

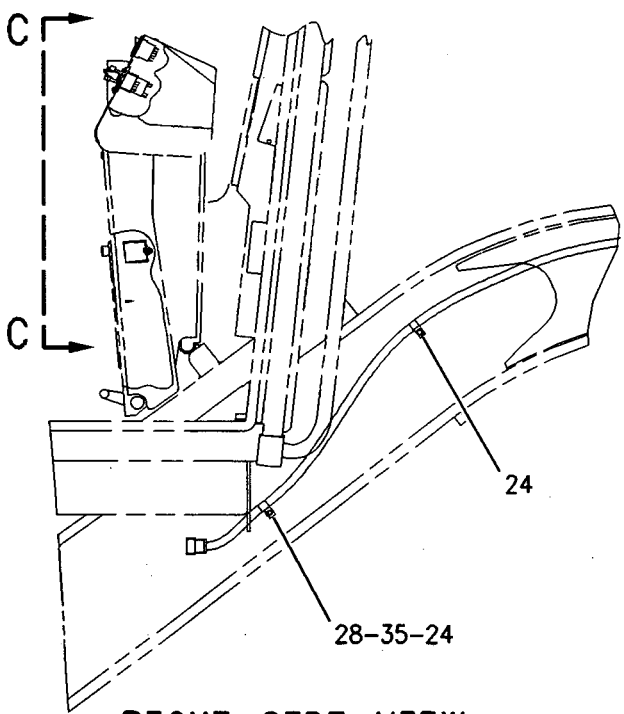

RIGHT SIDE VIEW

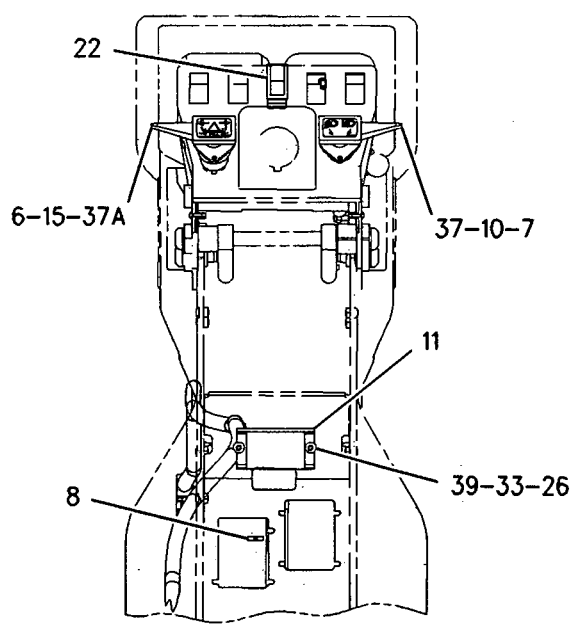

VIEW C-C

GRAPHIC #1 **<END>** g00845105

ELECTRICAL AND STARTING SYSTEM

161-1015 LIGHTING GP-FLOOD–BOLSTER–DOUBLE WORKLAMPS

S/N: CCA1-UP
PART OF 188-9328 LIGHTING AR-FLOOD
AN ATTACHMENT
TYPE 2

SMCS-1434 **i02200299**

NOTE	REF NO	GRAPHIC REF	PART NUMBER	QTY	PART NAME 1 2 3 4 5 6 (PRODUCT LEVEL)	SEE PAGE
	1	1	**2G-0617**	4	CLAMP	
	2	1	**2G-0988**	2	CAP	
	3	1	**3K-9520**	3	GROMMET	
	4	1	**3S-2093**	4	STRAP-CABLE	
	5	1	**5T-9313**	1	TUBE	
	6	2	**8X-5153**	1	FILM-FACE (TURN SIGNAL, HAZARD)	
	7	2	**8X-5154**	1	FILM-FACE (HEADLIGHTS HIGH, LOW BEAM)	
	8	2	**9W-1442**	1	FUSE (10-AMPERE) (TURN SIGNAL, HAZARD)	
	9	1	**103-1592**	2	PLATE	
	10	2	**103-5678**	1	SWITCH AS-ROTARY (HEADLIGHT DIMMER)	
		2	**5L-7200**	1	SCREW (8-32X0.375-IN)	
		2	**9B-7233**	1	LOCKWASHER	
	11	2	**108-0358**	1	FLASHER AS (12/24-VOLT) (TURN SIGNAL, HAZARD)	
Y	12	1	**135-0427**	2	LAMP GP-SIGNAL (24-VOLT) (PARK, TURN)	184
	13	1	**137-9410**	4	CLAMP	
	14	1	**169-3176**	1	HARNESS AS-LIGHTING	
		1	**155-2260**	2	KIT-CONNECTING PLUG (3-PIN)	
		1	**155-2270**	4	KIT-CONNECTING PLUG (2-PIN)	
					(INCLUDES PLUG AS & WEDGE)	
		1	**102-8801**	1	KIT-RECEPTACLE (12-PIN)	
					(INCLUDES RECEPTACLE AS & WEDGE)	
	15	2	**173-3064**	1	SWITCH GP-ROTARY (TURN SIGNAL, HAZARD)	
		2	**5L-7200**	1	SCREW (8-32X0.375-IN)	
		2	**9B-7233**	1	LOCKWASHER	
	16	1	**179-8700**	1	HARNESS AS-FRONT CHASSIS	
		1	**155-2270**	2	KIT-CONNECTING PLUG (2-PIN)	
					(INCLUDES PLUG AS & WEDGE)	
		1	**102-8801**	1	KIT-RECEPTACLE (12-PIN)	
					(INCLUDES RECEPTACLE AS & WEDGE)	
Y	17	1	**234-4323**	2	LAMP GP-FLOOD (24-VOLT, VERTICAL MOUNT) (LOW BEAM)	167
Y	18	1	**234-4324**	2	LAMP GP-FLOOD (24-VOLT, VERTICAL MOUNT) (HIGH BEAM)	168
	19	1	**108-3519**	4	CLAMP	
	20	1	**130-5300**	2	CLIP	
	21	2	*3E-9317*	1	SWITCH AS-ROCKER	
		2	**3E-8772**	1	SWITCH AS-ROCKER (HEADLIGHTS, TAIL LIGHTS)	
		2	**3E-8825**	2	LAMP (24-VOLT) (HEADLIGHTS, TAIL LIGHTS)	
		2	**3E-9326**	1	ACTUATOR-ROCKER	
	22	1	**4D-7794**	4	CLIP	
	23	2	**4K-8864**	2	CLIP	
	24	1	**4L-6454**	4	BOLT (3/8-16X1-IN)	
M	25	1,2	**5C-2890**	8	NUT (M6X1-THD)	
	26	2	**5M-3062**	1	BOLT (3/8-16X0.75-IN)	
	27	1	**5S-7379**	4	BOLT (3/8-16X0.875-IN)	
	28	1	**6V-8801**	4	NUT (3/8-16-THD)	
	29	1	**8T-4121**	4	WASHER-HARD (11X21X2.5-MM THK)	
	30	1,2	**8T-4205**	8	WASHER-HARD (7.2X14.5X2-MM THK)	
	31	1,2	**8T-4896**	9	WASHER-HARD (10.2X18.5X2.5-MM THK)	
	32	2	**8X-6296**	1	LEVER (HEADLIGHT DIMMER)	
	32A	2	**8X-6296**	1	LEVER (TURN SIGNAL)	
	33	1	**9D-6164**	4	BOSS (3/8-16-THD)	
M	34	2	**9X-2043**	2	SCREW-TRUSS HEAD (M6X1X14-MM)	

M-METRIC PART
Y-SEPARATE ILLUSTRATION

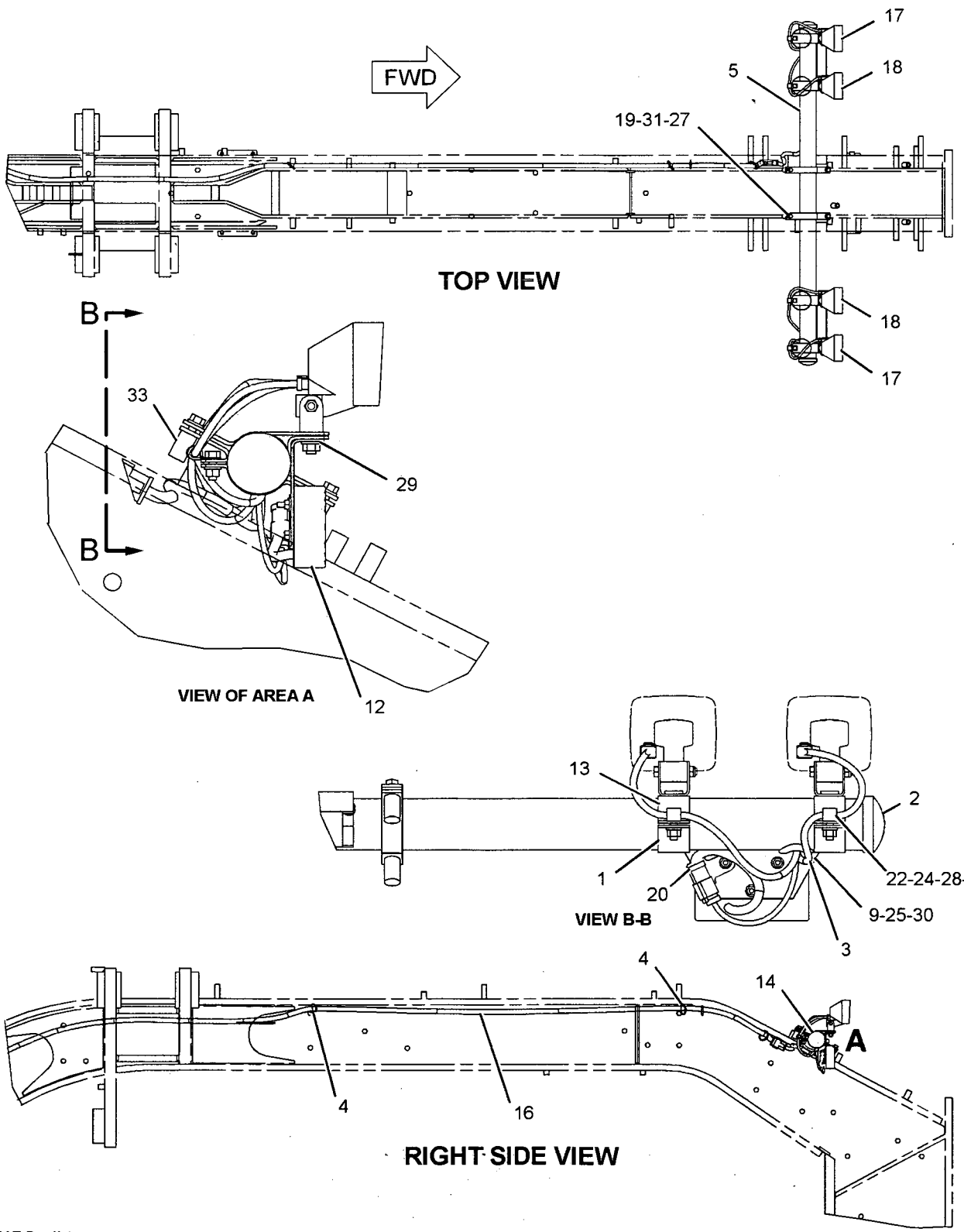

GRAPHIC #1

g01086888

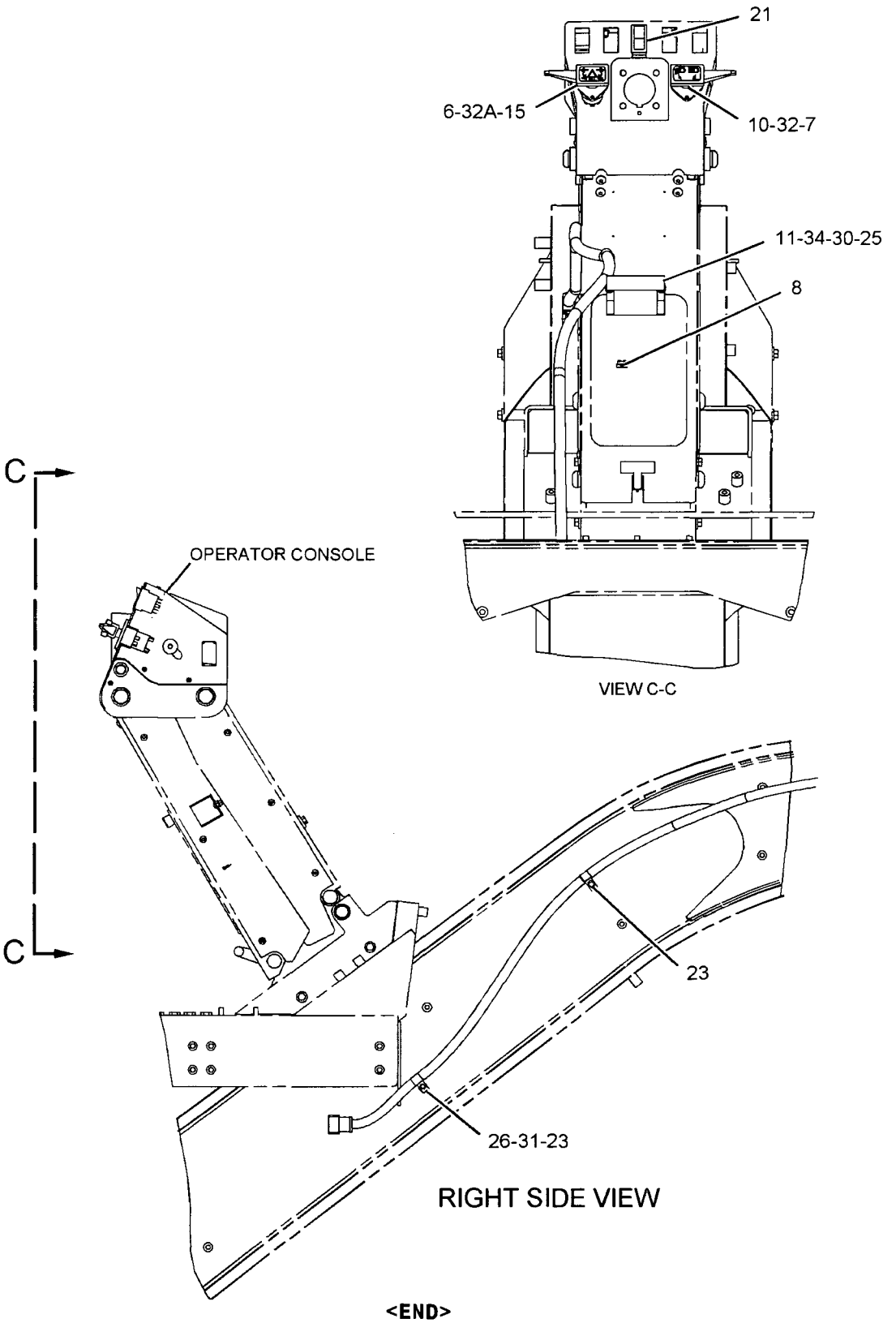

GRAPHIC #2 **<END>** g01086992

ELECTRICAL AND STARTING SYSTEM

161-1017 LIGHTING GP-FLOOD–BOLSTER

S/N: CCA1-UP
PART OF 161-0771 LIGHTING AR-FLOOD & SIGNAL
AN ATTACHMENT
TYPE 1

SMCS-1434 i02204083

NOTE	REF NO	GRAPHIC REF	PART NUMBER	QTY	PART NAME 1 2 3 4 5 6 (PRODUCT LEVEL)	SEE PAGE
	1	1	**2G-0617**	2	CLAMP	
	2	1	**2G-0988**	2	CAP	
	3	1	**3K-9520**	3	GROMMET	
	4	1	**3S-2093**	4	STRAP-CABLE	
	5	1	**5T-9313**	1	TUBE	
	6	1	**8X-5153**	1	FILM-FACE (TURN SIGNAL, HAZARD)	
	7	1	**8X-5154**	1	FILM-FACE (HEADLIGHTS HIGH, LOW BEAM)	
	8	1	**9W-1442**	1	FUSE (10-AMPERE)	
	9	1	**103-5678**	1	SWITCH AS-ROTARY (HEADLIGHT DIMMER)	
		1	**5L-7200**	1	SCREW (8-32X0.375-IN)	
		1	**9B-7233**	1	LOCKWASHER	
	10	1	**108-0358**	1	FLASHER AS (12/24-VOLT) (TURN SIGNAL, HAZARD)	
	11	1	**137-9410**	2	CLAMP	
	12	1	**169-3181**	1	HARNESS AS-LIGHTING	
		1	**155-2270**	2	KIT-CONNECTING PLUG (2-PIN) (EACH INCLUDES PLUG AS & WEDGE)	
		1	**102-8801**	1	KIT-RECEPTACLE (12-PIN) (INCLUDES RECEPTACLE AS & WEDGE)	
	13	1	**173-3064**	1	SWITCH GP-ROTARY (TURN SIGNAL, HAZARD)	
		1	**5L-7200**	1	SCREW (8-32X0.375-IN)	
		1	**9B-7233**	1	LOCKWASHER	
	14	1	**178-8067**	2	BRACKET AS	
	15	1	**179-8700**	1	HARNESS AS-FRONT CHASSIS	
		1	**155-2255**	2	KIT-CONNECTING PLUG (12-PIN) (EACH INCLUDES PLUG AS & WEDGE)	
		1	**102-8801**	1	KIT-RECEPTACLE (12-PIN) (INCLUDES RECEPTACLE AS & WEDGE)	
	16	1	**108-3519**	4	CLAMP	
Y	17	1	**161-3509**	2	LAMP GP-HEAD (24-VOLT. LOW BEAM, VERT MOUNT)	171
	18	1	**3E-8772**	1	SWITCH AS-ROCKER (HEADLIGHTS, TAIL LIGHTS)	
		1	**3E-8825**	2	LAMP (24-VOLT)	
		1	**3E-9326**	1	ACTUATOR-ROCKER	
	19	1	**4D-7794**	2	CLIP	
	20	1	**4L-6454**	2	BOLT (3/8-16X1-IN)	
M	21	1	**5C-2890**	2	NUT (M6X1-THD)	
M	22	1	**5C-7261**	2	NUT (M8X1.25-THD)	
	23	1	**5M-3062**	1	BOLT (3/8-16X0.75-IN)	
	24	1	**5S-7379**	4	BOLT (3/8-16X0.875-IN)	
	25	1	**6V-8801**	2	NUT (3/8-16-THD)	
	26	1	**8T-4121**	2	WASHER-HARD (11X21X2.5-MM THK)	
M	27	1	**8T-4136**	2	BOLT (M10X1.5X25-MM)	
	28	1	**8T-4205**	2	WASHER-HARD (7.2X14.5X2-MM THK)	
	29	1	**8T-4224**	2	WASHER-HARD (8.8X16X2-MM THK)	
	30	1	**8T-4896**	7	WASHER-HARD (10.2X18.5X2.5-MM THK)	
M	31	1	**8T-6869**	2	BOLT (M8X1.25X60-MM)	
	32	1	**8X-6296**	1	LEVER (TURN SIGNAL)	
	32A	1	**8X-6296**	1	LEVER (HEADLIGHT DIMMER)	
	33	1	**9D-6164**	4	BOSS (3/8-16-THD)	
M	34	1	**9X-2043**	2	SCREW-TRUSS HEAD (M6X1X14-MM)	
	35	1	**9X-9631**	1	SWITCH AS-ROCKER (LIGHTBAR LOW BEAM)	
		1	**3E-8814**	1	ACTUATOR-ROCKER	
		1	**3E-8825**	1	LAMP (24-VOLT)	
	36	1	**174-5907**	2	CLIP	

161-1017 LIGHTING GP-FLOOD *(contd.)*

i02204083

M-METRIC PART
Y-SEPARATE ILLUSTRATION

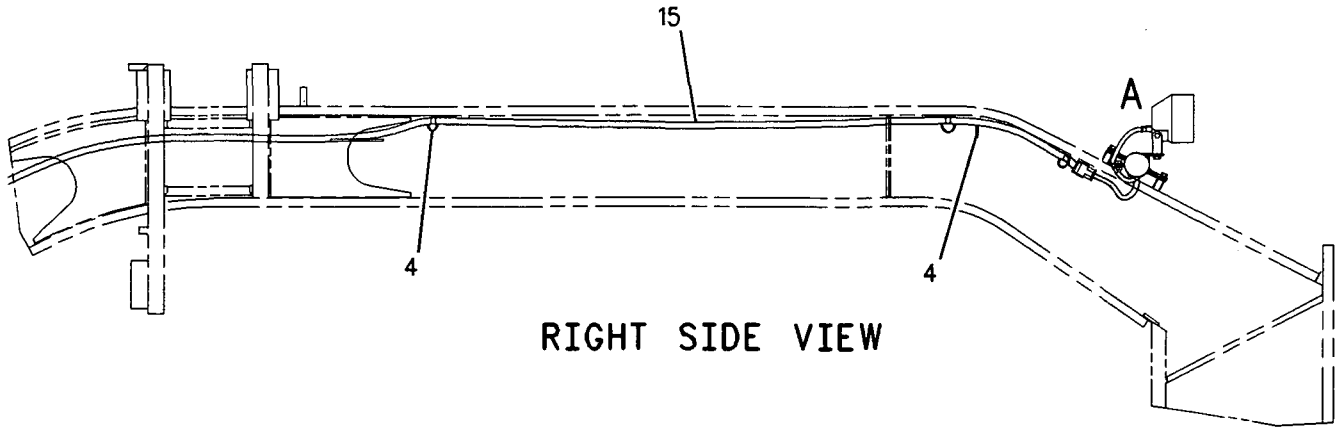

RIGHT SIDE VIEW

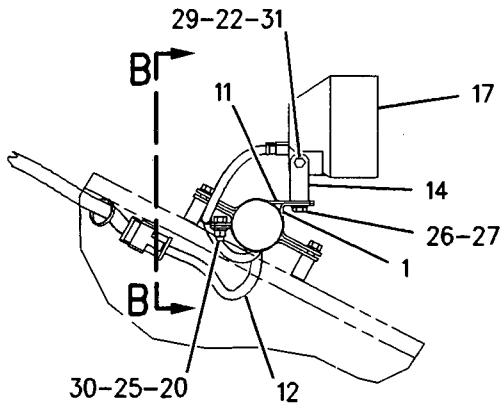

VIEW OF AREA A

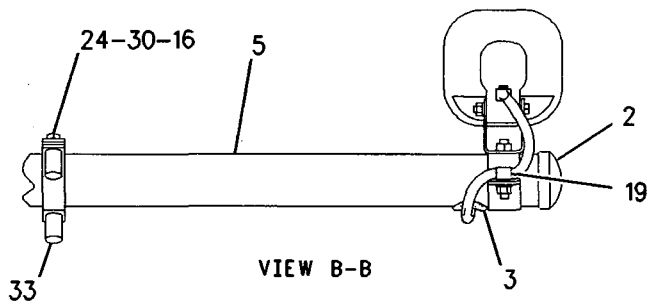

VIEW B-B

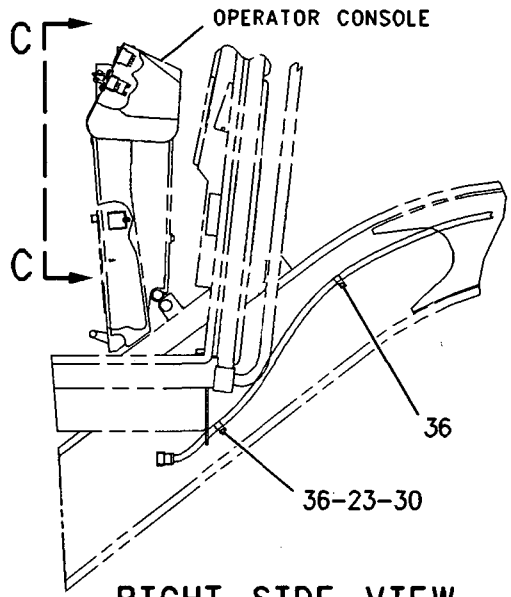

RIGHT SIDE VIEW

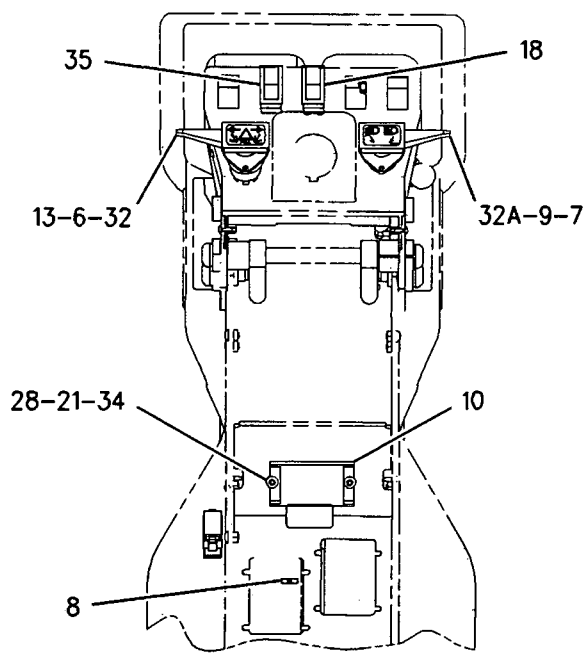

VIEW C-C

GRAPHIC #1 **<END>** g00921424

ELECTRICAL AND STARTING SYSTEM

161-1017 LIGHTING GP-FLOOD–BOLSTER

S/N: CCA1-UP
PART OF 161-0771 LIGHTING AR-FLOOD & SIGNAL
AN ATTACHMENT
TYPE 2

SMCS-1434 **i02204084**

NOTE	REF NO	GRAPHIC REF	PART NUMBER	QTY	PART NAME 1 2 3 4 5 6 (PRODUCT LEVEL)	SEE PAGE
	1	1	**2G-0617**	2	CLAMP	
	2	1	**2G-0988**	2	CAP	
	3	1	**3K-9520**	3	GROMMET	
	4	1	**3S-2093**	4	STRAP-CABLE	
	5	1	**5T-9313**	1	TUBE	
	6	2	**8X-5153**	1	FILM-FACE (TURN SIGNAL, HAZARD)	
	7	2	**8X-5154**	1	FILM-FACE (HEADLIGHTS HIGH, LOW BEAM)	
	8	2	**9W-1442**	1	FUSE (10-AMPERE)	
	9	2	**103-5678**	1	SWITCH AS-ROTARY (HEADLIGHT DIMMER)	
		2	**5L-7200**	1	SCREW (8-32X0.375-IN)	
		2	**9B-7233**	1	LOCKWASHER	
	10	2	**108-0358**	1	FLASHER AS (12/24-VOLT) (TURN SIGNAL, HAZARD)	
	11	1	**137-9410**	2	CLAMP	
	12	1	**169-3181**	1	HARNESS AS-LIGHTING	
		1	**155-2270**	2	KIT-CONNECTING PLUG (2-PIN) (EACH INCLUDES PLUG AS & WEDGE)	
		1	**102-8801**	1	KIT-RECEPTACLE (12-PIN) (INCLUDES RECEPTACLE AS & WEDGE)	
	13	2	**173-3064**	1	SWITCH GP-ROTARY (TURN SIGNAL, HAZARD)	
		2	**5L-7200**	1	SCREW (8-32X0.375-IN)	
		2	**9B-7233**	1	LOCKWASHER	
	14	1	**179-8700**	1	HARNESS AS-FRONT CHASSIS	
		1	**155-2255**	2	KIT-CONNECTING PLUG (12-PIN) (EACH INCLUDES PLUG AS & WEDGE)	
		1	**102-8801**	1	KIT-RECEPTACLE (12-PIN) (INCLUDES RECEPTACLE AS & WEDGE)	
Y	15	1	**234-4323**	2	LAMP GP-FLOOD (24-VOLT, VERTICAL MOUNT) (LOW BEAM)	167
	16	1	**108-3519**	4	CLAMP	
	17	2	**174-5907**	2	CLIP	
	18	2	**3E-8772**	1	SWITCH AS-ROCKER (HEADLIGHTS, TAIL LIGHTS)	
		2	**3E-8825**	2	LAMP (24-VOLT)	
		2	**3E-9326**	1	ACTUATOR-ROCKER	
	19	1	**4D-7794**	2	CLIP	
	20	1	**4L-6454**	2	BOLT (3/8-16X1-IN)	
M	21	2	**5C-2890**	2	NUT (M6X1-THD)	
	22	2	**5M-3062**	1	BOLT (3/8-16X0.75-IN)	
	23	1	**5S-7379**	4	BOLT (3/8-16X0.875-IN)	
	24	1	**6V-8801**	2	NUT (3/8-16-THD)	
	25	1	**8T-4121**	2	WASHER-HARD (11X21X2.5-MM THK)	
	26	2	**8T-4205**	2	WASHER-HARD (7.2X14.5X2-MM THK)	
	27	1,2	**8T-4896**	7	WASHER-HARD (10.2X18.5X2.5-MM THK)	
	28	2	**8X-6296**	1	LEVER (TURN SIGNAL)	
	28A	2	**8X-6296**	1	LEVER (HEADLIGHT DIMMER)	
	29	1	**9D-6164**	4	BOSS (3/8-16-THD)	
M	30	2	**9X-2043**	2	SCREW-TRUSS HEAD (M6X1X14-MM)	
	31	2	**9X-9631**	1	SWITCH AS-ROCKER (LIGHTBAR LOW BEAM)	
		2	**3E-8814**	1	ACTUATOR-ROCKER	
		2	**3E-8825**	1	LAMP (24-VOLT)	

M-METRIC PART
Y-SEPARATE ILLUSTRATION

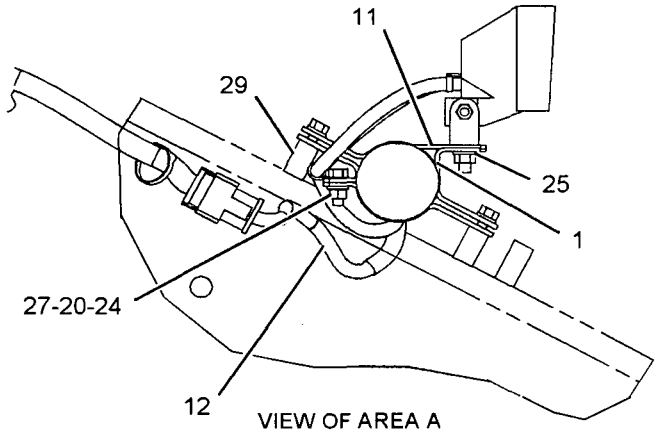

VIEW OF AREA A

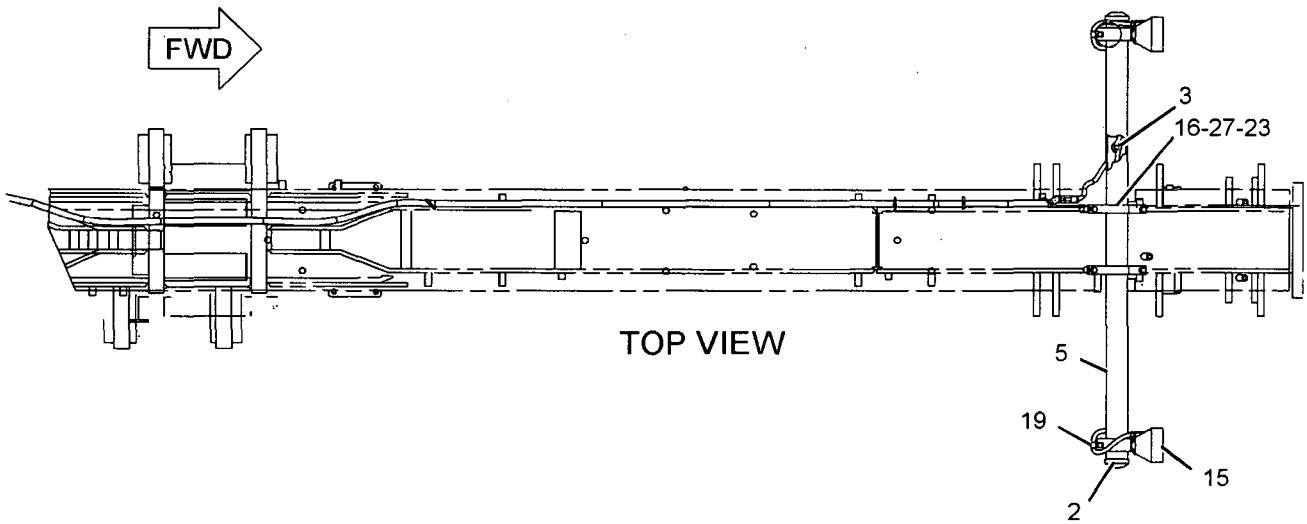

TOP VIEW

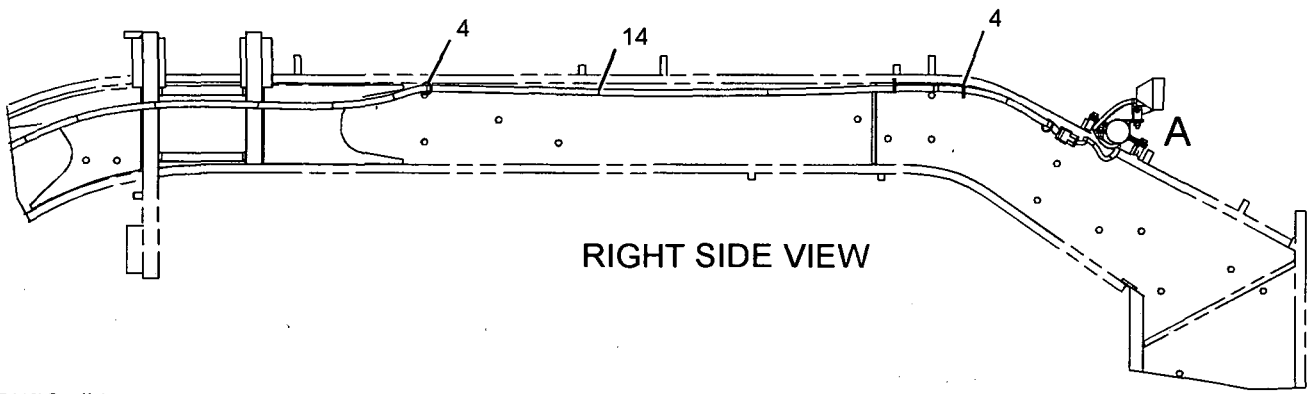

RIGHT SIDE VIEW

GRAPHIC #1

g01075288

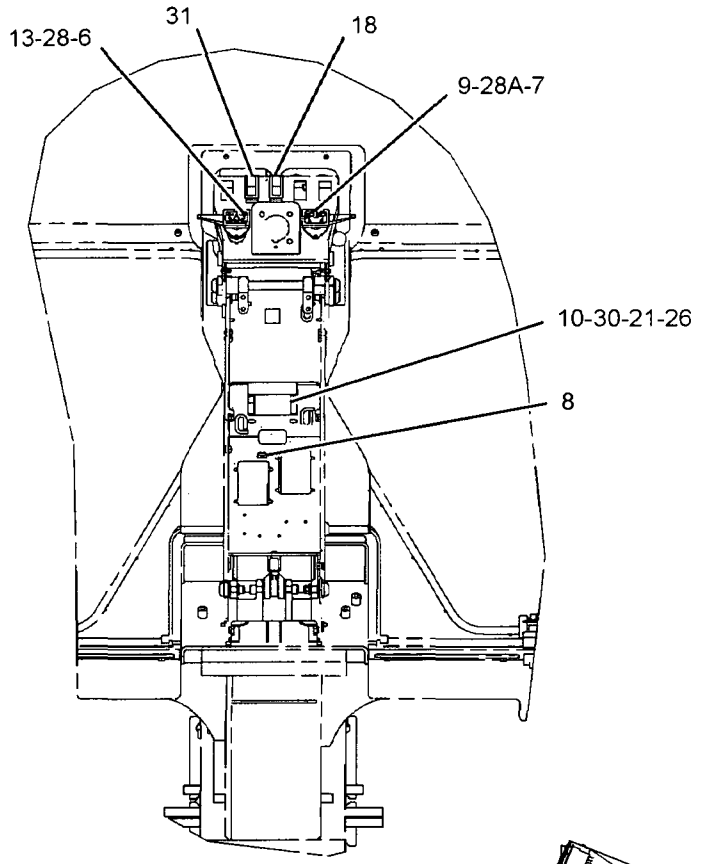

REAR VIEW

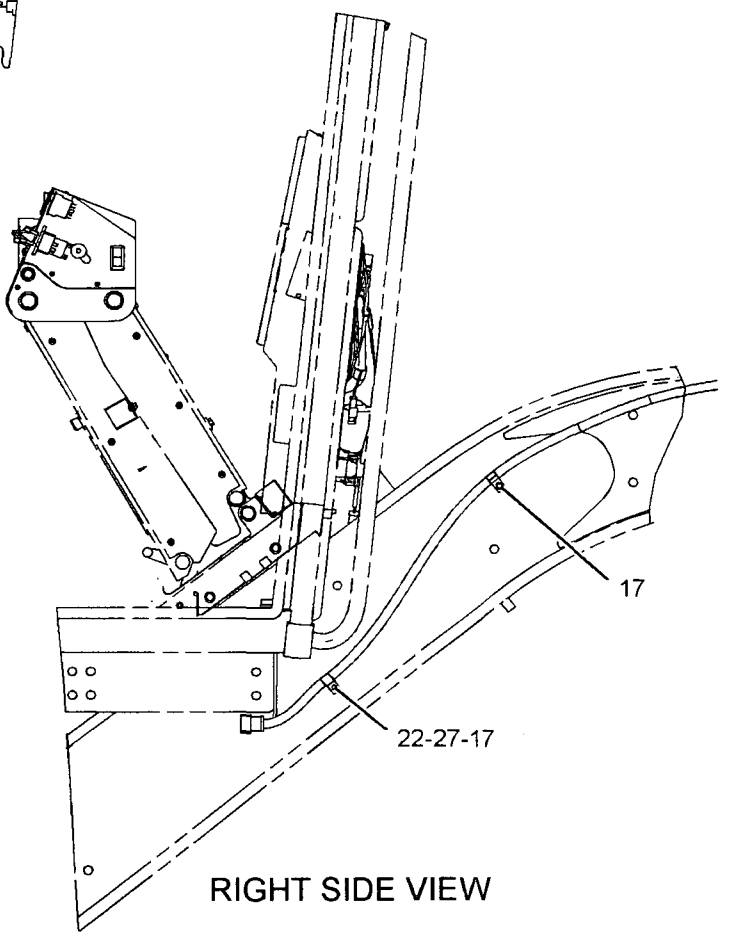

RIGHT SIDE VIEW

GRAPHIC #2

<END>

g01075730

161-1021 LIGHTING GP-FLOOD–CAB–SNOW–RH

S/N: CCA1-UP
PART OF 197-5955, 236-3948 SNOW AR-MOTOR GRADER
AN ATTACHMENT
TYPE 1

SMCS-1434 i02013761

NOTE	REF NO	GRAPHIC REF	PART NUMBER	QTY	PART NAME 1 2 3 4 5 6 (PRODUCT LEVEL)	SEE PAGE
	1	1	3E-0109	5	PLUG (ROCKER SWITCH)	
C	2	1	3S-2093	2	STRAP-CABLE	
	3	1	9W-1442	1	FUSE (10-AMPERE) (FLOODLAMP RH)	
C	4	1	145-3350	1	PLATE	
C	5	1	153-2147	1	PLATE	
	6	1	168-8243	1	HARNESS AS-PANEL	
		1	102-8802	4	KIT-RECEPTACLE (2-PIN)	
		1	102-8804	4	KIT-RECEPTACLE (4-PIN)	
		1	102-8806	1	KIT-RECEPTACLE (8-PIN)	
		1	102-8801	1	KIT-RECEPTACLE (12-PIN)	
					(EACH INCLUDES RECEPTACLE AS & WEDGE)	
		1	155-2255	1	KIT-CONNECTING PLUG (12-PIN)	
		1	155-2265	1	KIT-CONNECTING PLUG (8-PIN)	
		1	155-2270	1	KIT-CONNECTING PLUG (2-PIN)	
		1	155-2271	1	KIT-CONNECTING PLUG (4-PIN)	
					(EACH INCLUDES PLUG AS & WEDGE)	
	7	1	171-6175	1	HARNESS AS-FRONT LIGHTING	
		1	155-2270	1	KIT-CONNECTING PLUG (2-PIN)	
					(INCLUDES PLUG AS & WEDGE)	
		1	102-8802	1	KIT-RECEPTACLE (2-PIN)	
					(INCLUDES RECEPTACLE AS & WEDGE)	
	8	1	172-6556	1	PANEL	
	9	1	188-3862	1	BRACKET AS	
	10	1	190-1680	1	BRACKET	
	11	1	3E-8766	1	SWITCH AS (24-VOLT) (FLOODLAMP RH)	
		1	3E-8782	1	ACTUATOR-ROCKER	
		1	3E-8825	1	LAMP (24-VOLT) (FLOODLAMP RH)	
Y	12	1	153-2073	1	LAMP GP-FLOOD (24-VOLT, VERTICAL MOUNT) (RH)	166
	13	1	116-5710	1	GROMMET	
	14	1	5P-8525	1	GROMMET	
M	15	1	6V-9189	1	LOCKNUT (M8X1.25-THD)	
	16	1	8T-4224	1	WASHER-HARD (8.8X16X2-MM THK)	
M	17	1	8T-6869	1	BOLT (M8X1.25X60-MM)	
M	18	1	9X-2043	6	SCREW-TRUSS HEAD (M6X1X14-MM)	

C-CHANGE FROM PREVIOUS TYPE
M-METRIC PART
Y-SEPARATE ILLUSTRATION

161-1021 LIGHTING GP-FLOOD *(contd.)* i02013761

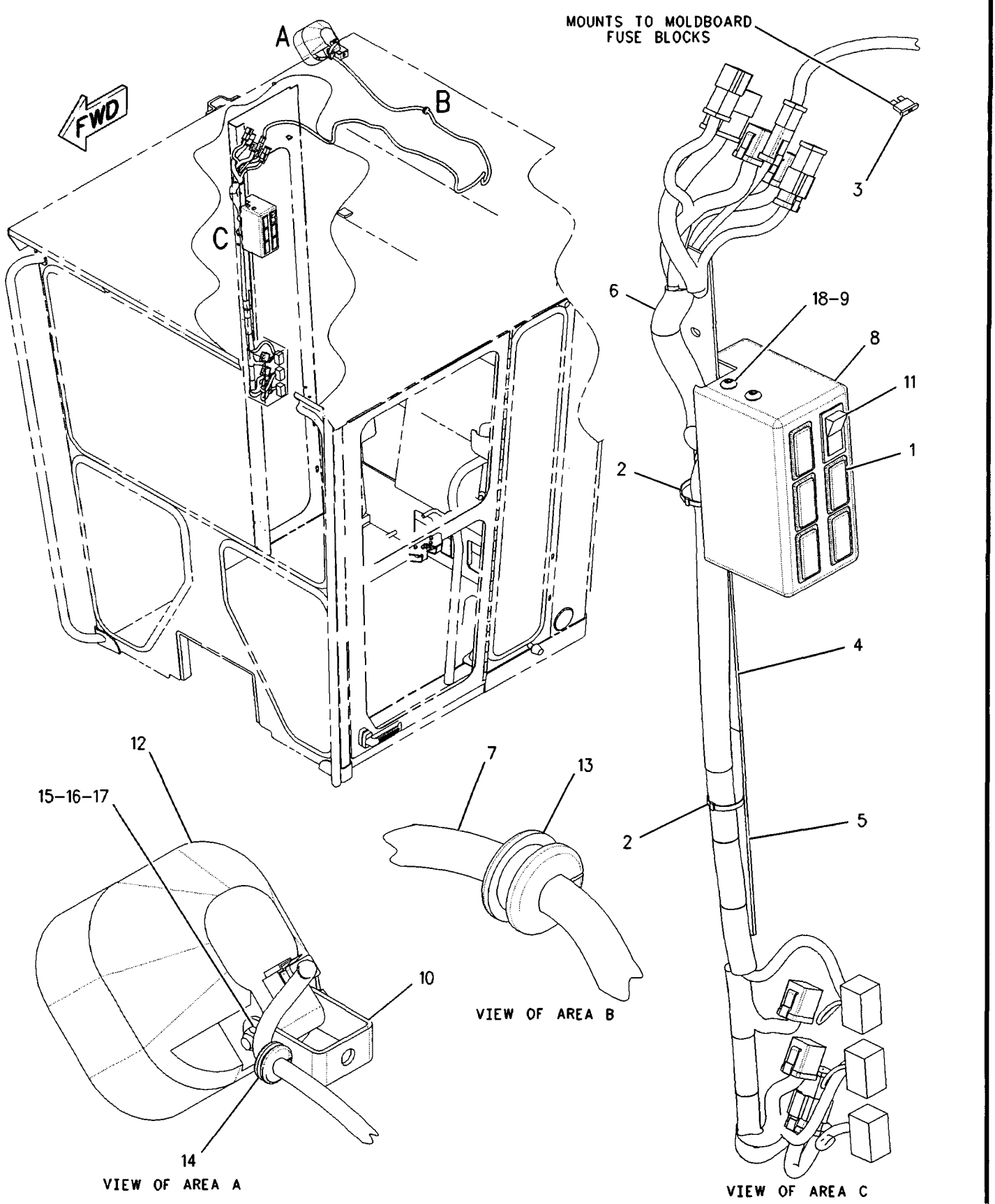

GRAPHIC #1 **<END>** g00846133

161-1021 LIGHTING GP-FLOOD–CAB–SNOW–RH

S/N: CCA1-UP
PART OF 197-5955, 236-3948 SNOW AR-MOTOR GRADER
AN ATTACHMENT
TYPE 2

SMCS-1434 i02013829

NOTE	REF NO	GRAPHIC REF	PART NUMBER	QTY	PART NAME 1 2 3 4 5 6 (PRODUCT LEVEL)	SEE PAGE
	1	1	**3E-0109**	5	PLUG (ROCKER SWITCH)	
	2	1	**3S-2093**	2	STRAP-CABLE	
C	3	1	**9L-1566**	1	SUPPORT	
	4	1	**9W-1442**	1	FUSE (10-AMPERE) (FLOODLAMP RH)	
	5	1	**116-5710**	1	GROMMET	
	6	1	**145-3350**	1	PLATE	
	7	1	**153-2147**	1	PLATE	
	8	1	**168-8243**	1	HARNESS AS-PANEL	
		1	**102-8802**	4	KIT-RECEPTACLE (2-PIN)	
		1	**102-8804**	4	KIT-RECEPTACLE (4-PIN)	
		1	**102-8806**	1	KIT-RECEPTACLE (8-PIN)	
		1	**102-8801**	1	KIT-RECEPTACLE (12-PIN)	
					(EACH INCLUDES RECEPTACLE AS & WEDGE)	
		1	**155-2255**	1	KIT-CONNECTING PLUG (12-PIN)	
		1	**155-2265**	1	KIT-CONNECTING PLUG (8-PIN)	
		1	**155-2270**	1	KIT-CONNECTING PLUG (2-PIN)	
		1	**155-2271**	1	KIT-CONNECTING PLUG (4-PIN)	
					(EACH INCLUDES PLUG AS & WEDGE)	
	9	1	**171-6175**	1	HARNESS AS-FRONT LIGHTING	
		1	**155-2270**	1	KIT-CONNECTING PLUG (2-PIN)	
					(INCLUDES PLUG AS & WEDGE)	
		1	**102-8802**	1	KIT-RECEPTACLE (2-PIN)	
					(INCLUDES RECEPTACLE AS & WEDGE)	
	10	1	**172-6556**	1	PANEL	
	11	1	**188-3862**	1	BRACKET AS	
CY	12	1	**234-4323**	1	LAMP GP-FLOOD (24-VOLT, VERTICAL MOUNT) (RH)	167
	13	1	**3E-8766**	1	SWITCH AS (24-VOLT) (FLOODLAMP RH)	
			3E-8782	1	ACTUATOR-ROCKER	
			3E-8825	1	LAMP (24-VOLT) (FLOODLAMP RH)	
	14	1	**5P-8525**	1	GROMMET	
C	15	1	**8T-4121**	1	WASHER-HARD (11X21X2.5-MM THK)	
M	16	1	**9X-2043**	6	SCREW-TRUSS HEAD	

C-CHANGE FROM PREVIOUS TYPE
M-METRIC PART
Y-SEPARATE ILLUSTRATION

161-1021 **LIGHTING GP-FLOOD** *(contd.)* **i02013829**

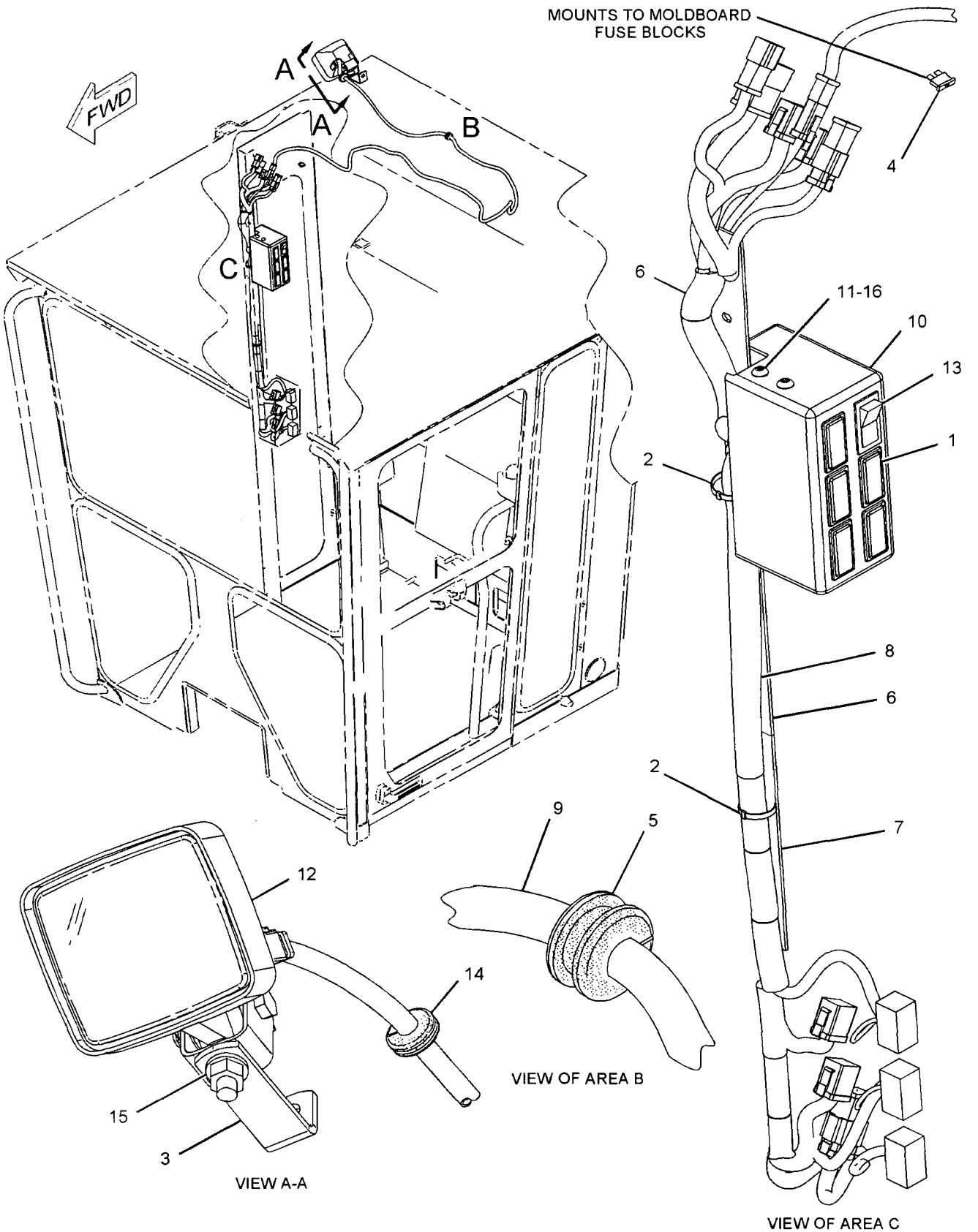

GRAPHIC #1

<END>

g01070197

ELECTRICAL AND STARTING SYSTEM

183-4069 LIGHTING GP-FLOOD–EXTENDED BOLSTER

S/N: CCA1-UP
PART OF 179-1548 LIGHTING AR-FLOOD & SIGNAL
AN ATTACHMENT
TYPE 1

SMCS-1434 i02204102

NOTE	REF NO	GRAPHIC REF	PART NUMBER	QTY	PART NAME 1 2 3 4 5 6 (PRODUCT LEVEL)	SEE PAGE
	1	1	**2G-0617**	2	CLAMP	
	2	1	**2G-0659**	2	BRACKET	
	3	1	**2G-0988**	2	CAP	
	4	1	**3K-9520**	3	GROMMET	
	5	1	**3S-2093**	4	STRAP-CABLE	
	6	1	**8X-5153**	1	FILM-FACE (TURN SIGNAL, HAZARD)	
	7	1	**8X-5154**	1	FILM-FACE (HEADLIGHTS HIGH, LOW BEAM)	
	8	1	**9W-1442**	1	FUSE (10-AMPERE)	
	9	1	**103-5678**	1	SWITCH AS-ROTARY (HEADLIGHT DIMMER)	
		1	**5L-7200**	1	SCREW (8-32X0.375-IN)	
		1	**9B-7233**	1	LOCKWASHER	
	10	1	**108-0358**	1	FLASHER AS (12/24-VOLT) (TURN SIGNAL, HAZARD)	
	11	1	**137-9410**	2	CLAMP	
	12	1	**173-3064**	1	SWITCH GP-ROTARY (TURN SIGNAL, HAZARD)	
		1	**5L-7200**	1	SCREW (8-32X0.375-IN)	
		1	**9B-7233**	1	LOCKWASHER	
	13	1	**178-8067**	2	BRACKET AS	
	14	1	**179-1549**	1	TUBE	
	15	1	**179-1550**	2	CLAMP	
	16	1	**179-8700**	1	HARNESS AS-FRONT CHASSIS (BOLSTER LIGHT BAR)	
		1	**155-2255**	1	KIT-CONNECTING PLUG (12-PIN)	
					(INCLUDES PLUG AS & WEDGE)	
		1	**102-8801**	1	KIT-RECEPTACLE (12-PIN)	
					(INCLUDES RECEPTACLE AS & WEDGE)	
	17	1	**179-8701**	1	HARNESS AS-FRONT LIGHTING (ELEVATED LIGHT BAR)	
		1	**155-2270**	2	KIT-CONNECTING PLUG (2-PIN)	
					(INCLUDES PLUG AS & WEDGE)	
		1	**102-8801**	1	KIT-RECEPTACLE (12-PIN)	
					(INCLUDES RECEPTACLE AS & WEDGE)	
Y	18	1	**153-2073**	2	LAMP GP-FLOOD (24-VOLT, VERTICAL MOUNT)	166
	19	1	**3E-8772**	1	SWITCH AS-ROCKER (HEADLIGHTS, TAIL LIGHTS)	
		1	**3E-8825**	1	LAMP (24-VOLT)	
		1	**3E-9326**	2	ACTUATOR-ROCKER	
	20	1	**174-5907**	2	CLIP	
M	21	1	**5C-2890**	2	NUT (M6X1-THD)	
M	22	1	**5C-7261**	2	NUT (M8X1.25-THD)	
	23	1	**5M-3062**	1	BOLT (3/8-16X0.75-IN)	
	24	1	**8M-2770**	2	CLIP	
	25	1	**8T-4121**	4	WASHER-HARD (11X21X2.5-MM THK)	
M	26	1	**8T-4133**	2	NUT (M10X1.5-THD)	
M	27	1	**8T-4136**	4	BOLT (M10X1.5X25-MM)	
	28	1	**8T-4205**	2	WASHER-HARD (7.2X14.5X2-MM THK)	
M	29	1	**8T-4223**	4	WASHER-HARD (13.5X25.5X3-MM THK)	
	30	1	**8T-4224**	2	WASHER-HARD (8.8X16X2-MM THK)	
M	31	1	**8T-4244**	4	NUT (M12X1.75-THD)	
	32	1	**8T-4896**	1	WASHER-HARD (10.2X18.5X2.5-MM THK)	
M	33	1	**8T-5412**	4	BOLT (M12X1.75X140-MM)	
M	34	1	**8T-6869**	2	BOLT (M8X1.25X60-MM)	
	35	1	**8X-6296**	1	LEVER (TURN SIGNAL)	
	35A	1	**8X-6296**	1	LEVER (HEADLIGHT DIMMER)	
M	36	1	**9X-2043**	2	SCREW-TRUSS HEAD (M6X1X14-MM)	
	37	1	**9X-9631**	1	SWITCH AS-ROCKER (LIGHTBAR LOW BEAM)	
		1	**3E-8814**	1	ACTUATOR-ROCKER	

183-4069 LIGHTING GP-FLOOD *(contd.)* i02204102

NOTE	REF NO	GRAPHIC REF	PART NUMBER	QTY	PART NAME 1 2 3 4 5 6 (PRODUCT LEVEL)	SEE PAGE
		1	3E-8825	1	LAMP (24-VOLT)	

M-METRIC PART
Y-SEPARATE ILLUSTRATION

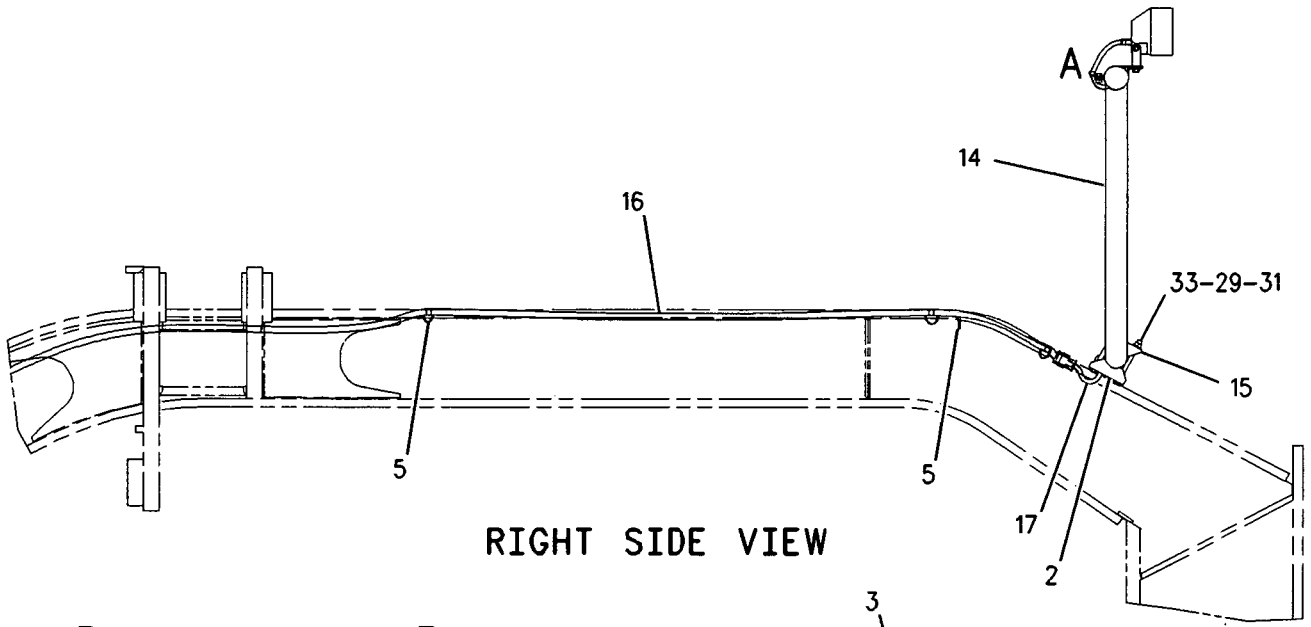

RIGHT SIDE VIEW

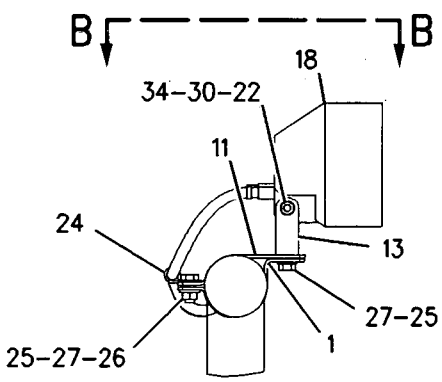

VIEW OF AREA A

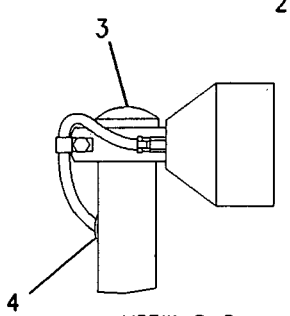

VIEW B-B

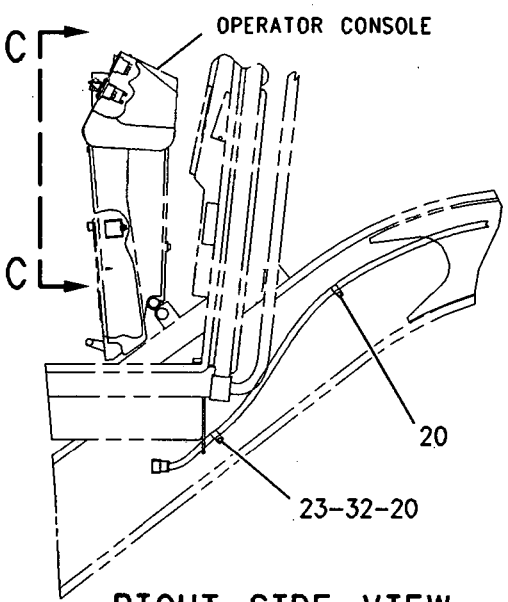

RIGHT SIDE VIEW

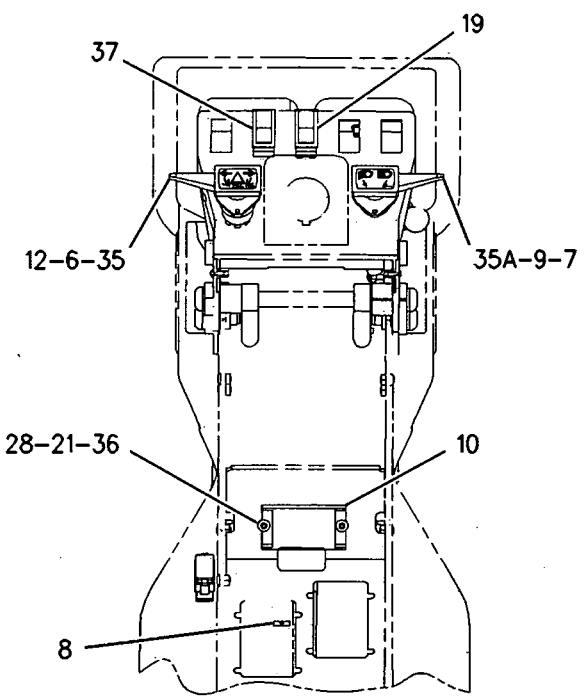

VIEW C-C

GRAPHIC #1 **<END>** g00845039

ELECTRICAL AND STARTING SYSTEM

183-4069 LIGHTING GP-FLOOD–EXTENDED BOLSTER

S/N: CCA1-UP
PART OF 179-1548 LIGHTING AR-FLOOD & SIGNAL
AN ATTACHMENT
TYPE 2

SMCS-1434 **i02204103**

NOTE	REF NO	GRAPHIC REF	PART NUMBER	QTY	PART NAME 1 2 3 4 5 6 (PRODUCT LEVEL)	SEE PAGE
	1	2	**2G-0617**	2	CLAMP	
	2	2	**2G-0659**	2	BRACKET	
	3	2	**2G-0988**	2	CAP	
	4	2	**3K-9520**	3	GROMMET	
	5	2	**3S-2093**	4	STRAP-CABLE	
	6	1	**8X-5153**	1	FILM-FACE (TURN SIGNAL, HAZARD)	
	7	1	**8X-5154**	1	FILM-FACE (HEADLIGHTS HIGH, LOW BEAM)	
	8	1	**9W-1442**	1	FUSE (10-AMPERE)	
	9	1	**103-5678**	1	SWITCH AS-ROTARY (HEADLIGHT DIMMER)	
		1	**5L-7200**	1	SCREW (8-32X0.375-IN)	
		1	**9B-7233**	1	LOCKWASHER	
	10	1	**108-0358**	1	FLASHER AS (12/24-VOLT) (TURN SIGNAL, HAZARD)	
	11	2	**137-9410**	2	CLAMP	
	12	1	**173-3064**	1	SWITCH GP-ROTARY (TURN SIGNAL, HAZARD)	
		1	**5L-7200**	1	SCREW (8-32X0.375-IN)	
		1	**9B-7233**	1	LOCKWASHER	
	13	2	**179-1549**	1	TUBE	
	14	2	**179-1550**	2	CLAMP	
	15	2	**179-8700**	1	HARNESS AS-FRONT CHASSIS (WORK LIGHTS, FRONT)	
		2	**155-2255**	1	KIT-CONNECTING PLUG (12-PIN)	
					(INCLUDES PLUG AS & WEDGE)	
		2	**102-8801**	1	KIT-RECEPTACLE (12-PIN)	
					(INCLUDES RECEPTACLE AS & WEDGE)	
	16	2	**179-8701**	1	HARNESS AS-FRONT LIGHTING (WORK LIGHTS)	
		2	**155-2270**	2	KIT-CONNECTING PLUG (2-PIN)	
					(EACH INCLUDES PLUG AS & WEDGE)	
		2	**102-8801**	1	KIT-RECEPTACLE (12-PIN)	
					(INCLUDES RECEPTACLE AS & WEDGE)	
CY	17	2	**234-4323**	2	LAMP GP-FLOOD (24-VOLT, VERTICAL MOUNT) (WORK LIGHTS)	167
	18	1	**174-5907**	2	CLIP	
	19	1	**3E-8772**	1	SWITCH AS-ROCKER (HEADLIGHTS, TAIL LIGHTS)	
		1	**3E-8825**	1	LAMP (24-VOLT)	
		1	**3E-9326**	2	ACTUATOR-ROCKER	
M	20	1	**5C-2890**	2	NUT (M6X1-THD)	
	21	1	**5M-3062**	1	BOLT (3/8-16X0.75-IN)	
	22	2	**8M-2770**	2	CLIP	
	23	2	**8T-4121**	4	WASHER-HARD (11X21X2.5-MM THK)	
M	24	1	**8T-4133**	2	NUT (M10X1.5-THD)	
CM	25	2	**8T-4136**	2	BOLT (M10X1.5X25-MM)	
	26	1	**8T-4205**	2	WASHER-HARD (7.2X14.5X2-MM THK)	
M	27	2	**8T-4223**	4	WASHER-HARD (13.5X25.5X3-MM THK)	
M	28	2	**8T-4244**	4	NUT (M12X1.75-THD)	
	29	1	**8T-4896**	1	WASHER-HARD (10.2X18.5X2.5-MM THK)	
M	30	2	**8T-5412**	4	BOLT (M12X1.75X140-MM)	
	31	1	**8X-6296**	1	LEVER (TURN SIGNAL)	
	31A	1	**8X-6296**	1	LEVER (HEADLIGHT DIMMER)	
M	32	1	**9X-2043**	2	SCREW-TRUSS HEAD (M6X1X14-MM)	
	33	1	**9X-9631**	1	SWITCH AS-ROCKER (WORK LIGHTS, FRONT)	
		1	**3E-8814**	1	ACTUATOR-ROCKER	
		1	**3E-8825**	1	LAMP (24-VOLT)	

C-CHANGE FROM PREVIOUS TYPE
M-METRIC PART
Y-SEPARATE ILLUSTRATION

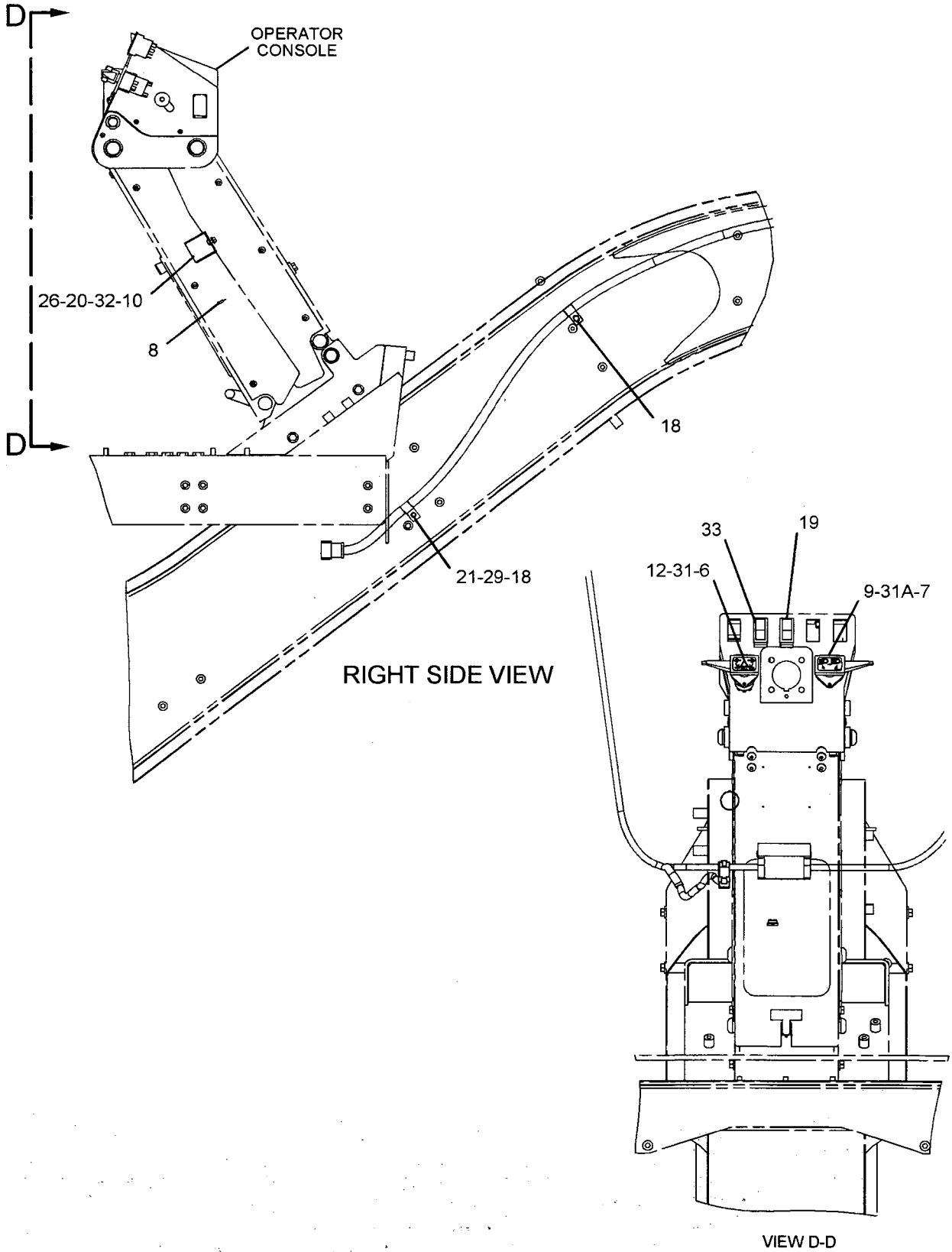

GRAPHIC #1

g01088161

183-4069 **LIGHTING GP-FLOOD** *(contd.)* **i02204103**

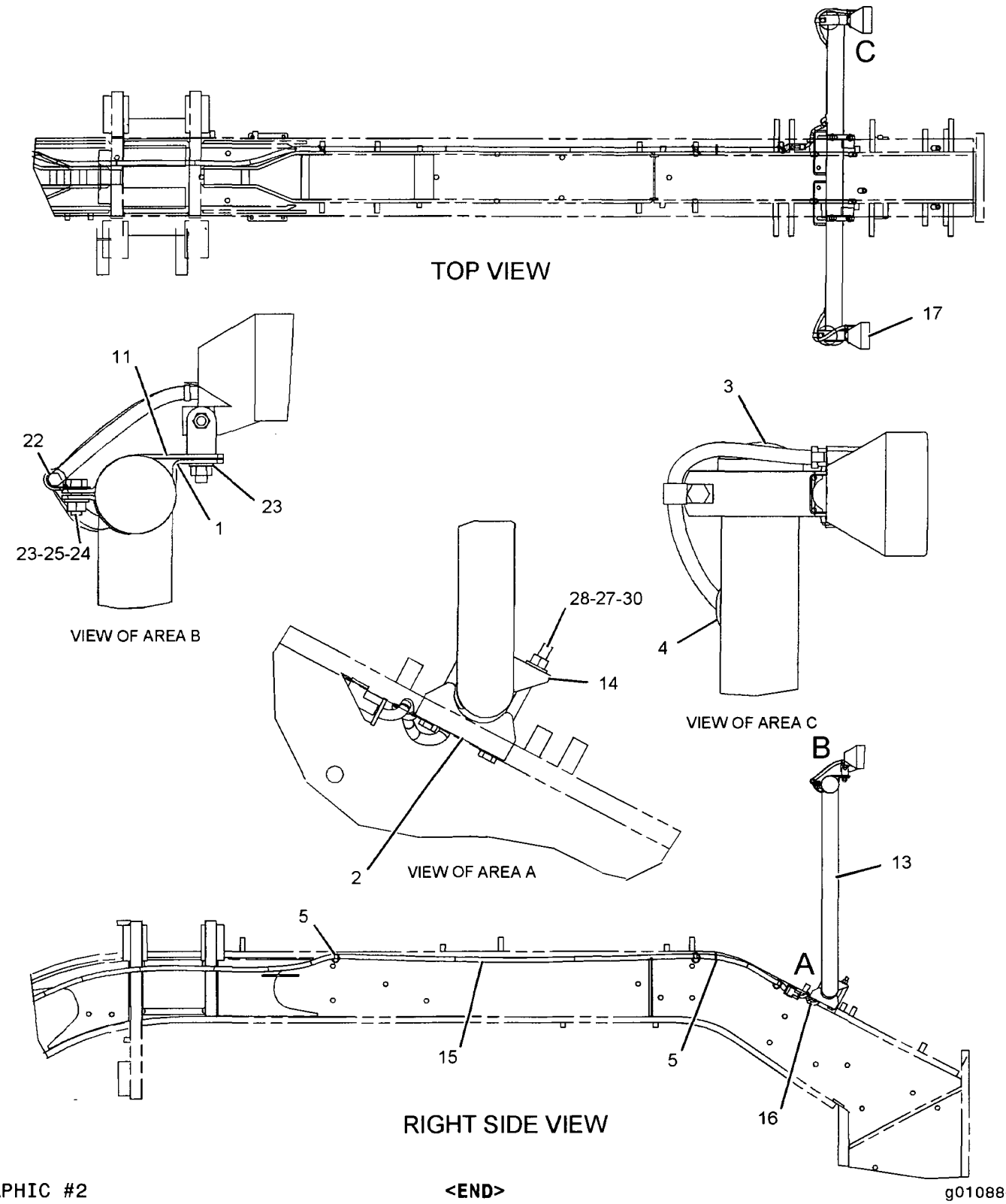

GRAPHIC #2

<END>

g01088078

188-9324 LIGHTING GP-FLOOD–SNOW–REAR

S/N: CCA1-UP
PART OF 161-0768, 188-9321 LIGHTING AR-FLOOD
AN ATTACHMENT
TYPE 1

SMCS-1434 **i02200289**

NOTE	REF NO	GRAPHIC REF	PART NUMBER	QTY	PART NAME 1 2 3 4 5 6 (PRODUCT LEVEL)	SEE PAGE
	1	1	**9X-9365**	2	BRACKET	
	2	1	**116-5710**	2	GROMMET	
	3	1	**169-3520**	1	HARNESS AS-REAR LIGHTING	
		1	**155-2270**	2	KIT-CONNECTING PLUG (2-PIN)	
					(INCLUDES PLUG ASSEMBLY AND WEDGE)	
		1	**102-8802**	1	KIT-RECEPTACLE (2-PIN)	
					(INCLUDES RECEPTACLE ASSEMBLY AND WEDGE)	
	4	1	**178-8067**	2	BRACKET AS	
Y	5	1	**153-2073**	2	LAMP GP-FLOOD (24-VOLT, VERTICAL MOUNT)	166
M	6	1	**5C-7261**	2	NUT (M8X1.25-THD)	
	7	1	**5K-3294**	4	CLIP	
	8	1	**6V-3265**	6	CLIP	
	9	1	**8T-4121**	12	WASHER-HARD (11X21X2.5-MM THK)	
M	10	1	**8T-4136**	2	BOLT (M10X1.5X25-MM)	
M	11	1	**8T-4137**	10	BOLT (M10X1.5X20-MM)	
	12	1	**8T-4224**	4	WASHER-HARD (8.8X16X2-MM THK)	
M	13	1	**8T-6869**	2	BOLT (M8X1.25X60-MM)	

M-METRIC PART
Y-SEPARATE ILLUSTRATION

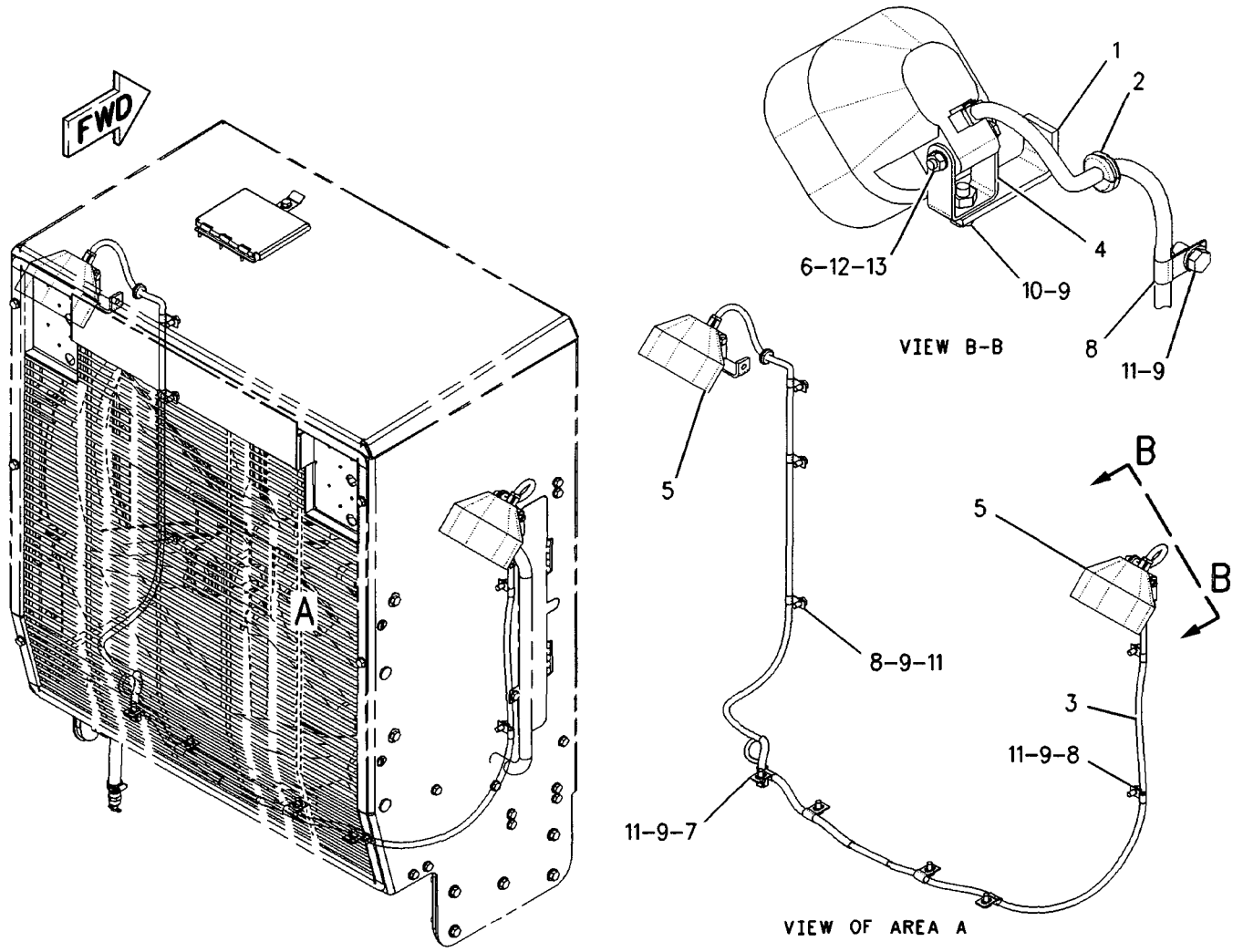

GRAPHIC #1

<END>

g00844562

188-9324 LIGHTING GP-FLOOD–SNOW–REAR

S/N: CCA1-UP
PART OF 161-0768, 188-9321 LIGHTING AR-FLOOD
AN ATTACHMENT
TYPE 2

SMCS-1434 i02200290

NOTE	REF NO	GRAPHIC REF	PART NUMBER	QTY	PART NAME 1 2 3 4 5 6 (PRODUCT LEVEL)	SEE PAGE
	1	1	**9X-9365**	2	BRACKET	
	2	1	**116-5710**	2	GROMMET	
	3	1	**169-3520**	1	HARNESS AS-REAR LIGHTING	
		1	**155-2270**	2	KIT-CONNECTING PLUG (2-PIN)	
					(EACH INCLUDES PLUG ASSEMBLY & WEDGE)	
		1	**102-8802**	1	KIT-RECEPTACLE (2-PIN)	
					(INCLUDES RECEPTACLE ASSEMBLY & WEDGE)	
Y	4	1	**234-4323**	2	LAMP GP-FLOOD (24-VOLT, VERTICAL MOUNT) (REAR)	167
	5	1	**5K-3294**	4	CLIP	
	6	1	**6V-3265**	6	CLIP	
	7	1	**8T-4121**	12	WASHER-HARD (11X21X2.5-MM THK)	
M	8	1	**8T-4137**	10	BOLT (M10X1.5X20-MM)	

M-METRIC PART
Y-SEPARATE ILLUSTRATION

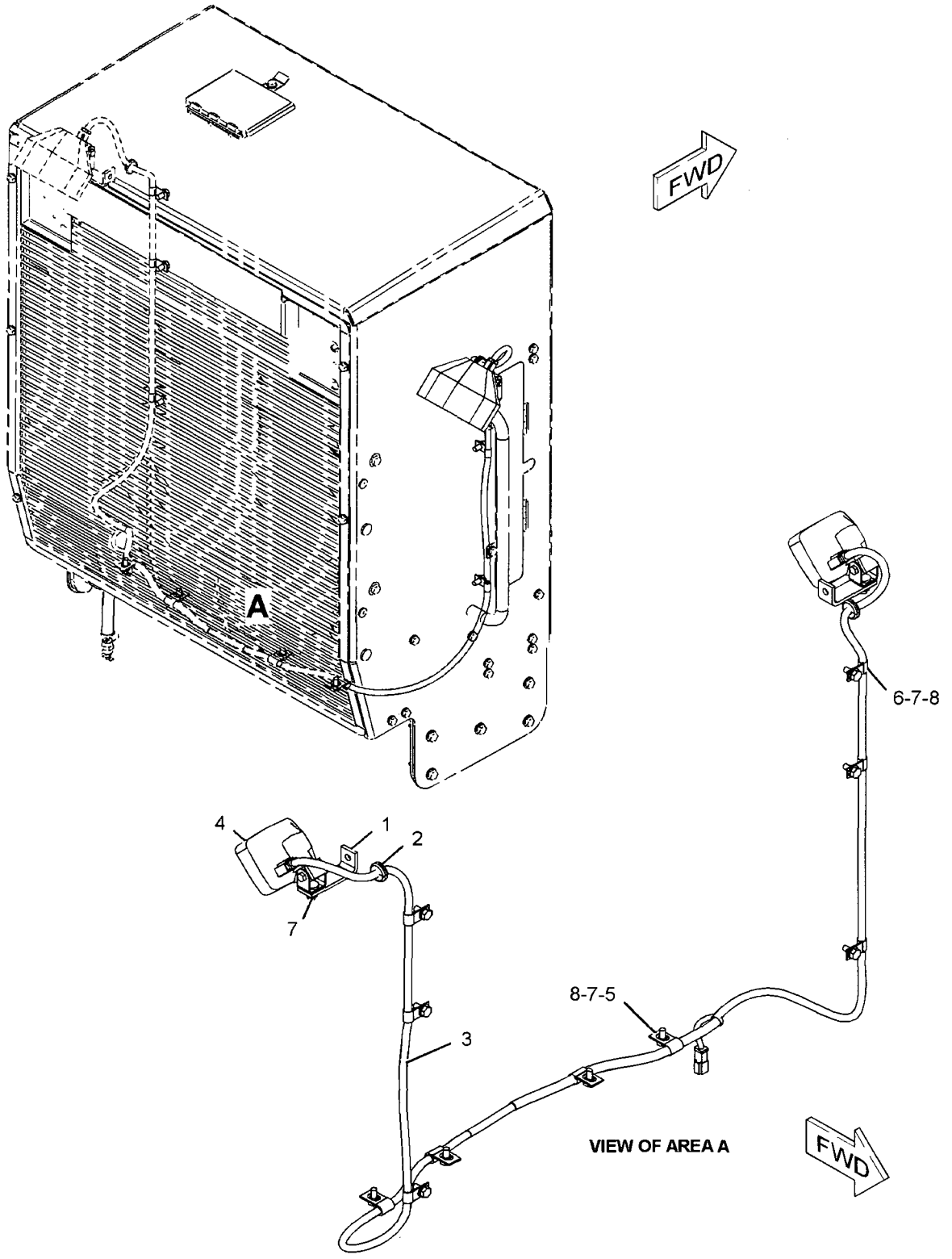

GRAPHIC #1

<END>

g01092773

196-8532 LIGHTING GP-FLOOD–MOLDBOARD

S/N: CCA1-UP
PART OF 203-6536, 204-6109 LIGHTING AR-FLOOD
AN ATTACHMENT
TYPE 1

SMCS-1434 i02200286

NOTE	REF NO	GRAPHIC REF	PART NUMBER	QTY	PART NAME 1 2 3 4 5 6 (PRODUCT LEVEL)	SEE PAGE
	2	1	169-3147	1	HARNESS AS-CHASSIS	
		1	102-8802	4	KIT-RECEPTACLE (2-PIN)	
		1	102-8803	1	KIT-RECEPTACLE (3-PIN)	
					(EACH INCLUDES RECEPTACLES AS & WEDGE)	
	3	1	183-9606	2	BRACKET	
	4	1	033-8248	5	CLIP	
Y	5	1	153-2073	2	LAMP GP-FLOOD (24-VOLT, VERTICAL MOUNT)	166
	6	1	4D-9517	1	CLIP	
M	7	1	5C-7261	2	NUT (M8X1.25-THD)	
	8	1	5P-8167	3	BOLT (3/8-16X0.625-IN)	
	9	1	8M-2770	1	CLIP	
	10	1	8T-4224	2	WASHER-HARD (8.8X16X2-MM THK)	
	11	1	8T-4896	3	WASHER-HARD (10.2X18.5X2.5-MM THK)	
M	12	1	8T-6869	2	BOLT (M8X1.25X60-MM)	

M-METRIC PART
Y-SEPARATE ILLUSTRATION

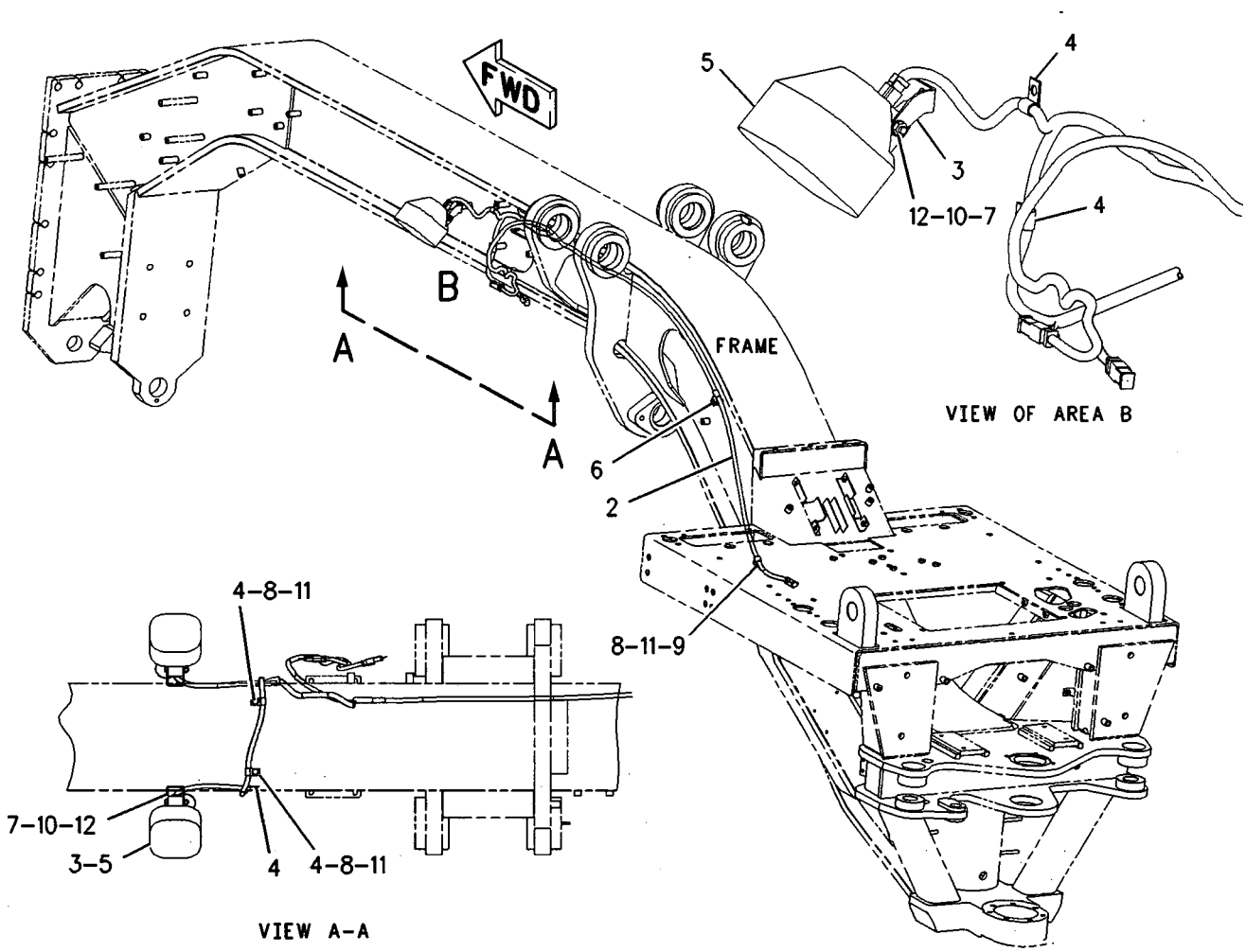

GRAPHIC #1 <END> g00890532

ELECTRICAL AND STARTING SYSTEM

196-8532 LIGHTING GP-FLOOD–MOLDBOARD

S/N: CCA1-UP
PART OF 203-6536, 204-6109 LIGHTING AR-FLOOD
AN ATTACHMENT
TYPE 2

SMCS-1434 i02102329

NOTE	REF NO	GRAPHIC REF	PART NUMBER	QTY	PART NAME 1 2 3 4 5 6 (PRODUCT LEVEL)	SEE PAGE
	1	1	**9L-1566**	2	SUPPORT	
	3	1	**169-3147**	1	HARNESS AS-CHASSIS (MOLDBOARD)	
		1	**155-2270**	4	KIT-CONNECTING PLUG (2-PIN)	
					(INCLUDES PLUG AS & WEDGE)	
		1	**102-8802**	4	KIT-RECEPTACLE (2-PIN)	
		1	**102-8803**	1	KIT-RECEPTACLE (3-PIN)	
					(INCLUDES RECEPTACLE AS & WEDGE)	
Y	4	1	**234-4325**	2	LAMP GP-FLOOD (24-VOLT, SUSPENDED MOUNT)	169
	5	1	**033-8248**	5	CLIP	
	6	1	**147-0385**	2	CLIP	
	7	1	**5P-8167**	3	BOLT (3/8-16X0.625-IN)	
	8	1	**5S-7379**	2	BOLT (3/8-16X0.875-IN)	
	9	1	**8T-4121**	4	WASHER-HARD (11X21X2.5-MM THK)	
	10	1	**8T-4896**	3	WASHER-HARD (10.2X18.5X2.5-MM THK)	

Y-SEPARATE ILLUSTRATION

196-8532 LIGHTING GP-FLOOD *(contd.)* i02102329

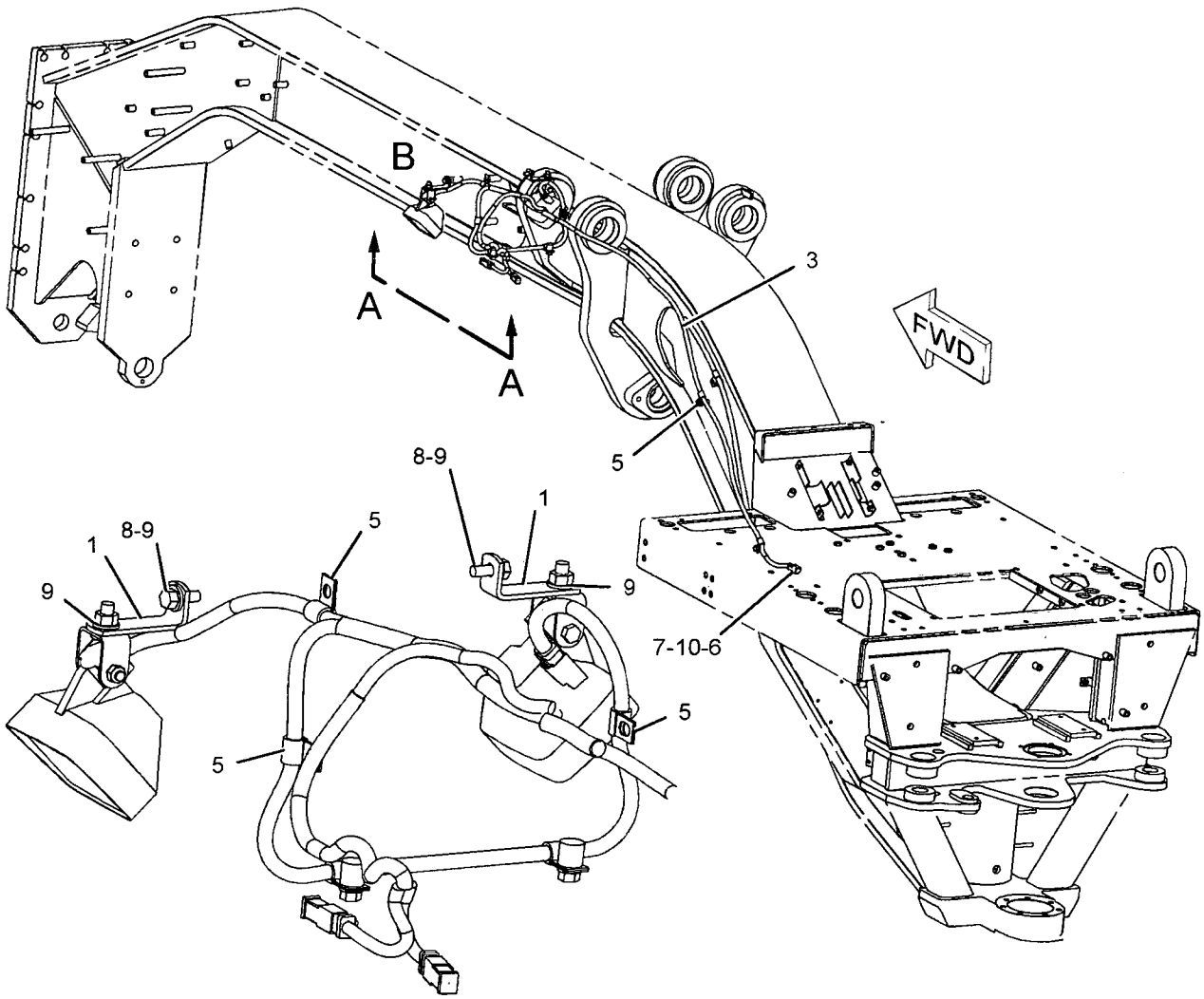

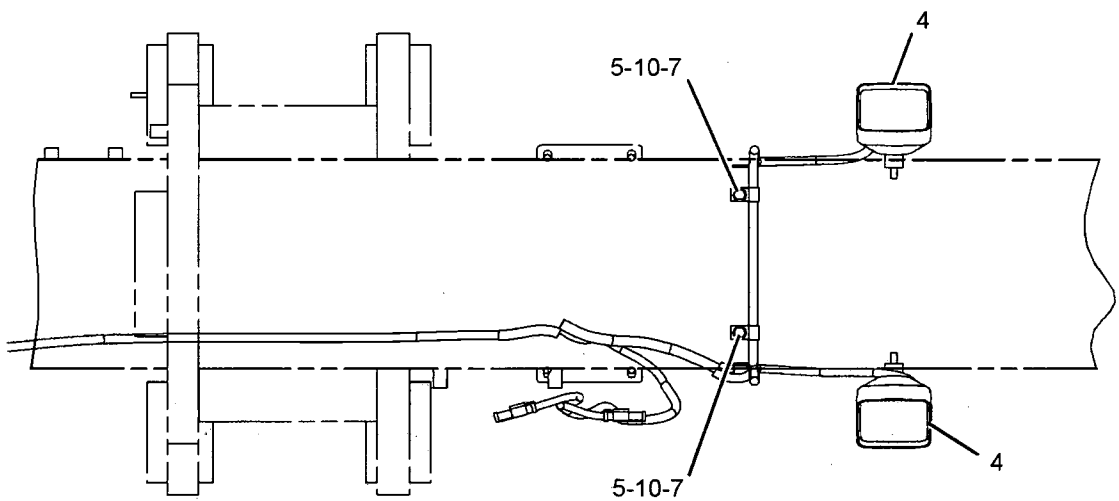

GRAPHIC #1

<END>

g01075816

196-8559 LIGHTING GP-FLOOD–CAB–SNOW–RH

S/N: CCA1-UP
PART OF 221-5368 LIGHTING GP-FLOOD
AN ATTACHMENT
TYPE 1

SMCS-1434 i02204124

NOTE	REF NO	GRAPHIC REF	PART NUMBER	QTY	PART NAME 1 2 3 4 5 6 (PRODUCT LEVEL)	SEE PAGE
	1	1	**3E-0109**	5	PLUG (ROCKER SWITCH)	
	2	1	**3S-2093**	2	STRAP-CABLE	
	3	1	**9W-1442**	1	FUSE (10-AMPERE)	
	4	1	**145-3350**	1	PLATE	
B	5	1	**153-2147**	1	PLATE	
	6	1	**171-6175**	1	HARNESS AS-FRONT LIGHTING	
		1	**155-2270**	1	KIT-CONNECTING PLUG (2-PIN)	
					(INCLUDES PLUG AS & WEDGE)	
		1	**102-8802**	1	KIT-RECEPTACLE (2-PIN)	
					(INCLUDES RECEPTACLE AS & WEDGE)	
	7	1	**172-6556**	1	PANEL	
	8	1	**188-3862**	1	BRACKET AS	
	9	1	**190-1680**	1	BRACKET	
	10	1	**196-8557**	1	HARNESS AS-CAB	
		1	**155-2255**	1	KIT-CONNECTING PLUG (12-PIN)	
		1	**155-2265**	4	KIT-CONNECTING PLUG (8-PIN)	
		1	**155-2270**	4	KIT-CONNECTING PLUG (2-PIN)	
		1	**155-2271**	1	KIT-CONNECTING PLUG (4-PIN)	
					(EACH INCLUDES PLUG AS & WEDGE)	
		1	**102-8802**	1	KIT-RECEPTACLE (2-PIN)	
		1	**102-8804**	2	KIT-RECEPTACLE (4-PIN)	
		1	**102-8806**	1	KIT-RECEPTACLE (8-PIN)	
		1	**102-8801**	1	KIT-RECEPTACLE (12-PIN)	
					(EACH INCLUDES RECEPTACLE AS & WEDGE)	
	11	1	**3E-8766**	1	SWITCH AS (24-VOLT) (CAB-RH FLOOD)	
		1	**3E-8782**	1	ACTUATOR-ROCKER	
		1	**3E-8825**	1	LAMP (24-VOLT)	
Y	12	1	**153-2073**	1	LAMP GP-FLOOD (24-VOLT, VERTICAL MOUNT) (CAB-RH)	166
	13	1	**116-5710**	1	GROMMET	
	14	1	**5P-8439**	1	GROMMET	
M	15	1	**6V-9189**	1	LOCKNUT (M8X1.25-THD)	
	16	1	**8T-4224**	1	WASHER-HARD (8.8X16X2-MM THK)	
M	17	1	**8T-6869**	1	BOLT (M8X1.25X60-MM)	
M	18	1	**9X-2043**	6	SCREW-TRUSS HEAD (M6X1X14-MM)	

B-USE AS REQUIRED
M-METRIC PART
Y-SEPARATE ILLUSTRATION

196-8559 LIGHTING GP-FLOOD *(contd.)* i02204124

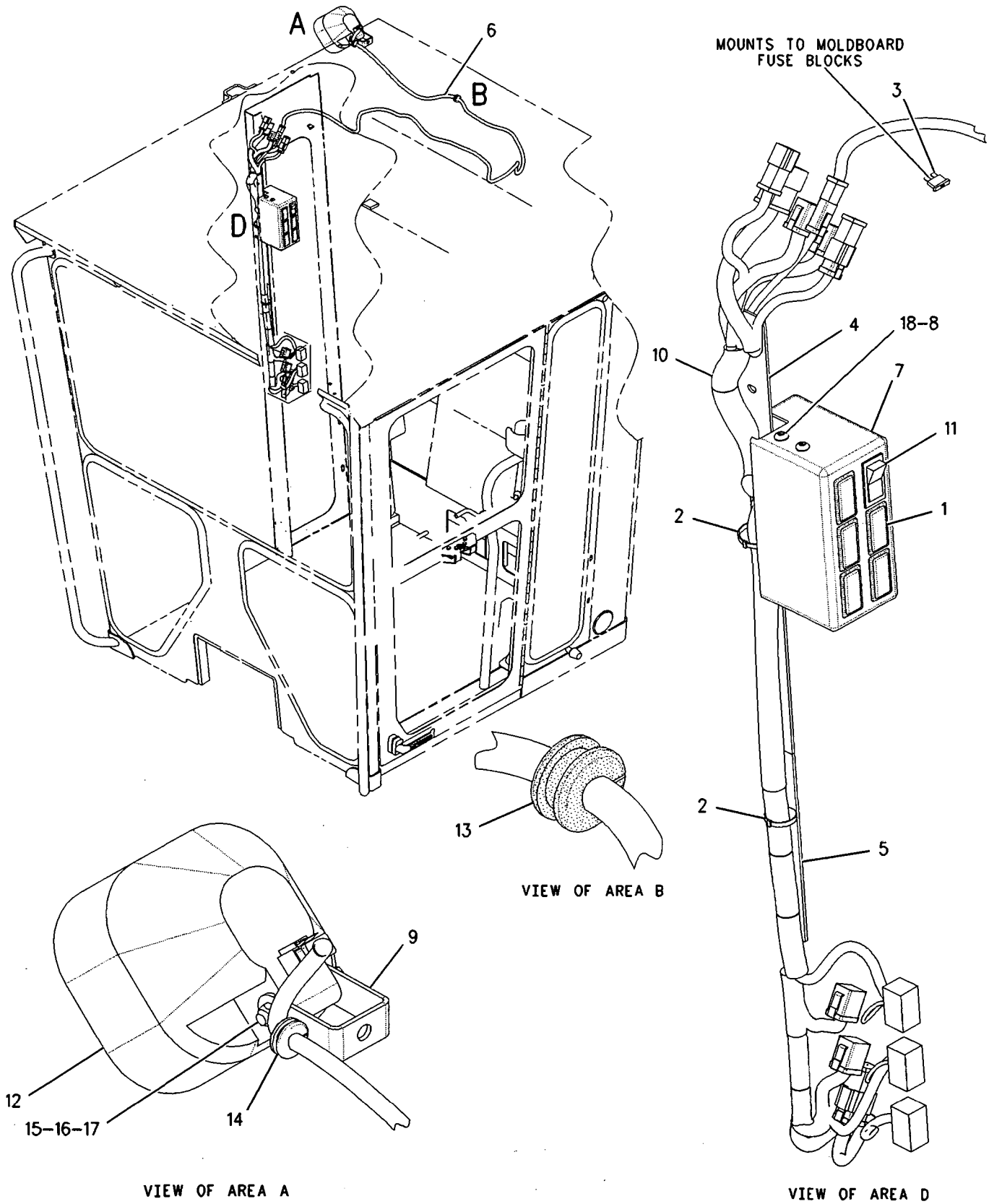

GRAPHIC #1 **<END>** g00917517

196-8559 LIGHTING GP-FLOOD–CAB–SNOW–RH

S/N: CCA1-UP
PART OF 221-5368 LIGHTING GP-FLOOD
AN ATTACHMENT
TYPE 2

SMCS-1434 i02204125

NOTE	REF NO	GRAPHIC REF	PART NUMBER	QTY	PART NAME 1 2 3 4 5 6 (PRODUCT LEVEL)	SEE PAGE
	1	1	**3E-0109**	5	PLUG (ROCKER SWITCH)	
	2	1	**3S-2093**	2	STRAP-CABLE	
C	3	1	**9L-1566**	1	SUPPORT	
	4	1	**9W-1442**	1	FUSE (10-AMPERE)	
	5	1	**116-5710**	1	GROMMET	
	6	1	**145-3350**	1	PLATE	
B	7	1	**153-2147**	1	PLATE	
	8	1	**171-6175**	1	HARNESS AS-FRONT LIGHTING	
		1	**155-2270**	1	KIT-CONNECTING PLUG (2-PIN)	
					(INCLUDES PLUG AS & WEDGE)	
		1	**102-8802**	1	KIT-RECEPTACLE (2-PIN)	
					(INCLUDES RECEPTACLE AS & WEDGE)	
	9	1	**172-6556**	1	PANEL	
	10	1	**188-3862**	1	BRACKET AS	
	11	1	**196-8557**	1	HARNESS AS-CAB	
		1	**155-2255**	1	KIT-CONNECTING PLUG (12-PIN)	
		1	**155-2265**	4	KIT-CONNECTING PLUG (8-PIN)	
		1	**155-2270**	4	KIT-CONNECTING PLUG (2-PIN)	
		1	**155-2271**	1	KIT-CONNECTING PLUG (4-PIN)	
					(EACH INCLUDES PLUG AS & WEDGE)	
		1	**102-8802**	1	KIT-RECEPTACLE (2-PIN)	
		1	**102-8804**	2	KIT-RECEPTACLE (4-PIN)	
		1	**102-8806**	1	KIT-RECEPTACLE (8-PIN)	
		1	**102-8801**	1	KIT-RECEPTACLE (12-PIN)	
					(EACH INCLUDES RECEPTACLE AS & WEDGE)	
CY	12	1	**234-4323**	1	LAMP GP-FLOOD (24-VOLT, VERTICAL MOUNT) (CAB-RH)	167
	13	1	**3E-8766**	1	SWITCH AS (24-VOLT) (CAB-RH FLOOD)	
			3E-8782	1	ACTUATOR-ROCKER	
			3E-8825	1	LAMP (24-VOLT)	
	14	1	**5P-8439**	1	GROMMET	
C	15	1	**8T-4121**	1	WASHER-HARD (11X21X2.5-MM THK)	
M	16	1	**9X-2043**	6	SCREW-TRUSS HEAD (M6X1X14-MM)	

B-USE AS REQUIRED
C-CHANGE FROM PREVIOUS TYPE
M-METRIC PART
Y-SEPARATE ILLUSTRATION

196-8559 LIGHTING GP-FLOOD *(contd.)* i02204125

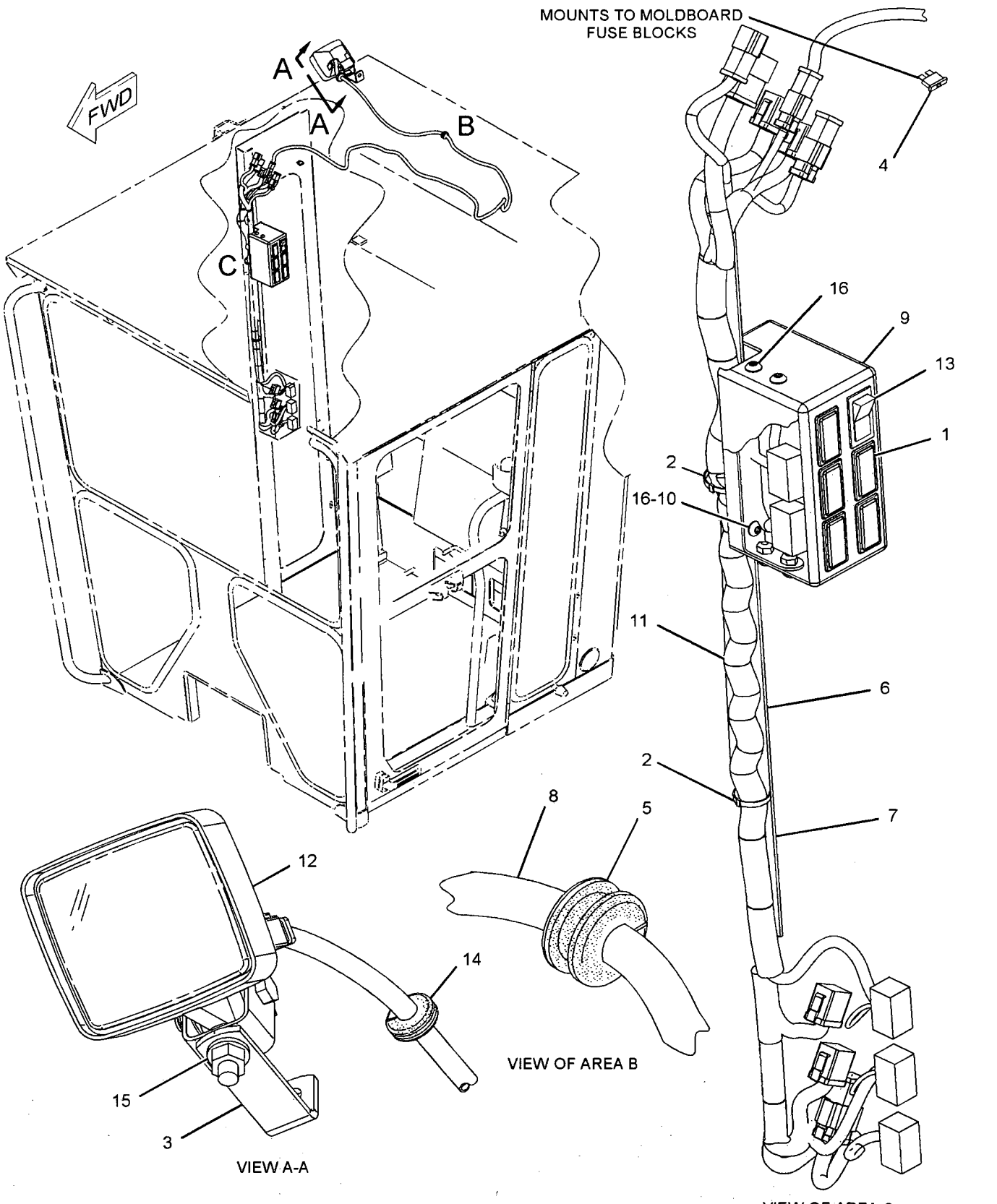

GRAPHIC #1

<END>

g01070388

203-7620 LIGHTING GP-FLOOD–BOLSTER

S/N: CCA1-UP

AN ATTACHMENT

SMCS-1434 i01683969

NOTE	PART NUMBER	QTY	PART NAME 1 2 3 4 5 6 (PRODUCT LEVEL)	SEE PAGE
Y	203-7625	1	LAMP GP-HEAD (LH)	173
Y	203-7626	1	LAMP GP-HEAD (RH)	175

Y-SEPARATE ILLUSTRATION

<END>

221-5368 LIGHTING GP-FLOOD–CAB

S/N: CCA1-UP
AN ATTACHMENT

SMCS-1434 i01835680

NOTE	REF NO	GRAPHIC REF	PART NUMBER	QTY	PART NAME 1 2 3 4 5 6 (PRODUCT LEVEL)	SEE PAGE
	1	1	**106-8704**	1	SUPPRESSOR AS-ARC	
		1	**3E-3365**	1	WEDGE-RECEPTACLE LOCK (2 PIN)	
		1	**186-3735**	2	PIN-CONNECTOR	
		1	**102-8802**	1	KIT-RECEPTACLE (2 PIN)	
					(INCLUDES RECEPTACLE AS & WEDGE)	
Y	2	1	*196-8559*	1	LIGHTING GP-FLOOD (CAB)(RH)	235

Y-SEPARATE ILLUSTRATION

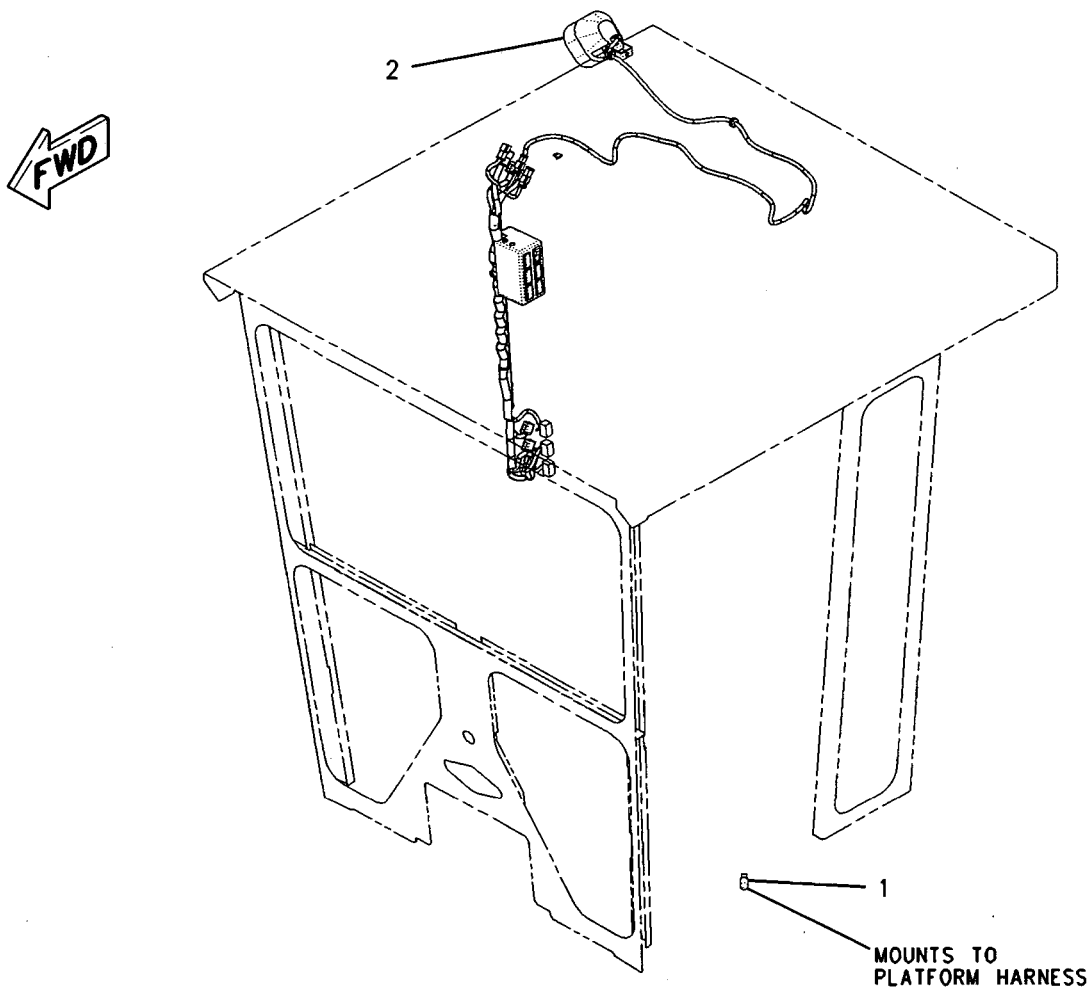

GRAPHIC #1 **<END>** g00915219

211-1520 LIGHTING GP-ROADING–CAB POSITION LAMP–EU

S/N: CCA1-UP
PART OF 197-5572 ROADING AR
AN ATTACHMENT

SMCS-1429 i02204135

NOTE	REF NO	GRAPHIC REF	PART NUMBER	QTY	PART NAME 1 2 3 4 5 6 (PRODUCT LEVEL)	SEE PAGE
Y	1	1	**212-3924**	2	LAMP GP-MARKER	181
	2	1	**130-5300**	2	CLIP	
M	3	1	**5C-2874**	4	NUT (M5X0.8-THD)	
	4	1	**8T-4121**	2	WASHER-HARD (11X21X2.5-MM THK)	
M	5	1	**8T-4137**	2	BOLT (M10X1.5X20-MM)	
	6	1	**8T-4205**	4	WASHER-HARD (7.2X14.5X2-MM THK)	

M-METRIC PART
Y-SEPARATE ILLUSTRATION

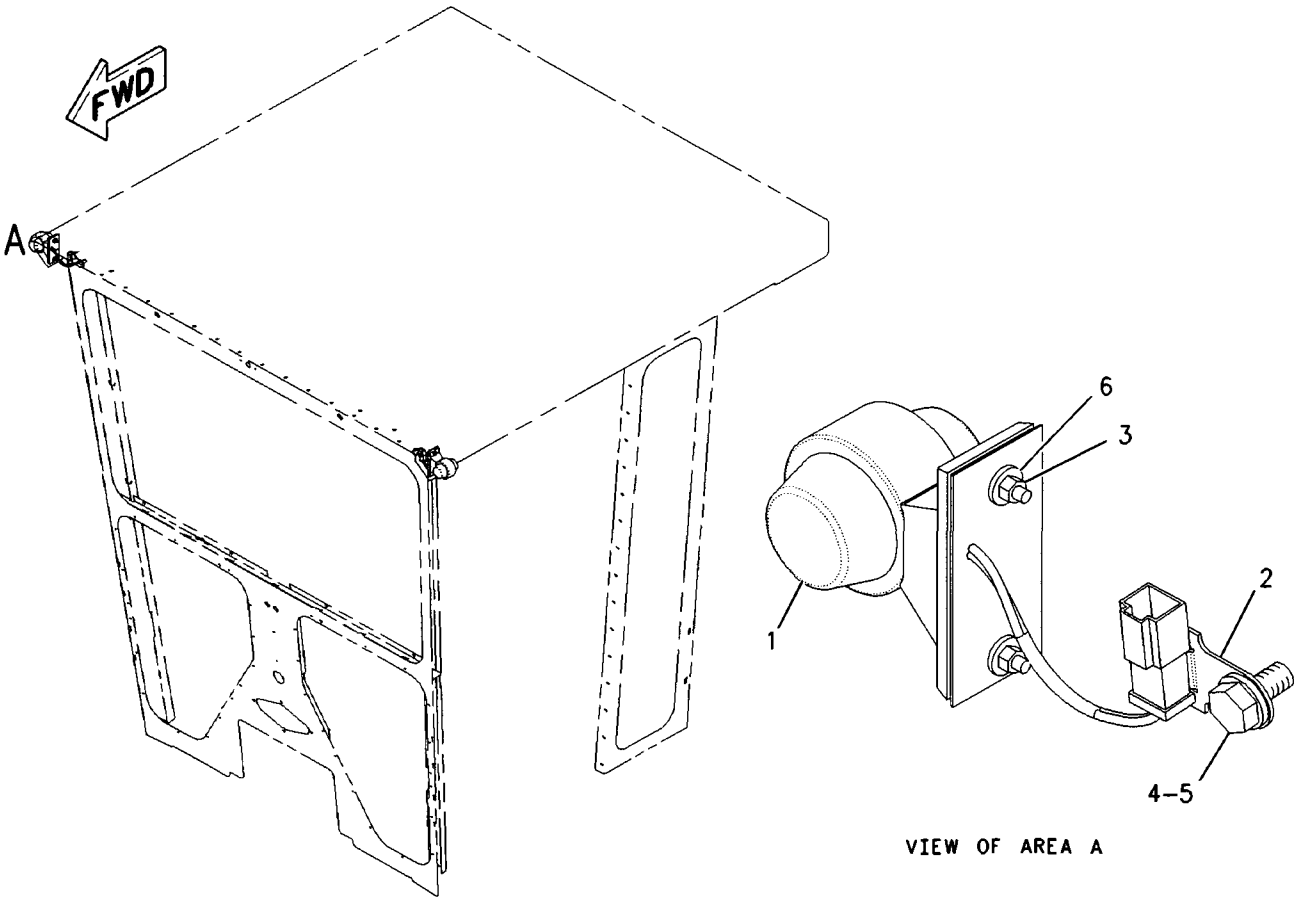

VIEW OF AREA A

GRAPHIC #1 <END> g00892028

188-9331 LIGHTING GP-SIGNAL–REAR TURN LAMPS

S/N: CCA1-213

PART OF 188-9328 LIGHTING AR-FLOOD, 161-0770, 161-0771, 179-1548 LIGHTING AR-FLOOD & SIGNAL AN ATTACHMENT

SMCS-1430 i02204137

NOTE	REF NO	GRAPHIC REF	PART NUMBER	QTY	PART NAME 1 2 3 4 5 6 (PRODUCT LEVEL)	SEE PAGE
Y	1	1	**135-0427**	2	LAMP GP-SIGNAL (24-VOLT) (PARK, TURN)	184
M	2	1	**5C-2890**	6	NUT (M6X1-THD)	
	3	1	**8T-4224**	6	WASHER-HARD (8.8X16X2-MM THK)	

M-METRIC PART
Y-SEPARATE ILLUSTRATION

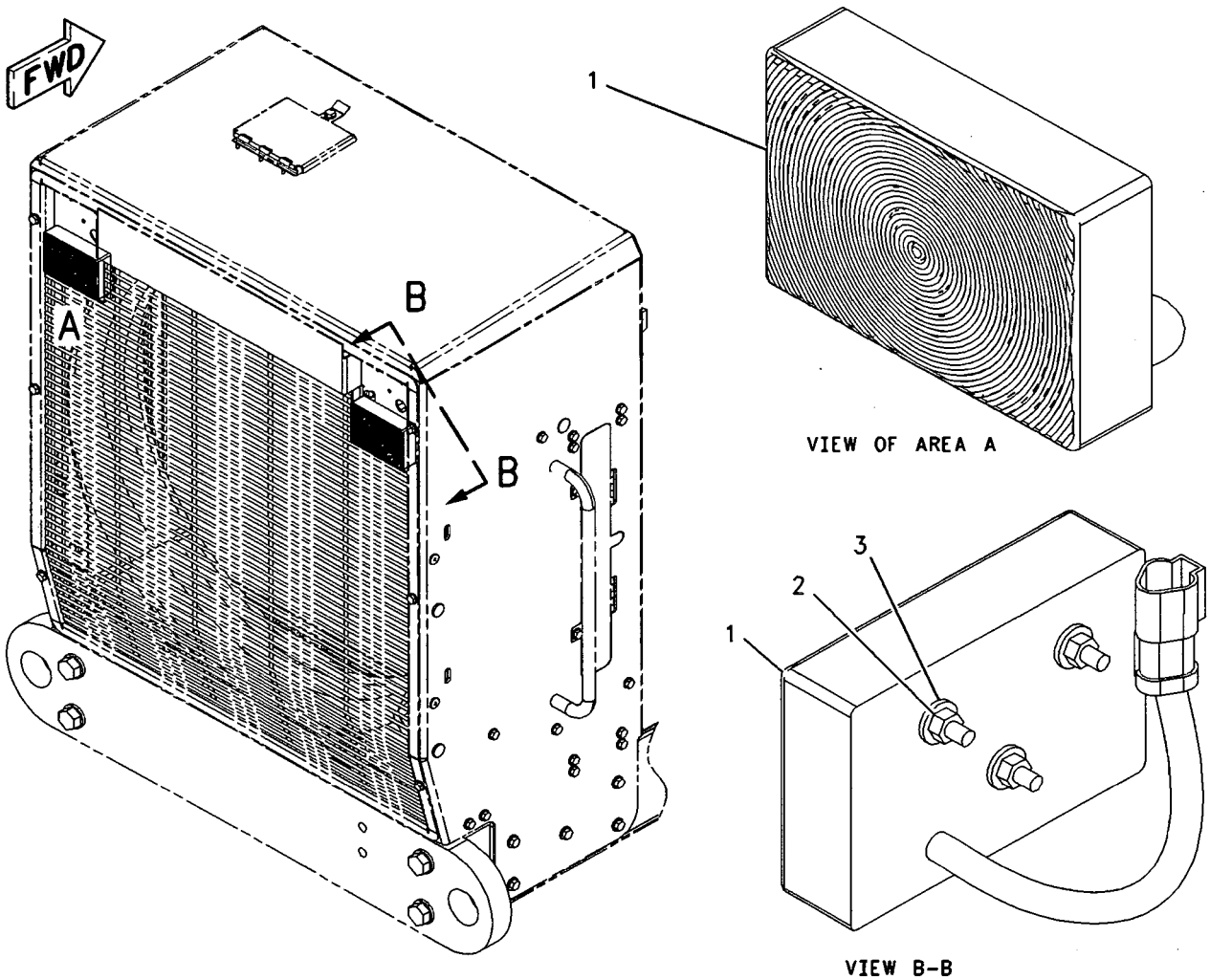

GRAPHIC #1

<END>

g00843802

188-9331 LIGHTING GP-SIGNAL–REAR TURN LAMPS

S/N: CCA214-UP

PART OF 188-9328 LIGHTING AR-FLOOD, 161-0770, 161-0771, 179-1548 LIGHTING AR-FLOOD & SIGNAL AN ATTACHMENT

SMCS-1430 **i02204141**

NOTE	REF NO	GRAPHIC REF	PART NUMBER	QTY	PART NAME 1 2 3 4 5 6 (PRODUCT LEVEL)	SEE PAGE
CY	1	1	**199-3368**	2	LAMP GP-SIGNAL (24-VOLT) (PARK, TURN)	185
M	2	1	**5C-2890**	6	NUT (M6X1-THD)	
	3	1	**8T-4224**	6	WASHER-HARD (8.8X16X2-MM THK)	

C-CHANGE FROM PREVIOUS TYPE
M-METRIC PART
Y-SEPARATE ILLUSTRATION

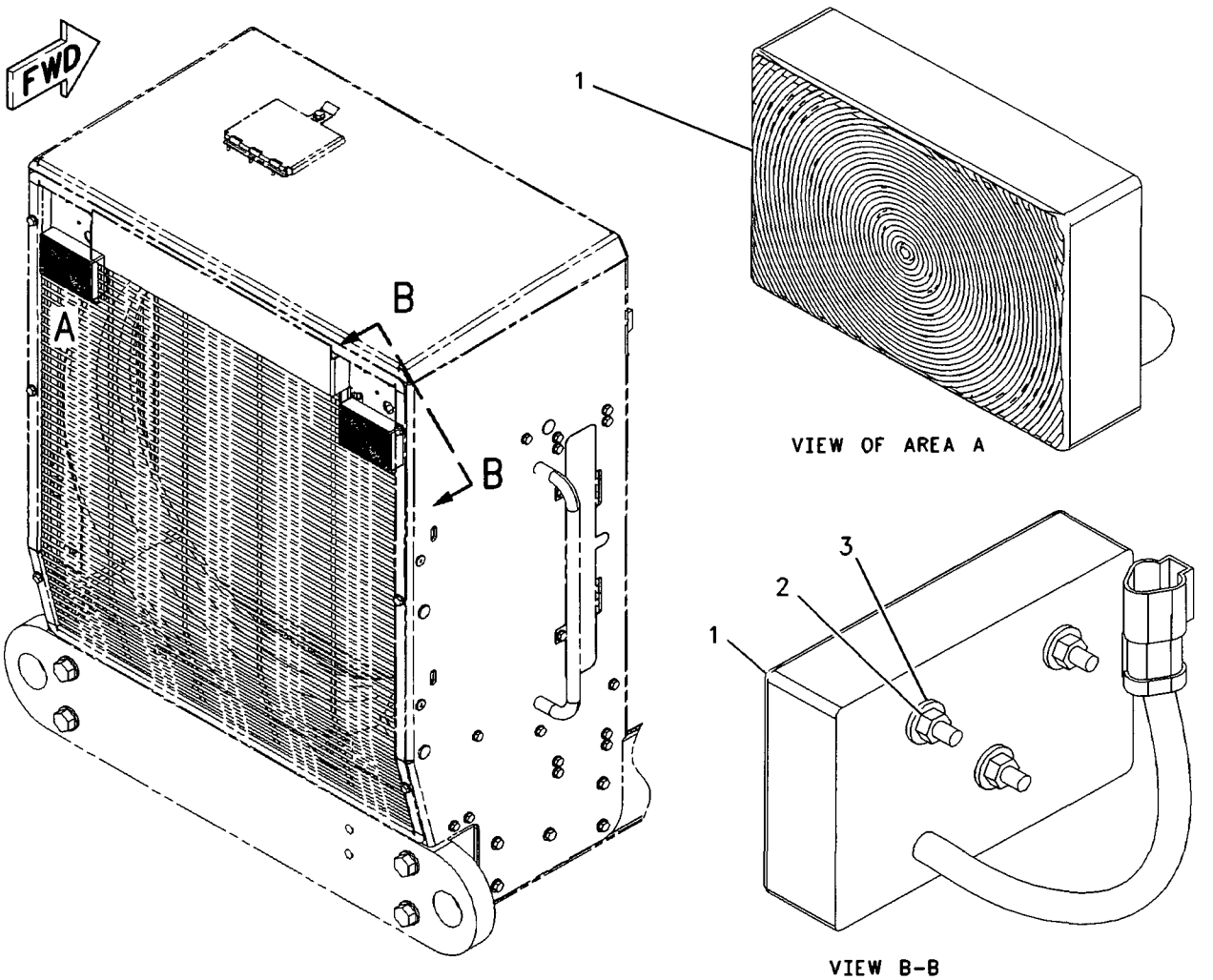

GRAPHIC #1 **<END>** g00843802

ELECTRICAL AND STARTING SYSTEM

161-0773 LIGHTING GP-WARNING–ROTATING

S/N: CCA1-UP
AN ATTACHMENT

SMCS-1429, 1431 **i02204140**

NOTE	REF NO	GRAPHIC REF	PART NUMBER	QTY	PART NAME 1 2 3 4 5 6 (PRODUCT LEVEL)	SEE PAGE
	1	1	**9W-1442**	1	FUSE (10-AMPERE)	
Y	2	1	**233-4253**	1	LIGHTING GP-WARNING	247

Y-SEPARATE ILLUSTRATION

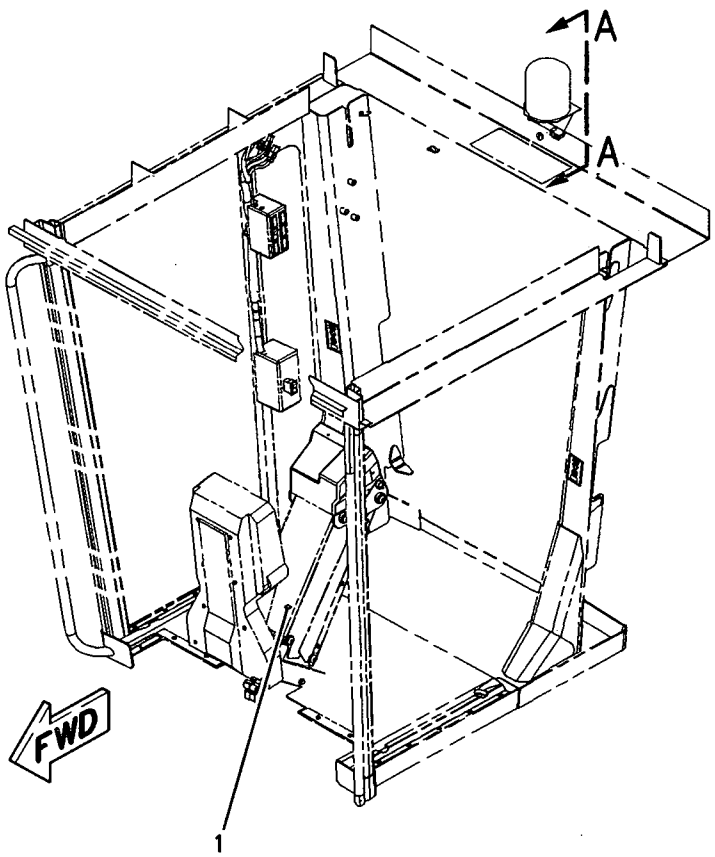

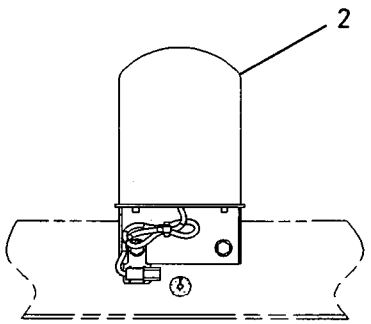

VIEW A-A

GRAPHIC #1 **<END>** g01005309

161-0774 LIGHTING GP-WARNING–ROTATING

S/N: CCA1-UP

AN ATTACHMENT

SMCS-1429, 1431 i01990760

NOTE	REF NO	GRAPHIC REF	PART NUMBER	QTY	PART NAME 1 2 3 4 5 6 (PRODUCT LEVEL)	SEE PAGE
	1	1	**9W-1442**	1	FUSE (10-AMPERE) (WARNING BEACON)	
Y	2	1	*239-9354*	1	LIGHTING GP-WARNING BEACON	249

Y-SEPARATE ILLUSTRATION

161-0774 **LIGHTING GP-WARNING** *(contd.)* **i01990760**

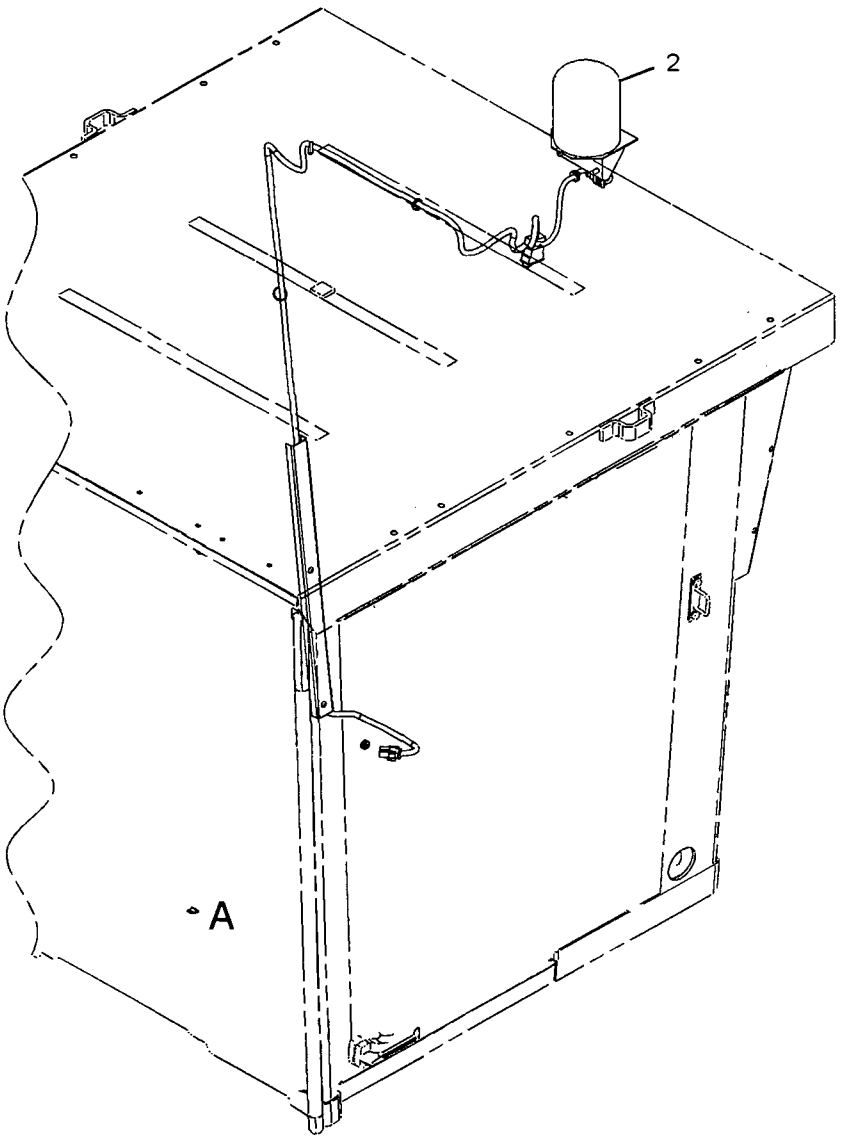

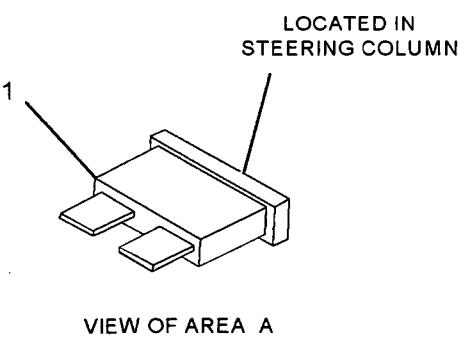

VIEW OF AREA A

GRAPHIC #1

<END>

g01035618

233-4253 LIGHTING GP-WARNING

S/N: CCA1-UP
PART OF 161-0773 LIGHTING GP-WARNING
AN ATTACHMENT
TYPE 1

SMCS-1429, 1431 i02204179

NOTE	REF NO	GRAPHIC REF	PART NUMBER	QTY	PART NAME 1 2 3 4 5 6 (PRODUCT LEVEL)	SEE PAGE
	1	1	3S-2093	1	STRAP-CABLE	
	2	1	107-4932	1	PLATE AS	
Y	3	1	128-6983	1	LAMP GP-WARNING BEACON (24-VOLT, AMBER)	186
	4	1	130-5300	1	CLIP	
	5	1	5P-8525	1	GROMMET	
	6	1	8T-4121	2	WASHER-HARD (11X21X2.5-MM THK)	
M	7	1	8T-4136	2	BOLT (M10X1.5X25-MM)	
	8	1	102-9862	1	SWITCH AS (WARNING BEACON)	
		1	3E-8822	1	ACTUATOR-ROCKER	
		1	3E-8825	1	LAMP (24-VOLT)	
		1	165-5674	1	LAMP-LED (LED)	

M-METRIC PART
Y-SEPARATE ILLUSTRATION

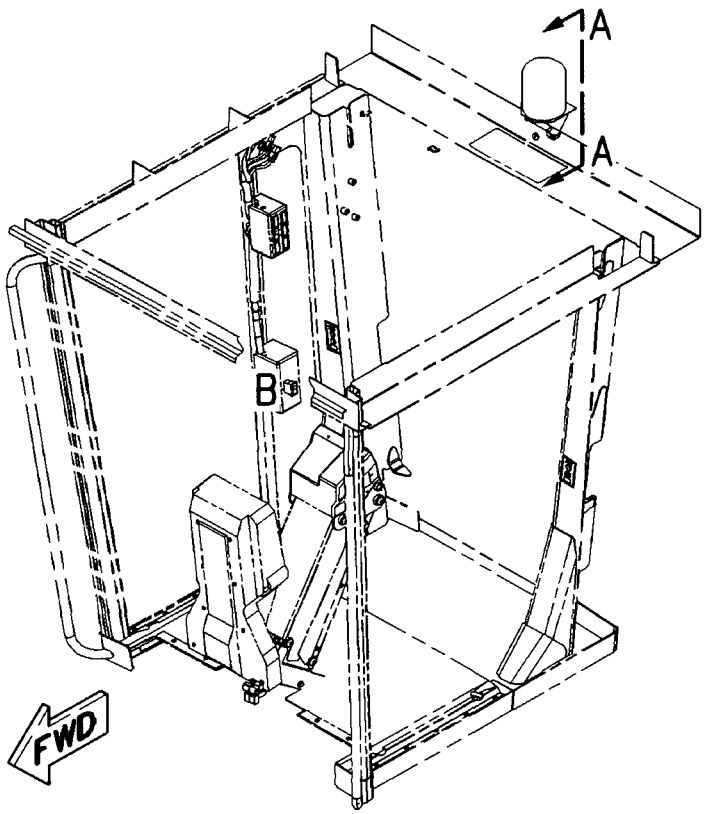

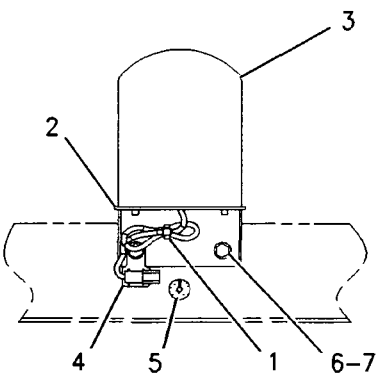

VIEW A-A

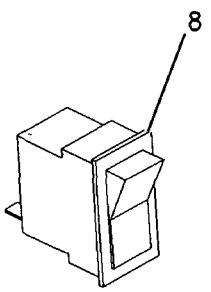

VIEW OF AREA B

GRAPHIC #1 <END> g01005314

233-4253 LIGHTING GP-WARNING

S/N: CCA1-UP
PART OF 161-0773 LIGHTING GP-WARNING
AN ATTACHMENT
TYPE 2

SMCS-1429, 1431 i02204180

NOTE	REF NO	GRAPHIC REF	PART NUMBER	QTY	PART NAME 1 2 3 4 5 6 (PRODUCT LEVEL)	SEE PAGE
	1	1	**3S-2093**	1	STRAP-CABLE	
	2	1	**107-4932**	1	PLATE AS	
CY	3	1	**235-3937**	1	LAMP GP-WARNING BEACON (24-VOLT, AMBER)	187
	4	1	**130-5300**	1	CLIP	
	5	1	**5P-8525**	1	GROMMET	
	6	1	**8T-4121**	2	WASHER-HARD (11X21X2.5-MM THK)	
M	7	1	**8T-4136**	2	BOLT (M10X1.5X25-MM)	
	8	1	**102-9862**	1	SWITCH AS (WARNING BEACON)	
		1	**3E-8822**	1	ACTUATOR-ROCKER	
		1	**3E-8825**	1	LAMP (24-VOLT)	
		1	**165-5674**	1	LAMP-LED (LED)	

C-CHANGE FROM PREVIOUS TYPE
M-METRIC PART
Y-SEPARATE ILLUSTRATION

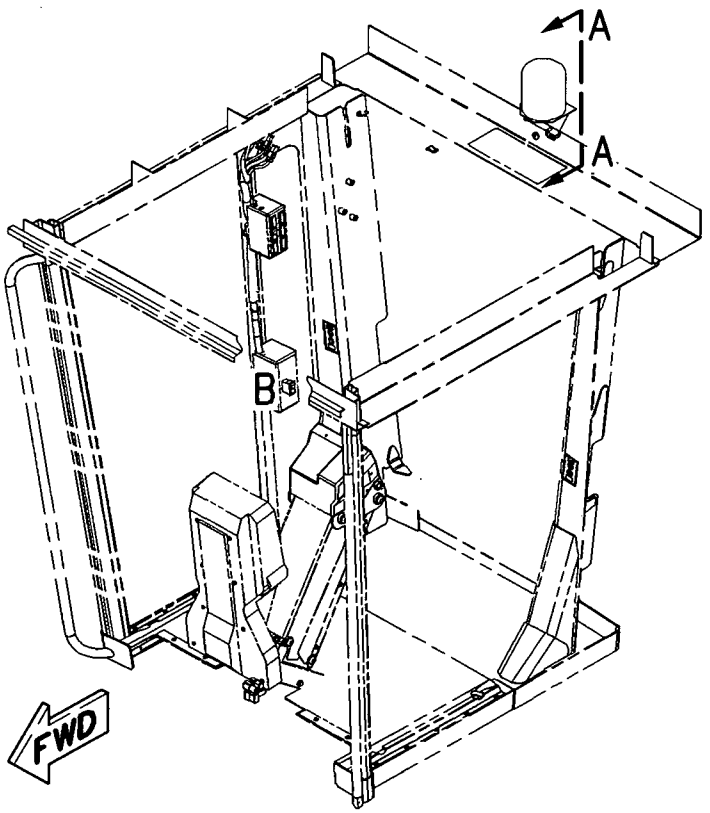

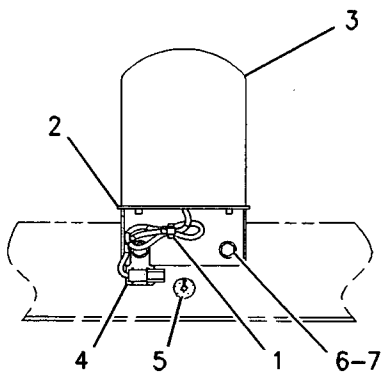

VIEW A-A

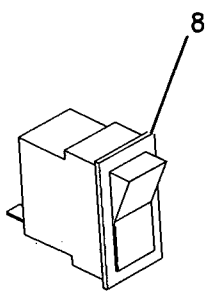

VIEW OF AREA B

GRAPHIC #1 <END> g01005314

239-9354 LIGHTING GP-WARNING BEACON

S/N: CCA1-UP
ROTATING, AMBER, OPEN
PART OF 161-0774 LIGHTING GP-WARNING
AN ATTACHMENT

SMCS-1431 **i02204181**

NOTE	REF NO	GRAPHIC REF	PART NUMBER	QTY	PART NAME 1 2 3 4 5 6 (PRODUCT LEVEL)	SEE PAGE
	1	1	**3S-2093**	6	STRAP-CABLE	
	2	1	**107-4932**	1	PLATE AS	
Y	3	1	**128-6983**	1	LAMP GP-WARNING BEACON (24-VOLT, AMBER)	186
	4	1	**169-3230**	1	HARNESS AS-FRONT LIGHTING	
		1	**102-8804**	1	KIT-RECEPTACLE (4-PIN)	
					(INCLUDES RECEPTACLE AS & WEDGE)	
		1	**155-2270**	1	KIT-CONNECTING PLUG (2-PIN)	
					(INCLUDES PLUG AS & WEDGE)	
	5	1	**173-1885**	1	COVER	
	6	1	**115-3070**	1	CLIP AS-CONNECT (4-PIN)	
	7	1	**130-5300**	1	CLIP	
	8	1	**5P-8525**	1	GROMMET	
	9	1	**8T-4121**	2	WASHER-HARD (11X21X2.5-MM THK)	
M	10	1	**8T-4136**	2	BOLT (M10X1.5X25-MM)	
	11	1	**9D-8508**	1	GROMMET	
M	12	1	**9X-2043**	2	SCREW-TRUSS HEAD (M6X1X14-MM)	
	13	1	**102-9862**	1	SWITCH AS (WARNING BEACON)	
			3E-8822	1	ACTUATOR-ROCKER	
			3E-8825	1	LAMP (24-VOLT)	

M-METRIC PART
Y-SEPARATE ILLUSTRATION

239-9354 LIGHTING GP-WARNING BEACON *(contd.)* i02204181

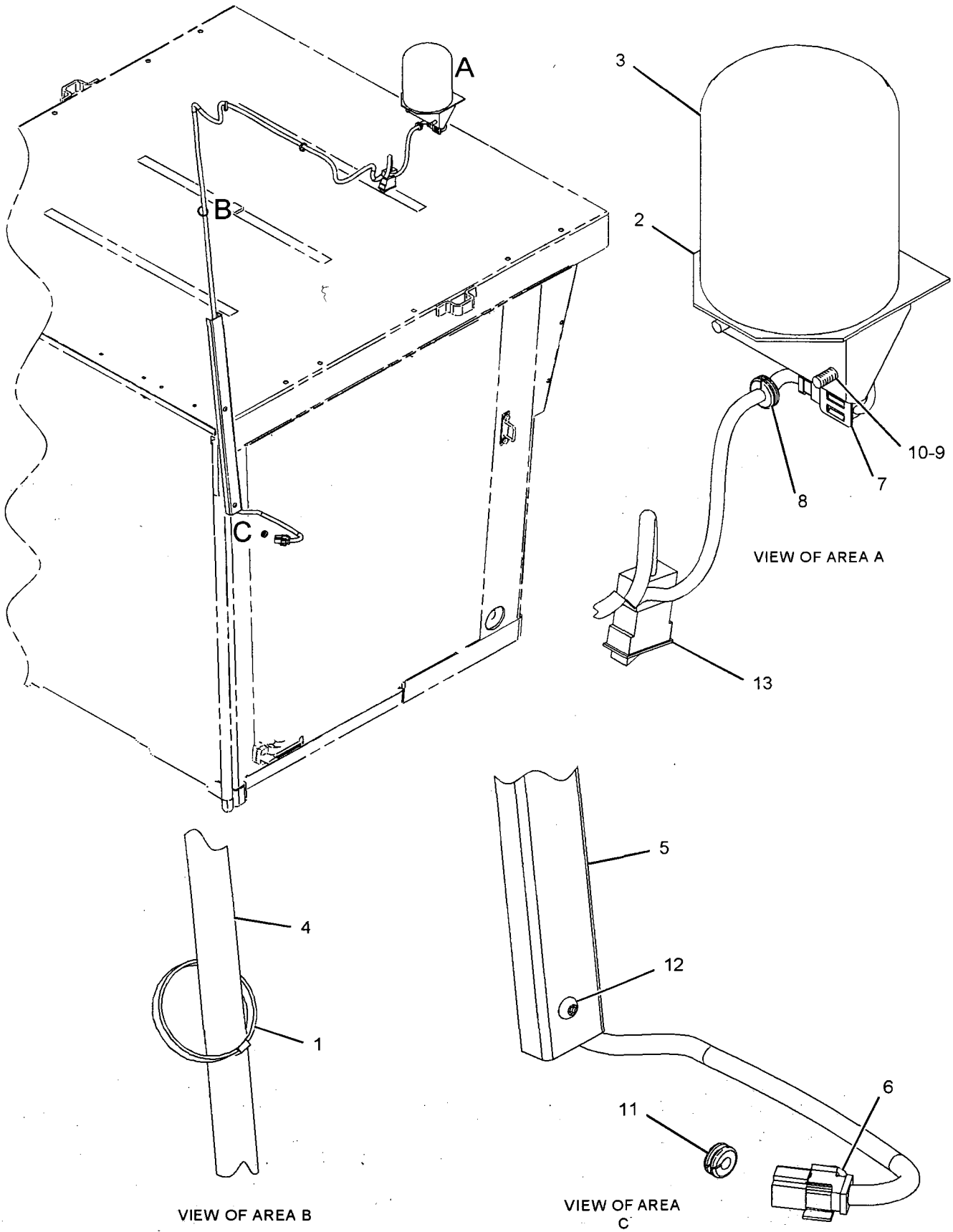

GRAPHIC #1

<END>

g01070888

117-3915 MOTOR GP-ELECTRIC

S/N: CCA1-UP
24V
PART OF 123-8867 PUMP & MOTOR GP-SEC STEERING
AN ATTACHMENT

SMCS-5927 **i00138924**

NOTE	REF NO	GRAPHIC REF	PART NUMBER	QTY	PART NAME 1 2 3 4 5 6 (PRODUCT LEVEL)	SEE PAGE
	1	1	**6V-8801**	2	NUT (3/8-16-THD)	
	2	1	**7X-0608**	2	WASHER-HARD (10.2X16X2-MM THK)	

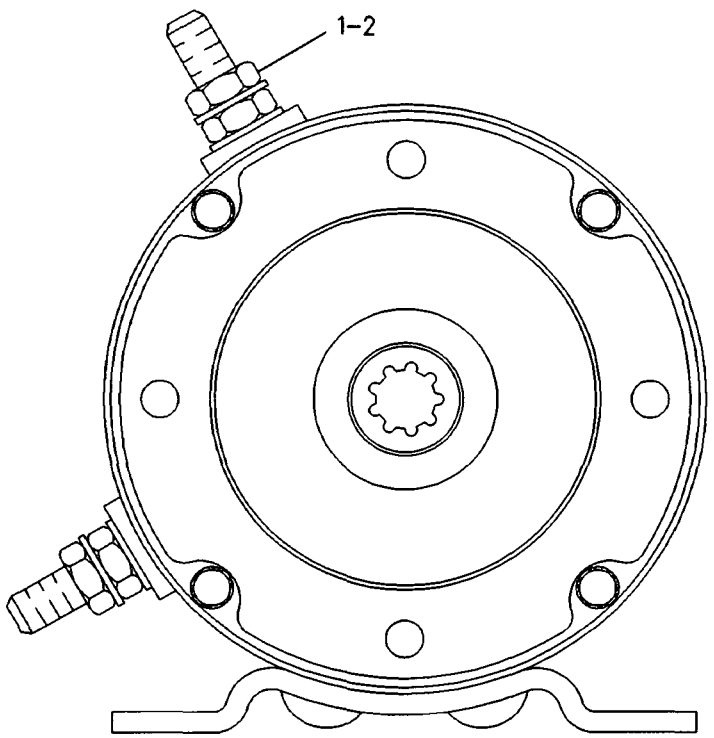

GRAPHIC #1 **<END>** g00085784

160-2443 SENSOR GP-POSITION–THROTTLE

S/N: CCA1-UP
ROTARY
PART OF 159-5935 CONTROL GP-GOVERNOR

SMCS-1408, 1905 i01431988

NOTE	REF NO	GRAPHIC REF	PART NUMBER	QTY	PART NAME 1 2 3 4 5 6 (PRODUCT LEVEL)	SEE PAGE
	1	1	102-8803	1	KIT-RECEPTACLE (3-PIN)	
					(INCLUDES RECEPTACLE AS & WEDGE)	
	2	1	8T-8729	3	PIN-CONNECTOR	
	3	1	3E-3371	1	WEDGE-RECEPTACLE LOCK (3-PIN)	

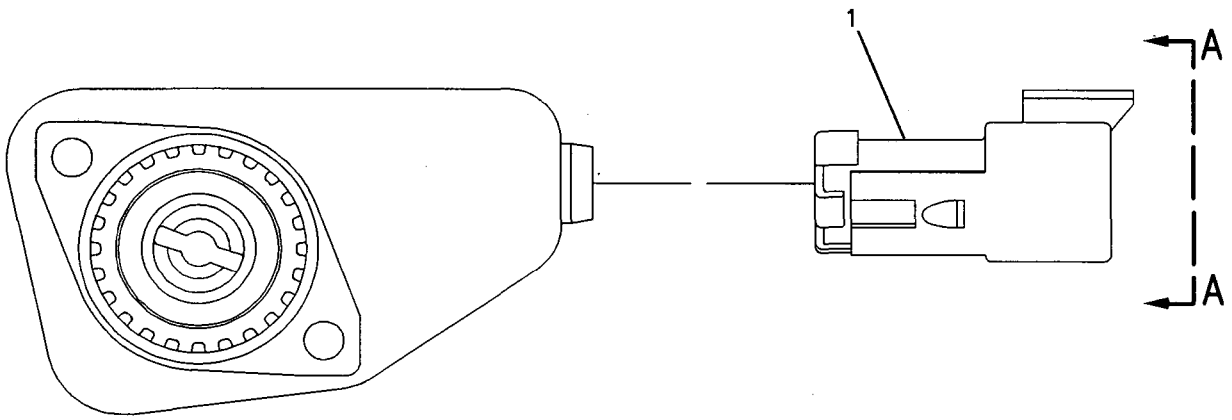

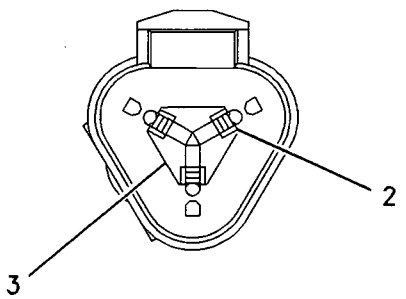

VIEW A-A

GRAPHIC #1 <END> g00637818

214-4863 SENSOR GP-POSITION-CLUTCH

S/N: CCA1-UP

PART OF 159-5933 CONTROL GP-CLUTCH

SMCS-1408, 1905 i01898168

NOTE	REF NO	GRAPHIC REF	PART NUMBER	QTY	PART NAME 1 2 3 4 5 6 (PRODUCT LEVEL)	SEE PAGE
	1	1	102-8803	1	KIT-RECEPTACLE (3-PIN)	
					(INCLUDES RECEPTACLE AS & WEDGE)	
	2	1	186-3735	1	PIN-CONNECTOR	
	3	1	3E-3371	1	WEDGE-RECEPTACLE LOCK (3-PIN)	

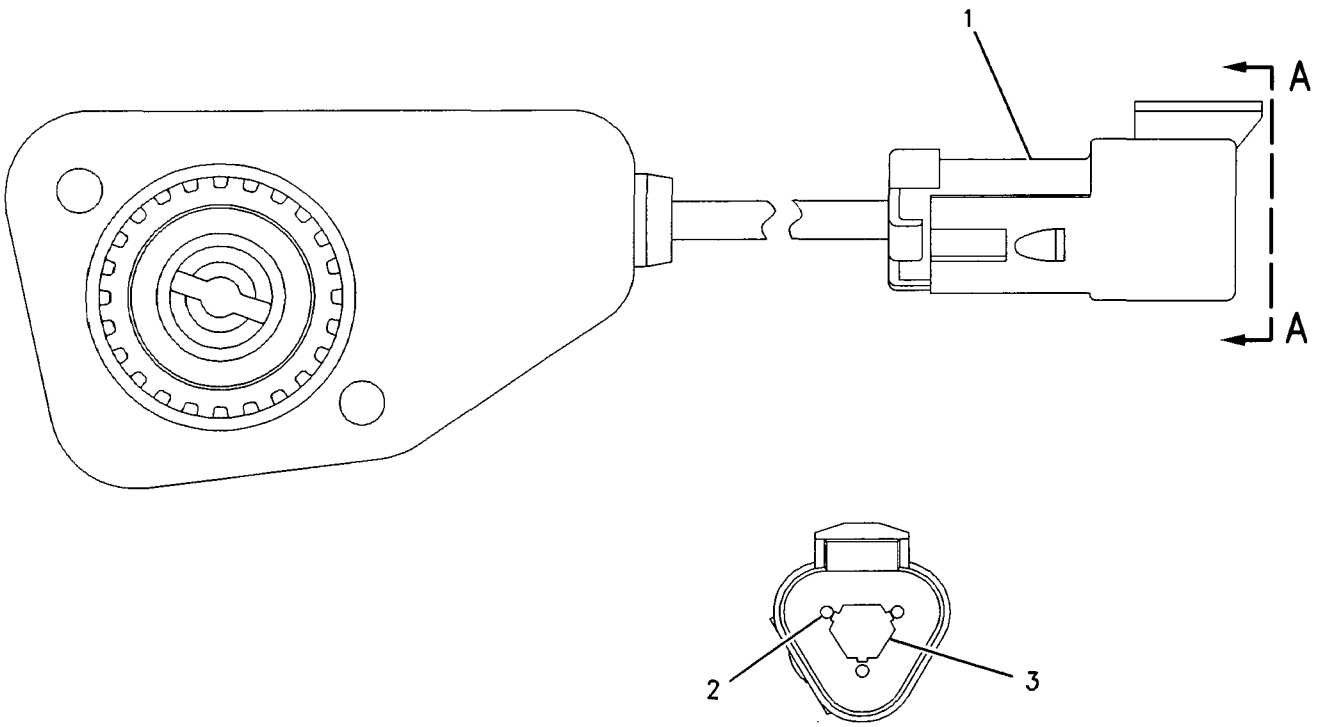

VIEW A-A

GRAPHIC #1 <END> g00925281

167-1709 SENSOR GP-PRESSURE–HYDRAULIC FAN

S/N: CCA1-534
PART OF 175-6981 LINES GP-HYDRAULIC FAN
ALSO AN ATTACHMENT

SMCS-4351, 4352 **i02205190**

NOTE	REF NO	GRAPHIC REF	PART NUMBER	QTY	PART NAME 1 2 3 4 5 6 (PRODUCT LEVEL)	SEE PAGE
BE	1	1	**9X-1813**		SLEEVE	
	2	1	**155-2260**	1	KIT-CONNECTING PLUG (3-PIN)	
					(KIT INCLUDES PLUG AS & WEDGE)	
	3	1	**194-5226**	3	WIRE AS-HARNESS (16-GA TO 18-GA)	
					–OR–	
		1	**194-5227**	3	HARNESS AS-SENSOR (14-GA WIRE)	
	4	1	**3E-3368**	1	WEDGE-PLUG LOCK (3-PIN)	

B-USE AS REQUIRED
E-ORDER BY THE CENTIMETER

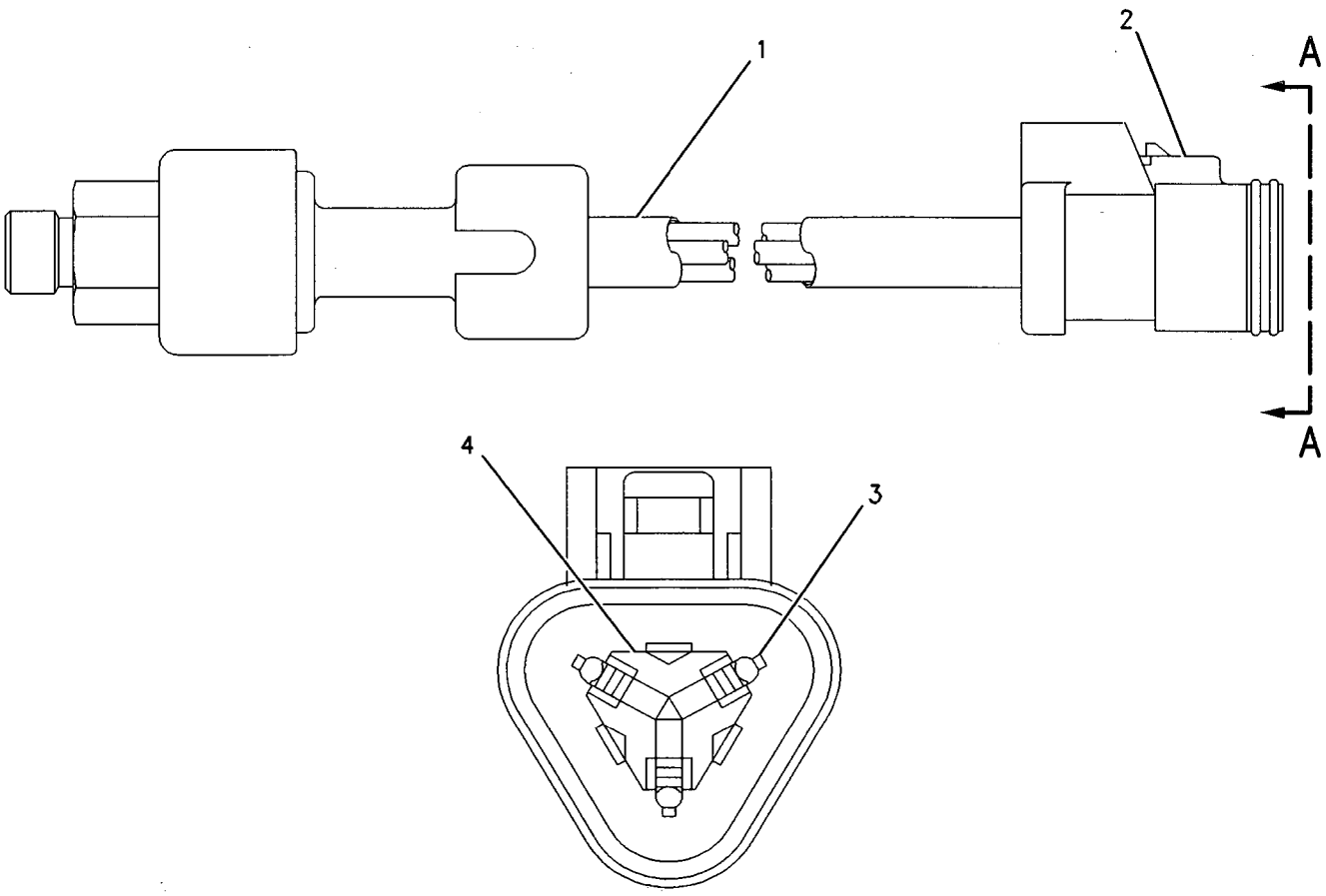

VIEW A-A

GRAPHIC #1 **<END>** g00888413

194-6724 SENSOR GP-PRESSURE–INLET MANIFOLD

S/N: 3PD1-UP

PART OF 197-8395 SENSOR GP-PRESSURE

SMCS-4351, 4352 **i02034021**

NOTE	REF NO	GRAPHIC REF	PART NUMBER	QTY	PART NAME 1 2 3 4 5 6 (PRODUCT LEVEL)	SEE PAGE
BE	1	1	**9X-1813**		SLEEVE	
	2	1	**155-2260**	1	KIT-CONNECTING PLUG (3-PIN)	
					(INCLUDES PLUG AS AND WEDGE)	
	3	1	**180-9340**	3	SOCKET-CONNECTOR	
	4	1	**3E-3368**	1	WEDGE-PLUG LOCK (3-PIN)	

B-USE AS REQUIRED
E-ORDER BY THE CENTIMETER

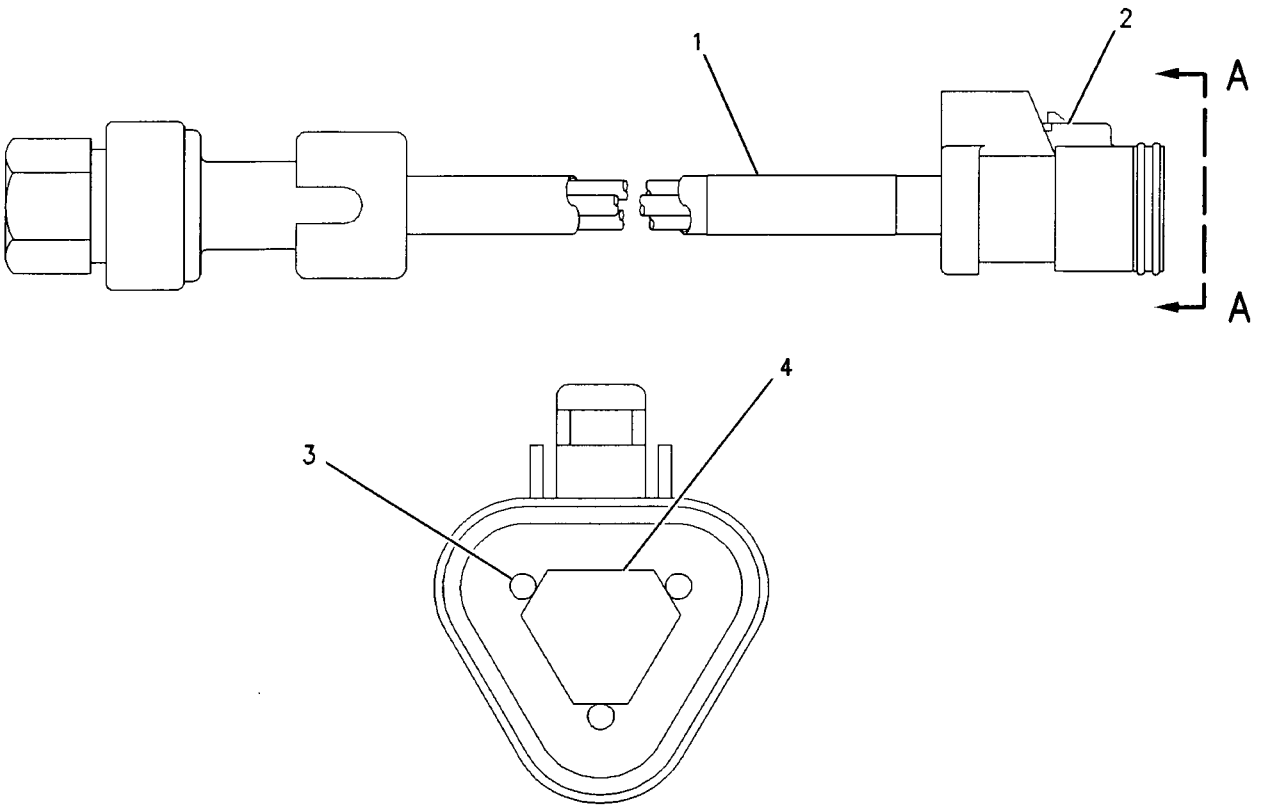

VIEW A-A

GRAPHIC #1 **<END>** g00851220

197-8393 SENSOR GP-PRESSURE–ATMOSPHERIC AIR

S/N: 3PD1-UP

PART OF 171-1103 WIRING GP-ENGINE

SMCS-4351, 4352 i01855744

NOTE	REF NO	GRAPHIC REF	PART NUMBER	QTY	PART NAME 1 2 3 4 5 6 (PRODUCT LEVEL)	SEE PAGE
	1	1	**161-1703**	1	SENSOR GP-PRESSURE	
	2	1	**6V-5049**	1	SEAL-O-RING	

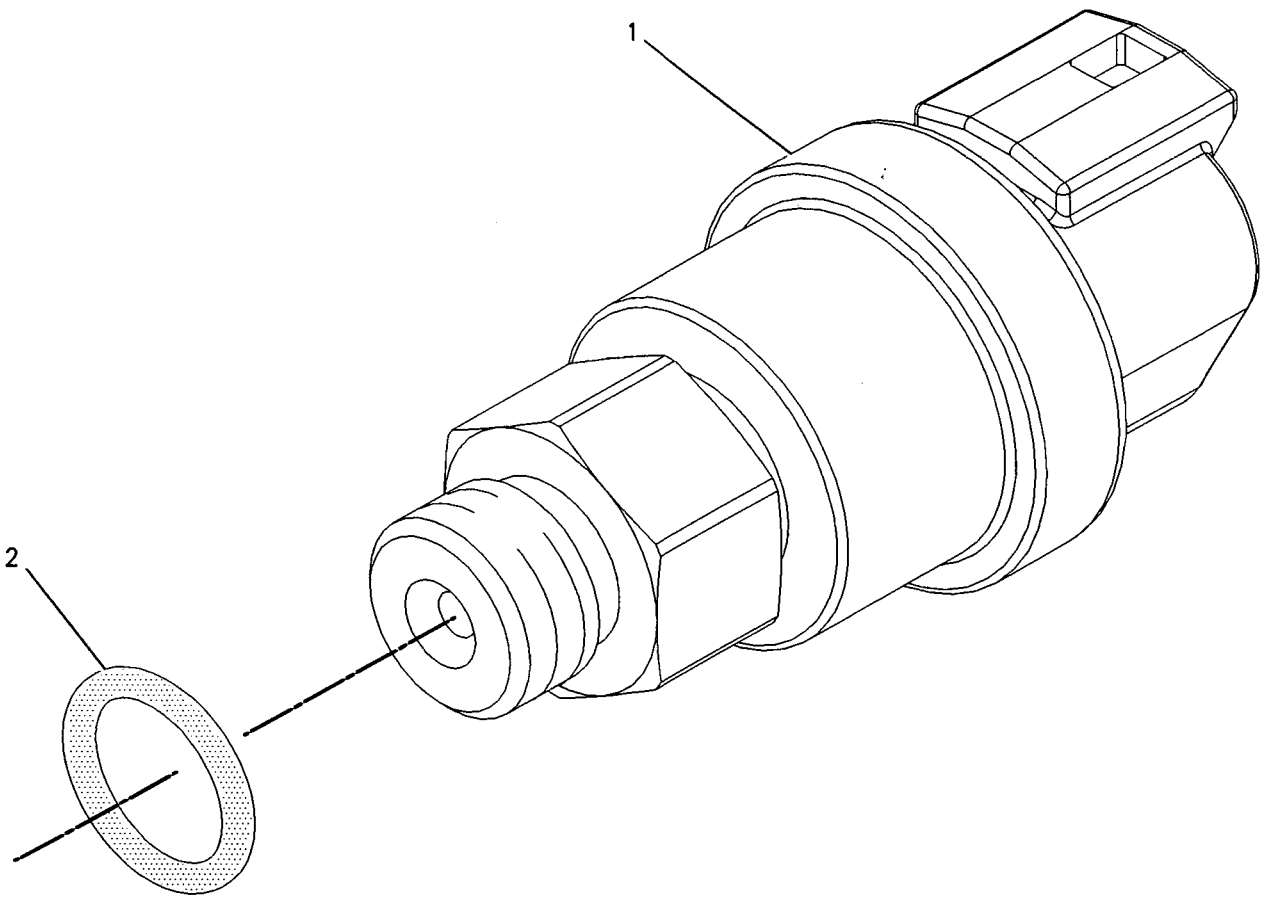

GRAPHIC #1 **<END>** g00855973

197-8394 SENSOR GP-PRESSURE–FUEL

S/N: 3PD1-UP

PART OF 171-1103 WIRING GP-ENGINE

SMCS-4351, 4352 i01855745

NOTE	REF NO	GRAPHIC REF	PART NUMBER	QTY	PART NAME 1 2 3 4 5 6 (PRODUCT LEVEL)	SEE PAGE
	1	1	**161-1705**	1	SENSOR GP-PRESSURE	
	2	1	**6V-5048**	1	SEAL-O-RING	

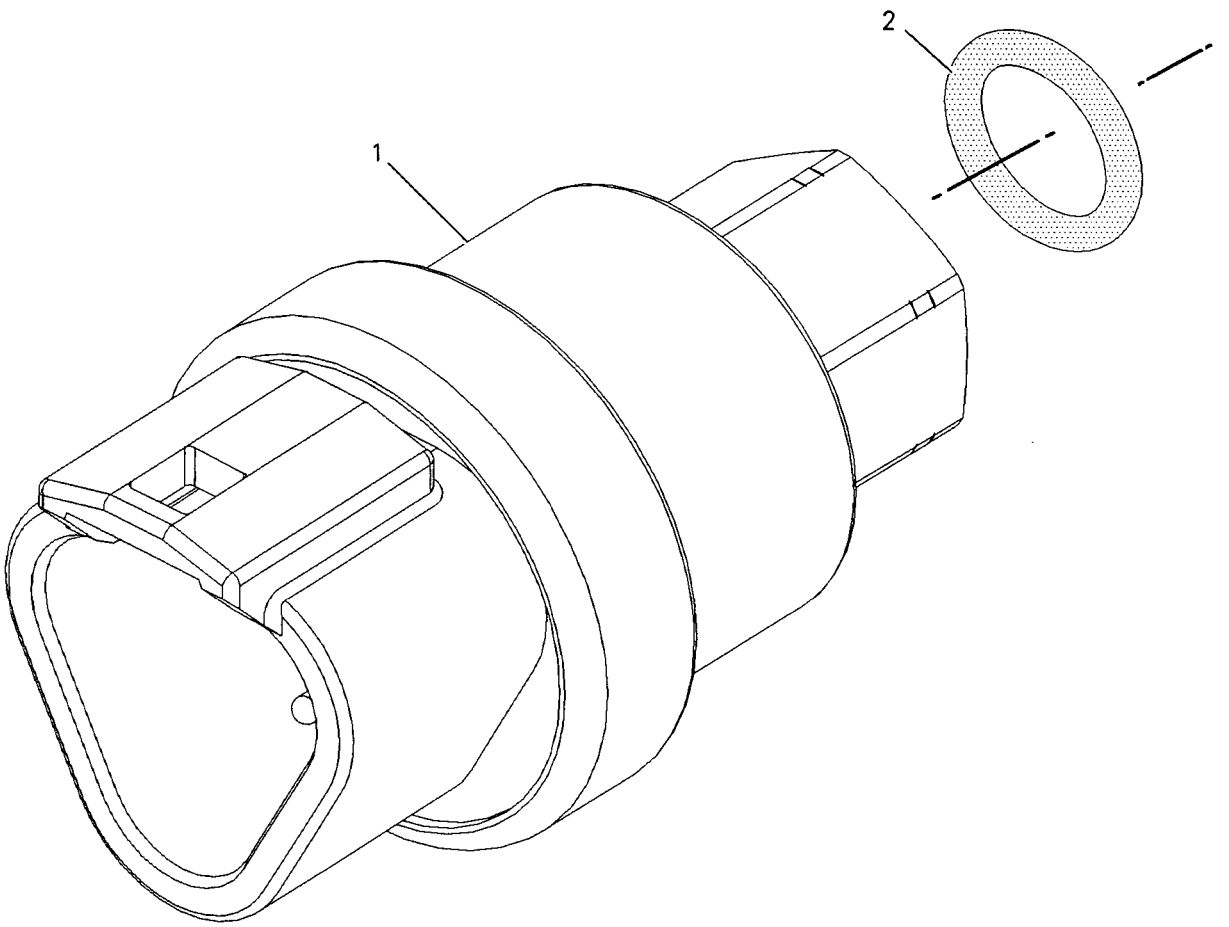

GRAPHIC #1 **<END>** g00856107

197-8395 SENSOR GP-PRESSURE–INLET MANIFOLD

S/N: 3PD1-UP

PART OF 171-1103 WIRING GP-ENGINE

SMCS-4351, 4352 i01855747

NOTE	REF NO	GRAPHIC REF	PART NUMBER	QTY	PART NAME 1 2 3 4 5 6 (PRODUCT LEVEL)	SEE PAGE
Y	1	1	**194-6724**	1	SENSOR GP-PRESSURE	255
	2	1	**6V-5048**	1	SEAL-O-RING	

Y-SEPARATE ILLUSTRATION

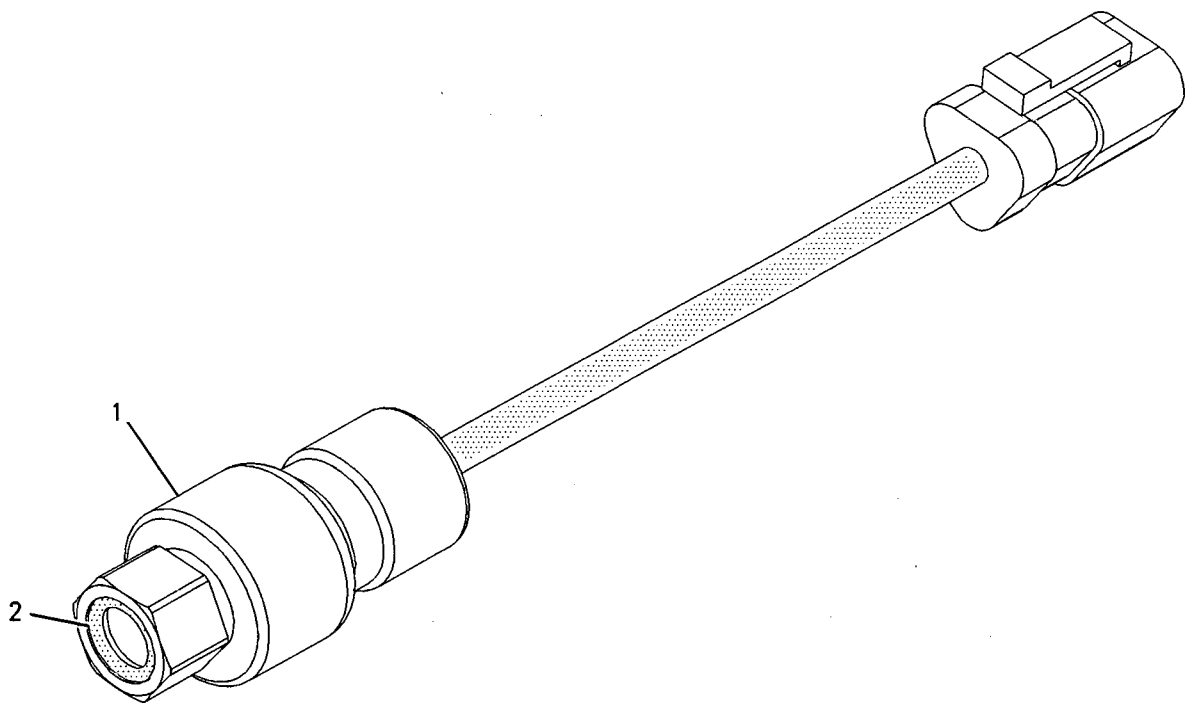

GRAPHIC #1 **<END>** g00870289

183-8597 SENSOR GP-SPEED–TRANSMISSION OUTPUT–TRANSMISSION INPUT, OUTPUT

S/N: BJN1-UP

PART OF 180-9146 CASE & PARTS GP-TRANSMISSION

SMCS-1907, 3175 **i02205193**

NOTE	REF NO	GRAPHIC REF	PART NUMBER	QTY	PART NAME 1 2 3 4 5 6 (PRODUCT LEVEL)	SEE PAGE
	1	1	**171-5349**	1	MARKER	
	2	1	**102-8802**	1	KIT-RECEPTACLE (2-PIN)	
					(INCLUDES RECEPTACLE AS & WEDGE)	
	3	1	**186-3735**	2	PIN-CONNECTOR	
	4	1	**3E-3365**	1	WEDGE-RECEPTACLE LOCK (2-PIN)	
BE	5	1	**9X-1813**		SLEEVE	

B-USE AS REQUIRED
E-ORDER BY THE CENTIMETER

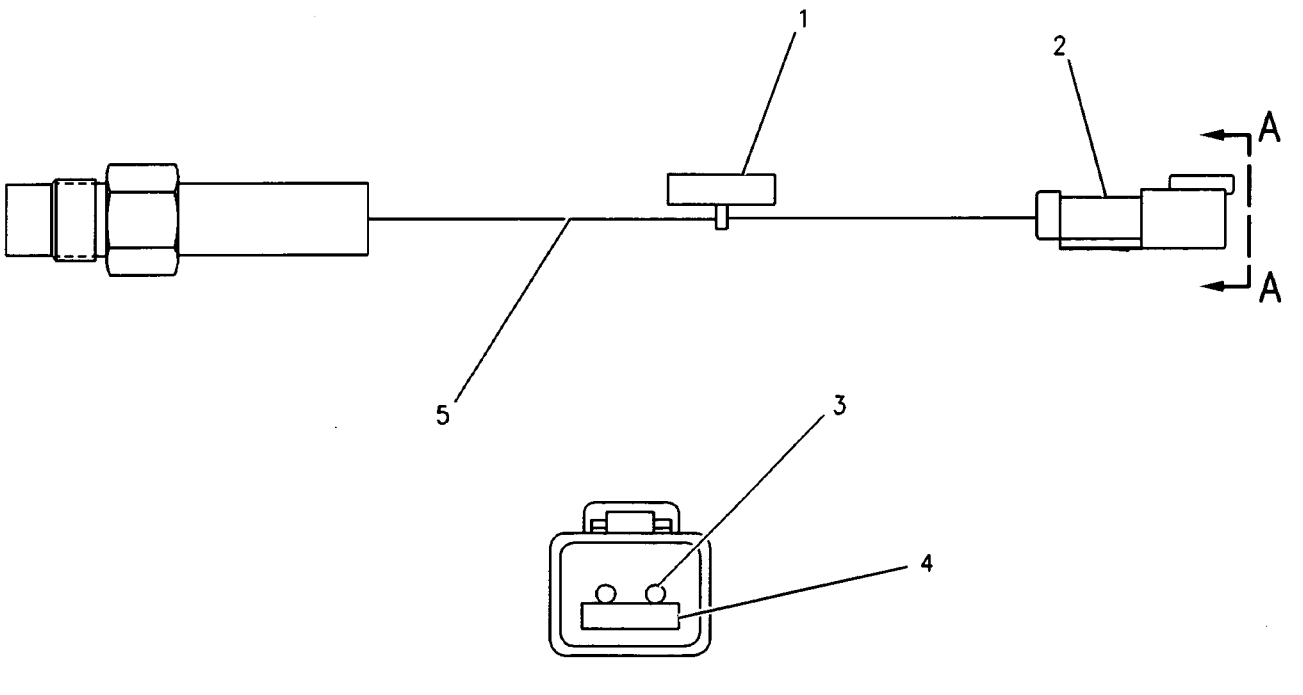

VIEW A-A

GRAPHIC #1 **<END>** g00680294

197-8396 SENSOR GP-SPEED–CRANKSHAFT TIMING

S/N: 3PD1-UP

PART OF 171-1103 WIRING GP-ENGINE

SMCS-1907, 3175 i01855748

NOTE	REF NO	GRAPHIC REF	PART NUMBER	QTY	PART NAME 1 2 3 4 5 6 (PRODUCT LEVEL)	SEE PAGE
	1	1	**188-7511**	1	SENSOR GP-SPEED	
	2	1	**203-3940**	1	SEAL-O-RING	

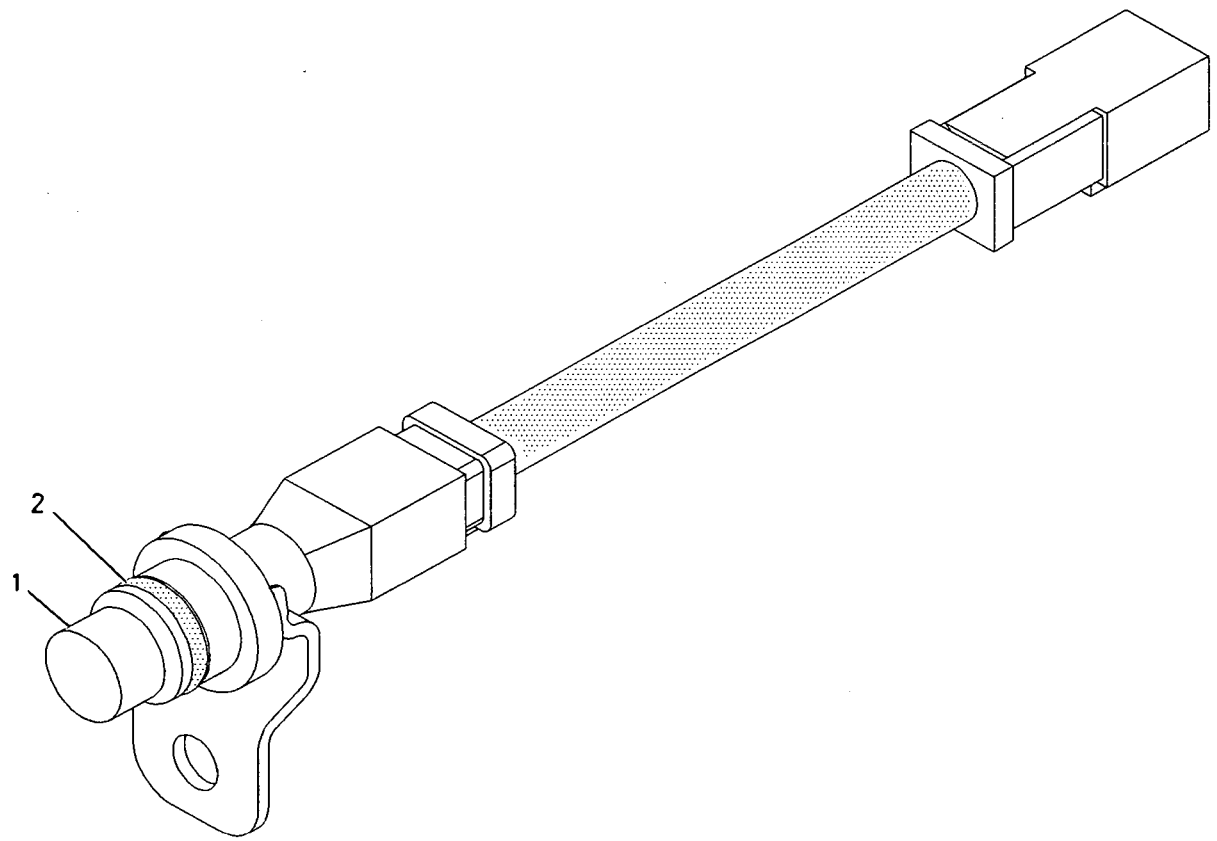

GRAPHIC #1 **<END>** g00870282

197-8397 SENSOR GP-SPEED–CAMSHAFT TIMING

S/N: 3PD1-UP

PART OF 171-1103 WIRING GP-ENGINE

SMCS-1907, 3175 i01855749

NOTE	REF NO	GRAPHIC REF	PART NUMBER	QTY	PART NAME 1 2 3 4 5 6 (PRODUCT LEVEL)	SEE PAGE
	1	1	**189-9801**	1	SENSOR GP-SPEED	
	2	1	**203-3940**	1	SEAL-O-RING	

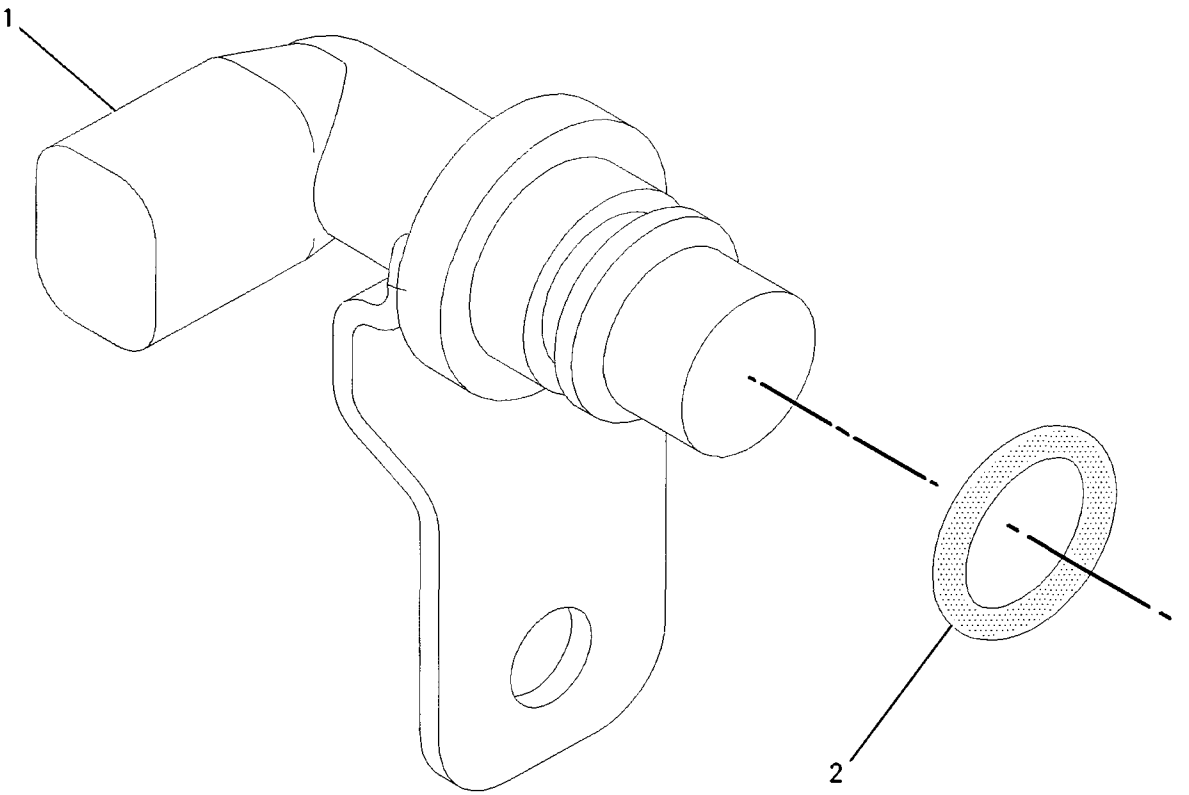

GRAPHIC #1 **<END>** g00856021

3E-8700 SENSOR GP-TEMPERATURE–TRANSMISSION OIL

S/N: BJN1-UP

PART OF 180-9146 CASE & PARTS GP-TRANSMISSION

SMCS-1330 i02204190

NOTE	REF NO	GRAPHIC REF	PART NUMBER	QTY	PART NAME 1 2 3 4 5 6 (PRODUCT LEVEL)	SEE PAGE
	1	1	**8T-8730**	3	SOCKET-CONNECTOR	
	2	1	**102-8813**	1	SEAL	
	3	1	**102-8808**	1	KIT-CONNECTING PLUG (3-PIN)	
E	4	1	**9X-1813**		SLEEVE (31-CM)	
	5	1	**3E-3368**	1	WEDGE-PLUG LOCK (3-PIN)	

E-ORDER BY THE CENTIMETER

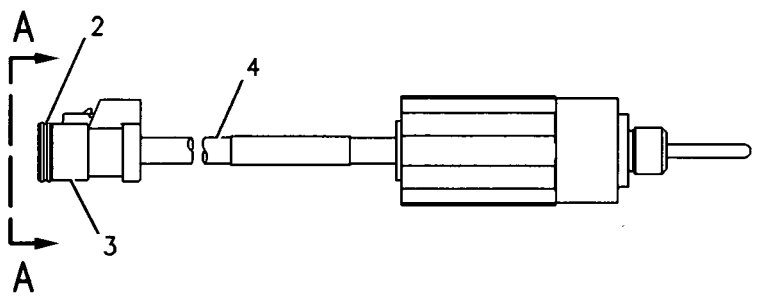

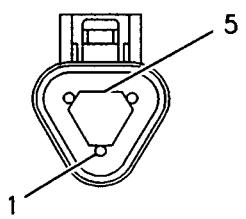

VIEW A-A

GRAPHIC #1 **<END>** g00248316

197-8391 SENSOR GP-TEMPERATURE–FUEL–INLET MANIFOLD

S/N: 3PD1-UP

PART OF 171-1103 WIRING GP-ENGINE

SMCS-1330 i02203394

NOTE	REF NO	GRAPHIC REF	PART NUMBER	QTY	PART NAME 1 2 3 4 5 6 (PRODUCT LEVEL)	SEE PAGE
	1	1	130-9811	1	SENSOR GP-TEMPERATURE	
	2	1	8L-2786	1	SEAL-O-RING	

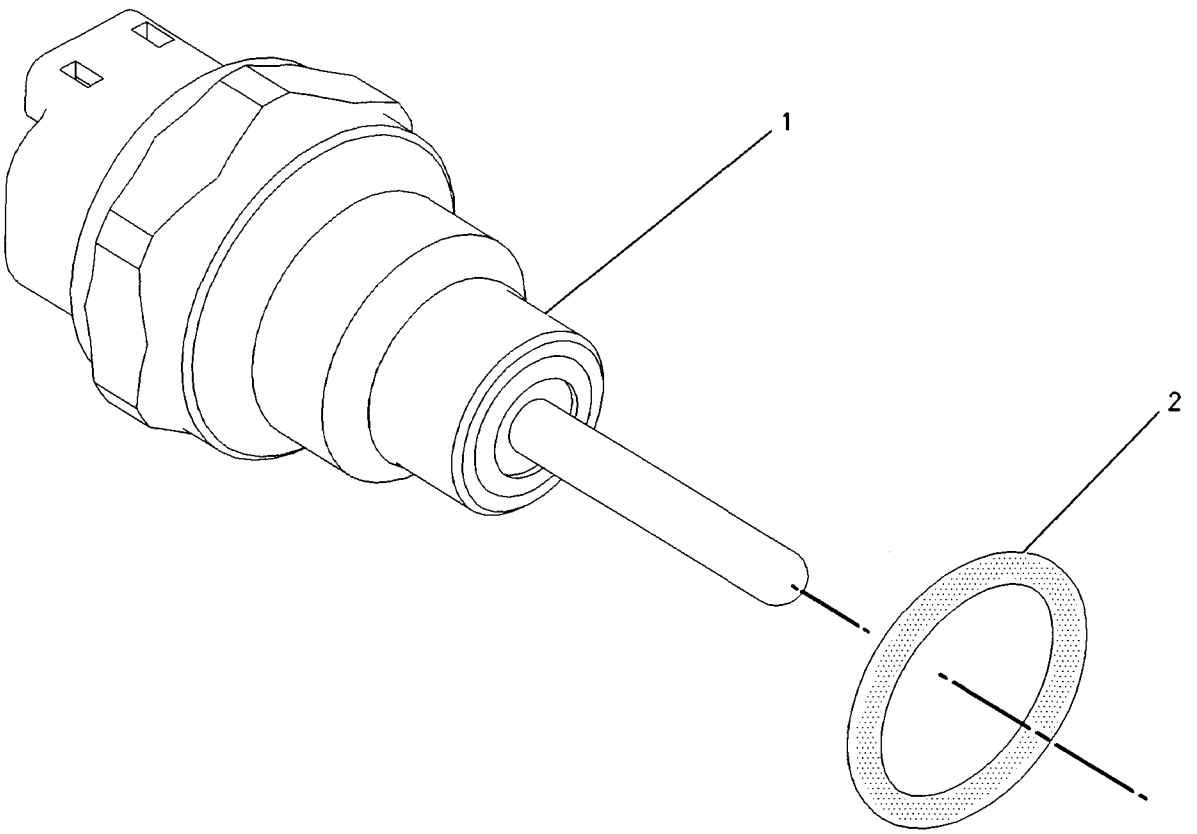

GRAPHIC #1 <END> g00856011

197-8392 SENSOR GP-TEMPERATURE–COOLANT

S/N: 3PD1-UP

PART OF 171-1103 WIRING GP-ENGINE

SMCS-1330 i02203395

NOTE	REF NO	GRAPHIC REF	PART NUMBER	QTY	PART NAME 1 2 3 4 5 6 (PRODUCT LEVEL)	SEE PAGE
	1	1	130-9811	1	SENSOR GP-TEMPERATURE	
	2	1	6V-6609	1	SEAL-O-RING	

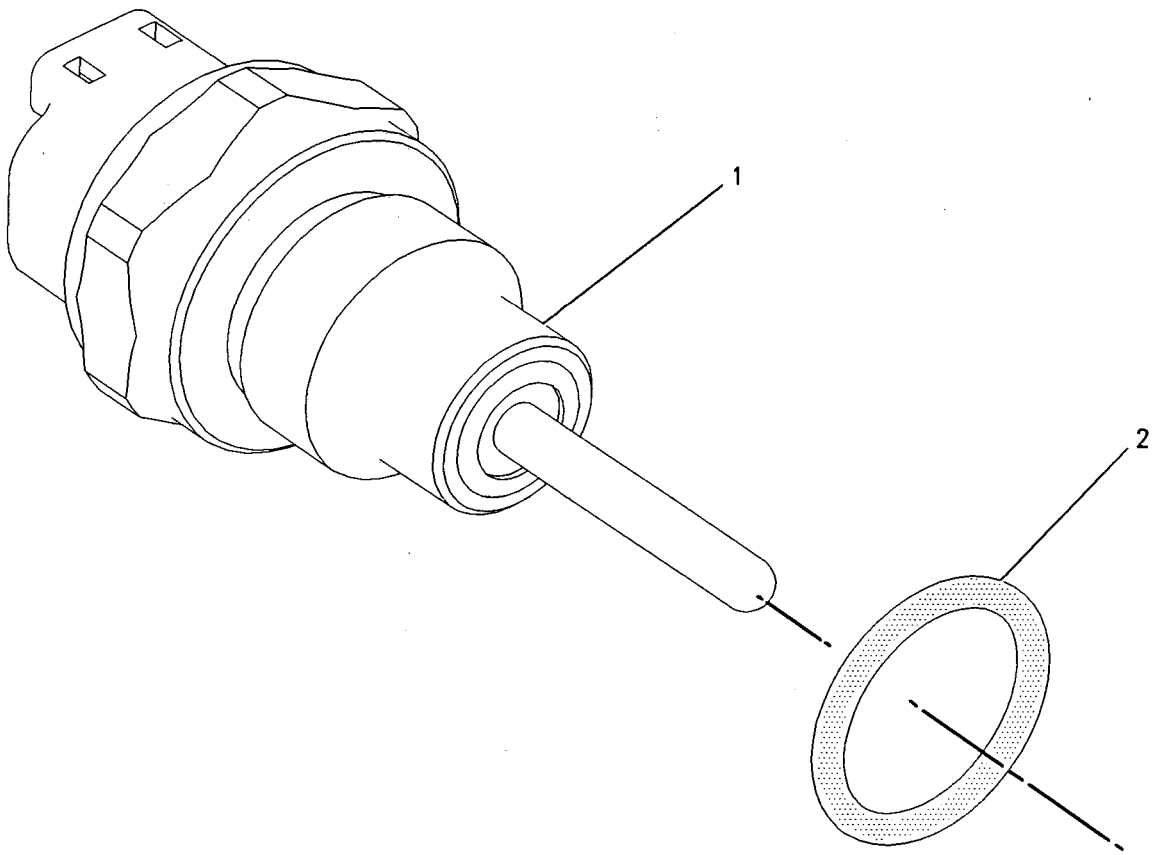

GRAPHIC #1 <END> g00856005

ELECTRICAL AND STARTING SYSTEM

173-5304 STARTING AID GP-ETHER

S/N: CCA1-UP
PART OF 197-0579 STARTING AID GP-ETHER
AN ATTACHMENT

SMCS-1456 **i02101681**

NOTE	REF NO	GRAPHIC REF	PART NUMBER	QTY	PART NAME 1 2 3 4 5 6 (PRODUCT LEVEL)	SEE PAGE
	1	1	**3E-5239**	1	RELAY AS (24-VOLT) (ETHER STARTING AID)	
	2	1	**3E-6332**	1	VALVE GP-ETHER STARTING (24-VOLT)	
		1	**3E-3365**	1	WEDGE-RECEPTACLE LOCK (2-PIN)	
		1	**7N-9801**	1	GASKET	
		1	**186-3735**	2	PIN-CONNECTOR	
		1	**102-8802**	1	KIT-RECEPTACLE (2-PIN)	
					(INCLUDES RECEPTACLE AS & WEDGE)	
	3	1	**3S-2093**	2	STRAP-CABLE	
	4	1	**7N-2059**	1	CLAMP AS	
	5	1	**174-5636**	1	TUBE AS	
	6	1	**177-9812**	1	HARNESS AS-STARTING AID	
		1	**155-2270**	1	KIT-CONNECTING PLUG (2-PIN)	
					(INCLUDES PLUG AS & WEDGE)	
		1	**102-8804**	1	KIT-RECEPTACLE (4-PIN)	
					(INCLUDES RECEPTACLE AS & WEDGE)	
	7	1	**033-8248**	1	CLIP	
	8	1	**130-5300**	1	CLIP	
	9	1	**4D-7794**	1	CLIP	
	10	1	**4H-2558**	1	GROMMET	
	11	1	**6V-2686**	1	CLIP	
	12	1	**8T-4121**	2	WASHER-HARD (11X21X2.5-MM THK)	
M	13	1	**8T-4136**	1	BOLT (M10X1.5X25-MM)	
M	14	1	**8T-4189**	4	BOLT (M8X1.25X20-MM)	
M	15	1	**8T-4191**	1	BOLT (M10X1.5X16-MM)	
	16	1	**8T-4224**	4	WASHER-HARD (8.8X16X2-MM THK)	
AF			**7N-0296**	1	CYLINDER AS-ETHER	
					(MAY BE PROCURED LOCALLY FROM CAT DEALER)	

A-NOT PART OF THIS GROUP
F-NOT SHOWN
M-METRIC PART

173-5304 **STARTING AID GP-ETHER** *(contd.)* i02101681

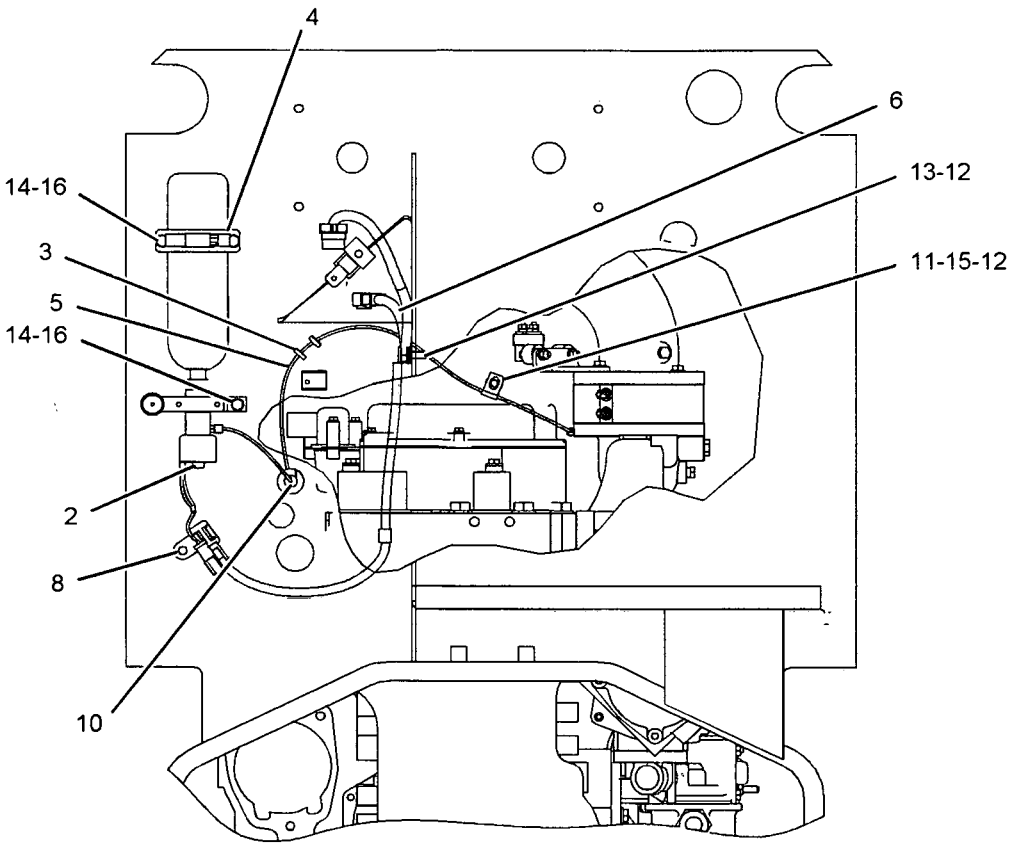

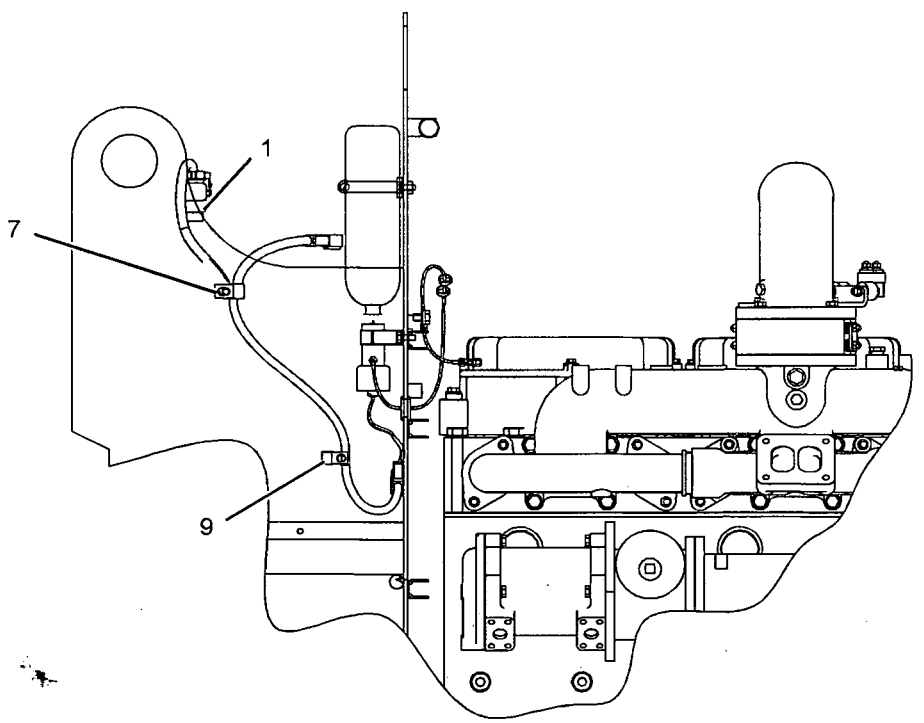

GRAPHIC #1

<END>

g01071903

ELECTRICAL AND STARTING SYSTEM

197-0579 STARTING AID GP-ETHER

S/N: CCA1-UP

PART OF 197-5955, 236-3948 SNOW AR-MOTOR GRADER

AN ATTACHMENT

SMCS-1456 i01874934

NOTE	PART NUMBER	QTY	PART NAME 1 2 3 4 5 6 (PRODUCT LEVEL)	SEE PAGE
Y	*173-5304*	1	STARTING AID GP-ETHER	265
Y	*197-0580*	1	STARTING AID GP-ETHER	268

Y-SEPARATE ILLUSTRATION

<END>

197-0580 STARTING AID GP-ETHER

S/N: CCA1-UP
PART OF 197-0579 STARTING AID GP-ETHER
AN ATTACHMENT

SMCS-1456 **i02204193**

NOTE	REF NO	GRAPHIC REF	PART NUMBER	QTY	PART NAME 1 2 3 4 5 6 (PRODUCT LEVEL)	SEE PAGE
	1	1	**6N-9995**	1	ATOMIZER AS-ETHER	
	2	1	**7N-3725**	2	BRACKET	
	3	1	**175-1367**	2	SPACER (8.8X16X10-MM THK)	
	4	1	**176-6391**	1	TUBE	
	5	1	**3E-8768**	1	SWITCH AS (24-VOLT) (ETHER STARTING AID)	
		1	**3E-8825**	1	LAMP (24-VOLT)	
		1	**3E-8776**	1	ACTUATOR-ROCKER	
	6	1	**6V-2686**	2	CLIP	
M	7	1	**8T-3647**	2	BOLT (M8X1.25X80-MM)	
	8	1	**8T-4121**	4	WASHER-HARD (11X21X2.5-MM THK)	
M	9	1	**8T-4133**	2	NUT (M10X1.5-THD)	
M	10	1	**8T-4137**	2	BOLT (M10X1.5X20-MM)	
	11	1	**8T-4224**	2	WASHER-HARD (8.8X16X2-MM THK)	
A		1	**7N-0296**	1	CYLINDER AS-ETHER	
					PROCURE LOCALLY FROM YOUR CATERPILLAR DEALER	

A-NOT PART OF THIS GROUP
M-METRIC PART

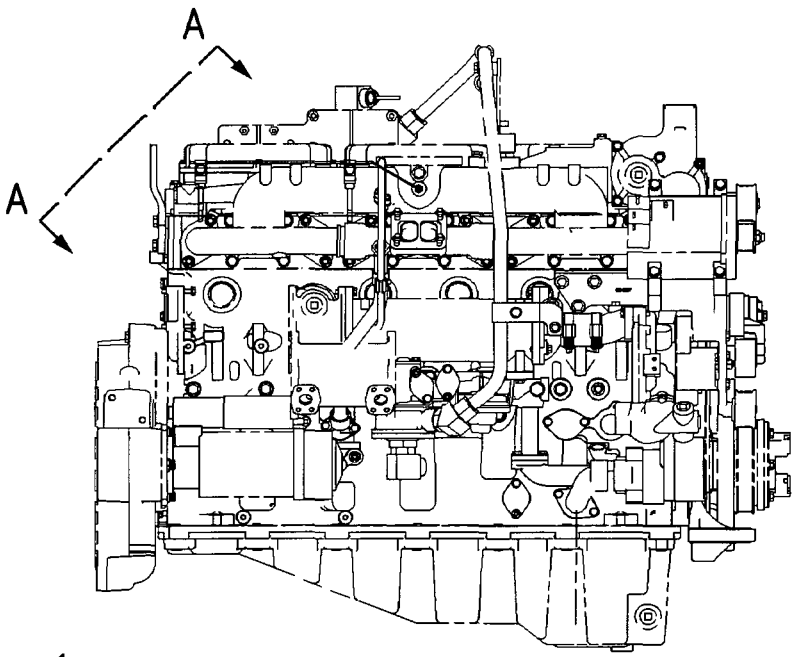

RIGHT SIDE VIEW

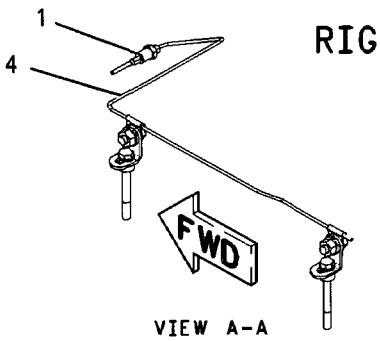

VIEW A-A

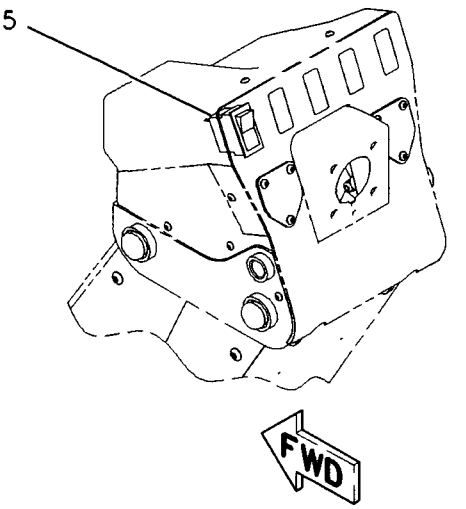

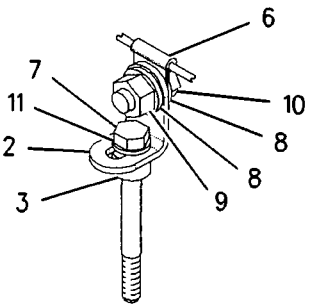

VIEW OF AREA B

GRAPHIC #1 **<END>** g00807749

ELECTRICAL AND STARTING SYSTEM

165-4619 STARTING MOTOR GP-ELECTRIC*R

S/N: 3PD1-UP

24 VOLT

PART OF 174-0620 STARTING MOTOR GP-ELECTRIC

SMCS-1453 **i01855720**

NOTE	REF NO	GRAPHIC REF	PART NUMBER	QTY	PART NAME 1 2 3 4 5 6 (PRODUCT LEVEL)	SEE PAGE
	1	1	**3T-3434**	6	PLUG	
	2	1	**7T-3279**	1	HOUSING AS	
	3	1	**212-0443**	1	TERMINAL AS	
	4	1	**6V-8188**	4	NUT (1/2-13 THD)	
	5	1	**7X-0562**	4	WASHER-HARD (13.5X19X0.8MM THK)	
	6	1	**3T-3422**	1	WIRE AS	
	7	1	**7T-3278**	1	HOLDER AS-BRUSH	
	8	1	**7T-3277**	1	COIL AS-FIELD	
	9	1	**7T-3454**	1	INSULATOR	
	10	1	**7T-3271**	1	CONNECTOR	
	11	1	**7T-3451**	1	INSULATOR-TERMINAL	
	12	1	**8T-8569**	1	INSULATOR-TERMINAL	
	13	1	**5S-7349**	4	BOLT (1/4-20X0.5 IN)	
	14	1	**8T-4205**	4	WASHER-HARD (7.2X14.5X2MM THK)	
	15	1	**8H-1141**	4	SHOE-POLE	
	16	1	**1H-2629**	2	STRIP-INSULATION	
	17	1	**3F-0379**	8	SCREW-POLE SHOE (3/8-24 THD)	
	18	1	**7T-3276**	1	ARMATURE AS (24 VOLT)	
	19	1	**7T-3973**	1	HOUSING AS-LEVER	
	20	1	**4M-1831**	1	PLUG-LEVER HOUSING	
	21	1	**7L-2894**	1	GASKET	
	22	1	**036-9823**	5	BOLT	
	23	1	**184-6964**	1	DRIVE AS-MOTOR	
	24	1	**7T-3974**	1	HOUSING AS-DRIVE	
	25	1	**7X-3373**	6	BOLT (5/16-18X0.88 IN)	
	26	1	**193-8570**	1	SOLENOID AS (24 VOLT)	
	27	1	**6V-8378**	2	NUT (10-32 THD)	
	28	1	**8F-1434**	2	LOCKWASHER	
	29	1	**8T-0328**	2	WASHER-HARD (5.5X10X1MM THK)	
	30	1	**9X-4824**	1	COVER-STARTING MOTOR	
					AVAILABLE REPAIR KIT(S):	
			8T-9884	1	KIT-INSULATOR (STARTING MOTOR)	
					(INCLUDES INSULATORS AND BUSHING)	
			8C-3655	1	KIT-BRUSH (STARTING MOTOR)	
					(INCLUDES BRUSH,SPRING,SCREW,SEAL AND SCREW ASSEMBLY)	
			7T-3267	1	KIT-BUSHING (STARTING MOTOR)	
					(INCLUDES BUSHINGS WICKS,CUPS SEALS,GASKET,	
					SCREW ASSEMBLIES,WASHERS,SPACER AND NUT)	
			7T-3268	1	KIT-LEVER (STARTING MOTOR)	
					(INCLUDES LEVER ASSEMBLIES,SEALS,NUT,GASKET AND RETAINER)	

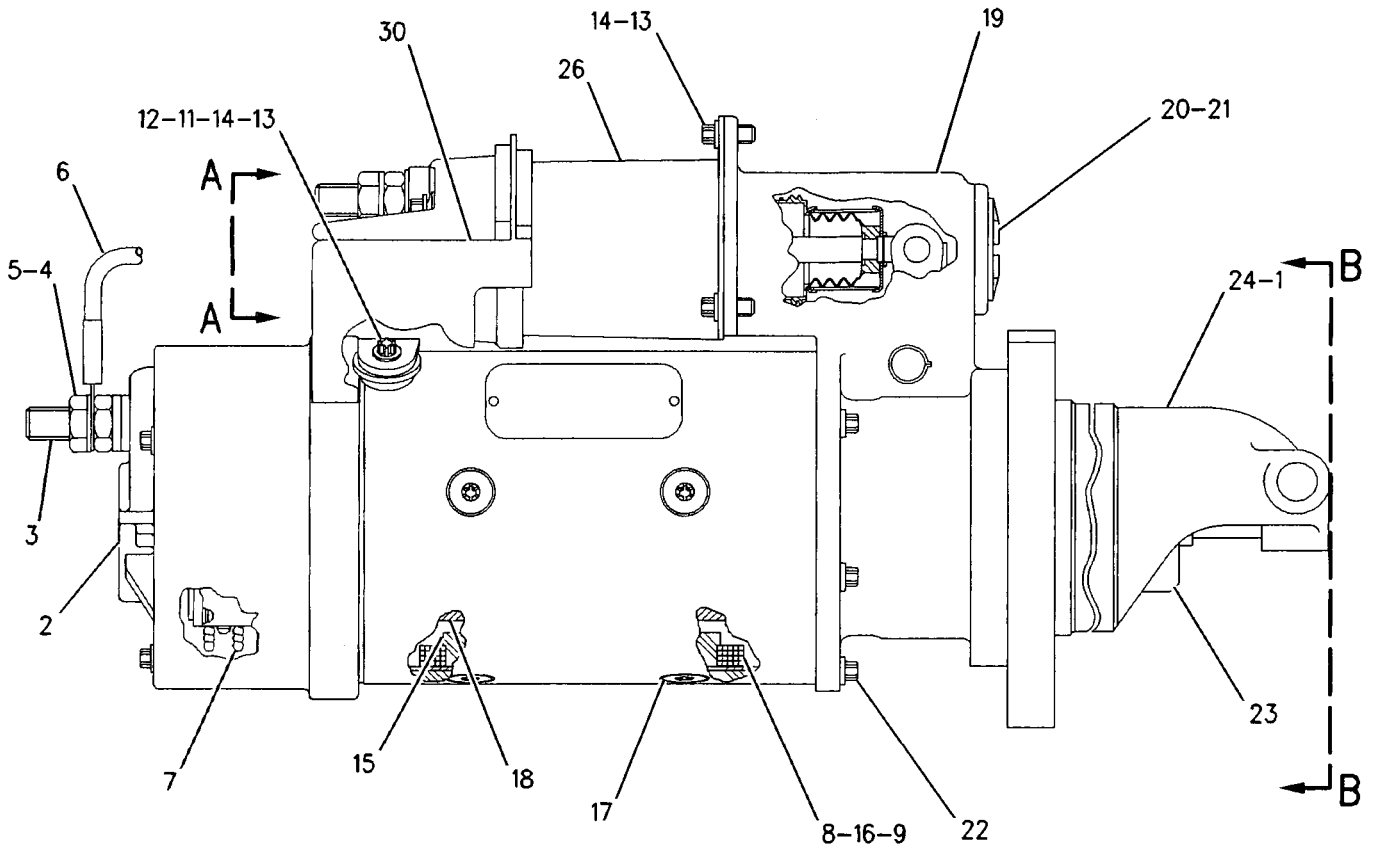

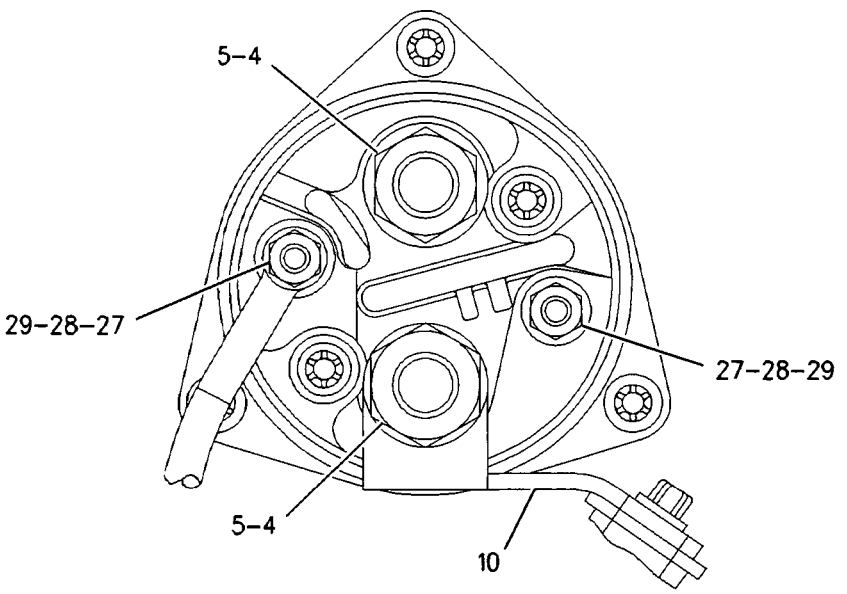

VIEW A-A

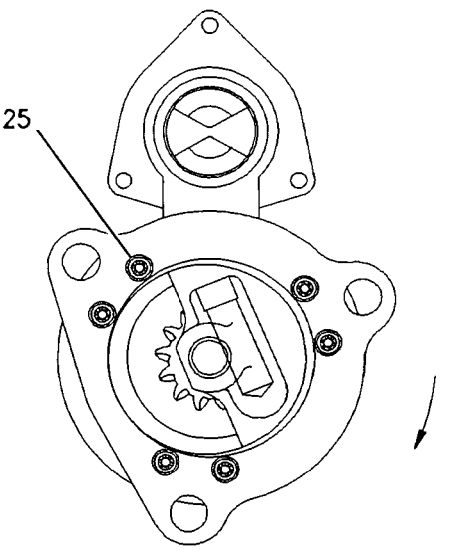

VIEW B-B

GRAPHIC #1 **<END>** g00767005

174-0620 STARTING MOTOR GP-ELECTRIC

S/N: 3PD1-UP
24 VOLT
PART OF 160-5101 ENGINE AR

SMCS-1453 **i01855451**

NOTE	REF NO	GRAPHIC REF	PART NUMBER	QTY	PART NAME 1 2 3 4 5 6 (PRODUCT LEVEL)	SEE PAGE
	1	1	**4N-1059**	1	GASKET	
	2	1	**105-4728**	1	WIRE AS	
YR	3	1	**165-4619**	1	STARTING MOTOR GP-ELECTRIC	270
	4	1	**6V-0371**	3	BOLT (5/8-11X1.375)	

R-REMFG PART MAY BE AVAILABLE
Y-SEPARATE ILLUSTRATION

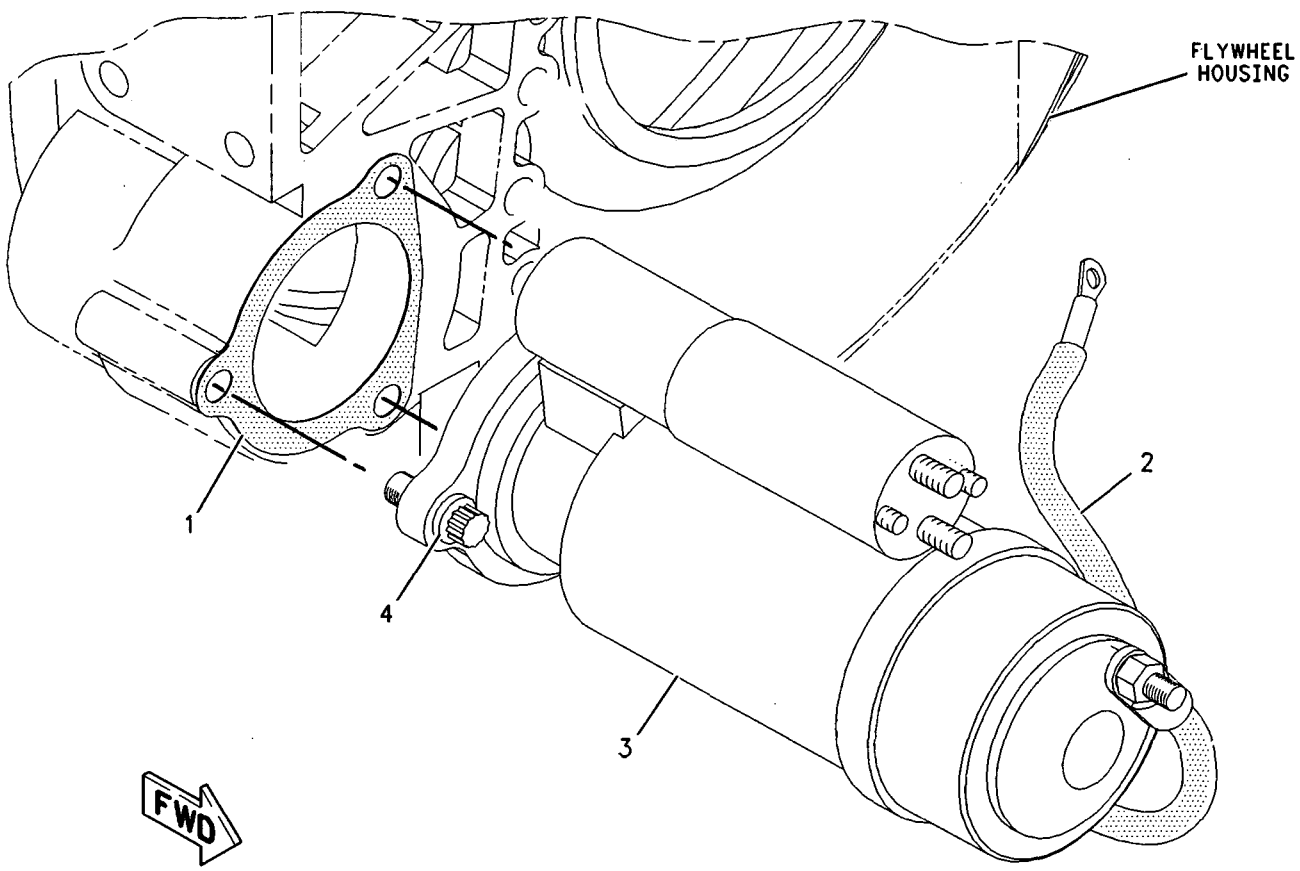

GRAPHIC #1 **<END>** g00894444

164-7577 SWITCH GP-BYPASS–OIL FILTER–TRANSMISSION OIL FILTER

S/N: CCA1-UP

PART OF 207-3819 FILTER GP-OIL

ALSO AN ATTACHMENT

SMCS-1408, 1435 i02204195

NOTE	REF NO	GRAPHIC REF	PART NUMBER	QTY	PART NAME 1 2 3 4 5 6 (PRODUCT LEVEL)	SEE PAGE
E	1	1	9X-1813		SLEEVE (19-CM)	
	2	1	102-8802	1	KIT-RECEPTACLE (2-PIN)	
					(INCLUDES RECEPTACLE AS & WEDGE)	
	3	1	186-3735	2	PIN-CONNECTOR	
	4	1	3E-3365	1	WEDGE-RECEPTACLE LOCK (2-PIN)	
	5	1	3D-2824	1	SEAL-O-RING	
Z	6	1		1	SWITCH AS	

E-ORDER BY THE CENTIMETER
Z-NOT SERVICED SEPARATELY

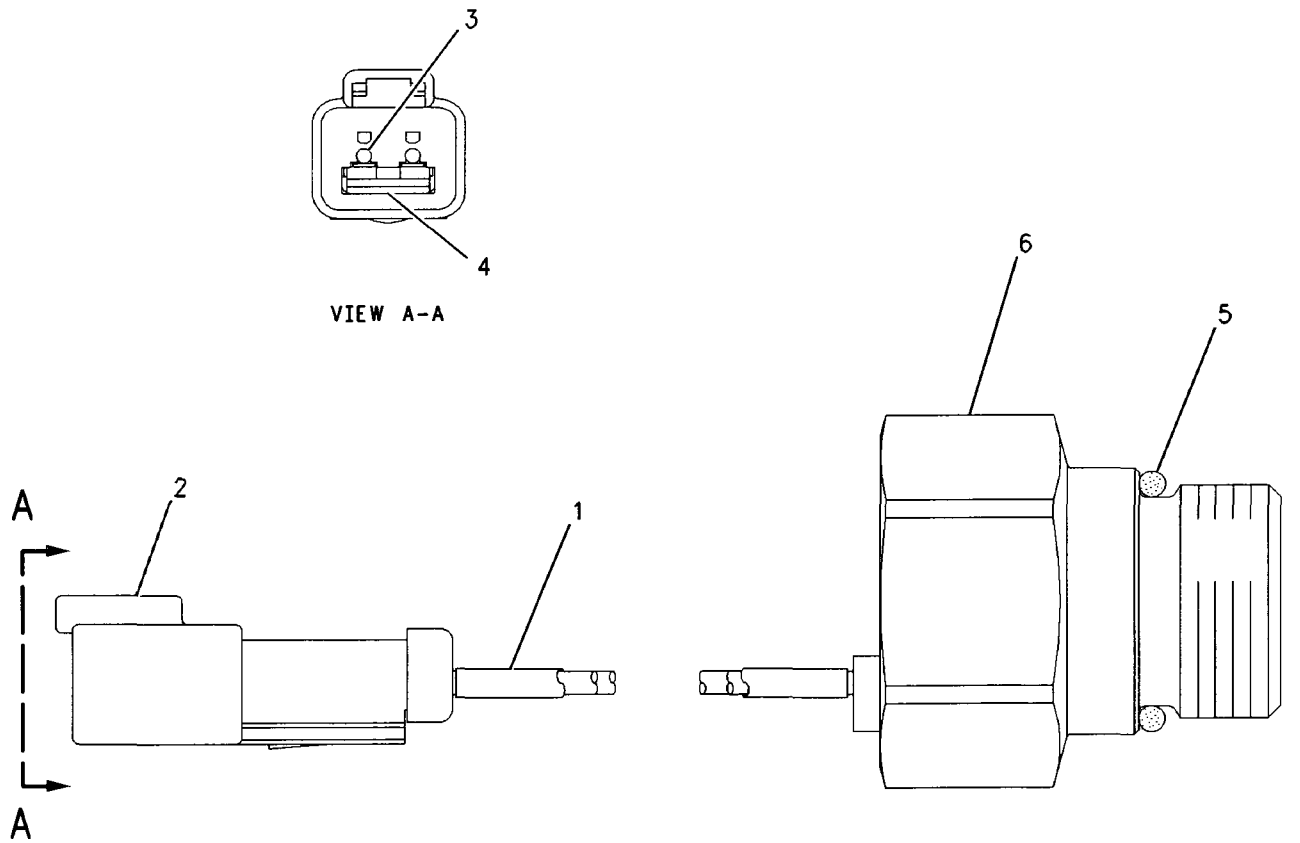

GRAPHIC #1 <END> g00750019

7N-0718 SWITCH GP-DISCONNECT–BATTERY

S/N: CCA1-UP
PART OF 178-0163 WIRING GP-REAR
ALSO AN ATTACHMENT

SMCS-1411 i01810002

NOTE	REF NO	GRAPHIC REF	PART NUMBER	QTY	PART NAME 1 2 3 4 5 6 (PRODUCT LEVEL)	SEE PAGE
	1	1	**8H-5306**	1	KEY (BATTERY DISCONNECT)	
	2	1	**8H-5303**	1	NUT (3/4-16 THD)	
	3	1	**2H-3922**	2	LOCKWASHER	
	4	1	**9F-5644**	2	LOCKWASHER	
	5	1	**6F-7045**	2	NUT-FULL (3/8X24 THD)	

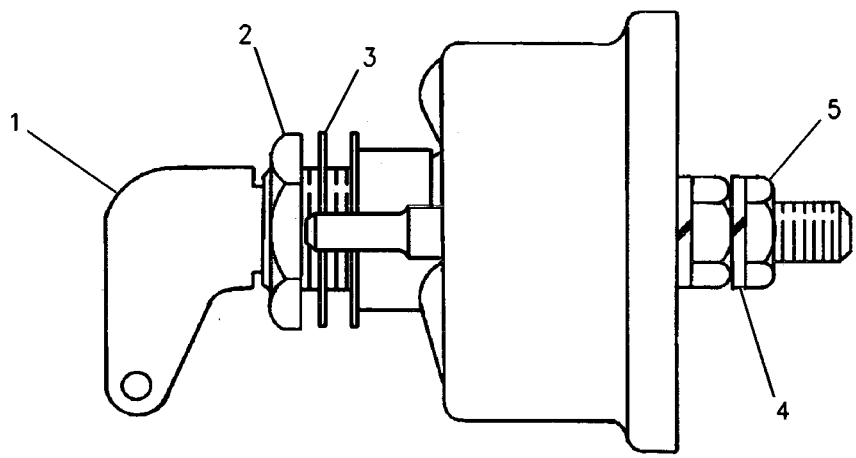

GRAPHIC #1 **<END>** g00715584

161-1018 SWITCH GP-LIGHT–TURN

S/N: CCA1-UP

PART OF 161-0770 LIGHTING AR-FLOOD & SIGNAL AN ATTACHMENT

SMCS-1429, 1435, 7332 **i02204198**

NOTE	REF NO	GRAPHIC REF	PART NUMBER	QTY	PART NAME 1 2 3 4 5 6 (PRODUCT LEVEL)	SEE PAGE
	1	1	**8X-5153**	1	FILM-FACE (TURN SIGNAL, HAZARD)	
	2	1	**8X-5154**	1	FILM-FACE (HEADLIGHTS HIGH, LOW BEAM)	
	3	1	**9W-1442**	1	FUSE (10-AMPERE)	
	4	1	**103-5678**	1	SWITCH AS-ROTARY (TURN SIGNAL)	
		1	**5L-7200**	1	SCREW (8-32X0.375-IN)	
		1	**9B-7233**	1	LOCKWASHER	
	5	1	**108-0358**	1	FLASHER AS (12/24-VOLT) (TURN SIGNAL, HAZARD)	
	6	1	**173-3064**	1	SWITCH GP-ROTARY (TURN SIGNAL, HAZARD)	
		1	**5L-7200**	1	SCREW (8-32X0.375-IN)	
		1	**9B-7233**	1	LOCKWASHER	
	7	1	**3E-8772**	1	SWITCH AS-ROCKER (HEADLIGHTS, TAIL LIGHTS)	
		1	**3E-8825**	2	LAMP (24-VOLT)	
		1	**3E-9326**	1	ACTUATOR-ROCKER	
M	8	1	**5C-2890**	2	NUT (M6X1-THD)	
	9	1	**8X-6296**	1	LEVER (TURN SIGNAL)	
	9A	1	**8X-6296**	1	LEVER (HEADLIGHT DIMMER)	
M	10	1	**9X-2043**	2	SCREW-TRUSS HEAD (M6X1X14-MM)	
	11	1	**9X-8256**	2	WASHER (6.6X12X2-MM THK)	

M-METRIC PART

161-1018 **SWITCH GP-LIGHT** *(contd.)* i02204198

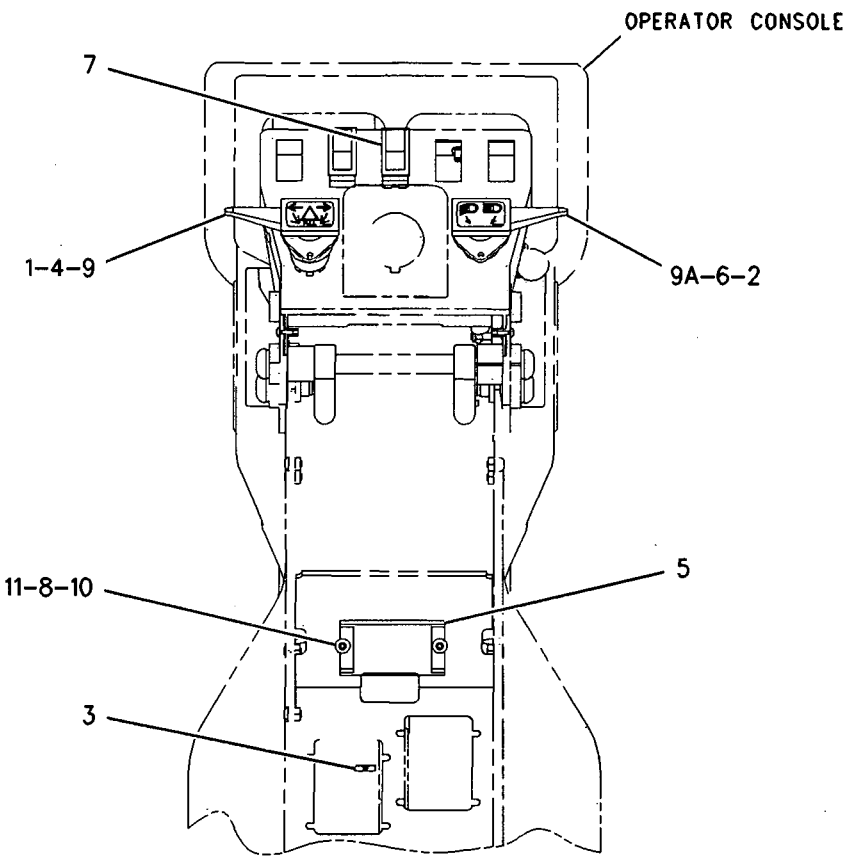

REAR VIEW

GRAPHIC #1 **<END>** g00846541

3E-0154 SWITCH GP-MAGNETIC–SECONDARY STEERING RELAY

S/N: CCA1-UP

PART OF 194-3200 WIRING GP-REAR, 161-1020 WIRING GP-SECONDARY STEERING AN ATTACHMENT

SMCS-7499 i01676990

NOTE	REF NO	GRAPHIC REF	PART NUMBER	QTY	PART NAME 1 2 3 4 5 6 (PRODUCT LEVEL)	SEE PAGE
	1	1	**7X-0620**	2	WASHER-HARD (5.5X13X1.6-MM THK)	
	2	1	**8F-1434**	2	LOCKWASHER	
	3	1	**6V-8378**	2	NUT (10-32-THD)	
	4	1	**6V-8801**	2	NUT (3/8-16-THD)	
	5	1	**7X-0608**	2	WASHER-HARD (10.2X16X2-MM THK)	
	6	1	**4D-1326**	2	LOCKWASHER	

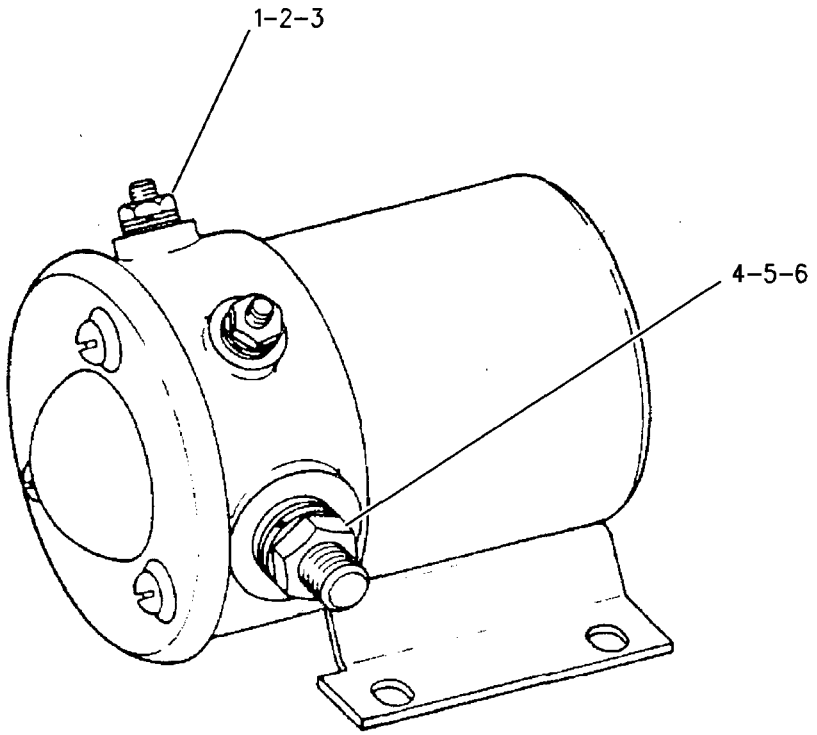

GRAPHIC #1 **<END>** g00726410

167-0138 SWITCH GP-MAGNETIC–MAIN RELAY

S/N: CCA1-UP
24V
PART OF 178-0163 WIRING GP-REAR
ALSO AN ATTACHMENT

SMCS-7499 i02021607

NOTE	REF NO	GRAPHIC REF	PART NUMBER	QTY	PART NAME 1 2 3 4 5 6 (PRODUCT LEVEL)	SEE PAGE
	1	1	**4F-2294**	2	NUT-JAM (5/16-24-THD)	
	2	1	**6V-8186**	2	NUT-FULL (5/16-24-THD)	
	3	1	**155-2270**	1	KIT-CONNECTING PLUG (2-PIN)	
	4	1	**8T-8730**	2	SOCKET-CONNECTOR	
	5	1	**155-2261**	1	WEDGE-PLUG LOCK (2-PIN)	

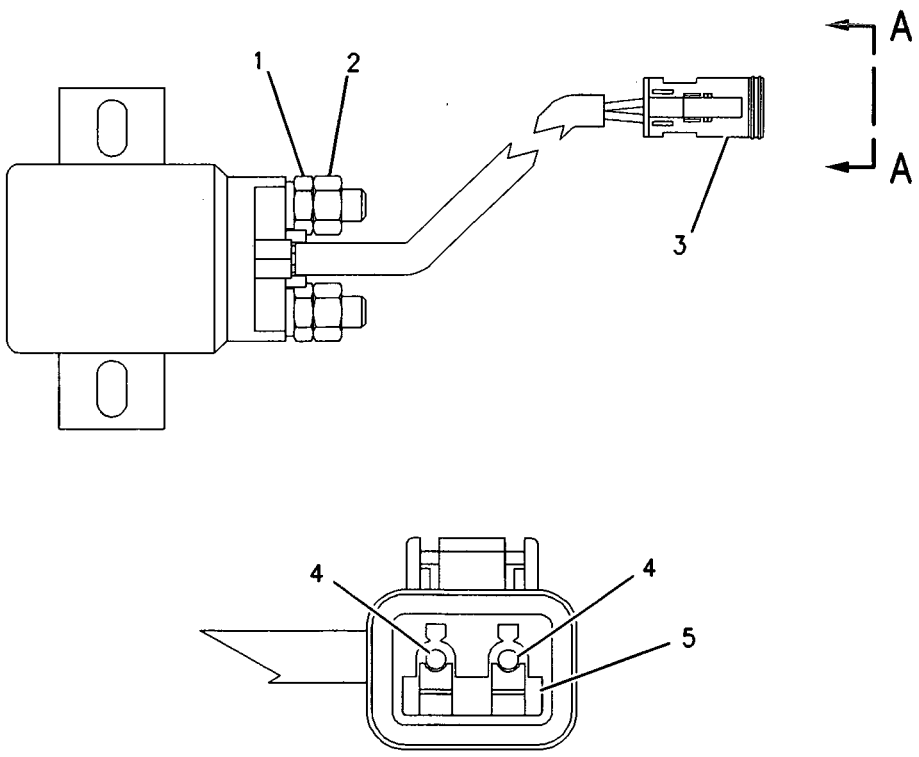

VIEW A-A

GRAPHIC #1 **<END>** g00823979

3E-0155 SWITCH GP-WIPER

S/N: CCA1-UP

PART OF 177-8784 WIPER GP-WINDOW, 193-7359 WIRING GP-CAB AN ATTACHMENT

SMCS-7305, 7332 i01864892

NOTE	REF NO	GRAPHIC REF	PART NUMBER	QTY	PART NAME 1 2 3 4 5 6 (PRODUCT LEVEL)	SEE PAGE
C	1	1	**102-8806**	1	KIT-RECEPTACLE (8-PIN)	
					(INCLUDES RECEPTACLE AS & WEDGE)	
	2	1	**7T-9302**	1	KNOB (WIPER, WASHER)	
		1	**014-0816**	1	SETSCREW (8-32X0.5-IN)	
	3	1	**8T-8737**	1	PLUG-SEAL	
	4	1	**3E-3389**	1	WEDGE-RECEPTACLE LOCK	
C	5	1	**8T-8729**	3	PIN-CONNECTOR	
	6	1	**6V-8369**	1	NUT (7/16-28-THD)	
	7	1	**2H-3920**	1	LOCKWASHER	
C	8	1	**9W-0852**	4	PIN-CONNECTOR	

C-CHANGE FROM PREVIOUS TYPE

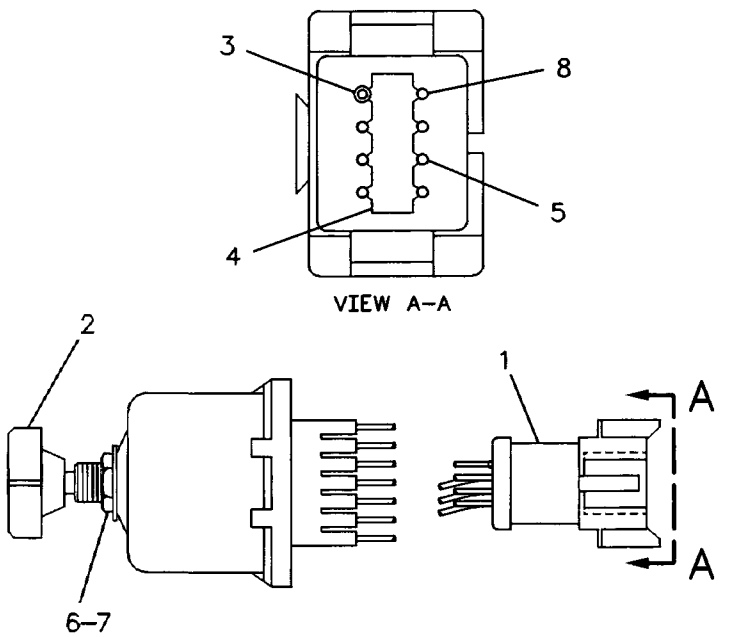

GRAPHIC #1 **<END>** g00120668

161-1022 WIRING GP-BLADE CUSHION

S/N: CCA1-UP

PART OF 166-3337, 221-2961 ACCUMULATOR AR-BLADE CUSHION AN ATTACHMENT

SMCS-1408 **i02205195**

NOTE	REF NO.	GRAPHIC REF	PART NUMBER	QTY	PART NAME 1 2 3 4 5 6 (PRODUCT LEVEL)	SEE PAGE
	1	1	**3S-2093**	2	STRAP-CABLE	
	2	1	**130-5300**	2	CLIP	
	3	1	**169-3147**	1	HARNESS AS-CHASSIS	
		1	**102-8802**	4	KIT-RECEPTACLE (2-PIN)	
		1	**102-8803**	1	KIT-RECEPTACLE (3-PIN)	
					(EACH INCLUDES RECEPTACLE AS & WEDGE)	
		1	**155-2270**	4	KIT-CONNECTING PLUG (2-PIN)	
					(INCLUDES PLUG AS & WEDGE)	
	4	1	**033-8248**	1	CLIP	
	5	1	**147-0385**	2	CLIP	
	6	1	**4L-6459**	2	BOLT (3/8-16X2.5-IN)	
	7	1	**5P-8167**	1	BOLT (3/8-16X0.625-IN)	
	8	1	**6V-8801**	2	NUT (3/8-16-THD)	
	10	1	**8T-4896**	5	WASHER-HARD (10.2X18.5X2.5-MM THK)	
	11	1	**3E-8763**	1	SWITCH AS (BLADE CUSHION)	
		1	**3E-8812**	1	ACTUATOR-ROCKER	
		1	**3E-8825**	1	LAMP (24-VOLT) (BLADE CUSHION SWITCH)	

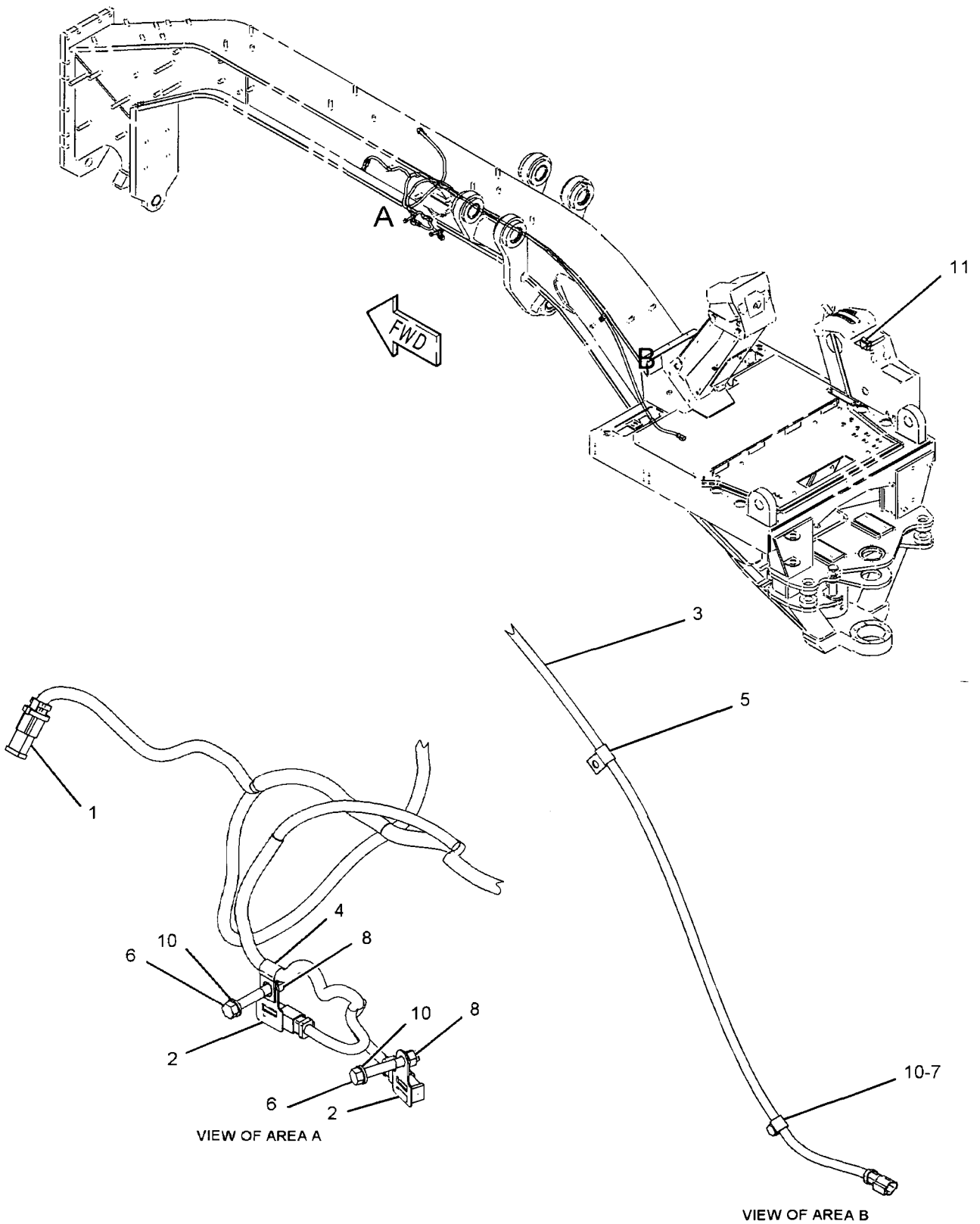

GRAPHIC #1 **<END>** g01113643

ELECTRICAL AND STARTING SYSTEM

159-5878 WIRING GP-CAB

S/N: CCA1-UP

PART OF 159-4615 GENERAL AR

SMCS-1408, 7301 **i02204202**

NOTE	REF NO	GRAPHIC REF	PART NUMBER	QTY	PART NAME 1 2 3 4 5 6 (PRODUCT LEVEL)	SEE PAGE
	1	1	**3E-0109**	3	PLUG (ROCKER SWITCH)	
Y	2	1	**3E-6389**	1	LAMP GP-DOME (24-VOLT, WITH SWITCH)	165
	3	1	**3S-2093**	23	STRAP-CABLE	
	4	1	**131-5171**	1	CLIP	
	5	1	**6V-6578**	2	RIVET-BLIND	
	6	1	**7T-9302**	2	KNOB (WIPER, WASHER) (FRONT)	
	7	1	**9W-1441**	1	FUSE (15-AMPERE)	
	8	1	**112-6174**	2	SWITCH AS-ROTARY (24-VOLT) (FRONT WIPER CONTROL)	
					(EACH INCLUDES)	
		1	**2H-3920**	1	LOCKWASHER	
		1	**3E-3389**	1	WEDGE-RECEPTACLE LOCK	
		1	**6V-8369**	1	NUT (7/16-28-THD)	
		1	**186-3735**	6	PIN-CONNECTOR	
		1	**8T-8737**	2	PLUG-SEAL	
		1	**102-8806**	1	KIT-RECEPTACLE (8-PIN)	
	9	1	**160-6382**	1	GROMMET	
	10	1	**167-7504**	1	HARNESS AS-CAB (SWITCH PANEL)	
		1	**102-8806**	1	KIT-RECEPTACLE (8-PIN)	
		1	**102-8801**	1	KIT-RECEPTACLE (12-PIN)	
		1	**155-2255**	1	KIT-CONNECTING PLUG (12-PIN)	
		1	**155-2265**	4	KIT-CONNECTING PLUG (8-PIN)	
	11	1	**167-7505**	1	HARNESS AS-CAB (REAR)	
		1	**102-8802**	2	KIT-RECEPTACLE (2-PIN)	
		1	**102-8805**	1	KIT-RECEPTACLE (6-PIN)	
		1	**102-8806**	1	KIT-RECEPTACLE (8-PIN)	
		1	**155-2270**	2	KIT-CONNECTING PLUG (2-PIN)	
		1	**155-2274**	1	KIT-CONNECTING PLUG (6-PIN)	
	12	1	**168-8248**	1	HARNESS AS-CAB (FRONT)	
		1	**102-8802**	9	KIT-RECEPTACLE (2-PIN)	
		1	**102-8803**	2	KIT-RECEPTACLE (3-PIN)	
		1	**102-8804**	1	KIT-RECEPTACLE (4-PIN)	
		1	**102-8806**	1	KIT-RECEPTACLE (8-PIN)	
		1	**102-8801**	2	KIT-RECEPTACLE (12-PIN)	
		1	**155-2255**	2	KIT-CONNECTING PLUG (12-PIN)	
		1	**155-2265**	1	KIT-CONNECTING PLUG (8-PIN)	
		1	**155-2260**	3	KIT-CONNECTING PLUG (3-PIN)	
		1	**155-2270**	9	KIT-CONNECTING PLUG (2-PIN)	
		1	**155-2274**	1	KIT-CONNECTING PLUG (6-PIN)	
	13	1	**169-8938**	1	PLATE AS	
	14	1	**172-6555**	1	PANEL	
	15	1	**172-8641**	1	PLATE	
	16	1	**172-9316**	1	FILM-FUSE (LIGHTS, WASHER, WIPER, DEFROST)	
	17	1	**096-6166**	3	WASHER-HARD (4.5X9X1-MM THK)	
M	18	1	**5C-8312**	3	NUT (M4X0.7-THD)	
	19	1	**6V-5645**	4	SCREW-MACHINE (10-32X0.87-IN)	
	20	1	**6V-8801**	1	NUT (3/8-16-THD)	
	21	1	**8T-4896**	1	WASHER-HARD (10.2X18.5X2.5-MM THK)	
M	22	1	**9X-1046**	3	SCREW (M4X0.7X18-MM)	
M	23	1	**9X-2042**	4	SCREW-TRUSS HEAD (M6X1X12-MM)	
E	24	1	**7X-7877**		STRIP-EDGING (10-CM)	

E-ORDER BY THE CENTIMETER
M-METRIC PART
Y-SEPARATE ILLUSTRATION

159-5878 **WIRING GP-CAB** *(contd.)* **i02204202**

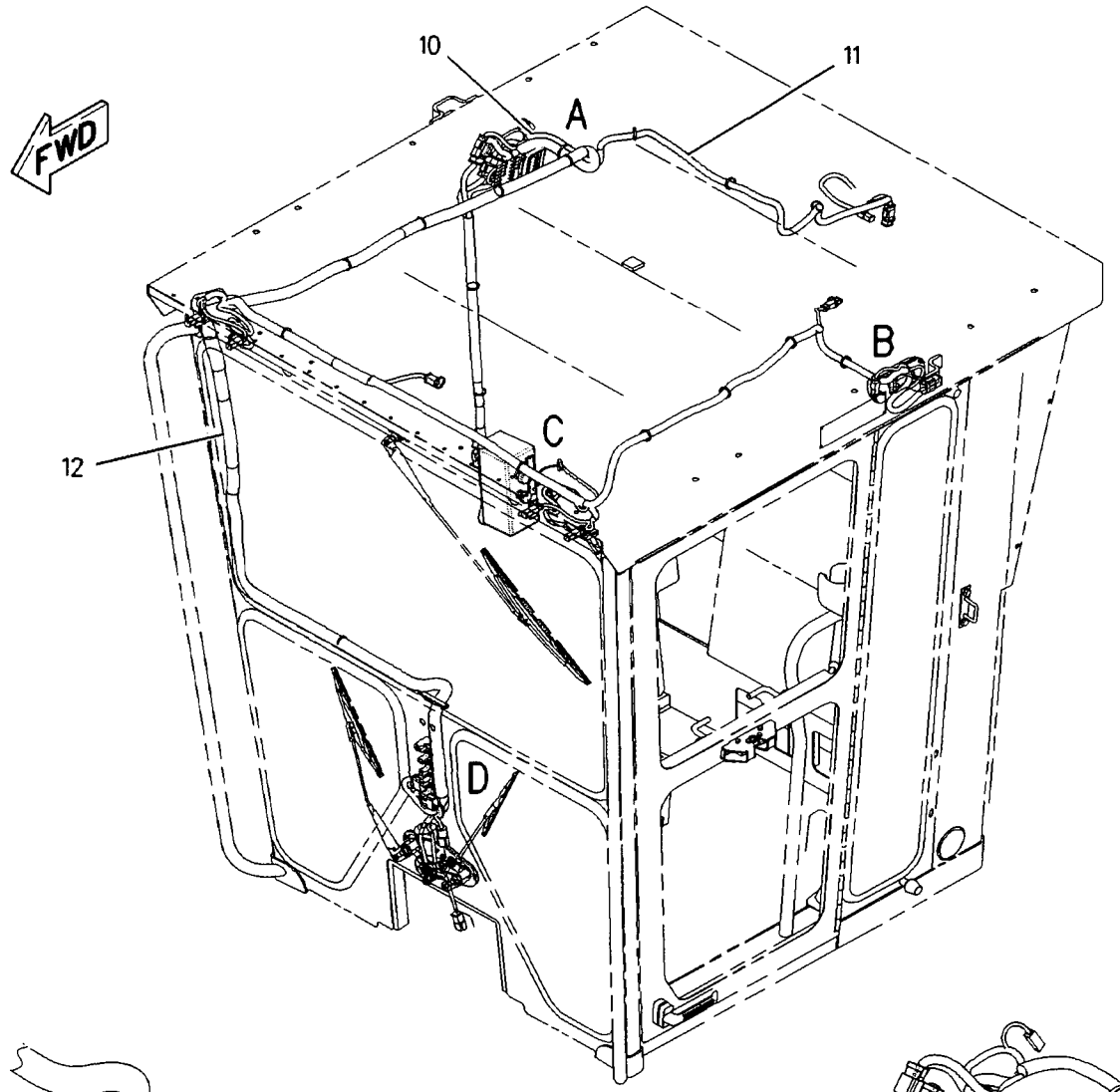

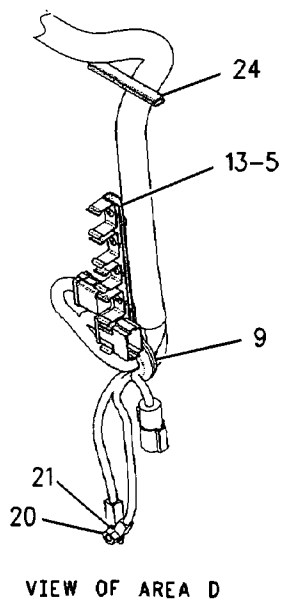

VIEW OF AREA D

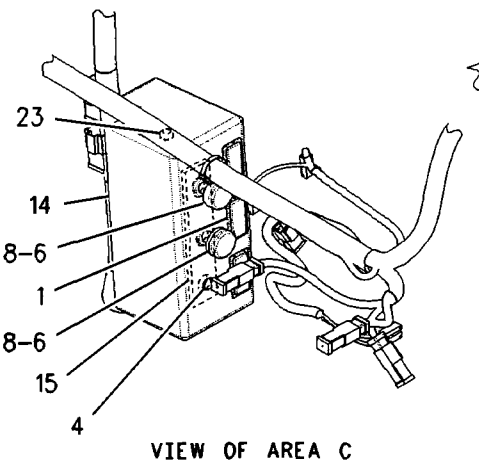

VIEW OF AREA C

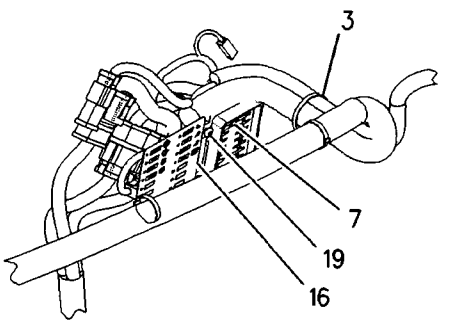

VIEW OF AREA A

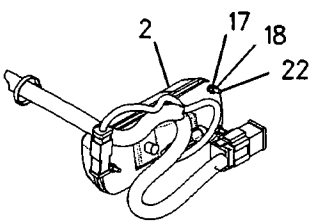

VIEW OF AREA B

GRAPHIC #1 **<END>** g00808291

161-1921 WIRING GP-CAB

S/N: CCA1-UP

PART OF 197-5955, 236-3948 SNOW AR-MOTOR GRADER

AN ATTACHMENT

SMCS-1408, 7301 i02070958

NOTE	REF NO	GRAPHIC REF	PART NUMBER	QTY	PART NAME 1 2 3 4 5 6 (PRODUCT LEVEL)	SEE PAGE
	1	1	9W-1442	1	FUSE (10-AMPERE) (WARNING BEACON)	
Y	2	1	239-9362	1	INSTALLATION GP-WARNING BEACON (WARNING)	163

Y-SEPARATE ILLUSTRATION

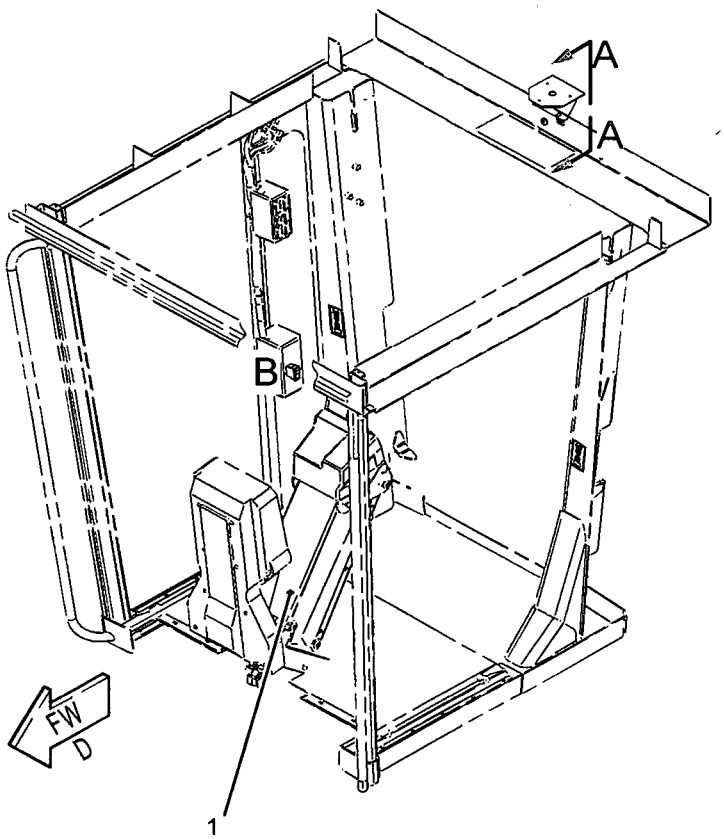

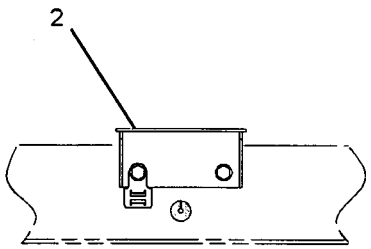

VIEW A-A

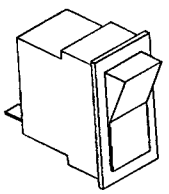

VIEW OF AREA B

GRAPHIC #1

<END>

g01060901

193-7359 WIRING GP-CAB-EU

S/N: CCA1-UP
PART OF 207-4453, 210-2044 CONVERSION AR-CERTIFICATION, 218-4759, 218-4761
ROPS GP-ENCLOSED
AN ATTACHMENT

SMCS-1408, 7301 i02204205

NOTE	REF NO	GRAPHIC REF	PART NUMBER	QTY	PART NAME 1 2 3 4 5 6 (PRODUCT LEVEL)	SEE PAGE
	1	1	3E-0109	3	PLUG (ROCKER SWITCH)	
Y	2	1	3E-0155	2	SWITCH GP-WIPER (24-VOLT) (FRONT INTERMITTENT)	279
Y	3	1	3E-6389	1	LAMP GP-DOME (24-VOLT, WITH SWITCH)	165
	4	1	3S-2093	23	STRAP-CABLE	
	5	1	131-5171	1	CLIP	
	6	1	6V-6578	2	RIVET-BLIND	
	8	1	9W-1441	1	FUSE (15-AMPERE)	
	9	1	160-6382	1	GROMMET	
	10	1	167-7504	1	HARNESS AS-CAB (FRONT)	
		1	155-2255	1	KIT-CONNECTING PLUG (12-PIN)	
		1	155-2265	4	KIT-CONNECTING PLUG (8-PIN)	
					(KIT INCLUDES PLUG AS & WEDGE)	
		1	102-8806	1	KIT-RECEPTACLE (8-PIN)	
		1	102-8801	1	KIT-RECEPTACLE (12-PIN)	
					(KIT INCLUDES RECEPTACLE AS & WEDGE)	
	11	1	167-7505	1	HARNESS AS-CAB (REAR)	
		1	155-2270	2	KIT-CONNECTING PLUG (2-PIN)	
		1	155-2274	1	KIT-CONNECTING PLUG (6-PIN)	
					(KIT INCLUDES PLUG AS & WEDGE)	
		1	102-8802	2	KIT-RECEPTACLE (2-PIN)	
		1	102-8805	1	KIT-RECEPTACLE (6-PIN)	
		1	102-8806	1	KIT-RECEPTACLE (8-PIN)	
					(KIT INCLUDES RECEPTACLE AS & WEDGE)	
	12	1	169-8938	1	PLATE AS	
	13	1	172-6555	1	PANEL	
	14	1	172-8641	1	PLATE	
	15	1	172-9316	1	FILM-FUSE	
	16	1	196-9373	1	HARNESS AS-CAB (SWITCH PANEL)	
		1	155-2255	2	KIT-CONNECTING PLUG (12-PIN)	
		1	155-2265	1	KIT-CONNECTING PLUG (8-PIN)	
		1	155-2260	1	KIT-CONNECTING PLUG (3-PIN)	
		1	155-2270	11	KIT-CONNECTING PLUG (2-PIN)	
		1	155-2271	1	KIT-CONNECTING PLUG (4-PIN)	
		1	155-2274	1	KIT-CONNECTING PLUG (6-PIN)	
					(KITS INCLUDE PLUG AS & WEDGE)	
		1	127-5484	1	RECEPTACLE AS (1-PIN)	
		1	102-8802	11	KIT-RECEPTACLE (2-PIN)	
		1	102-8804	1	KIT-RECEPTACLE (4-PIN)	
		1	102-8806	1	KIT-RECEPTACLE (8-PIN)	
		1	102-8801	2	KIT-RECEPTACLE (12-PIN)	
					(KITS INCLUDE RECEPTACLE AS & WEDGE)	
	17	1	096-6166	3	WASHER-HARD (4.5X9X1-MM THK)	
M	18	1	5C-8312	3	NUT (M4X0.7-THD)	
	19	1	6V-5645	4	SCREW-MACHINE (10-32X0.87-IN)	
	20	1	6V-8801	1	NUT (3/8-16-THD)	
	21	1	8T-4896	1	WASHER-HARD (10.2X18.5X2.5-MM THK)	
M	22	1	9X-1046	3	SCREW (M4X0.7X18-MM)	
M	23	1	9X-2042	4	SCREW-TRUSS HEAD (M6X1X12-MM)	
BE	24	1	7X-7877		STRIP-EDGING	

B-USE AS REQUIRED
E-ORDER BY THE CENTIMETER
M-METRIC PART
Y-SEPARATE ILLUSTRATION

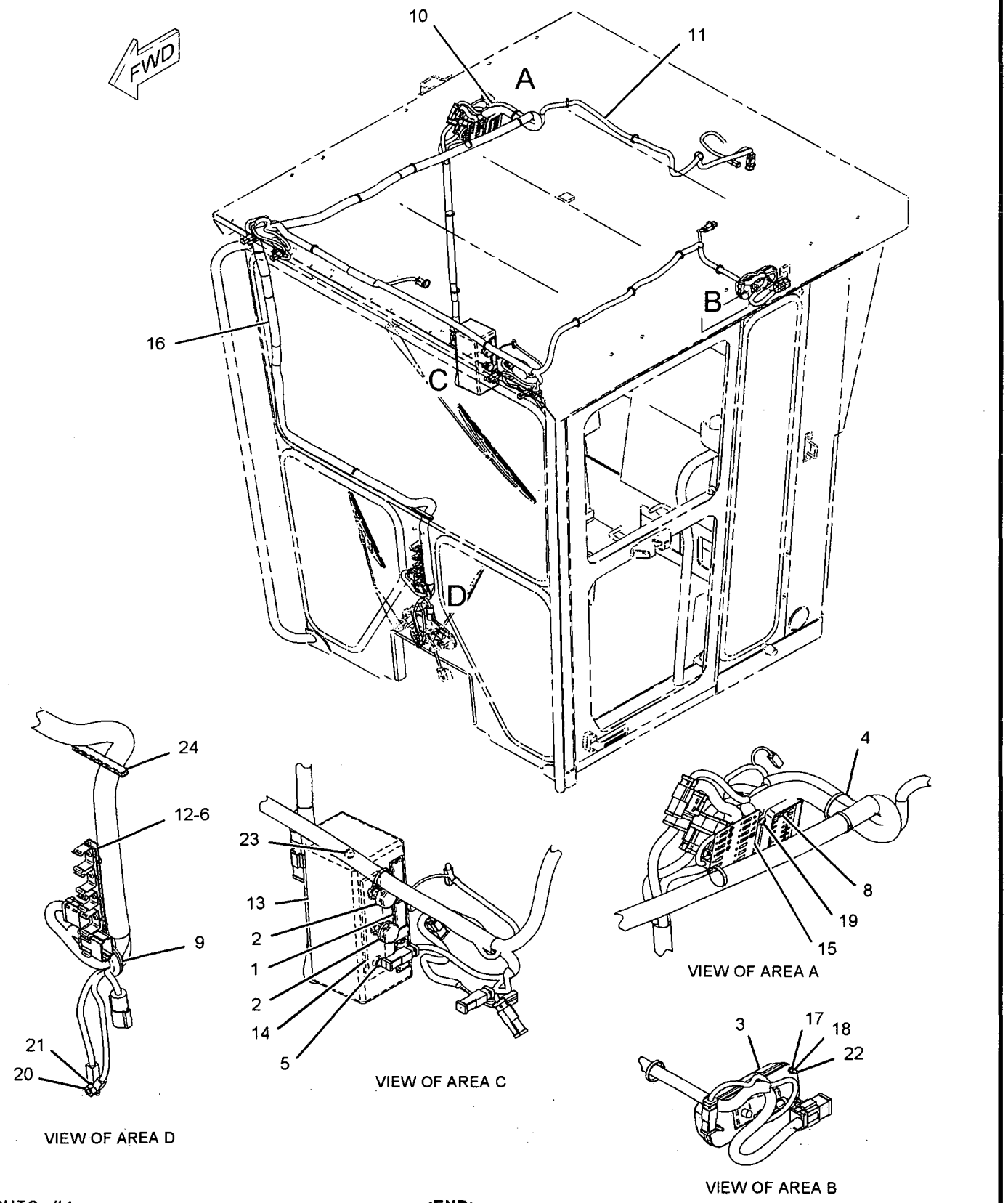

GRAPHIC #1

<END>

g01010923

203-6551 WIRING GP-CAB–MOLDBOARD

S/N: CCA1-UP

PART OF 203-6536 LIGHTING AR-FLOOD

AN ATTACHMENT

SMCS-1408, 7301 **i02204209**

NOTE	REF NO	GRAPHIC REF	PART NUMBER	QTY	PART NAME 1 2 3 4 5 6 (PRODUCT LEVEL)	SEE PAGE
	1	1	**3E-0109**	5	PLUG (ROCKER SWITCH)	
	2	1	**3S-2093**	2	STRAP-CABLE	
	3	1	**9W-1442**	1	FUSE (10-AMPERE)	
	4	1	**145-3350**	1	PLATE	
	5	1	**153-2147**	1	PLATE	
	6	1	**168-8243**	1	HARNESS AS-PANEL	
		1	**155-2255**	1	KIT-CONNECTING PLUG (12-PIN)	
		1	**155-2265**	4	KIT-CONNECTING PLUG (8-PIN)	
		1	**155-2270**	1	KIT-CONNECTING PLUG (2-PIN)	
		1	**155-2271**	1	KIT-CONNECTING PLUG (4-PIN)	
					(EACH INCLUDES A PLUG AS & WEDGE)	
		1	**102-8802**	1	KIT-RECEPTACLE (2-PIN)	
		1	**102-8804**	2	KIT-RECEPTACLE (4-PIN)	
		1	**102-8806**	1	KIT-RECEPTACLE (8-PIN)	
		1	**102-8801**	1	KIT-RECEPTACLE (12-PIN)	
					(EACH INCLUDES A RECEPTACLE AS & WEDGE)	
	7	1	**172-6556**	1	PANEL	
	8	1	**188-3862**	1	BRACKET AS	
	9	1	**3E-8766**	1	SWITCH AS (24-VOLT) (MOLDBOARD)	
		1	**3E-8782**	1	ACTUATOR-ROCKER	
		1	**3E-8825**	1	LAMP (24-VOLT)	
M	10	1	**9X-2043**	6	SCREW-TRUSS HEAD (M6X1X14-MM)	

M-METRIC PART

203-6551 **WIRING GP-CAB** *(contd.)* i02204209

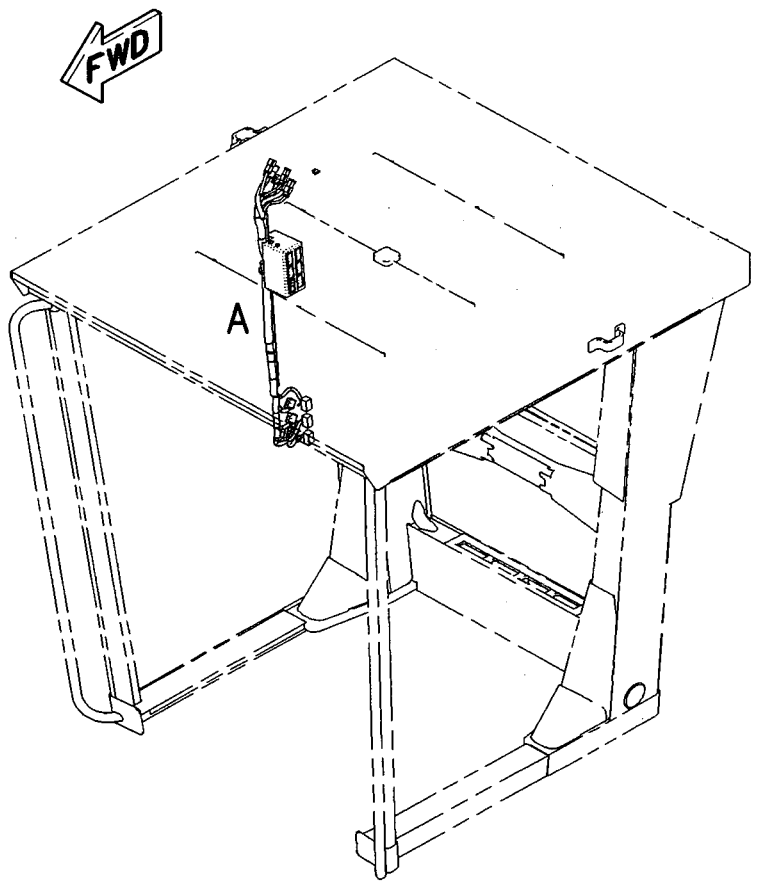

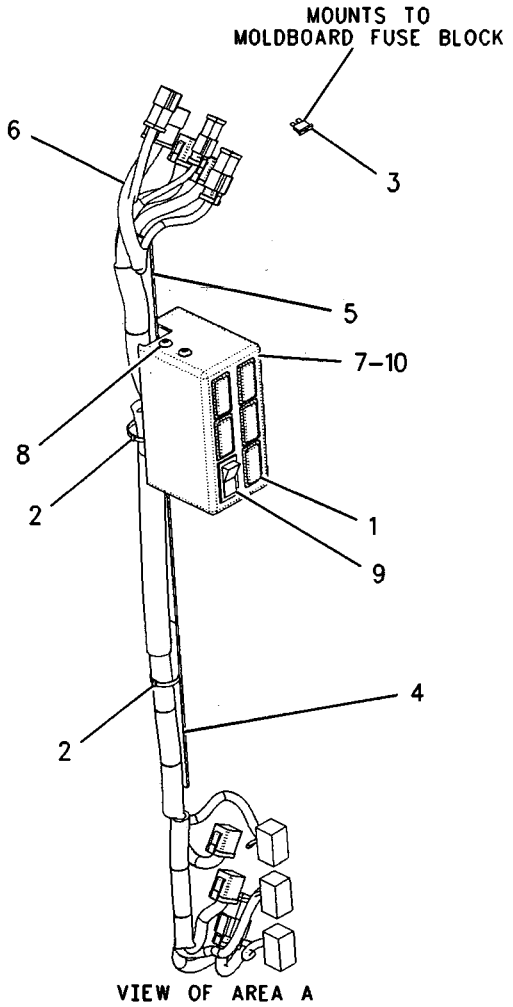

VIEW OF AREA A

GRAPHIC #1 **<END>** g00941003

204-6127 WIRING GP-CAB–MOLDBOARD

S/N: CCA1-UP

PART OF 204-6109 LIGHTING AR-FLOOD

AN ATTACHMENT

SMCS-1408, 7301 i02204211

NOTE	REF NO	GRAPHIC REF	PART NUMBER	QTY	PART NAME 1 2 3 4 5 6 (PRODUCT LEVEL)	SEE PAGE
	1	1	**3E-0109**	5	PLUG (ROCKER SWITCH)	
	2	1	**3S-2093**	2	STRAP-CABLE	
	3	1	**9W-1442**	1	FUSE (10-AMPERE)	
	4	1	**145-3350**	1	PLATE	
	5	1	**153-2147**	1	PLATE	
	6	1	**172-6556**	1	PANEL	
	7	1	**188-3862**	1	BRACKET AS	
	8	1	**196-8557**	1	HARNESS AS-CAB	
		1	**102-8802**	1	KIT-RECEPTACLE (2-PIN)	
		1	**102-8804**	2	KIT-RECEPTACLE (4-PIN)	
		1	**102-8806**	1	KIT-RECEPTACLE (8-PIN)	
		1	**102-8801**	1	KIT-RECEPTACLE (12-PIN)	
		1	**155-2255**	1	KIT-CONNECTING PLUG (12-PIN)	
		1	**155-2265**	4	KIT-CONNECTING PLUG (8-PIN)	
		1	**155-2270**	1	KIT-CONNECTING PLUG (2-PIN)	
		1	**155-2271**	1	KIT-CONNECTING PLUG (4-PIN)	
	9	1	**3E-8766**	1	SWITCH AS (24-VOLT) (MOLDBOARD)	
		1	**3E-8782**	1	ACTUATOR-ROCKER	
		1	**3E-8825**	1	LAMP (24-VOLT)	
M	10	1	**9X-2043**	6	SCREW-TRUSS HEAD (M6X1X14-MM)	

M-METRIC PART

204-6127 **WIRING GP-CAB** *(contd.)* i02204211

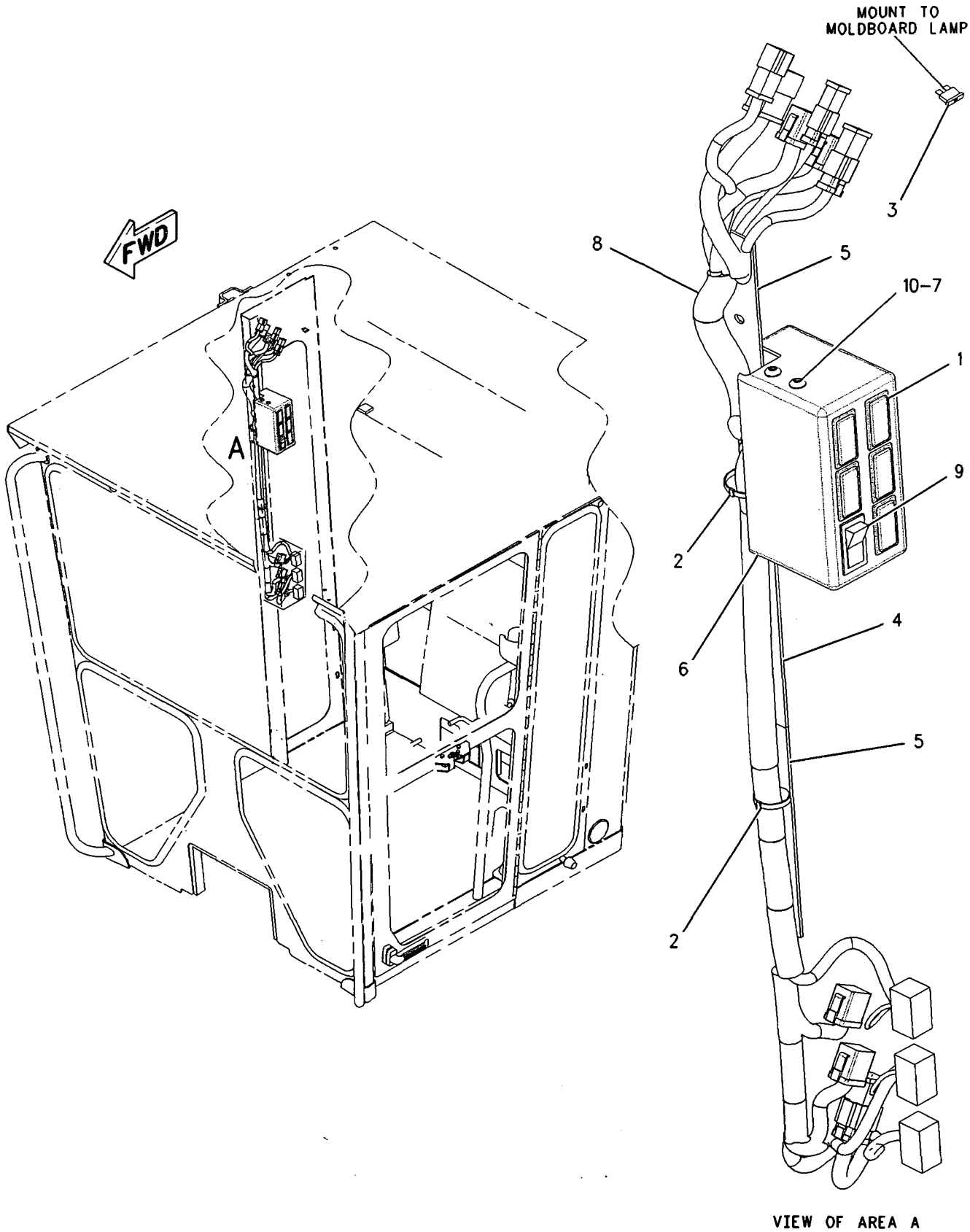

VIEW OF AREA A

GRAPHIC #1 **<END>** g00843569

223-3941 WIRING GP-CAB

S/N: CCA1-UP
PART OF 223-3937 CAB GP
AN ATTACHMENT

SMCS-1408, 7301 **i02204213**

NOTE	REF NO	GRAPHIC REF	PART NUMBER	QTY	PART NAME 1 2 3 4 5 6 (PRODUCT LEVEL)	SEE PAGE
E	1	1	**7X-7877**		STRIP-EDGING (10-CM)	
Y	2	1	**3E-6389**	1	LAMP GP-DOME (24-VOLT, WITH SWITCH)	165
	3	1	**3S-2093**	6	STRAP-CABLE	
	4	1	**3V-4694**	1	PLUG-BUTTON	
	5	1	**7T-9302**	1	KNOB (WIPER, WASHER)	
		1	**014-0816**	1	SETSCREW (8-32X0.5-IN)	
	6	1	**112-6174**	1	SWITCH AS-ROTARY (24-VOLT) (FRONT WIPER)	
		1	**2H-3920**	1	LOCKWASHER	
		1	**3E-3389**	1	WEDGE-RECEPTACLE LOCK	
		1	**6V-8369**	1	NUT (7/16-28-THD)	
		1	**186-3735**	6	PIN-CONNECTOR	
		1	**8T-8737**	2	PLUG-SEAL	
		1	**102-8806**	1	KIT-RECEPTACLE (8-PIN)	
					(INCLUDES RECEPTACLE AS & WEDGE)	
	7	1	**129-4647**	1	PLATE	
	8	1	**169-8938**	1	PLATE AS	
	9	1	**171-6561**	1	FILM (WINDOW WASHER)	
	10	1	**223-3939**	1	HARNESS AS-WINDOW WIPER (CONTROL)	
		1	**155-2265**	2	KIT-CONNECTING PLUG (8-PIN)	
					(EACH INCLUDES PLUG AS & WEDGE)	
	11	1	**223-3940**	1	HARNESS AS-WINDOW WIPER (FUSE BOX)	
		1	**102-8806**	1	KIT-RECEPTACLE (8-PIN)	
		1	**102-8801**	1	KIT-RECEPTACLE (12-PIN)	
					(EACH INCLUDES RECEPTACLE AS & WEDGE)	
		1	**127-5484**	1	RECEPTACLE AS (1-PIN)	
		1	**155-2260**	1	KIT-CONNECTING PLUG (3-PIN)	
		1	**155-2274**	1	KIT-CONNECTING PLUG (6-PIN)	
	12	1	**096-6166**	3	WASHER-HARD (4.5X9X1-MM THK)	
	13	1	**3K-8782**	1	FUSE (10-AMPERE)	
	14	1	**4K-5122**	1	HOLDER AS-FUSE	
					(EACH INCLUDES)	
		1	**6T-8115**	1	NUT (1/2-24-THD)	
		1	**139-0178**	1	CAP (FUSE HOLDER)	
M	15	1	**5C-8312**	3	NUT (M4X0.7-THD)	
	16	1	**6V-6578**	2	RIVET-BLIND	
	17	1	**6V-8801**	1	NUT (3/8-16-THD)	
	18	1	**8T-4896**	1	WASHER-HARD (10.2X18.5X2.5-MM THK)	
M	19	1	**9X-1046**	3	SCREW (M4X0.7X18-MM)	
M	20	1	**9X-2043**	2	SCREW-TRUSS HEAD (M6X1X14-MM)	

E-ORDER BY THE CENTIMETER
M-METRIC PART
Y-SEPARATE ILLUSTRATION

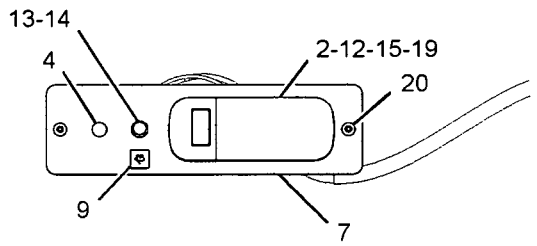

VIEW OF AREA A

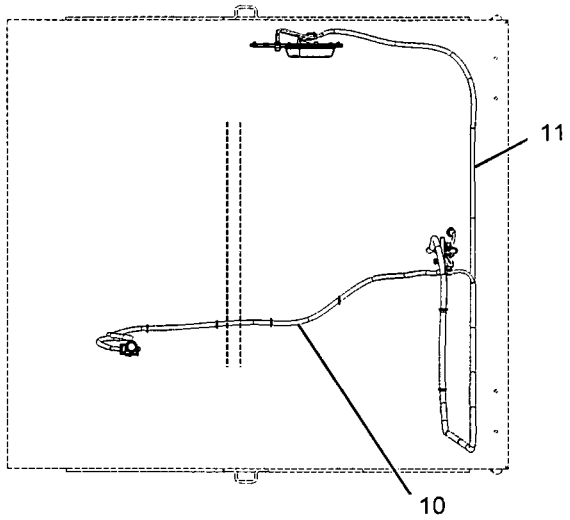

TOP VIEW

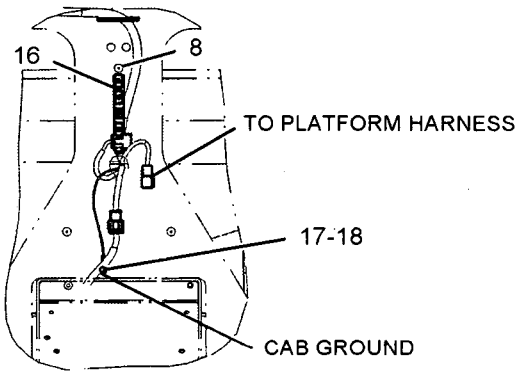

VIEW C-C

FWD

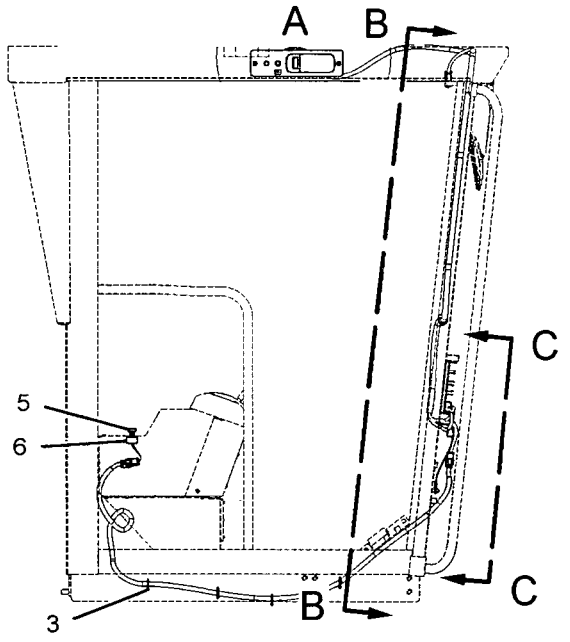

RIGHT SIDE VIEW

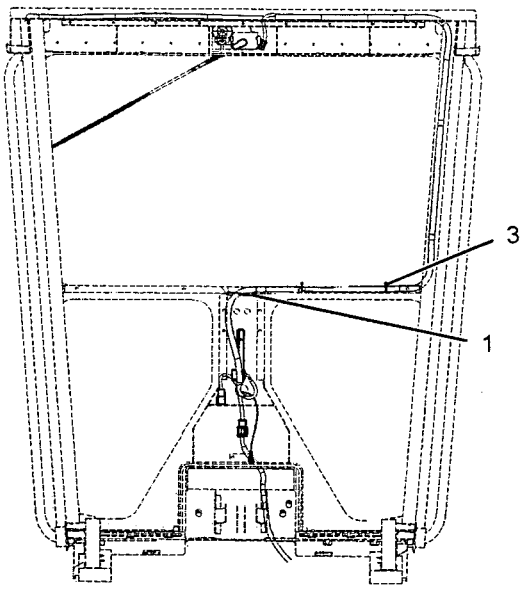

VIEW B-B

GRAPHIC #1

<END>

g01031236

171-1103 WIRING GP-ENGINE

S/N: 3PD1-UP

PART OF 160-5101 ENGINE AR

SMCS-1408 i01917648

NOTE	REF NO	GRAPHIC REF	PART NUMBER	QTY	PART NAME 1 2 3 4 5 6 (PRODUCT LEVEL)	SEE PAGE
	1	1	2M-7077	1	SPACER (0.406X0.62X0.37-IN THK)	
	2	1	3E-7448	1	CONNECTOR	
C	3	1	3S-2093	5	STRAP-CABLE	
	4	1	4P-5918	1	CLIP	
	5	1	9X-0262	1	ADAPTER	
CY	6	1	197-8391	1	SENSOR GP-TEMPERATURE (INLET MANIFOLD)	263
CY	7	1	197-8392	1	SENSOR GP-TEMPERATURE (COOLANT)	264
CY	8	1	197-8393	1	SENSOR GP-PRESSURE (ATMOSPHERIC)	256
CY	9	1	197-8394	1	SENSOR GP-PRESSURE (FUEL)	257
CY	10	1	197-8395	1	SENSOR GP-PRESSURE (INLET MANIFOLD)	258
CY	11	1	197-8396	1	SENSOR GP-SPEED (CRANKSHAFT)	260
CY	12	1	197-8397	1	SENSOR GP-SPEED (CAMSHAFT)	261
	13	1	164-9609	1	ELBOW	
	14	1	222-4086	1	HARNESS AS (ENGINE ELECTRONIC)	
		1	126-1774	1	COVER (MODULE CONNECTOR)	
		1	155-2255	1	KIT-CONNECTING PLUG (12-PIN) (ENGINE ELECTRONIC HARNESS)	
					(INCLUDES PLUG AS AND WEDGE)	
		1	155-2260	3	KIT-CONNECTING PLUG (3-PIN) (ENGINE ELECTRONIC HARNESS)	
					(INCLUDES PLUG AS AND WEDGE)	
		1	155-2270	7	KIT-CONNECTING PLUG (2-PIN) (ENGINE ELECTRONIC HARNESS)	
					(INCLUDES PLUG AS AND WEDGE)	
		1	102-8802	1	KIT-RECEPTACLE (2-PIN) (ENGINE ELECTRONIC HARNESS)	
					(INCLUDES RECEPTACLE AS AND WEDGE)	
		1	102-8803	1	KIT-RECEPTACLE (3-PIN) (ENGINE ELECTRONIC HARNESS)	
					(INCLUDES RECEPTACLE AS AND WEDGE)	
		1	160-7690	1	PLUG AS-CONNECTOR (70-PIN)	
		1	159-9322	1	SEAL-O-RING	
		1	3S-2093	2	STRAP-CABLE (MODULE CONNECTOR)	
	15	1	102-8802	1	KIT-RECEPTACLE (2-PIN) (AIR INLET HEATER)	
C	16	1	3E-4353	1	WASHER-HARD (11X25X3-MM THK)	
	17	1	4D-7794	1	CLIP	
C	18	1	4K-8864	2	CLIP	
	19	1	4P-8134	3	CLIP	
	20	1	5P-4115	2	WASHER-HARD (7.2X19X2-MM THK)	
C	21	1	6V-5048	2	SEAL-O-RING	
C	22	1	6V-5049	1	SEAL-O-RING	
M	23	1	6V-5215	2	BOLT (M8X1.25X16-MM)	
	24	1	6V-5839	1	WASHER (11X21X2.5-MM THK)	
CM	25	1	6V-6317	1	BOLT (M10X1.5X20-MM)	
M	26	1	6V-7981	1	BOLT (M10X1.5X70-MM)	
M	27	1	6V-8214	2	BOLT (M6X1X20-MM)	
M	28	1	6V-8837	1	BOLT (M6X1X16-MM)	
	29	1	8J-1256	1	CLIP	
C	30	1	8M-2770	4	CLIP	
	31	1	8M-2771	1	CLIP	
M	32	1	8T-0642	1	BOLT (M8X1.25X14-MM)	
	33	1	8T-8737	2	PLUG-SEAL	
	34	1	9M-1974	2	WASHER-HARD (8.8X16X2-MM THK)	
	35	1	9S-4191	1	PLUG	
	36	1	9X-8267	1	WASHER (6.6X12X2-MM THK)	
CY	37	1	197-8391	1	SENSOR GP-TEMPERATURE (FUEL)	263
Y	38	1	197-8394	1	SENSOR GP-PRESSURE (OIL)	257

171-1103 WIRING GP-ENGINE *(contd.)*

i01917648

C-CHANGE FROM PREVIOUS TYPE
M-METRIC PART
Y-SEPARATE ILLUSTRATION

171-1103 WIRING GP-ENGINE (contd.) i01917648

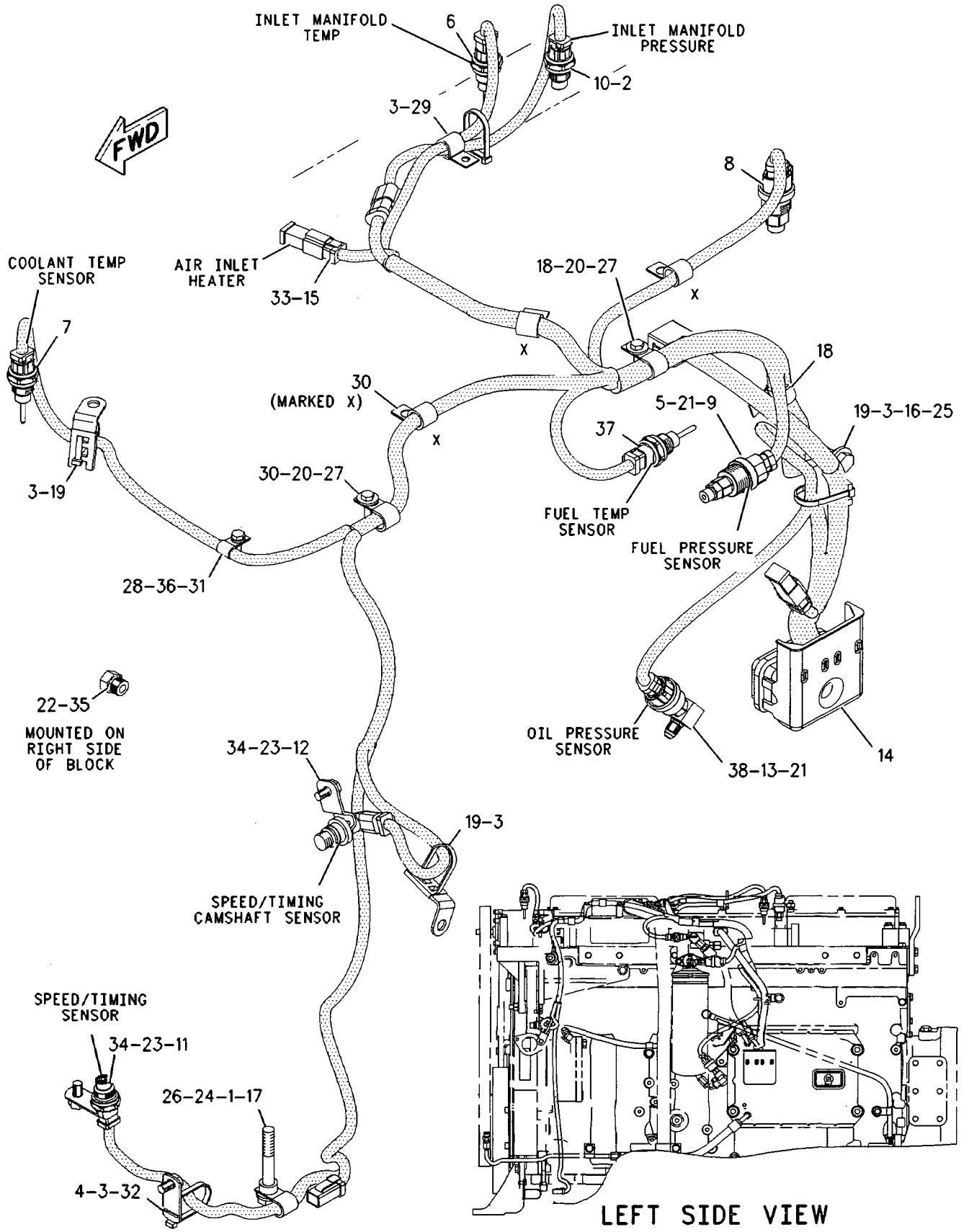

GRAPHIC #1 <END> g01007424

ELECTRICAL AND STARTING SYSTEM

159-5856 WIRING GP-FRONT

S/N: CCA1-UP

PART OF 159-4615 GENERAL AR

SMCS-1408 **i02204527**

NOTE	REF NO	GRAPHIC REF	PART NUMBER	QTY	PART NAME 1 2 3 4 5 6 (PRODUCT LEVEL)	SEE PAGE
	1	1	**1S-2342**	1	STRAP AS-GROUND	
	2	1	**3E-2026**	1	SWITCH AS-PRESSURE (STOP LAMP)	
		1	**186-3735**	2	PIN-CONNECTOR	
		1	**102-8802**	1	KIT-RECEPTACLE (2-PIN)	
					(INCLUDES RECEPTACLE AS & WEDGE)	
	3	1	**3E-3636**	1	SWITCH AS-BALL (CENTERSHIFT INDICATOR)	
		1	**186-3735**	4	PIN-CONNECTOR	
		1	**102-8804**	1	KIT-RECEPTACLE (4-PIN)	
					(INCLUDES RECEPTACLE AS & WEDGE)	
	4	1,2	**3S-2093**	15	STRAP-CABLE	
	5	2	**6I-1418**	4	SPACER (8.2X12.7X28.7-MM THK)	
	6	1,2	**7K-1181**	5	STRAP-CABLE	
	7	2	**8T-9655**	8	MOUNT (ISOLATION)	
	8	1,2	**9L-1566**	3	SUPPORT	
	9	1	**9L-6331**	1	BRACKET	
	10	1	**114-9281**	2	SWITCH AS-PRESSURE (AIR BRAKES)	
					(EACH INCLUDES)	
		1	**186-3735**	2	PIN-CONNECTOR	
		1	**102-8802**	1	KIT-RECEPTACLE (2-PIN)	
					(INCLUDES RECEPTACLE AS & WEDGE)	
	11	1	**131-4135**	1	SWITCH AS-TEMPERATURE (HYDRAULIC OIL)	
		1	**186-3735**	2	PIN-CONNECTOR	
		1	**102-8802**	1	KIT-RECEPTACLE (2-PIN)	
					(INCLUDES RECEPTACLE AS & WEDGE)	
	12	1,2	**169-5414**	5	CLIP	
Y	13	2	*171-5941*	1	ELECTRONICS GP-POWER TRAIN (MOTOR GRADER)	160
Y	14	2	**172-9389**	1	CONTROL GP-UNPROGRAMMED (POWER TRAIN)	152
	15	1	**185-4076**	1	HARNESS AS-PLATFORM	
		1	**9X-1343**	1	RECEPTACLE AS (40-PIN)	
		1	**127-5484**	3	RECEPTACLE AS (1-PIN)	
		1	**127-5486**	1	RECEPTACLE AS (1-PIN)	
		1	**129-7164**	1	RECEPTACLE AS (1-PIN)	
		1	**102-8802**	2	KIT-RECEPTACLE (2-PIN)	
		1	**102-8803**	2	KIT-RECEPTACLE (3-PIN)	
		1	**102-8805**	4	KIT-RECEPTACLE (6-PIN)	
		1	**102-8801**	8	KIT-RECEPTACLE (12-PIN)	
					(EACH INCLUDES RECEPTACLE AS & WEDGE)	
		1	**127-5483**	3	PLUG AS-CONNECTOR (1-PIN)	
		1	**127-5485**	1	PLUG AS-CONNECTOR (1-PIN)	
		1	**129-7163**	1	PLUG AS-CONNECTOR (1-PIN)	
		1	**155-2255**	6	KIT-CONNECTING PLUG (12-PIN)	
		1	**155-2265**	1	KIT-CONNECTING PLUG (8-PIN)	
		1	**155-2260**	4	KIT-CONNECTING PLUG (3-PIN)	
		1	**155-2270**	11	KIT-CONNECTING PLUG (2-PIN)	
		1	**155-2271**	1	KIT-CONNECTING PLUG (4-PIN)	
		1	**155-2274**	4	KIT-CONNECTING PLUG (6-PIN)	
					(EACH INCLUDES PLUG AS & WEDGE)	
	16	2	**201-5244**	1	PLATE AS	
	17	1	**6V-1889**	1	CLIP	
	18	2	**096-6166**	4	WASHER-HARD (4.5X9X1-MM THK)	
	19	1,2	**130-5300**	8	CLIP	
	20	1	**3J-1907**	1	SEAL-O-RING	
	21	1	**3K-0360**	1	SEAL-O-RING	
	22	1	**4D-7388**	2	CLIP	
	23	1,2	**4D-7794**	10	CLIP	
	24	1	**4K-8864**	1	CLIP	

159-5856 WIRING GP-FRONT *(contd.)* i02204527

NOTE	REF NO	GRAPHIC REF	PART NUMBER	QTY	PART NAME 1 2 3 4 5 6 (PRODUCT LEVEL)	SEE PAGE
	25	1,2	**4L-6454**	4	BOLT (3/8-16X1-IN)	
	26	1,2	**4P-8134**	2	CLIP	
	27	1	**4S-4455**	1	CLIP	
	28	1,2	**5M-3062**	31	BOLT (3/8-16X0.75-IN)	
	29	1	**5S-7379**	1	BOLT (3/8-16X0.875-IN)	
	30	1	**6D-4246**	1	CLIP	
	31	1,2	**6V-3265**	5	CLIP	
	32	2	**6V-3964**	4	WASHER-HARD (8.8X25.5X5-MM THK)	
	33	1,2	**6V-8801**	4	NUT (3/8-16-THD)	
	34	1	**7C-4354**	1	CLIP	
	35	2	**7X-0440**	4	BOLT (5/16-18X1.75-IN)	
B	36	1	**8F-1974**	10	SHIM (0.13-MM THK)	
	37	2	**8M-2770**	1	CLIP	
	38	1,2	**8T-4121**	5	WASHER-HARD (11X21X2.5-MM THK)	
M	39	1	**8T-4137**	1	BOLT (M10X1.5X20-MM)	
M	40	2	**8T-4647**	4	SCREW-MACHINE (M4X0.7X20-MM)	
	41	1,2	**8T-4896**	40	WASHER-HARD (10.2X18.5X2.5-MM THK)	
	42	1	**174-5907**	2	CLIP	
M	43	1,2	**8T-4195**	2	BOLT (M10X1.5X30-MM)	
M	44	1,2	**8T-4133**	2	NUT (M10X1.5-THD)	
	45	1,2	**7D-7233**	2	CLIP	
	46	1	**8M-2773**	1	CLIP	
	47	1	**114-9281**	1	SWITCH AS-PRESSURE (PARKING BRAKE)	
		1	**186-3735**	2	PIN-CONNECTOR	
		1	**102-8802**	1	KIT-RECEPTACLE (2-PIN) (INCLUDES RECEPTACLE AS & WEDGE)	
FY			*198-7332*	1	ELECTRONICS GP-MONITOR (CATERPILLAR MONITORING SYSTEM)	159

B-USE AS REQUIRED
F-NOT SHOWN
M-METRIC PART
Y-SEPARATE ILLUSTRATION

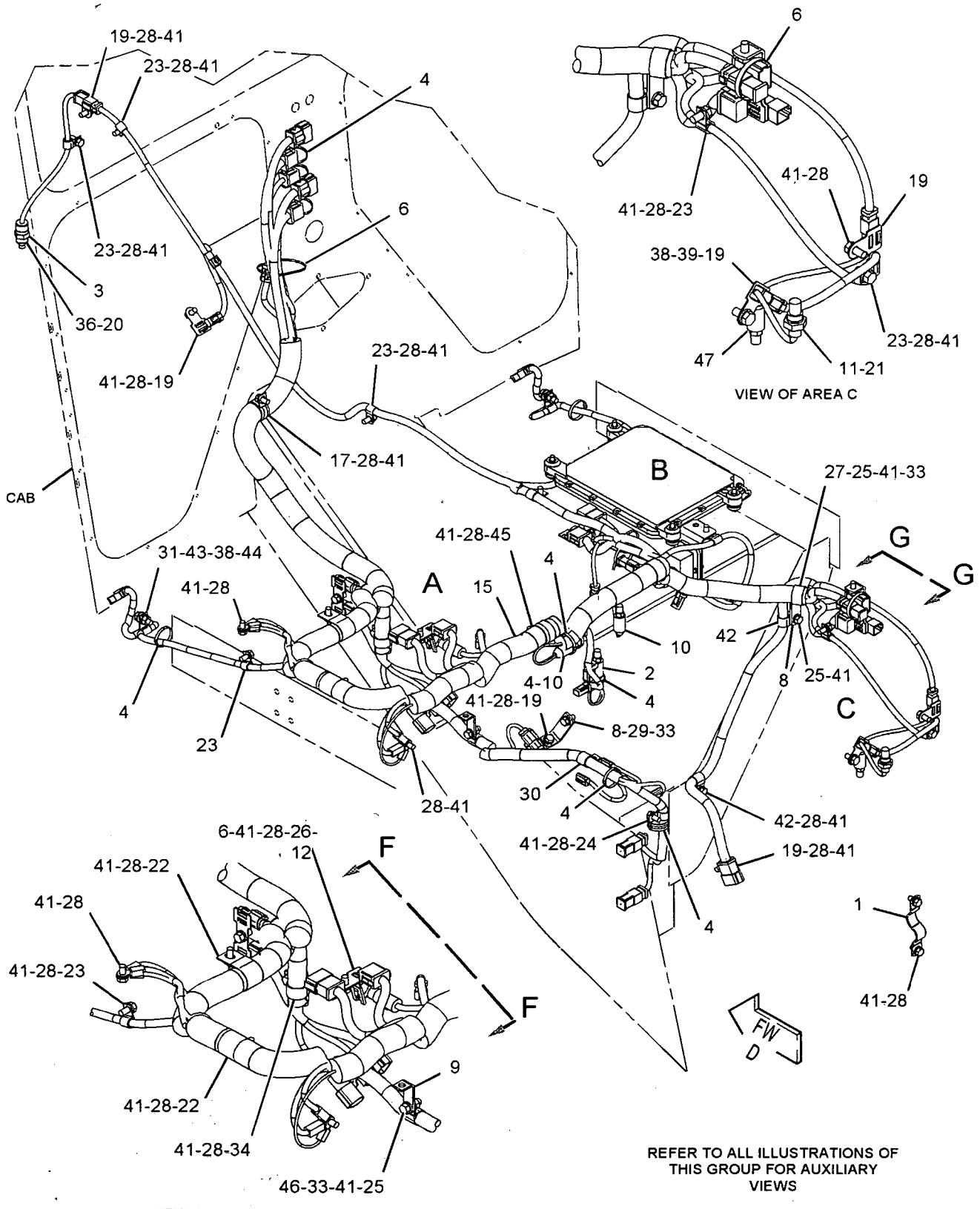

REFER TO ALL ILLUSTRATIONS OF THIS GROUP FOR AUXILIARY VIEWS

GRAPHIC #1

g01061211

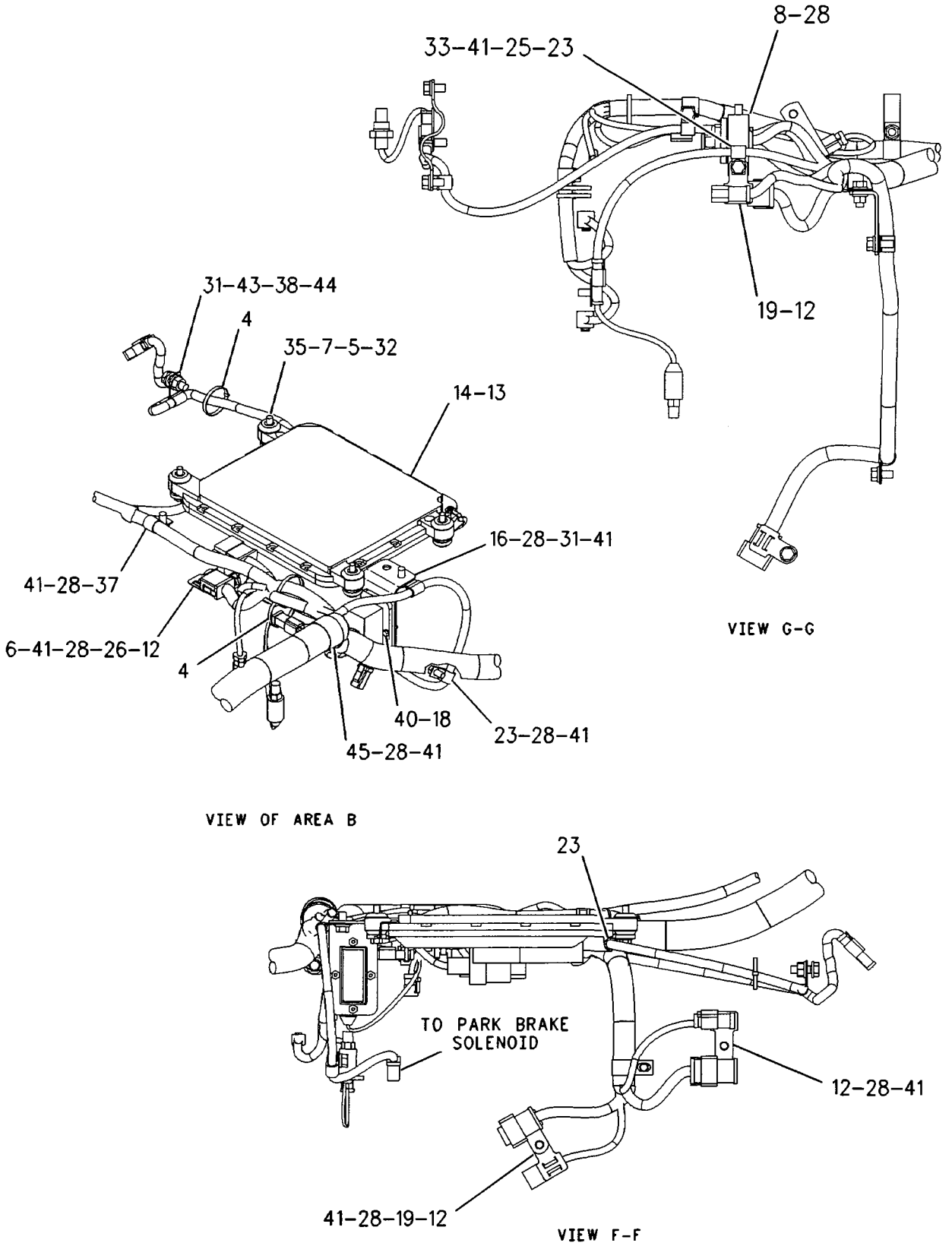

GRAPHIC #2 **<END>** g00941203

ELECTRICAL AND STARTING SYSTEM

159-5865 WIRING GP-FRONT–EU

S/N: CCA1-UP

PART OF 207-4453, 210-2044 CONVERSION AR-CERTIFICATION AN ATTACHMENT

SMCS-1408 **i02203088**

NOTE	REF NO	GRAPHIC REF	PART NUMBER	QTY	PART NAME 1 2 3 4 5 6 (PRODUCT LEVEL)	SEE PAGE
	1	3	**1S-2342**	1	STRAP AS-GROUND	
	2	1	**2G-0617**	2	CLAMP	
	3	1	**2G-0988**	2	CAP	
	4	3	**2L-0273**	1	FITTING (RUBBER)	
	5	3	**3E-2026**	1	SWITCH AS-PRESSURE (STOP LAMP)	
		3	**186-3735**	2	PIN-CONNECTOR	
		3	**102-8802**	1	KIT-RECEPTACLE (2-PIN)	
					(INCLUDES RECEPTACLE AS & WEDGE)	
	6	2	**3E-3636**	1	SWITCH AS-BALL (CENTERSHIFT INDICATOR)	
		2	**186-3735**	4	PIN-CONNECTOR	
		2	**102-8804**	1	KIT-RECEPTACLE (4-PIN)	
					(INCLUDES RECEPTACLE AS & WEDGE)	
	7	3	**3E-6450**	1	SWITCH AS-PRESSURE (PRIMARY STEERING)	
		3	**186-3735**	3	PIN-CONNECTOR	
		3	**102-8803**	1	KIT-RECEPTACLE (3-PIN)	
					(INCLUDES RECEPTACLE AS & WEDGE)	
	8	1	**3K-9520**	3	GROMMET	
	9	1,2,3	**3S-2093**	17	STRAP-CABLE	
	10	3	**6I-1418**	4	SPACER (8.2X12.7X28.7-MM THK)	
	11	1,2,3	**7K-1181**	7	STRAP-CABLE	
	12	3	**8T-9655**	8	MOUNT (ISOLATION)	
	13	2,3	**9L-1566**	3	SUPPORT	
	14	3	**9L-6331**	1	BRACKET	
Y	15	1	**105-4849**	1	LAMP GP-HEAD & SIGNAL (LH)	177
Y	16	1	**105-4850**	1	LAMP GP-HEAD & SIGNAL (RH)	179
	17	3	**114-9281**	2	SWITCH AS-PRESSURE (AIR BRAKE)	
					(EACH INCLUDES)	
		3	**186-3735**	2	PIN-CONNECTOR	
		3	**102-8802**	1	KIT-RECEPTACLE (2-PIN)	
					(INCLUDES RECEPTACLE AS & WEDGE)	
	17A	2,3	**114-9281**	1	SWITCH AS-PRESSURE (PARKING BRAKE)	
		2,3	**186-3735**	2	PIN-CONNECTOR	
		2,3	**102-8802**	1	KIT-RECEPTACLE (2-PIN)	
					(INCLUDES RECEPTACLE AS & WEDGE)	
	18	3	**131-4135**	1	SWITCH AS-TEMPERATURE (HYDRAULIC OIL)	
		3	**186-3735**	2	PIN-CONNECTOR	
		3	**102-8802**	1	KIT-RECEPTACLE (2-PIN)	
					(INCLUDES RECEPTACLE AS & WEDGE)	
	19	1	**137-9410**	2	CLAMP	
	20	3	**140-8864**	1	CABLE AS	
	21	1	**159-3959**	1	TUBE	
	22	2,3	**169-5414**	5	CLIP	
Y	23	3	*171-5941*	1	ELECTRONICS GP-POWER TRAIN (MOTOR GRADER)	160
Y	24	3	**172-9389**	1	CONTROL GP-UNPROGRAMMED (EMS ELECTRONIC)	152
	25	1	**179-8700**	1	HARNESS AS-FRONT CHASSIS	
		1	**155-2255**	1	KIT-CONNECTING PLUG (12-PIN)	
					(INCLUDES PLUG AS & WEDGE)	
		1	**102-8801**	1	KIT-RECEPTACLE (12-PIN)	
					(INCLUDES RECEPTACLE AS & WEDGE)	
	26	3	*194-2903*	1	ELBOW AS	
		3	**3K-0360**	1	SEAL-O-RING	
		3	**8T-0119**	1	ELBOW	
	27	2	**196-4226**	1	HARNESS AS-PLATFORM	
		2	**127-5483**	3	PLUG AS-CONNECTOR (1-PIN)	
		2	**9X-1343**	1	RECEPTACLE AS (40-PIN)	

159-5865 WIRING GP-FRONT *(contd.)* i02203088

NOTE	REF NO	GRAPHIC REF	PART NUMBER	QTY	PART NAME 1 2 3 4 5 6 (PRODUCT LEVEL)	SEE PAGE
		2	**155-2255**	6	KIT-CONNECTING PLUG (12-PIN)	
		2	**155-2265**	1	KIT-CONNECTING PLUG (8-PIN)	
		2	**155-2260**	4	KIT-CONNECTING PLUG (3-PIN)	
		2	**155-2270**	13	KIT-CONNECTING PLUG (2-PIN)	
		2	**155-2271**	1	KIT-CONNECTING PLUG (4-PIN)	
		2	**155-2274**	4	KIT-CONNECTING PLUG (6-PIN)	
					(EACH INCLUDES PLUG AS & WEDGE)	
		2	**102-8802**	4	KIT-RECEPTACLE (2-PIN)	
		2	**102-8803**	1	KIT-RECEPTACLE (3-PIN)	
		2	**102-8805**	5	KIT-RECEPTACLE (6-PIN)	
		2	**102-8801**	7	KIT-RECEPTACLE (12-PIN)	
					(EACH INCLUDES RECEPTACLE AS & WEDGE)	
	28	1	**197-1988**	1	HARNESS AS-FRONT LIGHTING	
		1	**155-2274**	2	KIT-CONNECTING PLUG (6-PIN)	
					(EACH INCLUDES PLUG AS & WEDGE)	
		1	**102-8801**	1	KIT-RECEPTACLE (12-PIN) (PS)	
					(INCLUDES RECEPTACLE AS & WEDGE)	
	29	3	**201-5244**	1	PLATE AS	
	30	3	**096-6166**	4	WASHER-HARD (4.5X9X1-MM THK)	
	31	1	**108-3519**	4	CLAMP	
	32	2,3	**130-5300**	9	CLIP	
	33	2,3	**174-5907**	4	CLIP	
	35	2	**3J-1907**	1	SEAL-O-RING	
	36	3	**3K-0360**	2	SEAL-O-RING	
	37	2,3	**4D-7794**	10	CLIP	
	38	3	**4K-8864**	1	CLIP	
	39	1,2	**4L-6454**	6	BOLT (3/8-16X1-IN)	
	40	3	**4P-8134**	2	CLIP	
	41	2	**4S-4455**	1	CLIP	
	42	1	**5M-2894**	4	WASHER-HARD (10.2X18.5X2.5-MM THK)	
	43	2,3	**5M-3062**	32	BOLT (3/8-16X0.75-IN)	
	44	1,3	**5S-7379**	5	BOLT (3/8-16X0.875-IN)	
	45	3	**6D-4246**	1	CLIP	
	46	2	**6V-1889**	1	CLIP	
	47	2,3	**6V-3265**	5	CLIP	
	48	3	**6V-3964**	4	WASHER-HARD (8.8X25.5X5-MM THK)	
	49	1,2,3	**6V-8801**	6	NUT (3/8-16-THD)	
	50	3	**7C-4354**	1	CLIP	
	51	2	**7D-7233**	4	CLIP	
	52	3	**7X-0440**	4	BOLT (5/16-18X1.75-IN)	
B	53	2	**8F-1974**	10	SHIM (0.13-MM THK)	
	54	1,3	**8M-2770**	3	CLIP	
	55	3	**8M-2773**	1	CLIP	
	56	2,3	**8T-4121**	5	WASHER-HARD (11X21X2.5-MM THK)	
M	57	2,3	**8T-4133**	2	NUT (M10X1.5-THD)	
M	58	2	**8T-4137**	1	BOLT (M10X1.5X20-MM)	
M	59	2,3	**8T-4195**	2	BOLT (M10X1.5X30-MM)	
M	60	3	**8T-4647**	4	SCREW-MACHINE (M4X0.7X20-MM)	
	61	1,2,3	**8T-4896**	43	WASHER-HARD (10.2X18.5X2.5-MM THK)	
	62	1	**9D-6164**	4	BOSS (3/8-16-THD)	
FY			*198-7332*	1	ELECTRONICS GP-MONITOR (CATERPILLAR MONITORING SYSTEM)	159

B-USE AS REQUIRED
F-NOT SHOWN
M-METRIC PART
Y-SEPARATE ILLUSTRATION

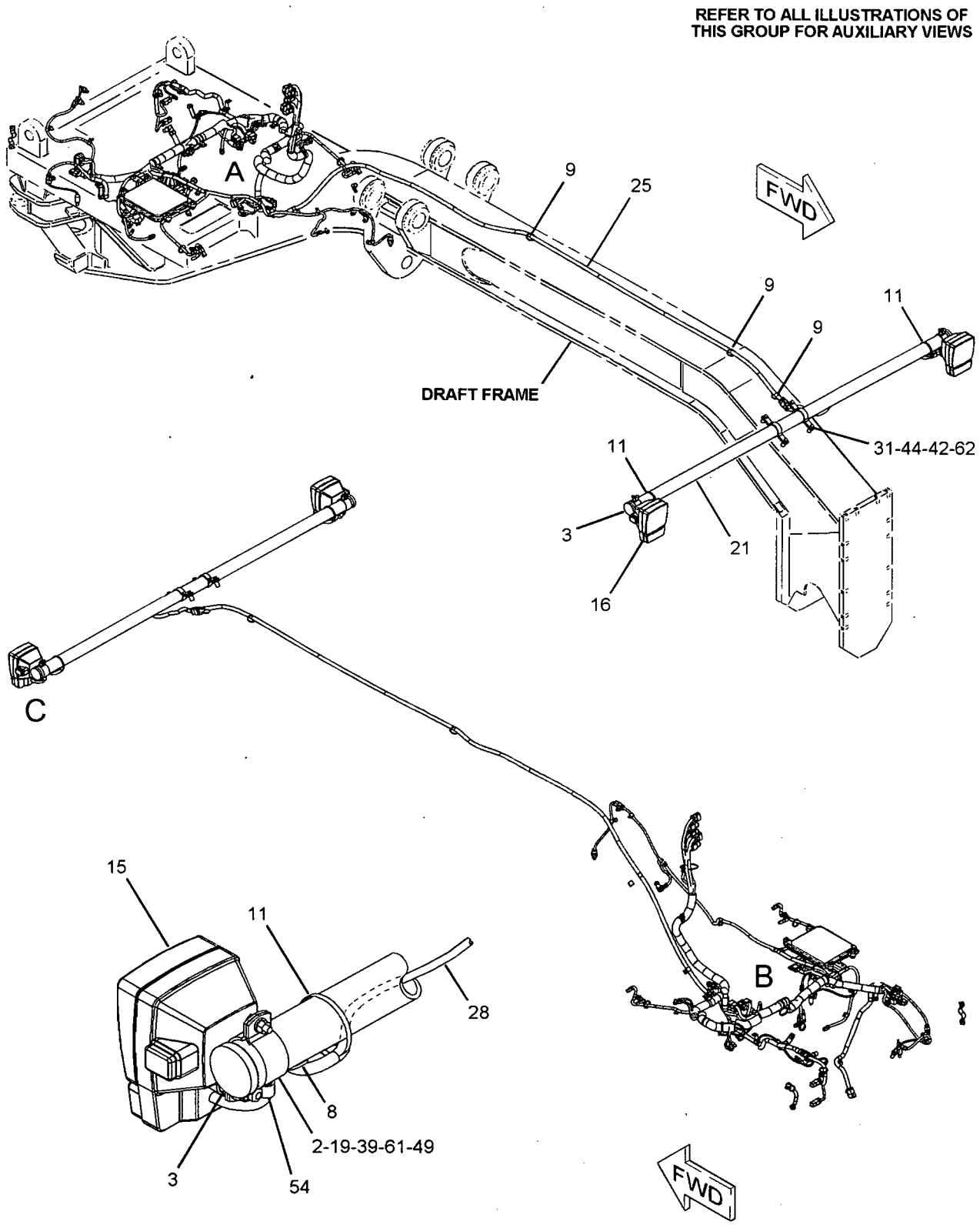

VIEW OF AREA C

GRAPHIC #1

g01086317

159-5865 WIRING GP-FRONT *(contd.)* i02203088

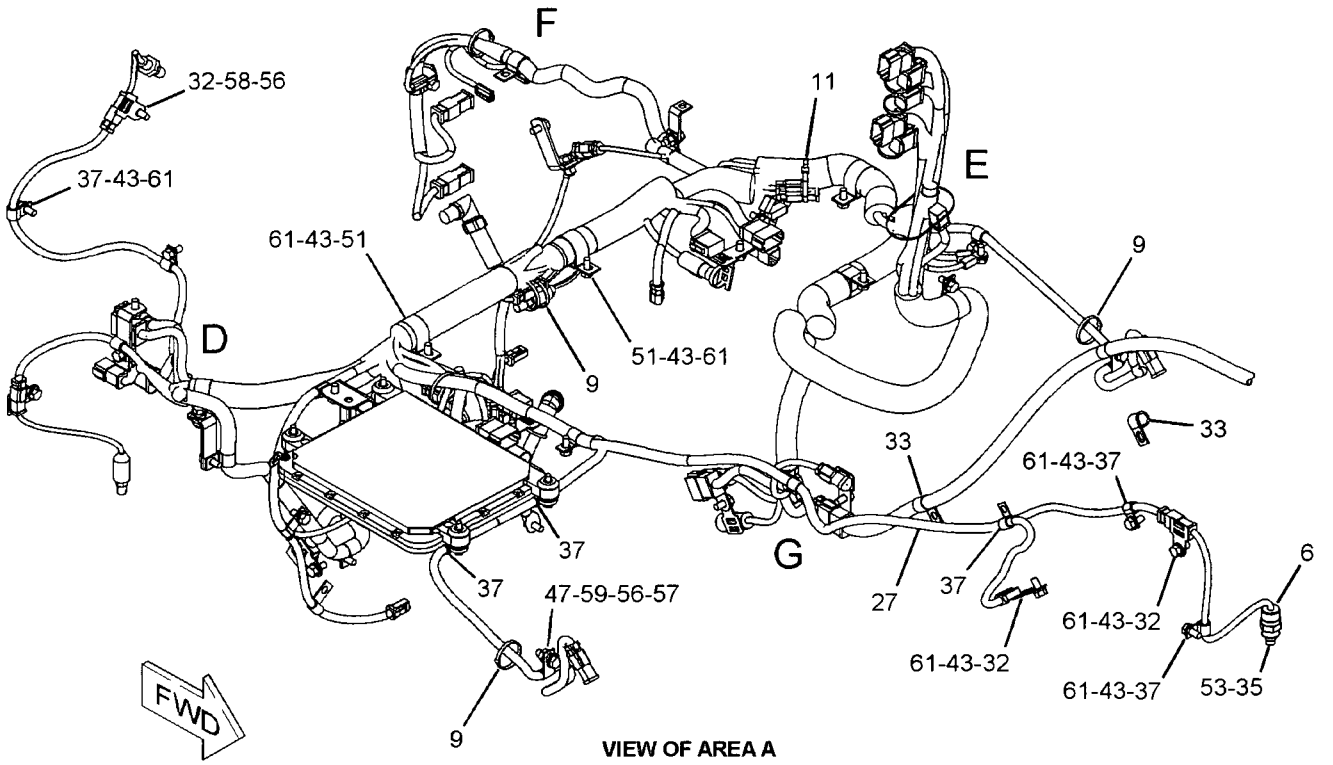

VIEW OF AREA A

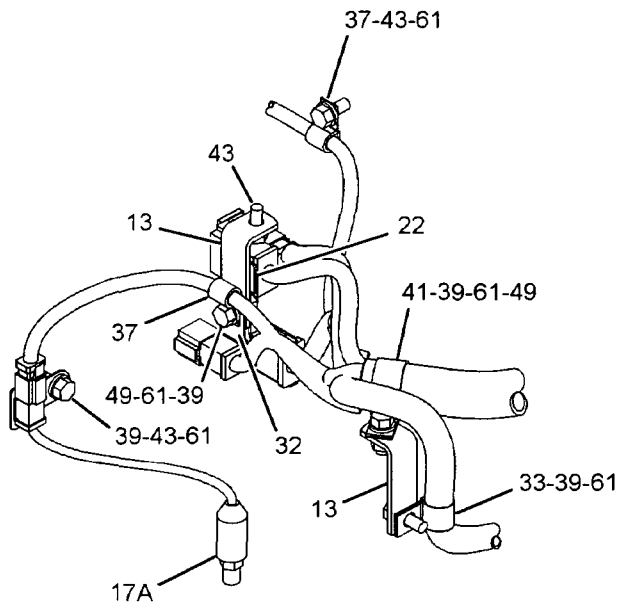

VIEW OF AREA D

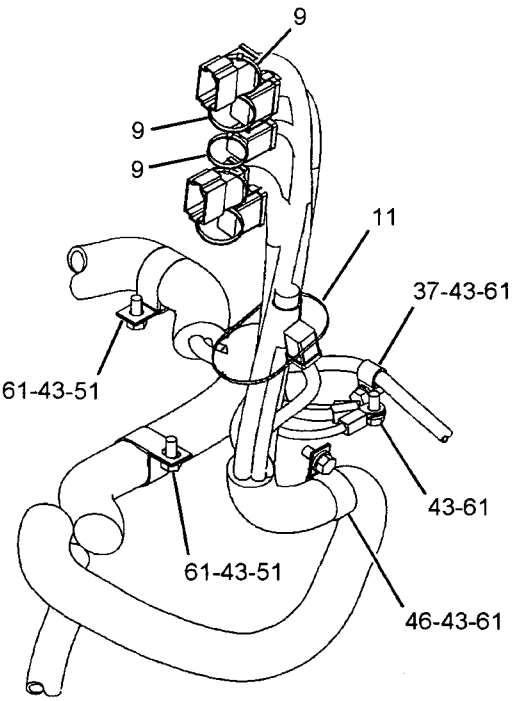

VIEW OF AREA E

REFER TO ALL ILLUSTRATIONS OF THIS GROUP FOR AUXILIARY VIEWS

GRAPHIC #2

g01086319

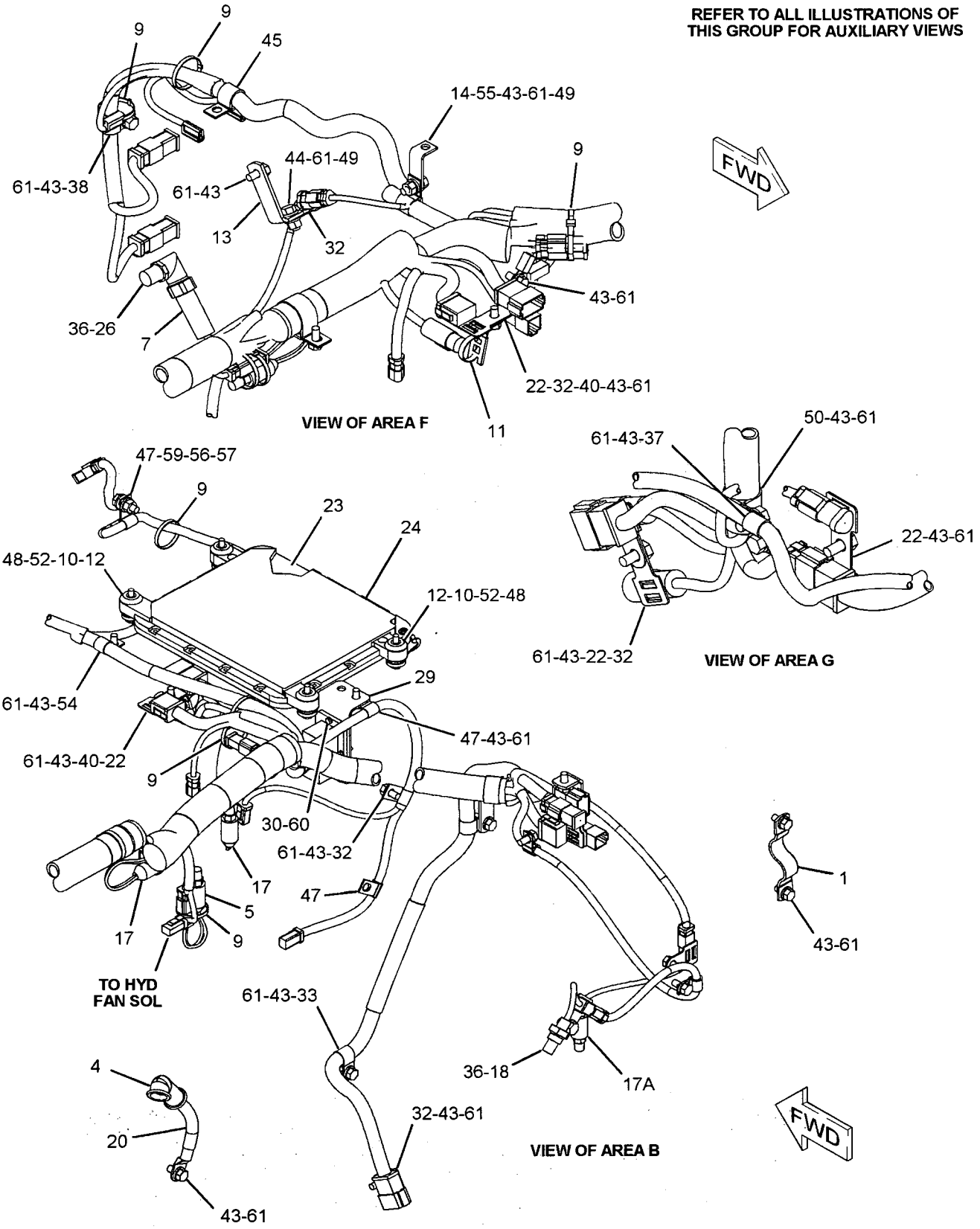

GRAPHIC #3 **<END>** g01087648

ELECTRICAL AND STARTING SYSTEM

159-5877 WIRING GP-REAR

S/N: CCA1-UP

PART OF 159-4615 GENERAL AR

SMCS-1408 **i02204528**

NOTE	REF NO	GRAPHIC REF	PART NUMBER	QTY	PART NAME 1 2 3 4 5 6 (PRODUCT LEVEL)	SEE PAGE
	1	1,2	**3S-2093**	6	STRAP-CABLE	
	2	1	**7G-1060**	1	STRAP AS-GROUND	
	3	2	**7K-1181**	1	STRAP-CABLE	
	4	2	**8W-3642**	1	CABLE AS	
		2	**1S-7251**	2	TERMINAL-RING	
E		2	**5P-0747**		CABLE (00-GA, BLACK) (90-CM)	
		2	**9G-8909**	1	COVER-TERMINAL (BLACK)	
	5	1	**8W-8527**	1	SLEEVE	
	6	1,2	**8W-8528**	4	SLEEVE	
	7	2	**9L-1566**	1	SUPPORT	
	8	1	**9L-3059**	1	SUPPORT-TUBE	
	9	2	**9M-4594**	2	SPACER (0.406X0.875X0.75-IN THK)	
	10	2	**9U-2277**	1	CLIP AS	
	11	2	**061-7661**	1	CABLE AS	
		2	**1S-7251**	2	TERMINAL-RING	
E		2	**5P-0747**		CABLE (00-GA, BLACK) (42-CM)	
	12	2	**106-8704**	1	SUPPRESSOR AS-ARC	
		1	**102-8802**	1	KIT-RECEPTACLE (2-PIN)	
					(INCLUDES RECEPTACLE AS & WEDGE)	
		2	**3E-3365**	1	WEDGE-RECEPTACLE LOCK (2-PIN)	
		2	**102-8802**	1	KIT-RECEPTACLE (2-PIN)	
					(INCLUDES RECEPTACLE AS & WEDGE)	
		2	**186-3735**	1	PIN-CONNECTOR	
	13	2	**123-3688**	1	PLATE AS	
		2	**7L-0811**	1	DOWEL	
	14	2	**123-3689**	1	PLATE AS	
		2	**5M-6687**	1	STUD-TAPERLOCK (3/8-16X1.28-IN OAL)	
	15	2	**123-3692**	1	ARM	
	16	2	**123-3695**	1	PLATE	
	17	2	**139-2116**	1	SWITCH AS-TOGGLE (GROUND LEVEL ENGINE SHUTDOWN)	
		2	**3E-3371**	1	WEDGE-RECEPTACLE LOCK (3-PIN)	
		2	**6T-3631**	2	NUT-HEX (15/32-32-THD)	
		2	**6T-3632**	1	LOCKWASHER	
		2	**6T-3633**	1	RING-LOCKING	
		2	**186-3735**	3	PIN-CONNECTOR	
		2	**102-8803**		KIT-RECEPTACLE (3-PIN)	
					(INCLUDES RECEPTACLE AS & WEDGE)	
	18	2	**139-6122**	1	BOSS	
	19	1	**169-3292**	1	HARNESS AS-TRANSMISSION	
		1	**102-8802**	2	KIT-RECEPTACLE (2-PIN)	
		1	**102-8803**	2	KIT-RECEPTACLE (3-PIN)	
		1	**102-8805**	1	KIT-RECEPTACLE (6-PIN)	
		1	**102-8801**	2	KIT-RECEPTACLE (12-PIN)	
					(EACH INCLUDES RECEPTACLE AS & WEDGE)	
		1	**110-6846**	1	PLUG AS-CONNECTOR (40-PIN)	
		1	**9X-0141**	1	PLUG AS-CONNECTOR (40-PIN)	
		1	**160-7689**	1	PLUG AS-CONNECTOR (70-PIN)	
		1	**155-2255**	3	KIT-CONNECTING PLUG (12-PIN)	
		1	**155-2260**	1	KIT-CONNECTING PLUG (3-PIN)	
		1	**155-2270**	3	KIT-CONNECTING PLUG (2-PIN)	
		1	**155-2271**	1	KIT-CONNECTING PLUG (4-PIN)	
		1	**155-2274**	1	KIT-CONNECTING PLUG (6-PIN)	
					(EACH INCLUDES PLUG AS & WEDGE)	
	20	1	**169-3502**	1	HARNESS AS-REAR CHASSIS	

159-5877 WIRING GP-REAR (contd.) i02204528

NOTE	REF NO	GRAPHIC REF	PART NUMBER	QTY	PART NAME 1 2 3 4 5 6 (PRODUCT LEVEL)	SEE PAGE
		1	102-8802	2	KIT-RECEPTACLE (2-PIN)	
					(EACH INCLUDES RECEPTACLE AS & WEDGE)	
		1	8T-8737	9	PLUG-SEAL	
		1	155-2255	2	KIT-CONNECTING PLUG (12-PIN)	
		1	155-2270	5	KIT-CONNECTING PLUG (2-PIN)	
					(EACH INCLUDES PLUG AS & WEDGE)	
	21	2	169-5414	1	CLIP	
	22	1	179-2187	1	HARNESS AS-REAR CHASSIS	
		1	102-8802	1	KIT-RECEPTACLE (2-PIN)	
		1	102-8805	1	KIT-RECEPTACLE (6-PIN)	
					(EACH INCLUDES RECEPTACLE AS & WEDGE)	
		1	127-5483	5	PLUG AS-CONNECTOR (1-PIN)	
		1	127-5485	1	PLUG AS-CONNECTOR (1-PIN)	
		1	155-2255	1	KIT-CONNECTING PLUG (12-PIN)	
		1	155-2270	2	KIT-CONNECTING PLUG (2-PIN)	
					(EACH INCLUDES PLUG AS & WEDGE)	
	23	2	187-1008	1	SENDER AS-POSITION (ARTICULATION)	
		2	3E-3365	1	WEDGE-RECEPTACLE LOCK (2-PIN)	
E		2	9X-1813		SLEEVE (15-CM)	
		2	102-8802	1	KIT-RECEPTACLE (2-PIN)	
					(INCLUDES RECEPTACLE AS & WEDGE)	
		2	186-3735	2	PIN-CONNECTOR	
	24	2	033-8248	1	CLIP	
	25	2	109-0361	1	FILM-INSTRUCTION (ENGINE SHUTDOWN)	
	26	2	115-3073	1	CLIP AS-CONNECTING	
	27	2	130-5300	5	CLIP	
	28	2	130-5301	1	CLIP	
	29	2	174-5907	4	CLIP	
	30	2	1S-0994	1	CLIP	
	31	1	1S-0996	2	CLIP	
	32	2	3E-5169	1	GUARD-SWITCH	
	33	1	4D-1432	2	SPACER (1.8-IN THK)	
	34	1	4D-7388	1	CLIP	
	35	1,2	4D-7794	4	CLIP	
	36	2	4K-8864	1	CLIP	
	37	1	4S-4455	3	CLIP	
	38	1	5M-3062	1	BOLT (3/8-16X0.75-IN)	
	39	1	5P-1075	2	WASHER-HARD (10.2X22.5X3-MM THK)	
	40	2	5P-4116	1	WASHER-HARD (8.8X20.5X2-MM THK)	
	41	2	5P-8167	2	BOLT (3/8-16X0.625-IN)	
	42	2	6D-4244	3	CLIP	
	43	1	6D-4246	3	CLIP	
	44	2	6V-6893	3	BOLT (6-32X0.375-IN)	
	45	2	6V-8801	1	NUT (3/8-16-THD)	
	46	1,2	7C-4354	6	CLIP	
M	47	2	7X-2537	1	BOLT (M8X1.25X35-MM)	
	48	1	8D-9671	1	CLIP	
	49	2	8M-2773	3	CLIP	
	50	1,2	8T-4121	27	WASHER-HARD (11X21X2.5-MM THK)	
M	51	1,2	8T-4133	3	NUT (M10X1.5-THD)	
M	52	1,2	8T-4136	5	BOLT (M10X1.5X25-MM)	
M	53	1,2	8T-4137	17	BOLT (M10X1.5X20-MM)	
M	54	2	8T-4179	3	BOLT (M12X1.75X20-MM)	
M	55	2	8T-4185	1	BOLT (M10X1.5X50-MM)	
M	56	1	8T-4191	2	BOLT (M10X1.5X16-MM)	
M	57	2	8T-4196	1	BOLT (M10X1.5X35-MM)	
M	58	2	8T-4200	1	BOLT (M8X1.25X16-MM)	
	59	2	8T-4205	2	WASHER-HARD (7.2X14.5X2-MM THK)	
M	60	2	8T-4223	3	WASHER-HARD (13.5X25.5X3-MM THK)	

159-5877 WIRING GP-REAR *(contd.)*

i02204528

NOTE	REF NO	GRAPHIC REF	PART NUMBER	QTY	PART NAME 1 2 3 4 5 6 (PRODUCT LEVEL)	SEE PAGE
	61	1,2	**8T-4224**	3	WASHER-HARD (8.8X16X2-MM THK)	
	62	2	**8T-4226**	1	WASHER-PLATED (10.5X45X3-MM THK)	
	63	1,2	**8T-4896**	3	WASHER-HARD (10.2X18.5X2.5-MM THK)	
M	64	1	**8T-6870**	2	BOLT (M8X1.25X70-MM)	
	65	2	**8T-9364**	2	BOLT (1/4-20X0.625-IN)	
	66	1	**8W-8909**	3	SLEEVE	
	67	1	**8X-5489**	1	SLEEVE	

E-ORDER BY THE CENTIMETER
M-METRIC PART

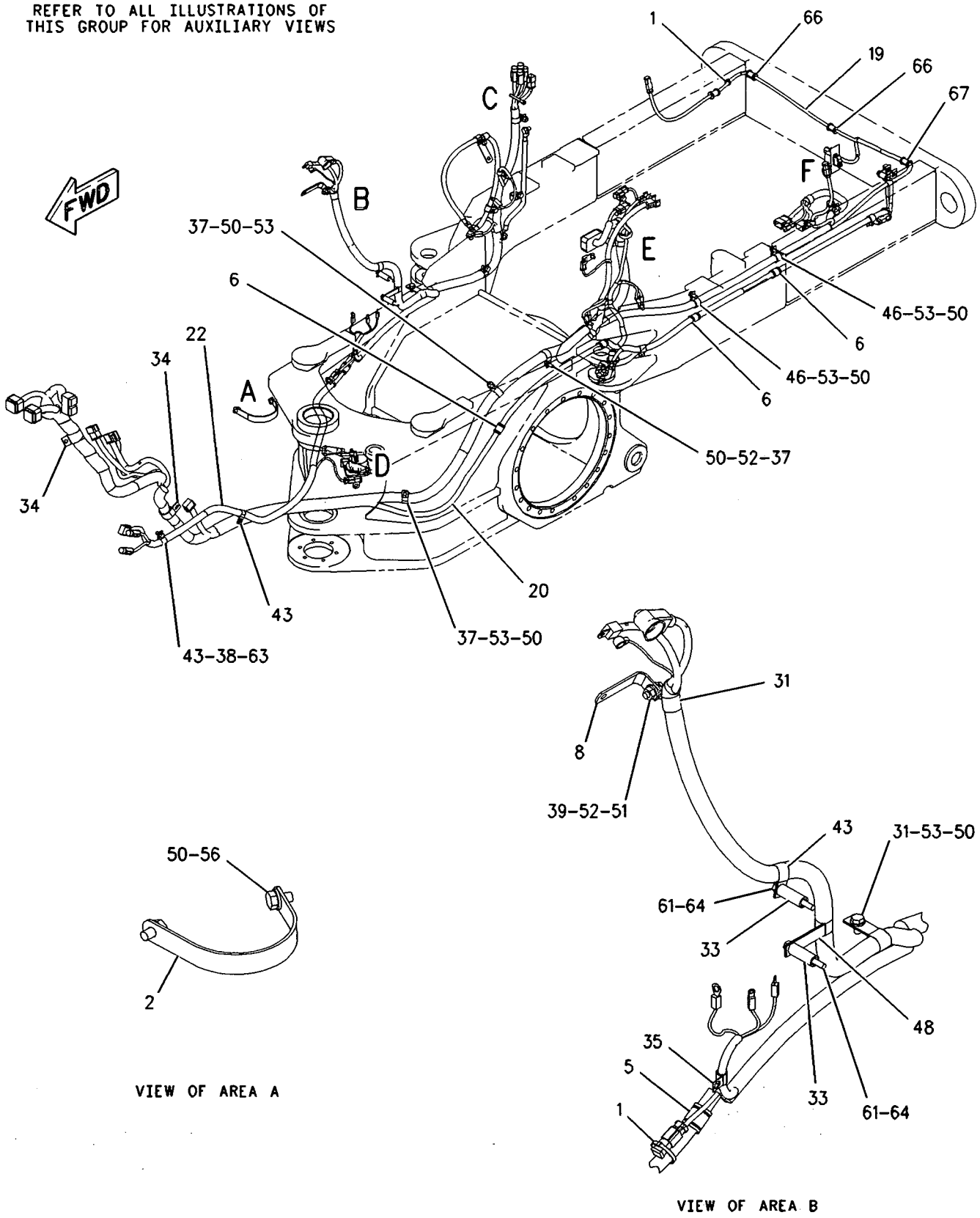

GRAPHIC #1 g00896485

159-5877 **WIRING GP-REAR** *(contd.)* **i02204528**

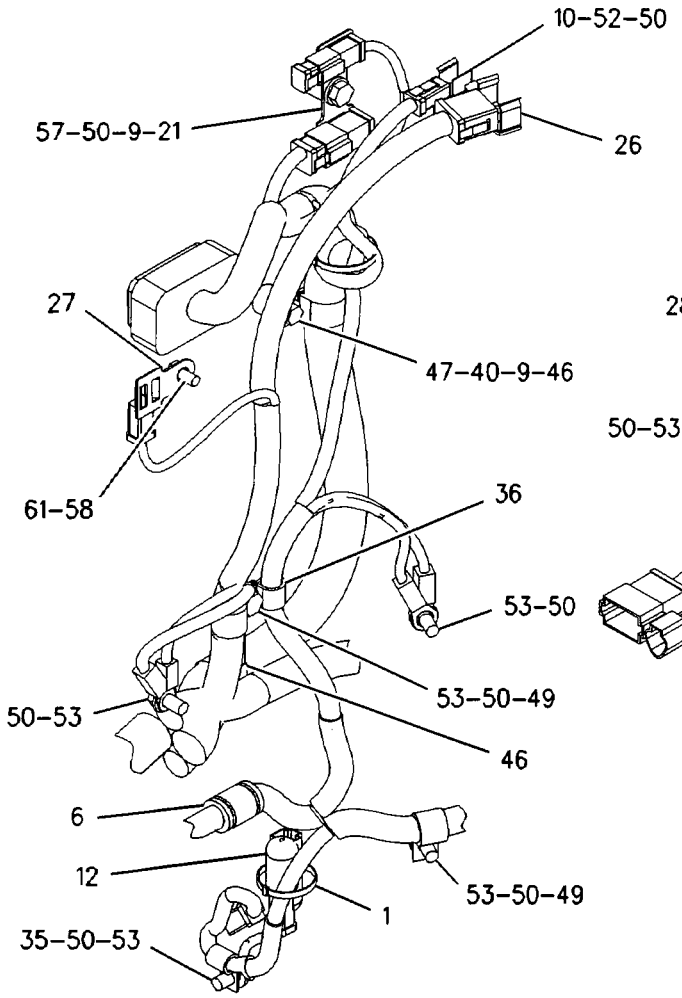

VIEW OF AREA E

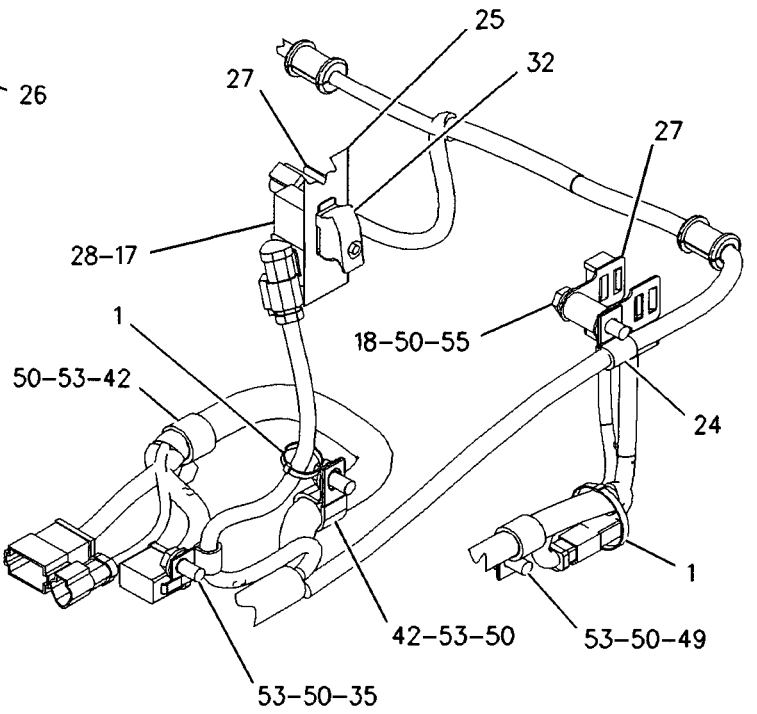

VIEW OF AREA F

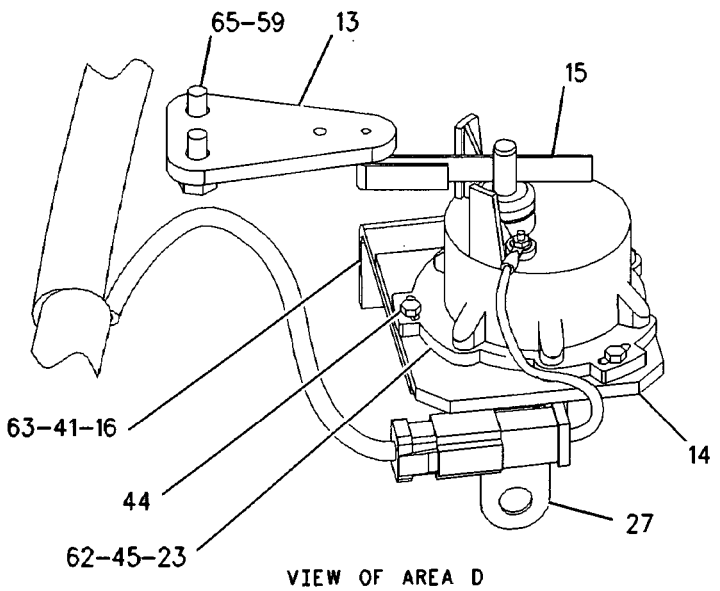

VIEW OF AREA D

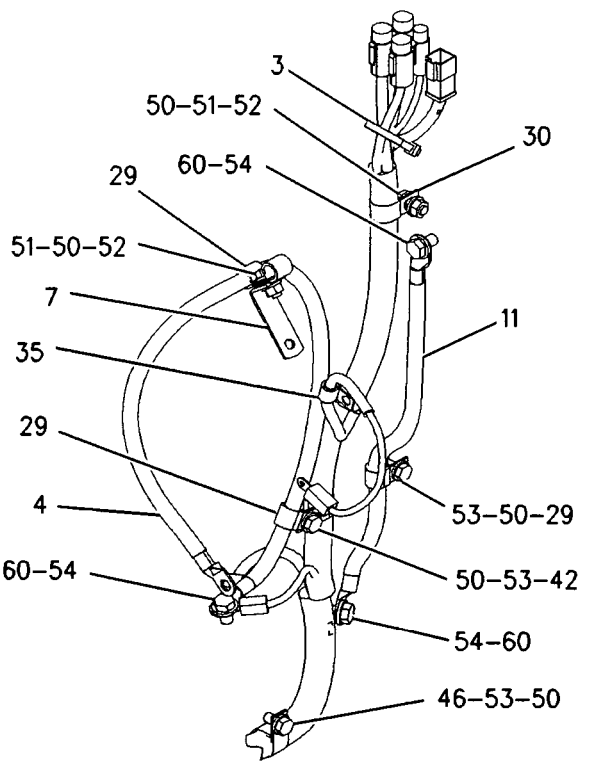

VIEW OF AREA C

GRAPHIC #2 **<END>** g00896486

ELECTRICAL AND STARTING SYSTEM

178-0163 WIRING GP-REAR–SERVICE CENTER

S/N: CCA1-UP

PART OF 171-6700, 185-3143 SUPPORT AR-REAR CHASSIS

ALSO AN ATTACHMENT

SMCS-1408 **i02204538**

NOTE	REF NO	GRAPHIC REF	PART NUMBER	QTY	PART NAME 1 2 3 4 5 6 (PRODUCT LEVEL)	SEE PAGE
	1	2	**2L-0273**	1	FITTING (RUBBER)	
	2	2	**3E-8320**	1	PLATE-INSTRUCTION (BATTERY)	
	3	2	**3S-2093**	2	STRAP-CABLE	
	4	2	**6V-4283**	1	PLATE-IDENTIFICATION (ALTERNATOR)	
	5	2	**7K-4743**	2	SPACER (10.31X25.4X6.35-MM THK)	
	6	2	**7V-9275**	1	STRAP	
	7	1	**9L-1566**	1	SUPPORT	
	8	1	**112-4428**	1	CABLE AS	
		1	**1S-7251**	1	TERMINAL-RING	
		1	**1S-7252**	1	TERMINAL-RING	
		1	**5P-0747**		CABLE (00-GA, BLACK) (27-CM)	
	9	1	**115-5593**	1	CABLE AS	
		1	**1S-7252**	1	TERMINAL-RING	
E		1	**5P-0747**		CABLE (00-GA, BLACK) (119-CM)	
		1	**7N-5274**	1	COVER-TERMINAL (BLACK)	
		1	**3S-6050**	1	TERMINAL AS	
		1	**1M-6119**	1	BOLT (5/16-18X1.375-IN)	
		1	**1M-6120**	1	NUT (5/16-18-THD)	
	10	2	**118-3534**	1	SWITCH GP-MAGNETIC (24-VOLT) (CRANKING RELAY)	
	11	2	**125-6390**	1	PLATE-IDENTIFICATION (ENGINE)	
Y	12	2	**167-0138**	1	SWITCH GP-MAGNETIC (24-VOLT) (MAIN RELAY)	278
	13	2	**169-5414**	1	CLIP	
	14	1	**169-7262**	1	HARNESS AS-REAR	
		1	**102-8802**	1	KIT-RECEPTACLE (2-PIN)	
		1	**127-5484**	1	RECEPTACLE AS (1-PIN)	
		1	**127-5486**	1	RECEPTACLE AS (1-PIN)	
					(INCLUDES RECEPTACLE AS AND WEDGE)	
		1	**155-2270**	1	KIT-CONNECTING PLUG (2-PIN)	
		1	**155-2274**	2	KIT-CONNECTING PLUG (6-PIN)	
					(INCLUDES PLUG AS AND WEDGE)	
	15	1	**169-7263**	1	HARNESS AS-REAR	
		1	**102-8802**	1	KIT-RECEPTACLE (2-PIN)	
		1	**102-8804**	1	KIT-RECEPTACLE (4-PIN)	
		1	**102-8805**	1	KIT-RECEPTACLE (6-PIN)	
		1	**102-8801**	1	KIT-RECEPTACLE (12-PIN)	
					(INCLUDES RECEPTACLE AS AND WEDGE)	
		1	**155-2270**	1	KIT-CONNECTING PLUG (2-PIN)	
		1	**155-2271**	1	KIT-CONNECTING PLUG (4-PIN)	
					(INCLUDES PLUG AS AND WEDGE)	
	16	2	**171-2210**	1	CIRCUIT BREAKER AS (80-AMPERE) (MAIN)	
	16A	2	**171-2210**	1	CIRCUIT BREAKER AS (80-AMPERE) (ALTERNATOR)	
					(EACH INCLUDES)	
		2	**8T-4205**	2	WASHER-HARD (7.2X14.5X2-MM THK)	
		2	**6V-8187**	2	NUT (1/4-28-THD)	
		2	**1H-3244**	2	LOCKWASHER	
	17	1	**177-8802**	1	CABLE AS	
		1	**1S-7251**	1	TERMINAL-RING	
E		1	**5P-0761**		CABLE (00-GA, RED) (32-CM)	
		1	**8N-0869**	1	COVER-TERMINAL (RED)	
		1	**8N-1725**	1	COVER-TERMINAL (RED)	
		1	**3S-6049**	1	TERMINAL AS-BATTERY (POSITIVE)	
		1	**1M-6119**	1	BOLT (5/16-18X1.375-IN)	
		1	**1M-6120**	1	NUT (5/16-18-THD)	
	18	2	**177-9813**	1	CABLE AS	
		2	**2L-8050**	1	TERMINAL (FOR 1/4-IN SCREW)	

178-0163 WIRING GP-REAR (contd.) i02204538

NOTE	REF NO	GRAPHIC REF	PART NUMBER	QTY	PART NAME 1 2 3 4 5 6 (PRODUCT LEVEL)	SEE PAGE
		2	2L-8058	1	TERMINAL (FOR 1/4-IN SCREW)	
		2	8N-1546	1	PIN-CONNECTOR	
		2	127-5484	1	RECEPTACLE AS (1-PIN)	
	19	1	177-9814	1	CABLE AS	
		1	9G-4343	1	TERMINAL	
		1	8N-1548	1	PIN-CONNECTOR	
		1	127-5484	1	RECEPTACLE AS (1-PIN)	
	20	2	178-0160	1	WIRE AS	
	21	2	178-0162	1	CABLE AS	
BD		2	5P-5689		WIRE (08-GA)	
		2	2L-8050	1	TERMINAL (FOR 1/4-IN SCREW)	
		2	2L-8058	1	TERMINAL (FOR 1/4-IN SCREW)	
	22	2	178-0555	1	CABLE AS	
		2	9G-4343	1	TERMINAL	
		2	5P-3454	1	TERMINAL	
	23	2	189-0108	1	PLATE	
	24	2	194-1854	1	COVER	
	25	1	195-4990	1	WIRE AS	
	26	1	174-3897	1	CABLE AS	
		1	1S-7251	2	TERMINAL-RING	
E		1	5P-0761		CABLE (00-GA, RED) (117-CM)	
		1	8N-0869	2	COVER-TERMINAL (RED)	
	27	1	033-8248	1	CLIP	
	28	1	130-5300	3	CLIP	
	29	1	132-6938	1	PLATE	
	30	2	157-2528	1	SPACER (7X16X20-MM THK)	
	31	1,2	174-5907	6	CLIP	
	32	1,2	1S-0994	2	CLIP	
	33	2	1S-1015	1	CLIP	
	34	2	1V-6688	1	GROMMET	
	35	2	3K-8106	2	SCREW-MACHINE (8-32X1-IN)	
	36	2	4B-4274	4	WASHER (5.5X13X1.2-MM THK)	
	37	2	4B-4863	2	WASHER (4.7X11X1.2-MM THK)	
	38	1,2	4D-7794	3	CLIP	
	39	2	4D-8948	1	CLIP	
	40	1	4H-2558	2	GROMMET	
M	41	1	5C-9553	1	BOLT (M6X1X16-MM)	
	42	2	5L-4507	4	SCREW-MACHINE (10-32X0.875-IN)	
	43	1	5P-4116	1	WASHER-HARD (8.8X20.5X2-MM THK)	
	44	2	6D-3479	1	CLIP	
	45	1,2	6K-8178	2	CLIP	
	46	2	6T-3643	1	CIRCUIT BREAKER AS (15-AMPERE) (ENGINE CONTROL)	
		2	6V-8376	2	SCREW-MACHINE (8-32X0.25-IN)	
		2	9B-7233	2	LOCKWASHER	
M	47	2	6V-7357	1	BOLT (M6X1X25-MM)	
Y	48	2	7N-0718	1	SWITCH GP-DISCONNECT (BATTERY)	274
	49	2	7N-3718	1	CLIP	
	50	2	7Y-8169	1	GROMMET	
M	51	2	8C-8451	1	BOLT (M6X1X40-MM)	
	52	1	8M-2772	1	CLIP	
M	53	2	8T-0293	1	BOLT (M12X1.75X20-MM)	
	54	1,2	8T-4121	19	WASHER-HARD (11X21X2.5-MM THK)	
M	55	1	8T-4133	1	NUT (M10X1.5-THD)	
M	56	1,2	8T-4136	10	BOLT (M10X1.5X25-MM)	
M	57	1,2	8T-4137	6	BOLT (M10X1.5X20-MM)	
M	58	2	8T-4138	2	BOLT (M6X1X20-MM)	
M	59	1	8T-4189	3	BOLT (M8X1.25X20-MM)	
M	60	1	8T-4191	2	BOLT (M10X1.5X16-MM)	
	61	2	8T-4205	4	WASHER-HARD (7.2X14.5X2-MM THK)	

178-0163 WIRING GP-REAR *(contd.)* i02204538

NOTE	REF NO	GRAPHIC REF	PART NUMBER	QTY	PART NAME 1 2 3 4 5 6 (PRODUCT LEVEL)	SEE PAGE
M	62	2	**8T-4223**	1	WASHER-HARD (13.5X25.5X3-MM THK)	
	63	1	**8T-4224**	3	WASHER-HARD (8.8X16X2-MM THK)	
Y	64	1	*9W-0742*	1	BLOCK GP-JUNCTION	140

B-USE AS REQUIRED
D-ORDER BY THE METER
E-ORDER BY THE CENTIMETER
M-METRIC PART
Y-SEPARATE ILLUSTRATION

178-0163 **WIRING GP-REAR** *(contd.)* **i02204538**

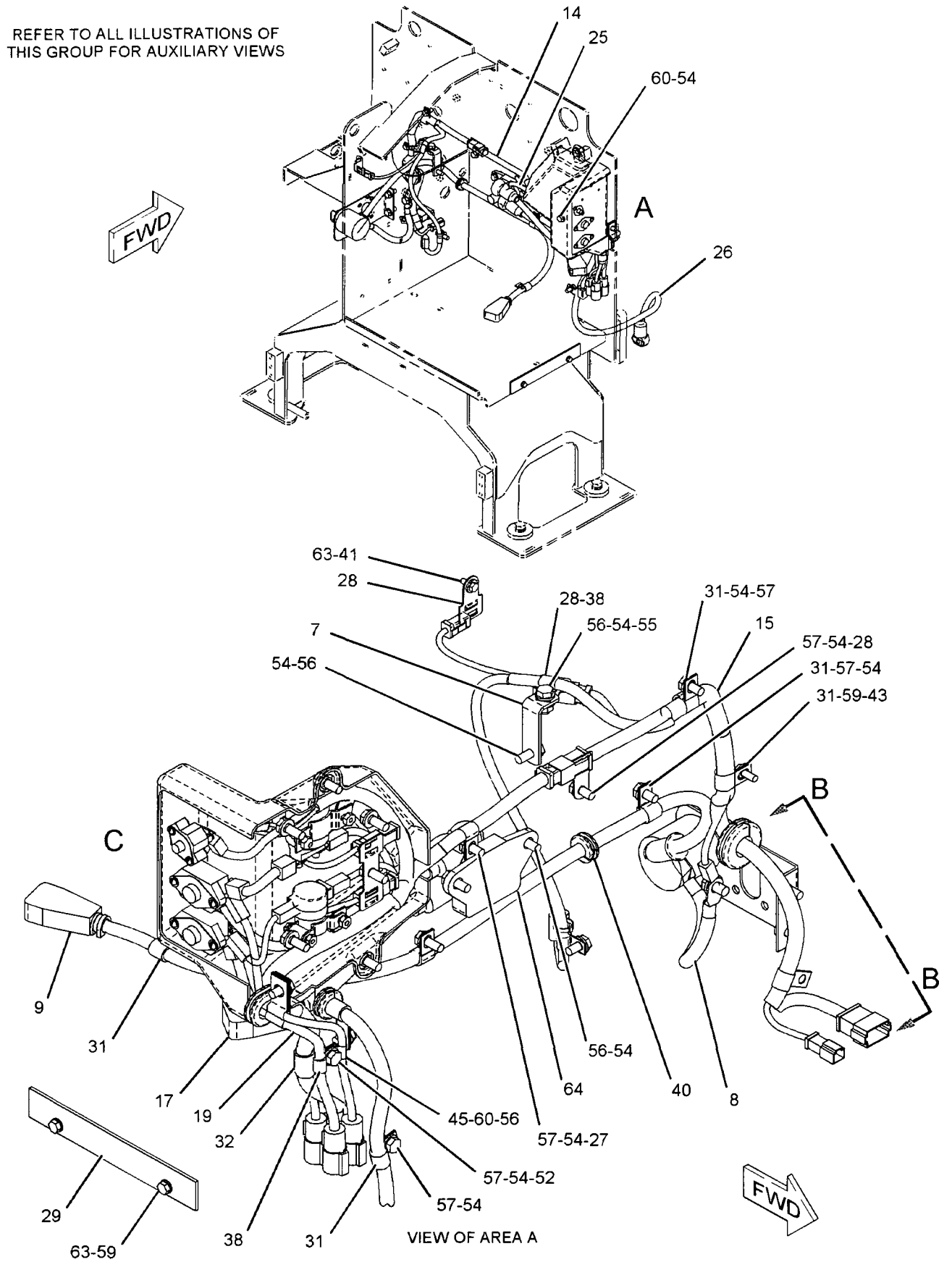

GRAPHIC #1 g01026085

178-0163 **WIRING GP-REAR** *(contd.)* **i02204538**

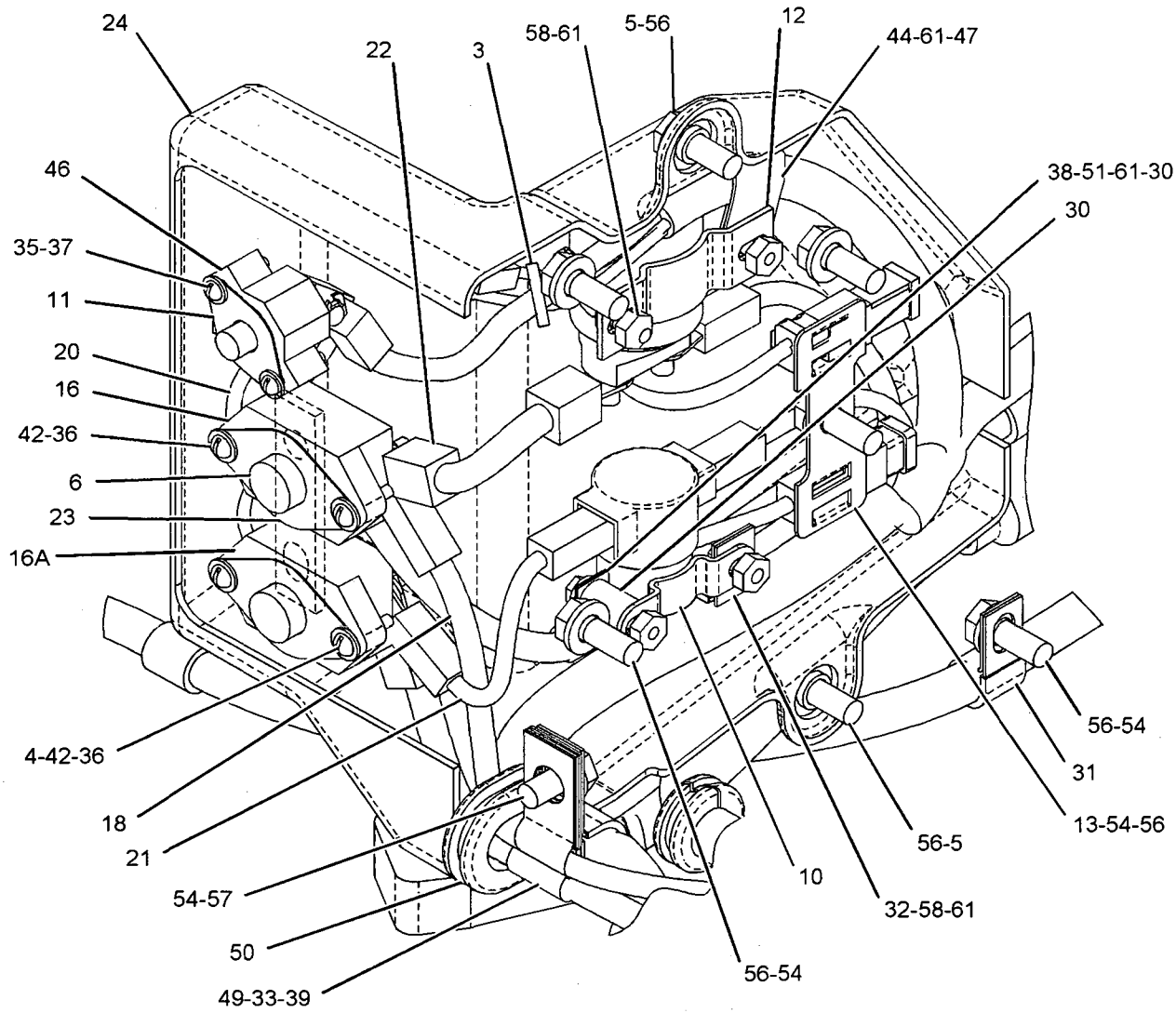

VIEW OF AREA C

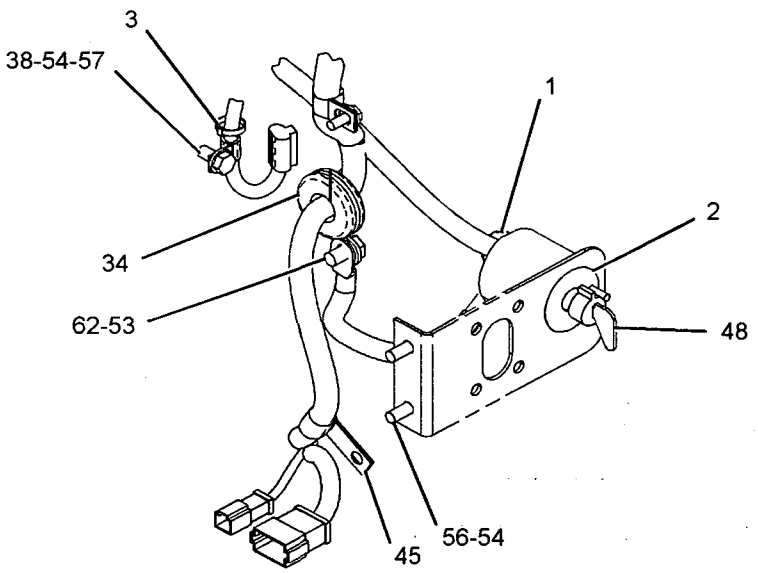

VIEW B-B

GRAPHIC #2

<END>

g01026086

184-1299 WIRING GP-REAR–BACKUP ALARM, LIGHTS

S/N: CCA1-UP

PART OF 159-4615 GENERAL AR

SMCS-1408 i02204547

NOTE	REF NO	GRAPHIC REF	PART NUMBER	QTY	PART NAME 1 2 3 4 5 6 (PRODUCT LEVEL)	SEE PAGE
	1	1	**3S-2093**	9	STRAP-CABLE	
	2	1	**213-9100**	1	ALARM AS-BACKUP	
		1	**102-8802**	1	KIT-RECEPTACLE (2-PIN)	
					(INCLUDES RECEPTACLE AS & WEDGE)	
D		1	**5P-5623**		WIRE-ELECTRICAL (16-GA) (0.4-M)	
		1	**186-3735**	2	PIN-CONNECTOR	
E		1	**9X-1813**		SLEEVE (31CM)	
	3	1	**231-4527**	1	HARNESS AS-REAR LIGHTING	
		1	**102-8802**	2	KIT-RECEPTACLE (2-PIN)	
		1	**102-8801**	1	KIT-RECEPTACLE (12-PIN)	
					(EACH INCLUDES RECEPTACLE AS & WEDGE)	
		1	**155-2260**	2	KIT-CONNECTING PLUG (3-PIN)	
		1	**155-2270**	3	KIT-CONNECTING PLUG (2-PIN)	
					(EACH INCLUDES PLUG AS & WEDGE)	
	4	1	**130-5300**	5	CLIP	
Y	5	1	**135-0426**	2	LAMP GP-SIGNAL (24-VOLT) (STOP, TAIL)	183
M	6	1	**5C-2890**	6	NUT (M6X1-THD)	
	7	1	**5P-4116**	4	WASHER-HARD (8.8X20.5X2-MM THK)	
M	8	1	**8T-4189**	4	BOLT (M8X1.25X20-MM)	
	9	1	**8T-4224**	6	WASHER-HARD (8.8X16X2-MM THK)	

D-ORDER BY THE METER
E-ORDER BY THE CENTIMETER
M-METRIC PART
Y-SEPARATE ILLUSTRATION

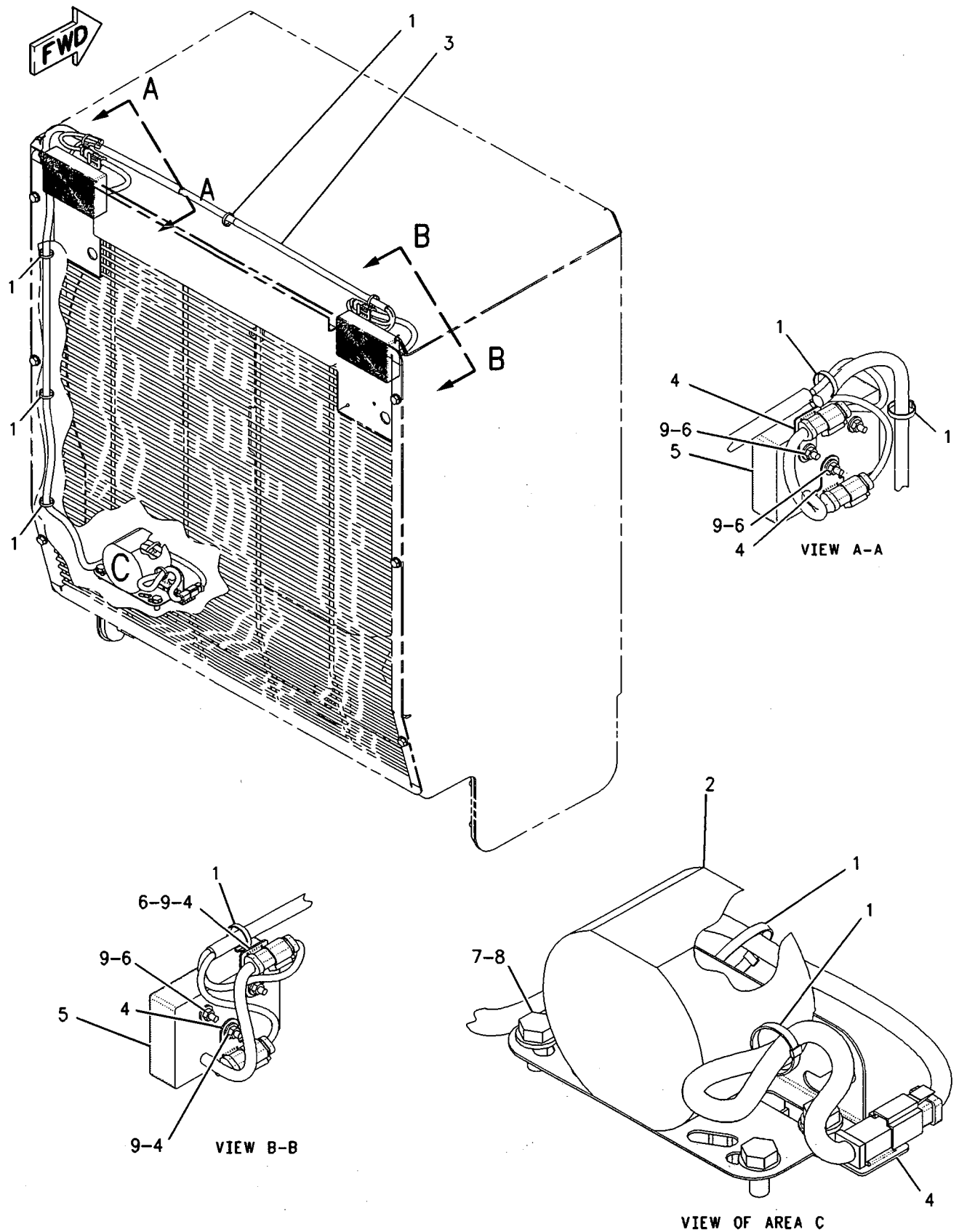

GRAPHIC #1 **<END>** g00940373

ELECTRICAL AND STARTING SYSTEM

193-8253 WIRING GP-REAR–BACKUP ALARM, LIGHTS, EU

S/N: CCA1-213
PART OF 191-9260 COOLING AR
AN ATTACHMENT

SMCS-1408 i02204557

NOTE	REF NO	GRAPHIC REF	PART NUMBER	QTY	PART NAME 1 2 3 4 5 6 (PRODUCT LEVEL)	SEE PAGE
	1	1	**3S-2093**	12	STRAP-CABLE	
	2	1	*5C-9930*	1	LAMP GP (STOP, TURN, TAIL, RH)	
		1	**4V-8116**	1	LAMP (24-VOLT, 5-WATT)	
		1	**5C-9584**	2	LAMP (24-VOLT, 21-WATT)	
		1	**6C-0109**	1	LAMP AS	
		1	**5M-6725**	1	SCREW-TAPPING (8-18X0.625-IN)	
		1	**8L-5828**	1	SCREW-TAPPING (8-18X0.875-IN)	
		1	**188-9694**	1	LENS	
		1	**188-9695**	1	SEAL	
	3	1	*5C-9931*	1	LAMP GP (STOP, TAIL, TURN, LH)	
		1	**4V-8116**	1	LAMP (24-VOLT, 5-WATT)	
		1	**5C-9584**	2	LAMP (24-VOLT, 21-WATT)	
		1	**6C-0110**	1	LAMP AS	
		1	**5M-6725**	1	SCREW-TAPPING (8-18X0.625-IN)	
		1	**8L-5828**	1	SCREW-TAPPING (8-18X0.875-IN)	
		1	**188-9694**	1	LENS	
		1	**188-9695**	1	SEAL	
	4	1	**6C-5233**	1	BRACKET AS	
	5	1	**6C-5234**	1	BRACKET AS	
	6	1	**7V-7835**	1	ARM AS	
		1	**5C-9563**	1	SPACER (11.2X26.67X55-MM THK)	
	7	1	**7V-7838**	1	ARM AS	
		1	**5C-9563**	1	SPACER (11.2X26.67X55-MM THK)	
	8	1	**7X-2393**	4	BUMPER-CONICAL	
	9	1	**9S-1316**	2	SPRING	
	10	1	**112-5555**	2	ROD	
	11	1	**156-0283**	2	WASHER-HARD (8.4X35X2.5-MM THK)	
	12	1	**196-4609**	1	HARNESS AS-REAR LIGHTING	
		1	**102-8802**	2	KIT-RECEPTACLE (2-PIN)	
		1	**102-8801**	1	KIT-RECEPTACLE (12-PIN) (EACH INCLUDES RECEPTACLE AS & WEDGE)	
		1	**155-2270**	2	KIT-CONNECTING PLUG (2-PIN) (EACH INCLUDES PLUG AS & WEDGE)	
	13	1	**208-7933**	2	PLATE	
	15	1	**2V-3216**	2	CLIP	
	16	1	**3B-5301**	2	PIN-COTTER	
M	17	1	**5C-2890**	6	NUT (M6X1-THD)	
M	18	1	**5C-7261**	4	NUT (M8X1.25-THD)	
	19	1	**8D-5641**	4	BEARING	
	20	1	**8T-4121**	12	WASHER-HARD (11X21X2.5-MM THK)	
	21	1	**8T-4122**	4	WASHER-HARD (17X32X3.5-MM THK)	
M	22	1	**8T-4136**	8	BOLT (M10X1.5X25-MM)	
M	23	1	**8T-4171**	2	BOLT (M6X1X12-MM)	
M	24	1	**8T-4173**	2	BOLT (M16X2X110-MM)	
	25	1	**8T-4205**	6	WASHER-HARD (7.2X14.5X2-MM THK)	
M	26	1	**8T-4223**	2	WASHER-HARD (13.5X25.5X3-MM THK)	
	27	1	**8T-4224**	4	WASHER-HARD (8.8X16X2-MM THK)	
M	28	1	**8T-4778**	2	LOCKNUT (M16X2-THD)	
	29	1	**9M-5870**	2	GROMMET (11.11-MM ID)	
M	30	1	**8T-4133**	2	NUT (M10X1.5-THD)	
M	31	1	**8T-4198**	2	BOLT (M10X1.5X100-MM)	
Y	32	1	**123-6449**	1	ALARM GP	129
	33	1	**130-5300**	3	CLIP	
	34	1	**160-1744**	2	BRACKET	
	35	1	**213-1413**	1	HARNESS AS-REAR LIGHTING (RH)	

193-8253 WIRING GP-REAR *(contd.)* i02204557

NOTE	REF NO	GRAPHIC REF	PART NUMBER	QTY	PART NAME 1 2 3 4 5 6 (PRODUCT LEVEL)	SEE PAGE
		1	**102-8804**	1	KIT-RECEPTACLE (4-PIN)	
					(INCLUDES RECEPTACLE AS & WEDGE)	
	36	1	**213-1414**	1	HARNESS AS-REAR LIGHTING (LH)	
		1	**102-8804**	1	KIT-RECEPTACLE (4-PIN)	
					(INCLUDES RECEPTACLE AS & WEDGE)	

M-METRIC PART
Y-SEPARATE ILLUSTRATION

193-8253 **WIRING GP-REAR** *(contd.)* **i02204557**

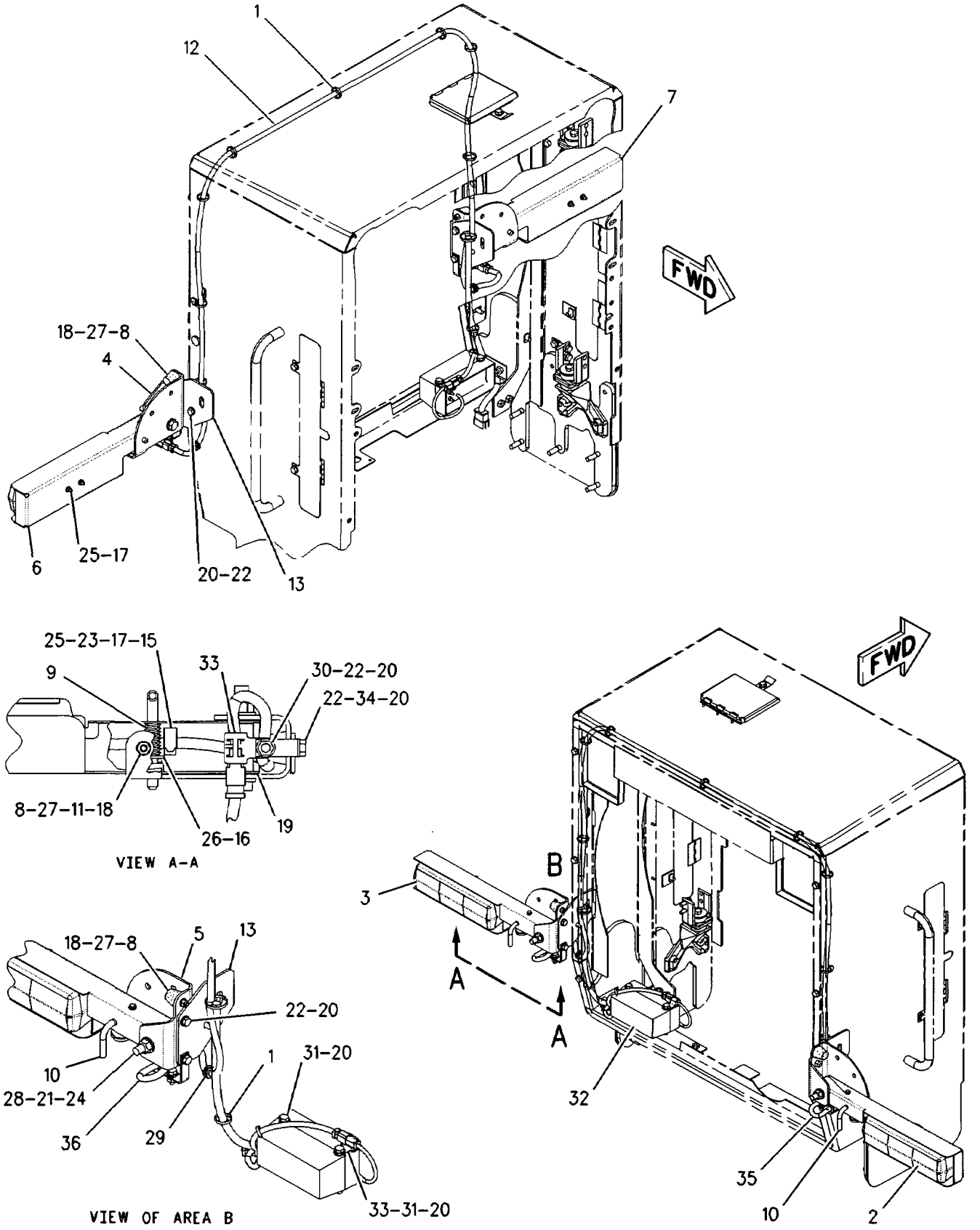

GRAPHIC #1 **<END>** g00845742

ELECTRICAL AND STARTING SYSTEM

193-8253 WIRING GP-REAR–BACKUP ALARM, LIGHTS, EU

S/N: CCA1-UP

PART OF 207-4453, 210-2044 CONVERSION AR-CERTIFICATION, 191-9260 COOLING AR AN ATTACHMENT

SMCS-1408 **i02204558**

NOTE	REF NO	GRAPHIC REF	PART NUMBER	QTY	PART NAME 1 2 3 4 5 6 (PRODUCT LEVEL)	SEE PAGE
C	1	1	**3S-2093**	13	STRAP-CABLE	
	2	1	*5C-9930*	1	LAMP GP (STOP, TURN, TAIL, RH)	
		1	**4V-8116**	1	LAMP (24-VOLT, 5-WATT)	
		1	**5C-9584**	2	LAMP (24-VOLT, 21-WATT)	
		1	**6C-0109**	1	LAMP AS	
	3	1	*5C-9931*	1	LAMP GP (STOP, TAIL, TURN, LH)	
		1	**4V-8116**	1	LAMP (24-VOLT, 5-WATT)	
		1	**5C-9584**	2	LAMP (24-VOLT, 21-WATT)	
		1	**6C-0110**	1	LAMP AS	
	4	1	**6C-5233**	1	BRACKET AS	
M		1	**8T-3490**	2	NUT-WELD (M10X1.5-THD)	
	5	1	**6C-5234**	1	BRACKET AS	
M		1	**8T-3490**	2	NUT-WELD (M10X1.5-THD)	
	6	1	**7V-7835**	1	ARM AS (RH)	
		1	**5C-9563**	1	SPACER (11.2X26.67X55-MM THK)	
	7	1	**7V-7838**	1	ARM AS (LH)	
		1	**5C-9563**	1	SPACER (11.2X26.67X55-MM THK)	
	8	1,2	**7X-2393**	4	BUMPER-CONICAL	
	9	2	**9S-1316**	2	SPRING	
	10	1	**112-5555**	2	ROD	
	11	2	**156-0283**	2	WASHER-HARD (8.4X35X2.5-MM THK)	
	12	2	**160-1744**	2	BRACKET	
	13	1	**196-4609**	1	HARNESS AS-REAR LIGHTING	
		1	**102-8802**	2	KIT-RECEPTACLE (2-PIN)	
		1	**102-8801**	1	KIT-RECEPTACLE (12-PIN)	
					(EACH INCLUDES RECEPTACLE AS & WEDGE)	
		1	**155-2270**	2	KIT-CONNECTING PLUG (2-PIN)	
		1	**155-2271**	2	KIT-CONNECTING PLUG (4-PIN)	
					(EACH INCLUDES PLUG AS & WEDGE)	
	14	1	**208-7933**	2	PLATE	
	15	2	**213-1413**	1	HARNESS AS-REAR LIGHTING (RH)	
		2	**102-8804**	1	KIT-RECEPTACLE (4-PIN)	
					(INCLUDES RECEPTACLE AS & WEDGE)	
	16	2	**213-1414**	1	HARNESS AS-REAR LIGHTING (LH)	
		2	**102-8804**	1	KIT-RECEPTACLE (4-PIN)	
					(INCLUDES RECEPTACLE AS & WEDGE)	
C	17	1	**213-9100**	1	ALARM AS-BACKUP	
	18	1,2	**130-5300**	3	CLIP	
	19	2	**2V-3216**	2	CLIP	
	20	2	**3B-5301**	2	PIN-COTTER	
M	21	1,2	**5C-2890**	6	NUT (M6X1-THD)	
M	22	1,2	**5C-7261**	4	NUT (M8X1.25-THD)	
C	23	1	**5P-1076**	2	WASHER-HARD (13.5X30X4-MM THK)	
	24	1	**5P-4116**	4	WASHER-HARD (8.8X20.5X2-MM THK)	
C	25	1,2	**7G-7053**	2	GROMMET	
	26	2	**8D-5641**	4	BEARING	
	27	1,2	**8T-4121**	8	WASHER-HARD (11X21X2.5-MM THK)	
	28	2	**8T-4122**	4	WASHER-HARD (17X32X3.5-MM THK)	
M	29	2	**8T-4133**	2	NUT (M10X1.5-THD)	
CM	30	1,2	**8T-4136**	6	BOLT (M10X1.5X25-MM)	
CM	31	1	**8T-4139**	2	BOLT (M12X1.75X30-MM)	
M	32	2	**8T-4171**	2	BOLT (M6X1X12-MM)	
M	33	2	**8T-4173**	2	BOLT (M16X2X110-MM)	
CM	34	1	**8T-4189**	4	BOLT (M8X1.25X20-MM)	
	35	1,2	**8T-4205**	6	WASHER-HARD (7.2X14.5X2-MM THK)	

193-8253 WIRING GP-REAR *(contd.)* i02204558

NOTE	REF NO	GRAPHIC REF	PART NUMBER	QTY	PART NAME 1 2 3 4 5 6 (PRODUCT LEVEL)	SEE PAGE
M	36	2	**8T-4223**	2	WASHER-HARD (13.5X25.5X3-MM THK)	
	37	1,2	**8T-4224**	4	WASHER-HARD (8.8X16X2-MM THK)	
M	38	2	**8T-4778**	2	LOCKNUT (M16X2-THD)	

C-CHANGE FROM PREVIOUS TYPE
M-METRIC PART

193-8253 **WIRING GP-REAR** *(contd.)* **i02204558**

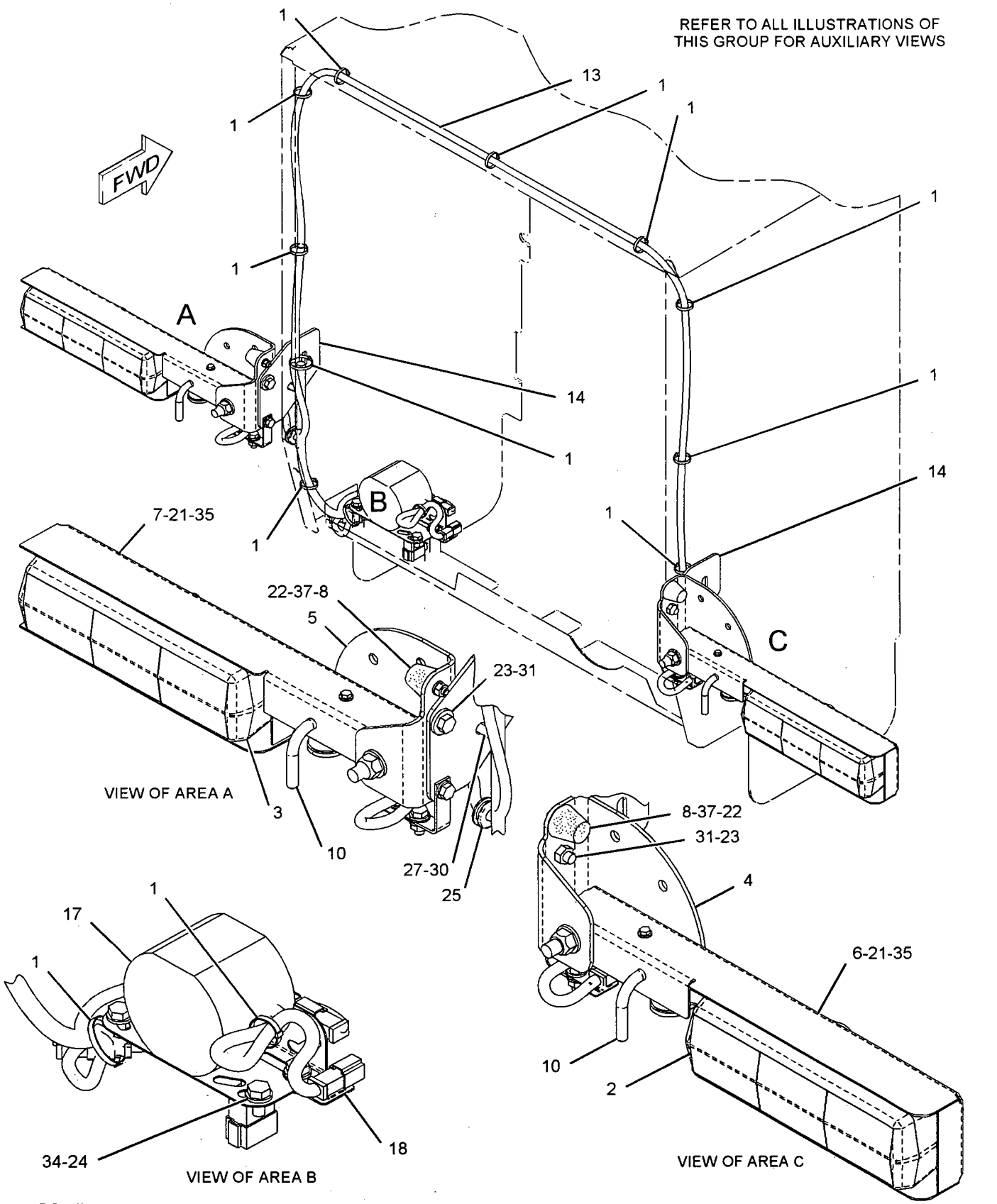

GRAPHIC #1

g01041753

193-8253 **WIRING GP-REAR** *(contd.)* **i02204558**

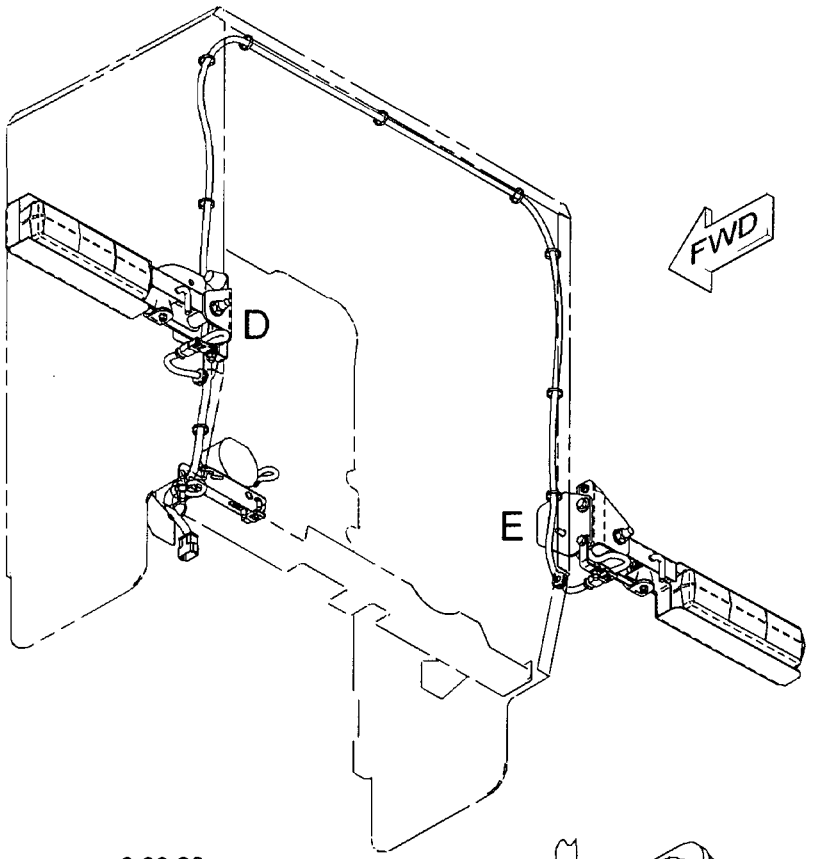

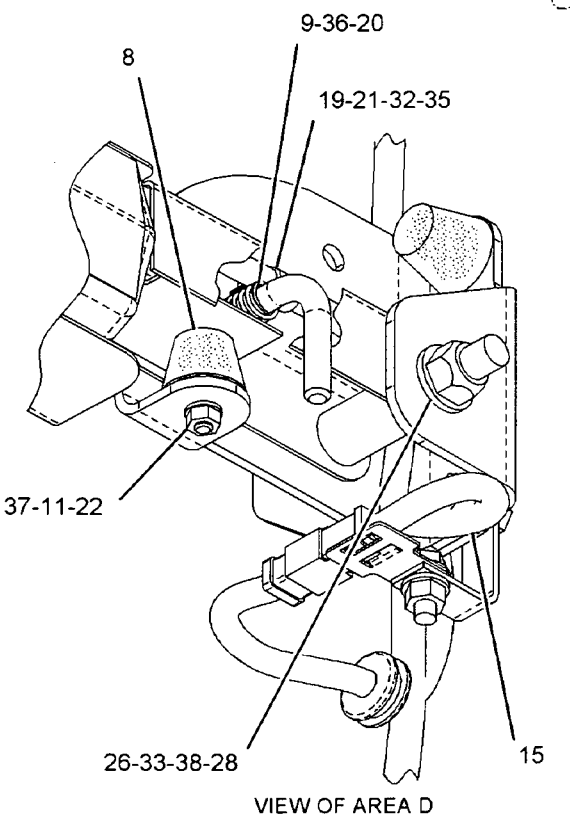

VIEW OF AREA D

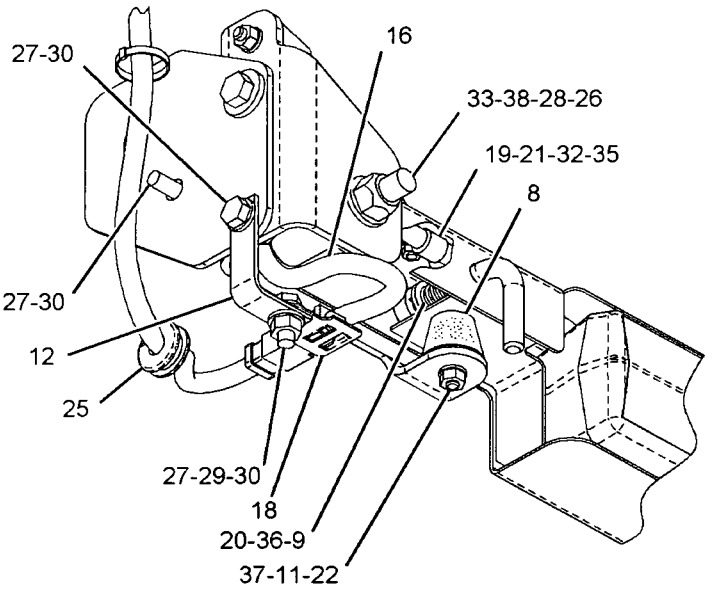

VIEW OF AREA E

GRAPHIC #2 **<END>** g01093417

ELECTRICAL AND STARTING SYSTEM

194-3200 WIRING GP-REAR

S/N: CCA1-UP

PART OF 207-4453, 210-2044 CONVERSION AR-CERTIFICATION AN ATTACHMENT

SMCS-1408 **i02204602**

NOTE	REF NO	GRAPHIC REF	PART NUMBER	QTY	PART NAME 1 2 3 4 5 6 (PRODUCT LEVEL)	SEE PAGE
	1	2	**3E-7842**	1	RESISTOR AS	
		2	**3E-3365**	1	WEDGE-RECEPTACLE LOCK (2-PIN)	
BD		2	**5P-5677**		WIRE (18-GA)	
		2	**6T-3610**	1	RESISTOR	
		2	**186-3735**	2	PIN-CONNECTOR	
		2	**102-8802**	1	KIT-RECEPTACLE (2-PIN)	
					(INCLUDES RECEPTACLE AS & WEDGE)	
	2	2	**3S-2093**	9	STRAP-CABLE	
	3	1	**7G-1060**	1	STRAP AS-GROUND	
					–OR–	
		1	**134-3355**	1	STRAP AS (GROUND)	
	4	2	**7K-1181**	1	STRAP-CABLE	
	5	2	**8W-3642**	1	CABLE AS	
E		2	**5P-0747**		CABLE (00-GA, BLACK) (90-CM)	
		2	**1S-7251**	2	TERMINAL-RING	
		2	**9G-8909**	1	COVER-TERMINAL (BLACK)	
	6	2	**8W-8527**	1	SLEEVE	
	7	1,2	**8W-8528**	4	SLEEVE	
	8	2	**9L-1566**	1	SUPPORT	
	9	2	**9L-3059**	1	SUPPORT-TUBE	
	10	2	**9M-4594**	2	SPACER (0.406X0.875X0.75-IN THK)	
	11	2	**9U-2277**	1	CLIP AS	
	12	2	**061-7661**	1	CABLE AS	
		2	**1S-7251**	1	TERMINAL-RING	
E		2	**5P-0747**		CABLE (00-GA, BLACK) (42-CM)	
	13	2	**106-8704**	1	SUPPRESSOR AS-ARC	
		2	**3E-3365**	1	WEDGE-RECEPTACLE LOCK (2-PIN)	
		2	**186-3735**	2	PIN-CONNECTOR	
		2	**102-8802**	1	KIT-RECEPTACLE (2-PIN)	
					(INCLUDES RECEPTACLE AS & WEDGE)	
	14	2	**118-7809**	1	PLATE	
	15	1	**123-3688**	1	PLATE AS	
		1	**7L-0811**	1	DOWEL	
	16	1	**123-3689**	1	PLATE AS	
		1	**5M-6687**	1	STUD-TAPERLOCK (3/8-16X1.28-IN OAL)	
	17	1	**123-3692**	1	ARM	
	18	1	**123-3695**	1	PLATE	
	19	2	**139-2116**	1	SWITCH AS-TOGGLE (ENGINE SHUTDOWN)	
		2	**3E-3371**	1	WEDGE-RECEPTACLE LOCK (3-PIN)	
		2	**6T-3631**	2	NUT-HEX (15/32-32-THD)	
		2	**6T-3632**	1	LOCKWASHER	
		2	**6T-3633**	1	RING-LOCKING	
		2	**186-3735**	3	PIN-CONNECTOR	
		2	**102-8803**	1	KIT-RECEPTACLE (3-PIN)	
					(INCLUDES RECEPTACLE AS & WEDGE)	
	20	2	**139-6122**	1	BOSS	
	21	1	**169-3292**	1	HARNESS AS-TRANSMISSION	
		1	**155-2255**	3	KIT-CONNECTING PLUG (12-PIN)	
		1	**155-2274**	1	KIT-CONNECTING PLUG (6-PIN)	
		1	**155-2270**	1	KIT-CONNECTING PLUG (2-PIN)	
		1	**155-2271**	1	KIT-CONNECTING PLUG (4-PIN)	
					(EACH INCLUDES PLUG AS & WEDGE)	
		1	**102-8802**	2	KIT-RECEPTACLE (2-PIN)	
		1	**102-8803**	2	KIT-RECEPTACLE (3-PIN)	
		1	**102-8805**	1	KIT-RECEPTACLE (6-PIN)	

194-3200 WIRING GP-REAR (contd.) i02204602

NOTE	REF NO	GRAPHIC REF	PART NUMBER	QTY	PART NAME 1 2 3 4 5 6 (PRODUCT LEVEL)	SEE PAGE
		1	102-8801	2	KIT-RECEPTACLE (12-PIN)	
					(EACH INCLUDES RECEPTACLE AS & WEDGE)	
		1	110-6846	1	PLUG AS-CONNECTOR (40-PIN)	
		1	9X-0141	1	PLUG AS-CONNECTOR (40-PIN)	
		1	160-7689	1	PLUG AS-CONNECTOR (70-PIN)	
		1	155-2260	3	KIT-CONNECTING PLUG (3-PIN)	
	22	2	169-5414	1	CLIP	
	23	2	178-0101	1	CABLE AS (RED)	
E		2	5P-0761		CABLE (00-GA, RED) (87-CM)	
		2	1S-7252	1	TERMINAL-RING	
		2	8N-0869	1	COVER-TERMINAL (RED)	
		2	9X-9825	1	TERMINAL-CABLE	
	24	1	178-0102	1	CABLE AS (RED)	
E		1	5P-0761		CABLE (00-GA, RED) (148-CM)	
		1	1S-7252	2	TERMINAL-RING	
		1	8N-0869	2	COVER-TERMINAL (RED)	
	25	1	179-2187	1	HARNESS AS-REAR CHASSIS	
		1	155-2255	1	KIT-CONNECTING PLUG (12-PIN)	
		1	155-2270	2	KIT-CONNECTING PLUG (2-PIN)	
					(EACH INCLUDES PLUG AS & WEDGE)	
		1	102-8802	1	KIT-RECEPTACLE (2-PIN)	
		1	102-8805	1	KIT-RECEPTACLE (6-PIN)	
					(EACH INCLUDES RECEPTACLE AS & WEDGE)	
		1	127-5483	5	PLUG AS-CONNECTOR (1-PIN)	
		1	110-6848	1	PLUG AS-CONNECTOR (40-PIN)	
		1	127-5485	1	PLUG AS-CONNECTOR (1-PIN)	
	26	1	187-1008	1	SENDER AS-POSITION (ARTICULATION)	
		1	3E-3365	1	WEDGE-RECEPTACLE LOCK (2-PIN)	
E		1	9X-1813		SLEEVE (15-CM)	
		1	102-8802	1	KIT-RECEPTACLE (2-PIN)	
					(INCLUDES RECEPTACLE AS & WEDGE)	
		1	186-3735	2	PIN-CONNECTOR	
	27	2	195-0434	1	BRACKET	
	28	2	196-2970	1	HARNESS AS-REAR LIGHTING	
		2	155-2255	2	KIT-CONNECTING PLUG (12-PIN)	
		2	155-2270	5	KIT-CONNECTING PLUG (2-PIN)	
					(EACH INCLUDES PLUG AS & WEDGE)	
		2	102-8802	2	KIT-RECEPTACLE (2-PIN)	
					(EACH INCLUDES RECEPTACLE AS & WEDGE)	
	29	2	197-1459	1	PLATE	
	30	2	033-8248	1	CLIP	
	31	2	109-0361	1	FILM-INSTRUCTION (ENGINE SHUTDOWN)	
	32	2	115-3073	1	CLIP AS-CONNECTING	
	33	2	130-5300	5	CLIP	
	34	1,2	130-5301	1	CLIP	
	35	2	174-5907	7	CLIP	
	36	2	1S-0994	1	CLIP	
	37	2	1S-0996	2	CLIP	
Y	38	2	3E-0154	1	SWITCH GP-MAGNETIC (SECONDARY STEERING RELAY)	277
	39	2	3E-5169	1	GUARD-SWITCH	
	40	2	4D-1432	2	SPACER (1.8-IN THK)	
	41	1	4D-7388	2	CLIP	
	42	2	4D-7794	4	CLIP	
	43	2	4K-8864	1	CLIP	
	44	1	4S-4455	3	CLIP	
	45	1	5M-3062	1	BOLT (3/8-16X0.75-IN)	
	46	2	5P-1075	2	WASHER-HARD (10.2X22.5X3-MM THK)	
	47	2	5P-4116	1	WASHER-HARD (8.8X20.5X2-MM THK)	
	48	1	5P-8167	2	BOLT (3/8-16X0.625-IN)	

194-3200 WIRING GP-REAR *(contd.)* i02204602

NOTE	REF NO	GRAPHIC REF	PART NUMBER	QTY	PART NAME 1 2 3 4 5 6 (PRODUCT LEVEL)	SEE PAGE
	49	2	**6D-4244**	3	CLIP	
	50	1,2	**6D-4246**	3	CLIP	
	51	2	**6V-1322**	4	BOLT (1/4-20X0.375-IN)	
	52	1	**6V-6893**	3	BOLT (6-32X0.375-IN)	
	53	1	**6V-8801**	1	NUT (3/8-16-THD)	
	54	2	**7C-4354**	5	CLIP	
M	55	2	**7X-2537**	1	BOLT (M8X1.25X35-MM)	
	56	2	**7X-7729**	1	WASHER (11X25X3-MM THK)	
	57	2	**8D-9671**	1	CLIP	
	58	2	**8M-2773**	3	CLIP	
	59	1,2	**8T-4121**	33	WASHER-HARD (11X21X2.5-MM THK)	
M	60	2	**8T-4133**	5	NUT (M10X1.5-THD)	
M	61	2	**8T-4136**	5	BOLT (M10X1.5X25-MM)	
M	62	1,2	**8T-4137**	22	BOLT (M10X1.5X20-MM)	
M	63	2	**8T-4179**	3	BOLT (M12X1.75X20-MM)	
M	64	2	**8T-4185**	1	BOLT (M10X1.5X50-MM)	
M	65	1	**8T-4191**	2	BOLT (M10X1.5X16-MM)	
M	66	2	**8T-4196**	1	BOLT (M10X1.5X35-MM)	
M	67	2	**8T-4200**	1	BOLT (M8X1.25X16-MM)	
	68	1,2	**8T-4205**	6	WASHER-HARD (7.2X14.5X2-MM THK)	
M	69	2	**8T-4223**	3	WASHER-HARD (13.5X25.5X3-MM THK)	
	70	2	**8T-4224**	3	WASHER-HARD (8.8X16X2-MM THK)	
	71	1	**8T-4226**	1	WASHER-PLATED (10.5X45X3-MM THK)	
	72	1	**8T-4896**	3	WASHER-HARD (10.2X18.5X2.5-MM THK)	
M	73	2	**8T-6870**	2	BOLT (M8X1.25X70-MM)	
	74	1	**8T-9364**	2	BOLT (1/4-20X0.625-IN)	
	75	2	**8W-8909**	3	SLEEVE	
	76	2	**8X-5489**	1	SLEEVE	

B-USE AS REQUIRED
D-ORDER BY THE METER
E-ORDER BY THE CENTIMETER
M-METRIC PART
Y-SEPARATE ILLUSTRATION

194-3200 WIRING GP-REAR *(contd.)* i02204602

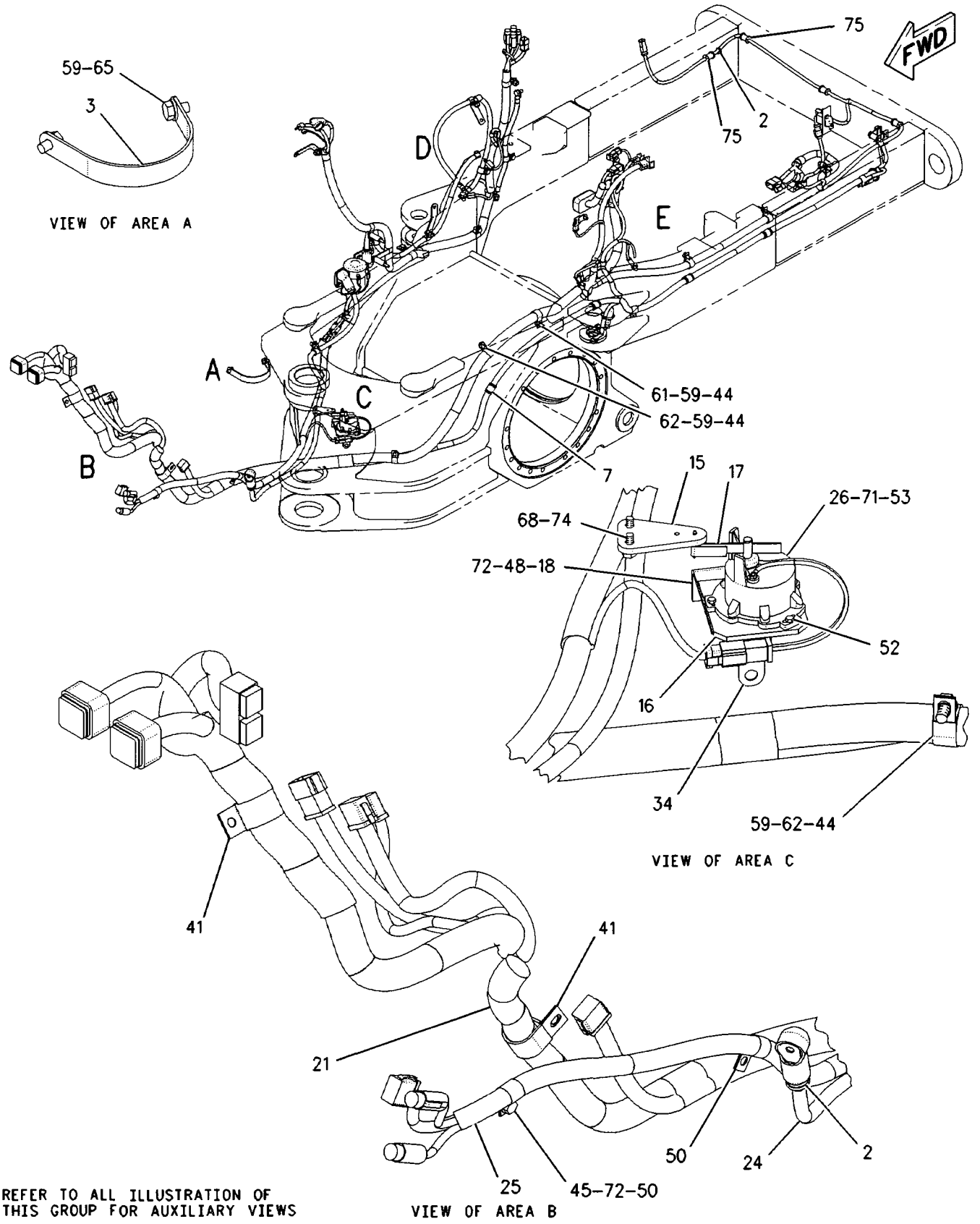

GRAPHIC #1 g00955367

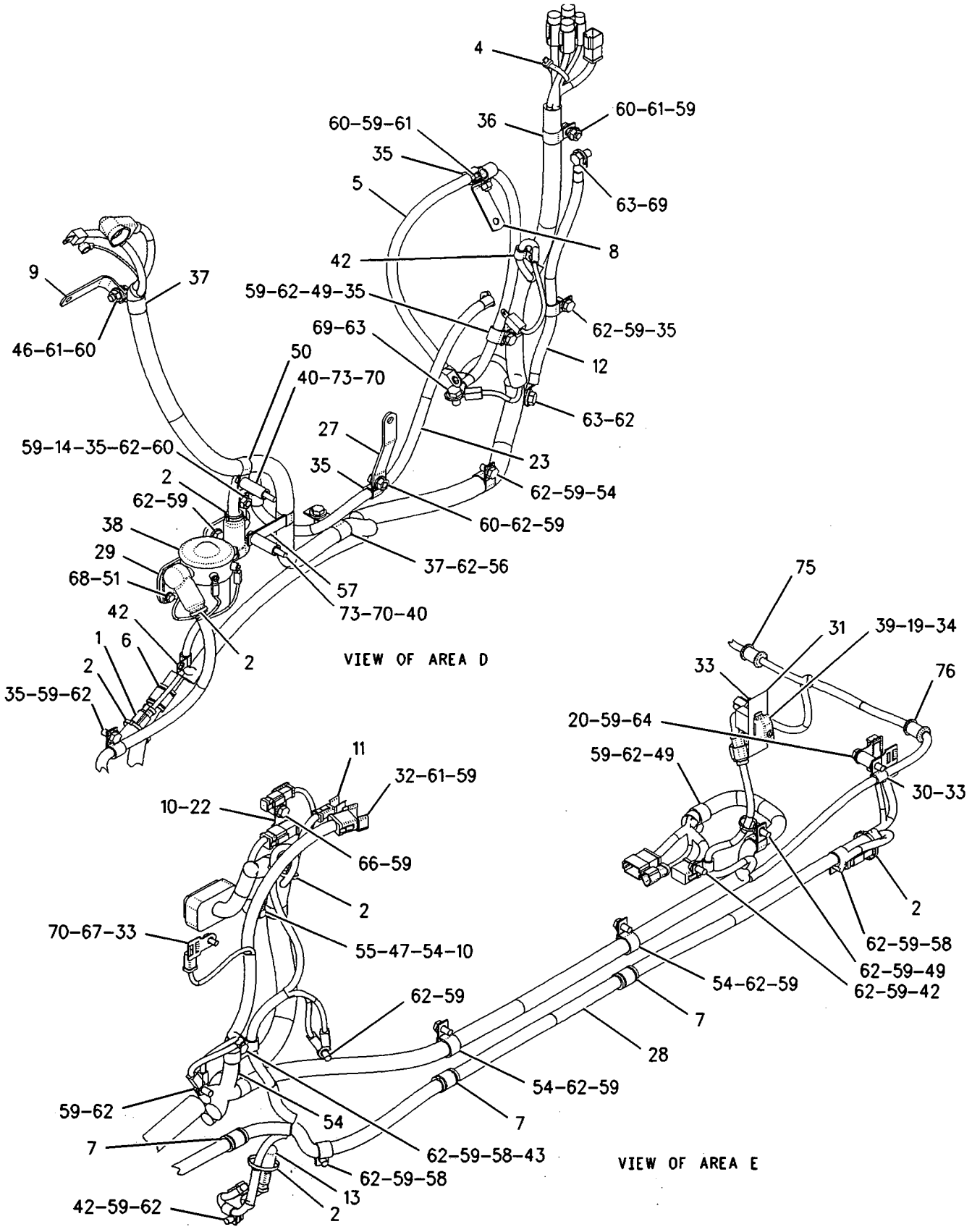

GRAPHIC #2 **<END>** g00955374

ELECTRICAL AND STARTING SYSTEM

161-1020 WIRING GP-SECONDARY STEERING

S/N: CCA1-UP
PART OF 166-3302 STEERING AR-SECONDARY
AN ATTACHMENT

SMCS-1408, 4334 **i02204633**

NOTE	REF NO	GRAPHIC REF	PART NUMBER	QTY	PART NAME 1 2 3 4 5 6 (PRODUCT LEVEL)	SEE PAGE
	1	1	**2L-0273**	1	FITTING (RUBBER)	
Y	2	1	**3E-0154**	1	SWITCH GP-MAGNETIC (SECONDARY STEERING)	277
	3	1	**3E-6450**	1	SWITCH AS-PRESSURE (SECONDARY STEERING)	
		1	**102-8803**	1	KIT-RECEPTACLE (3-PIN)	
					(INCLUDES RECEPTACLE AS & WEDGE)	
		1	**186-3735**	3	PIN-CONNECTOR	
	4	1	**3E-7842**	1	RESISTOR AS (SECONDARY STEERING INDICATOR)	
		1	**102-8802**	1	KIT-RECEPTACLE (2-PIN)	
					(INCLUDES RECEPTACLE AS & WEDGE)	
		1	**6T-3610**	1	RESISTOR	
		1	**186-3735**	2	PIN-CONNECTOR	
	5	1	**3S-2093**	2	STRAP-CABLE	
	6	1	**9L-1566**	1	SUPPORT	
	7	1	**9W-1442**	2	FUSE (10-AMPERE)	
	8	1	**118-7809**	1	PLATE	
Y	9	1	**132-6640**	1	CONTROL GP-SECONDARY STEERING	150
	10	1	**134-3355**	1	STRAP AS	
	11	1	**140-8864**	1	CABLE AS	
		1	**1S-7252**	2	TERMINAL-RING	
E		1	**5P-0747**		CABLE (00-GA, BLACK) (20-CM)	
	12	1	**178-0101**	1	CABLE AS	
		1	**1S-7252**	1	TERMINAL-RING	
E		1	**5P-0761**		CABLE (00-GA, RED) (87-CM)	
		1	**8N-0869**	1	COVER-TERMINAL (RED)	
		1	**9X-9825**	1	TERMINAL-CABLE	
	13	1	**178-0102**	1	CABLE AS	
		1	**1S-7252**	2	TERMINAL-RING (148CM)	
E		1	**5P-0761**		CABLE (00-GA, RED) (148-CM)	
		1	**9X-6932**	2	BOOT-TERMINAL	
	14	1	*194-2903*	1	ELBOW AS	
		1	**8T-0119**	1	ELBOW	
		1	**3K-0360**	1	SEAL-O-RING	
	15	1	**195-0434**	1	BRACKET	
	16	1	**197-1459**	1	PLATE	
	17	1	**130-5300**	1	CLIP	
	18	1	**174-5907**	3	CLIP	
	19	1	**3E-6754**	1	GROMMET	
	20	1	**3K-0360**	1	SEAL-O-RING	
M	21	1	**5C-2890**	2	NUT (M6X1-THD)	
	22	1	**5M-3062**	2	BOLT (3/8-16X0.75-IN)	
	23	1	**6V-1322**	4	BOLT (1/4-20X0.375-IN)	
	24	1	**6V-8801**	2	NUT (3/8-16-THD)	
	25	1	**8T-4121**	7	WASHER-HARD (11X21X2.5-MM THK)	
M	26	1	**8T-4133**	2	NUT (M10X1.5-THD)	
M	27	1	**8T-4137**	5	BOLT (M10X1.5X20-MM)	
	28	1	**8T-4205**	4	WASHER-HARD (7.2X14.5X2-MM THK)	
	29	1	**8T-4896**	4	WASHER-HARD (10.2X18.5X2.5-MM THK)	
M	31	1	**9X-2045**	2	SCREW-TRUSS HEAD (6X1X20-MM)	
	32	1	**9X-8256**	2	WASHER (6.6X12X2-MM THK)	
	33	1	**3E-8765**	1	SWITCH AS (24-VOLT) (SECONDARY STEERING)	
		1	**3E-8816**	1	ACTUATOR-ROCKER	
		1	**3E-8825**	2	LAMP (24-VOLT)	

E-ORDER BY THE CENTIMETER
M-METRIC PART
Y-SEPARATE ILLUSTRATION

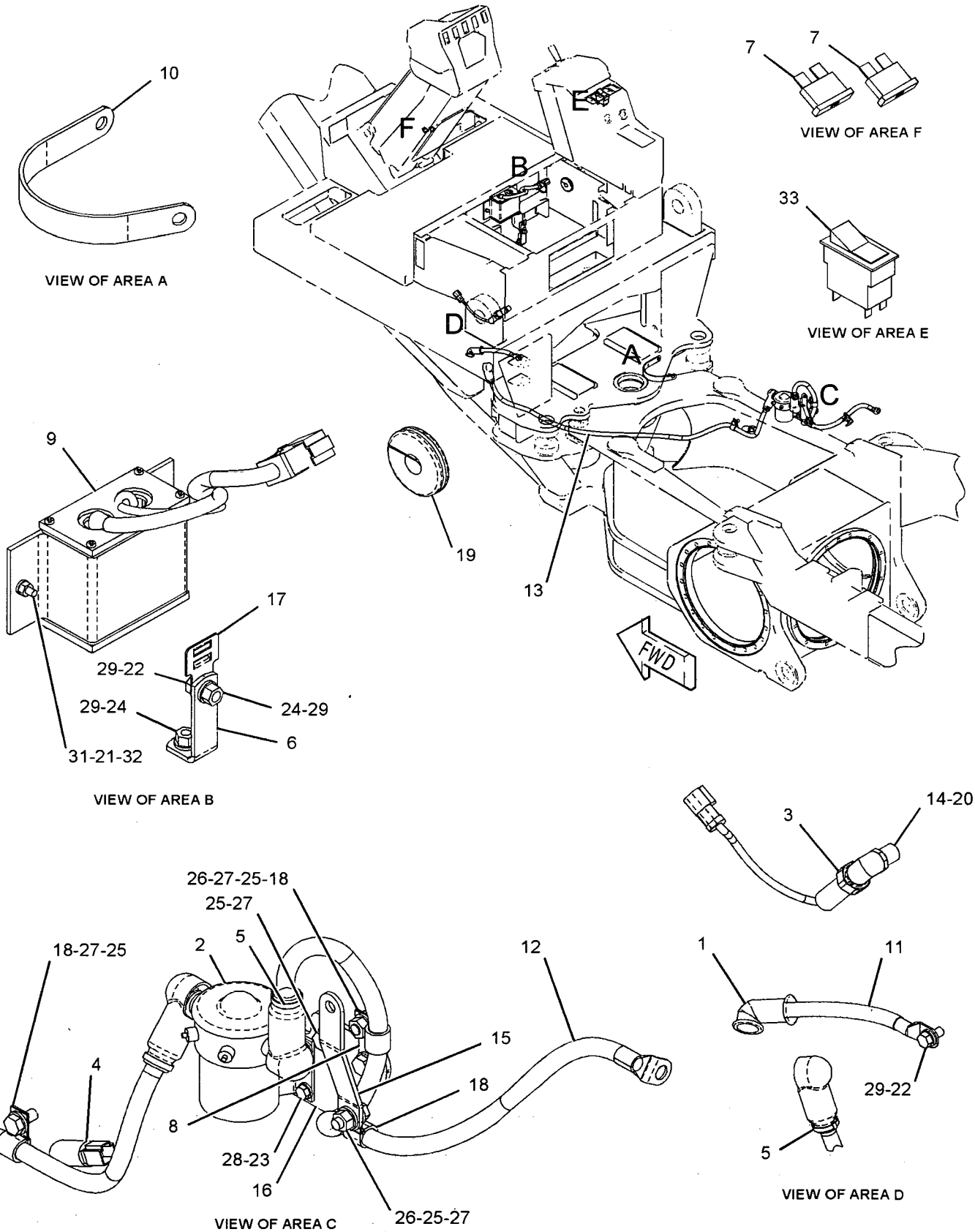

GRAPHIC #1

<END>

g01070020

ELECTRICAL AND STARTING SYSTEM

159-5839 WIRING GP-SHIFT CONSOLE

S/N: CCA1-UP

PART OF 159-4615 GENERAL AR

SMCS-1408, 1435 **i02204645**

NOTE	REF NO	GRAPHIC REF	PART NUMBER	QTY	PART NAME 1 2 3 4 5 6 (PRODUCT LEVEL)	SEE PAGE
	1	1	**3E-0109**	4	PLUG (ROCKER SWITCH)	
Y	2	1	**3E-6328**	1	ALARM GP (24-VOLT) (ACTION)	128
	3	1	**3S-2093**	5	STRAP-CABLE	
	4	1	**7N-5876**	1	LAMP (24-VOLT)	
	5	1	**8C-6354**	1	CAP-RECEPTACLE (DUST)	
	6	1	**110-7887**	1	SWITCH GP-START (KEY)	
		1	**3E-3377**	1	WEDGE-RECEPTACLE LOCK (4-PIN)	
		1	**7T-6799**	1	NUT-MOUNTING (1-32-THD)	
		1	**186-3735**	4	PIN-CONNECTOR	
		1	**102-8804**	1	KIT-RECEPTACLE (4-PIN)	
	8	1	**167-7506**	1	HARNESS AS-CONSOLE	
		1	**102-8804**	1	KIT-RECEPTACLE (4-PIN)	
		1	**102-8805**	1	KIT-RECEPTACLE (6-PIN)	
		1	**102-8801**	1	KIT-RECEPTACLE (12-PIN)	
		1	**155-2255**	2	KIT-CONNECTING PLUG (12-PIN)	
		1	**155-2270**	1	KIT-CONNECTING PLUG (2-PIN)	
		1	**155-2271**	2	KIT-CONNECTING PLUG (4-PIN)	
		1	**155-2274**	2	KIT-CONNECTING PLUG (6-PIN)	
		1	**102-8801**	1	KIT-RECEPTACLE (12-PIN)	
	9	1	**167-7536**	1	HARNESS AS-CONSOLE	
		1	**7X-6222**	1	PLUG AS-CONNECTOR (24-PIN)	
		1	**102-8804**	1	KIT-RECEPTACLE (4-PIN)	
		1	**102-8801**	1	KIT-RECEPTACLE (12-PIN)	
		1	**155-2255**	1	KIT-CONNECTING PLUG (12-PIN)	
	10	1	**169-5414**	2	CLIP	
	11	1	**196-7268**	1	SWITCH AS (THROTTLE SPEED SET)	
		1	**3E-8825**	2	LAMP (24-VOLT)	
		1	**183-2136**	1	ACTUATOR-ROCKER	
	12	1	**190-0370**	1	SWITCH AS (THROTTLE HOLD MODE)	
		1	**3E-8825**	2	LAMP (24-VOLT)	
		1	**187-9380**	1	ACTUATOR-ROCKER	
	13	1	**130-5300**	2	CLIP	
	14	1	**2V-8259**	2	GROMMET	
	15	1	**3H-2900**	1	GROMMET	
	16	1	**4D-7794**	1	CLIP	
	17	1	**4L-6454**	1	BOLT (3/8-16X1-IN)	
	18	1	**4P-7581**	1	CLIP	
	19	1	**5M-3062**	3	BOLT (3/8-16X0.75-IN)	
	20	1	**5S-4246**	4	LOCKWASHER	
	21	1	**6B-4540**	4	NUT (4-40-THD)	
	22	1	**6V-2480**	4	SCREW (4-40X0.5-IN)	
	23	1	**6V-8801**	1	NUT (3/8-16-THD)	
	24	1	**7C-4354**	1	CLIP	
	25	1	**7G-7053**	1	GROMMET	
	26	1	**8M-2770**	1	CLIP	
	27	1	**8T-4121**	1	WASHER-HARD (11X21X2.5-MM THK)	
M	28	1	**8T-4137**	1	BOLT (M10X1.5X20-MM)	
	29	1	**8T-4896**	5	WASHER-HARD (10.2X18.5X2.5-MM THK)	
	30	1	**9W-0335**	1	LIGHTER AS (CIGAR, 24-VOLT)	
	31	1	**3E-9327**	1	SWITCH AS (CENTERSHIFT PIN PULLER)	
		1	**3E-8817**	1	ACTUATOR-ROCKER	
		1	**3E-8825**	1	LAMP (24-VOLT)	

M-METRIC PART
Y-SEPARATE ILLUSTRATION

159-5839 WIRING GP-SHIFT CONSOLE *(contd.)* i02204645

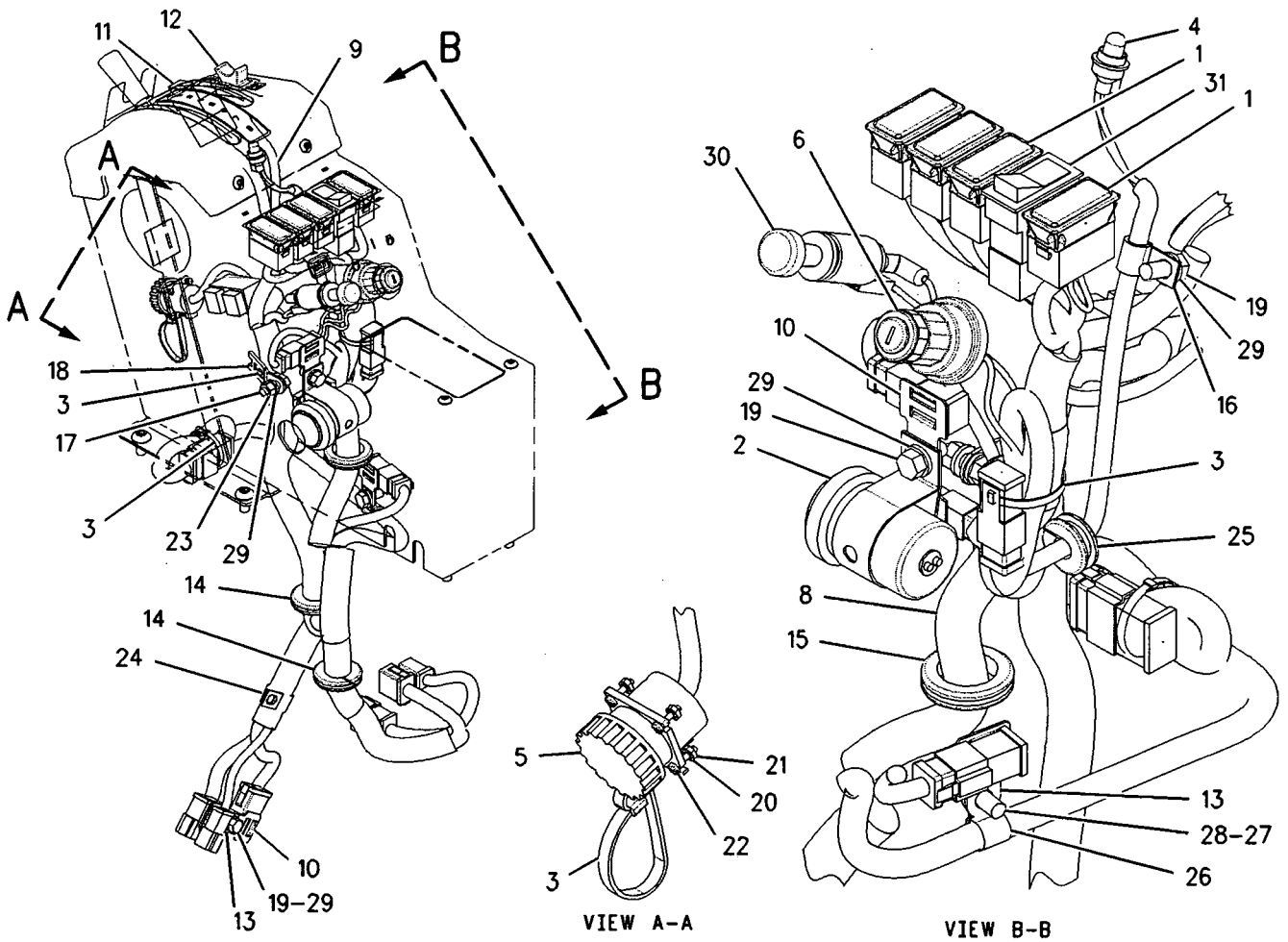

GRAPHIC #1

<END>

g00865816

ELECTRICAL AND STARTING SYSTEM

159-5841 WIRING GP-SHIFT CONSOLE

S/N: CCA1-UP

PART OF 207-4453, 210-2044 CONVERSION AR-CERTIFICATION AN ATTACHMENT

SMCS-1408, 1435 **i02204653**

NOTE	REF NO	GRAPHIC REF	PART NUMBER	QTY	PART NAME 1 2 3 4 5 6 (PRODUCT LEVEL)	SEE PAGE
	1	2	**3E-0109**	3	PLUG (ROCKER SWITCH)	
Y	2	1	**3E-6328**	1	ALARM GP (24-VOLT) (ACTION)	128
	3	1,2	**3S-2093**	6	STRAP-CABLE	
	4	1	**7N-5876**	1	LAMP (24-VOLT)	
	5	1	**8C-6354**	1	CAP-RECEPTACLE (DUST)	
	6	1	**110-7887**	1	SWITCH GP-START (KEY)	
		1	**3E-3377**	1	WEDGE-RECEPTACLE LOCK (4-PIN)	
		1	**7T-6799**	1	NUT-MOUNTING (1-32-THD)	
		1	**186-3735**	4	PIN-CONNECTOR	
		1	**102-8804**	1	KIT-RECEPTACLE (4-PIN)	
					(INCLUDES RECEPTACLE AS & WEDGE)	
Y	8	2	**132-6640**	1	CONTROL GP-SECONDARY STEERING	150
	9	1	**167-7506**	1	HARNESS AS-CONSOLE	
		1	**155-2255**	2	KIT-CONNECTING PLUG (12-PIN)	
		1	**155-2270**	1	KIT-CONNECTING PLUG (2-PIN)	
		1	**155-2271**	2	KIT-CONNECTING PLUG (4-PIN)	
		1	**155-2274**	2	KIT-CONNECTING PLUG (6-PIN)	
					(EACH INCLUDES PLUG AS & WEDGE)	
		1	**102-8804**	1	KIT-RECEPTACLE (4-PIN)	
		1	**102-8805**	1	KIT-RECEPTACLE (6-PIN)	
		1	**102-8801**	1	KIT-RECEPTACLE (12-PIN)	
					(EACH INCLUDES RECEPTACLE AS & WEDGE)	
	10	1	**167-7536**	1	HARNESS AS-CONSOLE	
		1	**155-2255**	1	KIT-CONNECTING PLUG (12-PIN)	
					(INCLUDES PLUG AS & WEDGE)	
		1	**102-8804**	1	KIT-RECEPTACLE (4-PIN)	
		1	**102-8801**	1	KIT-RECEPTACLE (12-PIN)	
					(EACH INCLUDES RECEPTACLE AS & WEDGE)	
		1	**7X-6222**	1	PLUG AS-CONNECTOR (24-PIN)	
	11	2	**169-5414**	2	CLIP	
	12	1	**196-7268**	1	SWITCH AS (THROTTLE LOCK ENABLE)	
		1	**183-2136**	1	ACTUATOR-ROCKER	
		1	**3E-8825**	2	LAMP (24-VOLT)	
	13	1	**185-2197**	1	SWITCH AS-ROCKER (THROTTLE LOCK SET, RESET)	
	14	1,2	**130-5300**	2	CLIP	
	15	1	**2V-8259**	2	GROMMET	
	16	2	**3E-6754**	1	GROMMET	
	17	1	**3H-2900**	1	GROMMET	
	18	1	**4D-7794**	1	CLIP	
	19	1	**4L-6454**	1	BOLT (3/8-16X1-IN)	
	20	1	**4P-7581**	1	CLIP	
M	21	2	**5C-2890**	2	NUT (M6X1-THD)	
	22	2	**5M-3062**	3	BOLT (3/8-16X0.75-IN)	
	23	1	**5S-4246**	4	LOCKWASHER	
	24	1	**6B-4540**	4	NUT (4-40-THD)	
	25	1	**6V-2480**	4	SCREW (4-40X0.5-IN)	
	26	1	**6V-8801**	1	NUT (3/8-16-THD)	
	27	1	**7C-4354**	1	CLIP	
	28	1	**7G-7053**	1	GROMMET	
	29	1	**8M-2770**	1	CLIP	
	30	1	**8T-4121**	1	WASHER-HARD (11X21X2.5-MM THK)	
M	31	1	**8T-4137**	1	BOLT (M10X1.5X20-MM)	
	32	1,2	**8T-4896**	5	WASHER-HARD (10.2X18.5X2.5-MM THK)	
	33	1	**9W-0335**	1	LIGHTER AS (CIGAR, 24-VOLT)	
M	34	2	**9X-2045**	2	SCREW-TRUSS HEAD (6X1X20-MM)	

159-5841 WIRING GP-SHIFT CONSOLE *(contd.)* i02204653

NOTE	REF NO	GRAPHIC REF	PART NUMBER	QTY	PART NAME 1 2 3 4 5 6 (PRODUCT LEVEL)	SEE PAGE
	35	2	**9X-8256**	2	WASHER (6.6X12X2-MM THK)	
	36	2	**9X-9633**	1	SWITCH AS-ROCKER (SECONDARY STEERING)	
		2	**3E-8816**	1	ACTUATOR-ROCKER	
		2	**3E-8825**	2	LAMP (24-VOLT) (NG)	
	37	2	**3E-9327**	1	SWITCH AS (CENTERSHIFT PIN PULLER)	
		2	**3E-8825**	1	LAMP (24-VOLT)	
		2	**3E-8817**	1	ACTUATOR-ROCKER	

M-METRIC PART
Y-SEPARATE ILLUSTRATION

159-5841 WIRING GP-SHIFT CONSOLE *(contd.)* i02204653

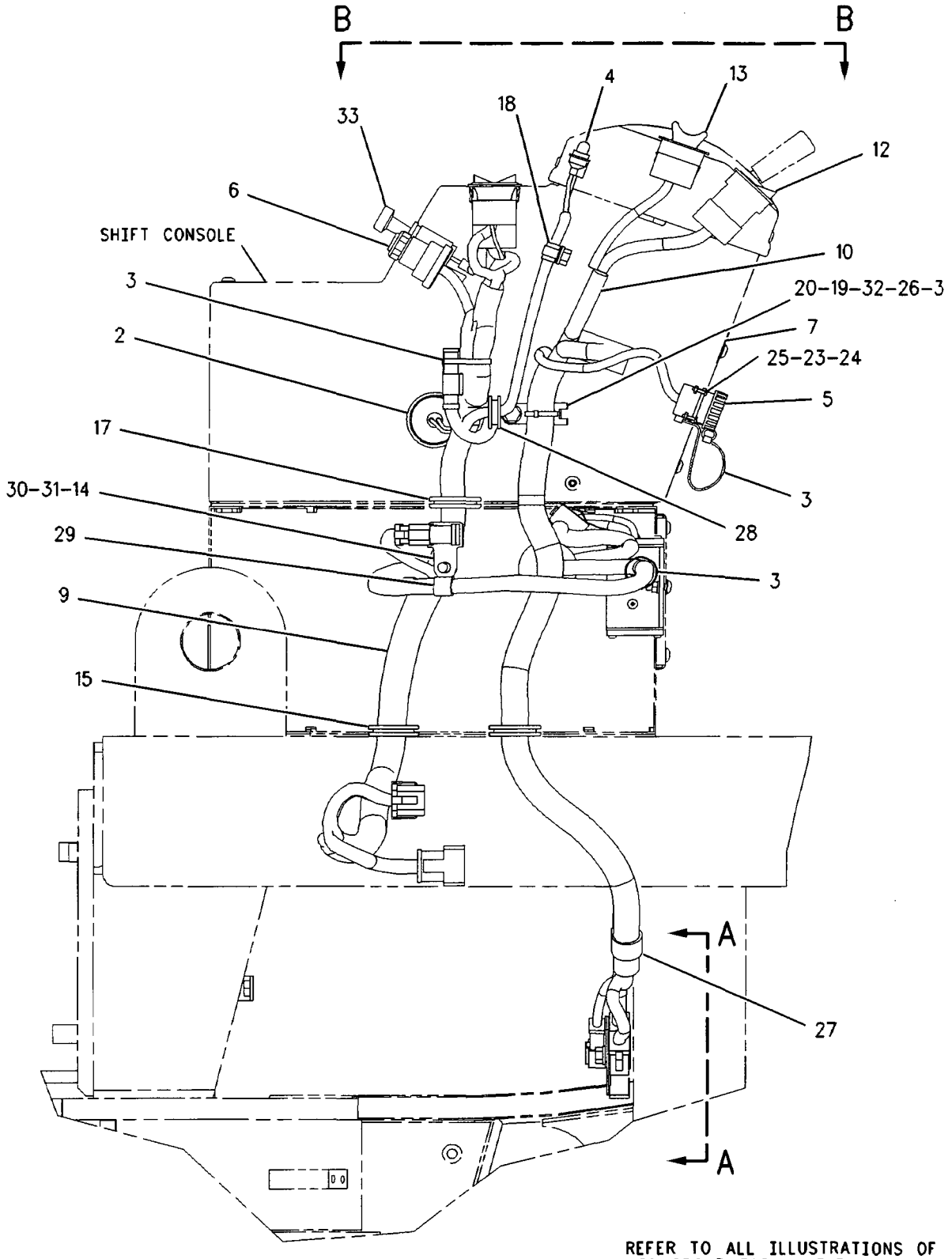

RIGHT SIDE VIEW

GRAPHIC #1 g00934782

159-5841 WIRING GP-SHIFT CONSOLE *(contd.)* i02204653

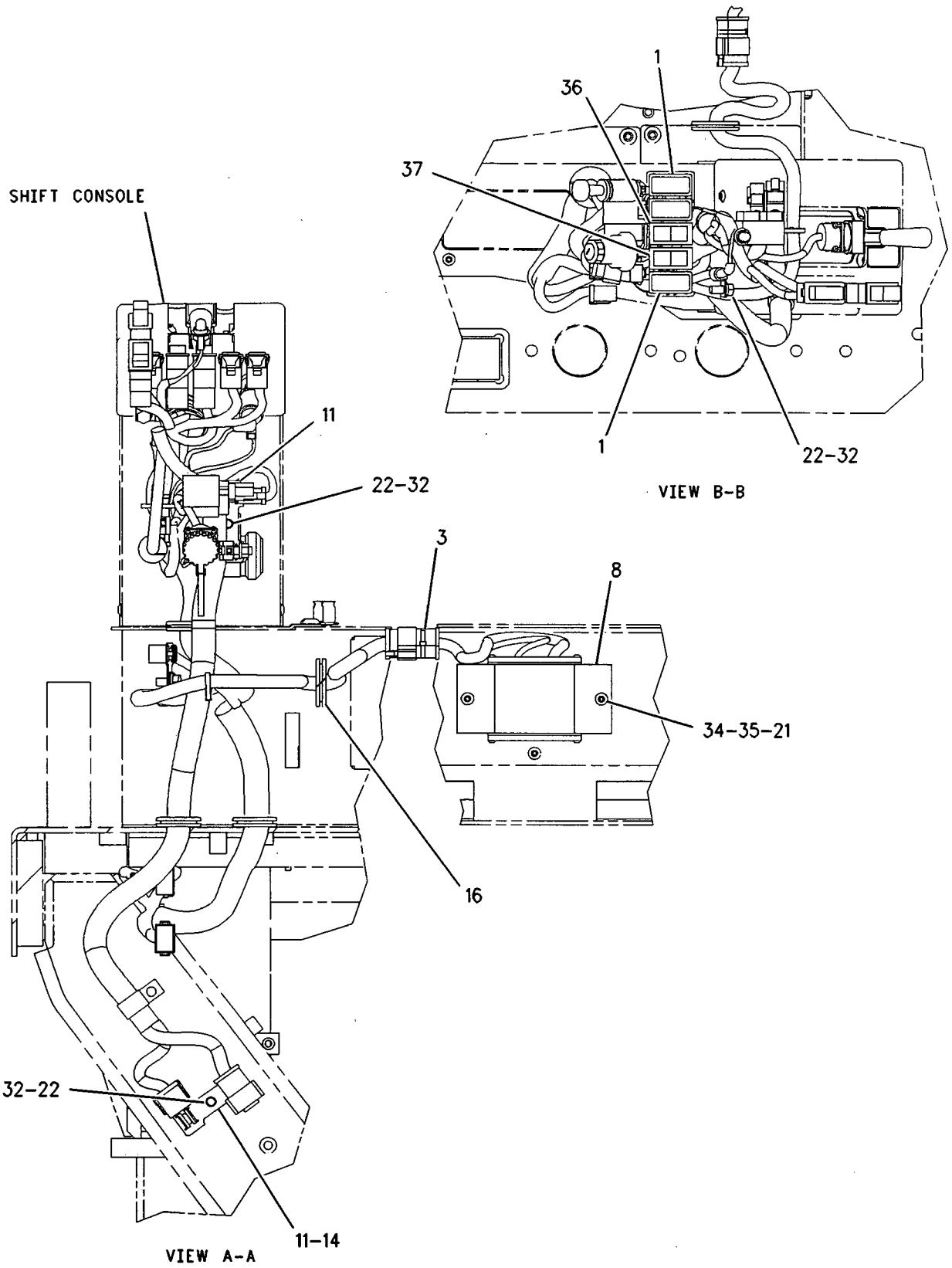

GRAPHIC #2 **<END>** g00934783

159-5845 WIRING GP-STEERING CONSOLE

S/N: CCA1-UP

PART OF 159-4615 GENERAL AR

SMCS-4334 i02204666

NOTE	REF NO	GRAPHIC REF	PART NUMBER	QTY	PART NAME 1 2 3 4 5 6 (PRODUCT LEVEL)	SEE PAGE
	1	1	3E-0109	3	PLUG (ROCKER SWITCH)	
	2	1	3E-6477	1	RELAY AS (24-VOLT) (TAIL, PANEL LAMPS)	
	3	1	3S-2093	8	STRAP-CABLE	
	4	1	9W-1441	1	FUSE (15-AMPERE)	
	5	1	9W-1442	11	FUSE (10-AMPERE)	
	6	1	102-9383	1	PLATE	
	7	1	112-6175	2	SWITCH AS-LIMIT (INCHING PEDAL)	
					(EACH INCLUDES)	
		1	6V-8376	3	SCREW-MACHINE (8-32X0.25-IN)	
		1	9B-7233	3	LOCKWASHER	
	8	1	239-8335	1	HARNESS AS-CONSOLE (STEERING)	
		1	127-5483	1	PLUG AS-CONNECTOR (1-PIN)	
		1	155-2255	1	KIT-CONNECTING PLUG (12-PIN)	
		1	155-2260	1	KIT-CONNECTING PLUG (3-PIN)	
		1	155-2270	2	KIT-CONNECTING PLUG (2-PIN)	
		1	155-2271	1	KIT-CONNECTING PLUG (4-PIN)	
		1	155-2255	2	KIT-CONNECTING PLUG (12-PIN)	
		1	155-2270	2	KIT-CONNECTING PLUG (2-PIN)	
					(EACH INCLUDES PLUG AS & WEDGE)	
		1	127-5484	2	RECEPTACLE AS (1-PIN)	
		1	102-8804	1	KIT-RECEPTACLE (4-PIN)	
		1	102-8801	2	KIT-RECEPTACLE (12-PIN)	
					(EACH INCLUDES RECEPTACLE AS & WEDGE)	
	9	1	180-4028	2	BRACKET	
	10	1	180-7033	1	COVER	
	11	1	186-1714	1	FILM-FUSE (LH)	
	12	1	186-1715	1	FILM-FUSE (RH)	
	13	1	194-4181	1	RESISTOR AS	
		1	8C-3334	1	RIVET-TUBULAR	
		1	186-3735	2	PIN-CONNECTOR	
		1	1S-9593	1	STRAP-CABLE	
BE		1	5P-6008		TUBE	
		1	102-8802	1	KIT-RECEPTACLE (2-PIN)	
					(INCLUDES RECEPTACLE AS & WEDGE)	
	14	1	130-5300	2	CLIP	
	15	1	139-2120	1	SWITCH AS (DIFFERENTIAL LOCK)	
		1	3E-8825	2	LAMP (24-VOLT)	
		1	123-5861	1	ACTUATOR-ROCKER	
M	16	1	151-4957	4	BOLT-SOCKET HEAD (M3X0.5X25-MM)	
M	17	1	174-8131	1	SCREW-TRUSS HEAD	
	18	1	228-5009	4	CLIP	
M	19	1	3C-6969	4	NUT (M3X0.5-THD)	
	20	1	3E-9324	1	SWITCH AS (PANEL LAMP DIMMER)	
		1	3E-8783	1	ACTUATOR-ROCKER	
		1	3E-8825	1	LAMP (24-VOLT)	
	21	1	3E-8763	1	SWITCH AS (TAIL LAMP)	
		1	3E-8825	1	LAMP (24-VOLT)	
		1	3E-9323	1	ACTUATOR-ROCKER	
	22	1	3L-8187	4	LOCKWASHER	
	23	1	4B-1281	4	SCREW-MACHINE (1/4-20X0.625-IN)	
	24	1	4B-4274	16	WASHER (5.5X13X1.2-MM THK)	
	25	1	4D-1212	1	GROMMET	
M	26	1	5C-2890	3	NUT (M6X1-THD)	
M	27	1	5C-8312	1	NUT (M4X0.7-THD)	
M	28	1	5C-9553	2	BOLT (M6X1X16-MM)	
	29	1	5P-4115	2	WASHER-HARD (7.2X19X2-MM THK)	

159-5845 WIRING GP-STEERING CONSOLE *(contd.)* i02204666

NOTE	REF NO	GRAPHIC REF	PART NUMBER	QTY	PART NAME 1 2 3 4 5 6 (PRODUCT LEVEL)	SEE PAGE
	30	1	**6D-4244**	2	CLIP	
	31	1	**6J-0488**	1	SCREW-BUTTON HEAD (3/8-16X0.875-IN)	
	32	1	**6V-8185**	4	NUT (1/4-20-THD)	
	33	1	**6V-8801**	1	NUT (3/8-16-THD)	
	34	1	**8C-7508**	2	LOCKWASHER	
	36	1	**8L-6521**	8	BOLT (10-32X0.5-IN)	
	37	1	**8T-4205**	2	WASHER-HARD (7.2X14.5X2-MM THK)	
	38	1	**8T-4896**	1	WASHER-HARD (10.2X18.5X2.5-MM THK)	
M	39	1	**8T-4971**	1	BOLT (M6X1X30-MM)	
	40	1	**9P-2553**	1	SPACER (6.83X10.28X11-MM THK)	
M	41	1	**9X-1046**	6	SCREW (M4X0.7X18-MM)	
M	42	1	**9X-2042**	1	SCREW-TRUSS HEAD (M6X1X12-MM)	
	43	1	**9X-8256**	6	WASHER (6.6X12X2-MM THK)	
	44	1	**3E-0109**	1	PLUG (ROCKER SWITCH) (ETHER STARTING AID)	
	45	1	**3E-0109**	1	PLUG (ROCKER SWITCH) (FLOOD LAMP CONNECTOR)	

B-USE AS REQUIRED
E-ORDER BY THE CENTIMETER
M-METRIC PART

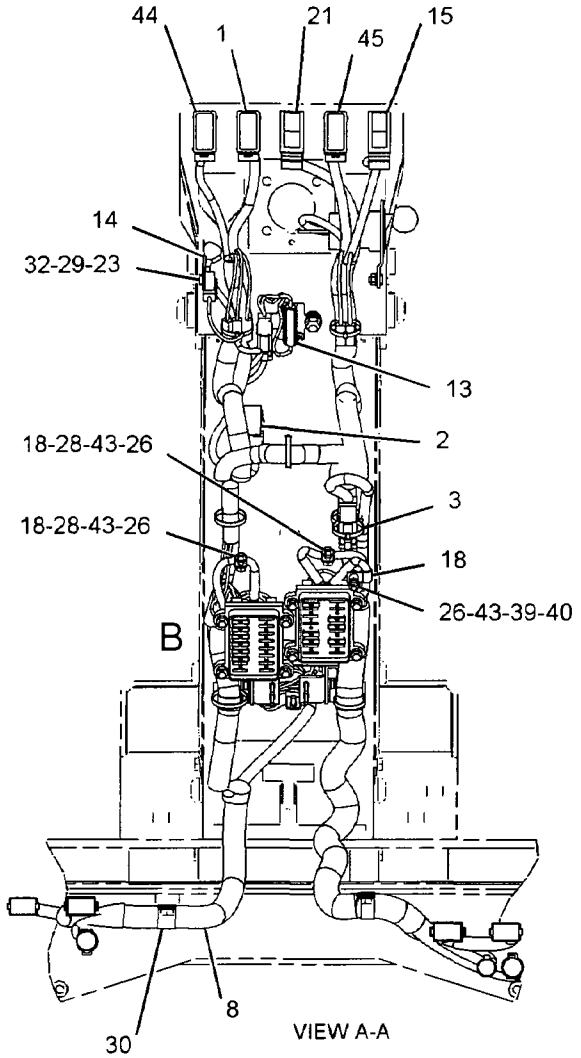

VIEW A-A

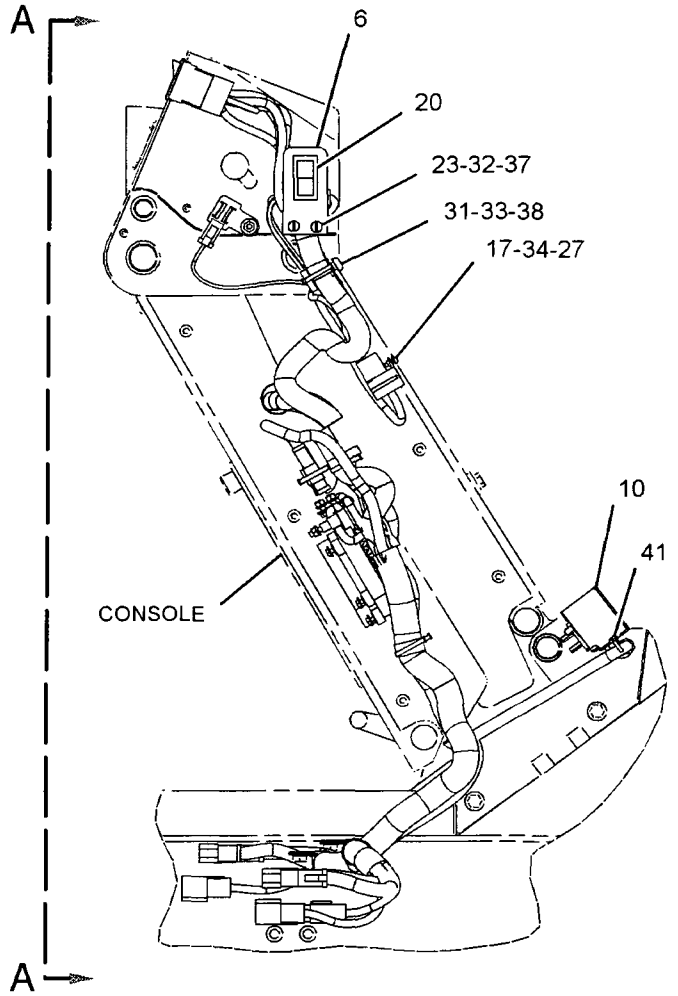

RIGHT SIDE VIEW

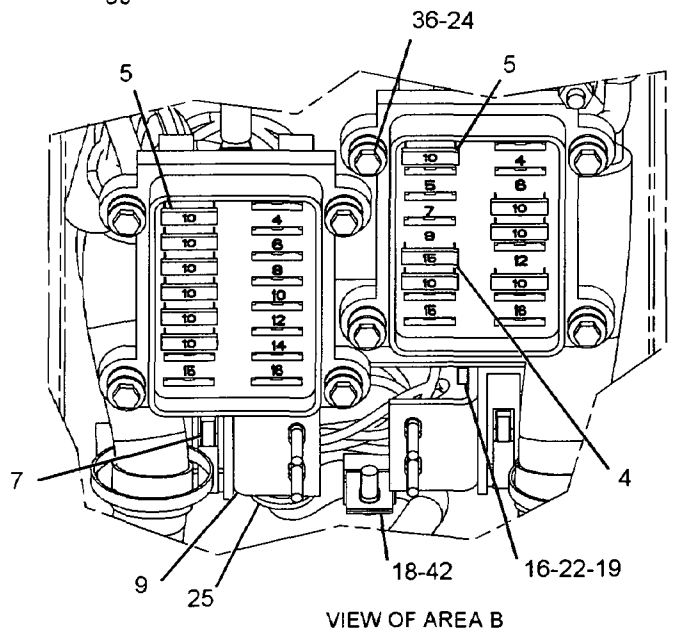

VIEW OF AREA B

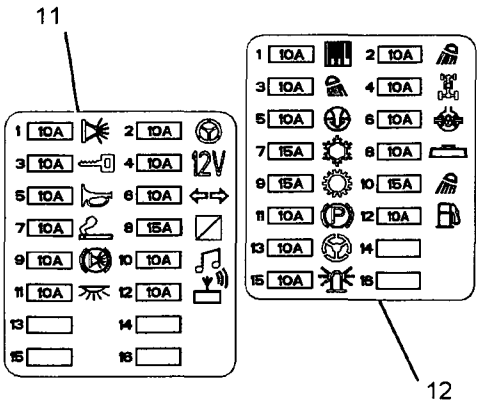

FUSE BLOCK COVERS

GRAPHIC #1 **<END>** g01056255

ELECTRICAL AND STARTING SYSTEM

159-5853 WIRING GP-STEERING CONSOLE–EU

S/N: CCA1-UP

PART OF 207-4453, 210-2044 CONVERSION AR-CERTIFICATION AN ATTACHMENT

SMCS-4334 **i02204687**

NOTE	REF NO	GRAPHIC REF	PART NUMBER	QTY	PART NAME 1 2 3 4 5 6 (PRODUCT LEVEL)	SEE PAGE
	1	1	**3E-0109**	3	PLUG (ROCKER SWITCH)	
	2	2	**3E-6477**	3	RELAY AS (24-VOLT) (TAIL,PANEL LAMPS)	
	3	1	**3S-2093**	8	STRAP-CABLE	
	4	1	**8X-5153**	1	FILM-FACE (TURN SIGNAL, HAZARD)	
	5	1	**8X-5154**	1	FILM-FACE (HEADLIGHTS HIGH, LOW BEAM)	
	6	1	**9W-1441**	1	FUSE (15-AMPERE)	
	7	1	**9W-1442**	12	FUSE (10-AMPERE)	
	8	2	**102-9383**	1	PLATE	
	9	2	**112-6175**	1	SWITCH AS-LIMIT (INCHING PEDAL)	
		2	**6V-8376**	3	SCREW-MACHINE (8-32X0.25-IN)	
		2	**9B-7233**	3	LOCKWASHER	
	10	1	**173-3064**	1	SWITCH GP-ROTARY (TURN SIGNAL, HAZARD)	
		1	**5L-7200**	1	SCREW (8-32X0.375-IN)	
		1	**9B-7233**	1	LOCKWASHER	
	11	1	**173-4490**	1	FLASHER AS (24 VOLT)	
	12	2	**180-4028**	2	BRACKET	
	13	2	**180-7033**	1	COVER	
	14	1	**186-1715**	1	FILM-FUSE (LH)	
	15	2	**194-4181**	1	RESISTOR AS (PANEL LAMP DIMMER)	
	16	1	**239-8336**	1	HARNESS AS (CONSOLE)	
		1	**127-5483**	1	PLUG AS-CONNECTOR (1-PIN)	
		1	**127-5484**	2	RECEPTACLE AS (1-PIN)	
		1	**102-8802**	1	KIT-RECEPTACLE (2-PIN)	
		1	**102-8803**	1	KIT-RECEPTACLE (3-PIN)	
		1	**102-8804**	1	KIT-RECEPTACLE (4-PIN)	
		1	**102-8801**	2	KIT-RECEPTACLE (12-PIN)	
					(EACH INCLUDES RECEPTACLE AS & WEDGE)	
		1	**155-2255**	2	KIT-CONNECTING PLUG (12-PIN)	
		1	**155-2260**	1	KIT-CONNECTING PLUG (3-PIN)	
		1	**155-2270**	4	KIT-CONNECTING PLUG (2-PIN)	
		1	**155-2271**	1	KIT-CONNECTING PLUG (4-PIN)	
		1	**155-2274**	1	KIT-CONNECTING PLUG (6-PIN)	
					(EACH INCLUDES PLUG AS & WEDGE)	
	17	1	**197-5453**	1	FILM-FUSE (RH)	
	18	1	**089-7960**	2	WASHER (5.3X25X1.6-MM THK)	
	19	1	**103-5678**	1	SWITCH AS-ROTARY (HEADLIGHT DIMMER)	
		1	**5L-7200**	1	SCREW (8-32X0.375-IN)	
		1	**9B-7233**	1	LOCKWASHER	
	20	1	**130-5300**	2	CLIP	
	21	1	**139-2120**	1	SWITCH AS (DIFFERENTIAL LOCK)	
		1	**3E-8825**	2	LAMP (24-VOLT)	
		1	**123-5861**	1	ACTUATOR-ROCKER	
M	22	2	**151-4957**	4	BOLT-SOCKET HEAD (M3X0.5X25-MM)	
M	23	2	**174-8131**	2	SCREW-TRUSS HEAD	
	24	1,2	**228-5009**	4	CLIP	
M	25	2	**3C-6969**	4	NUT (M3X0.5-THD)	
	26	1	**3E-8772**	1	SWITCH AS-ROCKER (HEADLIGHTS, TAIL LIGHTS)	
		1	**3E-8825**	2	LAMP (24-VOLT)	
		1	**3E-9326**	1	ACTUATOR-ROCKER	
	27	2	**3E-9324**	1	SWITCH AS (PANEL BACKLIGHTS)	
		2	**3E-8825**	1	LAMP (24-VOLT)	
		2	**3E-8783**	1	ACTUATOR-ROCKER	
	28	2	**3L-8187**	4	LOCKWASHER	
	29	1,2	**4B-1281**	4	SCREW-MACHINE (1/4-20X0.625-IN)	
	30	1	**4B-2047**	2	NUT (10-24-THD)	

159-5853 WIRING GP-STEERING CONSOLE *(contd.)* i02204687

NOTE	REF NO	GRAPHIC REF	PART NUMBER	QTY	PART NAME 1 2 3 4 5 6 (PRODUCT LEVEL)	SEE PAGE
	31	1	**4B-4274**	18	WASHER (5.5X13X1.2-MM THK)	
	32	2	**4D-1212**	1	GROMMET	
M	33	1	**5C-2890**	3	NUT (M6X1-THD)	
M	34	2	**5C-8312**	2	NUT (M4X0.7-THD)	
M	35	1	**5C-9553**	2	BOLT (M6X1X16-MM)	
	36	1	**5M-6755**	2	SCREW-MACHINE (NO 10X0.562-IN)	
	37	1	**5P-4115**	2	WASHER-HARD (7.2X19X2-MM THK)	
	38	1	**6D-4244**	2	CLIP	
	39	2	**6J-0488**	1	SCREW-BUTTON HEAD (3/8-16X0.875-IN)	
	40	1,2	**6V-8185**	4	NUT (1/4-20-THD)	
	41	2	**6V-8801**	1	NUT (3/8-16-THD)	
	42	2	**8C-7508**	4	LOCKWASHER	
	44	1	**8L-6521**	8	BOLT (10-32X0.5-IN)	
	45	2	**8T-4205**	2	WASHER-HARD (7.2X14.5X2-MM THK)	
	46	2	**8T-4896**	1	WASHER-HARD (10.2X18.5X2.5-MM THK)	
M	47	1	**8T-4971**	1	BOLT (M6X1X30-MM)	
	48	1	**8X-6296**	1	LEVER (TURN SIGNAL, HAZARD)	
	49	1	**9P-2553**	1	SPACER (6.83X10.28X11-MM THK)	
M	50	2	**9X-1046**	6	SCREW (M4X0.7X18-MM)	
M	51	2	**9X-2042**	1	SCREW-TRUSS HEAD (M6X1X12-MM)	
	52	1	**9X-8256**	6	WASHER (6.6X12X2-MM THK)	
	53	2	**112-6175**	1	SWITCH AS-LIMIT (BRAKE PEDAL)	
		2	**6V-8376**	3	SCREW-MACHINE (8-32X0.25-IN)	
		2	**9B-7233**	3	LOCKWASHER	
	54	1	**8X-6296**	1	LEVER (HEADLAMP DIMMER)	

M-METRIC PART

159-5853 WIRING GP-STEERING CONSOLE *(contd.)* i02204687

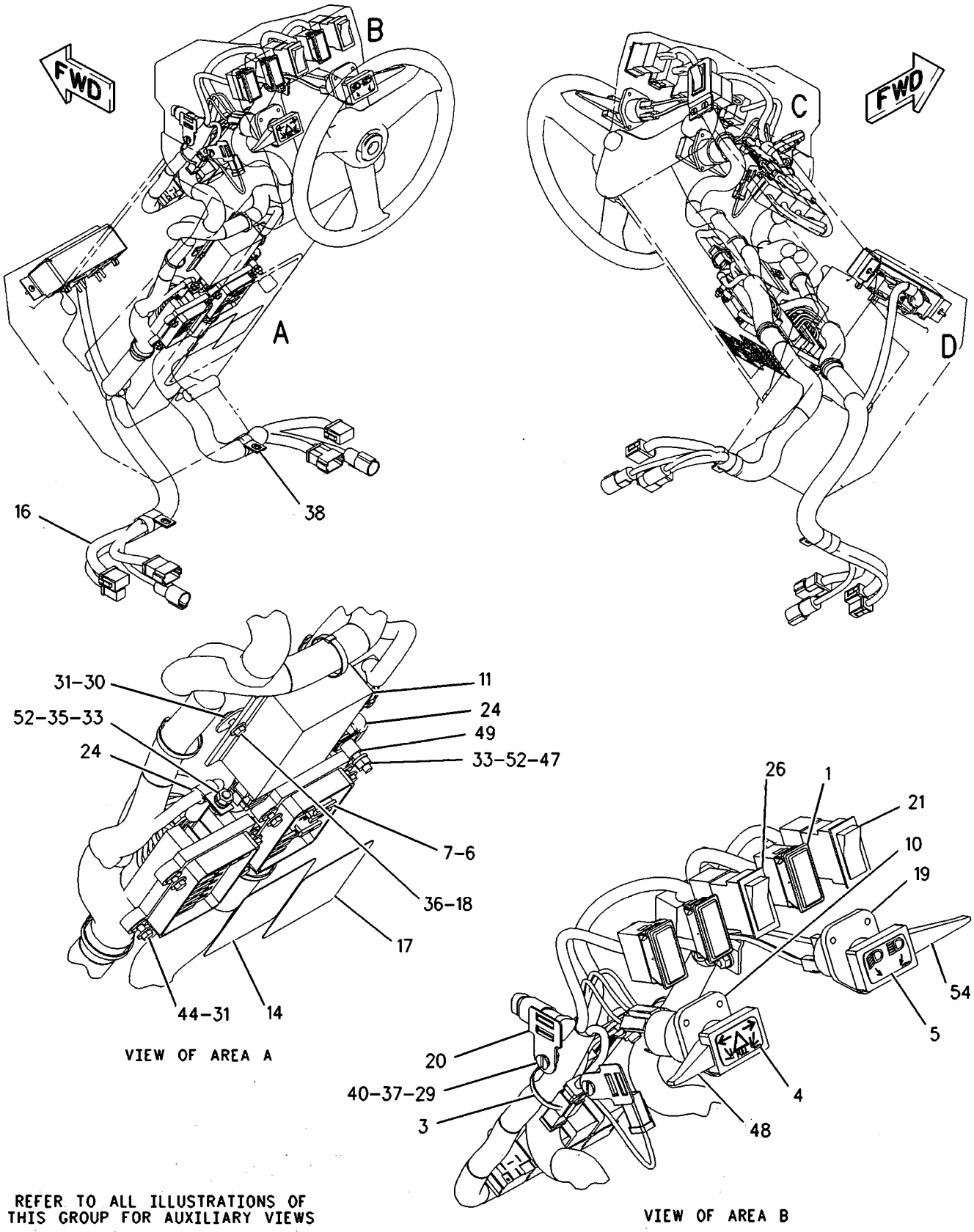

REFER TO ALL ILLUSTRATIONS OF THIS GROUP FOR AUXILIARY VIEWS

GRAPHIC #1 g00941586

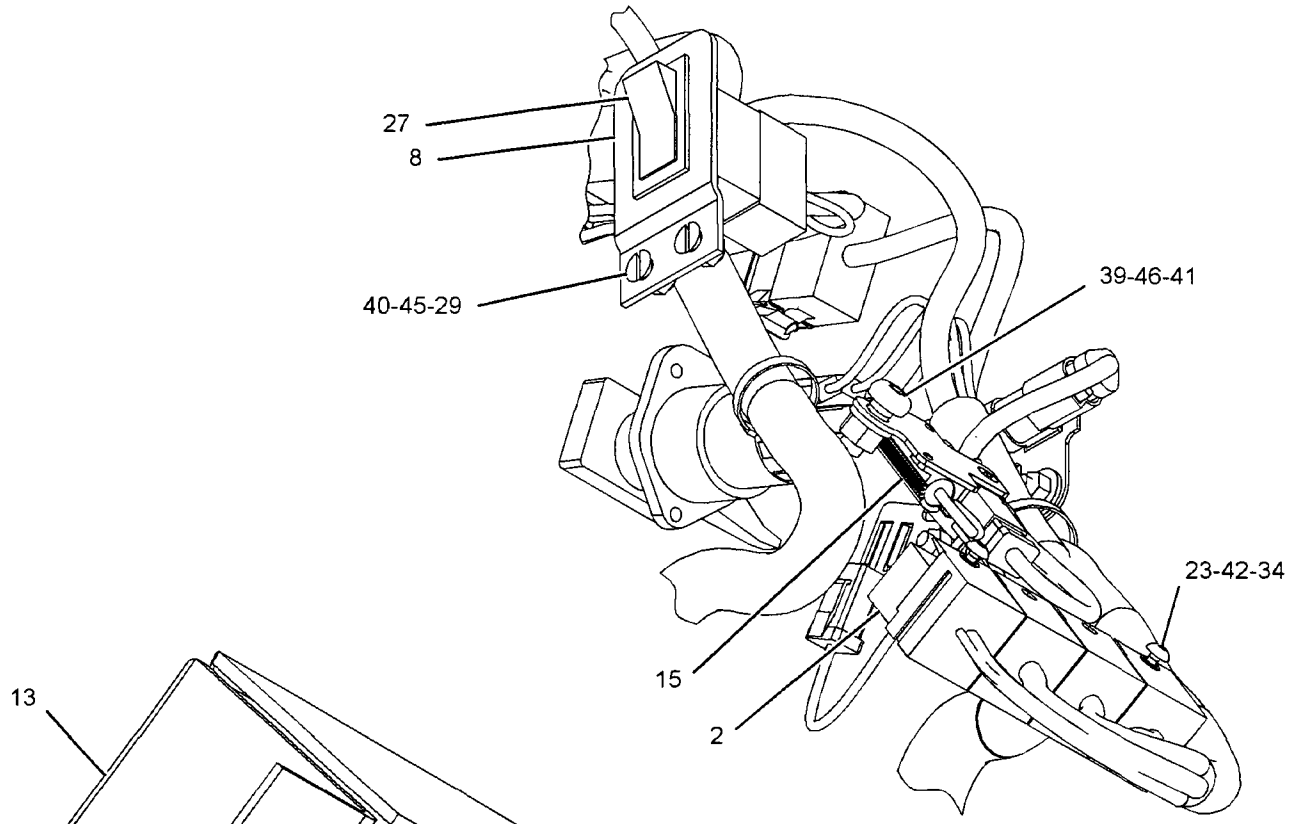

VIEW OF AREA C

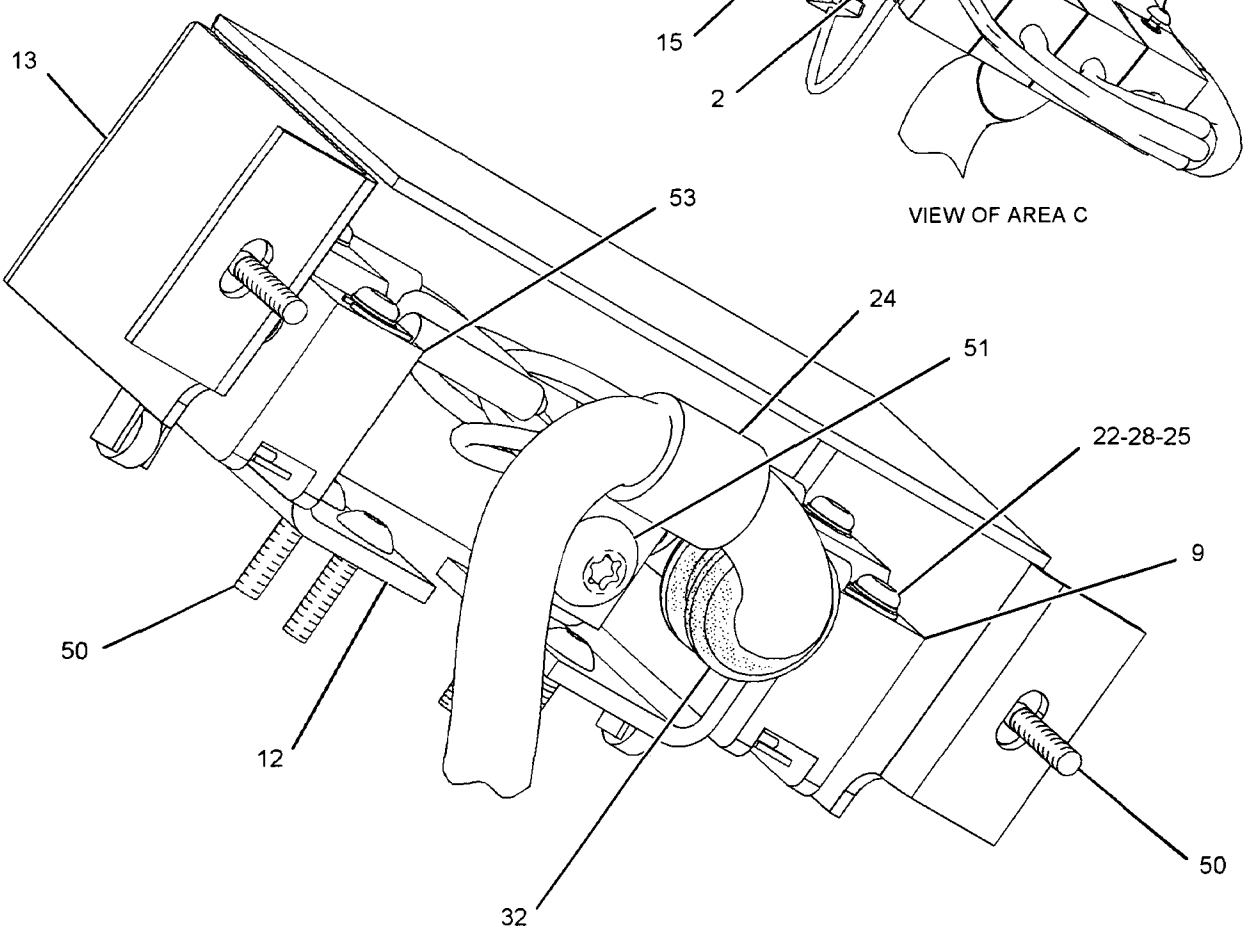

VIEW OF AREA D

GRAPHIC #2 **<END>** g01056251

117-2760 WIRING GP-UNIT INJECTOR

S/N: 3PD1-UP

PART OF 160-5101 ENGINE AR

SMCS-1408 **i02200301**

NOTE	REF NO	GRAPHIC REF	PART NUMBER	QTY	PART NAME 1 2 3 4 5 6 (PRODUCT LEVEL)	SEE PAGE
	1	1	**4P-9537**	1	HARNESS AS-WIRING (UNIT INJECTOR)	
	2	1	**2V-3216**	4	CLIP	
	3	1	**7X-2468**	3	CLIP	
	4	1	**7E-6508**	6	CAP AS	
M	5	1	**6V-8214**	9	BOLT (M6X1X20-MM)	
	6	1	**5P-0537**	9	WASHER-HARD (7.2X14.5X2-MM THK)	

M-METRIC PART

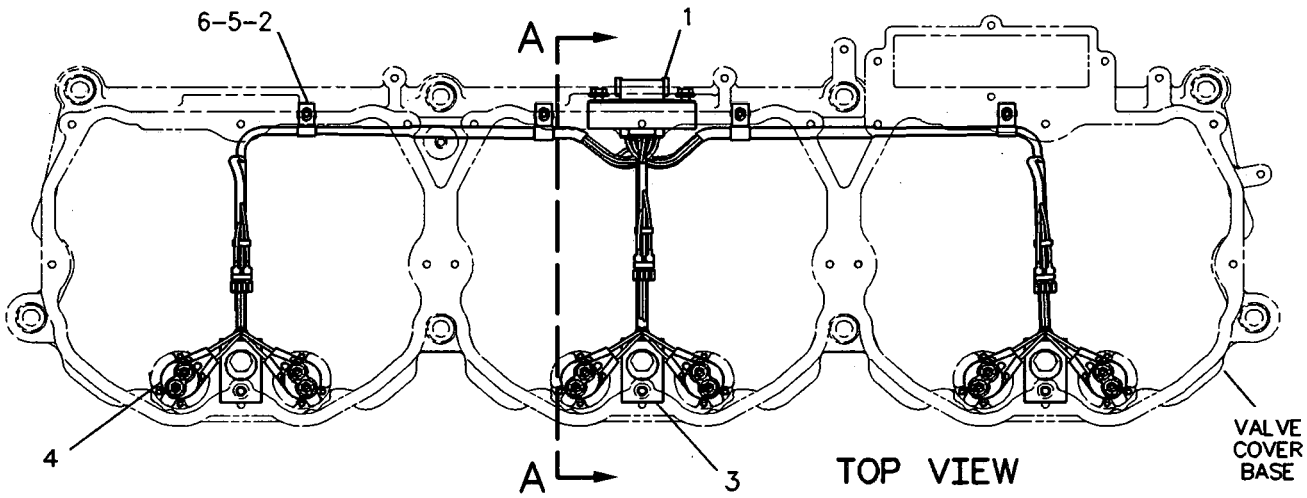

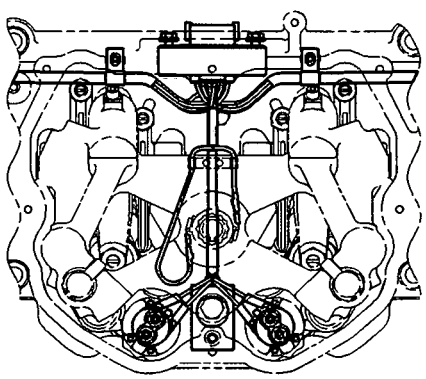

WIRING CONNECTIONS SHOWN FOR USE WITH ENGINE RETARDER

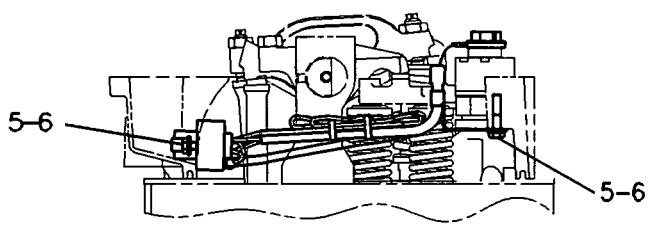

VIEW A-A

GRAPHIC #1 **<END>** g00399410

161-0764 AUTOSHIFT AR–TRANSMISSION

S/N: CCA1-UP

PART OF 207-4453, 210-2044 CONVERSION AR-CERTIFICATION, 197-5955, 236-3948 SNOW AR-MOTOR GRADER AN ATTACHMENT

SMCS-3168 i01816435

NOTE	PART NUMBER	QTY	PART NAME 1 2 3 4 5 6 (PRODUCT LEVEL)	SEE PAGE
Z		1	ELECTRONICS GP-POWER TRAIN (AUTOSHIFT)	
	3E-8763	1	SWITCH AS (AUTOSHIFT TRANSMISSION)	
	3E-8784	1	ACTUATOR-ROCKER	
	3E-8825	1	LAMP (24-VOLT) (AUTOSHIFT)	

Z-NOT SERVICED SEPARATELY

<END>

POWER TRAIN

180-9146 CASE & PARTS GP-TRANSMISSION

S/N: BJN1-UP

PART OF 160-2196 TRANSMISSION AR

SMCS-3064 **i02204709**

NOTE	REF NO	GRAPHIC REF	PART NUMBER	QTY	PART NAME 1 2 3 4 5 6 (PRODUCT LEVEL)	SEE PAGE
	1	1	**178-9158**	1	CASE AS	
		1	**7T-6496**	7	PLUG	
		1	**8M-6521**	2	DOWEL	
	2	1	**6Y-5728**	1	COVER AS-TRANSMISSION	
		1	**7T-6496**	1	PLUG	
M	3	1	**6V-1820**	35	BOLT (M10X1.5X30-MM)	
M	4	1	**8T-5436**	2	BOLT (M10X1.5X130-MM)	
	5	1,2	**9S-4185**	2	PLUG	
	6	1,2	**3K-0360**	9	SEAL-O-RING	
	7	1	**2J-0157**	1	SEAL-O-RING	
B	8	1,2	**1U-8846**		SEALANT-GASKET	
	9	1	**8T-6765**	1	PLUG-PIPE	
	10	1	**5M-6200**	1	SEAL-O-RING	
	11	1	**8E-1133**	1	TUBE AS	
	12	1	**6L-1650**	1	SEAL-O-RING	
M	13	1,2	**6V-5217**	13	BOLT (M8X1.25X20-MM)	
	14	1,2	**5P-3863**	5	SEAL-O-RING	
	15	1,2	**9W-1454**	5	COVER	
	16	1	**8S-9129**	1	FILTER-MAGNETIC (TRANSMISSION OIL)	
	17	1	**8S-9130**	1	SCREEN-SUCTION (TRANSMISSION)	
	18	1	**4M-6108**	2	RACE-BEARING OUTER	
	19	1	**148-1925**	2	VALVE-RELIEF	
	20	1	**9X-4609**	2	SEAL-O-RING	
	21	1	**9W-7038**	1	RING-SNAP	
M	22	1	**6V-3940**	4	BOLT (M8X1.25X25-MM)	
	23	1	**6Y-9763**	1	GEAR AS (38-TEETH)	
		1	**4K-8603**	1	PLUG-CUP	
	24	1	**2S-3029**	1	BALL BEARING	
	25	1	**9W-6465**	1	RETAINER-BEARING	
	26	2	**9S-4190**	5	PLUG	
	27	2	**2M-9780**	6	SEAL-O-RING	
	28	2	**9S-4191**	1	PLUG	
	29	1,2	**3J-1907**	2	SEAL-O-RING	
	30	1,2	**8T-4121**	13	WASHER-HARD (11X21X2.5-MM THK)	
	31	1	**190-1684**	1	PLATE AS	
M	32	1	**6V-8212**	1	BOLT (M10X1.5X16-MM)	
	33	1	**5P-4483**	1	PLUG	
	34	1	**7M-8485**	4	SEAL-O-RING	
M	35	1,2	**6V-7981**	5	BOLT (M10X1.5X70-MM)	
M	36	1,2	**6V-4248**	8	BOLT (M10X1.5X25-MM)	
	37	2	**9S-8006**	1	PLUG	
	38	2	**9S-8005**	2	PLUG	
	39	2	**4M-6109**	4	RACE-ROLLER BEARING	
	40	2	**5P-3924**	2	RACE-BEARING OUTER	
	41	2	**9M-2042**	1	RACE-BEARING OUTER	
	42	2	**191-3680**	1	COVER AS	
		2	**4F-2609**	2	DOWEL	
	43	2	**2H-6489**	1	RACE-BEARING OUTER	
	44	2	**198-6421**	1	HARNESS AS-TRANSMISSION	
		2	**155-2255**	1	KIT-CONNECTING PLUG (12-PIN)	
		2	**155-2270**	5	KIT-CONNECTING PLUG (2-PIN)	
					(EACH PLUG KIT INCLUDES PLUG ASSEMBLY AND WEDGE)	
	45	2	**191-9256**	2	CLIP	
M	46	1,2	**8T-4137**	4	BOLT (M10X1.5X20-MM)	
Y	48	2	**183-8597**	2	SENSOR GP-SPEED (TMSN INTERMEDIATE OUTPUT)	259

180-9146 CASE & PARTS GP-TRANSMISSION *(contd.)* i02204709

NOTE	REF NO	GRAPHIC REF	PART NUMBER	QTY	PART NAME 1 2 3 4 5 6 (PRODUCT LEVEL)	SEE PAGE
Y	48A	2	**183-8597**	1	SENSOR GP-SPEED (TRANSMISSION INPUT)	259
Y	48B	2	**183-8597**	2	SENSOR GP-SPEED (TRANSMISSION OUTPUT)	259
	49	2	**201-0387**	1	CLIP AS	
M	50	2	**8T-4133**	1	NUT (M10X1.5-THD)	
	51	2	**143-5373**	1	GUARD AS	
	52	1,2	**5P-9299**	3	CLIP	
Y	53	1	**3E-8700**	1	SENSOR GP-TEMPERATURE (TRANSMISSION OIL)	262
M	54	2	**6V-3822**	2	BOLT (M10X1.5X35-MM)	
	55	1	**9S-4181**	3	PLUG	
	56	1	**1B-5174**	1	PLUG-PIPE	
	57	2	**113-7745**	1	PLATE AS	
M		2	**8T-3490**	2	NUT-WELD (M10X1.5-THD)	
	58	1	**6D-3479**	1	CLIP	
	59	2	**206-3713**	1	PLATE AS	
M		2	**8T-3490**	3	NUT-WELD (M10X1.5-THD)	
	60	1	**145-8039**	3	LOCK	
	61	2	**133-5631**	1	PLUG	
	62	2	**5F-1678**	1	SEAL-O-RING	
M	63	2	**6V-5219**	4	BOLT (M8X1.25X40-MM)	
	64	2	**190-5212**	1	ROTOR	
M	65	2	**6V-8202**	4	BOLT-SOCKET HEAD (M8X1.25X16-MM)	
	66	1,2	**130-5300**	3	CLIP	
	67	2	**206-3714**	1	PLATE	
M	68	2	**6V-2317**	2	BOLT (M8X1.25X30-MM)	

B-USE AS REQUIRED
M-METRIC PART
Y-SEPARATE ILLUSTRATION

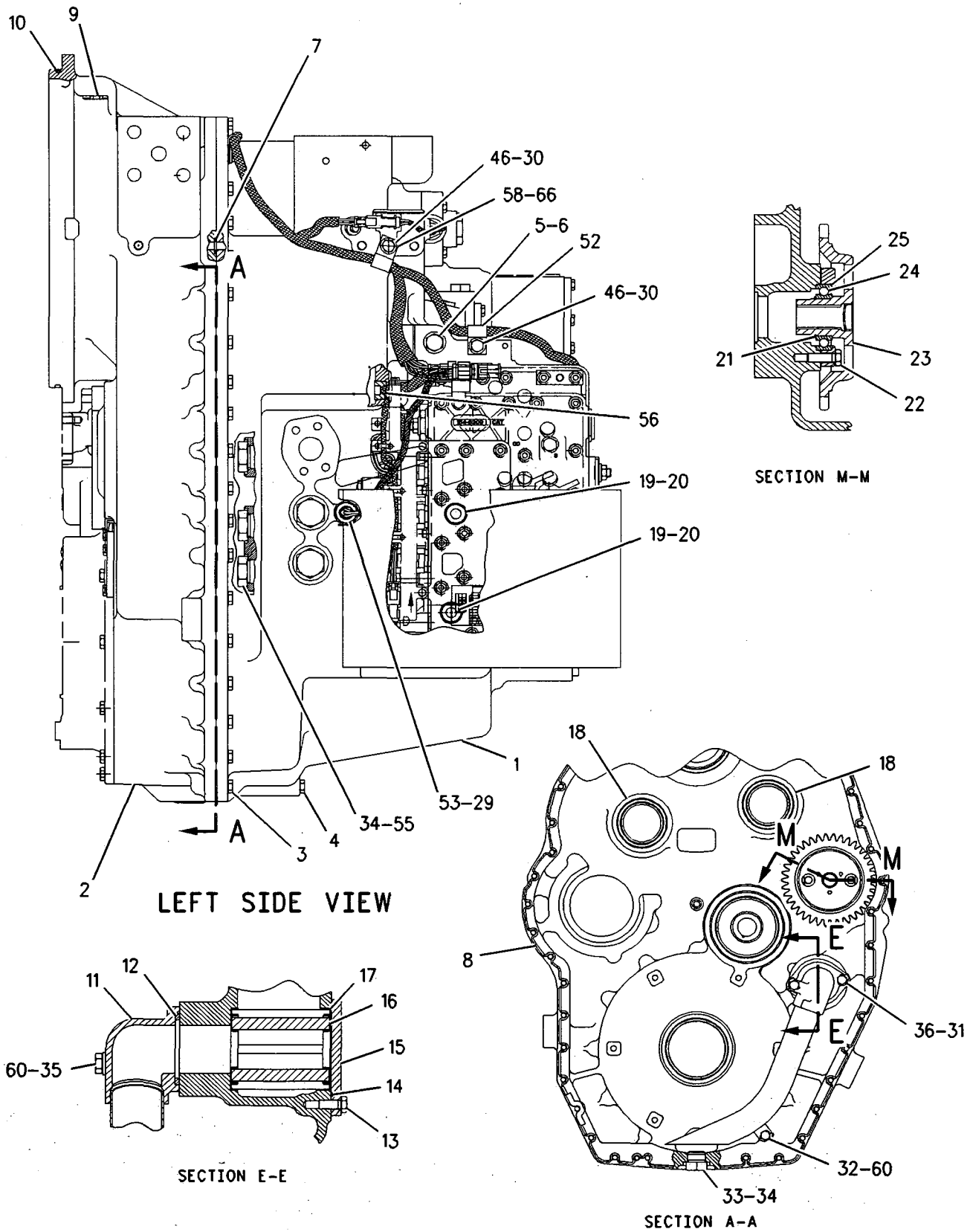

GRAPHIC #1

g00849253

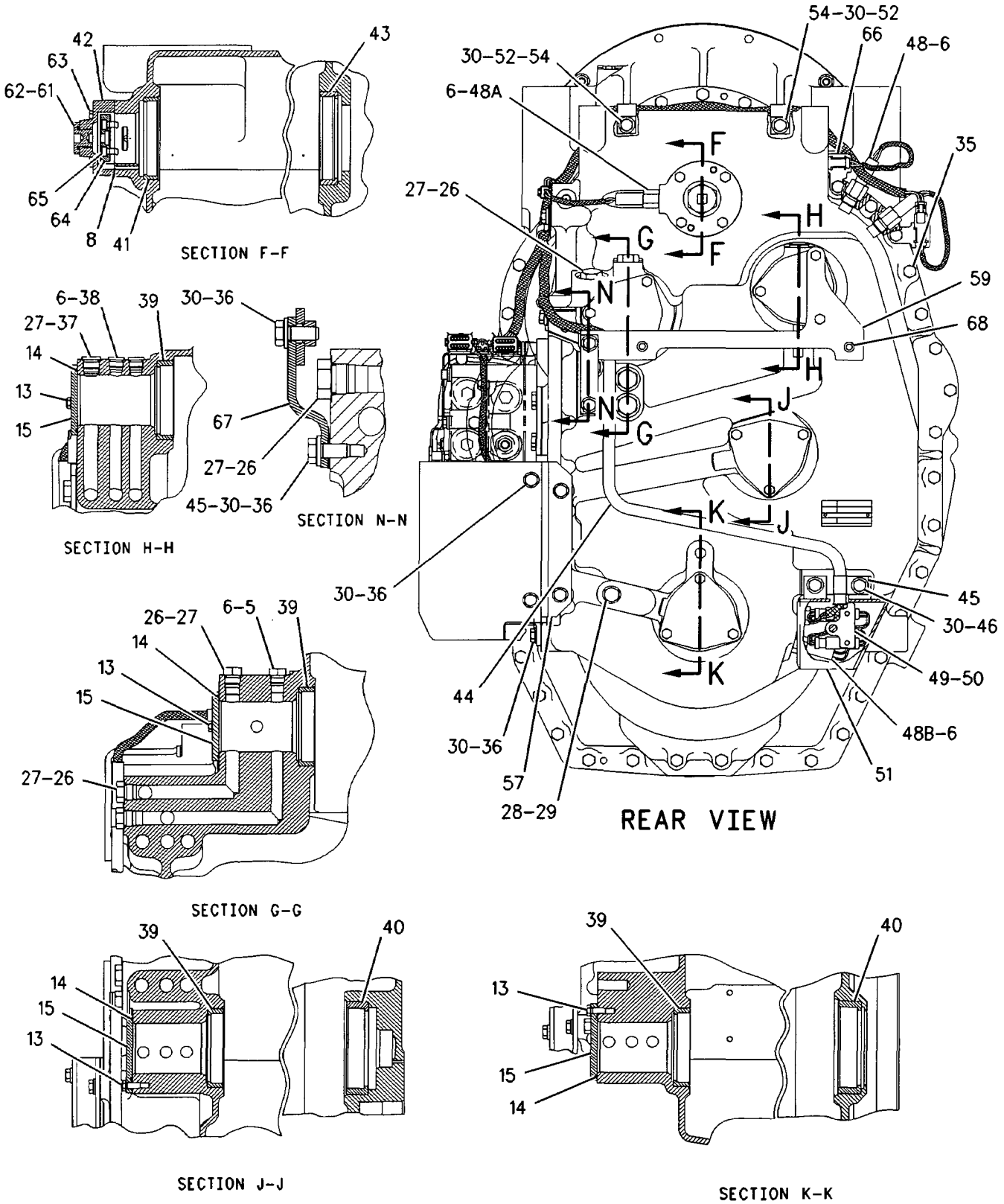

GRAPHIC #2 **<END>** g00849255

POWER TRAIN

6G-1755 CHAIN GP-DRIVE

S/N: CCA1-UP

PART OF 159-4615 GENERAL AR

SMCS-3261, 4063 **i02202894**

NOTE	REF NO	GRAPHIC REF	PART NUMBER	QTY	PART NAME 1 2 3 4 5 6 (PRODUCT LEVEL)	SEE PAGE
	1	1	**6G-1633**	4	CHAIN GP	
					(EACH INCLUDES)	
	2	1	**6G-1631**	1	LINK-CONNECTING	
					(CHAIN TO CONSIST OF 24 PIN LINKS, 25 ROLLER LINKS, 1 CONNECTING LINK & COTTERS)	

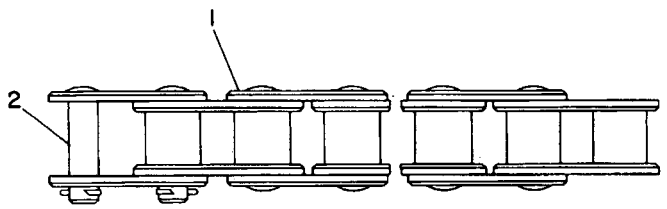

GRAPHIC #1 **<END>** g00108322

POWER TRAIN

6Y-2303 CLUTCH GP-TRANSMISSION–1ST & 3RD

S/N: BJN1-UP

PART OF 160-2196 TRANSMISSION AR

SMCS-3063, 3155, 3170 **i01052624**

NOTE	REF NO	GRAPHIC REF	PART NUMBER	QTY	PART NAME 1 2 3 4 5 6 (PRODUCT LEVEL)	SEE PAGE
	1	1,2	**6Y-1878**	1	SHAFT AS (64 TEETH)	
	2	1,2	**6Y-1000**	1	GEAR (69 TEETH)	
	3	1,2	**8E-1909**	1	GEAR AS (54 TEETH)	
	4	1,2	**6Y-1895**	1	BEARING-SLEEVE	
	5	1,2	**3B-8921**	1	BEARING-INNER	
	6	1,2	**6Y-8285**	1	RING-SEAL	
	7	1,2	**7T-4897**	2	DISC-THRUST	
	8	1,2	**6Y-1891**	1	HUB AS	
	9	1,2	**8E-5734**	2	RING-SEAL EXTENSION	
	10	1,2	**6Y-1887**	2	PISTON	
	11	1,2	**5H-8985**	1	PIN-SPRING	
	12	1,2	**6I-8912**	10	DISC-FRICTION	
	13	1,2	**110-7723**	8	PLATE-CLUTCH	
	14	1,2	**6Y-2312**	1	HUB AS	
	15	1,2	**8E-1910**	1	GEAR AS (79 TEETH)	
	16	1,2	**6Y-2419**	1	BEARING-SLEEVE	
	17	1,2	**6I-8641**	1	RACE & BEARING	
	18	1,2	**7G-4822**	3	RING-SEAL	
M	19	1,2	**6V-1819**	2	BOLT (M10X1.50X100MM)	
	20	1,2	**6Y-2425**	1	CARRIER-SEAL	
	21	1,2	**8F-3469**	3	SEAL (15.54MM ID)	
	22	1,2	**8E-8319**	4	DISC-THRUST	
	23	1,2	**6Y-1115**	4	RING-HALF	
	24	1,2	**6Y-1114**	2	WASHER	
	25	1,2	**9W-9905**	4	LOCKRING	
	26	1,2	**102-5881**	2	SPRING-WAVE	
	27	1,2	**8E-5742**	2	RING-SEAL	
	28	1,2	**6Y-0982**	1	GEAR (30 TEETH)	

M-METRIC PART

6Y-2303 CLUTCH GP-TRANSMISSION *(contd.)* i01052624

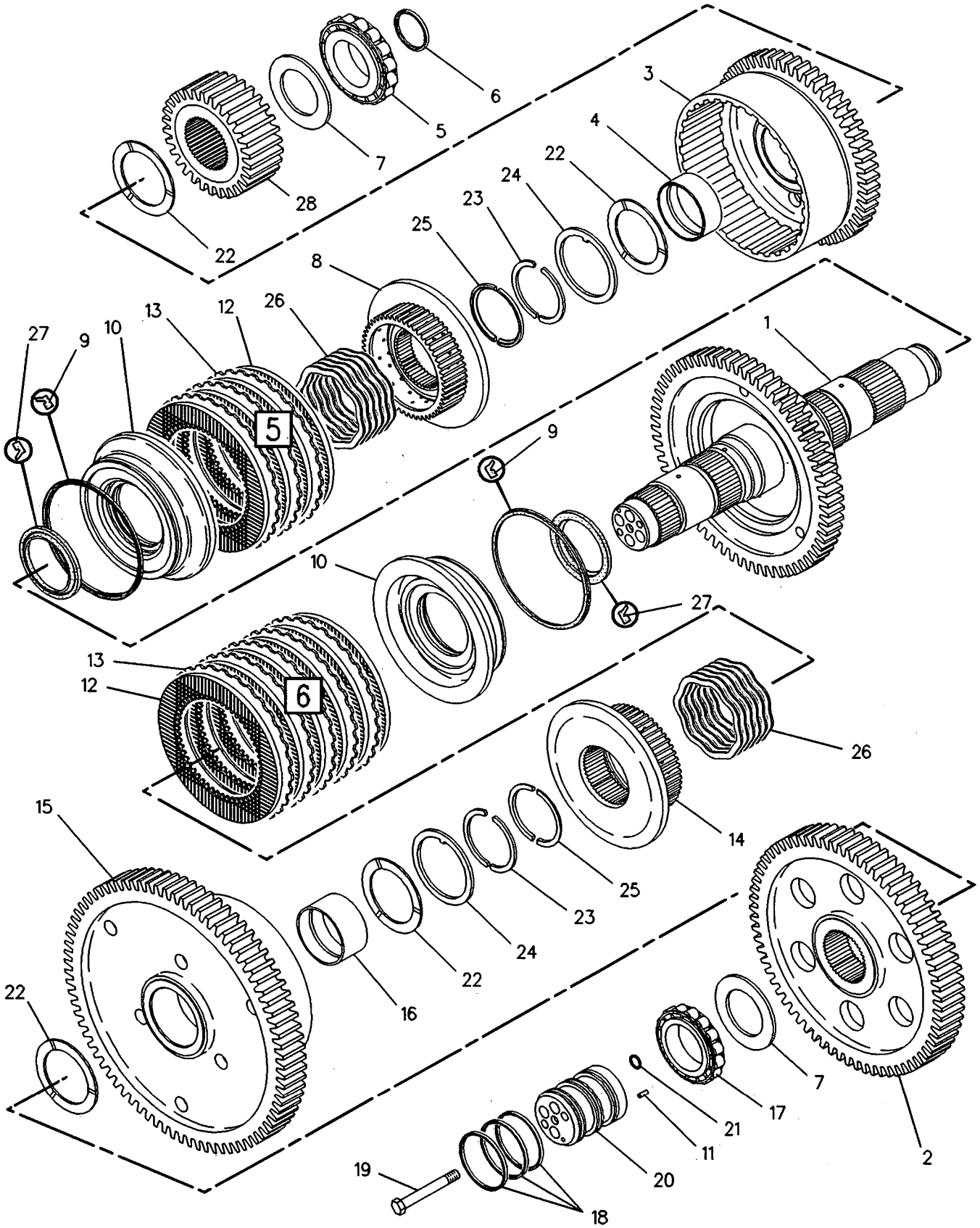

GRAPHIC #1 g00108910

6Y-2303 CLUTCH GP-TRANSMISSION *(contd.)* i01052624

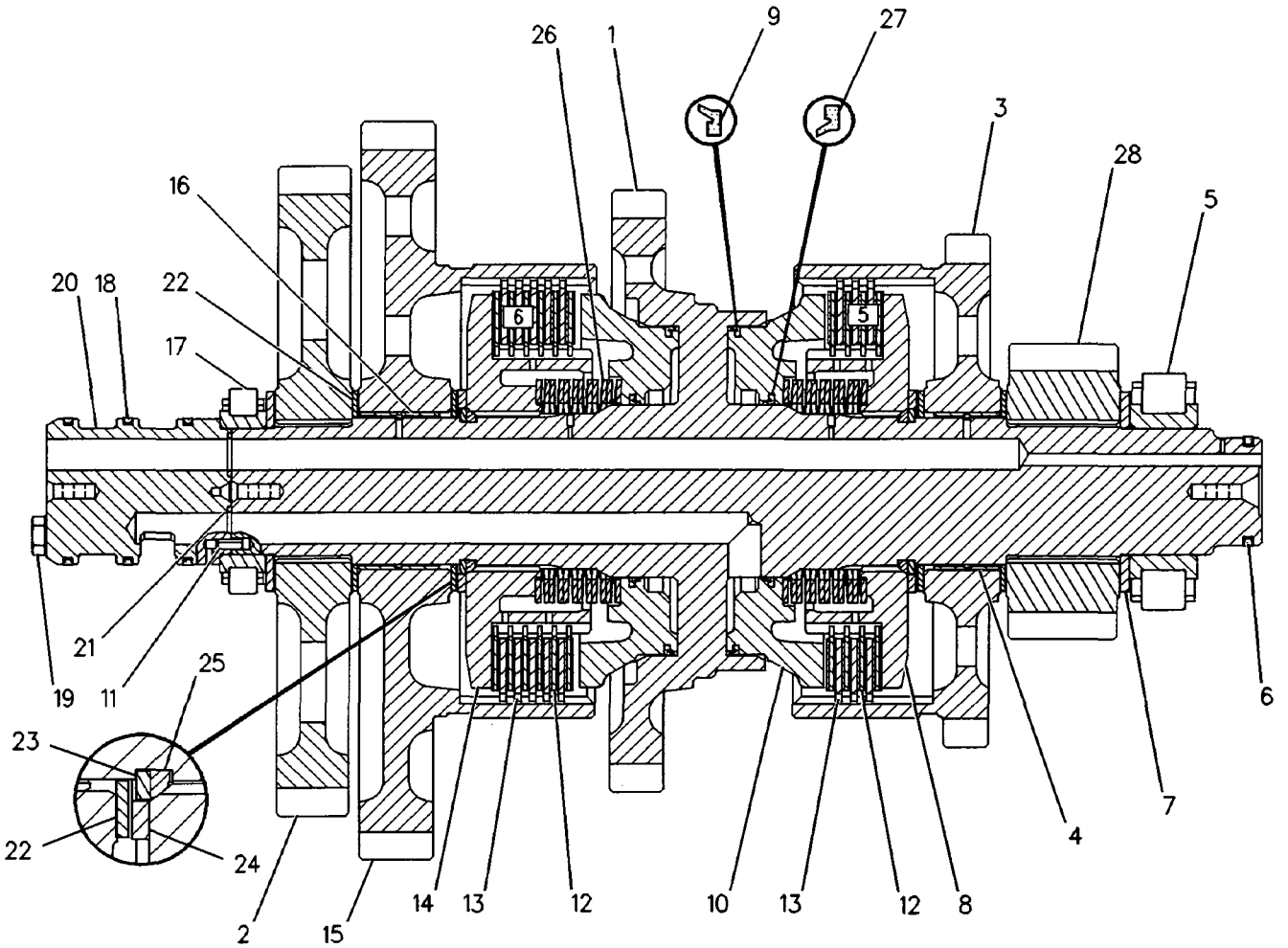

GRAPHIC #2 **<END>** g00108656

8E-9316 CLUTCH GP-TRANSMISSION-HI & LO

S/N: BJN1-UP

PART OF 160-2196 TRANSMISSION AR

SMCS-3063, 3155, 3170 i00131365

NOTE	REF NO	GRAPHIC REF	PART NUMBER	QTY	PART NAME 1 2 3 4 5 6 (PRODUCT LEVEL)	SEE PAGE
	1	1,2	6Y-1864	1	SHAFT AS	
	2	1,2	8M-4295	15	SPRING	
	3	1,2	6Y-2428	1	PISTON	
	4	1,2	6Y-1890	1	RING-RETAINING	
	5	1,2	9W-9905	4	LOCKRING	
	6	1,2	6Y-1114	2	WASHER	
	7	1,2	6Y-1115	4	RING-HALF	
	8	1,2	8E-8319	4	DISC-THRUST	
	9	1,2	7T-4897	1	DISC-THRUST	
	10	1,2	3B-8921	1	BEARING-INNER	
	11	1,2	8E-1913	1	GEAR AS (84 TEETH)	
	12	1,2	9W-6467	2	BEARING-SLEEVE	
	13	1,2	6Y-7981	7	DISC-FRICTION	
	14	1,2	3P-0337	8	PLATE-CLUTCH	
	15	1,2	8E-5736	2	RING-SEAL EXTENSION	
	16	1,2	6Y-2429	1	PISTON-BALANCE	
	17	1,2	102-5881	1	SPRING-WAVE	
	18	1,2	8E-5742	2	RING-SEAL	
	19	1,2	8E-5734	1	RING-SEAL EXTENSION	
	20	1,2	110-7723	5	PLATE-CLUTCH	
	21	1,2	6I-8912	6	DISC-FRICTION	
	22	1,2	8E-1914	1	GEAR AS (45 TEETH)	
	23	1,2	9W-6467	2	BEARING-SLEEVE	
	24	1,2	6I-8641	1	RACE & BEARING	
	25	1,2	6Y-2425	1	CARRIER-SEAL	
M	26	1,2	6V-1819	2	BOLT (M10X1.50X100MM)	
	27	1,2	7G-4822	3	RING-SEAL	
	28	1,2	8F-3469	3	SEAL (15.54MM ID)	
	29	1,2	6Y-2312	1	HUB AS	
	30	1,2	5H-8985	1	PIN-SPRING	
	31	1,2	6Y-1887	1	PISTON	
	32	1,2	6Y-2430	1	HUB AS	
	33	1,2	8E-1161	1	ROTOR	

M-METRIC PART

8E-9316 CLUTCH GP-TRANSMISSION *(contd.)* i00131365

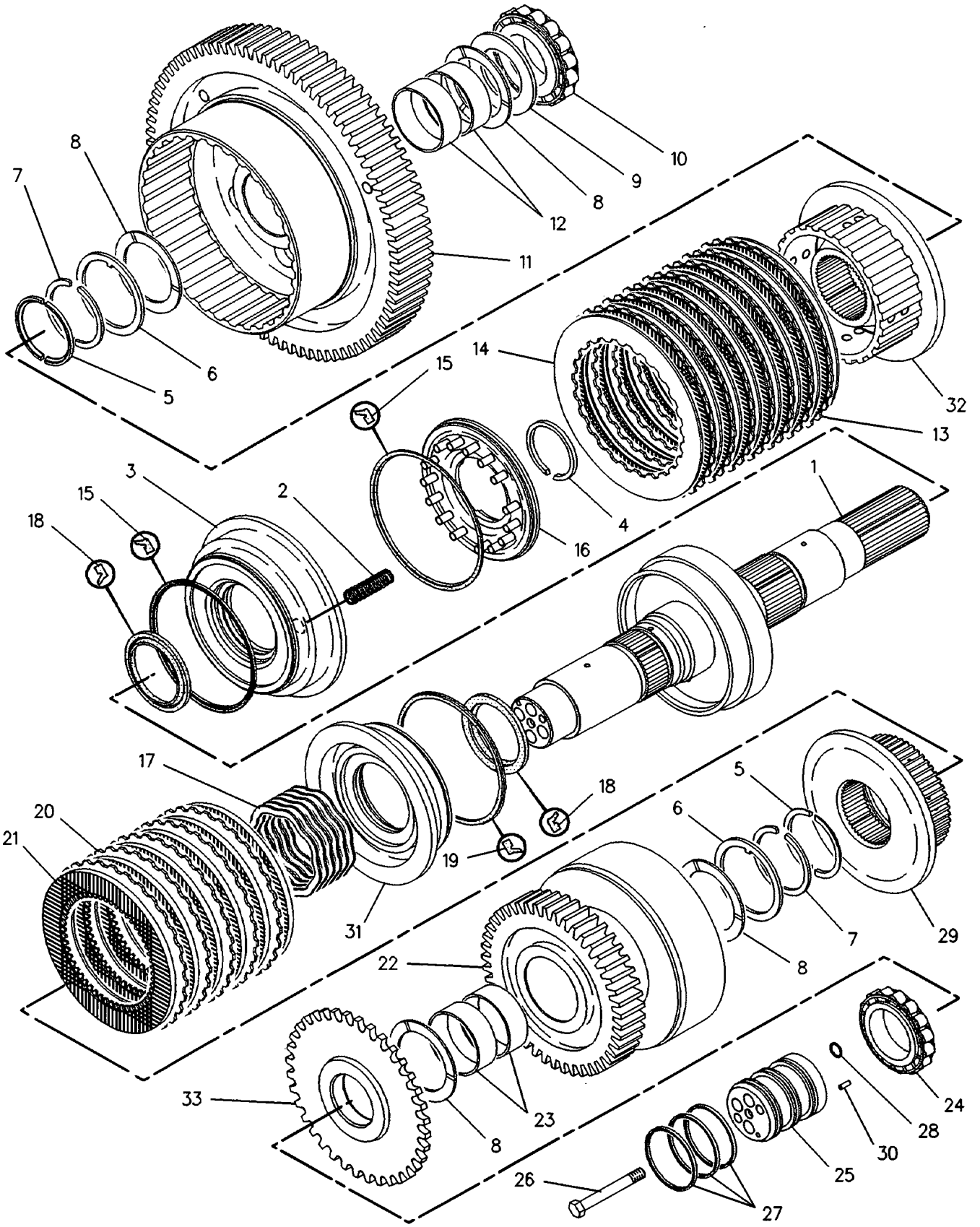

GRAPHIC #1 g00108549

8E-9316 CLUTCH GP-TRANSMISSION *(contd.)* i00131365

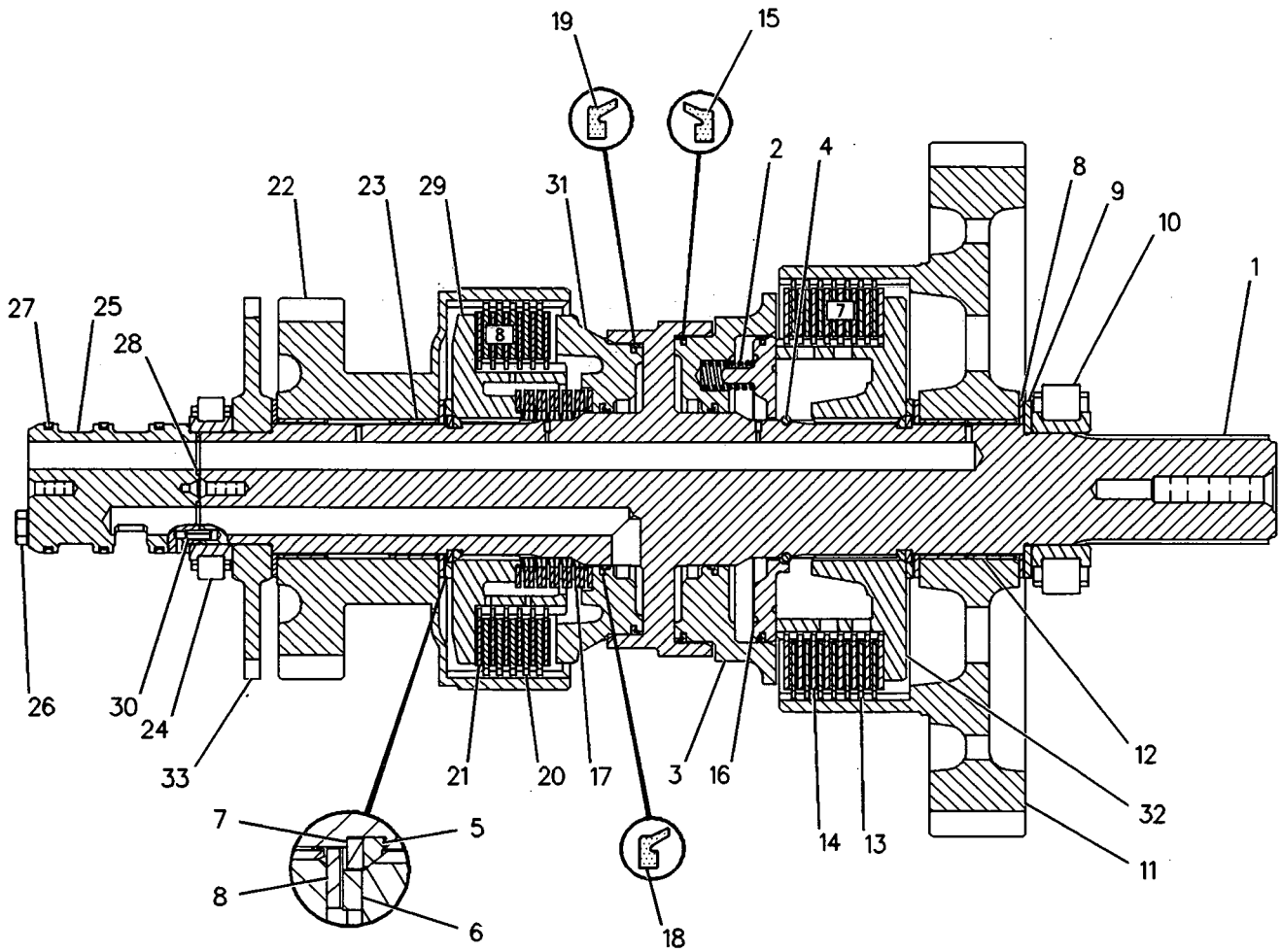

GRAPHIC #2 **<END>** g00108658

159-9228 CLUTCH GP-TRANSMISSION–FORWARD

S/N: BJN1-UP

PART OF 160-2196 TRANSMISSION AR

SMCS-3063, 3155, 3170 i02204737

NOTE	REF NO	GRAPHIC REF	PART NUMBER	QTY	PART NAME 1 2 3 4 5 6 (PRODUCT LEVEL)	SEE PAGE
	1	1	171-7091	1	SHAFT AS	
		1	1P-0604	1	PLUG-CUP	
	2	1	159-0308	2	PISTON	
	3	1	159-9258	2	VALVE AS	
	4	1	9U-8815	2	SPRING	
	5	1	161-6713	2	PLATE-LOCK	
	6	1	6Y-1115	4	RING-HALF	
	7	1	8E-8319	4	DISC-THRUST	
	8	1	5H-8985	1	PIN-SPRING	
	9	1	4M-6107	1	BEARING-INNER	
	10	1	9W-2029	1	RACE-THRUST BEARING	
	11	1	8E-1263	2	BEARING-ROLLER	
	12	1	132-9625	1	GEAR AS (50-TEETH)	
	13	1	171-7093	2	HUB AS	
	14	1	6I-8911	5	DISC-FRICTION	
	15	1	9U-9995	6	PLATE-CLUTCH	
	16	1	8E-5742	2	RING-SEAL	
	17	1	9W-9371	2	RING-SEAL	
	18	1	131-3919	1	BEARING-ROLLER	
	19	1	7G-4822	3	RING-SEAL	
M	20	1	6V-1819	2	BOLT (M10X1.5X100-MM)	
	21	1	6Y-1119	1	CARRIER-SEAL	
	22	1	8F-3469	4	SEAL-O-RING	
	23	1	7T-4897	2	DISC-THRUST	
	24	1	6Y-1116	1	GEAR AS (43-TEETH)	
	25	1	110-7723	6	PLATE-CLUTCH	
	26	1	6I-8912	6	DISC-FRICTION	
	27	1	108-5751	2	DISC-FRICTION	
	28	1	159-0927	1	DISC-FRICTION	
	29	1	9W-9905	4	RING-LOCK	
M	30	1	5C-7423	4	SCREW (M6X1X16-MM)	

M-METRIC PART

159-9228 CLUTCH GP-TRANSMISSION *(contd.)* i02204737

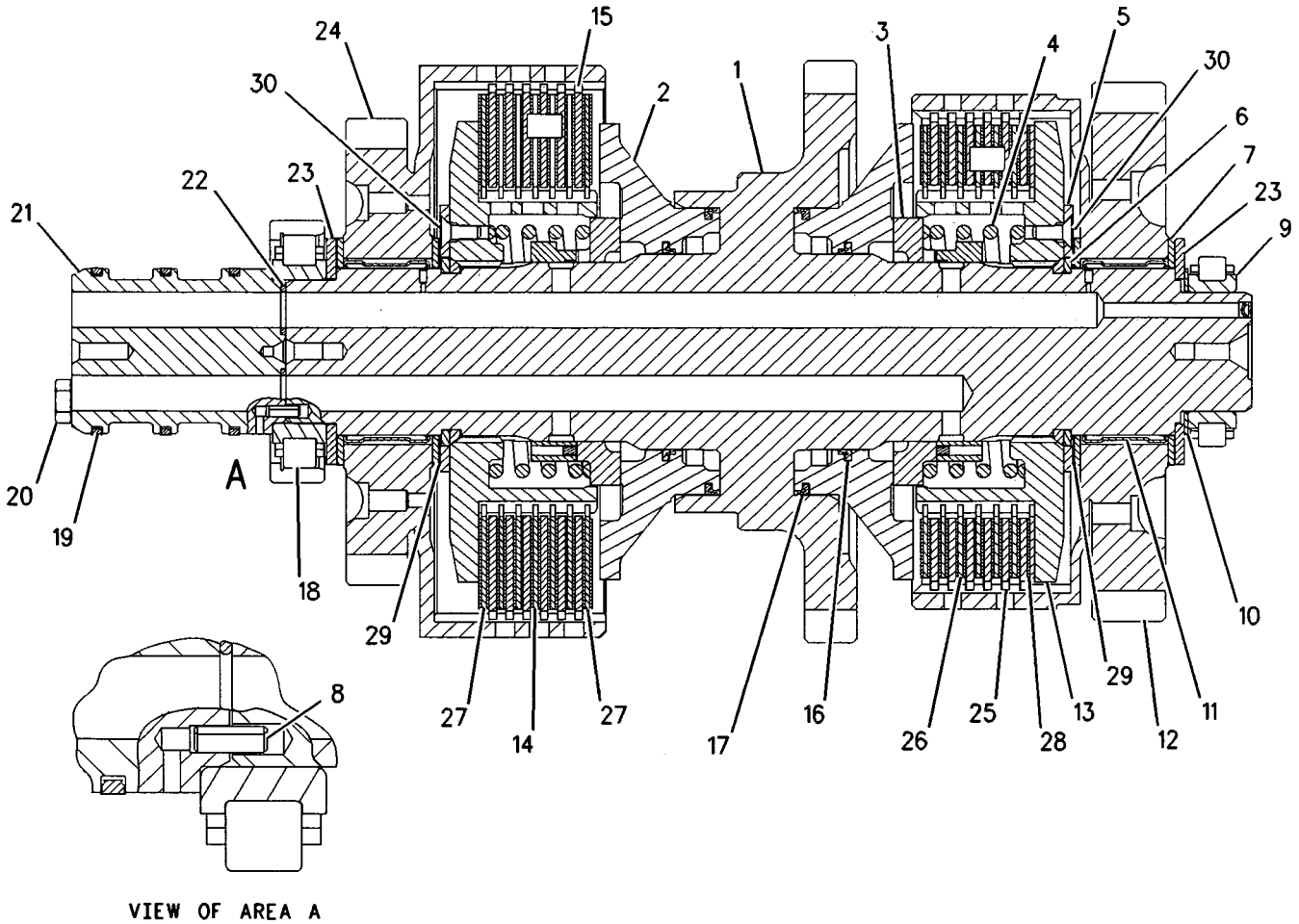

VIEW OF AREA A

GRAPHIC #1 **<END>** g00574942

159-9229 CLUTCH GP-TRANSMISSION–REVERSE & 2ND

S/N: BJN1-UP

PART OF 160-2196 TRANSMISSION AR

SMCS-3063, 3155, 3170 i02204738

NOTE	REF NO	GRAPHIC REF	PART NUMBER	QTY	PART NAME 1 2 3 4 5 6 (PRODUCT LEVEL)	SEE PAGE
	1	1	171-7095	1	SHAFT AS	
		1	1P-0604	1	PLUG-CUP	
	2	1	159-0308	1	PISTON	
	3	1	159-9258	1	VALVE AS	
	4	1	9U-8815	1	SPRING	
	5	1	6Y-1114	1	LOCKWASHER	
	6	1	6Y-1115	4	RING-HALF	
	7	1	8E-8319	4	DISC-THRUST	
	8	1	7T-4897	1	DISC-THRUST	
	9	1	4M-6107	1	BEARING-INNER	
	10	1	6Y-3855	1	GEAR AS (46-TEETH)	
	11	1	9W-2029	1	RACE-THRUST BEARING	
	12	1	8E-1263	1	BEARING-ROLLER	
	13	1	171-7093	1	HUB AS	
	14	1	110-7723	9	PLATE-CLUTCH	
	15	1	6I-8912	10	DISC-FRICTION	
	16	1	5H-8985	1	PIN-SPRING	
	17	1	8E-5742	2	RING-SEAL	
	18	1	9W-9371	1	RING-SEAL	
	19	1	8E-5734	1	RING-SEAL EXTENSION	
	20	1	6Y-1888	1	PLATE-CLUTCH	
	21	1	6Y-0976	1	GEAR (29-TEETH)	
	22	1	6Y-2307	1	SPACER (61X82.55X43.88-MM THK)	
	23	1	131-3919	1	BEARING-ROLLER	
	24	1	6Y-1119	1	CARRIER-SEAL	
M	25	1	6V-1819	2	BOLT (M10X1.5X100-MM)	
	26	1	7G-4822	3	RING-SEAL	
	27	1	8F-3469	4	SEAL-O-RING	
	28	1	8E-1908	1	GEAR AS (44-TEETH)	
		1	6Y-1895	1	BEARING-SLEEVE	
	29	1	6Y-1891	1	HUB AS	
	30	1	6Y-1887	1	PISTON	
	31	1	102-5881	1	SPRING-WAVE	
	32	1	9W-9905	4	RING-LOCK	
	33	1	159-0927	1	DISC-FRICTION	
	34	1	161-6713	1	PLATE-LOCK	
M	35	1	5C-7423	2	SCREW (M6X1X16-MM)	

M-METRIC PART

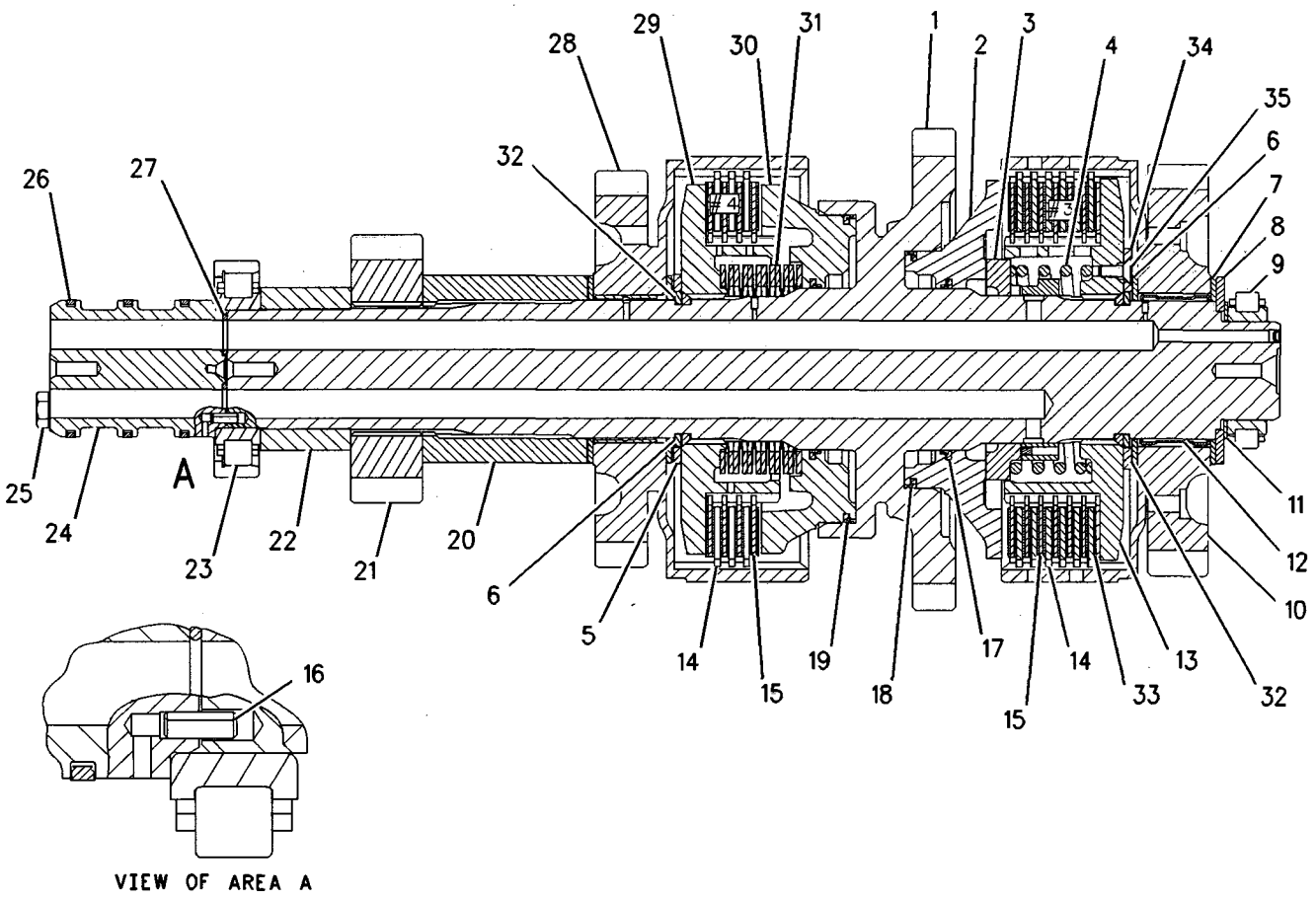

GRAPHIC #1 **<END>** g00574994

POWER TRAIN

159-5933 CONTROL GP-CLUTCH

S/N: CCA1-UP

PART OF 159-4615 GENERAL AR

SMCS-5157 **i02200300**

NOTE	REF NO	GRAPHIC REF	PART NUMBER	QTY	PART NAME 1 2 3 4 5 6 (PRODUCT LEVEL)	SEE PAGE
	1	1	**1B-2578**	1	NUT (3/8-16-THD)	
	2	1	**1F-4622**	2	BEARING AS-NEEDLE	
	3	1	**5P-9209**	2	BEARING AS-NEEDLE	
	4	1	**7V-0446**	2	CLIP	
	5	1	**9J-8783**	1	SHIM (0.508-MM THK)	
	6	1	**116-5710**	1	GROMMET	
	7	1	**149-2065**	1	SPRING	
	8	1	**161-7062**	1	HOUSING	
	9	1	**161-7063**	1	SHAFT	
	10	1	**162-8218**	1	GASKET	
	11	1	**162-8219**	1	COVER	
	12	1	**169-0921**	1	ROD END (INTERNAL THREAD)	
	13	1	**169-0922**	1	ROD	
	14	1	**172-4211**	1	SPACER (10.5X22X50.8-MM THK)	
	15	1	**180-4027**	1	CAM	
	16	1	**180-7147**	1	LEVER	
	17	1	**190-3043**	1	BRACKET AS	
	18	1	**206-3599**	1	LEVER	
	19	1	**207-4922**	1	PEDAL-CLUTCH	
CY	20	1	**214-4863**	1	SENSOR GP-POSITION (ROTARY) (CLUTCH)	253
	21	1	**129-3173**	1	BOLT-12 POINT HEAD (3/8-16X31.75-MM)	
	22	1	**130-5300**	1	CLIP	
	23	1	**1B-0676**	1	PIN	
	24	1	**1B-8704**	1	KEY-WOODRUFF	
	25	1	**3H-8538**	1	PIN	
	26	1	**3S-2713**	1	NUT-FULL (3/8-24-THD)	
	27	1	**4B-6060**	1	SETSCREW-SOCKET (1/4-20X0.375-IN)	
	28	1	**4J-8922**	1	ROD END	
	29	1	**5P-1075**	2	WASHER-HARD (10.2X22.5X3-MM THK)	
	30	1	**5S-7382**	2	BOLT (3/8-16X1.375-IN)	
C	31	1	**6V-0894**	1	SEAL-O-RING	
M	32	1	**6V-2313**	2	BOLT (M5X0.8X30-MM)	
	33	1	**8T-0328**	2	WASHER-HARD (5.5X10X1-MM THK)	
	34	1	**8T-4121**	5	WASHER-HARD (11X21X2.5-MM THK)	
M	35	1	**8T-4133**	1	NUT (M10X1.5-THD)	
M	36	1	**8T-4136**	3	BOLT (M10X1.5X25-MM)	
M	37	1	**8T-4182**	1	BOLT (M10X1.5X45-MM)	
M	38	1	**8T-4195**	2	BOLT (M10X1.5X30-MM)	
	39	1	**8T-4226**	1	WASHER-PLATED (10.5X45X3-MM THK)	
	40	1	**8T-4896**	1	WASHER-HARD (10.2X18.5X2.5-MM THK)	
	41	1	**8T-5390**	1	BOLT (3/8-16X3.5-IN)	

C-CHANGE FROM PREVIOUS TYPE
M-METRIC PART
Y-SEPARATE ILLUSTRATION

159-5933 CONTROL GP-CLUTCH *(contd.)* i02200300

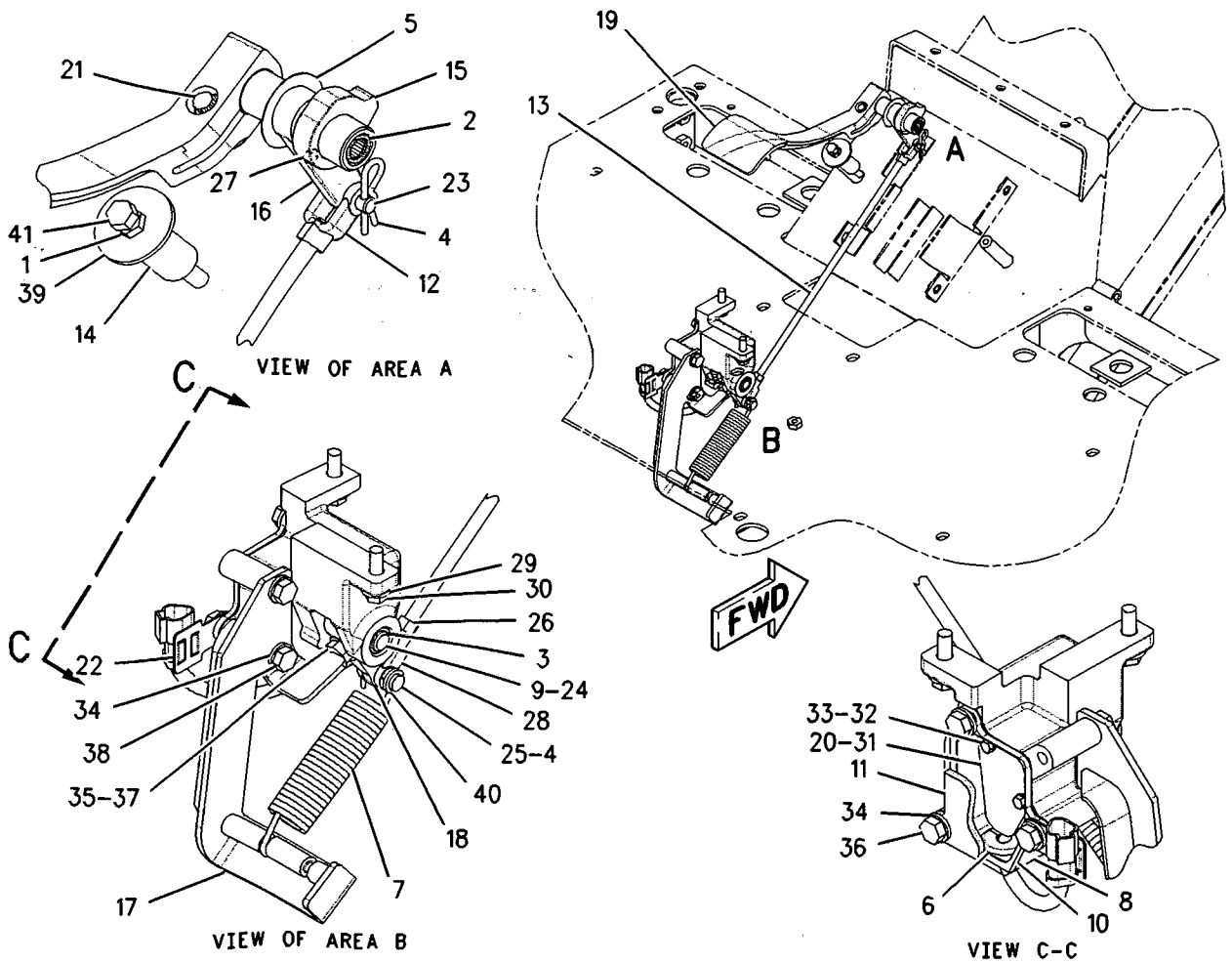

GRAPHIC #1 **<END>** g00921402

160-7756 CONTROL GP-DIFFERENTIAL LOCK

S/N: CCA1-UP

PART OF 159-4615 GENERAL AR

SMCS-3264 **i01811077**

NOTE	REF NO	GRAPHIC REF	PART NUMBER	QTY	PART NAME 1 2 3 4 5 6 (PRODUCT LEVEL)	SEE PAGE
	1	1	**6D-0580**	1	TUBE	
	2	1	**6V-0852**	1	CAP-DUST	
I	3	1	**7T-1159**	1	HOSE AS	
	4	1	*164-5567*	1	FITTING AS	
		1	**6V-3965**	1	FITTING AS (QUICK DISCONNECT)	
		1	**3J-1907**	1	SEAL-O-RING	
	5	1	**165-9928**	1	PLATE	
Y	6	1	**174-3705**	1	VALVE & MTG GP-DIFF LOCK	395
I	7	1	**178-9952**	1	HOSE AS	
	8	1	*180-9933*	1	ADAPTER GP	
		1	**135-9941**	1	ADAPTER-90 DEGREE	
		1	**3J-7354**	1	SEAL-O-RING	
	9	1	**130-5300**	1	CLIP	
	10	1	*148-8316*	1	CONNECTOR AS	
		1	**6V-8647**	1	CONNECTOR	
		1	**3J-7354**	1	SEAL-O-RING	
		1	**4J-5477**	1	SEAL-O-RING	
	11	1	*148-8368*	1	ELBOW AS	
		1	**6V-8627**	1	ELBOW	
		1	**3J-1907**	1	SEAL-O-RING	
		1	**4J-5477**	1	SEAL-O-RING	
	12	1	*148-8369*	1	ELBOW AS	
		1	**6V-8628**	1	ELBOW	
		1	**3J-7354**	1	SEAL-O-RING	
		1	**4J-5477**	1	SEAL-O-RING	
	13	1	**4J-2506**	2	SEAL-O-RING	
	14	1	**4P-8134**	1	CLIP	
	15	1	**8M-4438**	2	SEAL-O-RING	
	16	1	**8T-2501**	2	BOLT (3/8-16X2-IN)	
	17	1	**8T-4896**	2	WASHER-HARD (10.2X18.5X2.5-MM THK)	
	18	1	**9X-6772**	1	STRAP-CABLE	

I-REFER TO HYDRAULIC INFORMATION SYSTEM
Y-SEPARATE ILLUSTRATION

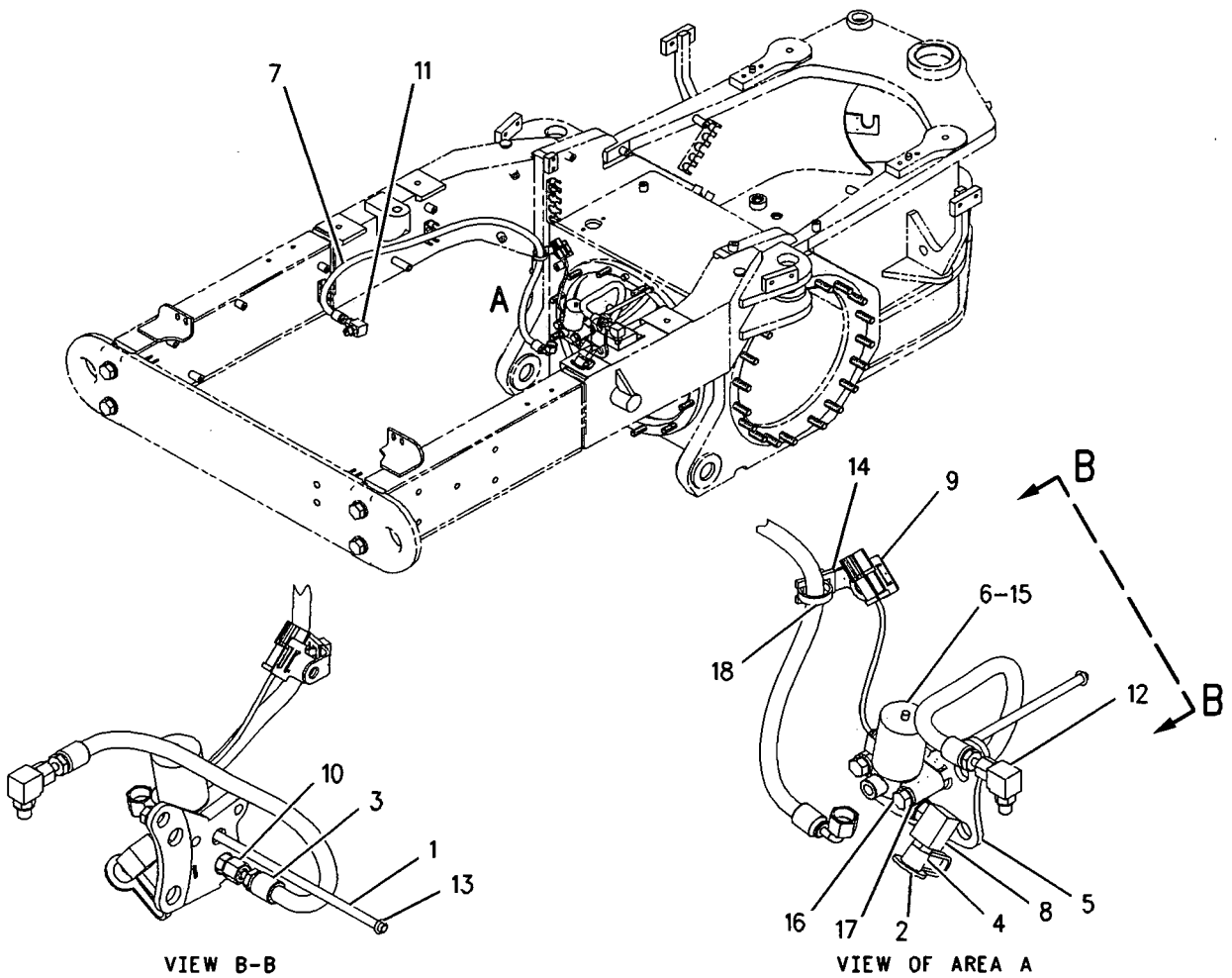

GRAPHIC #1 **<END>** g00803217

POWER TRAIN

167-9002 CONTROL GP-TRANSMISSION

S/N: CCA1-UP

PART OF 159-4615 GENERAL AR

SMCS-3065 **i02204739**

NOTE	REF NO	GRAPHIC REF	PART NUMBER	QTY	PART NAME 1 2 3 4 5 6 (PRODUCT LEVEL)	SEE PAGE
	1	1	**7M-0706**	1	KNOB (TRANSMISSION CONTROL)	
	2	1	**8X-4879**	2	BRACKET AS	
M		1	**6V-9632**	1	NUT-WELD (M6X1-THD)	
	3	1	**8X-8096**	1	FILM (COVER BLACK)	
	4	1	**143-9290**	1	PLATE AS	
M		1	**6V-9632**	2	NUT-WELD (M6X1-THD)	
	5	1	**169-2621**	1	GATE AS	
	6	1	**169-3380**	1	PLATE AS	
	7	1	**180-3531**	1	CONTROL GP-TRANSMISSION	
	8	1	**171-2122**	1	COVER	
	9	1	**172-7105**	1	FILM-PANEL (TRANSMISSION INDICATOR PANEL)	
	10	1	**172-7106**	1	FILM-PANEL (SPEED SELECT)	
	11	1	**185-2274**	1	FILM-INFORMATION (ENGINE, HIGH IDLE, HOLD)	
	12	1	**185-2287**	1	FILM-INFORMATION (ENGINE, LOW IDLE, HOLD)	
	13	1	**187-0491**	1	COVER	
M	14	1	**9X-2041**	10	SCREW-TRUSS HEAD	
M	15	1	**9X-2042**	2	SCREW-TRUSS HEAD (M6X1X12-MM)	
M	16	1	**9X-2043**	10	SCREW-TRUSS HEAD (M6X1X14-MM)	
M	17	1	**9X-2045**	4	SCREW-TRUSS HEAD (6X1X20-MM)	

M-METRIC PART

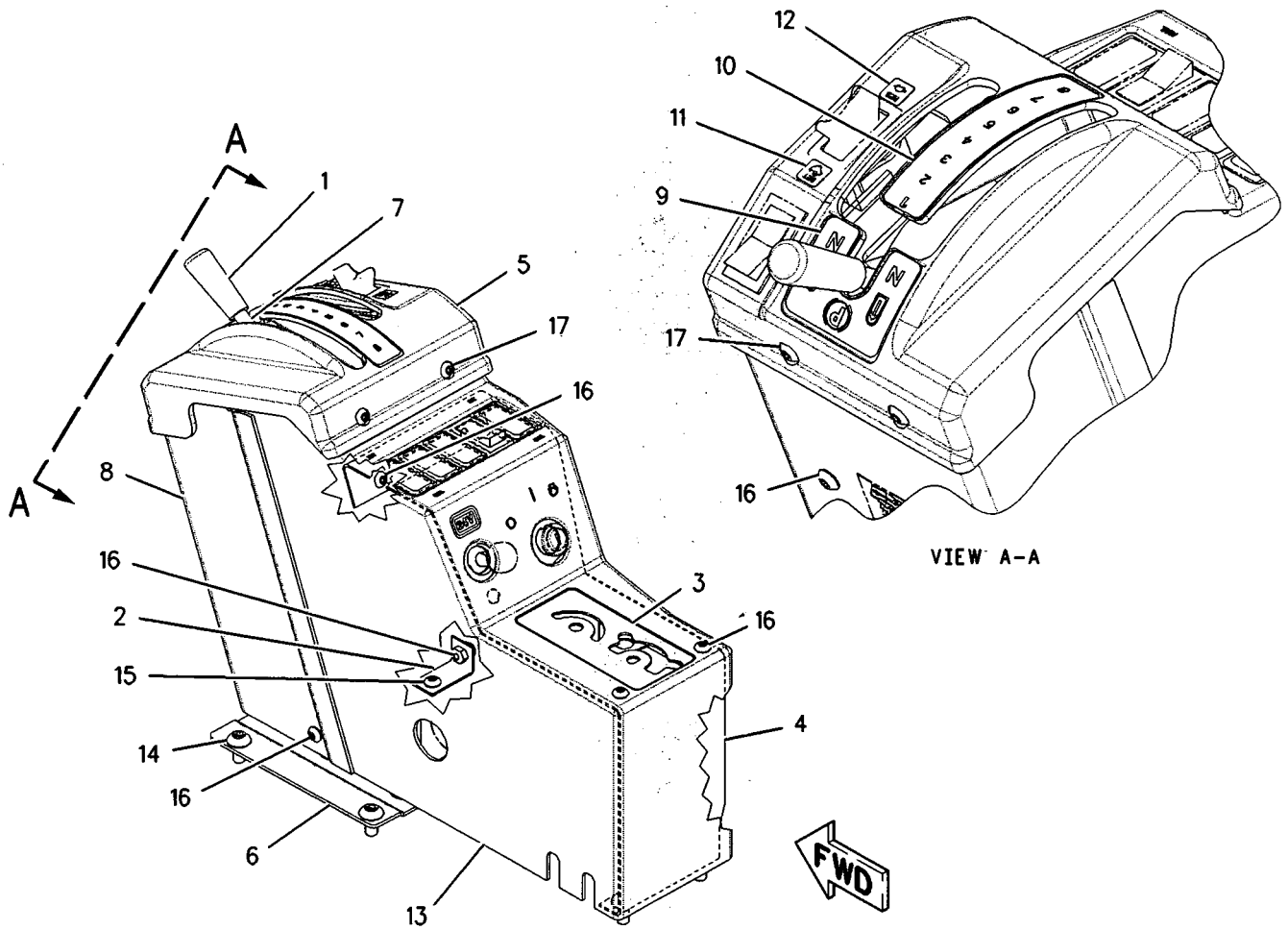

GRAPHIC #1 **<END>** g00937652

179-6064 CONTROL GP-TRANSMISSION HYD

S/N: BJN1-UP

PART OF 160-2196 TRANSMISSION AR

SMCS-3073, 3167 i02204746

NOTE	REF NO	GRAPHIC REF	PART NUMBER	QTY	PART NAME 1 2 3 4 5 6 (PRODUCT LEVEL)	SEE PAGE
Y	1	1	**179-6063**	1	VALVE GP-TRANSMISSION CONTROL	404
M	2	1	**6V-3918**	5	BOLT (M8X1.25X50-MM)	
	3	1	**9P-9150**	66	WASHER (8.25X18X0.84-MM THK)	
	4	1	**1T-0738**	31	WASHER (8.4X19X1.83-MM THK)	
M	5	1	**8C-4984**	14	BOLT (M8X1.25X150-MM)	
M	6	1	**3E-8005**	14	BOLT (M8X1.25X160-MM)	
	7	1	**4S-5879**	1	SEAL-O-RING	
	8	1	**180-9322**	1	HARNESS AS-TRANSMISSION	
		1	**102-8801**	1	KIT-RECEPTACLE (12-PIN)	
					(INCLUDES RECEPTACLE AS & WEDGE)	
		1	**155-2270**	8	KIT-CONNECTING PLUG (2-PIN)	
					(EACH INCLUDES PLUG AS & WEDGE)	
M	9	1	**8T-0639**	2	BOLT (M6X1X12-MM)	
M	10	1	**6V-5217**	3	BOLT (M8X1.25X20-MM)	
	11	1	**198-7657**	1	BLOCK	

M-METRIC PART
Y-SEPARATE ILLUSTRATION

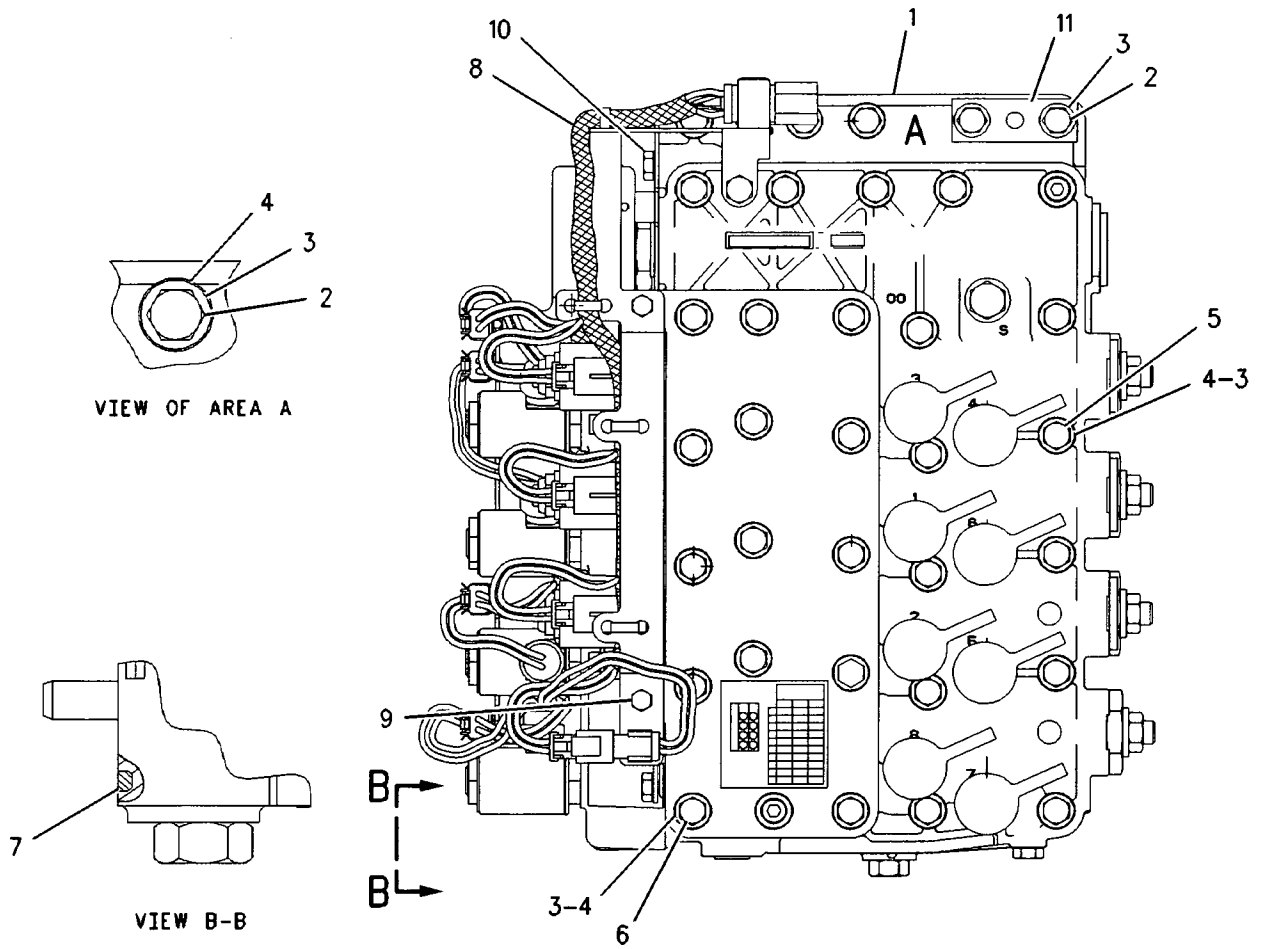

GRAPHIC #1 **<END>** g00864228

163-9322 COOLER GP-TRANSMISSION OIL

S/N: 3PD1-UP

PART OF 160-5101 ENGINE AR

SMCS-1375 **i01855419**

NOTE	REF NO	GRAPHIC REF	PART NUMBER	QTY	PART NAME 1 2 3 4 5 6 (PRODUCT LEVEL)	SEE PAGE
	1	1	**8T-4984**	2	CLAMP-HOSE	
	2	1	**100-8525**	1	GASKET	
R	3	1	**115-4517**	1	CORE AS-ENGINE OIL COOLER	
	4	1	**122-0763**	1	ELBOW	
	5	1	**124-5043**	1	COUPLING	
M	6	1	**131-0353**	2	STUD	
	7	1	**131-6645**	1	HOSE	
	8	1	**155-7970**	1	BONNET-OIL COOLER	
	9	1	**174-1637**	1	ELBOW	
	10	1	**175-7453**	1	CORE AS	
	11	1	**209-1743**	1	BRACKET	
	12	1	**209-7389**	1	BONNET	
	13	1	**061-7540**	2	SEAL-O-RING	
	14	1	**117-3036**	2	SEAL-O-RING	
	15	1	**129-2861**	2	GASKET	
	16	1	**2N-0475**	2	SEAL-O-RING	
	17	1	**3E-4352**	4	WASHER-HARD (8.8X20.5X2.5-MM THK)	
	18	1	**5P-4116**	4	WASHER-HARD (8.8X20.5X2-MM THK)	
M	19	1	**5P-7970**	4	NUT (M8X1.25-THD)	
M	20	1	**5P-8245**	2	WASHER-HARD (13.5X25.5X3-MM THK)	
M	21	1	**6V-2317**	10	BOLT (M8X1.25X30-MM)	
M	22	1	**6V-3918**	2	BOLT (M8X1.25X50-MM)	
M	23	1	**6V-5218**	6	BOLT (M8X1.25X35-MM)	
	24	1	**6V-9027**	1	SEAL-O-RING	
	25	1	**7X-7731**	1	PLUG-PIPE	
M	26	1	**6A-5591**	2	BOLT (M12X1.75X25-MM)	
	27	1	**8T-6761**	1	PLUG-PIPE	
	28	1	**8T-6767**	1	PLUG-PIPE	
	29	1	**9M-1974**	16	WASHER-HARD (8.8X16X2-MM THK)	
	30	1	**9S-4182**	2	PLUG	

M-METRIC PART
R-REMFG PART MAY BE AVAILABLE

163-9322 COOLER GP-TRANSMISSION OIL *(contd.)* i01855419

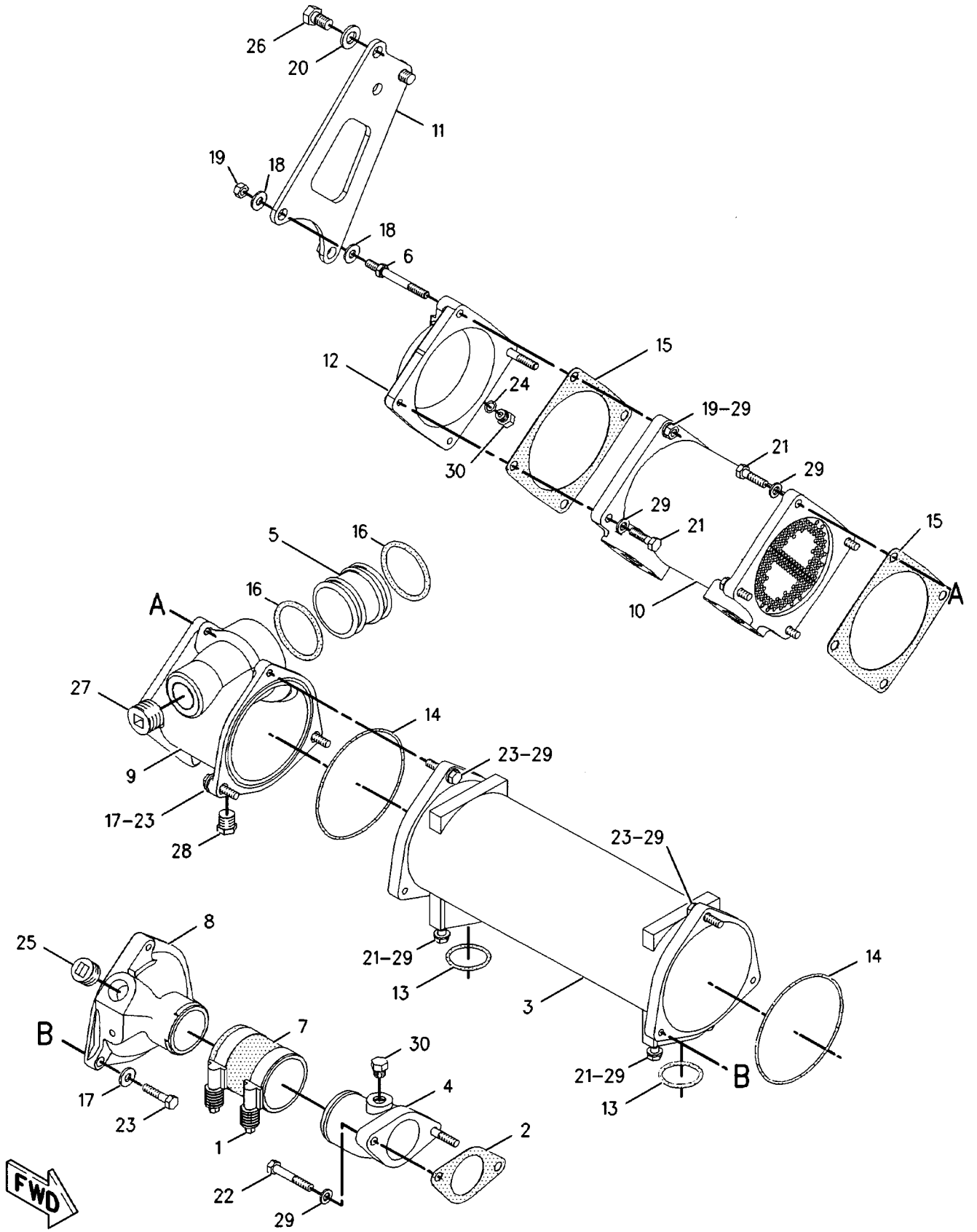

GRAPHIC #1 **<END>** g00834518

8E-3366 COUPLING GP-TORSIONAL

S/N: CCA1-UP

DRIVE

PART OF 159-4615 GENERAL AR

SMCS-3252, 3279 i00131351

NOTE	REF NO	GRAPHIC REF	PART NUMBER	QTY	PART NAME 1 2 3 4 5 6 (PRODUCT LEVEL)	SEE PAGE
	1	1	8E-1368	1	COUPLING AS	
	2	1	0S-1594	12	BOLT (3/8-16X1IN)	

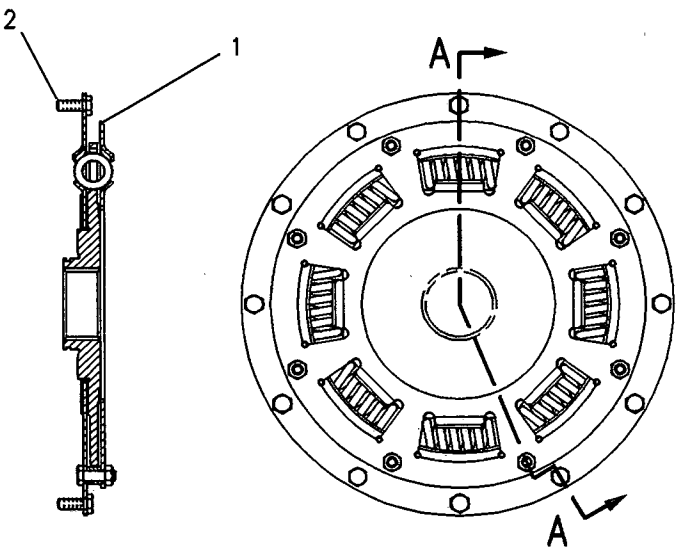

SECTION A-A

GRAPHIC #1 <END> g00108540

8W-5430 DIFFERENTIAL & BEVEL GEAR GP

S/N: CCA1-UP

PART OF 159-4615 GENERAL AR

SMCS-3256, 3258 i02204763

NOTE	REF NO	GRAPHIC REF	PART NUMBER	QTY	PART NAME 1 2 3 4 5 6 (PRODUCT LEVEL)	SEE PAGE
	1	1	5D-9844	1	BOLT-LOCKING (3/8-16X2-IN)	
	2	1	5P-8247	20	WASHER-HARD (17X32X3.5-MM THK)	
	3	1	034-3557	5	BOLT-LOCKING (3/8-16X1.125-IN)	
	4	1	5M-2894	8	WASHER-HARD (10.2X18.5X2.5-MM THK)	
	5	1	2K-5109	1	GASKET	
	6	1	8W-5279	1	RETAINER	
	7	1	123-4003	1	SEAL-LIP TYPE	
	8	1	8T-8883	1	SEAL-O-RING	
	9	1	5P-5813	1	LOCKNUT-BEARING	
	10	1	9B-0143	1	LOCK-NUT	
	11	1	7D-8347	1	WASHER-TAB	
	12	1	8X-2534	1	HOUSING	
	13	1	5L-2031	1	CUP-BEARING	
	14	1	5L-2030	1	CONE-BEARING	
	15	1	9X-8880	8	BOLT (5/8-11X2-IN)	
	16	1	2K-5106	1	SHIM (2.54-MM THK)	
	17	1	4K-0367	12	NUT-FULL (5/8-11-THD)	
	18	1	4H-6520	1	SEAL-O-RING	
	19	1	1J-4757	1	CONE-BEARING	
	20	1	1J-2860	1	CUP-BEARING	
	21	1	8D-8197	1	CAGE	
	22	1	6G-4703		NUT (5 1/4-12-THD)	
	23	1	126-2729	1	CONE-SPECIAL TAPERED	
	24	1	5P-2503	1	CUP	
	25	1	6F-0698	1	DOWEL	
	26	1	8D-9784	2	LOCK	
	27	1	030-8535	2	BOLT-LOCKING (3/8-16X0.875-IN)	
C	28	1	154-2687	1	CARRIER AS	
	29	1	0S-1756	4	BOLT (3/4-10X4.25-IN)	
	30	1	5P-8248	4	WASHER-HARD (20X36.5X3.5-MM THK)	
	31	1	4D-5292	1	RING-RETAINING	
	32	1	1P-2662	1	CONE-BEARING	
	33	1	1P-2636	1	CUP-BEARING	
	34	1	6G-4701	1	NUT (4 1/4-12-THD)	
	35	1	8X-2308	1	CAGE AS	
		1	2D-6642	1	BALL	
	36	1	2H-5001		SEAL-O-RING	
	37	1	8W-5111	1	SLEEVE	
	38	1	169-1548	1	SHAFT-PINION (15-TEETH)	
	40	1	9G-2991	2	RING-SEAL	
CY	42	1	154-2688	1	DIFFERENTIAL GP	373

C-CHANGE FROM PREVIOUS TYPE
Y-SEPARATE ILLUSTRATION

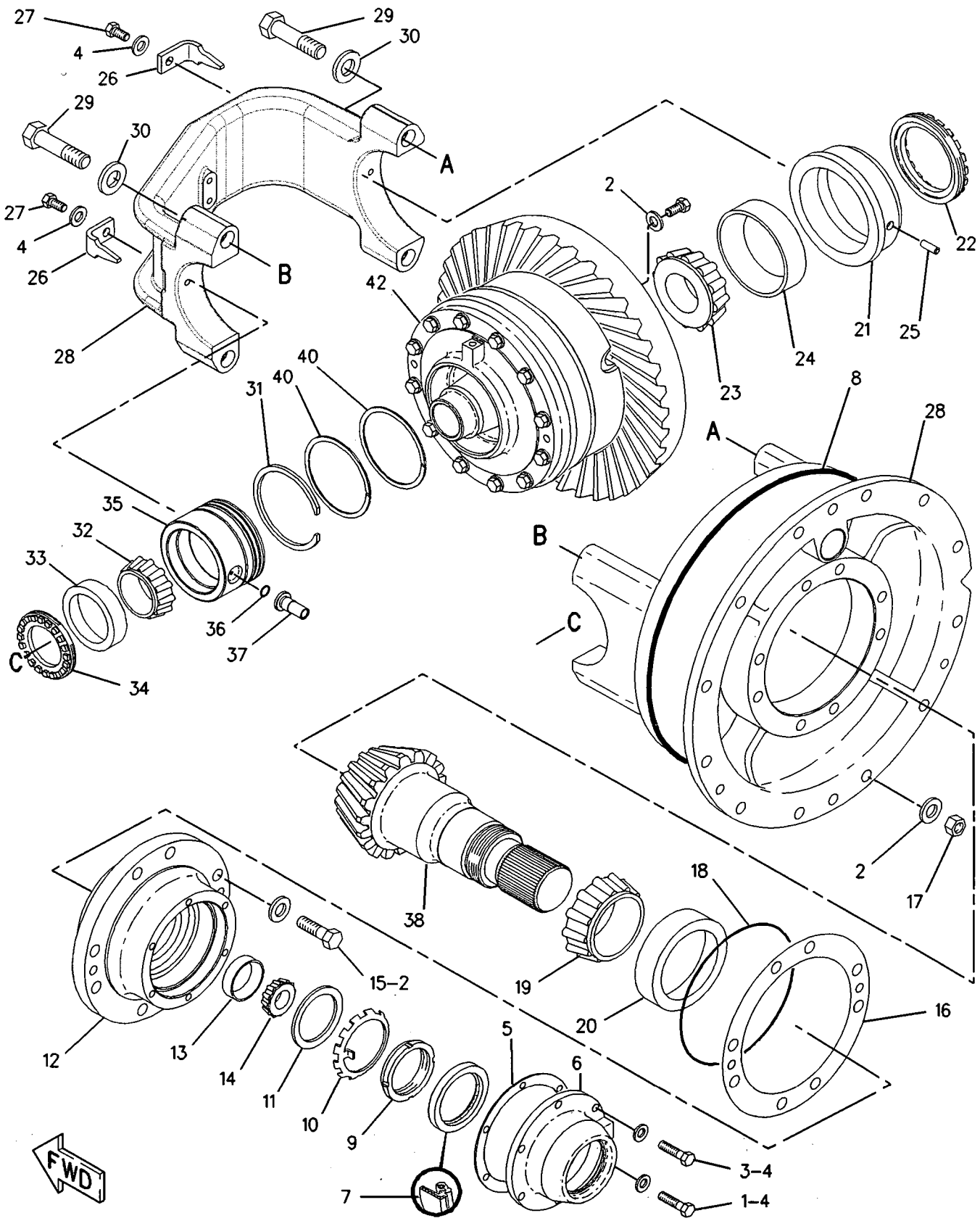

GRAPHIC #1 **<END>** g00635014

154-2688 DIFFERENTIAL GP

S/N: CCA1-UP

PART OF 8W-5430 DIFFERENTIAL & BEVEL GEAR GP

SMCS-3258 **i02204766**

NOTE	REF NO	GRAPHIC REF	PART NUMBER	QTY	PART NAME 1 2 3 4 5 6 (PRODUCT LEVEL)	SEE PAGE
	1	1	**5T-9628**	1	PISTON	
	2	1	**7D-8225**	1	SEAL-RING	
	3	1	**7D-8226**	1	SEAL-RING	
	4	1	**6Y-7954**	7	DISC-FRICTION	
	5	1	**169-1549**	1	GEAR-BEVEL (54-TEETH)	
	6	1	**8X-2528**	1	HOUSING AS	
	6A	1	**2D-6642**	1	BALL	
	6C	1	**3D-6509**	2	DOWEL	
	7	1	**8X-4641**	4	SPACER-THRUST	
	8	1	**155-2283**	4	PINION AS	
					(EACH INCLUDES)	
	8A	1	**155-2285**	1	BEARING-SLEEVE	
	9	1	**154-2692**	1	HOUSING AS	
	9A	1	**3D-6509**	2	DOWEL	
	10	1	**8D-4064**	2	WASHER-THRUST	
	11	1	**109-4582**	1	GEAR-BEVEL (24-TEETH)	
	12	1	**109-4583**	1	GEAR-BEVEL (24-TEETH)	
	13	1	**8D-4282**	1	DISC	
	14	1	**7D-8185**	8	DISC	
	15	1	**2B-0947**	12	BOLT (1/2-13X2.25-IN)	
M	16	1	**5P-8245**	12	WASHER-HARD (13.5X25.5X3-MM THK)	
	17	1	**5P-8247**	24	WASHER-HARD (17X32X3.5-MM THK)	
	18	1	**5B-0841**	24	BOLT (5/8-18X1.75-IN)	
	19	1	**154-2689**	1	SPIDER	

M-METRIC PART

154-2688 DIFFERENTIAL GP *(contd.)* i02204766

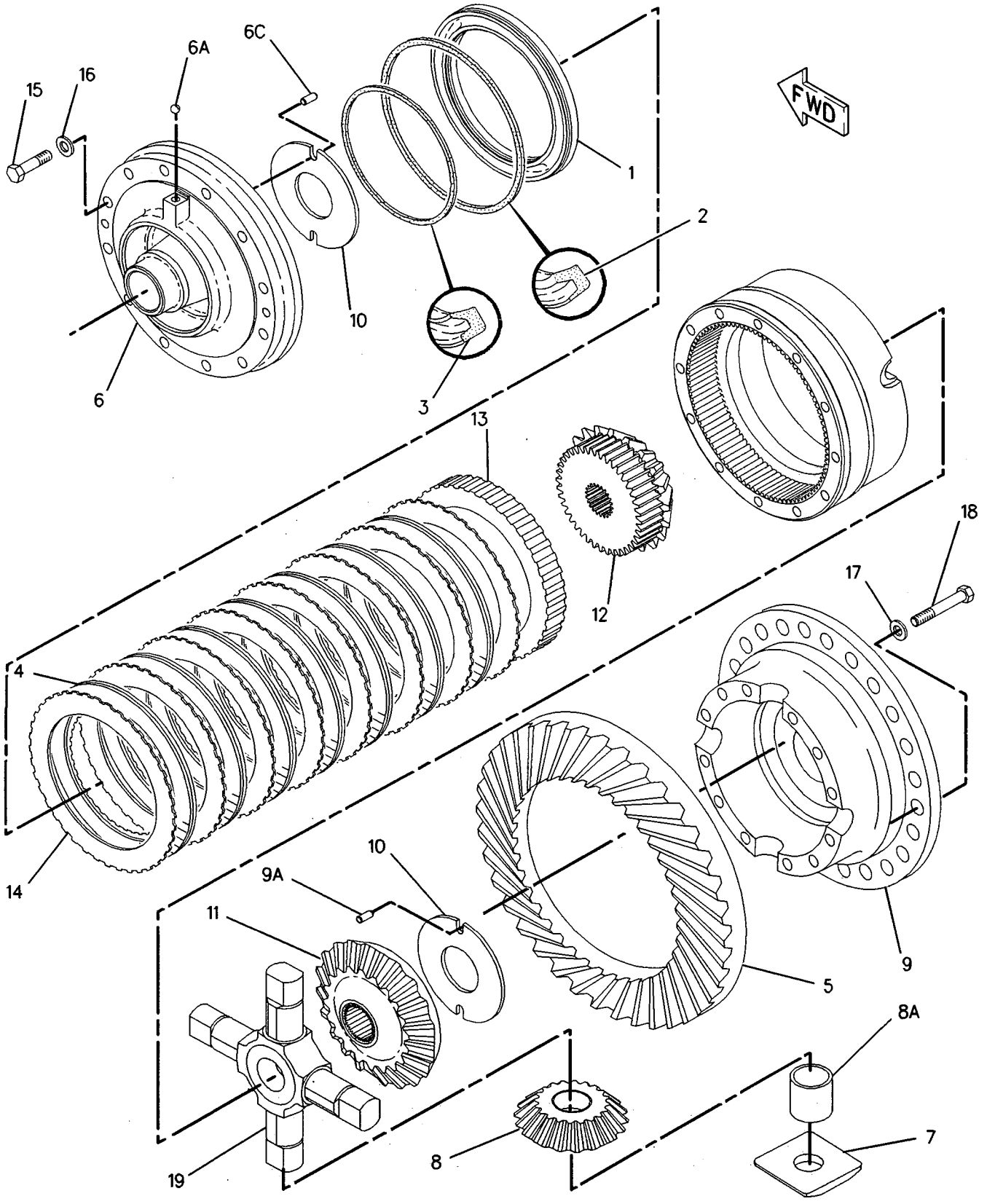

GRAPHIC #1 **<END>** g00597332

POWER TRAIN

159-6173 FILLER GP-POWER TRAIN OIL

S/N: CCA1-UP

PART OF 159-4615 GENERAL AR

SMCS-3005, 3081 **i01879067**

NOTE	REF NO	GRAPHIC REF	PART NUMBER	QTY	PART NAME 1 2 3 4 5 6 (PRODUCT LEVEL)	SEE PAGE
	1	1	**8X-4271**	1	GAUGE AS-OIL LEVEL (DIPSTICK) (TRANSMISSION)	
	2	1	**9G-5127**	1	BREATHER AS (POWER TRAIN OIL FILLER)	
	3	1	**200-5924**	1	TUBE AS	
	4	1	**7J-8611**	1	ELBOW	
	5	1	**8B-1615**	1	GASKET	
	6	1	**8T-4121**	2	WASHER-HARD (11X21X2.5-MM THK)	
M	7	1	**9X-2125**	2	BOLT-LOCKING (M10X1.5X25-MM)	

M-METRIC PART

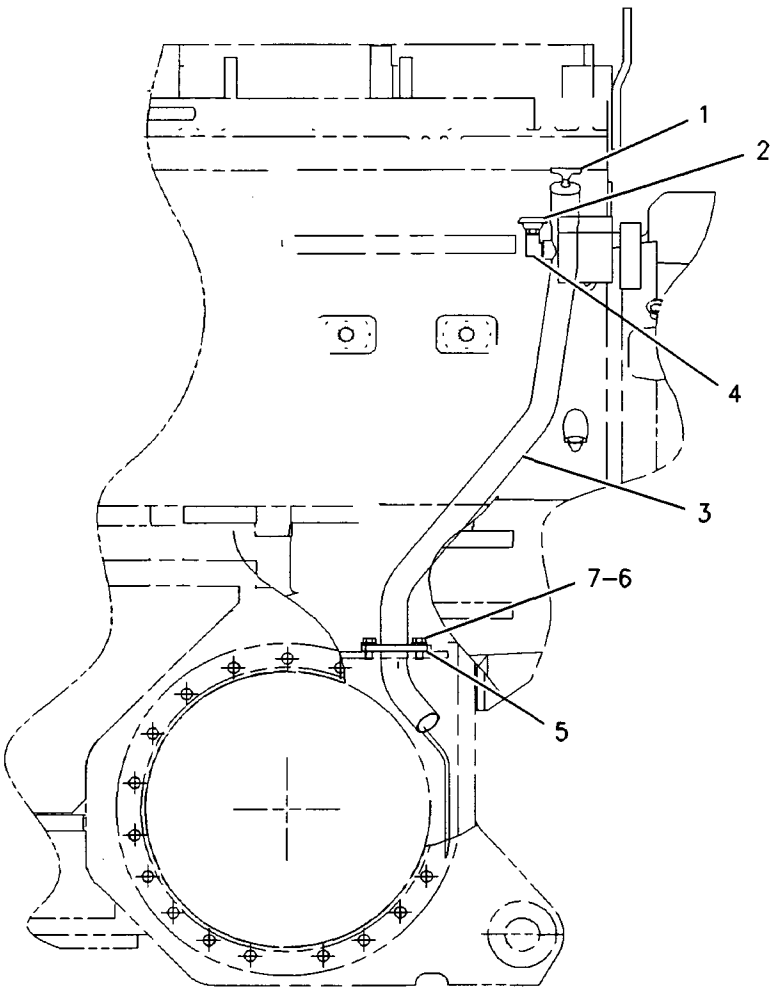

GRAPHIC #1 **<END>** g00807177

169-3651 FILTER & MTG GP-OIL

S/N: CCA361-UP

PART OF 159-4615 GENERAL AR, 171-6700 SUPPORT AR-REAR CHASSIS

ALSO AN ATTACHMENT

SMCS-3067, 5068 **i02202907**

NOTE	REF NO	GRAPHIC REF	PART NUMBER	QTY	PART NAME 1 2 3 4 5 6 (PRODUCT LEVEL)	SEE PAGE
	1	1	**5P-4961**	1	CLAMP-HOSE	
	2	1	**8C-3446**	1	VALVE AS-FLUID SAMPLING (TRANSMISSION OIL)	
		1	**3J-7354**	1	SEAL-O-RING	
Y	3	1	**207-3819**	1	FILTER GP-OIL (TRANSMISSION)	378
	4	1	**242-0407**	1	VALVE-DRAIN (TRANSMISSION OIL)	
	5	1	*148-8339*	1	CONNECTOR GP	
		1	**6V-8716**	1	CONNECTOR	
		1	**6V-9746**	1	SEAL-O-RING	
		1	**7M-8485**	1	SEAL-O-RING	
	6	1	*148-8357*	1	ELBOW AS	
		1	**6V-9008**	1	ELBOW	
		1	**5K-9090**	1	SEAL-O-RING	
		1	**7M-8485**	1	SEAL-O-RING	
	7	1	*148-8392*	1	ELBOW AS	
		1	**6V-9853**	1	ELBOW	
		1	**6V-9746**	1	SEAL-O-RING	
	8	1	**3K-0360**	1	SEAL-O-RING	
	9	1	**5M-3062**	3	BOLT (3/8-16X0.75-IN)	
	10	1	**8C-3447**	1	CAP-DUST	
	11	1	**8T-4896**	3	WASHER-HARD (10.2X18.5X2.5-MM THK)	
	12	1	**8X-5489**	1	SLEEVE	
	13	1	**9S-8005**	1	PLUG	
E	14	1	**9X-2023**		HOSE (57-CM)	

E-ORDER BY THE CENTIMETER
Y-SEPARATE ILLUSTRATION

169-3651 **FILTER & MTG GP-OIL** *(contd.)* i02202907

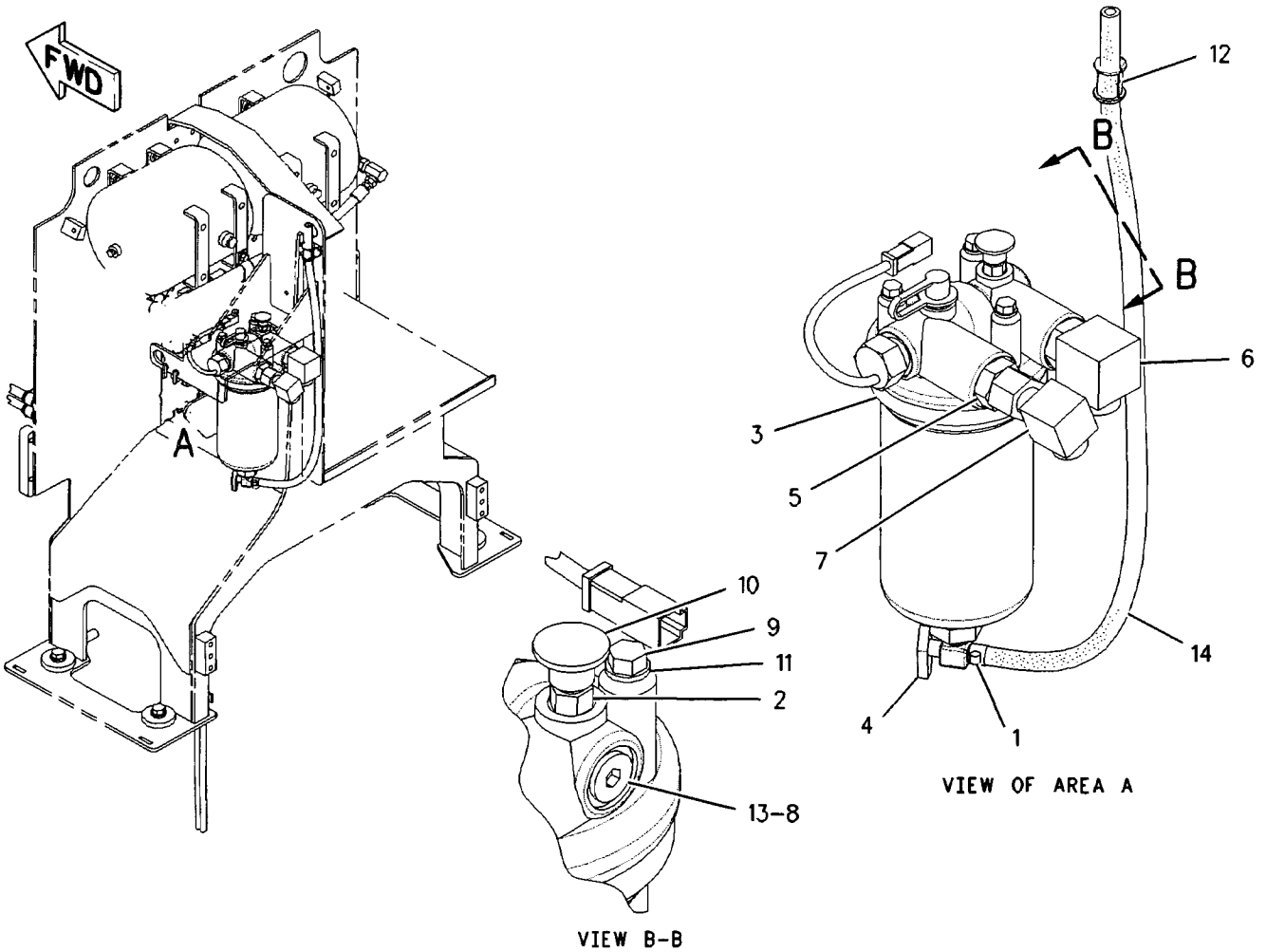

VIEW OF AREA A

VIEW B-B

GRAPHIC #1 **<END>** g00860464

207-3819 FILTER GP-OIL–TRANSMISSION

S/N: CCA1-UP
PART OF 169-3651 FILTER & MTG GP-OIL
ALSO AN ATTACHMENT

SMCS-3004, 3067 i02204772

NOTE	REF NO	GRAPHIC REF	PART NUMBER	QTY	PART NAME 1 2 3 4 5 6 (PRODUCT LEVEL)	SEE PAGE
	1	1	9T-8326	1	BASE	
Y	2	1	164-7577	1	SWITCH GP-BYPASS	273
	3	1	6V-0852	1	CAP-DUST	
	4	1	6V-3965	1	FITTING AS (QUICK DISCONNECT)	
	5	1	3J-1907	1	SEAL-O-RING	
	6	1	2S-8439	1	SEAL-O-RING	
	7	1	133-1278	1	HOUSING AS-OIL FILTER	
	8	1	132-8875	1	FILTER ELEMENT AS-OIL (HIGH EFFICIENCY) (TRANSMISSION)	
	9	1	8M-6393	1	RING-RETAINING	
	10	1	133-1288	1	RETAINER	
	11	1	148-8407	1	PLUG AS (TRANSMISSION OIL FILTER DRAIN)	
	12	1	3S-8652	1	SPRING	
	13	1	6T-9222	1	SPOOL	
	14	1	133-2199	1	SPRING	

Y-SEPARATE ILLUSTRATION

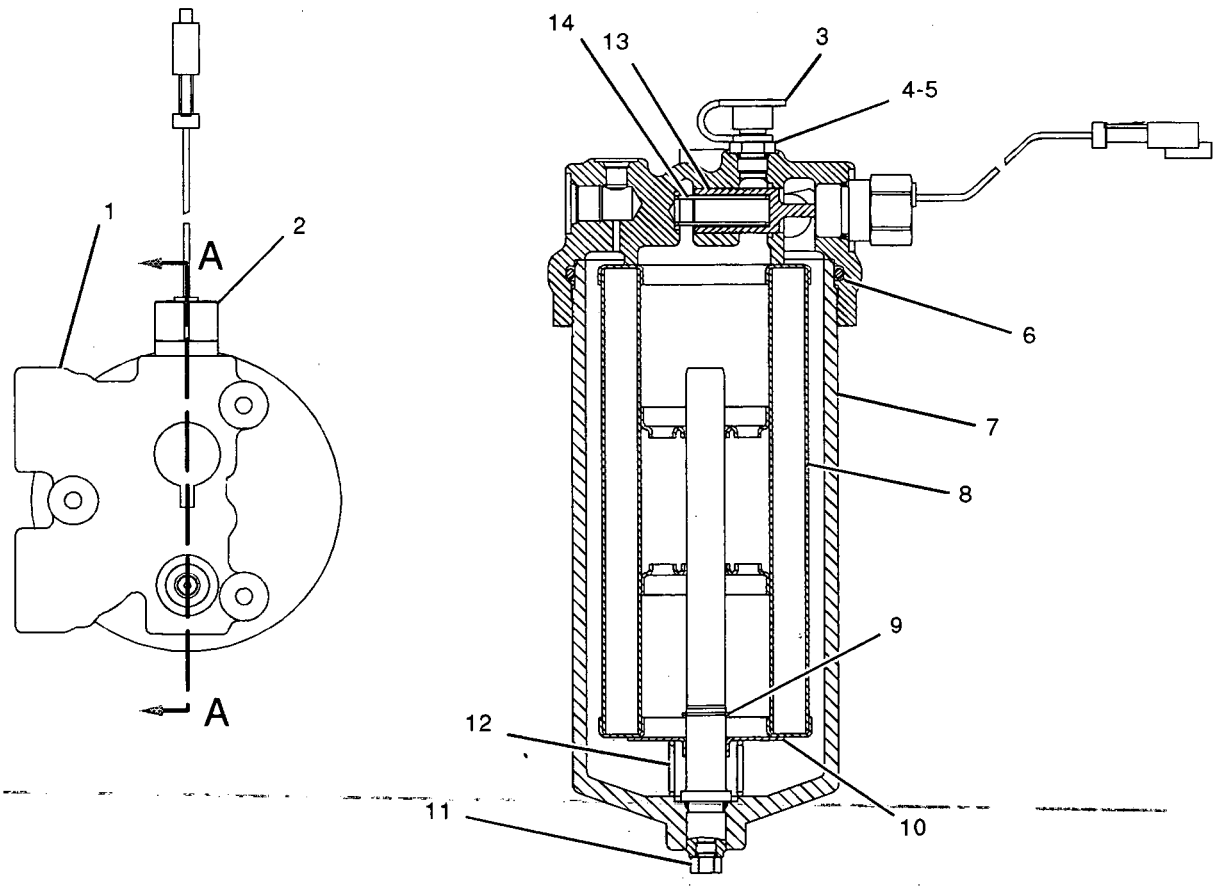

SECTION A-A

GRAPHIC #1 **<END>** g01034504

POWER TRAIN

8W-4368 FINAL DRIVE GP

S/N: CCA1-UP

PART OF 159-4615 GENERAL AR

SMCS-4050 **i01922689**

NOTE	REF NO	GRAPHIC REF	PART NUMBER	QTY	PART NAME 1 2 3 4 5 6 (PRODUCT LEVEL)	SEE PAGE
	1	1	**191-5973**	2	SHAFT-SUN GEAR (18 TEETH)	
	2	1	**6V-8081**	2	SEAL-LIP	
	3	1	**8D-3591**	2	CARRIER-PLANETARY	
	4	1	**030-8535**	18	BOLT-LOCKING (3/8-16X0.875 IN)	
	5	1	**5M-2894**	30	WASHER-HARD (10.2X18.5X2.5MM THK)	
	6	1	**7D-7889**	2	GEAR-RING (72 TEETH)	
	7	1	**7D-0035**	8	PLATE	
	8	1	**7S-4571**	2	SEAL-O-RING	
	9	1	**5P-8248**	38	WASHER-HARD (20X36.5X3.5MM THK)	
	10	1	**2J-3506**	38	NUT-FULL (3/4-10 THD)	
	11	1	**9F-2247**	2	PLUG-PIPE	
	12	1	**3E-4307**	36	BOLT-LOCKING (5/8X11X2 IN)	
	13	1	**4D-3704**	32	WASHER-HARD (17X30X5MM THK)	
	14	1	**8W-8317**	2	SPROCKET (20 TEETH)	
	15	1	**214-3540**	2	RETAINER	
	16	1	**8W-8317**	2	SPROCKET (20 TEETH)	
	17	1	**4D-6695**	2	SEAL-O-RING	
B	18	1	**6G-3212**	2	SHIM PACK (INCLUDES 10 SHIMS)	
	19	1	**1P-4693**	4	CUP-BEARING	
	20	1	**5P-3490**	2	CONE-BEARING	
	21	1	**8W-4142**	2	SHAFT-DRIVE	
	22	1	**5D-0353**	12	BOLT-LOCKING (3/8-16X1 IN)	
	23	1	**7D-0028**	6	RETAINER	
	24	1	**8S-9092**	32	BOLT (5/8-11X2.25 IN)	
	25	1	**200-7929**	2	HOUSING	
	26	1	**218-4406**	4	RING-WEAR	
	27	1	**1P-4694**	2	CONE-BEARING	
	28	1	**6G-3206**	4	WASHER-THRUST	
	29	1	**5T-7129**	2	HOUSING	
	30	1	**8D-3902**	2	SEAL-LIP	
	31	1	**8W-2308**	6	SHAFT-PLANETARY	
	32	1	**8D-3540**	2	NUT (3 1/4-12 THD)	
	33	1	**129-2381**	6	GEAR-PLANET (26 TEETH)	
	34	1	**8W-4141**	2	LOCK	
	35	1	**1S-9110**	12	ROLLER AS	
	36	1	**8X-8377**	12	WASHER (47.57X82.55X2.92MM THK)	
	37	1	**8D-3886**	2	RING-RETAINING	
	38	1	**8D-3885**	2	WASHER (50.8X107.95X6.35MM THK)	
	39	1	**198-4768**	36	WASHER-HARD (17.5X32X8MM THK)	

B-USE AS REQUIRED

8W-4368 FINAL DRIVE GP *(contd.)* i01922689

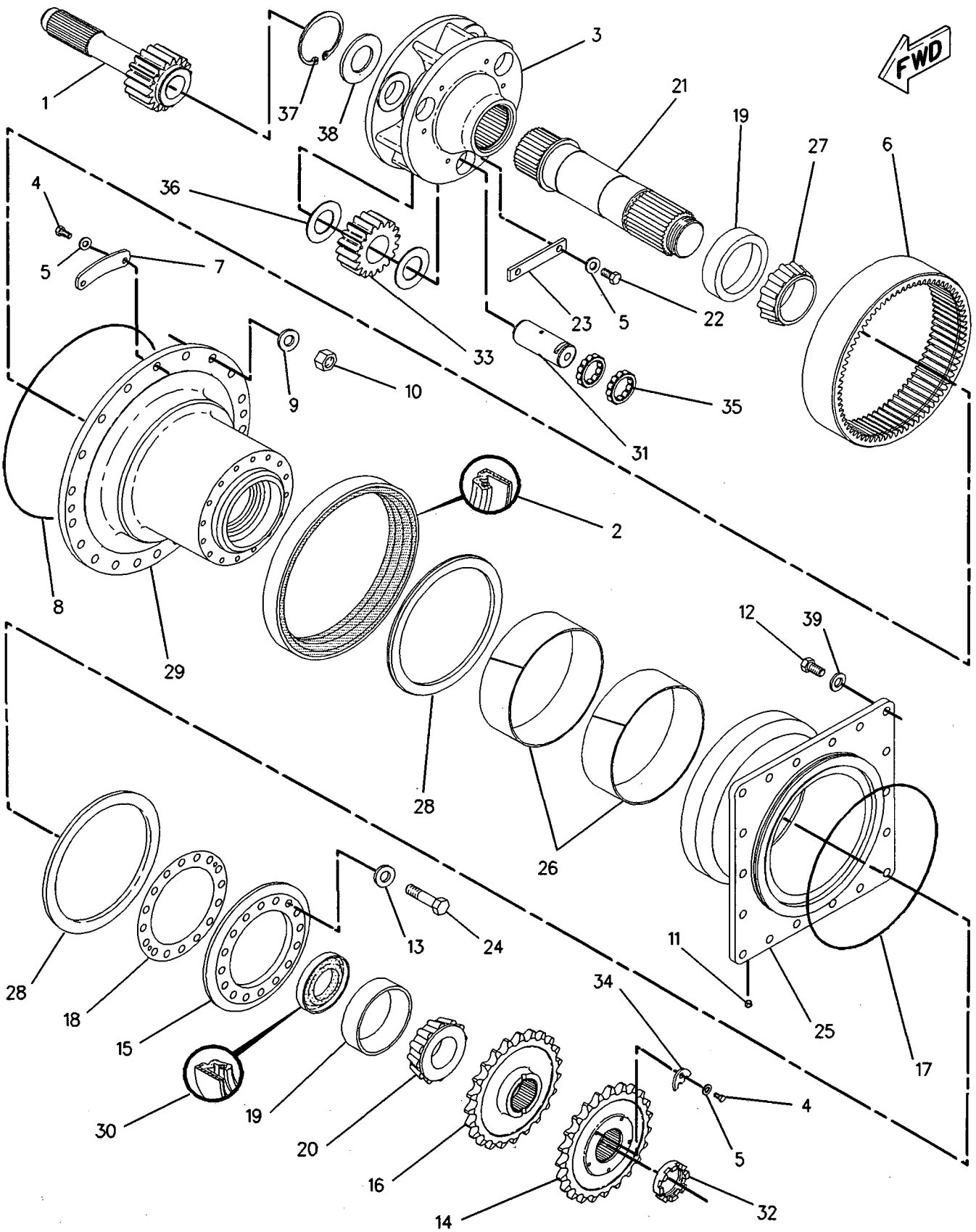

GRAPHIC #1 **<END>** g00954365

159-6174 LINES GP-TRANSMISSION OIL

S/N: CCA1-UP

PART OF 159-4615 GENERAL AR

SMCS-3154 i02204768

NOTE	REF NO	GRAPHIC REF	PART NUMBER	QTY	PART NAME 1 2 3 4 5 6 (PRODUCT LEVEL)	SEE PAGE
	1	1	**5D-1026**	2	CLAMP-HOSE	
	2	1	**7N-3725**	1	BRACKET	
	3	2	**8T-4983**	2	CLAMP-HOSE	
	4	1	**8X-5121**	1	TUBE	
	5	2	**8X-7317**	1	HOSE	
	6	2	**8X-8916**	1	PLATE	
	7	2	**9C-5344**	1	SPACER (10.5X20X18-MM THK)	
	8	2	**9C-9467**	1	CLIP	
	9	1	**005-7898**	2	CONNECTOR-HOSE	
	10	1	**113-9048**	1	BAFFLE	
	11	2	**132-8875**	1	FILTER ELEMENT AS-OIL (HIGH EFFICIENCY) (TRANSMISSION)	
	12	1,2	**173-2087**	3	SPACER (11X20X28-MM THK)	
I	13	1	**176-9747**	1	HOSE AS	
I	14	1	**177-1633**	1	HOSE AS	
I	15	1	**177-1677**	1	HOSE AS	
	16	2	**178-3695**	1	ADAPTER	
	17	1	**183-1406**	2	CLIP	
I	18	1	**203-6016**	1	HOSE AS	
	19	1	**203-6018**	1	HOSE AS	
	20	2	**203-6019**	1	TUBE AS	
	21	2	*148-8335*	1	CONNECTOR AS	
		2	**6V-8635**	1	CONNECTOR	
		2	**5K-9090**	1	SEAL-O-RING	
		2	**7M-8485**	1	SEAL-O-RING	
	22	2	*148-8339*	1	CONNECTOR GP	
		2	**6V-8716**	1	CONNECTOR	
		2	**6V-9746**	1	SEAL-O-RING	
		2	**7M-8485**	1	SEAL-O-RING	
	23	2	*148-8392*	1	ELBOW AS	
		2	**6V-9853**	1	ELBOW	
		2	**6V-9746**	1	SEAL-O-RING	
	24	2	*148-8407*	1	PLUG AS	
		2	**9S-4191**	1	PLUG	
		2	**3J-1907**	1	SEAL-O-RING	
	25	1	**1L-0509**	2	BOLT (3/8-16X0.74-IN)	
	26	1	**1P-4577**	10	FLANGE-HALF	
	27	2	**1P-4578**	2	FLANGE-HALF	
	28	1	**3B-7732**	1	ELBOW-STREET	
	29	1	**4F-7389**	2	SEAL-O-RING	
	30	1,2	**4J-0520**	6	SEAL-O-RING	
	31	2	**4J-0522**	1	SEAL-O-RING	
	32	2	**5K-9090**	1	SEAL-O-RING	
	33	1	**5S-7382**	8	BOLT (3/8-16X1.375-IN)	
	34	1,2	**6V-1889**	6	CLIP	
	35	2	**7X-0342**	1	BOLT (5/8-11X0.74-IN)	
M	36	1	**7X-2552**	1	BOLT (M16X2X30-MM)	
	37	1	**7X-7729**	1	WASHER (11X25X3-MM THK)	
M	38	1	**8T-0722**	4	BOLT-LOCKING (M10X1.5X30-MM)	
	39	1,2	**8T-4121**	20	WASHER-HARD (11X21X2.5-MM THK)	
M	40	1	**8T-4133**	1	NUT (M10X1.5-THD)	
M	41	1	**8T-7547**	1	BOLT (M8X1.25X30-MM)	
M	42	2	**8T-4182**	2	BOLT (M10X1.5X45-MM)	
M	43	1	**8T-4195**	3	BOLT (M10X1.5X30-MM)	
M	44	1	**8T-4196**	8	BOLT (M10X1.5X35-MM)	
	45	1	**8T-4896**	10	WASHER-HARD (10.2X18.5X2.5-MM THK)	

159-6174 LINES GP-TRANSMISSION OIL *(contd.)* i02204768

NOTE	REF NO	GRAPHIC REF	PART NUMBER	QTY	PART NAME 1 2 3 4 5 6 (PRODUCT LEVEL)	SEE PAGE
M	46	1,2	**8T-6466**	5	BOLT (M10X1.5X60-MM)	
	47	1	**9X-8257**	1	WASHER (17.5X30X3.5-MM THK)	
E	48	1	**5P-0765**		HOSE (47-CM)	
M	49	1	**5C-7261**	1	NUT (M8X1.25-THD)	
	50	1	**5P-4116**	2	WASHER-HARD (8.8X20.5X2-MM THK)	

E-ORDER BY THE CENTIMETER
I-REFER TO HYDRAULIC INFORMATION SYSTEM
M-METRIC PART

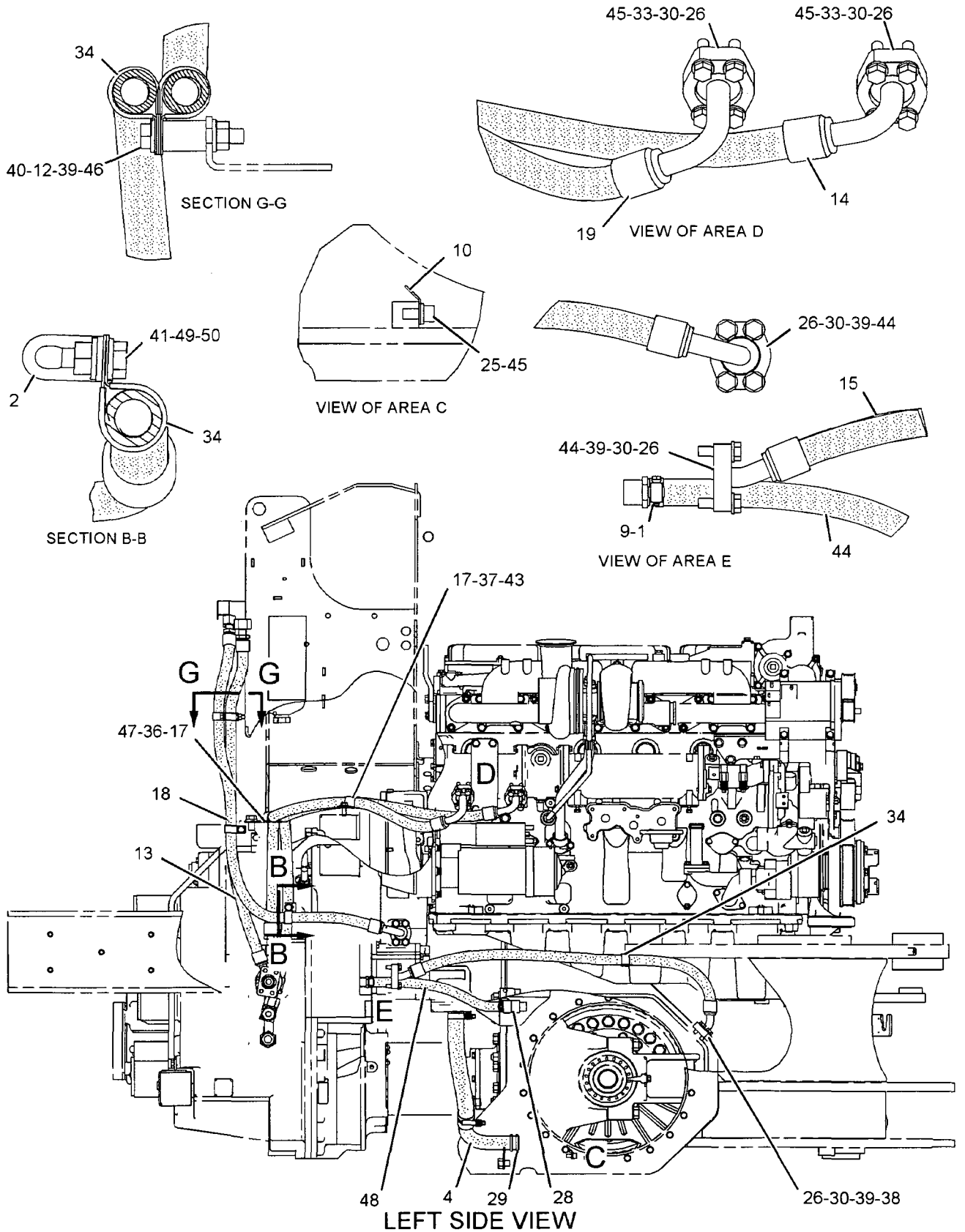

GRAPHIC #1

g01090892

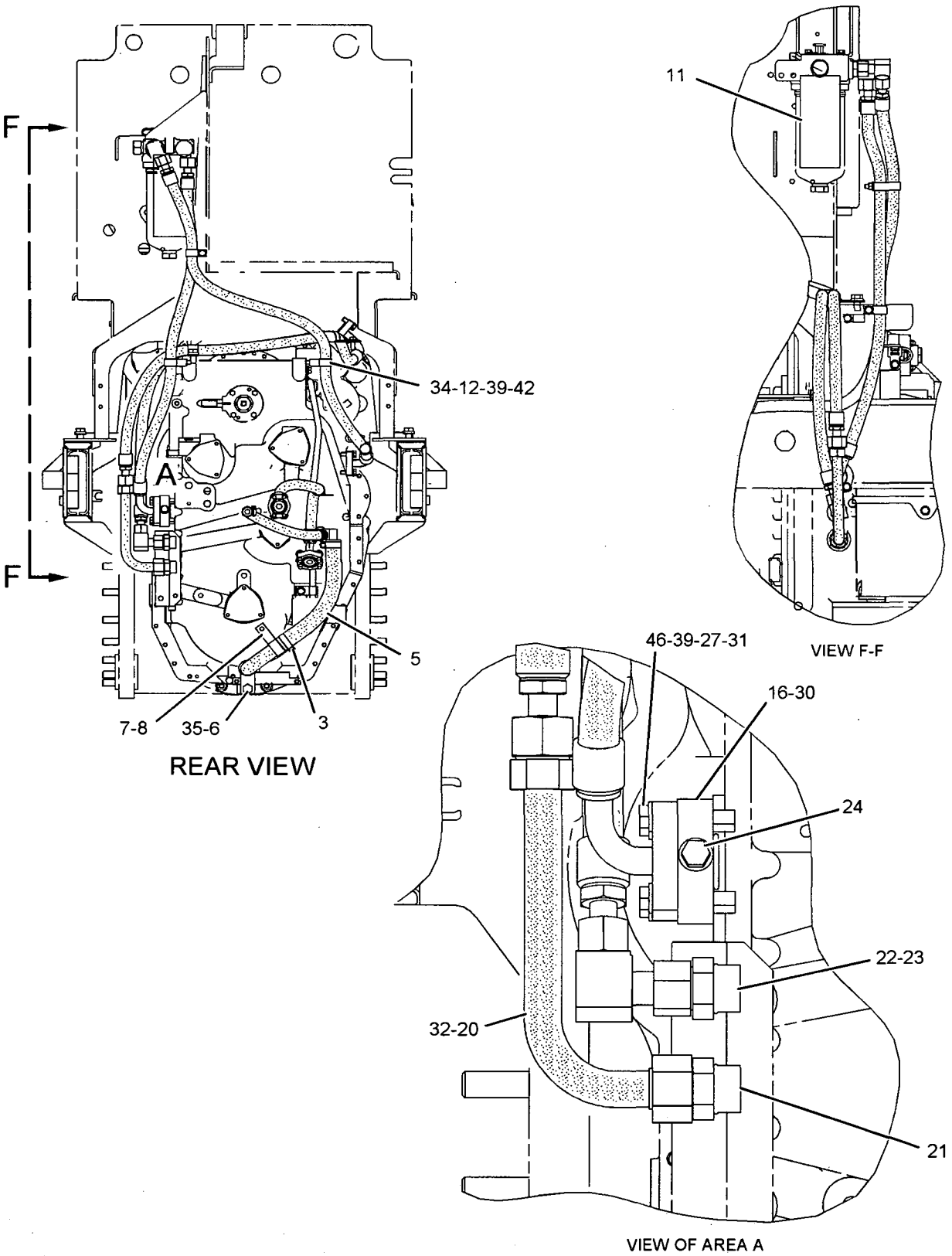

GRAPHIC #2

<END>

g01075091

142-6203 MOUNTING GP-WHEEL

S/N: CCA1-UP

PART OF 159-4615 GENERAL AR

SMCS-4201 i01055119

NOTE	PART NUMBER	QTY	PART NAME 1 2 3 4 5 6 (PRODUCT LEVEL)	SEE PAGE
	0S-1973	60	BOLT (7/8-9X2IN)	
	4M-6953	60	WASHER-HARD (3.5MM THK)	

<END>

6Y-8764 PUMP GP-GEAR–TRANSMISSION

S/N: BJN1-UP
2 SECTION
PART OF 6Y-8765 PUMP GP-GEAR

SMCS-3066, 3115, 5073 **i02204764**

NOTE	REF NO	GRAPHIC REF	PART NUMBER	QTY	PART NAME 1 2 3 4 5 6 (PRODUCT LEVEL)	SEE PAGE
	1	1	**9N-4163**	1	COVER AS-PUMP	
	2	1	**1M-3780**	2	BEARING-SLEEVE (23.81-MM THK)	
	3	1	**9N-4162**	1	GEAR AS-OIL PUMP (12-TEETH)	
		1	**2B-9373**	1	KEY-WOODRUFF	
	4	1	**9N-4159**	1	BODY AS-OIL PUMP	
	5	1	**1M-3780**	2	BEARING-SLEEVE (23.81-MM THK)	
	6	1	**5S-4385**	1	BODY AS-OIL PUMP	
		1	**8M-8489**	4	DOWEL	
	7	1	**9N-4158**	2	GEAR (8-TEETH)	
	8	1	**2B-9373**	1	KEY-WOODRUFF	
	9	1	**2D-8009**	3	SEAL-O-RING	
	10	1	**3S-0004**	6	WASHER (0.406X0.728X0.09-IN THK)	
M	11	1	**8T-5030**	2	BOLT (M10X1.5X120-MM)	
	12	1	**6Y-5010**	8	WASHER (10.16X19X0.84-MM THK)	
M	13	1	**8C-2926**	4	BOLT (M10X1.5X140-MM)	
	14	1	**9N-4161**	1	GEAR AS-OIL PUMP (12-TEETH)	
		1	**2B-9373**	1	KEY-WOODRUFF	
	15	1	**9N-4156**	1	MANIFOLD AS-PUMP	
		1	**8M-8489**	2	DOWEL	

M-METRIC PART

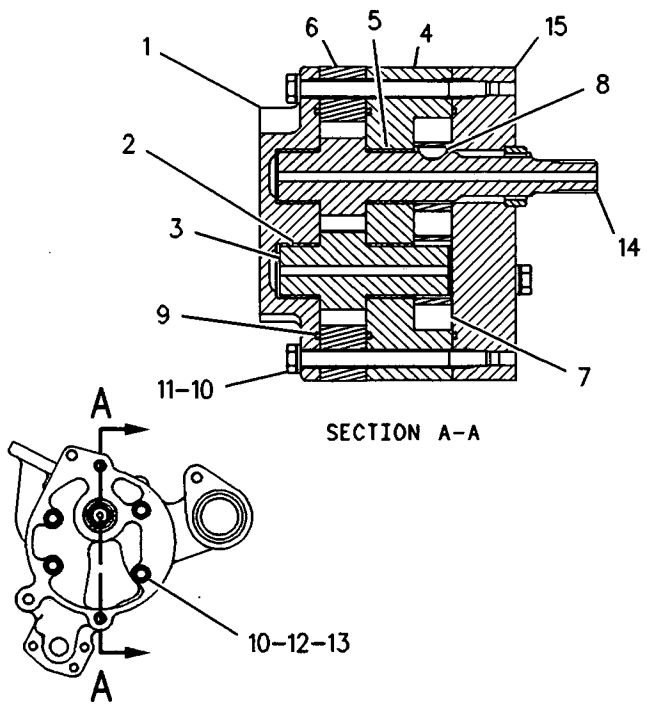

GRAPHIC #1 **<END>** g00108548

6Y-8765 PUMP GP-GEAR–TRANSMISSION

S/N: BJN1-UP
2 SECTION
PART OF 160-2196 TRANSMISSION AR

SMCS-3066, 3115, 5073 **i02204765**

NOTE	REF NO	GRAPHIC REF	PART NUMBER	QTY	PART NAME 1 2 3 4 5 6 (PRODUCT LEVEL)	SEE PAGE
Y	1	1	**6Y-8764**	1	PUMP GP-GEAR	386
	2	1	**4F-7952**	1	SEAL-O-RING	
	3	1	**7F-8268**	1	SEAL-O-RING	
M	4	1	**6V-1820**	3	BOLT (M10X1.5X30-MM)	

M-METRIC PART
Y-SEPARATE ILLUSTRATION

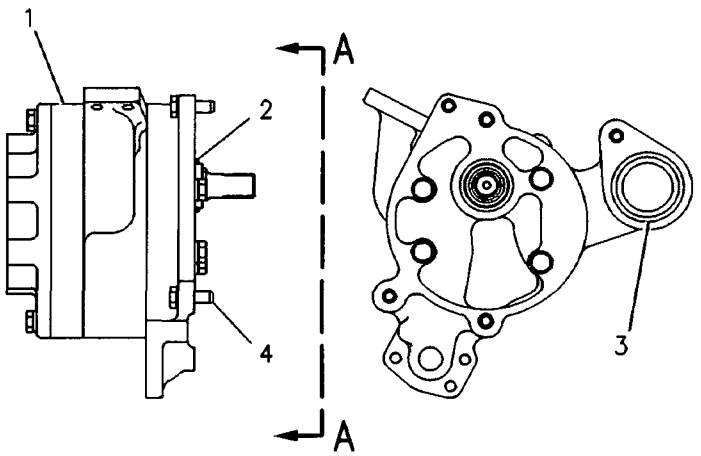

VIEW A-A

GRAPHIC #1 **<END>** g00108547

9W-5134 SCREEN GP-MAGNETIC–TRANSMISSION

S/N: BJN1-UP

PART OF 160-2196 TRANSMISSION AR

SMCS-3067 i01623693

NOTE	REF NO	GRAPHIC REF	PART NUMBER	QTY	PART NAME 1 2 3 4 5 6 (PRODUCT LEVEL)	SEE PAGE
	1	1	**6Y-3861**	1	COVER AS	
	2	1	**6Y-3860**	1	HOUSING-FILTER	
	3	1	**8S-9130**	1	SCREEN-SUCTION (TRANSMISSION)	
	4	1	**8S-9129**	1	FILTER-MAGNETIC (TRANSMISSION)	
	5	1	**5P-3863**	1	SEAL-O-RING	
M	6	1	**6V-5219**	3	BOLT (M8X1.25X40MM)	
	7	1	**5F-8000**	1	SEAL-O-RING (50.39MM ID)	
M	8	1	**8T-0355**	3	BOLT (M10X1.50X110MM)	

M-METRIC PART

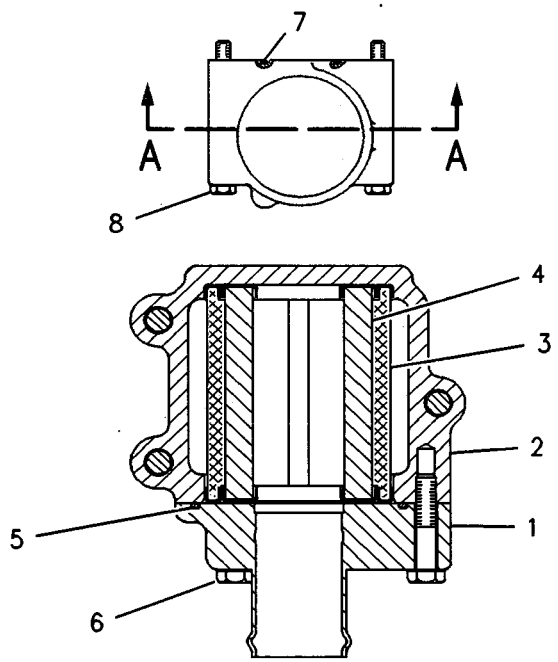

VIEW A–A

GRAPHIC #1 **<END>** g00108551

8W-5394 SHAFT GP-DRIVE

S/N: CCA1-UP

PART OF 159-4615 GENERAL AR

SMCS-3253 i01701959

NOTE	REF NO	GRAPHIC REF	PART NUMBER	QTY	PART NAME 1 2 3 4 5 6 (PRODUCT LEVEL)	SEE PAGE
	1	1	8X-5620	2	SHIELD AS	
					(EACH INCLUDES)	
M		1	8T-3597	1	NUT-WELD (M12X1.75-THD)	
	2	1	8W-1592	1	YOKE AS	
		1	3K-0986	1	PLUG	
	3	1	3K-0196	1	GUARD	
	4	1	0S-1604	4	BOLT (1/2-20X2.5-IN)	
	5	1	5P-7213	4	WASHER-HARD (13.5X20.5X2-MM THK)	
	6	1	6B-6684	4	NUT-FULL (1/2-20-THD)	
	7	1	6V-1911	4	BOLT-LOCKING	
Y	8	1	8X-5005	1	UNIVERSAL JOINT GP	394
M	9	1	8T-4179	2	BOLT (M12X1.75X20-MM)	
M	10	1	8T-4223	6	WASHER-HARD (13.5X25.5X3-MM THK)	
M	11	1	8T-4192	4	BOLT (M12X1.75X25-MM)	

M-METRIC PART
Y-SEPARATE ILLUSTRATION

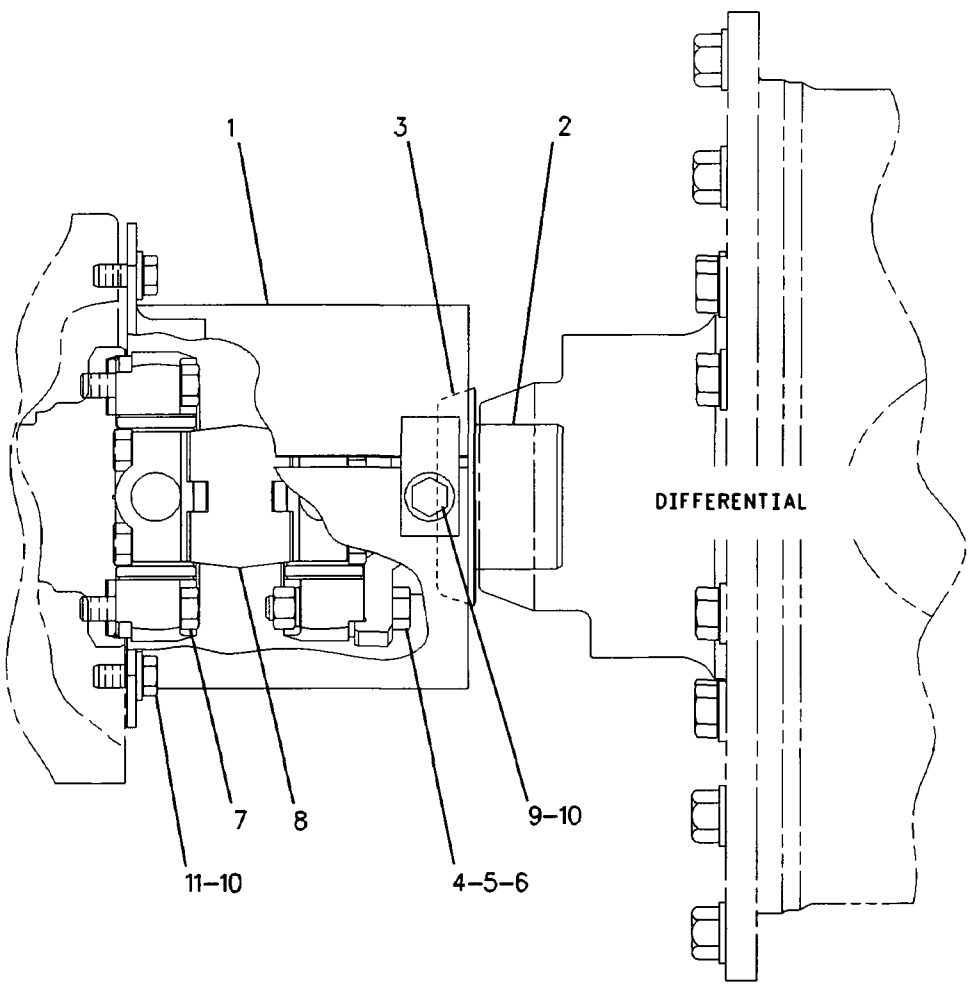

GRAPHIC #1 <END> g00718327

176-6465 SHAFT GP-INPUT

S/N: BJN1-UP

PART OF 160-2196 TRANSMISSION AR

SMCS-3063 i02204771

NOTE	REF NO	GRAPHIC REF	PART NUMBER	QTY	PART NAME 1 2 3 4 5 6 (PRODUCT LEVEL)	SEE PAGE
	1	1	**176-6464**	1	SHAFT AS	
		1	**4B-4845**	1	PLUG	
	2	1	**3T-4377**	2	SEAL-RING	
	3	1	**6Y-0591**	1	GEAR (45-TEETH)	
	4	1	**6Y-0590**	1	GEAR (38-TEETH)	
	5	1	**2H-6490**	1	BEARING-INNER	
	6	1	**1M-4095**	1	BEARING-INNER	

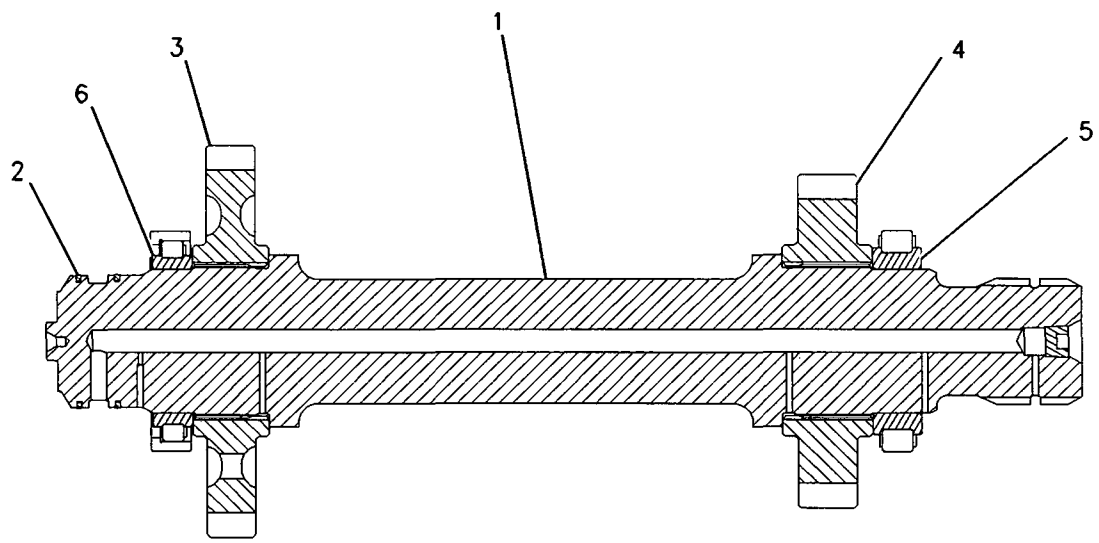

GRAPHIC #1 **<END>** g00788549

POWER TRAIN

190-1688 TANDEM & COVER GP

S/N: CCA1-UP

PART OF 159-4615 GENERAL AR

SMCS-4062, 4064 **i01814297**

NOTE	REF NO	GRAPHIC REF	PART NUMBER	QTY	PART NAME 1 2 3 4 5 6 (PRODUCT LEVEL)	SEE PAGE
	1	1	**1F-8488**	2	BREATHER AS (TANDEM)	
	2	1	**2A-6938**	2	COVER	
	3	1	**2B-3147**	8	GASKET	
	4	1	**2B-3148**	8	COVER	
	5	1	**3D-2981**	4	GASKET	
	6	1	**8T-6468**	48	BOLT (1/2-13X1-IN)	
	7	1	**002-6453**	2	ELBOW	
	8	1	**190-1690**	1	HOUSING AS-TANDEM DRIVE (RH)	
	9	1	**190-1691**	1	HOUSING AS-TANDEM DRIVE (LH)	
	10	1	**2G-9791**	2	GASKET	
	11	1	**2M-9780**	2	SEAL-O-RING	
	12	1	**3J-5389**	2	PLUG	
	13	1	**3K-0360**	2	SEAL-O-RING	
M	14	1	**5P-8245**	32	WASHER-HARD (13.5X25.5X3-MM THK)	
	15	1	**6B-5072**	2	BUSHING-TERMINAL	
	16	1	**6E-5047**	2	PLUG	
	17	1	**7D-6567**	4	COVER	
	18	1	**9S-4190**	2	PLUG (TRANSMISSION OIL)	

M-METRIC PART

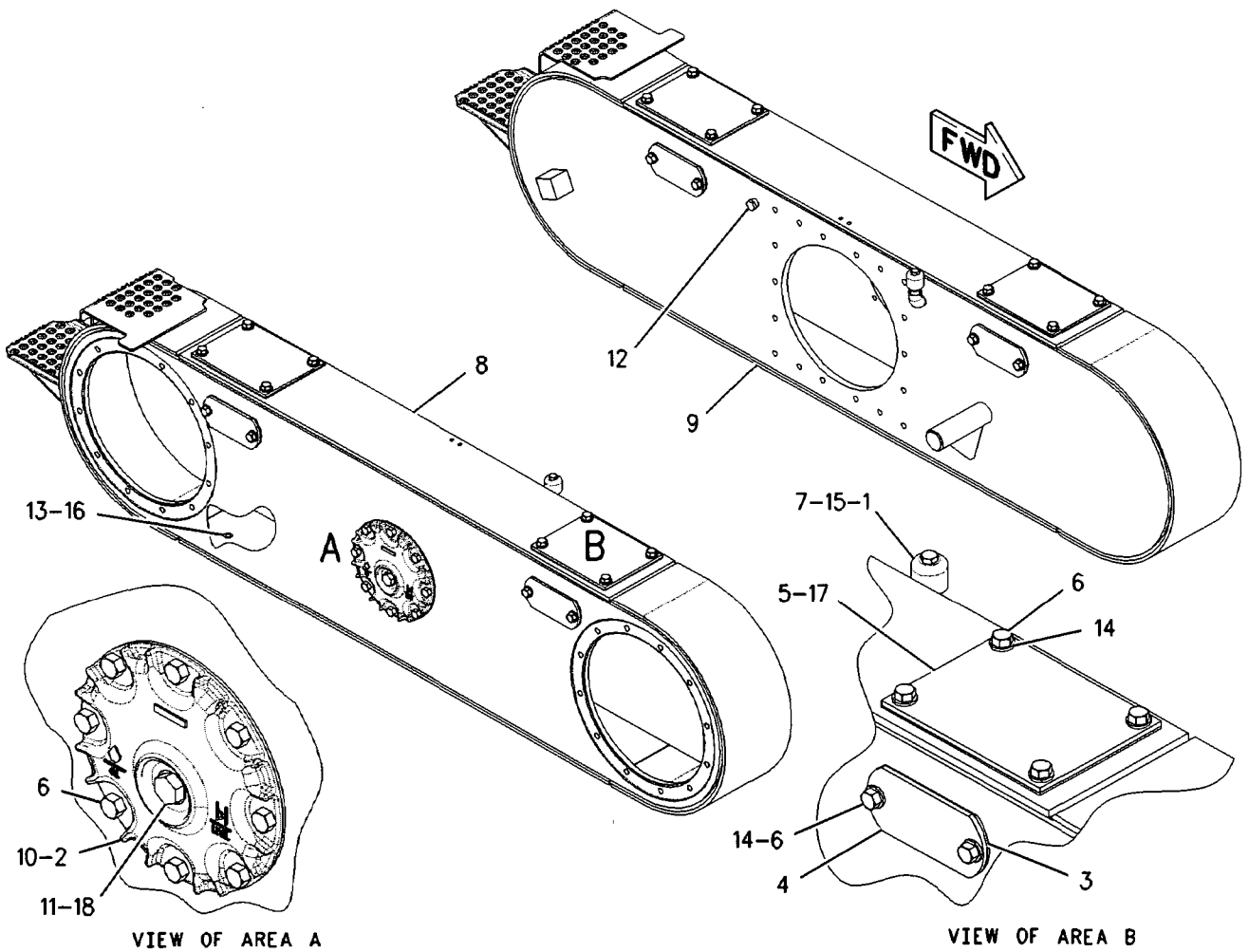

GRAPHIC #1 **<END>** g00828990

160-2196 TRANSMISSION AR

S/N: BJN1-UP

PART OF 159-4615 GENERAL AR

SMCS-3030 **i01882503**

NOTE	REF NO	GRAPHIC REF	PART NUMBER	QTY	PART NAME 1 2 3 4 5 6 (PRODUCT LEVEL)	SEE PAGE
Y	1	1	*176-6465*	1	SHAFT GP-INPUT	390
Y	2	1	*159-9228*	1	CLUTCH GP-TRANSMISSION (FWD)	357
Y	3	1	*159-9229*	1	CLUTCH GP-TRANSMISSION (REV & 2ND)	359
Y	4	1	*6Y-2303*	1	CLUTCH GP-TRANSMISSION (1ST & 3RD)	351
Y	5	1	*8E-9316*	1	CLUTCH GP-TRANSMISSION (HI & LO)	354
Y	6	1	*180-9146*	1	CASE & PARTS GP-TRANSMISSION	346
Y	7	1	*9W-5132*	1	BRAKE GP-PARKING	502
Y	8	1	*9W-5134*	1	SCREEN GP-MAGNETIC (TRANSMISSION)	388
Y	9	1	*6Y-8765*	1	PUMP GP-GEAR (TRANSMISSION)	387
Y	10	1	*179-6064*	1	CONTROL GP-TRANSMISSION HYD	367

Y-SEPARATE ILLUSTRATION

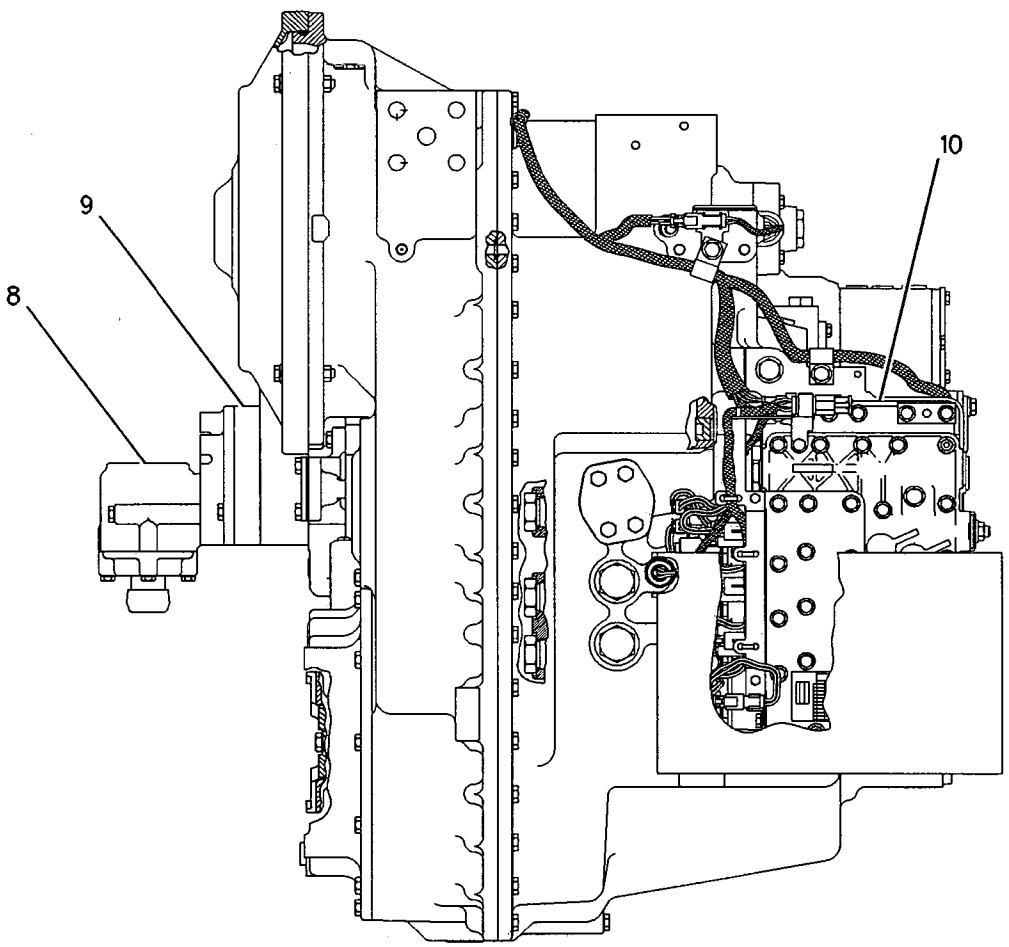

LEFT SIDE VIEW

GRAPHIC #1 g00978850

160-2196 TRANSMISSION AR *(contd.)* i01882503

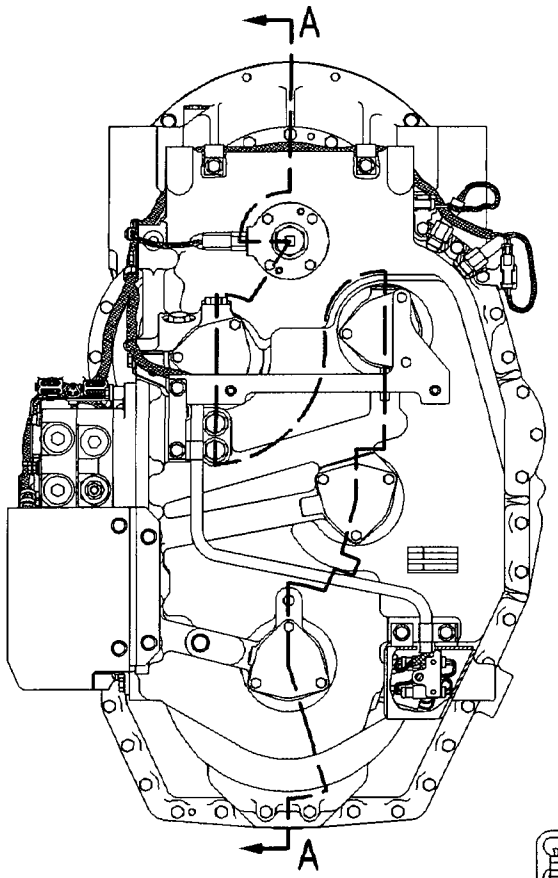

REAR VIEW

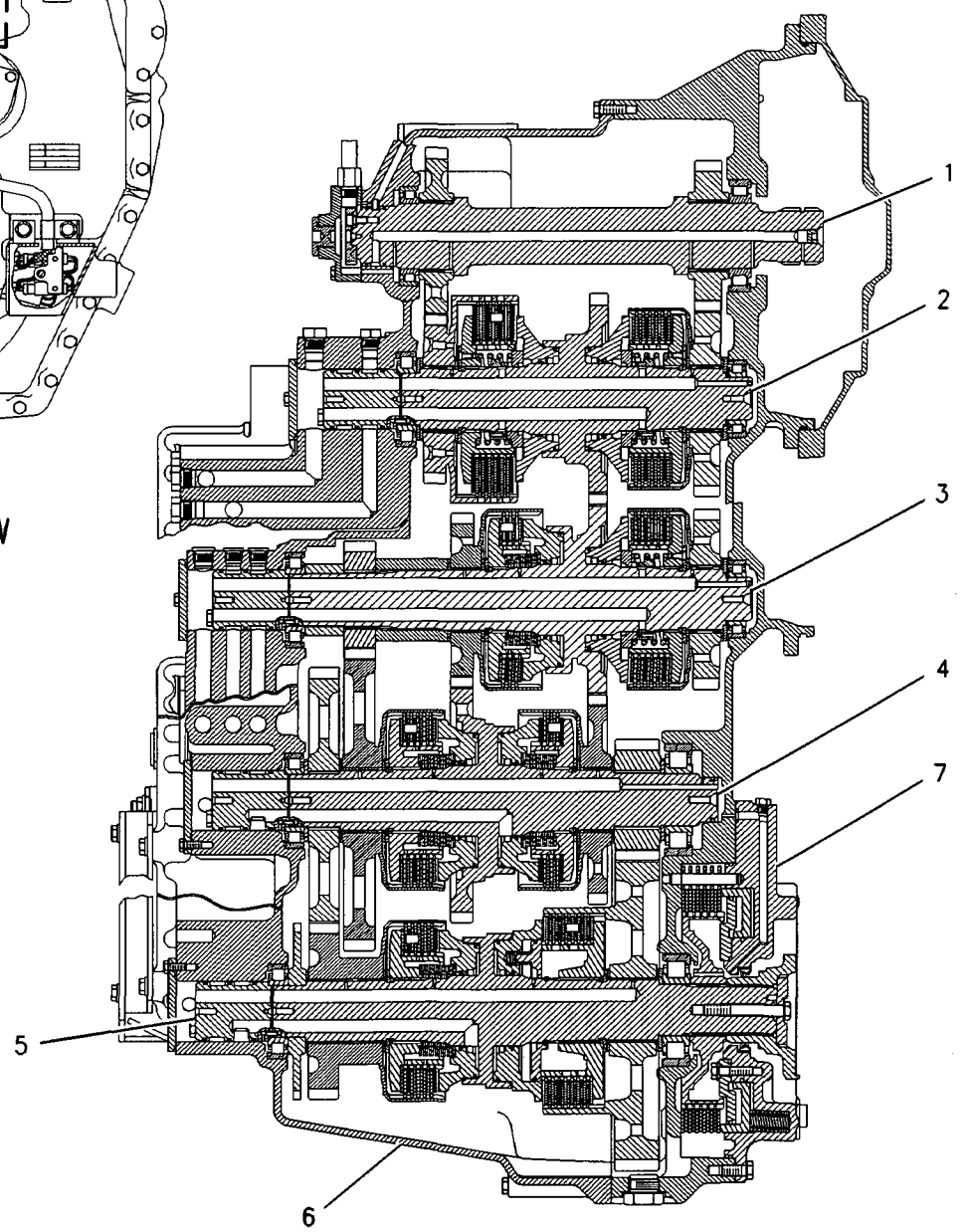

SECTION A-A

GRAPHIC #2 **<END>** g00978852

8X-5005 UNIVERSAL JOINT GP

S/N: CCA1-UP

PART OF 8W-5394 SHAFT GP-DRIVE

SMCS-3251, 3253 i00135798

NOTE	REF NO	GRAPHIC REF	PART NUMBER	QTY	PART NAME 1 2 3 4 5 6 (PRODUCT LEVEL)	SEE PAGE
	1	1	**3D-6689**	1	YOKE-COUPLING	
	2	1	**9P-0356**	2	SPIDER & BEARING AS	
	3	1	**0S-1579**	8	BOLT (1/2-20X2IN)	

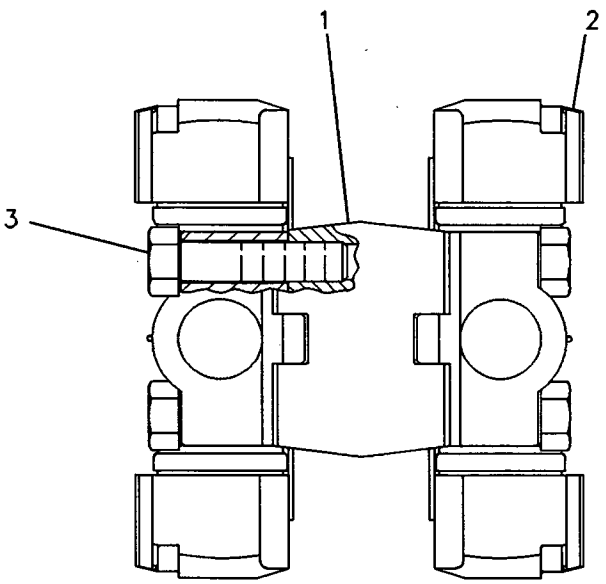

GRAPHIC #1 **<END>** g00108575

174-3705 VALVE & MTG GP-DIFF LOCK

S/N: CCA1-UP

PART OF 160-7756 CONTROL GP-DIFFERENTIAL LOCK

SMCS-3272 i02204770

NOTE	REF NO	GRAPHIC REF	PART NUMBER	QTY	PART NAME 1 2 3 4 5 6 (PRODUCT LEVEL)	SEE PAGE
	1	1	6G-5979	1	KIT-SEAL (DIFFERENTIAL LOCK)	
					(INCLUDES O-RINGS)	
Y	2	1	154-3064	1	VALVE GP-SOLENOID	402
	3	1	148-2516	1	MANIFOLD	

Y-SEPARATE ILLUSTRATION

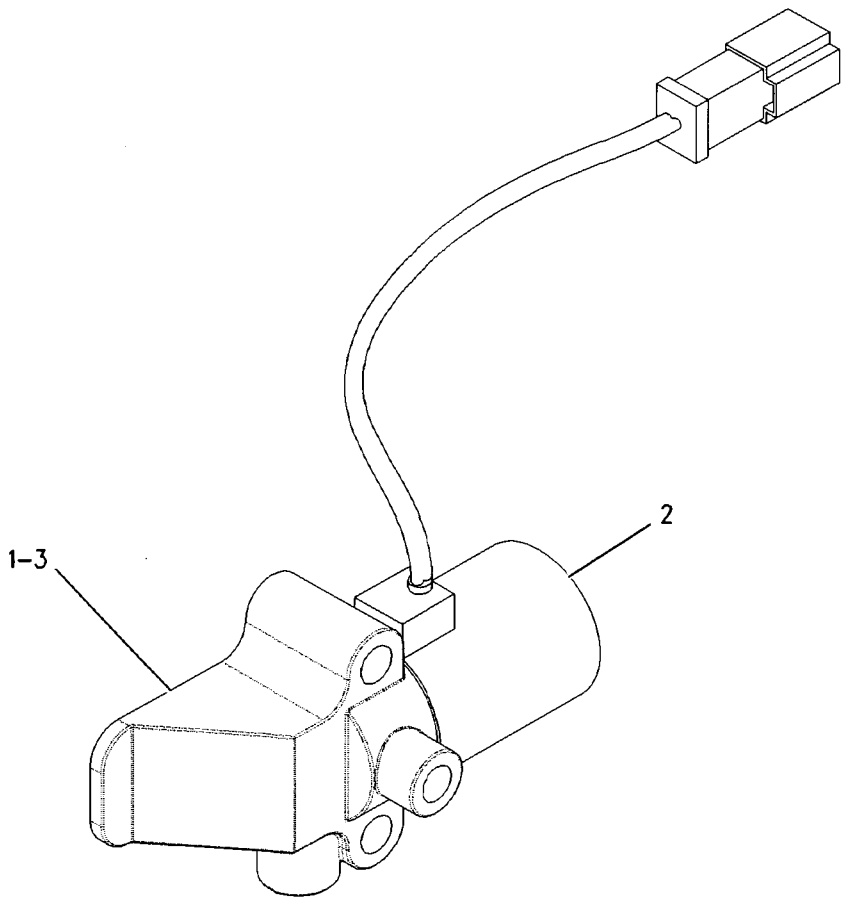

GRAPHIC #1 **<END>** g00806911

184-1130 VALVE GP-SELECTOR & PRESS CONT-
DIRECTION & RANGE
S/N: BJN1-UP

PART OF 179-6063 VALVE GP-TRANSMISSION CONTROL

SMCS-3083 **i01696424**

NOTE	REF NO	GRAPHIC REF	PART NUMBER	QTY	PART NAME 1 2 3 4 5 6 (PRODUCT LEVEL)	SEE PAGE
	1	1	**154-6309**	1	BODY	
M	2	1	**149-4311**	5	BOLT-SOCKET HEAD (M6X1X16-MM)	
	3	1	**7M-8485**	5	SEAL-O-RING	
	4	1	**3D-4245**	1	SEAL-O-RING	
	5	1	**5F-9144**	1	SEAL-O-RING	
	6	1	**8E-9894**	1	SPOOL	
	7	1	**9U-8068**	1	SLUG	
	8	1	**9U-9282**	1	SPRING (OUTER)	
	9	1	**9U-9316**	1	SPRING (INNER)	
	10	1	**108-6523**	1	ADJUSTER AS	
		1	**4K-2039**	1	SEAL-O-RING	
		1	**7M-8485**	1	SEAL-O-RING	
M		1	**8T-4223**	1	WASHER-HARD (13.5X25.5X3-MM THK)	
		1	**9U-8069**	1	PLUG	
M		1	**095-1207**	1	NUT (M12X1.75-THD)	
		1	**101-9754**	1	SCREW-ADJUSTMENT (M12X1.75X18-MM THD)	
	11	1	**9U-8620**	1	ORIFICE	
	12	1	**9U-8067**	1	RETAINER	
	13	1	**8E-9895**	1	PISTON-LOAD	
	14	1	**9W-7412**	1	SPRING (OUTER)	
	15	1	**4J-2506**	1	SEAL-O-RING	
	16	1	**6F-4855**	1	SEAL-O-RING	
B	17	1	**5J-1036**	4	SHIM (0.8-MM THK)	
	18	1	**8E-9896**	1	PISTON-SELECTOR	
	19	1	**179-1298**	3	SPACER	
	20	1	**7T-0570**	1	SPRING (INNER)	
B	21	1	**4M-1751**	2	SPACER (15.09X0.4-MM THK)	
	22	1	**4J-7533**	1	SEAL-O-RING	
Y	23	1	**186-1526**	1	VALVE GP-SOLENOID (24-VOLT DC) (SELECTOR & PRESSURE RANGE)	403
	25	1	**9G-7132**	1	PLUG-ORIFICE	
	26	1	**9S-8004**	1	PLUG	
	27	1	**3J-1907**	1	SEAL-O-RING	
	28	1	**180-9327**	1	MANIFOLD	
	30	1	**3K-6116**	1	WASHER (0.27X0.47X0.03-IN THK)	
M	31	1	**8T-8442**	1	BOLT-SOCKET HEAD (M6X1X30-MM)	
	32	1	**5P-0537**	6	WASHER-HARD (7.2X14.5X2-MM THK)	
	33	1	**9X-7384**	3	SEAL-O-RING	
	34	1	**175-3893**	1	VALVE GP-SOLENOID (PROPN SOL FOR CL PACK 1)	
	34A	1	**175-3893**	1	VALVE GP-SOLENOID (PROPN SOL FOR CL PACK 2)	
	34B	1	**175-3893**	1	VALVE GP-SOLENOID (PROPN SOL FOR CL PACK 3)	
					(EACH CLUTCH PACK INCLUDES)	
		1	**145-1144**	1	COIL AS	
		1	**164-2108**	1	WASHER (13.03X25.4X2.38-MM THK)	
		1	**167-9524**	1	NUT-SELF-LOCKING (1/2-28-THD)	
	35	1	**183-6774**	1	PLATE	
M	36	1	**8C-6965**	1	BOLT-SOCKET HEAD (M6X1X45-MM)	
	37	1	**154-7172**	1	SPOOL	
	38	1	**6Y-4638**	5	PLUG-HEX SOCKET (1 5/16-12-2A THD)	
	39	1	**183-6775**	3	SPOOL AS	
					(EACH INCLUDES)	
		1	**167-0566**	1	CARTRIDGE	
	40	1	**154-7175**	3	SLUG	
	41	1	**154-7176**	3	SPRING (INNER)	
	42	1	**154-7177**	3	SPRING (OUTER)	

184-1130 VALVE GP-SELECTOR & PRESS CONT *(contd.)* i01696424

B-USE AS REQUIRED
M-METRIC PART
Y-SEPARATE ILLUSTRATION

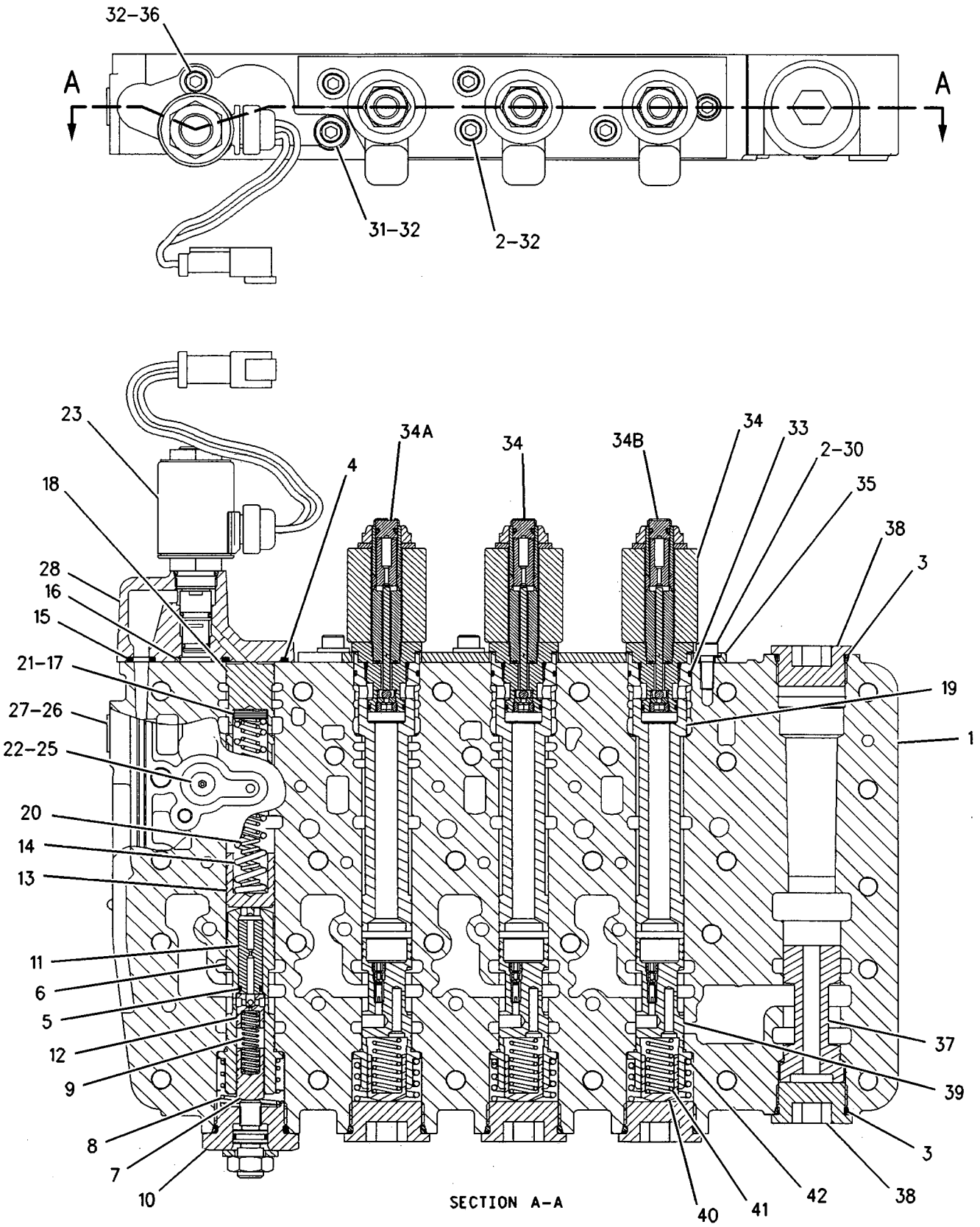

GRAPHIC #1

<END>

g00876452

184-1132 VALVE GP-SELECTOR & PRESS CONT-

SPEED & RANGE

S/N: BJN1-UP

PART OF 179-6063 VALVE GP-TRANSMISSION CONTROL

SMCS-3083 i01755276

NOTE	REF NO	GRAPHIC REF	PART NUMBER	QTY	PART NAME 1 2 3 4 5 6 (PRODUCT LEVEL)	SEE PAGE
	1	1	110-5158	1	BODY	
	2	1	8E-7714	2	ORIFICE	
	3	1	5F-9144	4	SEAL-O-RING	
	4	1	8E-9894	4	SPOOL	
	5	1	9U-8068	4	SLUG	
	6	1	9U-9316	4	SPRING (INNER)	
	7	1	9U-9282	4	SPRING (OUTER)	
	8	1	7M-8485	1	SEAL-O-RING	
	9	1	9U-8067	4	RETAINER	
	10	1	8E-9895	4	PISTON-LOAD	
	11	1	4J-2506	1	SEAL-O-RING	
	12	1	6F-4855	4	SEAL-O-RING	
	13	1	8E-9896	4	PISTON-SELECTOR	
B	14	1	4M-1751	3	SPACER (15.09X0.4-MM THK)	
B	15	1	5J-1036	14	SHIM (0.8-MM THK)	
	16	1	3D-4245	4	SEAL-O-RING	
	17	1	9W-7410	2	SPRING (OUTER)	
	18	1	7T-0570	2	SPRING (INNER)	
	19	1	8E-1143	1	SLUG	
	20	1	9U-8668	1	SPOOL AS	
		1	3D-8317	1	RING-RETAINING	
		1	4B-9880	1	BALL	
		1	4M-2381	1	SPRING	
		1	8E-9893	1	SPOOL-RELIEF	
		1	9U-8669	1	RETAINER	
	21	1	9U-9595	1	SPRING	
	22	1	9N-4500	1	SPRING (OUTER)	
	23	1	9N-4498	1	SPRING (INNER)	
	24	1	8E-9897	1	SPOOL	
	25	1	9W-0898	1	SLUG	
	26	1	4J-7533	4	SEAL-O-RING	
	27	1	8E-6570	1	MANIFOLD	
Y	28	1	186-1526	4	VALVE GP-SOLENOID (24-VOLT DC) (SELECTOR & PRESSURE RANGE)	403
M	31	1	8C-6965	4	BOLT-SOCKET HEAD (M6X1X45-MM)	
	32	1	5P-0537	5	WASHER-HARD (7.2X14.5X2-MM THK)	
M	33	1	8T-8442	1	BOLT-SOCKET HEAD (M6X1X30-MM)	
	34	1	9U-8620	1	ORIFICE	
	35	1	9G-7132	4	PLUG-ORIFICE	
	36	1	3J-7354	1	SEAL-O-RING	
	37	1	9S-8002	1	PLUG	
	38	1	9S-8004	1	PLUG	
	39	1	3J-1907	1	SEAL-O-RING	
	40	1	108-6523	5	ADJUSTER AS	
					(EACH INCLUDES)	
		1	4K-2039	1	SEAL-O-RING	
		1	7M-8485	1	SEAL-O-RING	
M		1	8T-4223	1	WASHER-HARD (13.5X25.5X3-MM THK)	
		1	9U-8069	1	PLUG	
M		1	095-1207	1	NUT (M12X1.75-THD)	
		1	101-9754	1	SCREW-ADJUSTMENT (M12X1.75X18-MM THD)	
	41	1	6Y-4638	1	PLUG-HEX SOCKET (1 5/16-12-2A THD)	
	42	1	8E-7713	1	ORIFICE	
	43	1	9W-7412	2	SPRING (OUTER)	
	44	1	7G-5453	1	SPRING (INNER)	

184-1132 VALVE GP-SELECTOR & PRESS CONT *(contd.)* i01755276

NOTE	REF NO	GRAPHIC REF	PART NUMBER	QTY	PART NAME 1 2 3 4 5 6 (PRODUCT LEVEL)	SEE PAGE
	45	1	**108-3129**	1	STOP	

B-USE AS REQUIRED
M-METRIC PART
Y-SEPARATE ILLUSTRATION

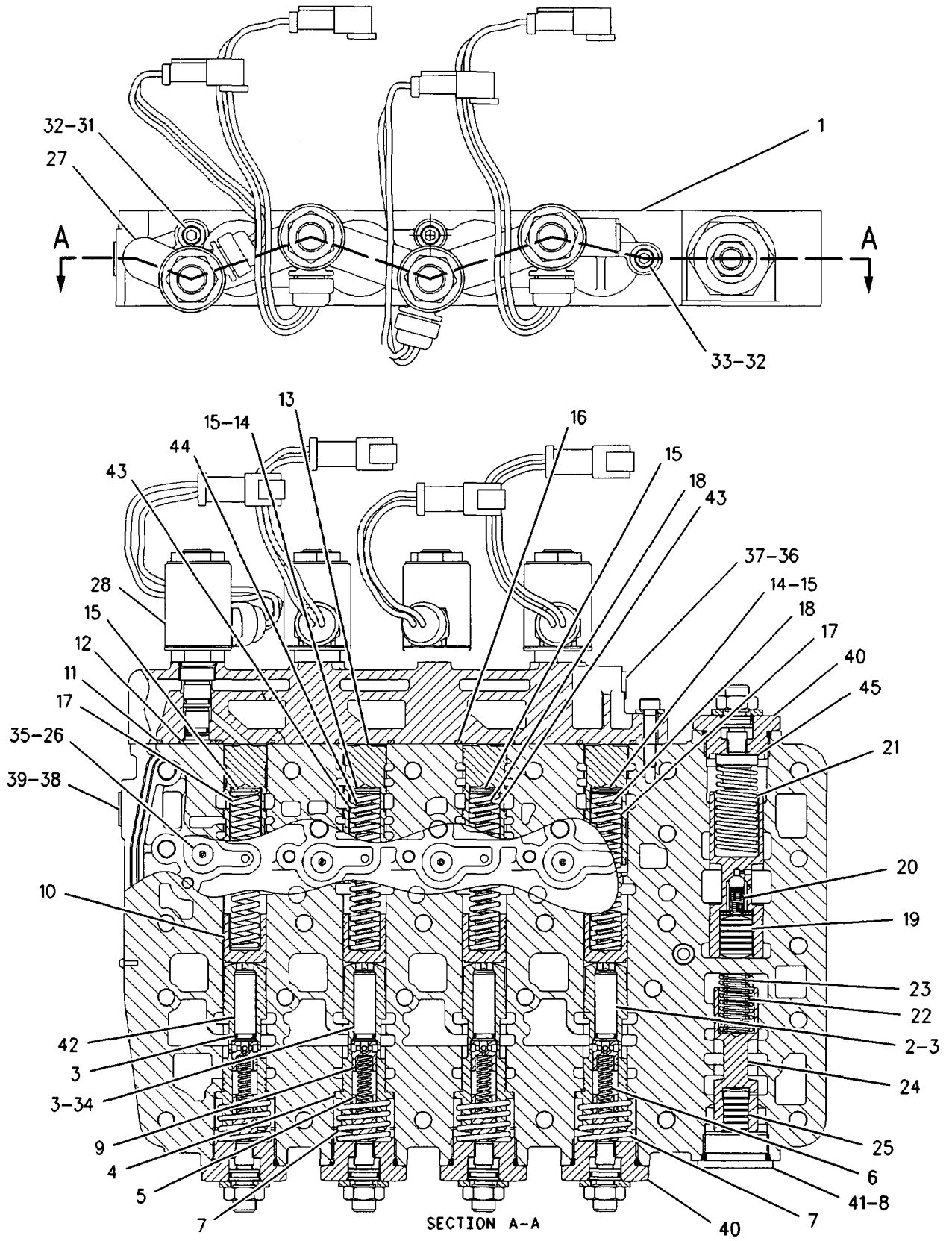

GRAPHIC #1 **<END>** g00898353

154-3064 VALVE GP-SOLENOID–DIFFERENTIAL LOCK

S/N: CCA1-UP
24V DC
PART OF 174-3705 VALVE & MTG GP-DIFF LOCK

SMCS-5479 i02204767

NOTE	REF NO	GRAPHIC REF	PART NUMBER	QTY	PART NAME 1 2 3 4 5 6 (PRODUCT LEVEL)	SEE PAGE
	1	1	**8C-9987**	1	WASHER (8.3X28X2.5-MM THK)	
	2	1	**111-0343**	1	LOCKNUT (5/16-18-THD)	
	3	1	**142-0350**	1	CARTRIDGE AS	
		1	**8C-9987**	1	WASHER (8.3X28X2.5-MM THK)	
		1	**111-0343**	1	LOCKNUT (5/16-18-THD)	
	4	1	**189-0189**	1	COIL AS	
		1	**1S-9593**	2	STRAP-CABLE	
		1	**102-8802**	1	KIT-RECEPTACLE (2-PIN)	
					(INCLUDES RECEPTACLE AS & WEDGE)	
		1	**3E-3365**	1	WEDGE-RECEPTACLE LOCK (2-PIN)	
		1	**186-3735**	2	PIN-CONNECTOR	
					AVAILABLE REPAIR KIT(S):	
			6G-5979	1	KIT-SEAL (DIFFERENTIAL LOCK VALVE)	

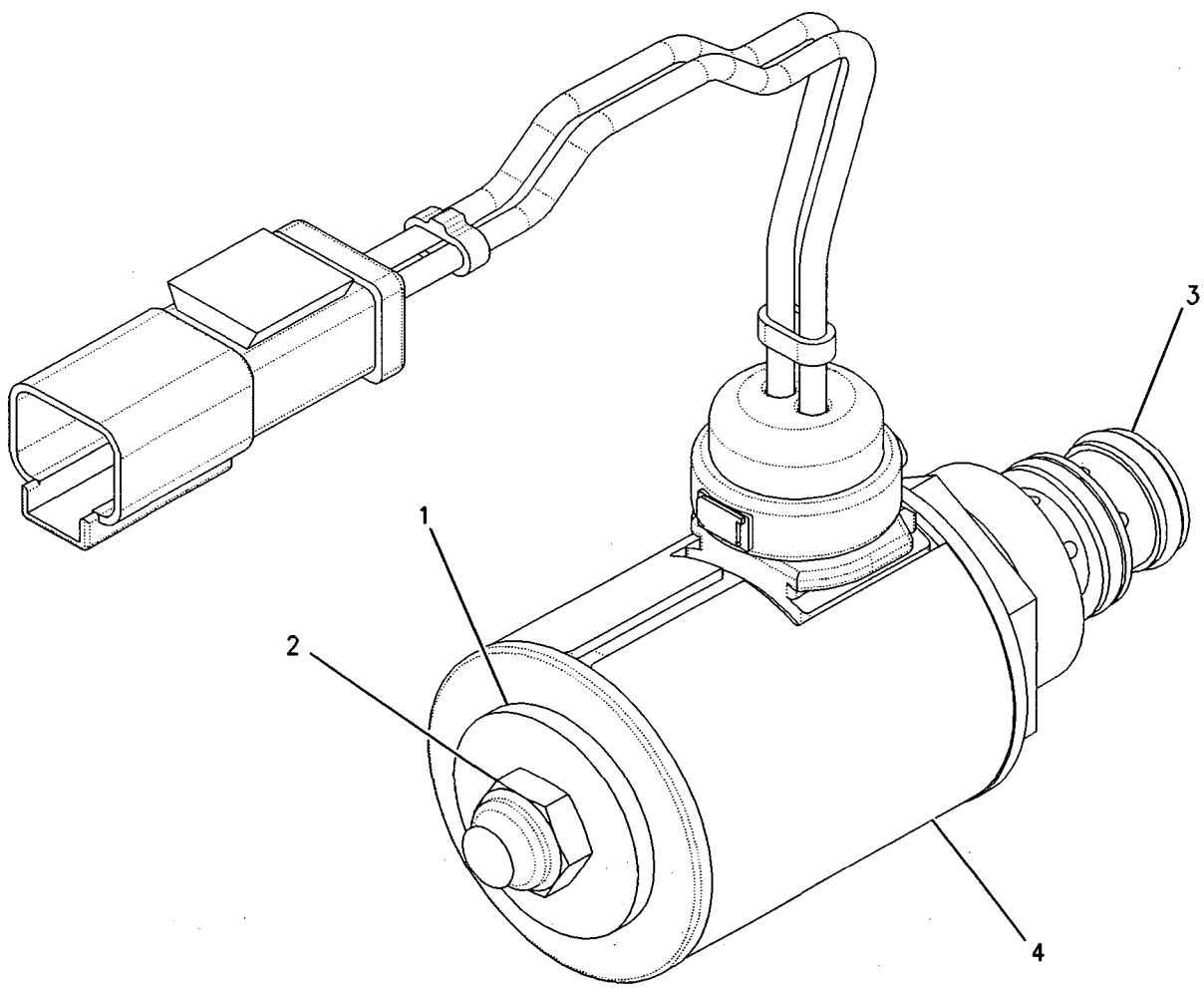

GRAPHIC #1 **<END>** g00877963

186-1526 VALVE GP-SOLENOID-DIRECTION-SPEED

S/N: BJN1-UP

PART OF 184-1130, 184-1132 VALVE GP-SELECTOR & PRESS CONT

SMCS-5479 i02204907

NOTE	REF NO	GRAPHIC REF	PART NUMBER	QTY	PART NAME 1 2 3 4 5 6 (PRODUCT LEVEL)	SEE PAGE
J	1	1	234-6666	1	CARTRIDGE AS-VALVE	
	2	1	104-3947	1	LOCKNUT (5/8-11-THD)	
	3	1	240-6822	1	COIL AS	
	4	1	1S-9593	2	STRAP-CABLE	
	5	1	102-8802	1	KIT-RECEPTACLE (2-PIN)	
					(INCLUDES RECEPTACLE AS & WEDGE)	
	6	1	3E-3365	1	WEDGE-RECEPTACLE LOCK (2-PIN)	
	7	1	186-3735	2	PIN-CONNECTOR	
					AVAILABLE REPAIR KIT(S):	
J			7T-4515		KIT-SEAL (TRANSMISSION SOLENOID)	
					(INCLUDES SEAL-O-RINGS)	

J-KIT MARKED J SERVICES PART MARKED J

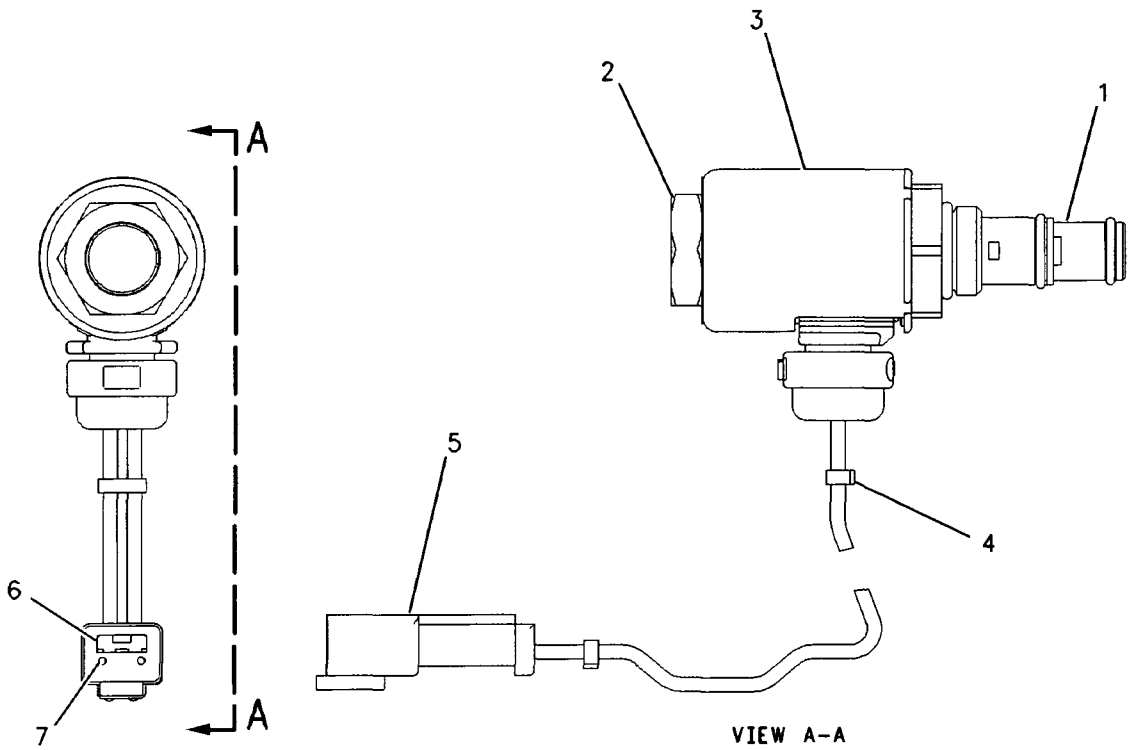

VIEW A-A

GRAPHIC #1 <END> g00661740

179-6063 VALVE GP-TRANSMISSION CONTROL

S/N: BJN1-UP

PART OF 179-6064 CONTROL GP-TRANSMISSION HYD

SMCS-3073 i02204908

NOTE	REF NO	GRAPHIC REF	PART NUMBER	QTY	PART NAME 1 2 3 4 5 6 (PRODUCT LEVEL)	SEE PAGE
Y	1	1	**184-1130**	1	VALVE GP-SELECTOR & PRESS CONT (TRANSMISSION DIRECTION)	396
	2	1	**154-6306**	1	PLATE	
Y	3	1	**184-1132**	1	VALVE GP-SELECTOR & PRESS CONT (TRANSMISSION SPEED)	399
	4	1	**110-5161**	1	MANIFOLD	
	5	1	**154-6307**	1	PLATE	
	6	1	**8E-9474**	1	COVER	
	7	1	**6V-3965**	8	FITTING AS (QUICK DISCONNECT) (QUICK DISCONNECT) (DIAGNOSTIC)	
	8	1	**3J-1907**	10	SEAL-O-RING	
	9	1	**6V-0852**	8	CAP-DUST (TRANSMISSION OIL)	
	11	1	**1T-0738**	2	WASHER (8.4X19X1.83-MM THK)	
	12	1	**9P-9150**	4	WASHER (8.25X18X0.84-MM THK)	
M	13	1	**3E-8006**	2	BOLT (M8X1.25X130-MM)	
	15	1	**9L-9068**	6	DOWEL	
	16	1	**8F-6230**	1	SEAL-O-RING	
	17	1	**4D-6695**	4	SEAL-O-RING	
	18	1	**142-1767**	1	POPPET	
	19	1	**4D-1322**	1	RING-RETAINING	
	20	1	**6Y-2584**	1	RETAINER	
	21	1	**3J-6956**	1	SPRING	
	22	1	**6I-9395**	1	SCREEN (TRANSMISSION CONTROL VALVE)	
M	23	1	**6V-5217**	1	BOLT (M8X1.25X20-MM)	
	24	1	**9S-4191**	2	PLUG	

M-METRIC PART
Y-SEPARATE ILLUSTRATION

179-6063 VALVE GP-TRANSMISSION CONTROL *(contd.)* i02204908

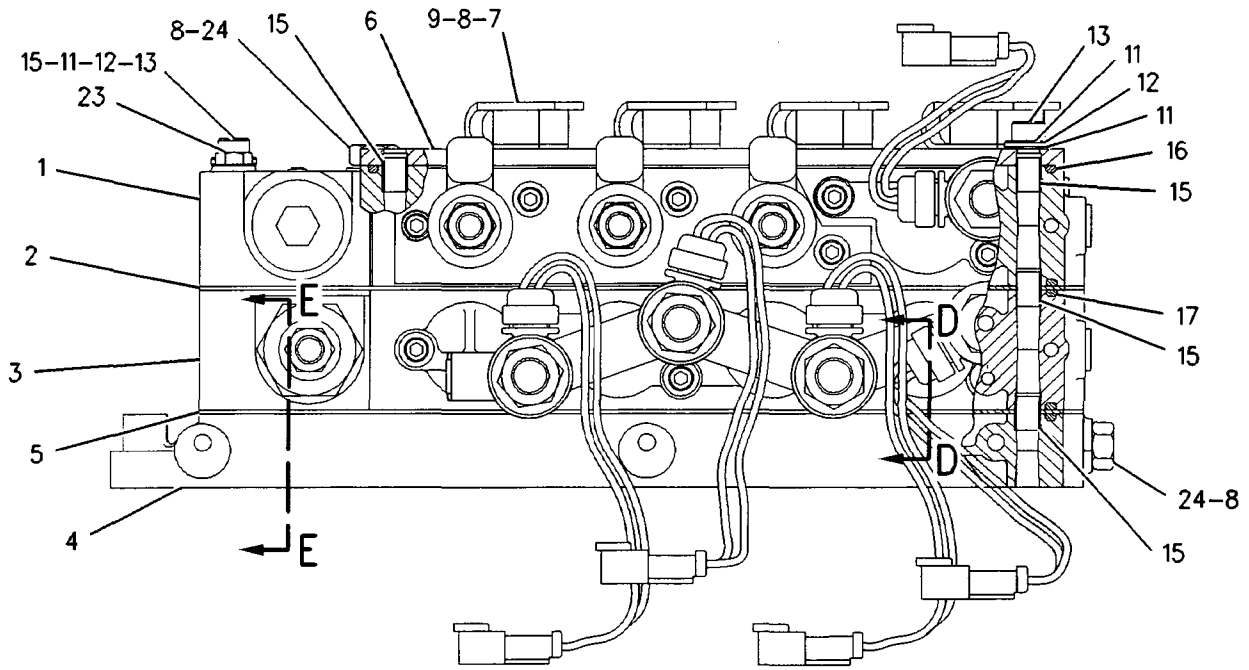

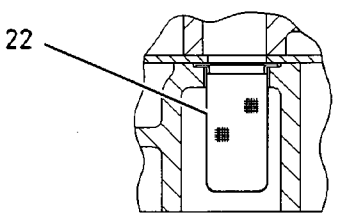

SECTION E-E

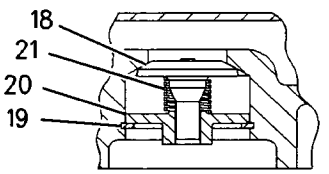

SECTION D-D

GRAPHIC #1 **<END>** g00928707

142-6445 WHEEL & TIRE AR

S/N: CCA1-UP
AN ATTACHMENT

SMCS-4200 i00751976

NOTE	PART NUMBER	QTY	PART NAME 1 2 3 4 5 6 (PRODUCT LEVEL)	SEE PAGE
Y	142-6297	6	WHEEL & TIRE GP	420

Y-SEPARATE ILLUSTRATION

<END>

142-6446 WHEEL & TIRE AR

S/N: CCA1-UP
AN ATTACHMENT

SMCS-4200 i00751969

NOTE	PART NUMBER	QTY	PART NAME 1 2 3 4 5 6 (PRODUCT LEVEL)	SEE PAGE
Y	142-6298	6	WHEEL & TIRE GP	420

Y-SEPARATE ILLUSTRATION

<END>

142-6448 WHEEL & TIRE AR

S/N: CCA1-UP
AN ATTACHMENT

SMCS-4200 i00758986

NOTE	PART NUMBER	QTY	PART NAME 1 2 3 4 5 6 (PRODUCT LEVEL)	SEE PAGE
Y	142-6300	6	WHEEL & TIRE GP	421

Y-SEPARATE ILLUSTRATION

<END>

142-6449 WHEEL & TIRE AR

S/N: CCA1-UP
AN ATTACHMENT

SMCS-4200 i00759108

NOTE	PART NUMBER	QTY	PART NAME 1 2 3 4 5 6 (PRODUCT LEVEL)	SEE PAGE
Y	142-6301	6	WHEEL & TIRE GP	421

Y-SEPARATE ILLUSTRATION

<END>

142-6454 WHEEL & TIRE AR

S/N: CCA1-UP
AN ATTACHMENT

SMCS-4200 i00758826

NOTE	PART NUMBER	QTY	PART NAME 1 2 3 4 5 6 (PRODUCT LEVEL)	SEE PAGE
Y	142-6306	6	WHEEL & TIRE GP	422
Y-SEPARATE ILLUSTRATION				

<END>

142-6455 WHEEL & TIRE AR

S/N: CCA1-UP
AN ATTACHMENT

SMCS-4200 i00758972

NOTE	PART NUMBER	QTY	PART NAME 1 2 3 4 5 6 (PRODUCT LEVEL)	SEE PAGE
Y	142-6307	6	WHEEL & TIRE GP	422
Y-SEPARATE ILLUSTRATION				

<END>

142-6457 WHEEL & TIRE AR

S/N: CCA1-UP
AN ATTACHMENT

SMCS-4200 i00758987

NOTE	PART NUMBER	QTY	PART NAME 1 2 3 4 5 6 (PRODUCT LEVEL)	SEE PAGE
Y	142-6309	6	WHEEL & TIRE GP	423
Y-SEPARATE ILLUSTRATION				

<END>

142-6458 WHEEL & TIRE AR

S/N: CCA1-UP
AN ATTACHMENT

SMCS-4200 i00759110

NOTE	PART NUMBER	QTY	PART NAME 1 2 3 4 5 6 (PRODUCT LEVEL)	SEE PAGE
Y	142-6310	6	WHEEL & TIRE GP	423
Y-SEPARATE ILLUSTRATION				

<END>

POWER TRAIN

142-6460 WHEEL & TIRE AR

S/N: CCA1-UP
AN ATTACHMENT

SMCS-4200 **i00758825**

NOTE	PART NUMBER	QTY	PART NAME 1 2 3 4 5 6 (PRODUCT LEVEL)	SEE PAGE
Y	*142-6312*	6	WHEEL & TIRE GP	424

Y-SEPARATE ILLUSTRATION

<END>

142-6461 WHEEL & TIRE AR

S/N: CCA1-UP
AN ATTACHMENT

SMCS-4200 **i00758822**

NOTE	PART NUMBER	QTY	PART NAME 1 2 3 4 5 6 (PRODUCT LEVEL)	SEE PAGE
Y	*142-6313*	6	WHEEL & TIRE GP	424

Y-SEPARATE ILLUSTRATION

<END>

142-6463 WHEEL & TIRE AR

S/N: CCA1-UP
AN ATTACHMENT

SMCS-4200 **i00758971**

NOTE	PART NUMBER	QTY	PART NAME 1 2 3 4 5 6 (PRODUCT LEVEL)	SEE PAGE
Y	*142-6315*	6	WHEEL & TIRE GP	425

Y-SEPARATE ILLUSTRATION

<END>

142-6464 WHEEL & TIRE AR

S/N: CCA1-UP
AN ATTACHMENT

SMCS-4200 **i00758982**

NOTE	PART NUMBER	QTY	PART NAME 1 2 3 4 5 6 (PRODUCT LEVEL)	SEE PAGE
Y	*142-6316*	6	WHEEL & TIRE GP	425

Y-SEPARATE ILLUSTRATION

<END>

142-6466 WHEEL & TIRE AR

S/N: CCA1-UP
AN ATTACHMENT

SMCS-4200 i00766611

NOTE	PART NUMBER	QTY	PART NAME 1 2 3 4 5 6 (PRODUCT LEVEL)	SEE PAGE
Y	142-6318	6	WHEEL & TIRE GP	426

Y-SEPARATE ILLUSTRATION

<END>

142-6467 WHEEL & TIRE AR

S/N: CCA1-UP
AN ATTACHMENT

SMCS-4200 i00766609

NOTE	PART NUMBER	QTY	PART NAME 1 2 3 4 5 6 (PRODUCT LEVEL)	SEE PAGE
Y	142-6319	6	WHEEL & TIRE GP	426

Y-SEPARATE ILLUSTRATION

<END>

142-6469 WHEEL & TIRE AR

S/N: CCA1-UP
AN ATTACHMENT

SMCS-4200 i00766607

NOTE	PART NUMBER	QTY	PART NAME 1 2 3 4 5 6 (PRODUCT LEVEL)	SEE PAGE
Y	142-6321	6	WHEEL & TIRE GP	427

Y-SEPARATE ILLUSTRATION

<END>

142-6470 WHEEL & TIRE AR

S/N: CCA1-UP
AN ATTACHMENT

SMCS-4200 i00766617

NOTE	PART NUMBER	QTY	PART NAME 1 2 3 4 5 6 (PRODUCT LEVEL)	SEE PAGE
Y	142-6322	6	WHEEL & TIRE GP	427

Y-SEPARATE ILLUSTRATION

<END>

142-6472 WHEEL & TIRE AR

S/N: CCA1-UP
AN ATTACHMENT

SMCS-4200 i00766614

NOTE	PART NUMBER	QTY	PART NAME 1 2 3 4 5 6 (PRODUCT LEVEL)	SEE PAGE
Y	142-6324	6	WHEEL & TIRE GP	428

Y-SEPARATE ILLUSTRATION

<END>

142-6474 WHEEL & TIRE AR

S/N: CCA1-UP
AN ATTACHMENT

SMCS-4200 i00766612

NOTE	PART NUMBER	QTY	PART NAME 1 2 3 4 5 6 (PRODUCT LEVEL)	SEE PAGE
Y	142-6325	6	WHEEL & TIRE GP	428

Y-SEPARATE ILLUSTRATION

<END>

142-6477 WHEEL & TIRE AR

S/N: CCA1-UP
AN ATTACHMENT

SMCS-4200 i00766608

NOTE	PART NUMBER	QTY	PART NAME 1 2 3 4 5 6 (PRODUCT LEVEL)	SEE PAGE
Y	142-6328	6	WHEEL & TIRE GP	429

Y-SEPARATE ILLUSTRATION

<END>

142-6479 WHEEL & TIRE AR

S/N: CCA1-UP
AN ATTACHMENT

SMCS-4200 i00766605

NOTE	PART NUMBER	QTY	PART NAME 1 2 3 4 5 6 (PRODUCT LEVEL)	SEE PAGE
Y	142-6330	6	WHEEL & TIRE GP	429

Y-SEPARATE ILLUSTRATION

<END>

151-0361 WHEEL & TIRE AR

S/N: CCA1-UP
AN ATTACHMENT

SMCS-4200 i02164874

NOTE	PART NUMBER	QTY	PART NAME 1 2 3 4 5 6 (PRODUCT LEVEL)	SEE PAGE
Y	150-4467	6	WHEEL & TIRE GP	440
Y-SEPARATE ILLUSTRATION				

<END>

151-0362 WHEEL & TIRE AR

S/N: CCA1-UP
AN ATTACHMENT

SMCS-4200 i00775616

NOTE	PART NUMBER	QTY	PART NAME 1 2 3 4 5 6 (PRODUCT LEVEL)	SEE PAGE
Y	142-6332	6	WHEEL & TIRE GP	430
Y-SEPARATE ILLUSTRATION				

<END>

151-0364 WHEEL & TIRE AR

S/N: CCA1-UP
AN ATTACHMENT

SMCS-4200 i00759127

NOTE	PART NUMBER	QTY	PART NAME 1 2 3 4 5 6 (PRODUCT LEVEL)	SEE PAGE
Y	142-6353	6	WHEEL & TIRE GP	430
Y-SEPARATE ILLUSTRATION				

<END>

151-0365 WHEEL & TIRE AR

S/N: CCA1-UP
AN ATTACHMENT

SMCS-4200 i00759194

NOTE	PART NUMBER	QTY	PART NAME 1 2 3 4 5 6 (PRODUCT LEVEL)	SEE PAGE
Y	142-6360	6	WHEEL & TIRE GP	433
Y-SEPARATE ILLUSTRATION				

<END>

151-0366 WHEEL & TIRE AR

S/N: CCA1-UP
AN ATTACHMENT

SMCS-4200 i00759349

NOTE	PART NUMBER	QTY	PART NAME 1 2 3 4 5 6 (PRODUCT LEVEL)	SEE PAGE
Y	142-6363	6	WHEEL & TIRE GP	434

Y-SEPARATE ILLUSTRATION

<END>

151-0367 WHEEL & TIRE AR

S/N: CCA1-UP
AN ATTACHMENT

SMCS-4200 i00759353

NOTE	PART NUMBER	QTY	PART NAME 1 2 3 4 5 6 (PRODUCT LEVEL)	SEE PAGE
Y	142-6366	6	WHEEL & TIRE GP	435

Y-SEPARATE ILLUSTRATION

<END>

151-0368 WHEEL & TIRE AR

S/N: CCA1-UP
AN ATTACHMENT

SMCS-4200 i00759354

NOTE	PART NUMBER	QTY	PART NAME 1 2 3 4 5 6 (PRODUCT LEVEL)	SEE PAGE
Y	142-6371	6	WHEEL & TIRE GP	436

Y-SEPARATE ILLUSTRATION

<END>

151-0371 WHEEL & TIRE AR

S/N: CCA1-UP
AN ATTACHMENT

SMCS-4200 i00759269

NOTE	PART NUMBER	QTY	PART NAME 1 2 3 4 5 6 (PRODUCT LEVEL)	SEE PAGE
Y	142-6354	6	WHEEL & TIRE GP	431

Y-SEPARATE ILLUSTRATION

<END>

151-0372 WHEEL & TIRE AR

S/N: CCA1-UP
AN ATTACHMENT

SMCS-4200 i00759272

NOTE	PART NUMBER	QTY	PART NAME 1 2 3 4 5 6 (PRODUCT LEVEL)	SEE PAGE
Y	142-6372	6	WHEEL & TIRE GP	437
Y-SEPARATE ILLUSTRATION				

<END>

151-0374 WHEEL & TIRE AR

S/N: CCA1-UP
AN ATTACHMENT

SMCS-4200 i00759278

NOTE	PART NUMBER	QTY	PART NAME 1 2 3 4 5 6 (PRODUCT LEVEL)	SEE PAGE
Y	142-6355	6	WHEEL & TIRE GP	431
Y-SEPARATE ILLUSTRATION				

<END>

151-0375 WHEEL & TIRE AR

S/N: CCA1-UP
AN ATTACHMENT

SMCS-4200 i00759351

NOTE	PART NUMBER	QTY	PART NAME 1 2 3 4 5 6 (PRODUCT LEVEL)	SEE PAGE
Y	142-6373	6	WHEEL & TIRE GP	437
Y-SEPARATE ILLUSTRATION				

<END>

151-0378 WHEEL & TIRE AR

S/N: CCA1-UP
AN ATTACHMENT

SMCS-4200 i00759357

NOTE	PART NUMBER	QTY	PART NAME 1 2 3 4 5 6 (PRODUCT LEVEL)	SEE PAGE
Y	142-6356	6	WHEEL & TIRE GP	432
Y-SEPARATE ILLUSTRATION				

<END>

151-0379 WHEEL & TIRE AR

S/N: CCA1-UP
AN ATTACHMENT

SMCS-4200 i00759358

NOTE	PART NUMBER	QTY	PART NAME 1 2 3 4 5 6 (PRODUCT LEVEL)	SEE PAGE
Y	142-6361	6	WHEEL & TIRE GP	434

Y-SEPARATE ILLUSTRATION

<END>

151-0380 WHEEL & TIRE AR

S/N: CCA1-UP
AN ATTACHMENT

SMCS-4200 i00759275

NOTE	PART NUMBER	QTY	PART NAME 1 2 3 4 5 6 (PRODUCT LEVEL)	SEE PAGE
Y	142-6364	6	WHEEL & TIRE GP	435

Y-SEPARATE ILLUSTRATION

<END>

151-0381 WHEEL & TIRE AR

S/N: CCA1-UP
AN ATTACHMENT

SMCS-4200 i00760333

NOTE	PART NUMBER	QTY	PART NAME 1 2 3 4 5 6 (PRODUCT LEVEL)	SEE PAGE
Y	142-6367	6	WHEEL & TIRE GP	436

Y-SEPARATE ILLUSTRATION

<END>

151-0382 WHEEL & TIRE AR

S/N: CCA1-UP
AN ATTACHMENT

SMCS-4200 i00760334

NOTE	PART NUMBER	QTY	PART NAME 1 2 3 4 5 6 (PRODUCT LEVEL)	SEE PAGE
Y	142-6374	6	WHEEL & TIRE GP	438

Y-SEPARATE ILLUSTRATION

<END>

151-0385 WHEEL & TIRE AR

S/N: CCA1-UP
AN ATTACHMENT

SMCS-4200 i00775615

NOTE	PART NUMBER	QTY	PART NAME 1 2 3 4 5 6 (PRODUCT LEVEL)	SEE PAGE
Y	*142-6385*	6	WHEEL & TIRE GP	439
Y-SEPARATE ILLUSTRATION				

<END>

151-0388 WHEEL & TIRE AR

S/N: CCA1-UP
AN ATTACHMENT

SMCS-4200 i00760579

NOTE	PART NUMBER	QTY	PART NAME 1 2 3 4 5 6 (PRODUCT LEVEL)	SEE PAGE
Y	*142-6357*	6	WHEEL & TIRE GP	432
Y-SEPARATE ILLUSTRATION				

<END>

151-0389 WHEEL & TIRE AR

S/N: CCA1-UP
AN ATTACHMENT

SMCS-4200 i00760599

NOTE	PART NUMBER	QTY	PART NAME 1 2 3 4 5 6 (PRODUCT LEVEL)	SEE PAGE
Y	*142-6375*	6	WHEEL & TIRE GP	438
Y-SEPARATE ILLUSTRATION				

<END>

151-0392 WHEEL & TIRE AR

S/N: CCA1-UP
AN ATTACHMENT

SMCS-4200 i00760499

NOTE	PART NUMBER	QTY	PART NAME 1 2 3 4 5 6 (PRODUCT LEVEL)	SEE PAGE
Y	*142-6358*	6	WHEEL & TIRE GP	433
Y-SEPARATE ILLUSTRATION				

<END>

151-0393 WHEEL & TIRE AR

S/N: CCA1-UP
AN ATTACHMENT

SMCS-4200 i00760539

NOTE	PART NUMBER	QTY	PART NAME 1 2 3 4 5 6 (PRODUCT LEVEL)	SEE PAGE
Y	142-6376	6	WHEEL & TIRE GP	439

Y-SEPARATE ILLUSTRATION

<END>

153-5460 WHEEL & TIRE AR

S/N: CCA1-UP
AN ATTACHMENT

SMCS-4200 i00767526

NOTE	PART NUMBER	QTY	PART NAME 1 2 3 4 5 6 (PRODUCT LEVEL)	SEE PAGE
Y	153-5459	6	WHEEL & TIRE GP	441

Y-SEPARATE ILLUSTRATION

<END>

153-5464 WHEEL & TIRE AR

S/N: CCA1-UP
AN ATTACHMENT

SMCS-4200 i00767583

NOTE	PART NUMBER	QTY	PART NAME 1 2 3 4 5 6 (PRODUCT LEVEL)	SEE PAGE
Y	153-5463	6	WHEEL & TIRE GP	441

Y-SEPARATE ILLUSTRATION

<END>

153-5468 WHEEL & TIRE AR

S/N: CCA1-UP
AN ATTACHMENT

SMCS-4200 i00767538

NOTE	PART NUMBER	QTY	PART NAME 1 2 3 4 5 6 (PRODUCT LEVEL)	SEE PAGE
Y	153-5467	6	WHEEL & TIRE GP	442

Y-SEPARATE ILLUSTRATION

<END>

159-1782 WHEEL & TIRE AR

S/N: CCA1-UP
AN ATTACHMENT

SMCS-4200 i01035793

NOTE	PART NUMBER	QTY	PART NAME 1 2 3 4 5 6 (PRODUCT LEVEL)	SEE PAGE
Y	159-1785	6	WHEEL & TIRE GP	442

Y-SEPARATE ILLUSTRATION

<END>

163-0375 WHEEL & TIRE AR

S/N: CCA1-UP
AN ATTACHMENT

SMCS-4200 i02164193

NOTE	PART NUMBER	QTY	PART NAME 1 2 3 4 5 6 (PRODUCT LEVEL)	SEE PAGE
Y	163-0376	6	WHEEL & TIRE GP	443

Y-SEPARATE ILLUSTRATION

<END>

174-2304 WHEEL & TIRE AR

S/N: CCA1-UP
AN ATTACHMENT

SMCS-4200 i01680354

NOTE	PART NUMBER	QTY	PART NAME 1 2 3 4 5 6 (PRODUCT LEVEL)	SEE PAGE
Y	173-7813	6	WHEEL & TIRE GP	443

Y-SEPARATE ILLUSTRATION

<END>

183-1416 WHEEL & TIRE AR

S/N: CCA1-UP
AN ATTACHMENT

SMCS-4200 i02164215

NOTE	PART NUMBER	QTY	PART NAME 1 2 3 4 5 6 (PRODUCT LEVEL)	SEE PAGE
Y	183-1415	6	WHEEL & TIRE GP	444

Y-SEPARATE ILLUSTRATION

<END>

POWER TRAIN

183-1417 WHEEL & TIRE AR

S/N: CCA1-UP
AN ATTACHMENT

SMCS-4200 **i02164201**

NOTE	PART NUMBER	QTY	PART NAME 1 2 3 4 5 6 (PRODUCT LEVEL)	SEE PAGE
Y	*183-1418*	6	WHEEL & TIRE GP	444

Y-SEPARATE ILLUSTRATION

<END>

184-2362 WHEEL & TIRE AR

S/N: CCA1-UP
AN ATTACHMENT

SMCS-4200 **i01459486**

NOTE	PART NUMBER	QTY	PART NAME 1 2 3 4 5 6 (PRODUCT LEVEL)	SEE PAGE
Y	*184-2346*	6	WHEEL & TIRE GP	445

Y-SEPARATE ILLUSTRATION

<END>

184-2363 WHEEL & TIRE AR

S/N: CCA1-UP
AN ATTACHMENT

SMCS-4200 **i01459493**

NOTE	PART NUMBER	QTY	PART NAME 1 2 3 4 5 6 (PRODUCT LEVEL)	SEE PAGE
Y	*184-2347*	6	WHEEL & TIRE GP	445

Y-SEPARATE ILLUSTRATION

<END>

198-6565 WHEEL & TIRE AR

S/N: CCA1-UP
AN ATTACHMENT

SMCS-4200 **i02164297**

NOTE	PART NUMBER	QTY	PART NAME 1 2 3 4 5 6 (PRODUCT LEVEL)	SEE PAGE
Y	*198-6572*	6	WHEEL & TIRE GP	446

Y-SEPARATE ILLUSTRATION

<END>

204-8786 WHEEL & TIRE AR

S/N: CCA1-UP
AN ATTACHMENT

SMCS-4200 i01562289

NOTE	PART NUMBER	QTY	PART NAME 1 2 3 4 5 6 (PRODUCT LEVEL)	SEE PAGE
Y	204-8785	6	WHEEL & TIRE GP	446

Y-SEPARATE ILLUSTRATION

<END>

207-9862 WHEEL & TIRE AR

S/N: CCA1-UP
AN ATTACHMENT

SMCS-4200 i02164332

NOTE	PART NUMBER	QTY	PART NAME 1 2 3 4 5 6 (PRODUCT LEVEL)	SEE PAGE
Y	207-9861	6	WHEEL & TIRE GP	447

Y-SEPARATE ILLUSTRATION

<END>

216-7444 WHEEL & TIRE AR

S/N: CCA1-UP
AN ATTACHMENT

SMCS-4200 i02164771

NOTE	PART NUMBER	QTY	PART NAME 1 2 3 4 5 6 (PRODUCT LEVEL)	SEE PAGE
Y	216-7443	6	WHEEL & TIRE GP	447

Y-SEPARATE ILLUSTRATION

<END>

228-9265 WHEEL & TIRE AR

S/N: CCA1-UP
AN ATTACHMENT

SMCS-4200 i02164807

NOTE	PART NUMBER	QTY	PART NAME 1 2 3 4 5 6 (PRODUCT LEVEL)	SEE PAGE
Y	226-0735	6	WHEEL & TIRE GP	448

Y-SEPARATE ILLUSTRATION

<END>

142-6297 WHEEL & TIRE GP

S/N: CCA1-UP
(9 X 24)
PART OF 142-6445 WHEEL & TIRE AR
AN ATTACHMENT

SMCS-4200 i02205244

NOTE	PART NUMBER	QTY	PART NAME 1 2 3 4 5 6 (PRODUCT LEVEL)	SEE PAGE
	123-3420	1	RIM AS (9X24)	
	142-6170	1	TIRE (14-24)	
	2D-2511	1	VALVE GP-TIRE	
	9K-7951	1	CAP-VALVE (STEM)	
	6F-3930	1	CORE-VALVE	
	7D-5252	1	SPUD AS	
	2D-2508	1	GROMMET	
	2D-2509	1	LOCKNUT (11/16-16-THD)	
	2D-2507	1	SPUD	

<END>

142-6298 WHEEL & TIRE GP

S/N: CCA1-UP
PART OF 142-6446 WHEEL & TIRE AR
AN ATTACHMENT

SMCS-4200 i02205245

NOTE	PART NUMBER	QTY	PART NAME 1 2 3 4 5 6 (PRODUCT LEVEL)	SEE PAGE
Y	*142-6226*	1	WHEEL GP	451
	2D-2565	1	SEAL-O-RING	
	142-6170	1	TIRE (14-24)	
	110-4213	1	VALVE GP-TIRE	
	7D-5252	1	SPUD AS	
	2D-2508	1	GROMMET	
	2D-2509	1	LOCKNUT (11/16-16-THD)	
	110-4214	1	STEM AS	
	9K-7951	1	CAP-VALVE (STEM)	
	6F-3930	1	CORE-VALVE	

Y-SEPARATE ILLUSTRATION

<END>

142-6300 WHEEL & TIRE GP

S/N: CCA1-UP
(9 X 24)
PART OF 142-6448 WHEEL & TIRE AR
AN ATTACHMENT

SMCS-4200 i02205249

NOTE	PART NUMBER	QTY	PART NAME 1 2 3 4 5 6 (PRODUCT LEVEL)	SEE PAGE
	123-3420	1	RIM AS (9X24)	
	142-6171	1	TIRE (14-24)	
	2D-2511	1	VALVE GP-TIRE	
	9K-7951	1	CAP-VALVE (STEM)	
	6F-3930	1	CORE-VALVE	
	7D-5252	1	SPUD AS	
	2D-2508	1	GROMMET	
	2D-2509	1	LOCKNUT (11/16-16-THD)	
	2D-2507	1	SPUD	

<END>

142-6301 WHEEL & TIRE GP

S/N: CCA1-UP
PART OF 142-6449 WHEEL & TIRE AR
AN ATTACHMENT

SMCS-4200 i02205296

NOTE	PART NUMBER	QTY	PART NAME 1 2 3 4 5 6 (PRODUCT LEVEL)	SEE PAGE
Y	*142-6226*	1	WHEEL GP	451
	2D-2565	1	SEAL-O-RING	
	142-6171	1	TIRE (14-24)	
	110-4213	1	VALVE GP-TIRE	
	7D-5252	1	SPUD AS	
	2D-2508	1	GROMMET	
	2D-2509	1	LOCKNUT (11/16-16-THD)	
	110-4214	1	STEM AS	
	9K-7951	1	CAP-VALVE (STEM)	
	6F-3930	1	CORE-VALVE	

Y-SEPARATE ILLUSTRATION

<END>

142-6306 WHEEL & TIRE GP

S/N: CCA1-UP
(9 X 24)
PART OF 142-6454 WHEEL & TIRE AR
AN ATTACHMENT

SMCS-4200 **i02205305**

NOTE	PART NUMBER	QTY	PART NAME 1 2 3 4 5 6 (PRODUCT LEVEL)	SEE PAGE
	123-3420	1	RIM AS (9X24)	
	142-6173	1	TIRE (14-24)	
	2D-2511	1	VALVE GP-TIRE	
	9K-7951	1	CAP-VALVE (STEM)	
	6F-3930	1	CORE-VALVE	
	7D-5252	1	SPUD AS	
	2D-2508	1	GROMMET	
	2D-2509	1	LOCKNUT (11/16-16-THD)	
	2D-2507	1	SPUD	

<END>

142-6307 WHEEL & TIRE GP

S/N: CCA1-UP
PART OF 142-6455 WHEEL & TIRE AR
AN ATTACHMENT

SMCS-4200 **i02205306**

NOTE	PART NUMBER	QTY	PART NAME 1 2 3 4 5 6 (PRODUCT LEVEL)	SEE PAGE
Y	*142-6226*	1	WHEEL GP	451
	2D-2565	1	SEAL-O-RING	
	142-6173	1	TIRE (14-24)	
	110-4213	1	VALVE GP-TIRE	
	7D-5252	1	SPUD AS	
	2D-2508	1	GROMMET	
	2D-2509	1	LOCKNUT (11/16-16-THD)	
	110-4214	1	STEM AS	
	6F-3930	1	CORE-VALVE	
	9K-7951	1	CAP-VALVE (STEM)	

Y-SEPARATE ILLUSTRATION

<END>

142-6309 WHEEL & TIRE GP

S/N: CCA1-UP
(9 X 24)
PART OF 142-6457 WHEEL & TIRE AR
AN ATTACHMENT

SMCS-4200 i02205309

NOTE	PART NUMBER	QTY	PART NAME 1 2 3 4 5 6 (PRODUCT LEVEL)	SEE PAGE
	123-3420	1	RIM AS (9X24)	
	142-6174	1	TIRE (14-24)	
	2D-2511	1	VALVE GP-TIRE	
	9K-7951	1	CAP-VALVE (STEM)	
	6F-3930	1	CORE-VALVE	
	7D-5252	1	SPUD AS	
	2D-2508	1	GROMMET	
	2D-2509	1	LOCKNUT (11/16-16-THD)	
	2D-2507	1	SPUD	

<END>

142-6310 WHEEL & TIRE GP

S/N: CCA1-UP
(9X24)
PART OF 142-6458 WHEEL & TIRE AR
AN ATTACHMENT

SMCS-4200 i02205321

NOTE	PART NUMBER	QTY	PART NAME 1 2 3 4 5 6 (PRODUCT LEVEL)	SEE PAGE
Y	*142-6226*	1	WHEEL GP	451
	142-6174	1	TIRE (14-24)	
	2D-2565	1	SEAL-O-RING	
	110-4213	1	VALVE GP-TIRE	
	7D-5252	1	SPUD AS	
	2D-2508	1	GROMMET	
	2D-2509	1	LOCKNUT (11/16-16-THD)	
	110-4214	1	STEM AS	
	9K-7951	1	CAP-VALVE (STEM)	
	6F-3930	1	CORE-VALVE	

Y-SEPARATE ILLUSTRATION

<END>

142-6312 WHEEL & TIRE GP

S/N: CCA1-UP
(9 X 24)
PART OF 142-6460 WHEEL & TIRE AR
AN ATTACHMENT

SMCS-4200 i02205329

NOTE	PART NUMBER	QTY	PART NAME 1 2 3 4 5 6 (PRODUCT LEVEL)	SEE PAGE
	123-3420	1	RIM AS (9X24)	
	142-6175	1	TIRE (14-24)	
	2D-2511	1	VALVE GP-TIRE	
	9K-7951	1	CAP-VALVE (STEM)	
	6F-3930	1	CORE-VALVE	
	7D-5252	1	SPUD AS	
	2D-2508	1	GROMMET	
	2D-2509	1	LOCKNUT (11/16-16-THD)	
	2D-2507	1	SPUD	

<END>

142-6313 WHEEL & TIRE GP

S/N: CCA1-UP
PART OF 142-6461 WHEEL & TIRE AR
AN ATTACHMENT

SMCS-4200 i02205334

NOTE	PART NUMBER	QTY	PART NAME 1 2 3 4 5 6 (PRODUCT LEVEL)	SEE PAGE
Y	*142-6226*	1	WHEEL GP	451
	2D-2565	1	SEAL-O-RING	
	142-6175	1	TIRE (14-24)	
	110-4213	1	VALVE GP-TIRE	
	7D-5252	1	SPUD AS	
	2D-2508	1	GROMMET	
	2D-2509	1	LOCKNUT (11/16-16-THD)	
	110-4214		STEM AS	
	9K-7951	1	CAP-VALVE (STEM)	
	6F-3930	1	CORE-VALVE	

Y-SEPARATE ILLUSTRATION

<END>

142-6315 WHEEL & TIRE GP

S/N: CCA1-UP
(9 X 24)
PART OF 142-6463 WHEEL & TIRE AR
AN ATTACHMENT

SMCS-4200 i02205330

NOTE	PART NUMBER	QTY	PART NAME 1 2 3 4 5 6 (PRODUCT LEVEL)	SEE PAGE
	123-3420	1	RIM AS (9X24)	
	112-9813	1	TIRE (14-R24)	
	2D-2511	1	VALVE GP-TIRE	
	9K-7951	1	CAP-VALVE (STEM)	
	6F-3930	1	CORE-VALVE	
	7D-5252	1	SPUD AS	
	2D-2508	1	GROMMET	
	2D-2509	1	LOCKNUT (11/16-16-THD)	
	2D-2507	1	SPUD	

<END>

142-6316 WHEEL & TIRE GP

S/N: CCA1-UP
PART OF 142-6464 WHEEL & TIRE AR
AN ATTACHMENT

SMCS-4200 i02205331

NOTE	PART NUMBER	QTY	PART NAME 1 2 3 4 5 6 (PRODUCT LEVEL)	SEE PAGE
Y	*142-6226*	1	WHEEL GP	451
	2D-2565	1	SEAL-O-RING	
	112-9813	1	TIRE (14-R24)	
	110-4213	1	VALVE GP-TIRE	
	7D-5252	1	SPUD AS	
	2D-2508	1	GROMMET	
	2D-2509	1	LOCKNUT (11/16-16-THD)	
	110-4214	1	STEM AS	
	6F-3930	1	CORE-VALVE	
	9K-7951	1	CAP-VALVE (STEM)	

Y-SEPARATE ILLUSTRATION

<END>

142-6318 WHEEL & TIRE GP

S/N: CCA1-UP
(9 X 24)
PART OF 142-6466 WHEEL & TIRE AR
AN ATTACHMENT

SMCS-4200 i02205332

NOTE	PART NUMBER	QTY	PART NAME 1 2 3 4 5 6 (PRODUCT LEVEL)	SEE PAGE
	123-3420	1	RIM AS (9X24)	
	123-3178	1	TIRE (14-R24)	
	2D-2511	1	VALVE GP-TIRE	
	9K-7951	1	CAP-VALVE (STEM)	
	6F-3930	1	CORE-VALVE	
	7D-5252	1	SPUD AS	
	2D-2508	1	GROMMET	
	2D-2509	1	LOCKNUT (11/16-16-THD)	
	2D-2507	1	SPUD	

<END>

142-6319 WHEEL & TIRE GP

S/N: CCA1-UP
(9X24)
PART OF 142-6467 WHEEL & TIRE AR
AN ATTACHMENT

SMCS-4200 i02205335

NOTE	PART NUMBER	QTY	PART NAME 1 2 3 4 5 6 (PRODUCT LEVEL)	SEE PAGE
Y	*142-6226*	1	WHEEL GP	451
	2D-2565	1	SEAL-O-RING	
	123-3178	1	TIRE (14-R24)	
	110-4213	1	VALVE GP-TIRE	
	7D-5252	1	SPUD AS	
	2D-2508	1	GROMMET	
	2D-2509	1	LOCKNUT (11/16-16-THD)	
	110-4214	1	STEM AS	
	9K-7951	1	CAP-VALVE (STEM)	
	6F-3930	1	CORE-VALVE	

Y-SEPARATE ILLUSTRATION

<END>

142-6321 WHEEL & TIRE GP

S/N: CCA1-UP
(9 X 24)
PART OF 142-6469 WHEEL & TIRE AR
AN ATTACHMENT

SMCS-4200 i02205364

NOTE	PART NUMBER	QTY	PART NAME 1 2 3 4 5 6 (PRODUCT LEVEL)	SEE PAGE
	123-3420	1	RIM AS (9X24)	
	106-1567	1	TIRE (14-R24)	
	2D-2511	1	VALVE GP-TIRE	
	9K-7951	1	CAP-VALVE (STEM)	
	6F-3930	1	CORE-VALVE	
	7D-5252	1	SPUD AS	
	2D-2508	1	GROMMET	
	2D-2509	1	LOCKNUT (11/16-16-THD)	
	2D-2507	1	SPUD	

<END>

142-6322 WHEEL & TIRE GP

S/N: CCA1-UP
(9X24)
PART OF 142-6470 WHEEL & TIRE AR
AN ATTACHMENT

SMCS-4200 i02205366

NOTE	PART NUMBER	QTY	PART NAME 1 2 3 4 5 6 (PRODUCT LEVEL)	SEE PAGE
Y	*142-6226*	1	WHEEL GP	451
	2D-2565	1	SEAL-O-RING	
	106-1567	1	TIRE (14-R24)	
	110-4213	1	VALVE GP-TIRE	
	7D-5252	1	SPUD AS	
	2D-2508	1	GROMMET	
	2D-2509	1	LOCKNUT (11/16-16-THD)	
	110-4214	1	STEM AS	
	6F-3930	1	CORE-VALVE	
	9K-7951	1	CAP-VALVE (STEM)	

Y-SEPARATE ILLUSTRATION

<END>

142-6324 WHEEL & TIRE GP

S/N: CCA1-UP
(9 X 24)
PART OF 142-6472 WHEEL & TIRE AR
AN ATTACHMENT

SMCS-4200 i02205367

NOTE	PART NUMBER	QTY	PART NAME 1 2 3 4 5 6 (PRODUCT LEVEL)	SEE PAGE
	123-3420	1	RIM AS (9X24)	
	129-5454	1	TIRE (14-R24)	
	2D-2511	1	VALVE GP-TIRE	
	9K-7951	1	CAP-VALVE (STEM)	
	6F-3930	1	CORE-VALVE	
	7D-5252	1	SPUD AS	
	2D-2508	1	GROMMET	
	2D-2509	1	LOCKNUT (11/16-16-THD)	
	2D-2507	1	SPUD	

<END>

142-6325 WHEEL & TIRE GP

S/N: CCA1-UP
(9X24)
PART OF 142-6474 WHEEL & TIRE AR
AN ATTACHMENT

SMCS-4200 i02205368

NOTE	PART NUMBER	QTY	PART NAME 1 2 3 4 5 6 (PRODUCT LEVEL)	SEE PAGE
Y	*142-6226*	1	WHEEL GP	451
	2D-2565	1	SEAL-O-RING	
	129-5454	1	TIRE (14-R24)	
	110-4213	1	VALVE GP-TIRE	
	7D-5252	1	SPUD AS	
	2D-2508	1	GROMMET	
	2D-2509	1	LOCKNUT (11/16-16-THD)	
	110-4214	1	STEM AS	
	9K-7951	1	CAP-VALVE (STEM)	
	6F-3930	1	CORE-VALVE	

Y-SEPARATE ILLUSTRATION

<END>

142-6328 WHEEL & TIRE GP

S/N: CCA1-UP
(9X24)
PART OF 142-6477 WHEEL & TIRE AR
AN ATTACHMENT

SMCS-4200 **i02205369**

NOTE	PART NUMBER	QTY	PART NAME 1 2 3 4 5 6 (PRODUCT LEVEL)	SEE PAGE
Y	*142-6226*	1	WHEEL GP	451
	2D-2565	1	SEAL-O-RING	
	141-0360	1	TIRE (14-R24)	
	110-4213	1	VALVE GP-TIRE	
	7D-5252	1	SPUD AS	
	2D-2507	1	SPUD	
	2D-2508	1	GROMMET	
	2D-2509	1	LOCKNUT (11/16-16-THD)	
	110-4214	1	STEM AS	
	6F-3930	1	CORE-VALVE	
	9K-7951	1	CAP-VALVE (STEM)	

Y-SEPARATE ILLUSTRATION

<END>

142-6330 WHEEL & TIRE GP

S/N: CCA1-UP
(9X24)
PART OF 142-6479 WHEEL & TIRE AR
AN ATTACHMENT

SMCS-4200 **i02205370**

NOTE	PART NUMBER	QTY	PART NAME 1 2 3 4 5 6 (PRODUCT LEVEL)	SEE PAGE
Y	*142-6226*	1	WHEEL GP	451
	2D-2565	1	SEAL-O-RING	
	140-3607	1	TIRE (14-R24)	
	110-4213	1	VALVE GP-TIRE	
	7D-5252	1	SPUD AS	
	2D-2508	1	GROMMET	
	2D-2509	1	LOCKNUT (11/16-16-THD)	
	110-4214	1	STEM AS	
	9K-7951	1	CAP-VALVE (STEM)	
	6F-3930	1	CORE-VALVE	

Y-SEPARATE ILLUSTRATION

<END>

142-6332 WHEEL & TIRE GP

S/N: CCA1-UP
(9X24)
PART OF 151-0362 WHEEL & TIRE AR
AN ATTACHMENT

SMCS-4200 **i02205434**

NOTE	PART NUMBER	QTY	PART NAME 1 2 3 4 5 6 (PRODUCT LEVEL)	SEE PAGE
Y	*142-6226*	1	WHEEL GP	451
	2D-2565	1	SEAL-O-RING	
	8W-7957	1	TIRE (14-R24)	
	110-4213	1	VALVE GP-TIRE	
	7D-5252	1	SPUD AS	
	2D-2508	1	GROMMET	
	2D-2509	1	LOCKNUT (11/16-16-THD)	
	110-4214	1	STEM AS	
	9K-7951	1	CAP-VALVE (STEM)	
	6F-3930	1	CORE-VALVE	

Y-SEPARATE ILLUSTRATION

<END>

142-6353 WHEEL & TIRE GP

S/N: CCA1-UP
(13 X 25)
PART OF 151-0364 WHEEL & TIRE AR
AN ATTACHMENT

SMCS-4200 **i02205435**

NOTE	PART NUMBER	QTY	PART NAME 1 2 3 4 5 6 (PRODUCT LEVEL)	SEE PAGE
	8X-1160	1	RIM AS (13X25)	
	142-6182	1	TIRE (7.5-25)	
	2G-6595	1	VALVE GP-TIRE	
	9K-7951	1	CAP-VALVE (STEM)	
	6F-3930	1	CORE-VALVE	
	7D-5252	1	SPUD AS	
	2D-2508	1	GROMMET	
	2D-2509	1	LOCKNUT (11/16-16-THD)	
	2D-2507	1	SPUD	

<END>

142-6354 WHEEL & TIRE GP

S/N: CCA1-UP
(13 X 25)
PART OF 151-0371 WHEEL & TIRE AR
AN ATTACHMENT

SMCS-4200 i02205436

NOTE	PART NUMBER	QTY	PART NAME 1 2 3 4 5 6 (PRODUCT LEVEL)	SEE PAGE
	8X-1160	1	RIM AS (13X25)	
	142-6183	1	TIRE (7.5X25)	
	2G-6595	1	VALVE GP-TIRE	
	9K-7951	1	CAP-VALVE (STEM)	
	6F-3930	1	CORE-VALVE	
	7D-5252	1	SPUD AS	
	2D-2508	1	GROMMET	
	2D-2509	1	LOCKNUT (11/16-16-THD)	
	2D-2507	1	SPUD	

<END>

142-6355 WHEEL & TIRE GP

S/N: CCA1-UP
(13 X 25)
PART OF 151-0374 WHEEL & TIRE AR
AN ATTACHMENT

SMCS-4200 i02205437

NOTE	PART NUMBER	QTY	PART NAME 1 2 3 4 5 6 (PRODUCT LEVEL)	SEE PAGE
	8X-1160	1	RIM AS (13X25)	
	142-6184	1	TIRE (17.5-25)	
	2G-6595	1	VALVE GP-TIRE	
	9K-7951	1	CAP-VALVE (STEM)	
	6F-3930	1	CORE-VALVE	
	7D-5252	1	SPUD AS	
	2D-2508	1	GROMMET	
	2D-2509	1	LOCKNUT (11/16-16-THD)	
	2D-2507	1	SPUD	

<END>

142-6356 WHEEL & TIRE GP

S/N: CCA1-UP
(13X25)
PART OF 151-0378 WHEEL & TIRE AR
AN ATTACHMENT

SMCS-4200 **i02205438**

NOTE	PART NUMBER	QTY	PART NAME 1 2 3 4 5 6 (PRODUCT LEVEL)	SEE PAGE
Y	*142-6229*	1	WHEEL GP	451
	8W-3686	1	SEAL-O-RING	
	142-6182	1	TIRE (7.5-25)	
	2G-6595	1	VALVE GP-TIRE	
	9K-7951	1	CAP-VALVE (STEM)	
	6F-3930	1	CORE-VALVE	
	7D-5252	1	SPUD AS	
	2D-2508	1	GROMMET	
	2D-2509	1	LOCKNUT (11/16-16-THD)	
	2D-2507	1	SPUD	

Y-SEPARATE ILLUSTRATION

<END>

142-6357 WHEEL & TIRE GP

S/N: CCA1-UP
(13X25)
PART OF 151-0388 WHEEL & TIRE AR
AN ATTACHMENT

SMCS-4200 **i02205458**

NOTE	PART NUMBER	QTY	PART NAME 1 2 3 4 5 6 (PRODUCT LEVEL)	SEE PAGE
Y	*142-6229*	1	WHEEL GP	451
	8W-3686	1	SEAL-O-RING	
	142-6183	1	TIRE (7.5X25)	
	2G-6595	1	VALVE GP-TIRE	
	9K-7951	1	CAP-VALVE (STEM)	
	6F-3930	1	CORE-VALVE	
	7D-5252	1	SPUD AS	
	2D-2508	1	GROMMET	
	2D-2509	1	LOCKNUT (11/16-16-THD)	
	2D-2507	1	SPUD	

Y-SEPARATE ILLUSTRATION

<END>

142-6358 WHEEL & TIRE GP

S/N: CCA1-UP
(13X25)
PART OF 151-0392 WHEEL & TIRE AR
AN ATTACHMENT

SMCS-4200 i02205459

NOTE	PART NUMBER	QTY	PART NAME 1 2 3 4 5 6 (PRODUCT LEVEL)	SEE PAGE
Y	*142-6229*	1	WHEEL GP	451
	8W-3686	1	SEAL-O-RING	
	142-6184	1	TIRE (17.5-25)	
	2G-6595	1	VALVE GP-TIRE	
	9K-7951	1	CAP-VALVE (STEM)	
	6F-3930	1	CORE-VALVE	
	7D-5252	1	SPUD AS	
	2D-2508	1	GROMMET	
	2D-2509	1	LOCKNUT (11/16-16-THD)	
	2D-2507	1	SPUD	

Y-SEPARATE ILLUSTRATION

<END>

142-6360 WHEEL & TIRE GP

S/N: CCA1-UP
(13 X 25)
PART OF 151-0365 WHEEL & TIRE AR
AN ATTACHMENT

SMCS-4200 i01755157

NOTE	PART NUMBER	QTY	PART NAME 1 2 3 4 5 6 (PRODUCT LEVEL)	SEE PAGE
	8X-1160	1	RIM AS (13X25)	
	6C-7366	1	TIRE (17.5-R25)	
	2G-6595	1	VALVE GP-TIRE	
	6F-3930	1	CORE-VALVE	
	9K-7951	1	CAP-VALVE (STEM)	
	7D-5252	1	SPUD AS	
	2D-2507	1	SPUD	
	2D-2508	1	GROMMET	
	2D-2509	1	LOCKNUT (11/16-16-THD)	

<END>

142-6361 WHEEL & TIRE GP

S/N: CCA1-UP
(13X25)
PART OF 151-0379 WHEEL & TIRE AR
AN ATTACHMENT

SMCS-4200 **i02205460**

NOTE	PART NUMBER	QTY	PART NAME 1 2 3 4 5 6 (PRODUCT LEVEL)	SEE PAGE
Y	*142-6229*	1	WHEEL GP	451
	8W-3686	1	SEAL-O-RING	
	6C-7366	1	TIRE (17.5-R25)	
	2G-6595	1	VALVE GP-TIRE	
	9K-7951	1	CAP-VALVE (STEM)	
	6F-3930	1	CORE-VALVE	
	7D-5252	1	SPUD AS	
	2D-2508	1	GROMMET	
	2D-2509	11	LOCKNUT (11/16-16-THD)	
	2D-2507	1	SPUD	

Y-SEPARATE ILLUSTRATION

<END>

142-6363 WHEEL & TIRE GP

S/N: CCA1-UP
(13 X 25)
PART OF 151-0366 WHEEL & TIRE AR
AN ATTACHMENT

SMCS-4200 **i01755167**

NOTE	PART NUMBER	QTY	PART NAME 1 2 3 4 5 6 (PRODUCT LEVEL)	SEE PAGE
	8X-1160	1	RIM AS (13X25)	
	6C-3246	1	TIRE (17.5-R25)	
	2G-6595	1	VALVE GP-TIRE	
	6F-3930	1	CORE-VALVE	
	9K-7951	1	CAP-VALVE (STEM)	
	7D-5252	1	SPUD AS	
	2D-2507	1	SPUD	
	2D-2508	1	GROMMET	
	2D-2509	1	LOCKNUT (11/16-16-THD)	

<END>

142-6364 WHEEL & TIRE GP

S/N: CCA1-UP
(13X25)
PART OF 151-0380 WHEEL & TIRE AR
AN ATTACHMENT

SMCS-4200 **i02205476**

NOTE	PART NUMBER	QTY	PART NAME 1 2 3 4 5 6 (PRODUCT LEVEL)	SEE PAGE
Y	*142-6229*	1	WHEEL GP	451
	8W-3686	1	SEAL-O-RING	
	6C-3246	1	TIRE (17.5-R25)	
	2G-6595	1	VALVE GP-TIRE	
	6F-3930	1	CORE-VALVE	
	9K-7951	1	CAP-VALVE (STEM)	
	7D-5252	1	SPUD AS	
	2D-2507	1	SPUD	
	2D-2508	1	GROMMET	
	2D-2509	1	LOCKNUT (11/16-16-THD)	

Y-SEPARATE ILLUSTRATION

<END>

142-6366 WHEEL & TIRE GP

S/N: CCA1-UP
(13 X 25)
PART OF 151-0367 WHEEL & TIRE AR
AN ATTACHMENT

SMCS-4200 **i01755200**

NOTE	PART NUMBER	QTY	PART NAME 1 2 3 4 5 6 (PRODUCT LEVEL)	SEE PAGE
	8X-1160	1	RIM AS (13X25)	
	106-4835	1	TIRE (17.5-R25)	
	2G-6595	1	VALVE GP-TIRE	
	6F-3930	1	CORE-VALVE	
	9K-7951	1	CAP-VALVE (STEM)	
	7D-5252	1	SPUD AS	
	2D-2507	1	SPUD	
	2D-2508	1	GROMMET	
	2D-2509	1	LOCKNUT (11/16-16-THD)	

<END>

142-6367 WHEEL & TIRE GP

S/N: CCA1-UP
(13X25)
PART OF 151-0381 WHEEL & TIRE AR
AN ATTACHMENT

SMCS-4200 **i01755828**

NOTE	PART NUMBER	QTY	PART NAME 1 2 3 4 5 6 (PRODUCT LEVEL)	SEE PAGE
	8W-3686	1	SEAL-O-RING	
	106-4835	1	TIRE (17.5-R25)	
	2G-6595	1	VALVE GP-TIRE	
	6F-3930	1	CORE-VALVE	
	9K-7951	1	CAP-VALVE (STEM)	
	7D-5252	1	SPUD AS	
	2D-2507	1	SPUD	
	2D-2508	1	GROMMET	
	2D-2509	1	LOCKNUT (11/16-16-THD)	
Y	*142-6229*	1	WHEEL GP	451

Y-SEPARATE ILLUSTRATION

<END>

142-6371 WHEEL & TIRE GP

S/N: CCA1-UP
(13 X 25)
PART OF 151-0368 WHEEL & TIRE AR
AN ATTACHMENT

SMCS-4200 **i02205485**

NOTE	PART NUMBER	QTY	PART NAME 1 2 3 4 5 6 (PRODUCT LEVEL)	SEE PAGE
	8X-1160	1	RIM AS (13X25)	
	142-6185	1	TIRE (7.5-25)	
	2G-6595	1	VALVE GP-TIRE	
	9K-7951	1	CAP-VALVE (STEM)	
	6F-3930	1	CORE-VALVE	
	7D-5252	1	SPUD AS	
	2D-2508	1	GROMMET	
	2D-2509	1	LOCKNUT (11/16-16-THD)	
	2D-2507	1	SPUD	

<END>

142-6372 WHEEL & TIRE GP

S/N: CCA1-UP
(13 X 25)
PART OF 151-0372 WHEEL & TIRE AR
AN ATTACHMENT

SMCS-4200 i01755168

NOTE	PART NUMBER	QTY	PART NAME 1 2 3 4 5 6 (PRODUCT LEVEL)	SEE PAGE
	8X-1160	1	RIM AS (13X25)	
	142-6186	1	TIRE (7.5-25)	
	2G-6595	1	VALVE GP-TIRE	
	9K-7951	1	CAP-VALVE (STEM)	
	6F-3930	1	CORE-VALVE	
	7D-5252	1	SPUD AS	
	2D-2508	1	GROMMET	
	2D-2509	1	LOCKNUT (11/16-16-THD)	
	2D-2507	1	SPUD	

<END>

142-6373 WHEEL & TIRE GP

S/N: CCA1-UP
(13 X 25)
PART OF 151-0375 WHEEL & TIRE AR
AN ATTACHMENT

SMCS-4200 i02205493

NOTE	PART NUMBER	QTY	PART NAME 1 2 3 4 5 6 (PRODUCT LEVEL)	SEE PAGE
	8X-1160	1	RIM AS (13X25)	
	142-6187	1	TIRE (17.5-25)	
	2G-6595	1	VALVE GP-TIRE	
	9K-7951	1	CAP-VALVE (STEM)	
	6F-3930	1	CORE-VALVE	
	7D-5252	1	SPUD AS	
	2D-2508	1	GROMMET	
	2D-2509	1	LOCKNUT (11/16-16-THD)	
	2D-2507	1	SPUD	

<END>

142-6374 WHEEL & TIRE GP

S/N: CCA1-UP
PART OF 151-0382 WHEEL & TIRE AR
AN ATTACHMENT

SMCS-4200 **i02205510**

NOTE	PART NUMBER	QTY	PART NAME 1 2 3 4 5 6 (PRODUCT LEVEL)	SEE PAGE
Y	*142-6229*	1	WHEEL GP	451
	8W-3686	1	SEAL-O-RING	
	142-6185	1	TIRE (7.5-25)	
	2G-6595	1	VALVE GP-TIRE	
	9K-7951	1	CAP-VALVE (STEM)	
	6F-3930	1	CORE-VALVE	
	7D-5252	1	SPUD AS	
	2D-2508	1	GROMMET	
	2D-2509	1	LOCKNUT (11/16-16-THD)	
	2D-2507	1	SPUD	

Y-SEPARATE ILLUSTRATION

<END>

142-6375 WHEEL & TIRE GP

S/N: CCA1-UP
PART OF 151-0389 WHEEL & TIRE AR
AN ATTACHMENT

SMCS-4200 **i02205511**

NOTE	PART NUMBER	QTY	PART NAME 1 2 3 4 5 6 (PRODUCT LEVEL)	SEE PAGE
Y	*142-6229*	1	WHEEL GP	451
	8W-3686	1	SEAL-O-RING	
	142-6186	1	TIRE (7.5-25)	
	2G-6595	1	VALVE GP-TIRE	
	9K-7951	1	CAP-VALVE (STEM)	
	6F-3930	1	CORE-VALVE	
	7D-5252	1	SPUD AS	
	2D-2508	1	GROMMET	
	2D-2509	1	LOCKNUT (11/16-16-THD)	
	2D-2507	1	SPUD	

Y-SEPARATE ILLUSTRATION

<END>

142-6376 WHEEL & TIRE GP

S/N: CCA1-UP
PART OF 151-0393 WHEEL & TIRE AR
AN ATTACHMENT

SMCS-4200 **i02205503**

NOTE	PART NUMBER	QTY	PART NAME 1 2 3 4 5 6 (PRODUCT LEVEL)	SEE PAGE
Y	*142-6229*	1	WHEEL GP	451
	8W-3686	1	SEAL-O-RING	
	142-6187	1	TIRE (17.5-25)	
	2G-6595	1	VALVE GP-TIRE	
	9K-7951	1	CAP-VALVE (STEM)	
	6F-3930	1	CORE-VALVE	
	7D-5252	1	SPUD AS	
	2D-2508	1	GROMMET	
	2D-2509	1	LOCKNUT (11/16-16-THD)	
	2D-2507	1	SPUD	

Y-SEPARATE ILLUSTRATION

<END>

142-6385 WHEEL & TIRE GP

S/N: CCA1-UP
PART OF 151-0385 WHEEL & TIRE AR
AN ATTACHMENT

SMCS-4200 **i02205508**

NOTE	PART NUMBER	QTY	PART NAME 1 2 3 4 5 6 (PRODUCT LEVEL)	SEE PAGE
Y	*142-6229*	1	WHEEL GP	451
	8W-3686	1	SEAL-O-RING	
	105-3249	1	TIRE (17.5-R25)	
	2G-6595	1	VALVE GP-TIRE	
	9K-7951	1	CAP-VALVE (STEM)	
	6F-3930	1	CORE-VALVE	
	7D-5252	1	SPUD AS	
	2D-2508	1	GROMMET	
	2D-2509	1	LOCKNUT (11/16-16-THD)	
	2D-2507	1	SPUD	

Y-SEPARATE ILLUSTRATION

<END>

150-4467 WHEEL & TIRE GP

S/N: CCA1-UP
(9X24)
PART OF 151-0361 WHEEL & TIRE AR
AN ATTACHMENT

SMCS-4200 i02164875

NOTE	PART NUMBER	QTY	PART NAME 1 2 3 4 5 6 (PRODUCT LEVEL)	SEE PAGE
Y	*142-6226*	1	WHEEL GP	451
	2D-2565	1	SEAL-O-RING	
	150-7955	1	TIRE (14-24)	
	110-4213	1	VALVE GP-TIRE	
	7D-5252	1	SPUD AS	
	2D-2507	1	SPUD	
	2D-2508	1	GROMMET	
	2D-2509	1	LOCKNUT (11/16-16-THD)	
	110-4214	1	STEM AS	
	6F-3930	1	CORE-VALVE	
	9K-7951	1	CAP-VALVE (STEM)	

Y-SEPARATE ILLUSTRATION

<END>

150-4482 WHEEL & TIRE GP

S/N: CCA1-UP
(9X24)
PART OF 151-0370 WHEEL AR
AN ATTACHMENT

SMCS-4200 i02164885

NOTE	PART NUMBER	QTY	PART NAME 1 2 3 4 5 6 (PRODUCT LEVEL)	SEE PAGE
Y	*142-6226*	1	WHEEL GP	451
	2D-2565	1	SEAL-O-RING	
	150-7956	1	TIRE (14-24)	
	110-4213	1	VALVE GP-TIRE	
	7D-5252	1	SPUD AS	
	2D-2507	1	SPUD	
	2D-2508	1	GROMMET	
	2D-2509	1	LOCKNUT (11/16-16-THD)	
	110-4214	1	STEM AS	
	6F-3930	1	CORE-VALVE	
	9K-7951	1	CAP-VALVE (STEM)	

Y-SEPARATE ILLUSTRATION

<END>

153-5459 WHEEL & TIRE GP

S/N: CCA1-UP
(13 X 25)
PART OF 153-5460 WHEEL & TIRE AR
AN ATTACHMENT

SMCS-4200 i02205539

NOTE	PART NUMBER	QTY	PART NAME 1 2 3 4 5 6 (PRODUCT LEVEL)	SEE PAGE
	8X-1160	1	RIM AS (13X25)	
	153-5425	1	TIRE (15.5-25)	
	2G-6595	1	VALVE GP-TIRE	
	9K-7951	1	CAP-VALVE (STEM)	
	6F-3930	1	CORE-VALVE	
	7D-5252	1	SPUD AS	
	2D-2508	1	GROMMET	
	2D-2509	1	LOCKNUT (11/16-16-THD)	
	2D-2507	1	SPUD	

<END>

153-5463 WHEEL & TIRE GP

S/N: CCA1-UP
(13 X 25)
PART OF 153-5464 WHEEL & TIRE AR
AN ATTACHMENT

SMCS-4200 i02205540

NOTE	PART NUMBER	QTY	PART NAME 1 2 3 4 5 6 (PRODUCT LEVEL)	SEE PAGE
	8X-1160	1	RIM AS (13X25)	
	153-5427	1	TIRE (15.5-R25)	
	2G-6595	1	VALVE GP-TIRE	
	9K-7951	1	CAP-VALVE (STEM)	
	6F-3930	1	CORE-VALVE	
	7D-5252	1	SPUD AS	
	2D-2508	1	GROMMET	
	2D-2509	1	LOCKNUT (11/16-16-THD)	
	2D-2507	1	SPUD	

<END>

153-5467 WHEEL & TIRE GP

S/N: CCA1-UP
(13 X 25)
PART OF 153-5468 WHEEL & TIRE AR
AN ATTACHMENT

SMCS-4200 i02205541

NOTE	PART NUMBER	QTY	PART NAME 1 2 3 4 5 6 (PRODUCT LEVEL)	SEE PAGE
	8X-1160	1	RIM AS (13X25)	
	105-3249	1	TIRE (17.5-R25)	
	2G-6595	1	VALVE GP-TIRE	
	9K-7951	1	CAP-VALVE (STEM)	
	6F-3930	1	CORE-VALVE	
	7D-5252	1	SPUD AS	
	2D-2508	1	GROMMET	
	2D-2509	1	LOCKNUT (11/16-16-THD)	
	2D-2507	1	SPUD	

<END>

159-1785 WHEEL & TIRE GP

S/N: CCA1-UP
(13X25)
PART OF 159-1782 WHEEL & TIRE AR
AN ATTACHMENT

SMCS-4200 i02205542

NOTE	PART NUMBER	QTY	PART NAME 1 2 3 4 5 6 (PRODUCT LEVEL)	SEE PAGE
Y	*142-6229*	1	WHEEL GP	451
	8W-3686	1	SEAL-O-RING	
	154-0051	1	TIRE (17.5-R25)	
	2G-6595	1	VALVE GP-TIRE	
	9K-7951	1	CAP-VALVE (STEM)	
	6F-3930	1	CORE-VALVE	
	7D-5252	1	SPUD AS	
	2D-2507	1	SPUD	
	2D-2508	1	GROMMET	
	2D-2509	1	LOCKNUT (11/16-16-THD)	

Y-SEPARATE ILLUSTRATION

<END>

163-0376 WHEEL & TIRE GP

S/N: CCA1-UP
(13X25)
PART OF 163-0375 WHEEL & TIRE AR
AN ATTACHMENT

SMCS-4200 **i02205543**

NOTE	PART NUMBER	QTY	PART NAME 1 2 3 4 5 6 (PRODUCT LEVEL)	SEE PAGE
	8X-1160	1	RIM AS (13X25)	
	154-0051	1	TIRE (17.5-R25)	
	2G-6595	1	VALVE GP-TIRE	
	6F-3930	1	CORE-VALVE	
	9K-7951	1	CAP-VALVE (STEM)	
	7D-5252	1	SPUD AS	
	2D-2507	1	SPUD	
	2D-2508	1	GROMMET	
	2D-2509	1	LOCKNUT (11/16-16-THD)	

<END>

173-7813 WHEEL & TIRE GP

S/N: CCA1-UP
PART OF 174-2304 WHEEL & TIRE AR
AN ATTACHMENT

SMCS-4200 **i02205568**

NOTE	PART NUMBER	QTY	PART NAME 1 2 3 4 5 6 (PRODUCT LEVEL)	SEE PAGE
Y	*142-6226*	1	WHEEL GP	451
	2D-2565	1	SEAL-O-RING	
	173-7830	1	TIRE (14-R24)	
	110-4213	1	VALVE GP-TIRE	
	110-4214	1	STEM AS	
	6F-3930	1	CORE-VALVE	
	9K-7951	1	CAP-VALVE (STEM)	
	7D-5252	1	SPUD AS	
	2D-2508	1	GROMMET	
	2D-2509	1	LOCKNUT (11/16-16-THD)	

Y-SEPARATE ILLUSTRATION

<END>

183-1415 WHEEL & TIRE GP

S/N: CCA1-UP
(13X25)
PART OF 183-1416 WHEEL & TIRE AR
AN ATTACHMENT

SMCS-4200 **i02164214**

NOTE	PART NUMBER	QTY	PART NAME 1 2 3 4 5 6 (PRODUCT LEVEL)	SEE PAGE
Y	*142-6226*	1	WHEEL GP	451
	2D-2565	1	SEAL-O-RING	
	180-9853	1	TIRE (17.5-25)	
	2G-6595	1	VALVE GP-TIRE	
	9K-7951	1	CAP-VALVE (STEM)	
	6F-3930	1	CORE-VALVE	
	7D-5252	1	SPUD AS	
	2D-2507	1	SPUD	
	2D-2508	1	GROMMET	
	2D-2509	1	LOCKNUT (11/16-16-THD)	

Y-SEPARATE ILLUSTRATION

<END>

183-1418 WHEEL & TIRE GP

S/N: CCA1-UP
(13X25)
PART OF 183-1417 WHEEL & TIRE AR
AN ATTACHMENT

SMCS-4200 **i02164200**

NOTE	PART NUMBER	QTY	PART NAME 1 2 3 4 5 6 (PRODUCT LEVEL)	SEE PAGE
Y	*142-6229*	1	WHEEL GP	451
	8W-3686	1	SEAL-O-RING	
	180-9852	1	TIRE (17.5-R25)	
	2G-6595	1	VALVE GP-TIRE	
	9K-7951	1	CAP-VALVE (STEM)	
	6F-3930	1	CORE-VALVE	
	7D-5252	1	SPUD AS	
	2D-2507	1	SPUD	
	2D-2508	1	GROMMET	
	2D-2509	1	LOCKNUT (11/16-16-THD)	

Y-SEPARATE ILLUSTRATION

<END>

184-2346 WHEEL & TIRE GP

S/N: CCA1-UP
(9 X 24)
PART OF 184-2362 WHEEL & TIRE AR
AN ATTACHMENT

SMCS-4200 **i02205580**

NOTE	PART NUMBER	QTY	PART NAME 1 2 3 4 5 6 (PRODUCT LEVEL)	SEE PAGE
	123-3420	1	RIM AS (9X24)	
	184-1681	1	TIRE (14-R24)	
	2D-2511	1	VALVE GP-TIRE	
	3D-2239	1	VALVE GP-TIRE	
	6F-3930	1	CORE-VALVE	
	9K-7951	1	CAP-VALVE (STEM)	
	7D-5252	1	SPUD AS	
	2D-2508	1	GROMMET	
	2D-2509	1	LOCKNUT (11/16-16-THD)	

<END>

184-2347 WHEEL & TIRE GP

S/N: CCA1-UP
(9X24)
PART OF 184-2363 WHEEL & TIRE AR
AN ATTACHMENT

SMCS-4200 **i02205581**

NOTE	PART NUMBER	QTY	PART NAME 1 2 3 4 5 6 (PRODUCT LEVEL)	SEE PAGE
Y	*142-6226*	1	WHEEL GP	451
	2D-2565	1	SEAL-O-RING	
	184-1681	1	TIRE (14-R24)	
	110-4213	1	VALVE GP-TIRE	
	7D-5252	1	SPUD AS	
	2D-2508	1	GROMMET	
	2D-2509	1	LOCKNUT (11/16-16-THD)	
	110-4214	1	STEM AS	
	6F-3930	1	CORE-VALVE	
	9K-7951	1	CAP-VALVE (STEM)	

Y-SEPARATE ILLUSTRATION

<END>

198-6572 WHEEL & TIRE GP

S/N: CCA1-UP
(13X25)
PART OF 198-6565 WHEEL & TIRE AR
AN ATTACHMENT

SMCS-4200 **i02164298**

NOTE	PART NUMBER	QTY	PART NAME 1 2 3 4 5 6 (PRODUCT LEVEL)	SEE PAGE
	8X-1160	1	RIM AS (13X25)	
	180-9852	1	TIRE (17.5-R25)	
	2G-6595	1	VALVE GP-TIRE	
	6F-3930	1	CORE-VALVE	
	9K-7951	1	CAP-VALVE (STEM)	
	7D-5252	1	SPUD AS	
	2D-2507	1	SPUD	
	2D-2508	1	GROMMET	
	2D-2509	1	LOCKNUT (11/16-16-THD)	

<END>

204-8785 WHEEL & TIRE GP

S/N: CCA1-UP
(17.5XR25)
PART OF 204-8786 WHEEL & TIRE AR
AN ATTACHMENT

SMCS-4200 **i01562298**

NOTE	PART NUMBER	QTY	PART NAME 1 2 3 4 5 6 (PRODUCT LEVEL)	SEE PAGE
	8W-3686	1	SEAL-O-RING	
	2G-6595	1	VALVE GP-TIRE	
	9K-7951	1	CAP-VALVE (STEM)	
	6F-3930	1	CORE-VALVE	
	7D-5252	1	SPUD AS	
	2D-2508	1	GROMMET	
	2D-2509	1	LOCKNUT	
Y	*142-6229*	1	WHEEL GP	451

Y-SEPARATE ILLUSTRATION

<END>

207-9861 WHEEL & TIRE GP

S/N: CCA1-UP
(13X25)
PART OF 207-9862 WHEEL & TIRE AR
AN ATTACHMENT

SMCS-4200 i02164334

NOTE	PART NUMBER	QTY	PART NAME 1 2 3 4 5 6 (PRODUCT LEVEL)	SEE PAGE
	8X-1160	1	RIM AS (13X25)	
	170-0432	1	TIRE (17.5-R25)	
	2G-6595	1	VALVE GP-TIRE	
	6F-3930	1	CORE-VALVE	
	9K-7951	1	CAP-VALVE (STEM)	
	7D-5252	1	SPUD AS	
	2D-2507	1	SPUD	
	2D-2508	1	GROMMET	
	2D-2509	1	LOCKNUT (11/16-16-THD)	

<END>

216-7443 WHEEL & TIRE GP

S/N: CCA1-UP
(9X24)
PART OF 216-7444 WHEEL & TIRE AR
AN ATTACHMENT

SMCS-4200 i02164773

NOTE	PART NUMBER	QTY	PART NAME 1 2 3 4 5 6 (PRODUCT LEVEL)	SEE PAGE
Y	*142-6226*	1	WHEEL GP	451
	2D-2565	1	SEAL-O-RING	
	216-7435	1	TIRE (14-24)	
	110-4213	1	VALVE GP-TIRE	
	7D-5252	1	SPUD AS	
	2D-2507	1	SPUD	
	2D-2508	1	GROMMET	
	2D-2509	1	LOCKNUT (11/16-16-THD)	
	110-4214	1	STEM AS	
	6F-3930	1	CORE-VALVE	
	9K-7951	1	CAP-VALVE (STEM)	

Y-SEPARATE ILLUSTRATION

<END>

226-0735 WHEEL & TIRE GP

S/N: CCA1-UP
(13X25)
PART OF 228-9265 WHEEL & TIRE AR
AN ATTACHMENT

SMCS-4200 i02164805

NOTE	PART NUMBER	QTY	PART NAME 1 2 3 4 5 6 (PRODUCT LEVEL)	SEE PAGE
Y	*142-6229*	1	WHEEL GP	451
	8W-3686	1	SEAL-O-RING	
	226-0733	1	TIRE (17.5-R25)	
	2G-6595	1	VALVE GP-TIRE	
	6F-3930	1	CORE-VALVE	
	9K-7951	1	CAP-VALVE (STEM)	
	7D-5252	1	SPUD AS	
	2D-2507	1	SPUD	
	2D-2508	1	GROMMET	
	2D-2509	1	LOCKNUT (11/16-16-THD)	

Y-SEPARATE ILLUSTRATION

<END>

142-6303 WHEEL AR

S/N: CCA1-UP
AN ATTACHMENT

SMCS-4208 i00761194

NOTE	PART NUMBER	QTY	PART NAME 1 2 3 4 5 6 (PRODUCT LEVEL)	SEE PAGE
Y	*142-6172*	6	WHEEL GP	450

Y-SEPARATE ILLUSTRATION

<END>

142-6305 WHEEL AR

S/N: CCA1-UP
AN ATTACHMENT

SMCS-4208 i00761196

NOTE	PART NUMBER	QTY	PART NAME 1 2 3 4 5 6 (PRODUCT LEVEL)	SEE PAGE
Y	*142-6304*	6	WHEEL GP	452

Y-SEPARATE ILLUSTRATION

<END>

148-2405 WHEEL AR

S/N: CCA1-UP
AN ATTACHMENT

SMCS-4208 i01880496

NOTE	PART NUMBER	QTY	PART NAME 1 2 3 4 5 6 (PRODUCT LEVEL)	SEE PAGE
Y	148-2404	6	WHEEL GP	452

Y-SEPARATE ILLUSTRATION

<END>

148-2409 WHEEL AR

S/N: CCA1-UP
AN ATTACHMENT

SMCS-4208 i00762414

NOTE	PART NUMBER	QTY	PART NAME 1 2 3 4 5 6 (PRODUCT LEVEL)	SEE PAGE
Y	148-2408	6	WHEEL GP	453

Y-SEPARATE ILLUSTRATION

<END>

151-0370 WHEEL AR

S/N: CCA1-UP
AN ATTACHMENT

SMCS-4208 i02164886

NOTE	PART NUMBER	QTY	PART NAME 1 2 3 4 5 6 (PRODUCT LEVEL)	SEE PAGE
Y	150-4482	6	WHEEL & TIRE GP	440

Y-SEPARATE ILLUSTRATION

<END>

174-7507 WHEEL AR

S/N: CCA1-UP
AN ATTACHMENT

SMCS-4208 i01825874

NOTE	PART NUMBER	QTY	PART NAME 1 2 3 4 5 6 (PRODUCT LEVEL)	SEE PAGE
Y	170-0436	6	WHEEL GP	453

Y-SEPARATE ILLUSTRATION

<END>

POWER TRAIN

186-4461 WHEEL AR

S/N: CCA1-UP
AN ATTACHMENT

SMCS-4208 **i02164210**

NOTE	PART NUMBER	QTY	PART NAME 1 2 3 4 5 6 (PRODUCT LEVEL)	SEE PAGE
Y	*186-4460*	6	WHEEL GP	454

Y-SEPARATE ILLUSTRATION

<END>

216-7446 WHEEL AR

S/N: CCA1-UP
AN ATTACHMENT

SMCS-4208 **i02164777**

NOTE	PART NUMBER	QTY	PART NAME 1 2 3 4 5 6 (PRODUCT LEVEL)	SEE PAGE
Y	*216-7445*	6	WHEEL GP	454

Y-SEPARATE ILLUSTRATION

<END>

142-6172 WHEEL GP–BAREFOOT

S/N: CCA1-UP
(9 X 24)
PART OF 142-6303 WHEEL AR
AN ATTACHMENT

SMCS-4201, 4208 **i02205609**

NOTE	PART NUMBER	QTY	PART NAME 1 2 3 4 5 6 (PRODUCT LEVEL)	SEE PAGE
	123-3420	1	RIM AS (9X24)	
	2D-2511	1	VALVE GP-TIRE	
	9K-7951	1	CAP-VALVE (STEM)	
	6F-3930	1	CORE-VALVE	
	7D-5252	1	SPUD AS	
	2D-2508	1	GROMMET	
	2D-2509	1	LOCKNUT (11/16-16-THD)	
	2D-2507	1	SPUD	

<END>

142-6226 WHEEL GP

S/N: CCA1-UP
(10 X 24)
PART OF 142-6298, 142-6301, 142-6307, 142-6310, 142-6313, 142-6316, 142-6319, 142-6322, 142-6325, 142-6328, 142-6330, 142-6332, 150-4467, 150-4482, 173-7813, 183-1415, 184-2347, 216-7443 WHEEL & TIRE GP, 142-6304, 186-4460 WHEEL GP
AN ATTACHMENT

SMCS-4201, 4208 i01457104

NOTE	PART NUMBER	QTY	PART NAME 1 2 3 4 5 6 (PRODUCT LEVEL)	SEE PAGE
	8W-9566	1	FLANGE AS	
	2D-2654	1	LOCK RING	
	184-2309	1	RIM AS	

<END>

142-6229 WHEEL GP

S/N: CCA1-UP
(14 X 25)
PART OF 142-6356, 142-6357, 142-6358, 142-6361, 142-6364, 142-6367, 142-6374, 142-6375, 142-6376, 142-6385, 159-1785, 183-1418, 204-8785, 226-0735 WHEEL & TIRE GP, 148-2408, 170-0436, 216-7445 WHEEL GP
AN ATTACHMENT

SMCS-4201, 4208 i00756189

NOTE	PART NUMBER	QTY	PART NAME 1 2 3 4 5 6 (PRODUCT LEVEL)	SEE PAGE
	8W-9594	1	FLANGE AS	
	4K-4881	1	LOCKRING	
	6G-1528	1	WHEEL	

<END>

142-6304 WHEEL GP–BAREFOOT

S/N: CCA1-UP
(10X24)
PART OF 142-6305 WHEEL AR
AN ATTACHMENT

SMCS-4201, 4208 i02205614

NOTE	PART NUMBER	QTY	PART NAME 1 2 3 4 5 6 (PRODUCT LEVEL)	SEE PAGE
Y	*142-6226*	1	WHEEL GP	451
	2D-2565	1	SEAL-O-RING	
	110-4213	1	VALVE GP-TIRE	
	7D-5252	1	SPUD AS	
	2D-2508	1	GROMMET	
	2D-2509	1	LOCKNUT (11/16-16-THD)	
	110-4214	1	STEM AS	
	6F-3930	1	CORE-VALVE	
	9K-7951	1	CAP-VALVE (STEM)	

Y-SEPARATE ILLUSTRATION

<END>

148-2404 WHEEL GP–BAREFOOT

S/N: CCA1-UP
(13 X 25)
PART OF 148-2405 WHEEL AR
AN ATTACHMENT

SMCS-4201, 4208 i01755146

NOTE	PART NUMBER	QTY	PART NAME 1 2 3 4 5 6 (PRODUCT LEVEL)	SEE PAGE
	8X-1160	1	RIM AS (13X25)	
	2G-6595	1	VALVE GP-TIRE	
	9K-7951	1	CAP-VALVE (STEM)	
	6F-3930	1	CORE-VALVE	
	7D-5252	1	SPUD AS	
	2D-2508	1	GROMMET	
	2D-2509	1	LOCKNUT (11/16-16-THD)	
	2D-2507	1	SPUD	

<END>

148-2408 WHEEL GP–BAREFOOT

S/N: CCA1-UP
(14X25)
PART OF 148-2409 WHEEL AR
AN ATTACHMENT

SMCS-4201, 4208 **i02205621**

NOTE	PART NUMBER	QTY	PART NAME 1 2 3 4 5 6 (PRODUCT LEVEL)	SEE PAGE
Y	*142-6229*	1	WHEEL GP	451
	8W-3686	1	SEAL-O-RING	
	2G-6595	1	VALVE GP-TIRE	
	9K-7951	1	CAP-VALVE (STEM)	
	6F-3930	1	CORE-VALVE	
	7D-5252	1	SPUD AS	
	2D-2508	1	GROMMET	
	2D-2509	1	LOCKNUT (11/16-16-THD)	
	2D-2507	1	SPUD	

Y-SEPARATE ILLUSTRATION

<END>

170-0436 WHEEL GP

S/N: CCA1-UP
(14 X 25)
PART OF 174-7507 WHEEL AR
AN ATTACHMENT

SMCS-4201, 4208 **i02205662**

NOTE	PART NUMBER	QTY	PART NAME 1 2 3 4 5 6 (PRODUCT LEVEL)	SEE PAGE
Y	*142-6229*	1	WHEEL GP	451
	8W-3686	1	SEAL-O-RING	
	170-0432	1	TIRE (17.5-R25)	
	2G-6595	1	VALVE GP-TIRE	
	9K-7951	1	CAP-VALVE (STEM)	
	6F-3930	1	CORE-VALVE	
	7D-5252	1	SPUD AS	
	2D-2507	1	SPUD	
	2D-2508	1	GROMMET	
	2D-2509	1	LOCKNUT (11/16-16-THD)	

Y-SEPARATE ILLUSTRATION

<END>

186-4460 WHEEL GP

S/N: CCA1-UP
PART OF 186-4461 WHEEL AR
AN ATTACHMENT

SMCS-4201, 4208 **i02205670**

NOTE	PART NUMBER	QTY	PART NAME 1 2 3 4 5 6 (PRODUCT LEVEL)	SEE PAGE
Y	*142-6226*	1	WHEEL GP	451
	2D-2565	1	SEAL-O-RING	
	186-3696	1	TIRE (14-24)	
	110-4213	1	VALVE GP-TIRE	
	7D-5252	1	SPUD AS	
	2D-2507	1	SPUD	
	2D-2508	1	GROMMET	
	2D-2509	1	LOCKNUT (11/16-16-THD)	
	110-4214	1	STEM AS	
	6F-3930	1	CORE-VALVE	
	9K-7951	1	CAP-VALVE (STEM)	

Y-SEPARATE ILLUSTRATION

<END>

216-7445 WHEEL GP

S/N: CCA1-UP
PART OF 216-7446 WHEEL AR
AN ATTACHMENT

SMCS-4201, 4208 **i02164778**

NOTE	PART NUMBER	QTY	PART NAME 1 2 3 4 5 6 (PRODUCT LEVEL)	SEE PAGE
Y	*142-6229*	1	WHEEL GP	451
	8W-3686	1	SEAL-O-RING	
	216-7437	1	TIRE (17.5-25)	
	2G-6595	1	VALVE GP-TIRE	
	6F-3930	1	CORE-VALVE	
	9K-7951	1	CAP-VALVE (STEM)	
	7D-5252	1	SPUD AS	
	2D-2507	1	SPUD	
	2D-2508	1	GROMMET	
	2D-2509	1	LOCKNUT (11/16-16-THD)	

Y-SEPARATE ILLUSTRATION

<END>

PART NUMBER INDEX

Part	Page
0	
0A-3721	499
0L-0478	608
0L-1026	41
0L-1178	477
0L-1352	10
0S-1566	504
0S-1571	608
0S-1573	532
0S-1579	394
0S-1585	455
	484
	554
0S-1587	484
0S-1589	484
0S-1591	88
0S-1592	455
	538
0S-1594	370
	823
	824
0S-1604	389
0S-1617	10
0S-1621	535
0S-1756	371
	800
0S-1973	385
0T-0065	95
0V-0375	455
1	
1A-0224	808
	811
1A-1415	554
1A-1460	484
1A-2170	60
1A-2209	599
1A-4350	939
	940
1A-5822	600
1A-8063	808
	811
1B-0676	100
	361
	508
1B-2578	100
	361
	508
1B-2713	852
	854
1B-2886	536
1B-3867	84
1B-4038	554
1B-4046	554
1B-4208	808
	811
1B-4367	489
1B-4430	957
1B-5174	347
	554
1B-5355	95
1B-7182	115
1B-8704	100
	361
1B-8705	20
1B-8737	608
1C-0569	941
	943
1D-0503	775
1D-4569	484
1D-4612	808
	811
1D-4627	455
1D-4628	532
	534
1D-4677	955
1D-4689	492
1D-5119	779
1D-5120	608
1F-0748	615
	617
	619
	621
	623
	625
	627
	629
	631
	633
	635
	641
	643
	645
	647
	649
	651
	653
	656
	658
	662
	664
	668
	670
	775
1F-0750	477
	905
1F-1651	951
1F-4622	361
	508
1F-5339	462
	463
1F-7854	108
1F-7958	536
	554
	808
	811
1F-8488	391
1H-0337	697
	699
1H-1023	514
1H-2629	270
1H-3244	130
	133
	310
1H-3338	835
	838
	842
	844
1H-3340	969
	971
1H-3937	610
1H-5728	37
1H-7339	21
	554
1H-7724	509
1H-8456	969
	971
1J-2860	371
1J-4757	371
1J-5929	43
1J-6762	786
1J-9671	522
	697
	699
1K-3113	900
1K-6872	492
	802
	805
1L-0509	381
1L-5072	612
1M-1230	852
	854
1M-3780	386
1M-4095	390
1M-4543	512
1M-6119	136
	137
	138
	310
1M-6120	136
	137
	138
	310
1M-6718	769
1N-4403	90
1N-5999	27
	547
	548
1P-0436	115
1P-0451	98
1P-0604	357
	359
1P-2378	903
	905
	909
1P-2636	371
1P-2662	371
1P-2807	999
1P-3700	611
1P-4278	108
	512
1P-4577	381
1P-4578	381
1P-4693	379
	504
1P-4694	379
1P-6356	898
1P-7297	79
	474
1P-7521	502
1P-9328	512
1R-0716	63
1R-0762	103
1R-0774	612
1S-0994	306
	311
	325
	567
	570
	585
	587
1S-0996	306
	325
1S-1015	311
1S-2342	296
	300
1S-3618	589
1S-7251	305
	310
	311
	324
1S-7252	310
	325
	329
1S-9110	379
1S-9593	150
	337
	402
	403
	771
	772
1T-0738	367
	404
1U-3998	547
	548
1U-8846	37
	346
1V-6688	311
1V-8230	45
1W-0428	12
	14
1W-2431	95
1W-3011	462
1Y-7927	876
2	
2A-1538	536
2A-3034	91
2A-3211	761
	763
	765
	766
	767
2A-3348	39
2A-3398	458
2A-4429	32
2A-6684	880
2A-6926	975
	977
	979
	981
2A-6928	975
	977
	979
	981

► PRIMARY REFERENCE

PART NUMBER INDEX

Part	Page	Part	Page	Part	Page	Part	Page
2A-6929	975		427		426	2G-5493	566
	977		428		427		569
	979		429		428	2G-5667	455
	981		430		445		538
2A-6938	391		431		450	2G-5673	455
2A-6985	▶915		432	2D-2565	420	2G-6285	515
	932		433		421	2G-6337	504
	933		434		422	2G-6595	430
	935		435		423		431
2A-7081	566		436		424		432
2A-7089	777		437		425		433
2A-7184	830		438		426		434
2B-0941	560		439		427		435
	566		440		428		436
	569		441		429		437
2B-0947	373		442		430		438
2B-2673	775		443		440		439
2B-2695	12		444		443		441
	14		445		444		442
	941		446		445		443
	943		447		447		444
2B-3147	391		448		452		446
2B-3148	391		450		454		447
2B-7410	554		452	2D-2654	451		448
2B-9373	386		453	2D-4202	612		452
2D-0626	805		454	2D-6006	515		453
2D-2507	420	2D-2509	420	2D-6235	852		454
	421		421		854	2G-6664	871
	422		422		876	2G-6695	554
	423		423	2D-6642	53	2G-6740	617
	424		424		371		627
	425		425		373		629
	426		426	2D-7325	508		633
	427		427	2D-8009	386		641
	428		428	2D-8154	554		647
	429		429	2D-8652	540		649
	430		430	2D-8822	458		653
	431		431	2F-7306	918		660
	432		432	2F-8057	489		662
	433		433		537		664
	434		434	2F-8509	602		666
	435		435	2G-0478	554		668
	436		436	2G-0617	206		670
	437		437		209	2G-6747	615
	438		438		212		617
	439		439		215		619
	440		440		222		621
	441		441		225		623
	442		442		300		625
	443		443	2G-0659	222		627
	444		444		225		629
	446		445	2G-0988	206		631
	447		446		209		633
	448		447		212		635
	450		448		215		637
	452		450		222		639
	453		452		225		641
	454		453		300		643
2D-2508	420		454	2G-1034	512		645
	421	2D-2511	420	2G-3219	775		647
	422		421	2G-3221	775		649
	423		422	2G-3865	455		651
	424		423	2G-3967	533		653
	425		424	2G-3971	777		656
	426		425	2G-4332	808		658

▶ PRIMARY REFERENCE

PART NUMBER INDEX

Part	Page
	660
	662
	664
	666
	668
	670
2G-6748	615
	617
	619
	621
	623
	625
	627
	629
	631
	633
	635
	637
	639
	641
	643
	645
	647
	649
	651
	653
	656
	658
	660
	662
	664
	666
	668
	670
2G-6749	615
	617
	619
	621
	623
	625
	627
	629
	631
	633
	635
	637
	639
	641
	643
	645
	647
	649
	651
	653
	656
	658
	660
	662
	664
	666
	668
	670
2G-6751	615
	617
	619
	621
	623
	625
	627
	629
	631
2G-6752	615
	617
	619
	621
	623
	625
	627
	629
	631
	633
	635
	637
	639
	641
	643
	645
	647
	649
	651
	653
	656
	658
	660
	662
	664
	666
	668
	670
2G-6753	615
	621
	625
	637
	639
	645
2G-6754	615
	619
	625
	627
	629
	631
	633
	635
	637
	639
	641
	643
	645
	647
	649
	651
	653
	656
	658
2G-6755	615
	617
	619
	621
	623
	625
	627
	629
	631
	633
	635
	637
	639
	641
	643
	645
	647
	649
	651
	653
	656
	658
	660
	662
	664
	666
	668
	670
2G-6756	615
	617
	619
	621
	623
	625
	627
	629
	631
	633
	635
	637
	639
	641
	643
	645
	647
	649
	651
	653
	656
	658
	660
	662
	664
	666
	668
	670
2G-6757	615
	617
	619
	621
	623
	625
	627
	629
	631
	633
	635
	637
	639
	641
	643
	645
	647
	649
	651
	653
	656
	658
	660
	662
	664
	666
	668
	670
2G-7097	914
	915
2G-7098	914
	915
2G-7107	619
	625
	627
	631
	633
	637
	643
	647
	651
	653
	660
	662
	666
	668
	670
2G-7108	619
	625
	627
	631
	633
	637
	643
	647
	651
	653
	660
	662

► PRIMARY REFERENCE

PART NUMBER INDEX

Part	Page	Part	Page	Part	Page	Part	Page
	666		512		721		697
	668	2H-5001	371		723		699
	670	2H-5549	39		725	2S-5100	612
2G-7149	811	2H-6489	346		727	2S-5658	34
2G-7309	808	2H-6490	390		729	2S-8439	378
	811	2H-9247	554		731	2V-0099	819
2G-7728	808	2H-9889	567		733		863
	811		570		735		867
2G-8233	800	2J-0157	346		737	2V-3216	317
2G-8241	903	2J-3505	455		739		320
	905	2J-3506	379		741		344
	909		554		743	2V-4331	484
2G-8242	903		789		745	2V-8259	331
	905		796		747		333
2G-8572	830		797	2L-0273	300	2Y-5828	599
	886		800		310	2Y-5829	53
	889		808		329		70
	894		811	2L-3331	508		72
	903	2J-6089	761	2L-8050	310		82
	905		762		311		
2G-8573	830		763	2L-8058	311		
	886		765	2M-0849	532	3	
	889		766		800		
	894		767	2M-4779	519	3B-0623	27
	903	2J-6274	502		524		29
	905	2J-7761	612	2M-7077	293		51
2G-8609	538	2J-8163	455	2M-7819	876		60
2G-8615	455	2K-0120	805	2M-9780	108	3B-4501	820
2G-8624	455	2K-0419	775		346	3B-4505	10
2G-8626	455	2K-0420	531		391	3B-4506	589
2G-8631	455	2K-0703	805		502	3B-4607	515
	550	2K-4233	802		552		830
2G-8633	455	2K-4821	133		566	3B-4610	515
2G-8741	455	2K-4973	612		697		612
2G-8742	455		802		699	3B-4615	116
2G-8767	880		805	2N-0475	368	3B-4618	455
	886		823	2N-8037	79		537
	889		824	2N-9421	100	3B-4628	567
	894		941	2P-1279	761	3B-4647	536
2G-8768	455		943		762	3B-5301	317
2G-8777	455		955		763		320
2G-9098	532		957		765	3B-5320	775
	534	2K-5106	371		766	3B-5325	815
2G-9103	532	2K-5109	371		767	3B-5329	533
	534	2K-5830	830	2P-4304	60	3B-6753	779
2G-9791	391	2K-5986	466		63		800
2H-3740	455		469	2P-4339	819	3B-6769	488
2H-3746	808	2K-6061	823		863	3B-7721	509
	811		824		867	3B-7732	381
2H-3764	779	2K-6413	815	2R-0694	515	3B-7733	488
2H-3786	537	2K-6830	544	2R-0719	515	3B-8485	532
2H-3920	279	2K-7471	808	2R-0724	515		534
	282		811	2R-1600	458	3B-8489	455
	291	2K-7979	830	2R-1922	951		488
	983	2K-8199	552	2R-6806	113		538
	985		701	2S-0115	796		779
	987		703		797		805
	989		705	2S-2053	12		808
2H-3922	274		707		14		811
	925		709		66	3B-8822	506
	930		711	2S-3029	346	3B-8921	351
2H-3928	611		713	2S-3440	499		354
2H-3931	595		715	2S-4078	576	3C-1884	974
2H-3934	10		717		579	3C-6969	337
2H-3940	92		719		582		340

► PRIMARY REFERENCE

PART NUMBER INDEX

Part	Page
3D-2239	445
3D-2824	45
	47
	66
	73
	273
	558
	574
	576
	577
	579
	580
	582
	583
	590
	592
	602
	697
	699
3D-2981	391
3D-4245	396
	399
3D-4904	808
	811
3D-6399	874
3D-6509	373
3D-6689	394
3D-8317	399
3D-8747	852
	854
3D-8748	852
	854
3D-8749	852
	854
3D-8752	852
	854
3D-8884	506
3D-9253	951
3E-0109	191
	193
	218
	220
	235
	237
	282
	285
	287
	289
	331
	333
	337
	338
	340
	894
	906
	910
3E-0154	▶277
	325
	329
3E-0155	▶279
	285
	991
3E-0400	819
	863
	867
3E-2026	296
	300
3E-3365	181
	185
	186
	187
	204
	205
	240
	259
	265
	273
	305
	306
	324
	325
	402
	403
	518
	771
	772
	819
	852
	854
	863
	867
	872
	906
	925
	927
	929
3E-3368	254
	255
	262
3E-3371	165
	183
	184
	197
	252
	253
	305
	324
3E-3377	331
	333
3E-3383	173
	175
	177
	179
	912
	913
	929
	979
3E-3389	279
	282
	291
	985
	987
	989
3E-3535	898
3E-3636	296
	300
3E-3890	819
	863
	867
3E-4039	21
3E-4048	915
	917
3E-4302	602
3E-4307	379
3E-4335	918
3E-4336	918
3E-4352	49
	58
	65
	68
	77
	368
3E-4353	12
	14
	18
	132
	293
3E-4356	471
3E-4362	918
3E-5169	306
	325
3E-5180	150
3E-5239	191
	193
	265
3E-5464	819
3E-6017	753
3E-6328	▶128
	331
	333
3E-6332	265
3E-6388	975
	979
3E-6389	▶165
	282
	285
	291
3E-6450	300
	329
3E-6477	204
	205
	337
	340
3E-6575	918
3E-6754	329
	333
3E-7417	602
3E-7448	293
3E-7842	324
	329
3E-8005	367
3E-8006	404
3E-8016	39
	45
	47
	68
	93
	98
3E-8020	925
	927
	930
3E-8043	830
3E-8320	310
3E-8646	157
3E-8700	▶262
	347
3E-8763	280
	337
	345
3E-8765	329
3E-8766	218
	220
	235
	237
	287
	289
	906
	910
3E-8768	268
3E-8770	193
3E-8772	201
	202
	204
	205
	206
	209
	212
	215
	222
	225
	275
	340
3E-8776	268
3E-8782	218
	220
	235
	237
	287
	289
3E-8783	337
	340
3E-8784	345
3E-8812	280
3E-8814	212
	215
	222
	225
3E-8815	201
	202
	204
	205
3E-8816	329
	334
3E-8817	331
	334
3E-8821	856
	857
3E-8822	163
	247
	248
	249
3E-8825	163
	191
	193
	201
	202
	204
	205
	206
	209

▶ PRIMARY REFERENCE

PART NUMBER INDEX

Part	Page	Part	Page	Part	Page	Part	Page
	212		627		577		577
	215		629		579		580
	218		631		580		583
	220		633		582		585
	222		635		583		587
	223		637		590		589
	225		639		592		590
	235		641		697		592
	237		643		699		593
	247		645		749		697
	248		647		756		699
	249		649		757		701
	268		651		760		703
	275		653		761		705
	280		656		762		707
	287		658		763		709
	289		660		764		711
	329		662		765		713
	331		664		766		715
	333		666		767		717
	334		668		768		719
	337		670		769		721
	340	3G-0361	612		770		723
	345	3G-1701	872	3J-3679	697		725
	856		874	3J-4818	957		727
	857	3G-2165	796	3J-5389	391		729
	906		797	3J-5390	499		731
	910	3G-2579	805		504		733
3E-9317	209	3G-2581	805	3J-6956	404		735
3E-9323	337	3G-3265	886	3J-7354	63		737
3E-9324	337		889		363		739
	340		894		376		741
3E-9326	206		896		399		743
	209	3G-3726	756		502		745
	212		757		564		747
	215		760		572		753
	222	3G-6659	488		576		755
	225	3G-7875	951		579		758
	275	3G-8175	771		582	3K-0835	925
	340	3H-2900	331		590		927
3E-9327	331		333		592		929
	334		820		604	3K-0986	389
3E-9330	856		864		697	3K-2889	489
	857		867		699	3K-4897	753
3E-9413	921	3H-7654	39		751		919
	922	3H-8538	361		758	3K-6060	509
	923	3J-1907	50	3J-8500	606		830
3E-9865	830		51	3K-0196	389	3K-6116	396
3F-0379	270		94	3K-0360	37	3K-8106	141
3F-1547	612		106		51		142
3F-5108	787		108		108		311
	788		111		296	3K-8280	509
	790		113		300	3K-8460	37
	794		296		301	3K-8782	291
	795		301		329	3K-9520	206
	798		346		346		209
	799		363		376		212
3F-7514	830		378		391		215
3F-9556	133		381		560		222
	615		396		562		225
	617		399		563		300
	619		404		566	3L-8187	337
	621		564		569		340
	623		572		571	3L-8855	63
	625		576		572	3N-3790	997

► PRIMARY REFERENCE

PART NUMBER INDEX

Part	Page
	999
3P-0337	354
3P-0647	65
3P-1461	800
3P-1896	60
3P-1932	572
3P-3839	480
	482
3P-9498	697
	699
3P-9554	906
	910
3P-9900	466
	469
3R-2437	697
3S-0004	386
3S-0391	508
3S-1349	808
	811
3S-2093	95
	106
	157
	191
	193
	206
	209
	212
	215
	218
	220
	222
	225
	235
	237
	247
	248
	249
	265
	280
	282
	285
	287
	289
	291
	293
	296
	300
	305
	310
	315
	317
	320
	324
	329
	331
	333
	337
	340
	490
	508
	569
	592
	819
	863
	867
3S-2713	361
	508
3S-6049	310
3S-6050	310
3S-6605	53
3S-6925	699
3S-7023	541
	543
	544
3S-8652	378
3S-8665	108
3S-9643	76
3T-0049	62
3T-0050	508
	898
3T-2662	141
	142
3T-3197	819
3T-3198	819
3T-3422	270
3T-3434	270
3T-4377	390
3T-4965	577
	580
	583
	592
3T-5760	139
3T-6354	130
3T-6774	852
	854
3T-6848	589
3T-7059	974
3T-7086	974
3T-8236	697
	699
3V-0409	92
3V-3816	961
3V-4694	291
	894
3V-9244	915
	917
3W-6485	529
3W-7254	802
3W-7256	802
3Y-2806	830
4B-0418	65
	108
4B-1281	337
	340
4B-2047	130
	340
4B-2049	925
	927
4B-2913	612
4B-3388	872
	874
4B-3604	779
4B-4274	311
	337
	341
4B-4283	975
	977
	979
	981
	983
	985
	987
	989
	992
	993
	994
4B-4314	830
4B-4845	390
4B-4863	117
	118
	119
	121
	311
4B-4909	466
	469
4B-5059	876
4B-5271	589
4B-5275	871
4B-6060	361
	509
4B-7270	504
4B-9302	900
4B-9880	399
4C-2959	828
4D-0577	509
4D-0582	509
4D-1135	514
4D-1138	514
4D-1212	337
	341
4D-1322	404
4D-1326	277
4D-1432	306
	325
4D-2297	735
	756
	757
	760
	761
	762
	763
	764
	765
	766
	767
	768
4D-2560	92
4D-2886	589
4D-3704	379
	455
	504
	538
4D-4064	100
4D-4375	777
4D-4839	898
4D-5292	371
4D-5497	504
4D-6086	808
	811
4D-6432	939
	940
	941
	943
4D-6585	506
4D-6695	379
	404
4D-6885	508
4D-7246	554
4D-7388	296
	306
	325
	959
	961
	962
4D-7733	564
4D-7735	108
	512
4D-7794	206
	209
	212
	215
	265
	293
	296
	301
	306
	311
	325
	331
	333
	488
	614
	898
	951
	961
4D-8148	458
4D-8948	311
4D-9517	232
4D-9986	701
	703
	705
	707
	709
	711
	713
	715
	717
	719
	721
	723
	725
	727
	729
	731
	733
	735
	737

4

► PRIMARY REFERENCE

PART NUMBER INDEX

Part	Page	Part	Page	Part	Page	Part	Page
	739		697		788		649
	741		699		790		653
	743	4J-7533	396		794		660
	745		399		795		662
	747		552		798		664
4E-2392	592		673		799		666
4E-6867	590		674		914		668
4E-9628	574		675		915		670
4F-2294	278		676		917	4M-0061	854
4F-2609	346		677	4K-1388	697	4M-1751	396
4F-3657	786		678		699		399
4F-3658	786		679	4K-2039	396	4M-1831	270
	794		680		399	4M-2381	399
	795		681	4K-3004	805	4M-5281	480
	798		682	4K-3150	805		482
	799		683	4K-3330	▶814		882
4F-4097	602		684	4K-4881	451	4M-6107	357
4F-4879	947		685	4K-5122	291		359
	948		686	4K-5824	67	4M-6108	346
	949		687	4K-6781	484	4M-6109	346
	957		688	4K-7463	484	4M-6425	509
4F-5695	26		689	4K-7464	484	4M-6582	820
4F-7389	381		690	4K-8603	346		864
4F-7390	502		692	4K-8659	484		868
4F-7952	62		693	4K-8864	206	4M-6921	612
	387		694		209	4M-6953	385
4F-9653	554		695		293	4N-1059	272
4G-4972	27		696		296	4N-2927	876
4H-2558	265		697		301	4N-5091	519
	311		699		306		524
4H-2633	85		701		325	4N-7431	79
	86		703	4K-9097	941	4P-0659	95
4H-6147	506		705		943	4P-1650	21
4H-6520	371		707	4K-9841	20	4P-1659	49
4H-6996	554		709	4L-5966	819	4P-3966	10
4H-9105	502		711		863	4P-3977	10
4J-0520	381		713		867	4P-4369	93
4J-0521	577		715	4L-6454	48	4P-5524	90
	580		717		206	4P-5918	293
	583		719		209	4P-6587	21
4J-0522	381		721		212	4P-7581	331
4J-0523	577		723		215		333
	580		725		297	4P-8134	106
	583		727		301		293
4J-2506	363		729		331		297
	396		731		333		301
	399		733		462		363
4J-3914	509		735		472	4P-8279	93
4J-3915	840		737		480	4P-8280	93
	846		739		482	4P-8525	114
4J-5267	572		741		509	4P-9485	76
4J-5468	560		743		570	4P-9537	344
	566		745		589	4S-1962	79
	569		747		593		898
	592	4J-8524	514		872		900
4J-5477	363	4J-8527	514		874	4S-4455	297
	572	4J-8922	361		959		301
	576		509	4L-6459	280		306
	577	4J-9224	550		615		325
	579	4J-9225	540		619	4S-5838	502
	580		547		625	4S-5879	367
	582		548		629		504
	583	4J-9964	611		631	4S-7529	506
	590	4K-0367	371		639	4S-7560	512
	592		787		643	4S-7606	506

▶ PRIMARY REFERENCE

PART NUMBER INDEX

Part	Page
	512
4S-8287	918
4S-9191	87
	474
4T-1700	758
4T-1860	697
	699
	▶769
4T-4207	699
4T-4509	758
4T-4935	697
	699
	▶755
4T-4942	755
4T-5070	769
4T-5071	769
4T-5074	758
4T-5613	541
	543
	544
	550
4T-6779	539
4T-6780	540
4T-6907	545
	546
4T-7571	755
4T-8050	463
4T-8054	550
	595
4V-0015	484
4V-7875	876
4V-7877	876
4V-7884	955
	957
4V-8116	317
	320
4V-8556	957
4V-8577	955
4V-9803	492
4V-9804	492
4V-9809	492
4W-7356	596
4W-7627	900
4Z-6267	662
	▶689
4Z-6346	666
	▶690

5

Part	Page
5B-0577	808
	811
5B-0841	373
5B-8978	590
5B-9079	764
	768
5B-9318	551
	552
	701
	703
	705
	707
	709
	711
	713
	715
	717
	719
	721
	723
	725
	727
	729
	731
	733
	735
	737
	739
	741
	743
	745
	747
5C-2874	182
	241
5C-2890	197
	199
	206
	209
	212
	215
	222
	225
	242
	243
	275
	315
	317
	320
	329
	333
	337
	341
	509
	820
	849
	864
	868
	959
	962
5C-6565	491
5C-7261	106
	195
	197
	201
	204
	206
	212
	222
	228
	232
	317
	320
	382
5C-7423	357
	359
	975
	977
	979
	981
5C-8312	282
	285
	291
	337
	341
	830
5C-9553	121
	311
	337
	341
	574
	938
	974
5C-9563	317
	320
5C-9583	182
5C-9584	317
	320
5C-9930	317
	320
5C-9931	317
	320
5D-0269	925
	927
	929
	951
5D-0353	379
	455
5D-0768	515
5D-1026	79
	381
	474
	900
5D-1911	612
5D-2645	566
	569
5D-3636	515
5D-4382	506
	▶514
5D-4822	876
5D-4988	569
5D-6644	775
5D-6993	871
5D-6994	871
5D-6996	871
5D-6997	871
5D-6998	871
	▶871
	872
	874
5D-7778	514
5D-7780	514
5D-8159	808
	811
5D-8161	808
	811
5D-9344	37
5D-9553	787
5D-9554	788
5D-9558	792
5D-9559	792
5D-9561	790
	793
5D-9562	792
5D-9844	371
5F-0149	800
5F-1678	347
5F-5434	512
5F-8000	388
5F-8933	796
	797
5F-9144	396
	399
5H-4778	506
	509
	512
	872
	874
5H-4909	554
5H-7826	488
5H-8848	577
	580
	583
5H-8936	951
5H-8985	351
	354
	357
	359
5J-1036	396
	399
5J-1086	502
5J-1246	611
5J-2974	612
5J-4773	789
	796
	797
5J-5402	544
5J-7010	540
5J-7333	781
5K-0871	484
5K-0983	484
5K-0984	484
5K-0985	484
5K-0987	484
5K-0988	484
5K-0989	484
5K-0991	484
5K-1458	808
	811
	814
5K-1459	808
	811
	814
5K-2408	506
	872
	874
	951
5K-3294	228
	230
5K-5068	88
5K-5129	554
5K-5288	455
5K-5552	533
5K-7577	925
	929
5K-8454	554
5K-9090	376
	381
	576
	577
	579

▶ PRIMARY REFERENCE

PART NUMBER INDEX

Part	Page	Part	Page	Part	Page	Part	Page
	580		55		662		617
	582		115		664		619
	583		186		666		621
5K-9107	995		187		668		623
5K-9238	508		344		670		625
5L-2030	371		396		781		627
5L-2031	371		399		820		629
5L-2952	62		852		830		631
5L-4507	311		854		840		633
5L-7200	206		974		846		635
	209	5P-0599	569		864		641
	212	5P-0747	305		868		643
	215		310		898		645
	222		324		903		647
	225		329		905		649
	275	5P-0761	136		953		651
	340		137		955		653
5M-2057	697		138		995		656
	699		139	5P-1076	73		658
5M-2894	95		310		100		660
	301		311		102		662
	371		325		320		664
	379		329		466		666
5M-3062	206	5P-0765	382		469		668
	209	5P-0767	79		492		670
	212		474		496		805
	215		509		615	5P-2503	371
	222		900		617	5P-2566	482
	225	5P-1064	900		619		499
	297	5P-1075	100		621		611
	301		306		623	5P-2817	88
	306		325		625	5P-3454	311
	325		361		627	5P-3456	106
	329		455		629		111
	331		462		631	5P-3490	379
	333		463		633	5P-3863	346
	376		472		635		388
	462		480		637	5P-3924	346
	463		482		639	5P-3999	999
	472		491		641	5P-4000	1003
	506		509		643	5P-4001	1003
	509		593		645	5P-4002	1004
	522		615		647	5P-4003	1004
	585		617		649	5P-4077	999
	587		619		651	5P-4086	1004
	781		621		653		1005
	818		623		656	5P-4115	44
	840		625		658		293
	846		627		660		337
	898		629		662		341
	955		631		664		480
	959		633		666		482
	962		635		668		882
5M-6200	346		637		670		886
5M-6213	506		639	5P-1175	999		889
	509		641	5P-1291	116		959
5M-6687	305		643		576		962
	324		645		579		975
5M-6725	317		647		582		977
5M-6755	341		649	5P-1295	576		979
5M-7087	63		651		579		981
5M-8500	830		653		582		983
5M-9695	965		656	5P-1465	512		985
	968		658	5P-2228	805		987
5P-0537	39		660	5P-2424	615		989

PART NUMBER INDEX

Part	Page
	992
	993
	994
5P-4116	63
	108
	306
	311
	315
	320
	325
	368
	382
	490
5P-4401	499
5P-4405	88
5P-4423	88
5P-4424	499
5P-4426	499
5P-4483	346
5P-4868	576
	579
	582
5P-4961	376
5P-5454	886
	889
5P-5623	315
5P-5627	965
	968
5P-5637	820
	831
	864
	868
5P-5639	831
5P-5677	129
	324
5P-5678	44
	835
5P-5680	969
	971
5P-5689	311
5P-5768	838
	842
	844
	921
	922
	923
	937
5P-5813	371
5P-5824	886
	889
5P-5908	820
	864
	868
5P-5923	466
	469
	781
5P-5931	567
	570
5P-5969	472
	529
	840
	846
	882
	887
	890
	896
	902
	964
5P-6008	337
5P-6011	88
5P-6129	820
5P-6652	477
	779
	781
5P-6871	904
5P-6872	905
5P-6882	882
5P-7162	965
	968
5P-7213	389
5P-7701	63
5P-7803	819
	863
	867
	886
	889
	894
	896
	953
5P-7813	27
5P-7814	37
5P-7854	62
	572
	593
5P-7958	941
5P-7970	21
	67
	368
5P-8066	67
5P-8068	68
5P-8167	232
	233
	280
	306
	325
	472
	830
	957
	961
5P-8211	45
	47
5P-8244	504
5P-8245	12
	14
	16
	18
	42
	45
	47
	56
	73
	368
	373
	391
	484
	535
	536
	538
	554
	596
	600
	775
	808
	811
5P-8246	37
5P-8247	25
	33
	35
	133
	371
	373
	484
	775
	794
	795
	798
	799
5P-8248	371
	379
	536
	554
	608
	800
	808
	811
5P-8249	532
	534
5P-8250	808
	811
5P-8291	779
5P-8347	81
	144
5P-8439	116
	235
	237
5P-8445	876
5P-8500	614
	825
	834
	934
	995
5P-8502	614
	834
	934
	995
5P-8525	163
	218
	220
	247
	248
	249
	857
	880
5P-8842	455
	538
5P-8843	455
5P-8890	455
5P-9085	480
	482
5P-9118	504
5P-9135	820
	863
	867
5P-9209	100
	361
5P-9262	751
5P-9297	113
5P-9299	347
	512
5P-9617	592
5P-9810	558
	592
5R-4787	600
5R-7137	16
	18
5S-0003	12
	14
	872
	874
5S-4246	331
	333
5S-4385	386
5S-7349	130
	133
	270
5S-7379	206
	209
	212
	215
	233
	297
	301
	455
	491
	537
	554
	564
	567
	570
	571
	572
	593
	781
	830
	903
	905
5S-7382	43
	100
	361
	381
	463
5S-7383	570
	823
	824
	830
5S-9134	21
5T-0570	3
	▶554
5T-0906	455
5T-1362	608
5T-1958	969
5T-1959	971
5T-1964	969
	971
5T-1969	969
5T-1972	969
	971
5T-3093	964
5T-3144	969
5T-3145	971

▶ PRIMARY REFERENCE

PART NUMBER INDEX

Part	Page
5T-3146	969
5T-3147	971
5T-3889	777
5T-3890	777
5T-4030	872
	874
5T-4267	777
5T-5295	536
5T-6775	779
5T-7129	379
5T-7486	835
	838
	842
	844
5T-8285	506
	508
5T-8366	775
5T-8417	536
5T-9313	206
	209
	212
	215
5T-9628	373
5T-9903	592
5T-9986	566
5V-0770	876
5V-1474	876
5V-1497	876
	955
5V-1498	823
	824

6

6A-5591	47
	368
6A-9718	974
6B-0933	615
	617
	619
	621
	623
	625
	627
	629
	631
	633
	635
	637
	639
	641
	643
	645
	647
	649
	651
	653
	656
	658
	660
	662
	664
	666
	668
6B-3260	808
	811
	814
6B-4540	331
	333
6B-5072	391
6B-6684	73
	389
	596
6C-0109	317
	320
6C-0110	317
	320
6C-3246	434
	435
6C-5233	317
	320
6C-5234	317
	320
6C-7366	433
	434
6D-0580	363
6D-1432	506
6D-1641	571
	900
6D-3479	311
	347
6D-4161	872
6D-4244	12
	14
	306
	326
	338
	341
	462
	558
	567
	570
	571
	593
6D-4246	297
	301
	306
	326
6D-4247	560
	585
	587
6D-6489	512
6D-6581	835
	838
	842
	844
6D-7146	69
	600
6D-7563	794
	799
6D-7564	795
	798
6D-9718	872
6D-9855	508
6E-0123	539
6E-0775	544
6E-1131	541
	543
6E-1343	534
	▶541
6E-1344	541
6E-1346	541
6E-1436	602
6E-1835	755
6E-1923	697
	699
6E-1924	697
6E-1925	697
6E-1926	576
	579
	582
6E-3006	761
	763
	765
6E-3007	701
	703
	705
	707
	709
	711
	713
	715
	717
	719
	721
	723
	725
	727
	729
	731
	733
	735
	737
	739
	741
	743
	745
	747
6E-3013	701
	703
	705
	707
	709
	711
	713
	715
	717
	719
	721
	723
	725
	727
	729
	731
	733
	735
	737
	739
	741
	743
	745
	747
6E-3019	701
	703
	705
	707
	709
	711
	713
	715
	717
	719
	721
	723
	725
	727
	729
	731
	733
6E-3028	673
	675
	679
	682
	684
	686
	688
	689
	▶701
6E-3029	673
	675
	679
	682
	684
	686
	688
	689
	▶703
6E-3030	673
	675
	679
	682
	684
	686
	688
	689
	▶705
6E-3031	673
	679
	684
	688
	▶707
6E-3032	617
	621
	623
	▶673
6E-3033	707
	715
	721
	729
	731
	733

▶ PRIMARY REFERENCE

PART NUMBER INDEX

Part	Page	Part	Page	Part	Page	Part	Page
	▶756		703		721	6F-4855	396
6E-3034	674		705		723		399
	676		711		725	6F-6405	63
	677	6E-3058	713		727	6F-6992	808
	678	6E-3059	721		729		811
	680		745		731	6F-7045	274
	681	6E-3268	751		733	6G-0417	484
	683	6E-3269	751		735	6G-0905	504
	685	6E-3272	751		737	6G-1528	451
	687	6E-3273	751		739	6G-1631	350
	690	6E-3274	751		741	6G-1633	350
	692	6E-3275	751		743	6G-1755	2
	693	6E-3276	751		745		▶350
	694	6E-4224	602		747	6G-1908	554
	695	6E-4228	749	6E-5200	758	6G-1914	779
	696	6E-4230	749	6E-6140	749	6G-1915	779
	▶709	6E-4239	749	6E-6141	749	6G-2395	886
6E-3035	674	6E-4502	701	6E-6142	749		889
	676		703	6E-6419	749		894
	677		705	6E-6420	749		896
	678		707	6E-6527	751	6G-2396	886
	680		709	6E-6528	751		889
	681		711	6E-6536	751		894
	683		713	6E-6537	751		896
	685		715	6E-6538	751	6G-2751	886
	687		717	6E-6539	751		889
	690		719	6E-6540	751	6G-2914	830
	692		721	6F-0253	871		886
	693		723		925		889
	694		725		927	6G-2946	777
	695		727		929	6G-2959	971
	696		729	6F-0698	371	6G-3206	379
	▶711		731	6F-3930	420	6G-3212	379
6E-3036	674		733		421	6G-4526	779
	676		735		422	6G-4701	371
	677		737		423	6G-4703	371
	678		739		424	6G-5214	896
	680		741		425	6G-5442	779
	681		743		426	6G-5532	554
	683		745		427	6G-5533	554
	685		747		428	6G-5534	554
	687	6E-4599	709		429	6G-5537	554
	690		717		430	6G-5538	554
	692		719		431	6G-5539	554
	693		723		432	6G-5542	554
	694		725		433	6G-5543	554
	695		727		434	6G-5544	554
	696		747		435	6G-5547	554
	▶713	6E-4703	697		436	6G-5548	554
6E-3037	674		699		437	6G-5979	395
	677		▶757		438		402
	678	6E-4704	756		439	6G-5987	852
	683	6E-4940	540		440		854
	687	6E-4974	550		441	6G-6122	554
	690	6E-5047	391		442	6G-7187	535
	692	6E-5153	701		443		538
	693		703		444	6G-7222	886
	696		705		445		894
	▶715		707		446		896
6E-3038	623		709		447	6G-8623	798
	656		711		448		799
	▶674		713		450	6G-8814	830
6E-3043	707		715		452	6G-8831	904
	715		717		453		906
6E-3044	701		719		454		908

▶ PRIMARY REFERENCE

PART NUMBER INDEX

Part	Page	Part	Page	Part	Page	Part	Page
	910		625	6T-9222	378	6V-2687	480
6H-0211	536		627	6V-0292	886		482
6H-1717	538		629		889		902
	554		631		896	6V-2722	140
	775		633	6V-0371	272	6V-2773	835
6H-9691	514		635	6V-0505	859		838
6I-0273	90		637		860		842
6I-0274	90		639		887		844
6I-0275	90		641		890	6V-3251	12
6I-1418	144		643		894		14
	145		645	6V-0852	51	6V-3259	876
	296		647		363	6V-3265	228
	300		649		378		230
6I-1638	32		651		404		297
6I-2662	32		653		572		301
6I-2663	32		656		576	6V-3342	872
6I-2720	49		658		579		874
6I-8641	351		660		582	6V-3536	23
	354		662		697	6V-3537	41
6I-8911	357		664		699	6V-3538	27
6I-8912	351		666	6V-0894	100		39
	354		668		361	6V-3668	502
	357		670	6V-1250	21	6V-3821	81
	359	6L-2609	62	6V-1322	326	6V-3822	18
6I-9395	404	6L-8617	85		329		62
6J-0488	338		86	6V-1572	105		132
	341	6M-5062	522	6V-1573	105		347
6J-0789	539		592	6V-1581	79	6V-3831	63
6J-0790	539		764	6V-1582	79	6V-3834	68
6J-0793	539		768	6V-1668	820	6V-3908	63
6J-1381	539	6M-7476	12		864	6V-3918	77
6J-1972	541		14		868		78
	543	6M-9537	508	6V-1819	351		367
	545	6N-6033	67		354		368
	546	6N-8863	45		357	6V-3928	884
6J-2797	544		47		359		886
6J-5731	541	6N-9995	268	6V-1820	18		889
	543	6P-0205	816		21		894
	545		817		87		896
	546		886		132	6V-3940	39
6J-5733	541		889		346		60
	543		896		387		67
	545	6P-3236	819		474		84
	546		863	6V-1889	296		346
6J-6439	755		867		301	6V-3964	297
6K-0545	808	6P-5647	802		381		301
	811	6P-6641	499		463	6V-3965	51
6K-3273	886	6T-2770	974		572		363
	889	6T-3610	324	6V-1911	389		378
	894		329	6V-2313	100		404
6K-4076	472	6T-3631	305		361		572
6K-6826	508		324	6V-2315	44		576
6K-8079	900	6T-3632	305	6V-2317	21		579
6K-8178	108		324		63		582
	311	6T-3633	305		68		697
	499		324		69		699
	898	6T-3643	311		91	6V-4245	509
6K-9632	961	6T-5345	819		115	6V-4248	12
	962		863		347		14
6L-1650	346		867		368		70
6L-1962	615	6T-6708	819	6V-2480	331		72
	617		863		333		82
	619		867	6V-2610	499		346
	621	6T-7695	880	6V-2686	265		829
	623	6T-8115	291		268	6V-4249	47

► PRIMARY REFERENCE

PART NUMBER INDEX

Part	Page
6V-4283	310
6V-4367	60
6V-4589	51
	111
	126
6V-5048	27
	50
	257
	258
	293
6V-5049	51
	106
	256
	293
6V-5063	12
	14
6V-5134	68
6V-5158	840
	846
6V-5163	840
	846
	887
	890
	894
6V-5164	938
6V-5192	45
	47
	606
6V-5215	65
	293
6V-5217	20
	21
	58
	346
	367
	404
6V-5218	63
	67
	106
	111
	368
6V-5219	39
	347
	388
6V-5221	68
	83
6V-5230	45
	697
	699
6V-5556	758
6V-5586	769
6V-5645	282
	285
6V-5696	577
	580
	583
	827
6V-5722	552
6V-5834	880
6V-5839	12
	14
	16
	18
	21
	33
6V-5842	33
	94
	502
6V-5849	983
	985
6V-5853	975
	977
	979
	981
	987
	989
	992
	993
	994
6V-6209	974
6V-6213	974
6V-6214	974
6V-6219	974
6V-6317	62
	113
	293
6V-6467	962
6V-6578	282
	285
	291
6V-6609	12
	14
	264
6V-6703	152
	160
6V-6888	974
	975
	977
	979
	981
6V-6889	974
	975
	977
	979
	981
6V-6893	306
	326
6V-6923	125
	127
6V-6959	117
	118
	119
	121
6V-7350	83
6V-7357	311
	509
6V-7418	699
6V-7571	97
6V-7604	29
6V-7636	835
	838
	842
	844
6V-7673	602
6V-7687	73
6V-7728	820
	864
	868
6V-7742	12
	14
6V-7744	904
	906
	908
	910
6V-7981	94
	293
	346
	572
6V-8004	16
	18
6V-8077	590
6V-8081	379
6V-8149	16
	18
6V-8183	100
	830
6V-8185	338
	341
6V-8186	278
	615
	617
	619
	621
	623
	625
	627
	629
	631
	633
	635
	637
	639
	641
	643
	645
	647
	649
	651
	653
	656
	658
	660
	662
	664
	666
	668
	670
6V-8189	133
	509
6V-8197	12
	14
	42
	45
6V-8202	347
6V-8212	346
6V-8214	293
	344
	474
6V-8225	39
	186
	187
6V-8237	545
6V-8255	964
6V-8257	985
6V-8258	975
	977
	983
	987
	989
6V-8259	979
	981
	992
	993
	994
6V-8336	56
	73
	602
6V-8337	602
6V-8352	751
6V-8359	60
6V-8362	819
	863
6V-8369	279
	282

► PRIMARY REFERENCE

PART NUMBER INDEX

Part	Page
	291
	983
	985
	987
	989
6V-8376	141
	142
	311
	337
	340
	341
6V-8378	270
	277
6V-8397	51
	108
	560
	562
	563
	564
	566
	567
	569
	570
	572
	585
	587
	589
	770
6V-8398	108
	558
	566
	569
	571
	577
	580
	583
	590
	592
	593
	697
	699
	770
6V-8624	108
	566
6V-8625	566
	569
	577
	579
	583
	590
	593
6V-8627	363
	572
	576
	579
	582
6V-8628	363
	572
6V-8633	558
6V-8634	108
	560
	562
	563
	566
	569
6V-8635	381
6V-8636	564
6V-8637	66
	574
6V-8639	108
	566
	571
	592
6V-8647	363
	576
	579
	582
	592
	697
	699
6V-8675	600
6V-8676	106
	111
6V-8716	376
	381
6V-8723	108
	560
	566
	569
	585
	587
	589
6V-8724	564
6V-8731	108
6V-8765	600
6V-8777	577
	580
	583
6V-8801	88
	100
	157
	206
	209
	212
	215
	251
	277
	280
	282
	285
	291
	297
	301
	306
	326
	329
	331
	333
	338
	341
	462
	463
	506
	509
	519
	524
	567
	570
	589
	593
	820
	864
	868
	953
	959
6V-8837	293
	602
6V-8918	509
6V-8928	886
	889
	894
6V-8936	770
6V-9001	572
6V-9002	108
	593
6V-9004	73
	577
	580
	583
6V-9005	63
6V-9007	576
	579
	582
6V-9008	63
	376
6V-9027	368
6V-9168	585
	587
6V-9189	218
	235
6V-9607	31
6V-9632	157
	365
	480
	482
	825
	830
	835
	842
	849
	882
	896
	925
	929
	938
	953
6V-9746	66
	73
	376
	381
	572
	574
	576
	577
	579
	580
	582
	583
	592
6V-9829	585
6V-9835	577
	580
	583
6V-9836	570
6V-9837	558
	593
6V-9839	574
6V-9840	577
	580
	583
6V-9844	590
6V-9849	590
	592
6V-9850	564
6V-9851	558
6V-9853	376
	381
	572
6V-9872	572
6V-9873	590
6V-9875	576
	579
	582
6V-9876	566
	569
6W-5698	959
	962
6W-5817	508
6Y-0309	815
6Y-0590	390
6Y-0591	390
6Y-0976	359
6Y-0982	351
6Y-1000	351
6Y-1114	351
	354
	359
6Y-1115	351
	354
	357
	359
6Y-1116	357
6Y-1119	357
	359
6Y-1864	354
6Y-1878	351
6Y-1887	351
	354
	359
6Y-1888	359
6Y-1890	354
6Y-1891	351
	359
6Y-1895	351
	359
6Y-2303	▶351
	392
6Y-2307	359
6Y-2312	351
	354
6Y-2419	351
6Y-2425	351
	354
6Y-2428	354
6Y-2429	354
6Y-2430	354
6Y-2584	404
6Y-2805	786
6Y-2932	597
6Y-2933	597

▶ PRIMARY REFERENCE

PART NUMBER INDEX

Part	Page
6Y-2934	597
6Y-2935	597
6Y-3849	502
6Y-3850	502
6Y-3852	502
6Y-3855	359
6Y-3860	388
6Y-3861	388
6Y-4280	602
6Y-4638	396
	399
6Y-5010	386
6Y-5230	808
	811
	814
6Y-5352	502
6Y-5728	346
6Y-7916	504
6Y-7953	554
6Y-7954	373
6Y-7981	354
6Y-8285	351
6Y-8764	▶386
	387
6Y-8765	▶387
	392
6Y-9763	346
7	
7B-7525	941
	943
7B-9323	515
7C-0752	91
7C-1445	21
7C-1583	55
7C-1728	55
7C-1798	53
7C-1821	68
7C-1822	68
7C-2891	60
7C-3081	60
7C-3082	60
7C-3083	60
7C-3095	76
7C-3953	60
7C-3954	60
7C-4354	297
	301
	306
	326
	331
	333
7C-4993	115
7C-5736	42
7C-6178	10
7C-6921	65
7C-7851	36
7C-7852	36
7C-8292	58
7C-8296	45
7C-8581	32
7C-8639	49
7C-8851	114
7C-9532	99
7C-9538	99
7C-9542	21
7D-0028	379
7D-0035	379
7D-0215	499
7D-1158	789
7D-1195	612
7D-1576	792
7D-1577	792
7D-1649	455
7D-2135	808
	811
7D-2136	808
	811
7D-2196	808
	811
7D-3963	506
7D-4903	499
7D-5252	420
	421
	422
	423
	424
	425
	426
	427
	428
	429
	430
	431
	432
	433
	434
	435
	436
	437
	438
	439
	440
	441
	442
	443
	444
	445
	446
	447
	448
	450
	452
	453
	454
7D-6567	391
7D-6671	▶786
7D-7026	79
	474
	900
7D-7233	297
	301
7D-7496	477
7D-7889	379
7D-8185	373
7D-8225	373
7D-8226	373
7D-8245	809
	811
7D-8347	371
7D-8354	504
7D-8362	504
7D-8434	504
7D-8436	504
7D-8437	504
7D-8439	504
7D-8440	2
	▶504
7D-8441	504
7D-8636	455
7D-8637	455
7D-8643	455
7D-8825	808
7D-8826	808
7D-8875	800
7D-8876	800
7D-8877	800
7D-8878	800
7D-8879	800
7D-8881	800
7D-8882	800
7D-8883	800
7D-8884	800
7D-8889	800
7D-8891	800
7D-8912	455
	▶489
7D-8983	554
7D-8984	554
7D-9267	608
7E-3369	45
7E-5555	77
7E-6508	344
7E-7912	76
7E-8629	91
7E-8923	10
7E-8925	10
7E-8926	10
7E-8928	10
7E-9578	32
7F-0192	100
7F-0560	140
7F-1327	808
	811
7F-4617	585
	587
7F-7685	141
7F-8268	387
7F-9223	466
	469
7G-0437	502
7G-1060	305
	324
7G-4326	959
7G-4822	351
	354
	357
	359
7G-4824	819
	863
	867
	886
	889
7G-5453	399
7G-7053	320
	331
	333
7G-7920	480
	482
7H-1447	612
7H-2423	547
	548
7H-2444	800
7H-3641	615
	617
	619
	621
	623
	625
	627
	629
	631
	633
	635
	637
	639
	641
	643
	645
	647
	649
	651
	653
	656
	658
	660
	662
	664
	666
	668
	670
7I-4610	3
	▶488
7I-4621	▶615
7I-4622	525
	▶617
7I-4623	▶619
7I-4624	▶621
7I-4696	872
	874
7I-4698	872
	874
7I-4699	872
	874
7I-4718	2
	▶530
7I-4890	830
7I-5015	818
	▶849
	861
7I-5412	589
7J-0204	547
	548
	574
7J-8611	375
	499

▶ PRIMARY REFERENCE

PART NUMBER INDEX

Part	Page	Part	Page	Part	Page	Part	Page
	512	7N-3725	268		320	7X-0632	466
	951		381	7V-7838	317		469
7J-9885	550	7N-5274	310		320	7X-0838	564
7J-9933	701	7N-5683	27	7V-9275	310	7X-0871	592
	703	7N-5876	331	7W-5164	94	7X-0909	44
	705		333	7W-5499	12	7X-0943	1003
	707		913		14	7X-0944	1003
	709		925	7W-5672	566	7X-0945	1004
	711		927		569	7X-0946	1004
	713		929	7W-5844	49	7X-1387	116
	715	7N-7688	79	7W-6390	60	7X-2049	898
	717	7N-9801	265	7W-7235	53	7X-2393	317
	719	7N-9943	165	7X-0288	567		320
	721	7S-4571	379		570	7X-2468	344
	723	7S-9396	88	7X-0289	558	7X-2533	44
	725	7T-0020	165		560	7X-2537	306
	727	7T-0570	396		570		326
	729		399		593	7X-2538	827
	731	7T-0582	852	7X-0291	462	7X-2539	827
	733		854		625	7X-2540	552
	735	7T-1099	819		627	7X-2546	673
	737		830		631		674
	739		863		633		675
	741		867		666		676
	743	7T-1159	363		668		677
	745	7T-1961	959	7X-0292	802		678
	747		962	7X-0328	482		679
	755	7T-3267	270	7X-0333	519		680
7K-1181	79	7T-3268	270		524		681
	296	7T-3271	270		802		682
	300	7T-3276	270		805		683
	305	7T-3277	270	7X-0334	775		684
	324	7T-3278	270	7X-0342	381		685
	480	7T-3279	270	7X-0346	531		686
	482	7T-3451	270		595		687
7K-4129	106	7T-3454	270	7X-0354	914		688
7K-4199	858	7T-3973	270		915		689
7K-4201	848	7T-3974	270		917		690
7K-4743	310	7T-4003	856	7X-0375	914		692
7K-6117	531		857		915		693
7K-9202	531	7T-4515	403		917		694
	535	7T-4532	828	7X-0390	808		695
7K-9203	805	7T-4897	351		811		696
7L-0811	305		354	7X-0399	458	7X-2552	381
	324		357	7X-0403	486	7X-2607	602
7L-2894	270		359		802	7X-3182	975
7L-6580	77	7T-6496	346	7X-0404	487		979
7L-8316	852	7T-6799	331	7X-0440	297		983
	854		333		301		987
7L-9061	602	7T-7358	858	7X-0452	775		994
7M-0706	365	7T-8891	959	7X-0456	823	7X-3229	999
7M-2360	554		961		824	7X-3373	270
7M-7219	876		962	7X-0550	775	7X-4736	506
7M-7410	509	7T-9302	279	7X-0562	270	7X-4776	697
7M-8485	346		282	7X-0579	117		699
	376		291		118	7X-6222	331
	381	7T-9755	602		119		333
	396	7T-9793	819		121	7X-6312	161
	399	7U-4898	943	7X-0591	820	7X-6315	146
7N-0296	265	7U-4998	941		864		149
	268	7V-0446	100		868		152
7N-0718	▶274		361		953		160
	311		508	7X-0608	251	7X-7644	999
7N-2059	265	7V-5191	876		277	7X-7661	969
7N-3718	311	7V-7835	317	7X-0620	277		971

▶ PRIMARY REFERENCE

PART NUMBER INDEX

Part	Page
7X-7729	87
	88
	91
	95
	326
	381
	466
	469
	474
	479
	827
7X-7731	78
	84
	368
	455
7X-7732	76
7X-7739	957
7X-7877	157
	282
	285
	291
	474
7X-7958	66
7Y-5226	964
	969
	971
7Y-7388	925
	927
	930
7Y-8169	311
8	
8B-1615	375
8C-2926	386
8C-3085	753
	769
8C-3089	602
8C-3100	84
8C-3205	572
8C-3309	576
	582
8C-3334	337
8C-3425	600
8C-3442	830
8C-3445	63
8C-3446	63
	376
	592
8C-3447	376
8C-3451	592
8C-3655	270
8C-3756	819
8C-4403	27
8C-4586	819
	863
	867
8C-4984	367
8C-5060	983
	985
8C-5230	63
8C-5897	999
8C-5917	136
	137
8C-5918	138
8C-6162	139
8C-6354	773
	331
	333
8C-6358	140
8C-6738	965
	968
8C-6857	781
8C-6913	808
	811
8C-6921	140
8C-6959	109
8C-6965	396
	399
8C-7508	338
	341
8C-8451	311
8C-8454	840
	846
8C-8923	999
8C-9987	402
	771
	772
8D-1268	808
	811
8D-1429	819
	863
	867
8D-1470	499
8D-2429	537
8D-2638	537
8D-2811	455
	537
8D-3540	379
8D-3591	379
8D-3791	472
8D-3885	379
8D-3886	379
8D-3902	379
8D-4064	373
8D-4282	373
8D-4332	800
8D-4336	800
8D-4766	531
8D-5632	615
	617
	619
	621
	623
	625
	627
	629
	631
	633
	635
	637
	639
	641
	643
	645
	647
	649
	651
	653
8D-5633	615
	617
	619
	621
	623
	625
	627
	629
	631
	633
	635
	637
	639
	641
	643
	645
	647
	649
	651
	653
8D-5634	615
	617
	619
	621
	623
	625
	627
	629
	631
	633
	635
	637
	639
	641
	643
	645
	647
	649
	651
	653
8D-5636	615
	617
	619
	621
	623
	625
	627
	629
	631
	633
	635
	637
	639
	641
	643
	645
	647
	649
	651
	653
8D-5637	615
	617
	619
	621
	623
	625
	627
	629
	631
	633
	635
	637
	639
	641
	643
	645
	647
	649
	651
	653
8D-5640	615
	617
	619
	621
	623
	625
	627
	629
	631
	633

► PRIMARY REFERENCE

PART NUMBER INDEX

Part	Page	Part	Page	Part	Page	Part	Page
	635	8D-9159	472		277	8J-9910	544
	637	8D-9671	306		925	8J-9911	544
	639		326		927	8K-0530	477
	641	8D-9784	371		930	8L-2777	53
	643	8D-9882	777	8F-1462	918	8L-2786	60
	645	8D-9886	777	8F-1974	297		67
	647	8D-9887	777		301		263
	649	8E-1118	880	8F-3469	351	8L-5008	92
	651	8E-1133	346		354	8L-5828	317
	653	8E-1143	399		357	8L-6005	508
	656	8E-1161	354		359	8L-6521	338
	658	8E-1263	357	8F-4102	533		341
	660		359	8F-6230	404	8L-6557	12
	662	8E-1368	370	8F-6437	474		14
	664	8E-1908	359		615	8L-7905	830
	666	8E-1909	351		617	8L-8413	138
	668	8E-1910	351		619		957
	670	8E-1913	354		621	8L-8598	637
8D-5641	317	8E-1914	354		623		639
	320	8E-3366	2		625		641
	615		▶370		627		643
	617	8E-5529	789		629		645
	619	8E-5531	787		631		647
	621		788		633		649
	623		790		635		651
	625	8E-5734	351		637		653
	627		354		639		658
	629		359		641		660
	631	8E-5736	354		643		662
	633	8E-5742	351		645		664
	635		354		647		666
	637		357		649		668
	639		359		651		670
	641	8E-6130	802		653	8M-0505	67
	643	8E-6570	399		656	8M-2770	12
	645	8E-7713	399		658		14
	647	8E-7714	399		660		222
	649	8E-7791	819		662		225
	651		863		664		232
	653		867		666		293
	656		886		668		297
	658		889		670		301
	660		894	8F-9836	779		331
	662		953	8H-1141	270		333
	664	8E-8319	351	8H-1728	903		898
	666		354	8H-3481	181	8M-2771	293
	668		357	8H-4040	808	8M-2772	311
	670		359		811	8M-2773	106
	830	8E-9316	▶354	8H-5303	274		111
8D-5949	775		392	8H-5306	274		297
8D-6687	533	8E-9474	404	8H-9789	39		301
8D-7026	508	8E-9893	399	8I-1362	499		306
8D-7086	531	8E-9894	396	8J-0112	540		326
	535		399	8J-1256	293		564
8D-7225	535	8E-9895	396	8J-1434	805		572
8D-7423	554		399		▶815		818
8D-7424	554	8E-9896	396	8J-2331	611	8M-3175	697
8D-7425	554		399	8J-4351	68		699
8D-7426	554	8E-9897	399	8J-6273	596	8M-3267	957
8D-7678	533	8F-0492	886	8J-6371	539	8M-3837	458
8D-7960	830		889	8J-6384	543	8M-4295	354
8D-7996	532		894	8J-6815	697	8M-4437	701
8D-8168	800	8F-1434	130	8J-7008	805		703
8D-8197	371		182	8J-7024	804		705
8D-9092	567		270		▶805		707

▶ PRIMARY REFERENCE

PART NUMBER INDEX

Part	Page	Part	Page	Part	Page	Part	Page
	709		58	8T-1296	567		136
	711	8T-0119	300		569		137
	713		329	8T-1683	569		138
	715	8T-0249	590		585		139
	717	8T-0275	58		587		157
	719	8T-0276	67	8T-1687	566		163
	721		106		569		195
	723		111	8T-1698	597		196
	725		144	8T-2275	612		197
	727		145	8T-2501	154		199
	729	8T-0281	36		156		202
	731	8T-0285	154		363		205
	733		156		567		206
	735	8T-0292	76		570		209
	737	8T-0293	311		957		212
	739	8T-0328	100	8T-2502	506		215
	741		130		509		220
	743		270		567		222
	745		361	8T-2561	831		225
	747		964	8T-2901	959		228
8M-4438	363		969	8T-3282	12		230
8M-6393	378		971		14		233
8M-6521	346	8T-0335	964		540		237
8M-7065	12	8T-0336	554		547		241
	14	8T-0343	39		548		247
8M-8489	386	8T-0352	964	8T-3426	887		248
8N-0869	310		969		890		249
	311		971		894		265
	325	8T-0355	388	8T-3490	62		268
	329	8T-0358	33		88		297
8N-1546	311	8T-0372	502		95		301
8N-1548	311		602		199		306
8N-1725	310	8T-0389	136		206		311
8N-2694	88		137		320		317
8N-4617	90		138		347		320
8N-6854	45		139		480		326
	47		173		482		329
8N-8846	85		175		819		331
	86		177		835		333
8N-9071	79		179		842		346
8N-9072	79		466		863		361
8P-5141	819		469		867		375
	863		479		953		381
	867	8T-0639	367	8T-3518	140		466
8R-1778	858	8T-0640	55	8T-3519	140		469
8R-3393	898		115	8T-3597	389		474
8S-1162	106	8T-0642	293	8T-3647	268		478
8S-6109	898	8T-0643	16	8T-3957	577		480
8S-6110	898		18		580		482
8S-7566	848		132		583		499
8S-7803	876	8T-0646	577	8T-4009	804		509
8S-9092	379		580	8T-4121	16		512
8S-9129	346		583		63		564
	388	8T-0667	546		66		572
8S-9130	346	8T-0722	381		73		577
	388	8T-1159	113		79		580
8T-0075	108	8T-1174	831		92		583
8T-0076	108	8T-1191	834		95		585
	560		934		100		587
	562		999		105		612
	563	8T-1192	1003		106		614
	566	8T-1193	1003		109		615
	569	8T-1194	1004		111		617
8T-0077	571		1005		132		619
8T-0100	49	8T-1195	1004		134		621

► **PRIMARY REFERENCE**

PART NUMBER INDEX

Part	Page
	623
	625
	627
	629
	631
	633
	635
	637
	639
	641
	643
	645
	647
	649
	651
	653
	656
	658
	660
	662
	664
	666
	668
	670
	835
	838
	840
	842
	844
	846
	880
	886
	889
	894
	898
	900
	904
	906
	908
	910
8T-4122	317
	320
	531
	595
	914
	915
	917
8T-4123	43
8T-4133	100
	136
	137
	138
	167
	168
	169
	170
	222
	225
	268
	297
	301
	306
	311
	317
	320
	326
	329
	347
	361
	381
	466
	469
	585
	587
	831
	840
	846
	904
	906
	908
	910
8T-4136	75
	100
	109
	136
	137
	138
	163
	206
	212
	222
	225
	228
	247
	248
	249
	265
	306
	311
	317
	320
	326
	361
	466
	469
	474
	615
	617
	619
	621
	623
	625
	627
	629
	631
	633
	635
	637
	639
	641
	643
	645
	647
	649
	651
	653
	656
	658
	660
	662
8T-4137	66
	79
	109
	139
	157
	195
	197
	199
	228
	230
	241
	268
	297
	301
	306
	311
	326
	329
	331
	333
	346
	478
	479
	480
	482
	499
	509
	512
	564
	572
	835
	838
	842
	844
	880
	898
	904
	906
	908
	910
8T-4138	63
	311
	701
	703
	705
	707
	709
	711
	713
	715
	717
	719
	721
	723
	725
	727
	729
	731
	733
	735
	737
	739
	741
	743
	745
	747
	975
	977
	979
	981
8T-4139	102
	320
	466
	469
	496
8T-4140	471
	497
8T-4171	317
	320
	820
	864
	868
	977
	981
	985
	989
	992
	993
8T-4172	577
	580
	583
8T-4173	317
	320
8T-4178	70
	72
	82
8T-4179	306
	326
	389
	466
	469
8T-4181	835
	838
	842
	844
8T-4182	100
	136
	137
	138
	139
	361
	381
	466
	469
	886
	889
	894
	904
	906
	908
	910
8T-4183	73
8T-4185	65
	92
	306

► PRIMARY REFERENCE

PART NUMBER INDEX

Part	Page
	326
	479
	512
	898
8T-4186	63
	79
	106
	111
	673
	674
	675
	676
	898
	906
	908
	910
8T-4189	117
	118
	119
	121
	265
	311
	315
	320
	499
	701
	703
	705
	707
	709
	711
	713
	715
	717
	719
	721
	723
	725
	727
	729
	731
	733
	735
	737
	739
	741
	743
	745
	747
8T-4191	265
	306
	311
	326
	474
	512
	614
	906
	910
8T-4192	389
8T-4195	63
	73
	79
	88
	95
	105
	297
	301
	361
	381
	466
	469
	474
	612
	615
	617
	619
	621
	623
	625
	627
	629
	631
	633
	635
	637
	639
	641
	643
	645
	647
	649
	651
	653
	656
	658
	660
	662
	664
	666
	668
	670
	840
	846
	887
	889
	894
	904
8T-4196	88
	91
	95
	306
	326
	381
	466
	469
	474
8T-4198	132
	134
	317
8T-4200	306
	326
8T-4205	130
	133
	143
	199
	206
	209
	212
	215
	222
	225
	241
	270
	306
	310
	311
	317
	320
	326
	329
	338
	341
	820
	849
	864
	868
8T-4222	70
	72
	82
8T-4223	73
	75
	102
	222
	225
	306
	312
	317
	321
	326
	389
	396
	399
	474
	477
	482
	492
	496
	499
	519
	524
	567
	577
	580
	583
	595
	611
	614
	781
	800
	827
8T-4224	37
	106
	121
	133
	145
	195
	197
	201
	204
	206
	212
	218
	222
	228
	232
	235
	242
	243
	265
	268
	307
	312
	315
	317
	321
	326
	499
	509
	552
	701
	703
	705
	707
	709
	711
	713
	715
	717
	719
	721
	723
	725
	727
	729
	731
	733
	735
	737
	739
	741
	743
	745
	747
	827
8T-4226	100
	307
	326
	361
	509
8T-4244	222
	225
	474
	827
8T-4647	297
	301
8T-4750	602
8T-4778	317
	321
8T-4835	614
	637
	639
8T-4896	43
	154
	156
	157
	206
	209
	212
	215
	222

► **PRIMARY REFERENCE**

PART NUMBER INDEX

Part	Page	Part	Page	Part	Page	Part	Page
	225	8T-5004	466		201	8T-8919	477
	232		469		204		492
	233	8T-5005	16		206		800
	280		109		212	8T-8924	487
	282		173		218	8T-8987	697
	285		175		222		699
	291		177		228	8T-9006	830
	297		179		232	8T-9043	615
	301	8T-5030	386		235		617
	307	8T-5082	592		707		619
	326	8T-5255	▶997		715		621
	329	8T-5360	939		721		623
	331		940		745		625
	333	8T-5361	43	8T-6870	307		627
	338		458		326		629
	341		486	8T-6871	531		631
	361		487	8T-6974	512		633
	363		802	8T-7008	567		635
	376	8T-5372	97	8T-7044	93		637
	381	8T-5390	100	8T-7547	109		639
	472		361		381		641
	506		509	8T-7876	602		643
	509	8T-5401	886	8T-7971	491		645
	519		889	8T-8442	396		647
	524	8T-5412	222		399		649
	537		225		604		651
	554	8T-5429	590	8T-8569	270		653
	558	8T-5436	87	8T-8729	165		656
	560		346		177		658
	564		900		182		660
	567	8T-5890	585		252		662
	570		587		279		664
	571	8T-6430	43		518		666
	572	8T-6466	63		772		668
	585		382		925		670
	587		512		929	8T-9056	509
	593		900	8T-8730	262	8T-9107	579
	818	8T-6468	391		278	8T-9311	43
	872	8T-6472	504	8T-8737	150	8T-9364	307
	874	8T-6473	504		173		326
	915	8T-6631	820		175	8T-9378	805
	917	8T-6685	577		177	8T-9389	567
	959		580		179	8T-9515	84
	961		583		279	8T-9530	999
	962	8T-6703	116		282	8T-9597	604
8T-4897	48	8T-6757	76		291	8T-9598	84
8T-4908	490		512		293	8T-9636	157
8T-4910	75	8T-6761	45		306	8T-9655	144
	102		368		480		145
8T-4956	102	8T-6762	10		482		296
	496		50		975		300
	577		76		979	8T-9756	139
	580		84		981	8T-9757	136
	583	8T-6763	37		983		137
8T-4971	338	8T-6764	10		985		138
	341	8T-6765	91		987	8T-9834	925
8T-4983	381		94		989		927
8T-4984	79		346	8T-8748	925		929
	105	8T-6766	76		927	8T-9884	270
	368	8T-6767	76		929	8U-6457	604
8T-4994	43		94	8T-8883	371	8V-0622	136
	466		368	8T-8915	462		137
	469	8T-6868	474		463		138
	487	8T-6869	195	8T-8917	595	8W-0206	585
	567		197		781		587

▶ PRIMARY REFERENCE

PART NUMBER INDEX

Part	Page	Part	Page	Part	Page	Part	Page
8W-0220	569		448		431		▶903
8W-0225	592		453		433	8X-2893	830
8W-0302	569		454		434	8X-2913	480
8W-0456	615	8W-3902	482		435		482
	619	8W-4141	379		436		882
	625	8W-4142	379		437	8X-2925	818
	627	8W-4193	566		441		▶858
	629	8W-4194	566		442		861
	631	8W-4368	3		443	8X-3200	472
	633		▶379		446	8X-3261	100
	639	8W-4652	455		447	8X-3434	455
	643	8W-4653	455		452	8X-3435	455
	649	8W-5092	554	8X-1853	154	8X-3615	800
	653	8W-5111	371		156	8X-3616	800
	660	8W-5279	371	8X-1904	830	8X-3663	808
	662	8W-5293	455	8X-1907	831		811
	664	8W-5394	3	8X-1908	830	8X-3749	595
	666		▶389	8X-1911	830	8X-3789	830
	668	8W-5430	3	8X-1913	830	8X-3806	835
	670		▶371	8X-1914	830		838
8W-0663	808	8W-5597	808	8X-1921	830	8X-3938	835
	811		811	8X-1935	3		838
8W-0681	791	8W-5651	515		▶800	8X-3951	830
8W-0684	791	8W-5870	3	8X-1943	2	8X-3965	830
8W-0934	959		▶491		▶533	8X-4066	842
	962	8W-6061	882	8X-1944	2		844
8W-0935	959	8W-6476	455		▶534	8X-4243	835
	962	8W-6497	456	8X-1947	2		842
8W-1028	969	8W-6590	600		▶532	8X-4244	838
8W-1029	971	8W-6626	477	8X-1949	3		844
8W-1592	389	8W-6627	477		▶623	8X-4245	835
8W-1614	92	8W-7324	789	8X-1960	3		838
8W-1749	775	8W-7957	430		▶779		842
8W-2213	795	8W-8124	504	8X-2160	830		844
8W-2214	794	8W-8317	379	8X-2161	830	8X-4262	835
8W-2290	2	8W-8412	477	8X-2226	480		842
	▶537	8W-8527	108		882	8X-4263	838
8W-2308	379		305	8X-2228	922		844
8W-2624	576		324		923	8X-4271	375
	579		508	8X-2308	371	8X-4276	615
	582		585	8X-2349	▶781		617
8W-2737	3		587	8X-2366	781		619
	▶538		898	8X-2375	▶921		621
8W-2761	788	8W-8528	92		935		623
8W-2768	787		305		936		625
8W-2842	532		324	8X-2385	825		627
8W-2913	▶535		506		▶922		629
	807		898		935		631
8W-3166	576	8W-8532	508		936		633
	579	8W-8903	508	8X-2528	373		635
	582	8W-8909	307	8X-2534	371		656
8W-3330	▶794		326	8X-2556	975	8X-4277	637
8W-3332	▶795	8W-9227	48		977		639
8W-3642	305	8W-9228	48		979		664
	324	8W-9566	451		981		666
8W-3686	432	8W-9594	451	8X-2646	515	8X-4278	627
	433	8X-0674	914	8X-2650	508	8X-4279	625
	434		915		▶515	8X-4280	▶625
	435		917	8X-2663	975	8X-4317	▶835
	436	8X-1030	3		977		840
	438		▶492		979	8X-4318	▶838
	439	8X-1032	492		981		840
	442	8X-1135	959	8X-2680	508	8X-4413	825
	444		962	8X-2795	3		▶840
	446	8X-1160	430		825		935

▶ PRIMARY REFERENCE

PART NUMBER INDEX

Part	Page
	936
8X-4446	842
	844
8X-4448	835
	838
	842
	844
8X-4467	600
8X-4525	▶842
	846
8X-4526	▶844
	846
8X-4527	▶846
	935
	936
8X-4641	373
8X-4741	532
	534
8X-4879	365
8X-5005	389
	▶394
8X-5102	849
8X-5106	800
8X-5107	800
8X-5108	800
8X-5109	800
8X-5110	800
8X-5111	800
8X-5121	381
8X-5123	830
8X-5153	206
	209
	212
	215
	222
	225
	275
	340
8X-5154	206
	209
	212
	215
	222
	225
	275
	340
8X-5160	506
8X-5280	959
	962
8X-5395	92
8X-5414	886
	889
	894
8X-5456	921
8X-5489	307
	326
	376
8X-5498	623
	635
8X-5499	615
	617
	619
	621
	625
	627
	629
	631
	633
	637
	639
	641
	643
	645
	647
	649
	651
	653
	656
	658
	660
	662
	664
	666
	668
	670
8X-5536	819
	863
	867
	953
8X-5538	819
	863
	867
	953
8X-5540	819
	863
	867
	953
8X-5620	389
8X-6070	▶560
	807
8X-6075	808
	811
8X-6080	807
	▶808
8X-6131	914
	915
8X-6296	206
	209
	212
	215
	222
	225
	275
	341
8X-6419	482
8X-6475	480
	482
8X-6998	886
8X-6999	889
	894
8X-7152	819
8X-7153	819
8X-7317	381
8X-7603	508
8X-7820	576
	579
	582
8X-7845	886
	889
	896
8X-7951	779
8X-7956	779
8X-7973	576
	579
	582
8X-7974	576
	579
	582
8X-7975	592
8X-8011	2
	▶787
8X-8016	▶788
8X-8055	882
8X-8096	365
8X-8351	882
8X-8377	379
8X-8406	779
8X-8407	779
8X-8408	779
8X-8409	779
8X-8450	509
8X-8451	508
8X-8505	480
	482
8X-8790	896
8X-8813	576
	579
	582
8X-8916	381
8X-9349	959
	962
8X-9387	872
	874
8X-9405	959
	962
8X-9464	482
8X-9675	932
	933
	▶959
8X-9680	▶961
	973
8X-9751	1
	2
	▶601
	609
8X-9884	880
8Y-4194	3
	▶945
8Y-4398	835
	838
	842
	844
8Y-4399	838
	844
8Y-4400	835
	842
8Y-4401	835
	838
	842
	844
8Y-4408	959
	962
8Y-4409	959
8Y-4512	903
8Y-4619	835
8Y-4620	835
	838
	842
	844
8Y-4801	835
	838
	842
	844
8Y-4951	825
	834
	934
	▶946
8Y-5874	▶850
	947
	950
8Y-5877	850
	851
8Y-5878	941
8Y-5890	941
8Y-5891	941
8Y-5903	918
8Y-5928	941
	943
8Y-5929	941
	943
8Y-5932	941
	943
8Y-5936	941
	943
8Y-5937	941
	943
8Y-5938	941
	943
8Y-5943	850
8Y-5944	955
8Y-5947	850
	851
	941
	943
8Y-5953	939
	940
8Y-5957	943
8Y-5959	▶851
	948
8Y-5960	851
8Y-5972	918
8Y-5979	941
	943
8Y-5981	941
	943
8Y-5999	919
8Y-6006	918
8Y-6010	918
8Y-6012	955
8Y-6022	955
8Y-6023	955
8Y-6024	955
8Y-6041	876
8Y-6044	876
8Y-6045	876
8Y-6046	876
8Y-6047	876

▶ PRIMARY REFERENCE

PART NUMBER INDEX

Part	Page
8Y-6051	941
	943
8Y-6060	876
8Y-6062	876
8Y-6063	876
8Y-6064	876
8Y-6066	876
8Y-6067	876
8Y-6068	876
8Y-6069	876
8Y-6277	823
	824
8Y-6364	614
	834
	934
	995
8Y-6379	859
	860
8Y-6388	819
	848
	849
	863
	902
8Y-6833	941
	943
8Y-6834	941
	943
8Y-6859	877
8Y-6860	877
8Y-6928	957
8Y-6933	941
	943
8Y-6981	965
	968
8Y-6982	965
	968

9

Part	Page
9B-0143	371
9B-1565	794
	795
	798
	799
9B-2596	90
9B-4179	79
9B-7233	141
	142
	206
	209
	212
	215
	222
	225
	275
	311
	337
	340
	341
	819
	863
9B-7237	509
	570
	615
	617
	621
	623
	627
	629
	635
	637
	639
	641
	645
	647
	649
	651
	653
	656
	658
	670
	898
9C-5344	63
	106
	111
	381
9C-5928	904
	906
	908
	910
9C-9467	381
9D-0953	558
	566
	592
9D-1142	554
9D-1377	800
9D-1491	554
9D-1589	914
	915
	917
9D-2804	625
	627
9D-3075	504
9D-3311	472
9D-3523	456
9D-3583	800
9D-3767	474
	834
	934
9D-3768	195
	196
	197
	199
9D-5516	808
	811
9D-5659	462
9D-6164	206
	209
	212
	215
	301
	781
9D-6584	472
	595
9D-6589	472
9D-7047	504
9D-8121	515
9D-8508	249
9D-9257	472
9D-9797	455
9F-2247	379
9F-2978	491
	781
	823
	824
9F-5644	274
9F-6580	115
9F-6705	697
	699
9G-0002	139
9G-0003	136
	137
	138
9G-0004	136
	137
	138
9G-0005	139
9G-1950	819
	863
	867
9G-2991	371
9G-3695	872
	906
	974
	977
9G-4343	311
9G-5127	375
9G-5211	455
9G-7132	396
	399
9G-8140	508
9G-8661	67
9G-8909	305
	324
9H-1031	779
9H-6454	612
9J-0096	805
9J-0403	701
	703
	705
	707
	709
	711
	713
	715
	717
	719
	721
	723
	725
	727
	729
	731
	733
	735
	737
	739
	741
	743
	745
	747
9J-1979	612
9J-3047	612
9J-4963	597
9J-5498	504
9J-6586	815
9J-8783	361
	508
9K-7951	420
	421
	422
	423
	424
	425
	426
	427
	428
	429
	430
	431
	432
	433
	434
	435
	436
	437
	438
	439
	440
	441
	442
	443
	444
	445
	446
	447
	448
	450
	452
	453
	454
9L-1566	220
9J-0404	701
	703
	705
	707
	709

► PRIMARY REFERENCE

PART NUMBER INDEX

Part	Page	Part	Page	Part	Page	Part	Page
	310		106	9S-1302	508		749
	324		111	9S-1316	317	9S-7706	508
	329		115		320	9S-8001	552
9L-3059	305		144	9S-1322	779		697
	324		293	9S-1354	871		699
9L-6331	296		368	9S-1366	800		729
	300		852	9S-2302	130		731
9L-6770	130		854	9S-2390	130		733
	133		872	9S-4167	106	9S-8002	27
9L-7469	941		874		111		399
	943	9M-2042	346	9S-4180	673		604
9L-9068	404	9M-2092	455		674		697
9M-0164	88	9M-2904	12		675		699
	576		14		676		751
	579	9M-4335	502		677	9S-8003	697
	582	9M-4594	305		678		699
9M-0402	512		324		679	9S-8004	106
9M-0853	60	9M-5590	79		680		111
9M-1853	615		831		681		396
	617	9M-5733	918		682		399
	619		919		683	9S-8005	346
	621		943		684		376
	623	9M-5870	317		685		701
	625	9M-7394	612		686		703
	627	9M-8406	512		687		705
	629		820		688		707
	631		864		689		709
	633		868		690		711
	635	9M-8662	925		692		713
	637		929		693		715
	639	9N-0869	12		694		717
	641		14		695		719
	643		144		696		721
	645		145	9S-4181	347		723
	647	9N-1995	459	9S-4182	50		725
	649		461		368		727
	651		886		502		735
	653		889	9S-4183	45		737
	656	9N-4156	386		47		739
	658	9N-4158	386		577		741
	660	9N-4159	386		580		743
	662	9N-4161	386		583		745
	664	9N-4162	386		602		747
	666	9N-4163	386		697	9S-8006	51
	668	9N-4498	399		699		346
	670	9N-4500	399	9S-4185	37		552
9M-1974	12	9N-6152	502		60	9S-8009	697
	14	9P-0356	394		108		699
	20	9P-2369	959		346	9T-1013	590
	21		962	9S-4189	697	9T-1636	602
	39	9P-2553	338		699	9T-1652	602
	45		341	9S-4190	346	9T-1699	602
	47	9P-9150	367		391	9T-1710	602
	58		404	9S-4191	50	9T-1857	749
	60	9R-1183	566		51	9T-2186	749
	63	9R-2620	887		94	9T-2388	547
	67		889		106		548
	68	9R-5008	91		111	9T-2457	540
	69	9R-6414	136		293	9T-2482	546
	76		137		346	9T-2659	764
	78		138		381		768
	81		139		404	9T-3133	544
	83	9R-7240	117		577	9T-3727	547
	84		118		580		548
	91	9R-8870	569		583	9T-4211	545

► PRIMARY REFERENCE

PART NUMBER INDEX

Part	Page
	546
9T-5241	854
9T-5603	611
9T-5934	697
9T-5935	697
9T-5957	576
	▶697
9T-6001	953
9T-6146	590
9T-7750	749
9T-7765	606
9T-7767	606
9T-7769	606
9T-7771	606
9T-7773	606
9T-7774	606
9T-7775	602
9T-8051	597
9T-8053	597
9T-8054	597
9T-8056	597
9T-8058	597
9T-8059	597
9T-8061	597
9T-8063	597
9T-8065	597
9T-8067	597
9T-8069	597
9T-8070	597
9T-8071	590
9T-8326	378
9T-8958	544
9T-9040	550
9T-9071	597
9T-9072	597
9U-2277	305
	324
9U-8067	396
	399
9U-8068	396
	399
9U-8069	396
	399
9U-8263	880
9U-8620	396
	399
9U-8668	399
9U-8669	399
9U-8815	357
	359
9U-9282	396
	399
9U-9316	396
	399
9U-9595	399
9U-9995	357
9V-7447	823
	824
9W-0335	331
	333
9W-0742	▶140
	312
9W-0852	279
	819
	852
9W-0898	854
9W-1441	863
	867
	983
	985
	987
	989
	399
	155
	204
	205
	282
	285
	337
	340
	818
	861
9W-1442	154
	156
	191
	193
	201
	202
	204
	205
	206
	209
	212
	215
	218
	220
	222
	225
	235
	237
	244
	245
	275
	284
	287
	289
	329
	337
	340
	498
	856
	857
	906
	910
	983
	985
	987
	989
9W-1454	346
9W-1767	786
9W-1768	786
9W-1835	794
	795
9W-2029	357
	359
9W-3073	880
9W-3155	805
9W-4430	502
9W-4431	502
9W-4452	502
9W-4453	502
9W-5132	392
	▶502
9W-5134	▶388
	392
9W-6465	346
9W-6467	354
9W-6582	43
9W-6584	43
9W-6645	504
	554
9W-7038	346
9W-7385	43
9W-7388	43
9W-7410	399
9W-7412	396
	399
9W-7469	802
9W-7470	802
9W-9371	357
	359
9W-9905	351
	354
	357
	359
9X-0141	305
	325
9X-0262	293
9X-1046	282
	285
	291
	338
	341
	831
	856
	857
9X-1054	191
	193
9X-1343	296
	300
9X-1813	129
	254
	255
	259
	262
	273
	306
	315
	325
9X-2022	55
9X-2023	376
9X-2027	33
9X-2039	951
9X-2040	820
	864
	868
	953
9X-2041	365
	820
	864
	867
	887
	889
	894
	945
	946
	951
	953
9X-2042	157
	282
	285
	338
	341
	365
	831
	835
	838
	842
	844
	962
9X-2043	191
	193
	206
	209
	212
	215
	218
	220
	222
	225
	235
	237
	249
	275
	287
	289
	291
	365
	480
	482
	529
	848
	849
	882
	884
	887
	890
	894
	896
	906
	910
	925
	930
9X-2045	329
	333
	365
	820
	835
	838
	840
	842
	844
	846
	857
	864
	868
	884
	887
	890
	894

▶ PRIMARY REFERENCE

PART NUMBER INDEX

Part	Page
	896
	953
	959
	962
9X-2046	887
	890
	903
	905
	909
9X-2097	21
	60
9X-2098	145
9X-2125	375
9X-2126	820
	864
	868
9X-2185	819
	863
	867
9X-2388	85
	86
9X-2488	819
	863
	867
9X-2532	97
9X-2546	835
	838
	842
	844
9X-3463	166
	167
	168
	169
	170
	171
	172
	197
9X-3465	173
	175
	177
	179
9X-4244	167
	168
	169
	170
	173
	175
	177
	179
9X-4493	173
	175
	177
	179
9X-4494	181
9X-4609	346
9X-4824	270
9X-6019	965
	968
9X-6032	604
9X-6395	755
	758
9X-6650	51
9X-6772	363
9X-6932	329
9X-7317	114
9X-7378	828
	898
9X-7380	898
9X-7381	820
	898
9X-7382	820
	898
9X-7383	898
9X-7384	396
9X-7385	828
	898
9X-7680	604
	749
9X-7743	502
9X-7849	186
	187
9X-8121	186
9X-8122	858
9X-8139	186
9X-8256	44
	63
	121
	191
	193
	197
	206
	275
	329
	334
	338
	341
	466
	469
	509
	512
	574
	816
	817
	835
	838
	840
	842
	844
	846
	887
	890
	896
	938
9X-8257	382
	497
9X-8267	58
	293
	474
9X-8355	999
9X-8372	999
9X-8399	539
	550
9X-8600	119
	121
9X-8606	508
9X-8875	808
	811
9X-8880	371
	794
	795
	798
	799
9X-8881	775
9X-8883	775
9X-8885	796
	797
9X-8887	554
9X-8979	604
9X-9365	228
	230
9X-9631	212
	215
	222
	225
9X-9633	334
9X-9639	163
9X-9653	819
9X-9688	925
	927
	929
9X-9689	852
	854
9X-9825	325
	329
9X-9865	173
	175
	177
	179
9Y-0810	23
9Y-0821	23
9Y-1116	12
	14
9Y-1758	58
9Y-3513	84
9Y-3520	36
9Y-4357	58
9Y-4580	44
9Y-5631	16
	18
9Y-7215	58
9Y-8075	69
9Y-8076	69
9Y-9236	85
	86
0	
001-7043	12
	14
002-1212	602
002-6453	391
	512
002-6454	117
	119
	123
	124
003-9514	79
	474
005-0658	12
	14
005-7898	381
005-8639	548
006-8663	602
009-0008	100
009-3681	919
	941
	943
009-4184	872
	874
009-4185	872
	874
014-0816	279
	291
	989
030-0060	455
030-0061	455
030-7947	106
	111
030-8535	371
	379
	830
	915
	917
031-2666	830
031-4155	854
032-3631	12
	14
033-6027	749
033-6033	125
	127
033-6036	602
	749
033-6043	751
033-8248	232
	233
	265
	280
	306
	311
	325
034-1994	830
034-3557	371
036-9823	270
037-4838	819
038-3987	914
061-7540	368
061-7661	305
	324
061-8561	68
061-9455	21
068-4860	782
	783
	784
	785
085-8091	95
	898
086-0507	612
089-7960	340
090-8635	12
	14
090-9019	512
091-0081	951
091-9071	872
	874
092-2570	113
092-3200	530
095-0878	876
	941
	943

► PRIMARY REFERENCE

PART NUMBER INDEX

Part	Page
095-0888	602
095-1207	396
	399
095-1260	529
096-0014	53
096-6166	154
	156
	282
	285
	291
	296
	301
	830
098-7467	872
	874
099-0492	896
099-3095	596
099-3649	37
1	
100-3224	877
100-3245	173
	175
	177
	179
100-3248	177
	179
100-3249	173
	175
100-3250	173
	175
	177
	179
100-3251	173
	175
	177
	179
100-3253	173
	175
	177
	179
100-3254	173
	175
	177
	179
100-3255	173
	175
	177
	179
100-3402	602
100-3404	602
100-3405	602
100-3407	602
100-3408	602
100-3409	602
100-3410	606
100-3411	606
100-3412	602
	▶606
100-3413	602
100-3415	602
100-4318	774
100-4336	569
100-5179	877
100-5612	859
	860
100-6021	697
	699
	▶758
100-6531	130
100-8150	32
100-8525	368
101-0003	955
101-0509	673
	674
	675
	676
	677
	678
	679
	680
	681
	682
	683
	684
	685
	686
	687
	688
	689
	690
	692
	693
	694
	695
	696
101-0852	152
	160
101-1147	721
	733
	745
101-1148	701
	719
101-1149	703
101-1150	707
	715
	729
	731
101-1151	711
101-1152	727
101-1153	713
101-1154	705
101-1155	709
101-1635	78
101-1970	701
	703
	705
	707
	721
	723
	729
	733
	741
	743
101-1971	701
	703
	705
	707
	709
	711
	713
	715
	717
	719
	721
	723
	725
	727
101-1972	707
	715
	721
	729
101-1973	701
	703
	705
	707
	709
	711
	713
	719
	721
	723
	725
	727
	729
	731
	733
	735
	737
	739
	741
	743
	745
101-1974	551
	552
101-1975	551
101-1978	701
	703
	705
	709
	711
	713
	717
	719
	723
	725
	727
101-1980	707
	715
	721
	745
101-1982	709
	711
	713
	715
	717
	719
	725
	727
	731
	735
	737
	739
	745
	747
101-1983	701
	703
	705
	707
	709
	711
	713
	715
	717
	719
	721
	723
	725
	727
	729
	731
	733
	735
	737
	739
	741
	743
	745
	747
101-1984	701
	703
	705
	707
	709
	711
	713
	715
	717
	719
	721
	723
	725
	727
	729
	731
	733

▶ PRIMARY REFERENCE

PART NUMBER INDEX

Part	Page	Part	Page	Part	Page	Part	Page
	735		703		743		206
	737		705	102-4578	723		209
	739		707		737		212
	741		709		739		215
	743		711		741		218
	745		713		747		220
	747		715	102-5828	63		222
101-2042	49		717	102-5829	63		225
101-2457	615		719	102-5842	58		235
	617		721	102-5881	351		237
	619		723		354		282
	621		725		359		285
	623		727	102-6238	673		287
	625		729		675		289
	627		731		679		291
	629		733		682		296
	631		735		684		300
	633		737		686		301
	635		739		688		305
	637		741		689		310
	639		743	102-6317	957		315
	641		745	102-7412	701		317
	643		747		703		320
	645	101-2850	90		705		325
	647	101-3055	886		707		331
	649		889		709		333
	651	101-3125	91		711		337
	653	101-4147	709		713		340
	656		713		715		367
	658		723		717		480
	660		▶759		719		482
	662	101-4148	759		721		906
	664		▶760		723		910
	666	101-4194	955		725		925
	668	101-4195	955		727		927
	670	101-9346	673		729		929
101-2458	615		674		731	102-8802	128
	617		675		733		129
	619		676		735		157
	621		677		737		181
	623		678		739		182
	625		679		741		185
	627		680		743		186
	629		681		745		187
	631		682		747		189
	633		683	102-7423	551		191
	635		684	102-8385	674		193
	637		685		676		204
	639		686		677		205
	641		687		678		218
	643		688		680		220
	645		689		681		228
	647		690		683		230
	649		692		685		232
	651		693		687		233
	653		694		690		235
	656		695		692		237
	658		696		693		240
	660	101-9754	396		694		259
	662		399		695		265
	664	102-3645	959		696		273
	666		962	102-8785	78		280
	668	102-4108	602	102-8801	150		282
	670	102-4139	775		191		285
101-2480	701	102-4577	735		193		287

▶ PRIMARY REFERENCE

PART NUMBER INDEX

Part	Page	Part	Page	Part	Page	Part	Page
	289		287	102-8813	262	104-3124	602
	293		289	102-9372	922	104-3560	26
	296		296		923	104-3567	58
	297		300		937	104-3568	58
	300		310	102-9381	921	104-3601	181
	301		318	102-9383	337	104-3947	403
	305		320		340	104-4286	576
	306		331	102-9862	163		579
	310		333		247		582
	315		337		248	104-4523	802
	317		340		249	104-5958	965
	320		906	103-1592	206		968
	324		910		209	104-7419	615
	325	102-8805	173	103-1597	619		617
	329		175		625		619
	337		177		627		621
	340		179		631		623
	402		282		633		625
	403		285		637		627
	518		296		643		629
	771		301		647		631
	772		305		651		633
	816		306		653		635
	817		310		660		637
	820		324		662		639
	828		325		664		641
	852		331		666		643
	854		333		668		645
	863		480		670		647
	867		482	103-2006	119		649
	872		820		121		651
	898		864	103-4660	108		653
	906		868	103-4771	915		656
	910		912		917		658
	925		913	103-4953	914		660
	927		925		915		662
	929		927		917		664
102-8803	165		929	103-5417	491		666
	183		974	103-5419	491		668
	184		975	103-5515	914		670
	197		977		915	104-7429	615
	232		979		917		617
	233		981	103-5516	914		619
	252	102-8806	191		915		621
	253		193		917		623
	280		218	103-5678	206		625
	282		220		209		627
	293		235		212		629
	296		237		215		631
	300		279		222		633
	301		282		225		635
	305		285		275		637
	324		287		340		639
	329		289	103-6100	898		641
	340		291	103-6216	10		643
102-8804	191		906	103-9125	455		645
	193		910	103-9425	886		647
	218		925		889		649
	220		927	104-2091	820		651
	235		929		849		653
	237		983		864		656
	249		985		925		658
	265		987		930		660
	282		989	104-3122	602		662
	285	102-8808	262		▶749		664

▶ PRIMARY REFERENCE

PART NUMBER INDEX

Part	Page
	666
	668
	670
104-7740	615
	617
	619
	621
	623
	625
	627
	629
	631
	633
	635
	637
	639
	641
	643
	645
	647
	649
	651
	653
	656
	658
	660
	662
	664
	666
	668
	670
104-7995	63
104-8645	617
	629
	664
	▶677
104-8646	615
	621
	▶678
104-8647	625
	▶692
104-8648	619
	631
	▶683
104-8651	627
	633
	▶693
104-8655	775
104-8671	615
	619
	625
	627
	629
	656
	666
	▶679
105-2080	775
105-2145	751
105-2508	115
105-3196	554
	▶597
105-3249	439
	442
105-3484	73
105-4208	77
105-4210	84
105-4728	272
105-4849	▶177
	300
105-4850	▶179
	300
105-5180	782
	783
	784
	785
105-7167	585
	587
106-1567	427
106-3658	701
	703
	705
	707
	709
	711
	713
	715
	717
	719
	721
	723
	725
	727
	729
	731
	733
	739
	741
	743
	747
106-3659	701
	703
	705
	709
	711
	713
	715
	717
	719
	721
	723
	725
	727
	729
	731
	733
	735
	737
	739
	741
	743
	745
106-3660	707
	715
	721
	729
	731
	733
	745
106-4496	849
106-4835	435
	436
106-4884	3
	▶484
106-6553	840
	846
106-7389	759
	▶761
106-7390	756
	▶762
	▶763
106-8704	189
	204
	205
	240
	305
	324
	898
	929
106-9586	63
107-0516	707
107-0520	715
107-0543	678
	692
	▶717
107-0545	677
	687
	690
	693
	696
	▶719
107-0547	679
	684
	▶721
107-1983	925
	927
	929
107-3392	▶792
107-3393	▶792
107-3395	▶786
107-3396	▶792
107-3397	▶792
107-3398	▶786
107-3417	▶782
107-3418	▶783
107-3419	▶784
107-3420	▶785
107-3425	▶792
107-3426	▶793
107-3856	525
	▶627
107-4865	959
	962
107-4932	163
	247
	248
	249
107-5014	529
	886
	889
	896
107-5795	77
107-6280	55
107-6813	840
	846
107-8140	569
107-8141	569
107-8142	569
107-8143	566
107-8144	566
107-8147	569
107-8148	569
107-8149	566
107-8150	566
	569
107-8374	808
	811
107-8375	808
	811
107-9641	835
	838
	842
	844
108-0358	206
	209
	212
	215
	222
	225
	275
108-0702	592
108-0703	592
108-0706	558
108-0713	590
108-0714	592
108-1104	▶807
108-1610	566
	569
	592
108-2187	701
	703
	705
	707
	709
	711
	713
	715
	717
	719
	721
	723
	725
	727
	729
	731
	733
	735
	737
	739
	741
	743
	745
	747
108-3129	400
108-3519	206
	209
	212
	215
	301
108-4086	877
108-4087	876
108-4103	877
108-4814	749
108-4815	749
108-4816	749

▶ PRIMARY REFERENCE

PART NUMBER INDEX

Part	Page
108-4878	955
108-4916	▶551
	707
	715
	721
	745
108-5157	758
108-5751	357
108-5949	838
	844
108-5950	835
	842
108-5951	838
	844
108-5952	835
	842
108-6523	396
	399
108-8421	▶918
	941
	943
108-8423	918
108-8424	918
108-8425	943
108-8426	941
109-0146	965
	968
109-0361	306
	325
109-1144	754
109-2804	886
	889
109-3036	772
109-3204	602
109-4582	373
109-4583	373
109-5308	45
109-5309	58
109-5313	93
109-5319	49
109-6776	802
109-8176	99
110-2079	925
	927
110-2445	117
	119
	123
	124
110-3003	569
110-3326	508
110-4213	420
	421
	422
	423
	424
	425
	426
	427
	428
	429
	430
	440
	443
	445
	447
	452
	454
110-4214	420
	421
	422
	423
	424
	425
	426
	427
	428
	429
	430
	440
	443
	445
	447
	452
	454
110-5158	399
110-5161	404
110-5326	▶796
110-5327	▶797
110-5334	796
	797
110-5335	797
110-5336	796
110-6241	830
110-6393	819
110-6846	305
	325
110-6848	325
110-7723	351
	354
	357
	359
110-7885	983
	985
	987
	989
110-7886	983
	985
	987
	989
110-7887	331
	333
111-0343	402
	771
	772
111-1719	2
	▶995
111-2645	60
111-3883	807
	▶811
111-3945	472
111-5042	955
111-5754	761
	762
	763
111-7978	139
111-8233	701
	703
	705
	709
	711
	713
	717
	719
	723
	725
	727
	735
	737
	739
	741
	743
	747
111-8234	707
	715
	721
	729
	731
	733
	745
111-9110	522
112-1813	787
112-1814	788
	789
	790
112-2240	558
	▶773
112-3199	560
112-3200	560
112-4428	310
112-4521	▶789
112-4834	506
112-5060	775
112-5061	775
112-5499	525
	▶629
112-5555	317
	320
112-5575	536
	▶546
112-5852	781
112-5853	781
112-5855	781
112-6174	282
	291
112-6175	337
	340
	341
112-7462	536
112-7463	2
	▶536
112-7486	2
	▶775
112-9035	546
112-9104	945
	▶947
112-9105	946
	▶948
112-9164	882
112-9442	564
112-9555	858
112-9813	425
113-0704	▶807
113-4240	823
113-4242	▶823
	947
	948
	950
113-4243	824
113-4245	▶824
	947
	948
	950
113-5800	947
	948
	▶955
113-5801	876
113-5804	955
113-5805	876
113-5806	876
113-5807	876
113-5808	▶876
	955
113-5809	919
113-5810	▶919
	941
	943
113-7745	347
113-7754	▶544
	804
113-7755	544
113-7756	544
113-8218	904
	906
	908
	910
113-8457	116
113-9005	42
113-9048	381
113-9533	576
	579
	582
114-0025	▶562
114-0026	563
114-0027	562
114-0359	815
114-1067	919
114-1068	919
114-1069	919
114-1070	919
114-1081	919
114-1082	919
114-1083	919
114-1183	▶941
	947
	950
114-1185	▶943
	948
114-2687	67
114-2886	571
114-3469	828
114-5224	997
114-6635	761
	762
	763
	765
	766
	767
114-6685	▶974
	975
	979

▶ PRIMARY REFERENCE

PART NUMBER INDEX

Part	Page
	983
	987
	992
114-9190	835
	838
	842
	844
114-9223	898
114-9281	296
	297
	300
115-0540	595
115-0541	595
115-0788	996
115-0791	▶631
115-0805	525
	▶633
115-1007	684
	686
	689
	▶723
115-1008	631
	633
	664
	▶684
115-1748	925
	927
	929
115-3003	68
115-3070	249
115-3072	480
	482
115-3073	306
	325
115-4517	368
115-5593	310
115-5852	4
	997
	▶998
115-6804	884
115-6805	884
115-6806	922
115-6807	886
	889
	894
115-9397	▶53
	58
115-9398	53
115-9399	53
115-9400	53
115-9402	53
115-9403	53
115-9424	39
115-9923	886
	889
116-0374	727
	▶764
116-0379	▶791
	807
116-0405	97
116-1083	▶34
	44
116-1085	6
	9
	▶31
116-1091	6
	9
	▶55
116-1102	29
116-3211	576
	579
	582
116-3715	93
	585
	587
116-5405	6
	9
	▶94
116-5406	94
116-5408	6
	9
	▶44
116-5416	111
116-5418	111
116-5428	6
	9
	▶113
116-5435	51
116-5436	6
	9
	▶103
116-5438	6
	9
	▶115
116-5460	6
	9
	▶77
116-5710	100
	197
	199
	218
	220
	228
	230
	235
	237
	361
117-0166	25
117-0221	12
	14
117-0228	93
117-0472	631
	633
	651
	653
	662
	664
	670
117-2311	816
	817
117-2674	6
	9
	▶83
117-2746	6
	9
	▶68
117-2748	6
	9
	▶42
117-2749	6
	9
	▶58
117-2750	6
	9
	▶36
117-2760	6
	9
	▶344
117-3036	368
117-3302	1005
117-3915	▶251
	599
117-4698	937
117-8319	▶182
	490
117-8810	894
117-9966	925
	929
118-0459	20
118-2557	921
118-2558	889
118-2797	81
118-2800	76
118-2808	6
	9
	▶78
118-3534	310
118-4728	12
	14
118-7809	324
	329
118-7880	808
	811
118-7881	808
	811
118-9573	530
119-2942	67
119-5708	201
	202
	204
	205
119-7997	571
119-8784	114
119-9549	681
	694
	▶725
119-9550	680
	695
	▶727
121-4083	1
	2
	▶635
121-4084	▶637
121-4086	▶639
121-4090	526
	▶641
121-4094	▶643
121-4095	▶645
121-4096	526
	▶647
121-4097	526
	▶649
121-4098	▶651
121-4099	526
	▶653
121-7137	16
	18
121-9242	538
	▶550
121-9245	550
122-0760	68
122-0763	368
122-4617	▶939
	948
122-7045	925
	929
122-8146	925
	929
122-8154	849
122-8155	849
122-8677	886
122-8795	886
	889
122-9760	998
122-9761	998
122-9867	803
122-9868	803
122-9869	803
123-0764	16
	18
123-0790	16
	134
123-0872	818
	861
123-1076	550
123-3178	426
123-3420	420
	421
	422
	423
	424
	425
	426
	427
	428
	445
	450
123-3688	305
	324
123-3689	305
	324
123-3692	305
	324
123-3695	305
	324
123-3698	492
123-3699	492
123-3793	543
123-3827	87
	474
123-4003	371
123-4354	975
	977
	979
	981
123-4355	975
	977
	979
	981
123-4358	▶904

▶ PRIMARY REFERENCE

PART NUMBER INDEX

Part	Page
123-4511	76
123-4586	904
	906
	908
	910
123-4587	904
	906
	908
	910
123-4618	819
	863
	867
	953
123-4701	819
	863
	867
	953
123-5798	770
123-5799	770
123-5857	906
	910
123-5861	337
	340
123-6449	▶129
	317
123-6661	758
123-6806	914
	915
123-7707	779
123-8157	957
123-8187	800
123-8408	953
123-8866	599
123-8867	▶599
	601
123-9128	957
124-0311	▶656
124-0435	800
124-0507	955
124-1431	819
	863
	867
124-1432	819
	863
	867
124-2456	479
124-2655	45
	47
124-2887	552
124-2888	552
124-2889	552
124-2890	552
124-2891	552
124-3137	819
	863
	867
124-3138	819
	863
	867
124-3240	484
124-3771	▶658
124-5043	368
124-5572	10
124-8843	840
	846
124-9006	819
	863
	867
124-9007	819
	863
	867
125-0438	819
125-0439	863
	867
125-0442	863
	867
125-2235	528
	▶660
125-2236	528
	▶662
125-4342	825
	▶962
125-4344	825
	▶914
125-4388	896
125-4389	896
125-5321	515
125-5520	896
125-6390	310
125-6482	896
125-6483	896
125-7003	975
	977
	979
	981
125-7004	975
	977
	979
	981
125-9487	576
	579
	582
125-9584	896
125-9596	896
126-0146	12
	14
126-0179	106
	111
126-0208	969
	971
126-0209	969
	971
126-0210	969
	971
126-0228	969
	971
126-0961	▶964
126-1135	902
126-1136	902
126-1167	969
	971
126-1539	969
	971
126-1774	293
126-2729	371
126-4966	840
	846
126-6929	462
126-6930	462
	1
	2
	▶462
	▶463
126-7168	466
	469
127-4038	466
	469
127-5483	296
	300
	306
	325
	337
	340
127-5484	285
	291
	296
	310
	311
	337
	340
127-5485	296
	306
	325
127-5486	296
	310
127-8609	162
128-0037	835
	838
	842
	844
128-0314	139
128-0331	12
	14
128-0382	23
128-0383	23
128-0384	23
128-0385	23
128-0400	23
128-0401	23
128-0402	23
128-0403	23
128-0411	20
128-0420	12
	14
128-0613	957
128-0686	957
128-2972	717
	725
128-5082	957
128-5084	957
128-5085	957
128-5924	898
128-6983	▶186
	247
	249
128-7625	576
	579
	582
128-8643	552
128-8644	552
128-8645	729
	731
128-8646	733
128-8647	675
	682
	686
	689
	▶729
128-9654	779
128-9656	779
129-0375	104
129-1047	753
129-1052	753
129-1054	729
	731
	733
	▶753
129-2181	12
	14
129-2381	379
129-2861	368
129-2893	41
129-3173	100
	361
	508
129-3178	466
	469
	816
	817
	820
	840
	846
	864
	868
	886
	889
129-3184	34
129-4618	826
	▶884
129-4622	884
129-4645	884
129-4646	884
129-4647	291
129-4935	819
	863
	867
129-5049	462
	463
129-5454	428
129-7163	296
129-7164	296
129-7249	995
129-7632	749
129-7679	999
129-8614	826
	▶923
130-3110	676
	680
	681
	685
	694
	695
	▶731
130-3111	682
	686
	689
	▶733
130-3116	635

▶ PRIMARY REFERENCE

PART NUMBER INDEX

Part	Page	Part	Page	Part	Page	Part	Page
	641		347	131-8777	764		329
	645		361		765	134-4126	152
	660		363		766	134-5245	63
	▶675		490		767	134-6474	884
130-3117	635		506		768	134-6749	182
	658		820	132-1143	489	134-6751	182
	▶676		864		537	134-8221	684
130-3118	641		867	132-1144	489		685
	649		906	132-1340	777		686
	▶680		910	132-2906	576		687
130-3119	639	130-5301	306		582		688
	645		325	132-3203	6	134-8232	▶965
	▶681	130-5770	754		9		967
130-3120	637	130-5997	10		▶49	134-8233	966
	▶694	130-7084	592	132-3210	6		▶968
130-3121	643	130-9041	537		9	135-0426	▶183
	651		▶547		▶23		315
	▶685	130-9042	537	132-3439	957	135-0427	▶184
130-3122	647		▶548	132-4354	466		197
	653	130-9044	547		469		199
	660	130-9045	548	132-4928	543		206
	662	130-9432	879	132-4929	532		209
	▶695		▶880		▶543		242
130-3123	637	130-9811	263	132-5789	95	135-0450	569
	639		264		898	135-0451	566
	643	131-0353	368	132-6478	527	135-0452	566
	647	131-0749	770		▶664	135-0453	569
	649	131-0752	770	132-6640	▶150	135-0611	974
	658	131-0753	580		329		977
	▶682		▶770		333		981
130-3124	651	131-2171	12	132-6938	311	135-1979	854
	653		14	132-8875	378	135-3894	482
	▶686	131-3736	537		381	135-7123	522
130-3280	97	131-3737	489	132-9496	900	135-9941	363
130-3535	▶552	131-3738	489	132-9625	357	136-1953	820
	729	131-3739	489	133-1278	378		864
	731	131-3919	357	133-1288	378		868
	733		359	133-2199	378	136-3845	173
130-3595	455	131-4135	296	133-5631	347		177
130-4926	592		300	133-5671	▶104	136-3846	175
130-5300	100	131-4242	876		108		179
	163	131-4428	455	133-5673	104	136-3848	173
	197	131-5167	876	133-6517	161		175
	199	131-5171	282		162		177
	206		285	133-7029	32		179
	209		474	133-7031	6	136-4183	33
	241	131-5492	858		▶12	136-6330	592
	247	131-6009	886	133-7068	20	136-6331	592
	248		889	133-7075	6	136-8308	815
	249		894		9	136-8423	604
	265	131-6645	368		▶39	137-4367	104
	280	131-6679	▶10	133-7083	36	137-4515	615
	296		12	133-7086	36		617
	301		14	133-7098	49		619
	306	131-7191	533	133-7100	20		621
	311		▶540	133-7523	796		623
	315	131-7194	540	133-7524	797		629
	317	131-7195	540	134-0744	558		631
	320	131-8126	4	134-0746	558		633
	325		5	134-0747	566		635
	329		▶161		569		637
	331	131-8350	697	134-1080	2		639
	333		699		▶455		641
	337		▶754	134-1081	455		643
	340	131-8627	161	134-3355	324		645

▶ PRIMARY REFERENCE

PART NUMBER INDEX

Part	Page	Part	Page	Part	Page	Part	Page
	647		694		737	142-6186	437
	649		695		741		438
	651		696		743	142-6187	437
	653	137-6783	886		747		439
	656		889		▶765	142-6203	3
	658	137-6791	539	139-8473	717		▶385
	660	137-8065	886		▶766	142-6226	420
	662		889	139-8474	745		421
	664	137-8104	683		▶767		422
	666		685	139-8476	725		423
	668		692		739		424
	670		693		▶768		425
137-4516	615		694	139-9132	965		426
	617		695		968		427
	619		▶735	139-9133	968		428
	621	137-8106	683	139-9134	965		429
	623		690		968		430
	629		692	139-9135	965		440
	631		693		968		443
	633		▶737	139-9136	965		444
	635	137-8107	739		968		445
	639		741	139-9137	965		447
	641		743		968		▶451
	643	137-8130	539	139-9138	965		452
	645	137-9410	206	140-3607	429		454
	649		209	140-6418	905	142-6229	432
	656		212	140-8127	▶905		433
	658		215	140-8864	300		434
	660		222		329		435
	664		225	141-0284	104		436
	666		300	141-0360	429		438
	668	138-2006	29	141-1480	95		439
137-4517	637	138-2028	6	141-2325	193		442
	647		9	141-6343	100		444
	651		▶50	141-6787	771		446
	653	138-4054	840		772		448
	662		846	141-6968	557		▶451
	670	138-7026	886	141-9661	612		453
137-5503	938		889	141-9784	820		454
137-6719	677	138-7065	816		864	142-6297	406
	678	138-9910	886		868		▶420
	679		889	142-0308	548	142-6298	406
	680	139-0178	291	142-0350	402		▶420
	681	139-1117	886	142-1767	404	142-6300	406
	682	139-1118	889	142-2011	16		▶421
137-6720	673	139-1153	817		18	142-6301	406
	674	139-2116	305	142-4940	819		▶421
	675		324		863	142-6303	▶448
	676	139-2120	337		867	142-6304	448
	677		340	142-5787	595		▶452
	678	139-2944	466	142-6170	420	142-6305	▶448
	679		469	142-6171	421	142-6306	407
	680	139-3593	886	142-6172	448		▶422
	681		889		▶450	142-6307	407
	682		894	142-6173	422		▶422
	683	139-3595	848	142-6174	423	142-6309	407
	684	139-4605	938	142-6175	424		▶423
	685	139-4612	▶938	142-6182	430	142-6310	407
	686	139-6122	305		432		▶423
	687		324	142-6183	431	142-6312	408
	688		512		432		▶424
	689	139-6128	▶966	142-6184	431	142-6313	408
	690	139-6129	▶967		433		▶424
	692	139-8472	719	142-6185	436	142-6315	408
	693		735		438		▶425

▶ PRIMARY REFERENCE

PART NUMBER INDEX

Part	Page	Part	Page	Part	Page	Part	Page
142-6316	408	142-6458	▶407	146-0835	10		571
	▶425	142-6460	▶408	146-1842	455		592
142-6318	409	142-6461	▶408		456	148-8347	574
	▶426	142-6463	▶408	146-1843	455		576
142-6319	409	142-6464	▶408		456		579
	▶426	142-6466	▶409	146-7453	66		582
142-6321	409	142-6467	▶409	147-0385	233	148-8351	590
	▶427	142-6469	▶409		280		592
142-6322	409	142-6470	▶409	147-3310	504	148-8353	572
	▶427	142-6472	▶410	147-3400	455	148-8354	108
142-6324	410	142-6474	▶410	147-4549	957		593
	▶428	142-6477	▶410	147-5088	84	148-8357	376
142-6325	410	142-6479	▶410	147-6143	777	148-8358	108
	▶428	143-5373	347	147-6144	777		566
142-6328	410	143-8938	527	147-6522	957	148-8363	566
	▶429		▶666	147-6541	957		569
142-6330	410	143-9290	365	148-1925	346	148-8364	566
	▶429	144-0195	959	148-2063	▶41		569
142-6332	411		961		58		576
	▶430		962	148-2064	41		579
142-6353	411	144-2161	472	148-2065	41		582
	▶430	144-4107	886	148-2125	26		590
142-6354	412		889	148-2149	31		593
	▶431	144-5611	16		▶32	148-8367	564
142-6355	413		18	148-2404	449	148-8368	363
	▶431	144-6695	530		▶452		572
142-6356	413	144-7620	472	148-2405	▶449		576
	▶432	145-0326	957	148-2408	449		579
142-6357	415	145-1144	396		▶453		582
	▶432	145-1297	▶154	148-2409	▶449	148-8369	363
142-6358	415		879	148-2516	395		572
	▶433	145-1300	▶879	148-2592	547	148-8370	558
142-6360	411	145-1780	111	148-2593	541	148-8374	108
	▶433	145-3261	798		543		560
142-6361	414	145-3350	191	148-3749	957		566
	▶434		193	148-8305	592		569
142-6363	412		218	148-8312	577		585
	▶434		220		580		587
142-6364	414		235		583		589
	▶435		237		592	148-8378	564
142-6366	412		287	148-8316	363	148-8381	590
	▶435		289		576	148-8383	569
142-6367	414		906		579		585
	▶436		910		582		587
142-6371	412	145-4953	799		592	148-8392	376
	▶436	145-5968	472	148-8318	108		381
142-6372	413	145-5969	472		560		572
	▶437	145-7214	894		562	148-8395	719
142-6373	413	145-7217	894		563	148-8407	378
	▶437	145-8039	347		566		381
142-6374	414	146-0705	637		569		577
	▶438		639	148-8323	576		580
142-6375	415		641		579		583
	▶438		643		582	148-8408	577
142-6376	416		645	148-8326	572		580
	▶439		647	148-8327	66		583
142-6385	415		649		574		697
	▶439		651	148-8328	558	148-8411	108
142-6445	▶406		653	148-8335	381	148-8429	577
142-6446	▶406		658	148-8336	564		580
142-6448	▶406		660	148-8338	108		583
142-6449	▶406		662	148-8339	376	148-8433	570
142-6454	▶407		666		381	148-8444	558
142-6455	▶407		668	148-8340	108		593
142-6457	▶407		670		566	148-8449	574

▶ PRIMARY REFERENCE

PART NUMBER INDEX

Part	Page	Part	Page	Part	Page	Part	Page
149-2065	361	151-5968	790	153-8906	688		340
149-2400	957	151-5969	▶790		▶743		346
149-2402	957	151-9849	558	153-8907	687		480
149-2610	▶771	152-3001	114		690		482
	773	152-5430	529		696		906
149-2611	771	152-5431	529		▶745		910
149-3409	921	152-5436	529	153-8908	696		925
	922	152-7903	1		▶747		927
	923		2	153-8910	668		929
149-4311	396		▶529		▶687	155-2260	206
149-4745	947	152-8346	595	153-8911	668		209
	948		▶772		670		254
149-7226	876	152-8352	772		▶688		255
150-1280	546	153-0185	777	153-8912	670		282
150-4035	579	153-0187	777		▶696		285
150-4037	590	153-2073	▶166	153-9360	775		291
150-4043	590		195		▶777		293
150-4467	411		201	154-0051	442		296
	▶440		204		443		301
150-4482	▶440		218	154-2687	371		305
	449		222	154-2688	371		315
150-4868	592		228		▶373		325
150-5105	969		232	154-2689	373		337
	971		235	154-2692	373		340
150-5106	964	153-2147	191	154-2881	162	155-2261	278
	▶969		193	154-3064	395	155-2265	191
150-5107	964		218		▶402		193
	▶971		220	154-5732	▶949		218
150-5146	10		235		951		220
150-5968	577		237	154-6306	404		235
	580		287	154-6307	404		237
	583		289	154-6309	396		282
150-6649	685		906	154-6579	547		285
	694		910		548		287
	695	153-3580	775	154-7172	396		289
	▶739	153-5425	441	154-7175	396		291
150-7955	440	153-5427	441	154-7176	396		296
150-7956	440	153-5459	416	154-7177	396		301
150-8006	739		▶441	154-7246	▶162		906
151-0361	▶411	153-5460	▶416	154-9025	79		910
151-0362	▶411	153-5463	416	155-2255	191	155-2270	191
151-0364	▶411		▶441		193		193
151-0365	▶411	153-5464	▶416		212		206
151-0366	▶412	153-5467	416		215		209
151-0367	▶412		▶442		218		212
151-0368	▶412	153-5468	▶416		220		215
151-0370	▶449	153-5700	136		222		218
151-0371	▶412		138		225		220
151-0372	▶413	153-5710	137		235		222
151-0374	▶413	153-6237	73		237		225
151-0375	▶413		577		282		228
151-0378	▶413		580		285		230
151-0379	▶414		583		287		233
151-0380	▶414	153-6259	577		289		235
151-0381	▶414		580		293		237
151-0382	▶414		583		296		249
151-0385	▶415	153-7062	12		300		265
151-0388	▶415		14		301		278
151-0389	▶415	153-7383	779		305		280
151-0392	▶415	153-7964	527		306		282
151-0393	▶416		▶668		324		285
151-2900	16	153-7966	527		325		287
	18		▶670		331		289
151-4957	337	153-8905	688		333		293
	340		▶741		337		296

▶ PRIMARY REFERENCE

PART NUMBER INDEX

Part	Page	Part	Page	Part	Page	Part	Page
	301		860	159-3759	932	159-9229	▶359
	305	155-5958	949		933		392
	306		▶950		935	159-9258	357
	310	155-5959	949		937		359
	315		▶957	159-3923	3	159-9322	293
	317	155-6629	49		▶466	160-1744	317
	320	155-6642	23		▶469		320
	324	155-7970	368	159-3924	493	160-2196	3
	325	155-9112	607		▶497		▶392
	331	155-9115	607	159-3928	2	160-2323	55
	333	155-9116	607		▶458	160-2353	951
	337	155-9117	607	159-3931	3	160-2443	100
	340	155-9125	604		▶116		▶252
	346	155-9127	604	159-3934	458	160-3662	957
	367	155-9129	604	159-3959	300	160-5101	3
	490	155-9134	604	159-4615	▶2		▶6
	820	155-9136	607	159-4729	3		▶9
	863	155-9139	604		▶564	160-6382	282
	867	155-9141	604	159-4730	3		285
	898	155-9142	604		▶566		480
	906	155-9143	604	159-4731	3		482
	910	156-0283	317		▶569	160-6543	512
	925		320	159-5436	3	160-6567	▶151
	927	156-1148	▶940		▶43		925
	929		947	159-5439	3		927
155-2271	191		950		▶79		929
	193	156-3680	6	159-5812	3	160-7681	3
	218		9		▶925		▶472
	220		▶93	159-5839	3	160-7689	305
	235	156-4281	564		▶331		325
	237	156-5783	111	159-5841	1	160-7690	293
	285		▶125		2	160-7753	2
	287	156-5970	517		▶333		▶506
	289	156-7778	▶951	159-5845	3	160-7754	2
	296	156-8352	894		▶337		▶508
	301	157-0305	197	159-5853	1	160-7756	2
	305	157-0670	79		2		▶363
	310	157-1206	104		▶340	160-7758	3
	320	157-2528	311	159-5856	3		▶872
	324	157-6129	951		▶296		▶874
	331	158-0248	166	159-5865	1	160-7759	3
	333	158-0249	172		2		▶108
	337		197		▶300	160-7760	4
	340	158-0250	166	159-5877	3		5
	906		171		▶305		▶498
	910		172	159-5878	3	160-7765	957
155-2274	282		197		▶282	160-7766	957
	285	158-0252	166	159-5933	2	160-7767	957
	291		171		▶361	160-8185	35
	296		172	159-5935	2	160-9177	2
	301		197		▶100		▶531
	305	158-3198	957	159-6173	3	160-9178	3
	310	159-0308	357		▶375		▶576
	324		359	159-6174	3		▶579
	331	159-0311	782		▶381		▶582
	333		783	159-7342	4	160-9179	3
	340	159-0312	783	159-7364	2		▶592
	925	159-0313	784		▶88	160-9180	3
	927		785	159-7368	3		▶600
	929	159-0314	785		▶95	161-0764	1
155-2283	373	159-0927	357	159-8127	775		2
155-2285	373		359	159-9169	117		4
155-2629	104	159-1782	▶417	159-9170	119		5
155-4077	▶563	159-1785	417	159-9228	▶357		▶345
155-4098	859		▶442		392	161-0768	▶188

▶ PRIMARY REFERENCE

PART NUMBER INDEX

Part	Page
161-0769	188
	▶195
	▶196
161-0770	▶190
161-0771	▶190
161-0772	190
	▶197
	▶199
161-0773	▶244
161-0774	▶245
161-0776	▶153
161-0777	▶153
161-0778	188
	▶201
	▶202
161-0779	188
	▶204
	▶205
161-0908	197
161-1015	188
	▶206
	▶209
161-1016	▶159
161-1017	190
	▶212
	▶215
161-1018	190
	▶275
161-1020	▶329
	609
161-1021	4
	5
	▶218
	▶220
161-1022	▶280
	520
161-1141	▶932
161-1417	191
161-1418	191
161-1703	256
161-1705	257
161-1921	4
	5
	▶284
161-2444	951
161-2445	951
161-3509	▶171
	206
	212
161-6713	357
	359
161-7062	100
	361
161-7063	361
162-2077	171
	197
162-2776	35
162-6448	547
	548
162-7449	519
	524
162-7450	519
	520
	▶522
162-7451	▶519
	520
162-8218	100
	361
162-8219	100
	361
162-9523	105
163-0310	70
	71
	72
	▶87
163-0319	91
163-0375	▶417
163-0376	417
	▶443
163-0872	827
	▶828
163-4720	775
163-4721	775
163-6074	775
163-9322	6
	9
	▶368
164-2108	396
	517
164-2465	914
	915
	917
164-2490	6
	9
	▶63
164-4858	119
	121
164-5567	363
	572
	576
	579
	582
164-5572	108
164-5586	592
164-5590	592
164-5605	108
	560
	562
	563
	566
	569
164-5608	566
	569
164-5641	576
	579
	582
164-7556	167
	168
	169
	170
164-7577	▶273
	378
164-8462	3
	▶595
164-8474	848
	902
164-8908	571
164-9609	293
165-2510	535
	▶545
	548
165-4619	▶270
	272
165-4632	572
165-4931	590
165-5674	247
	248
165-6762	3
	▶91
165-7014	576
	582
165-9928	363
166-0939	474
166-1328	60
166-1329	▶60
	63
166-1997	915
	917
166-1999	915
	917
166-2829	921
166-2830	922
166-3302	▶609
166-3305	▶525
166-3308	525
	526
	527
	528
	▶585
	▶587
166-3336	520
	▶558
166-3337	▶520
166-6352	12
	14
166-6358	16
	18
166-6368	14
166-7064	▶480
	934
166-7065	▶482
	834
166-7224	957
166-7225	949
167-0017	6
	▶16
167-0138	▶278
	310
167-0566	396
167-1709	▶254
	574
167-1776	497
167-1801	610
167-2186	540
	547
	548
167-2190	545
	546
167-2192	539
167-2195	541
	543
	544
167-2294	540
	547
	548
167-2300	545
	546
167-2302	539
167-2304	541
	543
	544
	550
167-2307	595
167-3911	87
167-7504	282
	285
167-7505	282
	285
167-7506	331
	333
167-7536	331
	333
167-8053	2
	▶830
167-8067	2
	4
	▶818
167-8102	818
	▶898
167-8125	33
167-8382	▶155
167-8390	1
	5
	▶861
167-8398	818
	861
	862
	▶900
167-8423	▶862
167-9002	2
	▶365
167-9524	396
167-9671	99
168-4490	6
	▶144
168-4594	144
168-7212	49
168-7276	49
168-7408	472
168-7960	▶486
168-8233	157
168-8235	157
168-8243	191
	218
	220
	287
	910
168-8248	282
168-8683	100
168-8758	519
	524
168-9108	545
168-9110	545
169-0921	100
	361
	508
169-0922	100
	361
169-1548	371
169-1549	373

▶ PRIMARY REFERENCE

PART NUMBER INDEX

Part	Page	Part	Page	Part	Page	Part	Page
169-2621	365	170-5334	▶854	172-5377	932		340
169-3145	872		856		▶935	173-3882	474
	874	170-5335	852	172-5378	825	173-3924	474
169-3147	232		854		▶882	173-3942	474
	233	170-6570	825		932	173-3993	697
	280	170-9051	576		933	173-4490	340
169-3176	206		579	172-6540	99	173-5304	▶265
	209		582	172-6555	282		267
169-3181	212	171-1103	6		285	173-5313	▶818
	215		9	172-6556	191	173-5320	973
169-3230	249		▶293		193		▶983
169-3263	925	171-2122	365		218		▶985
	927	171-2210	310		220	173-5321	973
169-3264	816	171-2212	143		235		▶987
	817	171-3062	6		237		▶989
169-3290	602		9		287	173-5322	861
	▶610		▶20		289		▶863
169-3292	305	171-3063	20		906	173-5360	▶861
	324	171-5349	259		910		862
169-3380	365	171-5831	3	172-6830	935	173-5981	531
169-3502	305		▶999		936		▶539
169-3520	228	171-5941	▶160		▶975	173-5990	539
	230		296		▶977	173-6754	936
169-3523	157		300	172-6831	935	173-6756	▶935
169-3651	3	171-6165	882		936	173-7813	417
	▶376	171-6175	218		▶979		▶443
	493		220		▶981	173-7830	443
169-4166	39		235	172-6834	4	173-8290	576
169-4170	39		237		5		579
169-4172	39	171-6458	1		▶856		582
169-4187	23		2	172-6835	4	173-9683	539
169-4657	18		▶590		5		541
	132		609		▶857		543
169-4882	600	171-6466	558	172-7105	365		544
	▶602		592	172-7106	365		550
169-4883	600	171-6467	592	172-8641	282	173-9685	540
	▶604	171-6470	590		285		547
169-5414	296	171-6561	291	172-9316	282		548
	300	171-6700	1		285	173-9779	545
	306		2	172-9389	▶152	174-0620	6
	310		▶493		160		9
	325		▶494		296		▶272
	331	171-6728	590		300	174-1494	819
	333	171-7091	357	173-1007	611		863
	480	171-7093	357	173-1008	611		867
	482		359	173-1009	611	174-1541	6
169-5937	936	171-7095	359	173-1011	566		9
169-7262	310	171-7096	▶191		▶611	174-1574	6
169-7263	310	171-7185	153	173-1498	16		9
169-7397	572		▶816		18		▶45
169-8938	282	171-7186	153	173-1500	16	174-1575	45
	285		▶817		18	174-1576	6
	291	171-7626	825	173-1885	249		9
170-0432	447	171-8077	▶479	173-2018	119		▶65
	453	172-0165	100		121	174-1577	65
170-0436	449	172-1239	886	173-2087	381	174-1578	65
	▶453		889	173-2751	934	174-1579	6
170-0493	521	172-4211	100		▶937		9
	522		361	173-3064	206		▶62
	523		508		209	174-1580	62
170-0503	522	172-4702	12		212	174-1581	6
	592		14		215		9
170-1564	900	172-5376	▶886		222		▶35
170-4820	▶852		935		225	174-1584	6
	857		936		275		9

▶ PRIMARY REFERENCE

PART NUMBER INDEX

Part	Page
	▶37
174-1586	37
174-1591	6
	9
	▶33
174-1592	33
174-1593	33
174-1602	91
174-1604	6
	9
	▶98
174-1610	88
174-1612	88
	▶90
174-1613	88
174-1627	6
	9
	▶56
174-1628	56
174-1637	368
174-1644	98
	▶99
174-1760	6
	9
	▶51
174-1762	6
	9
	▶21
174-2104	73
174-2253	576
	579
	582
174-2304	▶417
174-2339	▶589
	804
174-2475	39
174-2863	474
174-2952	43
174-2953	43
174-3705	363
	▶395
174-3897	311
174-4140	889
174-4141	886
174-4492	820
	863
	867
	953
174-4546	3
	▶953
174-4547	861
	▶867
174-4548	818
	▶819
174-4552	▶861
174-4971	820
	863
174-5415	97
174-5635	79
174-5636	265
174-5692	102
174-5907	136
	137
	138
	212
	215
	222
	225
	297
	301
	306
	311
	325
	329
174-6051	867
	953
174-6353	820
	863
	867
	953
174-7507	▶449
174-8131	337
	340
	830
174-8961	572
174-9527	43
174-9529	43
174-9690	818
175-0403	499
175-0447	574
175-0454	25
175-1343	925
	927
175-1367	268
175-2559	▶804
175-3893	396
175-5480	466
	469
175-6978	3
	▶572
175-6981	70
	71
	72
	▶574
175-7049	574
175-7314	33
175-7453	368
175-7698	486
175-7895	540
	547
	548
175-7896	541
	543
	545
	546
175-7897	539
175-7898	550
175-7900	544
176-0209	596
176-1378	604
176-2918	466
	469
176-2922	466
	469
176-2945	508
176-3896	572
176-4168	44
176-5507	820
	863
	867
	953
176-5638	797
176-5639	796
176-5640	795
	798
176-5641	794
	799
176-5642	794
	795
	796
	797
	798
	799
176-5643	794
	795
	796
	797
	798
	799
176-5760	466
	469
176-5765	466
	469
176-5767	466
	469
176-5768	466
	469
176-5770	466
	469
176-5775	466
	469
176-6391	268
176-6464	390
176-6465	▶390
	392
176-6994	84
176-6995	84
176-6997	84
176-6998	84
176-6999	84
176-7000	83
	▶84
176-9747	381
177-0279	499
177-0581	91
177-0717	91
177-1633	381
177-1677	381
177-1713	508
177-2202	91
177-2932	466
	469
177-3582	508
177-4118	466
	469
177-4119	474
177-4120	466
	469
177-4142	92
177-4255	596
177-4292	108
177-4311	63
177-4394	108
177-5303	73
177-6821	▶802
177-6822	802
177-7448	830
177-7858	820
	863
	867
177-7891	818
	▶848
	861
177-8778	▶934
177-8779	932
	▶935
177-8781	▶889
	935
	936
177-8784	4
	5
	▶991
177-8802	310
177-8830	▶973
177-8831	▶973
177-9548	▶136
177-9549	4
	5
	▶137
177-9615	91
177-9741	4
	5
	▶913
177-9812	265
177-9813	310
177-9814	311
178-0101	325
	329
178-0102	325
	329
178-0131	466
	469
178-0160	311
178-0162	311
178-0163	▶310
	493
	494
	495
178-0555	311
178-1685	775
178-1686	775
178-1688	775
178-3030	834
	▶927
	934
178-3086	779
178-3643	20
178-3695	381
178-4190	882
178-4626	498
178-4875	16
	18
178-5252	16
178-5253	16
178-6267	191
	193
178-6327	79
178-7983	608
178-7985	608

▶ PRIMARY REFERENCE

PART NUMBER INDEX

Part	Page
178-8067	201
	204
	206
	212
	222
	228
178-8455	775
178-8481	134
178-8603	862
	▶902
178-8894	840
	846
178-8993	73
178-9158	346
178-9527	1
	2
	▶57
178-9582	3
	▶608
178-9952	363
178-9961	564
178-9962	564
179-0092	33
179-1298	396
179-1548	▶190
179-1549	222
	225
179-1550	222
	225
179-2138	882
179-2139	882
179-2140	882
179-2173	886
179-2176	894
179-2177	886
179-2179	889
	894
179-2187	306
	325
179-2426	79
179-2509	73
179-2966	79
179-3261	70
	71
	72
	▶73
179-3275	898
179-3276	898
179-3277	898
179-3581	3
	▶932
179-4356	▶525
179-4814	872
	874
179-5776	▶459
179-5777	▶461
179-6063	367
	▶404
179-6064	▶367
	392
179-6588	▶48
179-6851	16
	18
179-6852	16
	18
179-6853	16
	18
179-8700	206
	209
	212
	215
	222
	225
	300
179-8701	222
	225
179-9398	▶520
179-9453	29
179-9459	▶29
	32
179-9563	67
179-9564	67
179-9565	6
	9
	▶67
180-1300	▶172
	206
180-1538	53
180-1679	▶803
180-3531	365
180-4027	361
	508
180-4028	337
	340
180-4643	153
	▶156
180-5462	898
180-6662	6
	9
	▶27
180-7004	70
	72
	▶85
180-7033	337
	340
180-7147	361
	508
180-9146	▶346
	392
180-9285	▶912
	925
	927
	929
180-9322	367
180-9327	396
180-9340	255
180-9852	444
	446
180-9853	444
180-9867	508
180-9933	363
183-1156	572
183-1406	381
183-1415	417
	▶444
183-1416	▶417
183-1417	▶418
183-1418	418
	▶444
183-1425	830
183-2136	331
	333
183-2302	57
183-2303	57
183-2304	57
183-2306	57
183-3018	▶834
183-3072	108
183-3408	106
183-4069	190
	▶222
	▶225
183-4365	53
183-4386	108
183-4691	508
183-5504	3
	▶66
183-5806	▶996
	999
183-6633	479
183-6638	479
183-6774	396
183-6775	396
183-6933	474
183-7263	697
183-7595	774
183-7913	474
183-8597	▶259
	346
	347
183-9606	232
184-0871	70
	72
	82
184-0874	70
	71
	▶82
184-0903	195
	197
184-1130	▶396
	404
184-1132	▶399
	404
184-1299	3
	▶315
184-1681	445
184-2309	451
184-2346	418
	▶445
184-2347	418
	▶445
184-2362	▶418
184-2363	▶418
184-2472	146
	149
184-2524	21
184-4322	925
	927
	929
184-5073	996
184-5076	996
184-5394	79
184-6665	508
184-6964	270
184-7303	▶525
184-7304	▶525
184-7305	▶526
184-7306	▶526
184-7307	▶526
184-7308	▶526
184-7315	▶527
184-7317	▶527
184-9843	545
	546
184-9854	62
185-0008	506
	▶517
	874
185-1122	508
185-1542	2
	▶70
	▶71
185-1717	63
185-1718	63
185-2042	479
185-2049	479
185-2197	333
185-2274	365
185-2287	365
185-2638	133
185-2639	133
185-2644	133
185-2647	133
185-2648	133
185-2650	133
185-2654	133
185-2655	133
185-2658	133
185-3143	3
	▶495
185-3632	900
185-4076	296
185-4461	53
185-6362	925
	927
185-6596	540
185-7025	545
186-1526	396
	399
	▶403
186-1714	337
186-1715	337
	340
186-3696	454
186-3705	63
186-3735	128
	129
	150
	173
	175
	179
	181
	183
	184
	185
	186
	187
	189
	197
	204

▶ PRIMARY REFERENCE

PART NUMBER INDEX

Part	Page	Part	Page	Part	Page	Part	Page
	205		910		864	194-3200	1
	240	188-3951	▶139		868		2
	253		495		953		▶324
	259	188-3959	139	191-2314	512	194-3845	937
	265	188-6126	67	191-3645	499	194-4019	▶528
	273	188-7511	260	191-3680	346	194-4020	▶528
	282	188-8849	166	191-5236	818	194-4181	337
	291		171		861		340
	296		172	191-5292	572	194-4679	496
	297		197		▶774	194-4863	474
	300	188-9250	▶518	191-5293	472	194-4939	466
	305		872	191-5973	379		469
	306	188-9321	4	191-7581	604	194-5141	827
	315		5	191-7582	604	194-5226	254
	324		▶188	191-7583	604	194-5227	254
	325	188-9324	188	191-7584	604	194-6158	469
	329		▶228	191-8692	▶917	194-6523	119
	331		▶230		937		121
	333	188-9328	▶188	191-8695	▶894	194-6724	▶255
	337	188-9331	188		937		258
	402		190	191-9256	346	194-7987	466
	403		▶242	191-9260	1	194-8535	119
	771		▶243		▶72		121
	872	188-9390	522	192-1434	1	194-9453	604
	898		592		2		▶607
	910	188-9694	317		▶1002	194-9478	607
	912	188-9695	317	192-4699	▶571	194-9479	607
	913	189-0108	311	192-4969	▶527	194-9480	607
	927	189-0146	136	192-4970	▶527	194-9481	607
	974		137	192-4984	592	195-0434	325
	975		138	192-5490	774		329
	977	189-0189	402	192-5629	466	195-0852	108
	979	189-9801	261		469	195-2097	141
	981	190-0370	331	192-5638	466	195-2274	1002
	983	190-0649	16		469	195-4990	311
	985		18	192-6492	63	195-7218	808
	987	190-1680	218	192-7135	63		814
	989		235	193-1036	751	195-7219	811
186-4460	450	190-1684	346	193-1728	496	195-9634	604
	▶454	190-1688	3	193-1729	496	195-9639	604
186-4461	▶450		▶391	193-1758	88		▶751
186-6098	95	190-1690	391	193-3982	113	196-0180	925
187-0491	365	190-1691	391	193-7359	1		927
187-0745	508	190-1697	▶478		2		929
187-0953	805	190-1699	478		▶285	196-1867	600
187-0976	466	190-1700	478		936	196-2970	325
	469	190-2938	999	193-7416	197	196-4150	925
187-1008	306	190-3043	361		199		929
	325	190-3482	913	193-8212	▶906	196-4226	300
187-2034	130		929	193-8253	1	196-4609	317
187-3307	31	190-3850	521		2		320
187-8028	▶138		522		72	196-4622	929
	493		523		▶317	196-4909	1
	494		592		▶320		2
187-9380	331	190-5212	347	193-8257	3		▶929
188-0576	898	190-5386	805		▶496	196-7268	331
188-3862	191		999	193-8570	270		333
	193		1002	193-9147	496	196-8532	188
	218	190-6017	6	194-1854	311		189
	220		9	194-2612	117		▶232
	235		▶114		119		▶233
	237	190-6535	119		123	196-8557	193
	287	190-9775	119		124		235
	289		121	194-2903	300		237
	906	191-0027	820		329		289

▶ PRIMARY REFERENCE

PART NUMBER INDEX

Part	Page	Part	Page	Part	Page	Part	Page
	906	197-8397	▶261	199-4321	596	201-8327	602
196-8559	▶235		293	199-4322	596	201-8328	600
	▶237	197-8611	886	199-7111	459	201-8424	141
	240		889	199-7113	459		142
196-9295	496		896	199-7118	459	201-8430	576
196-9373	285	197-8624	886		461		579
196-9521	23		889	199-7119	459		582
197-0579	4		896		461	202-1138	925
	5	197-8627	886	199-7891	133		929
	▶267	197-8628	886	199-8436	133	202-2703	130
197-0580	267	197-8629	889	199-9731	117	202-2708	130
	▶268	197-8630	889	199-9732	119	202-2783	130
197-0949	105	197-9377	49	199-9907	119	202-2784	130
197-0951	105	198-0151	66		121	202-2785	130
197-1351	479	198-4768	379	199-9912	116	202-2786	130
197-1444	474	198-4777	95		▶117	202-2787	130
197-1448	70	198-5438	508		▶118	202-4322	▶1003
	71	198-5439	508	199-9913	116	202-4323	▶1003
	72	198-5440	508		▶119	202-4324	▶1004
	▶474	198-6068	67		▶121	202-6611	168
197-1459	325	198-6421	346	199-9959	132		170
	329	198-6565	▶418		134	202-6614	167
197-1708	117	198-6572	418	199-9983	466		169
197-1744	▶193		▶446		469	202-7475	41
197-1801	479	198-7332	▶159	199-9984	121	202-7711	130
197-1988	301		297	199-9985	121	202-7713	130
197-2054	909		301			202-8647	130
197-2055	908	198-7379	492			202-8649	906
197-2064	4	198-7380	492		2		910
	▶908	198-7657	367			202-9824	999
197-2066	1	198-8588	480	200-1173	910	202-9897	130
	2		482	200-2056	25	203-1124	977
	▶909	198-9811	809	200-2057	▶25		981
197-3616	45		811		26		985
	47	198-9812	809	200-2232	▶130		989
197-4568	818		812		132		993
	▶827	198-9942	474		134		994
197-4569	827	199-2585	▶859	200-3967	480	203-2260	1
197-4637	105	199-2586	859		482		2
197-4638	105	199-2625	478	200-5924	375		▶477
197-5453	340	199-2626	478	200-7929	379	203-2268	▶1004
197-5572	▶4	199-2677	835	200-7933	860	203-2389	501
197-5867	1002		838	200-7934	▶860	203-2390	501
197-5955	▶4		842	200-8623	886	203-2391	501
197-5964	925		844		889	203-2423	501
	927	199-2711	70	201-0387	347	203-3175	602
	929		72	201-1036	▶141	203-3337	508
197-6218	898		82		190	203-3340	508
197-6437	4		87		493	203-3341	508
	5	199-2712	835		494	203-3342	508
	▶997		838	201-1038	▶142	203-3940	260
197-7659	818		842		188		261
	▶829		844		190	203-5957	502
197-8391	▶263	199-2737	842	201-1055	996	203-5958	502
	293	199-2738	844	201-5244	296	203-6016	381
197-8392	▶264	199-2739	835		301	203-6018	381
	293	199-2740	838	201-5894	894	203-6019	381
197-8393	▶256	199-2756	474	201-7603	462	203-6061	4
	293	199-3368	▶185		463	203-6536	▶188
197-8394	▶257		243		999	203-6551	188
	293	199-4051	37	201-7626	1003		▶287
197-8395	▶258	199-4317	596	201-7627	1004	203-7620	▶239
	293	199-4318	459	201-7631	1004	203-7625	▶173
197-8396	▶260		461		1005		239
	293	199-4320	596	201-7633	1003	203-7626	▶175

▶ PRIMARY REFERENCE

PART NUMBER INDEX

Part	Page	Part	Page	Part	Page	Part	Page
	239	209-3334	95	213-4099	490	218-4761	933
203-7627	▶997	209-4578	91	213-4558	898		▶936
203-8466	▶798	209-5776	999	213-5132	909	219-4458	49
203-8467	▶799	209-7309	65	213-9100	315	219-6701	487
203-9807	121	209-7389	368		320	219-7258	▶523
203-9808	121	209-7827	3	214-0586	32	219-7265	▶521
204-0638	6		▶92	214-1102	898		524
	▶111	209-9587	▶146	214-2242	508	219-8543	▶1005
204-0712	39		147	214-2466	508	220-0768	3
204-0795	997	209-9588	145	214-3540	379		▶105
204-3451	▶26		▶147	214-4863	▶253	220-1922	462
	27	209-9985	512		361	220-3373	39
204-4376	820	209-9986	493	214-6277	37	221-0319	121
	864		494	214-6278	37	221-2801	520
	868		495	214-6598	117		▶524
204-6109	▶189		▶512		119	221-2961	▶520
204-6127	189	210-0849	144	214-6867	474	221-5368	▶240
	▶289		▶148	215-2062	▶76	222-2060	113
204-6488	830	210-2044	▶2		81	222-2367	521
204-8785	419	211-0587	23	215-2063	6		523
	▶446	211-0588	23		9	222-3769	530
204-8786	▶419	211-1519	4		▶81	222-4086	293
204-9840	474		▶490	215-2409	459	222-4737	673
205-0626	133	211-1520	4	215-2410	459		677
205-4285	154		▶241	215-2412	459		678
	156	211-2060	517	215-2413	459		679
205-7187	512	211-2822	39		461	222-6457	159
206-3599	100	211-4906	▶825	215-2414	459	222-6458	159
	361	211-4907	825		461	223-0580	611
206-3600	100	211-4908	825	215-2415	459	223-3935	826
206-3713	347	211-4912	825		461	223-3936	826
206-3714	347		▶896	215-2430	459		▶994
206-4669	66	211-4913	825	215-2431	459	223-3937	825
206-7515	97		▶992		461		▶826
206-9651	830		▶993	215-3005	499	223-3939	291
207-2409	3	212-0443	270		▶501	223-3940	291
	▶614	212-0615	6	215-3198	114	223-3941	▶291
207-2410	▶612		▶132	215-5648	999		826
	614	212-2162	999	215-6425	612	224-2821	490
207-2411	612	212-3266	79	215-6672	187	224-3240	35
207-3819	376	212-3590	466	215-6673	187	224-4441	32
	▶378	212-3591	466	215-6674	187	224-5844	463
207-4453	▶1		469	216-5583	25	224-5845	463
207-4922	361	212-3924	▶181	216-5584	25	224-5912	463
207-4924	508		241	216-5585	25	224-6637	999
207-4927	100	212-4174	66	216-7435	447	224-6958	1003
207-9861	419	212-6961	95	216-7437	454	224-6963	1004
	▶447	212-6962	95	216-7443	419		1005
207-9862	▶419	212-7431	466		▶447	224-6965	1003
208-0014	498	212-7432	466	216-7444	▶419	224-7040	73
	▶499	212-9510	466	216-7445	450		▶596
208-0520	512		469		▶454	225-3174	▶825
208-0800	119	212-9511	466	216-7446	▶450	225-4150	999
	121		469	217-0577	49	225-5182	496
208-1512	499	213-0430	1003	217-2661	612	225-5404	160
208-1535	499	213-0431	1004	217-3673	47	225-5405	160
208-6678	512	213-0435	1004	217-3674	47	226-0295	835
208-7448	91		1005	218-2971	501		838
208-7782	154	213-0437	1003	218-4406	379		842
	156	213-1413	317	218-4758	▶932		844
208-7933	317		320	218-4759	932	226-0342	835
	320	213-1414	318		▶936		838
208-9160	114		320	218-4760	1		842
209-1743	368	213-2264	95		2		844
209-3332	95	213-3733	490		▶933	226-0733	448

▶ PRIMARY REFERENCE

PART NUMBER INDEX

Part	Page
226-0735	419
	▶448
226-1187	▶97
226-2870	612
226-2871	612
226-7683	▶133
	135
226-8202	540
	547
	548
226-9996	474
227-1143	539
227-2517	90
227-4676	90
227-4709	530
227-6672	118
	121
228-2918	494
	495
228-5009	337
	340
228-7559	3
	▶487
228-9265	▶419
228-9655	133
228-9656	133
228-9657	133
229-0119	996
229-0674	136
	137
	138
	139
229-5815	121
	▶123
229-5816	118
	▶124
229-7155	579
	582
	▶699
229-8906	130
229-9382	541
	543
	544
	550
230-4171	18
230-4477	123
	124
230-4617	3
	▶102
230-4672	118
230-5839	3
	▶75
230-7570	3
	▶471
230-8089	579
230-9138	830
231-0221	123
	124
231-3539	545
	546
231-4486	858
231-4487	858
231-4527	315
231-5251	463
231-6133	130
231-6134	130
231-6524	4
	5
	▶910
232-1732	858
232-5990	9
	▶145
233-0712	2
	▶134
233-0713	▶135
233-4253	244
	▶247
	▶248
233-5220	68
	▶69
233-6659	155
	▶157
233-6663	9
	▶106
233-6742	106
	▶126
234-2412	9
	▶18
234-2413	9
	▶14
234-4323	▶167
	202
	205
	209
	215
	220
	225
	230
	237
234-4324	▶168
	209
234-4325	▶169
	196
	199
	233
234-4326	▶170
	199
234-6666	403
234-7730	167
	168
	169
	170
234-7731	167
	168
	169
	170
235-1122	469
235-1123	469
235-3937	▶187
	248
236-0737	830
236-3948	▶5
236-5498	135
	▶143
237-0226	88
238-0296	126
	▶127
238-0415	820
	864
	868
238-0417	820
	864
	868
238-4462	541
238-6780	106
238-9421	997
238-9422	997
239-4990	999
239-6989	999
239-8335	337
239-8336	340
239-9354	245
	▶249
239-9362	▶163
	284
240-5304	148
	▶149
240-5919	95
240-6822	403
241-3013	▶557
241-4943	925
	927
	929
241-6949	71
	▶86
242-0407	376
242-3633	75
242-9245	508
243-3769	999
243-5466	590
245-6095	53
245-9129	41
246-2591	108
246-2596	108
246-2641	825
246-3144	23
248-6772	820
	864
	868
248-6919	47
249-2843	925
	927
	930
250-7695	108
251-1005	41
251-3179	829
252-8692	9
	▶47
252-9685	113
253-2111	143

▶ PRIMARY REFERENCE

CATERPILLAR®

© 2004 Caterpillar
All Rights Reserved

Printed in U.S.A.