CATERPILLAR®

SEBP5013
December 2008

RUTHZIL TRATOR COMERCIAL DE PEÇAS LTDA 11 97083-6812 ROLANDO

Parts Manual

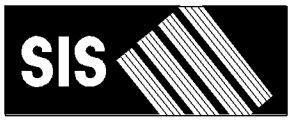

See "General Information" for New Parts Manual Features.

140K Motor Grader

JPA1-Up (Machine)
KHX8814-Up (Engine)
DMJ1-Up (Transmission)

Powered By C7 Engine
This Parts Manual is also available in .PDF format on Compact Disc (CD-ROM) - Caterpillar Form No. SERP5013

Product and Dealer Information

Note: For product identification plate locations, see the section “Product Identification Information” in the Operation and Maintenance Manual.

Delivery Date: _____

Product Information

Model: _____

Product Identification Number: _____

Engine Serial Number: _____

Transmission Serial Number: _____

Generator Serial Number: _____

Attachment Serial Numbers: _____

Attachment Information: _____

Customer Equipment Number: _____

Dealer Equipment Number: _____

Dealer Information

Name: _____ Branch: _____

Address: _____

_____

_____

	Dealer Contact	Phone Number	Hours
Sales:	_____	_____	_____
Parts:	_____	_____	_____
Service:	_____	_____	_____

MEMORANDA

TABLE OF CONTENTS

Name	Page
GENERAL INFORMATION	A5
REPAIR ALTERNATIVES	A8
SUPPLEMENTAL COOLANT ADDITIVES	A9
MAINTENANCE PARTS	A10
INDEX	A13
MACHINE ARRANGEMENT	1
GENERAL AR	1
ENGINE ARRANGEMENT	3
ENGINE AR-COMPLETE	3
ENGINE AR-CORE	4
INSTALLATION AR-ENGINE	5
BASIC ENGINE	7
AIR COMPRESSOR GP	7
CAMSHAFT GP	11
CARRIER GP-SEAL	12
COVER GP-CYLINDER BLOCK	13
COVER GP-FRONT HOUSING	14
COVER GP-VALVE MECHANISM	16
CRANKSHAFT GP	18
CYLINDER BLOCK GP	20
CYLINDER HEAD AS	24
CYLINDER HEAD GP	25
DAMPER & PULLEY GP	28
DRIVE GP-ACCESSORY	29
DRIVE GP-FAN	30
FASTENER GP-CYLINDER HEAD	32
FASTENER GP-ENGINE	33
FASTENER GP-FRONT HOUSING	34
FLYWHEEL GP	35
GEAR GP-FRONT	36
HOUSING GP-FLYWHEEL	37
HOUSING GP-FRONT	38
LIFTER GP-VALVE	39
LIFTING GP-ENGINE	40
MOUNTING GP-ENGINE	41
PAN GP-OIL	42
PISTON & ROD GP	43
PLUG GP-CYLINDER BLOCK	44
PLUG GP-ENGINE	45
PLUG GP-OIL PAN	46
SEAL GP-CRANKSHAFT	47
VALVE MECHANISM GP	48
LUBRICATION SYSTEM	51
ADAPTER GP-OIL LINE	51
BREATHER GP	52
FILTER GP-ENGINE OIL	53
FUMES DISPOSAL GP	54
GAUGE GP-OIL LEVEL (DIPSTICK)	55
LINES GP-ENGINE OIL	56
LINES GP-DRAIN	57
LINES GP-TURBOCHARGER OIL	58
MANIFOLD GP-ENGINE OIL	60
PUMP GP-ENGINE OIL	61
COOLING SYSTEM	63
COOLER GP-ENGINE OIL	63
COOLING AR	64
FAN GP	65
GUARD GP-FAN	66
LINES GP-WATER	67
PUMP GP-WATER	71
RADIATOR GP	74
TANK GP-WATER	75
AIR INLET AND EXHAUST SYSTEM	77
AFTERCOOLER GP-AIR	77
AIR CLEANER GP	78
COVER GP-AIR INLET	81
ELBOW GP-AIR INLET	82
LINES GP-AIR	83
MANIFOLD GP-EXHAUST	84
MUFFLER GP	85
TURBOCHARGER GP	86
FUEL SYSTEM	88
CONTROL GP-GOVERNOR	88
FILTER GP-WATER SEP & FUEL	90
INJECTOR GP-FUEL	91
LINES GP-FUEL	92
LINES GP-INJECTOR HYD PUMP	96
PUMP & MTG GP-UNIT INJ HYD	97
PUMP GP-FUEL INJECTION	98
PUMP GP-FUEL PRM & WATER SEP	99
REGULATOR GP-FUEL PRESSURE	100
TANK GP-FUEL	101
ELECTRICAL AND STARTING SYSTEM	102
ALARM GP	102
ALTERNATOR AR-CHARGING	103
ALTERNATOR GP-CHARGING	104
BATTERY & WIRING GP	110
CONTROL & MTG GP-ENGINE ELEK	119
CONTROL GP-POWER TRAIN	120
CONTROL GP-UNPROGRAMMED	121
CONVERTER AR-ELECTRICAL	122
CONVERTER GP-ELECTRICAL	123
ELECTRONICS GP-COMMUNICATION	126
ELECTRONICS GP-IMPLEMENT	126
ELECTRONICS GP-POWER TRAIN	126
GRADE CONTROL AR	127
GROUND GP-ELECTRICAL	129

TABLE OF CONTENTS

Name	Page
INSTALLATION AR-COMMUNICATION	130
INSTALLATION GP-COMMUNICATION	131
LAMP GP	133
LAMP GP-DOME	134
LAMP GP-FLOOD	135
LAMP GP-SIGNAL	139
LAMP GP-WARNING BEACON	142
LIGHTING AR-FLOOD	144
LIGHTING AR-ROADING	144
LIGHTING GP-BACKUP	145
LIGHTING GP-FLOOD	147
LIGHTING GP-ROADING	153
LIGHTING GP-SIGNAL	156
LIGHTING GP-WARNING	157
LIGHTING GP-WARNING BEACON	158
MOTOR GP-ELECTRIC	160
MOUNTING GP-GRADE CONTROL	161
PLUG GP-CONNECTOR	163
RADIO GP-COMMUNICATION	164
SENSOR GP-ENGINE	165
SENSOR GP-POSITION	167
SENSOR GP-PRESSURE	169
SENSOR GP-SPEED	175
SENSOR GP-TEMPERATURE	178
STARTING AID AR-ETHER	182
STARTING AID GP-ETHER	183
STARTING MOTOR GP-ELECTRIC	185
SWITCH GP-BYPASS	188
SWITCH GP-DISCONNECT	189
SWITCH GP-LIGHT	190
SWITCH GP-MAGNETIC	191
SWITCH GP-PRESSURE	192
SWITCH GP-WIPER	193
VALVE GP-ETHER STARTING	195
WIRING GP-AIR CONDITIONER	196
WIRING GP-AUXILIARY	198
WIRING GP-BLADE CUSHION	201
WIRING GP-CAB	202
WIRING GP-CONSOLE	206
WIRING GP-ENGINE	208
WIRING GP-ETHER STARTING AID	210
WIRING GP-FRONT	211
WIRING GP-GRADE CONTROL	215
WIRING GP-CHASSIS	216
WIRING GP-POWER RECEPTACLE	219
WIRING GP-REAR	220
WIRING GP-STEERING CONSOLE	226
WIRING GP-TRANSMISSION	228
POWER TRAIN	229
APPLICATION GP-POWER TRAIN	229
AUTOSHIFT AR	229
BASE GP-OIL FILTER	230
CASE & PARTS GP-PLANETARY	231
CHAIN GP-DRIVE	236
CLUTCH GP-TRANSMISSION	237
CONTROL GP-DIFFERENTIAL LOCK	246
CONTROL GP-TRANSMISSION HYD	248
COOLER GP-TRANSMISSION OIL	249
COUPLING GP-TORSIONAL	250
DIFFERENTIAL & BEVEL GEAR GP	251
DIFFERENTIAL AR	253
DIFFERENTIAL GP	254
FINAL DRIVE GP	256
FILLER GP-POWER TRAIN OIL	258
FILTER GP-OIL	259
GEAR GP-BEVEL & PINION	260
LINES GP-TRANSMISSION OIL	262
MOUNTING GP-WHEEL	265
PROTECTION GP-XMSN OIL FILLER	266
PUMP GP-GEAR	267
SCREEN GP-MAGNETIC	269
SHAFT GP-DRIVE	270
SHAFT GP-INPUT	271
TANDEM & COVER GP	272
TRANSMISSION AR	273
UNIVERSAL JOINT GP	274
VALVE & MTG GP-DIFF LOCK	275
VALVE GP-SELECTOR & PRESS CONT	276
VALVE GP-SOLENOID	282
VALVE GP-TRANSMISSION CONTROL	284
WHEEL & TIRE AR	286
WHEEL & TIRE GP	292
WHEEL AR	304
WHEEL GP	305
FRAME AND BODY	311
AXLE GP-FRONT	311
BOSS GP-FRAME	314
BOX GP-BATTERY	316
BUMPER GP-REAR	317
CASE & FRAME GP	319
ENCLOSURE GP-ENGINE	320
FRAME GP-FRONT	324
GUARD GP-BOTTOM	326
GUARD GP-DRIVE SHAFT	327
GUARD GP-PLATFORM	328
HITCH GP-ARTICULATING	335
LINES GP-GREASE	337
LINK GP-STEERING	338
STEP GP	339
SUPPORT GP-BATTERY	340
SUPPORT GP-RADIATOR	341
BRAKING SYSTEM	343
AIR DRYER GP	343
BRAKE GP-PARKING	345
BRAKE GP-SERVICE	347

TABLE OF CONTENTS

Name	Page
CONTROL GP-PARKING BRAKE	349
CONTROL GP-SERVICE BRAKE	351
DRYER & LINES GP-AIR	355
TANK GP-AIR	358
VALVE GP-SOLENOID	361
HYDRAULIC SYSTEM	362
ACCUMULATOR & MTG GP-HYDRAULIC	362
ACCUMULATOR AR-BLADE CUSHION	363
ACCUMULATOR GP	363
ACCUMULATOR GP-HYDRAULIC	364
CONTROL AR-HYDRAULIC	365
CYLINDER & MTG GP-ARTICULATION	367
CYLINDER & MTG GP-BLADE LIFT	368
CYLINDER & MTG GP-BLADE TIP	369
CYLINDER & MTG GP-CENTERSHIFT	370
CYLINDER & MTG GP-SCARIFIER	371
CYLINDER & MTG GP-SIDESHIFT	372
CYLINDER & MTG GP-STEERING	374
CYLINDER & MTG GP-WHEEL LEAN	375
CYLINDER GP-ARTICULATION	376
CYLINDER GP-CENTERSHIFT	379
CYLINDER GP-HYDRAULIC	381
CYLINDER GP-LIFT	382
CYLINDER GP-RIPPER	383
CYLINDER GP-SCARIFIER	384
CYLINDER GP-SIDESHIFT	385
CYLINDER GP-STEERING	386
CYLINDER GP-WHEEL LEAN	388
DETENT GP-CONTROL VALVE	389
DRIVE GP-CIRCLE	390
GUARD GP-CYLINDER	393
LINES GP-ACCUMULATOR	394
LINES GP-HYDRAULIC	396
LINES GP-PUMP	414
LINES GP-RIPPER	418
LINES GP-STEERING	421
LOCK GP-CENTERSHIFT	425
MANIFOLD GP-CONTROL	426
MANIFOLD GP-VALVE	427
MOTOR GP-GEROTOR	430
PUMP & MTG GP-STEERING	432
PUMP GP-PISTON	433
ROTATING GP-PUMP	435
SHAFT GP-PUMP DRIVE	436
SWIVEL GP	437
TANK & FILTER GP-HYDRAULIC	439
TANK & MTG GP-HYDRAULIC	441
VALVE & LINKAGE GP	442
VALVE GP-BANK 2	508
VALVE GP-BANK 3	509
VALVE GP-BANK 4	512
VALVE GP-BANK 5	520
VALVE GP-BANK 6	530
VALVE GP-BANK 7	534
VALVE GP-COMBINATION	536
VALVE GP-CONTROL	538
VALVE GP-PUMP CONTROL	572
VALVE GP-PURGE	573
VALVE GP-RELIEF	574
VALVE GP-SHUTTLE	582
VALVE GP-SOLENOID	583
IMPLEMENTS	585
CIRCLE GP	585
DRAWBAR GP	591
PLATE GP-PUSH	593
WORK TOOLS	594
BAR GP-LINK	594
BIT GP-END	594
BLADE & TIP AR-POWER	594
BLADE AR	595
BLADE GP	596
BRACKET GP-BLADE	600
BRACKET GP-SCARIFIER	601
EDGE GP-CUTTING	602
EXTENSION GP-BLADE	606
LIFT GP-BLADE	609
MOUNTING GP-RIPPER	611
RIPPER AR	612
RIPPER GP	613
SCARIFIER AR	615
SCARIFIER GP	616
TOOTH GP-RIPPER	620
TOOTH GP-SCARIFIER	621
OPERATOR STATION	622
ACCESSORY GP-CAB	622
ADJUSTER GP-SEAT	624
AIR CONDITIONER & HEATER GP	628
AIR CONDITIONER AR	632
AIR CONDITIONER GP	633
ARMREST GP	634
CAB AR	636
CAB GP	638
CANOPY AR	639
COMPRESSOR GP-REFRIGERANT	641
CONDENSER & MTG GP-REFRIGERANT	643
CONSOLE GP-OPERATOR	644
CONTROL GP-CLUTCH	647
CONTROL GP-STEERING	649
CONTROL GP-TRANSMISSION	650
DOOR GP-CAB	652
DUCT & CONTROL GP	659
DUCT GP	660
FAN GP-CIRCULATING	661
FILTER GP-CAB AIR	666

TABLE OF CONTENTS

Name	Page	Name	Page
GUARD GP-VANDALISM	667		
HEATER & MTG GP-CAB	668		
HEATER AR-CAB	669		
HEATER GP-CAB	670		
HORN GP-ELECTRIC	674		
HOUSING GP-SEAT SUSPENSION	675		
INDICATOR GP-LEVEL	678		
INSTALLATION AR-RADIO	679		
INSTALLATION GP-RADIO	680		
INSULATION GP-WEATHER	683		
LINER GP-CAB	685		
LINES GP-AIR CONDITIONER	692		
LINES GP-HEATER	694		
LOUVER GP-CAB	696		
MIRROR GP-REAR VIEW	697		
MODULE GP-QUAD GAUGE	702		
MODULE GP-SPEEDOMETER & TACH	703		
MOUNTING GP-CAB	704		
MOUNTING GP-ROPS	705		
PAN GP-BACKREST	707		
PANEL GP-CAB	708		
PANEL GP-INSTRUMENT	709		
RECLINER GP-SEAT	714		
ROPS AR	715		
ROPS AR-ENCLOSED	716		
ROPS GP	717		
ROPS GP-ENCLOSED	719		
SCREEN GP-SUN	720		
SEAT BELT GP	721		
SEAT GP	723		
SEAT GP-STATIC	733		
SEAT GP-SUSPENSION	739		
SUPPORT GP-SEAT	741		
SUSPENSION GP-SEAT	743		
VALVE GP-AIR CONTROL	745		
WASHER GP-WINDOW	746		
WINDOW GP-CAB	751		
WINDOW GP-VENT	759		
WIPER AR-WINDOW	760		
WIPER GP-WINDOW	762		
SERVICE EQUIPMENT AND SUPPLIES	769		
BOX GP-TOOL	769		
FILM GP	770		
GREASE GUN GP	771		
PLATE & FILM GP	772		
TOOL GP-HAND	773		
PART NUMBER INDEX	B1		

GENERAL INFORMATION

1. MACHINE IDENTIFICATION

Caterpillar machines are identified by Product Identification Numbers (PIN). Some components included in a machine may be identified by Serial Numbers (S/N). Typical components that will be serialized include engines, transmissions, bulldozers, and rippers. The machine and engine are further identified by arrangement numbers and in some cases modification numbers. These numbers are shown on the product identification plate(s) and on the master plate in the operator's compartment.

Caterpillar dealers need all of these numbers to determine accurate parts identification.

SIS *New Feature*

Effective First Quarter 2001 the Caterpillar Product Identification Number (PIN) changed from 8 to 17 characters. In an effort to provide uniform equipment identification, Caterpillar and other construction equipment manufacturers are moving to comply with the latest version of the product identification numbering standard. Non-road machine PINs are defined by ISO 10261. The new PIN format will apply to all Caterpillar machines and generator sets. The PIN plates and frame marking will display the 17 character PIN. The new format will look like the following:

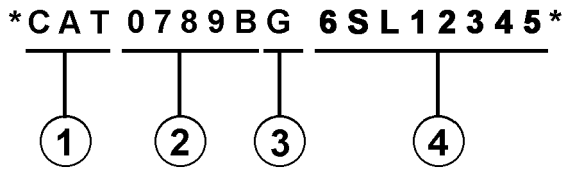

Where:

1. Caterpillar's World Manufacturing Code (characters 1-3)

2. Machine Descriptor (characters 4-8)

3. Check Character (character 9)

4. Machine Indicator Section (MIS) or Product Sequence Number (characters 10-17). These were previously referred to as the Serial Number.

Machines and generator sets produced before First Quarter 2001 will maintain their 8 character PIN format.

Components such as engines, transmissions, axles, etc. and work tools will continue to use an 8 character Serial Number (S/N).

2. ORDERING PARTS

WARNING

When replacement parts are required for this product Caterpillar recommends using Caterpillar replacement parts or parts with equivalent specifications including, but not limited to, physical dimensions, type, strength and material.

Failure to heed this warning can lead to premature failures, product damage, personal injury or death.

Quality Caterpillar replacement parts are available from Caterpillar dealers throughout the world. Their parts inventories are up to date and include all parts normally required to protect your investment in Caterpillar machines. Dealers may offer repair kits or remanufactured parts to allow selection of the most effective repair alternative for a particular situation. When ordering parts, your order should specify the quantity, part number, part name, and the serial number/product identification number of the machine for which the parts are needed.

3. PARTS MANUAL ORGANIZATION

Product information in this manual is presented as "information elements" that represent all of the components for the specific model. Engine Arrangement and Seat Group are examples of information elements. The information elements are organized alphabetically by part name and secondarily by part number within each major section of the manual.

4. TABLE OF CONTENTS

A table of contents (TOC) is found at the beginning of the manual. The TOC lists each section of the manual with a complete list of all information elements organized as they appear in the manual. Page numbers are provided for quick reference to detailed parts identification illustrations and serviceable consist lists.

5. MAINTENANCE PARTS INDEX

The Maintenance Parts Index, located near the beginning of the manual, references most frequently used maintenance part numbers, providing description, quantity, usage and page number. This information is organized alphabetically by part description.

6. INDEX

The index located near the front of the manual is an alphabetical listing of all information elements included in the manual. Page numbers are provided for quick reference to detailed parts identification illustrations and serviceable consist lists.

7. PART NUMBER INDEX

A numerical index listing all part numbers and the corresponding page number(s) appears at the back of the manual.

8. CAPTIONS

Captions located at the beginning of each information element identify the part number and part name along with additional descriptive information. PIN and S/N information found in each caption should be used to select correct information for a specific machine. Field replacement options, identification of optional attachment components, and where used ("part of") information is also provided.

The first line of a caption is shown in larger type font to indicate the beginning of an information element. Captions for additional pages that may be required to illustrate an information element will be shown in standard type font and will include the term *(contd.)* .

9. NON-SERVICED PARTS

In some instances it is necessary to display non-serviced parts that are a link to a lower level serviceable consist lists. These non-serviced part numbers are shown in *italic* type indicating that they are not available.

10. PARTS LIST REFERENCE NUMBERS

Numbers shown in the Ref No column correspond to numbers used in the associated graphic(s). An alphabetic suffix may be added to a reference number to identify lower level consist items. Numbers shown in the Graphic Ref column refer to the graphic number identifier displayed in the lower left corner of each illustration. The Graphic Ref number may be used in combination with the item Ref No to determine the correct part number. There may be intentional omission of a Ref No in a consist list as information is updated to reflect the latest serviceable part numbers.

11. INDENTED PART NAMES

When a part name is indented in a parts list, it is part of (included in) the group or assembly under which it is indented.

12. ILLUSTRATION REFERENCE LETTERS

When necessary, illustrations contain reference letters (A, B, C etc.) that are intended to track lines and harnesses from one point to another. They are also used to show where to reconnect illustrations that have been separated.

13. ABBREVIATIONS AND SYMBOLS

O.D. – Outside Diameter
I.D. – Inside Diameter
A – Not Part Of This Group
B – Use As Required
C – Change From Previous Type
D – Order By The Meter
E – Order By The Centimeter
F – Not Shown
G – Order By The Inch
I – Refer To Hydraulic Information System
M – Metric Part
R – Remfg Part May Be Available
Y – Separate Illustration
Z – Not Serviced Separately

SIS *New Feature*

14. DESCRIPTION OF TYPE CHANGES

Type - A type is defined as any configuration change that requires an additional Information Element for an Arrangement, Group, or Assembly. If serial number breaks for types are not available, a type # (Type 1, Type 2, etc.) will be displayed in the caption. These "type" changes are identified with a "C" note (change from previous type) in the Parts List. Only the "types" that apply to this Parts Manual will be included. Additional types may exist causing "C" notes to appear on an Information Element when no other types are shown.

15.<END>

This symbol indicates the end of an information element.

NOTE:

Continuing improvement and advancement of product design may cause changes to your machine which may not be included in this publication. Whenever a question arises regarding your caterpillar product or this publication, please consult your caterpillar dealer for the latest available information.

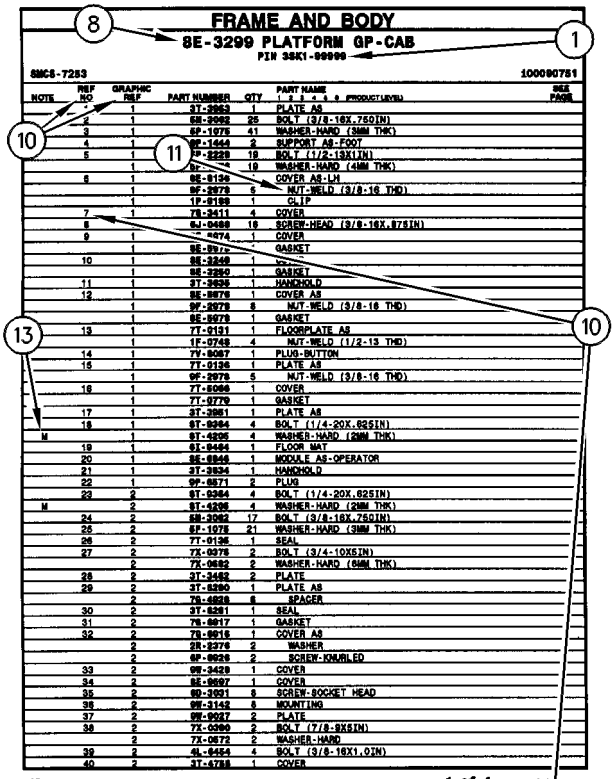
FRAME AND BODY
8E-3299 PLATFORM GP-CAB
PIN 3SK1-99999
SMCS-7253
100090751
NOTE REF NO GRAPHIC REF PART NUMBER QTY PART NAME SEE PAGE
1 1 3T-2953 1 PLATE AS
2 1 6E-2992 25 BOLT (3/8-16X.750IN)
3 1 6P-1076 41 WASHER-HARD (38MM THK)
4 1 9P-1444 2 SUPPORT AS-FOOT
5 1 7P-2229 19 BOLT (1/2-13X1IN)
1 19 WASHER-HARD (44MM THK)
6 1 8E-6136 COVER AS-LH
1 9F-2978 5 NUT-WELD (3/8-16 THD)
1 1P-0188 1 CLIP
7 1 7S-2411 4 COVER
8 9J-0498 18 SCREW-HEAD (3/8-16X.875IN)
9 1 1 COVER
1 GASKET
1 10
1 GASKET
11 1 3T-2636 1 HANDHOLD
12 1 8E-9979 1 COVER AS
1 9F-2978 8 NUT-WELD (3/8-16 THD)
1 GASKET
13 1 7T-0131 1 FLOORPLATE AS
1 1F-0748 4 NUT-WELD (1/2-13 THD)
14 1 7V-8067 1 PLUG-BUTTON
15 1 7T-0136 1 PLATE AS
1 9F-2978 5 NUT-WELD (3/8-16 THD)
16 1 7T-8066 1 COVER
1 7T-9779 1 GASKET
17 1 3T-3951 1 PLATE AS
18 1 6T-8264 4 BOLT (1/4-20X.625IN)
M 1 9T-4205 4 WASHER-HARD (26MM THK)
19 1 6L-8494 1 FLOOR MAT
20 1 8E-8846 1 MODULE AS-OPERATOR
21 1 3T-3934 1 HANDHOLD
22 1 9P-8671 2 PLUG
23 2 6T-8264 4 BOLT (1/4-20X.625IN)
M 2 9T-4205 4 WASHER-HARD (26MM THK)
24 2 6B-3062 17 BOLT (3/8-16X.750IN)
25 2 8P-1076 21 WASHER-HARD (38MM THK)
26 2 7T-0135 1 SEAL
27 2 7X-0975 2 BOLT (3/4-10X5IN)
2 7X-0682 2 WASHER-HARD (64MM THK)
28 2 3T-3452 2 PLATE
29 2 3T-8290 1 PLATE AS
2 7S-4828 8 SPACER
30 2 3T-8281 1 SEAL
31 2 7S-8817 1 GASKET
32 2 7S-9615 1 COVER AS
2 2R-3276 2 WASHER
2 6P-9926 2 SCREW-KNURLED
33 2 9W-3429 1 COVER
34 2 8E-9597 1 COVER
35 2 6D-3931 8 SCREW-SOCKET HEAD
36 2 9W-3142 8 MOUNTING
37 2 9W-9027 2 PLATE
38 2 7X-0990 2 BOLT (7/8-9X5IN)
2 7X-0672 2 WASHER-HARD
39 2 4L-8454 4 BOLT (3/8-16X1.0IN)
40 2 3T-4788 1 COVER
12 FRAME AND BODY
1 of 4
SELP4570-01

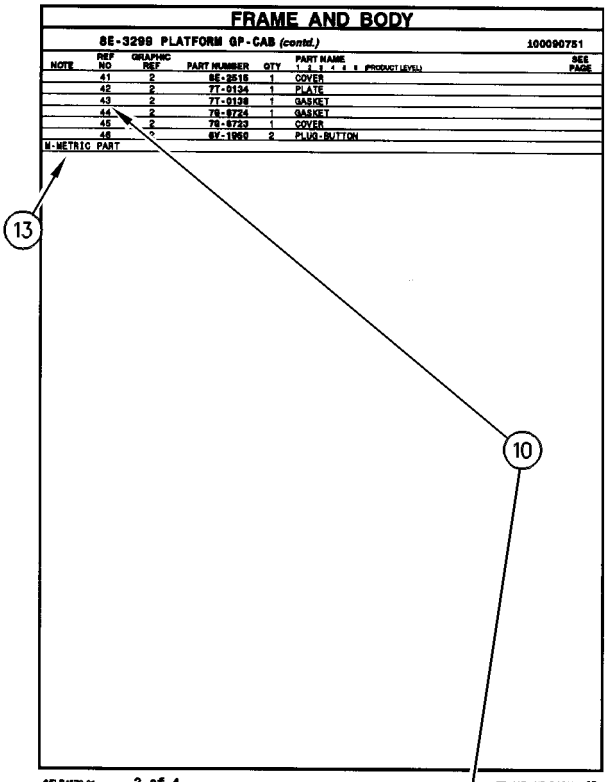
FRAME AND BODY
8E-3299 PLATFORM GP-CAB (contd.)
100090751
NOTE REF NO GRAPHIC REF PART NUMBER QTY PART NAME SEE PAGE
41 2 8E-2516 1 COVER
42 2 7T-0134 1 PLATE
43 2 7T-0138 1 GASKET
44 2 7S-9724 1 GASKET
45 2 7S-8723 1 COVER
46 2 6V-1950 2 PLUG-BUTTON
M-METRIC PART
SELP4570-01
2 of 4
FRAME AND BODY 13

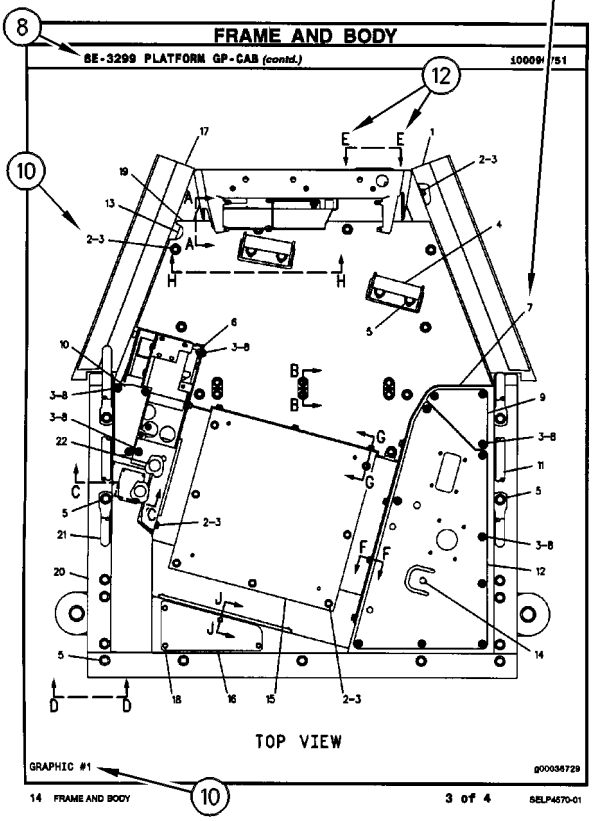
FRAME AND BODY
8E-3299 PLATFORM GP-CAB (contd.)
100090751
TOP VIEW
GRAPHIC #1
g00036729
14 FRAME AND BODY
3 of 4
SELP4570-01

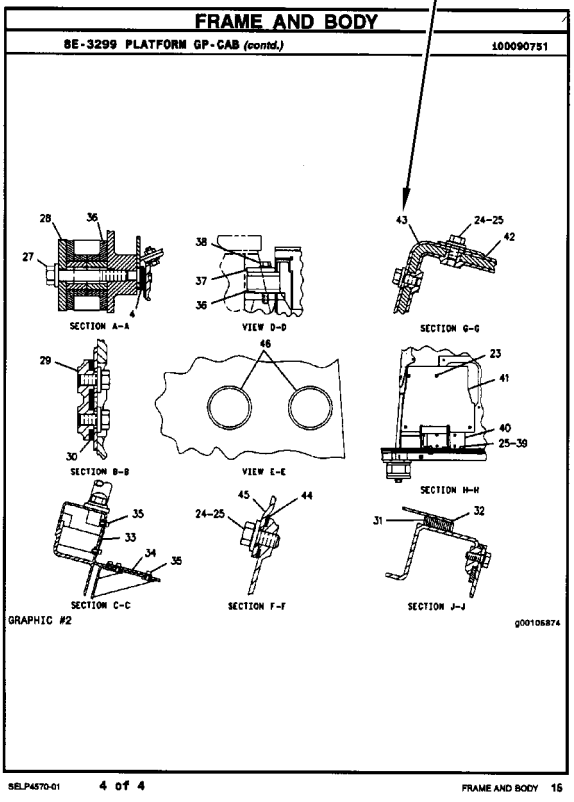
FRAME AND BODY
8E-3299 PLATFORM GP-CAB (contd.)
100090751
SECTION A-A
VIEW D-D
SECTION G-G
SECTION B-B
VIEW E-E
SECTION H-H
SECTION C-C
SECTION F-F
SECTION J-J
GRAPHIC #2
g00105874
SELP4570-01
4 of 4
FRAME AND BODY 15

REPAIR ALTERNATIVES

REMANUFACTURED COMPONENTS

As an option when making repairs consider Caterpillar Remanufactured Components. Components that are available through the Caterpillar Remanufactured Program are identified three ways in the parts book:

- with the letter R in the note field of the parts list
- with an R* at the beginning of the first line of the caption
- with an *R at the end of the first line of the caption

Typical components included in the Remanufacturing Program include:

ALTERNATORS
CONNECTING RODS
CRANKSHAFTS - UNDERSIZE
CRANKSHAFTS - UPGRADE TO NEW
CYLINDER HEADS
ELECTRONIC CONTROL MODULES (ECM)
ELECTRONIC SENSORS
FUEL INJECTORS
FUEL NOZZLES
FUEL PUMPS
GOVERNORS
OIL PUMPS
PISTONS
SHORT BLOCKS
STARTERS
TURBOCHARGERS - COMPLETE
TURBOCHARGER CARTRIDGES
WATER PUMPS

Caterpillar Remanufactured engines for many engine arrangements are also available.

SUPPLEMENTAL COOLANT ADDITIVES

CUSTOMER BENEFITS:

Protects against cavitation, foam, erosion, corrosion, and scale buildup in cooling systems.

- Provides measured coolant conditioner.

DESCRIPTION:

Additives deplete from the coolant with normal operation. For this reason, Supplemental Coolant Additives (SCA) must be added to all heavy duty coolants at regular intervals. In addition, when not using a fully formulated, pre-charged antifreeze, like Caterpillar's DEAC, an initial charge of SCA must be added to the cooling system. The amount of SCA added to the system is dependent on the capacity of the system.

The SCA for initial fill is provided as a liquid. SCA's for maintenance intervals are available in liquid form and as a spin-on element. (No Spin-on available for 3600 Family of Engines)

NOTE:

The amount of SCA added at initial fill is not the same as the amount added at maintenance intervals.

The coolant additive elements can be used with any ethylene or propylene glycol type antifreeze which meets ASTM D4985 or ASTM D5345 Specifications.

NOTE:

For use with standard heavy duty coolant only, not for use with Extended Life Coolant.

PARTS NEEDED:

Cooling System Capacity		Liquid SCA at Initial Fill	Liquid SCA at Maintenance*	Spin-on SCA Maintenance Element*
Liters	Gallons			
22-30	(6-8)	3P-2044 (1)	6V-3542 (1)	111-2370 (1)
30-38	(8-10)	3P-2044 (1) 6V-3542 (1)	111-2372 (1)	111-2369 (1)
38-49	(10-13)	3P-2044 (1) 8T-1589 (1)	111-2372 (1)	111-2369 (1)
49-64	(13-17)	3P-2044 (2)	8T-1589 (1)	9N-3368 (1)
64-83	(17-22)	3P-2044 (2) 8T-1589 (1)	111-2372 (1) 6V-3542 (1)	111-2371 (1)
83-114	(22-30)	3P-2044 (3) 8T-1589 (1)	3P-2044 (1)	9N-3718 (1)
114-163	(30-43)	3P-2044 (5)	3P-2044 (1) 6V-3542 (1)	111-2371 (2)
163-242	(43-64)	3P-2044 (8)	3P-2044 (2)	9N-3718 (2)

** Normal maintenance period is 250 hrs. See your Operation and Maintenance Manual for complete coolant maintenance instructions.*

( ) Indicates quantity required.

MAINTENANCE PARTS

DESCRIPTION	PART NUMBER	QTY	WHERE USED	PAGE
AIR INLET AND EXHAUST SYSTEM				
FILTER ELEMENT AS-AIR (SECONDARY)	245-6376	1	AIR CLEANER GP	78
FILTER ELEMENT-AIR (PRIMARY)	245-6375	1	AIR CLEANER GP	78
BASIC ENGINE				
CAP AS-ENGINE OIL FILLER	241-5645	1	COVER GP-FRONT HOUSING	15
SEAL-INTEGRAL	135-9819	1	AIR COMPRESSOR GP	7
SEAL-VALVE COVER	272-0388	1	COVER GP-VALVE MECHANISM	16
V-BELT SET (INCLUDES 3-BELTS)	319-6293	1	DRIVE GP-FAN	31
BRAKING SYSTEM				
ELEMENT-HEATING (AIR DRYER)	203-2423	1	AIR DRYER GP	343
FUSE (10-AMPERE)	9W-1442	1	AIR DRYER GP	344
COOLING SYSTEM				
CAP AS-COOLANT TANK	251-3227	1	TANK GP-WATER	75
GASKET (TEMPERATURE REGULATOR HOUSING)	222-5915	1	LINES GP-WATER	67
REGULATOR-WATER TEMPERATURE (97-DEG C)	115-4223	2	LINES GP-WATER	67
ELECTRICAL AND STARTING SYSTEM				
BATTERY (12-VOLT, MAINTENANCE FREE)	153-5700	2	BATTERY & WIRING GP	112
	153-5710	2	BATTERY & WIRING GP	110
		2	BATTERY & WIRING GP	113
BATTERY (12-VOLT, MAINTENANCE FREE, WET)	3T-5760	2	BATTERY & WIRING GP	117
BELT-DRIVE	9X-8139	1	LAMP GP-WARNING BEACON	142
CAP AS-FILLER (BATTERY)	123-1373	6	BATTERY & WIRING GP	117
CIRCUIT BREAKER AS (105-AMPERE)	171-2212	2	WIRING GP-AUXILIARY	198
FLASHER AS (24-VOLT)	108-0358	1	LIGHTING GP-ROADING	153
		1	SWITCH GP-LIGHT	190
FUSE (10-AMPERE)	9W-1442	1	CONVERTER GP-ELECTRICAL	124
		1	LIGHTING GP-FLOOD	147
		1	LIGHTING GP-FLOOD	150
		1	LIGHTING GP-FLOOD	152
		1	LIGHTING GP-ROADING	153
		1	LIGHTING GP-WARNING	157
		1	LIGHTING GP-WARNING BEACON	158
		1	SWITCH GP-LIGHT	190
		1	WIRING GP-POWER RECEPTACLE	219
		9	WIRING GP-STEERING CONSOLE	226
FUSE (10-AMPERE) (POWER CONVERTER)	9W-1442	1	CONVERTER GP-ELECTRICAL	123
FUSE (15-AMPERE)	9W-1441	1	CONVERTER GP-ELECTRICAL	125
		1	LIGHTING GP-FLOOD	150
		1	LIGHTING GP-ROADING	153
		1	SWITCH GP-LIGHT	190
		1	WIRING GP-CAB	203
		2	WIRING GP-STEERING CONSOLE	226
KEY (BATTERY DISCONNECT)	8H-5306	1	SWITCH GP-DISCONNECT	189
		1	WIRING GP-AUXILIARY	198

MAINTENANCE PARTS

DESCRIPTION	PART NUMBER	QTY	WHERE USED	PAGE
LAMP (24-VOLT)	3E-8825	1	LIGHTING GP-FLOOD	147
		2	LIGHTING GP-FLOOD	150
		1	LIGHTING GP-FLOOD	152
		1	LIGHTING GP-WARNING	157
		1	LIGHTING GP-WARNING BEACON	158
		1	SWITCH GP-LIGHT	190
		1	WIRING GP-BLADE CUSHION	201
		1	WIRING GP-CONSOLE	206
		1	WIRING GP-STEERING CONSOLE	226
LAMP (24-VOLT) (DOME)	7N-9943	1	LAMP GP-DOME	134
LAMP (24-VOLT) (HEADLIGHTS, TAIL LIGHTS)	3E-8825	2	LIGHTING GP-ROADING	153
LAMP (24-VOLT, 21-WATT)	9X-4493	1	LAMP GP	133
LAMP (24-VOLT, 3-WATT)	115-1748	1	WIRING GP-GRADE CONTROL	215
LAMP (24-VOLT, 5.6-WATT)	7N-5876	1	WIRING GP-CONSOLE	206
LAMP (24-VOLT, 70-WATT)	9X-7849	1	LAMP GP-WARNING BEACON	142
LAMP GP-SIGNAL (24-VOLT, TURN) (LH)	199-3368	1	LIGHTING GP-SIGNAL	156
LAMP GP-SIGNAL (24-VOLT, TURN) (RH)	199-3368	1	LIGHTING GP-SIGNAL	156
LAMP-HALOGEN (24-VOLT, 65-WATT)	9X-3463	1	LAMP GP-FLOOD	135
		1	LAMP GP-FLOOD	136
		1	LAMP GP-FLOOD	137
		1	LAMP GP-FLOOD	138
RELAY (24-VOLT)	111-4871	2	WIRING GP-CHASSIS	216
ENGINE ARRANGEMENT				
BELT-SERPENTINE	313-4537	1	INSTALLATION AR-ENGINE	5
FRAME AND BODY				
PLUG-MAGNETIC (DRAIN)	8M-3837	1	CASE & FRAME GP	319
FUEL SYSTEM				
CAP AS-FILLER (FUEL TANK)	7X-7700	1	TANK GP-FUEL	101
FILTER AS-WATER SEP & FUEL (PRIMARY)	326-1644	1	FILTER GP-WATER SEP & FUEL	90
FILTER-FUEL (ADVANCED EFFICIENCY)	1R-0762	1	LINES GP-FUEL	93
STRAINER-FUEL	9P-7121	1	TANK GP-FUEL	101
HYDRAULIC SYSTEM				
CAP-FILLER (HYDRAULIC TANK)	7H-1447	1	TANK & FILTER GP-HYDRAULIC	439
FILTER ELEMENT AS-OIL (ADVANCED EFFICIENCY)	1R-0774	1	TANK & FILTER GP-HYDRAULIC	439
STRAINER (HYDRAULIC)	9J-3047	1	TANK & FILTER GP-HYDRAULIC	439
LUBRICATION SYSTEM				
BREATHER AS (CRANKCASE)	164-0210	1	BREATHER GP	52
FILTER AS-ENGINE OIL (ADVANCED EFFICIENCY)	1R-1807	1	FILTER GP-ENGINE OIL	53

MAINTENANCE PARTS

DESCRIPTION	PART NUMBER	QTY	WHERE USED	PAGE
OPERATOR STATION				
BELT-SERPENTINE	291-4051	1	COMPRESSOR GP-REFRIGERANT	642
BLADE AS-WIPER (255-MM)	6V-8255	2	WINDOW GP-VENT	759
BLADE AS-WIPER (300-MM) (FRONT, LOWER)	123-4355	2	WIPER GP-WINDOW	763
BLADE AS-WIPER (350-MM) (REAR)	6V-5849	1	WIPER GP-WINDOW	765
BLADE AS-WIPER (450-MM)	6V-5853	1	WIPER GP-WINDOW	762
		1	WIPER GP-WINDOW	766
BLADE AS-WIPER (450-MM) (FRONT)	6V-5853	1	WIPER GP-WINDOW	763
FILTER ELEMENT AS-CAB AIR	231-4487	2	FILTER GP-CAB AIR	666
FILTER ELEMENT AS-CAB AIR (CAB)	231-4486	1	FILTER GP-CAB AIR	666
	232-1732	1	FILTER GP-CAB AIR	666
	7T-7358	1	FILTER GP-CAB AIR	666
FUSE (10-AMPERE)	9W-1442	1	FAN GP-CIRCULATING	664
		1	FAN GP-CIRCULATING	665
		1	MIRROR GP-REAR VIEW	700
		1	WIPER GP-WINDOW	765
		1	WIPER GP-WINDOW	766
FUSE (15-AMPERE) (HEATER)	9W-1441	1	HEATER & MTG GP-CAB	668
INDICATOR (ENGINE RPM)	288-5736	1	MODULE GP-SPEEDOMETER & TACH	703
INDICATOR (SPEED)	287-3259	1	MODULE GP-SPEEDOMETER & TACH	703
KEY	113-5805	1	HOUSING GP-SEAT SUSPENSION	675
LAMP (12-VOLT)	8M-6176	2	MODULE GP-QUAD GAUGE	702
LAMP (24-VOLT)	107-1983	4	PANEL GP-INSTRUMENT	709
		4	PANEL GP-INSTRUMENT	711
		4	PANEL GP-INSTRUMENT	713
	3E-8825	1	FAN GP-CIRCULATING	664
		1	FAN GP-CIRCULATING	665
		1	MIRROR GP-REAR VIEW	700
	8D-1429	1	AIR CONDITIONER & HEATER GP	628
		1	HEATER GP-CAB	670
LAMP (24-VOLT, 3-WATT)	115-1748	10	PANEL GP-INSTRUMENT	709
		11	PANEL GP-INSTRUMENT	711
		10	PANEL GP-INSTRUMENT	713
LAMP-LED (24-VOLT, WHITE)	163-6508	1	PANEL GP-INSTRUMENT	713
RECEIVER-REFRIGERANT DRYER	257-3227	1	LINES GP-AIR CONDITIONER	692
SEAT BELT GP	8Y-4030	1	SEAT GP	727
SEAT BELT GP (RETRACTABLE)	222-0345	1	SEAT GP	730
POWER TRAIN				
BREATHER (POWER TRAIN OIL FILLER)	9G-5127	1	FILLER GP-POWER TRAIN OIL	258
BREATHER (TANDEM)	4H-6112	1	TANDEM & COVER GP	272
FILTER ELEMENT-OIL (ULTRA HIGH EFFICIENCY) (TRANSMISSION)	1R-1809	1	FILTER GP-OIL	259
		1	LINES GP-TRANSMISSION OIL	262
FILTER-MAGNETIC (TRANSMISSION)	8S-9129	1	CASE & PARTS GP-PLANETARY	231
		1	SCREEN GP-MAGNETIC	269
LAMP (24-VOLT)	3E-8825	1	AUTOSHIFT AR	229
SCREEN-SUCTION (TRANSMISSION)	8S-9130	1	CASE & PARTS GP-PLANETARY	231
		1	SCREEN GP-MAGNETIC	269

INDEX

Name	Page
A	
ACCESSORY GP-CAB–HIGH PROFILE	623
ACCESSORY GP-CAB–LOW PROFILE	622
ACCUMULATOR & MTG GP-HYDRAULIC–BLADE CUSHION	362
ACCUMULATOR AR-BLADE CUSHION	363
ACCUMULATOR GP–UNCHARGED	363
ACCUMULATOR GP-HYDRAULIC–CHARGED	364
ACCUMULATOR-REFRIGERANT	692
ADAPTER GP-OIL LINE–ENGINE	51
ADJUSTER GP-SEAT	624 626 627
AFTERCOOLER GP-AIR	77
AIR CLEANER GP	78 79
AIR COMPRESSOR GP	7 9
AIR CONDITIONER & HEATER GP	628
AIR CONDITIONER AR	632
AIR CONDITIONER GP	633
AIR DRYER GP	343 344
ALARM GP	102
ALARM GP (BACKUP)	145
ALTERNATOR AR-CHARGING	103
ALTERNATOR GP-CHARGING	104 106 108 109
APPLICATION GP-POWER TRAIN	229
ARMREST GP–LH	635
ARMREST GP–RH	634
ASHTRAY	685
AUTOSHIFT AR	229
AXLE GP-FRONT	311
B	
BAR GP-LINK	594
BASE GP-OIL FILTER	230
BATTERY & WIRING GP	110 116
BATTERY & WIRING GP–HEAVY DUTY	112 113 115
BATTERY (12-VOLT, MAINTENANCE FREE)	110 112 113
BATTERY (12-VOLT, MAINTENANCE FREE, WET)	117
BEARING GP-MAIN	18
BELT-DRIVE	142
BELT-SERPENTINE	5 642
BIT GP-END	594
BLADE & TIP AR-POWER	594
BLADE AR	595
BLADE AS-WIPER (255-MM)	759
BLADE AS-WIPER (300-MM) (FRONT, LOWER)	763
BLADE AS-WIPER (350-MM) (REAR)	765
BLADE AS-WIPER (450-MM)	762 766
BLADE AS-WIPER (450-MM) (FRONT)	763
BLADE GP	596 597 598 599
BOSS GP-FRAME	314
BOX GP-BATTERY	316
BOX GP-TOOL	769
BRACKET GP-BLADE	600
BRACKET GP-SCARIFIER	601
BRAKE GP-PARKING	345
BRAKE GP-SERVICE	347
BREATHER (POWER TRAIN OIL FILLER)	258
BREATHER (TANDEM)	272
BREATHER AS (CRANKCASE)	52
BREATHER GP	52
BUMPER GP-REAR	317 318
C	
CAB AR–NON ROPS/FOPS	637
CAB AR–NON-ROPS	636
CAB GP–HIGH PROFILE	638
CAMSHAFT GP	11
CANOPY AR	639
CAP AS-COOLANT TANK	75
CAP AS-ENGINE OIL FILLER	15
CAP AS-FILLER (BATTERY)	117
CAP AS-FILLER (FUEL TANK)	101
CAP-FILLER (HYDRAULIC TANK)	439
CARRIER GP-SEAL	12
CASE & FRAME GP	319
CASE & PARTS GP-PLANETARY	231
CHAIN GP	236
CHAIN GP-DRIVE	236
CIRCLE GP	585 586 588 589
CIRCUIT BREAKER AS (105-AMPERE)	198
CLIP	647
CLUTCH GP-TRANSMISSION–1ST & 3RD	237
CLUTCH GP-TRANSMISSION–FORWARD	242

INDEX

Name	Page
CLUTCH GP-TRANSMISSION–HI & LO	240
CLUTCH GP-TRANSMISSION–REVERSE, SECOND	244
COMPRESSOR GP-REFRIGERANT	641 642
CONDENSER & MTG GP-REFRIGERANT	643
CONSOLE GP-OPERATOR	644
CONTROL & MTG GP-ENGINE ELEK	119
CONTROL AR-HYDRAULIC–DOZER, PLOW, RIPPER	365
CONTROL AR-HYDRAULIC–RIPPER	365 366
CONTROL GP-CLUTCH	647
CONTROL GP-DIFFERENTIAL LOCK	246
CONTROL GP-GOVERNOR	88
CONTROL GP-PARKING BRAKE	349
CONTROL GP-POWER TRAIN	120
CONTROL GP-SERVICE BRAKE	351
CONTROL GP-STEERING	649
CONTROL GP-TRANSMISSION	650
CONTROL GP-TRANSMISSION HYD	248
CONTROL GP-UNPROGRAMMED	121
CONTROL GP-UNPROGRAMMED (POWER TRAIN)	120 229
CONVERTER AR-ELECTRICAL–HIGH PROFILE	122
CONVERTER AR-ELECTRICAL–LOW PROFILE	122
CONVERTER GP-ELECTRICAL	123
CONVERTER GP-ELECTRICAL (24-VOLT TO 12-VOLT)	123 124 681
CONVERTER GP-ELECTRICAL–RADIO	124 125
COOLER GP-ENGINE OIL	63
COOLER GP-TRANSMISSION OIL	249
COOLING AR	64
CORE AS-CONDENSER (REFRIGERANT)	643
CORE AS-ENGINE OIL COOLER	63
CORE AS-HYDRAULIC OIL COOLER	249
CORE AS-RADIATOR	74
COUPLING GP-TORSIONAL	250
COVER GP-AIR INLET	81
COVER GP-CYLINDER BLOCK	13
COVER GP-FRONT HOUSING	14 15
COVER GP-VALVE MECHANISM	16
CRANKSHAFT GP	18
CYLINDER & MTG GP-ARTICULATION	367
CYLINDER & MTG GP-BLADE LIFT	368
CYLINDER & MTG GP-BLADE TIP	369
CYLINDER & MTG GP-CENTERSHIFT	370
CYLINDER & MTG GP-SCARIFIER	371
CYLINDER & MTG GP-SIDESHIFT	372
CYLINDER & MTG GP-STEERING	374
CYLINDER & MTG GP-WHEEL LEAN	375
CYLINDER BLOCK GP	20 21 22
CYLINDER GP-ARTICULATION	376 377
CYLINDER GP-CENTERSHIFT	379
CYLINDER GP-HYDRAULIC	381
CYLINDER GP-LIFT–BLADE	382
CYLINDER GP-RIPPER	383
CYLINDER GP-SCARIFIER	384
CYLINDER GP-SIDESHIFT	385
CYLINDER GP-STEERING–LH	386
CYLINDER GP-STEERING–RH	387
CYLINDER GP-WHEEL LEAN	388
CYLINDER HEAD AS	24
CYLINDER HEAD GP	25 26 27

D

DAMPER & PULLEY GP	28
DETENT GP-CONTROL VALVE–PLOW, BULLDOZER LIFT	389
DIFFERENTIAL & BEVEL GEAR GP	251
DIFFERENTIAL AR	253
DIFFERENTIAL GP	254
DOOR GP (AIR VENTED)	685 690 718
DOOR GP-CAB–HIGH PROFILE	657
DOOR GP-CAB–HIGH PROFILE–LH	655
DOOR GP-CAB–HIGH PROFILE–RH	652
DRAWBAR GP	591
DRIVE GP-ACCESSORY	29
DRIVE GP-CIRCLE	390
DRIVE GP-FAN	30 31
DRYER & LINES GP-AIR	355 356
DUCT & CONTROL GP–A/C, HEATER DISTRIBUTOR	659
DUCT GP–AIR CONDITIONER, HEATER	660

E

EDGE GP-CUTTING	602 603 604 605
ELBOW GP-AIR INLET	82

INDEX

Name	Page
ELECTRONICS GP-COMMUNICATION–PRODUCT LINK 300	126
ELECTRONICS GP-IMPLEMENT	126
ELECTRONICS GP-POWER TRAIN	126
ELEMENT-HEATING (AIR DRYER)	343
ENCLOSURE GP-ENGINE	320
ENGINE AR-COMPLETE	3
ENGINE AR-CORE	4
EXTENSION GP-BACKREST	730
EXTENSION GP-BLADE–LH	608
EXTENSION GP-BLADE–RH	606

F

Name	Page
FAN GP–RADIATOR	65
FAN GP-CIRCULATING	661
FAN GP-CIRCULATING–DEFROSTER, REAR	665
FAN GP-CIRCULATING–FRONT	662
FAN GP-CIRCULATING–FRONT DEFROSTER	664
FASTENER GP-CYLINDER HEAD	27, 32
FASTENER GP-ENGINE	33
FASTENER GP-FRONT HOUSING	34
FILLER GP-POWER TRAIN OIL	258
FILM (DRAIN, ENGINE COOLANT)	772
FILM (SUNSHADE-CATERPILLAR)	708
FILM GP	770
FILM-CONTROL (AIR CONDITIONER, HEATER)	628
FILM-CONTROL (FAN SPEED, TEMPERATURE)	670
FILM-COVER (BLACK BACKGROUND)	650
FILM-FACE (HEADLIGHTS HIGH, LOW BEAM)	153, 190
FILM-FACE (TURN SIGNAL, HAZARD)	153, 190
FILM-FUSE (PANEL ACTION LAMPS)	203
FILM-IDENTIFICATION (AIR CONDITIONER)	628
FILM-IDENTIFICATION (CAT, LH)	770
FILM-IDENTIFICATION (CAT, RH)	770
FILM-IDENTIFICATION (FUSE BOX)	226
FILM-IDENTIFICATION (HEATER)	670
FILM-IDENTIFICATION (HYDRAULIC SYSTEM MALFUNCTION)	709
FILM-IDENTIFICATION (HYDRAULIC SYSTEM MALFUNCTION) (INSTRUMENT CLUSTER)	711
FILM-INFORMATION (BRAZIL)	772
FILM-INFORMATION (ENGINE, HIGH IDLE, HOLD)	650
FILM-INFORMATION (ENGINE, LOW IDLE, HOLD)	650
FILM-INSTRUCTION (BELT ROUTING)	632, 642
FILM-INSTRUCTION (DO NOT DRILL, WELD ROPS)	718
FILM-INSTRUCTION (SEAT ADJUSTMENT)	743
FILM-PANEL (LH)	709
FILM-PANEL (LH) (INSTRUMENT CLUSTER)	711
FILM-PANEL (RH)	709
FILM-PANEL (RH) (INSTRUMENT CLUSTER)	711
FILM-PANEL (SPEED CONTROL)	650
FILM-PANEL (TRANSMISSION, PARKING BRAKE)	650
FILM-WARNING (ACCUM, HIGH PRESS, READ OMM)	364
FILM-WARNING (CRUSH HAZARD, STAY BACK, INTL)	328
FILM-WARNING (HOT FLUID UNDER PRESS, INTL)	772
FILM-WARNING (NO STEP)	773
FILM-WARNING (NO WELD, NO DRILL, READ OMM)	716
FILM-WARNING (SEAT BELT, INTERNATIONAL)	773
FILTER AS-ENGINE OIL (ADVANCED EFFICIENCY)	53
FILTER AS-WATER SEP & FUEL (PRIMARY)	90
FILTER ELEMENT AS-AIR (SECONDARY)	78
FILTER ELEMENT AS-CAB AIR	666
FILTER ELEMENT AS-CAB AIR (CAB)	666
FILTER ELEMENT AS-OIL (ADVANCED EFFICIENCY)	439
FILTER ELEMENT-AIR (PRIMARY)	78
FILTER ELEMENT-OIL (ULTRA HIGH EFFICIENCY) (TRANSMISSION)	259, 262
FILTER GP-CAB AIR	666
FILTER GP-ENGINE OIL	53
FILTER GP-OIL–TRANSMISSION	259
FILTER GP-WATER SEP & FUEL	90
FILTER-FUEL (ADVANCED EFFICIENCY)	93
FILTER-MAGNETIC (TRANSMISSION)	231, 269
FINAL DRIVE GP	256
FLASHER AS (24-VOLT)	153, 190
FLOOR MAT	331, 333
FLOOR MAT (CAB)	683
FLYWHEEL GP	35
FRAME GP-FRONT	324
FUMES DISPOSAL GP	54
FUSE (10-AMPERE)	124, 147, 150, 152

INDEX

Name	Page
	153
	157
	158
	190
	219
	226
	344
	664
	665
	700
	765
	766
FUSE (10-AMPERE) (POWER CONVERTER)	123
FUSE (15-AMPERE)	125
	150
	153
	190
	203
	226
FUSE (15-AMPERE) (HEATER)	668

G

GASKET (TEMPERATURE REGULATOR HOUSING)	67
GAUGE AS-OIL LEVEL (DIPSTICK) (ENGINE)	55
GAUGE GP-AIR PRESSURE	709
	713
GAUGE GP-AIR PRESSURE (BRAKE)	711
GAUGE GP-FEELER	773
GAUGE GP-OIL LEVEL (DIPSTICK)	55
GAUGE GP-PRESSURE	773
GAUGE-SIGHT (HYDRAULIC)	439
GEAR GP-BEVEL & PINION	260
GEAR GP-FRONT	36
GENERAL AR	1
GRADE CONTROL AR	127
GREASE GUN GP	771
GROUND GP-ELECTRICAL	129
GUARD GP-BOTTOM	326
GUARD GP-CYLINDER	393
GUARD GP-DRIVE SHAFT	327
GUARD GP-FAN	66
GUARD GP-PLATFORM	331
	333
GUARD GP-PLATFORM–ACCUGRADE	328
GUARD GP-VANDALISM	667

H

HARNESS AS	216
HARNESS AS-CAB (FRONT)	203
HARNESS AS-CAB (REAR)	203
HARNESS AS-CAB (SWITCH PANEL)	203
HARNESS AS-CHASSIS	216
	220
HARNESS AS-CONSOLE	206
	226
HARNESS AS-CONTROL	709
HARNESS AS-CONTROL (PRODUCT LINK)	130
HARNESS AS-ENGINE (ELECTRONIC CONTROL MODULE)	208
HARNESS AS-ENGINE (FUEL INJECTION)	208
HARNESS AS-FRONT LIGHTING	147
	158
HARNESS AS-HEATER & AIR COND	196
	628
	670
HARNESS AS-LIGHTING	147
	153
HARNESS AS-PANEL	700
	711
HARNESS AS-PANEL (SWITCH)	152
HARNESS AS-PLATFORM	211
HARNESS AS-RADIO (PRODUCT LINK)	130
HARNESS AS-REAR CHASSIS (RELAY)	221
HARNESS AS-REAR CHASSIS (TAIL)	221
HARNESS AS-REAR LIGHTING	149
HARNESS AS-SENSOR (ANGLE)	216
HARNESS AS-SENSOR (ENGINE)	221
HARNESS AS-SENSOR (ROTATION)	216
HARNESS AS-SENSOR (SPEED)	231
HARNESS AS-SENSOR (TRANSMISSION SPEED)	221
HARNESS AS-SOLENOID	150
	201
HARNESS AS-STARTING AID	210
	219
HARNESS AS-SWITCH	125
	202
HARNESS AS-TRANSMISSION	221
	228
HARNESS AS-WIRING	344
HEATER & MTG GP-CAB	668
HEATER AR-CAB	669
HEATER GP-CAB–LIGHT DUTY	670
HITCH GP-ARTICULATING	335
HORN GP-ELECTRIC	674
HOUSING GP-FLYWHEEL	37
HOUSING GP-FRONT	38
HOUSING GP-SEAT SUSPENSION	675

I

INDICATOR (ENGINE RPM)	703
INDICATOR (SPEED)	703
INDICATOR AS-ARTICULATION	702
INDICATOR AS-COOLANT TEMP	702
INDICATOR AS-FUEL LEVEL	702
INDICATOR GP-AIR FILTER CHANGE	79

INDEX

Name	Page
INDICATOR GP-LEVEL	678
INDICATOR-LEVEL (TEMPERATURE)	678
INJECTOR GP-FUEL	91
INSTALLATION AR-COMMUNICATION–PRODUCT LINK 321SR	130
INSTALLATION AR-ENGINE	5
INSTALLATION AR-RADIO	679
INSTALLATION GP-COMMUNICATION–PRODUCT LINK	131
INSTALLATION GP-RADIO	680
INSTALLATION GP-RADIO–NON-ROPS	681
INSULATION GP-WEATHER–COLD WEATHER	683
K	
KEY	675
KEY (BATTERY DISCONNECT)	189
	198
KIT-AIR CONTROL VALVE	745
KIT-IDLER HOUSING-LH (WINDOW)	757
KIT-IDLER HOUSING-RH (WINDOW)	755
KIT-SEAL	384
KIT-SEAL (DIFFERENTIAL LOCK VALVE)	282
L	
LAMP (12-VOLT)	702
LAMP (24-VOLT)	147
	150
	152
	157
	158
	190
	201
	206
	226
	229
	628
	664
	665
	670
	700
	709
	711
	713
LAMP (24-VOLT) (DOME)	134
LAMP (24-VOLT) (HEADLIGHTS, TAIL LIGHTS)	153
LAMP (24-VOLT, 21-WATT)	133
LAMP (24-VOLT, 3-WATT)	215
	709
	711
	713
LAMP (24-VOLT, 5.6-WATT)	206
LAMP (24-VOLT, 70-WATT)	142
LAMP GP	133
LAMP GP-DOME	134
LAMP GP-FLOOD	135
	136
	137
	138
LAMP GP-SIGNAL (24-VOLT, TURN) (LH)	156
LAMP GP-SIGNAL (24-VOLT, TURN) (RH)	156
LAMP GP-SIGNAL–PARK, TURN	140
LAMP GP-SIGNAL–STOP, TAIL	139
LAMP GP-SIGNAL–TURN	141
LAMP GP-WARNING BEACON–ROTATING	142
LAMP GP-WARNING BEACON–STROBE LIGHT	143
LAMP-HALOGEN (24-VOLT, 65-WATT)	135
	136
	137
	138
LAMP-LED (24-VOLT, WHITE)	713
LIFT GP-BLADE	609
LIFTER GP-VALVE	39
LIFTING GP-ENGINE	40
LIGHTING AR-FLOOD	144
LIGHTING AR-ROADING	144
LIGHTING GP-BACKUP	145
LIGHTING GP-FLOOD	149
LIGHTING GP-FLOOD–FRONT FRAME	150
LIGHTING GP-FLOOD–RIPPER	147
LIGHTING GP-FLOOD–SNOW WING	152
LIGHTING GP-ROADING	153
LIGHTING GP-ROADING–FRONT	155
LIGHTING GP-SIGNAL–REAR TURN	156
LIGHTING GP-WARNING	157
LIGHTING GP-WARNING BEACON	158
LINER GP-CAB–ENCLOSED –HIGH PROFILE	685
LINER GP-CAB–HIGH PROFILE	690
LINES GP-ACCUMULATOR	394
LINES GP-AIR	83
LINES GP-AIR CONDITIONER	692
LINES GP-DRAIN	57
LINES GP-ENGINE OIL	56
LINES GP-FUEL	92
	95
LINES GP-GREASE	337
LINES GP-HEATER	694
LINES GP-HYDRAULIC–BULLDOZER LIFT, PLOW, LH	405
LINES GP-HYDRAULIC–CENTERSHIFT LOCK	412
LINES GP-HYDRAULIC–LH	398
	409
LINES GP-HYDRAULIC–LH BLADE LIFT, CIRCLE DRIVE	406
LINES GP-HYDRAULIC–RH	402

INDEX

Name	Page
LINES GP-HYDRAULIC–SCARIFIER	396
LINES GP-INJECTOR HYD PUMP	96
LINES GP-PUMP	414
LINES GP-RIPPER	418
	419
LINES GP-STEERING	421
LINES GP-TRANSMISSION OIL	262
LINES GP-TURBOCHARGER OIL	58
LINES GP-WATER	67
	69
LINK GP-STEERING	338
LOCK GP-CENTERSHIFT	425
LOUVER GP-CAB	696

M

MANIFOLD GP-CONTROL	426
MANIFOLD GP-ENGINE OIL	60
MANIFOLD GP-EXHAUST	84
MANIFOLD GP-VALVE–LH	427
MANIFOLD GP-VALVE–RH	429
METER GP-SERVICE	226
MIRROR GP-REAR VIEW–DUAL INSIDE	697
MIRROR GP-REAR VIEW–DUAL INTERIOR	699
MIRROR GP-REAR VIEW–EXTERIOR, HEATED	698
MIRROR GP-REAR VIEW–HEATED	700
MODULE GP-INTERFACE	703
MODULE GP-QUAD GAUGE	702
MODULE GP-SPEEDOMETER & TACH	703
MOTOR GP-ELECTRIC–CIRCULATING FAN	160
MOTOR GP-GEROTOR	430
MOTOR GP-WINDOW WIPER (24-VOLT)	762
MOTOR GP-WINDOW WIPER (24-VOLT) (FRONT UPPER)	763
MOTOR GP-WINDOW WIPER (24-VOLT) (REAR)	765
	766
MOTOR GP-WINDOW WIPER (24-VOLT, 2-SPEED)	763
	765
MOTOR GP-WINDOW WIPER (24-VOLT, 2-SPEED) (FRONT, LOWER)	763
MOTOR GP-WINDOW WIPER (24-VOLT, 2-SPEED) (REAR)	766
MOUNTING GP-CAB–NON-ROPS, ENCLOSED	704
MOUNTING GP-ENGINE	41
MOUNTING GP-GRADE CONTROL	161
	162
MOUNTING GP-RIPPER	611
MOUNTING GP-ROPS	705
MOUNTING GP-WHEEL	265
MUFFLER GP	85

O

ORIFICE AS-AIR CONDITIONER	692

P

PADLOCK GP	101
	266
	316
	340
	441
	667
	727
	729
PADLOCK GP (TOOL BOX)	769
PAN GP-BACKREST	707
PAN GP-OIL	42
PANEL GP-CAB–HIGH PROFILE	708
PANEL GP-INSTRUMENT	709
	713
PANEL GP-INSTRUMENT–FRONT CONSOLE	711
PISTON & ROD GP	43
PLATE & FILM GP	772
PLATE GP-CERTIFICATION	716
	717
PLATE GP-CERTIFICATION (ROPS, FOPS, OPS, READ OMM)	718
PLATE GP-PUSH	593
PLATE-IDENTIFICATION (ALTERNATOR)	198
PLATE-SERIAL NUMBER (TRANSMISSION)	232
PLATE-WARNING (ROPS, FOPS, OPS, READ OMM)	718
PLUG GP-CONNECTOR–ENGINE HARNESS, PROTECTIVE COVER	163
PLUG GP-CYLINDER BLOCK	44
PLUG GP-ENGINE	45
PLUG GP-OIL PAN	46
PLUG-MAGNETIC (DRAIN)	319
PROTECTION GP-OIL LEVEL GAUGE	266
PROTECTION GP-XMSN OIL FILLER	266
PUMP & MTG GP-STEERING–STEERING	432
PUMP & MTG GP-UNIT INJ HYD	97
PUMP GP-ENGINE OIL	61
	62
PUMP GP-FUEL INJECTION	98
PUMP GP-FUEL PRM & WATER SEP	99
PUMP GP-GEAR	267
	268
PUMP GP-METERING (HMU)	649
PUMP GP-PISTON	433
PUMP GP-UNIT INJECTOR HYD	97
PUMP GP-WATER	71
	72

INDEX

Name	Page
R	
RADIATOR GP	74
RADIO GP-COMMUNICATION–PRODUCT LINK 121SR	164
RECEIVER-REFRIGERANT DRYER	692
RECLINER GP-SEAT	714
REGULATOR AS-VOLTAGE (24-VOLT)	104
	106
REGULATOR GP-FUEL PRESSURE	100
REGULATOR-WATER TEMPERATURE (97-DEG C)	67
RELAY (24-VOLT)	216
RELAY AS (24-VOLT)	202
	206
	226
RELAY AS (24-VOLT) (BACKUP LIGHT)	145
RELAY AS (24-VOLT) (ETHER STARTING AID)	210
RELAY AS (24-VOLT) (FUEL PRIMING)	221
RIPPER AR	612
RIPPER GP	613
ROCKER ARM GP (EXHAUST)	49
ROCKER ARM GP (INTAKE)	49
ROPS AR–HIGH PROFILE	715
ROPS AR-ENCLOSED–HIGH PROFILE	716
ROPS GP–HIGH PROFILE	717
	718
ROPS GP-ENCLOSED	719
ROTATING GP-PUMP	435
S	
SCARIFIER AR–VEE TYPE	615
SCARIFIER GP	616
SCREEN GP-MAGNETIC–TRANSMISSION	269
SCREEN GP-SUN	720
SCREEN-SUCTION (TRANSMISSION)	231
	269
SEAL GP-CRANKSHAFT	47
SEAL GP-DUO-CONE	311
	390
SEAL-INTEGRAL	7
SEAL-VALVE COVER	16
SEAT BELT GP	727
SEAT BELT GP (RETRACTABLE)	730
SEAT BELT GP–RETRACTABLE	721
	722
SEAT GP	728
SEAT GP–CLOTH	723
	730
	731
SEAT GP–VINYL	725
	727
	729
SEAT GP-STATIC	738
SEAT GP-STATIC–CLOTH	733
	734
SEAT GP-STATIC–VINYL	736
SEAT GP-SUSPENSION–CLOTH	739
	740
SEGMENT-CIRCLE	585
	589
SENDER AS-FUEL LEVEL	198
SENDER AS-POSITION (ARTICULATION)	221
SENDER-TEMPERATURE	221
SENSOR AS-PRESSURE	171
SENSOR AS-TEMPERATURE	179
SENSOR GP-ENGINE	165
SENSOR GP-POSITION	167
	168
SENSOR GP-POSITION (ROTARY) (CLUTCH CONTROL)	647
SENSOR GP-POSITION (ROTARY) (GOVERNOR, BRAKE PEDAL)	88
SENSOR GP-PRESSURE	169
	170
	171
	172
	173
	174
SENSOR GP-PRESSURE (ATMOSPHERIC)	165
SENSOR GP-PRESSURE (BOOST)	165
SENSOR GP-PRESSURE (ENGINE OIL)	165
SENSOR GP-PRESSURE (FUEL FILTER)	92
SENSOR GP-PRESSURE (RAIL)	165
SENSOR GP-SPEED	175
	176
	177
SENSOR GP-SPEED (ENGINE TIMING)	165
SENSOR GP-SPEED (MAGNETIC, HIGH OUTPUT)	221
SENSOR GP-SPEED (TRANSMISSION OUTPUT)	232
SENSOR GP-TEMPERATURE	178
	179
	180
	181
SENSOR GP-TEMPERATURE (TRANSMISSION OIL)	232
SERVICE GP-POWER TRAIN	126
SHAFT GP-DRIVE–TRANSMISSION	270
SHAFT GP-INPUT	271
SHAFT GP-PUMP DRIVE	436
SLIP JOINT GP	436
SOFTWARE GP-COMMUNICATION (PRODUCT LINK 121SR)	164
SOFTWARE GP-COMMUNICATION (PRODUCT LINK 300)	126
SOFTWARE GP-POWER TRAIN	126

INDEX

Name	Page
STARTING AID AR-ETHER	182
STARTING AID GP-ETHER	183
STARTING MOTOR GP-ELECTRIC	185, 186
STEP GP	339
STRAINER (HYDRAULIC)	439
STRAINER-FUEL	101
SUPPORT GP-BATTERY	340
SUPPORT GP-RADIATOR	341
SUPPORT GP-SEAT	741
SUSPENSION GP-SEAT	743
SWASHPLATE GP	433
SWITCH AS	157, 158, 201
SWITCH AS (24-VOLT) (AUXILIARY BACKUP LIGHTS)	147
SWITCH AS (24-VOLT) (FLOODLIGHT, RH)	152
SWITCH AS (24-VOLT) (HEATED MIRRORS)	700
SWITCH AS (AUTOSHIFT ON, OFF)	229
SWITCH AS (CENTERSHIFT PIN)	206
SWITCH AS (CIRCULATING FAN)	664, 665
SWITCH AS (TAIL LIGHTS)	226
SWITCH AS (THROTTLE HOLD MODE)	206
SWITCH AS-BALL (CENTERSHIFT INDICATOR)	211
SWITCH AS-LIMIT	226
SWITCH AS-PRESSURE (AIR BRAKE)	211
SWITCH AS-PRESSURE (PARKING BRAKE)	211
SWITCH AS-PRESSURE (REFRIGERANT, HIGH, LOW)	692
SWITCH AS-PRESSURE (REFRIGERANT, LOW SIDE)	692
SWITCH AS-PRESSURE (STOP LIGHT)	211
SWITCH AS-ROCKER (24-VOLT) (AUXILIARY BACKUP LIGHTS)	147
SWITCH AS-ROCKER (24-VOLT) (BLADE CUSHION)	201
SWITCH AS-ROCKER (24-VOLT) (FLOODLIGHT, RH)	152
SWITCH AS-ROCKER (24-VOLT) (WARNING BEACON)	157, 158
SWITCH AS-ROCKER (24-VOLT, SEALED, ILLUMINATED)	150, 664, 665
SWITCH AS-ROCKER (CENTERSHIFT PIN)	206
SWITCH AS-ROCKER (DIFFERENTIAL LOCK)	246
SWITCH AS-ROCKER (THROTTLE LOCK SET, RESET)	206
SWITCH AS-ROTARY	153, 190
SWITCH AS-ROTARY (FAN SPEED)	628, 670
SWITCH AS-ROTARY (WIPER, WASHER) (FRONT)	203
SWITCH AS-START (KEY)	206
SWITCH AS-TOGGLE (ENGINE SHUTDOWN)	221
SWITCH GP-BYPASS	188
SWITCH GP-DISCONNECT–BATTERY	189
SWITCH GP-LIGHT	190
SWITCH GP-MAGNETIC	191
SWITCH GP-MAGNETIC (24-VOLT)	198
SWITCH GP-PRESSURE–FUEL FILTER	192
SWITCH GP-ROTARY (TURN SIGNAL, HAZARD)	153, 190
SWITCH GP-WIPER (24-VOLT, INTERMITTENT)	194, 765
SWITCH GP-WIPER (24-VOLT, INTERMITTENT) (FRONT WIPER)	768
SWITCH GP-WIPER (24-VOLT, INTERMITTENT) (REAR)	766
SWITCH GP-WIPER–INTERMITTENT	193, 194
SWITCH-ROCKER (AIR CONDITIONER, HEATER)	190
SWITCH-ROCKER (HEADLIGHTS, TAIL LIGHTS)	153
SWITCH-ROCKER (WORK LIGHTS)	150
SWIVEL GP–CIRCLE DRIVE	437

T

Name	Page
TANDEM & COVER GP	272
TANK & FILTER GP-HYDRAULIC	439
TANK & MTG GP-HYDRAULIC	441
TANK GP-AIR	358
TANK GP-COOLANT	75
TANK GP-FUEL	101
TANK GP-WATER	75
TIE ROD GP (STEERING)	374
TOOL GP-HAND	773
TOOTH GP-RIPPER	620
TOOTH GP-SCARIFIER	621
TRANSMISSION AR	273
TURBOCHARGER GP	86, 87

U

Name	Page
UNIVERSAL JOINT GP	274

V

Name	Page
V-BELT SET (INCLUDES 3-BELTS)	31

INDEX

Name	Page
VALVE & LINKAGE GP	471
VALVE & LINKAGE GP– 4-BANK, RH; 2-BANK, LH	442
VALVE & LINKAGE GP– 4-BANK, RH; 3-BANK, LH	444
	446
	448
VALVE & LINKAGE GP– 4-BANK, RH; 4-BANK, LH	456
VALVE & LINKAGE GP– 4-BANK, RH; 5-BANK, LH	450
	452
	475
	481
	485
VALVE & LINKAGE GP–4-BANK, RH, LH	461
	463
	477
	504
VALVE & LINKAGE GP– 5-BANK, RH; 4-BANK, LH	469
VALVE & LINKAGE GP– 5-BANK, RH; 6-BANK, LH	473
	500
VALVE & LINKAGE GP– 5-BANK, RH; 7-BANK, LH	479
	496
VALVE & LINKAGE GP–5-BANK, RH, LH	454
	458
	465
	492
VALVE & LINKAGE GP–6-BANK, RH, LH	467
	488
VALVE & MTG GP-DIFF LOCK	275
VALVE AS	364
VALVE GP-AIR CONTROL	745
VALVE GP-BANK 2–LH	508
VALVE GP-BANK 3–LH	509
	510
	511
VALVE GP-BANK 4–LH	513
	515
	516
	517
	518
VALVE GP-BANK 4–RH	512
	514
	519
VALVE GP-BANK 5–LH	520
	521
	524
	525
	527
	529
VALVE GP-BANK 5–RH	522
	523
	526
VALVE GP-BANK 6–LH	530
	533
VALVE GP-BANK 6–RH	531
	532
VALVE GP-BANK 7–LH	534
	535
VALVE GP-CHECK	538
	540
	542
	544
	552
	556
	558
	560
VALVE GP-COMBINATION	536
VALVE GP-CONTROL (AIR)	745
VALVE GP-CONTROL–ARTICULATION	538
VALVE GP-CONTROL–BLADE LIFT	544
	552
	562
	564
VALVE GP-CONTROL–BLADE TIP	546
VALVE GP-CONTROL– BULLDOZER ANGLE, PLOW, RH	560
VALVE GP-CONTROL– BULLDOZER LIFT, PLOW	566
VALVE GP-CONTROL–CENTERSHIFT	540
VALVE GP-CONTROL–CIRCLE DRIVE	548
VALVE GP-CONTROL–DOZER LIFT, PLOW	558
VALVE GP-CONTROL–RIPPER	556
VALVE GP-CONTROL–SCARIFIER	554
VALVE GP-CONTROL–SIDESHIFT	550
VALVE GP-CONTROL–WHEEL LEAN	542
VALVE GP-CONTROL–WING LIFT	570
VALVE GP-CONTROL–WING TILT	568
VALVE GP-COUNTERBALANCE	429
VALVE GP-DRAIN (COOLANT)	69
VALVE GP-ETHER STARTING	195
VALVE GP-PUMP CONTROL– IMPLEMENT, STEERING	572
VALVE GP-PURGE	573
VALVE GP-PURGE (AIR DRYER)	343
VALVE GP-RELIEF	554
	574
	575
	576
	577
	578
	579
	580
	581
VALVE GP-RELIEF (BLADE TIP)	546
VALVE GP-SELECTOR & PRESS CONT	276

INDEX

Name	Page
	279
VALVE GP-SHUTOFF (MANUAL) (FUEL)	92
VALVE GP-SHUTTLE	582
VALVE GP-SOLENOID	282
	283
	361
	583
	584
VALVE GP-SOLENOID (24-VOLT) (SELECTOR & PRESSURE RANGE)	276
VALVE GP-SOLENOID (24-VOLT) (SPEED, RANGE, TRANSMISSION)	279
VALVE GP-SOLENOID (CENTERSHIFT LOCK)	425
VALVE GP-SOLENOID (PARKING BRAKE)	349
VALVE GP-TIRE	292
	293
	294
	295
	296
	297
	300
	301
	302
	305
	306
VALVE GP-TIRE (BASIC)	309
VALVE GP-TIRE (TIRE INFLATION)	296
	297
	298
	299
	300
	306
	309
	310
VALVE GP-TRANSMISSION CONTROL	284
VALVE MECHANISM GP	48
	49
VALVE-RELIEF	231
VOLTMETER GP	702

W

WASHER GP-WINDOW–FRONT	746
	749
WASHER GP-WINDOW–REAR	748
WATER SEP & FUEL PRM PUMP GP	99
WHEEL & TIRE AR	286
	287
	288
	289
	290
	291
WHEEL & TIRE GP	292
	293
	294
	295
	296
	297
	298
	299
	300
	301
	302
	303
	304
WHEEL AR	304
	305
WHEEL GP	305
	306
	307
	308
	309
	310
WHEEL GP–BAREFOOT	306
WINDOW GP-CAB–LH	757
WINDOW GP-CAB–RH	755
WINDOW GP-CAB–SIDE SLIDING–HIGH PROFILE	751
WINDOW GP-CAB–SIDE SLIDING HIGH PROFILE	754
WINDOW GP-CAB–SIDE SLIDING–LOW PROFILE	752
	753
WINDOW GP-VENT–CAB	759
WIPER AR-WINDOW–REAR	760
	761
WIPER GP-WINDOW–FRONT	762
	768
WIPER GP-WINDOW–FRONT–HIGH PROFILE	763
WIPER GP-WINDOW–REAR	765
	766
WIRING AS	215
WIRING GP-AIR CONDITIONER	196
WIRING GP-AUXILIARY–FUEL TANK	198
WIRING GP-BLADE CUSHION	201
WIRING GP-CAB	203
WIRING GP-CAB–MACHINE IMMOBILIZER	202
WIRING GP-CHASSIS–ACCUGRADE	216
WIRING GP-CONSOLE	206
WIRING GP-ENGINE	208
WIRING GP-ETHER STARTING AID	210
WIRING GP-FRONT	211
WIRING GP-GRADE CONTROL–CAB, INDICATOR LAMP	215
WIRING GP-POWER RECEPTACLE–CIGARETTE LIGHTER	219
WIRING GP-REAR	220
	221

INDEX

Name	Page	Name	Page
WIRING GP-STEERING CONSOLE	226		
WIRING GP-TRANSMISSION	228		

MEMORANDA

MACHINE ARRANGEMENT

274-7940 GENERAL AR

S/N: JPA1-UP

SMCS-7000 **i03301585**

NOTE	PART NUMBER	QTY	PART NAME 1 2 3 4 5 6 (PRODUCT LEVEL)	SEE PAGE
Y	*310-6459*	1	AIR CLEANER GP	79
Y	*313-2656*	1	AIR COMPRESSOR GP	7
Y	*253-4006*	1	ALTERNATOR GP-CHARGING	108
Y	*134-1080*	1	AXLE GP-FRONT	311
Y	*311-0795*	1	BATTERY & WIRING GP	116
Y	*324-0151*	1	BLADE GP	599
Y	*295-8090*	1	BOX GP-BATTERY	316
Y	*111-1719*	1	BOX GP-TOOL	769
Y	*7D-8440*	1	BRAKE GP-SERVICE	347
Y	*284-5378*	1	BUMPER GP-REAR	318
Y	*311-8138*	1	CASE & FRAME GP	319
Y	*6G-1755*	1	CHAIN GP-DRIVE	236
Y	*113-9422*	1	CIRCLE GP	588
Y	*282-2475*	1	CONSOLE GP-OPERATOR	644
Y	*282-2473*	1	CONTROL GP-CLUTCH	647
Y	*282-2472*	1	CONTROL GP-GOVERNOR	88
Y	*284-5771*	1	CONTROL GP-PARKING BRAKE	349
Y	*283-3499*	1	CONTROL GP-SERVICE BRAKE	351
Y	*7I-4718*	1	CONTROL GP-STEERING	649
Y	*167-9002*	1	CONTROL GP-TRANSMISSION	650
Y	*281-5641*	1	COOLER GP-TRANSMISSION OIL	249
Y	*310-5881*	1	COOLING AR	64
Y	*337-3357*	1	COUPLING GP-TORSIONAL	250
Y	*112-5361*	1	CYLINDER & MTG GP-ARTICULATION	367
Y	*8X-1947*	1	CYLINDER & MTG GP-BLADE LIFT	368
Y	*8X-1944*	1	CYLINDER & MTG GP-CENTERSHIFT	370
Y	*8W-2290*	1	CYLINDER & MTG GP-STEERING	374
Y	*8W-2737*	1	CYLINDER & MTG GP-WHEEL LEAN	375
Y	*8X-1960*	1	DRAWBAR GP	591
Y	**5T-0570**	1	DRIVE GP-CIRCLE	390
Y	*318-9471*	1	DRIVE GP-FAN	31
Y	*8W-4368*	1	DRIVE GP-FINAL	256
Y	*311-2741*	1	ENCLOSURE GP-ENGINE	320
Y	**312-0255**	1	ENGINE AR-COMPLETE	3
Y	*284-0824*	1	FAN GP (RADIATOR)	65
Y	**315-4118**	1	FILLER GP-POWER TRAIN OIL	258
Y	*282-2496*	1	FRAME GP-FRONT	324
Y	*115-0632*	1	GEAR GP-BEVEL & PINION	260
Y	*298-8895*	1	GUARD GP-DRIVE SHAFT	327
Y	*282-2469*	1	GUARD GP-PLATFORM	331
Y	*106-4884*	1	HITCH GP-ARTICULATING	335
Y	*295-4371*	1	HORN GP-ELECTRIC	674
Y	*310-6437*	1	INSTALLATION AR-ENGINE	5
Y	*125-0290*	1	LIFT GP-BLADE	609
Y	*311-0864*	1	LINES GP-AIR	83
Y	*310-6469*	1	LINES GP-DRAIN	57
Y	*311-2770*	1	LINES GP-FUEL	92
Y	*7I-4610*	1	LINES GP-GREASE	337
Y	*110-2985*	1	LINES GP-HYDRAULIC (RH)	402
Y	*115-8078*	1	LINES GP-HYDRAULIC (LH BLADE LIFT, CIRCLE DRIVE)	406
Y	*293-0648*	1	LINES GP-HYDRAULIC (CENTERSHIFT LOCK)	412
Y	*299-5544*	1	LINES GP-PUMP	414
Y	*301-4376*	1	LINES GP-STEERING	421
Y	*315-5378*	1	LINES GP-TRANSMISSION OIL	262
Y	*311-0274*	1	LINES GP-WATER	69
Y	*164-8462*	1	LOCK GP-CENTERSHIFT	425

MACHINE ARRANGEMENT

274-7940 **GENERAL AR** ***(contd.)*** **i03301585**

NOTE	PART NUMBER	QTY	PART NAME 1 2 3 4 5 6 (PRODUCT LEVEL)	SEE PAGE
Y	*142-6203*	1	MOUNTING GP-WHEEL	265
Y	*310-6472*	1	MUFFLER GP	85
Y	*316-5238*	1	PANEL GP-INSTRUMENT	713
Y	*285-4189*	1	PLATE & FILM GP	772
Y	*299-5543*	1	PUMP & MTG GP-STEERING	432
Y	*113-4254*	1	SEAT GP	727
Y	*8W-5394*	1	SHAFT GP-DRIVE (TRANSMISSION)	270
Y	*311-0514*	1	SHAFT GP-PUMP DRIVE	436
Y	*295-2933*	1	STEP GP	339
Y	*299-8307*	1	SUPPORT GP-RADIATOR	341
Y	*174-4546*	1	SUPPORT GP-SEAT	741
Y	*190-1688*	1	TANDEM & COVER GP	272
Y	*214-1983*	1	TANK & MTG GP-HYDRAULIC	441
Y	*314-9370*	1	TANK GP-AIR	358
Y	*311-2749*	1	TANK GP-FUEL	101
Y	*311-2766*	1	TANK GP-WATER	75
Y	**275-6535**	1	TRANSMISSION AR	273
Y	*112-6795*	1	VALVE & LINKAGE GP (4-BANK, RH; 2-BANK, LH)	442
Y	*311-0802*	1	WIRING GP-AUXILIARY	198
Y	*284-5346*	1	WIRING GP-CONSOLE	206
Y	*284-5343*	1	WIRING GP-FRONT	211
Y	*284-5348*	1	WIRING GP-REAR (LIGHTS)	220
Y	*311-0794*	1	WIRING GP-REAR	221
Y	*284-5347*	1	WIRING GP-STEERING CONSOLE	226
	6V-1970	1	LITERATURE GP	
	5P-7958	1	SLEEVE-CABLE SPLICE	
	5P-8500	2	KEY	

Y-SEPARATE ILLUSTRATION

<END>

ENGINE ARRANGEMENT

312-0255 ENGINE AR-COMPLETE

S/N: KHX8814-UP
FOR 160 K SERIES MOTOR GRADER APPLICATION
PART OF 274-7940 GENERAL AR

SMCS-1000 **i03338541**

NOTE	PART NUMBER	QTY	PART NAME 1 2 3 4 5 6 (PRODUCT LEVEL)	SEE PAGE
Y	*222-5946*	1	BREATHER GP	52
Y	*4W-3462*	1	CARRIER GP-SEAL	12
Y	**246-9345**	1	CONTROL & MTG GP-ENGINE ELEK	119
Y	*153-1794*	1	COVER GP-AIR INLET	81
Y	*229-8841*	1	COVER GP-CYLINDER BLOCK	13
Y	*275-0595*	1	COVER GP-FRONT HOUSING	15
Y	*118-1727*	1	COVER GP-FRONT HOUSING (ACCESSORY DRIVE)	14
Y	*307-1735*	1	COVER GP-VALVE MECHANISM	16
Y	*250-8309*	1	DAMPER & PULLEY GP	28
Y	*313-4384*	1	DRIVE GP-ACCESSORY	29
Y	*322-0245*	1	ELBOW GP-AIR INLET	82
Y	*312-0254*	1	ENGINE AR-CORE	4
Y	*258-8723*	1	FASTENER GP-CYLINDER HEAD	32
Y	*322-0246*	1	FASTENER GP-ENGINE	33
Y	*116-4556*	1	FASTENER GP-FRONT HOUSING	34
Y	*323-8936*	1	FILTER GP-ENGINE OIL	53
Y	*275-8387*	1	FLYWHEEL GP	35
Y	*220-1194*	1	FUMES DISPOSAL GP	54
Y	*276-3681*	1	GAUGE GP-OIL LEVEL (DIPSTICK) (ENGINE)	55
Y	*297-6867*	1	GROUND GP-ELECTRICAL	129
Y	*197-5210*	1	HOUSING GP-FLYWHEEL	37
Y	*237-9822*	1	LIFTING GP-ENGINE	40
Y	*128-0316*	1	LINES GP-ENGINE OIL	56
Y	*313-3967*	1	LINES GP-FUEL	95
Y	*187-6279*	1	LINES GP-TURBOCHARGER OIL	58
Y	*206-4228*	1	LINES GP-WATER (ENGINE)	67
Y	*237-8063*	1	MANIFOLD GP-ENGINE OIL	60
Y	*183-6845*	1	MANIFOLD GP-EXHAUST (DRY)	84
Y	*311-3542*	1	MOUNTING GP-ENGINE	41
Y	*122-8936*	1	PAN GP-OIL (ENGINE)	42
Y	*235-8200*	1	PLUG GP-CONNECTOR (ENGINE HARNESS, PROT COVER)	163
Y	*159-0303*	1	PLUG GP-CYLINDER BLOCK	44
Y	*162-8068*	1	PLUG GP-ENGINE	45
Y	*323-8959*	1	PLUG GP-OIL PAN	46
Y	*318-2076*	1	PUMP GP-WATER	72
Y	*7E-7590*	1	SEAL GP-CRANKSHAFT	47
Y	*297-5355*	1	SENSOR GP-ENGINE	165
Y	*111-4275*	1	STARTING MOTOR GP-ELECTRIC	185
Y	*198-2714*	1	WIRING GP-ENGINE	208
			PLEASE USE THE GASKET KIT LINK IN SIS OR CONTACT YOUR LOCAL DEALER FOR THE LATEST GASKET KIT INFORMATION	

Y-SEPARATE ILLUSTRATION

ENGINE ARRANGEMENT

312-0254 ENGINE AR-CORE

S/N: KHX8814-UP
166 BKW (223 BHP)
PART OF 312-0255 ENGINE AR-COMPLETE
FOR USE WITH 160 K SERIES MOTOR GRADER

SMCS-1000 **i03339141**

NOTE	PART NUMBER	QTY	PART NAME 1 2 3 4 5 6 (PRODUCT LEVEL)	SEE PAGE
Y	*212-4289*	1	CAMSHAFT GP	11
Y	*117-3643*	1	COOLER GP-ENGINE OIL	63
Y	*210-5590*	1	CRANKSHAFT GP	18
Y	*221-4482*	1	CYLINDER BLOCK GP	20
Y	*219-5849*	1	CYLINDER HEAD GP	27
Y	*205-1321*	1	GEAR GP-FRONT	36
Y	*165-4446*	1	HOUSING GP-FRONT	38
Y	*191-0461*	1	LINES GP-INJECTOR HYD PUMP	96
YR	*212-3652*	6	PISTON & ROD GP	43
Y	*254-0095*	1	PUMP & MTG GP-UNIT INJ HYD	97
Y	*212-2270*	1	PUMP GP-ENGINE OIL	62
Y	*268-1839*	6	PUMP GP-FUEL INJECTION	98
Y	*258-2403*	1	TURBOCHARGER GP	87
Y	*232-3717*	1	VALVE MECHANISM GP	48
	313-4694	1	ELECTRONICS GP-ENGINE RATINGS	
			PLEASE USE THE GASKET KIT LINK IN SIS OR CONTACT YOUR LOCAL DEALER FOR THE LATEST GASKET KIT INFORMATION	

R-REMFG PART MAY BE AVAILABLE
Y-SEPARATE ILLUSTRATION

ENGINE ARRANGEMENT

310-6437 INSTALLATION AR-ENGINE

S/N: JPA1-UP

PART OF 274-7940 GENERAL AR

SMCS-1000 **i03438860**

NOTE	REF NO	GRAPHIC REF	PART NUMBER	QTY	PART NAME 1 2 3 4 5 6 (PRODUCT LEVEL)	SEE PAGE
	1	1	**174-9529**	2	MOUNT AS	
					(EACH INCLUDES)	
		1	**6Y-9960**	1	MOUNT AS	
		1	**9W-7385**	1	SLEEVE	
		1	**9W-7388**	2	WASHER (26X144X12-MM THK)	
	2	1	*192-7357*	2	MOUNT AS	
					(EACH INCLUDES)	
		1	**9W-6582**	1	SLEEVE	
		1	**9W-6584**	1	WASHER (20.5X114X10-MM THK)	
		1	**9W-9920**	1	MOUNT AS	
	3	1	**211-9274**	1	SUPPORT	
	4	1	**211-9275**	1	SUPPORT	
	5	1	**313-4537**	1	BELT-SERPENTINE	
	6	1	**316-6682**	1	PLATE AS	
	7	1	**316-6686**	1	PLATE AS	
	8	1	**198-4776**	4	WASHER-HARD (8.8X20X8-MM THK)	
	9	1	**198-4777**	4	WASHER-HARD (11X25X10-MM THK)	
M	10	1	**8C-3290**	2	BOLT (M24X3X150-MM)	
	11	1	**8T-4121**	12	WASHER-HARD (11X21X2.5-MM THK)	
	12	1	**8T-4123**	10	WASHER (22X35X3.5-MM THK)	
M	13	1	**8T-4136**	4	BOLT (M10X1.5X25-MM)	
	14	1	**8T-4167**	2	WASHER-HARD (26X44X4-MM THK)	
M	15	1	**8T-4196**	12	BOLT (M10X1.5X35-MM)	
M	16	1	**8T-4908**	4	BOLT (M8X1.25X25-MM)	
M	17	1	**8T-6381**	2	BOLT (M20X2.5X120-MM)	
M	18	1	**8T-6430**	8	BOLT (M20X2.5X50-MM)	

M-METRIC PART

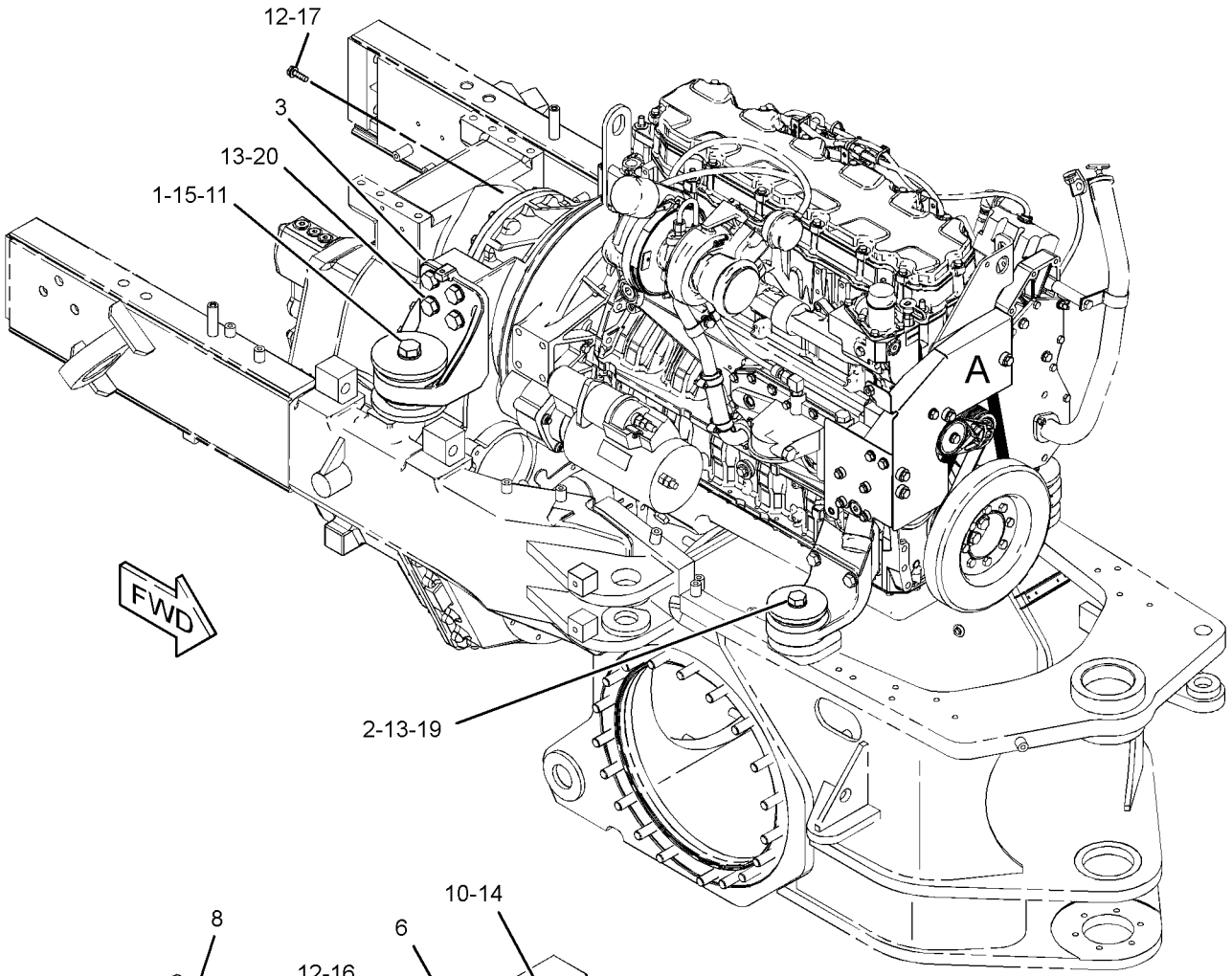

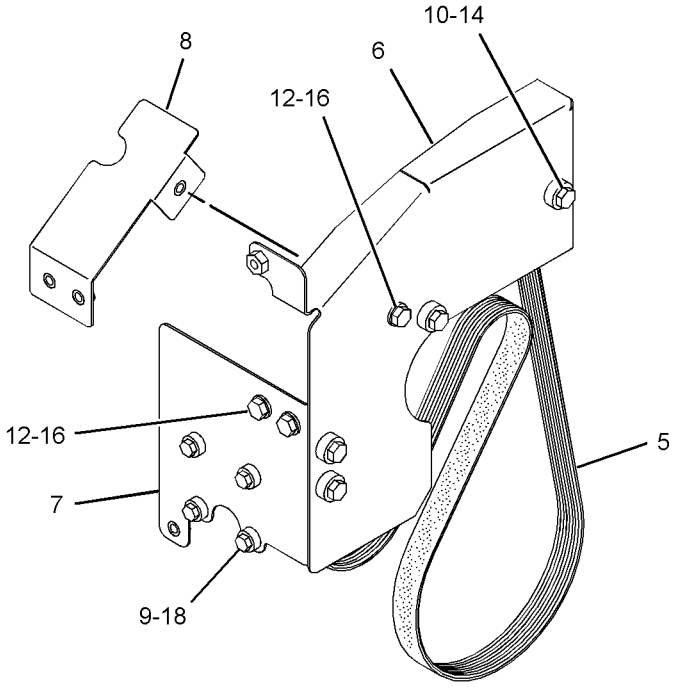

VIEW OF AREA A

GRAPHIC #1 **<END>** g01697633

BASIC ENGINE

313-2656 AIR COMPRESSOR GP

S/N: JPA1-UP

PART OF 274-7940 GENERAL AR

SMCS-1803 **i03435740**

NOTE	REF NO	GRAPHIC REF	PART NUMBER	QTY	PART NAME 1 2 3 4 5 6 (PRODUCT LEVEL)	SEE PAGE
	1	1	**135-9819**	1	SEAL-INTEGRAL	
I	2	1	**145-1849**	1	HOSE AS	
	3	1	**146-8121**	1	SPACER (10.5X14.5X25-MM THK)	
I	4	1	**313-2762**	1	HOSE AS	
	5	1	**313-6100**	1	TUBE AS	
Y	6	1	**314-6148**	1	AIR COMPRESSOR GP (AIR CONDITIONER)	9
	7	1	**315-4150**	1	TUBE AS	
	8	1	*148-8340*	2	CONNECTOR AS	
					(EACH INCLUDES)	
		1	**3K-0360**	1	SEAL-O-RING	
		1	**6V-8398**	1	SEAL-O-RING	
		1	**6V-8639**	1	CONNECTOR	
	9	1	*148-8347*	1	ELBOW AS	
		1	**3D-2824**	1	SEAL-O-RING	
		1	**6V-9007**	1	ELBOW	
		1	**6V-9746**	1	SEAL-O-RING	
	10	1	*148-8364*	1	ELBOW AS	
		1	**3K-0360**	1	SEAL-O-RING	
		1	**6V-8398**	1	SEAL-O-RING	
		1	**6V-8625**	1	ELBOW	
	11	1	*148-8368*	1	ELBOW AS	
		1	**3J-1907**	1	SEAL-O-RING	
		1	**4J-5477**	1	SEAL-O-RING	
		1	**6V-8627**	1	ELBOW	
	12	1	*148-8369*	1	ELBOW AS	
		1	**3J-7354**	1	SEAL-O-RING	
		1	**4J-5477**	1	SEAL-O-RING	
		1	**6V-8628**	1	ELBOW	
	13	1	*155-6258*	1	ELBOW AS	
		1	**3D-2824**	1	SEAL-O-RING	
		1	**6V-8398**	1	SEAL-O-RING	
		1	**127-1647**	1	ELBOW	
	14	1	*165-4927*	1	CONNECTOR AS	
		1	**2T-2991**	1	CONNECTOR	
		1	**4K-1388**	1	SEAL-O-RING	
		1	**6V-9746**	1	SEAL-O-RING	
	15	1	**225-5222**	1	VALVE AS-PRESSURE RELIEF	
		1	**2M-9780**	1	SEAL-O-RING	
	16	1	**1B-3057**	2	CLIP	
	17	1	**8T-4121**	1	WASHER-HARD (11X21X2.5-MM THK)	
M	18	1	**8T-4185**	1	BOLT (M10X1.5X50-MM)	
	19	1	**8T-4223**	2	WASHER-HARD (13.5X25.5X3-MM THK)	
M	20	1	**8T-6868**	2	BOLT (M12X1.75X80-MM)	

I-REFER TO HYDRAULIC INFORMATION SYSTEM
M-METRIC PART
Y-SEPARATE ILLUSTRATION

313-2656 **AIR COMPRESSOR GP** *(contd.)* **i03435740**

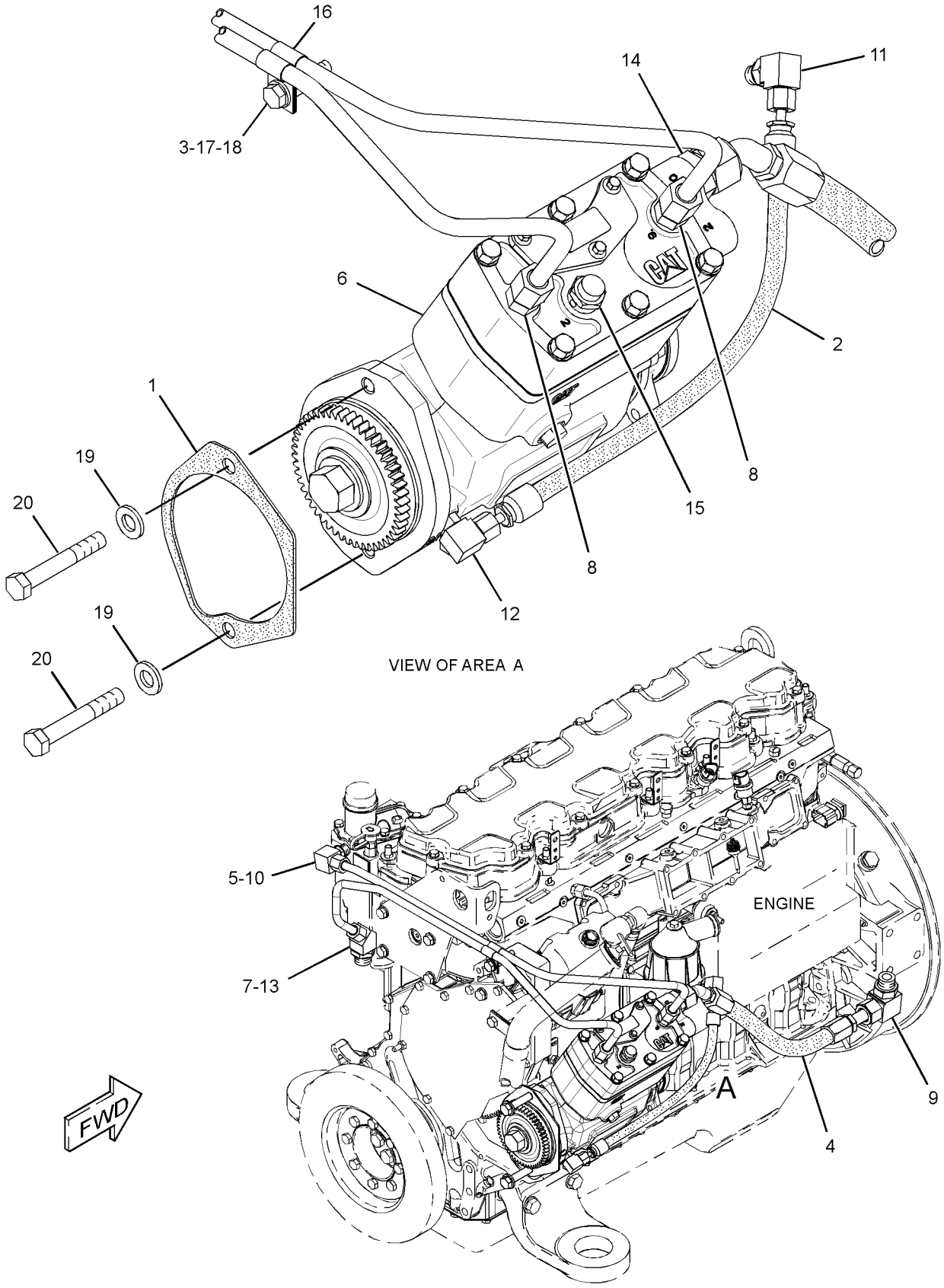

GRAPHIC #1 **<END>** g01689193

BASIC ENGINE

314-6148 AIR COMPRESSOR GP

S/N: JPA1-UP

PART OF 313-2656 AIR COMPRESSOR GP

SMCS-1803 **i03251941**

NOTE	REF NO	GRAPHIC REF	PART NUMBER	QTY	PART NAME 1 2 3 4 5 6 (PRODUCT LEVEL)	SEE PAGE
	1	1	**221-9361**	1	GEAR (50-TEETH)	
	2	1	**267-5212**	2	RING-RETAINING	
	3	1	**287-1690**	1	GASKET	
	4	1	**288-1347**	2	PLUG	
	5	1	**307-6192**	1	GASKET	
	6	1	**307-6200**	1	GASKET	
M	7	1	**271-8090**	3	BOLT-FLANGE HEAD (M6X1X65-MM)	
	8	1	**2P-4358**	1	FLANGE	
	9	1	**3J-1907**	1	SEAL-O-RING	
	10	1	**3K-0360**	1	SEAL-O-RING	
M	11	1	**5A-3604**	4	BOLT-SOCKET HEAD (M8X1.25X25-MM)	
	12	1	**5E-8769**	1	SEAL-O-RING	
	13	1	**6D-1004**	1	GASKET	
	14	1	**6D-7889**	2	SEAL-O-RING	
M	15	1	**6V-1820**	2	BOLT (M10X1.5X30-MM)	
	16	1	**6V-5839**	2	WASHER (11X21X2.5-MM THK)	
	17	1	**8T-4224**	6	WASHER-HARD (8.8X16X2-MM THK)	
	18	1	**9S-4185**	1	PLUG-O-RING	
	19	1	**9S-4191**	1	PLUG-O-RING	
	20	1	**199-4317**	6	BOLT (M10X1.5X115-MM)	
					AVAILABLE REPAIR KIT(S):	
			307-6205	1	KIT-UNLOADER (AIR COMPRESSOR)	
					(KIT INCLUDES SEAL-O-RINGS, SPRINGS, BOLTS, GASKET & GREASE-O-RING)	
			307-6209	1	KIT-CYLINDER HEAD (AIR COMPRESSOR)	
					(KIT INCLUDES HEAD AS, BOLTS & GASKET)	

M-METRIC PART

314-6148 AIR COMPRESSOR GP *(contd.)* i03251941

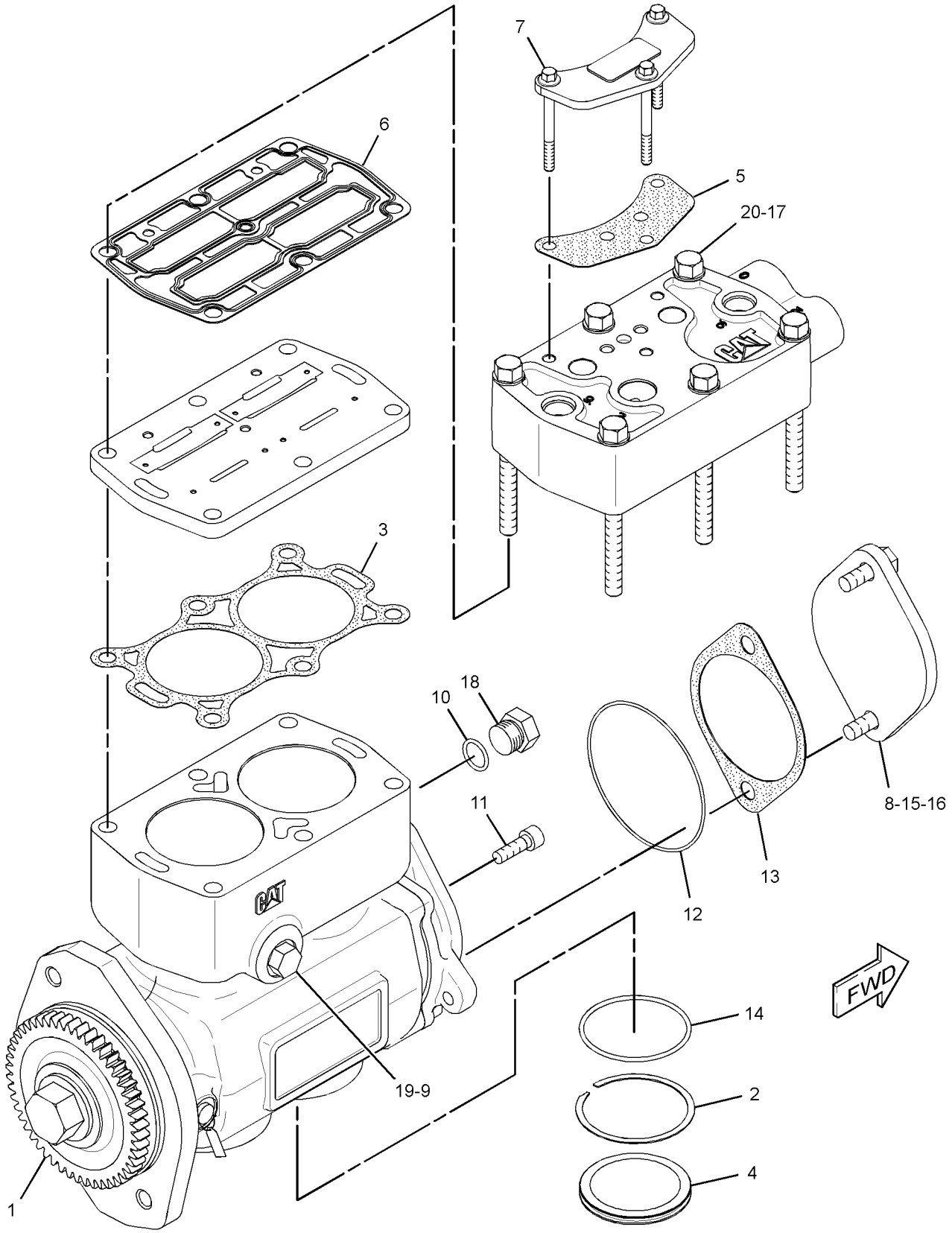

GRAPHIC #1 **<END>** g01689303

BASIC ENGINE

212-4289 CAMSHAFT GP

S/N: KHX8814-UP

PART OF 312-0254 ENGINE AR-CORE

SMCS-1210 **i02215726**

NOTE	REF NO	GRAPHIC REF	PART NUMBER	QTY	PART NAME 1 2 3 4 5 6 (PRODUCT LEVEL)	SEE PAGE
	1	1	**107-7694**	1	PLATE-THRUST	
	2	1	**212-4288**	1	CAMSHAFT AS	
	2A	1	**1B-8705**	1	KEY-WOODRUFF	
	2B	1	**224-3247**	1	GEAR (100-TEETH)	
M	3	1	**6V-3940**	2	BOLT (M8X1.25X25-MM)	

M-METRIC PART

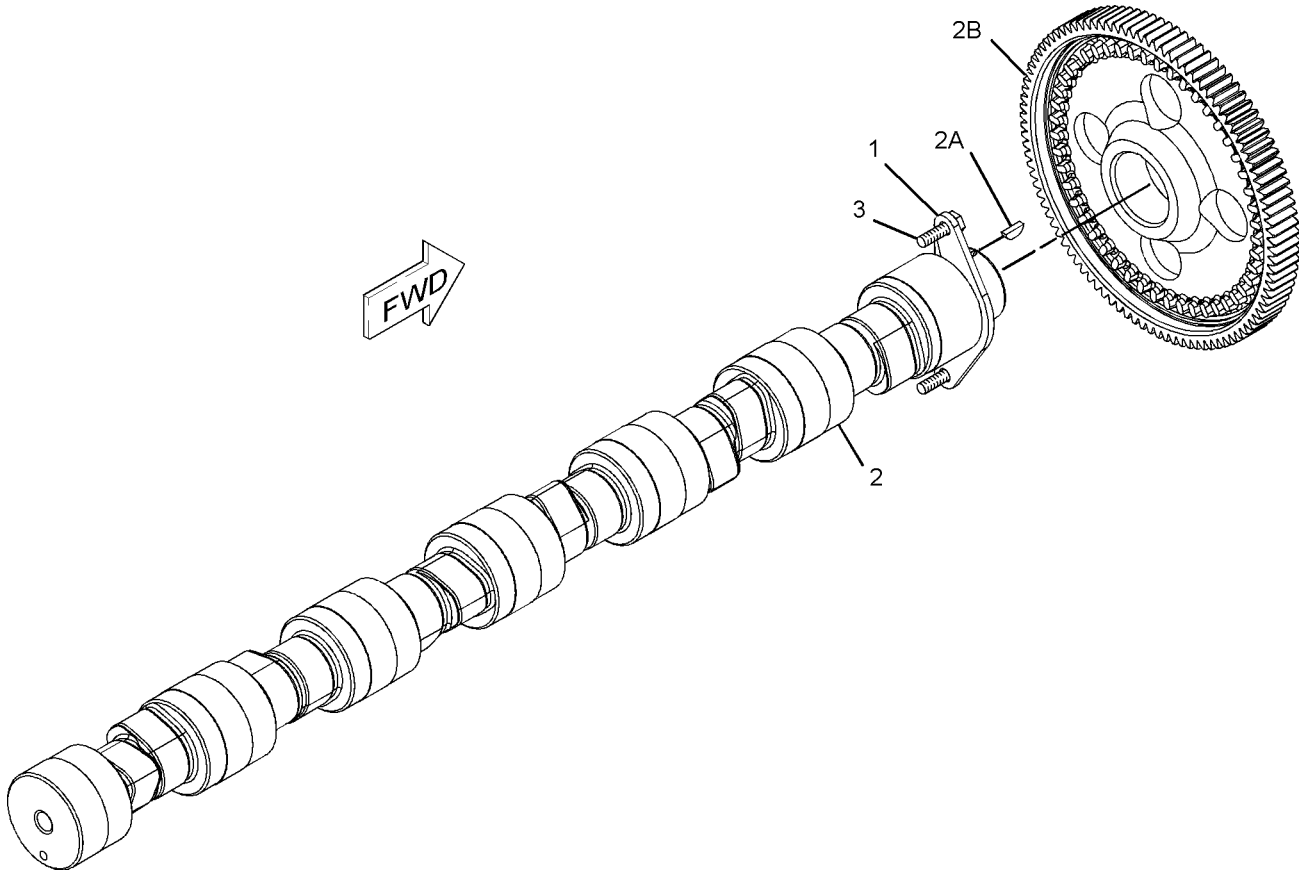

GRAPHIC #1 **<END>** g01099239

4W-3462 CARRIER GP-SEAL

S/N: KHX8814-UP

PART OF 312-0255 ENGINE AR-COMPLETE

SMCS-1161 **i02482079**

NOTE	REF NO	GRAPHIC REF	PART NUMBER	QTY	PART NAME 1 2 3 4 5 6 (PRODUCT LEVEL)	SEE PAGE
	1	1	**2W-6546**	1	COVER	
	2	1	**247-1876**	1	SEAL	
	3	1	**239-0583**	1	GASKET	
	4	1	**6V-3538**	2	DOWEL	
M	5	1	**6V-3940**	8	BOLT (M8X1.25X25-MM)	
	6	1	**9M-1974**	8	WASHER-HARD (8.8X16X2-MM THK)	
BF		1	**4C-9612**		SEALANT-SILICONE	

B-USE AS REQUIRED
F-NOT SHOWN
M-METRIC PART

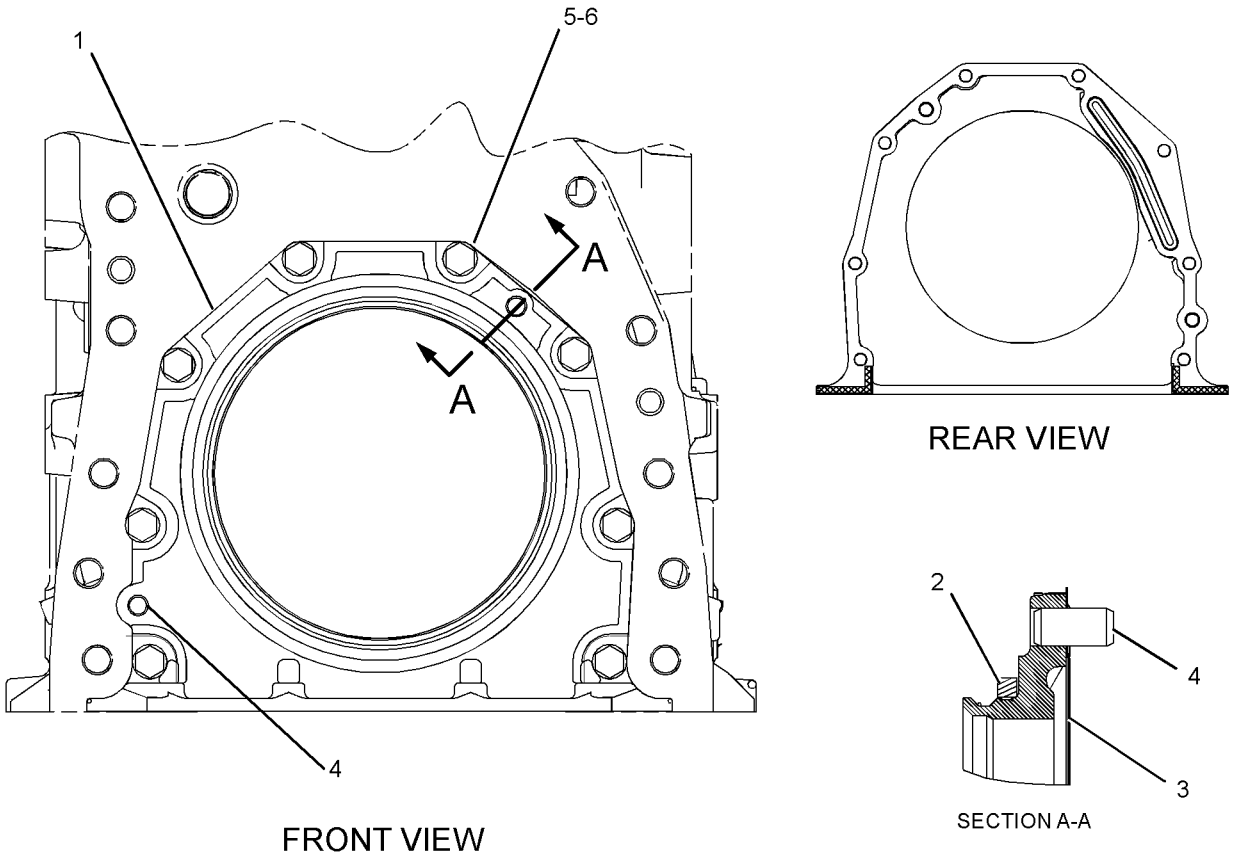

GRAPHIC #1 **<END>** g01239787

229-8841 COVER GP-CYLINDER BLOCK

S/N: KHX8814-UP

PART OF 312-0255 ENGINE AR-COMPLETE

SMCS-1201 **i02789604**

NOTE	REF NO	GRAPHIC REF	PART NUMBER	QTY	PART NAME 1 2 3 4 5 6 (PRODUCT LEVEL)	SEE PAGE
	1	1	**2W-6544**	1	COVER	
	2	1	**4P-5918**	3	CLIP	
	3	1	**4Y-9652**	3	GASKET	
	4	1	**277-4421**	2	COVER-SIDE	
	5	1	**7W-3872**	6	SLEEVE	
	6	1	**110-7618**	4	BOLT AS	
	8	1	**222-5893**	1	COVER AS	
M	8A	1	**6V-5698**	2	SCREW-BUTTON HEAD (M4X0.7X10-MM)	
	9	1	**210-3321**	1	STUD (M8X1.25-THD)	
M	10	1	**5C-7261**	1	NUT (M8X1.25-THD)	
M	11	1	**6V-2317**	23	BOLT (M8X1.25X30-MM)	
	12	1	**9M-1974**	22	WASHER-HARD (8.8X16X2-MM THK)	
B	13	1	**1U-8846**		SEALANT-GASKET	

B-USE AS REQUIRED
M-METRIC PART

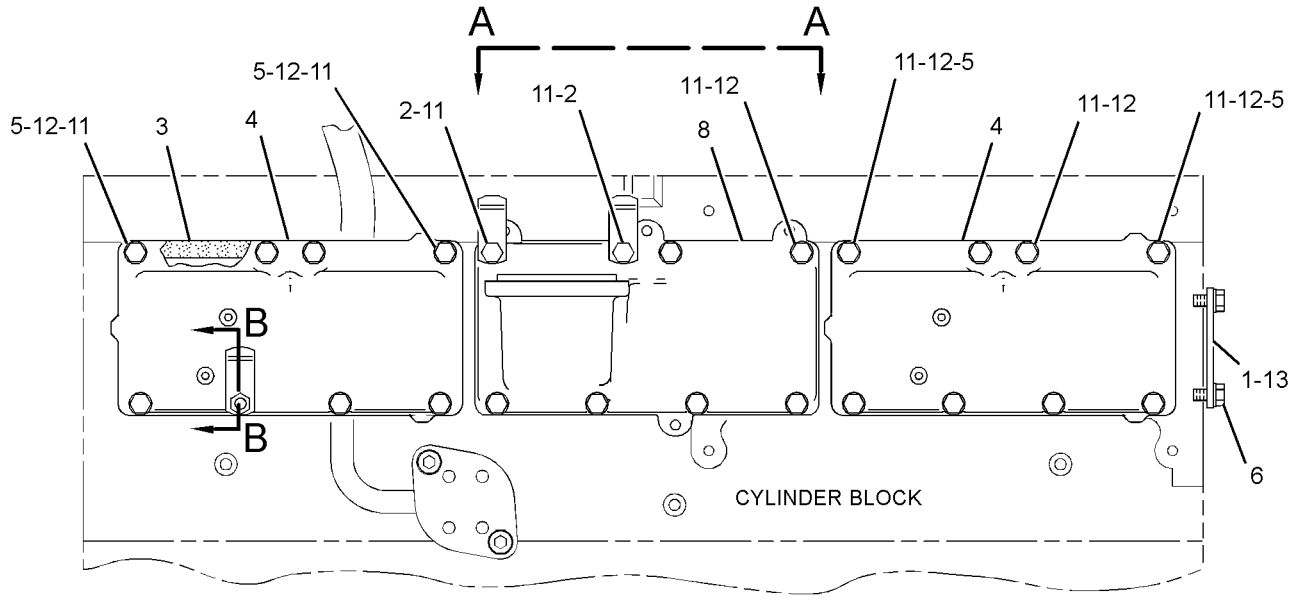

LEFT SIDE VIEW OF ENGINE

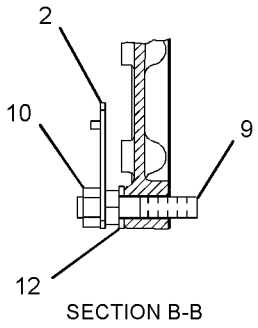

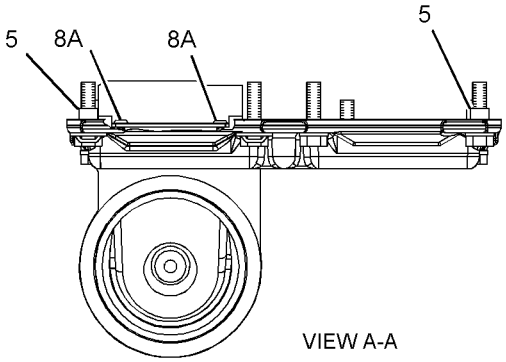

GRAPHIC #1 **<END>** g01331079

BASIC ENGINE

118-1727 COVER GP-FRONT HOUSING

S/N: KHX8814-UP

PART OF 312-0255 ENGINE AR-COMPLETE

SMCS-1151, 1166 **i01671188**

NOTE	REF NO	GRAPHIC REF	PART NUMBER	QTY	PART NAME 1 2 3 4 5 6 (PRODUCT LEVEL)	SEE PAGE
	1	1	**5P-8245**	4	WASHER-HARD (13.5X25.5X3-MM THK)	
M	2	1	**6V-5696**	2	BOLT (M12X1.75X80-MM)	
	3	1	**4W-2026**	1	COVER	
	4	1	**135-9819**	1	SEAL-INTEGRAL	
M	5	1	**6V-8149**	2	NUT (M12X1.75-THD)	

M-METRIC PART

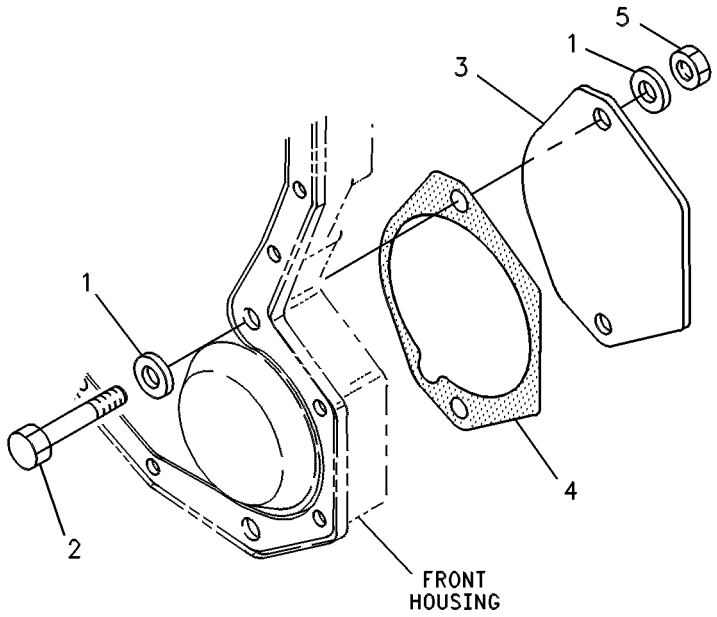

GRAPHIC #1 **<END>** g00245495

BASIC ENGINE

275-0595 COVER GP-FRONT HOUSING

S/N: KHX8814-UP

PART OF 312-0255 ENGINE AR-COMPLETE

SMCS-1151, 1166 **i03087632**

NOTE	REF NO	GRAPHIC REF	PART NUMBER	QTY	PART NAME 1 2 3 4 5 6 (PRODUCT LEVEL)	SEE PAGE
M	1	1	**9X-2099**	1	STUD (M8X1.25X52.75-MM)	
	2	1	**002-3448**	1	CLIP	
	3	1	**108-3612**	1	SPACER (11.13X19.05X53-MM THK)	
	4	1	**159-0286**	1	TUBE AS-FILLER	
	5	1	**166-1776**	1	COVER AS-FRONT	
		1	**126-1757**	2	WASHER (10.85X19.3X1.27-MM THK)	
		1	**136-0822**	2	STUD	
	6	1	**166-1781**	1	GASKET	
	7	1	**241-5645**	1	CAP AS-ENGINE OIL FILLER	
	8	1	**061-9455**	1	SEAL-O-RING	
M	9	1	**5C-7261**	2	NUT (M8X1.25-THD)	
M	10	1	**6V-2317**	10	BOLT (M8X1.25X30-MM)	
	11	1	**6V-5839**	1	WASHER (11X21X2.5-MM THK)	
M	12	1	**8T-0100**	2	BOLT (M8X1.25X60-MM)	
M	13	1	**8T-0643**	1	BOLT (M10X1.5X80-MM)	
	14	1	**8T-4224**	2	WASHER-HARD (8.8X16X2-MM THK)	

M-METRIC PART

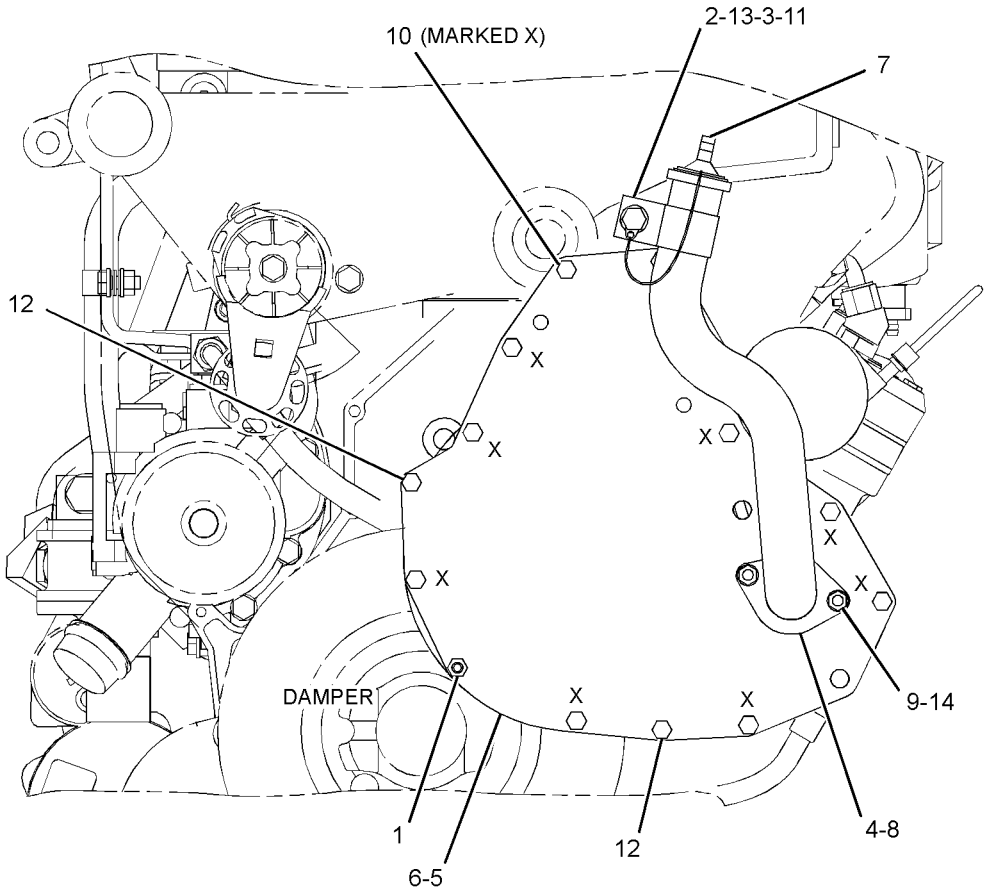

FRONT VIEW OF ENGINE

GRAPHIC #1 **<END>** g01312839

BASIC ENGINE

307-1735 COVER GP-VALVE MECHANISM

S/N: KHX8814-UP

PART OF 312-0255 ENGINE AR-COMPLETE

SMCS-1107, 1120 **i02791485**

NOTE	REF NO	GRAPHIC REF	PART NUMBER	QTY	PART NAME 1 2 3 4 5 6 (PRODUCT LEVEL)	SEE PAGE
	1	1	**271-2417**	1	COVER GP-VALVE MECHANISM	
	1A	1	**244-4486**	1	SEAL-COVER	
		1	**245-6796**	1	COVER AS-BASE	
	2	1	**307-1738**	1	COVER GP-VALVE MECHANISM	
	2A	1	**272-0388**	1	SEAL-VALVE COVER	
M	3	1	**099-3649**	13	BOLT (M8X1.25X40-MM)	
	4	1	**8T-4224**	13	WASHER-HARD (8.8X16X2-MM THK)	

M-METRIC PART

307-1735 **COVER GP-VALVE MECHANISM** *(contd.)* **i02791485**

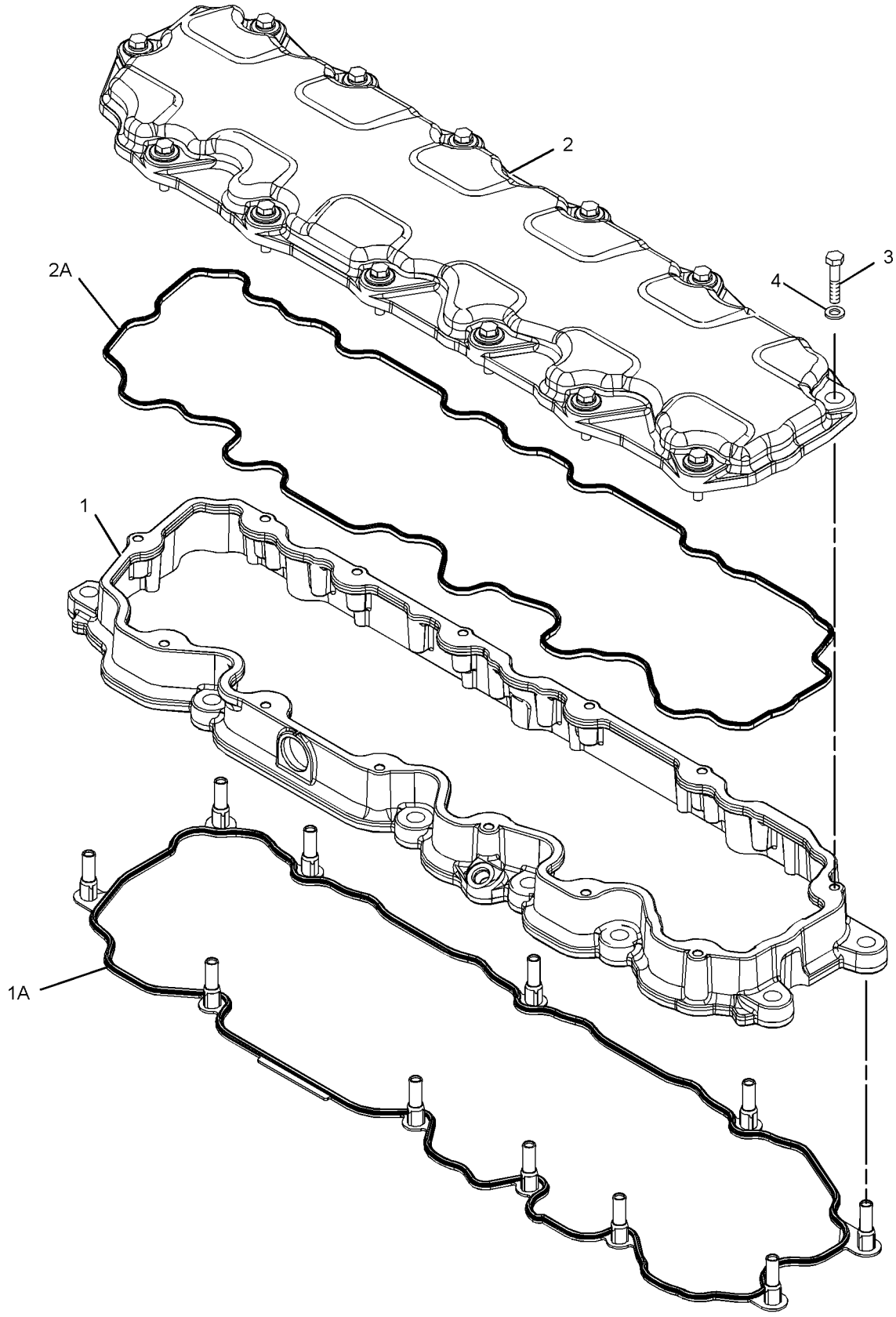

GRAPHIC #1 **<END>** g01348109

BASIC ENGINE

210-5590 CRANKSHAFT GP

S/N: KHX8814-UP

PART OF 312-0254 ENGINE AR-CORE

SMCS-1202, 1203, 1204, 1232 **i02215729**

NOTE	REF NO	GRAPHIC REF	PART NUMBER	QTY	PART NAME 1 2 3 4 5 6 (PRODUCT LEVEL)	SEE PAGE
	1	1	**227-5480**	1	CRANKSHAFT AS	
	1A	1	**1B-8705**	1	KEY-WOODRUFF	
	1B	1	**2W-8147**	1	GEAR (50-TEETH)	
J	2	1	**212-4893**	1	BEARING-THRUST (STANDARD)	
AB		1	**229-5153**		BEARING-THRUST (0.25-MM US)	
AB		1	**229-5154**		BEARING-THRUST (0.5-MM US)	
AB		1	**229-5155**		BEARING-THRUST (0.5-MM OS)	
AB		1	**229-5156**		BEARING-THRUST (0.5-MM US - 0.5-MM OS)	
J	3	1	**107-7708**	6	BEARING-MAIN (STANDARD)	
AB		1	**145-0168**		BEARING-MAIN (0.5-MM OS)	
AB		1	**145-0170**		BEARING-MAIN (0.5-MM US - 0.5-MM OS)	
AB		1	**145-0162**		BEARING-MAIN (0.25-MM US)	
AB		1	**145-0164**		BEARING-MAIN (0.5-MM US)	
ABF		1	**7C-7980**	1	SLEEVE-OIL SEAL	
					(THIS WEAR SLEEVE IS USED ONLY TO SALVAGE (REPAIR) THE REAR SEAL SURFACE OF THE CRANKSHAFT)	
					AVAILABLE REPAIR KIT(S):	
AJ			**196-9519**		BEARING GP-MAIN	

A-NOT PART OF THIS GROUP
B-USE AS REQUIRED
F-NOT SHOWN
J-KIT MARKED J SERVICES PARTS MARKED J

210-5590 **CRANKSHAFT GP** *(contd.)* **i02215729**

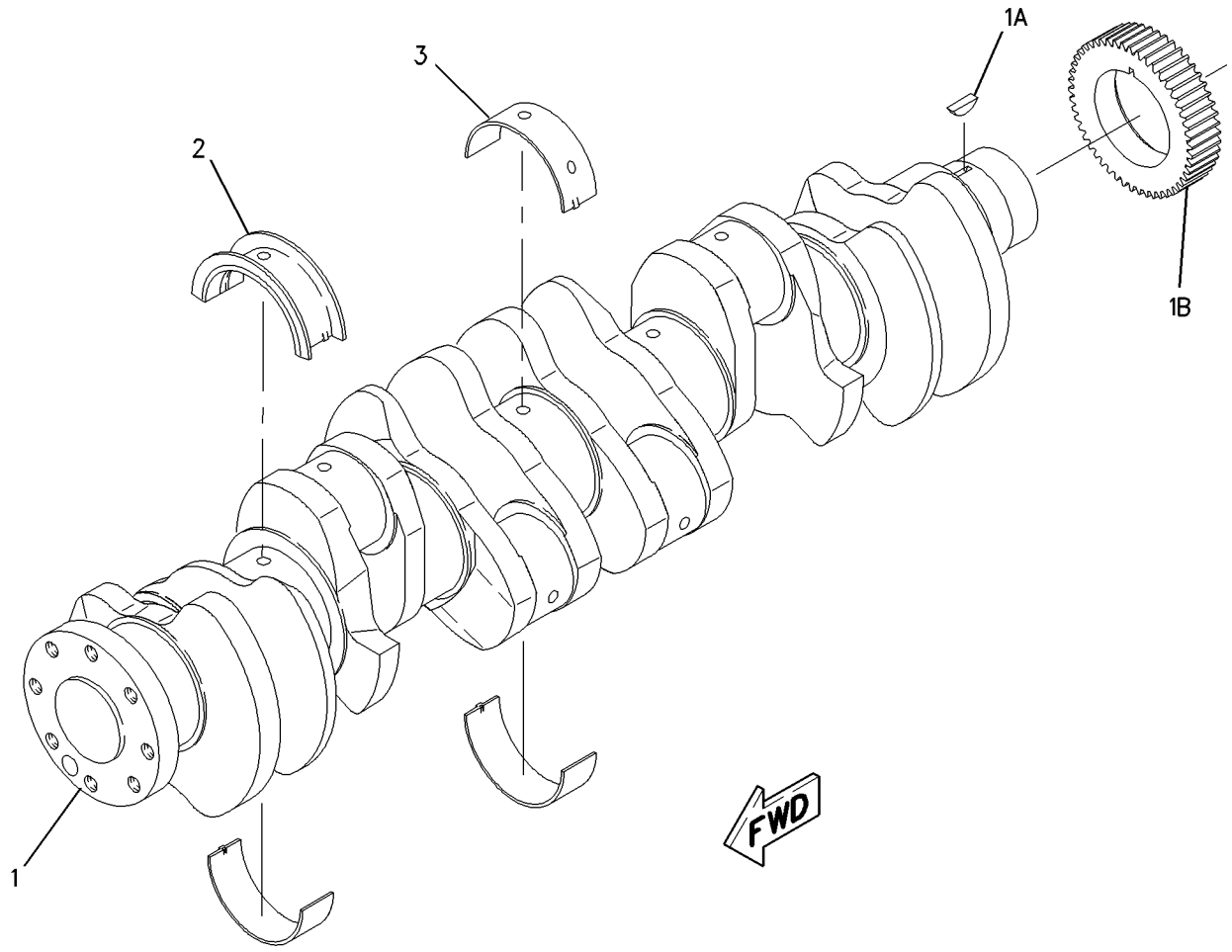

GRAPHIC #1 **<END>** g00977492

BASIC ENGINE

221-4482 CYLINDER BLOCK GP

S/N: KHX8814-UP

PART OF 312-0254 ENGINE AR-CORE

SMCS-1201 **i02690900**

NOTE	REF NO	GRAPHIC REF	PART NUMBER	QTY	PART NAME 1 2 3 4 5 6 (PRODUCT LEVEL)	SEE PAGE
CY	1	1	**305-8141**	1	CYLINDER BLOCK GP	22
	2	1	**7N-5683**	2	DOWEL	
	3	1	**1W-8407**	2	SLEEVE	
	4	1	**6V-3538**	2	DOWEL	

C-CHANGE FROM PREVIOUS TYPE
Y-SEPARATE ILLUSTRATION

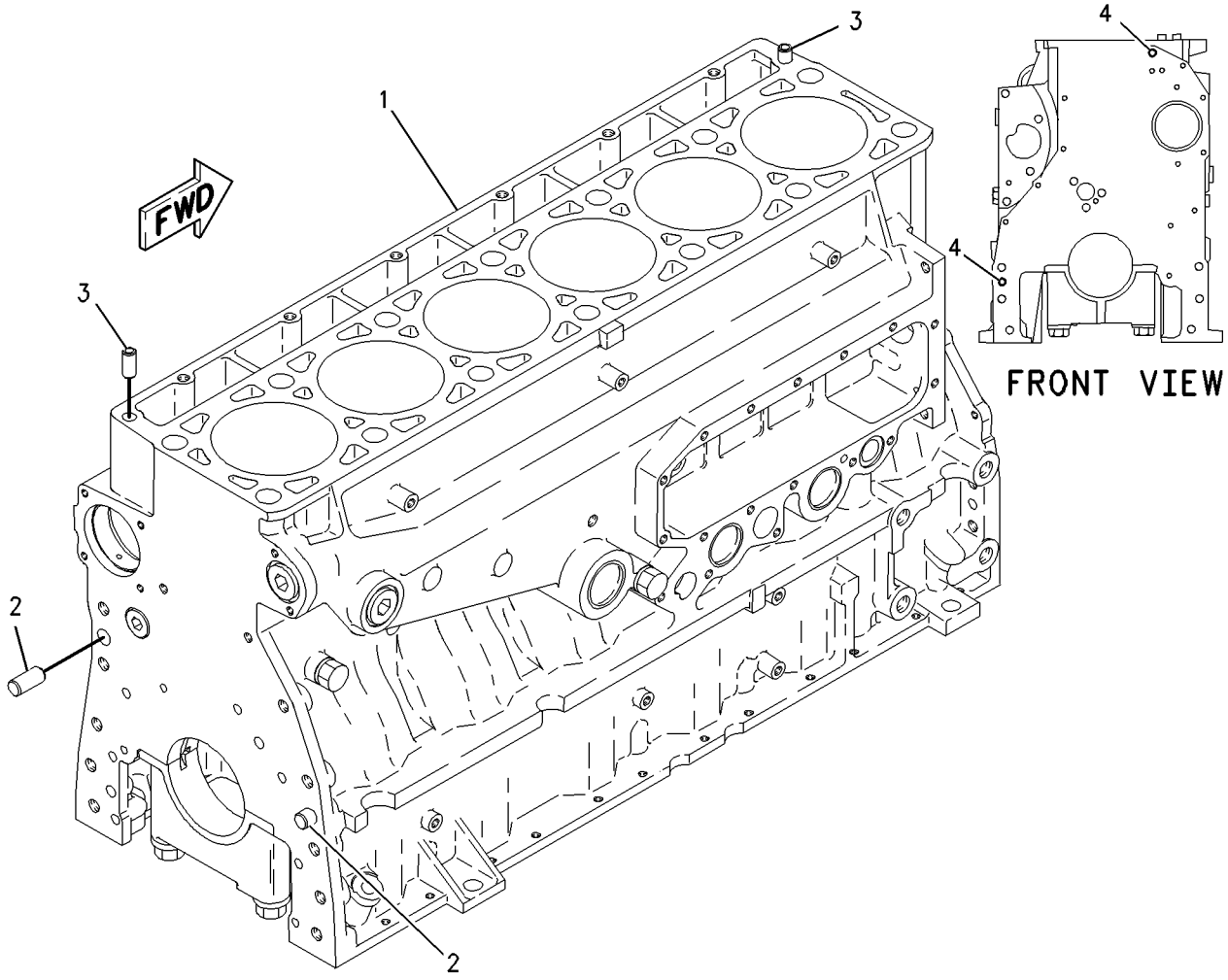

GRAPHIC #1 **<END>** g00800849

263-3774 CYLINDER BLOCK GP

S/N: KHX8814-UP

PART OF 305-8141 CYLINDER BLOCK GP

SMCS-1201 **i02696326**

NOTE	REF NO	GRAPHIC REF	PART NUMBER	QTY	PART NAME 1 2 3 4 5 6 (PRODUCT LEVEL)	SEE PAGE
	1	1	**7E-2968**	7	CAP-CRANKSHAFT BEARING	
M	2	1	**9X-8916**	14	BOLT (M16X2X140-MM)	
	3	1	**5P-8247**	14	WASHER-HARD (17X32X3.5-MM THK)	

M-METRIC PART

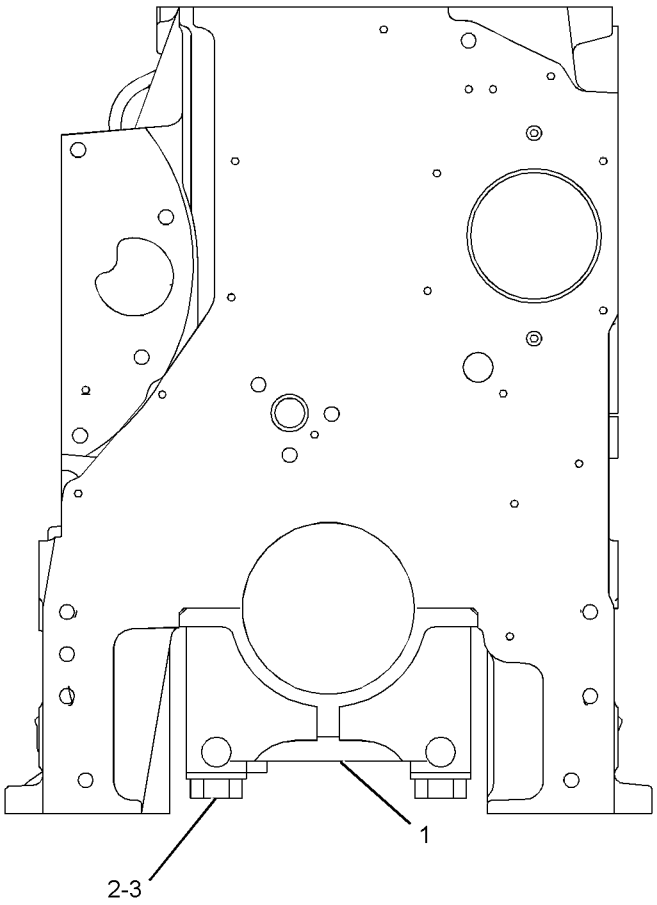

FRONT VIEW

GRAPHIC #1

<END>

g01352581

BASIC ENGINE

305-8141 CYLINDER BLOCK GP

S/N: KHX8814-UP

PART OF 221-4482 CYLINDER BLOCK GP

SMCS-1201 **i02690909**

NOTE	REF NO	GRAPHIC REF	PART NUMBER	QTY	PART NAME 1 2 3 4 5 6 (PRODUCT LEVEL)	SEE PAGE
Y	1	1	*263-3774*	1	CYLINDER BLOCK GP	21
	2	1	**2M-6471**	2	PLUG-CUP	
	3	1	**3H-5552**	1	PLUG-CUP	
	4	1	**9S-8006**	1	PLUG-O-RING	
	5	1	**2M-9780**	1	SEAL-O-RING	
	6	1	**216-5586**	1	BEARING-SLEEVE (CAMSHAFT)	
	7	1	**2W-7213**	6	BEARING-SLEEVE (CAMSHAFT)	

Y-SEPARATE ILLUSTRATION

305-8141 **CYLINDER BLOCK GP** *(contd.)* **i02690909**

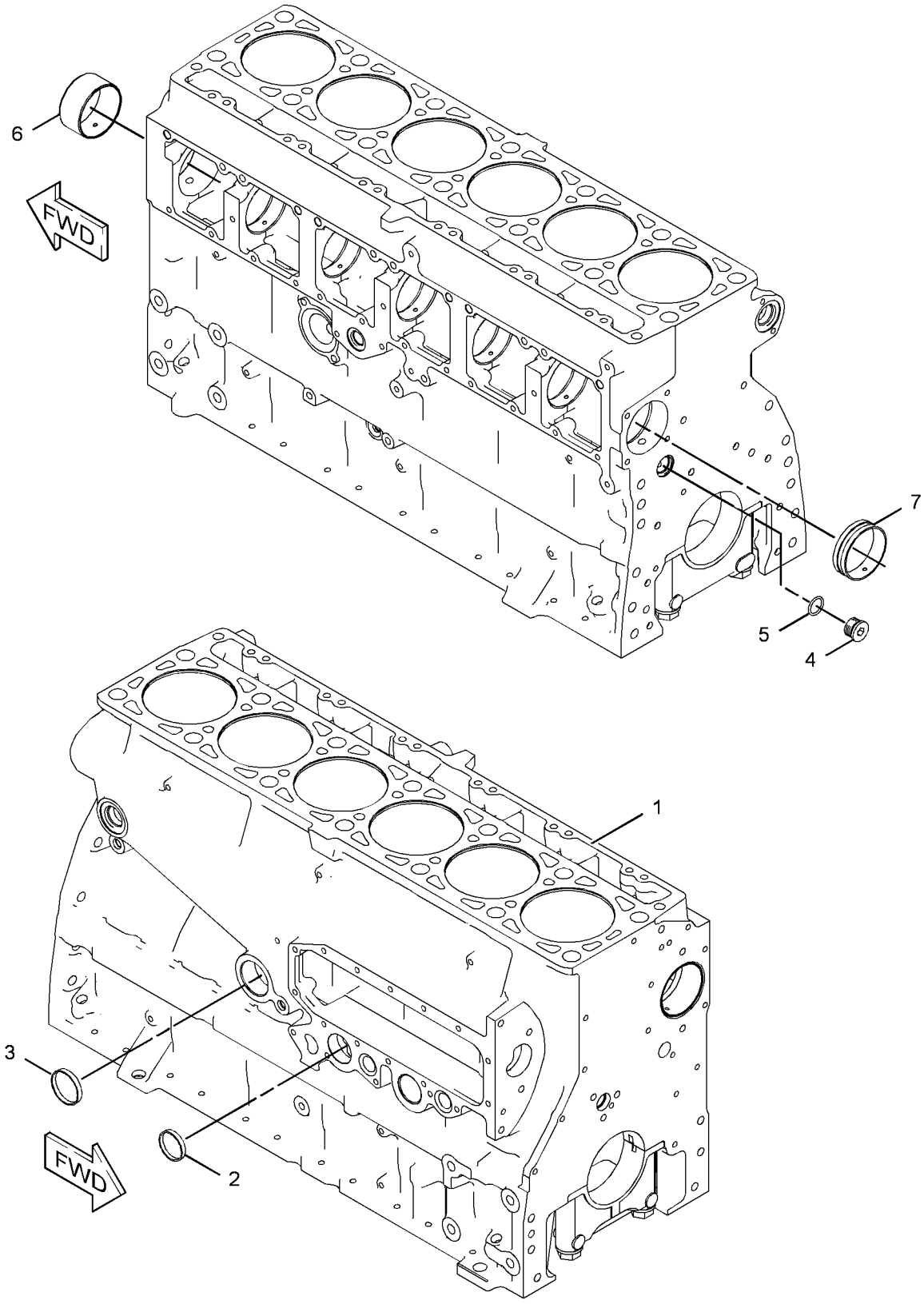

GRAPHIC #1 **<END>** g01348114

BASIC ENGINE

219-5844 CYLINDER HEAD AS

S/N: KHX8814-UP

PART OF 219-5846 CYLINDER HEAD GP

SMCS-1100 **i02215799**

NOTE	REF NO	GRAPHIC REF	PART NUMBER	QTY	PART NAME 1 2 3 4 5 6 (PRODUCT LEVEL)	SEE PAGE
	2	1	**8M-5860**	12	PLUG-CUP	
	3	1	**4F-5695**	2	PLUG-CUP	
	4	1	**227-1200**	6	SLEEVE-INJECTOR	
	5	1	**217-5213**	12	INSERT-VALVE SEAT (INLET)	
	6	1	**147-8218**	6	INSERT-VALVE SEAT (EXHAUST)	
	7	1	**8C-0563**	12	SEAL-O-RING	
	8	1	**9S-9334**	1	PLUG-O-RING	
	9	1	**9X-7712**	1	SEAL-O-RING	

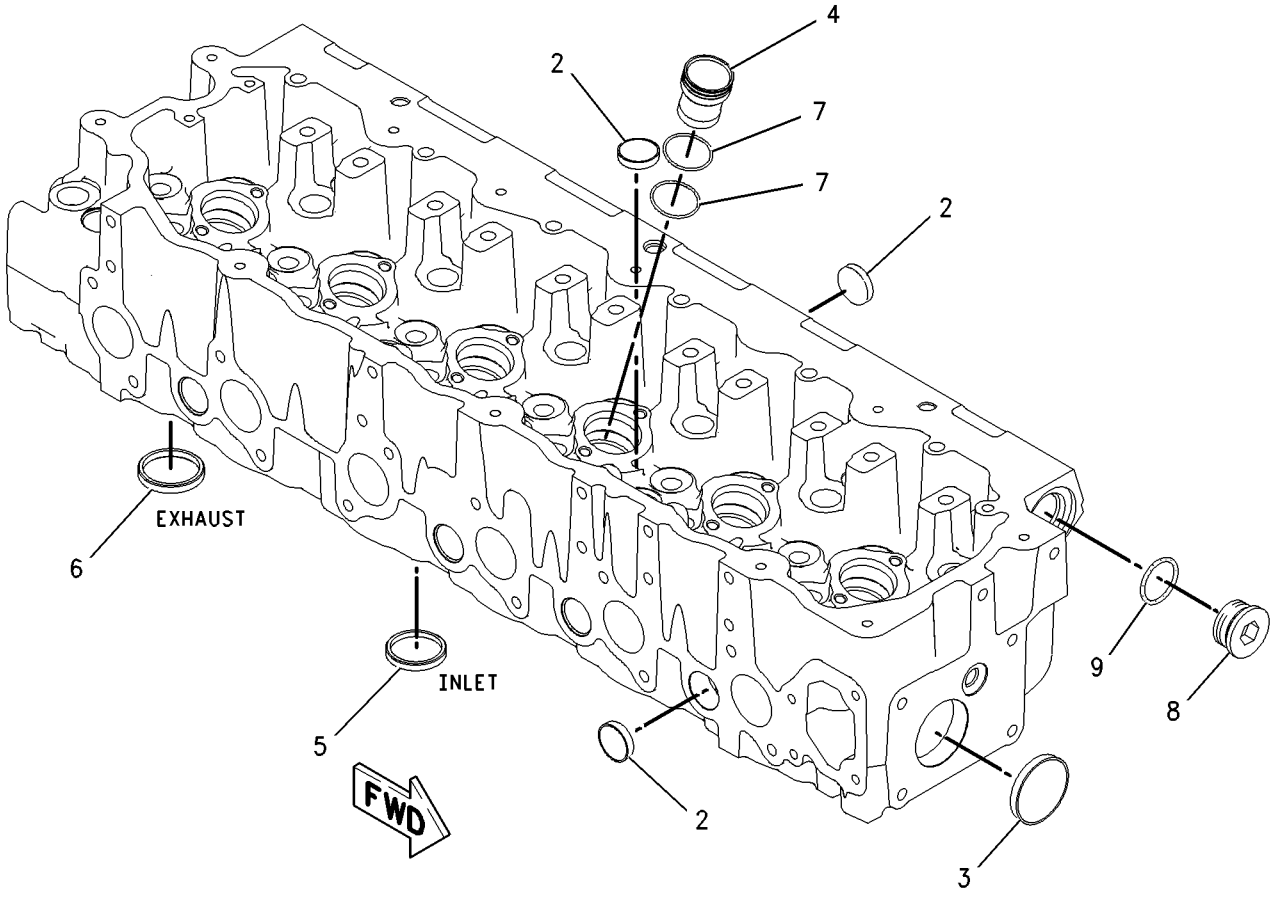

GRAPHIC #1 **<END>** g00948980

219-5846 CYLINDER HEAD GP*R

S/N: KHX8814-UP

PART OF 219-5847 CYLINDER HEAD GP

SMCS-1100 **i02215801**

NOTE	REF NO	GRAPHIC REF	PART NUMBER	QTY	PART NAME 1 2 3 4 5 6 (PRODUCT LEVEL)	SEE PAGE
Y	1	1	*219-5844*	1	CYLINDER HEAD AS	24
	2	1	**145-7390**	12	VALVE-INLET	
	3	1	**147-8211**	6	VALVE-EXHAUST	
	4	1	**1W-2715**	24	LOCK-RETAINER	
	5	1	**7E-7779**	12	RETAINER-SPRING	
	6	1	**147-8214**	12	SEAL-VALVE STEM	
	7	1	**140-9670**	12	GUIDE-VALVE	
	8	1	**137-6718**	6	SPRING-VALVE	
	9	1	**140-6188**	12	SPRING-VALVE	
	10	1	**2A-4429**	12	LOCK-RETAINER	
	11	1	**134-4483**	6	RETAINER-SPRING	
	12	1	**147-8220**	6	GUIDE-VALVE	
	13	1	**163-2478**	6	SEAL-VALVE STEM	
	14	1	**137-6715**	6	SEAT-VALVE SPRING	

Y-SEPARATE ILLUSTRATION

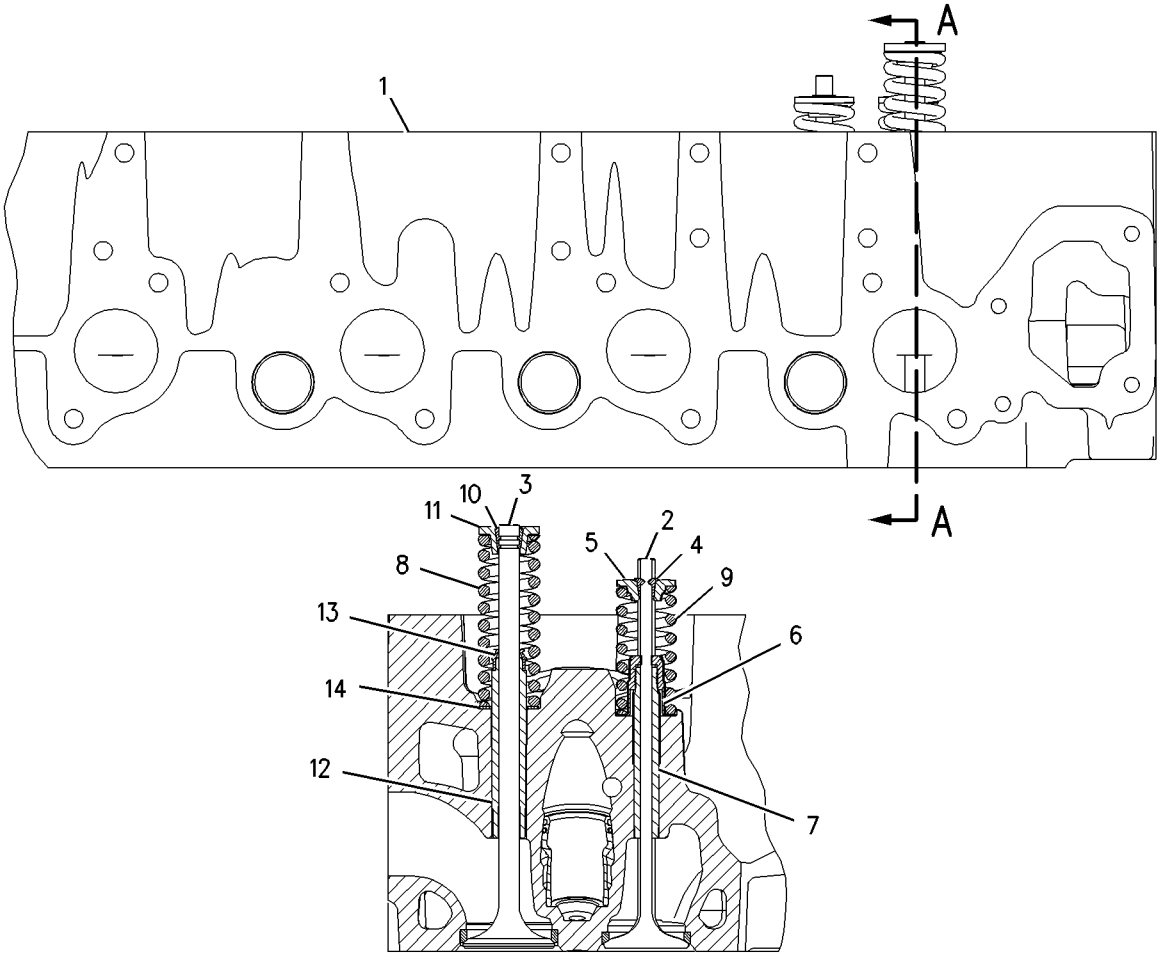

SECTION A-A

GRAPHIC #1 **<END>** g00947786

BASIC ENGINE

219-5847 CYLINDER HEAD GP*R

S/N: KHX8814-UP

PART OF 219-5849 CYLINDER HEAD GP

SMCS-1100 **i02215791**

NOTE	REF NO	GRAPHIC REF	PART NUMBER	QTY	PART NAME 1 2 3 4 5 6 (PRODUCT LEVEL)	SEE PAGE
YR	1	1	**219-5846**	1	CYLINDER HEAD GP	25
	2	1	**1N-5999**	2	PLUG-O-RING	
	3	1	**2M-9780**	1	SEAL-O-RING	
	4	1	**3J-1907**	2	SEAL-O-RING	
	5	1	**6V-5048**	6	SEAL-O-RING	
	6	1	**7J-0204**	2	SEAL-O-RING	
	7	1	**9S-8002**	6	PLUG-O-RING	
	8	1	**9S-8004**	2	PLUG-O-RING	
	9	1	**9S-8006**	1	PLUG-O-RING	
	10	1	**9S-9334**	1	PLUG-O-RING	
	11	1	**9X-7712**	1	SEAL-O-RING	

R-REMFG PART MAY BE AVAILABLE
Y-SEPARATE ILLUSTRATION

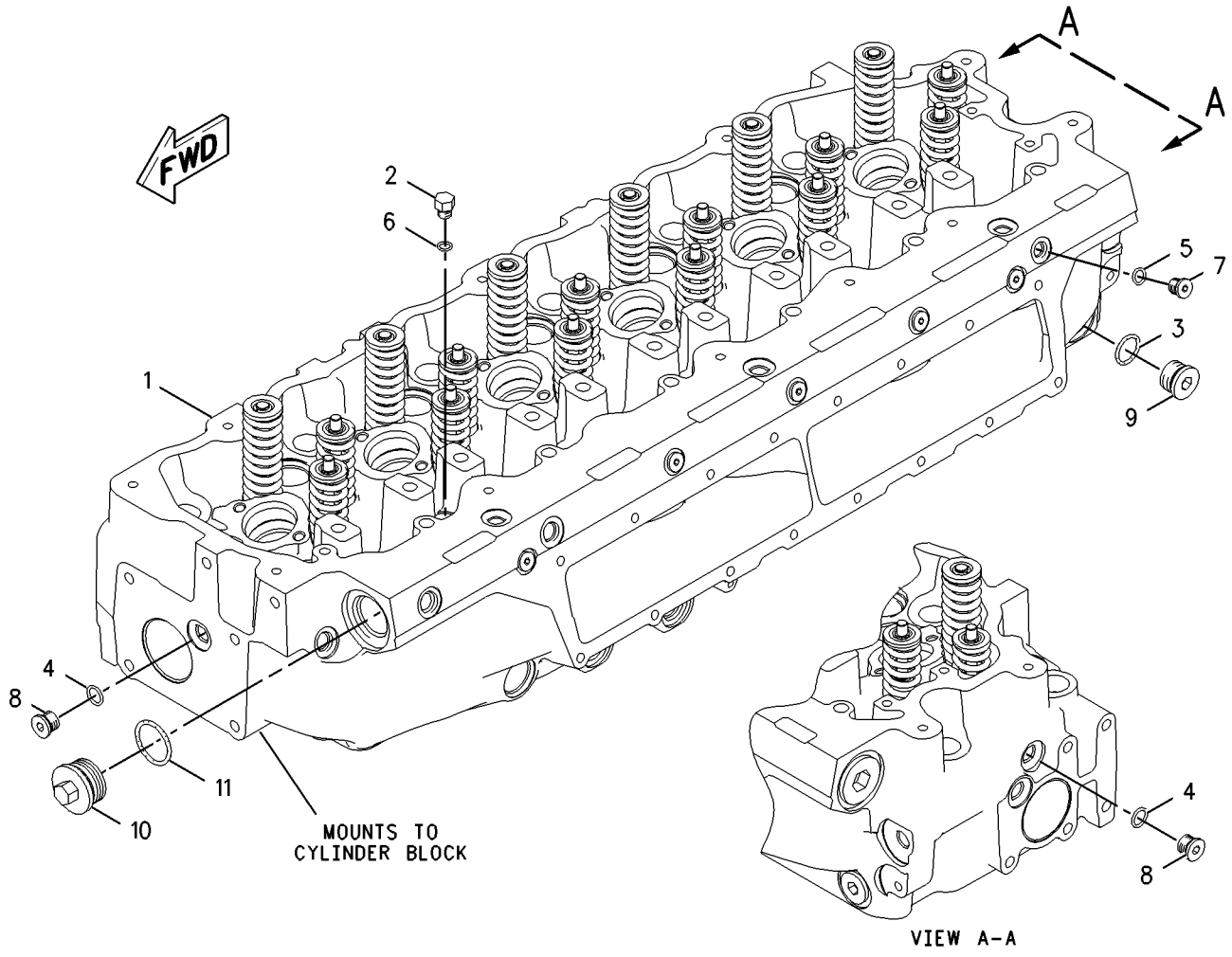

GRAPHIC #1 **<END>** g00947578

219-5849 CYLINDER HEAD GP

S/N: KHX8814-UP

PART OF 312-0254 ENGINE AR-CORE

SMCS-1100 **i02260856**

NOTE	REF NO	GRAPHIC REF	PART NUMBER	QTY	PART NAME 1 2 3 4 5 6 (PRODUCT LEVEL)	SEE PAGE
Y	1	1	*219-5847*	1	CYLINDER HEAD GP	26
	2	1	**133-4995**	1	GASKET-CYLINDER HEAD	
	3	1	*142-7289*	14	FASTENER GP-CYLINDER HEAD	
					(EACH INCLUDES)	
		1	**138-3252**	1	BOLT-12 POINT HEAD	
		1	**8T-3282**	1	WASHER-HARD (22X35X3.5-MM THK)	
M	4	1	**8T-7950**	6	BOLT (M10X1.5X180-MM)	
	5	1	**6V-5839**	6	WASHER (11X21X2.5-MM THK)	

M-METRIC PART
Y-SEPARATE ILLUSTRATION

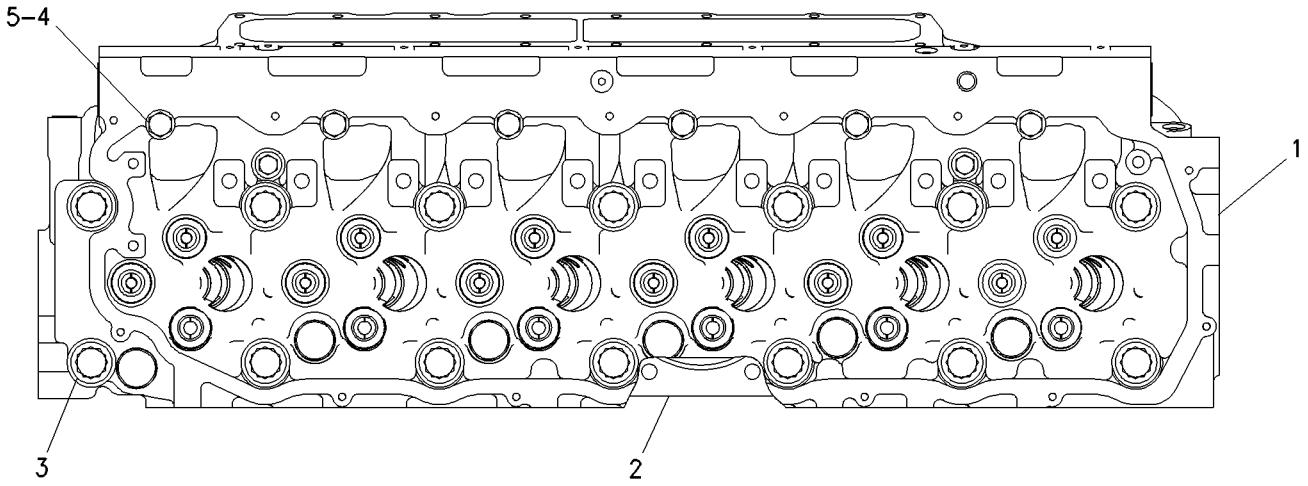

TOP VIEW

GRAPHIC #1 **<END>** g00760746

BASIC ENGINE

250-8309 DAMPER & PULLEY GP

S/N: KHX8814-UP

PART OF 312-0255 ENGINE AR-COMPLETE

SMCS-1205 **i02789612**

NOTE	REF NO	GRAPHIC REF	PART NUMBER	QTY	PART NAME 1 2 3 4 5 6 (PRODUCT LEVEL)	SEE PAGE
	1	1	**2W-7381**	1	PLATE-CLAMP	
	2	1	**167-8121**	1	DAMPER AS	
	3	1	**172-9367**	1	PULLEY-CRANKSHAFT	
	4	1	**228-3621**	1	SPACER (101.5X167X8-MM THK)	
M	5	1	**6V-4249**	8	BOLT (M10X1.5X50-MM)	
M	6	1	**8T-3666**	4	BOLT (M14X2X60-MM)	

M-METRIC PART

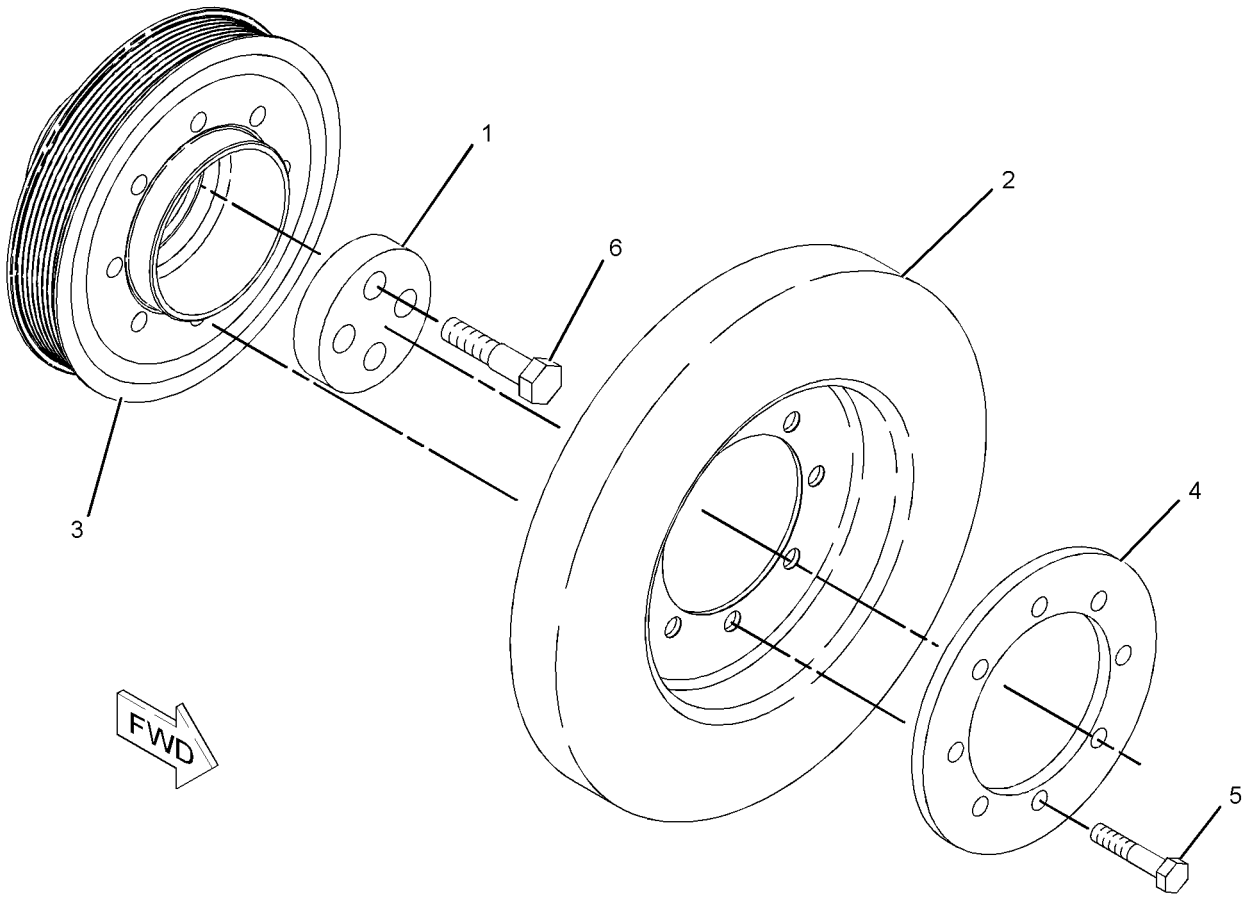

GRAPHIC #1 **<END>** g01148400

BASIC ENGINE

313-4384 DRIVE GP-ACCESSORY

S/N: KHX8814-UP

PART OF 312-0255 ENGINE AR-COMPLETE

SMCS-1207 **i03339007**

NOTE	REF NO	GRAPHIC REF	PART NUMBER	QTY	PART NAME 1 2 3 4 5 6 (PRODUCT LEVEL)	SEE PAGE
	1	1	**124-7792**	1	PULLEY AS-IDLER	
	2	1	**145-2901**	1	COVER-DUST	
	3	1	**220-1209**	1	BELT TENSIONER	
	4	1	**228-4766**	1	PLATE-LIFTING	
	5	1	**263-1786**	1	SPACER	
	6	1	**316-4404**	1	BRACKET AS	
	7	1	**285-9066**	1	BOLT (M8X1.25X65-MM)	
	8	1	**5P-4116**	1	WASHER-HARD (8.8X20.5X2-MM THK)	
	9	1	**8T-4121**	5	WASHER-HARD (11X21X2.5-MM THK)	
M	10	1	**8T-4172**	1	BOLT (M10X1.5X80-MM)	
M	11	1	**8T-4196**	4	BOLT (M10X1.5X35-MM)	

M-METRIC PART

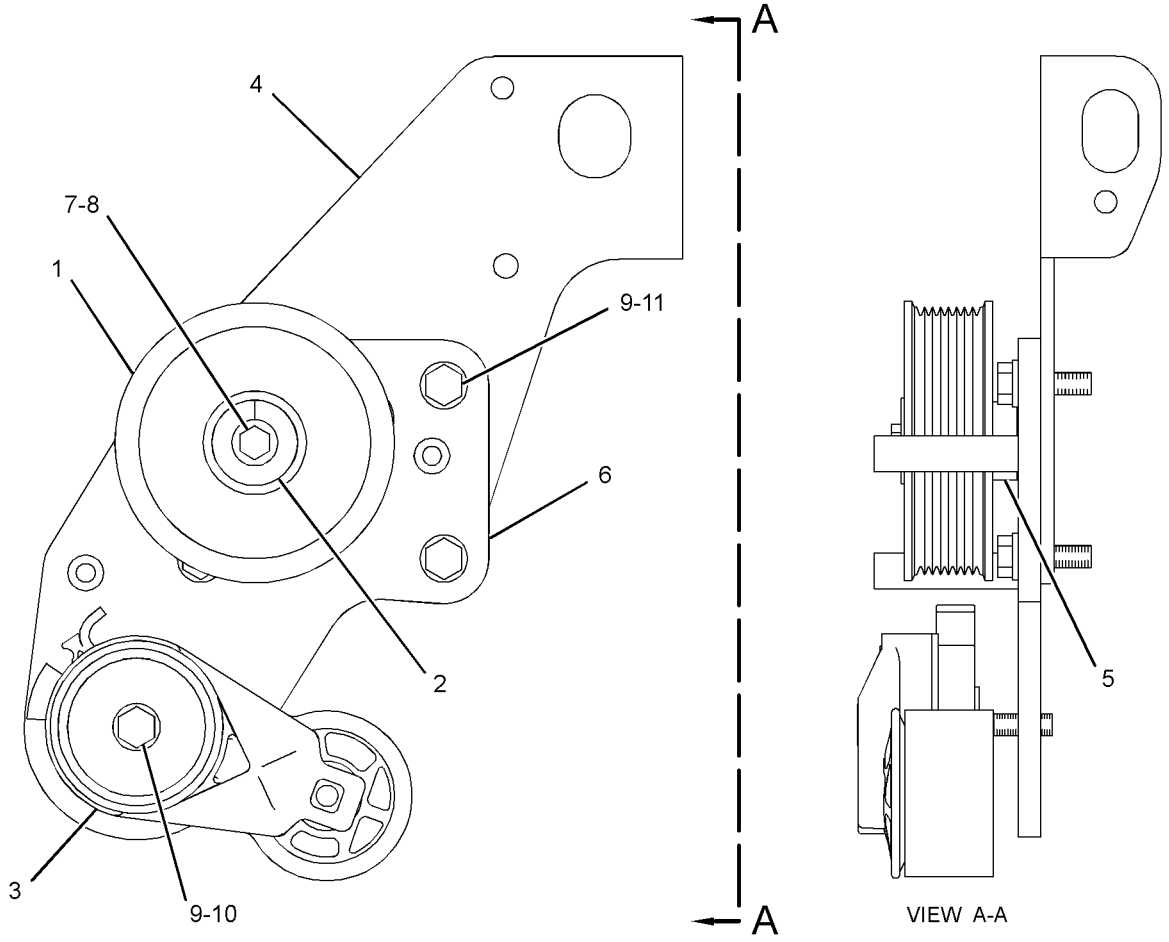

GRAPHIC #1 **<END>** g01716996

7C-8365 DRIVE GP-FAN

S/N: JPA1-UP

PART OF 318-9471 DRIVE GP-FAN

SMCS-1359 **i03432296**

NOTE	REF NO	GRAPHIC REF	PART NUMBER	QTY	PART NAME 1 2 3 4 5 6 (PRODUCT LEVEL)	SEE PAGE
	1	1	**5S-9062**	1	SPACER (35.032X50.8X15.88-MM THK)	
	2	1	**7C-8370**	1	CAP-DUST	
	3	1	**7C-8366**	1	BRACKET AS	
	4	1	**7C-8369**	1	HUB	
	5	1	**6V-9748**	1	SEAL-LIP TYPE	
	6	1	**4W-1203**	2	CUP-BEARING	
	7	1	**4W-1204**	2	CONE-BEARING	
	8	1	**4W-2042**	1	SPACER (35.3X45.5X38.331-MM THK)	
M	9	1	**6V-8004**	1	BOLT (M12X1.75X120-MM)	
	10	1	**7C-8634**	1	PLATE	

M-METRIC PART

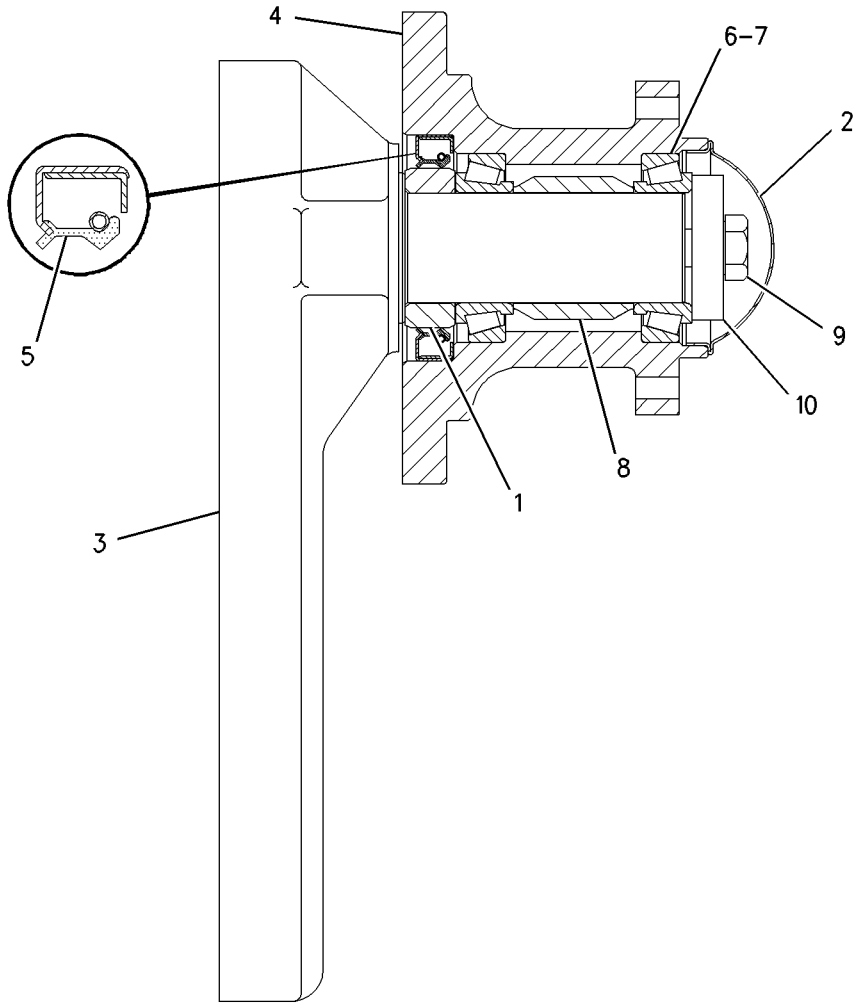

GRAPHIC #1 **<END>** g00799529

318-9471 DRIVE GP-FAN

S/N: JPA1-UP

PART OF 274-7940 GENERAL AR

SMCS-1359 **i03246261**

NOTE	REF NO	GRAPHIC REF	PART NUMBER	QTY	PART NAME 1 2 3 4 5 6 (PRODUCT LEVEL)	SEE PAGE
Y	1	1	**7C-8365**	1	DRIVE GP-FAN	30
	2	1	**107-9579**	1	PULLEY	
	3	1	**276-7462**	1	ADAPTER-FAN	
	4	1	**294-1136**	1	SUPPORT AS	
	5	1	**318-9543**	1	PULLEY	
	6	1	**319-6293**	1	V-BELT SET (INCLUDES 3-BELTS)	
M	7	1	**7X-0818**	6	BOLT (M8X1.25X45-MM)	
M	8	1	**7X-2553**	4	BOLT (M16X2X40-MM)	
	9	1	**8T-4121**	8	WASHER-HARD (11X21X2.5-MM THK)	
M	10	1	**8T-4185**	4	BOLT (M10X1.5X50-MM)	
M	11	1	**8T-4196**	4	BOLT (M10X1.5X35-MM)	
	12	1	**8T-4224**	12	WASHER-HARD (8.8X16X2-MM THK)	
M	13	1	**8T-4908**	6	BOLT (M8X1.25X25-MM)	
	14	1	**9X-8257**	4	WASHER (17.5X30X3.5-MM THK)	

M-METRIC PART
Y-SEPARATE ILLUSTRATION

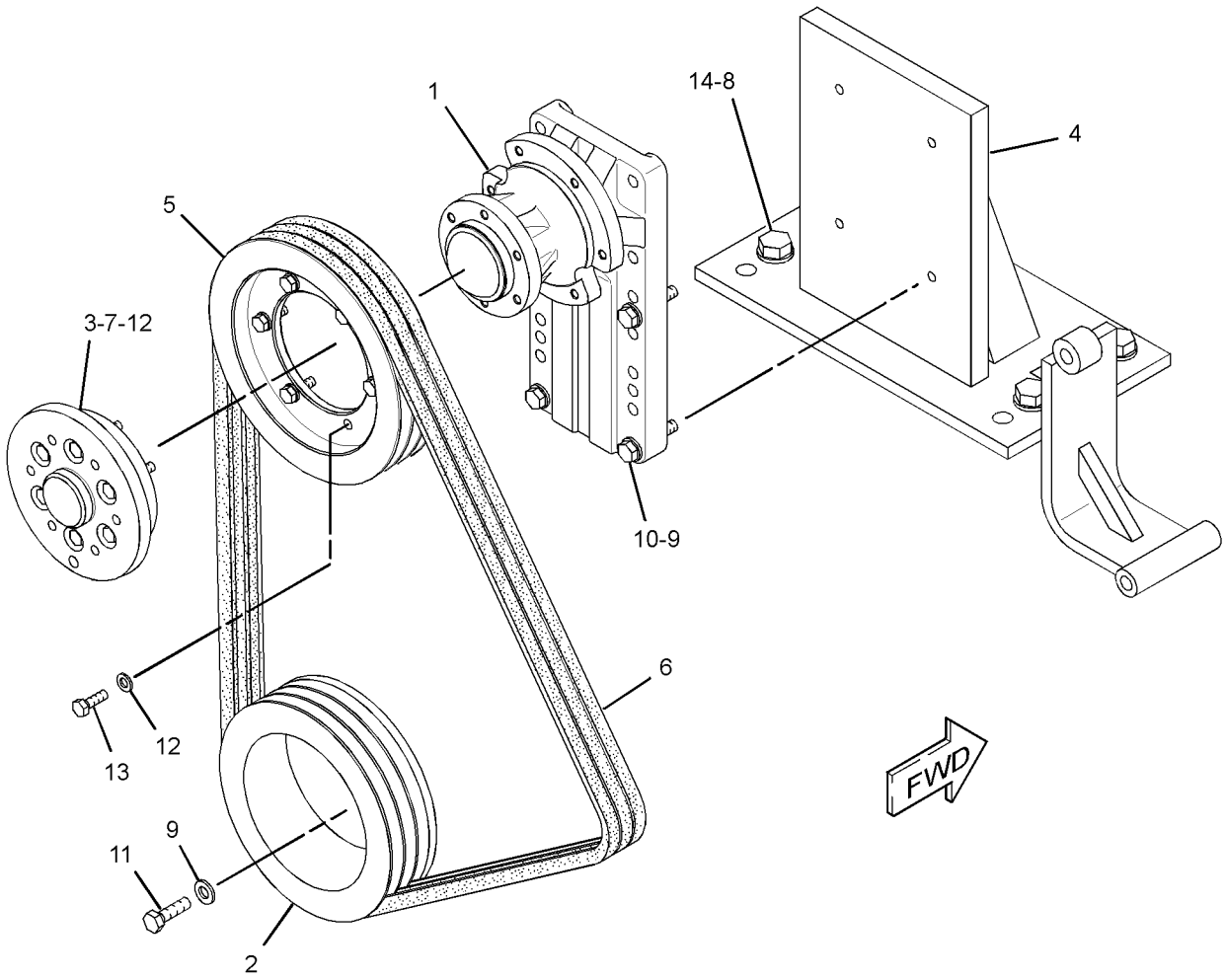

GRAPHIC #1 **<END>** g01686013

BASIC ENGINE

258-8723 FASTENER GP-CYLINDER HEAD

S/N: KHX8814-UP

PART OF 312-0255 ENGINE AR-COMPLETE

SMCS-1100 **i02310961**

NOTE	REF NO	GRAPHIC REF	PART NUMBER	QTY	PART NAME 1 2 3 4 5 6 (PRODUCT LEVEL)	SEE PAGE
	1	1	**229-8844**	3	CLIP	
	2	1	**244-4500**	11	SPRING	
M	3	1	**8T-0100**	11	BOLT (M8X1.25X60-MM)	
	4	1	**9N-0869**	11	WASHER-HARD (8.8X25.5X2-MM THK)	

M-METRIC PART

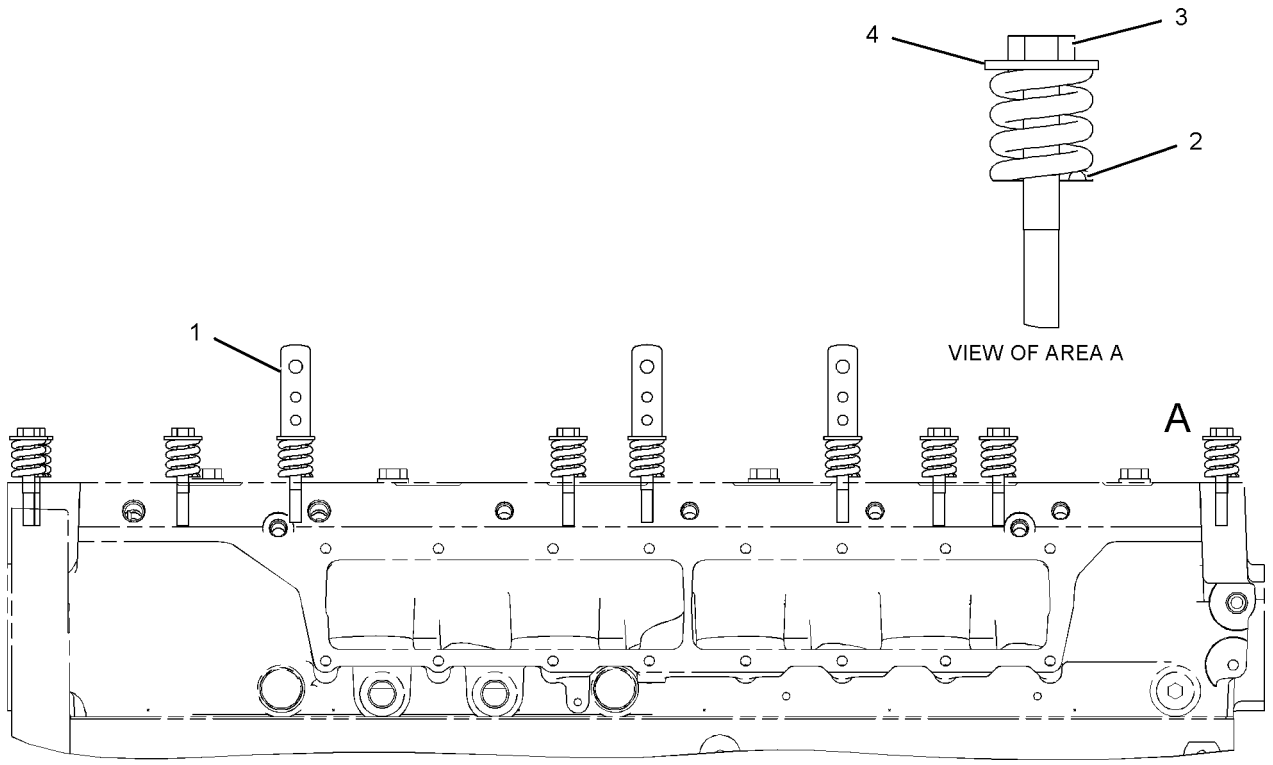

VIEW OF AREA A

RIGHT SIDE VIEW

GRAPHIC #1 **<END>** g01125046

322-0246 FASTENER GP-ENGINE

S/N: KHX8814-UP

PART OF 312-0255 ENGINE AR-COMPLETE

SMCS-1000, 7553 **i02981180**

NOTE	REF NO	GRAPHIC REF	PART NUMBER	QTY	PART NAME 1 2 3 4 5 6 (PRODUCT LEVEL)	SEE PAGE
M	1	1	**6V-2317**	4	BOLT (M8X1.25X30-MM)	
M	2	1	**6V-5218**	2	BOLT (M8X1.25X35-MM)	
M	3	1	**6V-8337**	1	BOLT-SOCKET HEAD (M8X1.25X35-MM)	
	4	1	**9M-1974**	7	WASHER-HARD (8.8X16X2-MM THK)	

M-METRIC PART

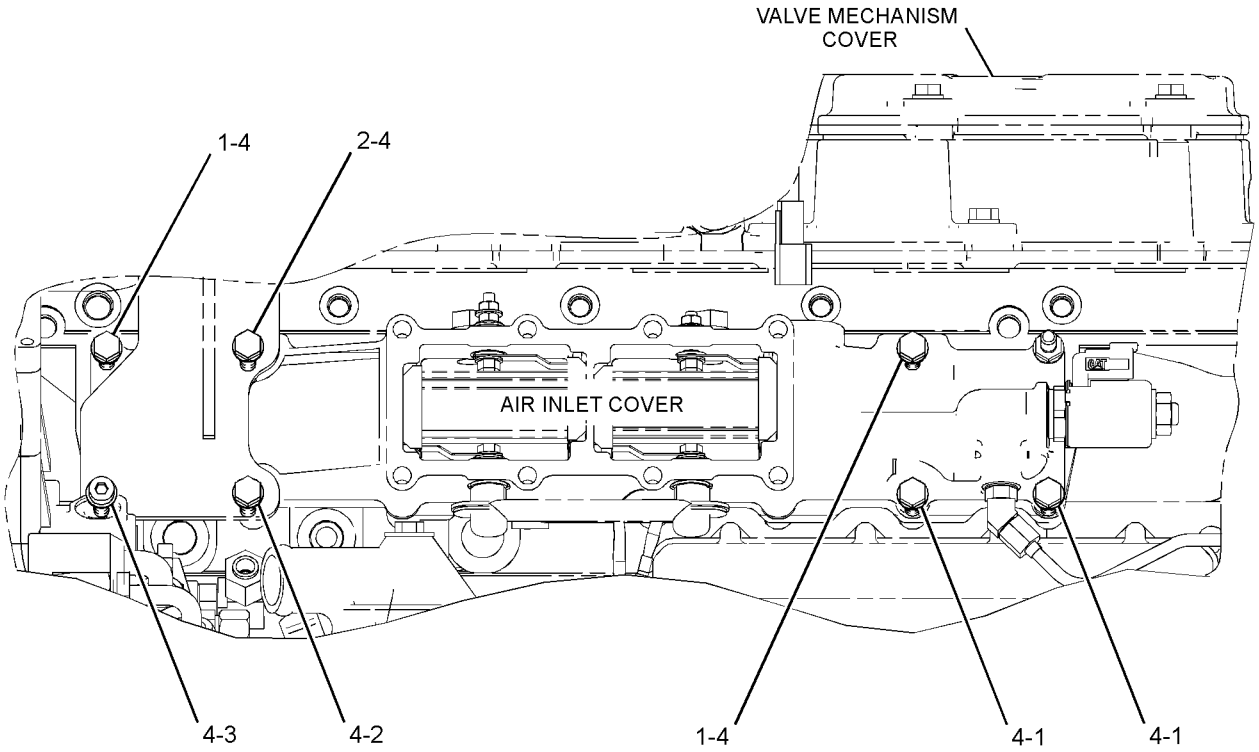

LEFT SIDE VIEW OF ENGINE

GRAPHIC #1 **<END>** g01528516

116-4556 FASTENER GP-FRONT HOUSING

S/N: KHX8814-UP

PART OF 312-0255 ENGINE AR-COMPLETE

SMCS-1151 **i01487429**

NOTE	REF NO	GRAPHIC REF	PART NUMBER	QTY	PART NAME 1 2 3 4 5 6 (PRODUCT LEVEL)	SEE PAGE
M	1	1	**6V-8336**	6	BOLT (M12X1.75X70-MM)	
		1	**5P-8245**	6	WASHER-HARD (13.5X25.5X3-MM THK)	

M-METRIC PART

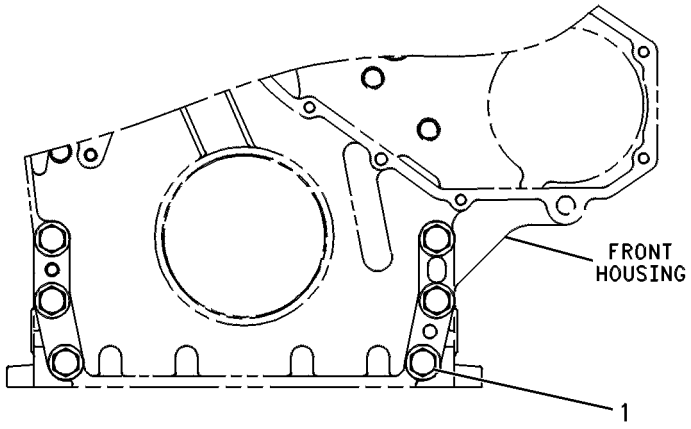

FRONT VIEW

GRAPHIC #1 **<END>** g00244671

BASIC ENGINE

275-8387 FLYWHEEL GP

S/N: KHX8814-UP

PART OF 312-0255 ENGINE AR-COMPLETE

SMCS-1156, 1158 **i03338762**

NOTE	REF NO	GRAPHIC REF	PART NUMBER	QTY	PART NAME 1 2 3 4 5 6 (PRODUCT LEVEL)	SEE PAGE
	1	1	**3E-3213**	1	PIN-SPRING	
M	2	1	**7X-7961**	8	BOLT-SELF-LOCKING (M12X1.75X100-MM)	
	3	1	**311-7210**	1	FLYWHEEL AS	
		1	**7W-5095**	1	GEAR-FLYWHEEL (134-TEETH)	
	4	1	**5P-8245**	8	WASHER-HARD (13.5X25.5X3-MM THK)	

M-METRIC PART

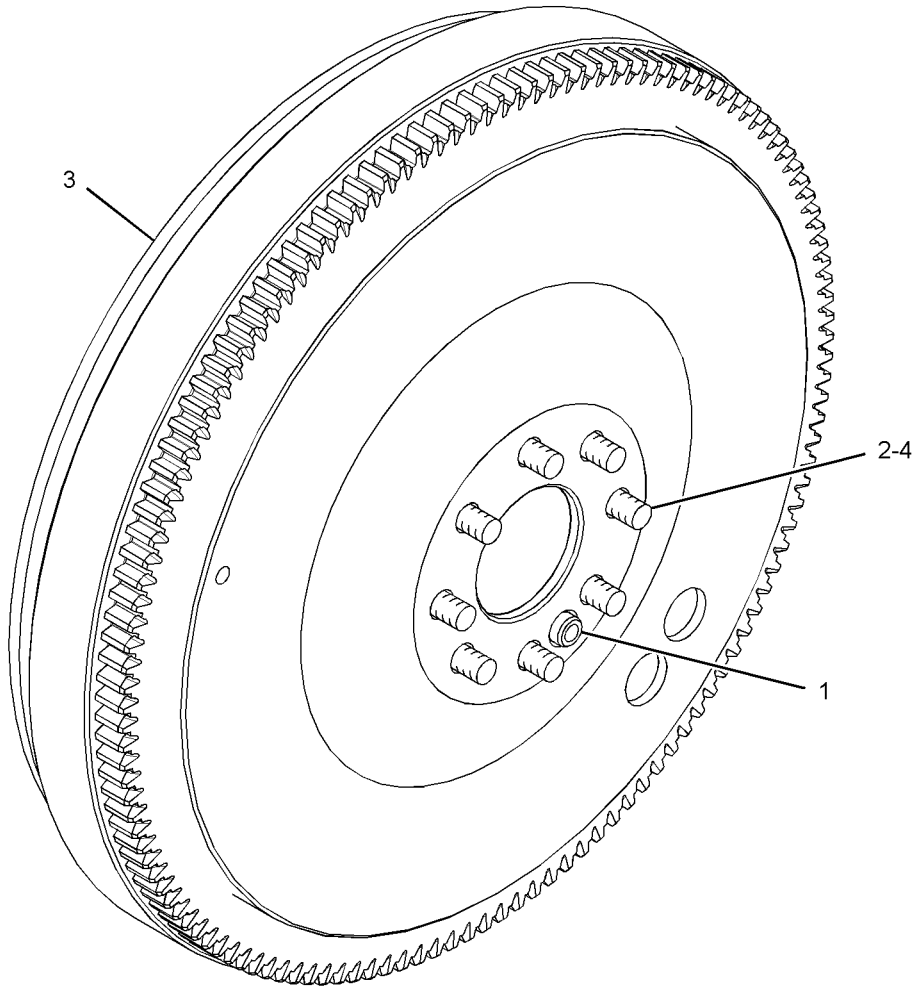

GRAPHIC #1 **<END>** g01717017

205-1321 GEAR GP-FRONT

S/N: KHX8814-UP

PART OF 312-0254 ENGINE AR-CORE

SMCS-1151, 1162, 1206 **i01696307**

NOTE	REF NO	GRAPHIC REF	PART NUMBER	QTY	PART NAME 1 2 3 4 5 6 (PRODUCT LEVEL)	SEE PAGE
	1	1	**113-6069**	1	PLATE-THRUST	
	2	1	**115-4219**	1	PLATE-RETAINING	
	3	1	**200-4495**	1	SHAFT-IDLER	
	4	1	**205-1320**	1	GEAR AS-IDLER (50 TEETH)	
	4A	1	**115-4072**	1	BEARING	
M	5	1	**136-4183**	1	BOLT-12 POINT HEAD (M10X1.5X30MM)	
M	6	1	**6V-5843**	2	BOLT (M10X1.50X45MM)	

M-METRIC PART

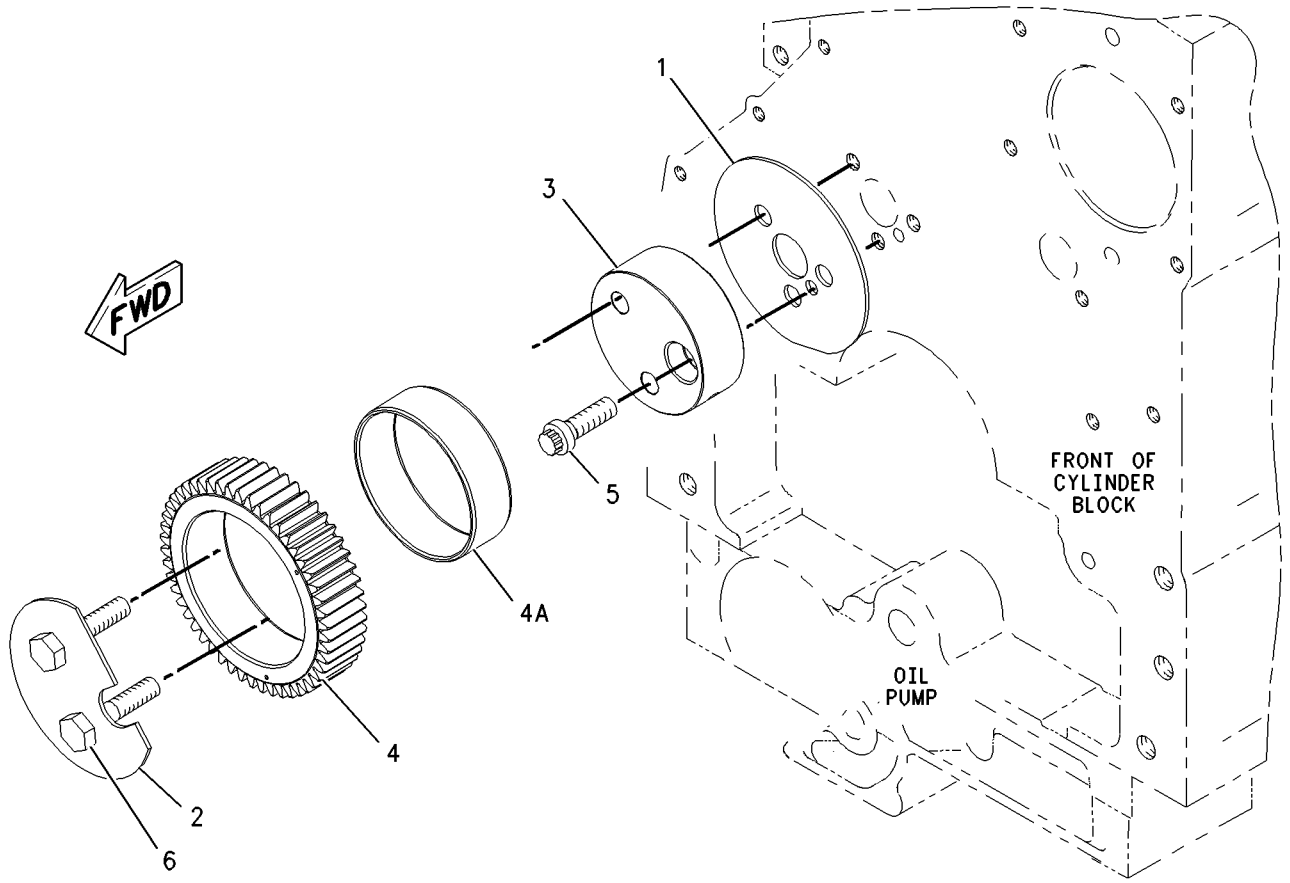

GRAPHIC #1 **<END>** g00873940

197-5210 HOUSING GP-FLYWHEEL

S/N: KHX8814-UP

PART OF 312-0255 ENGINE AR-COMPLETE

SMCS-1157 **i02333440**

NOTE	REF NO	GRAPHIC REF	PART NUMBER	QTY	PART NAME 1 2 3 4 5 6 (PRODUCT LEVEL)	SEE PAGE
	1	1	**5F-0304**	1	PLUG	
	2	1	**100-6551**	1	HOUSING-FLYWHEEL	
	4	1	**2A-1162**	1	GASKET	
	5	1	**3D-2824**	1	SEAL-O-RING	
	6	1	**3J-7354**	1	SEAL-O-RING	
M	7	1	**6V-5842**	2	BOLT (M10X1.5X40-MM)	
M	9	1	**8T-0226**	10	BOLT (M14X2X45-MM)	
	10	1	**9S-4182**	1	PLUG-O-RING	
	11	1	**9S-4183**	1	PLUG-O-RING	
BF		1	**1U-8846**		SEALANT-GASKET	

B-USE AS REQUIRED
F-NOT SHOWN
M-METRIC PART

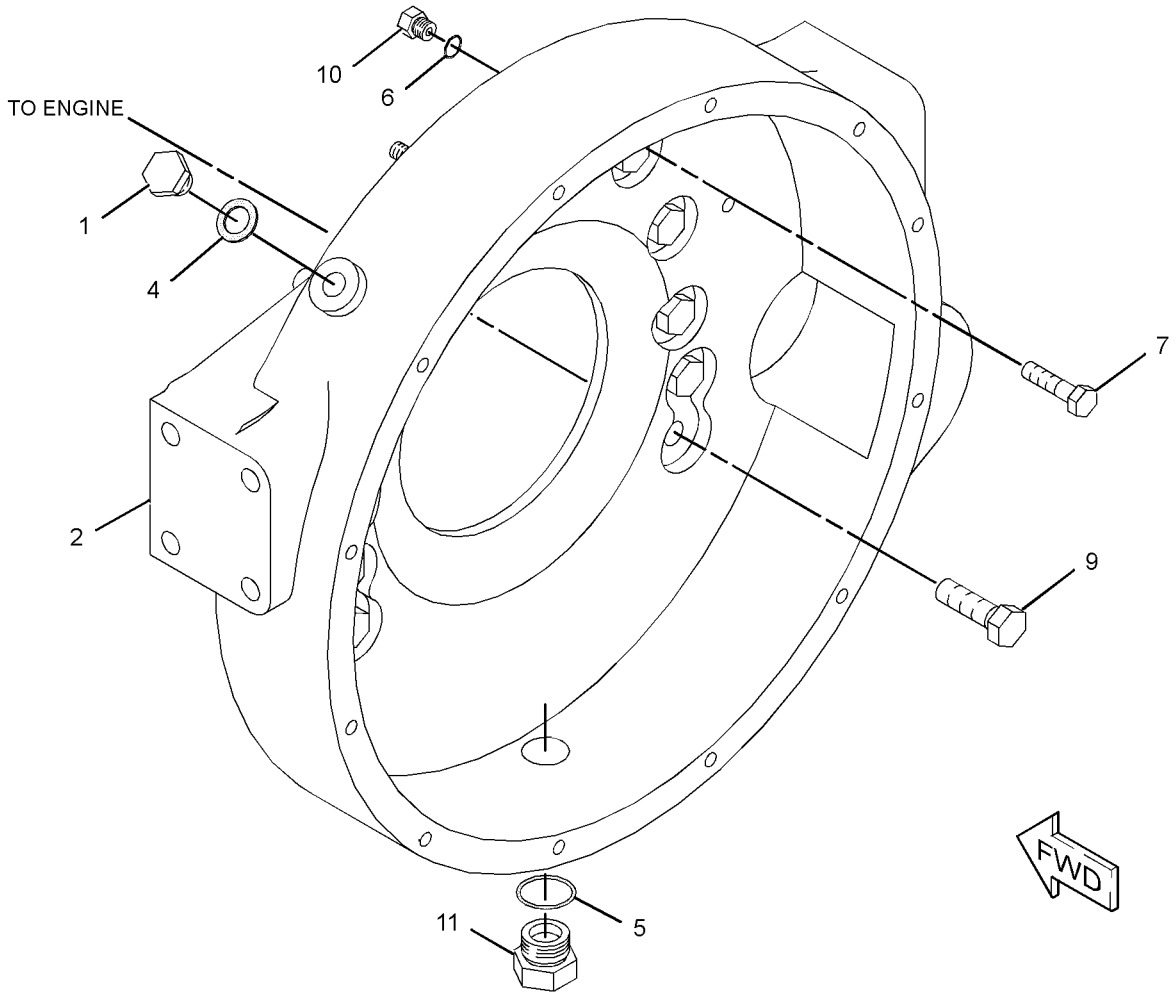

GRAPHIC #1 **<END>** g01170483

165-4446 HOUSING GP-FRONT

S/N: KHX8814-UP

PART OF 312-0254 ENGINE AR-CORE

SMCS-1151, 1162, 1206 **i02061168**

NOTE	REF NO	GRAPHIC REF	PART NUMBER	QTY	PART NAME 1 2 3 4 5 6 (PRODUCT LEVEL)	SEE PAGE
	1	1	**236-2216**	1	HOUSING-FRONT	
M	2	1	**6V-3918**	4	BOLT (M8X1.25X50-MM)	
M	3	1	**6V-5217**	8	BOLT (M8X1.25X20-MM)	
	4	1	**9M-1974**	12	WASHER-HARD (8.8X16X2-MM THK)	
B	5	1	**1U-8846**		SEALANT-GASKET	

B-USE AS REQUIRED
M-METRIC PART

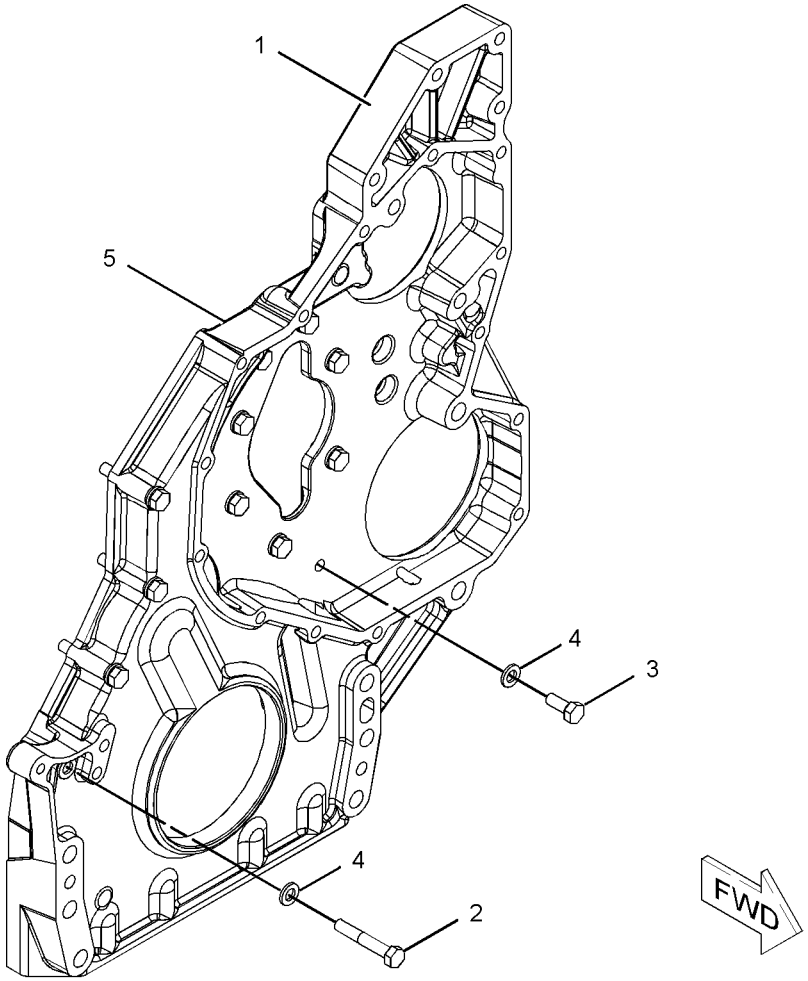

GRAPHIC #1 **<END>** g01060731

139-4081 LIFTER GP-VALVE

S/N: KHX8814-UP

PART OF 232-3717 VALVE MECHANISM GP

SMCS-1209 **i01615435**

NOTE	REF NO	GRAPHIC REF	PART NUMBER	QTY	PART NAME 1 2 3 4 5 6 (PRODUCT LEVEL)	SEE PAGE
	1	1	**139-9476**	1	SHAFT AS-LIFTER	
		1	**2D-6642**	2	BALL	
	2	1	**7E-6794**	4	ARM AS-LIFTER	
	3	1	**139-4084**	2	SPACER	

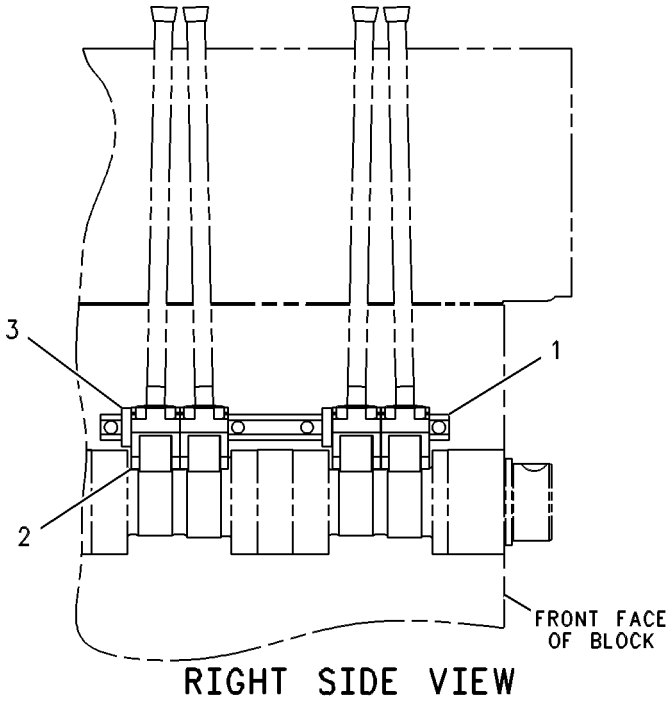

RIGHT SIDE VIEW

GRAPHIC #1 **<END>** g00288708

237-9822 LIFTING GP-ENGINE

S/N: KHX8814-UP

PART OF 312-0255 ENGINE AR-COMPLETE

SMCS-1122 **i02215501**

NOTE	REF NO	GRAPHIC REF	PART NUMBER	QTY	PART NAME 1 2 3 4 5 6 (PRODUCT LEVEL)	SEE PAGE
	1	1	**154-0896**	1	PLATE-LIFTING	
	2	1	**8T-4121**	4	WASHER-HARD (11X21X2.5-MM THK)	
M	3	1	**8T-4136**	4	BOLT (M10X1.5X25-MM)	

M-METRIC PART

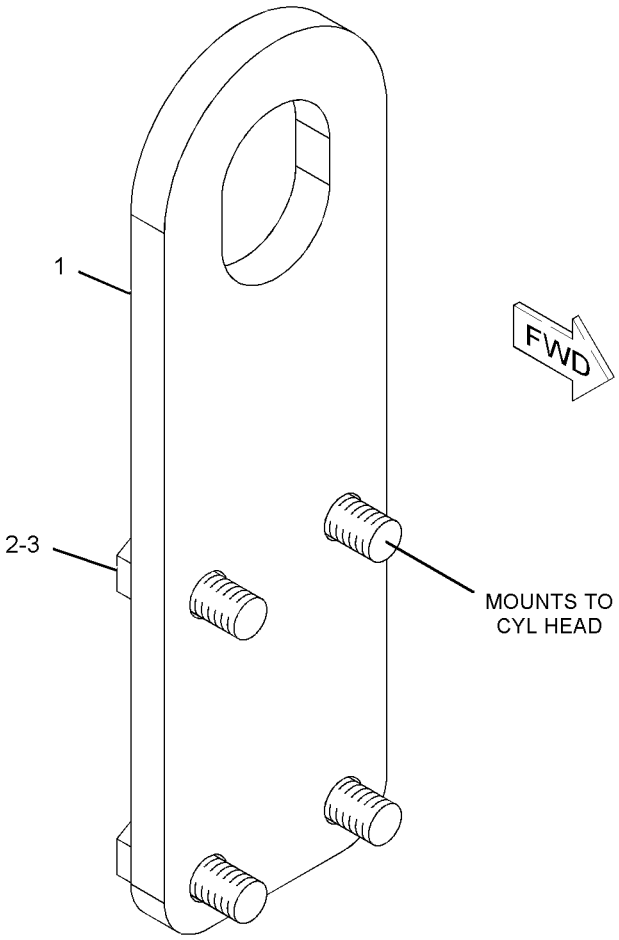

GRAPHIC #1 **<END>** g01118450

311-3542 MOUNTING GP-ENGINE

S/N: KHX8814-UP

PART OF 312-0255 ENGINE AR-COMPLETE

SMCS-1152, 1153, 1154 **i03338921**

NOTE	REF NO	GRAPHIC REF	PART NUMBER	QTY	PART NAME 1 2 3 4 5 6 (PRODUCT LEVEL)	SEE PAGE
M	1	1	**8T-3653**	4	BOLT (M14X2X80-MM)	
	2	1	**180-7344**	2	SUPPORT	
	3	1	**7X-0510**	8	WASHER-HARD (15.5X29X3-MM THK)	
M	4	1	**8C-3425**	4	BOLT (M14X2X35-MM)	

M-METRIC PART

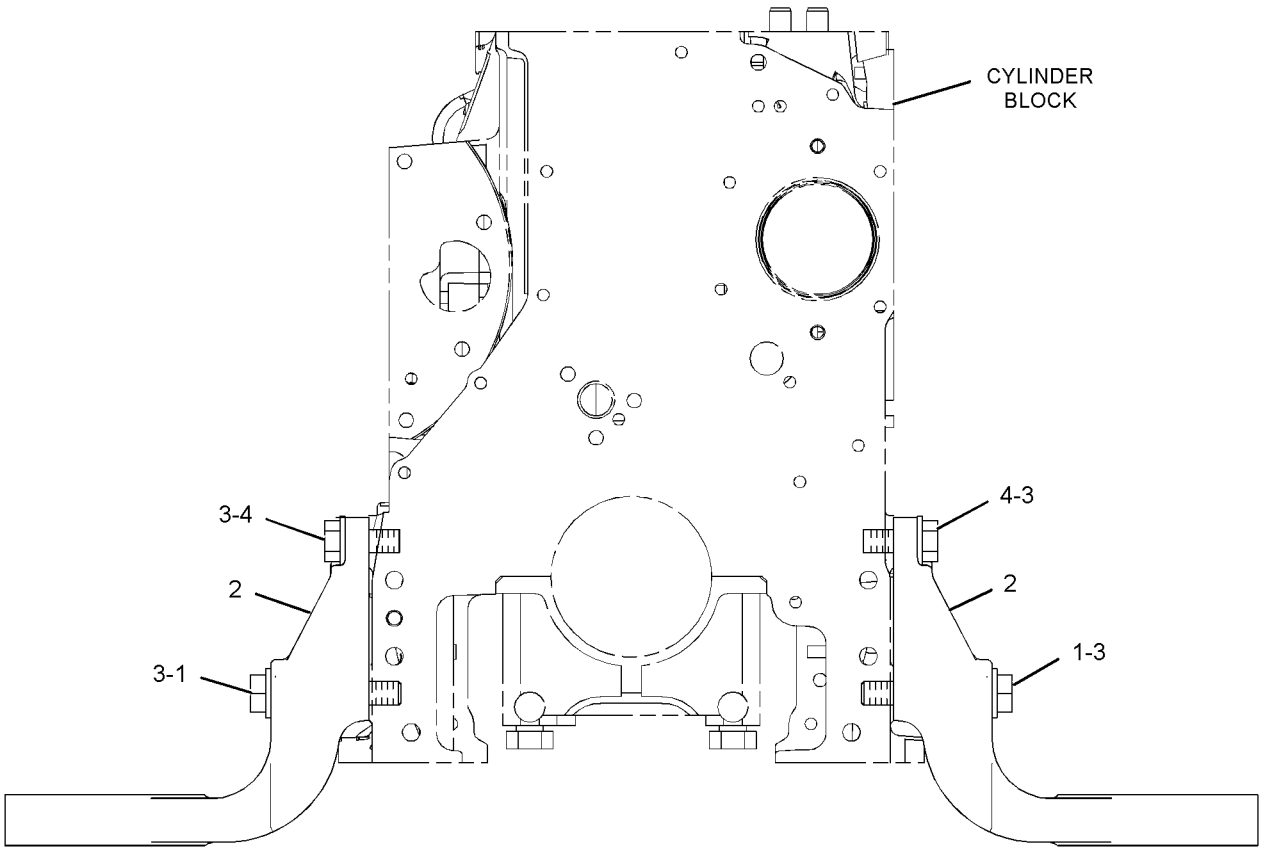

FRONT VIEW OF ENGINE

GRAPHIC #1

<END>

g01722074

BASIC ENGINE

122-8936 PAN GP-OIL

S/N: KHX8814-UP

PART OF 312-0255 ENGINE AR-COMPLETE

SMCS-1302 **i03338826**

NOTE	REF NO	GRAPHIC REF	PART NUMBER	QTY	PART NAME 1 2 3 4 5 6 (PRODUCT LEVEL)	SEE PAGE
	1	1	**115-4170**	1	PAN AS-OIL (ENGINE)	
	2	1	**217-9946**	36	BOLT AS	
	3	1	**261-3816**	1	GASKET-OIL PAN (ENGINE)	
	4	1	**9S-4191**	1	PLUG-O-RING	
	5	1	**3J-1907**	1	SEAL-O-RING	
B	6	1	**4C-9612**		SEALANT-SILICONE	

B-USE AS REQUIRED

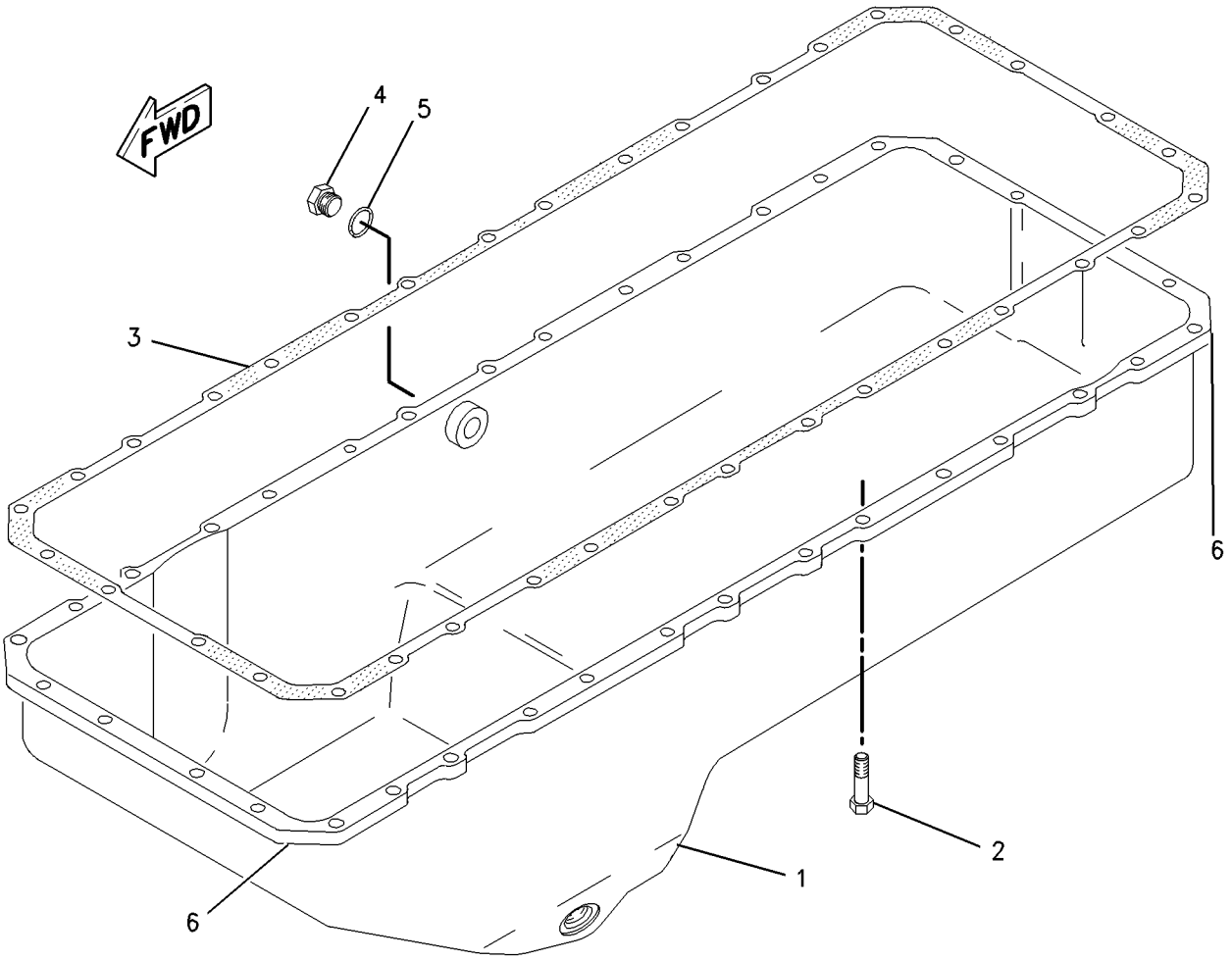

GRAPHIC #1 **<END>** g01005487

BASIC ENGINE

212-3652 PISTON & ROD GP

S/N: KHX8814-UP
16.5:1 COMPRESSION RATIO
PART OF 312-0254 ENGINE AR-CORE

SMCS-1225 **i02421065**

NOTE	REF NO	GRAPHIC REF	PART NUMBER	QTY	PART NAME 1 2 3 4 5 6 (PRODUCT LEVEL)	SEE PAGE
R	1	1	**213-3193**	1	ROD AS-CONNECTING (NON-DRILLED)	
	1A	1	**2W-0027**	1	BEARING (EYE END)	
	1B	1	**195-0321**	2	BOLT	
	2	1	**224-6638**	1	BEARING-CONNECTING ROD (STANDARD)	
AB		1	**7C-6976**		BEARING-CONNECTING ROD (0.25-MM US)	
AB		1	**7C-6977**		BEARING-CONNECTING ROD (0.5-MM US)	
	3	1	**238-2706**	1	RING-PISTON-OIL	
	4	1	**197-9353**	1	RING-PISTON (INTERMEDIATE)	
	5	1	**197-9386**	1	RING-PISTON (TOP)	
	6	1	**197-9371**	1	PIN-PISTON	
	7	1	**280-2748**	1	TUBE AS-OIL JET	
	8	1	**238-2720**	1	BODY AS-PISTON	
M	9	1	**6V-3940**	1	BOLT (M8X1.25X25-MM)	
	10	1	**197-9372**	2	RETAINER-PIN	

A-NOT PART OF THIS GROUP
B-USE AS REQUIRED
M-METRIC PART
R-REMFG PART MAY BE AVAILABLE

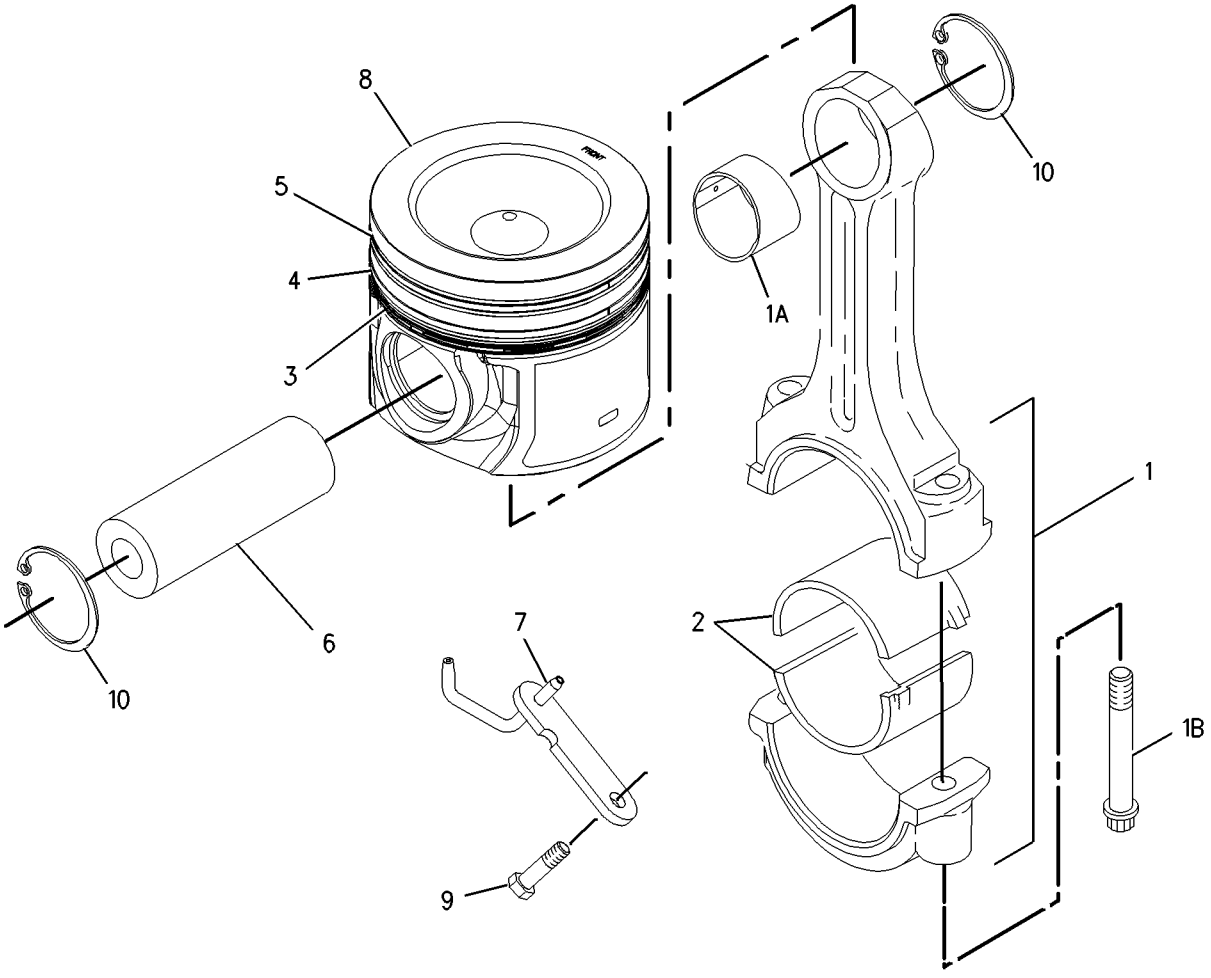

GRAPHIC #1 **<END>** g00903037

BASIC ENGINE

159-0303 PLUG GP-CYLINDER BLOCK

S/N: KHX8814-UP

PART OF 312-0255 ENGINE AR-COMPLETE

SMCS-1201 **i01370005**

NOTE	REF NO	GRAPHIC REF	PART NUMBER	QTY	PART NAME 1 2 3 4 5 6 (PRODUCT LEVEL)	SEE PAGE
M	1	1	**8T-0293**	1	BOLT (M12X1.75X20-MM)	
	2	1	**6F-7062**	1	WASHER (12.7X19.05X1.83-MM THK)	
	3	1	**9S-8008**	2	PLUG-O-RING	
	4	1	**3D-2824**	2	SEAL-O-RING	

M-METRIC PART

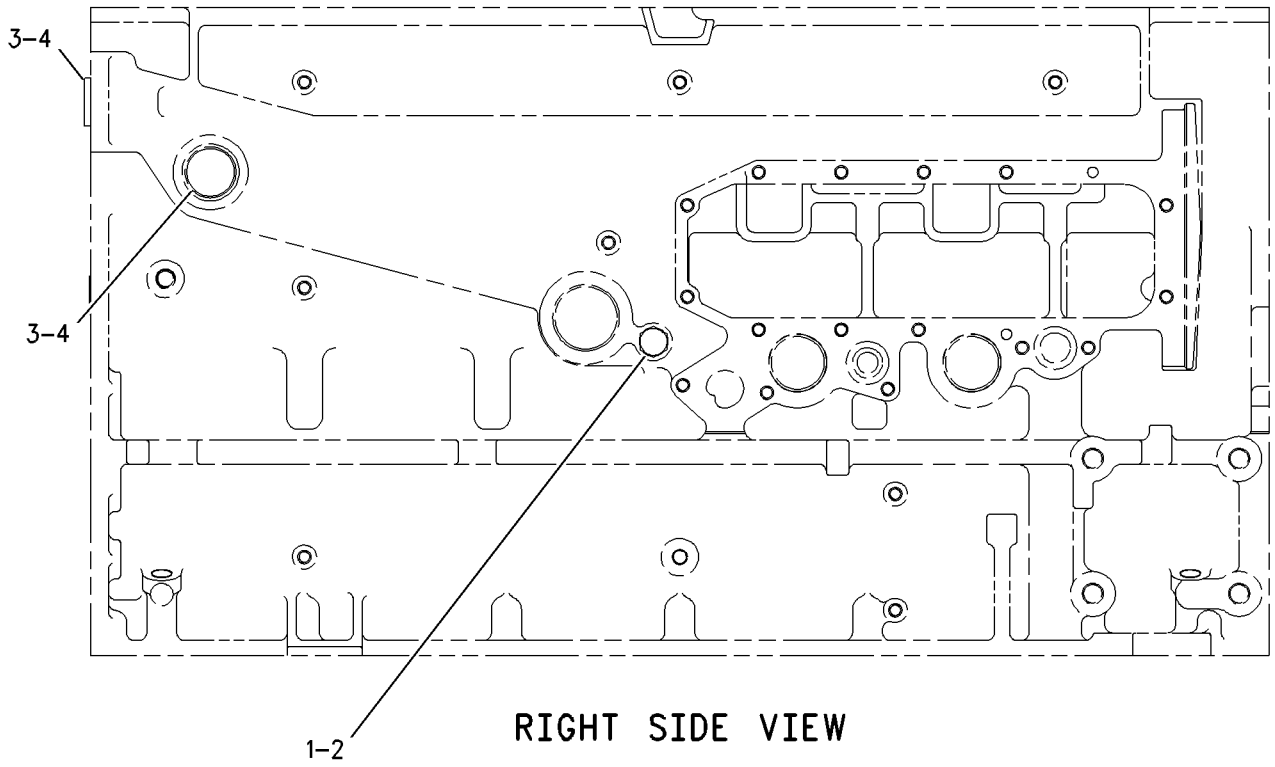

RIGHT SIDE VIEW

GRAPHIC #1 **<END>** g00677138

162-8068 PLUG GP-ENGINE

S/N: KHX8814-UP

PART OF 312-0255 ENGINE AR-COMPLETE

SMCS-1000, 1201 **i02940613**

NOTE	REF NO	GRAPHIC REF	PART NUMBER	QTY	PART NAME 1 2 3 4 5 6 (PRODUCT LEVEL)	SEE PAGE
	1	1	*148-8395*	1	PLUG AS	
		1	**9S-8005**	1	PLUG-O-RING	
		1	**3K-0360**	1	SEAL-O-RING	

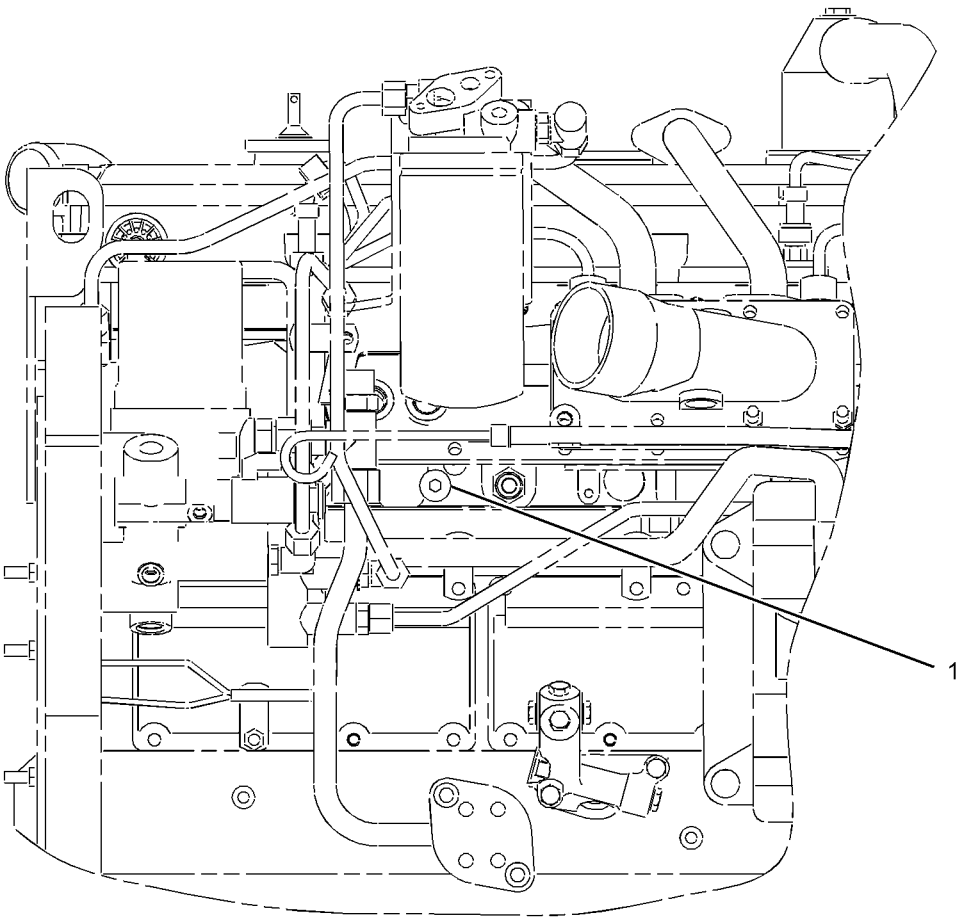

LEFT SIDE VIEW

GRAPHIC #1 **<END>** g01457732

BASIC ENGINE

323-8959 PLUG GP-OIL PAN

S/N: KHX8814-UP

PART OF 312-0255 ENGINE AR-COMPLETE

SMCS-1302 **i03339062**

NOTE	REF NO	GRAPHIC REF	PART NUMBER	QTY	PART NAME 1 2 3 4 5 6 (PRODUCT LEVEL)	SEE PAGE
	1	1	*148-8411*	1	PLUG AS	
		1	**3K-0360**	1	SEAL-O-RING	
		1	**9S-4185**	1	PLUG-O-RING	

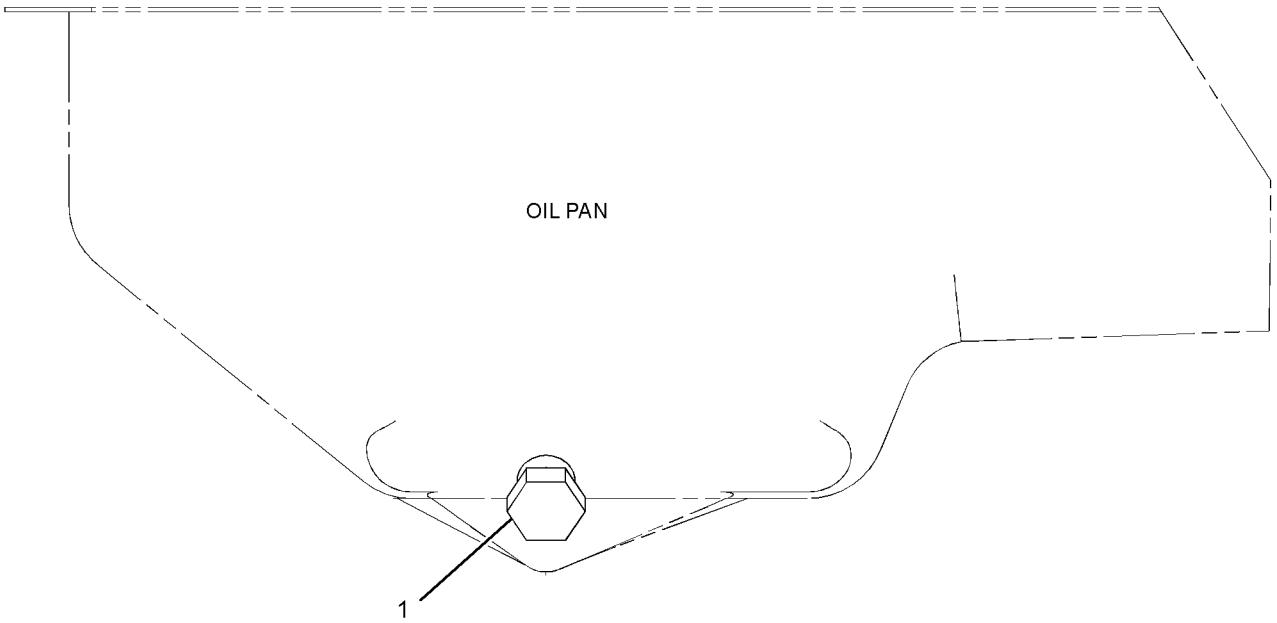

RIGHT SIDE VIEW OF ENGINE

GRAPHIC #1 **<END>** g01721918

7E-7590 SEAL GP-CRANKSHAFT

S/N: KHX8814-UP

PART OF 312-0255 ENGINE AR-COMPLETE

SMCS-1160, 1161 **i02891342**

NOTE	REF NO	GRAPHIC REF	PART NUMBER	QTY	PART NAME 1 2 3 4 5 6 (PRODUCT LEVEL)	SEE PAGE
	1	1	**7E-7589**	1	SEAL GP-CRANKSHAFT (REAR)	
	2	1	**245-7339**	1	SEAL-CRANKSHAFT (FRONT)	

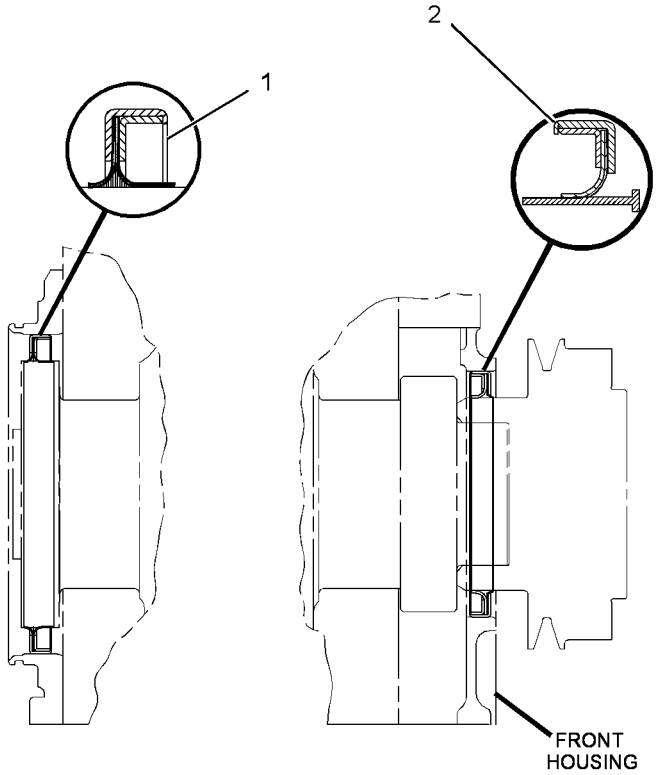

RIGHT SIDE VIEW

GRAPHIC #1 **<END>** g01438665

BASIC ENGINE

232-3717 VALVE MECHANISM GP

S/N: KHX8814-UP

PART OF 312-0254 ENGINE AR-CORE

SMCS-1102 **i02215717**

NOTE	REF NO	GRAPHIC REF	PART NUMBER	QTY	PART NAME 1 2 3 4 5 6 (PRODUCT LEVEL)	SEE PAGE
	1	1	**133-6379**	12	ROD-VALVE PUSH	
	2	1	**219-3309**	6	BRIDGE-VALVE	
Y	3	1	*139-4081*	3	LIFTER GP-VALVE	39
M	4	1	**8T-8442**	12	BOLT-SOCKET HEAD (M6X1X30-MM)	
	5	1	**3E-9412**	6	DOWEL	
Y	6	1	*235-5528*	1	VALVE MECHANISM GP	49
M	7	1	**6V-5696**	11	BOLT (M12X1.75X80-MM)	
	8	1	**9M-1974**	2	WASHER-HARD (8.8X16X2-MM THK)	
	9	1	**3H-7654**	9	WASHER-HARD (13.5X22.5X3-MM THK)	
M	10	1	**8T-0100**	2	BOLT (M8X1.25X60-MM)	
	11	1	**232-1754**	1	CLIP	

M-METRIC PART
Y-SEPARATE ILLUSTRATION

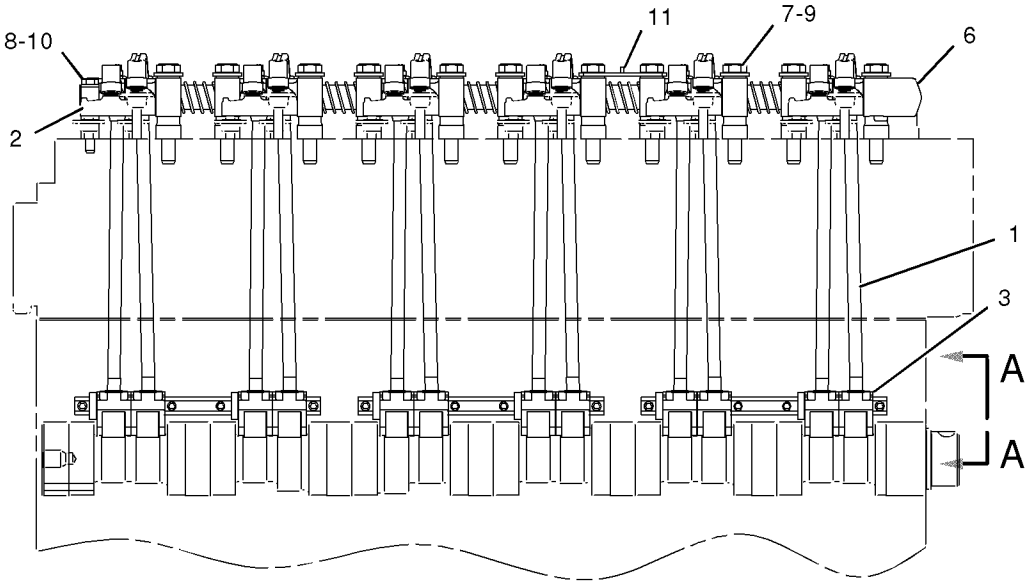

RIGHT SIDE VIEW

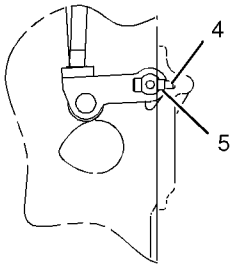

VIEW A-A

GRAPHIC #1

<END>

g01028897

235-5528 VALVE MECHANISM GP

S/N: KHX8814-UP

PART OF 232-3717 VALVE MECHANISM GP

SMCS-1102 **i02215718**

NOTE	REF NO	GRAPHIC REF	PART NUMBER	QTY	PART NAME 1 2 3 4 5 6 (PRODUCT LEVEL)	SEE PAGE
	1	1	**137-6717**	5	SPRING	
	2	1	*222-1185*	6	ROCKER ARM GP (INTAKE)	
					(EACH INCLUDES)	
M	2A	1	**2Y-5829**	1	NUT (M10X1.5-THD)	
M		1	**183-4365**	1	SCREW-ADJUSTMENT (M10X1.15-THD)	
R	2B	1	**153-8467**	1	ROCKER ARM AS	
	2C	1	**173-5549**	1	SEAL-O-RING	
	2D	1	**145-7376**	1	INSERT	
	2E	1	**145-7385**	1	SOCKET	
	3	1	**138-8403**	1	STAND	
	4	1	*222-1186*	6	ROCKER ARM GP (EXHAUST)	
					(EACH INCLUDES)	
M	4A	1	**2Y-5829**	1	NUT (M10X1.5-THD)	
M		1	**183-4365**	1	SCREW-ADJUSTMENT (M10X1.15-THD)	
R	4B	1	**153-8470**	1	ROCKER ARM AS	
	4C	1	**173-5549**	1	SEAL-O-RING	
	4D	1	**145-7376**	1	INSERT	
	4E	1	**145-7385**	1	SOCKET	
	5	1	**235-5527**	10	STAND	
	6	1	**138-8402**	1	STAND (END)	
	7	1	**138-9868**	1	RING-RETAINING	
	8	1	**8H-5244**	1	DOWEL	
	9	1	**138-7198**	1	SHAFT AS	
		1	**5B-1866**	1	PLUG-CUP	

M-METRIC PART
R-REMFG PART MAY BE AVAILABLE

235-5528 **VALVE MECHANISM GP** *(contd.)* **i02215718**

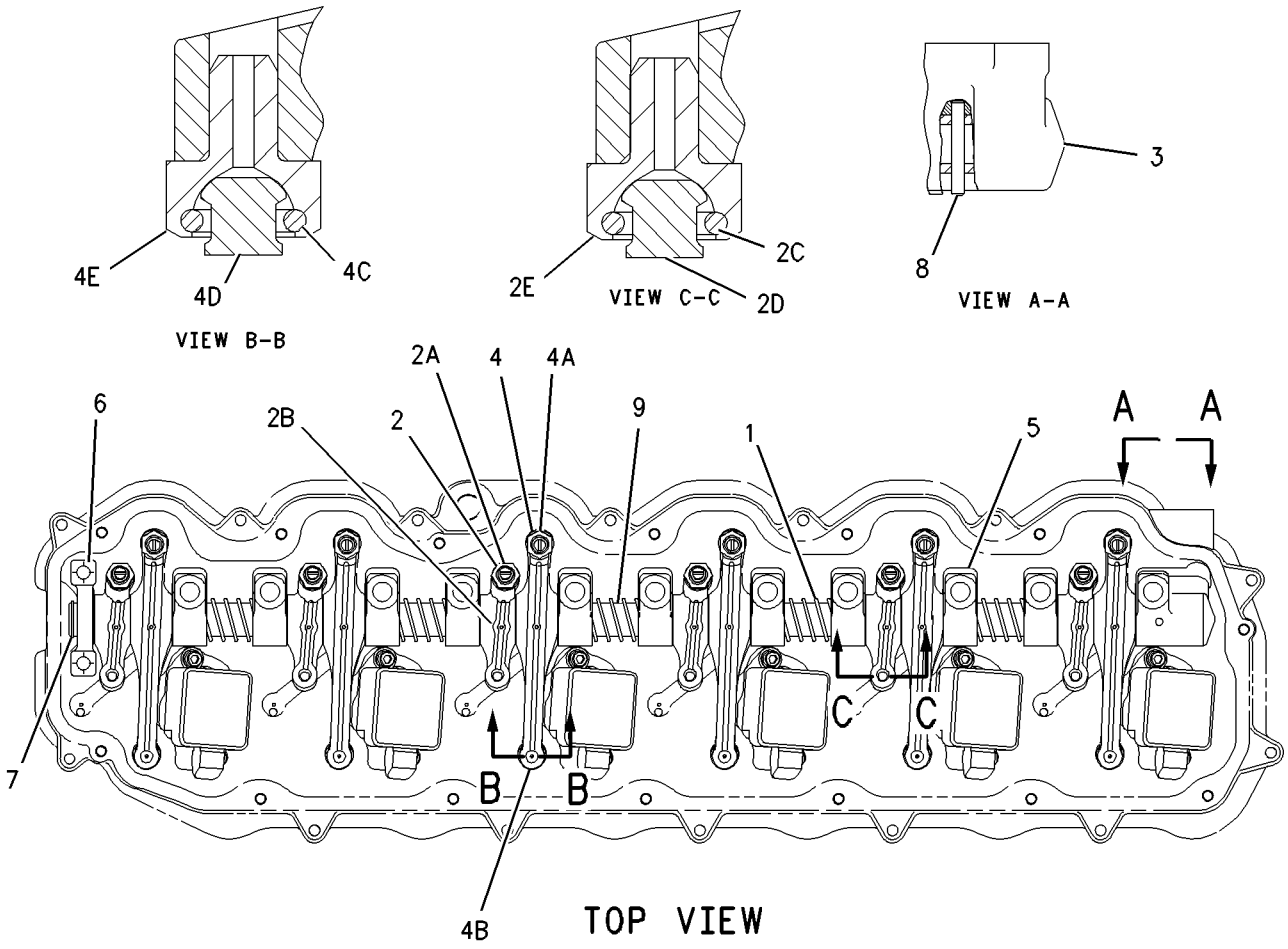

GRAPHIC #1 **<END>** g00901133

191-0523 ADAPTER GP-OIL LINE–ENGINE

S/N: KHX8814-UP

PART OF 191-0461 LINES GP-INJECTOR HYD PUMP

SMCS-1307 **i03363386**

NOTE	REF NO	GRAPHIC REF	PART NUMBER	QTY	PART NAME 1 2 3 4 5 6 (PRODUCT LEVEL)	SEE PAGE
	1	1	**191-0522**	1	ADAPTER	
	2	1	**033-6027**	1	SEAL-O-RING	

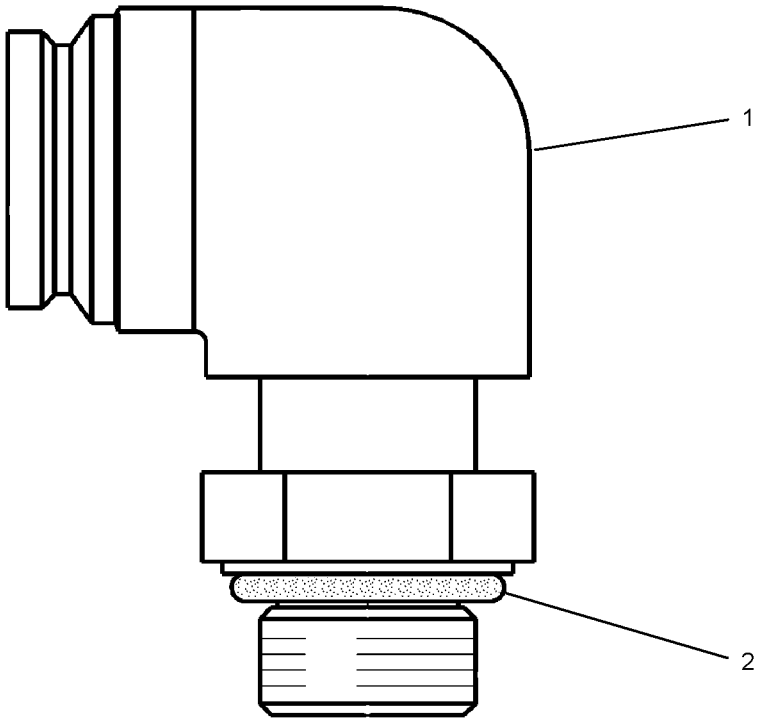

GRAPHIC #1 **<END>** g01735676

LUBRICATION SYSTEM

222-5946 BREATHER GP

S/N: KHX8814-UP

PART OF 312-0255 ENGINE AR-COMPLETE

SMCS-1317 **i02214598**

NOTE	REF NO	GRAPHIC REF	PART NUMBER	QTY	PART NAME 1 2 3 4 5 6 (PRODUCT LEVEL)	SEE PAGE
	1	1	**164-0210**	1	BREATHER AS (CRANKCASE)	
M	2	1	**143-4654**	1	BOLT (M8X1.25X105-MM)	
	3	1	**8H-2046**	1	SEAL-O-RING (BREATHER)	
	4	1	**9N-0869**	1	WASHER-HARD (8.8X25.5X2-MM THK)	

M-METRIC PART

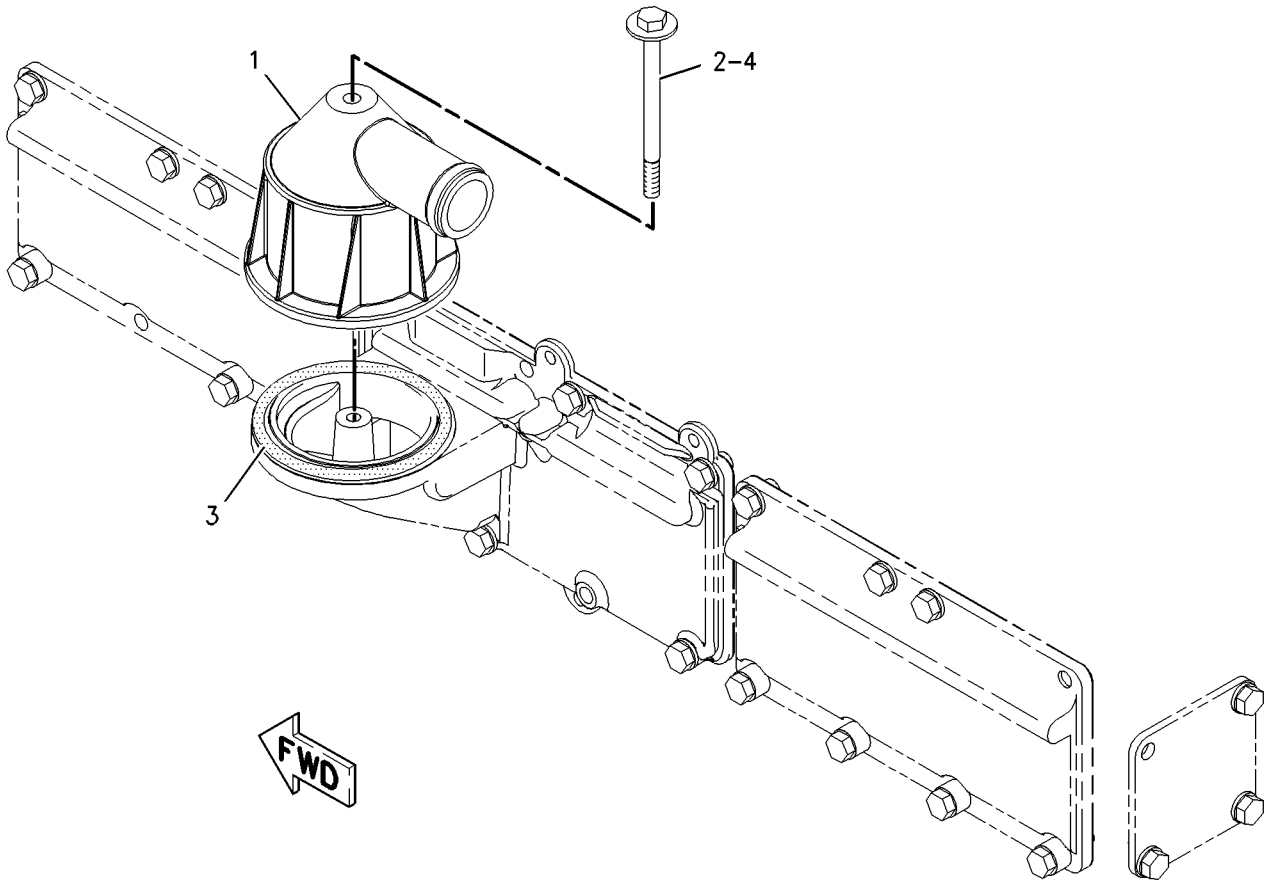

GRAPHIC #1 **<END>** g00947923

323-8936 FILTER GP-ENGINE OIL

S/N: KHX8814-UP

PART OF 312-0255 ENGINE AR-COMPLETE

SMCS-1308 **i03338906**

NOTE	REF NO	GRAPHIC REF	PART NUMBER	QTY	PART NAME 1 2 3 4 5 6 (PRODUCT LEVEL)	SEE PAGE
	1	1	**7C-1493**	2	VALVE AS-BYPASS	
	2	1	**201-9774**	1	BASE AS-OIL FILTER	
	2A	1	**2P-2537**	1	STUD-HOLLOW	
	3	1	**242-3864**	2	SPRING	
	4	1	**300-7933**	1	GASKET	
	5	1	*148-8395*	1	PLUG AS	
	5A	1	**3K-0360**	1	SEAL-O-RING	
	5B	1	**9S-8005**	1	PLUG-O-RING	
	6	1	**1R-1807**	1	FILTER AS-ENGINE OIL (ADVANCED EFFICIENCY)	
	7	1	**2M-9780**	2	SEAL-O-RING	
M	8	1	**5P-8196**	2	PLUG	
M	9	1	**6V-2317**	10	BOLT (M8X1.25X30-MM)	
M	10	1	**8T-0276**	5	BOLT (M8X1.25X45-MM)	
	11	1	**9M-1974**	15	WASHER-HARD (8.8X16X2-MM THK)	

M-METRIC PART

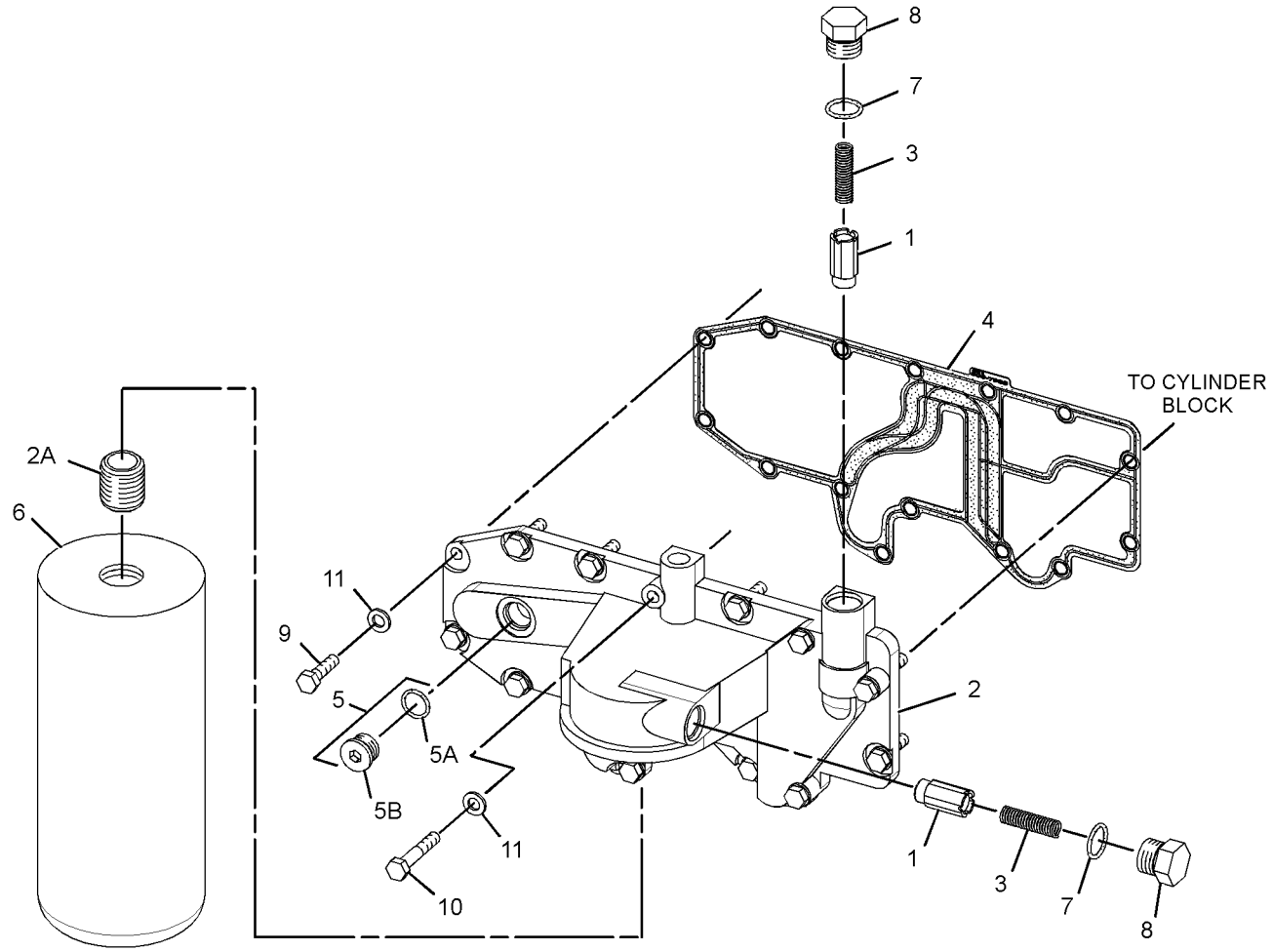

GRAPHIC #1 **<END>** g01721921

LUBRICATION SYSTEM

220-1194 FUMES DISPOSAL GP

S/N: KHX8814-UP

PART OF 312-0255 ENGINE AR-COMPLETE

SMCS-1317 **i02789603**

NOTE	REF NO	GRAPHIC REF	PART NUMBER	QTY	PART NAME 1 2 3 4 5 6 (PRODUCT LEVEL)	SEE PAGE
	1	1	**4P-4369**	1	SPACER (12X19X23.5-MM THK)	
	2	1	**9M-2904**	1	CLAMP-HOSE	
	3	1	**228-8510**	1	HOSE-DISPOSAL (FUMES)	
	4	1	**2S-2053**	1	CLIP	
	5	1	**3E-4352**	1	WASHER-HARD (8.8X20.5X2.5-MM THK)	
	6	1	**162-3148**	1	STUD (M8X1.25X62.75-MM)	

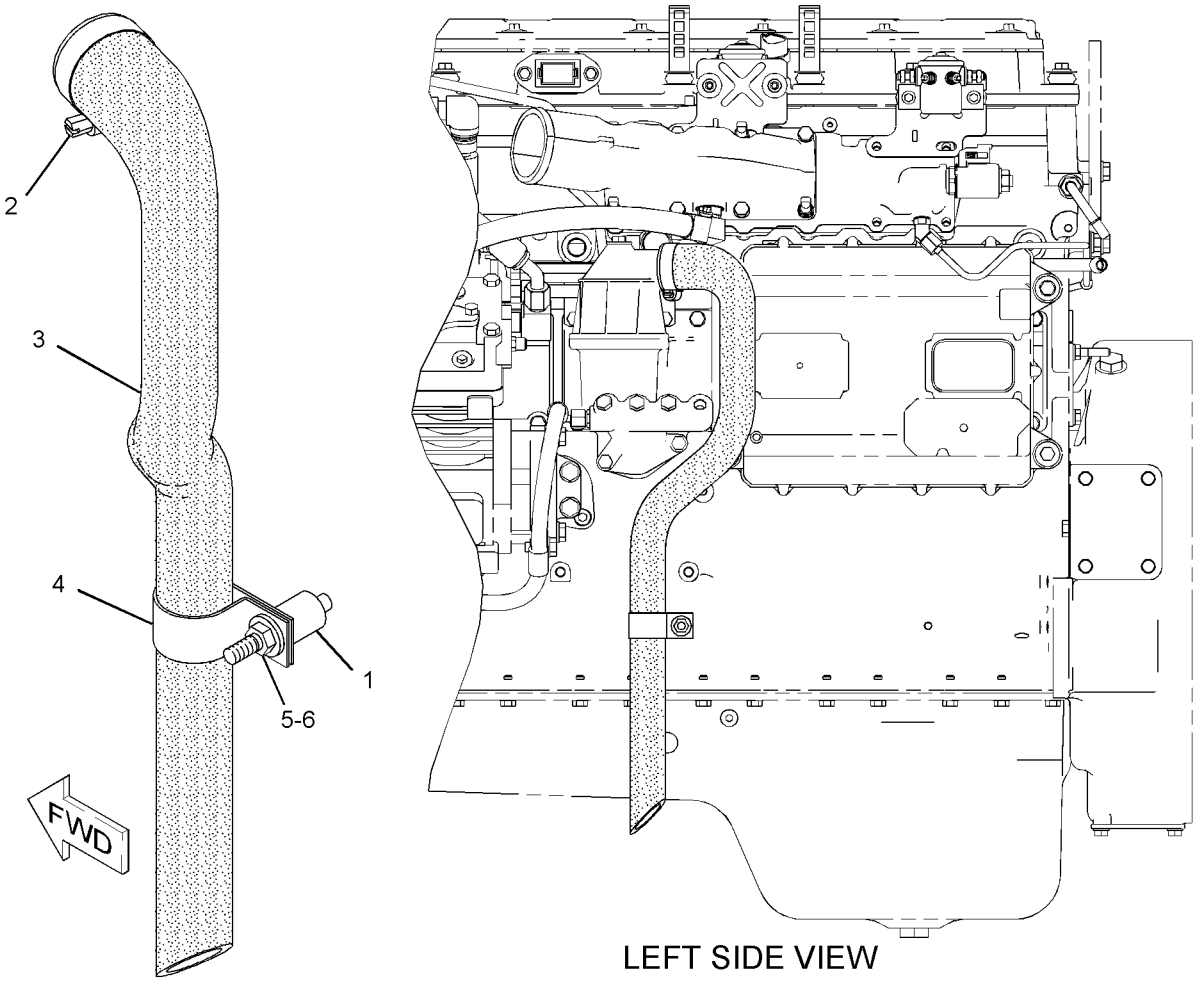

LEFT SIDE VIEW

GRAPHIC #1 **<END>** g01095248

276-3681 GAUGE GP-OIL LEVEL (DIPSTICK)

S/N: KHX8814-UP

PART OF 312-0255 ENGINE AR-COMPLETE

SMCS-1326 **i02791440**

NOTE	REF NO	GRAPHIC REF	PART NUMBER	QTY	PART NAME 1 2 3 4 5 6 (PRODUCT LEVEL)	SEE PAGE
	1	1	**1S-2563**	3	PLUG	
	2	1	**194-5131**	1	CLIP	
	3	1	**276-3674**	1	TUBE AS	
	4	1	**291-2634**	1	GAUGE AS-OIL LEVEL (DIPSTICK) (ENGINE)	
	5	1	**1F-7567**	1	CLIP	
M	6	1	**5P-7970**	1	NUT (M8X1.25-THD)	
M	7	1	**6V-2317**	1	BOLT (M8X1.25X30-MM)	
M	8	1	**6V-5217**	1	BOLT (M8X1.25X20-MM)	
	9	1	**8T-4224**	2	WASHER-HARD (8.8X16X2-MM THK)	

M-METRIC PART

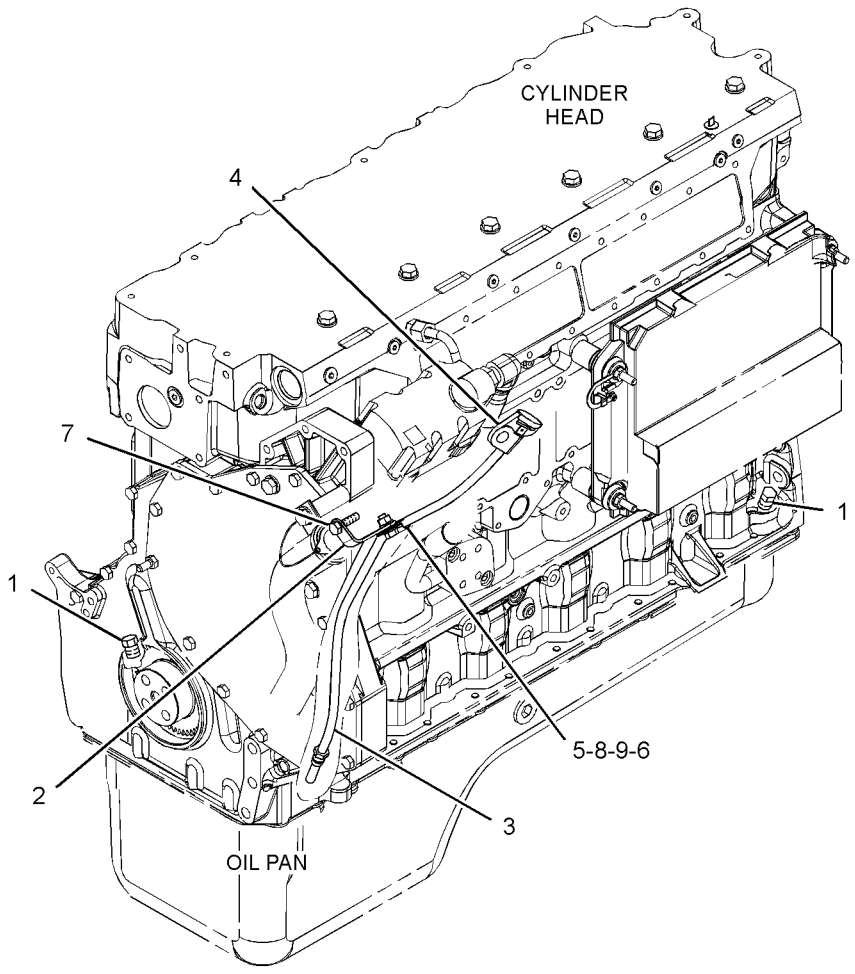

GRAPHIC #1 **<END>** g01319304

LUBRICATION SYSTEM

128-0316 LINES GP-ENGINE OIL

S/N: KHX8814-UP

PART OF 312-0255 ENGINE AR-COMPLETE

SMCS-1307 **i03338829**

NOTE	REF NO	GRAPHIC REF	PART NUMBER	QTY	PART NAME 1 2 3 4 5 6 (PRODUCT LEVEL)	SEE PAGE
	1	1	**9Y-9854**	1	TUBE AS-OIL SUCTION (ENGINE)	
	2	1	**7W-5340**	1	GASKET	
M	3	1	**6V-3940**	4	BOLT (M8X1.25X25-MM)	
	4	1	**9M-1974**	2	WASHER-HARD (8.8X16X2-MM THK)	
	5	1	**4W-2232**	1	ELBOW-OUTLET	
	6	1	**3P-1156**	2	SEAL-O-RING	
M	7	1	**6V-4248**	2	BOLT (M10X1.5X25-MM)	
	8	1	**3E-4353**	2	WASHER-HARD (11X25X3-MM THK)	

M-METRIC PART

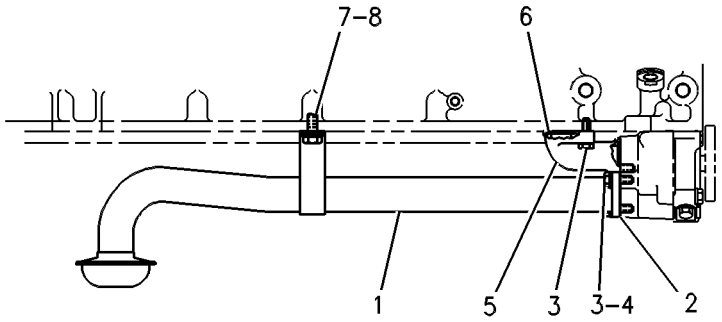

RIGHT SIDE VIEW

GRAPHIC #1 **<END>** g00256385

310-6469 LINES GP-DRAIN

S/N: JPA1-UP

PART OF 274-7940 GENERAL AR

SMCS-1307 **i03246350**

NOTE	REF NO	GRAPHIC REF	PART NUMBER	QTY	PART NAME 1 2 3 4 5 6 (PRODUCT LEVEL)	SEE PAGE
	1	1	**7X-7958**	1	CLAMP-HOSE	
	2	1	**206-4669**	1	VALVE-DRAIN	
	3	1	**212-4174**	1	LOCKWASHER	
I	4	1	**317-8063**	1	HOSE AS	
	5	1	*239-5030*	1	ADAPTER AS	
		1	**3K-0360**	1	SEAL-O-RING	
		1	**9X-2493**	1	ADAPTER	
	6	1	**3K-0360**	1	SEAL-O-RING	
	7	1	**6V-1889**	1	CLIP	
	8	1	**6V-9746**	1	SEAL-O-RING	
	9	1	**7X-7729**	1	WASHER (11X25X3-MM THK)	
	10	1	**8C-6920**	1	ELBOW	
	11	1	**8T-4121**	1	WASHER-HARD (11X21X2.5-MM THK)	
M	12	1	**8T-4137**	1	BOLT (M10X1.5X20-MM)	
E	13	1	**146-7453**		HOSE (13-CM)	

E-ORDER BY THE CENTIMETER
I-REFER TO HYDRAULIC INFORMATION SYSTEM
M-METRIC PART

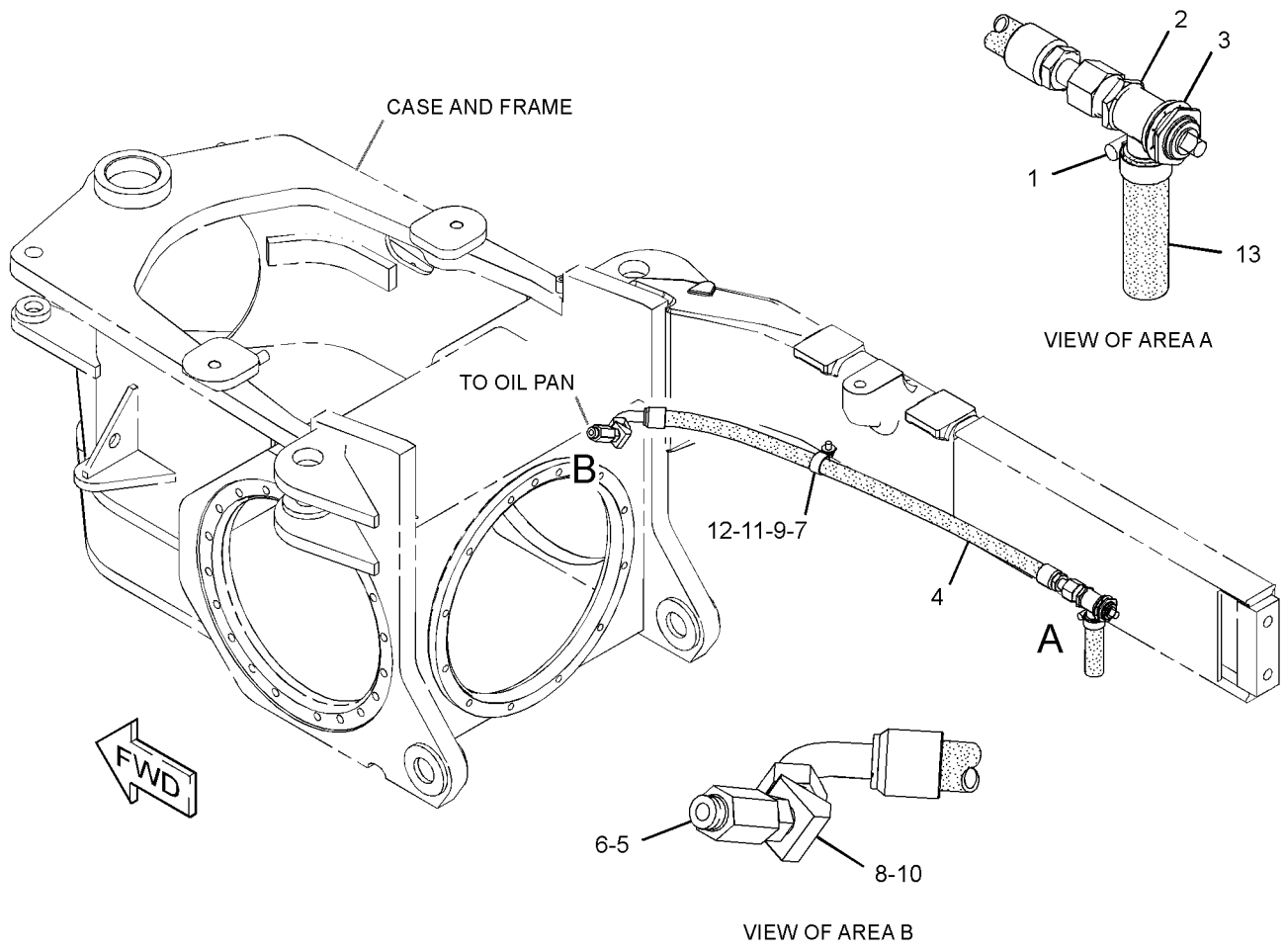

GRAPHIC #1 **<END>** g01705699

LUBRICATION SYSTEM

187-6279 LINES GP-TURBOCHARGER OIL

S/N: KHX8814-UP

PART OF 312-0255 ENGINE AR-COMPLETE

SMCS-1052, 1307 **i02628089**

NOTE	REF NO	GRAPHIC REF	PART NUMBER	QTY	PART NAME 1 2 3 4 5 6 (PRODUCT LEVEL)	SEE PAGE
	1	1	*183-3399*	1	CONNECTOR AS	
		1	**6V-8636**	1	CONNECTOR	
		1	**214-7568**	1	SEAL-O-RING (11.89MM ID)	
		1	**221-3494**	1	SEAL-O-RING (12.83MM OD)	
C	2	1	**246-6036**	1	HOSE	
	3	1	**187-6294**	1	HOSE AS-OIL SUPPLY	
	4	1	*148-8378*	1	ELBOW AS	
		1	**6V-8724**	1	ELBOW	
		1	**3J-1907**	1	SEAL-O-RING (11.89MM ID)	
		1	**6V-8397**	1	SEAL-O-RING (12.83MM OD)	
C	5	1	**197-8419**	1	GASKET (21.82MM ID)	
C	6	1	**210-9246**	1	SEAL-O-RING (32.92MM ID)	
M	7	1	**9X-2099**	2	STUD (M8X1.25X52.75-MM)	
	8	1	**8T-4224**	4	WASHER-HARD (8.8X16X2-MM THK)	
CM	9	1	**7X-2537**	2	BOLT (M8X1.25X35-MM)	
C	10	1	**260-8630**	1	TUBE AS-DRAIN	
C	11	1	**260-8631**	1	TUBE AS-DRAIN	
C	12	1	**269-8788**	2	CLAMP-BAND	
M	13	1	**2Y-5829**	1	NUT (M10X1.5-THD)	
M	14	1	**6V-4248**	1	BOLT (M10X1.5X25-MM)	
	15	1	**6V-5839**	2	WASHER (11X21X2.5-MM THK)	
	16	1	**7C-4354**	1	CLIP	
	17	1	**033-8248**	1	CLIP	

C-CHANGE FROM PREVIOUS TYPE
M-METRIC PART

187-6279 **LINES GP-TURBOCHARGER OIL** *(contd.)* **i02628089**

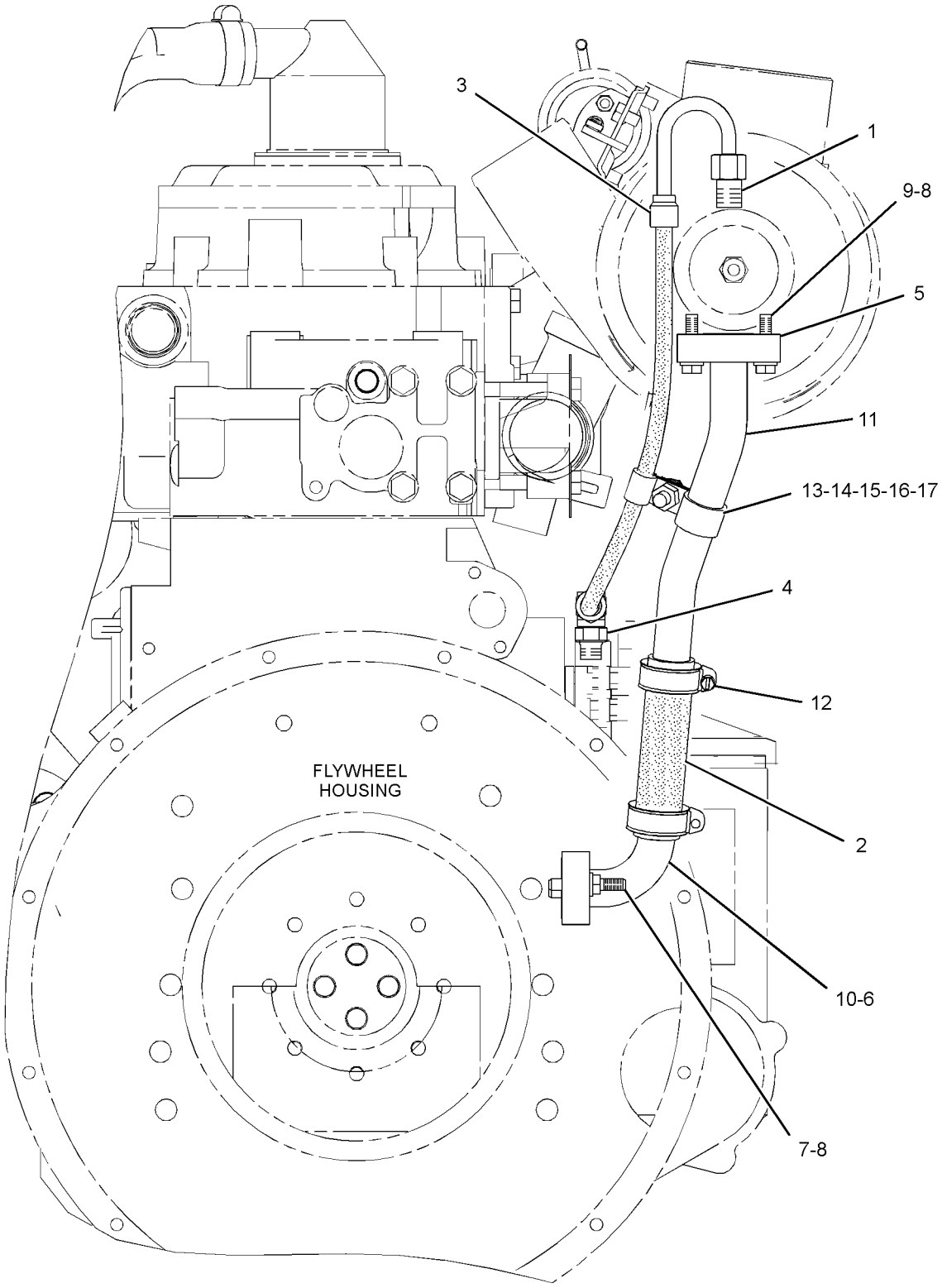

REAR VIEW OF ENGINE

GRAPHIC #1 **<END>** g01319683

LUBRICATION SYSTEM

237-8063 MANIFOLD GP-ENGINE OIL

S/N: KHX8814-UP

PART OF 312-0255 ENGINE AR-COMPLETE

SMCS-1307 **i02789607**

NOTE	REF NO	GRAPHIC REF	PART NUMBER	QTY	PART NAME 1 2 3 4 5 6 (PRODUCT LEVEL)	SEE PAGE
	1	1	**226-8696**	1	MANIFOLD-OIL (ENGINE)	
	2	1	**3J-1907**	4	SEAL-O-RING	
	3	1	**4F-9029**	1	SEAL	
M	4	1	**6V-5219**	2	BOLT (M8X1.25X40-MM)	
	5	1	**9S-4191**	4	PLUG-O-RING	

M-METRIC PART

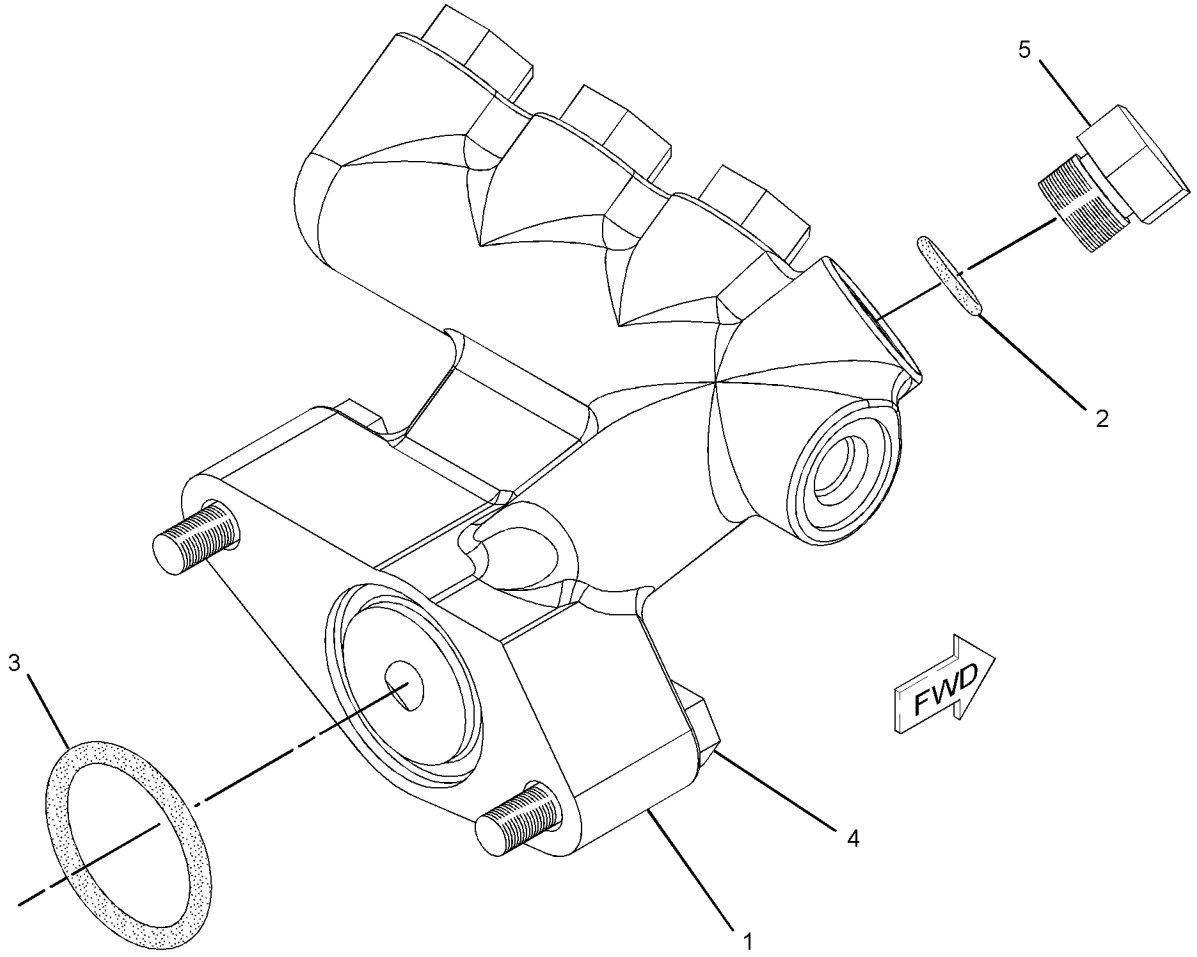

GRAPHIC #1 **<END>** g01099259

200-4497 PUMP GP-ENGINE OIL

S/N: KHX8814-UP

PART OF 212-2270 PUMP GP-ENGINE OIL

SMCS-1304, 1315 **i02120062**

NOTE	REF NO	GRAPHIC REF	PART NUMBER	QTY	PART NAME 1 2 3 4 5 6 (PRODUCT LEVEL)	SEE PAGE
	1	1	**7W-9737**	1	SHAFT	
	2	1	**7W-9738**	1	WASHER (10.5X38X1.6-MM THK)	
	3	1	**7W-9740**	1	GEAR AS-IDLER (43-TEETH)	
	3A	1	**7W-9930**	1	BEARING-SLEEVE	
M	4	1	**9X-2305**	1	BOLT-LOCKING (M10X1.5X50-MM)	
	5	1	**189-8777**	1	PUMP GP-ENGINE OIL	

M-METRIC PART

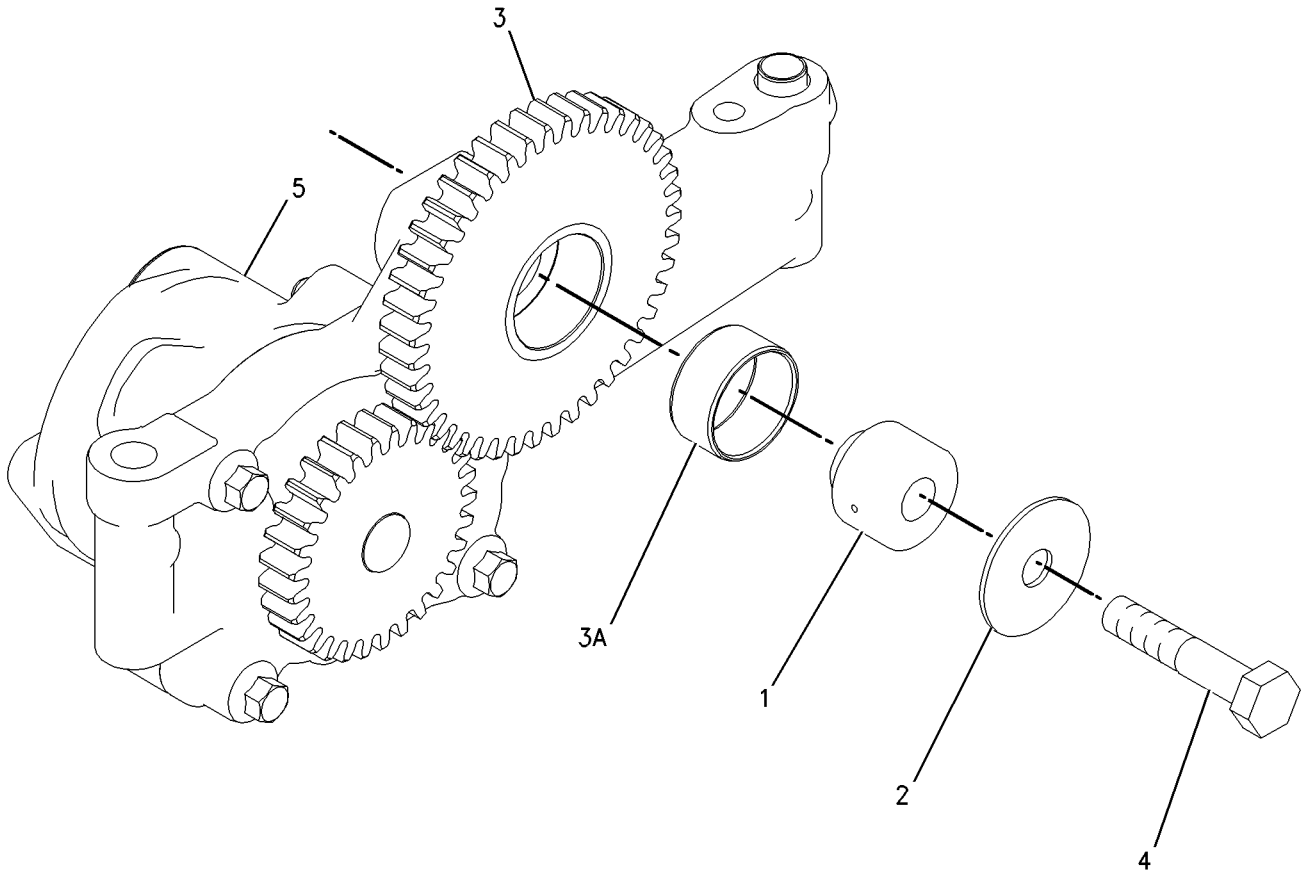

GRAPHIC #1 **<END>** g00775788

LUBRICATION SYSTEM

212-2270 PUMP GP-ENGINE OIL

S/N: KHX8814-UP

PART OF 312-0254 ENGINE AR-CORE

SMCS-1304, 1315 **i02294171**

NOTE	REF NO	GRAPHIC REF	PART NUMBER	QTY	PART NAME 1 2 3 4 5 6 (PRODUCT LEVEL)	SEE PAGE
Y	1	1	**200-4497**	1	PUMP GP-ENGINE OIL	61
M	2	1	**6V-5815**	2	BOLT (M10X1.5X75-MM)	
	3	1	**6V-5839**	2	WASHER (11X21X2.5-MM THK)	

M-METRIC PART
Y-SEPARATE ILLUSTRATION

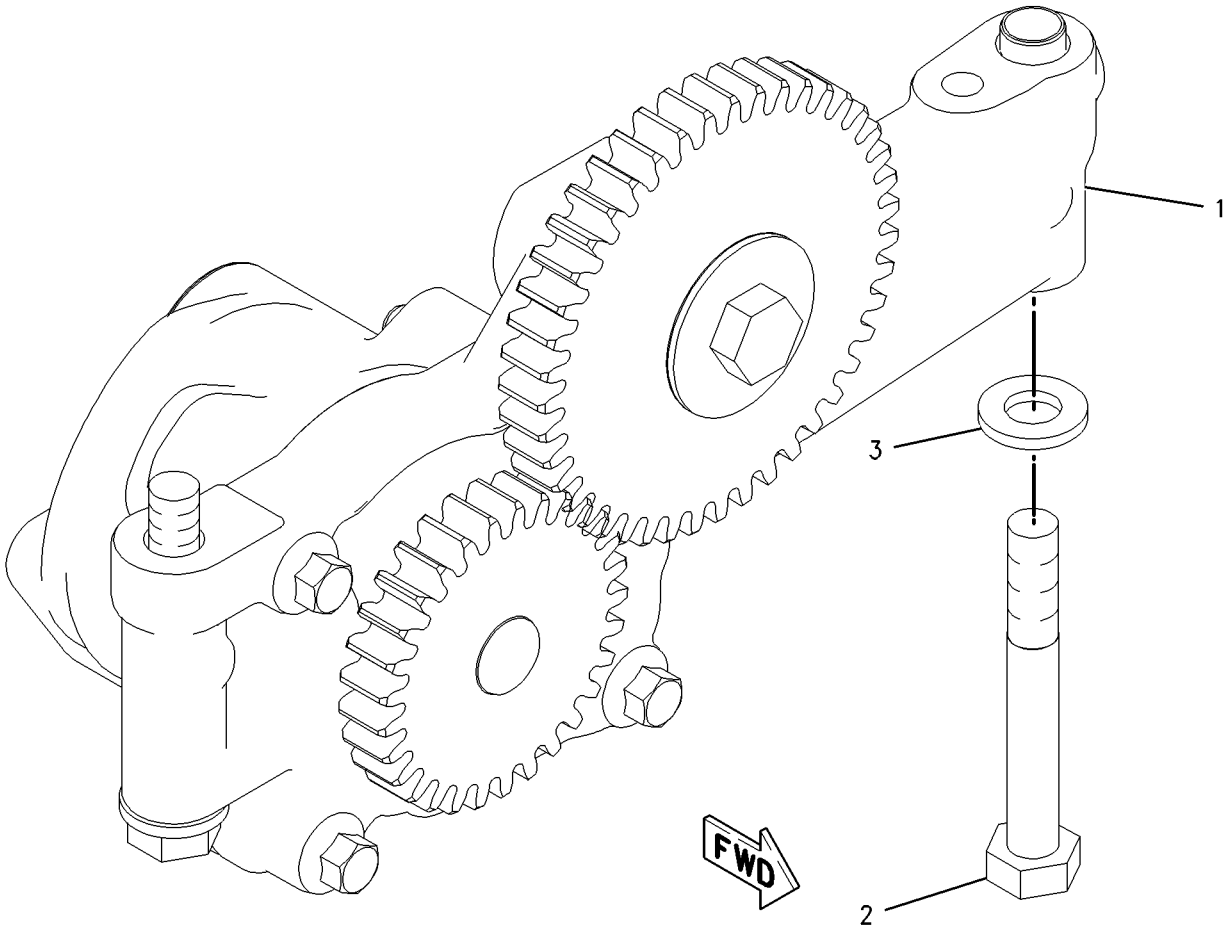

GRAPHIC #1 **<END>** g00849437

117-3643 COOLER GP-ENGINE OIL

S/N: KHX8814-UP

PART OF 312-0254 ENGINE AR-CORE

SMCS-1378 **i02835867**

NOTE	REF NO	GRAPHIC REF	PART NUMBER	QTY	PART NAME 1 2 3 4 5 6 (PRODUCT LEVEL)	SEE PAGE
R	1	1	**267-4743**	1	CORE AS-ENGINE OIL COOLER	
	2	1	**233-7655**	1	GASKET	
	3	1	**3P-1156**	2	SEAL-O-RING	

R-REMFG PART MAY BE AVAILABLE

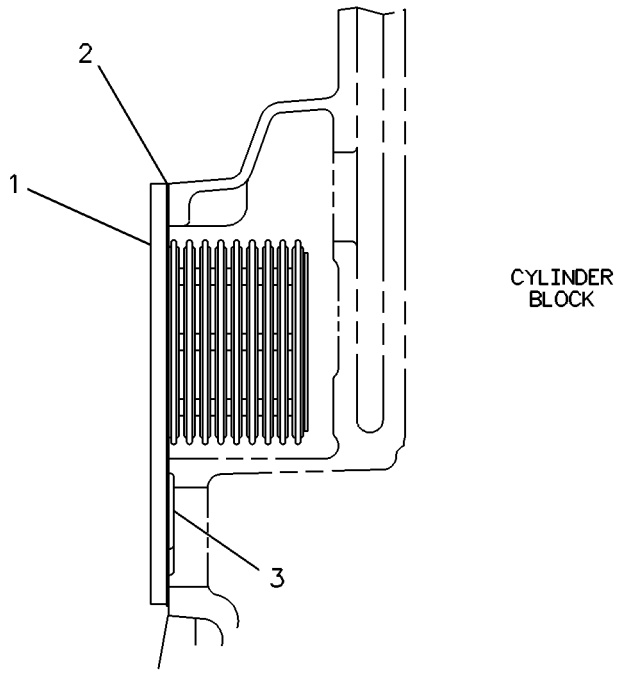

GRAPHIC #1 **<END>** g00117316

COOLING SYSTEM

310-5881 COOLING AR

S/N: JPA1-UP

PART OF 274-7940 GENERAL AR

SMCS-1350 **i03246252**

NOTE	REF NO	GRAPHIC REF	PART NUMBER	QTY	PART NAME 1 2 3 4 5 6 (PRODUCT LEVEL)	SEE PAGE
Y	1	1	*299-8311*	1	AFTERCOOLER GP-AIR	77
Y	2	1	*310-5882*	1	RADIATOR GP	74

Y-SEPARATE ILLUSTRATION

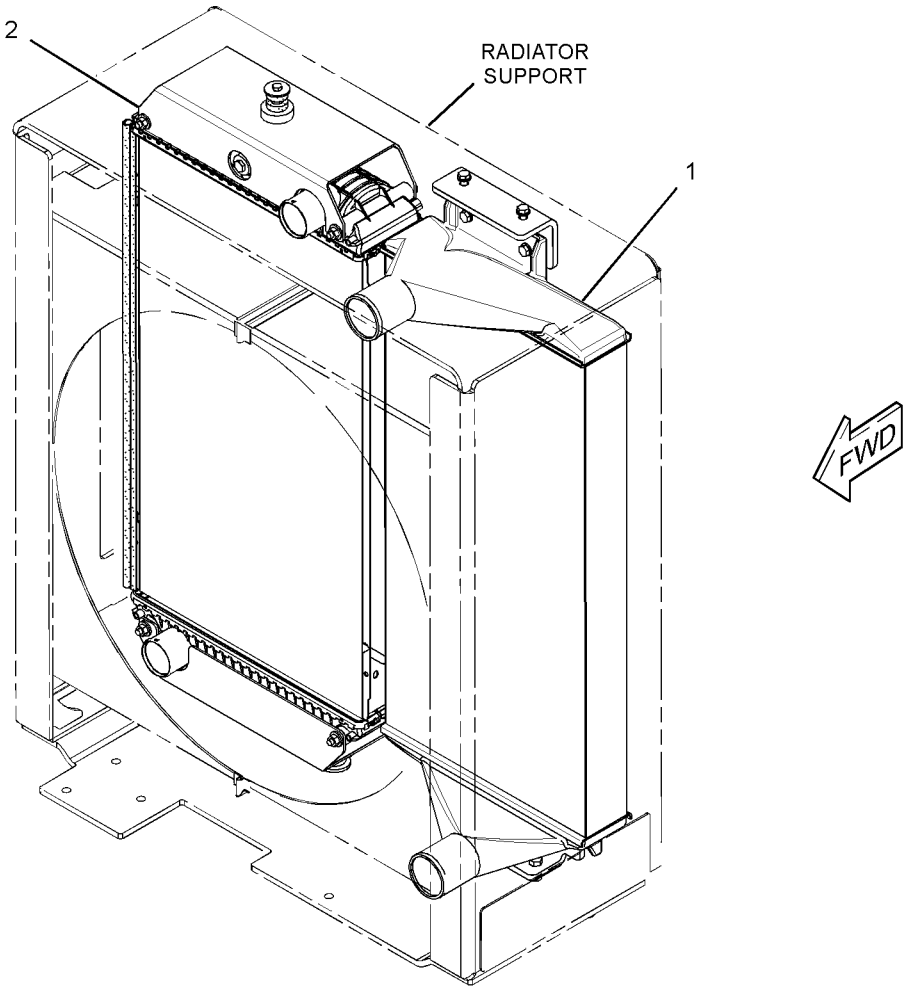

GRAPHIC #1 **<END>** g01691033

COOLING SYSTEM

284-0824 FAN GP–RADIATOR

S/N: JPA1-UP

PART OF 274-7940 GENERAL AR

SMCS-1356 **i03247411**

NOTE	REF NO	GRAPHIC REF	PART NUMBER	QTY	PART NAME 1 2 3 4 5 6 (PRODUCT LEVEL)	SEE PAGE
	1	1	**241-8534**	1	SPIDER AS (8-BLADE)	
	2	1	**8T-4121**	6	WASHER-HARD (11X21X2.5-MM THK)	
M	3	1	**8T-4195**	6	BOLT (M10X1.5X30-MM)	

M-METRIC PART

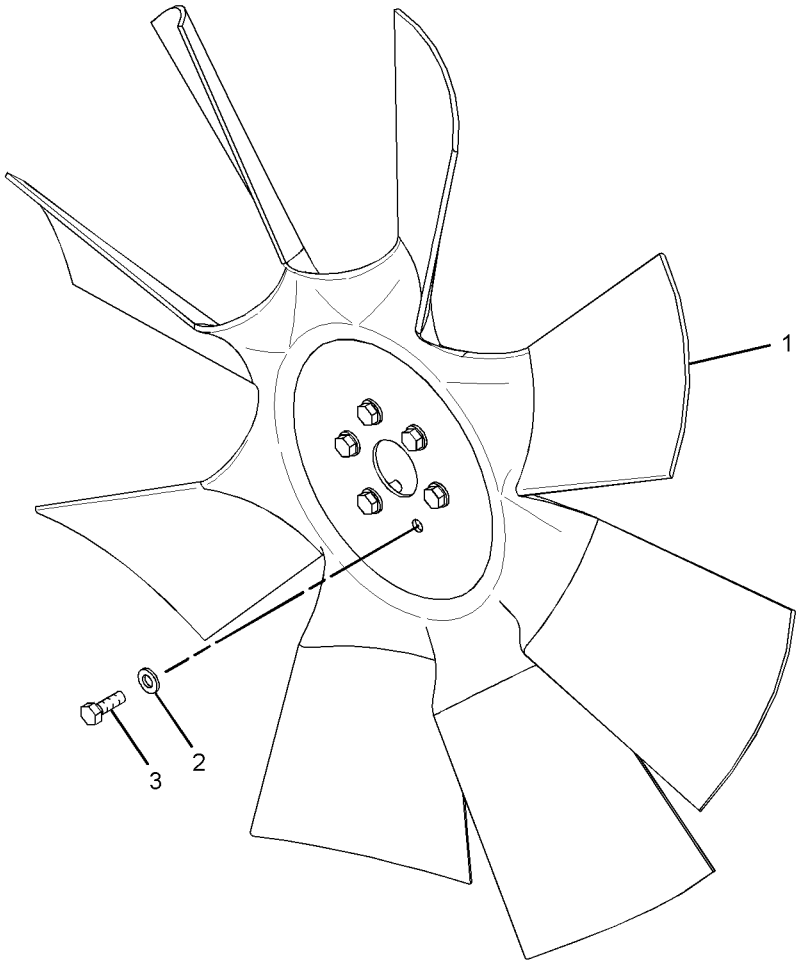

GRAPHIC #1 **<END>** g01687413

COOLING SYSTEM

303-6003 GUARD GP-FAN

S/N: JPA1-UP

PART OF 299-8307 SUPPORT GP-RADIATOR

SMCS-1360 **i03247380**

NOTE	REF NO	GRAPHIC REF	PART NUMBER	QTY	PART NAME 1 2 3 4 5 6 (PRODUCT LEVEL)	SEE PAGE
	1	1	**303-6009**	1	SHROUD AS (UPPER, LH)	
	2	1	**303-6010**	1	SHROUD AS (UPPER, RH)	
	3	1	**303-6011**	1	SHROUD AS (LOWER, RH)	
	4	1	**303-6012**	1	SHROUD AS (LOWER, LH)	
					(EACH SHROUD AS INCLUDES)	
		1	**6V-4604**	3	RIVET-POP	
M		1	**8T-3490**	3	NUT-WELD (M10X1.5-THD)	
	5	1	**303-6037**	2	BRUSH AS	
	6	1	**122-9764**	6	RIVET-POP	
E	7	1	**266-8568**		SEAL-BULK (17-CM EACH)	
E	7A	1	**266-8568**		SEAL-BULK (3.6-CM)	
E	7B	1	**266-8568**		SEAL-BULK (3-CM)	

E-ORDER BY THE CENTIMETER
M-METRIC PART

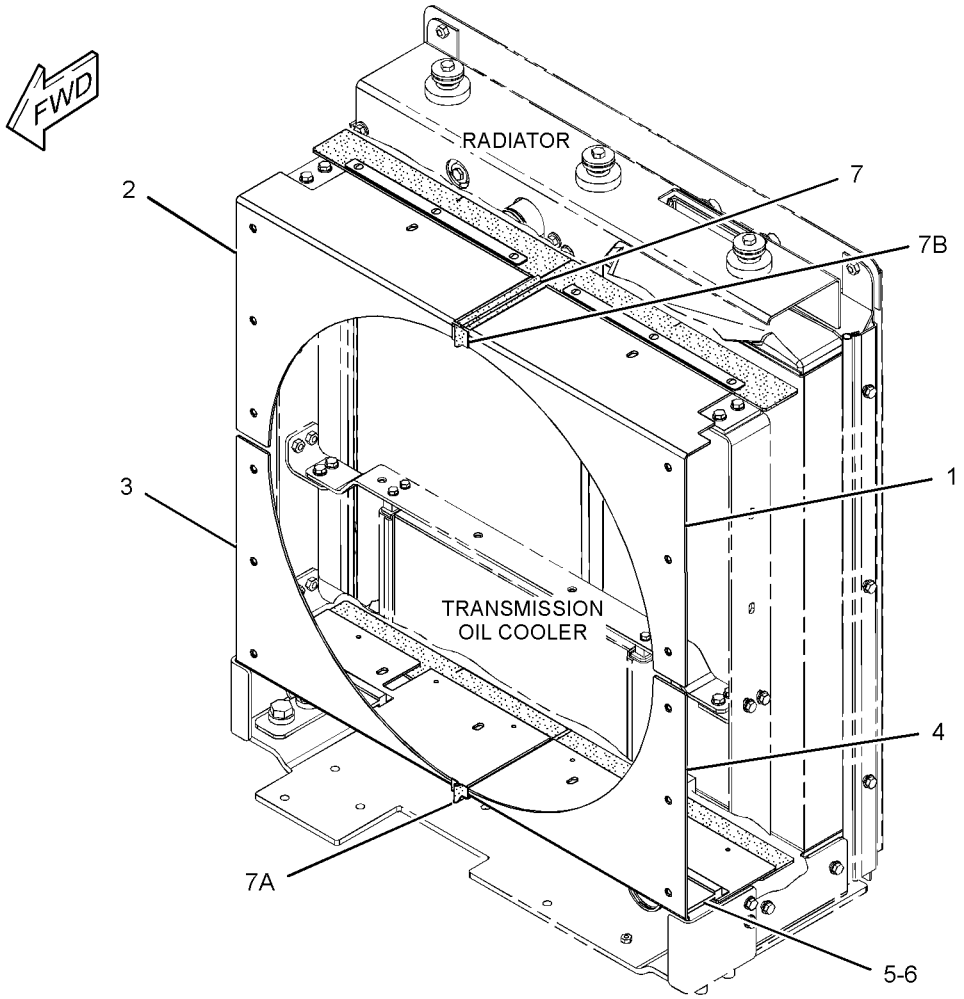

GRAPHIC #1 **<END>** g01696568

COOLING SYSTEM

206-4228 LINES GP-WATER

S/N: KHX8814-UP

PART OF 312-0255 ENGINE AR-COMPLETE

SMCS-1355, 1380, 1393 **i02838599**

NOTE	REF NO	GRAPHIC REF	PART NUMBER	QTY	PART NAME 1 2 3 4 5 6 (PRODUCT LEVEL)	SEE PAGE
	1	1	**7E-0759**	1	HOSE	
	3	1	**115-4223**	2	REGULATOR-WATER TEMPERATURE (97-DEG C)	
	4	1	**126-5466**	1	GASKET	
	5	1	**157-0670**	1	CAP-DUST	
	6	1	**160-5131**	1	PIPE (OUTLET)	
	7	1	*217-9060*	1	VALVE AS-FLUID SAMPLING (ENGINE COOLANT)	
	7A	1	**3J-7354**	1	SEAL-O-RING	
	7B	1	**154-9023**	1	VALVE-SAMPLING	
	8	1	**222-5915**	1	GASKET (TEMPERATURE REGULATOR HOUSING)	
	9	1	**227-5942**	1	HOUSING-WATER REGULATOR	
	10	1	**237-5176**	2	CLAMP-BAND	
	11	1	*148-8395*	1	PLUG AS	
		1	**3K-0360**	1	SEAL-O-RING	
		1	**9S-8005**	1	PLUG-O-RING	
M	12	1	**5P-8347**	2	BOLT (M8X1.25X70-MM)	
	13	1	**5P-9617**	1	ADAPTER	
	14	1	**6V-3250**	1	SEAL-O-RING	
M	15	1	**6V-3940**	6	BOLT (M8X1.25X25-MM)	
M	16	1	**6V-5223**	1	BOLT (M8X1.25X100-MM)	
	17	1	**6V-6609**	3	SEAL-O-RING	
	18	1	**6V-9027**	1	SEAL-O-RING	
	19	1	**9M-1974**	6	WASHER-HARD (8.8X16X2-MM THK)	
	20	1	**9S-4182**	1	PLUG-O-RING	
	21	1	**9S-4185**	3	PLUG-O-RING	

M-METRIC PART

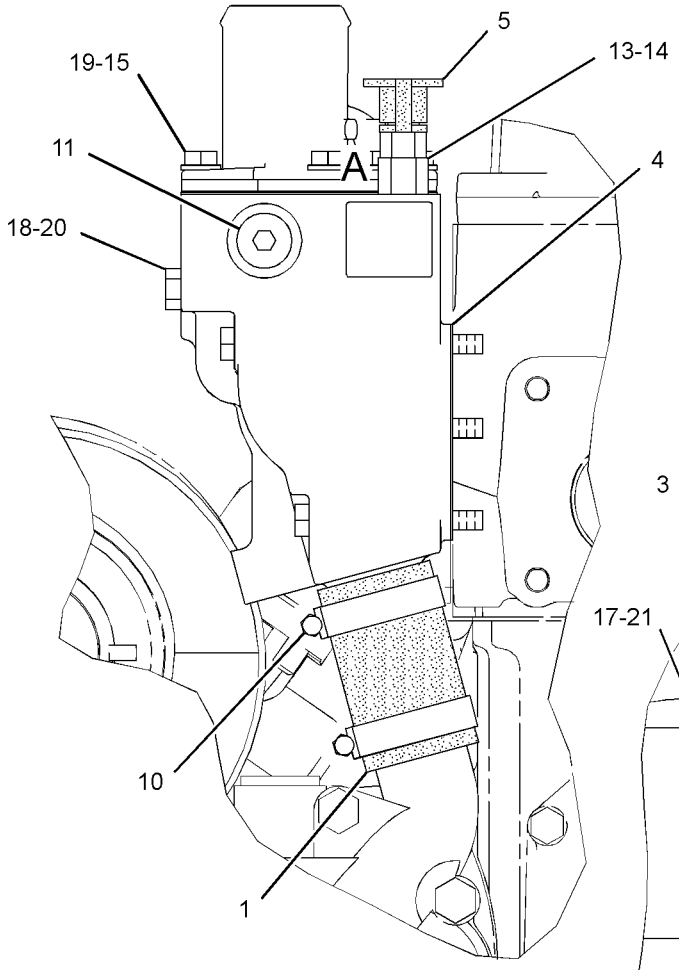

FRONT VIEW OF ENGINE

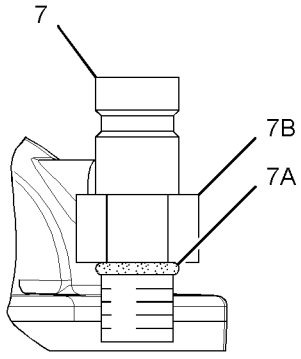

VIEW OF AREA A
(CAP REMOVED FOR CLARITY)

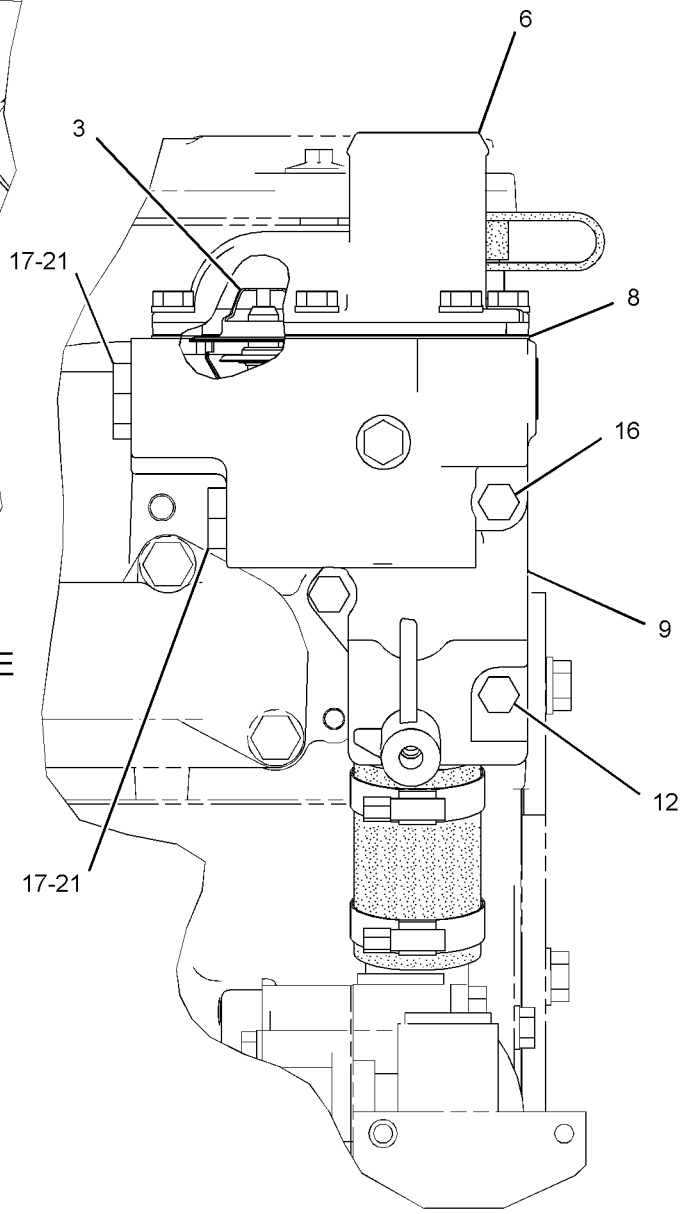

RIGHT SIDE VIEW OF ENGINE

GRAPHIC #1 **<END>** g01430061

COOLING SYSTEM

311-0274 LINES GP-WATER

S/N: JPA1-UP

PART OF 274-7940 GENERAL AR

SMCS-1355, 1380, 1393 **i03432290**

NOTE	REF NO	GRAPHIC REF	PART NUMBER	QTY	PART NAME 1 2 3 4 5 6 (PRODUCT LEVEL)	SEE PAGE
	1	1	**5D-1026**	1	CLAMP-HOSE	
	2	1	**5I-4376**	1	FITTING	
	3	1	**5P-4961**	4	CLAMP-HOSE	
	4	1	**157-0670**	1	CAP-DUST	
	5	1	*164-5562*	1	CONNECTOR AS	
		1	**3J-1907**	1	SEAL-O-RING	
		1	**5P-1046**	1	CONNECTOR	
	6	1	*184-2509*	1	VALVE GP-DRAIN (COOLANT)	
		1	**3K-0360**	1	SEAL-O-RING	
		1	**7E-4761**	1	VALVE-DRAIN	
	7	1	*215-7067*	3	ELBOW AS	
					(EACH INCLUDES)	
		1	**3J-1907**	1	SEAL-O-RING	
		1	**215-7066**	1	ELBOW	
	8	1	**263-6914**	1	HOSE	
	9	1	**265-5007**	1	HOSE	
	10	1	**266-7650**	1	ELBOW	
	11	1	**266-7651**	1	HOSE	
	12	1	**311-3025**	1	TUBE AS	
	13	1	**311-3026**	1	TUBE AS	
	14	1	**328-3496**	1	BRACKET	
	15	1	**154-9025**	1	VALVE-FLUID SAMPLING (COOLANT)	
	16	1	*184-2420*	1	ADAPTER AS	
		1	**3E-7401**	1	ADAPTER	
		1	**6V-8397**	1	SEAL-O-RING	
	17	1	**1P-7009**	1	CLIP	
	18	1	**208-6054**	4	CLAMP	
	19	1	**212-6933**	4	CLAMP	
	20	1	**2S-7010**	1	CLIP	
	21	1	**4D-7388**	1	CLIP	
	22	1	**6K-8178**	1	CLIP	
	23	1	**6V-2235**	1	CLIP	
	24	1	**6V-8367**	1	LOCKWASHER	
	25	1	**6V-9168**	1	NUT (11/16-16-THD)	
	26	1	**7J-8611**	1	ELBOW-PIPE (90-DEG)	
	27	1	**8M-2773**	1	CLIP	
	28	1	**8T-4121**	7	WASHER-HARD (11X21X2.5-MM THK)	
M	29	1	**8T-4133**	1	NUT (M10X1.5-THD)	
M	30	1	**8T-4137**	6	BOLT (M10X1.5X20-MM)	
E	31	1	**5P-0767**		HOSE (18-CM)	
E	32	1	**6V-8523**		HOSE (133.8-CM)	
E	32A	1	**6V-8523**		HOSE (38.2-CM)	

E-ORDER BY THE CENTIMETER
M-METRIC PART

311-0274 **LINES GP-WATER** *(contd.)* **i03432290**

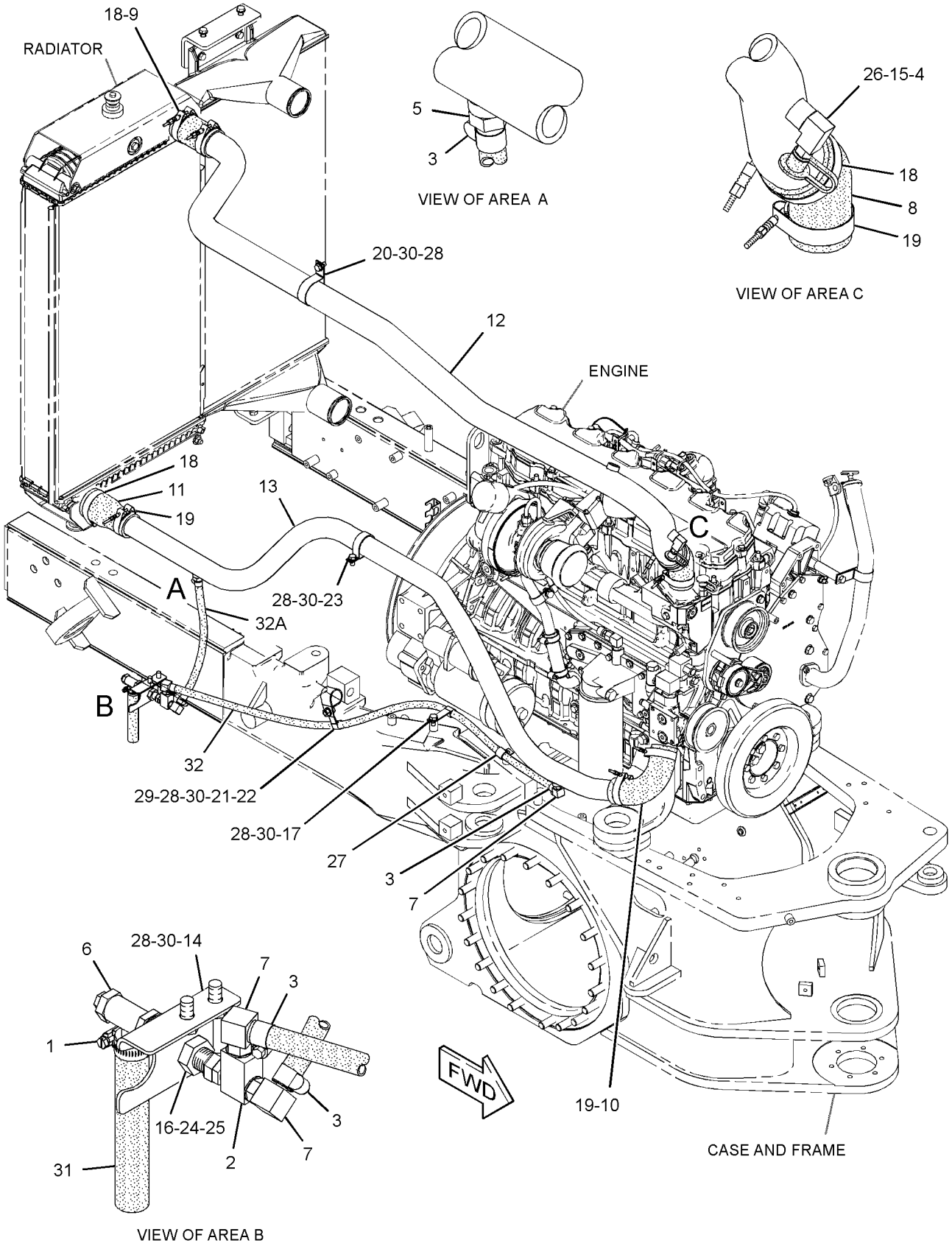

GRAPHIC #1 **<END>** g01710315

236-4413 PUMP GP-WATER*R

S/N: KHX8814-UP

PART OF 318-2076 PUMP GP-WATER

SMCS-1361 **i02871912**

NOTE	REF NO	GRAPHIC REF	PART NUMBER	QTY	PART NAME 1 2 3 4 5 6 (PRODUCT LEVEL)	SEE PAGE
	1	1	**4W-0253**	1	COVER	
	2	1	**4W-7592**	1	GASKET	
R	3	1	**236-4420**	1	PUMP AS-WATER	
		1	**117-3437**	1	PULLEY	
		1	**119-3025**	1	PLUG-FELT	
		1	**129-1170**	1	SHAFT AS	
		1	**147-5088**	1	SEAL AS-WATER PUMP	
		1	**152-3952**	1	IMPELLER-PUMP	
		1	**236-4421**	1	HOUSING-PUMP	
M	4	1	**6V-3918**	4	BOLT (M8X1.25X50-MM)	
	5	1	**9M-1974**	4	WASHER-HARD (8.8X16X2-MM THK)	

M-METRIC PART
R-REMFG PART MAY BE AVAILABLE

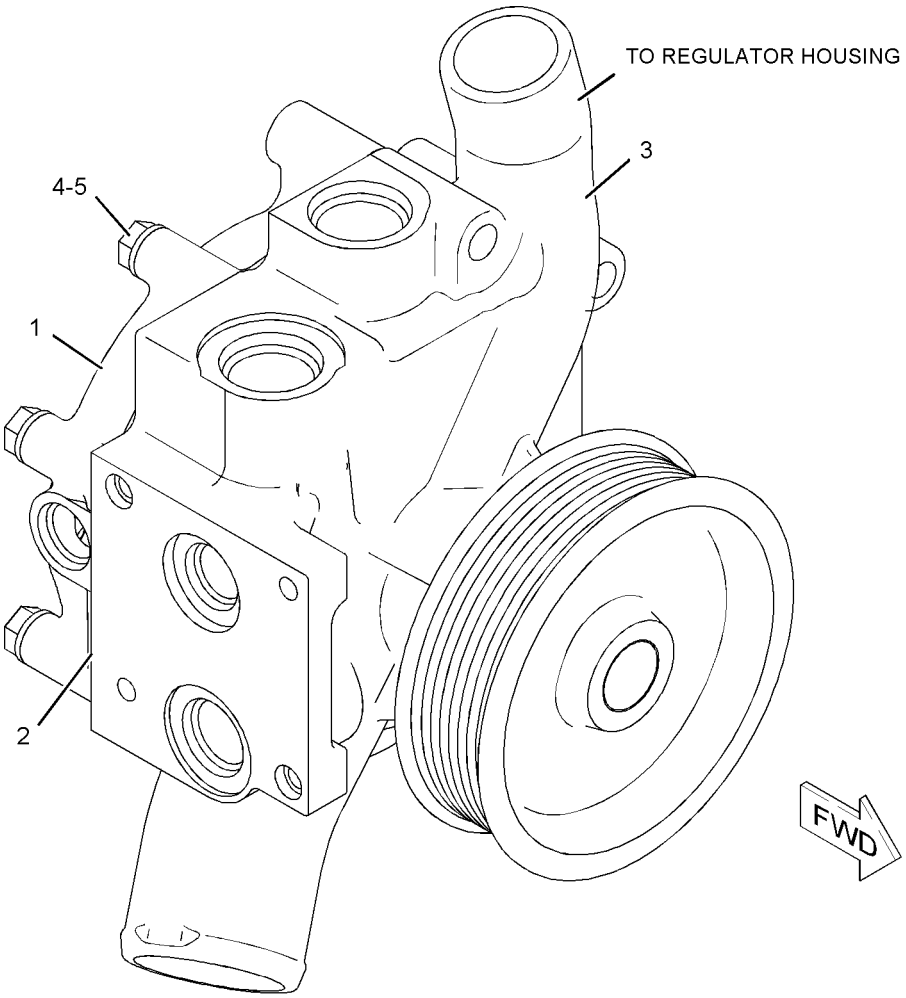

GRAPHIC #1 **<END>** g01040531

COOLING SYSTEM

318-2076 PUMP GP-WATER

S/N: KHX8814-UP

PART OF 312-0255 ENGINE AR-COMPLETE

SMCS-1361 **i03339021**

NOTE	REF NO	GRAPHIC REF	PART NUMBER	QTY	PART NAME 1 2 3 4 5 6 (PRODUCT LEVEL)	SEE PAGE
	1	1	**069-4269**	1	STEM	
YR	2	1	**236-4413**	1	PUMP GP-WATER	71
	3	1	*148-8395*	2	PLUG AS	
					(EACH INCLUDES)	
	3A	1	**3K-0360**	1	SEAL-O-RING	
		1	**9S-8005**	1	PLUG-O-RING	
	4	1	*155-6258*	1	ELBOW AS	
	4A	1	**3D-2824**	1	SEAL-O-RING	
	4B	1	**6V-8398**	1	SEAL-O-RING	
		1	**127-1647**	1	ELBOW	
	5	1	*164-5619*	1	PLUG AS	
	5A	1	**2M-9780**	1	SEAL-O-RING	
		1	**9S-8006**	1	PLUG-O-RING	
	6	1	**2M-4453**	1	SEAL-O-RING	
	7	1	**3D-2824**	1	SEAL-O-RING	
	8	1	**3J-3679**	1	PLUG AS	
	8A	1	**1J-9671**	1	SEAL-O-RING	
		1	**9S-8003**	1	PLUG	
	9	1	**4J-0524**	1	SEAL-O-RING	
M	10	1	**8T-0644**	4	BOLT (M10X1.5X90-MM)	

M-METRIC PART
R-REMFG PART MAY BE AVAILABLE
Y-SEPARATE ILLUSTRATION

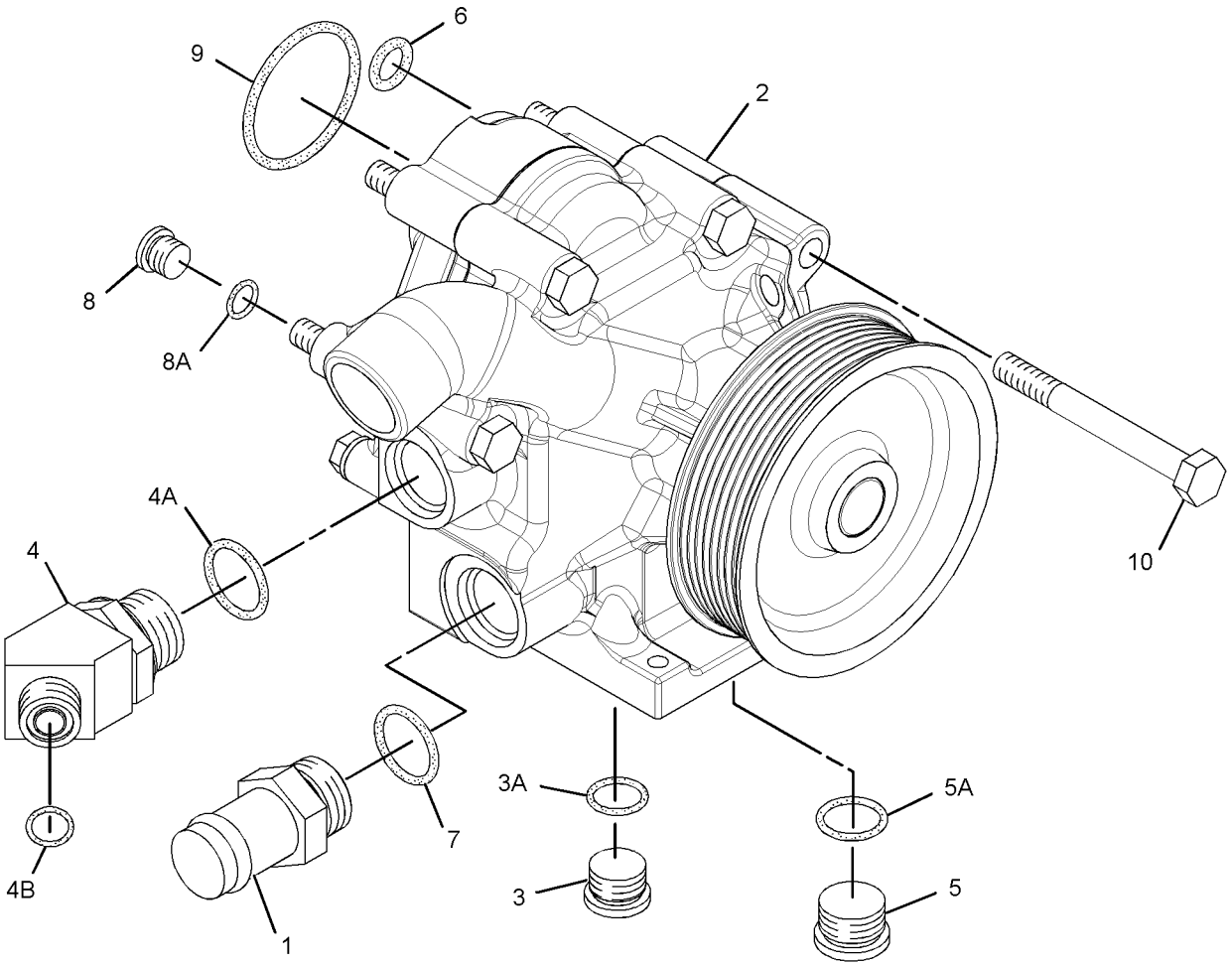

GRAPHIC #1 **<END>** g01722080

COOLING SYSTEM

310-5882 RADIATOR GP

S/N: JPA1-UP

PART OF 310-5881 COOLING AR

SMCS-1353 **i03246384**

NOTE	REF NO	GRAPHIC REF	PART NUMBER	QTY	PART NAME 1 2 3 4 5 6 (PRODUCT LEVEL)	SEE PAGE
	1	1	**6S-6251**	2	MOUNT	
	2	1	**121-3307**	1	MOUNT AS-RESILIENT	
M	3	1	**174-4181**	1	WASHER-HARD (8.5X40X3-MM THK)	
	4	1	**256-5308**	1	CORE AS-RADIATOR	
	5	1	**310-5883**	1	BRACKET AS	
	6	1	**310-5884**	1	BRACKET AS	
	7	1	**3J-5390**	1	PLUG	
M	8	1	**7X-2546**	4	BOLT (M10X1.5X180-MM)	
	9	1	**7X-7729**	8	WASHER (11X25X3-MM THK)	
M	10	1	**8T-4133**	4	NUT (M10X1.5-THD)	
M	11	1	**8T-4194**	2	BOLT (M12X1.75X50-MM)	
	12	1	**8T-4895**	2	WASHER (13.5X50X5-MM THK)	
M	13	1	**8T-6912**	1	BOLT (M8X1.25X50-MM)	
D	14	1	**5P-8309**		SEAL (1.8-M)	

D-ORDER BY THE METER
M-METRIC PART

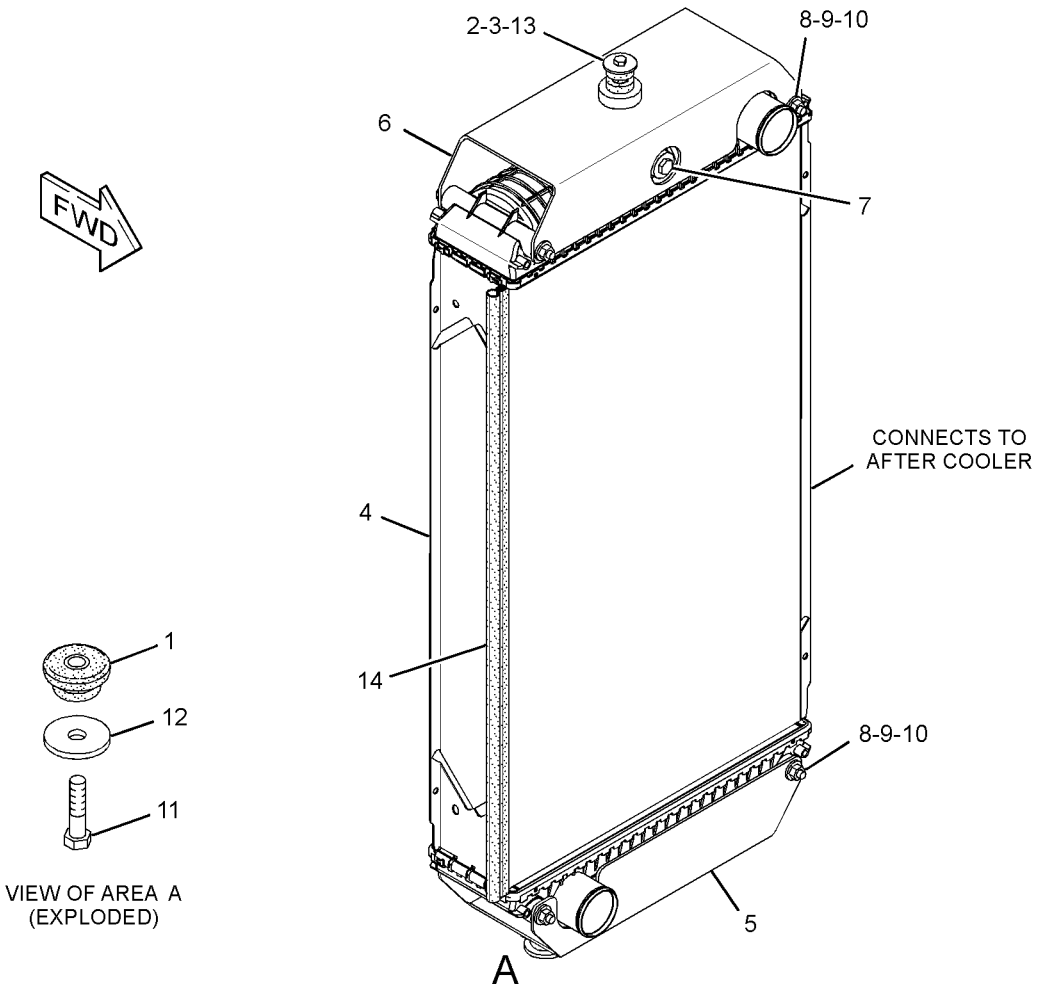

GRAPHIC #1 **<END>** g01661236

COOLING SYSTEM

311-2766 TANK GP-WATER

S/N: JPA1-UP

PART OF 274-7940 GENERAL AR

SMCS-1354, 1377 **i03246390**

NOTE	REF NO	GRAPHIC REF	PART NUMBER	QTY	PART NAME 1 2 3 4 5 6 (PRODUCT LEVEL)	SEE PAGE
	1	1	**6V-1230**	1	ELBOW	
	2	1	**277-4837**	1	TANK GP-COOLANT	
		1	**251-3227**	1	CAP AS-COOLANT TANK	
	3	1	**316-6689**	1	PLATE AS	
	4	1	**317-1529**	1	PLATE	
	5	1	**033-8248**	4	CLIP	
	6	1	**198-4776**	4	WASHER-HARD (8.8X20X8-MM THK)	
	7	1	**198-4777**	2	WASHER-HARD (11X25X10-MM THK)	
	8	1	**1S-0994**	1	CLIP	
	9	1	**3K-0360**	1	SEAL-O-RING	
	10	1	**4D-7388**	1	CLIP	
	11	1	**5D-1026**	2	CLAMP-HOSE	
	12	1	**8T-1117**	2	CLAMP-HOSE	
	13	1	**8T-4121**	10	WASHER-HARD (11X21X2.5-MM THK)	
M	14	1	**8T-4133**	3	NUT (M10X1.5-THD)	
M	15	1	**8T-4137**	6	BOLT (M10X1.5X20-MM)	
M	16	1	**8T-4195**	2	BOLT (M10X1.5X30-MM)	
M	17	1	**8T-4196**	1	BOLT (M10X1.5X35-MM)	
M	18	1	**8T-4908**	4	BOLT (M8X1.25X25-MM)	
E	19	1	**9X-2133**		HOSE (35-CM)	
E	20	1	**5P-1251**		HOSE (75-CM)	
E	21	1	**8C-3681**		HOSE (219-CM)	

E-ORDER BY THE CENTIMETER
M-METRIC PART

311-2766 **TANK GP-WATER** *(contd.)* **i03246390**

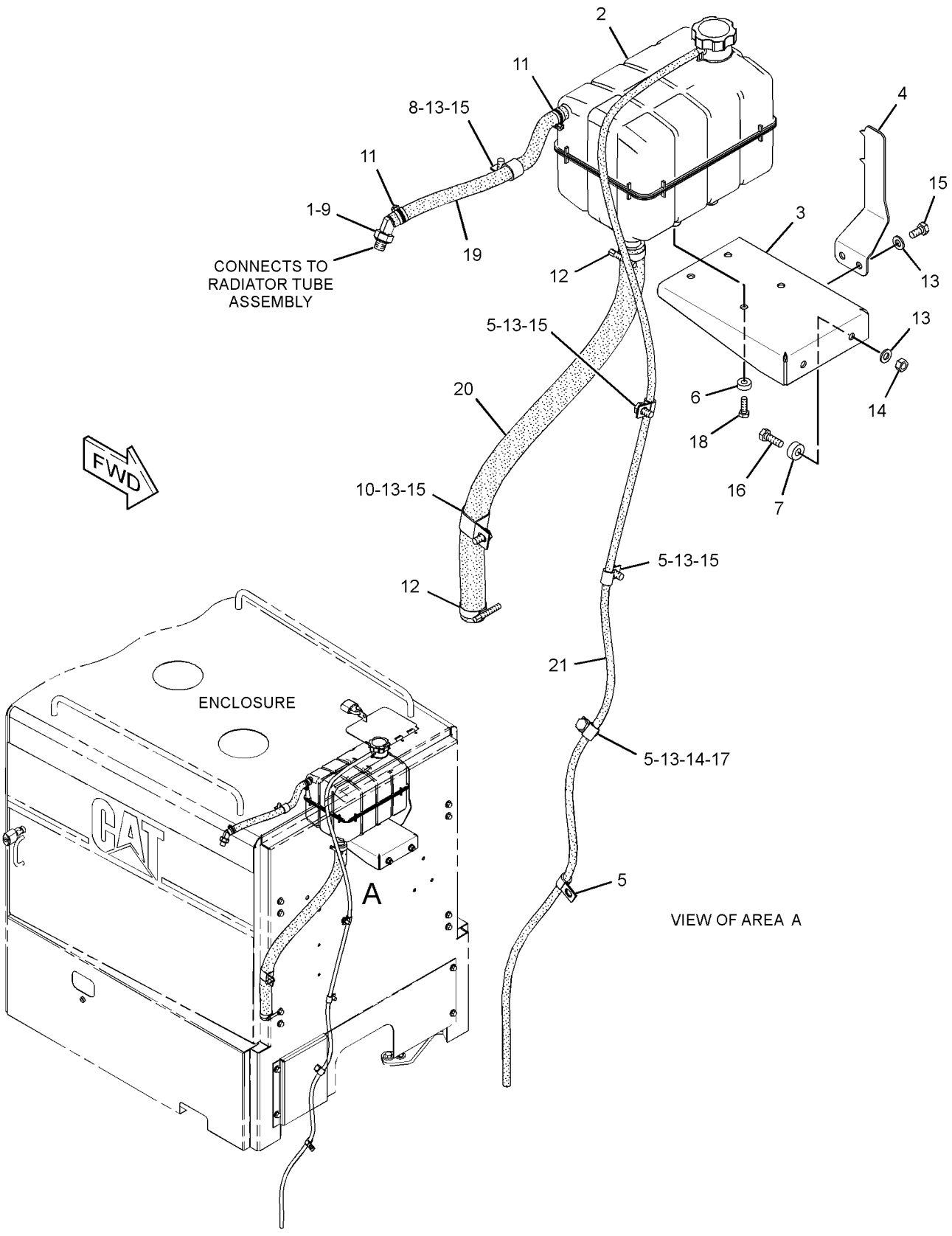

GRAPHIC #1 **<END>** g01689236

AIR INLET AND EXHAUST SYSTEM

299-8311 AFTERCOOLER GP-AIR

S/N: JPA1-UP

PART OF 310-5881 COOLING AR

SMCS-1063, 1064, 1079 **i03242667**

NOTE	REF NO	GRAPHIC REF	PART NUMBER	QTY	PART NAME 1 2 3 4 5 6 (PRODUCT LEVEL)	SEE PAGE
	1	1	**121-3307**	4	MOUNT AS-RESILIENT (RUBBER)	
	2	1	**243-5063**	1	AFTERCOOLER AS	
	3	1	**317-1538**	1	PLATE AS	
	4	1	**317-5601**	1	BRACKET AS	
	5	1	**8T-4121**	6	WASHER-HARD (11X21X2.5-MM THK)	
M	6	1	**8T-4133**	2	NUT (M10X1.5-THD)	
M	7	1	**8T-4196**	4	BOLT (M10X1.5X35-MM)	
	8	1	**8T-4226**	4	WASHER-PLATED (10.5X45X3-MM THK)	
M	9	1	**8T-6466**	4	BOLT (M10X1.5X60-MM)	

M-METRIC PART

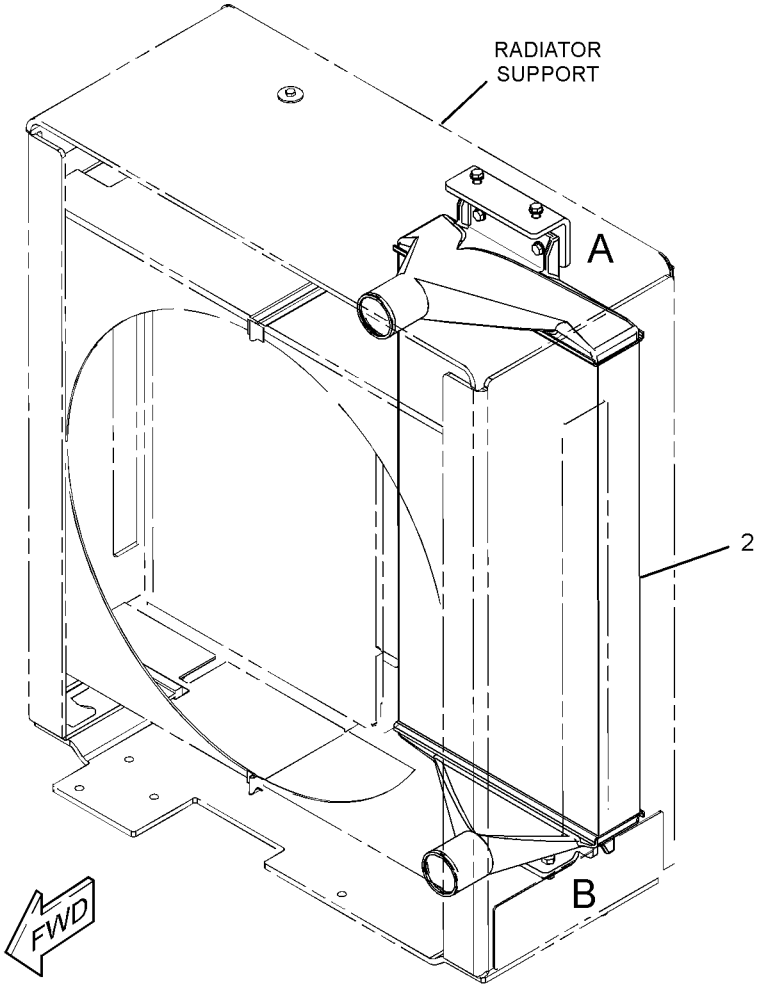

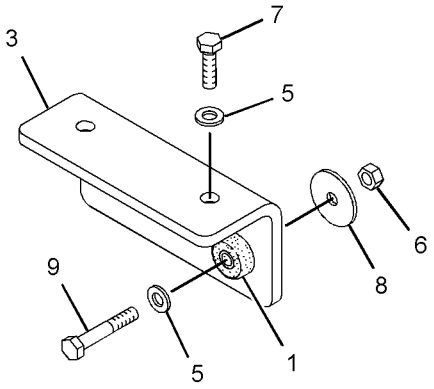

VIEW OF AREA A

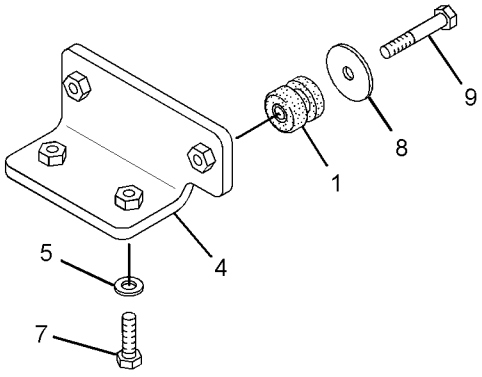

VIEW OF AREA B

GRAPHIC #1 **<END>** g01690853

AIR INLET AND EXHAUST SYSTEM

264-3762 AIR CLEANER GP

S/N: JPA1-UP

PART OF 310-6459 AIR CLEANER GP

SMCS-1051, 1054 **i03245923**

NOTE	REF NO	GRAPHIC REF	PART NUMBER	QTY	PART NAME 1 2 3 4 5 6 (PRODUCT LEVEL)	SEE PAGE
	1	1	**212-5081**	1	COVER AS	
	2	1	**245-6375**	1	FILTER ELEMENT-AIR (PRIMARY)	
	3	1	**245-6376**	1	FILTER ELEMENT AS-AIR (SECONDARY)	
	4	1	**246-4615**	2	BRACKET AS	
	5	1	**247-9730**	1	VALVE AS-CHECK	

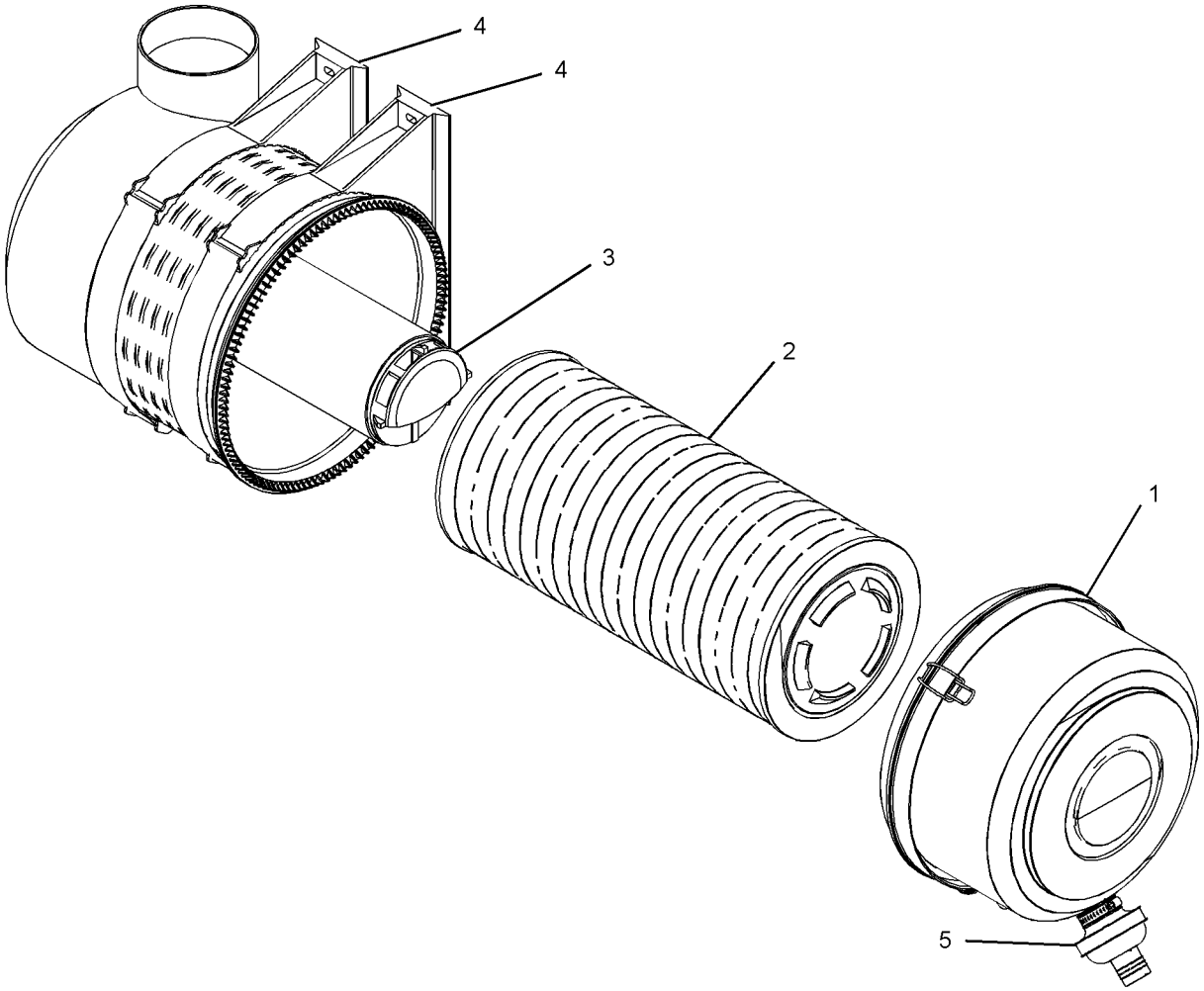

GRAPHIC #1 **<END>** g01691874

AIR INLET AND EXHAUST SYSTEM

310-6459 AIR CLEANER GP

S/N: JPA1-UP

PART OF 274-7940 GENERAL AR

SMCS-1051, 1054 **i03246214**

NOTE	REF NO	GRAPHIC REF	PART NUMBER	QTY	PART NAME 1 2 3 4 5 6 (PRODUCT LEVEL)	SEE PAGE
	1	1	**5P-2230**	2	CLAMP-HOSE	
	2	1	**8N-2694**	1	INDICATOR GP-AIR FILTER CHANGE	
	3	1	**119-6723**	1	FITTING	
	4	1	*150-3058*	1	TEE AS	
		1	**3J-1907**	1	SEAL-O-RING	
		1	**8C-8431**	1	TEE	
	5	1	**246-4611**	1	CAP AS-AIR CLEANER	
	6	1	**250-2984**	1	PIPE-EXTENSION	
Y	7	1	**264-3762**	1	AIR CLEANER GP	78
	8	1	**284-7774**	1	BRACKET	
	9	1	**311-4907**	1	HOSE AS	
I	10	1	**311-4908**	1	HOSE AS	
	11	1	**313-6096**	1	PLATE	
	12	1	**313-9542**	1	HOSE	
M	13	1	**099-3649**	4	BOLT (M8X1.25X40-MM)	
	14	1	*169-5862*	1	ELBOW AS	
		1	**3J-1907**	1	SEAL-O-RING	
		1	**8C-6712**	1	ELBOW	
	15	1	**1S-1014**	1	GROMMET	
	16	1	**219-0314**	1	CLAMP	
	17	1	**220-4125**	1	CLAMP	
	18	1	**224-0807**	1	CLAMP	
	19	1	**3J-7354**	1	SEAL-O-RING	
	20	1	**4D-7794**	1	CLIP	
M	21	1	**5C-2890**	2	NUT (M6X1-THD)	
	22	1	**7L-6326**	1	CLIP	
	23	1	**8T-4121**	6	WASHER-HARD (11X21X2.5-MM THK)	
M	24	1	**8T-4133**	1	NUT (M10X1.5-THD)	
M	25	1	**8T-4136**	1	BOLT (M10X1.5X25-MM)	
M	26	1	**8T-4137**	3	BOLT (M10X1.5X20-MM)	
M	27	1	**8T-4138**	2	BOLT (M6X1X20-MM)	
M	28	1	**8T-4191**	1	BOLT (M10X1.5X16-MM)	
	29	1	**5P-4116**	4	WASHER-HARD (8.8X20.5X2-MM THK)	
	30	1	**9X-8256**	4	WASHER (6.6X12X2-MM THK)	

I-REFER TO HYDRAULIC INFORMATION SYSTEM
M-METRIC PART
Y-SEPARATE ILLUSTRATION

310-6459 **AIR CLEANER GP** *(contd.)* **i03246214**

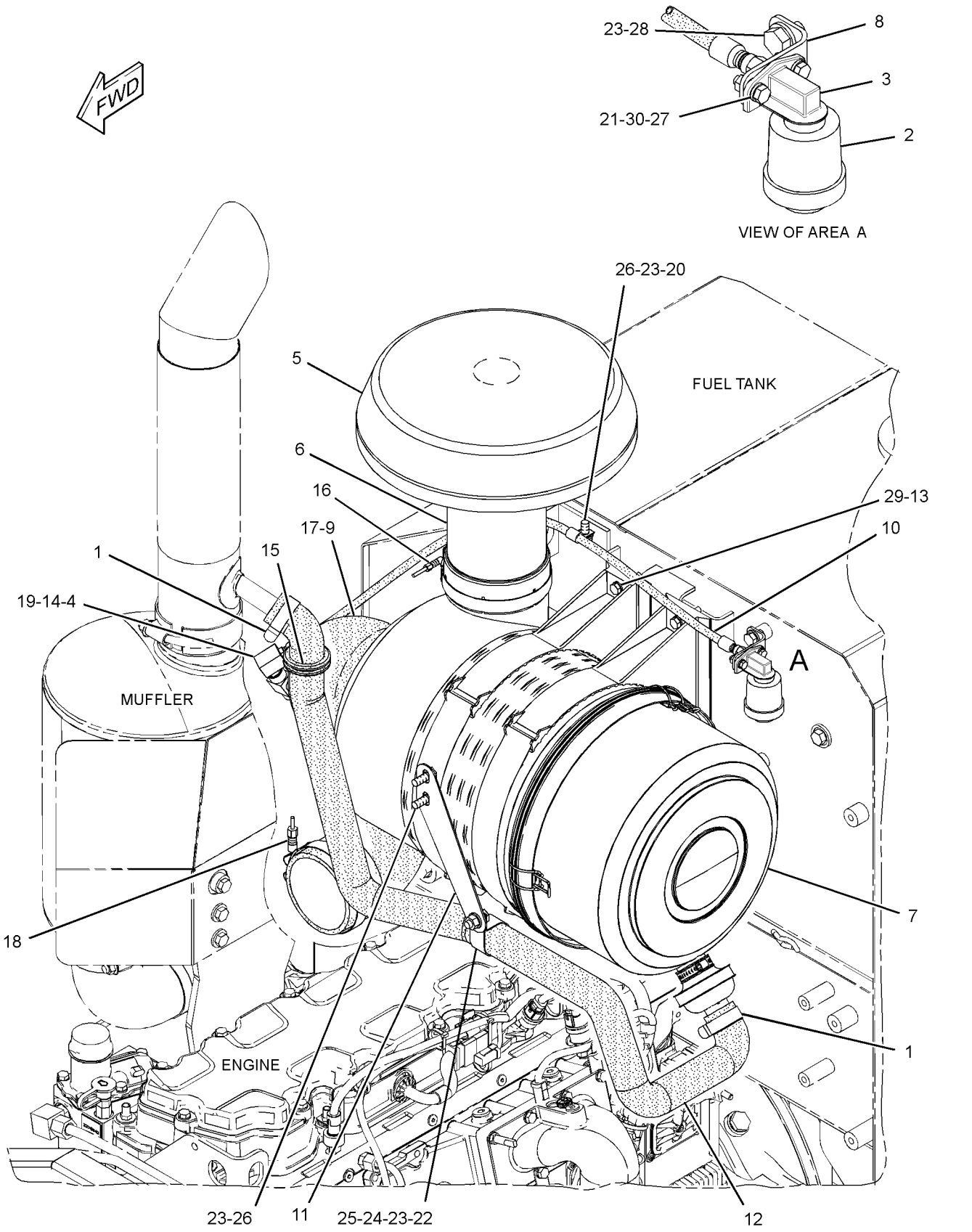

GRAPHIC #1 **<END>** g01752915

AIR INLET AND EXHAUST SYSTEM

153-1794 COVER GP-AIR INLET

S/N: KHX8814-UP

PART OF 312-0255 ENGINE AR-COMPLETE

SMCS-1087 **i02295151**

NOTE	REF NO	GRAPHIC REF	PART NUMBER	QTY	PART NAME 1 2 3 4 5 6 (PRODUCT LEVEL)	SEE PAGE
	1	1	**203-3769**	1	COVER	
B	2	1	**1U-8846**		SEALANT-GASKET	
	3	1	**9S-8005**	2	PLUG-O-RING	
	4	1	**3K-0360**	2	SEAL-O-RING	

B-USE AS REQUIRED

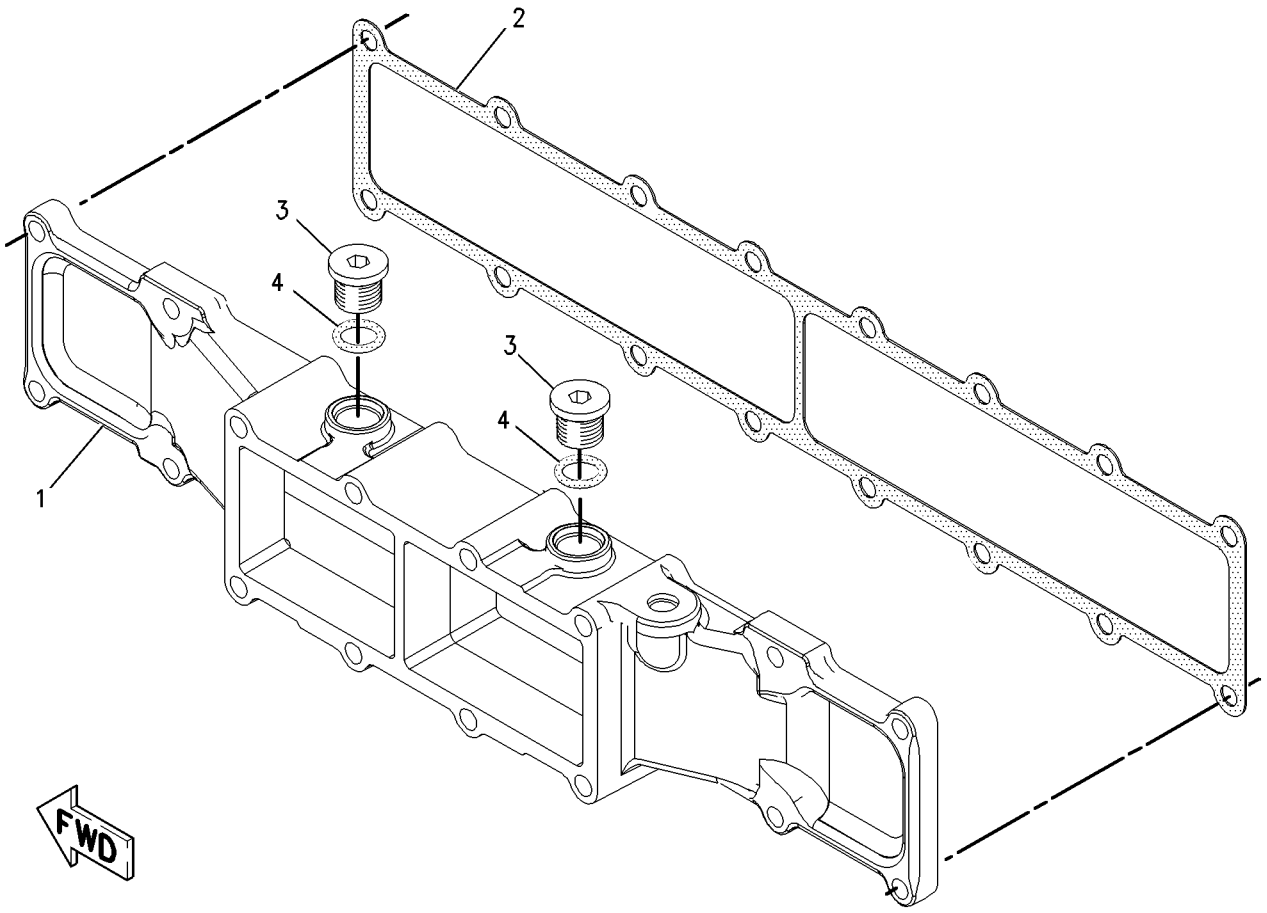

GRAPHIC #1 **<END>** g00826727

AIR INLET AND EXHAUST SYSTEM

322-0245 ELBOW GP-AIR INLET

S/N: KHX8814-UP

PART OF 312-0255 ENGINE AR-COMPLETE

SMCS-1087 **i03438862**

NOTE	REF NO	GRAPHIC REF	PART NUMBER	QTY	PART NAME 1 2 3 4 5 6 (PRODUCT LEVEL)	SEE PAGE
	1	1	**4P-5918**	1	CLIP	
	2	1	**7S-6369**	1	WASHER (0.344X0.75X0.188-IN THK)	
M	3	1	**123-4511**	4	STUD (M8X1.25-THD)	
	4	1	**197-0416**	1	ELBOW	
	5	1	*162-0177*	1	PLUG AS	
	5A	1	**3J-1907**	1	SEAL-O-RING	
	5B	1	**9S-8004**	1	PLUG-O-RING	
M	6	1	**8T-0292**	4	BOLT (M8X1.25X90-MM)	
	7	1	**9M-1974**	7	WASHER-HARD (8.8X16X2-MM THK)	
B	8	1	**1U-8846**	1	SEALANT-GASKET	

B-USE AS REQUIRED
M-METRIC PART

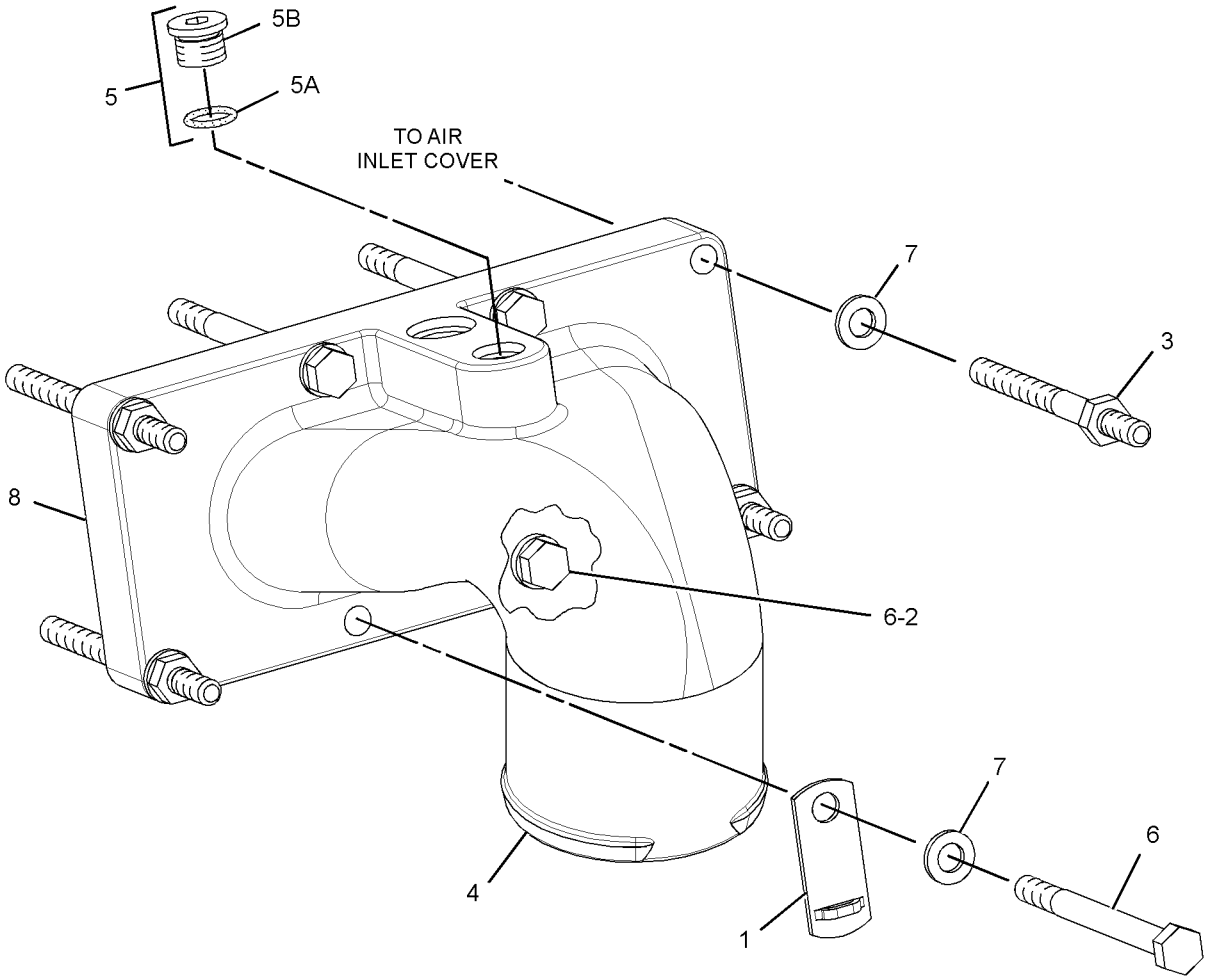

GRAPHIC #1 **<END>** g01721986

AIR INLET AND EXHAUST SYSTEM

311-0864 LINES GP-AIR

S/N: JPA1-UP

PART OF 274-7940 GENERAL AR

SMCS-1071 **i03353921**

NOTE	REF NO	GRAPHIC REF	PART NUMBER	QTY	PART NAME 1 2 3 4 5 6 (PRODUCT LEVEL)	SEE PAGE
	1	1	**177-0581**	2	HOSE	
	2	1	**209-4578**	8	CLAMP	
	3	1	**247-8602**	1	HOSE-ELBOW	
	4	1	**254-6802**	1	HOSE-ELBOW	
	5	1	**311-4959**	1	TUBE	
	6	1	**312-8434**	1	TUBE AS	
	7	1	**313-6098**	1	PLATE AS	
	8	1	**5L-3244**	2	CLIP	
M	9	1	**7X-2552**	3	BOLT (M16X2X30-MM)	
	10	1	**8T-4121**	2	WASHER-HARD (11X21X2.5-MM THK)	
M	11	1	**8T-4136**	1	BOLT (M10X1.5X25-MM)	
M	12	1	**8T-4195**	1	BOLT (M10X1.5X30-MM)	
	13	1	**9X-8257**	3	WASHER (17.5X30X3.5-MM THK)	

M-METRIC PART

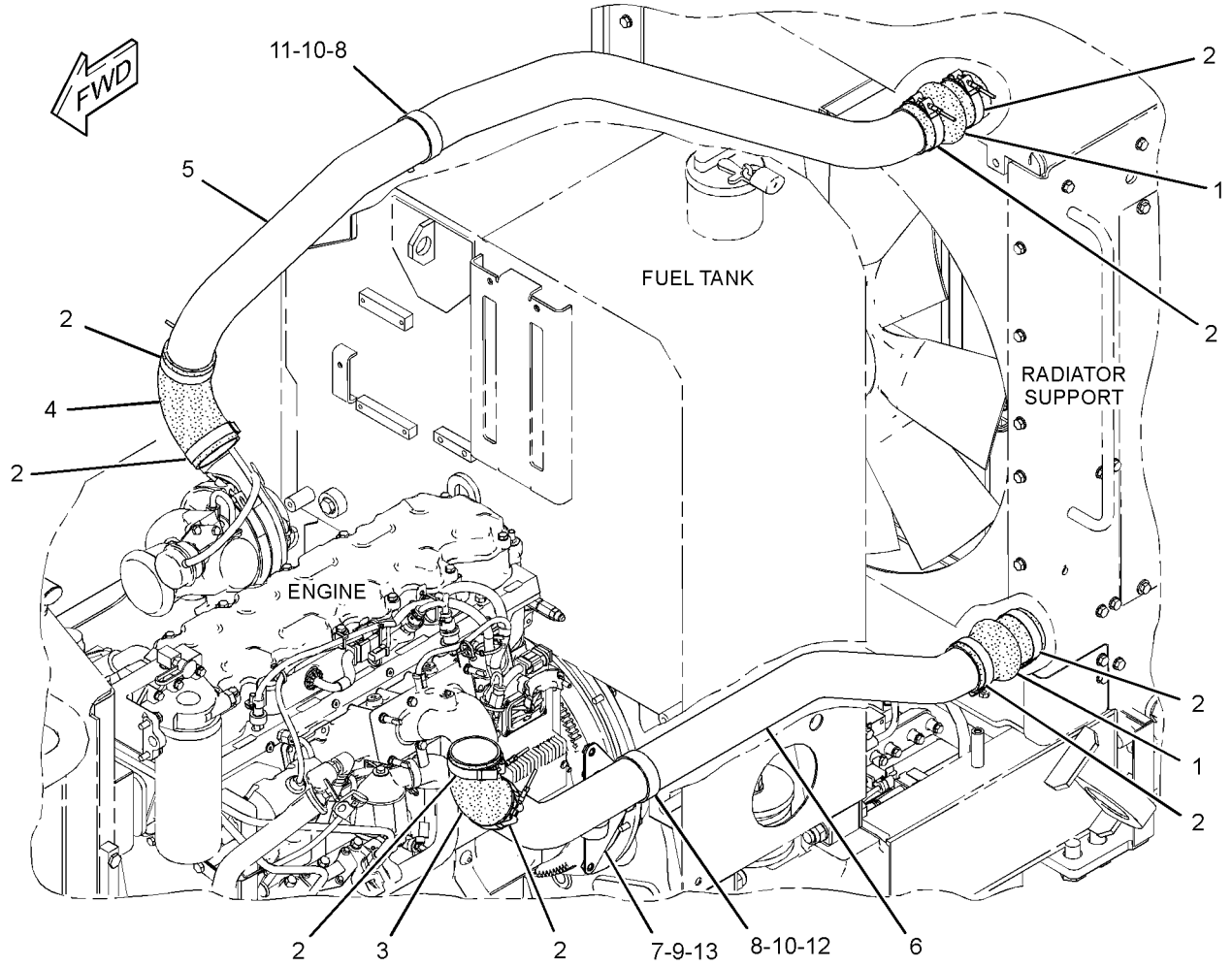

GRAPHIC #1

<END>

g01704994

AIR INLET AND EXHAUST SYSTEM

183-6845 MANIFOLD GP-EXHAUST

S/N: KHX8814-UP

PART OF 312-0255 ENGINE AR-COMPLETE

SMCS-1059 **i02419842**

NOTE	REF NO	GRAPHIC REF	PART NUMBER	QTY	PART NAME 1 2 3 4 5 6 (PRODUCT LEVEL)	SEE PAGE
M	1	1	**8T-7044**	4	STUD-TAPERLOCK (M10X1.5X40-MM)	
	2	1	**272-1956**	6	GASKET	
M	3	1	**172-6298**	8	BOLT-FLANGE HEAD (M10)	
	4	1	**183-6854**	1	MANIFOLD-EXHAUST (CENTER)	
	5	1	**183-6856**	2	MANIFOLD-EXHAUST (END)	
	6	1	**189-8772**	8	SPACER (11X16X35-MM THK)	
	7	1	**203-3768**	4	SPACER (11X16X60-MM THK)	
	8	1	**210-7722**	4	BOLT-FLANGE HEAD (M10)	

M-METRIC PART

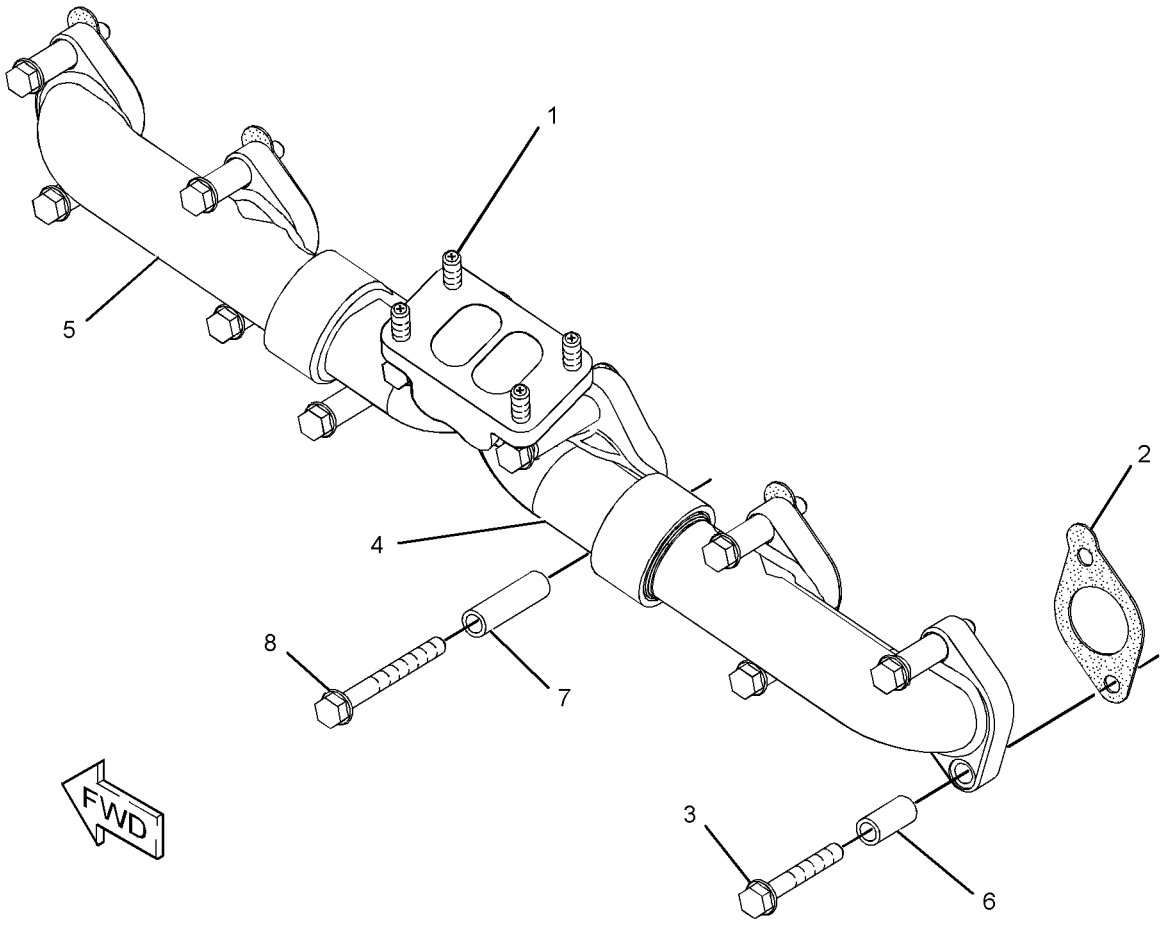

GRAPHIC #1 **<END>** g01211596

AIR INLET AND EXHAUST SYSTEM

310-6472 MUFFLER GP

S/N: JPA1-UP

PART OF 274-7940 GENERAL AR

SMCS-1062 **i03246366**

NOTE	REF NO	GRAPHIC REF	PART NUMBER	QTY	PART NAME 1 2 3 4 5 6 (PRODUCT LEVEL)	SEE PAGE
	1	1	**1W-2431**	1	CLAMP-BAND	
	2	1	**312-3542**	1	TUBE AS	
M	3	1	**8T-4195**	5	BOLT (M10X1.5X30-MM)	
M	4	1	**8T-4196**	2	BOLT (M10X1.5X35-MM)	
	5	1	**317-2757**	1	PLATE	
	6	1	**317-2792**	1	PLATE AS	
	7	1	**317-3758**	1	PLATE AS	
	8	1	**198-4777**	7	WASHER-HARD (11X25X10-MM THK)	
	9	1	**8T-4121**	6	WASHER-HARD (11X21X2.5-MM THK)	
M	10	1	**8T-4136**	4	BOLT (M10X1.5X25-MM)	
M	11	1	**8T-4191**	2	BOLT (M10X1.5X16-MM)	

M-METRIC PART

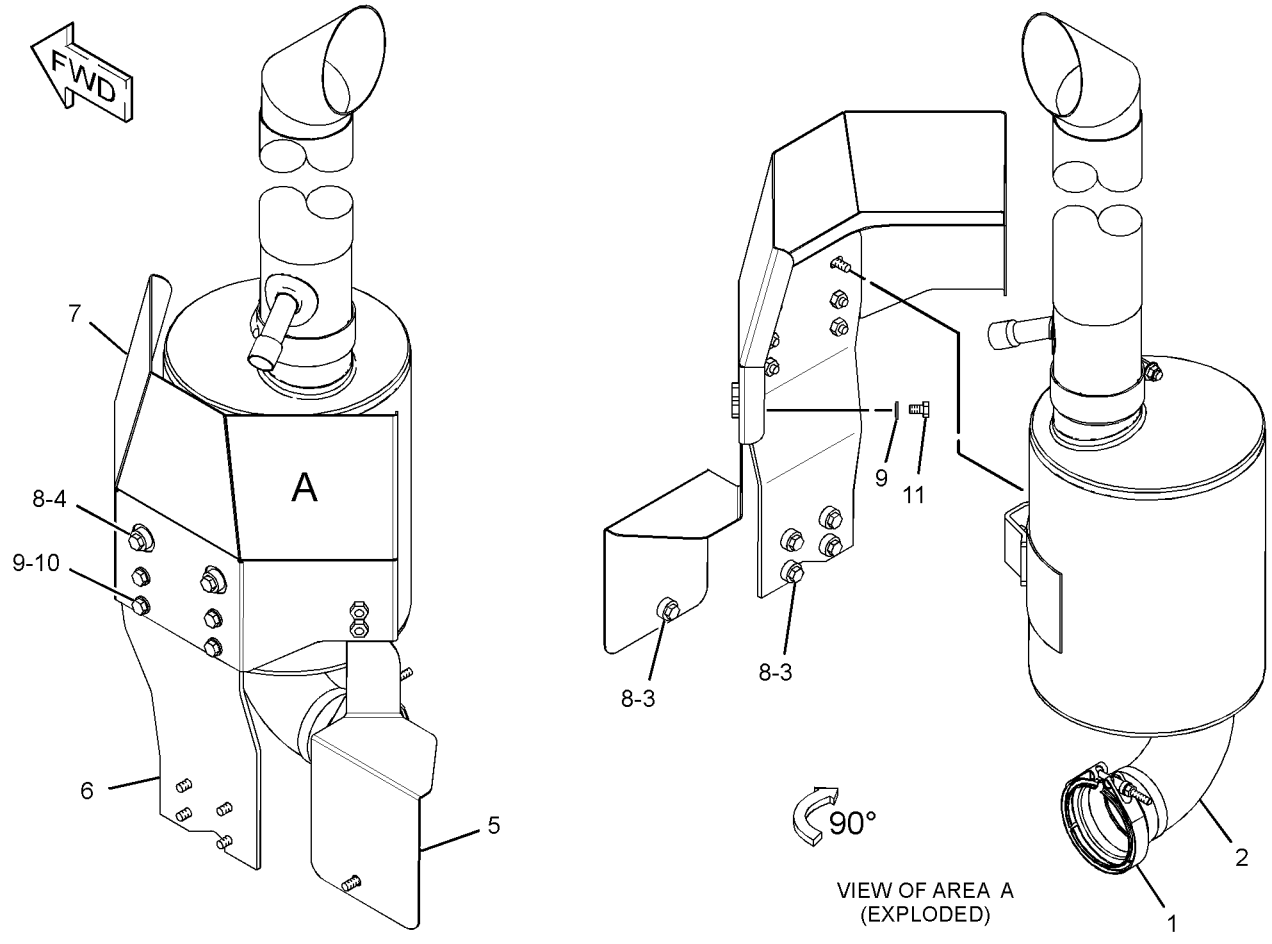

GRAPHIC #1 **<END>** g01692635

AIR INLET AND EXHAUST SYSTEM

250-0841 TURBOCHARGER GP*R

S/N: KHX8814-UP

PART OF 258-2403 TURBOCHARGER GP

SMCS-1052, 1053 **i03432285**

NOTE	REF NO	GRAPHIC REF	PART NUMBER	QTY	PART NAME 1 2 3 4 5 6 (PRODUCT LEVEL)	SEE PAGE
	1	1	**137-1602**	1	CLAMP AS (TURBINE)	
		1	**7M-9918**	1	LOCKNUT (1/4-28-THD)	
	2	1	**158-6072**	1	CLAMP AS (COMPRESSOR)	
	3	1	**161-6963**	2	CLAMP	
	4	1	**261-9287**	1	CARTRIDGE GP-TURBOCHARGER	
	5	1	**5P-4536**	1	ELBOW	
E	6	1	**242-3360**		HOSE (44-CM)	

E-ORDER BY THE CENTIMETER

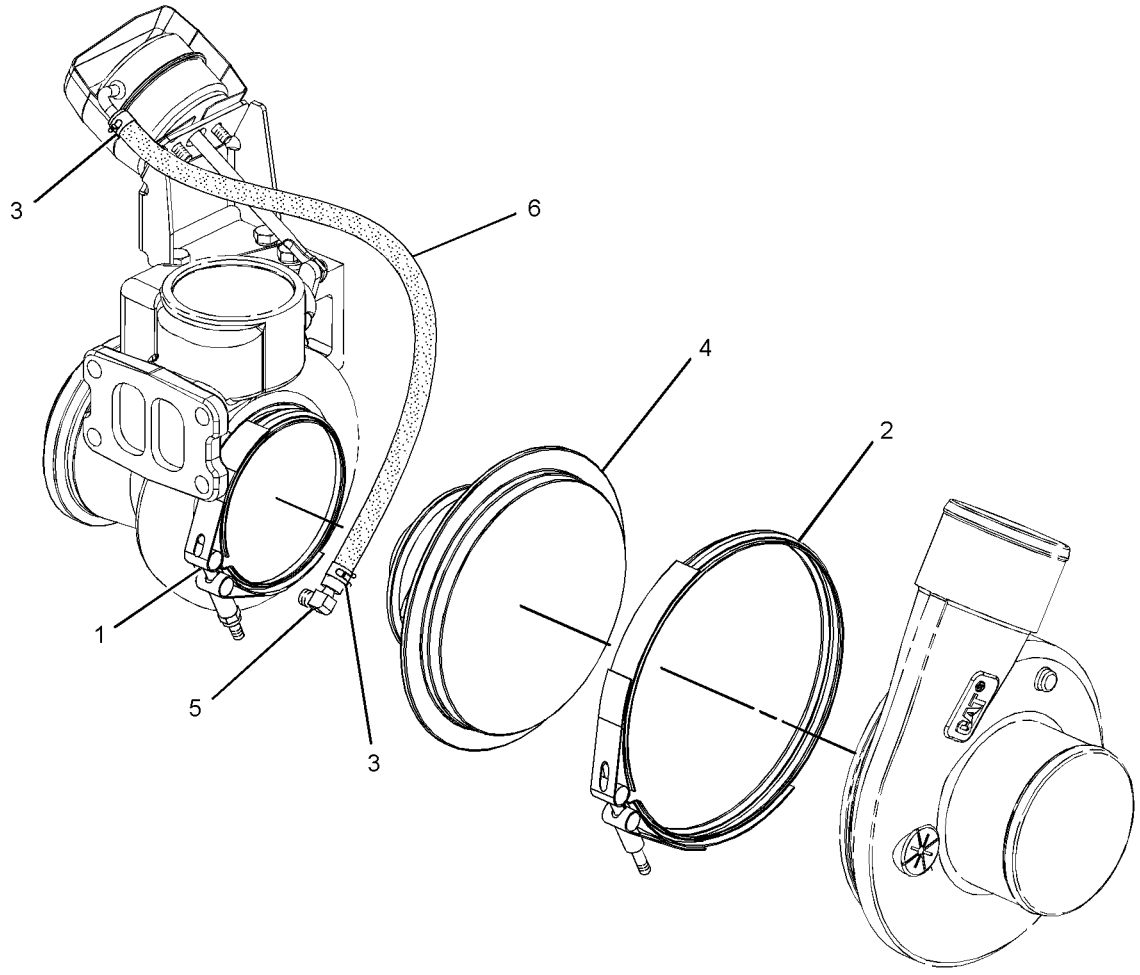

GRAPHIC #1 **<END>** g01370583

AIR INLET AND EXHAUST SYSTEM

258-2403 TURBOCHARGER GP

S/N: KHX8814-UP

PART OF 312-0254 ENGINE AR-CORE

SMCS-1052, 1053 **i03013756**

NOTE	REF NO	GRAPHIC REF	PART NUMBER	QTY	PART NAME 1 2 3 4 5 6 (PRODUCT LEVEL)	SEE PAGE
	1	1	**7C-7431**	1	GASKET	
Y	2	1	**250-0841**	1	TURBOCHARGER GP	86
M	3	1	**3E-8017**	4	LOCKNUT (M10X1.5-THD)	

M-METRIC PART
Y-SEPARATE ILLUSTRATION

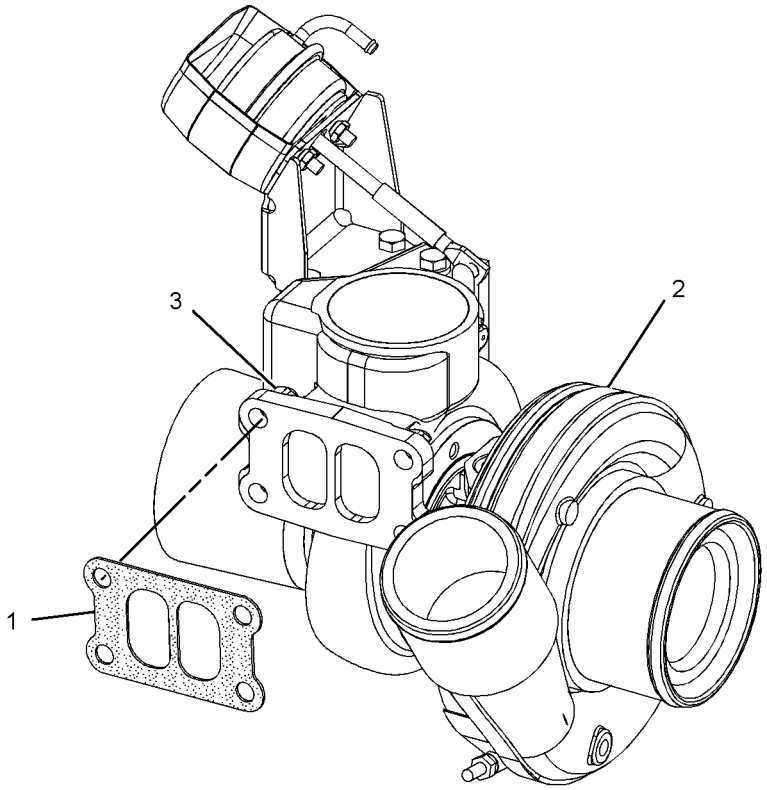

GRAPHIC #1 **<END>** g01118532

FUEL SYSTEM

282-2472 CONTROL GP-GOVERNOR

S/N: JPA1-UP

PART OF 274-7940 GENERAL AR

SMCS-1265, 1276 **i03247386**

NOTE	REF NO	GRAPHIC REF	PART NUMBER	QTY	PART NAME 1 2 3 4 5 6 (PRODUCT LEVEL)	SEE PAGE
	1	1	**2L-6267**	1	LOCKNUT (3/8-24-THD)	
B	2	1	**2N-9421**	2	SPRING-DISC	
	3	1	**4D-4064**	1	ROD END (3/8-24-THD, FEMALE)	
	4	1	**5P-9209**	2	BEARING AS-NEEDLE	
	5	1	**7F-0192**	1	BOLT (3/8-16X2-IN)	
	6	1	**7V-0446**	1	CLIP	
	7	1	**8X-3261**	1	LEVER	
	8	1	**116-5710**	1	GROMMET	
	9	1	**130-5300**	1	CLIP	
	10	1	**141-6343**	1	SPRING	
	11	1	**161-7062**	1	HOUSING	
	12	1	**162-8218**	1	GASKET	
	13	1	**162-8219**	1	COVER	
	14	1	**168-8683**	1	SHAFT	
	15	1	**169-0921**	1	ROD END (INTERNAL THREAD)	
	16	1	**169-0922**	1	ROD	
	17	1	**172-0165**	1	SHAFT	
	18	1	**172-4211**	1	SPACER (10.5X22X50.8-MM THK)	
	19	1	**206-3599**	1	LEVER	
	20	1	**206-3600**	1	LEVER	
	21	1	**207-4927**	1	PEDAL-GOVERNOR CONTROL	
Y	22	1	**266-1467**	1	SENSOR GP-POSITION (ROTARY) (GOVERNOR, BRAKE PEDAL)	168
	23	1	**009-0008**	1	SETSCREW-SOCKET (3/8-16X0.5-IN)	
	24	1	**129-3173**	1	BOLT-12 POINT HEAD (3/8-16X1.25-IN)	
M	25	1	**142-0485**	1	NUT (M10X1.15-THD)	
	26	1	**1B-0676**	1	PIN	
	27	1	**1B-8704**	3	KEY-WOODRUFF	
	28	1	**272-3089**	1	BOLT (M10X1.5X90-MM)	
	29	1	**5P-1075**	2	WASHER-HARD (10.2X22.5X3-MM THK)	
	30	1	**5P-1076**	1	WASHER-HARD (13.5X30X4-MM THK)	
M	31	1	**6V-2313**	2	BOLT (M5X0.8X30-MM)	
	32	1	**6V-8801**	2	NUT (3/8-16-THD)	
	33	1	**8T-0328**	2	WASHER-HARD (5.5X10X1-MM THK)	
	34	1	**8T-4121**	3	WASHER-HARD (11X21X2.5-MM THK)	
M	35	1	**8T-4133**	2	NUT (M10X1.5-THD)	
M	36	1	**8T-4136**	3	BOLT (M10X1.5X25-MM)	
M	37	1	**8T-4182**	2	BOLT (M10X1.5X45-MM)	
M	38	1	**8T-4196**	2	BOLT (M10X1.5X35-MM)	
	39	1	**8T-4226**	1	WASHER-PLATED (10.5X45X3-MM THK)	

B-USE AS REQUIRED
M-METRIC PART
Y-SEPARATE ILLUSTRATION

282-2472 **CONTROL GP-GOVERNOR** *(contd.)* **i03247386**

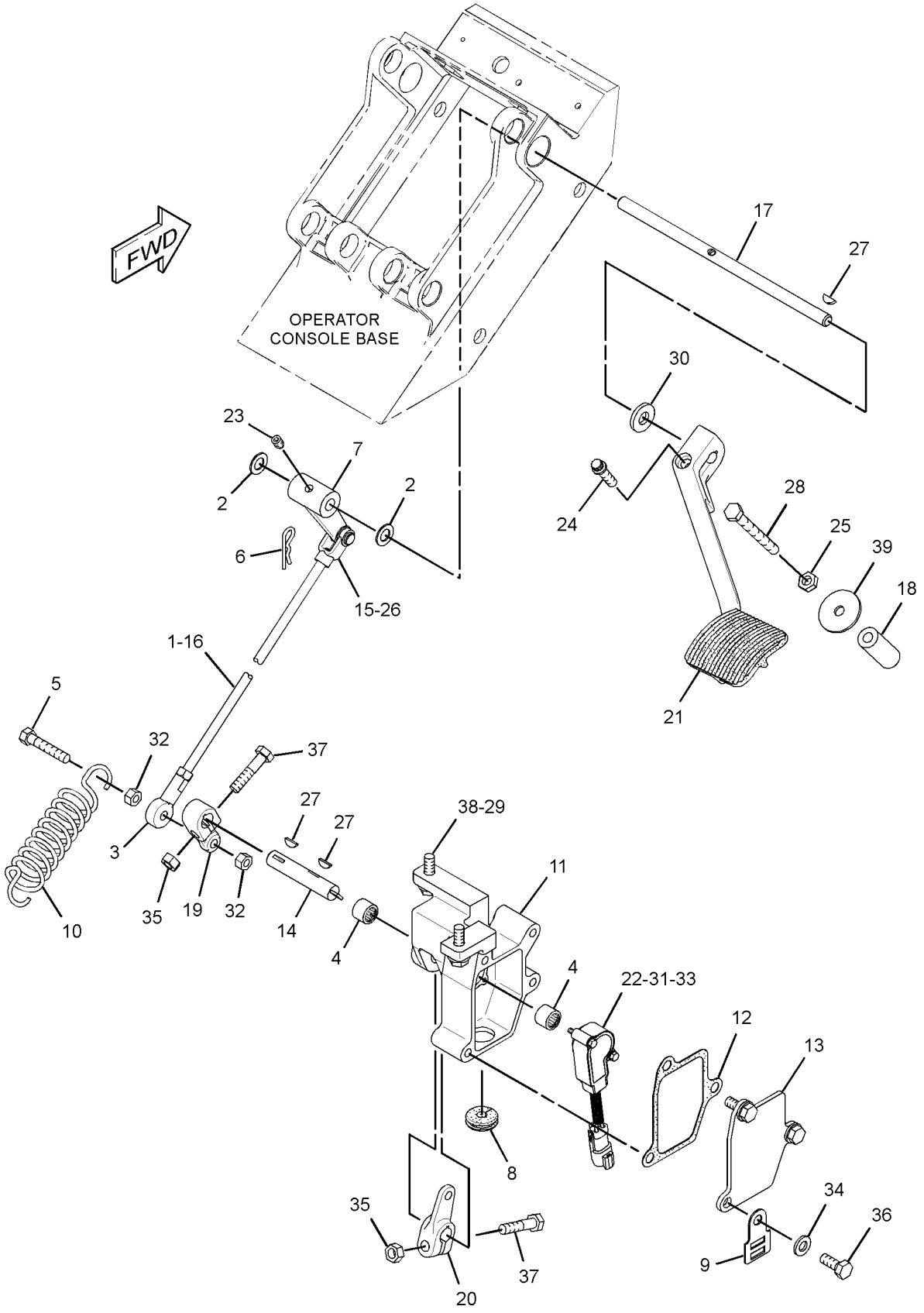

GRAPHIC #1 **<END>** g01705276

174-9570 FILTER GP-WATER SEP & FUEL

S/N: JPA1-UP

PART OF 190-8977 PUMP GP-FUEL PRM & WATER SEP

SMCS-1261, 1263 **i03181922**

NOTE	REF NO	GRAPHIC REF	PART NUMBER	QTY	PART NAME 1 2 3 4 5 6 (PRODUCT LEVEL)	SEE PAGE
	1	1	**326-1644**	1	FILTER AS-WATER SEP & FUEL (PRIMARY)	
	1A	1	**220-8678**	1	SEAL-RING (FUEL, WATER SEPARATOR)	
	2	1	**270-5320**	1	BOWL AS (FUEL, WATER SEPARATOR)	

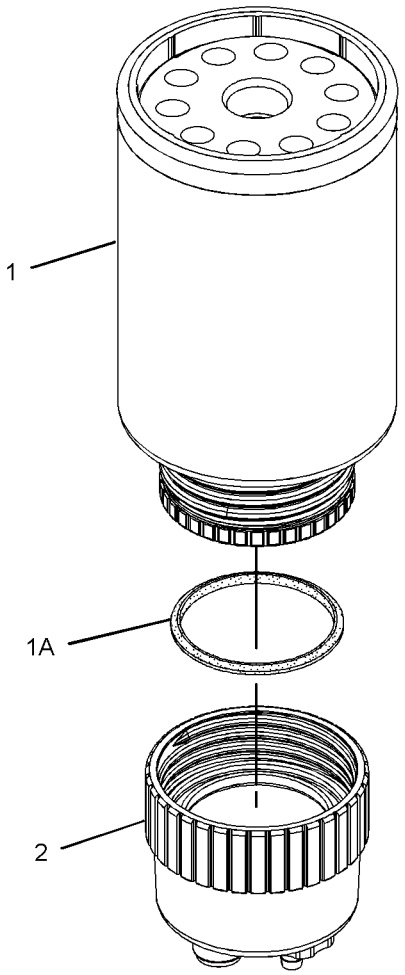

GRAPHIC #1 **<END>** g01179858

328-2585 INJECTOR GP-FUEL*R

S/N: KHX8814-UP

PART OF 268-1839 PUMP GP-FUEL INJECTION

SMCS-1251, 1254, 1290, 1713 **i03293520**

NOTE	REF NO	GRAPHIC REF	PART NUMBER	QTY	PART NAME 1 2 3 4 5 6 (PRODUCT LEVEL)	SEE PAGE
	1	1	**149-5240**	1	RING-BACKUP	
	2	1	*263-8218*	1	INJECTOR GP-FUEL	
	3	1	**293-0730**	1	RING-BACKUP	
	4	1	**109-3207**	1	SEAL-O-RING	
	5	1	**148-2903**	2	SEAL-O-RING (FUEL SYSTEM)	

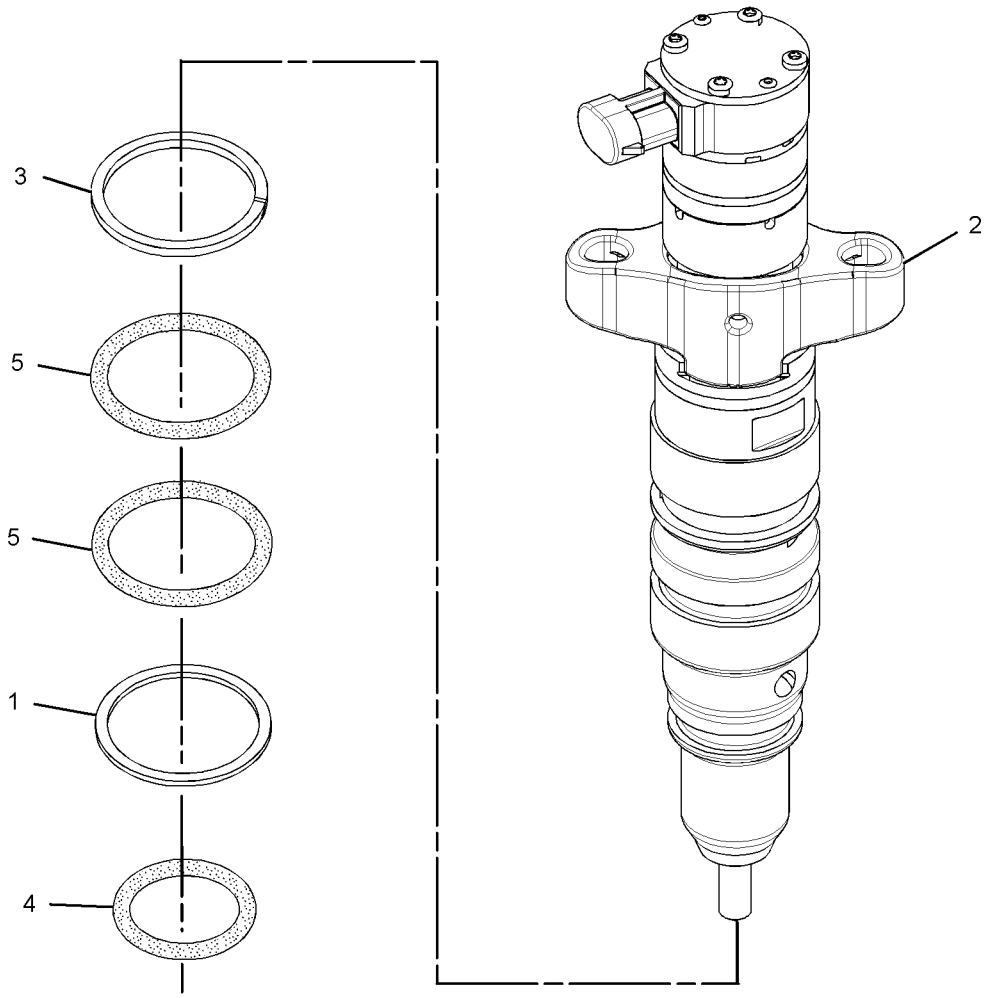

GRAPHIC #1 **<END>** g01684557

FUEL SYSTEM

311-2770 LINES GP-FUEL

S/N: JPA1-UP

PART OF 274-7940 GENERAL AR

SMCS-1274 **i03432224**

NOTE	REF NO	GRAPHIC REF	PART NUMBER	QTY	PART NAME 1 2 3 4 5 6 (PRODUCT LEVEL)	SEE PAGE
	1	1	**3S-2093**	1	STRAP-CABLE	
	2	1	**8T-9655**	6	MOUNT-ISOLATION	
I	3	1	**170-0271**	1	HOSE AS	
	4	1	*171-6729*	1	VALVE GP-SHUTOFF (MANUAL) (FUEL)	
		1	**3K-0360**	1	SEAL-O-RING	
		1	**8T-0081**	1	VALVE-BALL	
	5	1	*173-7223*	1	ADAPTER AS	
		1	**3J-1907**	1	SEAL-O-RING	
		1	**3J-7354**	1	SEAL-O-RING	
		1	**9X-0261**	1	ADAPTER	
Y	6	1	**190-8977**	1	PUMP GP-FUEL PRM & WATER SEP	99
	7	1	**191-1782**	1	SPACER (8.5X12.7X38.2-MM THK)	
	8	1	**191-1783**	2	SPACER (8.5X12.7X87.3-MM THK)	
	9	1	**213-0064**	1	BASE AS	
		1	**9S-4167**	1	STUD-HOLLOW (1-14X1.47-IN)	
Y	10	1	*234-5013*	1	SENSOR GP-TEMPERATURE	179
	11	1	*268-1531*	1	ELBOW AS	
		1	**2M-9780**	1	SEAL-O-RING	
		1	**268-1530**	1	ELBOW	
	12	1	**274-6719**	1	SENSOR GP-PRESSURE (FUEL FILTER)	
Y	13	1	**275-1253**	1	SWITCH GP-PRESSURE (FUEL FILTER)	192
I	14	1	*311-7049*	1	HOSE AS	
I	15	1	**311-8756**	1	HOSE AS	
	16	1	**316-4351**	1	PLATE AS	
	17	1	**317-1533**	1	TUBE AS	
	18	1	**030-7962**	1	ELBOW	
	19	1	**033-8248**	1	CLIP	
	20	1	*148-8307*	1	ADAPTER AS	
		1	**3J-1907**	1	SEAL-O-RING	
		1	**5P-8874**	1	ADAPTER	
	21	1	*148-8336*	1	CONNECTOR AS	
		1	**3J-1907**	1	SEAL-O-RING	
		1	**6V-8397**	1	SEAL-O-RING	
		1	**6V-8636**	1	CONNECTOR	
	22	1	*148-8345*	2	CONNECTOR AS	
					(EACH INCLUDES)	
		1	**2M-9780**	1	SEAL-O-RING	
		1	**6V-8398**	1	SEAL-O-RING	
		1	**6V-8638**	1	CONNECTOR	
	23	1	*148-8364*	2	ELBOW AS	
					(EACH INCLUDES)	
		1	**3K-0360**	1	SEAL-O-RING	
		1	**6V-8398**	1	SEAL-O-RING	
		1	**6V-8625**	1	ELBOW	
	24	1	*148-8365*	1	ELBOW AS	
		1	**3J-1907**	1	SEAL-O-RING	
		1	**6V-8398**	1	SEAL-O-RING	
		1	**8T-6876**	1	ELBOW	
	25	1	*164-5570*	1	UNION AS	
		1	**6V-8397**	2	SEAL-O-RING	
		1	**6V-8730**	1	UNION (FACE SEAL)	
	26	1	*164-5619*	2	PLUG AS	
					(EACH INCLUDES)	
		1	**2M-9780**	1	SEAL-O-RING	
		1	**9S-8006**	1	PLUG-O-RING	

311-2770 **LINES GP-FUEL** ***(contd.)*** **i03432224**

NOTE	REF NO	GRAPHIC REF	PART NUMBER	QTY	PART NAME 1 2 3 4 5 6 (PRODUCT LEVEL)	SEE PAGE
	27	1	*183-3406*	2	PLUG AS	
					(EACH INCLUDES)	
		1	**214-7568**	1	SEAL-O-RING	
		1	**9S-4191**	1	PLUG-O-RING	
I	28	1	**192-1298**	1	HOSE AS	
	29	1	**198-4777**	4	WASHER-HARD (11X25X10-MM THK)	
	30	1	*239-5030*	1	ADAPTER AS	
		1	**3K-0360**	1	SEAL-O-RING	
		1	**9X-2493**	1	ADAPTER	
	31	1	*260-9171*	1	CONNECTOR AS	
		1	**3J-1907**	1	SEAL-O-RING	
		1	**6V-8397**	1	SEAL-O-RING	
		1	**8T-9041**	1	CONNECTOR	
	32	1	**1F-7567**	1	CLIP	
	33	1	**1R-0762**	1	FILTER-FUEL (ADVANCED EFFICIENCY)	
	34	1	**3J-1907**	1	SEAL-O-RING	
	35	1	**5P-4116**	1	WASHER-HARD (8.8X20.5X2-MM THK)	
	36	1	**5P-7462**	1	CLIP (SLOT)	
	37	1	**5P-7463**	1	CLIP (TAB)	
	38	1	**5P-7464**	1	CLIP (SLOT)	
	39	1	**5P-7465**	1	CLIP (TAB)	
	40	1	**6V-0683**	1	GROMMET	
	41	1	**6V-1249**	1	GROMMET	
	42	1	**6V-8397**	1	SEAL-O-RING	
	43	1	**6V-8724**	1	ELBOW	
M	44	1	**7X-2539**	2	BOLT (M8X1.25X110-MM)	
	45	1	**8T-4121**	5	WASHER-HARD (11X21X2.5-MM THK)	
M	46	1	**8T-4137**	1	BOLT (M10X1.5X20-MM)	
M	47	1	**8T-4139**	2	BOLT (M12X1.75X30-MM)	
M	48	1	**8T-4196**	8	BOLT (M10X1.5X35-MM)	
M	49	1	**8T-4200**	1	BOLT (M8X1.25X16-MM)	
	50	1	**8T-4223**	2	WASHER-HARD (13.5X25.5X3-MM THK)	
M	51	1	**8T-6869**	1	BOLT (M8X1.25X60-MM)	
	52	1	**9N-0869**	6	WASHER-HARD (8.8X25.5X2-MM THK)	
E	53	1	**8C-6959**		HOSE (135-CM)	

E-ORDER BY THE CENTIMETER
I-REFER TO HYDRAULIC INFORMATION SYSTEM
M-METRIC PART
Y-SEPARATE ILLUSTRATION

311-2770 **LINES GP-FUEL** *(contd.)* **i03432224**

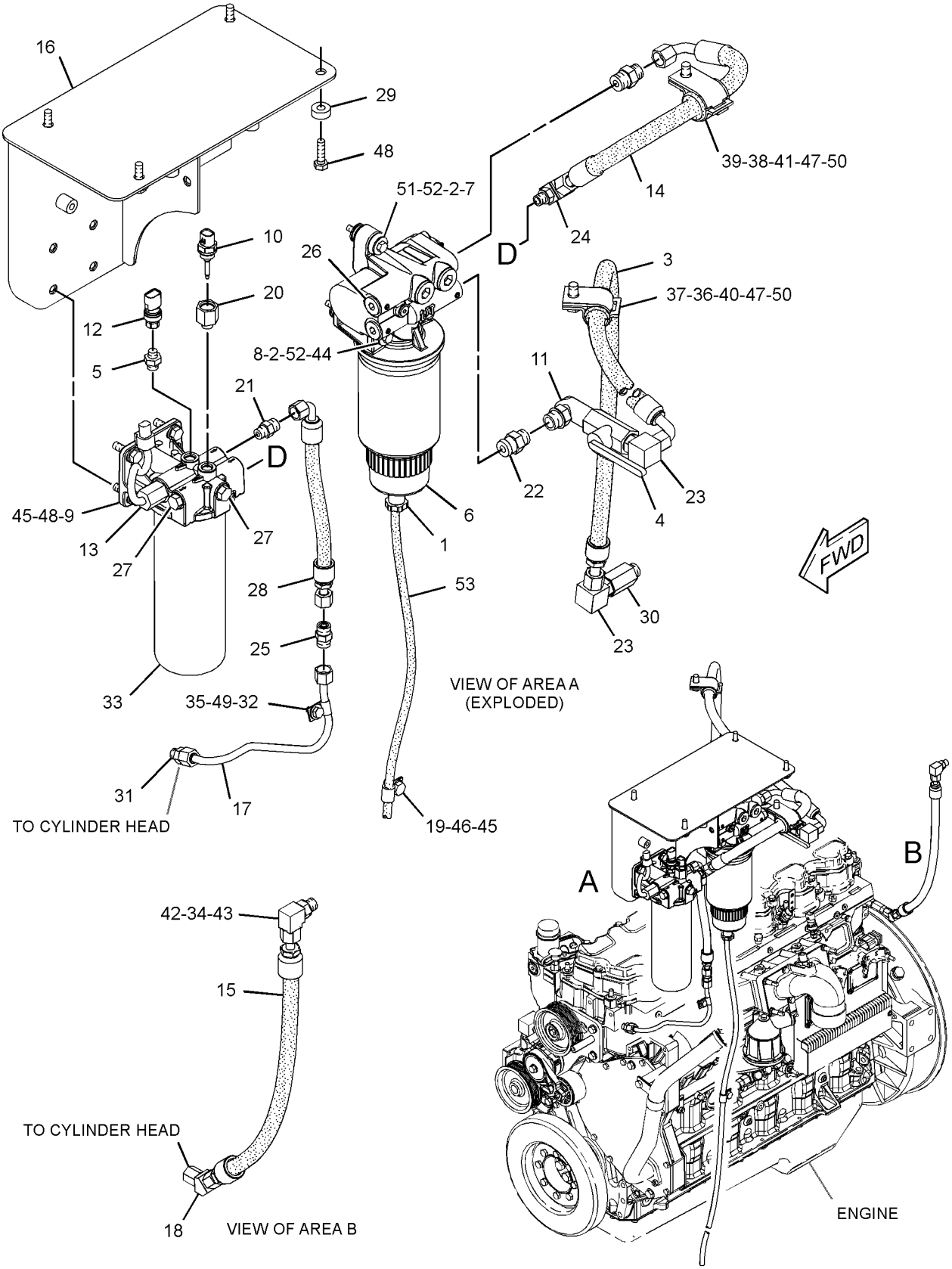

GRAPHIC #1 **<END>** g01714377

313-3967 LINES GP-FUEL

S/N: KHX8814-UP

PART OF 312-0255 ENGINE AR-COMPLETE

SMCS-1274 **i03435841**

NOTE	REF NO	GRAPHIC REF	PART NUMBER	QTY	PART NAME 1 2 3 4 5 6 (PRODUCT LEVEL)	SEE PAGE
	1	1	**164-6867**	2	CONNECTOR AS	
					(EACH INCLUDES)	
		1	**2R-6806**	1	CONNECTOR-O-RING	
		1	**3J-1907**	1	SEAL-O-RING	
Y	2	1	*232-0343*	1	REGULATOR GP-FUEL PRESSURE	100
	3	1	*162-0177*	1	PLUG AS	
		1	**3J-1907**	1	SEAL-O-RING	
		1	**9S-8004**	1	PLUG-O-RING	

Y-SEPARATE ILLUSTRATION

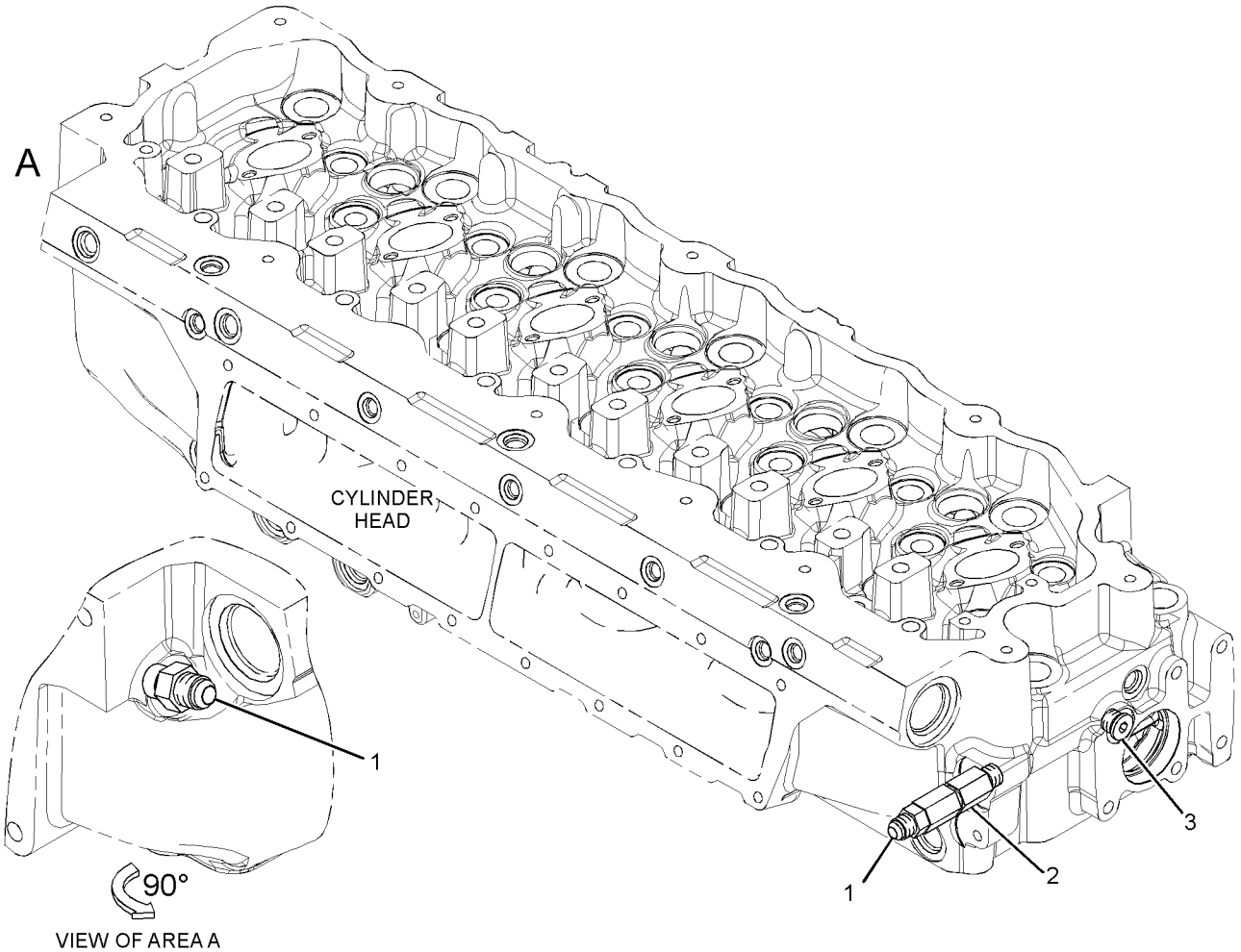

GRAPHIC #1 **<END>** g01717142

FUEL SYSTEM

191-0461 LINES GP-INJECTOR HYD PUMP

S/N: KHX8814-UP

PART OF 312-0254 ENGINE AR-CORE

SMCS-1714 **i02215817**

NOTE	REF NO	GRAPHIC REF	PART NUMBER	QTY	PART NAME 1 2 3 4 5 6 (PRODUCT LEVEL)	SEE PAGE
	1	1	*183-3399*	2	CONNECTOR AS	
					(EACH INCLUDES)	
		1	**6V-8636**	1	CONNECTOR	
		1	**214-7568**	1	SEAL-O-RING	
		1	**221-3494**	1	SEAL-O-RING	
Y	2	1	*191-0523*	1	ADAPTER GP-OIL LINE	51
	3	1	**205-1280**	1	HOSE AS	
	4	1	**212-3706**	1	TUBE AS	
	5	1	**3V-2431**	2	WASHER (10.2X16X2-MM THK)	
	6	1	**4F-9653**	1	SEAL-O-RING	
M	7	1	**8T-1159**	2	BOLT-SOCKET HEAD (M10X1.5X25-MM)	

M-METRIC PART
Y-SEPARATE ILLUSTRATION

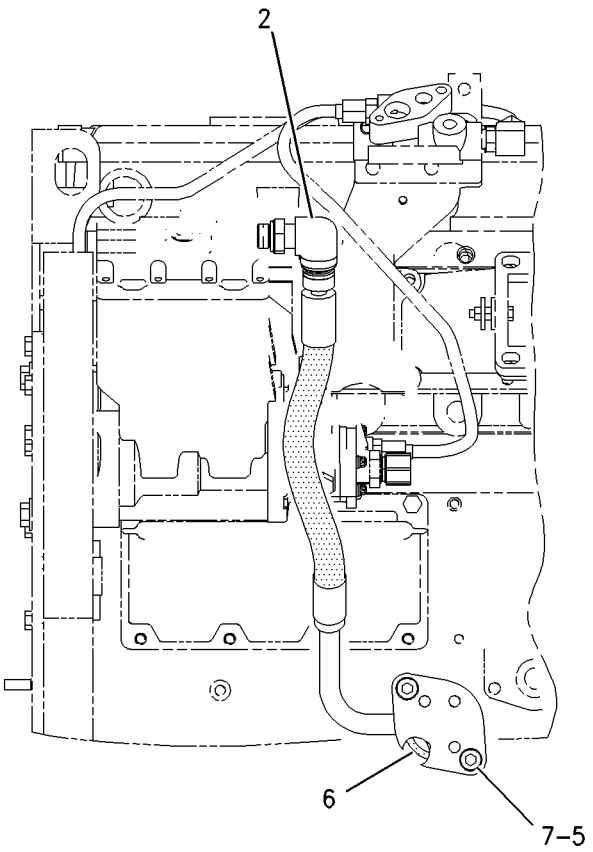

LEFT SIDE VIEW

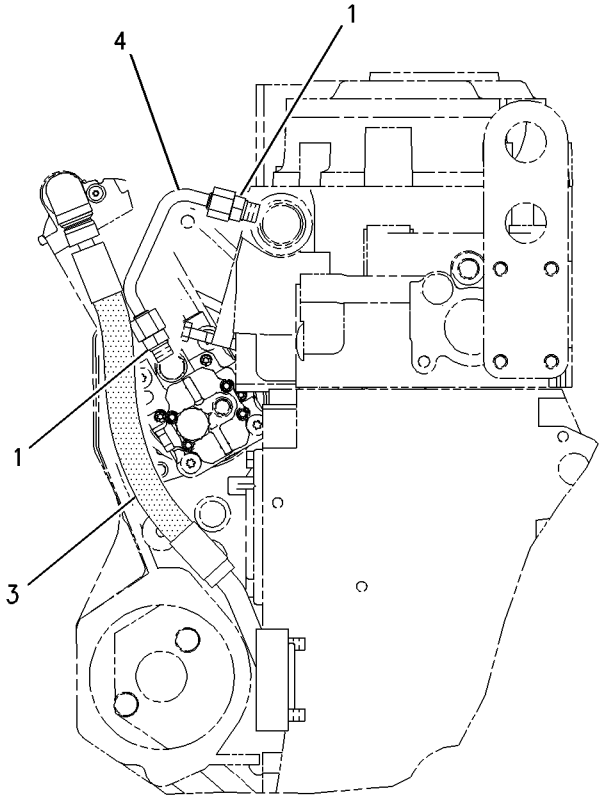

REAR VIEW

GRAPHIC #1 **<END>** g00881566

254-0095 PUMP & MTG GP-UNIT INJ HYD

S/N: KHX8814-UP

PART OF 312-0254 ENGINE AR-CORE

SMCS-1714 **i02791863**

NOTE	REF NO	GRAPHIC REF	PART NUMBER	QTY	PART NAME 1 2 3 4 5 6 (PRODUCT LEVEL)	SEE PAGE
	1	1	**214-7568**	2	SEAL-O-RING	
	2	1	**227-5904**	1	SEAL-O-RING (UNIT INJECTION HYD PUMP)	
	3	1	**304-0607**	1	PUMP GP-UNIT INJECTOR HYD	
	4	1	**3E-9412**	1	DOWEL	
	5	1	**6V-5839**	2	WASHER (11X21X2.5-MM THK)	
M	6	1	**6V-7981**	2	BOLT (M10X1.5X70-MM)	
	7	1	**9S-8004**	2	PLUG-O-RING	

M-METRIC PART

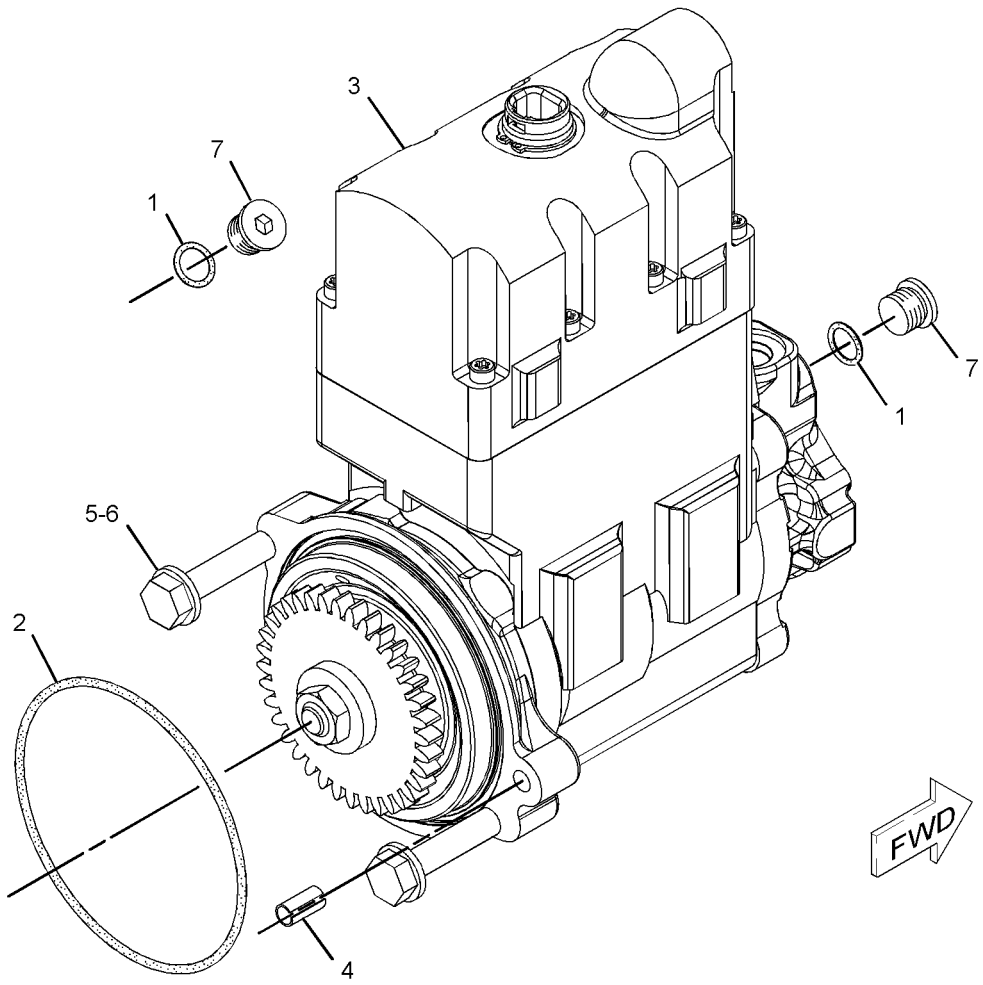

GRAPHIC #1 **<END>** g01108902

FUEL SYSTEM

268-1839 PUMP GP-FUEL INJECTION

S/N: KHX8814-UP

PART OF 312-0254 ENGINE AR-CORE

SMCS-1251, 1290 **i03293388**

NOTE	REF NO	GRAPHIC REF	PART NUMBER	QTY	PART NAME 1 2 3 4 5 6 (PRODUCT LEVEL)	SEE PAGE
	1	1	**235-9651**	2	BOLT-SOCKET HEAD (M8X1.25X65-MM)	
YR	2	1	**328-2585**	1	INJECTOR GP-FUEL	91

R-REMFG PART MAY BE AVAILABLE
Y-SEPARATE ILLUSTRATION

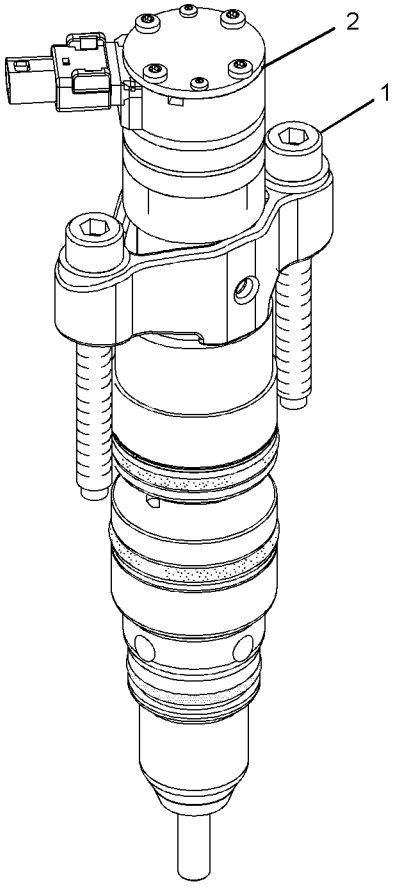

ISOMETRIC VIEW

GRAPHIC #1

<END>

g01038652

190-8977 PUMP GP-FUEL PRM & WATER SEP

S/N: JPA1-UP

PART OF 311-2770 LINES GP-FUEL

SMCS-1258, 1261, 1263 **i01934929**

NOTE	REF NO	GRAPHIC REF	PART NUMBER	QTY	PART NAME 1 2 3 4 5 6 (PRODUCT LEVEL)	SEE PAGE
Y	1	1	*174-9570*	1	FILTER GP-WATER SEP & FUEL (PRIMARY)	90
	2	1	**190-8970**	1	BASE AS (FUEL PRIMING PUMP)	

Y-SEPARATE ILLUSTRATION

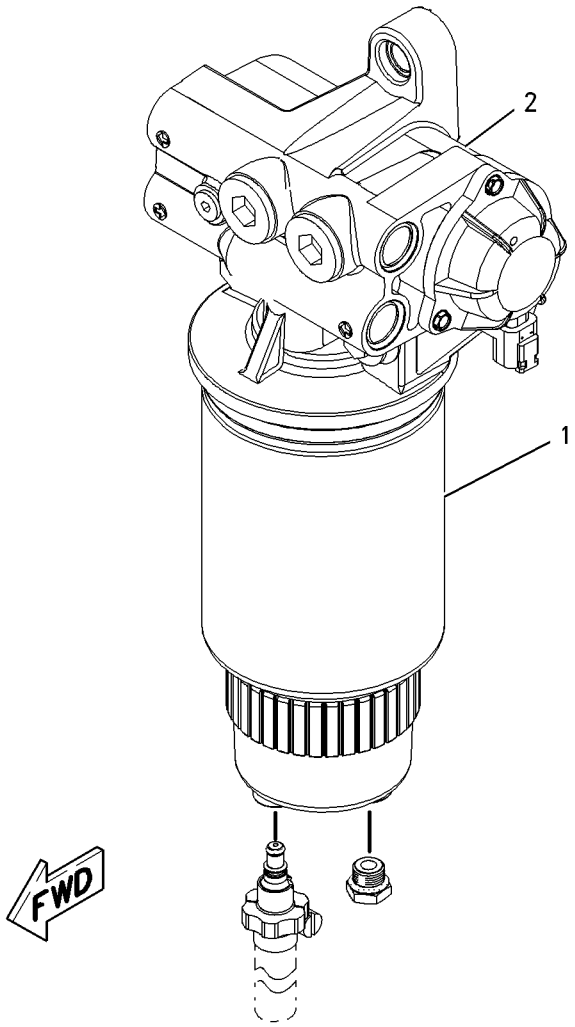

GRAPHIC #1 **<END>** g00904493

FUEL SYSTEM

232-0343 REGULATOR GP-FUEL PRESSURE

S/N: KHX8814-UP

PART OF 313-3967 LINES GP-FUEL

SMCS-1715 **i02676270**

NOTE	REF NO	GRAPHIC REF	PART NUMBER	QTY	PART NAME 1 2 3 4 5 6 (PRODUCT LEVEL)	SEE PAGE
	1	1	**6V-5049**	1	SEAL-O-RING	
	2	1	**294-8620**	1	REGULATOR AS (FUEL PRESSURE)	

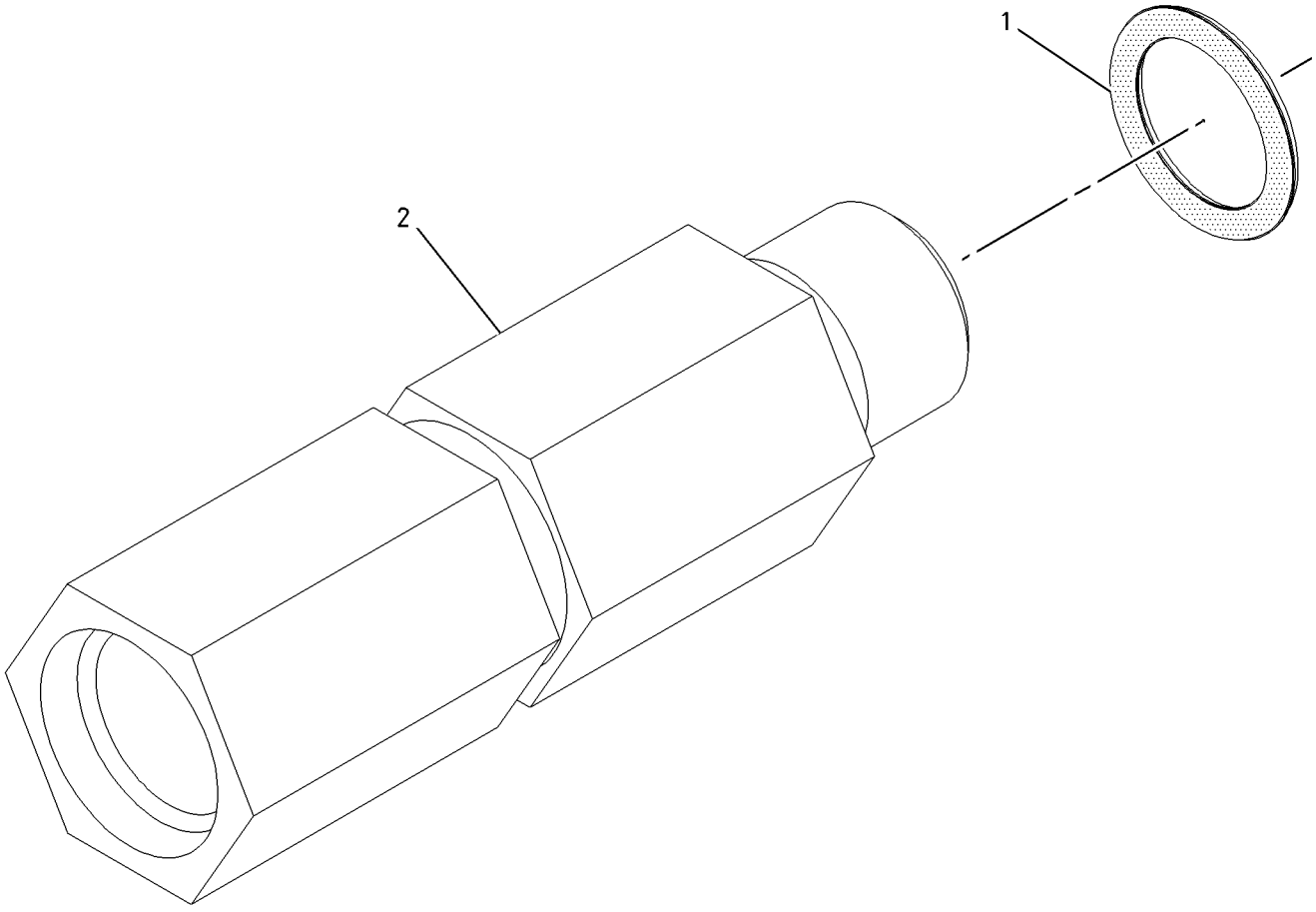

GRAPHIC #1 **<END>** g01004480

FUEL SYSTEM

311-2749 TANK GP-FUEL

S/N: JPA1-UP

PART OF 274-7940 GENERAL AR

SMCS-1273 **i03246377**

NOTE	REF NO	GRAPHIC REF	PART NUMBER	QTY	PART NAME 1 2 3 4 5 6 (PRODUCT LEVEL)	SEE PAGE
	1	1	**246-2641**	1	PADLOCK GP	
		1	**5P-8500**	1	KEY	
	2	1	**7X-7700**	1	CAP AS-FILLER (FUEL TANK)	
		1	**9X-2205**	1	KIT-CAP FILTER (FUEL TANK)	
		1	**9X-8600**	1	SEAL-O-RING	
	3	1	**9P-7121**	1	STRAINER-FUEL	
	4	1	**006-6586**	1	CONNECTOR-HOSE	
	5	1	**312-5109**	1	TANK AS-FUEL	
	6	1	**1H-8306**	1	SCREW-PURGE (1/2-20X1.625-IN)	
	7	1	**5D-1026**	1	CLAMP-HOSE	
M	8	1	**6V-7688**	4	LOCKNUT (M20X2.5-THD)	
M	9	1	**7X-2566**	4	BOLT (M20X2.5X110-MM)	
	10	1	**8T-4123**	8	WASHER (22X35X3.5-MM THK)	
E	11	1	**5P-0721**		HOSE (60-CM)	

E-ORDER BY THE CENTIMETER
M-METRIC PART

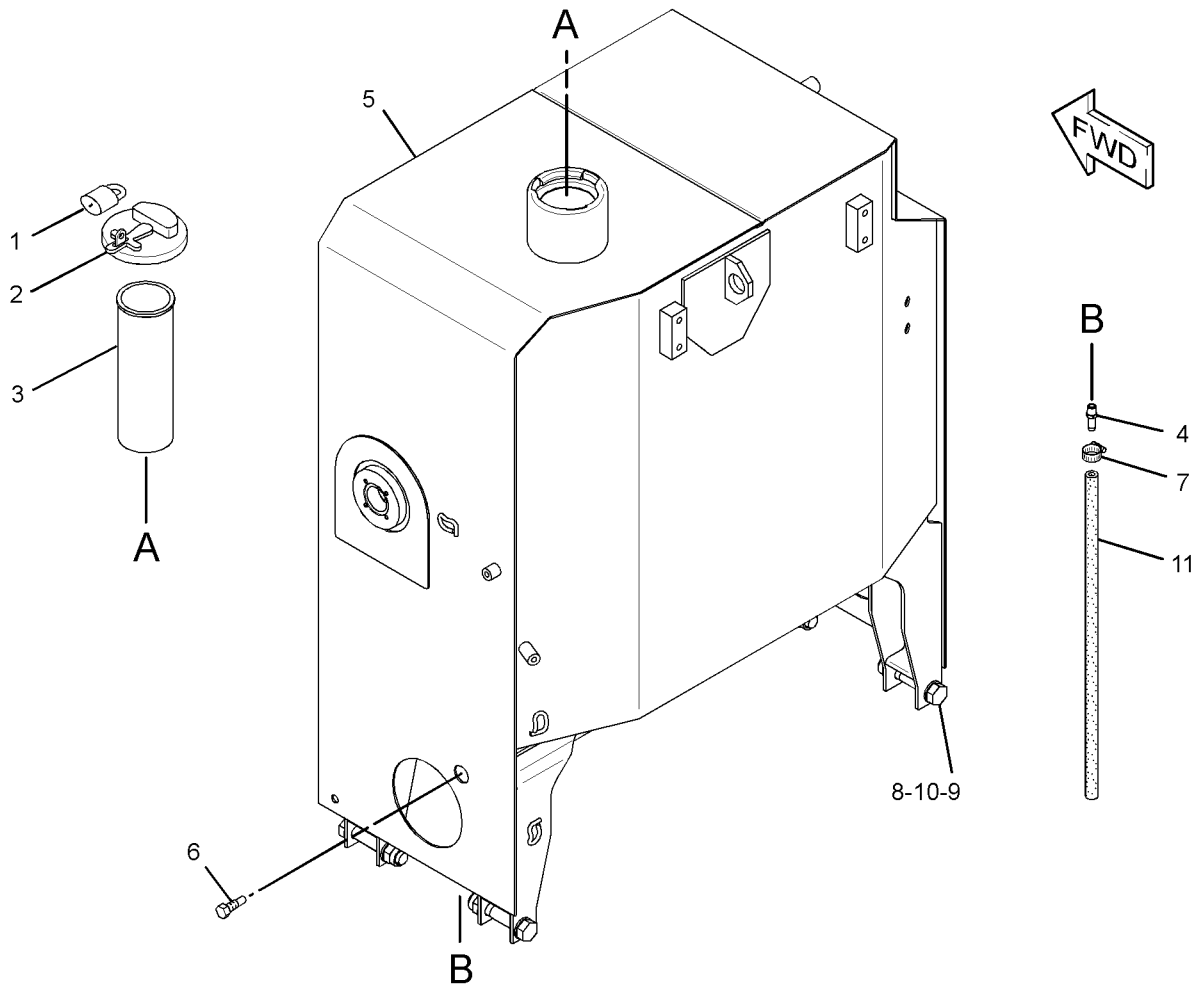

GRAPHIC #1 **<END>** g01689658

3E-6328 ALARM GP

S/N: JPA1-UP
24-VOLT
PART OF 284-5346 WIRING GP-CONSOLE

SMCS-7400, 7402, 7407 **i02942905**

NOTE	REF NO	GRAPHIC REF	PART NUMBER	QTY	PART NAME 1 2 3 4 5 6 (PRODUCT LEVEL)	SEE PAGE
	1	1	**102-8802**	1	KIT-RECEPTACLE (2-PIN)	
					(INCLUDES RECEPTACLE AS & WEDGE)	
	2	1	**186-3735**	2	PIN-CONNECTOR (16-GA TO 18-GA)	

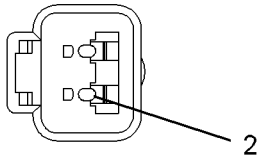

VIEW A–A

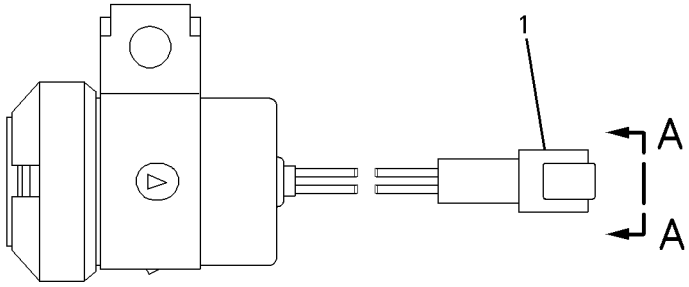

GRAPHIC #1 **<END>** g00697818

312-0970 ALTERNATOR AR-CHARGING

S/N: JPA1-UP
24-V, 95-AMPERE
AN ATTACHMENT

SMCS-1405 **i03432221**

NOTE	PART NUMBER	QTY	PART NAME 1 2 3 4 5 6 (PRODUCT LEVEL)	SEE PAGE
Y	*263-3982*	1	ALTERNATOR GP-CHARGING	109
	312-0377	1	CABLE AS	
D	**6V-2369**		WIRE (4-GA, BLACK) (1-M)	
	9G-4343	1	TERMINAL (4-GA) (FOR 1/4-IN SCREW)	
	9G-4336	1	TERMINAL-RING	
	1P-0810	1	TAPE-ELECTRICAL	
	312-0378	1	CABLE AS	
D	**6V-2369**		WIRE (4-GA, BLACK) (1.1-M)	
	8T-8827	1	BOOT	
	9G-4343	2	TERMINAL (4-GA) (FOR 1/4-IN SCREW)	
	135-2543	1	BOOT	
	1P-0810	1	TAPE-ELECTRICAL	

D-ORDER BY THE METER
Y-SEPARATE ILLUSTRATION

<END>

ELECTRICAL AND STARTING SYSTEM

6N-9294 ALTERNATOR GP-CHARGING*R

S/N: JPA1-UP
24-VOLT, 35-AMP
PART OF 253-4006 ALTERNATOR GP-CHARGING

SMCS-1405 **i01597772**

NOTE	REF NO	GRAPHIC REF	PART NUMBER	QTY	PART NAME 1 2 3 4 5 6 (PRODUCT LEVEL)	SEE PAGE
	1	1	**7N-9024**	4	BOLT (M10X24X63.5-MM)	
	2	1	**187-2034**	1	NUT-FLANGE (5/8-18-THD)	
	4	1	**3E-5454**	1	FAN-ALTERNATOR	
	5	1	**7N-7810**	1	FRAME AS-DRIVE END	
	6	1	**7N-7805**	1	HOUSING	
	7	1	**6V-2202**	1	BALL BEARING	
	8	1	**9S-2437**	3	SCREW-TAPPING (10-24X19.05-MM)	
	9	1	**7N-7809**	1	PLATE	
	10	1	**5P-6920**	1	BEARING-ROLLER	
	11	1	**030-9612**	5	SCREW-FORMING (10-24X0.5-IN)	
	12	1	**7N-7806**	1	COIL AS-FIELD	
	13	1	**7N-7800**	1	ROTOR AS	
	14	1	**7N-7804**	1	STATOR AS	
	15	1	**9L-2137**	1	RETAINER AS	
	16	1	**7X-3353**	4	SCREW-HEX HEAD (10X24X19.05-MM)	
	17	1	**7N-7795**	1	COLLAR	
	18	1	**9S-2544**	2	SCREW-HEX HEAD (8-32X11.13-MM)	
	19	1	**9L-2140**	1	PLATE	
	20	1	**9L-2139**	1	WASHER-FELT (1.31X1.68X0.125-IN THK)	
	21	1	**6V-8377**	4	NUT (8-32 THD)	
	22	1	**8T-0328**	6	WASHER-HARD (5.5X10X1-MM THK)	
	23	1	**6N-1872**	2	SCREW AS (8-32X1.25-IN)	
	24	1	**9B-7233**	6	LOCKWASHER	
	25	1	**8F-1434**	4	LOCKWASHER	
	26	1	**7N-9023**	2	SCREW AS (8-32X26.9-MM)	
	27	1	**3T-6354**	1	REGULATOR AS-VOLTAGE (24-VOLT)	
	28	1	**1H-3244**	1	LOCKWASHER	
	29	1	**7N-7811**	1	CONNECTOR	
	30	1	**6V-8187**	1	NUT (1/4-28-THD)	
	31	1	**112-9119**	1	DIODE AS-ALTERNATOR	
	32	1	**8T-4205**	1	WASHER-HARD (7.2X14.5X2-MM THK)	
	33	1	**206-4202**	1	RECTIFIER AS	
	34	1	**7N-9021**	1	SCREW AS (8-32X1.34-IN)	
	35	1	**7N-7796**	1	BUSHING-TERMINAL	
	36	1	**7N-7802**	1	CAPACITOR AS	
	37	1	**7N-7801**	1	CONNECTOR	
	38	1	**7N-7798**	1	CONNECTOR	
	39	1	**9L-6770**	1	CAP-DUST	
					AVAILABLE REPAIR KIT(S):	
			7N-7807	1	KIT-OUTPUT TERMINAL (OUTPUT)	
					(INCLUDES INSULATOR, SCREW, WASHERS, LOCKWASHER, NUT & ADAPTER)	
			7N-7808	1	KIT-RELAY TERMINAL (ALTERNATOR)	
					(INCLUDES STUD, BUSHINGS, WASHERS & NUT AS)	

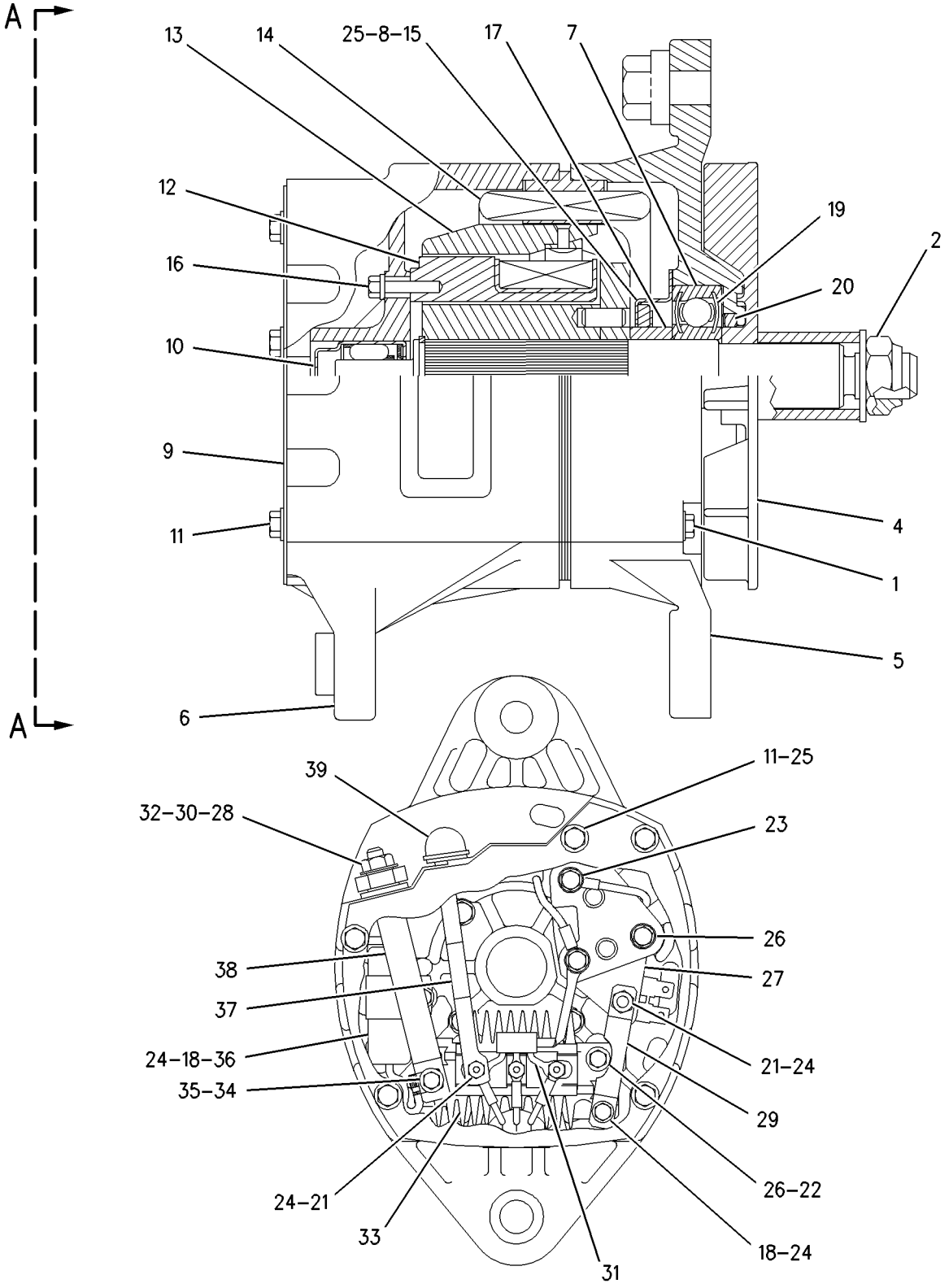

VIEW A-A

GRAPHIC #1 **<END>** g00810638

197-8820 ALTERNATOR GP-CHARGING*R

S/N: JPA1-UP
24 VOLT, 95 AMP
PART OF 263-3982 ALTERNATOR GP-CHARGING
AN ATTACHMENT

SMCS-1405 **i02469493**

NOTE	REF NO	GRAPHIC REF	PART NUMBER	QTY	PART NAME 1 2 3 4 5 6 (PRODUCT LEVEL)	SEE PAGE
	1	1	**185-2653**	1	FRAME	
	2	1	**5S-7349**	1	BOLT (1/4-20X0.5-IN)	
	3	1	**185-2639**	1	FAN AS	
	4	1	**1H-3244**	1	LOCKWASHER	
	5	1	**185-2645**	1	FRAME	
	6	1	**2K-4821**	1	LOCKNUT (5/8-18-THD)	
	7	1	**5P-8247**	1	WASHER-HARD (17X32X3.5-MM THK)	
	8	1	**185-2651**	1	COVER	
	9	1	**8T-4205**	1	WASHER-HARD (7.2X14.5X2-MM THK)	
	10	1	**185-2647**	1	GROMMET	
	11	1	**9L-6770**	1	CAP-DUST (ALTERNATOR AC TAP)	
	12	1	**205-0626**	1	STATOR AS-ALTERNATOR	
	13	1	**185-2638**	2	COLLAR	
	14	1	**185-2654**	1	PLATE	
	15	1	**185-2650**	1	ROTOR AS	
	16	1	**185-2644**	1	COIL AS	
	17	1	**185-2648**	1	REGULATOR AS-VOLTAGE (24-VOLT)	
	18	1	**6V-8189**	1	NUT (5/16-18-THD)	
	19	1	**8T-4224**	1	WASHER-HARD (8.8X16X2-MM THK)	
	20	1	**3F-9556**	1	LOCKWASHER	
					AVAILABLE REPAIR KIT(S):	
			185-2655		KIT-BEARING (ALTERNATOR)	
					(INCLUDES 2 BEARINGS)	
			199-8436		KIT-TERMINAL (ALTERNATOR)	
					(INCLUDES HOLDER AS, PLATE, INSULATOR, PIN, BOLTS, GROMMET, & NUT	
			199-7891		KIT-TERMINAL (ALTERNATOR)	
					(INCLUDES INSULATORS, WASHERS, & NUTS)	
			185-2658		KIT-HARDWARE (ALTERNATOR)	
					(INCLUDES BOLTS)	

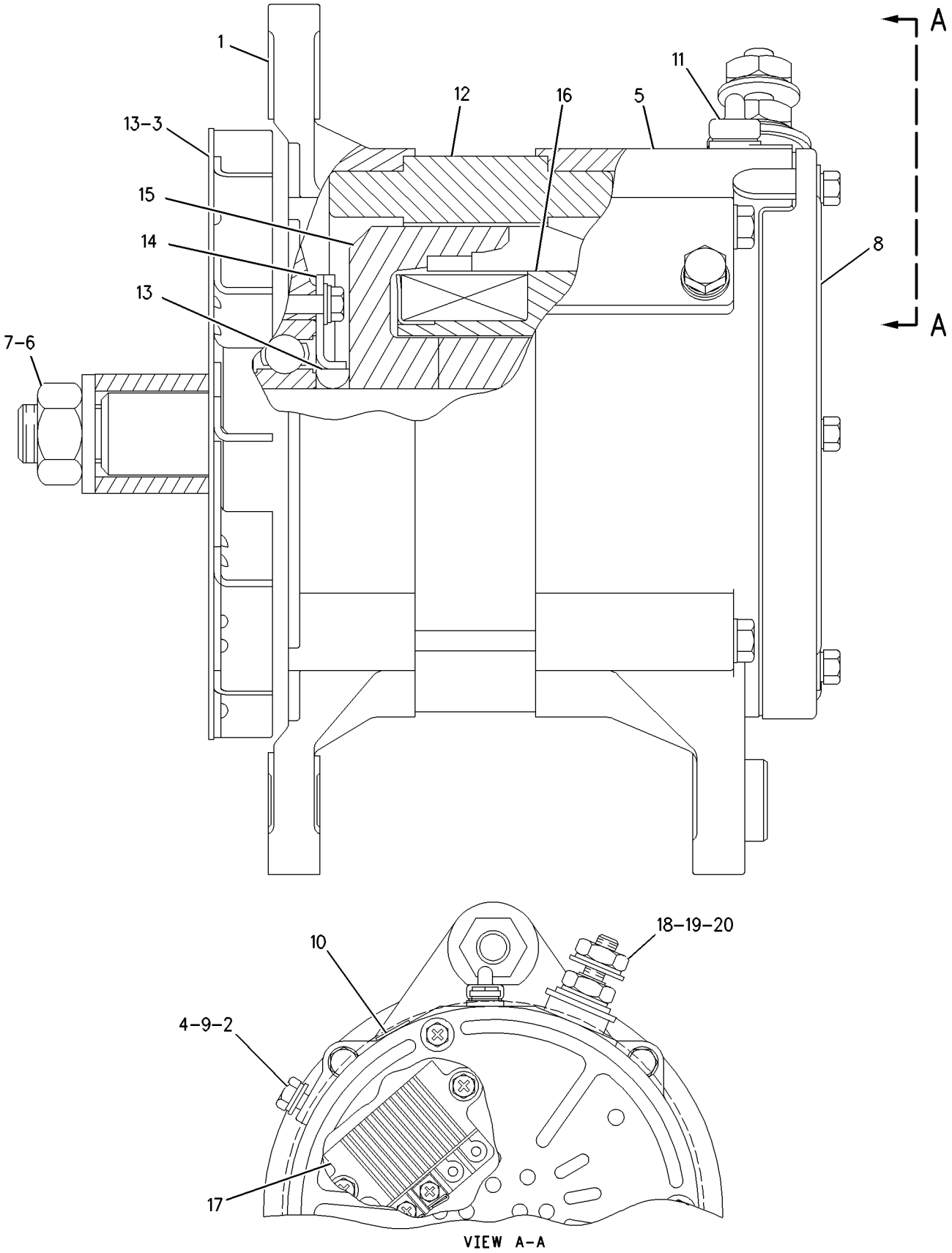

GRAPHIC #1 **<END>** g00873198

253-4006 ALTERNATOR GP-CHARGING

S/N: JPA1-UP
24-VOLT, 35-AMPERE
PART OF 274-7940 GENERAL AR

SMCS-1405 **i03260044**

NOTE	REF NO	GRAPHIC REF	PART NUMBER	QTY	PART NAME 1 2 3 4 5 6 (PRODUCT LEVEL)	SEE PAGE
	1	1	**8S-5383**	1	BLOCK	
	2	1	**8X-1805**	1	PULLEY	
	3	1	**9S-1240**	1	BRACKET AS	
		1	**1F-0748**	1	NUT-WELD (1/2-13-THD)	
	4	1	**4S-5780**	1	ROD	
	5	1	**5P-1076**	1	WASHER-HARD (13.5X30X4-MM THK)	
YR	6	1	**6N-9294**	1	ALTERNATOR GP-CHARGING	104
	7	1	**6V-8188**	1	NUT (1/2-13-THD)	
	8	1	**7X-0325**	1	BOLT (1/2-13X2.5-IN)	
	9	1	**7X-0339**	1	BOLT (1/2-13X6.25-IN)	
	10	1	**7X-0346**	1	BOLT (5/8-11X2-IN)	
	11	1	**7X-0448**	2	NUT (5/8-11-THD)	
	12	1	**8T-4122**	1	WASHER-HARD (17X32X3.5-MM THK)	
	13	1	**8T-4223**	2	WASHER-HARD (13.5X25.5X3-MM THK)	

R-REMFG PART MAY BE AVAILABLE
Y-SEPARATE ILLUSTRATION

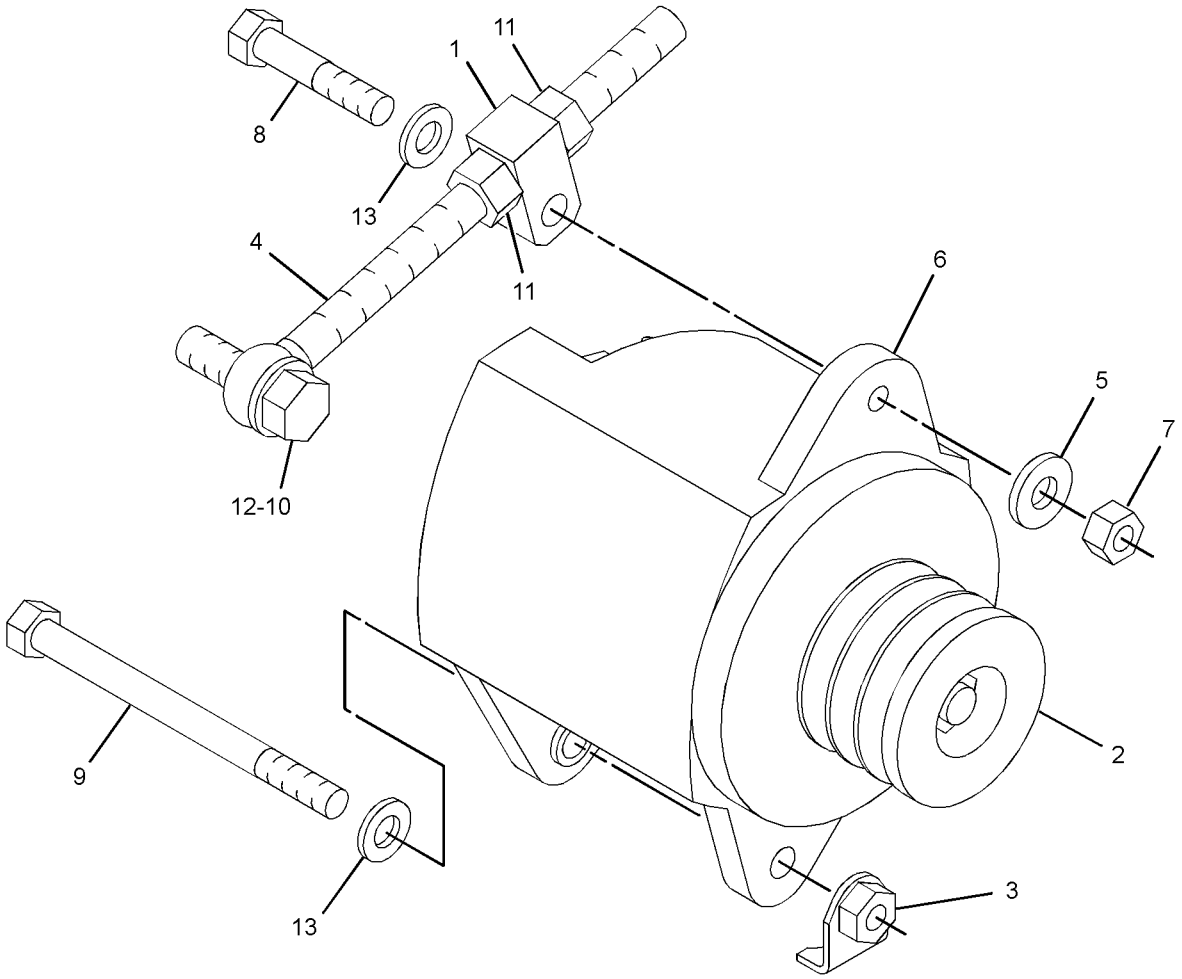

GRAPHIC #1 **<END>** g01687535

263-3982 ALTERNATOR GP-CHARGING

S/N: JPA1-UP
PART OF 312-0970 ALTERNATOR AR-CHARGING
AN ATTACHMENT

SMCS-1405 **i03310900**

NOTE	REF NO	GRAPHIC REF	PART NUMBER	QTY	PART NAME 1 2 3 4 5 6 (PRODUCT LEVEL)	SEE PAGE
YR	1	1	**197-8820**	1	ALTERNATOR GP-CHARGING (24-VOLT, 95-AMPERE)	106

R-REMFG PART MAY BE AVAILABLE
Y-SEPARATE ILLUSTRATION

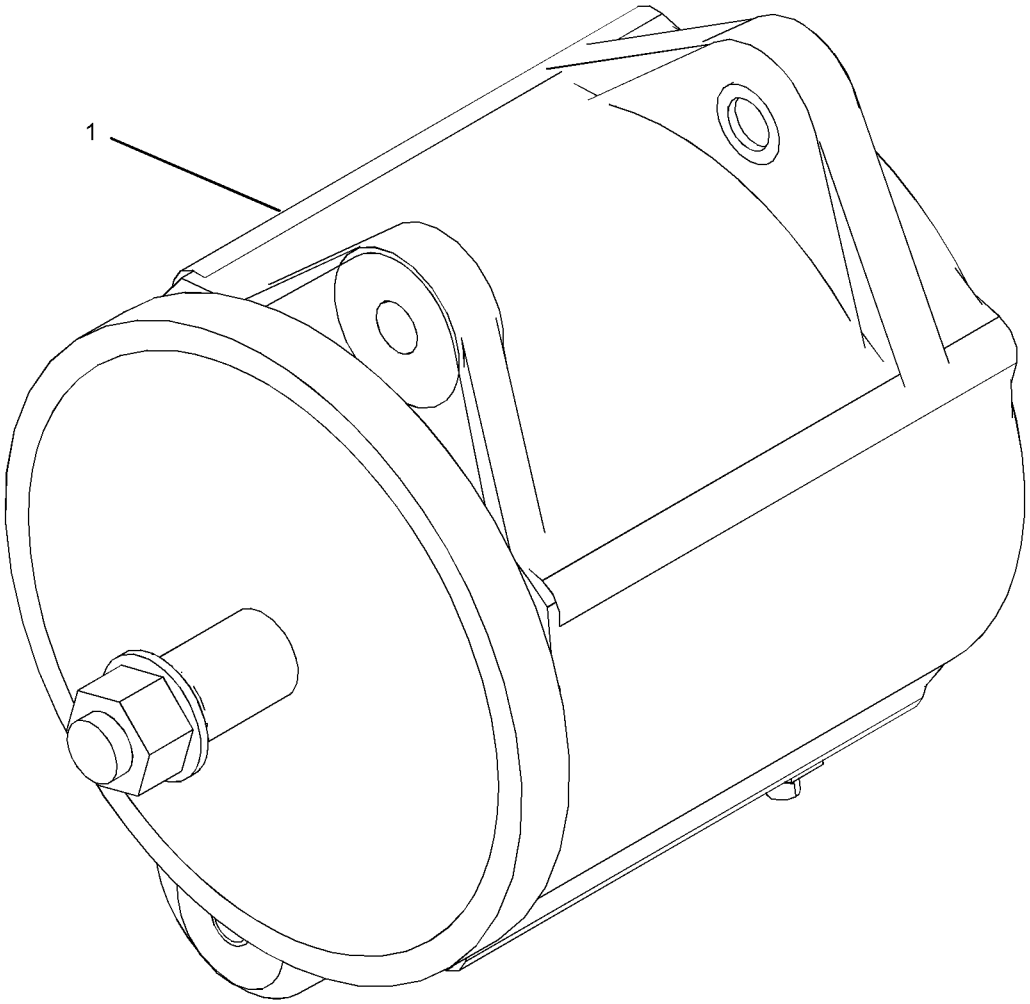

GRAPHIC #1 **<END>** g01700397

ELECTRICAL AND STARTING SYSTEM

284-5358 BATTERY & WIRING GP

S/N: JPA1-UP

AN ATTACHMENT

SMCS-1401, 1402, 1408 **i03258525**

NOTE	REF NO	GRAPHIC REF	PART NUMBER	QTY	PART NAME 1 2 3 4 5 6 (PRODUCT LEVEL)	SEE PAGE
M	1	1	**8T-4191**	1	BOLT (M10X1.5X16-MM)	
	2	1	**153-5710**	2	BATTERY (12-VOLT, MAINTENANCE FREE)	
	3	1	**295-1138**	1	HOLD-DOWN AS	
	4	1	**300-6496**	1	CABLE AS	
		1	**9G-0003**	1	COVER-TERMINAL (BLACK)	
		1	**9G-0004**	1	COVER-TERMINAL (RED)	
		1	**8C-5917**	1	TERMINAL AS-BATTERY (POSITIVE)	
		1	**8T-9757**	1	TERMINAL AS-BATTERY (NEGATIVE)	
E		1	**159-8049**		CABLE (00-GA, RED) (12-CM)	
	5	1	**305-0038**	1	CABLE AS	
		1	**1S-7252**	1	TERMINAL-CABLE (00-GA, 3/8-IN BOLT)	
		1	**7N-5274**	1	COVER-TERMINAL (BLACK)	
		1	**9G-8909**	1	COVER-TERMINAL (BLACK)	
		1	**3S-6050**	1	TERMINAL AS-BATTERY (NEGATIVE)	
		1	**1M-6119**	1	BOLT (5/16-18X1.375-IN)	
		1	**1M-6120**	1	NUT (5/16-18-THD)	
E		1	**159-8050**		CABLE (00-GA, BLACK) (306-CM)	
	6	1	**2V-1771**	3	GROMMET	
	7	1	**6D-4246**	3	CLIP	
	8	1	**8T-4121**	3	WASHER-HARD (11X21X2.5-MM THK)	
M	9	1	**8T-4137**	2	BOLT (M10X1.5X20-MM)	

E-ORDER BY THE CENTIMETER
M-METRIC PART

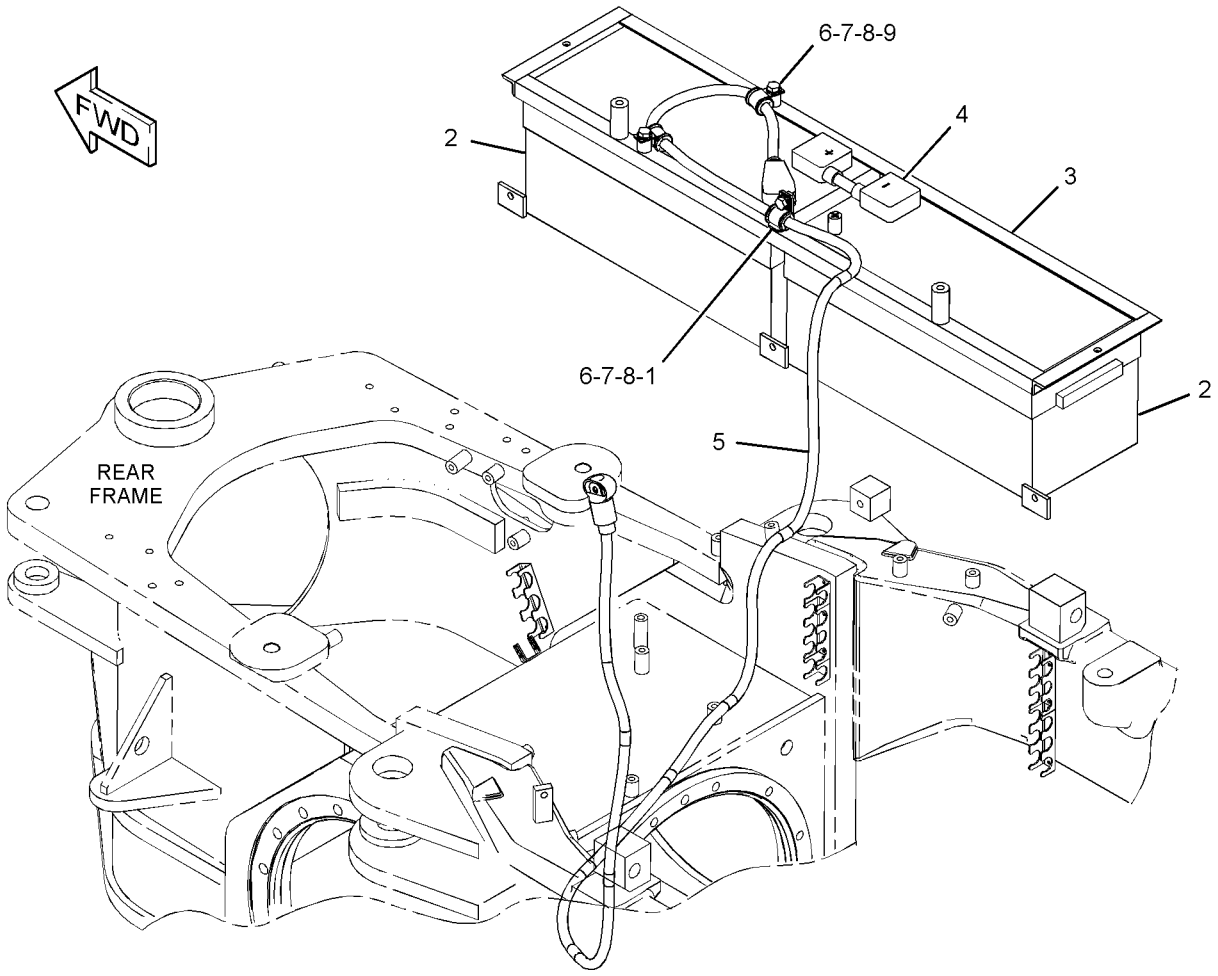

GRAPHIC #1 **<END>** g01670915

ELECTRICAL AND STARTING SYSTEM

284-5359 BATTERY & WIRING GP–HEAVY DUTY

S/N: JPA1-UP
AN ATTACHMENT

SMCS-1401, 1402, 1408 **i03258488**

NOTE	REF NO	GRAPHIC REF	PART NUMBER	QTY	PART NAME 1 2 3 4 5 6 (PRODUCT LEVEL)	SEE PAGE
M	1	1	**8T-4191**	1	BOLT (M10X1.5X16-MM)	
	2	1	**153-5700**	2	BATTERY (12-VOLT, MAINTENANCE FREE)	
	3	1	**295-1138**	1	HOLD-DOWN AS	
	4	1	**300-6496**	1	CABLE AS	
	5	1	**305-0038**	1	CABLE AS	
	6	1	**2V-1771**	3	GROMMET	
	7	1	**6D-4246**	3	CLIP	
	8	1	**8T-4121**	3	WASHER-HARD (11X21X2.5-MM THK)	
M	9	1	**8T-4137**	2	BOLT (M10X1.5X20-MM)	

M-METRIC PART

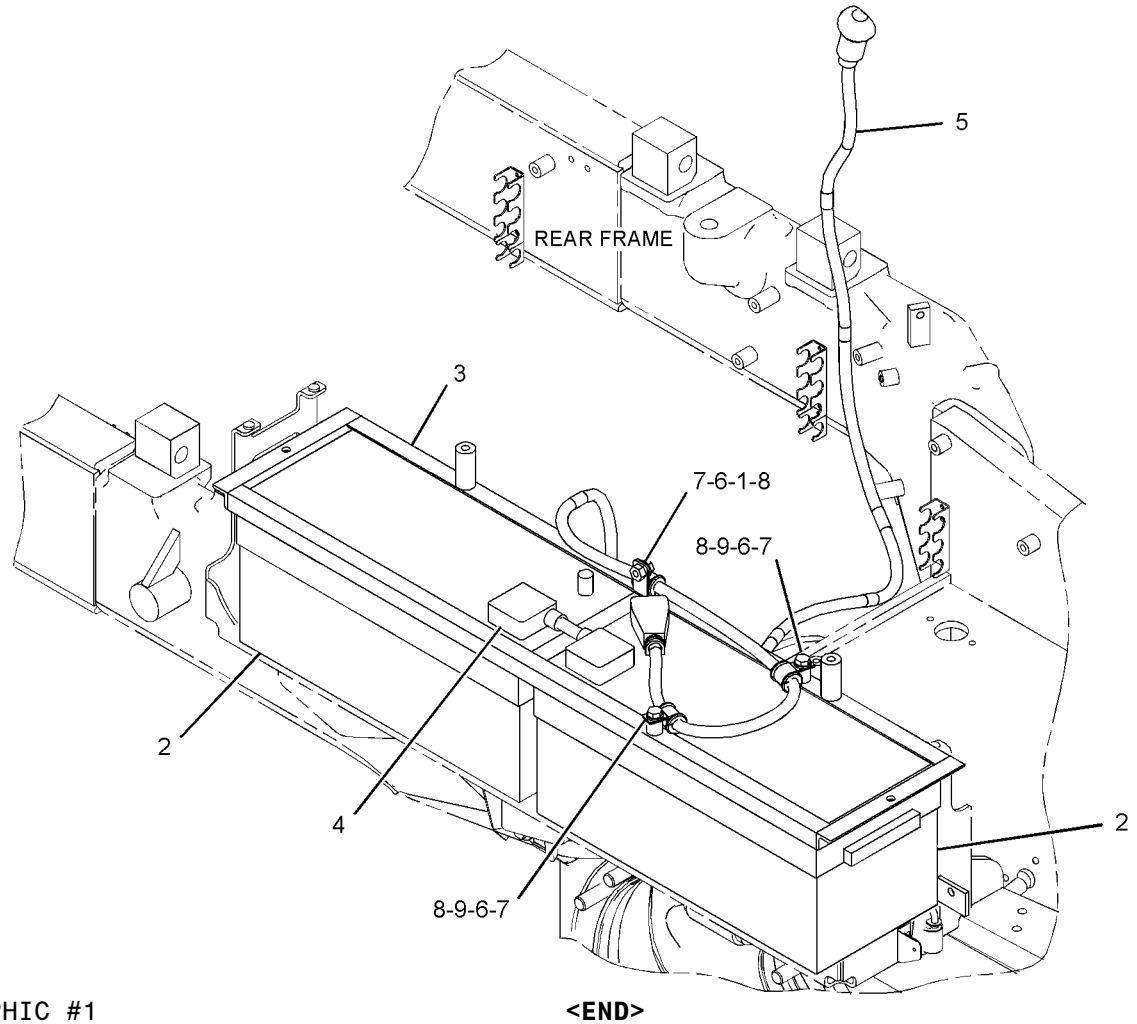

GRAPHIC #1 **<END>** g01753413

298-5592 BATTERY & WIRING GP—HEAVY DUTY

S/N: JPA1-UP
PART OF 304-9957 BATTERY & WIRING GP
AN ATTACHMENT

SMCS-1401, 1402, 1408 **i03316106**

NOTE	REF NO	GRAPHIC REF	PART NUMBER	QTY	PART NAME 1 2 3 4 5 6 (PRODUCT LEVEL)	SEE PAGE
	1	1	**108-2949**	2	ROD	
	2	1	**153-5710**	2	BATTERY (12-VOLT, MAINTENANCE FREE)	
	3	1	**301-6664**	1	BRACKET	
	4	1	**308-9112**	2	HOLD-DOWN AS	
	5	1	**308-9113**	1	CABLE AS	
		1	**1M-6119**	1	BOLT (5/16-18X1.375-IN)	
		1	**1M-6120**	1	NUT (5/16-18-THD)	
		1	**1M-6119**	1	BOLT (5/16-18X1.375-IN)	
		1	**1M-6120**	1	NUT (5/16-18-THD)	
		1	**9G-0003**	1	COVER-TERMINAL (BLACK)	
		1	**8L-8413**	1	STRAP-CABLE	
		1	**9G-0004**	1	COVER-TERMINAL (RED)	
		1	**8L-8413**	1	STRAP-CABLE	
E		1	**159-8049**		CABLE (00-GA, RED) (264-CM)	
E		1	**1P-0810**		TAPE-ELECTRICAL (45-CM)	
	6	1	**308-9114**	1	CABLE AS	
		1	**1S-7252**	1	TERMINAL-CABLE (00-GA, 3/8-IN BOLT)	
		1	**7N-5274**	1	COVER-TERMINAL (BLACK)	
		1	**8L-8413**	1	STRAP-CABLE	
		1	**9G-8909**	1	COVER-TERMINAL (BLACK)	
E		1	**159-8050**		CABLE (00-GA, BLACK) (70-CM)	
E		1	**1P-0810**		TAPE-ELECTRICAL (5-CM)	
	7	1	**311-1513**	1	CABLE AS	
		1	**8N-1725**	1	COVER-TERMINAL (RED)	
		1	**8L-8413**	1	STRAP-CABLE	
		1	**1M-6119**	1	BOLT (5/16-18X1.375-IN)	
		1	**1M-6120**	1	NUT (5/16-18-THD)	
		1	**194-4046**	1	COVER-TERMINAL (00-GA, POSITIVE, RED)	
		1	**8L-8413**	1	STRAP-CABLE	
		1	**208-4617**	1	TERMINAL-RING (00-GA, 90-DEG)	
		1	**159-8049**		CABLE (00-GA, RED) (99-CM)	
E		1	**1P-0810**		TAPE-ELECTRICAL (10-CM)	
	8	1	**326-3121**	1	BRACKET AS	
	9	1	**2V-1771**	3	GROMMET	
	10	1	**6D-4246**	2	CLIP	
	11	1	**8S-0948**	1	CLIP	
M	12	1	**8T-0389**	2	LOCKNUT (M10X1.5-THD)	
	13	1	**8T-4121**	8	WASHER-HARD (11X21X2.5-MM THK)	
M	14	1	**8T-4133**	3	NUT (M10X1.5-THD)	
M	15	1	**8T-4137**	2	BOLT (M10X1.5X20-MM)	
M	16	1	**8T-4195**	1	BOLT (M10X1.5X30-MM)	

E-ORDER BY THE CENTIMETER
M-METRIC PART

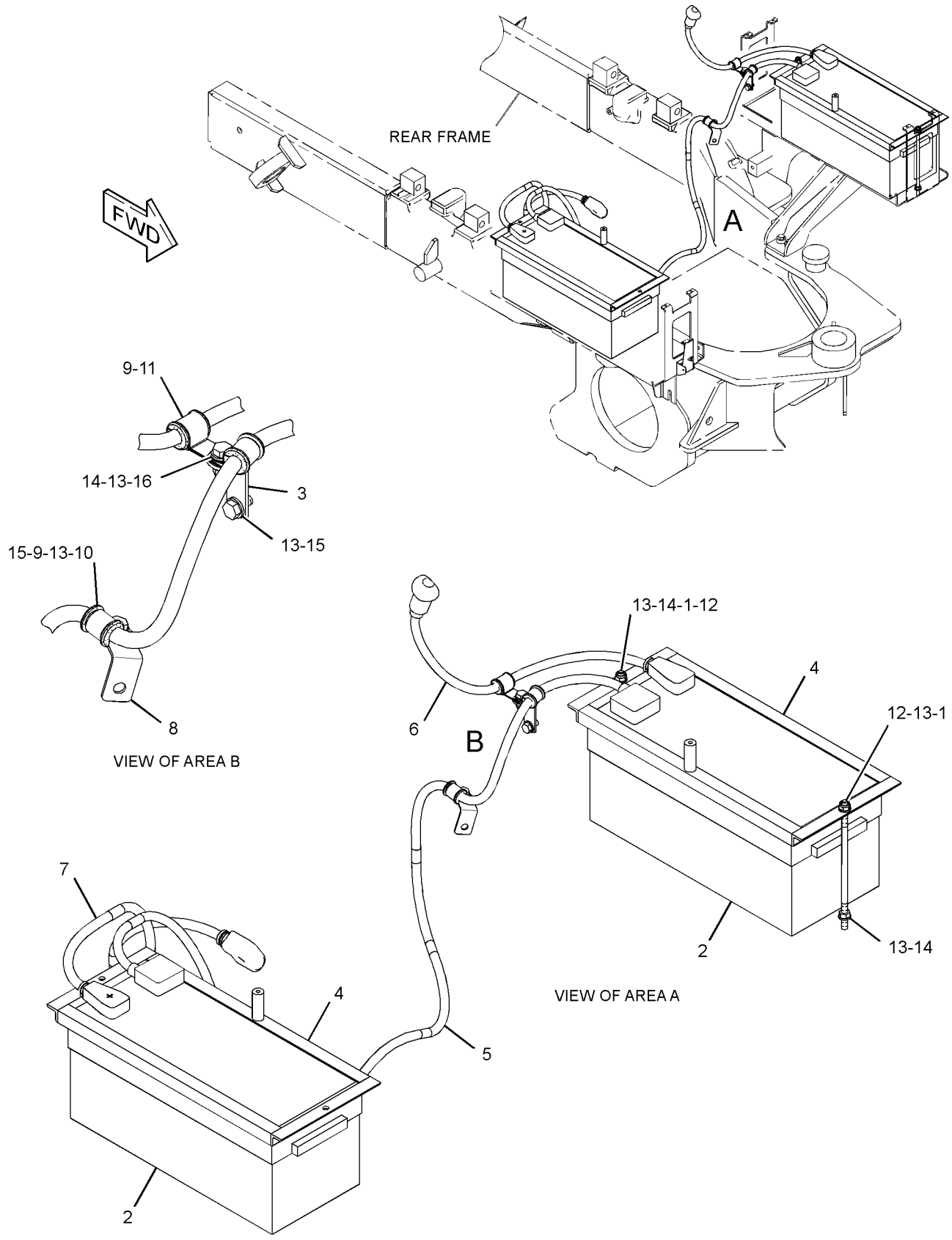

GRAPHIC #1 **<END>** g01757458

304-9957 BATTERY & WIRING GP–HEAVY DUTY

S/N: JPA1-UP
AN ATTACHMENT

SMCS-1401, 1402, 1408 **i03316084**

NOTE	REF NO	GRAPHIC REF	PART NUMBER	QTY	PART NAME 1 2 3 4 5 6 (PRODUCT LEVEL)	SEE PAGE
Y	1	1	*298-3520*	1	SUPPORT GP-BATTERY	340
	2	1	**298-5315**	1	PLATE AS	
Y	3	1	*298-5592*	1	BATTERY & WIRING GP	113
	4	1	**7X-7729**	3	WASHER (11X25X3-MM THK)	
M	5	1	**8T-4136**	3	BOLT (M10X1.5X25-MM)	

M-METRIC PART
Y-SEPARATE ILLUSTRATION

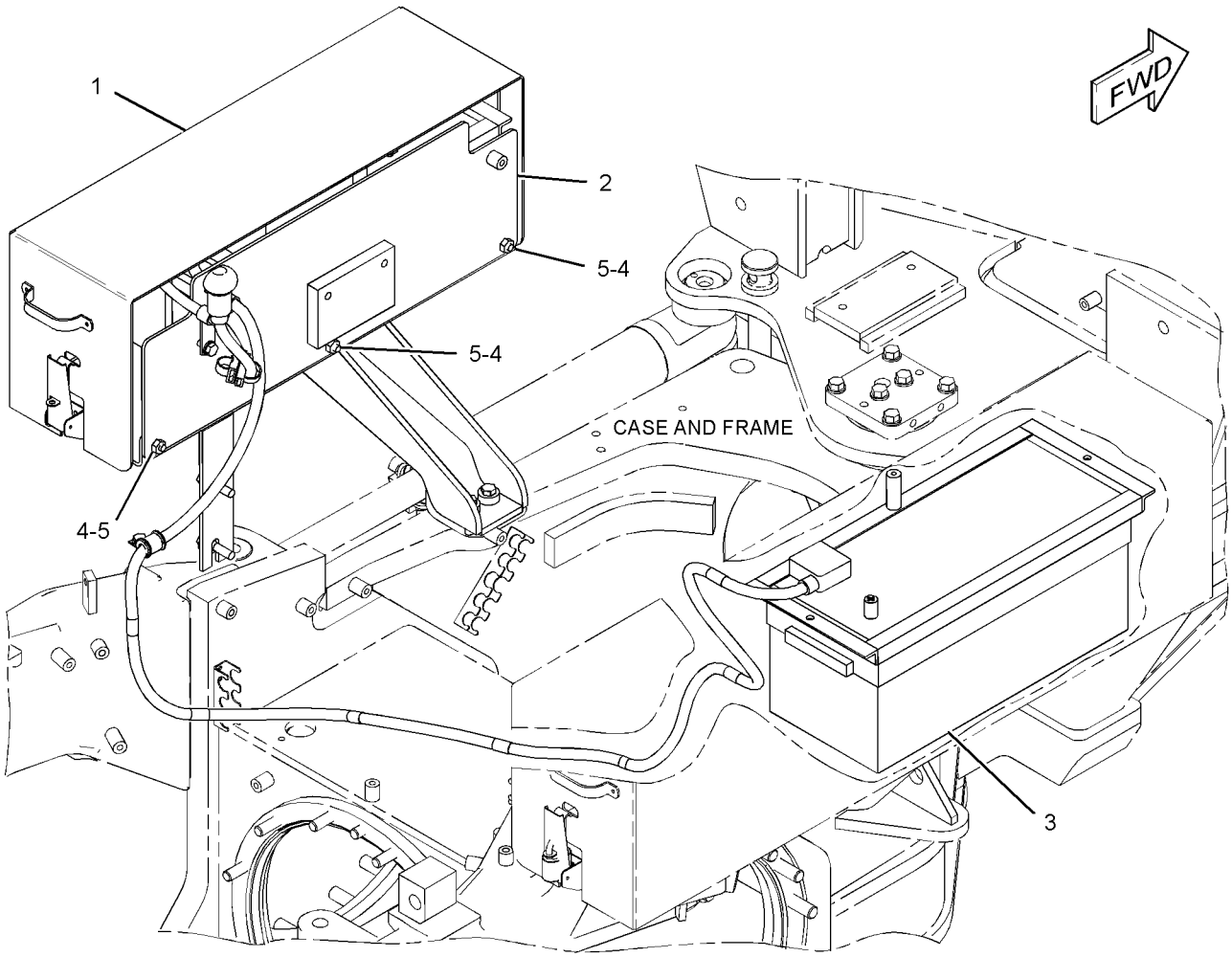

GRAPHIC #1 **<END>** g01757253

ELECTRICAL AND STARTING SYSTEM

311-0795 BATTERY & WIRING GP

S/N: JPA1-UP

PART OF 274-7940 GENERAL AR

SMCS-1401, 1402, 1408 **i03246394**

NOTE	REF NO	GRAPHIC REF	PART NUMBER	QTY	PART NAME 1 2 3 4 5 6 (PRODUCT LEVEL)	SEE PAGE
	1	1	**8W-8528**	3	SLEEVE	
	2	1	**9G-9154**	3	CLIP	
	3	1	**102-8704**	2	PLATE AS	
	4	1	**102-8705**	1	PLATE	
	5	1	**108-2949**	2	ROD	
	6	1	**177-2215**	1	STRAP-DUAL CLAMP	
	7	1	**294-9621**	1	CABLE AS	
		1	**8T-8827**	1	BOOT	
		1	**135-2543**	1	BOOT	
B		1	**1P-0810**		TAPE-ELECTRICAL	
		1	**9G-4343**	1	TERMINAL (4-GA)	
D		1	**6V-2369**		WIRE (4-GA, BLACK) (1-M)	
	8	1	**294-9622**	1	CABLE AS	
B		1	**1P-0810**		TAPE-ELECTRICAL	
		1	**9G-4343**	1	TERMINAL (4-GA)	
		1	**9G-4336**	1	TERMINAL-RING	
D		1	**6V-2369**		WIRE (4-GA, BLACK) (0.8-M)	
	9	1	**295-1139**	1	HOLD-DOWN AS	
	10	1	**297-8049**	2	GROMMET	
	11	1	**300-6152**	1	CABLE AS	
		1	**9G-0003**	1	COVER-TERMINAL (BLACK)	
		1	**9G-0004**	1	COVER-TERMINAL (RED)	
		1	**8C-5917**	1	TERMINAL AS-BATTERY (POSITIVE)	
		1	**8T-9757**	1	TERMINAL AS-BATTERY (NEGATIVE)	
E		1	**159-8049**		CABLE (00-GA, RED) (9-CM)	
	12	1	**301-6664**	1	BRACKET	
	13	1	**311-6573**	1	BRACKET AS	
	14	1	**312-0379**	1	BRACKET AS	
	15	1	**314-7946**	1	BRACKET AS	
	16	1	**317-3164**	1	CABLE AS	
D		1	**5P-5689**		WIRE (8-GA, BLACK) (1-M)	
		1	**2L-8050**	1	TERMINAL-RING (6-GA, 1/4-IN)	
					—OR—	
		1	**2L-8058**	1	TERMINAL-RING (8-GA, 1/4-IN)	
BD		1	**1P-0810**		TAPE-ELECTRICAL (1-M)	
	17	1	**317-3165**	1	CABLE AS	
		1	**135-2543**	1	BOOT	
BD		1	**1P-0810**		TAPE-ELECTRICAL (0.1-M)	
		1	**9G-4343**	1	TERMINAL (4-GA)	
		1	**9G-4344**	1	TERMINAL (4-GA)	
D		1	**6V-2369**		WIRE (4-GA, BLACK) (0.8-M)	
	18	1	**317-3166**	1	CABLE AS	
		1	**208-4617**	1	TERMINAL-RING (00-GA, 90-DEG)	
		1	**6V-2722**	1	TUBE-HEAT SHRINK (25.4-MM DIA)	
E		1	**159-8049**		CABLE (00-GA, RED) (96-CM)	
		1	**8N-1725**	1	COVER-TERMINAL (RED)	
		1	**194-4046**	1	COVER-TERMINAL (00-GA, POSITIVE, RED)	
BD		1	**1P-0810**		TAPE-ELECTRICAL (0.1-M)	
		1	**3S-6049**	1	TERMINAL AS-BATTERY (POSITIVE)	
	19	1	**317-3168**	1	CABLE AS	
E		1	**159-8050**		CABLE (00-GA, BLACK) (47-CM)	
D		1	**1P-0810**		TAPE-ELECTRICAL (0.1-M)	
		1	**1S-7251**	2	TERMINAL-CABLE (00-GA, 1/2-IN BOLT)	
D		1	**6V-2722**		TUBE-HEAT SHRINK (25.4-MM DIA) (0.1-M)	
	20	1	**318-2063**	1	CABLE AS	
		1	**1S-7252**	1	TERMINAL-CABLE (00-GA, 3/8-IN BOLT)	

311-0795 **BATTERY & WIRING GP** *(contd.)* **i03246394**

NOTE	REF NO	GRAPHIC REF	PART NUMBER	QTY	PART NAME 1 2 3 4 5 6 (PRODUCT LEVEL)	SEE PAGE
D		1	**6V-2722**		TUBE-HEAT SHRINK (25.4-MM DIA) (0.1-M)	
E		1	**159-8050**		CABLE (00-GA, BLACK) (291-CM)	
		1	**7N-5274**	1	COVER-TERMINAL (BLACK)	
		1	**9G-8909**	1	COVER-TERMINAL (BLACK)	
BD		1	**1P-0810**		TAPE-ELECTRICAL (0.3-M)	
		1	**3S-6050**	1	TERMINAL AS-BATTERY (NEGATIVE)	
	21	1	**318-2064**	1	CABLE AS	
E		1	**159-8050**		CABLE (00-GA, BLACK) (60-CM)	
BD		1	**1P-0810**		TAPE-ELECTRICAL (0.1-M)	
		1	**1S-7252**	2	TERMINAL-CABLE (00-GA, 3/8-IN BOLT)	
D		1	**6V-2722**		TUBE-HEAT SHRINK (25.4-MM DIA) (0.1-M)	
	22	1	**206-6410**	2	CLAMP-HALF	
	23	1	**1P-7009**	1	CLIP	
	24	1	**2V-1771**	13	GROMMET	
	25	1	**3S-8664**	3	CLIP	
	26	1	**3T-5760**	2	BATTERY (12-VOLT, MAINTENANCE FREE, WET)	
		1	**123-1373**	6	CAP AS-FILLER (BATTERY)	
	27	1	**5P-4295**	3	CLIP	
	28	1	**6D-4246**	11	CLIP	
	29	1	**6K-8178**	1	CLIP	
	30	1	**6V-8188**	1	NUT (1/2-13-THD)	
	31	1	**6W-6672**	2	SPACER (10.5X20X38-MM THK)	
	32	1	**7K-1181**	4	STRAP-CABLE	
	33	1	**8S-0948**	3	CLIP	
M	34	1	**8T-0389**	2	LOCKNUT (M10X1.5-THD)	
	35	1	**8T-4121**	27	WASHER-HARD (11X21X2.5-MM THK)	
M	36	1	**8T-4133**	3	NUT (M10X1.5-THD)	
M	37	1	**8T-4136**	1	BOLT (M10X1.5X25-MM)	
M	38	1	**8T-4137**	17	BOLT (M10X1.5X20-MM)	
M	39	1	**8T-4179**	1	BOLT (M12X1.75X20-MM)	
M	40	1	**8T-4195**	2	BOLT (M10X1.5X30-MM)	
M	41	1	**8T-4198**	1	BOLT (M10X1.5X100-MM)	
	42	1	**8T-4223**	2	WASHER-HARD (13.5X25.5X3-MM THK)	
M	43	1	**8T-6466**	1	BOLT (M10X1.5X60-MM)	
	44	1	**8W-8909**	7	SLEEVE	

B-USE AS REQUIRED
D-ORDER BY THE METER
E-ORDER BY THE CENTIMETER
M-METRIC PART

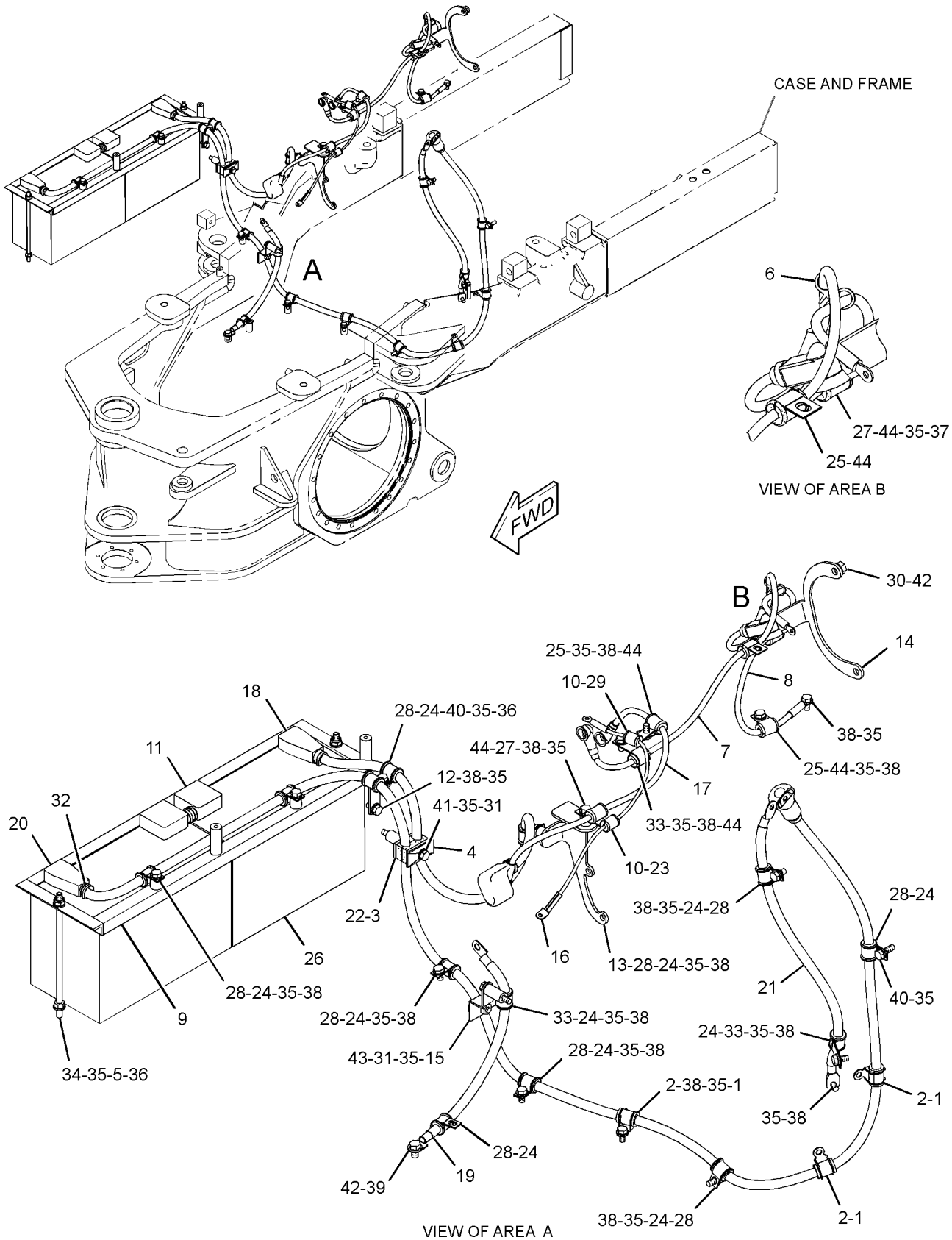

GRAPHIC #1 **<END>** g01709873

246-9345 CONTROL & MTG GP-ENGINE ELEK

S/N: KHX8814-UP

PART OF 312-0255 ENGINE AR-COMPLETE

SMCS-1901 **i02320629**

NOTE	REF NO	GRAPHIC REF	PART NUMBER	QTY	PART NAME 1 2 3 4 5 6 (PRODUCT LEVEL)	SEE PAGE
	1	1	**8T-9655**	8	MOUNT-ISOLATION	
	2	1	**101-3128**	4	SPACER-SPECIAL	
M	3	1	**143-9392**	4	STUD (M8X1.25-THD)	
	4	1	**255-5284**	1	CONTROL GP-UNPROGRAMMED (ENGINE)	
	6	1	**244-3168**	1	BRACKET AS	
	7	1	**233-0891**	1	BRACKET AS	
	8	1	**9M-1974**	4	WASHER-HARD (8.8X16X2-MM THK)	
	9	1	**9N-0869**	4	WASHER-HARD (8.8X25.5X2-MM THK)	

M-METRIC PART

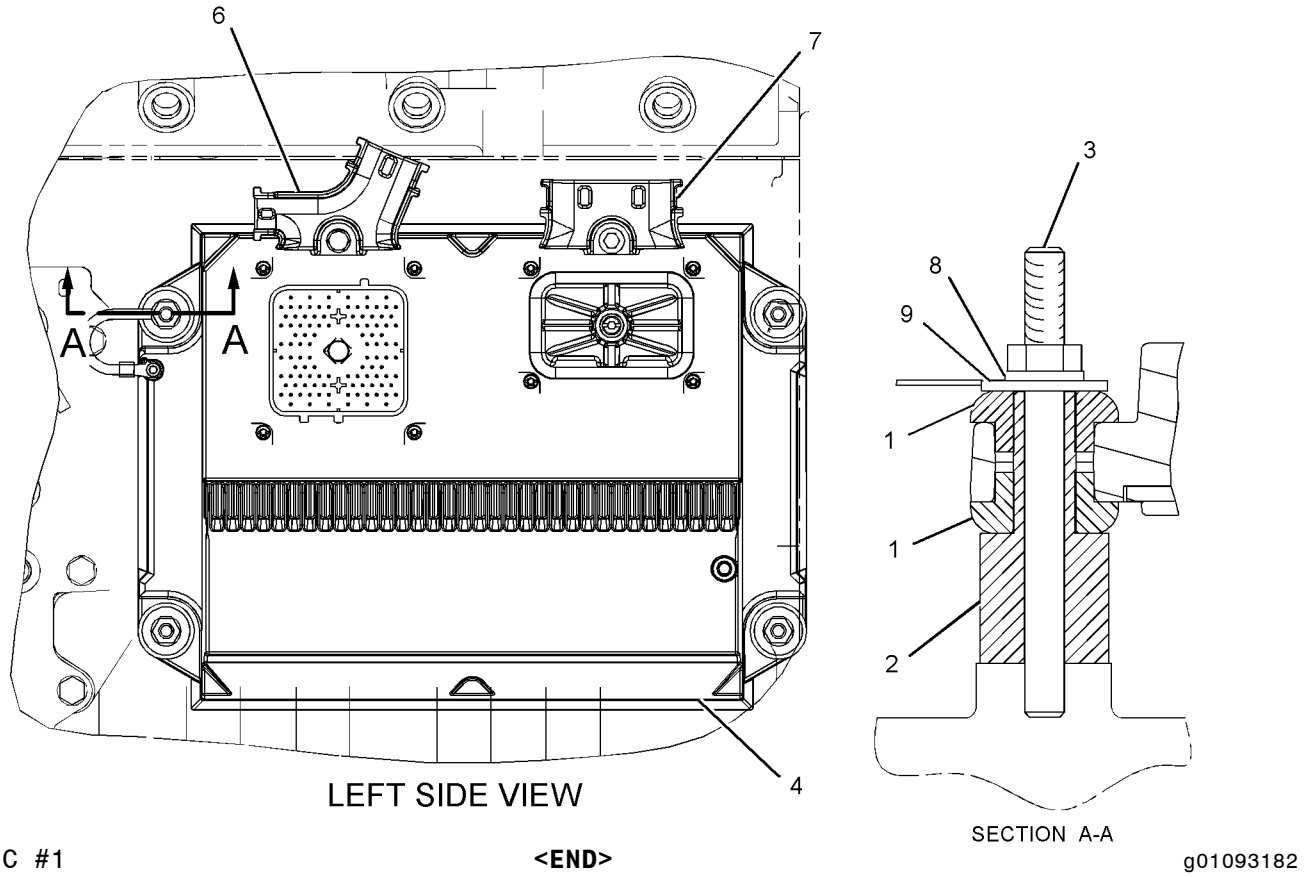

GRAPHIC #1 **<END>** g01093182

ELECTRICAL AND STARTING SYSTEM

177-4493 CONTROL GP-POWER TRAIN

S/N: JPA1-UP

PART OF 284-5343 WIRING GP-FRONT

SMCS-4808, 7610 **i01310536**

NOTE	REF NO	GRAPHIC REF	PART NUMBER	QTY	PART NAME 1 2 3 4 5 6 (PRODUCT LEVEL)	SEE PAGE
Y	1	1	**172-9389**	1	CONTROL GP-UNPROGRAMMED (POWER TRAIN)	121

Y-SEPARATE ILLUSTRATION

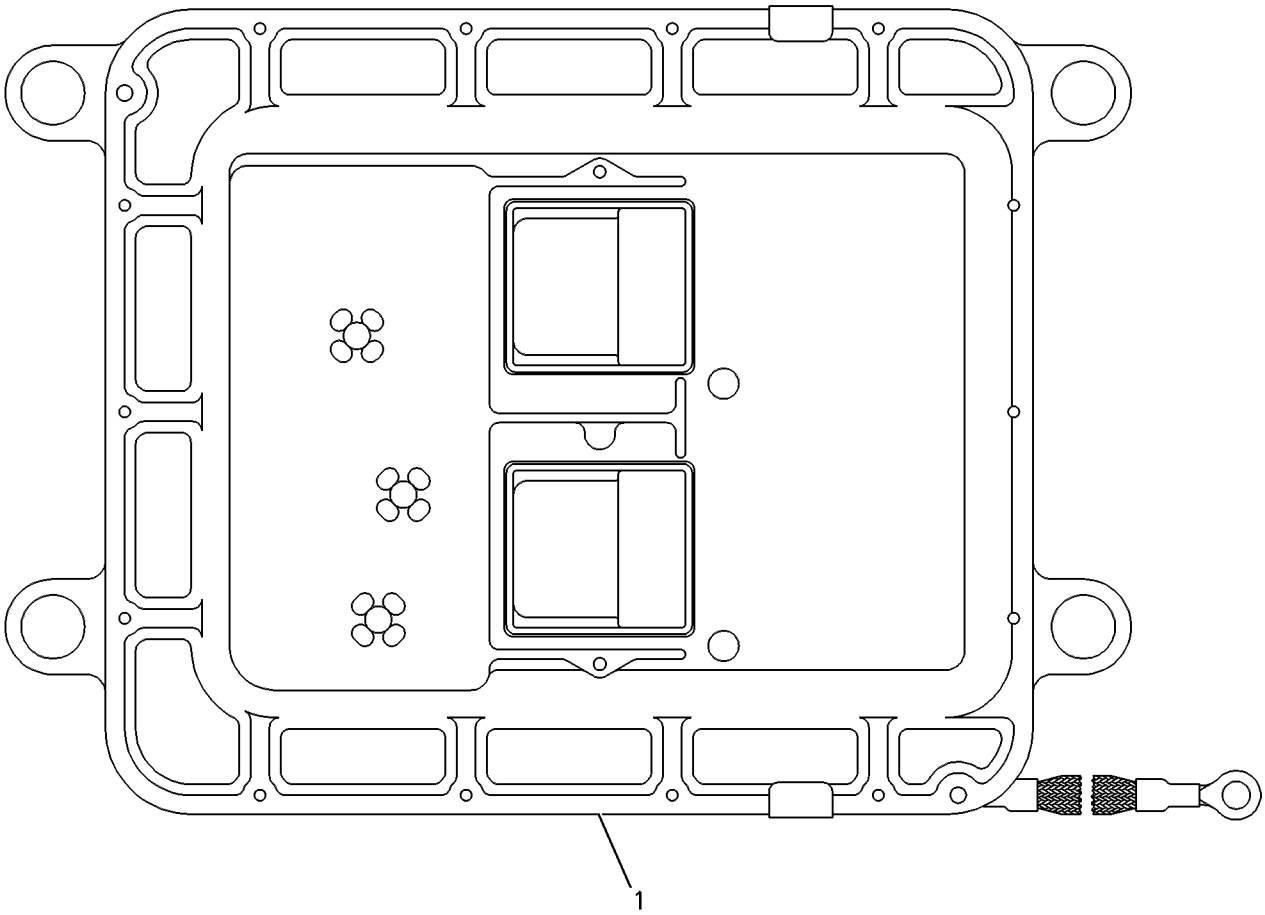

GRAPHIC #1 **<END>** g00415185

172-9389 CONTROL GP-UNPROGRAMMED*R

S/N: JPA1-UP

PART OF 177-4493 CONTROL GP-POWER TRAIN

SMCS-7610 **i02941930**

NOTE	REF NO	GRAPHIC REF	PART NUMBER	QTY	PART NAME 1 2 3 4 5 6 (PRODUCT LEVEL)	SEE PAGE
	1	1	**7X-6315**	1	STRAP AS-GROUND	
	2	1	**101-0852**	1	SCREW-PAN HEAD (NO 8X3/8-IN)	
M	3	1	**6V-6703**	2	KIT-RETAINING BOLT (ELECTRONIC CONTROL MODULE)	
					(EACH INCLUDES BOLT, RING, AND SEALS)	
	4	1	**134-4126**	1	WASHER (4.52X8.28X0.76-MM THK)	

M-METRIC PART

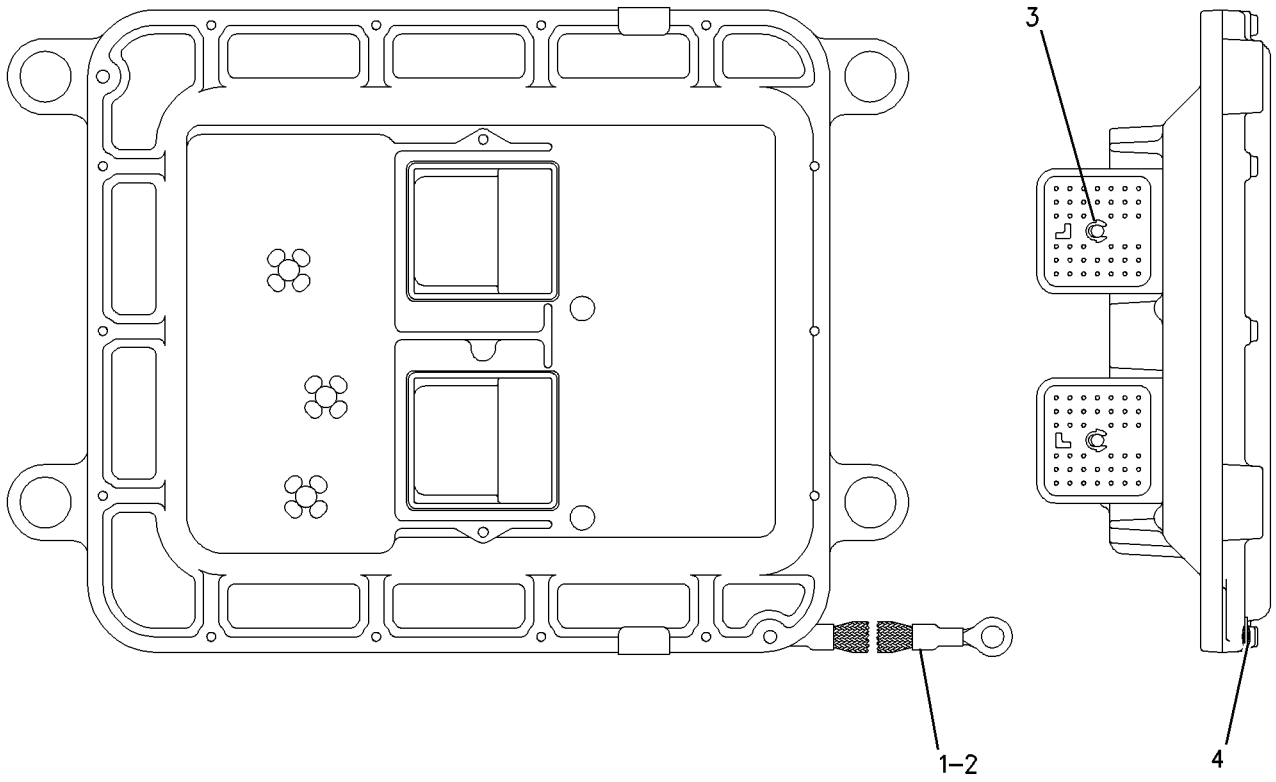

GRAPHIC #1 **<END>** g00951290

286-4328 CONVERTER AR-ELECTRICAL—HIGH PROFILE

S/N: JPA1-UP
12-VOLT
AN ATTACHMENT

SMCS-1421 **i03261402**

NOTE	PART NUMBER	QTY	PART NAME 1 2 3 4 5 6 (PRODUCT LEVEL)	SEE PAGE
Y	*171-7186*	1	ACCESSORY GP-CAB (15-AMPERE)	623
Y	*180-4643*	1	CONVERTER GP-ELECTRICAL (12-VOLT)	123

Y-SEPARATE ILLUSTRATION

<END>

286-4329 CONVERTER AR-ELECTRICAL—LOW PROFILE

S/N: JPA1-UP
12-VOLT POWER PORT
AN ATTACHMENT

SMCS-1421 **i03261763**

NOTE	PART NUMBER	QTY	PART NAME 1 2 3 4 5 6 (PRODUCT LEVEL)	SEE PAGE
Y	*171-7185*	1	ACCESSORY GP-CAB (5-AMPERE)	622
Y	*180-4643*	1	CONVERTER GP-ELECTRICAL (12-VOLT)	123

Y-SEPARATE ILLUSTRATION

<END>

180-4643 CONVERTER GP-ELECTRICAL

S/N: JPA1-UP
12-VOLT
PART OF 286-4328, 286-4329 CONVERTER AR-ELECTRICAL
AN ATTACHMENT

SMCS-1421 **i01936021**

NOTE	REF NO	GRAPHIC REF	PART NUMBER	QTY	PART NAME 1 2 3 4 5 6 (PRODUCT LEVEL)	SEE PAGE
	1	1	**9W-1442**	1	FUSE (10-AMPERE) (POWER CONVERTER)	
	2	1	**205-4285**	1	CONVERTER GP-ELECTRICAL (24-VOLT TO 12-VOLT)	
	3	1	**208-7782**	1	PLATE AS	
	4	1	**096-6166**	2	WASHER-HARD (4.5X9X1-MM THK)	
	5	1	**8T-2501**	2	BOLT (3/8-16X2-IN)	
M	6	1	**8T-0285**	2	SCREW-MACHINE (M4X0.7X12-MM)	
	7	1	**8T-4896**	2	WASHER-HARD (10.2X18.5X2.5-MM THK)	
	8	1	**8X-1853**	2	SPACER (13.1X15.9X30.4-MM THK)	

M-METRIC PART

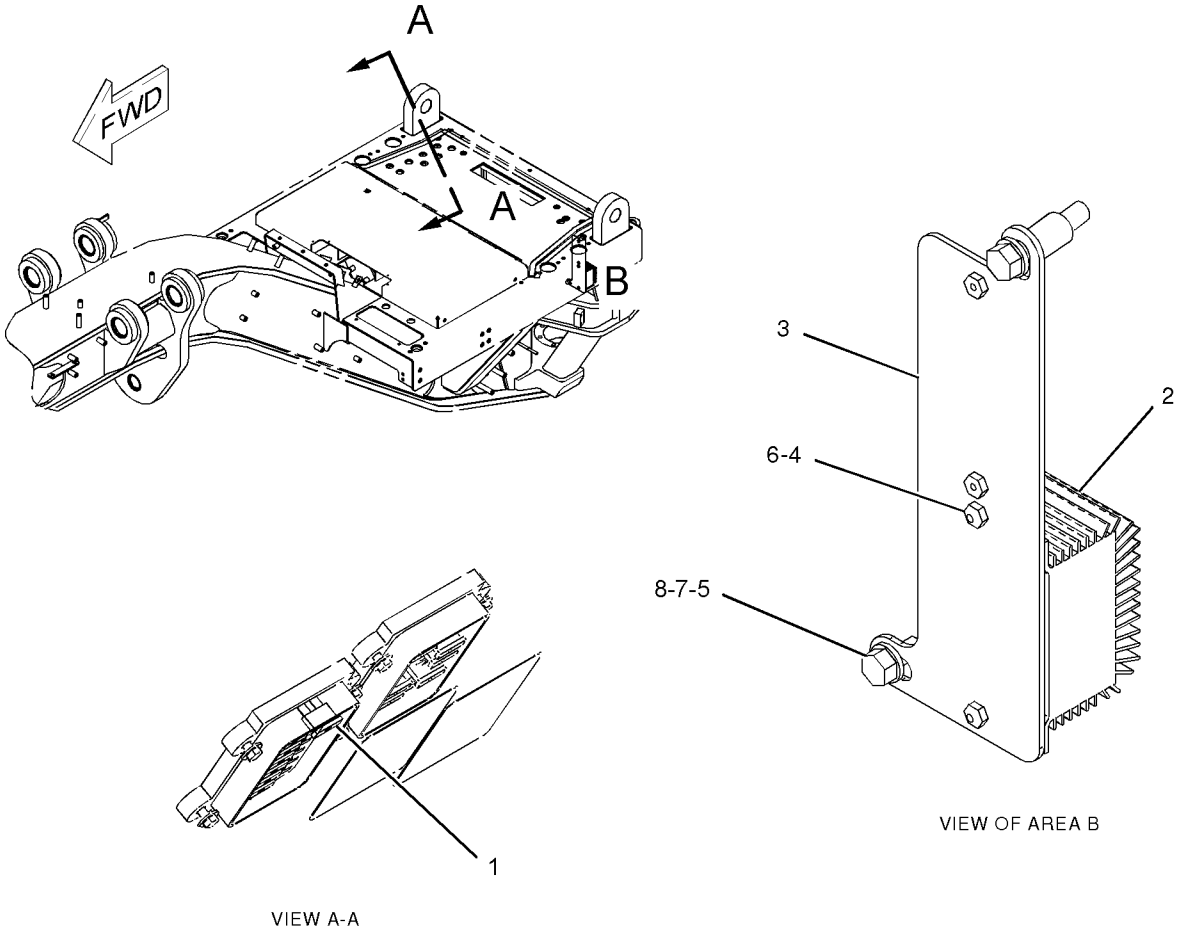

GRAPHIC #1 **<END>** g01010434

286-4330 CONVERTER GP-ELECTRICAL–RADIO

S/N: JPA1-UP
PART OF 295-7991 INSTALLATION AR-RADIO
AN ATTACHMENT

SMCS-1421 **i03256013**

NOTE	REF NO	GRAPHIC REF	PART NUMBER	QTY	PART NAME 1 2 3 4 5 6 (PRODUCT LEVEL)	SEE PAGE
	1	1	**8X-1853**	2	SPACER (13.1X15.9X30.4-MM THK)	
	2	1	**9W-1442**	1	FUSE (10-AMPERE)	
	3	1	**205-4285**	1	CONVERTER GP-ELECTRICAL (24-VOLT TO 12-VOLT)	
	4	1	**208-7782**	1	PLATE AS	
	5	1	**096-6166**	2	WASHER-HARD (4.5X9X1-MM THK)	
M	6	1	**8T-0285**	2	SCREW-MACHINE (M4X0.7X12-MM)	
	7	1	**8T-2501**	2	BOLT (3/8-16X2-IN)	
	8	1	**8T-4896**	2	WASHER-HARD (10.2X18.5X2.5-MM THK)	

M-METRIC PART

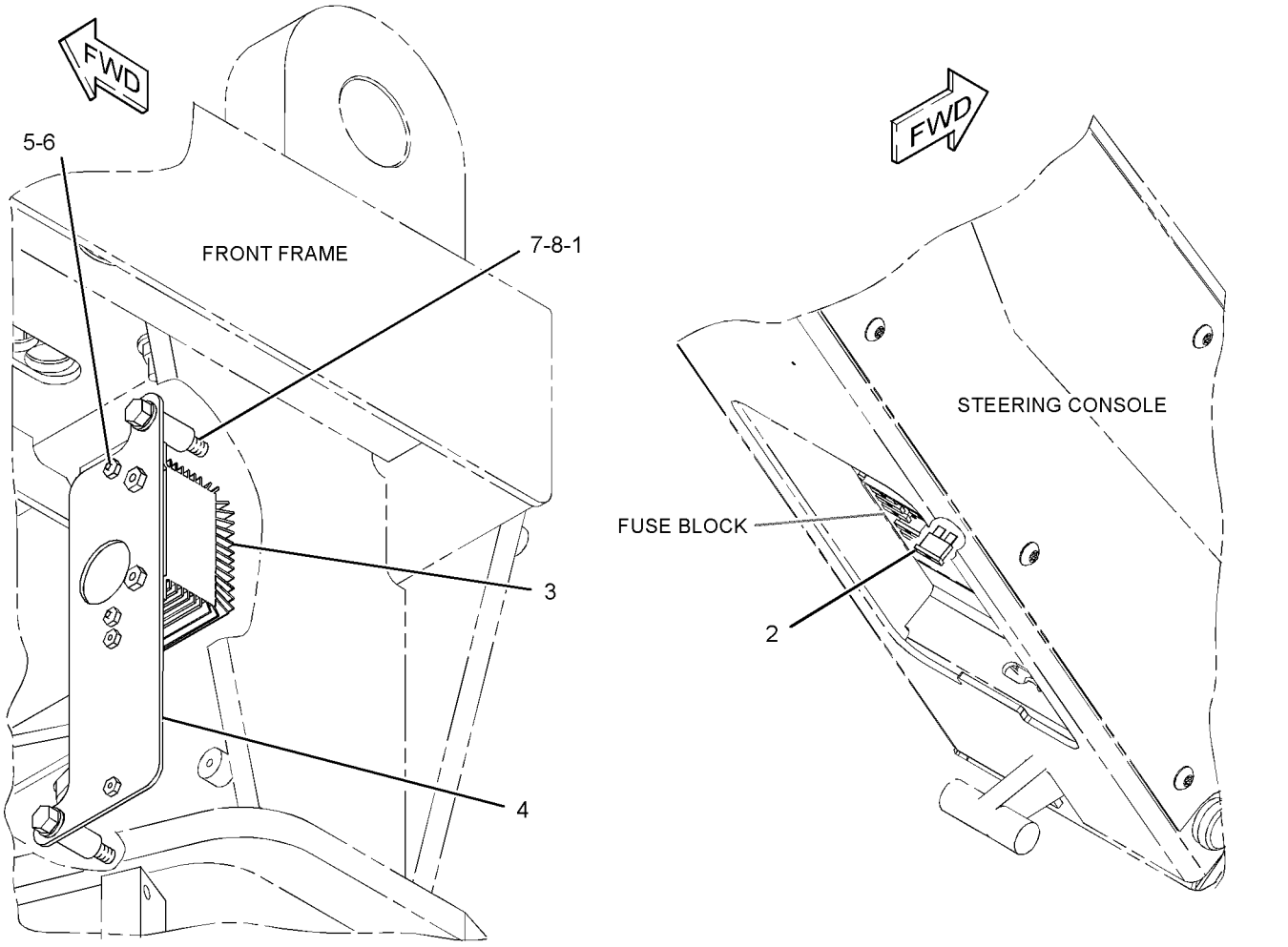

GRAPHIC #1 **<END>** g01689522

286-4331 CONVERTER GP-ELECTRICAL–RADIO

S/N: JPA1-UP

AN ATTACHMENT

SMCS-1421 **i03261420**

NOTE	REF NO	GRAPHIC REF	PART NUMBER	QTY	PART NAME 1 2 3 4 5 6 (PRODUCT LEVEL)	SEE PAGE
	1	1	**9W-1441**	1	FUSE (15-AMPERE)	
	2	1	**239-3902**	1	CONVERTER-ELECTRICAL (24-VOLT TO 12-VOLT)	
	3	1	**317-2835**	1	HARNESS AS-SWITCH	
	4	1	**317-2836**	1	PLATE AS	
	5	1	**317-2837**	1	PLATE AS	
	6	1	**6V-8801**	1	NUT (3/8-16-THD)	
	7	1	**7K-1181**	4	STRAP-CABLE	
	8	1	**8T-4121**	2	WASHER-HARD (11X21X2.5-MM THK)	
M	9	1	**8T-4137**	2	BOLT (M10X1.5X20-MM)	
	10	1	**8T-4896**	1	WASHER-HARD (10.2X18.5X2.5-MM THK)	
M	11	1	**9X-2042**	2	SCREW-TRUSS HEAD (M6X1X12-MM)	
E	12	1	**7X-7877**		STRIP-EDGING (106-CM)	

E-ORDER BY THE CENTIMETER
M-METRIC PART

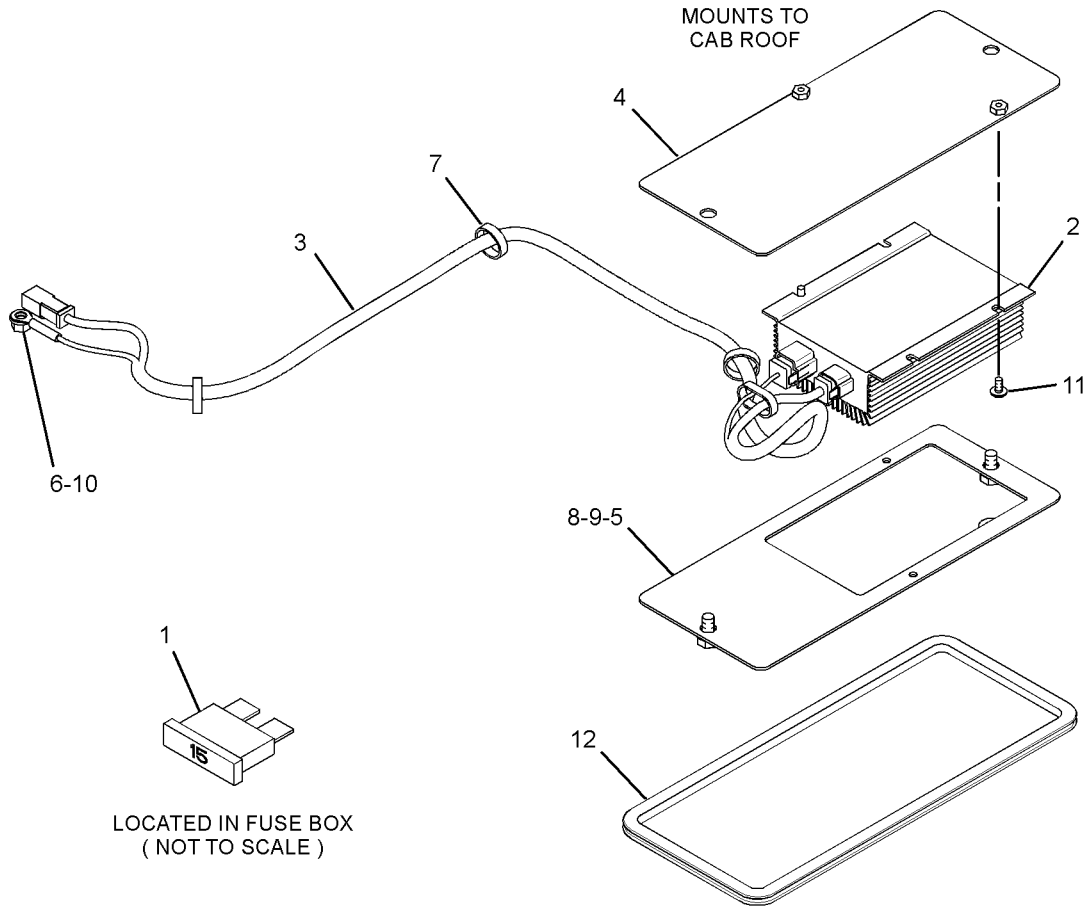

GRAPHIC #1 **<END>** g01673193

ELECTRICAL AND STARTING SYSTEM

262-1421 ELECTRONICS GP-COMMUNICATION–

PRODUCT LINK 300

S/N: JPA1-UP

PART OF 302-5429 INSTALLATION AR-COMMUNICATION

AN ATTACHMENT

SMCS-7606, 7610, 7620 **i03183460**

NOTE	PART NUMBER	QTY	PART NAME 1 2 3 4 5 6 (PRODUCT LEVEL)	SEE PAGE
	330-3409	1	SOFTWARE GP-COMMUNICATION (PRODUCT LINK 300)	
			-OR-	
	330-3410	1	SERVICE GP-COMMUNICATION (PRODUCT LINK 300)	
			(OPTIONAL SERVICE REPLACEMENT)(INCLUDES CONTROL GP & SOFTWARE)	

<END>

253-2697 ELECTRONICS GP-IMPLEMENT

S/N: JPA1-UP

PART OF 297-8448 GRADE CONTROL AR

AN ATTACHMENT

SMCS-5701, 7610, 7620 **i03359962**

NOTE	PART NUMBER	QTY	PART NAME 1 2 3 4 5 6 (PRODUCT LEVEL)	SEE PAGE
	314-7803	1	SOFTWARE GP-IMPLEMENT	
			-OR-	
	335-2383	1	SERVICE GP-IMPLEMENT	
			(OPTIONAL SERVICE REPLACEMENT)	
			(INCLUDES CONTROL GP & SOFTWARE)	

<END>

291-5475 ELECTRONICS GP-POWER TRAIN

S/N: JPA1-UP

PART OF 295-8278 AUTOSHIFT AR

AN ATTACHMENT

SMCS-4800, 4808, 7610, 7620 **i03377411**

NOTE	PART NUMBER	QTY	PART NAME 1 2 3 4 5 6 (PRODUCT LEVEL)	SEE PAGE
	291-1400	1	SOFTWARE GP-POWER TRAIN	
			-OR-	
	291-1401	1	SERVICE GP-POWER TRAIN	
			(OPTIONAL SERVICE REPLACEMENT)(INCLUDES CONTROL GP & SOFTWARE)	

<END>

297-8448 GRADE CONTROL AR

S/N: JPA1-UP

AN ATTACHMENT

SMCS-7220 **i03253062**

NOTE	REF NO	GRAPHIC REF	PART NUMBER	QTY	PART NAME 1 2 3 4 5 6 (PRODUCT LEVEL)	SEE PAGE
	1	1	**3S-2093**	6	STRAP-CABLE	
Y	2	1	*126-6933*	1	GUARD GP-PLATFORM (ACCUGRADE)	328
	3	1	**152-6824**	1	KNOB AS (BLADE LIFT, RH)	
		1	**8T-8737**	1	PLUG-SEAL	
		1	**102-8804**	1	KIT-RECEPTACLE (4-PIN)	
					(INCLUDES RECEPTACLE AS & WEDGE)	
		1	**186-3735**	3	PIN-CONNECTOR (16-GA TO 18-GA)	
	4	1	**152-6825**	1	KNOB AS (BLADE LIFT, LH)	
		1	**8T-8737**	1	PLUG-SEAL	
		1	**102-8804**	1	KIT-RECEPTACLE (4-PIN)	
					(INCLUDES RECEPTACLE AS & WEDGE)	
		1	**186-3735**	3	PIN-CONNECTOR (16-GA TO 18-GA)	
	5	1	**246-6561**	1	KNOB AS (RH) (ARTICULATION)	
		1	**102-8804**	1	KIT-RECEPTACLE (4-PIN)	
					(INCLUDES RECEPTACLE AS & WEDGE)	
		1	**186-3735**	4	PIN-CONNECTOR (16-GA TO 18-GA)	
	6	1	**246-6562**	1	KNOB AS (LH) (BLADE LIFT, LOWER)	
		1	**102-8804**	1	KIT-RECEPTACLE (4-PIN)	
					(INCLUDES RECEPTACLE AS & WEDGE)	
		1	**186-3735**	4	PIN-CONNECTOR (16-GA TO 18-GA)	
Y	7	1	*247-6449*	1	MOUNTING GP-GRADE CONTROL (DRAWBAR)	161
Y	8	1	*252-5709*	1	WIRING GP-GRADE CONTROL (CAB, INDICATOR LAMP)	215
Y	9	1	*254-5960*	1	MOUNTING GP-GRADE CONTROL (CIRCLE)	162
Y	10	1	*294-3542*	1	WIRING GP-CHASSIS	216
Y	11	1	*297-8449*	1	BOSS GP-FRAME (ACCUGRADE)	314
	12	1	**130-5300**	4	CLIP	
	13	1	**1V-7368**	2	SPACER (0.364X0.54X1.06-IN THK)	
	15	1	**8T-4896**	2	WASHER-HARD (10.2X18.5X2.5-MM THK)	
M	16	1	**9X-2480**	2	BOLT (M6X1X45-MM)	
FY			*253-2697*	1	ELECTRONICS GP-IMPLEMENT (GRADE CONTROL)	126

F-NOT SHOWN
M-METRIC PART
Y-SEPARATE ILLUSTRATION

297-8448 **GRADE CONTROL AR** *(contd.)* **i03253062**

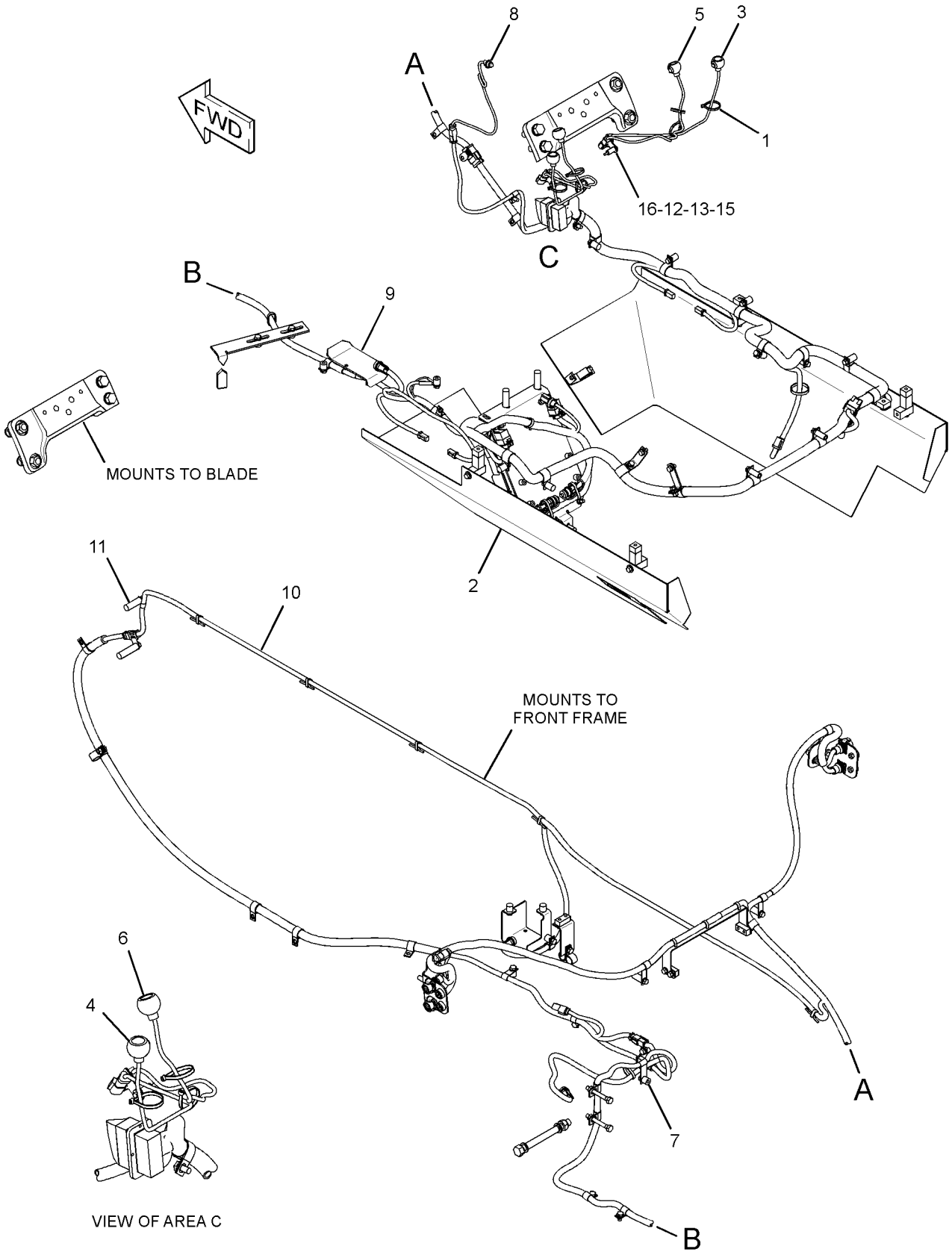

GRAPHIC #1 **<END>** g01783393

ELECTRICAL AND STARTING SYSTEM

297-6867 GROUND GP-ELECTRICAL

S/N: KHX8814-UP

PART OF 312-0255 ENGINE AR-COMPLETE

SMCS-1405, 1453 **i02789819**

NOTE	REF NO	GRAPHIC REF	PART NUMBER	QTY	PART NAME 1 2 3 4 5 6 (PRODUCT LEVEL)	SEE PAGE
M	1	1	**5C-7261**	1	NUT (M8X1.25-THD)	
	2	1	**8T-4224**	2	WASHER-HARD (8.8X16X2-MM THK)	

M-METRIC PART

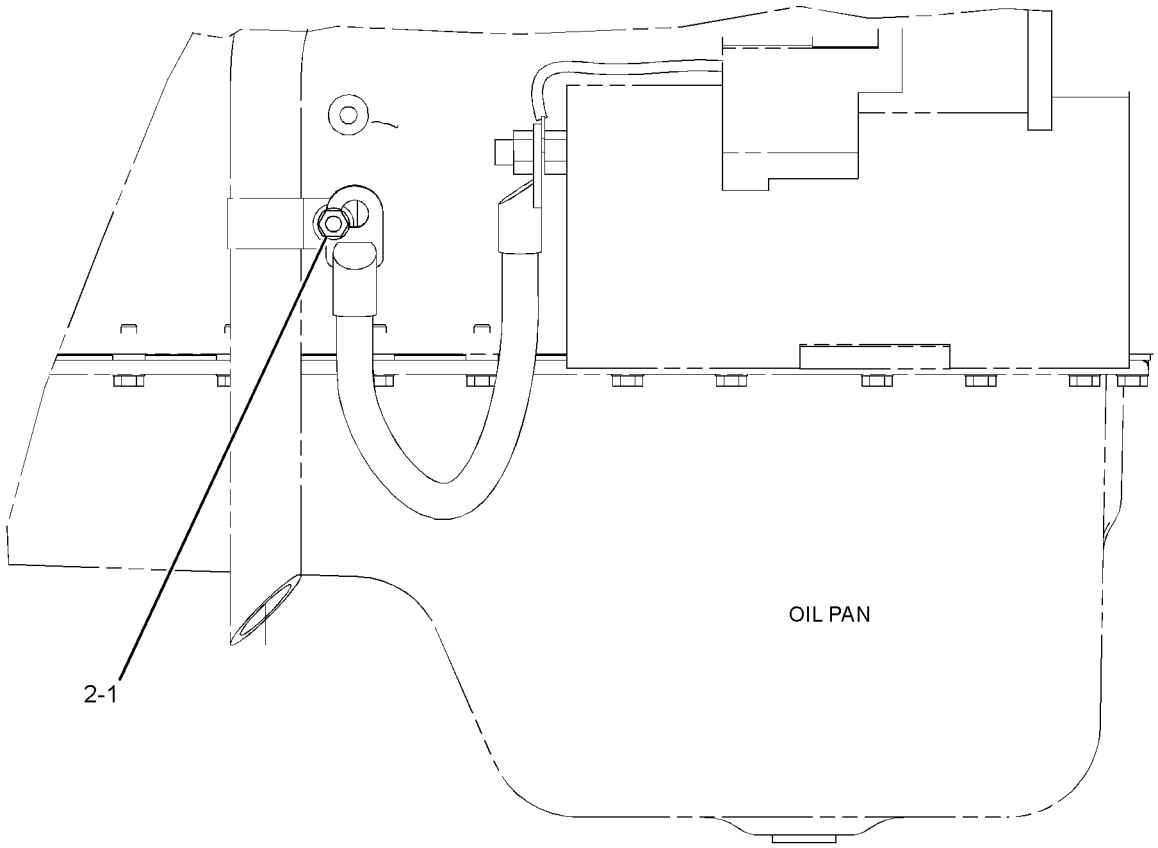

LEFT SIDE VIEW OF ENGINE

GRAPHIC #1 **<END>** g01352470

302-5429 INSTALLATION AR-COMMUNICATION–

PRODUCT LINK 321SR

S/N: JPA1-UP

AN ATTACHMENT

SMCS-7606 **i03258941**

NOTE	REF NO	GRAPHIC REF	PART NUMBER	QTY	PART NAME 1 2 3 4 5 6 (PRODUCT LEVEL)	SEE PAGE
	1	1	**256-6803**	1	HARNESS AS-RADIO (PRODUCT LINK)	
	2	1	**256-6804**	1	HARNESS AS-CONTROL (PRODUCT LINK)	
	3	1	**257-9363**	1	HARNESS AS-RADIO (PRODUCT LINK)	
Y	4	1	*262-1421*	1	ELECTRONICS GP-COMMUNICATION (PRODUCT LINK 300)	126
	5	1	*263-8948*	1	ANTENNA AS	
		1	**223-4296**	1	ANTENNA (WHIP)	
Y	6	1	**263-9088**	1	RADIO GP-COMMUNICATION (PRODUCT LINK 121SR)	164
Y	7	1	*302-5428*	1	INSTALLATION GP-COMMUNICATION (PRODUCT LINK 121SR)	131

Y-SEPARATE ILLUSTRATION

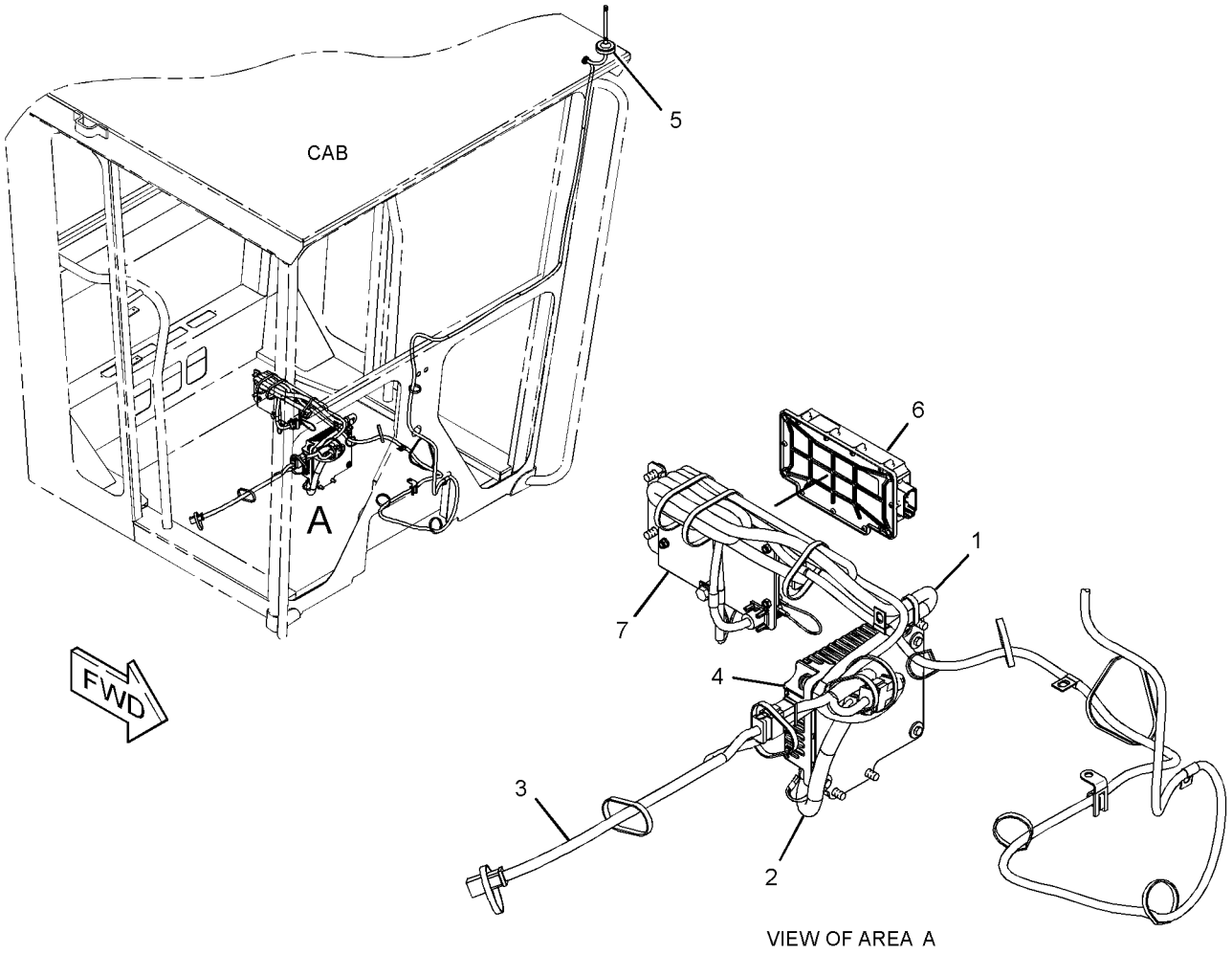

VIEW OF AREA A

GRAPHIC #1 **<END>** g01784959

302-5428 INSTALLATION GP-COMMUNICATION—PRODUCT LINK

S/N: JPA1-UP

PART OF 302-5429 INSTALLATION AR-COMMUNICATION

AN ATTACHMENT

SMCS-7606 **i03258960**

NOTE	REF NO	GRAPHIC REF	PART NUMBER	QTY	PART NAME 1 2 3 4 5 6 (PRODUCT LEVEL)	SEE PAGE
	1	1	**8C-5608**	4	SPACER (6.5X9.5X25.4-MM THK)	
	2	1	**090-8247**	1	BLOCK	
	3	1	**103-5304**	1	PLATE	
	4	1	**302-5210**	1	PLATE	
	5	1	**302-5211**	1	PLATE	
	6	1	**302-5212**	1	PLATE	
M	7	1	**129-3178**	8	LOCKNUT (M6X1-THD)	
	8	1	**174-5907**	3	CLIP	
	9	1	**5M-3062**	1	BOLT (3/8-16X0.75-IN)	
	10	1	**5S-4246**	4	LOCKWASHER	
M	11	1	**6V-8950**	4	NUT (M2.5X0.45-THD)	
M	12	1	**6V-9326**	4	SCREW-MACHINE (M2.5X0.45X10-MM)	
	13	1	**7K-1181**	10	STRAP-CABLE	
	14	1	**7T-1099**	2	LINK	
	15	1	**8J-1256**	1	CLIP	
	16	1	**8M-2770**	1	CLIP	
	17	1	**8T-4121**	10	WASHER-HARD (11X21X2.5-MM THK)	
M	18	1	**8T-4137**	10	BOLT (M10X1.5X20-MM)	
M	19	1	**8T-4138**	4	BOLT (M6X1X20-MM)	
	20	1	**8T-4896**	1	WASHER-HARD (10.2X18.5X2.5-MM THK)	
M	21	1	**9R-2613**	2	BOSS-WELD (M10X1.5X25-MM)	
M	22	1	**9R-2672**	3	BOSS (M10X1.5X20-MM)	
M	23	1	**9X-2480**	4	BOLT (M6X1X45-MM)	
	24	1	**9X-6165**	12	WASHER (6.5X22X2.5-MM THK)	
	25	1	**9X-8256**	8	WASHER (6.6X12X2-MM THK)	
	26	1	**9X-9896**	8	MOUNT (ISOLATION)	

M-METRIC PART

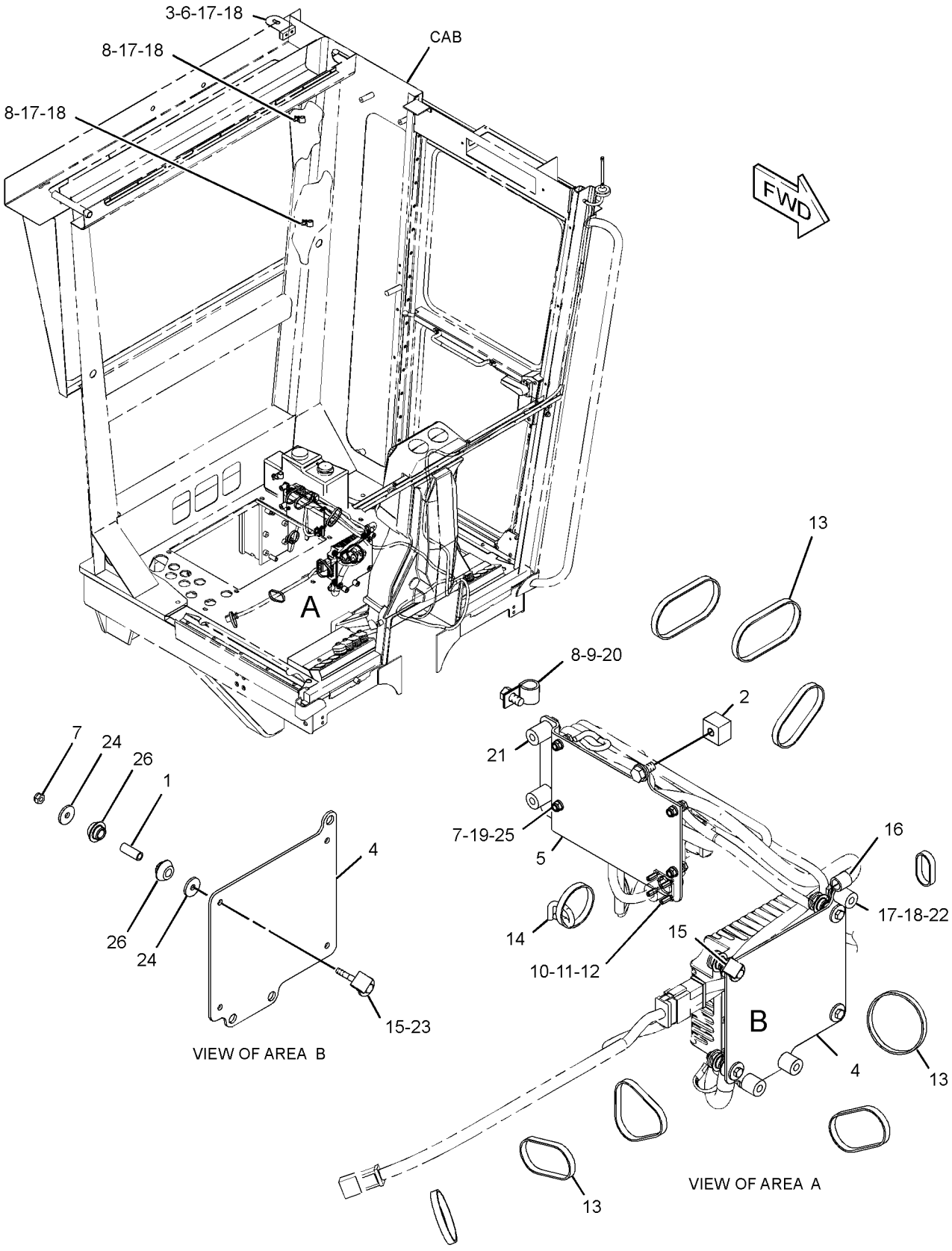

GRAPHIC #1 **<END>** g01697993

171-5672 LAMP GP

S/N: JPA1-UP
24-VOLT
PART OF 284-5394 LIGHTING GP-BACKUP
AN ATTACHMENT

SMCS-1429 **i03341367**

NOTE	REF NO	GRAPHIC REF	PART NUMBER	QTY	PART NAME 1 2 3 4 5 6 (PRODUCT LEVEL)	SEE PAGE
	1	1	**9X-3068**	1	LENS-CLEAR	
	2	1	**9X-4493**	1	LAMP (24-VOLT, 21-WATT)	
	3	1	**186-3735**	2	PIN-CONNECTOR (16-GA TO 18-GA)	
	4	1	**102-8802**	1	KIT-RECEPTACLE (2-PIN)	
					(INCLUDES RECEPTACLE AS & WEDGE)	
					PARTS SHOWN IN GRAPHIC(S) WITHOUT A REFERENCE NUMBER ARE NOT SERVICED SEPARATELY	

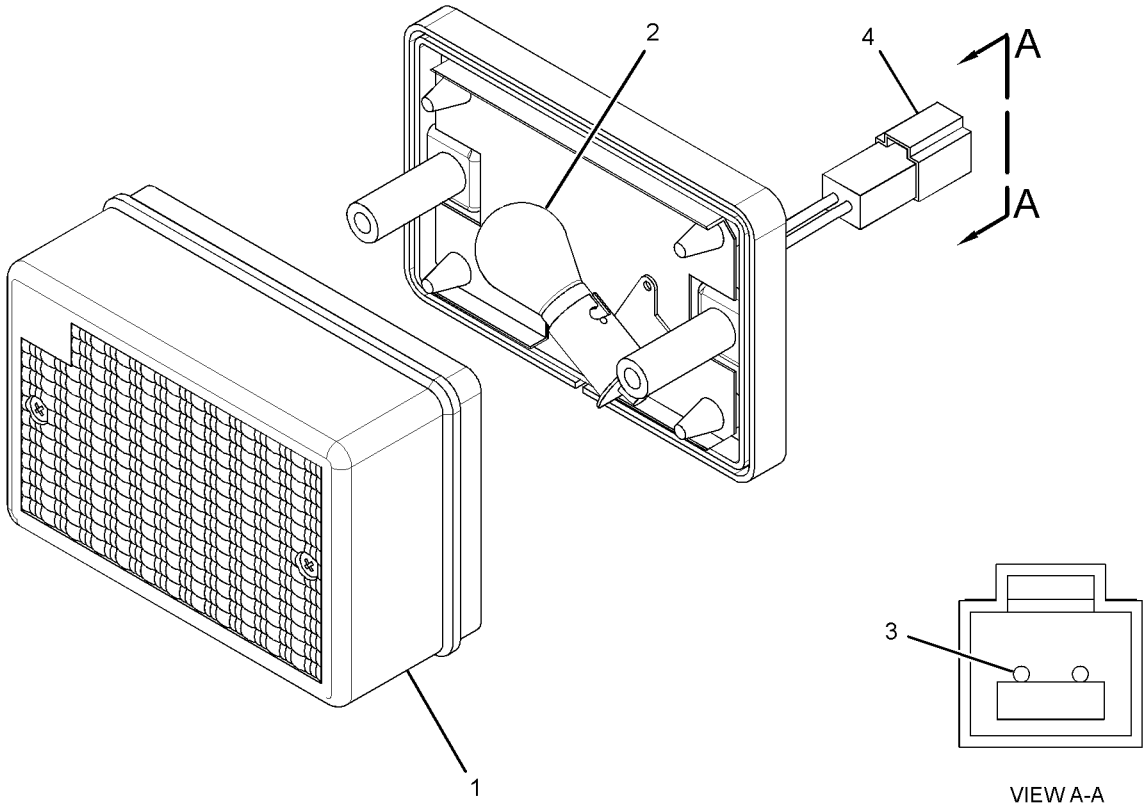

GRAPHIC #1 **<END>** g01676744

3E-6389 LAMP GP-DOME

S/N: JPA1-UP
24-VOLT, WITH SWITCH
PART OF 285-3361 WIRING GP-CAB
AN ATTACHMENT

SMCS-1433 **i02942903**

NOTE	REF NO	GRAPHIC REF	PART NUMBER	QTY	PART NAME 1 2 3 4 5 6 (PRODUCT LEVEL)	SEE PAGE
	1	1	**7N-9943**	1	LAMP (24-VOLT) (DOME)	
	2	1	**102-8803**	1	KIT-RECEPTACLE (3-PIN)	
					(INCLUDES RECEPTACLE AS & WEDGE)	
	3	1	**186-3735**	3	PIN-CONNECTOR (16-GA TO 18-GA)	
	4	1	**7T-0020**	1	LENS-DOME LAMP	

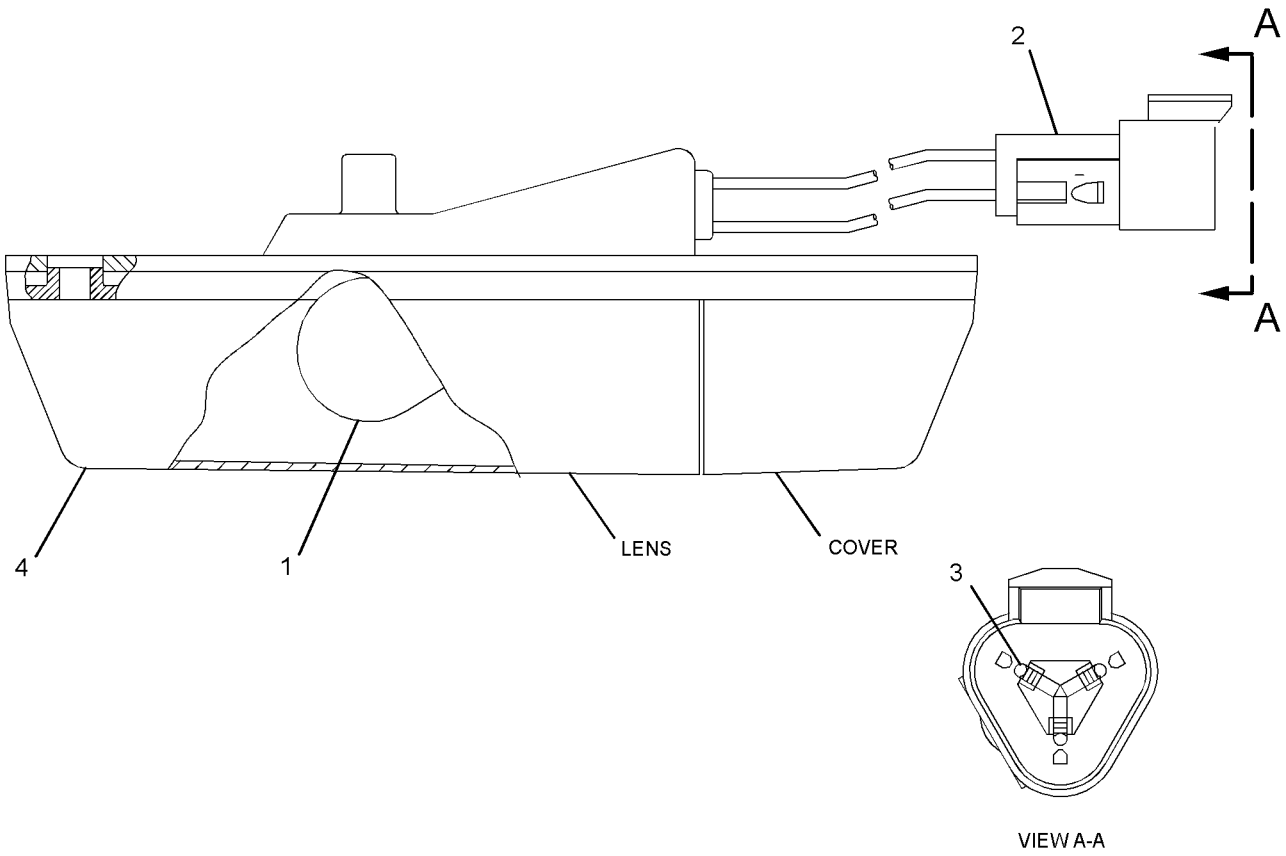

GRAPHIC #1 **<END>** g01270113

234-4323 LAMP GP-FLOOD

S/N: JPA1-UP
24-VOLT
PART OF 284-5354, 284-5362, 284-5376, 284-5377 LIGHTING GP-FLOOD, 284-5353 LIGHTING GP-ROADING
AN ATTACHMENT

SMCS-1434 **i02648056**

NOTE	REF NO	GRAPHIC REF	PART NUMBER	QTY	PART NAME 1 2 3 4 5 6 (PRODUCT LEVEL)	SEE PAGE
	1	1	**9X-3463**	1	LAMP-HALOGEN (24-VOLT, 65-WATT)	
	2	1	**9X-4244**	2	SCREW-SPECIAL	
	3	1	**202-6614**	1	LENS AS	
	4	1	**234-7730**	1	BODY AS	
	5	1	**164-7556**	1	BRACKET (LAMP RETAINING)	
M	6	1	**8T-0389**	1	LOCKNUT (M10X1.5-THD)	
	7	1	**234-7731**	1	BRACKET AS	
	8	1	**8T-4121**	1	WASHER-HARD (11X21X2.5-MM THK)	

M-METRIC PART

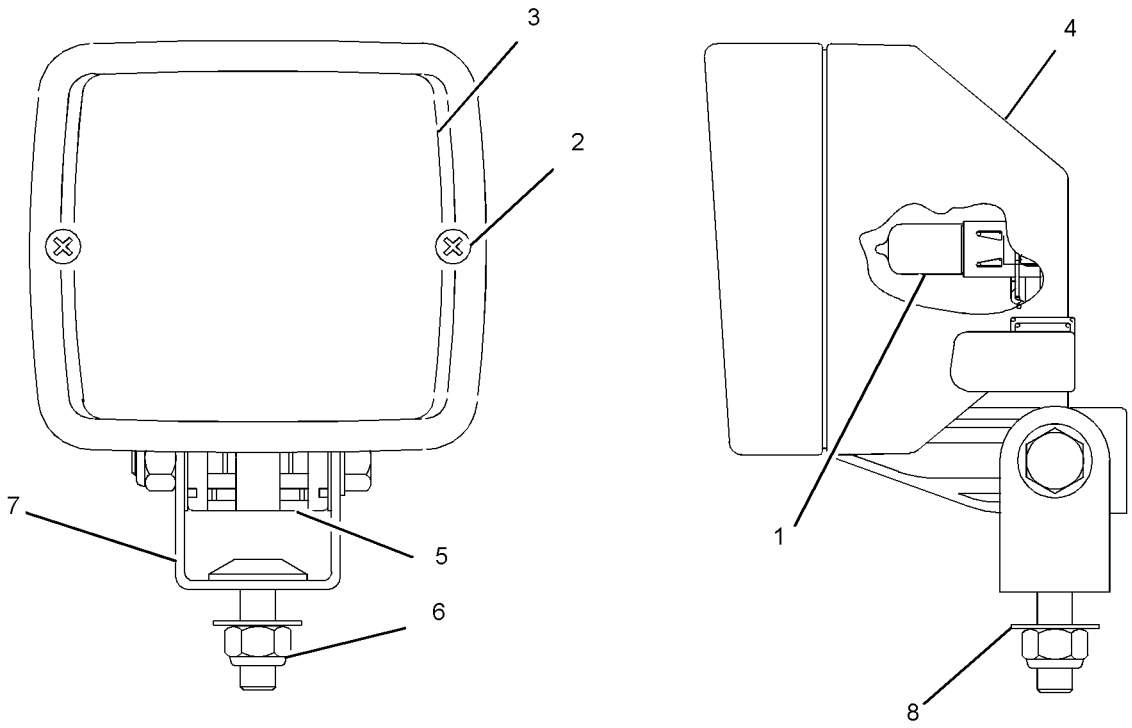

GRAPHIC #1 **<END>** g01329130

234-4324 LAMP GP-FLOOD

S/N: JPA1-UP
PART OF 284-5353 LIGHTING GP-ROADING
AN ATTACHMENT

SMCS-1434 **i02549180**

NOTE	REF NO	GRAPHIC REF	PART NUMBER	QTY	PART NAME 1 2 3 4 5 6 (PRODUCT LEVEL)	SEE PAGE
	1	1	**9X-3463**	1	LAMP-HALOGEN (24-VOLT, 65-WATT)	
	2	1	**9X-4244**	2	SCREW-SPECIAL	
	3	1	**202-6611**	1	LENS AS	
	4	1	**234-7730**	1	BODY AS	
	5	1	**164-7556**	1	BRACKET (LAMP RETAINING)	
M	6	1	**8T-0389**	1	LOCKNUT (M10X1.5-THD)	
	7	1	**234-7731**	1	BRACKET AS	
	8	1	**8T-4121**	1	WASHER-HARD (11X21X2.5-MM THK)	

M-METRIC PART

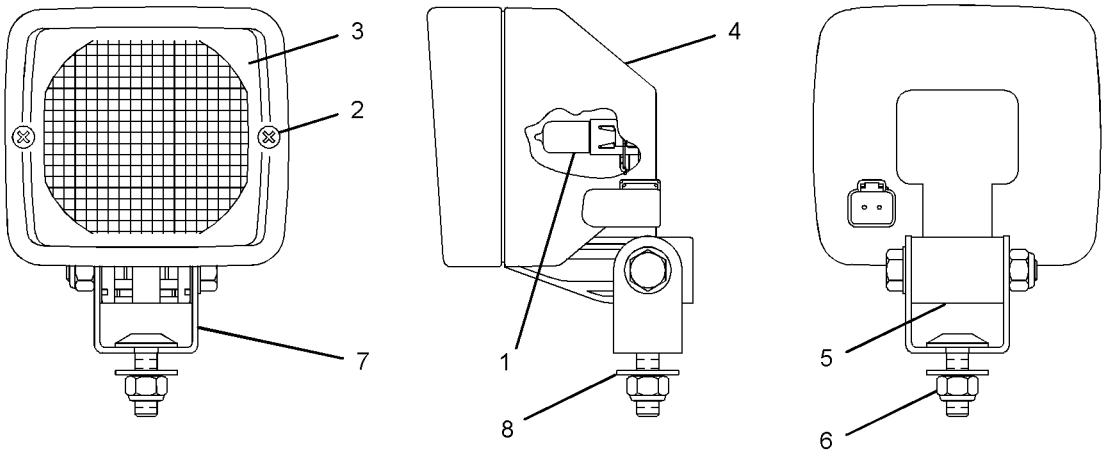

GRAPHIC #1 **<END>** g01276050

234-4325 LAMP GP-FLOOD

S/N: JPA1-UP
24-VOLT
PART OF 284-5376 LIGHTING GP-FLOOD, 284-5355 LIGHTING GP-ROADING AN ATTACHMENT

SMCS-1434 **i02648057**

NOTE	REF NO	GRAPHIC REF	PART NUMBER	QTY	PART NAME 1 2 3 4 5 6 (PRODUCT LEVEL)	SEE PAGE
	1	1	**9X-3463**	1	LAMP-HALOGEN (24-VOLT, 65-WATT)	
M	2	1	**8T-0389**	1	LOCKNUT (M10X1.5-THD)	
	3	1	**9X-4244**	2	SCREW-SPECIAL	
	4	1	**202-6614**	1	LENS AS	
	5	1	**234-7730**	1	BODY AS	
	6	1	**164-7556**	1	BRACKET (LAMP RETAINING)	
	7	1	**234-7731**	1	BRACKET AS	
	8	1	**8T-4121**	1	WASHER-HARD (11X21X2.5-MM THK)	

M-METRIC PART

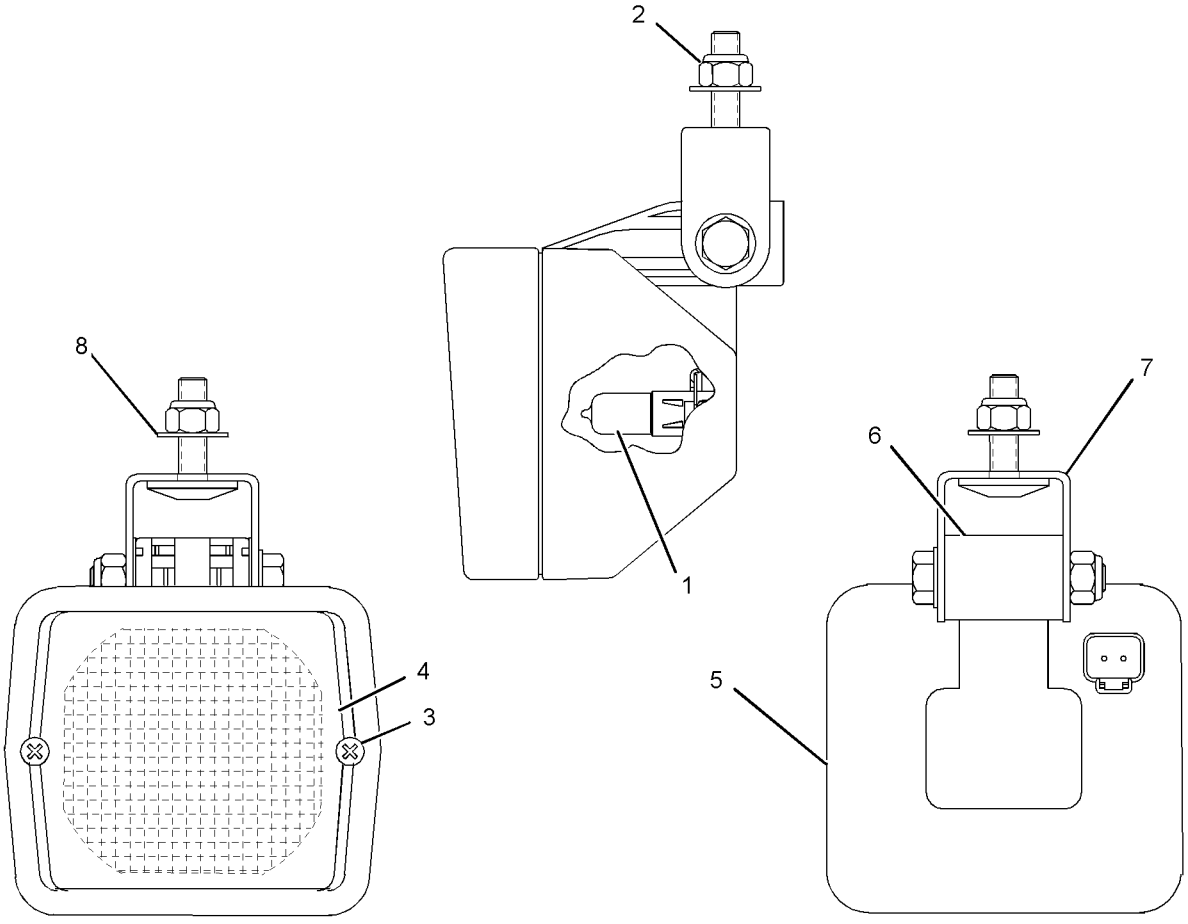

GRAPHIC #1 **<END>** g01329238

234-4326 LAMP GP-FLOOD

S/N: JPA1-UP
24-VOLT
PART OF 284-5355 LIGHTING GP-ROADING
AN ATTACHMENT

SMCS-1434 **i02549179**

NOTE	REF NO	GRAPHIC REF	PART NUMBER	QTY	PART NAME 1 2 3 4 5 6 (PRODUCT LEVEL)	SEE PAGE
	1	1	**9X-3463**	1	LAMP-HALOGEN (24-VOLT, 65-WATT)	
M	2	1	**8T-0389**	1	LOCKNUT (M10X1.5-THD)	
	3	1	**9X-4244**	2	SCREW-SPECIAL	
	4	1	**202-6611**	1	LENS AS	
	5	1	**234-7730**	1	BODY AS	
	6	1	**164-7556**	1	BRACKET (LAMP RETAINING)	
	7	1	**234-7731**	1	BRACKET AS	
	8	1	**8T-4121**	1	WASHER-HARD (11X21X2.5-MM THK)	

M-METRIC PART

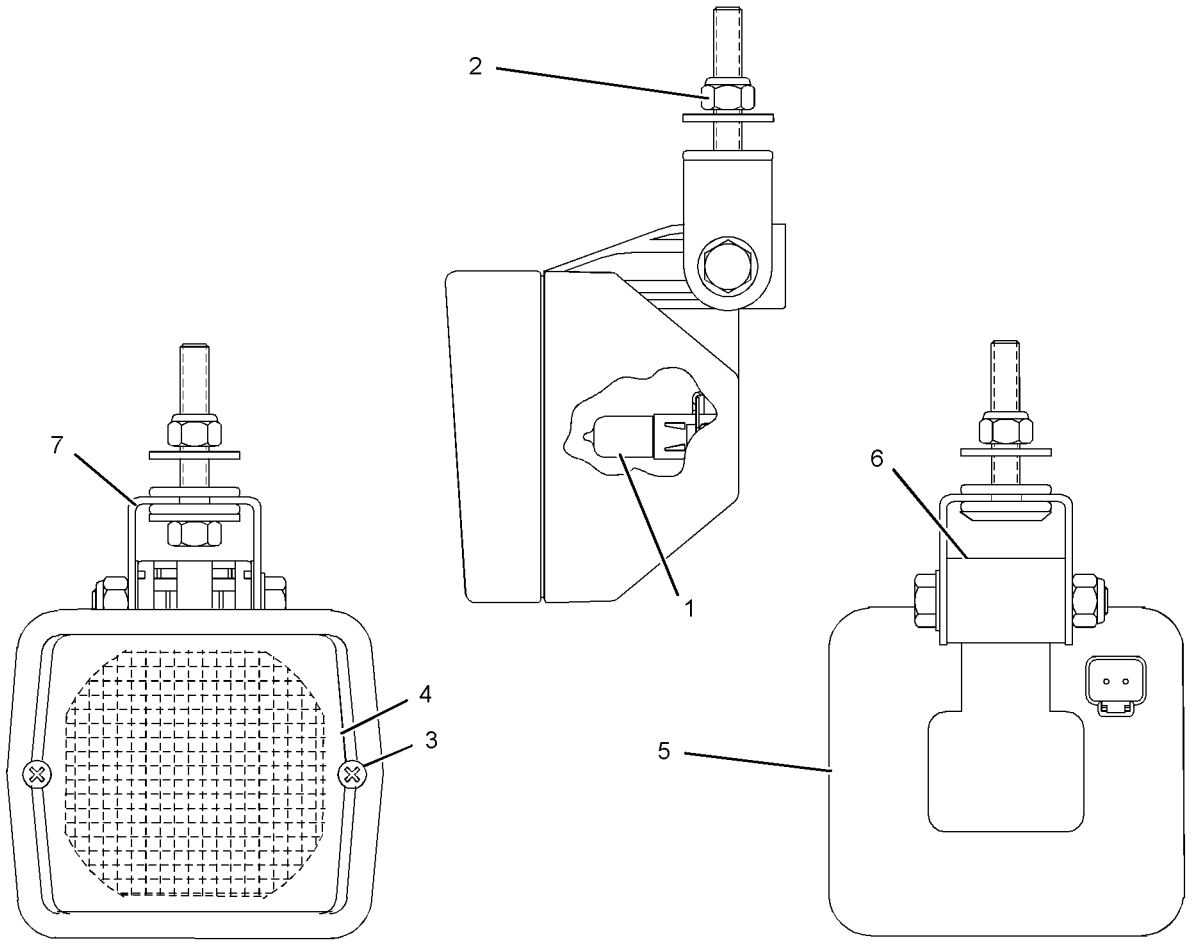

GRAPHIC #1 **<END>** g01276026

135-0426 LAMP GP-SIGNAL–STOP, TAIL

S/N: JPA1-UP
24 VOLT
PART OF 284-5348 WIRING GP-REAR

SMCS-1430 **i02443767**

NOTE	REF NO	GRAPHIC REF	PART NUMBER	QTY	PART NAME 1 2 3 4 5 6 (PRODUCT LEVEL)	SEE PAGE
	1	1	**102-8803**	1	KIT-RECEPTACLE (3-PIN)	
					(INCLUDES RECEPTACLE AS & WEDGE)	
	2	1	**186-3735**	3	PIN-CONNECTOR (16-GA TO 18-GA)	

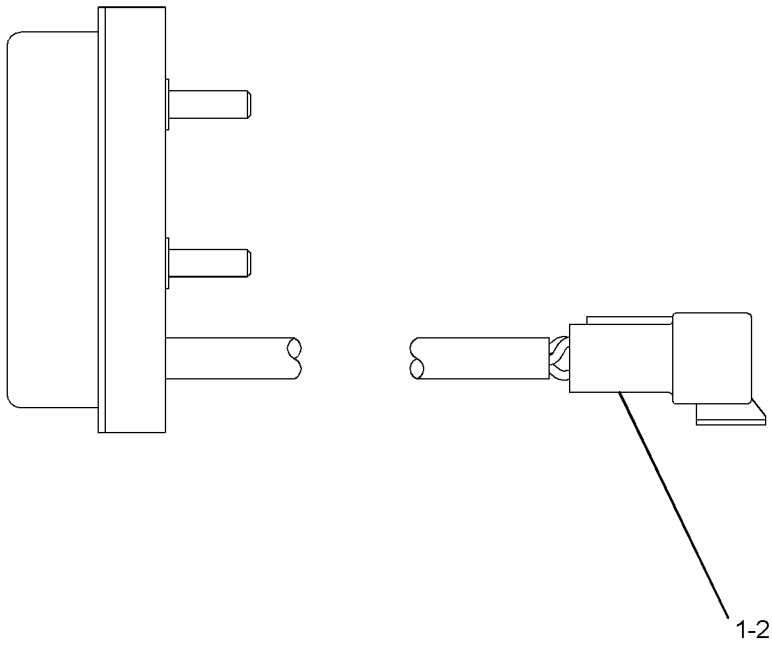

GRAPHIC #1 **<END>** g01213248

135-0427 LAMP GP-SIGNAL–PARK, TURN

S/N: JPA1-UP
PART OF 284-5353, 284-5355 LIGHTING GP-ROADING
AN ATTACHMENT

SMCS-1430 **i02526811**

NOTE	REF NO	GRAPHIC REF	PART NUMBER	QTY	PART NAME 1 2 3 4 5 6 (PRODUCT LEVEL)	SEE PAGE
	1	1	**102-8803**	1	KIT-RECEPTACLE (3-PIN)	
					(INCLUDES RECEPTACLE AS & WEDGE)	
	2	1	**186-3735**	3	PIN-CONNECTOR (16-GA TO 18-GA)	

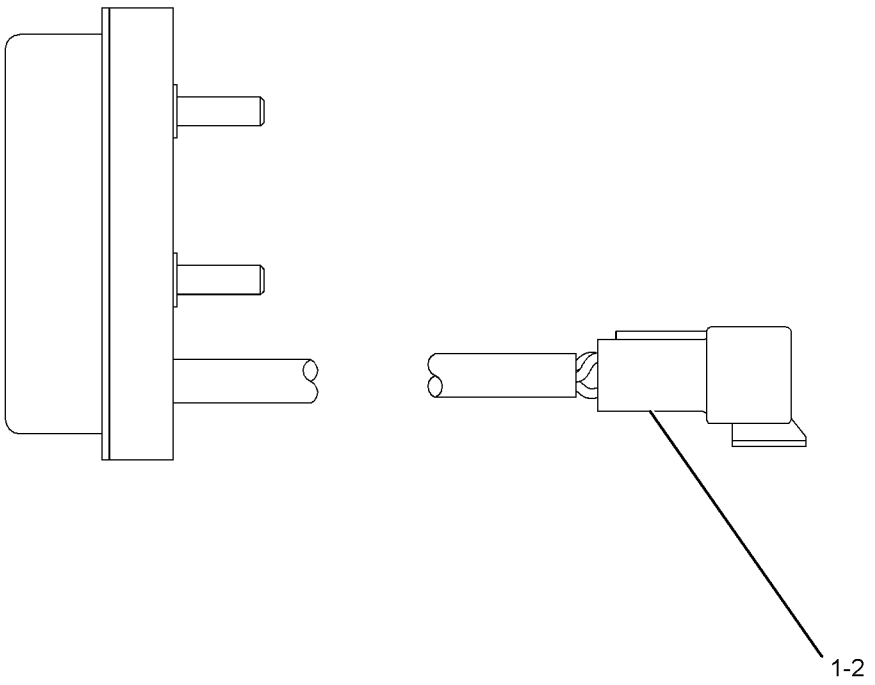

GRAPHIC #1 **<END>** g01273007

199-3368 LAMP GP-SIGNAL–TURN

S/N: JPA1-UP
24-VOLT
PART OF 284-5363 LIGHTING GP-SIGNAL
AN ATTACHMENT

SMCS-1430 **i03432182**

NOTE	REF NO	GRAPHIC REF	PART NUMBER	QTY	PART NAME 1 2 3 4 5 6 (PRODUCT LEVEL)	SEE PAGE
	1	1	**102-8802**	1	KIT-RECEPTACLE (2-PIN)	
					(INCLUDES RECEPTACLE AS & WEDGE)	
	2	1	**186-3735**	2	PIN-CONNECTOR (16-GA TO 18-GA)	

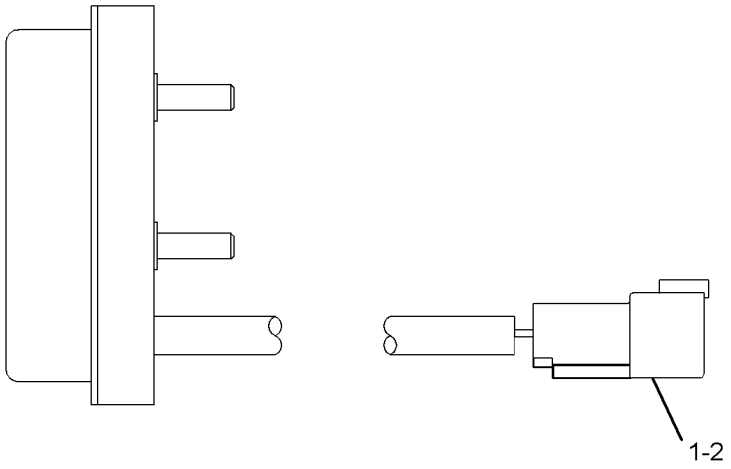

GRAPHIC #1 **<END>** g01217868

235-3937 LAMP GP-WARNING BEACON—ROTATING

S/N: JPA1-UP
24-VOLT. AMBER
PART OF 284-5357 LIGHTING GP-WARNING, 286-4430 LIGHTING GP-WARNING BEACON
FIELD REPLACEMENT ORDER 284-3757—PAGE 143
AN ATTACHMENT

SMCS-1431 **i02585409**

NOTE	REF NO	GRAPHIC REF	PART NUMBER	QTY	PART NAME 1 2 3 4 5 6 (PRODUCT LEVEL)	SEE PAGE
	1	1	**272-9800**	1	LENS (AMBER)	
	2	1	**9X-7849**	1	LAMP (24-VOLT, 70-WATT)	
	3	1	**9X-8139**	1	BELT-DRIVE	
M	5	1	**6V-8225**	3	NUT (M6X1-THD)	
	6	1	**5P-0537**	3	WASHER-HARD (7.2X14.5X2-MM THK)	
	7	1	**102-8802**	1	KIT-RECEPTACLE (2-PIN)	
					(INCLUDES RECEPTACLE AS & WEDGE)	
	9	1	**186-3735**	2	PIN-CONNECTOR (16-GA TO 18-GA)	

M-METRIC PART

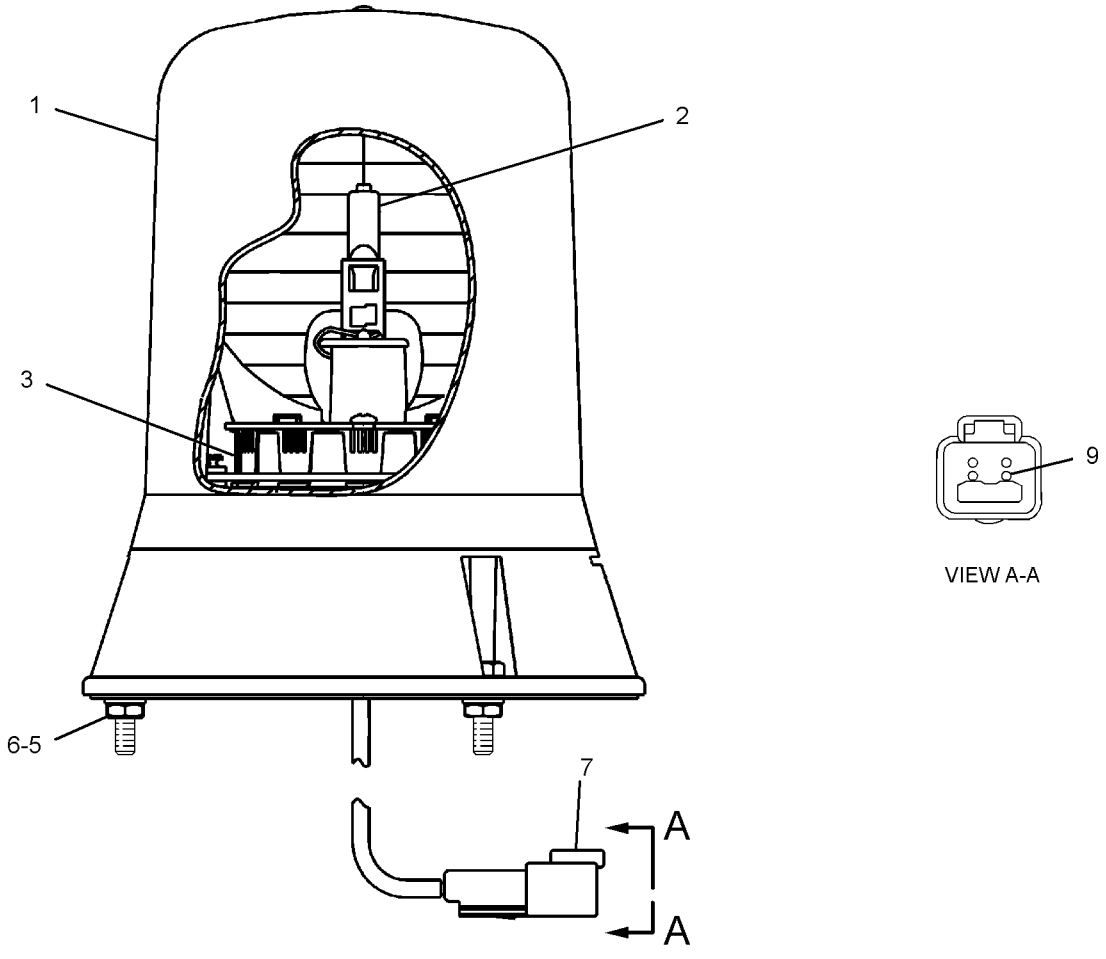

GRAPHIC #1 **<END>** g01199570

284-3757 LAMP GP-WARNING BEACON–STROBE LIGHT

S/N: JPA1-UP

12-VOLT, 24-VOLT. AMBER

FIELD REPLACEMENT FOR 235-3937–PAGE 142

SMCS-1431 **i02872241**

NOTE	REF NO	GRAPHIC REF	PART NUMBER	QTY	PART NAME 1 2 3 4 5 6 (PRODUCT LEVEL)	SEE PAGE
	1	1	**102-8802**	1	KIT-RECEPTACLE (2-PIN)	
					(INCLUDES RECEPTACLE AS & WEDGE)	
	2	1	**186-3735**	2	PIN-CONNECTOR (16-GA TO 18-GA)	

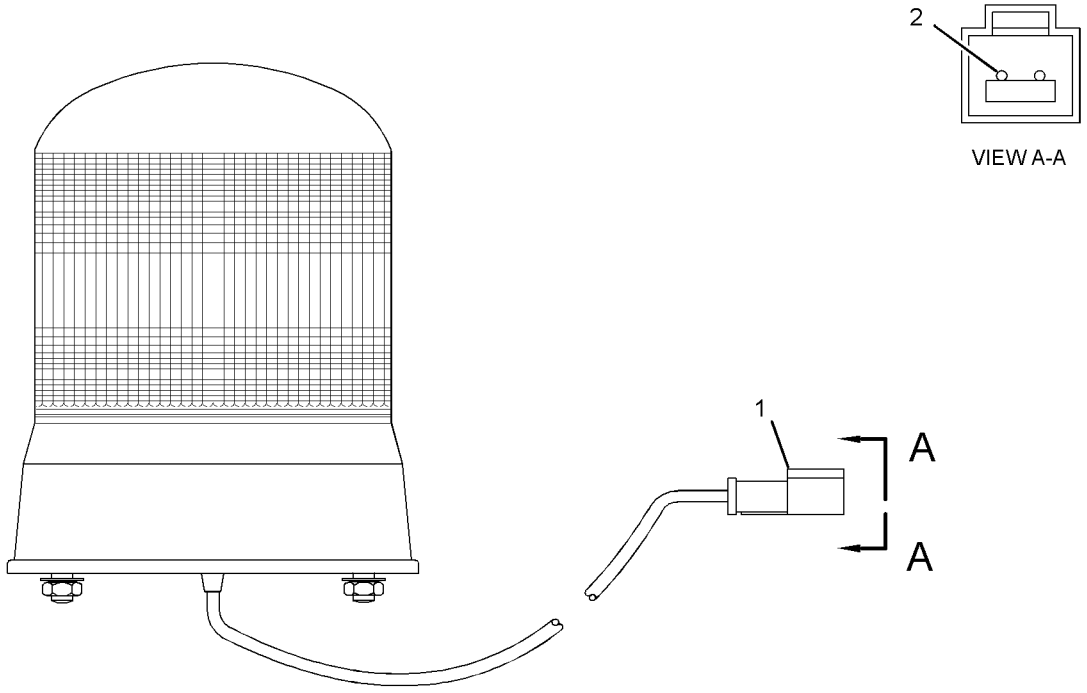

GRAPHIC #1 **<END>** g01373385

294-8547 LIGHTING AR-FLOOD

S/N: JPA1-UP
AN ATTACHMENT

SMCS-1434 **i03258646**

NOTE	PART NUMBER	QTY	PART NAME 1 2 3 4 5 6 (PRODUCT LEVEL)	SEE PAGE
Y	*284-5376*	1	LIGHTING GP-FLOOD	150
Y	*284-5362*	1	LIGHTING GP-FLOOD (RIPPER)	149

Y-SEPARATE ILLUSTRATION

<END>

294-8544 LIGHTING AR-ROADING

S/N: JPA1-UP
AN ATTACHMENT

SMCS-1408, 1429 **i03278662**

NOTE	PART NUMBER	QTY	PART NAME 1 2 3 4 5 6 (PRODUCT LEVEL)	SEE PAGE
Y	*284-5355*	1	LIGHTING GP-ROADING	155
Y	*284-5363*	1	LIGHTING GP-SIGNAL	156
Y	*294-8641*	1	SWITCH GP-LIGHT	190

Y-SEPARATE ILLUSTRATION

<END>

294-8545 LIGHTING AR-ROADING

S/N: JPA1-UP
AN ATTACHMENT

SMCS-1408, 1429 **i03254680**

NOTE	PART NUMBER	QTY	PART NAME 1 2 3 4 5 6 (PRODUCT LEVEL)	SEE PAGE
Y	*284-5355*	1	LIGHTING GP-ROADING	155
Y	*284-5354*	1	LIGHTING GP-FLOOD	147
Y	*284-5363*	1	LIGHTING GP-SIGNAL	156
Y	*294-8641*	1	SWITCH GP-LIGHT	190

Y-SEPARATE ILLUSTRATION

<END>

294-8546 LIGHTING AR-ROADING

S/N: JPA1-UP
AN ATTACHMENT

SMCS-1408, 1429 **i03259140**

NOTE	PART NUMBER	QTY	PART NAME 1 2 3 4 5 6 (PRODUCT LEVEL)	SEE PAGE
Y	*284-5353*	1	LIGHTING GP-ROADING	153
Y	*284-5363*	1	LIGHTING GP-SIGNAL	156

Y-SEPARATE ILLUSTRATION

<END>

284-5394 LIGHTING GP-BACKUP

S/N: JPA1-UP
AN ATTACHMENT

SMCS-1408 **i03261480**

NOTE	REF NO	GRAPHIC REF	PART NUMBER	QTY	PART NAME 1 2 3 4 5 6 (PRODUCT LEVEL)	SEE PAGE
	1	1	**3E-5239**	1	RELAY AS (24-VOLT) (BACKUP LIGHT)	
	2	1	**213-9100**	1	ALARM GP (BACKUP)	
		1	**102-8802**	1	KIT-RECEPTACLE (2-PIN)	
					(INCLUDES RECEPTACLE AS & WEDGE)	
D		1	**5P-5623**		WIRE-ELECTRICAL (16-GA, BLACK) (0.4-M EACH)	
		1	**186-3735**		PIN-CONNECTOR (16-GA TO 18-GA)	
E		1	**9X-1813**		SLEEVE (29-CM)	
	3	1	**304-5794**	1	BRACKET AS	
	4	1	**304-5795**	1	COVER	
	5	1	**130-5300**	3	CLIP	
Y	6	1	**171-5672**	2	LAMP GP (ENGINE COMPARTMENT LIGHTS)	133
M	7	1	**5C-2890**	6	NUT (M6X1-THD)	
	8	1	**7K-1181**	1	STRAP-CABLE	
	9	1	**7X-7729**	2	WASHER (11X25X3-MM THK)	
	10	1	**8T-4121**	4	WASHER-HARD (11X21X2.5-MM THK)	
M	11	1	**8T-4133**	2	NUT (M10X1.5-THD)	
M	12	1	**8T-4137**	2	BOLT (M10X1.5X20-MM)	
	13	1	**8T-4224**	6	WASHER-HARD (8.8X16X2-MM THK)	
M	14	1	**8T-4970**	1	BOLT (M6X1X14-MM)	
	15	1	**9X-8256**	1	WASHER (6.6X12X2-MM THK)	

D-ORDER BY THE METER
E-ORDER BY THE CENTIMETER
M-METRIC PART
Y-SEPARATE ILLUSTRATION

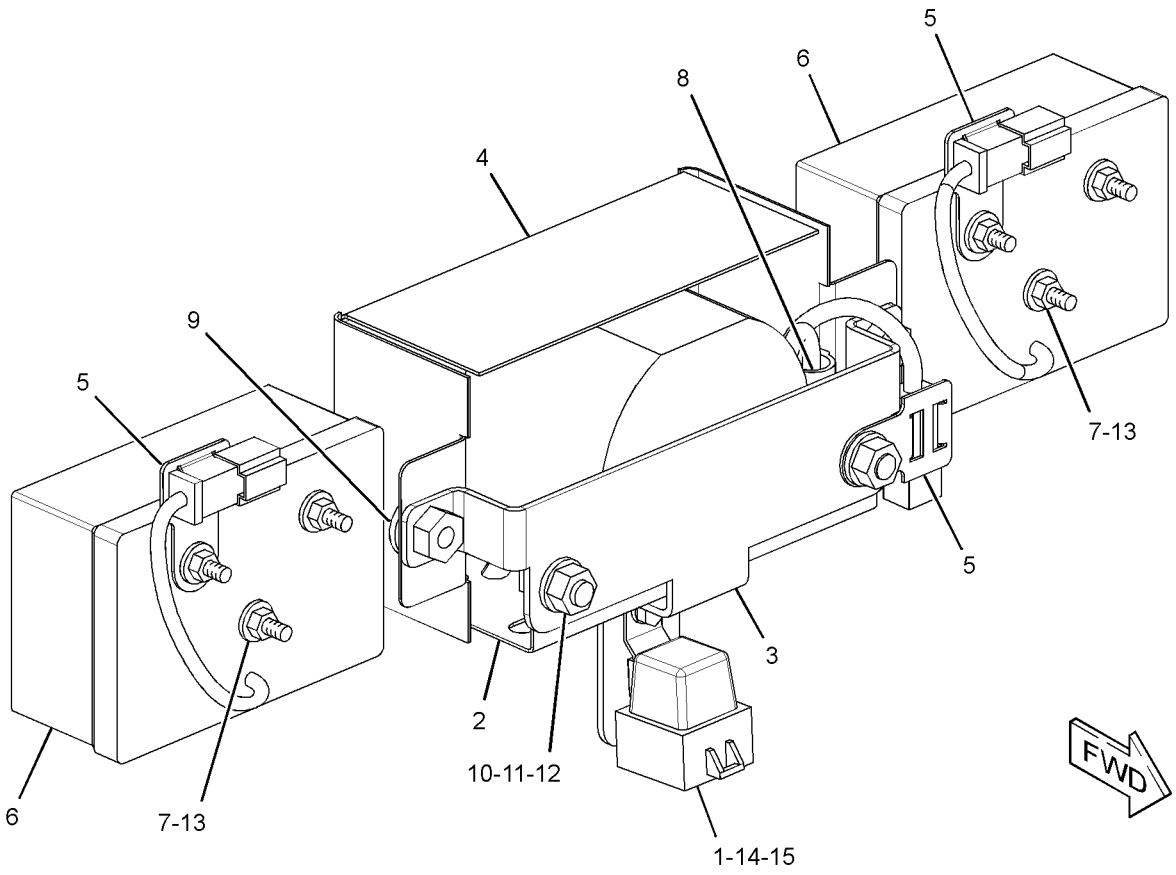

GRAPHIC #1 **<END>** g01683013

284-5354 LIGHTING GP-FLOOD–RIPPER

S/N: JPA1-UP
PART OF 294-8545 LIGHTING AR-ROADING
AN ATTACHMENT

SMCS-1434 **i03432180**

NOTE	REF NO	GRAPHIC REF	PART NUMBER	QTY	PART NAME 1 2 3 4 5 6 (PRODUCT LEVEL)	SEE PAGE
	1	1	**2G-0617**	2	CLAMP	
	2	1	**2G-0659**	2	BRACKET	
	3	1	**2G-0988**	2	CAP	
	4	1	**3K-9520**	3	GROMMET	
	5	1	**3S-2093**	4	STRAP-CABLE	
	6	1	**9W-1442**	1	FUSE (10-AMPERE)	
	7	1	**137-9410**	2	CLAMP	
	8	1	**179-1549**	1	TUBE	
	9	1	**179-1550**	2	CLAMP	
Y	10	1	**234-4323**	2	LAMP GP-FLOOD (24-VOLT)	135
	11	1	**336-0959**	1	HARNESS AS-LIGHTING	
	12	1	**336-0960**	1	HARNESS AS-FRONT LIGHTING	
	13	1	*123-5847*	1	SWITCH AS-ROCKER (24-VOLT) (AUXILIARY BACKUP LIGHTS)	
		1	**3E-8782**	1	ACTUATOR-ROCKER	
		1	**3E-8825**	1	LAMP (24-VOLT)	
		1	**3E-8766**	1	SWITCH AS (24-VOLT) (AUXILIARY BACKUP LIGHTS)	
	14	1	**5M-3062**	1	BOLT (3/8-16X0.75-IN)	
	15	1	**8M-2770**	2	CLIP	
	16	1	**8T-4121**	4	WASHER-HARD (11X21X2.5-MM THK)	
M	17	1	**8T-4133**	2	NUT (M10X1.5-THD)	
M	18	1	**8T-4136**	2	BOLT (M10X1.5X25-MM)	
	19	1	**8T-4223**	4	WASHER-HARD (13.5X25.5X3-MM THK)	
M	20	1	**8T-4244**	4	NUT (M12X1.75-THD)	
	21	1	**8T-4896**	1	WASHER-HARD (10.2X18.5X2.5-MM THK)	
M	22	1	**8T-5412**	4	BOLT (M12X1.75X140-MM)	
	23	1	**9M-8406**	2	CLIP	
E	24	1	**235-4765**		SEAL (4-CM)	

E-ORDER BY THE CENTIMETER
M-METRIC PART
Y-SEPARATE ILLUSTRATION

284-5354 **LIGHTING GP-FLOOD** *(contd.)* **i03432180**

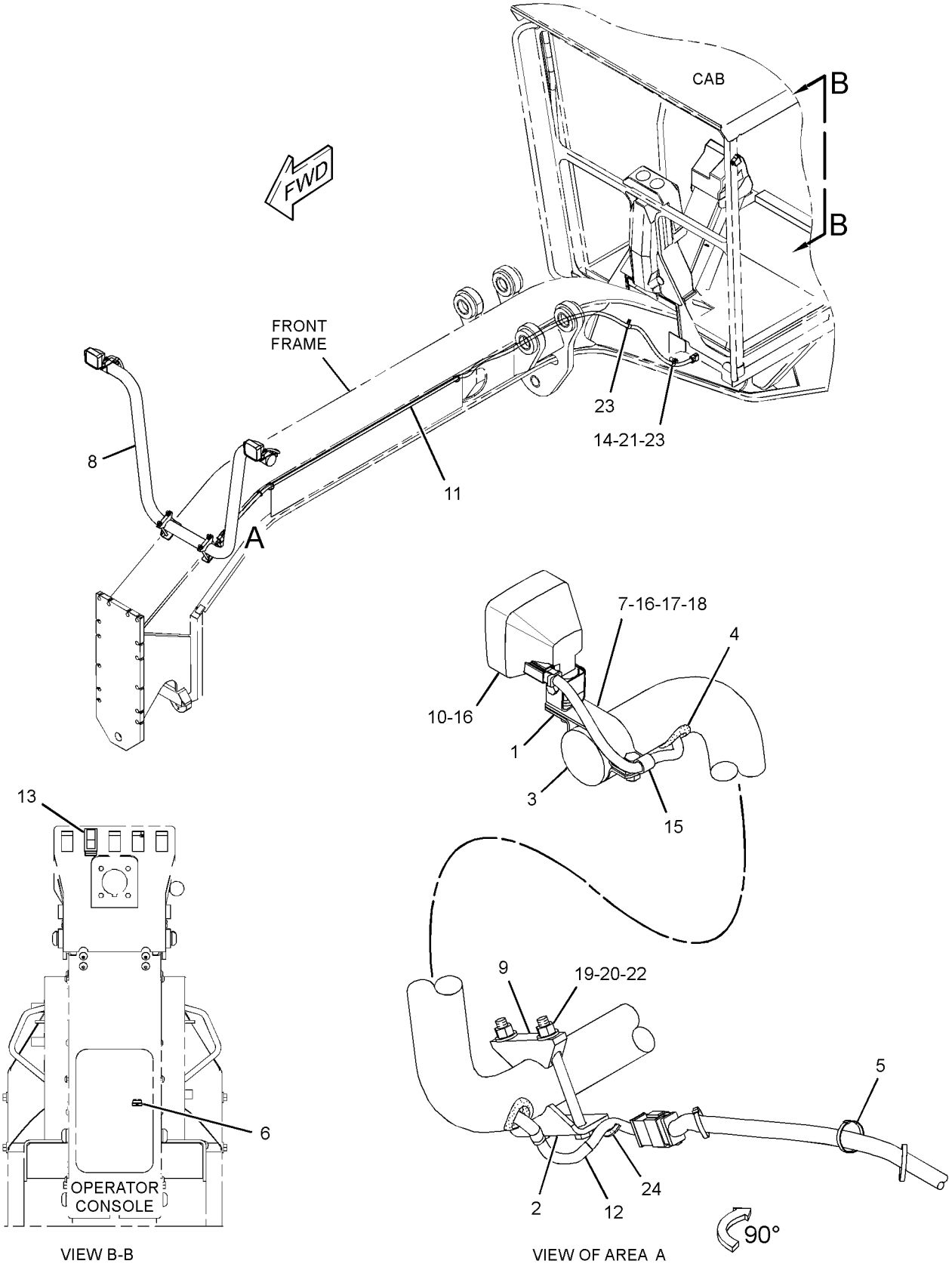

VIEW B-B

VIEW OF AREA A

GRAPHIC #1 **<END>** g01695116

ELECTRICAL AND STARTING SYSTEM

284-5362 LIGHTING GP-FLOOD

S/N: JPA1-UP
PART OF 294-8547 LIGHTING AR-FLOOD
AN ATTACHMENT

SMCS-1434 **i03258690**

NOTE	REF NO	GRAPHIC REF	PART NUMBER	QTY	PART NAME 1 2 3 4 5 6 (PRODUCT LEVEL)	SEE PAGE
	1	1	**9X-9365**	2	BRACKET	
Y	2	1	**234-4323**	2	LAMP GP-FLOOD (24-VOLT)	135
	3	1	**304-5880**	1	HARNESS AS-REAR LIGHTING	
	4	1	**6V-3265**	2	CLIP	
	5	1	**7G-7053**	2	GROMMET	
	6	1	**7K-1181**	9	STRAP-CABLE	
M	7	1	**8T-4195**	2	BOLT (M10X1.5X30-MM)	

M-METRIC PART
Y-SEPARATE ILLUSTRATION

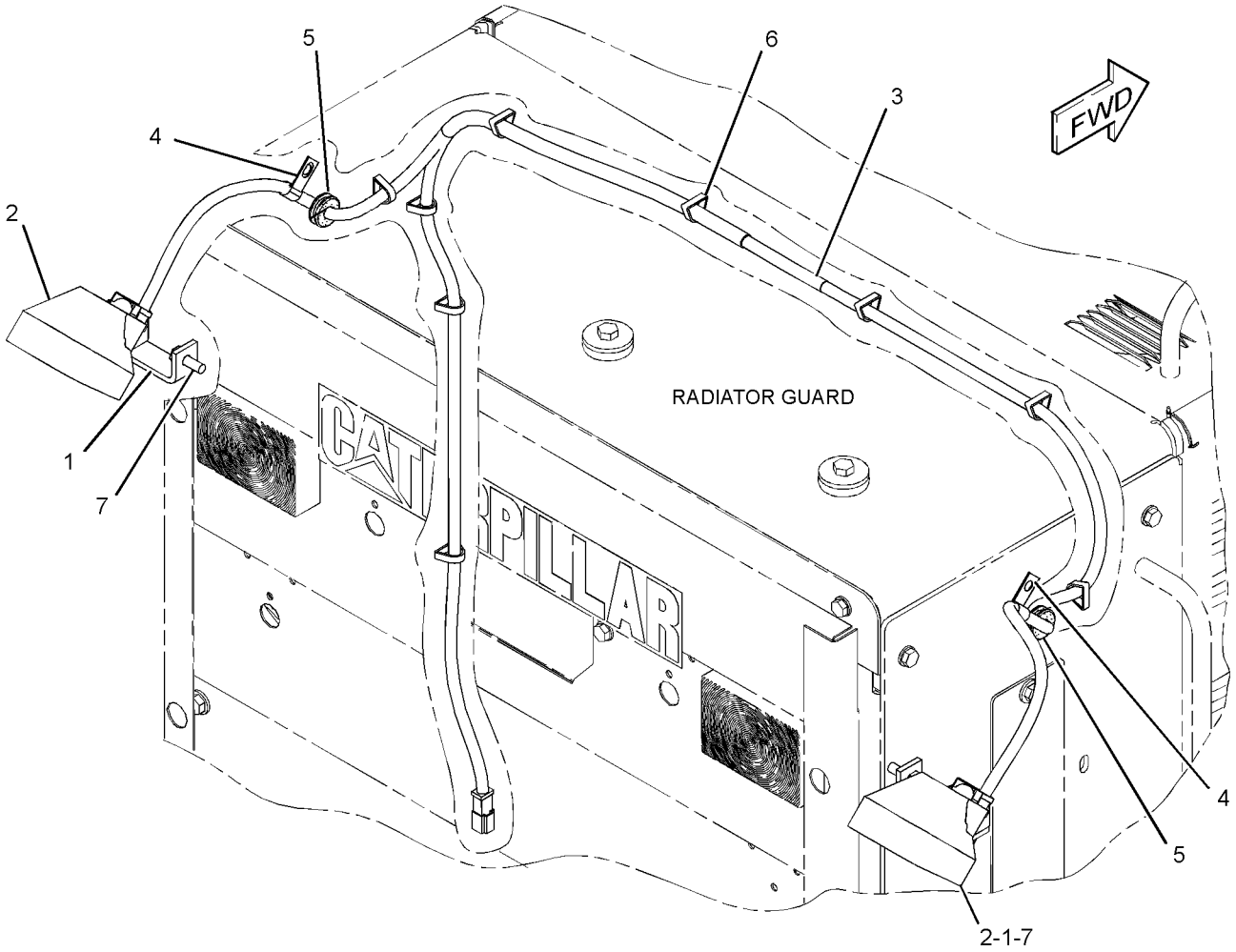

GRAPHIC #1 **<END>** g01755335

284-5376 LIGHTING GP-FLOOD—FRONT FRAME

S/N: JPA1-UP

PART OF 294-8547 LIGHTING AR-FLOOD

AN ATTACHMENT

SMCS-1434 **i03258421**

NOTE	REF NO	GRAPHIC REF	PART NUMBER	QTY	PART NAME 1 2 3 4 5 6 (PRODUCT LEVEL)	SEE PAGE
	1	1	**9L-1566**	2	SUPPORT	
	2	1	**9W-1441**	1	FUSE (15-AMPERE)	
	3	1	**9W-1442**	1	FUSE (10-AMPERE)	
	4	1	*9X-9632*	1	SWITCH AS-ROCKER (24-VOLT, SEALED, ILLUMINATED)	
		1	**3E-8772**	1	SWITCH-ROCKER (WORK LIGHTS)	
		1	**3E-8815**	1	ACTUATOR-ROCKER	
		1	**3E-8825**	2	LAMP (24-VOLT)	
Y	5	1	**234-4325**	2	LAMP GP-FLOOD (24-VOLT)	137
	6	1	**335-8402**	1	HARNESS AS-SOLENOID	
	7	1	**033-8248**	6	CLIP	
	8	1	**147-0385**	1	CLIP	
Y	9	1	**234-4323**	2	LAMP GP-FLOOD (24-VOLT)	135
	10	1	**5P-8167**	3	BOLT (3/8-16X0.625-IN)	
	11	1	**5S-7379**	2	BOLT (3/8-16X0.875-IN)	
	12	1	**7K-1181**	2	STRAP-CABLE	
	13	1	**8T-4121**	6	WASHER-HARD (11X21X2.5-MM THK)	
M	14	1	**8T-4133**	2	NUT (M10X1.5-THD)	
	15	1	**8T-4896**	3	WASHER-HARD (10.2X18.5X2.5-MM THK)	

M-METRIC PART
Y-SEPARATE ILLUSTRATION

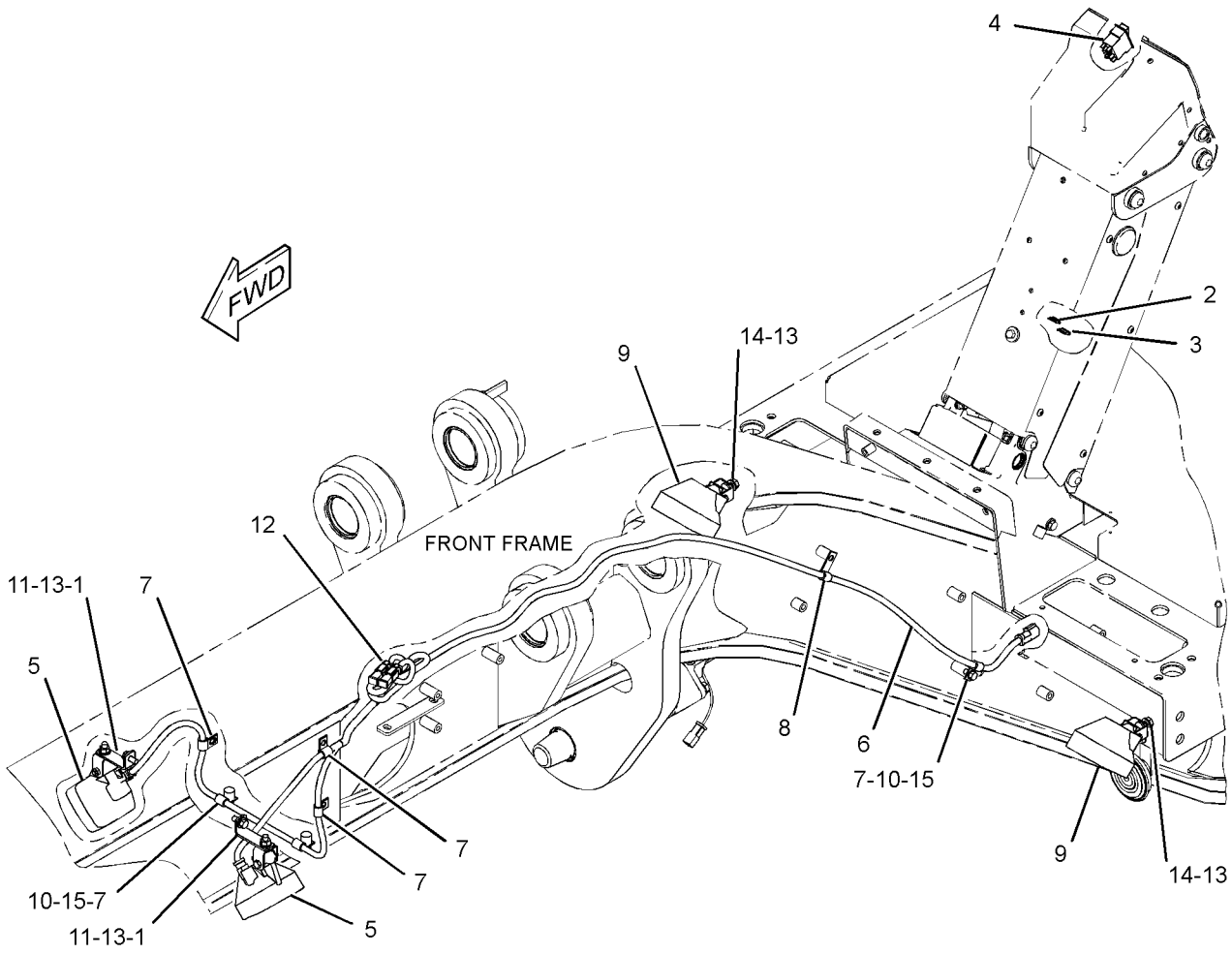

GRAPHIC #1 **<END>** g01754313

ELECTRICAL AND STARTING SYSTEM

284-5377 LIGHTING GP-FLOOD—SNOW WING

S/N: JPA1-UP
AN ATTACHMENT

SMCS-1434 **i03432142**

NOTE	REF NO	GRAPHIC REF	PART NUMBER	QTY	PART NAME 1 2 3 4 5 6 (PRODUCT LEVEL)	SEE PAGE
	1	1	**3E-0109**	5	PLUG (ROCKER SWITCH)	
	2	1	**3S-2093**	2	STRAP-CABLE	
	3	1	**9L-1566**	1	SUPPORT	
	4	1	**9W-1442**	1	FUSE (10-AMPERE)	
	5	1	**116-5710**	1	GROMMET	
	6	1	**145-3350**	1	PLATE	
	7	1	**153-2147**	1	PLATE	
	8	1	**168-8243**	1	HARNESS AS-PANEL (SWITCH)	
	9	1	**336-4099**	1	HARNESS AS-FRONT LIGHTING	
	10	1	**172-6556**	1	PANEL	
	11	1	**188-3862**	1	BRACKET AS	
Y	12	1	**234-4323**	1	LAMP GP-FLOOD (24-VOLT)	135
	13	1	*123-5847*	1	SWITCH AS-ROCKER (24-VOLT) (FLOODLIGHT, RH)	
		1	**3E-8766**	1	SWITCH AS (24-VOLT) (FLOODLIGHT, RH)	
		1	**3E-8782**	1	ACTUATOR-ROCKER	
		1	**3E-8825**	1	LAMP (24-VOLT)	
	14	1	**5P-8525**	1	GROMMET	
	15	1	**8T-4121**	1	WASHER-HARD (11X21X2.5-MM THK)	
M	16	1	**9X-2043**	6	SCREW-TRUSS HEAD (M6X1X14-MM)	

M-METRIC PART
Y-SEPARATE ILLUSTRATION

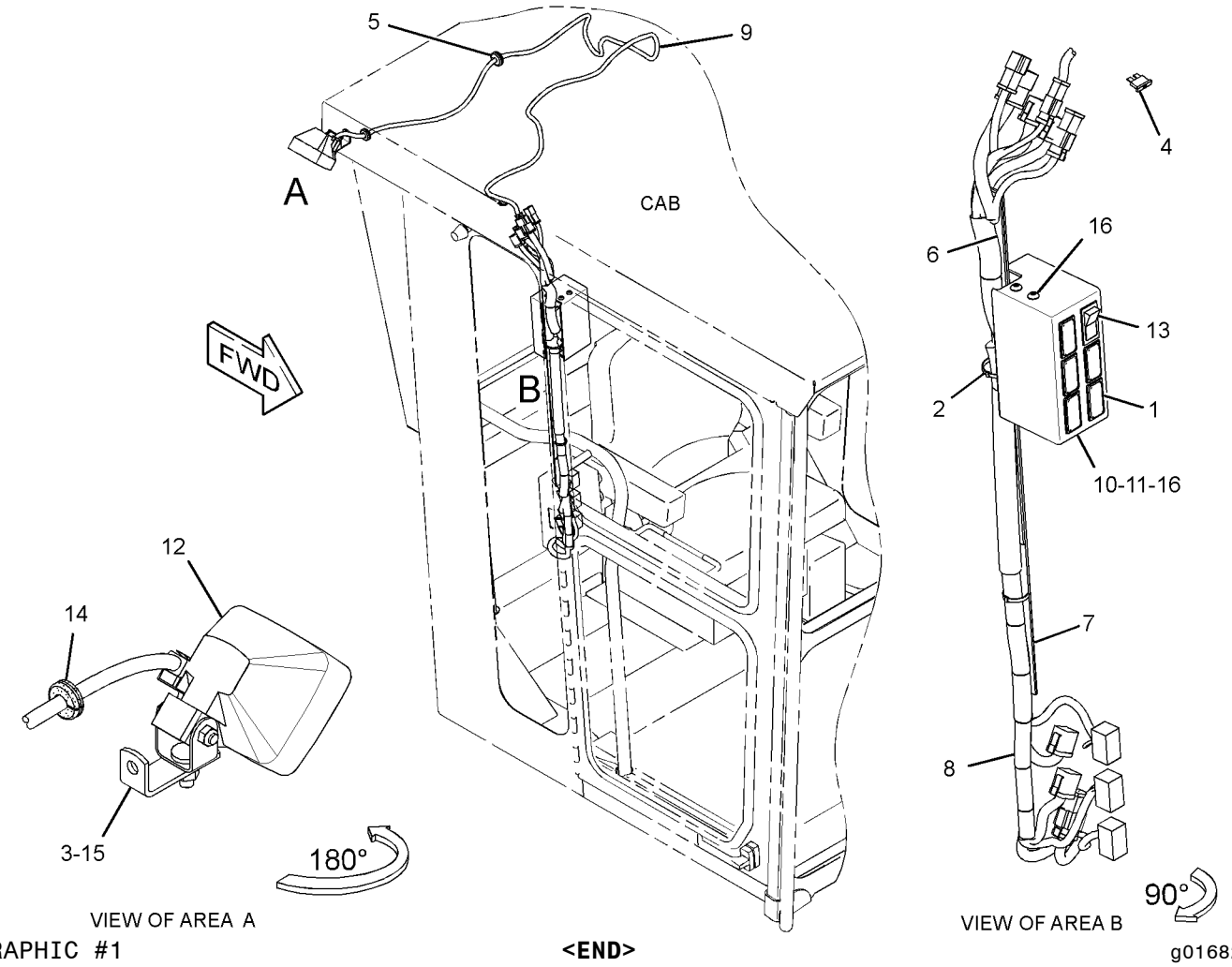

GRAPHIC #1

<END>

g01682333

ELECTRICAL AND STARTING SYSTEM

284-5353 LIGHTING GP-ROADING

S/N: JPA1-UP
PART OF 294-8546 LIGHTING AR-ROADING
AN ATTACHMENT

SMCS-1429 **i03432040**

NOTE	REF NO	GRAPHIC REF	PART NUMBER	QTY	PART NAME 1 2 3 4 5 6 (PRODUCT LEVEL)	SEE PAGE
	1	1	**2G-0617**	4	CLAMP	
	2	1	**2G-0659**	2	BRACKET	
	3	1	**2G-0988**	2	CAP	
	4	1	**3K-9520**	3	GROMMET	
	5	1	**5T-9313**	1	TUBE	
	6	1	**8X-5153**	1	FILM-FACE (TURN SIGNAL, HAZARD)	
	7	1	**8X-5154**	1	FILM-FACE (HEADLIGHTS HIGH, LOW BEAM)	
	8	1	**9W-1441**	1	FUSE (15-AMPERE)	
	9	1	**9W-1442**	1	FUSE (10-AMPERE)	
	10	1	**103-1592**	2	PLATE	
	11	1	**108-0358**	1	FLASHER AS (24-VOLT)	
Y	12	1	**135-0427**	2	LAMP GP-SIGNAL (24-VOLT, PARK, TURN)	140
	13	1	**137-9410**	4	CLAMP	
	14	1	**173-3064**	1	SWITCH GP-ROTARY (TURN SIGNAL, HAZARD)	
		1	**5L-7200**	1	SCREW (8-32X0.375-IN)	
		1	**9B-7233**	1	LOCKWASHER	
	15	1	**179-1550**	2	CLAMP	
Y	16	1	**234-4323**	2	LAMP GP-FLOOD (24-VOLT)	135
Y	17	1	**234-4324**	2	LAMP GP-FLOOD (24-VOLT)	136
	18	1	**336-0959**	1	HARNESS AS-LIGHTING	
	19	1	**336-0961**	1	HARNESS AS-LIGHTING	
	20	1	**103-5678**	1	SWITCH AS-ROTARY	
		1	**5L-7200**	1	SCREW (8-32X0.375-IN)	
		1	**9B-7233**	1	LOCKWASHER	
	21	1	**130-5300**	2	CLIP	
	22	1	*3E-9317*	1	SWITCH AS-ROCKER (24-VOLT) (HEADLIGHTS, TAIL LIGHTS)	
		1	**3E-8772**	1	SWITCH-ROCKER (HEADLIGHTS, TAIL LIGHTS)	
		1	**3E-8825**	2	LAMP (24-VOLT) (HEADLIGHTS, TAIL LIGHTS)	
		1	**3E-9326**	1	ACTUATOR-ROCKER	
	23	1	**4D-7794**	4	CLIP	
	24	1	**4K-8864**	2	CLIP	
	25	1	**4L-6454**	4	BOLT (3/8-16X1-IN)	
M	26	1	**5C-2890**	8	NUT (M6X1-THD)	
	27	1	**5M-3062**	1	BOLT (3/8-16X0.75-IN)	
	28	1	**6V-8801**	4	NUT (3/8-16-THD)	
	29	1	**7K-1181**	4	STRAP-CABLE	
	30	1	**8T-4205**	8	WASHER-HARD (7.2X14.5X2-MM THK)	
	31	1	**8T-4223**	4	WASHER-HARD (13.5X25.5X3-MM THK)	
M	32	1	**8T-4244**	4	NUT (M12X1.75-THD)	
	33	1	**8T-4896**	5	WASHER-HARD (10.2X18.5X2.5-MM THK)	
M	34	1	**8T-5412**	4	BOLT (M12X1.75X140-MM)	
	35	1	**8X-6296**	2	LEVER	
M	36	1	**9X-2043**	2	SCREW-TRUSS HEAD (M6X1X14-MM)	

M-METRIC PART
Y-SEPARATE ILLUSTRATION

284-5353 **LIGHTING GP-ROADING** *(contd.)* **i03432040**

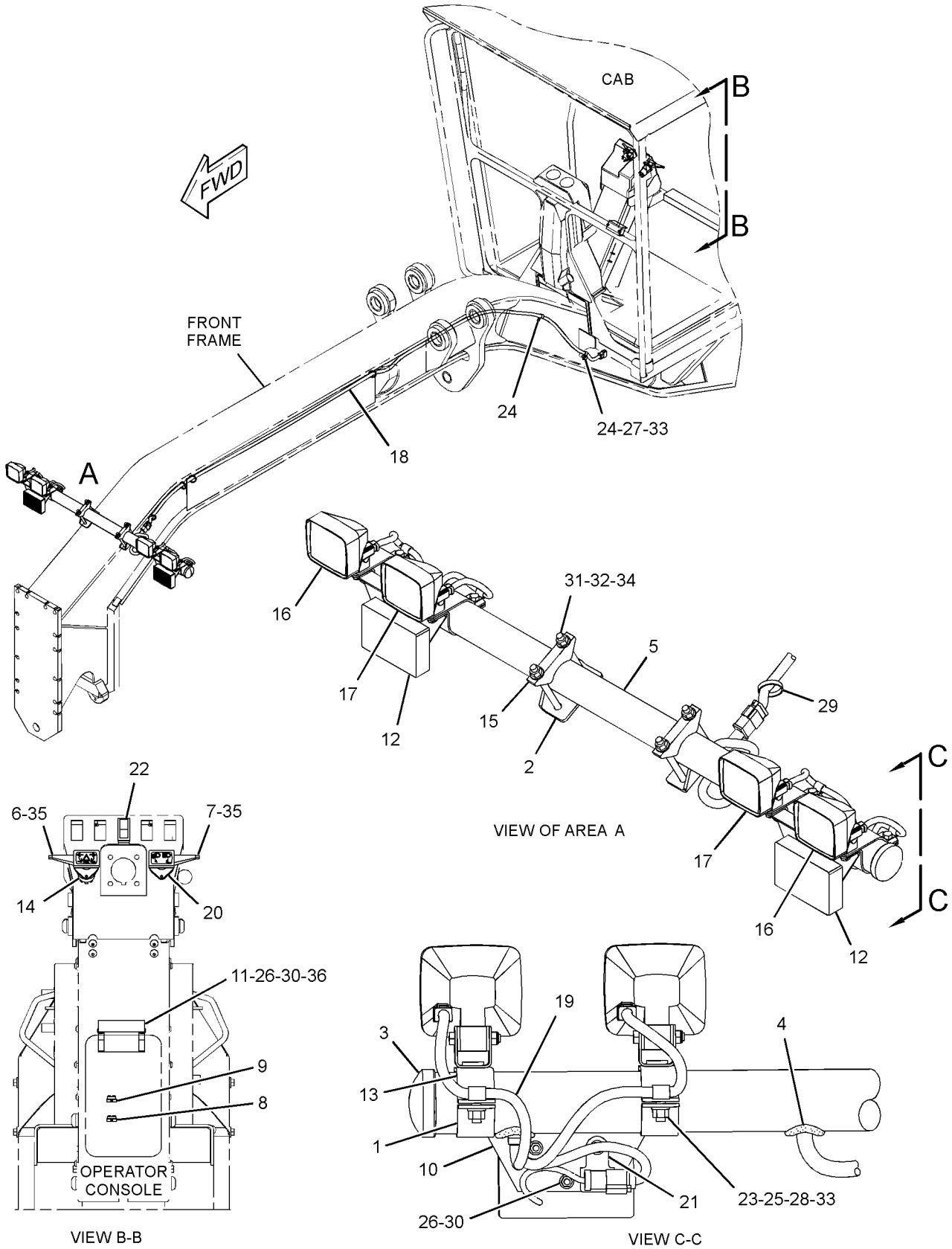

GRAPHIC #1

<END>

g01687683

284-5355 LIGHTING GP-ROADING–FRONT

S/N: JPA1-UP
PART OF 294-8544, 294-8545 LIGHTING AR-ROADING
AN ATTACHMENT

SMCS-1429 **i03254700**

NOTE	REF NO	GRAPHIC REF	PART NUMBER	QTY	PART NAME 1 2 3 4 5 6 (PRODUCT LEVEL)	SEE PAGE
Y	1	1	**135-0427**	1	LAMP GP-SIGNAL (24-VOLT, PARK, TURN) (LH)	140
Y	1A	1	**135-0427**	1	LAMP GP-SIGNAL (24-VOLT, PARK, TURN) (RH)	140
	2	1	**193-7416**	2	PLATE AS	
Y	3	1	**234-4325**	1	LAMP GP-FLOOD (24-VOLT) (LOW BEAM, LH)	137
Y	3A	1	**234-4325**	1	LAMP GP-FLOOD (24-VOLT) (LOW BEAM, RH)	137
Y	4	1	**234-4326**	1	LAMP GP-FLOOD (24-VOLT) (HIGH BEAM, LH)	138
Y	4A	1	**234-4326**	1	LAMP GP-FLOOD (24-VOLT) (HIGH BEAM, RH)	138
	5	1	**130-5300**	2	CLIP	
M	6	1	**5C-2890**	6	NUT (M6X1-THD)	
	7	1	**8T-4121**	8	WASHER-HARD (11X21X2.5-MM THK)	
M	8	1	**8T-4137**	4	BOLT (M10X1.5X20-MM)	
	9	1	**8T-4205**	6	WASHER-HARD (7.2X14.5X2-MM THK)	
	10	1	**9D-3768**	2	GROMMET	
	11	1	**9G-1307**	2	GROMMET	

M-METRIC PART
Y-SEPARATE ILLUSTRATION

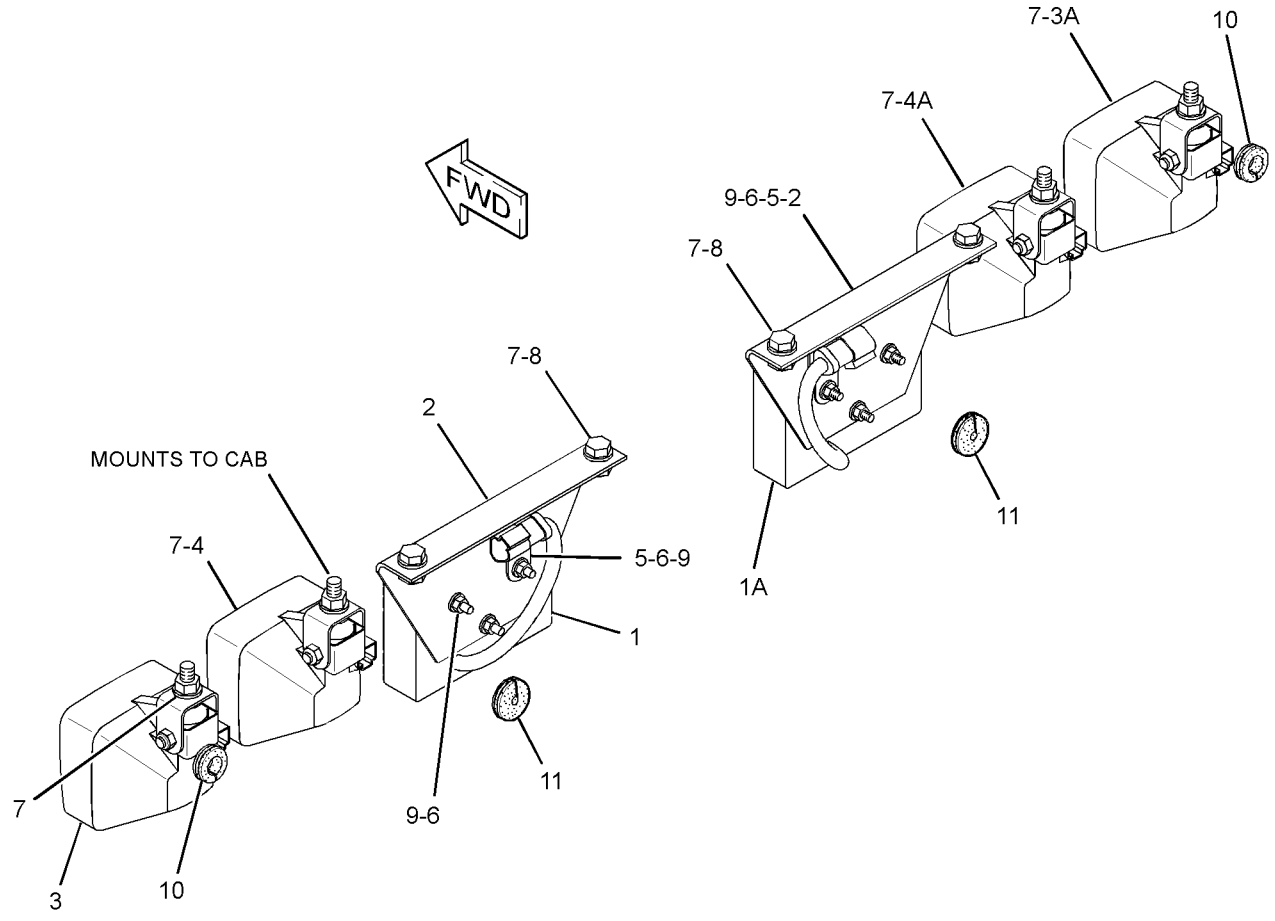

GRAPHIC #1 **<END>** g01703493

284-5363 LIGHTING GP-SIGNAL–REAR TURN

S/N: JPA1-UP

PART OF 294-8544, 294-8545, 294-8546 LIGHTING AR-ROADING AN ATTACHMENT

SMCS-1430 **i03254704**

NOTE	REF NO	GRAPHIC REF	PART NUMBER	QTY	PART NAME 1 2 3 4 5 6 (PRODUCT LEVEL)	SEE PAGE
	1	1	**130-5300**	2	CLIP	
Y	2	1	**199-3368**	1	LAMP GP-SIGNAL (24-VOLT, TURN) (LH)	141
Y	2A	1	**199-3368**	1	LAMP GP-SIGNAL (24-VOLT, TURN) (RH)	141
M	3	1	**5C-2890**	6	NUT (M6X1-THD)	
	4	1	**8T-4205**	6	WASHER-HARD (7.2X14.5X2-MM THK)	

M-METRIC PART
Y-SEPARATE ILLUSTRATION

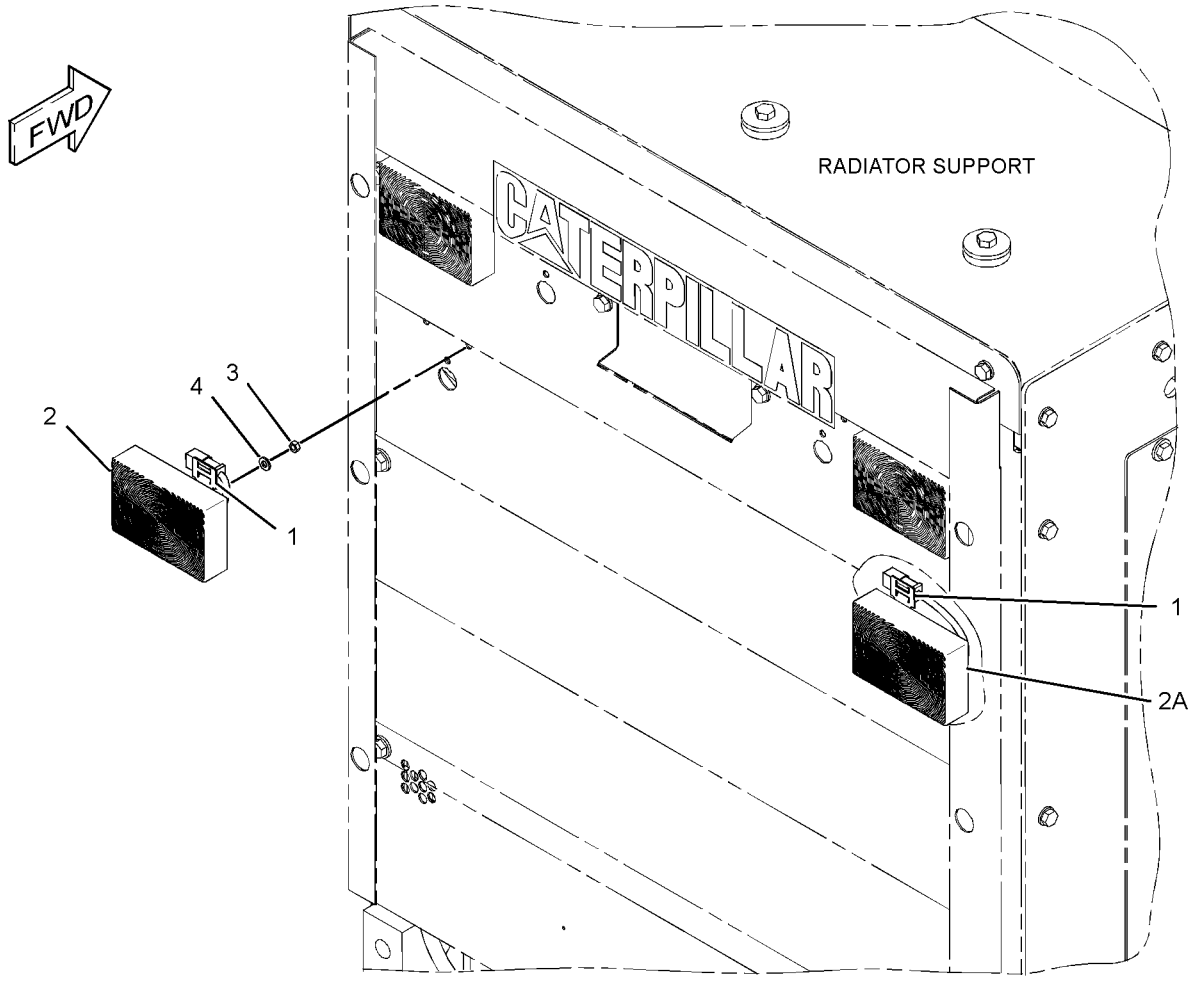

GRAPHIC #1 **<END>** g01705434

ELECTRICAL AND STARTING SYSTEM

284-5357 LIGHTING GP-WARNING

S/N: JPA1-UP
AN ATTACHMENT

SMCS-1429, 1431 **i03258413**

NOTE	REF NO	GRAPHIC REF	PART NUMBER	QTY	PART NAME 1 2 3 4 5 6 (PRODUCT LEVEL)	SEE PAGE
	1	1	**3S-2093**	1	STRAP-CABLE	
	2	1	**9W-1442**	1	FUSE (10-AMPERE)	
	3	1	**107-4932**	1	PLATE AS	
Y	4	1	**235-3937**	1	LAMP GP-WARNING BEACON (24-VOLT, AMBER)	142
	5	1	**130-5300**	1	CLIP	
	6	1	**5P-8525**	1	GROMMET	
	7	1	**8T-4121**	2	WASHER-HARD (11X21X2.5-MM THK)	
M	8	1	**8T-4136**	2	BOLT (M10X1.5X25-MM)	
	9	1	*9X-9639*	1	SWITCH AS-ROCKER (24-VOLT) (WARNING BEACON)	
		1	**3E-8822**	1	ACTUATOR-ROCKER	
		1	**3E-8825**	1	LAMP (24-VOLT)	
		1	**102-9862**	1	SWITCH AS	

M-METRIC PART
Y-SEPARATE ILLUSTRATION

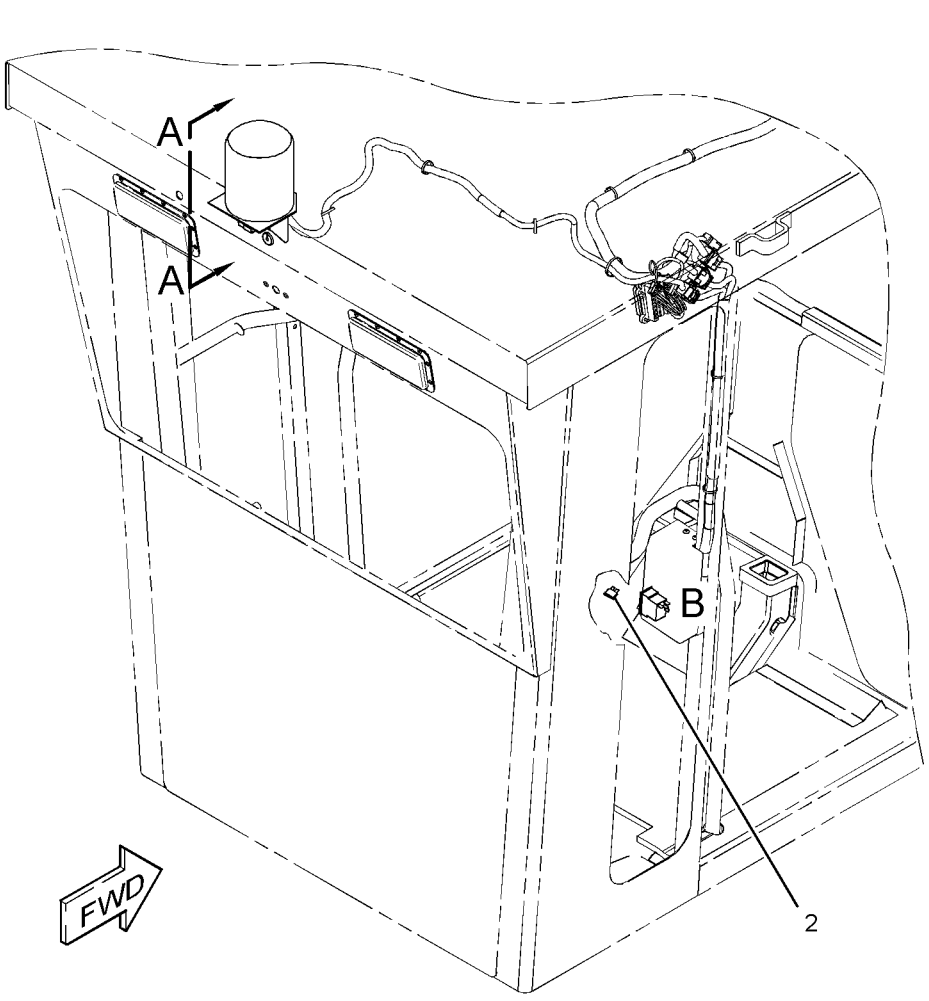

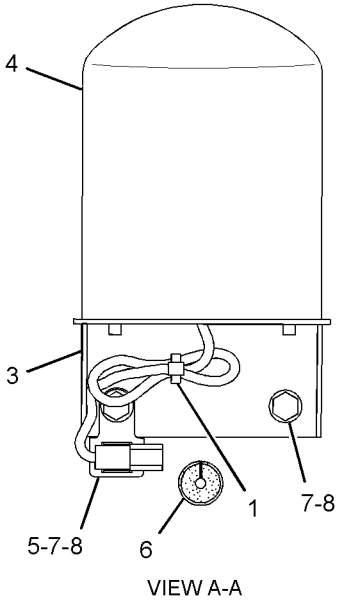

VIEW A-A

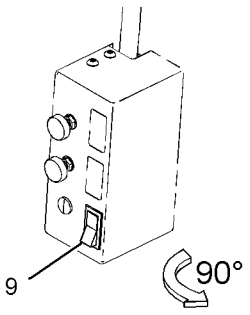

VIEW OF AREA B

GRAPHIC #1

<END>

g01686573

ELECTRICAL AND STARTING SYSTEM

286-4430 LIGHTING GP-WARNING BEACON

S/N: JPA1-UP

AN ATTACHMENT

SMCS-1431 **i03432022**

NOTE	REF NO	GRAPHIC REF	PART NUMBER	QTY	PART NAME 1 2 3 4 5 6 (PRODUCT LEVEL)	SEE PAGE
	1	1	**3S-2093**	6	STRAP-CABLE	
	2	1	**9W-1442**	1	FUSE (10-AMPERE)	
	3	1	**107-4932**	1	PLATE AS	
	4	1	**336-2259**	1	HARNESS AS-FRONT LIGHTING	
	5	1	**173-1885**	1	COVER	
Y	6	1	**235-3937**	1	LAMP GP-WARNING BEACON (24-VOLT, AMBER)	142
	7	1	**115-3070**	1	CLIP AS-CONNECT (4-PIN)	
		1	**8C-3334**	1	RIVET-TUBULAR	
	8	1	**130-5300**	1	CLIP	
	9	1	**5P-8525**	1	GROMMET	
	10	1	**8T-4121**	2	WASHER-HARD (11X21X2.5-MM THK)	
M	11	1	**8T-4136**	2	BOLT (M10X1.5X25-MM)	
	12	1	**9D-8508**	1	GROMMET	
M	13	1	**9X-2043**	2	SCREW-TRUSS HEAD (M6X1X14-MM)	
	14	1	*9X-9639*	1	SWITCH AS-ROCKER (24-VOLT) (WARNING BEACON)	
		1	**3E-8822**	1	ACTUATOR-ROCKER	
		1	**3E-8825**	1	LAMP (24-VOLT)	
		1	**102-9862**	1	SWITCH AS	

M-METRIC PART
Y-SEPARATE ILLUSTRATION

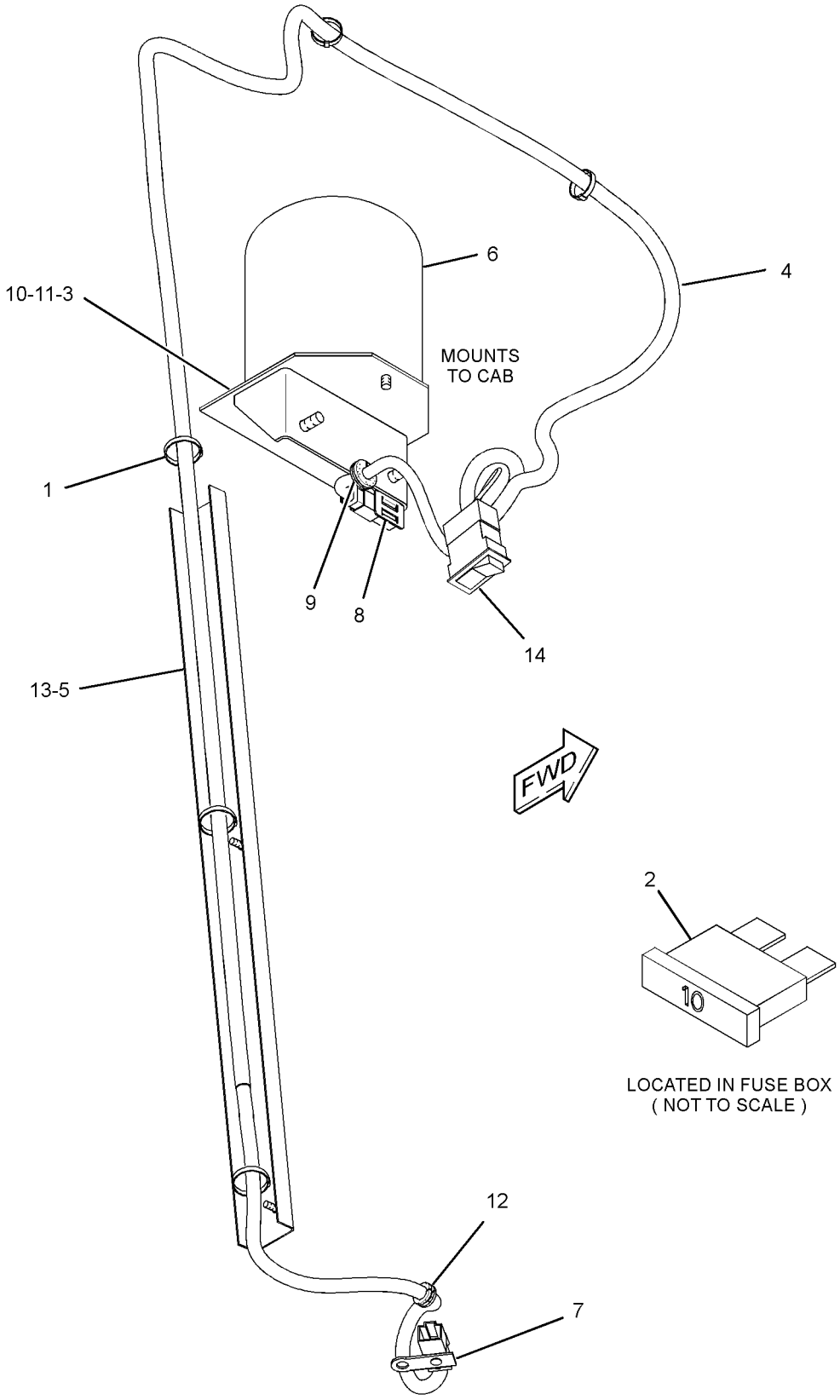

GRAPHIC #1 **<END>** g01673474

170-5335 MOTOR GP-ELECTRIC—CIRCULATING FAN

S/N: JPA1-UP
24-VOLT
PART OF 170-4820, 170-5334 FAN GP-CIRCULATING
AN ATTACHMENT

SMCS-5927 **i02463158**

NOTE	REF NO	GRAPHIC REF	PART NUMBER	QTY	PART NAME 1 2 3 4 5 6 (PRODUCT LEVEL)	SEE PAGE
	1	1	**102-8802**	1	KIT-RECEPTACLE (2-PIN)	
					(INCLUDES RECEPTACLE AS & WEDGE)	
	2	1	**9W-0852**	2	PIN-CONNECTOR (14-GA)	

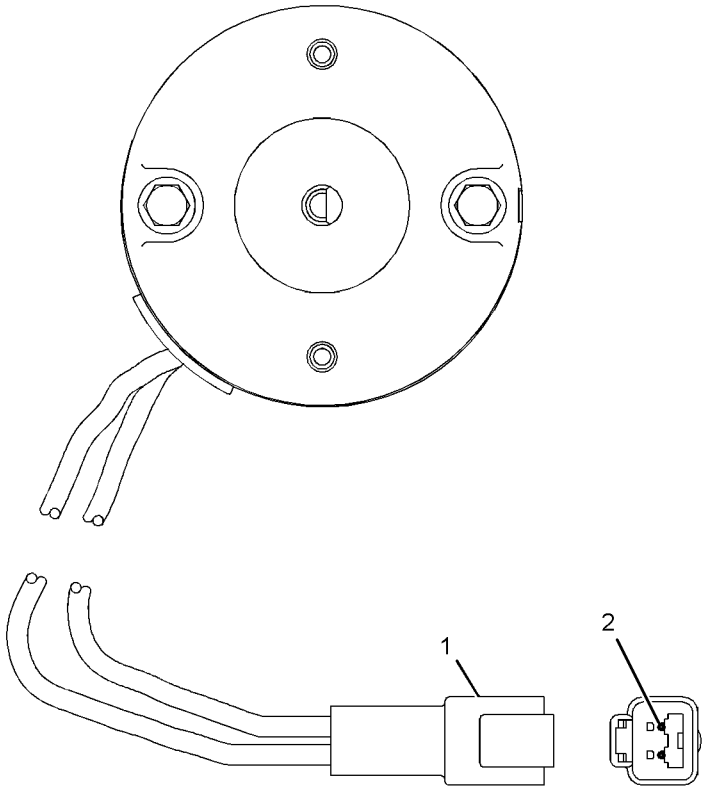

GRAPHIC #1 **<END>** g01240075

247-6449 MOUNTING GP-GRADE CONTROL

S/N: JPA1-UP

PART OF 297-8448 GRADE CONTROL AR

AN ATTACHMENT

SMCS-7220 **i02389804**

NOTE	PART NUMBER	QTY	PART NAME 1 2 3 4 5 6 (PRODUCT LEVEL)	SEE PAGE
	269-9322	1	DRAWBAR AS	
	8X-7951	1	DRAWBAR & YOKE AS	
	5T-6775	2	REINFORCEMENT	
	8F-9836	12	BOSS (3/8-16-THD)	
	8X-7956	1	SHAFT AS	

<END>

ELECTRICAL AND STARTING SYSTEM

254-5960 MOUNTING GP-GRADE CONTROL

S/N: JPA1-UP
PART OF 297-8448 GRADE CONTROL AR
AN ATTACHMENT

SMCS-7220 **i02457278**

NOTE	REF NO	GRAPHIC REF	PART NUMBER	QTY	PART NAME 1 2 3 4 5 6 (PRODUCT LEVEL)	SEE PAGE
	1	1	**187-7738**	2	WASHER-HARD (21X36.5X3.5-MM THK)	
	2	1	**236-1927**	1	BRACKET AS	
	3	1	**251-2382**	1	BOSS	
M	4	1	**9C-8895**	1	BOSS-TAPPED (M10X1.5-THD)	
Y	5	1	**153-9360**	1	CIRCLE GP	589

M-METRIC PART
Y-SEPARATE ILLUSTRATION

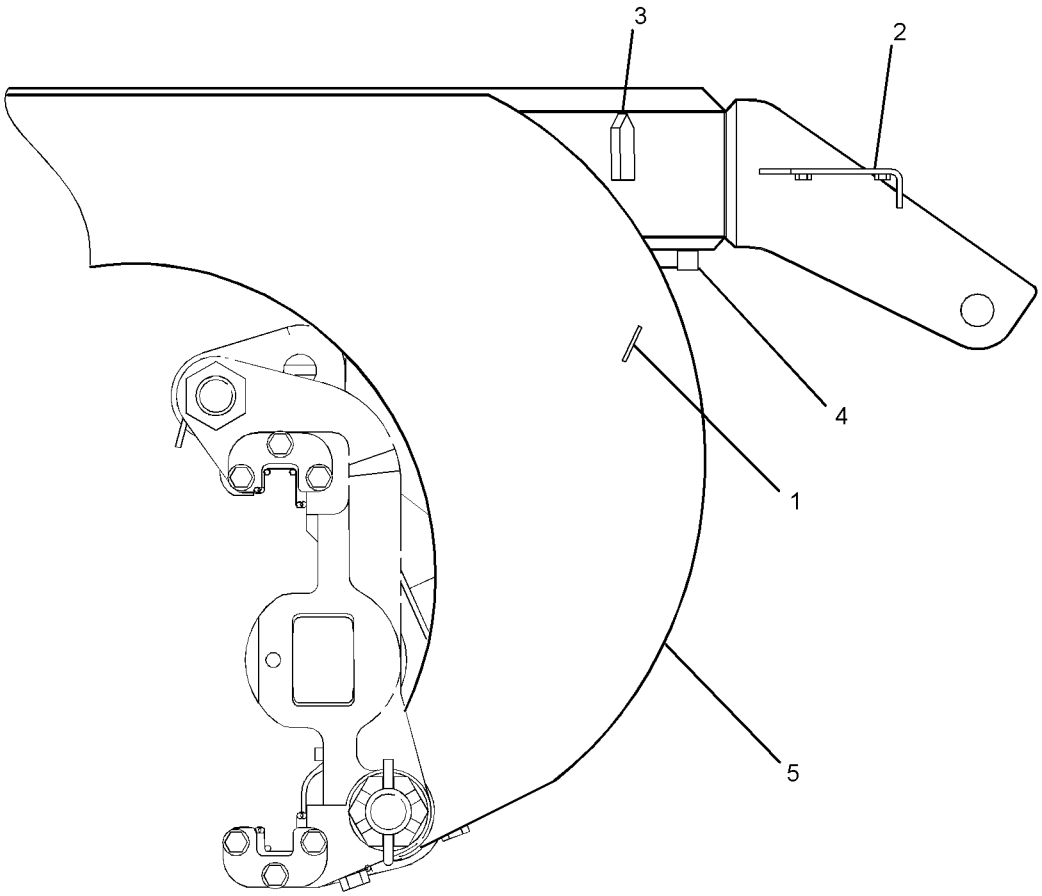

LEFT SIDE VIEW

GRAPHIC #1 **<END>** g01241625

235-8200 PLUG GP-CONNECTOR–
ENGINE HARNESS, PROTECTIVE COVER
S/N: KHX8814-UP
PART OF 312-0255 ENGINE AR-COMPLETE

SMCS-1403, 1408 **i02951921**

NOTE	REF NO	GRAPHIC REF	PART NUMBER	QTY	PART NAME 1 2 3 4 5 6 (PRODUCT LEVEL)	SEE PAGE
	1	1	**246-9353**	1	PLUG AS	
	1A	1	**8T-8737**	8	PLUG-SEAL	
	1B	1	**102-8806**	1	KIT-RECEPTACLE (8-PIN)	
					(INCLUDES RECEPTACLE AS & WEDGE)	
	2	1	**3S-2093**	1	STRAP-CABLE	

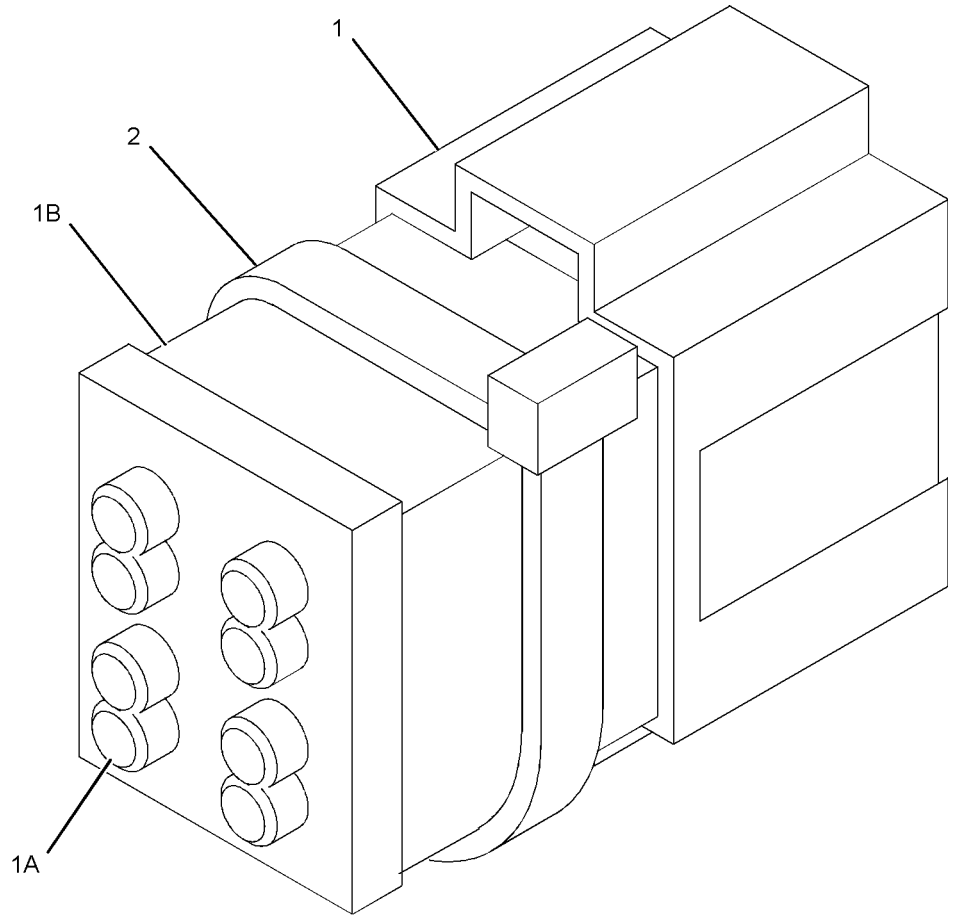

GRAPHIC #1 **<END>** g01105455

263-9088 RADIO GP-COMMUNICATION—PRODUCT LINK 121SR

S/N: JPA1-UP

PART OF 302-5429 INSTALLATION AR-COMMUNICATION

AN ATTACHMENT

SMCS-733T **i03194501**

NOTE	PART NUMBER	QTY	PART NAME 1 2 3 4 5 6 (PRODUCT LEVEL)	SEE PAGE
	330-3408	1	SOFTWARE GP-COMMUNICATION (PRODUCT LINK 121SR)	

<END>

297-5355 SENSOR GP-ENGINE

S/N: KHX8814-UP

PART OF 312-0255 ENGINE AR-COMPLETE

SMCS-1052, 1087, 1439, 1906, 1912, 1917, 1923, 1924, 1925

i02789817

NOTE	REF NO	GRAPHIC REF	PART NUMBER	QTY	PART NAME 1 2 3 4 5 6 (PRODUCT LEVEL)	SEE PAGE
	1	1	**9X-0262**	1	ADAPTER	
	2	1	**9X-8403**	1	ELBOW	
Y	3	1	*197-8393*	1	SENSOR GP-PRESSURE (ATMOSPHERIC)	170
Y	4	1	*197-8394*	1	SENSOR GP-PRESSURE (ENGINE OIL)	171
Y	5	1	*210-1747*	1	SENSOR GP-PRESSURE (BOOST)	172
Y	6	1	*236-6220*	1	SENSOR GP-PRESSURE (RAIL)	174
Y	7	1	*236-6221*	1	SENSOR GP-SPEED (ENGINE TIMING)	176
Y	8	1	*274-7395*	1	SENSOR GP-TEMPERATURE (AIR INLET MANIFOLD)	180
Y	9	1	*274-7396*	1	SENSOR GP-TEMPERATURE (ENGINE COOLANT)	181
	10	1	*169-5861*	1	PLUG AS	
		1	**3K-8460**	1	PLUG	
		1	**5P-7814**	1	SEAL-O-RING	
	11	1	*183-3406*	1	PLUG AS	
		1	**6V-5049**	1	SEAL-O-RING	
		1	**9S-4191**	1	PLUG-O-RING	
	12	1	*183-7263*	1	PLUG AS	
		1	**3J-7354**	1	SEAL-O-RING	
		1	**9S-8002**	1	PLUG-O-RING	
	13	1	**3E-4352**	1	WASHER-HARD (8.8X20.5X2.5-MM THK)	
M	14	1	**6V-3940**	1	BOLT (M8X1.25X25-MM)	
	15	1	**6V-5048**	2	SEAL-O-RING	
	16	1	**6V-5049**	1	SEAL-O-RING	
	17	1	**8T-2353**	1	ADAPTER	

M-METRIC PART
Y-SEPARATE ILLUSTRATION

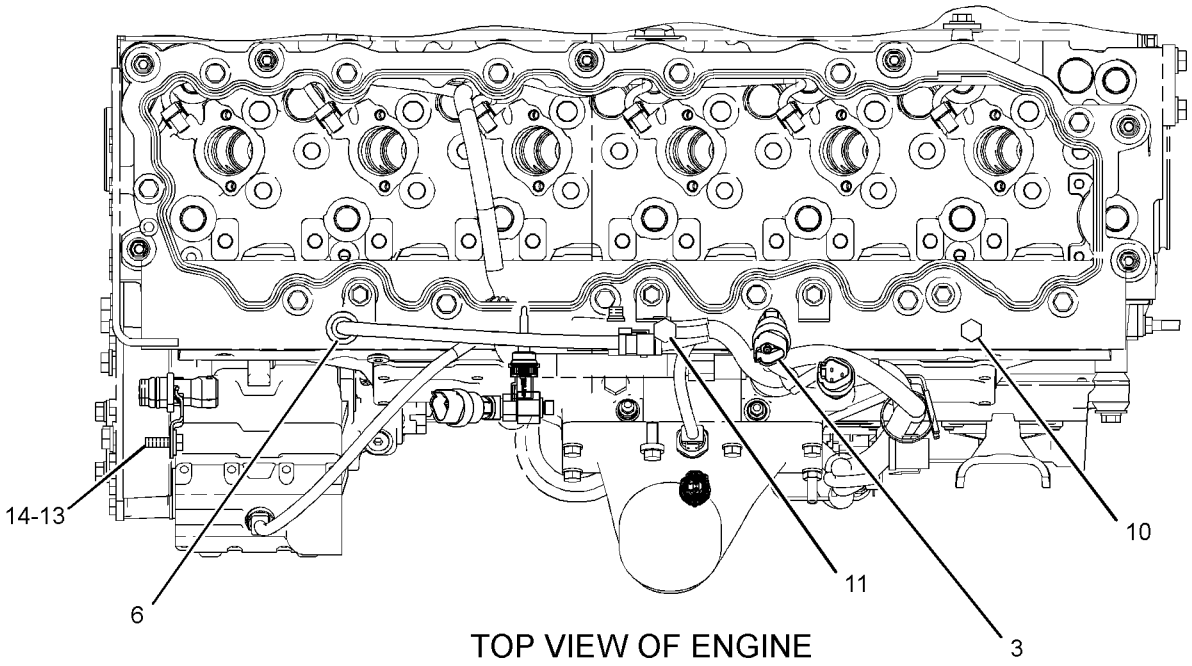

TOP VIEW OF ENGINE

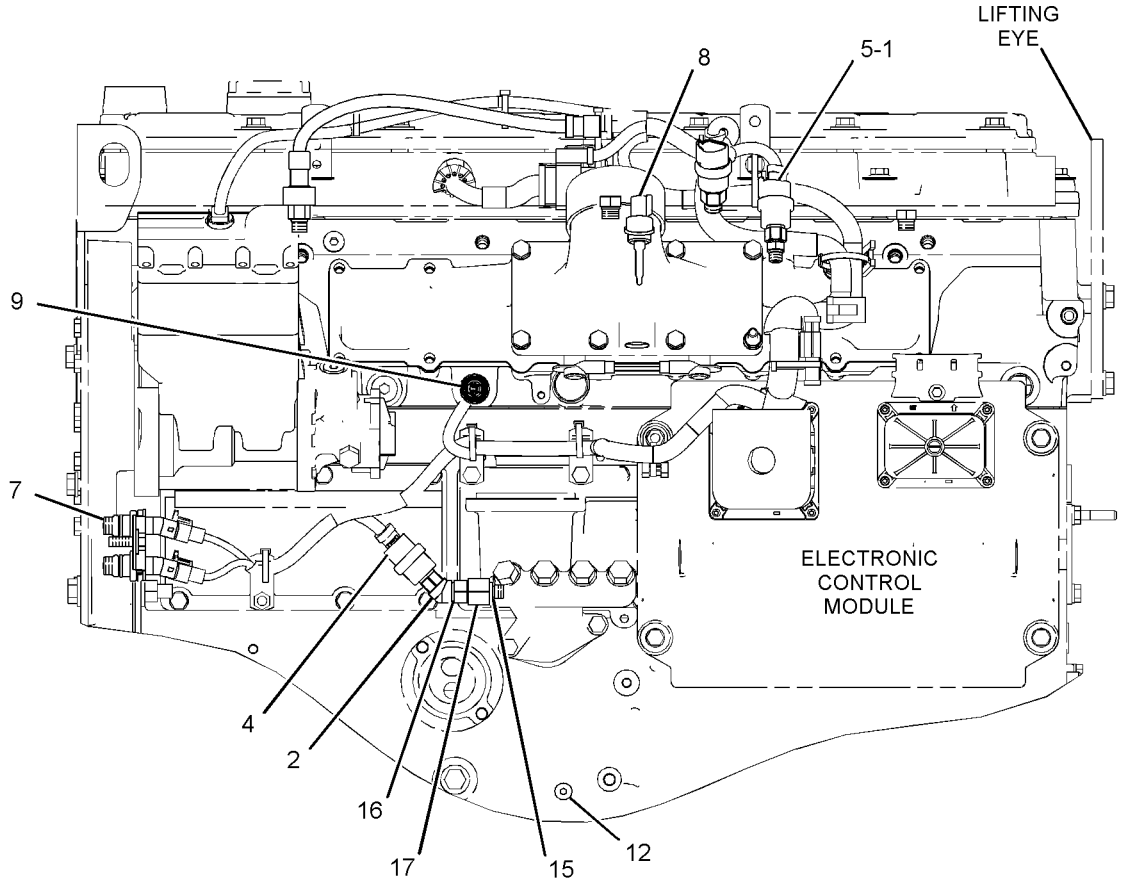

LEFT SIDE VIEW OF ENGINE

GRAPHIC #1 **<END>** g01335124

214-4863 SENSOR GP-POSITION

S/N: JPA1-UP
ROTARY
PART OF 282-2473 CONTROL GP-CLUTCH

SMCS-1408, 3168, 3175, 4269, 4809 **i01898168**

NOTE	REF NO	GRAPHIC REF	PART NUMBER	QTY	PART NAME 1 2 3 4 5 6 (PRODUCT LEVEL)	SEE PAGE
	1	1	**102-8803**	1	KIT-RECEPTACLE (3-PIN)	
					(INCLUDES RECEPTACLE AS & WEDGE)	
	2	1	**186-3735**	1	PIN-CONNECTOR (16-GA TO 18-GA)	
	3	1	**3E-3371**	1	WEDGE-RECEPTACLE LOCK (3-PIN)	

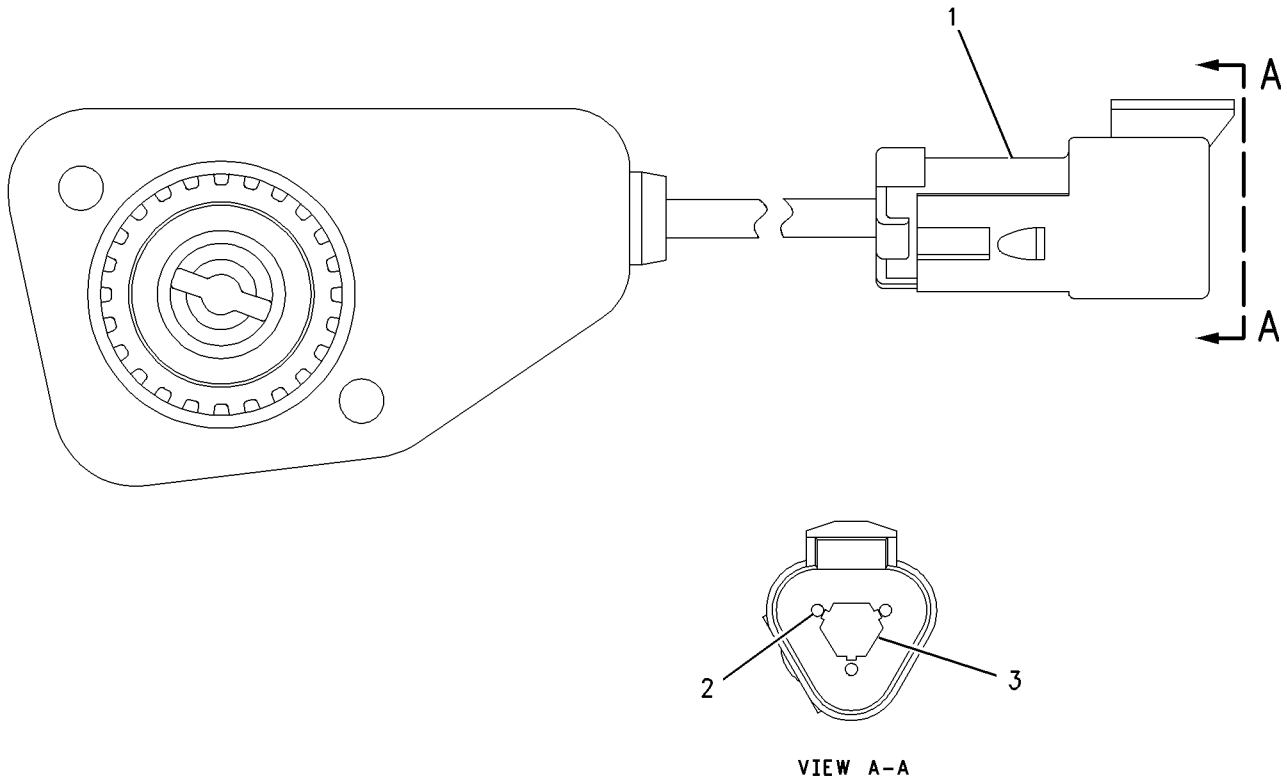

VIEW A-A

GRAPHIC #1 **<END>** g00925281

266-1467 SENSOR GP-POSITION

S/N: JPA1-UP

PART OF 282-2472 CONTROL GP-GOVERNOR

SMCS-1408, 3168, 3175, 4269, 4809 **i02987860**

NOTE	REF NO	GRAPHIC REF	PART NUMBER	QTY	PART NAME 1 2 3 4 5 6 (PRODUCT LEVEL)	SEE PAGE
	1	1	**9X-3401**	3	PIN-CONNECTOR (16-GA TO 18-GA)	
					—OR—	
		1	**126-1767**	3	PIN-CONNECTOR (14-GA)	
	2	1	**102-8803**	1	KIT-RECEPTACLE (3-PIN)	
					(INCLUDES RECEPTACLE AS & WEDGE)	
	3	1	**3E-3371**	1	WEDGE-RECEPTACLE LOCK (3-PIN)	

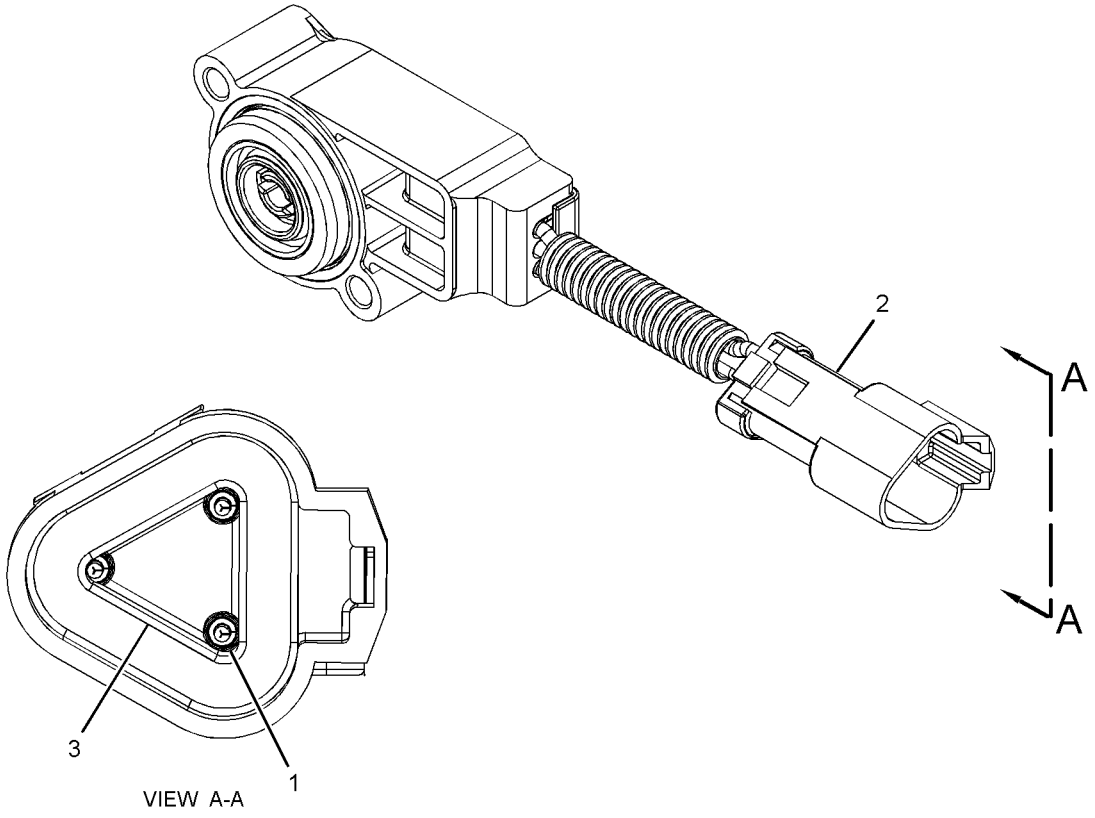

GRAPHIC #1 **<END>** g01514049

194-6722 SENSOR GP-PRESSURE

S/N: JPA1-UP

PART OF 311-0802 WIRING GP-AUXILIARY

SMCS-1052, 1058, 1439, 1718, 1917, 1923, 1924, 1925 **i03435061**

NOTE	REF NO	GRAPHIC REF	PART NUMBER	QTY	PART NAME 1 2 3 4 5 6 (PRODUCT LEVEL)	SEE PAGE
E	1	1	**9X-1813**		SLEEVE (34-CM)	
	2	1	**155-2260**	1	KIT-CONNECTING PLUG (3-PIN)	
					(INCLUDES PLUG AS, WEDGE & INTERFACE SEAL)	
	3	1	**180-9340**	3	SOCKET-CONNECTOR	

E-ORDER BY THE CENTIMETER

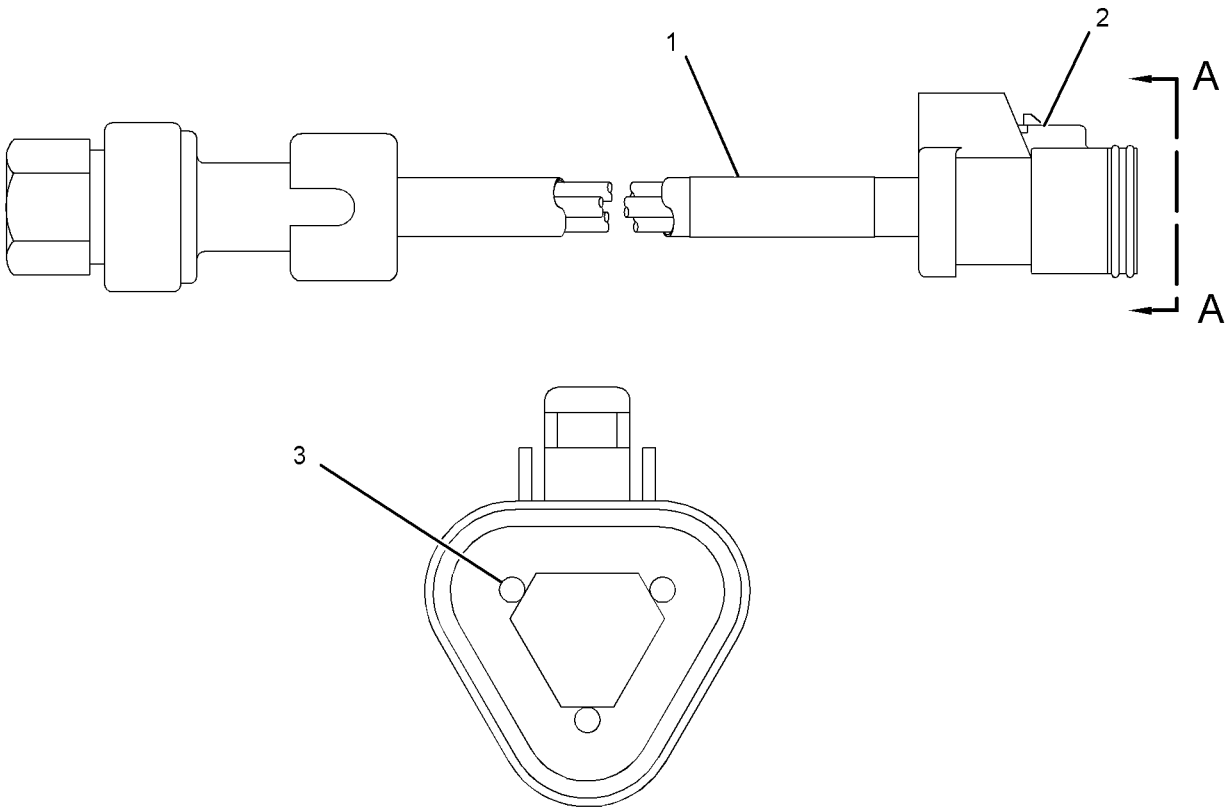

VIEW A-A

GRAPHIC #1 **<END>** g01381175

ELECTRICAL AND STARTING SYSTEM

197-8393 SENSOR GP-PRESSURE

S/N: KHX8814-UP

PART OF 297-5355 SENSOR GP-ENGINE

SMCS-1052, 1058, 1439, 1718, 1917, 1923, 1924, 1925 **i01855744**

NOTE	REF NO	GRAPHIC REF	PART NUMBER	QTY	PART NAME 1 2 3 4 5 6 (PRODUCT LEVEL)	SEE PAGE
	1	1	**161-1703**	1	SENSOR GP-PRESSURE	
	2	1	**6V-5049**	1	SEAL-O-RING	

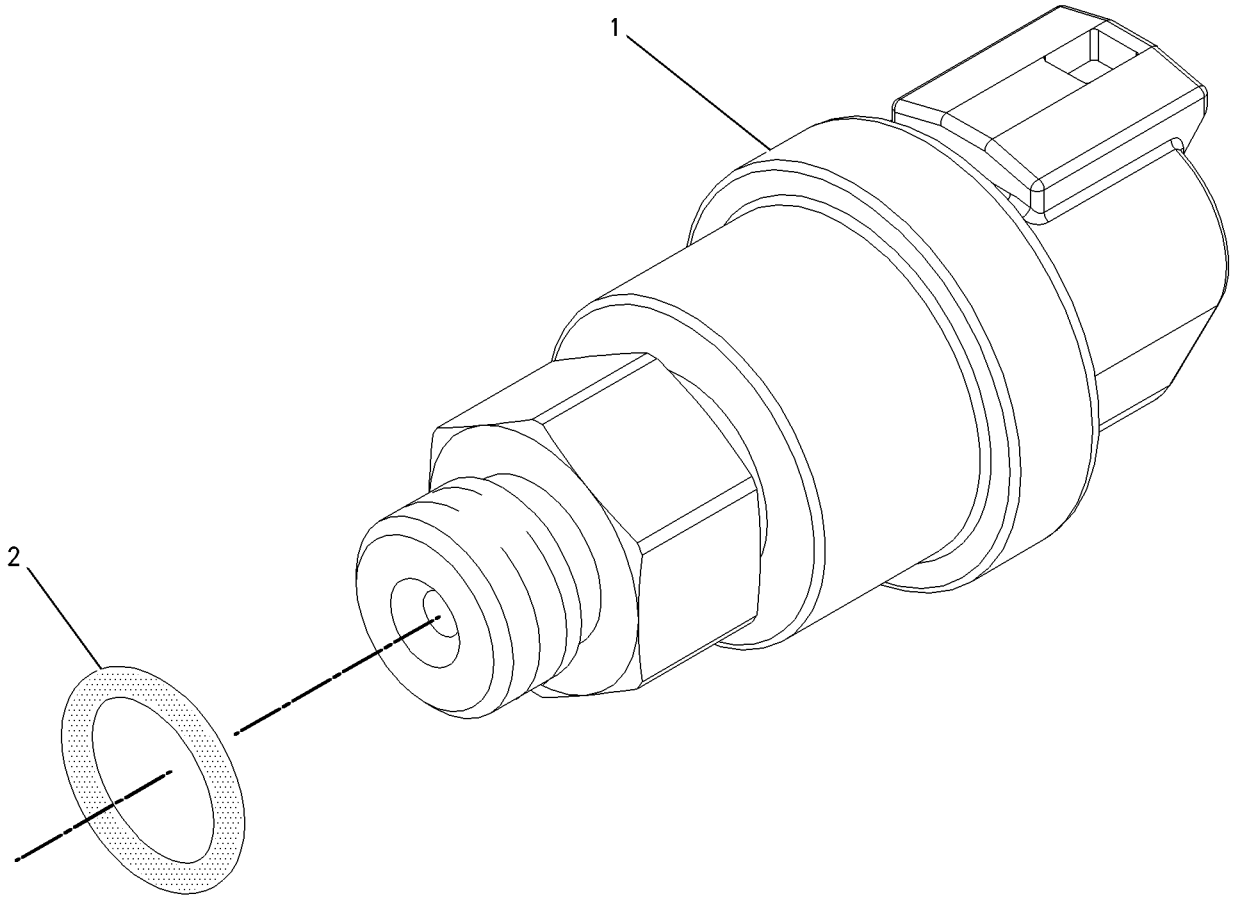

GRAPHIC #1 **<END>** g00855973

197-8394 SENSOR GP-PRESSURE

S/N: KHX8814-UP
ENGINE OIL
PART OF 297-5355 SENSOR GP-ENGINE

SMCS-1052, 1058, 1439, 1718, 1917, 1923, 1924, 1925 **i01855745**

NOTE	REF NO	GRAPHIC REF	PART NUMBER	QTY	PART NAME 1 2 3 4 5 6 (PRODUCT LEVEL)	SEE PAGE
	1	1	**161-1705**	1	SENSOR AS-PRESSURE	
	2	1	**6V-5048**	1	SEAL-O-RING	

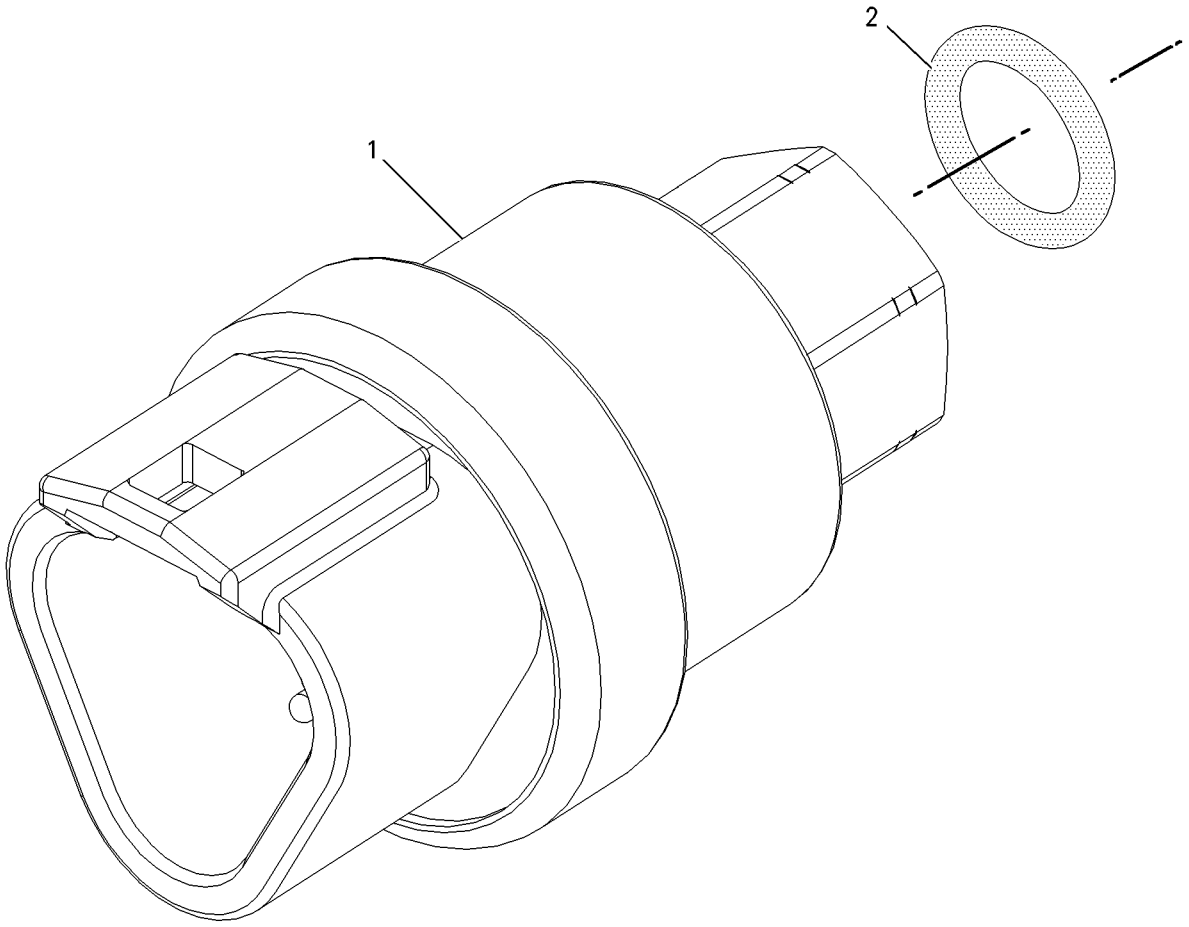

GRAPHIC #1 **<END>** g00856107

210-1747 SENSOR GP-PRESSURE

S/N: KHX8814-UP

PART OF 297-5355 SENSOR GP-ENGINE

SMCS-1052, 1058, 1439, 1718, 1917, 1923, 1924, 1925 **i02147083**

NOTE	REF NO	GRAPHIC REF	PART NUMBER	QTY	PART NAME 1 2 3 4 5 6 (PRODUCT LEVEL)	SEE PAGE
	1	1	**161-1704**	1	SENSOR GP-PRESSURE	
	2	1	**6V-5048**	1	SEAL-O-RING	

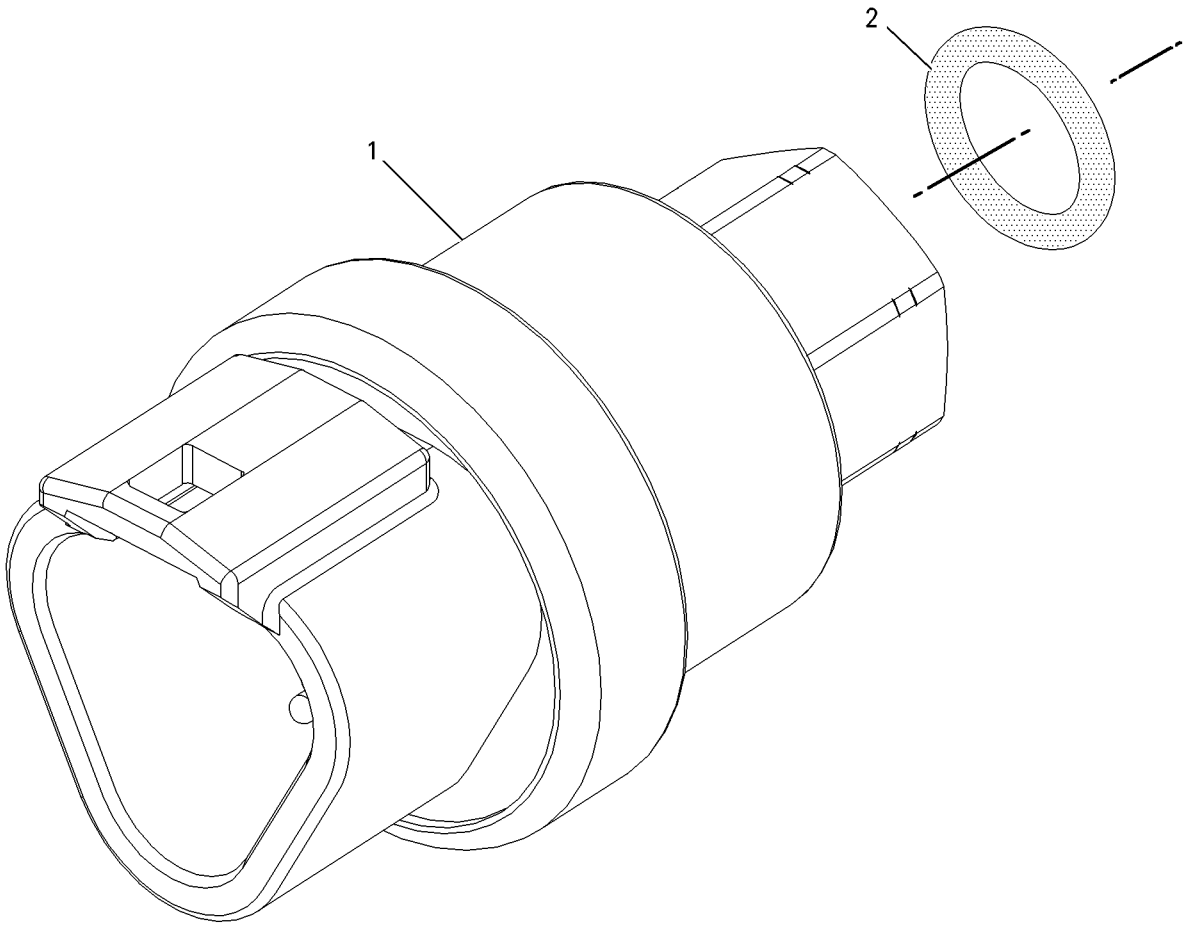

GRAPHIC #1 **<END>** g00856107

224-4536 SENSOR GP-PRESSURE

S/N: KHX8814-UP

PART OF 236-6220 SENSOR GP-PRESSURE

SMCS-1052, 1058, 1439, 1718, 1917, 1923, 1924, 1925 **i03172043**

NOTE	REF NO	GRAPHIC REF	PART NUMBER	QTY	PART NAME 1 2 3 4 5 6 (PRODUCT LEVEL)	SEE PAGE
BE	1	1	**9X-1813**		SLEEVE	
	2	1	**155-2260**	1	KIT-CONNECTING PLUG (3-PIN)	
					(INCLUDES PLUG AS, WEDGE, & INTERFACE SEAL)	
	3	1	**194-5226**	1	WIRE AS-HARNESS (16-GA TO 18-GA)	
					—OR—	
		1	**194-5227**	1	WIRE AS-HARNESS (14-GA WIRE)	
	4	1	**155-2276**	1	WEDGE-PLUG LOCK (3-PIN)	

B-USE AS REQUIRED
E-ORDER BY THE CENTIMETER

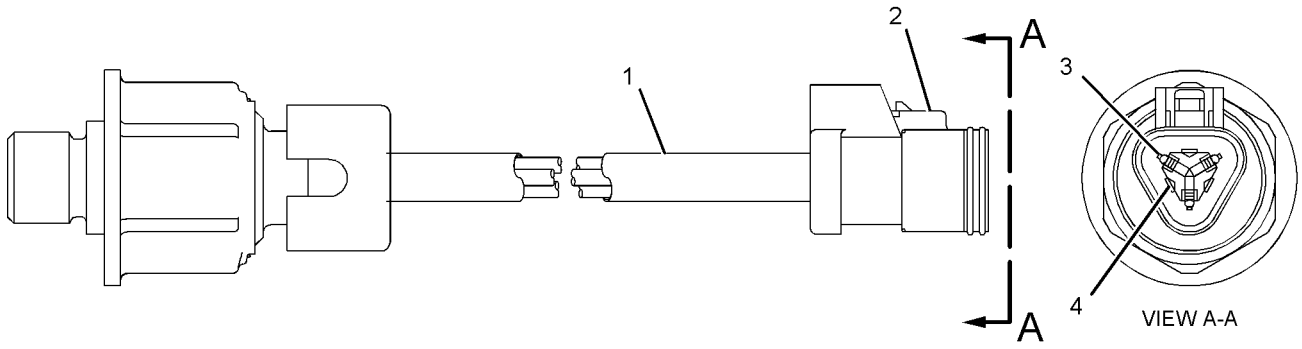

GRAPHIC #1 **<END>** g01040301

236-6220 SENSOR GP-PRESSURE

S/N: KHX8814-UP

PART OF 297-5355 SENSOR GP-ENGINE

SMCS-1052, 1058, 1439, 1718, 1917, 1923, 1924, 1925 **i02835983**

NOTE	REF NO	GRAPHIC REF	PART NUMBER	QTY	PART NAME 1 2 3 4 5 6 (PRODUCT LEVEL)	SEE PAGE
	1	1	**214-7567**	1	SEAL-O-RING	
Y	2	1	**224-4536**	1	SENSOR GP-PRESSURE	173

Y-SEPARATE ILLUSTRATION

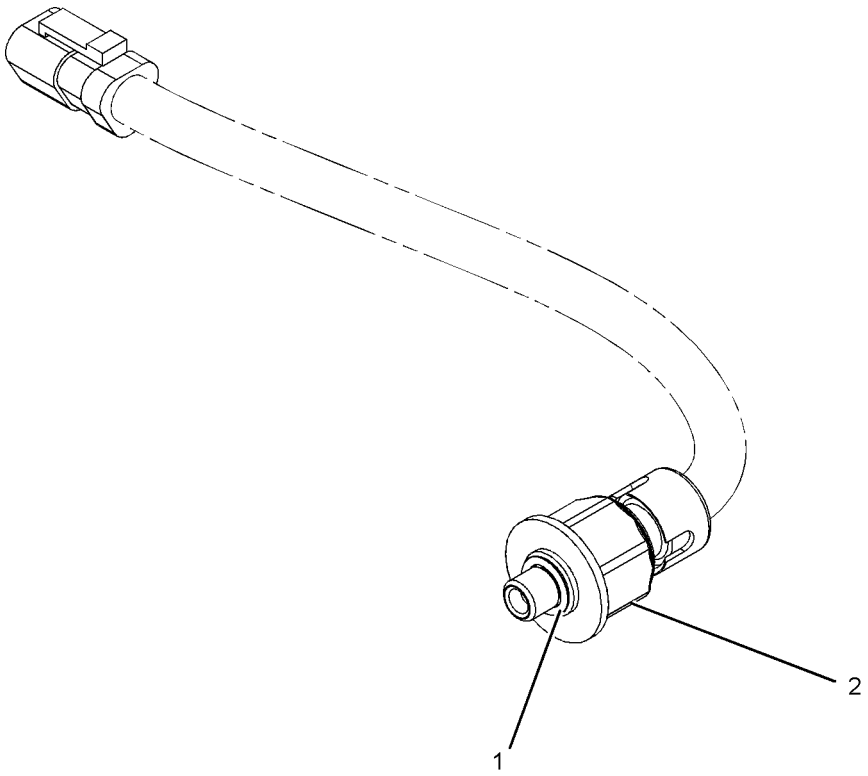

GRAPHIC #1 **<END>** g01054528

193-2550 SENSOR GP-SPEED

S/N: JPA1-UP

PART OF 311-0794 WIRING GP-REAR

SMCS-1439, 1907, 1912, 3141, 3175, 4803 **i02919909**

NOTE	REF NO	GRAPHIC REF	PART NUMBER	QTY	PART NAME 1 2 3 4 5 6 (PRODUCT LEVEL)	SEE PAGE
	1	1	**171-5349**	1	STRAP-MARKER	
	2	1	**102-8802**	1	KIT-RECEPTACLE (2-PIN)	
					(INCLUDES RECEPTACLE AS & WEDGE)	
	3	1	**9X-3401**	2	PIN-CONNECTOR (16-GA TO 18-GA)	
E	4	1	**9X-1813**		SLEEVE (14-CM)	

E-ORDER BY THE CENTIMETER

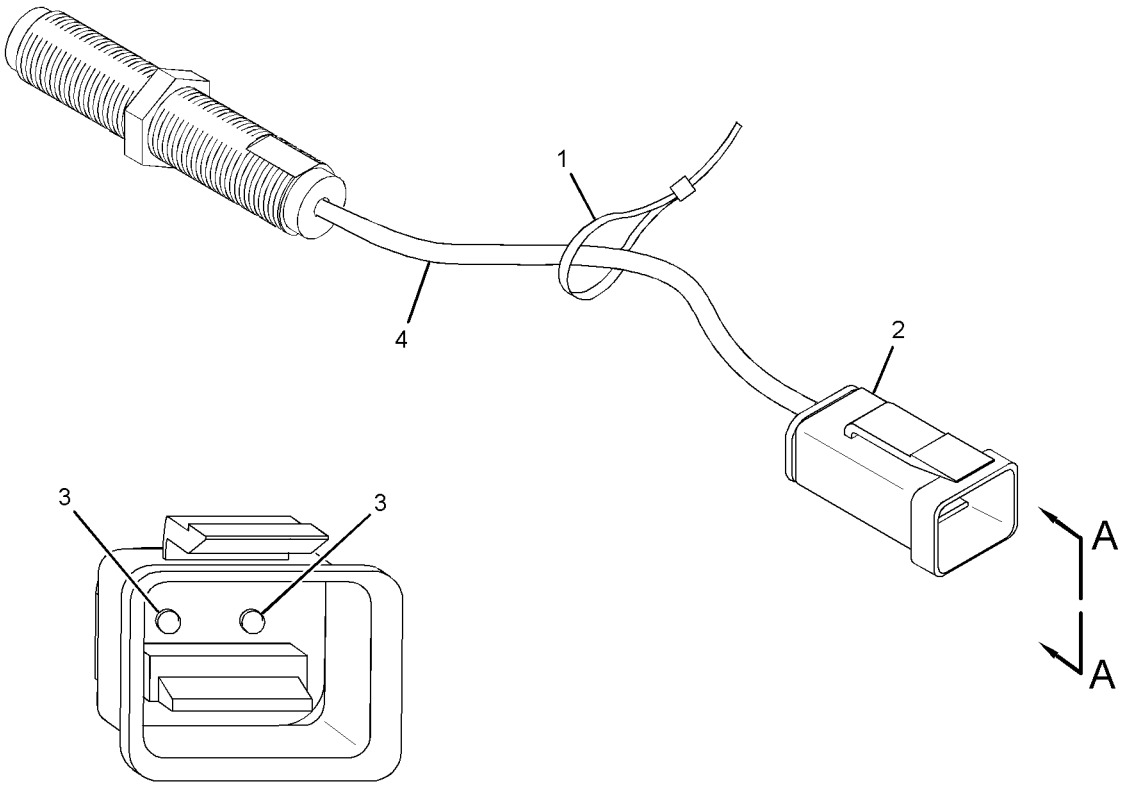

VIEW A-A

GRAPHIC #1 **<END>** g01454055

236-6221 SENSOR GP-SPEED

S/N: KHX8814-UP
ENGINE SPEED
PART OF 297-5355 SENSOR GP-ENGINE

SMCS-1439, 1907, 1912, 3141, 3175, 4803 **i02421726**

NOTE	REF NO	GRAPHIC REF	PART NUMBER	QTY	PART NAME 1 2 3 4 5 6 (PRODUCT LEVEL)	SEE PAGE
	1	1	**203-3940**	2	SEAL-O-RING	
	2	1	**245-4630**	1	SENSOR GP-SPEED	

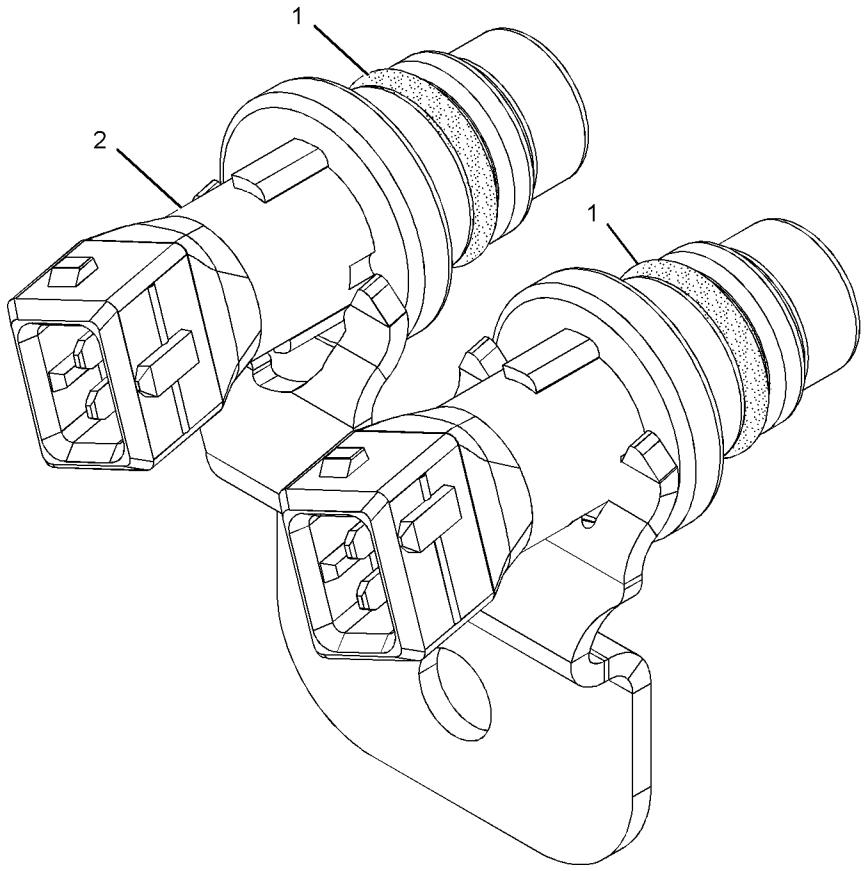

GRAPHIC #1 **<END>** g01013894

290-5792 SENSOR GP-SPEED

S/N: DMJ1-UP

PART OF 277-6433 CASE & PARTS GP-PLANETARY

SMCS-1439, 1907, 1912, 3141, 3175, 4803 **i02836788**

NOTE	REF NO	GRAPHIC REF	PART NUMBER	QTY	PART NAME 1 2 3 4 5 6 (PRODUCT LEVEL)	SEE PAGE
	1	1	**171-5349**	1	STRAP-MARKER	
	2	1	**102-8802**	1	KIT-RECEPTACLE (2-PIN)	
					(INCLUDES RECEPTACLE AS & WEDGE)	
	3	1	**186-3735**	2	PIN-CONNECTOR (16-GA TO 18-GA)	
E	4	1	**9X-1813**		SLEEVE (14-CM)	

E-ORDER BY THE CENTIMETER

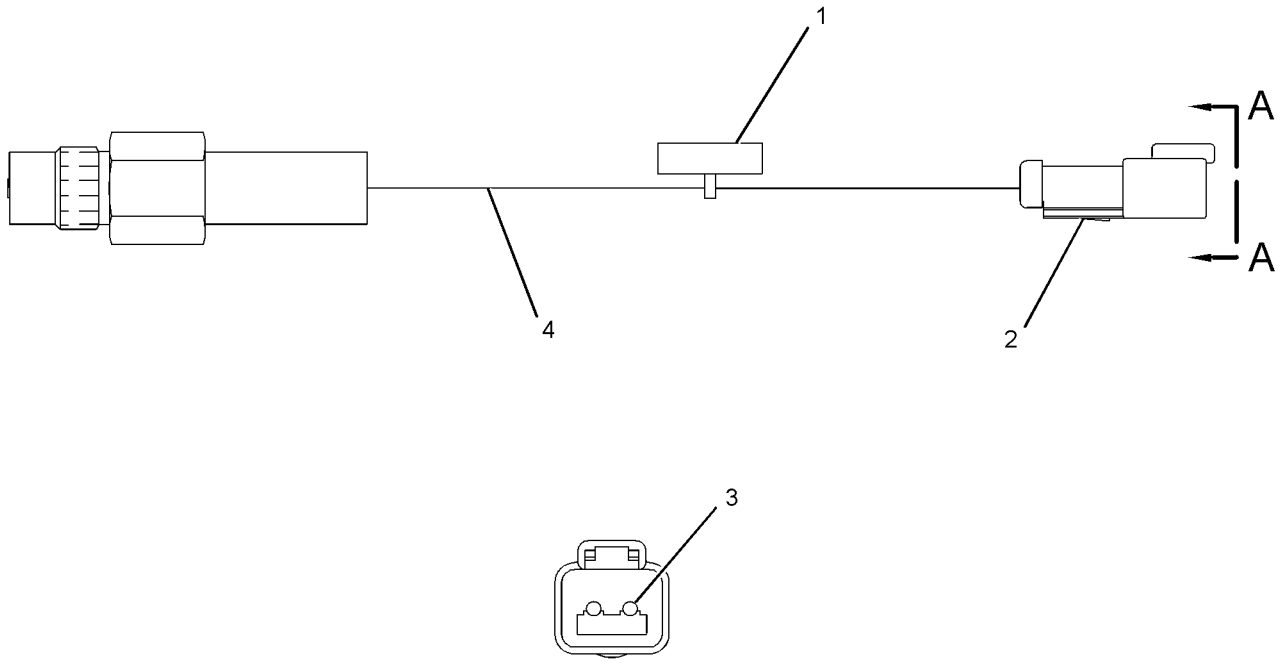

VIEW A-A

GRAPHIC #1 **<END>** g01409880

3E-8700 SENSOR GP-TEMPERATURE

S/N: DMJ1-UP

PART OF 277-6433 CASE & PARTS GP-PLANETARY

SMCS-1087, 1439, 1906, 1919, 1921, 1922, 1928, 1929, 192T, 1932, 301T, 3194, 3290, 429T, 509T, 7344

i02865269

NOTE	REF NO	GRAPHIC REF	PART NUMBER	QTY	PART NAME 1 2 3 4 5 6 (PRODUCT LEVEL)	SEE PAGE
	1	1	**8T-8730**	3	SOCKET-CONNECTOR (16-GA TO 18-GA)	
	2	1	**102-8813**	1	SEAL	
	3	1	**102-8808**	1	KIT-CONNECTING PLUG (3-PIN)	
BE	4	1	**9X-1813**		SLEEVE	
	5	1	**3E-3368**	1	WEDGE-PLUG LOCK (3-PIN)	

B-USE AS REQUIRED
E-ORDER BY THE CENTIMETER

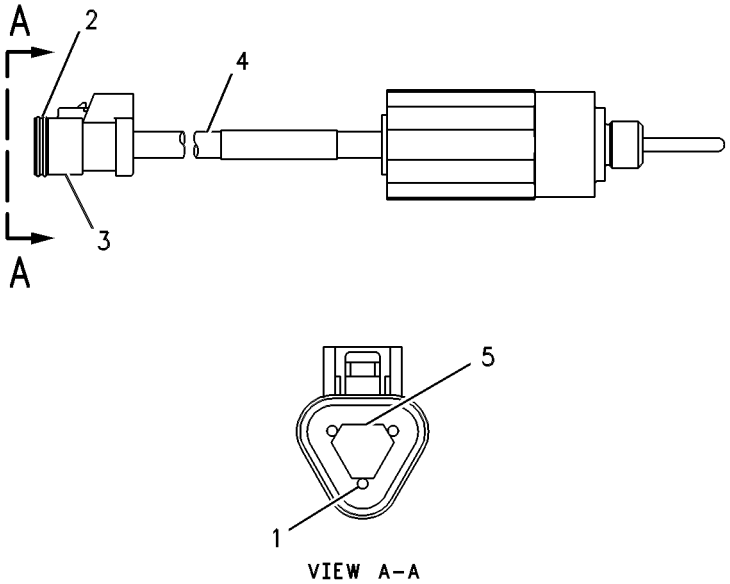

VIEW A-A

GRAPHIC #1

<END>

g00248316

234-5013 SENSOR GP-TEMPERATURE

S/N: JPA1-UP
AMPSEAL CONNECTOR
PART OF 311-2770 LINES GP-FUEL

SMCS-1087, 1439, 1906, 1919, 1921, 1922, 1928, 1929, 192T, 1932, 301T, 3194, 3290, 429T, 509T, 7344 **i02434804**

NOTE	REF NO	GRAPHIC REF	PART NUMBER	QTY	PART NAME 1 2 3 4 5 6 (PRODUCT LEVEL)	SEE PAGE
	1	1	**256-6453**	1	SENSOR AS-TEMPERATURE	
	2	1	**8L-2786**	1	SEAL-O-RING	

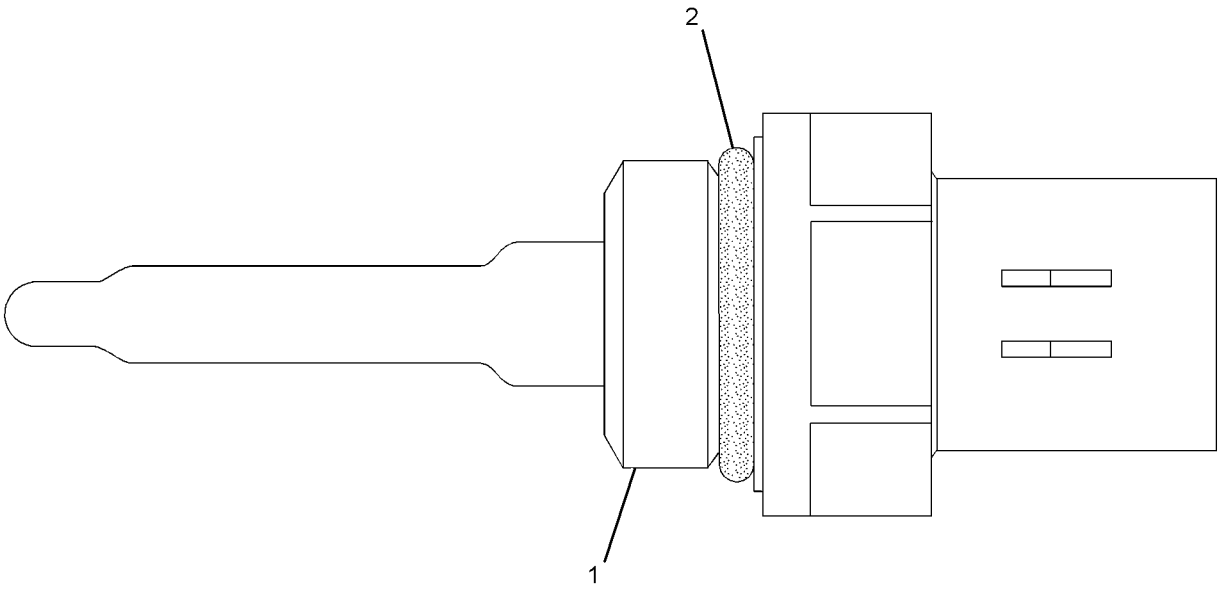

GRAPHIC #1 **<END>** g01164268

274-7395 SENSOR GP-TEMPERATURE

S/N: KHX8814-UP

PART OF 297-5355 SENSOR GP-ENGINE

SMCS-1087, 1439, 1906, 1919, 1921, 1922, 1928, 1929, 192T, 1932, 301T, 3194, 3290, 429T, 509T, 7344 **i03435385**

NOTE	REF NO	GRAPHIC REF	PART NUMBER	QTY	PART NAME 1 2 3 4 5 6 (PRODUCT LEVEL)	SEE PAGE
	1	1	**264-4297**	1	SENSOR GP-TEMPERATURE	
		1	**137-6645**	1	PAD	
	2	1	**8L-2786**	1	SEAL-O-RING	

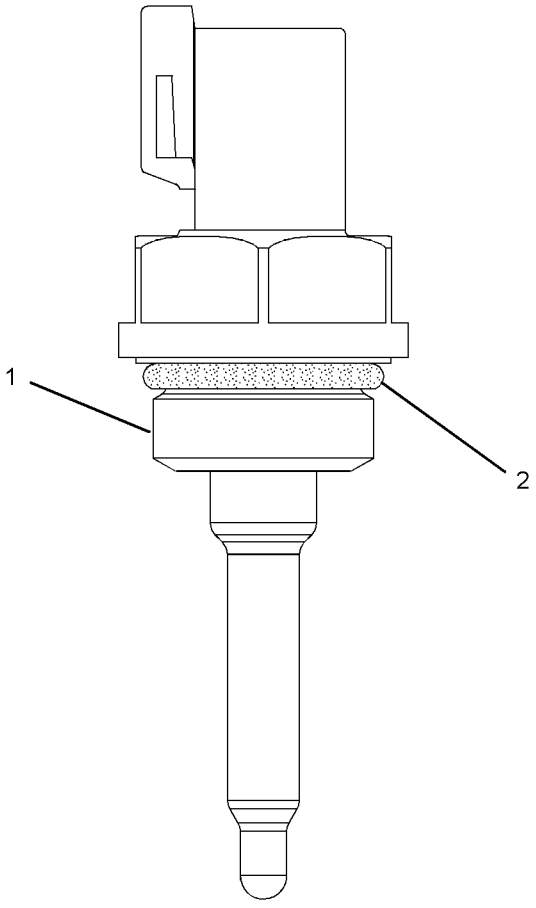

GRAPHIC #1 **<END>** g01353734

274-7396 SENSOR GP-TEMPERATURE

S/N: KHX8814-UP

PART OF 297-5355 SENSOR GP-ENGINE

SMCS-1087, 1439, 1906, 1919, 1921, 1922, 1928, 1929, 192T, 1932, 301T, 3194, 3290, 429T, 509T, 7344

i03435390

NOTE	REF NO	GRAPHIC REF	PART NUMBER	QTY	PART NAME 1 2 3 4 5 6 (PRODUCT LEVEL)	SEE PAGE
	1	1	**264-4297**	1	SENSOR GP-TEMPERATURE	
		1	**137-6645**	1	PAD	
	2	1	**6V-6609**	1	SEAL-O-RING	

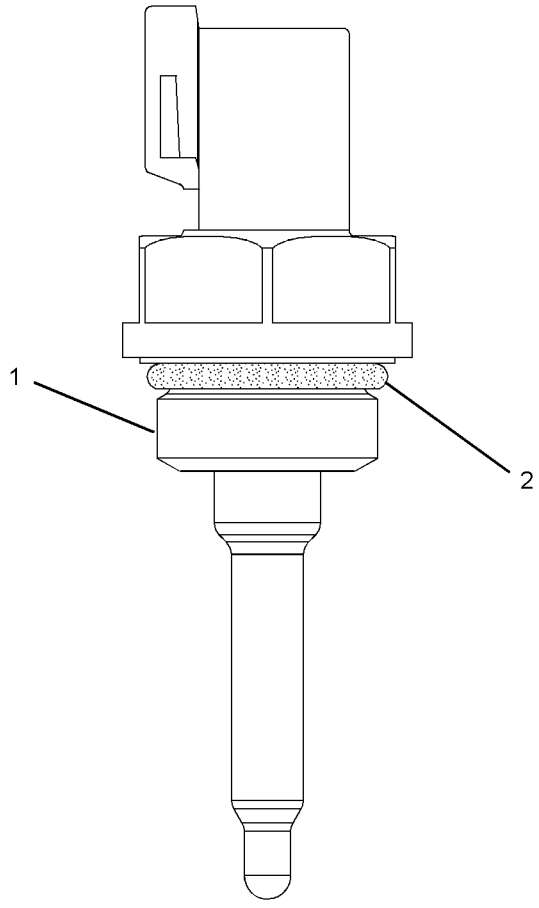

GRAPHIC #1

<END>

g01353734

ELECTRICAL AND STARTING SYSTEM

320-1340 STARTING AID AR-ETHER

S/N: JPA1-UP

AN ATTACHMENT

SMCS-1456 **i03251920**

NOTE	REF NO	GRAPHIC REF	PART NUMBER	QTY	PART NAME 1 2 3 4 5 6 (PRODUCT LEVEL)	SEE PAGE
Y	1	1	*311-0801*	1	WIRING GP-ETHER STARTING AID	210
Y	2	1	*311-2771*	1	STARTING AID GP-ETHER	183

Y-SEPARATE ILLUSTRATION

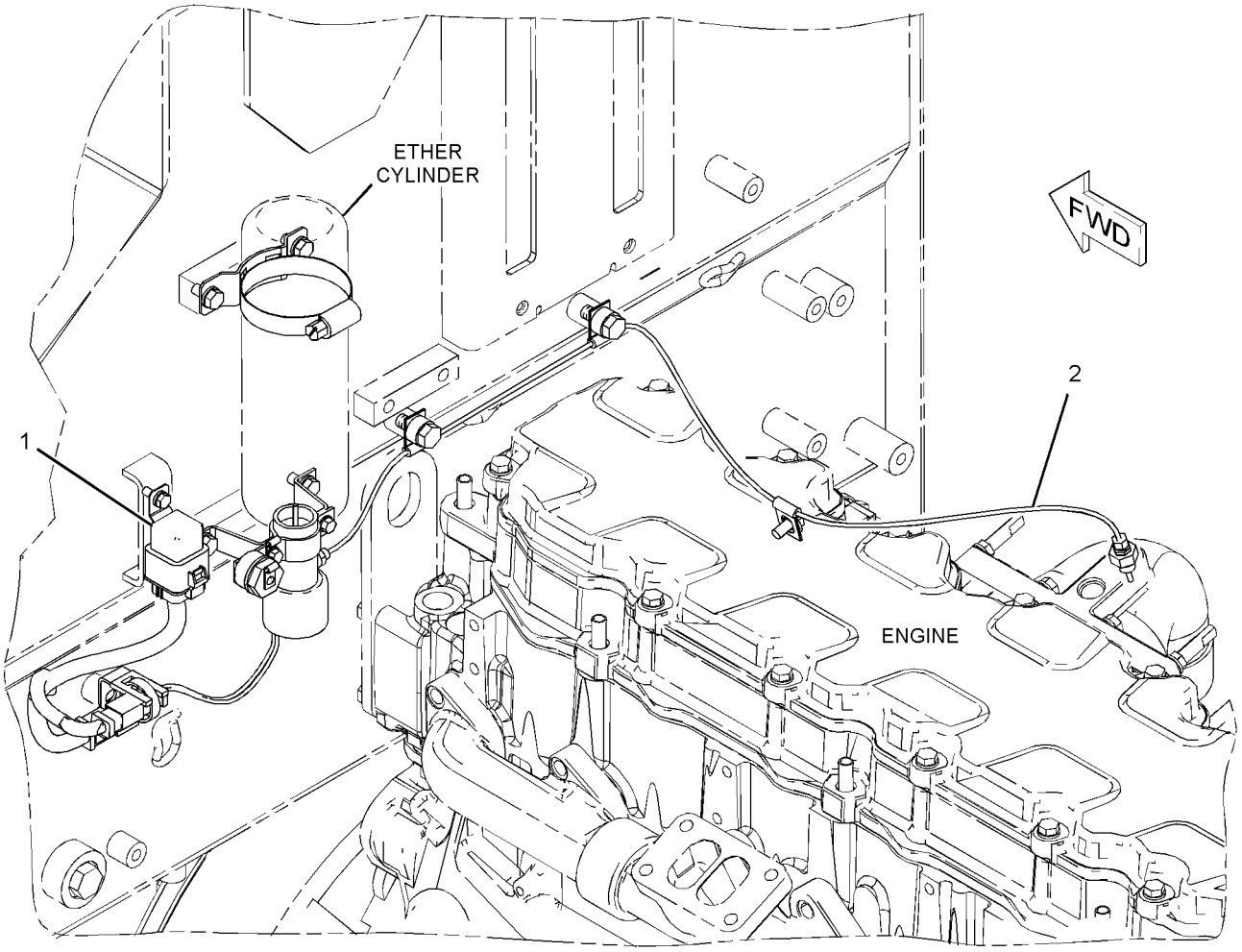

GRAPHIC #1 **<END>** g01691993

311-2771 STARTING AID GP-ETHER

S/N: JPA1-UP

PART OF 320-1340 STARTING AID AR-ETHER

AN ATTACHMENT

SMCS-1456 **i03251801**

NOTE	REF NO	GRAPHIC REF	PART NUMBER	QTY	PART NAME 1 2 3 4 5 6 (PRODUCT LEVEL)	SEE PAGE
	1	1	**7N-2059**	1	CLAMP AS	
Y	2	1	**239-1134**	1	VALVE GP-ETHER STARTING (24-VOLT)	195
	3	1	**241-4194**	1	FITTING AS (CONTROL)	
	4	1	**258-0733**	1	ATOMIZER AS	
		1	**236-4545**	1	NUT-SLEEVE (5/16-24-THD)	
	5	1	**124-2528**	2	SPACER (11X20X10-MM THK)	
	6	1	**3J-1907**	1	SEAL-O-RING	
	7	1	**3Y-2888**	1	CONNECTOR	
	8	1	**5P-4116**	1	WASHER-HARD (8.8X20.5X2-MM THK)	
	9	1	**6V-2686**	3	CLIP	
M	10	1	**8T-4136**	2	BOLT (M10X1.5X25-MM)	
M	11	1	**8T-4200**	5	BOLT (M8X1.25X16-MM)	
	12	1	**8T-4224**	4	WASHER-HARD (8.8X16X2-MM THK)	
J	13	1	**5P-5630**		TUBE (9-DM)	
A			**275-3634**	1	CYLINDER AS-ETHER (U.S.)	
					(MUST BE PROCURED LOCALLY FROM YOUR CATERPILLAR DEALER)	

A-NOT PART OF THIS GROUP
J-ORDER BY THE DECIMETER
M-METRIC PART
Y-SEPARATE ILLUSTRATION

311-2771 **STARTING AID GP-ETHER** *(contd.)* **i03251801**

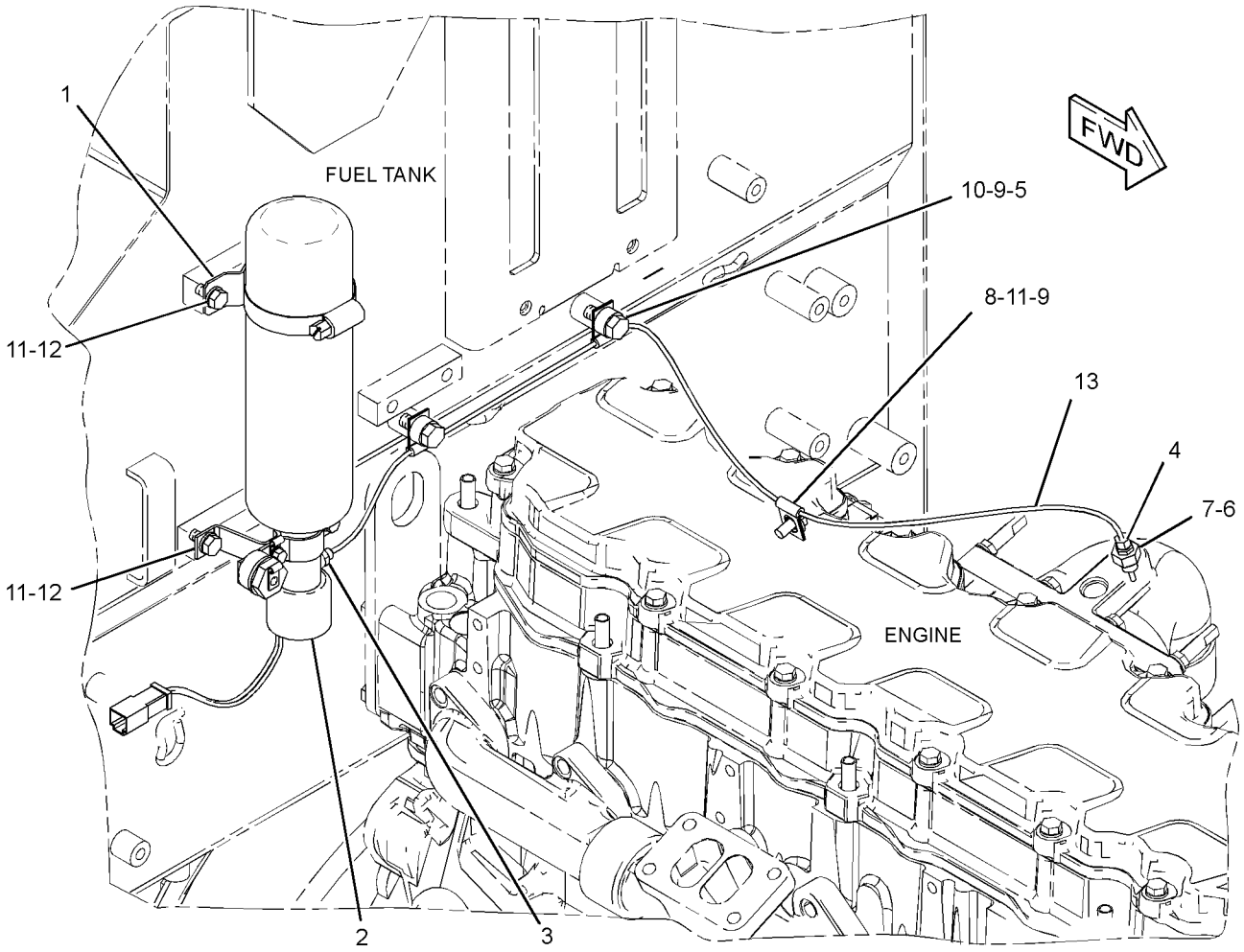

GRAPHIC #1 **<END>** g01731999

111-4275 STARTING MOTOR GP-ELECTRIC

S/N: KHX8814-UP
24 VOLT
PART OF 312-0255 ENGINE AR-COMPLETE

SMCS-1453 **i01635526**

NOTE	REF NO	GRAPHIC REF	PART NUMBER	QTY	PART NAME 1 2 3 4 5 6 (PRODUCT LEVEL)	SEE PAGE
M	1	1	**118-9573**	3	BOLT-12 POINT HEAD (M10X1.15-THD)	
CYR	2	1	**207-1517**	1	STARTING MOTOR GP-ELECTRIC	186
	3	1	**3K-3257**	1	GASKET	
M	4	1	**8T-4191**	1	BOLT (M10X1.5X16-MM)	
	5	1	**8Y-9603**	1	CABLE AS-STARTING MOTOR	
		1	**1S-7251**	1	TERMINAL-CABLE (00-GA, 1/2-IN BOLT)	
		1	**1S-7252**	1	TERMINAL-CABLE (00-GA, 3/8-IN BOLT)	
E		1	**5P-0747**		CABLE (00-GA, BLACK) (28CM)	
	6	1	**8T-4121**	4	WASHER-HARD (11X21X2.5-MM THK)	

C-CHANGE FROM PREVIOUS TYPE
E-ORDER BY THE CENTIMETER
M-METRIC PART
R-REMFG PART MAY BE AVAILABLE
Y-SEPARATE ILLUSTRATION

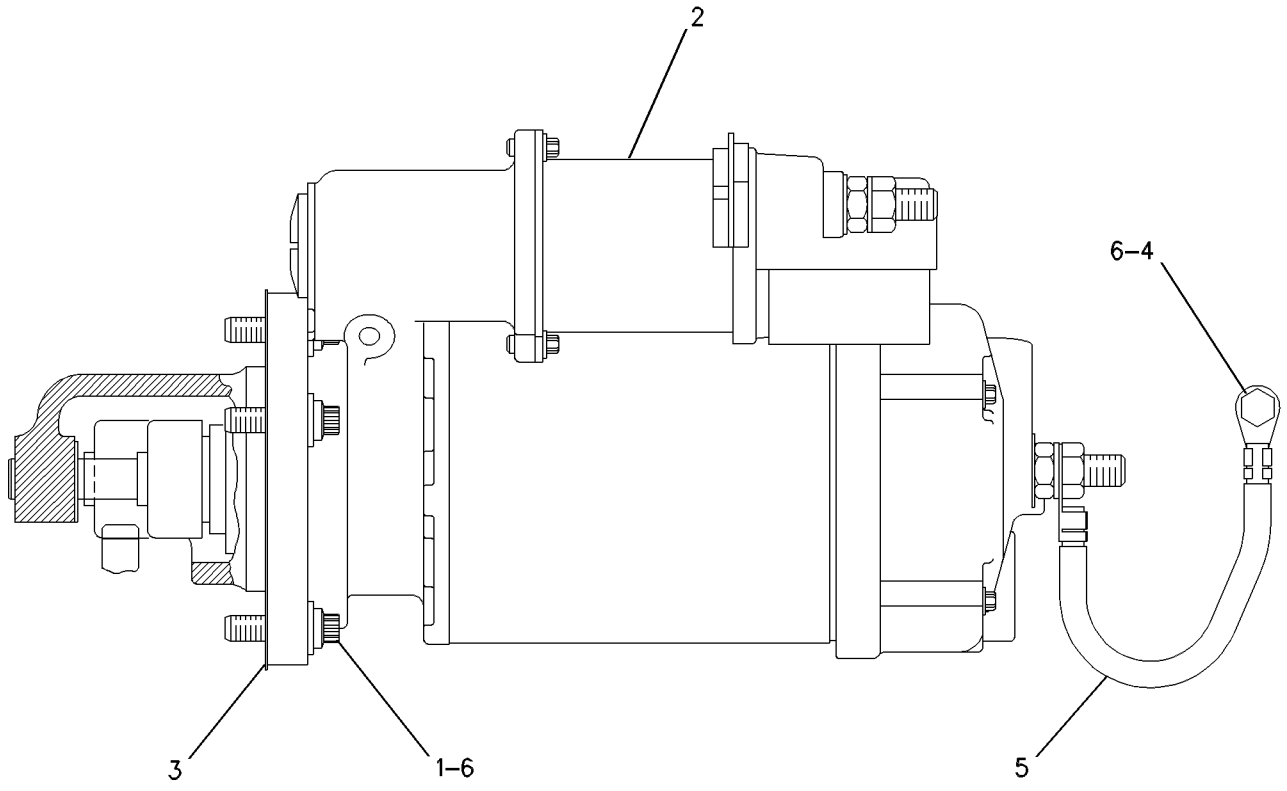

GRAPHIC #1 **<END>** g00613782

ELECTRICAL AND STARTING SYSTEM

207-1517 STARTING MOTOR GP-ELECTRIC*R

S/N: KHX8814-UP

24 VOLT

PART OF 111-4275 STARTING MOTOR GP-ELECTRIC

SMCS-1453 **i02946769**

NOTE	REF NO	GRAPHIC REF	PART NUMBER	QTY	PART NAME 1 2 3 4 5 6 (PRODUCT LEVEL)	SEE PAGE
	1	1	**8T-9884**	1	KIT-INSULATOR (STARTING MOTOR)	
					(INCLUDES INSULATORS & BUSHING)	
	2	1	**106-7149**	1	HOUSING AS	
	3	1	**102-9863**	1	TERMINAL AS	
	4	1	**6V-8188**	4	NUT (1/2-13-THD)	
	5	1	**7X-0562**	4	WASHER-HARD (13.5X19X0.8-MM THK)	
	6	1	**3E-7853**	1	TERMINAL	
	7	1	**9X-4821**	1	PLATE AS	
	8	1	**3E-7852**	1	COIL-STARTING MOTOR	
	9	1	**7T-3454**	1	INSULATOR	
	10	1	**9X-4271**	1	CONNECTOR	
	11	1	**7T-3451**	1	KIT-INSULATOR (TERMINAL)	
	12	1	**8T-8569**	1	INSULATOR-TERMINAL	
	13	1	**5S-7349**	4	BOLT (1/4-20X0.5-IN)	
	14	1	**8T-4205**	4	WASHER-HARD (7.2X14.5X2-MM THK)	
	15	1	**7X-1950**	4	SHOE-POLE	
	16	1	**3E-7861**	1	KIT-LEVER (STARTING MOTOR)	
					(INCLUDES LEVER AS, SHAFT AS, GASKET, O-RINGS, RING & NUT)	
	17	1	**3R-8797**	8	SCREW & WASHER AS (3/8-24X0.72-IN)	
	18	1	**3E-7855**	1	ARMATURE AS-STARTER (24-VOLT)	
	19	1	**7X-1952**	1	HOUSING AS-LEVER	
	20	1	**4M-1831**	1	PLUG-LEVER HOUSING	
	21	1	**7L-2894**	1	GASKET	
	22	1	**036-9823**	5	BOLT (1/4-28X1-IN)	
	23	1	**3E-7857**	1	DRIVE AS-STARTING MOTOR	
	24	1	**3E-7858**	1	HOUSING AS	
	25	1	**7X-3373**	6	BOLT (5/16-18X0.88-IN)	
	26	1	**206-8784**	1	KIT-SOLENOID (STARTING MOTOR)	
					(INCLUDES SOLENOID AS, BOLT, CONNECTORS, NUT & NUT AS)	
	27	1	**6V-8378**	2	NUT (10-32-THD)	
	28	1	**8F-1434**	1	LOCKWASHER	
	29	1	**8T-0328**	2	WASHER-HARD (5.5X10X1-MM THK)	
	30	1	**9X-4824**	1	COVER-STARTING MOTOR	
	31	1	**9X-4825**	1	KIT-BRUSH (STARTING MOTOR)	
					(INCLUDES O-RING, SCREWS, BRUSHES, AND SPRINGS)	
					AVAILABLE REPAIR KIT(S):	
			3E-7860	1	KIT-BUSHING (STARTING MOTOR)	
					(INCLUDES BUSHINGS, PLUGS, CUPS, SEAL, NUT, O-RINGS, GASKET, SPACER, WASHERS & SCREW ASSEMBLIES)	

207-1517 **STARTING MOTOR GP-ELECTRIC** *(contd.)* **i02946769**

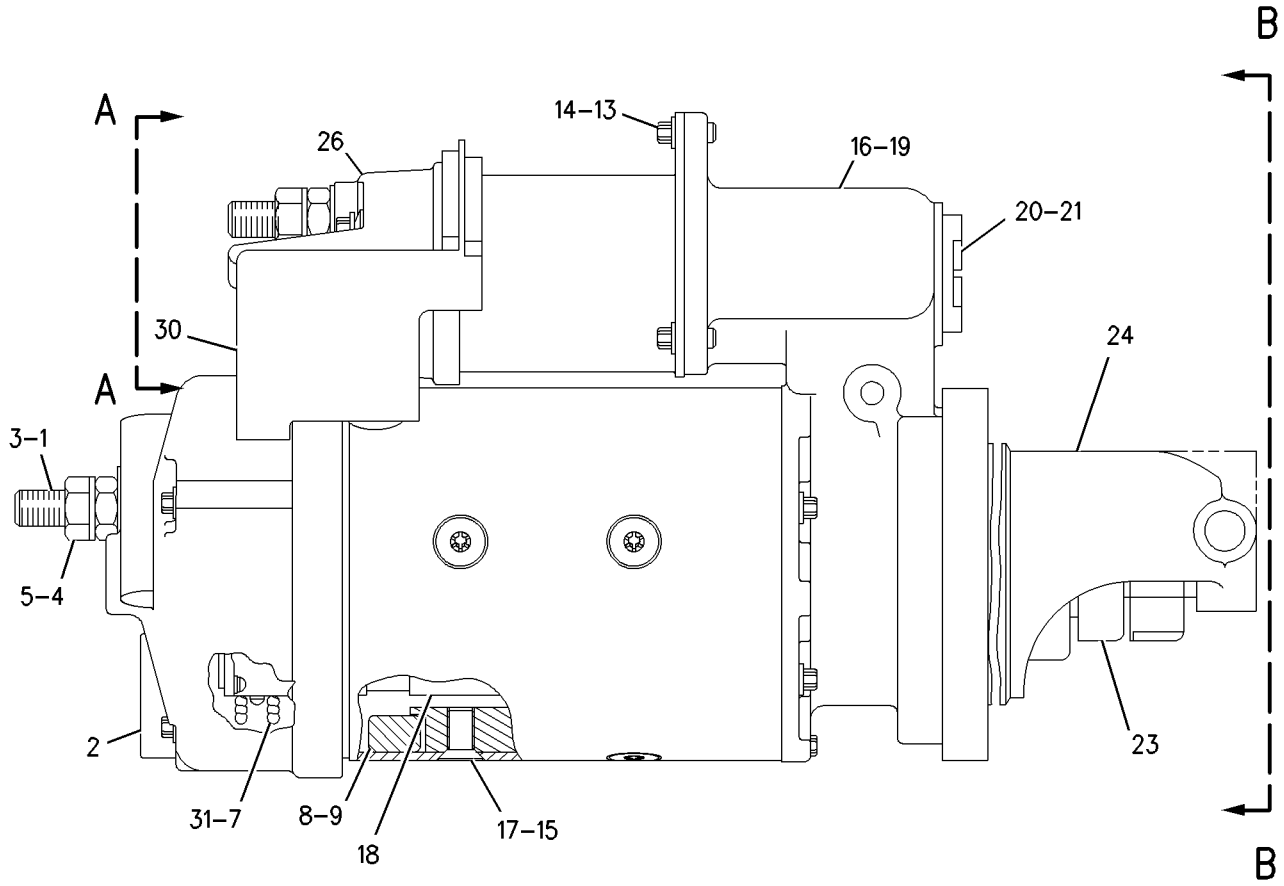

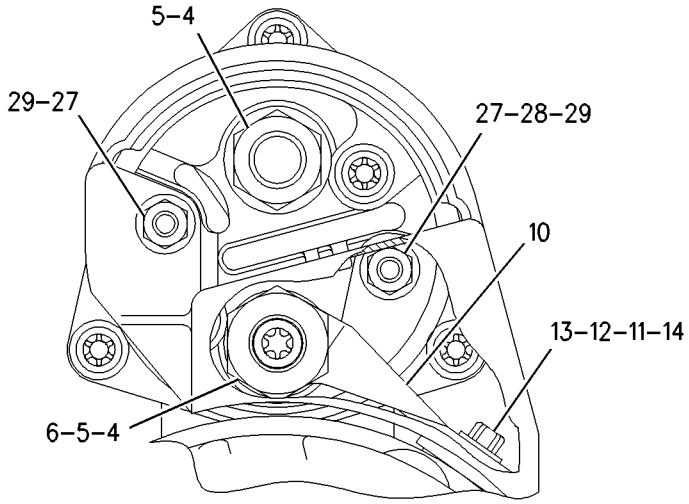

VIEW A-A

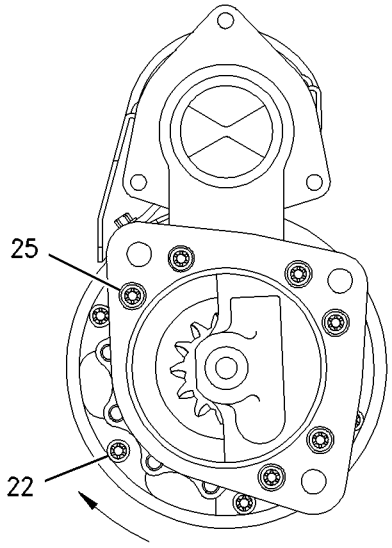

VIEW B-B

GRAPHIC #1 **<END>** g00839695

164-7577 SWITCH GP-BYPASS

S/N: JPA1-UP

PART OF 238-1029 BASE GP-OIL FILTER

SMCS-1408, 1435 **i02891455**

NOTE	REF NO	GRAPHIC REF	PART NUMBER	QTY	PART NAME 1 2 3 4 5 6 (PRODUCT LEVEL)	SEE PAGE
BE	1	1	**9X-1813**		SLEEVE	
	2	1	**102-8802**	1	KIT-RECEPTACLE (2-PIN)	
					(INCLUDES RECEPTACLE AS & WEDGE)	
	3	1	**186-3735**	2	PIN-CONNECTOR (16-GA TO 18-GA)	
	4	1	**3E-3365**	1	WEDGE-RECEPTACLE LOCK (2-PIN)	
	5	1	**3D-2824**	1	SEAL-O-RING	
Z	6	1		1	SWITCH AS	

B-USE AS REQUIRED
E-ORDER BY THE CENTIMETER
Z-NOT SERVICED SEPARATELY

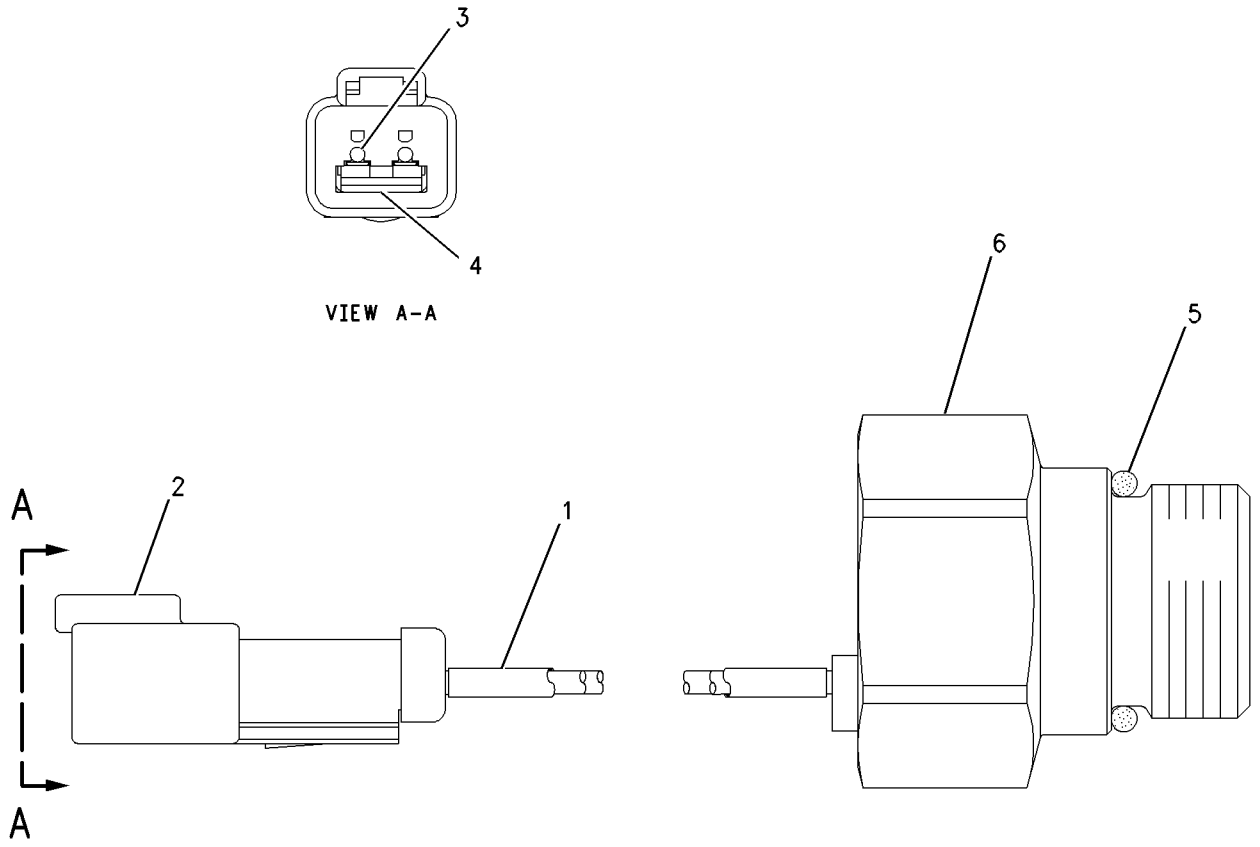

GRAPHIC #1 **<END>** g00750019

7N-0718 SWITCH GP-DISCONNECT–BATTERY

S/N: JPA1-UP

PART OF 311-0802 WIRING GP-AUXILIARY

SMCS-1411 **i02587657**

NOTE	REF NO	GRAPHIC REF	PART NUMBER	QTY	PART NAME 1 2 3 4 5 6 (PRODUCT LEVEL)	SEE PAGE
	1	1	**8H-5306**	1	KEY (BATTERY DISCONNECT)	
	2	1	**8H-5303**	1	NUT (3/4-16-THD)	
	3	1	**2H-3922**	2	LOCKWASHER	
	4	1	**9F-5644**	2	LOCKWASHER	
	5	1	**6F-7045**	2	NUT-FULL (3/8-24-THD)	

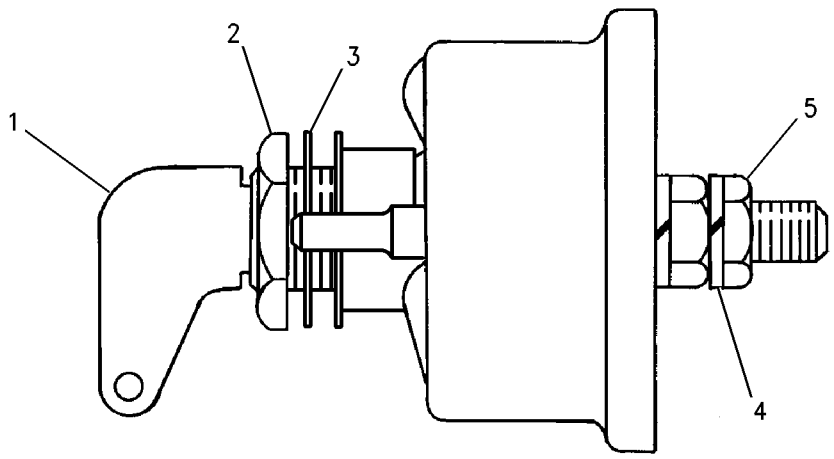

GRAPHIC #1 **<END>** g00715584

294-8641 SWITCH GP-LIGHT

S/N: JPA1-UP
PART OF 294-8544, 294-8545 LIGHTING AR-ROADING
AN ATTACHMENT

SMCS-1429, 1430, 7332 **i03254728**

NOTE	REF NO	GRAPHIC REF	PART NUMBER	QTY	PART NAME 1 2 3 4 5 6 (PRODUCT LEVEL)	SEE PAGE
	1	1	**8X-5153**	1	FILM-FACE (TURN SIGNAL, HAZARD)	
	2	1	**8X-5154**	1	FILM-FACE (HEADLIGHTS HIGH, LOW BEAM)	
	3	1	**9W-1442**	1	FUSE (10-AMPERE)	
	4	1	**9W-1441**	1	FUSE (15-AMPERE)	
	5	1	**108-0358**	1	FLASHER AS (24-VOLT)	
	6	1	**173-3064**	1	SWITCH GP-ROTARY (TURN SIGNAL, HAZARD)	
		1	**5L-7200**	1	SCREW (8-32X0.375-IN)	
		1	**9B-7233**	1	LOCKWASHER	
	7	1	**103-5678**	1	SWITCH AS-ROTARY	
		1	**5L-7200**	1	SCREW (8-32X0.375-IN)	
		1	**9B-7233**	1	LOCKWASHER	
	8	1	*3E-9317*	1	SWITCH AS-ROCKER (24-VOLT)	
		1	**3E-8772**	1	SWITCH-ROCKER (AIR CONDITIONER, HEATER)	
		1	**3E-8825**	1	LAMP (24-VOLT)	
		1	**3E-9326**	1	ACTUATOR-ROCKER	
M	9	1	**5C-2890**	2	NUT (M6X1-THD)	
	10	1	**8T-4205**	2	WASHER-HARD (7.2X14.5X2-MM THK)	
	11	1	**8X-6296**	2	LEVER	
M	12	1	**9X-2043**	2	SCREW-TRUSS HEAD (M6X1X14-MM)	

M-METRIC PART

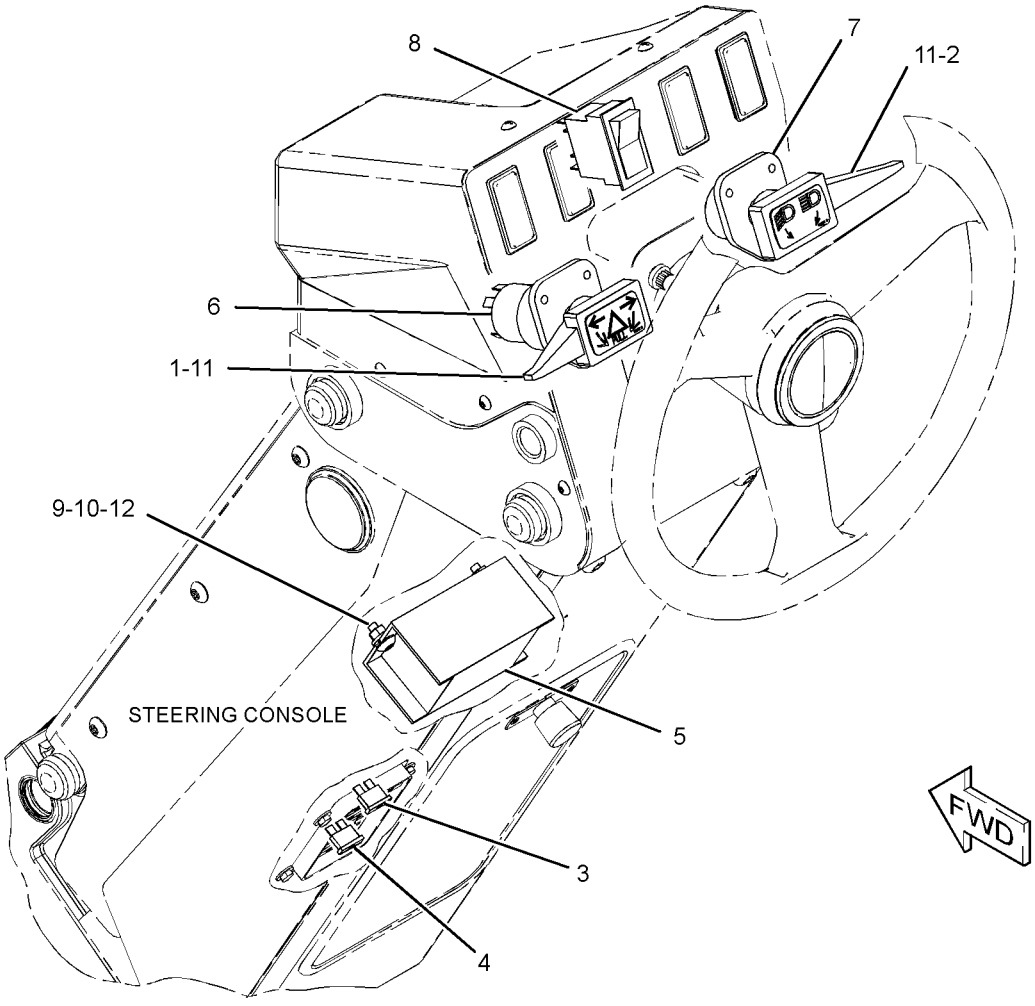

GRAPHIC #1 **<END>** g01697573

241-8368 SWITCH GP-MAGNETIC

S/N: JPA1-UP
24-VOLT
PART OF 311-0802 WIRING GP-AUXILIARY

SMCS-7499 **i02290099**

NOTE	REF NO	GRAPHIC REF	PART NUMBER	QTY	PART NAME 1 2 3 4 5 6 (PRODUCT LEVEL)	SEE PAGE
	1	1	**155-2270**	1	KIT-CONNECTING PLUG (2-PIN)	
					(INCLUDES PLUG AS, WEDGE & INTERFACE SEAL)	
	2	1	**4F-2294**	2	NUT-JAM (5/16-24-THD)	
	3	1	**186-3736**	2	SOCKET-CONNECTOR (16-GA TO 18-GA)	

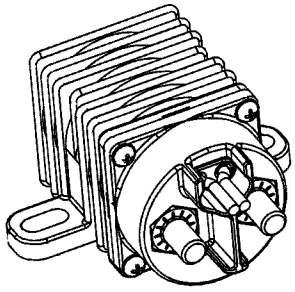

ISOMETRIC VIEW

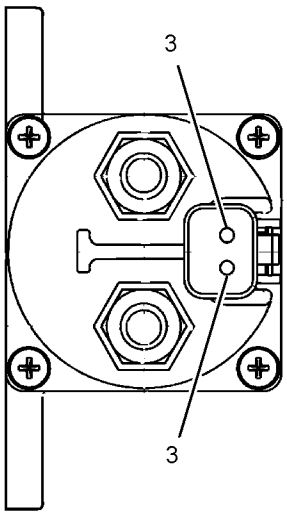

VIEW A-A

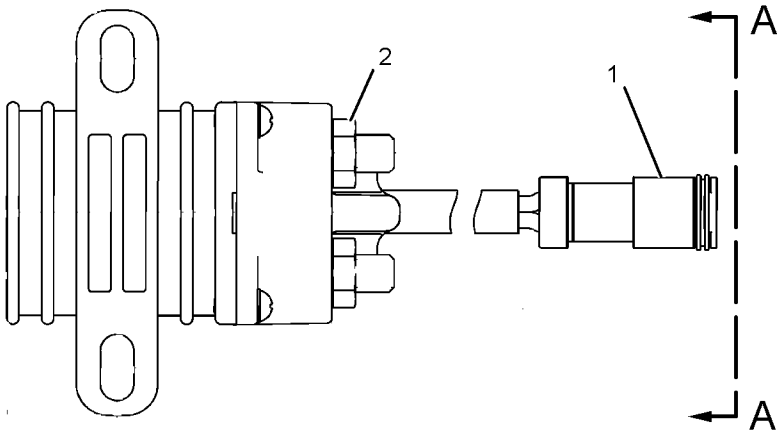

GRAPHIC #1 **<END>** g01077362

275-1253 SWITCH GP-PRESSURE–FUEL FILTER

S/N: JPA1-UP

PART OF 311-2770 LINES GP-FUEL

SMCS-1435 **i02434807**

NOTE	REF NO	GRAPHIC REF	PART NUMBER	QTY	PART NAME 1 2 3 4 5 6 (PRODUCT LEVEL)	SEE PAGE
	1	1	**230-4011**	1	PLUG AS-CONNECTOR (2-PIN)	
E	2	1	**9X-1813**		SLEEVE (14-CM)	
	3	1	**6V-4589**	1	SEAL-O-RING	
	4	1	**7L-9061**	1	SEAL-O-RING	
	5	1	**144-1636**	2	PIN-CONNECTOR (14-GA TO 18-GA)	

E-ORDER BY THE CENTIMETER

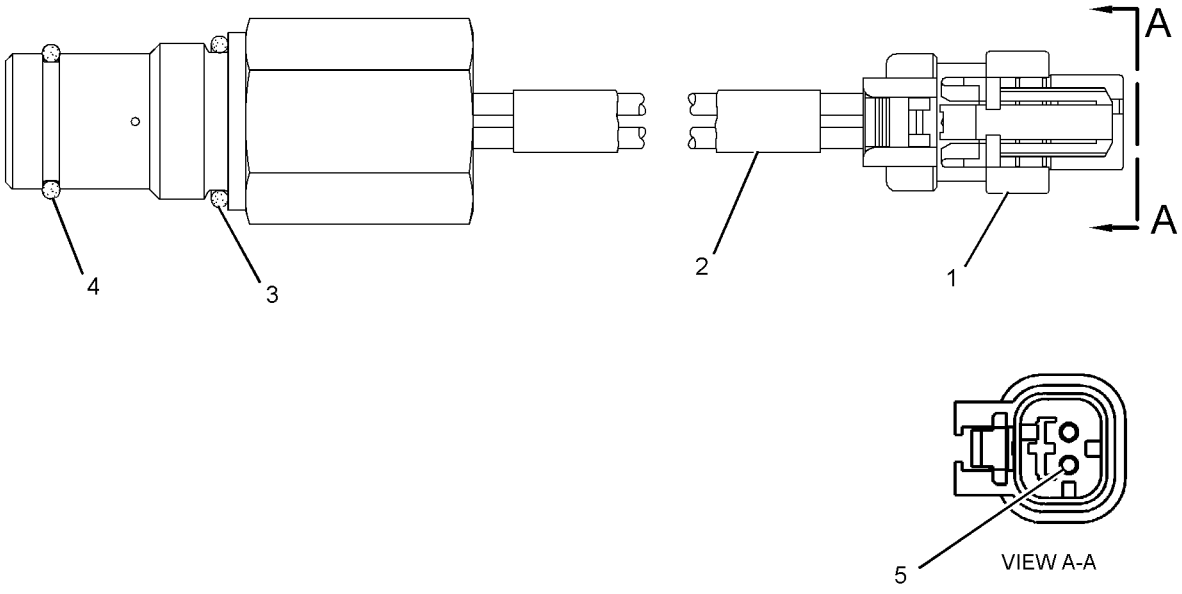

GRAPHIC #1 **<END>** g01238534

275-7741 SWITCH GP-WIPER–INTERMITTENT

S/N: JPA1-UP

PART OF 275-7764 SWITCH GP-WIPER, 286-4822, 286-4823 WIPER GP-WINDOW AN ATTACHMENT

SMCS-7305, 7332 **i02992478**

NOTE	REF NO	GRAPHIC REF	PART NUMBER	QTY	PART NAME 1 2 3 4 5 6 (PRODUCT LEVEL)	SEE PAGE
	1	1	**6V-8369**	1	NUT (7/16-28-THD)	
	2	1	**2H-3920**	1	LOCKWASHER	
	3	1	**8T-8737**	2	PLUG-SEAL	
	4	1	**186-3735**	6	PIN-CONNECTOR (16-GA TO 18-GA)	
	5	1	**102-8806**	1	KIT-RECEPTACLE (8-PIN)	
					(INCLUDES RECEPTACLE AS & WEDGE)	

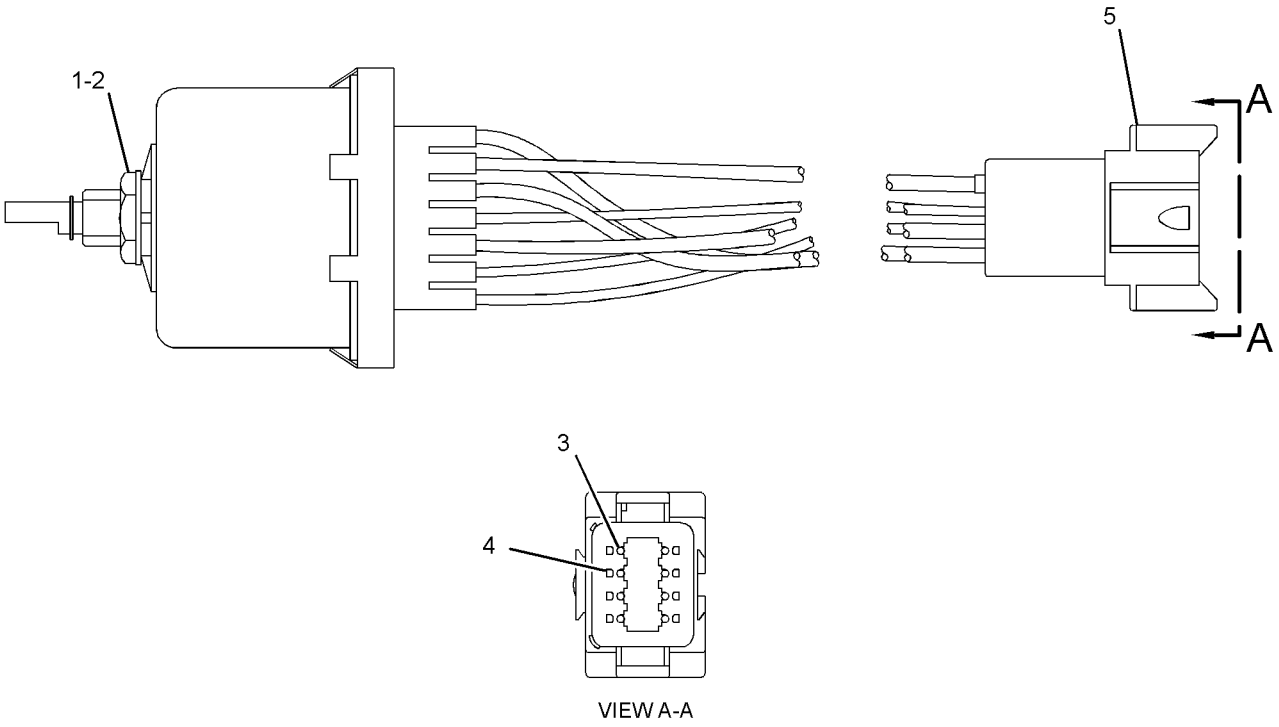

GRAPHIC #1 **<END>** g01445891

275-7764 SWITCH GP-WIPER–INTERMITTENT

S/N: JPA1-UP
24-VOLT
PART OF 286-4825 WIPER GP-WINDOW
AN ATTACHMENT

SMCS-7305, 7332 **i02978860**

NOTE	REF NO	GRAPHIC REF	PART NUMBER	QTY	PART NAME 1 2 3 4 5 6 (PRODUCT LEVEL)	SEE PAGE
Y	1	1	**275-7741**	1	SWITCH GP-WIPER (24-VOLT, INTERMITTENT)	193
	2	1	**7T-9302**	1	KNOB AS-WIPER SWITCH	
		1	**014-0816**	1	SETSCREW (8-32X0.5-IN)	

Y-SEPARATE ILLUSTRATION

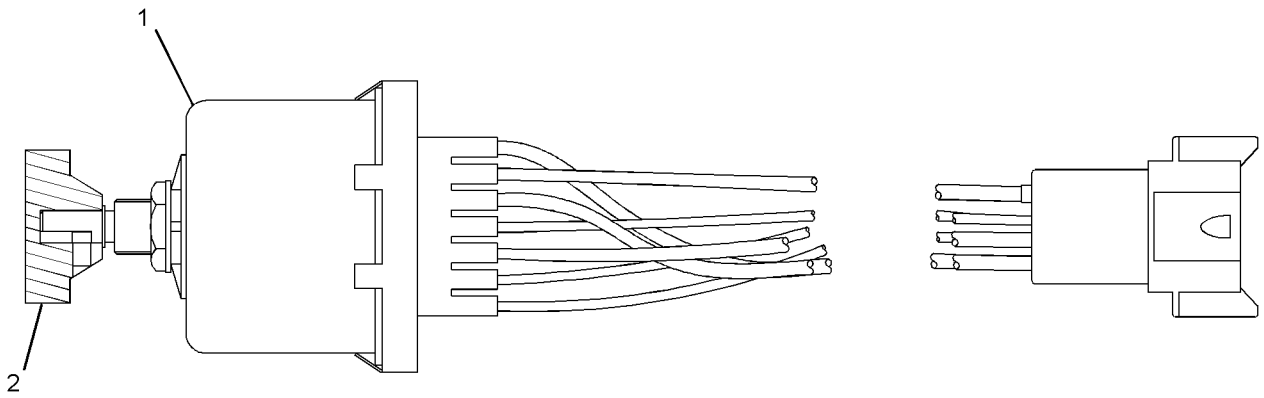

GRAPHIC #1 **<END>** g01516002

239-1134 VALVE GP-ETHER STARTING

S/N: JPA1-UP
24-VOLT
PART OF 311-2771 STARTING AID GP-ETHER
AN ATTACHMENT

SMCS-1456 **i03435882**

NOTE	REF NO	GRAPHIC REF	PART NUMBER	QTY	PART NAME 1 2 3 4 5 6 (PRODUCT LEVEL)	SEE PAGE
	1	1	**7N-9801**	1	GASKET	
	2	1	**102-8802**	1	KIT-RECEPTACLE (2-PIN)	
					(INCLUDES RECEPTACLE AS & WEDGE)	
	3	1	**186-3735**	2	PIN-CONNECTOR (16-GA TO 18-GA)	

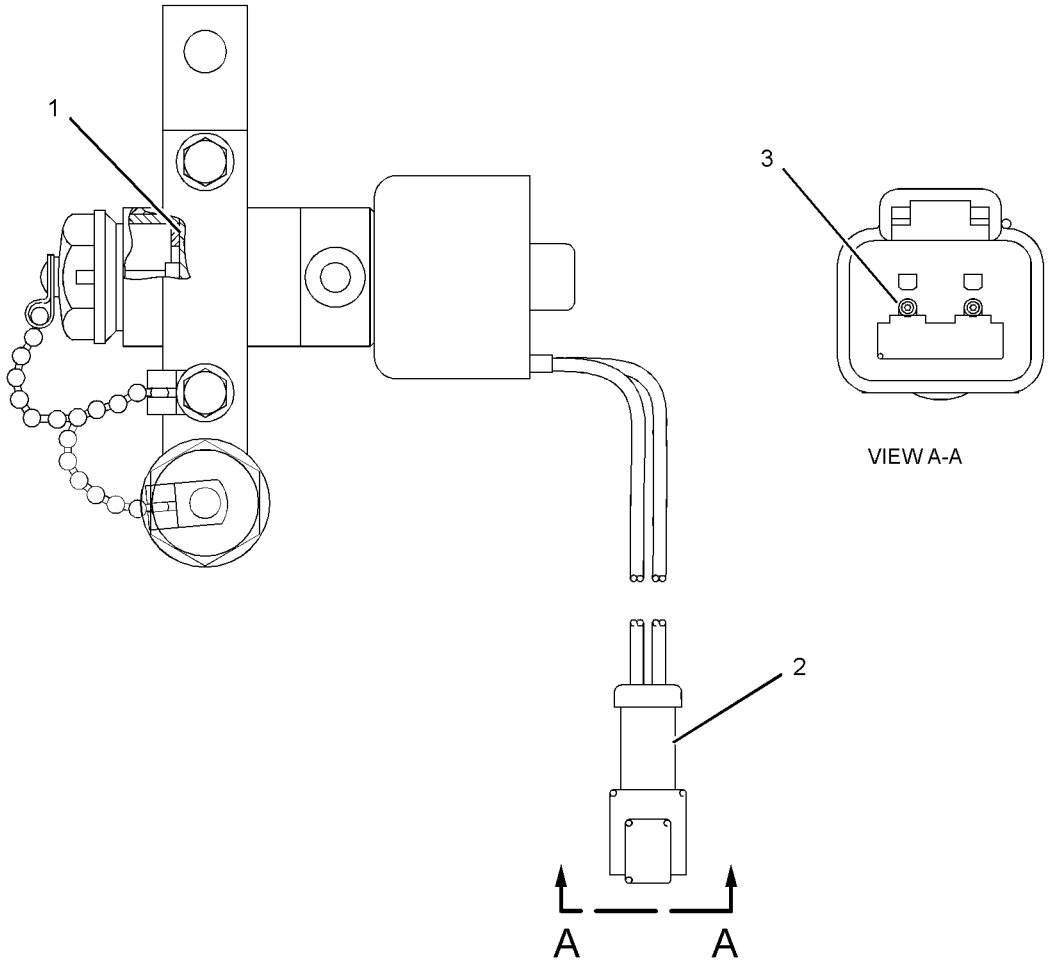

GRAPHIC #1 **<END>** g01375620

311-0803 WIRING GP-AIR CONDITIONER

S/N: JPA1-UP
PART OF 311-2751 AIR CONDITIONER AR
AN ATTACHMENT

SMCS-1408 **i03258803**

NOTE	REF NO	GRAPHIC REF	PART NUMBER	QTY	PART NAME 1 2 3 4 5 6 (PRODUCT LEVEL)	SEE PAGE
	1	1	**169-7443**	1	TIMER AS-ON DELAY (24-VOLT) (AIR CONDITIONER)	
		1	**102-8804**	1	KIT-RECEPTACLE (4-PIN)	
					(INCLUDES RECEPTACLE AS & WEDGE)	
		1	**186-3735**	4	PIN-CONNECTOR (16-GA TO 18-GA)	
	2	1	**313-7755**	1	HARNESS AS-HEATER & AIR COND	
	3	1	**317-8382**	1	BRACKET AS	
	4	1	**334-1429**	1	SHIELD	
	5	1	**334-1431**	1	BRACKET AS	
M		1	**9R-2613**	2	BOSS-WELD (M10X1.5X25-MM)	
	6	1	**125-8797**	1	CLIP	
	7	1	**130-5300**	4	CLIP	
	8	1	**4P-7581**	2	CLIP	
	9	1	**5P-1076**	2	WASHER-HARD (13.5X30X4-MM THK)	
	10	1	**7D-1553**	1	CLIP	
	11	1	**7K-1181**	3	STRAP-CABLE	
M	12	1	**7X-7478**	2	BOLT-LOCKING (M12X1.75X35-MM)	
	13	1	**8M-2770**	3	CLIP	
	14	1	**8T-4121**	7	WASHER-HARD (11X21X2.5-MM THK)	
M	15	1	**8T-4133**	1	NUT (M10X1.5-THD)	
M	16	1	**8T-4137**	6	BOLT (M10X1.5X20-MM)	

M-METRIC PART

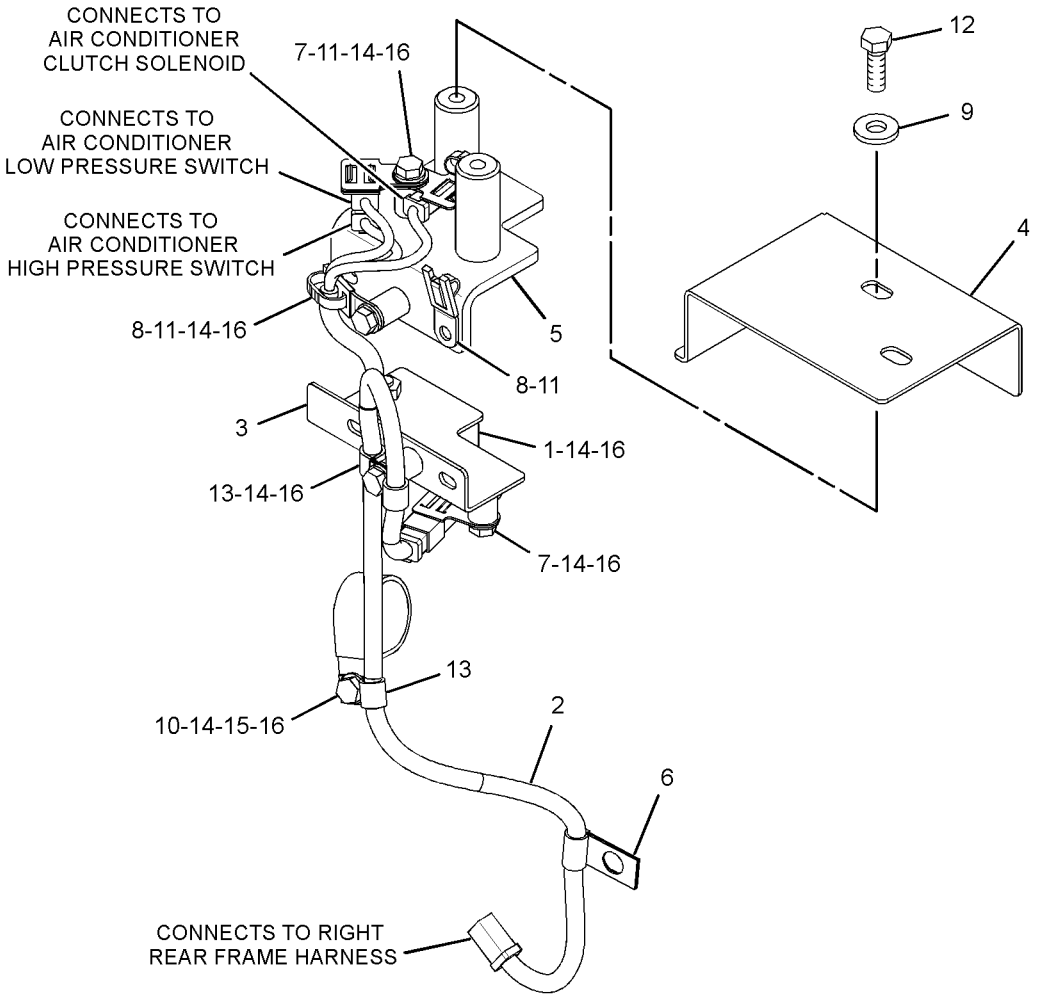

GRAPHIC #1 **<END>** g01677157

ELECTRICAL AND STARTING SYSTEM

311-0802 WIRING GP-AUXILIARY–FUEL TANK

S/N: JPA1-UP

PART OF 274-7940 GENERAL AR

SMCS-1408 **i03246388**

NOTE	REF NO	GRAPHIC REF	PART NUMBER	QTY	PART NAME 1 2 3 4 5 6 (PRODUCT LEVEL)	SEE PAGE
	1	2	**4S-5719**	1	SPACER (10.31X25X12.7-MM THK)	
	2	2	**6V-4283**	1	PLATE-IDENTIFICATION (ALTERNATOR)	
	3	2	**6V-7555**	1	STRAP-CABLE	
Y	4	2	**7N-0718**	1	SWITCH GP-DISCONNECT (BATTERY)	189
		2	**2H-3922**	2	LOCKWASHER	
		2	**6F-7045**	2	NUT-FULL (3/8-24-THD)	
		2	**8H-5303**	1	NUT (3/4-16-THD)	
		2	**8H-5306**	1	KEY (BATTERY DISCONNECT)	
		2	**9F-5644**	2	LOCKWASHER	
	5	2	**9C-5344**	1	SPACER (10.5X20X18-MM THK)	
	6	2	**9G-2758**	1	LOCKOUT AS-SWITCH	
	7	2	**118-3534**	1	SWITCH GP-MAGNETIC (24-VOLT)	
	8	2	**135-2543**	1	BOOT	
	9	2	**171-2212**	2	CIRCUIT BREAKER AS (105-AMPERE)	
	10	2	**186-3223**	1	PLATE AS	
	11	2	**189-0108**	1	PLATE	
Y	12	2	**194-6722**	1	SENSOR GP-PRESSURE (ATMOSPHERIC AIR)	169
	13	2	**204-8000**	1	MOUNT (TIE WRAP)	
Y	14	2	**241-8368**	1	SWITCH GP-MAGNETIC (24-VOLT)	191
	15	2	**289-9354**	1	CABLE AS	
		2	**6V-2369**	1	WIRE (4-GA, BLACK)	
		2	**9G-4343**	1	TERMINAL (4-GA)	
		2	**5P-3454**	1	TERMINAL (4-GA)	
		2	**135-2543**	2	BOOT	
	16	2	**289-9355**	1	CABLE AS	
		2	**5P-5689**	1	WIRE (8-GA, BLACK)	
		2	**131-1488**	2	TERMINAL AS (6-GA TO 8-GA)	
					(EACH INCLUDES)	
		2	**6H-3586**	1	TERMINAL (6-GA TO 8-GA)	
E		2	**119-3662**		TUBE-HEAT SHRINK (10.85-MM DIA) (4-CM)	
	17	2	**311-9296**	1	HARNESS AS-FUEL TANK	
	18	2	**335-0806**	1	BRACKET AS	
	19	2	**124-9633**	1	CLIP	
	20	1,2	**130-5300**	5	CLIP	
	21	2	**132-5789**	1	CLIP	
	22	1	**332-7657**	1	SENDER AS-FUEL LEVEL	
	23	2	**3J-1907**	1	SEAL-O-RING	
	24	2	**4D-7794**	1	CLIP	
M	25	1	**5C-9553**	5	BOLT (M6X1X16-MM)	
	26	2	**5L-4507**	4	SCREW-MACHINE (10-32X0.875-IN)	
M	27	2	**6V-7357**	1	BOLT (M6X1X25-MM)	
	28	2	**6V-7699**	4	WASHER-HARD (5.5X13X1.6-MM THK)	
	29	2	**7K-1181**	11	STRAP-CABLE	
	30	1,2	**8T-4121**	8	WASHER-HARD (11X21X2.5-MM THK)	
M	31	2	**8T-4133**	1	NUT (M10X1.5-THD)	
M	32	2	**8T-4136**	2	BOLT (M10X1.5X25-MM)	
M	33	1,2	**8T-4137**	3	BOLT (M10X1.5X20-MM)	
M	34	2	**8T-4138**	3	BOLT (M6X1X20-MM)	
M	35	2	**8T-4196**	2	BOLT (M10X1.5X35-MM)	
	36	1	**8T-4205**	5	WASHER-HARD (7.2X14.5X2-MM THK)	
	37	2	**9X-8256**	4	WASHER (6.6X12X2-MM THK)	
	38	1	**1U-8846**	1	SEALANT-GASKET	

E-ORDER BY THE CENTIMETER
M-METRIC PART
Y-SEPARATE ILLUSTRATION

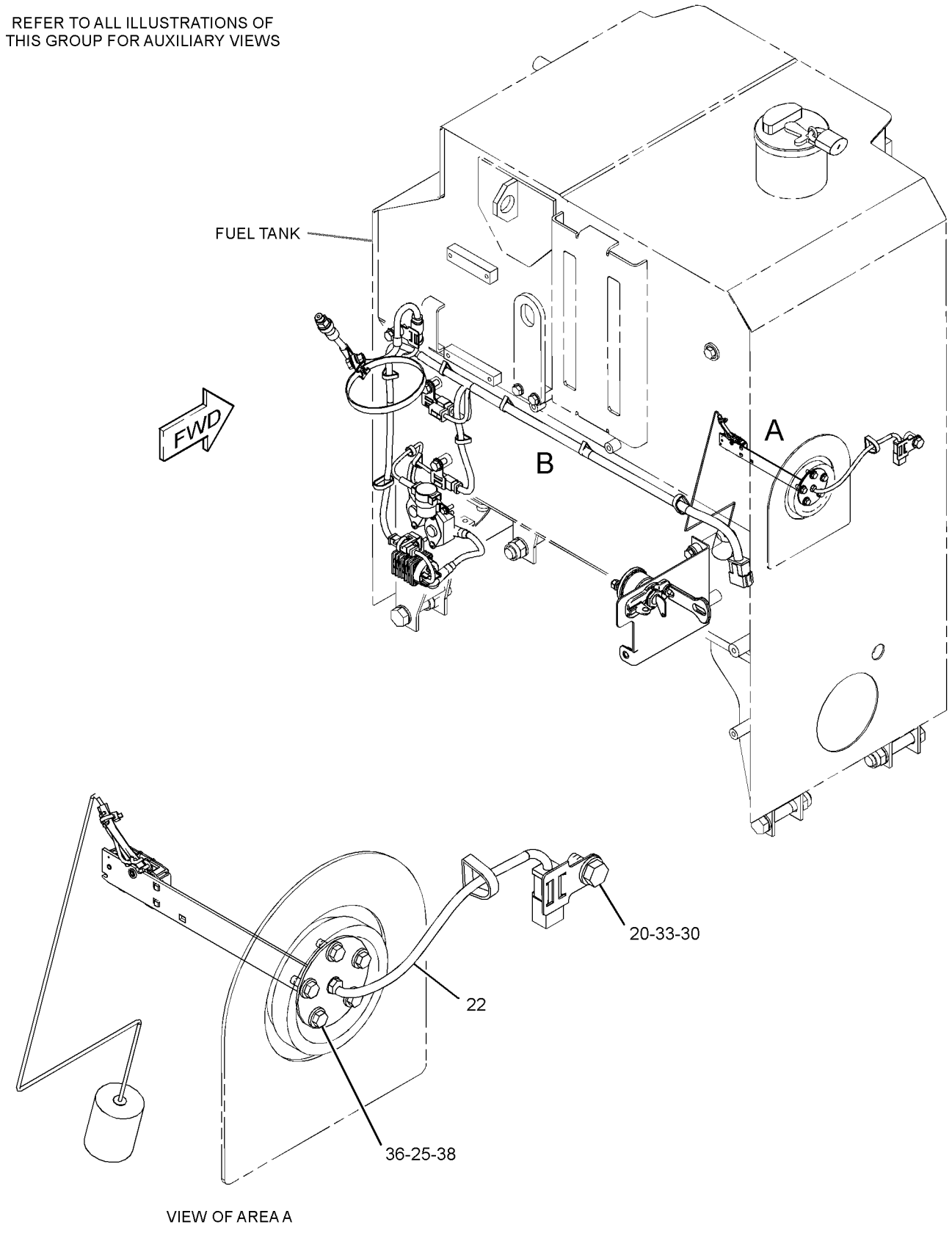

GRAPHIC #1 g01758311

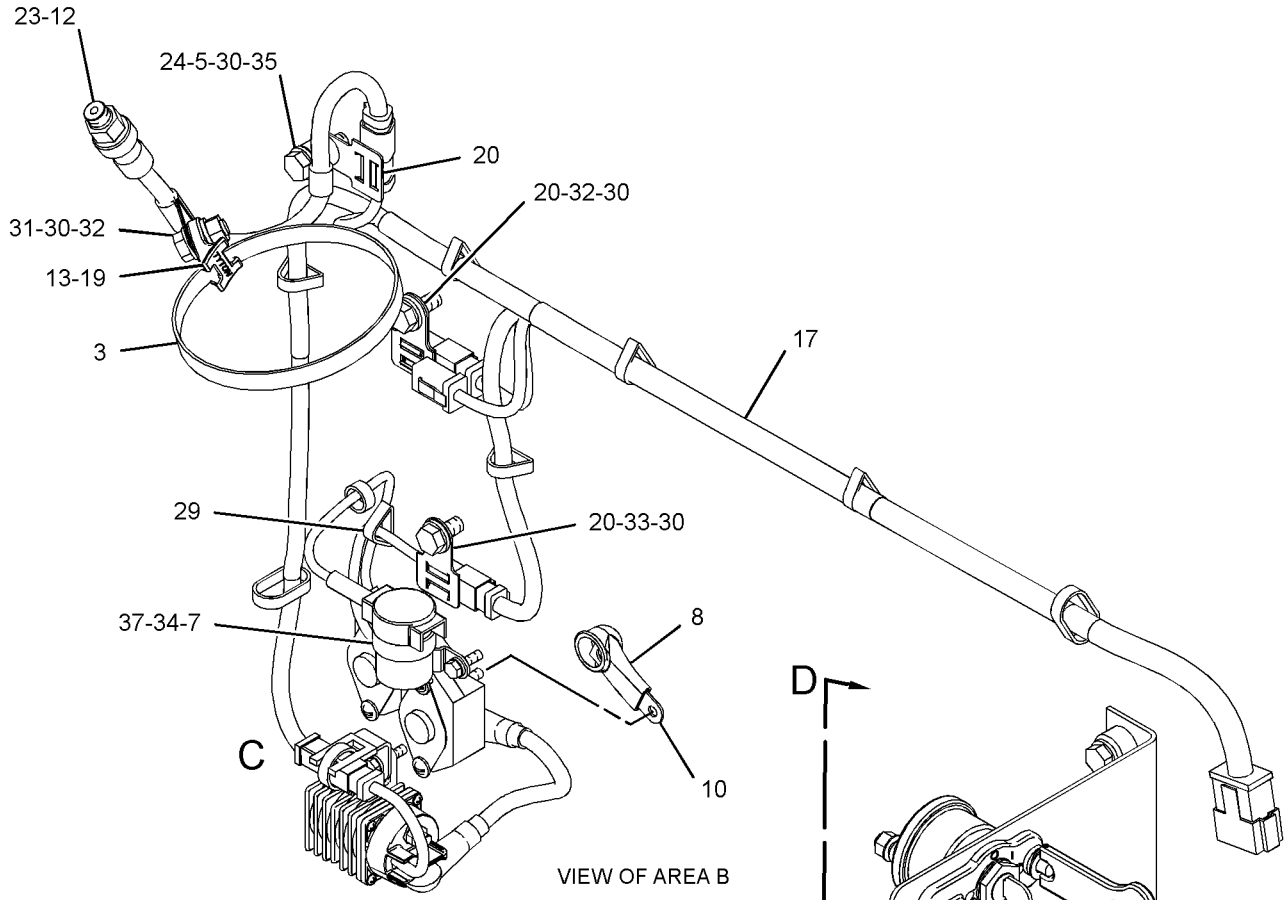

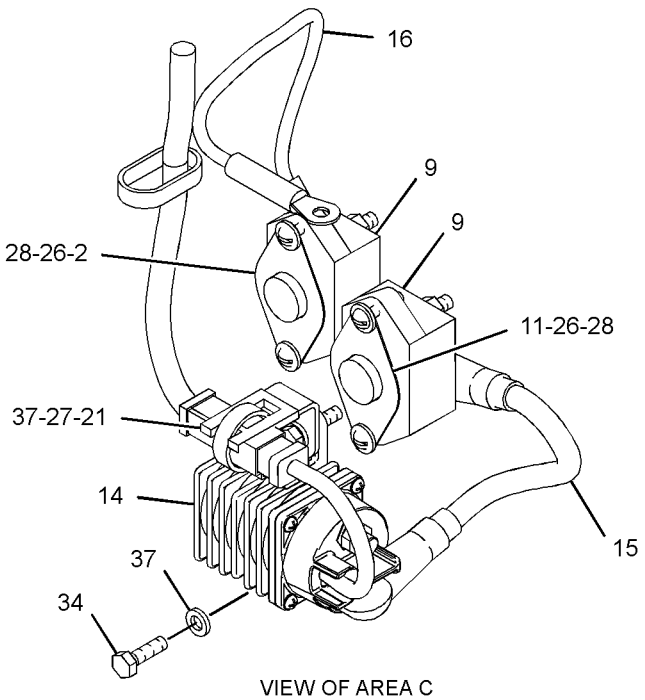

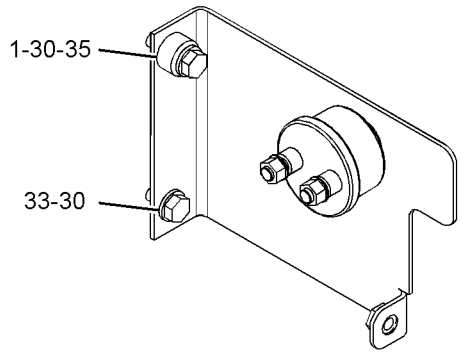

GRAPHIC #2 **<END>** g01758312

284-5352 WIRING GP-BLADE CUSHION

S/N: JPA1-UP
PART OF 285-4154 ACCUMULATOR AR-BLADE CUSHION
AN ATTACHMENT

SMCS-1408 **i03432001**

NOTE	REF NO	GRAPHIC REF	PART NUMBER	QTY	PART NAME 1 2 3 4 5 6 (PRODUCT LEVEL)	SEE PAGE
	1	1	**335-8402**	1	HARNESS AS-SOLENOID	
	2	1	**033-8248**	2	CLIP	
	3	1	**130-5300**	2	CLIP	
	4	1	**147-0385**	1	CLIP	
	5	1	**4L-6459**	2	BOLT (3/8-16X2.5-IN)	
	6	1	**5P-8167**	1	BOLT (3/8-16X0.625-IN)	
	7	1	**6V-8801**	2	NUT (3/8-16-THD)	
	8	1	**7K-1181**	2	STRAP-CABLE	
	9	1	**8T-4896**	5	WASHER-HARD (10.2X18.5X2.5-MM THK)	
	10	1	*9X-9629*	1	SWITCH AS-ROCKER (24-VOLT) (BLADE CUSHION)	
		1	**3E-8763**	1	SWITCH AS	
		1	**3E-8812**	1	ACTUATOR-ROCKER	
		1	**3E-8825**	1	LAMP (24-VOLT)	

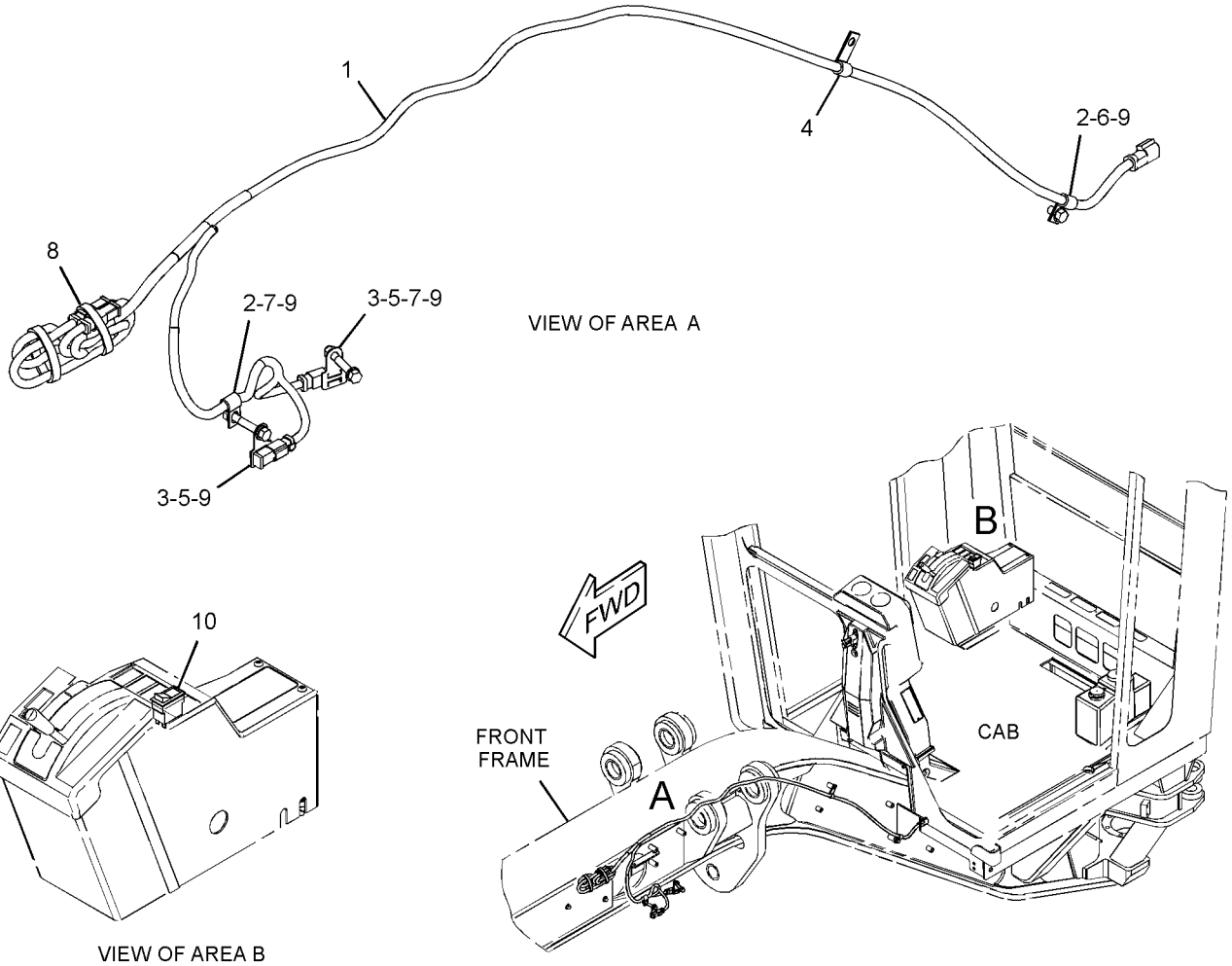

GRAPHIC #1

<END>

g01681934

284-5356 WIRING GP-CAB—MACHINE IMMOBILIZER

S/N: JPA1-UP

AN ATTACHMENT

SMCS-1408, 7301 **i03258721**

NOTE	REF NO	GRAPHIC REF	PART NUMBER	QTY	PART NAME 1 2 3 4 5 6 (PRODUCT LEVEL)	SEE PAGE
	1	1	**3S-2093**	1	STRAP-CABLE	
	2	1	**5M-3724**	1	BRACKET	
	3	1	**290-3979**	1	HARNESS AS-SWITCH	
	4	1	**115-3070**	1	CLIP AS-CONNECT (4-PIN)	
	5	1	**3E-5239**	1	RELAY AS (24-VOLT)	
	6	1	**4P-7581**	1	CLIP	
M	7	1	**5C-2890**	1	NUT (M6X1-THD)	
M	8	1	**5C-9553**	1	BOLT (M6X1X16-MM)	
M	9	1	**7X-2536**	1	BOLT (M8X1.25X14-MM)	
	10	1	**8T-4205**	2	WASHER-HARD (7.2X14.5X2-MM THK)	
	11	1	**8T-4224**	1	WASHER-HARD (8.8X16X2-MM THK)	

M-METRIC PART

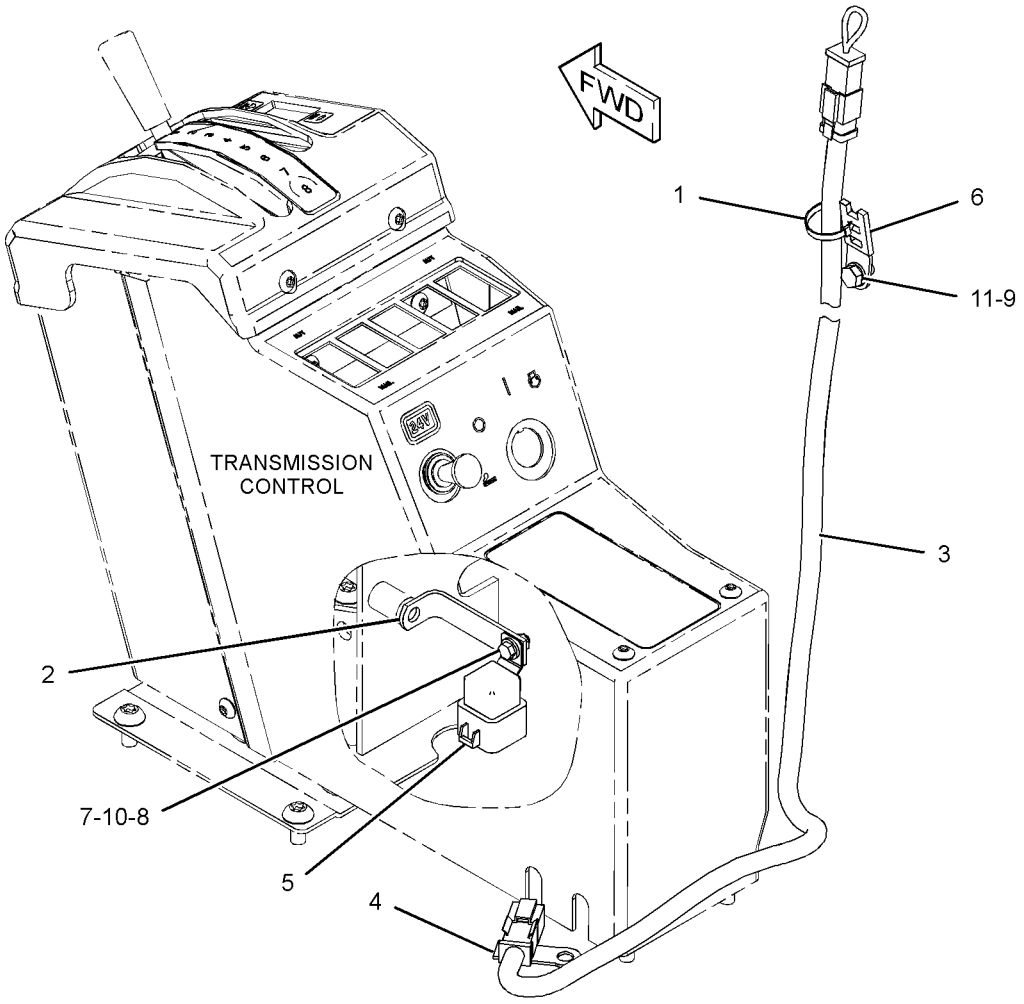

GRAPHIC #1 **<END>** g01678928

285-3361 WIRING GP-CAB

S/N: JPA1-UP
PART OF 320-0341 CAB AR, 320-0342 ROPS AR
AN ATTACHMENT

SMCS-1408, 7301 **i03251670**

NOTE	REF NO	GRAPHIC REF	PART NUMBER	QTY	PART NAME 1 2 3 4 5 6 (PRODUCT LEVEL)	SEE PAGE
	1	2	**3E-0109**	3	PLUG (ROCKER SWITCH)	
Y	2	2	**3E-6389**	1	LAMP GP-DOME (24-VOLT)	134
	3	1,2	**3S-2093**	23	STRAP-CABLE	
	4	2	**6V-6578**	2	RIVET-BLIND	
	5	2	**7T-9302**	2	KNOB AS-WIPER SWITCH	
		2	**014-0816**	1	SETSCREW (8-32X0.5-IN)	
	6	2	**9W-1441**	1	FUSE (15-AMPERE)	
	7	2	**112-6174**	2	SWITCH AS-ROTARY (WIPER, WASHER) (FRONT)	
					(EACH INCLUDES)	
		2	**2H-3920**	1	LOCKWASHER	
		2	**3E-3389**	1	WEDGE-RECEPTACLE LOCK	
		2	**6V-8369**	1	NUT (7/16-28-THD)	
		2	**186-3735**	6	PIN-CONNECTOR (16-GA TO 18-GA)	
		2	**8T-8737**	2	PLUG-SEAL	
		2	**102-8806**	1	KIT-RECEPTACLE (8-PIN)	
					(INCLUDES RECEPTACLE AS & WEDGE)	
	8	2	**131-5171**	1	CLIP	
	9	2	**160-6382**	1	GROMMET	
	10	1	**167-7504**	1	HARNESS AS-CAB (SWITCH PANEL)	
	11	1	**167-7505**	1	HARNESS AS-CAB (REAR)	
	12	1	**168-8248**	1	HARNESS AS-CAB (FRONT)	
	13	2	**169-8938**	1	PLATE AS	
	14	2	**172-6555**	1	PANEL	
	15	2	**172-8641**	1	PLATE	
	16	2	**172-9316**	1	FILM-FUSE (PANEL ACTION LAMPS)	
	17	2	**096-6166**	3	WASHER-HARD (4.5X9X1-MM THK)	
M	18	2	**5C-8312**	3	NUT (M4X0.7-THD)	
	19	2	**6V-5645**	4	SCREW-MACHINE (10-32X0.87-IN)	
	20	2	**6V-8801**	1	NUT (3/8-16-THD)	
	21	2	**8T-4896**	1	WASHER-HARD (10.2X18.5X2.5-MM THK)	
M	22	2	**9X-1046**	3	SCREW (M4X0.7X18-MM)	
M	23	2	**9X-2042**	4	SCREW-TRUSS HEAD (M6X1X12-MM)	
E	24	2	**7X-7877**		STRIP-EDGING (10-CM)	

E-ORDER BY THE CENTIMETER
M-METRIC PART
Y-SEPARATE ILLUSTRATION

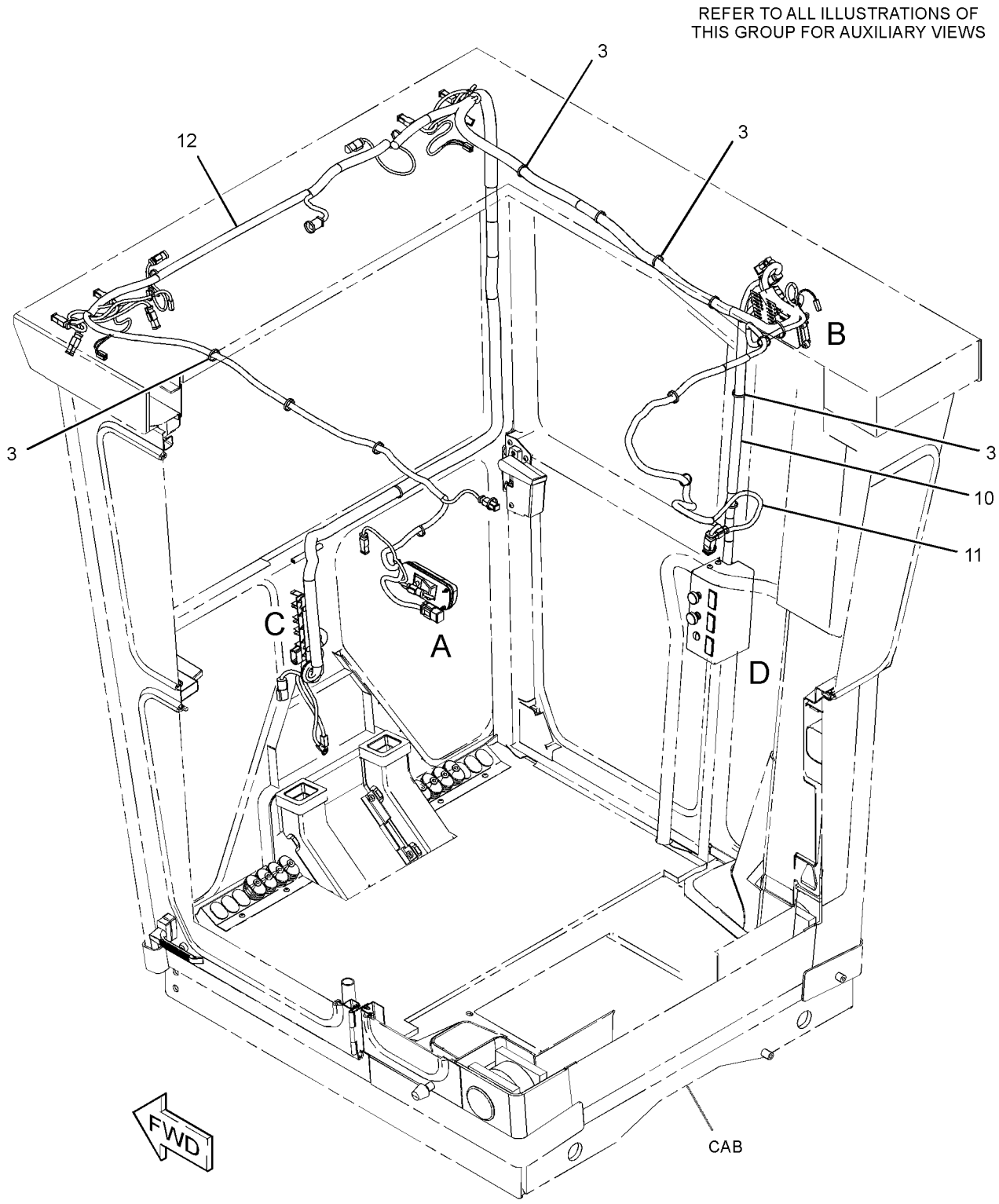

GRAPHIC #1 g01708016

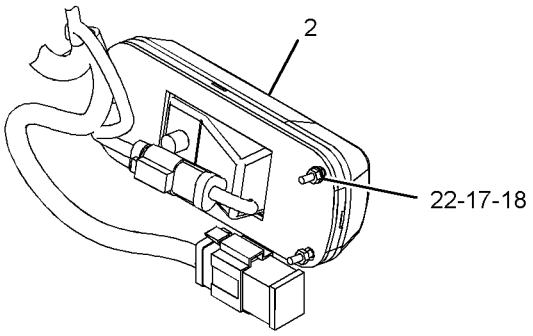

VIEW OF AREA A

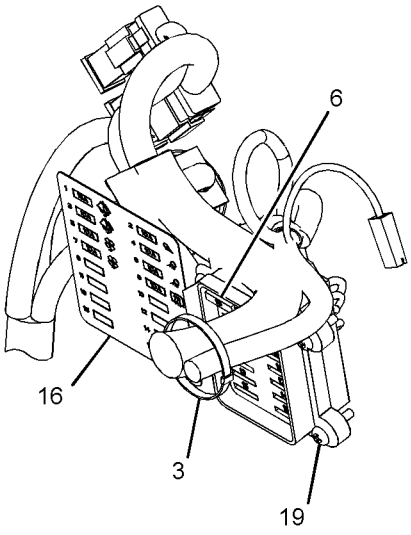

VIEW OF AREA B
(FUSE PANEL COVER REMOVED FOR CLARITY)

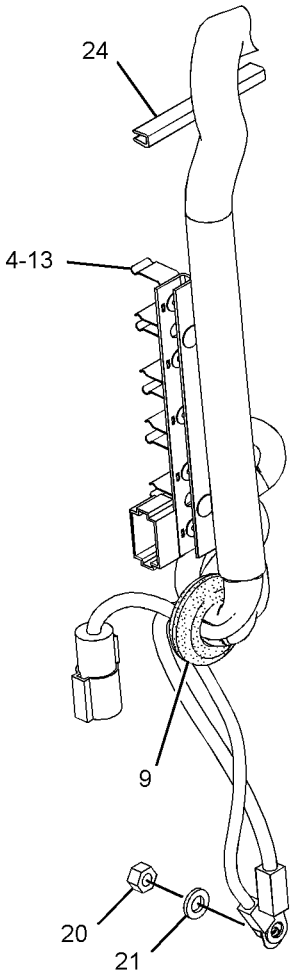

VIEW OF AREA C

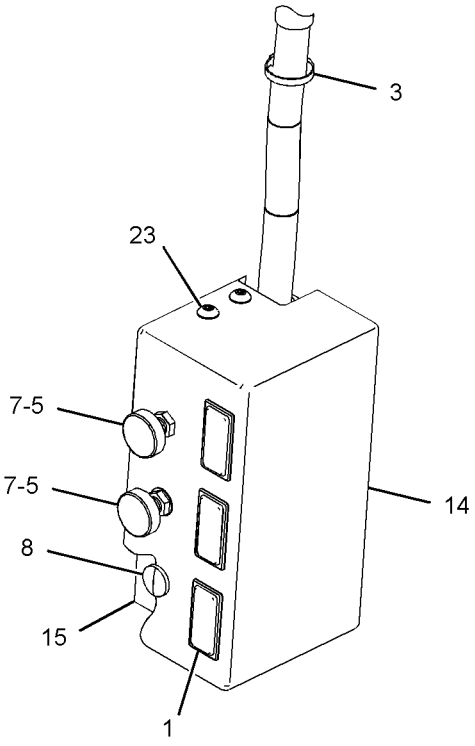

VIEW OF AREA D

GRAPHIC #2 **<END>** g01708015

ELECTRICAL AND STARTING SYSTEM

284-5346 WIRING GP-CONSOLE

S/N: JPA1-UP

PART OF 274-7940 GENERAL AR

SMCS-1408 **i03431980**

NOTE	REF NO	GRAPHIC REF	PART NUMBER	QTY	PART NAME 1 2 3 4 5 6 (PRODUCT LEVEL)	SEE PAGE
	1	1	**3E-0109**	4	PLUG (ROCKER SWITCH)	
Y	2	1	**3E-6328**	1	ALARM GP (24-VOLT) (ACTION)	102
	3	1	**3S-2093**	4	STRAP-CABLE	
	4	1	**5M-3724**	1	BRACKET	
	5	1	**7N-5876**	1	LAMP (24-VOLT, 5.6-WATT)	
	6	1	**8C-6354**	1	CAP-RECEPTACLE	
	7	1	**110-7887**	1	SWITCH AS-START (KEY)	
		1	**7T-6799**	1	NUT-MOUNTING (1-32-THD)	
		1	**102-8804**	1	KIT-RECEPTACLE (4-PIN)	
					(INCLUDES RECEPTACLE AS & WEDGE)	
		1	**186-3735**	4	PIN-CONNECTOR (16-GA TO 18-GA)	
	9	1	**169-5414**	3	CLIP	
	10	1	*183-2151*	1	SWITCH AS-ROCKER (24-VOLT) (THROTTLE HOLD MODE)	
		1	**3E-8825**	2	LAMP (24-VOLT)	
		1	**183-2136**	1	ACTUATOR-ROCKER	
		1	**196-7268**	1	SWITCH AS (THROTTLE HOLD MODE)	
	11	1	**185-2197**	1	SWITCH AS-ROCKER (THROTTLE LOCK SET, RESET)	
	12	1	**335-1894**	1	HARNESS AS-CONSOLE	
	13	1	**335-1895**	1	HARNESS AS-CONSOLE	
	14	1	**130-5300**	1	CLIP	
	15	1	**2V-8259**	2	GROMMET	
	16	1	**3E-5239**	1	RELAY AS (24-VOLT)	
	17	1	**4D-7794**	1	CLIP	
	18	1	**4L-6454**	1	BOLT (3/8-16X1-IN)	
	19	1	**4P-7581**	1	CLIP	
M	20	1	**5C-2890**	1	NUT (M6X1-THD)	
M	21	1	**5C-9553**	2	BOLT (M6X1X16-MM)	
	22	1	**5M-3062**	2	BOLT (3/8-16X0.75-IN)	
	23	1	**5S-4246**	4	LOCKWASHER	
	24	1	**6B-4540**	4	NUT (4-40-THD)	
	25	1	**6V-2480**	4	SCREW (4-40X0.5-IN)	
	26	1	**6V-8801**	1	NUT (3/8-16-THD)	
	27	1	**7C-4354**	1	CLIP	
	28	1	**7G-7053**	1	GROMMET	
	29	1	**7X-4743**	1	GROMMET	
	30	1	**8T-4121**	1	WASHER-HARD (11X21X2.5-MM THK)	
M	31	1	**8T-4137**	2	BOLT (M10X1.5X20-MM)	
	32	1	**8T-4896**	5	WASHER-HARD (10.2X18.5X2.5-MM THK)	
	33	1	**9X-8256**	2	WASHER (6.6X12X2-MM THK)	
	34	1	*9X-9634*	1	SWITCH AS-ROCKER (CENTERSHIFT PIN)	
		1	**3E-8817**	1	ACTUATOR-ROCKER	
		1	**3E-8825**	1	LAMP (24-VOLT)	
		1	**3E-9327**	1	SWITCH AS (CENTERSHIFT PIN)	
	35	1	**9R-2620**	1	PLUG	

M-METRIC PART
Y-SEPARATE ILLUSTRATION

284-5346 **WIRING GP-CONSOLE** *(contd.)* **i03431980**

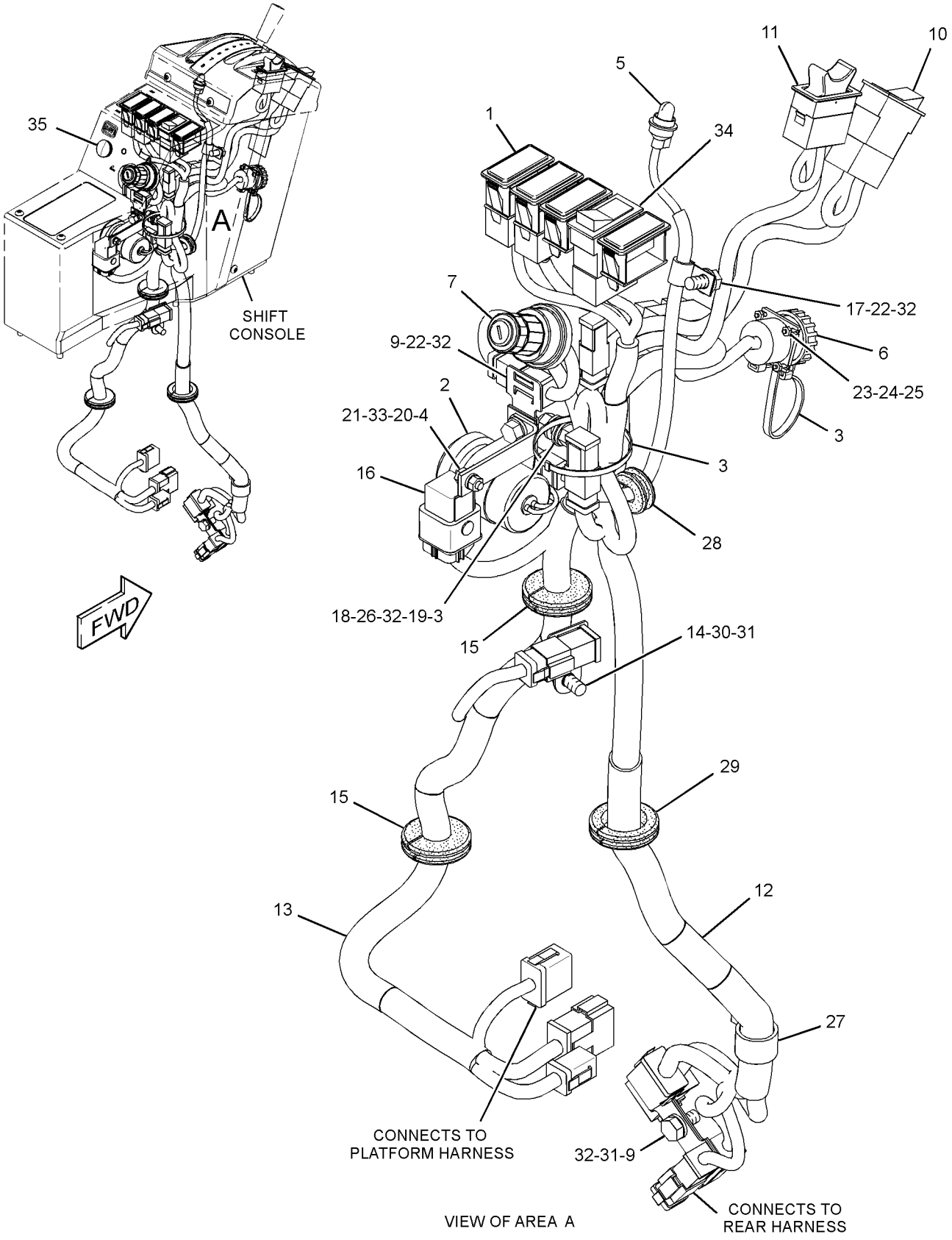

GRAPHIC #1

<END>

g01754234

ELECTRICAL AND STARTING SYSTEM

198-2714 WIRING GP-ENGINE

S/N: KHX8814-UP

PART OF 312-0255 ENGINE AR-COMPLETE

SMCS-1408 **i02953264**

NOTE	REF NO	GRAPHIC REF	PART NUMBER	QTY	PART NAME 1 2 3 4 5 6 (PRODUCT LEVEL)	SEE PAGE
	1	1	**3S-2093**	18	STRAP-CABLE	
	2	1	**4P-5918**	1	CLIP	
	3	1	**105-1797**	7	MOUNT	
	4	1	**198-2713**	1	HARNESS AS-ENGINE (ELECTRONIC CONTROL MODULE)	
	5	1	**206-1345**	2	STRAP-CABLE	
	6	1	**222-5917**	1	HARNESS AS-ENGINE (FUEL INJECTION)	
	7	1	**4P-8134**	1	CLIP	
M	8	1	**6V-2317**	1	BOLT (M8X1.25X30-MM)	
	9	1	**9M-1974**	1	WASHER-HARD (8.8X16X2-MM THK)	

M-METRIC PART

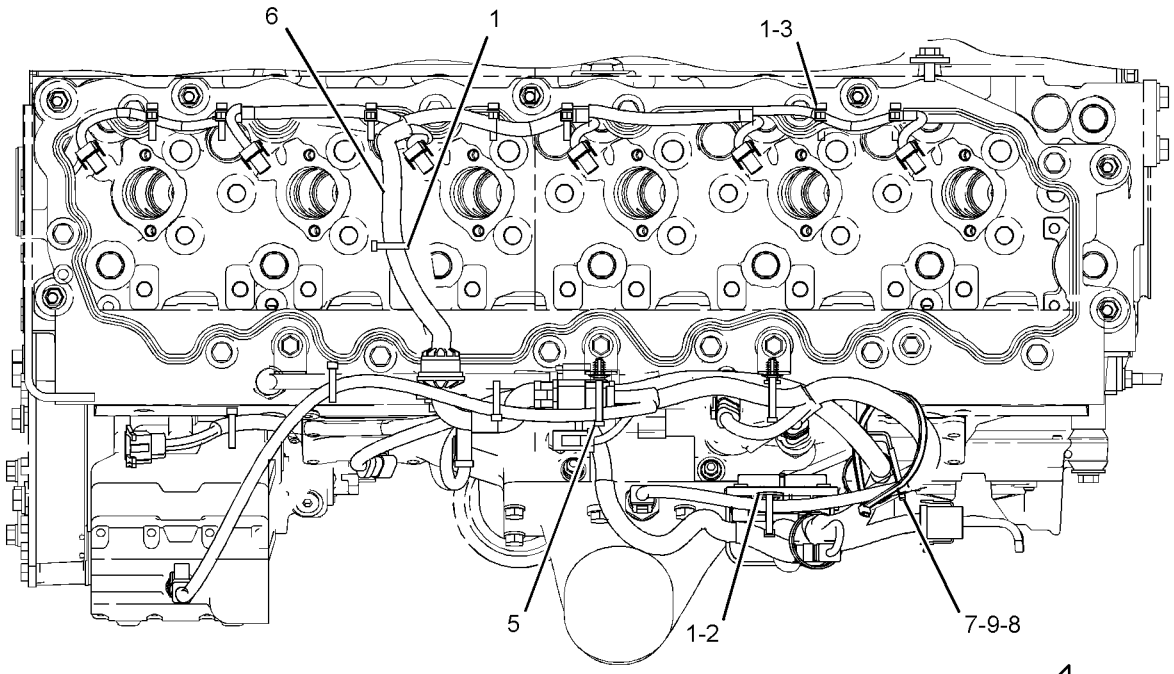

TOP VIEW

FWD

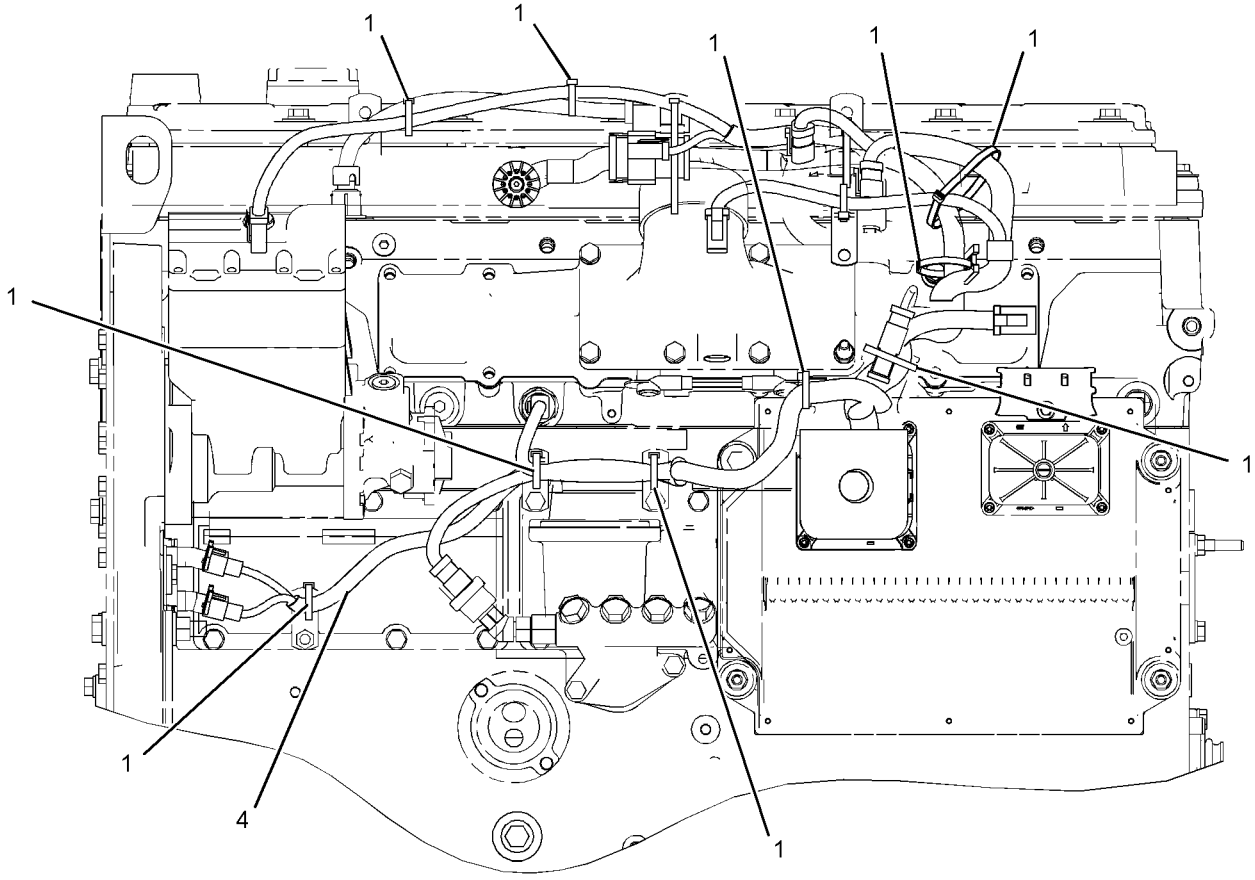

LEFT SIDE VIEW

GRAPHIC #1

<END>

g01175334

311-0801 WIRING GP-ETHER STARTING AID

S/N: JPA1-UP
PART OF 320-1340 STARTING AID AR-ETHER
AN ATTACHMENT

SMCS-1408 **i03251663**

NOTE	REF NO	GRAPHIC REF	PART NUMBER	QTY	PART NAME 1 2 3 4 5 6 (PRODUCT LEVEL)	SEE PAGE
	1	1	**334-6872**	1	HARNESS AS-STARTING AID	
	2	1	**132-5789**	1	CLIP	
	3	1	**3E-5239**	1	RELAY AS (24-VOLT) (ETHER STARTING AID)	
M	4	1	**5C-9553**	1	BOLT (M6X1X16-MM)	
	5	1	**7K-1181**	1	STRAP-CABLE	
	6	1	**9X-8256**	1	WASHER (6.6X12X2-MM THK)	

M-METRIC PART

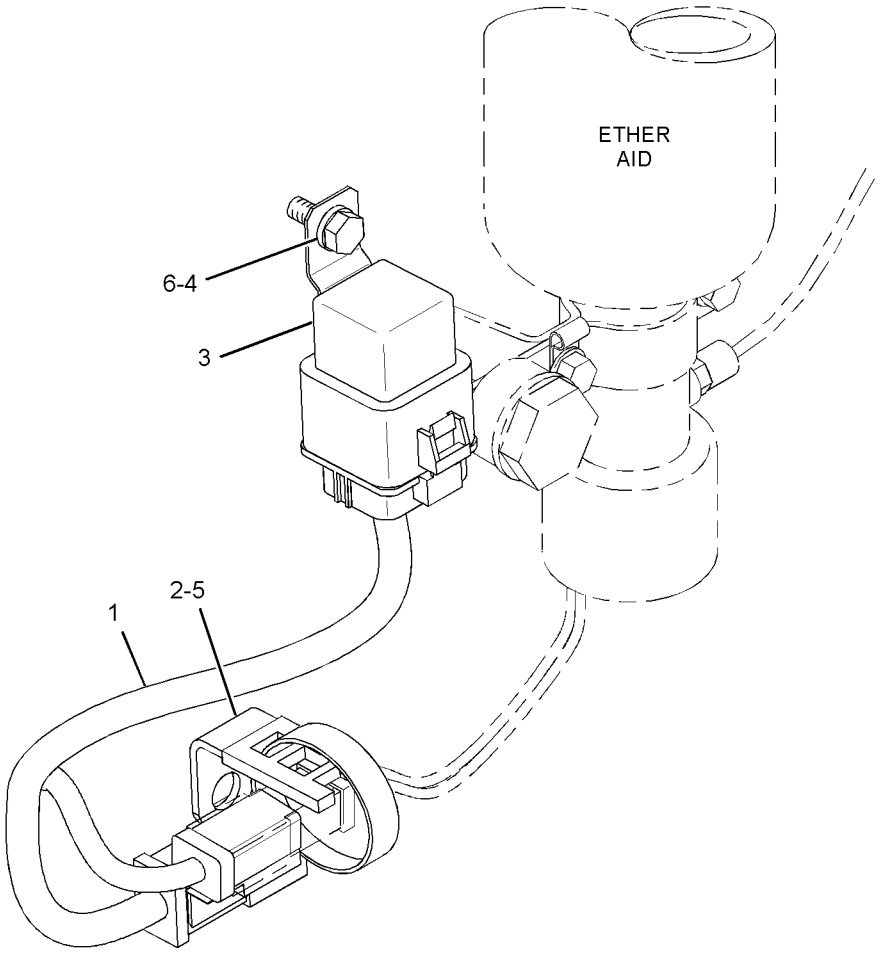

GRAPHIC #1 **<END>** g01703353

ELECTRICAL AND STARTING SYSTEM

284-5343 WIRING GP-FRONT

S/N: JPA1-UP

PART OF 274-7940 GENERAL AR

SMCS-1408 **i03247447**

NOTE	REF NO	GRAPHIC REF	PART NUMBER	QTY	PART NAME 1 2 3 4 5 6 (PRODUCT LEVEL)	SEE PAGE
	1	1	**1S-2342**	1	STRAP AS-GROUND	
	2	2	**3E-2026**	1	SWITCH AS-PRESSURE (STOP LIGHT)	
		2	**102-8802**	1	KIT-RECEPTACLE (2-PIN)	
					(INCLUDES RECEPTACLE AS & WEDGE)	
		2	**186-3735**	2	PIN-CONNECTOR (16-GA TO 18-GA)	
	3	2	**3E-3636**	1	SWITCH AS-BALL (CENTERSHIFT INDICATOR)	
		2	**186-3735**	4	PIN-CONNECTOR (16-GA TO 18-GA)	
		2	**102-8804**	1	KIT-RECEPTACLE (4-PIN)	
					(INCLUDES RECEPTACLE AS & WEDGE)	
	4	2	**6I-1418**	4	SPACER (8.2X12.7X28.7-MM THK)	
	5	2	**8T-9655**	8	MOUNT-ISOLATION	
	6	2	**9L-1566**	2	SUPPORT	
	7	1	**9L-6331**	1	BRACKET	
	8	2	**114-9281**	2	SWITCH AS-PRESSURE (AIR BRAKE)	
					(EACH INCLUDES)	
		2	**102-8802**	1	KIT-RECEPTACLE (2-PIN)	
					(INCLUDES RECEPTACLE AS & WEDGE)	
		2	**186-3735**	2	PIN-CONNECTOR (16-GA TO 18-GA)	
	9	1,2	**169-5414**	5	CLIP	
Y	10	2	**177-4493**	1	CONTROL GP-POWER TRAIN	120
	11	2	**297-1140**	1	SWITCH AS-PRESSURE (PARKING BRAKE)	
		2	**102-8802**	1	KIT-RECEPTACLE (2-PIN)	
					(INCLUDES RECEPTACLE AS & WEDGE)	
		2	**186-3735**	2	PIN-CONNECTOR (16-GA TO 18-GA)	
	12	2	**320-8203**	1	PLATE AS	
	13	1	**334-9745**	1	HARNESS AS-PLATFORM	
	14	2	**096-6166**	4	WASHER-HARD (4.5X9X1-MM THK)	
	15	1,2	**130-5300**	6	CLIP	
	16	2	**174-5907**	2	CLIP	
	17	2	**3J-1907**	1	SEAL-O-RING	
	18	1,2	**4D-7388**	4	CLIP	
	19	1,2	**4D-7794**	8	CLIP	
	20	1	**4K-8864**	1	CLIP	
	21	1	**4L-6454**	1	BOLT (3/8-16X1-IN)	
	22	1,2	**4P-8134**	2	CLIP	
	23	1,2	**5M-3062**	4	BOLT (3/8-16X0.75-IN)	
	24	1	**6D-4246**	1	CLIP	
	25	2	**6D-4636**	1	CLIP	
	26	1	**6V-1889**	1	CLIP	
	27	1,2	**6V-3265**	6	CLIP	
	28	2	**7X-0613**	4	WASHER-HARD (8.8X25.5X5-MM THK)	
	29	1	**6V-8801**	1	NUT (3/8-16-THD)	
	30	1	**7C-4354**	1	CLIP	
	31	1,2	**7K-1181**	19	STRAP-CABLE	
	32	2	**7N-3718**	1	CLIP	
M	33	2	**7X-0818**	4	BOLT (M8X1.25X45-MM)	
B	34	2	**8F-1974**	10	SHIM (0.13-MM THK)	
	35	2	**8M-2770**	1	CLIP	
	36	1	**8M-2773**	1	CLIP	
	37	1,2	**8T-4121**	33	WASHER-HARD (11X21X2.5-MM THK)	
M	38	1,2	**8T-4133**	4	NUT (M10X1.5-THD)	
M	39	2	**8T-4136**	2	BOLT (M10X1.5X25-MM)	
M	40	1,2	**8T-4137**	24	BOLT (M10X1.5X20-MM)	
M	41	1,2	**8T-4195**	3	BOLT (M10X1.5X30-MM)	
M	42	2	**8T-4647**	4	SCREW-MACHINE (M4X0.7X20-MM)	
	43	1,2	**8T-4896**	6	WASHER-HARD (10.2X18.5X2.5-MM THK)	

284-5343 **WIRING GP-FRONT** ***(contd.)*** **i03247447**

B-USE AS REQUIRED
M-METRIC PART
Y-SEPARATE ILLUSTRATION

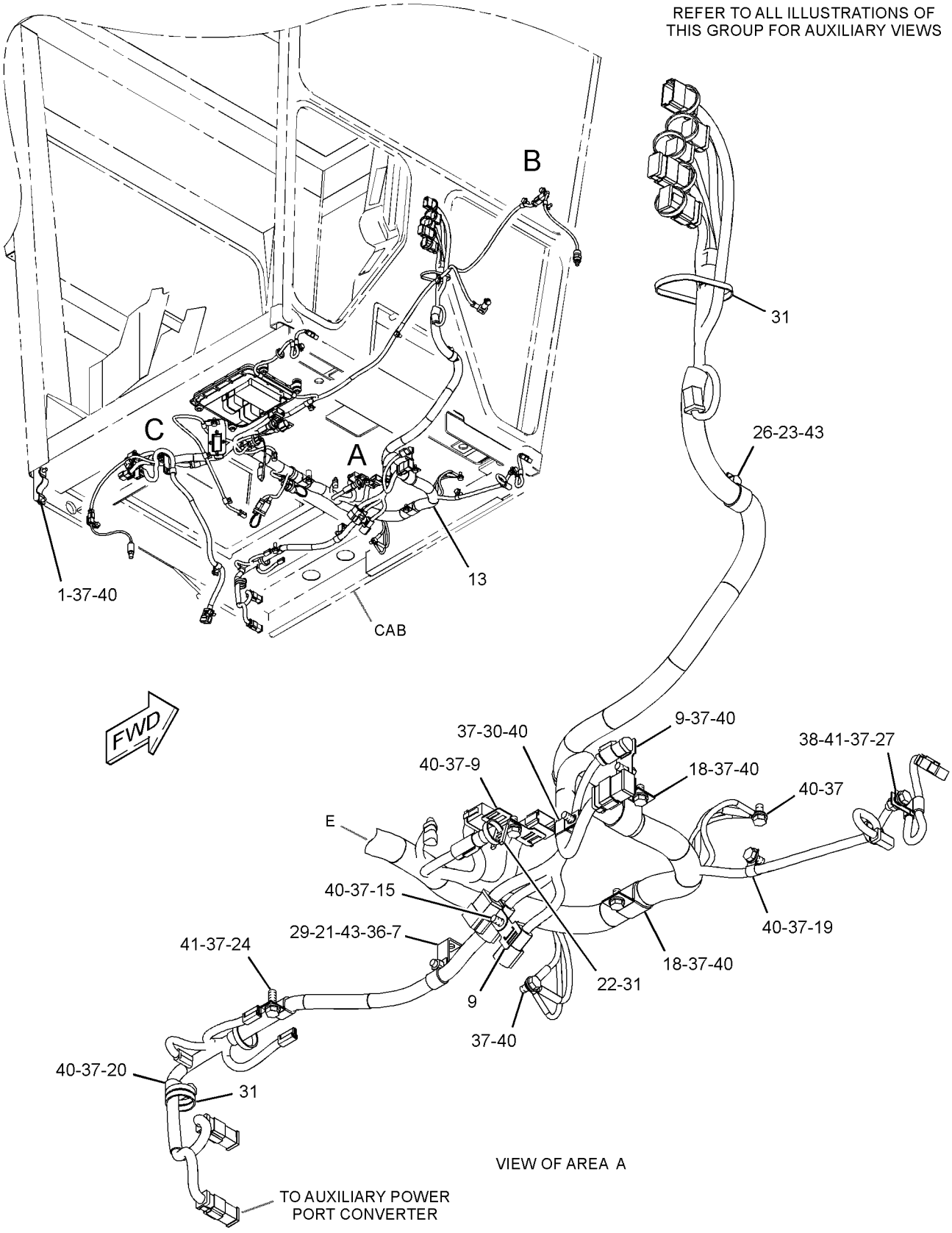

GRAPHIC #1 g01712254

284-5343 **WIRING GP-FRONT** *(contd.)* **i03247447**

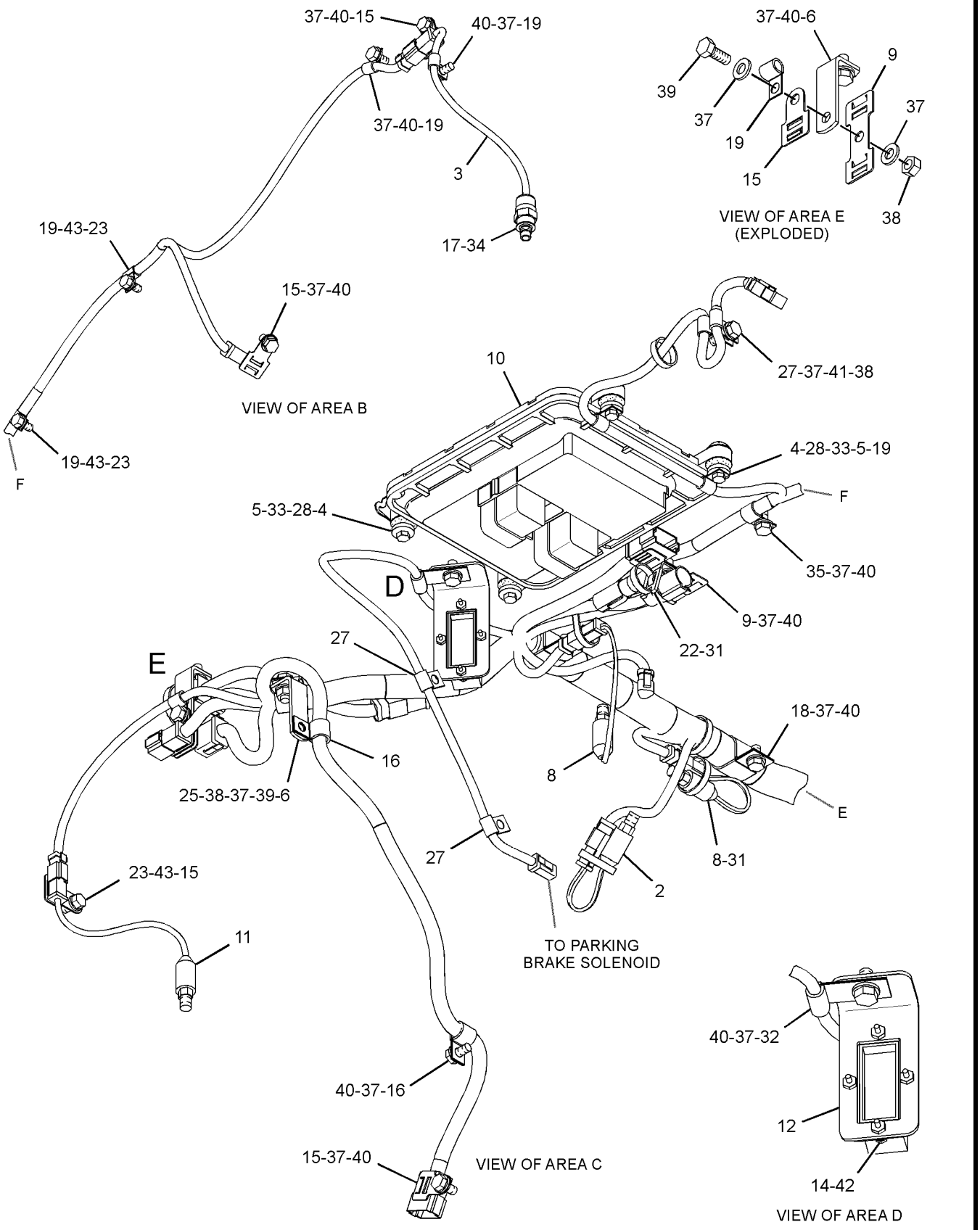

GRAPHIC #2 **<END>** g01712255

252-5709 WIRING GP-GRADE CONTROL–CAB, INDICATOR LAMP

S/N: JPA1-UP
PART OF 297-8448 GRADE CONTROL AR
AN ATTACHMENT

SMCS-1408 **i02397347**

NOTE	REF NO	GRAPHIC REF	PART NUMBER	QTY	PART NAME 1 2 3 4 5 6 (PRODUCT LEVEL)	SEE PAGE
	1	1	**115-1748**	1	LAMP (24-VOLT, 3-WATT)	
	2	1	**247-6457**	1	WIRING AS	

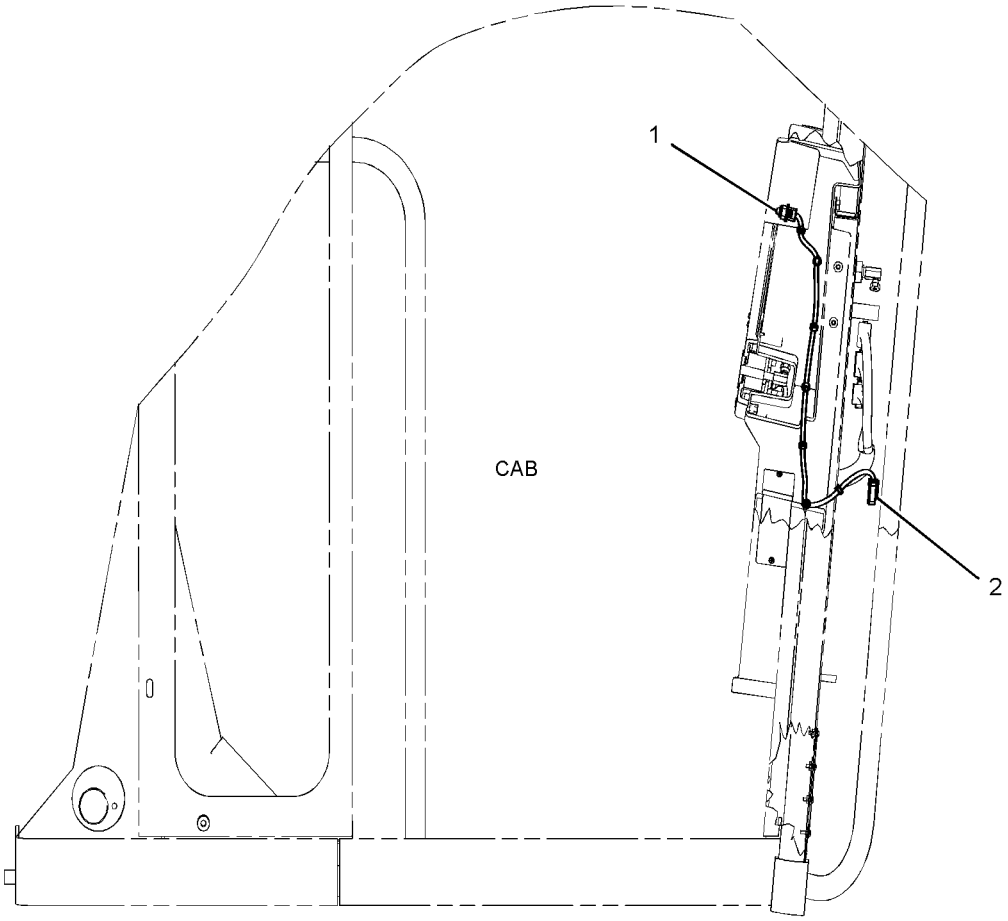

RIGHT SIDE VIEW

GRAPHIC #1 **<END>** g01239581

ELECTRICAL AND STARTING SYSTEM

294-3542 WIRING GP-CHASSIS–ACCUGRADE

S/N: JPA1-UP
PART OF 297-8448 GRADE CONTROL AR
AN ATTACHMENT

SMCS-1408 **i03266020**

NOTE	REF NO	GRAPHIC REF	PART NUMBER	QTY	PART NAME 1 2 3 4 5 6 (PRODUCT LEVEL)	SEE PAGE
	1	1	**6D-3033**	16	SCREW-SOCKET HEAD (4-40X0.5-IN)	
	2	1	**8T-9655**	8	MOUNT-ISOLATION	
	3	1	**9L-1566**	2	SUPPORT	
	4	1	**132-8487**	4	NUT-RING	
	5	1	**169-5414**	1	CLIP	
	6	1	**236-2356**	1	HARNESS AS-SENSOR (ANGLE)	
	7	1	**236-8826**	4	BOSS (1-1/8-18X0.708-IN)	
	8	1	**243-3250**	1	HARNESS AS-SENSOR (ROTATION)	
	9	1	**244-5880**	1	BRACKET	
	10	1	**251-2383**	1	BRACKET	
Y	11	1	*260-7647*	1	APPLICATION GP-POWER TRAIN	229
	12	1	**288-5508**	1	BRACKET AS (LH)	
	13	1	**288-5509**	1	BRACKET AS (RH)	
	14	1	**336-9456**	1	HARNESS AS-CHASSIS	
	15	1	**313-4670**	1	BRACKET AS	
M		1	**8T-3612**	2	NUT-WELD (M8X1.25-THD)	
		1	**7T-1099**	1	LINK	
M		1	**6V-9632**	2	NUT-WELD (M6X1-THD)	
	16	1	**323-0327**	1	HARNESS AS	
	17	1	**323-5592**	1	HARNESS AS	
	18	1	**324-3364**	1	PLATE	
	19	1	**324-3366**	1	PLATE AS	
	20	1	**327-0560**	1	BRACKET	
	21	1	**327-0561**	1	BRACKET	
	22	1	**331-1102**	1	BRACKET AS	
	23	1	**033-8248**	1	CLIP	
	24	1	**067-2551**	1	CLIP	
	25	1	**111-4871**	2	RELAY (24-VOLT)	
	26	1	**130-5300**	4	CLIP	
	27	1	**147-0385**	2	CLIP	
	28	1	**174-9692**	4	SPACER (20.5X35X16-MM THK)	
M	29	1	**188-9644**	4	SCREW-FLAT HEAD (M8X1.25X25-MM)	
	30	1	**1J-6762**	4	BOLT-PLOW (3/4-10X3-IN)	
	31	1	**1K-6870**	1	LOCKNUT (3/4-10-THD)	
	32	1	**1P-7009**	2	CLIP	
	33	1	**6V-8182**	4	NUT (3/4-10-THD)	
	34	1	**2Y-3812**	1	CLIP	
	35	1	**3P-2404**	1	CLIP	
	36	1	**4D-7794**	1	CLIP	
	37	1	**4K-8302**	2	CLIP	
	38	1	**4K-8864**	1	CLIP	
	39	1	**4S-1962**	6	CLIP	
M	40	1	**5C-7261**	2	NUT (M8X1.25-THD)	
M	41	1	**5C-9553**	2	BOLT (M6X1X16-MM)	
	42	1	**5M-3062**	28	BOLT (3/8-16X0.75-IN)	
	43	1	**5P-4135**	1	BOLT (3/4-10X8-IN)	
	44	1	**5P-9085**	1	CLIP	
	45	1	**5S-7379**	2	BOLT (3/8-16X0.875-IN)	
	46	1	**6D-4244**	8	CLIP	
	47	1	**6K-8178**	1	CLIP	
	48	1	**6V-1889**	7	CLIP	
	49	1	**6V-8801**	2	NUT (3/8-16-THD)	
	50	1	**7K-1181**	18	STRAP-CABLE	
	51	1	**7X-0550**	8	WASHER-HARD (13.5X32X5-MM THK)	
	52	1	**7X-0579**	8	WASHER-HARD (8.8X25.5X2-MM THK)	

294-3542 **WIRING GP-CHASSIS** *(contd.)* **i03266020**

NOTE	REF NO	GRAPHIC REF	PART NUMBER	QTY	PART NAME 1 2 3 4 5 6 (PRODUCT LEVEL)	SEE PAGE
	53	1	**7X-0619**	4	WASHER-HARD (20X30X2.5-MM THK)	
M	54	1	**7Y-0589**	2	BOLT (M12X1.75X90-MM)	
	55	1	**8C-6857**	4	BOLT (3/4-10X2.75-IN)	
	56	1	**8M-2773**	4	CLIP	
	57	1	**8T-4121**	18	WASHER-HARD (11X21X2.5-MM THK)	
	58	1	**8T-4123**	4	WASHER (22X35X3.5-MM THK)	
M	59	1	**8T-4133**	1	NUT (M10X1.5-THD)	
M	60	1	**8T-4137**	14	BOLT (M10X1.5X20-MM)	
M	61	1	**8T-4191**	3	BOLT (M10X1.5X16-MM)	
	62	1	**8T-4223**	2	WASHER-HARD (13.5X25.5X3-MM THK)	
	63	1	**8T-4224**	4	WASHER-HARD (8.8X16X2-MM THK)	
M	64	1	**8T-4244**	2	NUT (M12X1.75-THD)	
	65	1	**8T-4835**	4	BOLT (1/2-13X2-IN)	
	66	1	**8T-4896**	32	WASHER-HARD (10.2X18.5X2.5-MM THK)	
M	67	1	**8T-6869**	4	BOLT (M8X1.25X60-MM)	
	68	1	**8T-9658**	4	SPACER (8.2X12.7X25.4-MM THK)	
	69	1	**9M-8406**	4	CLIP	
	70	1	**9X-8256**	2	WASHER (6.6X12X2-MM THK)	

M-METRIC PART
Y-SEPARATE ILLUSTRATION

294-3542 **WIRING GP-CHASSIS** *(contd.)* **i03266020**

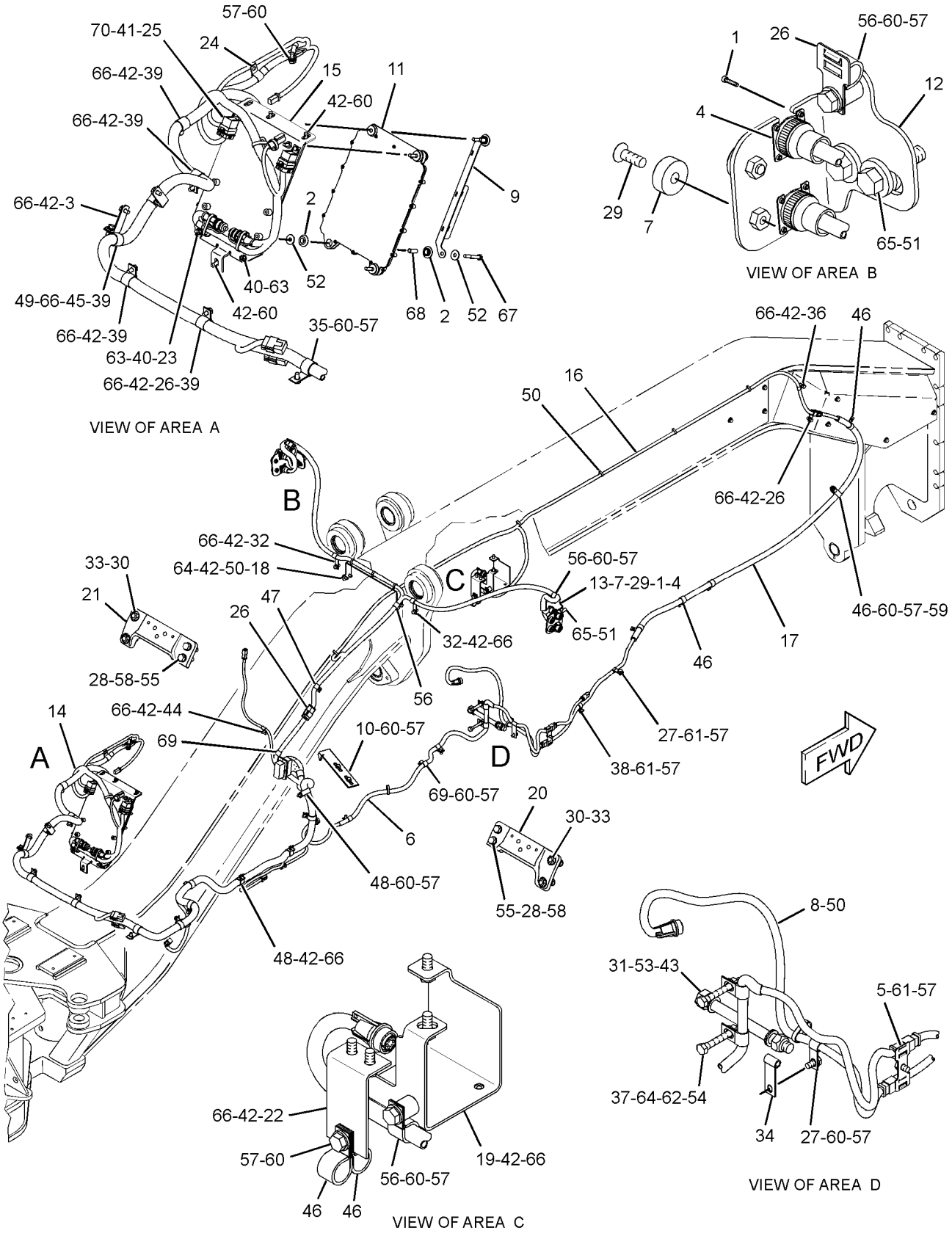

GRAPHIC #1 **<END>** g01716922

295-1090 WIRING GP-POWER RECEPTACLE–CIGARETTE LIGHTER

S/N: JPA1-UP

AN ATTACHMENT

SMCS-1408, 1463 **i03258799**

NOTE	REF NO	GRAPHIC REF	PART NUMBER	QTY	PART NAME 1 2 3 4 5 6 (PRODUCT LEVEL)	SEE PAGE
	1	1	**9W-1442**	1	FUSE (10-AMPERE)	
	2	1	**295-3849**	1	HARNESS AS-STARTING AID	
	3	1	**6T-1999**	1	HOUSING AS	
	4	1	**8N-2353**	1	KNOB AS-LIGHTER	

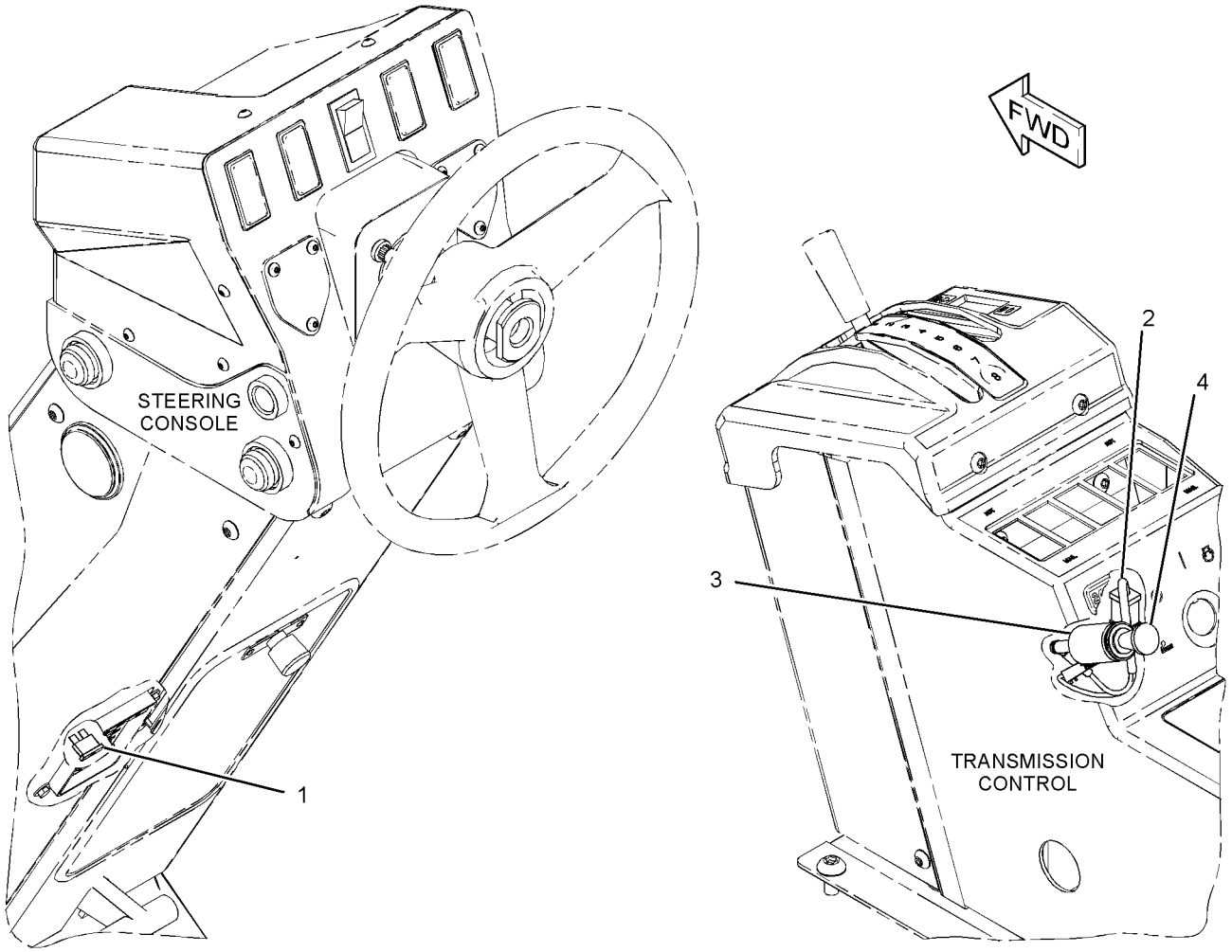

GRAPHIC #1 **<END>** g01678414

284-5348 WIRING GP-REAR

S/N: JPA1-UP

PART OF 274-7940 GENERAL AR

SMCS-1408 **i03247434**

NOTE	REF NO	GRAPHIC REF	PART NUMBER	QTY	PART NAME 1 2 3 4 5 6 (PRODUCT LEVEL)	SEE PAGE
	1	1	**334-7633**	1	HARNESS AS-CHASSIS	
	2	1	**130-5300**	2	CLIP	
Y	3	1	**135-0426**	2	LAMP GP-SIGNAL (24-VOLT, STOP, TAIL)	139
M	4	1	**5C-2890**	6	NUT (M6X1-THD)	
	5	1	**7K-1181**	9	STRAP-CABLE	
	6	1	**8T-4224**	6	WASHER-HARD (8.8X16X2-MM THK)	

M-METRIC PART
Y-SEPARATE ILLUSTRATION

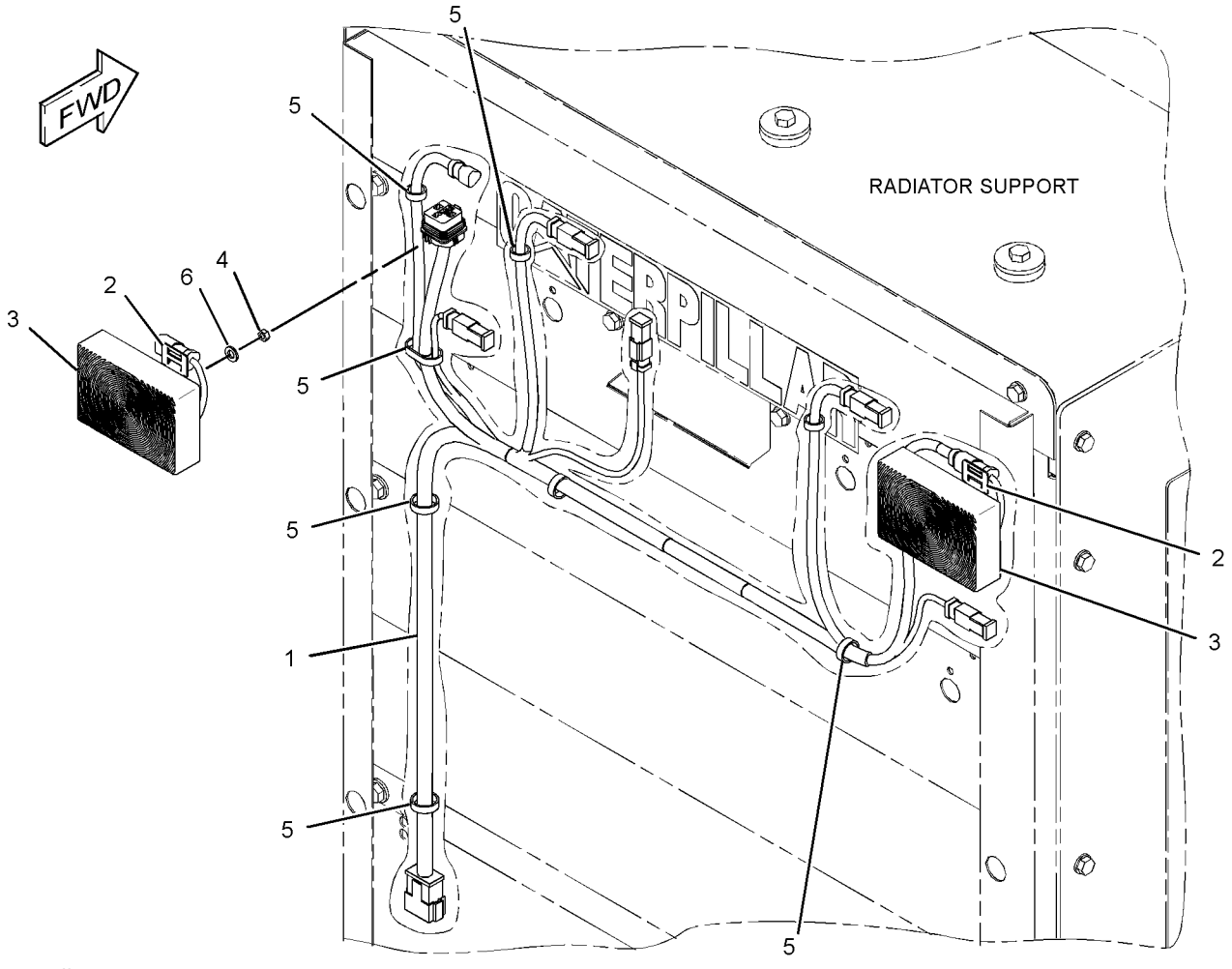

GRAPHIC #1 **<END>** g01708342

ELECTRICAL AND STARTING SYSTEM

311-0794 WIRING GP-REAR

S/N: JPA1-UP

PART OF 274-7940 GENERAL AR

SMCS-1408 **i03246410**

NOTE	REF NO	GRAPHIC REF	PART NUMBER	QTY	PART NAME 1 2 3 4 5 6 (PRODUCT LEVEL)	SEE PAGE
	1	1	**3E-5239**	1	RELAY AS (24-VOLT) (FUEL PRIMING)	
	2	1	**7G-1060**	1	STRAP AS-GROUND	
	3	2	**7W-9943**	1	SENDER-TEMPERATURE	
		2	**4B-4274**	1	WASHER (5.5X13X1.2-MM THK)	
		2	**6V-8378**	1	NUT (10-32-THD)	
		2	**8F-1434**	1	LOCKWASHER	
	4	2	**8W-8527**	1	SLEEVE	
	5	3	**123-3688**	1	PLATE AS	
		3	**7L-0811**	1	DOWEL	
	6	3	**123-3689**	1	PLATE AS	
		3	**9D-1541**	1	STUD	
	7	3	**123-3692**	1	ARM	
	8	3	**123-3695**	1	PLATE	
	9	2	**139-2116**	1	SWITCH AS-TOGGLE (ENGINE SHUTDOWN)	
		2	**6T-3631**	2	NUT-HEX (15/32-32-THD)	
		2	**6T-3632**	1	LOCKWASHER	
		2	**6T-3633**	1	RING-LOCKING	
		2	**186-3735**	3	PIN-CONNECTOR (16-GA TO 18-GA)	
		2	**102-8803**	1	KIT-RECEPTACLE (3-PIN)	
					(INCLUDES RECEPTACLE AS & WEDGE)	
	10	2	**177-2215**	3	STRAP-DUAL CLAMP	
	11	3	**187-1008**	1	SENDER AS-POSITION (ARTICULATION)	
		3	**102-8802**	1	KIT-RECEPTACLE (2-PIN)	
					(INCLUDES RECEPTACLE AS & WEDGE)	
E		3	**9X-1813**		SLEEVE (15-CM)	
		3	**186-3735**	2	PIN-CONNECTOR (16-GA TO 18-GA)	
	12	2	**308-0291**	1	HARNESS AS-SENSOR (TRANSMISSION SPEED)	
	13	2	**308-6403**	1	BRACKET AS	
	14	2	**322-7341**	1	BRACKET AS	
	15	3	**326-3120**	1	BRACKET AS	
	16	1	**334-0575**	1	HARNESS AS-TRANSMISSION	
	17	1	**334-0576**	1	HARNESS AS-REAR CHASSIS (RELAY)	
	18	1	**334-0577**	1	HARNESS AS-SENSOR (ENGINE)	
	19	1	**334-0578**	1	HARNESS AS-REAR CHASSIS (TAIL)	
	20	2	**109-0361**	1	FILM-INSTRUCTION (ENGINE SHUTDOWN)	
	21	1,2,3	**130-5300**	8	CLIP	
	22	1,2	**132-5789**	3	CLIP	
	23	2	**133-3260**	1	SPACER (11X19X10-MM THK)	
	24	2	**134-2540**	1	RECEPTACLE AS (3-PIN)	
	25	2	**147-0385**	1	CLIP	
	26	2	**172-6833**	1	CLIP (LOOP)	
Y	27	2	**193-2550**	1	SENSOR GP-SPEED (MAGNETIC, HIGH OUTPUT)	175
	28	2	**1V-1984**	1	CLIP	
	29	2	**277-1873**	1	CLIP	
	30	2	**3E-5169**	1	GUARD-SWITCH	
	31	2	**2A-1162**	1	GASKET	
	32	1,2,3	**4D-7794**	10	CLIP	
	33	2	**4D-8123**	1	CLIP	
	34	2	**4K-8864**	4	CLIP	
	35	1	**4S-1936**	1	CLIP	
	36	2	**4S-1962**	2	CLIP	
	37	2,3	**4S-4455**	4	CLIP	
	38	2,3	**5P-8167**	3	BOLT (3/8-16X0.625-IN)	
	39	2	**5P-9085**	1	CLIP	
	40	1	**6D-3479**	4	CLIP	
	41	2	**6D-4244**	4	CLIP	

311-0794 **WIRING GP-REAR** ***(contd.)*** **i03246410**

NOTE	REF NO	GRAPHIC REF	PART NUMBER	QTY	PART NAME 1 2 3 4 5 6 (PRODUCT LEVEL)	SEE PAGE
	42	2,3	**6D-4246**	4	CLIP	
	43	2	**6D-4636**	1	CLIP	
	44	3	**6V-1889**	1	CLIP	
	45	2	**6V-3265**	4	CLIP	
	46	3	**6V-6893**	3	BOLT (6-32X0.375-IN)	
	47	3	**6V-8801**	1	NUT (3/8-16-THD)	
M	48	1	**130-2792**	1	SCREW (M6X1X16-MM)	
	49	2	**7C-4354**	2	CLIP	
	50	2	**7D-7233**	1	CLIP	
	51	1,2	**7K-1181**	21	STRAP-CABLE	
	52	2,3	**7N-3718**	1	CLIP	
	53	2	**8D-9671**	1	CLIP	
	54	2	**8M-2773**	1	CLIP	
	55	1,2,3	**8T-4121**	57	WASHER-HARD (11X21X2.5-MM THK)	
M	56	2,3	**8T-4133**	4	NUT (M10X1.5-THD)	
M	57	1,2,3	**8T-4137**	53	BOLT (M10X1.5X20-MM)	
M	58	2	**8T-4195**	1	BOLT (M10X1.5X30-MM)	
	59	3	**8T-4205**	2	WASHER-HARD (7.2X14.5X2-MM THK)	
	60	3	**8T-4226**	1	WASHER-PLATED (10.5X45X3-MM THK)	
	61	3	**8T-4896**	2	WASHER-HARD (10.2X18.5X2.5-MM THK)	
	62	3	**8T-9364**	2	BOLT (1/4-20X0.625-IN)	
	63	2	**8W-8909**	1	SLEEVE	
	64	2,3	**8X-5489**	4	SLEEVE	
	65	3	**9M-4972**	3	CLIP	
	66	1	**9X-8256**	1	WASHER (6.6X12X2-MM THK)	

E-ORDER BY THE CENTIMETER
M-METRIC PART
Y-SEPARATE ILLUSTRATION

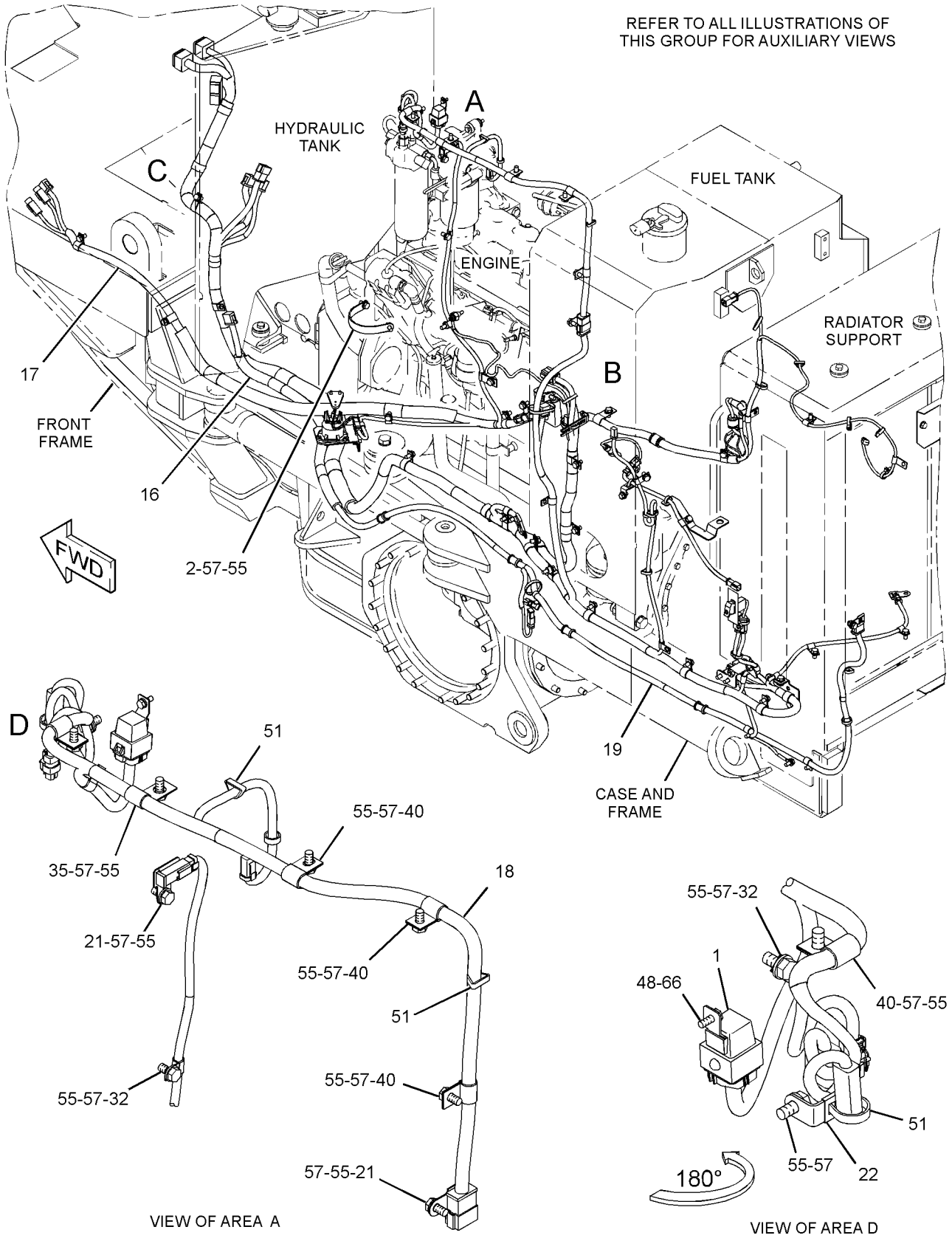

GRAPHIC #1 g01711953

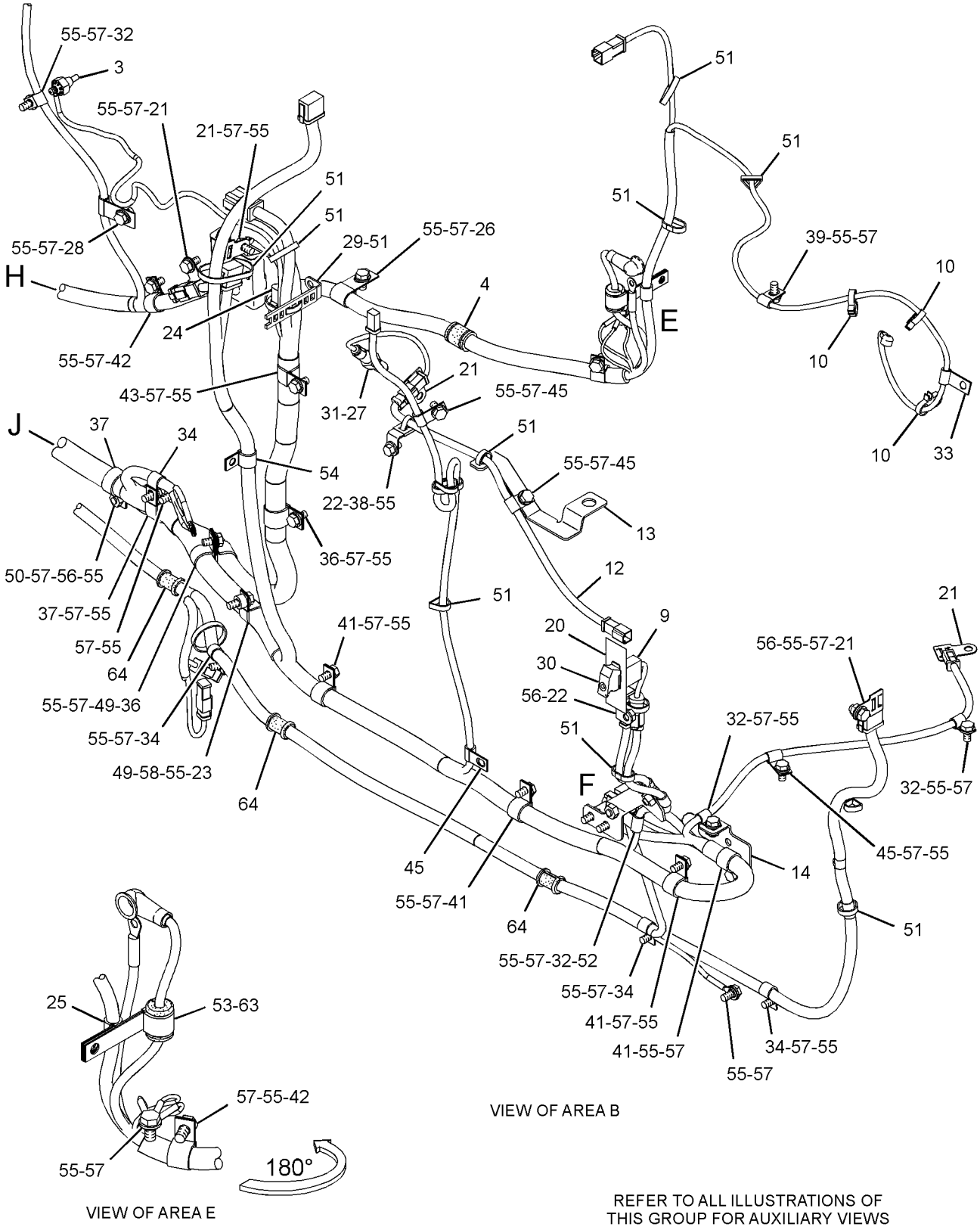

VIEW OF AREA B

VIEW OF AREA E

REFER TO ALL ILLUSTRATIONS OF THIS GROUP FOR AUXILIARY VIEWS

GRAPHIC #2

g01711954

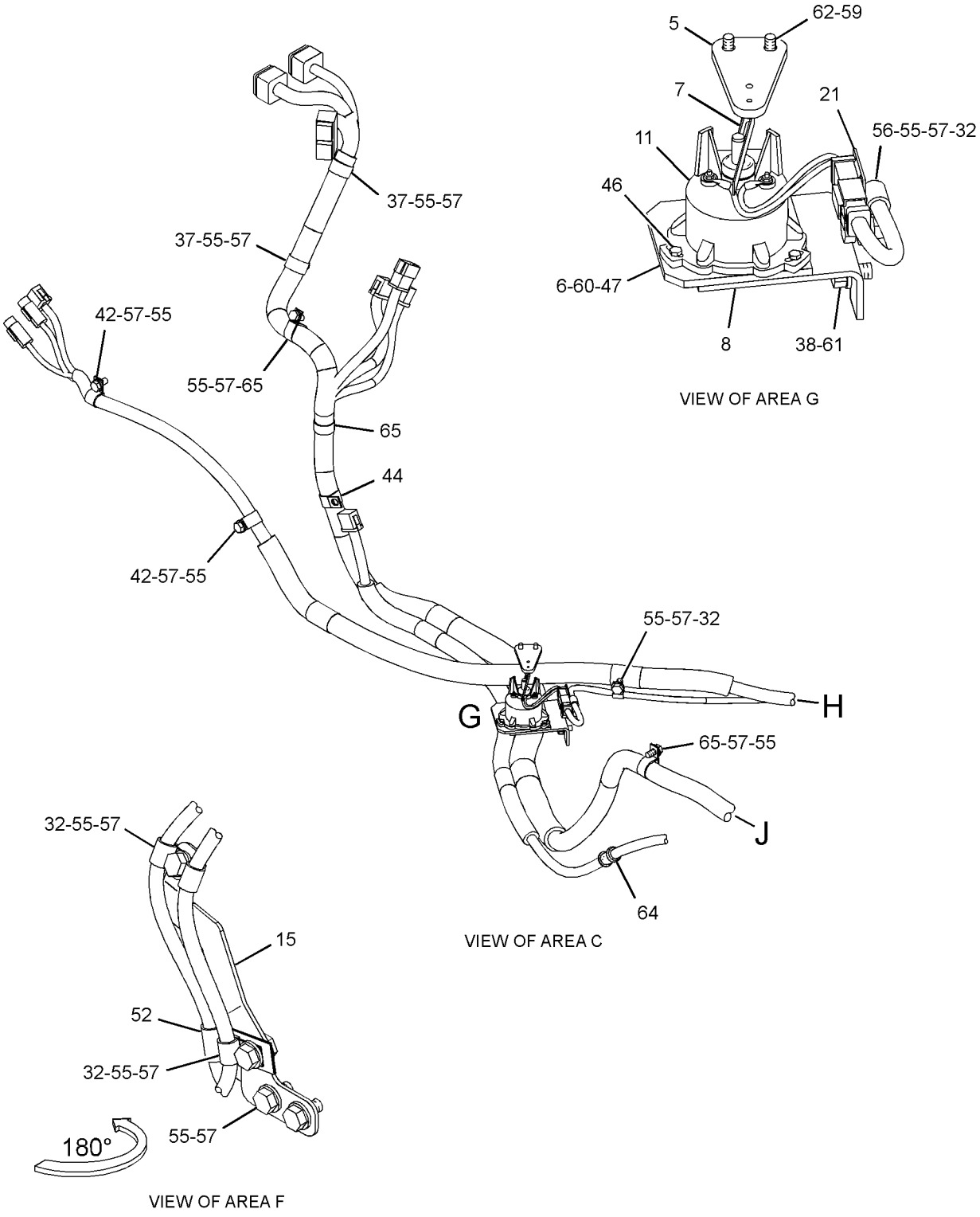

GRAPHIC #3 **<END>** g01711955

ELECTRICAL AND STARTING SYSTEM

284-5347 WIRING GP-STEERING CONSOLE

S/N: JPA1-UP

PART OF 274-7940 GENERAL AR

SMCS-4334 **i03378002**

NOTE	REF NO	GRAPHIC REF	PART NUMBER	QTY	PART NAME 1 2 3 4 5 6 (PRODUCT LEVEL)	SEE PAGE
	1	1	**3E-0109**	5	PLUG (ROCKER SWITCH)	
	2	1	**3E-6477**	2	RELAY AS (24-VOLT)	
	3	1	**3S-2093**	7	STRAP-CABLE	
	4	1	**9W-1441**	2	FUSE (15-AMPERE)	
	5	1	**9W-1442**	9	FUSE (10-AMPERE)	
	6	1	*112-6175*	2	SWITCH AS-LIMIT	
					(EACH INCLUDES)	
		1	**6V-8376**	3	SCREW-MACHINE (8-32X0.25-IN)	
		1	**9B-7233**	3	LOCKWASHER	
	7	1	*161-3932*	1	METER GP-SERVICE	
M		1	**5C-8312**	2	NUT (M4X0.7-THD)	
		1	**9B-7233**	2	LOCKWASHER	
		1	**096-6166**	2	WASHER-HARD (4.5X9X1-MM THK)	
	8	1	**180-4028**	2	BRACKET	
	9	1	**180-7033**	1	COVER	
	10	1	**228-5009**	4	CLIP	
	11	1	**338-8423**	1	HARNESS AS-CONSOLE	
	12	1	**295-1834**	1	FILM-IDENTIFICATION (FUSE BOX)	
	13	1	**295-1835**	1	FILM-IDENTIFICATION (FUSE BOX)	
	14	1	**130-5300**	1	CLIP	
M	15	1	**151-4957**	4	BOLT-SOCKET HEAD (M3X0.5X25-MM)	
M	16	1	**174-8131**	2	SCREW-TRUSS HEAD (M4X0.7X12-MM)	
	17	1	**1H-3244**	2	LOCKWASHER	
M	18	1	**3C-6969**	4	NUT (M3X0.5-THD)	
	19	1	*3E-9319*	1	SWITCH AS-ROCKER	
		1	**3E-8763**	1	SWITCH AS (TAIL LIGHTS)	
		1	**3E-8825**	1	LAMP (24-VOLT)	
		1	**3E-9323**	1	ACTUATOR-ROCKER	
	20	1	**3L-8187**	4	LOCKWASHER	
	21	1	**4B-1281**	1	SCREW-MACHINE (1/4-20X0.625-IN)	
	22	1	**4B-4274**	16	WASHER (5.5X13X1.2-MM THK)	
	23	1	**4D-1212**	1	GROMMET	
M	24	1	**5C-2890**	3	NUT (M6X1-THD)	
M	25	1	**5C-8312**	2	NUT (M4X0.7-THD)	
M	26	1	**5C-9553**	2	BOLT (M6X1X16-MM)	
	27	1	**5P-4115**	1	WASHER-HARD (7.2X19X2-MM THK)	
	28	1	**6D-4244**	2	CLIP	
	29	1	**6V-8185**	1	NUT (1/4-20-THD)	
	30	1	**8C-7508**	2	LOCKWASHER	
	31	1	**8L-6521**	8	BOLT (10-32X0.5-IN)	
M	32	1	**8T-4971**	1	BOLT (M6X1X30-MM)	
	33	1	**9P-2553**	1	SPACER (6.83X10.28X11-MM THK)	
M	34	1	**9X-1046**	6	SCREW (M4X0.7X18-MM)	
M	35	1	**9X-2042**	1	SCREW-TRUSS HEAD (M6X1X12-MM)	
	36	1	**9X-8256**	6	WASHER (6.6X12X2-MM THK)	

M-METRIC PART

284-5347 **WIRING GP-STEERING CONSOLE** *(contd.)* **i03378002**

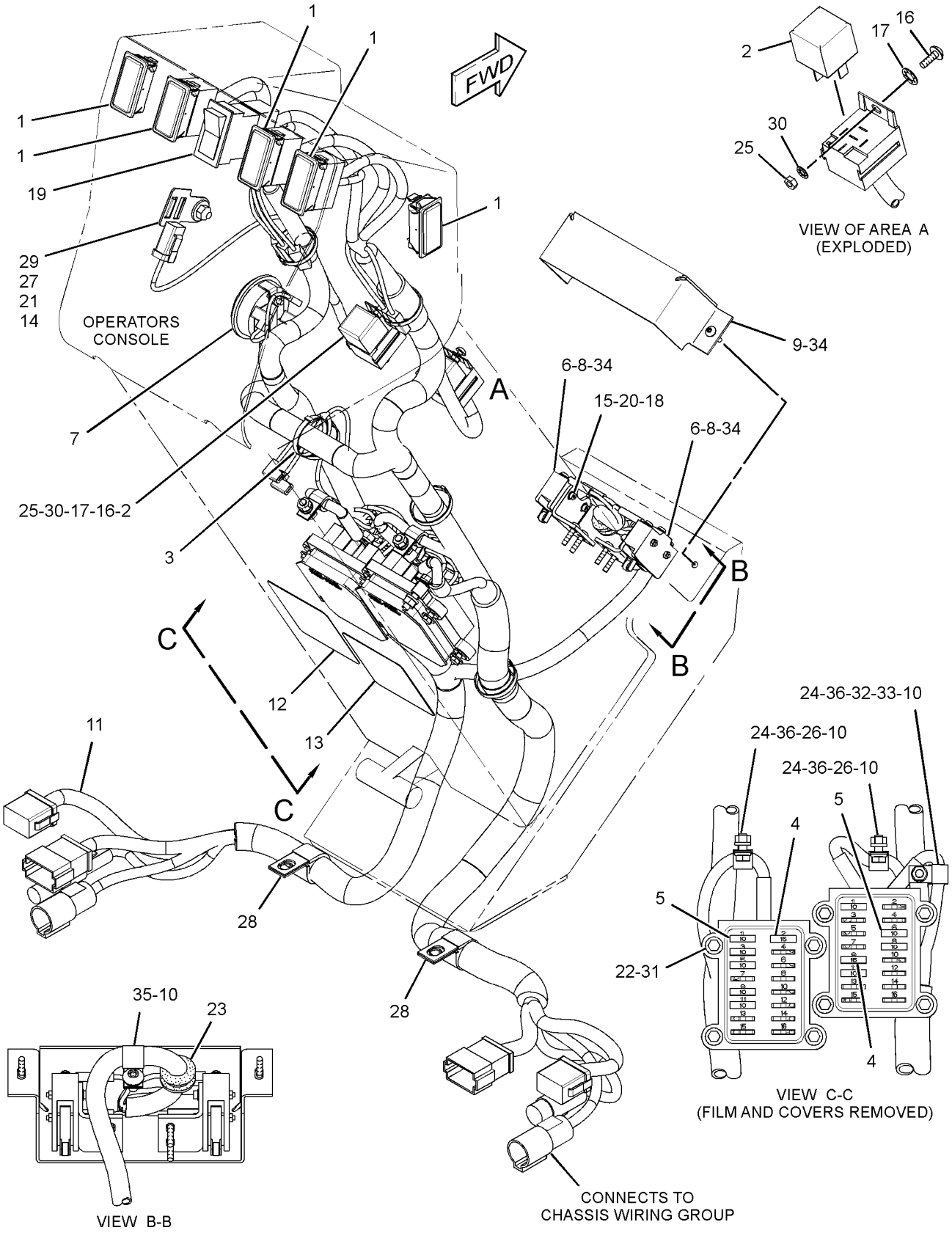

GRAPHIC #1 **<END>** g01753515

ELECTRICAL AND STARTING SYSTEM

180-9324 WIRING GP-TRANSMISSION

S/N: DMJ1-UP

PART OF 281-3165 CONTROL GP-TRANSMISSION HYD

SMCS-3104 **i02502591**

NOTE	REF NO	GRAPHIC REF	PART NUMBER	QTY	PART NAME 1 2 3 4 5 6 (PRODUCT LEVEL)	SEE PAGE
	1	1	**213-9842**	1	HARNESS AS-TRANSMISSION	
		1	**102-8801**	1	KIT-RECEPTACLE (12-PIN)	
					(INCLUDES RECEPTACLE AS & WEDGE)	
		1	**155-2270**	8	KIT-CONNECTING PLUG (2-PIN)	
					(EACH INCLUDES PLUG AS, WEDGE, & INTERFACE SEAL)	
	2	1	**207-6034**	1	PLATE AS	
	3	1	**205-8847**	1	PLATE AS	
	4	1	**3S-2093**	7	STRAP-CABLE	
	5	1	**205-8839**	1	CLIP AS	
M	6	1	**8T-0639**	1	BOLT (M6X1X12-MM)	

M-METRIC PART

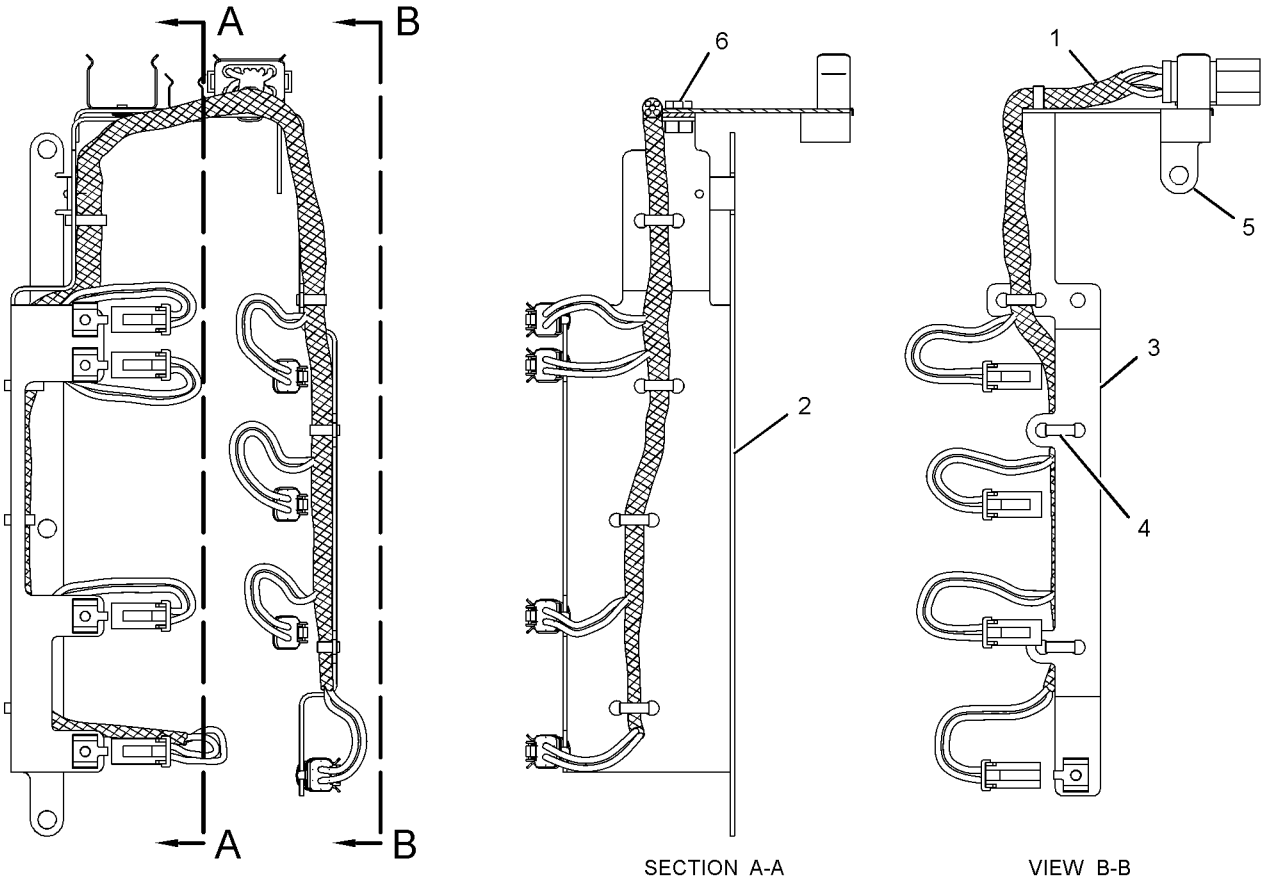

GRAPHIC #1 **<END>** g01256130

260-7647 APPLICATION GP-POWER TRAIN

S/N: JPA1-UP
PART OF 294-3542 WIRING GP-GRADE CONTROL
AN ATTACHMENT

i03193466

NOTE	PART NUMBER	QTY	PART NAME 1 2 3 4 5 6 (PRODUCT LEVEL)	SEE PAGE
R	**304-5687**	1	CONTROL GP-UNPROGRAMMED (POWER TRAIN)	
R-REMFG PART MAY BE AVAILABLE				

<END>

295-8278 AUTOSHIFT AR

S/N: JPA1-UP
AN ATTACHMENT

SMCS-3168

i03431941

NOTE	PART NUMBER	QTY	PART NAME 1 2 3 4 5 6 (PRODUCT LEVEL)	SEE PAGE
Y	*291-5475*	1	ELECTRONICS GP-POWER TRAIN	126
	102-9861	1	SWITCH AS-ROCKER (AUTOSHIFT)	
	3E-8763	1	SWITCH AS (AUTOSHIFT ON, OFF)	
	3E-8784	1	ACTUATOR-ROCKER	
	3E-8825	1	LAMP (24-VOLT)	
Y-SEPARATE ILLUSTRATION				

<END>

238-1029 BASE GP-OIL FILTER

S/N: JPA1-UP

PART OF 313-5233 FILTER GP-OIL

SMCS-3004, 3067 **i02943079**

NOTE	REF NO	GRAPHIC REF	PART NUMBER	QTY	PART NAME 1 2 3 4 5 6 (PRODUCT LEVEL)	SEE PAGE
	1	1	**3T-9549**	1	ADAPTER	
	2	1	**7G-4998**	1	SPOOL-BYPASS	
	3	1	**7M-1297**	1	SPRING	
	4	1	**133-2198**	1	SPRING	
Y	5	1	**164-7577**	1	SWITCH GP-BYPASS (POWER TRAIN OIL FILTER)	188
	7	1	**2S-4078**	1	SEAL-O-RING	
	8	1	**3D-2824**	1	SEAL-O-RING	
	9	1	**9S-8008**	1	PLUG-O-RING	
					PARTS SHOWN IN GRAPHIC(S) WITHOUT A REFERENCE NUMBER ARE NOT SERVICED SEPARATELY	

Y-SEPARATE ILLUSTRATION

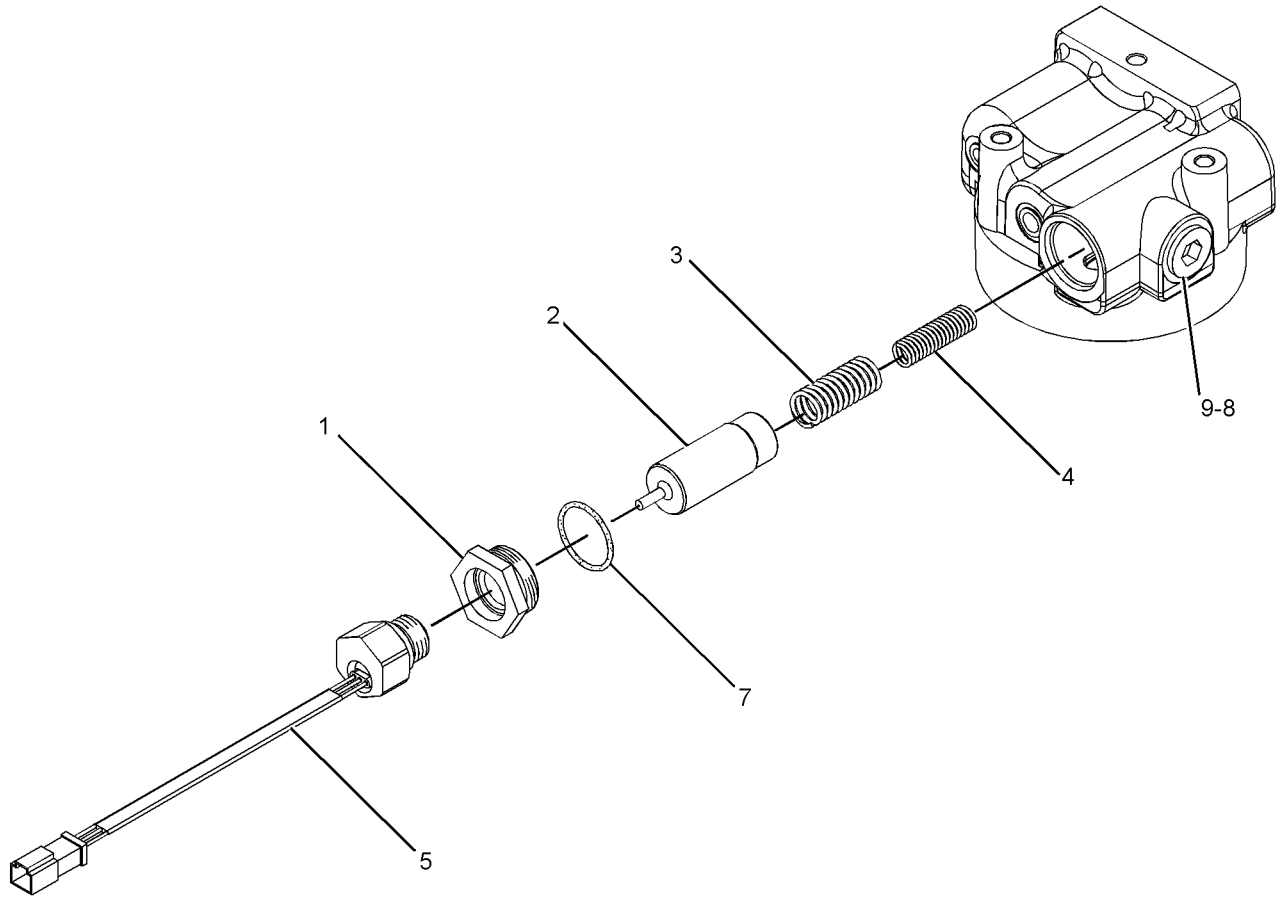

GRAPHIC #1 **<END>** g01366115

POWER TRAIN

277-6433 CASE & PARTS GP-PLANETARY

S/N: DMJ1-UP

PART OF 275-6535 TRANSMISSION AR

SMCS-3030, 3064, 3160 **i03304315**

NOTE	REF NO	GRAPHIC REF	PART NUMBER	QTY	PART NAME 1 2 3 4 5 6 (PRODUCT LEVEL)	SEE PAGE
	1	1	**277-6430**	1	CASE AS-TRANSMISSION	
		1	**7T-6496**	7	PLUG	
		1	**8M-6521**	2	DOWEL	
	2	1	**277-6432**	1	COVER AS-TRANSMISSION	
		1	**7T-6496**	1	PLUG	
M	3	1	**6V-1820**	37	BOLT (M10X1.5X30-MM)	
M	4	1	**8T-5436**	2	BOLT (M10X1.5X130-MM)	
	5	1,2	*148-8395*	4	PLUG AS	
					(EACH INCLUDES)	
		1,2	**9S-8005**	1	PLUG-O-RING	
		1,2	**3K-0360**	1	SEAL-O-RING	
	6	2	**3K-0360**	2	SEAL-O-RING	
	7	1	**2J-0157**	1	SEAL-O-RING	
B	8	2	**1U-8846**		SEALANT-GASKET	
	9	1	**8T-6765**	1	PLUG-PIPE	
	10	1	**5M-6200**	1	SEAL-O-RING	
	11	1	**8E-1133**	1	TUBE AS	
	12	1	**6L-1650**	1	SEAL-O-RING	
M	13	1,2,3	**6V-5217**	15	BOLT (M8X1.25X20-MM)	
	14	1,2,3	**5P-3863**	5	SEAL-O-RING	
	15	1,2,3	**9W-1454**	5	COVER	
	16	1	**8S-9129**	1	FILTER-MAGNETIC (TRANSMISSION)	
	17	1	**8S-9130**	1	SCREEN-SUCTION (TRANSMISSION)	
	18	3	**4M-6108**	2	RACE-BEARING OUTER	
	19	1	**148-1925**	2	VALVE-RELIEF	
	20	1	**9X-4609**	2	SEAL-O-RING	
	21	3	**9W-7038**	1	RING-SNAP	
M	22	3	**6V-3940**	4	BOLT (M8X1.25X25-MM)	
	23	3	**6Y-9763**	1	GEAR AS (38-TEETH)	
		3	**6Y-1007**	1	GEAR (38-TEETH)	
		3	**4K-8603**	1	PLUG-CUP	
	24	3	**2S-3029**	1	BALL BEARING	
	25	3	**9W-6465**	1	RETAINER-BEARING	
	26	2	*164-5619*	6	PLUG AS	
					(EACH INCLUDES)	
		2	**9S-8006**	1	PLUG-O-RING	
		2	**2M-9780**	1	SEAL-O-RING	
	28	2	*162-0177*	1	PLUG AS	
		2	**9S-8004**	1	PLUG-O-RING	
		2	**3J-1907**	1	SEAL-O-RING	
	29	1	**3J-1907**	1	SEAL-O-RING	
	30	1,2	**8T-4121**	10	WASHER-HARD (11X21X2.5-MM THK)	
	31	2	**190-1684**	1	PLATE AS	
M	32	2	**6V-8212**	1	BOLT (M10X1.5X16-MM)	
	33	2	*197-4977*	1	PLUG AS	
		2	**5P-4483**	1	PLUG-O-RING	
		2	**7M-8485**	1	SEAL-O-RING	
M	35	2	**6V-7981**	5	BOLT (M10X1.5X70-MM)	
M	36	2	**6V-4248**	7	BOLT (M10X1.5X25-MM)	
	39	2,3	**6I-8642**	4	RACE-BEARING OUTER	
	40	3	**5P-3924**	2	RACE-BEARING OUTER	
	41	3	**9M-2042**	1	RACE-BEARING OUTER	
	42	3	**2H-6489**	1	RACE-BEARING OUTER	
	43	2	**226-6621**	1	HARNESS AS-SENSOR (SPEED)	
	44	2	**191-9256**	2	CLIP	
M	45	1,2	**8T-4137**	4	BOLT (M10X1.5X20-MM)	

277-6433 CASE & PARTS GP-PLANETARY *(contd.)* i03304315

NOTE	REF NO	GRAPHIC REF	PART NUMBER	QTY	PART NAME 1 2 3 4 5 6 (PRODUCT LEVEL)	SEE PAGE
	46	2	**6V-1720**	1	PLATE-SERIAL NUMBER (TRANSMISSION)	
Y	47	2	**290-5792**	2	SENSOR GP-SPEED (TRANSMISSION OUTPUT)	177
	48	2	**201-0387**	1	CLIP AS	
M	49	2	**8T-4133**	1	NUT (M10X1.5-THD)	
	50	2	**143-5373**	1	GUARD AS	
	51	1	**5P-9299**	1	CLIP	
Y	52	1	**3E-8700**	1	SENSOR GP-TEMPERATURE (TRANSMISSION OIL)	178
	53	1	**4P-7581**	1	CLIP	
	54	1	*164-4180*	3	PLUG AS	
					(EACH INCLUDES)	
		1	**9S-4181**	1	PLUG-O-RING	
		1	**7M-8485**	1	SEAL-O-RING	
	55	1	**1B-5174**	1	PLUG-PIPE	
	56	2	**113-7745**	1	PLATE AS	
	57	1	**7K-1181**	1	STRAP-CABLE	
	58	2	**145-8039**	3	LOCK	
	59	1	**130-5300**	1	CLIP	
	60	3	**278-0642**	1	SEAL-LIP TYPE	

B-USE AS REQUIRED
M-METRIC PART
Y-SEPARATE ILLUSTRATION

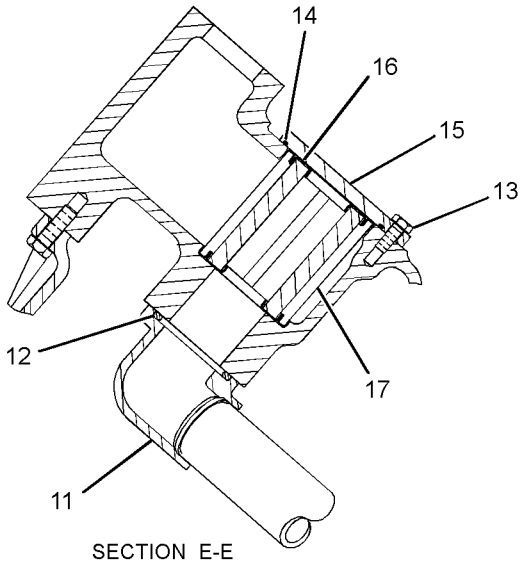

SECTION E-E

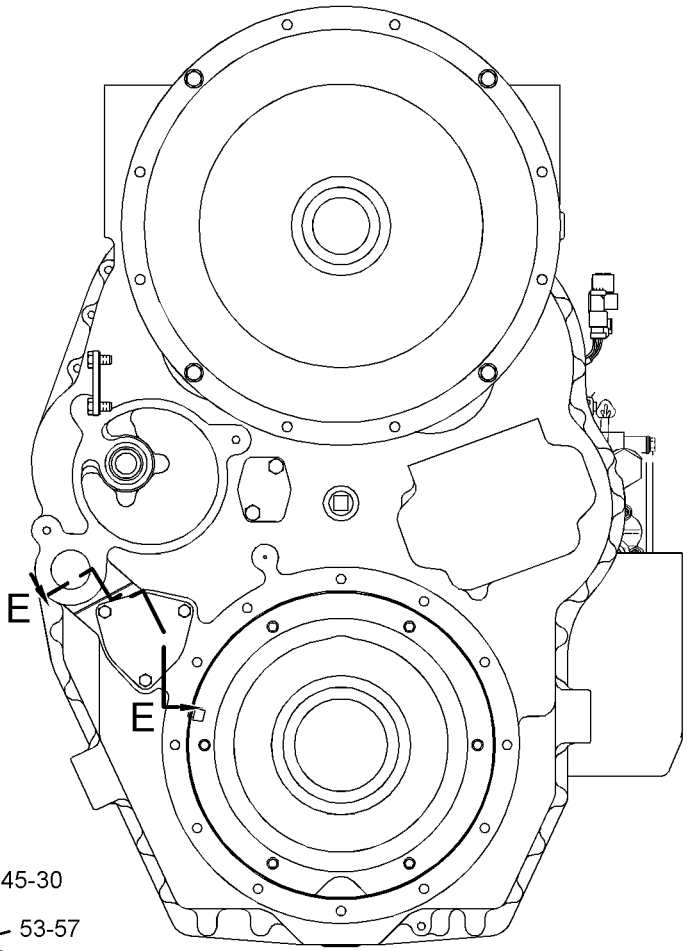

FRONT VIEW

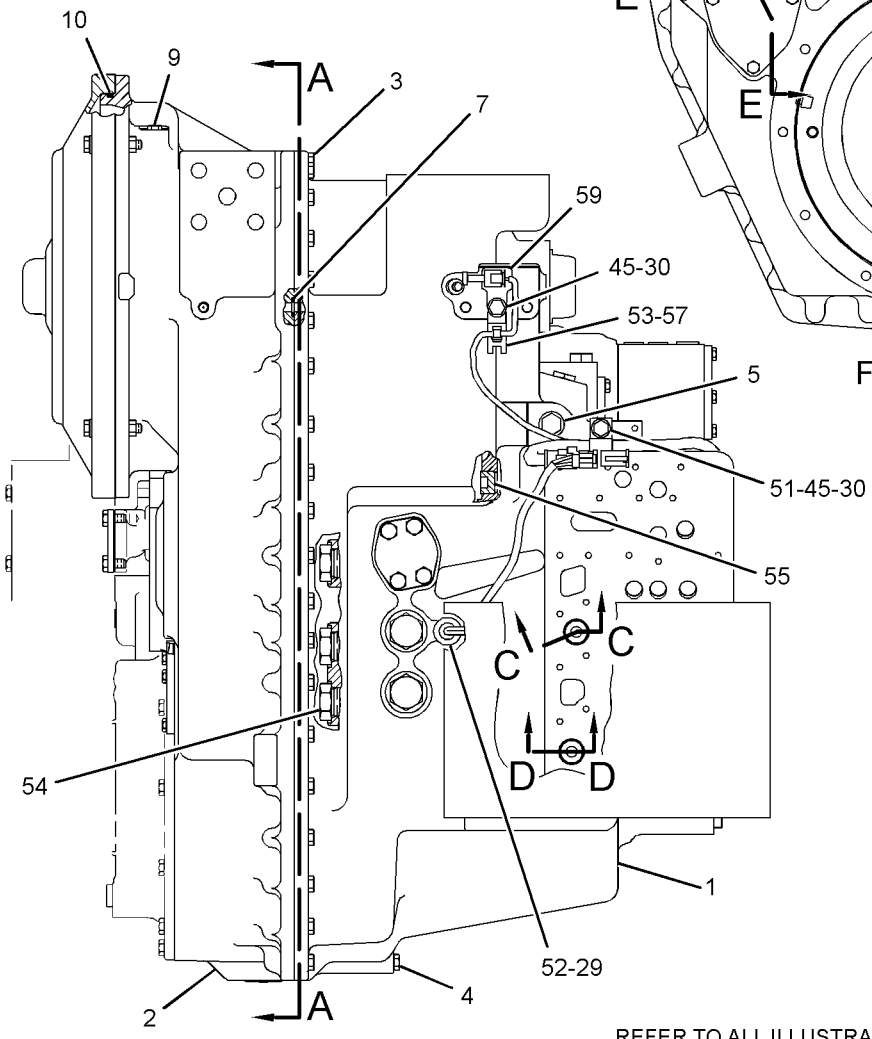

LEFT SIDE VIEW

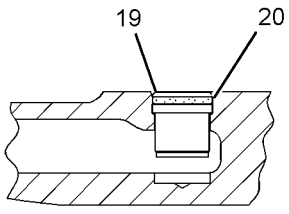

SECTION C-C

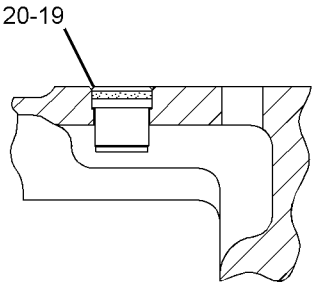

SECTION D-D

REFER TO ALL ILLUSTRATIONS OF THIS GROUP FOR AUXILIARY VIEWS

GRAPHIC #1

g01772113

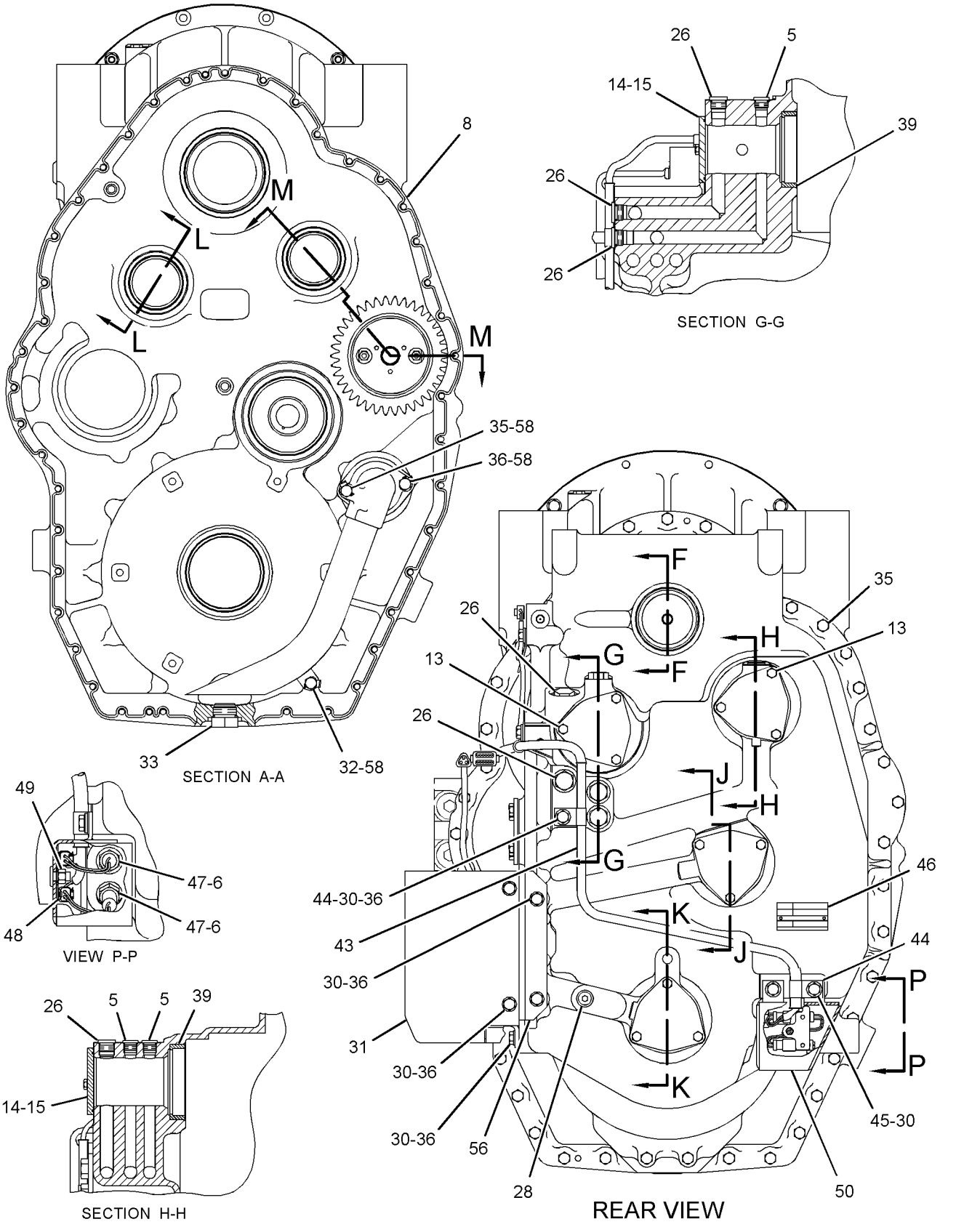

GRAPHIC #2

g01789333

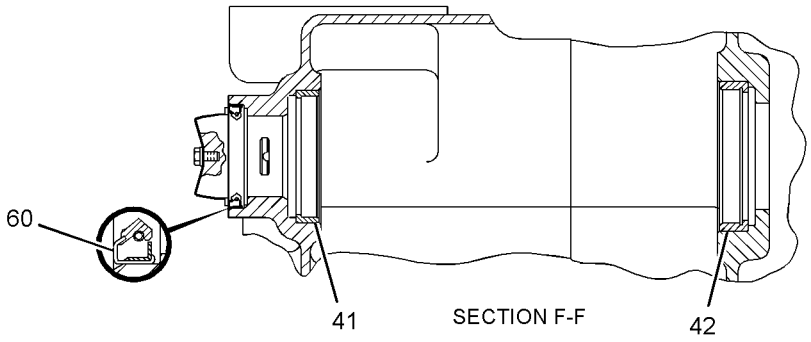

SECTION F-F

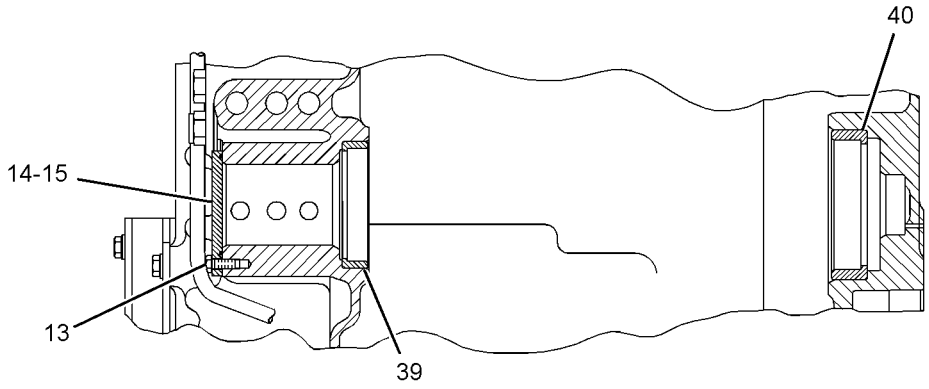

SECTION J-J

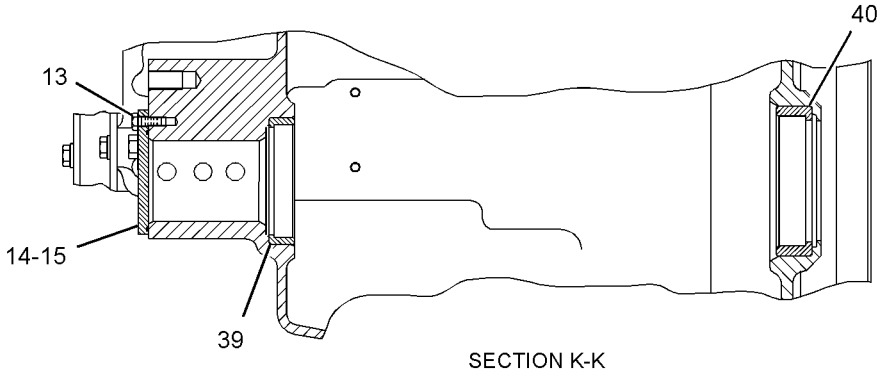

SECTION K-K

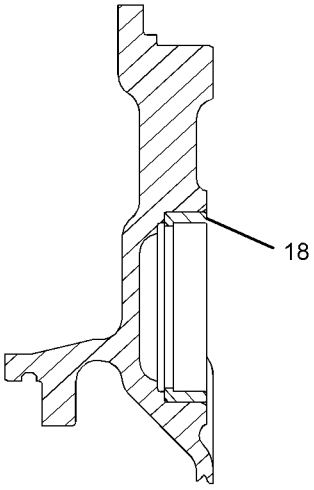

SECTION L-L

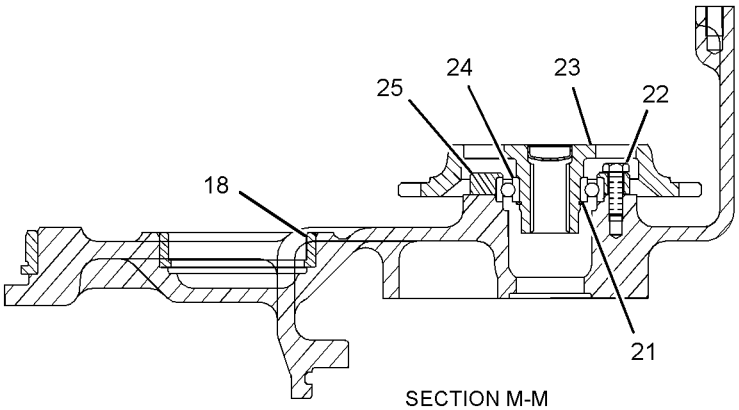

SECTION M-M

GRAPHIC #3 **<END>** g01772115

6G-1755 CHAIN GP-DRIVE

S/N: JPA1-UP

PART OF 274-7940 GENERAL AR

SMCS-3261, 4063 **i02202894**

NOTE	REF NO	GRAPHIC REF	PART NUMBER	QTY	PART NAME 1 2 3 4 5 6 (PRODUCT LEVEL)	SEE PAGE
	1	1	**6G-1633**	4	CHAIN GP	
					(EACH INCLUDES)	
	2	1	**6G-1631**	1	LINK-CONNECTING	
					(CHAIN TO CONSIST OF 24 PIN LINKS, 25 ROLLER LINKS, 1 CONNECTING LINK & COTTERS)	

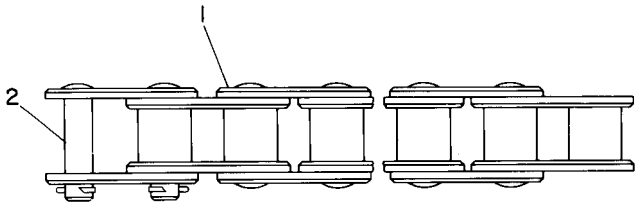

GRAPHIC #1 **<END>** g00108322

6Y-2303 CLUTCH GP-TRANSMISSION–1ST & 3RD

S/N: DMJ1-UP

PART OF 275-6535 TRANSMISSION AR

SMCS-3063, 3155, 3170 **i01052624**

NOTE	REF NO	GRAPHIC REF	PART NUMBER	QTY	PART NAME 1 2 3 4 5 6 (PRODUCT LEVEL)	SEE PAGE
	1	1,2	**6Y-1878**	1	SHAFT AS (64-TEETH)	
	2	1,2	**6Y-1000**	1	GEAR (69-TEETH)	
	3	1,2	**8E-1909**	1	GEAR AS (54-TEETH)	
	4	1,2	**6Y-1895**	1	BEARING-SLEEVE	
	5	1,2	**3B-8921**	1	BEARING-INNER	
	6	1,2	**6Y-8285**	1	RING-SEAL	
	7	1,2	**7T-4897**	2	DISC-THRUST	
	8	1,2	**6Y-1891**	1	HUB AS	
	9	1,2	**8E-5734**	2	RING-SEAL EXTENSION	
	10	1,2	**6Y-1887**	2	PISTON	
	11	1,2	**5H-8985**	1	PIN-SPRING	
	12	1,2	**6I-8912**	10	DISC-FRICTION	
	13	1,2	**110-7723**	8	PLATE-CLUTCH	
	14	1,2	**6Y-2312**	1	HUB AS	
	15	1,2	**8E-1910**	1	GEAR AS (79-TEETH)	
	16	1,2	**6Y-2419**	1	BEARING-SLEEVE	
	17	1,2	**6I-8641**	1	RACE & BEARING	
	18	1,2	**7G-4822**	3	RING-SEAL	
M	19	1,2	**6V-1819**	2	BOLT (M10X1.5X100-MM)	
	20	1,2	**6Y-2425**	1	CARRIER-SEAL	
	21	1,2	**8F-3469**	3	SEAL-O-RING	
	22	1,2	**8E-8319**	4	DISC-THRUST	
	23	1,2	**6Y-1115**	4	RING-HALF	
	24	1,2	**6Y-1114**	2	LOCKWASHER	
	25	1,2	**9W-9905**	4	RING-LOCK	
	26	1,2	**102-5881**	2	SPRING-WAVE	
	27	1,2	**8E-5742**	2	RING-SEAL	
	28	1,2	**6Y-0982**	1	GEAR (30-TEETH)	

M-METRIC PART

6Y-2303 **CLUTCH GP-TRANSMISSION** *(contd.)* **i01052624**

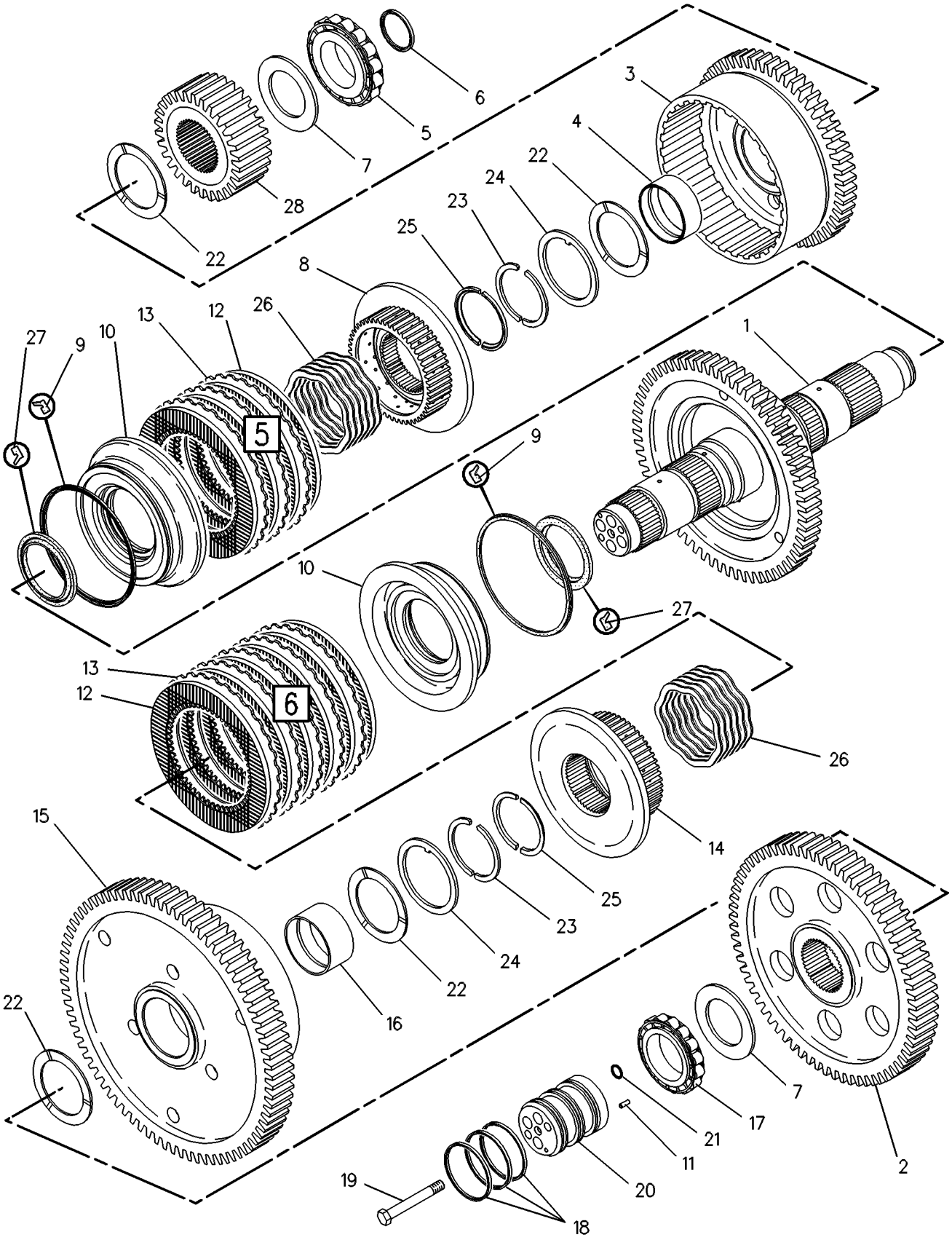

GRAPHIC #1 g00108910

6Y-2303 **CLUTCH GP-TRANSMISSION** *(contd.)* **i01052624**

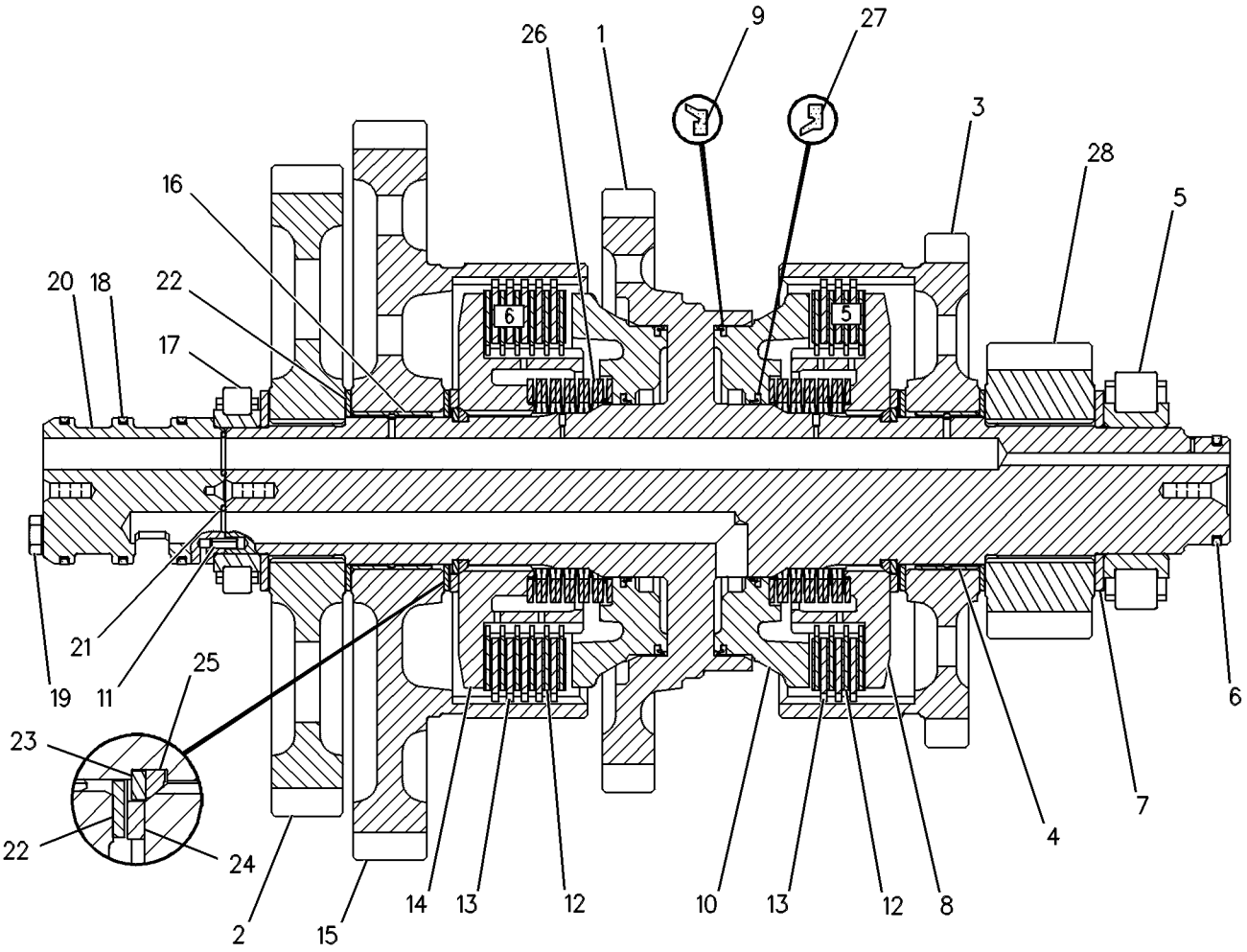

GRAPHIC #2 **<END>** g00108656

POWER TRAIN

8E-9316 CLUTCH GP-TRANSMISSION—HI & LO

S/N: DMJ1-UP

PART OF 275-6535 TRANSMISSION AR

SMCS-3063, 3155, 3170 **i02826169**

NOTE	REF NO	GRAPHIC REF	PART NUMBER	QTY	PART NAME 1 2 3 4 5 6 (PRODUCT LEVEL)	SEE PAGE
	1	1	**307-6260**	1	SHAFT AS	
	2	1	**8M-4295**	15	SPRING	
	3	1	**6Y-2428**	1	PISTON	
	4	1	**6Y-1890**	1	RING-RETAINING	
	5	1	**9W-9905**	4	RING-LOCK	
	6	1	**6Y-1114**	2	LOCKWASHER	
	7	1	**6Y-1115**	4	RING-HALF	
	8	1	**8E-8319**	4	DISC-THRUST	
	9	1	**7T-4897**	1	DISC-THRUST	
	10	1	**3B-8921**	1	BEARING-INNER	
	11	1	**8E-1913**	1	GEAR AS (84-TEETH)	
	12	1	**9W-6467**	2	BEARING-SLEEVE	
	13	1	**6Y-7981**	7	DISC-FRICTION	
	14	1	**3P-0337**	8	PLATE-CLUTCH	
	15	1	**8E-5736**	2	RING-SEAL EXTENSION	
	16	1	**6Y-2429**	1	PISTON-BALANCE	
	17	1	**102-5881**	1	SPRING-WAVE	
	18	1	**8E-5742**	2	RING-SEAL	
	19	1	**8E-5734**	1	RING-SEAL EXTENSION	
	20	1	**6I-9502**	5	PLATE-CLUTCH	
	21	1	**6I-8912**	6	DISC-FRICTION	
	22	1	**132-9635**	1	GEAR AS (45-TEETH)	
	23	1	**9W-6467**	2	BEARING-SLEEVE	
	24	1	**131-3919**	1	BEARING-ROLLER	
	25	1	**6Y-2425**	1	CARRIER-SEAL	
M	26	1	**6V-1819**	2	BOLT (M10X1.5X100-MM)	
	27	1	**7G-4822**	3	RING-SEAL	
	28	1	**8F-3469**	3	SEAL-O-RING	
	29	1	**6Y-2312**	1	HUB AS	
	30	1	**5H-8985**	1	PIN-SPRING	
	31	1	**6Y-1887**	1	PISTON	
	32	1	**218-3339**	1	HUB AS	
	33	1	**8E-1161**	1	ROTOR	

M-METRIC PART

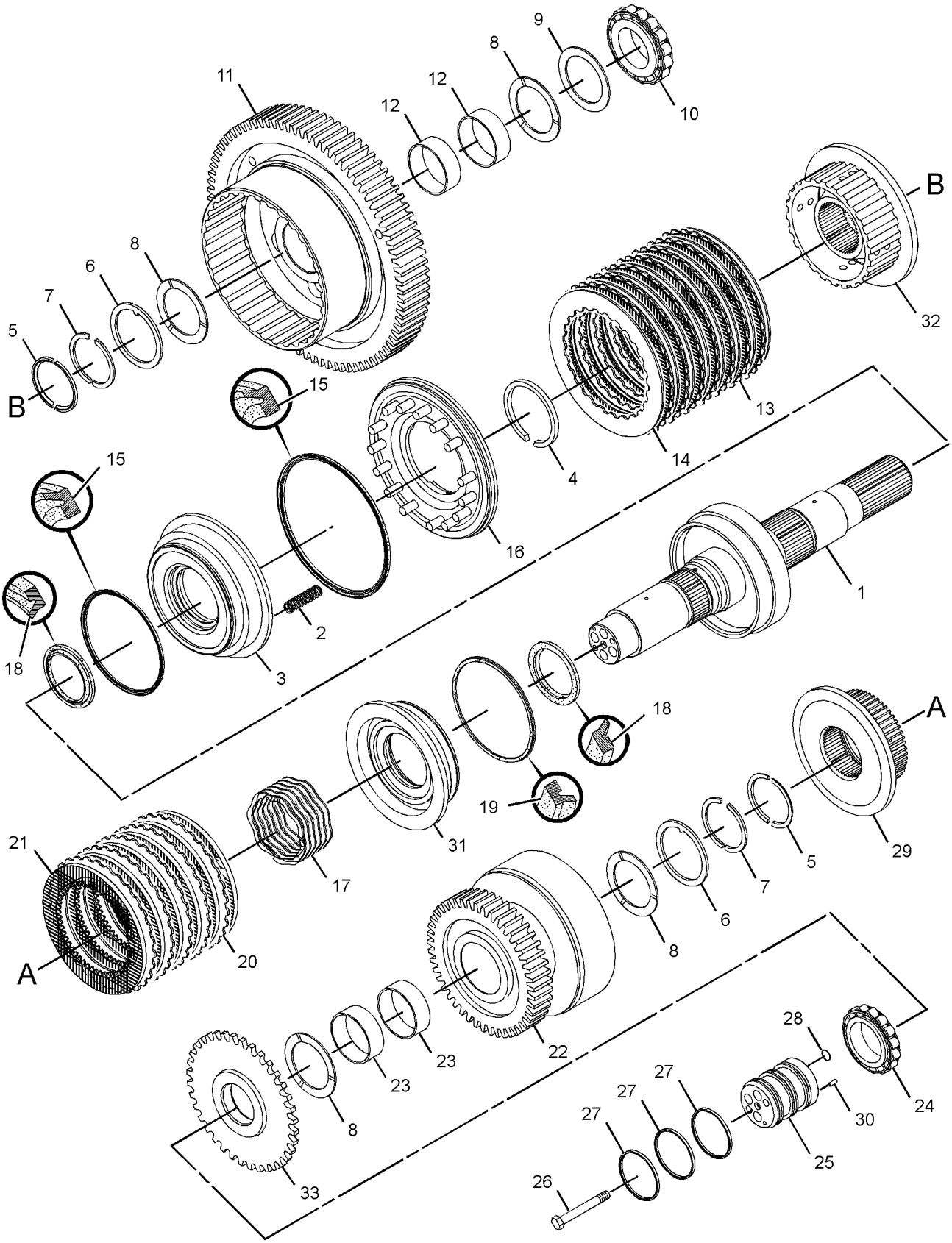

GRAPHIC #1 **<END>** g01525201

235-2412 CLUTCH GP-TRANSMISSION–FORWARD

S/N: DMJ1-UP

PART OF 275-6535 TRANSMISSION AR

SMCS-3063, 3155, 3170 **i02774944**

NOTE	REF NO	GRAPHIC REF	PART NUMBER	QTY	PART NAME 1 2 3 4 5 6 (PRODUCT LEVEL)	SEE PAGE
	1	1	**6I-8911**	5	DISC-FRICTION	
	2	1	**6I-8912**	6	DISC-FRICTION	
	3	1	**6I-9502**	6	PLATE-CLUTCH	
	4	1	**6Y-1115**	4	RING-HALF	
	5	1	**6Y-1116**	1	GEAR AS (43-TEETH)	
	6	1	**6Y-1119**	1	CARRIER-SEAL	
	7	1	**7G-4822**	3	RING-SEAL	
	8	1	**7T-4897**	2	DISC-THRUST	
	9	1	**8E-5742**	2	RING-SEAL	
	10	1	**8E-8319**	4	DISC-THRUST	
	11	1	**8F-3469**	4	SEAL-O-RING	
	12	1	**9U-8815**	2	SPRING	
	13	1	**9U-9995**	6	PLATE-CLUTCH	
	14	1	**9W-2029**	1	RACE-THRUST BEARING	
	15	1	**9W-9371**	2	RING-SEAL	
	16	1	**9W-9905**	4	RING-LOCK	
	17	1	**108-5751**	2	DISC-FRICTION	
	18	1	**132-9625**	1	GEAR AS (50-TEETH)	
	19	1	**159-0308**	2	PISTON	
	20	1	**159-0927**	1	DISC-FRICTION	
	21	1	**161-6713**	2	PLATE-LOCK	
	22	1	**171-7091**	1	SHAFT AS	
	23	1	**247-8629**	2	VALVE AS	
	24	1	**247-9711**	2	HUB AS	
	25	1	**2K-1738**	1	BEARING-INNER	
	26	1	**4M-6107**	1	BEARING-INNER	
M	27	1	**5C-7423**	4	SCREW (M6X1X16-MM)	
	28	1	**5H-8985**	1	PIN-SPRING	
M	29	1	**6V-1819**	2	BOLT (M10X1.5X100-MM)	
	30	1	**8E-1263**	2	BEARING-ROLLER	

M-METRIC PART

235-2412 **CLUTCH GP-TRANSMISSION** *(contd.)* **i02774944**

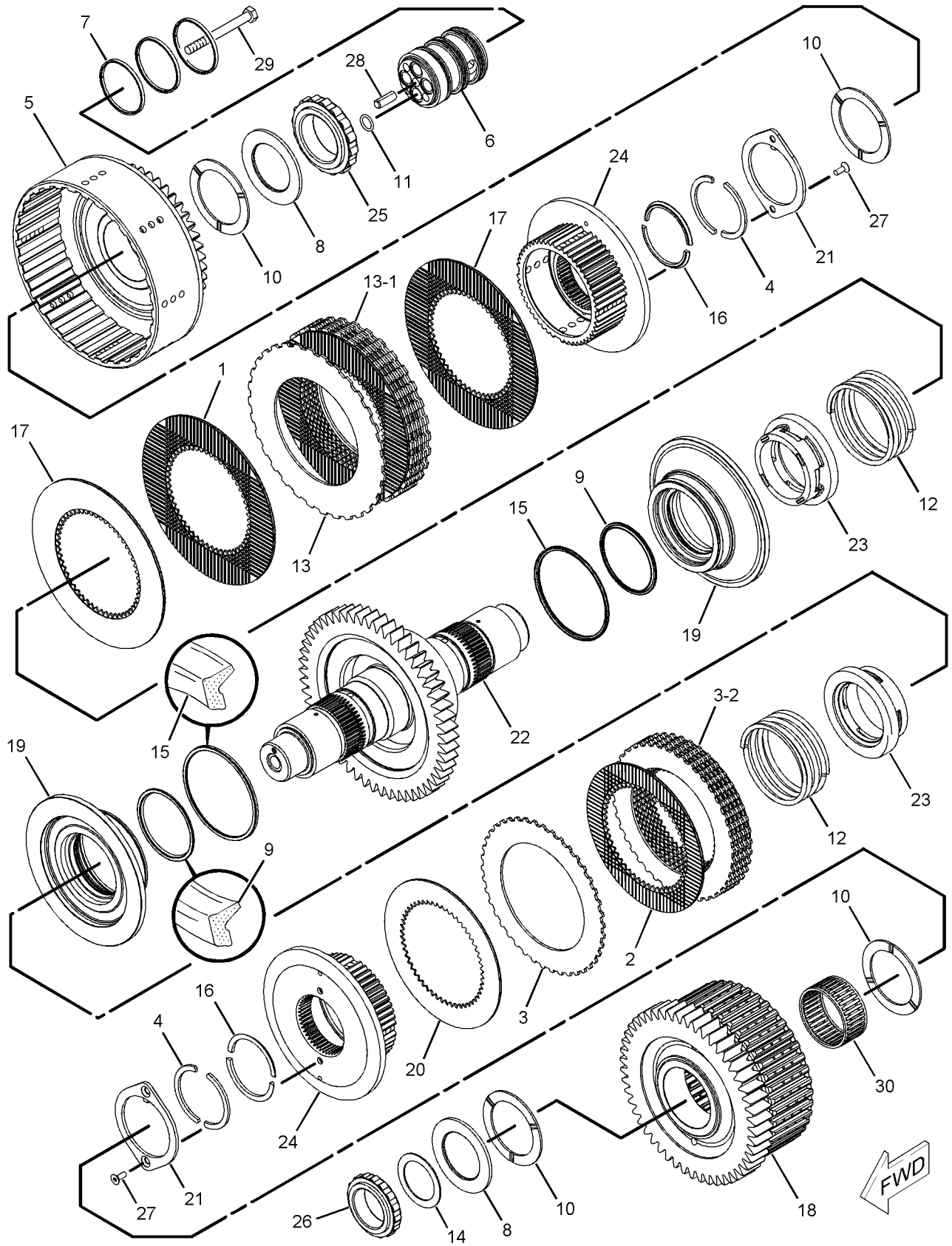

GRAPHIC #1 **<END>** g01137840

235-2413 CLUTCH GP-TRANSMISSION—REVERSE, SECOND

S/N: DMJ1-UP

PART OF 275-6535 TRANSMISSION AR

SMCS-3063, 3155, 3170 **i02774946**

NOTE	REF NO	GRAPHIC REF	PART NUMBER	QTY	PART NAME 1 2 3 4 5 6 (PRODUCT LEVEL)	SEE PAGE
	1	1	**131-3919**	1	BEARING-ROLLER	
	2	1	**4M-6107**	1	BEARING-INNER	
	3	1	**8E-1263**	1	BEARING-ROLLER	
	4	1	**6I-8912**	10	DISC-FRICTION	
	5	1	**6I-9502**	9	PLATE-CLUTCH	
	6	1	**6Y-0976**	1	GEAR (29-TEETH)	
	7	1	**6Y-1114**	1	LOCKWASHER	
	8	1	**6Y-1115**	4	RING-HALF	
	9	1	**6Y-1119**	1	CARRIER-SEAL	
	10	1	**6Y-1887**	1	PISTON	
	11	1	**6Y-1888**	1	PLATE-CLUTCH	
	12	1	**6Y-1891**	1	HUB AS	
	13	1	**6Y-2307**	1	SPACER (61X82.55X43.88-MM THK)	
	14	1	**7G-4822**	3	RING-SEAL	
	15	1	**7T-4897**	1	DISC-THRUST	
	16	1	**8E-5734**	1	RING-SEAL EXTENSION	
	17	1	**8E-5742**	2	RING-SEAL	
	18	1	**8E-8319**	4	DISC-THRUST	
	19	1	**8F-3469**	4	SEAL-O-RING	
	20	1	**9U-8815**	1	SPRING	
	21	1	**9W-2029**	1	RACE-THRUST BEARING	
	22	1	**9W-9371**	1	RING-SEAL	
	23	1	**9W-9905**	4	RING-LOCK	
	24	1	**102-5881**	1	SPRING-WAVE	
	25	1	**132-9628**	1	GEAR AS (44-TEETH)	
		1	**6Y-1895**	1	BEARING-SLEEVE	
	26	1	**159-0308**	1	PISTON	
	27	1	**159-0927**	1	DISC-FRICTION	
	28	1	**161-6713**	1	PLATE-LOCK	
	29	1	**171-7095**	1	SHAFT AS	
	30	1	**247-8629**	1	VALVE AS	
	31	1	**247-9711**	1	HUB AS	
	32	1	**248-2886**	1	GEAR AS (46-TEETH)	
M	33	1	**5C-7423**	2	SCREW (M6X1X16-MM)	
	34	1	**5H-8985**	1	PIN-SPRING	
M	35	1	**6V-1819**	2	BOLT (M10X1.5X100-MM)	

M-METRIC PART

235-2413 **CLUTCH GP-TRANSMISSION** *(contd.)* **i02774946**

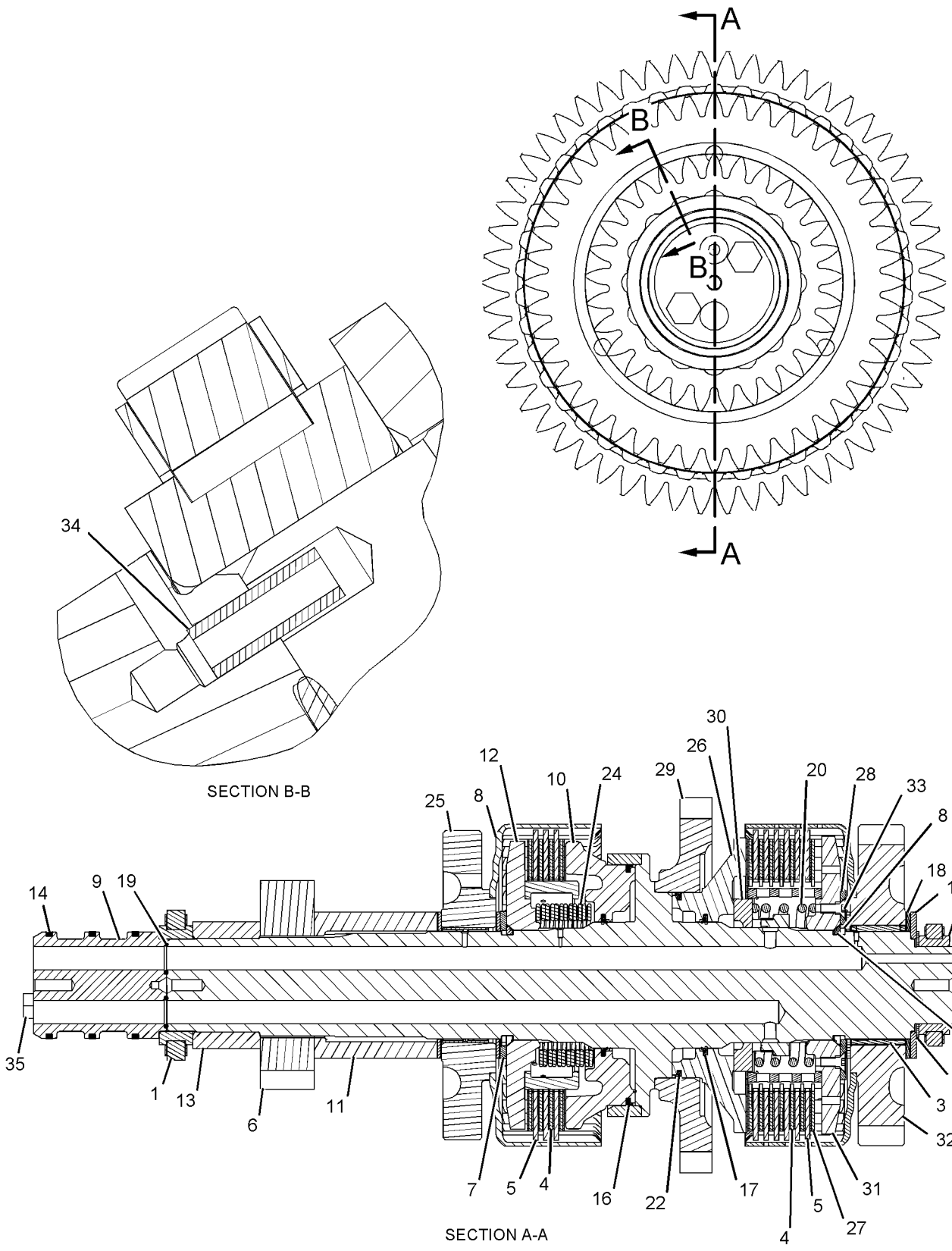

GRAPHIC #1 **<END>** g01132487

316-8363 CONTROL GP-DIFFERENTIAL LOCK

S/N: JPA1-UP
PART OF 316-8469 DIFFERENTIAL AR
AN ATTACHMENT

SMCS-3264 **i03252061**

NOTE	REF NO	GRAPHIC REF	PART NUMBER	QTY	PART NAME 1 2 3 4 5 6 (PRODUCT LEVEL)	SEE PAGE
	1	1	**6D-0580**	1	TUBE	
	2	1	**6V-0852**	1	CAP-DUST	
I	3	1	**7T-1159**	1	HOSE AS	
	4	1	*164-5567*	1	COUPLER AS-QUICK DISCONNECT (MALE)	
		1	**6V-3965**	1	FITTING (QUICK DISCONNECT)	
		1	**214-7568**	1	SEAL-O-RING	
	5	1	**165-9928**	1	PLATE	
Y	6	1	**174-3705**	1	VALVE & MTG GP-DIFF LOCK	275
	7	1	*180-9933*	1	ADAPTER GP (90-DEG)	
		1	**135-9941**	1	ADAPTER	
		1	**3J-7354**	1	SEAL-O-RING	
I	8	1	**313-6976**	1	HOSE AS	
I	9	1	**313-6977**	1	HOSE AS	
	10	1	**130-5300**	1	CLIP	
	11	1	**139-2119**	1	SWITCH AS-ROCKER (DIFFERENTIAL LOCK)	
	12	1	*148-8316*	1	CONNECTOR AS	
		1	**3J-7354**	1	SEAL-O-RING	
		1	**4J-5477**	1	SEAL-O-RING	
		1	**6V-8647**	1	CONNECTOR	
	13	1	*148-8369*	1	ELBOW AS	
		1	**3J-7354**	1	SEAL-O-RING	
		1	**4J-5477**	1	SEAL-O-RING	
		1	**6V-8628**	1	ELBOW	
	14	1	*156-4281*	1	TEE AS	
		1	**3J-7354**	1	SEAL-O-RING	
		1	**6V-8397**	2	SEAL-O-RING	
		1	**7X-0838**	1	TEE-O-RING	
	15	1	**4J-2506**	2	SEAL-O-RING	
	16	1	**4P-8134**	1	CLIP	
	17	1	**8M-2773**	1	CLIP	
	18	1	**8M-4438**	2	SEAL-O-RING	
	19	1	**8T-2501**	2	BOLT (3/8-16X2-IN)	
	20	1	**8T-4121**	2	WASHER-HARD (11X21X2.5-MM THK)	
M	21	1	**8T-4133**	1	NUT (M10X1.5-THD)	
M	22	1	**8T-4137**	1	BOLT (M10X1.5X20-MM)	
	23	1	**8T-4896**	2	WASHER-HARD (10.2X18.5X2.5-MM THK)	
	24	1	**9M-8406**	1	CLIP	
	25	1	**9X-6772**	1	STRAP-CABLE	

I-REFER TO HYDRAULIC INFORMATION SYSTEM
M-METRIC PART
Y-SEPARATE ILLUSTRATION

316-8363 **CONTROL GP-DIFFERENTIAL LOCK** *(contd.)* **i03252061**

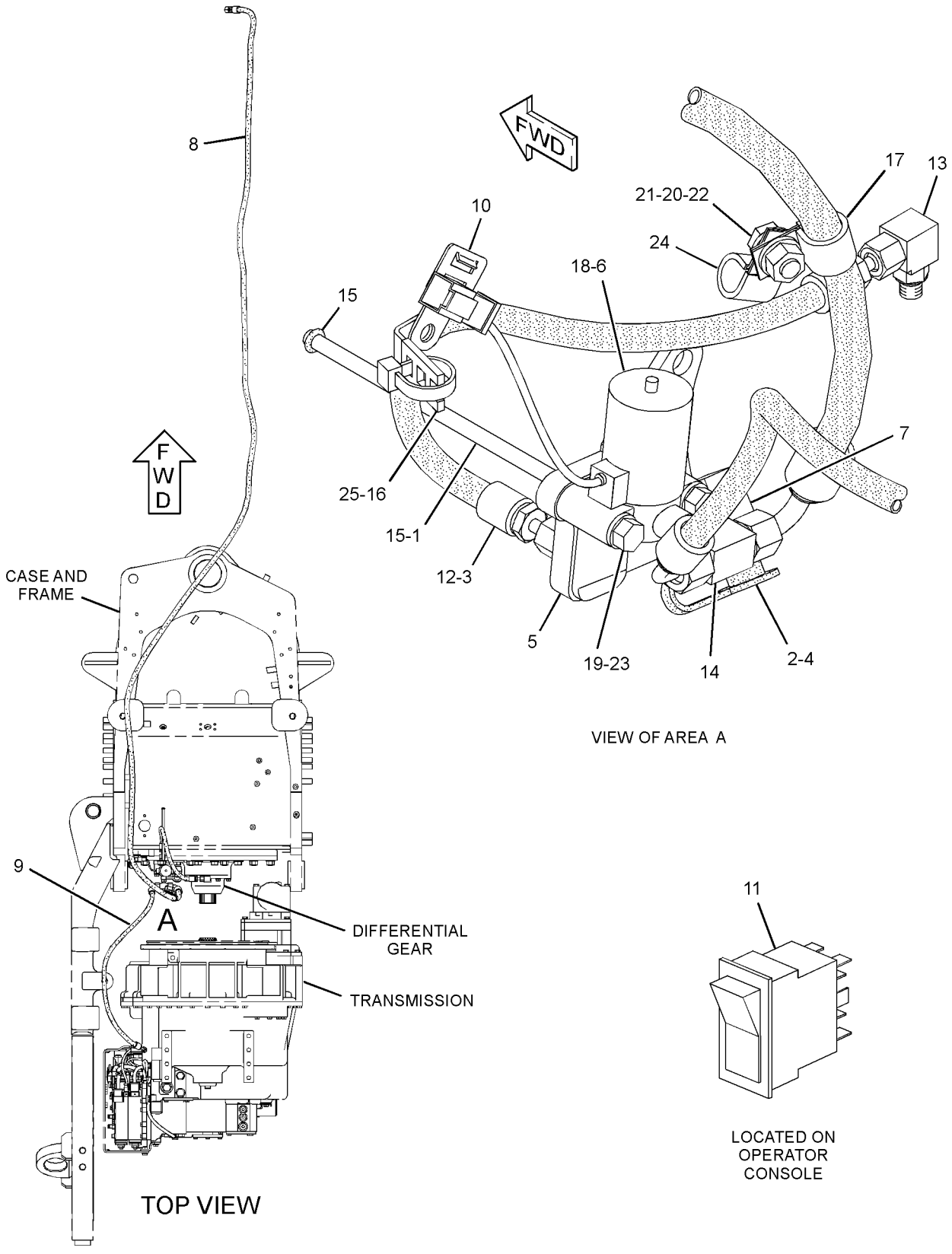

GRAPHIC #1 **<END>** g01693973

281-3165 CONTROL GP-TRANSMISSION HYD

S/N: DMJ1-UP

PART OF 275-6535 TRANSMISSION AR

SMCS-3073, 3167 **i02490493**

NOTE	REF NO	GRAPHIC REF	PART NUMBER	QTY	PART NAME 1 2 3 4 5 6 (PRODUCT LEVEL)	SEE PAGE
Y	1	1	**281-3163**	1	VALVE GP-TRANSMISSION CONTROL	284
M	2	1	**6V-3918**	5	BOLT (M8X1.25X50-MM)	
	3	1	**9P-9150**	66	WASHER (8.25X18X0.84-MM THK)	
	4	1	**1T-0738**	31	WASHER (8.4X19X1.83-MM THK)	
M	5	1	**8C-4984**	14	BOLT (M8X1.25X150-MM)	
M	6	1	**3E-8005**	14	BOLT (M8X1.25X160-MM)	
	7	1	**4S-5879**	1	SEAL-O-RING	
Y	8	1	*180-9324*	1	WIRING GP-TRANSMISSION	228
M	9	1	**8T-0639**	2	BOLT (M6X1X12-MM)	
M	10	1	**6V-5217**	3	BOLT (M8X1.25X20-MM)	
	11	1	**198-7657**	1	BLOCK	

M-METRIC PART
Y-SEPARATE ILLUSTRATION

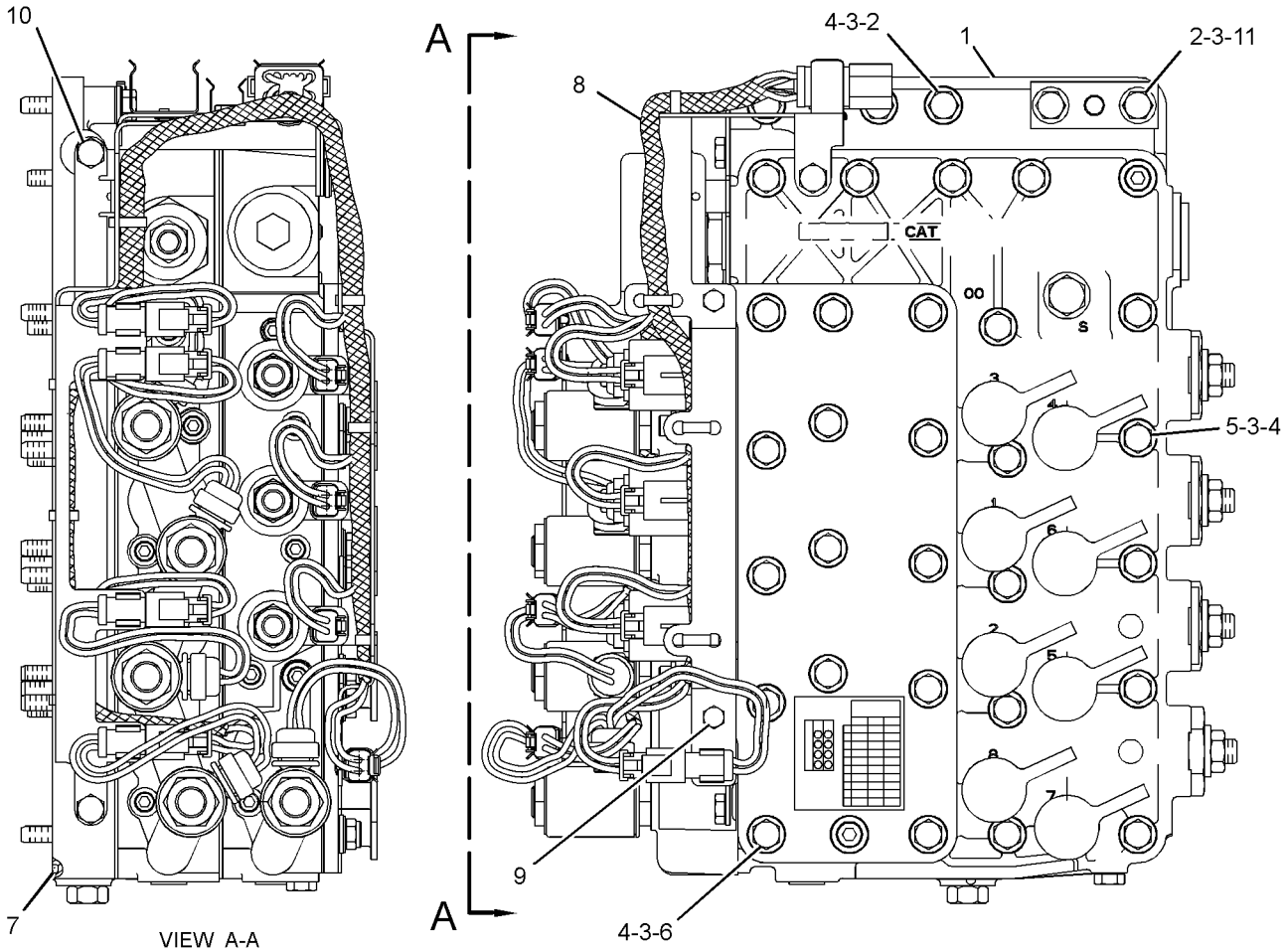

GRAPHIC #1 **<END>** g01254682

281-5641 COOLER GP-TRANSMISSION OIL

S/N: JPA1-UP

PART OF 274-7940 GENERAL AR

SMCS-1375 **i03247481**

NOTE	REF NO	GRAPHIC REF	PART NUMBER	QTY	PART NAME 1 2 3 4 5 6 (PRODUCT LEVEL)	SEE PAGE
	1	1	**242-7417**	1	CORE AS-HYDRAULIC OIL COOLER	
	2	1	**293-4277**	4	BRACKET AS	
	3	1	**303-6008**	2	BRACKET AS	
	4	1	*241-6185*	2	PLUG AS	
					(EACH INCLUDES)	
		1	**3D-2824**	1	SEAL-O-RING	
		1	**5P-9436**	1	PLUG-THREADED O-RING	
	5	1	**8T-4121**	24	WASHER-HARD (11X21X2.5-MM THK)	
M	6	1	**8T-4133**	8	NUT (M10X1.5-THD)	
M	7	1	**8T-4189**	8	BOLT (M8X1.25X20-MM)	
M	8	1	**8T-4195**	16	BOLT (M10X1.5X30-MM)	
	9	1	**8T-4224**	8	WASHER-HARD (8.8X16X2-MM THK)	

M-METRIC PART

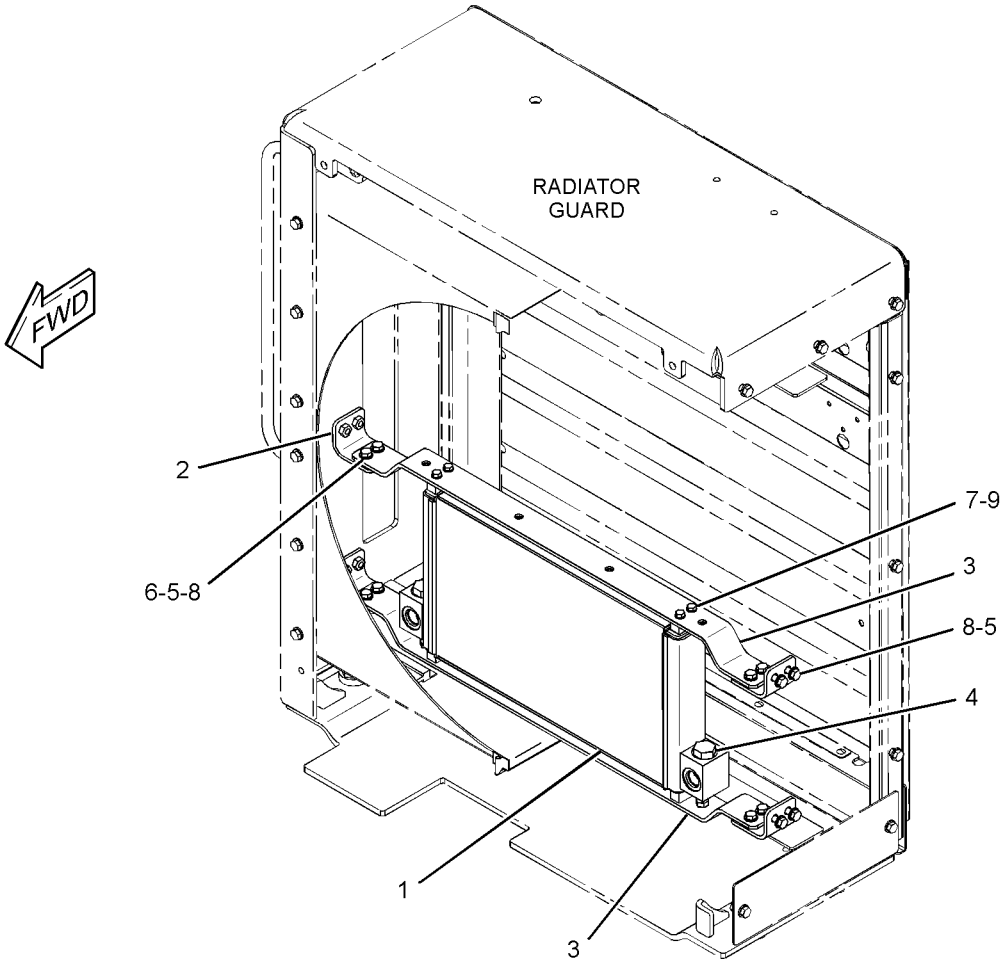

GRAPHIC #1 **<END>** g01699678

337-3357 COUPLING GP-TORSIONAL

S/N: JPA1-UP

PART OF 274-7940 GENERAL AR

SMCS-3252, 3279 **i03316061**

NOTE	REF NO	GRAPHIC REF	PART NUMBER	QTY	PART NAME 1 2 3 4 5 6 (PRODUCT LEVEL)	SEE PAGE
	1	1	**283-1099**	1	COUPLING AS	
M	2	1	**266-4360**	12	BOLT (M10X1.5X30-MM)	
	3	1	**6V-5839**	12	WASHER (11X21X2.5-MM THK)	

M-METRIC PART

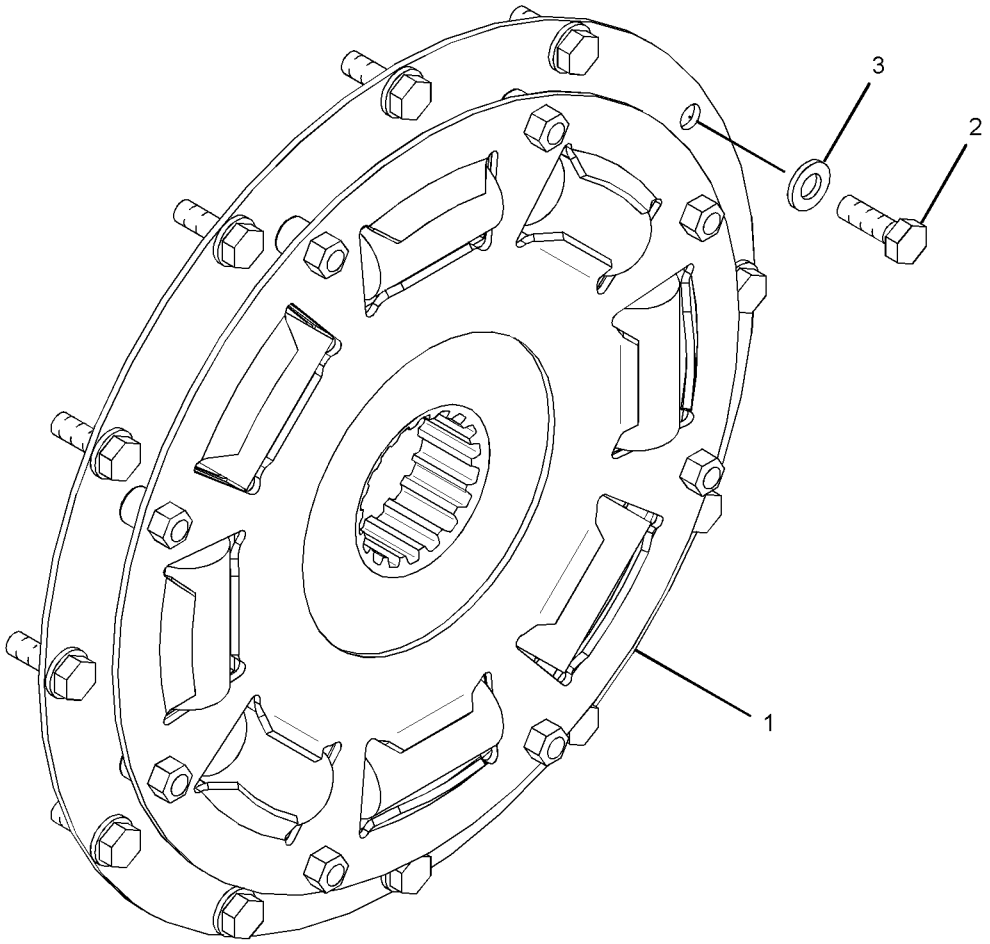

GRAPHIC #1 **<END>** g01769594

8W-5430 DIFFERENTIAL & BEVEL GEAR GP

S/N: JPA1-UP
PART OF 316-8469 DIFFERENTIAL AR
AN ATTACHMENT

SMCS-3256, 3258 **i02204763**

NOTE	REF NO	GRAPHIC REF	PART NUMBER	QTY	PART NAME 1 2 3 4 5 6 (PRODUCT LEVEL)	SEE PAGE
	1	1	**5D-9844**	1	BOLT-LOCKING (3/8-16X2-IN)	
	2	1	**5P-8247**	20	WASHER-HARD (17X32X3.5-MM THK)	
	3	1	**034-3557**	5	BOLT-LOCKING (3/8-16X1.125-IN)	
	4	1	**5M-2894**	8	WASHER-HARD (10.2X18.5X2.5-MM THK)	
	5	1	**2K-5109**	1	GASKET	
	6	1	**8W-5279**	1	RETAINER	
	7	1	**123-4003**	1	SEAL-LIP TYPE	
	8	1	**8T-8883**	1	SEAL-O-RING	
	9	1	**5P-5813**	1	LOCKNUT-BEARING	
	10	1	**9B-0143**	1	LOCKNUT	
	11	1	**7D-8347**	1	WASHER-TAB	
	12	1	**8X-2534**	1	HOUSING	
	13	1	**5L-2031**	1	CUP-BEARING	
	14	1	**5L-2030**	1	CONE-BEARING	
	15	1	**9X-8880**	8	BOLT (5/8-11X2-IN)	
	16	1	**2K-5106**	1	SHIM (2.54-MM THK)	
	17	1	**4K-0367**	12	NUT-FULL (5/8-11-THD)	
	18	1	**4H-6520**	1	SEAL-O-RING	
	19	1	**1J-4757**	1	CONE-BEARING	
	20	1	**1J-2860**	1	CUP-BEARING	
	21	1	**8D-8197**	1	CAGE	
	22	1	**6G-4703**		NUT (5 1/4-12-THD)	
	23	1	**126-2729**	1	CONE-SPECIAL TAPERED	
	24	1	**5P-2503**	1	CUP	
	25	1	**6F-0698**	1	DOWEL	
	26	1	**8D-9784**	2	LOCK	
	27	1	**030-8535**	2	BOLT-LOCKING (3/8-16XO.875-IN)	
C	28	1	**154-2687**	1	CARRIER AS	
	29	1	**0S-1756**	4	BOLT (3/4-10X4.25-IN)	
	30	1	**5P-8248**	4	WASHER-HARD (20X36.5X3.5-MM THK)	
	31	1	**4D-5292**	1	RING-RETAINING	
	32	1	**1P-2662**	1	CONE-BEARING	
	33	1	**1P-2636**	1	CUP-BEARING	
	34	1	**6G-4701**	1	NUT (4 1/4-12-THD)	
	35	1	**8X-2308**	1	CAGE AS	
		1	**2D-6642**	1	BALL	
	36	1	**2H-5001**		SEAL-O-RING	
	37	1	**8W-5111**	1	SLEEVE	
	38	1	**169-1548**	1	SHAFT-PINION	
	40	1	**9G-2991**	2	RING-SEAL	
CY	42	1	**154-2688**	1	DIFFERENTIAL GP	254

C-CHANGE FROM PREVIOUS TYPE
Y-SEPARATE ILLUSTRATION

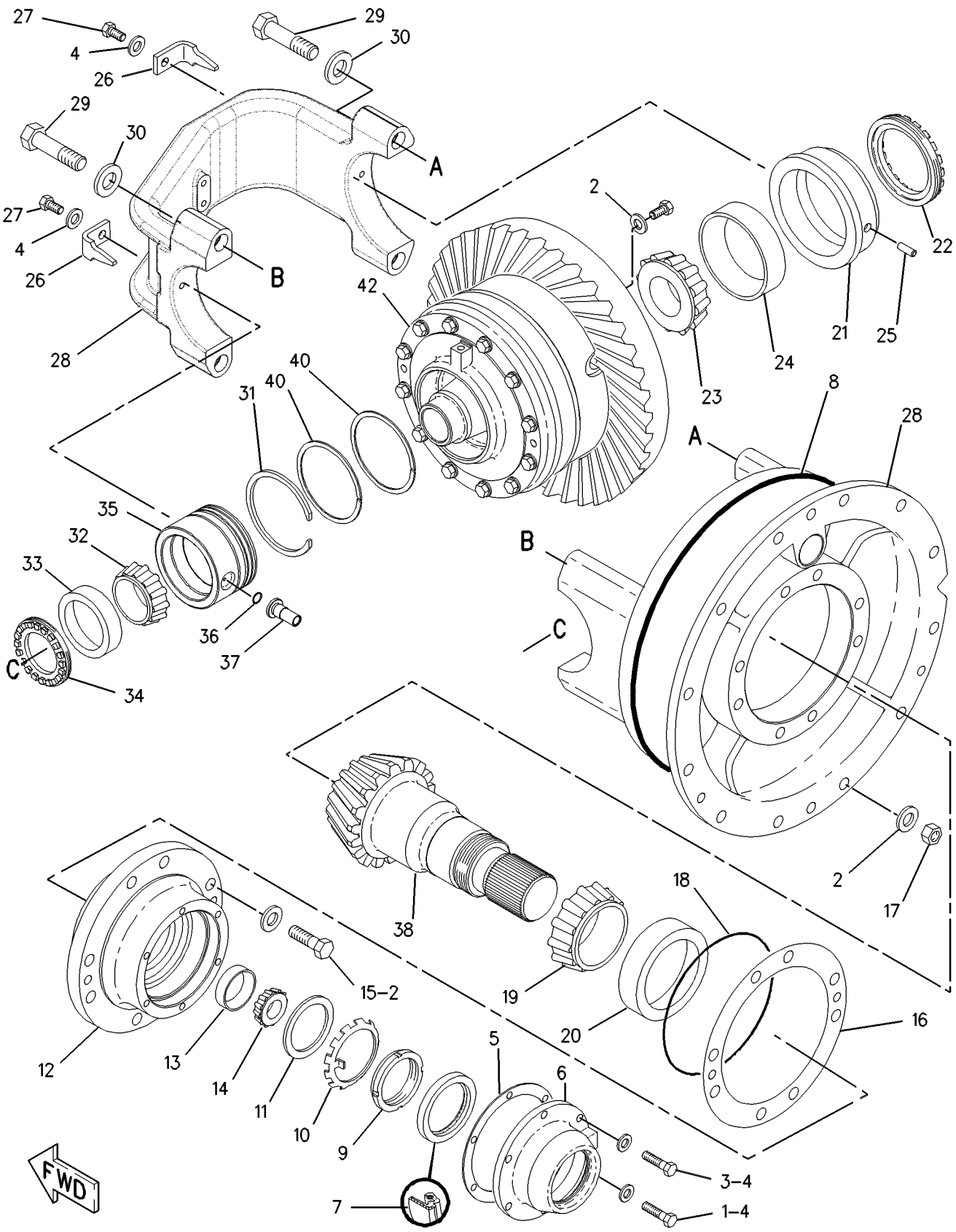

GRAPHIC #1 **<END>** g00635014

316-8469 DIFFERENTIAL AR

S/N: JPA1-UP
AN ATTACHMENT

SMCS-3264, 3266, 3270 **i03255277**

NOTE	REF NO	GRAPHIC REF	PART NUMBER	QTY	PART NAME 1 2 3 4 5 6 (PRODUCT LEVEL)	SEE PAGE
Y	1	1	*8W-5430*	1	DIFFERENTIAL & BEVEL GEAR GP	251
Y	2	1	*316-8363*	1	CONTROL GP-DIFFERENTIAL LOCK	246
	3	1	**8T-4121**	1	WASHER-HARD (11X21X2.5-MM THK)	
M	4	1	**8T-4137**	1	BOLT (M10X1.5X20-MM)	

M-METRIC PART
Y-SEPARATE ILLUSTRATION

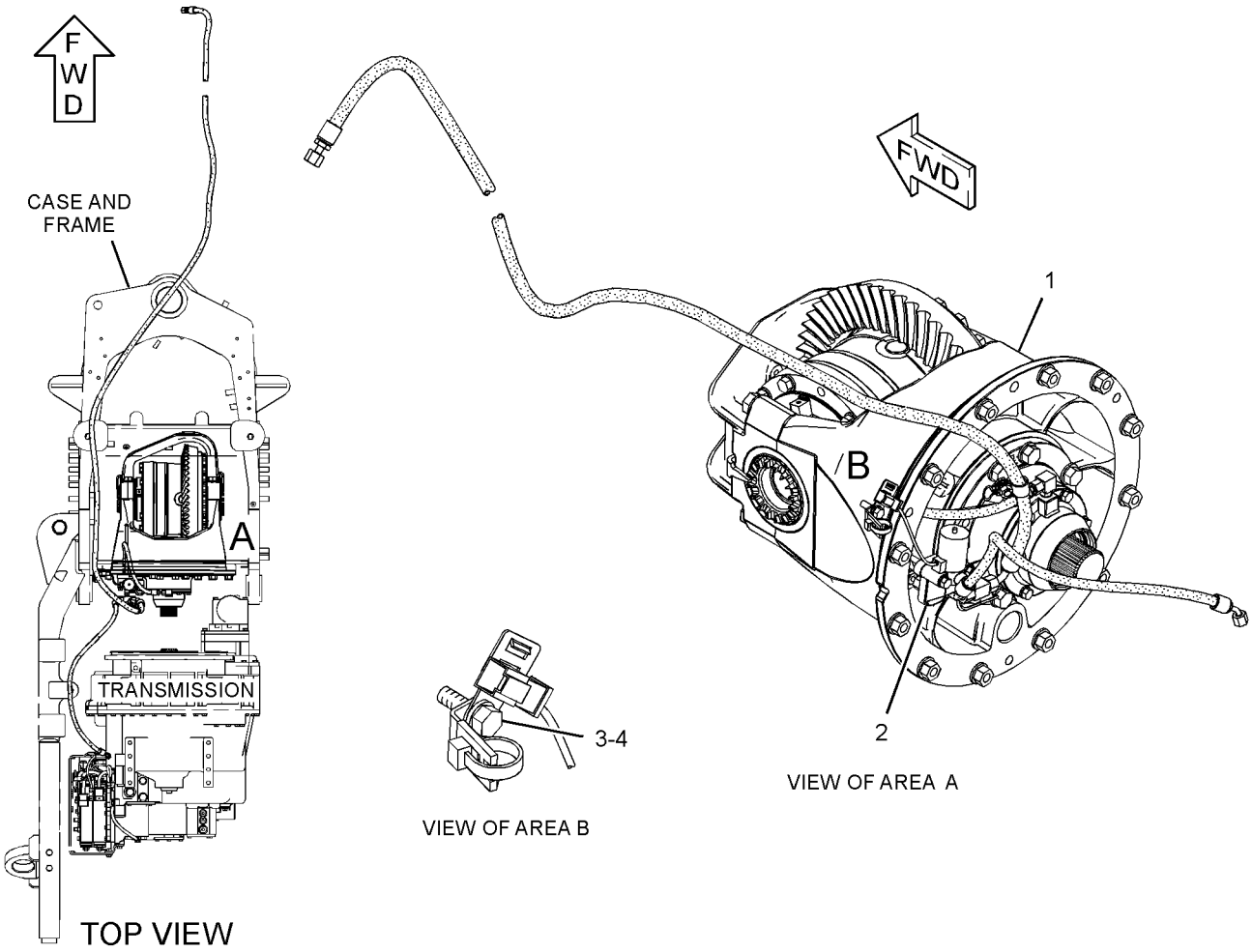

GRAPHIC #1 **<END>** g01702805

154-2688 DIFFERENTIAL GP

S/N: JPA1-UP

PART OF 8W-5430 DIFFERENTIAL & BEVEL GEAR GP

AN ATTACHMENT

SMCS-3258 **i02580119**

NOTE	REF NO	GRAPHIC REF	PART NUMBER	QTY	PART NAME 1 2 3 4 5 6 (PRODUCT LEVEL)	SEE PAGE
	1	1	**8D-4291**	1	PISTON	
	2	1	**7D-8225**	1	SEAL-RING	
	3	1	**7D-8226**	1	SEAL-RING	
	4	1	**6Y-7954**	7	DISC-FRICTION	
	5	1	**169-1549**	1	GEAR-BEVEL (54-TEETH)	
	6	1	**8X-2528**	1	HOUSING AS	
	6A	1	**2D-6642**	1	BALL	
	6C	1	**3D-6509**	2	DOWEL	
	7	1	**8X-4641**	4	SPACER-THRUST	
	8	1	**155-2283**	4	PINION AS (14-TEETH)	
					(EACH INCLUDES)	
	8A	1	**174-6819**	1	BEARING-SLEEVE	
	9	1	**154-2692**	1	HOUSING AS	
	9A	1	**3D-6509**	2	DOWEL	
	10	1	**8D-4064**	2	WASHER-THRUST	
	11	1	**109-4582**	1	GEAR-BEVEL (24-TEETH)	
	12	1	**109-4583**	1	GEAR-BEVEL (24-TEETH)	
	13	1	**8D-4282**	1	DISC (DIFFERENTIAL LOCK CLUTCH)	
	14	1	**7D-8185**	8	DISC (DIFFERENTIAL LOCK CLUTCH)	
	15	1	**2B-0947**	12	BOLT (1/2-13X2.25-IN)	
	16	1	**5P-8245**	12	WASHER-HARD (13.5X25.5X3-MM THK)	
	17	1	**5P-8247**	24	WASHER-HARD (17X32X3.5-MM THK)	
	18	1	**5B-0841**	24	BOLT (5/8-18X1.75-IN)	
	19	1	**154-2689**	1	SPIDER	

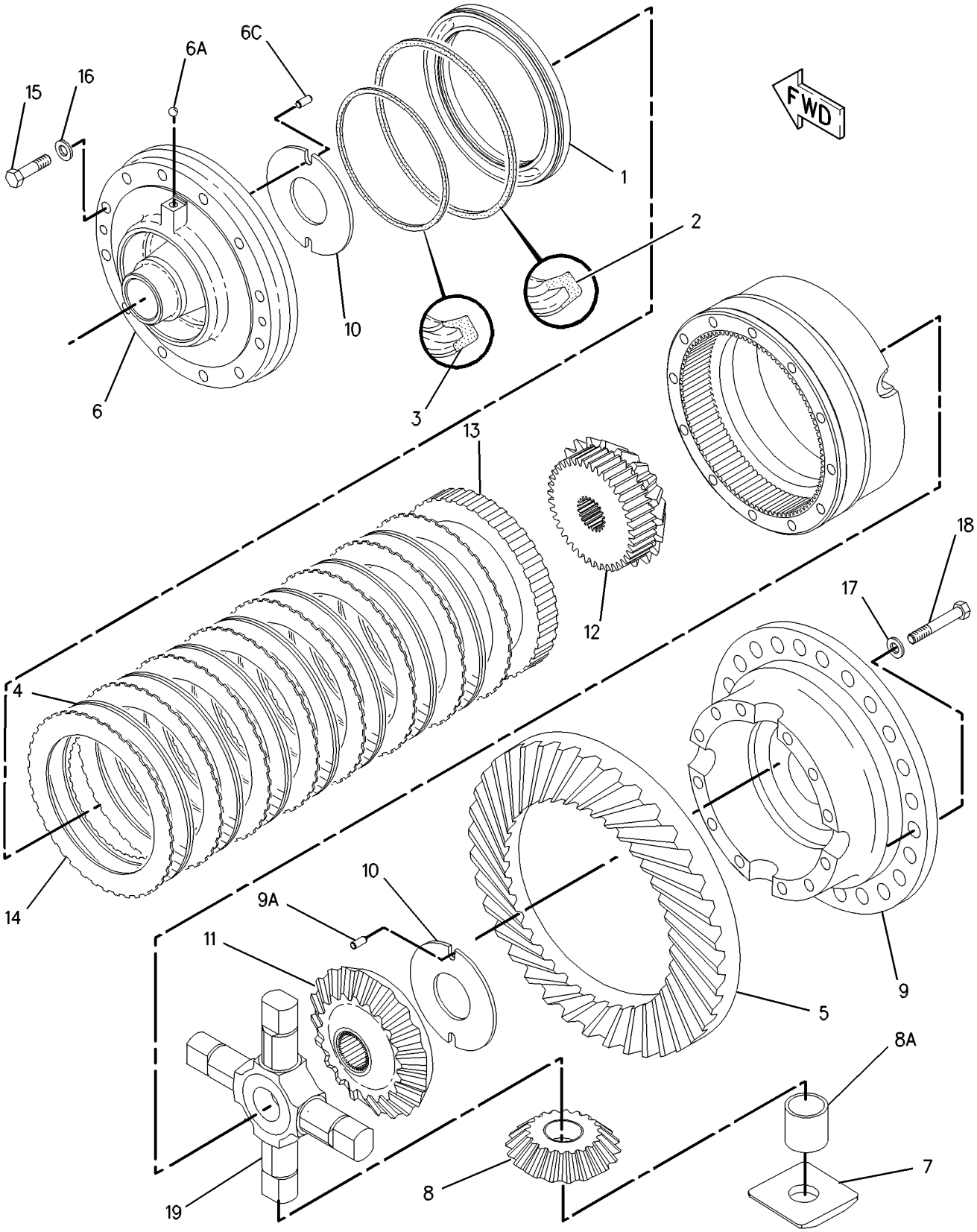

GRAPHIC #1 **<END>** g00597332

POWER TRAIN

8W-4368 FINAL DRIVE GP

S/N: JPA1-UP

PART OF 274-7940 GENERAL AR

SMCS-4050 **i02580081**

NOTE	REF NO	GRAPHIC REF	PART NUMBER	QTY	PART NAME 1 2 3 4 5 6 (PRODUCT LEVEL)	SEE PAGE
	1	1	**191-5973**	2	SHAFT-SUN GEAR (18-TEETH)	
	2	1	**282-4350**	2	SEAL-LIP TYPE	
	3	1	**8D-3591**	2	CARRIER-PLANETARY	
	4	1	**030-8535**	18	BOLT-LOCKING (3/8-16X0.875-IN)	
	5	1	**5M-2894**	30	WASHER-HARD (10.2X18.5X2.5-MM THK)	
	6	1	**7D-7889**	2	GEAR-RING	
	7	1	**7D-0035**	8	PLATE	
	8	1	**7S-4571**	2	SEAL-O-RING	
	9	1	**5P-8248**	38	WASHER-HARD (20X36.5X3.5-MM THK)	
	10	1	**2J-3506**	38	NUT-FULL (3/4-10-THD)	
	11	1	**9F-2247**	2	PLUG-PIPE	
	12	1	**3E-4307**	36	BOLT-LOCKING (5/8-11X1.75-IN)	
	13	1	**4D-3704**	32	WASHER-HARD (17X30X5-MM THK)	
	14	1	**8D-3743**	2	SPROCKET (20-TEETH)	
	15	1	**236-7724**	2	RETAINER	
	16	1	**8W-8317**	2	SPROCKET (20-TEETH)	
	17	1	**4D-6695**	2	SEAL-O-RING	
B	18	1	**6G-3212**	2	SHIM PACK (INCLUDES 10-SHIMS)	
	19	1	**1P-4693**	4	CUP-BEARING	
	20	1	**5P-3490**	2	CONE-BEARING	
	21	1	**8W-4142**	2	SHAFT-DRIVE	
	22	1	**5D-0353**	12	BOLT-LOCKING (3/8-16X1-IN)	
	23	1	**265-9125**	6	RETAINER	
	24	1	**8S-9092**	32	BOLT (5/8-11X2.25-IN)	
	25	1	**200-7929**	2	HOUSING	
	26	1	**218-4406**	4	RING-WEAR	
	27	1	**1P-4694**	2	CONE-BEARING	
	28	1	**6G-3206**	4	WASHER-THRUST (131.75X154.79X1.6-MM THK)	
	29	1	**5T-7129**	2	HOUSING	
	30	1	**8D-3902**	2	SEAL-LIP TYPE	
	31	1	**8W-2308**	6	SHAFT-PLANETARY	
	32	1	**8D-3540**	2	NUT (3 1/4-12-THD)	
	33	1	**129-2381**	6	GEAR-PLANETARY (26-TEETH)	
	34	1	**8W-4141**	2	LOCK	
	35	1	**1S-9110**	12	ROLLER AS	
	36	1	**8X-8377**	12	WASHER (47.57X82.55X2.92-MM THK)	
	37	1	**8D-3886**	2	RING-RETAINING	
	38	1	**8D-3885**	2	WASHER (50.8X107.95X6.35-MM THK)	
	39	1	**198-4768**	36	WASHER-HARD (17.5X32X8-MM THK)	

B-USE AS REQUIRED

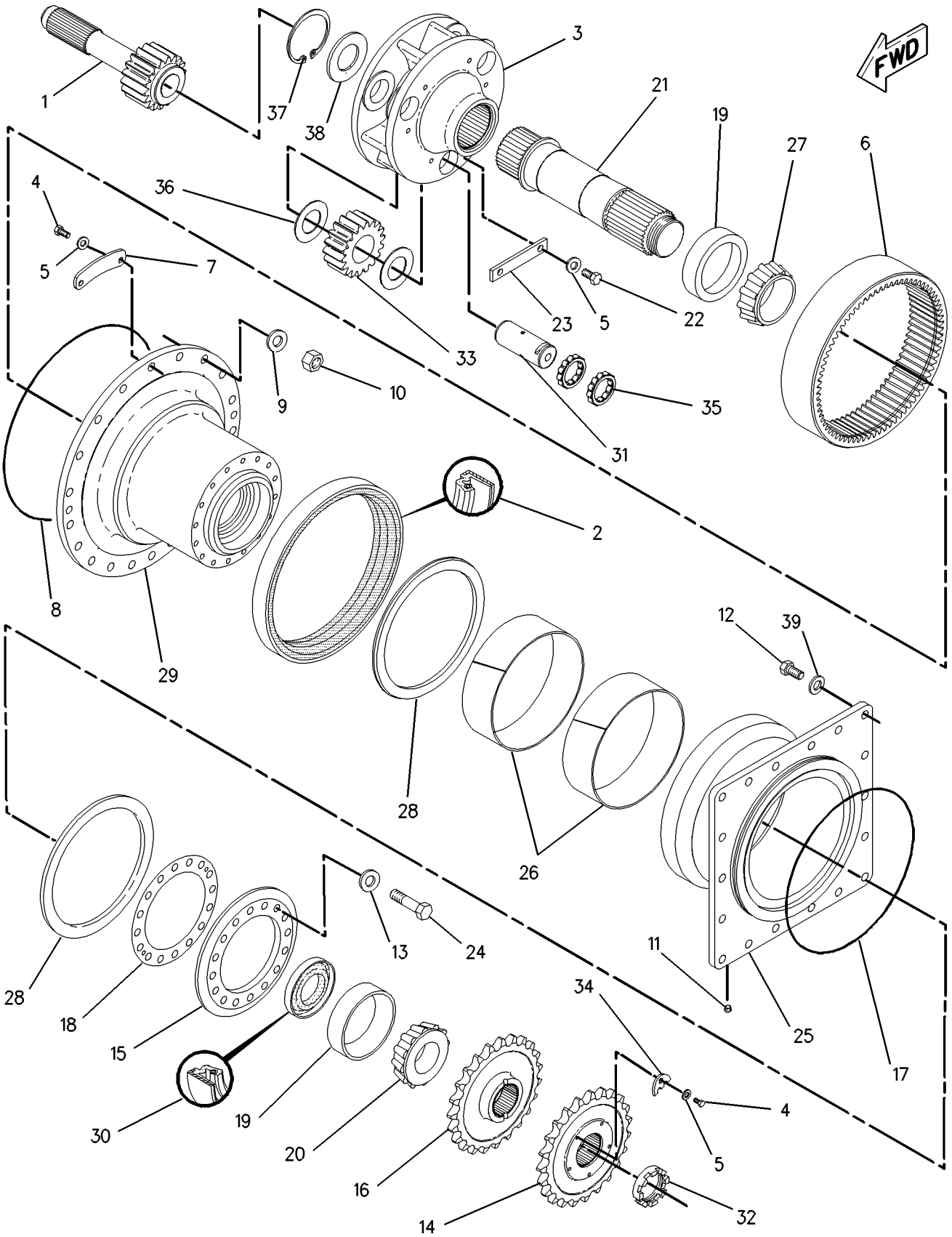

GRAPHIC #1 **<END>** g00954365

315-4118 FILLER GP-POWER TRAIN OIL

S/N: JPA1-UP

PART OF 274-7940 GENERAL AR

SMCS-3005, 3081, 7513 **i03246274**

NOTE	REF NO	GRAPHIC REF	PART NUMBER	QTY	PART NAME 1 2 3 4 5 6 (PRODUCT LEVEL)	SEE PAGE
	1	1	**7J-8611**	1	ELBOW-PIPE (90-DEG)	
	2	1	**9G-5127**	1	BREATHER (POWER TRAIN OIL FILLER)	
	3	1	**8T-4896**	2	WASHER-HARD (10.2X18.5X2.5-MM THK)	
	4	1	**315-6148**	1	GAUGE AS-OIL LEVEL (DIPSTICK) (POWER TRAIN OIL)	
	5	1	**5D-0353**	2	BOLT-LOCKING (3/8-16X1-IN)	
	6	1	**8B-1615**	1	GASKET	

PARTS SHOWN IN GRAPHIC(S) WITHOUT A REFERENCE NUMBER ARE NOT SERVICED SEPARATELY

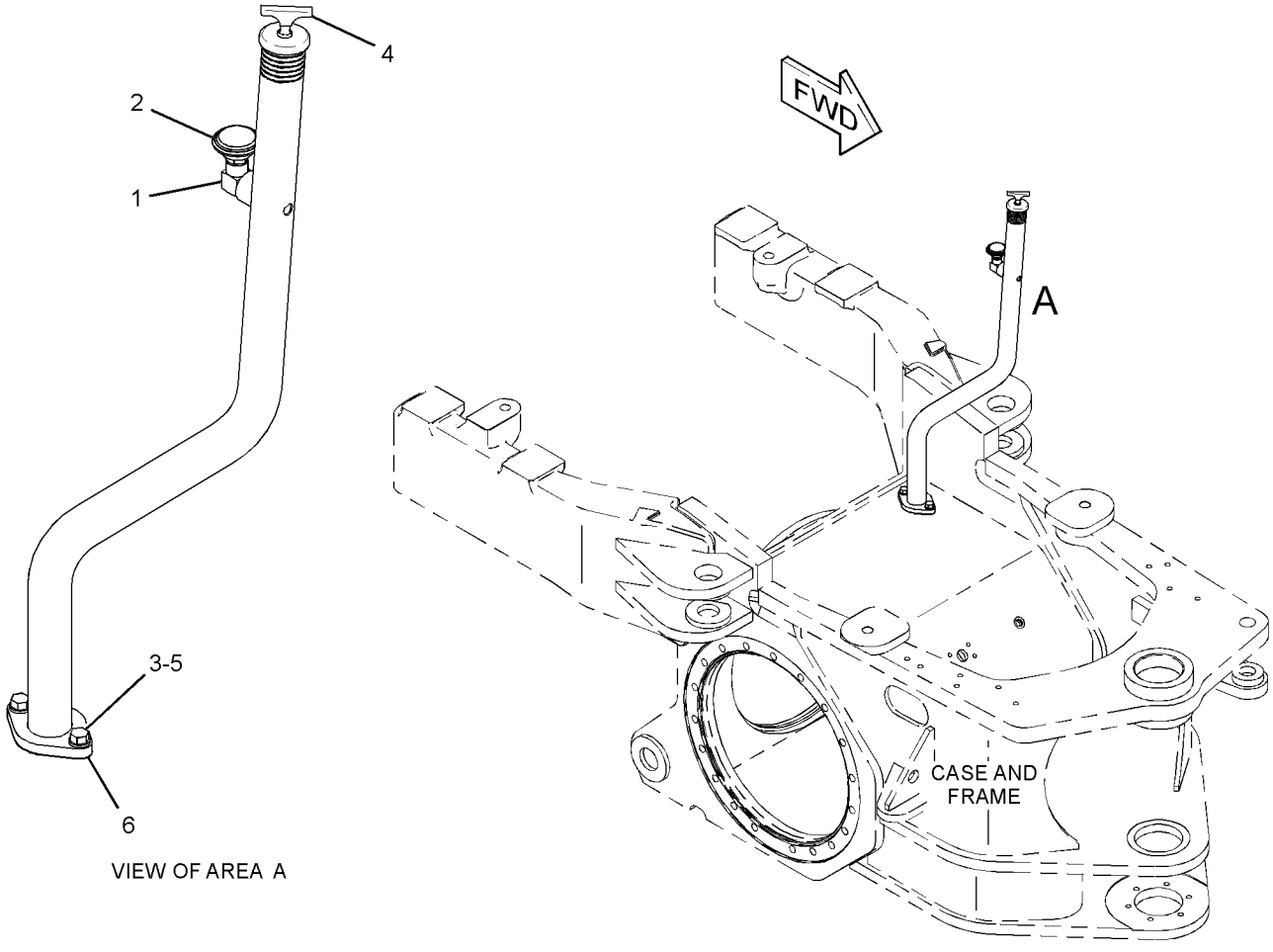

GRAPHIC #1 **<END>** g01690113

313-5233 FILTER GP-OIL–TRANSMISSION

S/N: JPA1-UP

PART OF 315-5378 LINES GP-TRANSMISSION OIL

SMCS-3004, 3067 **i03431963**

NOTE	REF NO	GRAPHIC REF	PART NUMBER	QTY	PART NAME 1 2 3 4 5 6 (PRODUCT LEVEL)	SEE PAGE
	1	1	**1R-1809**	1	FILTER ELEMENT-OIL (ULTRA HIGH EFFICIENCY) (TRANSMISSION)	
	1A	1	**130-0229**	1	SEAL-O-RING	
Y	2	1	**238-1029**	1	BASE GP-OIL FILTER (TRANSMISSION)	230
	3	1	*244-3712*	1	PLUG AS	
		1	**9S-4191**	1	PLUG-O-RING	
		1	**214-7568**	1	SEAL-O-RING	
	4	1	**321-5967**	1	HOUSING GP-FILTER	
		1	**3J-1907**	1	SEAL-O-RING	
		1	**9S-8004**	1	PLUG-O-RING	
	5	1	*155-3624*	1	PLUG AS	
		1	**3J-7354**	1	SEAL-O-RING	
		1	**9S-4182**	1	PLUG-O-RING	

Y-SEPARATE ILLUSTRATION

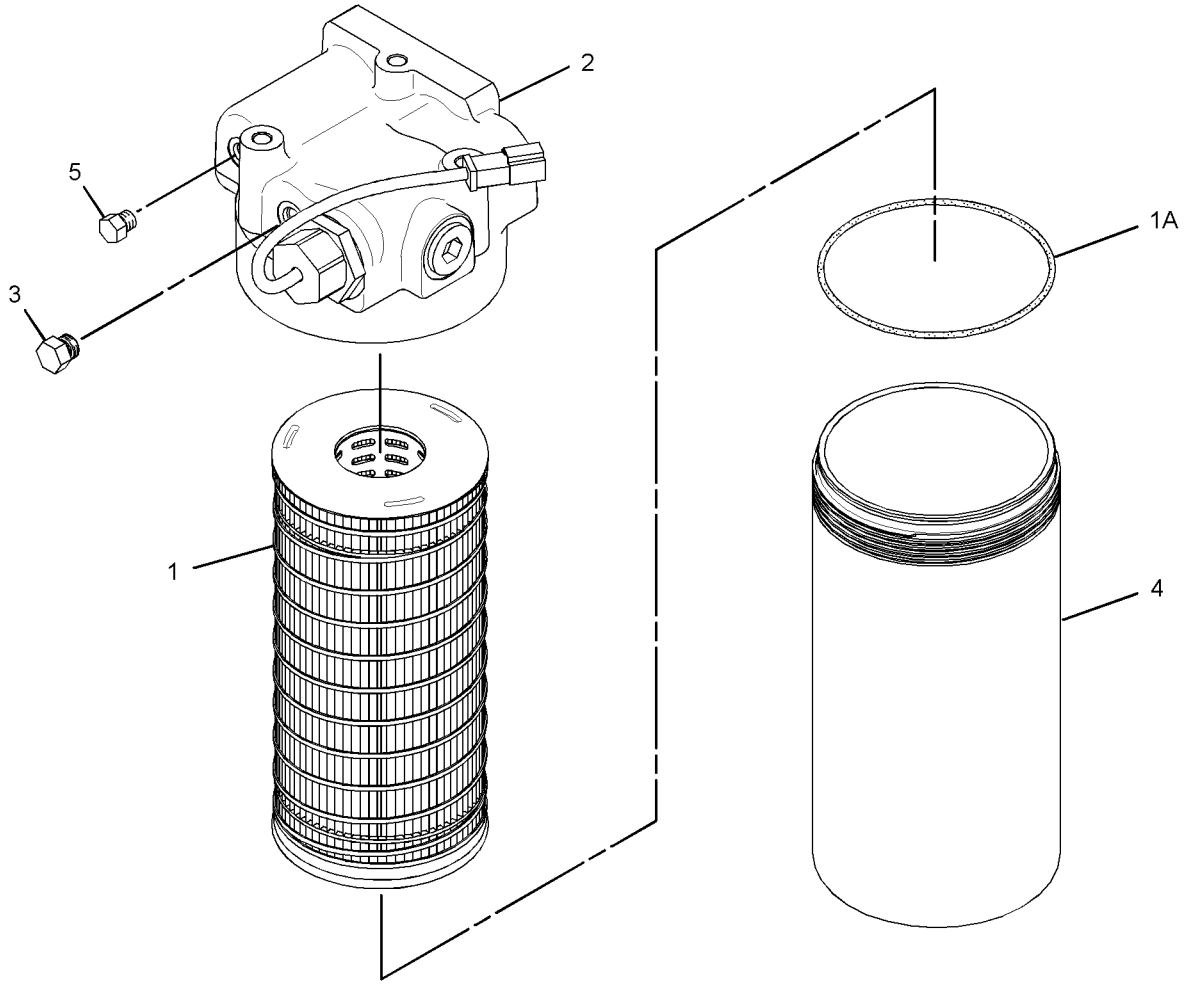

GRAPHIC #1 **<END>** g01702773

POWER TRAIN

115-0632 GEAR GP-BEVEL & PINION

S/N: JPA1-UP

PART OF 274-7940 GENERAL AR

SMCS-3254, 3256 **i02327843**

NOTE	REF NO	GRAPHIC REF	PART NUMBER	QTY	PART NAME 1 2 3 4 5 6 (PRODUCT LEVEL)	SEE PAGE
	1	1	**154-2687**	1	CARRIER AS	
	2	1	**0S-1756**	4	BOLT (3/4-10X4.25-IN)	
	3	1	**5P-8248**	4	WASHER-HARD (20X36.5X3.5-MM THK)	
B	4	1	**2K-5106**	1	SHIM (2.54-MM THK)	
	5	1	**4H-6520**	1	SEAL-O-RING	
	6	1	**1J-2860**	1	CUP-BEARING	
	7	1	**1J-4757**	1	CONE-BEARING	
	8	1	**8X-2534**	1	HOUSING	
	9	1	**7D-8347**	1	WASHER-TAB	
	10	1	**9B-0143**	1	LOCK-NUT	
	11	1	**5P-5813**	1	LOCKNUT-BEARING	
	12	1	**9S-4182**	1	PLUG-O RING	
	13	1	**123-4003**	1	SEAL-LIP TYPE	
	14	1	**8W-5279**	1	RETAINER	
	15	1	**5L-2031**	1	CUP-BEARING	
	16	1	**5L-2030**	1	CONE-BEARING	
	17	1	**2K-5109**	1	GASKET	
	18	1	**9X-8880**	8	BOLT (5/8-11X2-IN)	
	19	1	**8T-8883**	1	SEAL-O-RING	
	20	1	**115-0634**	1	PLUG	
	21	1	**110-6078**	1	CAGE	
	22	1	**6G-4701**	1	NUT (4 1/4-12-THD)	
	23	1	**1P-2636**	1	CUP-BEARING	
	24	1	**1P-2662**	1	CONE-BEARING	
	25	1	**8D-9784**	2	LOCK	
	26	1	**5M-2894**	8	WASHER-HARD (10.2X18.5X2.5-MM THK)	
	27	1	**030-8535**	2	BOLT-LOCKING (3/8-16X0.875-IN)	
	28	1	**115-0633**	1	HOUSING	
	29	1	**5B-0841**	24	BOLT (5/8-18X1.75-IN)	
	30	1	**5P-2503**	1	CUP	
	31	1	**126-2729**	1	CONE-SPECIAL TAPERED	
	32	1	**6G-4703**	1	NUT (5 1/4-12-THD)	
	33	1	**8D-8197**	1	CAGE	
	34	1	**6F-0698**	1	DOWEL	
	35	1	**034-3557**	5	BOLT-LOCKING (3/8-16X1.125-IN)	
	36	1	**5D-9844**	1	BOLT-LOCKING (3/8-16X2-IN)	
	37	1	**3J-7354**	1	SEAL-O-RING	
	38	1	**5P-8247**	44	WASHER-HARD (17X32X3.5-MM THK)	
	39	1	**4K-0367**	12	NUT-FULL (5/8-11-THD)	
	40	1	**169-1548**	1	SHAFT-PINION	
	41	1	**169-1549**	1	GEAR-BEVEL (54-TEETH)	

B-USE AS REQUIRED

115-0632 **GEAR GP-BEVEL & PINION** *(contd.)* **i02327843**

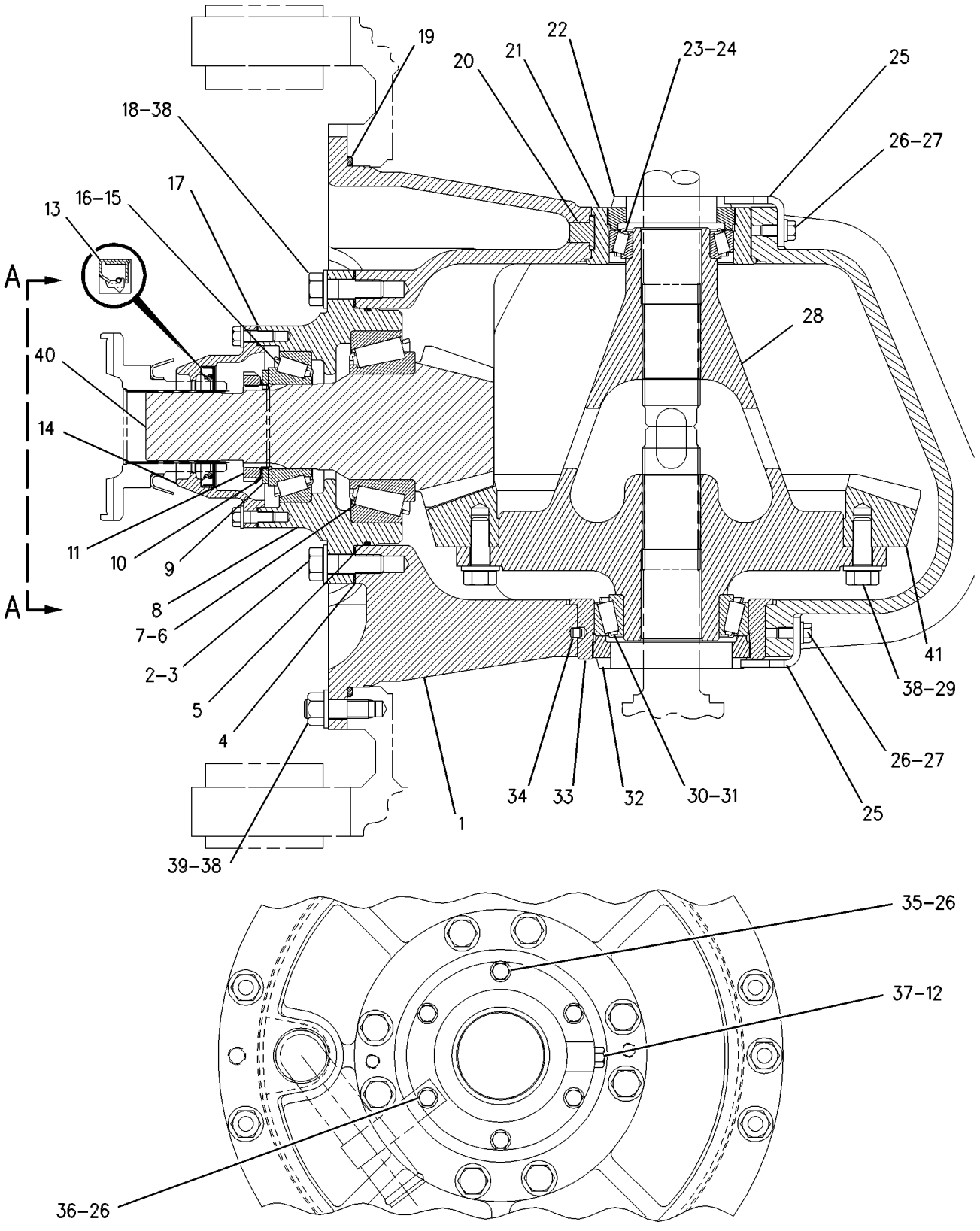

VIEW A-A

GRAPHIC #1 **<END>** g00398582

POWER TRAIN

315-5378 LINES GP-TRANSMISSION OIL

S/N: JPA1-UP

PART OF 274-7940 GENERAL AR

SMCS-3154 **i03431914**

NOTE	REF NO	GRAPHIC REF	PART NUMBER	QTY	PART NAME 1 2 3 4 5 6 (PRODUCT LEVEL)	SEE PAGE
	1	1	**1R-1809**	1	FILTER ELEMENT-OIL (ULTRA HIGH EFFICIENCY) (TRANSMISSION)	
		1	**130-0229**	1	SEAL-O-RING	
	2	1	**5D-1026**	2	CLAMP-HOSE	
	3	1	**8T-4983**	2	CLAMP-HOSE	
	4	1	**8X-5121**	1	TUBE	
	5	1	**8X-8916**	1	PLATE	
	6	1	**9C-5344**	1	SPACER (10.5X20X18-MM THK)	
	7	1	**005-7898**	2	CONNECTOR-HOSE	
	8	1	**113-9048**	1	BAFFLE	
	9	1	**118-0424**	1	ADAPTER	
	10	1	*164-5567*	1	COUPLER AS-QUICK DISCONNECT	
		1	**6V-3965**	1	FITTING (QUICK DISCONNECT)	
		1	**214-7568**	1	SEAL-O-RING	
	11	1	**178-3695**	1	ADAPTER	
	12	1	*244-3712*	1	PLUG AS	
		1	**9S-4191**	1	PLUG-O-RING	
		1	**214-7568**	1	SEAL-O-RING	
I	13	1	**266-6793**	1	HOSE AS	
	14	1	**285-6570**	1	TUBE AS	
I	15	1	**293-4285**	1	HOSE AS	
I	16	1	**303-6032**	1	HOSE AS	
Y	17	1	*313-5233*	1	FILTER GP-OIL (BYPASS)	259
I	18	1	**315-5668**	1	HOSE AS	
	19	1	**315-9792**	1	TUBE AS	
I	20	1	**316-6688**	1	HOSE AS	
	21	1	**000-7246**	1	ELBOW	
	22	1	*148-8327*	2	CONNECTOR AS	
					(EACH INCLUDES)	
		1	**3D-2824**	1	SEAL-O-RING	
		1	**6V-8637**	1	CONNECTOR	
		1	**6V-9746**	1	SEAL-O-RING	
	23	1	*148-8335*	2	CONNECTOR AS	
					(EACH INCLUDES)	
		1	**5K-9090**	1	SEAL-O-RING	
		1	**6V-8635**	1	CONNECTOR	
		1	**7M-8485**	1	SEAL-O-RING	
	24	1	*148-8339*	1	CONNECTOR AS	
		1	**6V-8716**	1	CONNECTOR	
		1	**6V-9746**	1	SEAL-O-RING	
		1	**7M-8485**	1	SEAL-O-RING	
	25	1	*148-8357*	1	ELBOW AS	
		1	**5K-9090**	1	SEAL-O-RING	
		1	**6V-9008**	1	ELBOW	
		1	**7M-8485**	1	SEAL-O-RING	
	26	1	**189-8772**	1	SPACER (11X16X35-MM THK)	
	27	1	**1L-0509**	2	BOLT (3/8-16X0.74-IN)	
	28	1	**1P-4577**	6	FLANGE-HALF	
	29	1	**1P-4578**	2	FLANGE-HALF	
	30	1	**4F-7389**	2	SEAL-O-RING	
	31	1	**4J-0520**	5	SEAL-O-RING	
	32	1	**4J-0522**	1	SEAL-O-RING	
	33	1	**5K-9090**	1	SEAL-O-RING	
	34	1	**5P-1075**	1	WASHER-HARD (10.2X22.5X3-MM THK)	
	35	1	**5P-9938**	4	BOLT-LOCKING (3/8-16X1.375-IN)	
	36	1	**6V-1889**	4	CLIP	

315-5378 LINES GP-TRANSMISSION OIL *(contd.)* i03431914

NOTE	REF NO	GRAPHIC REF	PART NUMBER	QTY	PART NAME 1 2 3 4 5 6 (PRODUCT LEVEL)	SEE PAGE
	37	1	**6V-9746**	1	SEAL-O-RING	
	38	1	**7X-0342**	1	BOLT (5/8-11X0.75-IN)	
M	39	1	**7X-2552**	2	BOLT (M16X2X30-MM)	
	40	1	**8C-3447**	1	CAP-DUST	
	41	1	**8M-2769**	2	CLIP	
	42	1	**8T-4121**	19	WASHER-HARD (11X21X2.5-MM THK)	
M	43	1	**8T-4196**	7	BOLT (M10X1.5X35-MM)	
	44	1	**8T-4224**	3	WASHER-HARD (8.8X16X2-MM THK)	
	45	1	**8T-4896**	2	WASHER-HARD (10.2X18.5X2.5-MM THK)	
M	46	1	**8T-4908**	3	BOLT (M8X1.25X25-MM)	
M	47	1	**8T-6466**	9	BOLT (M10X1.5X60-MM)	
	48	1	**9C-9467**	1	CLIP	
	49	1	**9X-8257**	2	WASHER (17.5X30X3.5-MM THK)	
	50	1	**8X-7317**	1	HOSE	
E	51	1	**5P-0765**		HOSE (46-CM)	

E-ORDER BY THE CENTIMETER
I-REFER TO HYDRAULIC INFORMATION SYSTEM
M-METRIC PART
Y-SEPARATE ILLUSTRATION

315-5378 **LINES GP-TRANSMISSION OIL** *(contd.)* **i03431914**

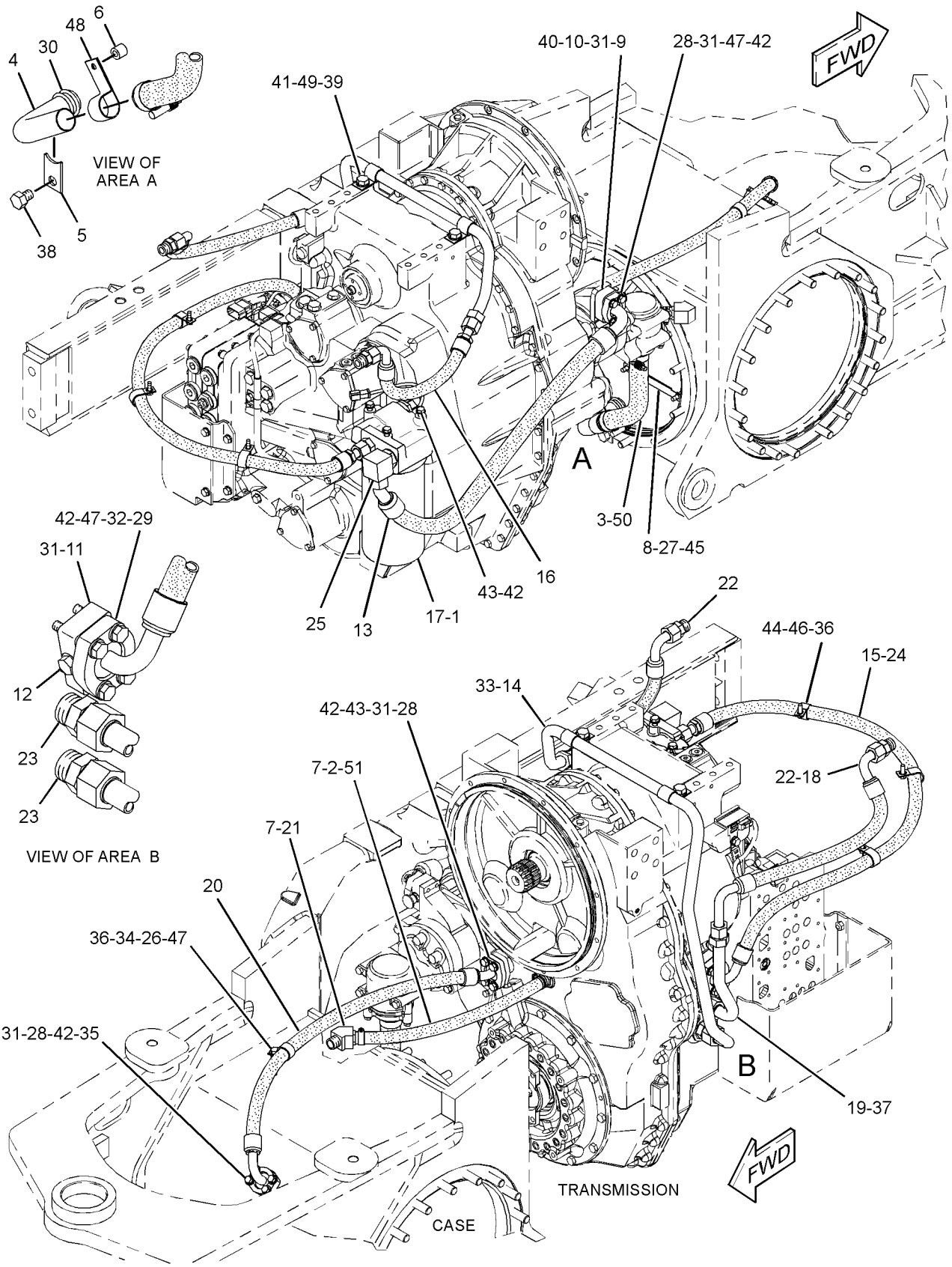

GRAPHIC #1 **<END>** g01712720

142-6203 MOUNTING GP-WHEEL

S/N: JPA1-UP

PART OF 274-7940 GENERAL AR

SMCS-4201 **i03431912**

NOTE	PART NUMBER	QTY	PART NAME 1 2 3 4 5 6 (PRODUCT LEVEL)	SEE PAGE
	0S-1973	60	BOLT (7/8-9X2-IN)	
	4M-6953	60	WASHER-HARD (24X38X3.5-MM THK)	

<END>

299-8294 PROTECTION GP-XMSN OIL FILLER

S/N: JPA1-UP
AN ATTACHMENT

SMCS-3005, 7315 **i03256002**

NOTE	REF NO	GRAPHIC REF	PART NUMBER	QTY	PART NAME 1 2 3 4 5 6 (PRODUCT LEVEL)	SEE PAGE
	1	1	**2P-2717**	1	HASP	
	2	1	**4B-4314**	1	RIVET	
	3	1	**246-2641**	1	PADLOCK GP	
		1	**5P-8500**	1	KEY	
	4	1	*299-8299*	1	PROTECTION GP-XMSN OIL FILLER	
	4A	1	**4B-4314**	1	RIVET	
	4B	1	**299-8295**	1	HASP	
	4C	1	**299-8296**	1	HASP	
	5	1	*299-8300*	1	PROTECTION GP-OIL LEVEL GAUGE	
	5A	1	**4B-4314**	1	RIVET	
	5B	1	**299-8297**	1	HASP	
	5C	1	**299-8298**	1	HASP	

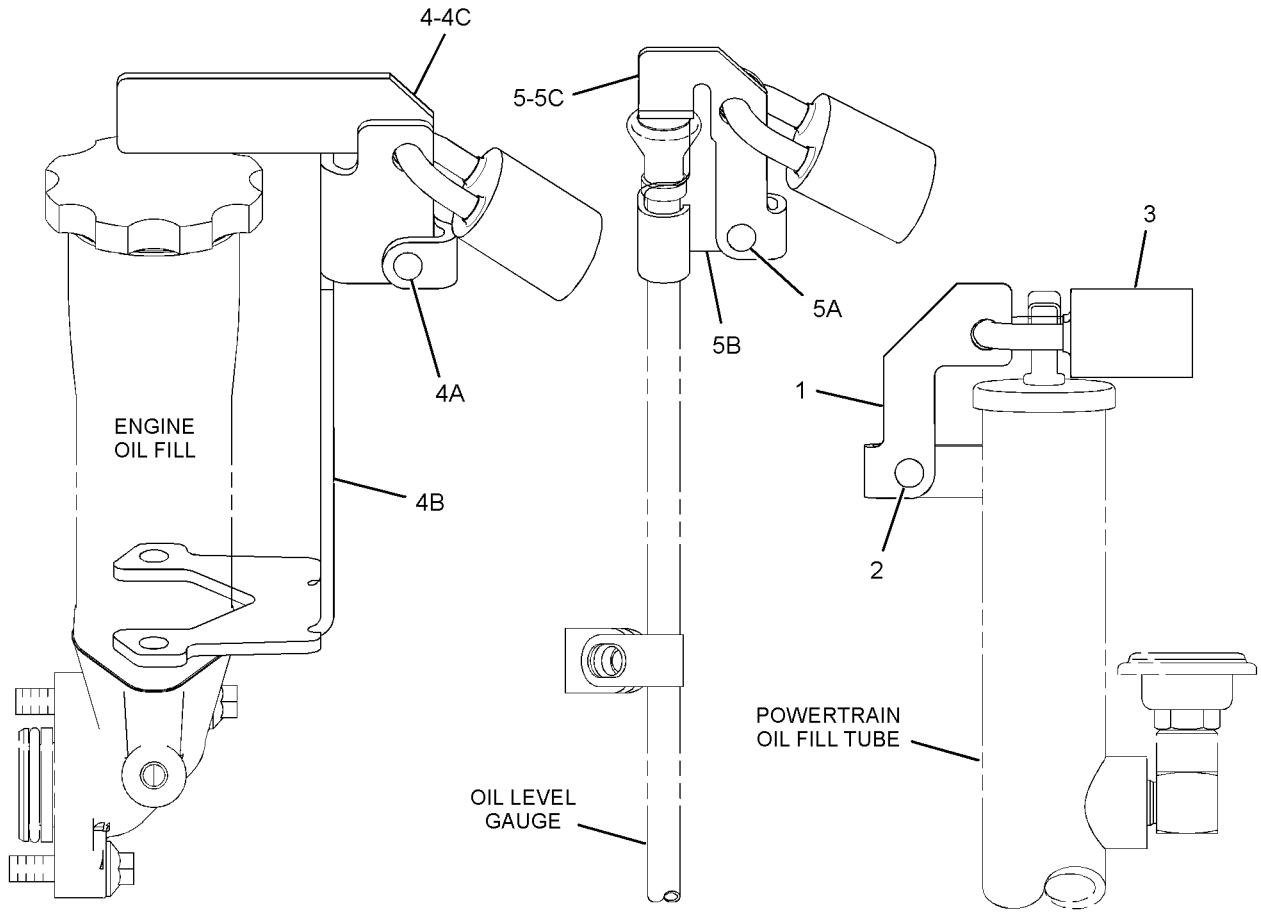

GRAPHIC #1 **<END>** g01783420

6Y-8764 PUMP GP-GEAR*R

S/N: DMJ1-UP
2-SECTION
PART OF 6Y-8765 PUMP GP-GEAR

SMCS-3066, 3115, 3203, 5073 **i03159027**

NOTE	REF NO	GRAPHIC REF	PART NUMBER	QTY	PART NAME 1 2 3 4 5 6 (PRODUCT LEVEL)	SEE PAGE
	1	1	**9N-4163**	1	COVER AS-PUMP	
	2	1	**1M-3780**	2	BEARING-SLEEVE	
	3	1	**9N-4162**	1	GEAR AS-OIL PUMP (12-TEETH)	
		1	**2B-9373**	1	KEY-WOODRUFF	
	4	1	**9N-4159**	1	BODY AS-OIL PUMP	
	5	1	**1M-3780**	2	BEARING-SLEEVE	
	6	1	**5S-4385**	1	BODY AS-OIL PUMP	
		1	**8M-8489**	4	DOWEL	
	7	1	**9N-4158**	2	GEAR (8-TEETH)	
	8	1	**2B-9373**	1	KEY-WOODRUFF	
	9	1	**2D-8009**	3	SEAL-O-RING	
	10	1	**3S-0004**	6	WASHER (0.406X0.728X0.09-IN THK)	
M	11	1	**8T-5030**	2	BOLT (M10X1.5X120-MM)	
	12	1	**6Y-5010**	8	WASHER (10.16X19X0.84-MM THK)	
M	13	1	**8C-2926**	4	BOLT (M10X1.5X140-MM)	
	14	1	**9N-4161**	1	GEAR AS-OIL PUMP (12-TEETH)	
		1	**2B-9373**	1	KEY-WOODRUFF	
	15	1	**9N-4156**	1	MANIFOLD AS-PUMP	
		1	**8M-8489**	2	DOWEL	

M-METRIC PART

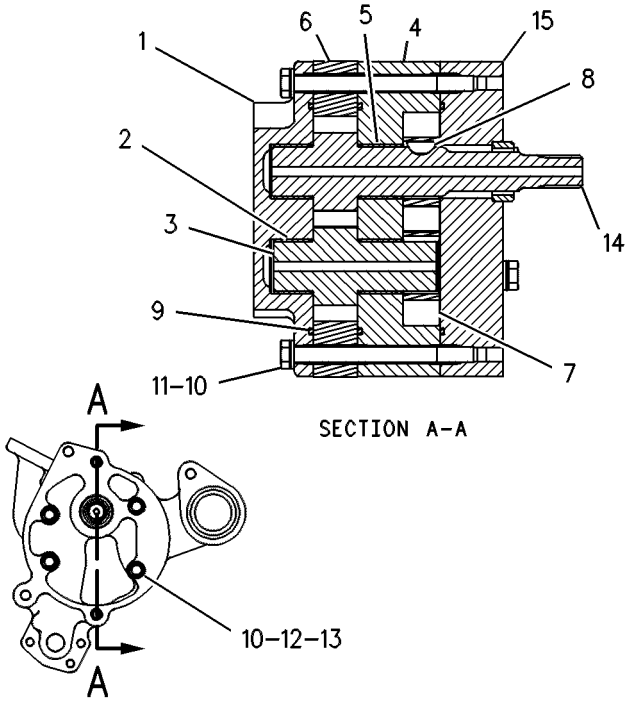

GRAPHIC #1 **<END>** g00108548

6Y-8765 PUMP GP-GEAR

S/N: DMJ1-UP
2-SECTION
PART OF 275-6535 TRANSMISSION AR

SMCS-3066, 3115, 3203, 5073 **i02588346**

NOTE	REF NO	GRAPHIC REF	PART NUMBER	QTY	PART NAME 1 2 3 4 5 6 (PRODUCT LEVEL)	SEE PAGE
YR	1	1	**6Y-8764**	1	PUMP GP-GEAR (TRANSMISSION)	267
	2	1	**4F-7952**	1	SEAL-O-RING	
	3	1	**7F-8268**	1	SEAL-O-RING	
M	4	1	**6V-1820**	3	BOLT (M10X1.5X30-MM)	

M-METRIC PART
R-REMFG PART MAY BE AVAILABLE
Y-SEPARATE ILLUSTRATION

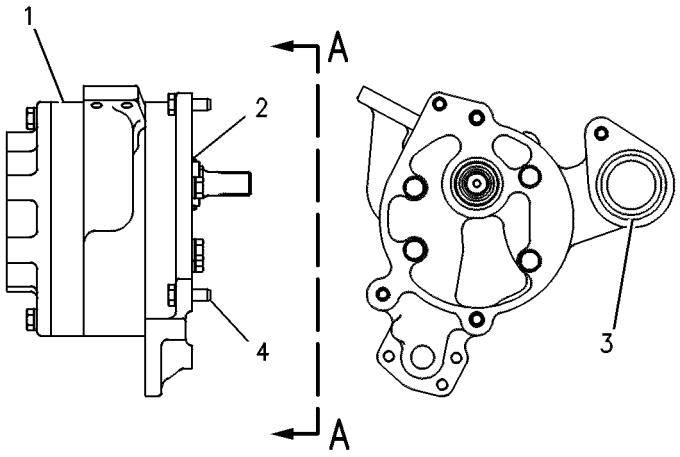

VIEW A-A

GRAPHIC #1 **<END>** g00108547

9W-5134 SCREEN GP-MAGNETIC—TRANSMISSION

S/N: DMJ1-UP

PART OF 275-6535 TRANSMISSION AR

SMCS-3067 **i01623693**

NOTE	REF NO	GRAPHIC REF	PART NUMBER	QTY	PART NAME 1 2 3 4 5 6 (PRODUCT LEVEL)	SEE PAGE
	1	1	**6Y-3861**	1	COVER AS	
	2	1	**6Y-3860**	1	HOUSING-FILTER	
	3	1	**8S-9130**	1	SCREEN-SUCTION (TRANSMISSION)	
	4	1	**8S-9129**	1	FILTER-MAGNETIC (TRANSMISSION)	
	5	1	**5P-3863**	1	SEAL-O-RING	
M	6	1	**6V-5219**	3	BOLT (M8X1.25X40-MM)	
	7	1	**5F-8000**	1	SEAL-O-RING	
M	8	1	**8T-0355**	3	BOLT (M10X1.5X110-MM)	

M-METRIC PART

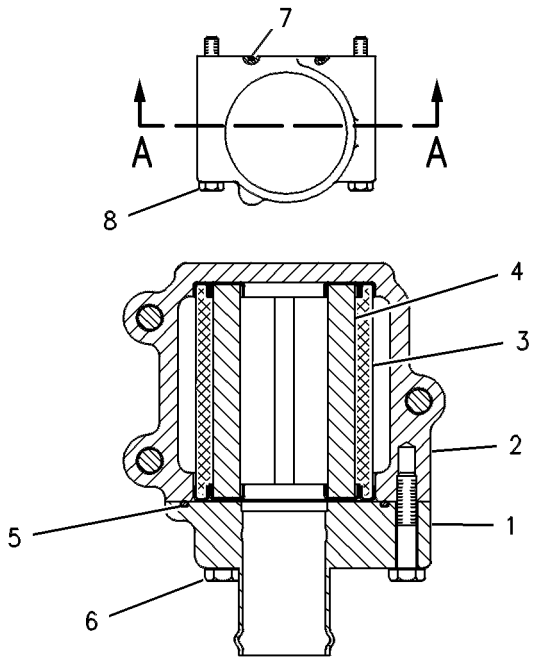

VIEW A–A

GRAPHIC #1 **<END>** g00108551

8W-5394 SHAFT GP-DRIVE—TRANSMISSION

S/N: JPA1-UP

PART OF 274-7940 GENERAL AR

SMCS-3253 **i03359940**

NOTE	REF NO	GRAPHIC REF	PART NUMBER	QTY	PART NAME 1 2 3 4 5 6 (PRODUCT LEVEL)	SEE PAGE
Y	1	1	**8X-5005**	1	UNIVERSAL JOINT GP	274
	2	1	**8W-1592**	1	YOKE AS	
		1	**3K-0986**	1	PLUG	
	3	1	**3K-0196**	1	GUARD	
	4	1	**0S-1604**	4	BOLT (1/2-20X2.5-IN)	
	5	1	**5P-7213**	4	WASHER-HARD (13.5X20.5X2-MM THK)	
	6	1	**6B-6684**	4	NUT-FULL (1/2-20-THD)	
	7	1	**6V-1911**	4	BOLT-LOCKING (1/2-20-THD)	

Y-SEPARATE ILLUSTRATION

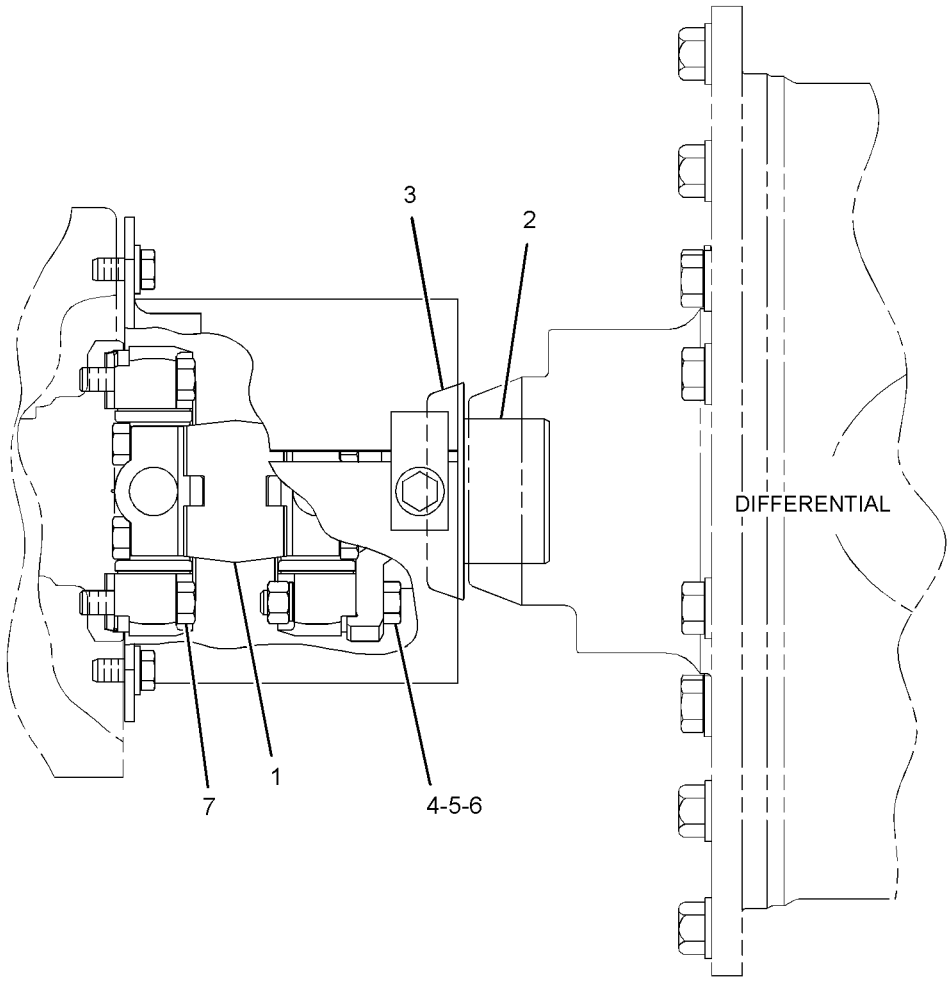

GRAPHIC #1 **<END>** g01786217

6Y-2300 SHAFT GP-INPUT

S/N: DMJ1-UP

PART OF 275-6535 TRANSMISSION AR

SMCS-3063 **i00134456**

NOTE	REF NO	GRAPHIC REF	PART NUMBER	QTY	PART NAME 1 2 3 4 5 6 (PRODUCT LEVEL)	SEE PAGE
	1	1	**6Y-1870**	1	SHAFT AS-INPUT	
	2	1	**0L-1026**	1	PLUG-CUP	
	3	1	**6Y-0591**	1	GEAR (45 TEETH)	
	4	1	**6Y-0590**	1	GEAR (38 TEETH)	
	5	1	**2H-6490**	1	BEARING-INNER	
	6	1	**1M-4095**	1	BEARING-INNER	
	7	1	**3T-4377**	2	SEAL-RING	

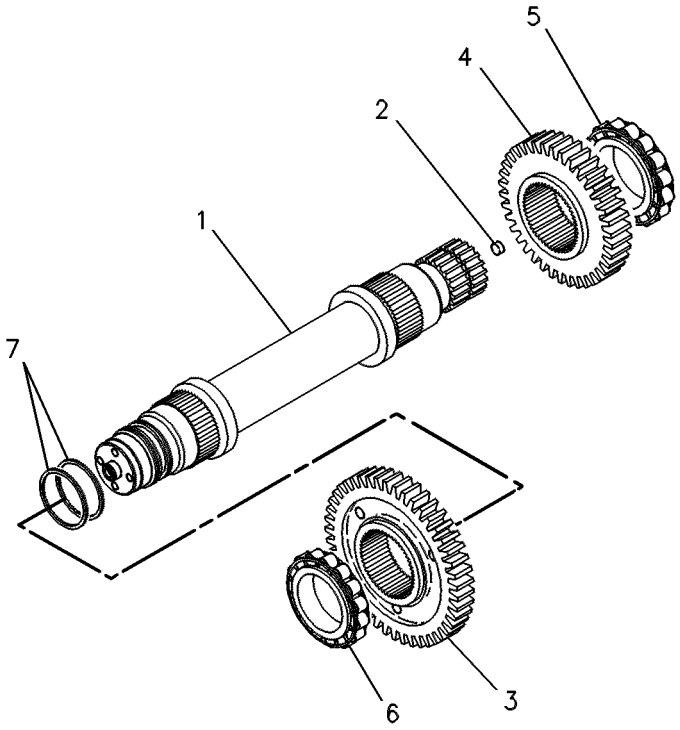

GRAPHIC #1 **<END>** g00108544

190-1688 TANDEM & COVER GP

S/N: JPA1-UP

PART OF 274-7940 GENERAL AR

SMCS-4062, 4064 **i02625394**

NOTE	REF NO	GRAPHIC REF	PART NUMBER	QTY	PART NAME 1 2 3 4 5 6 (PRODUCT LEVEL)	SEE PAGE
	1	1	**2A-6938**	2	COVER	
	2	1	**2B-3147**	8	GASKET	
	3	1	**2B-3148**	6	COVER	
	4	1	**2G-9791**	2	GASKET	
	5	1	**3D-2981**	4	GASKET	
	6	1	**7D-6567**	4	COVER	
	7	1	**190-1690**	1	HOUSING AS-TANDEM DRIVE (RH)	
	8	1	**190-1691**	1	HOUSING AS-TANDEM DRIVE (LH)	
	9	1	**248-1377**	2	COVER AS	
		1	**4H-6112**	1	BREATHER (TANDEM)	
		1	**6B-5072**	1	BUSHING-REDUCING	
		1	**002-6453**	1	ELBOW	
	10	1	**2M-9780**	2	SEAL-O-RING	
	11	1	**3K-0360**	2	SEAL-O-RING	
	12	1	**5P-8245**	32	WASHER-HARD (13.5X25.5X3-MM THK)	
	13	1	**6E-5047**	2	PLUG	
	14	1	**8T-6468**	48	BOLT (1/2-13X1-IN)	
	15	1	**9S-4190**	2	PLUG-O-RING	

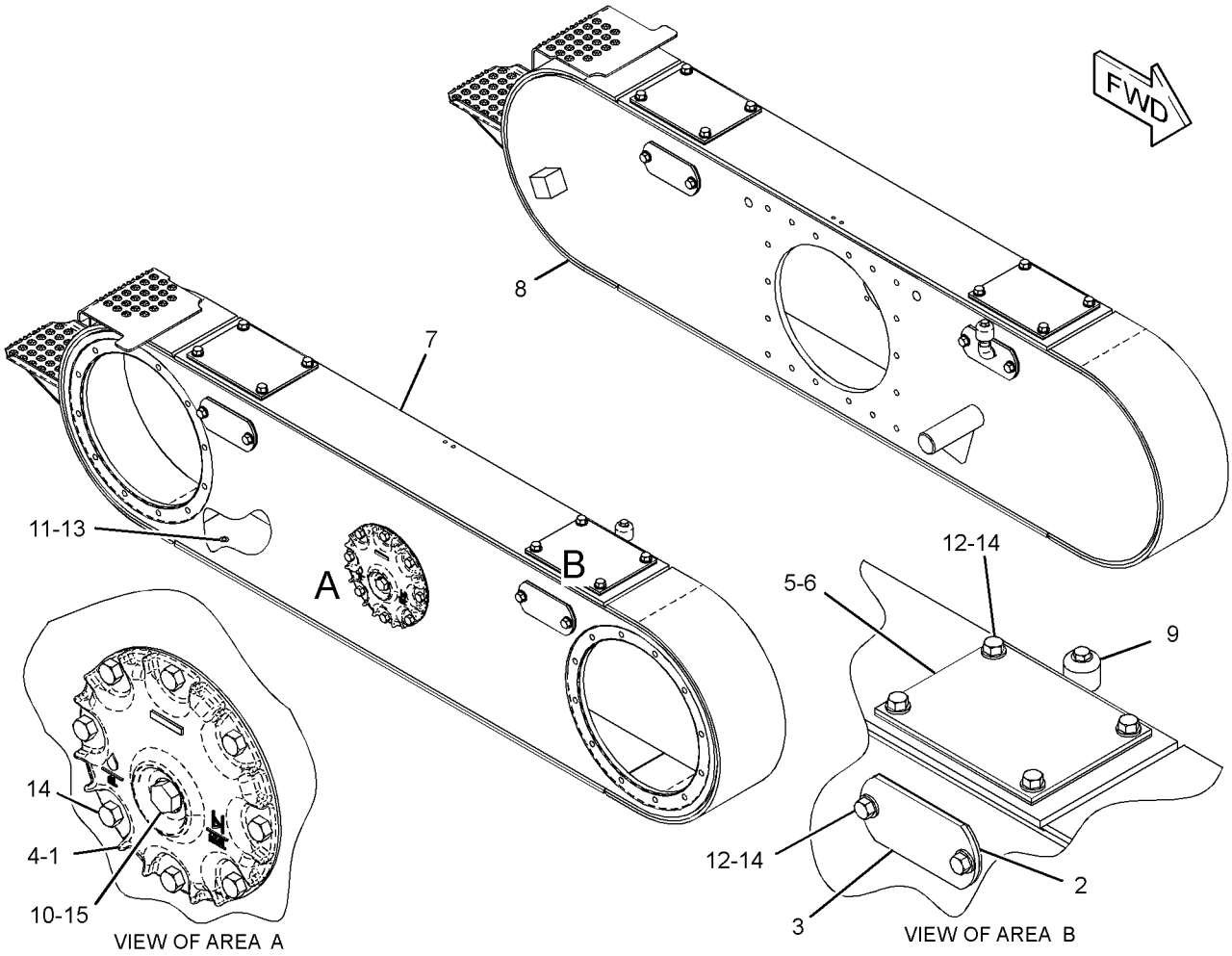

GRAPHIC #1 **<END>** g01329976

275-6535 TRANSMISSION AR

S/N: DMJ1-UP

PART OF 274-7940 GENERAL AR

SMCS-3030 **i03304191**

NOTE	REF NO	GRAPHIC REF	PART NUMBER	QTY	PART NAME 1 2 3 4 5 6 (PRODUCT LEVEL)	SEE PAGE
Y	1	1	*6Y-2300*	1	SHAFT GP-INPUT	271
Y	2	1	*235-2412*	1	CLUTCH GP-TRANSMISSION (FORWARD)	242
Y	3	1	*235-2413*	1	CLUTCH GP-TRANSMISSION (REVERSE, 2ND)	244
Y	4	1	*6Y-2303*	1	CLUTCH GP-TRANSMISSION (1ST, 3RD)	237
Y	5	1	*8E-9316*	1	CLUTCH GP-TRANSMISSION (HIGH, LOW)	240
Y	6	1	*277-6433*	1	CASE & PARTS GP-PLANETARY	231
Y	7	1	*9W-5132*	1	BRAKE GP-PARKING	345
Y	8	1	*9W-5134*	1	SCREEN GP-MAGNETIC (TRANSMISSION)	269
Y	9	1	*6Y-8765*	1	PUMP GP-GEAR	268
Y	10	1	*281-3165*	1	CONTROL GP-TRANSMISSION HYD	248

Y-SEPARATE ILLUSTRATION

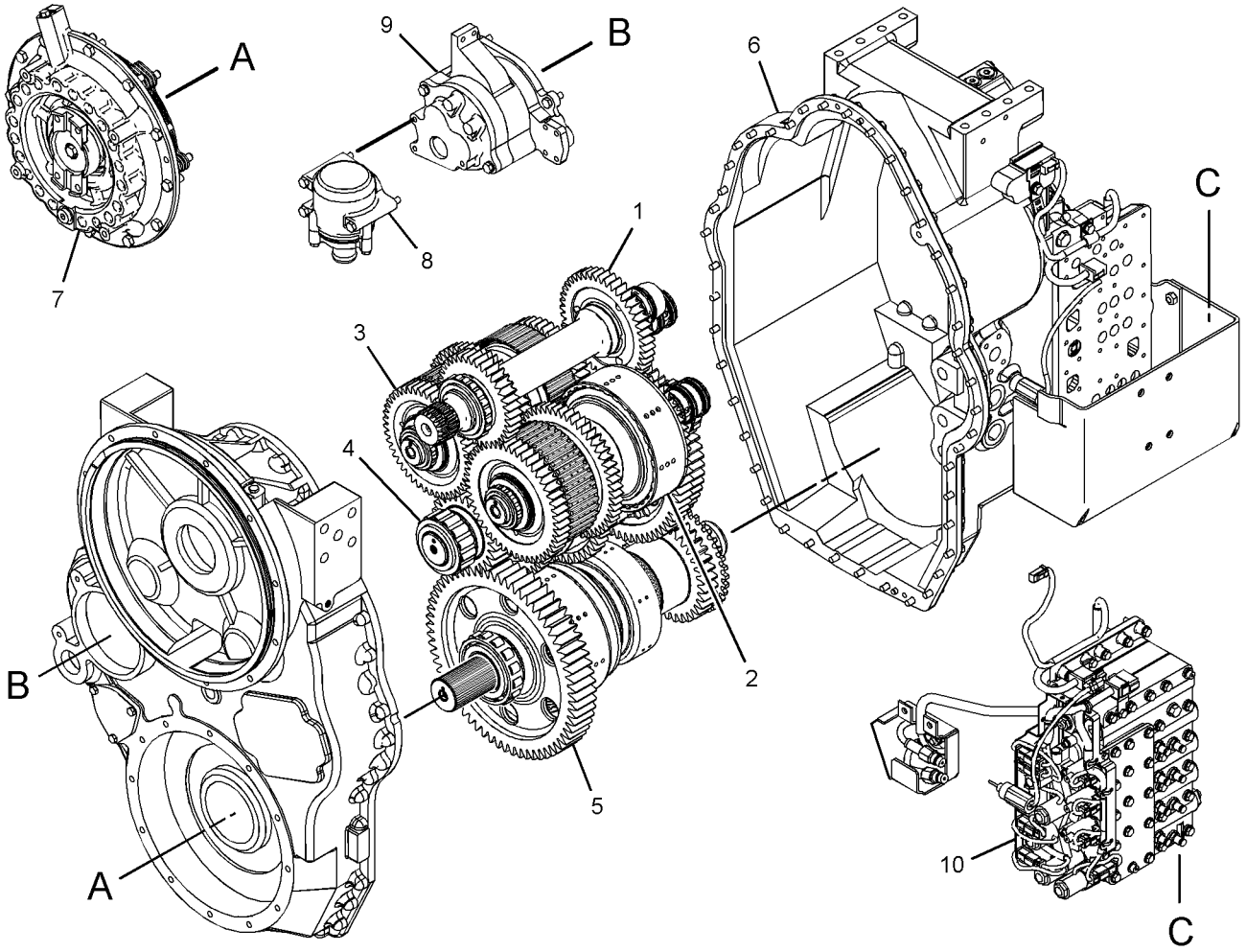

GRAPHIC #1 **<END>** g01770733

8X-5005 UNIVERSAL JOINT GP

S/N: JPA1-UP

PART OF 8W-5394 SHAFT GP-DRIVE

SMCS-3251, 3253 **i00135798**

NOTE	REF NO	GRAPHIC REF	PART NUMBER	QTY	PART NAME 1 2 3 4 5 6 (PRODUCT LEVEL)	SEE PAGE
	1	1	**3D-6689**	1	YOKE-COUPLING	
	2	1	**9P-0356**	2	SPIDER & BEARING AS	
	3	1	**0S-1579**	8	BOLT (1/2-20X2IN)	

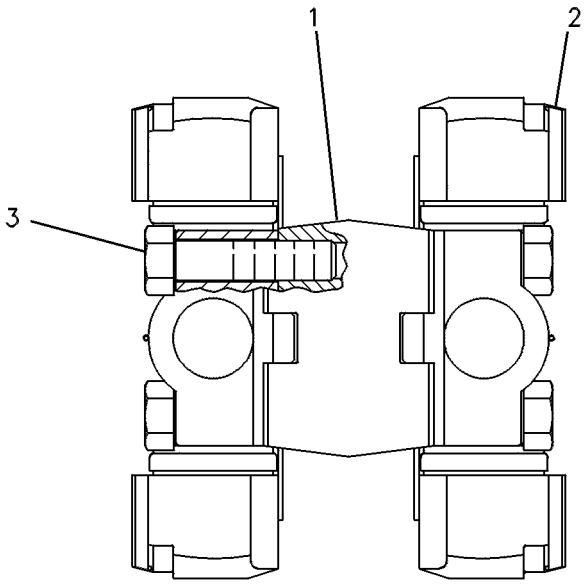

GRAPHIC #1 **<END>** g00108575

174-3705 VALVE & MTG GP-DIFF LOCK

S/N: JPA1-UP
PART OF 316-8363 CONTROL GP-DIFFERENTIAL LOCK
AN ATTACHMENT

SMCS-3272 **i03182460**

NOTE	REF NO	GRAPHIC REF	PART NUMBER	QTY	PART NAME 1 2 3 4 5 6 (PRODUCT LEVEL)	SEE PAGE
	1	1	**6G-5979**	1	KIT-SEAL (DIFFERENTIAL LOCK)	
					(INCLUDES O-RINGS)	
Y	2	1	**154-3064**	1	VALVE GP-SOLENOID (DIFFERENTIAL LOCK)	282
	3	1	**148-2516**	1	MANIFOLD	

Y-SEPARATE ILLUSTRATION

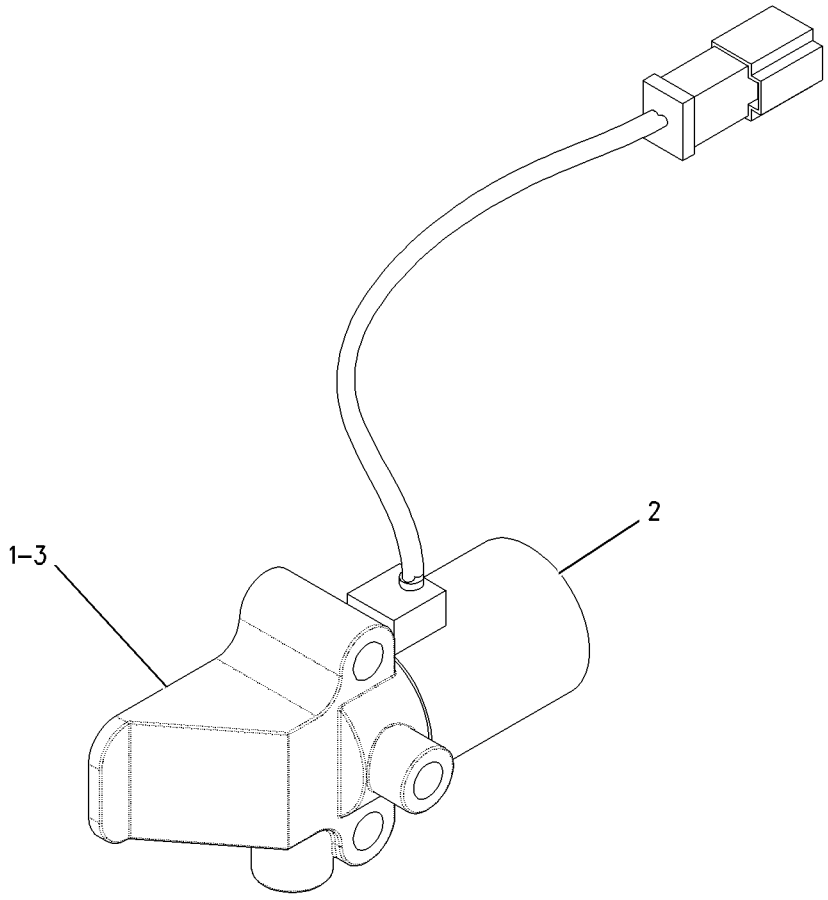

GRAPHIC #1 **<END>** g00806911

184-1130 VALVE GP-SELECTOR & PRESS CONT

S/N: DMJ1-UP

PART OF 281-3163 VALVE GP-TRANSMISSION CONTROL

SMCS-3083 **i02832244**

NOTE	REF NO	GRAPHIC REF	PART NUMBER	QTY	PART NAME 1 2 3 4 5 6 (PRODUCT LEVEL)	SEE PAGE
	1	1	**154-6309**	1	BODY	
M	2	1	**6V-5683**	5	BOLT (M6X1X16-MM)	
	4	1	**3D-4245**	1	SEAL-O-RING	
	6	1	**8E-9894**	1	SPOOL	
	7	1	**9U-8068**	1	SLUG	
	8	1	**9U-9282**	1	SPRING	
	9	1	**9U-9316**	1	SPRING	
	10	1	**108-6523**	1	ADJUSTER AS	
		1	**4K-2039**	1	SEAL-O-RING	
		1	**7M-8485**	1	SEAL-O-RING	
		1	**8T-4223**	1	WASHER-HARD (13.5X25.5X3-MM THK)	
		1	**9U-8069**	1	PLUG	
M		1	**095-1207**	1	NUT (M12X1.75-THD)	
		1	**101-9754**	1	SCREW-ADJUSTMENT (M12X1.75X18-MM)	
	11	1	*309-1877*	1	ORIFICE AS	
		1	**5F-9144**	1	SEAL-O-RING	
		1	**9U-8620**	1	ORIFICE	
	12	1	**9U-8067**	1	RETAINER	
	13	1	**8E-9895**	1	PISTON-LOAD	
	14	1	**9W-7412**	1	SPRING	
	15	1	**4J-2506**	1	SEAL-O-RING	
	16	1	**6F-4855**	1	SEAL-O-RING	
B	17	1	**5J-1036**	4	SHIM (0.8-MM THK)	
	18	1	**8E-9896**	1	PISTON-SELECTOR	
	19	1	**179-1298**	3	SPACER	
	20	1	**7T-0570**	1	SPRING	
B	21	1	**4M-1751**	2	SPACER (15.09X0.4-MM THK)	
Y	23	1	**186-1526**	1	VALVE GP-SOLENOID (24-VOLT) (SELECTOR & PRESSURE RANGE)	283
	25	1	*309-2995*	1	PLUG AS	
		1	**4J-7533**	1	SEAL-O-RING	
		1	**9G-7132**	1	PLUG-ORIFICE	
	26	1	*162-0177*	1	PLUG AS	
		1	**3J-1907**	1	SEAL-O-RING	
		1	**9S-8004**	1	PLUG-O-RING	
	28	1	**180-9327**	1	MANIFOLD	
	30	1	**3K-6116**	1	WASHER (0.266X0.47X0.031-IN THK)	
M	31	1	**8T-8442**	1	BOLT-SOCKET HEAD (M6X1X30-MM)	
	32	1	**5P-0537**	6	WASHER-HARD (7.2X14.5X2-MM THK)	
	33	1	**9X-7384**	3	SEAL-O-RING	
	34	1	**175-3893**	1	VALVE GP-SOLENOID (PROPN SOL FOR CL PACK 1)	
	34A	1	**175-3893**	1	VALVE GP-SOLENOID (PROPN SOL FOR CL PACK 2)	
	34B	1	**175-3893**	1	VALVE GP-SOLENOID (PROPN SOL FOR CL PACK 3)	
					(EACH VALVE GP INCLUDES)	
		1	**226-9622**	1	COIL AS (24-VOLT)	
		1	**164-2108**	1	WASHER (13.03X25.4X2.38-MM THK)	
		1	**167-9524**	1	NUT-SELF-LOCKING (1/2-28-THD)	
	35	1	**183-6774**	1	PLATE	
M	36	1	**8C-6965**	1	BOLT-SOCKET HEAD (M6X1X45-MM)	
	37	1	**154-7172**	1	SPOOL	
	38	1	*309-2996*	5	PLUG AS	
					(EACH INCLUDES)	
		1	**6Y-4638**	1	PLUG-HEX SOCKET (1-5/16-12-THD)	
		1	**7M-8485**	1	SEAL-O-RING	
	39	1	**183-6775**	3	SPOOL AS	
					(EACH INCLUDES)	

184-1130 VALVE GP-SELECTOR & PRESS CONT *(contd.)* i02832244

NOTE	REF NO	GRAPHIC REF	PART NUMBER	QTY	PART NAME 1 2 3 4 5 6 (PRODUCT LEVEL)	SEE PAGE
		1	**167-0566**	1	CARTRIDGE	
	40	1	**154-7175**	3	SLUG	
	41	1	**154-7176**	3	SPRING	
	42	1	**154-7177**	3	SPRING	

B-USE AS REQUIRED
M-METRIC PART
Y-SEPARATE ILLUSTRATION

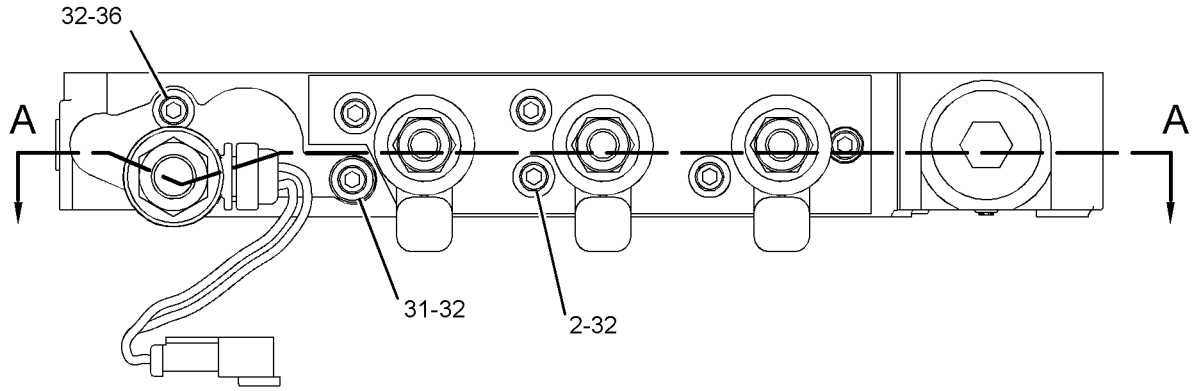

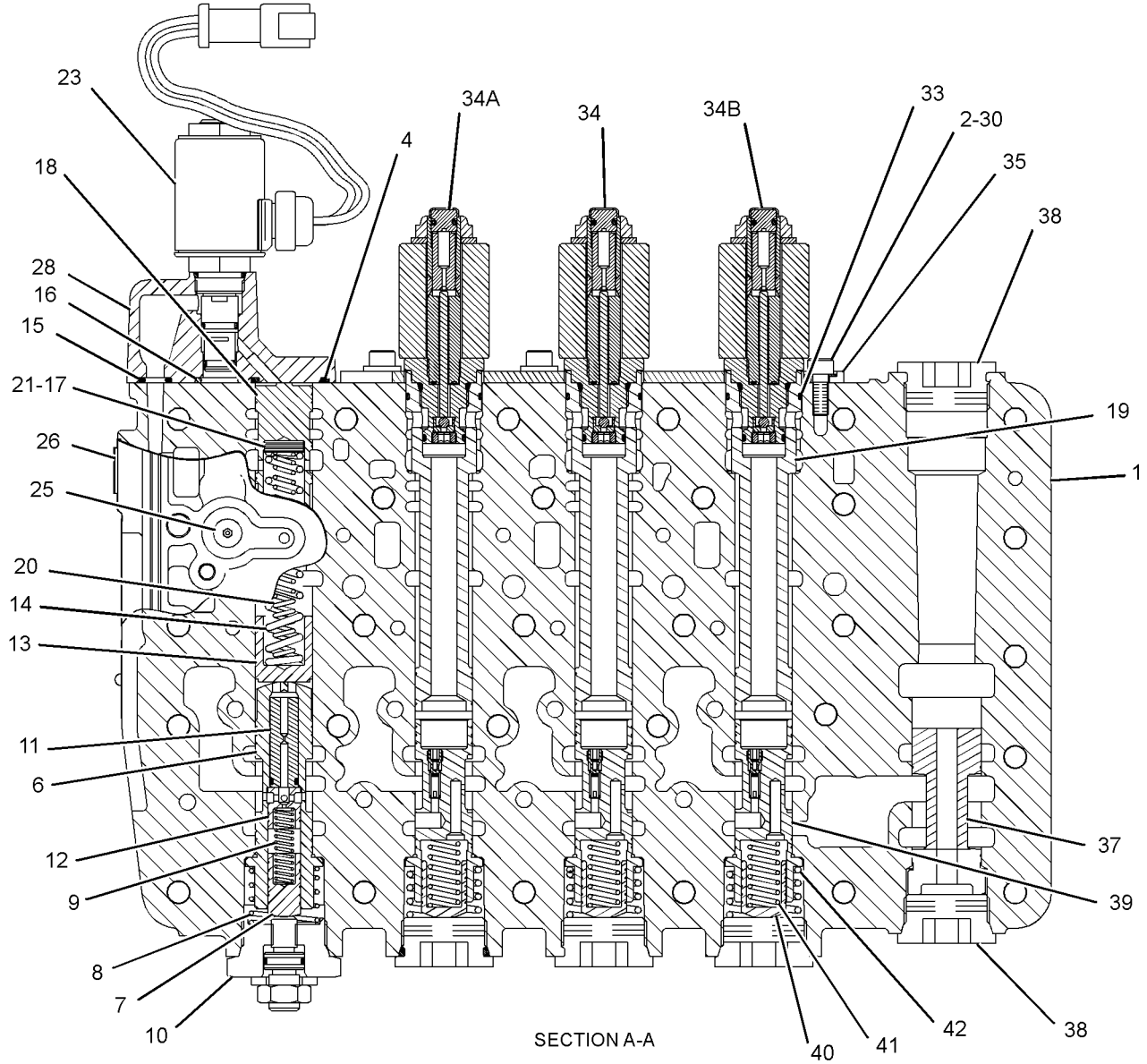

GRAPHIC #1 **<END>** g01415135

281-3160 VALVE GP-SELECTOR & PRESS CONT

S/N: DMJ1-UP

PART OF 281-3163 VALVE GP-TRANSMISSION CONTROL

SMCS-3083 **i02840144**

NOTE	REF NO	GRAPHIC REF	PART NUMBER	QTY	PART NAME 1 2 3 4 5 6 (PRODUCT LEVEL)	SEE PAGE
	1	1	**161-7055**	1	BODY	
	2	1	*309-1876*	2	ORIFICE AS	
					(EACH INCLUDES)	
		1	**5F-9144**	1	SEAL-O-RING	
		1	**8E-7714**	1	ORIFICE	
	4	1	**8E-9894**	4	SPOOL	
	5	1	**9U-8068**	4	SLUG	
	6	1	**9U-9316**	4	SPRING	
	7	1	**9U-9282**	4	SPRING	
	9	1	**9U-8067**	4	RETAINER	
	10	1	**8E-9895**	4	PISTON-LOAD	
	11	1	**4J-2506**	1	SEAL-O-RING	
	12	1	**6F-4855**	4	SEAL-O-RING	
	13	1	**8E-9896**	4	PISTON-SELECTOR	
B	14	1	**4M-1751**	4	SPACER (15.09X0.4-MM THK)	
B	15	1	**5J-1036**	15	SHIM (0.8-MM THK)	
	16	1	**3D-4245**	4	SEAL-O-RING	
	17	1	**9W-7410**	1	SPRING	
	18	1	**7T-0570**	3	SPRING	
	19	1	**8E-1143**	1	SLUG	
	20	1	**9U-8668**	1	SPOOL AS	
		1	**3D-8317**	1	RING-RETAINING	
		1	**4B-9880**	1	BALL	
		1	**4M-2381**	1	SPRING	
		1	**8E-9893**	1	SPOOL-RELIEF	
		1	**9U-8669**	1	RETAINER	
	21	1	**9U-9595**	1	SPRING	
	22	1	**9N-4500**	1	SPRING	
	23	1	**9N-4498**	1	SPRING	
	24	1	**8E-9897**	1	SPOOL	
	25	1	**9W-0898**	1	SLUG	
	27	1	**8E-6570**	1	MANIFOLD	
Y	28	1	**186-1526**	4	VALVE GP-SOLENOID (24-VOLT) (SPEED, RANGE, TRANSMISSION)	283
M	31	1	**8C-6965**	4	BOLT-SOCKET HEAD (M6X1X45-MM)	
	32	1	**5P-0537**	5	WASHER-HARD (7.2X14.5X2-MM THK)	
M	33	1	**8T-8442**	1	BOLT-SOCKET HEAD (M6X1X30-MM)	
	34	1	*309-1877*	1	ORIFICE AS	
		1	**5F-9144**	1	SEAL-O-RING	
		1	**9U-8620**	1	ORIFICE	
	35	1	*309-2995*	4	PLUG AS	
					(EACH INCLUDES)	
		1	**4J-7533**	1	SEAL-O-RING	
		1	**9G-7132**	1	PLUG-ORIFICE	
	37	1	*183-7263*	1	PLUG AS	
		1	**3J-7354**	1	SEAL-O-RING	
		1	**9S-8002**	1	PLUG-O-RING	
	38	1	*162-0177*	1	PLUG AS	
		1	**3J-1907**	1	SEAL-O-RING	
		1	**9S-8004**	1	PLUG-O-RING	
	40	1	**108-6523**	5	ADJUSTER AS	
					(EACH INCLUDES)	
		1	**4K-2039**	1	SEAL-O-RING	
		1	**7M-8485**	1	SEAL-O-RING	
		1	**8T-4223**	1	WASHER-HARD (13.5X25.5X3-MM THK)	
		1	**9U-8069**	1	PLUG	

281-3160 VALVE GP-SELECTOR & PRESS CONT *(contd.)* i02840144

NOTE	REF NO	GRAPHIC REF	PART NUMBER	QTY	PART NAME 1 2 3 4 5 6 (PRODUCT LEVEL)	SEE PAGE
M		1	**095-1207**	1	NUT (M12X1.75-THD)	
		1	**101-9754**	1	SCREW-ADJUSTMENT (M12X1.75X18-MM)	
	41	1	*309-2996*	1	PLUG AS	
		1	**6Y-4638**	1	PLUG-HEX SOCKET (1-5/16-12-THD)	
		1	**7M-8485**	1	SEAL-O-RING	
	42	1	*309-1878*	1	ORIFICE AS	
		1	**5F-9144**	1	SEAL-O-RING	
		1	**8E-7713**	1	ORIFICE	
	43	1	**9W-7412**	3	SPRING	
	44	1	**7G-5453**	1	SPRING	
	45	1	**108-3129**	1	STOP	

B-USE AS REQUIRED
M-METRIC PART
Y-SEPARATE ILLUSTRATION

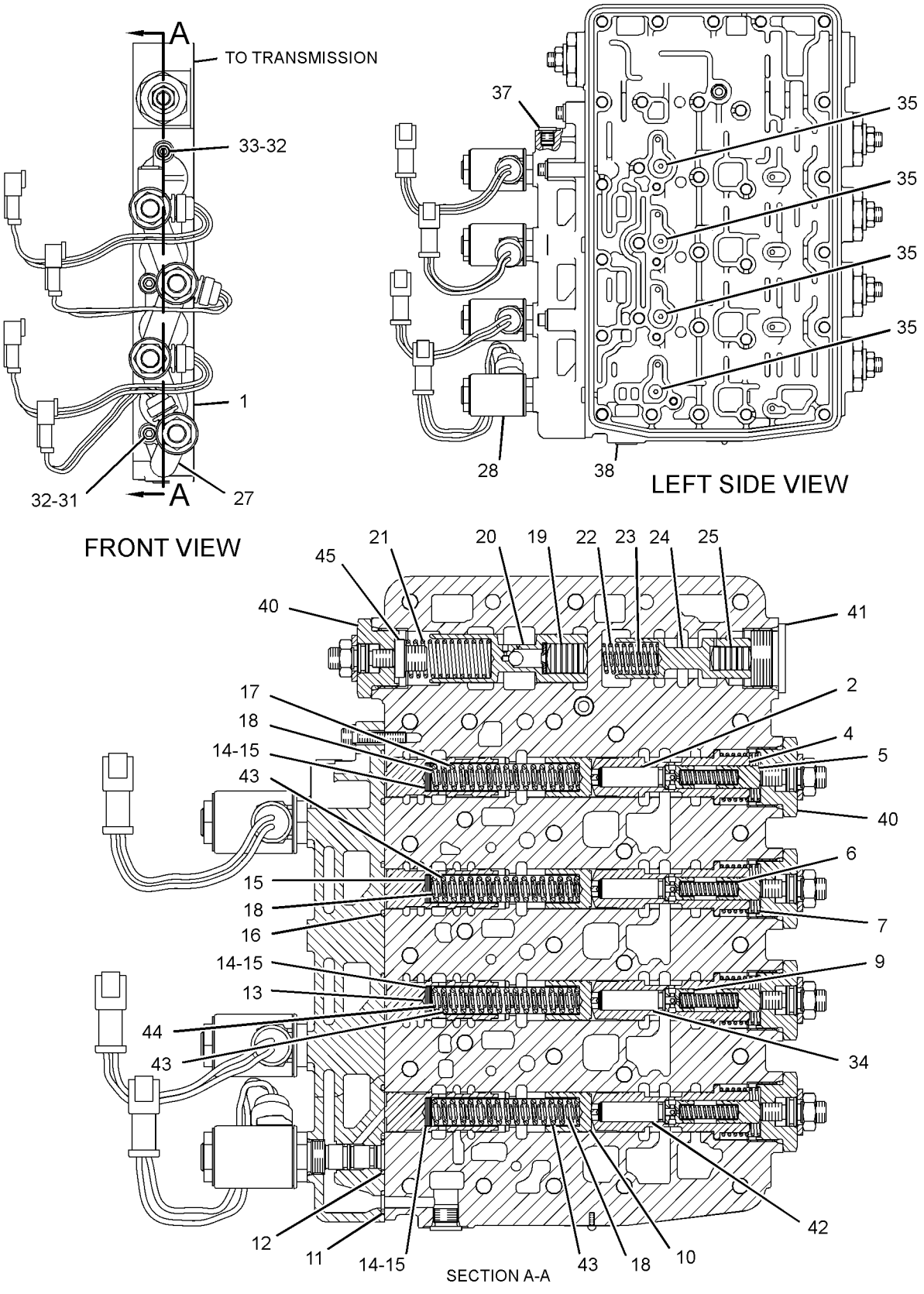

GRAPHIC #1 **<END>** g01419350

154-3064 VALVE GP-SOLENOID

S/N: JPA1-UP
PART OF 174-3705 VALVE & MTG GP-DIFF LOCK
AN ATTACHMENT

SMCS-5479 **i02204767**

NOTE	REF NO	GRAPHIC REF	PART NUMBER	QTY	PART NAME 1 2 3 4 5 6 (PRODUCT LEVEL)	SEE PAGE
	1	1	**8C-9987**	1	WASHER (8.3X28X2.5-MM THK)	
	2	1	**111-0343**	1	LOCKNUT (5/16-18-THD)	
	3	1	**142-0350**	1	CARTRIDGE AS	
		1	**8C-9987**	1	WASHER (8.3X28X2.5-MM THK)	
		1	**111-0343**	1	LOCKNUT (5/16-18-THD)	
	4	1	**189-0189**	1	COIL AS	
		1	**1S-9593**	2	STRAP-CABLE	
		1	**102-8802**	1	KIT-RECEPTACLE (2-PIN)	
					(INCLUDES RECEPTACLE AS & WEDGE)	
		1	**3E-3365**	1	WEDGE-RECEPTACLE LOCK (2-PIN)	
		1	**186-3735**	2	PIN-CONNECTOR (16-GA TO 18-GA)	
					AVAILABLE REPAIR KIT(S):	
			6G-5979	1	KIT-SEAL (DIFFERENTIAL LOCK VALVE)	

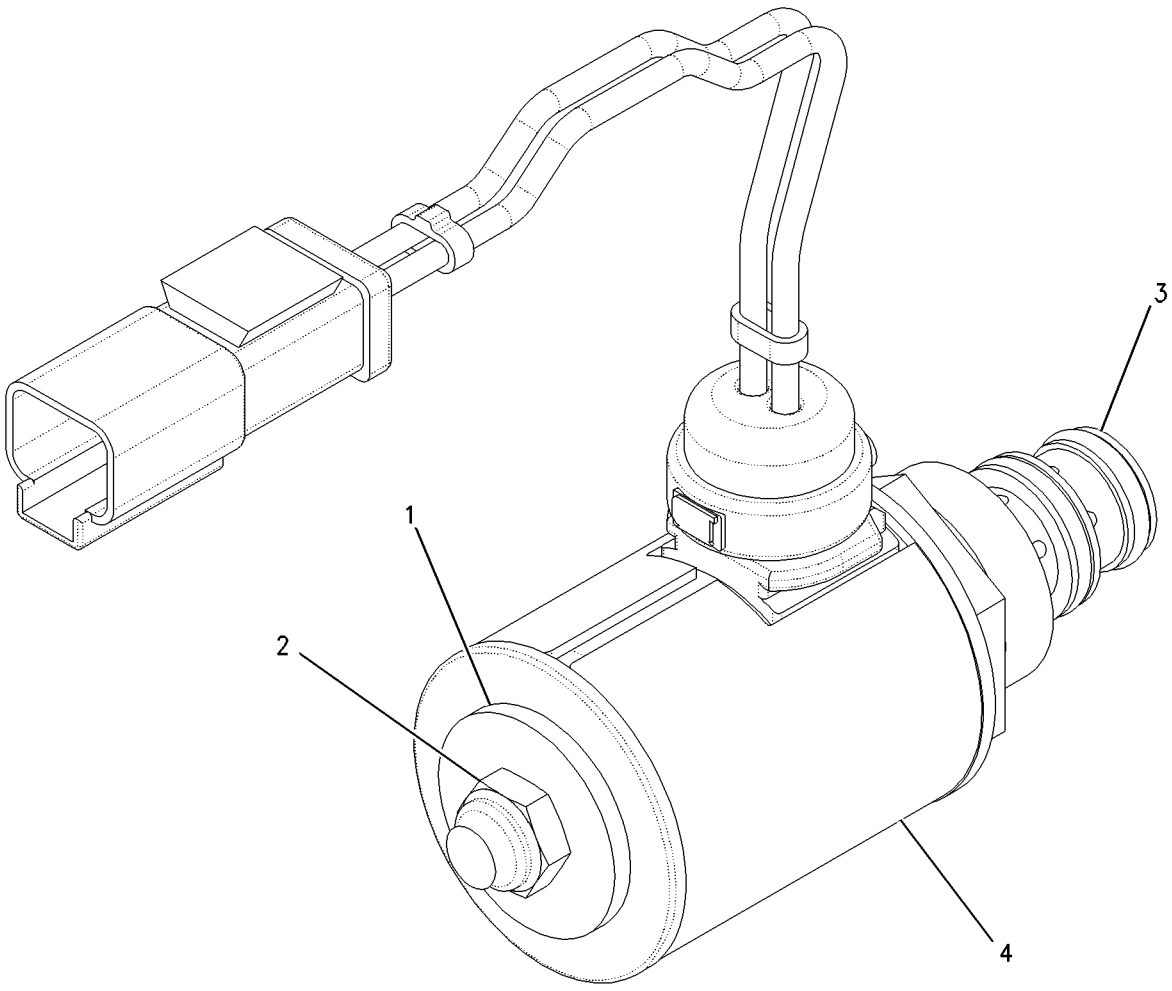

GRAPHIC #1 **<END>** g00877963

186-1526 VALVE GP-SOLENOID

S/N: DMJ1-UP

PART OF 184-1130, 281-3160 VALVE GP-SELECTOR & PRESS CONT

SMCS-5479 **i03195180**

NOTE	REF NO	GRAPHIC REF	PART NUMBER	QTY	PART NAME 1 2 3 4 5 6 (PRODUCT LEVEL)	SEE PAGE
	1	1	**104-3947**	1	LOCKNUT (5/8-11-THD)	
J	2	1	**234-6666**	1	CARTRIDGE AS-VALVE	
	3	1	**301-3118**	1	COIL AS	
	3A	1	**1S-9593**	2	STRAP-CABLE	
	3B	1	**102-8802**	1	KIT-RECEPTACLE (2-PIN)	
					(INCLUDES RECEPTACLE AS & WEDGE)	
	3C	1	**186-3735**	2	PIN-CONNECTOR (16-GA TO 18-GA)	
					AVAILABLE REPAIR KIT(S):	
J			**7T-4515**	1	KIT-SEAL (TRANSMISSION SOLENOID)	
					(INCLUDES SEAL-O-RINGS)	

J-KIT MARKED J SERVICES PART MARKED J

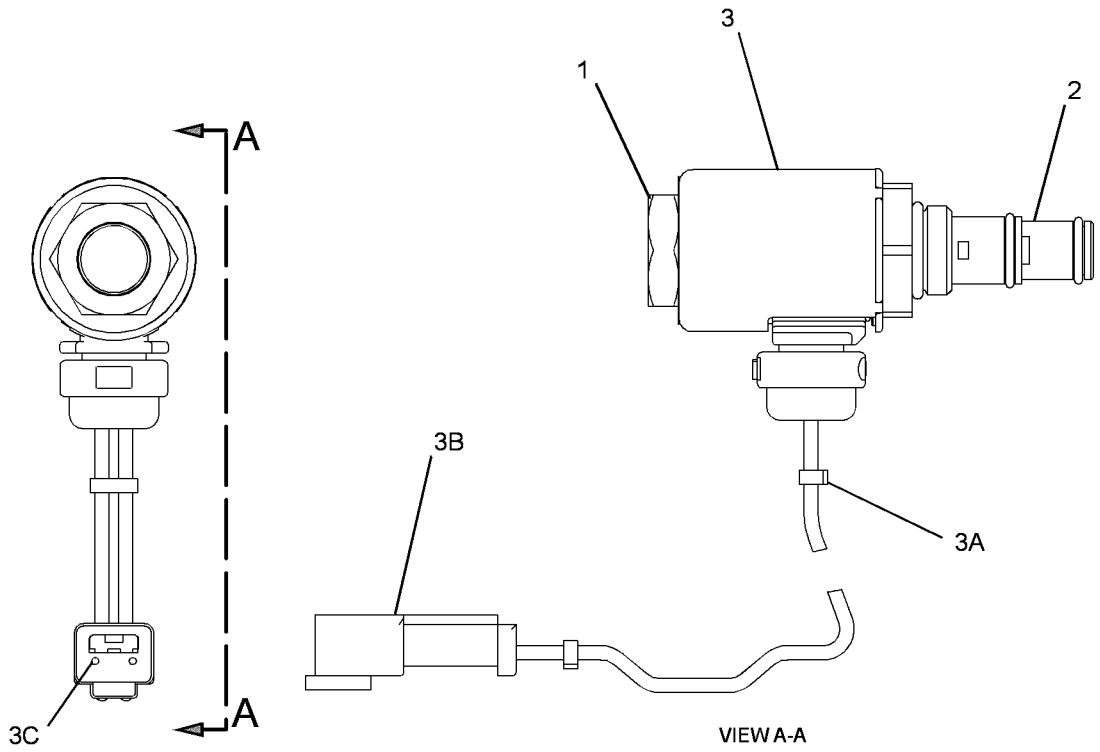

GRAPHIC #1 **<END>** g01628276

281-3163 VALVE GP-TRANSMISSION CONTROL

S/N: DMJ1-UP

PART OF 281-3165 CONTROL GP-TRANSMISSION HYD

SMCS-3073 **i02840282**

NOTE	REF NO	GRAPHIC REF	PART NUMBER	QTY	PART NAME 1 2 3 4 5 6 (PRODUCT LEVEL)	SEE PAGE
Y	1	1	**184-1130**	1	VALVE GP-SELECTOR & PRESS CONT (DIRECTION, RANGE, TRANSMISSION)	276
	2	1	**154-6306**	1	PLATE	
Y	3	1	**281-3160**	1	VALVE GP-SELECTOR & PRESS CONT (SPEED, RANGE, TRANSMISSION)	279
	4	1	**110-5161**	1	MANIFOLD	
	5	1	**154-6307**	1	PLATE	
	6	1	**8E-9474**	1	COVER	
	7	1	*164-5567*	8	COUPLER AS-QUICK DISCONNECT	
					(EACH INCLUDES)	
		1	**3J-1907**	1	SEAL-O-RING	
		1	**6V-3965**	1	FITTING (QUICK DISCONNECT)	
	8	1	*148-8407*	2	PLUG AS	
					(EACH INCLUDES)	
		1	**3J-1907**	1	SEAL-O-RING	
		1	**9S-4191**	1	PLUG-O-RING	
	9	1	**6V-0852**	8	CAP-DUST	
	11	1	**1T-0738**	2	WASHER (8.4X19X1.83-MM THK)	
	12	1	**9P-9150**	4	WASHER (8.25X18X0.84-MM THK)	
M	13	1	**3E-8006**	2	BOLT (M8X1.25X130-MM)	
	15	1	**9L-9068**	6	DOWEL	
	16	1	**8F-6230**	1	SEAL-O-RING	
	17	1	**4D-6695**	4	SEAL-O-RING	
	18	1	**142-1767**	1	POPPET	
	19	1	**4D-1322**	1	RING-RETAINING	
	20	1	**6Y-2584**	1	RETAINER	
	21	1	**3J-6956**	1	SPRING	
	22	1	**6I-9395**	1	SCREEN (TRANSMISSION CONTROL VALVE)	
M	23	1	**6V-5217**	1	BOLT (M8X1.25X20-MM)	

M-METRIC PART
Y-SEPARATE ILLUSTRATION

281-3163 VALVE GP-TRANSMISSION CONTROL *(contd.)* i02840282

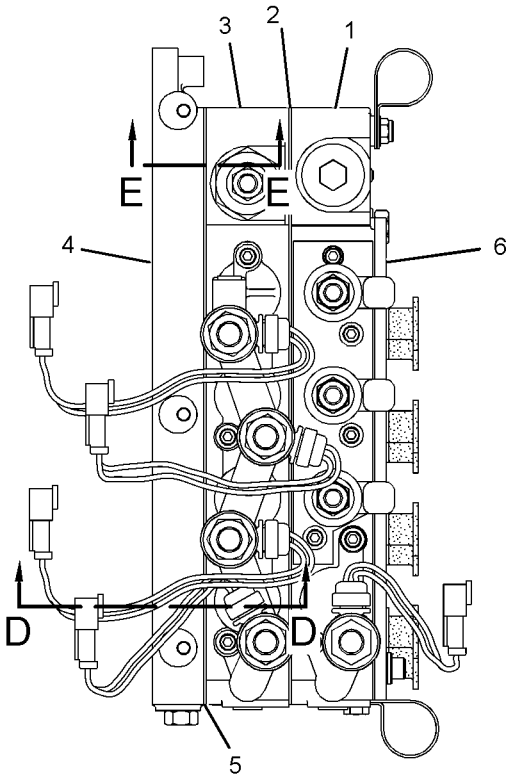

FRONT VIEW

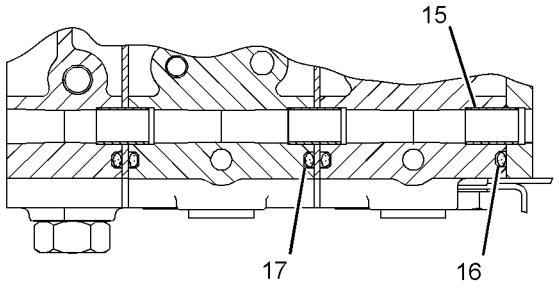

SECTION A-A

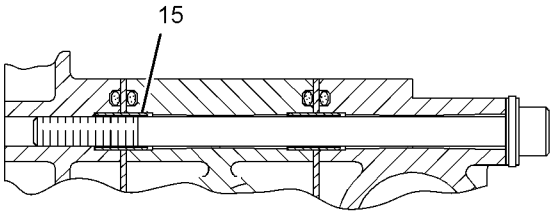

SECTION C-C

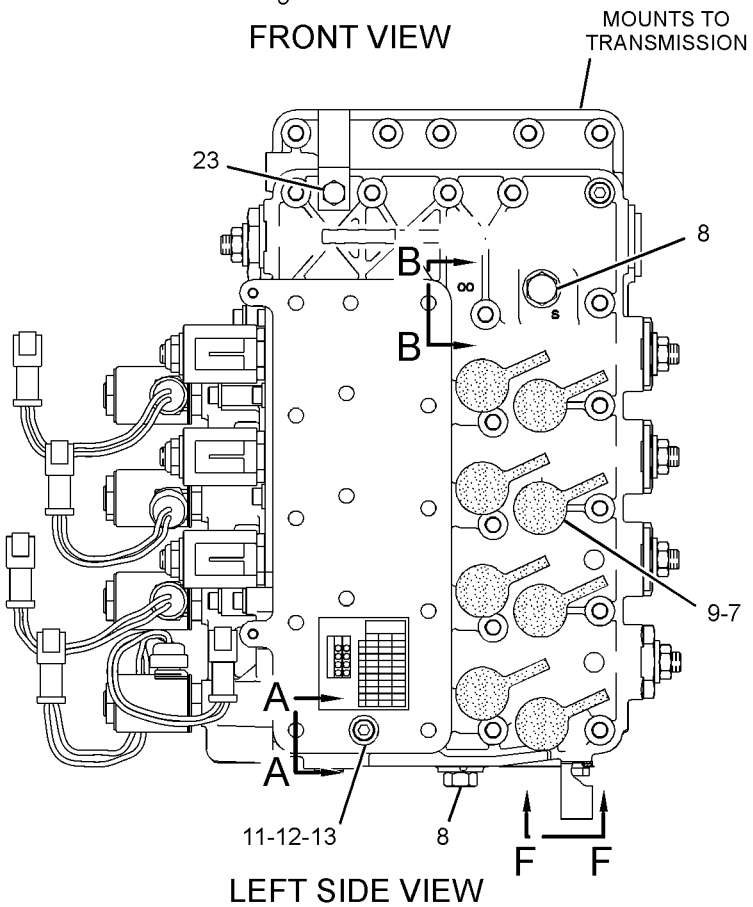

LEFT SIDE VIEW

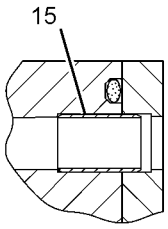

SECTION B-B

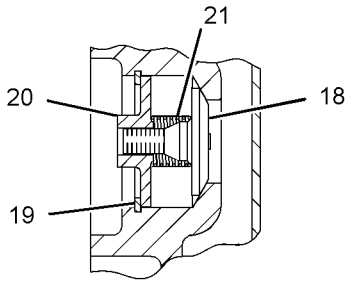

SECTION D-D

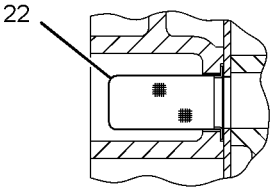

SECTION E-E

GRAPHIC #1 **<END>** g01419381

142-6448 WHEEL & TIRE AR

S/N: JPA1-UP
AN ATTACHMENT

SMCS-4200 **i00758986**

NOTE	PART NUMBER	QTY	PART NAME 1 2 3 4 5 6 (PRODUCT LEVEL)	SEE PAGE
Y	*142-6300*	6	WHEEL & TIRE GP	292

Y-SEPARATE ILLUSTRATION

<END>

142-6449 WHEEL & TIRE AR

S/N: JPA1-UP
AN ATTACHMENT

SMCS-4200 **i00759108**

NOTE	PART NUMBER	QTY	PART NAME 1 2 3 4 5 6 (PRODUCT LEVEL)	SEE PAGE
Y	*142-6301*	6	WHEEL & TIRE GP	293

Y-SEPARATE ILLUSTRATION

<END>

142-6454 WHEEL & TIRE AR

S/N: JPA1-UP
AN ATTACHMENT

SMCS-4200 **i00758826**

NOTE	PART NUMBER	QTY	PART NAME 1 2 3 4 5 6 (PRODUCT LEVEL)	SEE PAGE
Y	*142-6306*	6	WHEEL & TIRE GP	293

Y-SEPARATE ILLUSTRATION

<END>

142-6455 WHEEL & TIRE AR

S/N: JPA1-UP
AN ATTACHMENT

SMCS-4200 **i00758972**

NOTE	PART NUMBER	QTY	PART NAME 1 2 3 4 5 6 (PRODUCT LEVEL)	SEE PAGE
Y	*142-6307*	6	WHEEL & TIRE GP	294

Y-SEPARATE ILLUSTRATION

<END>

142-6457 WHEEL & TIRE AR

S/N: JPA1-UP
AN ATTACHMENT

SMCS-4200 **i00758987**

NOTE	PART NUMBER	QTY	PART NAME 1 2 3 4 5 6 (PRODUCT LEVEL)	SEE PAGE
Y	*142-6309*	6	WHEEL & TIRE GP	294

Y-SEPARATE ILLUSTRATION

<END>

POWER TRAIN

142-6458 WHEEL & TIRE AR

S/N: JPA1-UP
AN ATTACHMENT

SMCS-4200 **i00759110**

NOTE	PART NUMBER	QTY	PART NAME 1 2 3 4 5 6 (PRODUCT LEVEL)	SEE PAGE
Y	*142-6310*	6	WHEEL & TIRE GP	295

Y-SEPARATE ILLUSTRATION

<END>

142-6463 WHEEL & TIRE AR

S/N: JPA1-UP
AN ATTACHMENT

SMCS-4200 **i00758971**

NOTE	PART NUMBER	QTY	PART NAME 1 2 3 4 5 6 (PRODUCT LEVEL)	SEE PAGE
Y	*142-6315*	6	WHEEL & TIRE GP	295

Y-SEPARATE ILLUSTRATION

<END>

142-6464 WHEEL & TIRE AR

S/N: JPA1-UP
AN ATTACHMENT

SMCS-4200 **i00758982**

NOTE	PART NUMBER	QTY	PART NAME 1 2 3 4 5 6 (PRODUCT LEVEL)	SEE PAGE
Y	*142-6316*	6	WHEEL & TIRE GP	296

Y-SEPARATE ILLUSTRATION

<END>

151-0364 WHEEL & TIRE AR

S/N: JPA1-UP
AN ATTACHMENT

SMCS-4200 **i00759127**

NOTE	PART NUMBER	QTY	PART NAME 1 2 3 4 5 6 (PRODUCT LEVEL)	SEE PAGE
Y	*142-6353*	6	WHEEL & TIRE GP	296

Y-SEPARATE ILLUSTRATION

<END>

151-0365 WHEEL & TIRE AR

S/N: JPA1-UP
AN ATTACHMENT

SMCS-4200 **i00759194**

NOTE	PART NUMBER	QTY	PART NAME 1 2 3 4 5 6 (PRODUCT LEVEL)	SEE PAGE
Y	*142-6360*	6	WHEEL & TIRE GP	298

Y-SEPARATE ILLUSTRATION

<END>

151-0366 WHEEL & TIRE AR

S/N: JPA1-UP
AN ATTACHMENT

SMCS-4200 **i00759349**

NOTE	PART NUMBER	QTY	PART NAME 1 2 3 4 5 6 (PRODUCT LEVEL)	SEE PAGE
Y	*142-6363*	6	WHEEL & TIRE GP	299

Y-SEPARATE ILLUSTRATION

<END>

151-0368 WHEEL & TIRE AR

S/N: JPA1-UP
AN ATTACHMENT

SMCS-4200 **i00759354**

NOTE	PART NUMBER	QTY	PART NAME 1 2 3 4 5 6 (PRODUCT LEVEL)	SEE PAGE
Y	*142-6371*	6	WHEEL & TIRE GP	300

Y-SEPARATE ILLUSTRATION

<END>

151-0371 WHEEL & TIRE AR

S/N: JPA1-UP
AN ATTACHMENT

SMCS-4200 **i00759269**

NOTE	PART NUMBER	QTY	PART NAME 1 2 3 4 5 6 (PRODUCT LEVEL)	SEE PAGE
Y	*142-6354*	6	WHEEL & TIRE GP	297

Y-SEPARATE ILLUSTRATION

<END>

151-0372 WHEEL & TIRE AR

S/N: JPA1-UP
AN ATTACHMENT

SMCS-4200 **i00759272**

NOTE	PART NUMBER	QTY	PART NAME 1 2 3 4 5 6 (PRODUCT LEVEL)	SEE PAGE
Y	*142-6372*	6	WHEEL & TIRE GP	301

Y-SEPARATE ILLUSTRATION

<END>

151-0378 WHEEL & TIRE AR

S/N: JPA1-UP
AN ATTACHMENT

SMCS-4200 **i00759357**

NOTE	PART NUMBER	QTY	PART NAME 1 2 3 4 5 6 (PRODUCT LEVEL)	SEE PAGE
Y	*142-6356*	6	WHEEL & TIRE GP	297

Y-SEPARATE ILLUSTRATION

<END>

151-0379 WHEEL & TIRE AR

S/N: JPA1-UP
AN ATTACHMENT

SMCS-4200 **i00759358**

NOTE	PART NUMBER	QTY	PART NAME 1 2 3 4 5 6 (PRODUCT LEVEL)	SEE PAGE
Y	*142-6361*	6	WHEEL & TIRE GP	299

Y-SEPARATE ILLUSTRATION

<END>

151-0380 WHEEL & TIRE AR

S/N: JPA1-UP
AN ATTACHMENT

SMCS-4200 **i00759275**

NOTE	PART NUMBER	QTY	PART NAME 1 2 3 4 5 6 (PRODUCT LEVEL)	SEE PAGE
Y	*142-6364*	6	WHEEL & TIRE GP	300

Y-SEPARATE ILLUSTRATION

<END>

151-0382 WHEEL & TIRE AR

S/N: JPA1-UP
AN ATTACHMENT

SMCS-4200 **i00760334**

NOTE	PART NUMBER	QTY	PART NAME 1 2 3 4 5 6 (PRODUCT LEVEL)	SEE PAGE
Y	*142-6374*	6	WHEEL & TIRE GP	301

Y-SEPARATE ILLUSTRATION

<END>

151-0388 WHEEL & TIRE AR

S/N: JPA1-UP
AN ATTACHMENT

SMCS-4200 **i00760579**

NOTE	PART NUMBER	QTY	PART NAME 1 2 3 4 5 6 (PRODUCT LEVEL)	SEE PAGE
Y	*142-6357*	6	WHEEL & TIRE GP	298

Y-SEPARATE ILLUSTRATION

<END>

151-0389 WHEEL & TIRE AR

S/N: JPA1-UP
AN ATTACHMENT

SMCS-4200 **i00760599**

NOTE	PART NUMBER	QTY	PART NAME 1 2 3 4 5 6 (PRODUCT LEVEL)	SEE PAGE
Y	*142-6375*	6	WHEEL & TIRE GP	302

Y-SEPARATE ILLUSTRATION

<END>

174-2304 WHEEL & TIRE AR

S/N: JPA1-UP
AN ATTACHMENT

SMCS-4200 **i01680354**

NOTE	PART NUMBER	QTY	PART NAME 1 2 3 4 5 6 (PRODUCT LEVEL)	SEE PAGE
Y	*173-7813*	6	WHEEL & TIRE GP	302

Y-SEPARATE ILLUSTRATION

<END>

252-0679 WHEEL & TIRE AR

S/N: JPA1-UP
AN ATTACHMENT

SMCS-4200 **i02783324**

NOTE	PART NUMBER	QTY	PART NAME 1 2 3 4 5 6 (PRODUCT LEVEL)	SEE PAGE
Y	*252-0678*	6	WHEEL & TIRE GP	302

Y-SEPARATE ILLUSTRATION

<END>

252-0708 WHEEL & TIRE AR

S/N: JPA1-UP
AN ATTACHMENT

SMCS-4200 **i02784458**

NOTE	PART NUMBER	QTY	PART NAME 1 2 3 4 5 6 (PRODUCT LEVEL)	SEE PAGE
Y	*252-0707*	6	WHEEL & TIRE GP	303

Y-SEPARATE ILLUSTRATION

<END>

252-0727 WHEEL & TIRE AR

S/N: JPA1-UP
AN ATTACHMENT

SMCS-4200 **i02793724**

NOTE	PART NUMBER	QTY	PART NAME 1 2 3 4 5 6 (PRODUCT LEVEL)	SEE PAGE
Y	*252-0726*	6	WHEEL & TIRE GP	303

Y-SEPARATE ILLUSTRATION

<END>

252-0731 WHEEL & TIRE AR

S/N: JPA1-UP
AN ATTACHMENT

SMCS-4200 **i02784689**

NOTE	PART NUMBER	QTY	PART NAME 1 2 3 4 5 6 (PRODUCT LEVEL)	SEE PAGE
Y	*252-0730*	6	WHEEL & TIRE GP	303

Y-SEPARATE ILLUSTRATION

<END>

252-0753 WHEEL & TIRE AR

S/N: JPA1-UP
AN ATTACHMENT

SMCS-4200 **i02784880**

NOTE	PART NUMBER	QTY	PART NAME 1 2 3 4 5 6 (PRODUCT LEVEL)	SEE PAGE
Y	*252-0752*	6	WHEEL & TIRE GP	303

Y-SEPARATE ILLUSTRATION

<END>

252-7948 WHEEL & TIRE AR

S/N: JPA1-UP
AN ATTACHMENT

SMCS-4200 **i02811275**

NOTE	PART NUMBER	QTY	PART NAME 1 2 3 4 5 6 (PRODUCT LEVEL)	SEE PAGE
Y	*252-7947*	6	WHEEL & TIRE GP	304

Y-SEPARATE ILLUSTRATION

<END>

254-7963 WHEEL & TIRE AR

S/N: JPA1-UP
AN ATTACHMENT

SMCS-4200 **i02793987**

NOTE	PART NUMBER	QTY	PART NAME 1 2 3 4 5 6 (PRODUCT LEVEL)	SEE PAGE
Y	*254-7947*	6	WHEEL & TIRE GP	304

Y-SEPARATE ILLUSTRATION

<END>

254-7964 WHEEL & TIRE AR

S/N: JPA1-UP
AN ATTACHMENT

SMCS-4200 **i02787646**

NOTE	PART NUMBER	QTY	PART NAME 1 2 3 4 5 6 (PRODUCT LEVEL)	SEE PAGE
Y	*254-7948*	6	WHEEL & TIRE GP	304

Y-SEPARATE ILLUSTRATION

<END>

142-6297 WHEEL & TIRE GP

S/N: JPA1-UP
(14X24)
AN ATTACHMENT

SMCS-4200 **i02205244**

NOTE	PART NUMBER	QTY	PART NAME 1 2 3 4 5 6 (PRODUCT LEVEL)	SEE PAGE
	123-3420	1	RIM AS	
	142-6170	1	TIRE (14-24)	
	2D-2511	1	VALVE GP-TIRE	
	9K-7951	1	CAP-VALVE (STEM)	
	6F-3930	1	CORE-VALVE	
	7D-5252	1	SPUD AS	
	2D-2508	1	GROMMET	
	2D-2509	1	LOCKNUT (11/16-16-THD)	
	2D-2507	1	SPUD	

<END>

142-6300 WHEEL & TIRE GP

S/N: JPA1-UP
(14X24)
PART OF 142-6448 WHEEL & TIRE AR
AN ATTACHMENT

SMCS-4200 **i02205249**

NOTE	PART NUMBER	QTY	PART NAME 1 2 3 4 5 6 (PRODUCT LEVEL)	SEE PAGE
	123-3420	1	RIM AS	
	142-6171	1	TIRE (14-24)	
	2D-2511	1	VALVE GP-TIRE	
	9K-7951	1	CAP-VALVE (STEM)	
	6F-3930	1	CORE-VALVE	
	7D-5252	1	SPUD AS	
	2D-2508	1	GROMMET	
	2D-2509	1	LOCKNUT (11/16-16-THD)	
	2D-2507	1	SPUD	

<END>

142-6301 WHEEL & TIRE GP

S/N: JPA1-UP
PART OF 142-6449 WHEEL & TIRE AR
AN ATTACHMENT

SMCS-4200 **i02205296**

NOTE	PART NUMBER	QTY	PART NAME 1 2 3 4 5 6 (PRODUCT LEVEL)	SEE PAGE
Y	*142-6226*	1	WHEEL GP	305
	2D-2565	1	SEAL-O-RING	
	142-6171	1	TIRE (14-24)	
	110-4213	1	VALVE GP-TIRE	
	7D-5252	1	SPUD AS	
	2D-2508	1	GROMMET	
	2D-2509	1	LOCKNUT (11/16-16-THD)	
	110-4214	1	STEM AS	
	9K-7951	1	CAP-VALVE (STEM)	
	6F-3930	1	CORE-VALVE	

Y-SEPARATE ILLUSTRATION

<END>

142-6306 WHEEL & TIRE GP

S/N: JPA1-UP
(14X24)
PART OF 142-6454 WHEEL & TIRE AR
AN ATTACHMENT

SMCS-4200 **i02205305**

NOTE	PART NUMBER	QTY	PART NAME 1 2 3 4 5 6 (PRODUCT LEVEL)	SEE PAGE
	123-3420	1	RIM AS	
	142-6173	1	TIRE (14-24)	
	2D-2511	1	VALVE GP-TIRE	
	9K-7951	1	CAP-VALVE (STEM)	
	6F-3930	1	CORE-VALVE	
	7D-5252	1	SPUD AS	
	2D-2508	1	GROMMET	
	2D-2509	1	LOCKNUT (11/16-16-THD)	
	2D-2507	1	SPUD	

<END>

142-6307 WHEEL & TIRE GP

S/N: JPA1-UP
PART OF 142-6455 WHEEL & TIRE AR
AN ATTACHMENT

SMCS-4200 **i02205306**

NOTE	PART NUMBER	QTY	PART NAME 1 2 3 4 5 6 (PRODUCT LEVEL)	SEE PAGE
Y	*142-6226*	1	WHEEL GP	305
	2D-2565	1	SEAL-O-RING	
	142-6173	1	TIRE (14-24)	
	110-4213	1	VALVE GP-TIRE	
	7D-5252	1	SPUD AS	
	2D-2508	1	GROMMET	
	2D-2509	1	LOCKNUT (11/16-16-THD)	
	110-4214	1	STEM AS	
	6F-3930	1	CORE-VALVE	
	9K-7951	1	CAP-VALVE (STEM)	

Y-SEPARATE ILLUSTRATION

<END>

142-6309 WHEEL & TIRE GP

S/N: JPA1-UP
(14X24)
PART OF 142-6457 WHEEL & TIRE AR
AN ATTACHMENT

SMCS-4200 **i02205309**

NOTE	PART NUMBER	QTY	PART NAME 1 2 3 4 5 6 (PRODUCT LEVEL)	SEE PAGE
	123-3420	1	RIM AS	
	142-6174	1	TIRE (14-24)	
	2D-2511	1	VALVE GP-TIRE	
	9K-7951	1	CAP-VALVE (STEM)	
	6F-3930	1	CORE-VALVE	
	7D-5252	1	SPUD AS	
	2D-2508	1	GROMMET	
	2D-2509	1	LOCKNUT (11/16-16-THD)	
	2D-2507	1	SPUD	

<END>

142-6310 WHEEL & TIRE GP

S/N: JPA1-UP
PART OF 142-6458 WHEEL & TIRE AR
AN ATTACHMENT

SMCS-4200 **i02205321**

NOTE	PART NUMBER	QTY	PART NAME 1 2 3 4 5 6 (PRODUCT LEVEL)	SEE PAGE
Y	*142-6226*	1	WHEEL GP	305
	142-6174	1	TIRE (14-24)	
	2D-2565	1	SEAL-O-RING	
	110-4213	1	VALVE GP-TIRE	
	7D-5252	1	SPUD AS	
	2D-2508	1	GROMMET	
	2D-2509	1	LOCKNUT (11/16-16-THD)	
	110-4214	1	STEM AS	
	9K-7951	1	CAP-VALVE (STEM)	
	6F-3930	1	CORE-VALVE	

Y-SEPARATE ILLUSTRATION

<END>

142-6315 WHEEL & TIRE GP

S/N: JPA1-UP
(14X24)
PART OF 142-6463 WHEEL & TIRE AR
AN ATTACHMENT

SMCS-4200 **i02205330**

NOTE	PART NUMBER	QTY	PART NAME 1 2 3 4 5 6 (PRODUCT LEVEL)	SEE PAGE
	123-3420	1	RIM AS	
	112-9813	1	TIRE (14-R24)	
	2D-2511	1	VALVE GP-TIRE	
	9K-7951	1	CAP-VALVE (STEM)	
	6F-3930	1	CORE-VALVE	
	7D-5252	1	SPUD AS	
	2D-2508	1	GROMMET	
	2D-2509	1	LOCKNUT (11/16-16-THD)	
	2D-2507	1	SPUD	

<END>

142-6316 WHEEL & TIRE GP

S/N: JPA1-UP
PART OF 142-6464 WHEEL & TIRE AR
AN ATTACHMENT

SMCS-4200 **i02205331**

NOTE	PART NUMBER	QTY	PART NAME 1 2 3 4 5 6 (PRODUCT LEVEL)	SEE PAGE
Y	*142-6226*	1	WHEEL GP	305
	2D-2565	1	SEAL-O-RING	
	112-9813	1	TIRE (14-R24)	
	110-4213	1	VALVE GP-TIRE	
	7D-5252	1	SPUD AS	
	2D-2508	1	GROMMET	
	2D-2509	1	LOCKNUT (11/16-16-THD)	
	110-4214	1	STEM AS	
	6F-3930	1	CORE-VALVE	
	9K-7951	1	CAP-VALVE (STEM)	

Y-SEPARATE ILLUSTRATION

<END>

142-6353 WHEEL & TIRE GP

S/N: JPA1-UP
(17.5X25)
PART OF 151-0364 WHEEL & TIRE AR
AN ATTACHMENT

SMCS-4200 **i02468962**

NOTE	PART NUMBER	QTY	PART NAME 1 2 3 4 5 6 (PRODUCT LEVEL)	SEE PAGE
	8X-1160	1	RIM AS (13X25)	
	128-5450	1	TIRE (17.5-25)	
	2G-6595	1	VALVE GP-TIRE (TIRE INFLATION)	
	9K-7951	1	CAP-VALVE (STEM)	
	6F-3930	1	CORE-VALVE	
	7D-5252	1	SPUD AS	
	2D-2507	1	SPUD	
	2D-2508	1	GROMMET	
	2D-2509	1	LOCKNUT (11/16-16-THD)	

<END>

142-6354 WHEEL & TIRE GP

S/N: JPA1-UP
(17.5X25)
PART OF 151-0371 WHEEL & TIRE AR
AN ATTACHMENT

SMCS-4200 **i02205436**

NOTE	PART NUMBER	QTY	PART NAME 1 2 3 4 5 6 (PRODUCT LEVEL)	SEE PAGE
	8X-1160	1	RIM AS (13X25)	
	142-6183	1	TIRE (17.5-25)	
	2G-6595	1	VALVE GP-TIRE	
	9K-7951	1	CAP-VALVE (STEM)	
	6F-3930	1	CORE-VALVE	
	7D-5252	1	SPUD AS	
	2D-2508	1	GROMMET	
	2D-2509	1	LOCKNUT (11/16-16-THD)	
	2D-2507	1	SPUD	

<END>

142-6356 WHEEL & TIRE GP

S/N: JPA1-UP
PART OF 151-0378 WHEEL & TIRE AR
AN ATTACHMENT

SMCS-4200 **i02525540**

NOTE	PART NUMBER	QTY	PART NAME 1 2 3 4 5 6 (PRODUCT LEVEL)	SEE PAGE
Y	*142-6229*	1	WHEEL GP	306
	4K-4879	1	SEAL-O-RING	
	128-5450	1	TIRE (17.5-25)	
	2G-6595	1	VALVE GP-TIRE (TIRE INFLATION)	
	9K-7951	1	CAP-VALVE (STEM)	
	6F-3930	1	CORE-VALVE	
	7D-5252	1	SPUD AS	
	2D-2508	1	GROMMET	
	2D-2509	1	LOCKNUT (11/16-16-THD)	
	2D-2507	1	SPUD	

Y-SEPARATE ILLUSTRATION

<END>

142-6357 WHEEL & TIRE GP

S/N: JPA1-UP
PART OF 151-0388 WHEEL & TIRE AR
AN ATTACHMENT

SMCS-4200 **i02525538**

NOTE	PART NUMBER	QTY	PART NAME 1 2 3 4 5 6 (PRODUCT LEVEL)	SEE PAGE
Y	*142-6229*	1	WHEEL GP	306
	4K-4879	1	SEAL-O-RING	
	142-6183	1	TIRE (17.5-25)	
	2G-6595	1	VALVE GP-TIRE (TIRE INFLATION)	
	9K-7951	1	CAP-VALVE (STEM)	
	6F-3930	1	CORE-VALVE	
	7D-5252	1	SPUD AS	
	2D-2508	1	GROMMET	
	2D-2509	1	LOCKNUT (11/16-16-THD)	
	2D-2507	1	SPUD	

Y-SEPARATE ILLUSTRATION

<END>

142-6360 WHEEL & TIRE GP

S/N: JPA1-UP
(17.5X25)
PART OF 151-0365 WHEEL & TIRE AR
AN ATTACHMENT

SMCS-4200 **i01755157**

NOTE	PART NUMBER	QTY	PART NAME 1 2 3 4 5 6 (PRODUCT LEVEL)	SEE PAGE
	8X-1160	1	RIM AS (13X25)	
	6C-7366	1	TIRE (17.5-R25)	
	2G-6595	1	VALVE GP-TIRE	
	6F-3930	1	CORE-VALVE	
	9K-7951	1	CAP-VALVE (STEM)	
	7D-5252	1	SPUD AS	
	2D-2507	1	SPUD	
	2D-2508	1	GROMMET	
	2D-2509	1	LOCKNUT (11/16-16-THD)	

<END>

142-6361 WHEEL & TIRE GP

S/N: JPA1-UP
PART OF 151-0379 WHEEL & TIRE AR
AN ATTACHMENT

SMCS-4200 **i02525535**

NOTE	PART NUMBER	QTY	PART NAME 1 2 3 4 5 6 (PRODUCT LEVEL)	SEE PAGE
Y	*142-6229*	1	WHEEL GP	306
	4K-4879	1	SEAL-O-RING	
	6C-7366	1	TIRE (17.5-R25)	
	2G-6595	1	VALVE GP-TIRE (TIRE INFLATION)	
	9K-7951	1	CAP-VALVE (STEM)	
	6F-3930	1	CORE-VALVE	
	7D-5252	1	SPUD AS	
	2D-2508	1	GROMMET	
	2D-2509	11	LOCKNUT (11/16-16-THD)	
	2D-2507	1	SPUD	

Y-SEPARATE ILLUSTRATION

<END>

142-6363 WHEEL & TIRE GP

S/N: JPA1-UP
(17.5X25)
PART OF 151-0366 WHEEL & TIRE AR
AN ATTACHMENT

SMCS-4200 **i01755167**

NOTE	PART NUMBER	QTY	PART NAME 1 2 3 4 5 6 (PRODUCT LEVEL)	SEE PAGE
	8X-1160	1	RIM AS (13X25)	
	6C-3246	1	TIRE (17.5-R25)	
	2G-6595	1	VALVE GP-TIRE	
	6F-3930	1	CORE-VALVE	
	9K-7951	1	CAP-VALVE (STEM)	
	7D-5252	1	SPUD AS	
	2D-2507	1	SPUD	
	2D-2508	1	GROMMET	
	2D-2509	1	LOCKNUT (11/16-16-THD)	

<END>

142-6364 WHEEL & TIRE GP

S/N: JPA1-UP
PART OF 151-0380 WHEEL & TIRE AR
AN ATTACHMENT

SMCS-4200 **i02525536**

NOTE	PART NUMBER	QTY	PART NAME 1 2 3 4 5 6 (PRODUCT LEVEL)	SEE PAGE
Y	*142-6229*	1	WHEEL GP	306
	4K-4879	1	SEAL-O-RING	
	6C-3246	1	TIRE (17.5-R25)	
	2G-6595	1	VALVE GP-TIRE (TIRE INFLATION)	
	6F-3930	1	CORE-VALVE	
	9K-7951	1	CAP-VALVE (STEM)	
	7D-5252	1	SPUD AS	
	2D-2507	1	SPUD	
	2D-2508	1	GROMMET	
	2D-2509	1	LOCKNUT (11/16-16-THD)	

Y-SEPARATE ILLUSTRATION

<END>

142-6371 WHEEL & TIRE GP

S/N: JPA1-UP
(17.5X25)
PART OF 151-0368 WHEEL & TIRE AR
AN ATTACHMENT

SMCS-4200 **i02469284**

NOTE	PART NUMBER	QTY	PART NAME 1 2 3 4 5 6 (PRODUCT LEVEL)	SEE PAGE
	8X-1160	1	RIM AS (13X25)	
	128-5451	1	TIRE (17.5-25)	
	2G-6595	1	VALVE GP-TIRE	
	9K-7951	1	CAP-VALVE (STEM)	
	6F-3930	1	CORE-VALVE	
	7D-5252	1	SPUD AS	
	2D-2508	1	GROMMET	
	2D-2509	1	LOCKNUT (11/16-16-THD)	
	2D-2507	1	SPUD	

<END>

142-6372 WHEEL & TIRE GP

S/N: JPA1-UP
(17.5X25)
PART OF 151-0372 WHEEL & TIRE AR
AN ATTACHMENT

SMCS-4200 **i01755168**

NOTE	PART NUMBER	QTY	PART NAME 1 2 3 4 5 6 (PRODUCT LEVEL)	SEE PAGE
	8X-1160	1	RIM AS (13X25)	
	142-6186	1	TIRE (17.5-25)	
	2G-6595	1	VALVE GP-TIRE	
	9K-7951	1	CAP-VALVE (STEM)	
	6F-3930	1	CORE-VALVE	
	7D-5252	1	SPUD AS	
	2D-2508	1	GROMMET	
	2D-2509	1	LOCKNUT (11/16-16-THD)	
	2D-2507	1	SPUD	

<END>

142-6374 WHEEL & TIRE GP

S/N: JPA1-UP
PART OF 151-0382 WHEEL & TIRE AR
AN ATTACHMENT

SMCS-4200 **i02510300**

NOTE	PART NUMBER	QTY	PART NAME 1 2 3 4 5 6 (PRODUCT LEVEL)	SEE PAGE
Y	*142-6229*	1	WHEEL GP	306
	4K-4879	1	SEAL-O-RING	
	128-5451	1	TIRE (17.5-25)	
	2G-6595	1	VALVE GP-TIRE	
	9K-7951	1	CAP-VALVE (STEM)	
	6F-3930	1	CORE-VALVE	
	7D-5252	1	SPUD AS	
	2D-2507	1	SPUD	
	2D-2508	1	GROMMET	
	2D-2509	1	LOCKNUT (11/16-16-THD)	

Y-SEPARATE ILLUSTRATION

<END>

POWER TRAIN

142-6375 WHEEL & TIRE GP

S/N: JPA1-UP
PART OF 151-0389 WHEEL & TIRE AR
AN ATTACHMENT

SMCS-4200 **i02510299**

NOTE	PART NUMBER	QTY	PART NAME 1 2 3 4 5 6 (PRODUCT LEVEL)	SEE PAGE
Y	*142-6229*	1	WHEEL GP	306
	4K-4879	1	SEAL-O-RING	
	142-6186	1	TIRE (17.5-25)	
	2G-6595	1	VALVE GP-TIRE	
	9K-7951	1	CAP-VALVE (STEM)	
	6F-3930	1	CORE-VALVE	
	7D-5252	1	SPUD AS	
	2D-2507	1	SPUD	
	2D-2508	1	GROMMET	
	2D-2509	1	LOCKNUT (11/16-16-THD)	

Y-SEPARATE ILLUSTRATION

<END>

173-7813 WHEEL & TIRE GP

S/N: JPA1-UP
PART OF 174-2304 WHEEL & TIRE AR
AN ATTACHMENT

SMCS-4200 **i02205568**

NOTE	PART NUMBER	QTY	PART NAME 1 2 3 4 5 6 (PRODUCT LEVEL)	SEE PAGE
Y	*142-6226*	1	WHEEL GP	305
	2D-2565	1	SEAL-O-RING	
	173-7830	1	TIRE (14-R24)	
	110-4213	1	VALVE GP-TIRE	
	110-4214	1	STEM AS	
	6F-3930	1	CORE-VALVE	
	9K-7951	1	CAP-VALVE (STEM)	
	7D-5252	1	SPUD AS	
	2D-2508	1	GROMMET	
	2D-2509	1	LOCKNUT (11/16-16-THD)	

Y-SEPARATE ILLUSTRATION

<END>

252-0678 WHEEL & TIRE GP

S/N: JPA1-UP
PART OF 252-0679 WHEEL & TIRE AR
AN ATTACHMENT

SMCS-4200 **i02783317**

NOTE	PART NUMBER	QTY	PART NAME 1 2 3 4 5 6 (PRODUCT LEVEL)	SEE PAGE
Y	*252-0108*	1	WHEEL GP	309
	112-9813	1	TIRE (14-R24)	

Y-SEPARATE ILLUSTRATION

<END>

252-0707 WHEEL & TIRE GP

S/N: JPA1-UP
PART OF 252-0708 WHEEL & TIRE AR
AN ATTACHMENT

SMCS-4200 **i02784220**

NOTE	PART NUMBER	QTY	PART NAME 1 2 3 4 5 6 (PRODUCT LEVEL)	SEE PAGE
Y	*252-0108*	1	WHEEL GP	309
	140-3607	1	TIRE (14-R24)	

Y-SEPARATE ILLUSTRATION

<END>

252-0726 WHEEL & TIRE GP

S/N: JPA1-UP
PART OF 252-0727 WHEEL & TIRE AR
AN ATTACHMENT

SMCS-4200 **i02784676**

NOTE	PART NUMBER	QTY	PART NAME 1 2 3 4 5 6 (PRODUCT LEVEL)	SEE PAGE
Y	*252-0112*	1	WHEEL GP	310
	128-5450	1	TIRE (17.5-25)	

Y-SEPARATE ILLUSTRATION

<END>

252-0730 WHEEL & TIRE GP

S/N: JPA1-UP
PART OF 252-0731 WHEEL & TIRE AR
AN ATTACHMENT

SMCS-4200 **i02784687**

NOTE	PART NUMBER	QTY	PART NAME 1 2 3 4 5 6 (PRODUCT LEVEL)	SEE PAGE
Y	*252-0112*	1	WHEEL GP	310
	142-6183	1	TIRE (17.5-25)	

Y-SEPARATE ILLUSTRATION

<END>

252-0752 WHEEL & TIRE GP

S/N: JPA1-UP
PART OF 252-0753 WHEEL & TIRE AR
AN ATTACHMENT

SMCS-4200 **i02784882**

NOTE	PART NUMBER	QTY	PART NAME 1 2 3 4 5 6 (PRODUCT LEVEL)	SEE PAGE
Y	*252-0112*	1	WHEEL GP	310
	142-6186	1	TIRE (17.5-25)	

Y-SEPARATE ILLUSTRATION

<END>

POWER TRAIN

252-7947 WHEEL & TIRE GP

S/N: JPA1-UP
PART OF 252-7948 WHEEL & TIRE AR
AN ATTACHMENT

SMCS-4200 **i02785102**

NOTE	PART NUMBER	QTY	PART NAME 1 2 3 4 5 6 (PRODUCT LEVEL)	SEE PAGE
Y	*252-0106*	1	WHEEL GP	309
	142-6174	1	TIRE (14-24)	

Y-SEPARATE ILLUSTRATION

<END>

254-7947 WHEEL & TIRE GP

S/N: JPA1-UP
PART OF 254-7963 WHEEL & TIRE AR
AN ATTACHMENT

SMCS-4200 **i02793942**

NOTE	PART NUMBER	QTY	PART NAME 1 2 3 4 5 6 (PRODUCT LEVEL)	SEE PAGE
Y	*252-0111*	1	WHEEL GP	310
	142-6182	1	TIRE (17.5-25)	

Y-SEPARATE ILLUSTRATION

<END>

254-7948 WHEEL & TIRE GP

S/N: JPA1-UP
PART OF 254-7964 WHEEL & TIRE AR
AN ATTACHMENT

SMCS-4200 **i02787563**

NOTE	PART NUMBER	QTY	PART NAME 1 2 3 4 5 6 (PRODUCT LEVEL)	SEE PAGE
Y	*252-0111*	1	WHEEL GP	310
	142-6183	1	TIRE (17.5-25)	

Y-SEPARATE ILLUSTRATION

<END>

142-6303 WHEEL AR

S/N: JPA1-UP
AN ATTACHMENT

SMCS-4208 **i00761194**

NOTE	PART NUMBER	QTY	PART NAME 1 2 3 4 5 6 (PRODUCT LEVEL)	SEE PAGE
Y	*142-6172*	6	WHEEL GP	305

Y-SEPARATE ILLUSTRATION

<END>

142-6305 WHEEL AR

S/N: JPA1-UP
AN ATTACHMENT

SMCS-4208 **i02588546**

NOTE	PART NUMBER	QTY	PART NAME 1 2 3 4 5 6 (PRODUCT LEVEL)	SEE PAGE
Y	*142-6304*	6	WHEEL GP	306

Y-SEPARATE ILLUSTRATION

<END>

148-2405 WHEEL AR

S/N: JPA1-UP
AN ATTACHMENT

SMCS-4208 **i01880496**

NOTE	PART NUMBER	QTY	PART NAME 1 2 3 4 5 6 (PRODUCT LEVEL)	SEE PAGE
Y	*148-2404*	6	WHEEL GP	306

Y-SEPARATE ILLUSTRATION

<END>

142-6172 WHEEL GP

S/N: JPA1-UP
(9X24)
PART OF 142-6303 WHEEL AR
AN ATTACHMENT

SMCS-4006, 4201, 4208 **i02205609**

NOTE	PART NUMBER	QTY	PART NAME 1 2 3 4 5 6 (PRODUCT LEVEL)	SEE PAGE
	123-3420	1	RIM AS	
	2D-2511	1	VALVE GP-TIRE	
	9K-7951	1	CAP-VALVE (STEM)	
	6F-3930	1	CORE-VALVE	
	7D-5252	1	SPUD AS	
	2D-2508	1	GROMMET	
	2D-2509	1	LOCKNUT (11/16-16-THD)	
	2D-2507	1	SPUD	

<END>

142-6226 WHEEL GP

S/N: JPA1-UP
(10X24)
PART OF 142-6301, 142-6307, 142-6310, 142-6316, 173-7813 WHEEL & TIRE GP, 142-6304 WHEEL GP
AN ATTACHMENT

SMCS-4006, 4201, 4208 **i02830940**

NOTE	PART NUMBER	QTY	PART NAME 1 2 3 4 5 6 (PRODUCT LEVEL)	SEE PAGE
	8W-9566	1	FLANGE AS	
	290-1507	1	RIM AS (10X24)	
	2D-2654	1	RING-LOCK	

<END>

142-6229 WHEEL GP

S/N: JPA1-UP
(14X25)
PART OF 142-6356, 142-6357, 142-6361, 142-6364, 142-6374, 142-6375 WHEEL & TIRE GP
AN ATTACHMENT

SMCS-4006, 4201, 4208 **i02863873**

NOTE	PART NUMBER	QTY	PART NAME 1 2 3 4 5 6 (PRODUCT LEVEL)	SEE PAGE
	8W-9594	1	FLANGE AS	
	289-9725	1	RIM AS (14-25)	
	4K-4881	1	RING-LOCK	

<END>

142-6304 WHEEL GP

S/N: JPA1-UP
PART OF 142-6305 WHEEL AR
AN ATTACHMENT

SMCS-4006, 4201, 4208 **i03079300**

NOTE	PART NUMBER	QTY	PART NAME 1 2 3 4 5 6 (PRODUCT LEVEL)	SEE PAGE
Y	*142-6226*	1	WHEEL GP	305
	2D-2565	1	SEAL-O-RING	
	110-4213	1	VALVE GP-TIRE	
	7D-5252	1	SPUD AS	
	2D-2508	1	GROMMET	
	2D-2509	1	LOCKNUT (11/16-16-THD)	
	110-4214	1	STEM AS	
	6F-3930	1	CORE-VALVE	
	9K-7951	1	CAP-VALVE (STEM)	

Y-SEPARATE ILLUSTRATION

<END>

148-2404 WHEEL GP—BAREFOOT

S/N: JPA1-UP
(13X25)
PART OF 148-2405 WHEEL AR
AN ATTACHMENT

SMCS-4006, 4201, 4208 **i01755146**

NOTE	PART NUMBER	QTY	PART NAME 1 2 3 4 5 6 (PRODUCT LEVEL)	SEE PAGE
	8X-1160	1	RIM AS (13X25)	
	2G-6595	1	VALVE GP-TIRE (TIRE INFLATION)	
	9K-7951	1	CAP-VALVE (STEM)	
	6F-3930	1	CORE-VALVE	
	7D-5252	1	SPUD AS	
	2D-2508	1	GROMMET	
	2D-2509	1	LOCKNUT (11/16-16-THD)	
	2D-2507	1	SPUD	

<END>

252-0102 WHEEL GP

S/N: JPA1-UP
(10X24)
PART OF 252-0108 WHEEL GP
AN ATTACHMENT

SMCS-4006, 4201, 4208 **i02781649**

NOTE	REF NO	GRAPHIC REF	PART NUMBER	QTY	PART NAME 1 2 3 4 5 6 (PRODUCT LEVEL)	SEE PAGE
	1	1	**2D-2654**	1	RING-LOCK	
	2	1	**8W-9566**	1	FLANGE AS	
	3	1	**290-1505**	1	RIM AS	

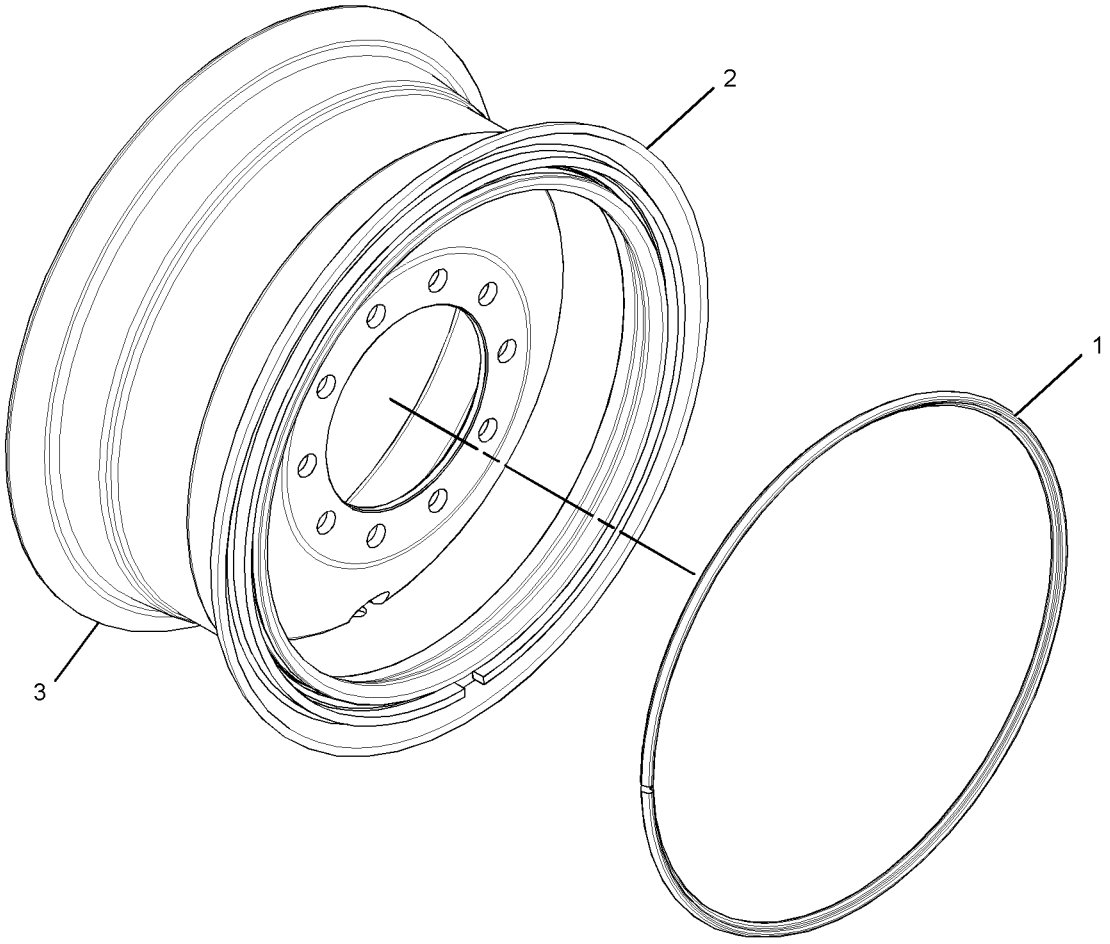

GRAPHIC #1 **<END>** g01393131

POWER TRAIN

252-0104 WHEEL GP

S/N: JPA1-UP
(14X25)
PART OF 252-0112 WHEEL GP
AN ATTACHMENT

SMCS-4006, 4201, 4208 **i02781823**

NOTE	REF NO	GRAPHIC REF	PART NUMBER	QTY	PART NAME 1 2 3 4 5 6 (PRODUCT LEVEL)	SEE PAGE
	1	1	**4K-4881**	1	RING-LOCK	
	2	1	**8W-9594**	1	FLANGE AS	
	3	1	**289-9726**	1	RIM AS	

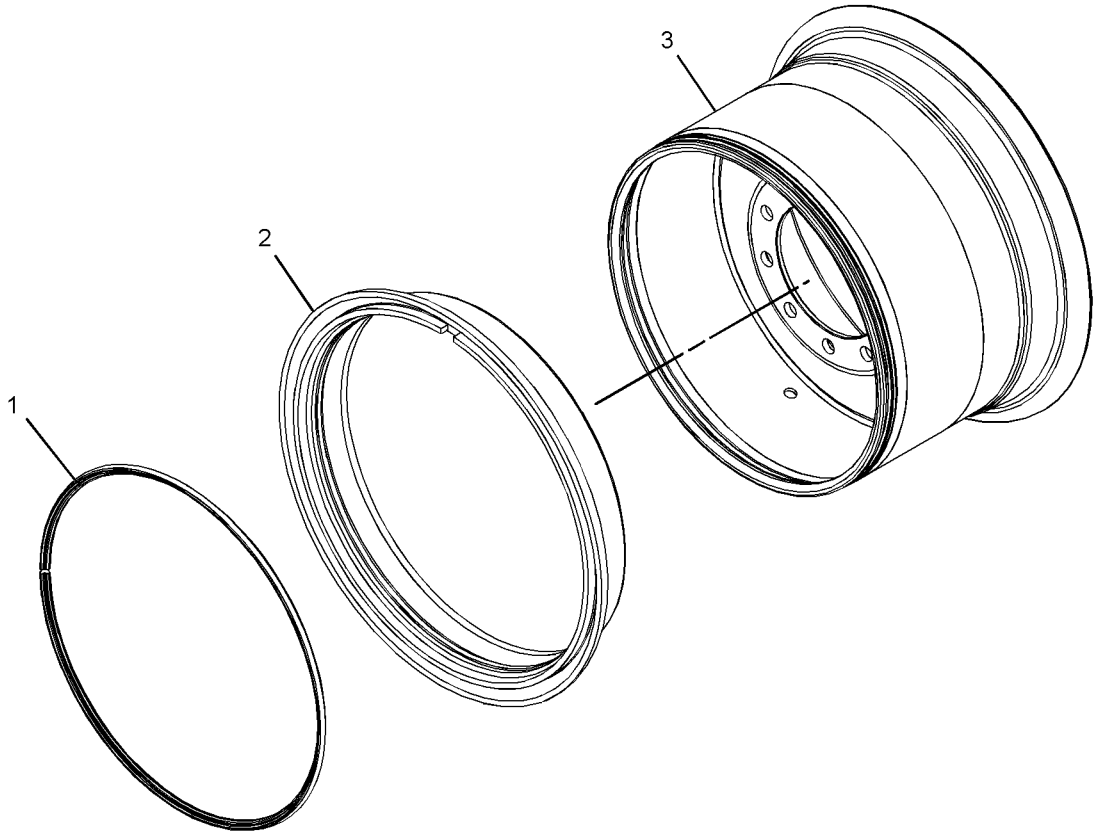

GRAPHIC #1 **<END>** g01392485

252-0106 WHEEL GP

S/N: JPA1-UP
(9X24)
PART OF 252-7947 WHEEL & TIRE GP
AN ATTACHMENT

SMCS-4006, 4201, 4208 **i02781471**

NOTE	PART NUMBER	QTY	PART NAME 1 2 3 4 5 6 (PRODUCT LEVEL)	SEE PAGE
	252-0098	1	RIM AS	
	2D-2511	1	VALVE GP-TIRE (BASIC)	
	3D-2239	1	VALVE AS-TIRE (TIRE INFLATION)	
	6F-3930	1	CORE-VALVE	
	9K-7951	1	CAP-VALVE (STEM)	
	7D-5252	1	SPUD AS	
	2D-2507	1	SPUD	
	2D-2508	1	GROMMET	
	2D-2509	1	LOCKNUT (11/16-16-THD)	

<END>

252-0108 WHEEL GP

S/N: JPA1-UP
PART OF 252-0678, 252-0707 WHEEL & TIRE GP
AN ATTACHMENT

SMCS-4006, 4201, 4208 **i02781628**

NOTE	PART NUMBER	QTY	PART NAME 1 2 3 4 5 6 (PRODUCT LEVEL)	SEE PAGE
Y	*252-0102*	1	WHEEL GP	307
	2D-2565	1	SEAL-O-RING	
	110-4213	1	VALVE GP-TIRE (TIRE INFLATION)	
	7D-5252	1	SPUD AS	
	2D-2507	1	SPUD	
	2D-2508	1	GROMMET	
	2D-2509	1	LOCKNUT (11/16-16-THD)	
	110-4214	1	STEM AS	
	6F-3930	1	CORE-VALVE	
	9K-7951	1	CAP-VALVE (STEM)	

Y-SEPARATE ILLUSTRATION

<END>

252-0111 WHEEL GP

S/N: JPA1-UP
(13X25)
PART OF 254-7947, 254-7948 WHEEL & TIRE GP
AN ATTACHMENT

SMCS-4006, 4201, 4208 **i02781762**

NOTE	PART NUMBER	QTY	PART NAME 1 2 3 4 5 6 (PRODUCT LEVEL)	SEE PAGE
	252-0100	1	RIM AS	
	2G-6595	1	VALVE GP-TIRE (TIRE INFLATION)	
	6F-3930	1	CORE-VALVE	
	9K-7951	1	CAP-VALVE (STEM)	
	7D-5252	1	SPUD AS	
	2D-2507	1	SPUD	
	2D-2508	1	GROMMET	
	2D-2509	1	LOCKNUT (11/16-16-THD)	

<END>

252-0112 WHEEL GP

S/N: JPA1-UP
PART OF 252-0726, 252-0730, 252-0752 WHEEL & TIRE GP
AN ATTACHMENT

SMCS-4006, 4201, 4208 **i02781820**

NOTE	PART NUMBER	QTY	PART NAME 1 2 3 4 5 6 (PRODUCT LEVEL)	SEE PAGE
Y	*252-0104*	1	WHEEL GP	308
	4K-4879	1	SEAL-O-RING	
	2G-6595	1	VALVE GP-TIRE (TIRE INFLATION)	
	6F-3930	1	CORE-VALVE	
	9K-7951	1	CAP-VALVE (STEM)	
	7D-5252	1	SPUD AS	
	2D-2507	1	SPUD	
	2D-2508	1	GROMMET	
	2D-2509	1	LOCKNUT (11/16-16-THD)	

Y-SEPARATE ILLUSTRATION

<END>

FRAME AND BODY

134-1080 AXLE GP-FRONT

S/N: JPA1-UP

PART OF 274-7940 GENERAL AR

SMCS-4305, 4313, 5225 **i03177581**

NOTE	REF NO	GRAPHIC REF	PART NUMBER	QTY	PART NAME 1 2 3 4 5 6 (PRODUCT LEVEL)	SEE PAGE
R	1	1	**5K-5288**	2	SEAL GP-DUO-CONE	
					(EACH INCLUDES)	
		1	**5K-5129**	2	RING-SEALING	
	2	1	**2G-8626**	2	WASHER-THRUST (2.02X3.63X0.16-IN THK)	
	3	1	**3B-8489**	7	FITTING-GREASE (WHEEL LEAN CYLINDER)	
	4	1	**4D-3704**	2	WASHER-HARD (17X30X5-MM THK)	
	5	1	**2G-8615**	4	WASHER-THRUST (2.015X3.625X0.11-IN THK)	
	6	1	**2G-8742**	2	WASHER-HARD (20X65X5-MM THK)	
	7	1	**2H-3740**	4	BOLT (3/4-16X1.25-IN)	
	8	1	**2G-8741**	4	RING-METAL SEAL	
	9	1	**2G-8777**	4	SEAL	
	10	1	**9M-2092**	4	SEAL-O-RING	
	11	1	**8W-5293**	4	PIN	
	12	1	**8W-4652**	1	HOUSING-SPINDLE	
	13	1	**8W-4653**	1	HOUSING-SPINDLE	
	14	1	**8D-2811**	2	WASHER (1.25X1.94X0.032-IN THK)	
	15	1	**2G-8633**	2	PIN	
	16	1	**1D-4627**	2	BOLT (7/8-9X3-IN)	
	17	1	**2J-3505**	2	NUT-FULL (7/8-9-THD)	
	18	1	**7X-7731**	2	PLUG-PIPE	
	19	1	**5P-8842**	8	SEAL-LIP TYPE	
	20	1	**3B-8489**	4	FITTING-GREASE (STEERING CYLINDER)	
	21	1	**5P-1075**	4	WASHER-HARD (10.2X22.5X3-MM THK)	
	22	1	**5S-7379**	4	BOLT (3/8-16X0.875-IN)	
	23	1	**2G-8768**	4	WASHER (10.5X53.8X3-MM THK)	
	24	1	**103-9125**	1	BAR AS	
		1	**2G-8624**	2	BEARING-SLEEVE	
	25	1	**5P-8890**	2	SEAL-LIP TYPE	
	26	1	**030-0060**	2	CUP-BEARING	
	27	1	**030-0061**	2	CONE-BEARING	
	28	1	**7D-8637**	2	CUP-BEARING	
	29	1	**7D-8636**	2	CONE-BEARING	
	30	1	**3B-4618**	2	PIN-COTTER	
	31	1	**7D-8643**	2	RETAINER	
B	32	1	**2G-3865**	6	SHIM (0.127-MM THK)	
	33	1	**0V-0375**	6	BOLT (1/2-13X3.25-IN)	
	34	1	**9D-9797**	2	LOCK	
	35	1	**5T-0906**	2	COVER	
	36	1	**2J-8163**	2	SEAL-O-RING	
	37	1	**5D-0353**	4	BOLT-LOCKING (3/8-16X1-IN)	
	38	1	**0S-1585**	1	BOLT (1/2-13X1.5-IN)	
	39	1	**7D-1649**	1	WASHER-HARD (13.5X32X5-MM THK)	
	40	1	**5P-8843**	2	SEAL-LIP TYPE	
B	41	1	**2G-5673**	2	WASHER (2.031X4X0.06-IN THK)	
	42	1	**9G-5211**	1	SPACER (12.95X19.05X9-MM THK)	
	43	1	**130-3595**	1	PIN AS	
	44	1	**147-3400**	2	SPINDLE	
	45	1	**0S-1592**	2	BOLT (5/8-11X1.25-IN)	
	46	1	**2G-5667**	2	RETAINER	
CY	47	1	*131-3740*	1	LINK GP-STEERING	338
	48	1	**134-1081**	1	AXLE AS-FRONT	
	49	1	**2G-8631**	4	BEARING-SLEEVE	
	50	1	**131-4428**	2	BEARING-SLEEVE	
	51	1	**8X-3434**	1	ARM AS-LEANING (LH)	
	52	1	**146-1842**	1	BEARING-SLEEVE	
	53	1	**146-1843**	1	BEARING-SLEEVE	

134-1080 **AXLE GP-FRONT** *(contd.)* **i03177581**

NOTE	REF NO	GRAPHIC REF	PART NUMBER	QTY	PART NAME 1 2 3 4 5 6 (PRODUCT LEVEL)	SEE PAGE
	54	1	**8W-6476**	1	PIN	
	56	1	**8X-3435**	1	ARM AS-LEANING (RH)	
	57	1	**146-1842**	1	BEARING-SLEEVE	
	58	1	**146-1843**	1	BEARING-SLEEVE	
	59	1	**8W-6497**	1	PIN	
	61	1	**9D-3523**	1	WASHER (2.062X4X0.188-MM THK)	

B-USE AS REQUIRED
C-CHANGE FROM PREVIOUS TYPE
R-REMFG PART MAY BE AVAILABLE
Y-SEPARATE ILLUSTRATION

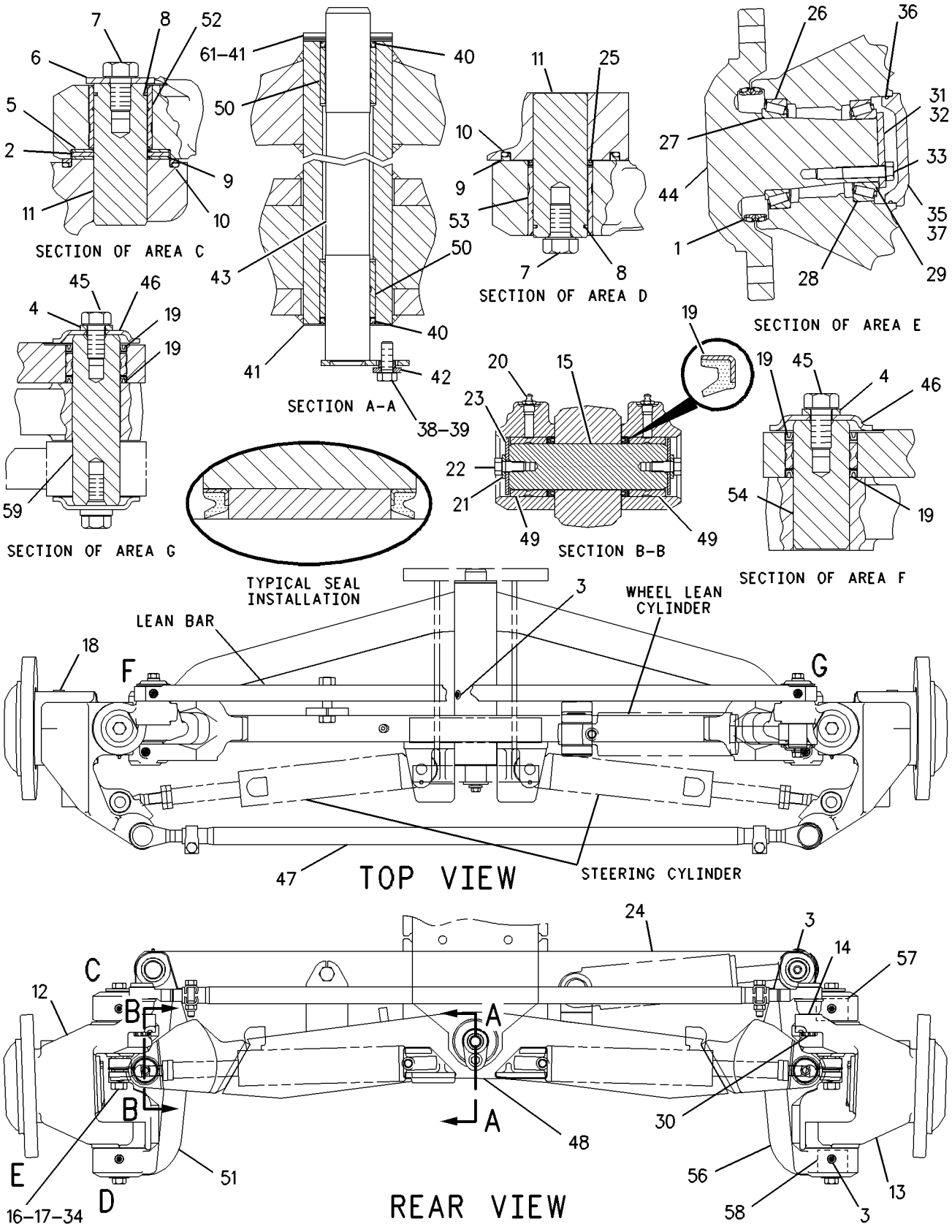

GRAPHIC #1 **<END>** g00885270

FRAME AND BODY

297-8449 BOSS GP-FRAME

S/N: JPA1-UP
PART OF 297-8448 GRADE CONTROL AR
AN ATTACHMENT

SMCS-7051 **i03349981**

NOTE	REF NO	GRAPHIC REF	PART NUMBER	QTY	PART NAME 1 2 3 4 5 6 (PRODUCT LEVEL)	SEE PAGE
	1	1	**5D-9629**	5	ROD	
	2	1	**1F-5339**	4	LUG (3/8-16-THD)	
	3	1	**3G-9190**	3	PLATE	
	4	1	**4D-8128**	2	COUPLING	
	5	1	**8X-5147**	1	BLOCK	
	6	1	**9D-5196**	1	BOSS (3/8-16X3.06-IN)	
	7	1	**9D-5567**	3	BOSS (3/8-16X2.44-IN)	
	8	1	**9D-5659**	6	BOSS (3/8-16X1.19-IN)	
	9	1	**9D-6164**	2	BOSS (3/8-16X1.44-IN)	
	10	1	**8D-3508**	1	BOSS (3/8-16X1-IN)	

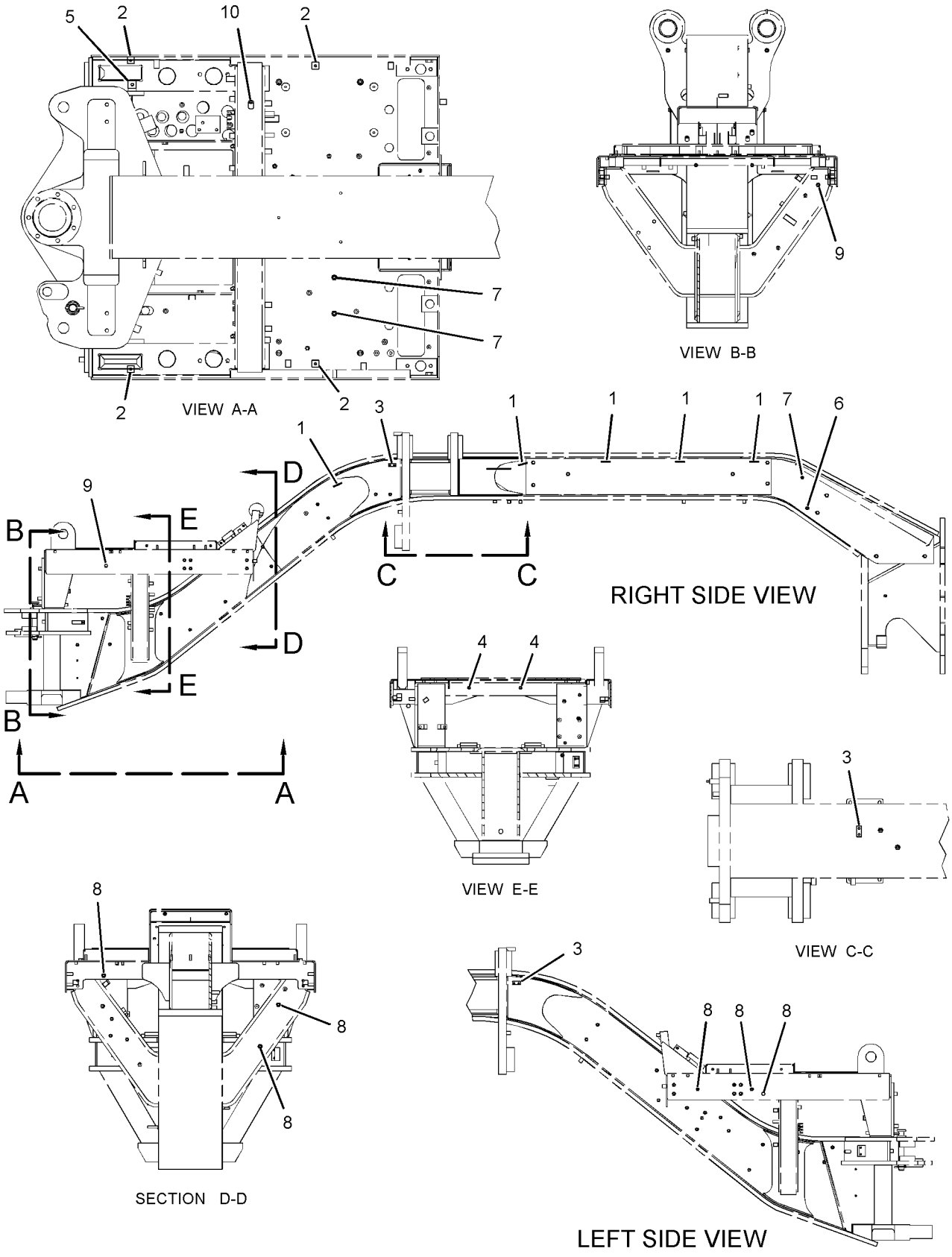

GRAPHIC #1 **<END>** g01768173

FRAME AND BODY

295-8090 BOX GP-BATTERY

S/N: JPA1-UP

PART OF 274-7940 GENERAL AR

SMCS-7257 **i03432322**

NOTE	REF NO	GRAPHIC REF	PART NUMBER	QTY	PART NAME 1 2 3 4 5 6 (PRODUCT LEVEL)	SEE PAGE
	1	1	**246-2641**	2	PADLOCK GP	
					(EACH INCLUDES)	
		1	**5P-8500**	1	KEY	
	2	1	**143-4792**	4	BUMPER	
	3	1	**295-8089**	1	SUPPORT AS	
	4	1	**295-8091**	1	COVER AS	
	5	1	**198-4778**	4	WASHER-HARD (13.5X30X12-MM THK)	
M	6	1	**8T-4194**	4	BOLT (M12X1.75X50-MM)	

M-METRIC PART

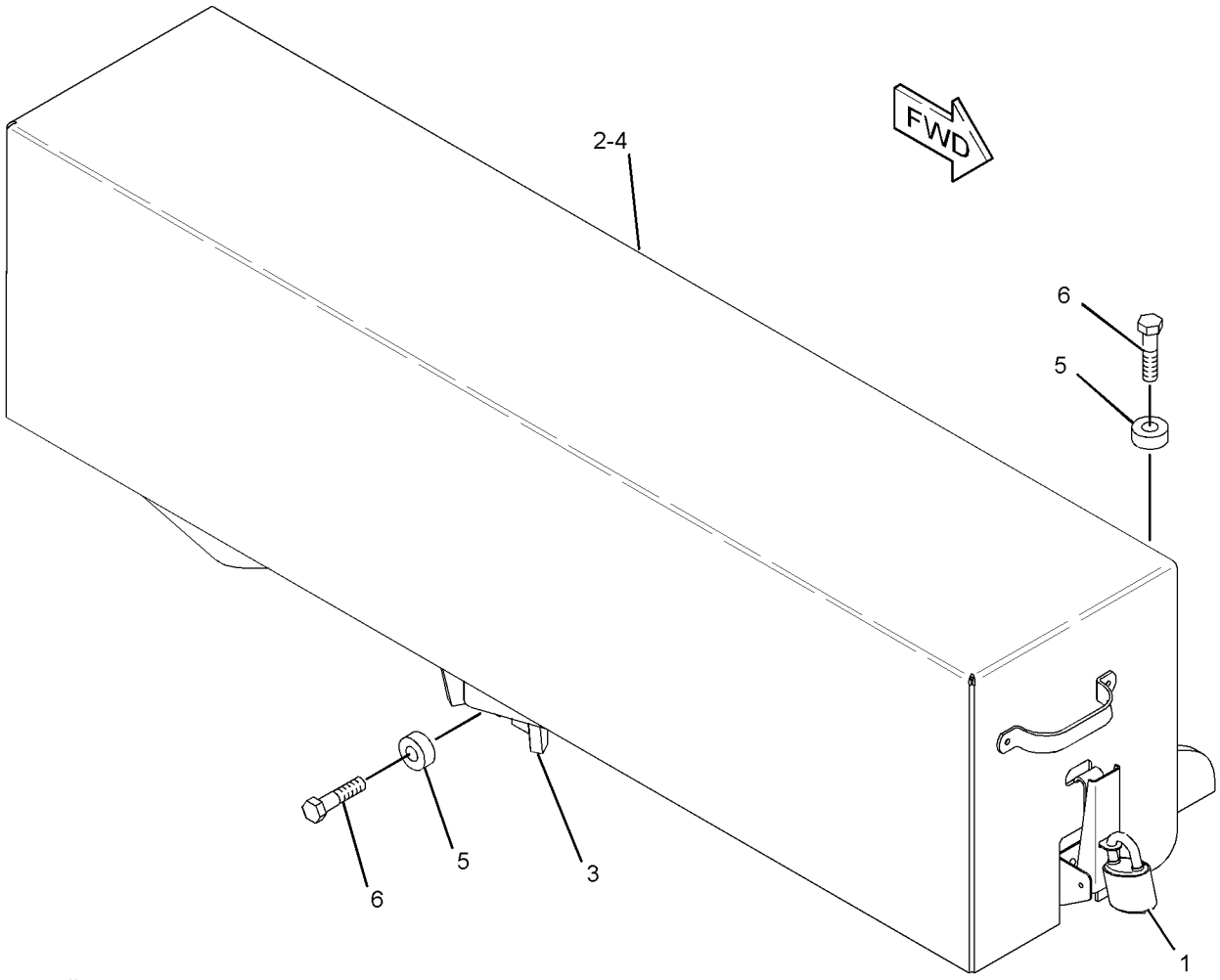

GRAPHIC #1 **<END>** g01701793

FRAME AND BODY

283-7190 BUMPER GP-REAR

S/N: JPA1-UP
AN ATTACHMENT

SMCS-7156 **i03258504**

NOTE	REF NO	GRAPHIC REF	PART NUMBER	QTY	PART NAME 1 2 3 4 5 6 (PRODUCT LEVEL)	SEE PAGE
	1	1	**291-6693**	1	BUMPER AS-TOW	
M	2	1	**7X-2575**	8	BOLT (M24X3X60-MM)	
	3	1	**8T-5361**	8	WASHER-HARD (28X49X5-MM THK)	

M-METRIC PART

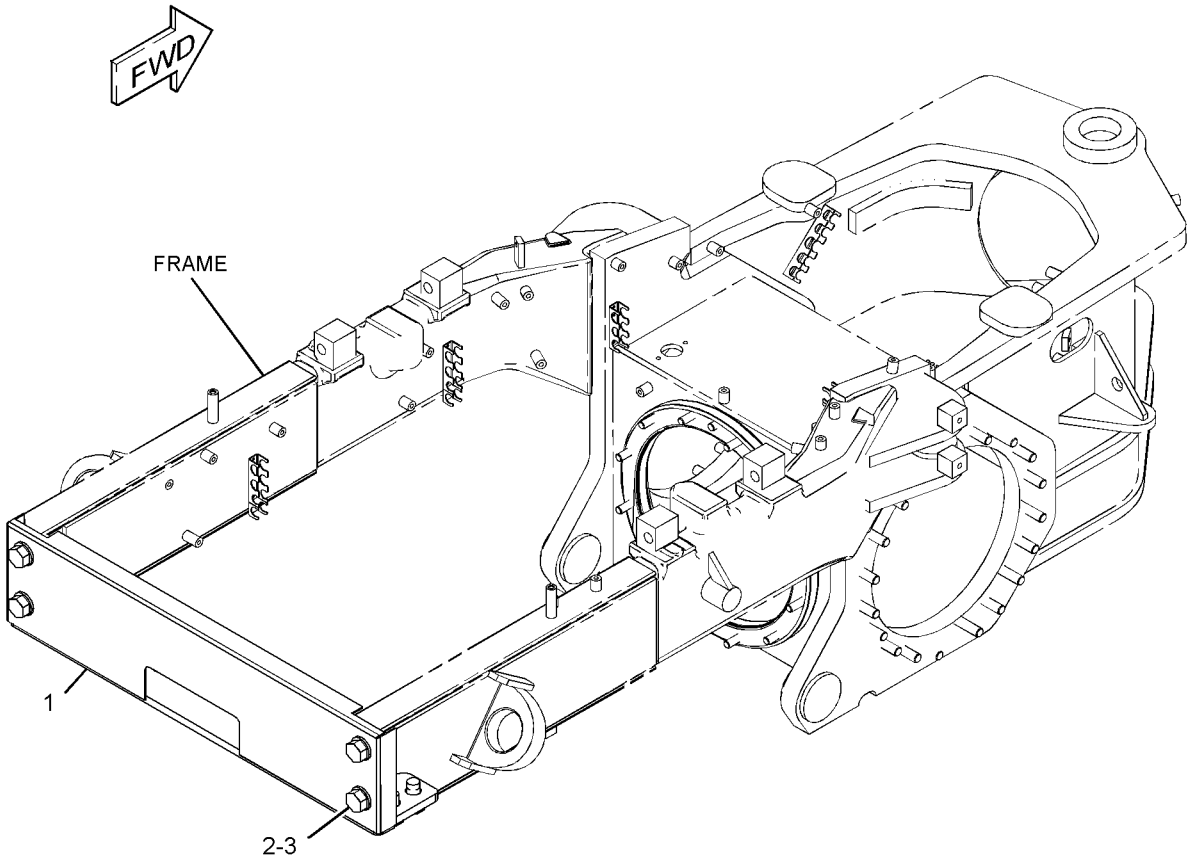

GRAPHIC #1 **<END>** g01667374

FRAME AND BODY

284-5378 BUMPER GP-REAR

S/N: JPA1-UP

PART OF 274-7940 GENERAL AR

SMCS-7156 **i03260160**

NOTE	REF NO	GRAPHIC REF	PART NUMBER	QTY	PART NAME 1 2 3 4 5 6 (PRODUCT LEVEL)	SEE PAGE
	1	1	**284-5379**	1	BUMPER AS	
M	2	1	**7X-2575**	6	BOLT (M24X3X60-MM)	
	3	1	**8T-5361**	6	WASHER-HARD (28X49X5-MM THK)	

M-METRIC PART

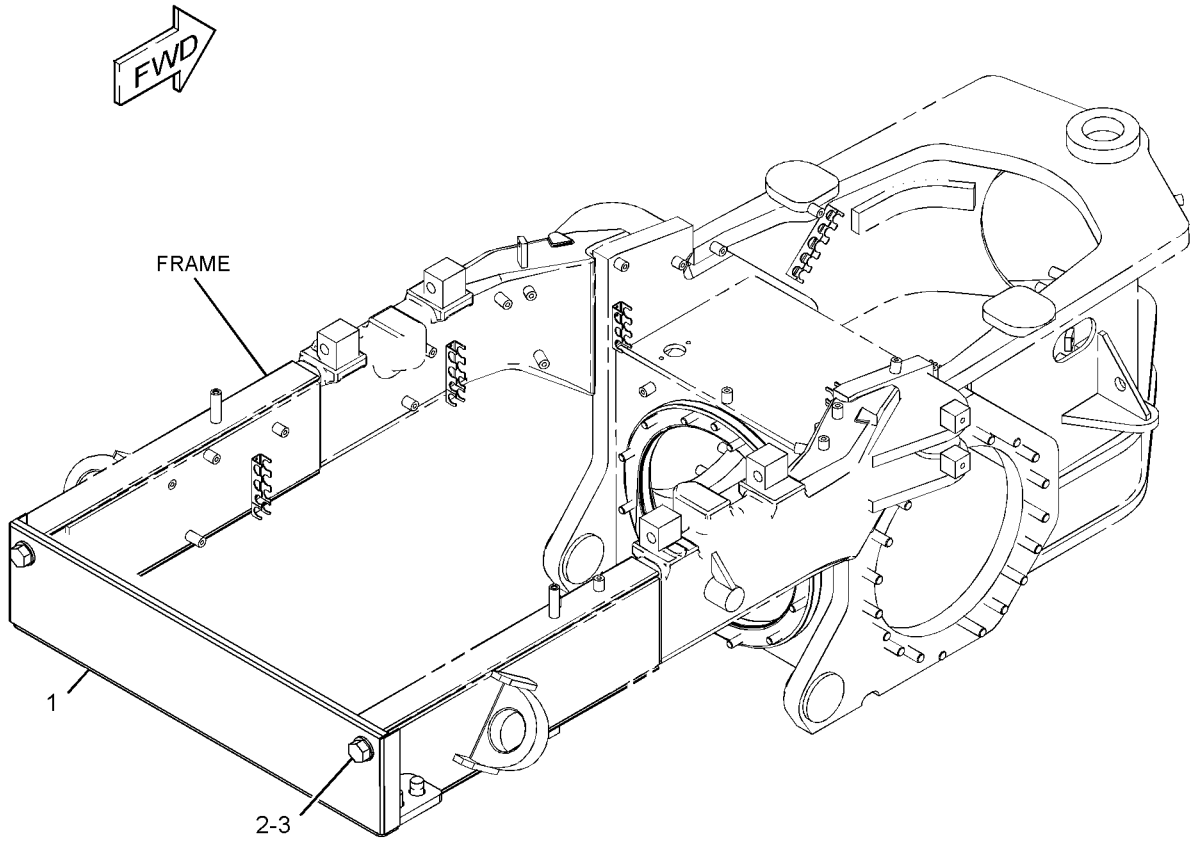

GRAPHIC #1 **<END>** g01667394

FRAME AND BODY

311-8138 CASE & FRAME GP

S/N: JPA1-UP

PART OF 274-7940 GENERAL AR

SMCS-7051 **i03246239**

NOTE	REF NO	GRAPHIC REF	PART NUMBER	QTY	PART NAME 1 2 3 4 5 6 (PRODUCT LEVEL)	SEE PAGE
	1	1	**2A-3398**	1	GASKET	
	2	1	**8M-3837**	1	PLUG-MAGNETIC (DRAIN)	
	3	1	**311-8139**	1	CASE & FRAME AS	
	4	1	**2D-5238**	12	STUD-TAPERLOCK (5/8-11X2.5-IN)	
	5	1	**2R-1600**	38	STUD-TAPERLOCK	
	6	1	**4D-8148**	1	DOWEL	

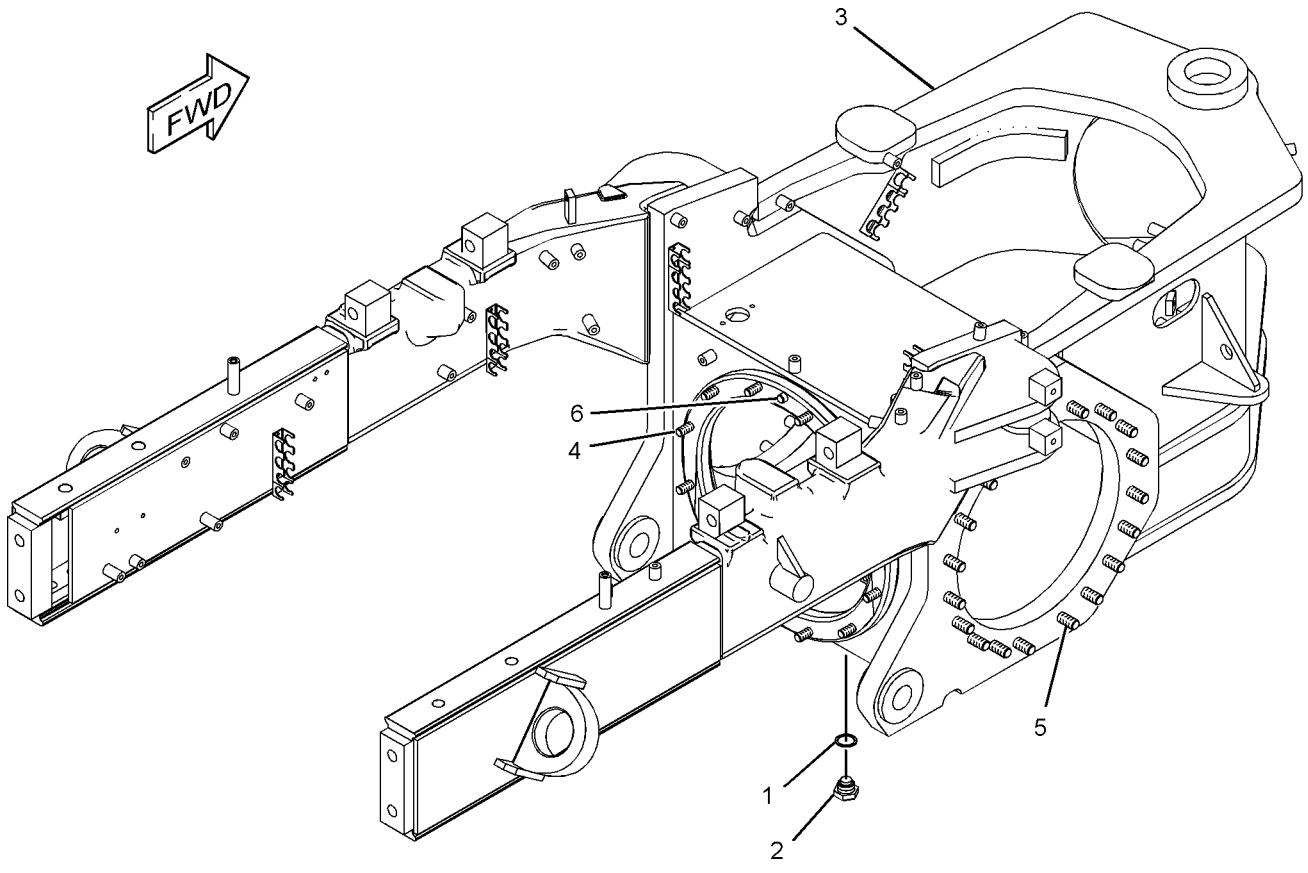

GRAPHIC #1 **<END>** g01667033

FRAME AND BODY

311-2741 ENCLOSURE GP-ENGINE

S/N: JPA1-UP

PART OF 274-7940 GENERAL AR

SMCS-7263 **i03246273**

NOTE	REF NO	GRAPHIC REF	PART NUMBER	QTY	PART NAME 1 2 3 4 5 6 (PRODUCT LEVEL)	SEE PAGE
	1	1	**3T-5763**	2	BUMPER	
	2	1,2	**7I-4959**	4	PLATE	
	3	2	**7I-4979**	2	HINGE AS	
	4	1	**7I-4981**	2	HINGE AS	
	5	2	**7X-1387**	4	WASHER (10.26X22.22X1.9-MM THK)	
	6	2	**8D-3786**	4	MOUNTING	
	7	2	**113-8457**	2	ROD	
	8	2	**134-0165**	6	WASHER (13.8X45X3-MM THK)	
	9	1	**177-4118**	2	HANDRAIL	
	10	1	**177-4119**	2	HANDRAIL	
	11	1	**177-4120**	2	HANDHOLD	
J	12	1	**275-0572**	1	LATCH AS	
	13	1	**294-2382**	2	LATCH AS	
	14	2	**294-4619**	1	PANEL AS (LH)	
	15	1	**294-4621**	1	PANEL AS (RH)	
	16	1	**295-3839**	2	PAWL	
	17	2	**295-6180**	1	PLATE AS	
	18	1	**295-6224**	1	PLATE AS	
	19	1	**296-1252**	2	HINGE AS (LH)	
	20	2	**304-6573**	2	PLATE	
	21	2	**304-7252**	2	BRACKET AS	
	22	2	**304-7415**	2	HINGE AS (RH)	
	23	2	**304-7417**	2	PLATE AS	
	24	1,2	**304-7418**	8	PLATE AS	
	25	2	**304-7419**	2	PLATE AS	
	26	1	**312-8319**	1	HOOD AS	
	27	1	**312-8526**	1	DOOR AS-ACCESS (RH)	
	28	2	**312-8528**	1	DOOR AS-ACCESS (LH)	
	29	2	**312-8529**	1	BRACKET AS (RH)	
	30	1	**312-8530**	1	BRACKET AS (LH)	
		1	**4K-9097**	1	NUT-WELD (5/16-18-THD)	
	31	1	**313-2484**	1	DASH AS	
	32	2	**313-4374**	2	BRACKET	
	33	1	**314-5093**	1	BRACKET AS (RH)	
	34	1	**314-5094**	1	BRACKET AS (LH)	
	35	1	**316-5743**	1	COVER AS	
	36	1	**317-7250**	1	CAM-LATCH	
	37	2	**3B-4615**	4	PIN-COTTER	
	38	1	**3V-0613**	6	BUMPER	
M	39	1	**5C-9553**	3	BOLT (M6X1X16-MM)	
	40	2	**5P-8439**	2	GROMMET	
	41	1	**6V-8189**	2	NUT (5/16-18-THD)	
	42	2	**7X-0550**	4	WASHER-HARD (13.5X32X5-MM THK)	
	43	1,2	**7X-7729**	69	WASHER (11X25X3-MM THK)	
	44	2	**8T-2561**	4	WASHER-HARD (10.5X28.5X5-MM THK)	
M	45	2	**8T-4133**	2	NUT (M10X1.5-THD)	
M	46	1,2	**8T-4136**	57	BOLT (M10X1.5X25-MM)	
M	47	1,2	**8T-4137**	4	BOLT (M10X1.5X20-MM)	
M	48	2	**8T-4139**	2	BOLT (M12X1.75X30-MM)	
M	49	2	**8T-4183**	4	BOLT (M12X1.75X40-MM)	
M	50	2	**8T-4195**	10	BOLT (M10X1.5X30-MM)	
	51	2	**8T-4223**	2	WASHER-HARD (13.5X25.5X3-MM THK)	
	52	1	**8T-4224**	2	WASHER-HARD (8.8X16X2-MM THK)	
M	53	2	**8T-4910**	4	BOLT (M12X1.75X60-MM)	
	54	2	**8X-5155**	2	PLATE	
	55	1	**9X-8256**	3	WASHER (6.6X12X2-MM THK)	

J-REQUIRES CORPORATE KEY
M-METRIC PART

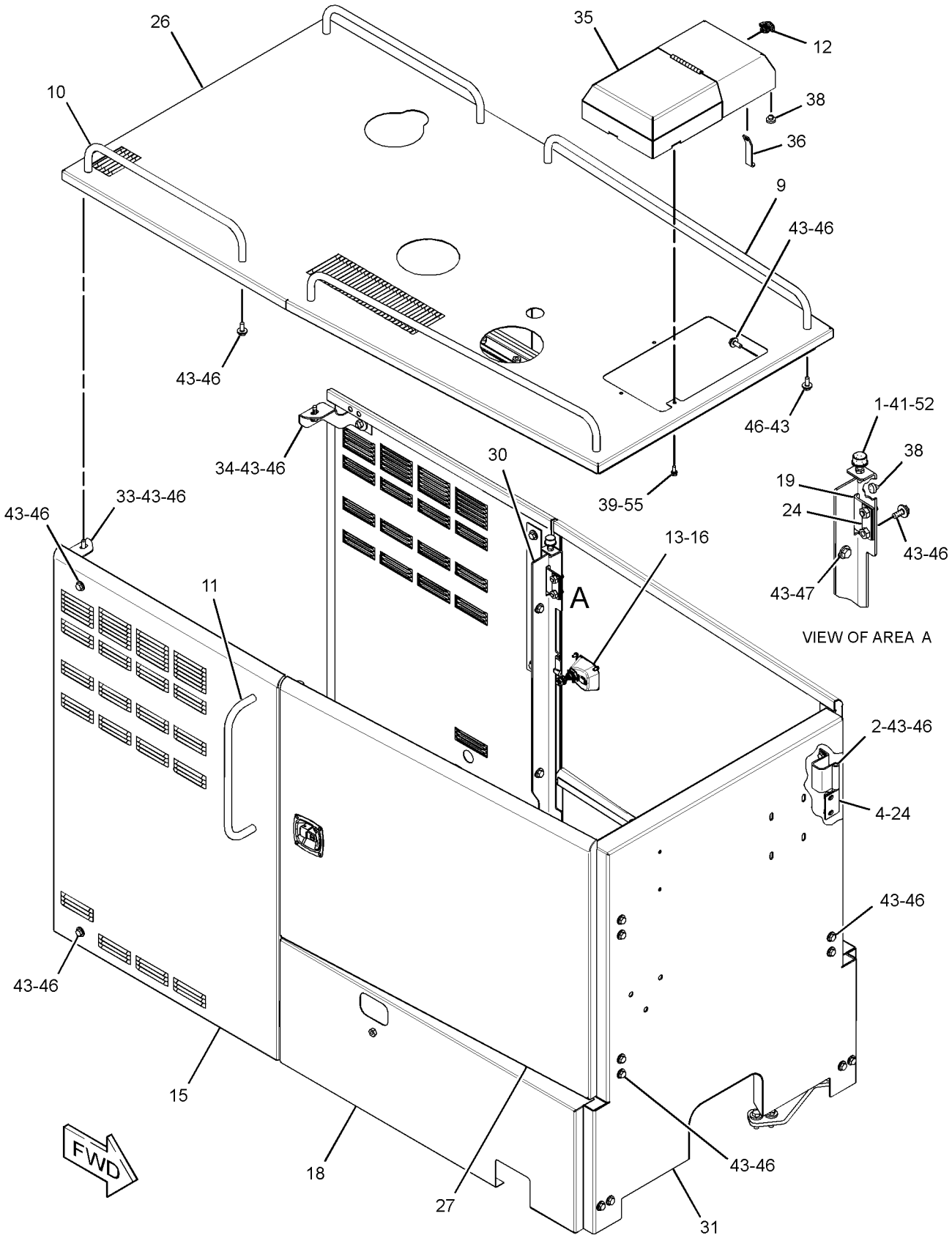

GRAPHIC #1

g01660313

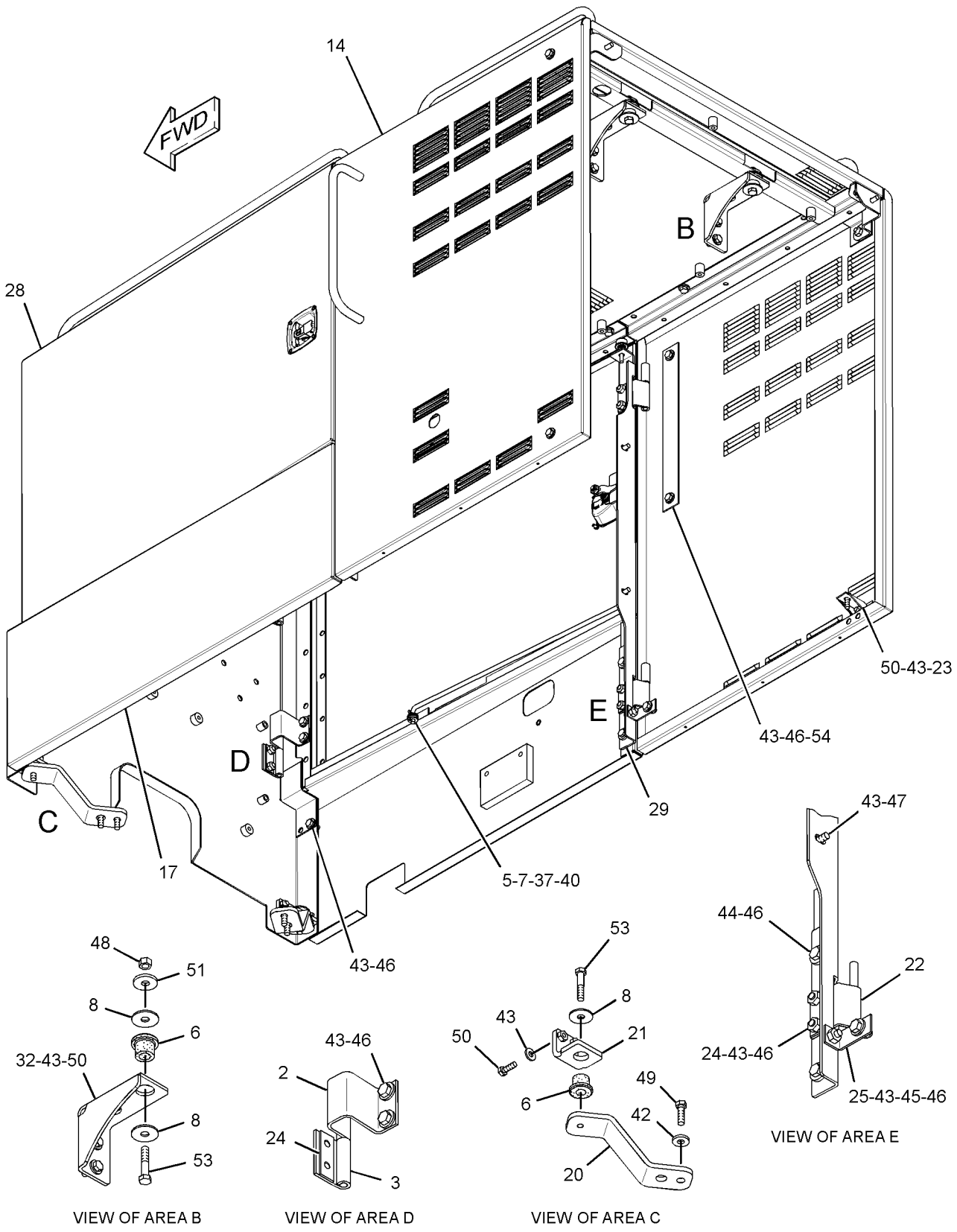

GRAPHIC #2 **<END>** g01660314

FRAME AND BODY

282-2496 FRAME GP-FRONT

S/N: JPA1-UP

PART OF 274-7940 GENERAL AR

SMCS-7050, 7051 **i03298088**

NOTE	REF NO	GRAPHIC REF	PART NUMBER	QTY	PART NAME 1 2 3 4 5 6 (PRODUCT LEVEL)	SEE PAGE
	1	1	**8D-3791**	1	PIN	
	2	1	**9D-6584**	1	SEAL-LIP TYPE	
	3	1	**9D-6589**	8	SEAL-LIP TYPE	
	4	1	**9D-9257**	1	PIN	
	5	1	**111-3945**	2	PLATE	
	6	1	**144-2161**	1	PLATE	
	7	1	**145-5968**	1	COVER (RH)	
	8	1	**145-5969**	1	COVER (LH)	
	9	1	**191-5293**	1	INSULATION	
	10	1	**282-2332**	1	FRAME AS	
	11	1	**283-0644**	1	PLATE AS	
	12	1	**5M-3062**	20	BOLT (3/8-16X0.75-IN)	
	13	1	**5P-1075**	27	WASHER-HARD (10.2X22.5X3-MM THK)	
	14	1	**5P-8167**	3	BOLT (3/8-16X0.625-IN)	
	15	1	**6K-4076**	1	BEARING-SLEEVE	
	16	1	**8D-9159**	4	BEARING-SLEEVE	
	17	1	**8T-4896**	16	WASHER-HARD (10.2X18.5X2.5-MM THK)	
	18	1	**9D-3311**	1	BEARING-SLEEVE	
M	19	1	**9X-2125**	7	BOLT-LOCKING (M10X1.5X25-MM)	
D	20	1	**5P-5969**		SEAL (0.05-M)(EACH)	
D	20A	1	**5P-5969**		SEAL (0.94-M)	
B	21	1	**146-9739**		TAPE	

B-USE AS REQUIRED
D-ORDER BY THE METER
M-METRIC PART

282-2496 **FRAME GP-FRONT** *(contd.)* **i03298088**

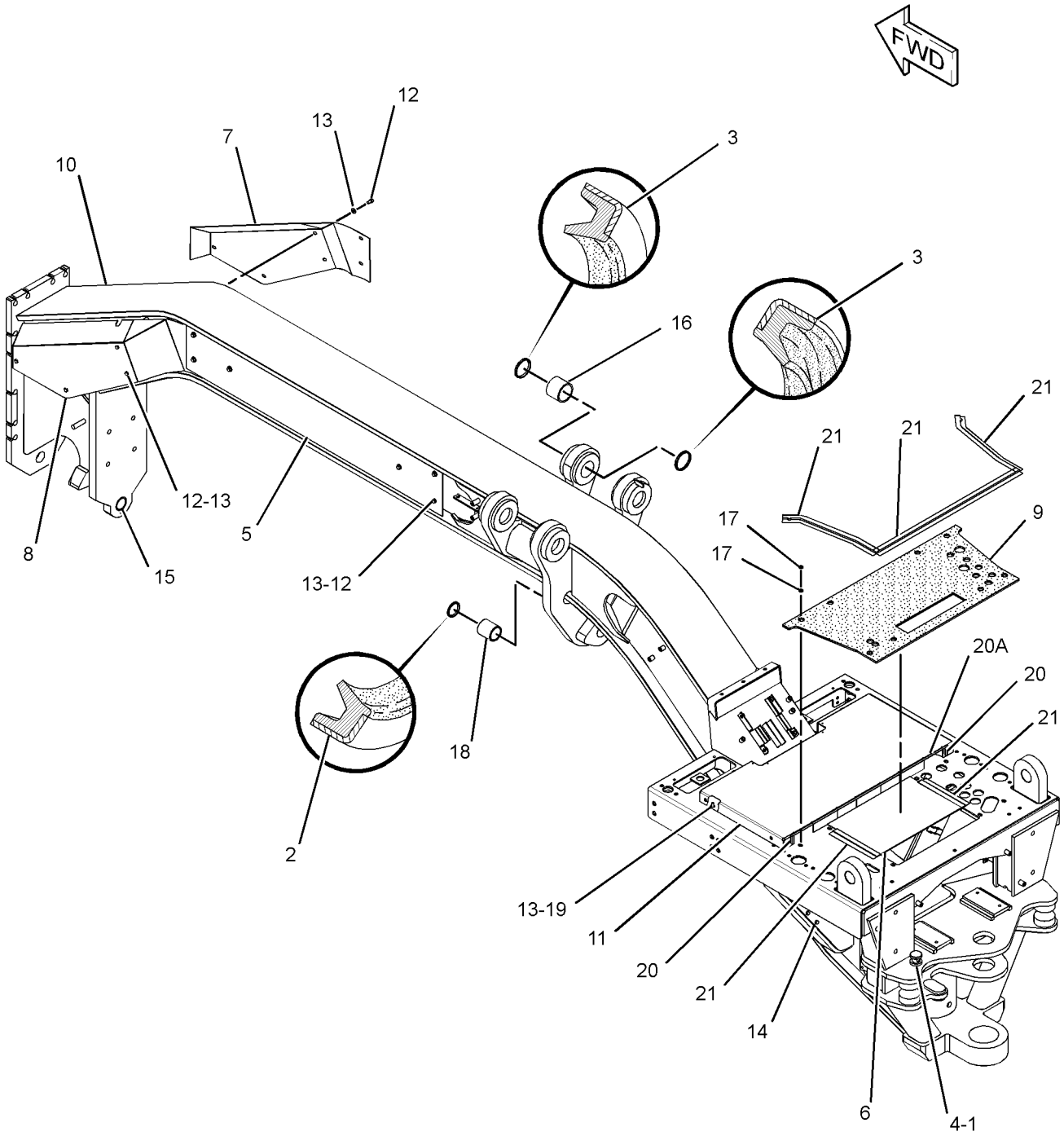

GRAPHIC #1 **<END>** g01684413

334-5760 GUARD GP-BOTTOM

S/N: JPA1-UP
AN ATTACHMENT

SMCS-7153 **i03400520**

NOTE	REF NO	GRAPHIC REF	PART NUMBER	QTY	PART NAME 1 2 3 4 5 6 (PRODUCT LEVEL)	SEE PAGE
	1	1	**7D-7496**	2	PIN AS	
	2	1	**8W-6626**	2	CAP	
	3	1	**8W-6627**	1	SUPPORT AS	
		1	**1F-0750**	3	NUT-WELD (3/8-16-THD)	
	4	1	**8W-8412**	1	GUARD AS	
	5	1	**3B-7740**	2	NIPPLE-PIPE	
	6	1	**8K-0530**	2	PIN-CABLE SOCKET	
M	7	1	**8T-4183**	8	BOLT (M12X1.75X40-MM)	
	8	1	**8T-4223**	8	WASHER-HARD (13.5X25.5X3-MM THK)	
	9	1	**8T-5439**	4	WASHER-HARD (21.5X45X6-MM THK)	
M	10	1	**8T-6430**	4	BOLT (M20X2.5X50-MM)	

M-METRIC PART

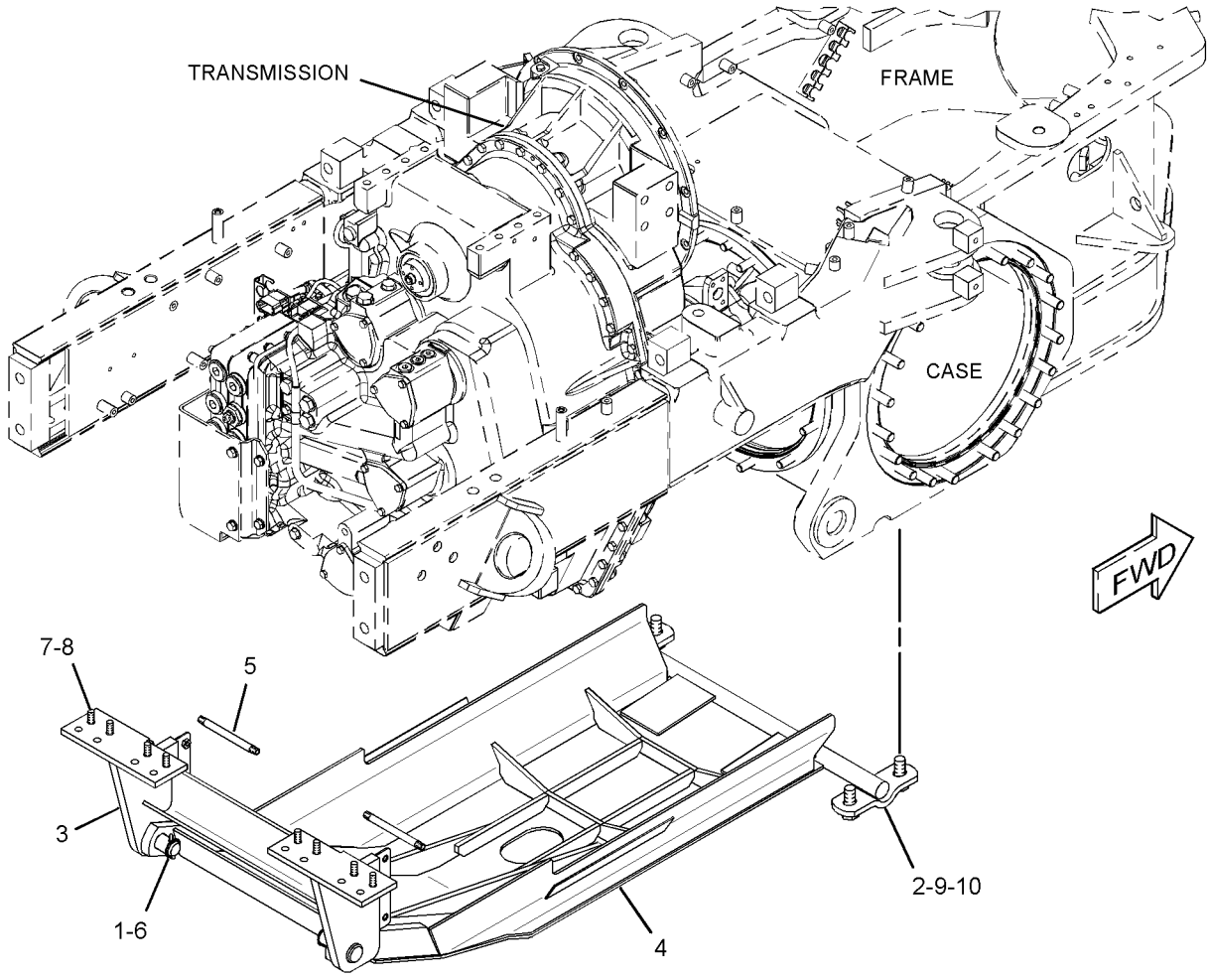

GRAPHIC #1 **<END>** g01768816

FRAME AND BODY

298-8895 GUARD GP-DRIVE SHAFT

S/N: JPA1-UP

PART OF 274-7940 GENERAL AR

SMCS-7153 **i03247369**

NOTE	REF NO	GRAPHIC REF	PART NUMBER	QTY	PART NAME 1 2 3 4 5 6 (PRODUCT LEVEL)	SEE PAGE
	1	1	**298-8898**	1	GUARD AS	
	2	1	**299-8249**	1	GUARD AS	
	3	1	**299-8251**	1	GUARD	
	4	1	**301-9593**	1	GUARD AS	
	5	1	**5C-6565**	4	BOLT (1/2-13X1.125-IN)	
	6	1	**5P-1075**	2	WASHER-HARD (10.2X22.5X3-MM THK)	
	7	1	**5S-7379**	2	BOLT (3/8-16X0.875-IN)	
	8	1	**8T-4121**	2	WASHER-HARD (11X21X2.5-MM THK)	
M	9	1	**8T-4136**	2	BOLT (M10X1.5X25-MM)	
M	10	1	**8T-4192**	4	BOLT (M12X1.75X25-MM)	
	11	1	**8T-4223**	4	WASHER-HARD (13.5X25.5X3-MM THK)	
	12	1	**8T-7971**	4	WASHER-HARD (13.5X25.5X5-MM THK)	

M-METRIC PART

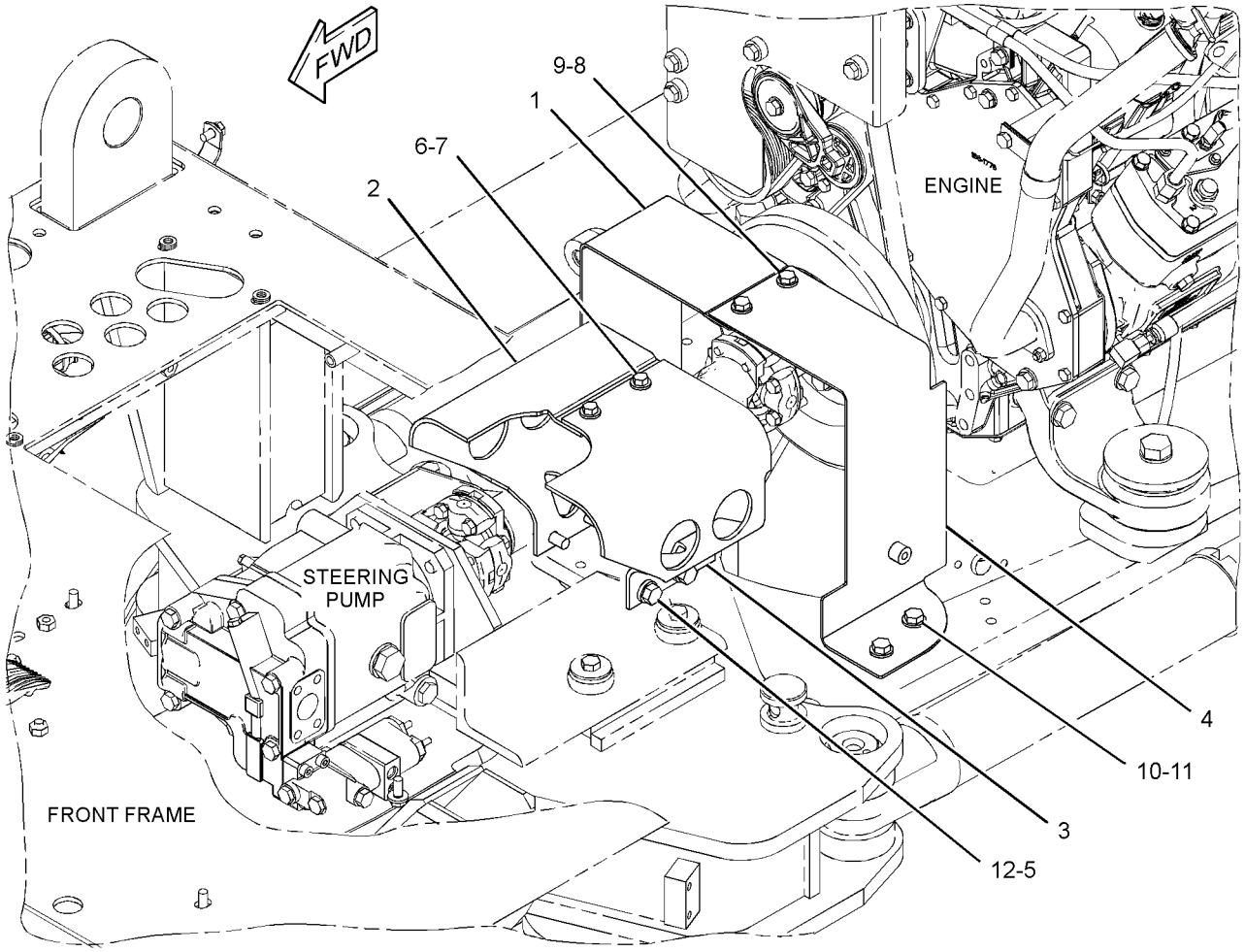

GRAPHIC #1 **<END>** g01696877

126-6933 GUARD GP-PLATFORM–ACCUGRADE

S/N: JPA1-UP
PART OF 297-8448 GRADE CONTROL AR
AN ATTACHMENT

SMCS-7150, 7253 **i02230061**

NOTE	REF NO	GRAPHIC REF	PART NUMBER	QTY	PART NAME 1 2 3 4 5 6 (PRODUCT LEVEL)	SEE PAGE
	1	1	**4T-8050**	1	SPACER (11X19X57-MM THK)	
	2	1,2	**129-5049**	4	BRACKET AS	
	3	2	**224-5912**	1	BRACKET	
	4	1	**226-1240**	2	FILM-WARNING (CRUSH HAZARD, STAY BACK, INTL)	
	5	2	**231-5251**	1	BRACKET	
C	6	1	**245-3930**	1	COVER (RH)	
C	7	1	**245-3933**	1	COVER (LH)	
	8	1,2	**1F-5339**	4	LUG (3/8-16-THD)	
	9	1,2	**5M-3062**	4	BOLT (3/8-16X0.75-IN)	
	10	1,2	**5P-1075**	12	WASHER-HARD (10.2X22.5X3-MM THK)	
	11	1,2	**5S-7382**	2	BOLT (3/8-16X1.375-IN)	
	12	2	**6V-1889**	1	CLIP	
	13	1,2	**6V-8801**	2	NUT (3/8-16-THD)	
	14	1,2	**8T-8915**	5	BOLT (3/8-16X3.25-IN)	

C-CHANGE FROM PREVIOUS TYPE

REFER TO ALL ILLUSTRATIONS OF THIS GROUP FOR AUXILIARY VIEWS

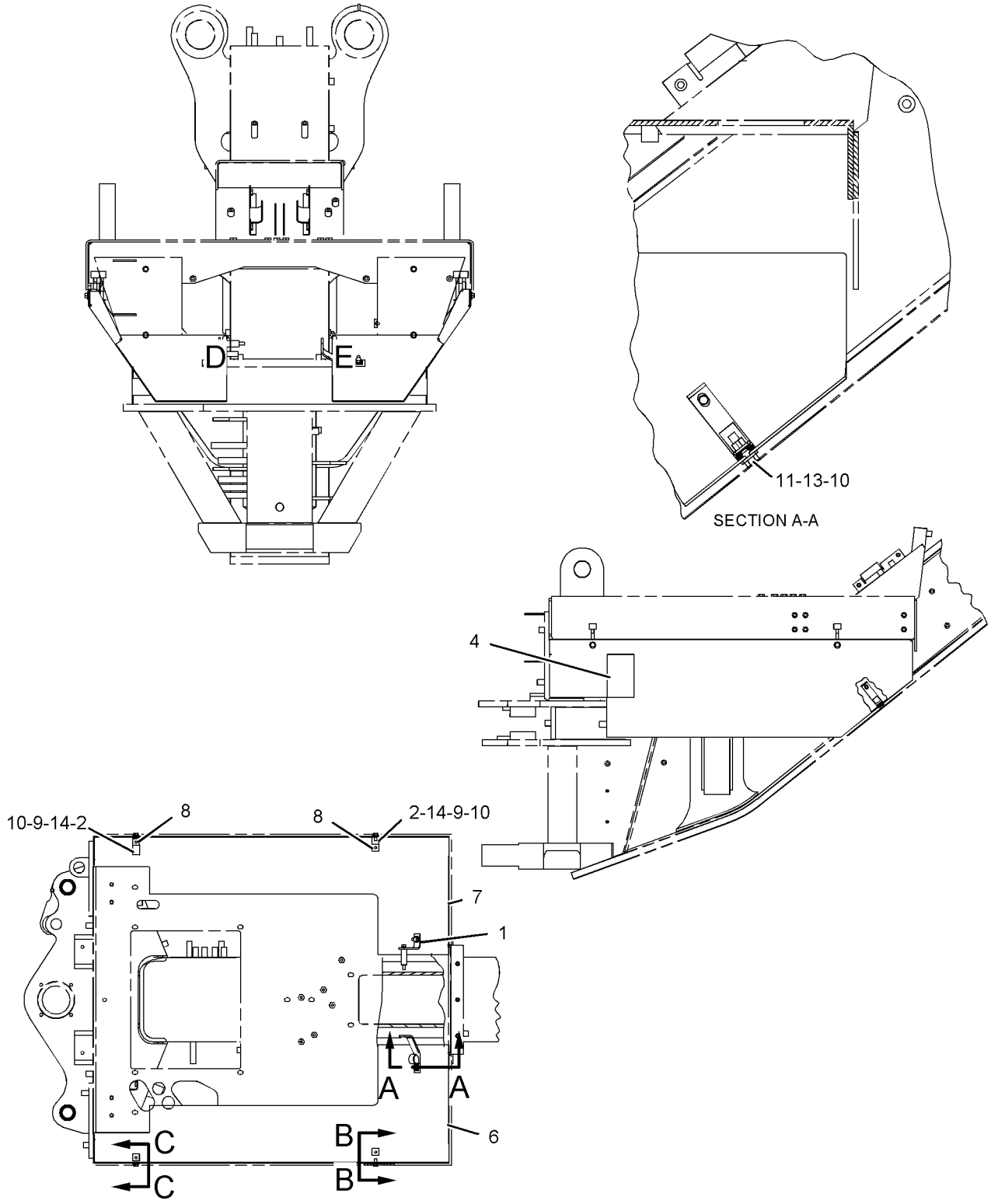

GRAPHIC #1

g01119645

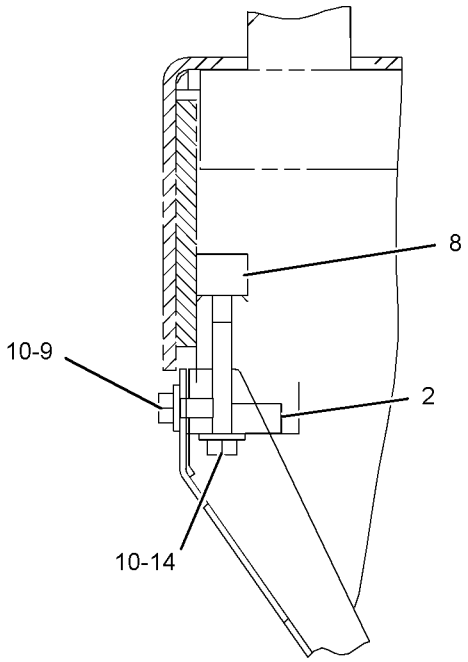

SECTION C-C

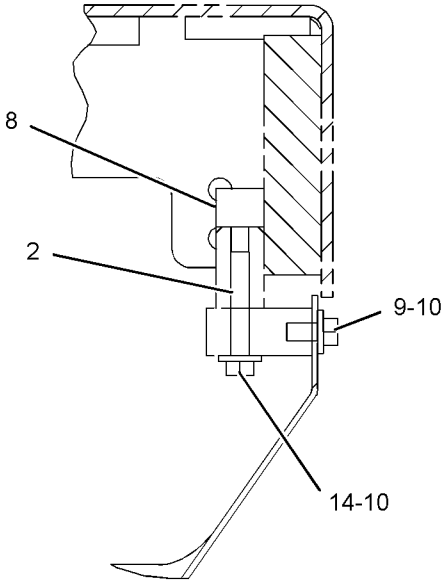

SECTION B-B

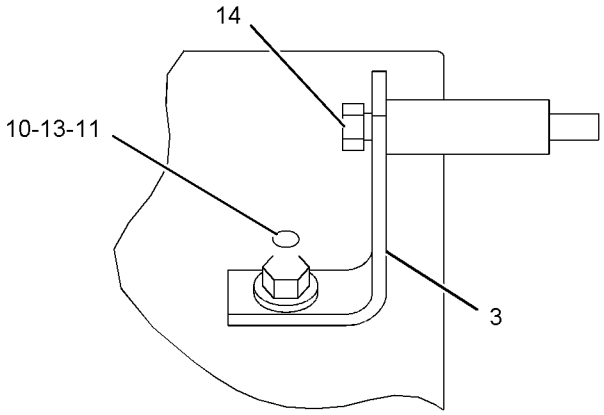

VIEW OF AREA E

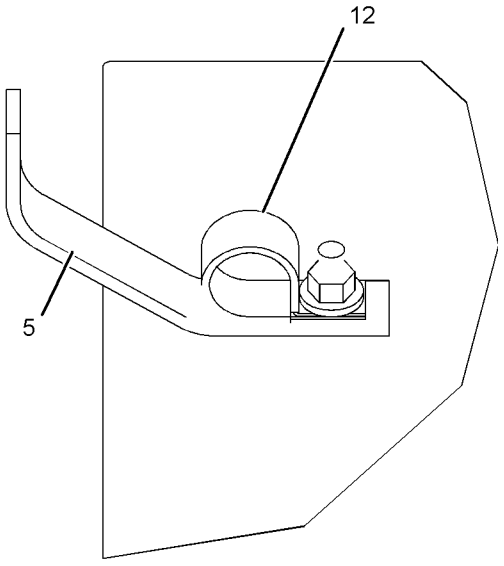

VIEW OF AREA D

GRAPHIC #2 **<END>** g01119647

282-2469 GUARD GP-PLATFORM

S/N: JPA1-UP

PART OF 274-7940 GENERAL AR

SMCS-7150, 7253 **i03247405**

NOTE	REF NO	GRAPHIC REF	PART NUMBER	QTY	PART NAME 1 2 3 4 5 6 (PRODUCT LEVEL)	SEE PAGE
	1	1	**8W-3902**	1	SUPPORT AS	
	2	1	**8X-2913**	2	COVER AS	
					(EACH INCLUDES)	
M		1	**6V-9632**	2	NUT-WELD (M6X1-THD)	
	3	1	**8X-6419**	1	FLOOR MAT	
	4	1	**8X-6475**	2	PLATE	
	5	1	**8X-8505**	2	PLATE	
	6	1	**8X-9464**	2	STEP AS	
	7	1	**135-3894**	1	PIPE AS	
	8	1	**160-6382**	1	GROMMET	
	9	1	**169-5414**	1	CLIP	
	10	1	**198-8588**	1	PANEL	
	11	1	**200-3967**	1	PANEL AS	
	12	1	**115-3072**	1	CLIP AS-CONNECTOR (8-PIN)	
	13	1	**3P-3839**	1	GROMMET	
	14	1	**5P-1075**	7	WASHER-HARD (10.2X22.5X3-MM THK)	
	15	1	**5P-4115**	4	WASHER-HARD (7.2X19X2-MM THK)	
	16	1	**5P-9085**	2	CLIP	
	17	1	**6V-2687**	4	SCREW-PAN HEAD (10-24X1-IN)	
	18	1	**8T-4121**	2	WASHER-HARD (11X21X2.5-MM THK)	
M	19	1	**8T-4137**	2	BOLT (M10X1.5X20-MM)	
M	20	1	**8T-4138**	4	BOLT (M6X1X20-MM)	
M	21	1	**8T-4176**	4	BOLT (M12X1.75X90-MM)	
M	22	1	**8T-4183**	8	BOLT (M12X1.75X40-MM)	
	23	1	**8T-4223**	16	WASHER-HARD (13.5X25.5X3-MM THK)	
M	24	1	**8T-4244**	4	NUT (M12X1.75-THD)	
M	25	1	**9X-2043**	12	SCREW-TRUSS HEAD (M6X1X14-MM)	
M	26	1	**9X-2125**	7	BOLT-LOCKING (M10X1.5X25-MM)	

M-METRIC PART

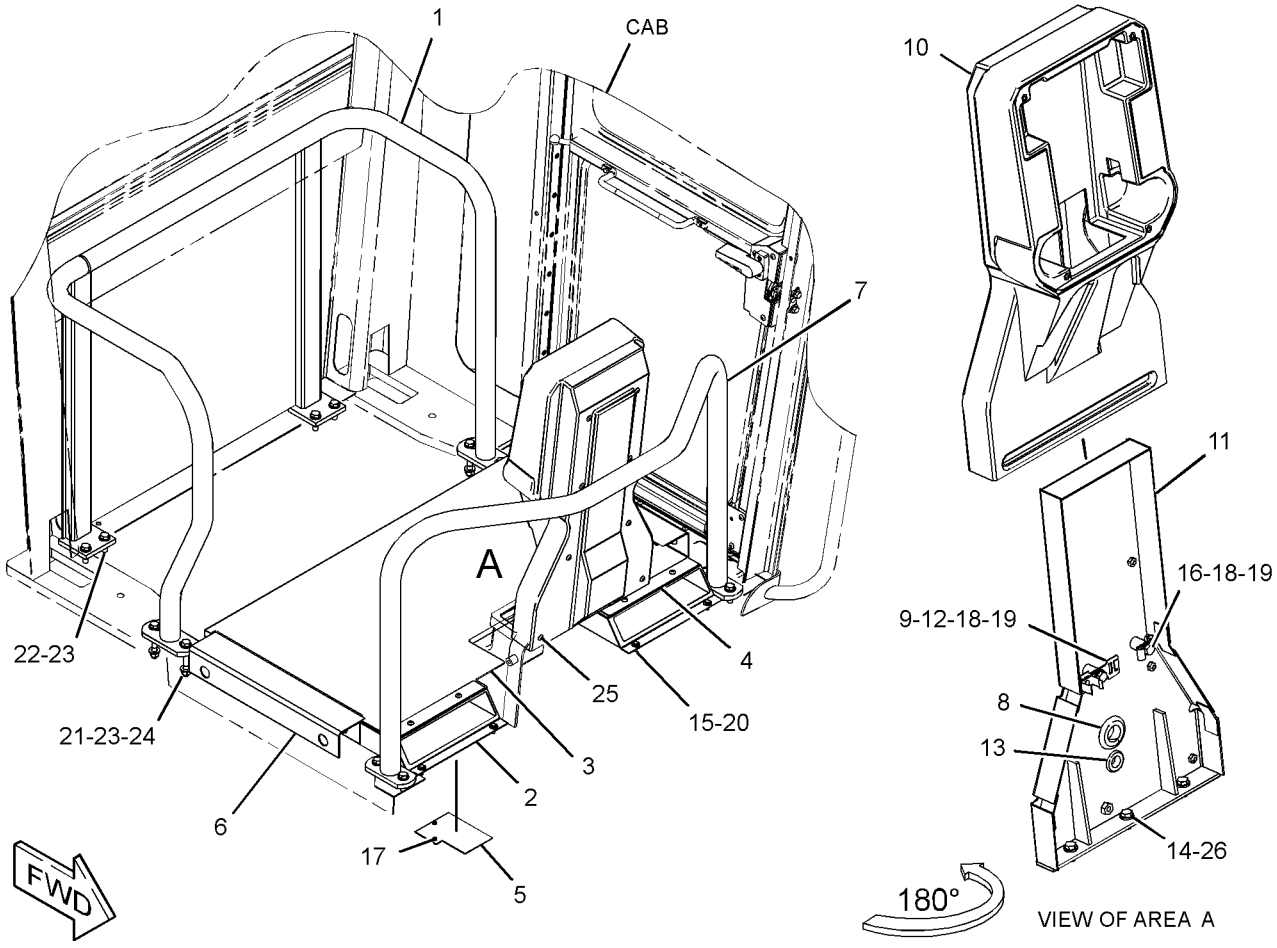

GRAPHIC #1 **<END>** g01700178

290-1148 GUARD GP-PLATFORM

S/N: JPA1-UP
PART OF 284-5398 CANOPY AR, 284-5400 ROPS AR
AN ATTACHMENT

SMCS-7150, 7253 **i03261504**

NOTE	REF NO	GRAPHIC REF	PART NUMBER	QTY	PART NAME 1 2 3 4 5 6 (PRODUCT LEVEL)	SEE PAGE
	1	1	**8X-2226**	2	PLATE	
	2	1	**8X-2913**	2	COVER AS	
					(EACH INCLUDES)	
M		1	**6V-9632**	2	NUT-WELD (M6X1-THD)	
	3	1	**8X-6475**	2	PLATE	
	4	1	**8X-8505**	2	PLATE	
	5	1	**124-8949**	1	FLOOR MAT	
	6	1	**160-6382**	1	GROMMET	
	7	1	**169-5414**	1	CLIP	
	8	1	**198-8588**	1	PANEL	
	9	1	**200-3967**	1	PANEL AS	
	10	1	**115-3072**	1	CLIP AS-CONNECTOR (8-PIN)	
	11	1	**3P-3839**	1	GROMMET	
	12	1	**5P-1075**	3	WASHER-HARD (10.2X22.5X3-MM THK)	
	13	1	**5P-4115**	4	WASHER-HARD (7.2X19X2-MM THK)	
	14	1	**5P-9085**	2	CLIP	
	15	1	**6V-2687**	4	SCREW-PAN HEAD (10-24X1-IN)	
M	16	1	**6V-7732**	3	BOLT (M10X1.5X25-MM)	
M	17	1	**6V-8214**	4	BOLT (M6X1X20-MM)	
	18	1	**8T-4121**	2	WASHER-HARD (11X21X2.5-MM THK)	
M	19	1	**8T-4137**	2	BOLT (M10X1.5X20-MM)	
M	20	1	**9X-2043**	22	SCREW-TRUSS HEAD (M6X1X14-MM)	

M-METRIC PART

290-1148 **GUARD GP-PLATFORM** *(contd.)* **i03261504**

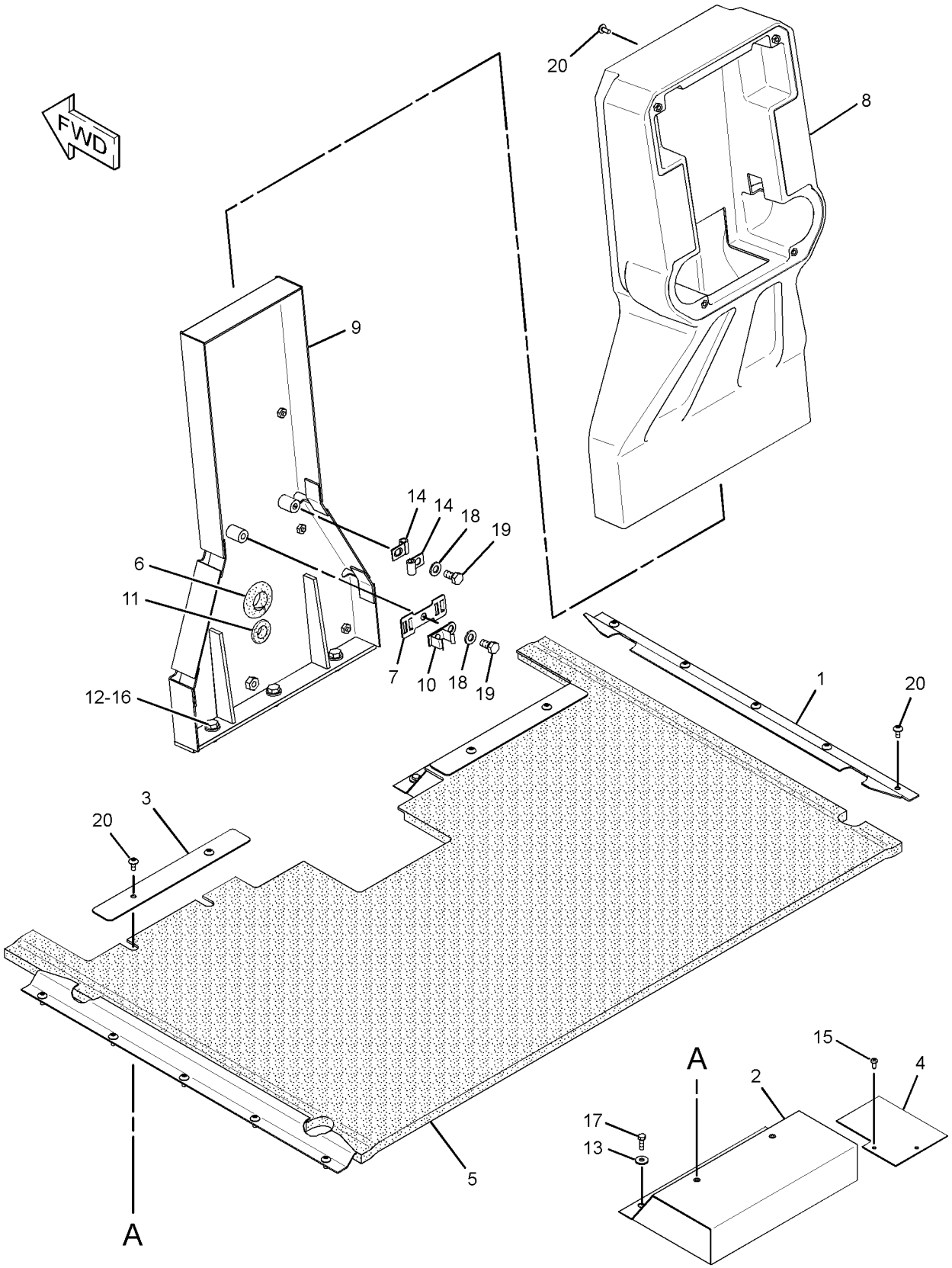

GRAPHIC #1 **<END>** g01671593

106-4884 HITCH GP-ARTICULATING

S/N: JPA1-UP

PART OF 274-7940 GENERAL AR

SMCS-7057, 7100 **i00652991**

NOTE	REF NO	GRAPHIC REF	PART NUMBER	QTY	PART NAME 1 2 3 4 5 6 (PRODUCT LEVEL)	SEE PAGE
	1	1	**4K-8659**	1	BEARING-SLEEVE	
	2	1	**4K-7463**	2	SEAL-LIP TYPE	
	3	1	**0S-1587**	2	BOLT (1/2-13X1.75-IN)	
	4	1	**5P-8245**	19	WASHER-HARD (13.5X25.5X3-MM THK)	
	5	1	**6G-0417**	1	COVER	
	6	1	**1A-1460**	4	BOLT (1/2-13X2-IN)	
	7	1	**2V-4331**	1	COLLAR	
	8	1	**5K-0984**	1	BEARING-SLEEVE	
	9	1	**124-3240**	1	PIN	
	10	1	**5K-0871**	1	PIN-LOWER	
	11	1	**5K-0987**	1	SPACER	
B	12	1	**5K-0988**	1	SHIM PACK (INCLUDES 35-SHIMS)	
	13	1	**5K-0985**	1	BEARING AS-ROLLER	
B	14	1	**4K-7464**	1	SHIM PACK (INCLUDES 19-SHIMS)	
	15	1	**0S-1585**	6	BOLT (1/2-13X1.5-IN)	
	16	1	**0S-1589**	4	BOLT (5/8-11X1.75-IN)	
	17	1	**5P-8247**	4	WASHER-HARD (17X32X3.5-MM THK)	
	18	1	**4V-0015**	1	PLATE-LOCK	
	19	1	**4K-6781**	1	SPACER	
	20	1	**5K-0991**	1	CAP-LOWER	
	21	1	**5K-0983**	2	SEAL-LIP TYPE	
	22	1	**5K-0989**	1	CAP-UPPER	
	23	1	**1D-4569**	7	BOLT (1/2-13X4.25-IN)	

B-USE AS REQUIRED

106-4884 **HITCH GP-ARTICULATING** *(contd.)* **i00652991**

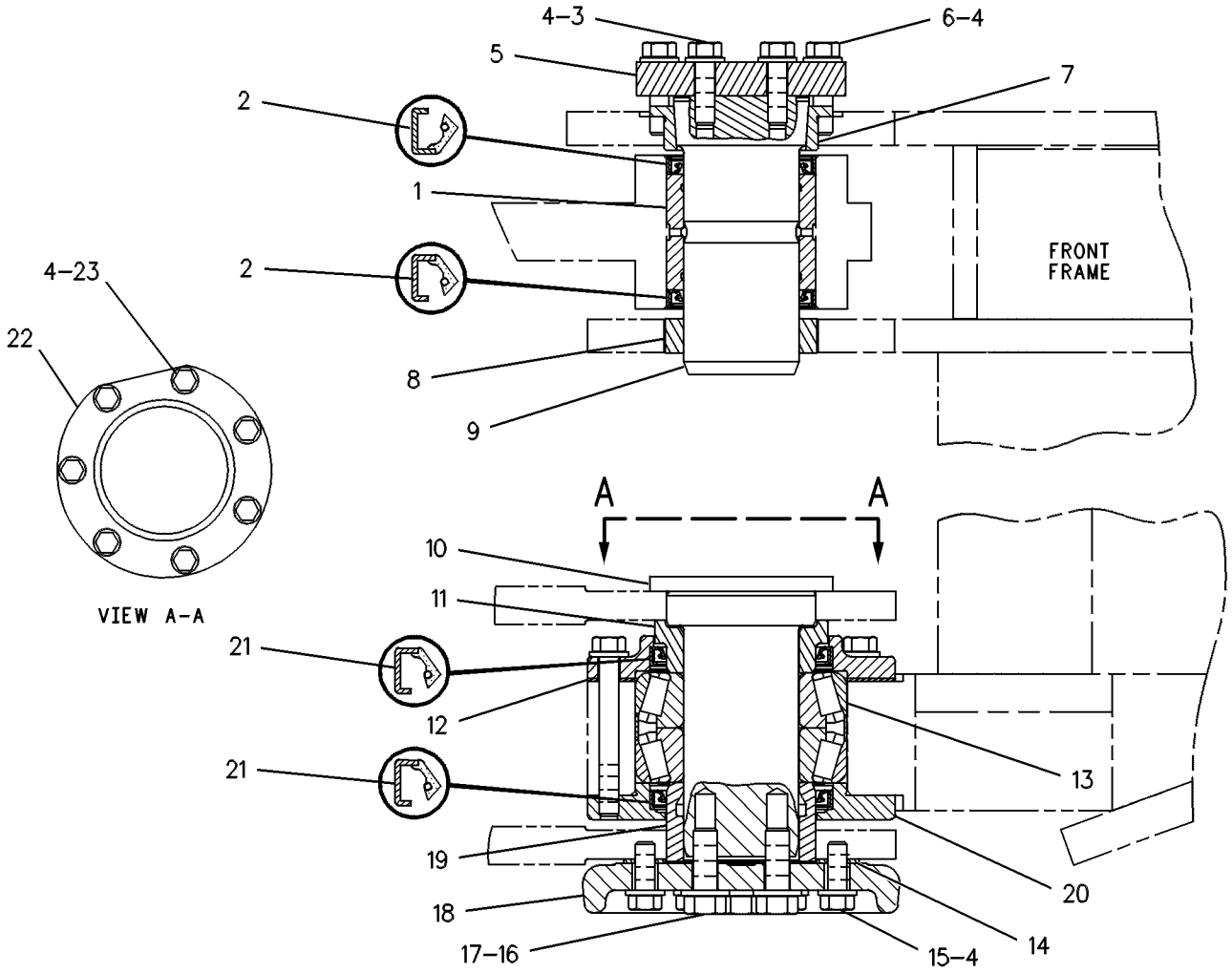

GRAPHIC #1 **<END>** g00108584

7I-4610 LINES GP-GREASE

S/N: JPA1-UP

PART OF 274-7940 GENERAL AR

SMCS-7510 **i01456162**

NOTE	REF NO	GRAPHIC REF	PART NUMBER	QTY	PART NAME 1 2 3 4 5 6 (PRODUCT LEVEL)	SEE PAGE
	1	1	**3B-7733**	1	FITTING	
	2	1	**3B-6769**	2	ELBOW	
	3	1	**3B-8489**	2	FITTING-GREASE (ARTICULATION HITCH)	
	4	1	**4D-7794**	1	CLIP	
	5	1	**5H-7826**	1	NIPPLE-PIPE	
I	6	1	**3G-6659**	2	HOSE AS	

I-REFER TO HYDRAULIC INFORMATION SYSTEM

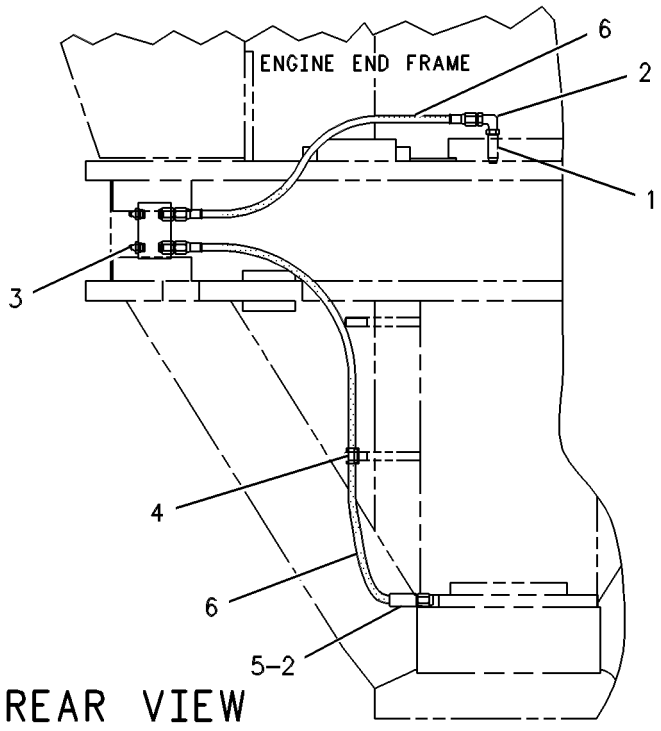

GRAPHIC #1 **<END>** g00109092

131-3740 LINK GP-STEERING

S/N: JPA1-UP

PART OF 134-1080 AXLE GP-FRONT

SMCS-4305 **i00136164**

NOTE	REF NO	GRAPHIC REF	PART NUMBER	QTY	PART NAME 1 2 3 4 5 6 (PRODUCT LEVEL)	SEE PAGE
	1	1	**131-3739**	1	TIE ROD	
	2	1	**131-3738**	1	TIE ROD GP (LH THREAD, RH)	
		1	**2F-8057**	1	NUT-SLOTTED	
		1	**132-1143**	1	SEAL-BOOT	
	3	1	**131-3737**	1	TIE ROD GP (RH THREAD, LH)	
		1	**2F-8057**	1	NUT-SLOTTED	
		1	**132-1143**	1	SEAL-BOOT	
	4	1	**132-1144**	2	CLAMP	
	5	1	**1B-4367**	2	BOLT (5/8-11X3-IN)	
	6	1	**3K-2889**	2	LOCKNUT (5/8-11-THD)	

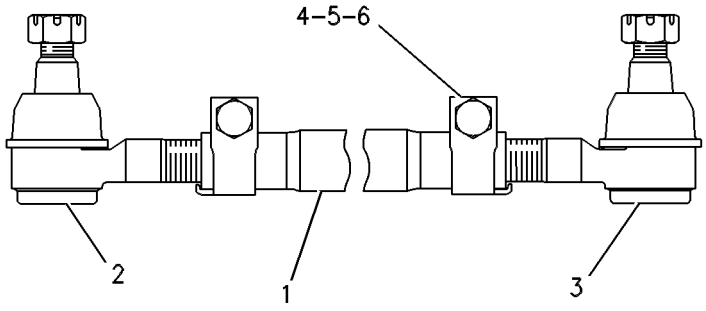

GRAPHIC #1 **<END>** g00109239

FRAME AND BODY

295-2933 STEP GP

S/N: JPA1-UP

PART OF 274-7940 GENERAL AR

SMCS-7254 **i03247345**

NOTE	REF NO	GRAPHIC REF	PART NUMBER	QTY	PART NAME 1 2 3 4 5 6 (PRODUCT LEVEL)	SEE PAGE
	1	1	**4V-9804**	8	PLATE	
	2	1	**4V-9809**	2	STEP AS	
					(EACH INCLUDES)	
		1	**4V-9803**	2	PLATE	
	3	1	**8X-1032**	4	SUPPORT-STEP (RUBBER)	
	4	1	**123-3698**	2	PLATE	
	5	1	**123-3699**	2	PLATE	
	6	1	**198-7379**	2	STEP AS	
					(EACH INCLUDES)	
		1	**4V-9803**	2	PLATE	
	7	1	**198-7380**	2	STEP AS	
					(EACH INCLUDES)	
		1	**4V-9803**	2	PLATE	
	8	1	**1D-4689**	24	BOLT (1/2-13X1.75-IN)	
	9	1	**1K-6872**	24	LOCKNUT (1/2-13-THD)	
	10	1	**5P-1076**	8	WASHER-HARD (13.5X30X4-MM THK)	
M	11	1	**8T-4183**	8	BOLT (M12X1.75X40-MM)	
	12	1	**8T-4223**	24	WASHER-HARD (13.5X25.5X3-MM THK)	

M-METRIC PART

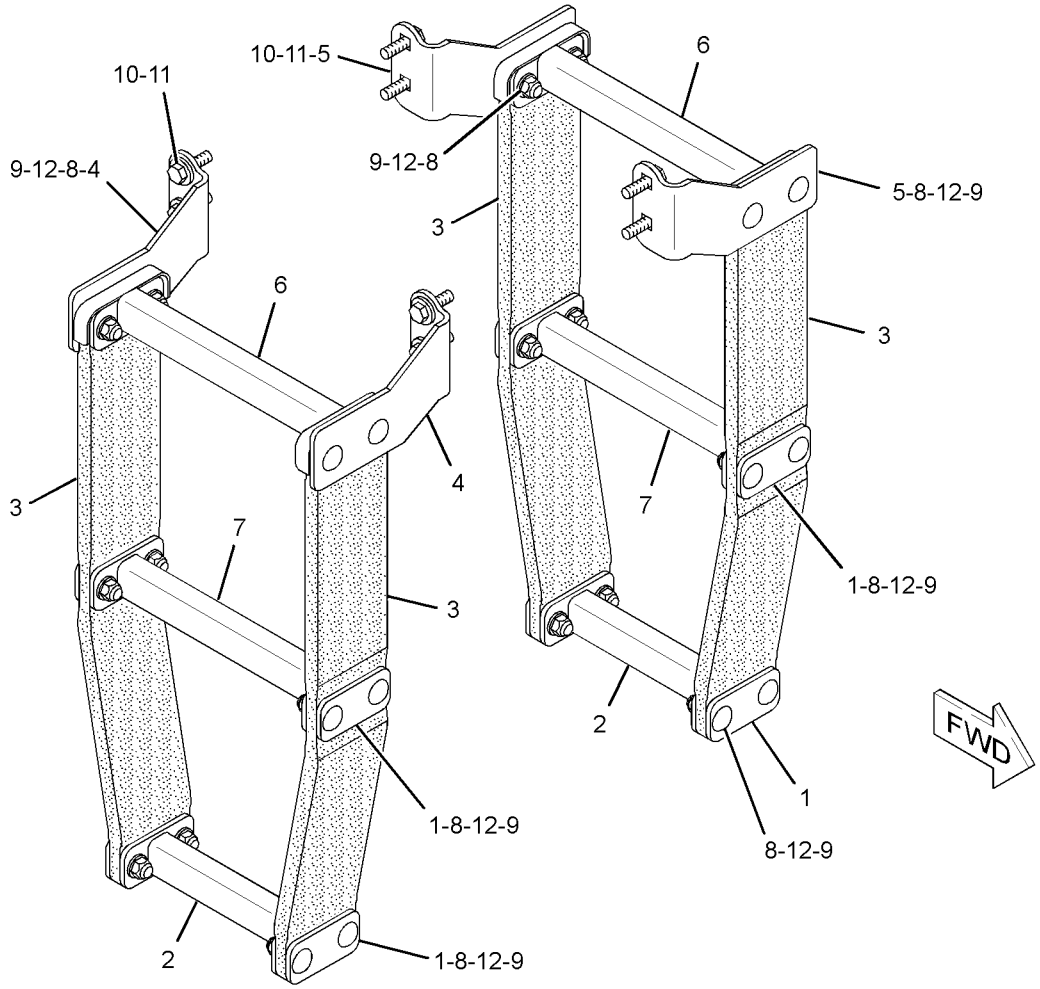

GRAPHIC #1 **<END>** g01708139

298-3520 SUPPORT GP-BATTERY

S/N: JPA1-UP
PART OF 304-9957 BATTERY & WIRING GP
AN ATTACHMENT

SMCS-7257 **i03316103**

NOTE	REF NO	GRAPHIC REF	PART NUMBER	QTY	PART NAME 1 2 3 4 5 6 (PRODUCT LEVEL)	SEE PAGE
	1	1	**246-2641**	1	PADLOCK GP	
		1	**5P-8500**	1	KEY	
	2	1	**143-4792**	4	BUMPER	
	3	1	**298-3523**	1	COVER AS	
		1	**6F-7013**	2	HANDLE	
	4	1	**298-3529**	1	SUPPORT AS	
M		1	**8T-3490**	4	NUT-WELD (M10X1.5-THD)	
		1	**034-7044**	6	RIVET	
		1	**161-4423**	2	LATCH AS	
	5	1	**198-4778**	4	WASHER-HARD (13.5X30X12-MM THK)	
M	6	1	**6V-5684**	2	BOLT (M12X1.75X45-MM)	
M	7	1	**6V-7673**	2	BOLT (M12X1.75X50-MM)	

M-METRIC PART

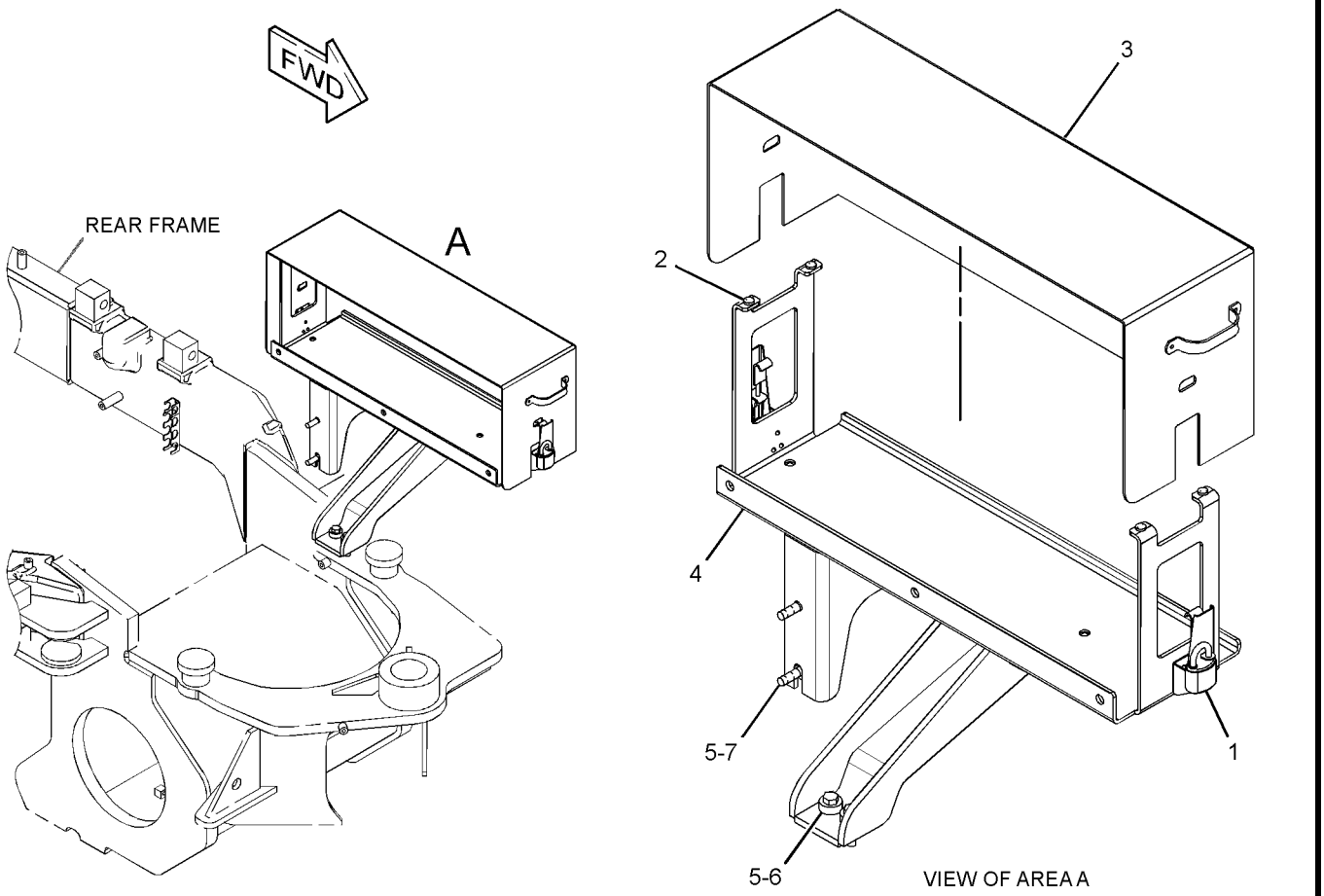

GRAPHIC #1 **<END>** g01758753

FRAME AND BODY

299-8307 SUPPORT GP-RADIATOR

S/N: JPA1-UP

PART OF 274-7940 GENERAL AR

SMCS-1353 **i03247342**

NOTE	REF NO	GRAPHIC REF	PART NUMBER	QTY	PART NAME 1 2 3 4 5 6 (PRODUCT LEVEL)	SEE PAGE
	1	1	**274-1704**	2	HANDHOLD	
	2	1	**299-8306**	1	BRACKET AS	
	3	1	**299-8318**	1	PLATE AS	
	4	1	**299-9478**	2	PLATE	
	5	1	**303-5996**	1	BRACKET AS	
	6	1	**303-5998**	1	BRACKET AS	
	7	1	**303-5999**	1	SUPPORT AS	
Y	8	1	*303-6003*	1	GUARD GP-FAN	66
	9	1	**303-6013**	1	BRACKET	
	10	1	**303-6014**	1	PLATE AS	
	11	1	**303-6015**	1	PLATE AS	
	12	1	**303-6017**	1	BRACKET AS	
	13	1	**303-6036**	1	PLATE AS	
	14	1	**317-1534**	1	PLATE AS	
		1	**5D-9629**	1	ROD	
		1	**6V-4604**	5	RIVET-POP	
	15	1	**317-1537**	2	PLATE	
	16	1	**320-0924**	1	PLATE	
	17	1	**198-4782**	4	WASHER-HARD (26X47X12-MM THK)	
M	18	1	**7X-2575**	4	BOLT (M24X3X60-MM)	
	19	1	**7X-7729**	8	WASHER (11X25X3-MM THK)	
	20	1	**8T-4121**	58	WASHER-HARD (11X21X2.5-MM THK)	
M	21	1	**8T-4136**	39	BOLT (M10X1.5X25-MM)	
M	22	1	**8T-4137**	16	BOLT (M10X1.5X20-MM)	
M	23	1	**8T-4195**	10	BOLT (M10X1.5X30-MM)	
M	24	1	**8T-4196**	1	BOLT (M10X1.5X35-MM)	
	25	1	**9D-3767**	1	PLUG-BUTTON	
D	26	1	**5P-8309**		SEAL (1.04-M EACH)	

D-ORDER BY THE METER
M-METRIC PART
Y-SEPARATE ILLUSTRATION

299-8307 **SUPPORT GP-RADIATOR** *(contd.)* **i03247342**

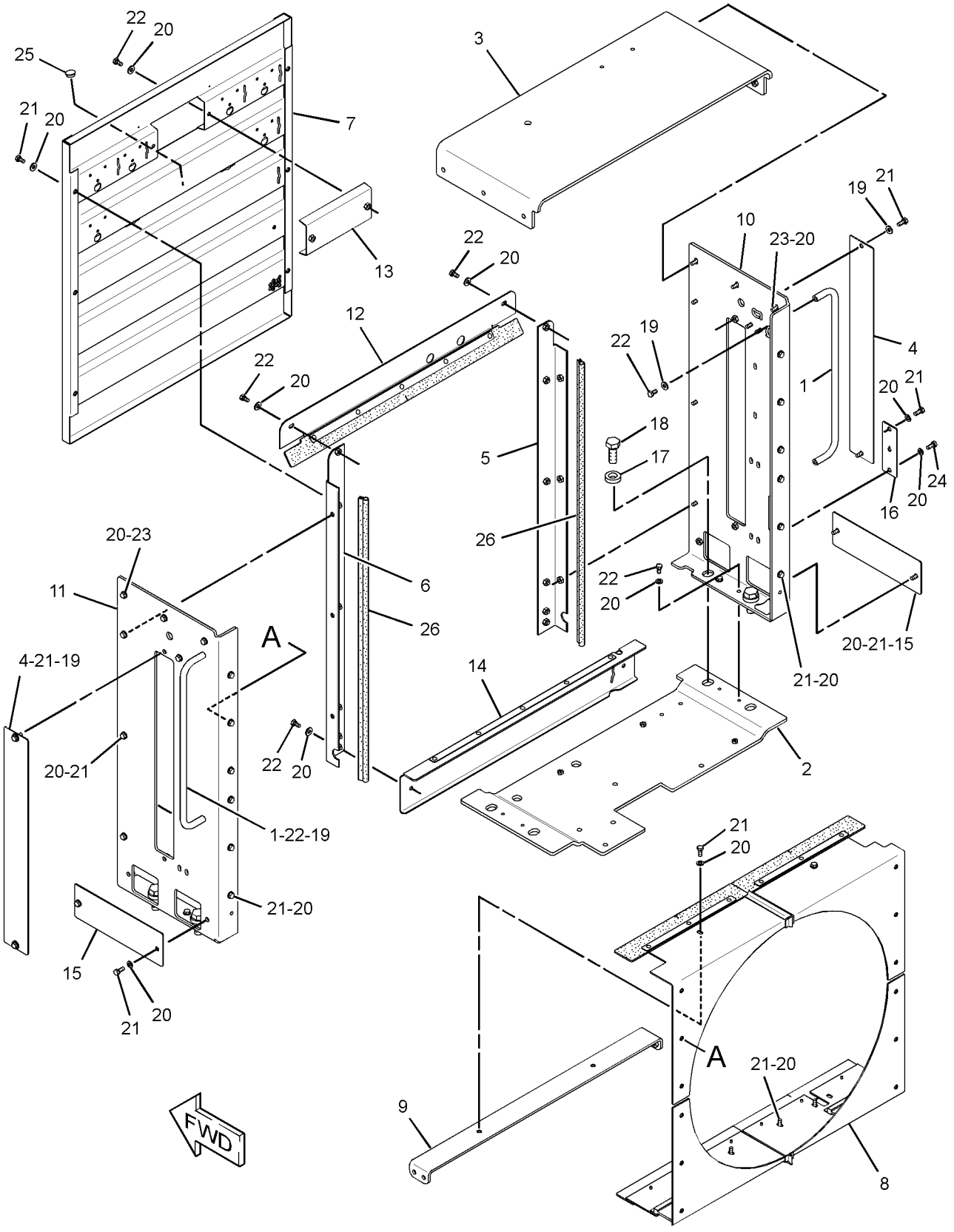

GRAPHIC #1 **<END>** g01769516

215-3005 AIR DRYER GP

S/N: JPA1-UP
PART OF 311-2739 DRYER & LINES GP-AIR
AN ATTACHMENT

SMCS-4285 **i02306471**

NOTE	REF NO	GRAPHIC REF	PART NUMBER	QTY	PART NAME 1 2 3 4 5 6 (PRODUCT LEVEL)	SEE PAGE
	1	1	**203-2390**	1	VALVE	
	2	1	**203-2391**	1	VALVE AS	
	3	1	**203-2423**	1	ELEMENT-HEATING (AIR DRYER)	
	4	1	**203-2389**	1	CARTRIDGE-DESICCANT (AIR DRYER)	
	5	1	**218-2971**	1	VALVE GP-PURGE (AIR DRYER)	

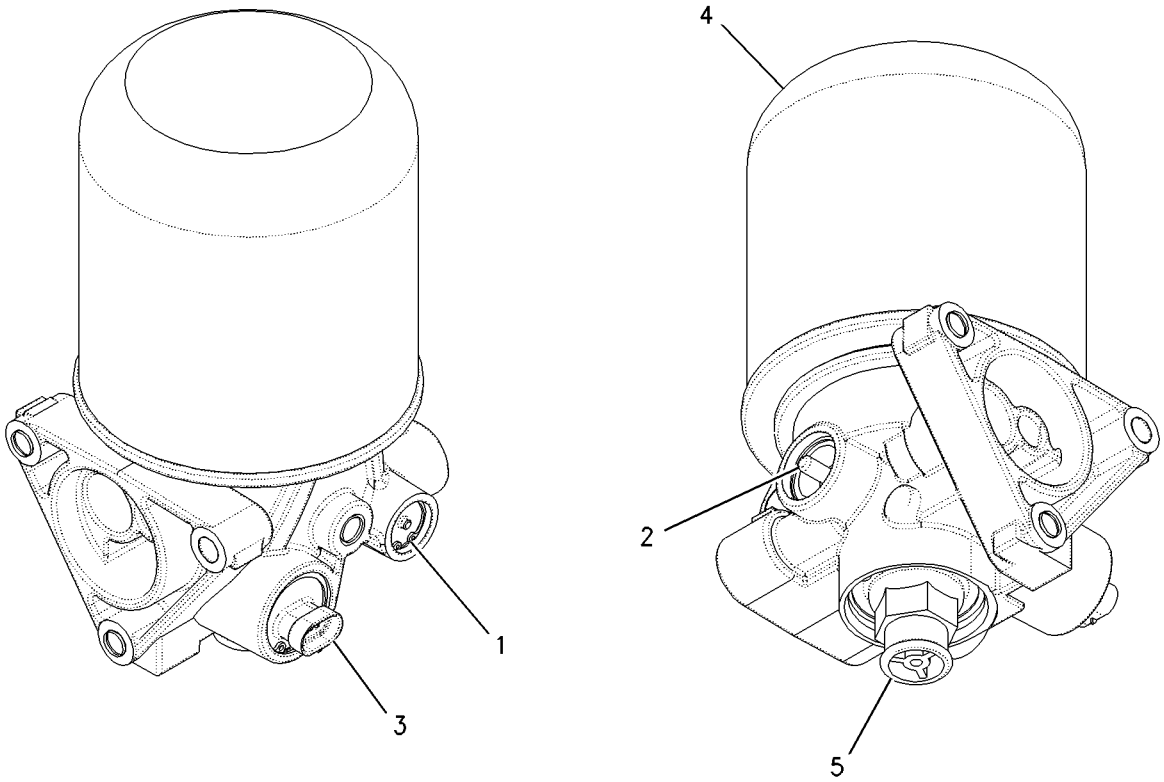

GRAPHIC #1 **<END>** g00945969

BRAKING SYSTEM

311-2737 AIR DRYER GP

S/N: JPA1-UP

AN ATTACHMENT

SMCS-4285 **i03251482**

NOTE	REF NO	GRAPHIC REF	PART NUMBER	QTY	PART NAME 1 2 3 4 5 6 (PRODUCT LEVEL)	SEE PAGE
	1	1	**9W-1442**	1	FUSE (10-AMPERE)	
	2	1	**300-1377**	1	HARNESS AS-WIRING	
Y	3	1	*311-2738*	1	DRYER & LINES GP-AIR	355

Y-SEPARATE ILLUSTRATION

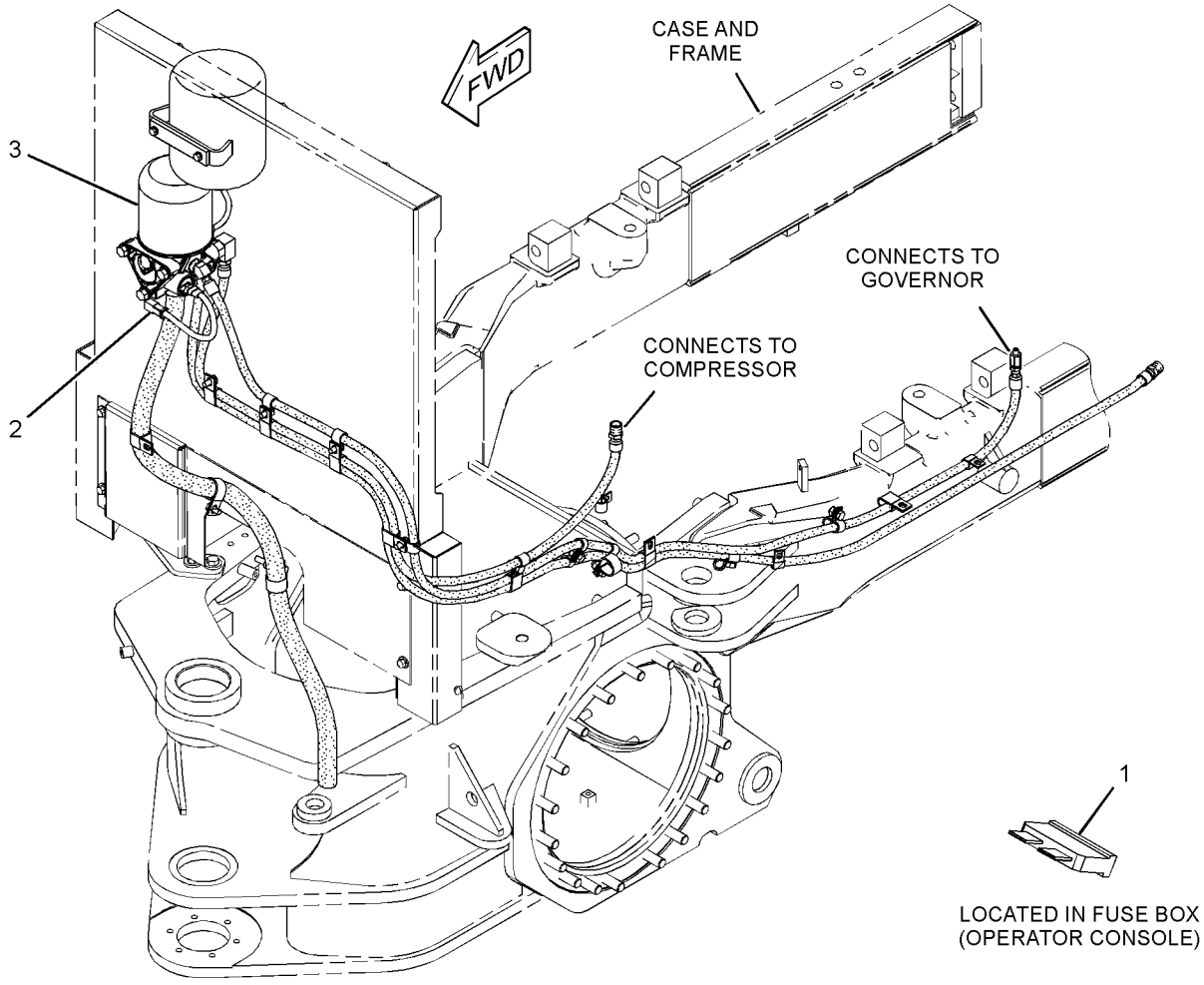

GRAPHIC #1 **<END>** g01689793

9W-5132 BRAKE GP-PARKING

S/N: DMJ1-UP

PART OF 275-6535 TRANSMISSION AR

SMCS-3077, 4267 **i02024329**

NOTE	REF NO	GRAPHIC REF	PART NUMBER	QTY	PART NAME 1 2 3 4 5 6 (PRODUCT LEVEL)	SEE PAGE
M	1	1	**6V-5842**	6	BOLT (M10X1.5X40-MM)	
	2	1	**6V-5839**	6	WASHER (11X21X2.5-MM THK)	
	3	1	**6Y-3849**	1	HUB-CLUTCH	
	4	1	**9M-4335**	6	DOWEL-REACTION	
	5	1	**5J-1086**	1	SEAL-O-RING	
	6	1	**6Y-3850**	1	HOUSING-BRAKE	
	7	1	**4S-5838**	1	RETAINER	
M	8	1	**8T-0372**	1	BOLT (M12X1.75X90-MM)	
	9	1	**4F-7390**	1	SEAL-O-RING	
	10	1	**1P-7521**	1	YOKE	
	11	1	**203-5957**	1	SEAL	
	12	1	**9W-4431**	20	SPRING	
	13	1	**9W-4430**	20	SPRING	
M	14	1	**6V-3668**	12	BOLT (M12X1.75X30-MM)	
	15	1	**7G-0437**	6	PLATE-CLUTCH	
	16	1	**6Y-5352**	5	DISC-FRICTION	
	17	1	**2J-6274**	1	SEAL-O-RING	
	18	1	**9S-4182**	1	PLUG-O-RING	
	19	1	**3J-7354**	1	SEAL-O-RING	
	20	1	**203-5958**	1	SEAL	
	21	1	**9W-4452**	1	PISTON	
	22	1	**9W-4453**	1	PISTON	
	23	1	**4H-9105**	1	SEAL-O-RING	
	24	1	**6Y-3852**	1	PLUG	
	25	1	**9N-6152**	1	PLUG	
	26	1	**2M-9780**	1	SEAL-O-RING	
	27	1	**9X-7743**	1	SEAL-LIP TYPE	

M-METRIC PART

9W-5132 **BRAKE GP-PARKING** *(contd.)* **i02024329**

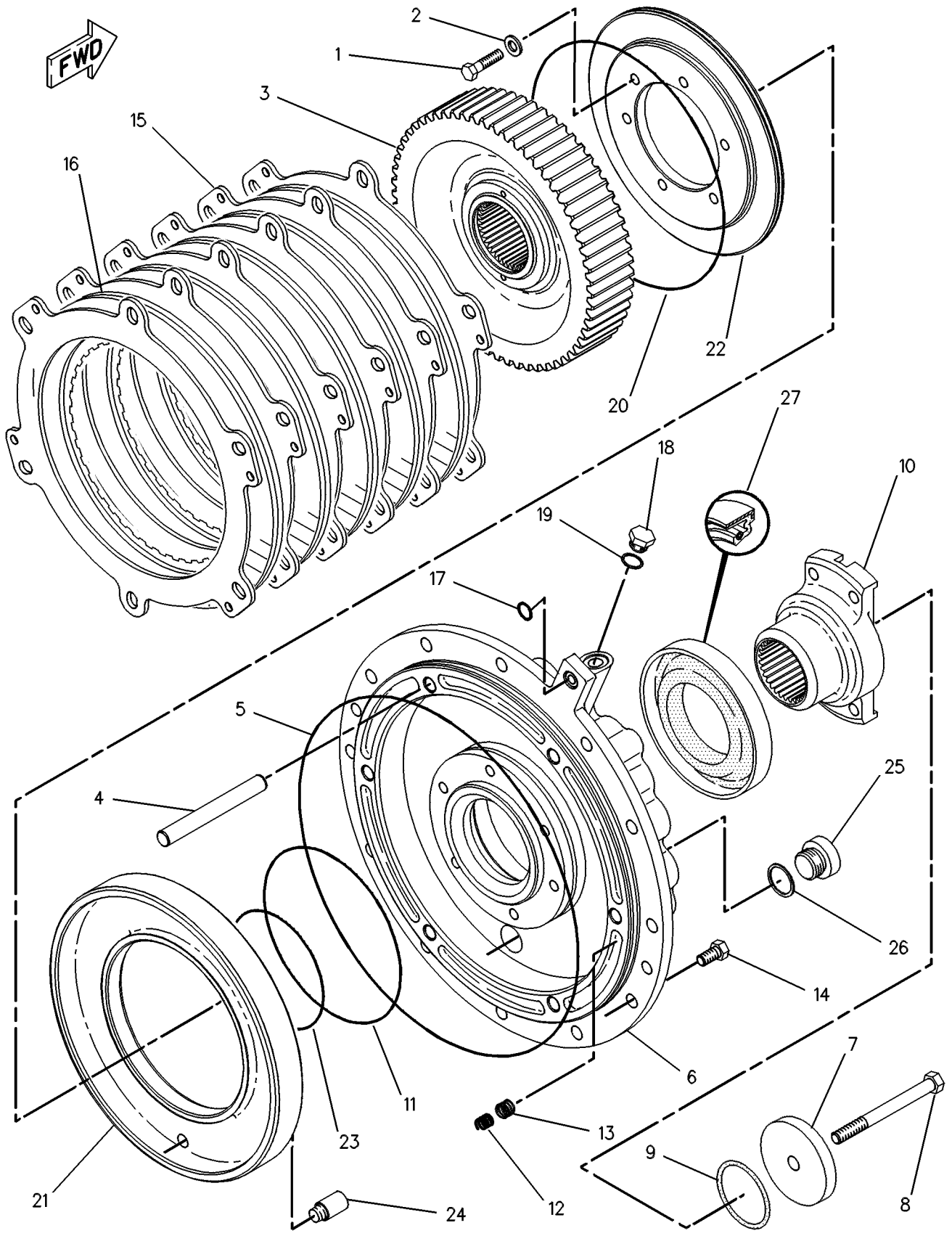

GRAPHIC #1 **<END>** g00108550

7D-8440 BRAKE GP-SERVICE

S/N: JPA1-UP

PART OF 274-7940 GENERAL AR

SMCS-4251 **i02267850**

NOTE	REF NO	GRAPHIC REF	PART NUMBER	QTY	PART NAME 1 2 3 4 5 6 (PRODUCT LEVEL)	SEE PAGE
	1	1	**7D-8354**	4	SPROCKET (20-TEETH)	
	2	1	**7D-8437**	4	CONE-BEARING	
	3	1	**1P-4693**	8	CUP-BEARING	
	4	1	**5P-9118**	12	BOLT-LOCKING (5/8-11X2.5-IN)	
B	5	1	**7D-8439**	20	SHIM (0.007-IN THK)	
B	6	1	**7D-8441**	28	SHIM (0.005-IN THK)	
B	7	1	**9D-7047**	8	SHIM (0.02-MM THK)	
	8	1	**9D-3075**	4	RETAINER	
	9	1	**4S-5879**	8	SEAL-O-RING	
C	10	1	**0S-1566**	16	BOLT (5/8-11X1.5-IN)	
C	11	1	**4D-3704**	64	WASHER-HARD (17X30X5-MM THK)	
	12	1	**7D-8434**	40	DISC	
	13	1	**4D-5497**	4	SEAL-D-RING	
	14	1	**6Y-7916**	36	DISC-FRICTION	
	15	1	**6G-0905**	24	BOLT (7/16-14X4.37-IN)	
	16	1	**9J-5498**	24	SPRING	
	17	1	**5P-8244**	24	WASHER-HARD (12X22.5X2.5-MM THK)	
	18	1	**4B-7270**	4	CONE-BEARING	
R	19	1	**5K-5288**	4	SEAL GP-DUO-CONE	
					(EACH INCLUDES)	
		1	**5K-5129**	2	RING-SEALING	
C	20	1	**147-3310**	4	SPINDLE-WHEEL	
C	21	1	**8W-8124**	4	HOUSING	
	22	1	**6G-3378**	4	PISTON	
	23	1	**7D-8436**	4	SEAL-D-RING	
	24	1	**2G-6337**	4	HUB-BRAKE	
C	25	1	**8T-6472**	40	BOLT-LOCKING (5/8-11X2.5-IN)	
	26	1	**7D-8362**	4	COVER	
	27	1	**3J-5390**	4	PLUG	
C	28	1	**8T-6473**	8	BOLT-LOCKING (5/8-11X2.75-IN)	

B-USE AS REQUIRED
C-CHANGE FROM PREVIOUS TYPE
R-REMFG PART MAY BE AVAILABLE

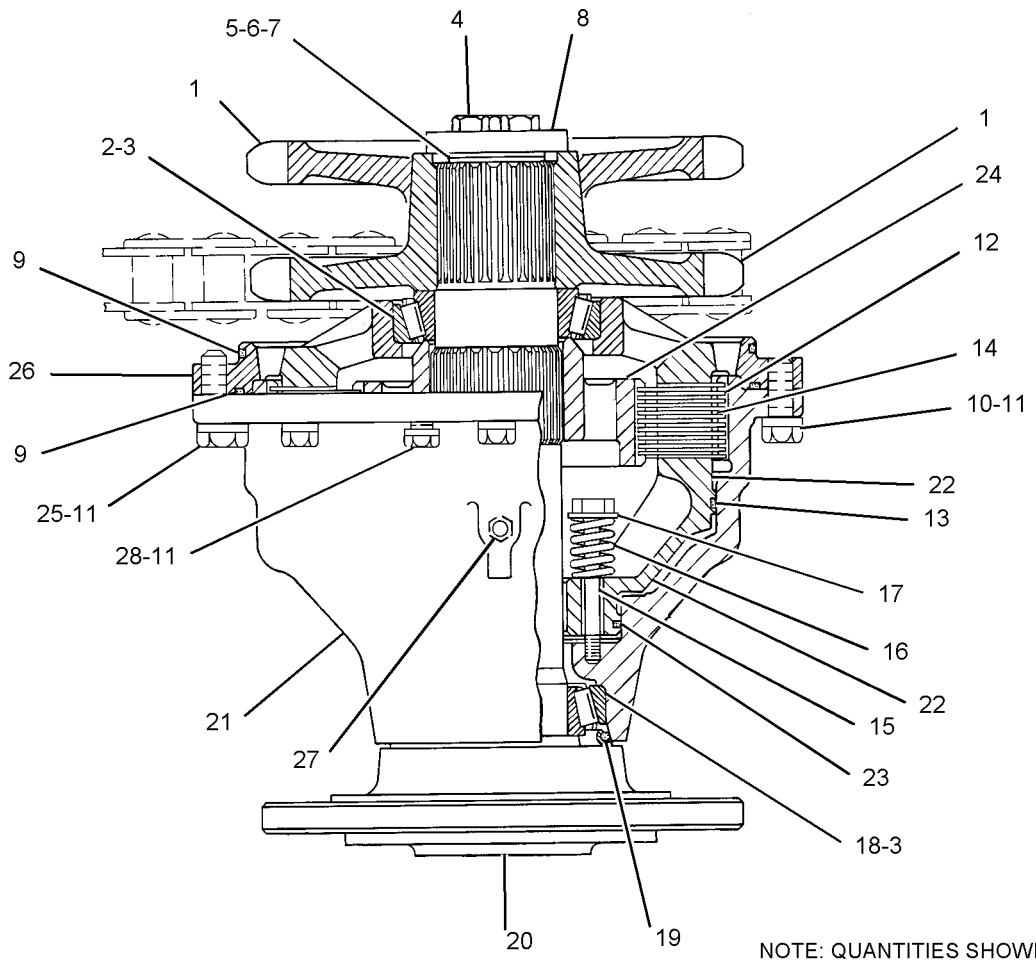

NOTE: QUANTITIES SHOWN ARE THOSE REQUIRED FOR BOTH RH & LH SIDES

GRAPHIC #1 **<END>** g01137517

284-5771 CONTROL GP-PARKING BRAKE

S/N: JPA1-UP

PART OF 274-7940 GENERAL AR

SMCS-4282, 4284 **i03431660**

NOTE	REF NO	GRAPHIC REF	PART NUMBER	QTY	PART NAME 1 2 3 4 5 6 (PRODUCT LEVEL)	SEE PAGE
	1	1	**3B-8822**	1	ELBOW	
I	2	1	**4S-7529**	1	HOSE AS	
	3	1	**4S-7606**	2	ELBOW	
	4	1	**5K-2408**	2	FITTING	
	5	1	**5T-8285**	1	JUNCTION BLOCK	
	6	1	**6D-1432**	1	VALVE-CHECK (PARKING BRAKE)	
	7	1	**7X-4736**	1	GROMMET	
	8	1	**8W-8528**	2	SLEEVE	
	9	1	**8X-5160**	1	GROMMET	
I	10	1	**112-4834**	1	HOSE AS	
Y	11	1	**185-0008**	1	VALVE GP-SOLENOID (PARKING BRAKE)	361
	12	1	**253-4347**	1	VALVE AS-AIR (PARKING BRAKE)	
		1	**1H-1023**	1	SEAL-O-RING	
		1	**6H-9691**	1	SEAL-O-RING	
	13	1	**316-6819**	1	PLATE	
I	14	1	**317-7375**	1	HOSE AS	
	15	1	**130-5300**	1	CLIP	
	16	1	**3D-8884**	1	ELBOW	
	17	1	**4D-6585**	1	ELBOW-PIPE	
	18	1	**4H-6147**	1	CONNECTOR (PIPE)	
	19	1	**4K-8864**	1	CLIP	
	20	1	**5H-4778**	2	ELBOW	
	21	1	**5K-1094**	1	LOCKWASHER	
	22	1	**5M-3062**	1	BOLT (3/8-16X0.75-IN)	
	23	1	**5M-6213**	2	PLUG-PIPE	
	24	1	**5P-1075**	1	WASHER-HARD (10.2X22.5X3-MM THK)	
	25	1	**6V-8801**	1	NUT (3/8-16-THD)	
	26	1	**8G-1815**	1	PLATE	
	27	1	**8T-2501**	2	BOLT (3/8-16X2-IN)	
	28	1	**8T-4121**	5	WASHER-HARD (11X21X2.5-MM THK)	
M	29	1	**8T-4133**	2	NUT (M10X1.5-THD)	
M	30	1	**8T-4136**	1	BOLT (M10X1.5X25-MM)	
M	31	1	**8T-4137**	2	BOLT (M10X1.5X20-MM)	
	32	1	**8T-4896**	3	WASHER-HARD (10.2X18.5X2.5-MM THK)	
	33	1	**9M-8406**	3	CLIP	

I-REFER TO HYDRAULIC INFORMATION SYSTEM
M-METRIC PART
Y-SEPARATE ILLUSTRATION

284-5771 **CONTROL GP-PARKING BRAKE** *(contd.)* **i03431660**

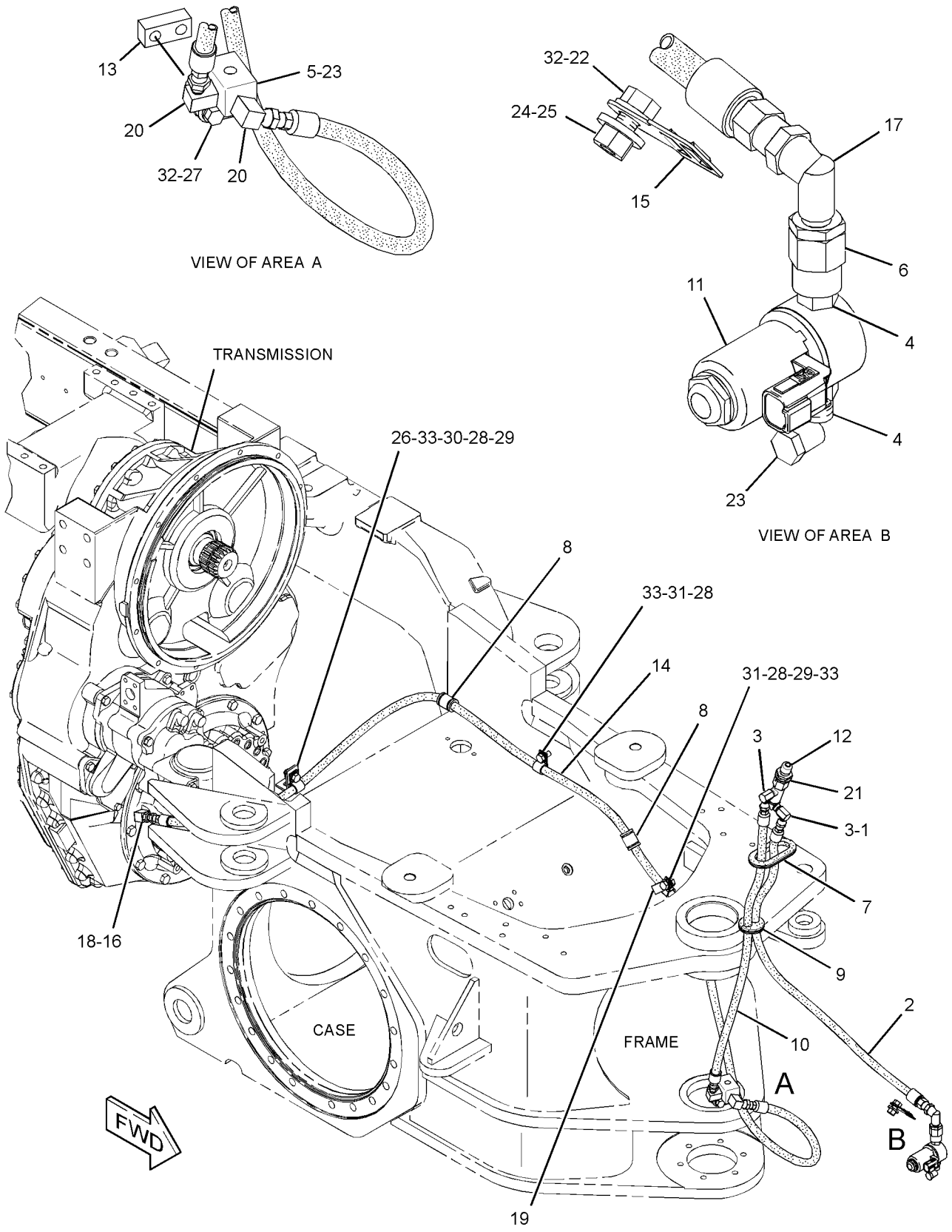

GRAPHIC #1 **<END>** g01696958

BRAKING SYSTEM

283-3499 CONTROL GP-SERVICE BRAKE

S/N: JPA1-UP

PART OF 274-7940 GENERAL AR

SMCS-4265, 4269 **i03431640**

NOTE	REF NO	GRAPHIC REF	PART NUMBER	QTY	PART NAME 1 2 3 4 5 6 (PRODUCT LEVEL)	SEE PAGE
	1	2	**1F-4622**	2	BEARING AS-NEEDLE	
	2	2	**2D-0193**	1	CONNECTOR-PIPE	
	3	2	**2D-7325**	1	TEE-PIPE	
	4	1,2	**2L-3331**	5	CONNECTOR-PIPE	
	5	2	**3S-2713**	1	NUT-FULL (3/8-24-THD)	
	6	1	**3T-0050**	2	CLIP	
	7	1	**5K-9238**	4	CONNECTOR	
	8	1	**5T-8285**	1	JUNCTION BLOCK	
	9	1	**6K-6826**	4	ELBOW (45-DEG)	
I	10	1	**6M-9537**	1	HOSE AS	
	11	2	**6W-5817**	1	SPRING	
	12	2	**7V-0446**	2	CLIP	
	13	1	**8D-7026**	4	GUARD	
	14	2	**8L-6005**	3	TEE-PIPE	
	15	1	**8W-8527**	14	SLEEVE	
	16	1	**8W-8903**	2	CLIP	
Y	17	2	*8X-2650*	1	VALVE GP-AIR CONTROL (SERVICE BRAKE)	745
	18	2	**8X-2680**	1	BRACKET AS	
	19	1	**8X-7603**	2	HOSE AS	
	20	1	**9G-8140**	1	SPACER (10.5X25X15-MM THK)	
	21	2	**9J-8783**	1	SHIM (0.508-MM THK)	
	22	1	**9S-1302**	2	WASHER (27X44.45X2.5-MM THK)	
	23	1	**9S-7706**	2	ELBOW-FLARED	
	24	1	**9X-8606**	8	CLIP	
	25	1	**110-3326**	1	PLATE AS	
		1	**3S-0391**	1	BOSS (3/8-16-THD)	
	26	1	**153-2446**	1	BRACKET	
	27	2	**169-0921**	1	ROD END (INTERNAL THREAD)	
	28	2	**172-4211**	1	SPACER (10.5X22X50.8-MM THK)	
	29	1	**176-2945**	2	FITTING-BULKHEAD	
	30	2	**177-1713**	1	ROD	
	31	2	**180-4027**	1	CAM	
	32	2	**180-7147**	1	LEVER	
	33	2	**185-1122**	1	BRACKET	
	34	1	**198-5438**	2	BLOCK	
	35	1	**198-5439**	1	TUBE AS	
	36	1	**198-5440**	1	TUBE AS	
	37	1	**203-3337**	1	TUBE AS	
	38	1	**203-3340**	1	TUBE AS	
	39	1	**203-3341**	1	TUBE AS	
	40	1	**203-3342**	1	TUBE AS	
	41	2	**207-4924**	1	PEDAL-BRAKE	
	42	1	**301-6395**	1	HOSE AS	
	43	1	**301-6398**	1	HOSE AS	
	44	1	**307-6241**	2	BLOCK-CLAMP	
	45	1	**307-6242**	2	BLOCK-CLAMP	
	46	1	**307-6243**	4	BLOCK-CLAMP	
	47	1	**307-7500**	2	BLOCK-CLAMP	
	48	1	**307-7501**	1	PLATE AS	
	49	1	**307-7502**	1	PLATE	
	50	1	**313-4181**	1	BRACKET AS	
	51	1	**316-8381**	1	HOSE AS	
	52	2	**129-3173**	1	BOLT-12 POINT HEAD (3/8-16X1.25-IN)	
	53	2	**1B-0676**	1	PIN	
	54	2	**1H-7724**	3	BUSHING-REDUCER	
	55	2	**1L-2279**	1	ELBOW	

283-3499 **CONTROL GP-SERVICE BRAKE** *(contd.)* **i03431640**

NOTE	REF NO	GRAPHIC REF	PART NUMBER	QTY	PART NAME 1 2 3 4 5 6 (PRODUCT LEVEL)	SEE PAGE
	56	1	**1S-0994**	1	CLIP	
	57	1	**242-9245**	2	HOSE AS	
	58	1	**302-3908**	1	SPACER (11X20X30-MM THK)	
	59	2	**3B-7721**	1	BUSHING-REDUCER	
	60	1	**3D-8913**	2	ELBOW	
	61	1	**3K-6060**	4	LOCKNUT (3/8-16-THD)	
	62	2	**3K-8280**	1	PIN-CLEVIS	
	63	1	**3S-8664**	5	CLIP	
	64	2	**4B-6060**	1	SETSCREW-SOCKET (1/4-20X0.375-IN)	
	65	2	**4D-0577**	1	ELBOW	
	66	1,2	**4D-0582**	4	ELBOW	
I	67	1	**4D-6885**	1	HOSE AS	
	68	1	**4D-7388**	1	CLIP	
	69	1	**4D-7735**	1	CLIP	
	70	2	**4J-8922**	1	ROD END	
	71	2	**4M-6425**	1	BOLT (5/16-18X1-IN)	
M	72	2	**5C-2890**	3	NUT (M6X1-THD)	
	73	1	**5H-4778**	1	ELBOW	
	74	1	**5M-3062**	1	BOLT (3/8-16X0.75-IN)	
	75	1	**5M-6213**	1	PLUG-PIPE	
	76	1	**6V-1228**	1	CLIP	
	77	2	**6V-4245**	1	ELBOW	
M	78	2	**6V-7357**	1	BOLT (M6X1X25-MM)	
	79	2	**6V-8189**	3	NUT (5/16-18-THD)	
	80	1	**6V-8801**	2	NUT (3/8-16-THD)	
	81	2	**6V-8918**	2	BOLT (5/16-18X1.25-IN)	
	82	1,2	**7M-7410**	6	PLUG-PIPE	
	83	2	**7X-7729**	2	WASHER (11X25X3-MM THK)	
	84	1	**8T-4121**	22	WASHER-HARD (11X21X2.5-MM THK)	
M	85	1,2	**8T-4133**	9	NUT (M10X1.5-THD)	
M	86	2	**8T-4136**	2	BOLT (M10X1.5X25-MM)	
M	87	1	**8T-4137**	11	BOLT (M10X1.5X20-MM)	
M	88	2	**8T-4178**	1	BOLT (M10X1.5X90-MM)	
M	89	1	**8T-4185**	1	BOLT (M10X1.5X50-MM)	
M	90	1	**8T-4186**	2	BOLT (M10X1.5X40-MM)	
	91	2	**8T-4224**	5	WASHER-HARD (8.8X16X2-MM THK)	
	92	2	**8T-4226**	1	WASHER-PLATED (10.5X45X3-MM THK)	
	93	1,2	**8T-4896**	13	WASHER-HARD (10.2X18.5X2.5-MM THK)	
	94	1	**8T-9056**	4	BOLT (3/8-16X1.25-IN)	
	95	1	**8X-8450**	1	PLATE	
	96	1	**9B-7237**	1	BOLT (3/8-16X1.25-IN)	
	97	1	**9X-8250**	1	CLIP	
	98	2	**9X-8256**	1	WASHER (6.6X12X2-MM THK)	
E	99	1	**5P-0767**		HOSE (82-CM)	

E-ORDER BY THE CENTIMETER
I-REFER TO HYDRAULIC INFORMATION SYSTEM
M-METRIC PART
Y-SEPARATE ILLUSTRATION

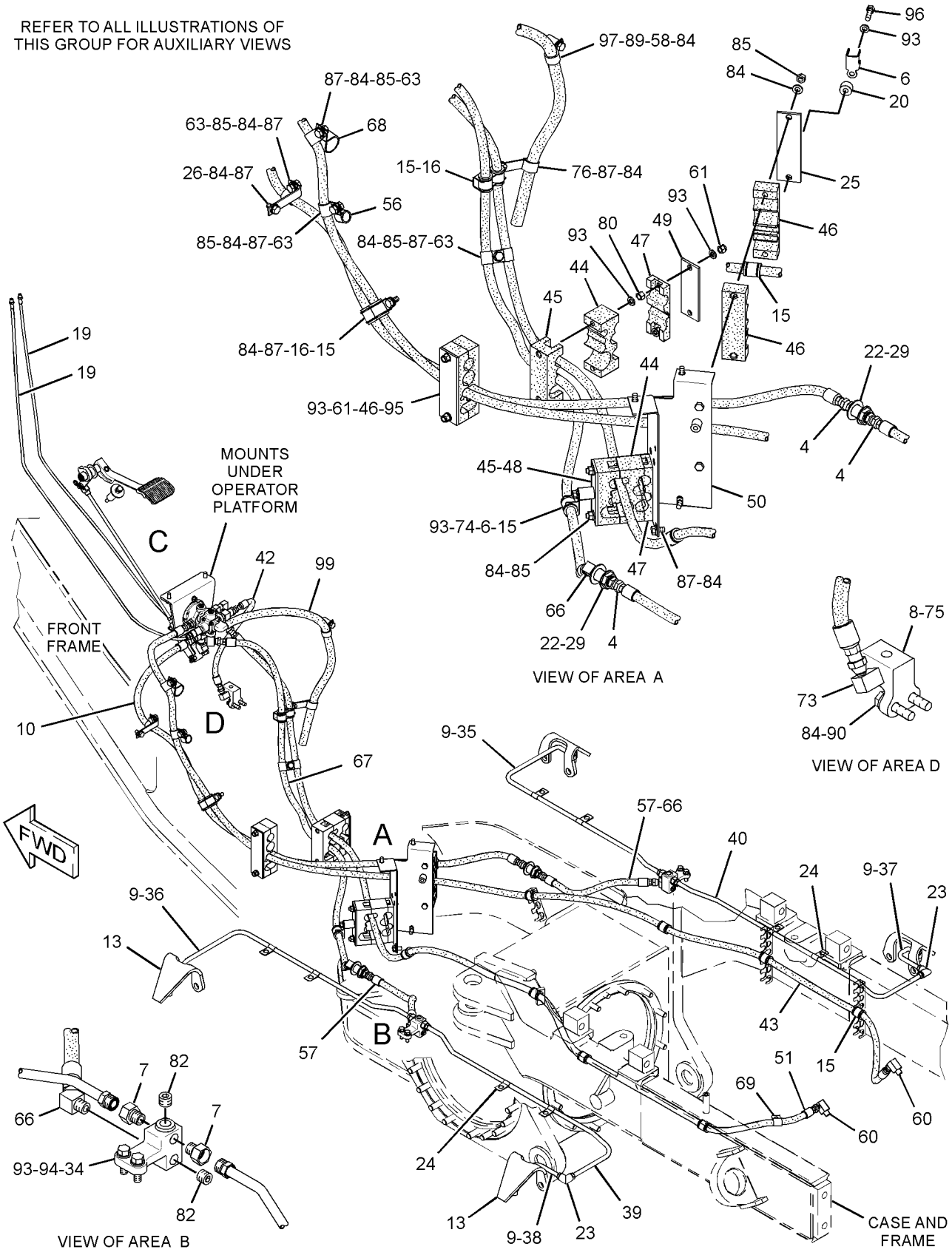

GRAPHIC #1

g01710518

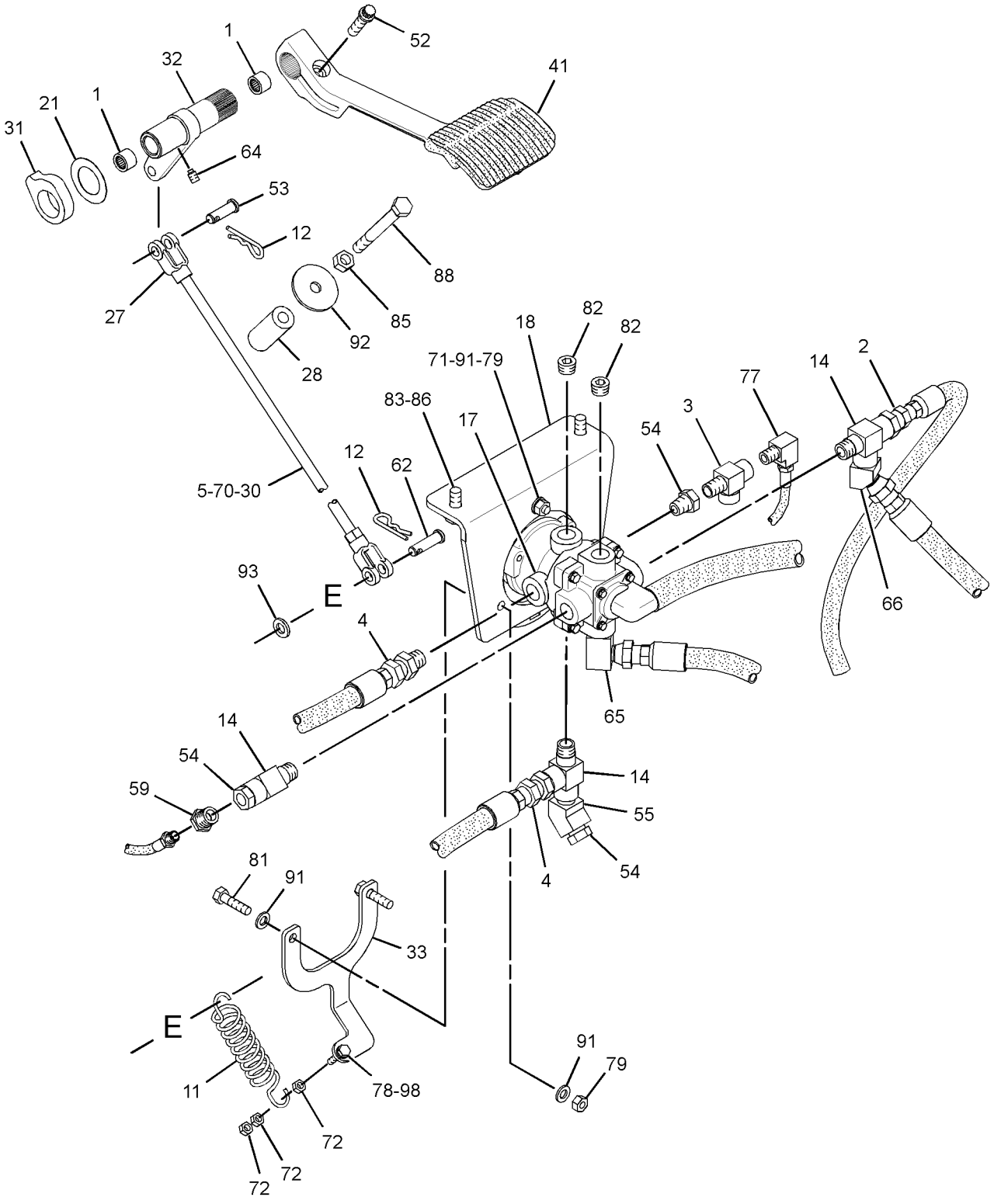

VIEW OF AREA C

GRAPHIC #2 **<END>** g01710519

311-2738 DRYER & LINES GP-AIR

S/N: JPA1-UP
PART OF 311-2737 AIR DRYER GP
AN ATTACHMENT

SMCS-4285 **i03251623**

NOTE	REF NO	GRAPHIC REF	PART NUMBER	QTY	PART NAME 1 2 3 4 5 6 (PRODUCT LEVEL)	SEE PAGE
Y	1	1	*311-2739*	1	DRYER & LINES GP-AIR	356
	2	1	**311-2743**	1	HOSE AS	
	3	1	**174-5907**	1	CLIP	
	4	1	**9M-8406**	1	CLIP	

Y-SEPARATE ILLUSTRATION

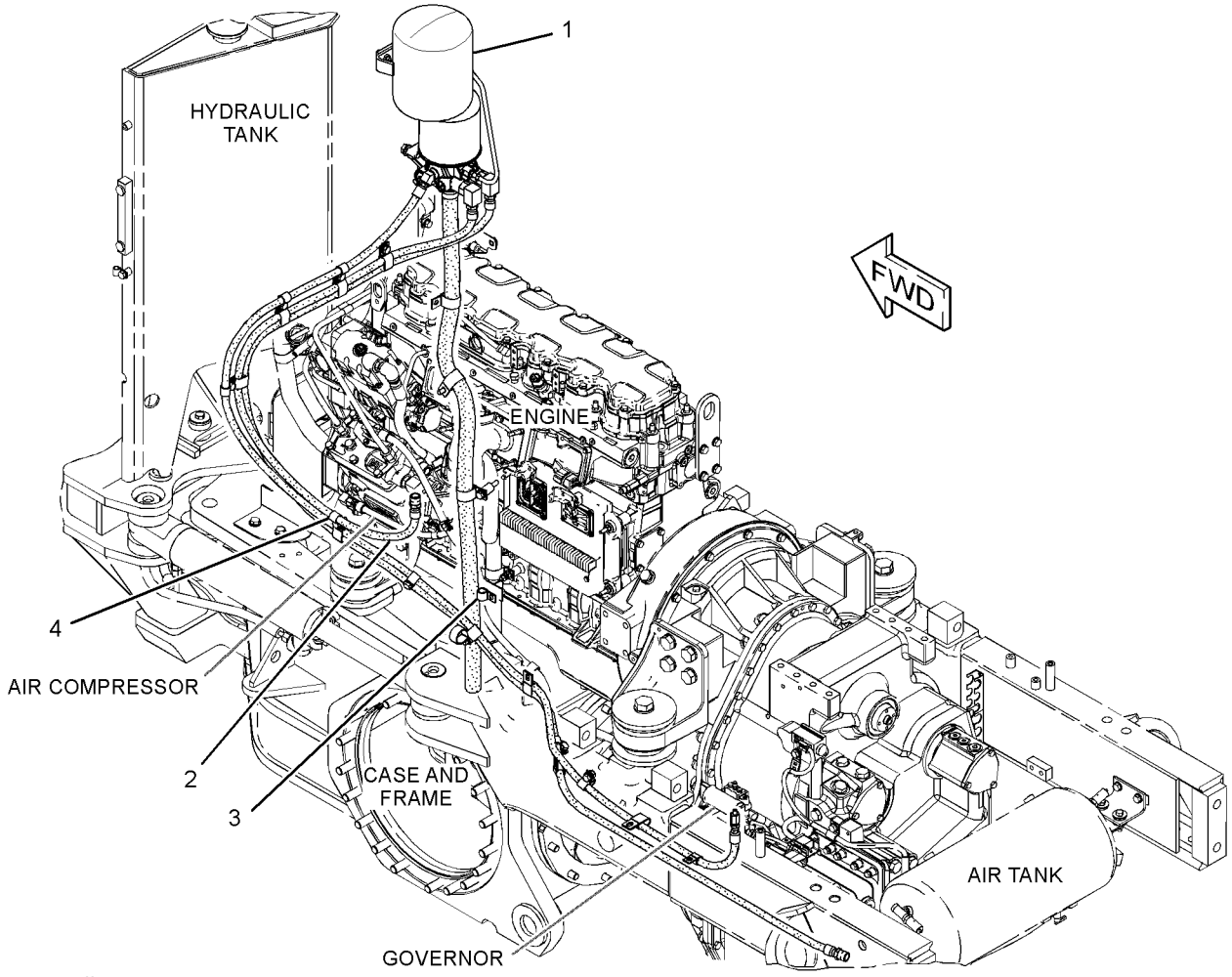

GRAPHIC #1 **<END>** g01690053

BRAKING SYSTEM

311-2739 DRYER & LINES GP-AIR

S/N: JPA1-UP

PART OF 311-2738 DRYER & LINES GP-AIR

AN ATTACHMENT

SMCS-4285 **i03251621**

NOTE	REF NO	GRAPHIC REF	PART NUMBER	QTY	PART NAME 1 2 3 4 5 6 (PRODUCT LEVEL)	SEE PAGE
	1	1	**2S-3440**	1	CLAMP-HOSE	
	2	1	**5P-4401**	1	CONNECTOR-AIR BRAKE	
	3	1	**5P-4424**	1	ELBOW-AIR BRAKE	
	4	1	**6V-2610**	1	FITTING	
	5	1	**191-3645**	1	RESERVOIR	
Y	6	1	**215-3005**	1	AIR DRYER GP	343
	7	1	**260-9133**	1	PLATE	
	8	1	**301-3170**	1	TUBE	
	9	1	**313-2207**	1	HOSE AS	
I	10	1	**313-2208**	1	HOSE AS	
	11	1	**174-5907**	1	CLIP	
	12	1	**302-3908**	1	SPACER (11X20X30-MM THK)	
	13	1	**3B-6772**	1	ELBOW-STREET	
	14	1	**3J-5390**	1	PLUG	
	15	1	**4S-4455**	1	CLIP	
	16	1	**5C-6565**	3	BOLT (1/2-13X1.125-IN)	
	17	1	**5K-8451**	8	CLIP	
	18	1	**5P-7854**	3	CLIP	
	19	1	**6L-5652**	2	ADAPTER	
	20	1	**7D-0215**	1	CONNECTOR-PIPE	
	21	1	**8T-4121**	16	WASHER-HARD (11X21X2.5-MM THK)	
M	22	1	**8T-4133**	5	NUT (M10X1.5-THD)	
M	23	1	**8T-4136**	2	BOLT (M10X1.5X25-MM)	
M	24	1	**8T-4137**	8	BOLT (M10X1.5X20-MM)	
	25	1	**8T-4223**	3	WASHER-HARD (13.5X25.5X3-MM THK)	
	26	1	**8T-4224**	2	WASHER-HARD (8.8X16X2-MM THK)	
M	27	1	**8T-6466**	1	BOLT (M10X1.5X60-MM)	
M	28	1	**8T-7547**	2	BOLT (M8X1.25X30-MM)	
	29	1	**9L-3560**	2	ELBOW	
	30	1	**9M-8406**	10	CLIP	
E	31	1	**8I-1362**		HOSE (131-CM)	

E-ORDER BY THE CENTIMETER
I-REFER TO HYDRAULIC INFORMATION SYSTEM
M-METRIC PART
Y-SEPARATE ILLUSTRATION

311-2739 **DRYER & LINES GP-AIR** *(contd.)* **i03251621**

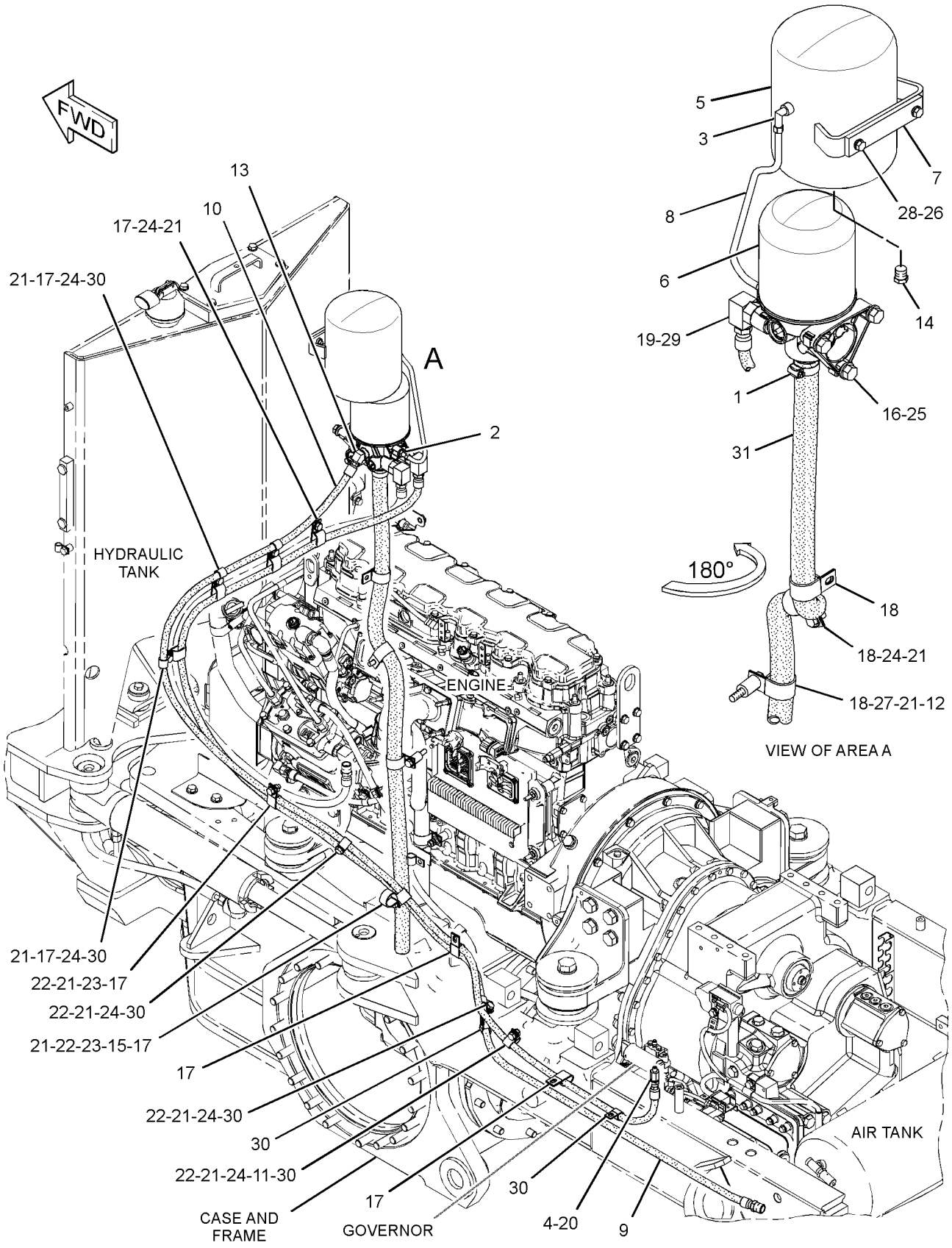

GRAPHIC #1 **<END>** g01690054

BRAKING SYSTEM

314-9370 TANK GP-AIR

S/N: JPA1-UP

PART OF 274-7940 GENERAL AR

SMCS-4272 **i03246383**

NOTE	REF NO	GRAPHIC REF	PART NUMBER	QTY	PART NAME 1 2 3 4 5 6 (PRODUCT LEVEL)	SEE PAGE
	1	1	**1P-7115**	4	GROMMET AS	
	2	1	**1W-7534**	1	ELBOW	
	3	1	**2G-1034**	2	VALVE-AIR RELIEF	
	4	1	**2H-9091**	1	CONNECTOR-PIPE	
	5	1	**2R-1922**	1	CONNECTOR	
	6	1	**3D-7587**	1	ELBOW	
	7	1	**4P-7048**	1	BRACKET	
	8	1	**5F-5434**	1	VALVE AS-VENT	
	9	1	**6A-3591**	1	TEE-PIPE	
	10	1	**8M-3368**	2	VALVE-CHECK	
	11	1	**8W-7915**	2	SHIM (2-MM THK)	
	12	1	**8W-8496**	2	PLATE	
	13	1	**8W-8528**	2	SLEEVE	
	14	1	**8W-8575**	1	RESERVOIR	
	15	1	**9D-6663**	2	VALVE-DRAIN	
	16	1	**9M-4594**	1	SPACER (0.406X0.875X0.75-IN THK)	
	17	1	**004-5933**	1	TEE-PIPE	
J	18	1	**205-7187**	1	GOVERNOR AS (AIR COMPRESSOR)	
	19	1	**292-4772**	1	PLATE-SUPPORT	
	20	1	**314-9368**	1	HOSE AS	
I	21	1	**314-9369**	1	HOSE AS	
	22	1	**334-5268**	1	HOSE AS	
	23	1	**334-5270**	1	HOSE AS	
	24	1	**002-6453**	2	ELBOW	
	25	1	**067-3045**	1	CLIP	
	26	1	**205-7299**	3	CLIP	
	27	1	**2M-9780**	1	SEAL-O-RING	
	28	1	**3D-8913**	2	ELBOW	
	29	1	**4D-0577**	1	ELBOW	
	30	1	**4D-2560**	1	CONNECTOR-PIPE	
	31	1	**4D-7388**	1	CLIP	
	32	1	**4D-7733**	1	CLIP	
	33	1	**4H-6147**	1	CONNECTOR (PIPE)	
	34	1	**4K-8864**	2	CLIP	
	35	1	**4S-1936**	2	CLIP	
	36	1	**4S-7606**	2	ELBOW	
	37	1	**5K-8451**	1	CLIP	
	38	1	**5P-8998**	2	FITTING	
	39	1	**5S-7383**	4	BOLT (3/8-16X1.75-IN)	
M	40	1	**6V-8225**	2	NUT (M6X1-THD)	
	41	1	**6V-8801**	4	NUT (3/8-16-THD)	
	42	1	**7D-4903**	1	ADAPTER	
	43	1	**7D-7233**	1	CLIP	
	44	1	**7F-9311**	4	FITTING	
	45	1	**7X-0578**	8	WASHER-HARD (10.2X32X2.5-MM THK)	
	46	1	**7X-7729**	4	WASHER (11X25X3-MM THK)	
	47	1	**8T-4121**	17	WASHER-HARD (11X21X2.5-MM THK)	
M	48	1	**8T-4133**	7	NUT (M10X1.5-THD)	
M	49	1	**8T-4136**	12	BOLT (M10X1.5X25-MM)	
M	50	1	**8T-4182**	1	BOLT (M10X1.5X45-MM)	
M	51	1	**8T-4195**	1	BOLT (M10X1.5X30-MM)	
	52	1	**8T-4896**	4	WASHER-HARD (10.2X18.5X2.5-MM THK)	
	53	1	**8T-6757**	4	PLUG-PIPE	
M	54	1	**8U-5746**	2	BOLT (M6X1X75-MM)	
	55	1	**9M-8406**	4	CLIP	
	56	1	**9X-8256**	4	WASHER (6.6X12X2-MM THK)	

314-9370 **TANK GP-AIR** *(contd.)* **i03246383**

NOTE	REF NO	GRAPHIC REF	PART NUMBER	QTY	PART NAME 1 2 3 4 5 6 (PRODUCT LEVEL)	SEE PAGE
					AVAILABLE REPAIR KIT(S):	
J			**9M-0402**	1	KIT-GOVERNOR OVERHAUL (AIR COMPRESSOR)	
					(INCLUDES GROMMETS, FILTERS, SPRING & VALVE)	

I-REFER TO HYDRAULIC INFORMATION SYSTEM
J-KIT MARKED J SERVICES PARTS MARKED J
M-METRIC PART

314-9370 **TANK GP-AIR** *(contd.)* **i03246383**

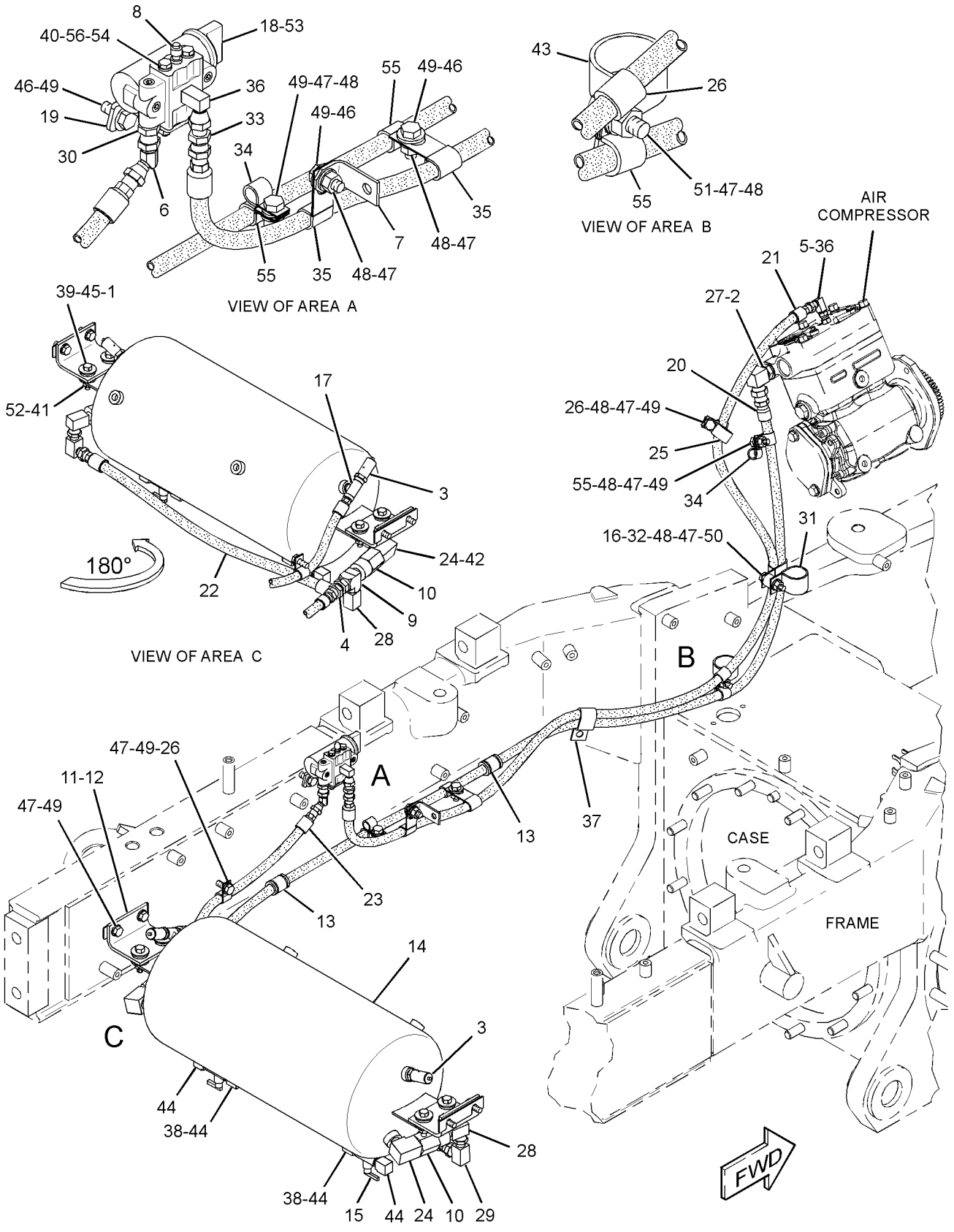

GRAPHIC #1 **<END>** g01696414

185-0008 VALVE GP-SOLENOID

S/N: JPA1-UP
24 VDC
PART OF 284-5771 CONTROL GP-PARKING BRAKE

SMCS-5479 **i03252107**

NOTE	REF NO	GRAPHIC REF	PART NUMBER	QTY	PART NAME 1 2 3 4 5 6 (PRODUCT LEVEL)	SEE PAGE
	1	1	**156-5970**	1	NUT (1/2-20-THD)	
	2	1	**164-2108**	1	WASHER (13.03X25.4X2.38-MM THK)	
	3	1	**314-7646**	1	COIL AS	

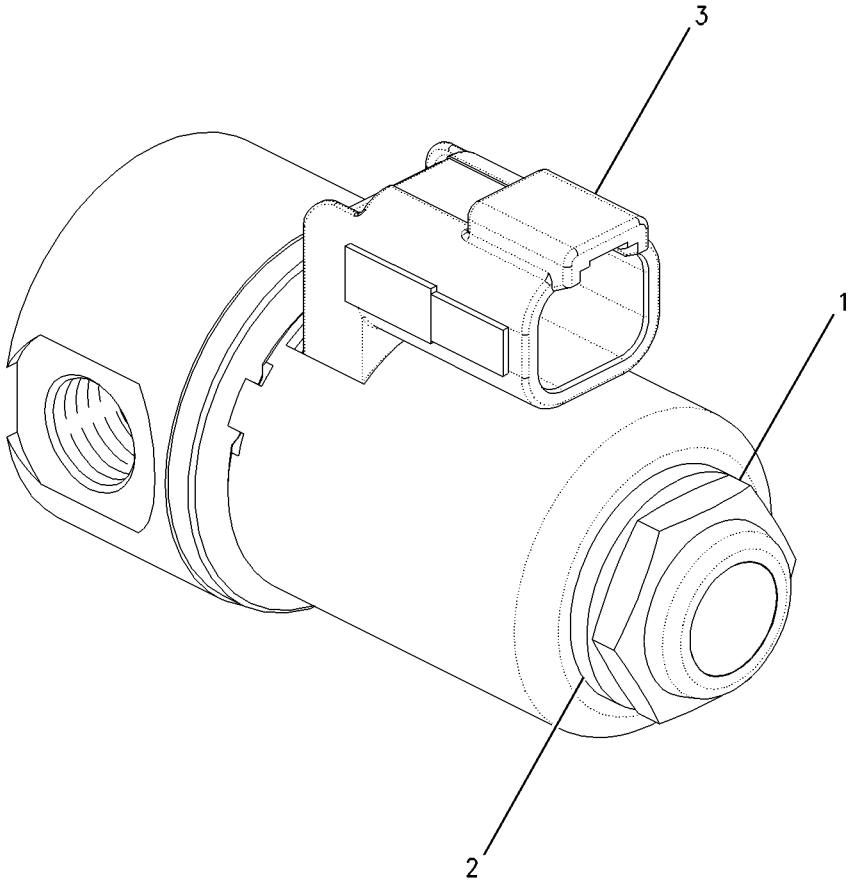

GRAPHIC #1 **<END>** g00925213

162-7451 ACCUMULATOR & MTG GP-HYDRAULIC–

BLADE CUSHION

S/N: JPA1-UP

PART OF 285-4154 ACCUMULATOR AR-BLADE CUSHION

FIELD REPLACEMENT ORDER 179-9398–PAGE 363

AN ATTACHMENT

SMCS-5077 **i02863917**

NOTE	REF NO	GRAPHIC REF	PART NUMBER	QTY	PART NAME 1 2 3 4 5 6 (PRODUCT LEVEL)	SEE PAGE
	1	1	**4N-5091**	2	SPACER (0.53X1X3.375-IN THK)	
	2	1	**162-7449**	2	CLAMP	
Y	3	1	*162-7450*	2	ACCUMULATOR GP-HYDRAULIC (BLADE CUSHION) (CHARGED)	364
	4	1	**168-8758**	1	PLATE AS	
	5	1	**2M-4779**	3	STUD-TAPERLOCK (3/8-16X0.177-IN)	
	6	1	**6V-8801**	3	NUT (3/8-16-THD)	
	7	1	**7X-0333**	2	BOLT (1/2-13X4.75-IN)	
	8	1	**8T-4223**	2	WASHER-HARD (13.5X25.5X3-MM THK)	
	9	1	**8T-4896**	3	WASHER-HARD (10.2X18.5X2.5-MM THK)	

Y-SEPARATE ILLUSTRATION

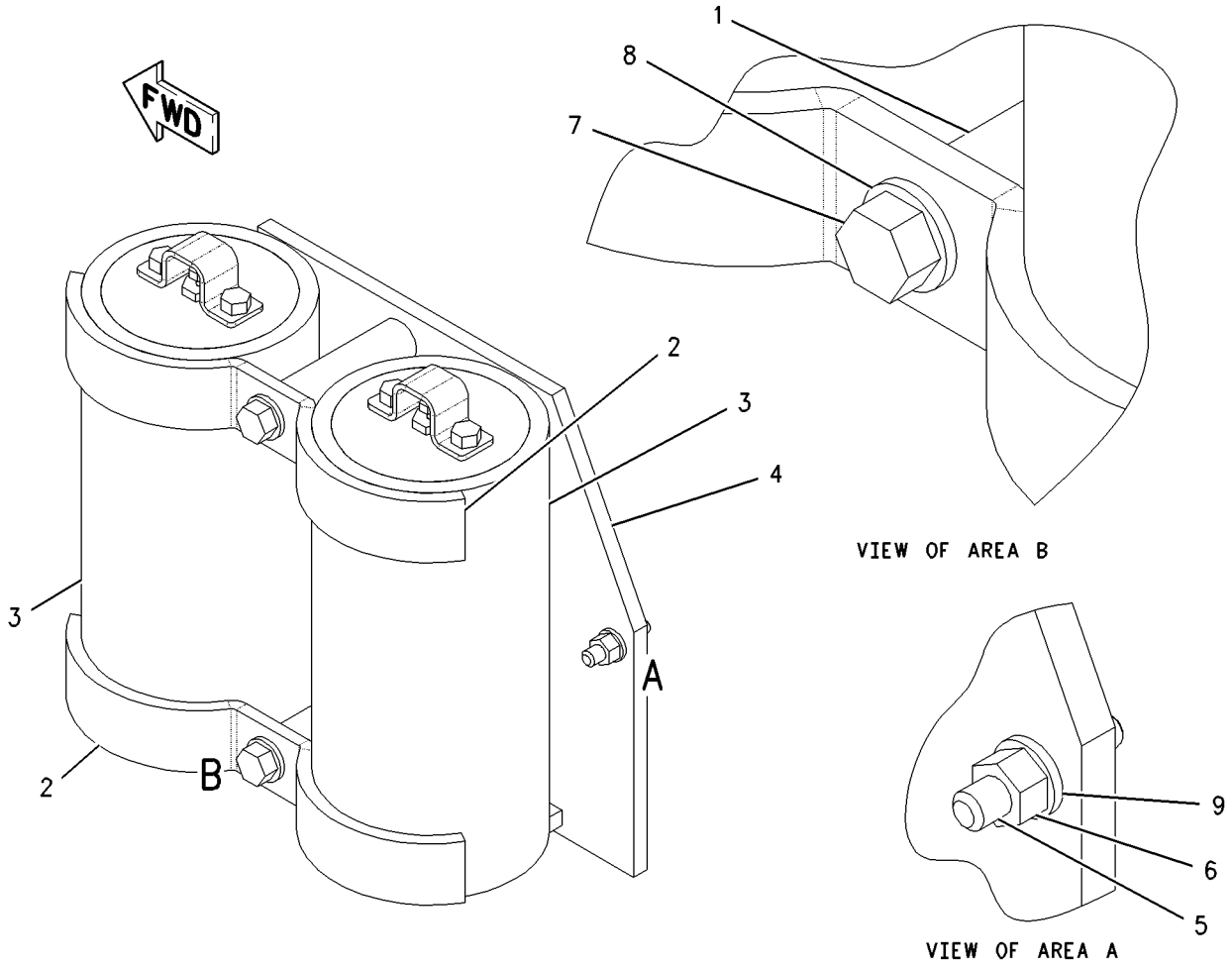

GRAPHIC #1 **<END>** g00788552

285-4154 ACCUMULATOR AR-BLADE CUSHION

S/N: JPA1-UP
AN ATTACHMENT

SMCS-5077, 5081 **i03261211**

NOTE	PART NUMBER	QTY	PART NAME 1 2 3 4 5 6 (PRODUCT LEVEL)	SEE PAGE
Y	*162-7451*	1	ACCUMULATOR & MTG GP-HYDRAULIC (BLADE CUSHION)	362
Y	*166-3336*	1	LINES GP-ACCUMULATOR	394
Y	*284-5352*	1	WIRING GP-BLADE CUSHION	201

Y-SEPARATE ILLUSTRATION

<END>

179-9398 ACCUMULATOR GP—UNCHARGED

S/N: JPA1-UP
FIELD REPLACEMENT FOR 162-7451—PAGE 362

SMCS-5077 **i02863918**

NOTE	PART NUMBER	QTY	PART NAME 1 2 3 4 5 6 (PRODUCT LEVEL)	SEE PAGE
Y	*162-7450*	1	ACCUMULATOR GP-HYDRAULIC (BLADE CUSHION) (CHARGED)	364

Y-SEPARATE ILLUSTRATION

<END>

162-7450 ACCUMULATOR GP-HYDRAULIC—CHARGED

S/N: JPA1-UP

PART OF 162-7451 ACCUMULATOR & MTG GP-HYDRAULIC, 179-9398 ACCUMULATOR GP

FIELD REPLACEMENT ORDER 179-9398—PAGE 363

AN ATTACHMENT

SMCS-5077 **i02863919**

NOTE	REF NO	GRAPHIC REF	PART NUMBER	QTY	PART NAME 1 2 3 4 5 6 (PRODUCT LEVEL)	SEE PAGE
	1	1	**135-7123**	1	PISTON	
	2	1	**170-0493**	1	KIT-SEAL (HYDRAULIC ACCUMULATOR)	
	3	1	**188-9390**	1	VALVE AS	
		1	**6M-5062**	1	SEAL-O-RING	
		1	**190-3850**	1	CORE	
	4	1	**111-9110**	1	PROTECTOR-GAS VALVE	
	5	1	**1J-9671**	1	SEAL-O-RING	
	6	1	**5M-3062**	2	BOLT (3/8-16X0.75-IN)	
	7	1	**170-0503**	1	FILM-WARNING (ACCUM, HIGH PRESS, READ OMM)	

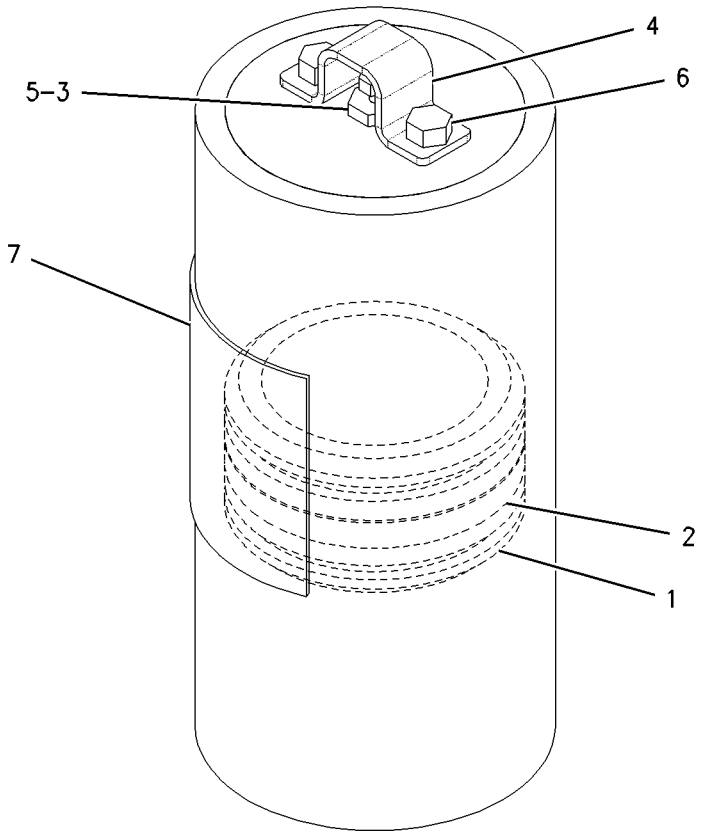

GRAPHIC #1 **<END>** g00789082

331-1499 CONTROL AR-HYDRAULIC—RIPPER

S/N: JPA1-UP
AN ATTACHMENT

SMCS-5050 **i03431565**

NOTE	PART NUMBER	QTY	PART NAME 1 2 3 4 5 6 (PRODUCT LEVEL)	SEE PAGE
Y	*302-7139*	1	LINES GP-RIPPER	419
Y	*138-7599*	1	VALVE & LINKAGE GP (5-BANK, RH, LH)	465

Y-SEPARATE ILLUSTRATION

<END>

331-1501 CONTROL AR-HYDRAULIC—DOZER, PLOW, RIPPER

S/N: JPA1-UP
AN ATTACHMENT

SMCS-5050 **i03431566**

NOTE	PART NUMBER	QTY	PART NAME 1 2 3 4 5 6 (PRODUCT LEVEL)	SEE PAGE
Y	*302-7139*	1	LINES GP-RIPPER	419
Y	*115-0812*	1	VALVE & LINKAGE GP (5-BANK, RH, LH)	458

Y-SEPARATE ILLUSTRATION

<END>

331-1503 CONTROL AR-HYDRAULIC—RIPPER

S/N: JPA1-UP
AN ATTACHMENT

SMCS-5050 **i03431567**

NOTE	PART NUMBER	QTY	PART NAME 1 2 3 4 5 6 (PRODUCT LEVEL)	SEE PAGE
Y	*302-7139*	1	LINES GP-RIPPER	419
Y	*115-0808*	1	VALVE & LINKAGE GP (4-BANK, RH; 5-BANK, LH)	452

Y-SEPARATE ILLUSTRATION

<END>

331-1506 CONTROL AR-HYDRAULIC—RIPPER

S/N: JPA1-UP
AN ATTACHMENT

SMCS-5050 **i03431568**

NOTE	PART NUMBER	QTY	PART NAME 1 2 3 4 5 6 (PRODUCT LEVEL)	SEE PAGE
Y	*302-7139*	1	LINES GP-RIPPER	419
Y	*130-7603*	1	VALVE & LINKAGE GP (4-BANK, RH, LH)	463

Y-SEPARATE ILLUSTRATION

<END>

HYDRAULIC SYSTEM

331-1507 CONTROL AR-HYDRAULIC—RIPPER

S/N: JPA1-UP

AN ATTACHMENT

SMCS-5050 **i03431500**

NOTE	PART NUMBER	QTY	PART NAME 1 2 3 4 5 6 (PRODUCT LEVEL)	SEE PAGE
Y	*302-7139*	1	LINES GP-RIPPER	419
Y	*112-6818*	1	VALVE & LINKAGE GP (4-BANK, RH; 3-BANK, LH)	448

Y-SEPARATE ILLUSTRATION

<END>

335-1875 CONTROL AR-HYDRAULIC—RIPPER

S/N: JPA1-UP

AN ATTACHMENT

SMCS-5050 **i03247297**

NOTE	PART NUMBER	QTY	PART NAME 1 2 3 4 5 6 (PRODUCT LEVEL)	SEE PAGE
Y	*302-7139*	1	LINES GP-RIPPER	419
Y	*331-1510*	1	VALVE & LINKAGE GP	485

Y-SEPARATE ILLUSTRATION

<END>

112-5361 CYLINDER & MTG GP-ARTICULATION

S/N: JPA1-UP

PART OF 274-7940 GENERAL AR

SMCS-5265 **i00130914**

NOTE	REF NO	GRAPHIC REF	PART NUMBER	QTY	PART NAME 1 2 3 4 5 6 (PRODUCT LEVEL)	SEE PAGE
	1	1	**7X-0346**	2	BOLT (5/8-11X2-IN)	
	2	1	**8T-4122**	4	WASHER-HARD (17X32X3.5-MM THK)	
	3	1	**7K-6117**	4	WASHER (0.656X2.5X0.5-IN THK)	
	4	1	**8D-4766**	4	PIN-CYLINDER	
	5	1	**8D-7086**	4	BEARING	
B	6	1	**2K-0420**	12	WASHER (1.766X3.5X0.032-IN THK)	
	7	1	**7K-9202**	8	SEAL-LIP TYPE	
Y	8	1	**9T-8784**	1	CYLINDER GP-ARTICULATION (LH)	377
	9	1	**8T-6871**	2	BOLT (5/8-11X2.5-IN)	
Y	10	1	**6E-1560**	1	CYLINDER GP-ARTICULATION (RH)	376

B-USE AS REQUIRED
Y-SEPARATE ILLUSTRATION

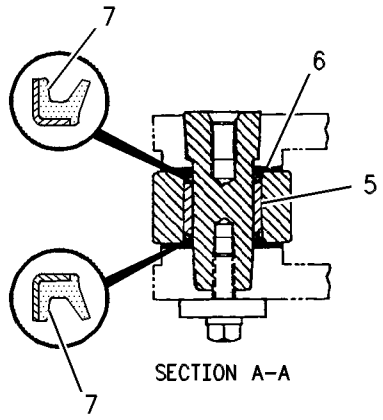

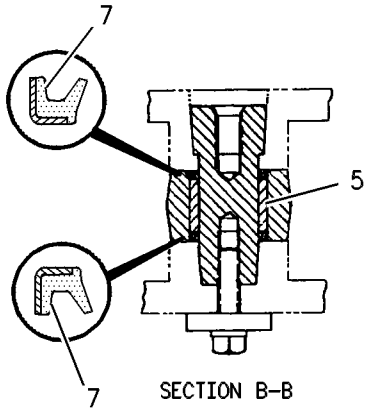

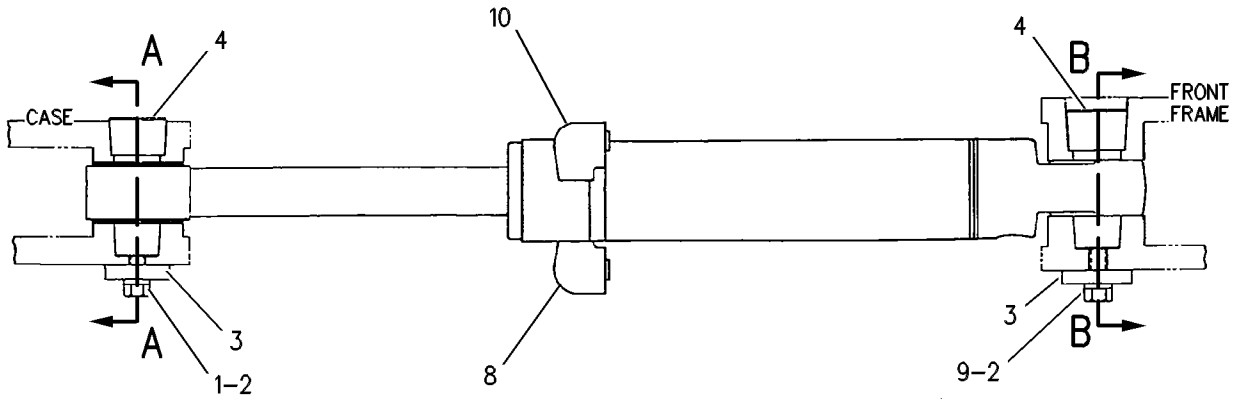

GRAPHIC #1 **<END>** g00108591

HYDRAULIC SYSTEM

8X-1947 CYLINDER & MTG GP-BLADE LIFT

S/N: JPA1-UP

PART OF 274-7940 GENERAL AR

SMCS-5102 **i03178142**

NOTE	REF NO	GRAPHIC REF	PART NUMBER	QTY	PART NAME 1 2 3 4 5 6 (PRODUCT LEVEL)	SEE PAGE
CY	1	1	**132-4929**	2	CYLINDER GP-LIFT (BLADE)	382
	2	1	**0S-1573**	8	BOLT (1/2-13X4-IN)	
	3	1	**2M-0849**	8	WASHER-HARD (13.5X25.5X5-MM THK)	
	4	1	**1D-4628**	4	BOLT (7/8-9X3.25-IN)	
	5	1	**5P-8249**	4	WASHER-HARD (24X41.5X4-MM THK)	
	7	1	**8W-2842**	4	CAP AS	
					(EACH INCLUDES)	
		1	**8D-7996**	1	BEARING-SLEEVE	
	8	1	**8X-4741**	4	INSERT	
B	9	1	**2G-9103**	8	SHIM (0.5-MM THK)	
	10	1	**3B-8485**	2	FITTING-GREASE (BLADE LIFT)	
	11	1	**2G-9098**	2	CAP	

QUANTITIES SHOWN ARE THOSE REQUIRED FOR BOTH LH AND RH SIDES
B-USE AS REQUIRED
C-CHANGE FROM PREVIOUS TYPE
Y-SEPARATE ILLUSTRATION

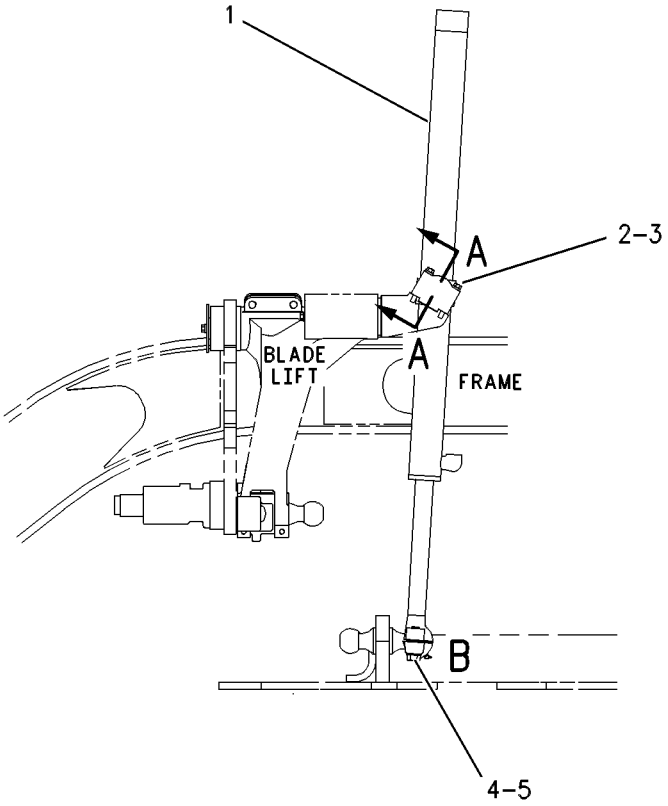

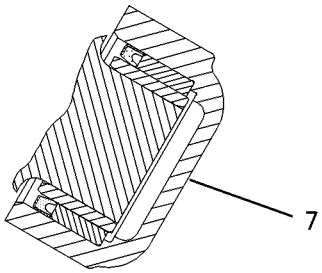

SECTION A-A

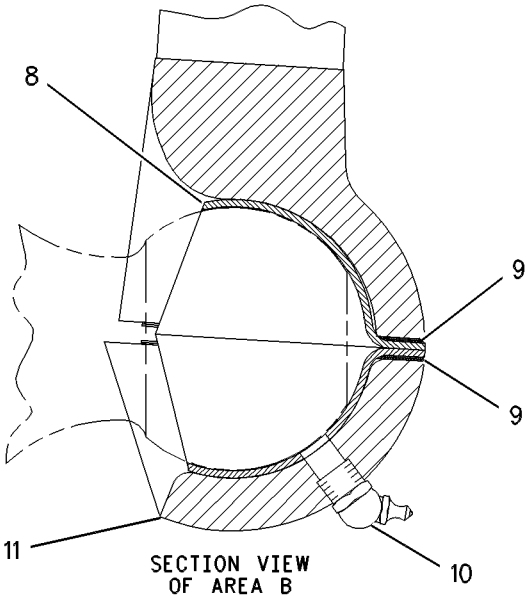

SECTION VIEW OF AREA B

GRAPHIC #1 **<END>** g00544601

8X-1943 CYLINDER & MTG GP-BLADE TIP

S/N: JPA1-UP

PART OF 329-3825, 329-3827 BLADE & TIP AR-POWER

AN ATTACHMENT

SMCS-5106 **i03178160**

NOTE	REF NO	GRAPHIC REF	PART NUMBER	QTY	PART NAME 1 2 3 4 5 6 (PRODUCT LEVEL)	SEE PAGE
	1	1	**3B-5329**	1	PIN-COTTER	
	2	1	**8D-7678**	1	PIN	
CY	3	1	**131-7191**	1	CYLINDER GP-HYDRAULIC (BLADE TIP)	381
	4	1	**2G-3967**	2	SPACER (1.266X3X0.781-IN)	
	5	1	**5K-5552**	1	BOLT-LOCKING (3/8-16X3-IN)	
	6	1	**8D-6687**	1	PIN	
	7	1	**8F-4102**	2	PLATE-SEAL	

C-CHANGE FROM PREVIOUS TYPE
Y-SEPARATE ILLUSTRATION

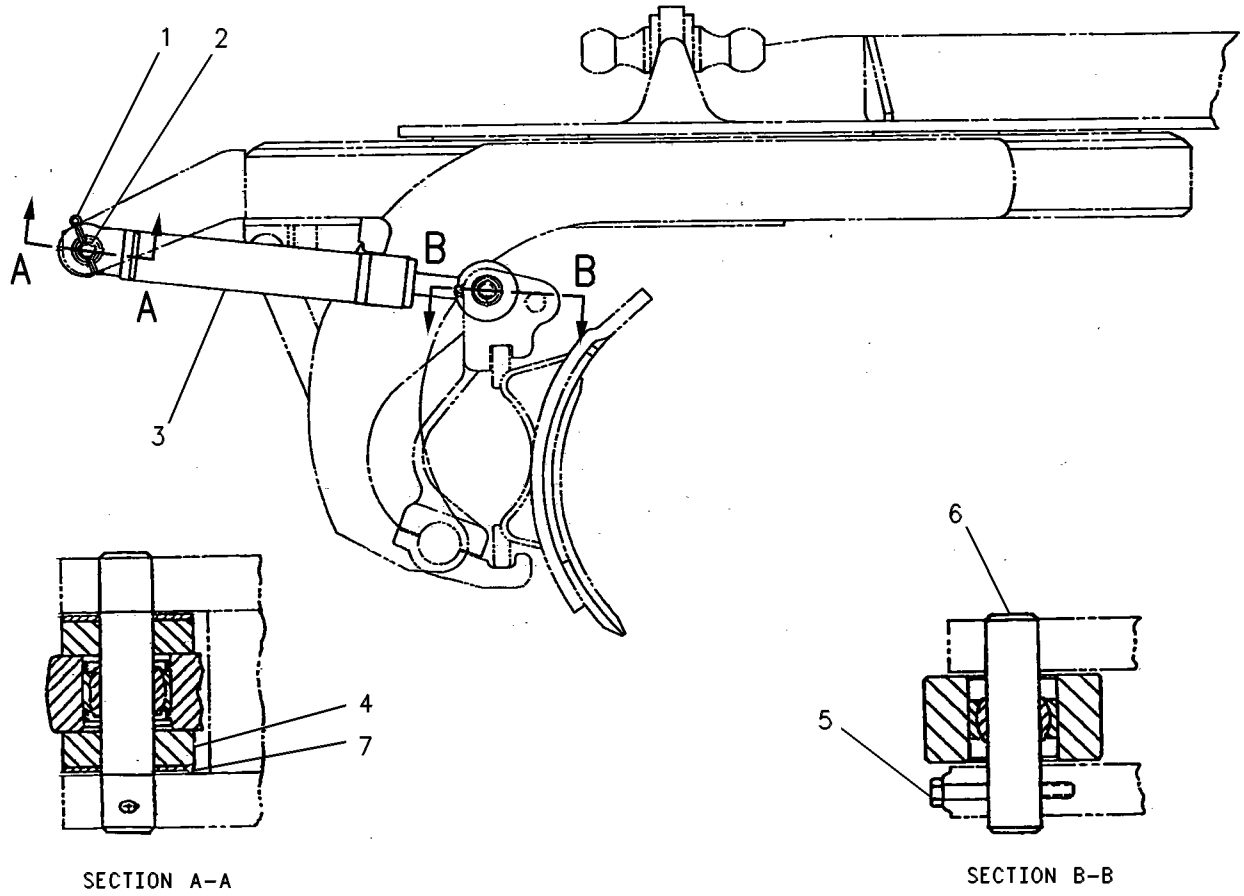

GRAPHIC #1 **<END>** g00108521

HYDRAULIC SYSTEM

8X-1944 CYLINDER & MTG GP-CENTERSHIFT

S/N: JPA1-UP

PART OF 274-7940 GENERAL AR

SMCS-5223 **i03438900**

NOTE	REF NO	GRAPHIC REF	PART NUMBER	QTY	PART NAME 1 2 3 4 5 6 (PRODUCT LEVEL)	SEE PAGE
Y	1	1	**6E-1343**	1	CYLINDER GP-CENTERSHIFT	379
	2	1	**2G-9098**	2	CAP	
	3	1	**3B-8485**	2	FITTING-GREASE (CENTERSHIFT CYLINDER SOCKET)	
B	4	1	**2G-9103**	8	SHIM (0.5-MM THK)	
	5	1	**8X-4741**	4	INSERT	
	6	1	**1D-4628**	4	BOLT (7/8-9X3.25-IN)	
	7	1	**5P-8249**	4	WASHER-HARD (24X41.5X4-MM THK)	

B-USE AS REQUIRED
Y-SEPARATE ILLUSTRATION

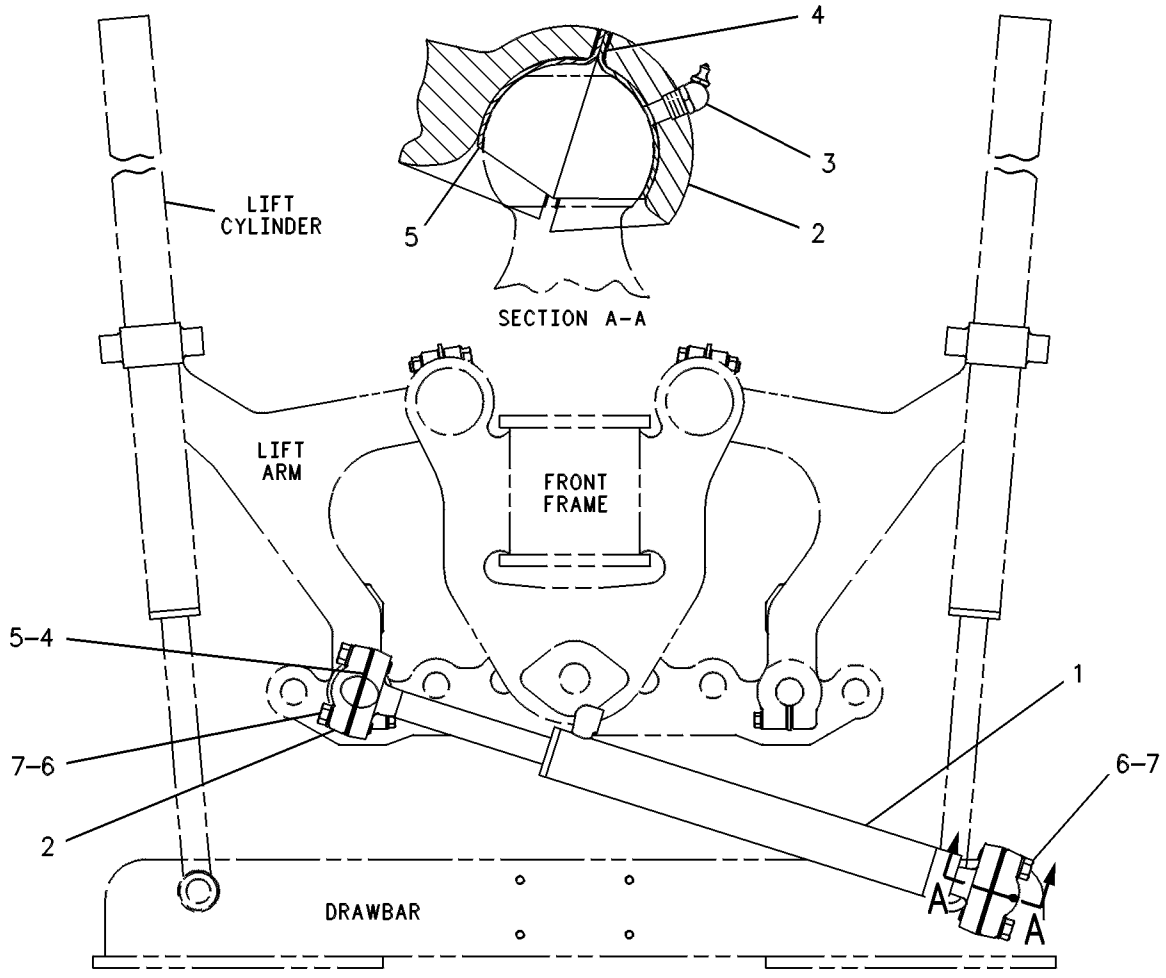

GRAPHIC #1 **<END>** g00108522

8W-2913 CYLINDER & MTG GP-SCARIFIER

S/N: JPA1-UP
PART OF 108-1104 SCARIFIER AR
AN ATTACHMENT

SMCS-5213, 6165 **i03301191**

NOTE	REF NO	GRAPHIC REF	PART NUMBER	QTY	PART NAME 1 2 3 4 5 6 (PRODUCT LEVEL)	SEE PAGE
	1	1	**7K-9202**	4	SEAL-LIP TYPE	
	2	1	**8D-7086**	2	BEARING	
Y	3	1	**165-2510**	1	CYLINDER GP-SCARIFIER	384
	4	1	**6G-7187**	2	LOCK	
	5	1	**8D-7225**	2	PIN	
	6	1	**5P-2228**	4	BOLT (1/2-13X1-IN)	
	7	1	**8T-4223**	4	WASHER-HARD (13.5X25.5X3-MM THK)	

Y-SEPARATE ILLUSTRATION

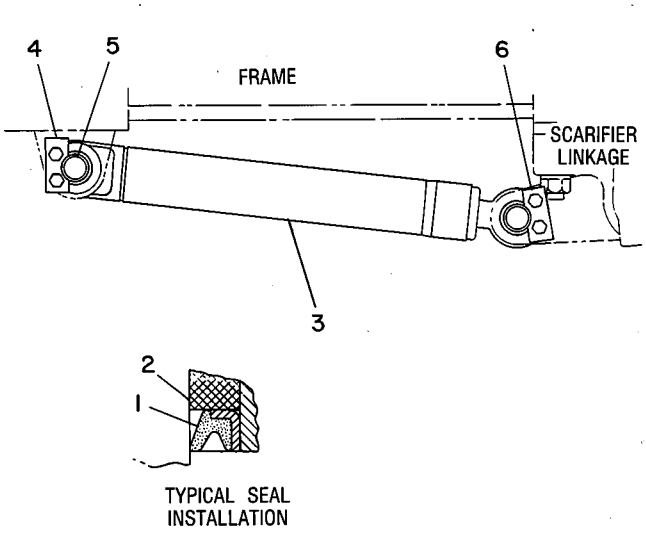

GRAPHIC #1 **<END>** g00108274

HYDRAULIC SYSTEM

112-7463 CYLINDER & MTG GP-SIDESHIFT

S/N: JPA1-UP

PART OF 329-3825, 329-3827 BLADE & TIP AR-POWER, 329-3828, 329-3829 BLADE AR AN ATTACHMENT

SMCS-5229 **i02252903**

NOTE	REF NO	GRAPHIC REF	PART NUMBER	QTY	PART NAME 1 2 3 4 5 6 (PRODUCT LEVEL)	SEE PAGE
	1	1	**6H-0211**	2	WASHER (1.563X2.75X0.06-IN THK)	
	2	1	**5T-5295**	1	PIN	
	3	1	**1B-2886**	1	BOLT (1/2-13X3.75-IN)	
	5	1	**1K-6872**	1	LOCKNUT (1/2-13-THD)	
	6	1	**3B-4647**	1	PIN-COTTER	
	7	1	**5T-8417**	1	PIN	
	8	1	**112-7462**	1	BRACKET	
	9	1	**2A-1538**	4	BOLT (3/4-10X2.25-IN)	
	10	1	**5P-8248**	4	WASHER-HARD (20X36.5X3.5-MM THK)	
Y	11	1	**112-5575**	1	CYLINDER GP-SIDESHIFT	385

Y-SEPARATE ILLUSTRATION

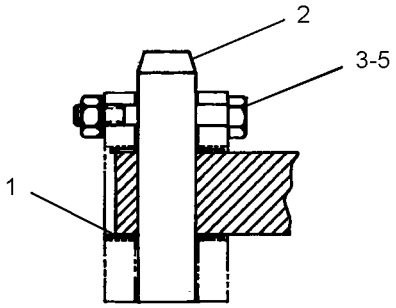

SECTION A-A

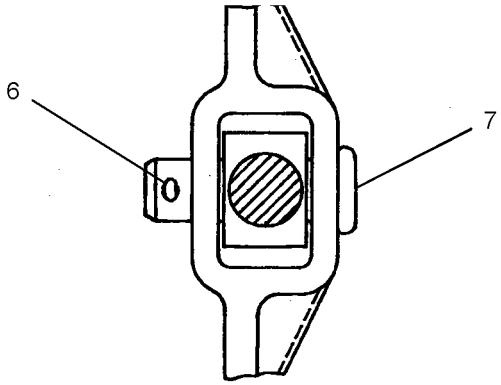

SECTION B-B

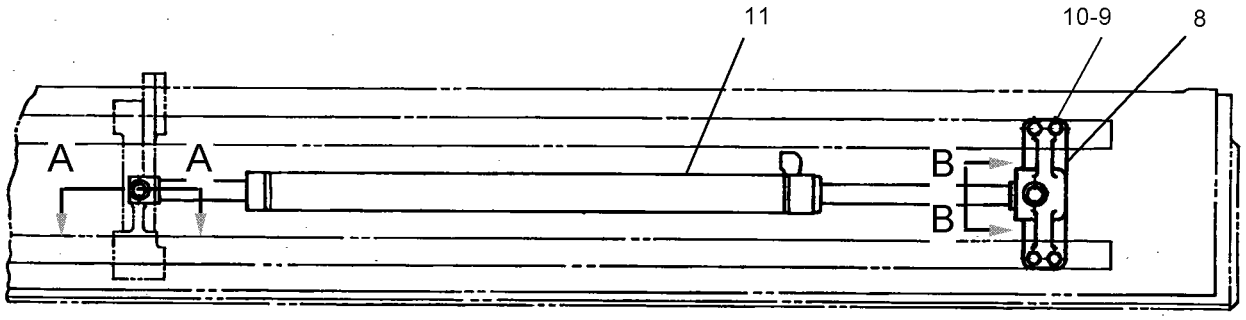

GRAPHIC #1 **<END>** g01131607

HYDRAULIC SYSTEM

8W-2290 CYLINDER & MTG GP-STEERING

S/N: JPA1-UP

PART OF 274-7940 GENERAL AR

SMCS-4303 **i02202916**

NOTE	REF NO	GRAPHIC REF	PART NUMBER	QTY	PART NAME 1 2 3 4 5 6 (PRODUCT LEVEL)	SEE PAGE
	1	1	**2H-3786**	2	NUT-JAM (1-14-THD)	
	2	1	**8D-2429**	2	PIN AS	
	3	1	**8D-2638**	4	SPACER (1.016X1.25X0.39-IN THK)	
Y	4	1	**130-9041**	1	CYLINDER GP-STEERING (LH)	386
Y	5	1	**130-9042**	1	CYLINDER GP-STEERING (RH)	387
	6	1	**131-3736**	2	TIE ROD GP (STEERING)	
					(EACH INCLUDES)	
		1	**2F-8057**	1	NUT-SLOTTED	
		1	**132-1143**	1	SEAL-BOOT	
	7	1	**3B-4618**	2	PIN-COTTER	
	8	1	**5S-7379**	2	BOLT (3/8-16X0.875-IN)	
	9	1	**8D-2811**	2	WASHER (1.25X1.94X0.032-IN THK)	
	10	1	**8T-4896**	2	WASHER-HARD (10.2X18.5X2.5-MM THK)	

Y-SEPARATE ILLUSTRATION

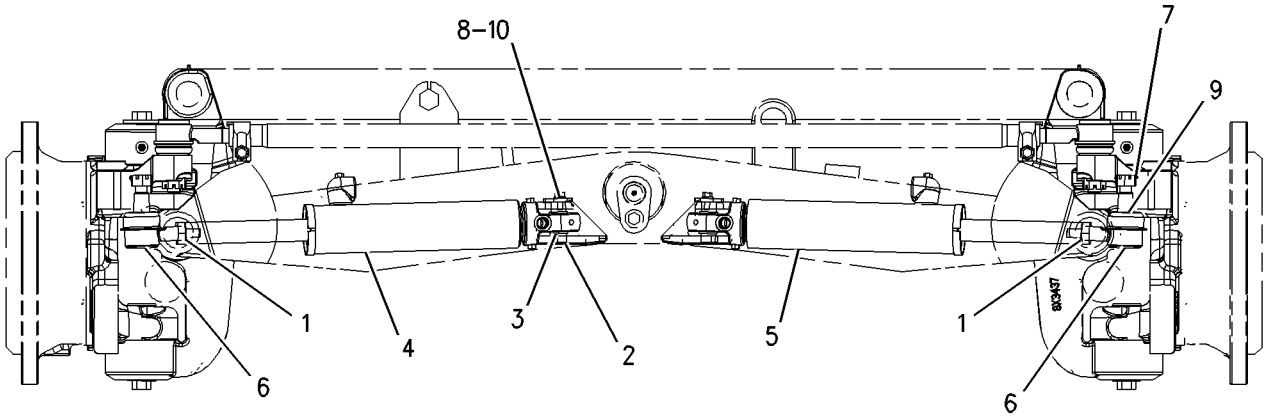

GRAPHIC #1 **<END>** g00743415

8W-2737 CYLINDER & MTG GP-WHEEL LEAN

S/N: JPA1-UP

PART OF 274-7940 GENERAL AR

SMCS-5211 **i01458451**

NOTE	REF NO	GRAPHIC REF	PART NUMBER	QTY	PART NAME 1 2 3 4 5 6 (PRODUCT LEVEL)	SEE PAGE
	1	1	**6H-1717**	2	BOLT (1/2-13X1.125-IN)	
		1	**5P-8245**	2	WASHER-HARD (13.5X25.5X3-MM THK)	
	2	1	**3B-8489**	2	FITTING-GREASE (WHEEL LEAN)	
	3	1	**2G-8609**	1	PIN	
	4	1	**6G-7187**	1	LOCK	
Y	5	1	**121-9242**	1	CYLINDER GP-WHEEL LEAN	388
	6	1	**2G-5667**	1	RETAINER	
	7	1	**0S-1592**	1	BOLT (5/8-11X1.25-IN)	
		1	**4D-3704**	1	WASHER-HARD (17X30X5-MM THK)	
	8	1	**5P-8842**	4	SEAL-LIP TYPE	

Y-SEPARATE ILLUSTRATION

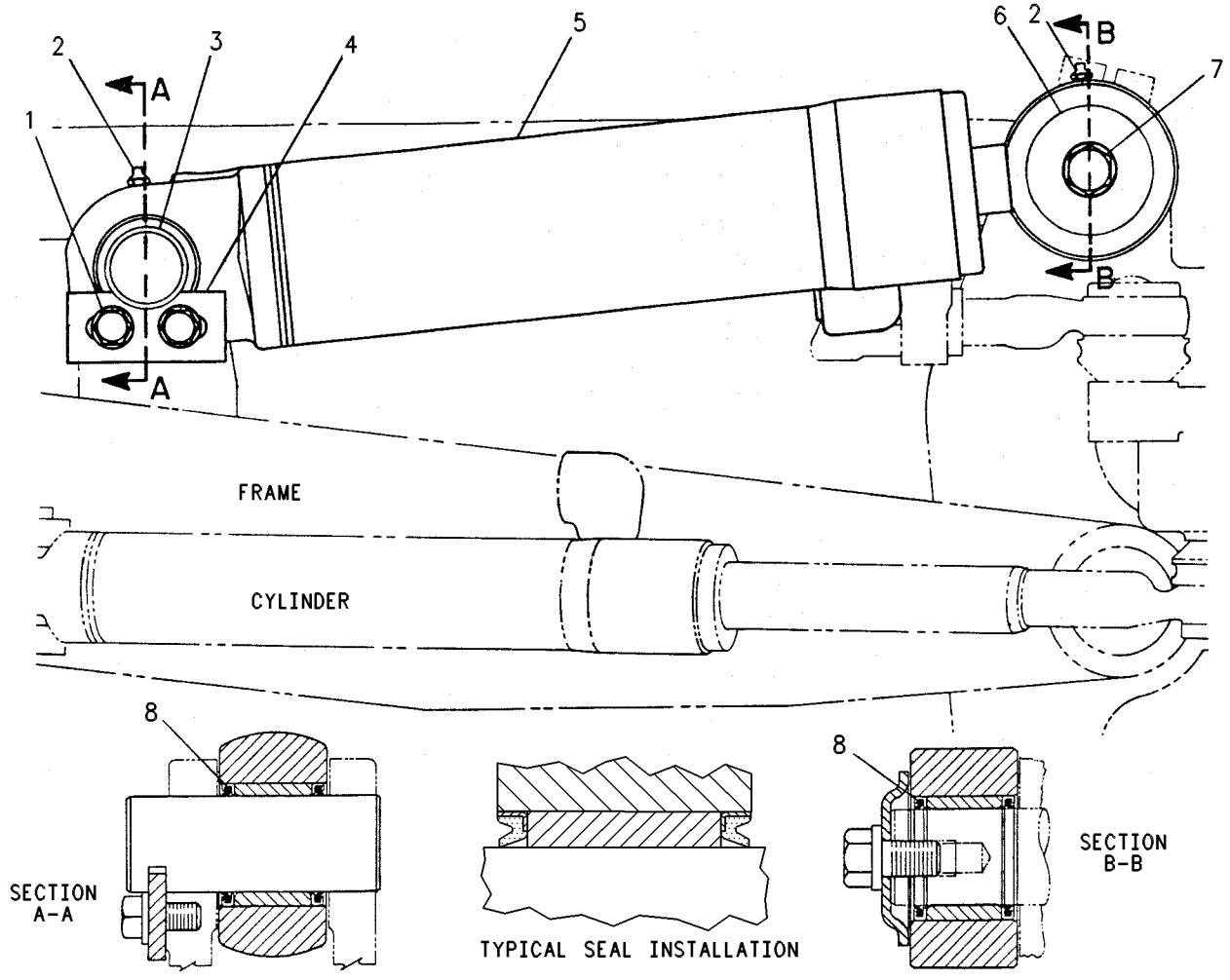

GRAPHIC #1 **<END>** g00108800

HYDRAULIC SYSTEM

6E-1560 CYLINDER GP-ARTICULATION

S/N: JPA1-UP
76.2-MM (3-IN) BORE X 284.3-MM (11.19-IN) STROKE
PART OF 112-5361 CYLINDER & MTG GP-ARTICULATION

SMCS-5265 **i01533651**

NOTE	REF NO	GRAPHIC REF	PART NUMBER	QTY	PART NAME 1 2 3 4 5 6 (PRODUCT LEVEL)	SEE PAGE
R	1	1	**6E-1561**	1	CYLINDER AS	
M	2	1	**173-9779**	1	BOLT (M24X3X80-MM)	
	3	1	**6V-8237**	1	WASHER (26X44X4-MM THK)	
	4	1	**6E-4090**	1	PISTON	
	5	1	**6J-1972**	1	SEAL AS	
					(INCLUDES EXPANDER RING & SEAL)	
	6	1	**6J-5733**	1	RING-WEAR	
R	7	1	**9T-4213**	1	ROD AS	
	8	1	**4T-6907**	1	RING-WEAR	
	9	1	**167-2190**	1	SEAL AS-BUFFER	
					(INCLUDES BUFFER SEAL & BACKUP RING)	
	10	1	**167-2300**	1	SEAL-U-CUP	
	11	1	**167-2452**	1	SEAL-WIPER	
	12	1	**175-7896**	1	SEAL-O-RING	
	13	1	**6J-5731**	1	RING-BACKUP	
	14	1	**184-9843**	1	HEAD	

M-METRIC PART
R-REMFG PART MAY BE AVAILABLE

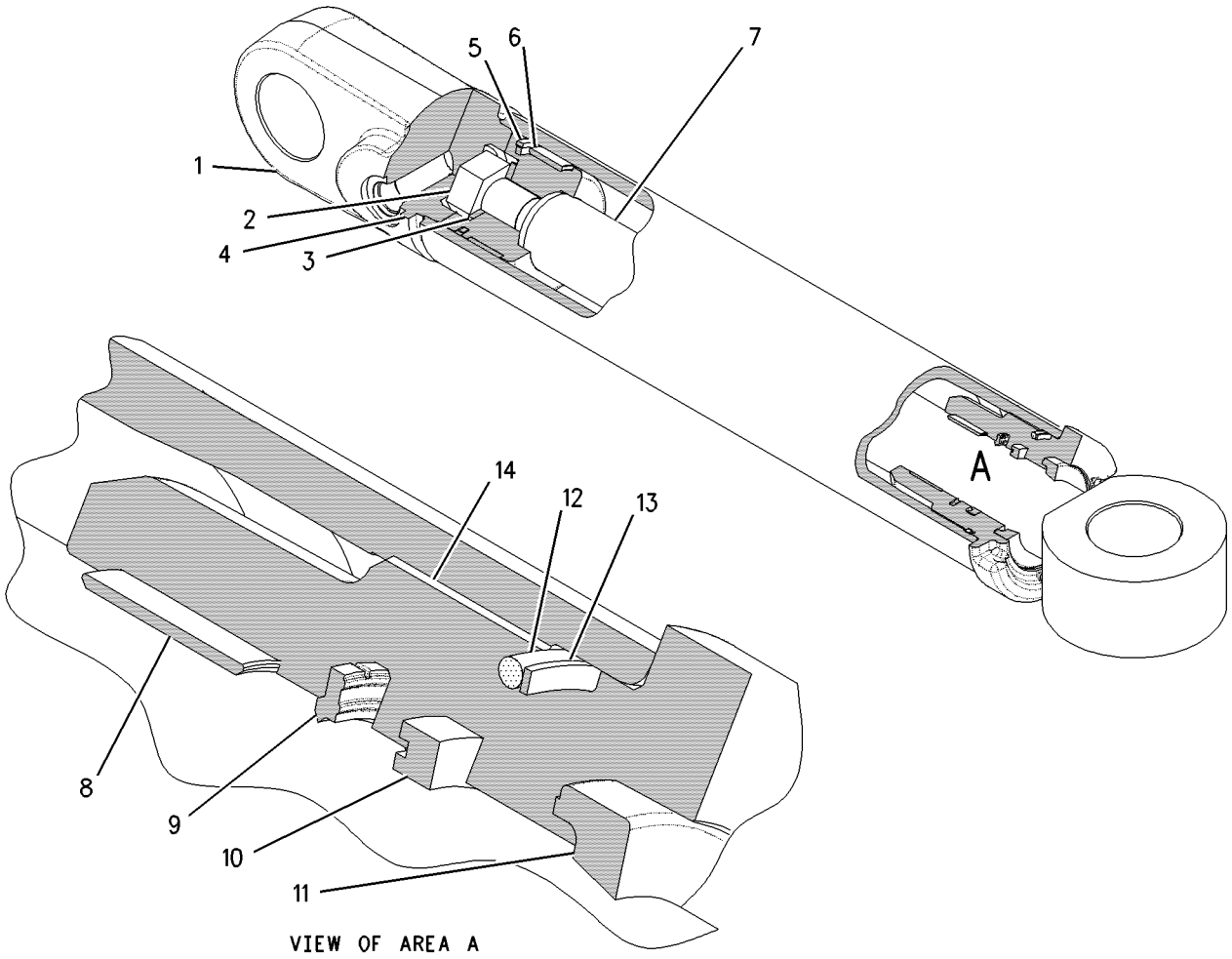

GRAPHIC #1 **<END>** g00764504

9T-8784 CYLINDER GP-ARTICULATION

S/N: JPA1-UP
76.2-MM (3-IN) BORE X 284.3-MM (11.20-IN) STROKE
PART OF 112-5361 CYLINDER & MTG GP-ARTICULATION

SMCS-5265 **i03178241**

NOTE	REF NO	GRAPHIC REF	PART NUMBER	QTY	PART NAME 1 2 3 4 5 6 (PRODUCT LEVEL)	SEE PAGE
R	1	1	**9T-2452**	1	CYLINDER AS	
M	2	1	**173-9779**	1	BOLT (M24X3X80-MM)	
	3	1	**6V-8237**	1	WASHER (26X44X4-MM THK)	
	4	1	**6E-4090**	1	PISTON	
J	5	1	**6J-1972**	1	SEAL AS	
J	6	1	**6J-5733**	1	RING-WEAR	
R	7	1	**9T-4213**	1	ROD AS	
J	8	1	**4T-6907**	1	RING-WEAR	
CJ	9	1	**167-2190**	1	SEAL AS-BUFFER	
CJ	10	1	**167-2300**	1	SEAL-U-CUP	
J	11	1	**231-3539**	1	SEAL-WIPER	
CJ	12	1	**175-7896**	1	SEAL-O-RING	
J	13	1	**6J-5731**	1	RING-BACKUP	
C	14	1	**184-9843**	1	HEAD	
					AVAILABLE REPAIR KIT(S):	
AJ			**185-7025**	1	KIT-SEAL	
					(INCLUDES SEAL-O-RING)	

A-NOT PART OF THIS GROUP
C-CHANGE FROM PREVIOUS TYPE
J-KIT MARKED J INCLUDES PARTS MARKED J
M-METRIC PART
R-REMFG PART MAY BE AVAILABLE

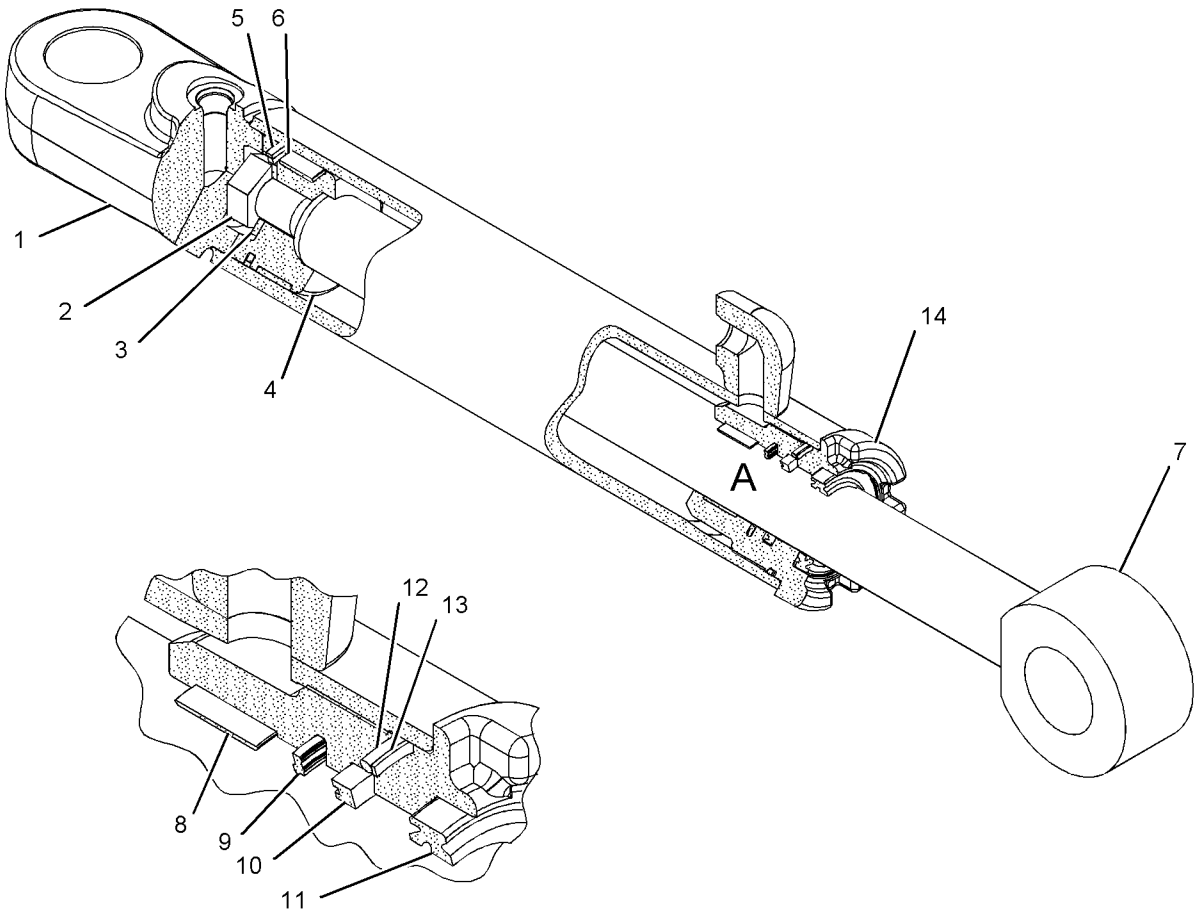

VIEW OF AREA A

GRAPHIC #1 **<END>** g01069017

6E-1343 CYLINDER GP-CENTERSHIFT

S/N: JPA1-UP
76.2-MM (3-IN) BORE X 630-MM (2.35-IN) STROKE
PART OF 8X-1944 CYLINDER & MTG GP-CENTERSHIFT

SMCS-5223 **i02108899**

NOTE	REF NO	GRAPHIC REF	PART NUMBER	QTY	PART NAME 1 2 3 4 5 6 (PRODUCT LEVEL)	SEE PAGE
	1	1	**6E-1344**	1	CYLINDER AS	
M	2	1	**173-9683**	1	BOLT (M30X3.5X90-MM)	
	3	1	**3S-7023**	1	WASHER (34X57X6-MM THK)	
	4	1	**6E-1131**	1	PISTON	
	5	1	**6E-1346**	1	ROD AS	
J	6	1	**175-7896**	1	SEAL-O-RING	
J	7	1	**6J-5731**	1	RING-BACKUP	
	8	1	**148-2593**	1	HEAD	
J	9	1	**6J-5733**	1	RING-WEAR	
J	10	1	**6J-1972**	1	SEAL AS	
J	11	1	**229-9382**	1	SEAL-WIPER	
J	12	1	**167-2304**	1	SEAL-U-CUP	
J	13	1	**167-2195**	1	SEAL AS-BUFFER	
J	14	1	**4T-5613**	1	RING-WEAR	
					AVAILABLE REPAIR KIT(S):	
J			**238-4462**	1	KIT-SEAL	
					(INCLUDES SEALS AND RINGS)	

J-KIT MARKED J INCLUDES PARTS MARKED J
M-METRIC PART

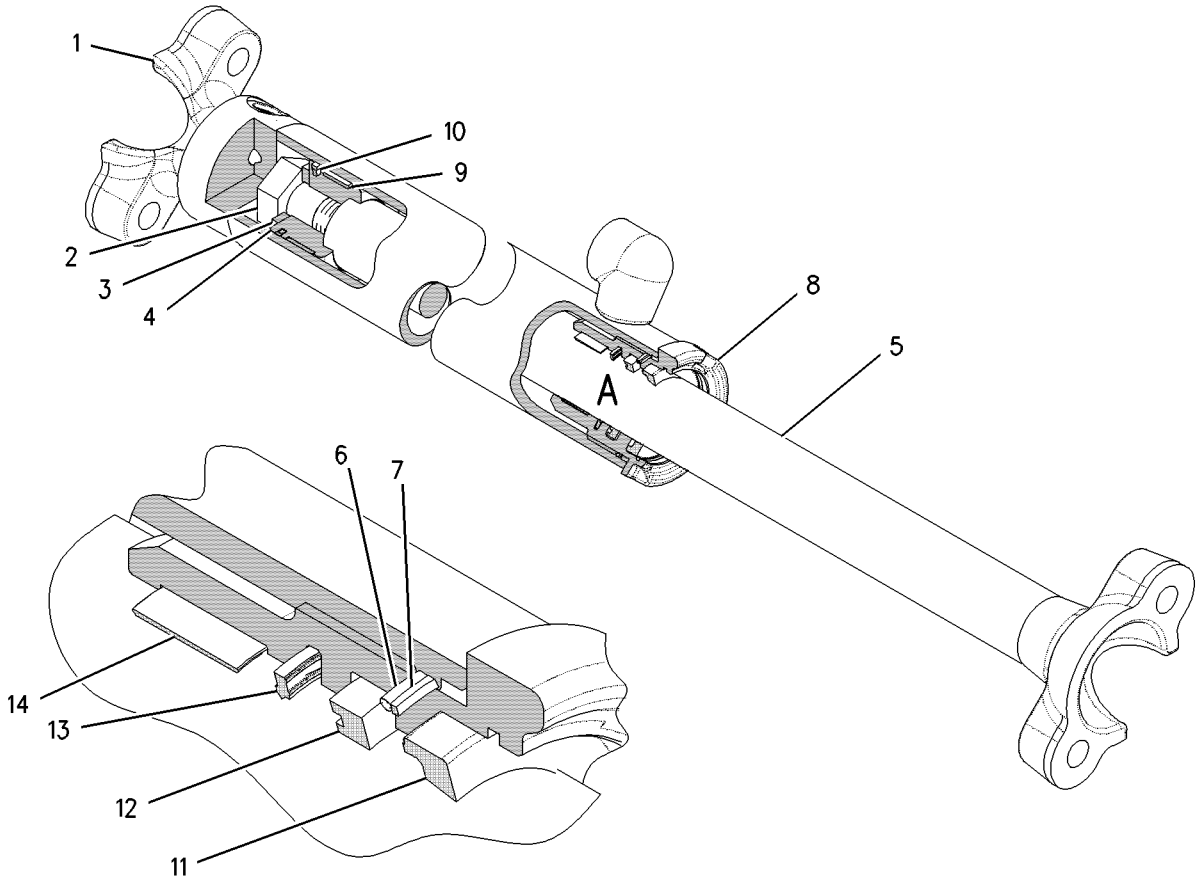

VIEW OF AREA A

GRAPHIC #1 **<END>** g00762040

131-7191 CYLINDER GP-HYDRAULIC

S/N: JPA1-UP
69.85-MM (2.75-IN) BORE X 307-MM (12.09-IN) STROKE
PART OF 8X-1943 CYLINDER & MTG GP-BLADE TIP
AN ATTACHMENT

SMCS-7562 **i02108889**

NOTE	REF NO	GRAPHIC REF	PART NUMBER	QTY	PART NAME 1 2 3 4 5 6 (PRODUCT LEVEL)	SEE PAGE
	1	1	**131-7194**	1	CYLINDER AS	
		1	**2D-8652**	1	BEARING	
M	2	1	**173-9685**	1	BOLT (M20X2.5X70-MM)	
	3	1	**8T-3282**	1	WASHER-HARD (22X35X3.5-MM THK)	
J	4	1	**5J-7010**	1	SEAL AS	
J	5	1	**8J-0112**	1	RING-WEAR	
	6	1	**9T-2457**	1	PISTON	
J	7	1	**175-7895**	1	SEAL-O-RING	
J	8	1	**4J-9225**	1	RING-BACKUP	
	9	1	**6E-4940**	1	HEAD	
	10	1	**131-7195**	1	ROD AS	
		1	**2D-8652**	1	BEARING	
J	11	1	**4T-6780**	1	RING-WEAR	
J	12	1	**167-2186**	1	SEAL AS-BUFFER	
J	13	1	**167-2294**	1	SEAL-U-CUP	
J	14	1	**226-8202**	1	SEAL-WIPER	
					AVAILABLE REPAIR KIT(S):	
AJ			**185-6596**	1	KIT-SEAL	
					(INCLUDES SEALS & RINGS)	

A-NOT PART OF THIS GROUP
J-KIT MARKED J INCLUDES PARTS MARKED J
M-METRIC PART

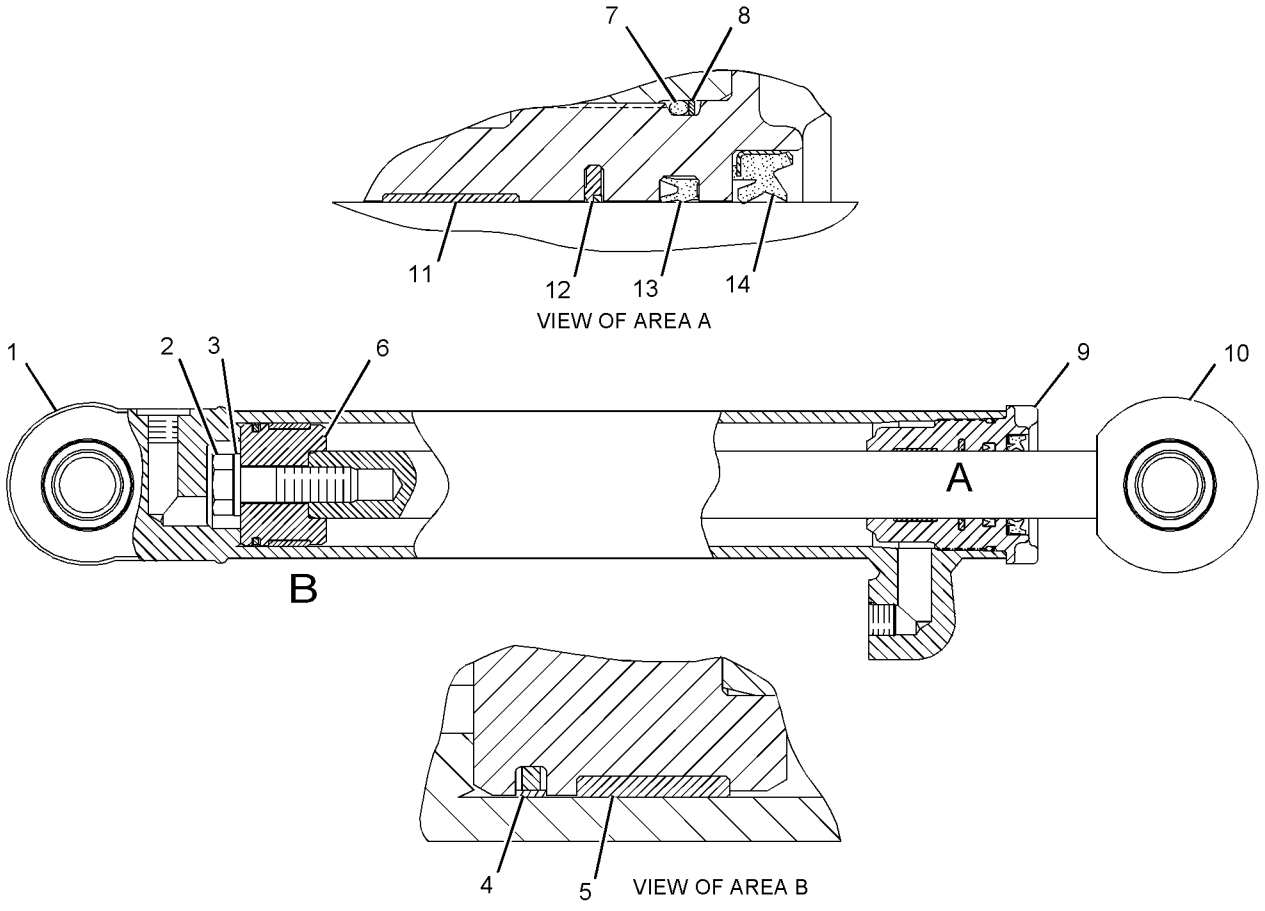

GRAPHIC #1 **<END>** g01097877

HYDRAULIC SYSTEM

132-4929 CYLINDER GP-LIFT–BLADE

S/N: JPA1-UP
76.2-MM (3-IN) BORE X 1245-MM (49.02-IN) STROKE
PART OF 8X-1947 CYLINDER & MTG GP-BLADE LIFT

SMCS-5102 **i02108887**

NOTE	REF NO	GRAPHIC REF	PART NUMBER	QTY	PART NAME 1 2 3 4 5 6 (PRODUCT LEVEL)	SEE PAGE
R	1	1	**132-4928**	1	CYLINDER AS	
		1	**8J-6384**	2	BEARING-SLEEVE	
M	2	1	**173-9683**	1	BOLT (M30X3.5X90-MM)	
	3	1	**3S-7023**	1	WASHER (34X57X6-MM THK)	
	4	1	**6J-1972**	1	SEAL AS	
	5	1	**6J-5733**	1	RING-WEAR	
	6	1	**6E-1131**	1	PISTON	
	7	1	**175-7896**	1	SEAL-O-RING	
	8	1	**6J-5731**	1	RING-BACKUP	
	9	1	**148-2593**	1	HEAD	
R	10	1	**123-3793**	1	ROD AS	
	11	1	**229-9382**	1	SEAL-WIPER	
	12	1	**167-2304**	1	SEAL-U-CUP	
	13	1	**167-2195**	1	SEAL AS-BUFFER	
	14	1	**4T-5613**	1	RING-WEAR	

M-METRIC PART
R-REMFG PART MAY BE AVAILABLE

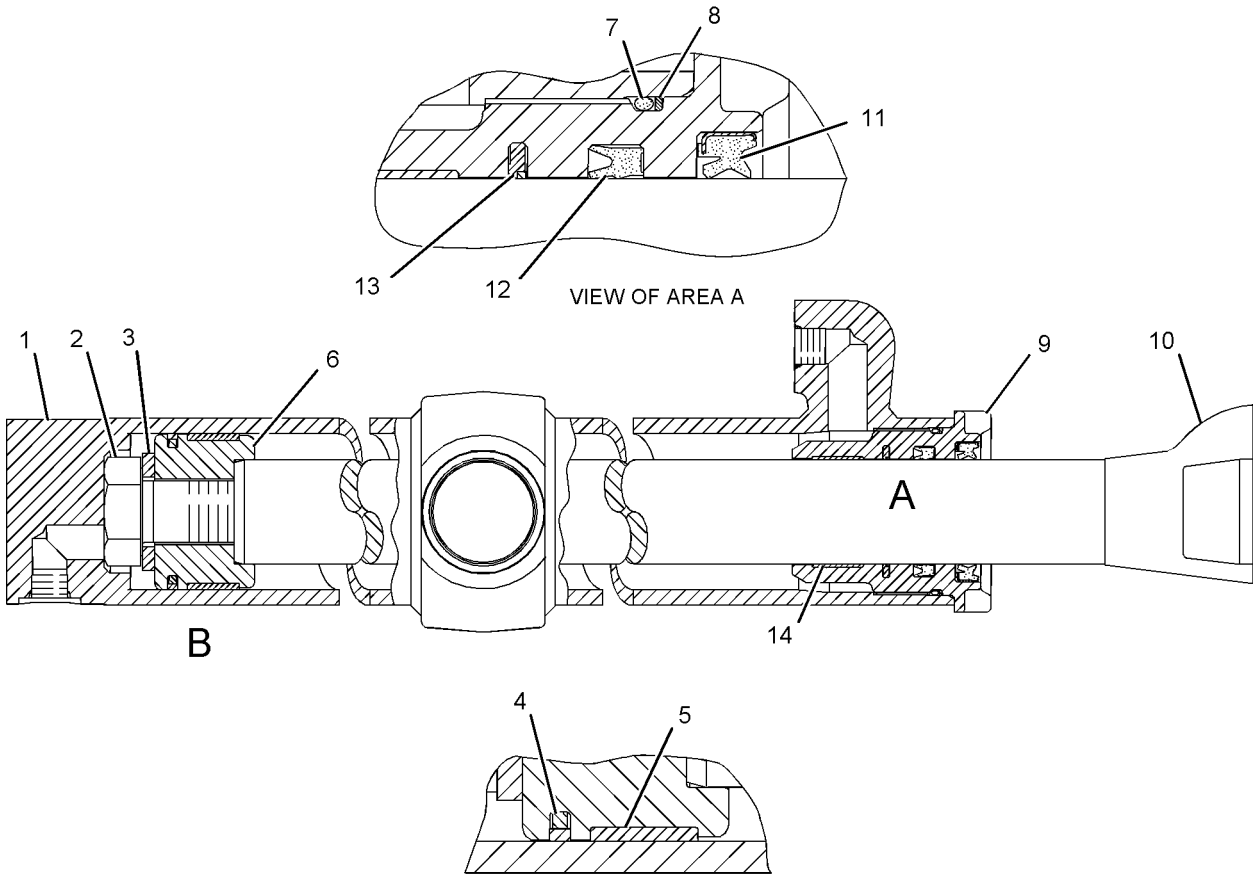

GRAPHIC #1

<END>

g01098705

113-7754 CYLINDER GP-RIPPER

S/N: JPA1-UP
101.6-MM (4-IN)BORE X 482.6-MM (19-IN) STROKE
PART OF 285-4183 RIPPER AR
AN ATTACHMENT

SMCS-5352, 5356 **i01988942**

NOTE	REF NO	GRAPHIC REF	PART NUMBER	QTY	PART NAME 1 2 3 4 5 6 (PRODUCT LEVEL)	SEE PAGE
R	1	1	**113-7755**	1	CYLINDER AS	
	1A	1	**8J-9911**	2	BEARING-SLEEVE	
	1B	1	**9T-8958**	1	TRUNNION	
M	2	1	**173-9683**	1	BOLT (M30X3.5X90-MM)	
	3	1	**3S-7023**	1	WASHER (34X57X6-MM THK)	
	4	1	**5J-5402**	1	SEAL AS	
	5	1	**6J-2797**	1	RING-WEAR	
	6	1	**9T-3133**	1	PISTON	
R	7	1	**113-7756**	1	ROD AS	
	7A	1	**8J-9910**	1	BEARING-SLEEVE	
	8	1	**175-7900**	1	SEAL-O-RING	
	9	1	**2K-6830**	1	RING-BACKUP	
	10	1	**6E-0775**	1	HEAD	
	11	1	**4T-5613**	1	RING-WEAR	
	12	1	**167-2195**	1	SEAL AS-BUFFER	
	13	1	**167-2304**	1	SEAL-U-CUP	
	14	1	**229-9382**	1	SEAL-WIPER	

M-METRIC PART
R-REMFG PART MAY BE AVAILABLE

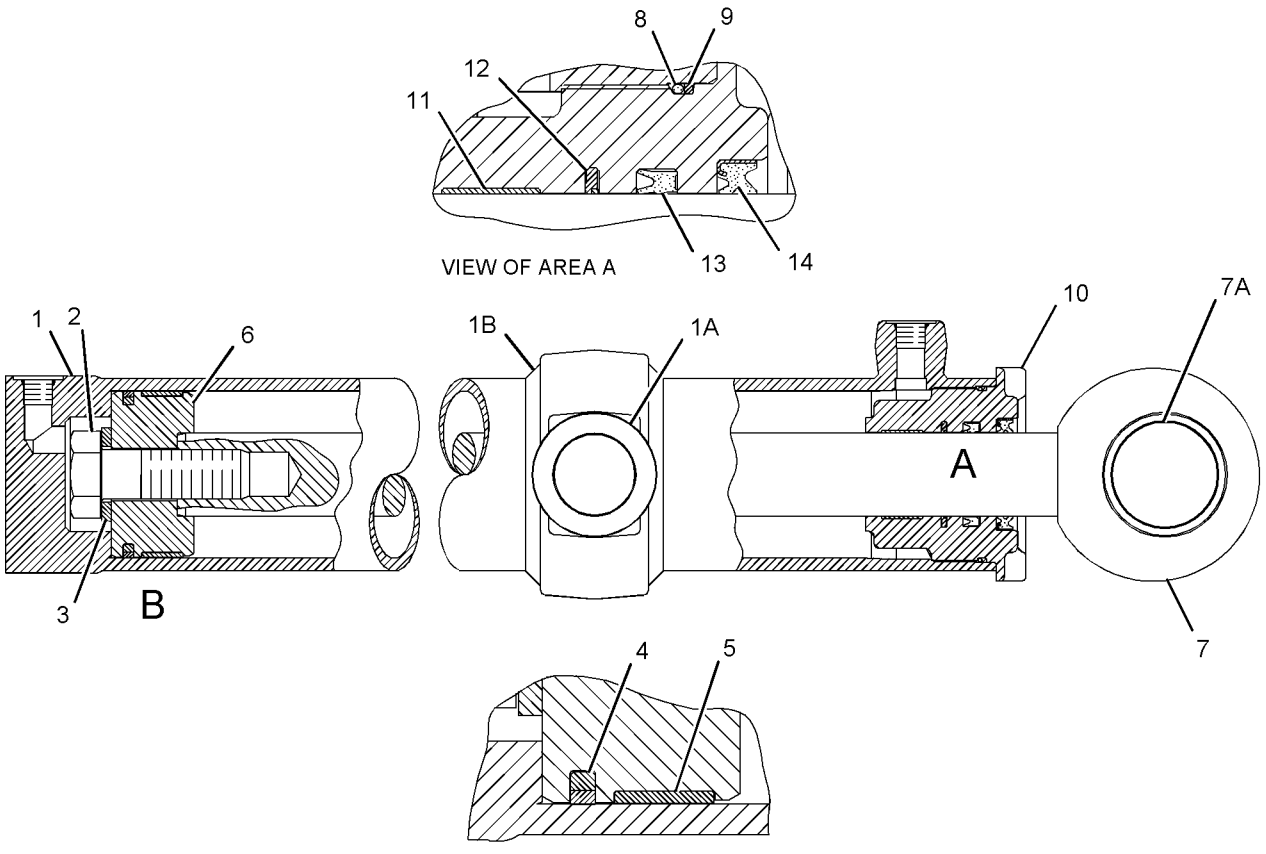

GRAPHIC #1

<END>

g01069015

HYDRAULIC SYSTEM

165-2510 CYLINDER GP-SCARIFIER

S/N: JPA1-UP
76.2-MM (3-IN) BORE X 406.5-MM (16-IN) STROKE
PART OF 8W-2913 CYLINDER & MTG GP-SCARIFIER
AN ATTACHMENT

SMCS-5213 **i01963757**

NOTE	REF NO	GRAPHIC REF	PART NUMBER	QTY	PART NAME 1 2 3 4 5 6 (PRODUCT LEVEL)	SEE PAGE
	1	1	**9T-4211**	1	PISTON	
	2	1	**168-9108**	1	CYLINDER AS	
	3	1	**168-9110**	1	ROD AS	
	4	1	**184-9843**	1	HEAD	
J	5	1	**167-2190**	1	SEAL AS-BUFFER	
J	6	1	**167-2300**	1	SEAL-U-CUP	
J	7	1	**231-3539**	1	SEAL-WIPER	
M	8	1	**173-9779**	1	BOLT (M24X3X80-MM)	
J	9	1	**175-7896**	1	SEAL-O-RING	
J	10	1	**4T-6907**	1	RING-WEAR	
J	11	1	**6J-1972**	1	SEAL AS	
J	12	1	**6J-5731**	1	RING-BACKUP	
J	13	1	**6J-5733**	1	RING-WEAR	
	14	1	**6V-8237**	1	WASHER (26X44X4-MM THK)	
					AVAILABLE REPAIR KIT(S):	
AJ			**185-7025**	1	KIT-SEAL	
					(INCLUDES SEAL-O-RING)	

A-NOT PART OF THIS GROUP
J-KIT MARKED J INCLUDES PARTS MARKED J
M-METRIC PART

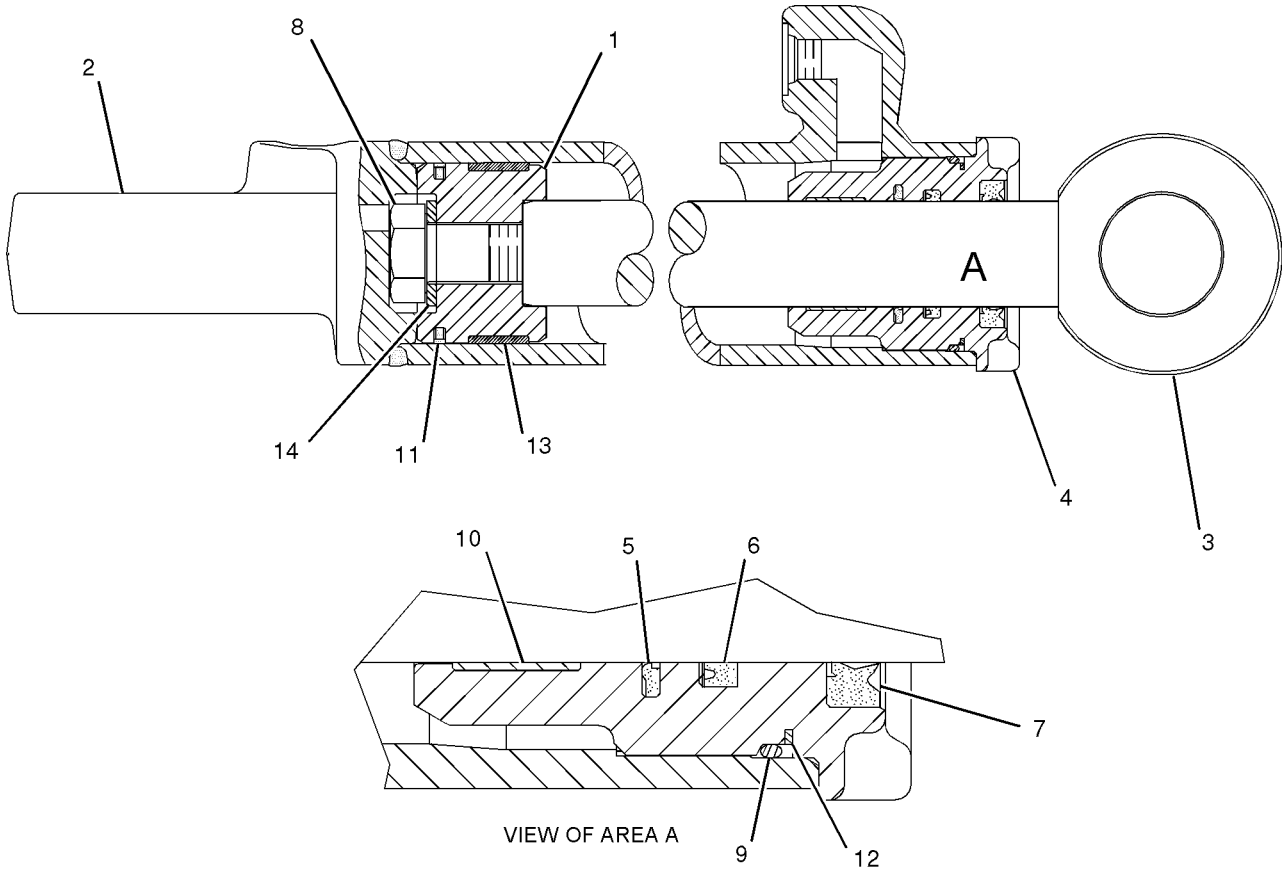

GRAPHIC #1 **<END>** g01045248

112-5575 CYLINDER GP-SIDESHIFT

S/N: JPA1-UP
76.2-MM (3-IN) BORE X 1185-MM (46.66-IN) STROKE
PART OF 112-7463 CYLINDER & MTG GP-SIDESHIFT
AN ATTACHMENT

SMCS-5229 **i02503930**

NOTE	REF NO	GRAPHIC REF	PART NUMBER	QTY	PART NAME 1 2 3 4 5 6 (PRODUCT LEVEL)	SEE PAGE
R	1	1	**9T-2482**	1	CYLINDER AS	
M	2	1	**8T-0667**	1	BOLT (M24X3X100-MM)	
	3	1	**150-1280**	1	WASHER-HARD (26X44X22-MM THK)	
	4	1	**9T-4211**	1	PISTON	
	5	1	**175-7896**	1	SEAL-O-RING	
	6	1	**6J-5731**	1	RING-BACKUP	
R	7	1	**112-9035**	1	ROD AS	
	8	1	**184-9843**	1	HEAD	
	9	1	**231-3539**	1	SEAL-WIPER	
	10	1	**167-2300**	1	SEAL-U-CUP	
	11	1	**167-2190**	1	SEAL AS-BUFFER	
	12	1	**4T-6907**	1	RING-WEAR	
	13	1	**6J-5733**	1	RING-WEAR	
	14	1	**6J-1972**	1	SEAL AS	

M-METRIC PART
R-REMFG PART MAY BE AVAILABLE

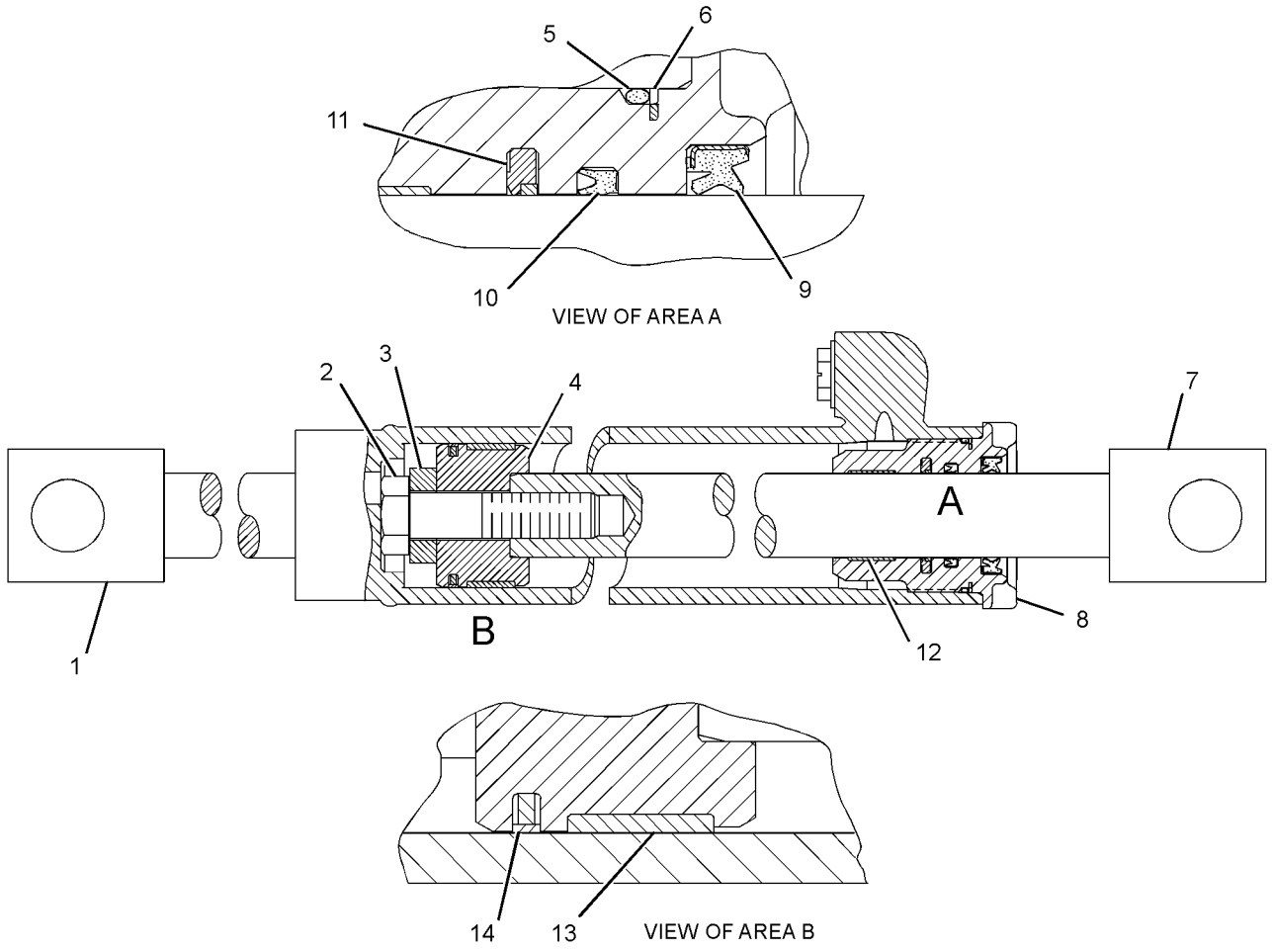

GRAPHIC #1 **<END>** g01259478

HYDRAULIC SYSTEM

130-9041 CYLINDER GP-STEERING—LH

S/N: JPA1-UP
57.15-MM (2.25-IN) BORE X 267-MM (10.51-IN) STROKE
PART OF 8W-2290 CYLINDER & MTG GP-STEERING

SMCS-4303 **i02097612**

NOTE	REF NO	GRAPHIC REF	PART NUMBER	QTY	PART NAME 1 2 3 4 5 6 (PRODUCT LEVEL)	SEE PAGE
	1	1	**9T-2388**	1	PISTON	
R	2	1	**130-9044**	1	CYLINDER AS (LH)	
		1	**148-2592**	1	BOSS AS	
		1	**1N-5999**	1	PLUG-O-RING	
		1	**7J-0204**	1	SEAL-O-RING	
	3	1	**154-6579**	1	ROD	
	4	1	*162-6448*	2	PLUG AS	
					(EACH INCLUDES)	
		1	**1N-5999**	1	PLUG-O-RING	
		1	**7J-0204**	1	SEAL-O-RING	
	5	1	**167-2186**	1	SEAL AS-BUFFER	
	6	1	**167-2294**	1	SEAL-U-CUP	
M	7	1	**173-9685**	1	BOLT (M20X2.5X70-MM)	
	8	1	**175-7895**	1	SEAL-O-RING	
	9	1	**1U-3998**	1	SEAL AS	
	10	1	**226-8202**	1	SEAL-WIPER	
	11	1	**4J-9225**	1	RING-BACKUP	
	12	1	**7H-2423**	1	RING-WEAR	
	13	1	**8T-3282**	1	WASHER-HARD (22X35X3.5-MM THK)	
	14	1	**9T-3727**	1	HEAD	

M-METRIC PART
R-REMFG PART MAY BE AVAILABLE

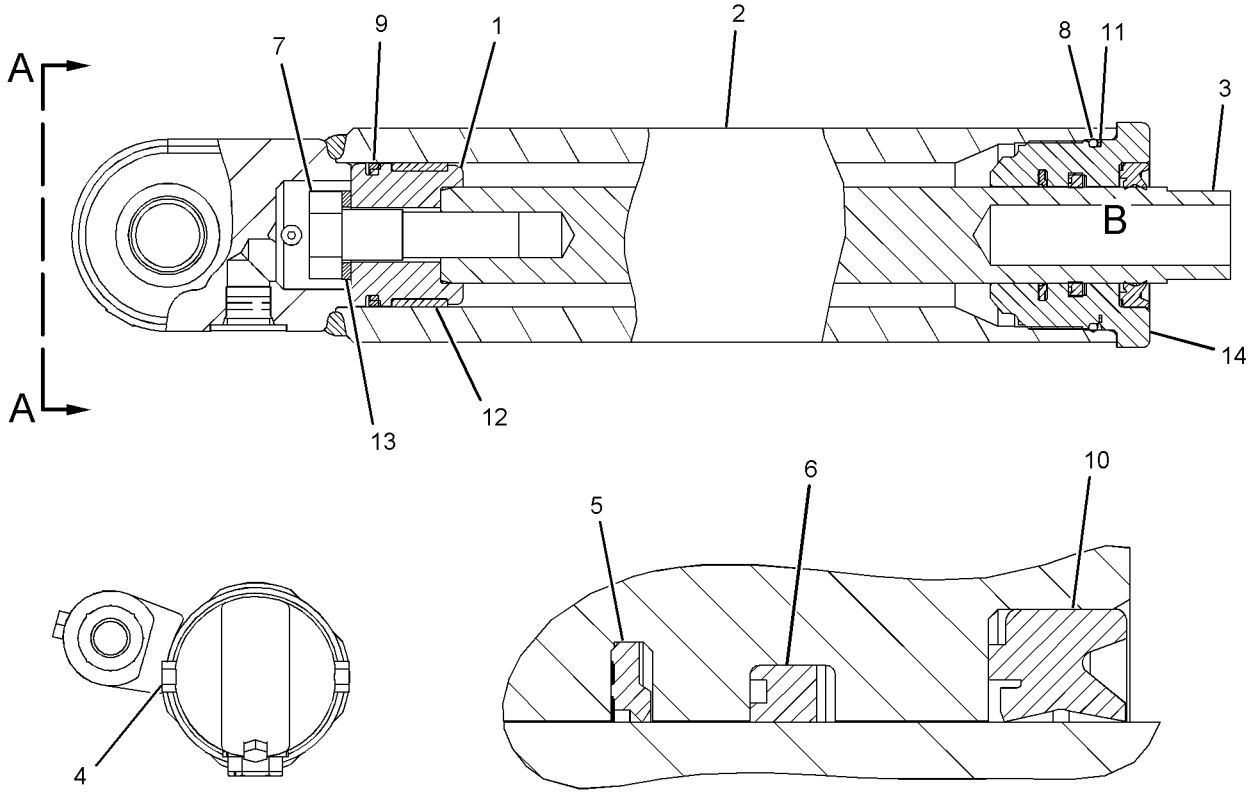

VIEW A-A

VIEW OF AREA B

GRAPHIC #1 **<END>** g01069447

130-9042 CYLINDER GP-STEERING–RH

S/N: JPA1-UP
57.15-MM (2.25-IN) BORE X 267-MM (10.51-IN) STROKE
PART OF 8W-2290 CYLINDER & MTG GP-STEERING

SMCS-4303 **i01961840**

NOTE	REF NO	GRAPHIC REF	PART NUMBER	QTY	PART NAME 1 2 3 4 5 6 (PRODUCT LEVEL)	SEE PAGE
	1	1	**9T-2388**	1	PISTON	
	2	1	**130-9045**	1	CYLINDER AS (RH)	
		1	**1N-5999**	1	PLUG-O-RING	
		1	**7J-0204**	1	SEAL-O-RING	
		1	**142-0308**	1	ELBOW	
		1	**005-8639**	1	BEARING-ALIGNING	
	3	1	**154-6579**	1	ROD	
	4	1	**167-2186**	1	SEAL AS-BUFFER	
	5	1	**167-2294**	1	SEAL-U-CUP	
	6	1	**226-8202**	1	SEAL-WIPER	
M	7	1	**173-9685**	1	BOLT (M20X2.5X70-MM)	
	8	1	**175-7895**	1	SEAL-O-RING	
	9	1	*162-6448*	2	PLUG AS	
					(EACH INCLUDES)	
		1	**1N-5999**	1	PLUG-O-RING	
		1	**7J-0204**	1	SEAL-O-RING	
	10	1	**1U-3998**	1	SEAL AS	
	11	1	**4J-9225**	1	RING-BACKUP	
	12	1	**7H-2423**	1	RING-WEAR	
	14	1	**8T-3282**	1	WASHER-HARD (22X35X3.5-MM THK)	
	15	1	**9T-3727**	1	HEAD	

M-METRIC PART

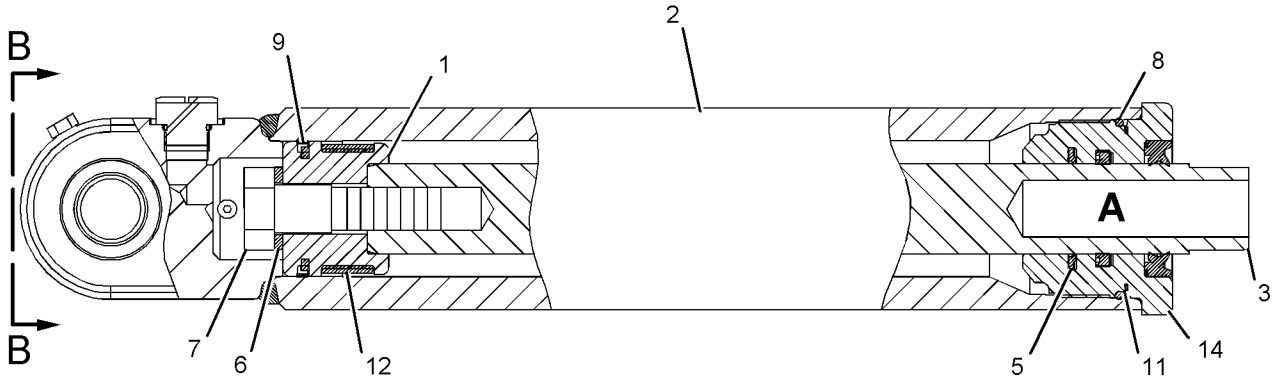

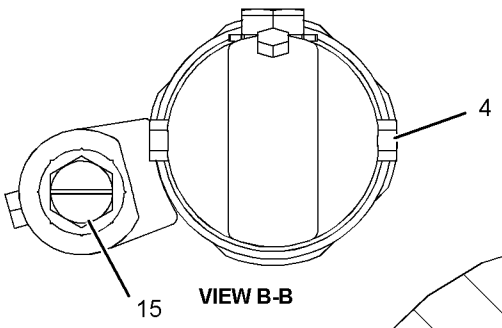

VIEW B-B

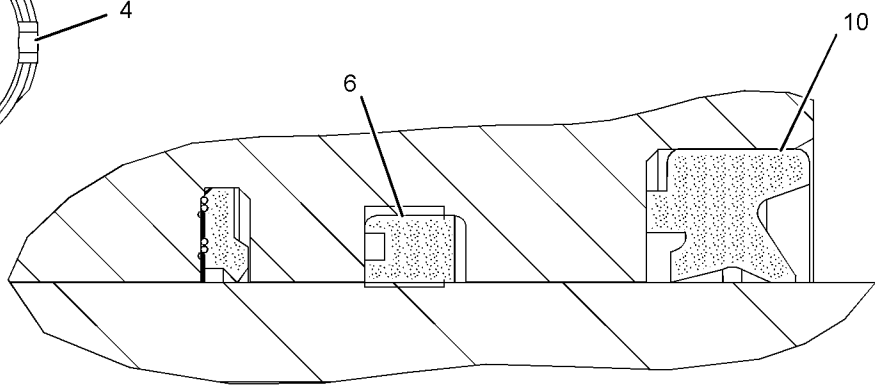

VIEW OF AREA A

GRAPHIC #1 **<END>** g01083880

HYDRAULIC SYSTEM

121-9242 CYLINDER GP-WHEEL LEAN

S/N: JPA1-UP
88.9-MM (3.5-IN) BORE X 149-MM (5.87-IN) STROKE
PART OF 8W-2737 CYLINDER & MTG GP-WHEEL LEAN

SMCS-5211 **i02108923**

NOTE	REF NO	GRAPHIC REF	PART NUMBER	QTY	PART NAME 1 2 3 4 5 6 (PRODUCT LEVEL)	SEE PAGE
	1	1	**123-1076**	1	CYLINDER AS	
M	2	1	**173-9683**	1	BOLT (M30X3.5X90-MM)	
	3	1	**9X-8399**	1	WASHER (33X56X6-MM THK)	
	4	1	**4T-8054**	1	SEAL AS	
	5	1	**7J-9885**	1	RING-WEAR	
	6	1	**9T-9040**	1	PISTON	
	7	1	**175-7898**	1	SEAL-O-RING	
	8	1	**4J-9224**	1	RING-BACKUP	
	9	1	**6E-4974**	1	HEAD	
	10	1	**121-9245**	1	ROD AS	
		1	**2G-8631**	1	BEARING-SLEEVE	
	11	1	**229-9382**	1	SEAL-WIPER	
	12	1	**167-2304**	1	SEAL-U-CUP	
	13	1	**167-2195**	1	SEAL AS-BUFFER	
	14	1	**4T-5613**	1	RING-WEAR	

M-METRIC PART

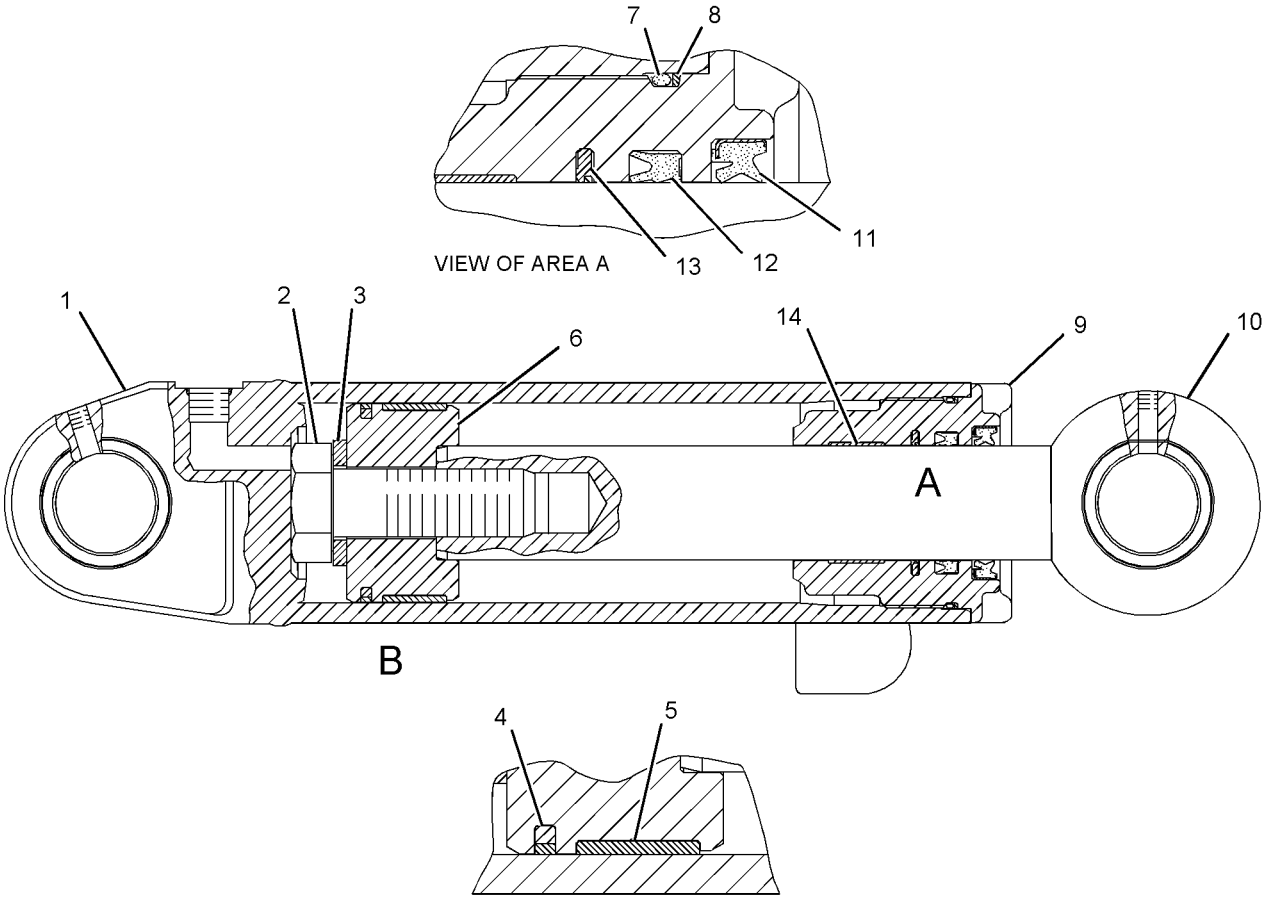

GRAPHIC #1

<END>

g01098821

108-4916 DETENT GP-CONTROL VALVE–PLOW, BULLDOZER LIFT

S/N: JPA1-UP

PART OF 107-0547, 6E-3031, 6E-3037 VALVE GP-CONTROL

AN ATTACHMENT

SMCS-5051 **i00131376**

NOTE	REF NO	GRAPHIC REF	PART NUMBER	QTY	PART NAME 1 2 3 4 5 6 (PRODUCT LEVEL)	SEE PAGE
	1	1	**101-1974**	1	RETAINER	
	2	1	**101-1975**	1	RETAINER	
	3	1	**102-7423**	1	SPRING	
	4	1	**5B-9318**	6	BALL	

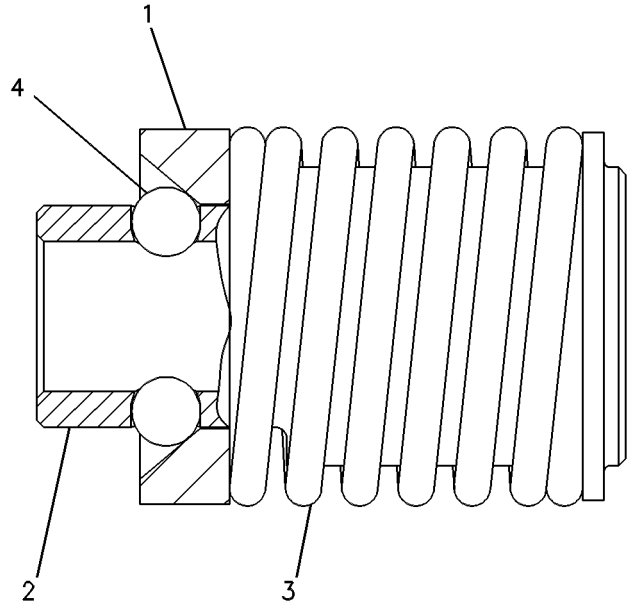

GRAPHIC #1 **<END>** g00108519

HYDRAULIC SYSTEM

5T-0570 DRIVE GP-CIRCLE

S/N: JPA1-UP

PART OF 274-7940 GENERAL AR

SMCS-5207 **i03193261**

NOTE	REF NO	GRAPHIC REF	PART NUMBER	QTY	PART NAME 1 2 3 4 5 6 (PRODUCT LEVEL)	SEE PAGE
CY	1	1	**105-3196**	1	MOTOR GP-GEROTOR (CIRCLE DRIVE)	430
	2	1	**1B-4046**	2	CONE-BEARING	
	3	1	**1B-4038**	2	CUP-BEARING	
	4	1	**1B-5174**	1	PLUG-PIPE	
	5	1	**312-0782**	1	WORM-CIRCLE DRIVE	
	6	1	**1H-7339**	1	SEAL-O-RING	
	7	1	**9D-1491**	1	COUPLING	
	8	1	**4H-6996**	1	PIN-SPRING	
	9	1	**2G-6695**	1	BRACKET	
B	10	1	**7D-8983**	10	SHIM (0.005-IN THK)	
B	11	1	**7D-8984**	6	SHIM (0.007-IN THK)	
	12	1	**2H-9247**	1	SEAL-O-RING	
	13	1	**6G-5548**	1	SPACER (69.5X89X0.8-MM THK)	
B	14	1	**307-1959**	2	SHIM (0.13-MM THK)	
R	15	1	**5K-5288**	1	SEAL GP-DUO-CONE	
	15A	1	**5K-5129**	2	RING-SEALING	
B	16	1	**307-1960**	1	SHIM (0.25-MM THK)	
	17	1	**6G-5538**	1	COVER	
	18	1	**6H-1717**	5	BOLT (1/2-13X1.125-IN)	
	19	1	**5P-8245**	16	WASHER-HARD (13.5X25.5X3-MM THK)	
	20	1	**2B-7410**	1	PLUG-PIPE	
	21	1	**8T-0336**	1	FITTING-PRESSURE RELIEF	
	22	1	**5K-8454**	3	BOLT (1/2-13X1.12-IN)	
	23	1	**6G-5534**	1	COVER AS	
		1	**6G-5537**	1	BEARING	
C	24	1	**1F-7958**	4	NUT-FULL (1/2-13-THD)	
	25	1	**5H-4909**	1	SEAL-O-RING	
	26	1	**6G-5539**	1	GASKET	
	27	1	**307-1961**	1	PLATE	
	28	1	**6G-5533**	1	GEAR-WORM (36-TEETH)	
C	29	1	**9X-8887**	2	BOLT (3/4-10X3-IN)	
	30	1	**7M-2360**	2	WASHER (19.8X41X9.5-MM THK)	
	31	1	**8D-7425**	2	WASHER-THRUST (2.8X4.25X0.12-MM THK)	
	32	1	**307-1958**	1	SHAFT-PINION DRIVE	
	33	1	**4F-9653**	1	SEAL-O-RING	
	34	1	**5P-8248**	4	WASHER-HARD (20X36.5X3.5-MM THK)	
	35	1	**2J-3506**	4	NUT-FULL (3/4-10-THD)	
	36	1	**8D-7424**	1	SPACER (48X81X6-MM THK)	
	37	1	**8D-7423**	1	WASHER-SPECIAL (1.906X3.19X1.6-MM THK)	
	38	1	**1A-1415**	1	NUT (23/4X17/8-THD)	
	39	1	**261-8553**	1	PINION-CIRCLE DRIVE	
	40	1	**6G-1908**	1	HOUSING AS-DRIVE	
	40A	1	**2D-8154**	4	STUD-TAPERLOCK (1/2-13X2.36-IN)	
	40B	1	**8D-7426**	1	BEARING-SLEEVE	
	40C	1	**7D-3504**	4	STUD-TAPERLOCK (3/4-10X3.39-IN)	
		1	**8D-9804**	1	HOUSING-DRIVE	
	41	1	**6G-5542**	2	SPACER (119.2X178X9.3-MM THK)	
	42	1	**0S-1585**	4	BOLT (1/2-13X1.5-IN)	
	43	1	**6Y-7953**	6	DISC-FRICTION (2.87MM .112IN THK)	
	44	1	**2G-0478**	5	DISC-FRICTION (1.52MM THK)	
	45	1	**6G-6122**	1	SPRING-DISC	
	46	1	**5S-7379**	4	BOLT (3/8-16X0.875-IN)	
	47	1	**8T-4896**	4	WASHER-HARD (10.2X18.5X2.5-MM THK)	
	48	1	**8D-5054**	3	WASHER-HARD (17X30X3-MM THK)	
M	49	1	**6V-5686**	3	BOLT (M16X2X50-MM)	
B	50	1	**307-1962**	12	SHIM (0.5-MM THK)	

B-USE AS REQUIRED
C-CHANGE FROM PREVIOUS TYPE
M-METRIC PART
R-REMFG PART MAY BE AVAILABLE
Y-SEPARATE ILLUSTRATION

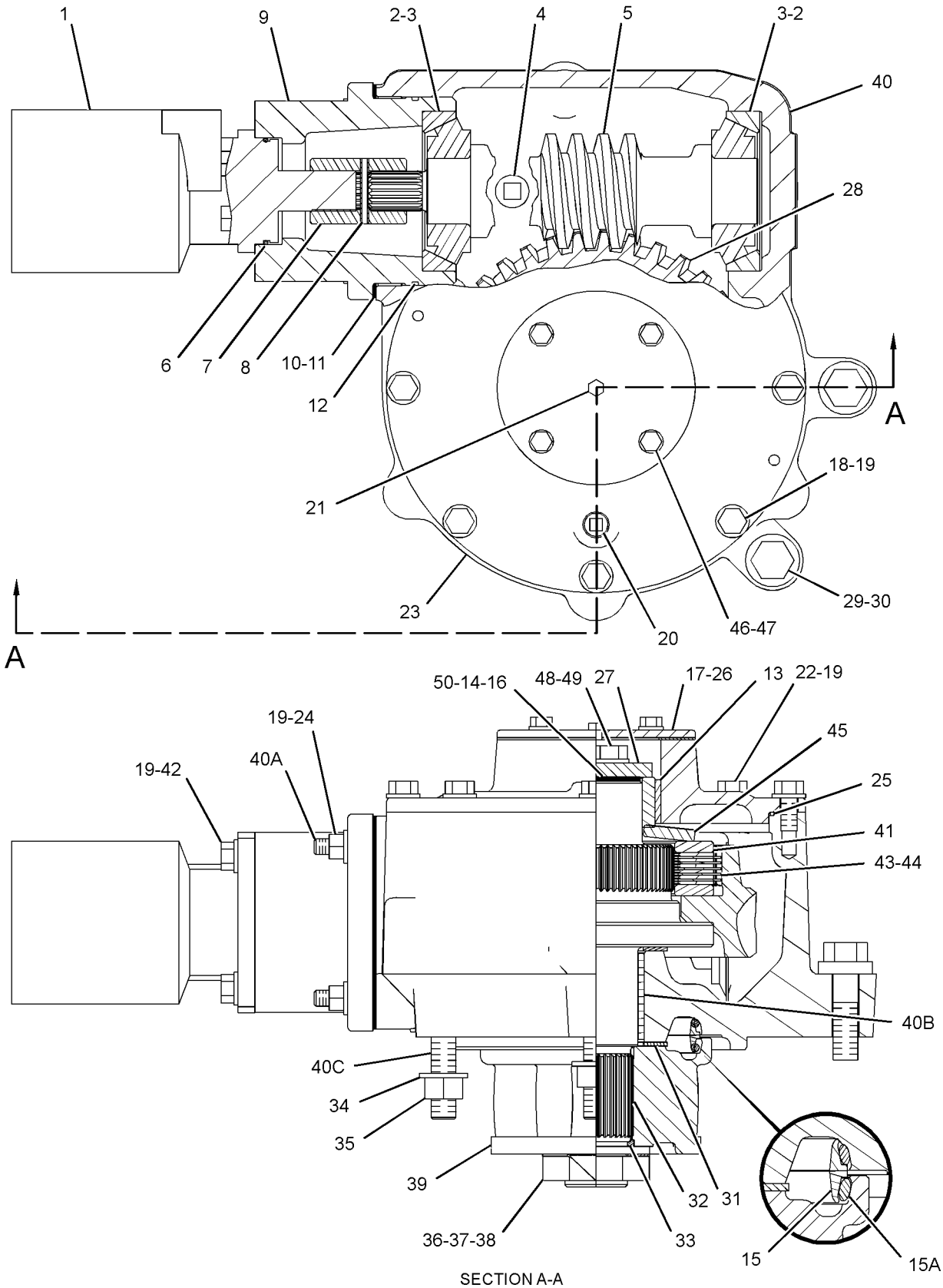

SECTION A-A

GRAPHIC #1 **<END>** g01615296

8W-7030 GUARD GP-CYLINDER

S/N: JPA1-UP
PART OF 329-3828, 329-3829 BLADE AR
AN ATTACHMENT

SMCS-7164 **i00834868**

NOTE	REF NO	GRAPHIC REF	PART NUMBER	QTY	PART NAME 1 2 3 4 5 6 (PRODUCT LEVEL)	SEE PAGE
	1	1	**8W-5227**	1	GUARD AS	
C	2	1	**7X-0334**	4	BOLT (1/2-13X5-IN)	
C	3	1	**105-2080**	2	BRACKET AS	
					(EACH INCLUDES)	
		1	**1F-0748**	2	NUT-WELD (1/2-13-THD)	
C	4	1	**7D-1649**	4	WASHER-HARD (13.5X32X5-MM THK)	
C	5	1	**102-4139**	4	SPACER (18.85X26.67X78-MM THK)	

C-CHANGE FROM PREVIOUS TYPE

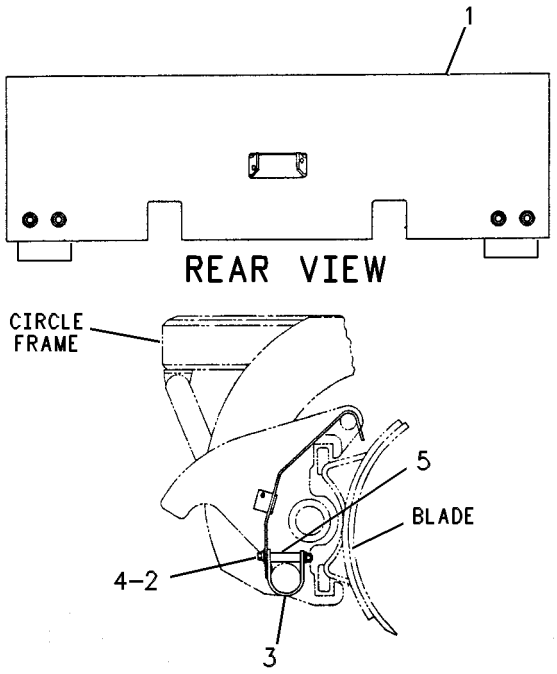

GRAPHIC #1 **<END>** g00109186

HYDRAULIC SYSTEM

166-3336 LINES GP-ACCUMULATOR

S/N: JPA1-UP
PART OF 285-4154 ACCUMULATOR AR-BLADE CUSHION
AN ATTACHMENT

SMCS-5057 **i01680380**

NOTE	REF NO	GRAPHIC REF	PART NUMBER	QTY	PART NAME 1 2 3 4 5 6 (PRODUCT LEVEL)	SEE PAGE
	1	1	**9D-0953**	1	SPACER (0.406X0.75X0.88-IN THK)	
I	2	1	**108-0706**	1	HOSE AS	
Y	3	1	**112-2240**	2	MANIFOLD GP-CONTROL (BLADE CUSHION)	426
I	4	1	**134-0744**	1	HOSE AS	
I	5	1	**134-0746**	1	HOSE AS	
I	6	1	**151-9849**	1	HOSE AS	
	7	1	*171-6466*	2	UNION AS	
					(EACH INCLUDES)	
		1	**5P-9810**	1	UNION	
		1	**3D-2824**	2	SEAL-O-RING	
	8	1	*148-8328*	2	CONNECTOR AS	
					(EACH INCLUDES)	
		1	**6V-8633**	1	CONNECTOR	
		1	**3D-2824**	1	SEAL-O-RING	
		1	**6V-8398**	1	SEAL-O-RING	
	9	1	*148-8370*	1	ELBOW AS	
		1	**6V-9851**	1	ELBOW	
		1	**6V-8398**	1	SEAL-O-RING	
	10	1	*148-8444*	2	TEE AS-SWIVEL	
					(EACH INCLUDES)	
		1	**6V-9837**	1	TEE-SWIVEL	
		1	**6V-8398**	2	SEAL-O-RING	
	11	1	**6D-4244**	2	CLIP	
	12	1	**7X-0289**	1	BOLT (3/8-16X1.875-IN)	
	13	1	**8T-4896**	1	WASHER-HARD (10.2X18.5X2.5-MM THK)	

I-REFER TO HYDRAULIC INFORMATION SYSTEM
Y-SEPARATE ILLUSTRATION

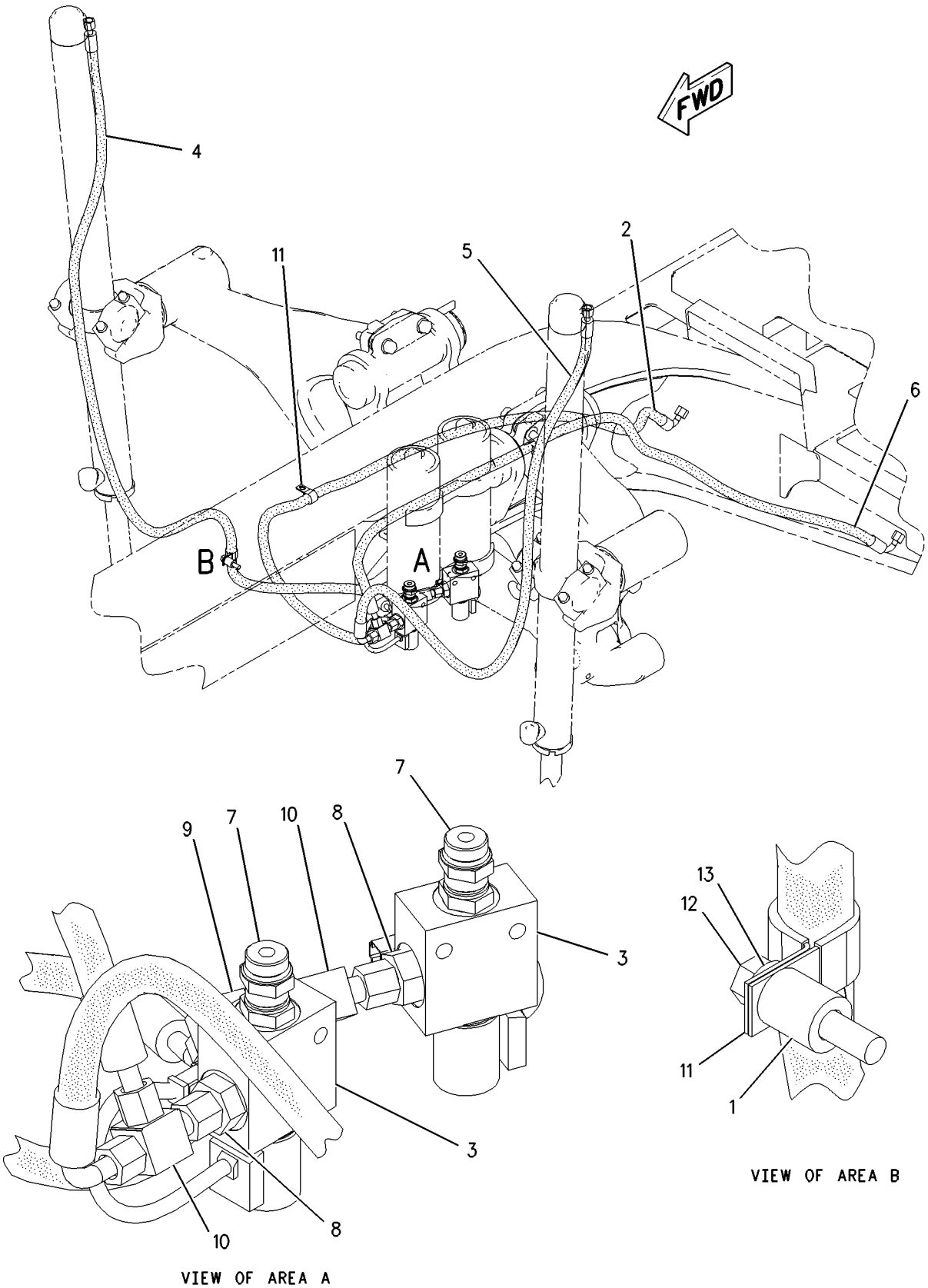

GRAPHIC #1 **<END>** g00889359

HYDRAULIC SYSTEM

8X-6070 LINES GP-HYDRAULIC—SCARIFIER

S/N: JPA1-UP
PART OF 108-1104 SCARIFIER AR
AN ATTACHMENT

SMCS-5057 **i01459260**

NOTE	REF NO	GRAPHIC REF	PART NUMBER	QTY	PART NAME 1 2 3 4 5 6 (PRODUCT LEVEL)	SEE PAGE
	1	1	**2B-0941**	1	SPACER (10.5X19X19-MM THK)	
	2	1	**4J-5468**	1	CLAMP	
I	3	1	**112-3199**	1	HOSE AS	
I	4	1	**112-3200**	1	HOSE AS	
	5	1	*164-5605*	1	CONNECTOR AS	
		1	**3K-0360**	1	SEAL-O-RING	
		1	**6V-8397**	1	SEAL-O-RING	
		1	**8T-0076**		CONNECTOR	
	6	1	*148-8318*	2	CONNECTOR AS	
					(EACH INCLUDES)	
		1	**3K-0360**	1	SEAL-O-RING	
		1	**6V-8397**	1	SEAL-O-RING	
		1	**6V-8634**	1	CONNECTOR	
	7	1	*148-8374*	1	ELBOW AS	
		1	**3K-0360**	1	SEAL-O-RING	
		1	**6V-8397**	1	SEAL-O-RING	
		1	**6V-8723**	1	ELBOW	
	8	1	**6D-4247**	1	CLIP	
	9	1	**7X-0289**	1	BOLT (3/8-16X1.875-IN)	
	10	1	**8T-4896**	1	WASHER-HARD (10.2X18.5X2.5-MM THK)	

I-REFER TO HYDRAULIC INFORMATION SYSTEM

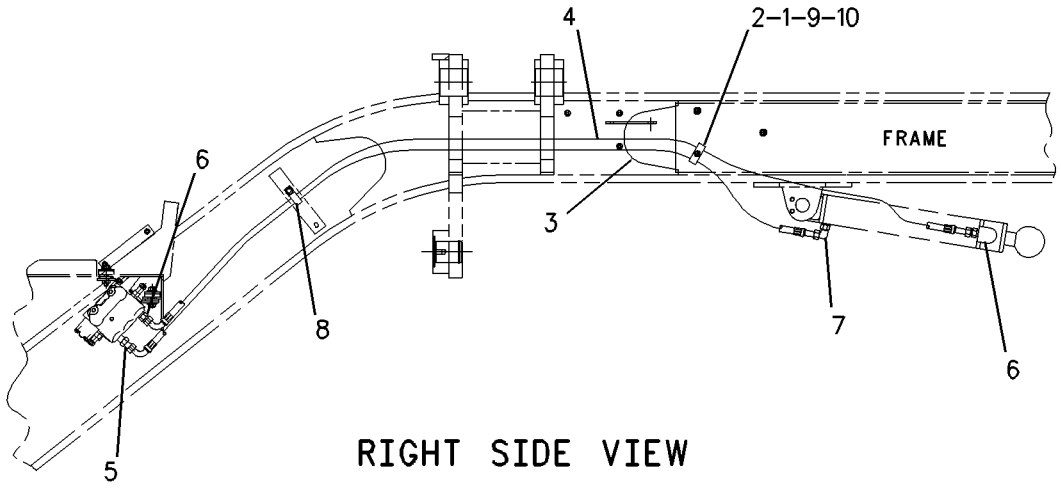

RIGHT SIDE VIEW

GRAPHIC #1 **<END>** g00633579

HYDRAULIC SYSTEM

106-4787 LINES GP-HYDRAULIC–LH

S/N: JPA1-UP
4 CIRCUITS
PART OF 329-3825, 329-3827 BLADE & TIP AR-POWER
AN ATTACHMENT

SMCS-5057 **i02425824**

NOTE	REF NO	GRAPHIC REF	PART NUMBER	QTY	PART NAME 1 2 3 4 5 6 (PRODUCT LEVEL)	SEE PAGE
	1	1	**135-0451**	1	PLATE	
	4	1,2	**5S-7379**	6	BOLT (3/8-16X0.875-IN)	
	5	1,2	**8T-4896**	20	WASHER-HARD (10.2X18.5X2.5-MM THK)	
	6	1	**135-0452**	2	PLATE	
	7	1	**5D-2645**	3	CLAMP	
	8	1,2	**9D-0953**	4	SPACER (0.406X0.75X0.88-IN THK)	
	9	1	**108-1610**	4	CLAMP	
	10	1,2	**2B-0941**	3	SPACER (10.5X19X19-MM THK)	
	11	1	**8T-7008**	1	BOLT (3/8-16X3-IN)	
	13	1	**8T-1687**	2	CONNECTOR	
	14	1,2	**3K-0360**	22	SEAL-O-RING	
	15	1,2	**6V-8398**	6	SEAL-O-RING	
I	16	1	**107-8149**	2	HOSE AS	
	17	2	**2M-9780**	2	SEAL-O-RING	
	18	2	**6V-8624**	2	ELBOW	
	19	1	**6V-8639**	1	CONNECTOR	
	20	1,2	**6V-8634**	8	CONNECTOR	
	21	1,2	**6V-8397**	18	SEAL-O-RING	
I	22	1	**107-8143**	2	HOSE AS	
	23	1,2	**6V-9876**	6	ELBOW	
	24	1,2	**6V-8723**	3	ELBOW (90-DEG)	
I	25	1	**9R-1183**	1	HOSE AS	
I	26	1	**5T-9986**	1	HOSE AS	
	27	1,2	**1S-0994**	8	CLIP	
	28	1	**8T-0076**	1	CONNECTOR	
I	29	1	**107-8144**	2	HOSE AS	
	30	2	**4J-5468**	6	CLAMP	
CY	31	1	**260-6502**	1	SWIVEL GP (CIRCLE DRIVE)	437
CM	32	1	**8T-4648**	4	BOLT (M12X1.75X70-MM)	
	33	1	**8T-4223**	4	WASHER-HARD (13.5X25.5X3-MM THK)	
	34	1	**2A-7081**	1	GUIDE AS-HOSE	
M		1	**8T-3490**	2	NUT-WELD (M10X1.5-THD)	
	35	1	**8D-9092**	1	PIN	
	36	1	**8T-4994**	2	WASHER-HARD (20X36.5X3.5-MM THK)	
	37	1	**3B-4628**	2	PIN-COTTER	
I	38	2	**8W-4194**	1	HOSE AS	
I	39	2	**8W-4193**	1	HOSE AS	
	40	2	**8T-2502**	2	BOLT (3/8-16X1.125-IN)	
	42	1,2	**6V-8801**	6	NUT (3/8-16-THD)	
I	43	1	**134-0747**	1	HOSE AS	
	44	1	**6V-8625**	1	ELBOW	
	45	1	**2G-5493**	1	CLAMP	
	46	1	**2H-9889**	1	BOLT (3/8-16X2.375-IN)	
	47	1	**7W-5672**	1	PIPE	
	49	1	**6D-4244**	2	CLIP	
	50	1	**9B-7237**	1	BOLT (3/8-16X1.25-IN)	
I	51	1	**107-8150**	1	HOSE AS	
D	52	1	**5P-5931**		SEAL (0.45-M EACH)	
	53	2	**5S-7383**	3	BOLT (3/8-16X1.75-IN)	
	54	1	**8T-2501**	2	BOLT (3/8-16X2-IN)	
B	55	1	**8T-1296**	4	WASHER (10.5X19X3.5-MM THK)	

B-USE AS REQUIRED
C-CHANGE FROM PREVIOUS TYPE
D-ORDER BY THE METER
I-REFER TO HYDRAULIC INFORMATION SYSTEM
M-METRIC PART
Y-SEPARATE ILLUSTRATION

REFER TO ALL ILLUSTRATIONS OF
THIS GROUP FOR AUXILIARY VIEWS

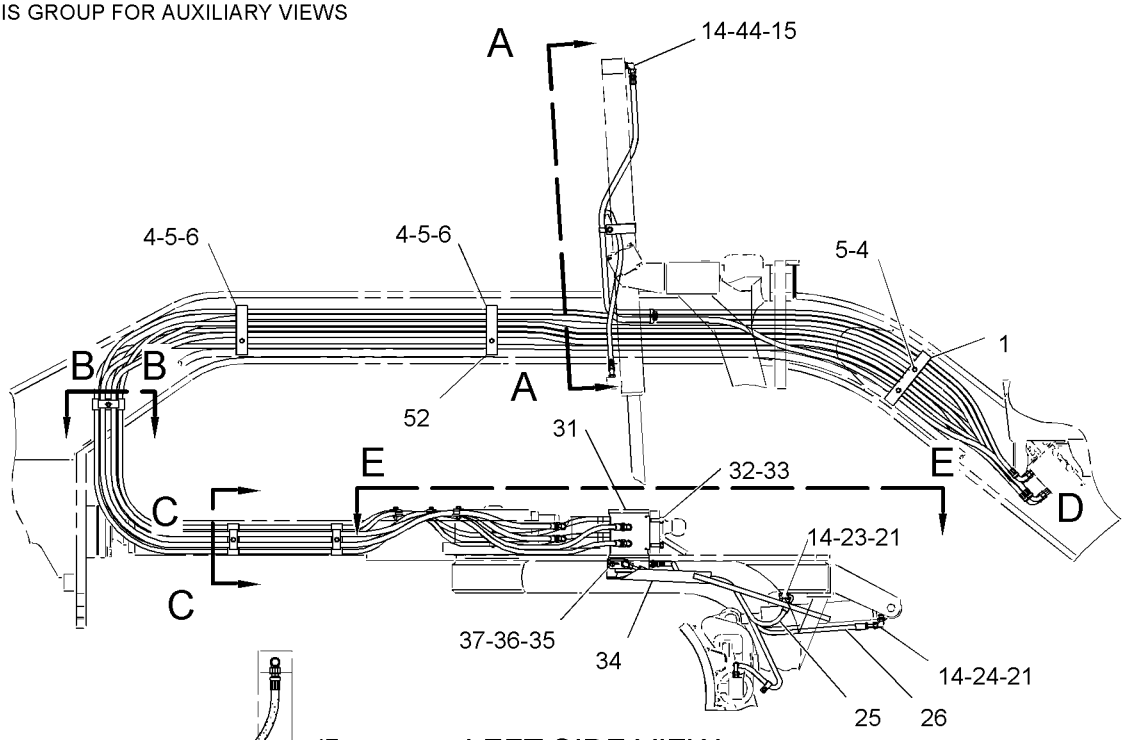

LEFT SIDE VIEW

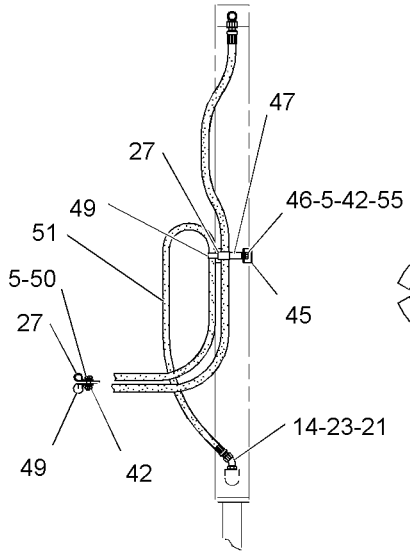

SECTION A-A

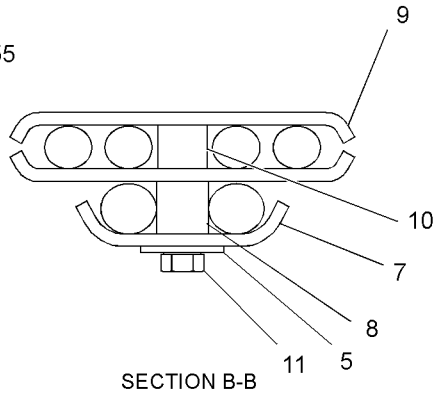

SECTION B-B

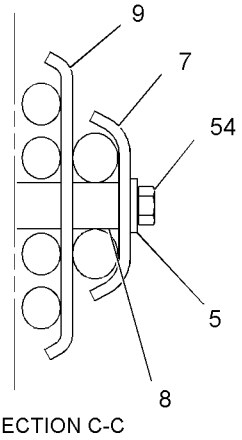

SECTION C-C

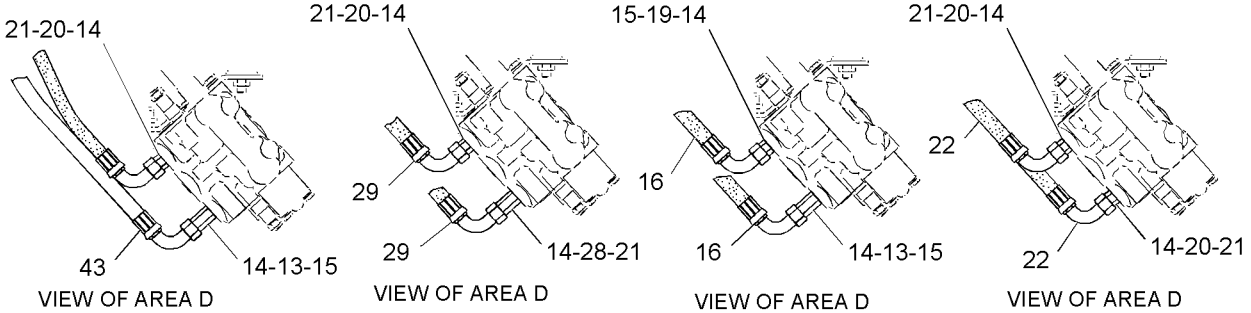

VIEW OF AREA D (FOURTH VALVE FROM FRAME) | VIEW OF AREA D (THIRD VALVE FROM FRAME) | VIEW OF AREA D (SECOND VALVE FROM FRAME) | VIEW OF AREA D (FIRST VALVE FROM FRAME)

GRAPHIC #1 g01213196

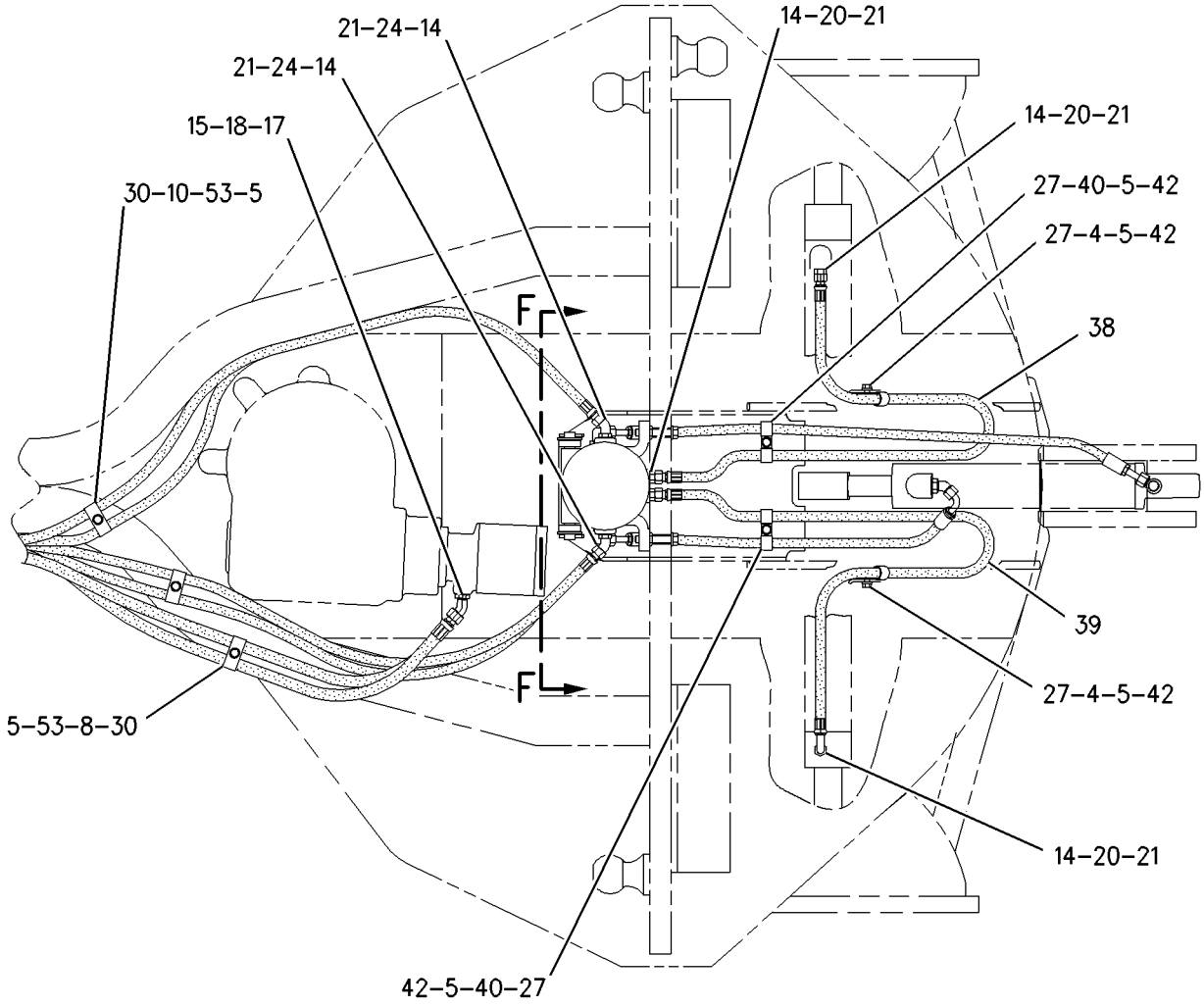

SECTION E-E

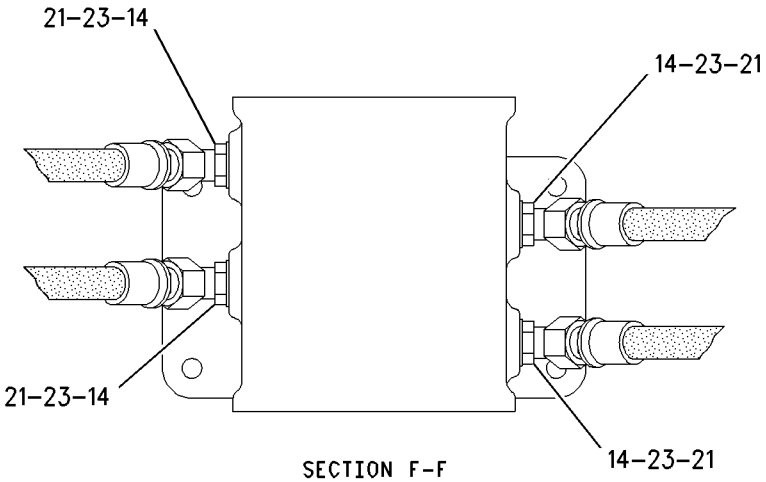

SECTION F-F

GRAPHIC #2 **<END>** g00911811

HYDRAULIC SYSTEM

110-2985 LINES GP-HYDRAULIC–RH

S/N: JPA1-UP
4 CIRCUITS
PART OF 274-7940 GENERAL AR

SMCS-5057 **i01627388**

NOTE	REF NO	GRAPHIC REF	PART NUMBER	QTY	PART NAME 1 2 3 4 5 6 (PRODUCT LEVEL)	SEE PAGE
	1	2	**6V-8723**	4	ELBOW	
	2	1,2	**3K-0360**	18	SEAL-O-RING	
	3	2	**6V-9836**	2	TEE-SWIVEL	
I	4	2	**107-8141**	1	HOSE AS	
I	5	2	**107-8142**	1	HOSE AS	
I	6	2	**107-8140**	1	HOSE AS	
I	7	2	**8W-0220**	1	HOSE AS	
I	8	2	**107-8148**	1	HOSE AS	
I	9	2	**107-8147**	1	HOSE AS	
	10	2	**8T-1683**	2	ELBOW	
	11	1,2	**6V-8397**	20	SEAL-O-RING	
	12	1,2	**6V-8634**	4	CONNECTOR	
I	13	2	**134-0747**	1	HOSE AS	
I	14	2	**107-8150**	1	HOSE AS	
	15	2	**8T-1687**	1	CONNECTOR	
	16	2	**6V-8398**	2	SEAL-O-RING	
	17	2	**100-4336**	1	CLIP	
	18	2	**4L-6454**	1	BOLT (3/8-16X1-IN)	
	19	1	**108-1610**	2	CLAMP	
	20	1	**7X-0289**	1	BOLT (3/8-16X1.875-IN)	
	21	1,2	**8T-4896**	19	WASHER-HARD (10.2X18.5X2.5-MM THK)	
	22	1	**135-0453**	1	PLATE	
	25	1,2	**5S-7379**	9	BOLT (3/8-16X0.875-IN)	
	26	1	**135-0450**	2	PLATE	
	27	1	**5D-2645**	2	CLAMP	
	29	1	**8T-0076**	3	CONNECTOR	
	30	1	**5D-4988**	4	CLAMP	
	31	1	**2B-0941**	4	SPACER (10.5X19X19-MM THK)	
	32	1	**7X-0288**	1	BOLT (3/8-16X1.625-IN)	
	33	2	**4J-5468**	3	CLAMP	
	34	2	**2G-5493**	1	CLAMP	
	35	2	**9R-8870**	1	BLOCK	
	36	2	**5P-0599**	1	CLAMP-BAND	
	37	1,2	**6V-9876**	3	ELBOW	
	38	2	**6V-8625**	1	ELBOW	
	39	2	**2H-9889**	1	BOLT (3/8-16X2.375-IN)	
	40	2	**7W-5672**	1	PIPE	
	42	1,2	**1S-0994**	6	CLIP	
	43	2	**6V-8801**	3	NUT (3/8-16-THD)	
	44	2	**9B-7237**	1	BOLT (3/8-16X1.25-IN)	
	45	1,2	**6D-4244**	2	CLIP	
I	46	2	**8W-0302**	1	HOSE AS	
I	47	2	**110-3003**	1	HOSE AS	
BD	48	2	**5P-0810**		SEAL	
	49	2	**3S-2093**	1	STRAP-CABLE	
	50	2	**5S-7383**	1	BOLT (3/8-16X1.75-IN)	
	51	2	**8T-2501**	1	BOLT (3/8-16X2-IN)	
B	52	2	**8T-1296**	4	WASHER (10.5X19X3.5-MM THK)	

B-USE AS REQUIRED
D-ORDER BY THE METER
I-REFER TO HYDRAULIC INFORMATION SYSTEM

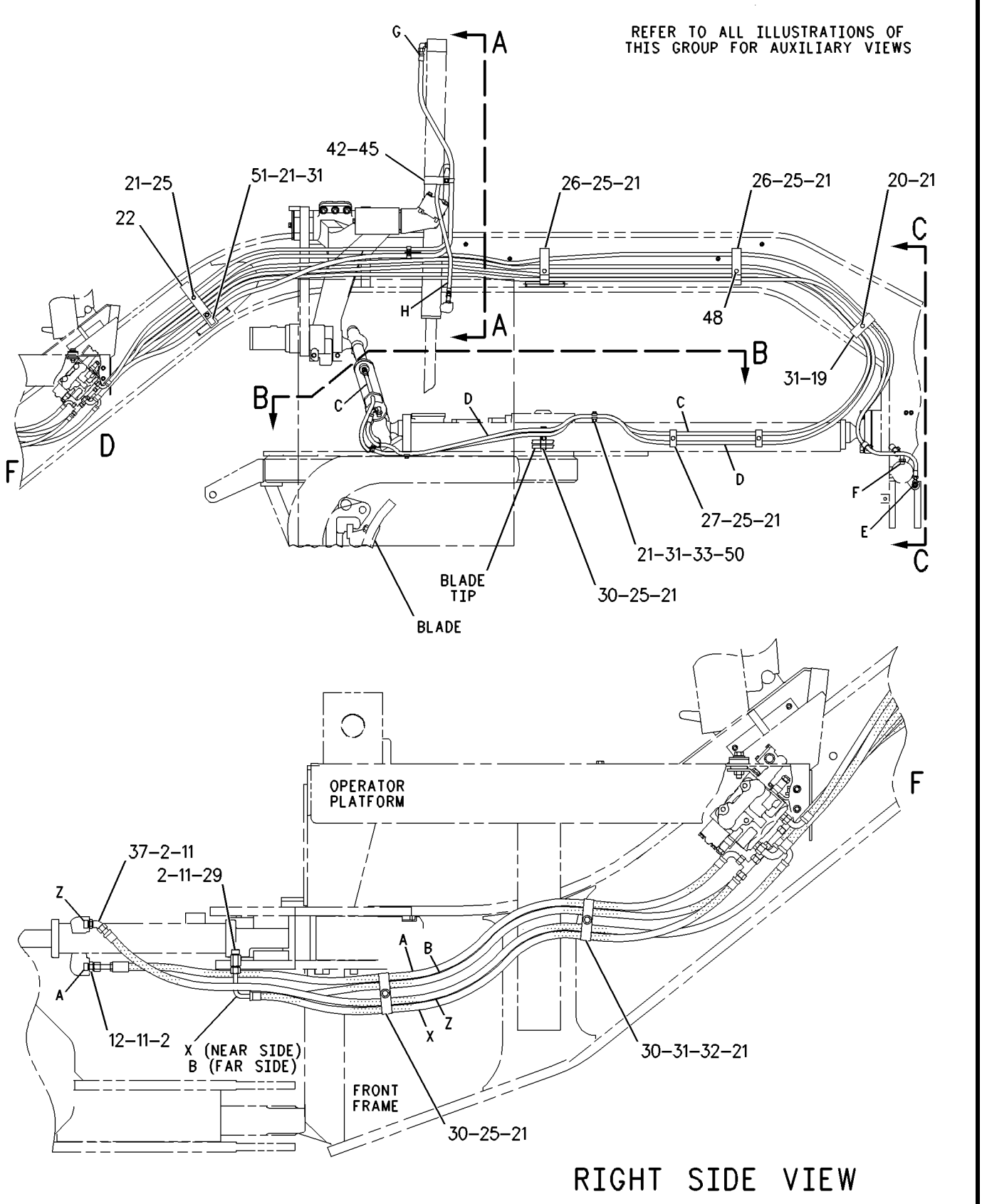

GRAPHIC #1 g00636996

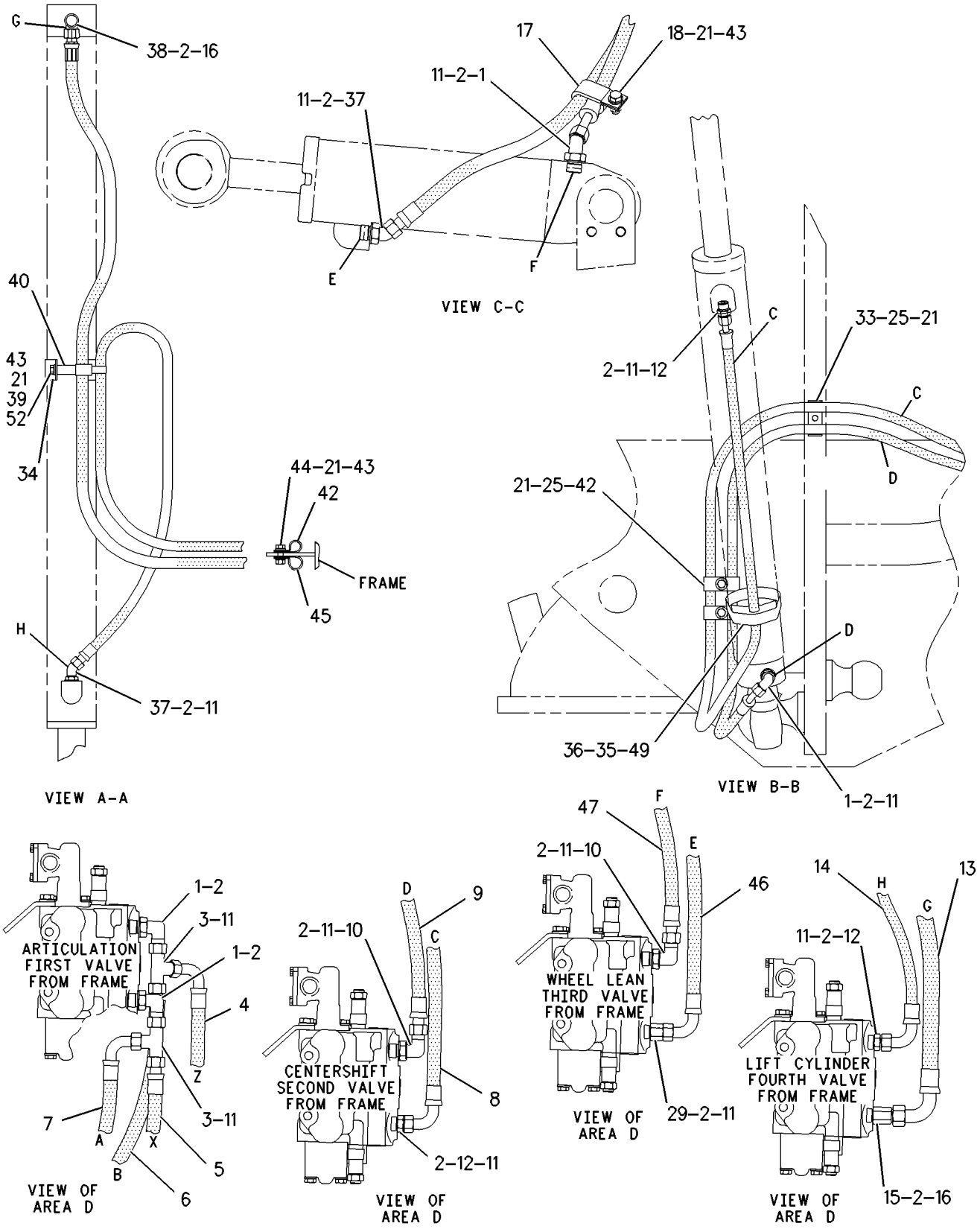

GRAPHIC #2 **<END>** g00843637

114-0025 LINES GP-HYDRAULIC—BULLDOZER LIFT, PLOW, LH

S/N: JPA1-UP
1-CIRCUIT
AN ATTACHMENT

SMCS-5057 **i02585616**

NOTE	REF NO	GRAPHIC REF	PART NUMBER	QTY	PART NAME 1 2 3 4 5 6 (PRODUCT LEVEL)	SEE PAGE
I	1	1	**114-0027**	2	HOSE AS	
	2	1	*164-5605*	1	CONNECTOR AS	
		1	**8T-0076**	1	CONNECTOR	
		1	**3K-0360**	1	SEAL-O-RING	
		1	**6V-8397**	1	SEAL-O-RING	
	3	1	*148-8318*	1	CONNECTOR AS	
		1	**6V-8634**	1	CONNECTOR	
		1	**3K-0360**	1	SEAL-O-RING	
		1	**6V-8397**	1	SEAL-O-RING	

I-REFER TO HYDRAULIC INFORMATION SYSTEM

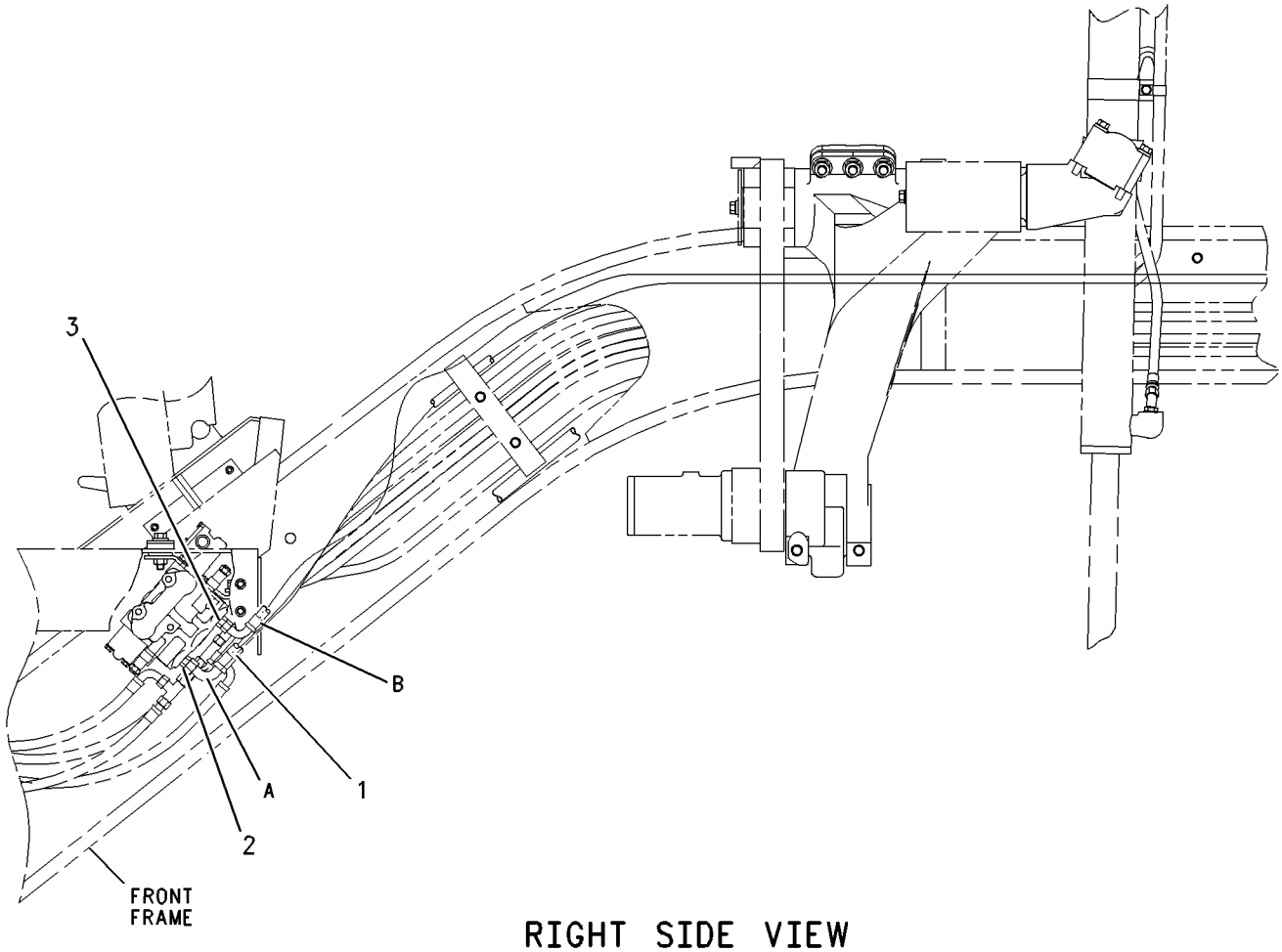

RIGHT SIDE VIEW

GRAPHIC #1 **<END>** g00636139

HYDRAULIC SYSTEM

115-8078 LINES GP-HYDRAULIC–

LH BLADE LIFT, CIRCLE DRIVE

S/N: JPA1-UP

2-CIRCUITS

PART OF 274-7940 GENERAL AR

SMCS-5057 **i00607050**

NOTE	REF NO	GRAPHIC REF	PART NUMBER	QTY	PART NAME 1 2 3 4 5 6 (PRODUCT LEVEL)	SEE PAGE
	1	1	**7X-0289**	4	BOLT (3/8-16X1.875-IN)	
	2	1	**135-0452**	2	PLATE	
	3	1	**5S-7379**	4	BOLT (3/8-16X0.875-IN)	
	4	1	**8T-4896**	12	WASHER-HARD (10.2X18.5X2.5-MM THK)	
	5	1	**135-0451**	1	PLATE	
	6	1	**9D-0953**	4	SPACER (0.406X0.75X0.88-IN THK)	
	7	2	**8T-1687**	2	CONNECTOR	
	8	1,2	**3K-0360**	6	SEAL-O-RING	
	9	1,2	**6V-8398**	6	SEAL-O-RING	
I	10	2	**107-8149**	2	HOSE AS	
	11	2	**2M-9780**	2	SEAL-O-RING	
	12	2	**6V-8624**	2	ELBOW	
	13	2	**6V-8639**	1	CONNECTOR	
	14	2	**6V-8634**	1	CONNECTOR	
	15	1	**6V-8397**	2	SEAL-O-RING	
	16	1	**6V-9876**	1	ELBOW	
	17	1	**1S-0994**	2	CLIP	
	18	1	**4J-5468**	8	CLAMP	
	19	1	**6V-8801**	2	NUT (3/8-16-THD)	
I	20	2	**134-0747**	1	HOSE AS	
	21	1	**6V-8625**	1	ELBOW	
	22	1	**2G-5493**	1	CLAMP	
	23	1	**2H-9889**	1	BOLT (3/8-16X2.375-IN)	
	24	1	**7W-5672**	1	PIPE	
	25	1	**8T-1296**	4	WASHER (10.5X19X3.5-MM THK)	
	26	1	**6D-4244**	2	CLIP	
	27	1	**9B-7237**	1	BOLT (3/8-16X1.25-IN)	
I	28	2	**107-8150**	1	HOSE AS	

I-REFER TO HYDRAULIC INFORMATION SYSTEM

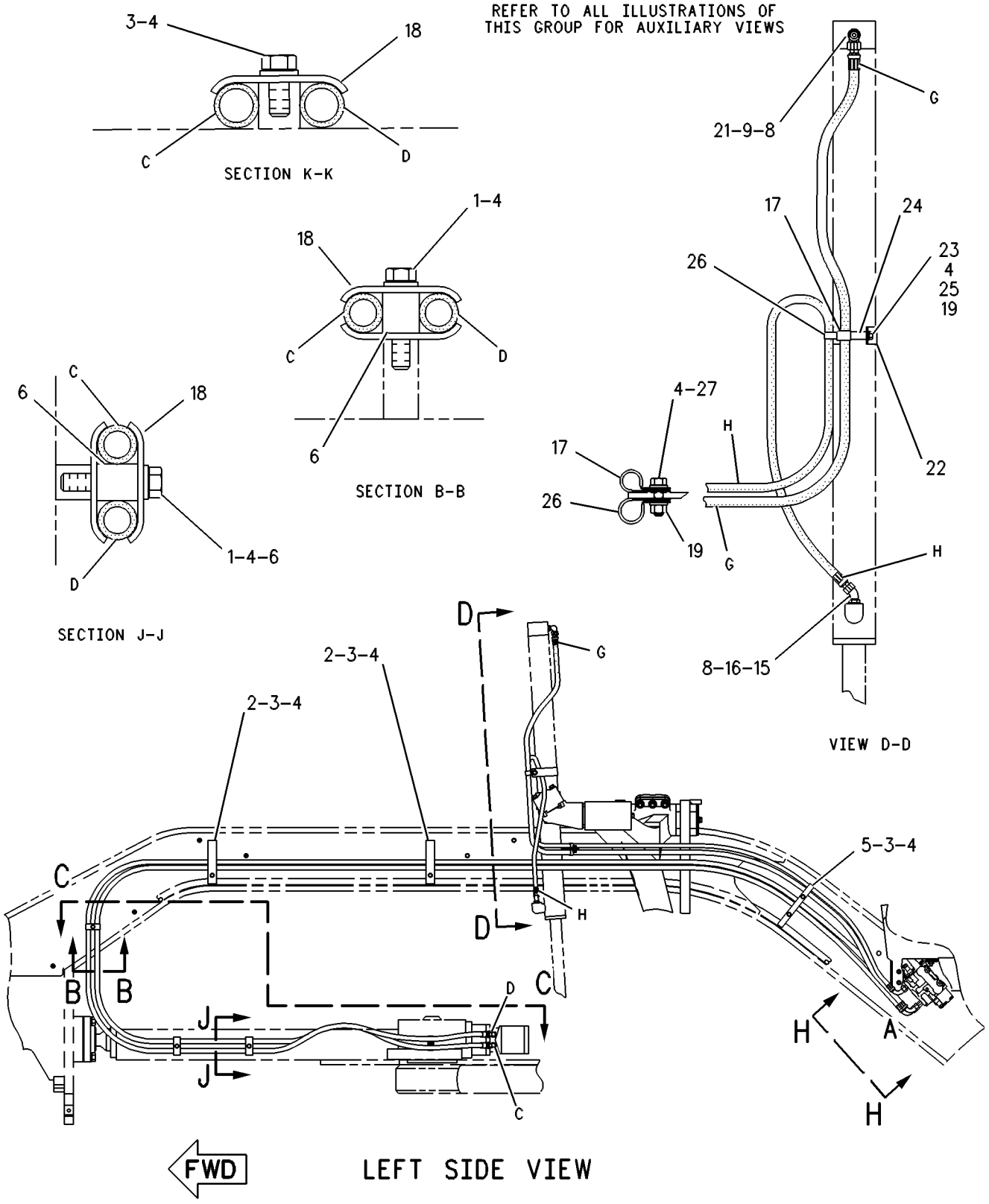

GRAPHIC #1 g00276405

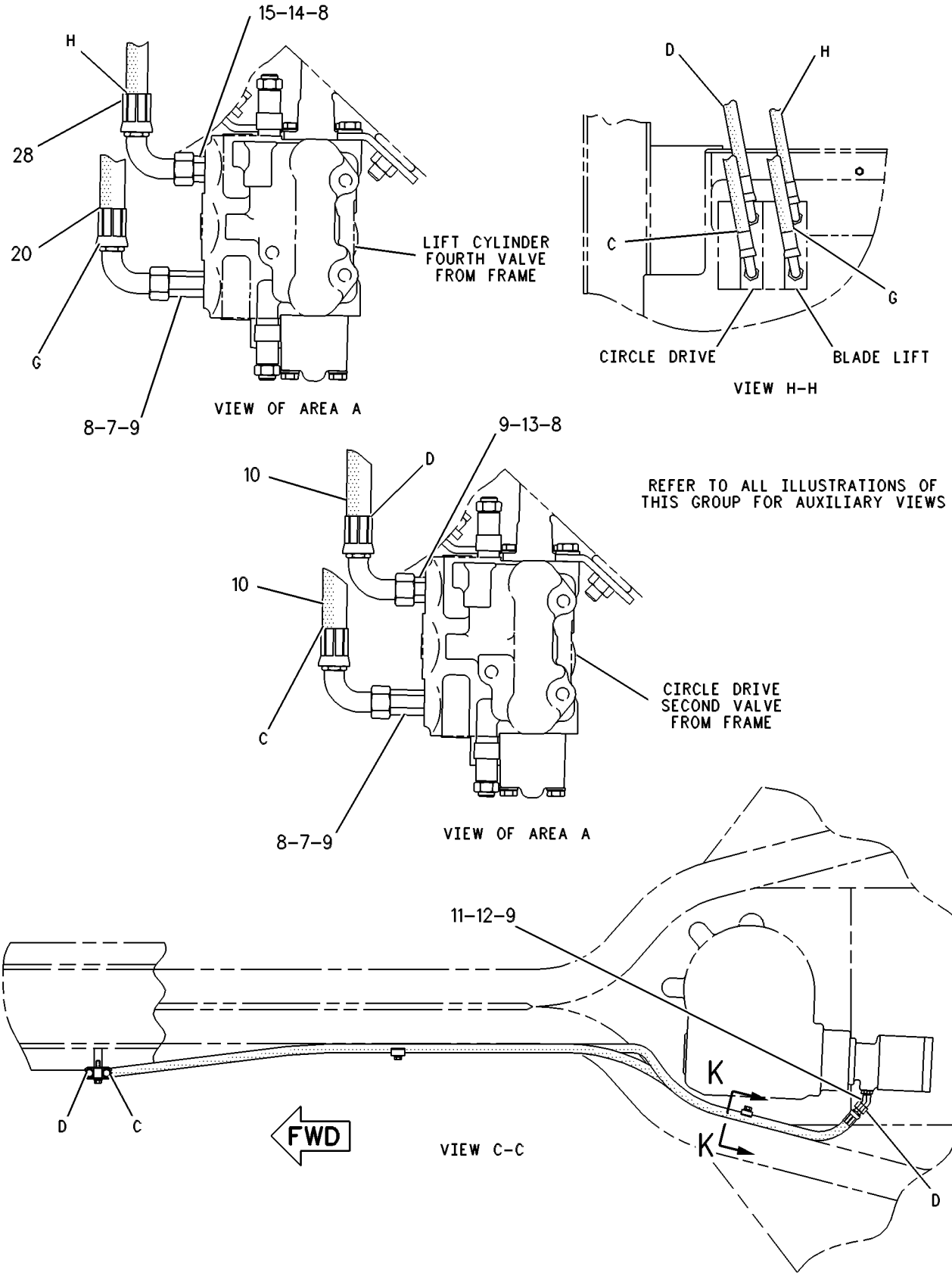

GRAPHIC #2 **<END>** g00109151

HYDRAULIC SYSTEM

117-3855 LINES GP-HYDRAULIC–LH

S/N: JPA1-UP
3-CIRCUITS
PART OF 329-3828, 329-3829 BLADE AR
AN ATTACHMENT

SMCS-5057 **i02425827**

NOTE	REF NO	GRAPHIC REF	PART NUMBER	QTY	PART NAME 1 2 3 4 5 6 (PRODUCT LEVEL)	SEE PAGE
	1	1	**135-0451**	1	PLATE	
	2	1	**5S-7383**	2	BOLT (3/8-16X1.75-IN)	
D	3	1	**5P-5931**		SEAL (0.1-M)	
	4	1,2	**5S-7379**	6	BOLT (3/8-16X0.875-IN)	
	5	1,2	**8T-4896**	19	WASHER-HARD (10.2X18.5X2.5-MM THK)	
	6	1	**135-0452**	2	PLATE	
	7	1	**5D-2645**	3	CLAMP	
	8	1	**9D-0953**	4	SPACER (0.406X0.75X0.88-IN THK)	
	9	1	**2B-0941**	2	SPACER (10.5X19X19-MM THK)	
	10	1	**8T-7008**	1	BOLT (3/8-16X3-IN)	
	11	1	**8T-2501**	2	BOLT (3/8-16X2-IN)	
	12	2	**8T-1687**	2	CONNECTOR	
	13	1,2	**3K-0360**	14	SEAL-O-RING	
	14	1,2	**6V-8398**	6	SEAL-O-RING	
I	15	2	**107-8149**	2	HOSE AS	
	16	2	**2M-9780**	2	SEAL-O-RING	
	17	2	**6V-8624**	2	ELBOW	
	18	2	**6V-8639**	1	CONNECTOR	
	19	2	**6V-8634**	6	CONNECTOR	
	20	1,2	**6V-8397**	10	SEAL-O-RING	
	21	1	**6V-9876**	3	ELBOW	
	22	1,2	**1S-0994**	6	CLIP	
	23	2	**8T-0076**	1	CONNECTOR	
I	24	2	**107-8144**	2	HOSE AS	
	25	1	**4J-5468**	8	CLAMP	
CY	26	1	**260-6502**	1	SWIVEL GP (CIRCLE DRIVE)	437
M	27	1	**8T-4648**	4	BOLT (M12X1.75X70-MM)	
	28	1	**8T-4223**	4	WASHER-HARD (13.5X25.5X3-MM THK)	
	29	1	**2A-7081**	1	GUIDE AS-HOSE	
	30	1	**8D-9092**	1	PIN	
	31	1	**8T-4994**	2	WASHER-HARD (20X36.5X3.5-MM THK)	
	32	1	**3B-4628**	2	PIN-COTTER	
I	33	2	**8W-4194**	1	HOSE AS	
I	34	2	**8W-4193**	1	HOSE AS	
	35	2	**8T-2502**	2	BOLT (3/8-16X1.125-IN)	
I	36	2	**107-8150**	1	HOSE AS	
	37	1,2	**6V-8801**	6	NUT (3/8-16-THD)	
I	38	2	**134-0747**	1	HOSE AS	
	39	1	**6V-8625**	1	ELBOW	
	40	1	**2G-5493**	1	CLAMP	
	41	1	**2H-9889**	1	BOLT (3/8-16X2.375-IN)	
	42	1	**7W-5672**	1	PIPE	
	43	1	**8T-1296**	4	WASHER (10.5X19X3.5-MM THK)	
	44	1	**6D-4244**	2	CLIP	
	45	1	**9B-7237**	1	BOLT (3/8-16X1.25-IN)	

C-CHANGE FROM PREVIOUS TYPE
D-ORDER BY THE METER
I-REFER TO HYDRAULIC INFORMATION SYSTEM
M-METRIC PART
Y-SEPARATE ILLUSTRATION

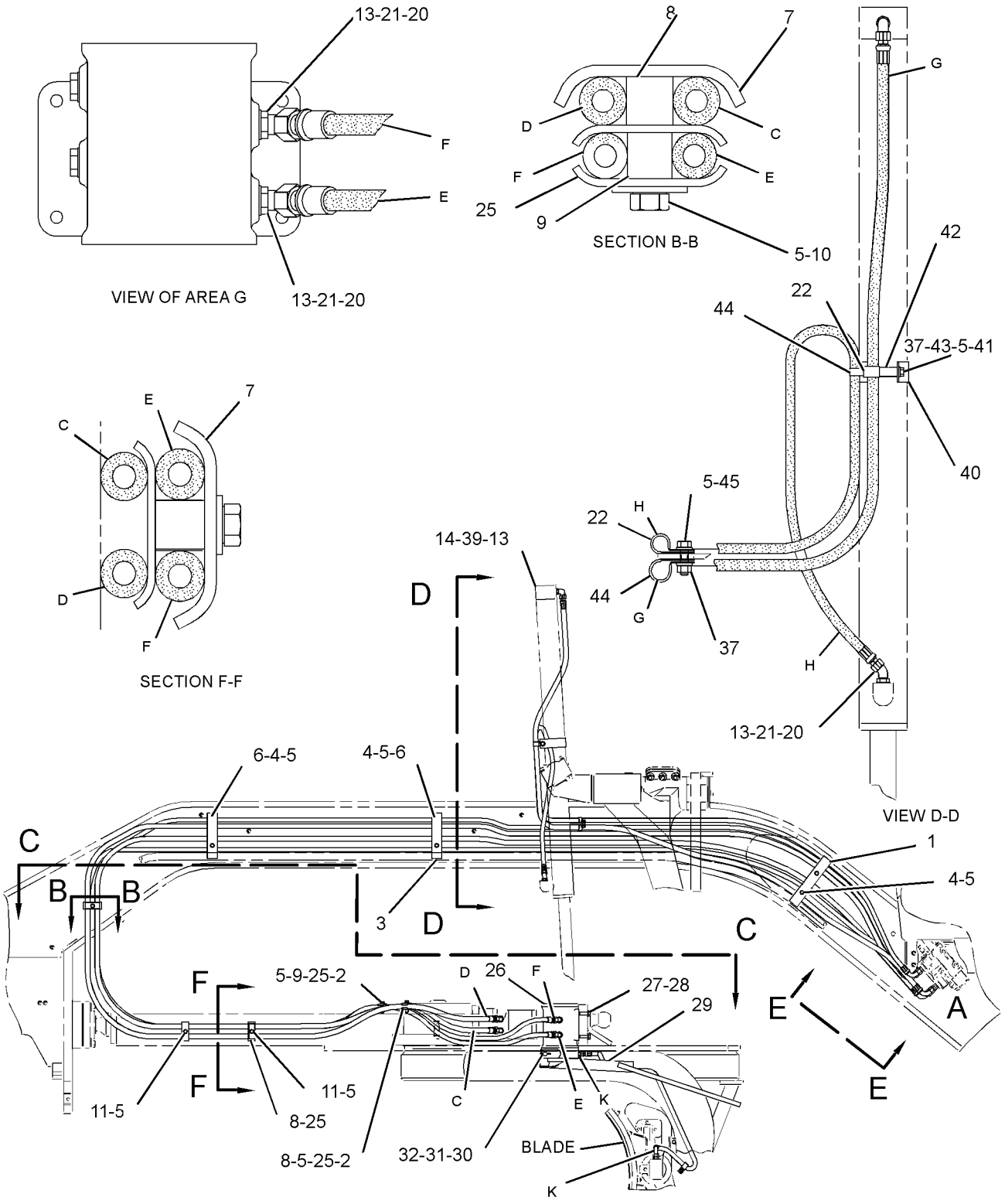

LEFT SIDE VIEW

REFER TO ALL ILLUSTRATIONS OF
THIS GROUP FOR AUXILIARY VIEWS

GRAPHIC #1

g01224224

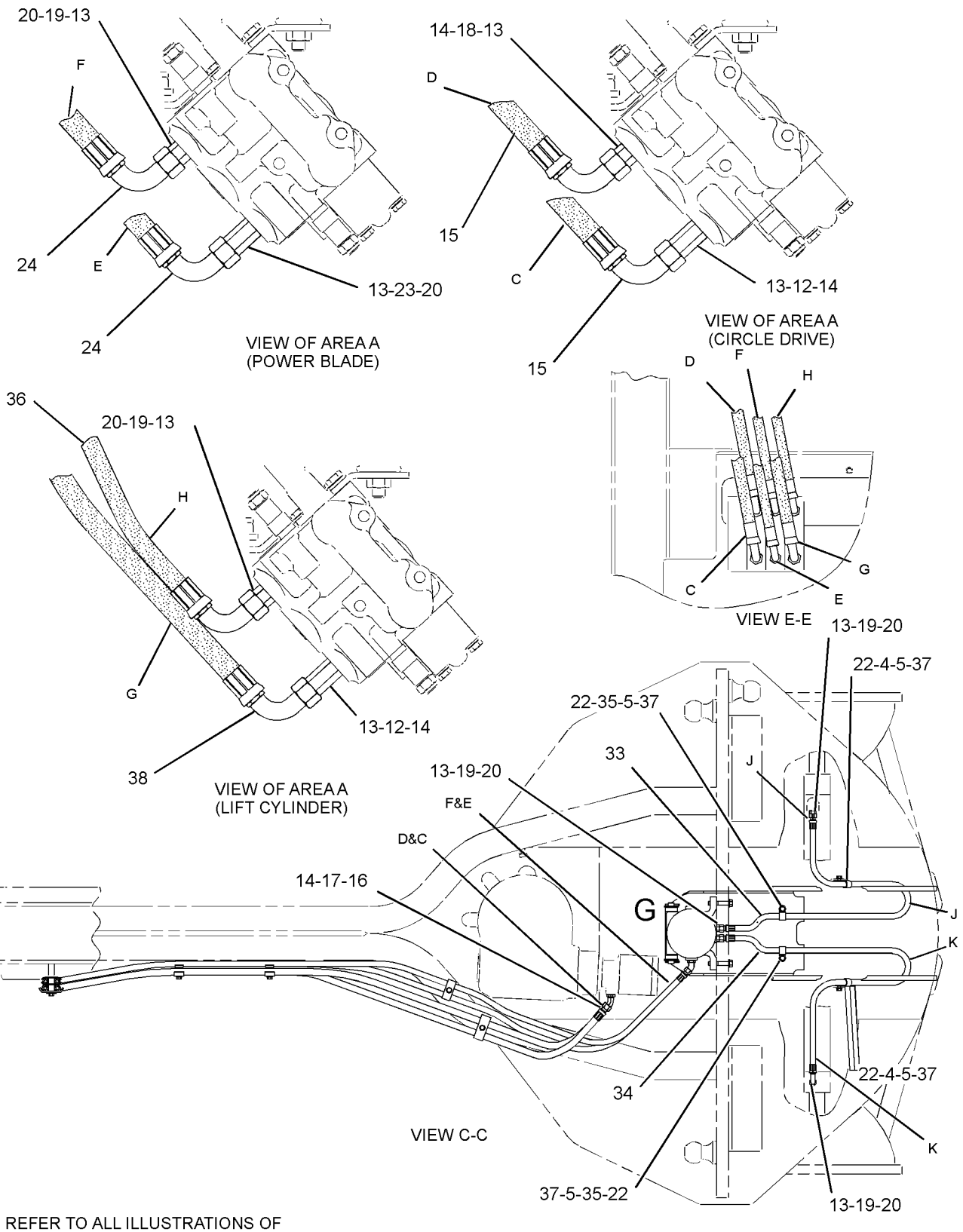

REFER TO ALL ILLUSTRATIONS OF
THIS GROUP FOR AUXILIARY VIEWS

GRAPHIC #2 **<END>** g01224233

HYDRAULIC SYSTEM

293-0648 LINES GP-HYDRAULIC—CENTERSHIFT LOCK

S/N: JPA1-UP

PART OF 274-7940 GENERAL AR

SMCS-5057 **i03378041**

NOTE	REF NO	GRAPHIC REF	PART NUMBER	QTY	PART NAME 1 2 3 4 5 6 (PRODUCT LEVEL)	SEE PAGE
	1	1	**8W-8527**	2	SLEEVE	
	2	1	**9G-9154**	1	CLIP	
I	3	1	**148-7027**	1	HOSE AS	
I	4	1	**178-9961**	1	HOSE AS	
	5	1	**300-6203**	1	PLATE	
I	6	1	**310-8005**	1	HOSE AS	
	7	1	*148-8336*	3	CONNECTOR AS	
					(EACH INCLUDES)	
		1	**3J-1907**	1	SEAL-O-RING	
		1	**6V-8397**	1	SEAL-O-RING	
		1	**6V-8636**	1	CONNECTOR	
	8	1	*148-8367*	2	ELBOW AS	
					(EACH INCLUDES)	
		1	**6V-8397**	1	SEAL-O-RING	
		1	**6V-9850**	1	ELBOW	
	9	1	*148-8368*	1	ELBOW AS	
		1	**3J-1907**	1	SEAL-O-RING	
		1	**4J-5477**	1	SEAL-O-RING	
		1	**6V-8627**	1	ELBOW	
	10	1	*148-8377*	1	ELBOW AS	
		1	**6V-8397**	2	SEAL-O-RING	
		1	**6V-8980**	1	ELBOW	
	11	1	*148-8378*	2	ELBOW AS	
					(EACH INCLUDES)	
		1	**3J-1907**	1	SEAL-O-RING	
		1	**6V-8397**	1	SEAL-O-RING	
		1	**6V-8724**	1	ELBOW	
	12	1	**174-5907**	1	CLIP	
I	13	1	**178-9962**	1	HOSE AS	
	14	1	**3S-8664**	1	CLIP	
	15	1	**4D-7733**	7	CLIP	
	16	1	**4K-8864**	2	CLIP	
	17	1	**4S-1962**	1	CLIP	
	18	1	**4S-4455**	1	CLIP	
	19	1	**7X-0619**	2	WASHER-HARD (20X30X2.5-MM THK)	
	20	1	**6V-9168**	1	NUT (11/16-16-THD)	
	21	1	**8T-4121**	11	WASHER-HARD (11X21X2.5-MM THK)	
M	22	1	**8T-4133**	3	NUT (M10X1.5-THD)	
M	23	1	**8T-4136**	2	BOLT (M10X1.5X25-MM)	
M	24	1	**8T-4137**	6	BOLT (M10X1.5X20-MM)	
	25	1	**8X-5489**	1	SLEEVE	

I-REFER TO HYDRAULIC INFORMATION SYSTEM
M-METRIC PART

293-0648 **LINES GP-HYDRAULIC** *(contd.)* **i03378041**

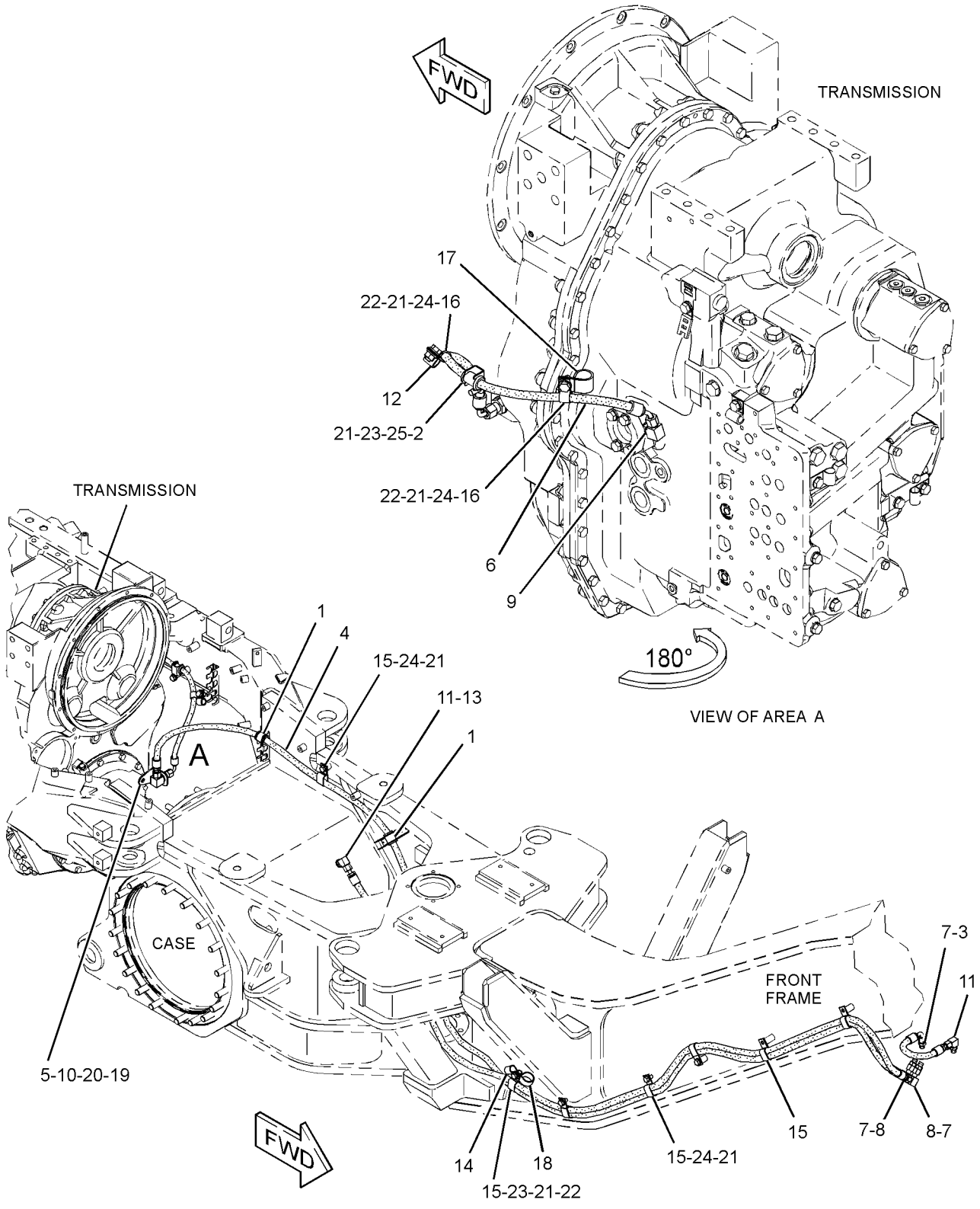

GRAPHIC #1 **<END>** g01714284

HYDRAULIC SYSTEM

299-5544 LINES GP-PUMP

S/N: JPA1-UP

PART OF 274-7940 GENERAL AR

SMCS-5057 **i03247377**

NOTE	REF NO	GRAPHIC REF	PART NUMBER	QTY	PART NAME 1 2 3 4 5 6 (PRODUCT LEVEL)	SEE PAGE
	1	2	**5P-4868**	4	CLAMP-HOSE	
	2	2	**6E-1926**	1	ADAPTER	
I	3	2	**6R-7669**	1	HOSE AS	
	4	2	**6V-0852**	1	CAP-DUST	
	5	2	**7K-1181**	1	STRAP-CABLE	
	6	2	**5P-1295**	1	HOSE	
Y	7	2	**9T-5957**	1	VALVE GP-COMBINATION	536
	8	2	**102-3659**	1	ELBOW	
	9	2	**104-4286**	1	TUBE	
	10	2	**156-4000**	1	HOSE	
	11	2	*165-7014*	1	TEE AS	
		2	**3J-1907**	1	SEAL-O-RING	
		2	**4J-5477**	1	SEAL-O-RING	
		2	**8C-3309**	1	TEE	
I	12	2	**175-3644**	1	HOSE AS	
I	13	2	**246-2822**	1	HOSE AS	
I	14	2	**246-4561**	1	HOSE AS	
I	15	2	**249-1054**	1	HOSE AS	
I	16	2	**318-8124**	1	HOSE AS	
I	17	2	**117-9683**	1	HOSE AS	
	18	2	*148-8316*	2	CONNECTOR AS	
					(EACH INCLUDES)	
		2	**3J-7354**	1	SEAL-O-RING	
		2	**4J-5477**	1	SEAL-O-RING	
		2	**6V-8647**	1	CONNECTOR	
	19	2	*148-8323*	1	CONNECTOR AS	
		2	**2S-4078**	1	SEAL-O-RING	
		2	**5K-9090**	1	SEAL-O-RING	
		2	**6V-9875**	1	CONNECTOR	
	20	2	*148-8327*	1	CONNECTOR AS	
		2	**3D-2824**	1	SEAL-O-RING	
		2	**6V-8637**	1	CONNECTOR	
		2	**6V-9746**	1	SEAL-O-RING	
	21	2	*148-8347*	5	ELBOW AS	
					(EACH INCLUDES)	
		2	**3D-2824**	1	SEAL-O-RING	
		2	**6V-9007**	1	ELBOW	
		2	**6V-9746**	1	SEAL-O-RING	
	22	2	*148-8364*	1	ELBOW AS	
		2	**3K-0360**	1	SEAL-O-RING	
		2	**6V-8398**	1	SEAL-O-RING	
		2	**6V-8625**	1	ELBOW	
	23	2	*148-8368*	2	ELBOW AS	
					(EACH INCLUDES)	
		2	**3J-1907**	1	SEAL-O-RING	
		2	**4J-5477**	1	SEAL-O-RING	
		2	**6V-8627**	1	ELBOW	
	24	2	*148-8381*	1	ELBOW AS	
		2	**3D-2824**	1	SEAL-O-RING	
		2	**6V-8398**	1	SEAL-O-RING	
		2	**8T-5429**	1	ELBOW	
	25	2	**149-7738**	2	CLIP	
	26	2	*150-5968*	1	TEE AS	
		2	**4J-5477**	2	SEAL-O-RING	
		2	**6V-9835**	1	TEE-SWIVEL	

299-5544 **LINES GP-PUMP** ***(contd.)*** **i03247377**

NOTE	REF NO	GRAPHIC REF	PART NUMBER	QTY	PART NAME 1 2 3 4 5 6 (PRODUCT LEVEL)	SEE PAGE
	27	2	*153-6237*	2	ELBOW AS	
					(EACH INCLUDES)	
		2	**3D-2824**	1	SEAL-O-RING	
		2	**6V-9004**	1	ELBOW	
		2	**6V-9746**	1	SEAL-O-RING	
	28	2	**174-5907**	2	CLIP	
I	29	2	**192-7238**	1	HOSE AS	
	30	2	**1H-8720**	1	SEAL-O-RING	
I	31	2	**301-2322**	1	HOSE AS	
	32	2	**3J-1907**	1	SEAL-O-RING	
	33	2	**4J-0521**	2	SEAL-O-RING	
	34	2	**6K-8178**	1	CLIP	
	35	2	**6V-3965**	1	FITTING (QUICK DISCONNECT)	
M	36	2	**6V-5696**	1	BOLT (M12X1.75X80-MM)	
M	37	2	**8T-0646**	3	BOLT (M12X1.75X110-MM)	
M	38	2	**8T-3957**	1	BOLT-SOCKET HEAD (M12X1.75X30-MM)	
	39	2	**8T-4121**	5	WASHER-HARD (11X21X2.5-MM THK)	
M	40	2	**8T-4133**	2	NUT (M10X1.5-THD)	
M	41	2	**8T-4136**	2	BOLT (M10X1.5X25-MM)	
M	42	2	**8T-4137**	1	BOLT (M10X1.5X20-MM)	
	43	2	**8T-4223**	8	WASHER-HARD (13.5X25.5X3-MM THK)	
M	44	2	**8T-4956**	4	BOLT (M12X1.75X35-MM)	
	45	2	**9M-4972**	1	CLIP	

I-REFER TO HYDRAULIC INFORMATION SYSTEM
M-METRIC PART
Y-SEPARATE ILLUSTRATION

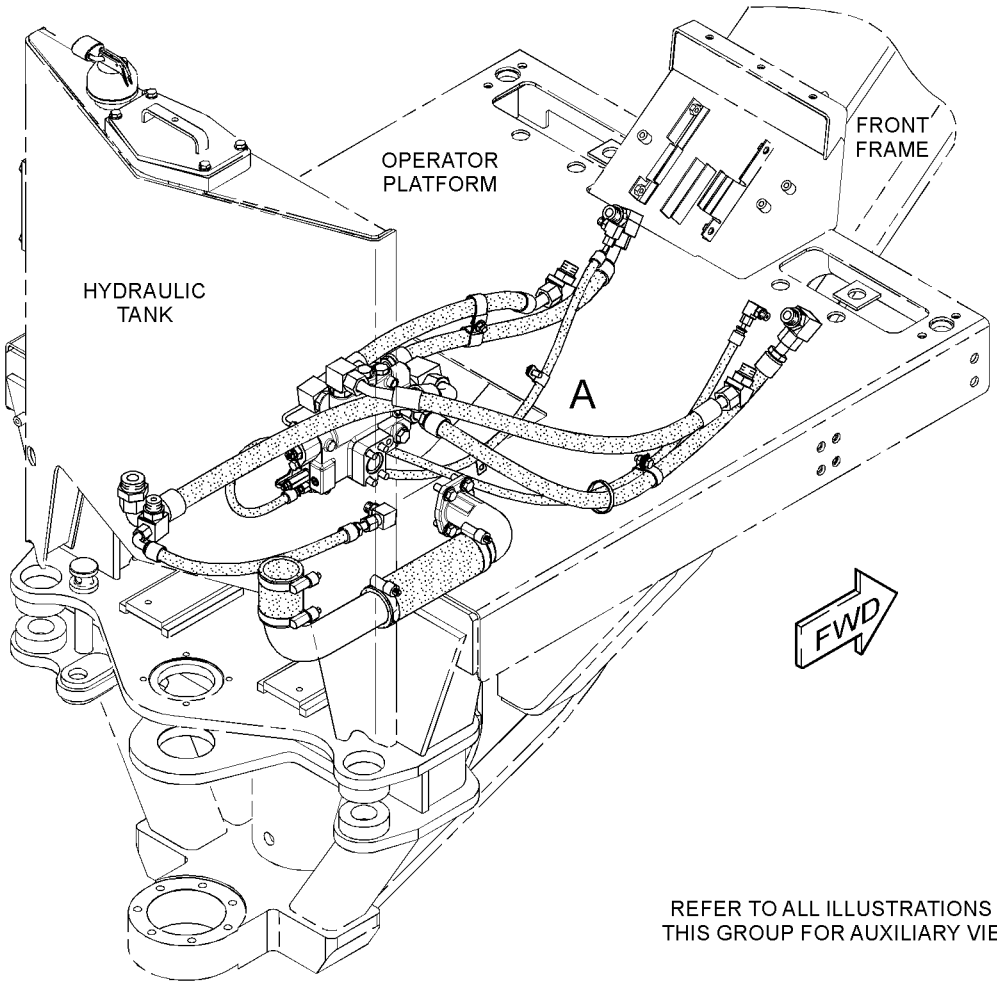

GRAPHIC #1 g01702797

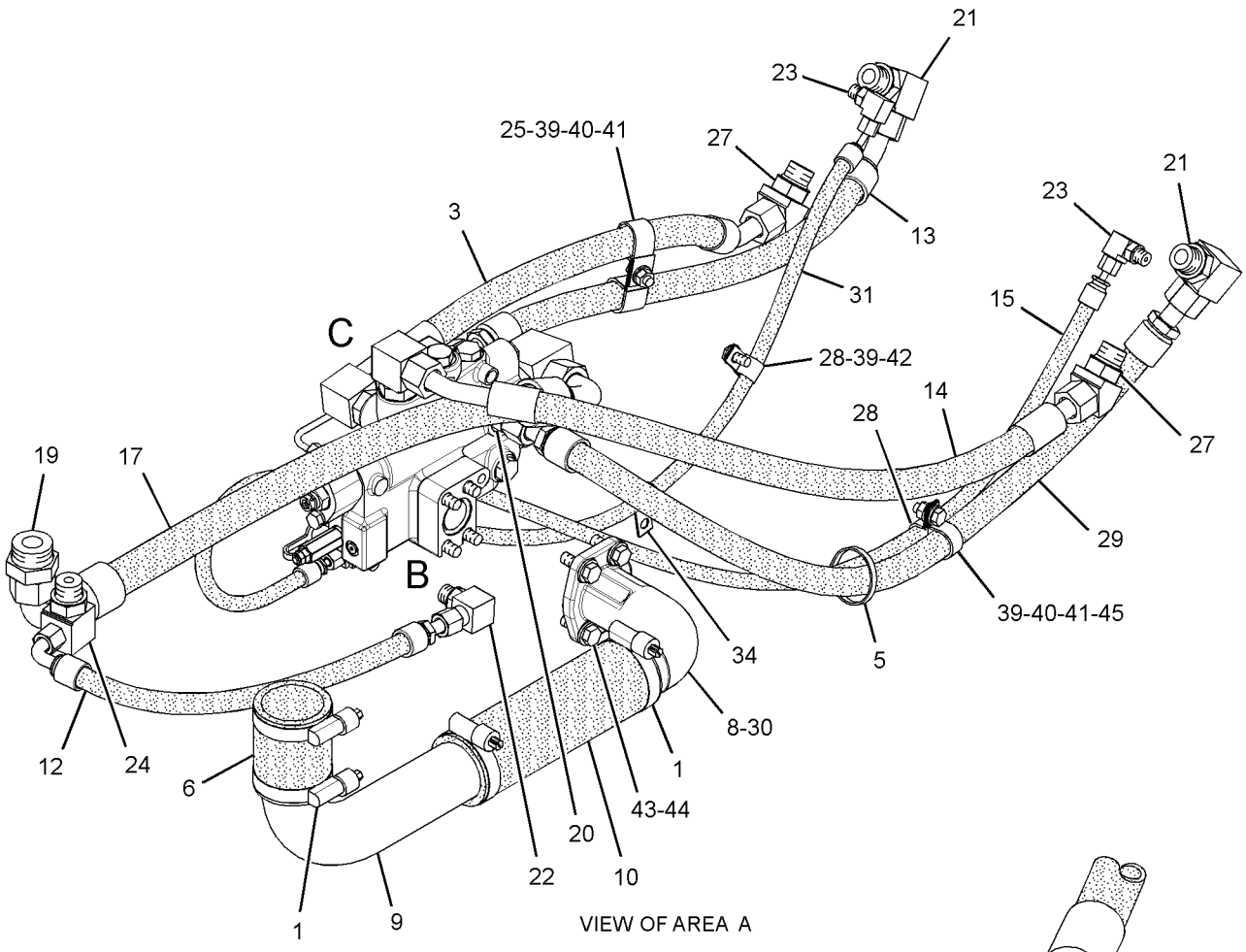

VIEW OF AREA A

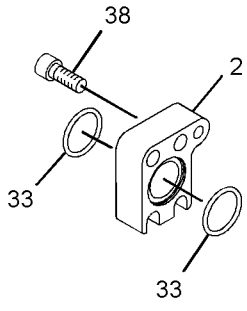

VIEW OF AREA B
(EXPLODED)

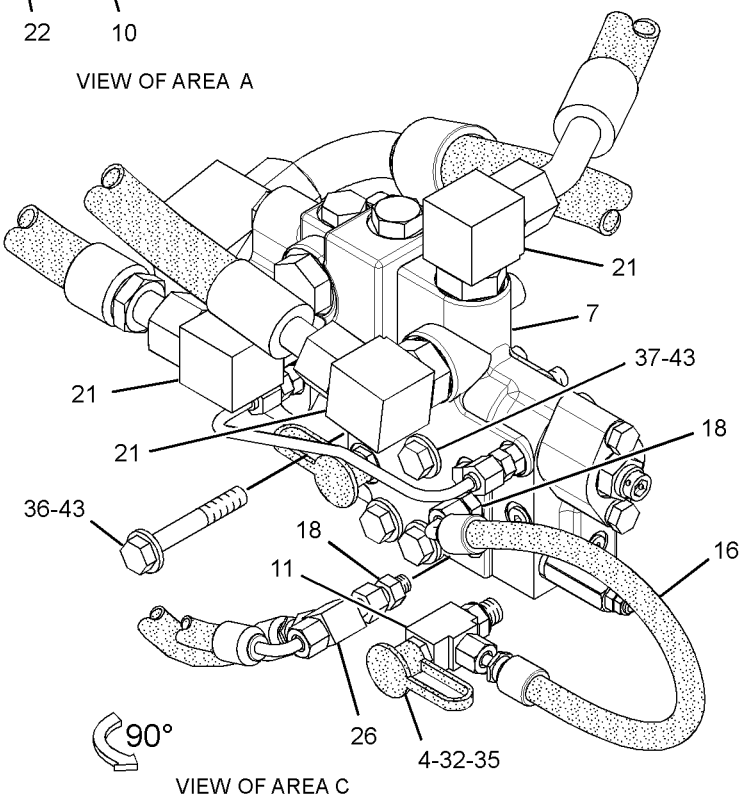

VIEW OF AREA C

GRAPHIC #2 **<END>** g01702804

HYDRAULIC SYSTEM

174-2339 LINES GP-RIPPER

S/N: JPA1-UP
PART OF 285-4183 RIPPER AR
AN ATTACHMENT

SMCS-5057 **i02524935**

NOTE	REF NO	GRAPHIC REF	PART NUMBER	QTY	PART NAME 1 2 3 4 5 6 (PRODUCT LEVEL)	SEE PAGE
I	1	1	**3T-6848**	1	HOSE AS	
I	2	1	**7I-5412**	1	HOSE AS	
	3	1	*148-8374*	2	ELBOW AS	
					(EACH INCLUDES)	
		1	**6V-8723**	1	ELBOW	
		1	**3K-0360**	1	SEAL-O-RING	
		1	**6V-8397**	1	SEAL-O-RING	
	4	1	**1S-3618**	1	CLIP	
	5	1	**4D-2886**	1	CLIP	
	6	1	**4L-6454**	1	BOLT (3/8-16X1-IN)	
	7	1	**5P-1075**	2	WASHER-HARD (10.2X22.5X3-MM THK)	
	8	1	**6V-8801**	1	NUT (3/8-16-THD)	

I-REFER TO HYDRAULIC INFORMATION SYSTEM

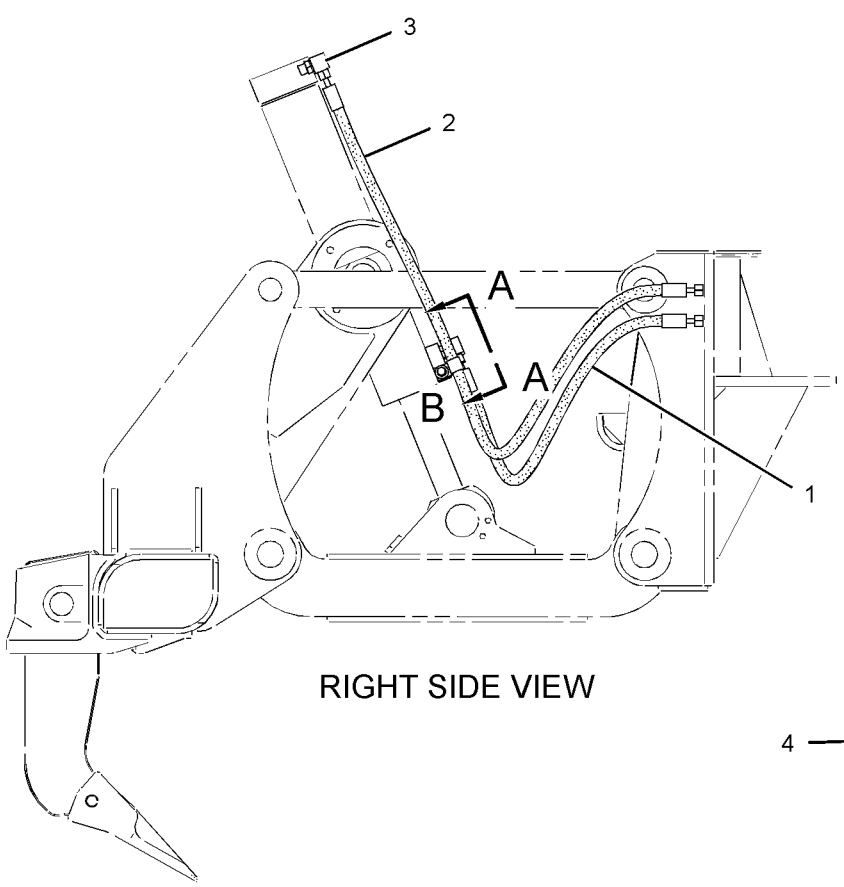

RIGHT SIDE VIEW

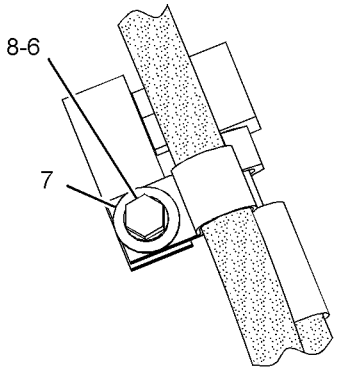

VIEW OF AREA B

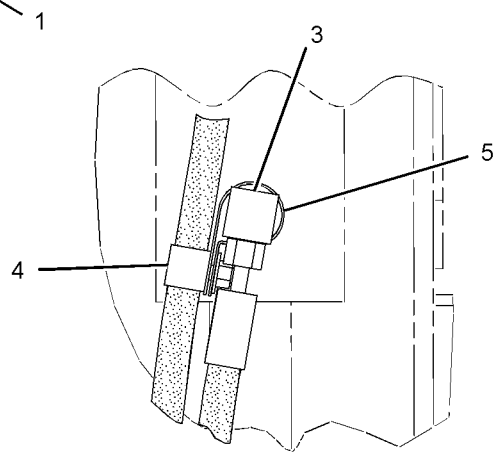

VIEW A-A

GRAPHIC #1 **<END>** g01277149

HYDRAULIC SYSTEM

302-7139 LINES GP-RIPPER

S/N: JPA1-UP

PART OF 331-1499, 331-1501, 331-1503, 331-1506, 331-1507, 335-1875 CONTROL

AR-HYDRAULIC

AN ATTACHMENT

SMCS-5057 **i03247354**

NOTE	REF NO	GRAPHIC REF	PART NUMBER	QTY	PART NAME 1 2 3 4 5 6 (PRODUCT LEVEL)	SEE PAGE
	1	1	**8W-8527**	8	SLEEVE	
	2	1	**100-4336**	1	CLIP	
I	3	1	**112-3837**	2	HOSE AS	
	4	1	*148-8374*	1	ELBOW AS	
		1	**3K-0360**	1	SEAL-O-RING	
		1	**6V-8397**	1	SEAL-O-RING	
		1	**6V-8723**	1	ELBOW	
	5	1	*148-8377*	2	ELBOW AS	
					(EACH INCLUDES)	
		1	**6V-8397**	2	SEAL-O-RING	
		1	**6V-8980**	1	ELBOW	
	6	1	*148-8383*	1	ELBOW AS	
		1	**3K-0360**	1	SEAL-O-RING	
		1	**6V-8397**	1	SEAL-O-RING	
		1	**8T-1683**	1	ELBOW	
	7	1	**1S-0994**	2	CLIP	
	8	1	**6D-4247**	1	CLIP	
	9	1	**6V-9168**	2	NUT (11/16-16-THD)	
	10	1	**8T-4121**	3	WASHER-HARD (11X21X2.5-MM THK)	
M	11	1	**8T-4137**	2	BOLT (M10X1.5X20-MM)	
M	12	1	**8T-4186**	1	BOLT (M10X1.5X40-MM)	

I-REFER TO HYDRAULIC INFORMATION SYSTEM
M-METRIC PART

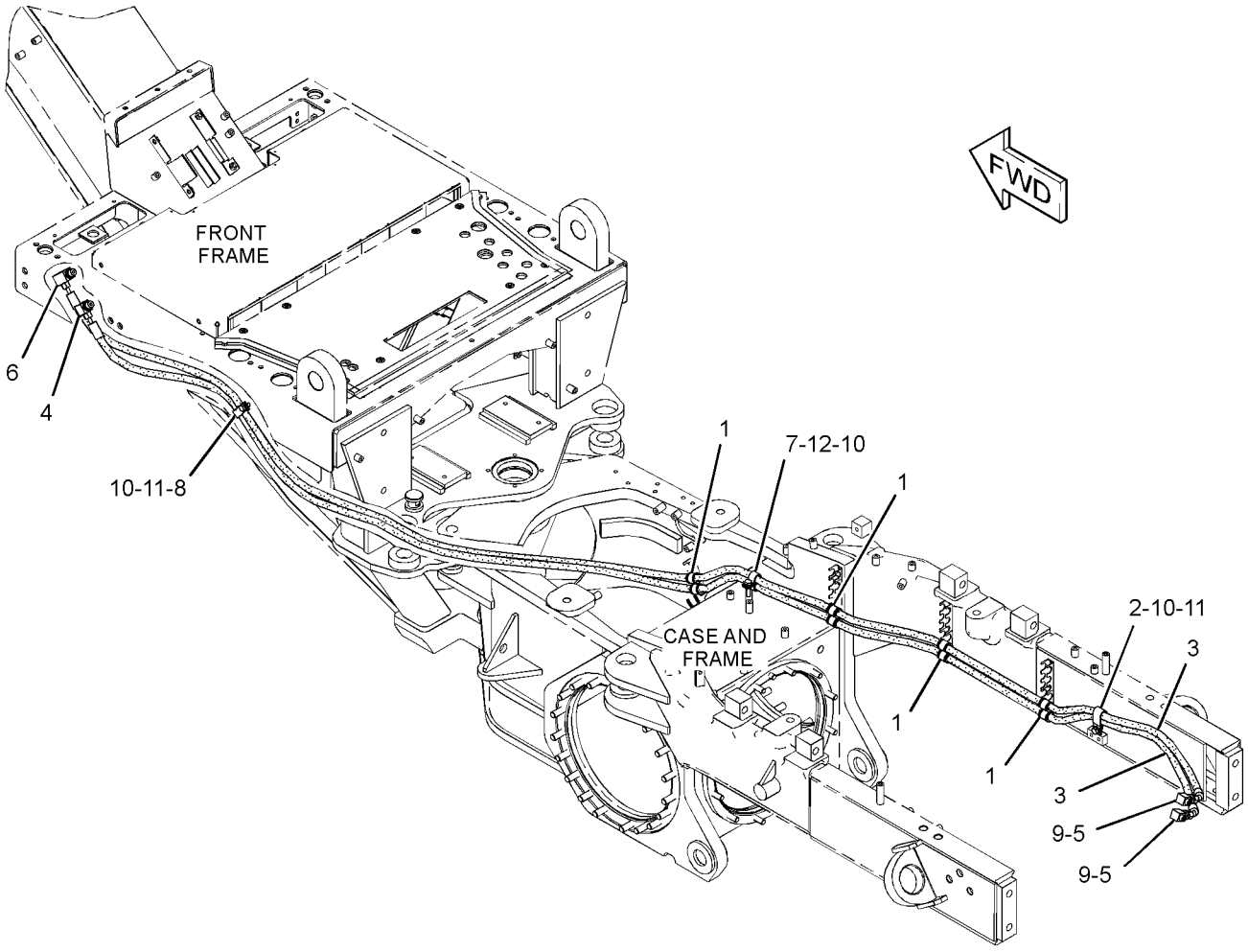

GRAPHIC #1 **<END>** g01705702

HYDRAULIC SYSTEM

301-4376 LINES GP-STEERING

S/N: JPA1-UP

PART OF 274-7940 GENERAL AR

SMCS-4304 **i03246405**

NOTE	REF NO	GRAPHIC REF	PART NUMBER	QTY	PART NAME 1 2 3 4 5 6 (PRODUCT LEVEL)	SEE PAGE
	1	2	**3S-2093**	2	STRAP-CABLE	
	2	2	**4J-5468**	2	CLAMP	
I	3	2	**5T-9903**	1	HOSE AS	
I	4	2	**8W-0225**	1	HOSE AS	
	5	2	**9D-0953**	1	SPACER (0.406X0.75X0.88-IN THK)	
I	6	1	**108-0714**	2	HOSE AS	
	7	2	**108-1610**	2	CLAMP	
I	8	2	**113-0981**	1	HOSE AS	
	9	2	**136-6330**	1	SEAL	
	10	2	**136-6331**	2	SEAL	
I	11	2	**150-4868**	1	HOSE AS	
	12	2	*164-5586*	1	TEE AS	
		2	**6V-8398**	1	SEAL-O-RING	
		2	**7X-0871**	1	TEE	
	13	2	*164-5590*	1	VALVE AS-FLUID SAMPLING	
		2	**3J-7354**	1	SEAL-O-RING	
		2	**8C-3446**	1	VALVE-FLUID SAMPLING	
	14	2	*171-6467*	4	UNION AS	
					(EACH INCLUDES)	
		2	**6V-8398**	1	SEAL-O-RING	
		2	**6V-9746**	1	SEAL-O-RING	
		2	**8T-5082**	1	UNION	
I	15	2	**301-4378**	1	HOSE AS	
I	16	2	**301-4380**	1	HOSE AS	
	17	2	**091-8792**	1	CLIP	
	18	2	*148-8316*	2	CONNECTOR AS	
					(EACH INCLUDES)	
		2	**3J-7354**	1	SEAL-O-RING	
		2	**4J-5477**	1	SEAL-O-RING	
		2	**6V-8647**	1	CONNECTOR	
	19	2	*148-8340*	6	CONNECTOR AS	
					(EACH INCLUDES)	
		2	**3K-0360**	1	SEAL-O-RING	
		2	**6V-8398**	1	SEAL-O-RING	
		2	**6V-8639**	1	CONNECTOR	
	20	2	*148-8351*	1	ELBOW AS	
		2	**4J-5477**	1	SEAL-O-RING	
		2	**6V-9849**	1	ELBOW	
	21	2	*148-8354*	1	ELBOW AS	
		2	**3K-0360**	1	SEAL-O-RING	
		2	**6V-8398**	1	SEAL-O-RING	
		2	**6V-9002**	1	ELBOW	
	22	2	*148-8364*	3	ELBOW AS	
					(EACH INCLUDES)	
		2	**3K-0360**	1	SEAL-O-RING	
		2	**6V-8398**	1	SEAL-O-RING	
		2	**6V-8625**	1	ELBOW	
	23	2	*148-8444*	2	TEE AS-SWIVEL	
					(EACH INCLUDES)	
		2	**6V-8398**	2	SEAL-O-RING	
		2	**6V-9837**	1	TEE-SWIVEL	
	24	2	*169-5862*	1	ELBOW AS	
		2	**3J-1907**	1	SEAL-O-RING	
		2	**8C-6712**	1	ELBOW	
I	25	2	**301-4379**	1	HOSE AS	
I	26	2	**4E-2392**	1	HOSE AS	

301-4376 **LINES GP-STEERING** *(contd.)* **i03246405**

NOTE	REF NO	GRAPHIC REF	PART NUMBER	QTY	PART NAME 1 2 3 4 5 6 (PRODUCT LEVEL)	SEE PAGE
	27	2	**4L-6454**	2	BOLT (3/8-16X1-IN)	
	28	2	**5P-1075**	2	WASHER-HARD (10.2X22.5X3-MM THK)	
	29	2	**5P-7854**	4	CLIP	
	30	2	**6D-4244**	15	CLIP	
	31	2	**6K-8178**	1	CLIP	
	32	2	**6V-8801**	2	NUT (3/8-16-THD)	
I	33	2	**7I-5405**	1	HOSE AS	
	34	2	**7X-0289**	1	BOLT (3/8-16X1.875-IN)	
	35	2	**8C-3451**	1	CAP-DUST	
	36	2	**8T-4121**	14	WASHER-HARD (11X21X2.5-MM THK)	
M	37	2	**8T-4133**	3	NUT (M10X1.5-THD)	
M	38	2	**8T-4136**	6	BOLT (M10X1.5X25-MM)	
M	39	2	**8T-4137**	5	BOLT (M10X1.5X20-MM)	
	40	2	**8T-4896**	3	WASHER-HARD (10.2X18.5X2.5-MM THK)	
	41	2	**9M-4972**	1	CLIP	
	42	2	**9X-8250**	2	CLIP	

I-REFER TO HYDRAULIC INFORMATION SYSTEM
M-METRIC PART

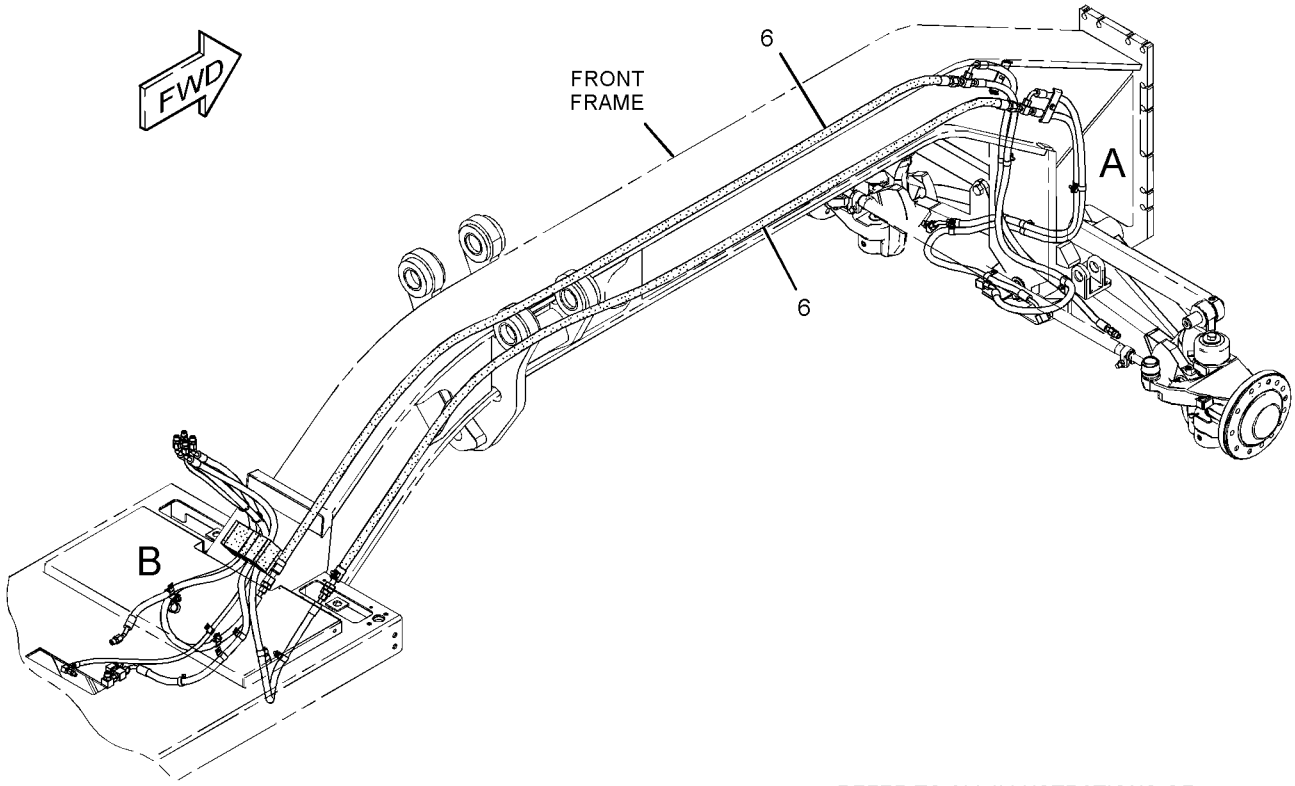

REFER TO ALL ILLUSTRATIONS OF
THIS GROUP FOR AUXILIARY VIEWS

GRAPHIC #1 g01663313

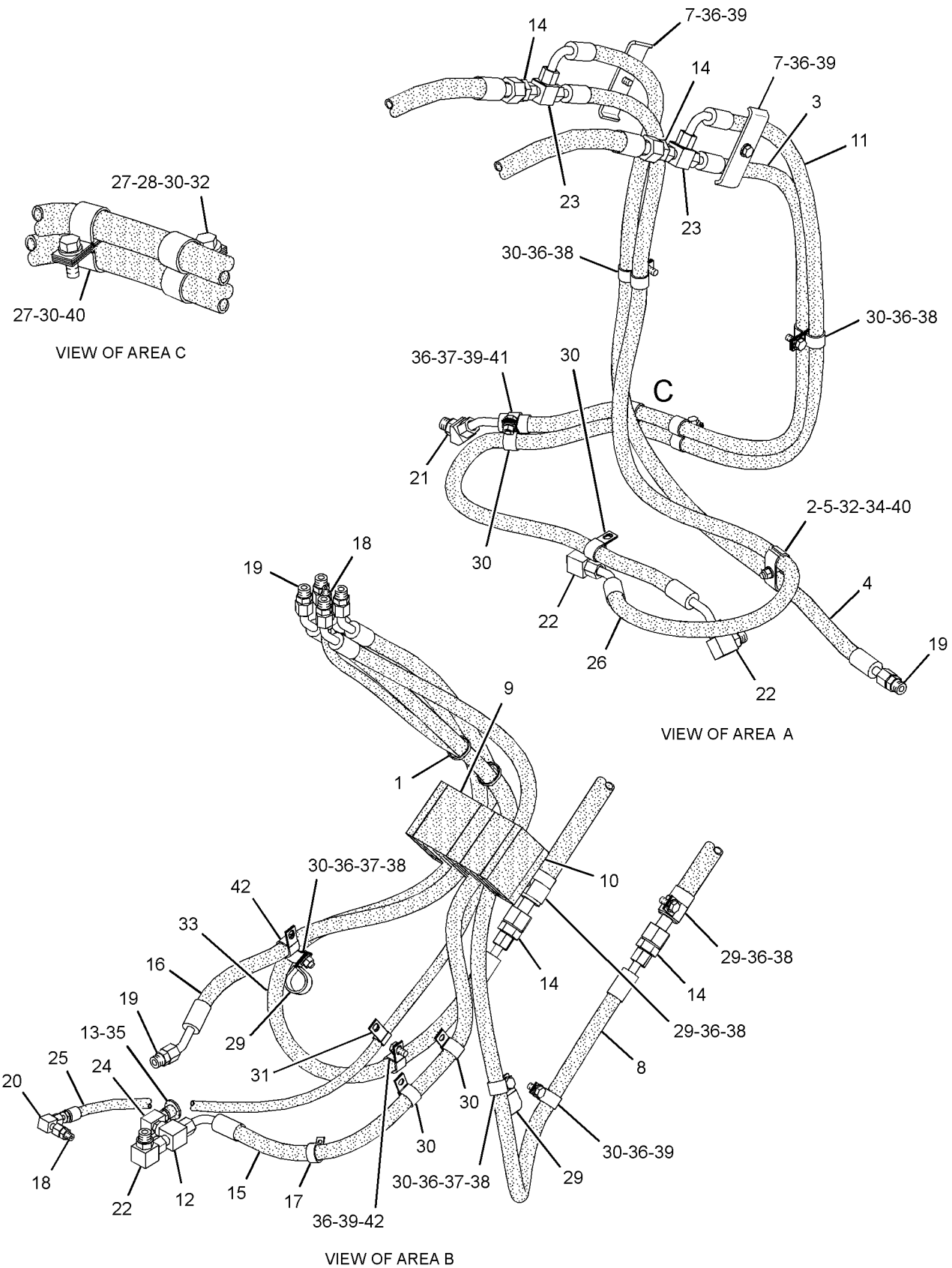

GRAPHIC #2 **<END>** g01663355

164-8462 LOCK GP-CENTERSHIFT

S/N: JPA1-UP

PART OF 274-7940 GENERAL AR

SMCS-5221 **i03291816**

NOTE	REF NO	GRAPHIC REF	PART NUMBER	QTY	PART NAME 1 2 3 4 5 6 (PRODUCT LEVEL)	SEE PAGE
	1	1	**2H-3931**	1	SEAL-O-RING	
	2	1	**4T-8054**	1	SEAL AS	
	3	1	**8X-3749**	1	PISTON	
	4	1	**9D-6584**	1	SEAL-LIP TYPE	
	5	1	**297-6979**	1	CYLINDER	
	6	1	**115-0541**	1	PIN	
	7	1	**142-5787**	1	CAP	
Y	8	1	**152-8346**	1	VALVE GP-SOLENOID (CENTERSHIFT LOCK)	584
	9	1	**167-2307**	1	SEAL-U-CUP	
	10	1	**7X-0346**	1	BOLT (5/8-11X2-IN)	
	11	1	**8T-4122**	1	WASHER-HARD (17X32X3.5-MM THK)	
	12	1	**8T-4223**	2	WASHER-HARD (13.5X25.5X3-MM THK)	
	13	1	**8T-8917**	2	BOLT (1/2-13X1.25-IN)	
	14	1	**7X-0350**	2	BOLT (5/8-11X3.5-IN)	
	15	1	**198-4780**	2	WASHER-HARD (17.5X32X8-MM THK)	

Y-SEPARATE ILLUSTRATION

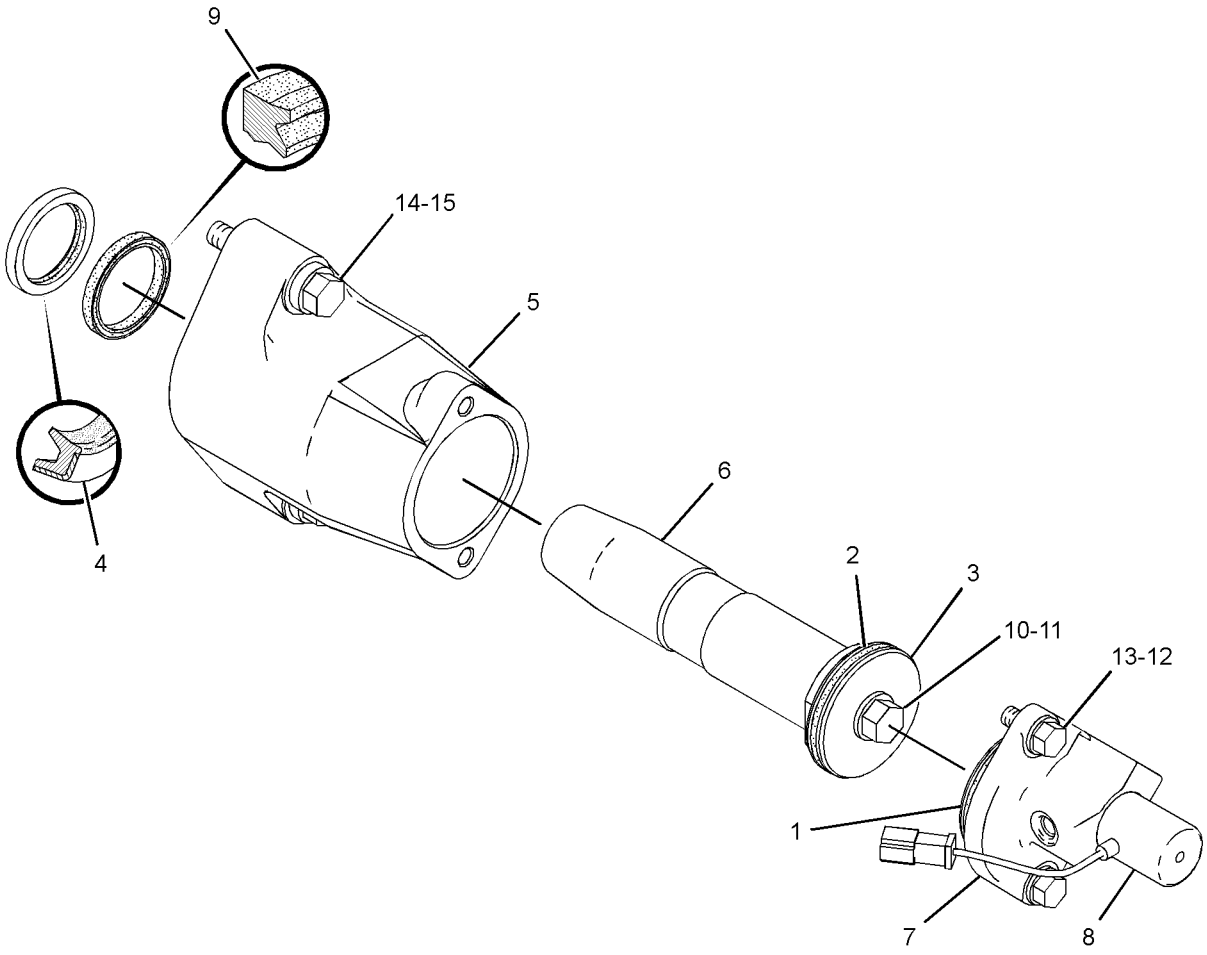

GRAPHIC #1 **<END>** g01702853

HYDRAULIC SYSTEM

112-2240 MANIFOLD GP-CONTROL

S/N: JPA1-UP
PART OF 166-3336 LINES GP-ACCUMULATOR
AN ATTACHMENT

SMCS-5051, 5069, 5264, 5467, 5479 **i02591821**

NOTE	REF NO	GRAPHIC REF	PART NUMBER	QTY	PART NAME 1 2 3 4 5 6 (PRODUCT LEVEL)	SEE PAGE
Y	1	1	**149-2610**	1	VALVE GP-SOLENOID (24-VOLT) (BLADE CUSHION)	583
	2	1	**8C-6162**	1	MANIFOLD	

Y-SEPARATE ILLUSTRATION

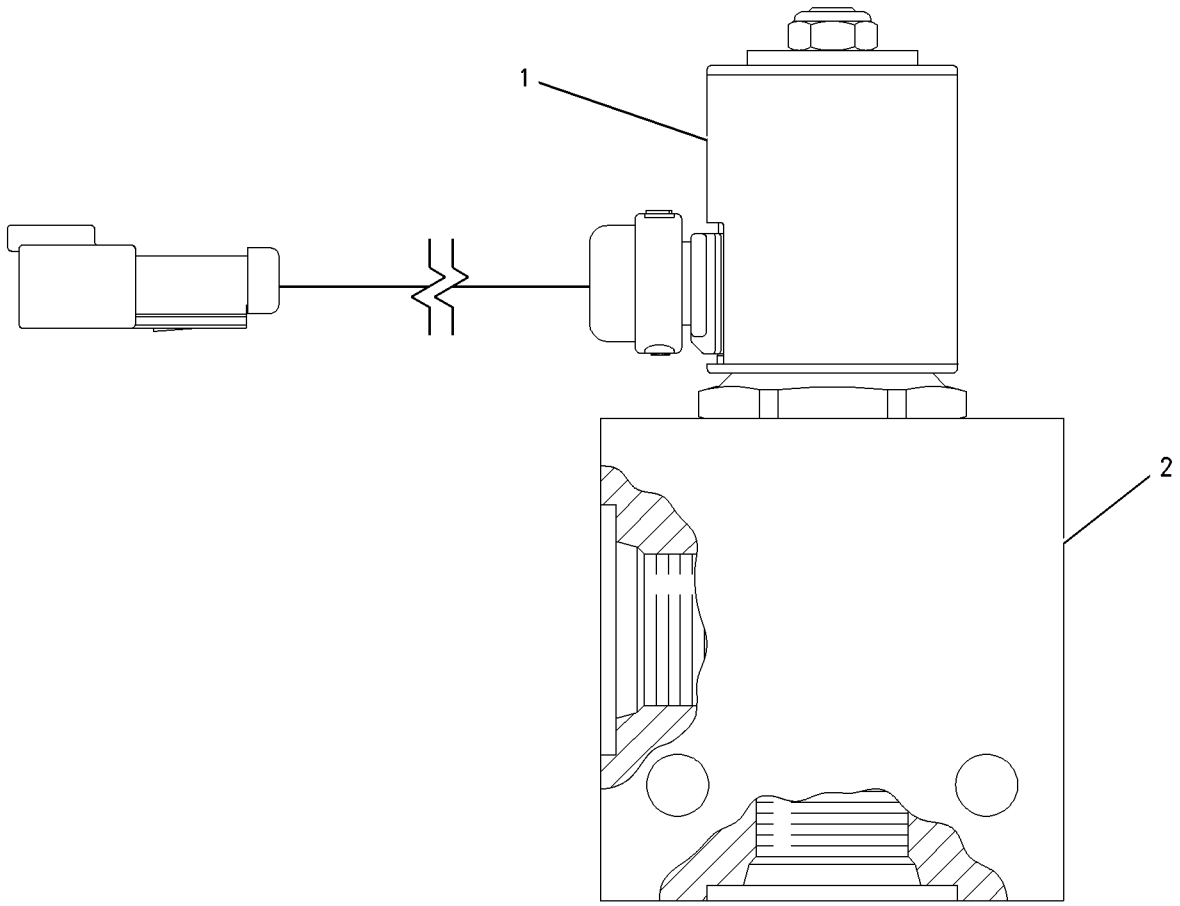

GRAPHIC #1 **<END>** g00995443

239-9893 MANIFOLD GP-VALVE–LH

S/N: JPA1-UP

PART OF 250-0543 VALVE GP-BANK 4, 250-0550, 262-7291 VALVE GP-BANK 5, 250-0567 VALVE GP-BANK 6, 263-6435 VALVE GP-BANK 7 AN ATTACHMENT

SMCS-5264 **i02453962**

NOTE	REF NO	GRAPHIC REF	PART NUMBER	QTY	PART NAME 1 2 3 4 5 6 (PRODUCT LEVEL)	SEE PAGE
J	1	1	**284-0815**	1	VALVE GP-CHECK E	
	2	1	**249-3251**	1	VALVE GP-CONTROL	
	3	1	**275-9638**	1	VALVE GP-CONTROL	
	4	1	**8C-6512**	4	BOLT-SOCKET HEAD (10-24X2-IN)	
	5	1	**241-5889**	1	VALVE GP-SHUTTLE	
	6	1	**266-1600**	1	VALVE GP-SOLENOID & MANIFOLD	
	7	1	**266-1599**	1	VALVE GP-SOLENOID & MANIFOLD	
	8	1	**9S-8003**	1	PLUG (HEX)	
	9	1	**3J-7354**	1	SEAL-O-RING	
	10	1	**9S-8001**	12	PLUG-O-RING (STRAIGHT THREAD O-RING)	
	11	1	**4J-7533**	12	SEAL-O-RING	
					AVAILABLE REPAIR KIT(S):	
J			**284-3045**	1	KIT-SEAL	

J-(KIT MARKED J SERVICES PARTS MARKED J)

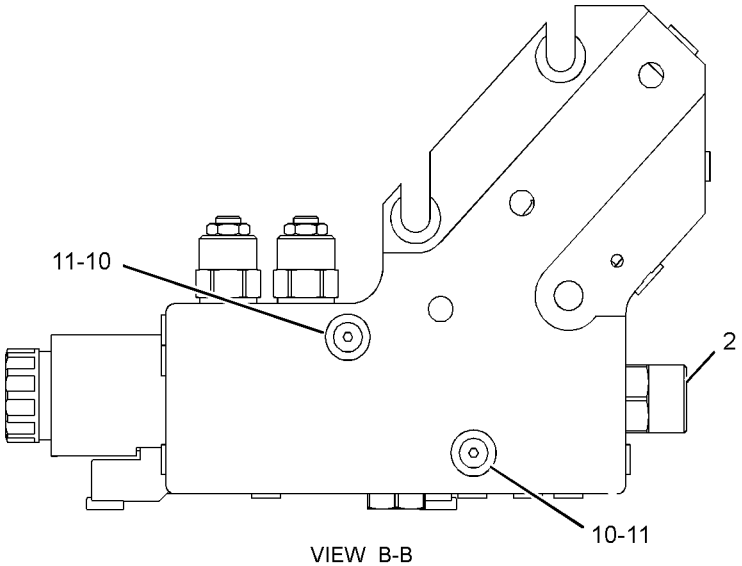

VIEW B-B

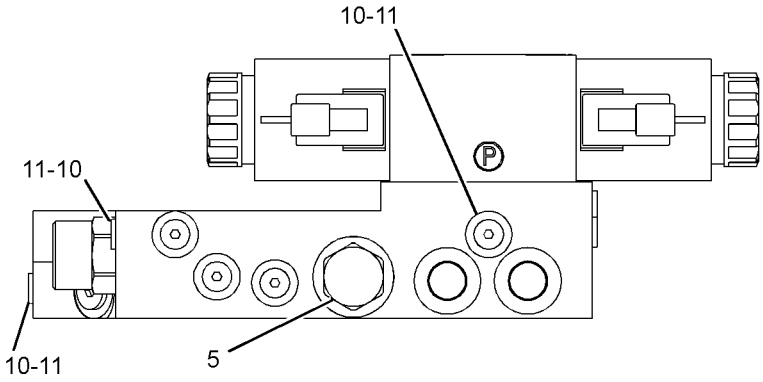

VIEW C-C

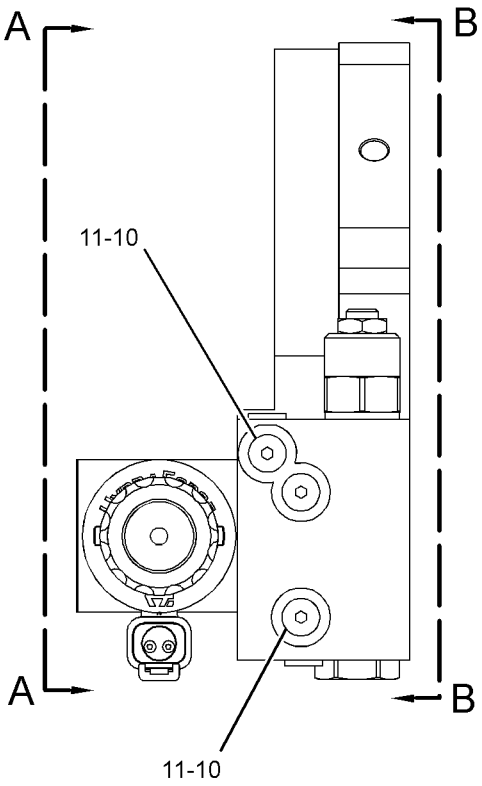

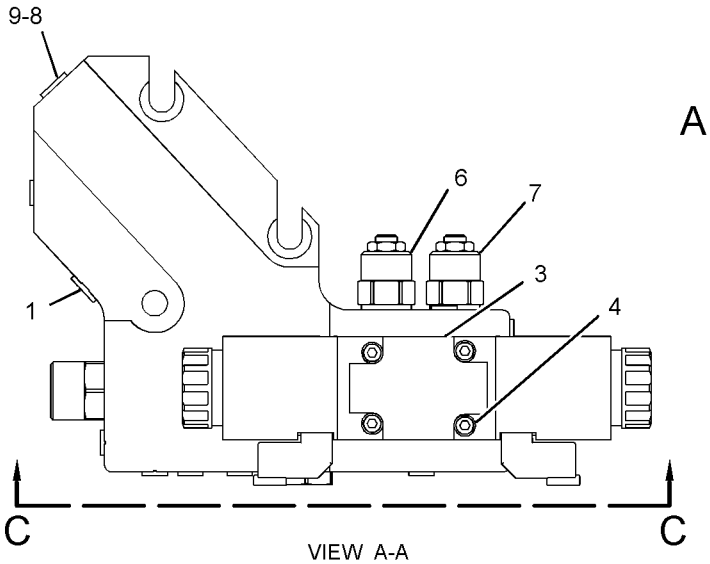

VIEW A-A

GRAPHIC #1 **<END>** g01249469

239-9894 MANIFOLD GP-VALVE–RH

S/N: JPA1-UP

PART OF 250-0544 VALVE GP-BANK 4, 250-0548 VALVE GP-BANK 5, 250-0565 VALVE GP-BANK 6

AN ATTACHMENT

SMCS-5264 **i02462900**

NOTE	REF NO	GRAPHIC REF	PART NUMBER	QTY	PART NAME 1 2 3 4 5 6 (PRODUCT LEVEL)	SEE PAGE
J	1	1	**284-0815**	1	VALVE GP-CHECK E	
		1	**3J-7354**	1	SEAL-O-RING	
	2	1	**249-3251**	1	VALVE GP-CONTROL	
	3	1	**275-9638**	1	VALVE GP-CONTROL	
	4	1	**8C-6512**	4	BOLT-SOCKET HEAD (10-24X2-IN)	
	5	1	**241-5889**	1	VALVE GP-SHUTTLE	
	6	1	**266-1599**	1	VALVE GP-SOLENOID & MANIFOLD	
	7	1	**266-1598**	1	VALVE GP-COUNTERBALANCE	
	8	1	**9S-8003**	1	PLUG (HEX)	
	9	1	**3J-7354**	1	SEAL-O-RING	
	10	1	**9S-8001**	12	PLUG-O-RING (STRAIGHT THREAD O-RING)	
	11	1	**4J-7533**	12	SEAL-O-RING	
					AVAILABLE REPAIR KIT(S):	
J			**284-3045**	1	KIT-SEAL	

J-KIT MARKED J ICLUDES PARTS MARKED J

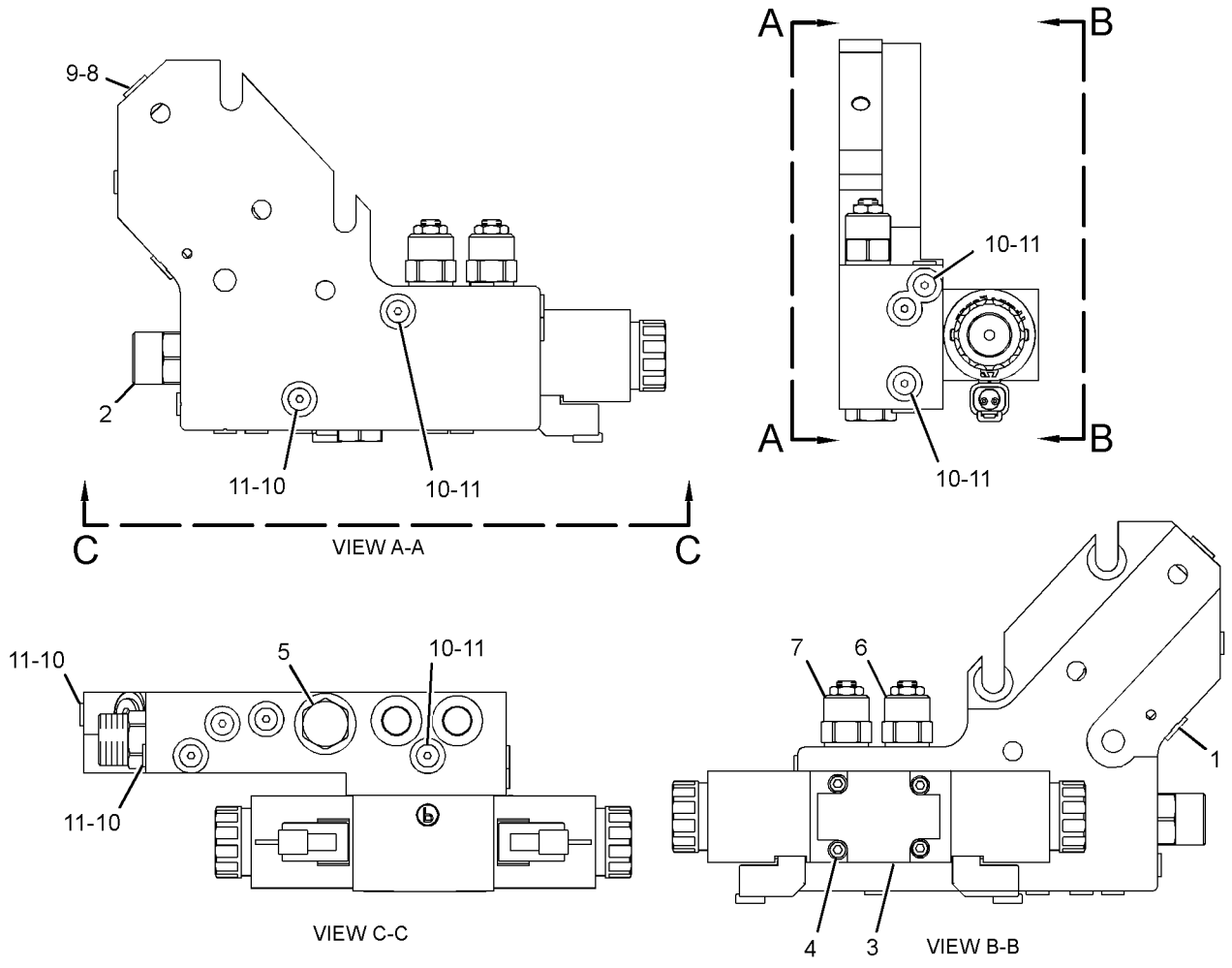

GRAPHIC #1 **<END>** g01249909

HYDRAULIC SYSTEM

105-3196 MOTOR GP-GEROTOR

S/N: JPA1-UP

PART OF 5T-0570 DRIVE GP-CIRCLE

SMCS-5082 **i02205130**

NOTE	REF NO	GRAPHIC REF	PART NUMBER	QTY	PART NAME 1 2 3 4 5 6 (PRODUCT LEVEL)	SEE PAGE
	1	1	**9T-8051**	7	BOLT (3/8-24X4.12-IN)	
	2	1	**9T-8070**	1	HOUSING AS	
	3	1	**6Y-2934**	1	BEARING-ROLLER	
	4	1	**6Y-2933**	2	RING-THRUST	
	5	1	**6Y-2932**	1	BEARING-THRUST	
	6	1	**8T-1698**	1	BEARING AS-NEEDLE	
	7	1	**9T-9071**	1	SHIM	
	8	1	**9T-8058**	1	BACKUP	
	9	1	**9T-8059**	1	SEAL	
	10	1	**9T-8056**	1	SHAFT	
	11	1	**6Y-2935**	1	BEARING	
	12	1	**9T-8053**	5	SEAL	
	13	1	**9T-8054**	1	LINK	
	14	1	**9T-8061**	1	PLATE	
	15	1	**9T-8063**	1	ROTOR SET	
	16	1	**9T-8065**	1	MANIFOLD	
	17	1	**9J-4963**	1	RING	
	18	1	**9T-8069**	1	PLATE AS	
	19	1	**9T-8067**	1	COVER	
					AVAILABLE REPAIR KIT(S):	
			9T-9072	1	KIT-SEAL (MOTOR) (CIRCLE DRIVE)	
					(INCLUDES RING, SHIM, SEALS & GREASE PACK)	

105-3196 **MOTOR GP-GEROTOR** *(contd.)* **i02205130**

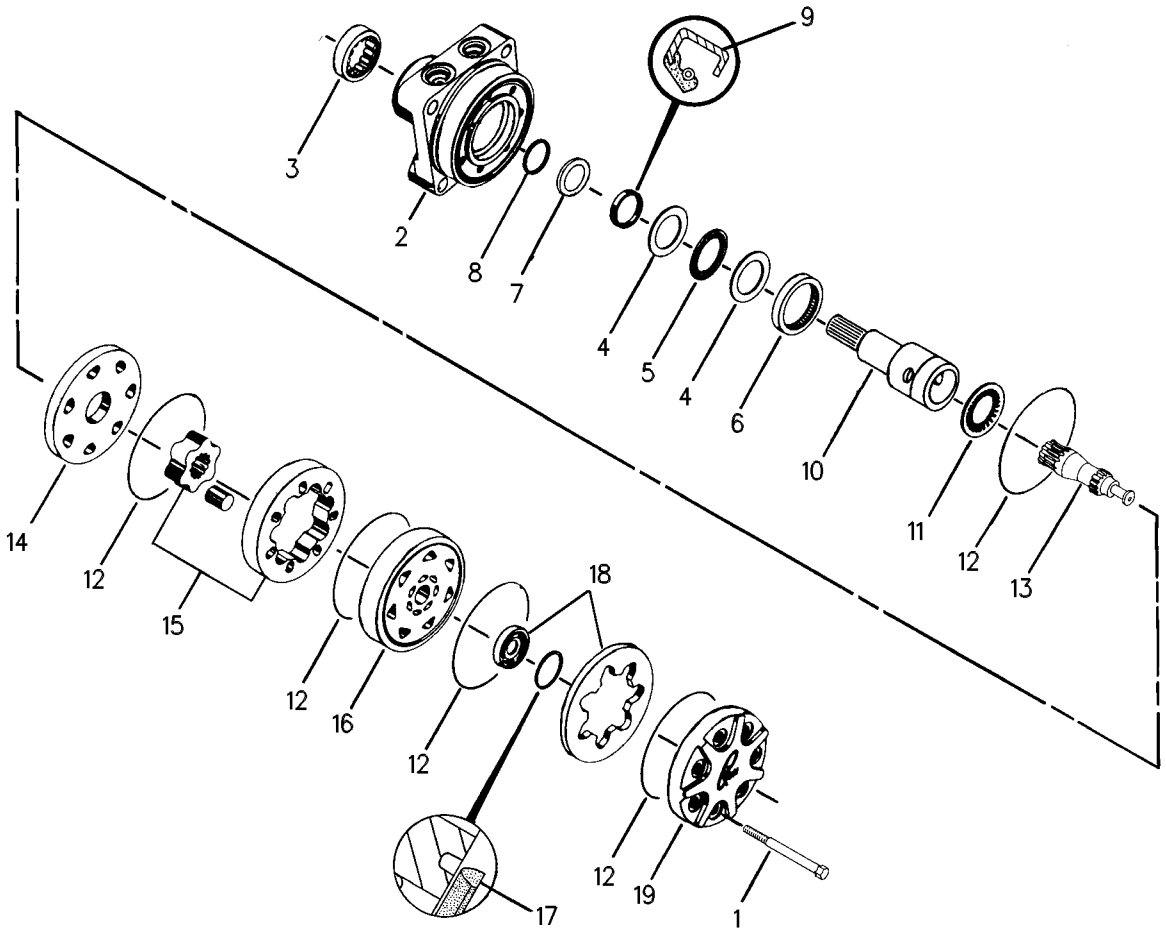

GRAPHIC #1 **<END>** g00108578

HYDRAULIC SYSTEM

299-5543 PUMP & MTG GP-STEERING—STEERING

S/N: JPA1-UP

PART OF 274-7940 GENERAL AR

SMCS-4306, 4344 **i03247368**

NOTE	REF NO	GRAPHIC REF	PART NUMBER	QTY	PART NAME 1 2 3 4 5 6 (PRODUCT LEVEL)	SEE PAGE
	1	1	**1D-5120**	1	NUT-JAM (3/4-16-THD)	
	2	1	**5R-4787**	4	PLATE	
YR	3	1	**6E-3136**	1	PUMP GP-PISTON	433
	4	1	**112-4159**	4	MOUNTING AS	
	5	1	**1A-5822**	4	BOLT (1/2-13X2.75-IN)	
	6	1	**1B-8737**	1	KEY-WOODRUFF	
	7	1	**299-5545**	1	PLATE AS	
	8	1	**5P-8248**	1	WASHER-HARD (20X36.5X3.5-MM THK)	
	9	1	**6V-8765**	4	WASHER-HARD (15X26X3-MM THK)	
M	10	1	**8C-3425**	4	BOLT (M14X2X35-MM)	
M	11	1	**8T-4910**	6	BOLT (M12X1.75X60-MM)	
	12	1	**8T-7971**	6	WASHER-HARD (13.5X25.5X5-MM THK)	

M-METRIC PART
R-REMFG PART MAY BE AVAILABLE
Y-SEPARATE ILLUSTRATION

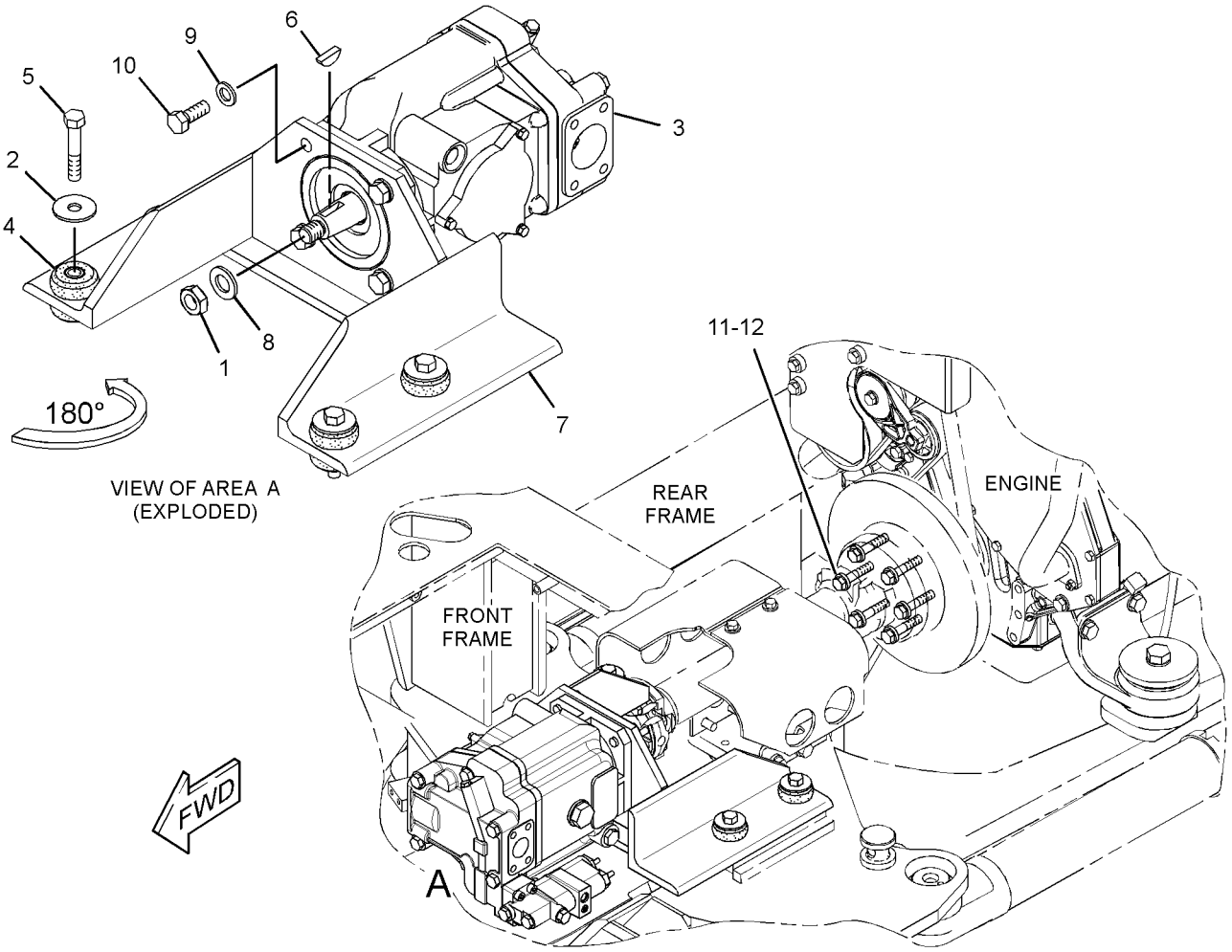

GRAPHIC #1 **<END>** g01698313

HYDRAULIC SYSTEM

6E-3136 PUMP GP-PISTON*R

S/N: JPA1-UP

PART OF 299-5543 PUMP & MTG GP-STEERING

SMCS-5070 **i03432324**

NOTE	REF NO	GRAPHIC REF	PART NUMBER	QTY	PART NAME 1 2 3 4 5 6 (PRODUCT LEVEL)	SEE PAGE
	1	1	**6E-6594**	1	BEARING-SWASH	
	2	1	**6E-4224**	1	PLUG-SWASHPLATE	
	3	1	**033-6036**	1	SEAL-O-RING	
	4	1	**102-2386**	1	HEAD-PUMP	
	5	1	**9T-1699**	1	SPRING	
	6	1	**9T-1710**	1	POPPET	
	7	1	**9T-1636**	1	SEAT	
	8	1	**6E-6596**	1	COVER-TRUNNION	
	9	1	**6V-3834**	1	SEAL-O-RING	
M	10	1	**3E-4302**	2	SCREW-FLAT HEAD (M4X0.7X10-MM)	
M	11	1	**6V-8214**	3	BOLT (M6X1X20-MM)	
	12	1	**6E-6597**	1	BEARING-SWASH	
M	13	1	**6V-7673**	2	BOLT (M12X1.75X50-MM)	
M	14	1	**8T-0372**	4	BOLT (M12X1.75X90-MM)	
Y	15	1	**104-3122**	1	VALVE GP-PUMP CONTROL (PRESSURE, FLOW COMPENSATOR)	572
	16	1	**109-3204**	3	SEAL-O-RING	
M	17	1	**6V-8337**	4	BOLT-SOCKET HEAD (M8X1.25X35-MM)	
	18	1	**095-0888**	2	PIN-SPRING	
	19	1	**102-2385**	1	SHAFT-PUMP	
	20	1	**102-2384**	1	HOUSING-PUMP	
	21	1	**006-8663**	1	RING	
	22	1	**8T-4750**	1	SEAL-LIP TYPE	
	23	1	**6E-6599**	1	KIT-BIAS PISTON	
					(INCLUDES SPRING,ROD,PISTON,SEAL)	
	24	1	**6E-6600**	1	SPRING-BIAS	
Y	25	1	**6E-6571**	1	ROTATING GP-PUMP (STEERING)	435
	26	1	**6E-6601**	1	GASKET	
	27	1	**7L-9061**	2	SEAL-O-RING	
	28	1	**3E-7417**	2	PLUG	
	29	1	**8T-7876**	2	SEAL-O-RING	
	30	1	**9T-1633**	1	PLATE	
B	31	1	**9T-2197**	1	SHIM PACK (INCLUDES 17-SHIMS)	
	32	1	**1P-6872**	1	CUP-BEARING	
	33	1	**004-9040**	1	CONE-BEARING	
	34	1	**9T-1652**	1	PIN	
	35	1	**6E-6602**	1	KIT-PISTON CONTROL	
					(INCLUDES ROD,PISTON,SEAL)	
	36	1	**167-1802**	1	SWASHPLATE GP	
		1	**167-1801**	2	STOP-SWASHPLATE	
		1	**1H-3937**	2	PIN	
	37	1	**7T-8273**	1	CUP-BEARING	
	38	1	**7T-8272**	1	CONE-BEARING	
	39	1	**3K-0360**	1	SEAL-O-RING	
	40	1	**9S-4185**	1	PLUG-O-RING	
	41	1	**104-3124**	1	SHIELD	

B-USE AS REQUIRED
M-METRIC PART
Y-SEPARATE ILLUSTRATION

6E-3136 PUMP GP-PISTON *(contd.)* i03432324

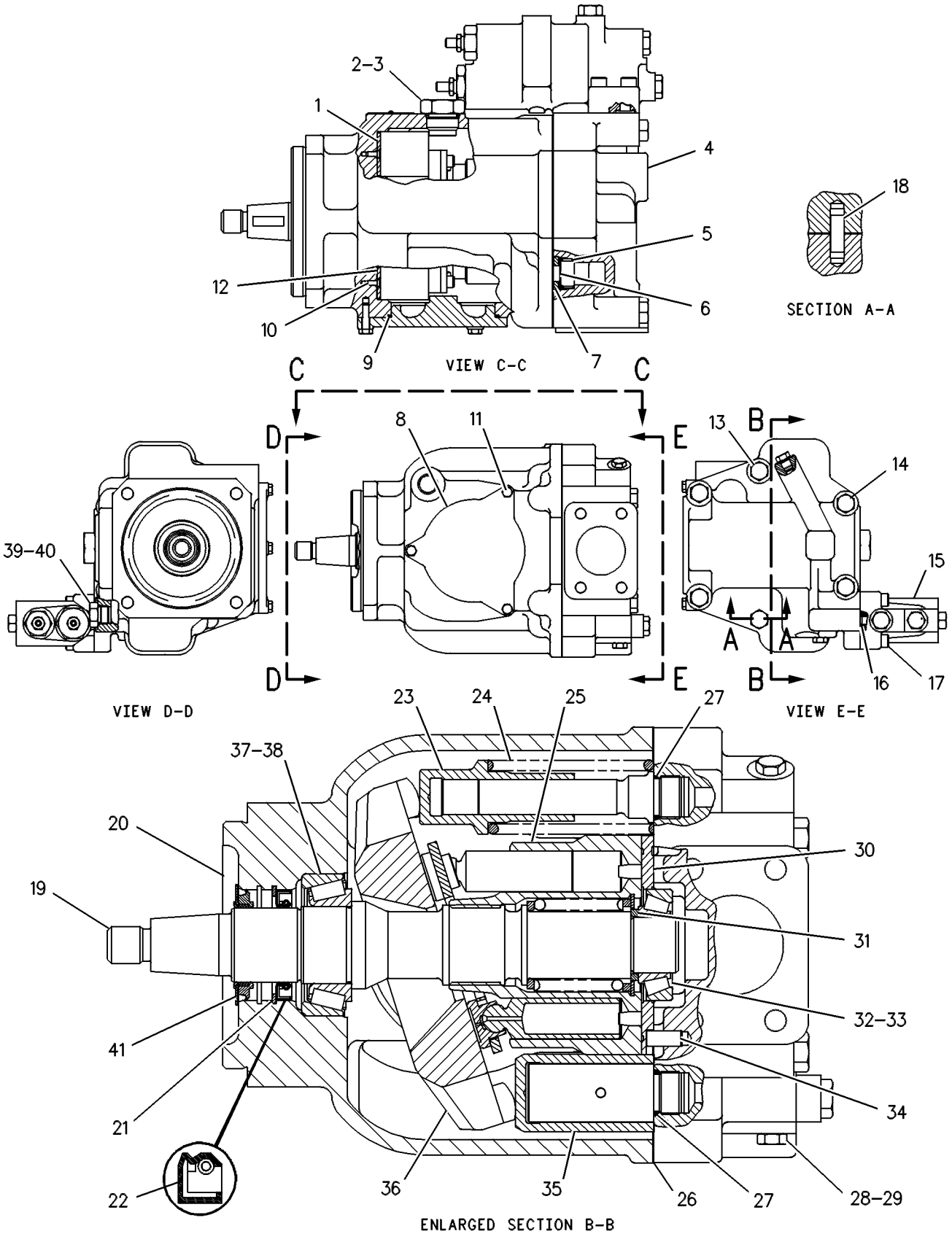

GRAPHIC #1 **<END>** g00108685

6E-6571 ROTATING GP-PUMP

S/N: JPA1-UP

PART OF 6E-3136 PUMP GP-PISTON

SMCS-5070 **i00131155**

NOTE	REF NO	GRAPHIC REF	PART NUMBER	QTY	PART NAME 1 2 3 4 5 6 (PRODUCT LEVEL)	SEE PAGE
	1	1	**6E-6604**	2	PLATE-SPACER	
	2	1	**6E-6605**	2	PLATE-LIMITER	
M	3	1	**3T-0849**	4	BOLT-SOCKET HEAD (M6X1X25-MM)	
	4	1	**9T-7755**	1	SPRING	
	5	1	**009-2069**	1	RING	
	6	1	**9T-7754**	1	GUIDE-OUTER	
	7	1	**9T-7757**	1	BARREL	
	8	1	**9T-7756**	1	GUIDE-INNER	
	9	1	**9T-7759**	1	PLATE-RETAINING	
	10	1	**9T-7761**	9	PISTON	

M-METRIC PART

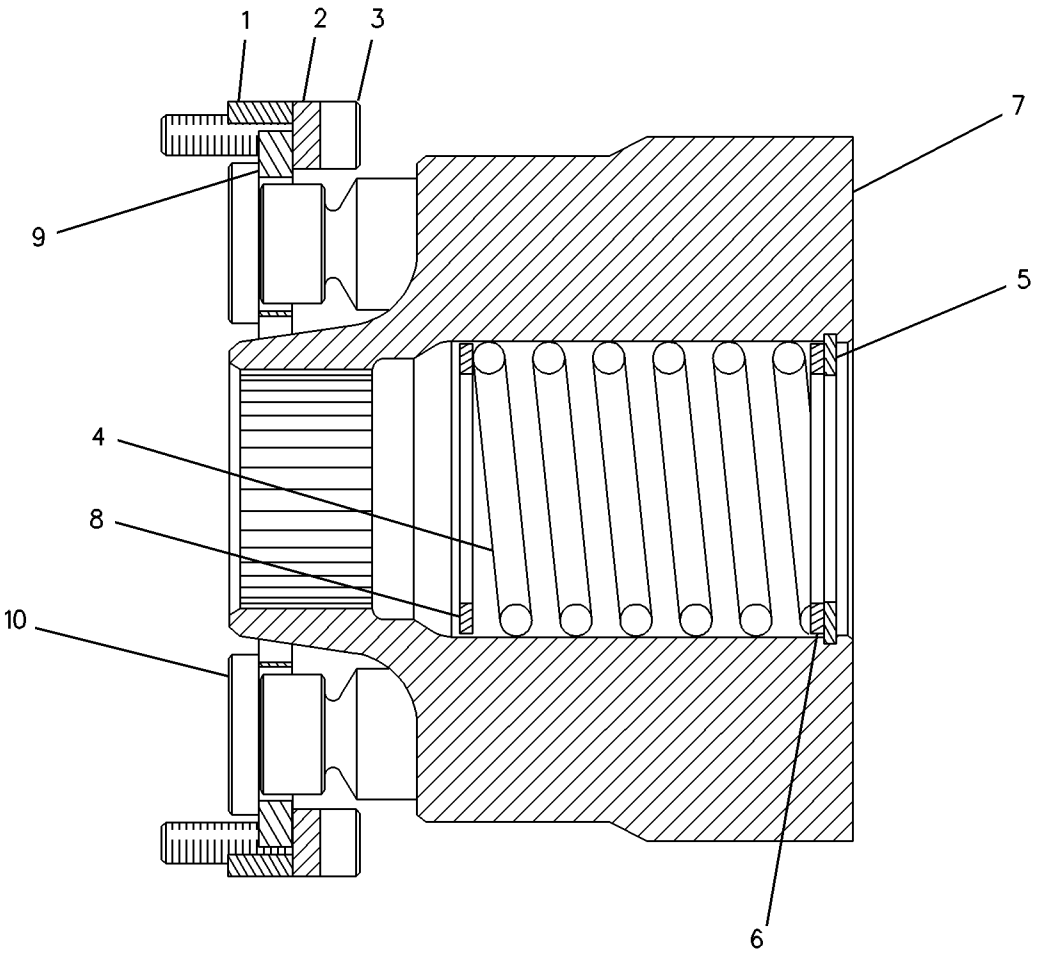

GRAPHIC #1 **<END>** g00083480

HYDRAULIC SYSTEM

311-0514 SHAFT GP-PUMP DRIVE

S/N: JPA1-UP

PART OF 274-7940 GENERAL AR

SMCS-3108 **i03246375**

NOTE	REF NO	GRAPHIC REF	PART NUMBER	QTY	PART NAME 1 2 3 4 5 6 (PRODUCT LEVEL)	SEE PAGE
	1	1	**7D-9267**	1	YOKE	
	2	1	**299-7700**	1	SLIP JOINT GP	
		1	**0L-0478**	8	BOLT (3/8-24X1.75-IN)	
		1	**5T-1362**	2	SPIDER & BEARING AS	
		1	**300-2688**	1	SHAFT AS-DRIVE	
	3	1	**0L-0478**	4	BOLT (3/8-24X1.75-IN)	
	4	1	**0S-1571**	4	BOLT (3/8-16X1.75-IN)	

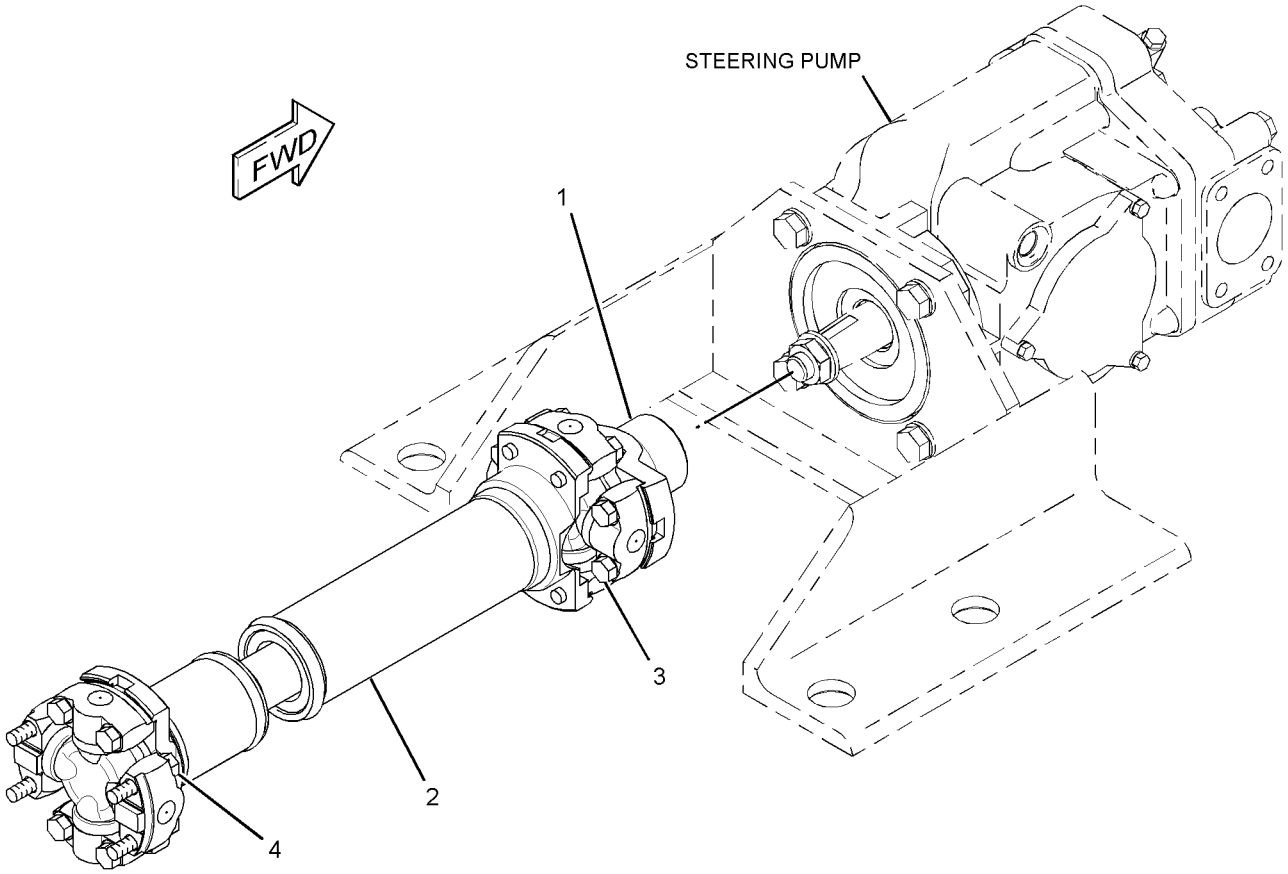

GRAPHIC #1 **<END>** g01703018

260-6502 SWIVEL GP—CIRCLE DRIVE

S/N: JPA1-UP

PART OF 106-4787, 117-3855 LINES GP-HYDRAULIC

AN ATTACHMENT

SMCS-5060 **i02322216**

NOTE	REF NO	GRAPHIC REF	PART NUMBER	QTY	PART NAME 1 2 3 4 5 6 (PRODUCT LEVEL)	SEE PAGE
B	1	1	**5J-1246**	6	SHIM (0.13-MM THK)	
	2	1	**8J-2331**	7	SEAL	
	3	1	**173-1008**	1	ROTOR	
	4	1	**173-1009**	1	RETAINER	
	5	1	**223-0580**	1	COVER	
	7	1	**260-6501**	1	BODY	
	8	1	**173-1007**	2	SEAL	
	9	1	**1P-3700**	4	SEAL-RECTANGULAR	
	10	1	**2H-3928**	7	SEAL-O-RING	
	11	1	**4J-9964**	2	SEAL	
	12	1	**5P-2566**	6	BOLT (1/2-13X1.5-IN)	
	13	1	**8T-4223**	4	WASHER-HARD (13.5X25.5X3-MM THK)	

B-USE AS REQUIRED

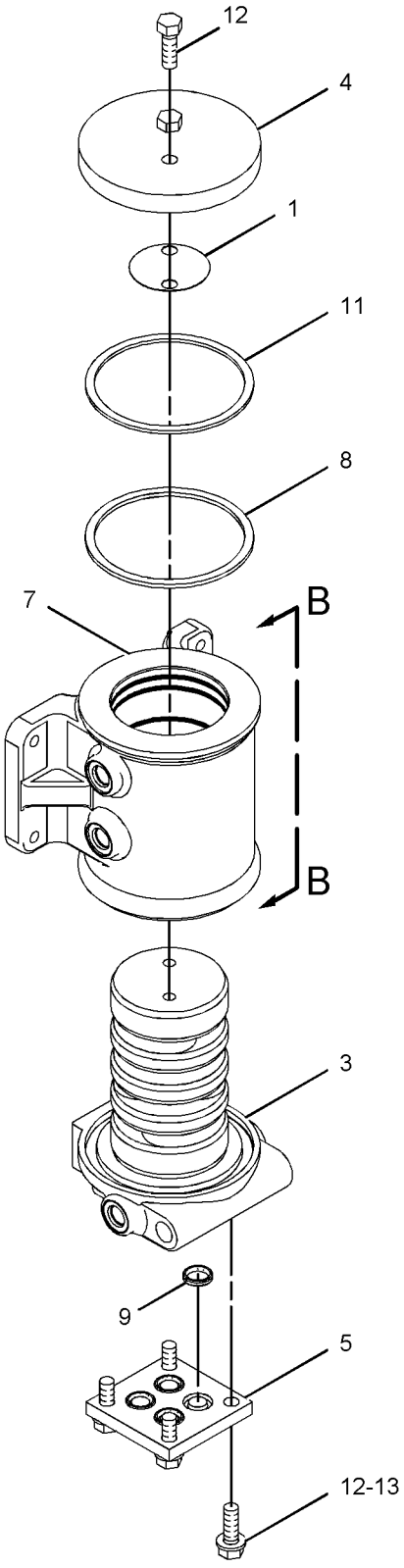

VIEW OF AREA A

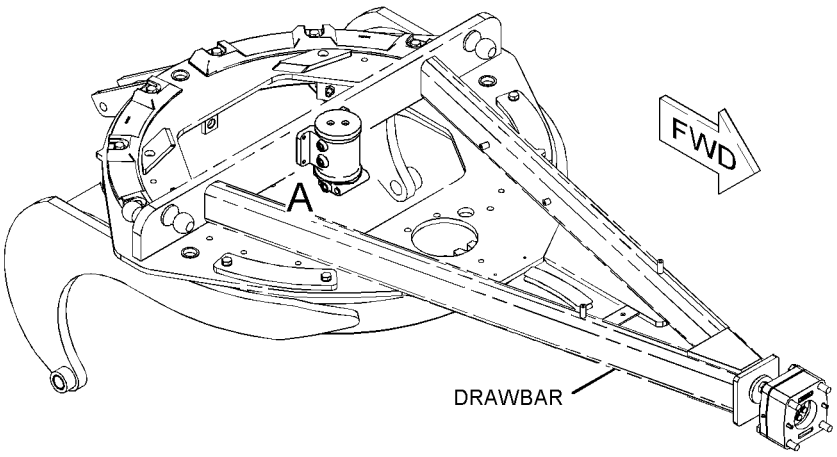

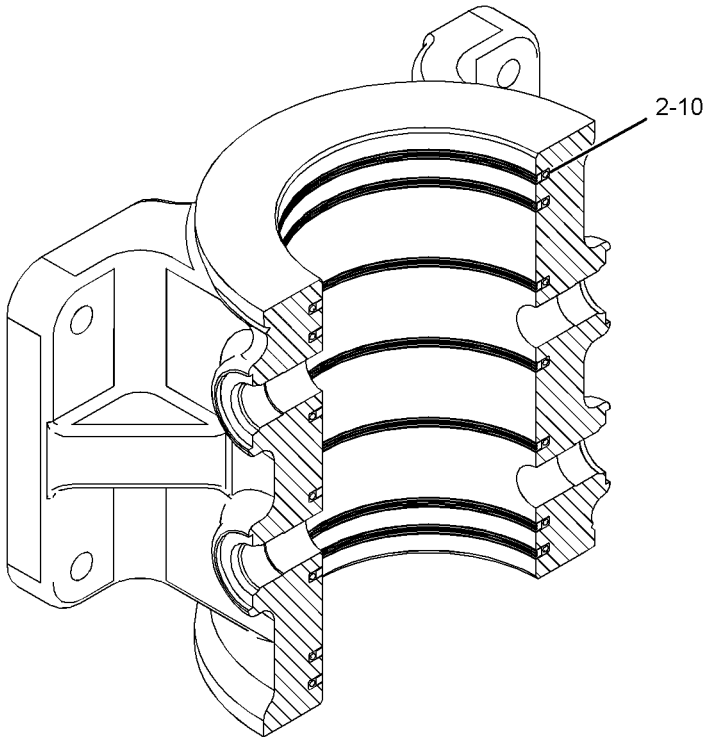

SECTION B-B

GRAPHIC #1 **<END>** g01142114

HYDRAULIC SYSTEM

214-1984 TANK & FILTER GP-HYDRAULIC

S/N: JPA1-UP

PART OF 214-1983 TANK & MTG GP-HYDRAULIC

SMCS-4332, 5056, 5068 **i02938304**

NOTE	REF NO	GRAPHIC REF	PART NUMBER	QTY	PART NAME 1 2 3 4 5 6 (PRODUCT LEVEL)	SEE PAGE
	1	1	**4B-2913**	1	PIN-CLEVIS	
	2	1	**1R-0774**	1	FILTER ELEMENT AS-OIL (ADVANCED EFFICIENCY)	
	3	1	**2S-5100**	1	VALVE AS-MANUAL (HYDRAULIC TANK)	
	4	1	**3F-1547**	1	SEAL-O-RING	
	6	1	**4M-6921**	1	WASHER-SPRING	
	7	1	**5D-1911**	1	COVER-HYDRAULIC CAP	
	8	1	**226-2871**	1	ROD	
	9	1	**9J-1979**	1	RETAINER AS	
	12	1	**9J-3047**	1	STRAINER (HYDRAULIC)	
	13	1	**9M-7394**	1	LEVER	
	14	1	**141-9661**	1	SPACER (20X128X6-MM THK)	
	15	1	**226-2870**	1	CAP AS (HYDRAULIC TANK)	
	16	1	**214-1982**	1	TANK AS	
	17	1	**217-2661**	1	GAUGE-SIGHT (HYDRAULIC)	
	18	1	**086-0507**	1	PIN	
	19	1	**1L-5072**	1	DOWEL	
	20	1	**2D-4202**	1	PLATE	
	21	1	**2J-7761**	1	RING-RETAINING	
	22	1	**3K-6060**	1	LOCKNUT (3/8-16-THD)	
	23	1	**3G-0361**	1	GASKET (HYDRAULIC TANK FILL CAP)	
	25	1	**7D-1195**	1	SEAL-O-RING	
	26	1	**7H-1447**	1	CAP-FILLER (HYDRAULIC TANK)	
	27	1	**8T-2275**	1	BALL	
	28	1	**8T-4121**	4	WASHER-HARD (11X21X2.5-MM THK)	
M	29	1	**8T-4195**	4	BOLT (M10X1.5X30-MM)	
	30	1	**9H-6454**	1	GASKET	
	31	1	**3B-4610**	1	PIN-COTTER	

M-METRIC PART

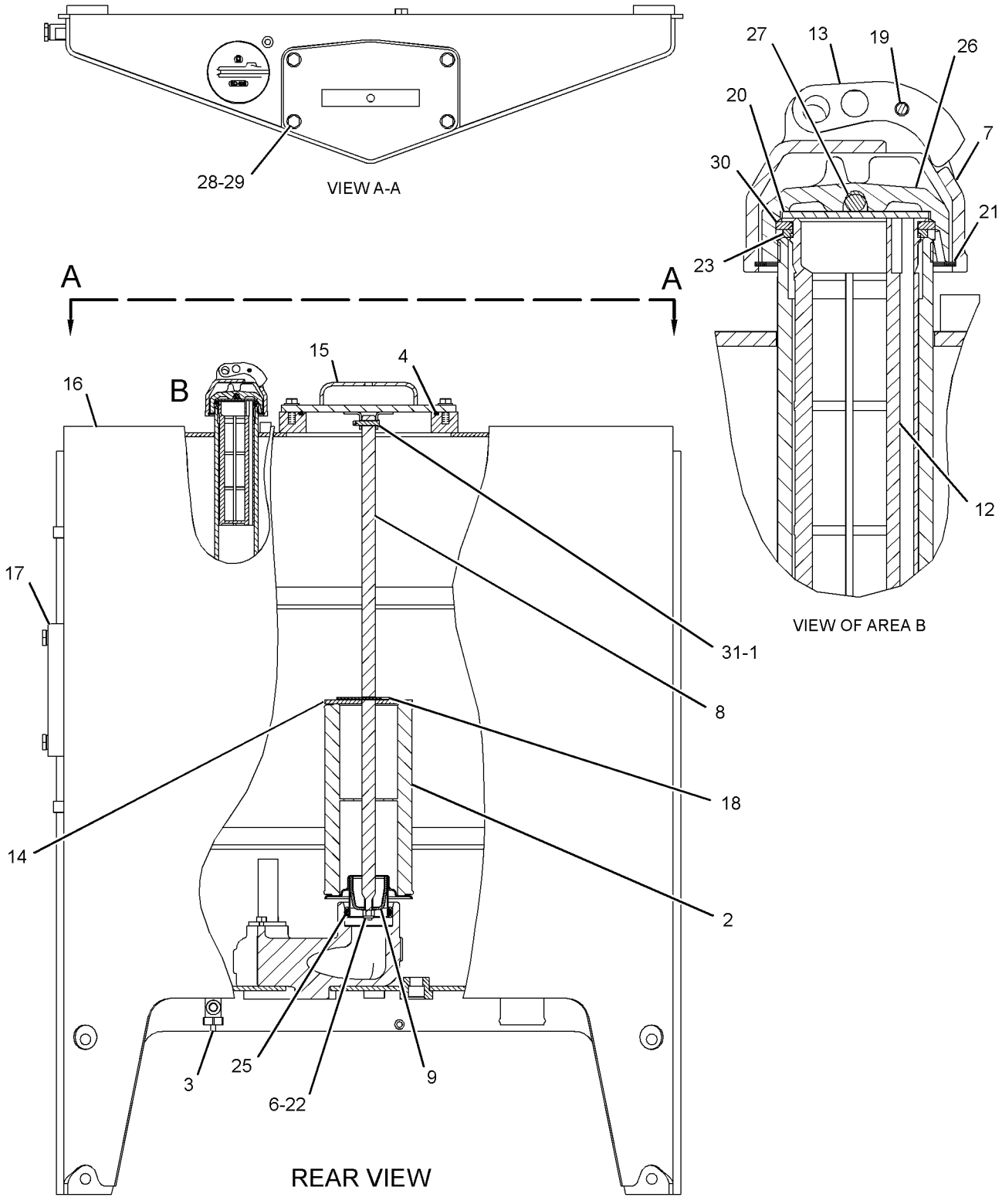

GRAPHIC #1 **<END>** g01514468

HYDRAULIC SYSTEM

214-1983 TANK & MTG GP-HYDRAULIC

S/N: JPA1-UP

PART OF 274-7940 GENERAL AR

SMCS-4332, 5056, 5068 **i01707184**

NOTE	REF NO	GRAPHIC REF	PART NUMBER	QTY	PART NAME 1 2 3 4 5 6 (PRODUCT LEVEL)	SEE PAGE
Y	1	1	*214-1984*	1	TANK & FILTER GP-HYDRAULIC	439
	2	1	**4D-7794**	3	CLIP	
	3	1	**5P-8502**	1	PADLOCK GP	
		1	**5P-8500**	1	KEY	
		1	**8Y-6364**	1	SLEEVE	
	4	1	**7X-0325**	4	BOLT (1/2-13X2.5-IN)	
	5	1	**8T-4121**	3	WASHER-HARD (11X21X2.5-MM THK)	
M	6	1	**8T-4191**	3	BOLT (M10X1.5X16-MM)	
	7	1	**8T-4223**	4	WASHER-HARD (13.5X25.5X3-MM THK)	

M-METRIC PART
Y-SEPARATE ILLUSTRATION

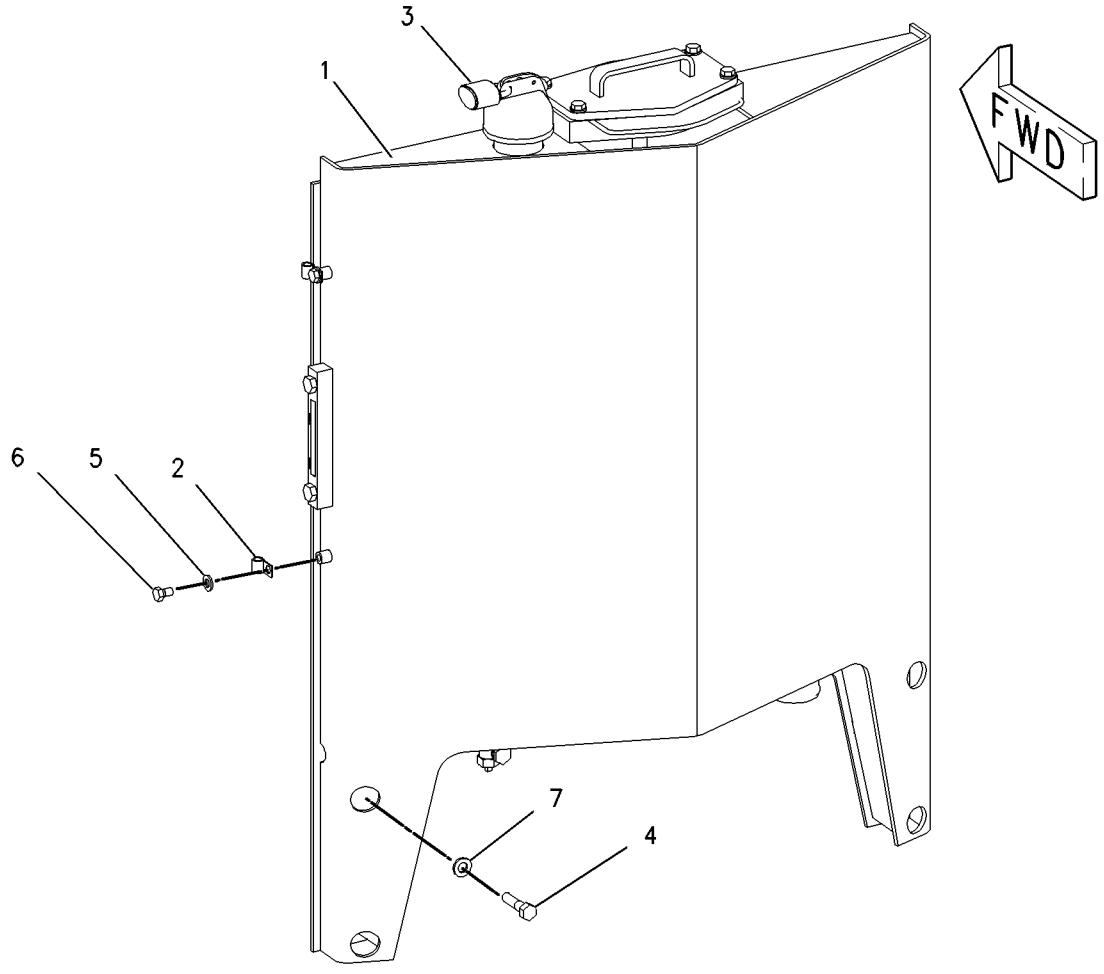

GRAPHIC #1 **<END>** g00894365

HYDRAULIC SYSTEM

112-6795 VALVE & LINKAGE GP—4-BANK, RH; 2-BANK, LH

S/N: JPA1-UP

PART OF 274-7940 GENERAL AR

SMCS-5051, 5063 **i01367556**

NOTE	REF NO	GRAPHIC REF	PART NUMBER	QTY	PART NAME 1 2 3 4 5 6 (PRODUCT LEVEL)	SEE PAGE
Y	1	1	**124-3325**	1	VALVE GP-BANK 4 (RH)	514
Y	2	1	**104-8672**	1	VALVE GP-BANK 2 (LH)	508
	3	1	**8X-5498**	2	RETAINER	
	4	1	**101-2457**	1	LEVER (ARTICULATION)	
	5	1	**8D-5634**	1	LEVER (CENTER SHIFT)	
	6	1	**6V-8186**	12	NUT-FULL (5/16-24-THD)	
		1	**7H-3641**	12	END-ROD (5/16-24-THD)	
		1	**8X-4276**	6	ROD	
	7	1	**8D-5633**	1	LEVER (WHEEL LEAN)	
	8	1	**8D-8852**	2	SPACER (0.78X1.5X1.344-IN THK)	
	9	1	**137-4515**	2	BUSHING	
	10	1	**8D-5640**	10	BEARING	
B	11	1	**8D-5636**	4	SHIM (0.254-MM THK)	
B	12	1	**8D-5637**	4	SHIM (0.762-MM THK)	
	13	1	**6L-1962**	6	NUT-JAM (3/8-24-THD)	
	14	1	**8T-9043**	12	BOLT (5/16-18X0.875-IN)	
	15	1	**3F-9556**	12	LOCKWASHER	
	16	1	**9B-7237**	2	BOLT (3/8-16X1.25-IN)	
	17	1	**8D-5641**	8	BEARING	
	18	1	**2G-6757**	1	KNOB-BLADE LIFT (LH)	
M	19	1	**8T-4136**	4	BOLT (M10X1.5X25-MM)	
	20	1	**8D-5632**	1	LEVER (BLADE LIFT-RH)	
	21	1	**2G-6751**	1	KNOB-CIRCLE DRIVE	
	22	1	**2G-6748**	1	KNOB-BLADE LIFT (RH)	
	23	1	**2G-6756**	1	KNOB-WHEEL LEAN	
	24	1	**2G-6752**	1	KNOB-ARTICULATION	
	25	1	**2G-6755**	1	KNOB-CENTERSHIFT	
	26	1	**5P-1075**	2	WASHER-HARD (10.2X22.5X3-MM THK)	
	27	1	**9M-1853**	6	MOUNTING	
	28	1	**5P-1076**	6	WASHER-HARD (13.5X30X4-MM THK)	
	29	1	**104-7740**	1	PLATE AS (LH)	
		1	**1F-0748**	2	NUT-WELD (1/2-13-THD)	
	30	1	**104-7419**	1	PLATE AS (RH)	
		1	**1F-0748**	2	NUT-WELD (1/2-13-THD)	
	31	1	**104-7429**	2	PLATE	
	32	1	**137-4516**	1	SHAFT	
	33	1	**8T-4121**	8	WASHER-HARD (11X21X2.5-MM THK)	
	34	1	**6B-0933**	4	SPACER (10.31X19.05X6.35-MM THK)	
	35	1	**5P-2424**	6	BOLT (1/2-13X2.25-IN)	
	36	1	**6V-8188**	2	NUT (1/2-13-THD)	
M	37	1	**8T-4195**	4	BOLT (M10X1.5X30-MM)	
	38	1	**8F-6437**	6	WASHER (13.5X50.8X4.76-MM THK)	
	39	1	**8D-5632**	1	LEVER (CIRCLE DRIVE)	
	40	1	**8D-5634**	1	LEVER (BLADE LIFT-LH)	

B-USE AS REQUIRED
M-METRIC PART
Y-SEPARATE ILLUSTRATION

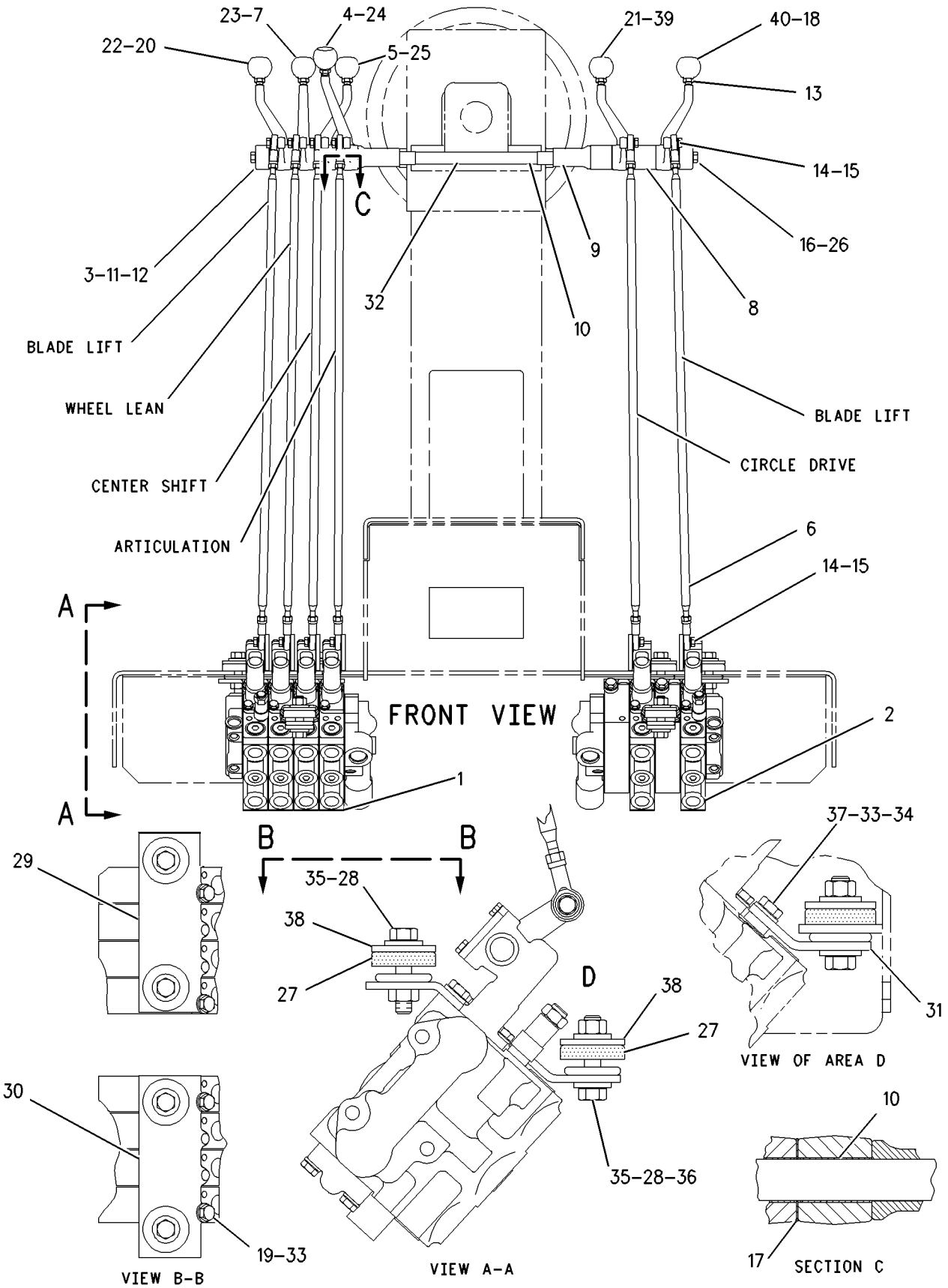

GRAPHIC #1 **<END>** g00721488

HYDRAULIC SYSTEM

112-6799 VALVE & LINKAGE GP—4-BANK, RH; 3-BANK, LH

S/N: JPA1-UP

AN ATTACHMENT

SMCS-5051, 5063 **i01367571**

NOTE	REF NO	GRAPHIC REF	PART NUMBER	QTY	PART NAME 1 2 3 4 5 6 (PRODUCT LEVEL)	SEE PAGE
Y	1	1	**124-3325**	1	VALVE GP-BANK 4 (RH)	514
Y	2	1	**104-8673**	1	VALVE GP-BANK 3 (LH)	509
	3	1	**8X-5498**	2	RETAINER	
	4	1	**101-2457**	1	LEVER (ARTICULATION)	
	5	1	**8D-5634**	1	LEVER (CENTER SHIFT)	
	6	1	**6V-8186**	14	NUT-FULL (5/16-24-THD)	
		1	**7H-3641**	14	END-ROD (5/16-24-THD)	
		1	**8X-4276**	7	ROD	
	7	1	**8D-5633**	1	LEVER (WHEEL LEAN)	
	8	1	**8D-8852**	1	SPACER (0.78X1.5X1.344-IN THK)	
	9	1	**137-4515**	2	BUSHING	
	10	1	**8D-5640**	10	BEARING	
B	11	1	**8D-5636**	4	SHIM (0.254-MM THK)	
B	12	1	**8D-5637**	4	SHIM (0.762-MM THK)	
	13	1	**6L-1962**	8	NUT-JAM (3/8-24-THD)	
	14	1	**8T-9043**	14	BOLT (5/16-18X0.875-IN)	
	15	1	**3F-9556**	14	LOCKWASHER	
	16	1	**9B-7237**	2	BOLT (3/8-16X1.25-IN)	
	17	1	**8D-5641**	8	BEARING	
	18	1	**2G-6757**	1	KNOB-BLADE LIFT (LH)	
M	19	1	**8T-4136**	4	BOLT (M10X1.5X25-MM)	
	20	1	**2G-6749**	1	KNOB-SIDESHIFT	
	21	1	**8D-5632**	1	LEVER (BLADE LIFT-RH)	
	22	1	**2G-6751**	1	KNOB-CIRCLE DRIVE	
	23	1	**2G-6748**	1	KNOB-BLADE LIFT	
	24	1	**2G-6756**	1	KNOB-WHEEL LEAN (RH)	
	25	1	**2G-6752**	1	KNOB-ARTICULATION	
	26	1	**2G-6755**	1	KNOB-CENTERSHIFT	
	27	1	**5P-1075**	2	WASHER-HARD (10.2X22.5X3-MM THK)	
	28	1	**9M-1853**	6	MOUNTING	
	29	1	**5P-1076**	6	WASHER-HARD (13.5X30X4-MM THK)	
	30	1	**104-7740**	1	PLATE AS (LH)	
		1	**1F-0748**	2	NUT-WELD (1/2-13-THD)	
	31	1	**104-7419**	1	PLATE AS (RH)	
		1	**1F-0748**	2	NUT-WELD (1/2-13-THD)	
	32	1	**104-7429**	2	PLATE	
	33	1	**137-4516**	1	SHAFT	
	34	1	**8T-4121**	8	WASHER-HARD (11X21X2.5-MM THK)	
	35	1	**6B-0933**	4	SPACER (10.31X19.05X6.35-MM THK)	
	36	1	**5P-2424**	6	BOLT (1/2-13X2.25-IN)	
	37	1	**6V-8188**	2	NUT (1/2-13-THD)	
M	38	1	**8T-4195**	4	BOLT (M10X1.5X30-MM)	
	39	1	**8F-6437**	6	WASHER (13.5X50.8X4.76-MM THK)	
	40	1	**8D-5633**	1	LEVER (SIDE SHIFT)	
	41	1	**8D-5632**	1	LEVER (CIRCLE DRIVE)	
	42	1	**8D-5634**	1	LEVER (BLADE LIFT-LH)	

B-USE AS REQUIRED
M-METRIC PART
Y-SEPARATE ILLUSTRATION

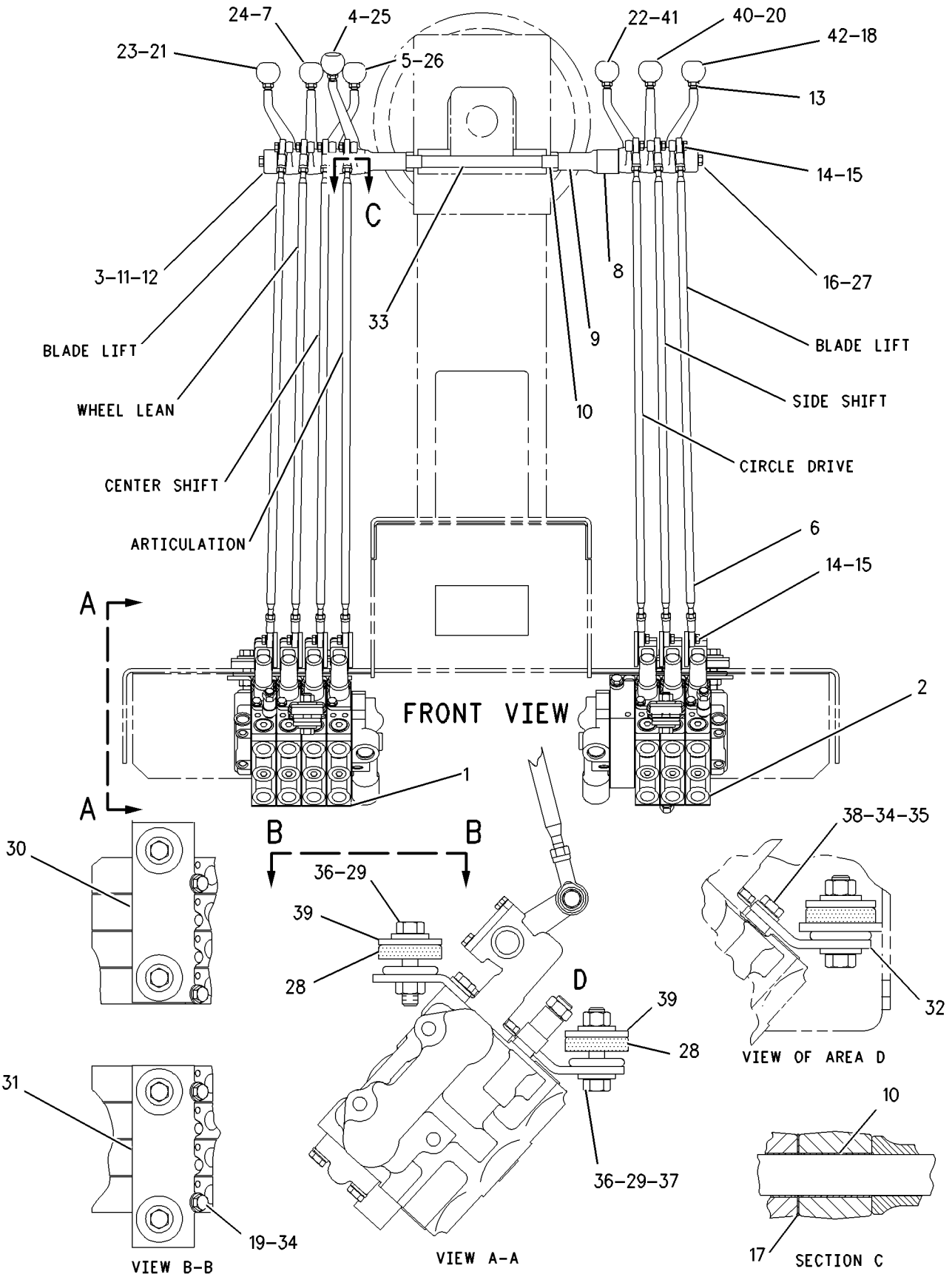

GRAPHIC #1

<END>

g00721500

HYDRAULIC SYSTEM

112-6804 VALVE & LINKAGE GP—4-BANK, RH; 3-BANK, LH

S/N: JPA1-UP

AN ATTACHMENT

SMCS-5051, 5063 **i01367580**

NOTE	REF NO	GRAPHIC REF	PART NUMBER	QTY	PART NAME 1 2 3 4 5 6 (PRODUCT LEVEL)	SEE PAGE
Y	1	1	**124-3325**	1	VALVE GP-BANK 4 (RH)	514
Y	2	1	**112-2580**	1	VALVE GP-BANK 3 (LH)	510
	3	1	**8X-5499**	2	RETAINER	
	4	1	**101-2457**	1	LEVER (ARTICULATION)	
	5	1	**8D-5634**	1	LEVER (CENTER SHIFT)	
	6	1	**6V-8186**	14	NUT-FULL (5/16-24-THD)	
		1	**7H-3641**	14	END-ROD (5/16-24-THD)	
		1	**8X-4276**	7	ROD	
	7	1	**8D-5633**	1	LEVER (WHEEL LEAN)	
	8	1	**8D-8852**	2	SPACER (0.78X1.5X1.344-IN THK)	
	9	1	**137-4515**	2	BUSHING	
	10	1	**8D-5640**	11	BEARING	
B	11	1	**8D-5636**	4	SHIM (0.254-MM THK)	
B	12	1	**8D-5637**	4	SHIM (0.762-MM THK)	
	13	1	**6L-1962**	7	NUT-JAM (3/8-24-THD)	
	14	1	**8T-9043**	14	BOLT (5/16-18X0.875-IN)	
	15	1	**3F-9556**	14	LOCKWASHER	
	16	1	**9B-7237**	2	BOLT (3/8-16X1.25-IN)	
	17	1	**8D-5641**	9	BEARING	
	18	1	**2G-6757**	1	KNOB-BLADE LIFT	
M	19	1	**8T-4136**	4	BOLT (M10X1.5X25-MM)	
	20	1	**8D-5632**	1	LEVER (BLADE LIFT-RH)	
	21	1	**2G-6751**	1	KNOB-CIRCLE DRIVE	
	22	1	**2G-6748**	1	KNOB-BLADE LIFT (RH)	
	23	1	**2G-6756**	1	KNOB-WHEEL LEAN	
	24	1	**2G-6752**	1	KNOB-ARTICULATION	
	25	1	**2G-6755**	1	KNOB-CENTERSHIFT	
	26	1	**5P-1075**	2	WASHER-HARD (10.2X22.5X3-MM THK)	
	27	1	**9M-1853**	6	MOUNTING	
	28	1	**5P-1076**	6	WASHER-HARD (13.5X30X4-MM THK)	
	29	1	**104-7740**	1	PLATE AS (LH)	
		1	**1F-0748**	2	NUT-WELD (1/2-13-THD)	
	30	1	**104-7419**	1	PLATE AS (RH)	
		1	**1F-0748**	2	NUT-WELD (1/2-13-THD)	
	31	1	**104-7429**	2	PLATE	
	32	1	**137-4516**	1	SHAFT	
	33	1	**8T-4121**	8	WASHER-HARD (11X21X2.5-MM THK)	
	34	1	**6B-0933**	4	SPACER (10.31X19.05X6.35-MM THK)	
	35	1	**5P-2424**	6	BOLT (1/2-13X2.25-IN)	
	36	1	**6V-8188**	2	NUT (1/2-13-THD)	
M	37	1	**8T-4195**	4	BOLT (M10X1.5X30-MM)	
	38	1	**2G-6753**	1	KNOB-SCARIFIER	
	39	1	**8F-6437**	6	WASHER (13.5X50.8X4.76-MM THK)	
	40	1	**101-2457**	1	LEVER (SCARIFER)	
	41	1	**8D-5634**	1	LEVER (BLADE LIFT-LH)	
	42	1	**8D-5632**	1	LEVER (CIRCLE DRIVE)	

B-USE AS REQUIRED
M-METRIC PART
Y-SEPARATE ILLUSTRATION

112-6804 **VALVE & LINKAGE GP** *(contd.)* **i01367580**

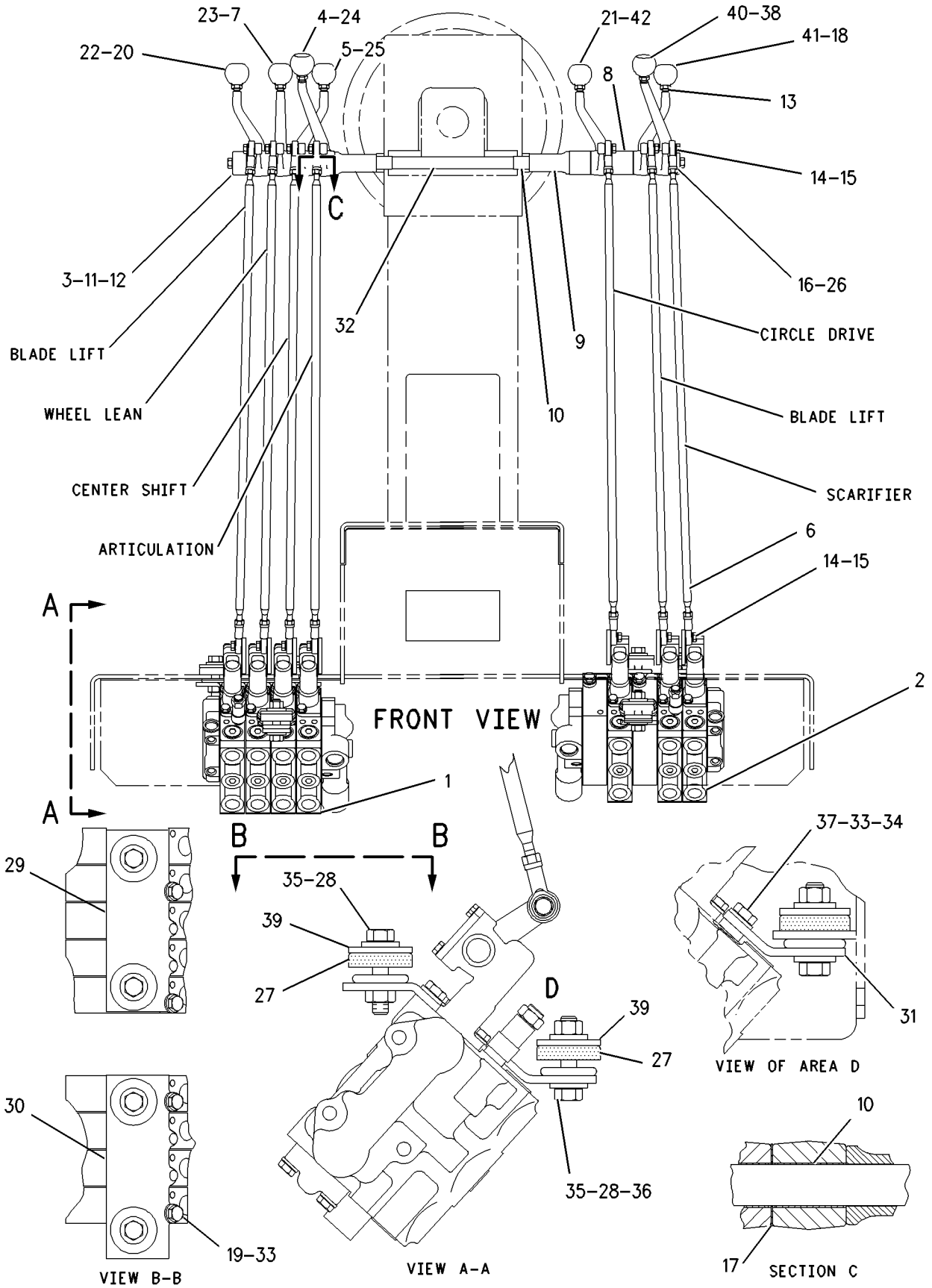

GRAPHIC #1 **<END>** g00721513

HYDRAULIC SYSTEM

112-6818 VALVE & LINKAGE GP—4-BANK, RH; 3-BANK, LH

S/N: JPA1-UP

PART OF 331-1507 CONTROL AR-HYDRAULIC

AN ATTACHMENT

SMCS-5051, 5063 **i01047715**

NOTE	REF NO	GRAPHIC REF	PART NUMBER	QTY	PART NAME 1 2 3 4 5 6 (PRODUCT LEVEL)	SEE PAGE
Y	1	1	**124-3325**	1	VALVE GP-BANK 4 (RH)	514
Y	2	1	**112-2581**	1	VALVE GP-BANK 3 (LH)	511
	3	1	**8X-5499**	2	RETAINER	
	4	1	**101-2457**	1	LEVER (RIPPER)	
	5	1	**8D-5634**	1	LEVER (LH BLADE LIFT)	
	6	1	**8X-4276**	7	ROD	
	7	1	**6V-8186**	2	NUT-FULL (5/16-24-THD)	
	8	1	**7H-3641**	2	END-ROD (5/16-24-THD)	
	9	1	**137-4515**	2	BUSHING	
	10	1	**8D-5640**	11	BEARING	
B	11	1	**8D-5636**	4	SHIM (0.254-MM THK)	
B	12	1	**8D-5637**	4	SHIM (0.762-MM THK)	
	13	1	**6L-1962**	7	NUT-JAM (3/8-24-THD)	
	14	1	**8T-9043**	14	BOLT (5/16-18X0.875-IN)	
	15	1	**3F-9556**	14	LOCKWASHER	
	16	1	**9B-7237**	2	BOLT (3/8-16X1.25-IN)	
	17	1	**8D-5641**	9	BEARING	
	18	1	**2G-6757**	1	KNOB-BLADE LIFT (LH)	
M	19	1	**8T-4136**	4	BOLT (M10X1.5X25-MM)	
	20	1	**8D-5632**	1	LEVER (CIRCLE DRIVE)	
	21	1	**2G-6751**	1	KNOB-CIRCLE DRIVE	
	22	1	**2G-6748**	1	KNOB-BLADE LIFT (RH)	
	23	1	**2G-6756**	1	KNOB-WHEEL LEAN	
	24	1	**2G-6752**	1	KNOB-ARTICULATION	
	25	1	**2G-6755**	1	KNOB-CENTERSHIFT	
	26	1	**5P-1075**	2	WASHER-HARD (10.2X22.5X3-MM THK)	
	27	1	**9M-1853**	6	MOUNTING	
	28	1	**5P-1076**	6	WASHER-HARD (13.5X30X4-MM THK)	
	29	1	**104-7740**	1	PLATE AS (LH)	
	30	1	**104-7419**	1	PLATE AS (RH)	
					(EACH PLATE AS INCLUDES)	
		1	**1F-0748**	2	NUT-WELD (1/2-13-THD)	
	31	1	**104-7429**	2	PLATE	
	32	1	**137-4516**	1	SHAFT	
	33	1	**2G-6740**	1	KNOB-RIPPER	
	34	1	**6B-0933**	4	SPACER (10.31X19.05X6.35-MM THK)	
	35	1	**5P-2424**	6	BOLT (1/2-13X2.25-IN)	
	36	1	**6V-8188**	2	NUT (1/2-13-THD)	
M	37	1	**8T-4195**	4	BOLT (M10X1.5X30-MM)	
	38	1	**8T-4121**	8	WASHER-HARD (11X21X2.5-MM THK)	
	39	1	**8F-6437**	6	WASHER (13.5X50.8X4.76-MM THK)	
	40	1	**8D-5633**	1	LEVER (WHEEL LEAN)	
	41	1	**8D-8852**	2	SPACER (0.78X1.5X1.344-IN THK)	
	42	1	**101-2457**	1	LEVER (ARTICULATION)	
	43	1	**8D-5634**	1	LEVER (CENTER SHIFT)	
	44	1	**8D-5632**	1	LEVER (RH BLADE LIFT)	

B-USE AS REQUIRED
M-METRIC PART
Y-SEPARATE ILLUSTRATION

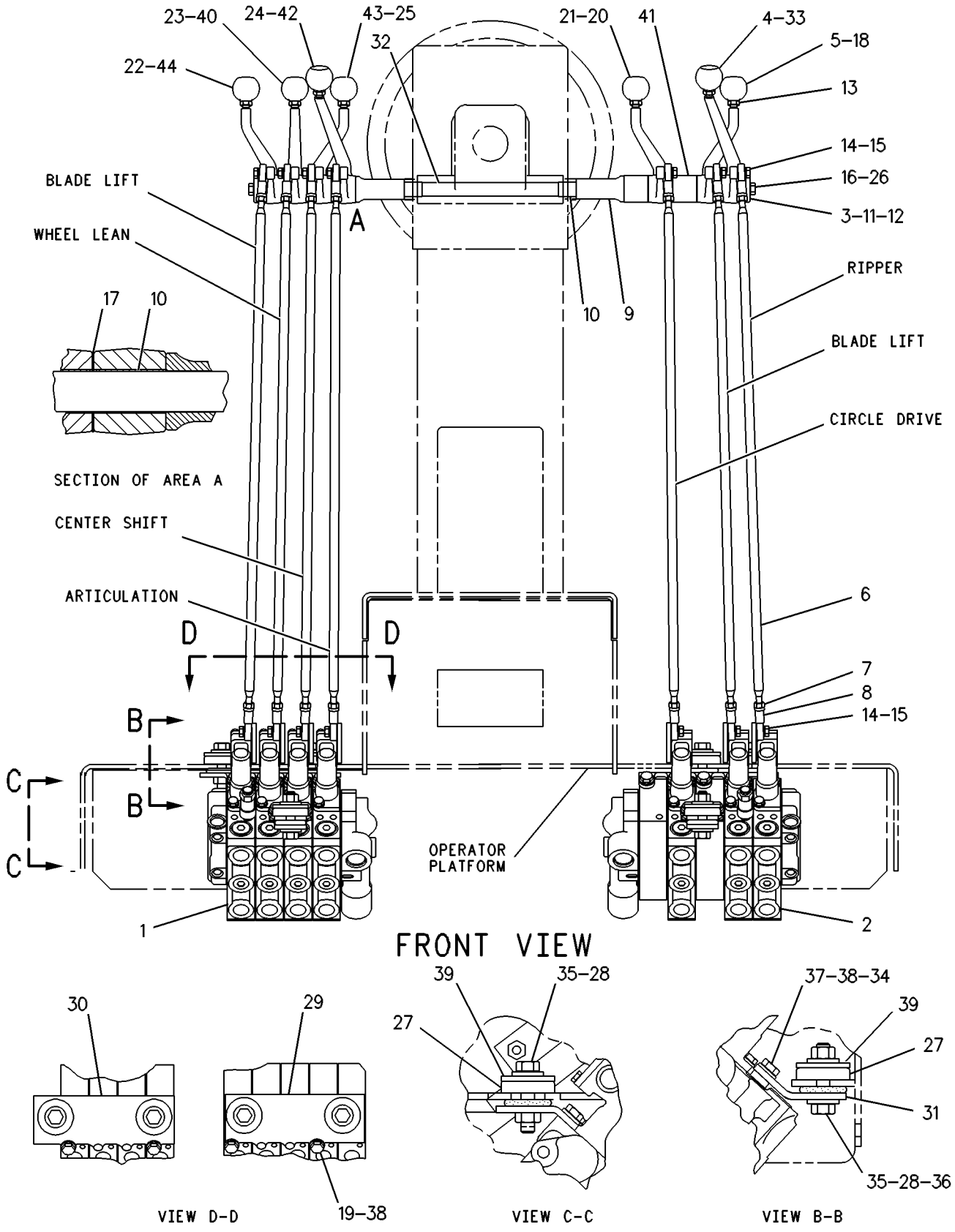

GRAPHIC #1 **<END>** g00286442

HYDRAULIC SYSTEM

115-0804 VALVE & LINKAGE GP—4-BANK, RH; 5-BANK, LH

S/N: JPA1-UP
AN ATTACHMENT

SMCS-5051, 5063 **i01367583**

NOTE	REF NO	GRAPHIC REF	PART NUMBER	QTY	PART NAME 1 2 3 4 5 6 (PRODUCT LEVEL)	SEE PAGE
Y	1	1	**124-3325**	1	VALVE GP-BANK 4 (RH)	514
Y	2	1	**124-3328**	1	VALVE GP-BANK 5 (LH)	524
	3	1	**8X-5499**	2	RETAINER	
	4	1	**101-2457**	1	LEVER (ARTICULATION)	
	5	1	**8D-5634**	1	LEVER (CENTER SHIFT)	
	6	1	**6V-8186**	18	NUT-FULL (5/16-24-THD)	
		1	**7H-3641**	18	END-ROD (5/16-24-THD)	
		1	**8X-4276**	9	ROD	
	7	1	**8D-5633**	1	LEVER (WHEEL LEAN)	
	8	1	**101-2458**	1	LEVER (BLADE TIP)	
	9	1	**137-4515**	2	BUSHING	
	10	1	**8D-5640**	11	BEARING	
B	11	1	**8D-5636**	4	SHIM (0.254-MM THK)	
B	12	1	**8D-5637**	4	SHIM (0.762-MM THK)	
	13	1	**6L-1962**	9	NUT-JAM (3/8-24-THD)	
	14	1	**8T-9043**	18	BOLT (5/16-18X0.875-IN)	
	15	1	**3F-9556**	18	LOCKWASHER	
	16	1	**9B-7237**	2	BOLT (3/8-16X1.25-IN)	
	17	1	**8D-5641**	9	BEARING	
	18	1	**2G-6757**	1	KNOB-BLADE LIFT (LH)	
M	19	1	**8T-4136**	4	BOLT (M10X1.5X25-MM)	
	20	1	**2G-6749**	1	KNOB-SIDESHIFT	
	21	1	**2G-6747**	1	KNOB-BLADE TIP	
	22	1	**8D-5632**	1	LEVER (BLADE LIFT-RH)	
	23	1	**2G-6751**	1	KNOB-CIRCLE DRIVE	
	24	1	**2G-6748**	1	KNOB-BLADE LIFT (RH)	
	25	1	**2G-6756**	1	KNOB-WHEEL LEAN	
	26	1	**2G-6752**	1	KNOB-ARTICULATION	
	27	1	**2G-6755**	1	KNOB-CENTERSHIFT	
	28	1	**5P-1075**	2	WASHER-HARD (10.2X22.5X3-MM THK)	
	29	1	**9M-1853**	6	MOUNTING	
	30	1	**5P-1076**	6	WASHER-HARD (13.5X30X4-MM THK)	
	31	1	**104-7740**	1	PLATE AS (LH)	
		1	**1F-0748**	2	NUT-WELD (1/2-13-THD)	
	32	1	**104-7419**	1	PLATE AS (RH)	
		1	**1F-0748**	2	NUT-WELD (1/2-13-THD)	
	33	1	**104-7429**	2	PLATE	
	34	1	**137-4516**	1	SHAFT	
	35	1	**8T-4121**	8	WASHER-HARD (11X21X2.5-MM THK)	
	36	1	**6B-0933**	4	SPACER (10.31X19.05X6.35-MM THK)	
	37	1	**5P-2424**	6	BOLT (1/2-13X2.25-IN)	
	38	1	**6V-8188**	2	NUT (1/2-13-THD)	
M	39	1	**8T-4195**	4	BOLT (M10X1.5X30-MM)	
	40	1	**2G-6753**	1	KNOB-SCARIFIER	
	41	1	**8F-6437**	6	WASHER (13.5X50.8X4.76-MM THK)	
	42	1	**101-2457**	1	LEVER (SCARIFIER)	
	43	1	**8D-5634**	1	LEVER (BLADE LIFT-LH)	
	44	1	**8D-5633**	1	LEVER (SIDE SHIFT)	
	45	1	**8D-5632**	1	LEVER (CIRCLE DRIVE)	

B-USE AS REQUIRED
M-METRIC PART
Y-SEPARATE ILLUSTRATION

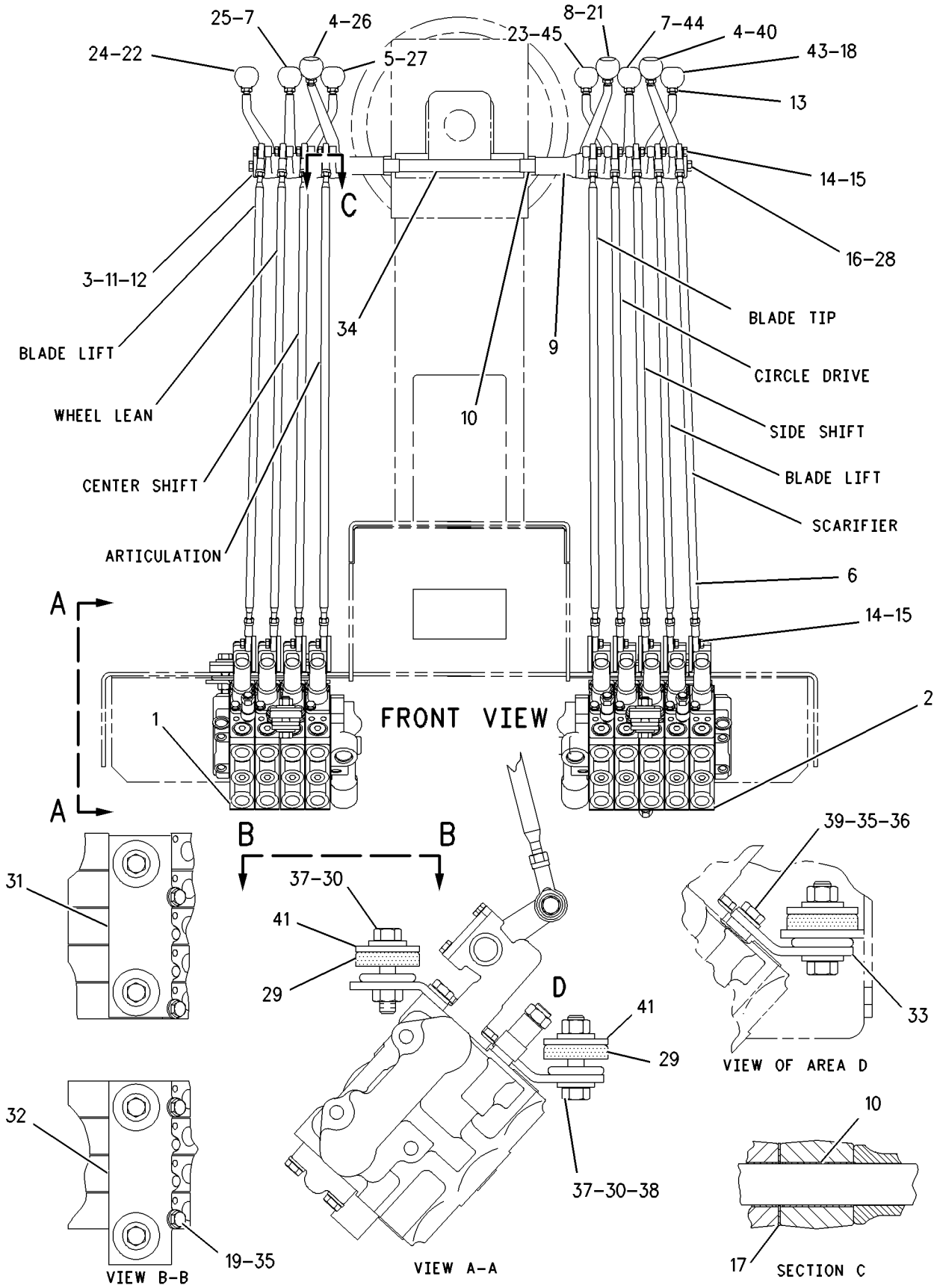

GRAPHIC #1

<END>

g00721517

HYDRAULIC SYSTEM

115-0808 VALVE & LINKAGE GP—4-BANK, RH; 5-BANK, LH

S/N: JPA1-UP
RIPPER
PART OF 331-1503 CONTROL AR-HYDRAULIC
AN ATTACHMENT

SMCS-5051, 5063 **i01367586**

NOTE	REF NO	GRAPHIC REF	PART NUMBER	QTY	PART NAME 1 2 3 4 5 6 (PRODUCT LEVEL)	SEE PAGE
Y	1	1	**124-3325**	1	VALVE GP-BANK 4 (RH)	514
Y	2	1	**124-3329**	1	VALVE GP-BANK 5 (LH)	525
	3	1	**8X-5499**	2	RETAINER	
	4	1	**101-2457**	1	LEVER (ARTICULATION)	
	5	1	**8D-5634**	1	LEVER (CENTER SHIFT)	
	6	1	**6V-8186**	18	NUT-FULL (5/16-24-THD)	
		1	**7H-3641**	18	END-ROD (5/16-24-THD)	
		1	**8X-4276**	9	ROD	
	7	1	**8D-5633**	1	LEVER (WHEEL LEAN)	
	8	1	**101-2458**	1	LEVER (BLADE TIP)	
	9	1	**137-4515**	2	BUSHING	
	10	1	**8D-5640**	11	BEARING	
B	11	1	**8D-5636**	4	SHIM (0.254-MM THK)	
B	12	1	**8D-5637**	4	SHIM (0.762-MM THK)	
	13	1	**6L-1962**	9	NUT-JAM (3/8-24-THD)	
	14	1	**8T-9043**	18	BOLT (5/16-18X0.875-IN)	
	15	1	**3F-9556**	18	LOCKWASHER	
	16	1	**9B-7237**	2	BOLT (3/8-16X1.25-IN)	
	17	1	**8D-5641**	9	BEARING	
	18	1	**2G-6757**	1	KNOB-BLADE LIFT (LH)	
M	19	1	**8T-4136**	4	BOLT (M10X1.5X25-MM)	
	20	1	**2G-6749**	1	KNOB-SIDESHIFT	
	21	1	**2G-6747**	1	KNOB-BLADE TIP	
	22	1	**8D-5632**	1	LEVER (BLADE LIFT-RH)	
	23	1	**2G-6751**	1	KNOB-CIRCLE DRIVE	
	24	1	**2G-6748**	1	KNOB-BLADE LIFT (RH)	
	25	1	**2G-6756**	1	KNOB-WHEEL LEAN	
	26	1	**2G-6752**	1	KNOB-ARTICULATION	
	27	1	**2G-6755**	1	KNOB-CENTERSHIFT	
	28	1	**5P-1075**	2	WASHER-HARD (10.2X22.5X3-MM THK)	
	29	1	**9M-1853**	6	MOUNTING	
	30	1	**5P-1076**	6	WASHER-HARD (13.5X30X4-MM THK)	
	31	1	**104-7740**	1	PLATE AS (LH)	
		1	**1F-0748**	2	NUT-WELD (1/2-13-THD)	
	32	1	**104-7419**	1	PLATE AS (RH)	
		1	**1F-0748**	2	NUT-WELD (1/2-13-THD)	
	33	1	**104-7429**	2	PLATE	
	34	1	**137-4516**	1	SHAFT	
	35	1	**2G-6740**	1	KNOB-RIPPER	
	36	1	**6B-0933**	4	SPACER (10.31X19.05X6.35-MM THK)	
	37	1	**5P-2424**	6	BOLT (1/2-13X2.25-IN)	
	38	1	**6V-8188**	2	NUT (1/2-13-THD)	
M	39	1	**8T-4195**	4	BOLT (M10X1.5X30-MM)	
	40	1	**8T-4121**	8	WASHER-HARD (11X21X2.5-MM THK)	
	41	1	**8F-6437**	6	WASHER (13.5X50.8X4.76-MM THK)	
	42	1	**8D-5632**	1	LEVER (CIRCLE DRIVE)	
	43	1	**8D-5633**	1	LEVER (SIDE SHIFT)	
	44	1	**101-2457**	1	LEVER (RIPPER)	
	45	1	**8D-5634**	1	LEVER (BLADE LIFT-LH)	

B-USE AS REQUIRED
M-METRIC PART
Y-SEPARATE ILLUSTRATION

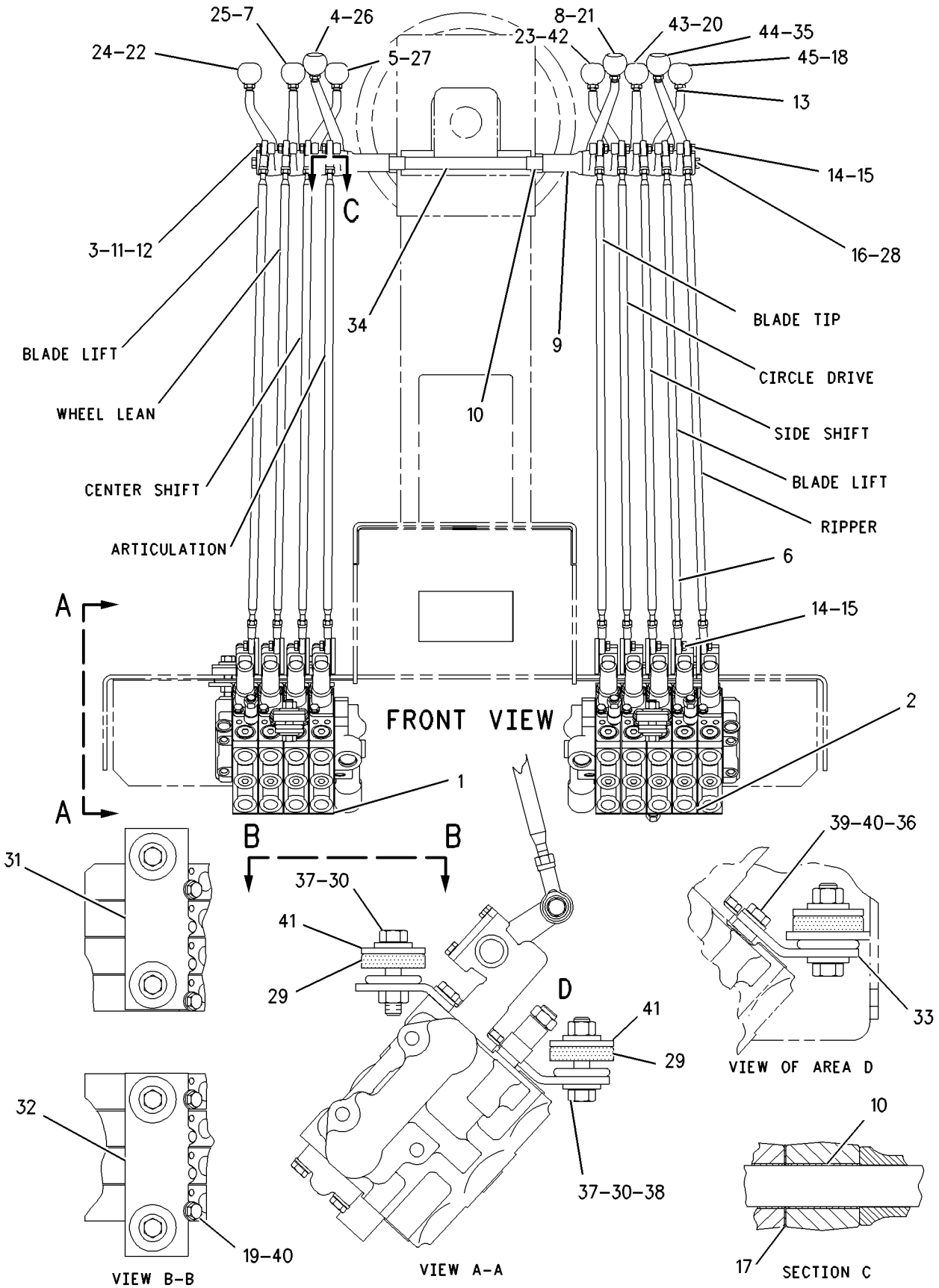

GRAPHIC #1

<END>

g00721567

HYDRAULIC SYSTEM

115-0810 VALVE & LINKAGE GP–5-BANK, RH, LH

S/N: JPA1-UP
AN ATTACHMENT

SMCS-5051, 5063 **i01367587**

NOTE	REF NO	GRAPHIC REF	PART NUMBER	QTY	PART NAME 1 2 3 4 5 6 (PRODUCT LEVEL)	SEE PAGE
	1	1	**8X-5499**	2	RETAINER	
	2	1	**101-2457**	1	LEVER (ARTICULATION)	
	3	1	**8D-5634**	1	LEVER (CENTER SHIFT)	
	4	1	**4L-6459**	1	BOLT (3/8-16X2.5-IN)	
	5	1	**8W-0456**	1	SHAFT	
	6	1	**6V-8186**	20	NUT-FULL (5/16-24-THD)	
		1	**7H-3641**	20	END-ROD (5/16-24-THD)	
		1	**8X-4276**	10	ROD	
	7	1	**8D-5633**	1	LEVER (WHEEL LEAN)	
	8	1	**101-2458**	1	LEVER (PLOW & BULLDOZER LIFT)	
	9	1	**137-4515**	2	BUSHING	
	10	1	**8D-5640**	12	BEARING	
B	11	1	**8D-5636**	4	SHIM (0.254-MM THK)	
B	12	1	**8D-5637**	4	SHIM (0.762-MM THK)	
	13	1	**6L-1962**	10	NUT-JAM (3/8-24-THD)	
	14	1	**8T-9043**	20	BOLT (5/16-18X0.875-IN)	
	15	1	**3F-9556**	20	LOCKWASHER	
	16	1	**9B-7237**	1	BOLT (3/8-16X1.25-IN)	
	17	1	**8D-5641**	10	BEARING	
	18	1	**2G-6757**	1	KNOB-BLADE LIFT (LH)	
M	19	1	**8T-4136**	4	BOLT (M10X1.5X25-MM)	
	20	1	**2G-6749**	1	KNOB-SIDESHIFT	
	21	1	**2G-6747**	1	KNOB-BLADE TIP	
	22	1	**8D-5632**	1	LEVER (BLADE LIFT-RH)	
	23	1	**2G-6751**	1	KNOB-CIRCLE DRIVE	
	24	1	**2G-6748**	1	KNOB-BLADE LIFT (RH)	
	25	1	**2G-6756**	1	KNOB-WHEEL LEAN	
	26	1	**2G-6752**	1	KNOB-ARTICULATION	
	27	1	**2G-6755**	1	KNOB-CENTERSHIFT	
	28	1	**5P-1075**	2	WASHER-HARD (10.2X22.5X3-MM THK)	
	29	1	**9M-1853**	6	MOUNTING	
	30	1	**5P-1076**	6	WASHER-HARD (13.5X30X4-MM THK)	
	31	1	**104-7740**	1	PLATE AS (LH)	
		1	**1F-0748**	2	NUT-WELD (1/2-13-THD)	
	32	1	**104-7419**	1	PLATE AS (RH)	
		1	**1F-0748**	2	NUT-WELD (1/2-13-THD)	
	33	1	**104-7429**	2	PLATE	
	34	1	**137-4516**	1	SHAFT	
	35	1	**2G-6753**	1	KNOB-SCARIFIER	
	36	1	**2G-6754**	1	KNOB (DOZER LIFT, PLOW)	
	37	1	**6V-8188**	2	NUT (1/2-13-THD)	
M	38	1	**8T-4195**	4	BOLT (M10X1.5X30-MM)	
	39	1	**8T-4121**	8	WASHER-HARD (11X21X2.5-MM THK)	
	40	1	**6B-0933**	4	SPACER (10.31X19.05X6.35-MM THK)	
	41	1	**8F-6437**	6	WASHER (13.5X50.8X4.76-MM THK)	
	42	1	**5P-2424**	6	BOLT (1/2-13X2.25-IN)	
Y	43	1	**124-3326**	1	VALVE GP-BANK 5 (RH)	523
Y	44	1	**124-3328**	1	VALVE GP-BANK 5 (LH)	524
	45	1	**101-2457**	1	LEVER (SCARIFIER)	
	46	1	**8D-5634**	1	LEVER (BLADE LIFT-LH)	
	47	1	**8D-5633**	1	LEVER (SIDE SHIFT)	
	48	1	**101-2458**	1	LEVER (BLADE TIP)	
	49	1	**8D-5632**	1	LEVER (CENTER SHIFT)	

B-USE AS REQUIRED
M-METRIC PART
Y-SEPARATE ILLUSTRATION

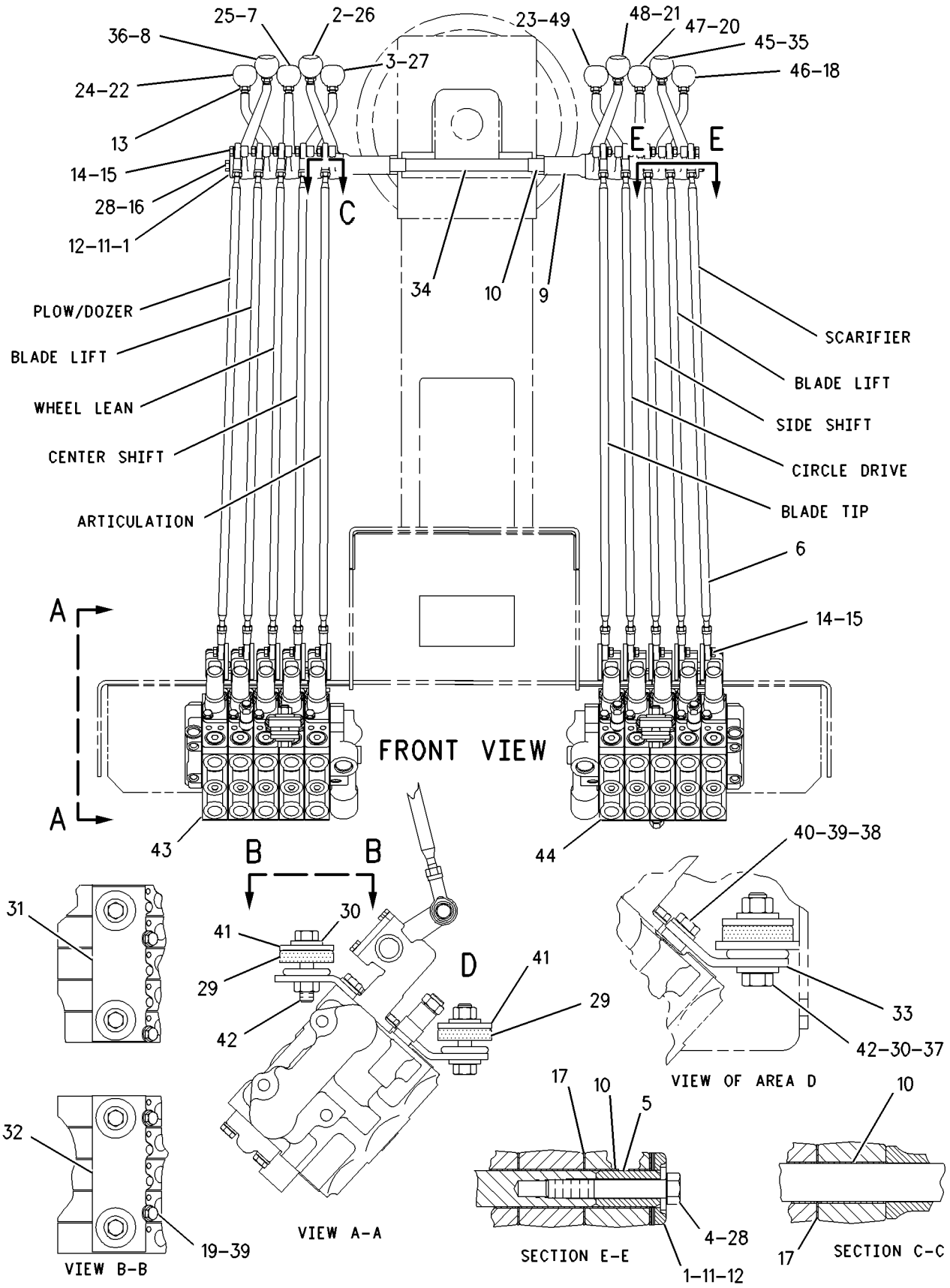

GRAPHIC #1 **<END>** g00721598

HYDRAULIC SYSTEM

115-0811 VALVE & LINKAGE GP—4-BANK, RH; 4-BANK, LH

S/N: JPA1-UP

AN ATTACHMENT

SMCS-5051, 5063 **i01367591**

NOTE	REF NO	GRAPHIC REF	PART NUMBER	QTY	PART NAME 1 2 3 4 5 6 (PRODUCT LEVEL)	SEE PAGE
Y	1	1	**124-3325**	1	VALVE GP-BANK 4 (RH)	514
Y	2	1	**124-3327**	1	VALVE GP-BANK 4 (LH)	515
	3	1	**8X-5498**	2	RETAINER	
	4	1	**101-2457**	1	LEVER (ARTICULATION)	
	5	1	**8D-5634**	1	LEVER (CENTER SHIFT)	
	6	1	**6V-8186**	16	NUT-FULL (5/16-24-THD)	
		1	**7H-3641**	16	END-ROD (5/16-24-THD)	
		1	**8X-4276**	8	ROD	
	7	1	**8D-5633**	1	LEVER (WHEEL LEAN)	
	8	1	**101-2458**	1	LEVER (BLADE TIP)	
	9	1	**137-4515**	2	BUSHING	
	10	1	**8D-5640**	10	BEARING	
B	11	1	**8D-5636**	4	SHIM (0.254-MM THK)	
B	12	1	**8D-5637**	4	SHIM (0.762-MM THK)	
	13	1	**6L-1962**	8	NUT-JAM (3/8-24-THD)	
	14	1	**8T-9043**	16	BOLT (5/16-18X0.875-IN)	
	15	1	**3F-9556**	16	LOCKWASHER	
	16	1	**9B-7237**	2	BOLT (3/8-16X1.25-IN)	
	17	1	**8D-5641**	8	BEARING	
	18	1	**2G-6757**	1	KNOB-BLADE LIFT (LH)	
M	19	1	**8T-4136**	4	BOLT (M10X1.5X25-MM)	
	20	1	**2G-6749**	1	KNOB-SIDESHIFT	
	21	1	**2G-6747**	1	KNOB-BLADE TIP	
	22	1	**8D-5632**	1	LEVER (BLADE LIFT-RH)	
	23	1	**2G-6751**	1	KNOB-CIRCLE DRIVE	
	24	1	**2G-6748**	1	KNOB-BLADE LIFT (RH)	
	25	1	**2G-6756**	1	KNOB-WHEEL LEAN	
	26	1	**2G-6752**	1	KNOB-ARTICULATION	
	27	1	**2G-6755**	1	KNOB-CENTERSHIFT	
	28	1	**5P-1075**	2	WASHER-HARD (10.2X22.5X3-MM THK)	
	29	1	**9M-1853**	6	MOUNTING	
	30	1	**5P-1076**	6	WASHER-HARD (13.5X30X4-MM THK)	
	31	1	**104-7740**	1	PLATE AS (LH)	
		1	**1F-0748**	2	NUT-WELD (1/2-13-THD)	
	32	1	**104-7419**	1	PLATE AS (RH)	
		1	**1F-0748**	2	NUT-WELD (1/2-13-THD)	
	33	1	**104-7429**	2	PLATE	
	34	1	**137-4516**	1	SHAFT	
	35	1	**8T-4121**	8	WASHER-HARD (11X21X2.5-MM THK)	
	36	1	**6B-0933**	4	SPACER (10.31X19.05X6.35-MM THK)	
	37	1	**5P-2424**	6	BOLT (1/2-13X2.25-IN)	
	38	1	**6V-8188**	2	NUT (1/2-13-THD)	
M	39	1	**8T-4195**	4	BOLT (M10X1.5X30-MM)	
	40	1	**8F-6437**	6	WASHER (13.5X50.8X4.76-MM THK)	
	41	1	**8D-5634**	1	LEVER (BLADE LIFT-LH)	
	42	1	**8D-5633**	1	LEVER (SIDE SHIFT)	
	43	1	**8D-5632**	1	LEVER (CIRCLE DRIVE)	

B-USE AS REQUIRED
M-METRIC PART
Y-SEPARATE ILLUSTRATION

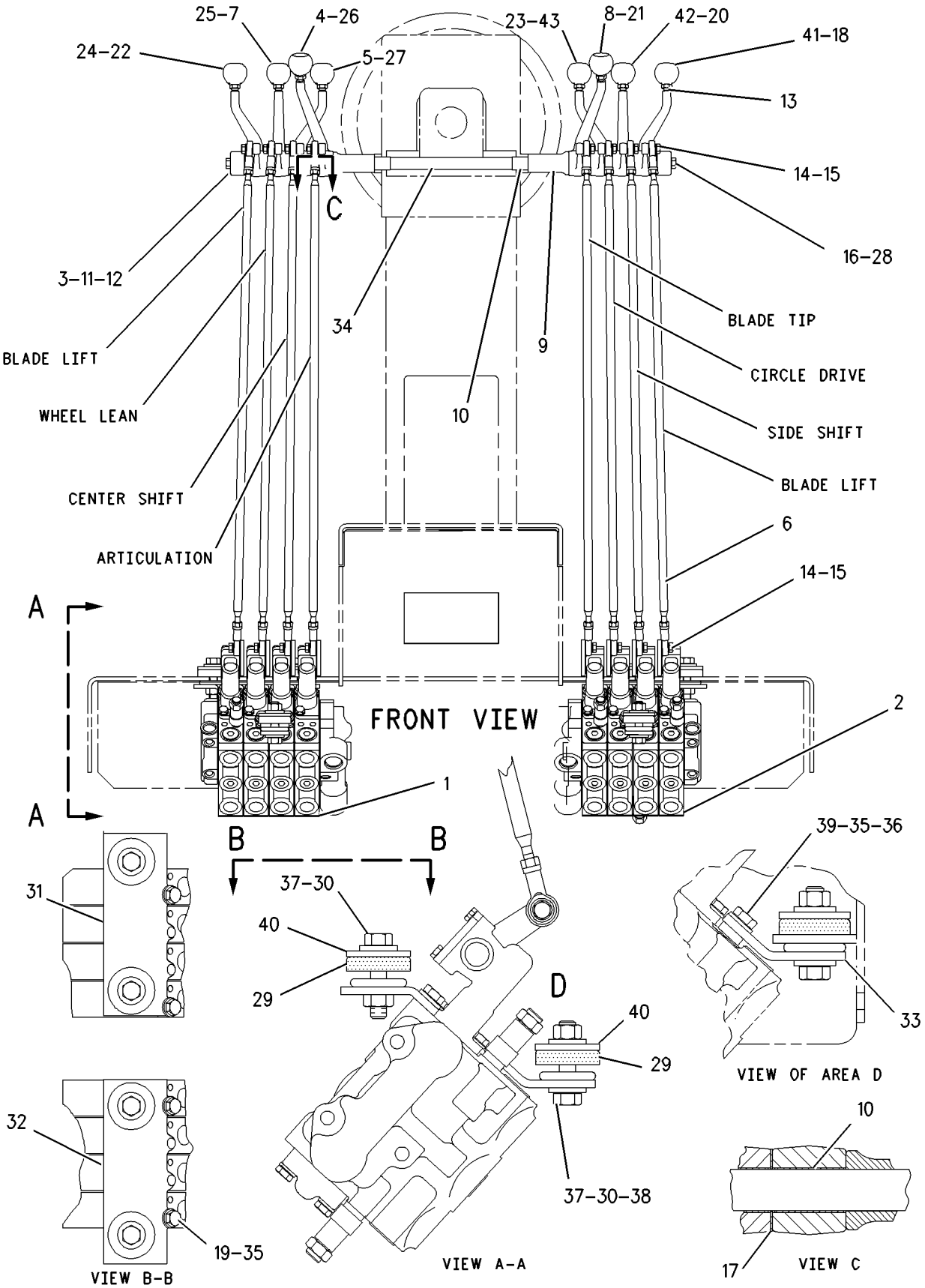

GRAPHIC #1 **<END>** g00721733

HYDRAULIC SYSTEM

115-0812 VALVE & LINKAGE GP–5-BANK, RH, LH

S/N: JPA1-UP

PART OF 331-1501 CONTROL AR-HYDRAULIC

AN ATTACHMENT

SMCS-5051, 5063 **i01367594**

NOTE	REF NO	GRAPHIC REF	PART NUMBER	QTY	PART NAME 1 2 3 4 5 6 (PRODUCT LEVEL)	SEE PAGE
	1	1	**8X-5499**	2	RETAINER	
	2	1	**101-2457**	1	LEVER (ARTICULATION)	
	3	1	**8D-5634**	1	LEVER (CENTER SHIFT)	
	4	1	**4L-6459**	1	BOLT (3/8-16X2.5-IN)	
	5	1	**8W-0456**	1	SHAFT	
	6	1	**6V-8186**	20	NUT-FULL (5/16-24-THD)	
		1	**7H-3641**	20	END-ROD (5/16-24-THD)	
		1	**8X-4276**	10	ROD	
	7	1	**8D-5633**	1	LEVER (WHEEL LEAN)	
	8	1	**101-2458**	1	LEVER (PLOW & BULLDOZER LIFT)	
	9	1	**137-4515**	2	BUSHING	
	10	1	**8D-5640**	12	BEARING	
B	11	1	**8D-5636**	4	SHIM (0.254-MM THK)	
B	12	1	**8D-5637**	4	SHIM (0.762-MM THK)	
	13	1	**6L-1962**	10	NUT-JAM (3/8-24-THD)	
	14	1	**8T-9043**	20	BOLT (5/16-18X0.875-IN)	
	15	1	**3F-9556**	20	LOCKWASHER	
	16	1	**9B-7237**	1	BOLT (3/8-16X1.25-IN)	
	17	1	**8D-5641**	10	BEARING	
	18	1	**2G-6757**	1	KNOB-BLADE LIFT (LH)	
M	19	1	**8T-4136**	4	BOLT (M10X1.5X25-MM)	
	20	1	**2G-6749**	1	KNOB-SIDESHIFT	
	21	1	**2G-6747**	1	KNOB-BLADE TIP	
	22	1	**8D-5632**	1	LEVER (BLADE LIFT-RH)	
	23	1	**2G-6751**	1	KNOB-CIRCLE DRIVE	
	24	1	**2G-6748**	1	KNOB-BLADE LIFT (RH)	
	25	1	**2G-6756**	1	KNOB-WHEEL LEAN	
	26	1	**2G-6752**	1	KNOB-ARTICULATION	
	27	1	**2G-6755**	1	KNOB-CENTERSHIFT	
	28	1	**5P-1075**	2	WASHER-HARD (10.2X22.5X3-MM THK)	
	29	1	**9M-1853**	6	MOUNTING	
	30	1	**5P-1076**	6	WASHER-HARD (13.5X30X4-MM THK)	
	31	1	**104-7740**	1	PLATE AS (LH)	
		1	**1F-0748**	2	NUT-WELD (1/2-13-THD)	
	32	1	**104-7419**	1	PLATE AS (RH)	
		1	**1F-0748**	2	NUT-WELD (1/2-13-THD)	
	33	1	**104-7429**	2	PLATE	
	34	1	**137-4516**	1	SHAFT	
	35	1	**2G-6740**	1	KNOB-RIPPER	
	36	1	**2G-6754**	1	KNOB (DOZER LIFT, PLOW)	
	37	1	**6V-8188**	2	NUT (1/2-13-THD)	
M	38	1	**8T-4195**	4	BOLT (M10X1.5X30-MM)	
	39	1	**8F-6437**	6	WASHER (13.5X50.8X4.76-MM THK)	
	40	1	**5P-2424**	6	BOLT (1/2-13X2.25-IN)	
	41	1	**6B-0933**	4	SPACER (10.31X19.05X6.35-MM THK)	
	42	1	**8T-4121**	8	WASHER-HARD (11X21X2.5-MM THK)	
Y	43	1	**124-3326**	1	VALVE GP-BANK 5 (RH)	523
Y	44	1	**124-3329**	1	VALVE GP-BANK 5 (LH)	525
	45	1	**8D-5632**	1	LEVER (CIRCLE DRIVE)	
	46	1	**101-2458**	1	LEVER (BLADE TIP)	
	47	1	**8D-5633**	1	LEVER (SIDE SHIFT)	
	48	1	**101-2457**	1	LEVER (RIPPER)	
	49	1	**8D-5634**	1	LEVER (BLADE LIFT-LH)	

B-USE AS REQUIRED
M-METRIC PART
Y-SEPARATE ILLUSTRATION

115-0812 **VALVE & LINKAGE GP** *(contd.)* **i01367594**

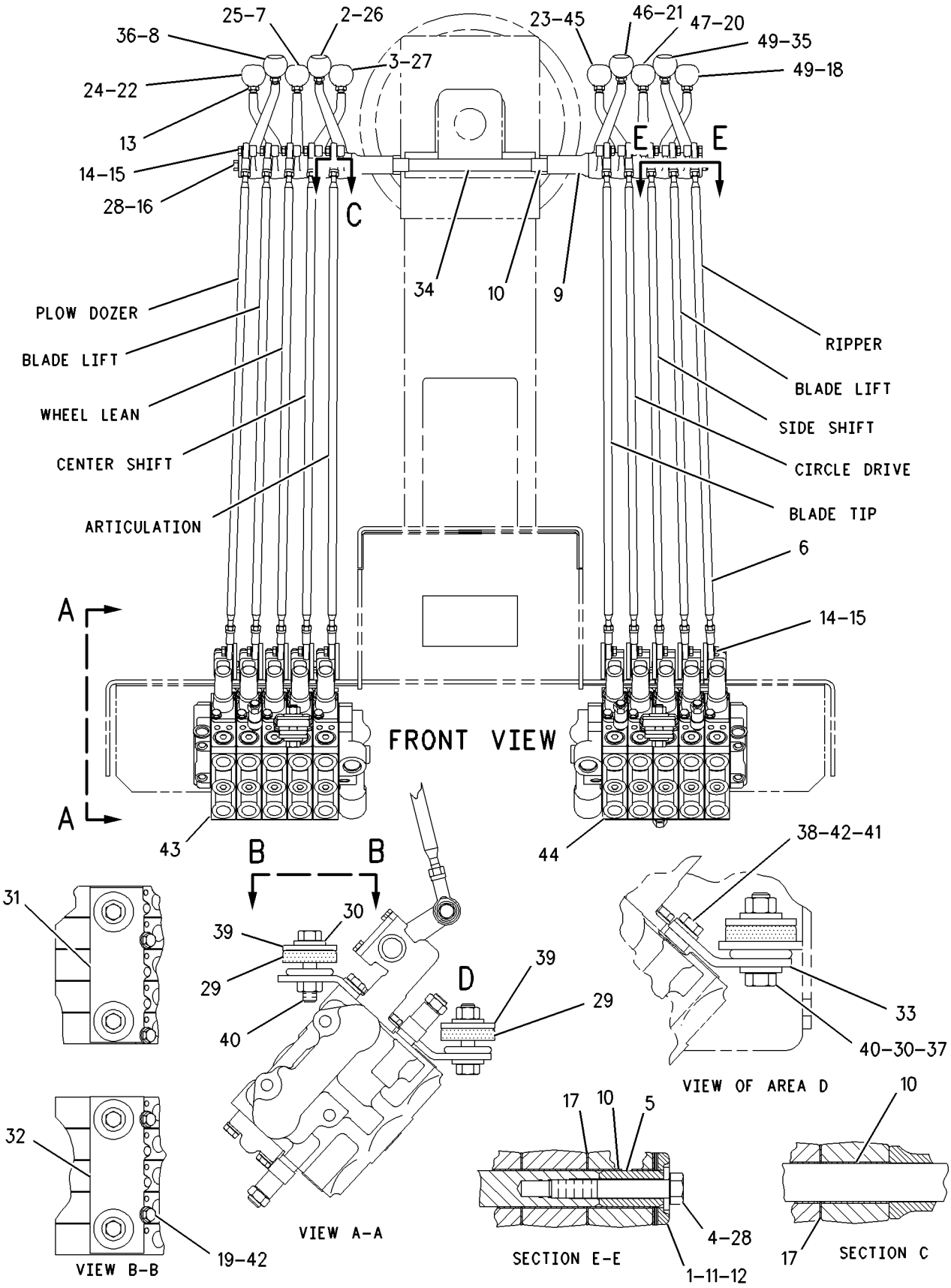

GRAPHIC #1 **<END>** g00721778

HYDRAULIC SYSTEM

130-0464 VALVE & LINKAGE GP–4-BANK, RH, LH

S/N: JPA1-UP
AN ATTACHMENT

SMCS-5051, 5063 **i03179101**

NOTE	REF NO	GRAPHIC REF	PART NUMBER	QTY	PART NAME 1 2 3 4 5 6 (PRODUCT LEVEL)	SEE PAGE
Y	1	1	**124-3325**	1	VALVE GP-BANK 4 (RH)	514
Y	2	1	**130-7754**	1	VALVE GP-BANK 4 (LH)	516
	3	1	**8X-5499**	2	RETAINER	
	4	1	**101-2457**	1	LEVER (ARTICULATION)	
	5	1	**8D-5634**	1	LEVER (CENTER SHIFT)	
	6	1	**8X-4276**	8	ROD	
		1	**6V-8186**	2	NUT-FULL (5/16-24-THD)	
		1	**7H-3641**	2	END-ROD (5/16-24-THD)	
	7	1	**8D-5633**	1	LEVER (WHEEL LEAN)	
	8	1	**8D-8852**	1	SPACER (0.78X1.5X1.344-IN THK)	
	9	1	**137-4515**	2	BUSHING	
	10	1	**8D-5640**	11	BEARING	
B	11	1	**8D-5636**	4	SHIM (0.254-MM THK)	
B	12	1	**8D-5637**	4	SHIM (0.762-MM THK)	
	13	1	**6L-1962**	8	NUT-JAM (3/8-24-THD)	
	14	1	**8T-9043**	16	BOLT (5/16-18X0.875-IN)	
	15	1	**3F-9556**	16	LOCKWASHER	
	16	1	**9B-7237**	2	BOLT (3/8-16X1.25-IN)	
	17	1	**8D-5641**	9	BEARING	
	18	1	**2G-6757**	1	KNOB-BLADE LIFT (LH)	
M	19	1	**8T-4136**	4	BOLT (M10X1.5X25-MM)	
	20	1	**2G-6749**	1	KNOB-SIDESHIFT	
	21	1	**8D-5632**	1	LEVER (BLADE LIFT)	
	22	1	**2G-6751**	1	KNOB-CIRCLE DRIVE	
	23	1	**2G-6748**	1	KNOB-BLADE LIFT (RH)	
	24	1	**2G-6756**	1	KNOB-WHEEL LEAN	
	25	1	**2G-6752**	1	KNOB-ARTICULATION	
	26	1	**2G-6755**	1	KNOB-CENTERSHIFT	
	27	1	**5P-1075**	2	WASHER-HARD (10.2X22.5X3-MM THK)	
	28	1	**9M-1853**	6	MOUNTING	
	29	1	**5P-1076**	6	WASHER-HARD (13.5X30X4-MM THK)	
	30	1	**104-7740**	1	PLATE AS (LH)	
		1	**1F-0748**	2	NUT-WELD (1/2-13-THD)	
	31	1	**104-7419**	1	PLATE AS (RH)	
		1	**1F-0748**	2	NUT-WELD (1/2-13-THD)	
	32	1	**104-7429**	2	PLATE	
	33	1	**137-4516**	1	SHAFT	
	34	1	**8T-4121**	8	WASHER-HARD (11X21X2.5-MM THK)	
	35	1	**6B-0933**	4	SPACER (10.31X19.05X6.35-MM THK)	
	36	1	**5P-2424**	6	BOLT (1/2-13X2.25-IN)	
	37	1	**6V-8188**	2	NUT (1/2-13-THD)	
M	38	1	**8T-4195**	4	BOLT (M10X1.5X30-MM)	
	39	1	**2G-6753**	1	KNOB-SCARIFIER	
	40	1	**8F-6437**	6	WASHER (13.5X50.8X4.76-MM THK)	
	41	1	**101-2457**	1	LEVER (SCARIFER)	
	42	1	**8D-5634**	1	LEVER (BLADE LIFT)	
	43	1	**8D-5633**	1	LEVER (SIDE SHIFT)	
	44	1	**8D-5632**	1	LEVER (CIRCLE DRIVE)	

B-USE AS REQUIRED
M-METRIC PART
Y-SEPARATE ILLUSTRATION

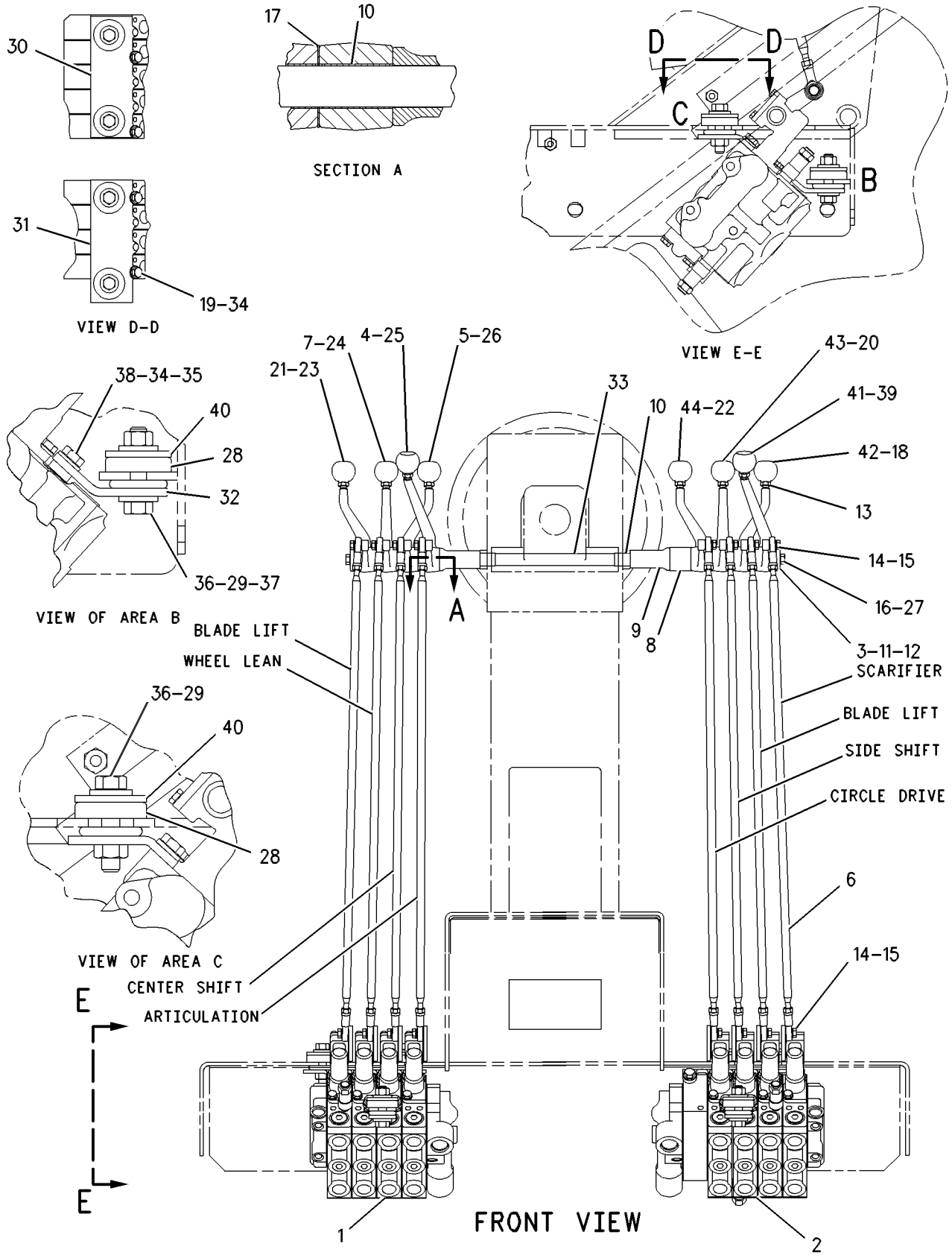

GRAPHIC #1 **<END>** g00543092

HYDRAULIC SYSTEM

130-7603 VALVE & LINKAGE GP—4-BANK, RH, LH

S/N: JPA1-UP

PART OF 331-1506 CONTROL AR-HYDRAULIC

AN ATTACHMENT

SMCS-5051, 5063 **i01047889**

NOTE	REF NO	GRAPHIC REF	PART NUMBER	QTY	PART NAME 1 2 3 4 5 6 (PRODUCT LEVEL)	SEE PAGE
Y	1	1	**124-3325**	1	VALVE GP-BANK 4 (RH)	514
Y	2	1	**130-7755**	1	VALVE GP-BANK 4 (LH)	517
	3	1	**8X-5499**	2	RETAINER	
	4	1	**101-2457**	1	LEVER (ARTICULATION)	
	5	1	**8D-5634**	1	LEVER (CENTER SHIFT)	
	6	1	**8X-4276**	8	ROD	
		1	**6V-8186**	16	NUT-FULL (5/16-24-THD)	
		1	**7H-3641**	16	END-ROD (5/16-24-THD)	
	7	1	**8D-5633**	1	LEVER (WHEEL LEAN)	
	8	1	**8D-8852**	1	SPACER (0.78X1.5X1.344-IN THK)	
	9	1	**137-4515**	2	BUSHING	
	10	1	**8D-5640**	11	BEARING	
B	11	1	**8D-5636**	4	SHIM (0.254-MM THK)	
B	12	1	**8D-5637**	4	SHIM (0.762-MM THK)	
	13	1	**6L-1962**	8	NUT-JAM (3/8-24-THD)	
	14	1	**8T-9043**	16	BOLT (5/16-18X0.875-IN)	
	15	1	**3F-9556**	16	LOCKWASHER	
	16	1	**9B-7237**	2	BOLT (3/8-16X1.25-IN)	
	17	1	**8D-5641**	9	BEARING	
	18	1	**2G-6757**	1	KNOB-BLADE LIFT (LH)	
M	19	1	**8T-4136**	4	BOLT (M10X1.5X25-MM)	
	20	1	**2G-6749**	1	KNOB-SIDESHIFT	
	21	1	**8D-5632**	1	LEVER (BLADE LIFT)	
	22	1	**2G-6751**	1	KNOB-CIRCLE DRIVE	
	23	1	**2G-6748**	1	KNOB-BLADE LIFT (RH)	
	24	1	**2G-6756**	1	KNOB-WHEEL LEAN	
	25	1	**2G-6752**	1	KNOB-ARTICULATION	
	26	1	**2G-6755**	1	KNOB-CENTERSHIFT	
	27	1	**5P-1075**	2	WASHER-HARD (10.2X22.5X3-MM THK)	
	28	1	**9M-1853**	6	MOUNTING	
	29	1	**5P-1076**	6	WASHER-HARD (13.5X30X4-MM THK)	
	30	1	**104-7740**	1	PLATE AS (LH)	
		1	**1F-0748**	2	NUT-WELD (1/2-13-THD)	
	31	1	**104-7419**	1	PLATE AS (RH)	
		1	**1F-0748**	2	NUT-WELD (1/2-13-THD)	
	32	1	**104-7429**	2	PLATE	
	33	1	**137-4516**	1	SHAFT	
	34	1	**2G-6740**	1	KNOB-RIPPER	
	35	1	**6B-0933**	4	SPACER (10.31X19.05X6.35-MM THK)	
	36	1	**5P-2424**	6	BOLT (1/2-13X2.25-IN)	
	37	1	**6V-8188**	2	NUT (1/2-13-THD)	
M	38	1	**8T-4195**	4	BOLT (M10X1.5X30-MM)	
	39	1	**8T-4121**	8	WASHER-HARD (11X21X2.5-MM THK)	
	40	1	**8F-6437**	6	WASHER (13.5X50.8X4.76-MM THK)	
	41	1	**101-2457**	1	LEVER (RIPPER)	
	42	1	**8D-5634**	1	LEVER (BLADE LIFT)	
	43	1	**8D-5633**	1	LEVER (SIDE SHIFT)	
	44	1	**8D-5632**	1	LEVER (CIRCLE DRIVE)	

B-USE AS REQUIRED
M-METRIC PART
Y-SEPARATE ILLUSTRATION

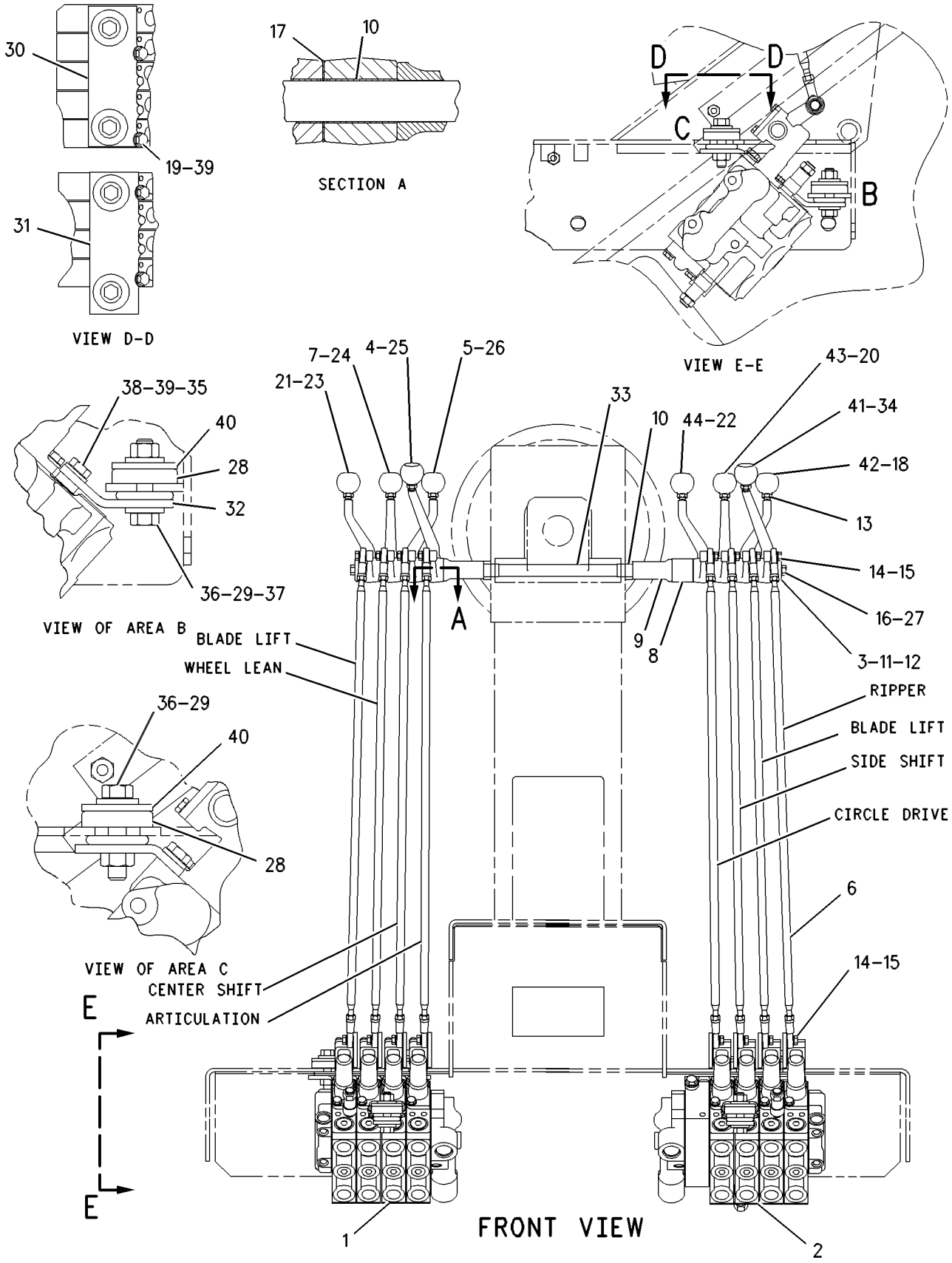

GRAPHIC #1 **<END>** g00543096

HYDRAULIC SYSTEM

138-7599 VALVE & LINKAGE GP—5-BANK, RH, LH

S/N: JPA1-UP
PART OF 331-1499 CONTROL AR-HYDRAULIC
AN ATTACHMENT

SMCS-5051, 5063 **i03434243**

NOTE	REF NO	GRAPHIC REF	PART NUMBER	QTY	PART NAME 1 2 3 4 5 6 (PRODUCT LEVEL)	SEE PAGE
	1	1	**8X-5499**	2	RETAINER	
	2	1	**101-2457**	1	LEVER (RIPPER)	
	2A	1	**101-2457**	1	LEVER (ARTICULATION)	
	3	1	**8D-5634**	1	LEVER (BLADE LIFT, LH)	
	3A	1	**8D-5634**	1	LEVER (CENTER SHIFT)	
	4	1	**4L-6459**	1	BOLT (3/8-16X2.5-IN)	
	5	1	**8W-0456**	1	SHAFT	
	6	1	*8X-4277*	10	ROD AS	
					(EACH INCLUDES)	
		1	**6V-8186**	1	NUT-FULL (5/16-24-THD)	
		1	**7H-3641**	1	END-ROD (5/16-24-THD)	
		1	**8L-8598**	1	ROD END	
		1	**146-0705**	1	ROD	
	7	1	**8D-5633**	1	LEVER (SIDE SHIFT)	
	7A	1	**8D-5633**	1	LEVER (WHEEL LEAN)	
	8	1	**101-2458**	1	LEVER (BLADE TIP)	
	8A	1	**101-2458**	1	LEVER (SCARIFIER)	
	9	1	**137-4515**	2	BUSHING	
	10	1	**8D-5640**	12	BEARING	
B	11	1	**8D-5636**	4	SHIM (0.254-MM THK)	
B	12	1	**8D-5637**	4	SHIM (0.762-MM THK)	
	13	1	**6L-1962**	10	NUT-JAM (3/8-24-THD)	
	14	1	**8T-9043**	20	BOLT (5/16-18X0.875-IN)	
	15	1	**3F-9556**	20	LOCKWASHER	
	16	1	**9B-7237**	1	BOLT (3/8-16X1.25-IN)	
	17	1	**8D-5641**	10	BEARING	
	18	1	**2G-6757**	1	KNOB-BLADE LIFT	
M	19	1	**8T-4136**	4	BOLT (M10X1.5X25-MM)	
	20	1	**2G-6749**	1	KNOB-SIDESHIFT	
	21	1	**2G-6747**	1	KNOB-BLADE TIP	
	22	1	**8D-5632**	1	LEVER (CIRCLE DRIVE)	
	22A	1	**8D-5632**	1	LEVER (BLADE LIFT, RH)	
	23	1	**2G-6751**	1	KNOB-CIRCLE DRIVE	
	24	1	**2G-6748**	1	KNOB-BLADE LIFT	
	25	1	**2G-6756**	1	KNOB-WHEEL LEAN	
	26	1	**2G-6752**	1	KNOB-ARTICULATION	
	27	1	**2G-6755**	1	KNOB-CENTERSHIFT	
	28	1	**5P-1075**	2	WASHER-HARD (10.2X22.5X3-MM THK)	
	29	1	**9M-1853**	6	MOUNTING	
	30	1	**5P-1076**	6	WASHER-HARD (13.5X30X4-MM THK)	
	31	1	**104-7740**	1	PLATE AS (LH)	
	32	1	**104-7419**	1	PLATE AS (RH)	
					(EACH PLATE AS INCLUDES)	
		1	**1F-0748**	2	NUT-WELD (1/2-13-THD)	
	33	1	**104-7429**	2	PLATE	
	34	1	**137-4516**	1	SHAFT	
	35	1	**2G-6740**	1	KNOB-RIPPER	
	36	1	**2G-6753**	1	KNOB-SCARIFIER	
	37	1	**6V-8188**	2	NUT (1/2-13-THD)	
M	38	1	**8T-4195**	4	BOLT (M10X1.5X30-MM)	
	39	1	**8F-6437**	6	WASHER (13.5X50.8X4.76-MM THK)	
	40	1	**5P-2424**	6	BOLT (1/2-13X2.25-IN)	
	41	1	**6B-0933**	4	SPACER (10.31X19.05X6.35-MM THK)	
	42	1	**8T-4121**	8	WASHER-HARD (11X21X2.5-MM THK)	
Y	44	1	**124-3329**	1	VALVE GP-BANK 5 (LH)	525

138-7599 **VALVE & LINKAGE GP** *(contd.)* **i03434243**

B-USE AS REQUIRED
M-METRIC PART
Y-SEPARATE ILLUSTRATION

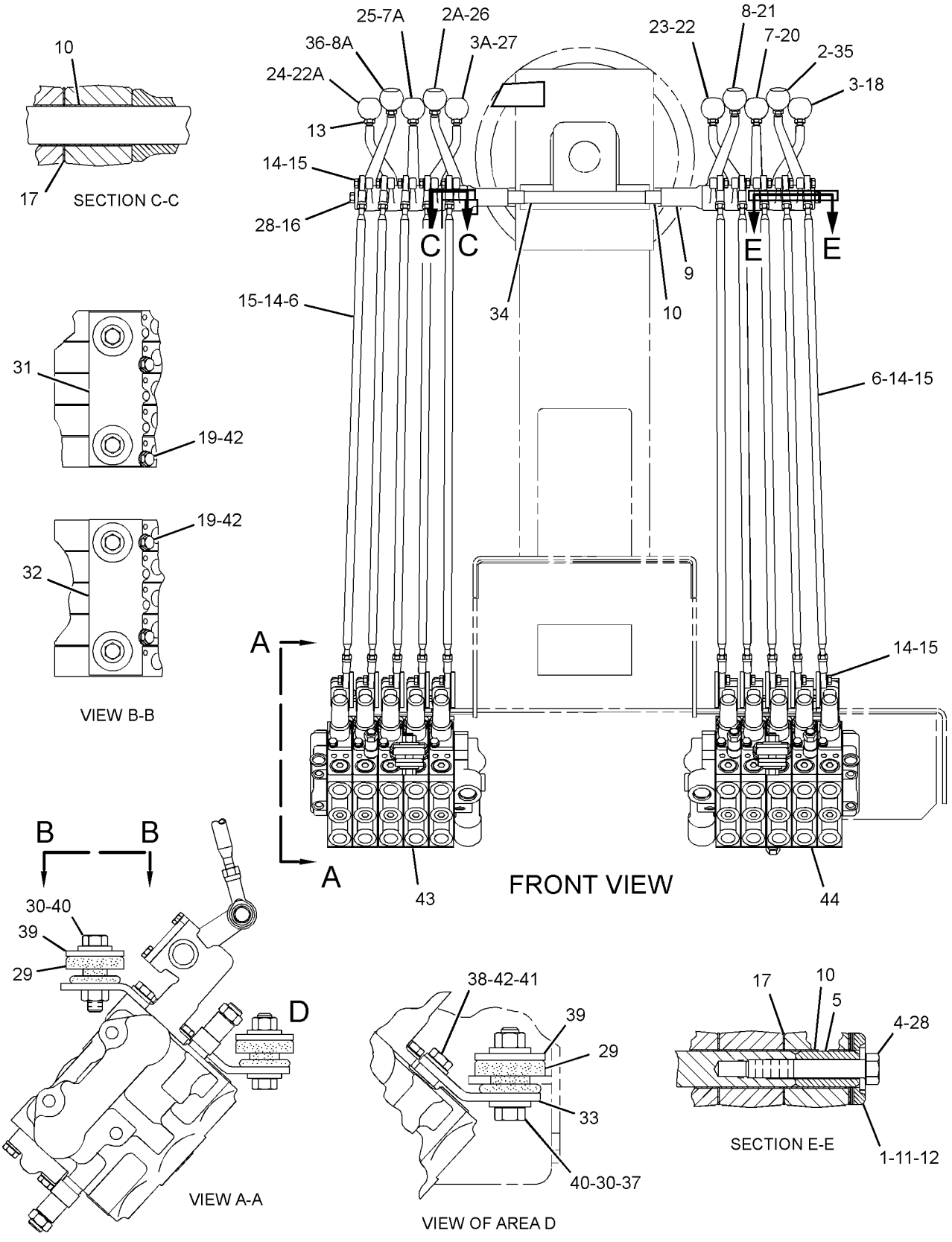

GRAPHIC #1 **<END>** g01694533

HYDRAULIC SYSTEM

315-5329 VALVE & LINKAGE GP–6-BANK, RH, LH

S/N: JPA1-UP
AN ATTACHMENT

SMCS-5051, 5063 **i03438943**

NOTE	REF NO	GRAPHIC REF	PART NUMBER	QTY	PART NAME 1 2 3 4 5 6 (PRODUCT LEVEL)	SEE PAGE
Y	1	1	**115-1008**	1	VALVE GP-BANK 6 (RH)	531
Y	2	1	**104-8648**	1	VALVE GP-BANK 6 (LH)	530
	3	1	**8X-5499**	2	RETAINER	
	4	1	**101-2457**	2	LEVER (WHEEL LEAN)	
	5	1	**8D-5634**	2	LEVER (CENTER SHIFT)	
	6	1	**8X-4276**	12	ROD	
		1	**6V-8186**	24	NUT-FULL (5/16-24-THD)	
		1	**7H-3641**	24	END-ROD (5/16-24-THD)	
	7	1	**8D-5633**	2	LEVER (WHEEL LEAN)	
	8	1	**101-2458**	2	LEVER (PLOW DOZER)	
	9	1	**8D-5640**	14	BEARING	
B	10	1	**8D-5636**	4	SHIM (0.254-MM THK)	
B	11	1	**8D-5637**	4	SHIM (0.762-MM THK)	
	12	1	**6L-1962**	12	NUT-JAM (3/8-24-THD)	
	13	1	**8T-9043**	24	BOLT (5/16-18X0.875-IN)	
	14	1	**3F-9556**	24	LOCKWASHER	
	15	1	**8D-5641**	12	BEARING	
	16	1	**2G-6757**	1	KNOB-BLADE LIFT	
M	17	1	**8T-4136**	4	BOLT (M10X1.5X25-MM)	
	18	1	**2G-6749**	1	KNOB-SIDESHIFT	
	19	1	**2G-6747**	1	KNOB-BLADE TIP	
	20	1	**8D-5632**	2	LEVER	
	21	1	**2G-6751**	1	KNOB-CIRCLE DRIVE	
	22	1	**2G-6748**	1	KNOB-BLADE LIFT	
	23	1	**2G-6756**	1	KNOB-WHEEL LEAN	
	24	1	**2G-6752**	1	KNOB-ARTICULATION	
	25	1	**2G-6755**	1	KNOB-CENTERSHIFT	
	26	1	**5P-1075**	2	WASHER-HARD (10.2X22.5X3-MM THK)	
	27	1	**9M-1853**	6	MOUNTING	
	28	1	**5P-1076**	6	WASHER-HARD (13.5X30X4-MM THK)	
	29	1	**104-7740**	1	PLATE AS (LH)	
		1	**1F-0748**	2	NUT-WELD (1/2-13-THD)	
	30	1	**104-7419**	1	PLATE AS (RH)	
		1	**1F-0748**	2	NUT-WELD (1/2-13-THD)	
	31	1	**8T-4121**	8	WASHER-HARD (11X21X2.5-MM THK)	
	32	1	**104-7429**	2	PLATE	
	33	1	**137-4516**	1	SHAFT	
	34	1	**2G-7108**	1	KNOB-WING TILT	
	35	1	**2G-6754**	1	KNOB (BULLDOZER LIFT, PLOW)	
	36	1	**103-1597**	2	LEVER (DOZER ANGLE)	
	37	1	**2G-7107**	1	KNOB-WING LIFT	
	38	1	**137-4515**	2	BUSHING	
	39	1	**6B-0933**	4	SPACER (10.31X19.05X6.35-MM THK)	
	40	1	**5P-2424**	6	BOLT (1/2-13X2.25-IN)	
	41	1	**6V-8188**	2	NUT (1/2-13-THD)	
	42	1	**8F-6437**	6	WASHER (13.5X50.8X4.76-MM THK)	
	43	1	**8W-0456**	3	SHAFT	
	44	1	**4L-6459**	1	BOLT (3/8-16X2.5-IN)	
M	45	1	**8T-4195**	4	BOLT (M10X1.5X30-MM)	
	46	1	**7X-0291**	1	BOLT (3/8-16X3.75-IN)	
	47	1	**117-0472**	1	KNOB (PLOW, BULLDOZER ANGLE)	

B-USE AS REQUIRED
M-METRIC PART
Y-SEPARATE ILLUSTRATION

315-5329 **VALVE & LINKAGE GP** *(contd.)* **i03438943**

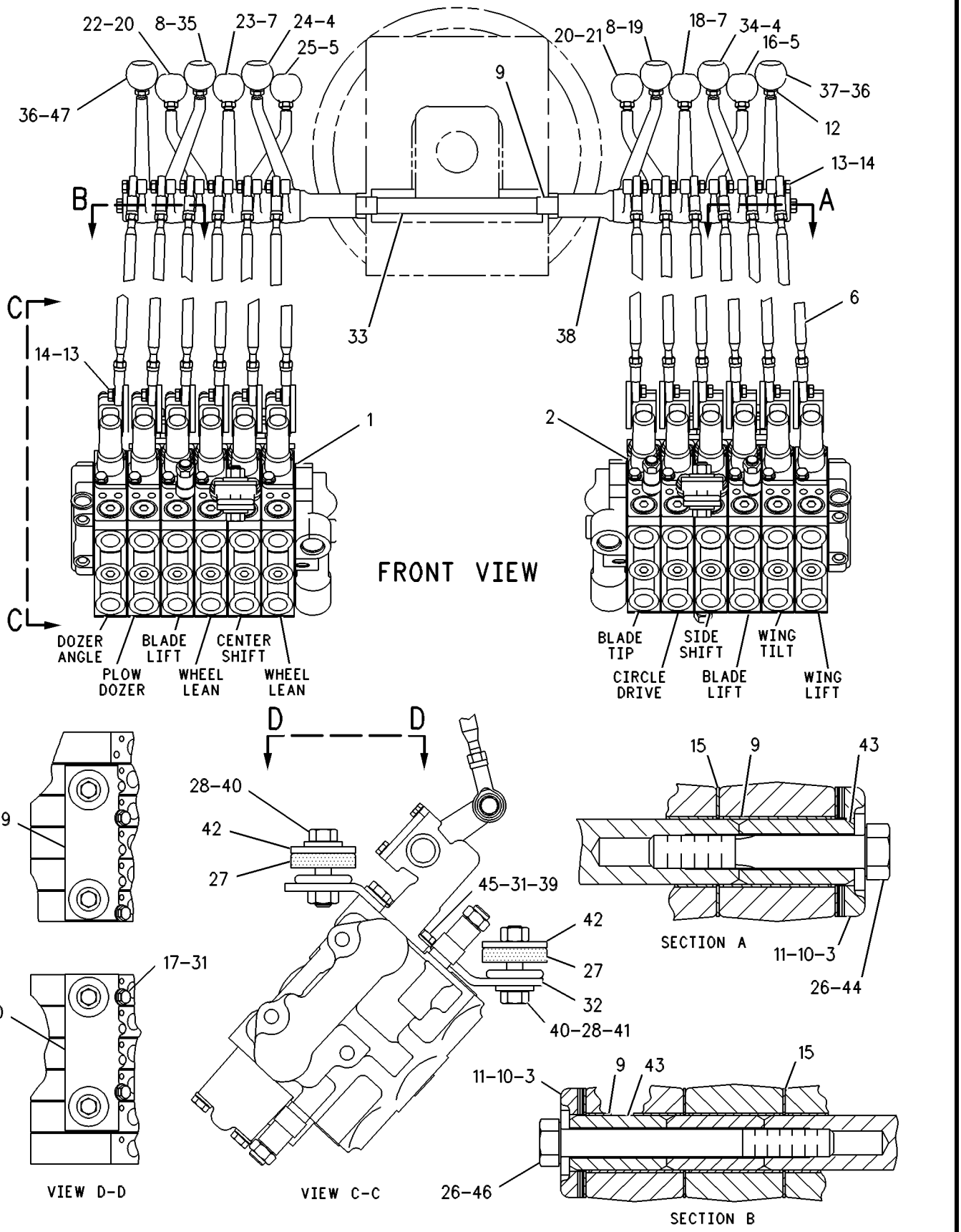

GRAPHIC #1 **<END>** g00109649

315-5330 VALVE & LINKAGE GP—5-BANK, RH; 4-BANK, LH

S/N: JPA1-UP
AN ATTACHMENT

SMCS-5051, 5063 **i03255958**

NOTE	REF NO	GRAPHIC REF	PART NUMBER	QTY	PART NAME 1 2 3 4 5 6 (PRODUCT LEVEL)	SEE PAGE
Y	1	1	**6E-3032**	1	VALVE GP-BANK 4 (RH)	512
Y	2	1	**104-8645**	1	VALVE GP-BANK 5 (LH)	520
	3	1	**8X-5499**	2	RETAINER	
	4	1	**101-2457**	1	LEVER	
	5	1	**8D-5634**	2	LEVER	
	6	1	**8X-4276**	9	ROD	
		1	**6V-8186**	18	NUT-FULL (5/16-24-THD)	
		1	**7H-3641**	18	END-ROD (5/16-24-THD)	
	7	1	**8D-5633**	2	LEVER	
	8	1	**101-2458**	2	LEVER	
	9	1	**137-4515**	2	BUSHING	
	10	1	**8D-5640**	11	BEARING	
B	11	1	**8D-5636**	4	SHIM (0.254-MM THK)	
B	12	1	**8D-5637**	4	SHIM (0.762-MM THK)	
	13	1	**6L-1962**	9	NUT-JAM (3/8-24-THD)	
	14	1	**8T-9043**	18	BOLT (5/16-18X0.875-IN)	
	15	1	**3F-9556**	18	LOCKWASHER	
	16	1	**9B-7237**	2	BOLT (3/8-16X1.25-IN)	
	17	1	**8D-5641**	9	BEARING	
	18	1	**2G-6757**	1	KNOB-BLADE LIFT	
M	19	1	**8T-4136**	4	BOLT (M10X1.5X25-MM)	
	20	1	**2G-6749**	1	KNOB-SIDESHIFT	
	21	1	**2G-6747**	1	KNOB-BLADE TIP	
	22	1	**8D-5632**	2	LEVER	
	23	1	**2G-6751**	1	KNOB-CIRCLE DRIVE	
	24	1	**2G-6748**	1	KNOB-BLADE LIFT	
	25	1	**2G-6756**	1	KNOB-WHEEL LEAN	
	26	1	**2G-6752**	1	KNOB-ARTICULATION	
	27	1	**2G-6755**	1	KNOB-CENTERSHIFT	
	28	1	**5P-1075**	2	WASHER-HARD (10.2X22.5X3-MM THK)	
	29	1	**9M-1853**	6	MOUNTING	
	30	1	**5P-1076**	6	WASHER-HARD (13.5X30X4-MM THK)	
	31	1	**104-7740**	1	PLATE AS (LH)	
		1	**1F-0748**	2	NUT-WELD (1/2-13-THD)	
	32	1	**104-7419**	1	PLATE AS (RH)	
		1	**1F-0748**	2	NUT-WELD (1/2-13-THD)	
	33	1	**104-7429**	2	PLATE	
	34	1	**137-4516**	1	SHAFT	
	35	1	**2G-6754**	1	KNOB (BULLDOZER LIFT, PLOW)	
	36	1	**6V-8188**	2	NUT (1/2-13-THD)	
M	37	1	**8T-4195**	4	BOLT (M10X1.5X30-MM)	
	38	1	**8T-4121**	8	WASHER-HARD (11X21X2.5-MM THK)	
	39	1	**6B-0933**	4	SPACER (10.31X19.05X6.35-MM THK)	
	40	1	**8F-6437**	6	WASHER (13.5X50.8X4.76-MM THK)	
	41	1	**5P-2424**	6	BOLT (1/2-13X2.25-IN)	

B-USE AS REQUIRED
M-METRIC PART
Y-SEPARATE ILLUSTRATION

315-5330 **VALVE & LINKAGE GP** *(contd.)* **i03255958**

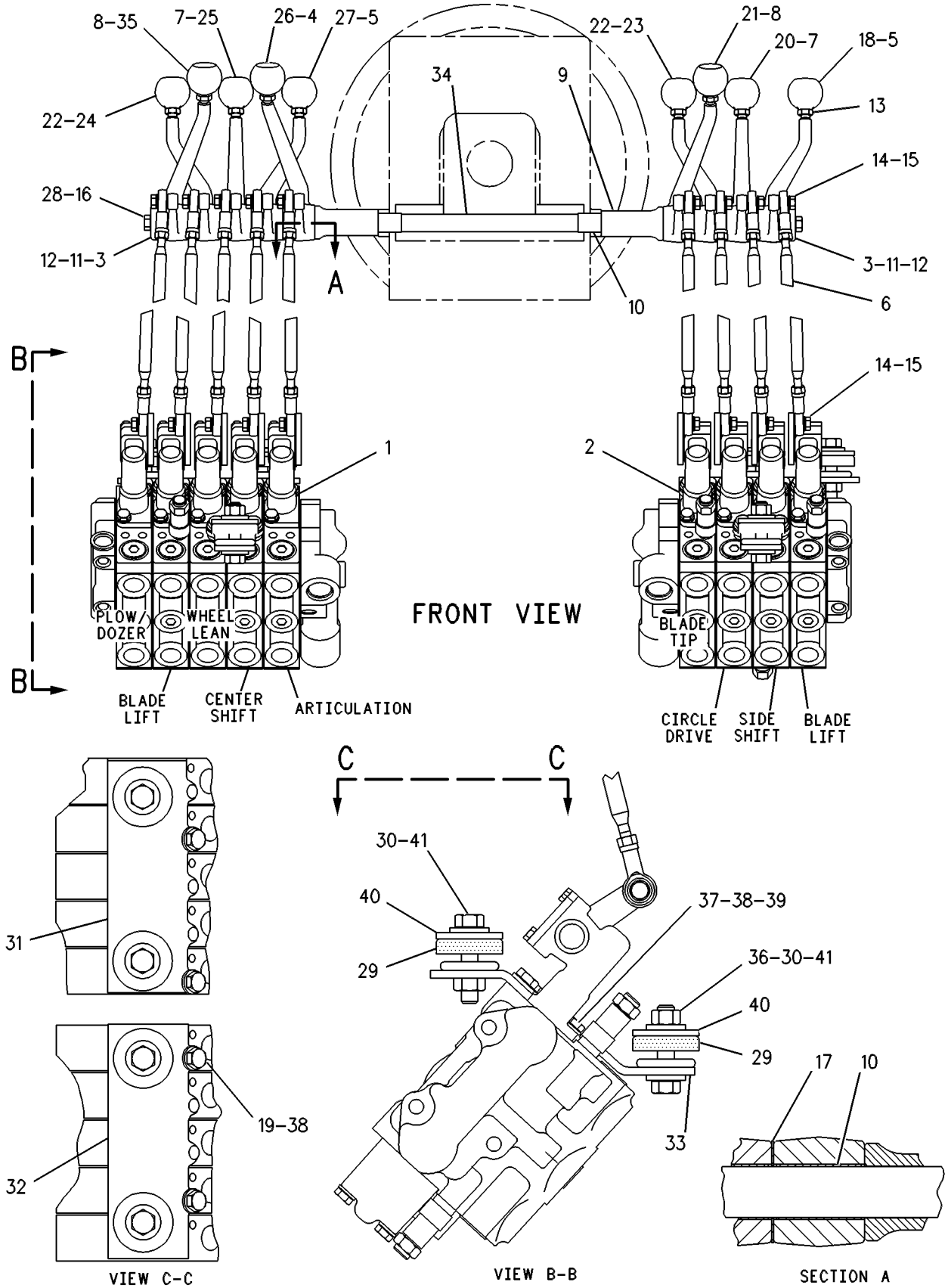

GRAPHIC #1 **<END>** g00109685

HYDRAULIC SYSTEM

315-5331 VALVE & LINKAGE GP

S/N: JPA1-UP
AN ATTACHMENT

SMCS-5051, 5063 **i03248080**

NOTE	REF NO	GRAPHIC REF	PART NUMBER	QTY	PART NAME 1 2 3 4 5 6 (PRODUCT LEVEL)	SEE PAGE
Y	1	1	**104-8671**	1	VALVE GP-BANK 5 (RH)	522
Y	2	1	**104-8646**	1	VALVE GP-BANK 5 (LH)	521
	3	1	**8X-5499**	2	RETAINER	
	4	1	**101-2457**	1	LEVER (SCARIFIER)	
	4A	1	**101-2457**	1	LEVER (ARTICULATION)	
	5	1	**8D-5634**	1	LEVER (BLADE LIFT)	
	5A	1	**8D-5634**	1	LEVER (CENTER SHIFT)	
	6	1	**4L-6459**	1	BOLT (3/8-16X2.5-IN)	
	7	1	**8W-0456**	1	SHAFT	
	8	1	**8X-4277**	10	ROD AS	
					(EACH INCLUDES)	
		1	**146-0705**	1	ROD	
		1	**6V-8186**	1	NUT-FULL (5/16-24-THD)	
		1	**7H-3641**	1	END-ROD (5/16-24-THD) (RH)	
		1	**8L-8598**	1	ROD END	
	9	1	**8D-5633**	1	LEVER (SIDE SHIFT)	
	9A	1	**8D-5633**	1	LEVER (WHEEL LEAN)	
	10	1	**101-2458**	1	LEVER (BLADE TIP)	
	10A	1	**101-2458**	1	LEVER (PLOW/DOZER)	
	11	1	**137-4515**	2	BUSHING	
	12	1	**8D-5640**	12	BEARING	
B	13	1	**8D-5636**	4	SHIM (0.254-MM THK)	
B	14	1	**8D-5637**	4	SHIM (0.762-MM THK)	
	15	1	**6L-1962**	10	NUT-JAM (3/8-24-THD)	
	16	1	**8T-9043**	20	BOLT (5/16-18X0.875-IN)	
	17	1	**3F-9556**	20	LOCKWASHER	
	18	1	**9B-7237**	1	BOLT (3/8-16X1.25-IN)	
	19	1	**8D-5641**	10	BEARING	
	20	1	**2G-6757**	1	KNOB-BLADE LIFT (LH)	
M	21	1	**8T-4136**	4	BOLT (M10X1.5X25-MM)	
	22	1	**2G-6749**	1	KNOB-SIDESHIFT	
	23	1	**2G-6747**	1	KNOB-BLADE TIP	
	24	1	**8D-5632**	1	LEVER (CIRCLE DRIVE)	
	24A	1	**8D-5632**	1	LEVER (BLADE LIFT)	
	25	1	**2G-6751**	1	KNOB-CIRCLE DRIVE	
	26	1	**2G-6748**	1	KNOB-BLADE LIFT (RH)	
	27	1	**2G-6756**	1	KNOB-WHEEL LEAN	
	28	1	**2G-6752**	1	KNOB-ARTICULATION	
	29	1	**2G-6755**	1	KNOB-CENTERSHIFT	
	30	1	**5P-1075**	2	WASHER-HARD (10.2X22.5X3-MM THK)	
	31	1	**9M-1853**	6	MOUNTING	
	32	1	**8T-4121**	8	WASHER-HARD (11X21X2.5-MM THK)	
M	33	1	**8T-4195**	4	BOLT (M10X1.5X30-MM)	
	34	1	**6V-8188**	2	NUT (1/2-13-THD)	
	35	1	**5P-2424**	6	BOLT (1/2-13X2.25-IN)	
	36	1	**5P-1076**	6	WASHER-HARD (13.5X30X4-MM THK)	
	37	1	**6B-0933**	4	SPACER (10.31X19.05X6.35-MM THK)	
	38	1	**104-7740**	1	PLATE AS (LH)	
	39	1	**104-7419**	1	PLATE AS (RH)	
					EACH PLATE AS INCLUDES	
	40	1	**1F-0748**	2	NUT-WELD (1/2-13-THD)	
	41	1	**2G-6753**	1	KNOB-SCARIFIER	
	42	1	**137-4516**	1	SHAFT	
	43	1	**104-7429**	2	PLATE	
	44	1	**8F-6437**	6	WASHER (13.5X50.8X4.76-MM THK)	
	45	1	**2G-6754**	1	KNOB (BULLDOZER LIFT, PLOW)	

315-5331 **VALVE & LINKAGE GP** *(contd.)* **i03248080**

B-USE AS REQUIRED
M-METRIC PART
Y-SEPARATE ILLUSTRATION

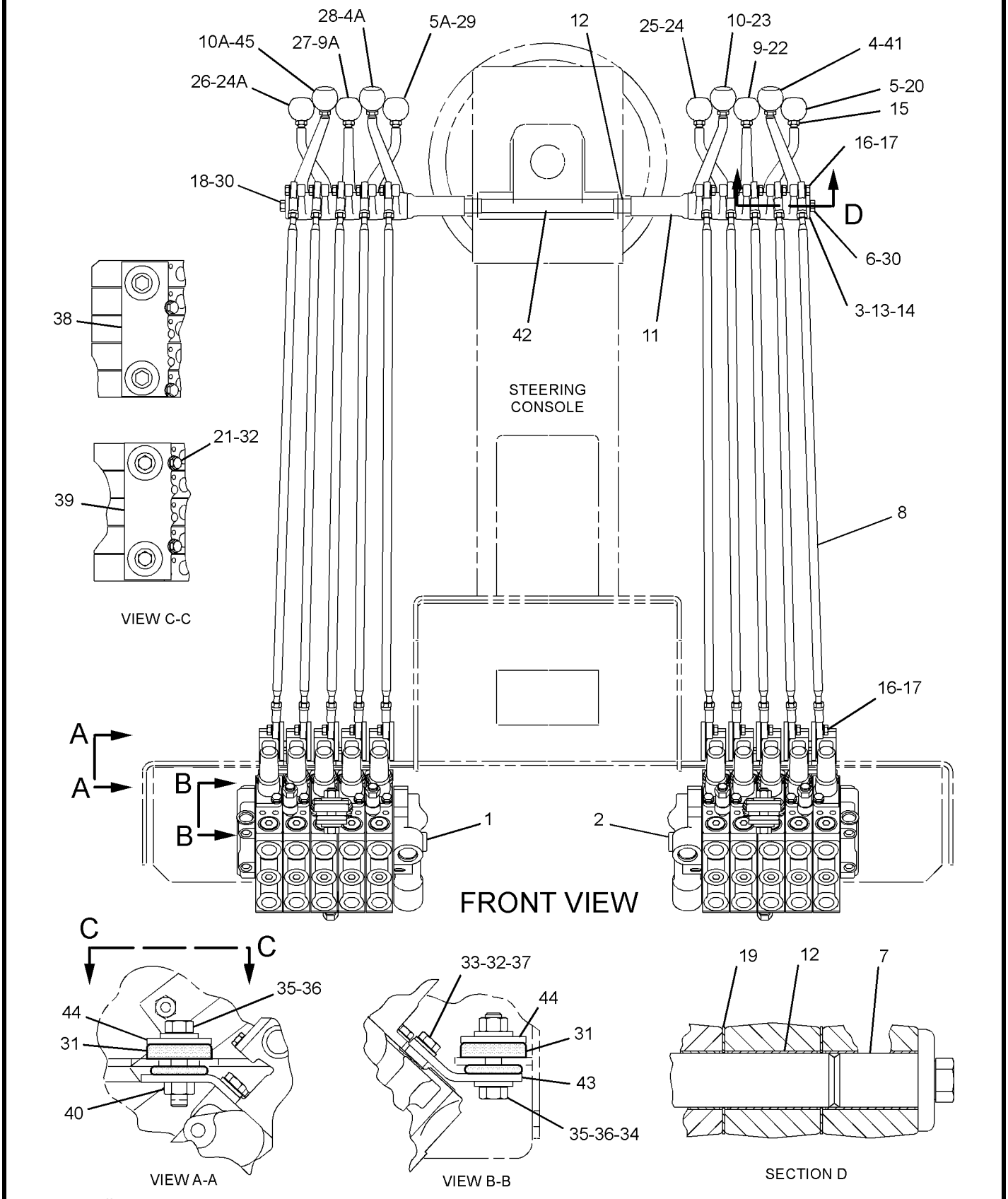

GRAPHIC #1 **<END>** g01701713

HYDRAULIC SYSTEM

315-5333 VALVE & LINKAGE GP—5-BANK, RH; 6-BANK, LH

S/N: JPA1-UP

AN ATTACHMENT

SMCS-5051, 5063 **i03434986**

NOTE	REF NO	GRAPHIC REF	PART NUMBER	QTY	PART NAME 1 2 3 4 5 6 (PRODUCT LEVEL)	SEE PAGE
Y	1	1	**104-8671**	1	VALVE GP-BANK 5 (RH)	522
Y	2	1	**104-8648**	1	VALVE GP-BANK 6 (LH)	530
	3	1	**8X-5499**	2	RETAINER	
	4	1	**101-2457**	2	LEVER	
	5	1	**8D-5634**	2	LEVER	
	6	1	*8X-4277*	11	ROD AS	
					(EACH INCLUDES)	
		1	**6V-8186**	1	NUT-FULL (5/16-24-THD)	
		1	**7H-3641**	1	END-ROD (5/16-24-THD)	
		1	**8L-8598**	1	ROD END	
		1	**146-0705**	1	ROD	
	9	1	**8D-5633**	2	LEVER	
	10	1	**101-2458**	2	LEVER	
	11	1	**4L-6459**	2	BOLT (3/8-16X2.5-IN)	
	12	1	**8D-5640**	13	BEARING	
B	13	1	**8D-5636**	4	SHIM (0.254-MM THK)	
B	14	1	**8D-5637**	4	SHIM (0.762-MM THK)	
	15	1	**6L-1962**	11	NUT-JAM (3/8-24-THD)	
	16	1	**8T-9043**	22	BOLT (5/16-18X0.875-IN)	
	17	1	**3F-9556**	22	LOCKWASHER	
M	18	1	**8T-4195**	4	BOLT (M10X1.5X30-MM)	
	19	1	**8D-5641**	11	BEARING	
	20	1	**2G-7108**	1	KNOB-WING TILT	
M	21	1	**8T-4136**	4	BOLT (M10X1.5X25-MM)	
	22	1	**2G-6749**	1	KNOB-SIDESHIFT	
	23	1	**2G-6747**	1	KNOB-BLADE TIP	
	24	1	**8D-5632**	2	LEVER	
	25	1	**2G-6751**	1	KNOB-CIRCLE DRIVE	
	26	1	**2G-6748**	1	KNOB-BLADE LIFT	
	27	1	**2G-6756**	1	KNOB-WHEEL LEAN	
	28	1	**2G-6752**	1	KNOB-ARTICULATION	
	29	1	**2G-6755**	1	KNOB-CENTERSHIFT	
	30	1	**5P-1075**	2	WASHER-HARD (10.2X22.5X3-MM THK)	
	31	1	**9M-1853**	6	MOUNTING	
	32	1	**8W-0456**	2	SHAFT	
	33	1	**8F-6437**	6	WASHER (13.5X50.8X4.76-MM THK)	
	34	1	**6V-8188**	2	NUT (1/2-13-THD)	
	35	1	**5P-2424**	6	BOLT (1/2-13X2.25-IN)	
	36	1	**5P-1076**	6	WASHER-HARD (13.5X30X4-MM THK)	
	37	1	**6B-0933**	4	SPACER (10.31X19.05X6.35-MM THK)	
	38	1	**104-7740**	1	PLATE AS (LH)	
					(EACH PLATE AS INCLUDES)	
		1	**1F-0748**	2	NUT-WELD (1/2-13-THD)	
	39	1	**104-7419**	1	PLATE AS (RH)	
	41	1	**137-4515**	2	BUSHING	
	42	1	**2G-7107**	1	KNOB-WING LIFT	
	43	1	**104-7429**	2	PLATE	
	44	1	**137-4516**	1	SHAFT	
	45	1	**2G-6757**	1	KNOB-BLADE LIFT	
	46	1	**2G-6754**	1	KNOB (BULLDOZER LIFT, PLOW)	
	47	1	**103-1597**	1	LEVER	
	48	1	**8T-4121**	8	WASHER-HARD (11X21X2.5-MM THK)	

315-5333 **VALVE & LINKAGE GP** *(contd.)* **i03434986**

B-USE AS REQUIRED
M-METRIC PART
Y-SEPARATE ILLUSTRATION

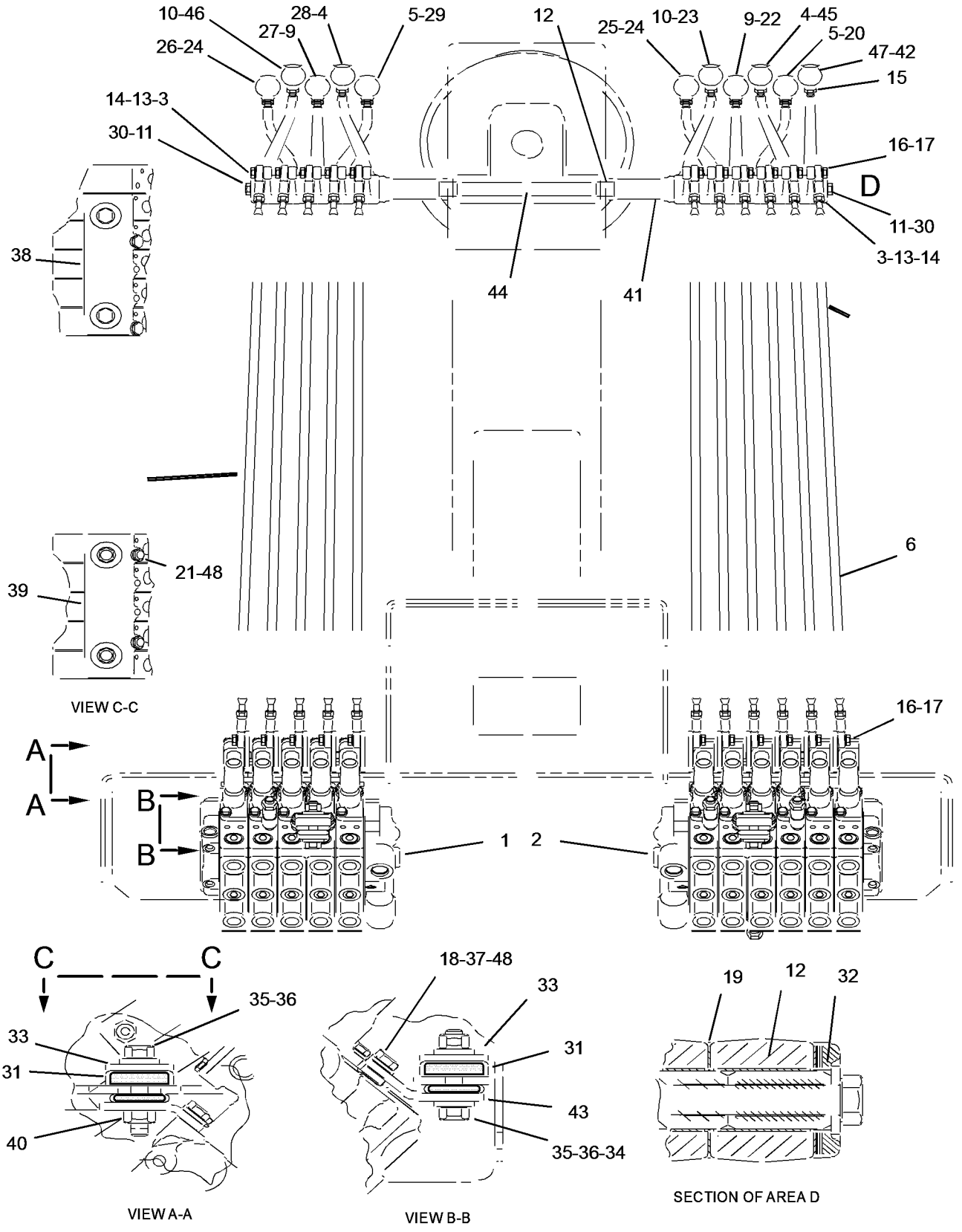

GRAPHIC #1 **<END>** g01785653

HYDRAULIC SYSTEM

315-5334 VALVE & LINKAGE GP—4-BANK, RH; 5-BANK, LH

S/N: JPA1-UP

AN ATTACHMENT

SMCS-5051, 5063 **i03248121**

NOTE	REF NO	GRAPHIC REF	PART NUMBER	QTY	PART NAME 1 2 3 4 5 6 (PRODUCT LEVEL)	SEE PAGE
Y	1	1	**6E-3032**	1	VALVE GP-BANK 4 (RH)	512
Y	2	1	**104-8646**	1	VALVE GP-BANK 5 (LH)	521
	3	1	**8X-5499**	2	RETAINER	
	4	1	**101-2457**	1	LEVER (SCARIFIER)	
	4A	1	**101-2457**	1	LEVER (ARTICULATION)	
	5	1	**8D-5634**	1	LEVER (BLADE LIFT, LH)	
	5A	1	**8D-5634**	1	LEVER (CENTERSHIFT)	
	6	1	*8X-4277*	9	ROD AS	
					(EACH INCLUDES)	
		1	**146-0705**	1	ROD	
		1	**8L-8598**	1	ROD END	
		1	**6V-8186**	1	NUT-FULL (5/16-24-THD)	
		1	**7H-3641**	1	END-ROD (5/16-24-THD)	
	7	1	**8D-5633**	1	LEVER (SIDESHIFT)	
	7A	1	**8D-5633**	1	LEVER (WHEEL LEAN)	
	8	1	**101-2458**	1	LEVER (BLADE TIP)	
	9	1	**137-4515**	2	BUSHING	
	10	1	**8D-5640**	11	BEARING	
B	11	1	**8D-5636**	4	SHIM (0.254-MM THK)	
B	12	1	**8D-5637**	4	SHIM (0.762-MM THK)	
	13	1	**6L-1962**	9	NUT-JAM (3/8-24-THD)	
	14	1	**8T-9043**	18	BOLT (5/16-18X0.875-IN)	
	15	1	**3F-9556**	18	LOCKWASHER	
	16	1	**9B-7237**	2	BOLT (3/8-16X1.25-IN)	
	17	1	**8D-5641**	9	BEARING	
	18	1	**2G-6757**	1	KNOB-BLADE LIFT (LH)	
M	19	1	**8T-4136**	4	BOLT (M10X1.5X25-MM)	
	20	1	**2G-6749**	1	KNOB-SIDESHIFT	
	21	1	**2G-6747**	1	KNOB-BLADE TIP	
	22	1	**8D-5632**	1	LEVER (CIRCLE DRIVE)	
	22A	1	**8D-5632**	1	LEVER (BLADE LIFT, RH)	
	23	1	**2G-6751**	1	KNOB-CIRCLE DRIVE	
	24	1	**2G-6748**	1	KNOB-BLADE LIFT (RH)	
	25	1	**2G-6756**	1	KNOB-WHEEL LEAN	
	26	1	**2G-6752**	1	KNOB-ARTICULATION	
	27	1	**2G-6755**	1	KNOB-CENTERSHIFT	
	28	1	**5P-1075**	2	WASHER-HARD (10.2X22.5X3-MM THK)	
	29	1	**9M-1853**	6	MOUNTING	
	30	1	**8T-4121**	8	WASHER-HARD (11X21X2.5-MM THK)	
M	31	1	**8T-4195**	4	BOLT (M10X1.5X30-MM)	
	32	1	**6V-8188**	2	NUT (1/2-13-THD)	
	33	1	**5P-2424**	6	BOLT (1/2-13X2.25-IN)	
	34	1	**5P-1076**	6	WASHER-HARD (13.5X30X4-MM THK)	
	35	1	**6B-0933**	4	SPACER (10.31X19.05X6.35-MM THK)	
	36	1	**104-7740**	1	PLATE AS (LH)	
		1	**1F-0748**	2	NUT-WELD (1/2-13-THD)	
	37	1	**104-7419**	1	PLATE AS (RH)	
		1	**1F-0748**	2	NUT-WELD (1/2-13-THD)	
	38	1	**2G-6753**	1	KNOB-SCARIFIER	
	39	1	**137-4516**	1	SHAFT	
	40	1	**104-7429**	2	PLATE	
	41	1	**8F-6437**	6	WASHER (13.5X50.8X4.76-MM THK)	

B-USE AS REQUIRED
M-METRIC PART
Y-SEPARATE ILLUSTRATION

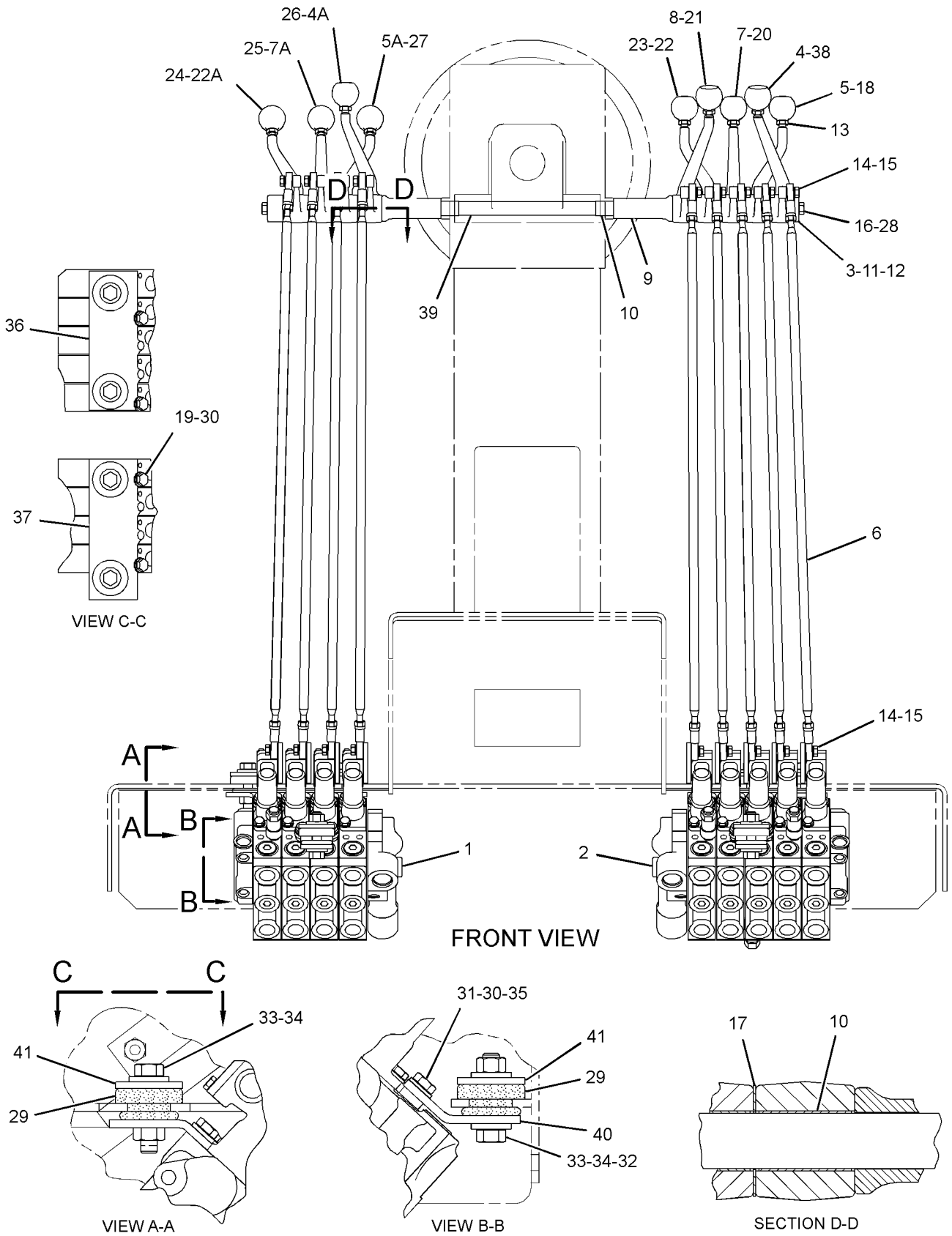

GRAPHIC #1

<END>

g01768713

HYDRAULIC SYSTEM

315-5335 VALVE & LINKAGE GP—4-BANK, RH, LH

S/N: JPA1-UP
AN ATTACHMENT

SMCS-5051, 5063 **i03255446**

NOTE	REF NO	GRAPHIC REF	PART NUMBER	QTY	PART NAME 1 2 3 4 5 6 (PRODUCT LEVEL)	SEE PAGE
Y	1	1	**6E-3032**	1	VALVE GP-BANK 4 (RH)	512
Y	2	1	**6E-3038**	1	VALVE GP-BANK 4 (LH)	513
	3	1	**8X-5498**	2	RETAINER	
	4	1	**101-2457**	1	LEVER	
	5	1	**8D-5634**	2	LEVER	
	8	1	*8X-4277*	8	ROD AS	
					(EACH INCLUDES)	
		1	**6V-8186**	1	NUT-FULL (5/16-24-THD)	
		1	**7H-3641**	1	END-ROD (5/16-24-THD)	
		1	**8L-8598**	1	ROD END	
		1	**146-0705**	1	ROD	
	9	1	**8D-5633**	2	LEVER	
	10	1	**101-2458**	1	LEVER	
	11	1	**137-4515**	2	BUSHING	
	12	1	**8D-5640**	10	BEARING	
B	13	1	**8D-5636**	4	SHIM (0.254-MM THK)	
B	14	1	**8D-5637**	4	SHIM (0.762-MM THK)	
	15	1	**6L-1962**	8	NUT-JAM (3/8-24-THD)	
	16	1	**8T-9043**	16	BOLT (5/16-18X0.875-IN)	
	17	1	**3F-9556**	16	LOCKWASHER	
	18	1	**9B-7237**	2	BOLT (3/8-16X1.25-IN)	
	19	1	**8D-5641**	8	BEARING	
	20	1	**2G-6757**	1	KNOB-BLADE LIFT (LH)	
M	21	1	**8T-4136**	4	BOLT (M10X1.5X25-MM)	
	22	1	**2G-6749**	1	KNOB-SIDESHIFT	
	23	1	**2G-6747**	1	KNOB-BLADE TIP	
	24	1	**8D-5632**	2	LEVER	
	25	1	**2G-6751**	1	KNOB-CIRCLE DRIVE	
	26	1	**2G-6748**	1	KNOB-BLADE LIFT (RH)	
	27	1	**2G-6756**	1	KNOB-WHEEL LEAN	
	28	1	**2G-6752**	1	KNOB-ARTICULATION	
	29	1	**2G-6755**	1	KNOB-CENTERSHIFT	
	30	1	**5P-1075**	2	WASHER-HARD (10.2X22.5X3-MM THK)	
	31	1	**9M-1853**	6	MOUNTING	
	36	1	**5P-1076**	6	WASHER-HARD (13.5X30X4-MM THK)	
	38	1	**104-7740**	1	PLATE AS (LH)	
					(EACH PLATE AS INCLUDES)	
		1	**1F-0748**	2	NUT-WELD (1/2-13-THD)	
	39	1	**104-7419**	1	PLATE AS (RH)	
	43	1	**104-7429**	2	PLATE	
	44	1	**137-4516**	1	SHAFT	
	45	1	**8T-4121**	8	WASHER-HARD (11X21X2.5-MM THK)	
	46	1	**6B-0933**	4	SPACER (10.31X19.05X6.35-MM THK)	
	47	1	**5P-2424**	6	BOLT (1/2-13X2.25-IN)	
	48	1	**6V-8188**	2	NUT (1/2-13-THD)	
M	49	1	**8T-4195**	4	BOLT (M10X1.5X30-MM)	
	50	1	**8F-6437**	6	WASHER (13.5X50.8X4.76-MM THK)	

B-USE AS REQUIRED
M-METRIC PART
Y-SEPARATE ILLUSTRATION

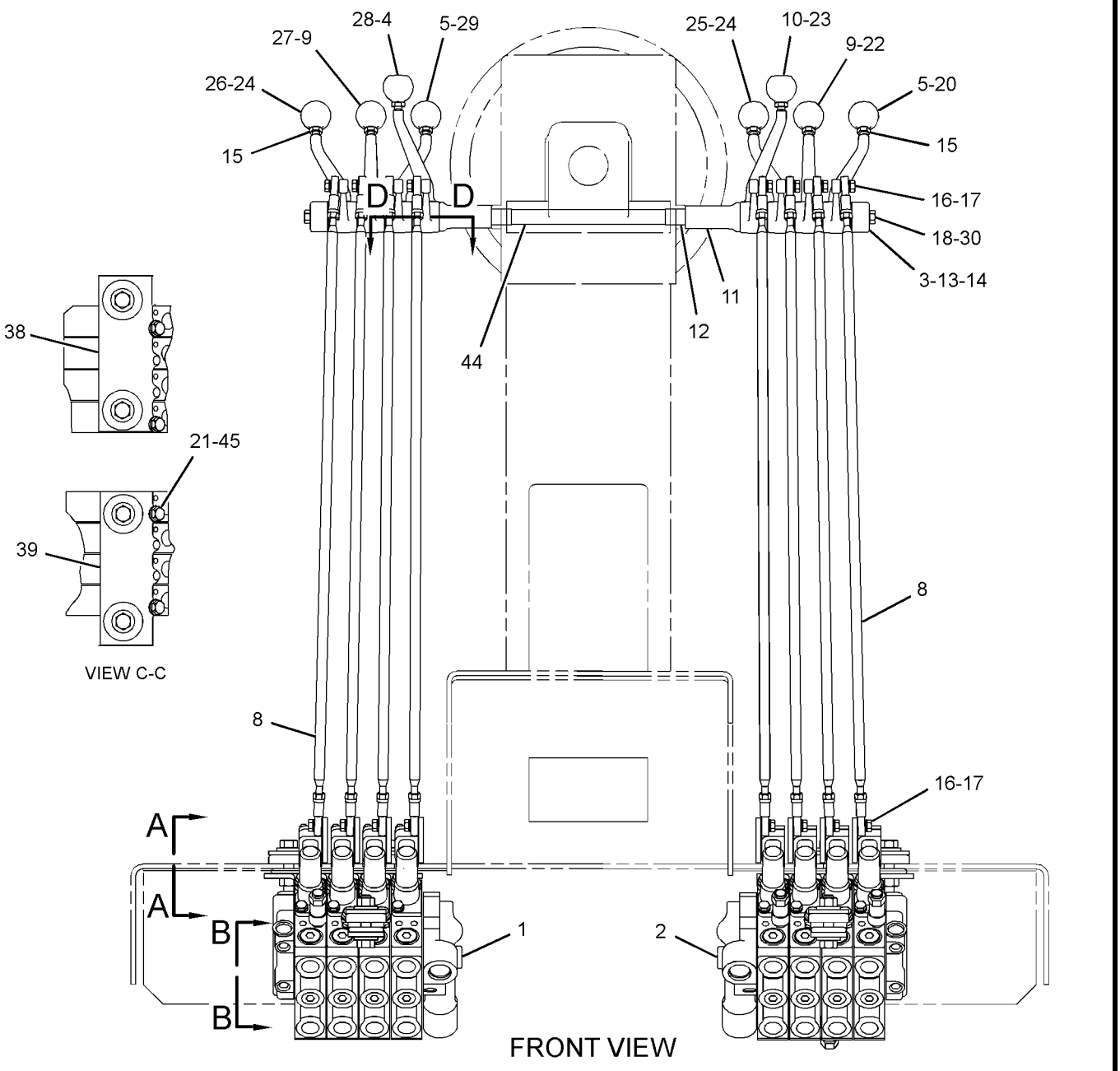

GRAPHIC #1

<END>

g01773074

HYDRAULIC SYSTEM

315-5336 VALVE & LINKAGE GP—5-BANK, RH; 7-BANK, LH

S/N: JPA1-UP

AN ATTACHMENT

SMCS-5051, 5063 **i03255934**

NOTE	REF NO	GRAPHIC REF	PART NUMBER	QTY	PART NAME 1 2 3 4 5 6 (PRODUCT LEVEL)	SEE PAGE
Y	1	1	**104-8671**	1	VALVE GP-BANK 5 (RH)	522
Y	2	1	**104-8647**	1	VALVE GP-BANK 7 (LH)	534
	3	1	**8X-5499**	2	RETAINER	
	4	1	**101-2457**	2	LEVER	
	5	1	**8D-5634**	2	LEVER	
	6	1	**2G-7107**	1	KNOB-WING LIFT	
	8	1	*8X-4277*	12	ROD AS	
					(EACH INCLUDES)	
		1	**6V-8186**	1	NUT-FULL (5/16-24-THD)	
		1	**7H-3641**	1	END-ROD (5/16-24-THD)	
		1	**8L-8598**	1	ROD END	
		1	**146-0705**	1	ROD	
	9	1	**8D-5633**	2	LEVER	
	10	1	**101-2458**	3	LEVER	
	11	1	**137-4515**	2	BUSHING	
	12	1	**8D-5640**	14	BEARING	
B	13	1	**8D-5636**	4	SHIM (0.254-MM THK)	
B	14	1	**8D-5637**	4	SHIM (0.762-MM THK)	
	15	1	**6L-1962**	12	NUT-JAM (3/8-24-THD)	
	16	1	**8T-9043**	24	BOLT (5/16-18X0.875-IN)	
	17	1	**3F-9556**	24	LOCKWASHER	
	18	1	**4L-6459**	1	BOLT (3/8-16X2.5-IN)	
	19	1	**8D-5641**	12	BEARING	
	20	1	**2G-6757**	1	KNOB-BLADE LIFT	
M	21	1	**8T-4136**	4	BOLT (M10X1.5X25-MM)	
	22	1	**2G-6749**	1	KNOB-SIDESHIFT	
	23	1	**2G-6747**	1	KNOB-BLADE TIP	
	24	1	**8D-5632**	2	LEVER	
	25	1	**2G-6751**	1	KNOB-CIRCLE DRIVE	
	26	1	**2G-6748**	1	KNOB-BLADE LIFT	
	27	1	**2G-6756**	1	KNOB-WHEEL LEAN	
	28	1	**2G-6752**	1	KNOB-ARTICULATION	
	29	1	**2G-6755**	1	KNOB-CENTERSHIFT	
	30	1	**5P-1075**	2	WASHER-HARD (10.2X22.5X3-MM THK)	
	31	1	**9M-1853**	6	MOUNTING	
	36	1	**5P-1076**	6	WASHER-HARD (13.5X30X4-MM THK)	
	38	1	**104-7740**	1	PLATE AS (LH)	
					(EACH PLATE AS INCLUDES)	
		1	**1F-0748**	2	NUT-WELD (1/2-13-THD)	
	39	1	**104-7419**	1	PLATE AS (RH)	
	43	1	**104-7429**	2	PLATE	
	44	1	**137-4516**	1	SHAFT	
	45	1	**8T-4121**	8	WASHER-HARD (11X21X2.5-MM THK)	
	46	1	**6B-0933**	4	SPACER (10.31X19.05X6.35-MM THK)	
	47	1	**5P-2424**	6	BOLT (1/2-13X2.25-IN)	
	48	1	**6V-8188**	2	NUT (1/2-13-THD)	
M	49	1	**8T-4195**	4	BOLT (M10X1.5X30-MM)	
	50	1	**2G-6754**	1	KNOB (BULLDOZER LIFT, PLOW)	
	51	1	**2G-6753**	1	KNOB-SCARIFIER	
	52	1	**103-1597**	1	LEVER	
	53	1	**2G-7108**	1	KNOB-WING TILT	
	54	1	**7X-0291**	1	BOLT (3/8-16X3.75-IN)	
	55	1	**8W-0456**	3	SHAFT	
	56	1	**8F-6437**	6	WASHER (13.5X50.8X4.76-MM THK)	

315-5336 **VALVE & LINKAGE GP** *(contd.)* **i03255934**

B-USE AS REQUIRED
M-METRIC PART
Y-SEPARATE ILLUSTRATION

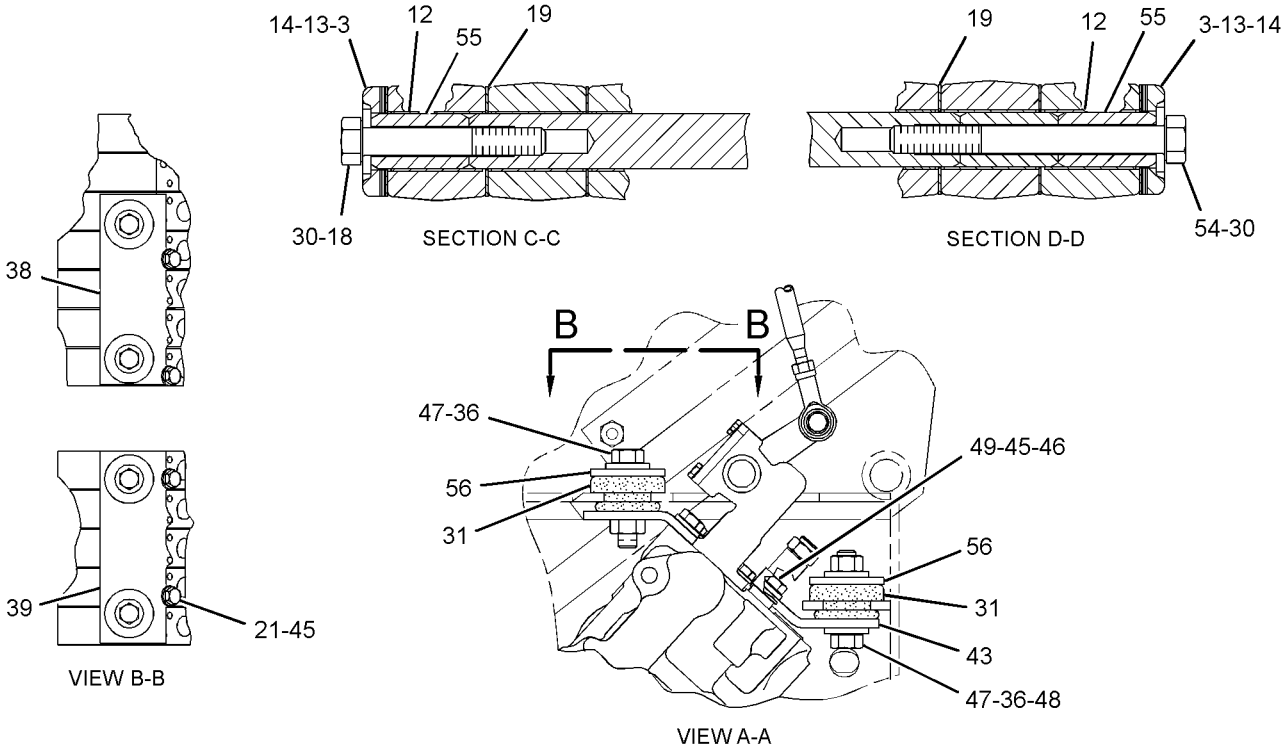

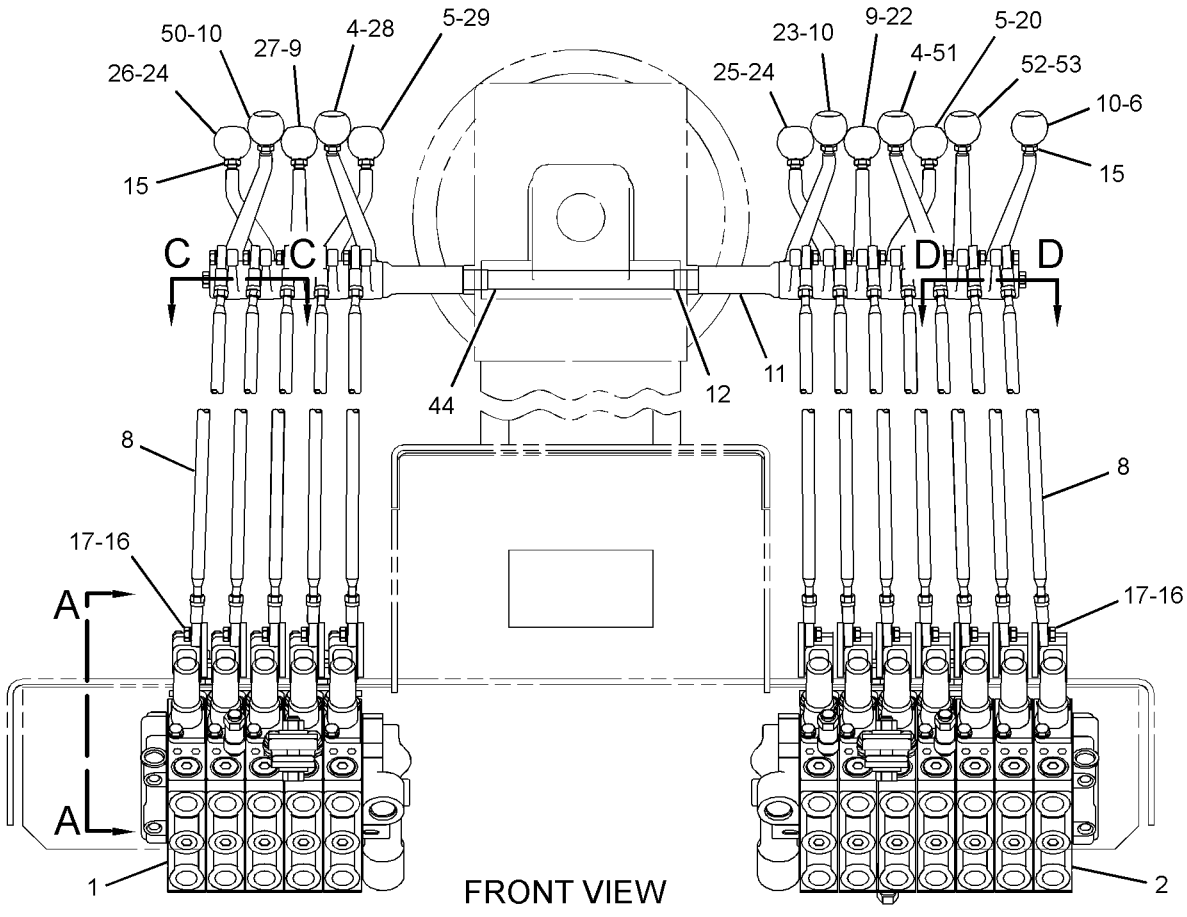

GRAPHIC #1

<END>

g01766633

HYDRAULIC SYSTEM

331-1509 VALVE & LINKAGE GP—4-BANK, RH; 5-BANK, LH

S/N: JPA1-UP

AN ATTACHMENT

SMCS-5051, 5063 **i03350421**

NOTE	REF NO	GRAPHIC REF	PART NUMBER	QTY	PART NAME 1 2 3 4 5 6 (PRODUCT LEVEL)	SEE PAGE
	1	1	**3F-9556**	18	LOCKWASHER	
	2	2	**6B-0933**	4	SPACER (10.31X19.05X6.35-MM THK)	
	3	1	**6L-1962**	9	NUT-JAM (3/8-24-THD)	
	4	1	**8D-5632**	1	LEVER (BLADE LIFT, RH)	
	4A	1	**8D-5632**	1	LEVER (CIRCLE DRIVE)	
	5	1	**8D-5633**	1	LEVER (WHEEL LEAN)	
	5A	1	**8D-5633**	1	LEVER (SIDESHIFT)	
	6	1	**8D-5634**	1	LEVER (CENTERSHIFT)	
	6A	1	**8D-5634**	1	LEVER (BLADE LIFT, LH)	
B	7	2	**8D-5636**	4	SHIM (0.254-MM THK)	
B	8	2	**8D-5637**	4	SHIM (0.762-MM THK)	
	9	1,2	**8D-5640**	11	BEARING	
	10	2	**8D-5641**	9	BEARING	
	11	1	**8X-4277**	9	ROD AS	
					(EACH INCLUDES)	
		1	**6V-8186**	2	NUT-FULL (5/16-24-THD)	
		1	**7H-3641**	1	END-ROD (5/16-24-THD)	
		1	**8L-8598**	1	ROD END	
		1	**146-0705**	1	ROD	
	12	2	**8X-5499**	2	RETAINER	
	13	2	**9M-1853**	6	MOUNTING	
	14	1	**101-2457**	2	LEVER (ARTICULATION)	
	15	1	**101-2458**	1	LEVER (BLADE TIP)	
	16	2	**104-7419**	1	PLATE AS (RH)	
		2	**1F-0748**	2	NUT-WELD (1/2-13-THD)	
	17	2	**104-7429**	2	PLATE	
	18	2	**104-7740**	1	PLATE AS (LH)	
		2	**1F-0748**	2	NUT-WELD (1/2-13-THD)	
	19	1	**137-4515**	2	BUSHING	
	20	1	**137-4516**	1	SHAFT	
	21	2	*164-5608*	2	CONNECTOR AS	
					(EACH INCLUDES)	
		2	**3K-0360**	1	SEAL-O-RING	
		2	**6V-8398**	1	SEAL-O-RING	
		2	**8T-1687**	1	CONNECTOR	
	22	1	**244-2585**	1	TUBE AS	
	23	1	**244-2589**	1	TUBE AS	
	24	1	**244-2592**	1	TUBE AS	
	25	1	**244-2596**	1	TUBE AS	
Y	26	1	**250-0544**	1	VALVE GP-BANK 4 (RH)	519
	27	2	*148-8318*	2	CONNECTOR AS	
					(EACH INCLUDES)	
		2	**6V-8634**	1	CONNECTOR	
		2	**3K-0360**	1	SEAL-O-RING	
		2	**6V-8397**	1	SEAL-O-RING	
	28	2	**153-1818**	1	ELBOW	
	29	2	*206-5123*	2	TEE AS	
					(EACH INCLUDES)	
		2	**206-5122**	1	TEE	
		2	**6V-8397**	1	SEAL-O-RING	
		2	**6V-8398**	1	SEAL-O-RING	
Y	30	1	**262-7291**	1	VALVE GP-BANK 5 (LH)	529
	31	1	**2G-6747**	1	KNOB-BLADE TIP	
	32	1	**2G-6748**	1	KNOB-BLADE LIFT (RH)	
	33	1	**2G-6749**	1	KNOB-SIDESHIFT	
	34	1	**2G-6751**	1	KNOB-CIRCLE DRIVE	

331-1509 **VALVE & LINKAGE GP** *(contd.)* **i03350421**

NOTE	REF NO	GRAPHIC REF	PART NUMBER	QTY	PART NAME 1 2 3 4 5 6 (PRODUCT LEVEL)	SEE PAGE
	35	1	**2G-6752**	1	KNOB-ARTICULATION	
	36	1	**2G-6753**	1	KNOB-SCARIFIER	
	37	1	**2G-6755**	1	KNOB-CENTERSHIFT	
	38	1	**2G-6756**	1	KNOB-WHEEL LEAN	
	39	1	**2G-6757**	1	KNOB-BLADE LIFT (LH)	
	40	2	**3J-1907**	4	SEAL-O-RING	
	41	2	**5P-1075**	2	WASHER-HARD (10.2X22.5X3-MM THK)	
	42	2	**5P-1076**	6	WASHER-HARD (13.5X30X4-MM THK)	
	43	2	**5P-2424**	6	BOLT (1/2-13X2.25-IN)	
	44	2	**6V-8188**	2	NUT (1/2-13-THD)	
	45	1,2	**6V-8397**	8	SEAL-O-RING	
	46	2	**6V-9836**	2	TEE-SWIVEL	
	47	2	**8F-6437**	6	WASHER (13.5X50.8X4.76-MM THK)	
	48	2	**8T-4121**	8	WASHER-HARD (11X21X2.5-MM THK)	
M	49	2	**8T-4136**	4	BOLT (M10X1.5X25-MM)	
M	50	2	**8T-4195**	4	BOLT (M10X1.5X30-MM)	
	51	2	**8T-9041**	3	CONNECTOR	
	52	1	**8T-9043**	18	BOLT (5/16-18X0.875-IN)	
	53	2	**9B-7237**	2	BOLT (3/8-16X1.25-IN)	

B-USE AS REQUIRED
M-METRIC PART
Y-SEPARATE ILLUSTRATION

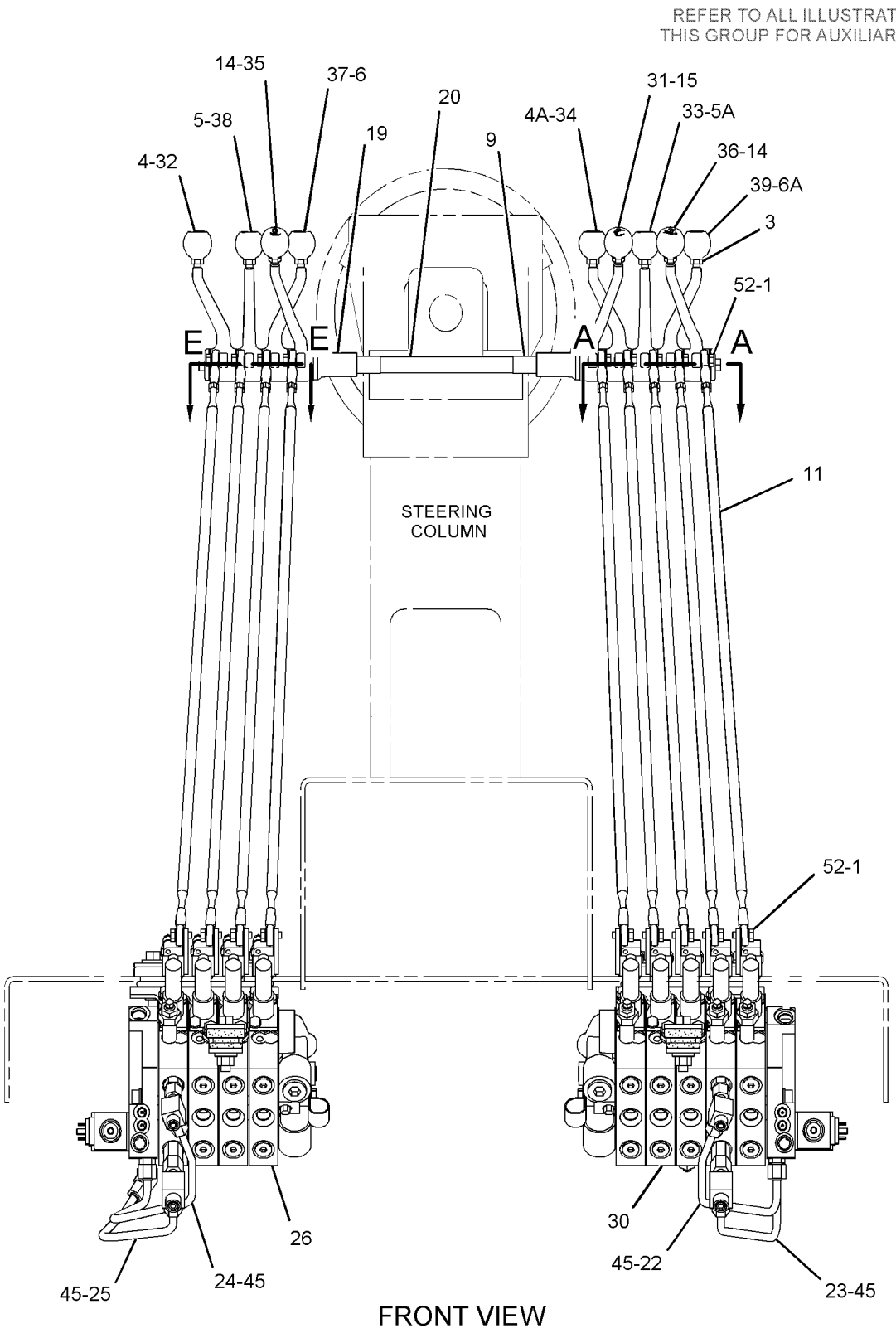

GRAPHIC #1

g01256592

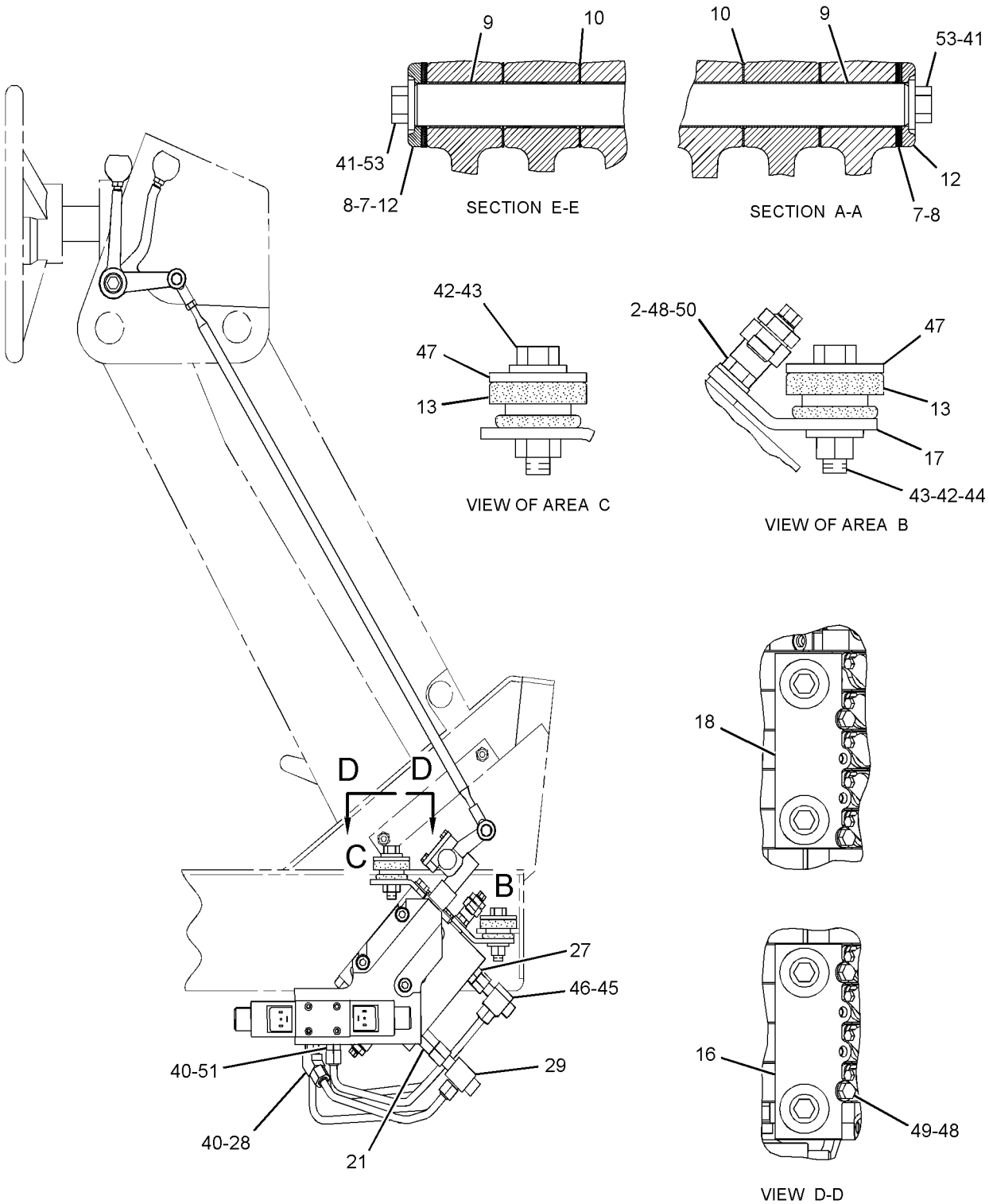

GRAPHIC #2 **<END>** g01256593

HYDRAULIC SYSTEM

331-1510 VALVE & LINKAGE GP—4-BANK, RH; 5-BANK, LH

S/N: JPA1-UP
PART OF 335-1875 CONTROL AR-HYDRAULIC
AN ATTACHMENT

SMCS-5051, 5063 **i03254821**

NOTE	REF NO	GRAPHIC REF	PART NUMBER	QTY	PART NAME 1 2 3 4 5 6 (PRODUCT LEVEL)	SEE PAGE
	1	1	**3F-9556**	18	LOCKWASHER	
	2	1	**6B-0933**	4	SPACER (10.31X19.05X6.35-MM THK)	
	3	1	**6L-1962**	9	NUT-JAM (3/8-24-THD)	
	4	1	**8D-5632**	1	LEVER (CIRCLE DRIVE)	
	4A	1	**8D-5632**	1	LEVER (BLADE LIFT, RH)	
	5	1	**8D-5633**	1	LEVER (SIDESHIFT)	
	5A	1	**8D-5633**	1	LEVER (WHEEL LEAN)	
	6	1	**8D-5634**	1	LEVER (BLADE LIFT, LH)	
	6A	1	**8D-5634**	1	LEVER (CENTERSHIFT)	
B	7	1	**8D-5636**	4	SHIM (0.254-MM THK)	
B	8	1	**8D-5637**	4	SHIM (0.762-MM THK)	
	9	1	**8D-5640**	11	BEARING	
	10	1	**8D-5641**	9	BEARING	
	11	1	**8X-4277**	9	ROD AS	
					(EACH INCLUDES)	
		1	**6V-8186**	1	NUT-FULL (5/16-24-THD)	
		1	**7H-3641**	1	END-ROD (5/16-24-THD)	
		1	**8L-8598**	1	ROD END	
		1	**146-0705**	1	ROD	
	12	1	**8X-5499**	2	RETAINER	
	13	1	**9M-1853**	6	MOUNTING	
	14	1	**101-2457**	1	LEVER (RIPPER)	
	14A	1	**101-2457**	1	LEVER (ARTICULATION)	
	15	1	**101-2458**	1	LEVER (BLADE TIP)	
	16	1	**104-7419**	1	PLATE AS (RH)	
		1	**1F-0748**	2	NUT-WELD (1/2-13-THD)	
	17	1	**104-7429**	2	PLATE	
	18	1	**104-7740**	1	PLATE AS (LH)	
		1	**1F-0748**	2	NUT-WELD (1/2-13-THD)	
	19	1	**137-4515**	2	BUSHING	
	20	1	**137-4516**	1	SHAFT	
	21	1	*164-5608*	2	CONNECTOR AS	
					(EACH INCLUDES)	
		1	**8T-1687**	1	CONNECTOR	
		1	**3K-0360**	1	SEAL-O-RING	
		1	**6V-8398**	1	SEAL-O-RING	
	22	1	**244-2585**	1	TUBE AS	
	23	1	**244-2589**	1	TUBE AS	
	24	1	**244-2592**	1	TUBE AS	
	25	1	**244-2596**	1	TUBE AS	
Y	26	1	**250-0544**	1	VALVE GP-BANK 4 (RH)	519
Y	27	1	**250-0550**	1	VALVE GP-BANK 5 (LH)	527
	28	1	*148-8318*	2	CONNECTOR AS	
					(EACH INCLUDES)	
		1	**6V-8634**	1	CONNECTOR	
		1	**3K-0360**	1	SEAL-O-RING	
		1	**6V-8397**	1	SEAL-O-RING	
	29	1	**153-1818**	1	ELBOW	
	30	1	*206-5123*	2	TEE AS	
					(EACH INCLUDES)	
		1	**6V-8397**	1	SEAL-O-RING	
		1	**6V-8398**	1	SEAL-O-RING	
	31	1	**2G-6740**	1	KNOB-RIPPER	
	32	1	**2G-6747**	1	KNOB-BLADE TIP	
	33	1	**2G-6748**	1	KNOB-BLADE LIFT (RH)	

331-1510 VALVE & LINKAGE GP *(contd.)* i03254821

NOTE	REF NO	GRAPHIC REF	PART NUMBER	QTY	PART NAME 1 2 3 4 5 6 (PRODUCT LEVEL)	SEE PAGE
	34	1	**2G-6749**	1	KNOB-SIDESHIFT	
	35	1	**2G-6751**	1	KNOB-CIRCLE DRIVE	
	36	1	**2G-6752**	1	KNOB-ARTICULATION	
	37	1	**2G-6755**	1	KNOB-CENTERSHIFT	
	38	1	**2G-6756**	1	KNOB-WHEEL LEAN	
	39	1	**2G-6757**	1	KNOB-BLADE LIFT (LH)	
	40	1	**3J-1907**	4	SEAL-O-RING	
	41	1	**5P-1075**	2	WASHER-HARD (10.2X22.5X3-MM THK)	
	42	1	**5P-1076**	6	WASHER-HARD (13.5X30X4-MM THK)	
	43	1	**5P-2424**	6	BOLT (1/2-13X2.25-IN)	
	44	1	**6V-8188**	2	NUT (1/2-13-THD)	
	45	1	**6V-8397**	8	SEAL-O-RING	
	46	1	**6V-9836**	2	TEE-SWIVEL	
	47	1	**8F-6437**	6	WASHER (13.5X50.8X4.76-MM THK)	
	48	1	**8T-4121**	8	WASHER-HARD (11X21X2.5-MM THK)	
M	49	1	**8T-4136**	4	BOLT (M10X1.5X25-MM)	
M	50	1	**8T-4195**	4	BOLT (M10X1.5X30-MM)	
	51	1	**8T-9041**	3	CONNECTOR	
	52	1	**8T-9043**	18	BOLT (5/16-18X0.875-IN)	
	53	1	**9B-7237**	2	BOLT (3/8-16X1.25-IN)	

B-USE AS REQUIRED
M-METRIC PART
Y-SEPARATE ILLUSTRATION

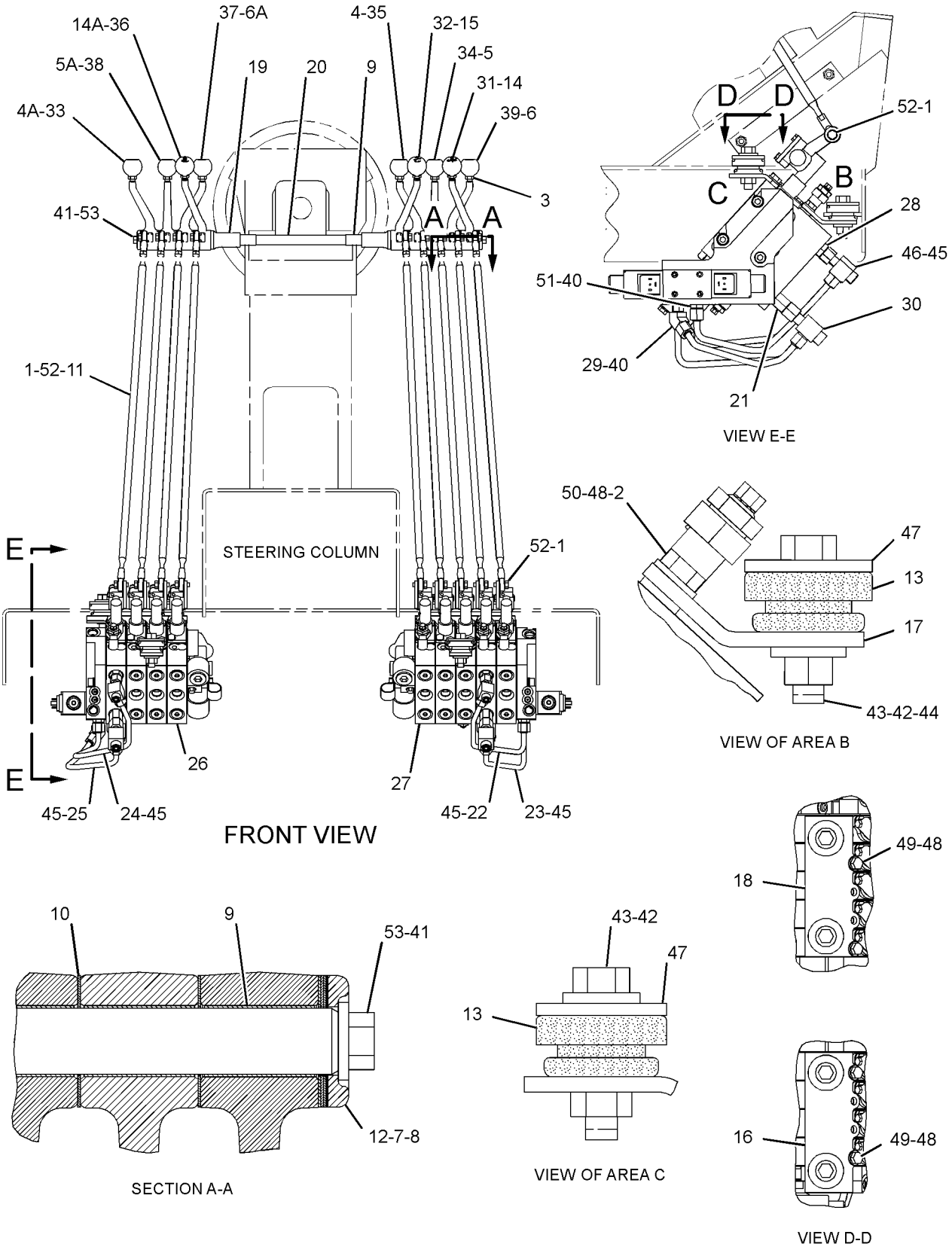

GRAPHIC #1 **<END>** g01710734

HYDRAULIC SYSTEM

331-1512 VALVE & LINKAGE GP–6-BANK, RH, LH

S/N: JPA1-UP
AN ATTACHMENT

SMCS-5051, 5063 **i03350506**

NOTE	REF NO	GRAPHIC REF	PART NUMBER	QTY	PART NAME 1 2 3 4 5 6 (PRODUCT LEVEL)	SEE PAGE
	1	1	**3F-9556**	24	LOCKWASHER	
	2	2	**6B-0933**	4	SPACER (10.31X19.05X6.35-MM THK)	
	3	1	**6L-1962**	12	NUT-JAM (3/8-24-THD)	
	4	1	**8D-5632**	1	LEVER (CIRCLE DRIVE)	
	4A	1	**8D-5632**	1	LEVER (BLADE LIFT, RH)	
	5	1	**8D-5633**	1	LEVER (SIDESHIFT)	
	5A	1	**8D-5633**	1	LEVER (WHEEL LEAN)	
	6	1	**8D-5634**	1	LEVER (BLADE LIFT, LH)	
	6A	1	**8D-5634**	1	LEVER (CENTERSHIFT)	
B	7	2	**8D-5636**	4	SHIM (0.254-MM THK)	
B	8	2	**8D-5637**	4	SHIM (0.762-MM THK)	
	9	1,2	**8D-5640**	14	BEARING	
	10	2	**8D-5641**	12	BEARING	
	11	1	**8X-4277**	12	ROD AS	
					(EACH INCLUDES)	
		1	**146-0705**	1	ROD	
		1	**6V-8186**	1	NUT-FULL (5/16-24-THD)	
		1	**7H-3641**	1	END-ROD (5/16-24-THD)	
		1	**8L-8598**	1	ROD END	
	12	2	**8X-5499**	2	RETAINER	
	13	2	**9M-1853**	6	MOUNTING	
	14	1	**101-2457**	1	LEVER (WING TILT)	
	14A	1	**101-2457**	1	LEVER (ARTICULATION)	
	15	1	**101-2458**	1	LEVER (BLADE TIP)	
	15A	1	**101-2458**	1	LEVER (PLOW, DOZER)	
	16	1	**103-1597**	1	LEVER (WING LIFT)	
	16A	1	**103-1597**	1	LEVER (PLOW, BULLDOZER ANGLE)	
	17	2	**104-7419**	1	PLATE AS (RH)	
		2	**1F-0748**	2	NUT-WELD (1/2-13-THD)	
	18	2	**104-7429**	2	PLATE	
	19	2	**104-7740**	1	PLATE AS (LH)	
		2	**1F-0748**	2	NUT-WELD (1/2-13-THD)	
	20	1	**137-4515**	2	BUSHING	
	21	1	**137-4517**	1	SHAFT	
	22	2	*164-5608*	2	CONNECTOR AS	
					(EACH INCLUDES)	
		2	**8T-1687**	1	CONNECTOR	
		2	**3K-0360**	1	SEAL-O-RING	
		2	**6V-8398**	1	SEAL-O-RING	
	23	1	**244-2586**	1	TUBE AS	
	24	1	**244-2590**	1	TUBE AS	
	25	1	**244-2594**	1	TUBE AS	
	26	1	**244-2598**	1	TUBE AS	
Y	27	1	**250-0565**	1	VALVE GP-BANK 6 (RH)	532
Y	28	1	**250-0567**	1	VALVE GP-BANK 6 (LH)	533
	29	1	**117-0472**	1	KNOB (PLOW, BULLDOZER ANGLE)	
	30	2	*148-8318*	2	CONNECTOR AS	
					(EACH INCLUDES)	
		2	**6V-8634**	1	CONNECTOR	
		2	**3K-0360**	1	SEAL-O-RING	
		2	**6V-8397**	1	SEAL-O-RING	
	31	2	*206-5123*	2	TEE AS	
					(EACH INCLUDES)	
		2	**206-5122**	1	TEE	
		2	**6V-8397**	1	SEAL-O-RING	
		2	**6V-8398**	1	SEAL-O-RING	

331-1512 **VALVE & LINKAGE GP** *(contd.)* **i03350506**

NOTE	REF NO	GRAPHIC REF	PART NUMBER	QTY	PART NAME 1 2 3 4 5 6 (PRODUCT LEVEL)	SEE PAGE
	32	1	**2G-6747**	1	KNOB-BLADE TIP	
	33	1	**2G-6748**	1	KNOB-BLADE LIFT (RH)	
	34	1	**2G-6749**	1	KNOB-SIDESHIFT	
	35	1	**2G-6751**	1	KNOB-CIRCLE DRIVE	
	36	1	**2G-6752**	1	KNOB-ARTICULATION	
	37	1	**2G-6754**	1	KNOB (BULLDOZER LIFT, PLOW)	
	38	1	**2G-6755**	1	KNOB-CENTERSHIFT	
	39	1	**2G-6756**	1	KNOB-WHEEL LEAN	
	40	1	**2G-6757**	1	KNOB-BLADE LIFT (LH)	
	41	1	**2G-7107**	1	KNOB-WING LIFT	
	42	1	**2G-7108**	1	KNOB-WING TILT	
	43	2	**3J-1907**	4	SEAL-O-RING	
	44	2	**5P-1075**	2	WASHER-HARD (10.2X22.5X3-MM THK)	
	45	2	**5P-1076**	6	WASHER-HARD (13.5X30X4-MM THK)	
	46	2	**5P-2424**	6	BOLT (1/2-13X2.25-IN)	
	47	2	**6V-8188**	2	NUT (1/2-13-THD)	
	48	1,2	**6V-8397**	8	SEAL-O-RING	
	49	2	**6V-9836**	2	TEE-SWIVEL	
	50	2	**8F-6437**	6	WASHER (13.5X50.8X4.76-MM THK)	
	51	2	**8T-4121**	8	WASHER-HARD (11X21X2.5-MM THK)	
M	52	2	**8T-4136**	4	BOLT (M10X1.5X25-MM)	
M	53	2	**8T-4195**	4	BOLT (M10X1.5X30-MM)	
	54	2	**8T-9041**	4	CONNECTOR	
	55	1	**8T-9043**	24	BOLT (5/16-18X0.875-IN)	
	56	2	**9B-7237**	2	BOLT (3/8-16X1.25-IN)	

B-USE AS REQUIRED
M-METRIC PART
Y-SEPARATE ILLUSTRATION

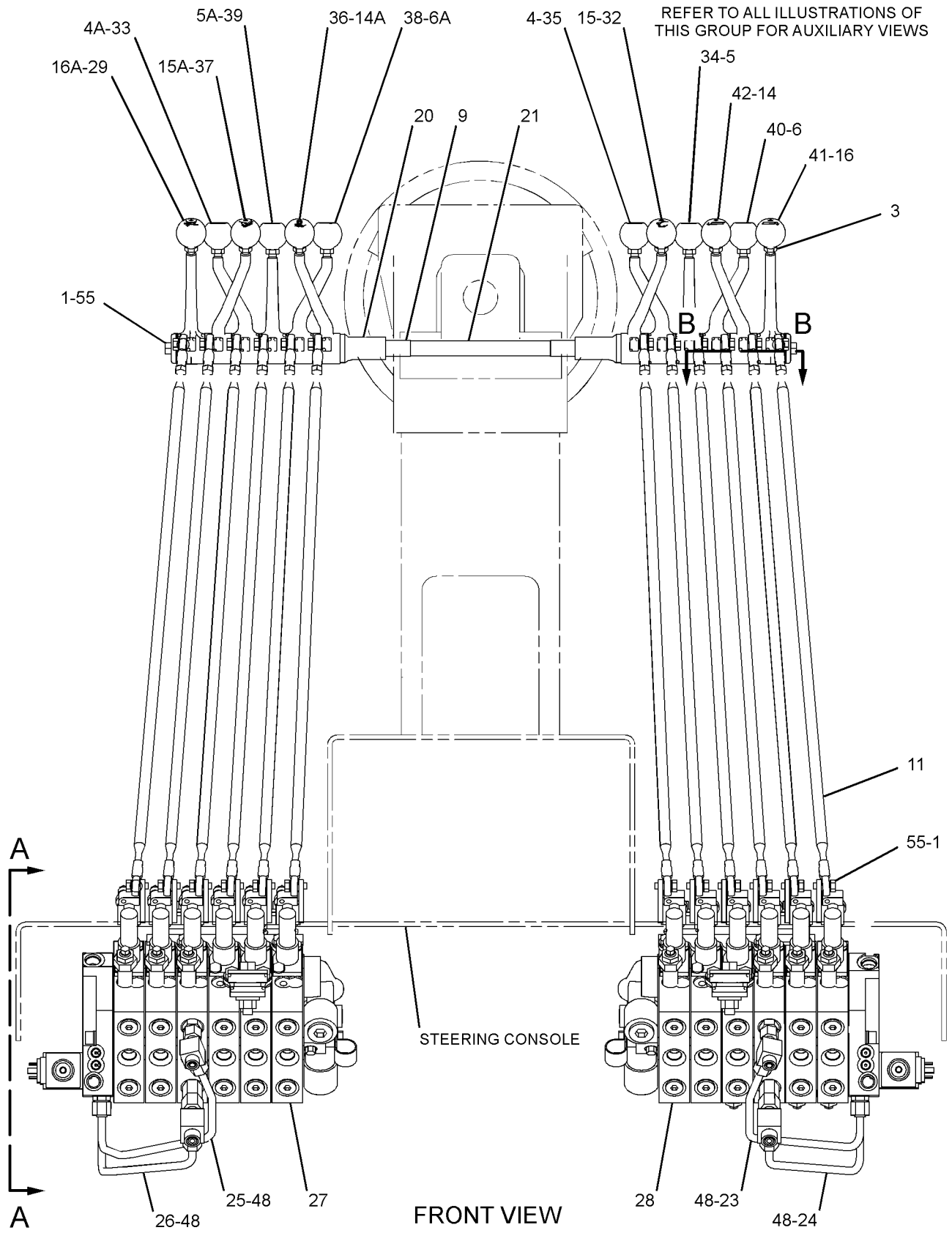

GRAPHIC #1

g01137775

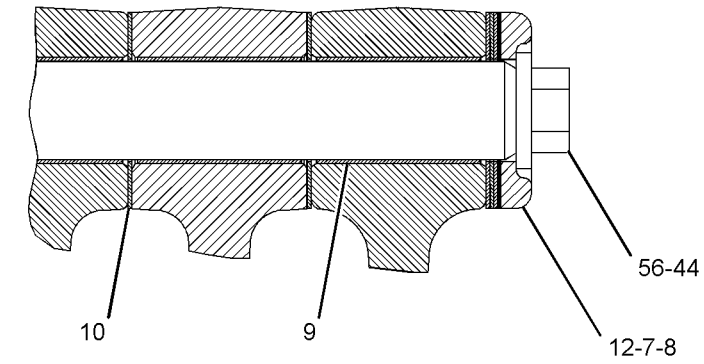

SECTION B-B

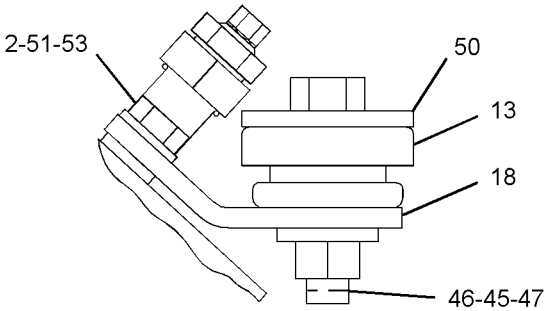

VIEW OF AREA C

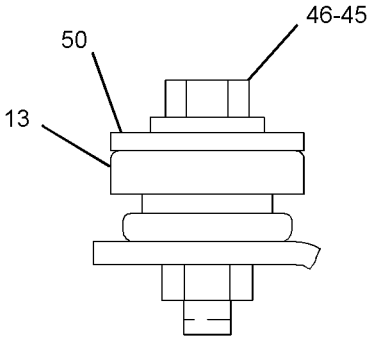

VIEW OF AREA D

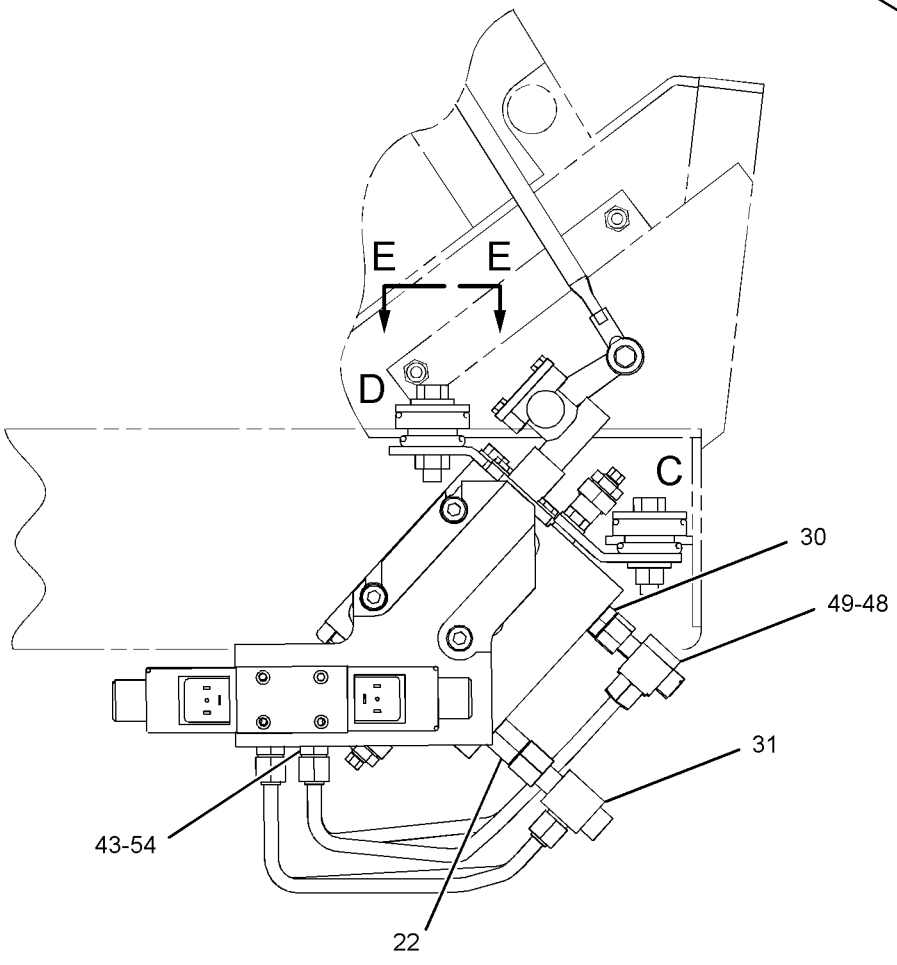

VIEW A-A

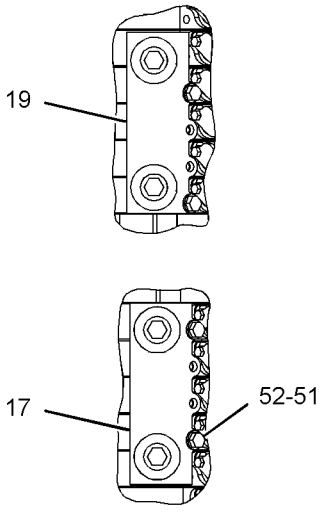

VIEW E-E

GRAPHIC #2 **<END>** g01137776

HYDRAULIC SYSTEM

331-1514 VALVE & LINKAGE GP–5-BANK, RH, LH

S/N: JPA1-UP

AN ATTACHMENT

SMCS-5051, 5063 **i03266521**

NOTE	REF NO	GRAPHIC REF	PART NUMBER	QTY	PART NAME 1 2 3 4 5 6 (PRODUCT LEVEL)	SEE PAGE
	1	1	**3F-9556**	20	LOCKWASHER	
	2	2	**6B-0933**	4	SPACER (10.31X19.05X6.35-MM THK)	
	3	1	**6L-1962**	10	NUT-JAM (3/8-24-THD)	
	4	1	**8D-5632**	1	LEVER (CIRCLE DRIVE)	
	4A	1	**8D-5632**	1	LEVER (BLADE LIFT, RH)	
	5	1	**8D-5633**	1	LEVER (SIDE SHIFT)	
	5A	1	**8D-5633**	1	LEVER (WHEEL LEAN)	
	6	1	**8D-5634**	1	LEVER (BLADE LIFT, LH)	
	6A	1	**8D-5634**	1	LEVER (CENTERSHIFT)	
B	7	1	**8D-5636**	4	SHIM (0.254-MM THK)	
B	8	1	**8D-5637**	4	SHIM (0.762-MM THK)	
	9	1	**8D-5640**	12	BEARING	
	10	1	**8D-5641**	10	BEARING	
	11	1	**8W-0456**	1	SHAFT	
	12	1	**8X-4277**	10	ROD AS	
					(EACH INCLUDES)	
		1	**6V-8186**	1	NUT-FULL (5/16-24-THD)	
		1	**7H-3641**	1	END-ROD (5/16-24-THD)	
		1	**8L-8598**	1	ROD END	
		1	**146-0705**	1	ROD	
	13	1	**8X-5499**	2	RETAINER	
	14	2	**9M-1853**	6	MOUNTING	
	15	1	**101-2457**	1	LEVER (SCARIFIER)	
	15A	1	**101-2457**	1	LEVER (ARTICULATION)	
	16	1	**101-2458**	1	LEVER (BLADE TIP)	
	16A	1	**101-2458**	1	LEVER (DOZER, PLOW)	
	17	2	**104-7419**	1	PLATE AS (RH)	
		2	**1F-0748**	2	NUT-WELD (1/2-13-THD)	
	18	2	**104-7429**	2	PLATE	
	19	2	**104-7740**	1	PLATE AS (LH)	
		2	**1F-0748**	2	NUT-WELD (1/2-13-THD)	
	20	1	**137-4515**	2	BUSHING	
	21	1	**137-4516**	1	SHAFT	
	22	2	*164-5608*	2	CONNECTOR AS	
					(EACH INCLUDES)	
		2	**8T-1687**	1	CONNECTOR	
		2	**3K-0360**	1	SEAL-O-RING	
		2	**6V-8398**	1	SEAL-O-RING	
	23	1	**244-2585**	1	TUBE AS	
	24	1	**244-2589**	1	TUBE AS	
	25	1	**244-2593**	1	TUBE AS	
	26	1	**244-2597**	1	TUBE AS	
Y	27	1	**250-0548**	1	VALVE GP-BANK 5 (RH)	526
	28	2	*148-8318*	2	CONNECTOR AS	
					(EACH INCLUDES)	
		2	**6V-8634**	1	CONNECTOR	
		2	**3K-0360**	1	SEAL-O-RING	
		2	**6V-8397**	1	SEAL-O-RING	
	29	2	*206-5123*	2	TEE AS	
					(EACH INCLUDES)	
		2	**206-5122**		TEE	
		2	**6V-8397**	1	SEAL-O-RING	
		2	**6V-8398**	1	SEAL-O-RING	
Y	30	1	**262-7291**	1	VALVE GP-BANK 5 (LH)	529
	31	1	**2G-6747**	1	KNOB-BLADE TIP	
	32	1	**2G-6748**	1	KNOB-BLADE LIFT	

331-1514 **VALVE & LINKAGE GP** *(contd.)* **i03266521**

NOTE	REF NO	GRAPHIC REF	PART NUMBER	QTY	PART NAME 1 2 3 4 5 6 (PRODUCT LEVEL)	SEE PAGE
	33	1	**2G-6749**	1	KNOB-SIDESHIFT	
	34	1	**2G-6751**	1	KNOB-CIRCLE DRIVE	
	35	1	**2G-6752**	1	KNOB-ARTICULATION	
	36	1	**2G-6753**	1	KNOB-SCARIFIER	
	37	1	**2G-6754**	1	KNOB (BULLDOZER LIFT, PLOW)	
	38	1	**2G-6755**	1	KNOB-CENTERSHIFT	
	39	1	**2G-6756**	1	KNOB-WHEEL LEAN	
	40	1	**2G-6757**	1	KNOB-BLADE LIFT (LH)	
	41	2	**3J-1907**	4	SEAL-O-RING	
	42	1	**4L-6459**	1	BOLT (3/8-16X2.5-IN)	
	43	1	**5P-1075**	2	WASHER-HARD (10.2X22.5X3-MM THK)	
	44	2	**5P-1076**	6	WASHER-HARD (13.5X30X4-MM THK)	
	45	2	**5P-2424**	6	BOLT (1/2-13X2.25-IN)	
	46	2	**6V-8188**	2	NUT (1/2-13-THD)	
	47	1,2	**6V-8397**	8	SEAL-O-RING	
	48	2	**6V-9836**	2	TEE-SWIVEL	
	49	2	**8F-6437**	6	WASHER (13.5X50.8X4.76-MM THK)	
	50	2	**8T-4121**	8	WASHER-HARD (11X21X2.5-MM THK)	
M	51	2	**8T-4136**	4	BOLT (M10X1.5X25-MM)	
M	52	2	**8T-4195**	4	BOLT (M10X1.5X30-MM)	
	53	2	**8T-9041**	4	CONNECTOR	
	54	1	**8T-9043**	20	BOLT (5/16-18X0.875-IN)	
	55	1	**9B-7237**	1	BOLT (3/8-16X1.25-IN)	

B-USE AS REQUIRED
M-METRIC PART
Y-SEPARATE ILLUSTRATION

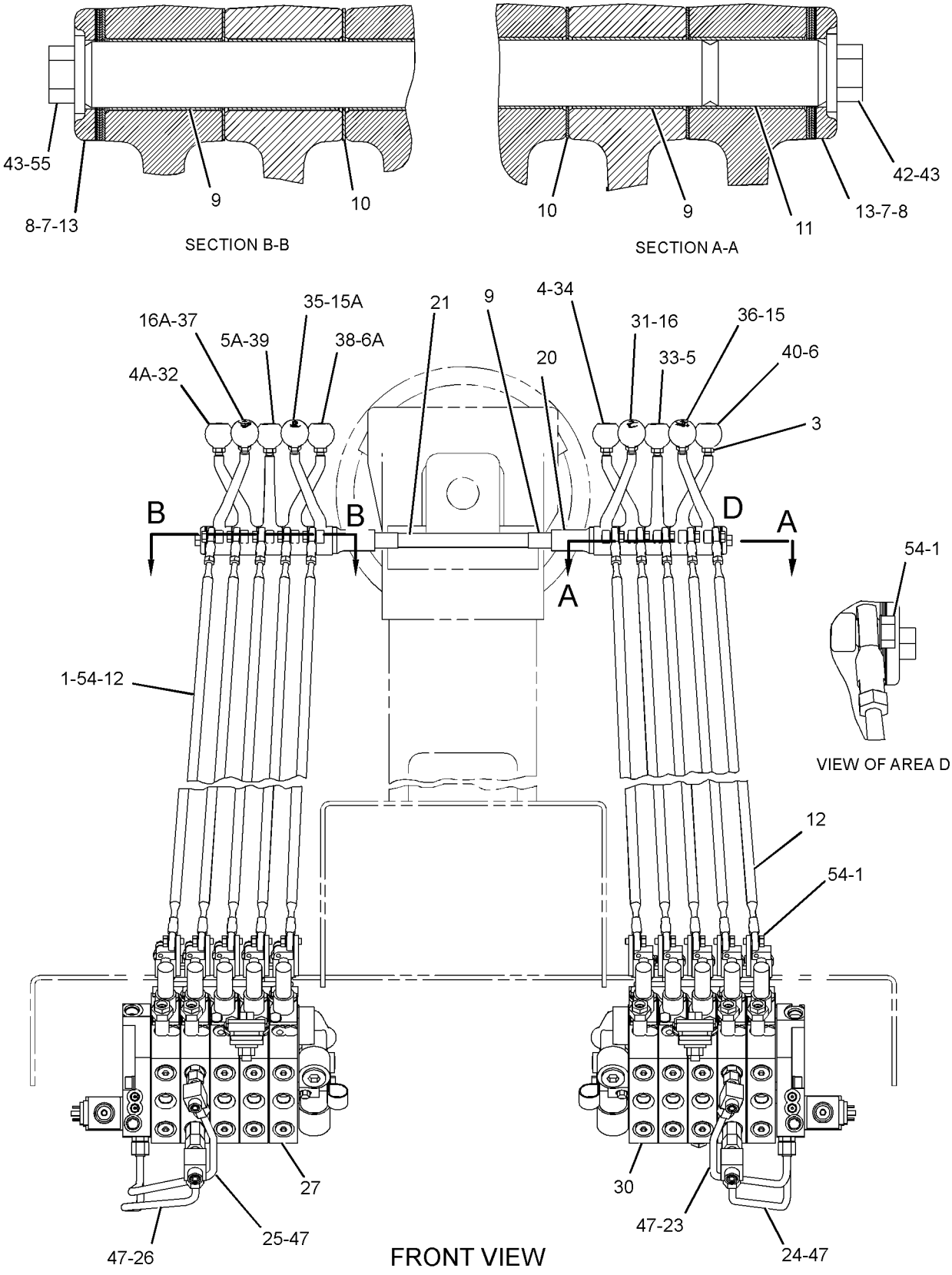

GRAPHIC #1 g01710933

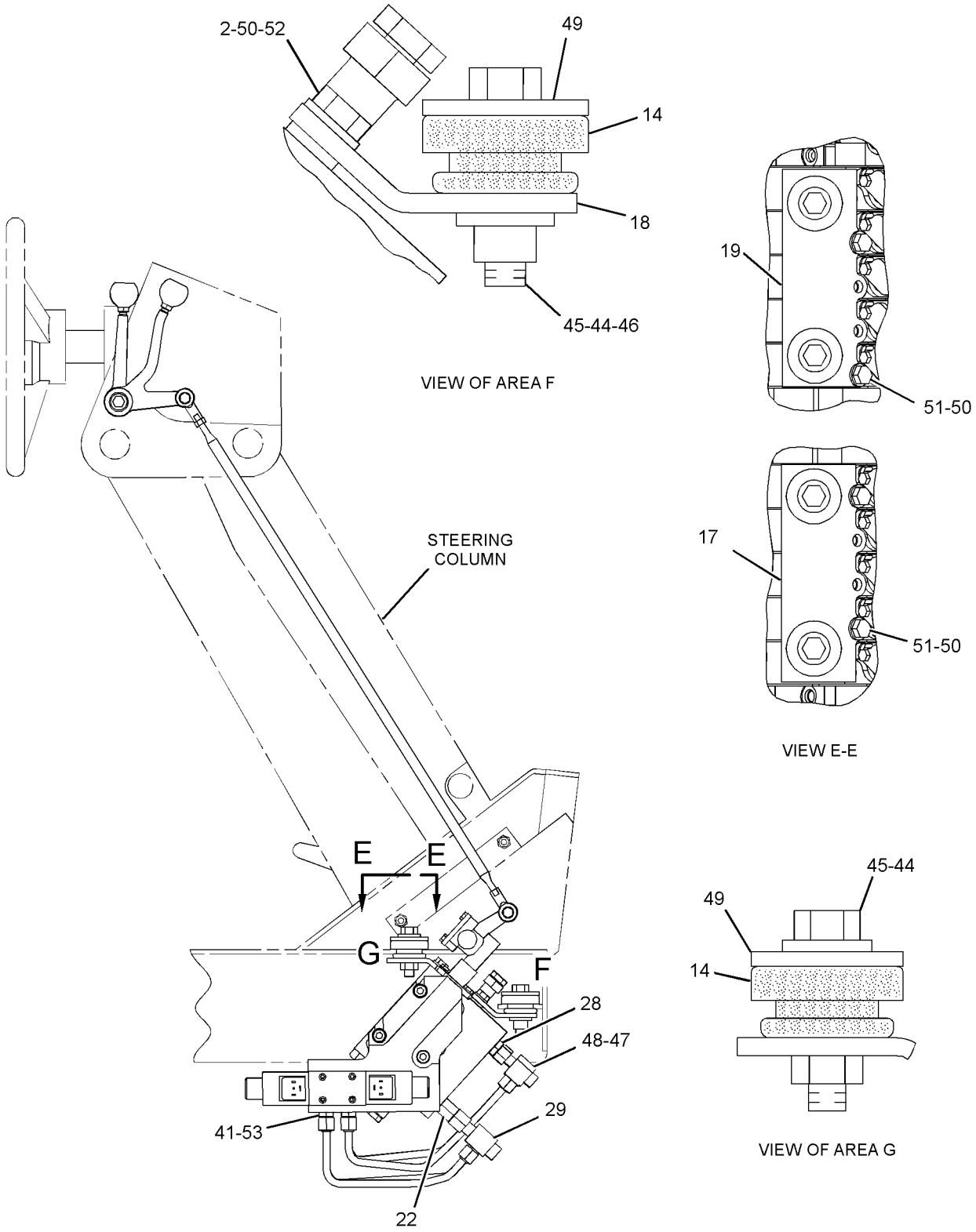

RIGHT SIDE VIEW

GRAPHIC #2 **<END>** g01710936

HYDRAULIC SYSTEM

331-1515 VALVE & LINKAGE GP—5-BANK, RH; 7-BANK, LH

S/N: JPA1-UP

AN ATTACHMENT

SMCS-5051, 5063 **i03266305**

NOTE	REF NO	GRAPHIC REF	PART NUMBER	QTY	PART NAME 1 2 3 4 5 6 (PRODUCT LEVEL)	SEE PAGE
	1	1,2	**3F-9556**	24	LOCKWASHER	
	2	2	**6B-0933**	4	SPACER (10.31X19.05X6.35-MM THK)	
	3	1	**6L-1962**	12	NUT-JAM (3/8-24-THD)	
	4	1	**8D-5632**	1	LEVER (CIRCLE DRIVE)	
	4A	1	**8D-5632**	1	LEVER (BLADE LIFT, RH)	
	5	1	**8D-5633**	1	LEVER (SIDESHIFT)	
	5A	1	**8D-5633**	1	LEVER (WHEEL LEAN)	
	6	1	**8D-5634**	1	LEVER (BLADE LIFT, LH)	
	6A	1	**8D-5634**	1	LEVER (CENTERSHIFT)	
B	7	1	**8D-5636**	4	SHIM (0.254-MM THK)	
B	8	1	**8D-5637**	4	SHIM (0.762-MM THK)	
	9	1	**8D-5640**	14	BEARING	
	10	1	**8D-5641**	12	BEARING	
	11	1	**8W-0456**	3	SHAFT	
	12	1	*8X-4277*	12	ROD AS	
					(EACH INCLUDES)	
		1	**6V-8186**	1	NUT-FULL (5/16-24-THD)	
		1	**7H-3641**	1	END-ROD (5/16-24-THD)	
		1	**8L-8598**	1	ROD END	
		1	**146-0705**	1	ROD	
	13	1	**8X-5499**	2	RETAINER	
	14	2	**9M-1853**	6	MOUNTING	
	15	1	**101-2457**	1	LEVER (SCARIFIER)	
	15A	1	**101-2457**	1	LEVER (ARTICULATION)	
	16	1	**101-2458**	1	LEVER (WING LIFT)	
	16A	1	**101-2458**	1	LEVER (BLADE TIP)	
	16B	1	**101-2458**	1	LEVER (DOZER, PLOW)	
	17	1	**103-1597**	1	LEVER (WING TILT)	
	18	2	**104-7419**	1	PLATE AS (RH)	
		2	**1F-0748**	2	NUT-WELD (1/2-13-THD)	
	19	2	**104-7429**	2	PLATE	
	20	2	**104-7740**	1	PLATE AS (LH)	
		2	**1F-0748**	2	NUT-WELD (1/2-13-THD)	
	21	1	**137-4515**	2	BUSHING	
	22	1	**137-4516**	1	SHAFT	
	23	2	*164-5608*	2	CONNECTOR AS	
					(EACH INCLUDES)	
		2	**3K-0360**	1	SEAL-O-RING	
		2	**6V-8398**	1	SEAL-O-RING	
		2	**8T-1687**	1	CONNECTOR	
	24	1	**244-2587**	1	TUBE AS	
	25	1	**244-2591**	1	TUBE AS	
	26	1	**244-2593**	1	TUBE AS	
	27	1	**244-2597**	1	TUBE AS	
Y	28	1	**250-0548**	1	VALVE GP-BANK 5 (RH)	526
	29	2	*148-8318*	2	CONNECTOR AS	
					(EACH INCLUDES)	
		2	**3K-0360**	1	SEAL-O-RING	
		2	**6V-8397**	1	SEAL-O-RING	
		2	**6V-8634**	1	CONNECTOR	
	30	2	*206-5123*	2	TEE AS	
					(EACH INCLUDES)	
		2	**6V-8397**	1	SEAL-O-RING	
		2	**6V-8398**	1	SEAL-O-RING	
		2	**206-5122**	1	TEE	
Y	31	1	**263-6435**	1	VALVE GP-BANK 7 (LH)	535

331-1515 **VALVE & LINKAGE GP** *(contd.)* **i03266305**

NOTE	REF NO	GRAPHIC REF	PART NUMBER	QTY	PART NAME 1 2 3 4 5 6 (PRODUCT LEVEL)	SEE PAGE
	32	1	**2G-6747**	1	KNOB-BLADE TIP	
	33	1	**2G-6748**	1	KNOB-BLADE LIFT	
	34	1	**2G-6749**	1	KNOB-SIDESHIFT	
	35	1	**2G-6751**	1	KNOB-CIRCLE DRIVE	
	36	1	**2G-6752**	1	KNOB-ARTICULATION	
	37	1	**2G-6753**	1	KNOB-SCARIFIER	
	38	1	**2G-6754**	1	KNOB (BULLDOZER LIFT, PLOW)	
	39	1	**2G-6755**	1	KNOB-CENTERSHIFT	
	40	1	**2G-6756**	1	KNOB-WHEEL LEAN	
	41	1	**2G-6757**	1	KNOB-BLADE LIFT	
	42	1	**2G-7107**	1	KNOB-WING LIFT	
	43	1	**2G-7108**	1	KNOB-WING TILT	
	44	2	**3J-1907**	4	SEAL-O-RING	
	45	1	**4L-6459**	1	BOLT (3/8-16X2.5-IN)	
	46	1	**5P-1075**	2	WASHER-HARD (10.2X22.5X3-MM THK)	
	47	2	**5P-1076**	6	WASHER-HARD (13.5X30X4-MM THK)	
	48	2	**5P-2424**	6	BOLT (1/2-13X2.25-IN)	
	49	2	**6V-8188**	2	NUT (1/2-13-THD)	
	50	1,2	**6V-8397**	8	SEAL-O-RING	
	51	2	**6V-9836**	2	TEE-SWIVEL	
	52	1	**7X-0291**	1	BOLT (3/8-16X3.75-IN)	
	53	2	**8F-6437**	6	WASHER (13.5X50.8X4.76-MM THK)	
	54	2	**8T-4121**	8	WASHER-HARD (11X21X2.5-MM THK)	
M	55	2	**8T-4136**	4	BOLT (M10X1.5X25-MM)	
M	56	2	**8T-4195**	4	BOLT (M10X1.5X30-MM)	
	57	2	**8T-9041**	4	CONNECTOR	
	58	1,2	**8T-9043**	24	BOLT (5/16-18X0.875-IN)	

B-USE AS REQUIRED
M-METRIC PART
Y-SEPARATE ILLUSTRATION

REFER TO ALL ILLUSTRATIONS OF
THIS GROUP FOR AUXILIARY VIEWS

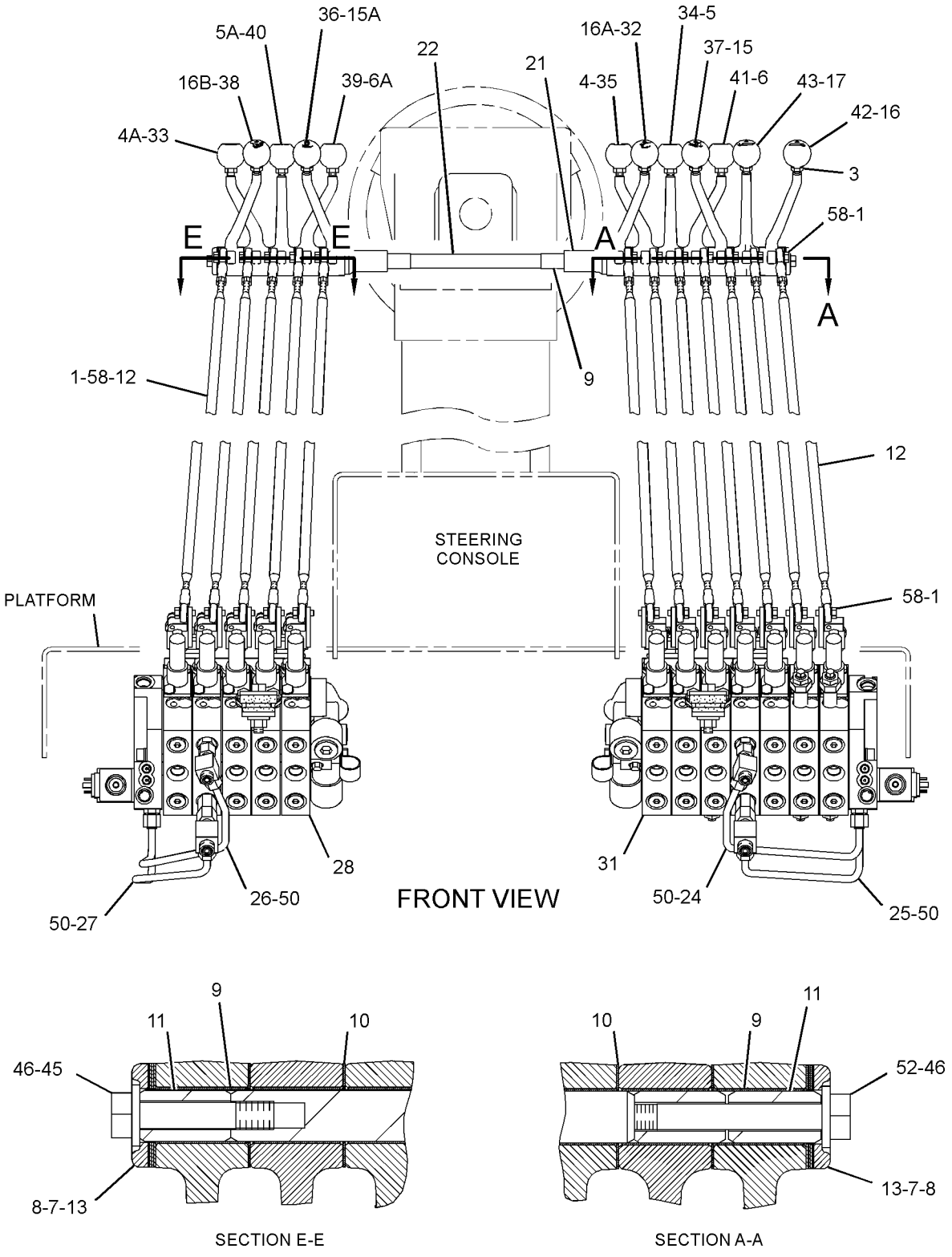

GRAPHIC #1

g01712641

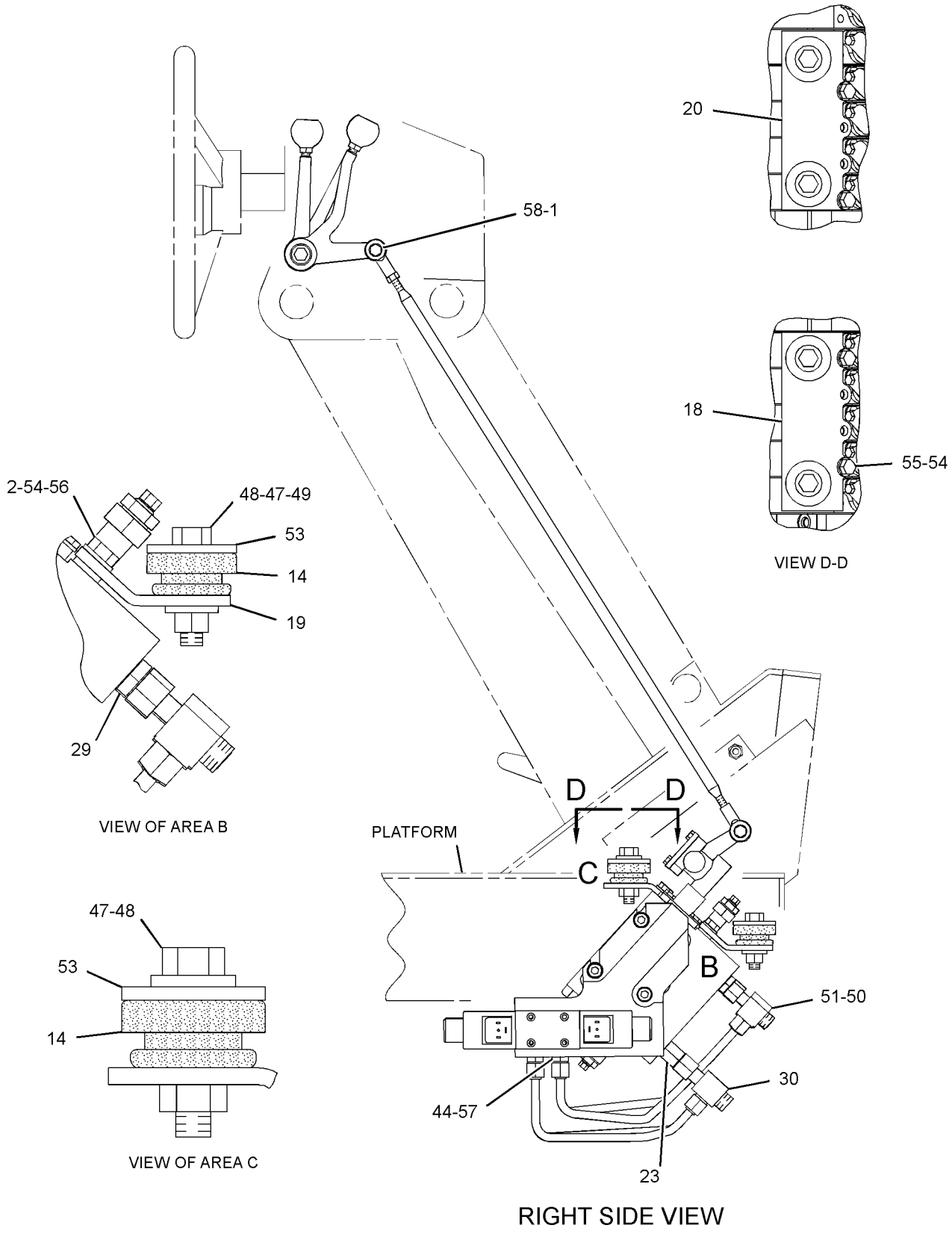

GRAPHIC #2 **<END>** g01242109

HYDRAULIC SYSTEM

331-1516 VALVE & LINKAGE GP—5-BANK, RH; 6-BANK, LH

S/N: JPA1-UP

AN ATTACHMENT

SMCS-5051, 5063 **i03266502**

NOTE	REF NO	GRAPHIC REF	PART NUMBER	QTY	PART NAME 1 2 3 4 5 6 (PRODUCT LEVEL)	SEE PAGE
	1	1	**3F-9556**	22	LOCKWASHER	
	2	2	**6B-0933**	4	SPACER (10.31X19.05X6.35-MM THK)	
	3	1	**6L-1962**	11	NUT-JAM (3/8-24-THD)	
	4	1	**8D-5632**	1	LEVER (CIRCLE DRIVE)	
	4A	1	**8D-5632**	1	LEVER (BLADE LIFT, RH)	
	5	1	**8D-5633**	1	LEVER (SIDESHIFT)	
	5A	1	**8D-5633**	1	LEVER (WHEEL LEAN)	
	6	1	**8D-5634**	1	LEVER (BLADE LIFT, LH)	
	6A	1	**8D-5634**	1	LEVER (CENTERSHIFT)	
B	7	1	**8D-5636**	4	SHIM (0.254-MM THK)	
B	8	1	**8D-5637**	4	SHIM (0.762-MM THK)	
	9	1	**8D-5640**	13	BEARING	
	10	1	**8D-5641**	11	BEARING	
	11	1	**8W-0456**	2	SHAFT	
	12	1	*8X-4277*	11	ROD AS	
					(EACH INCLUDES)	
		1	**8L-8598**	1	ROD END	
		1	**6V-8186**	1	NUT-FULL (5/16-24-THD)	
		1	**7H-3641**	1	END-ROD (5/16-24-THD)	
		1	**146-0705**	1	ROD	
	13	1	**8X-5499**	2	RETAINER	
	14	2	**9M-1853**	6	MOUNTING	
	15	1	**101-2457**	1	LEVER (WING TILT)	
	15A	1	**101-2457**	1	LEVER (ARTICULATION)	
	16	1	**101-2458**	1	LEVER (BLADE TIP)	
	16A	1	**101-2458**	1	LEVER (PLOW, DOZER)	
	17	1	**103-1597**	1	LEVER (WING LIFT)	
	18	2	**104-7419**	1	PLATE AS (RH)	
		2	**1F-0748**	2	NUT-WELD (1/2-13-THD)	
	19	2	**104-7429**	2	PLATE	
	20	2	**104-7740**	1	PLATE AS (LH)	
		2	**1F-0748**	2	NUT-WELD (1/2-13-THD)	
	21	1	**137-4515**	2	BUSHING	
	22	1	**137-4516**	1	SHAFT	
	23	2	*164-5608*	2	CONNECTOR AS	
					(EACH INCLUDES)	
		2	**8T-1687**	1	CONNECTOR	
		2	**6V-8398**	1	SEAL-O-RING	
		2	**3K-0360**	1	SEAL-O-RING	
	24	1	**244-2586**	1	TUBE AS	
	25	1	**244-2590**	1	TUBE AS	
	26	1	**244-2593**	1	TUBE AS	
	27	1	**244-2597**	1	TUBE AS	
Y	28	1	**250-0548**	1	VALVE GP-BANK 5 (RH)	526
Y	29	1	**250-0567**	1	VALVE GP-BANK 6 (LH)	533
	30	2	*148-8318*	2	CONNECTOR AS	
					(EACH INCLUDES)	
		2	**6V-8634**	1	CONNECTOR	
		2	**3K-0360**	1	SEAL-O-RING	
		2	**6V-8397**	1	SEAL-O-RING	
	31	2	*206-5123*	2	TEE AS	
					(EACH INCLUDES)	
		2	**206-5122**	1	TEE	
		2	**6V-8397**	1	SEAL-O-RING	
		2	**6V-8398**	1	SEAL-O-RING	
	32	1	**2G-6747**	1	KNOB-BLADE TIP	

331-1516 **VALVE & LINKAGE GP** *(contd.)* **i03266502**

NOTE	REF NO	GRAPHIC REF	PART NUMBER	QTY	PART NAME 1 2 3 4 5 6 (PRODUCT LEVEL)	SEE PAGE
	33	1	**2G-6748**	1	KNOB-BLADE LIFT (RH)	
	34	1	**2G-6749**	1	KNOB-SIDESHIFT	
	35	1	**2G-6751**	1	KNOB-CIRCLE DRIVE	
	36	1	**2G-6752**	1	KNOB-ARTICULATION	
	37	1	**2G-6754**	1	KNOB (BULLDOZER LIFT, PLOW)	
	38	1	**2G-6755**	1	KNOB-CENTERSHIFT	
	39	1	**2G-6756**	1	KNOB-WHEEL LEAN	
	40	1	**2G-6757**	1	KNOB-BLADE LIFT (LH)	
	41	1	**2G-7107**	1	KNOB-WING LIFT	
	42	1	**2G-7108**	1	KNOB-WING TILT	
	43	2	**3J-1907**	4	SEAL-O-RING	
	44	1	**4L-6459**	2	BOLT (3/8-16X2.5-IN)	
	45	1	**5P-1075**	2	WASHER-HARD (10.2X22.5X3-MM THK)	
	46	2	**5P-1076**	6	WASHER-HARD (13.5X30X4-MM THK)	
	47	2	**5P-2424**	6	BOLT (1/2-13X2.25-IN)	
	48	2	**6V-8188**	2	NUT (1/2-13-THD)	
	49	1,2	**6V-8397**	8	SEAL-O-RING	
	50	2	**6V-9836**	2	TEE-SWIVEL	
	51	2	**8F-6437**	6	WASHER (13.5X50.8X4.76-MM THK)	
	52	2	**8T-4121**	8	WASHER-HARD (11X21X2.5-MM THK)	
M	53	2	**8T-4136**	4	BOLT (M10X1.5X25-MM)	
M	54	2	**8T-4195**	4	BOLT (M10X1.5X30-MM)	
	55	2	**8T-9041**	4	CONNECTOR	
	56	1	**8T-9043**	22	BOLT (5/16-18X0.875-IN)	

B-USE AS REQUIRED
M-METRIC PART
Y-SEPARATE ILLUSTRATION

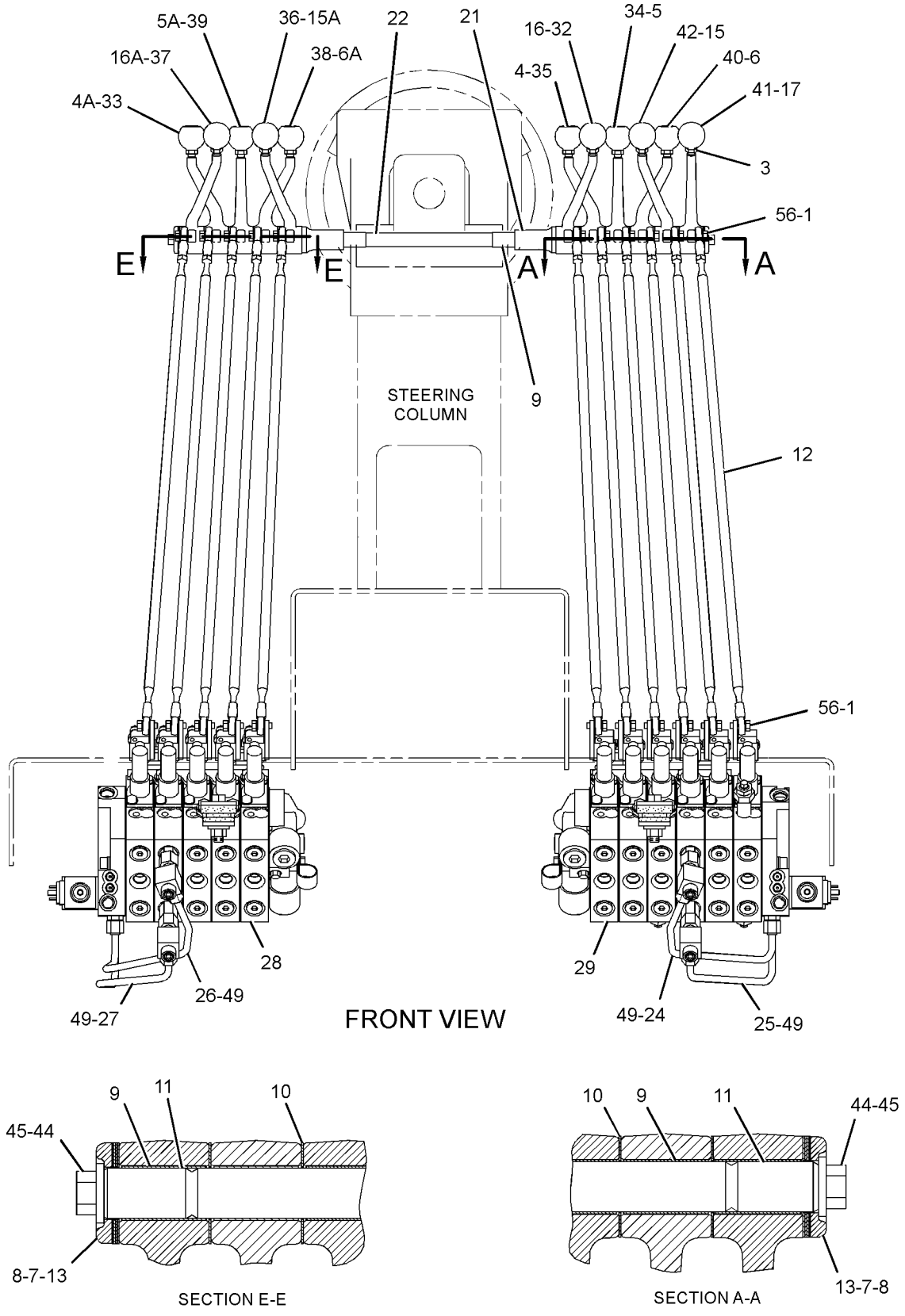

GRAPHIC #1

g01258802

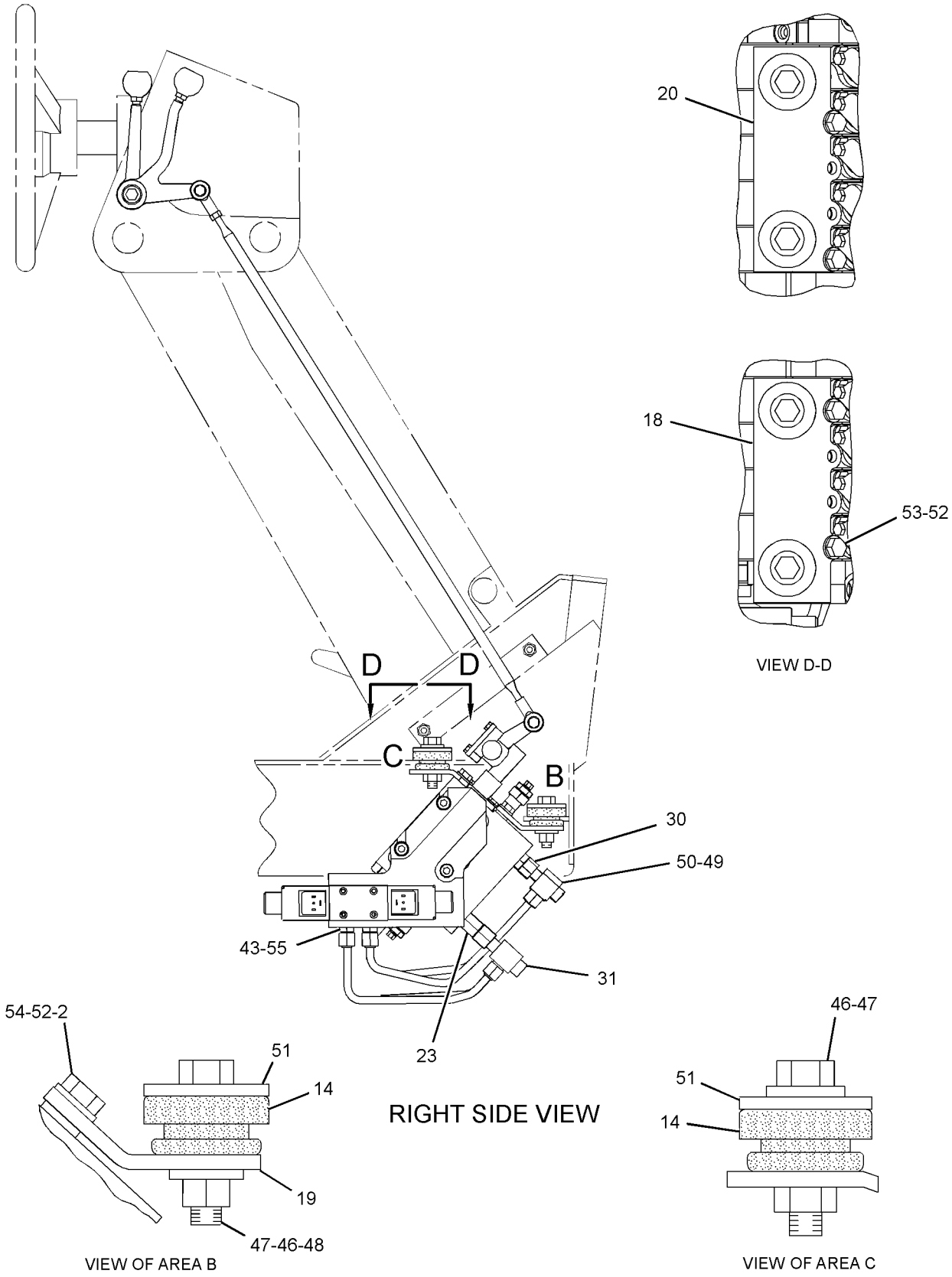

GRAPHIC #2 **<END>** g01258809

HYDRAULIC SYSTEM

331-1517 VALVE & LINKAGE GP–4-BANK, RH, LH

S/N: JPA1-UP

AN ATTACHMENT

SMCS-5051, 5063 **i03255882**

NOTE	REF NO	GRAPHIC REF	PART NUMBER	QTY	PART NAME 1 2 3 4 5 6 (PRODUCT LEVEL)	SEE PAGE
	1	1	**3F-9556**	16	LOCKWASHER	
	2	2	**6B-0933**	4	SPACER (10.31X19.05X6.35-MM THK)	
	3	1	**6L-1962**	8	NUT-JAM (3/8-24-THD)	
	4	1	**8D-5632**	1	LEVER (BLADE LIFT, RH)	
	4A	1	**8D-5632**	1	LEVER (CIRCLE DRIVE)	
	5	1	**8D-5633**	1	LEVER (WHEEL LEAN)	
	5A	1	**8D-5633**	1	LEVER (SIDESHIFT)	
	6	1	**8D-5634**	1	LEVER (CENTERSHIFT)	
	6A	1	**8D-5634**	1	LEVER (BLADE LIFT, LH)	
B	7	1	**8D-5636**	4	SHIM (0.254-MM THK)	
B	8	1	**8D-5637**	4	SHIM (0.762-MM THK)	
	9	1	**8D-5640**	10	BEARING	
	10	1	**8D-5641**	8	BEARING	
	11	1	*8X-4277*	8	ROD AS	
					(EACH INCLUDES)	
		1	**6V-8186**	1	NUT-FULL (5/16-24-THD)	
		1	**7H-3641**	1	END-ROD (5/16-24-THD)	
		1	**8L-8598**	1	ROD END	
		1	**146-0705**	1	ROD	
	12	1	**8X-5498**	2	RETAINER	
	13	2	**9M-1853**	6	MOUNTING	
	14	1	**101-2457**	1	LEVER	
	15	1	**101-2458**	1	LEVER	
	16	2	**104-7419**	1	PLATE AS (RH)	
		2	**1F-0748**	2	NUT-WELD (1/2-13-THD)	
	17	2	**104-7429**	2	PLATE	
	18	2	**104-7740**	1	PLATE AS (LH)	
		2	**1F-0748**	2	NUT-WELD (1/2-13-THD)	
	19	1	**137-4515**	2	BUSHING	
	20	1	**137-4516**	1	SHAFT	
	21	2	*164-5608*	2	CONNECTOR AS	
					(EACH INCLUDES)	
		2	**3K-0360**	1	SEAL-O-RING	
		2	**6V-8398**	1	SEAL-O-RING	
		2	**8T-1687**	1	CONNECTOR	
	22	1	**244-2584**	1	TUBE AS	
	23	1	**244-2588**	1	TUBE AS	
	24	1	**244-2592**	1	TUBE AS	
	25	1	**244-2596**	1	TUBE AS	
Y	26	1	**250-0543**	1	VALVE GP-BANK 4 (LH)	518
Y	27	1	**250-0544**	1	VALVE GP-BANK 4 (RH)	519
	28	2	*148-8318*	2	CONNECTOR AS	
					(EACH INCLUDES)	
		2	**3K-0360**	1	SEAL-O-RING	
		2	**6V-8397**	1	SEAL-O-RING	
		2	**6V-8634**	1	CONNECTOR	
	29	2	**153-1818**	1	ELBOW	
	30	2	*206-5123*	4	TEE AS	
					(EACH INCLUDES)	
		2	**6V-8397**	1	SEAL-O-RING	
		2	**6V-8398**	1	SEAL-O-RING	
		2	**206-5122**	1	TEE	
	31	1	**2G-6747**	1	KNOB-BLADE TIP	
	32	1	**2G-6748**	1	KNOB-BLADE LIFT	
	33	1	**2G-6749**	1	KNOB-SIDESHIFT	
	34	1	**2G-6751**	1	KNOB-CIRCLE DRIVE	

331-1517 **VALVE & LINKAGE GP** *(contd.)* **i03255882**

NOTE	REF NO	GRAPHIC REF	PART NUMBER	QTY	PART NAME 1 2 3 4 5 6 (PRODUCT LEVEL)	SEE PAGE
	35	1	**2G-6752**	1	KNOB-ARTICULATION	
	36	1	**2G-6755**	1	KNOB-CENTERSHIFT	
	37	1	**2G-6756**	1	KNOB-WHEEL LEAN	
	38	1	**2G-6757**	1	KNOB-BLADE LIFT	
	39	2	**3J-1907**	4	SEAL-O-RING	
	40	1	**5P-1075**	2	WASHER-HARD (10.2X22.5X3-MM THK)	
	41	2	**5P-1076**	6	WASHER-HARD (13.5X30X4-MM THK)	
	42	2	**5P-2424**	6	BOLT (1/2-13X2.25-IN)	
	43	2	**6V-8188**	2	NUT (1/2-13-THD)	
	44	1,2	**6V-8397**	8	SEAL-O-RING	
	45	2	**6V-9836**	2	TEE-SWIVEL	
	46	2	**8F-6437**	6	WASHER (13.5X50.8X4.76-MM THK)	
	47	2	**8T-4121**	8	WASHER-HARD (11X21X2.5-MM THK)	
M	48	2	**8T-4136**	4	BOLT (M10X1.5X25-MM)	
M	49	2	**8T-4195**	4	BOLT (M10X1.5X30-MM)	
	50	2	**8T-9041**	3	CONNECTOR	
	51	1	**8T-9043**	16	BOLT (5/16-18X0.875-IN)	
	52	1	**9B-7237**	2	BOLT (3/8-16X1.25-IN)	

B-USE AS REQUIRED
M-METRIC PART
Y-SEPARATE ILLUSTRATION

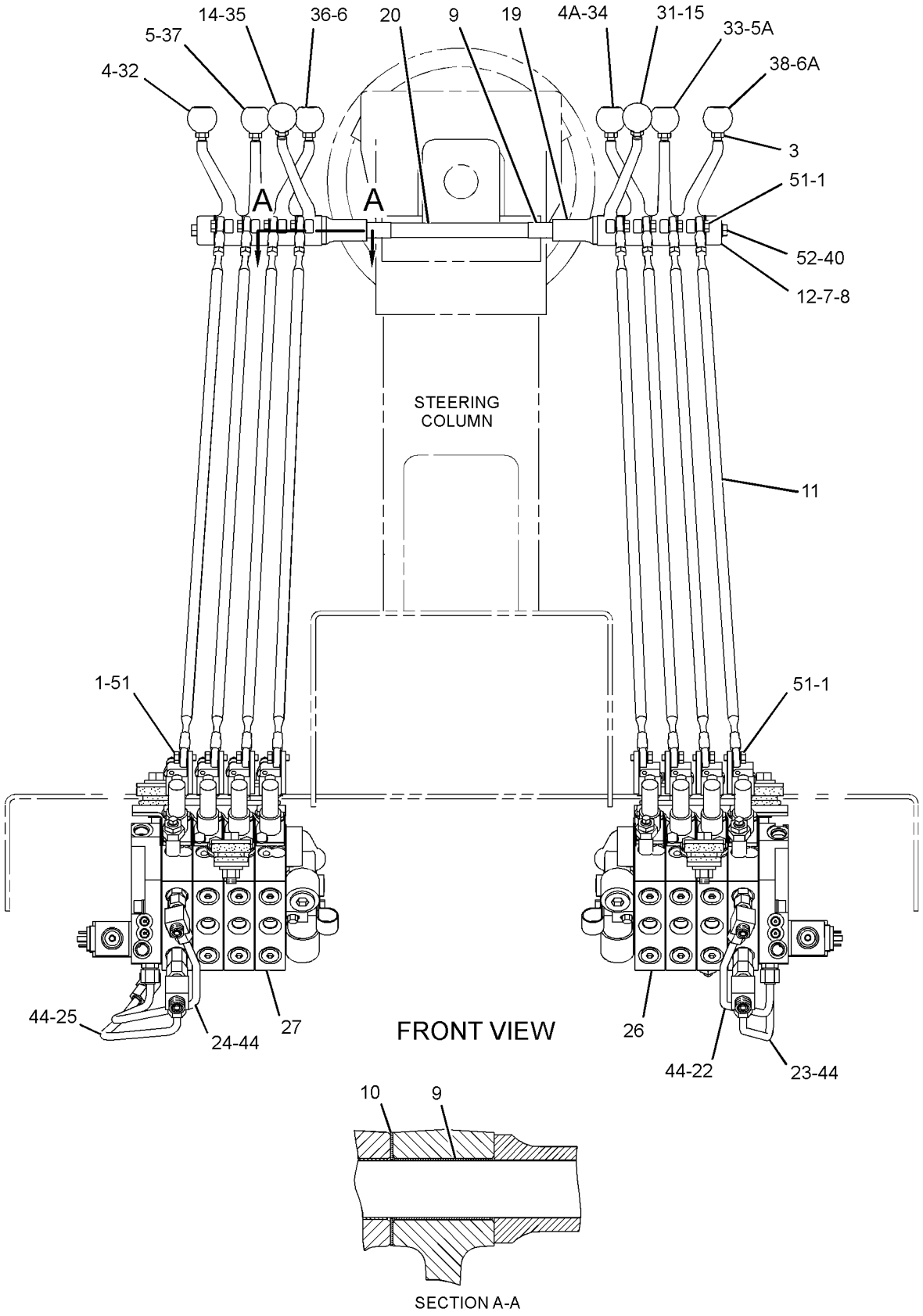

GRAPHIC #1

g01259648

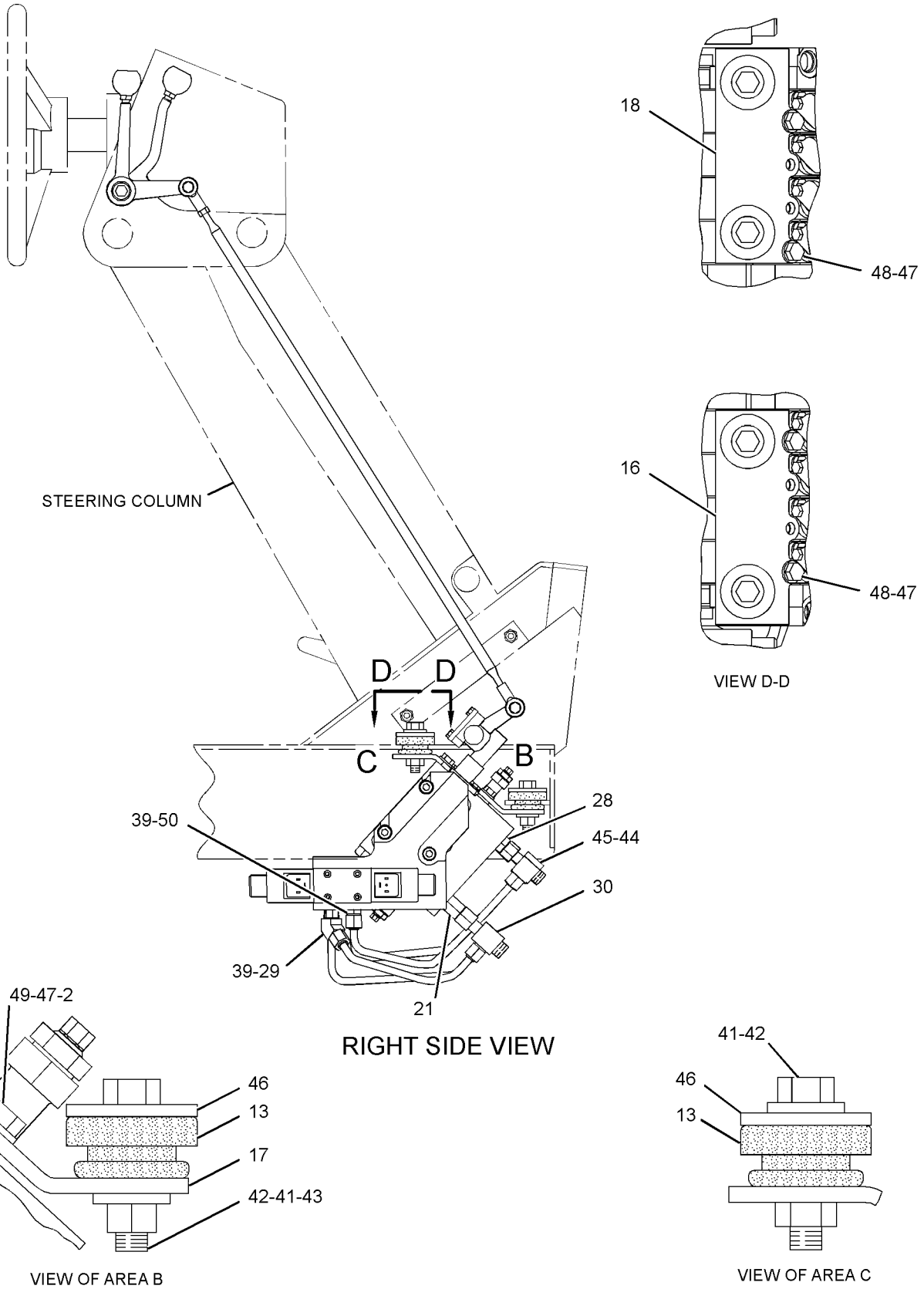

GRAPHIC #2 **<END>** g01259647

HYDRAULIC SYSTEM

104-8672 VALVE GP-BANK 2–LH

S/N: JPA1-UP

PART OF 112-6795 VALVE & LINKAGE GP

SMCS-5051 **i00857865**

NOTE	REF NO	GRAPHIC REF	PART NUMBER	QTY	PART NAME 1 2 3 4 5 6 (PRODUCT LEVEL)	SEE PAGE
M	1	1	**7X-2546**	2	BOLT (M10X1.5X180-MM)	
M	2	1	**137-6720**	1	BOLT (M10X1.5X160-MM)	
	3	1	**102-8385**	1	MANIFOLD	
	4	1	**101-0509**	5	SEAL-INTEGRAL	
Y	5	1	**124-2883**	1	VALVE GP-CONTROL (BLADE LIFT)	562
	6	1	**111-9321**	2	SPACER	
Y	7	1	**6E-3035**	1	VALVE GP-CONTROL (CIRCLE DRIVE)	548
	8	1	**101-9346**	1	COVER	
M	9	1	**8T-4186**	3	BOLT (M10X1.5X40-MM)	
	10	1	**4J-7533**	1	SEAL-O-RING	
	11	1	**9S-4180**	1	PLUG	

M-METRIC PART
Y-SEPARATE ILLUSTRATION

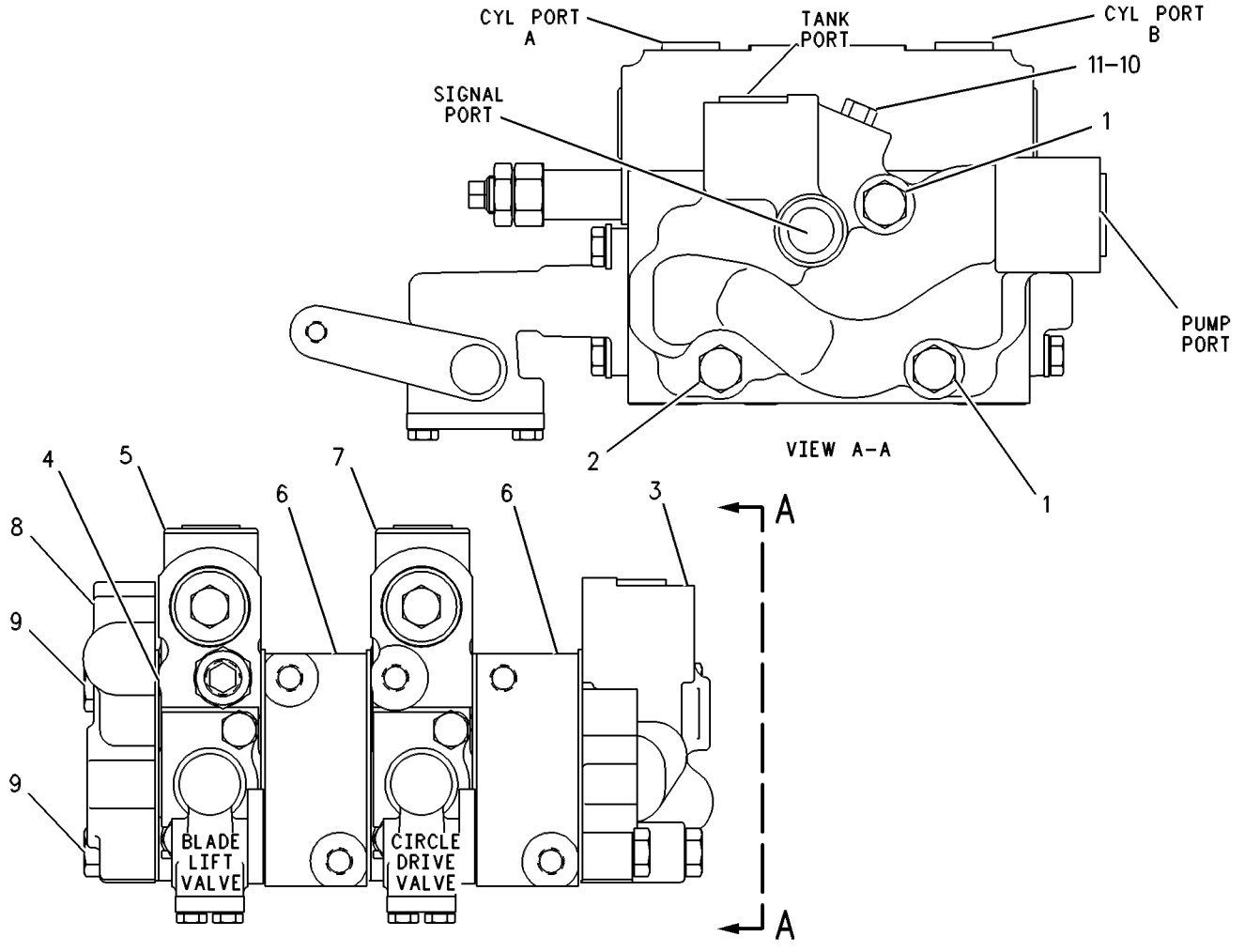

GRAPHIC #1 **<END>** g00272765

104-8673 VALVE GP-BANK 3–LH

S/N: JPA1-UP
PART OF 112-6799 VALVE & LINKAGE GP
AN ATTACHMENT

SMCS-5051 **i00857866**

NOTE	REF NO	GRAPHIC REF	PART NUMBER	QTY	PART NAME 1 2 3 4 5 6 (PRODUCT LEVEL)	SEE PAGE
M	1	1	**7X-2546**	2	BOLT (M10X1.5X180-MM)	
M	2	1	**137-6720**	1	BOLT (M10X1.5X160-MM)	
	3	1	**102-8385**	1	MANIFOLD	
	4	1	**101-0509**	5	SEAL-INTEGRAL	
Y	5	1	**124-2883**	1	VALVE GP-CONTROL (BLADE LIFT)	562
Y	6	1	**6E-3036**	1	VALVE GP-CONTROL (SIDESHIFT)	550
Y	7	1	**6E-3035**	1	VALVE GP-CONTROL (CIRCLE DRIVE)	548
	8	1	**111-9321**	1	SPACER	
	9	1	**101-9346**	1	COVER	
M	10	1	**8T-4186**	3	BOLT (M10X1.5X40-MM)	
	11	1	**4J-7533**	1	SEAL-O-RING	
	12	1	**9S-4180**	1	PLUG	

M-METRIC PART
Y-SEPARATE ILLUSTRATION

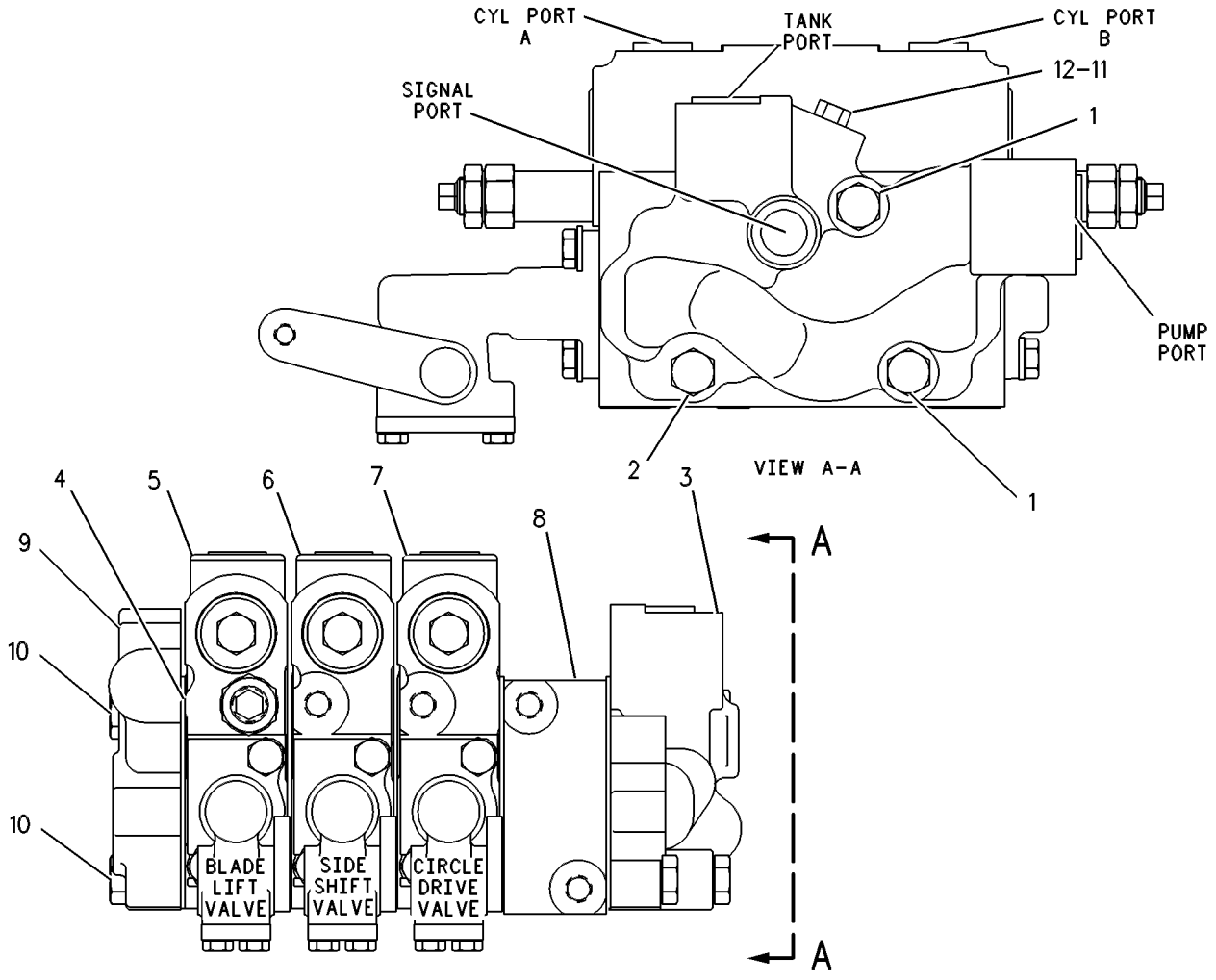

GRAPHIC #1 **<END>** g00272766

HYDRAULIC SYSTEM

112-2580 VALVE GP-BANK 3–LH

S/N: JPA1-UP
PART OF 112-6804 VALVE & LINKAGE GP
AN ATTACHMENT

SMCS-5051 **i03179202**

NOTE	REF NO	GRAPHIC REF	PART NUMBER	QTY	PART NAME 1 2 3 4 5 6 (PRODUCT LEVEL)	SEE PAGE
M	1	1	**7X-2546**	2	BOLT (M10X1.5X180-MM)	
M	2	1	**137-6720**	1	BOLT (M10X1.5X160-MM)	
	3	1	**102-8385**	1	MANIFOLD	
	4	1	**101-0509**	6	SEAL-INTEGRAL	
	5	1	**111-9321**	2	SPACER	
Y	6	1	**6E-3035**	1	VALVE GP-CONTROL (CIRCLE DRIVE)	548
Y	7	1	**124-2883**	1	VALVE GP-CONTROL (BLADE LIFT)	562
Y	8	1	**107-0543**	1	VALVE GP-CONTROL (SCARIFIER)	554
	9	1	**101-9346**	1	COVER	
M	10	1	**137-6719**	3	BOLT (M10X1.5X80-MM)	
	11	1	**9S-4180**	1	PLUG	
	12	1	**4J-7533**	1	SEAL-O-RING	

M-METRIC PART
Y-SEPARATE ILLUSTRATION

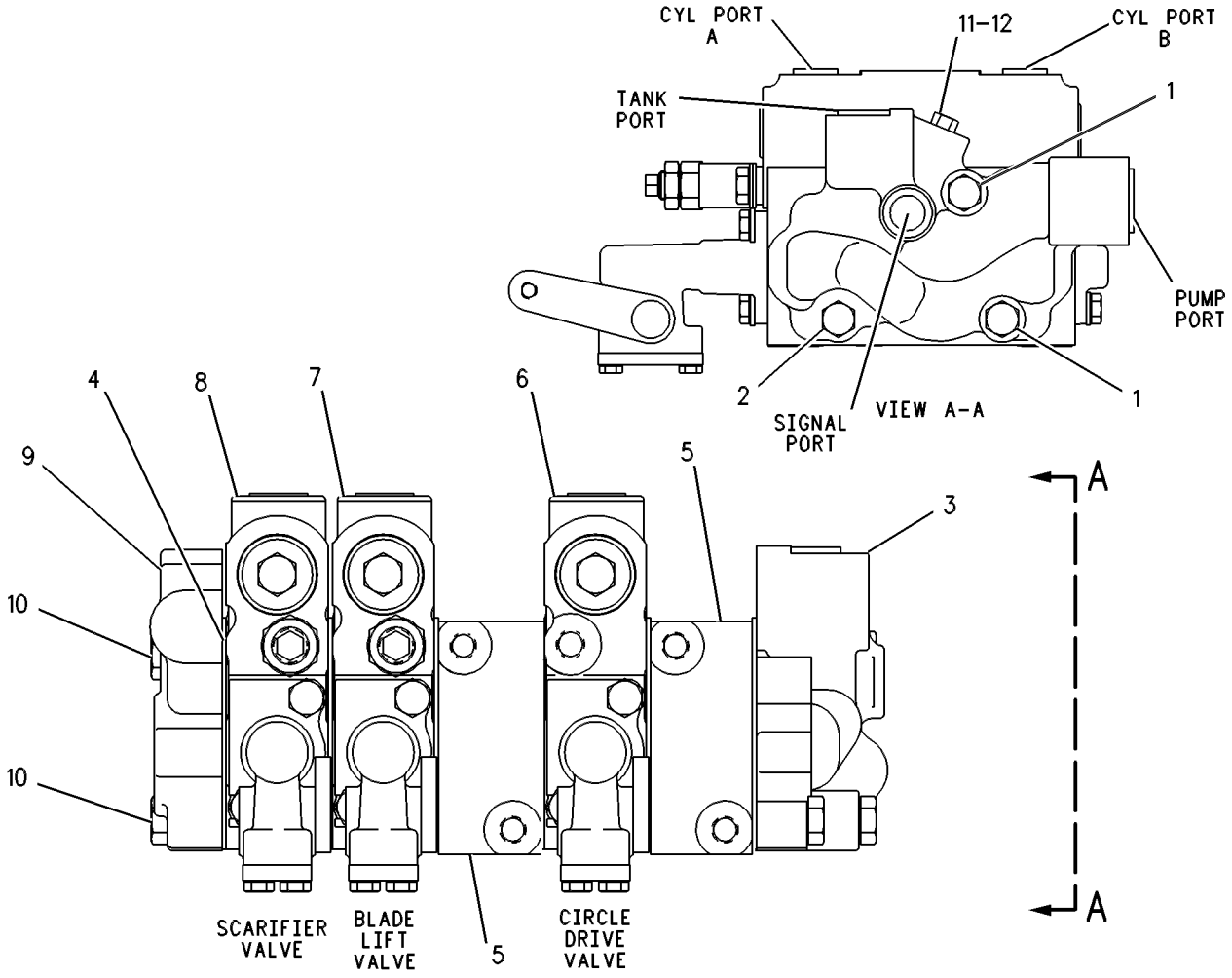

GRAPHIC #1 **<END>** g00272277

112-2581 VALVE GP-BANK 3–LH

S/N: JPA1-UP
PART OF 112-6818 VALVE & LINKAGE GP
AN ATTACHMENT

SMCS-5051 **i00857868**

NOTE	REF NO	GRAPHIC REF	PART NUMBER	QTY	PART NAME 1 2 3 4 5 6 (PRODUCT LEVEL)	SEE PAGE
M	1	1	**7X-2546**	2	BOLT (M10X1.5X180-MM)	
M	2	1	**137-6720**	1	BOLT (M10X1.5X160-MM)	
	3	1	**102-8385**	1	MANIFOLD	
	4	1	**101-0509**	6	SEAL-INTEGRAL	
	5	1	**111-9321**	2	SPACER	
Y	6	1	**6E-3035**	1	VALVE GP-CONTROL (CIRCLE DRIVE)	548
Y	7	1	**124-2883**	1	VALVE GP-CONTROL (BLADE LIFT)	562
Y	8	1	**107-0545**	1	VALVE GP-CONTROL (RIPPER)	556
	9	1	**101-9346**	1	COVER	
	10	1	**9S-4180**	1	PLUG	
	11	1	**4J-7533**	1	SEAL-O-RING	
M	12	1	**137-6719**	3	BOLT (M10X1.5X80-MM)	

M-METRIC PART
Y-SEPARATE ILLUSTRATION

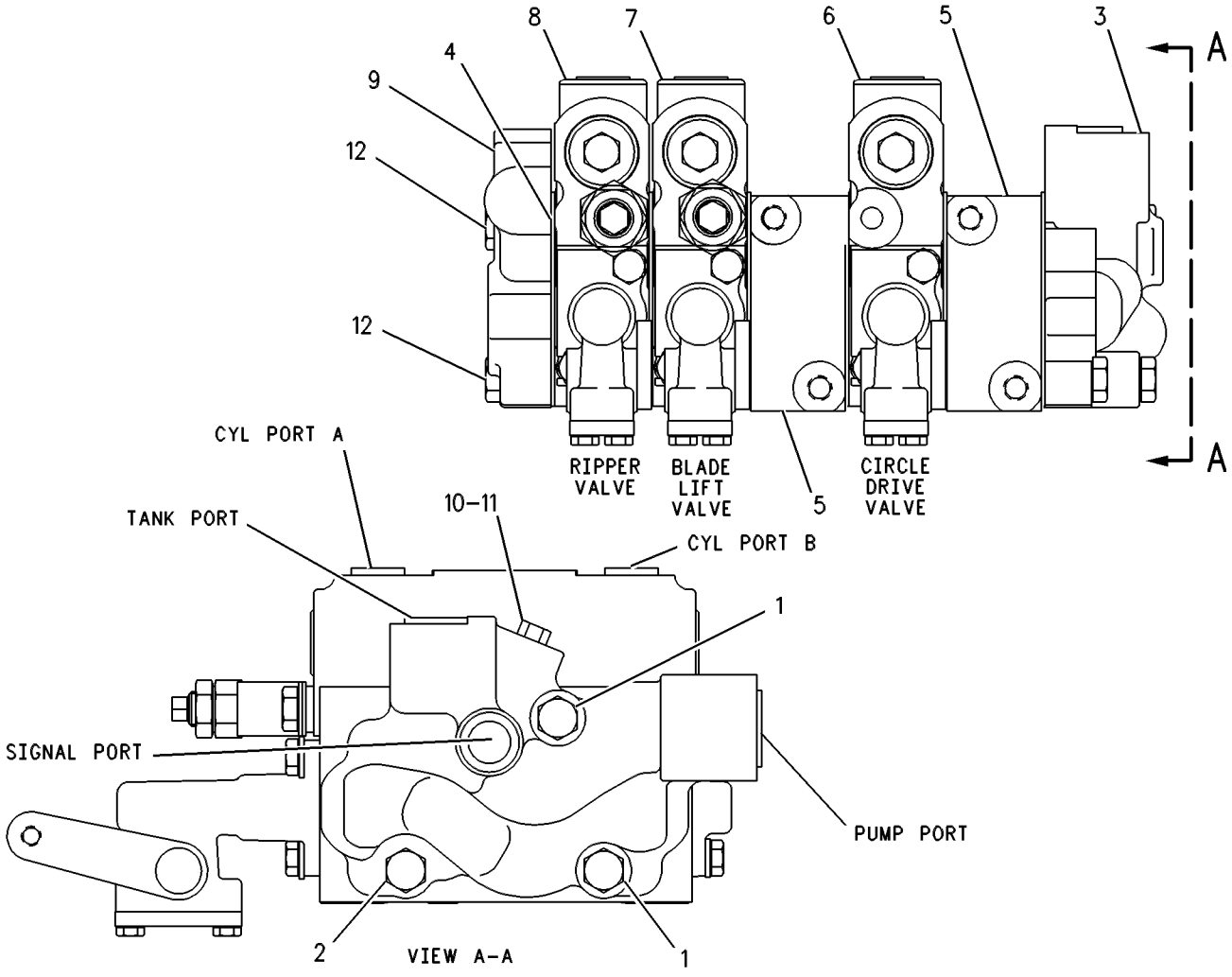

GRAPHIC #1 **<END>** g00272273

HYDRAULIC SYSTEM

6E-3032 VALVE GP-BANK 4—RH

S/N: JPA1-UP

PART OF 315-5330, 315-5334, 315-5335 VALVE & LINKAGE GP

AN ATTACHMENT

SMCS-5051 **i02591865**

NOTE	REF NO	GRAPHIC REF	PART NUMBER	QTY	PART NAME 1 2 3 4 5 6 (PRODUCT LEVEL)	SEE PAGE
M	1	1	**7X-2546**	2	BOLT (M10X1.5X180-MM)	
M	2	1	**137-6720**	1	BOLT (M10X1.5X160-MM)	
	3	1	**102-6238**	1	MANIFOLD	
	4	1	**101-0509**	5	SEAL-INTEGRAL	
Y	5	1	**6E-3028**	1	VALVE GP-CONTROL (ARTICULATION)	538
Y	6	1	**6E-3029**	1	VALVE GP-CONTROL (CENTERSHIFT)	540
Y	7	1	**6E-3030**	1	VALVE GP-CONTROL (WHEEL LEAN)	542
Y	8	1	**6E-3031**	1	VALVE GP-CONTROL (BLADE LIFT)	544
	9	1	**101-9346**	1	COVER	
M	10	1	**8T-4186**	3	BOLT (M10X1.5X40-MM)	
	12	1	*222-4737*	1	PLUG AS	
		1	**9S-4180**	1	PLUG	
		1	**4J-7533**	1	SEAL-O-RING	

M-METRIC PART
Y-SEPARATE ILLUSTRATION

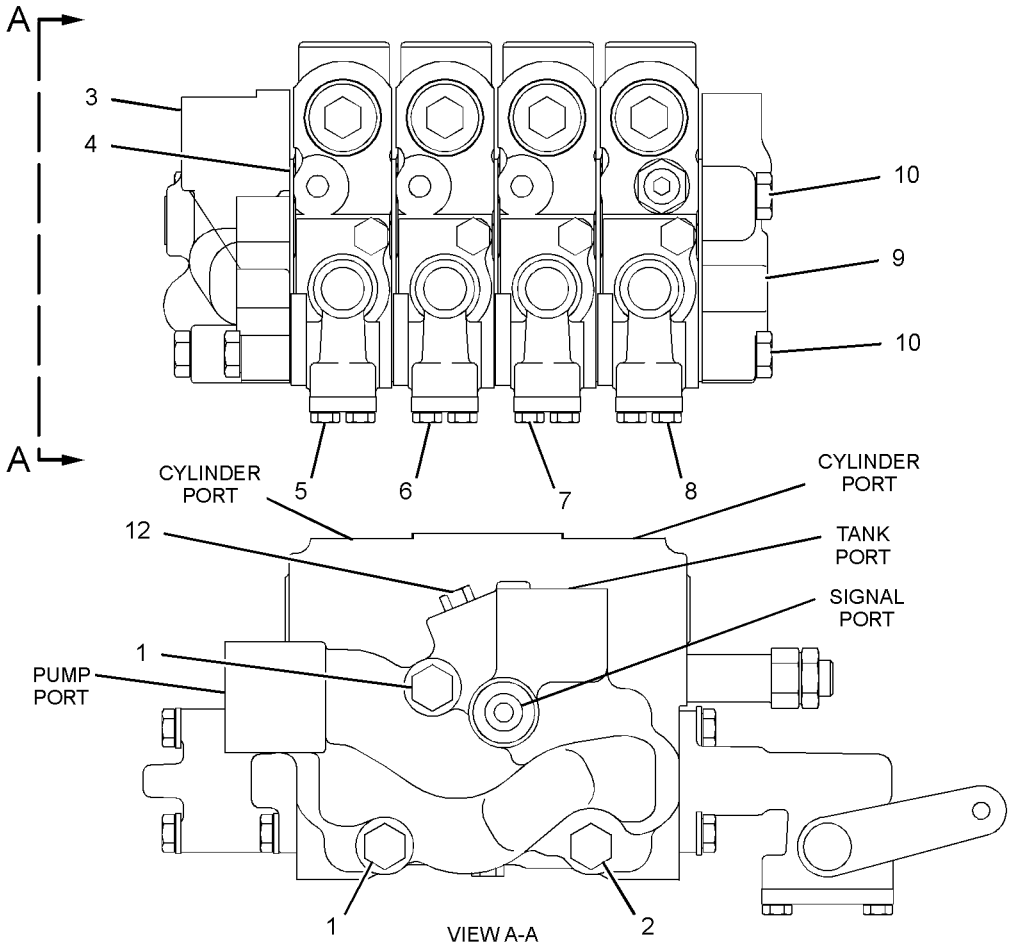

GRAPHIC #1 **<END>** g01297498

6E-3038 VALVE GP-BANK 4–LH

S/N: JPA1-UP
PART OF 315-5335 VALVE & LINKAGE GP
AN ATTACHMENT

SMCS-5051 **i01862273**

NOTE	REF NO	GRAPHIC REF	PART NUMBER	QTY	PART NAME 1 2 3 4 5 6 (PRODUCT LEVEL)	SEE PAGE
M	1	1	**7X-2546**	2	BOLT (M10X1.5X180-MM)	
M	2	1	**137-6720**	1	BOLT (M10X1.5X160-MM)	
	3	1	**102-8385**	1	MANIFOLD	
	4	1	**101-0509**	5	SEAL-INTEGRAL	
Y	5	1	**6E-3037**	1	VALVE GP-CONTROL (BLADE LIFT)	552
Y	6	1	**6E-3036**	1	VALVE GP-CONTROL (SIDESHIFT)	550
Y	7	1	**6E-3035**	1	VALVE GP-CONTROL (CIRCLE DRIVE)	548
Y	8	1	**6E-3034**	1	VALVE GP-CONTROL (BLADE TIP)	546
	9	1	**101-9346**	1	COVER	
M	10	1	**8T-4186**	3	BOLT (M10X1.5X40-MM)	
	11	1	**4J-7533**	1	SEAL-O-RING	
	12	1	**9S-4180**	1	PLUG	

M-METRIC PART
Y-SEPARATE ILLUSTRATION

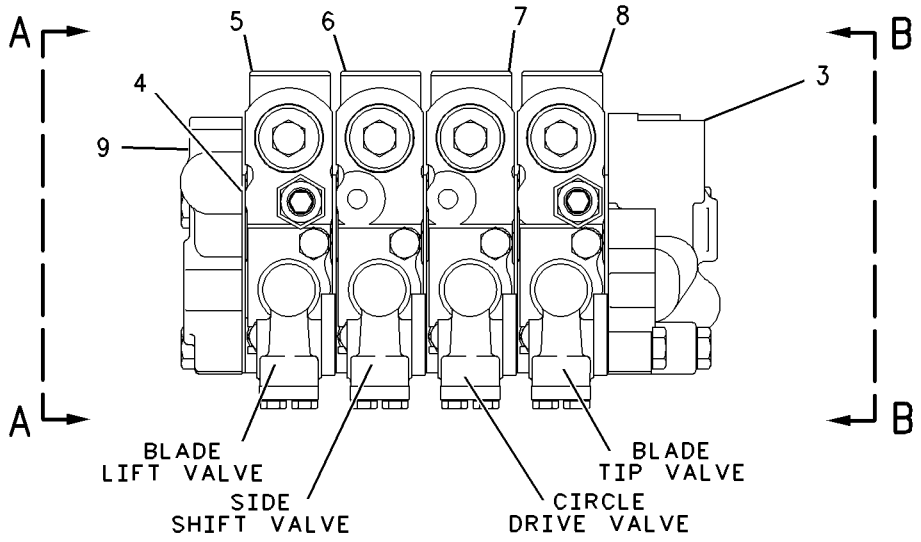

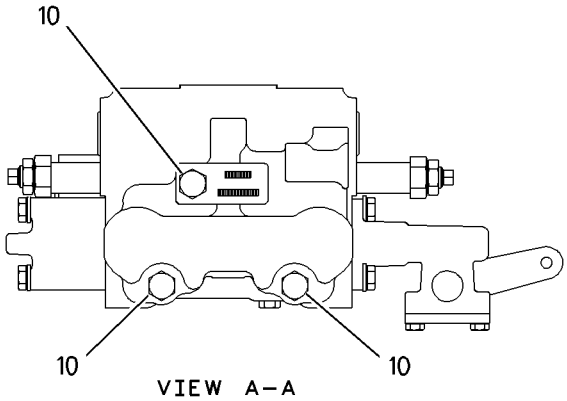

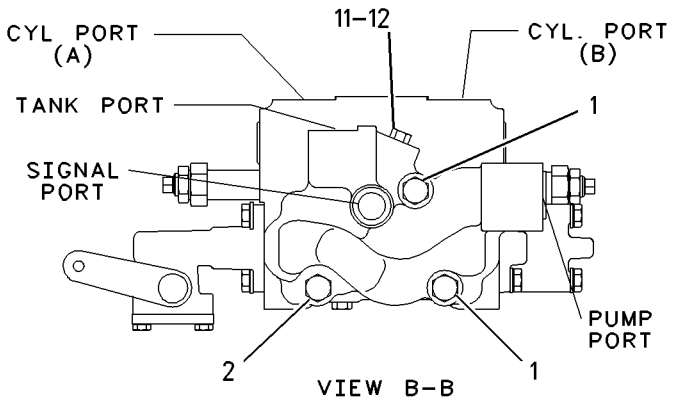

GRAPHIC #1 **<END>** g00898688

HYDRAULIC SYSTEM

124-3325 VALVE GP-BANK 4–RH

S/N: JPA1-UP

PART OF 112-6795, 112-6799, 112-6804, 112-6818, 115-0804, 115-0808, 115-0811, 130-0464, 130-7603 VALVE & LINKAGE GP

ALSO AN ATTACHMENT

SMCS-5051 **i03179249**

NOTE	REF NO	GRAPHIC REF	PART NUMBER	QTY	PART NAME 1 2 3 4 5 6 (PRODUCT LEVEL)	SEE PAGE
M	1	1	**7X-2546**	2	BOLT (M10X1.5X180-MM)	
M	2	1	**137-6720**	1	BOLT (M10X1.5X160-MM)	
	3	1	**102-6238**	1	MANIFOLD	
	4	1	**101-0509**	5	SEAL-INTEGRAL	
Y	5	1	**6E-3028**	1	VALVE GP-CONTROL (ARTICULATION)	538
Y	6	1	**6E-3029**	1	VALVE GP-CONTROL (CENTERSHIFT)	540
Y	7	1	**6E-3030**	1	VALVE GP-CONTROL (WHEEL LEAN)	542
Y	8	1	**124-2884**	1	VALVE GP-CONTROL (BLADE LIFT)	564
	9	1	**101-9346**	1	COVER	
M	10	1	**8T-4186**	3	BOLT (M10X1.5X40-MM)	
	11	1	*222-4737*	1	PLUG AS	
		1	**9S-4180**	1	PLUG	
		1	**4J-7533**	1	SEAL-O-RING	

M-METRIC PART
Y-SEPARATE ILLUSTRATION

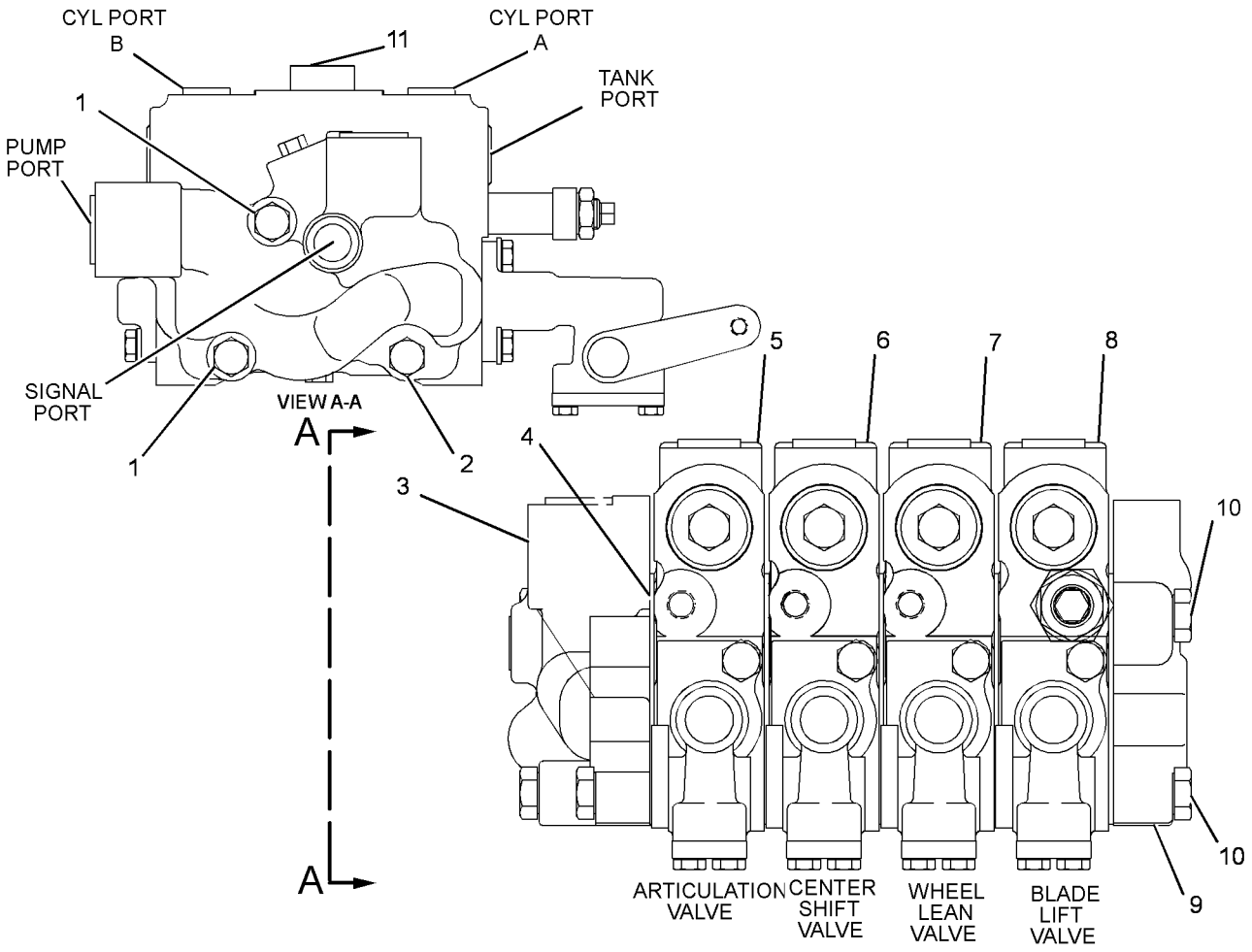

GRAPHIC #1 **<END>** g01625215

124-3327 VALVE GP-BANK 4–LH

S/N: JPA1-UP
PART OF 115-0811 VALVE & LINKAGE GP
AN ATTACHMENT

SMCS-5051 **i01044945**

NOTE	REF NO	GRAPHIC REF	PART NUMBER	QTY	PART NAME 1 2 3 4 5 6 (PRODUCT LEVEL)	SEE PAGE
M	1	1	**7X-2546**	2	BOLT (M10X1.5X180-MM)	
M	2	1	**137-6720**	1	BOLT (M10X1.5X160-MM)	
	3	1	**102-8385**	1	MANIFOLD	
	4	1	**101-0509**	5	SEAL-INTEGRAL	
Y	5	1	**124-2883**	1	VALVE GP-CONTROL (BLADE LIFT)	562
Y	6	1	**6E-3036**	1	VALVE GP-CONTROL (SIDESHIFT)	550
Y	7	1	**6E-3035**	1	VALVE GP-CONTROL (CIRCLE DRIVE)	548
Y	8	1	**6E-3034**	1	VALVE GP-CONTROL (BLADE TIP)	546
	9	1	**101-9346**	1	COVER	
M	10	1	**8T-4186**	3	BOLT (M10X1.5X40-MM)	
	11	1	**4J-7533**	1	SEAL-O-RING	
	12	1	**9S-4180**	1	PLUG	

M-METRIC PART
Y-SEPARATE ILLUSTRATION

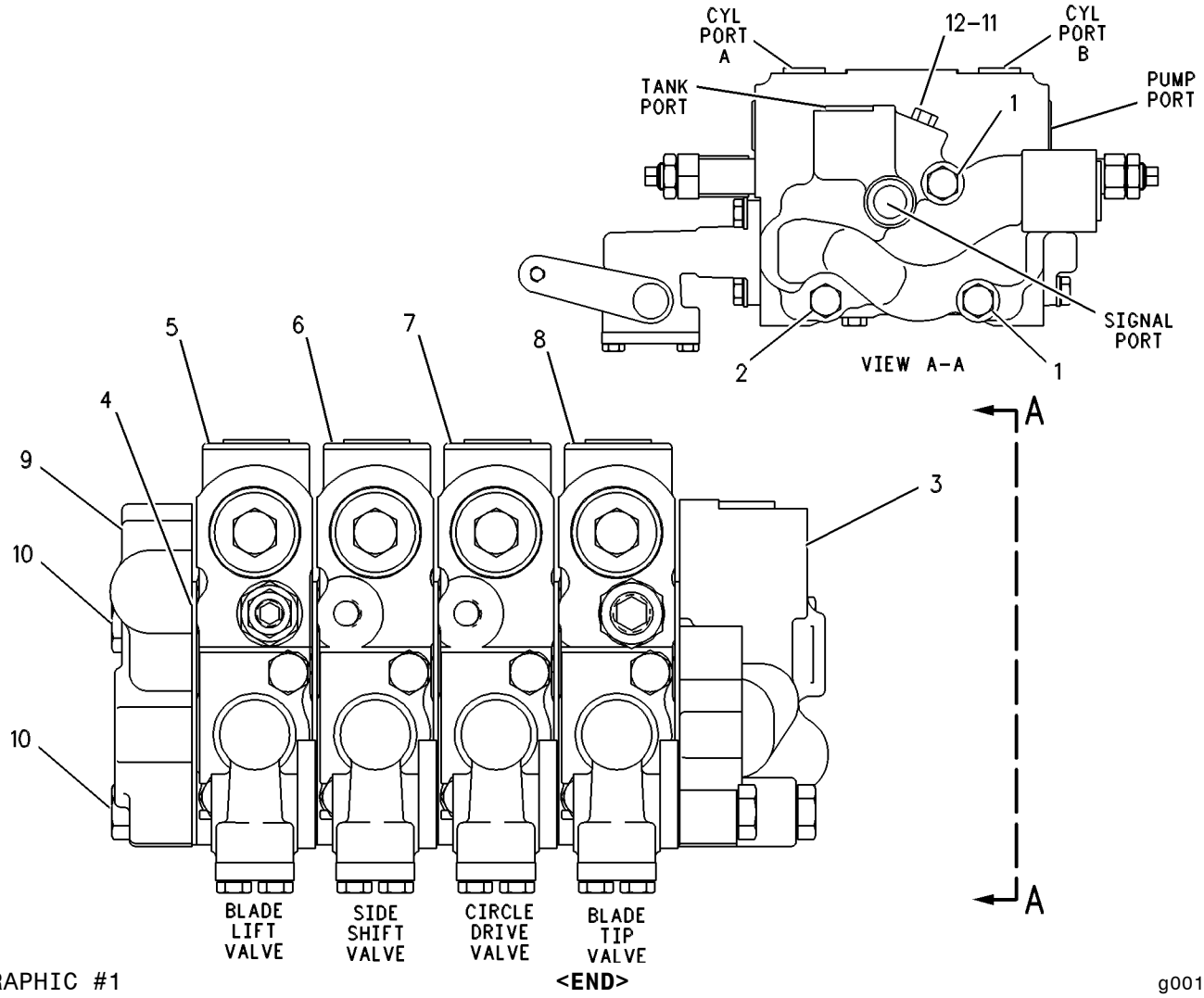

GRAPHIC #1

<END>

g00109153

HYDRAULIC SYSTEM

130-7754 VALVE GP-BANK 4–LH

S/N: JPA1-UP
PART OF 130-0464 VALVE & LINKAGE GP
AN ATTACHMENT

SMCS-5051 **i03179206**

NOTE	REF NO	GRAPHIC REF	PART NUMBER	QTY	PART NAME 1 2 3 4 5 6 (PRODUCT LEVEL)	SEE PAGE
M	1	1	**7X-2546**	2	BOLT (M10X1.5X180-MM)	
M	2	1	**137-6720**	1	BOLT (M10X1.5X160-MM)	
	3	1	**102-8385**	1	MANIFOLD	
	4	1	**101-0509**	6	SEAL-INTEGRAL	
	5	1	**111-9321**	1	SPACER	
Y	6	1	**6E-3035**	1	VALVE GP-CONTROL (CIRCLE DRIVE)	548
Y	7	1	**6E-3036**	1	VALVE GP-CONTROL (SIDESHIFT)	550
Y	8	1	**124-2883**	1	VALVE GP-CONTROL (BLADE LIFT)	562
Y	9	1	**107-0543**	1	VALVE GP-CONTROL (SCARIFIER)	554
	10	1	**101-9346**	1	COVER	
M	11	1	**137-6719**	1	BOLT (M10X1.5X80-MM)	
	12	1	**9S-4180**	1	PLUG	
	13	1	**4J-7533**	1	SEAL-O-RING	

M-METRIC PART
Y-SEPARATE ILLUSTRATION

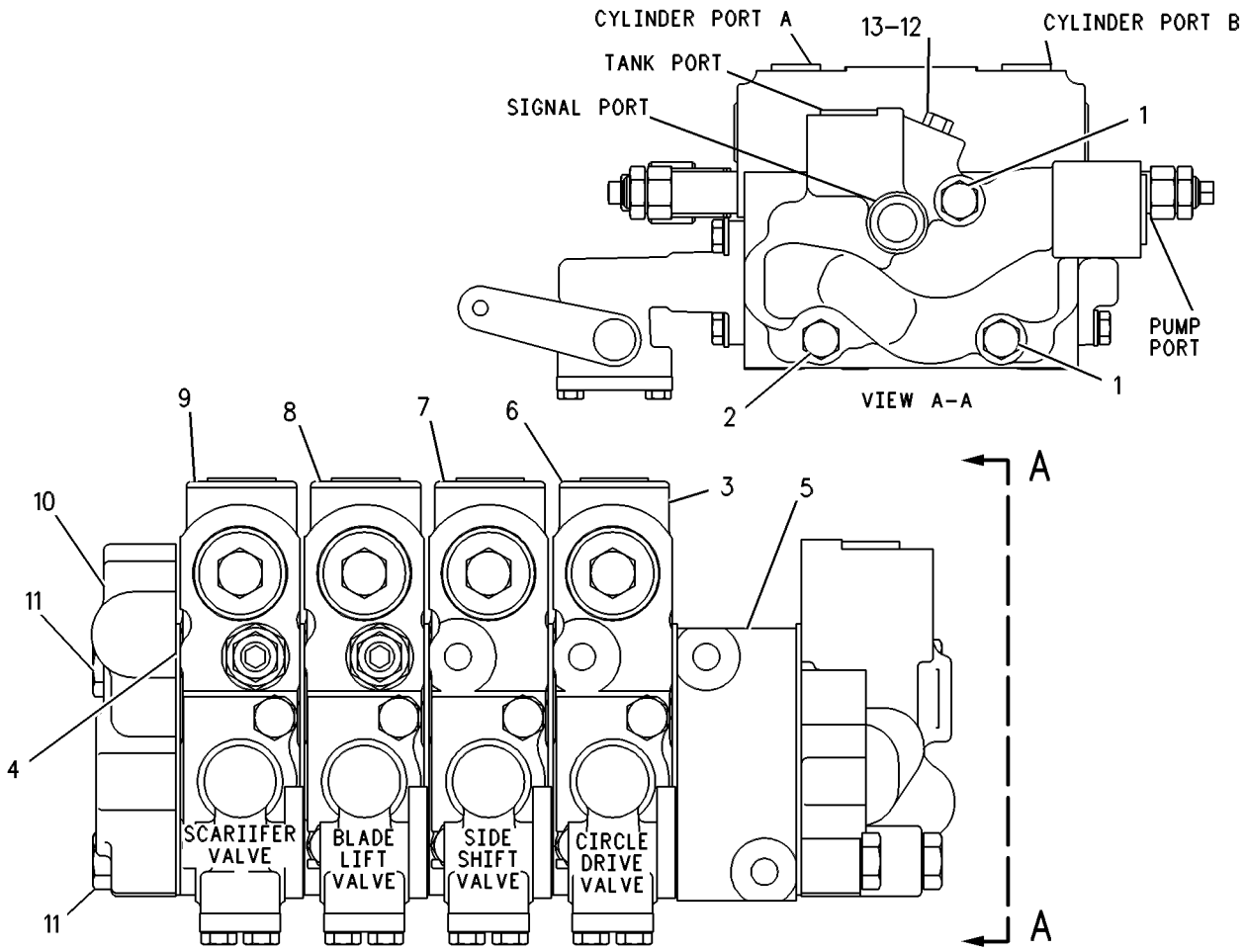

GRAPHIC #1 **<END>** g00109316

130-7755 VALVE GP-BANK 4–LH

S/N: JPA1-UP
PART OF 130-7603 VALVE & LINKAGE GP
AN ATTACHMENT

SMCS-5051 **i00158976**

NOTE	REF NO	GRAPHIC REF	PART NUMBER	QTY	PART NAME 1 2 3 4 5 6 (PRODUCT LEVEL)	SEE PAGE
M	1	1	**7X-2546**	2	BOLT (M10X1.5X180-MM)	
M	2	1	**137-6720**	1	BOLT (M10X1.5X160-MM)	
	3	1	**102-8385**	1	MANIFOLD	
	4	1	**101-0509**	6	SEAL-INTEGRAL	
	5	1	**111-9321**	1	SPACER	
Y	6	1	**6E-3035**	1	VALVE GP-CONTROL (CIRCLE DRIVE)	548
Y	7	1	**6E-3036**	1	VALVE GP-CONTROL (SIDESHIFT)	550
Y	8	1	**124-2883**	1	VALVE GP-CONTROL (BLADE LIFT)	562
Y	9	1	**107-0545**	1	VALVE GP-CONTROL (RIPPER)	556
	10	1	**101-9346**	1	COVER	
	11	1	**9S-4180**	1	PLUG	
	12	1	**4J-7533**	1	SEAL-O-RING	
M	13	1	**137-6719**	3	BOLT (M10X1.5X80-MM)	

M-METRIC PART
Y-SEPARATE ILLUSTRATION

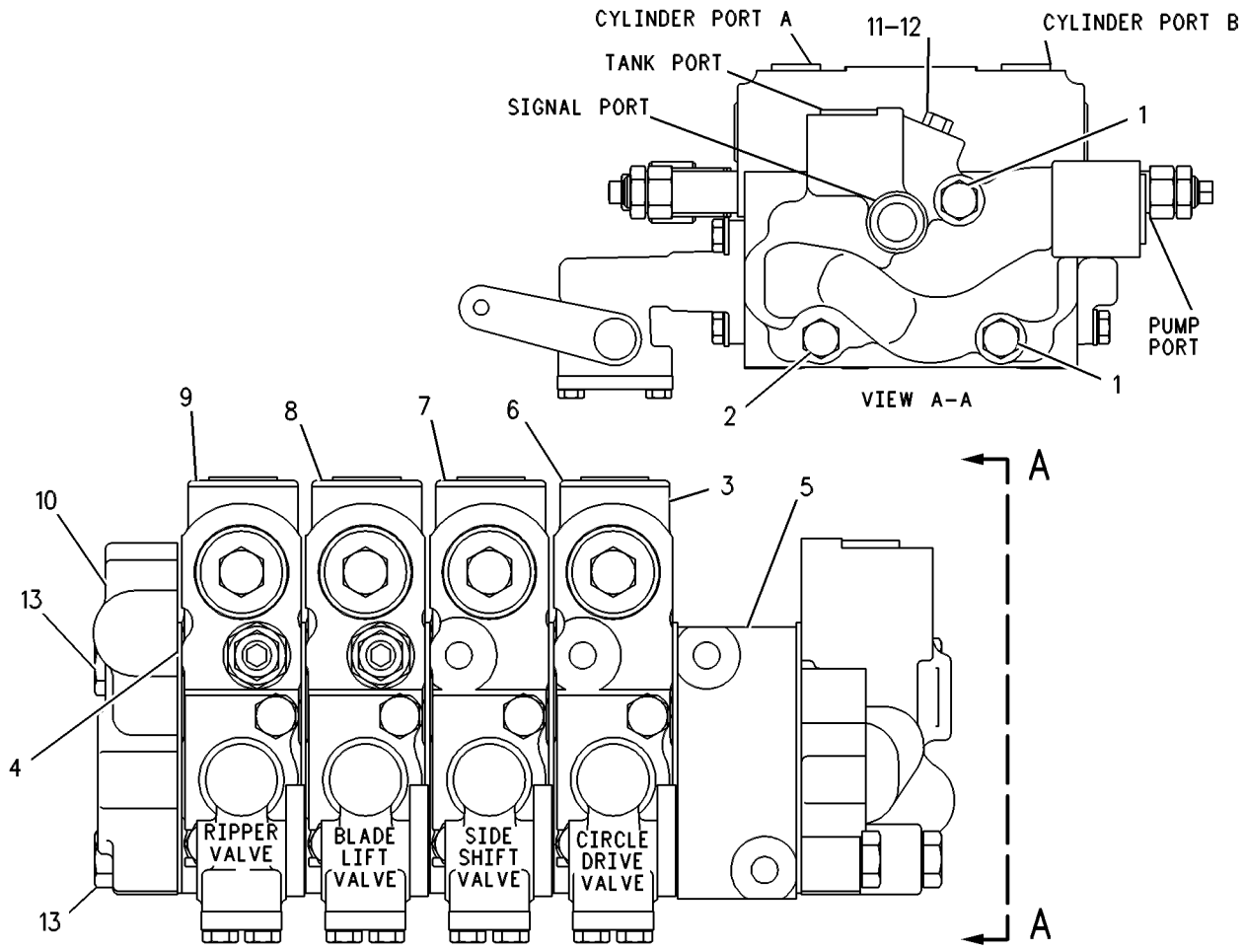

GRAPHIC #1 **<END>** g00109314

HYDRAULIC SYSTEM

250-0543 VALVE GP-BANK 4–LH

S/N: JPA1-UP
PART OF 331-1517 VALVE & LINKAGE GP
AN ATTACHMENT

SMCS-5051 **i03255863**

NOTE	REF NO	GRAPHIC REF	PART NUMBER	QTY	PART NAME 1 2 3 4 5 6 (PRODUCT LEVEL)	SEE PAGE
Y	1	1	**6E-3034**	1	VALVE GP-CONTROL (BLADE TIP)	546
Y	2	1	**6E-3035**	1	VALVE GP-CONTROL (CIRCLE DRIVE)	548
Y	3	1	**6E-3036**	1	VALVE GP-CONTROL (SIDESHIFT)	550
Y	4	1	**6E-3037**	1	VALVE GP-CONTROL (BLADE LIFT)	552
	5	1	**101-0509**	5	SEAL-INTEGRAL	
	6	1	**102-8385**	1	MANIFOLD	
	7	1	*222-4737*	1	PLUG AS	
		1	**9S-4180**	1	PLUG	
		1	**4J-7533**	1	SEAL-O-RING	
Y	8	1	**239-9893**	1	MANIFOLD GP-VALVE (LH)	427
	9	1	**8T-4896**	1	WASHER-HARD (10.2X18.5X2.5-MM THK)	
M	10	1	**137-6720**	1	BOLT (M10X1.5X160-MM)	
	11	1	*148-8409*	1	PLUG AS	
		1	**9S-8008**	1	PLUG-O-RING	
		1	**3D-2824**	1	SEAL-O-RING	
	12	1	**3K-6113**	3	WASHER-HARD (12X18.5X3-MM THK)	
M	13	1	**7X-2546**	2	BOLT (M10X1.5X180-MM)	
M	14	1	**8T-4186**	3	BOLT (M10X1.5X40-MM)	

M-METRIC PART
Y-SEPARATE ILLUSTRATION

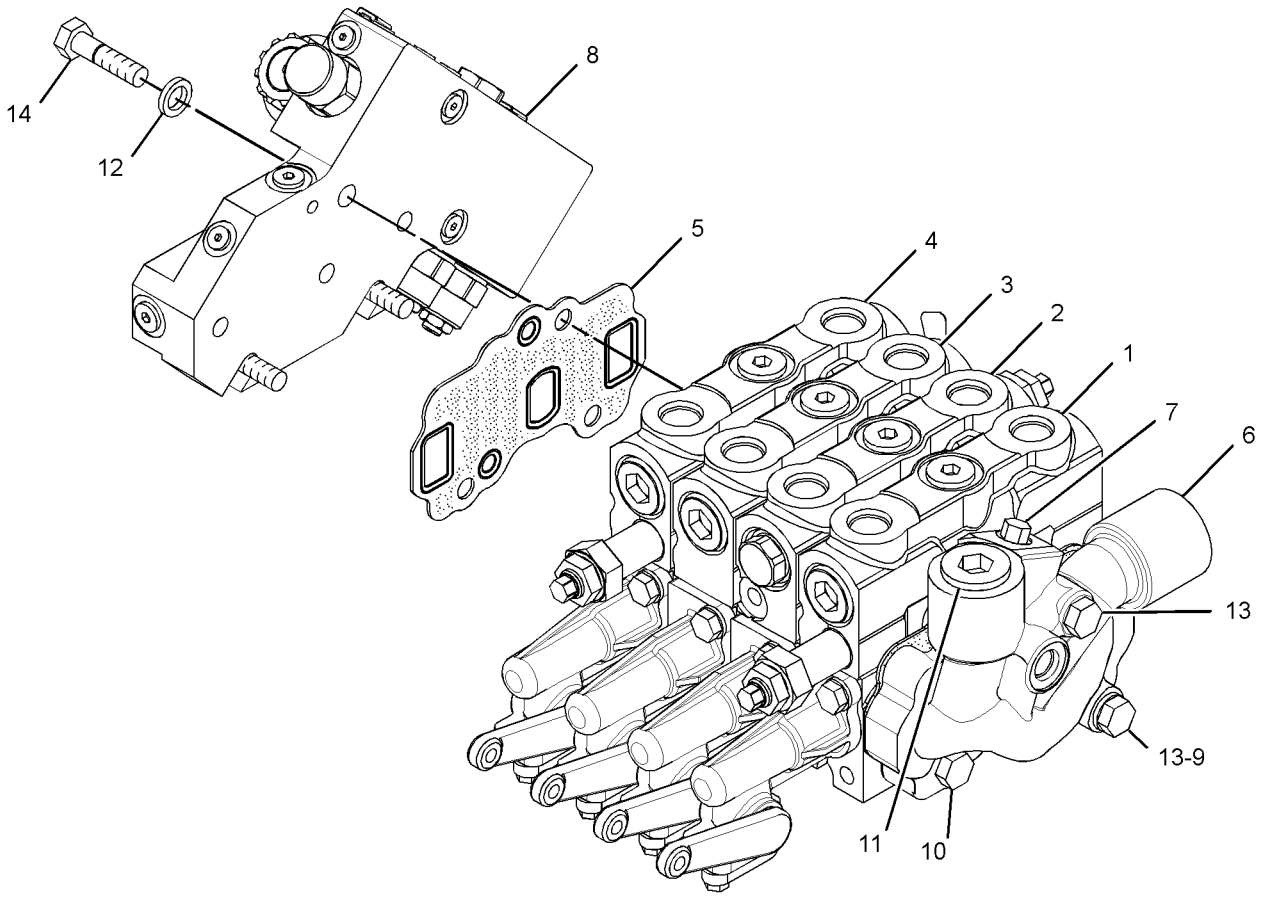

GRAPHIC #1 **<END>** g01692836

250-0544 VALVE GP-BANK 4–RH

S/N: JPA1-UP

PART OF 331-1509, 331-1510, 331-1517 VALVE & LINKAGE GP

AN ATTACHMENT

SMCS-5051 **i03255862**

NOTE	REF NO	GRAPHIC REF	PART NUMBER	QTY	PART NAME 1 2 3 4 5 6 (PRODUCT LEVEL)	SEE PAGE
Y	1	1	**6E-3028**	1	VALVE GP-CONTROL (ARTICULATION)	538
Y	2	1	**6E-3029**	1	VALVE GP-CONTROL (CENTERSHIFT)	540
Y	3	1	**6E-3030**	1	VALVE GP-CONTROL (WHEEL LEAN)	542
Y	4	1	**6E-3031**	1	VALVE GP-CONTROL (BLADE LIFT)	544
	5	1	**101-0509**	5	SEAL-INTEGRAL	
	6	1	*222-4737*	1	PLUG AS	
		1	**4J-7533**	1	SEAL-O-RING	
		1	**9S-4180**	1	PLUG	
Y	7	1	**239-9894**	1	MANIFOLD GP-VALVE (RH)	429
	8	1	**8T-4896**	1	WASHER-HARD (10.2X18.5X2.5-MM THK)	
	9	1	**102-6238**	1	MANIFOLD	
M	10	1	**137-6720**	1	BOLT (M10X1.5X160-MM)	
	11	1	**3K-6113**	3	WASHER-HARD (12X18.5X3-MM THK)	
M	12	1	**7X-2546**	2	BOLT (M10X1.5X180-MM)	
M	13	1	**8T-4186**	3	BOLT (M10X1.5X40-MM)	

M-METRIC PART
Y-SEPARATE ILLUSTRATION

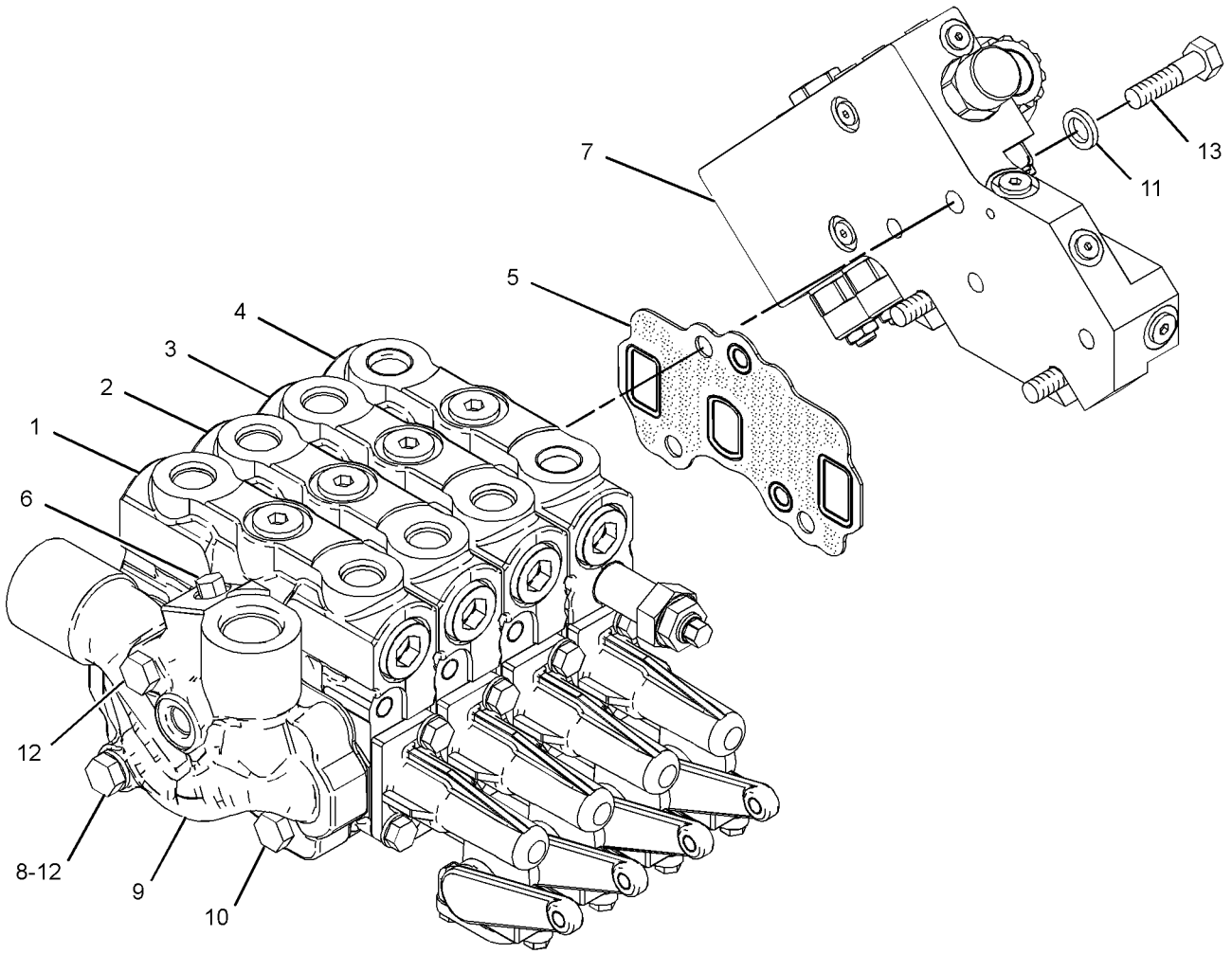

GRAPHIC #1 **<END>** g01693095

HYDRAULIC SYSTEM

104-8645 VALVE GP-BANK 5–LH

S/N: JPA1-UP
PART OF 315-5330 VALVE & LINKAGE GP
AN ATTACHMENT

SMCS-5051 **i02591872**

NOTE	REF NO	GRAPHIC REF	PART NUMBER	QTY	PART NAME 1 2 3 4 5 6 (PRODUCT LEVEL)	SEE PAGE
M	1	1	**7X-2546**	2	BOLT (M10X1.5X180-MM)	
M	2	1	**137-6720**	1	BOLT (M10X1.5X160-MM)	
	3	1	**102-8385**	1	MANIFOLD	
	4	1	**101-0509**	6	SEAL-INTEGRAL	
Y	5	1	**6E-3034**	1	VALVE GP-CONTROL (BLADE TIP)	546
Y	6	1	**6E-3035**	1	VALVE GP-CONTROL (CIRCLE DRIVE)	548
Y	7	1	**6E-3036**	1	VALVE GP-CONTROL (SIDESHIFT)	550
Y	8	1	**6E-3037**	1	VALVE GP-CONTROL (BLADE LIFT)	552
Y	9	1	**107-0545**	1	VALVE GP-CONTROL (RIPPER)	556
	10	1	**101-9346**	1	COVER	
M	12	1	**137-6719**	3	BOLT (M10X1.5X80-MM)	
	13	1	*222-4737*	1	PLUG AS	
		1	**9S-4180**	1	PLUG	
		1	**4J-7533**	1	SEAL-O-RING	

M-METRIC PART
Y-SEPARATE ILLUSTRATION

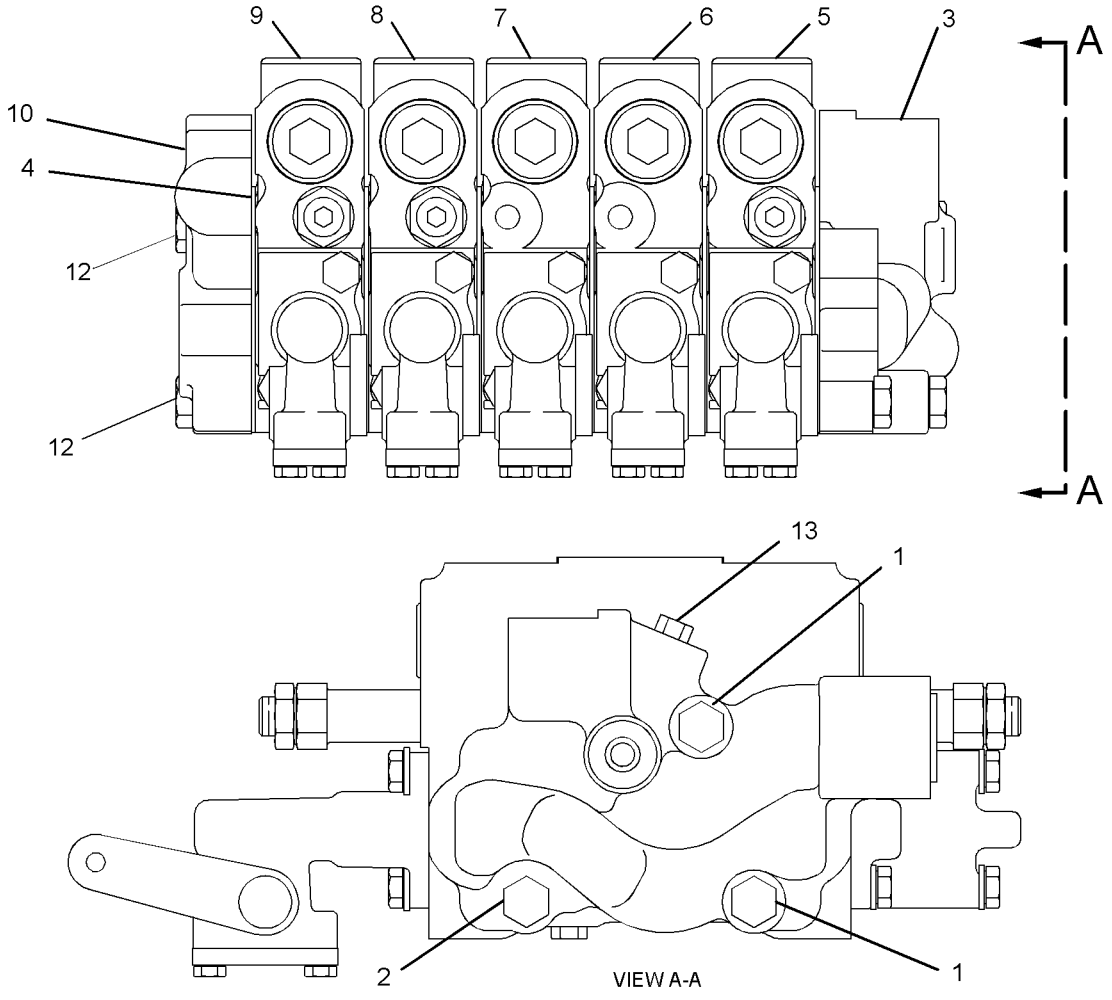

GRAPHIC #1 **<END>** g01297516

104-8646 VALVE GP-BANK 5–LH

S/N: JPA1-UP
PART OF 315-5331, 315-5334 VALVE & LINKAGE GP
AN ATTACHMENT

SMCS-5051 **i03435154**

NOTE	REF NO	GRAPHIC REF	PART NUMBER	QTY	PART NAME 1 2 3 4 5 6 (PRODUCT LEVEL)	SEE PAGE
M	1	1	**7X-2546**	2	BOLT (M10X1.5X180-MM)	
M	2	1	**137-6720**	1	BOLT (M10X1.5X160-MM)	
	3	1	**102-8385**	1	MANIFOLD	
	4	1	**101-0509**	6	SEAL-INTEGRAL	
Y	5	1	**6E-3034**	1	VALVE GP-CONTROL (BLADE TIP)	546
Y	6	1	**6E-3035**	1	VALVE GP-CONTROL (CIRCLE DRIVE)	548
Y	7	1	**6E-3036**	1	VALVE GP-CONTROL (SIDESHIFT)	550
Y	8	1	**6E-3037**	1	VALVE GP-CONTROL (BLADE LIFT)	552
Y	9	1	**107-0543**	1	VALVE GP-CONTROL (SCARIFIER)	554
	10	1	**101-9346**	1	COVER	
	12	1	**222-4737**	1	PLUG AS	
		1	**9S-4180**	1	PLUG	
		1	**4J-7533**	1	SEAL-O-RING	
M	13	1	**137-6719**	3	BOLT (M10X1.5X80-MM)	

M-METRIC PART
Y-SEPARATE ILLUSTRATION

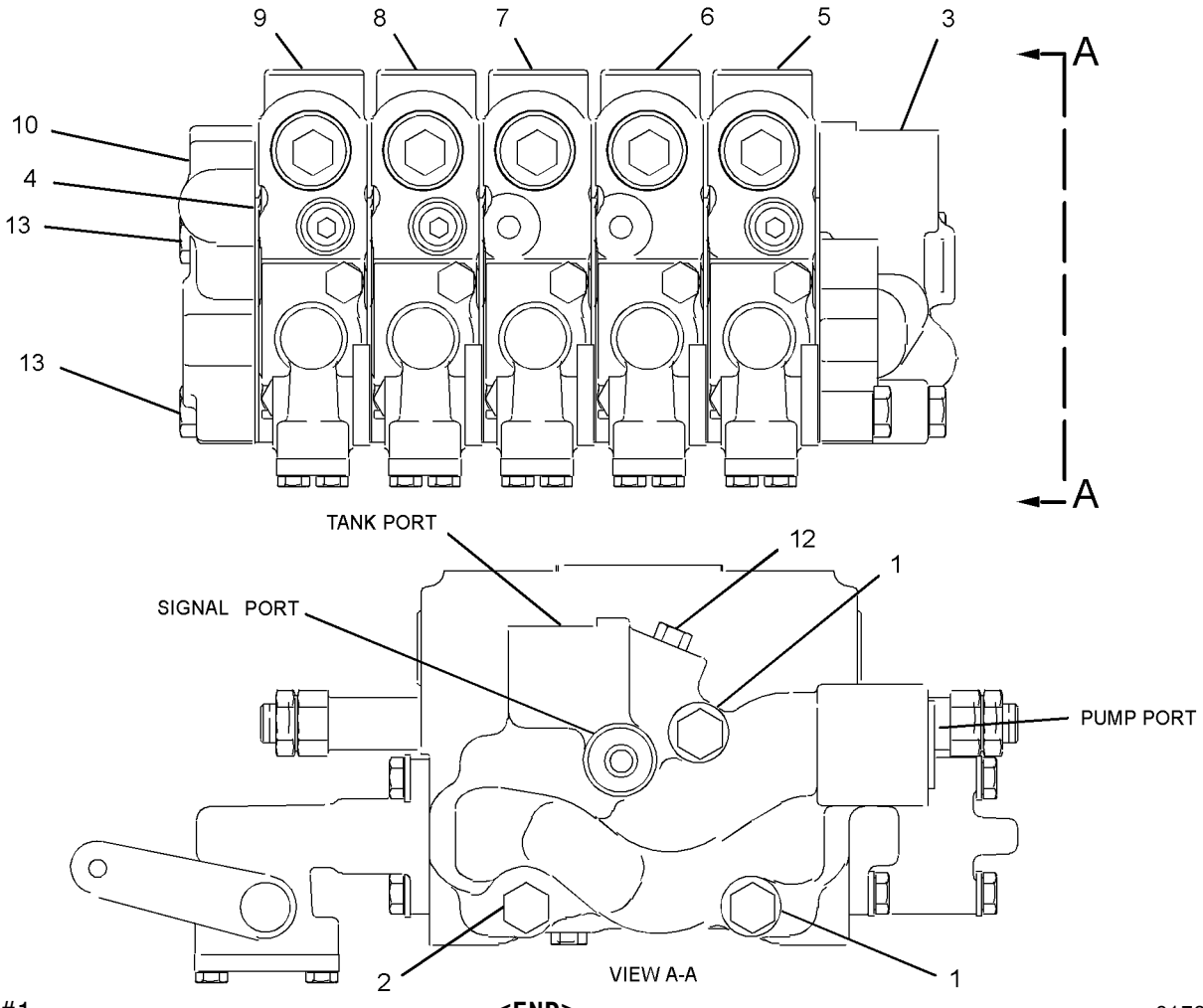

GRAPHIC #1 **<END>** g01785793

HYDRAULIC SYSTEM

104-8671 VALVE GP-BANK 5–RH

S/N: JPA1-UP

PART OF 315-5331, 315-5333, 315-5336 VALVE & LINKAGE GP

AN ATTACHMENT

SMCS-5051 **i02592713**

NOTE	REF NO	GRAPHIC REF	PART NUMBER	QTY	PART NAME 1 2 3 4 5 6 (PRODUCT LEVEL)	SEE PAGE
M	1	1	**7X-2546**	2	BOLT (M10X1.5X180-MM)	
M	2	1	**137-6720**	1	BOLT (M10X1.5X160-MM)	
	3	1	**102-6238**	1	MANIFOLD	
	4	1	**101-0509**	6	SEAL-INTEGRAL	
Y	5	1	**6E-3028**	1	VALVE GP-CONTROL (ARTICULATION)	538
Y	6	1	**6E-3029**	1	VALVE GP-CONTROL (CENTERSHIFT)	540
Y	7	1	**6E-3030**	1	VALVE GP-CONTROL (WHEEL LEAN)	542
Y	8	1	**6E-3031**	1	VALVE GP-CONTROL (BLADE LIFT)	544
Y	9	1	**107-0547**	1	VALVE GP-CONTROL (DOZER LIFT, PLOW)	558
	10	1	**101-9346**	1	COVER	
M	11	1	**137-6719**	3	BOLT (M10X1.5X80-MM)	
	13	1	*222-4737*	1	PLUG AS	
		1	**4J-7533**	1	SEAL-O-RING	
		1	**9S-4180**	1	PLUG	

M-METRIC PART
Y-SEPARATE ILLUSTRATION

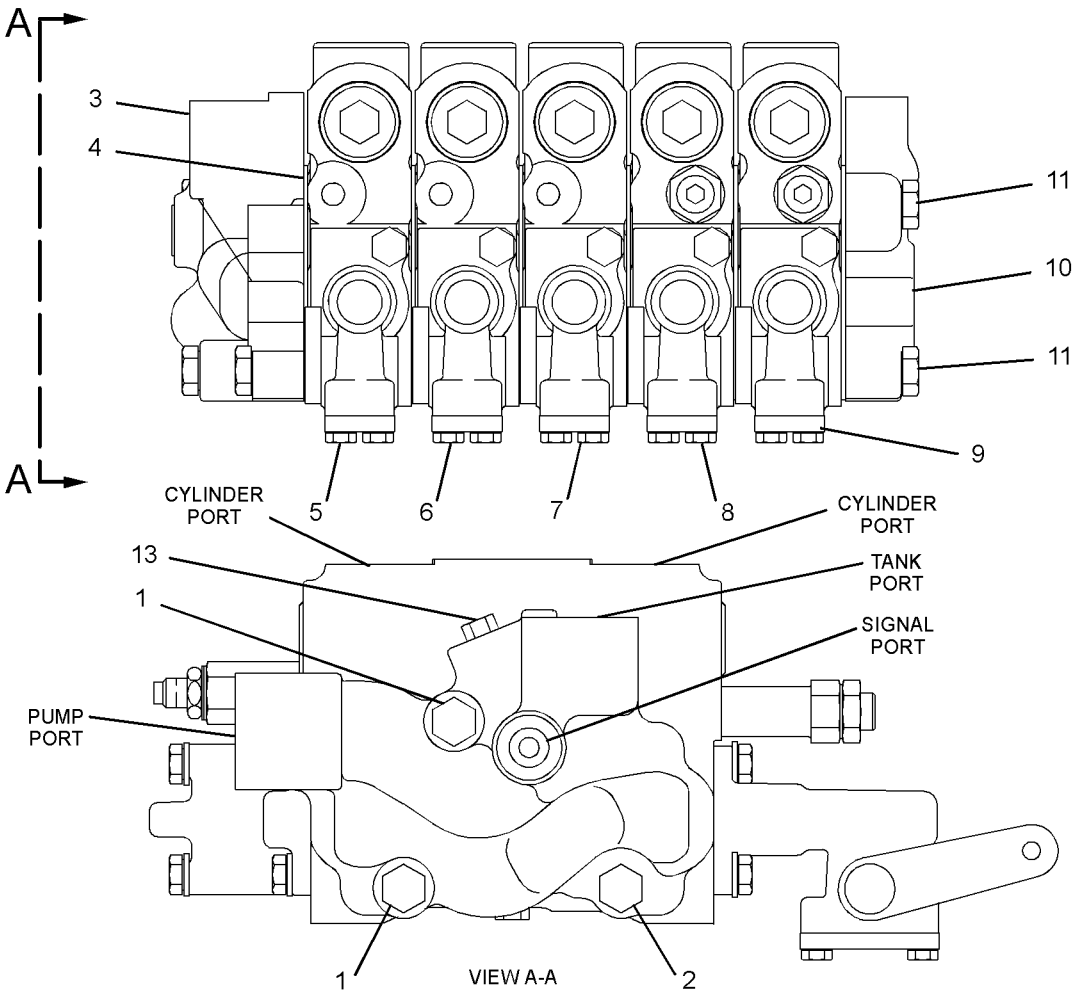

GRAPHIC #1 **<END>** g01297602

124-3326 VALVE GP-BANK 5–RH

S/N: JPA1-UP
PART OF 115-0810, 115-0812 VALVE & LINKAGE GP
AN ATTACHMENT

SMCS-5051 **i03435261**

NOTE	REF NO	GRAPHIC REF	PART NUMBER	QTY	PART NAME 1 2 3 4 5 6 (PRODUCT LEVEL)	SEE PAGE
M	1	1	**7X-2546**	2	BOLT (M10X1.5X180-MM)	
M	2	1	**137-6720**	1	BOLT (M10X1.5X160-MM)	
	3	1	**102-6238**	1	MANIFOLD	
	4	1	**101-0509**	6	SEAL-INTEGRAL	
Y	5	1	**6E-3028**	1	VALVE GP-CONTROL (ARTICULATION)	538
Y	6	1	**6E-3029**	1	VALVE GP-CONTROL (CENTERSHIFT)	540
Y	7	1	**6E-3030**	1	VALVE GP-CONTROL (WHEEL LEAN)	542
Y	8	1	**124-2884**	1	VALVE GP-CONTROL (BLADE LIFT)	564
Y	9	1	**124-2885**	1	VALVE GP-CONTROL (BULLDOZER LIFT, PLOW)	566
	10	1	**101-9346**	1	COVER	
M	11	1	**137-6719**	3	BOLT (M10X1.5X80-MM)	
	12	1	**4J-7533**	1	SEAL-O-RING	
	13	1	**9S-4180**	1	PLUG	

M-METRIC PART
Y-SEPARATE ILLUSTRATION

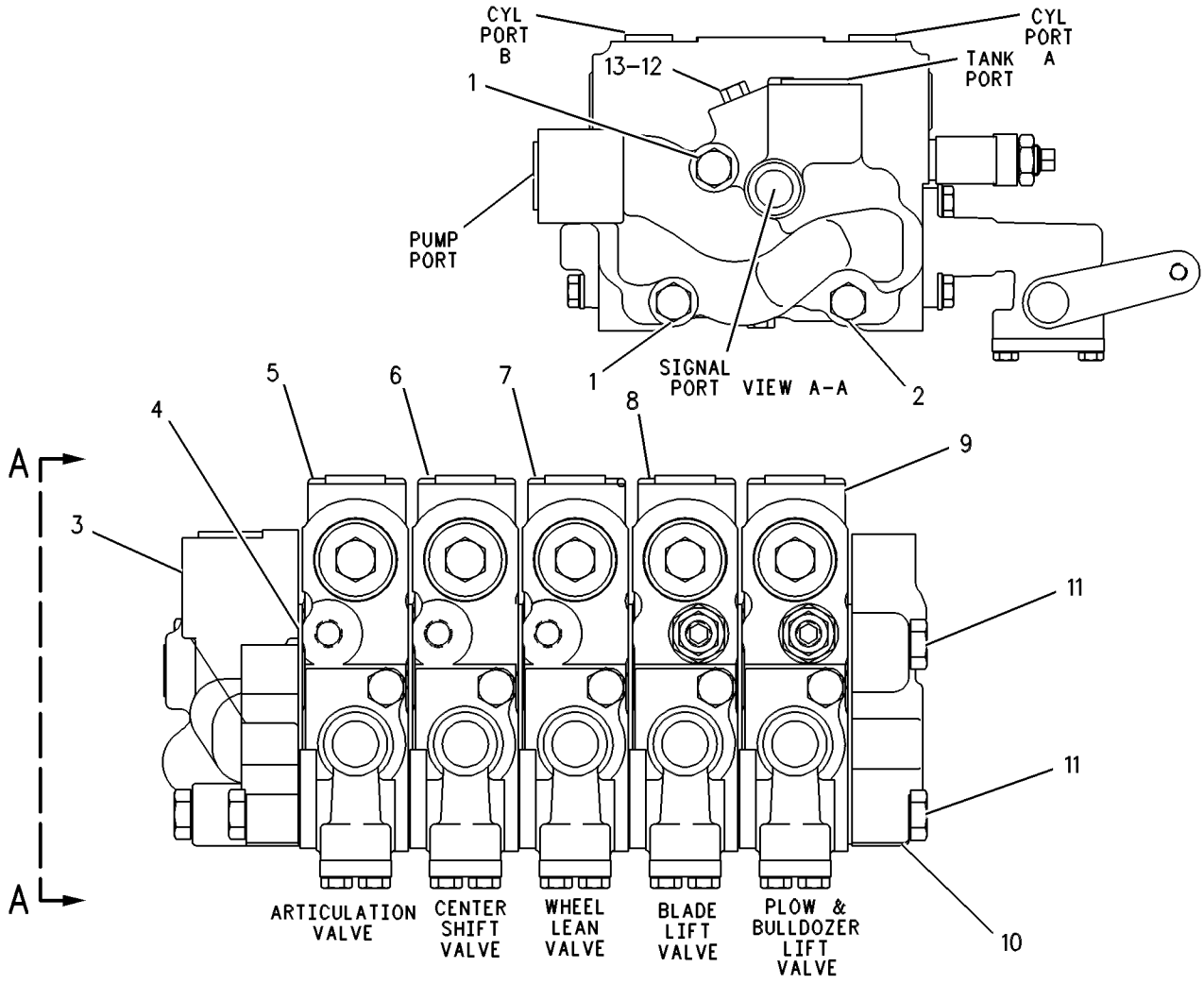

GRAPHIC #1 **<END>** g00109160

HYDRAULIC SYSTEM

124-3328 VALVE GP-BANK 5–LH

S/N: JPA1-UP
PART OF 115-0804, 115-0810 VALVE & LINKAGE GP
AN ATTACHMENT

SMCS-5051 **i03179224**

NOTE	REF NO	GRAPHIC REF	PART NUMBER	QTY	PART NAME 1 2 3 4 5 6 (PRODUCT LEVEL)	SEE PAGE
M	1	1	**7X-2546**	2	BOLT (M10X1.5X180-MM)	
M	2	1	**137-6720**	1	BOLT (M10X1.5X160-MM)	
	3	1	**102-8385**	1	MANIFOLD	
	4	1	**101-0509**	6	SEAL-INTEGRAL	
Y	5	1	**6E-3034**	1	VALVE GP-CONTROL (BLADE TIP)	546
Y	6	1	**6E-3035**	1	VALVE GP-CONTROL (CIRCLE DRIVE)	548
Y	7	1	**6E-3036**	1	VALVE GP-CONTROL (SIDESHIFT)	550
Y	8	1	**124-2883**	1	VALVE GP-CONTROL (BLADE LIFT)	562
Y	9	1	**107-0543**	1	VALVE GP-CONTROL (SCARIFIER)	554
	10	1	**101-9346**	1	COVER	
M	11	1	**137-6719**	3	BOLT (M10X1.5X80-MM)	
	12	1	**9S-4180**	1	PLUG	
	13	1	**4J-7533**	1	SEAL-O-RING	

M-METRIC PART
Y-SEPARATE ILLUSTRATION

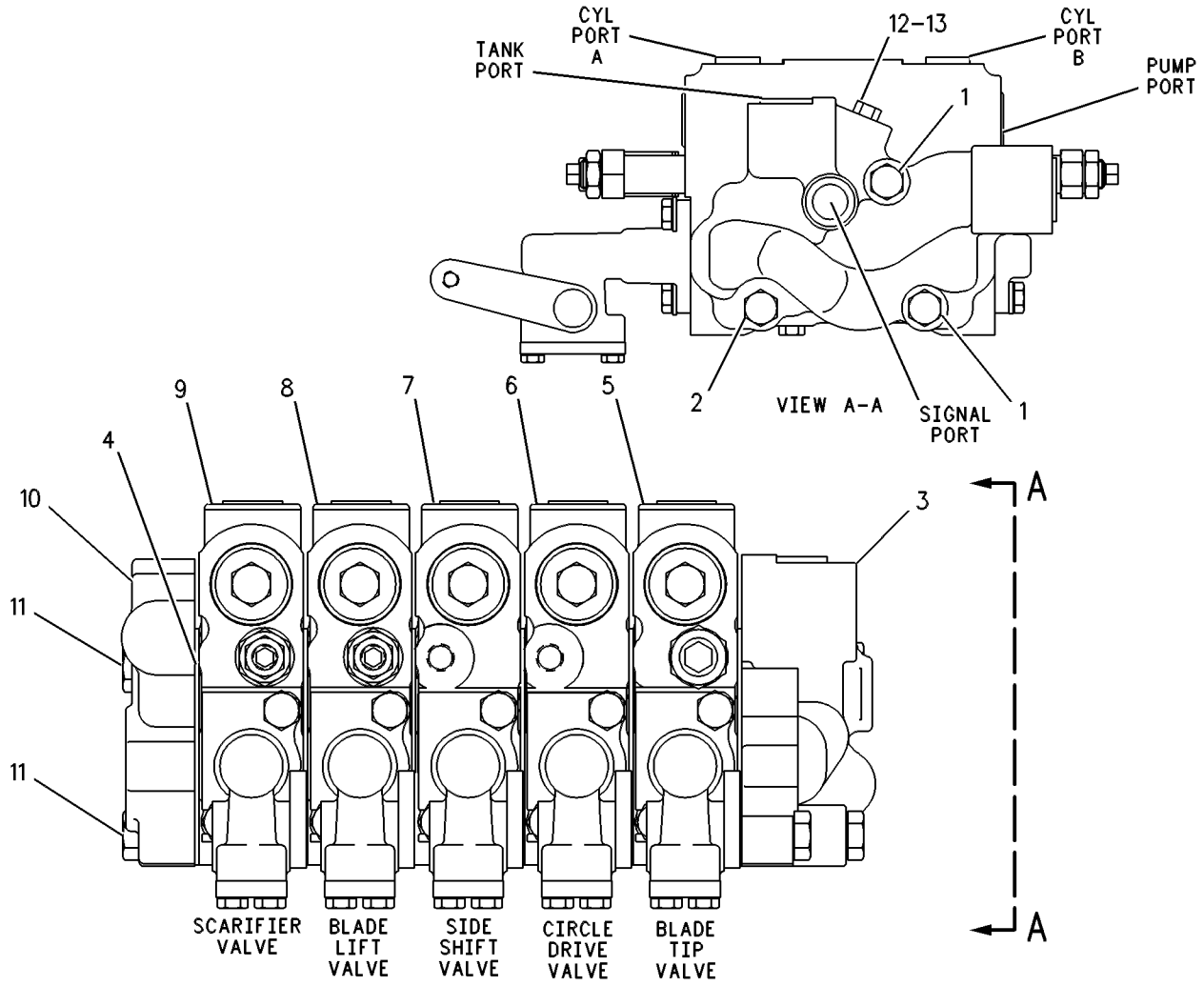

GRAPHIC #1 **<END>** g00252767

124-3329 VALVE GP-BANK 5–LH

S/N: JPA1-UP

PART OF 115-0808, 115-0812, 138-7599 VALVE & LINKAGE GP

AN ATTACHMENT

SMCS-5051 **i00857872**

NOTE	REF NO	GRAPHIC REF	PART NUMBER	QTY	PART NAME 1 2 3 4 5 6 (PRODUCT LEVEL)	SEE PAGE
M	1	1	**7X-2546**	2	BOLT (M10X1.5X180-MM)	
M	2	1	**137-6720**	1	BOLT (M10X1.5X160-MM)	
	3	1	**102-8385**	1	MANIFOLD	
	4	1	**101-0509**	6	SEAL-INTEGRAL	
Y	5	1	**6E-3034**	1	VALVE GP-CONTROL (BLADE TIP)	546
Y	6	1	**6E-3035**	1	VALVE GP-CONTROL (CIRCLE DRIVE)	548
Y	7	1	**6E-3036**	1	VALVE GP-CONTROL (SIDESHIFT)	550
Y	8	1	**124-2883**	1	VALVE GP-CONTROL (BLADE LIFT)	562
Y	9	1	**107-0545**	1	VALVE GP-CONTROL (RIPPER)	556
	10	1	**101-9346**	1	COVER	
	11	1	**9S-4180**	1	PLUG	
	12	1	**4J-7533**	1	SEAL-O-RING	
M	13	1	**137-6719**	3	BOLT (M10X1.5X80-MM)	

M-METRIC PART
Y-SEPARATE ILLUSTRATION

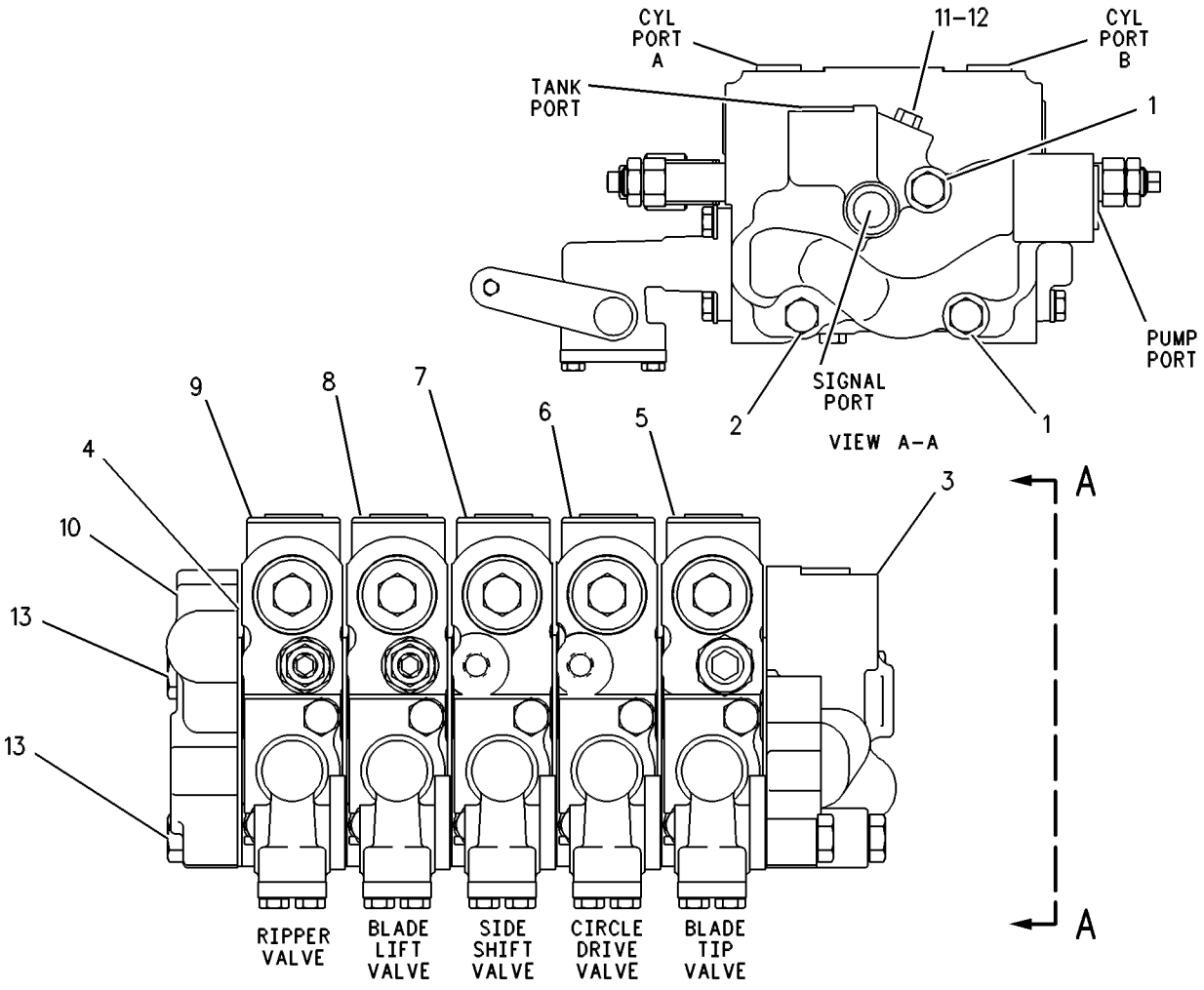

GRAPHIC #1 **<END>** g00252814

HYDRAULIC SYSTEM

250-0548 VALVE GP-BANK 5–RH

S/N: JPA1-UP

PART OF 331-1514, 331-1515, 331-1516 VALVE & LINKAGE GP

AN ATTACHMENT

SMCS-5051 **i03435300**

NOTE	REF NO	GRAPHIC REF	PART NUMBER	QTY	PART NAME 1 2 3 4 5 6 (PRODUCT LEVEL)	SEE PAGE
Y	1	1	**6E-3028**	1	VALVE GP-CONTROL (ARTICULATION)	538
Y	2	1	**6E-3029**	1	VALVE GP-CONTROL (CENTERSHIFT)	540
Y	3	1	**6E-3030**	1	VALVE GP-CONTROL (WHEEL LEAN)	542
Y	4	1	**6E-3031**	1	VALVE GP-CONTROL (BLADE LIFT)	544
	5	1	**101-0509**	6	SEAL-INTEGRAL	
	6	1	**102-6238**	1	MANIFOLD	
Y	7	1	**107-0547**	1	VALVE GP-CONTROL (BULLDOZER LIFT, PLOW)	558
Y	8	1	**239-9894**	1	MANIFOLD GP-VALVE (RH)	429
M	10	1	**137-6719**	3	BOLT (M10X1.5X80-MM)	
M	11	1	**137-6720**	1	BOLT (M10X1.5X160-MM)	
	12	1	*222-4737*	1	PLUG AS	
		1	**9S-4180**	1	PLUG	
		1	**4J-7533**	1	SEAL-O-RING	
	13	1	**3K-6113**	3	WASHER-HARD (12X18.5X3-MM THK)	
M	14	1	**7X-2546**	2	BOLT (M10X1.5X180-MM)	
	15	1	**8T-4896**	1	WASHER-HARD (10.2X18.5X2.5-MM THK)	

M-METRIC PART
Y-SEPARATE ILLUSTRATION

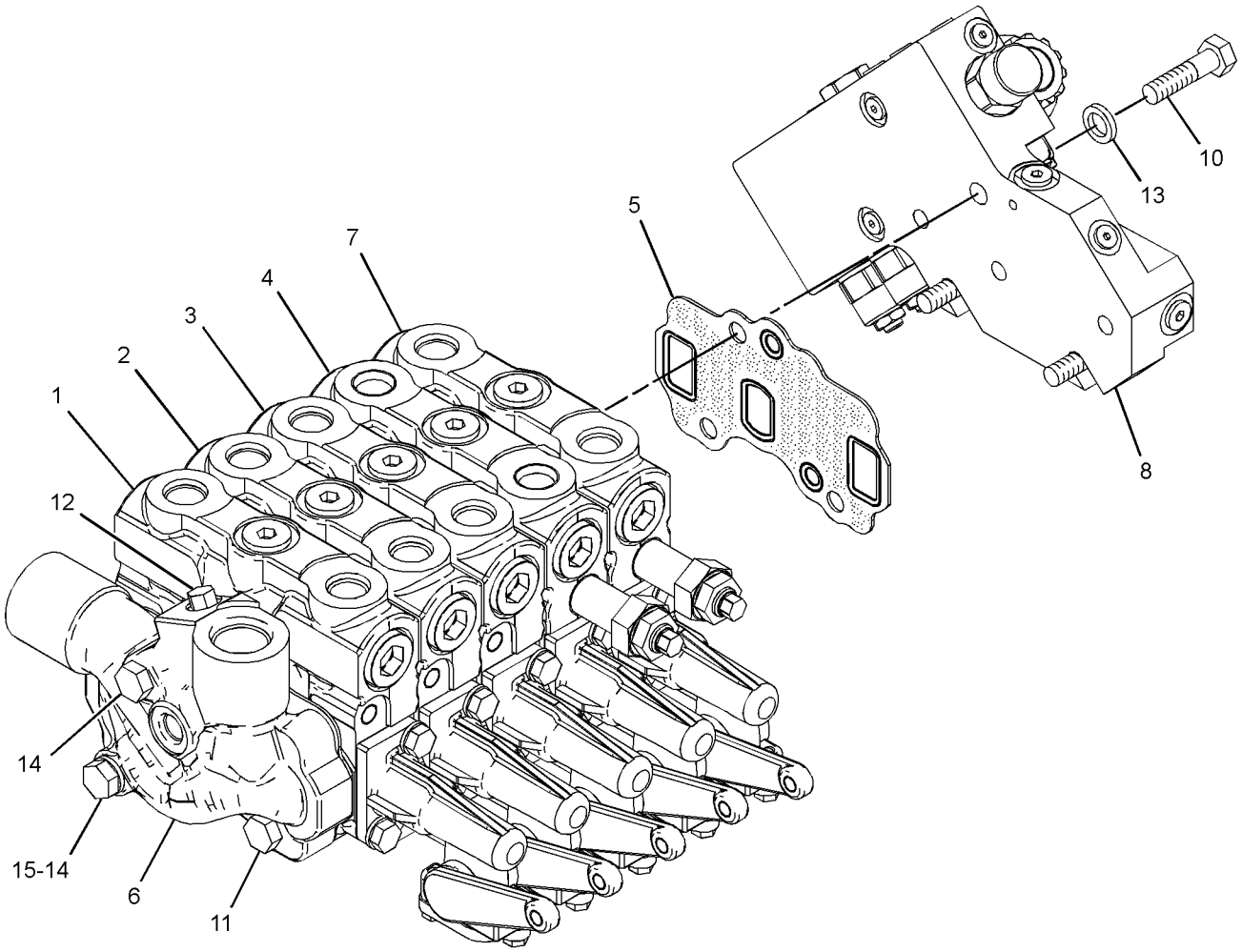

GRAPHIC #1 **<END>** g01693239

250-0550 VALVE GP-BANK 5–LH

S/N: JPA1-UP
PART OF 331-1510 VALVE & LINKAGE GP
AN ATTACHMENT

SMCS-5051 **i03303145**

NOTE	REF NO	GRAPHIC REF	PART NUMBER	QTY	PART NAME 1 2 3 4 5 6 (PRODUCT LEVEL)	SEE PAGE
Y	1	1	**6E-3034**	1	VALVE GP-CONTROL (BLADE TIP)	546
Y	2	1	**6E-3035**	1	VALVE GP-CONTROL (CIRCLE DRIVE)	548
Y	3	1	**6E-3036**	1	VALVE GP-CONTROL (SIDESHIFT)	550
Y	4	1	**6E-3037**	1	VALVE GP-CONTROL (BLADE LIFT)	552
	5	1	**101-0509**	6	SEAL-INTEGRAL	
	6	1	**102-8385**	1	MANIFOLD	
Y	7	1	**107-0545**	1	VALVE GP-CONTROL (RIPPER)	556
	8	1	*222-4737*	1	PLUG AS	
		1	**9S-4180**	1	PLUG	
		1	**4J-7533**	1	SEAL-O-RING	
Y	9	1	**239-9893**	1	MANIFOLD GP-VALVE (LH)	427
	10	1	**8T-4896**	1	WASHER-HARD (10.2X18.5X2.5-MM THK)	
M	11	1	**137-6719**	3	BOLT (M10X1.5X80-MM)	
M	12	1	**137-6720**	1	BOLT (M10X1.5X160-MM)	
	13	1	**3K-6113**	3	WASHER-HARD (12X18.5X3-MM THK)	
M	14	1	**7X-2546**	2	BOLT (M10X1.5X180-MM)	

M-METRIC PART
Y-SEPARATE ILLUSTRATION

250-0550 VALVE GP-BANK 5 *(contd.)* i03303145

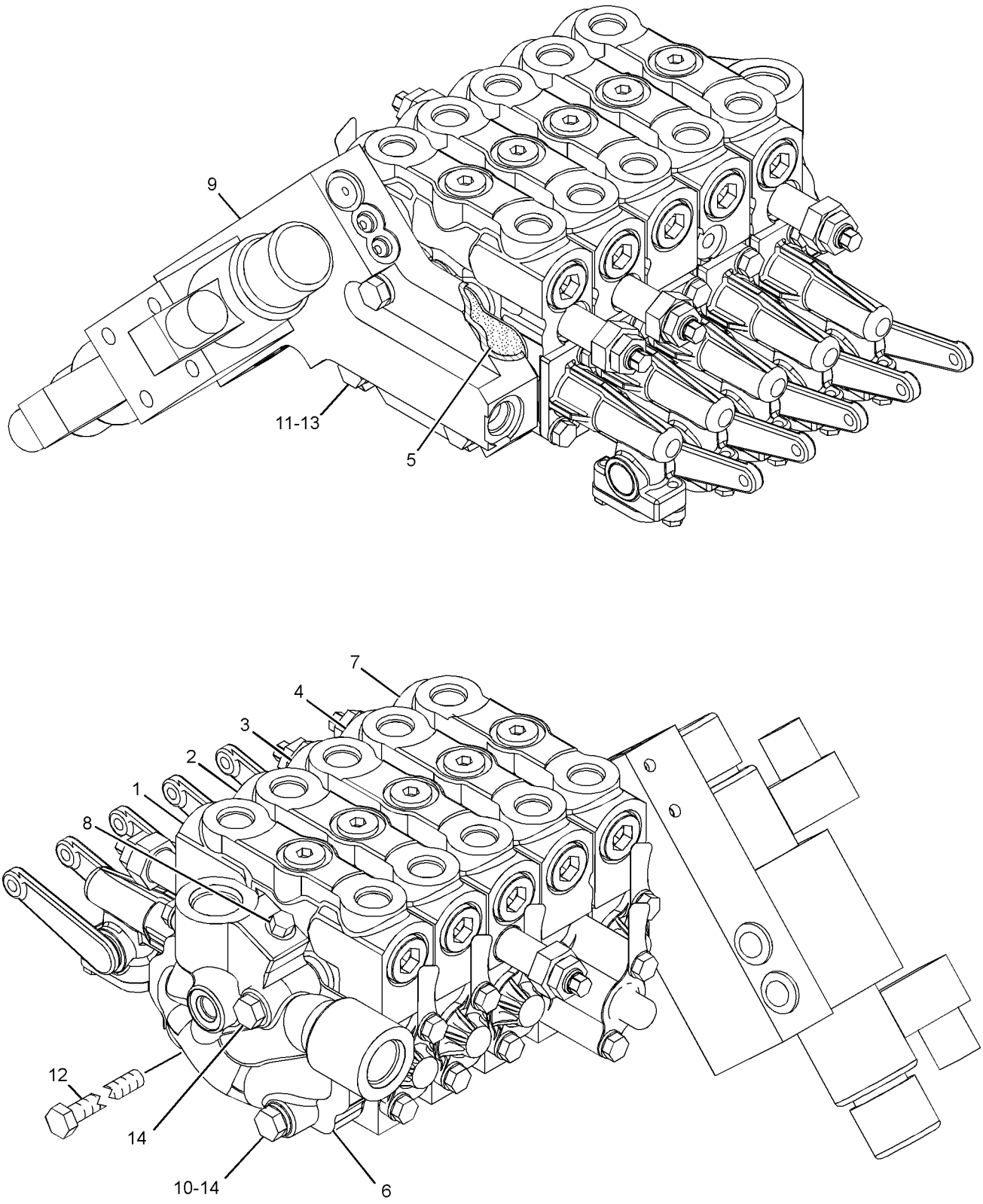

GRAPHIC #1 **<END>** g01700405

262-7291 VALVE GP-BANK 5–LH

S/N: JPA1-UP
PART OF 331-1509, 331-1514 VALVE & LINKAGE GP
AN ATTACHMENT

SMCS-5051 **i03266524**

NOTE	REF NO	GRAPHIC REF	PART NUMBER	QTY	PART NAME 1 2 3 4 5 6 (PRODUCT LEVEL)	SEE PAGE
Y	1	1	**6E-3034**	1	VALVE GP-CONTROL (BLADE TIP)	546
Y	2	1	**6E-3035**	1	VALVE GP-CONTROL (CIRCLE DRIVE)	548
Y	3	1	**6E-3036**	1	VALVE GP-CONTROL (SIDESHIFT)	550
Y	4	1	**6E-3037**	1	VALVE GP-CONTROL (BLADE LIFT)	552
	5	1	**101-0509**	6	SEAL-INTEGRAL	
	6	1	**102-8385**	1	MANIFOLD	
Y	7	1	**107-0543**	1	VALVE GP-CONTROL (SCARIFIER)	554
Y	8	1	**239-9893**	1	MANIFOLD GP-VALVE (LH)	427
M	10	1	**137-6719**	3	BOLT (M10X1.5X80-MM)	
M	11	1	**137-6720**	1	BOLT (M10X1.5X160-MM)	
	12	1	*222-4737*	1	PLUG AS	
		1	**9S-4180**	1	PLUG	
		1	**4J-7533**	1	SEAL-O-RING	
	13	1	**3K-6113**	3	WASHER-HARD (12X18.5X3-MM THK)	
M	14	1	**7X-2546**	2	BOLT (M10X1.5X180-MM)	
	15	1	**8T-4896**	1	WASHER-HARD (10.2X18.5X2.5-MM THK)	

M-METRIC PART
Y-SEPARATE ILLUSTRATION

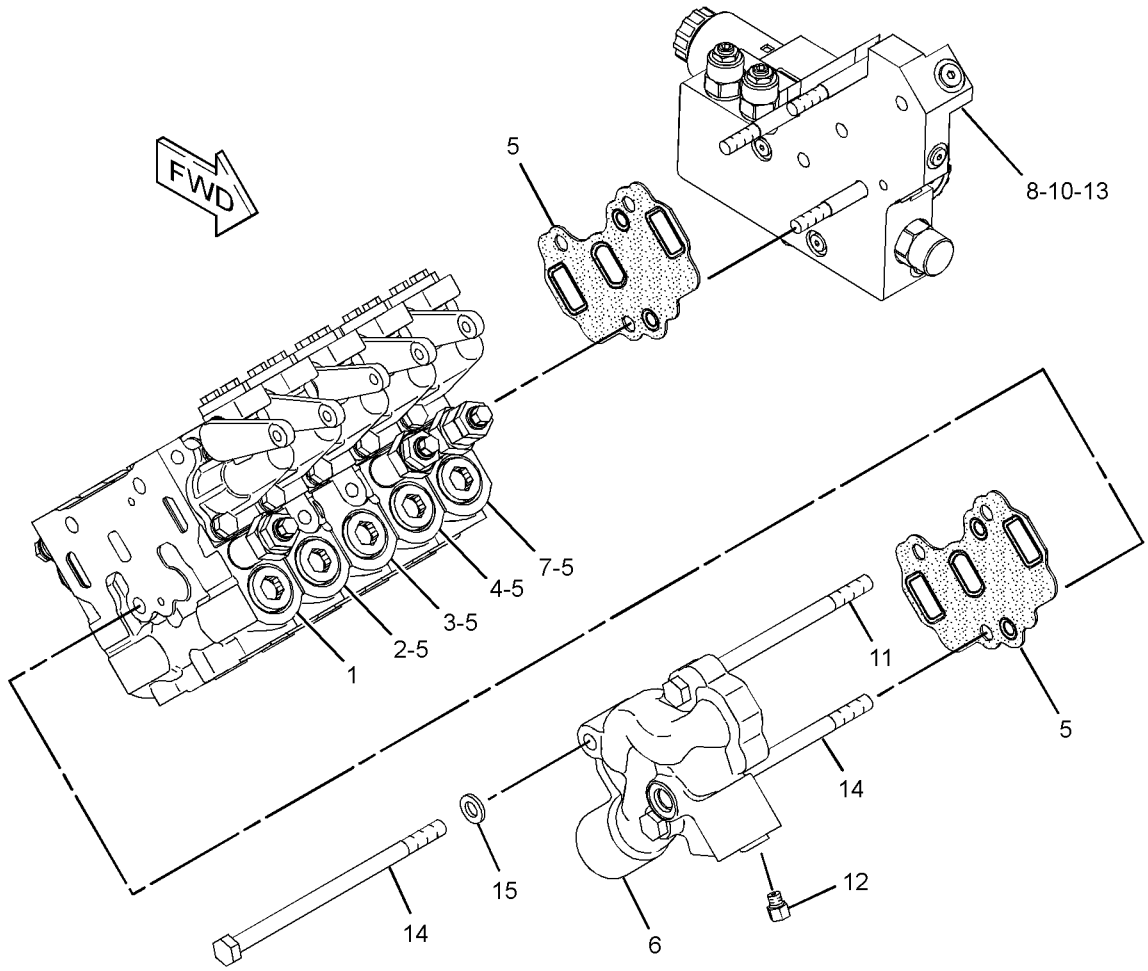

GRAPHIC #1 **<END>** g01770576

HYDRAULIC SYSTEM

104-8648 VALVE GP-BANK 6—LH

S/N: JPA1-UP
PART OF 315-5329, 315-5333 VALVE & LINKAGE GP
AN ATTACHMENT

SMCS-5051 **i03435320**

NOTE	REF NO	GRAPHIC REF	PART NUMBER	QTY	PART NAME 1 2 3 4 5 6 (PRODUCT LEVEL)	SEE PAGE
M	1	1	**7X-2546**	2	BOLT (M10X1.5X180-MM)	
CM	2	1	**137-6720**	1	BOLT (M10X1.5X160-MM)	
	3	1	**102-8385**	1	MANIFOLD	
	4	1	**101-0509**	7	SEAL-INTEGRAL	
Y	5	1	**6E-3034**	1	VALVE GP-CONTROL (BLADE TIP)	546
Y	6	1	**6E-3035**	1	VALVE GP-CONTROL (CIRCLE DRIVE)	548
Y	7	1	**6E-3036**	1	VALVE GP-CONTROL (SIDESHIFT)	550
Y	8	1	**6E-3037**	1	VALVE GP-CONTROL (BLADE LIFT)	552
YC	9	1	**137-8104**	1	VALVE GP-CONTROL (WING TILT)	568
YC	10	1	**137-8106**	1	VALVE GP-CONTROL (WING LIFT)	570
	11	1	**101-9346**	1	COVER	
	12	1	**9S-4180**	1	PLUG	
	13	1	**4J-7533**	1	SEAL-O-RING	

C-CHANGE FROM PREVIOUS TYPE
M-METRIC PART
Y-SEPARATE ILLUSTRATION

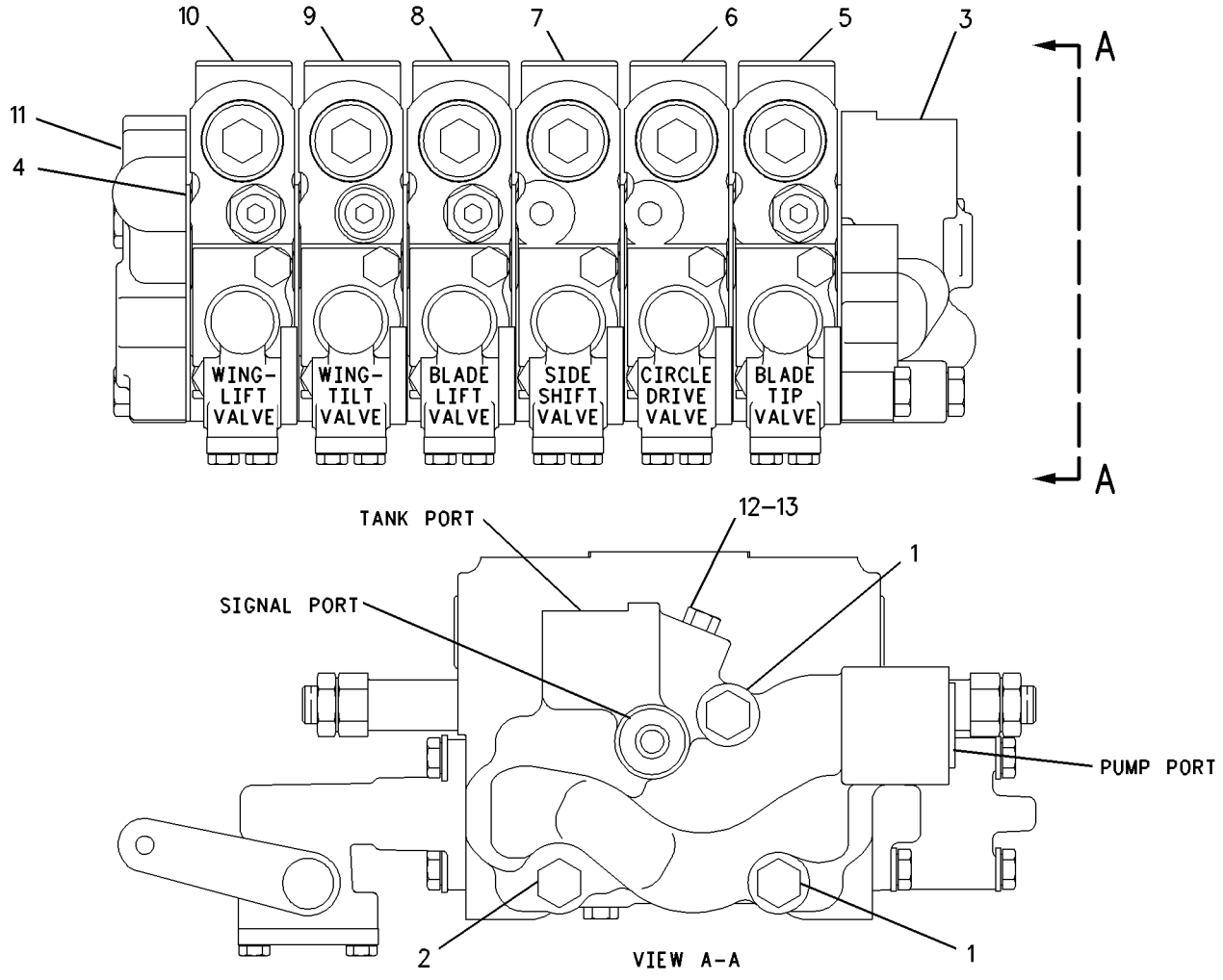

GRAPHIC #1 **<END>** g00637810

115-1008 VALVE GP-BANK 6–RH

S/N: JPA1-UP
PART OF 315-5329 VALVE & LINKAGE GP
AN ATTACHMENT

SMCS-5051 **i03435321**

NOTE	REF NO	GRAPHIC REF	PART NUMBER	QTY	PART NAME 1 2 3 4 5 6 (PRODUCT LEVEL)	SEE PAGE
M	1	1	**7X-2546**	2	BOLT (M10X1.5X180-MM)	
M	2	1	**137-6720**	1	BOLT (M10X1.5X160-MM)	
	3	1	**102-6238**	1	MANIFOLD	
	4	1	**101-0509**	7	SEAL-INTEGRAL	
Y	5	1	**6E-3028**	1	VALVE GP-CONTROL (ARTICULATION)	538
Y	6	1	**6E-3029**	1	VALVE GP-CONTROL (CENTERSHIFT)	540
Y	7	1	**6E-3030**	1	VALVE GP-CONTROL (WHEEL LEAN)	542
Y	8	1	**6E-3031**	1	VALVE GP-CONTROL (BLADE LIFT)	544
Y	9	1	**107-0547**	1	VALVE GP-CONTROL (BULLDOZER LIFT, PLOW)	558
	10	1	**101-9346**	1	COVER	
M	11	1	**134-8221**	3	BOLT (M10X1.5X120-MM)	
	12	1	**9S-4180**	1	PLUG	
	13	1	**4J-7533**	1	SEAL-O-RING	
Y	14	1	**115-1007**	1	VALVE GP-CONTROL (BULLDOZER ANGLE, PLOW)	560

M-METRIC PART
Y-SEPARATE ILLUSTRATION

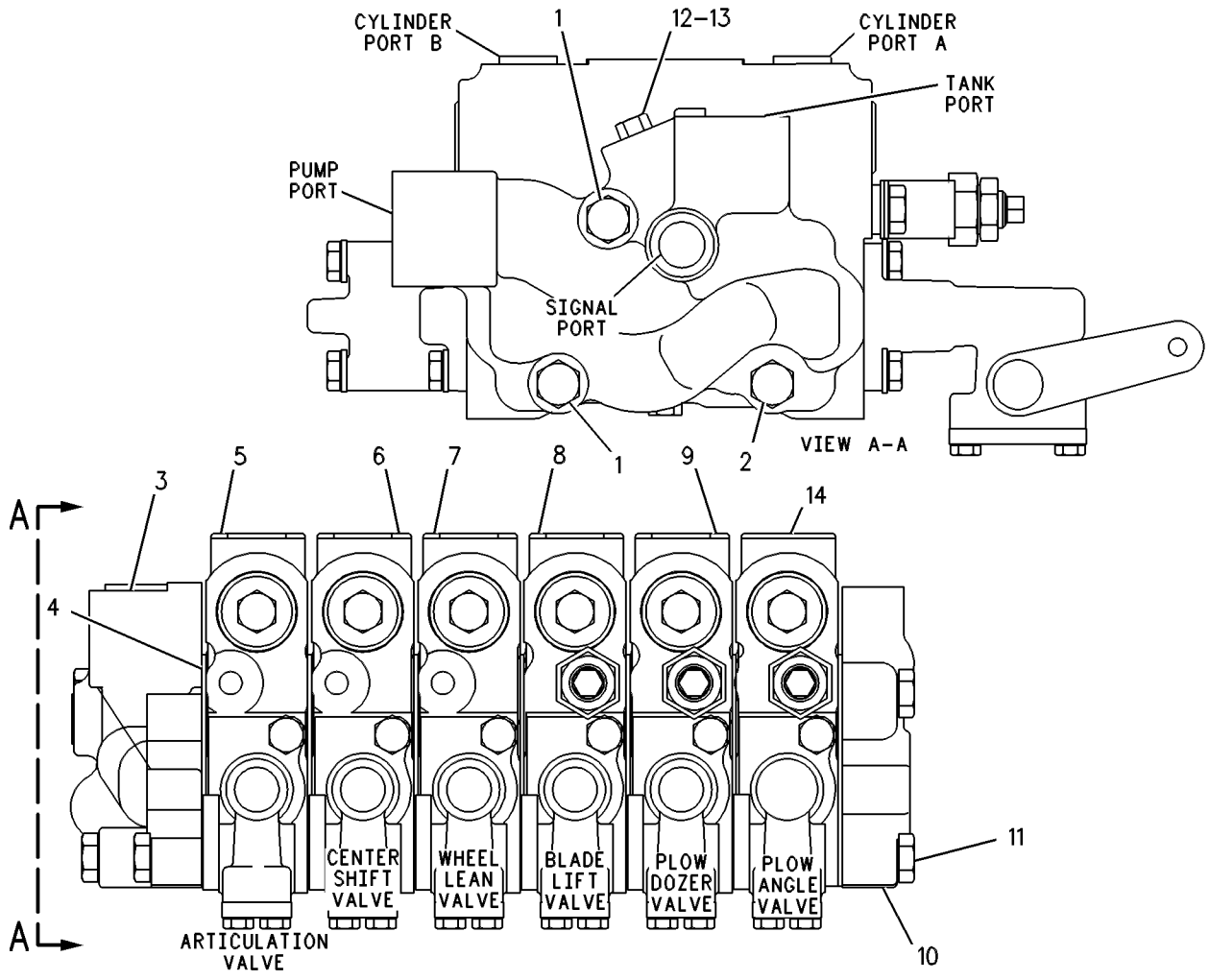

GRAPHIC #1 **<END>** g00108825

HYDRAULIC SYSTEM

250-0565 VALVE GP-BANK 6–RH

S/N: JPA1-UP
PART OF 331-1512 VALVE & LINKAGE GP
AN ATTACHMENT

SMCS-5051 **i03378241**

NOTE	REF NO	GRAPHIC REF	PART NUMBER	QTY	PART NAME 1 2 3 4 5 6 (PRODUCT LEVEL)	SEE PAGE
Y	1	1	**6E-3028**	1	VALVE GP-CONTROL (ARTICULATION)	538
Y	2	1	**6E-3029**	1	VALVE GP-CONTROL (CENTERSHIFT)	540
Y	3	1	**6E-3030**	1	VALVE GP-CONTROL (WHEEL LEAN)	542
Y	4	1	**6E-3031**	1	VALVE GP-CONTROL (BLADE LIFT)	544
	5	1	**101-0509**	7	SEAL-INTEGRAL	
	6	1	**102-6238**	1	MANIFOLD	
Y	7	1	**107-0547**	1	VALVE GP-CONTROL (PLOW, BULLDOZER LIFT)	558
Y	8	1	**115-1007**	1	VALVE GP-CONTROL (BULLDOZER ANGLE, PLOW) (PLOW, BULLDOZER ANGLE)	560
Y	9	1	**239-9894**	1	MANIFOLD GP-VALVE (RH)	429
M	11	1	**134-8221**	3	BOLT (M10X1.5X120-MM)	
M	12	1	**137-6720**	1	BOLT (M10X1.5X160-MM)	
	13	1	*222-4737*	1	PLUG AS	
		1	**9S-4180**	1	PLUG	
		1	**4J-7533**	1	SEAL-O-RING	
	14	1	**3K-6113**	3	WASHER-HARD (12X18.5X3-MM THK)	
M	15	1	**7X-2546**	2	BOLT (M10X1.5X180-MM)	
	16	1	**8T-4896**	1	WASHER-HARD (10.2X18.5X2.5-MM THK)	

M-METRIC PART
Y-SEPARATE ILLUSTRATION

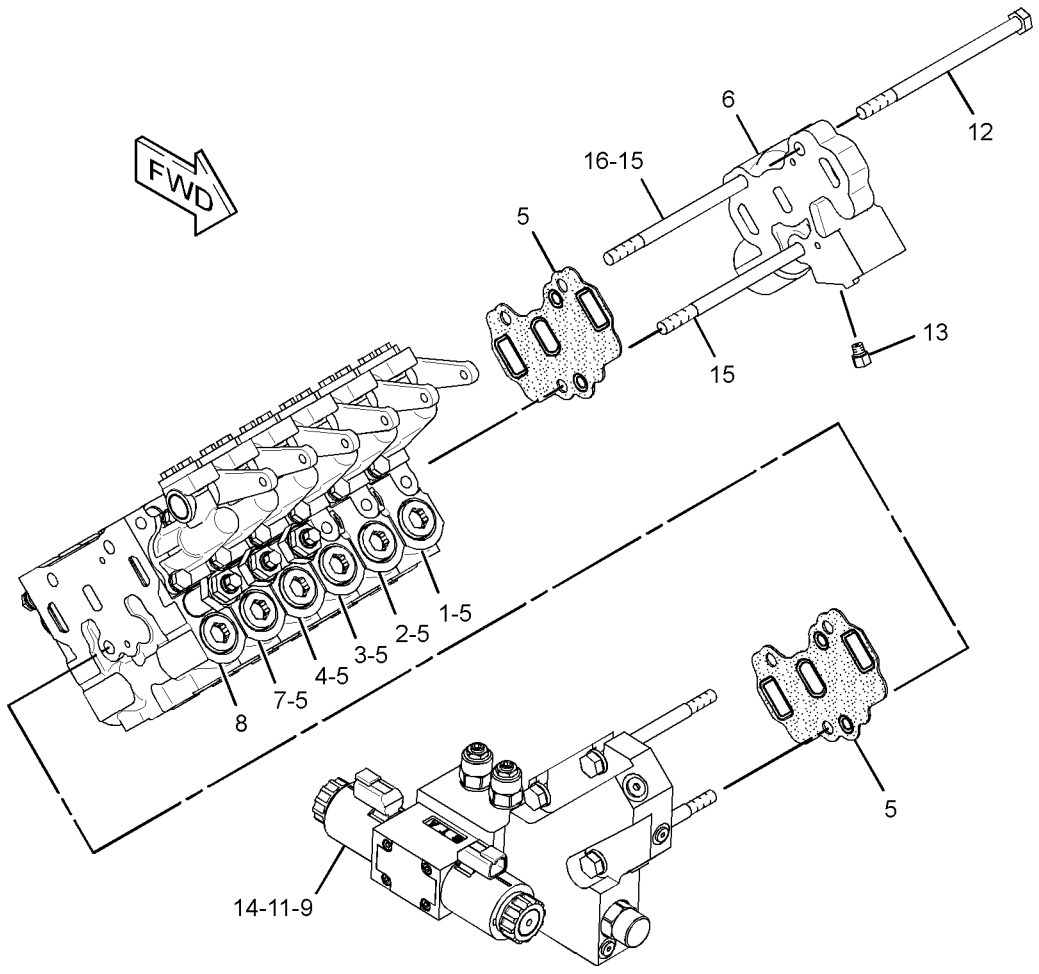

GRAPHIC #1 **<END>** g01770571

250-0567 VALVE GP-BANK 6–LH

S/N: JPA1-UP
PART OF 331-1512, 331-1516 VALVE & LINKAGE GP
AN ATTACHMENT

SMCS-5051 **i03266504**

NOTE	REF NO	GRAPHIC REF	PART NUMBER	QTY	PART NAME 1 2 3 4 5 6 (PRODUCT LEVEL)	SEE PAGE
Y	1	1	**6E-3034**	1	VALVE GP-CONTROL (BLADE TIP)	546
Y	2	1	**6E-3035**	1	VALVE GP-CONTROL (CIRCLE DRIVE)	548
Y	3	1	**6E-3036**	1	VALVE GP-CONTROL (SIDESHIFT)	550
Y	4	1	**6E-3037**	1	VALVE GP-CONTROL (BLADE LIFT)	552
	5	1	**101-0509**	7	SEAL-INTEGRAL	
	6	1	**102-8385**	1	MANIFOLD	
Y	7	1	**137-8104**	1	VALVE GP-CONTROL (WING TILT)	568
Y	8	1	**137-8106**	1	VALVE GP-CONTROL (WING LIFT)	570
Y	9	1	**239-9893**	1	MANIFOLD GP-VALVE (LH)	427
M	11	1	**134-8221**	3	BOLT (M10X1.5X120-MM)	
M	12	1	**137-6720**	1	BOLT (M10X1.5X160-MM)	
	13	1	*222-4737*	1	PLUG AS	
		1	**9S-4180**	1	PLUG	
		1	**4J-7533**	1	SEAL-O-RING	
M	14	1	**7X-2546**	2	BOLT (M10X1.5X180-MM)	
	15	1	**3K-6113**	3	WASHER-HARD (12X18.5X3-MM THK)	
	16	1	**8T-4896**	1	WASHER-HARD (10.2X18.5X2.5-MM THK)	

M-METRIC PART
Y-SEPARATE ILLUSTRATION

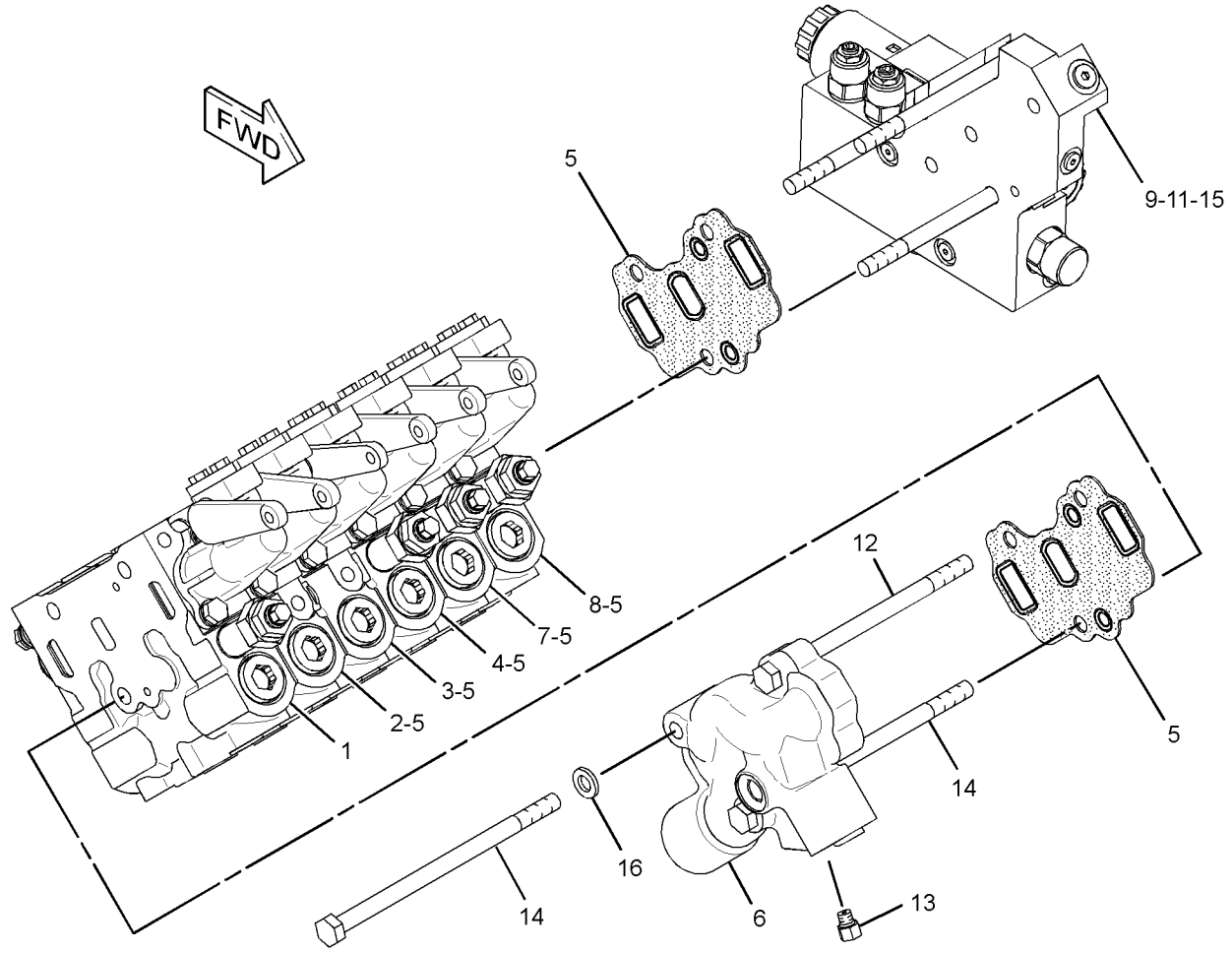

GRAPHIC #1 **<END>** g01776874

HYDRAULIC SYSTEM

104-8647 VALVE GP-BANK 7–LH

S/N: JPA1-UP
PART OF 315-5336 VALVE & LINKAGE GP
AN ATTACHMENT

SMCS-5051 **i02592689**

NOTE	REF NO	GRAPHIC REF	PART NUMBER	QTY	PART NAME 1 2 3 4 5 6 (PRODUCT LEVEL)	SEE PAGE
M	1	1	**7X-2546**	2	BOLT (M10X1.5X180-MM)	
CM	2	1	**137-6720**	4	BOLT (M10X1.5X160-MM)	
	3	1	**102-8385**	1	MANIFOLD	
	4	1	**101-0509**	8	SEAL-INTEGRAL	
Y	5	1	**6E-3034**	1	VALVE GP-CONTROL (BLADE TIP)	546
Y	6	1	**6E-3035**	1	VALVE GP-CONTROL (CIRCLE DRIVE)	548
Y	7	1	**6E-3036**	1	VALVE GP-CONTROL (SIDESHIFT)	550
Y	8	1	**6E-3037**	1	VALVE GP-CONTROL (BLADE LIFT)	552
Y	9	1	**107-0543**	1	VALVE GP-CONTROL (SCARIFIER)	554
YC	10	1	**137-8104**	1	VALVE GP-CONTROL (WING TILT)	568
YC	11	1	**137-8106**	1	VALVE GP-CONTROL (WING LIFT)	570
	12	1	**101-9346**	1	COVER	
	13	1	**4J-7533**	1	SEAL-O-RING	
	14	1	**9S-4180**	1	PLUG	

C-CHANGE FROM PREVIOUS TYPE
M-METRIC PART
Y-SEPARATE ILLUSTRATION

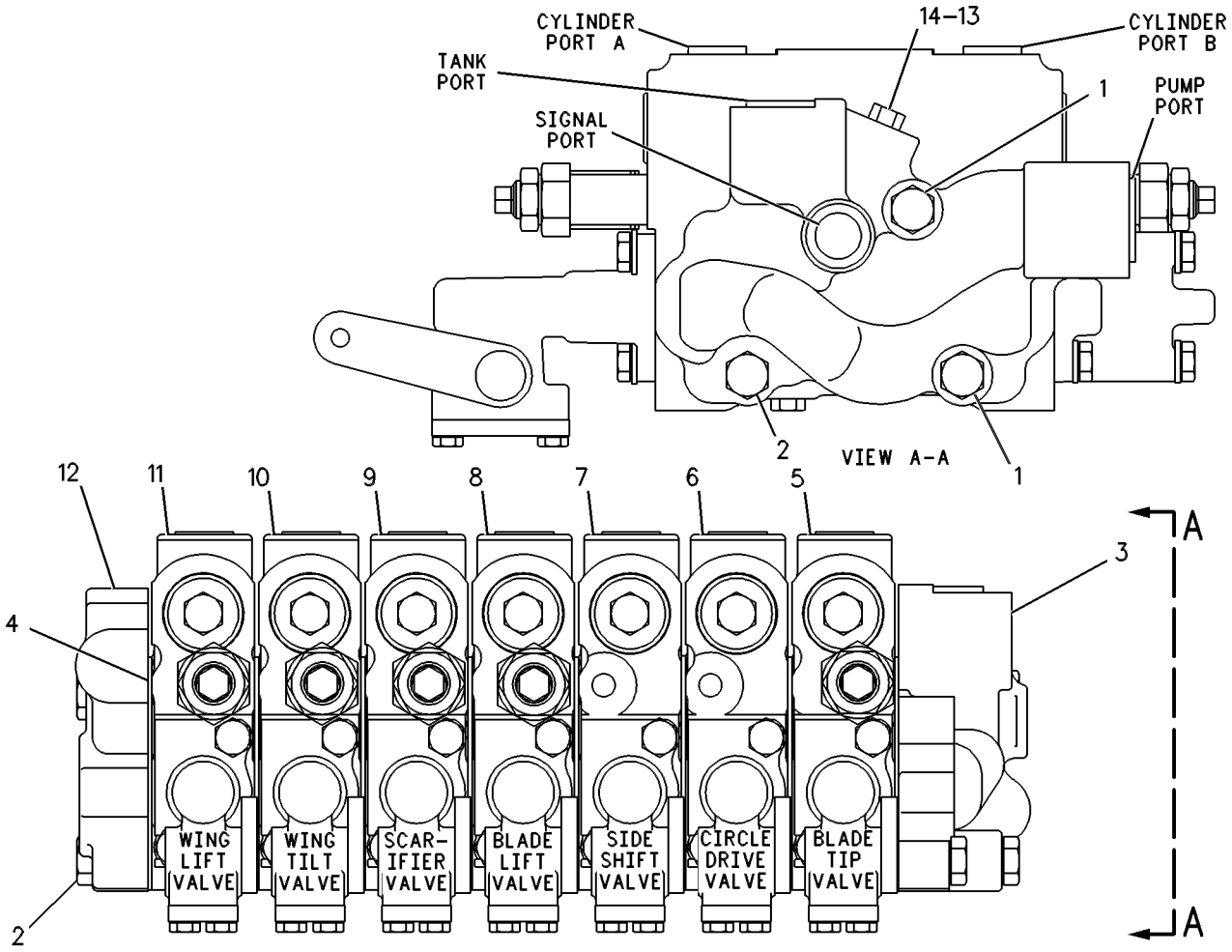

GRAPHIC #1 **<END>** g00273400

263-6435 VALVE GP-BANK 7–LH

S/N: JPA1-UP
PART OF 331-1515 VALVE & LINKAGE GP
AN ATTACHMENT

SMCS-5051 **i03266503**

NOTE	REF NO	GRAPHIC REF	PART NUMBER	QTY	PART NAME 1 2 3 4 5 6 (PRODUCT LEVEL)	SEE PAGE
Y	1	1	**6E-3034**	1	VALVE GP-CONTROL (BLADE TIP)	546
Y	2	1	**6E-3035**	1	VALVE GP-CONTROL (CIRCLE DRIVE)	548
Y	3	1	**6E-3036**	1	VALVE GP-CONTROL (SIDESHIFT)	550
Y	4	1	**6E-3037**	1	VALVE GP-CONTROL (BLADE LIFT)	552
	5	1	**101-0509**	8	SEAL-INTEGRAL	
	6	1	**102-8385**	1	MANIFOLD	
Y	7	1	**107-0543**	1	VALVE GP-CONTROL (SCARIFIER)	554
Y	8	1	**137-8104**	1	VALVE GP-CONTROL (WING TILT)	568
Y	9	1	**137-8106**	1	VALVE GP-CONTROL (WING LIFT)	570
	10	1	*222-4737*	1	PLUG AS	
		1	**4J-7533**	1	SEAL-O-RING	
		1	**9S-4180**	1	PLUG	
Y	11	1	**239-9893**	1	MANIFOLD GP-VALVE (LH)	427
M	13	1	**137-6720**	4	BOLT (M10X1.5X160-MM)	
	14	1	**3K-6113**	3	WASHER-HARD (12X18.5X3-MM THK)	
M	15	1	**7X-2546**	2	BOLT (M10X1.5X180-MM)	
	16	1	**8T-4896**	1	WASHER-HARD (10.2X18.5X2.5-MM THK)	

M-METRIC PART
Y-SEPARATE ILLUSTRATION

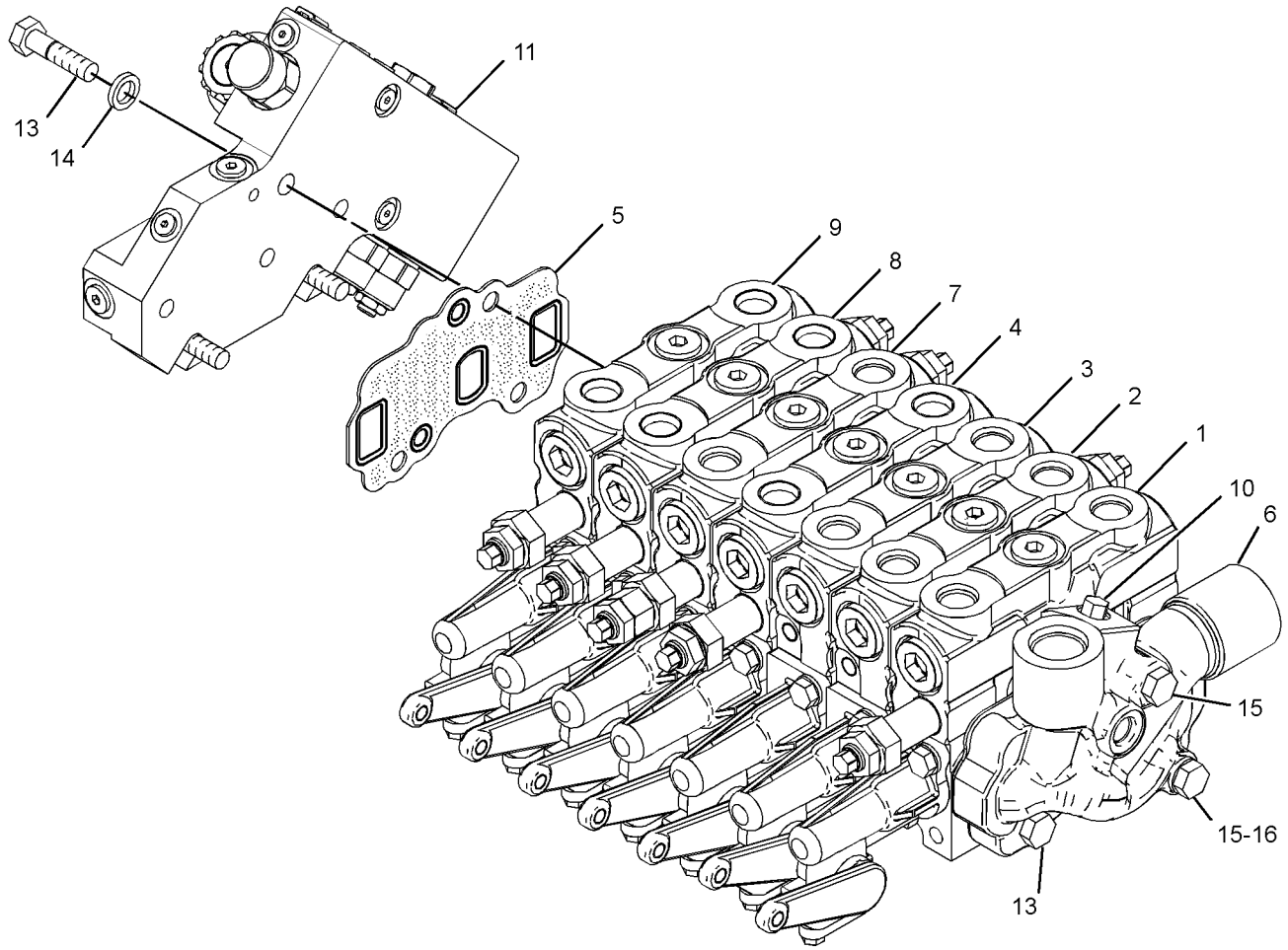

GRAPHIC #1 **<END>** g01693417

HYDRAULIC SYSTEM

9T-5957 VALVE GP-COMBINATION

S/N: JPA1-UP

PART OF 299-5544 LINES GP-PUMP

SMCS-5064 **i02592376**

NOTE	REF NO	GRAPHIC REF	PART NUMBER	QTY	PART NAME 1 2 3 4 5 6 (PRODUCT LEVEL)	SEE PAGE
C	1	1	**9T-5935**	1	BODY	
Y	2	1	**100-6021**	1	VALVE GP-RELIEF (STEERING)	577
	3	1	*3J-3679*	1	PLUG AS	
		1	**1J-9671**	1	SEAL-O-RING	
		1	**9S-8003**	1	PLUG	
	4	1	**3T-8236**	1	SPRING	
M	5	1	**6V-5230**	2	BOLT (M10X1.5X60-MM)	
	6	1	**6V-3965**	1	FITTING (QUICK DISCONNECT)	
	7	1	**3J-1907**	1	SEAL-O-RING	
	8	1	**6V-8647**	2	CONNECTOR	
	9	1	**3J-7354**	2	SEAL-O-RING	
	10	1	**6E-1923**	1	TUBE AS	
	11	1	**4J-5477**	2	SEAL-O-RING	
Y	12	1	**4T-4935**	1	VALVE GP-RELIEF (MAIN)	574
	13	1	**8T-8987**	1	ELBOW	
	14	1	**2M-9780**	1	SEAL-O-RING	
	15	1	**1H-0337**	1	VALVE	
	16	1	**9F-6705**	1	SPRING	
	17	1	**9S-4189**	1	PLUG	
	18	1	**6E-1924**	1	SPRING (OUTER)	
	19	1	**6E-1925**	1	SPRING (INNER)	
	20	1	**5M-2057**	1	SEAL-O-RING	
	21	1	**8M-3175**	2	WASHER-HARD (10.2X16X3-MM THK)	
	22	1	**6V-0852**	1	CAP-DUST	
Y	23	1	**6E-4703**	1	VALVE GP-RELIEF (IMPLEMENT SIGNAL)	576
C	24	1	**3K-0360**	1	SEAL-O-RING	
	25	1	**173-3993**	2	PLUG AS	
					(EACH INCLUDES)	
		1	**4J-7533**	1	SEAL-O-RING	
		1	**9S-8001**	1	PLUG-O-RING	
Y	27	1	**4T-1860**	1	VALVE GP-SHUTTLE (SIGNAL)	582
	30	1	**2S-4078**	1	SEAL-O-RING	
	31	1	*3R-2437*	1	PLUG AS	
		1	**4K-1388**	1	SEAL-O-RING	
		1	**9S-8009**	1	PLUG-O-RING	
C	32	1	**6V-8398**	1	SEAL-O-RING	
C	33	1	**7X-4776**	2	RING-BACKUP	
	34	1	*183-7263*	1	PLUG AS	
		1	**3J-7354**	1	SEAL-O-RING	
		1	**9S-8002**	1	PLUG-O-RING	
CY	35	1	**131-8350**	1	VALVE GP-PURGE (IMPLEMENT SIGNAL)	573
C	36	1	**3P-9498**	1	PLUG-ORIFICE	
C	37	1	**9T-5934**	1	VALVE	
C	38	1	**8J-6815**	2	PLUG-ORIFICE	
	39	1	*148-8408*	3	PLUG AS	
					(EACH INCLUDES)	
		1	**9S-4183**	1	PLUG-O-RING	
		1	**3D-2824**	1	SEAL-O-RING	

C-CHANGE FROM PREVIOUS TYPE
M-METRIC PART
Y-SEPARATE ILLUSTRATION

9T-5957 VALVE GP-COMBINATION *(contd.)* i02592376

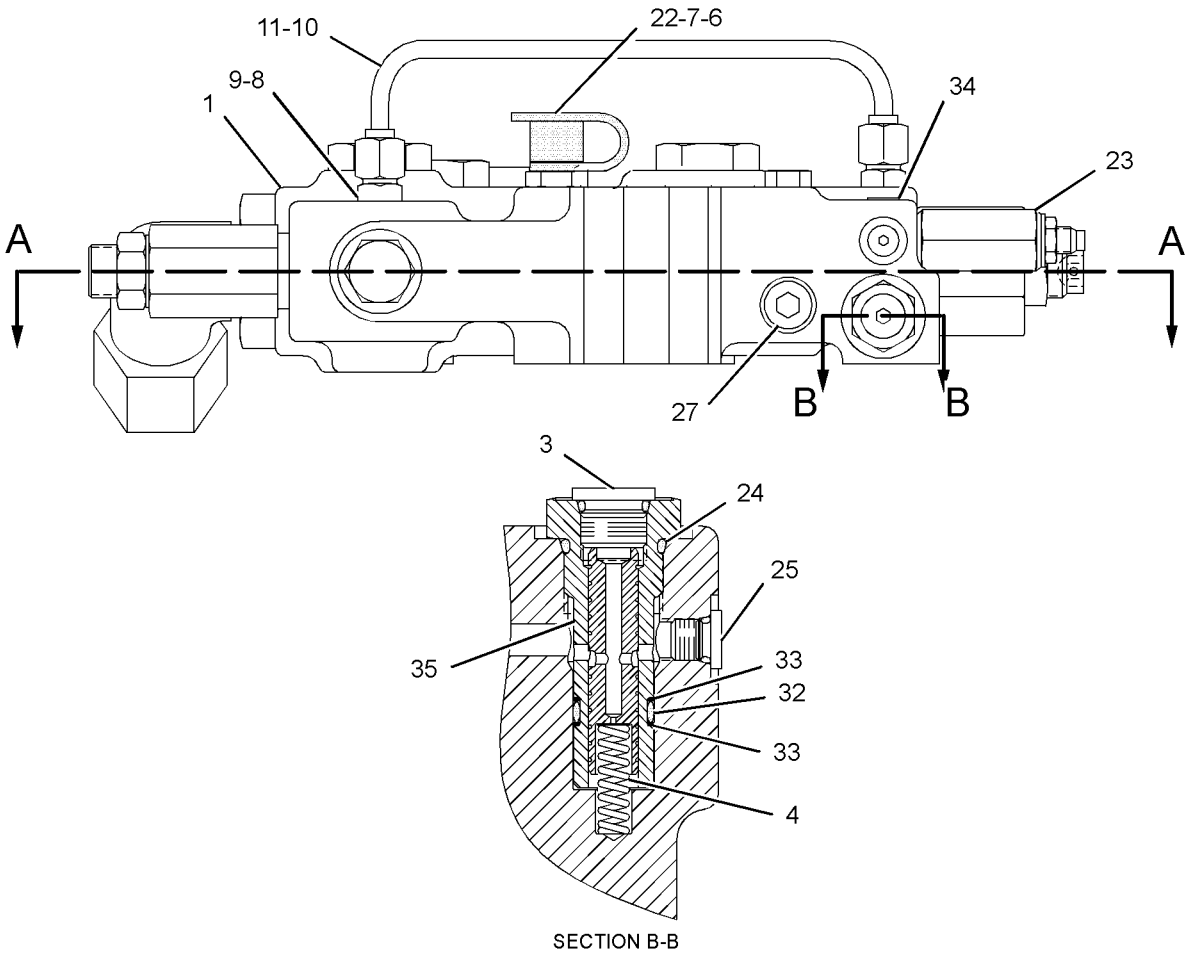

GRAPHIC #1 **<END>** g01297579

HYDRAULIC SYSTEM

6E-3028 VALVE GP-CONTROL—ARTICULATION

S/N: JPA1-UP

PART OF 124-3325, 250-0544, 6E-3032 VALVE GP-BANK 4, 104-8671, 124-3326, 250-0548 VALVE GP-BANK 5, 115-1008, 250-0565 VALVE GP-BANK 6 ALSO AN ATTACHMENT

SMCS-5051 **i03372403**

NOTE	REF NO	GRAPHIC REF	PART NUMBER	QTY	PART NAME 1 2 3 4 5 6 (PRODUCT LEVEL)	SEE PAGE
	1	1	**6E-3044**	1	BODY	
	2	1	**101-1148**	1	STEM	
	3	1	**101-1978**	1	COVER	
	4	1	**2K-8199**	2	SEAL-O-RING	
M	5	1	**8T-4189**	4	BOLT (M8X1.25X20-MM)	
	6	1	**8T-4224**	4	WASHER-HARD (8.8X16X2-MM THK)	
	7	1	**101-1984**	1	BODY	
	8	1	**102-7412**	1	SPRING	
	9	1	**101-1973**	4	RETAINER	
	10	1	**101-1971**	1	LEVER	
	11	1	**101-1970**	1	LEVER AS	
C	12	1	**325-6423**	2	VALVE GP-CHECK	
					(EACH INCLUDES)	
		1	**3K-0360**	1	SEAL-O-RING	
		1	**7J-9933**	1	SEAL-O-RING	
	13	1	**101-1983**	2	RING-BACKUP	
	14	1	**101-2480**	1	COVER	
	15	1	**4D-9986**	1	SEAL-O-RING	
M	16	1	**8T-4138**	2	BOLT (M6X1X20-MM)	
	17	1	**5B-9318**	1	BALL	
	18	1	**6E-3007**	1	SPRING	
	19	1	**6E-4502**	1	PLUG	
	20	1	**4J-7533**	1	SEAL-O-RING	
	21	1	**6E-3019**	1	VALVE	
	22	1	**6E-5153**	1	SPRING	
	23	1	**108-2187**	1	PLUG-PIPE	
	24	1	**106-3659**	1	PISTON	
	26	1	**111-8233**	1	SPRING	
	27	1	*148-8395*	1	PLUG AS	
		1	**9S-8005**	1	PLUG-O-RING	
		1	**3K-0360**	1	SEAL-O-RING	
	28	1	**8M-4437**	2	SEAL-O-RING	

C-CHANGE FROM PREVIOUS TYPE
M-METRIC PART

6E-3028 **VALVE GP-CONTROL** *(contd.)* **i03372403**

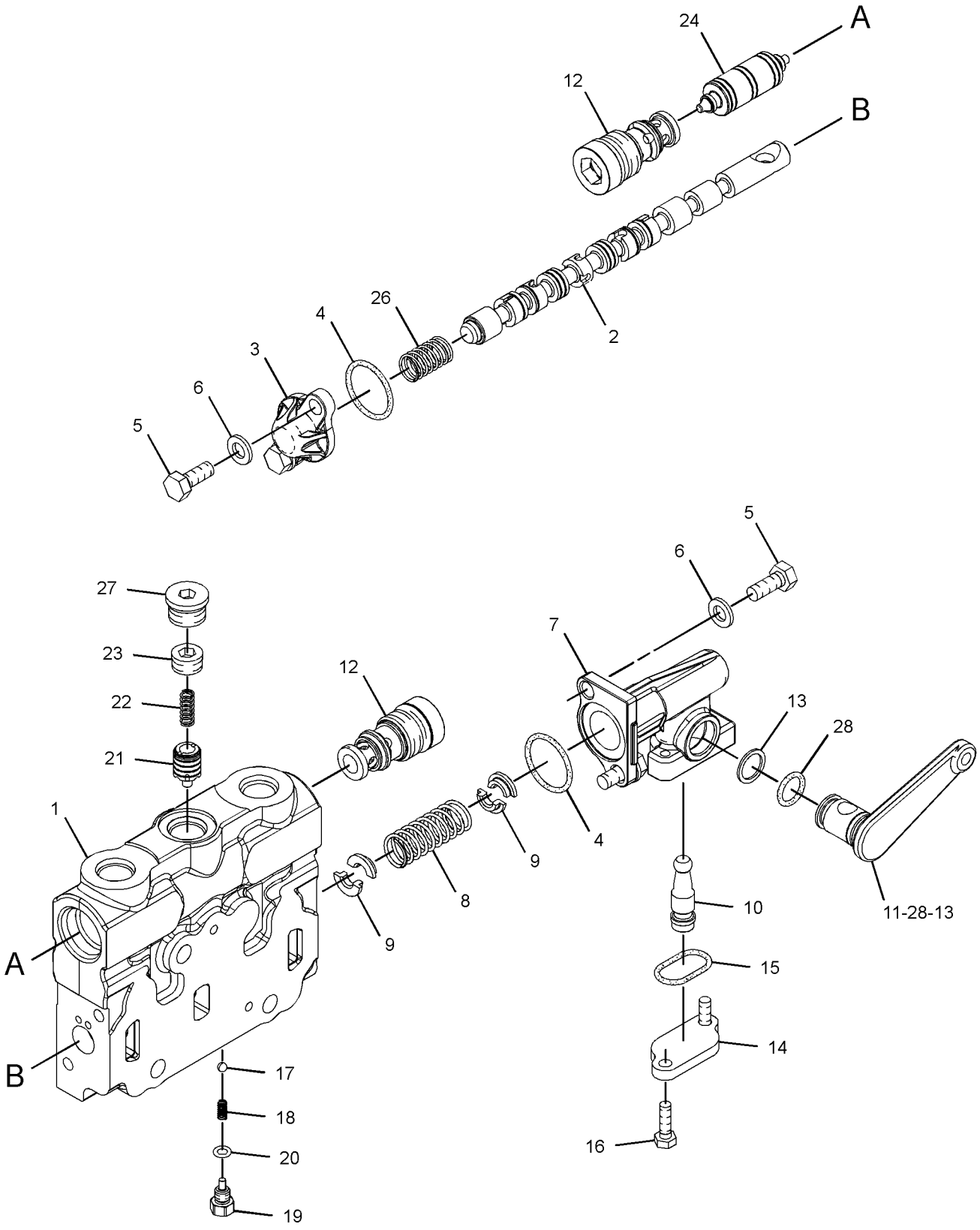

GRAPHIC #1 **<END>** g01748193

HYDRAULIC SYSTEM

6E-3029 VALVE GP-CONTROL—CENTERSHIFT

S/N: JPA1-UP

PART OF 124-3325, 250-0544, 6E-3032 VALVE GP-BANK 4, 104-8671, 124-3326, 250-0548 VALVE GP-BANK 5, 115-1008, 250-0565 VALVE GP-BANK 6 ALSO AN ATTACHMENT

SMCS-5051 **i03372660**

NOTE	REF NO	GRAPHIC REF	PART NUMBER	QTY	PART NAME 1 2 3 4 5 6 (PRODUCT LEVEL)	SEE PAGE
	1	1	**4D-9986**	1	SEAL-O-RING	
	2	1	**6E-3007**	1	SPRING	
	3	1	**6E-3019**	1	VALVE (COMPENSATOR)	
	4	1	**6E-3044**	1	BODY	
	5	1	**6E-4502**	1	PLUG	
	6	1	**6E-5153**	1	SPRING	
	7	1	**101-1970**	1	LEVER AS	
	8	1	**101-1971**	1	LEVER	
	9	1	**101-1973**	4	RETAINER	
	10	1	**101-1978**	1	COVER	
	11	1	**101-1984**	1	BODY	
	12	1	**101-2480**	1	COVER	
	13	1	**102-7412**	1	SPRING	
	14	1	**106-3659**	1	PISTON	
	15	1	**101-1149**	1	STEM	
	17	1	**111-8233**	1	SPRING	
C	18	1	**325-6423**	2	VALVE GP-CHECK	
					(EACH INCLUDES)	
		1	**3K-0360**	1	SEAL-O-RING	
		1	**7J-9933**	1	SEAL-O-RING	
	19	1	**101-1983**	2	RING-BACKUP	
	20	1	**108-2187**	1	PLUG-PIPE	
C	21	1	*148-8395*	1	PLUG AS	
		1	**9S-8005**	1	PLUG-O-RING	
		1	**3K-0360**	1	SEAL-O-RING	
	22	1	**2K-8199**	2	SEAL-O-RING	
	23	1	**4J-7533**	1	SEAL-O-RING	
	24	1	**5B-9318**	1	BALL	
	25	1	**8M-4437**	2	SEAL-O-RING	
M	26	1	**8T-4138**	2	BOLT (M6X1X20-MM)	
M	27	1	**8T-4189**	4	BOLT (M8X1.25X20-MM)	
	28	1	**8T-4224**	4	WASHER-HARD (8.8X16X2-MM THK)	

C-CHANGE FROM PREVIOUS TYPE
M-METRIC PART

6E-3029 **VALVE GP-CONTROL** *(contd.)* **i03372660**

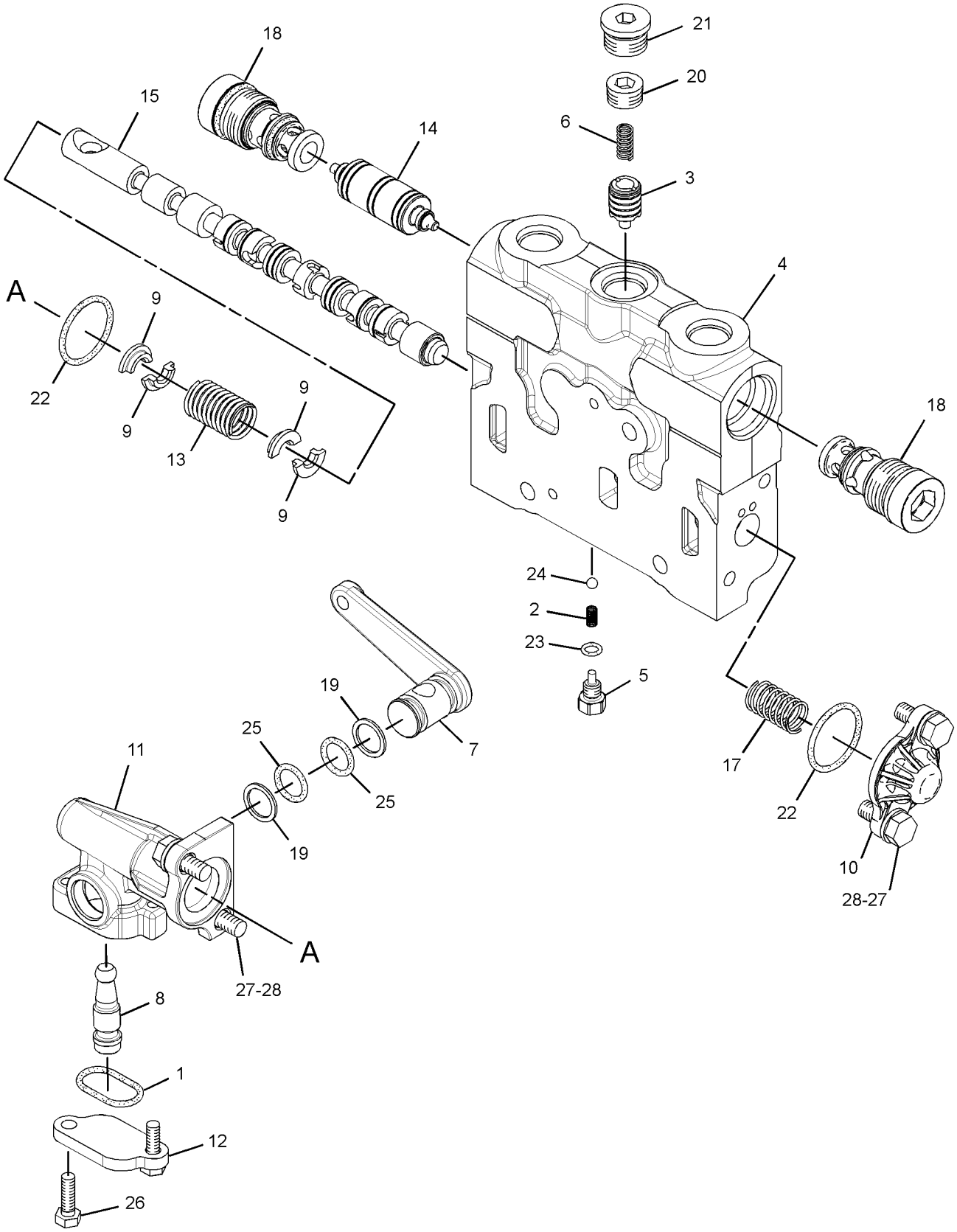

GRAPHIC #1 **<END>** g01688982

HYDRAULIC SYSTEM

6E-3030 VALVE GP-CONTROL—WHEEL LEAN

S/N: JPA1-UP

PART OF 124-3325, 250-0544, 6E-3032 VALVE GP-BANK 4, 104-8671, 124-3326, 250-0548 VALVE GP-BANK 5, 115-1008, 250-0565 VALVE GP-BANK 6

ALSO AN ATTACHMENT

SMCS-5051 **i03372783**

NOTE	REF NO	GRAPHIC REF	PART NUMBER	QTY	PART NAME 1 2 3 4 5 6 (PRODUCT LEVEL)	SEE PAGE
	1	1	**4D-9986**	1	SEAL-O-RING	
	2	1	**6E-3007**	1	SPRING	
	3	1	**6E-3019**	1	VALVE	
	4	1	**6E-3044**	1	BODY	
	5	1	**6E-4502**	1	PLUG	
	6	1	**6E-5153**	1	SPRING	
	7	1	**101-1154**	1	STEM	
	8	1	**101-1970**	1	LEVER AS	
	9	1	**101-1971**	1	LEVER	
	10	1	**101-1973**	4	RETAINER	
	11	1	**101-1978**	1	COVER	
	12	1	**101-1984**	1	BODY	
	13	1	**101-2480**	1	COVER	
	14	1	**102-7412**	1	SPRING	
	15	1	**106-3659**	1	PISTON	
	17	1	**111-8233**	1	SPRING	
C	18	1	**325-6423**	2	VALVE GP-CHECK	
					(EACH INCLUDES)	
		1	**3K-0360**	1	SEAL-O-RING	
		1	**7J-9933**	1	SEAL-O-RING	
	19	1	**101-1983**	2	RING-BACKUP	
	20	1	**108-2187**	1	PLUG-PIPE	
	21	1	*148-8395*	1	PLUG AS	
		1	**9S-8005**	1	PLUG-O-RING	
		1	**3K-0360**	1	SEAL-O-RING	
	22	1	**203-3940**	2	SEAL-O-RING	
	23	1	**2K-8199**	2	SEAL-O-RING	
	24	1	**4J-7533**	1	SEAL-O-RING	
	25	1	**5B-9318**	1	BALL	
M	26	1	**8T-4138**	2	BOLT (M6X1X20-MM)	
M	27	1	**8T-4189**	4	BOLT (M8X1.25X20-MM)	
	28	1	**8T-4224**	4	WASHER-HARD (8.8X16X2-MM THK)	

C-CHANGE FROM PREVIOUS TYPE
M-METRIC PART

6E-3030 **VALVE GP-CONTROL** *(contd.)* **i03372783**

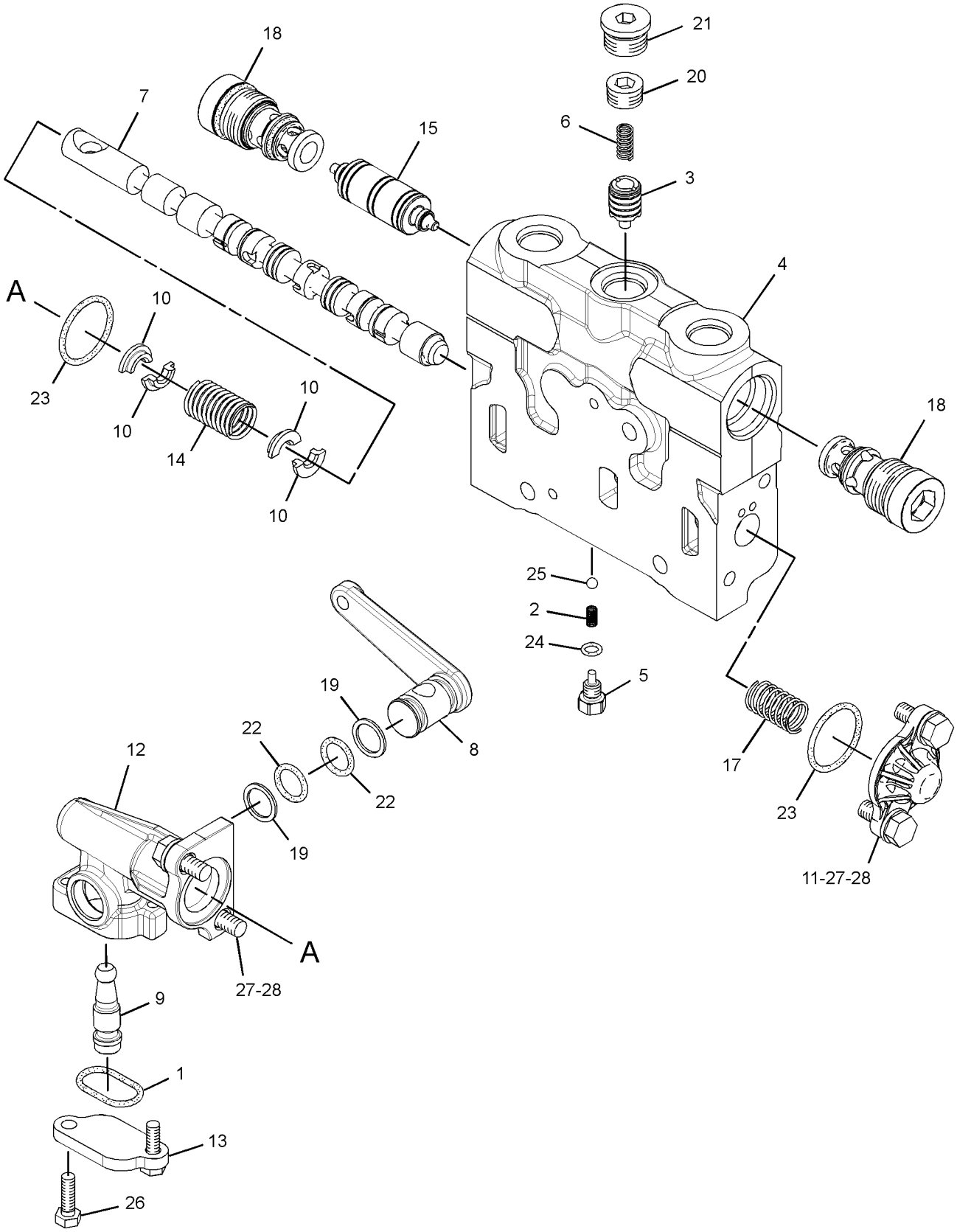

GRAPHIC #1 **<END>** g01668515

6E-3031 VALVE GP-CONTROL–BLADE LIFT

S/N: JPA1-UP

PART OF 250-0544, 6E-3032 VALVE GP-BANK 4, 104-8671, 250-0548 VALVE GP-BANK 5, 115-1008, 250-0565 VALVE GP-BANK 6

AN ATTACHMENT

SMCS-5051 **i03373022**

NOTE	REF NO	GRAPHIC REF	PART NUMBER	QTY	PART NAME 1 2 3 4 5 6 (PRODUCT LEVEL)	SEE PAGE
	1	1	**6E-3043**	1	BODY	
	2	1	**221-3676**	1	STEM	
	3	1	**101-1980**	1	HOUSING	
Y	4	1	**108-4916**	1	DETENT GP-CONTROL VALVE (BLADE LIFT)	389
	5	1	**5B-9318**	1	BALL	
M	6	1	**8T-6869**	2	BOLT (M8X1.25X60-MM)	
	7	1	**2K-8199**	2	SEAL-O-RING	
M	8	1	**8T-4189**	2	BOLT (M8X1.25X20-MM)	
	9	1	**8T-4224**	4	WASHER-HARD (8.8X16X2-MM THK)	
	10	1	**101-1984**	1	BODY	
	11	1	**102-7412**	1	SPRING	
	12	1	**101-1973**	4	RETAINER	
	13	1	**101-1971**	1	LEVER	
	14	1	**101-1970**	1	LEVER AS	
C	15	1	**325-6423**	2	VALVE GP-CHECK	
					(EACH INCLUDES)	
		1	**3K-0360**	1	SEAL-O-RING	
		1	**7J-9933**	1	SEAL-O-RING	
	16	1	**101-1983**	2	RING-BACKUP	
	17	1	**4D-9986**	1	SEAL-O-RING	
	18	1	**101-2480**	1	COVER	
M	19	1	**8T-4138**	2	BOLT (M6X1X20-MM)	
	20	1	**6E-3007**	1	SPRING	
	21	1	**6E-4502**	1	PLUG	
	22	1	**4J-7533**	1	SEAL-O-RING	
	23	1	**6E-3019**	1	VALVE	
	24	1	**6E-5153**	1	SPRING	
	25	1	**108-2187**	1	PLUG-PIPE	
	26	1	**106-3660**	2	PISTON	
Y	27	1	**222-7774**	1	VALVE GP-RELIEF (BLADE LIFT)	581
	29	1	**111-8234**	1	SPRING	
					SPRING MUST HAVE LIGHT BLUE STRIPE	
	30	1	*148-8395*	1	PLUG AS	
		1	**9S-8005**	1	PLUG-O-RING	
		1	**3K-0360**	1	SEAL-O-RING	
	31	1	**203-3940**	2	SEAL-O-RING	

C-CHANGE FROM PREVIOUS TYPE
M-METRIC PART
Y-SEPARATE ILLUSTRATION

6E-3031 **VALVE GP-CONTROL** *(contd.)* **i03373022**

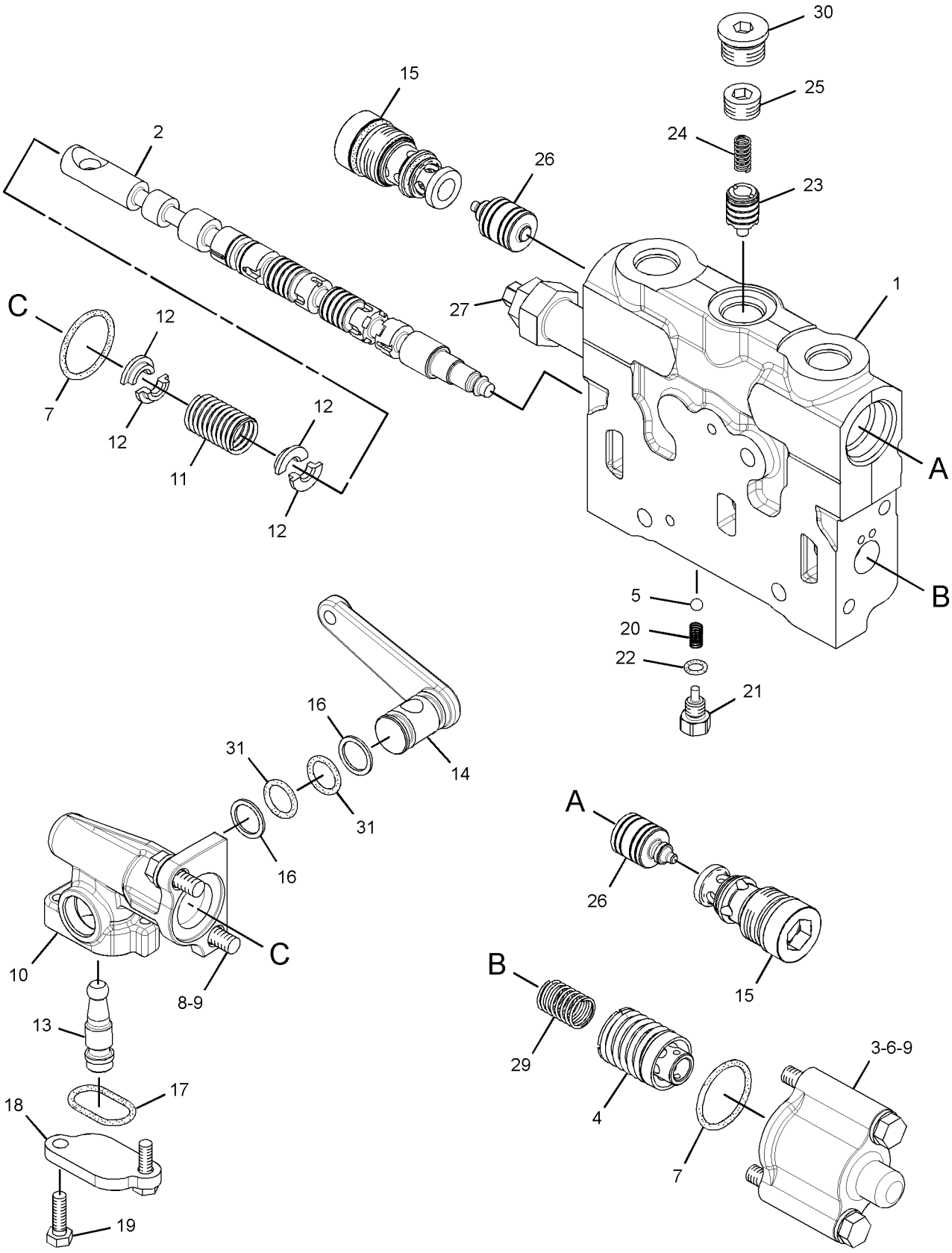

GRAPHIC #1 **<END>** g01668513

HYDRAULIC SYSTEM

6E-3034 VALVE GP-CONTROL—BLADE TIP

S/N: JPA1-UP

PART OF 124-3327, 250-0543, 6E-3038 VALVE GP-BANK 4, 104-8645, 104-8646, 124-3328, 124-3329, 250-0550, 262-7291 VALVE GP-BANK 5, 104-8648, 250-0567 VALVE GP-BANK 6, 104-8647, 263-6435 VALVE GP-BANK 7 AN ATTACHMENT

SMCS-5051 **i02585289**

NOTE	REF NO	GRAPHIC REF	PART NUMBER	QTY	PART NAME 1 2 3 4 5 6 (PRODUCT LEVEL)	SEE PAGE
	1	1	**6E-4599**	1	BODY	
	2	1	**101-1155**	1	STEM	
	3	1	**101-1978**	1	COVER	
	4	1	**2K-8199**	2	SEAL-O-RING	
M	5	1	**8T-4189**	4	BOLT (M8X1.25X20-MM)	
	6	1	**8T-4224**	4	WASHER-HARD (8.8X16X2-MM THK)	
	7	1	**101-1984**	1	BODY	
	8	1	**7J-9933**	2	SEAL-O-RING	
CY	9	1	**139-8472**	1	VALVE GP-RELIEF (BLADE TIP)	579
	11	1	**102-7412**	1	SPRING	
	12	1	**101-1973**	4	RETAINER	
	13	1	**101-1971**	1	LEVER	
	14	1	**101-1982**	1	LEVER AS	
	15	1	**8M-4437**	2	SEAL-O-RING	
	16	1	**101-1983**	2	RING-BACKUP	
	17	1	**4D-9986**	1	SEAL-O-RING	
	18	1	**101-2480**	1	COVER	
M	19	1	**8T-4138**	2	BOLT (M6X1X20-MM)	
	20	1	**5B-9318**	1	BALL	
	21	1	**6E-3007**	1	SPRING	
	22	1	**6E-4502**	1	PLUG	
	23	1	**4J-7533**	1	SEAL-O-RING	
	24	1	**6E-3019**	1	VALVE	
	25	1	**6E-5153**	1	SPRING	
	26	1	**108-2187**	1	PLUG-PIPE	
	27	1	**9J-0403**	2	SPRING	
	28	1	**9J-0404**	2	PLUG	
	29	1	*148-8395*	1	PLUG AS	
		1	**9S-8005**	1	PLUG-O-RING (HEX HEAD)	
		1	**3K-0360**	1	SEAL-O-RING	
	30	1	**3K-0360**	2	SEAL-O-RING	
C	31	1	**106-3659**	1	PISTON	
	32	1	**6E-3013**	2	SEAT	
	33	1	**106-3658**	2	VALVE	
	34	1	**111-8233**	1	SPRING	

C-CHANGE FROM PREVIOUS TYPE
M-METRIC PART
Y-SEPARATE ILLUSTRATION

6E-3034 VALVE GP-CONTROL *(contd.)*

i02585289

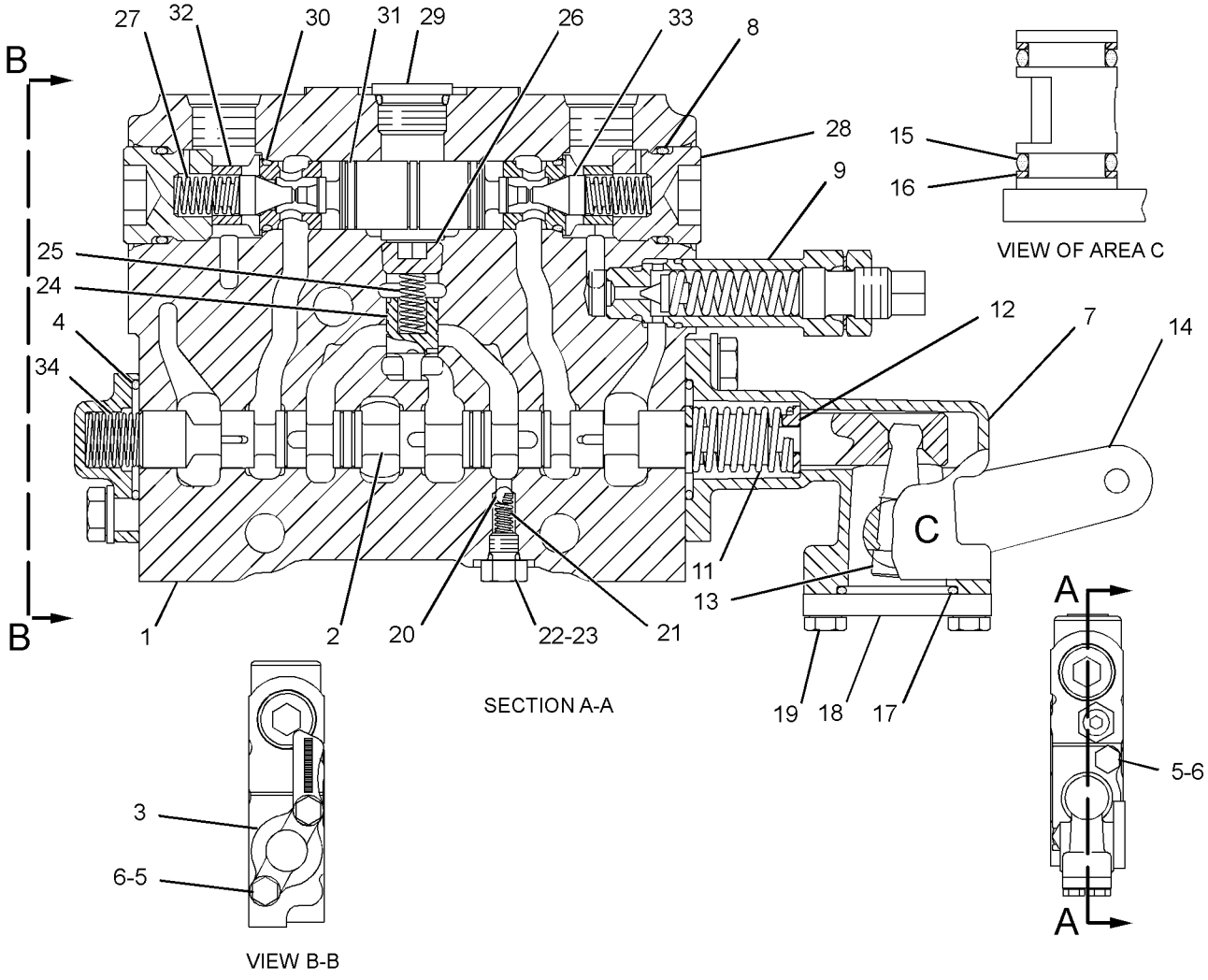

GRAPHIC #1

<END>

g01294323

HYDRAULIC SYSTEM

6E-3035 VALVE GP-CONTROL—CIRCLE DRIVE

S/N: JPA1-UP

PART OF 104-8672 VALVE GP-BANK 2, 104-8673, 112-2580, 112-2581 VALVE GP-BANK 3, 124-3327, 130-7754, 130-7755, 250-0543, 6E-3038 VALVE GP-BANK 4, 104-8645, 104-8646, 124-3328, 124-3329, 250-0550, 262-7291 VALVE GP-BANK 5, 104-8648, 250-0567 VALVE GP-BANK 6, 104-8647, 263-6435 VALVE GP-BANK 7

ALSO AN ATTACHMENT

SMCS-5051 **i03179442**

NOTE	REF NO	GRAPHIC REF	PART NUMBER	QTY	PART NAME 1 2 3 4 5 6 (PRODUCT LEVEL)	SEE PAGE
	1	1	**6E-3044**	1	BODY	
	2	1	**148-7906**	1	STEM	
	3	1	**101-1978**	1	COVER	
	4	1	**2K-8199**	2	SEAL-O-RING	
M	5	1	**8T-4189**	4	BOLT (M8X1.25X20-MM)	
	6	1	**8T-4224**	4	WASHER-HARD (8.8X16X2-MM THK)	
	7	1	**101-1984**	1	BODY	
	8	1	**102-7412**	1	SPRING	
	9	1	**101-1973**	4	RETAINER	
	10	1	**101-1971**	1	LEVER	
	11	1	**101-1982**	1	LEVER AS	
	12	1	**8M-4437**	2	SEAL-O-RING	
	13	1	**101-1983**	2	RING-BACKUP	
	14	1	**4D-9986**	1	SEAL-O-RING	
	15	1	**101-2480**	1	COVER	
M	16	1	**8T-4138**	2	BOLT (M6X1X20-MM)	
	17	1	**5B-9318**	1	BALL	
	18	1	**6E-3007**	1	SPRING	
	19	1	**6E-4502**	1	PLUG	
	20	1	**4J-7533**	1	SEAL-O-RING	
	21	1	**6E-3019**	1	VALVE	
	22	1	**6E-5153**	1	SPRING	
	23	1	**108-2187**	1	PLUG-PIPE	
	24	1	*148-8395*	1	PLUG AS	
		1	**9S-8005**	1	PLUG-O-RING	
		1	**3K-0360**	1	SEAL-O-RING	
	25	1	**3K-0360**	2	SEAL-O-RING	
	26	1	**106-3659**	1	PISTON	
	27	1	**6E-3013**	2	SEAT	
	28	1	**106-3658**	2	VALVE	
	29	1	**9J-0403**	2	SPRING	
	30	1	**9J-0404**	2	PLUG	
	31	1	**7J-9933**	2	SEAL-O-RING	
	32	1	**111-8233**	1	SPRING	

M-METRIC PART

6E-3035 **VALVE GP-CONTROL** *(contd.)* **i03179442**

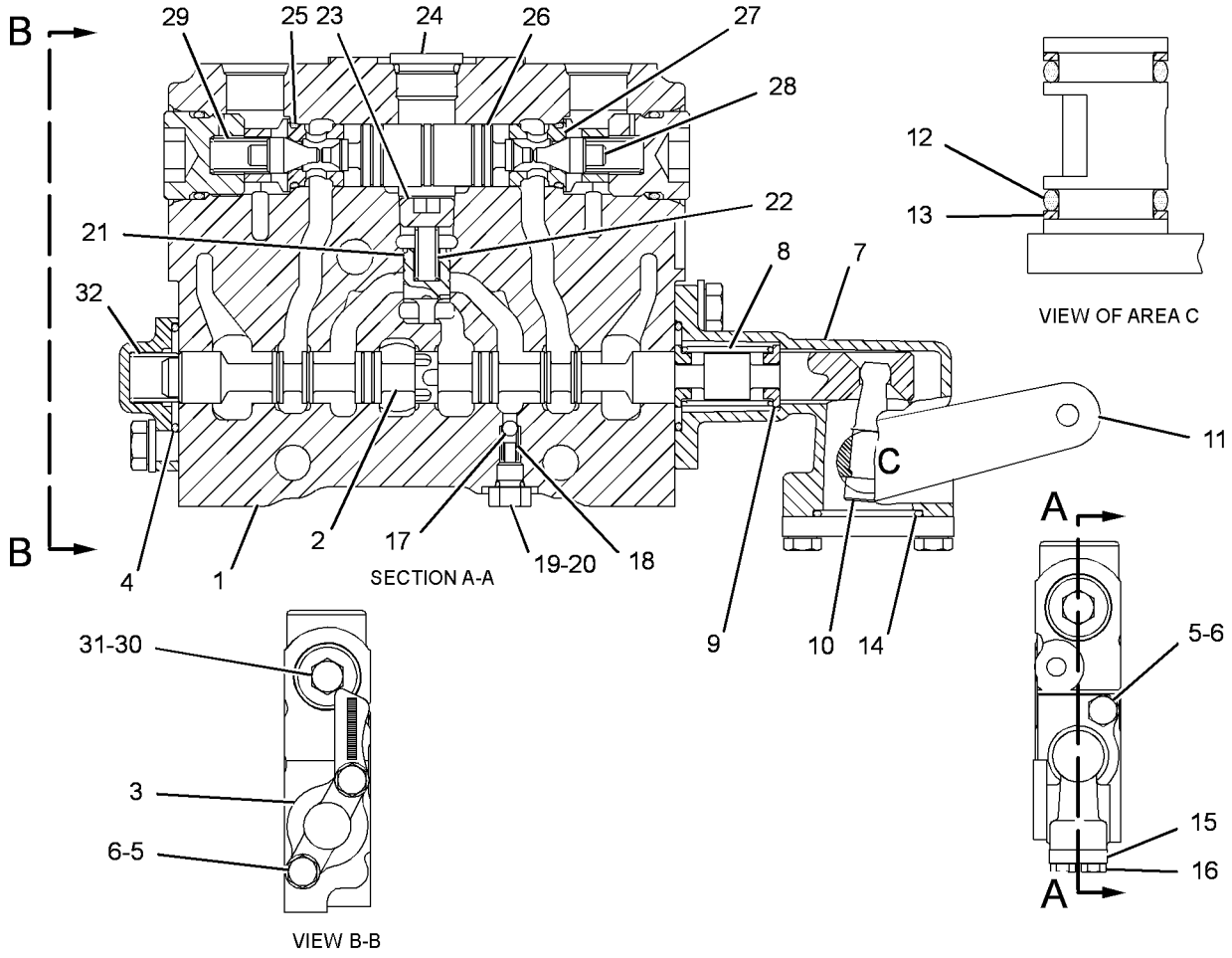

GRAPHIC #1 **<END>** g01625258

HYDRAULIC SYSTEM

6E-3036 VALVE GP-CONTROL—SIDESHIFT

S/N: JPA1-UP

PART OF 104-8673 VALVE GP-BANK 3, 124-3327, 130-7754, 130-7755, 250-0543, 6E-3038 VALVE GP-BANK 4, 104-8645, 104-8646, 124-3328, 124-3329, 250-0550, 262-7291 VALVE GP-BANK 5, 104-8648, 250-0567 VALVE GP-BANK 6, 104-8647, 263-6435 VALVE GP-BANK 7

AN ATTACHMENT

SMCS-5051 **i03399721**

NOTE	REF NO	GRAPHIC REF	PART NUMBER	QTY	PART NAME 1 2 3 4 5 6 (PRODUCT LEVEL)	SEE PAGE
	1	1	**4D-9986**	1	SEAL-O-RING	
	2	1	**6E-3007**	1	SPRING	
	3	1	**6E-3019**	1	VALVE	
	4	1	**6E-3058**	1	BODY	
	5	1	**6E-4502**	1	PLUG	
	6	1	**6E-5153**	1	SPRING	
	7	1	**101-1971**	1	LEVER	
	8	1	**101-1973**	4	RETAINER	
	9	1	**101-1978**	1	COVER	
	10	1	**101-1982**	1	LEVER AS	
	11	1	**101-1984**	1	BODY	
	12	1	**101-2480**	1	COVER	
	13	1	**102-4577**	1	STEM	
	14	1	**102-7412**	1	SPRING	
	15	1	**106-3659**	1	PISTON	
	17	1	**111-8233**	1	SPRING	
Y	18	1	**139-8472**	1	VALVE GP-RELIEF	579
C	19	1	**325-6423**	2	VALVE GP-CHECK	
					(EACH INCLUDES)	
		1	**3K-0360**	1	SEAL-O-RING	
		1	**7J-9933**	1	SEAL-O-RING	
	20	1	**101-1983**	2	RING-BACKUP	
	21	1	**108-2187**	1	PLUG-PIPE	
	22	1	*148-8395*	1	PLUG AS	
		1	**9S-8005**	1	PLUG-O-RING	
		1	**3K-0360**	1	SEAL-O-RING	
	23	1	**2K-8199**	2	SEAL-O-RING	
	24	1	**4J-7533**	1	SEAL-O-RING	
	25	1	**5B-9318**	1	BALL	
	26	1	**8M-4437**	2	SEAL-O-RING	
M	27	1	**8T-4138**	2	BOLT (M6X1X20-MM)	
M	28	1	**8T-4189**	4	BOLT (M8X1.25X20-MM)	
	29	1	**8T-4224**	4	WASHER-HARD (8.8X16X2-MM THK)	

C-CHANGE FROM PREVIOUS TYPE
M-METRIC PART
Y-SEPARATE ILLUSTRATION

6E-3036 VALVE GP-CONTROL *(contd.)* **i03399721**

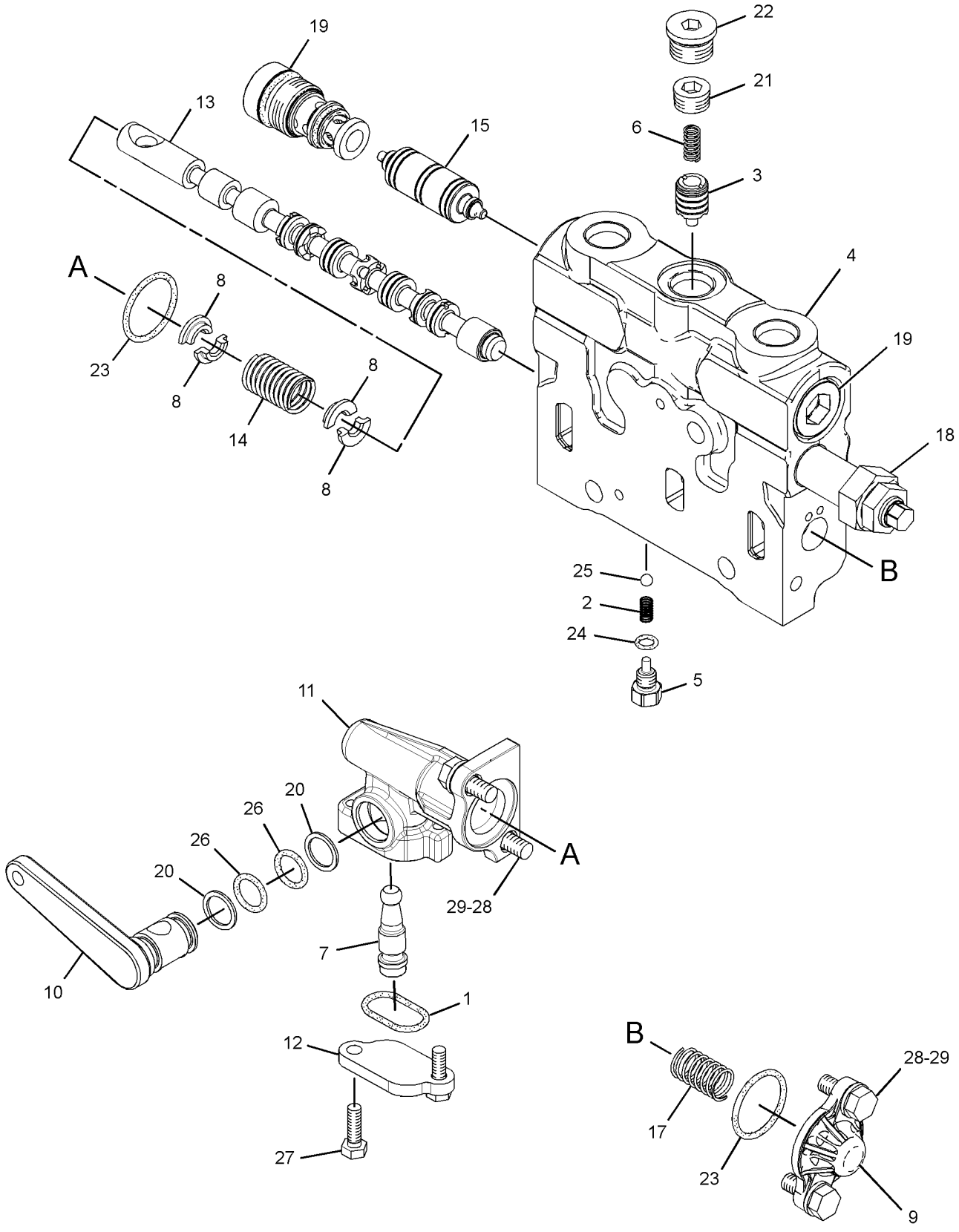

GRAPHIC #1 **<END>** g01771833

HYDRAULIC SYSTEM

6E-3037 VALVE GP-CONTROL—BLADE LIFT

S/N: JPA1-UP

PART OF 250-0543, 6E-3038 VALVE GP-BANK 4, 104-8645, 104-8646, 250-0550, 262-7291 VALVE GP-BANK 5, 104-8648, 250-0567 VALVE GP-BANK 6, 104-8647, 263-6435 VALVE GP-BANK 7

AN ATTACHMENT

SMCS-5051 **i02872563**

NOTE	REF NO	GRAPHIC REF	PART NUMBER	QTY	PART NAME 1 2 3 4 5 6 (PRODUCT LEVEL)	SEE PAGE
	1	1	**6E-3043**	1	BODY	
	2	1	**221-3676**	1	STEM	
	3	1	**101-1980**	1	HOUSING	
	5	1	**5B-9318**	1	BALL	
M	6	1	**8T-6869**	2	BOLT (M8X1.25X60-MM)	
	7	1	**2K-8199**	2	SEAL-O-RING	
M	8	1	**8T-4189**	2	BOLT (M8X1.25X20-MM)	
	9	1	**8T-4224**	4	WASHER-HARD (8.8X16X2-MM THK)	
	10	1	**101-1984**	1	BODY	
	11	1	**102-7412**	1	SPRING	
	12	1	**101-1973**	4	RETAINER	
	13	1	**101-1971**	1	LEVER	
	14	1	**101-1982**	1	LEVER AS	
	15	1	**8M-4437**	2	SEAL-O-RING	
	16	1	**101-1983**	2	RING-BACKUP	
	17	1	**4D-9986**	1	SEAL-O-RING	
	18	1	**101-2480**	1	COVER	
M	19	1	**8T-4138**	2	BOLT (M6X1X20-MM)	
	20	1	**6E-3007**	1	SPRING	
	21	1	**6E-4502**	1	PLUG	
	22	1	**4J-7533**	1	SEAL-O-RING	
	23	1	**6E-3019**	1	VALVE	
	24	1	**6E-5153**	1	SPRING	
	25	1	**108-2187**	1	PLUG-PIPE	
	26	1	*148-8395*	1	PLUG AS	
		1	**3K-0360**	1	SEAL-O-RING	
		1	**9S-8005**	1	PLUG-O-RING	
	27	1	**3K-0360**	2	SEAL-O-RING	
	28	1	**106-3660**	2	PISTON	
	29	1	**229-5010**	2	VALVE GP-CHECK	
	31	1	**9J-0403**	2	SPRING	
	32	1	**9J-0404**	2	PLUG	
	33	1	**7J-9933**	2	SEAL-O-RING	
CY	34	1	**222-7774**	1	VALVE GP-RELIEF (BLADE LIFT)	581
Y	36	1	**108-4916**	1	DETENT GP-CONTROL VALVE (BLADE LIFT)	389
	37	1	**111-8234**	1	SPRING	

C-CHANGE FROM PREVIOUS TYPE
M-METRIC PART
Y-SEPARATE ILLUSTRATION

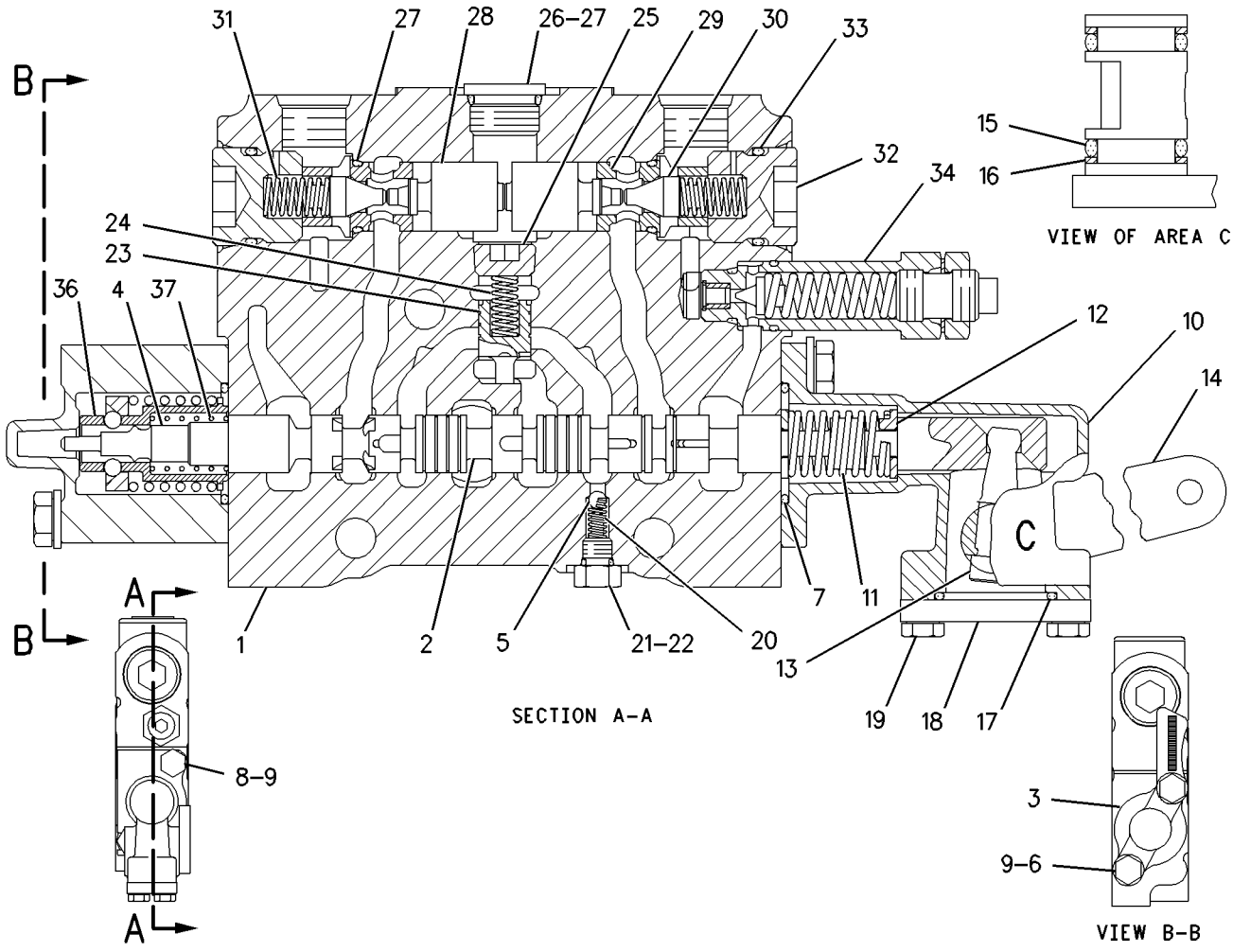

GRAPHIC #1 **<END>** g00922337

HYDRAULIC SYSTEM

107-0543 VALVE GP-CONTROL—SCARIFIER

S/N: JPA1-UP

PART OF 112-2580 VALVE GP-BANK 3, 130-7754 VALVE GP-BANK 4, 104-8646, 124-3328, 262-7291 VALVE GP-BANK 5, 104-8647, 263-6435 VALVE GP-BANK 7 AN ATTACHMENT

SMCS-5051 **i03418922**

NOTE	REF NO	GRAPHIC REF	PART NUMBER	QTY	PART NAME 1 2 3 4 5 6 (PRODUCT LEVEL)	SEE PAGE
	1	1	**4D-9986**	1	SEAL-O-RING	
	2	1	**6E-3007**	1	SPRING	
	3	1	**6E-3019**	1	VALVE	
	4	1	**6E-4502**	1	PLUG	
	5	1	**6E-4599**	1	BODY	
	6	1	**6E-5153**	1	SPRING	
	7	1	**101-1148**	1	STEM	
	8	1	**101-1971**	1	LEVER	
	9	1	**101-1973**	4	RETAINER	
	10	1	**101-1978**	1	COVER	
	11	1	**101-1982**	1	LEVER AS	
	12	1	**101-1984**	1	BODY	
	13	1	**101-2480**	1	COVER	
	14	1	**102-7412**	1	SPRING	
	15	1	**106-3659**	1	PISTON	
	17	1	**111-8233**	1	SPRING	
C	18	1	**325-6423**	2	VALVE GP-CHECK	
					(EACH INCLUDES)	
		1	**3K-0360**	1	SEAL-O-RING	
		1	**7J-9933**	1	SEAL-O-RING	
	19	1	**101-1983**	2	RING-BACKUP	
	20	1	**108-2187**	1	PLUG-PIPE	
	21	1	*148-8395*	1	PLUG AS	
		1	**9S-8005**	1	PLUG-O-RING	
		1	**3K-0360**	1	SEAL-O-RING	
	22	1	**263-9657**	1	VALVE GP-RELIEF	
		1	**3J-1907**	1	SEAL-O-RING	
		1	**4D-2297**	1	SEAL-O-RING	
	23	1	**2K-8199**	2	SEAL-O-RING	
	24	1	**4J-7533**	1	SEAL-O-RING	
	25	1	**5B-9318**	1	BALL	
	26	1	**8M-4437**	2	SEAL-O-RING	
M	27	1	**8T-4138**	2	BOLT (M6X1X20-MM)	
M	28	1	**8T-4189**	4	BOLT (M8X1.25X20-MM)	
	29	1	**8T-4224**	4	WASHER-HARD (8.8X16X2-MM THK)	

C-CHANGE FROM PREVIOUS TYPE
M-METRIC PART

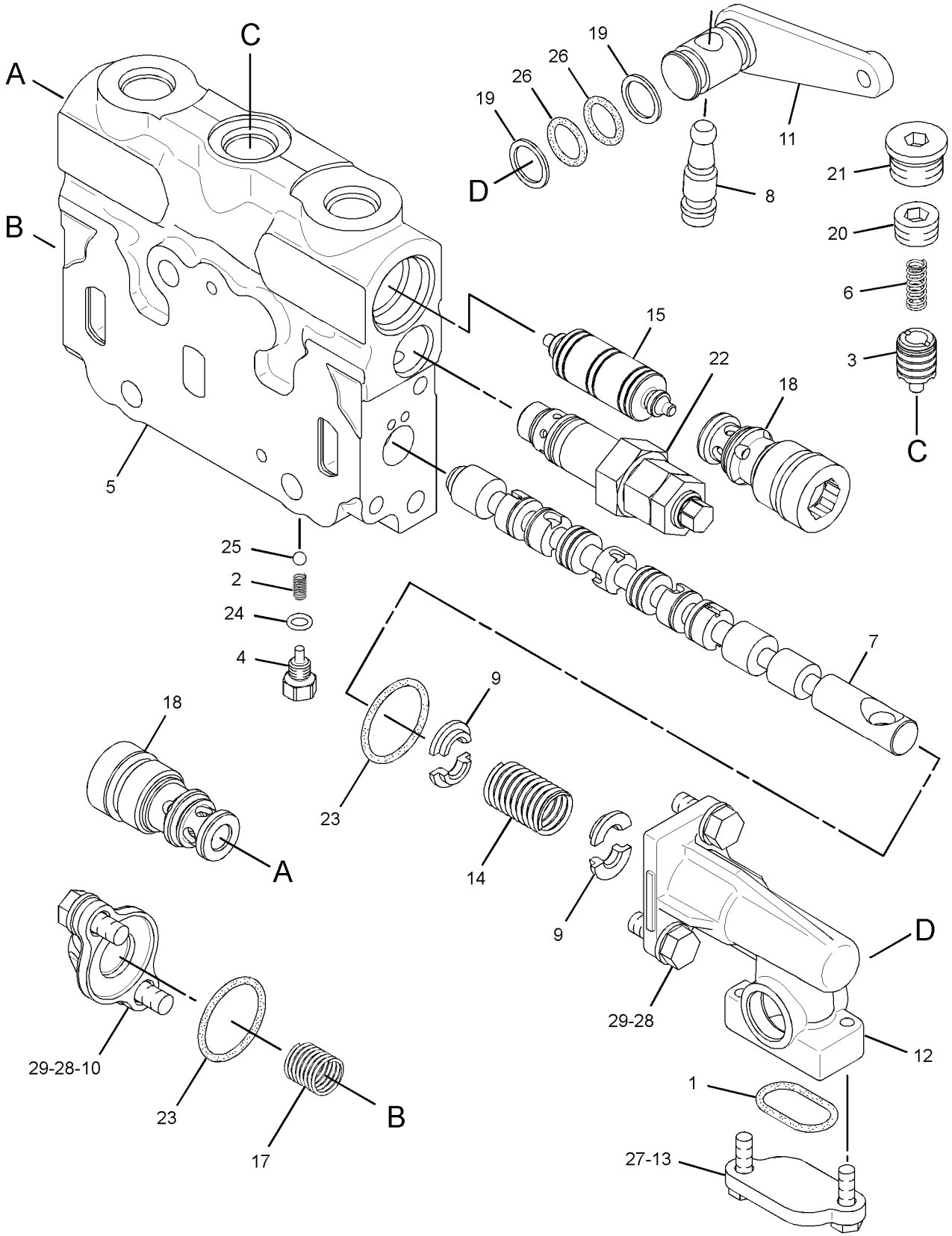

GRAPHIC #1 **<END>** g01674494

HYDRAULIC SYSTEM

107-0545 VALVE GP-CONTROL–RIPPER

S/N: JPA1-UP

PART OF 112-2581 VALVE GP-BANK 3, 130-7755 VALVE GP-BANK 4, 104-8645, 124-3329, 250-0550 VALVE GP-BANK 5

AN ATTACHMENT

SMCS-5051 **i03338460**

NOTE	REF NO	GRAPHIC REF	PART NUMBER	QTY	PART NAME 1 2 3 4 5 6 (PRODUCT LEVEL)	SEE PAGE
	1	1	**6E-4599**	1	BODY	
	2	1	**101-1148**	1	STEM	
	3	1	**101-1978**	1	COVER	
	4	1	**2K-8199**	2	SEAL-O-RING	
M	5	1	**8T-4189**	4	BOLT (M8X1.25X20-MM)	
	6	1	**8T-4224**	4	WASHER-HARD (8.8X16X2-MM THK)	
	7	1	**101-1984**	1	BODY	
C	8	1	**325-6423**	2	VALVE GP-CHECK	
					(EACH INCLUDES)	
		1	**3K-0360**	1	SEAL-O-RING	
		1	**7J-9933**	1	SEAL-O-RING	
Y	9	1	**139-8472**	1	VALVE GP-RELIEF (RIPPER)	579
	11	1	**102-7412**	1	SPRING	
	12	1	**101-1973**	4	RETAINER	
	13	1	**101-1971**	1	LEVER	
	14	1	**101-1982**	1	LEVER AS	
C	15	1	**8M-4437**	2	SEAL-O-RING	
	16	1	**101-1983**	2	RING-BACKUP	
	17	1	**4D-9986**	1	SEAL-O-RING	
	18	1	**101-2480**	1	COVER	
M	19	1	**8T-4138**	2	BOLT (M6X1X20-MM)	
	20	1	**5B-9318**	1	BALL	
	21	1	**6E-3007**	1	SPRING	
	22	1	**6E-4502**	1	PLUG	
	23	1	**4J-7533**	1	SEAL-O-RING	
	24	1	**6E-3019**	1	VALVE	
	25	1	**6E-5153**	1	SPRING	
	26	1	**108-2187**	1	PLUG-PIPE	
	29	1	*148-8395*	1	PLUG AS	
		1	**3K-0360**	1	SEAL-O-RING	
		1	**9S-8005**	1	PLUG-O-RING	
	31	1	**106-3659**	1	PISTON	
	34	1	**111-8233**	1	SPRING	

C-CHANGE FROM PREVIOUS TYPE
M-METRIC PART
Y-SEPARATE ILLUSTRATION

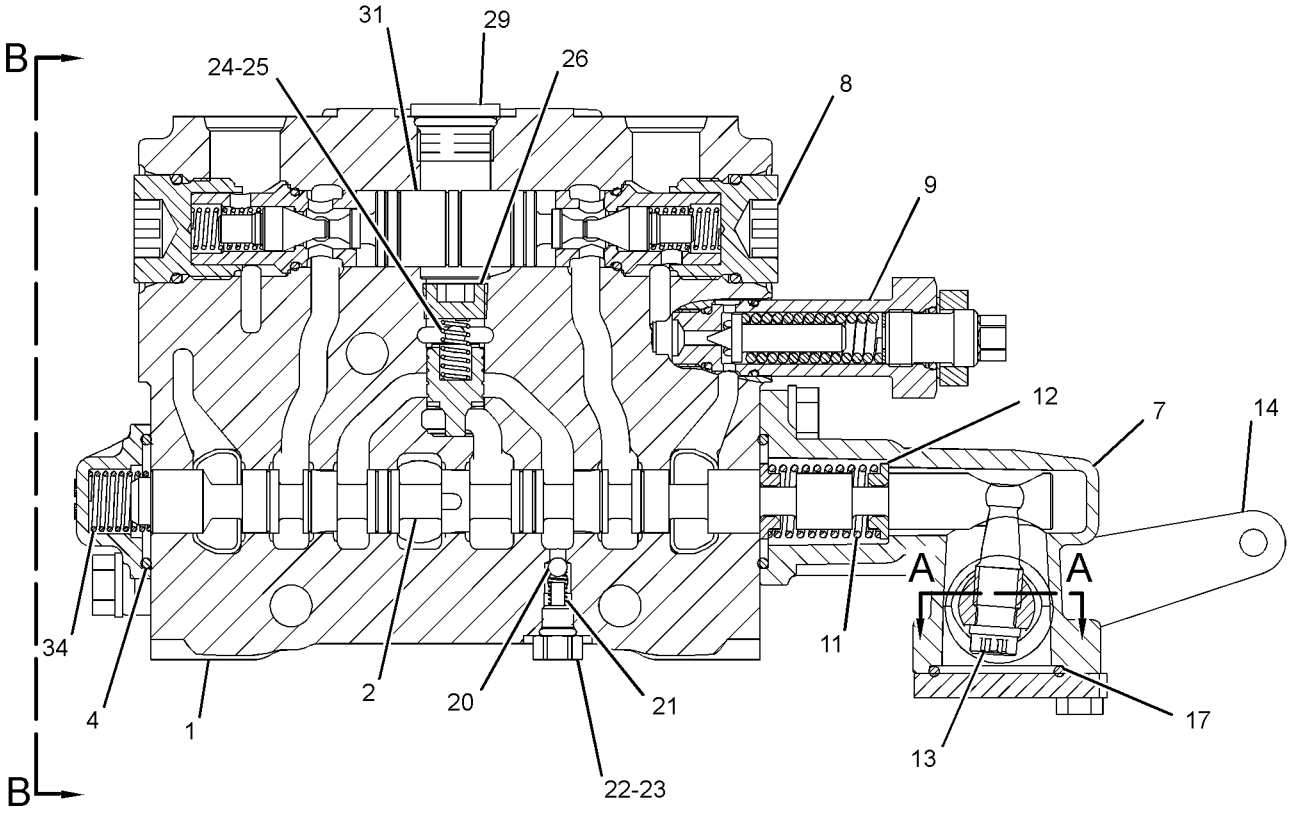

SECTION C-C

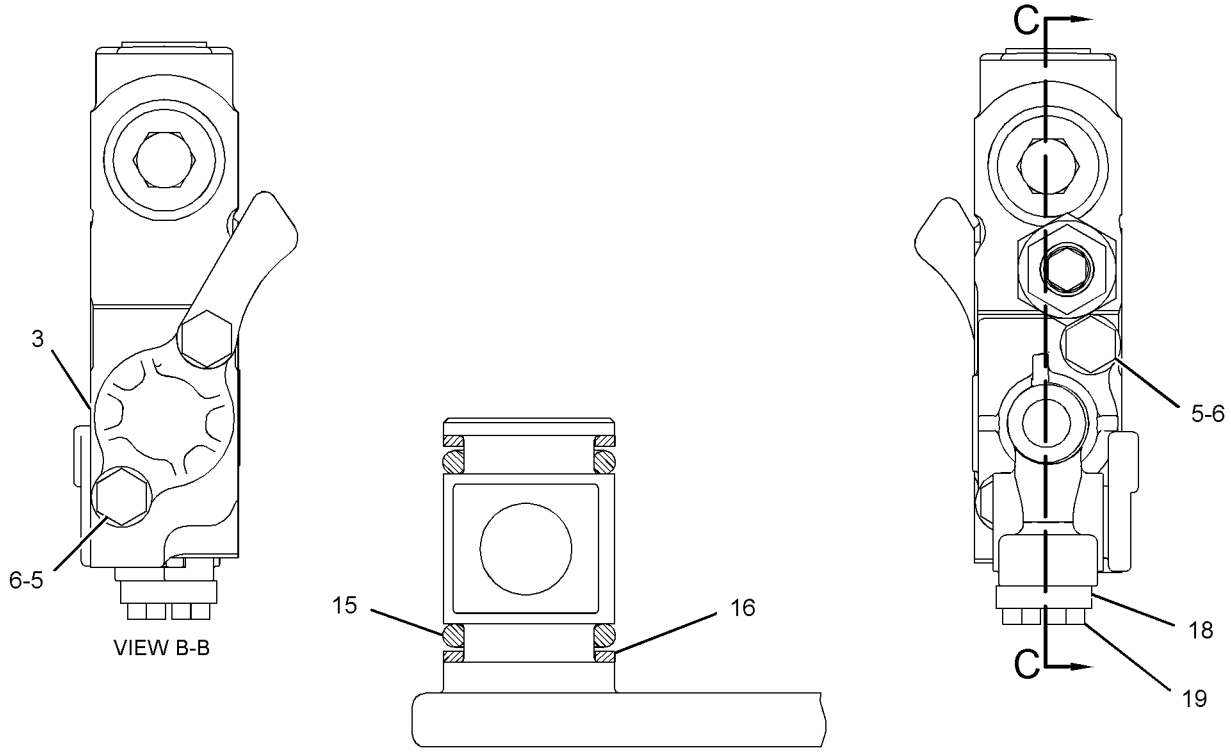

VIEW B-B

SECTION A-A

GRAPHIC #1 **<END>** g01619681

HYDRAULIC SYSTEM

107-0547 VALVE GP-CONTROL—DOZER LIFT, PLOW

S/N: JPA1-UP

PART OF 104-8671, 250-0548 VALVE GP-BANK 5, 115-1008, 250-0565 VALVE GP-BANK 6

AN ATTACHMENT

SMCS-5051 **i03247361**

NOTE	REF NO	GRAPHIC REF	PART NUMBER	QTY	PART NAME 1 2 3 4 5 6 (PRODUCT LEVEL)	SEE PAGE
	1	1	**6E-3059**	1	BODY	
	2	1	**221-3678**	1	STEM	
	3	1	**101-1980**	1	HOUSING	
Y	4	1	**108-4916**	1	DETENT GP-CONTROL VALVE (PLOW, BULLDOZER LIFT)	389
	5	1	**5B-9318**	1	BALL	
M	6	1	**8T-6869**	2	BOLT (M8X1.25X60-MM)	
	7	1	**2K-8199**	2	SEAL-O-RING	
M	8	1	**8T-4189**	2	BOLT (M8X1.25X20-MM)	
	9	1	**8T-4224**	4	WASHER-HARD (8.8X16X2-MM THK)	
	10	1	**101-1984**	1	BODY	
	11	1	**102-7412**	1	SPRING	
	12	1	**101-1973**	4	RETAINER	
	13	1	**101-1971**	1	LEVER	
	14	1	**101-1970**	1	LEVER AS	
	15	1	**8M-4437**	2	SEAL-O-RING	
	16	1	**101-1983**	2	RING-BACKUP	
	17	1	**4D-9986**	1	SEAL-O-RING	
	18	1	**101-2480**	1	COVER	
M	19	1	**8T-4138**	2	BOLT (M6X1X20-MM)	
	20	1	**6E-3007**	1	SPRING	
	21	1	**6E-4502**	1	PLUG	
	22	1	**4J-7533**	1	SEAL-O-RING	
	23	1	**6E-3019**	1	VALVE	
	24	1	**6E-5153**	1	SPRING	
	25	1	**108-2187**	1	PLUG-PIPE	
	26	1	*148-8395*	1	PLUG AS	
		1	**9S-8005**	1	PLUG-O-RING	
		1	**3K-0360**	1	SEAL-O-RING	
	27	1	**106-3660**	2	PISTON	
Y	28	1	**222-7774**	1	VALVE GP-RELIEF (PLOW, BULLDOZER LIFT)	581
	30	1	**111-8234**	1	SPRING	
C	31	1	**229-5010**	2	VALVE GP-CHECK (EACH INCLUDES)	
		1	**3K-0360**	1	SEAL-O-RING	
		1	**7J-9933**	1	SEAL-O-RING	

C-CHANGE FROM PREVIOUS TYPE
M-METRIC PART
Y-SEPARATE ILLUSTRATION

107-0547 VALVE GP-CONTROL *(contd.)* **i03247361**

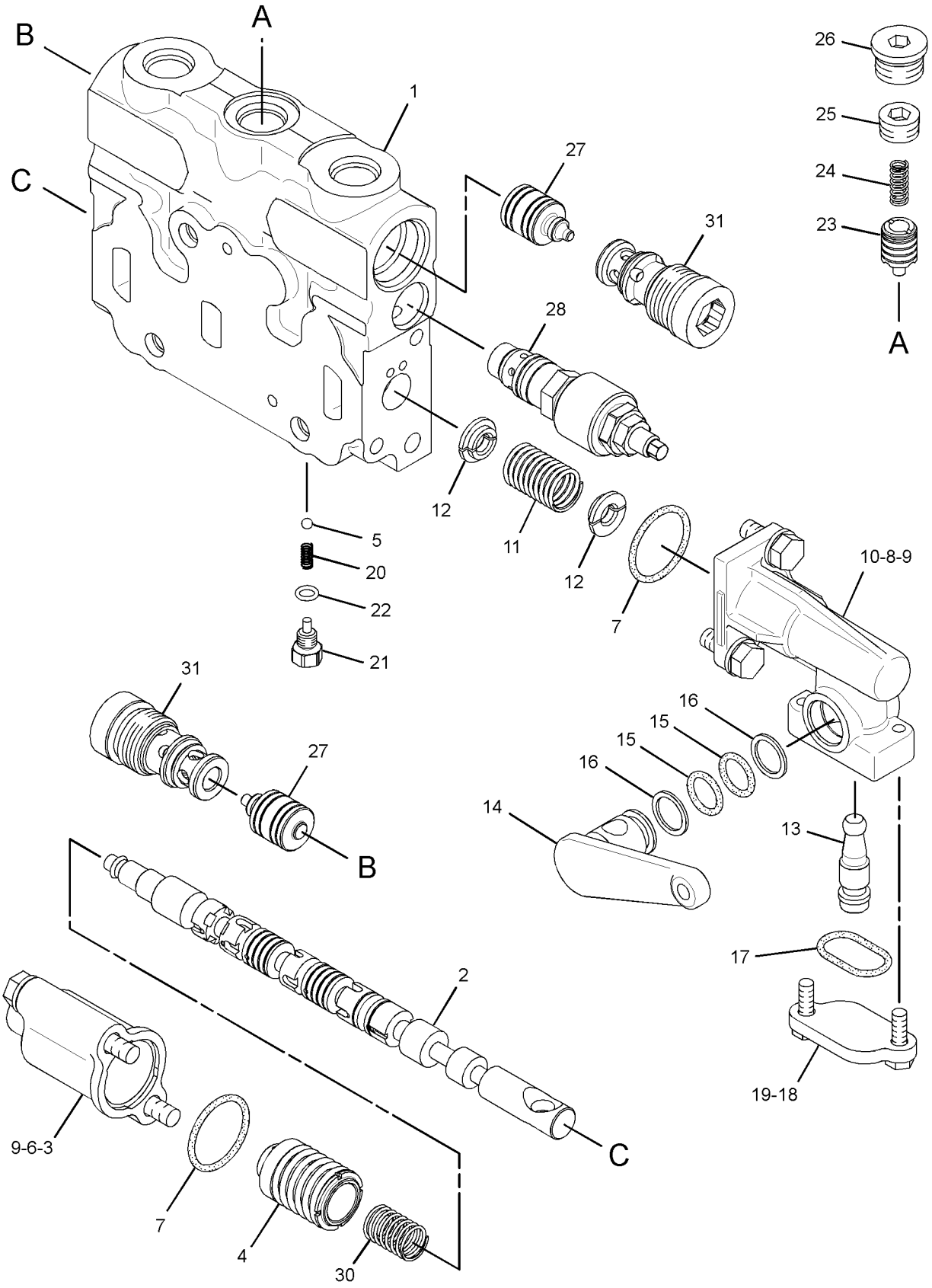

GRAPHIC #1 **<END>** g01641733

HYDRAULIC SYSTEM

115-1007 VALVE GP-CONTROL—BULLDOZER ANGLE, PLOW, RH

S/N: JPA1-UP

PART OF 115-1008, 250-0565 VALVE GP-BANK 6

AN ATTACHMENT

SMCS-5051 **i03361400**

NOTE	REF NO	GRAPHIC REF	PART NUMBER	QTY	PART NAME 1 2 3 4 5 6 (PRODUCT LEVEL)	SEE PAGE
	1	1	**4D-9986**	1	SEAL-O-RING	
	2	1	**6E-3007**	1	SPRING	
	3	1	**6E-3019**	1	VALVE	
	4	1	**6E-4502**	1	PLUG	
	5	1	**6E-4599**	1	BODY	
	6	1	**6E-5153**	1	SPRING	
	7	1	**101-1970**	1	LEVER AS	
	8	1	**101-1971**	1	LEVER	
	9	1	**101-1973**	4	RETAINER	
	10	1	**101-1978**	1	COVER	
	11	1	**101-1984**	1	BODY	
	12	1	**101-2480**	1	COVER	
	13	1	**102-4578**	1	STEM	
	14	1	**102-7412**	1	SPRING	
	15	1	**106-3659**	1	PISTON	
	16	1	**111-8233**	1	SPRING	
Y	18	1	**139-8472**	1	VALVE GP-RELIEF (BULLDOZER ANGLE, PLOW)	579
C	19	1	**325-6423**	2	VALVE GP-CHECK	
					(EACH INCLUDES)	
		1	**3K-0360**	1	SEAL-O-RING	
		1	**7J-9933**	1	SEAL-O-RING	
	20	1	**101-1983**	2	RING-BACKUP	
	21	1	**108-2187**	1	PLUG-PIPE	
C	22	1	*148-8395*	1	PLUG AS	
		1	**9S-8005**	1	PLUG-O-RING	
		1	**3K-0360**	1	SEAL-O-RING	
	23	1	**2K-8199**	2	SEAL-O-RING	
	24	1	**4J-7533**	1	SEAL-O-RING	
	25	1	**5B-9318**	1	BALL	
	26	1	**8M-4437**	2	SEAL-O-RING	
M	27	1	**8T-4138**	2	BOLT (M6X1X20-MM)	
M	28	1	**8T-4189**	4	BOLT (M8X1.25X20-MM)	
	29	1	**8T-4224**	4	WASHER-HARD (8.8X16X2-MM THK)	

C-CHANGE FROM PREVIOUS TYPE
M-METRIC PART
Y-SEPARATE ILLUSTRATION

115-1007 **VALVE GP-CONTROL** *(contd.)* **i03361400**

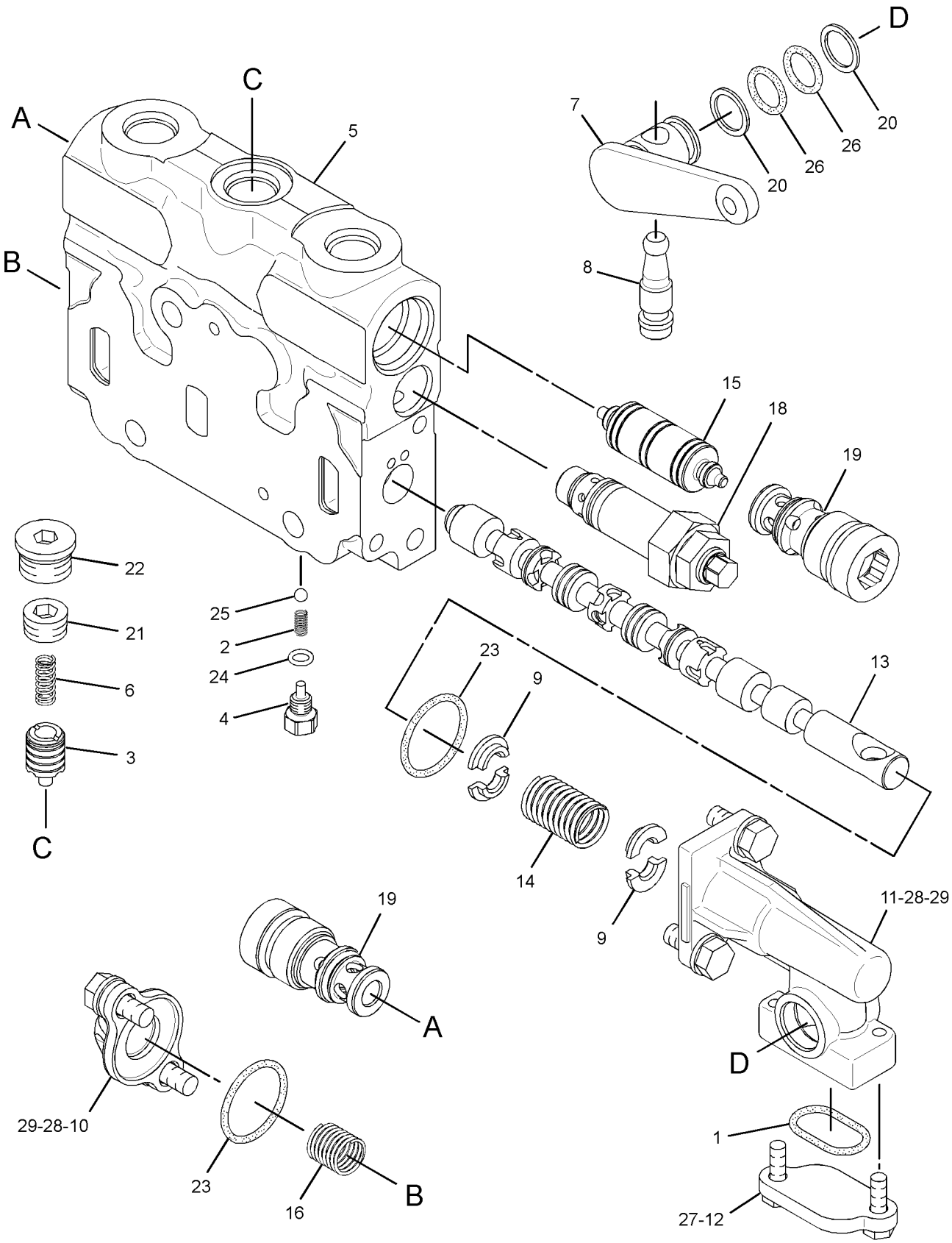

GRAPHIC #1 **<END>** g01735253

HYDRAULIC SYSTEM

124-2883 VALVE GP-CONTROL–BLADE LIFT

S/N: JPA1-UP

PART OF 104-8672 VALVE GP-BANK 2, 104-8673, 112-2580, 112-2581 VALVE GP-BANK 3, 124-3327, 130-7754, 130-7755 VALVE GP-BANK 4, 124-3328, 124-3329 VALVE GP-BANK 5

ALSO AN ATTACHMENT

SMCS-5051 **i03179677**

NOTE	REF NO	GRAPHIC REF	PART NUMBER	QTY	PART NAME 1 2 3 4 5 6 (PRODUCT LEVEL)	SEE PAGE
	1	1	**111-8233**	1	SPRING	
	2	1	**124-1840**	1	STEM-BLADE LIFT	
	3	1	**101-1978**	1	COVER	
	4	1	**2K-8199**	2	SEAL-O-RING	
M	5	1	**8T-4189**	4	BOLT (M8X1.25X20-MM)	
	6	1	**8T-4224**	4	WASHER-HARD (8.8X16X2-MM THK)	
	7	1	**106-3658**	2	VALVE	
	8	1	**7J-9933**	2	SEAL-O-RING	
Y	9	1	*6E-3033*	1	VALVE GP-RELIEF (BLADE LIFT)	575
	10	1	**124-3385**	1	PISTON	
	11	1	**102-7412**	1	SPRING	
	12	1	**101-1973**	4	RETAINER	
	13	1	**101-1971**	1	LEVER	
	14	1	**101-1982**	1	LEVER AS	
	15	1	**8M-4437**	2	SEAL-O-RING	
	16	1	**101-1983**	2	RING-BACKUP	
	17	1	**4D-9986**	1	SEAL-O-RING	
	18	1	**101-2480**	1	COVER	
M	19	1	**8T-4138**	2	BOLT (M6X1X20-MM)	
	20	1	**5B-9318**	1	BALL	
	21	1	**6E-3007**	1	SPRING	
	22	1	**6E-4502**	1	PLUG	
	23	1	**4J-7533**	1	SEAL-O-RING	
	24	1	**3K-0360**	3	SEAL-O-RING	
	25	1	**6E-5153**	1	SPRING	
	26	1	**108-2187**	1	PLUG-PIPE	
	27	1	**9J-0403**	2	SPRING	
	28	1	**9J-0404**	2	PLUG	
	29	1	**9S-8005**	1	PLUG-O-RING	

M-METRIC PART
Y-SEPARATE ILLUSTRATION

124-2883 VALVE GP-CONTROL *(contd.)* **i03179677**

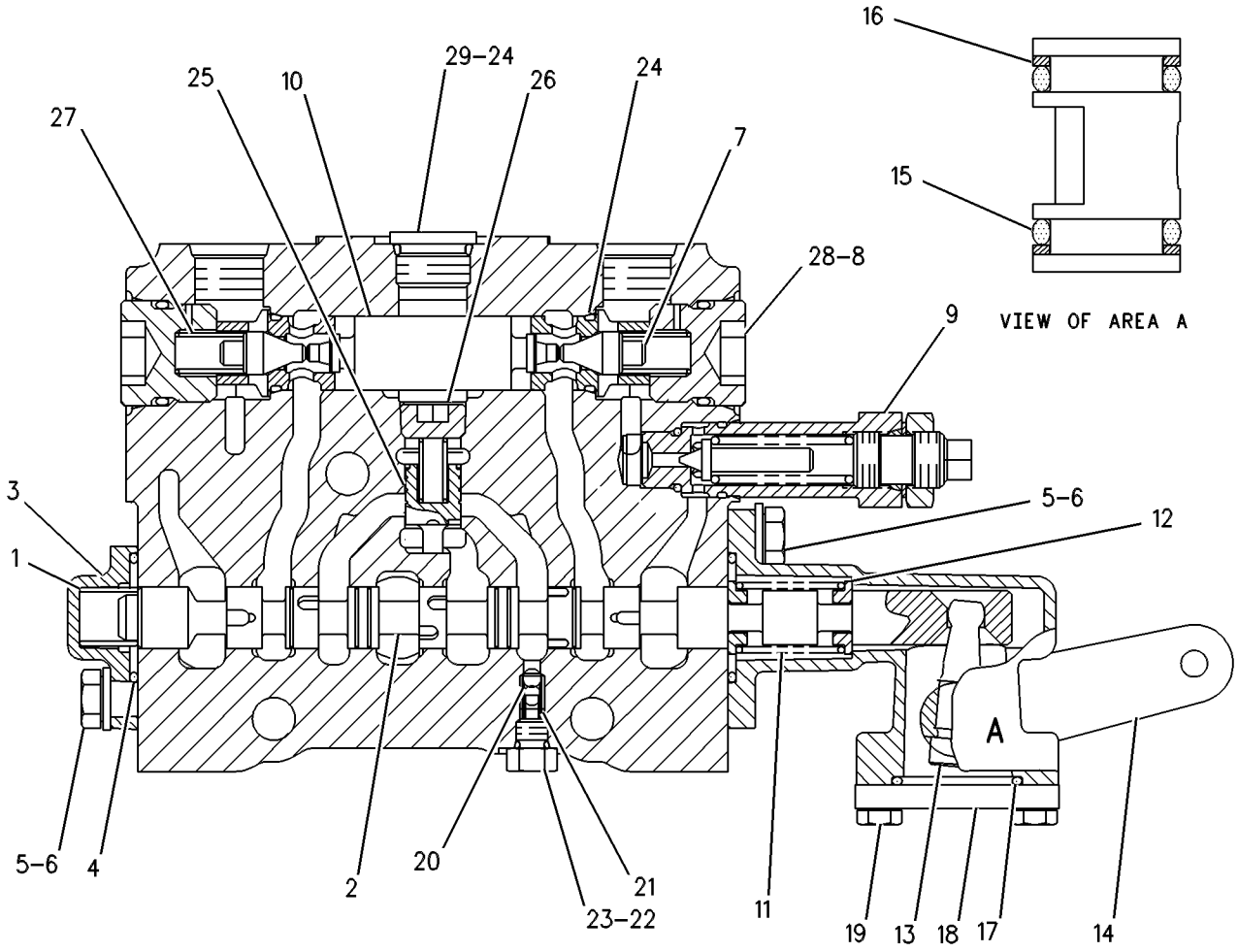

GRAPHIC #1 **<END>** g00109193

HYDRAULIC SYSTEM

124-2884 VALVE GP-CONTROL—BLADE LIFT

S/N: JPA1-UP

PART OF 124-3325 VALVE GP-BANK 4, 124-3326 VALVE GP-BANK 5

ALSO AN ATTACHMENT

SMCS-5051 **i03179703**

NOTE	REF NO	GRAPHIC REF	PART NUMBER	QTY	PART NAME 1 2 3 4 5 6 (PRODUCT LEVEL)	SEE PAGE
	1	1	**111-8233**	1	SPRING	
	2	1	**124-1840**	1	STEM-BLADE LIFT	
	3	1	**101-1978**	1	COVER	
	4	1	**2K-8199**	2	SEAL-O-RING	
M	5	1	**8T-4189**	4	BOLT (M8X1.25X20-MM)	
	6	1	**8T-4224**	4	WASHER-HARD (8.8X16X2-MM THK)	
	7	1	**106-3658**	2	VALVE	
	8	1	**7J-9933**	2	SEAL-O-RING	
YC	9	1	**139-8474**	1	VALVE GP-RELIEF (BLADE LIFT)	580
C	10	1	**124-3385**	1	PISTON	
	11	1	**102-7412**	1	SPRING	
	12	1	**101-1973**	4	RETAINER	
	13	1	**101-1971**	1	LEVER	
	14	1	**101-1970**	1	LEVER AS	
	15	1	**8M-4437**	2	SEAL-O-RING	
	16	1	**101-1983**	2	RING-BACKUP	
	17	1	**4D-9986**	1	SEAL-O-RING	
	18	1	**101-2480**	1	COVER	
M	19	1	**8T-4138**	2	BOLT (M6X1X20-MM)	
	20	1	**5B-9318**	1	BALL	
	21	1	**6E-3007**	1	SPRING	
	22	1	**6E-4502**	1	PLUG	
	23	1	**4J-7533**	1	SEAL-O-RING	
	24	1	**3K-0360**	3	SEAL-O-RING	
	25	1	**6E-5153**	1	SPRING	
	26	1	**108-2187**	1	PLUG-PIPE	
	27	1	**9J-0403**	2	SPRING	
	28	1	**9J-0404**	2	PLUG	
	29	1	**9S-8005**	1	PLUG-O-RING	

C-CHANGE FROM PREVIOUS TYPE
M-METRIC PART
Y-SEPARATE ILLUSTRATION

124-2884 VALVE GP-CONTROL *(contd.)* **i03179703**

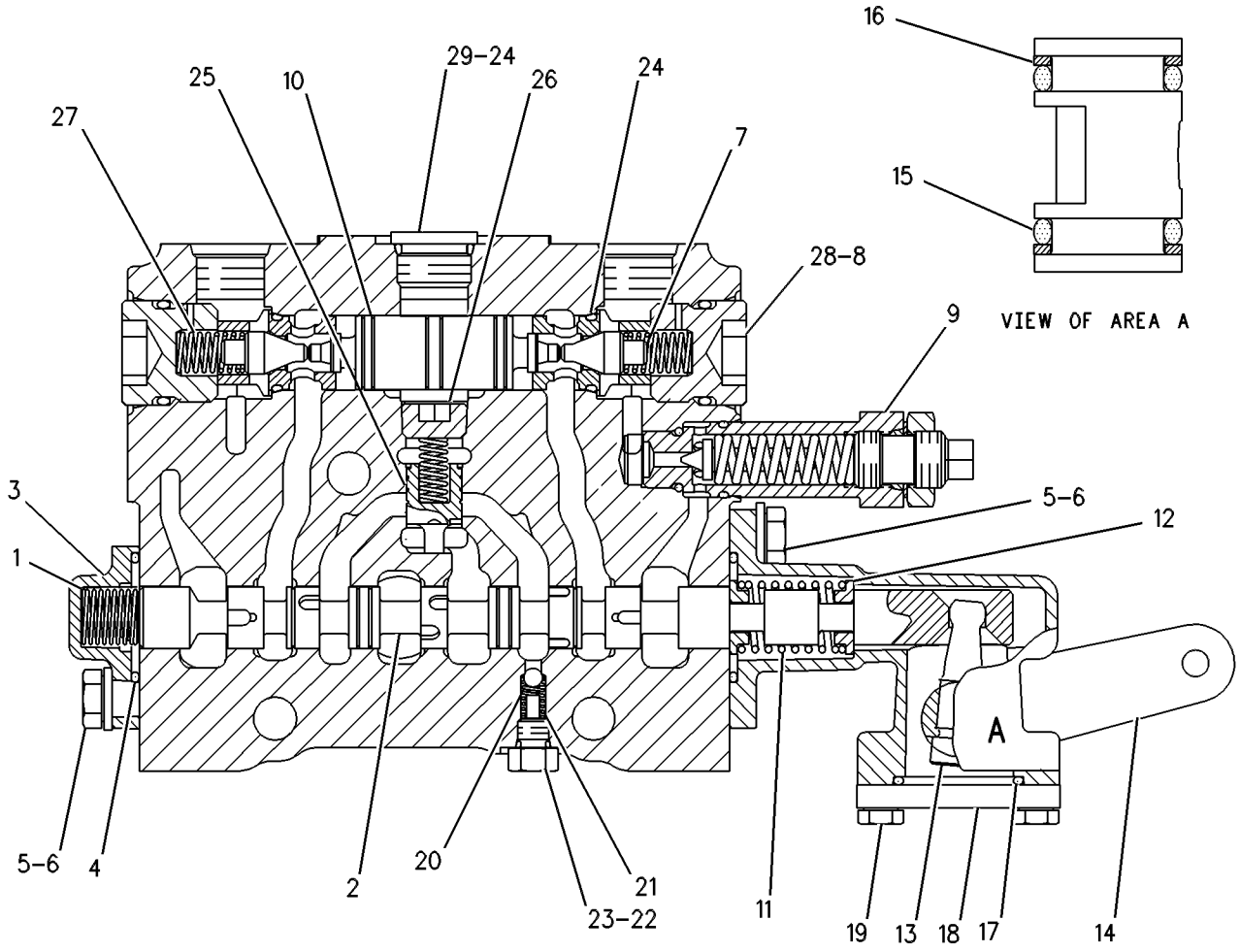

GRAPHIC #1 **<END>** g00273297

HYDRAULIC SYSTEM

124-2885 VALVE GP-CONTROL—BULLDOZER LIFT, PLOW

S/N: JPA1-UP

PART OF 124-3326 VALVE GP-BANK 5

AN ATTACHMENT

SMCS-5051 **i03179700**

NOTE	REF NO	GRAPHIC REF	PART NUMBER	QTY	PART NAME 1 2 3 4 5 6 (PRODUCT LEVEL)	SEE PAGE
	1	1	**6E-4599**	1	BODY	
	2	1	**124-1839**	1	STEM	
	3	1	**101-1978**	1	COVER	
	4	1	**2K-8199**	2	SEAL-O-RING	
M	5	1	**8T-4189**	4	BOLT (M8X1.25X20-MM)	
	6	1	**8T-4224**	4	WASHER-HARD (8.8X16X2-MM THK)	
	7	1	**101-1984**	1	BODY	
	8	1	**7J-9933**	2	SEAL-O-RING	
	9	1	**111-8233**	1	SPRING	
Y	10	1	*6E-3033*	1	VALVE GP-RELIEF (BULLDOZER LIFT, PLOW)	575
	11	1	**102-7412**	1	SPRING	
	12	1	**101-1973**	4	RETAINER	
	13	1	**101-1971**	1	LEVER	
	14	1	**101-1970**	1	LEVER AS	
	15	1	**8M-4437**	2	SEAL-O-RING	
	16	1	**101-1983**	2	RING-BACKUP	
	17	1	**4D-9986**	1	SEAL-O-RING	
	18	1	**101-2480**	1	COVER	
M	19	1	**8T-4138**	2	BOLT (M6X1X20-MM)	
	20	1	**5B-9318**	1	BALL	
	21	1	**6E-3007**	1	SPRING	
	22	1	**6E-4502**	1	PLUG	
	23	1	**4J-7533**	1	SEAL-O-RING	
	24	1	**6E-3019**	1	VALVE	
	25	1	**6E-5153**	1	SPRING	
	26	1	**108-2187**	1	PLUG-PIPE	
	27	1	**9J-0403**	2	SPRING	
	28	1	**9J-0404**	2	PLUG	
	29	1	**9S-8005**	1	PLUG-O-RING	
	30	1	**3K-0360**	3	SEAL-O-RING	
	31	1	**124-3385**	1	PISTON	
	32	1	**6E-3013**	2	SEAT	
	33	1	**106-3658**	2	VALVE	

M-METRIC PART
Y-SEPARATE ILLUSTRATION

124-2885 VALVE GP-CONTROL *(contd.)* **i03179700**

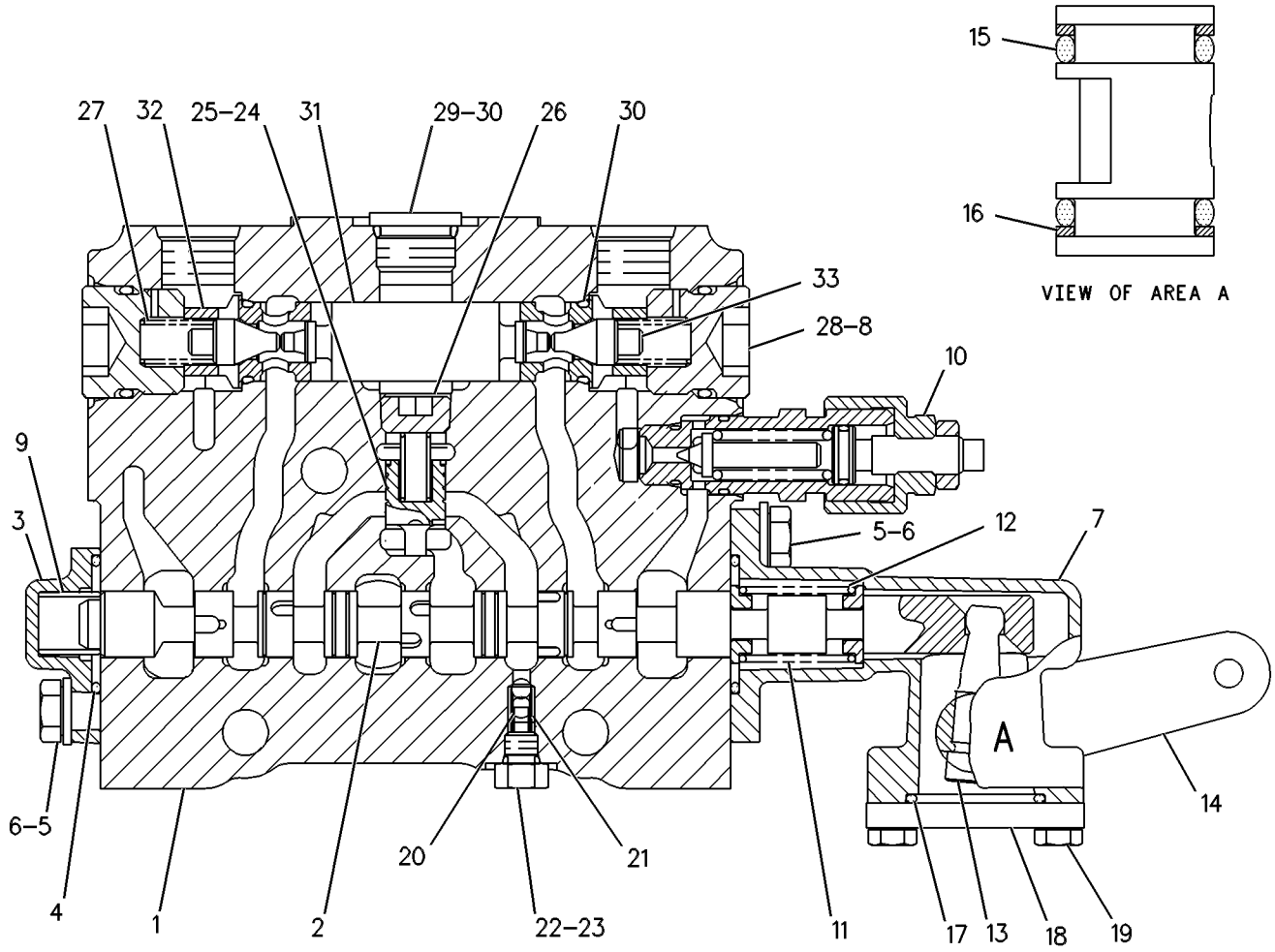

GRAPHIC #1 **<END>** g00108897

HYDRAULIC SYSTEM

137-8104 VALVE GP-CONTROL—WING TILT

S/N: JPA1-UP

PART OF 104-8648, 250-0567 VALVE GP-BANK 6, 104-8647, 263-6435 VALVE GP-BANK 7

AN ATTACHMENT

SMCS-5051 **i03435363**

NOTE	REF NO	GRAPHIC REF	PART NUMBER	QTY	PART NAME 1 2 3 4 5 6 (PRODUCT LEVEL)	SEE PAGE
	1	1	**111-8233**	1	SPRING	
	2	1	**102-4577**	1	STEM	
	3	1	**101-1978**	1	COVER	
	4	1	**2K-8199**	2	SEAL-O-RING	
M	5	1	**8T-4189**	4	BOLT (M8X1.25X20-MM)	
	6	1	**8T-4224**	4	WASHER-HARD (8.8X16X2-MM THK)	
	7	1	**101-1984**	1	BODY	
	8	1	**7J-9933**	2	SEAL-O-RING	
	9	1	**106-3659**	1	PISTON	
	10	1	**4D-2297**	1	SEAL-O-RING	
	11	1	**102-7412**	1	SPRING	
	12	1	**101-1973**	4	RETAINER	
	13	1	**101-1971**	1	LEVER	
	14	1	**101-1982**	1	LEVER AS	
	15	1	**8M-4437**	2	SEAL-O-RING	
	16	1	**101-1983**	2	RING-BACKUP	
	17	1	**4D-9986**	1	SEAL-O-RING	
	18	1	**101-2480**	1	COVER	
M	19	1	**8T-4138**	2	BOLT (M6X1X20-MM)	
	20	1	**5B-9318**	1	BALL	
	21	1	**6E-3007**	1	SPRING	
	22	1	**6E-4502**	1	PLUG	
	23	1	**4J-7533**	1	SEAL-O-RING	
	24	1	**6E-3019**	1	VALVE	
	25	1	**6E-5153**	1	SPRING	
	26	1	**108-2187**	1	PLUG-PIPE	
	27	1	**9J-0404**	2	PLUG	
	28	1	**9S-8005**	1	PLUG-O-RING	
	29	1	**3K-0360**	1	SEAL-O-RING	
Y	30	1	**139-8472**	2	VALVE GP-RELIEF (WING TILT)	579
	31	1	**6E-3013**	2	SEAT	

M-METRIC PART
Y-SEPARATE ILLUSTRATION

137-8104 VALVE GP-CONTROL *(contd.)* **i03435363**

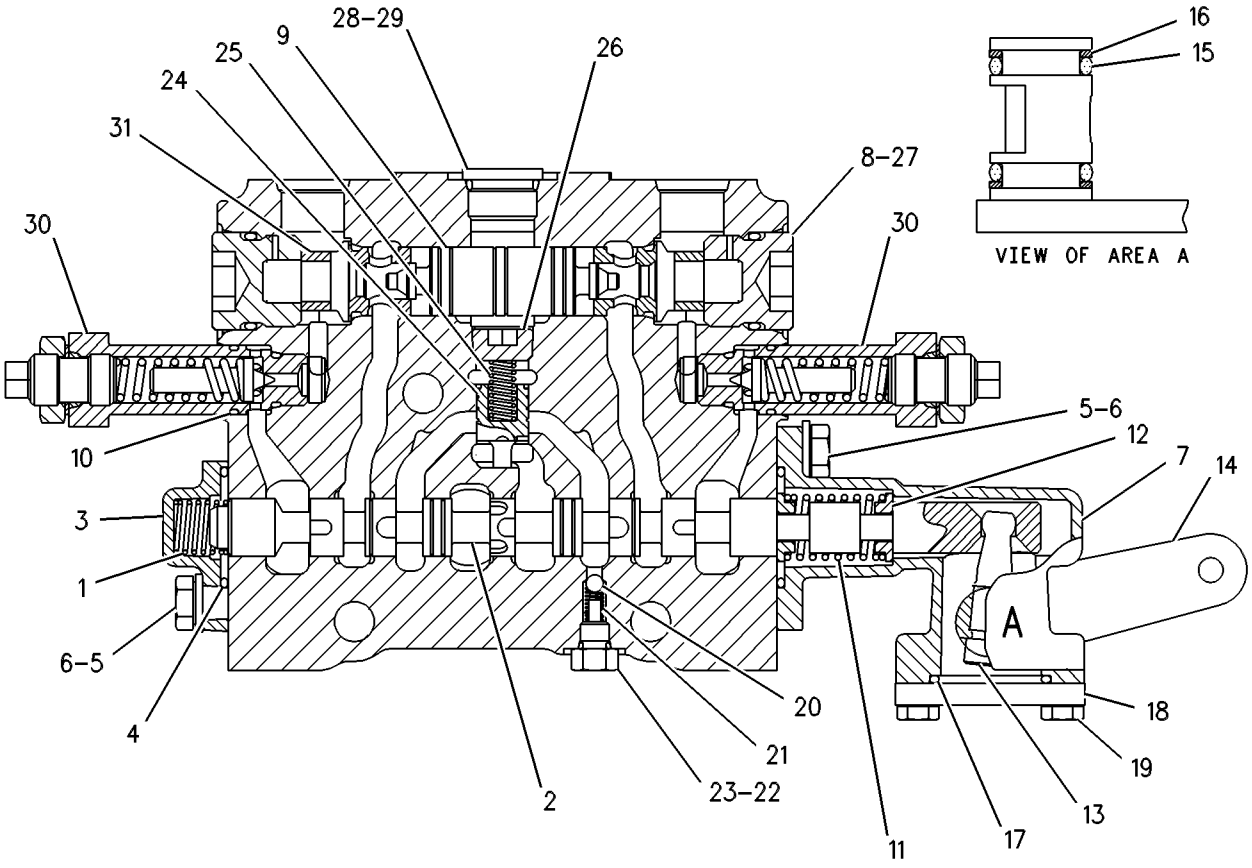

GRAPHIC #1 **<END>** g00109738

HYDRAULIC SYSTEM

137-8106 VALVE GP-CONTROL—WING LIFT

S/N: JPA1-UP

PART OF 104-8648, 250-0567 VALVE GP-BANK 6, 104-8647, 263-6435 VALVE GP-BANK 7

AN ATTACHMENT

SMCS-5051 **i03431540**

NOTE	REF NO	GRAPHIC REF	PART NUMBER	QTY	PART NAME 1 2 3 4 5 6 (PRODUCT LEVEL)	SEE PAGE
	1	1	**137-8107**	1	BODY	
	2	1	**102-4578**	1	STEM	
	3	1	**101-1978**	1	COVER	
	4	1	**2K-8199**	2	SEAL-O-RING	
M	5	1	**8T-4189**	4	BOLT (M8X1.25X20-MM)	
	6	1	**8T-4224**	4	WASHER-HARD (8.8X16X2-MM THK)	
	7	1	**101-1984**	1	BODY	
	8	1	**106-3659**	1	PISTON	
	10	1	**102-7412**	1	SPRING	
	11	1	**101-1973**	4	RETAINER	
	12	1	**101-1971**	1	LEVER	
	13	1	**101-1982**	1	LEVER AS	
	14	1	**6E-5153**	1	SPRING	
	15	1	**101-1983**	2	RING-BACKUP	
	16	1	**4D-9986**	1	SEAL-O-RING	
	17	1	**101-2480**	1	COVER	
M	18	1	**8T-4138**	2	BOLT (M6X1X20-MM)	
	19	1	**5B-9318**	1	BALL	
	20	1	**6E-3007**	1	SPRING	
	21	1	**6E-4502**	1	PLUG	
	22	1	**4J-7533**	1	SEAL-O-RING	
	23	1	**6E-3019**	1	VALVE	
	24	1	**108-2187**	1	PLUG-PIPE	
	25	1	**8M-4437**	2	SEAL-O-RING	
Y	26	1	**139-8472**	2	VALVE GP-RELIEF (WING LIFT)	579
	27	1	**111-8233**	1	SPRING	
C	28	1	**325-6423**	2	VALVE GP-CHECK	
					(EACH INCLUDES)	
		1	**3K-0360**	1	SEAL-O-RING	
		1	**7J-9933**	1	SEAL-O-RING	
C	29	1	*148-8395*	1	PLUG AS	
		1	**3K-0360**	1	SEAL-O-RING	
		1	**9S-8005**	1	PLUG-O-RING	

C-CHANGE FROM PREVIOUS TYPE
M-METRIC PART
Y-SEPARATE ILLUSTRATION

137-8106 **VALVE GP-CONTROL** *(contd.)* **i03431540**

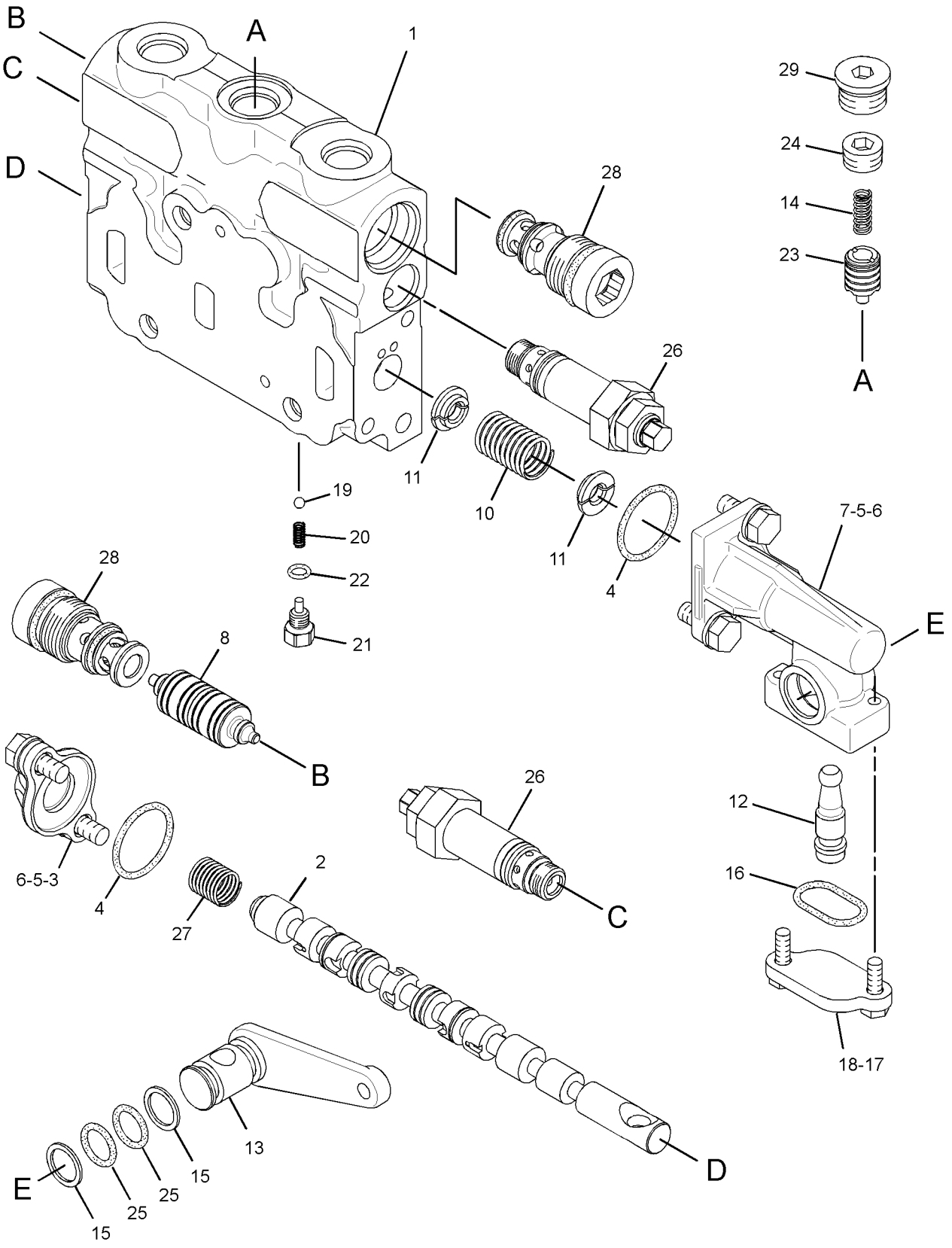

GRAPHIC #1 **<END>** g01642373

HYDRAULIC SYSTEM

104-3122 VALVE GP-PUMP CONTROL–IMPLEMENT, STEERING

S/N: JPA1-UP

PART OF 6E-3136 PUMP GP-PISTON

SMCS-5455 **i02844881**

NOTE	REF NO	GRAPHIC REF	PART NUMBER	QTY	PART NAME 1 2 3 4 5 6 (PRODUCT LEVEL)	SEE PAGE
	1	1	**108-4814**	1	BODY-COMPENSATOR	
	2	1	**9S-4191**	1	PLUG-O-RING	
	3	1	**3J-1907**	3	SEAL-O-RING	
	4	1	**9T-2186**	2	PLUG	
	5	1	**6E-4230**	2	GUIDE-SPRING	
	6	1	**6E-4228**	1	SPRING	
	7	1	**6E-6140**	1	PLUG-COMPENSATOR	
	8	1	**033-6036**	1	SEAL-O-RING	
	9	1	**6E-6141**	2	LOCKNUT-SEALING	
M	10	1	**129-7632**	2	SETSCREW-SOCKET (M8X1.25X45-MM)	
	11	1	**6E-6142**	1	PLUG-MARGIN	
	12	1	**033-6027**	1	SEAL-O-RING	
	13	1	**9T-7750**	1	SPRING	
	14	1	**108-4816**	1	PIN-SPRING STOP	
	15	1	**9T-1857**	2	GUIDE	
	16	1	**6E-6420**	1	VALVE-NEEDLE	
	17	1	**6E-6419**	1	RING	
	18	1	**9X-7680**	1	SEAL-O-RING	

M-METRIC PART

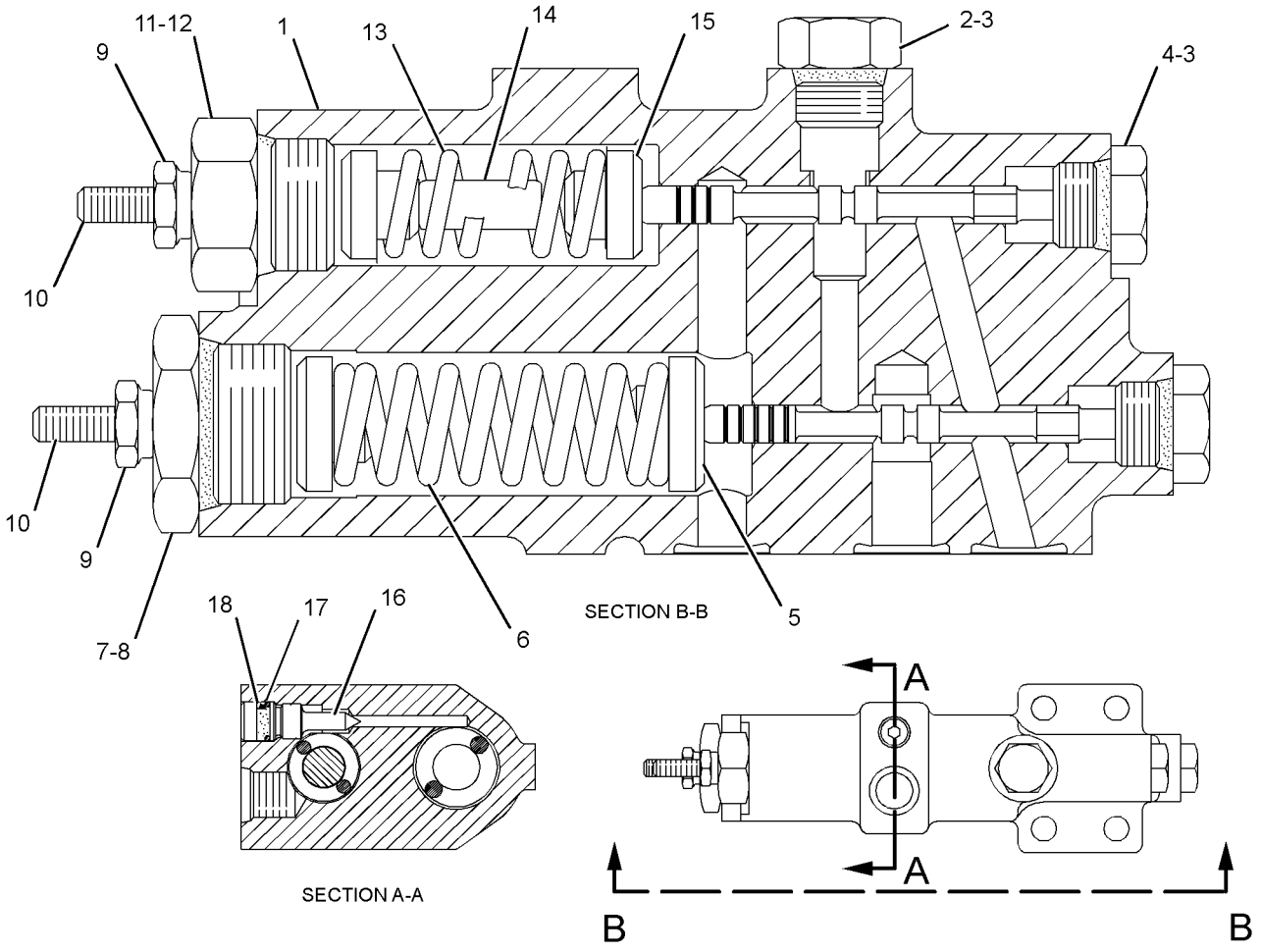

GRAPHIC #1 **<END>** g01419150

131-8350 VALVE GP-PURGE

S/N: JPA1-UP

PART OF 9T-5957 VALVE GP-COMBINATION

SMCS-4293 **i00139150**

NOTE	REF NO	GRAPHIC REF	PART NUMBER	QTY	PART NAME 1 2 3 4 5 6 (PRODUCT LEVEL)	SEE PAGE
	1	1	**109-1144**	1	VALVE	
	2	1	**130-5770**	1	SLEEVE	

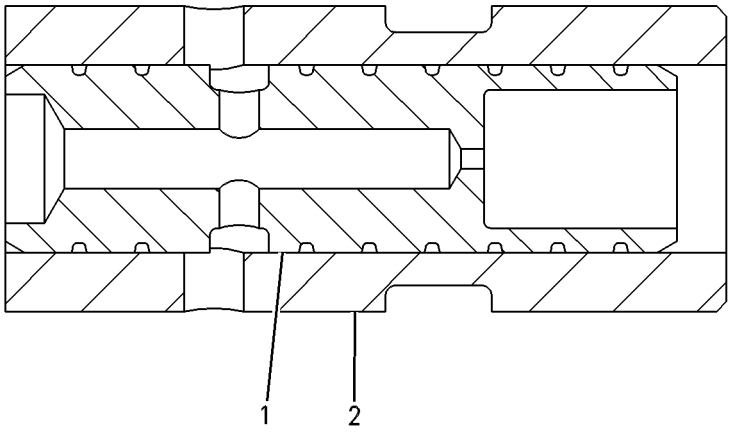

GRAPHIC #1 **<END>** g00087876

HYDRAULIC SYSTEM

4T-4935 VALVE GP-RELIEF

S/N: JPA1-UP

PART OF 9T-5957 VALVE GP-COMBINATION

SMCS-4322, 5069, 5072, 5117 **i00131002**

NOTE	REF NO	GRAPHIC REF	PART NUMBER	QTY	PART NAME 1 2 3 4 5 6 (PRODUCT LEVEL)	SEE PAGE
	1	1	**6E-1835**	1	RETAINER AS	
	2	1	**9X-6395**	1	NUT (3/4-16-THD)	
	3	1	**7J-9933**	1	SEAL-O-RING	
	4	1	**4T-7571**	1	PLATE	
	5	1	**6J-6439**	1	VALVE-POPPET	
	6	1	**3K-0360**	2	SEAL-O-RING	
	7	1	**4T-4942**	1	SPRING	

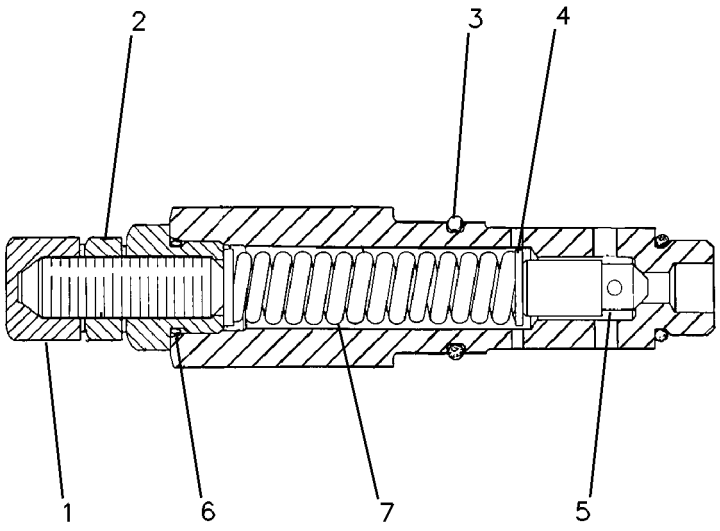

GRAPHIC #1 **<END>** g00082648

6E-3033 VALVE GP-RELIEF

S/N: JPA1-UP

PART OF 124-2883, 124-2885 VALVE GP-CONTROL

ALSO AN ATTACHMENT

SMCS-4322, 5069, 5072, 5117 **i01862903**

NOTE	PART NUMBER	QTY	PART NAME 1 2 3 4 5 6 (PRODUCT LEVEL)	SEE PAGE
Y	*106-7390*	1	VALVE GP-RELIEF (HYDRAULIC)	578
			—OR—	
	6E-4704	1	VALVE GP-RELIEF (HYDRAULIC)	
	3G-3726	1	NUT (3/8-40-THD)	
	3J-1907	1	SEAL-O-RING	
	4D-2297	1	SEAL-O-RING	

Y-SEPARATE ILLUSTRATION

<END>

HYDRAULIC SYSTEM

6E-4703 VALVE GP-RELIEF

S/N: JPA1-UP

PART OF 9T-5957 VALVE GP-COMBINATION

SMCS-4322, 5069, 5072, 5117 **i00131105**

NOTE	REF NO	GRAPHIC REF	PART NUMBER	QTY	PART NAME 1 2 3 4 5 6 (PRODUCT LEVEL)	SEE PAGE
	1	1	**4D-2297**	1	SEAL-O-RING	
	2	1	**3J-1907**	1	SEAL-O-RING	
	3	1	**3G-3726**	1	NUT (3/8-40-THD)	

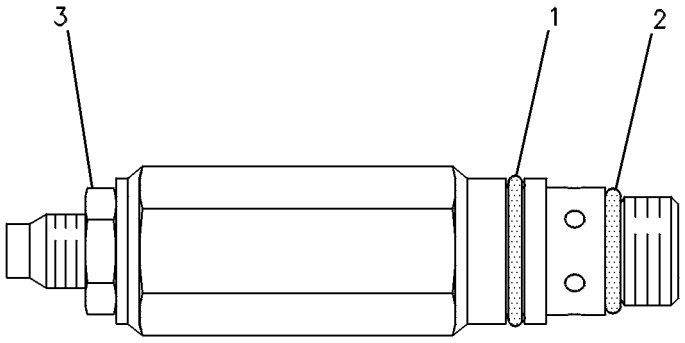

GRAPHIC #1 **<END>** g00084814

100-6021 VALVE GP-RELIEF

S/N: JPA1-UP

PART OF 9T-5957 VALVE GP-COMBINATION

SMCS-4322, 5069, 5072, 5117 **i01853030**

NOTE	REF NO	GRAPHIC REF	PART NUMBER	QTY	PART NAME 1 2 3 4 5 6 (PRODUCT LEVEL)	SEE PAGE
	1	1	**4T-1700**	1	SPRING	
	2	1	**4T-4509**	1	SEAT	
	3	1	**4T-5074**	1	RING-BACKUP	
	4	1	**6E-5200**	1	RETAINER AS	
	5	1	**123-6661**	1	HOUSING	
	6	1	**108-5157**	1	VALVE	
	7	1	**3J-7354**	1	SEAL-O-RING	
	8	1	**3K-0360**	1	SEAL-O-RING	
	9	1	**6V-5556**	1	SEAL-O-RING	
	10	1	**9X-6395**	1	NUT (3/4-16-THD)	

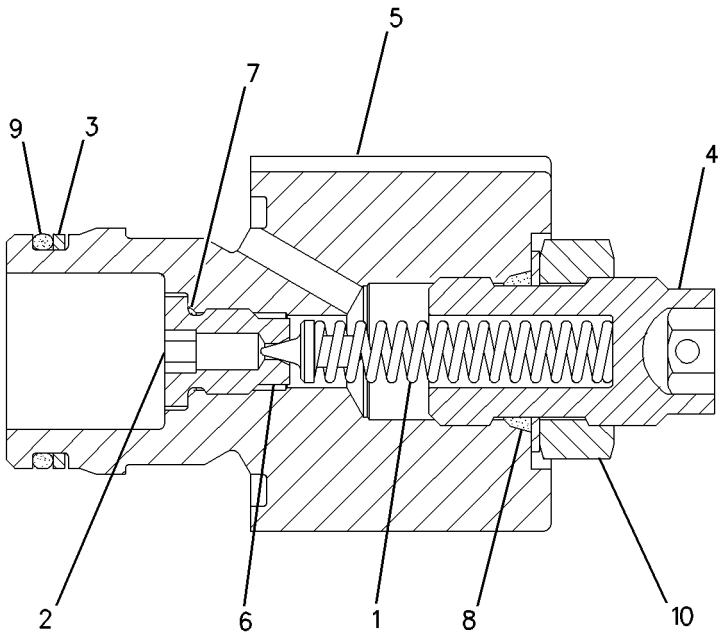

GRAPHIC #1 **<END>** g00949717

106-7390 VALVE GP-RELIEF

S/N: JPA1-UP
PART OF 6E-3033 VALVE GP-RELIEF
FIELD REPLACEMENT ORDER 6E-3033—PAGE 575
ALSO AN ATTACHMENT

SMCS-4322, 5069, 5072, 5117 **i01197997**

NOTE	REF NO	GRAPHIC REF	PART NUMBER	QTY	PART NAME 1 2 3 4 5 6 (PRODUCT LEVEL)	SEE PAGE
	1	1	**114-6635**	1	RETAINER AS	
	2	1	**2P-1279**	1	LOCKNUT (9/16-18-THD)	
	3	1	**3J-1907**	2	SEAL-O-RING	
	4	1	**2J-6089**	1	SPRING	
	6	1	**111-5754**	1	VALVE	
	7	1	**4D-2297**	1	SEAL-O-RING	

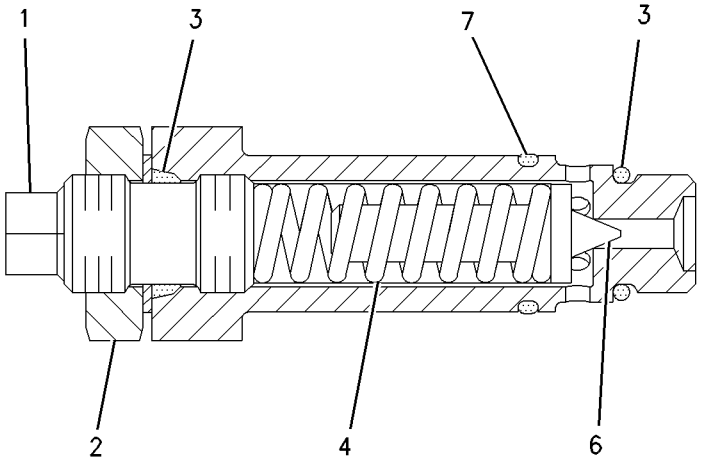

GRAPHIC #1 **<END>** g00638990

139-8472 VALVE GP-RELIEF

S/N: JPA1-UP

PART OF 107-0545, 115-1007, 137-8104, 137-8106, 6E-3034, 6E-3036 VALVE GP-CONTROL AN ATTACHMENT

SMCS-4322, 5069, 5072, 5117 **i01048867**

NOTE	REF NO	GRAPHIC REF	PART NUMBER	QTY	PART NAME 1 2 3 4 5 6 (PRODUCT LEVEL)	SEE PAGE
	1	1	**114-6635**	1	RETAINER AS	
	2	1	**2P-1279**	1	LOCKNUT (9/16-18-THD)	
	3	1	**3J-1907**	2	SEAL-O-RING	
	4	1	**2J-6089**	1	SPRING	
	5	1	**6E-3006**	1	BODY	
	6	1	**131-8777**	1	VALVE	
	7	1	**4D-2297**	1	SEAL-O-RING	
	8	1	**2A-3211**	1	WASHER (5.5X12.3X0.8-MM THK)	

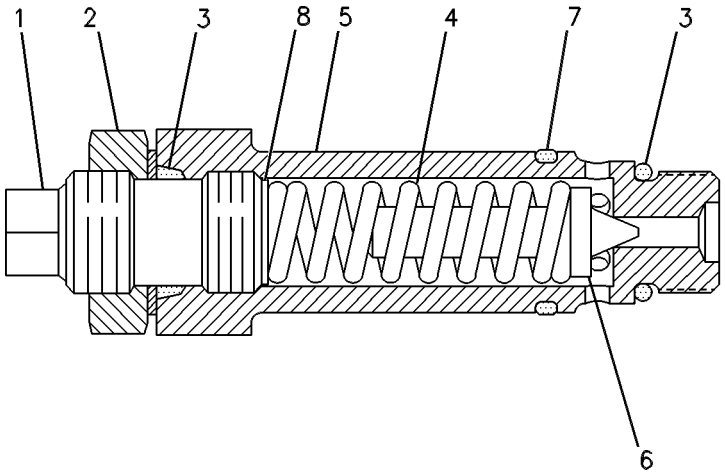

GRAPHIC #1 **<END>** g00109400

HYDRAULIC SYSTEM

139-8474 VALVE GP-RELIEF

S/N: JPA1-UP
PART OF 124-2884 VALVE GP-CONTROL
ALSO AN ATTACHMENT

SMCS-4322, 5069, 5072, 5117 **i00606809**

NOTE	REF NO	GRAPHIC REF	PART NUMBER	QTY	PART NAME 1 2 3 4 5 6 (PRODUCT LEVEL)	SEE PAGE
	1	1	**114-6635**	1	RETAINER AS	
	2	1	**2P-1279**	1	LOCKNUT (9/16-18-THD)	
	3	1	**3J-1907**	2	SEAL-O-RING	
	4	1	**2J-6089**	1	SPRING	
	5	1	**2A-3211**	1	WASHER (5.5X12.3X0.8-MM THK)	
	6	1	**131-8777**	1	VALVE	
	7	1	**4D-2297**	1	SEAL-O-RING	

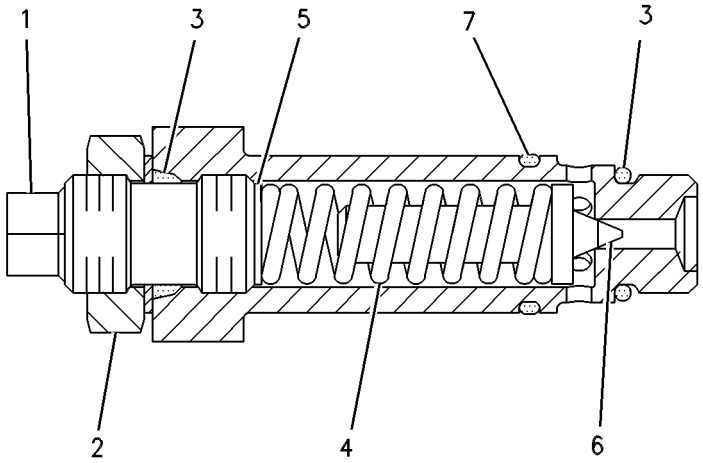

GRAPHIC #1 **<END>** g00089282

HYDRAULIC SYSTEM

222-7774 VALVE GP-RELIEF

S/N: JPA1-UP

PART OF 107-0547, 6E-3031, 6E-3037 VALVE GP-CONTROL

AN ATTACHMENT

SMCS-4322, 5069, 5072, 5117 **i03435404**

NOTE	REF NO	GRAPHIC REF	PART NUMBER	QTY	PART NAME 1 2 3 4 5 6 (PRODUCT LEVEL)	SEE PAGE
	1	1	**2J-6089**	1	SPRING	
	2	1	**114-6635**	1	RETAINER AS	
	3	1	**131-8777**	1	VALVE	
	5	1	**2A-3211**	1	WASHER (5.5X12.3X0.8-MM THK)	
	6	1	**2P-1279**	1	LOCKNUT (9/16-18-THD)	
	7	1	**3J-1907**	2	SEAL-O-RING	
	8	1	**4D-2297**	1	SEAL-O-RING	

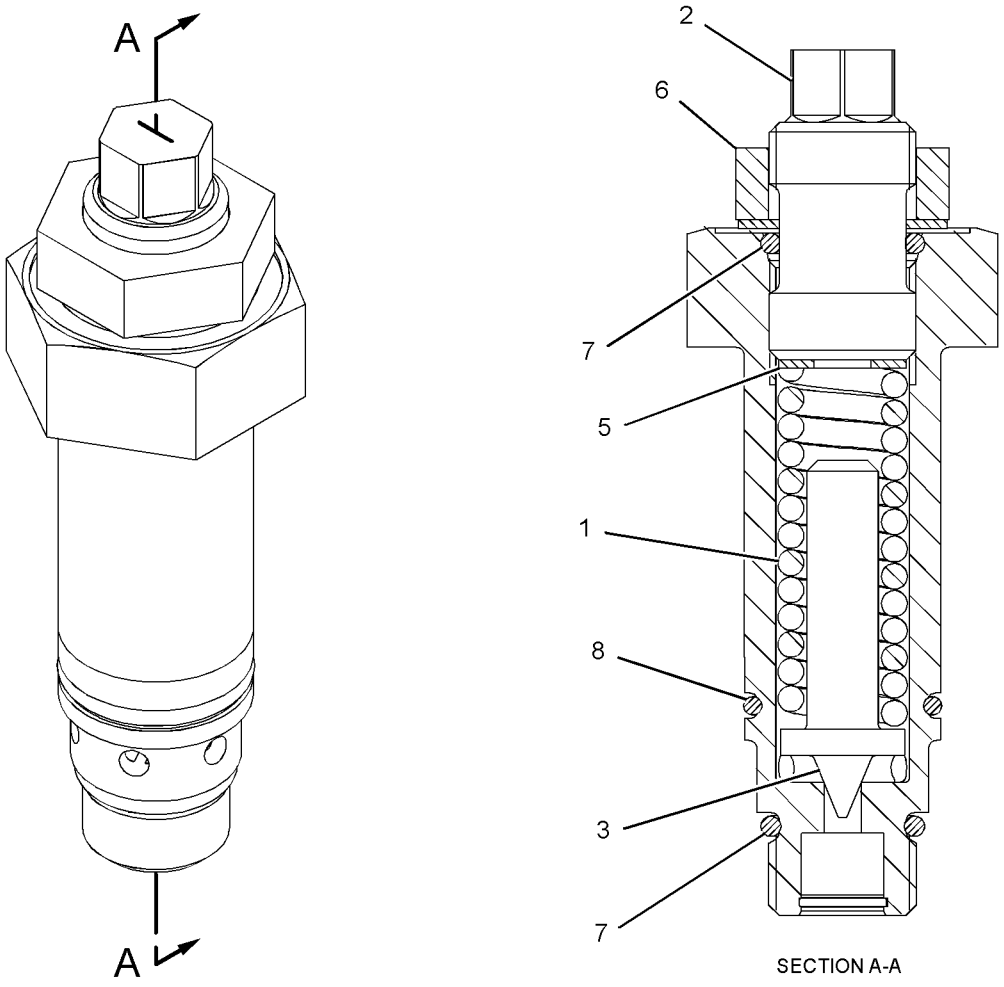

SECTION A-A

GRAPHIC #1 **<END>** g01785893

HYDRAULIC SYSTEM

4T-1860 VALVE GP-SHUTTLE

S/N: JPA1-UP

PART OF 9T-5957 VALVE GP-COMBINATION

SMCS-5079 **i02400665**

NOTE	REF NO	GRAPHIC REF	PART NUMBER	QTY	PART NAME 1 2 3 4 5 6 (PRODUCT LEVEL)	SEE PAGE
Z	1	1		1	SEAT	
	2	1	**1M-6718**	1	BALL	
Z	3	1		1	VALVE	
	4	1	**6V-5324**	1	SEAL-O-RING	
	5	1	**147-6603**	1	SEAL-O-RING	
	6	1	**3J-1907**	1	SEAL-O-RING	
	7	1	**147-6604**	2	RING-BACKUP	
	8	1	**147-6605**	2	RING-BACKUP	

Z-NOT SERVICED SEPARATELY

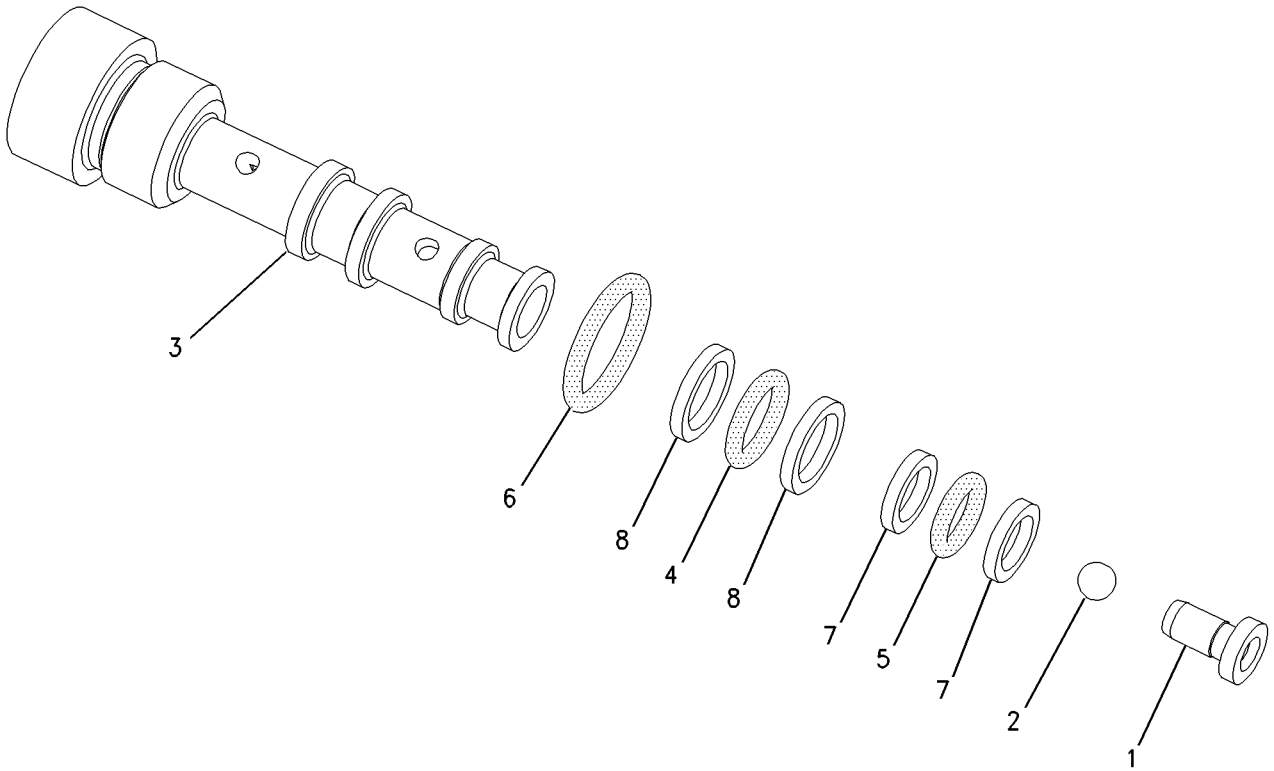

GRAPHIC #1 **<END>** g00775006

149-2610 VALVE GP-SOLENOID

S/N: JPA1-UP
24 VOLT
PART OF 112-2240 MANIFOLD GP-CONTROL
AN ATTACHMENT

SMCS-5479 **i01755293**

NOTE	REF NO	GRAPHIC REF	PART NUMBER	QTY	PART NAME 1 2 3 4 5 6 (PRODUCT LEVEL)	SEE PAGE
	1	1	**149-2611**	1	CARTRIDGE AS	
		1	**8C-9987**	1	WASHER (8.3X28X2.5-MM THK)	
	2	1	**111-0343**	1	LOCKNUT (5/16-18-THD)	
	3	1	**141-6787**	1	COIL AS	
		1	**1S-9593**	2	STRAP-CABLE	
		1	**3E-3365**	1	WEDGE-RECEPTACLE LOCK (2-PIN)	
		1	**186-3735**	2	PIN-CONNECTOR (16-GA TO 18-GA)	
		1	**102-8802**	2	KIT-RECEPTACLE (2-PIN)	
					(INCLUDES RECEPTACLE AS AND WEDGE)	
	4	1	**8C-9987**	1	WASHER (8.3X28X2.5-MM THK)	
		1	**111-0343**	1	LOCKNUT (5/16-18-THD)	
					AVAILABLE REPAIR KIT(S):	
			3G-8175	1	KIT-SEAL	
					(INCLUDES O-RINGS & BACK-UP RINGS)	

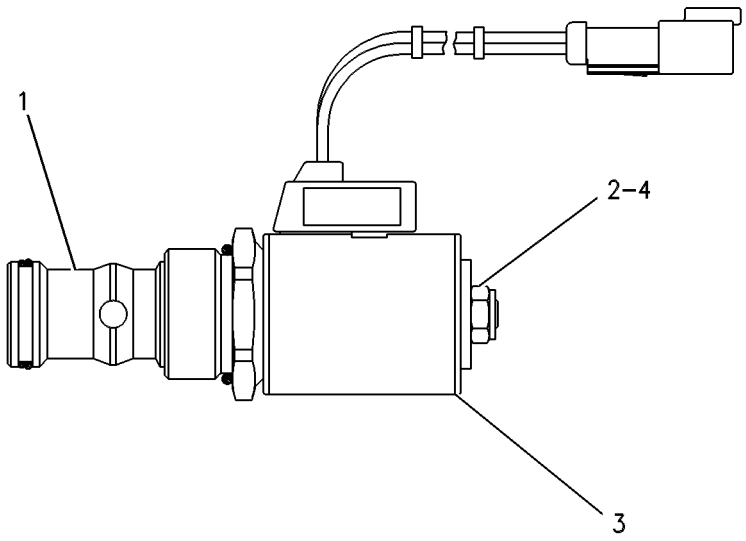

GRAPHIC #1 **<END>** g00308949

152-8346 VALVE GP-SOLENOID

S/N: JPA1-UP
24-VOLT
PART OF 164-8462 LOCK GP-CENTERSHIFT

SMCS-5479 **i01861563**

NOTE	REF NO	GRAPHIC REF	PART NUMBER	QTY	PART NAME 1 2 3 4 5 6 (PRODUCT LEVEL)	SEE PAGE
	1	1	**141-6787**	1	COIL AS	
	2	1	**102-8802**	1	KIT-RECEPTACLE (2-PIN)	
					(INCLUDES RECEPTACLE AS AND WEDGE)	
	3	1	**3E-3365**	1	WEDGE-RECEPTACLE LOCK (2-PIN)	
	4	1	**8T-8729**	2	PIN-CONNECTOR	
	5	1	**1S-9593**	2	STRAP-CABLE	
	6	1	**152-8352**	1	SPOOL AS-VALVE	
	7	1	**111-0343**	1	LOCKNUT (5/16-18-THD)	
	8	1	**8C-9987**	1	WASHER (8.3X28X2.5-MM THK)	
					AVAILABLE REPAIR KIT(S):	
			109-3036	1	KIT-SEAL	
					(INCLUDES SEALS & RINGS)	

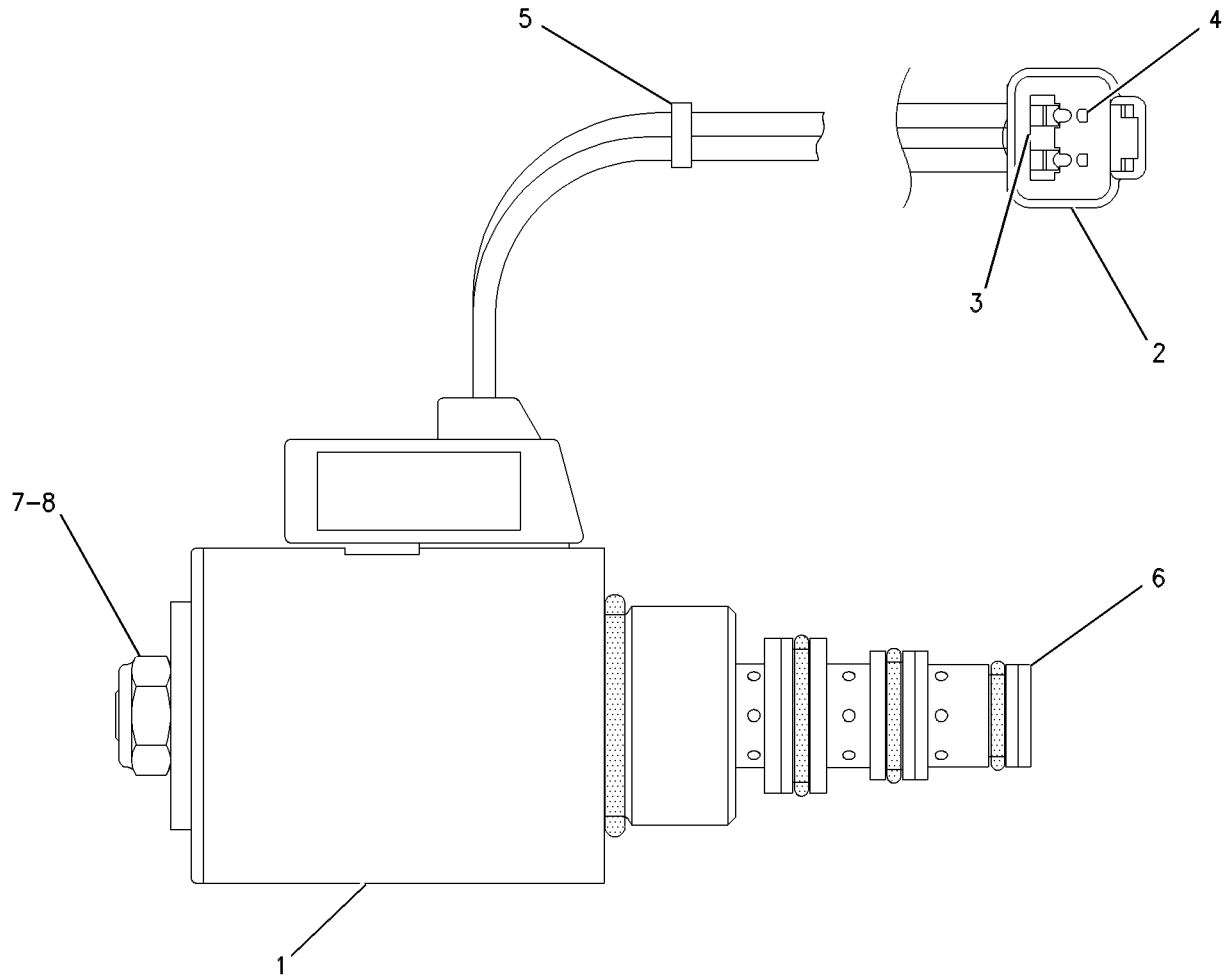

GRAPHIC #1 **<END>** g00482067

6G-2944 CIRCLE GP

S/N: JPA1-UP

PART OF 113-9422 CIRCLE GP

SMCS-6152, 6154, 6155 **i01193198**

NOTE	REF NO	GRAPHIC REF	PART NUMBER	QTY	PART NAME 1 2 3 4 5 6 (PRODUCT LEVEL)	SEE PAGE
	1	1	**8W-2226**	1	BEAM-BLADE	
	2	1	**8D-9883**	1	GUSSET	
	3	1	**8D-9886**	1	BRACE	
	4	1	**7B-5037**	2	LOCK-BOLT	
	5	1	**6G-2949**	1	BRACE	
	6	1	**5T-3890**	1	BRACE	
	7	1	**4D-4375**	2	LUG	
	8	1	**8D-9884**	1	GUSSET	
	9	1	**8D-9882**	2	BLOCK-FILLER	
	10	1	**8W-2227**	1	BEAM-BLADE	
	11	1	**8D-9887**	1	BRACE	
	12	1	**5T-3889**	1	BRACE	
FA		1	**5T-4267**	1	SEGMENT-CIRCLE	
					(4 TEETH - SERVICE REPAIR FOR WORN OR DAMAGED TEETH)	

A-NOT PART OF THIS GROUP
F-NOT SHOWN

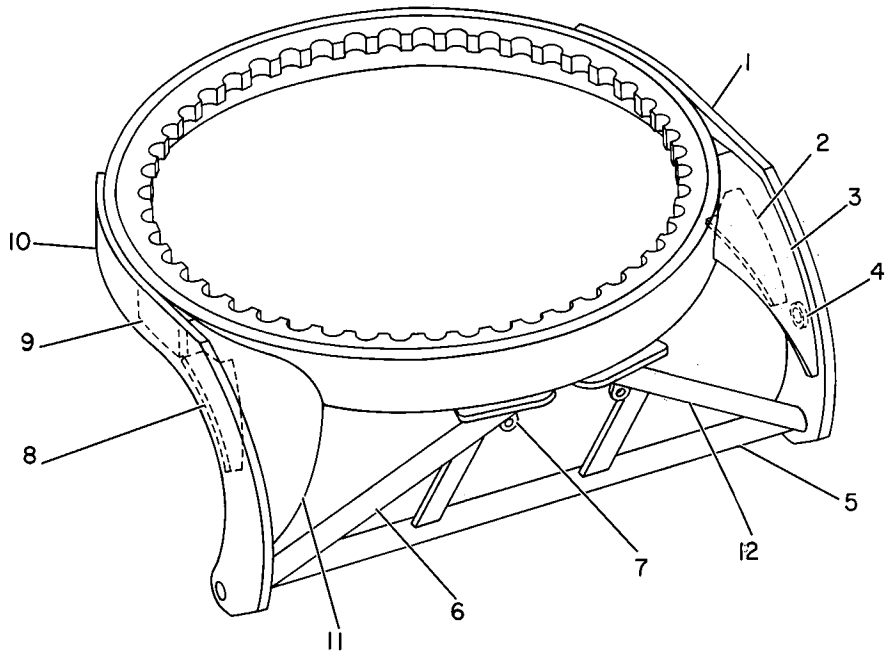

GRAPHIC #1 **<END>** g00108241

IMPLEMENTS

112-7486 CIRCLE GP

S/N: JPA1-UP

PART OF 329-3825, 329-3827 BLADE & TIP AR-POWER

AN ATTACHMENT

SMCS-6152, 6154, 6155 **i02291588**

NOTE	REF NO	GRAPHIC REF	PART NUMBER	QTY	PART NAME 1 2 3 4 5 6 (PRODUCT LEVEL)	SEE PAGE
	1	1	**1D-0503**	2	WASHER (45.25X76.2X6.35-MM THK)	
B	2	1	**2G-3219**	4	SHIM (0.8-MM THK)	
B	3	1	**2G-3221**	4	SHIM (1.6-MM THK)	
	4	1	**2K-0419**	4	WASHER (0.766X3.5X0.065-IN THK)	
	5	1	**5D-6644**	10	SHIM (0.762-MM THK)	
	6	1	**5T-8366**	4	STRIP-WEAR	
	7	1	**8D-5949**	1	BAR-SPREADER	
	8	1	**8W-1749**	10	PLATE	
B	9	1	**102-4139**	8	SPACER (18.85X26.67X78-MM THK)	
	10	1	**112-5060**	1	BRACKET AS	
		1	**104-8655**	1	BEARING-SLEEVE	
	11	1	**112-5061**	1	BRACKET AS	
		1	**104-8655**	1	BEARING-SLEEVE	
C	12	1	**153-3580**	1	SHAFT	
CY	13	1	**153-9360**	1	CIRCLE GP	589
	14	1	**159-8127**	1	BRACKET AS	
	14A	1	**9X-8881**	2	BOLT (5/8-11X2.25-IN)	
	14B	1	**5P-8247**	4	WASHER-HARD (17X32X3.5-MM THK)	
	14C	1	**9X-8883**	2	BOLT (5/8-11X2.75-IN)	
	15	1	**163-4720**	1	GUARD	
	16	1	**163-4721**	1	GUARD	
B	17	1	**163-6074**	2	SHIM (0.381-MM THK)	
	18	1	**178-1685**	1	STRIP-WEAR	
B	19	1	**178-1686**	1	SHIM (0.8-MM THK)	
B	20	1	**178-1688**	1	SHIM (1.8-MM THK)	
B	21	1	**178-8455**	1	SHIM (0.4-MM THK)	
	22	1	**105-2080**	4	BRACKET AS	
					(EACH INCLUDES)	
	22A	1	**1F-0748**	2	NUT-WELD (1/2-13-THD)	
	23	1	**2B-2673**	2	NUT (1-3/4-5-THD) (1 3/4-5 THD)	
	24	1	**3B-5320**	2	PIN-COTTER	
	25	1	**5P-8245**	30	WASHER-HARD (13.5X25.5X3-MM THK)	
	26	1	**6H-1717**	30	BOLT (1/2-13X1.125-IN)	
	27	1	**7X-0334**	8	BOLT (1/2-13X5-IN)	
	28	1	**7X-0452**	4	NUT-FULL (1-1/2-6-THD)	
	29	1	**7X-0550**	8	WASHER-HARD (13.5X32X5-MM THK)	
	30	1	**2A-7089**	2	BEARING-SLEEVE	

B-USE AS REQUIRED
C-CHANGE FROM PREVIOUS TYPE
Y-SEPARATE ILLUSTRATION

112-7486 **CIRCLE GP** *(contd.)* **i02291588**

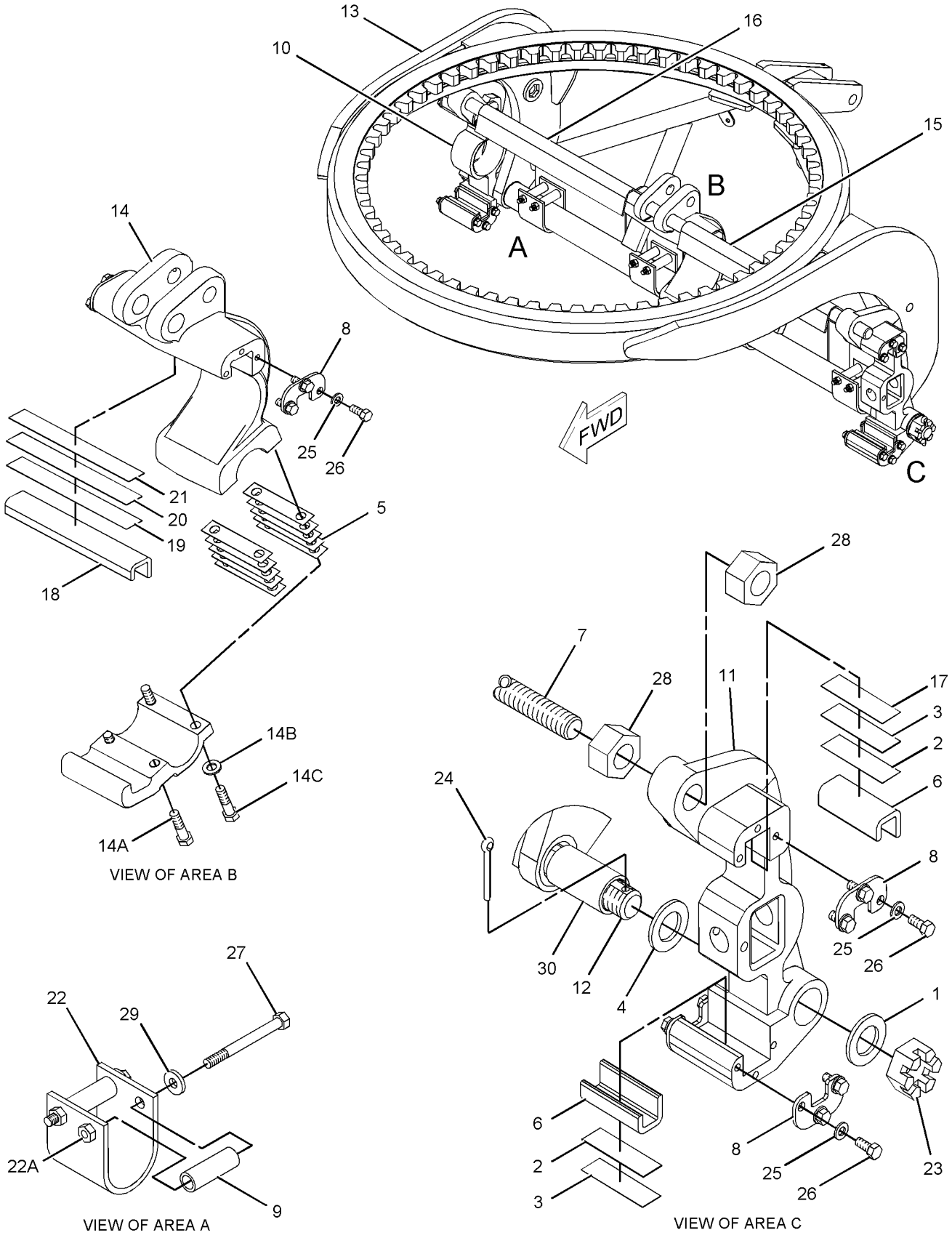

GRAPHIC #1 **<END>** g01149615

113-9422 CIRCLE GP

S/N: JPA1-UP

PART OF 274-7940 GENERAL AR

SMCS-6152, 6154, 6155 **i01538259**

NOTE	REF NO	GRAPHIC REF	PART NUMBER	QTY	PART NAME 1 2 3 4 5 6 (PRODUCT LEVEL)	SEE PAGE
	1	1	**9X-8898**	2	BOLT (1-8X5-IN)	
	2	1	**8D-5467**	2	WASHER-NOTCHED (3.00MM X 2.91MM)	
	3	1	**5D-5206**	2	WASHER-NOTCHED (2.50MM X 2.25MM)	
	4	1	**6K-3632**	2	LOCKNUT (1-8-THD)	
	5	1	**5D-0398**	1	PIN	
	6	1	**7B-2499**	1	RING-SNAP	
	7	1	**1D-0503**	2	WASHER (45.25X76.2X6.35-MM THK)	
	8	1	**2B-2673**	2	NUT (1-3/4-5-THD)	
	9	1	**6G-2947**	1	SHAFT	
	10	1	**3B-5320**	2	PIN-COTTER	
	11	1	**6G-9429**	1	BRACKET-RAIL	
	12	1	**5D-0399**	1	PLUNGER AS	
		1	**3K-2527**	1	BAR	
Y	13	1	*6G-2944*	1	CIRCLE GP	585
	14	1	**6G-9428**	1	BRACKET-RAIL	
B	15	1	**2K-0419**	4	WASHER (0.766X3.5X0.065-IN THK)	
	16	1	**2A-7089**	2	BEARING-SLEEVE	

B-USE AS REQUIRED
Y-SEPARATE ILLUSTRATION

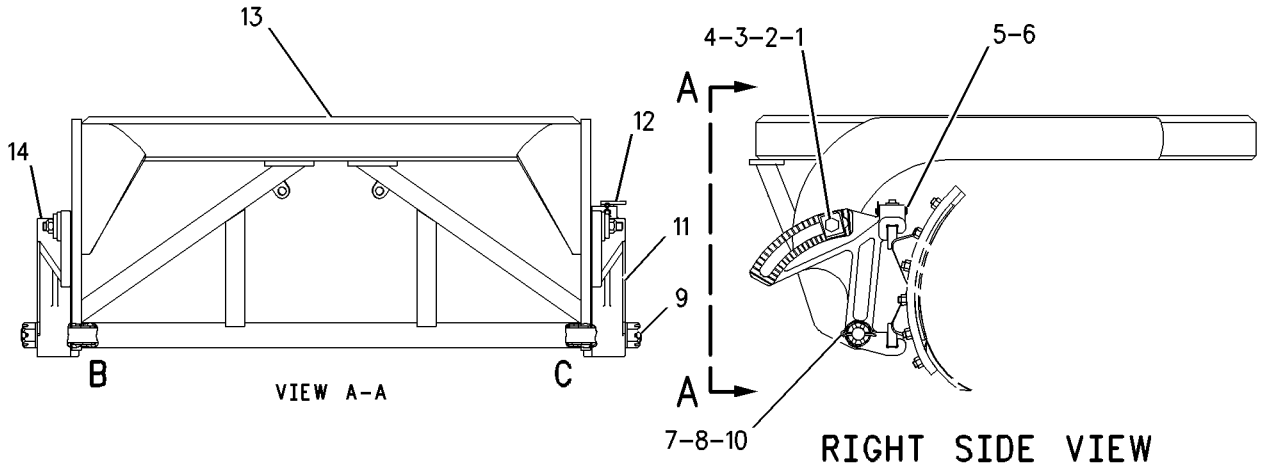

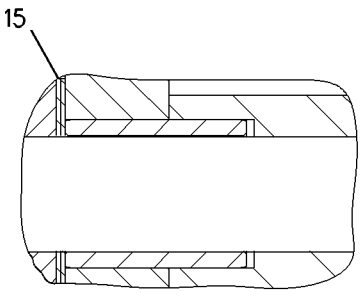

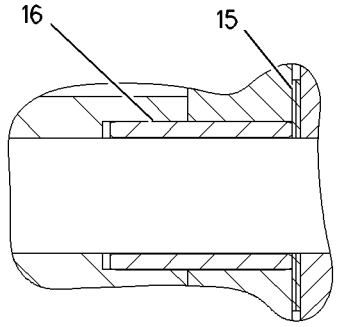

GRAPHIC #1 **<END>** g00798791

153-9360 CIRCLE GP

S/N: JPA1-UP

PART OF 112-7486 CIRCLE GP, 254-5960 MOUNTING GP-GRADE CONTROL AN ATTACHMENT

SMCS-6152, 6154, 6155 **i02075546**

NOTE	REF NO	GRAPHIC REF	PART NUMBER	QTY	PART NAME 1 2 3 4 5 6 (PRODUCT LEVEL)	SEE PAGE
	1	1	**2G-3971**	1	BRACKET AS	
	2	1	**4D-4375**	2	LUG	
	3	1	**5T-3889**	1	BRACE	
	4	1	**5T-3890**	1	BRACE	
	5	1	**6G-2946**	2	STOP	
	7	1	**8D-9882**	2	BLOCK-FILLER	
	8	1	**8D-9886**	1	BRACE	
	9	1	**8D-9887**	1	BRACE	
	11	1	**132-1340**	1	BRACE AS	
		1	**2A-7089**	2	BEARING-SLEEVE	
	12	1	**147-6143**	1	PLATE-LH	
	13	1	**147-6144**	1	PLATE-RH	
	14	1	**153-0185**	1	BEAM-BLADE	
	15	1	**153-0187**	1	BEAM-BLADE	
AF		1	**5T-4267**		SEGMENT-CIRCLE	
					(4 TEETH) SERVICE REPAIR FOR WORN OR DAMAGED TEETH	

A-NOT PART OF THIS GROUP
F-NOT SHOWN

153-9360 CIRCLE GP *(contd.)* **i02075546**

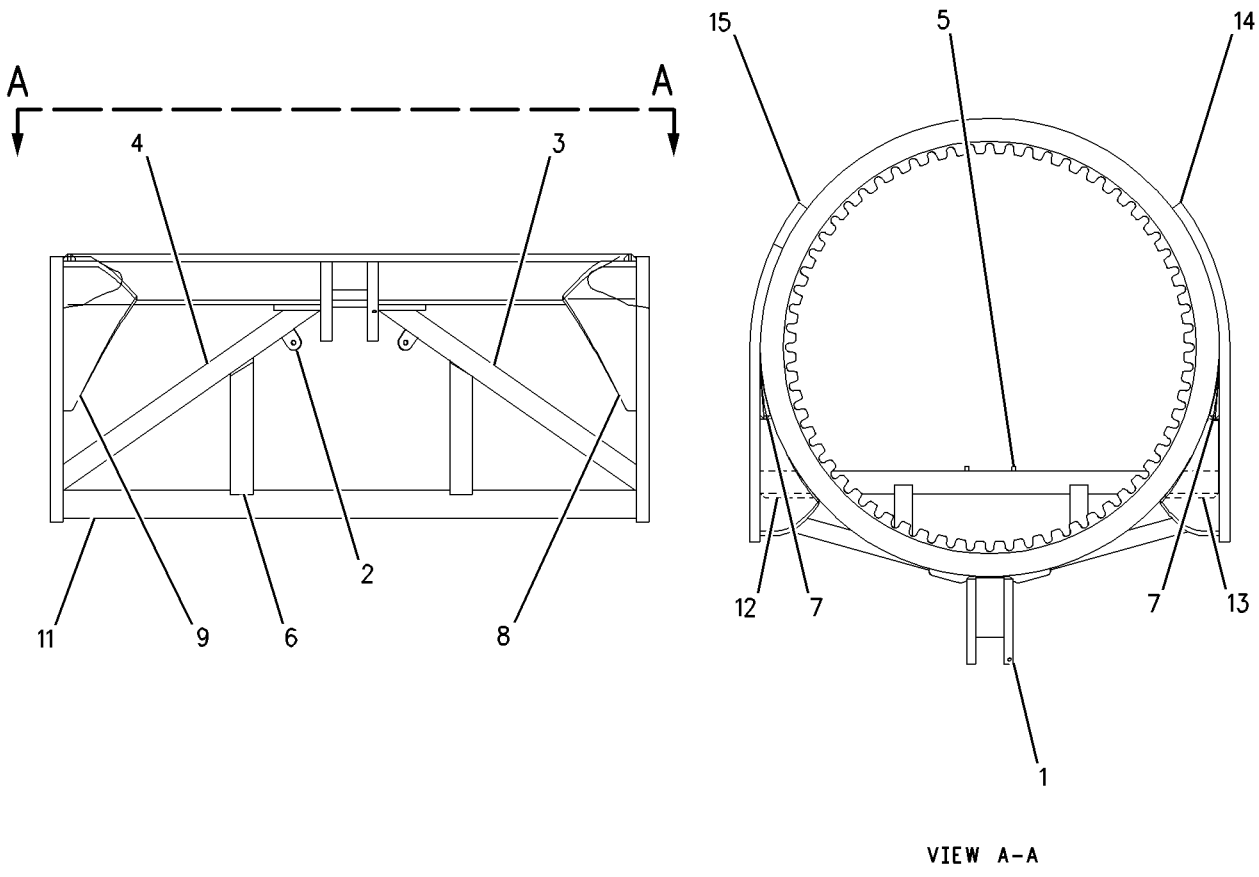

VIEW A-A

GRAPHIC #1 **<END>** g00665278

8X-1960 DRAWBAR GP

S/N: JPA1-UP

PART OF 274-7940 GENERAL AR

SMCS-6153 **i03298033**

NOTE	REF NO	GRAPHIC REF	PART NUMBER	QTY	PART NAME 1 2 3 4 5 6 (PRODUCT LEVEL)	SEE PAGE
	1	1	**9S-1322**	4	BOLT (7/8-9X6-IN)	
B	2	1	**6G-1915**	36	SHIM (0.25-MM THK)	
	3	1	**8X-7951**	1	DRAWBAR & YOKE AS	
	3A	1	**5T-6775**	2	REINFORCEMENT	
	3B	1	**178-3086**	3	STUD-BALL	
	3C	1	**8X-7956**	1	SHAFT AS	
	3D	1	**8F-9836**	12	BOSS (3/8-16-THD)	
	3E	1	**123-7707**	2	PLATE	
	4	1	**6G-5442**	1	BALL	
	5	1	**8X-8406**	1	CAP	
B	6	1	**8X-8409**	4	SHIM (0.8-MM THK)	
B	7	1	**8X-8408**	6	SHIM (0.25-MM THK)	
	8	1	**8X-8407**	1	ADAPTER	
	9	1	**5P-8291**	5	BOLT (3/4-16X2-IN)	
	10	1	**2H-3764**	2	BOLT-SOCKET HEAD (1/4-20X1.5-IN)	
	11	1	**9H-1031**	4	WASHER-HARD (24X41.5X6-MM THK)	
	12	1	**3B-8489**	1	FITTING-GREASE (DRAWBAR)	
	13	1	**319-2228**	6	SHOE-CIRCLE GUIDE	
	14	1	**4B-3604**	12	SETSCREW-SQUARE HEAD (3/4-10X2.5-IN)	
	15	1	**1D-5119**	12	NUT (3/4-10-THD)	
B	16	1	**6G-1914**	54	SHIM (0.76-MM THK)	
	17	1	**128-9654**	11	STRIP-WEAR	
	18	1	**333-0960**	6	STRIP-WEAR	
	19	1	**5P-6652**	18	WASHER (20X44.5X6-MM THK)	
	20	1	**3B-6753**	18	BOLT (3/4-10X4.75-IN)	
B	21	1	**153-7383**	1	SHIM (0.12-MM THK)	

B-USE AS REQUIRED

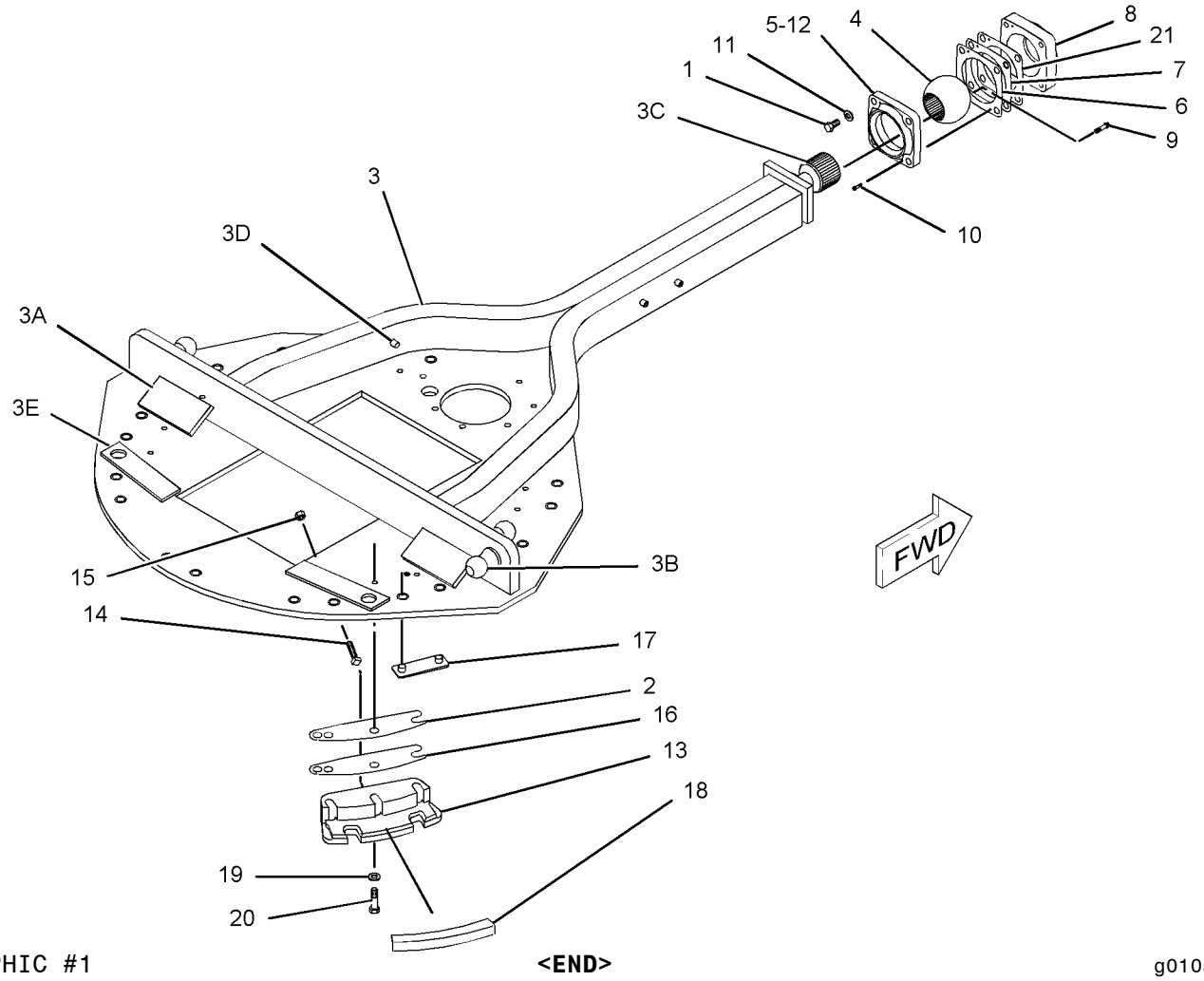

GRAPHIC #1 **<END>** g01050407

336-1559 PLATE GP-PUSH

S/N: JPA1-UP
AN ATTACHMENT

SMCS-6077 **i03247459**

NOTE	REF NO	GRAPHIC REF	PART NUMBER	QTY	PART NAME 1 2 3 4 5 6 (PRODUCT LEVEL)	SEE PAGE
	1	1	**112-5853**	1	PLATE	
M	2	1	**166-1880**	8	BOLT (M20X2.5X75-MM)	
	3	1	**336-1561**	1	PLATE AS-PUSH	
		1	**5J-7333**	2	HOOK	
	4	1	**336-1963**	1	PLATE AS	
M		1	**8T-3490**	4	NUT-WELD (M10X1.5-THD)	
	5	1	**336-1964**	1	BRACKET AS	
	6	1	**283-1578**	8	WASHER-HARD (22X45X10-MM THK)	
	7	1	**8T-4121**	8	WASHER-HARD (11X21X2.5-MM THK)	
M	8	1	**8T-4136**	2	BOLT (M10X1.5X25-MM)	
M	9	1	**8T-4137**	6	BOLT (M10X1.5X20-MM)	
M	10	1	**8T-4139**	2	BOLT (M12X1.75X30-MM)	
	11	1	**8T-4223**	2	WASHER-HARD (13.5X25.5X3-MM THK)	
D	12	1	**5P-5923**		SEAL (0.4-M)	

D-ORDER BY THE METER
M-METRIC PART

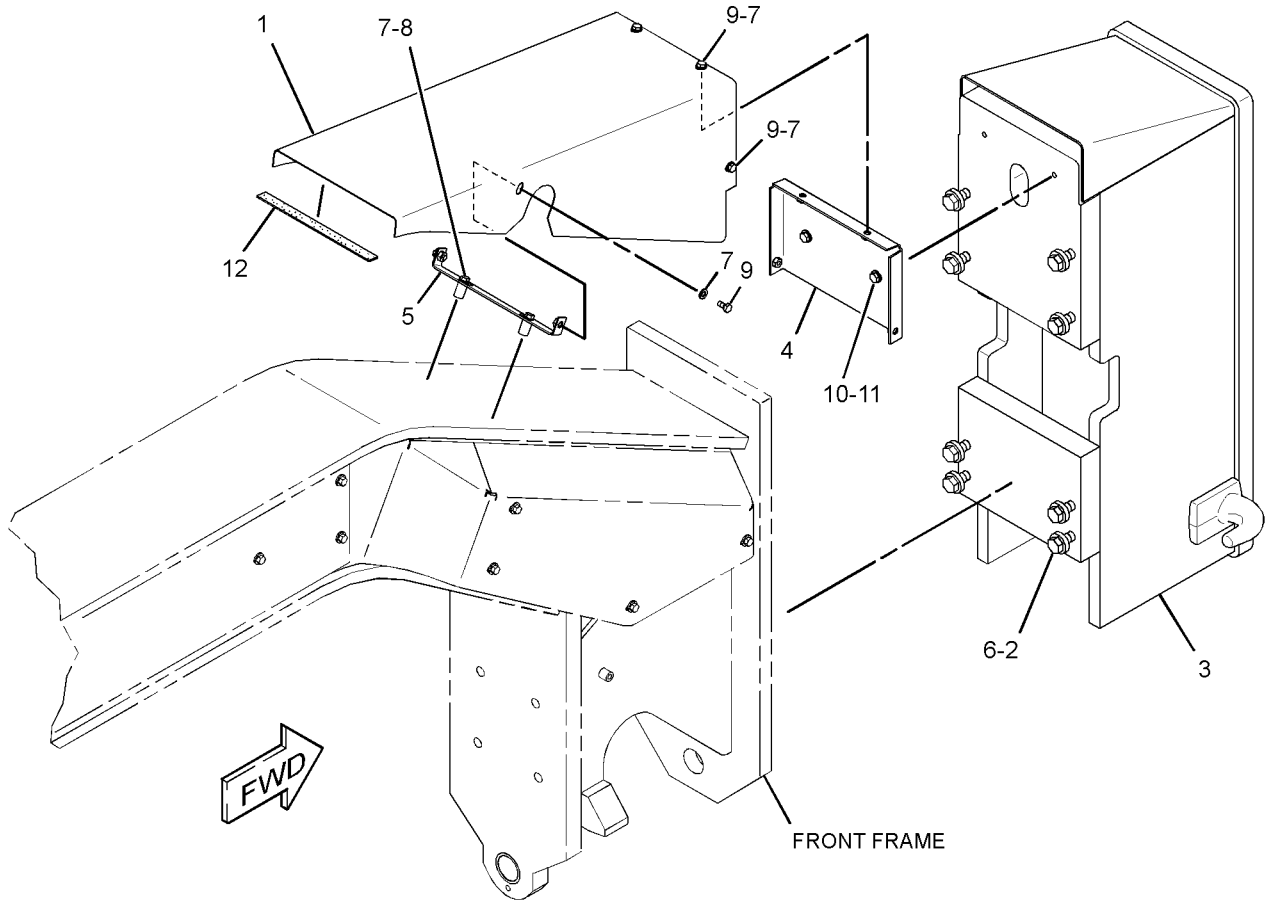

GRAPHIC #1 **<END>** g01696614

WORK TOOLS

130-5667 BAR GP-LINK

S/N: JPA1-UP
AN ATTACHMENT

SMCS-6151 **i00606649**

NOTE	PART NUMBER	QTY	PART NAME 1 2 3 4 5 6 (PRODUCT LEVEL)	SEE PAGE
	8X-5109	1	BAR AS	
	8X-5108	2	BEARING-SLEEVE	
	124-5826	5	CONTROL AR-GOVERNOR	
	9X-8355	1	FILM-IDENTIFICATION (BLADE CENTERSHIFT)	

<END>

107-3395 BIT GP-END

S/N: JPA1-UP
AN ATTACHMENT

SMCS-6804 **i00609607**

NOTE	PART NUMBER	QTY	PART NAME 1 2 3 4 5 6 (PRODUCT LEVEL)	SEE PAGE
	9W-1768	2	BIT-END	
	4F-3658	4	BOLT-PLOW (5/8-11X3.0IN)	
	4F-3657	6	BOLT-PLOW	

<END>

329-3825 BLADE & TIP AR-POWER

S/N: JPA1-UP
CANNOT BE USED WITH 329-3827—PAGE 594, 329-3828—PAGE 595, 329-3829—PAGE 595, 324-0150—PAGE 598
AN ATTACHMENT

SMCS-6151 **i03310488**

NOTE	PART NUMBER	QTY	PART NAME 1 2 3 4 5 6 (PRODUCT LEVEL)	SEE PAGE
Y	*320-9924*	1	BLADE GP	597
Y	*112-7486*	1	CIRCLE GP	586
Y	*8X-1943*	1	CYLINDER & MTG GP-BLADE TIP	369
Y	*112-7463*	1	CYLINDER & MTG GP-SIDESHIFT	372
Y	*106-4787*	1	LINES GP-HYDRAULIC	398

Y-SEPARATE ILLUSTRATION

<END>

329-3827 BLADE & TIP AR-POWER

S/N: JPA1-UP
CANNOT BE USED WITH 329-3825—PAGE 594, 329-3828—PAGE 595, 324-0150—PAGE 598
AN ATTACHMENT

SMCS-6151 **i03288504**

NOTE	PART NUMBER	QTY	PART NAME 1 2 3 4 5 6 (PRODUCT LEVEL)	SEE PAGE
Y	*320-7431*	1	BLADE GP	596
Y	*112-7486*	1	CIRCLE GP	586
Y	*8X-1943*	1	CYLINDER & MTG GP-BLADE TIP	369
Y	*112-7463*	1	CYLINDER & MTG GP-SIDESHIFT	372
Y	*106-4787*	1	LINES GP-HYDRAULIC (LH)	398

Y-SEPARATE ILLUSTRATION

<END>

329-3828 BLADE AR

S/N: JPA1-UP

CANNOT BE USED WITH 329-3825—PAGE 594, 329-3827—PAGE 594, 329-3829—PAGE 595, 324-0150—PAGE 598

AN ATTACHMENT

SMCS-6151 **i03253106**

NOTE	PART NUMBER	QTY	PART NAME 1 2 3 4 5 6 (PRODUCT LEVEL)	SEE PAGE
Y	*320-9924*	1	BLADE GP	597
Y	*9D-6425*	1	BRACKET GP-BLADE	600
Y	*112-7463*	1	CYLINDER & MTG GP-SIDESHIFT	372
Y	**8W-7030**	1	GUARD GP-CYLINDER	393
Y	*117-3855*	1	LINES GP-HYDRAULIC	409
Y-SEPARATE ILLUSTRATION				

<END>

329-3829 BLADE AR

S/N: JPA1-UP

CANNOT BE USED WITH 329-3825—PAGE 594, 329-3827—PAGE 594, 329-3828—PAGE 595, 324-0150—PAGE 598

AN ATTACHMENT

SMCS-6151 **i03297936**

NOTE	PART NUMBER	QTY	PART NAME 1 2 3 4 5 6 (PRODUCT LEVEL)	SEE PAGE
Y	*320-7431*	1	BLADE GP	596
Y	*9D-6425*	1	BRACKET GP-BLADE	600
Y	*112-7463*	1	CYLINDER & MTG GP-SIDESHIFT	372
Y	**8W-7030**	1	GUARD GP-CYLINDER	393
Y	*117-3855*	1	LINES GP-HYDRAULIC	409
Y-SEPARATE ILLUSTRATION				

<END>

WORK TOOLS

320-7431 BLADE GP

S/N: JPA1-UP
14-FT
PART OF 329-3827 BLADE & TIP AR-POWER, 329-3829 BLADE AR
AN ATTACHMENT

SMCS-6151 **i03288501**

NOTE	REF NO	GRAPHIC REF	PART NUMBER	QTY	PART NAME 1 2 3 4 5 6 (PRODUCT LEVEL)	SEE PAGE
	1	1	**9J-3658**	2	EDGE-CUTTING	
	2	1	**320-2746**	1	MOLDBOARD AS	
		1	**112-1814**	2	RAIL-MOLDBOARD	
	3	1	**2J-3506**	40	NUT-FULL (3/4-10-THD)	
	4	1	**5J-4773**	40	BOLT-PLOW (3/4-10X2.5-IN)	
	5	1	**8E-5529**	2	BIT-END	

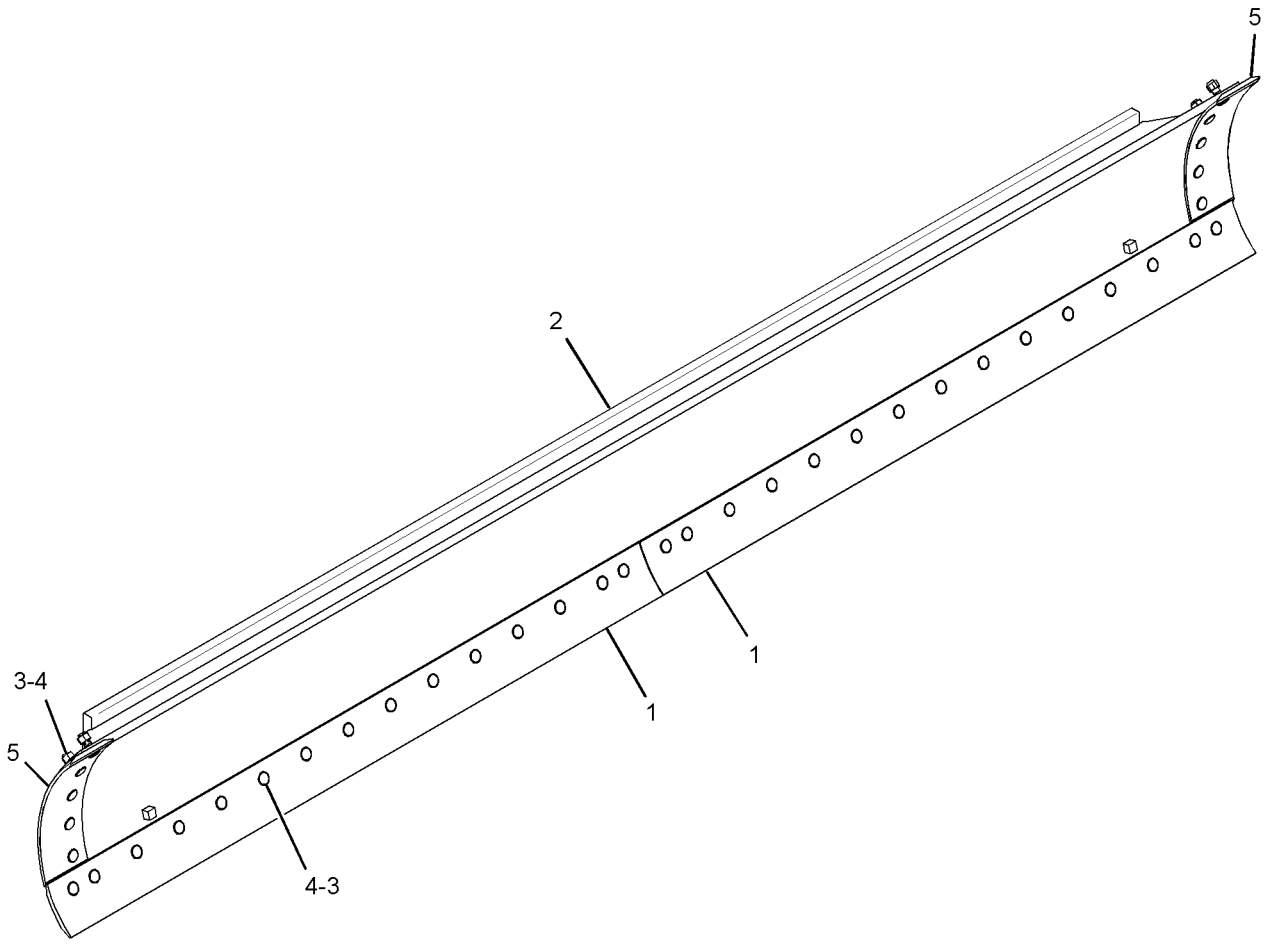

GRAPHIC #1 **<END>** g01698113

WORK TOOLS

320-9924 BLADE GP

S/N: JPA1-UP
12-FT
PART OF 329-3825 BLADE & TIP AR-POWER, 329-3828 BLADE AR
AN ATTACHMENT

SMCS-6151 **i03257564**

NOTE	REF NO	GRAPHIC REF	PART NUMBER	QTY	PART NAME 1 2 3 4 5 6 (PRODUCT LEVEL)	SEE PAGE
	1	1	**9J-3657**	2	EDGE-CUTTING	
	2	1	**320-2749**	1	MOLDBOARD AS	
		1	**112-1813**	1	RAIL-MOLDBOARD	
	3	1	**2J-3506**	36	NUT-FULL (3/4-10-THD)	
	4	1	**5J-4773**	36	BOLT-PLOW (3/4-10X2.5-IN)	
	5	1	**8E-5529**	2	BIT-END	

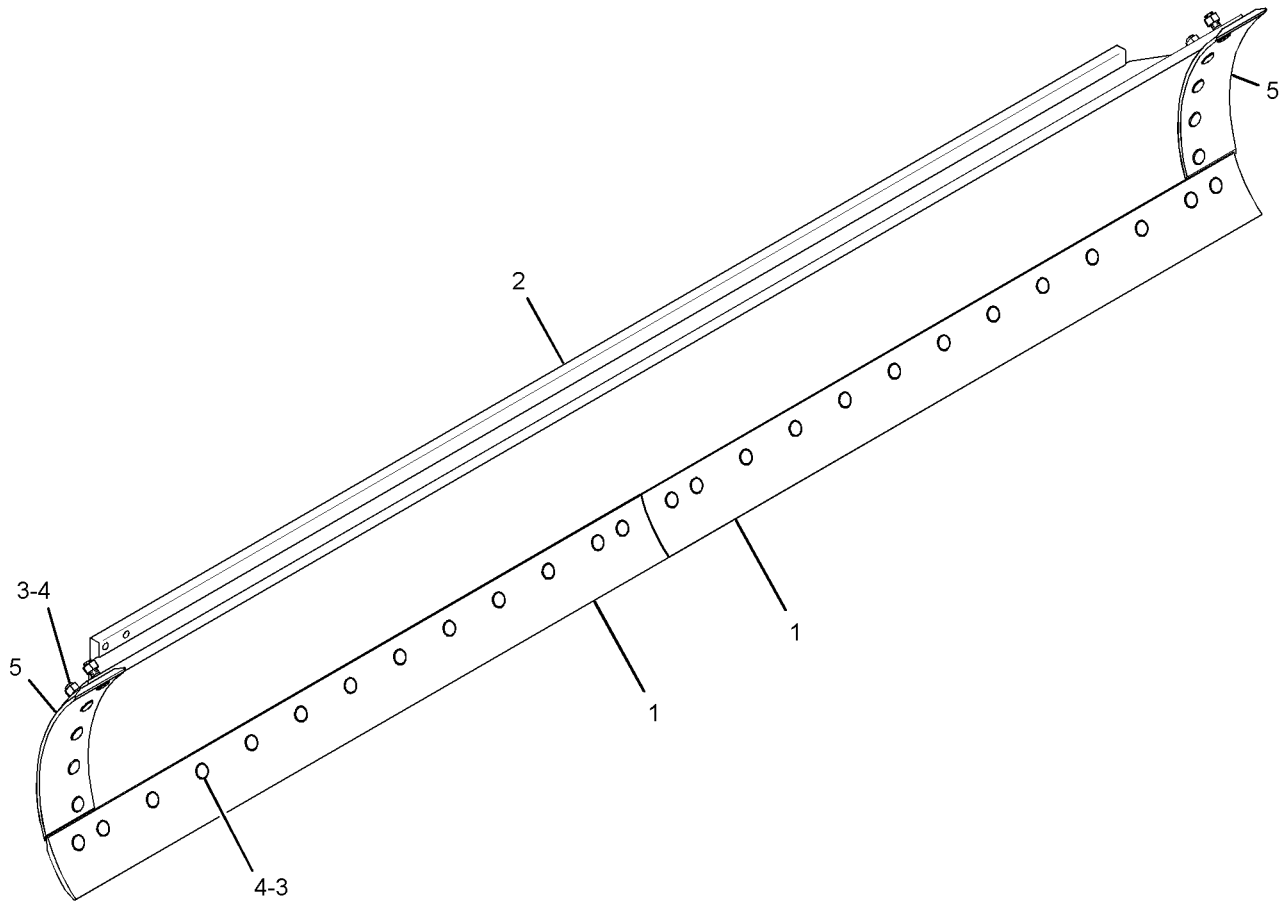

GRAPHIC #1 **<END>** g01698078

WORK TOOLS

324-0150 BLADE GP

S/N: JPA1-UP
14-FT
AN ATTACHMENT

SMCS-6151 **i03413707**

NOTE	REF NO	GRAPHIC REF	PART NUMBER	QTY	PART NAME 1 2 3 4 5 6 (PRODUCT LEVEL)	SEE PAGE
	1	1	**9J-3658**	2	EDGE-CUTTING	
	2	1	**320-2747**	1	MOLDBOARD AS	
		1	**112-1814**	1	RAIL-MOLDBOARD	
	3	1	**2J-3506**	40	NUT-FULL (3/4-10-THD)	
	4	1	**5J-4773**	40	BOLT-PLOW (3/4-10X2.5-IN)	
	5	1	**8E-5529**	2	BIT-END	

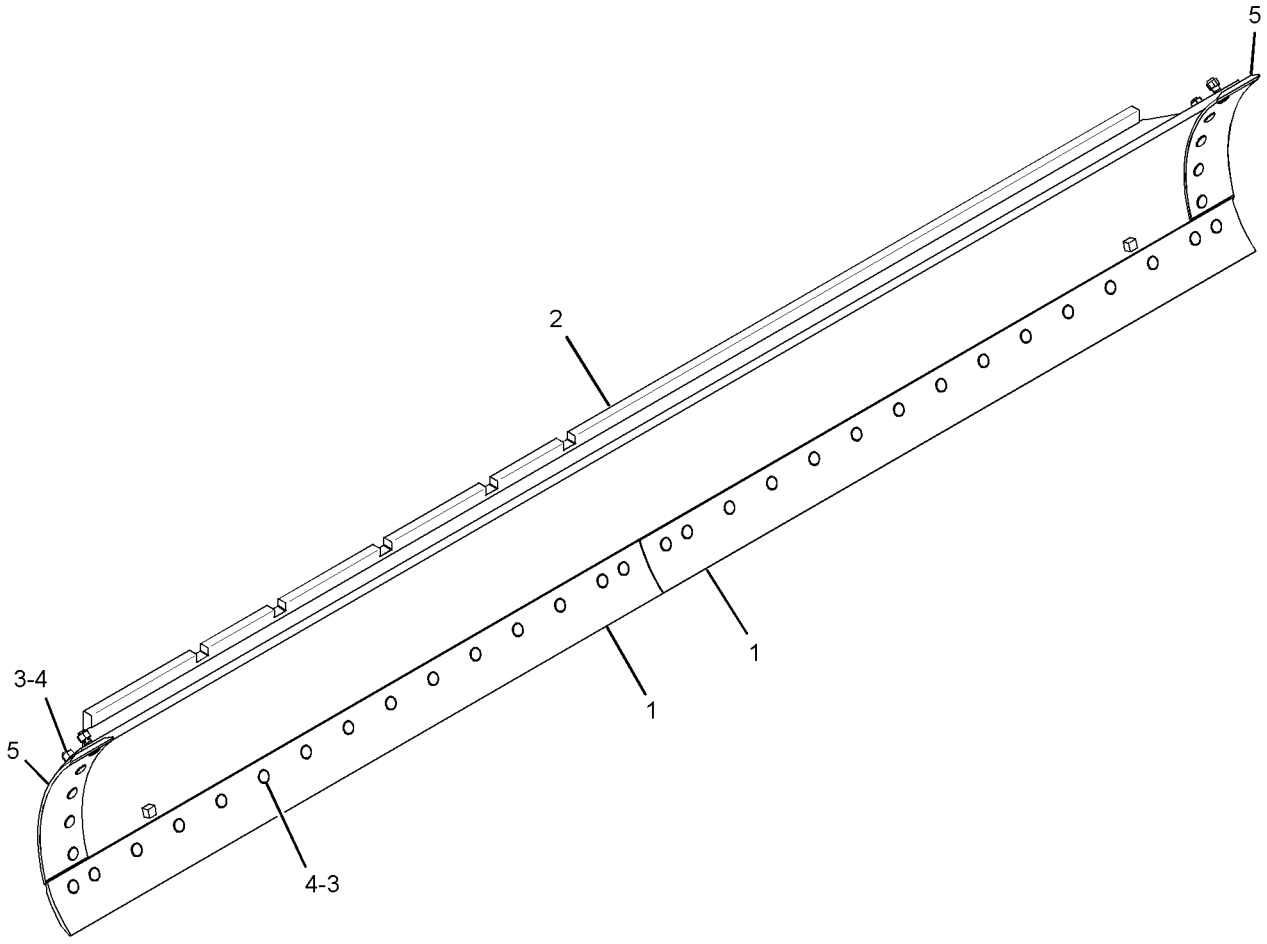

GRAPHIC #1 **<END>** g01697893

WORK TOOLS

324-0151 BLADE GP

S/N: JPA1-UP

PART OF 274-7940 GENERAL AR

SMCS-6151 **i03246221**

NOTE	REF NO	GRAPHIC REF	PART NUMBER	QTY	PART NAME 1 2 3 4 5 6 (PRODUCT LEVEL)	SEE PAGE
	1	1	**9J-3657**	2	EDGE-CUTTING	
	2	1	**320-2748**	1	MOLDBOARD AS	
		1	**112-1813**	1	RAIL-MOLDBOARD	
	3	1	**2J-3506**	36	NUT-FULL (3/4-10-THD)	
	4	1	**5J-4773**	36	BOLT-PLOW (3/4-10X2.5-IN)	
	5	1	**8E-5529**	2	BIT-END	

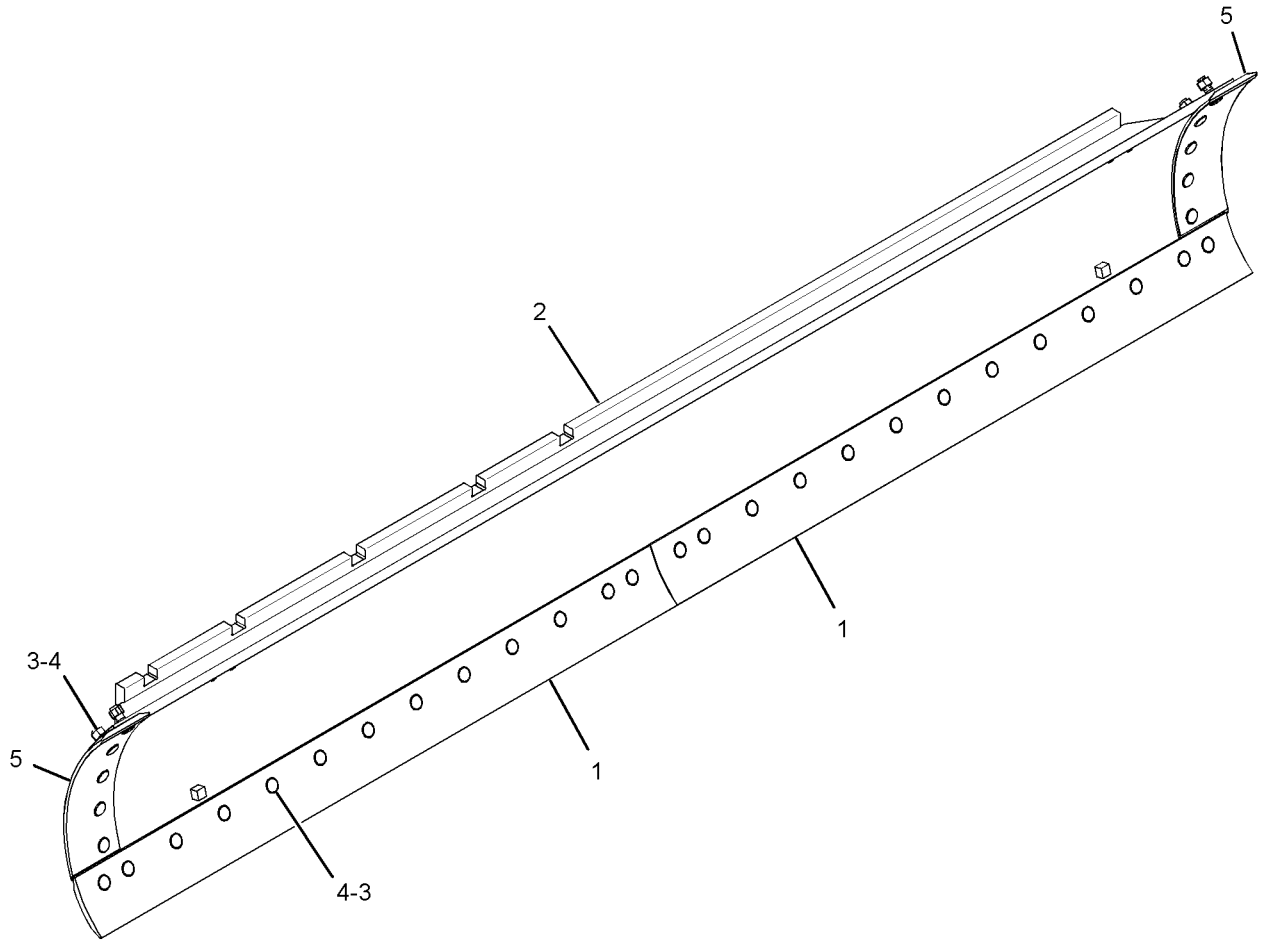

GRAPHIC #1 **<END>** g01697974

WORK TOOLS

9D-6425 BRACKET GP-BLADE

S/N: JPA1-UP
PART OF 329-3828, 329-3829 BLADE AR
AN ATTACHMENT

SMCS-6151 **i00834873**

NOTE	REF NO	GRAPHIC REF	PART NUMBER	QTY	PART NAME 1 2 3 4 5 6 (PRODUCT LEVEL)	SEE PAGE
	1	1	**8W-1753**	1	BRACKET-RAIL (RH)	
	2	1	**6H-1717**	24	BOLT (1/2-13X1.125IN)	
	3	1	**3B-4508**	24	LOCKWASHER (3.84MM THK)	
	4	1	**5T-8366**	4	STRIP-WEAR	
	5	1	**8W-1749**	8	PLATE	
	6	1	**7D-7095**	1	BAR-SPREADER	
	7	1	**7F-0482**	4	NUT-FULL (1-1/2-6 THD)	
	8	1	**8W-1752**	1	BRACKET-RAIL (LH)	
B	9	1	**2G-3221**	4	SHIM (1.6MM THK)	
B		1	**2G-3219**	4	SHIM (.80MM THK)	
B	10	1	**2K-0419**	4	WASHER (.065IN THK)	

B-USE AS REQUIRED

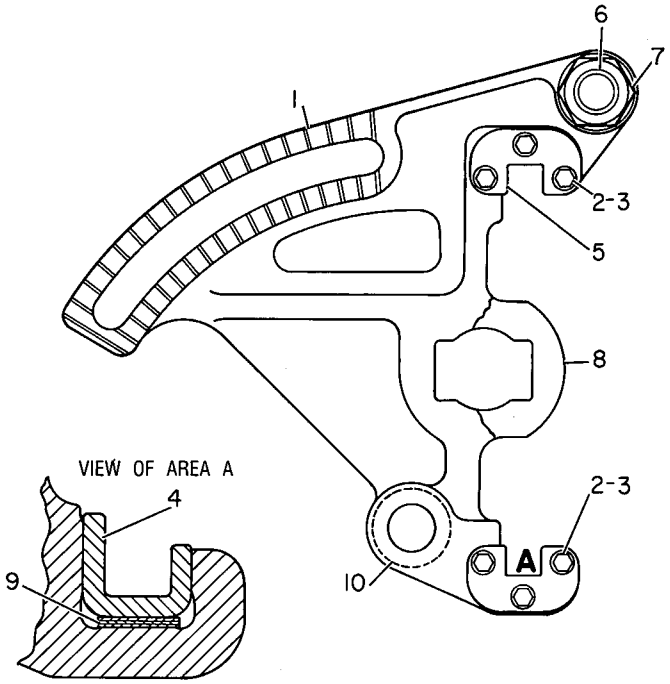

GRAPHIC #1 **<END>** g00108242

WORK TOOLS

116-0379 BRACKET GP-SCARIFIER

S/N: JPA1-UP
PART OF 108-1104 SCARIFIER AR
AN ATTACHMENT

SMCS-6162 **i01066613**

NOTE	REF NO	GRAPHIC REF	PART NUMBER	QTY	PART NAME 1 2 3 4 5 6 (PRODUCT LEVEL)	SEE PAGE
	1	1	**8W-0684**	1	BRACKET AS	
	2	1	**8W-0681**	1	PLATE	

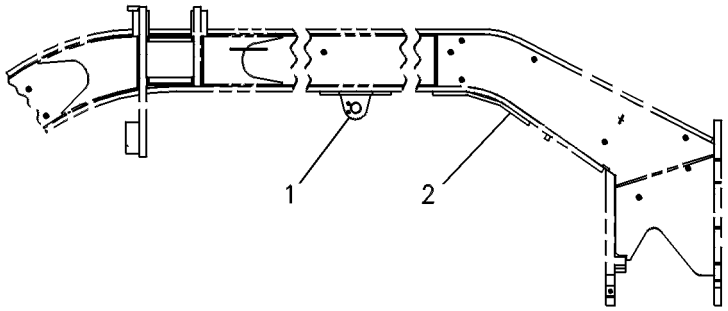

GRAPHIC #1 **<END>** g00108689

WORK TOOLS

107-3393 EDGE GP-CUTTING

S/N: JPA1-UP
7-FEET
AN ATTACHMENT

SMCS-6801 **i00136054**

NOTE	PART NUMBER	QTY	PART NAME 1 2 3 4 5 6 (PRODUCT LEVEL)	SEE PAGE
	5D-9559	2	EDGE-CUTTING	

<END>

WORK TOOLS

280-4072 EDGE GP-CUTTING

S/N: JPA1-UP
12-FOOT
AN ATTACHMENT

SMCS-6801 **i03291833**

NOTE	REF NO	GRAPHIC REF	PART NUMBER	QTY	PART NAME 1 2 3 4 5 6 (PRODUCT LEVEL)	SEE PAGE
	1	1	**7D-1576**	2	EDGE-CUTTING	

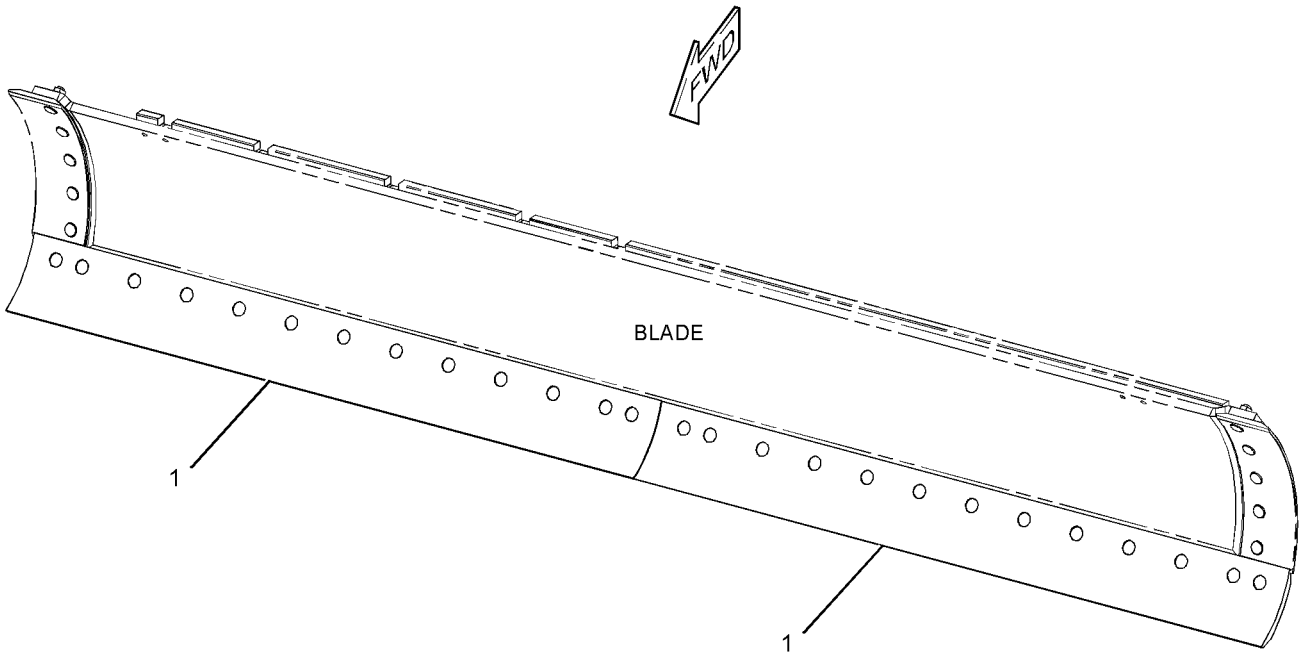

GRAPHIC #1 **<END>** g01701895

WORK TOOLS

282-0506 EDGE GP-CUTTING

S/N: JPA1-UP
14-FT
AN ATTACHMENT

SMCS-6801 **i03258796**

NOTE	REF NO	GRAPHIC REF	PART NUMBER	QTY	PART NAME 1 2 3 4 5 6 (PRODUCT LEVEL)	SEE PAGE
	1	1	**7D-1577**	2	EDGE-CUTTING	

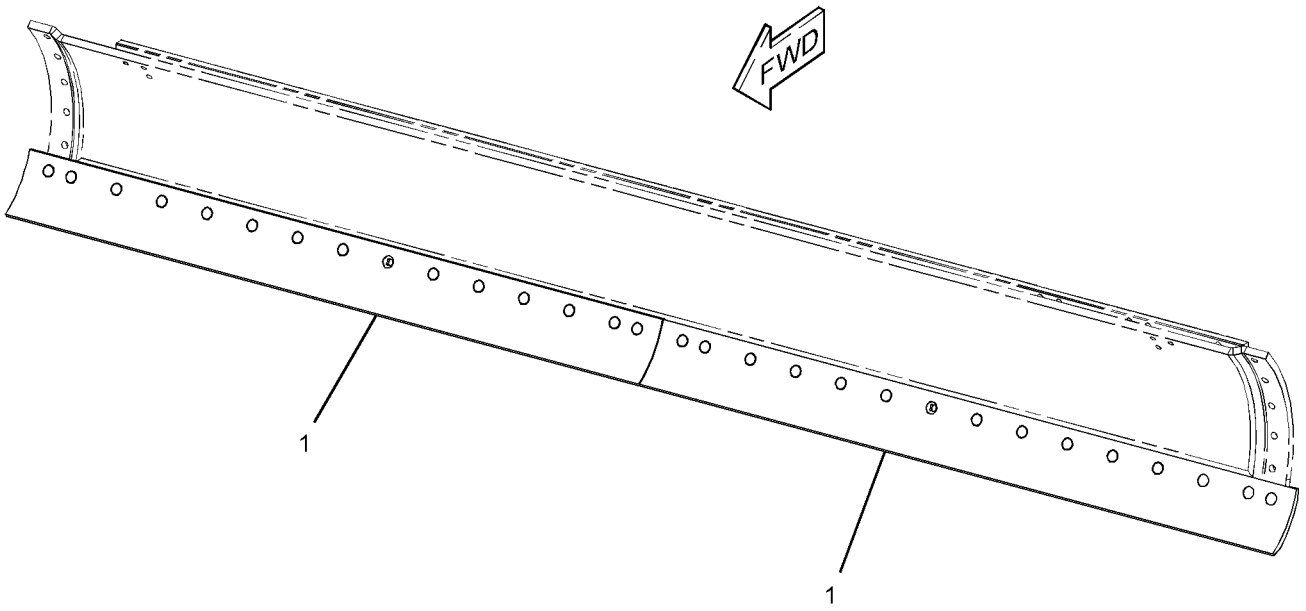

GRAPHIC #1 **<END>** g01667376

WORK TOOLS

282-0508 EDGE GP-CUTTING

S/N: JPA1-UP
14-FOOT
AN ATTACHMENT

SMCS-6801 **i03291840**

NOTE	REF NO	GRAPHIC REF	PART NUMBER	QTY	PART NAME 1 2 3 4 5 6 (PRODUCT LEVEL)	SEE PAGE
	1	1	**7D-1158**	2	EDGE-CUTTING	

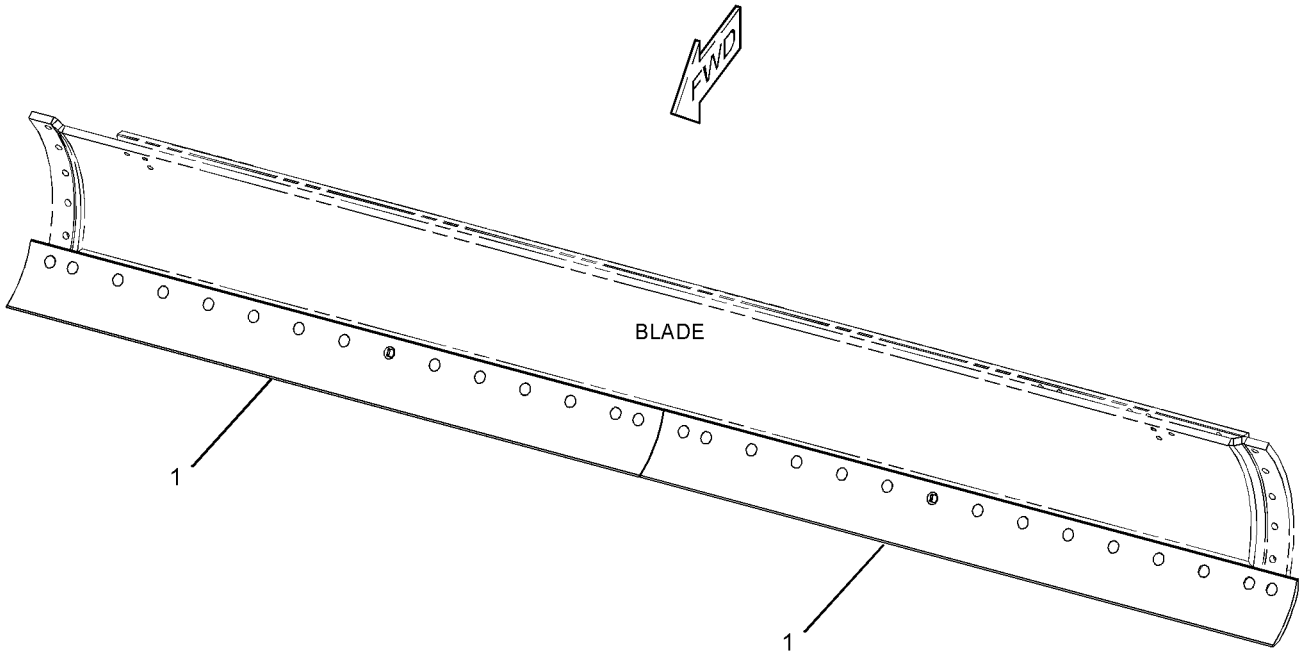

GRAPHIC #1 **<END>** g01701896

WORK TOOLS

243-6685 EXTENSION GP-BLADE—RH

S/N: JPA1-UP
2-FT
AN ATTACHMENT

SMCS-6173 **i02782233**

NOTE	REF NO	GRAPHIC REF	PART NUMBER	QTY	PART NAME 1 2 3 4 5 6 (PRODUCT LEVEL)	SEE PAGE
	1	1	**110-5334**	2	SPACER (3-MM THK)	
	2	1	**110-5336**	1	ANGLE AS	
B	3	1	**176-5642**	1	SPACER (2-MM THK)	
B	4	1	**176-5643**	2	SPACER (1-MM THK)	
	5	1	**232-2146**	1	EDGE-CUTTING	
	6	1	**243-6683**	1	EXTENSION	
	7	1	**243-6684**	1	PLATE AS	
	8	1	**2J-3506**	15	NUT-FULL (3/4-10-THD)	
	9	1	**2S-0115**	2	WASHER-HARD (20X36.5X5-MM THK)	
	10	1	**5F-8933**	10	BOLT-PLOW (3/4-10X3.75-IN)	
	11	1	**5J-4773**	5	BOLT-PLOW (3/4-10X2.5-IN)	
	12	1	**9X-8885**	2	BOLT (3/4-10X2.25-IN)	

B-USE AS REQUIRED

243-6685 **EXTENSION GP-BLADE** *(contd.)* **i02782233**

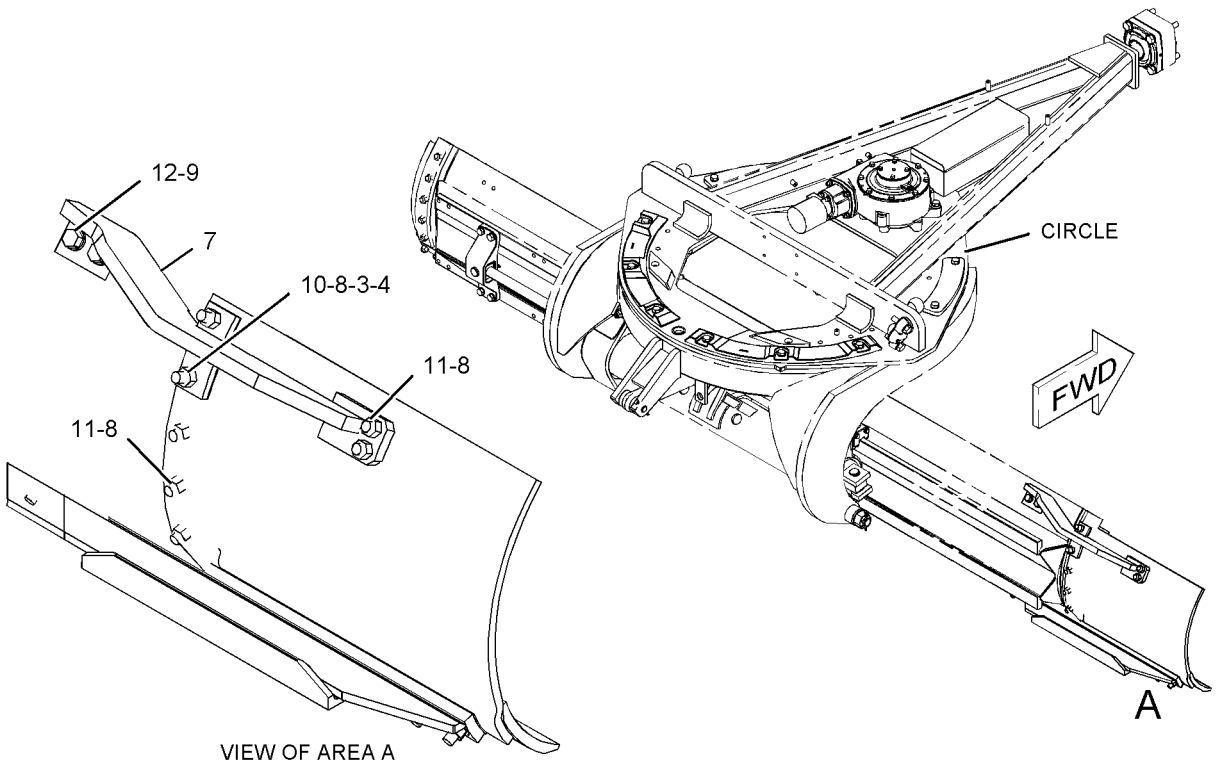

VIEW OF AREA A

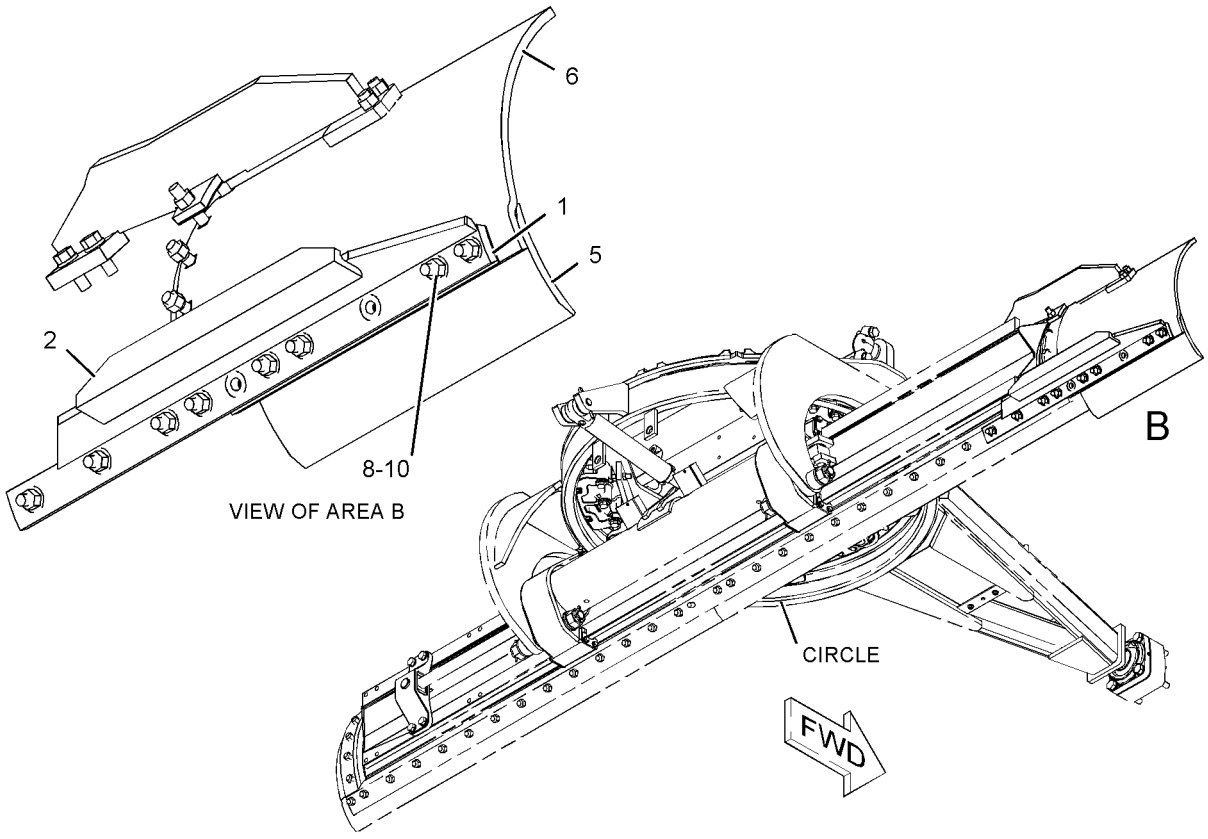

VIEW OF AREA B

GRAPHIC #1 **<END>** g01129959

WORK TOOLS

250-0615 EXTENSION GP-BLADE—LH

S/N: JPA1-UP
2-FT
AN ATTACHMENT

SMCS-6173 **i02783245**

NOTE	REF NO	GRAPHIC REF	PART NUMBER	QTY	PART NAME 1 2 3 4 5 6 (PRODUCT LEVEL)	SEE PAGE
	1	1	**110-5334**	2	SPACER (3-MM THK)	
	2	1	**110-5335**	1	ANGLE AS	
B	3	1	**176-5642**	1	SPACER (2-MM THK)	
B	4	1	**176-5643**	2	SPACER (1-MM THK)	
	5	1	**232-2146**	1	EDGE-CUTTING	
	6	1	**250-0613**	1	EXTENSION	
	7	1	**250-0614**	1	PLATE AS	
	8	1	**2J-3506**	15	NUT-FULL (3/4-10-THD)	
	9	1	**2S-0115**	2	WASHER-HARD (20X36.5X5-MM THK)	
	10	1	**5F-8933**	10	BOLT-PLOW (3/4-10X3.75-IN)	
	11	1	**5J-4773**	5	BOLT-PLOW (3/4-10X2.5-IN)	
	12	1	**9X-8885**	2	BOLT (3/4-10X2.25-IN)	

B-USE AS REQUIRED

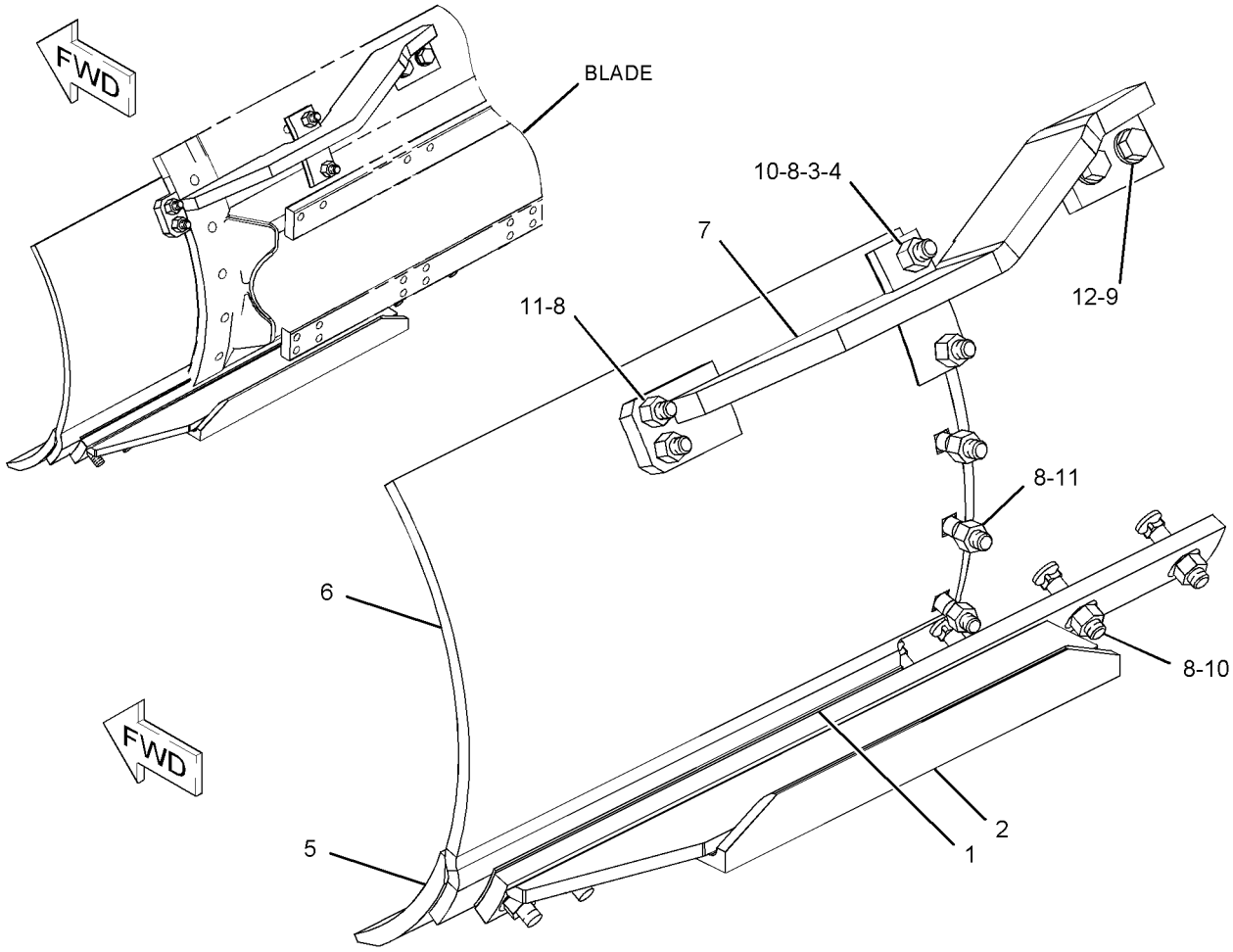

GRAPHIC #1 **<END>** g01134922

WORK TOOLS

125-0290 LIFT GP-BLADE

S/N: JPA1-UP

PART OF 274-7940 GENERAL AR

SMCS-6151 **i00130969**

NOTE	REF NO	GRAPHIC REF	PART NUMBER	QTY	PART NAME 1 2 3 4 5 6 (PRODUCT LEVEL)	SEE PAGE
	1	1	**8T-4223**	4	WASHER-HARD (13.5X25.5X3-MM THK)	
	2	1	**8T-8919**	4	BOLT (1/2-13X1.75-IN)	
	3	1	**7D-8891**	2	RETAINER	
	4	1	**8X-3616**	1	ARM AS (RH)	
	5	1	**7D-8889**	1	BEARING (76.35-MM ID)	
	6	1	**8D-8168**	1	BEARING (63.65-MM ID)	
	7	1	**2J-3506**	6	NUT-FULL (3/4-10-THD)	
		1	**3B-6753**	6	BOLT (3/4-10X4.75-IN)	
	8	1	**5P-8248**	16	WASHER-HARD (20X36.5X3.5-MM THK)	
	9	1	**8X-5106**	1	STUD-BALL	
	10	1	**8D-4332**	2	PIN	
	11	1	**8X-5110**	2	YOKE AS	
					(EACH INCLUDES)	
		1	**2G-8233**	1	RING	
	12	1	**2M-0849**	1	WASHER-HARD (13.5X25.5X5-MM THK)	
		1	**9S-1366**	1	BOLT (1/2-13X2.5-IN)	
	13	1	**125-0289**	1	BAR AS	
	14	1	**8X-5108**	2	BEARING-SLEEVE	
	15	1	**124-5836**	3	BUSHING	
	16	1	**0S-1756**	4	BOLT (3/4-10X4.25-IN)	
	17	1	**9D-3583**	2	LOCK	
	18	1	**7H-2444**	2	SEAL	
	19	1	**7D-8878**	4	WASHER-THRUST	
	20	1	**7D-8877**	2	WASHER-THRUST	
B	21	1	**7D-8879**	8	SHIM (0.127-MM THK)	
B	22	1	**7D-8881**	6	SHIM (0.254-MM THK)	
B	23	1	**7D-8882**	2	SHIM (0.508-MM THK)	
	24	1	**7D-8875**	4	WASHER-THRUST	
	25	1	**5F-0149**	2	SEAL-O-RING	
	26	1	**7D-8883**	2	SEAL	
	27	1	**8X-5107**	1	PIN	
	28	1	**3P-1461**	4	SEAL-LIP TYPE	
	29	1	**7D-8876**	2	WASHER-THRUST	
	30	1	**8X-5111**	2	LOCK	
	31	1	**7D-8884**	2	SEAL	
	32	1	**8X-3615**	1	ARM AS (LH)	
		1	**8D-8168**	1	BEARING (63.65-MM ID)	
		1	**7D-8889**	1	BEARING (76.35-MM ID)	
	33	1	**124-0435**	1	PLATE	
B	34	1	**8D-4336**	2	WASHER-THRUST (3.02X5.75X0.08-MM THK)	
B	35	1	**123-8187**	2	WASHER-THRUST (76.6X146X1-MM THK) (.100 THK)	

B-USE AS REQUIRED

125-0290 **LIFT GP-BLADE** *(contd.)* **i00130969**

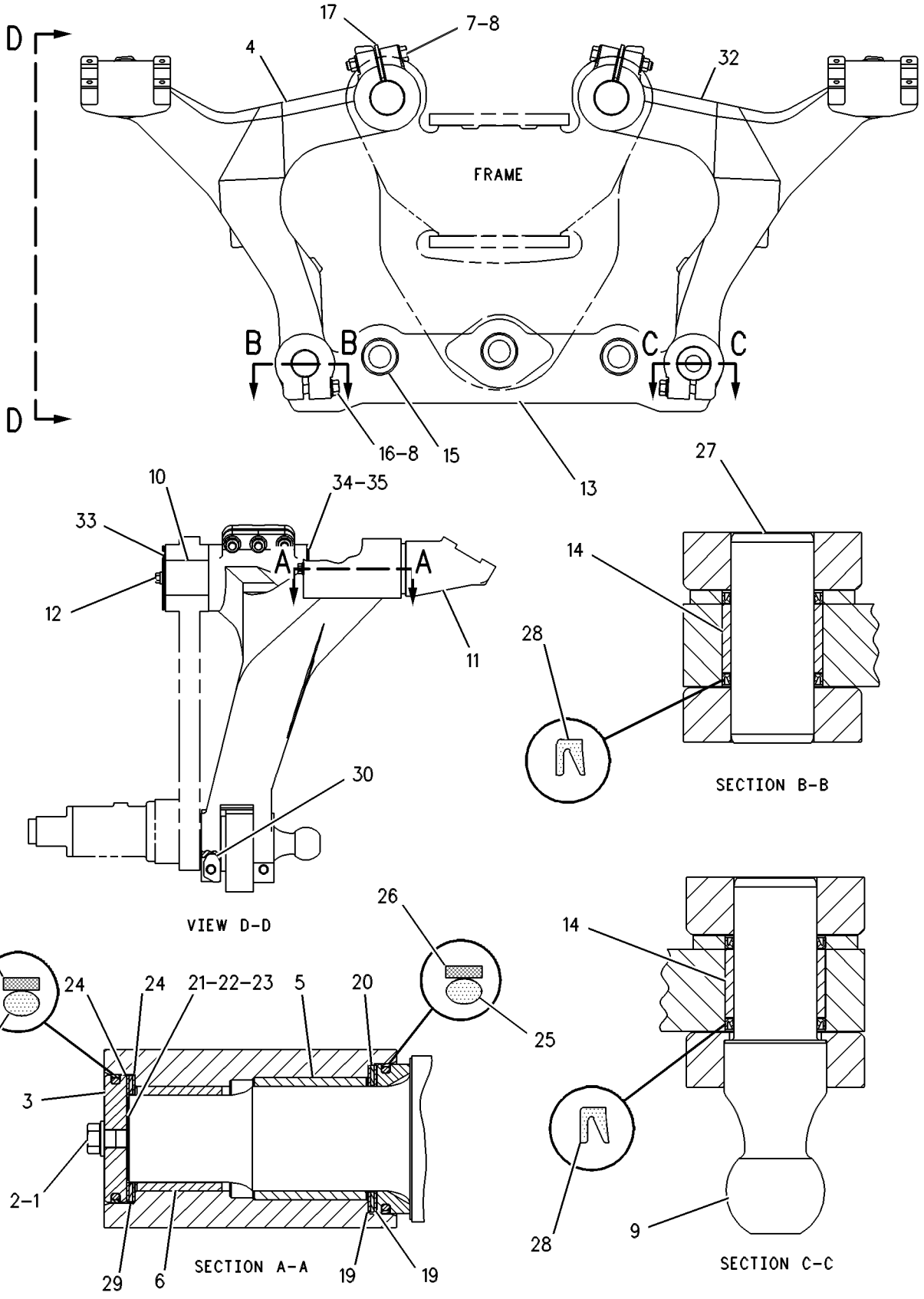

GRAPHIC #1 **<END>** g00109310

WORK TOOLS

289-7597 MOUNTING GP-RIPPER

S/N: JPA1-UP
PART OF 285-4183 RIPPER AR
AN ATTACHMENT

SMCS-6324 **i03265589**

NOTE	REF NO	GRAPHIC REF	PART NUMBER	QTY	PART NAME 1 2 3 4 5 6 (PRODUCT LEVEL)	SEE PAGE
	1	1	**3W-7254**	2	SPACER (47X80X20-MM THK)	
	2	1	**3W-7256**	2	SPACER (47X80X16-MM THK)	
	3	1	**6P-5647**	2	BOSS	
	4	1	**8E-6130**	2	LINK AS	
	5	1	**104-4523**	2	CAM AS	
	6	1	**333-1963**	1	PLATE AS	
	7	1	**109-6776**	2	PIN	
M	8	1	**129-3180**	2	LOCKNUT (M12X1.75-THD)	
	9	1	**267-3506**	10	WASHER-HARD (26X44X4-MM THK)	
M	10	1	**7X-2543**	2	BOLT (M10X1.5X120-MM)	
M	11	1	**8T-0389**	4	LOCKNUT (M10X1.5-THD)	
M	12	1	**8T-5041**	2	BOLT (M12X1.75X120-MM)	
M	13	1	**8T-6685**	2	BOLT (M10X1.5X110-MM)	
	14	1	**9W-7469**	2	PIN	
	15	1	**9W-7470**	2	PIN	
M	16	1	**9X-2615**	10	BOLT (M24X3X60-MM)	

M-METRIC PART

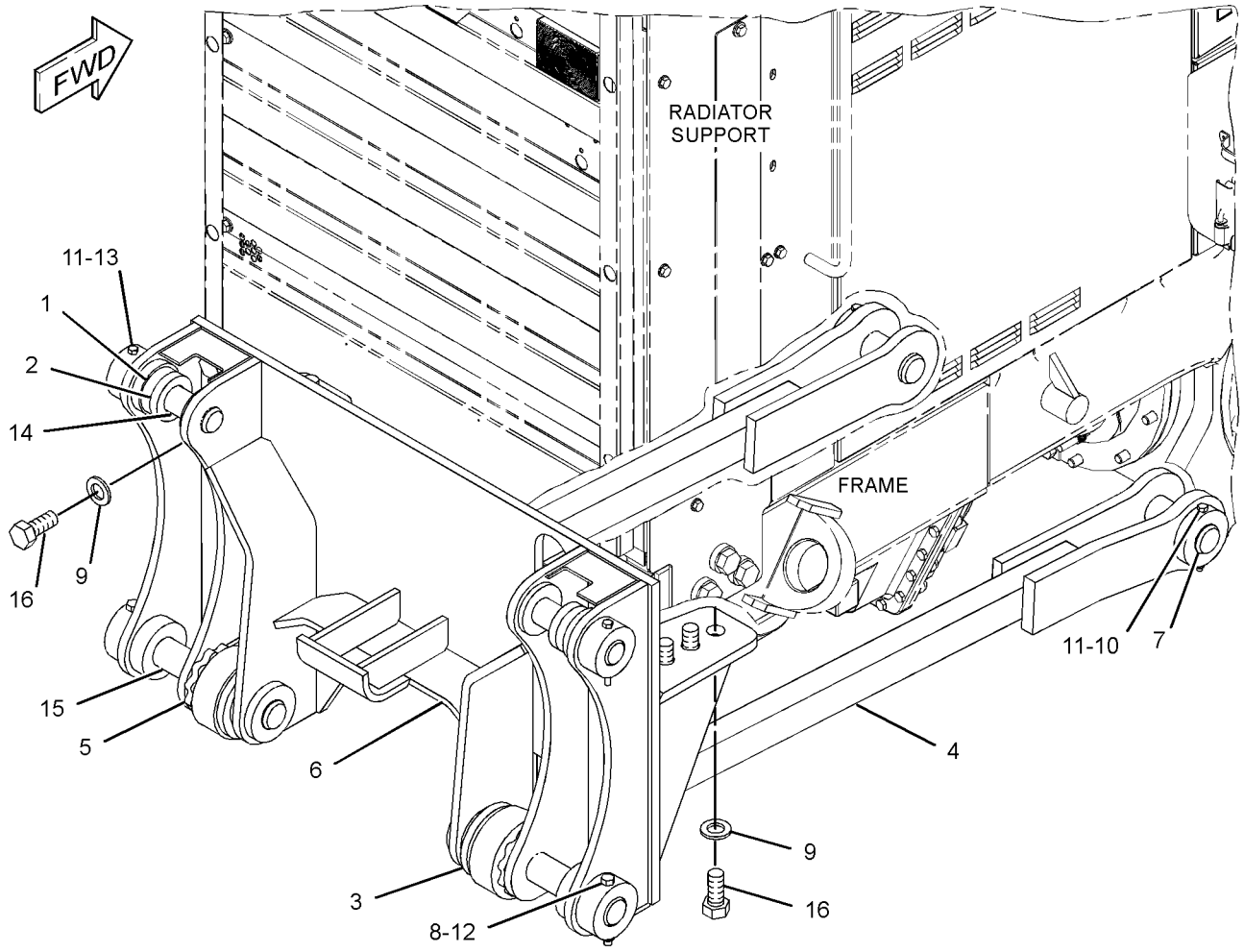

GRAPHIC #1 **<END>** g01698813

WORK TOOLS

285-4183 RIPPER AR

S/N: JPA1-UP

AN ATTACHMENT

SMCS-6325 **i03274161**

NOTE	REF NO	GRAPHIC REF	PART NUMBER	QTY	PART NAME 1 2 3 4 5 6 (PRODUCT LEVEL)	SEE PAGE
Y	1	1	*8J-7024*	1	RIPPER GP	613
Y	2	1	**113-7754**	1	CYLINDER GP-RIPPER	383
Y	3	1	*174-2339*	1	LINES GP-RIPPER	418
Y	4	1	*289-7597*	1	MOUNTING GP-RIPPER	611

Y-SEPARATE ILLUSTRATION

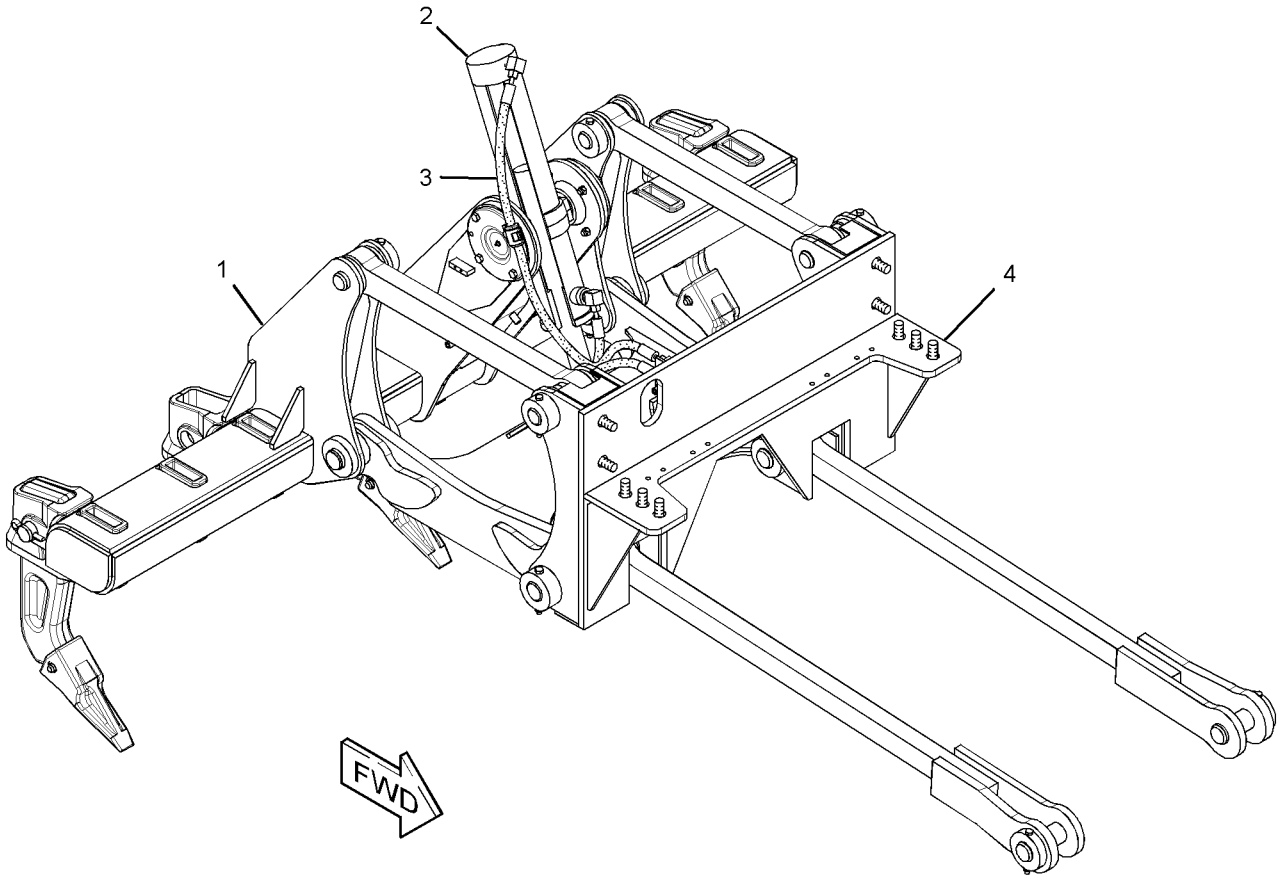

GRAPHIC #1 **<END>** g01683334

WORK TOOLS

8J-7024 RIPPER GP

S/N: JPA1-UP
3-TEETH
PART OF 285-4183 RIPPER AR
AN ATTACHMENT

SMCS-6325 **i03117515**

NOTE	REF NO	GRAPHIC REF	PART NUMBER	QTY	PART NAME 1 2 3 4 5 6 (PRODUCT LEVEL)	SEE PAGE
	2	1	**2K-0120**	1	PIN	
	3	1	**2K-0703**	1	BAR	
	4	1	**3B-8489**	3	FITTING-GREASE (RIPPER CYLINDER BEARING)	
	5	1	**4K-3004**	2	BEARING-TRUNNION SUPPLEMENTARY	
	6	1	**4K-3150**	2	PIN	
	7	1	**190-5386**	2	FILM-REFLECTOR (ROUND RED REFLECTIVE)	
Y	8	1	*8J-1434*	3	TOOTH GP-RIPPER	620
	9	1	**9J-0096**	2	LINK AS-UPPER	
					(EACH INCLUDES)	
	9A	1	**3G-2581**	2	BEARING	
	10	1	**9W-3155**	1	CARRIAGE AS	
	11	1	**187-0953**	1	LINK AS-LOWER	
	11A	1	**3G-2579**	4	BEARING	
	12	1	**1K-6872**	10	LOCKNUT (1/2-13-THD)	
	13	1	**2D-0626**	8	SEAL	
	14	1	**2K-4973**	2	LOCKNUT (3/8-16-THD)	
	15	1	**5P-2228**	2	BOLT (1/2-13X1-IN)	
	16	1	**5P-2424**	8	BOLT (1/2-13X2.25-IN)	
	17	1	**7K-9203**	8	SEAL-LIP TYPE	
	18	1	**7X-0333**	2	BOLT (1/2-13X4.75-IN)	
	19	1	**8J-7008**	2	PIN	
	20	1	**8T-9378**	2	BOLT (3/8-16X4-IN)	

Y-SEPARATE ILLUSTRATION

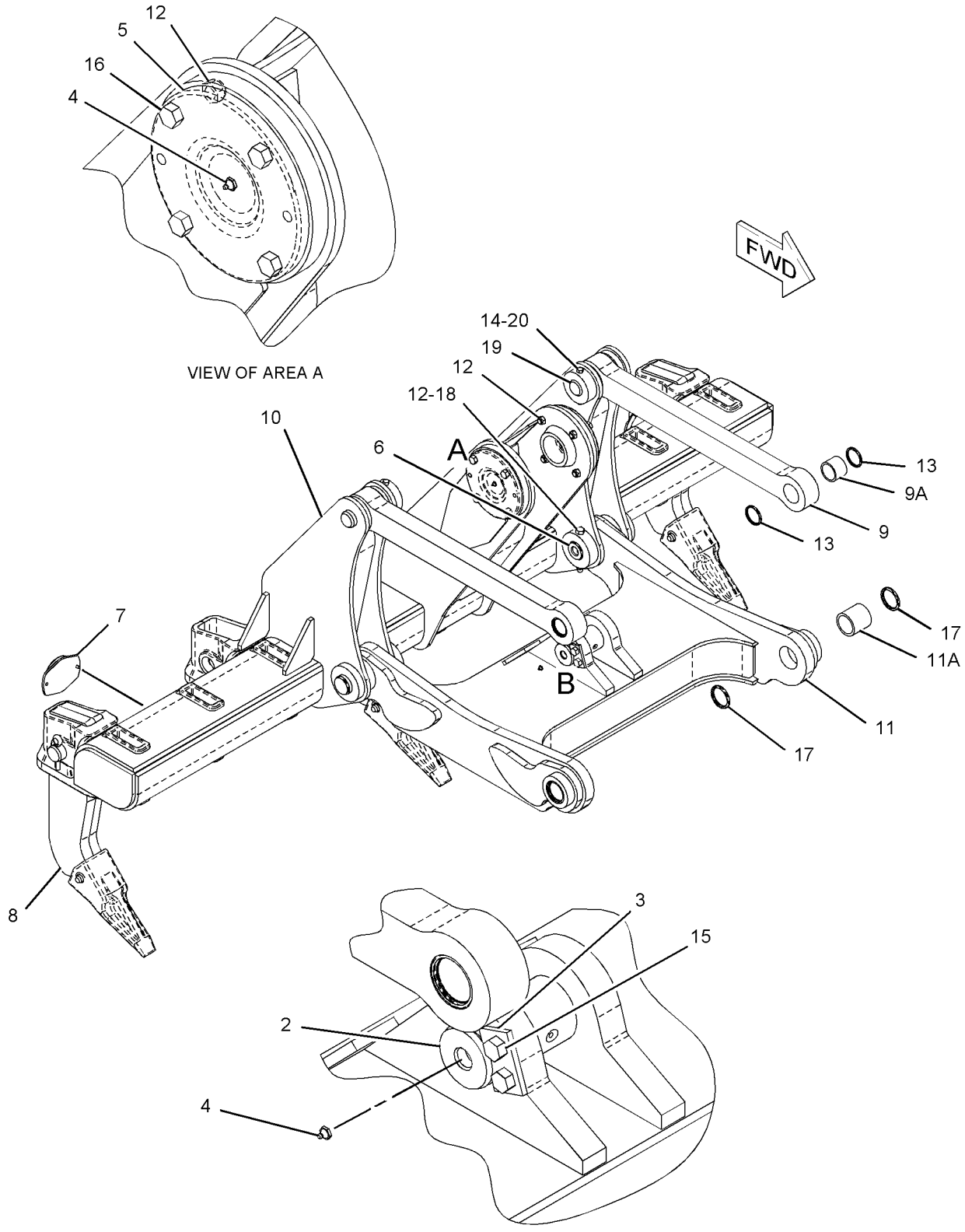

GRAPHIC #1

<END>

g01068995

WORK TOOLS

108-1104 SCARIFIER AR—VEE TYPE

S/N: JPA1-UP

AN ATTACHMENT

SMCS-6162, 6325, 6811 **i02592949**

NOTE	PART NUMBER	QTY	PART NAME 1 2 3 4 5 6 (PRODUCT LEVEL)	SEE PAGE
Y	*116-0379*	1	BRACKET GP-SCARIFIER	601
Y	*8W-2913*	1	CYLINDER & MTG GP-SCARIFIER	371
Y	*8X-6070*	1	LINES GP-HYDRAULIC (SCARIFIER)	396
Y	*8X-6080*	1	SCARIFIER GP (VEE TYPE)	616

Y-SEPARATE ILLUSTRATION

<END>

WORK TOOLS

8X-6080 SCARIFIER GP

S/N: JPA1-UP
PART OF 108-1104 SCARIFIER AR
AN ATTACHMENT

SMCS-6162, 6325, 6811 **i03291680**

NOTE	REF NO	GRAPHIC REF	PART NUMBER	QTY	PART NAME 1 2 3 4 5 6 (PRODUCT LEVEL)	SEE PAGE
	1	1	**1A-0224**	2	BOLT (7/8-14X3.5-IN)	
	2	1	**1B-4208**	2	NUT-FULL (7/8-14-THD)	
	3	1	**2G-4332**	1	BLOCK AS-SCARIFIER	
		1	**7D-8825**	11	SPACER	
		1	**7D-8826**	11	SPACER	
	4	1	**2H-3746**	4	BOLT (1-14X5-IN)	
	5	1	**2K-7471**	4	LOCKNUT (1-14-THD)	
	6	2	**3B-8489**	4	FITTING-GREASE	
	7	1	**3D-4904**	4	LOCKNUT (1-1/8-12-THD)	
	8	2	**4D-6086**	2	KEY	
	9	1	**5B-0577**	2	COLLAR	
	10	1	**5D-8159**	2	PIN AS	
	11	1	**5K-1458**	11	GROMMET	
	12	1	**5K-1459**	11	LOCK PIN	
	13	1	**6B-3260**	1	TOOL	
	14	2	**6F-6992**	4	CAP-BALL SOCKET	
	15	2	**6Y-5230**	11	TOOTH-SCARIFIER	
	16	1	**7D-2196**	2	SLEEVE AS-LINK	
					(EACH INCLUDES)	
		1	**7D-2136**	1	SOCKET-BALL	
B	17	2	**7F-1327**	32	SHIM (0.03-IN THK)	
	18	2	**8D-1268**	2	ARM AS-LIFT	
					(EACH INCLUDES)	
		2	**7D-8245**	1	STUD-BALL	
	19	1	**8H-4040**	4	BOLT (1-1/8-12X4.5-IN)	
	20	1	**8W-0663**	2	BRACKET AS	
					(EACH INCLUDES)	
		1	**3B-8489**	1	FITTING-GREASE	
		1	**107-8374**	2	BEARING	
	21	1	**8X-6075**	1	BOLSTER AS	
	22	1	**9D-5516**	2	LINK AS-LIFT	
					(EACH INCLUDES)	
		1	**7D-2135**	1	SOCKET-BALL	
	23	1	**107-8375**	1	SHAFT AS	
	24	1	**118-7880**	1	DRAWBAR AS	
	24A	1	**8W-5597**	1	STUD-BALL	
	24B	1	**2G-7728**	2	COLLAR	
	25	1	**118-7881**	1	DRAWBAR AS	
	25A	1	**8W-5597**	1	STUD-BALL	
	25B	1	**2G-7728**	2	COLLAR	
	26	2	**195-7218**	11	SHANK	
B	27	1	**198-9811**	4	SPACER (83X145X3-MM THK)	
B	28	1	**198-9812**	2	SPACER (83X145X2-MM THK)	
	29	2	**1A-8063**	8	BOLT (3/4-10X2.5-IN)	
	30	1	**1D-4612**	4	BOLT (3/4-10X4-IN)	
	31	2	**1F-7958**	2	NUT-FULL (1/2-13-THD)	
	32	1	**330-6877**	1	SHAFT	
	33	1	**2J-3506**	4	NUT-FULL (3/4-10-THD)	
	34	1	**3S-1349**	4	WASHER-HARD (31X52.5X6-MM THK)	
	35	1	**5D-8161**	2	PIN	
	36	2	**5P-8245**	2	WASHER-HARD (13.5X25.5X3-MM THK)	
	37	2	**5P-8248**	8	WASHER-HARD (20X36.5X3.5-MM THK)	
	38	1	**5P-8250**	8	WASHER (28X49X5-MM THK)	
	39	2	**6K-0545**	4	LOCKNUT (7/8X19-THD)	
	40	2	**7X-0390**	4	BOLT (7/8-9X5-IN)	

8X-6080 **SCARIFIER GP** *(contd.)* **i03291680**

NOTE	REF NO	GRAPHIC REF	PART NUMBER	QTY	PART NAME 1 2 3 4 5 6 (PRODUCT LEVEL)	SEE PAGE
	41	2	**8C-6913**	4	WASHER-HARD (24X41.5X4-MM THK)	
	42	1	**8X-3663**	8	WASHER (20X45X12-MM THK)	
	43	1	**9X-8875**	2	BOLT (1/2-13X3.5-IN)	
B-USE AS REQUIRED						

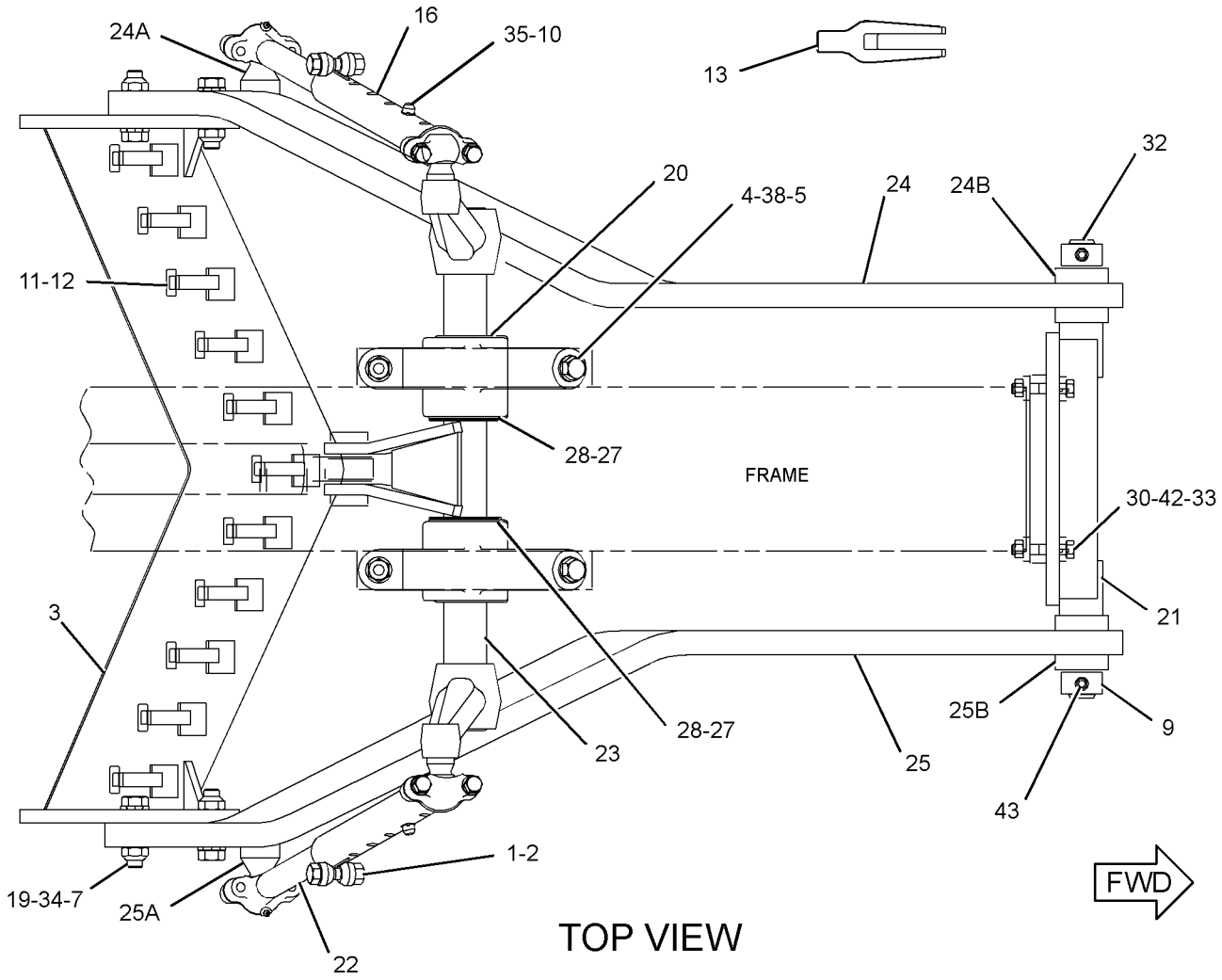

GRAPHIC #1 g01403760

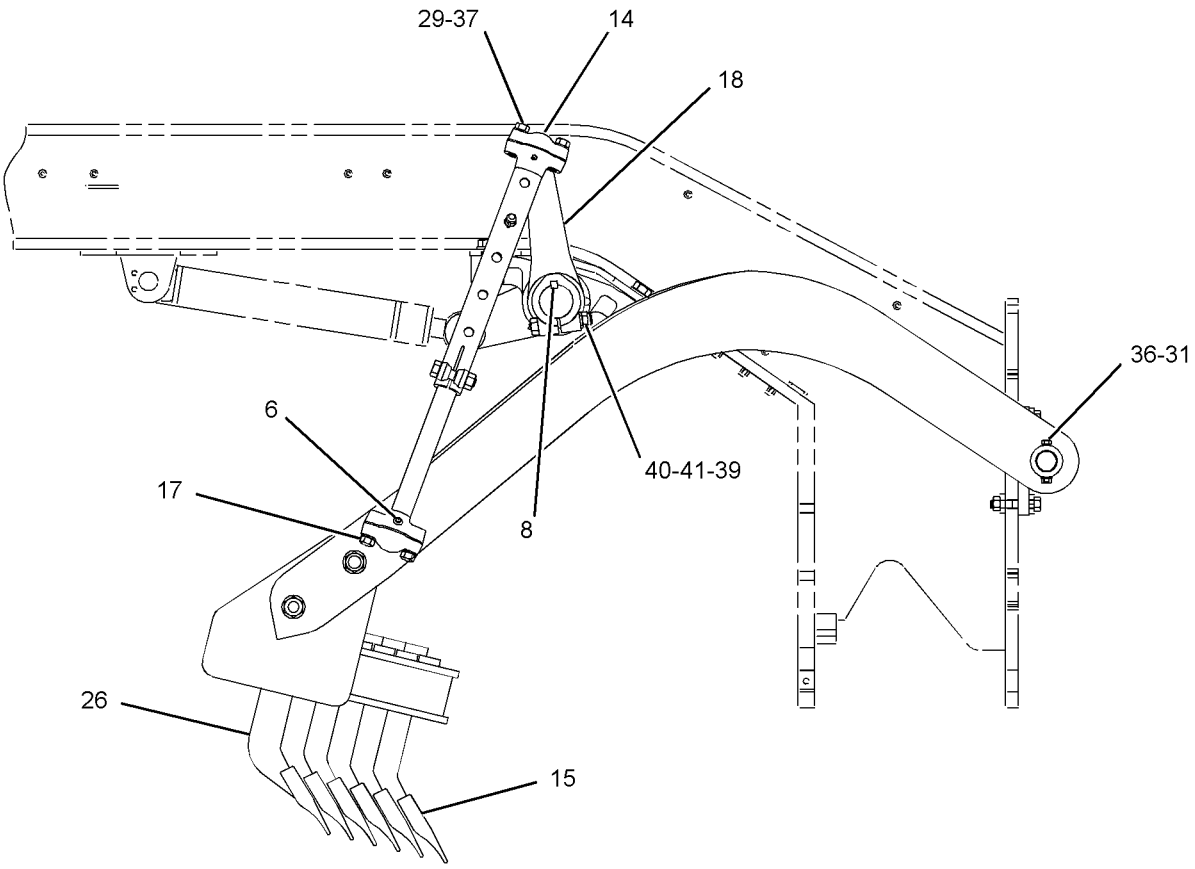

RIGHT SIDE VIEW

GRAPHIC #2 **<END>** g01403762

WORK TOOLS

8J-1434 TOOTH GP-RIPPER

S/N: JPA1-UP
PART OF 8J-7024 RIPPER GP
AN ATTACHMENT

SMCS-6808 **i02761493**

NOTE	REF NO	GRAPHIC REF	PART NUMBER	QTY	PART NAME 1 2 3 4 5 6 (PRODUCT LEVEL)	SEE PAGE
	1	1	**3B-5325**	2	PIN-COTTER	
	2	1	**2K-6413**	1	PIN	
	3	1	**9J-6586**	1	SHANK	
	4	1	**136-8308**	1	PIN	
	5	1	**6Y-0309**	1	TIP-RIPPER (PENETRATION)	
	6	1	**114-0359**	1	RETAINER AS	

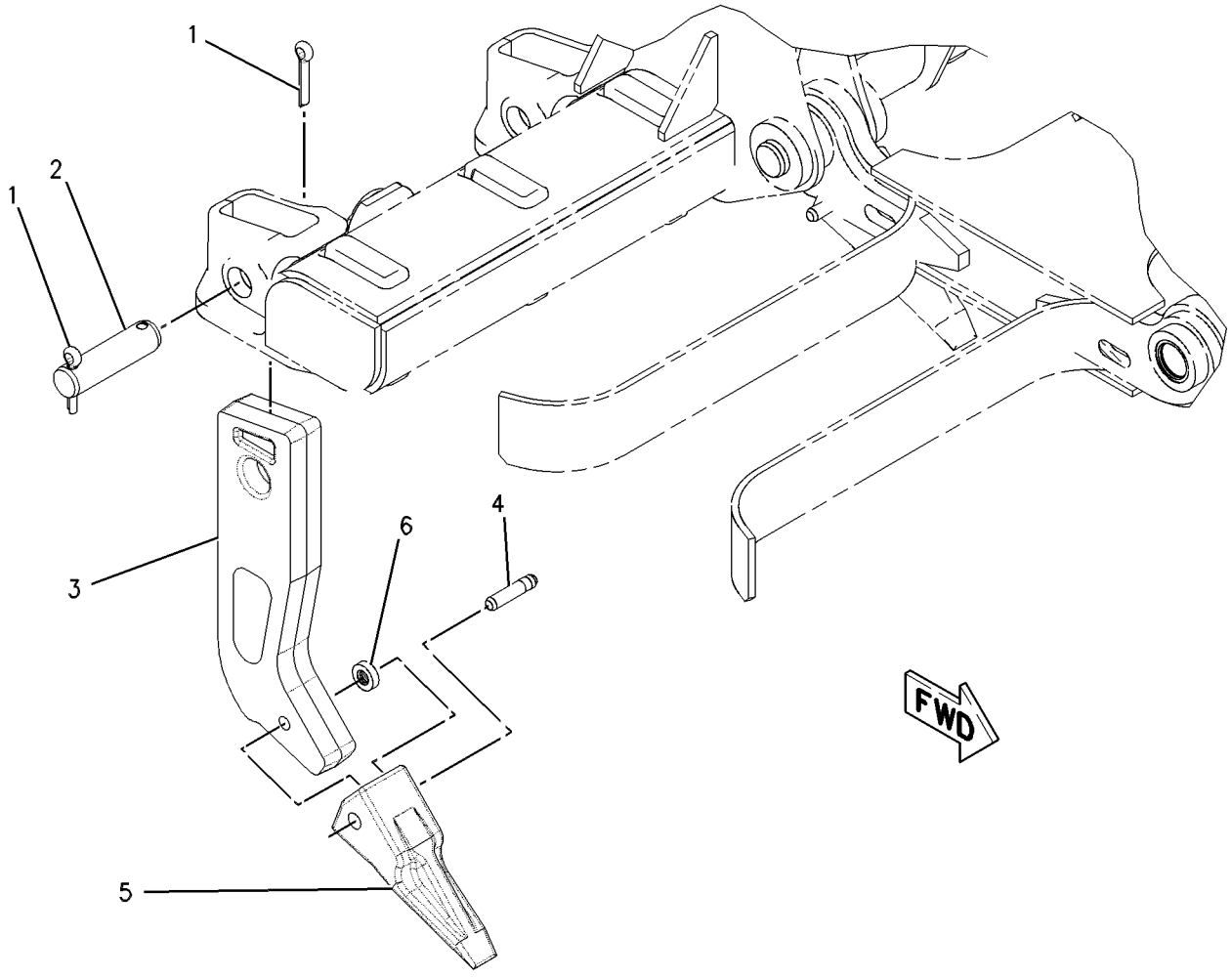

GRAPHIC #1 **<END>** g00632727

WORK TOOLS

4K-3330 TOOTH GP-SCARIFIER

S/N: JPA1-UP
9 TEETH
AN ATTACHMENT

SMCS-6807 **i01723061**

NOTE	REF NO	GRAPHIC REF	PART NUMBER	QTY	PART NAME 1 2 3 4 5 6 (PRODUCT LEVEL)	SEE PAGE
	1	1	**5K-1459**	9	LOCK PIN	
	2	1	**5K-1458**	9	GROMMET	
	3	1	**195-7218**	9	SHANK	
	4	1	**6Y-5230**	9	TOOTH-SCARIFIER	
F			**6B-3260**	1	TOOL	

F-NOT SHOWN

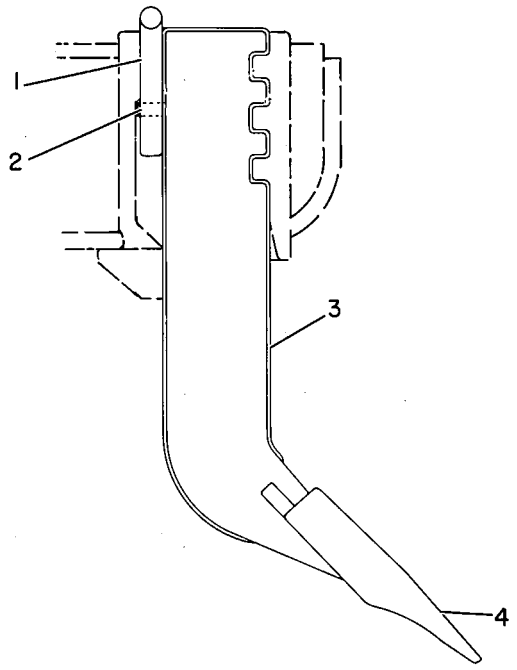

GRAPHIC #1 **<END>** g00108148

OPERATOR STATION

171-7185 ACCESSORY GP-CAB–LOW PROFILE

S/N: JPA1-UP
12-VOLT
PART OF 286-4329 CONVERTER AR-ELECTRICAL
AN ATTACHMENT

SMCS-1408, 1421 **i01683341**

NOTE	REF NO	GRAPHIC REF	PART NUMBER	QTY	PART NAME 1 2 3 4 5 6 (PRODUCT LEVEL)	SEE PAGE
	1	1	**117-2311**	1	RECEPTACLE AS-POWER (12-VOLT)	
	2	1	**138-7065**	1	PLATE	
	3	1	**169-3264**	1	HARNESS AS-CAB	
		1	**102-8802**	1	KIT-RECEPTACLE (2-PIN) (12V POWER PORT)	
M	4	1	**129-3178**	2	LOCKNUT (M6X1-THD)	
	5	1	**6P-0205**	2	SPACER (0.269X0.405X0.656-IN THK)	
	6	1	**9X-8256**	2	WASHER (6.6X12X2-MM THK)	

M-METRIC PART

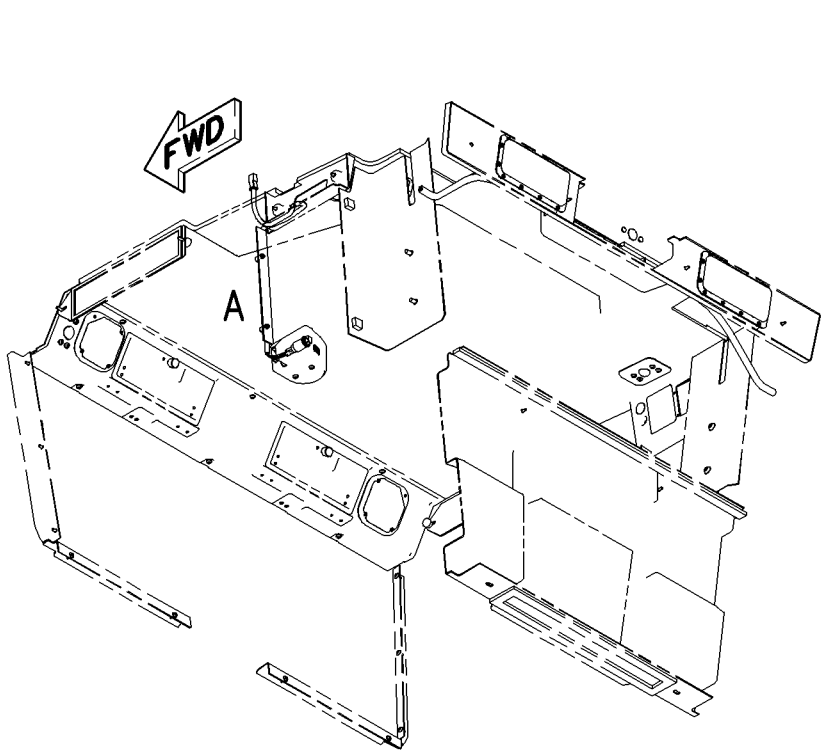

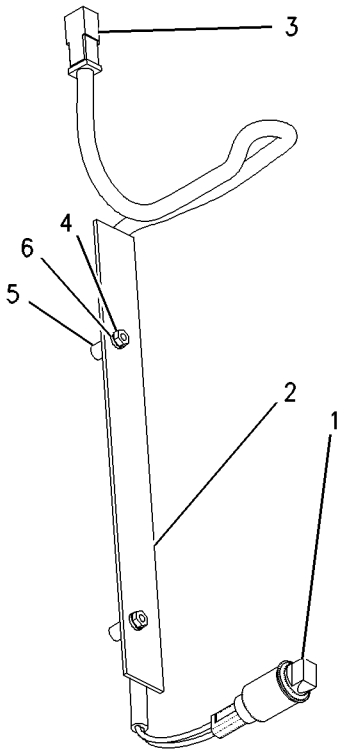

VIEW OF AREA A

GRAPHIC #1 **<END>** g00808417

171-7186 ACCESSORY GP-CAB–HIGH PROFILE

S/N: JPA1-UP
12-VOLT
PART OF 286-4328 CONVERTER AR-ELECTRICAL
AN ATTACHMENT

SMCS-1408, 1421 **i01689402**

NOTE	REF NO	GRAPHIC REF	PART NUMBER	QTY	PART NAME 1 2 3 4 5 6 (PRODUCT LEVEL)	SEE PAGE
	1	1	**117-2311**	1	RECEPTACLE AS-POWER (12-VOLT)	
	2	1	**169-3264**	1	HARNESS AS-CAB	
		1	**102-8802**	1	KIT-RECEPTACLE (2-PIN) (12V POWER PORT)	
					(INCLUDES RECEPTACLE AS & WEDGE)	
M	3	1	**129-3178**	2	LOCKNUT (M6X1-THD)	
	4	1	**139-1153**	1	PLATE	
	5	1	**6P-0205**	2	SPACER (0.269X0.405X0.656-IN THK)	
	6	1	**9X-8256**	2	WASHER (6.6X12X2-MM THK)	

M-METRIC PART

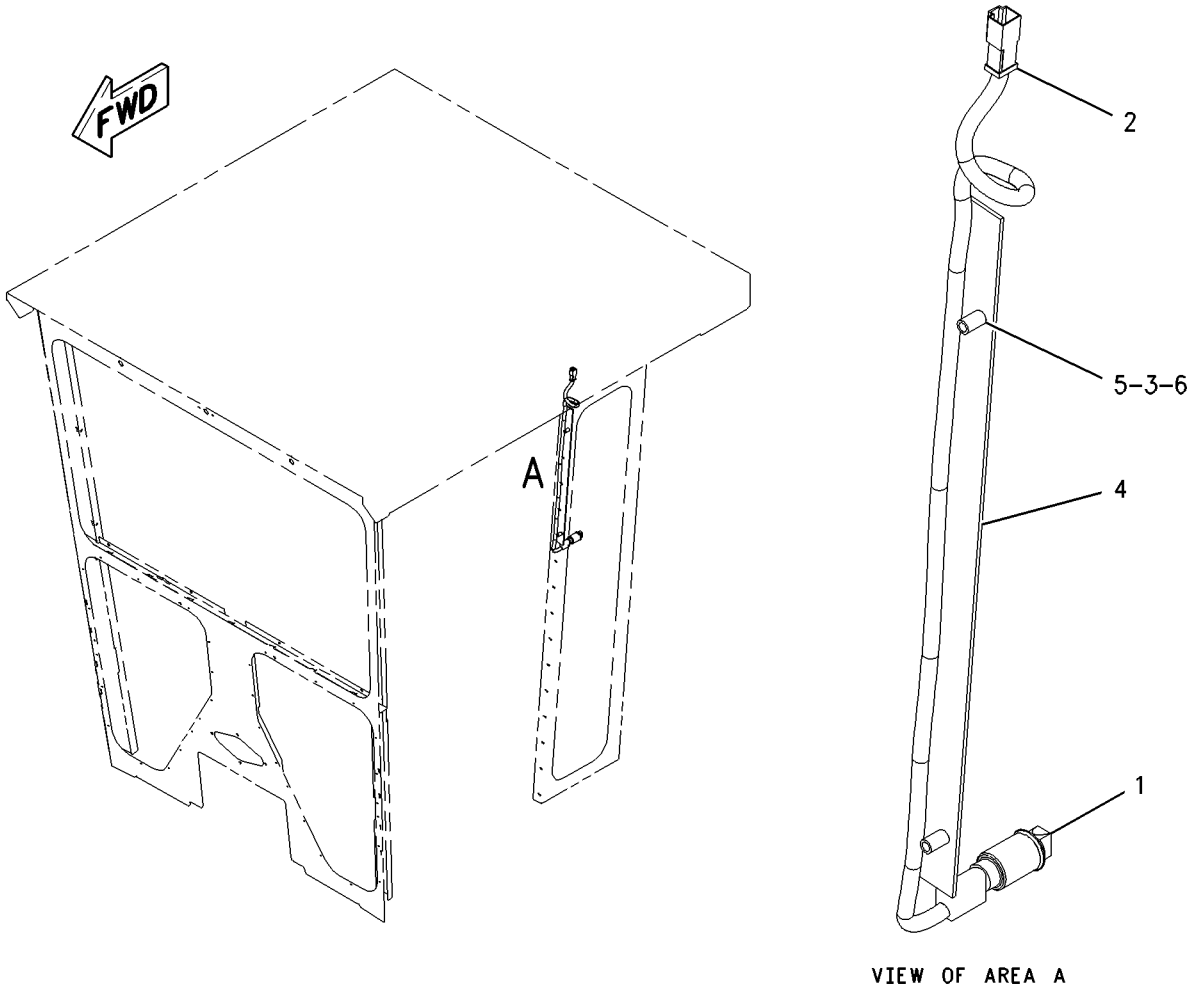

VIEW OF AREA A

GRAPHIC #1 **<END>** g00890902

OPERATOR STATION

116-2779 ADJUSTER GP-SEAT

S/N: JPA1-UP

PART OF 8Y-6851, 8Y-6852 SEAT GP-STATIC

AN ATTACHMENT

SMCS-7321 **i02847571**

NOTE	REF NO	GRAPHIC REF	PART NUMBER	QTY	PART NAME 1 2 3 4 5 6 (PRODUCT LEVEL)	SEE PAGE
	1	1	**9C-5347**	4	BOLT	
	2	1	**9V-7943**	2	SPRING	
	3	1	**116-2327**	1	SUPPORT AS	
	4	1	**9C-2177**	1	CAP	
	5	1	**6W-0590**	1	LEVER (SEAT ADJUST)	
	6	1	**3J-5696**	1	PIPE	
	7	1	**4V-7890**	1	SPRING	
	8	1	**6W-0111**	2	LINK	
	9	1	**2L-5893**	1	PIN-SPRING	
	10	1	**4V-7891**	1	LATCH AS	
	11	1	**5B-6172**	8	WASHER (9.7X19X0.8-MM THK)	
	12	1	**2K-4973**	8	LOCKNUT (3/8-16-THD)	
	13	1	**9V-3043**	1	LINK AS	
	14	1	**6W-0108**	1	LINK AS	
	15	1	**116-2016**	1	ANGLE AS (LH)	
	16	1	**116-2015**	1	ANGLE AS (RH)	
	17	1	**6W-1885**	1	CHANNEL AS	
		1	**9V-7440**	4	NUT-WELD	
	18	1	**5M-3062**	4	BOLT (3/8-16X0.75-IN)	

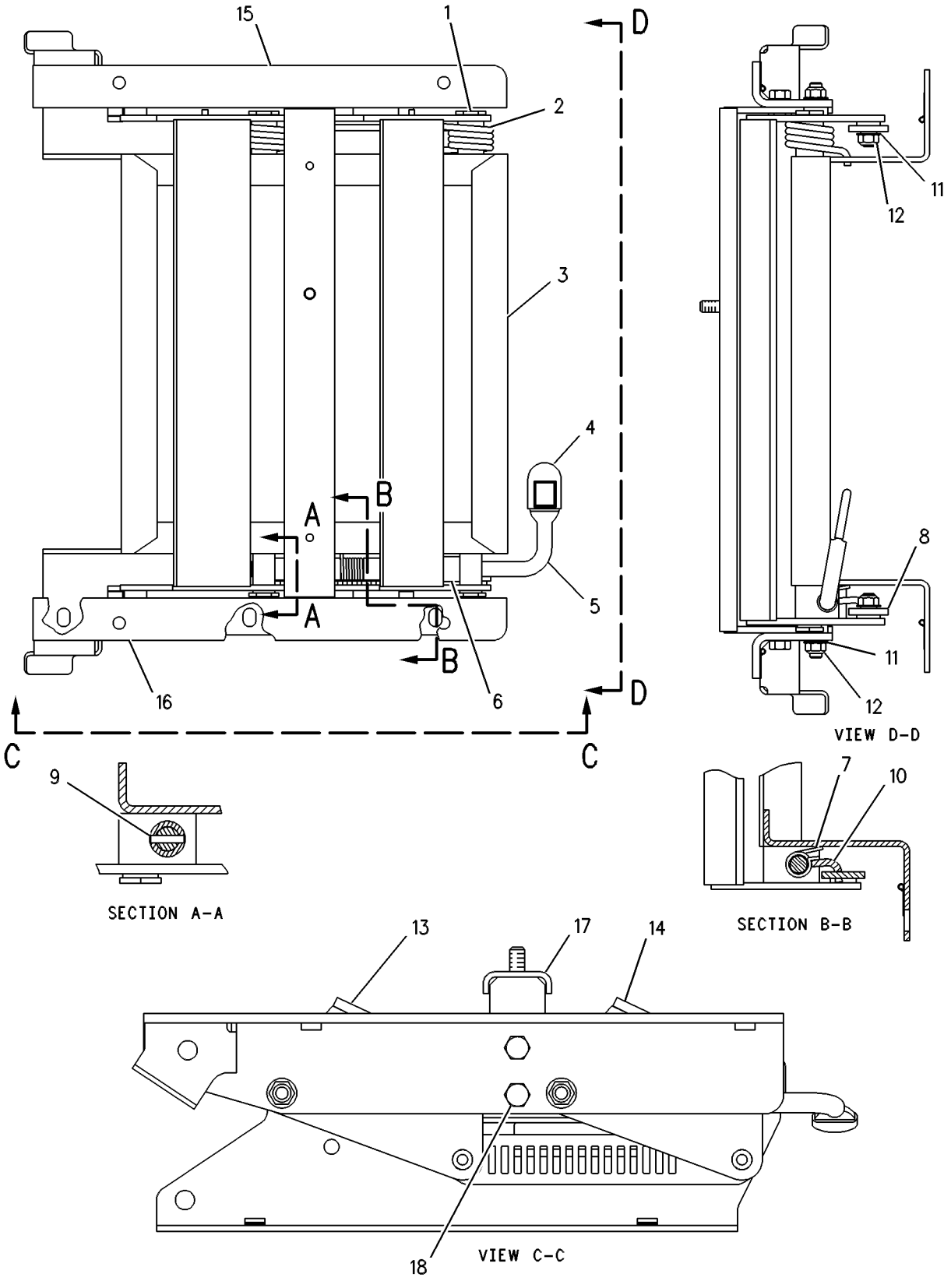

GRAPHIC #1 **<END>** g00108773

OPERATOR STATION

125-9854 ADJUSTER GP-SEAT

S/N: JPA1-UP

PART OF 125-9856 SEAT GP-STATIC

SMCS-7321 **i03438960**

NOTE	REF NO	GRAPHIC REF	PART NUMBER	QTY	PART NAME 1 2 3 4 5 6 (PRODUCT LEVEL)	SEE PAGE
	1	1	**125-9853**	1	BASE AS	
	2	1	**6W-1497**	1	SUPPORT AS	
	3	1	**6W-1496**	1	SUPPORT AS	
	4	1	**6W-1888**	1	SHEET	
	5	1	**6W-2371**	1	PLATE AS	
	6	1	**6W-3628**	2	CABLE	
	7	1	**8T-9381**	2	BOLT (7/16-20X1-IN)	
	8	1	**8S-4790**	4	SPACER (6.35-MM THK)	
	9	1	**4B-5272**	4	WASHER (12.7X31.7X2-MM THK)	
	10	1	**8R-4519**	4	LOCKNUT	
	11	1	**5V-5262**	2	BOLT-SHOULDER (7/16-20X1.26-IN)	
	12	1	**4L-6454**	4	BOLT (3/8-16X1-IN)	
	13	1	**5M-2894**	4	WASHER-HARD (10.2X18.5X2.5-MM THK)	

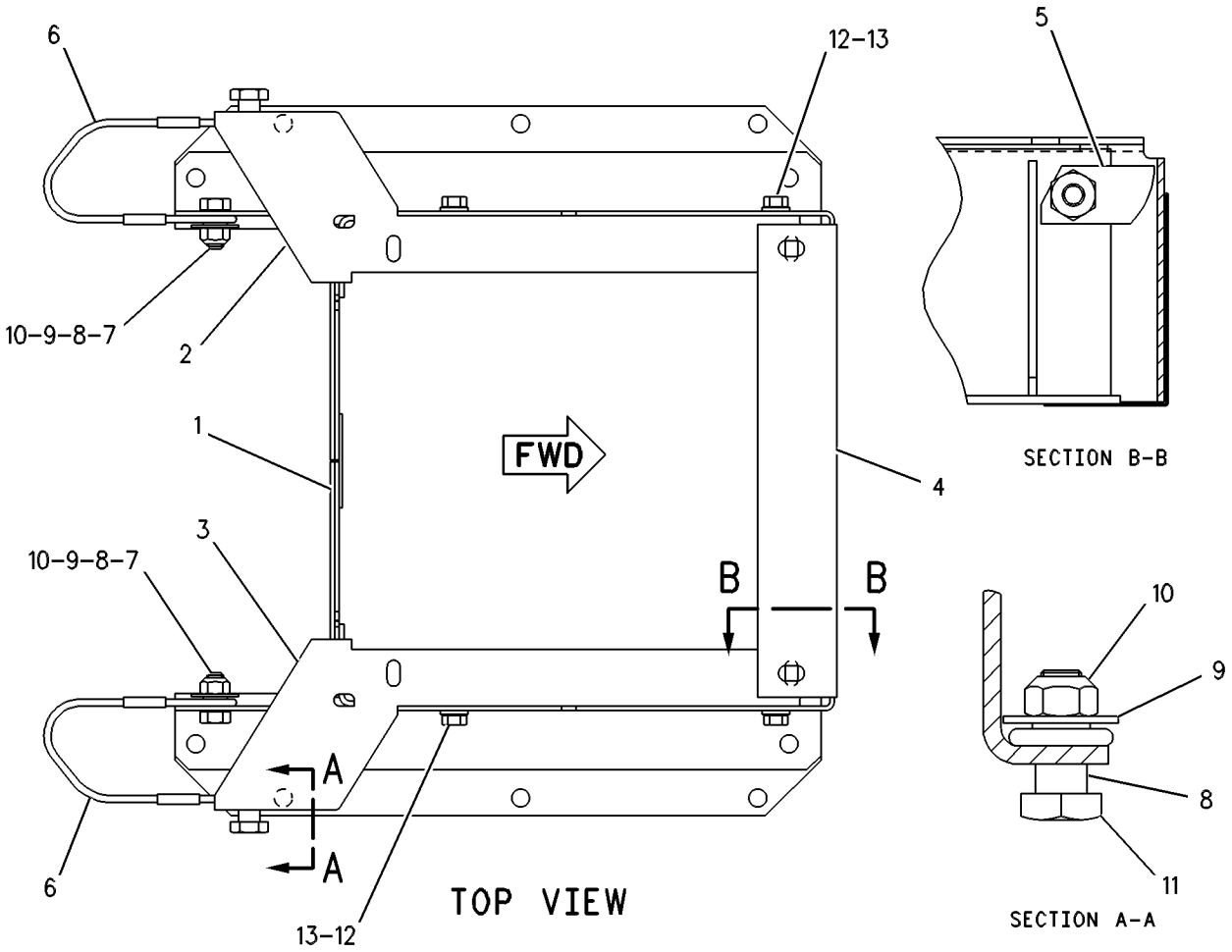

GRAPHIC #1 **<END>** g00109161

OPERATOR STATION

173-1028 ADJUSTER GP-SEAT

S/N: JPA1-UP
PART OF 301-4174 SEAT GP
AN ATTACHMENT

SMCS-7321 **i01437574**

NOTE	REF NO	GRAPHIC REF	PART NUMBER	QTY	PART NAME 1 2 3 4 5 6 (PRODUCT LEVEL)	SEE PAGE
	1	1	**4V-8256**	4	SPRING	
	2	1	**117-4486**	1	ANCHOR	
	3	1	**117-4492**	1	ROD	
	4	1	**132-0338**	2	WASHER-PLASTIC (13X31.7X0.8-MM THK)	
	5	1	**136-1544**	1	LATCH AS-LH	
	6	1	**143-1288**	1	LOCKNUT-FLANGE (3/8-16-THD)	
	7	1	**156-5545**	1	LATCH AS-RH	
	8	1	**164-4531**	1	ROD	
	9	1	**9M-1974**	1	WASHER-HARD (8.8X16X2-MM THK)	
	10	1	**170-1114**	1	HANDLE (SLIDE ADJUSTMENT)	
	11	1	**170-1115**	1	HANDLE (TILT ADJUSTMENT)	
	12	1	**172-4001**	1	BRACKET	
	13	1	**1D-4675**	1	BOLT-CARRIAGE (3/8-16X0.75-IN)	
	14	1	**2K-4973**	2	LOCKNUT (3/8-16-THD)	
	15	1	**7L-8170**	1	NUT-FULL (5/16-18-THD)	
	16	1	**7X-0608**	2	WASHER-HARD (10.2X16X2-MM THK)	
	17	1	**170-1112**	1	PLATE AS	

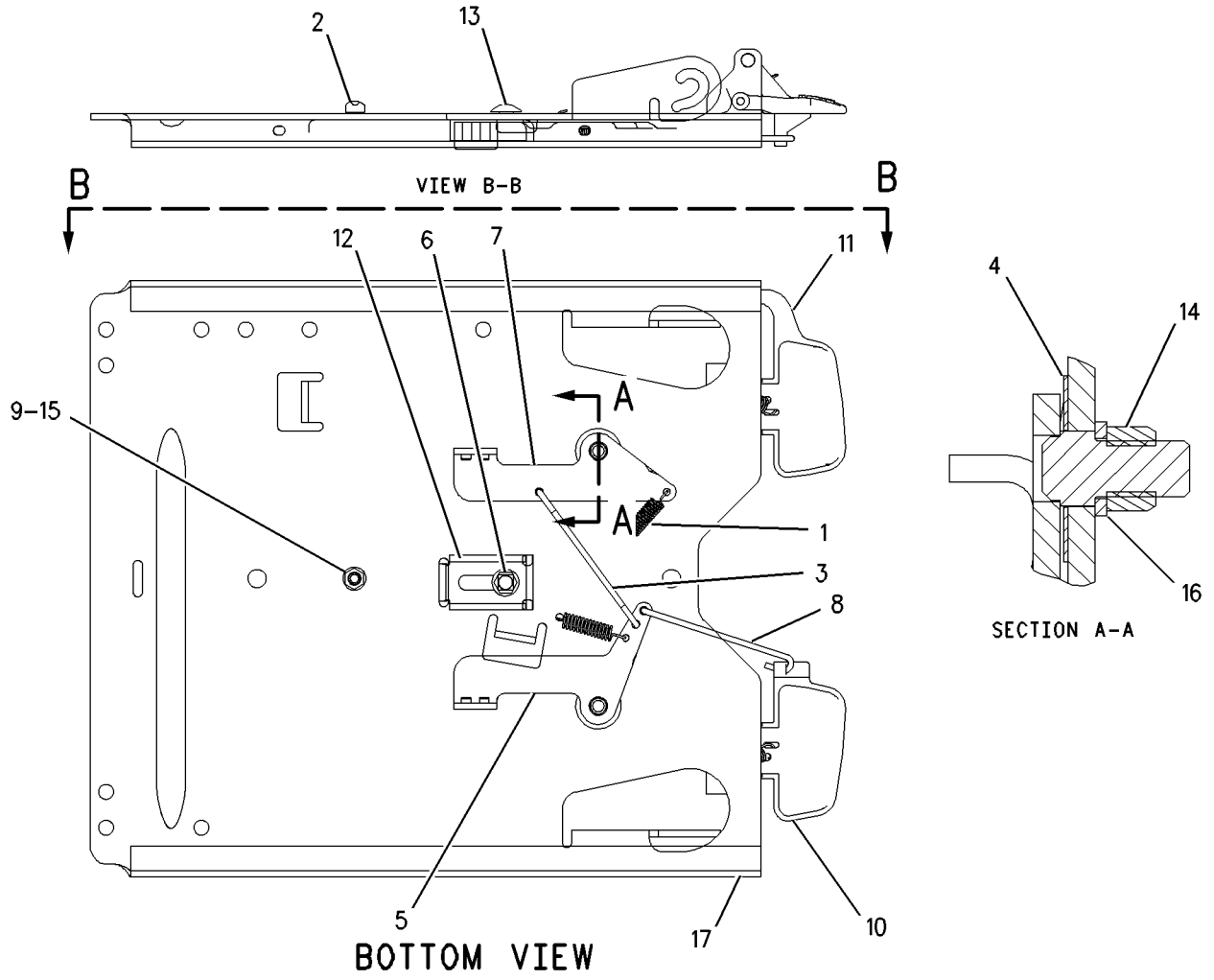

GRAPHIC #1 **<END>** g00686297

OPERATOR STATION

308-5633 AIR CONDITIONER & HEATER GP

S/N: JPA1-UP
PART OF 289-7545 AIR CONDITIONER GP
AN ATTACHMENT

SMCS-7304, 7320 **i03258804**

NOTE	REF NO	GRAPHIC REF	PART NUMBER	QTY	PART NAME 1 2 3 4 5 6 (PRODUCT LEVEL)	SEE PAGE
	1	1	**2P-4339**	1	NUT-JAM (7/16-28-THD)	
	2	1	**2V-0099**	1	KNOB-CONTROL (FAN SPEED)	
	2A	1	**2V-0099**	1	KNOB-CONTROL (TEMPERATURE CONTROL)	
	3	2	**3E-0400**	2	BLOWER AS	
					(EACH INCLUDES)	
		2	**037-4838**	1	CLAMP	
	4	1	**3E-3890**	1	FILM-CONTROL (AIR CONDITIONER, HEATER)	
	5	1	**3E-5464**	1	THERMOSTAT (CAB AIR) (REFRIGERANT)	
	6	2	**3S-2093**	2	STRAP-CABLE	
	7	2	**3T-3197**	1	GROMMET	
	8	2	**3T-3198**	1	GROMMET	
	9	1	**5P-7803**	2	PLUG-BUTTON	
	10	1	**6P-3236**	1	SWITCH AS-ROTARY (FAN SPEED)	
		1	**6V-8362**	5	SCREW-MACHINE (8-32X0.31-IN)	
		1	**9B-7233**	5	LOCKWASHER	
	11	1	**6T-5345**	1	BUSHING-TERMINAL	
	12	2	**6T-6708**	2	WASHER (7X28.6X4.1-MM THK)	
	13	1	**7G-4824**	1	STRAP	
	14	1	**8C-3756**	1	FILM-IDENTIFICATION (AIR CONDITIONER)	
	15	2	**8C-4586**	2	CLAMP	
	16	1	**8D-1429**	1	LAMP (24-VOLT)	
	17	1	**8E-7791**	1	STRAP	
	18	2	**8P-5141**	2	PLATE-ORIFICE	
	19	1	**8X-5536**	1	COVER	
	20	1	**8X-5538**	1	COVER AS	
M		1	**8T-3490**	4	NUT-WELD (M10X1.5-THD)	
	21	1	**8X-5540**	1	COVER	
	22	1	**8Y-6388**	4	LOUVER AS-VENT	
	23	2	**9G-1950**	1	RESISTOR	
	24	2	**9X-2185**	4	SCREW (8-15X0.44-IN)	
	25	2	**9X-2488**	4	CLAMP-HOSE	
	26	2	**9X-9653**	1	COIL AS-EVAPORATOR	
	27	1	**110-6393**	1	PLATE-INSTRUCTION (AIR CONDITIONER)	
	28	1	**123-4618**	1	COVER	
	29	1	**123-4701**	1	SEAL	
	30	2	**124-1431**	1	BRACKET	
	31	2	**124-1432**	1	HOUSING AS	
		2	**7T-1099**	1	LINK	
		2	**8P-5141**	2	PLATE-ORIFICE	
	32	2	**124-3137**	1	BRACKET	
	33	2	**124-3138**	1	SEAL	
	34	1	**124-9006**	1	SHAFT	
	35	2	**124-9007**	1	SHAFT AS	
		2	**4L-5966**	2	SETSCREW (NO 10X0.19-IN)	
	36	1	**125-0438**	1	GASKET	
	37	2	**129-4935**	1	SEAL	
	38	2	**142-4940**	1	PLATE AS	
	39	1	**174-4492**	1	COVER	
	40	2	**174-4971**	1	SUPPORT AS	
M		2	**3E-4304**	6	INSERT-THREADED (M6X1-THD)	
	41	1	**174-6353**	1	PLATE	
	42	1	**176-5507**	1	PAD	
	43	2	**177-7858**	1	HARNESS AS-HEATER & AIR COND	
	44	1	**191-0027**	1	PAD	
	45	2	**204-4376**	1	CAP-PROTECTIVE	

308-5633 AIR CONDITIONER & HEATER GP *(contd.)* i03258804

NOTE	REF NO	GRAPHIC REF	PART NUMBER	QTY	PART NAME 1 2 3 4 5 6 (PRODUCT LEVEL)	SEE PAGE
	46	2	**238-0415**	1	VALVE AS-WATER	
	47	2	**238-0417**	1	CORE AS-HEATER	
	48	2	**248-6772**	4	SCREW-MACHINE (8-16X7.75-IN)	
	49	1	**255-6261**	2	PLATE	
I	50	2	**308-5632**	1	HOSE AS	
I	51	2	**313-6224**	1	HOSE AS	
	52	2	**316-1927**	1	MOTOR AS-BLOWER (24-VOLT, A/C, HEATER)	
		2	**9W-0852**	2	PIN-CONNECTOR (14-GA)	
		2	**102-8802**	1	KIT-RECEPTACLE (2-PIN) (INCLUDES RECEPTACLE AS & WEDGE)	
	53	1	**104-2091**	8	SCREW-FLAT HEAD (NO 6X0.5-IN)	
M	54	2	**129-3178**	4	LOCKNUT (M6X1-THD)	
	55	2	**130-5300**	1	CLIP	
M	56	2	**141-9784**	1	BOLT (M6X1X190-MM)	
	57	1	**3B-4501**	2	LOCKWASHER	
	58	1	**3H-2900**	1	GROMMET	
	59	1	**3S-9557**	8	SCREW-PAN HEAD (4-40X0.5-IN)	
	60	2	**4M-6582**	1	SEAL-O-RING	
M	61	2	**5C-2890**	7	NUT (M6X1-THD)	
	62	1,2	**5P-1075**	13	WASHER-HARD (10.2X22.5X3-MM THK)	
	63	2	**5P-9135**	1	GROMMET	
	64	2	**6V-1668**	2	WASHER (6.5X29.1X3-MM THK)	
M	65	2	**6V-7728**	1	BOLT (M6X1X45-MM)	
	66	1,2	**6V-8801**	13	NUT (3/8-16-THD)	
	67	1	**7T-9793**	2	VALVE-CHECK (EVAPORATOR DRAIN)	
	68	1	**7X-0591**	2	WASHER-HARD (17X29X3-MM THK)	
M	69	2	**8T-4171**	2	BOLT (M6X1X12-MM)	
	70	2	**8T-4205**	15	WASHER-HARD (7.2X14.5X2-MM THK)	
	71	1	**8T-6631**	2	SCREW-MACHINE (8-32X0.5-IN)	
	72	2	**9M-8406**	1	CLIP	
M	73	1	**9X-2040**	4	SCREW-TRUSS HEAD (M10X1.5X25-MM)	
M	74	1	**9X-2041**	5	SCREW-TRUSS HEAD (M10X1.5X20-MM)	
M	75	1	**9X-2045**	6	SCREW-TRUSS HEAD (M6X1X20-MM)	
	76	2	**9X-7381**	1	SEAL-O-RING	
	77	2	**9X-7382**	1	SEAL-O-RING	
E	78	2	**136-1953**		HOSE (17-CM EACH)	
J	79	2	**5P-0878**		SEAL (2-DM)	
D	80	2	**5P-5637**		SEAL (0.2-M)	
D	80A	2	**5P-5637**		SEAL (0.1-M)	
D	80B	2	**5P-5637**		SEAL (0.9-M)	
D	80C	2	**5P-5637**		SEAL (0.8-M)	
D	80D	2	**5P-5637**		SEAL (0.5-M EACH)	
D	80E	2	**5P-5637**		SEAL (0.2-M)	
D	80F	2	**5P-5637**		SEAL (0.4-M)	
E	81	2	**9X-2126**		SEAL (20.5-CM)	
E	81A	2	**9X-2126**		SEAL (28.5-CM)	
J	82	1	**5P-6129**		TUBE (9-DM EACH)	

D-ORDER BY THE METER
E-ORDER BY THE CENTIMETER
I-REFER TO HYDRAULIC INFORMATION SYSTEM
J-ORDER BY THE DECIMETER
M-METRIC PART

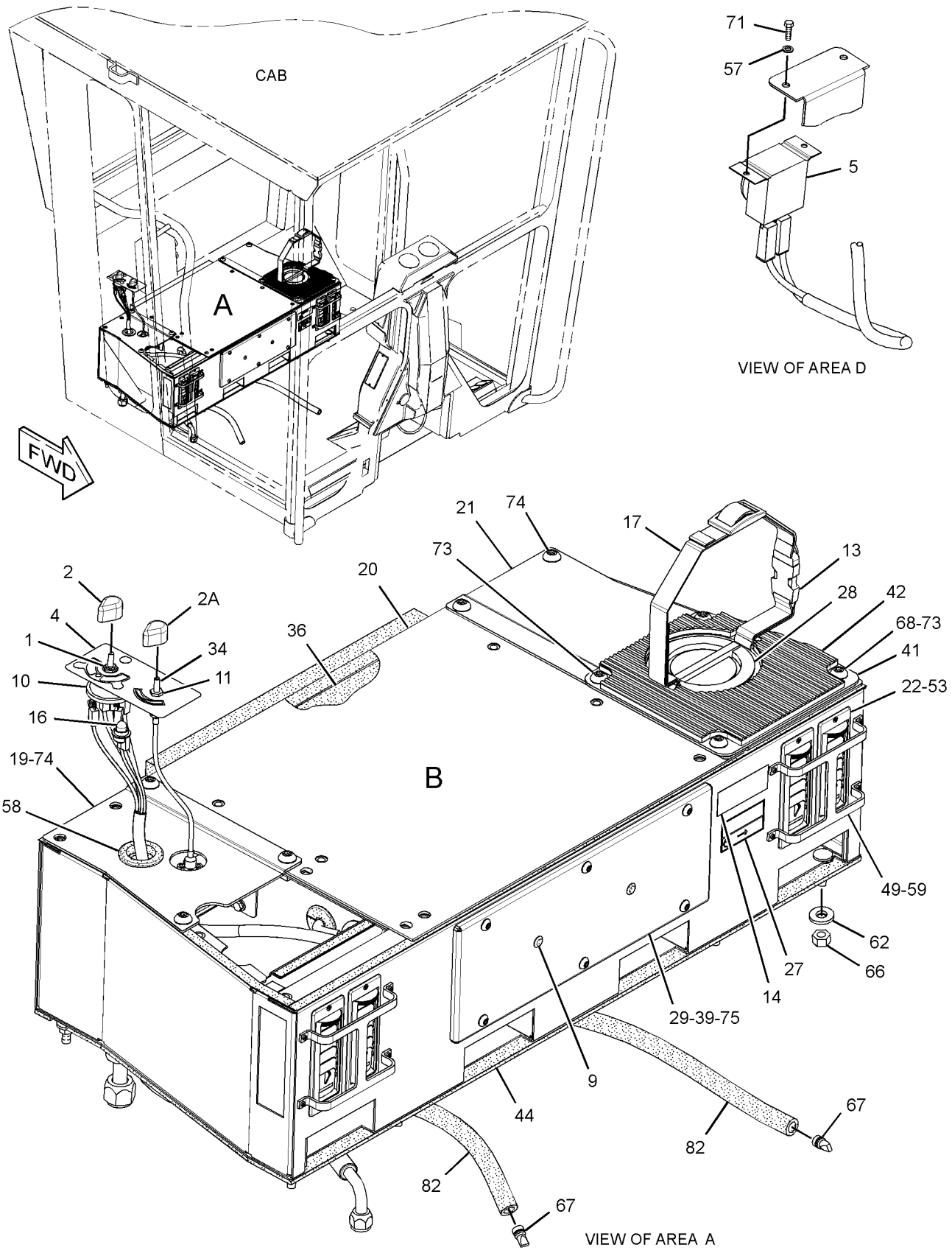

GRAPHIC #1

g01676295

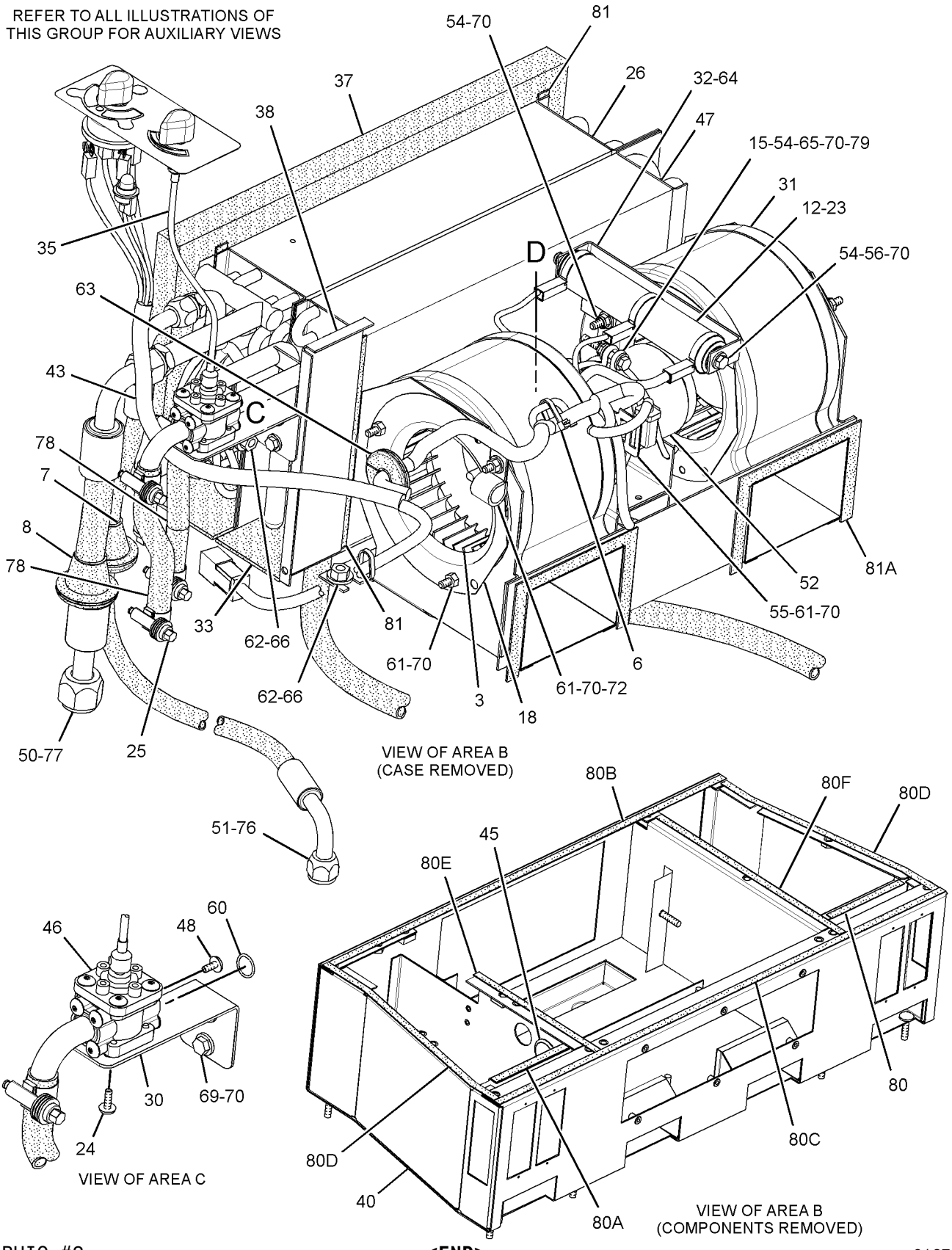

GRAPHIC #2

<END>

g01676313

OPERATOR STATION

311-2751 AIR CONDITIONER AR

S/N: JPA1-UP

AN ATTACHMENT

SMCS-7320 **i03258341**

NOTE	REF NO	GRAPHIC REF	PART NUMBER	QTY	PART NAME 1 2 3 4 5 6 (PRODUCT LEVEL)	SEE PAGE
Y	1	1	*7I-5015*	1	DUCT GP (AIR CONDITIONER, HEATER)	660
Y	2	1	**8X-2925**	1	FILTER GP-CAB AIR	666
Y	3	1	*177-7891*	1	DUCT & CONTROL GP (A/C, HEATER DISTRIBUTOR)	659
Y	4	1	*289-7545*	1	AIR CONDITIONER GP	633
Y	5	1	*295-4431*	1	CONDENSER & MTG GP-REFRIGERANT	643
Y	6	1	*311-0803*	1	WIRING GP-AIR CONDITIONER	196
Y	7	1	*311-2772*	1	LINES GP-AIR CONDITIONER	692
Y	8	1	*311-2773*	1	LINES GP-HEATER	694
Y	9	1	*311-2800*	1	COMPRESSOR GP-REFRIGERANT	642
	10	1	**335-6210**	1	FILM-INSTRUCTION (BELT ROUTING)	

Y-SEPARATE ILLUSTRATION

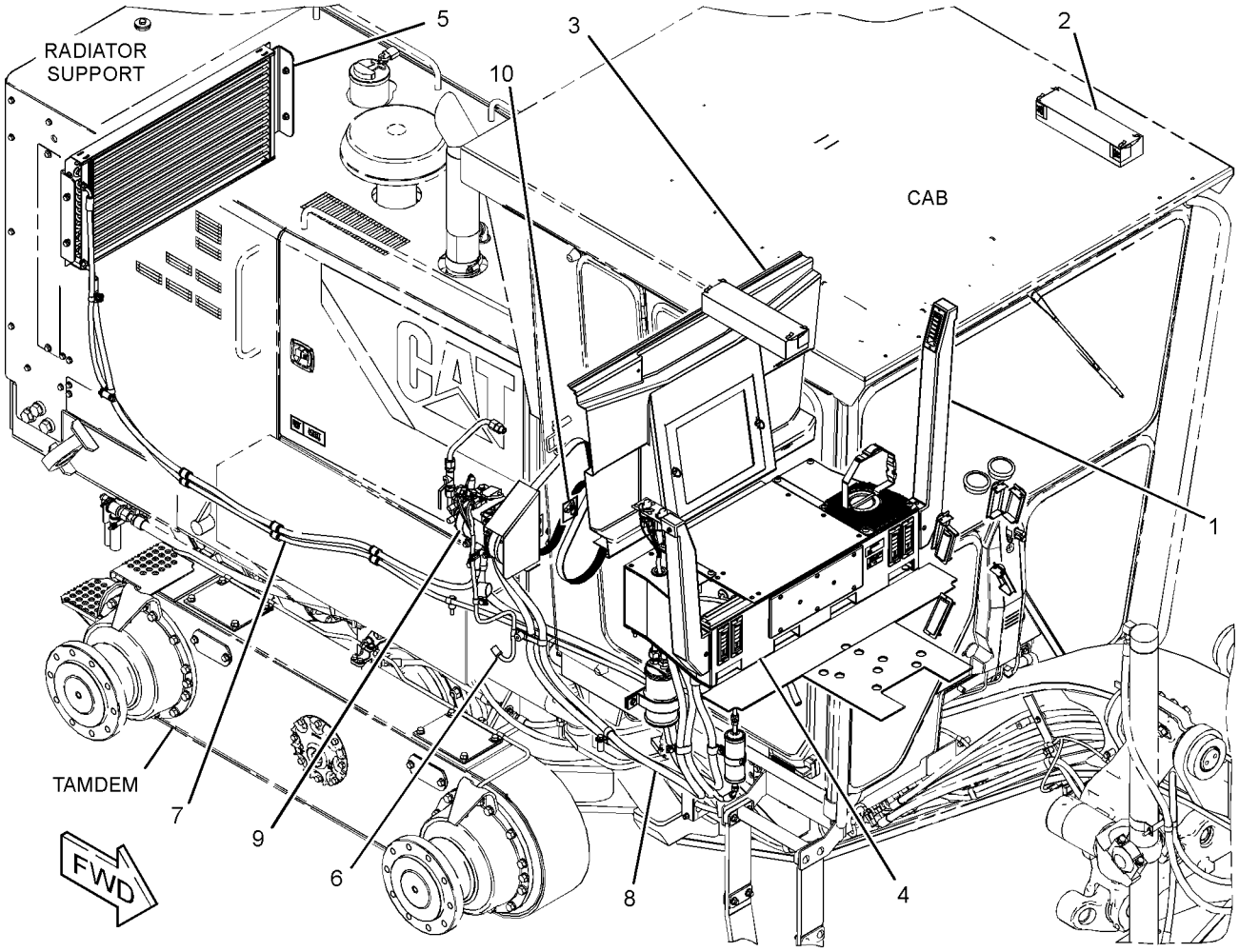

GRAPHIC #1 **<END>** g01669494

OPERATOR STATION

289-7545 AIR CONDITIONER GP

S/N: JPA1-UP

PART OF 311-2751 AIR CONDITIONER AR

AN ATTACHMENT

SMCS-7320 **i03258366**

NOTE	PART NUMBER	QTY	PART NAME 1 2 3 4 5 6 (PRODUCT LEVEL)	SEE PAGE
Y	**308-5633**	1	AIR CONDITIONER & HEATER GP	628
	5M-3062	1	BOLT (3/8-16X0.75-IN)	
	5D-1026	2	CLAMP-HOSE	
	8M-2773	2	CLIP	
	123-0872	1	PAD	
	191-5236	1	PAD	
	8T-4896	1	WASHER-HARD (10.2X18.5X2.5-MM THK)	

Y-SEPARATE ILLUSTRATION

<END>

OPERATOR STATION

202-7666 ARMREST GP–RH

S/N: JPA1-UP
PART OF 175-1504 SEAT GP
AN ATTACHMENT

SMCS-7307 **i02947634**

NOTE	REF NO	GRAPHIC REF	PART NUMBER	QTY	PART NAME 1 2 3 4 5 6 (PRODUCT LEVEL)	SEE PAGE
	1	1	**143-1288**	1	LOCKNUT-FLANGE (3/8-16-THD)	
	2	1	**166-9914**	1	BRACKET AS	
	3	1	**219-2000**	1	PAD AS	
		1	**1F-0750**	1	NUT-WELD (3/8-16-THD)	
	4	1	**294-5042**	2	SPACER (11.1X19.5X9.67-MM THK)	
	5	1	**2K-4973**	1	LOCKNUT (3/8-16-THD)	
	6	1	**2K-6061**	1	SCREW-MACHINE (3/8-16X1.5-IN)	
	7	1	**4L-6454**	1	BOLT (3/8-16X1-IN)	
	8	1	**5S-7383**	1	BOLT (3/8-16X1.75-IN)	
	9	1	**8T-4121**	1	WASHER-HARD (11X21X2.5-MM THK)	

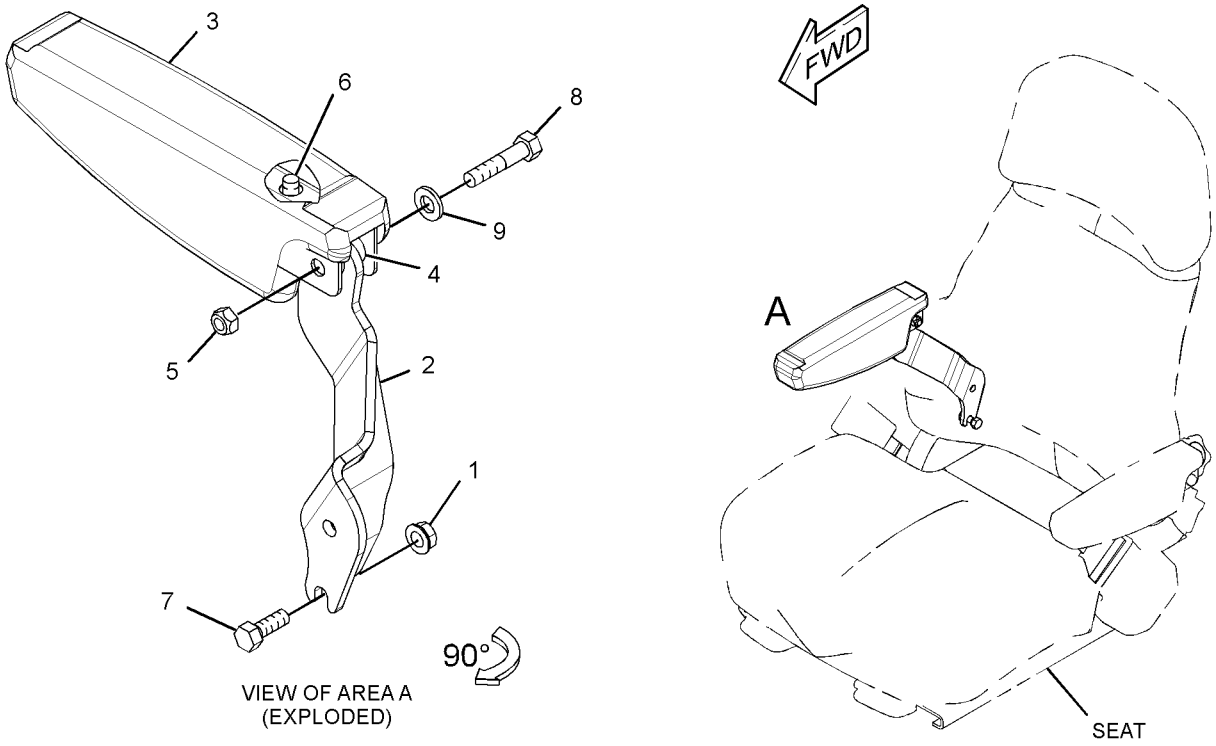

GRAPHIC #1 **<END>** g01487833

OPERATOR STATION

202-7668 ARMREST GP–LH

S/N: JPA1-UP
PART OF 175-1504 SEAT GP
AN ATTACHMENT

SMCS-7307 **i02947633**

NOTE	REF NO	GRAPHIC REF	PART NUMBER	QTY	PART NAME 1 2 3 4 5 6 (PRODUCT LEVEL)	SEE PAGE
	1	1	**143-1288**	1	LOCKNUT-FLANGE (3/8-16-THD)	
	2	1	**166-9913**	1	BRACKET AS	
	3	1	**219-2000**	1	PAD AS	
		1	**1F-0750**	1	NUT-WELD (3/8-16-THD)	
	4	1	**294-5042**	2	SPACER (11.1X19.5X9.67-MM THK)	
	5	1	**2K-4973**	1	LOCKNUT (3/8-16-THD)	
	6	1	**2K-6061**	1	SCREW-MACHINE (3/8-16X1.5-IN)	
	7	1	**4L-6454**	1	BOLT (3/8-16X1-IN)	
	8	1	**5S-7383**	1	BOLT (3/8-16X1.75-IN)	
	9	1	**8T-4121**	1	WASHER-HARD (11X21X2.5-MM THK)	

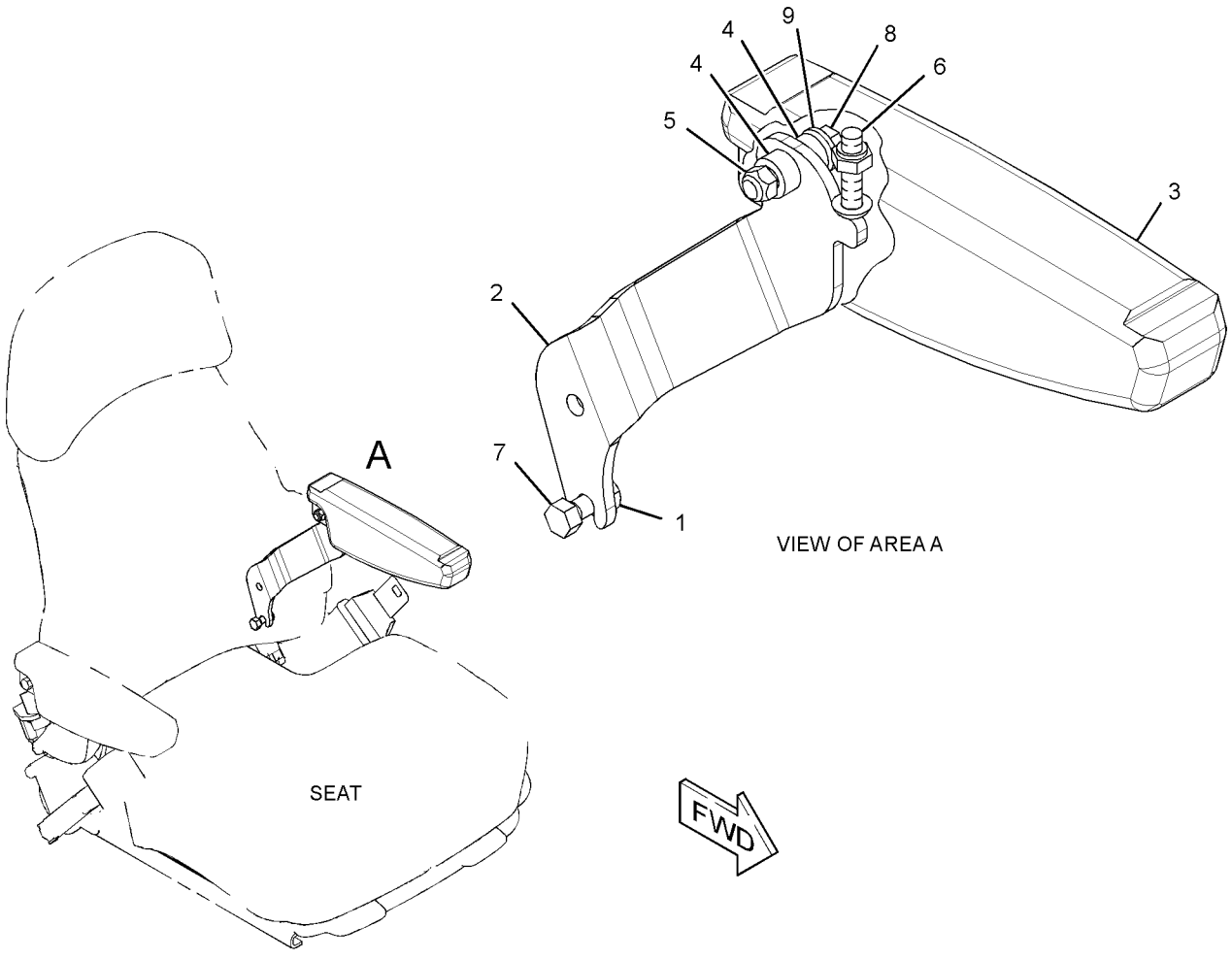

GRAPHIC #1 **<END>** g01487758

OPERATOR STATION

290-1126 CAB AR—NON-ROPS

S/N: JPA1-UP

AN ATTACHMENT

SMCS-7301 **i03435506**

NOTE	REF NO	GRAPHIC REF	PART NUMBER	QTY	PART NAME 1 2 3 4 5 6 (PRODUCT LEVEL)	SEE PAGE
Y	1	1	**8X-2795**	1	MIRROR GP-REAR VIEW (DUAL INSIDE)	697
Y	2	1	*8X-8940*	1	SEAT GP-STATIC (CLOTH)	733
Y	3	1	*125-4342*	1	WASHER GP-WINDOW (FRONT)	749
Y	4	1	*172-5378*	1	INSULATION GP-WEATHER (COLD WEATHER)	683
Y	5	1	*286-7853*	1	PANEL GP-INSTRUMENT	709
Y	6	1	*290-1127*	1	CAB GP (HIGH PROFILE)	638

Y-SEPARATE ILLUSTRATION

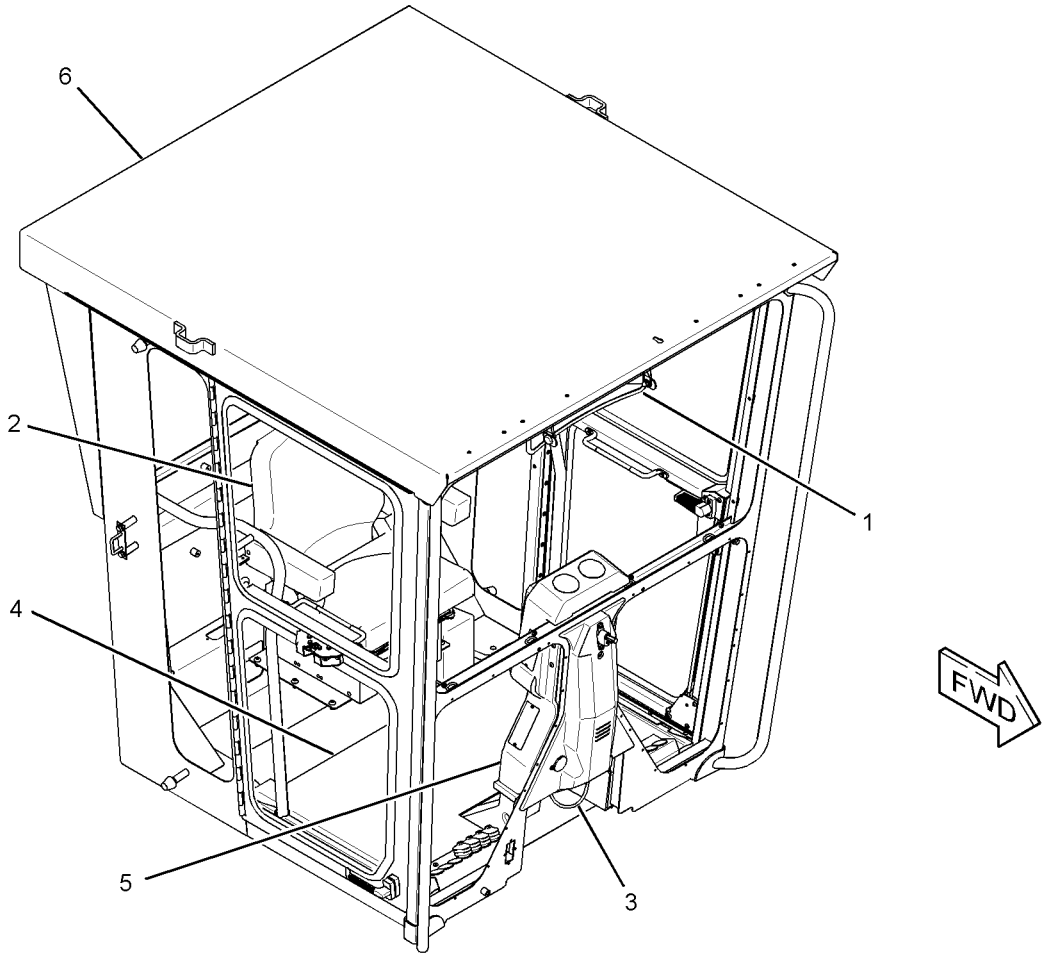

GRAPHIC #1 **<END>** g01672933

OPERATOR STATION

320-0341 CAB AR—NON ROPS/FOPS

S/N: JPA1-UP

AN ATTACHMENT

SMCS-7301 **i03251962**

NOTE	REF NO	GRAPHIC REF	PART NUMBER	QTY	PART NAME 1 2 3 4 5 6 (PRODUCT LEVEL)	SEE PAGE
Y	1	1	*8X-2385*	1	PANEL GP-CAB (HIGH PROFILE)	708
Y	2	1	**8X-2795**	1	MIRROR GP-REAR VIEW	697
Y	3	1	*125-4342*	1	WASHER GP-WINDOW	749
Y	4	1	*125-4344*	1	MOUNTING GP-CAB (NON-ROPS)	704
Y	5	1	*125-4345*	1	WIPER GP-WINDOW (FRONT)	762
Y	6	1	*172-5378*	1	INSULATION GP-WEATHER	683
Y	7	1	*285-3361*	1	WIRING GP-CAB	203
Y	8	1	*290-1127*	1	CAB GP (HIGH PROFILE)	638
Y	9	1	*294-8588*	1	LINER GP-CAB	690
Y	10	1	*316-5237*	1	PANEL GP-INSTRUMENT	711

Y-SEPARATE ILLUSTRATION

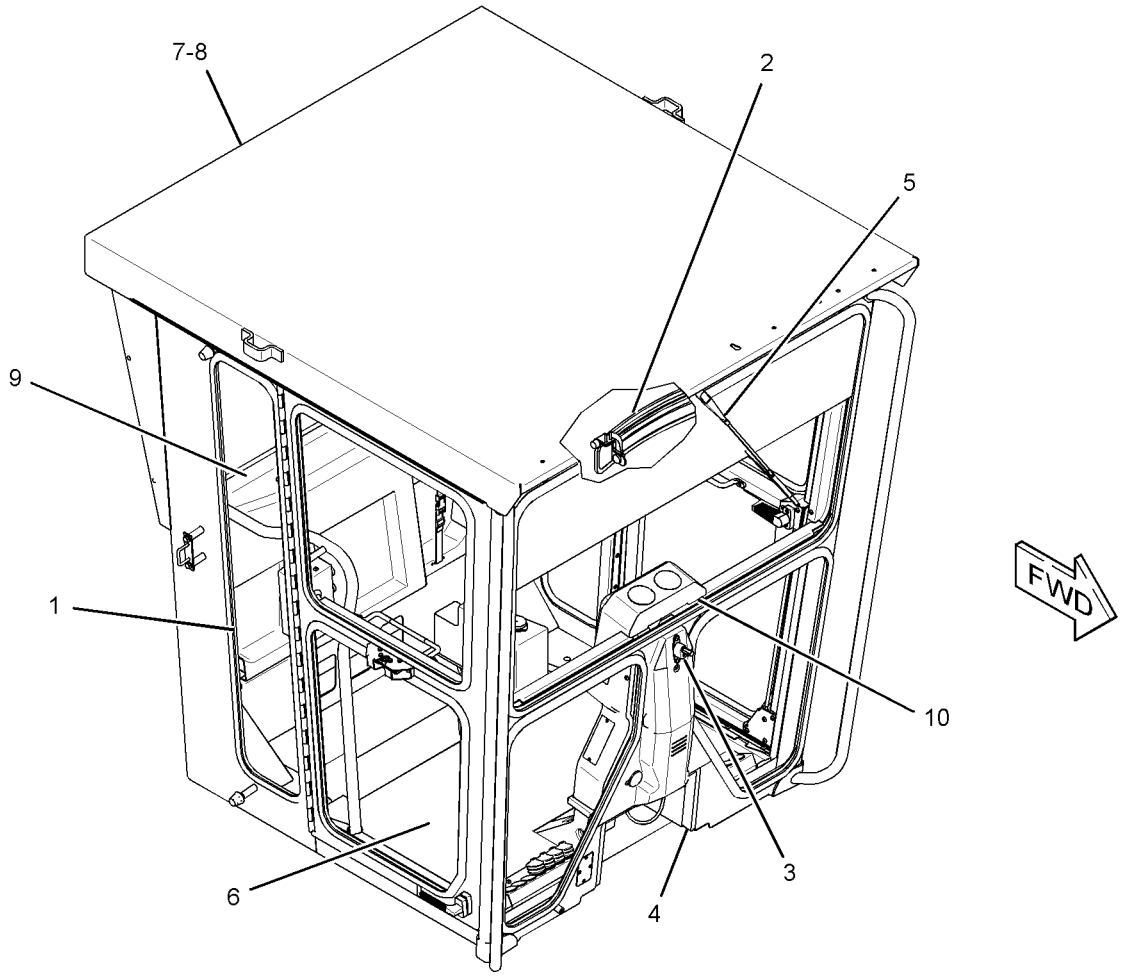

GRAPHIC #1 **<END>** g01759313

OPERATOR STATION

290-1127 CAB GP—HIGH PROFILE

S/N: JPA1-UP
PART OF 290-1126, 320-0341 CAB AR
AN ATTACHMENT

SMCS-7301 **i03251963**

NOTE	REF NO	GRAPHIC REF	PART NUMBER	QTY	PART NAME 1 2 3 4 5 6 (PRODUCT LEVEL)	SEE PAGE
Y	1	1	*8X-4413*	1	DOOR GP-CAB	657
	2	1	**211-4908**	1	CAB AS (NON-ROPS)	

Y-SEPARATE ILLUSTRATION

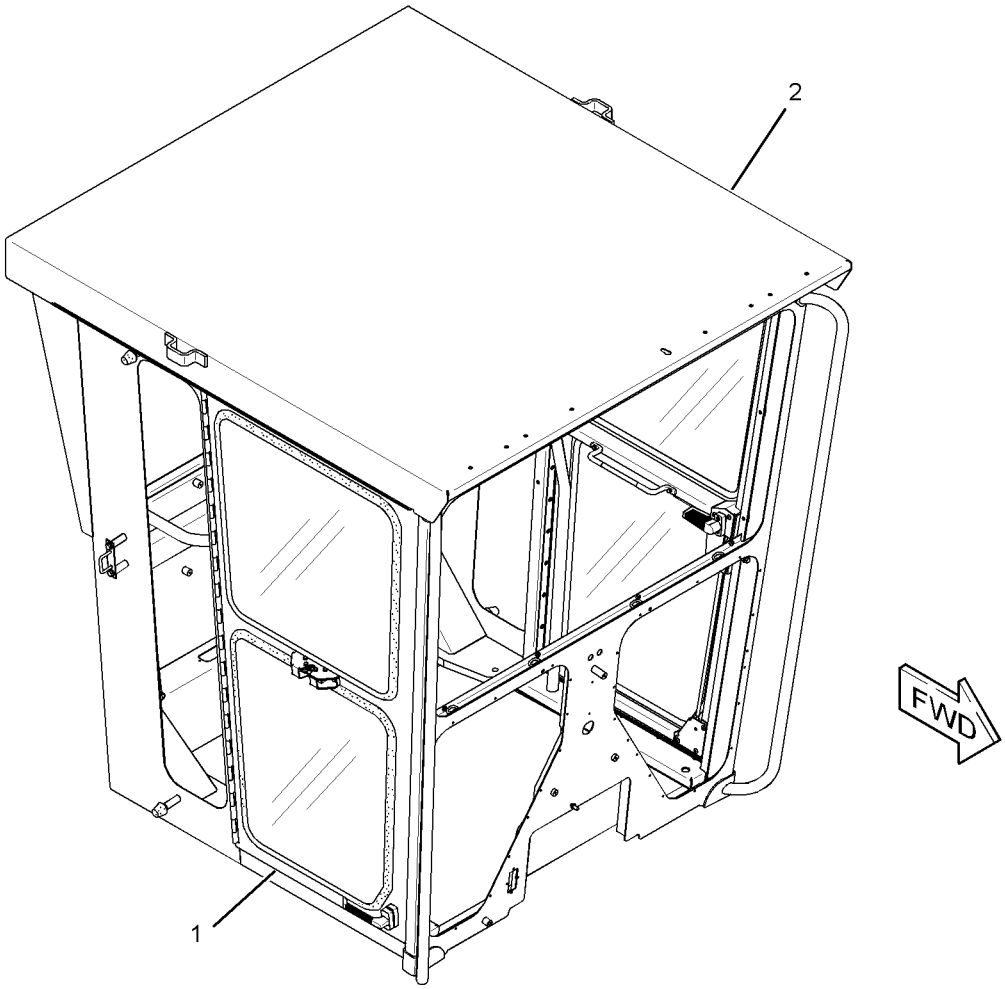

GRAPHIC #1 **<END>** g01676373

OPERATOR STATION

284-5398 CANOPY AR

S/N: JPA1-UP

AN ATTACHMENT

SMCS-7302 **i03261685**

NOTE	REF NO	GRAPHIC REF	PART NUMBER	QTY	PART NAME 1 2 3 4 5 6 (PRODUCT LEVEL)	SEE PAGE
	1	1	**4K-0367**	2	NUT-FULL (5/8-11-THD)	
Y	2	1	**8X-2795**	1	MIRROR GP-REAR VIEW	697
	3	1	**8X-6131**	1	SEAL	
	4	1	**9D-1589**	2	MOUNTING	
D	5	1	**5P-5768**		SEAL (4.3-M)	
	6	1	**102-9372**	1	GLASS (REAR)	
	7	1	**103-4953**	4	MOUNTING	
	8	1	**103-5515**	1	PAD-RH	
	9	1	**103-5516**	1	PAD-LH	
	10	1	**129-4645**	1	INSULATION	
	11	1	**129-4646**	1	INSULATION	
	12	1	**130-0111**	1	CANOPY AS	
	13	1	**134-6474**	1	PLATE	
	14	1	**164-2465**	2	PAD	
Y	15	1	*290-1148*	1	GUARD GP-PLATFORM	333
	16	1	**3V-9244**	2	WASHER (16.5X50X5-MM THK)	
	17	1	**7X-0354**	2	BOLT (5/8-11X4.5-IN)	
	18	1	**7X-0375**	4	BOLT (3/4-10X5-IN)	
	19	1	**8T-4122**	2	WASHER-HARD (17X32X3.5-MM THK)	
	20	1	**8X-0674**	4	WASHER (22X100X10-MM THK)	
M	21	1	**9X-2043**	5	SCREW-TRUSS HEAD (M6X1X14-MM)	

D-ORDER BY THE METER
M-METRIC PART
Y-SEPARATE ILLUSTRATION

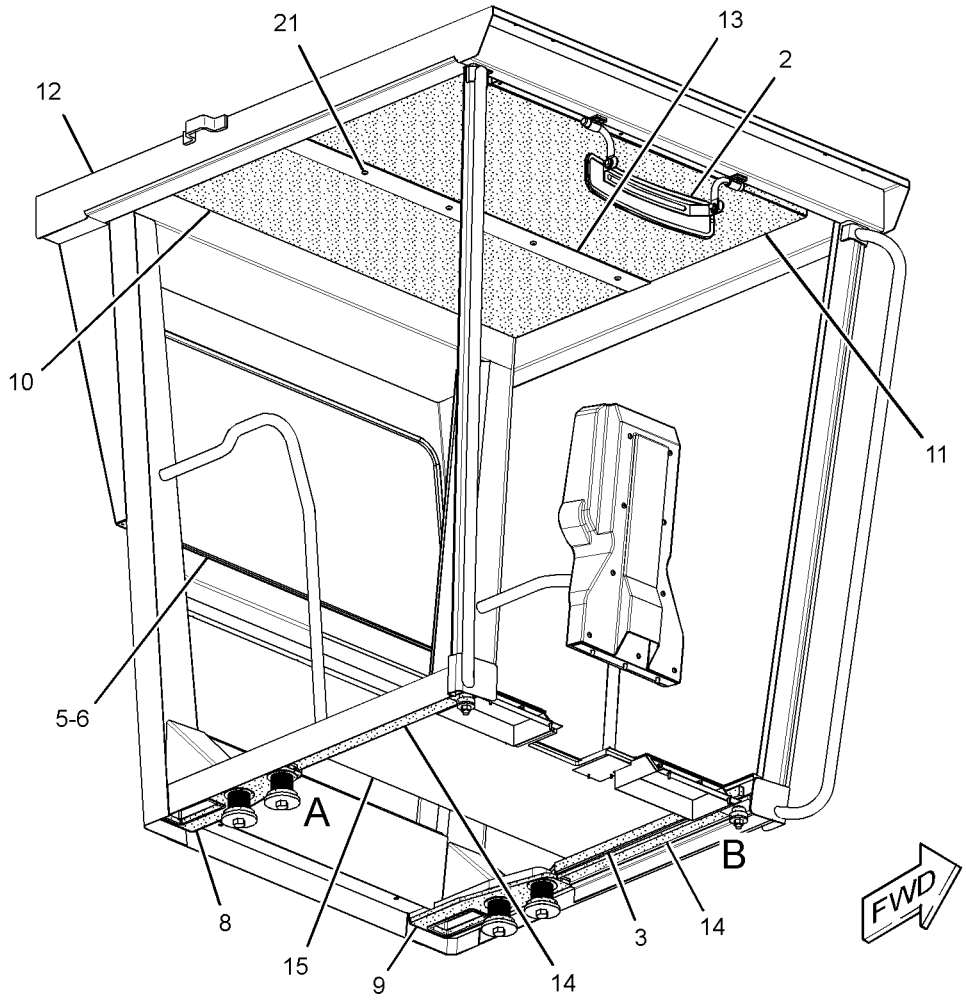

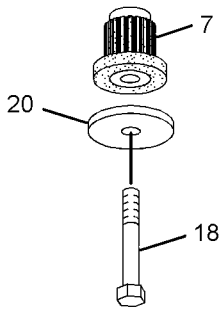

VIEW OF AREA A

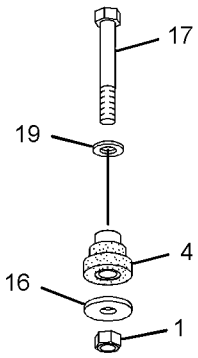

VIEW OF AREA B

GRAPHIC #1 **<END>** g01667084

OPERATOR STATION

163-0872 COMPRESSOR GP-REFRIGERANT

S/N: JPA1-UP

PART OF 311-2800 COMPRESSOR GP-REFRIGERANT

AN ATTACHMENT

SMCS-1802 **i02997522**

NOTE	REF NO	GRAPHIC REF	PART NUMBER	QTY	PART NAME 1 2 3 4 5 6 (PRODUCT LEVEL)	SEE PAGE
	1	1	**126-1767**	2	PIN-CONNECTOR (14-GA)	
	2	1	**102-8802**	1	KIT-RECEPTACLE (2-PIN)	
					(INCLUDES RECEPTACLE AS AND WEDGE)	
	3	1	**314-4018**	1	VALVE AS (REFRIGERANT COMPRESSOR)	
	4	1	**7T-4532**	1	PLUG AS	
	5	1	**9X-7385**	2	SEAL-O-RING	

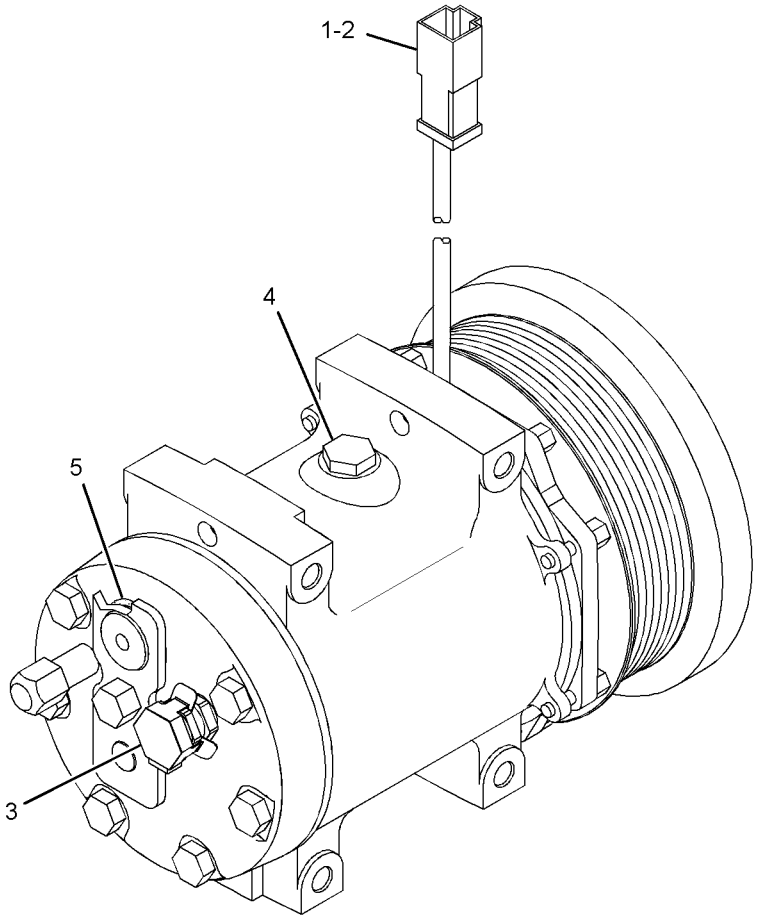

GRAPHIC #1 **<END>** g01524106

OPERATOR STATION

311-2800 COMPRESSOR GP-REFRIGERANT

S/N: JPA1-UP
PART OF 311-2751 AIR CONDITIONER AR
AN ATTACHMENT

SMCS-1802 **i03305847**

NOTE	REF NO	GRAPHIC REF	PART NUMBER	QTY	PART NAME 1 2 3 4 5 6 (PRODUCT LEVEL)	SEE PAGE
	1	1	**7W-3872**	2	SLEEVE	
Y	2	1	**163-0872**	1	COMPRESSOR GP-REFRIGERANT	641
	3	1	**266-6026**	1	SUPPORT	
	4	1	**316-4272**	1	GUARD	
	5	1	**291-4051**	1	BELT-SERPENTINE	
	6	1	**198-4776**	4	WASHER-HARD (8.8X20X8-MM THK)	
	7	1	**335-6210**	1	FILM-INSTRUCTION (BELT ROUTING)	
	8	1	**5P-4116**	1	WASHER-HARD (8.8X20.5X2-MM THK)	
M	9	1	**7X-2537**	4	BOLT (M8X1.25X35-MM)	
M	10	1	**7X-2538**	2	BOLT (M8X1.25X100-MM)	
M	11	1	**7X-2539**	2	BOLT (M8X1.25X110-MM)	
	12	1	**8T-4224**	4	WASHER-HARD (8.8X16X2-MM THK)	

M-METRIC PART
Y-SEPARATE ILLUSTRATION

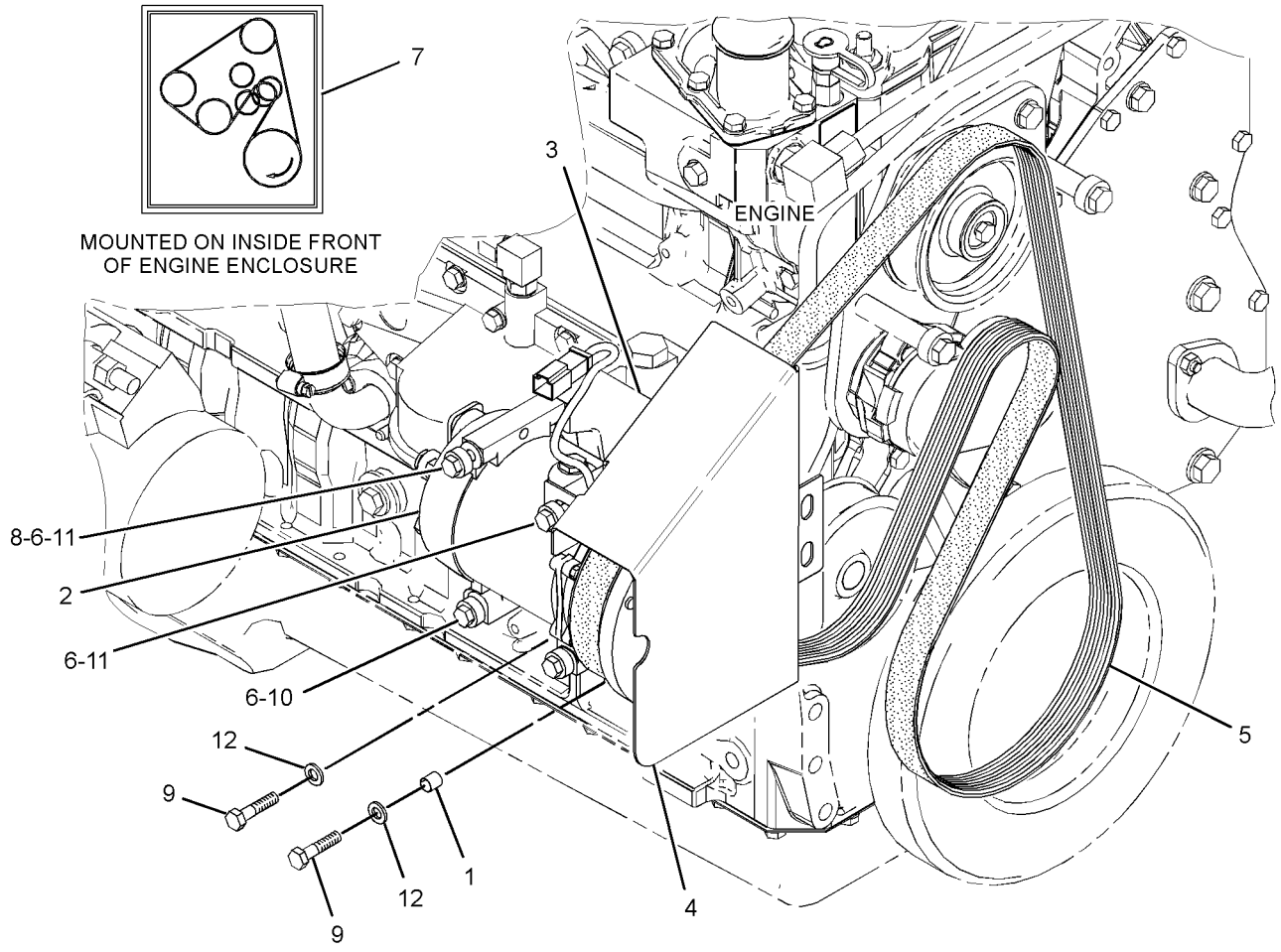

GRAPHIC #1 **<END>** g01701553

OPERATOR STATION

295-4431 CONDENSER & MTG GP-REFRIGERANT

S/N: JPA1-UP
PART OF 311-2751 AIR CONDITIONER AR
AN ATTACHMENT

SMCS-1805 **i03258484**

NOTE	REF NO	GRAPHIC REF	PART NUMBER	QTY	PART NAME 1 2 3 4 5 6 (PRODUCT LEVEL)	SEE PAGE
	1	1	**251-0982**	1	CORE AS-CONDENSER (REFRIGERANT)	
	2	1	**293-4500**	1	BRACKET	
	3	1	**303-6034**	1	BRACKET	
	4	1	**8T-4121**	16	WASHER-HARD (11X21X2.5-MM THK)	
M	5	1	**8T-4133**	8	NUT (M10X1.5-THD)	
M	6	1	**8T-4136**	4	BOLT (M10X1.5X25-MM)	
M	7	1	**8T-4195**	4	BOLT (M10X1.5X30-MM)	

M-METRIC PART

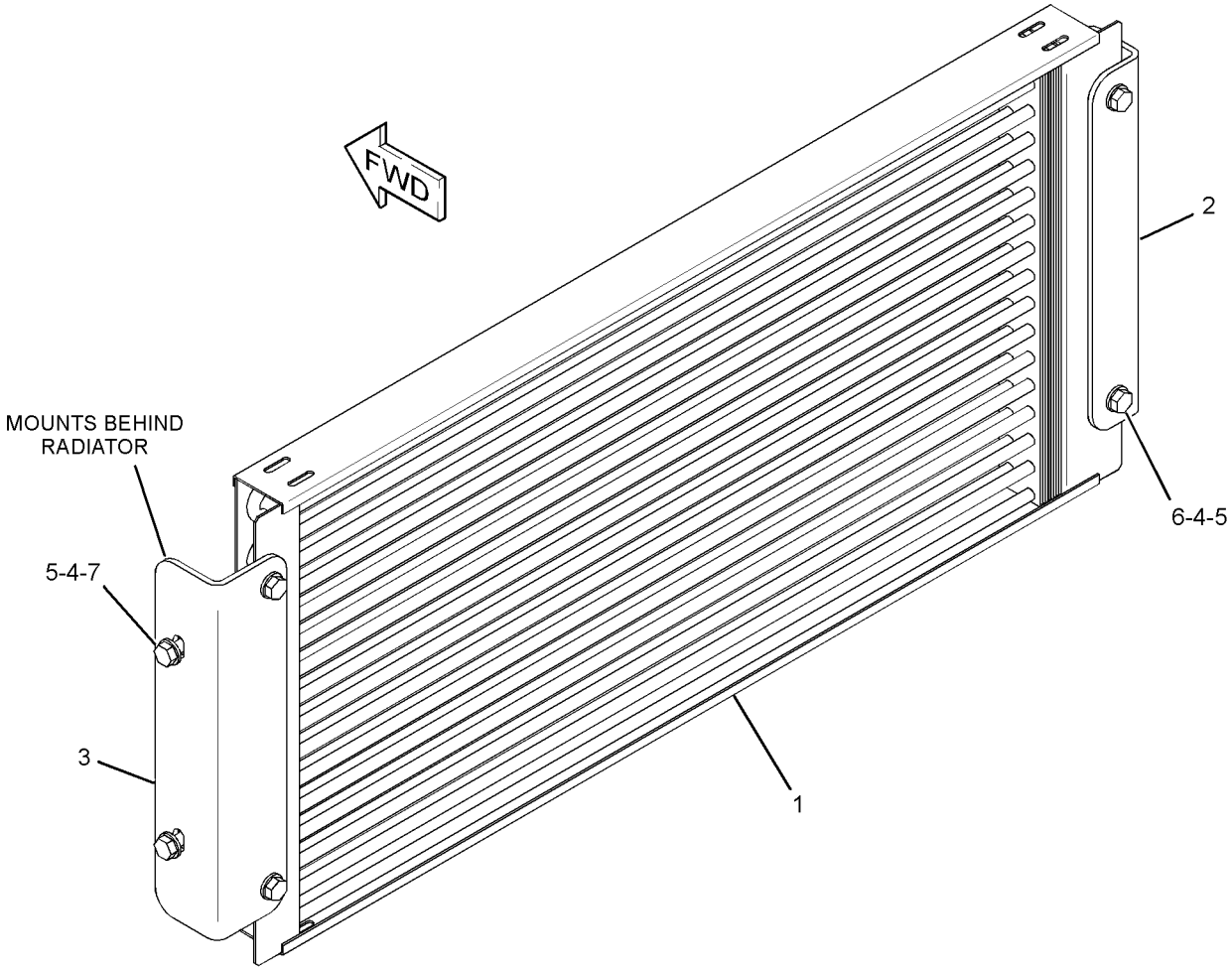

GRAPHIC #1 **<END>** g01673584

OPERATOR STATION

282-2475 CONSOLE GP-OPERATOR

S/N: JPA1-UP

PART OF 274-7940 GENERAL AR

SMCS-5258 **i03247296**

NOTE	REF NO	GRAPHIC REF	PART NUMBER	QTY	PART NAME 1 2 3 4 5 6 (PRODUCT LEVEL)	SEE PAGE
	1	1	**2G-8572**	8	WASHER-SPECIAL (10X27.81X2.54-MM THK)	
	2	1	**2G-8573**	8	CAP	
	3	1	**3Y-2806**	1	SPRING	
	4	1	**6G-2914**	1	LATCH	
	5	1	**6G-8814**	2	BRACKET	
	6	1	**6L-1962**	1	NUT-JAM (3/8-24-THD)	
	7	1	**6V-8183**	1	NUT-FULL (3/8-24-THD)	
	8	1	**7I-4890**	1	PLATE AS	
	9	1	**8C-3442**	1	SPRING-COIL	
	10	1	**8D-7960**	2	PLATE	
	11	1	**8L-7905**	2	RIVET-POP	
M	12	1	**8T-9006**	2	BOLT-SOCKET HEAD (M3X0.5X20-MM)	
	13	1	**8X-1904**	1	SPACER (20X35X26-MM THK)	
	14	1	**8X-1908**	1	PANEL	
	15	1	**8X-1913**	6	SPACER (10.5X32X19.5-MM THK)	
	16	1	**8X-1914**	1	SHAFT	
	17	1	**8X-1921**	1	HOOD	
	18	1	**8X-2160**	1	LEVER (STEERING WHEEL TILT CONTROL)	
	19	1	**8X-2161**	1	LEVER (STEERING COLUMN TILT)	
	20	1	**8X-2893**	10	NUT (M4X0.7-THD)	
	21	1	**8X-3951**	1	PANEL	
	22	1	**8X-3965**	1	RATCHET	
	23	1	**8X-5123**	1	RETAINER	
	24	1	**031-2666**	1	ROD	
	25	1	**110-6241**	1	BRACKET	
	26	1	**123-1201**	1	PLATE	
	27	1	**177-7448**	1	CHANNEL AS	
	28	1	**206-4097**	8	FASTENER	
	29	1	**206-9651**	1	PLATE	
	30	1	**236-0737**	1	CYLINDER	
	31	1	**030-8535**	1	BOLT-LOCKING (3/8-16X0.875-IN)	
	32	1	**034-1994**	1	PIN	
	33	1	**096-6166**	6	WASHER-HARD (4.5X9X1-MM THK)	
M	34	1	**174-8131**	16	SCREW-TRUSS HEAD (M4X0.7X12-MM)	
	35	1	**183-1425**	1	BASE	
	36	1	**204-6488**	1	CHANNEL AS	
	37	1	**2A-7184**	2	PLATE	
	38	1	**2K-5830**	2	BEARING AS-NEEDLE	
	39	1	**2K-7979**	13	BEARING-SLEEVE	
	40	1	**3E-9865**	1	LOCKNUT (1/4-20-THD)	
	41	1	**3F-7514**	4	PIN	
	42	1	**3K-6060**	6	LOCKNUT (3/8-16-THD)	
	43	1	**4B-4314**	1	RIVET	
M	44	1	**5C-8312**	6	NUT (M4X0.7-THD)	
	45	1	**5M-8500**	1	KNOB	
	46	1	**5P-1075**	8	WASHER-HARD (10.2X22.5X3-MM THK)	
	47	1	**5P-8167**	2	BOLT (3/8-16X0.625-IN)	
	48	1	**5S-7383**	6	BOLT (3/8-16X1.75-IN)	
	49	1	**6J-0488**	4	SCREW-BUTTON HEAD (3/8-16X0.875-IN)	
	50	1	**8D-5641**	14	BEARING	
	51	1	**8T-1174**	4	SEAL-LIP TYPE	
	52	1	**8T-2561**	11	WASHER-HARD (10.5X28.5X5-MM THK)	
M	53	1	**8T-4133**	1	NUT (M10X1.5-THD)	
M	54	1	**8T-4196**	4	BOLT (M10X1.5X35-MM)	
	55	1	**8X-1907**	1	SHAFT	
	56	1	**8X-1911**	1	PANEL	

282-2475 **CONSOLE GP-OPERATOR** *(contd.)* **i03247296**

NOTE	REF NO	GRAPHIC REF	PART NUMBER	QTY	PART NAME 1 2 3 4 5 6 (PRODUCT LEVEL)	SEE PAGE
	57	1	**8X-3789**	1	PANEL	
	58	1	**9M-5590**	1	BALL	
M	59	1	**9X-2042**	12	SCREW-TRUSS HEAD (M6X1X12-MM)	
D	60	1	**5P-5639**		SEAL (0.4-M)	
D	61	1	**5P-5637**		SEAL (1.2-M)	

D-ORDER BY THE METER
M-METRIC PART

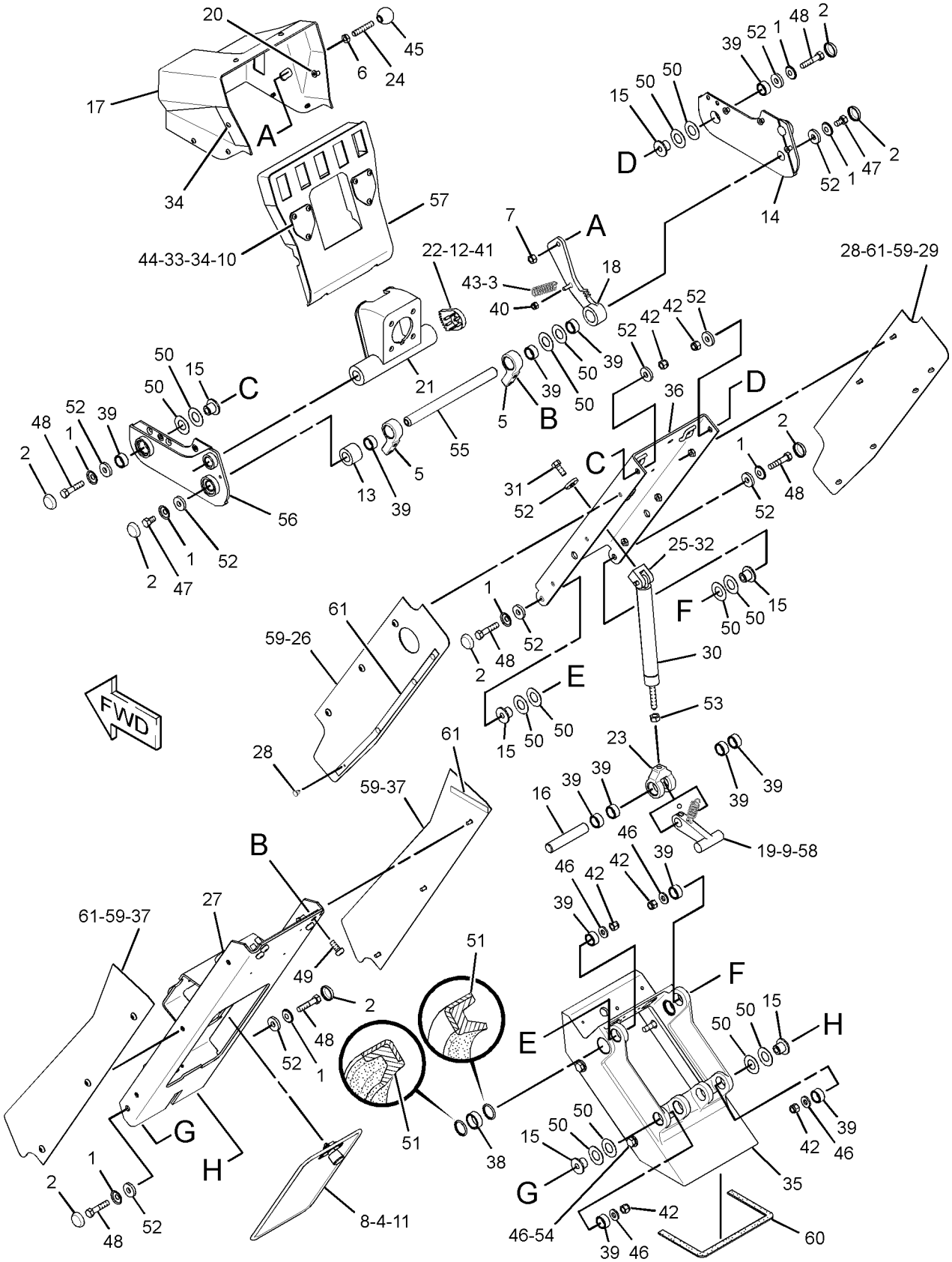

GRAPHIC #1 **<END>** g01694257

OPERATOR STATION

282-2473 CONTROL GP-CLUTCH

S/N: JPA1-UP

PART OF 274-7940 GENERAL AR

SMCS-5157 **i03247392**

NOTE	REF NO	GRAPHIC REF	PART NUMBER	QTY	PART NAME 1 2 3 4 5 6 (PRODUCT LEVEL)	SEE PAGE
	1	1	**1F-4622**	2	BEARING AS-NEEDLE	
	2	1	**5P-9209**	2	BEARING AS-NEEDLE	
	3	1	**7V-0446**	2	CLIP	
	4	1	**9J-8783**	1	SHIM (0.508-MM THK)	
	5	1	**116-5710**	1	GROMMET	
	6	1	**130-5300**	1	CLIP	
	7	1	**149-2065**	1	SPRING	
	8	1	**161-7062**	1	HOUSING	
	9	1	**161-7063**	1	SHAFT	
	10	1	**162-8218**	1	GASKET	
	11	1	**162-8219**	1	COVER	
	12	1	**169-0921**	1	ROD END (INTERNAL THREAD)	
	13	1	**169-0922**	1	ROD	
	14	1	**172-4211**	1	SPACER (10.5X22X50.8-MM THK)	
	15	1	**180-4027**	1	CAM	
	16	1	**180-7147**	1	LEVER	
	17	1	**190-3043**	1	BRACKET AS	
	18	1	**206-3599**	1	LEVER	
	19	1	**207-4922**	1	PEDAL-CLUTCH	
Y	20	1	**214-4863**	1	SENSOR GP-POSITION (ROTARY) (CLUTCH CONTROL)	167
	21	1	**129-3173**	1	BOLT-12 POINT HEAD (3/8-16X1.25-IN)	
M	22	1	**142-0485**	1	NUT (M10X1.15-THD)	
	23	1	**1B-0676**	1	PIN	
	24	1	**1B-8704**	1	KEY-WOODRUFF	
	25	1	**272-3089**	1	BOLT (M10X1.5X90-MM)	
	26	1	**3H-8538**	1	PIN	
	27	1	**3S-2713**	1	NUT-FULL (3/8-24-THD)	
	28	1	**4B-6060**	1	SETSCREW-SOCKET (1/4-20X0.375-IN)	
	29	1	**4J-8922**	1	ROD END	
	30	1	**5P-1075**	2	WASHER-HARD (10.2X22.5X3-MM THK)	
	31	1	**6V-0894**	1	SEAL-O-RING	
M	32	1	**6V-2313**	2	BOLT (M5X0.8X30-MM)	
	33	1	**8T-0328**	2	WASHER-HARD (5.5X10X1-MM THK)	
	34	1	**8T-4121**	5	WASHER-HARD (11X21X2.5-MM THK)	
M	35	1	**8T-4133**	1	NUT (M10X1.5-THD)	
M	36	1	**8T-4136**	3	BOLT (M10X1.5X25-MM)	
M	37	1	**8T-4182**	1	BOLT (M10X1.5X45-MM)	
M	38	1	**8T-4195**	2	BOLT (M10X1.5X30-MM)	
M	39	1	**8T-4196**	2	BOLT (M10X1.5X35-MM)	
	40	1	**8T-4226**	1	WASHER-PLATED (10.5X45X3-MM THK)	
	41	1	**8T-4896**	1	WASHER-HARD (10.2X18.5X2.5-MM THK)	

M-METRIC PART
Y-SEPARATE ILLUSTRATION

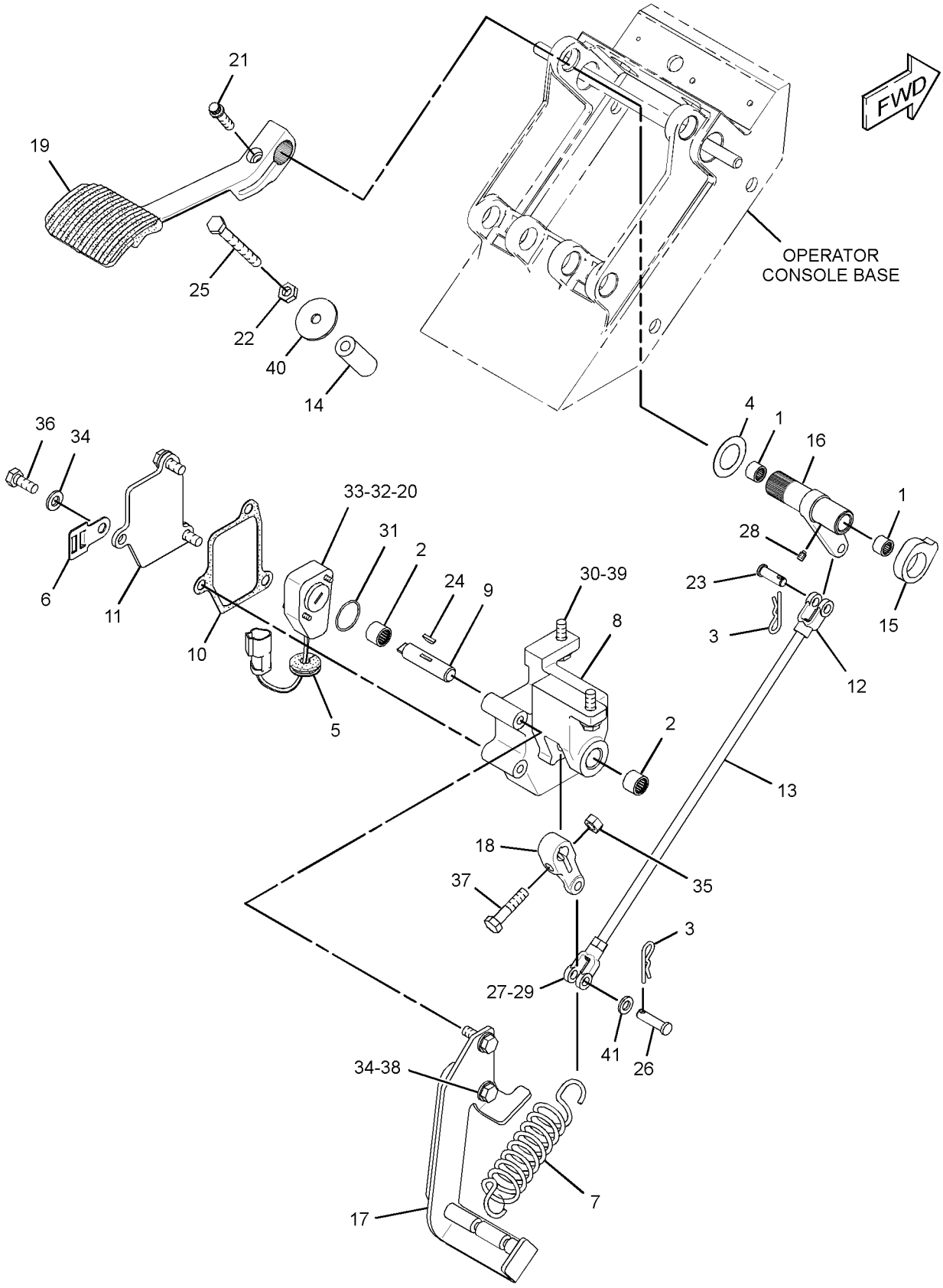

GRAPHIC #1 **<END>** g01706436

OPERATOR STATION

7I-4718 CONTROL GP-STEERING

S/N: JPA1-UP

PART OF 274-7940 GENERAL AR

SMCS-4309, 4310, 4338, 4343 **i02237701**

NOTE	REF NO	GRAPHIC REF	PART NUMBER	QTY	PART NAME 1 2 3 4 5 6 (PRODUCT LEVEL)	SEE PAGE
CJ	1	1	**222-3769**	1	PUMP GP-METERING (HMU)	
	2	1	**092-3200**	1	STEERING WHEEL	
	3	1	**144-6695**	1	NUT (13/16-20-THD)	
M	4	1	**118-9573**	4	BOLT-12 POINT HEAD (M10X1.15-THD)	
					AVAILABLE REPAIR KIT(S):	
J			**257-8471**	1	KIT-SEAL (HMU STEERING PUMP)	
					(INCLUDES SEALS & INSTALLATION TOOL)	

C-CHANGE FROM PREVIOUS TYPE
J-KIT MARKED J SERVICES PART MARKED J
M-METRIC PART

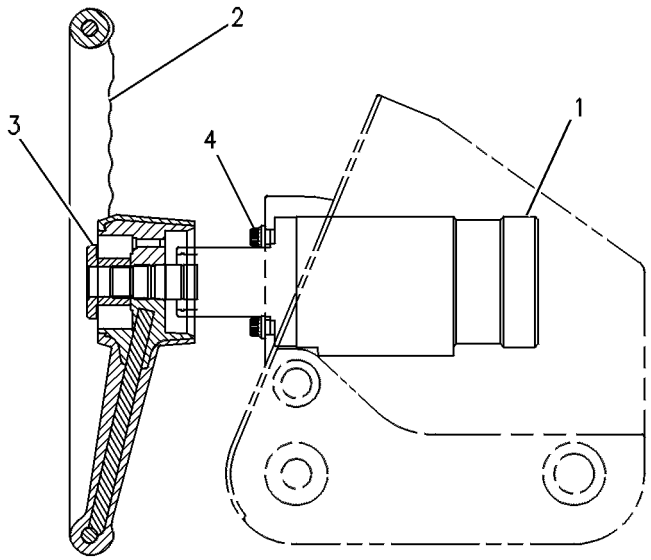

GRAPHIC #1 **<END>** g00108618

OPERATOR STATION

167-9002 CONTROL GP-TRANSMISSION

S/N: JPA1-UP

PART OF 274-7940 GENERAL AR

SMCS-3065 **i03438962**

NOTE	REF NO	GRAPHIC REF	PART NUMBER	QTY	PART NAME 1 2 3 4 5 6 (PRODUCT LEVEL)	SEE PAGE
	1	1	**7M-0706**	1	KNOB (TRANSMISSION DIRECTION, SPEED)	
	2	1	**8X-4879**	2	BRACKET AS	
					(EACH INCLUDES)	
M		1	**6V-9632**	1	NUT-WELD (M6X1-THD)	
	3	1	**8X-8096**	1	FILM-COVER (BLACK BACKGROUND)	
	4	1	**143-9290**	1	PLATE AS	
	5	1	**169-2621**	1	GATE AS	
	6	1	**169-3380**	1	PLATE AS	
C	7	1	**253-4019**	1	CONTROL GP-TRANSMISSION	
	8	1	**171-2122**	1	COVER	
	9	1	**172-7105**	1	FILM-PANEL (TRANSMISSION, PARKING BRAKE)	
	10	1	**172-7106**	1	FILM-PANEL (SPEED CONTROL)	
	11	1	**185-2274**	1	FILM-INFORMATION (ENGINE, HIGH IDLE, HOLD)	
	12	1	**185-2287**	1	FILM-INFORMATION (ENGINE, LOW IDLE, HOLD)	
	13	1	**187-0491**	1	COVER	
M	14	1	**9X-2041**	10	SCREW-TRUSS HEAD (M10X1.5X20-MM)	
M	15	1	**9X-2042**	2	SCREW-TRUSS HEAD (M6X1X12-MM)	
M	16	1	**9X-2043**	10	SCREW-TRUSS HEAD (M6X1X14-MM)	
M	17	1	**9X-2045**	4	SCREW-TRUSS HEAD (M6X1X20-MM)	

C-CHANGE FROM PREVIOUS TYPE
M-METRIC PART

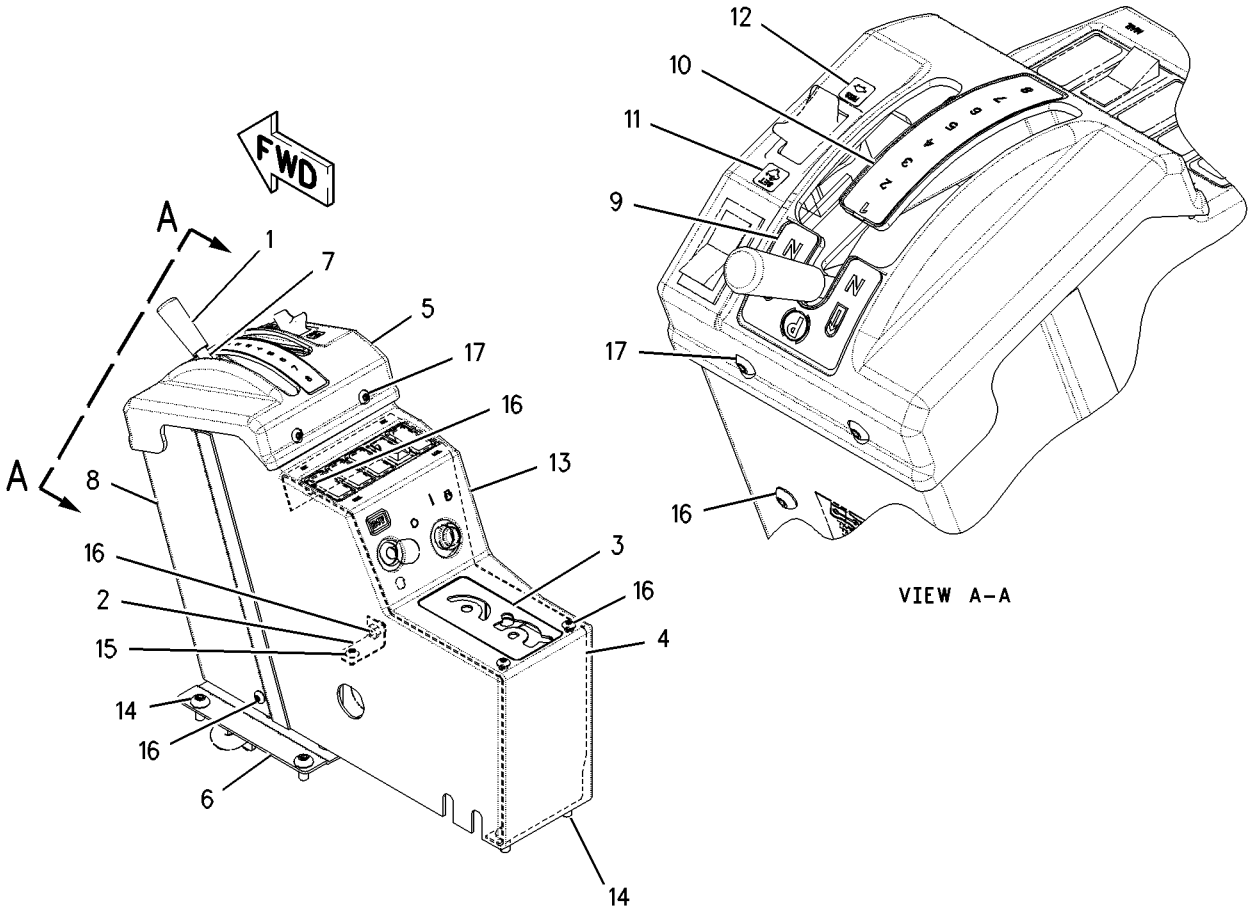

GRAPHIC #1 **<END>** g00882073

OPERATOR STATION

8X-4317 DOOR GP-CAB—HIGH PROFILE—RH

S/N: JPA1-UP

PART OF 8X-4413 DOOR GP-CAB

AN ATTACHMENT

SMCS-7308 **i02158613**

NOTE	REF NO	GRAPHIC REF	PART NUMBER	QTY	PART NAME 1 2 3 4 5 6 (PRODUCT LEVEL)	SEE PAGE
	1	1	**199-2677**	1	LINK (RELEASE)	
	2	1	**1H-3338**	1	LOCKWASHER	
	3	1	**5T-7486**	1	RETAINER-SPRING	
	4	2	**6D-6581**	16	RIVET-POP	
	5	1	**6V-2773**	2	PLUG	
	6	1	**6V-7636**	4	PIN AS-SPRING	
	7	2	**8X-3806**	1	HINGE	
	8	1	**8X-4243**	1	COVER (RH)	
	9	1	**8X-4262**	1	COVER (RH)	
	10	1	**8X-3938**	1	GLASS (UPPER)	
	11	1	**8X-4448**	1	GLASS (LOWER)	
	12	1	**8Y-4398**	1	LINK-CONNECTING	
	13	1	**8Y-4400**	1	LATCH AS-DOOR	
	14	1	**8Y-4401**	1	HANDLE AS (INSIDE)	
	15	2	**8Y-4619**	1	HANDLE AS (OUTSIDE)	
	16	1	**8Y-4620**	1	LINK-CONNECTING	
J	17	2	**8Y-4801**	1	LOCK AS-CYLINDER	
		2	**226-0295**	1	LOCK AS	
		2	**226-0342**	1	CAM	
M	18	1,2	**9X-2546**	4	BOLT (M6X1X20-MM)	
	19	2	**107-9641**	1	PLATE AS	
	20	2	**108-5950**	1	LATCH AS-RH	
	21	1	**108-5952**	1	LINK (RH)	
	22	1	**114-9190**	1	SEAL	
	23	1	**128-0037**	1	KNOB-BALL	
	24	1	**199-2712**	1	HANDLE	
	25	1	**199-2739**	1	DOOR AS (RH) (HIGH PROFILE)	
M		1	**6V-9632**	8	NUT-WELD (M6X1-THD)	
M		1	**8T-3490**	2	NUT-WELD (M10X1.5-THD)	
	26	2	**8T-4121**	2	WASHER-HARD (11X21X2.5-MM THK)	
M	27	2	**8T-4137**	2	BOLT (M10X1.5X20-MM)	
M	28	1	**8T-4181**	6	BOLT (M6X1X20-MM)	
M	29	1	**8X-4245**	1	BOSS (M6X1X18-MM)	
M	30	1	**9X-2042**	7	SCREW-TRUSS HEAD (M6X1X12-MM)	
	31	1	**9X-8256**	2	WASHER (6.6X12X2-MM THK)	
BD	32	1	**5P-5678**		SEAL	
M	33	2	**9X-2045**	4	SCREW-TRUSS HEAD (M6X1X20-MM)	

B-USE AS REQUIRED
D-ORDER BY THE METER
J-REQUIRES 5P8500 KEY
M-METRIC PART

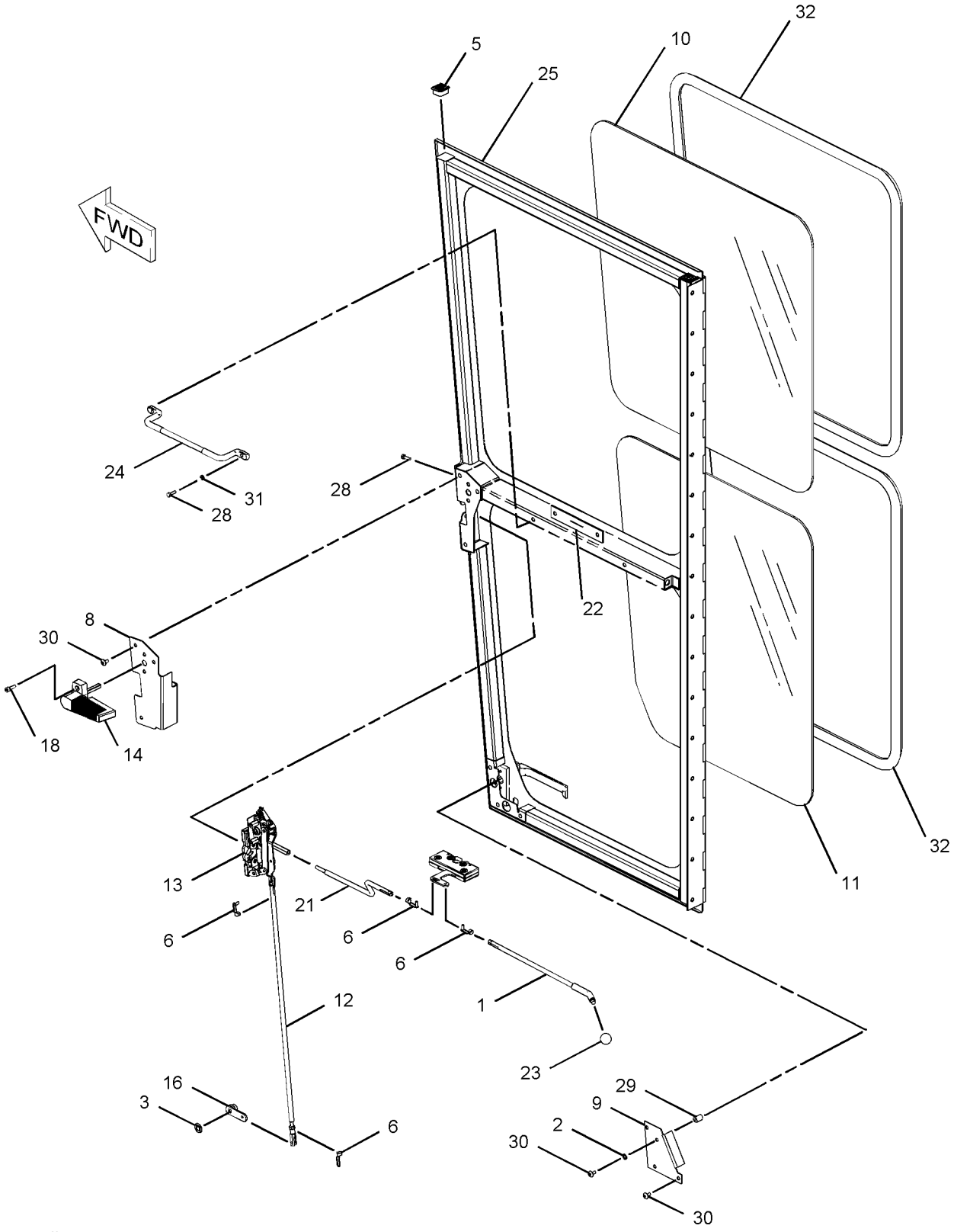

GRAPHIC #1 g01071777

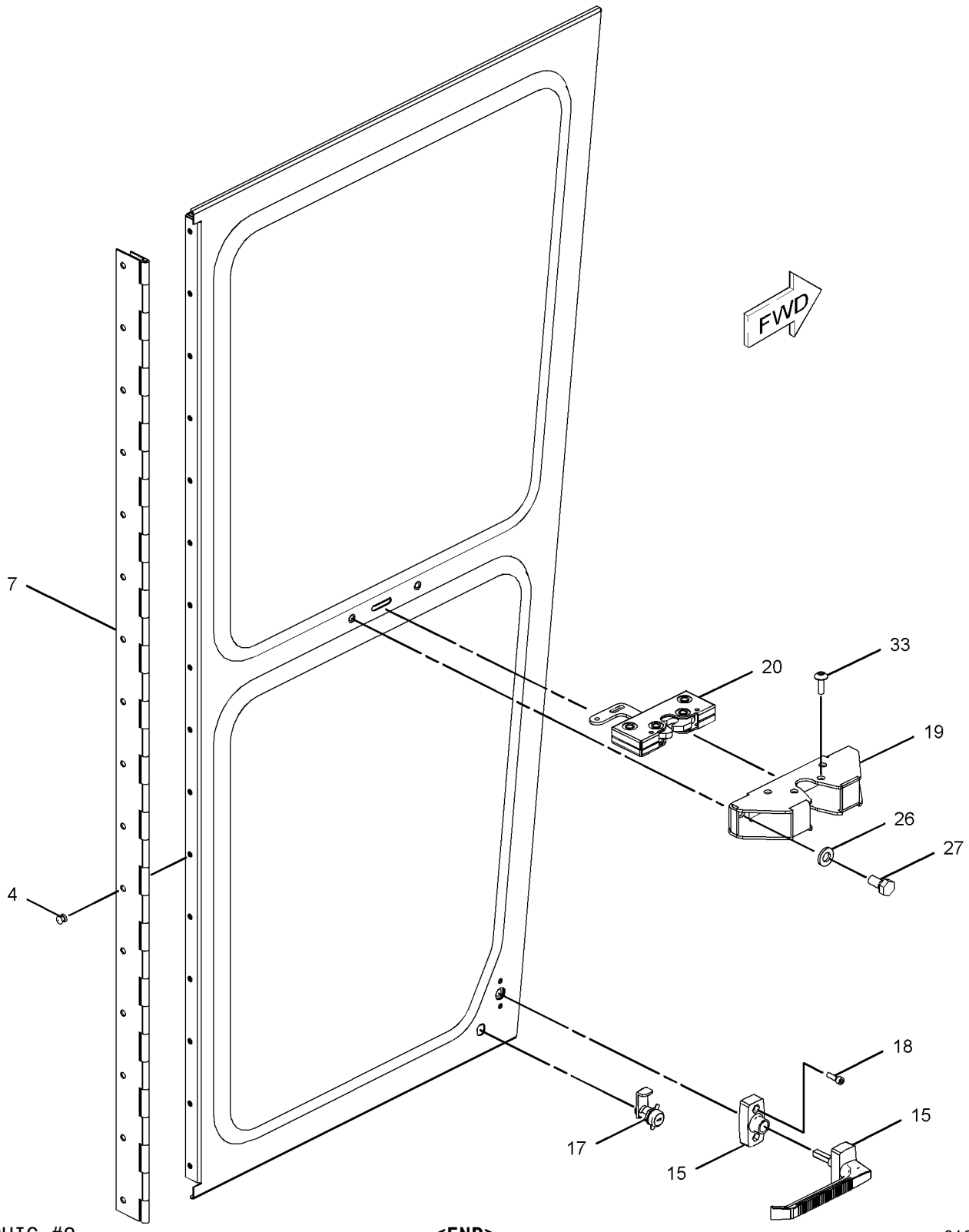

GRAPHIC #2 **<END>** g01071781

OPERATOR STATION

8X-4318 DOOR GP-CAB—HIGH PROFILE—LH

S/N: JPA1-UP
PART OF 8X-4413 DOOR GP-CAB
AN ATTACHMENT

SMCS-7308 **i02158611**

NOTE	REF NO	GRAPHIC REF	PART NUMBER	QTY	PART NAME 1 2 3 4 5 6 (PRODUCT LEVEL)	SEE PAGE
	1	1	**199-2677**	1	LINK (RELEASE)	
	2	1	**1H-3338**	1	LOCKWASHER	
	3	1	**5T-7486**	1	RETAINER-SPRING	
	4	1	**6D-6581**	16	RIVET-POP	
	5	1	**6V-2773**	2	PLUG	
	6	1	**6V-7636**	4	PIN AS-SPRING	
	7	1	**8X-3806**	1	HINGE	
	8	1	**8X-4244**	1	COVER (LH)	
	9	1	**8X-4263**	1	COVER (LH)	
	10	1	**8X-3938**	1	GLASS (UPPER)	
	11	1	**8X-4448**	1	GLASS (LOWER)	
	12	1	**8Y-4398**	1	LINK-CONNECTING	
	13	1	**8Y-4399**	1	LATCH AS-DOOR	
	14	1	**8Y-4401**	1	HANDLE AS (INSIDE)	
	15	1	**8Y-4619**	1	HANDLE AS (OUTSIDE)	
	16	1	**8Y-4620**	1	LINK-CONNECTING	
J	17	1	**8Y-4801**	1	LOCK AS-CYLINDER	
		1	**226-0295**	1	LOCK AS	
		1	**226-0342**	1	CAM	
M	18	1	**9X-2546**	4	BOLT (M6X1X20-MM)	
	19	1	**107-9641**	1	PLATE AS	
	20	1	**108-5949**	1	LATCH AS-LH	
	21	1	**108-5951**	1	LINK (LH)	
	22	1	**114-9190**	1	SEAL	
	23	1	**128-0037**	1	KNOB-BALL	
	24	1	**199-2712**	1	HANDLE	
	25	1	**199-2740**	1	DOOR AS (LH) (HIGH PROFILE)	
	26	1	**8T-4121**	2	WASHER-HARD (11X21X2.5-MM THK)	
M	27	1	**8T-4137**	2	BOLT (M10X1.5X20-MM)	
M	28	1	**8T-4181**	6	BOLT (M6X1X20-MM)	
M	29	1	**8X-4245**	1	BOSS (M6X1X18-MM)	
M	30	1	**9X-2042**	7	SCREW-TRUSS HEAD (M6X1X12-MM)	
M	31	1	**9X-2045**	4	SCREW-TRUSS HEAD (M6X1X20-MM)	
	32	1	**9X-8256**	2	WASHER (6.6X12X2-MM THK)	
BD	33	1	**5P-5768**		SEAL	

B-USE AS REQUIRED
D-ORDER BY THE METER
J-REQUIRES 5P8500 KEY
M-METRIC PART

8X-4318 DOOR GP-CAB *(contd.)* i02158611

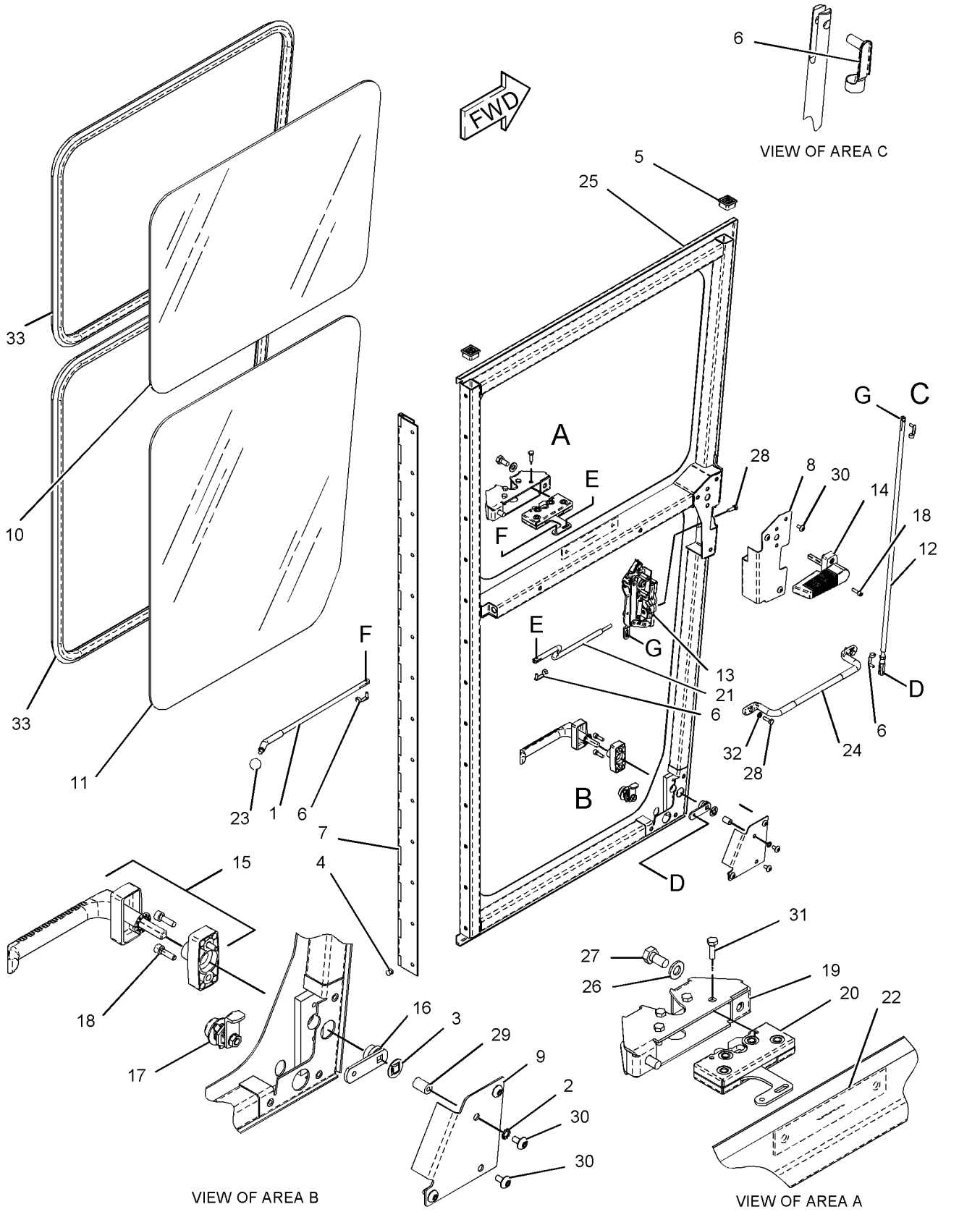

GRAPHIC #1

<END>

g01097693

OPERATOR STATION

8X-4413 DOOR GP-CAB—HIGH PROFILE

S/N: JPA1-UP

PART OF 290-1127 CAB GP, 290-0349 ROPS GP

AN ATTACHMENT

SMCS-7308 **i02895745**

NOTE	REF NO	GRAPHIC REF	PART NUMBER	QTY	PART NAME 1 2 3 4 5 6 (PRODUCT LEVEL)	SEE PAGE
	1	1	**6V-5158**	2	STRIKER AS-BODY	
Y	2	1	**8X-4317**	1	DOOR GP-CAB (RH)	652
Y	3	1	**8X-4318**	1	DOOR GP-CAB (LH)	655
	4	1	**106-6553**	4	BUMPER-CONICAL	
	5	1	**107-6813**	2	PLATE AS	
	6	1	**124-8843**	2	PLATE AS	
	7	1	**126-4966**	2	PLATE	
M	8	1	**129-3178**	32	LOCKNUT (M6X1-THD)	
M	9	1	**138-4054**	5	SCREW-FLAT HEAD (M6X1X45-MM)	
	10	1	**5M-3062**	4	BOLT (3/8-16X0.75-IN)	
	11	1	**5P-1075**	4	WASHER-HARD (10.2X22.5X3-MM THK)	
B	12	1	**7X-0605**	8	WASHER-HARD (13X28X1.6-MM THK)	
M	13	1	**8C-8454**	27	SCREW-MACHINE (M6X1X20-MM)	
	14	1	**8T-4121**	4	WASHER-HARD (11X21X2.5-MM THK)	
M	15	1	**8T-4133**	4	NUT (M10X1.5-THD)	
M	16	1	**8T-4195**	4	BOLT (M10X1.5X30-MM)	
M	17	1	**9X-2045**	4	SCREW-TRUSS HEAD (M6X1X20-MM)	
	18	1	**9X-8256**	32	WASHER (6.6X12X2-MM THK)	
D	19	1	**5P-5969**		SEAL (1.6-M EACH)	
E	20	1	**122-2228**		SEAL (172-CM EACH)	
E	21	1	**178-8894**		SEAL (335-CM EACH)	

B-USE AS REQUIRED
D-ORDER BY THE METER
E-ORDER BY THE CENTIMETER
M-METRIC PART
Y-SEPARATE ILLUSTRATION

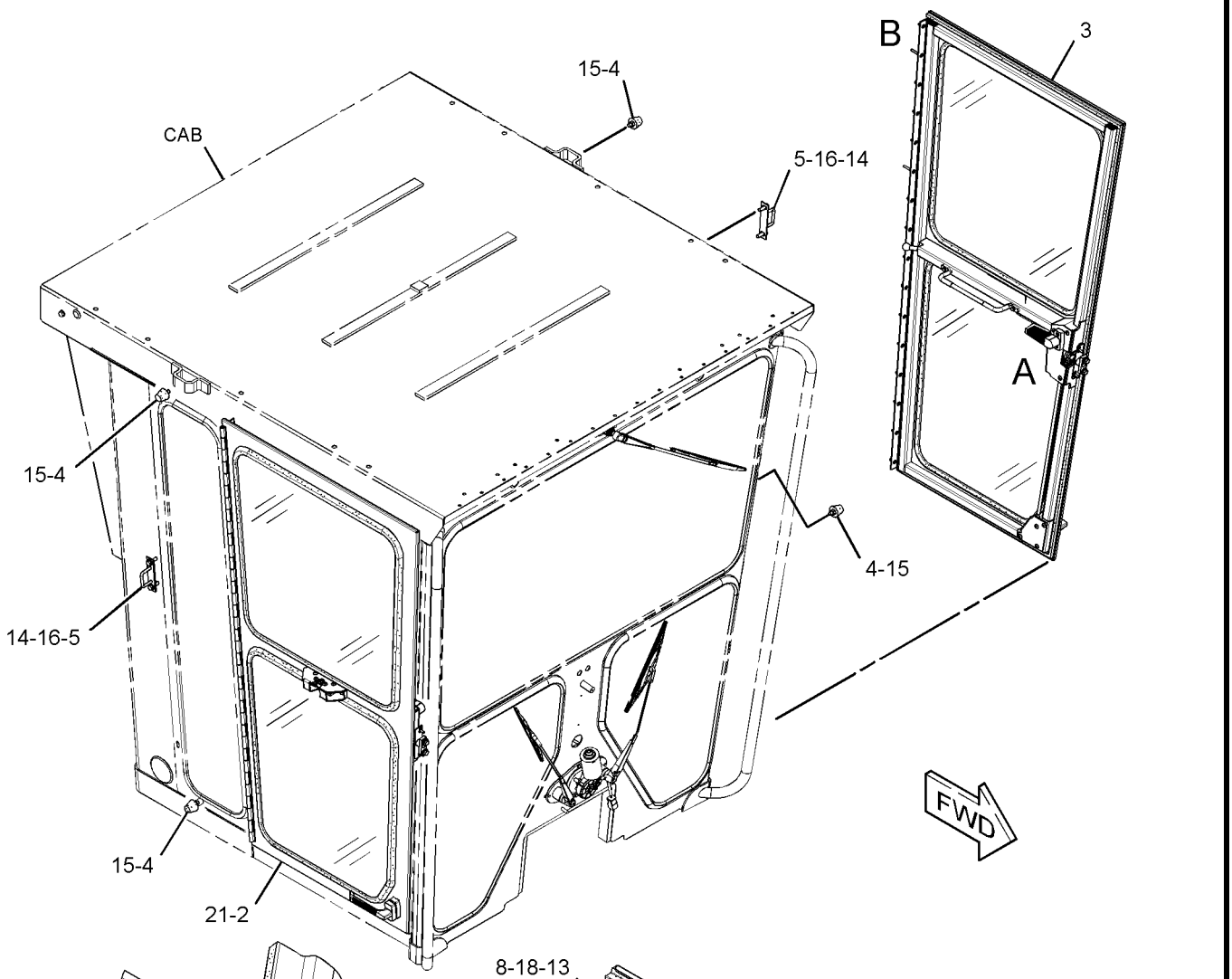

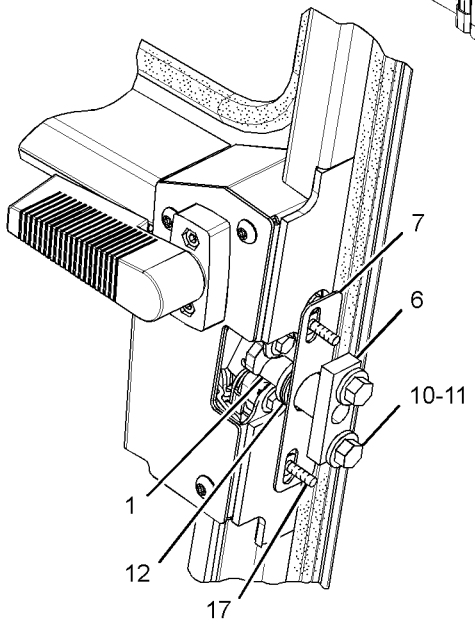

VIEW OF AREA A

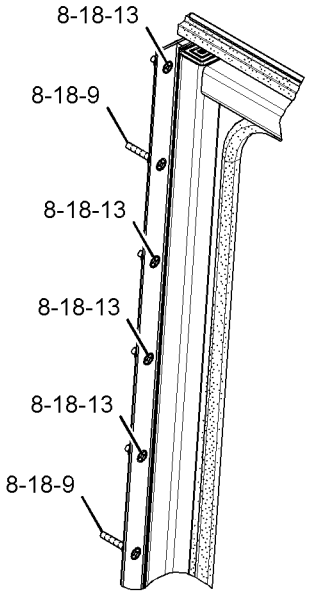

VIEW OF AREA B

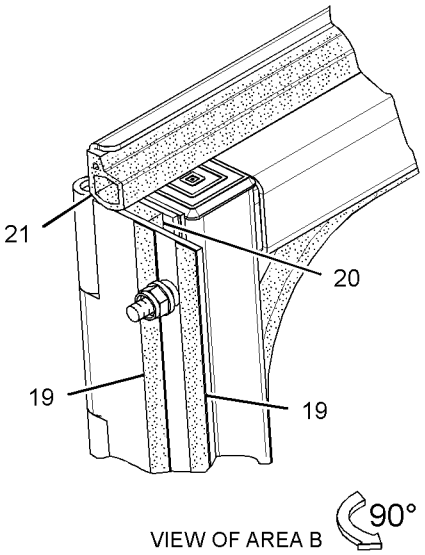

VIEW OF AREA B

GRAPHIC #1

<END>

g01563178

OPERATOR STATION

177-7891 DUCT & CONTROL GP–A/C, HEATER DISTRIBUTOR

S/N: JPA1-UP

PART OF 311-2751 AIR CONDITIONER AR

AN ATTACHMENT

SMCS-7337, 734D **i01679811**

NOTE	REF NO	GRAPHIC REF	PART NUMBER	QTY	PART NAME 1 2 3 4 5 6 (PRODUCT LEVEL)	SEE PAGE
	1	1	**8Y-6388**	6	LOUVER AS-VENT	
	2	1	**139-3595**	1	PANEL AS	
		1	**7K-4201**	2	NUT-SPEED	
		1	**8S-7566**	4	RIVET-POP	
	3	1	**164-8474**	2	LOUVER AS-VENT	
M	4	1	**9X-2043**	2	SCREW-TRUSS HEAD (M6X1X14-MM)	

M-METRIC PART

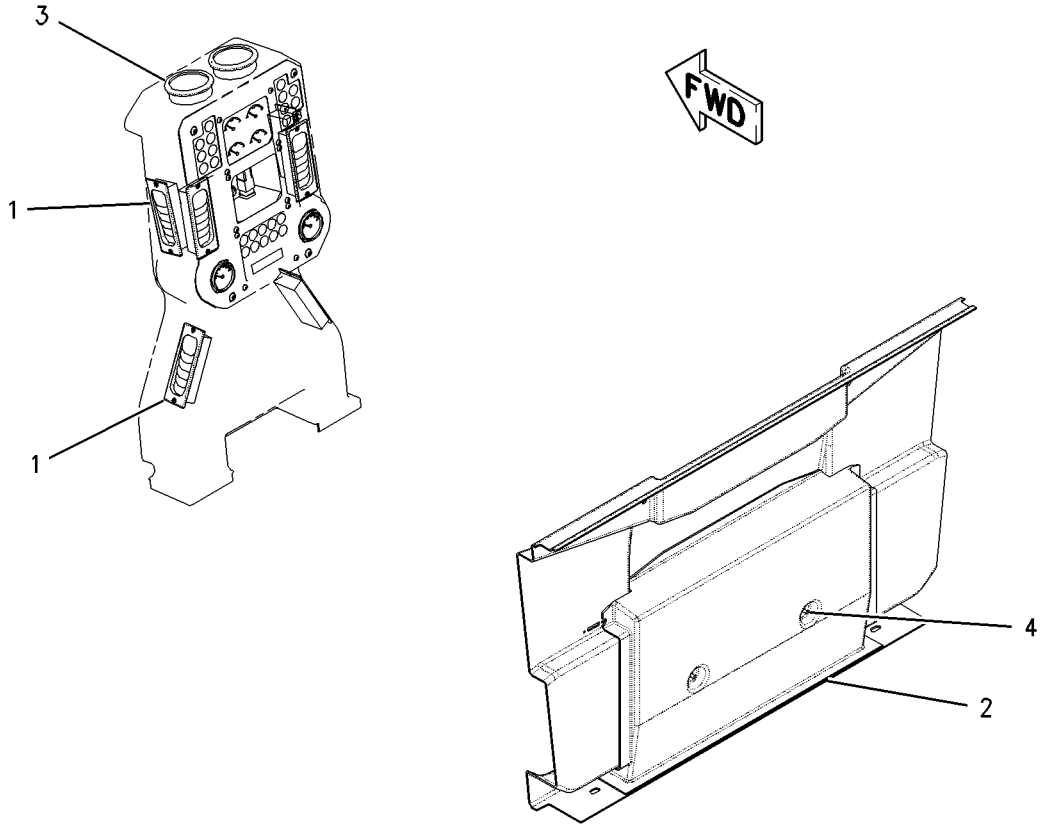

GRAPHIC #1 **<END>** g00796998

OPERATOR STATION

7I-5015 DUCT GP–AIR CONDITIONER, HEATER

S/N: JPA1-UP
PART OF 311-2751 AIR CONDITIONER AR
AN ATTACHMENT

SMCS-734D **i00135943**

NOTE	REF NO	GRAPHIC REF	PART NUMBER	QTY	PART NAME 1 2 3 4 5 6 (PRODUCT LEVEL)	SEE PAGE
	1	1	**104-2091**	8	SCREW-FLAT HEAD (NO 6X0.5-IN)	
	2	1	**106-4496**	6	BRACKET AS	
					(EACH INCLUDES)	
M	3	1	**6V-9632**	1	NUT-WELD (M6X1-THD)	
	4	1	**8X-5102**	2	SEAL	
	5	1	**8Y-6388**	4	LOUVER AS-VENT	
	6	1	**122-8155**	1	DUCT	
	7	1	**122-8154**	1	DUCT	
M	8	1	**9X-2043**	8	SCREW-TRUSS HEAD (M6X1X14-MM)	
	9	1	**8T-4205**	2	WASHER-HARD (7.2X14.5X2-MM THK)	
M	10	1	**5C-2890**	2	NUT (M6X1-THD)	

M-METRIC PART

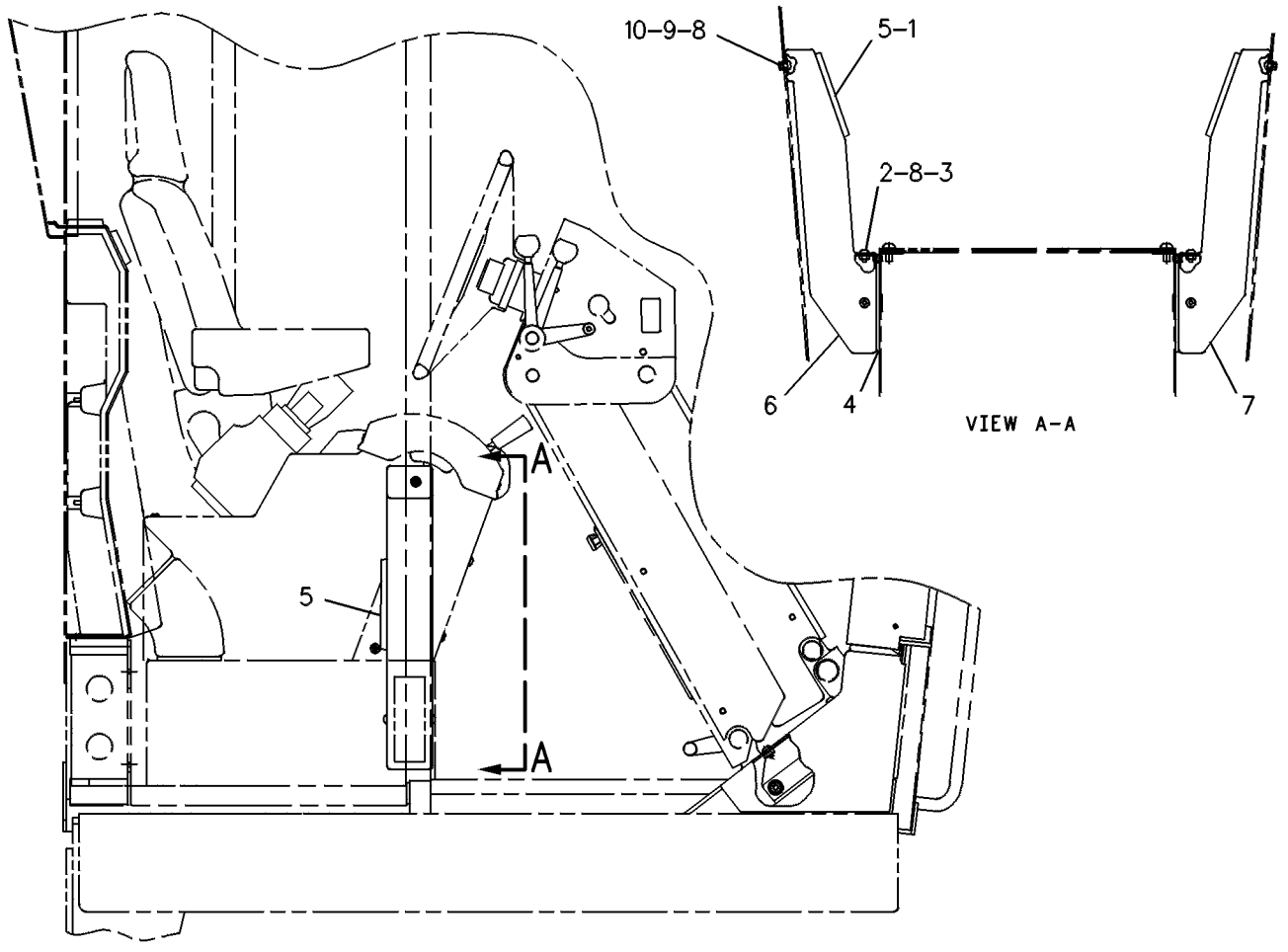

RIGHT SIDE VIEW

GRAPHIC #1 **<END>** g00108768

OPERATOR STATION

170-4820 FAN GP-CIRCULATING

S/N: JPA1-UP
24 VOLT
PART OF 286-4416 FAN GP-CIRCULATING
AN ATTACHMENT

SMCS-7316 **i02863989**

NOTE	REF NO	GRAPHIC REF	PART NUMBER	QTY	PART NAME 1 2 3 4 5 6 (PRODUCT LEVEL)	SEE PAGE
	1	1	**1M-1230**	2	NUT & LOCK AS (10-32-THD)	
	2	1	**3D-8747**	1	BRACKET	
	3	1	**3D-8748**	1	FAN AS (4-BLADE)	
	4	1	**3D-8749**	1	GUARD	
	5	1	**3T-6774**	1	GROMMET	
	6	1	**9X-9689**	1	BASE-FAN	
Y	7	1	**170-5335**	1	MOTOR GP-ELECTRIC (24-VOLT) (CIRCULATING FAN)	160
	8	1	**1B-2713**	1	BOLT (1/4-20X1.75-IN)	
	9	1	**2D-6235**	1	LOCKNUT (1/4-20-THD)	
	10	1	**3D-8752**	1	LOCKNUT (5/16-24-THD)	
	11	1	**5P-0537**	4	WASHER-HARD (7.2X14.5X2-MM THK)	
	12	1	**6G-5987**	1	BRACKET	
	13	1	**7L-8316**	1	SETSCREW-SOCKET (10-32X2.54-IN)	
	14	1	**7T-0582**	1	BOLT	
	15	1	**9M-1974**	2	WASHER-HARD (8.8X16X2-MM THK)	

Y-SEPARATE ILLUSTRATION

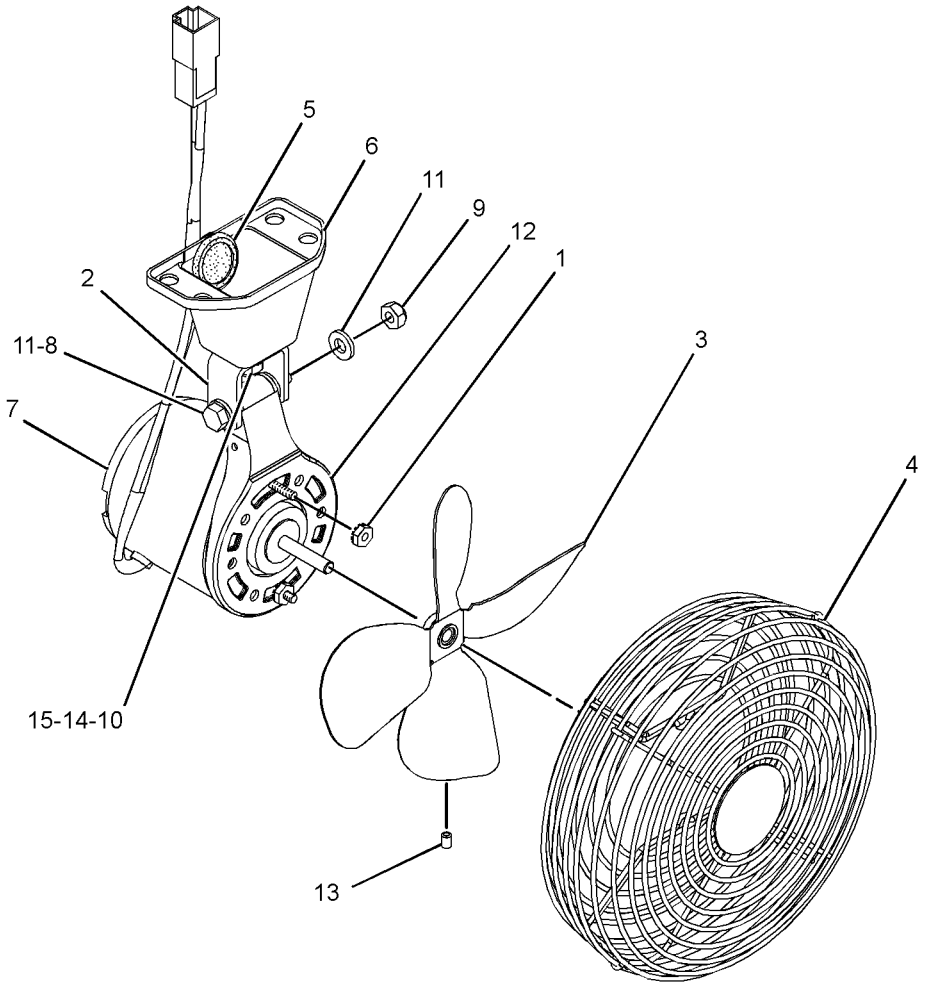

GRAPHIC #1 **<END>** g01256496

OPERATOR STATION

170-5334 FAN GP-CIRCULATING—FRONT

S/N: JPA1-UP
24 VOLT
PART OF 286-4415 FAN GP-CIRCULATING
AN ATTACHMENT

SMCS-7316 **i02838760**

NOTE	REF NO	GRAPHIC REF	PART NUMBER	QTY	PART NAME 1 2 3 4 5 6 (PRODUCT LEVEL)	SEE PAGE
	1	1	**3D-8747**	1	BRACKET	
	2	1	**3D-8748**	1	FAN AS (4-BLADE)	
	3	1	**3D-8749**	1	GUARD	
	4	1	**3T-6774**	1	GROMMET	
	5	1	**9X-9689**	1	BASE-FAN	
	6	1	**135-1979**	1	BRACKET	
Y	7	1	**170-5335**	1	MOTOR GP-ELECTRIC (24-VOLT) (CIRCULATING FAN)	160
	8	1	**031-4155**	1	LOCKNUT (5/16-18-THD)	
	9	1	**1B-2713**	1	BOLT (1/4-20X1.75-IN)	
	10	1	**1M-1230**	2	NUT & LOCK AS (10-32-THD)	
	11	1	**2D-6235**	1	LOCKNUT (1/4-20-THD)	
	12	1	**3D-8752**	1	LOCKNUT (5/16-24-THD)	
	13	1	**4M-0061**	1	BOLT (5/16-18X0.75-IN)	
	14	1	**5P-0537**	4	WASHER-HARD (7.2X14.5X2-MM THK)	
	15	1	**6G-5987**	1	BRACKET	
	16	1	**7L-8316**	1	SETSCREW-SOCKET (10-32X2.54-IN)	
	17	1	**7T-0582**	1	BOLT	
	18	1	**9M-1974**	3	WASHER-HARD (8.8X16X2-MM THK)	
	19	1	**9T-5241**	2	WASHER (9.53X18X1-MM THK)	

Y-SEPARATE ILLUSTRATION

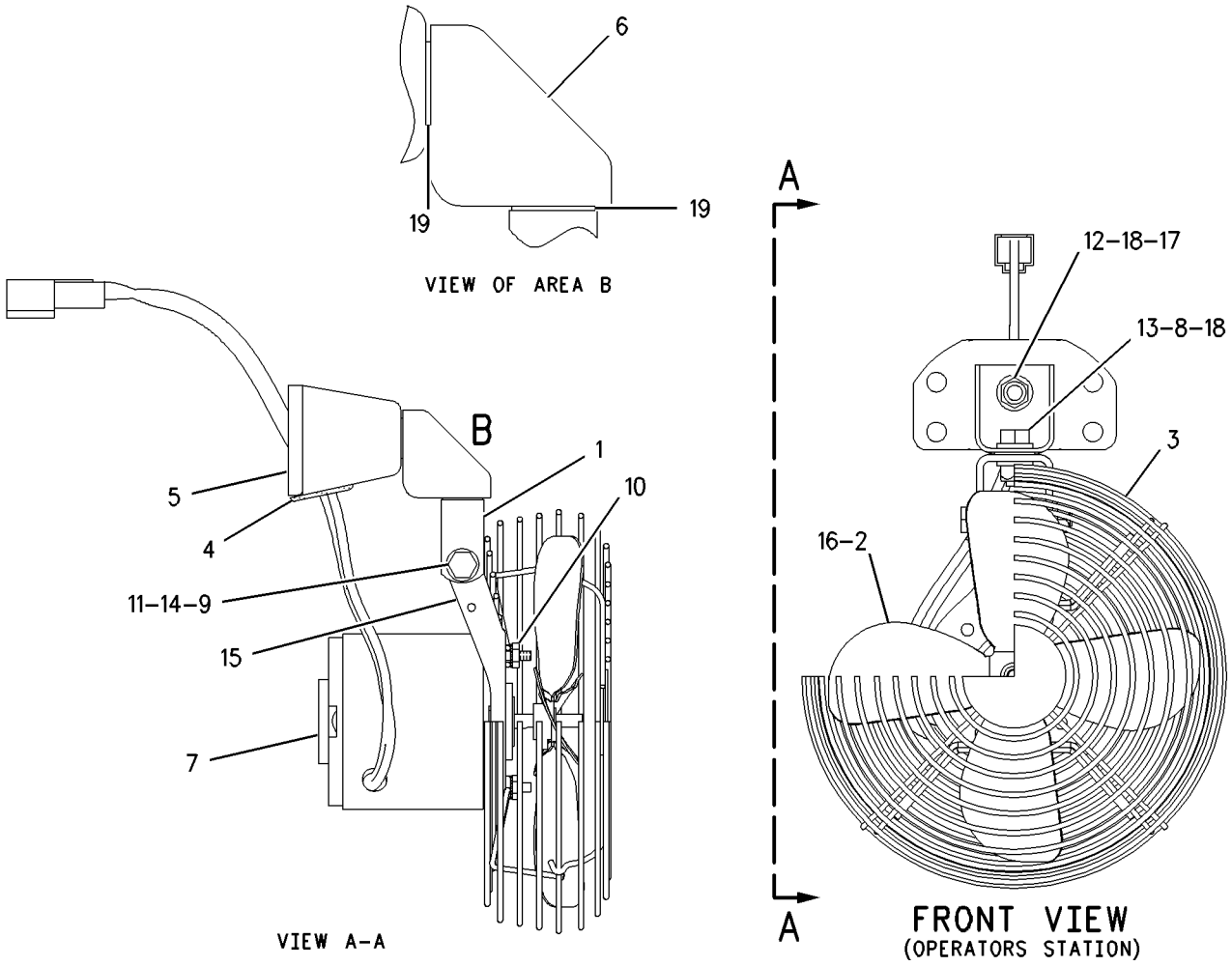

GRAPHIC #1 **<END>** g00761361

OPERATOR STATION

286-4415 FAN GP-CIRCULATING—FRONT DEFROSTER

S/N: JPA1-UP

AN ATTACHMENT

SMCS-7316 **i03435549**

NOTE	REF NO	GRAPHIC REF	PART NUMBER	QTY	PART NAME 1 2 3 4 5 6 (PRODUCT LEVEL)	SEE PAGE
	1	1	**7T-4003**	1	RESISTOR	
	2	1	**9W-1442**	1	FUSE (10-AMPERE)	
Y	3	1	**170-5334**	1	FAN GP-CIRCULATING	662
M	4	1	**9X-1046**	2	SCREW (M4X0.7X18-MM)	
	5	1	*9X-9638*	1	SWITCH AS-ROCKER (24-VOLT, SEALED, ILLUMINATED)	
		1	**3E-9330**	1	SWITCH AS (CIRCULATING FAN)	
		1	**3E-8821**	1	ACTUATOR-ROCKER	
		1	**3E-8825**	1	LAMP (24-VOLT)	

M-METRIC PART
Y-SEPARATE ILLUSTRATION

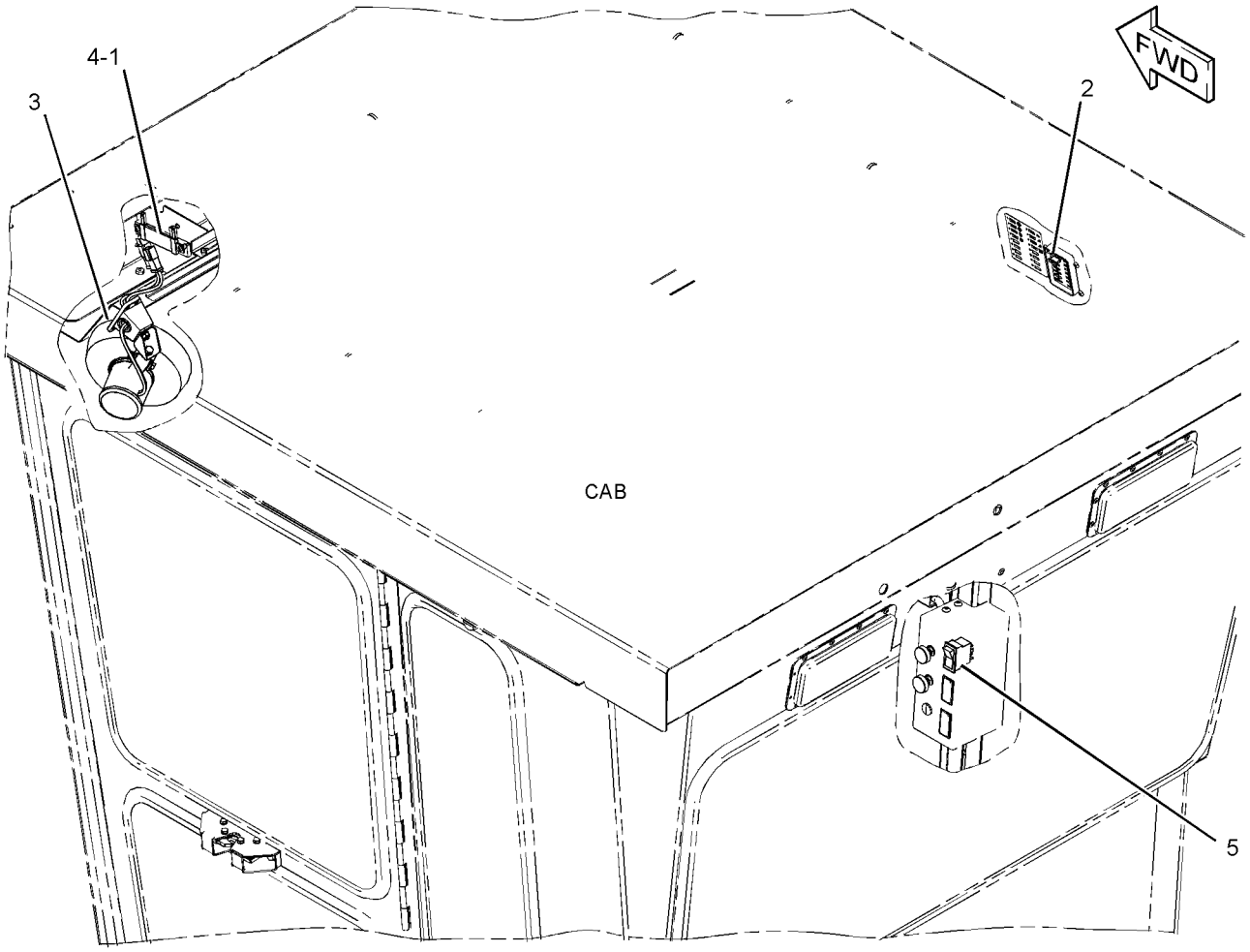

GRAPHIC #1 **<END>** g01671553

OPERATOR STATION

286-4416 FAN GP-CIRCULATING—DEFROSTER, REAR

S/N: JPA1-UP

AN ATTACHMENT

SMCS-7316 **i03259463**

NOTE	REF NO	GRAPHIC REF	PART NUMBER	QTY	PART NAME 1 2 3 4 5 6 (PRODUCT LEVEL)	SEE PAGE
	1	1	**7T-4003**	1	RESISTOR	
	2	1	**9W-1442**	1	FUSE (10-AMPERE)	
Y	3	1	**170-4820**	1	FAN GP-CIRCULATING (REAR)	661
	4	1	**5P-8525**	1	GROMMET	
M	5	1	**9X-1046**	2	SCREW (M4X0.7X18-MM)	
M	6	1	**9X-2045**	4	SCREW-TRUSS HEAD (M6X1X20-MM)	
	7	1	*9X-9638*	1	SWITCH AS-ROCKER (24-VOLT, SEALED, ILLUMINATED)	
		1	**3E-8821**	1	ACTUATOR-ROCKER	
		1	**3E-8825**	1	LAMP (24-VOLT)	
		1	**3E-9330**	1	SWITCH AS (CIRCULATING FAN)	

M-METRIC PART
Y-SEPARATE ILLUSTRATION

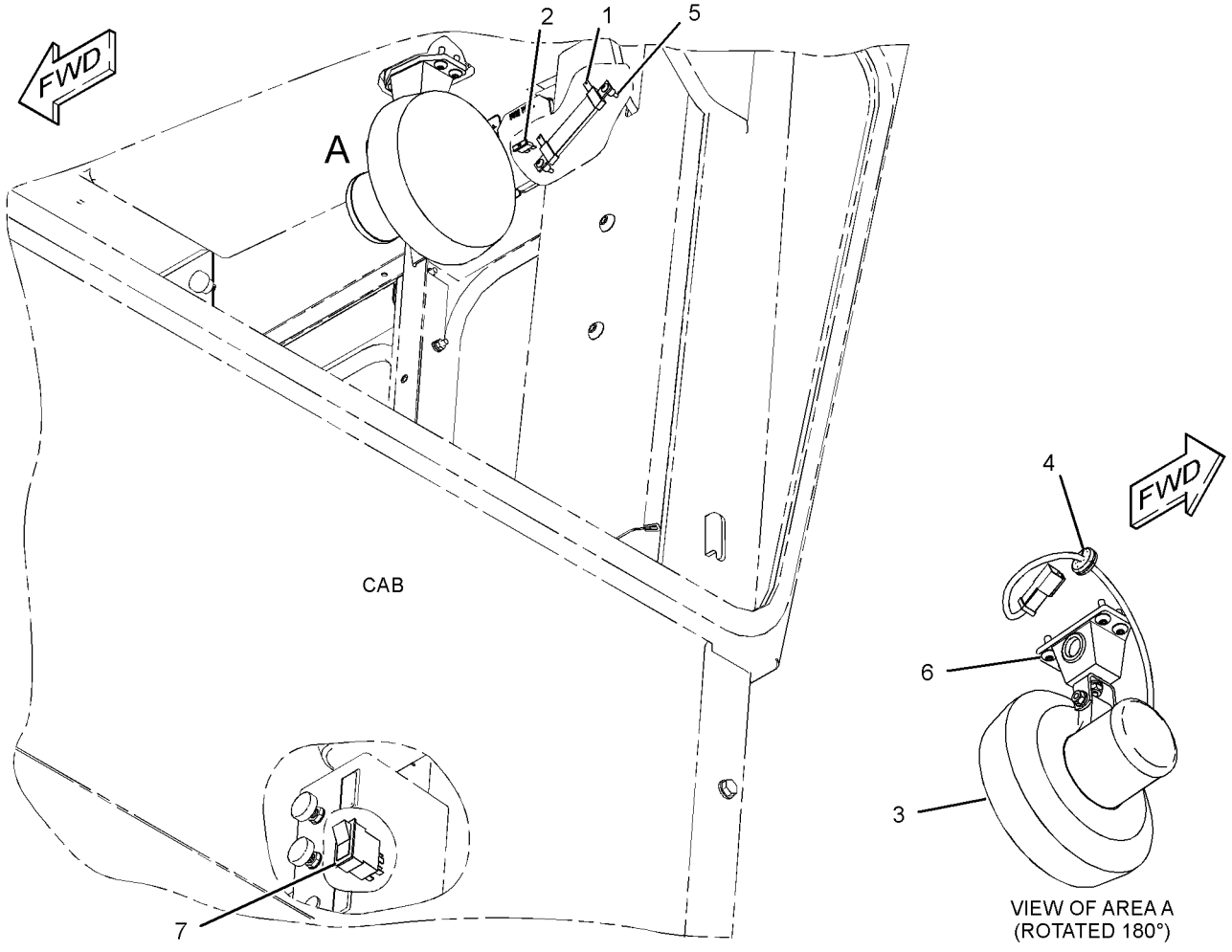

GRAPHIC #1 **<END>** g01754113

OPERATOR STATION

8X-2925 FILTER GP-CAB AIR

S/N: JPA1-UP
PART OF 311-2751 AIR CONDITIONER AR
AN ATTACHMENT

SMCS-7342 **i02200120**

NOTE	REF NO	GRAPHIC REF	PART NUMBER	QTY	PART NAME 1 2 3 4 5 6 (PRODUCT LEVEL)	SEE PAGE
	1	1	**7T-7358**	1	FILTER ELEMENT AS-CAB AIR (CAB)	
	2	1	**9X-8122**	1	PLATE AS	
		1	**7K-4199**	2	THUMBSCREW	
		1	**8R-1778**	1	COVER-FILTER	
		1	**131-5492**	2	RETAINER-CAPTIVE	
	3	1	**112-9555**	4	SPRING-FILTER	
	4	1	*231-4487*	2	FILTER ELEMENT AS-CAB AIR	
					(EACH INCLUDES)	
		1	**231-4486**	1	FILTER ELEMENT AS-CAB AIR (CAB)	
		1	**232-1732**	1	FILTER ELEMENT AS-CAB AIR (CAB)	

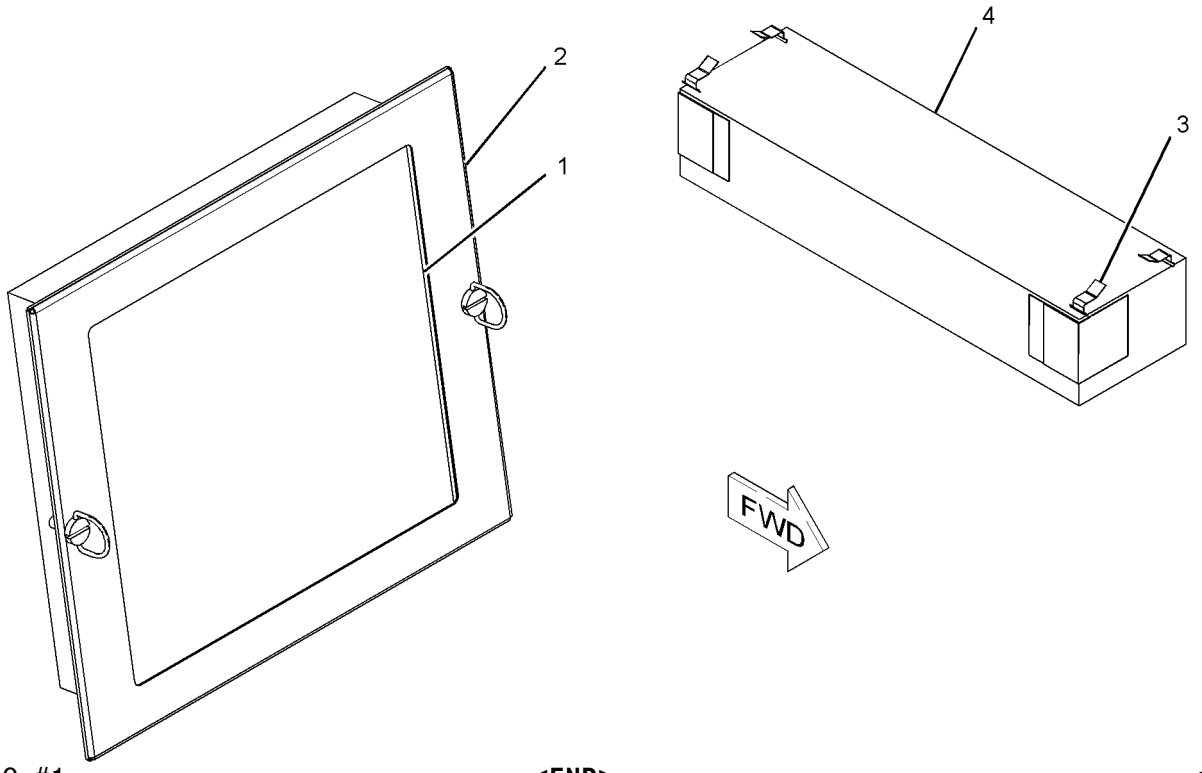

GRAPHIC #1 **<END>** g01070812

OPERATOR STATION

293-5950 GUARD GP-VANDALISM

S/N: JPA1-UP
AN ATTACHMENT

SMCS-7315 **i03259443**

NOTE	REF NO	GRAPHIC REF	PART NUMBER	QTY	PART NAME 1 2 3 4 5 6 (PRODUCT LEVEL)	SEE PAGE
	1	1	**293-5951**	1	SUPPORT AS	
	2	1	**293-5954**	1	SUPPORT	
	3	1	**293-5959**	1	COVER AS	
	4	1	**246-2641**	1	PADLOCK GP	
		1	**5P-8500**	1	KEY	
M	5	1	**9X-2046**	4	SCREW-TRUSS HEAD (M6X1X35-MM)	

M-METRIC PART

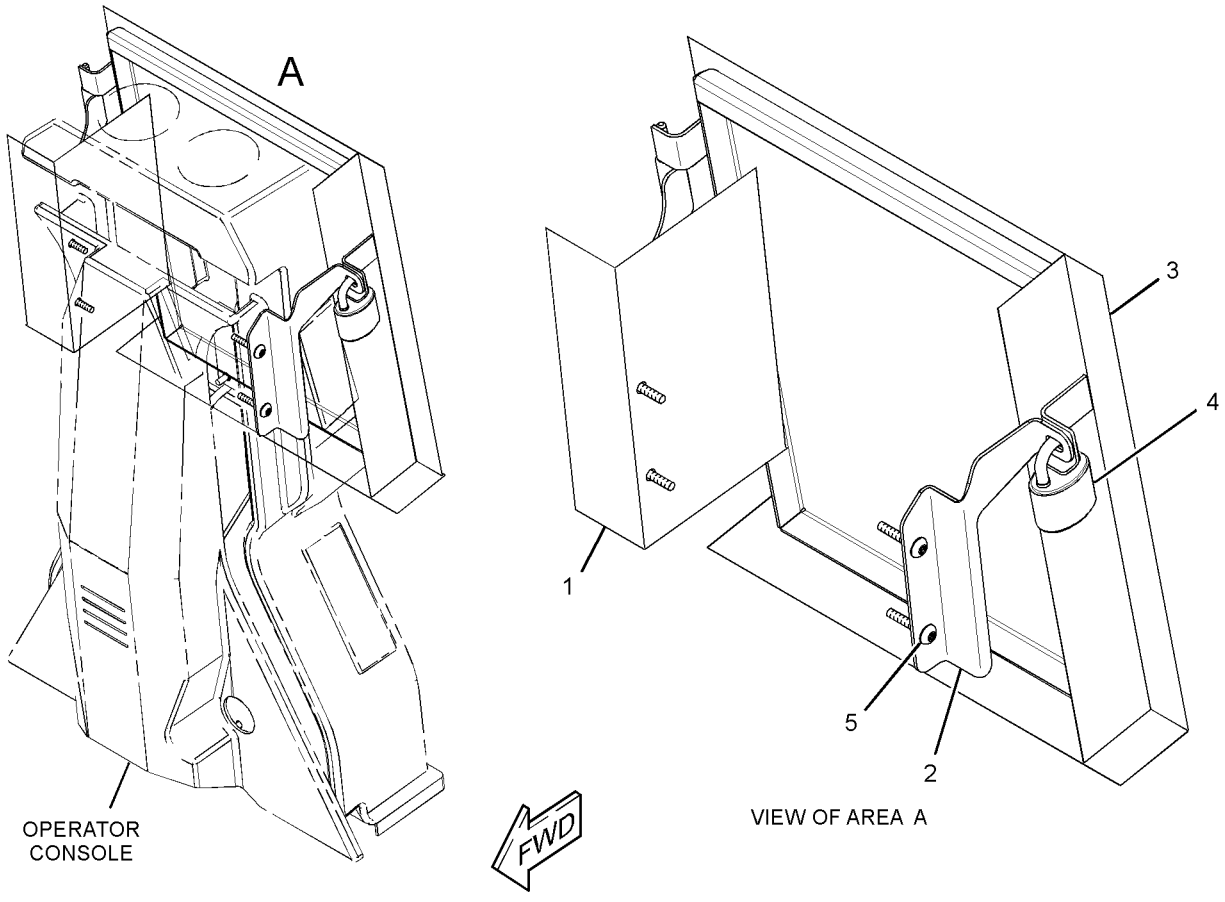

GRAPHIC #1

<END>

g01672738

OPERATOR STATION

173-5360 HEATER & MTG GP-CAB

S/N: JPA1-UP
PART OF 311-2753 HEATER AR-CAB
AN ATTACHMENT

SMCS-7304 **i02592140**

NOTE	PART NUMBER	QTY	PART NAME 1 2 3 4 5 6 (PRODUCT LEVEL)	SEE PAGE
Y	*174-4547*	1	HEATER GP-CAB (LIGHT-DUTY)	670
	9W-1441	1	FUSE (15-AMPERE) (HEATER)	

Y-SEPARATE ILLUSTRATION

<END>

OPERATOR STATION

311-2753 HEATER AR-CAB

S/N: JPA1-UP

AN ATTACHMENT

SMCS-7304 **i03258429**

NOTE	REF NO	GRAPHIC REF	PART NUMBER	QTY	PART NAME 1 2 3 4 5 6 (PRODUCT LEVEL)	SEE PAGE
Y	1	1	*178-8603*	1	LOUVER GP-CAB	696
Y	2	1	*311-2773*	1	LINES GP-HEATER	694
Y	3	1	*173-5360*	1	HEATER & MTG GP-CAB	668

Y-SEPARATE ILLUSTRATION

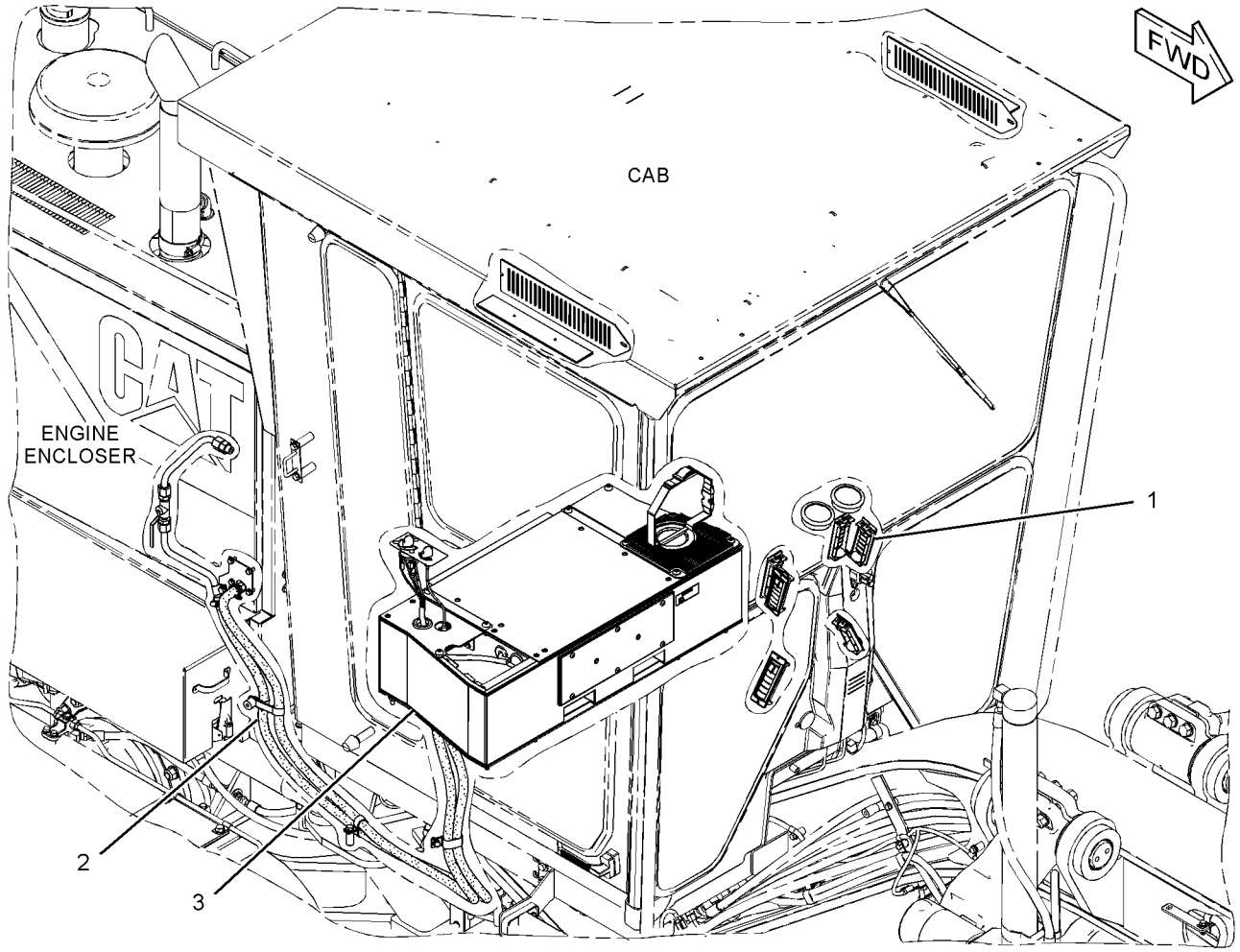

GRAPHIC #1 **<END>** g01671013

OPERATOR STATION

174-4547 HEATER GP-CAB—LIGHT DUTY

S/N: JPA1-UP
PART OF 173-5360 HEATER & MTG GP-CAB
AN ATTACHMENT

SMCS-7304 **i03288481**

NOTE	REF NO	GRAPHIC REF	PART NUMBER	QTY	PART NAME 1 2 3 4 5 6 (PRODUCT LEVEL)	SEE PAGE
	1	2	**2P-4339**	1	NUT-JAM (7/16-28-THD)	
	2	2	**2V-0099**	1	KNOB-CONTROL (FAN SPEED)	
	2A	2	**2V-0099**	1	KNOB-CONTROL (TEMPERATURE)	
	3	2	**3E-0400**	2	BLOWER AS	
	4	2	**3E-3890**	1	FILM-CONTROL (FAN SPEED, TEMPERATURE)	
	5	2	**3H-2900**	1	GROMMET	
	6	1	**3S-2093**	1	STRAP-CABLE	
	7	1	**5P-7803**	2	PLUG-BUTTON	
	8	2	**5P-9135**	1	GROMMET	
	9	2	**6P-3236**	1	SWITCH AS-ROTARY (FAN SPEED)	
		2	**6V-8362**	5	SCREW-MACHINE (8-32X0.31-IN)	
		2	**9B-7233**	5	LOCKWASHER	
	10	2	**6T-5345**	1	BUSHING-TERMINAL	
	11	2	**6T-6708**	2	WASHER (7X28.6X4.1-MM THK)	
	12	1	**7G-4824**	1	STRAP	
	13	1	**8C-3756**	1	FILM-IDENTIFICATION (HEATER)	
	14	2	**8C-4586**	2	CLAMP	
	15	1	**8D-1429**	1	LAMP (24-VOLT)	
	16	1	**8E-7791**	1	STRAP	
	17	1	**8P-5141**	2	PLATE-ORIFICE	
	18	2	**8X-5536**	1	COVER	
	19	1	**8X-5538**	1	COVER AS	
M		1	**8T-3490**	4	NUT-WELD (M10X1.5-THD)	
	20	1	**8X-5540**	1	COVER	
	21	2	**9G-1950**	1	RESISTOR	
M	22	1,2	**9X-2041**	5	SCREW-TRUSS HEAD (M10X1.5X20-MM)	
	23	2	**9X-2185**	4	SCREW (8-15X0.44-IN)	
	24	2	**9X-2488**	4	CLAMP-HOSE	
	25	1	**123-4618**	1	COVER	
	26	1	**123-4701**	1	SEAL	
	27	2	**124-1431**	1	BRACKET	
	28	1	**124-1432**	1	HOUSING AS	
		1	**7T-1099**	1	LINK	
		1	**8P-5141**	2	PLATE-ORIFICE	
	29	2	**124-3137**	1	BRACKET	
	30	1	**124-3138**	1	SEAL	
	31	2	**124-9006**	1	SHAFT	
	32	2	**124-9007**	1	SHAFT AS	
		2	**4L-5966**	2	SETSCREW (NO 10X0.19-IN)	
	33	1	**125-0439**	1	GASKET	
	34	1	**125-0442**	1	PLATE	
	35	2	**129-4935**	1	SEAL	
	36	2	**130-5300**	1	CLIP	
	37	1	**142-4940**	1	PLATE AS	
	38	2	**316-1927**	1	MOTOR AS-BLOWER (24-VOLT, A/C, HEATER)	
		2	**9W-0852**	2	PIN-CONNECTOR (14-GA)	
		2	**102-8802**	1	KIT-RECEPTACLE (2-PIN) (INCLUDES RECEPTACLE AS & WEDGE)	
	39	1	**174-4492**	1	COVER	
	40	1	**174-6051**	1	SUPPORT AS	
	41	1	**174-6353**	1	PLATE	
	42	1	**176-5507**	1	PAD	
	43	1	**177-7858**	1	HARNESS AS-HEATER & AIR COND	
		1	**155-2270**	1	KIT-CONNECTING PLUG (2-PIN) (INCLUDES PLUG AS & WEDGE)	

174-4547 **HEATER GP-CAB** *(contd.)* **i03288481**

NOTE	REF NO	GRAPHIC REF	PART NUMBER	QTY	PART NAME 1 2 3 4 5 6 (PRODUCT LEVEL)	SEE PAGE
		1	**102-8805**	1	KIT-RECEPTACLE (6-PIN)	
					(INCLUDES RECEPTACLE AS & WEDGE)	
	44	1	**191-0027**	1	PAD	
	45	2	**204-4376**	1	CAP-PROTECTIVE	
	46	1	**238-0415**	1	VALVE AS-WATER	
	47	1	**238-0417**	1	CORE AS-HEATER	
	48	1	**248-6772**	4	SCREW-MACHINE (8-16X7.75-IN)	
M	49	2	**129-3178**	4	LOCKNUT (M6X1-THD)	
M	50	2	**141-9784**	1	BOLT (M6X1X190-MM)	
	51	1	**4M-6582**	1	SEAL-O-RING	
M	52	1,2	**5C-2890**	7	NUT (M6X1-THD)	
	53	1	**5P-1075**	13	WASHER-HARD (10.2X22.5X3-MM THK)	
	54	2	**6V-1668**	2	WASHER (6.5X29.1X3-MM THK)	
M	55	2	**6V-7728**	1	BOLT (M6X1X45-MM)	
	56	1	**6V-8801**	13	NUT (3/8-16-THD)	
	57	2	**7X-0591**	2	WASHER-HARD (17X29X3-MM THK)	
M	58	2	**8T-4171**	2	BOLT (M6X1X12-MM)	
	59	1,2	**8T-4205**	15	WASHER-HARD (7.2X14.5X2-MM THK)	
	60	1	**9M-8406**	1	CLIP	
M	61	1	**9X-2040**	4	SCREW-TRUSS HEAD (M10X1.5X25-MM)	
M	62	1	**9X-2045**	6	SCREW-TRUSS HEAD (M6X1X20-MM)	
E	63	2	**136-1953**		HOSE (17-CM EACH)	
D	64	2	**5P-5905**		SEAL (0.1-M EACH)	
E	65	1	**9X-2126**		SEAL (33-CM)	
D	66	1	**5P-5637**		SEAL (0.9-M EACH)	
D	66A	1	**5P-5637**		SEAL (0.4-M EACH)	
D	66B	1	**5P-5637**		SEAL (0.2-M)	
D	66C	2	**5P-5637**		SEAL (0.3-M EACH)	

D-ORDER BY THE METER
E-ORDER BY THE CENTIMETER
M-METRIC PART

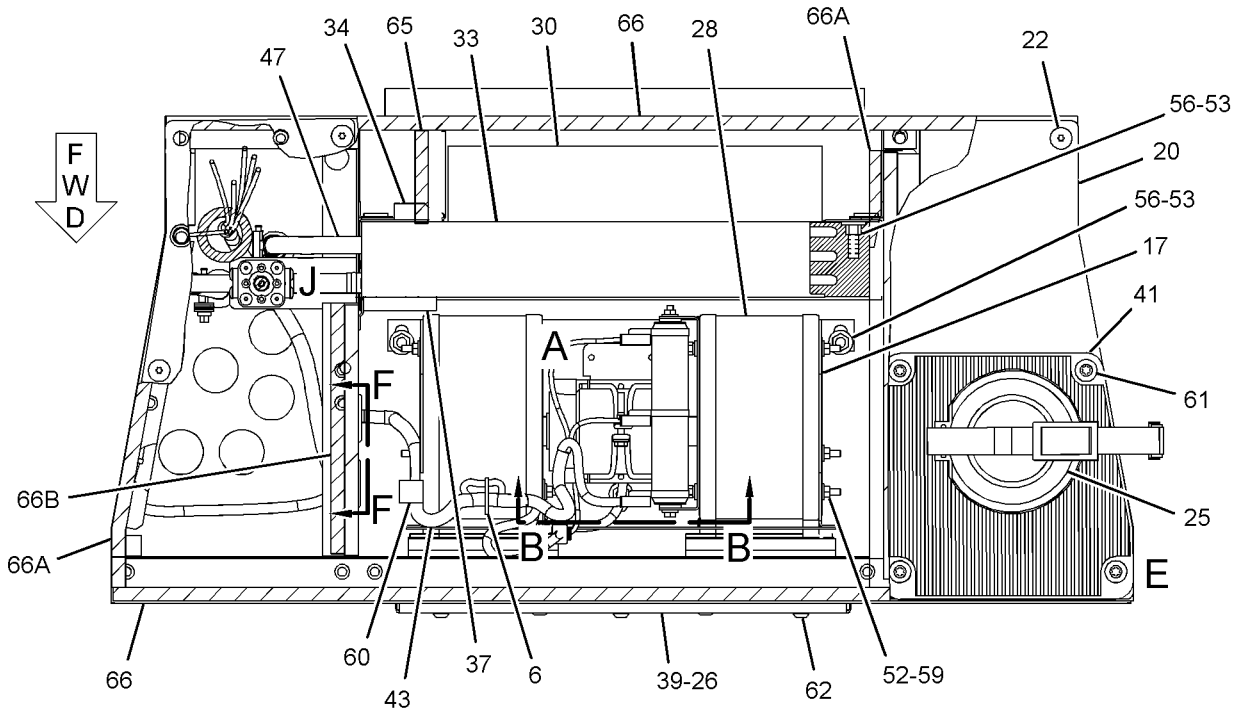

TOP VIEW

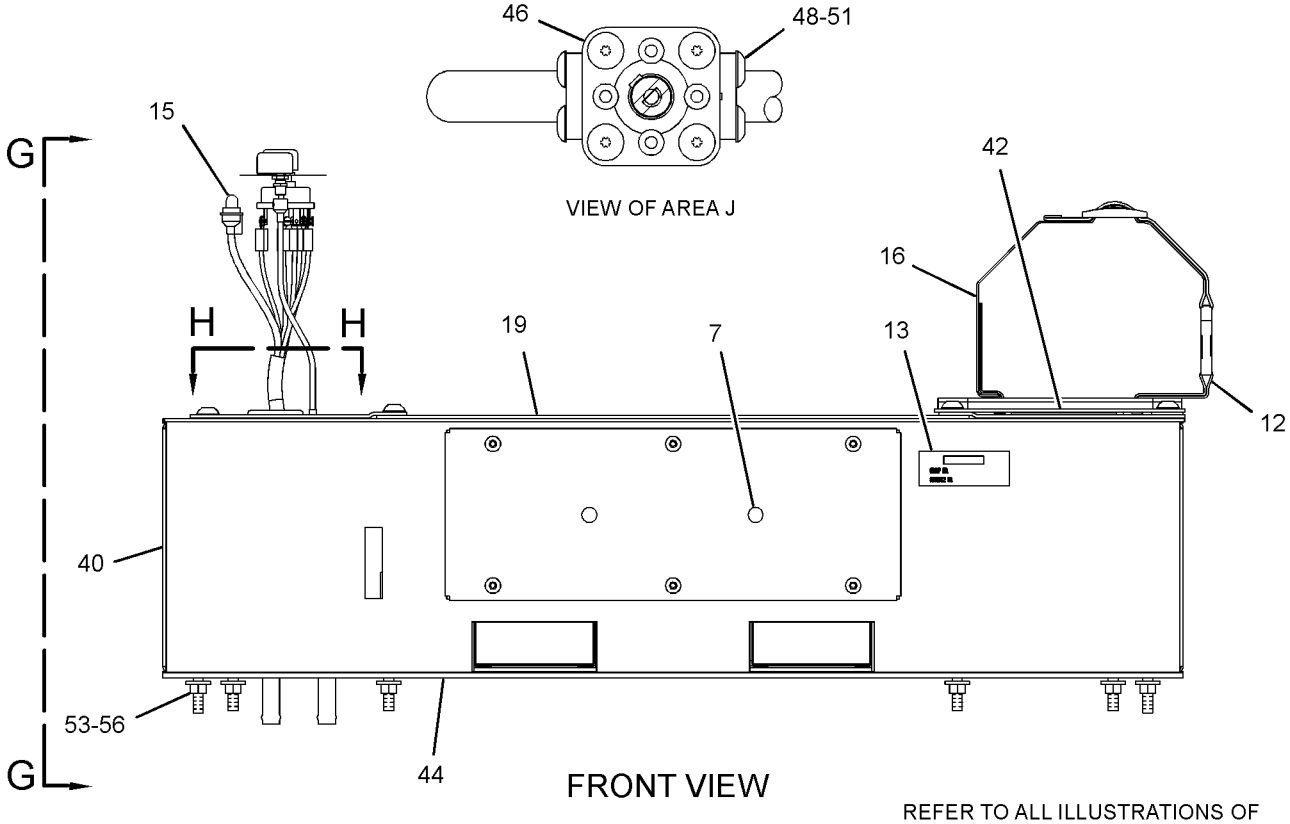

FRONT VIEW

REFER TO ALL ILLUSTRATIONS OF THIS GROUP FOR AUXILIARY VIEWS

GRAPHIC #1

g01758114

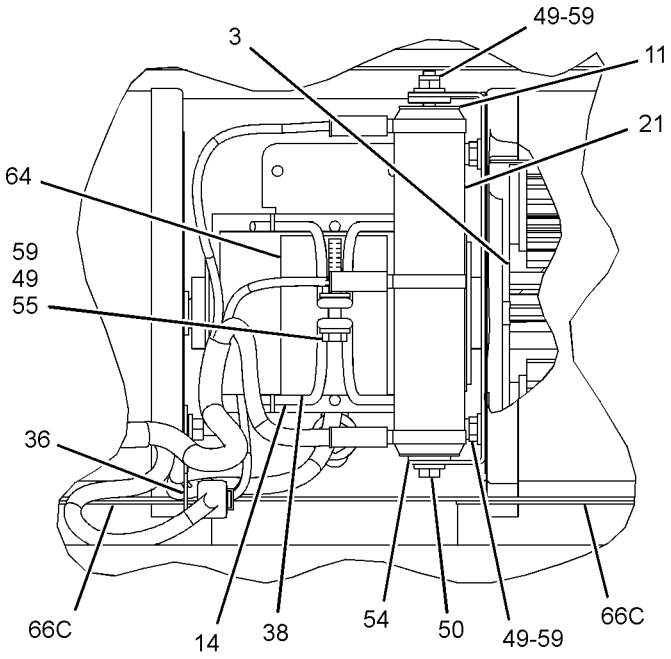

VIEW OF AREA A

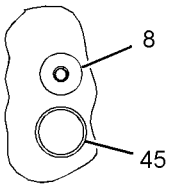

SECTION F-F

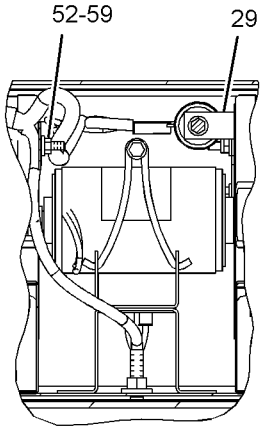

SECTION B-B

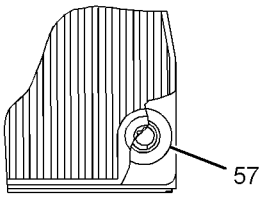

VIEW OF AREA E

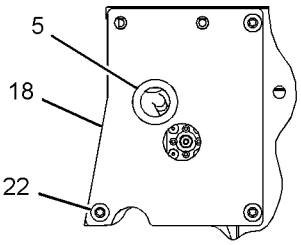

SECTION H-H

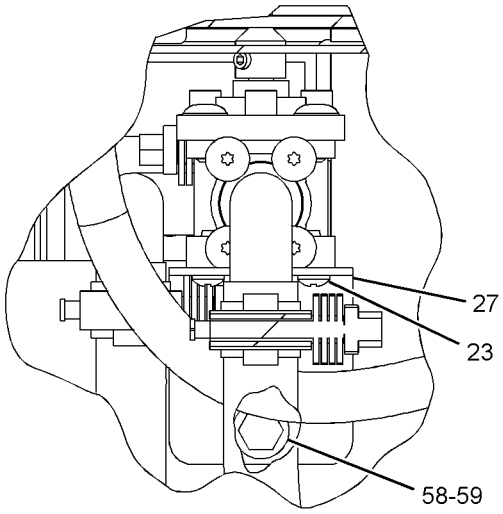

VIEW OF AREA C

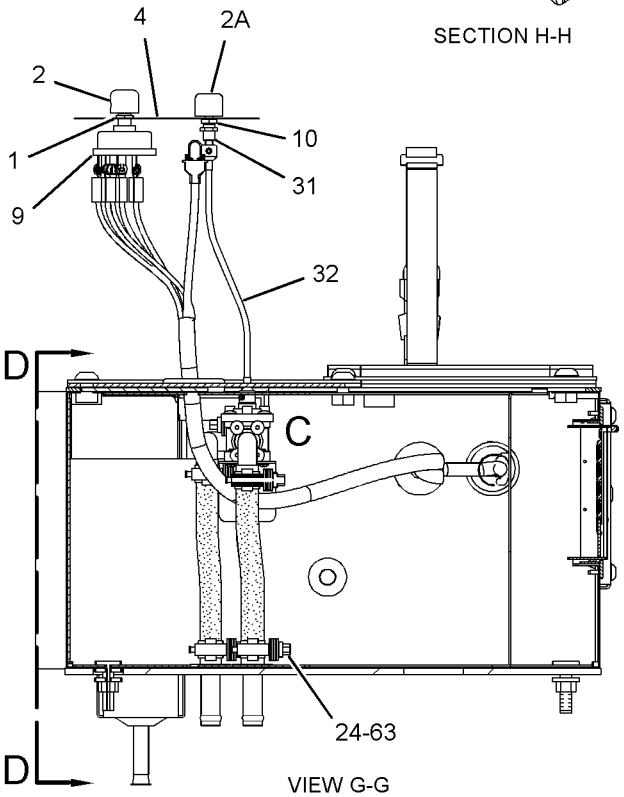

VIEW G-G

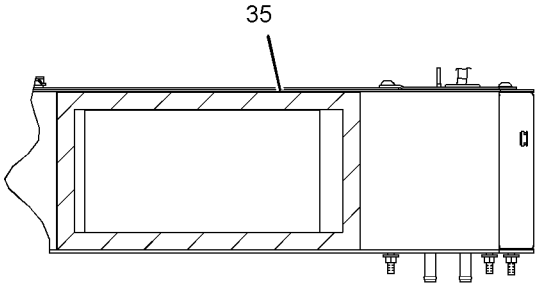

SECTION D-D

GRAPHIC #2 **<END>** g01758115

OPERATOR STATION

295-4371 HORN GP-ELECTRIC

S/N: JPA1-UP

PART OF 274-7940 GENERAL AR

SMCS-7402 **i03260122**

NOTE	REF NO	GRAPHIC REF	PART NUMBER	QTY	PART NAME 1 2 3 4 5 6 (PRODUCT LEVEL)	SEE PAGE
	1	1	**3G-1701**	1	SPRING	
	2	1	**5T-4030**	1	BRACKET	
	3	1	**7I-4696**	1	RETAINER	
	4	1	**7I-4698**	1	RING	
	5	1	**7I-4699**	1	INSULATOR	
	6	1	**009-4184**	4	SPRING-HORN	
	7	1	**009-4185**	4	BRUSH-HORN	
	8	1	**091-9071**	1	SEAL-HORN BUTTON	
	9	1	**098-7467**	1	BUTTON	
	10	1	**163-1201**	1	HORN AS (24-VOLT, LOW TONE)	
	11	1	**169-3145**	1	WIRE AS	
	12	1	**179-4814**	3	PIN	
	13	1	**8T-4121**	2	WASHER-HARD (11X21X2.5-MM THK)	
M	14	1	**8T-4133**	1	NUT (M10X1.5-THD)	
M	15	1	**8T-4195**	1	BOLT (M10X1.5X30-MM)	

M-METRIC PART

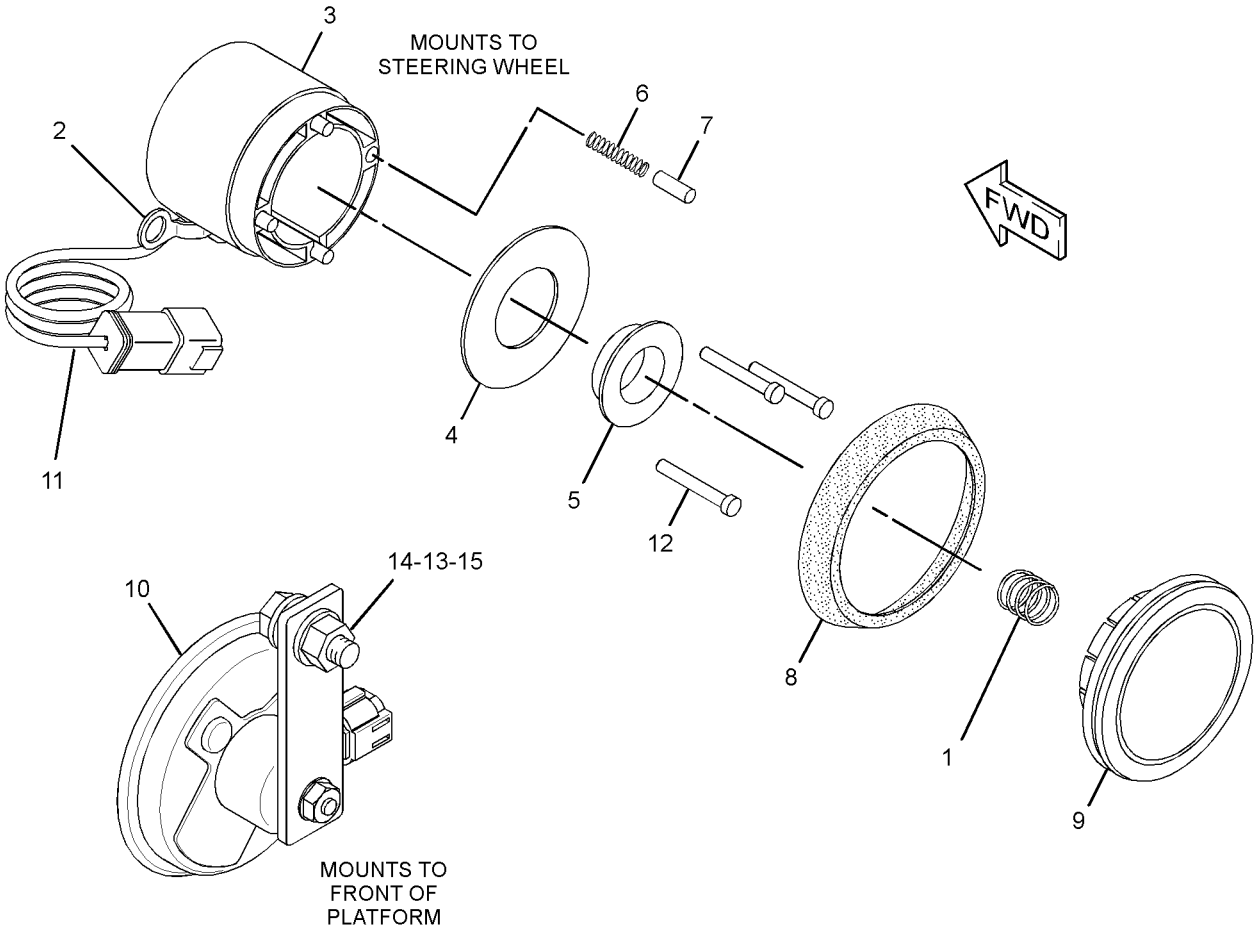

GRAPHIC #1 **<END>** g01685675

OPERATOR STATION

113-5808 HOUSING GP-SEAT SUSPENSION

S/N: JPA1-UP

PART OF 302-7458 SUSPENSION GP-SEAT

AN ATTACHMENT

SMCS-7321, 7324 **i03435560**

NOTE	REF NO	GRAPHIC REF	PART NUMBER	QTY	PART NAME 1 2 3 4 5 6 (PRODUCT LEVEL)	SEE PAGE
	1	1	**119-5026**	1	SCREW-PAN HEAD (10-16X0.63-IN)	
	2	1	**113-5807**	1	KNOB (SLIDE)	
	3	1	**113-5806**	1	ROD	
	4	1	**161-5967**	1	SHAFT	
	5	1	**8Y-6066**	1	SPRING	
	6	1	**8Y-6069**	1	ADJUSTER AS	
	7	1	**8Y-6068**	1	NUT (3/8X16-THD)	
	8	1	**113-5801**	1	HOUSING AS	
	9	1	**8Y-6047**	2	PIN	
	10	1	**2M-7819**	4	RING-RETAINING	
	11	1	**8Y-6041**	1	ARM AS	
	12	1	**8Y-6045**	1	CAM	
	13	1	**8Y-6046**	1	PIN	
	14	1	**5V-0770**	2	BOLT-CARRIAGE (1/4-20X0.74-IN)	
	15	1	**2D-6235**	2	LOCKNUT (1/4-20-THD)	
	16	1	**8S-7803**	4	RING-RETAINING	
	17	1	**7M-7219**	1	BEARING-THRUST	
	18	1	**4N-2927**	2	RACE-THRUST BEARING	
	19	1	**095-0878**	1	PIN-SPRING	
	20	1	**5P-8445**	4	RING-RETAINING	
	21	1	**4B-5059**	6	WASHER (15X29.5X2.5-MM THK)	
	22	1	**8Y-6060**	2	ROLLER	
	23	1	**1Y-7927**	1	PIN	
	24	1	**7V-5191**	2	SPACER (28X10X7.1-MM THK)	
	25	1	**5D-4822**	2	RING-RETAINING	
	26	1	**8Y-6062**	1	LINK-ACTUATOR	
	27	1	**8Y-6063**	1	LINK-ACTUATOR	
	28	1	**8Y-6064**	2	ROLLER-SLIDER	
	29	1	**113-5805**	1	KEY	
	30	1	**131-5167**	1	KNOB AS-ADJUSTMENT	
		1	**4V-7875**	1	HANDLE	
		1	**4V-7877**	1	SPRING	
		1	**6V-3259**	1	PIN-SPRING	
		1	**149-7226**	1	SCREW-PAN HEAD (10-16X0.625-IN)	
	31	1	**131-4242**	1	BOLT (3/8-16X5.18-IN) (SPECIAL)	
	32	1	**8Y-6067**	1	SPACER (10.54-MM THK)	
	33	1	**3D-2975**	2	RING-RETAINING	
	34	1	**8L-8413**	2	STRAP-CABLE	
					AVAILABLE REPAIR KIT(S):	
			100-5179	1	KIT-BUMPER (WEIGHT ADJUSTMENT)	
					(INCLUDES BUMPERS)	
			8Y-6860	1	KIT-SPRING (HEIGHT ADJUSTMENT)	
					(INCLUDES SPRINGS, SPACERS, BUSHING-GUIDES, & ROD HEIGHT ADJUSTERS)	
			8Y-6859	1	KIT-SPRING	
					(INCLUDES RING-RETAININGS, SPRINGS, & BUSHINGS)	
			108-4086	1	KIT-FOLLOWER	
					(INCLUDES PIN & FOLLOWER-CAM)	
			100-3224	1	KIT-INDICATOR (WEIGHT ADJUSTMENT)	
					(INCLUDES STRAP-CABLES, TAPE-INDICATOR, & GUIDE)	
			108-4087	1	KIT-FOLLOWER	
					(INCLUDES PIN & FOLLOWER-CAM)	

113-5808 **HOUSING GP-SEAT SUSPENSION** *(contd.)* **i03435560**

NOTE	REF NO	GRAPHIC REF	PART NUMBER	QTY	PART NAME 1 2 3 4 5 6 (PRODUCT LEVEL)	SEE PAGE
			108-4103	1	KIT-BEARING	
					(INCLUDES ROLLER ASSEMBLIES)	

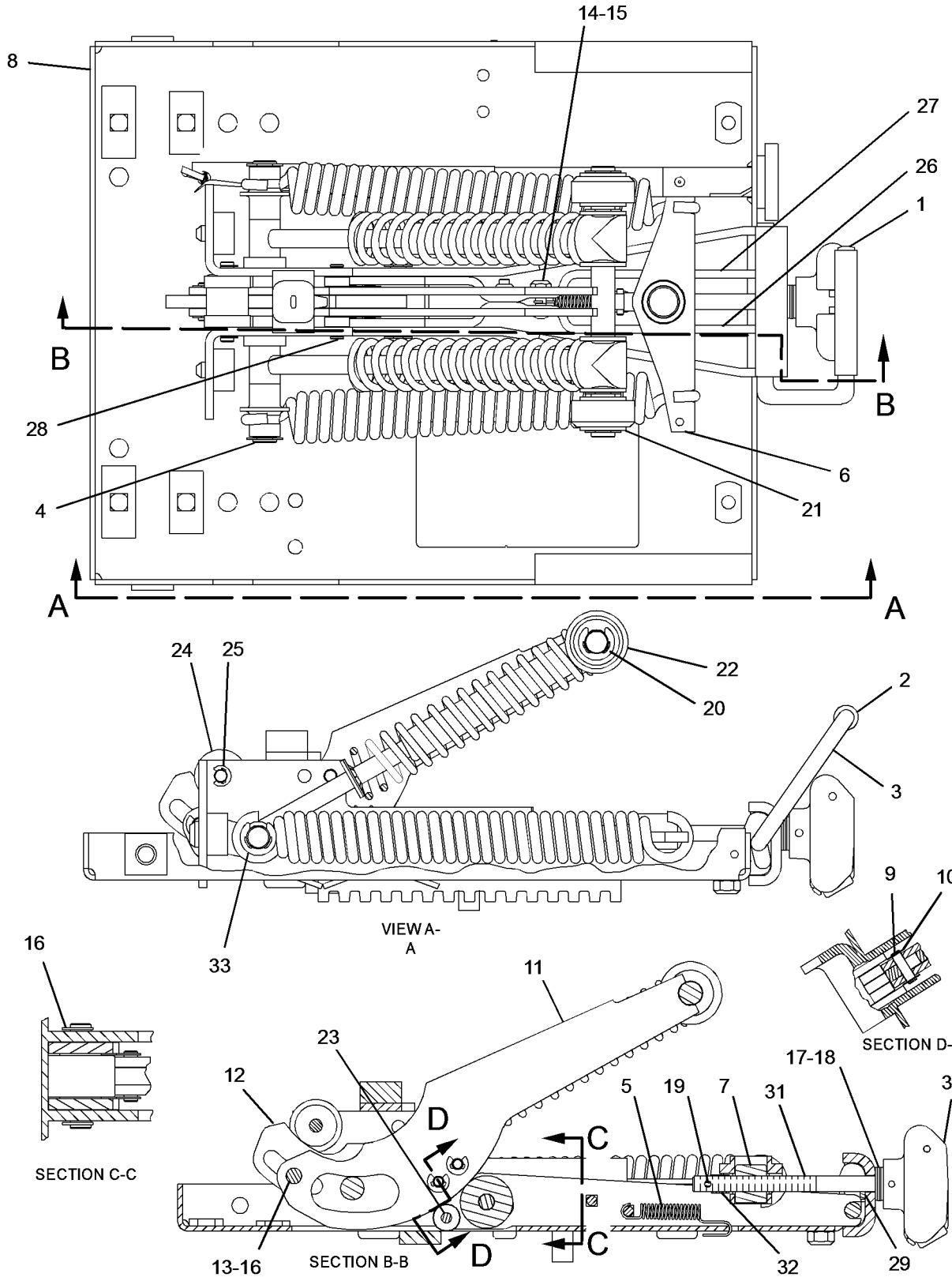

GRAPHIC #1 **<END>** g01786054

OPERATOR STATION

315-5327 INDICATOR GP-LEVEL

S/N: JPA1-UP

AN ATTACHMENT

SMCS-7857 **i03251675**

NOTE	REF NO	GRAPHIC REF	PART NUMBER	QTY	PART NAME 1 2 3 4 5 6 (PRODUCT LEVEL)	SEE PAGE
	1	1	**224-3969**	1	INDICATOR-LEVEL (TEMPERATURE)	

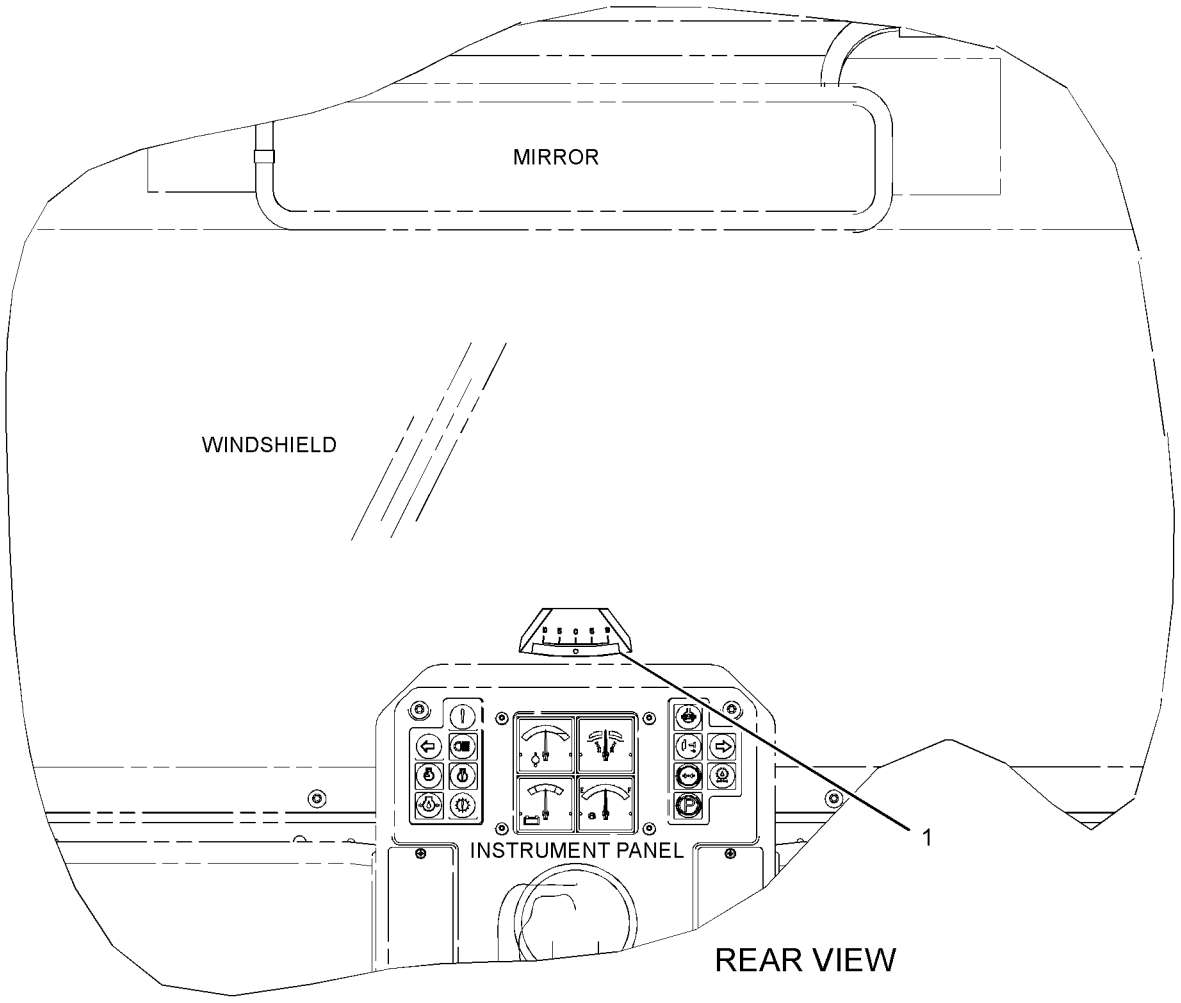

GRAPHIC #1 **<END>** g01702033

OPERATOR STATION

295-7991 INSTALLATION AR-RADIO

S/N: JPA1-UP

AN ATTACHMENT

SMCS-7338 **i03255290**

NOTE	PART NUMBER	QTY	PART NAME 1 2 3 4 5 6 (PRODUCT LEVEL)	SEE PAGE
Y	*286-4330*	1	CONVERTER GP-ELECTRICAL	124
Y	*293-6529*	1	INSTALLATION GP-RADIO	680

Y-SEPARATE ILLUSTRATION

<END>

OPERATOR STATION

293-6529 INSTALLATION GP-RADIO

S/N: JPA1-UP

PART OF 295-7991 INSTALLATION AR-RADIO

AN ATTACHMENT

SMCS-7338 **i03255428**

NOTE	REF NO	GRAPHIC REF	PART NUMBER	QTY	PART NAME 1 2 3 4 5 6 (PRODUCT LEVEL)	SEE PAGE
	1	1	**2A-6684**	1	BRACKET	
	2	1	**2G-8767**	1	WASHER (10.5X60X3-MM THK)	
	3	1	**3S-2093**	1	STRAP-CABLE	
	4	1	**6T-7695**	2	SPEAKER AS-RADIO	
	5	1	**8X-9884**	1	BRACKET AS	
	6	1	**9U-8263**	1	COVER	
	7	1	**9W-3072**	1	ANTENNA AS	
	8	1	**293-7533**	1	CABLE AS	
	9	1	**5P-8525**	1	GROMMET	
	10	1	**6V-5834**	3	SCREW-HEAD (10-14X0.75-IN)	
	11	1	**8T-4121**	2	WASHER-HARD (11X21X2.5-MM THK)	
M	12	1	**8T-4137**	2	BOLT (M10X1.5X20-MM)	

M-METRIC PART

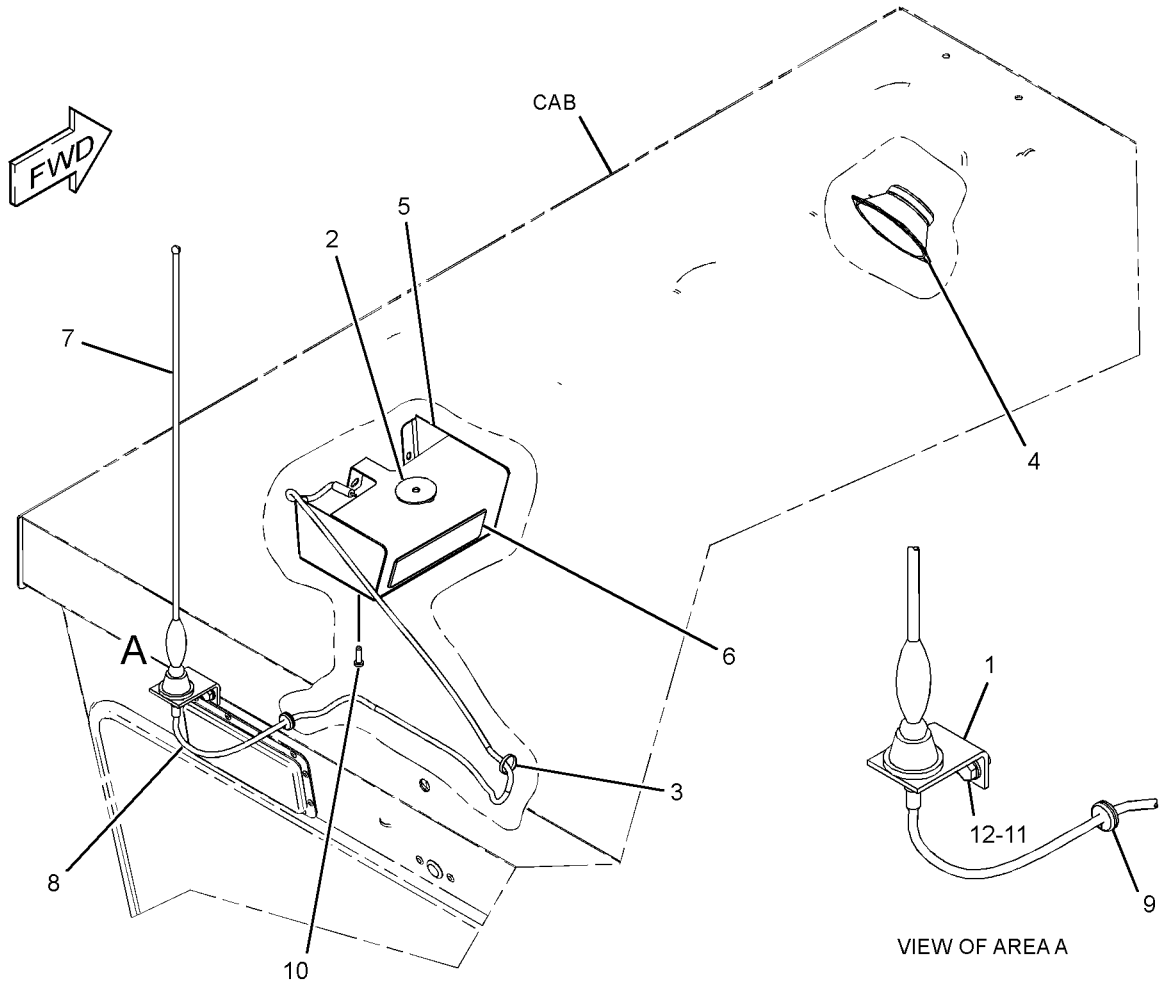

GRAPHIC #1 **<END>** g01687773

OPERATOR STATION

339-5313 INSTALLATION GP-RADIO—NON-ROPS

S/N: JPA1-UP

AN ATTACHMENT

SMCS-7338 **i03346545**

NOTE	REF NO	GRAPHIC REF	PART NUMBER	QTY	PART NAME 1 2 3 4 5 6 (PRODUCT LEVEL)	SEE PAGE
	1	1	**2A-6684**	1	BRACKET	
	2	1	**3S-2093**	4	STRAP-CABLE	
	3	1	**6T-7695**	2	SPEAKER AS-RADIO	
	4	1	**8E-1118**	1	ANTENNA AS	
	5	1	**8X-1853**	2	SPACER (13.1X15.9X30.4-MM THK)	
	6	1	**9U-8263**	1	COVER	
	7	1	**9W-3073**	1	CABLE AS-COAXIAL	
	8	1	**101-3055**	2	COVER-SPEAKER	
	9	1	**200-8623**	8	NUT-RETAINER	
	10	1	**205-4285**	1	CONVERTER GP-ELECTRICAL (24-VOLT TO 12-VOLT)	
	11	1	**208-7782**	1	PLATE AS	
	12	1	**258-7286**	1	PANEL AS-CAB (HIGH PROFILE)	
	13	1	**339-6124**	1	BRACKET AS	
	14	1	**096-6166**	2	WASHER-HARD (4.5X9X1-MM THK)	
	15	1	**103-9425**	8	SCREW-MACHINE (8-32X1-IN)	
M	16	1	**170-5632**	2	BOLT (M4X0.7X16-MM)	
	17	1	**5P-8525**	1	GROMMET	
	18	1	**8T-2501**	2	BOLT (3/8-16X2-IN)	
	19	1	**8T-4121**	2	WASHER-HARD (11X21X2.5-MM THK)	
M	20	1	**8T-4137**	2	BOLT (M10X1.5X20-MM)	
	21	1	**8T-4896**	2	WASHER-HARD (10.2X18.5X2.5-MM THK)	
M	22	1	**9X-2043**	1	SCREW-TRUSS HEAD (M6X1X14-MM)	

M-METRIC PART

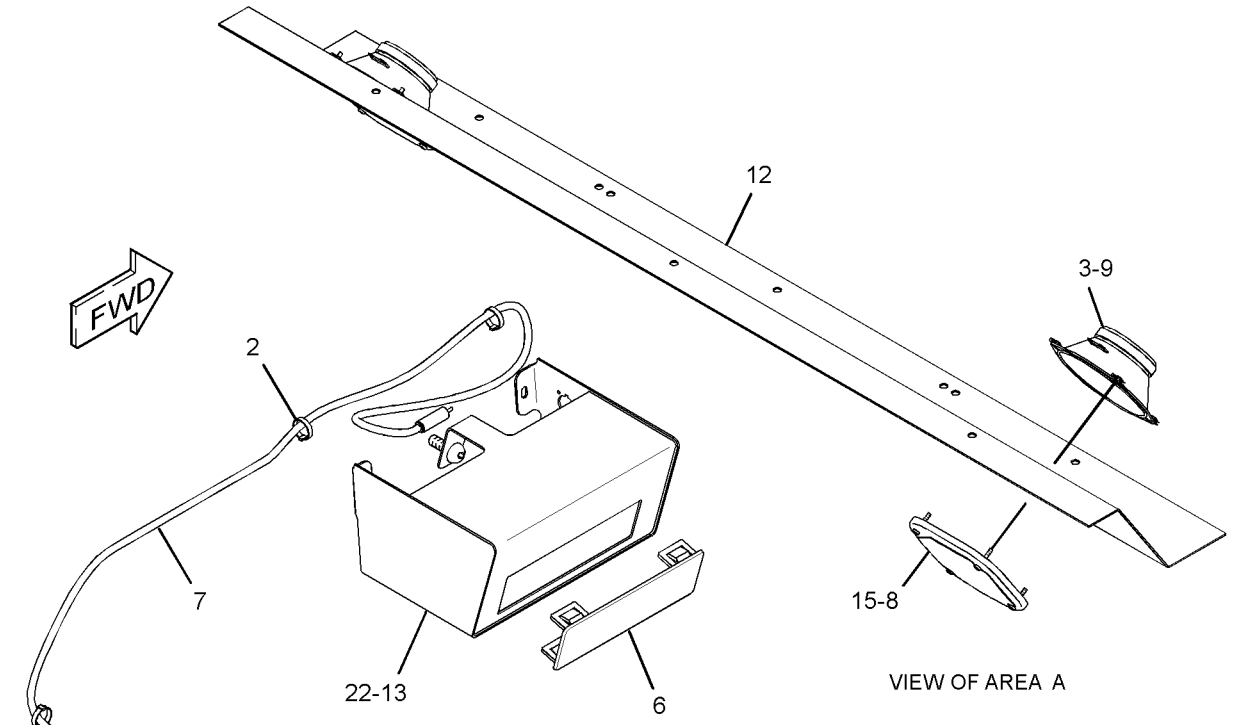

VIEW OF AREA A

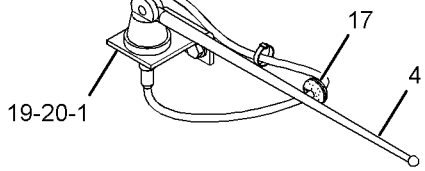

VIEW OF AREA B

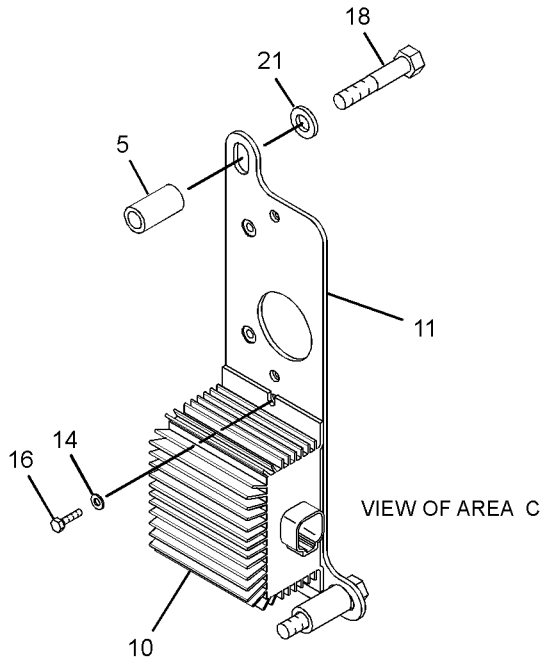

VIEW OF AREA C

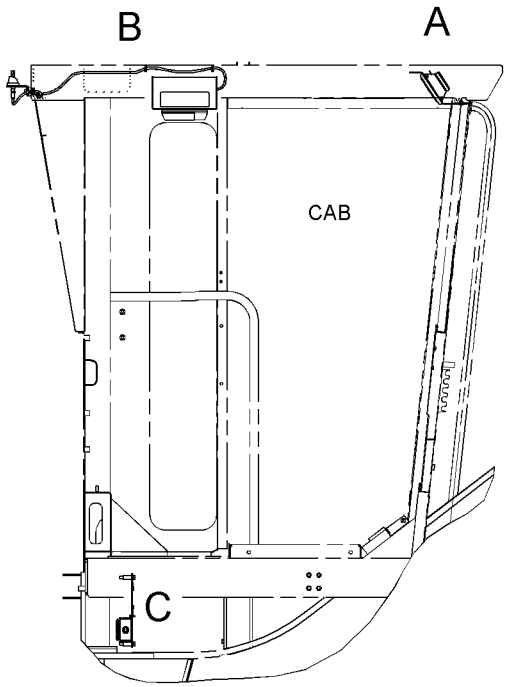

RIGHT SIDE VIEW

GRAPHIC #1 **<END>** g01758393

172-5378 INSULATION GP-WEATHER–COLD WEATHER

S/N: JPA1-UP

PART OF 290-1126, 320-0341 CAB AR, 320-0342 ROPS AR

AN ATTACHMENT

SMCS-7329 **i03435582**

NOTE	REF NO	GRAPHIC REF	PART NUMBER	QTY	PART NAME 1 2 3 4 5 6 (PRODUCT LEVEL)	SEE PAGE
	1	1	**8X-2226**	2	PLATE	
	2	1	**8X-2913**	2	COVER AS	
					(EACH INCLUDES)	
M		1	**6V-9632**	2	NUT-WELD (M6X1-THD)	
B	3	1	**8X-8055**	6	PLUG	
	4	1	**8X-8351**	2	PLATE AS	
	5	1	**8W-6061**	1	FLOOR MAT (CAB)	
	6	1	**171-6165**	2	DUCT	
	7	1	**178-4190**	2	SEAL	
	8	1	**179-2138**	2	SEAL	
	9	1	**179-2139**	1	FOAM (RH)	
	10	1	**179-2140**	1	FOAM (LH)	
	11	1	**4M-5281**	4	BOLT (1/4-20X0.75-IN)	
	12	1	**5P-4115**	4	WASHER-HARD (7.2X19X2-MM THK)	
M	13	1	**9X-2043**	14	SCREW-TRUSS HEAD (M6X1X14-MM)	
BD	14	1	**5P-6882**		SEAL	
BD	15	1	**5P-5969**		SEAL	
	16	1	**112-9164**	8	BOOT	

B-USE AS REQUIRED
D-ORDER BY THE METER
M-METRIC PART

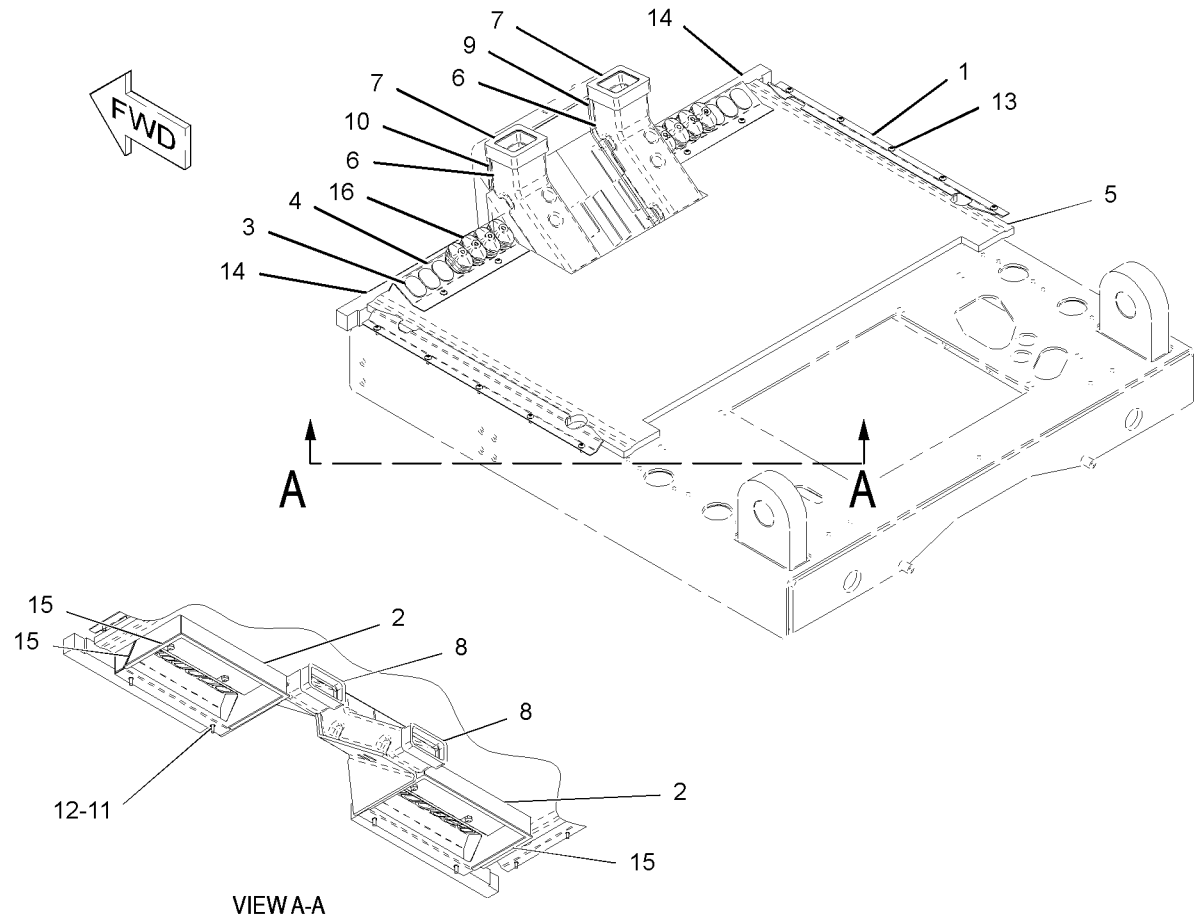

GRAPHIC #1 **<END>** g01786093

OPERATOR STATION

177-8781 LINER GP-CAB—ENCLOSED —HIGH PROFILE

S/N: JPA1-UP
PART OF 320-0342 ROPS AR
AN ATTACHMENT

SMCS-7329 **i02578239**

NOTE	REF NO	GRAPHIC REF	PART NUMBER	QTY	PART NAME 1 2 3 4 5 6 (PRODUCT LEVEL)	SEE PAGE
	1	2	**2G-8572**	2	WASHER-SPECIAL (10X27.81X2.54-MM THK)	
	2	2	**2G-8573**	2	CAP	
	3	2	**2G-8767**	1	WASHER (10.5X60X3-MM THK)	
	4	2	**3G-3265**	24	RIVET	
	5	3	**5P-5454**	1	ASHTRAY	
	6	3	**5P-5824**	1	HOLDER	
	7	2	**5P-7803**	2	PLUG-BUTTON	
	8	1	**6G-2395**	2	DOOR GP (AIR VENTED)	
	9	1	**6G-2396**	2	GASKET	
	10	1	**6G-2751**	4	HINGE	
	11	1	**6G-2914**	2	LATCH	
	12	3	**6K-3273**	4	RIVET-POP	
	13	1	**6P-0205**	3	SPACER (0.269X0.405X0.656-IN THK)	
	14	1,2	**6V-3928**	7	PLUG-BUTTON	
	15	2	**6V-8928**	1	HOOK-COAT	
	16	3	**7G-4824**	1	STRAP	
	17	3	**8E-7791**	1	STRAP	
	18	2	**8F-0492**	1	SPACER (0.531X1.125X0.625-IN THK)	
	19	2	**8T-5401**	2	PLUG-BUTTON	
	20	2	**8X-5414**	1	PLATE	
	21	1	**8X-6999**	1	INSULATION	
	22	1	**8X-7845**	2	COVER	
	23	3	**9N-1995**	20	RIVET-POP	
	24	3	**101-3055**	2	COVER-SPEAKER	
	25	1	**107-5014**	4	KNOB (AIR FILTER)	
	26	3	**109-2804**	2	DOOR	
	27	2	**115-6807**	1	PLATE	
	28	1	**115-9923**	1	COVER	
	29	1	**118-2558**	1	PANEL	
	30	3	**122-8795**	2	PLATE	
	31	3	**137-6783**	1	HOLDER	
	32	3	**137-8065**	1	COVER	
	33	3	**138-7026**	1	PLATE	
	34	3	**138-9910**	1	PLATE AS	
	35	1	**139-1118**	1	PLATE	
	36	1	**139-3593**	1	PANEL	
	37	2	**144-4107**	2	FASTENER	
	38	1	**172-1239**	1	COVER (RH)	
	39	1	**174-4140**	1	PANEL	
	40	1	**179-2176**	1	COVER	
	41	1	**179-2179**	1	PLATE AS	
	42	1	**197-8611**	1	COVER (RH)	
	43	1	**197-8624**	1	COVER (LH)	
	44	2	**197-8629**	1	COVER (RH)	
	45	2	**197-8630**	1	COVER (LH)	
	46	2	**200-8623**	8	NUT-RETAINER	
	47	3	**103-9425**	8	SCREW-MACHINE (8-32X1-IN)	
M	48	1	**129-3178**	3	LOCKNUT (M6X1-THD)	
	49	3	**131-6009**	2	PIN	
	50	3	**5P-4115**	2	WASHER-HARD (7.2X19X2-MM THK)	
	51	3	**6V-0292**	1	PLUG	
	52	1	**8T-4121**	1	WASHER-HARD (11X21X2.5-MM THK)	
M	53	2	**8T-4182**	2	BOLT (M10X1.5X45-MM)	
M	54	1	**8T-4195**	1	BOLT (M10X1.5X30-MM)	
	55	3	**9R-2620**	1	PLUG	

177-8781 **LINER GP-CAB** ***(contd.)*** **i02578239**

NOTE	REF NO	GRAPHIC REF	PART NUMBER	QTY	PART NAME 1 2 3 4 5 6 (PRODUCT LEVEL)	SEE PAGE
M	56	2	**9X-2041**	4	SCREW-TRUSS HEAD (M10X1.5X20-MM)	
M	57	1,3	**9X-2043**	29	SCREW-TRUSS HEAD (M6X1X14-MM)	
M	58	1,2,3	**9X-2045**	6	SCREW-TRUSS HEAD (M6X1X20-MM)	
M	59	3	**9X-2046**	4	SCREW-TRUSS HEAD (M6X1X35-MM)	
	60	1	**9X-8256**	3	WASHER (6.6X12X2-MM THK)	
D	61	2	**8T-3426**		CHANNEL-TRIM (1.4-M)	
D	61A	2	**8T-3426**		CHANNEL-TRIM (0.8-M EACH)	
D	62	1	**6V-0505**		SEAL (1.4-M)	
D	62A	2	**6V-0505**		SEAL (0.03-M EACH)	
D	63	1	**5P-5969**		SEAL (1.0-M)	
D	63A	1	**5P-5969**		SEAL (0.8-M EACH)	
D	64	2	**6V-5163**		SEAL	
M	65	1	**9X-2042**	4	SCREW-TRUSS HEAD (M6X1X12-MM)	
	66	2	**8T-4896**	1	WASHER-HARD (10.2X18.5X2.5-MM THK)	

D-ORDER BY THE METER
M-METRIC PART

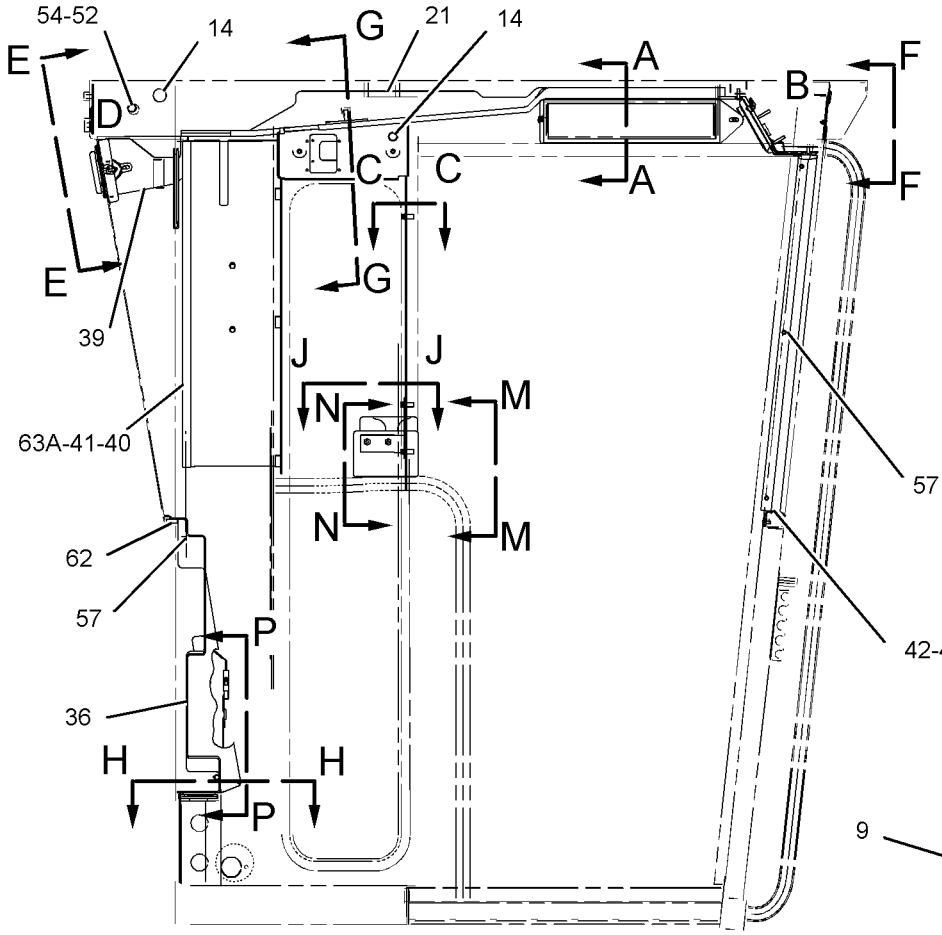

RIGHT SIDE VIEW

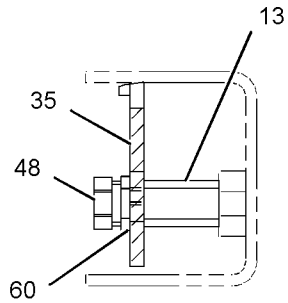

SECTION C-C

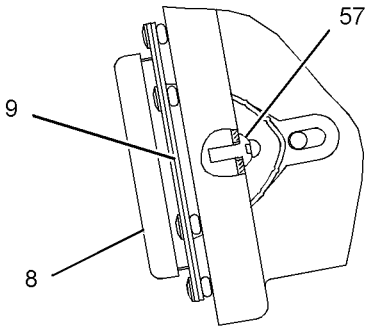

VIEW OF AREA D

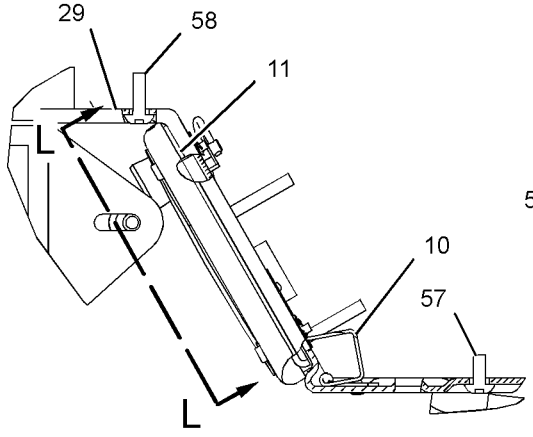

VIEW OF AREA B

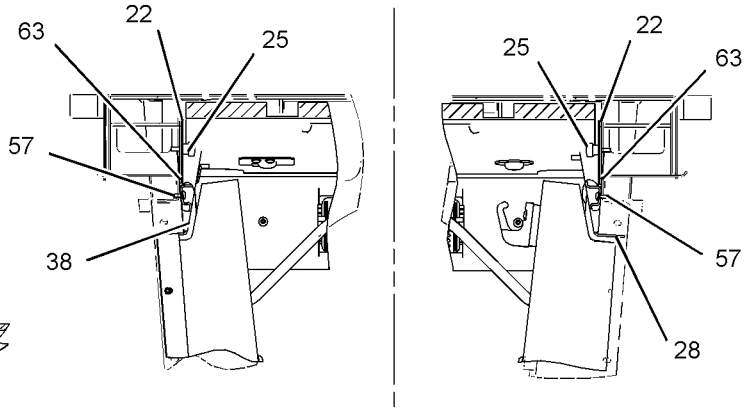

SECTION A-A

GRAPHIC #1 g01294607

177-8781 **LINER GP-CAB** *(contd.)* **i02578239**

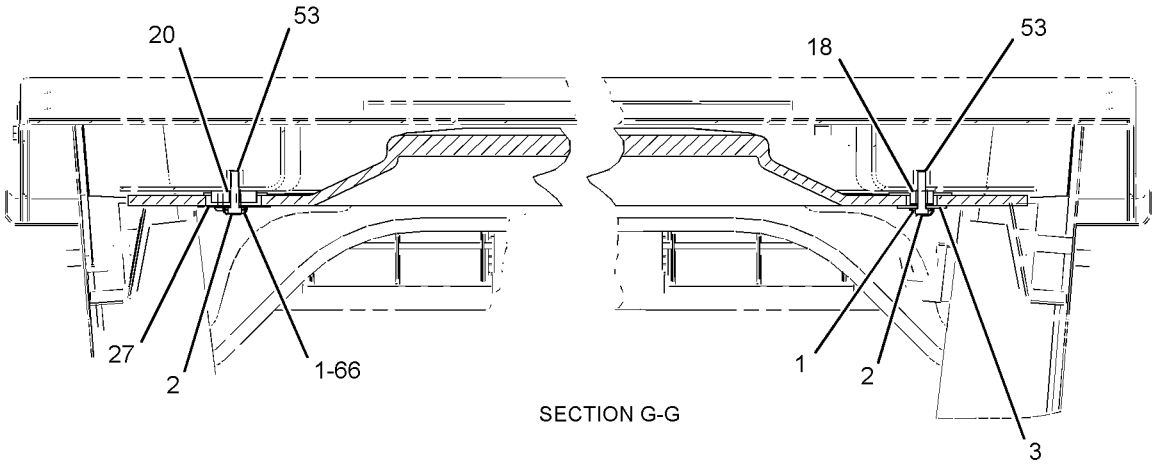

SECTION G-G

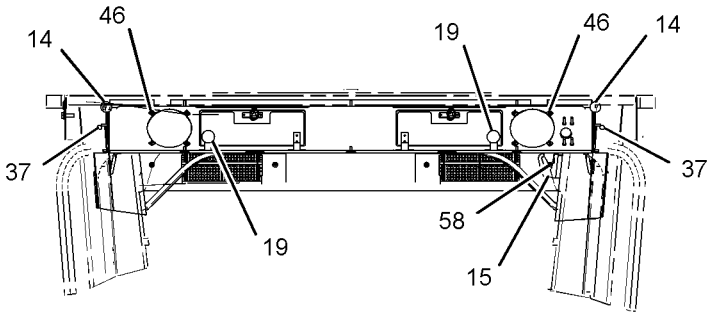

VIEW F-F

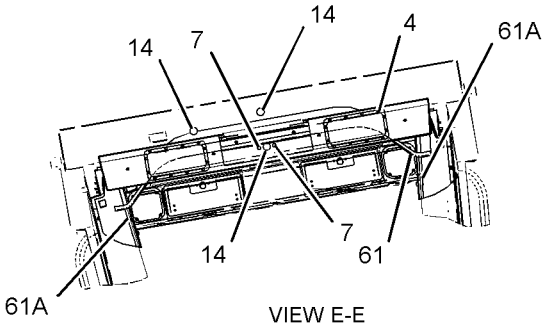

VIEW E-E

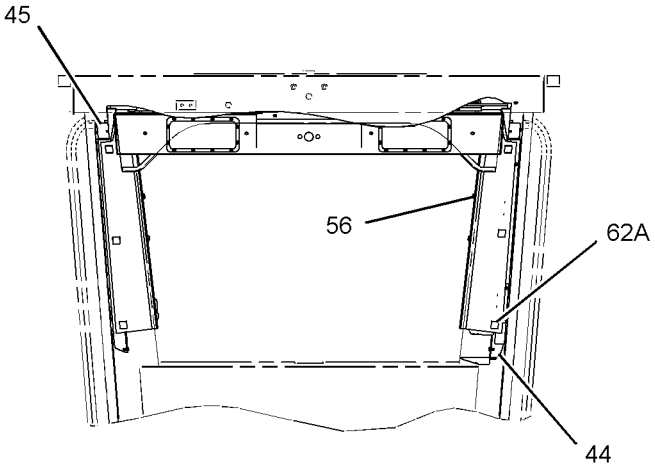

REAR VIEW

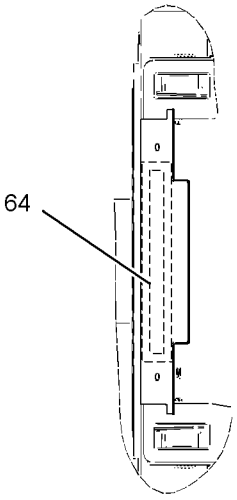

SECTION H-H

GRAPHIC #2 g01293386

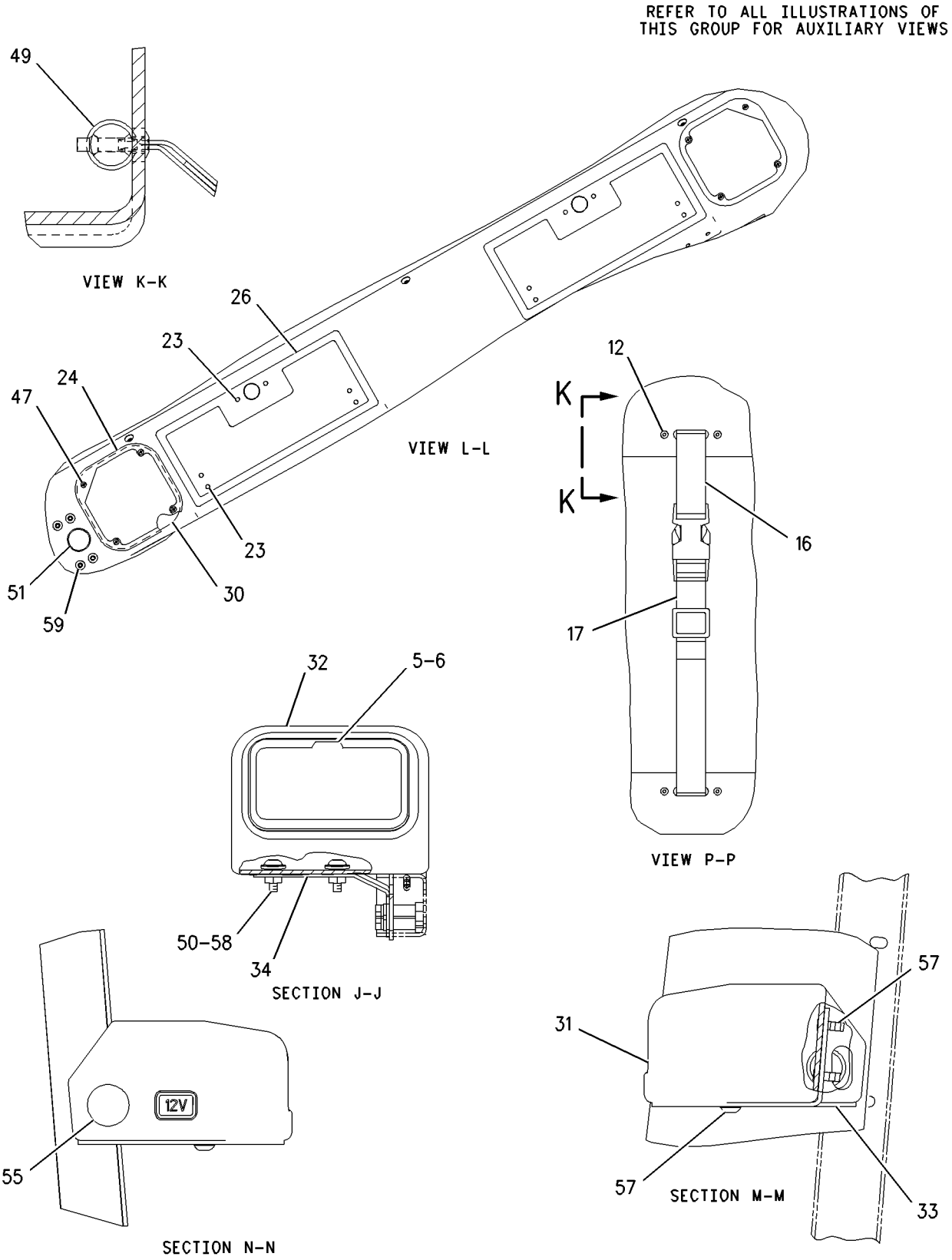

GRAPHIC #3 **<END>** g00846122

OPERATOR STATION

294-8588 LINER GP-CAB—HIGH PROFILE

S/N: JPA1-UP
PART OF 320-0341 CAB AR
AN ATTACHMENT

SMCS-7329 **i03254603**

NOTE	REF NO	GRAPHIC REF	PART NUMBER	QTY	PART NAME 1 2 3 4 5 6 (PRODUCT LEVEL)	SEE PAGE
	1	1	**3G-3265**	22	RIVET	
D	2	1	**5P-5969**		SEAL (2-M)	
	3	1	**5P-7803**	2	PLUG-BUTTON	
	4	1	**6G-2395**	2	DOOR GP (AIR VENTED)	
		1	**6G-7222**	2	ROLLER	
	5	1	**6G-2396**	2	GASKET	
	6	1	**6V-0292**	1	PLUG	
	7	1	**6V-3928**	3	PLUG-BUTTON	
	8	1	**8X-7845**	2	COVER	
	9	1	**8X-8790**	1	PLATE	
	10	1	**107-5014**	4	KNOB	
	11	1	**125-4388**	1	INSULATION	
	12	1	**125-4389**	1	INSULATION	
	13	1	**125-5520**	1	PANEL AS-CAB	
M		1	**6V-9632**	4	NUT-WELD (M6X1-THD)	
	14	1	**125-6483**	1	PLATE	
	15	1	**125-9584**	1	INSULATION	
	16	1	**197-8611**	1	COVER (RH)	
	17	1	**197-8624**	1	COVER (LH)	
	18	1	**294-8587**	1	COVER	
M		1	**6V-9632**	4	NUT-WELD (M6X1-THD)	
	19	1	**303-6203**	1	COVER	
M	20	1	**099-0492**	2	LOCKNUT (M6X1-THD)	
	21	1	**6G-5214**	5	WASHER (7.5X40X3-MM THK)	
	22	1	**6P-0205**	2	SPACER (0.269X0.405X0.656-IN THK)	
M	23	1	**9X-2043**	20	SCREW-TRUSS HEAD (M6X1X14-MM)	
M	24	1	**9X-2045**	7	SCREW-TRUSS HEAD (M6X1X20-MM)	
	25	1	**9X-8256**	2	WASHER (6.6X12X2-MM THK)	

D-ORDER BY THE METER
M-METRIC PART

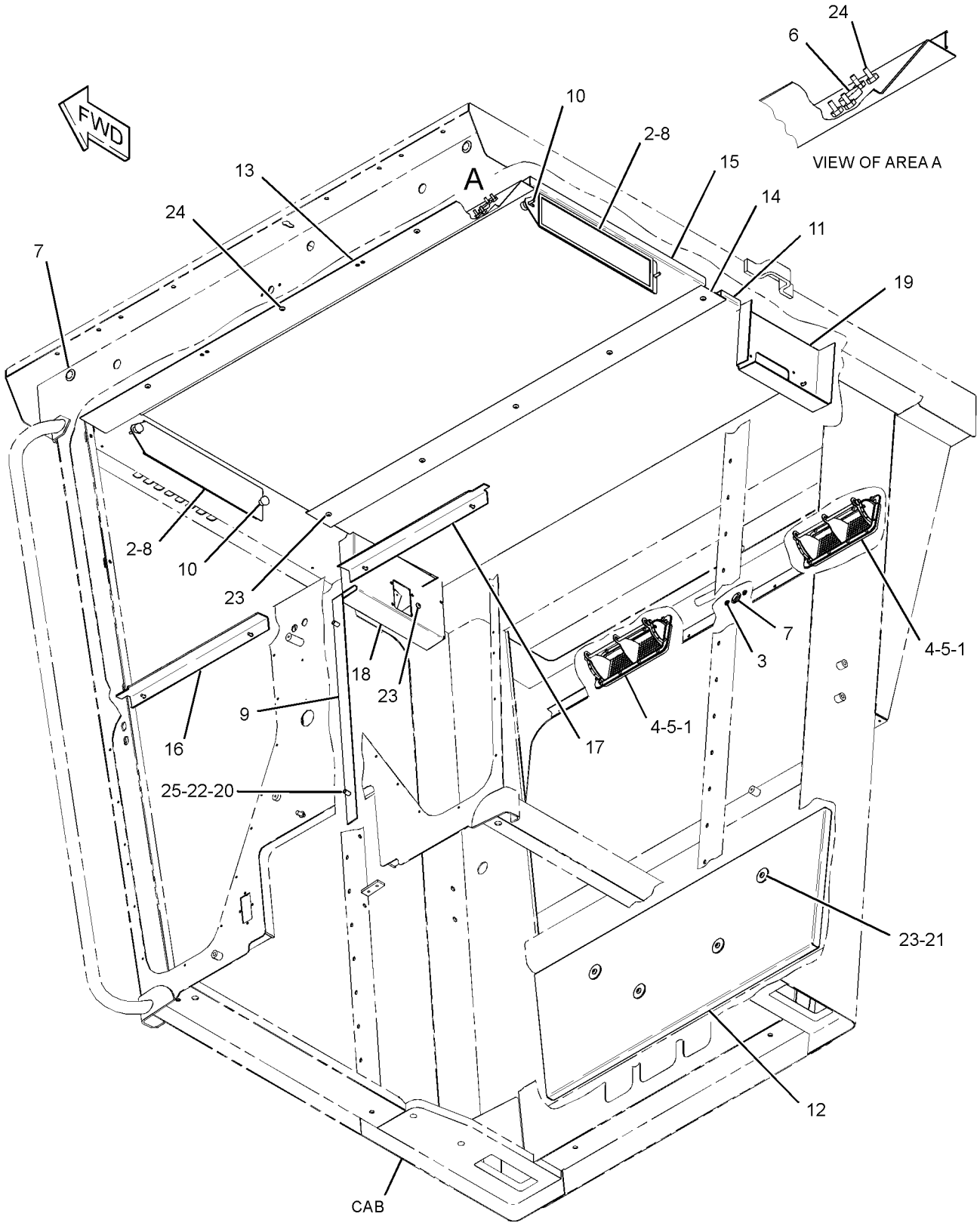

GRAPHIC #1 **<END>** g01757658

OPERATOR STATION

311-2772 LINES GP-AIR CONDITIONER

S/N: JPA1-UP
PART OF 311-2751 AIR CONDITIONER AR
AN ATTACHMENT

SMCS-1808, 7320 **i03400504**

NOTE	REF NO	GRAPHIC REF	PART NUMBER	QTY	PART NAME 1 2 3 4 5 6 (PRODUCT LEVEL)	SEE PAGE
	1	1	**1P-6356**	1	PLATE	
	2	1	**8W-8527**	3	SLEEVE	
	3	1	**8W-8528**	3	SLEEVE	
	4	1	**9G-7101**	1	SPACER (10.5X20X30-MM THK)	
	5	1	**114-5333**	1	SWITCH AS-PRESSURE (REFRIGERANT, HIGH, LOW)	
		1	**102-8802**	1	KIT-RECEPTACLE (2-PIN)	
					(INCLUDES RECEPTACLE AS & WEDGE)	
		1	**186-3735**	2	PIN-CONNECTOR (16-GA TO 18-GA)	
E		1	**9X-1386**		SLEEVE (25-CM)	
	6	1	**149-6371**	1	SWITCH AS-PRESSURE (REFRIGERANT, LOW SIDE)	
		1	**102-8802**	1	KIT-RECEPTACLE (2-PIN)	
					(INCLUDES RECEPTACLE AS & WEDGE)	
		1	**186-3735**	2	PIN-CONNECTOR (16-GA TO 18-GA)	
	7	1	**217-7742**	1	GROMMET	
	8	1	**257-3227**	1	RECEIVER-REFRIGERANT DRYER	
		1	**189-1707**	1	ORIFICE AS-AIR CONDITIONER	
	9	1	**274-5909**	1	ACCUMULATOR-REFRIGERANT	
I	10	1	**313-4127**	1	HOSE AS	
	11	1	**313-4131**	1	TUBE AS	
	12	1	**313-4132**	1	TUBE AS	
I	13	1	**313-5530**	1	HOSE AS	
I	14	1	**333-8326**	1	HOSE AS	
	15	1	**067-2551**	1	CLIP	
M	16	1	**085-8091**	1	BOLT (M10X1.5X55-MM)	
	17	1	**132-7551**	1	SPACER (11X19X6-MM THK)	
	18	1	**4B-0418**	1	CLIP	
	19	1	**4B-9302**	1	CLIP	
	20	1	**4D-7735**	1	CLIP	
	21	1	**4K-8864**	3	CLIP	
	22	1	**4L-6454**	1	BOLT (3/8-16X1-IN)	
	23	1	**4S-1962**	1	CLIP	
	24	1	**5P-1075**	3	WASHER-HARD (10.2X22.5X3-MM THK)	
	25	1	**7X-7910**	1	CLIP	
	26	1	**7X-7911**	1	CLIP	
	27	1	**8M-2773**	1	CLIP	
	28	1	**8S-6109**	1	CLIP (SLOT)	
	29	1	**8S-6110**	1	CLIP (TAB)	
	30	1	**8T-4121**	7	WASHER-HARD (11X21X2.5-MM THK)	
M	31	1	**8T-4133**	3	NUT (M10X1.5-THD)	
M	32	1	**8T-4136**	1	BOLT (M10X1.5X25-MM)	
M	33	1	**8T-4195**	1	BOLT (M10X1.5X30-MM)	
M	34	1	**8T-6466**	1	BOLT (M10X1.5X60-MM)	
	35	1	**9B-7237**	1	BOLT (3/8-16X1.25-IN)	
	36	1	**9X-7380**	1	SEAL-O-RING	
	37	1	**9X-7381**	4	SEAL-O-RING	
	38	1	**9X-7382**	1	SEAL-O-RING	
	39	1	**9X-7383**	1	SEAL-O-RING	
	40	1	**9X-7385**	2	SEAL-O-RING	
	41	1	**2K-5232**	1	SPACER (0.406X0.75X1.81-IN THK)	
M	42	1	**8T-5005**	1	BOLT (M10X1.5X70-MM)	

E-ORDER BY THE CENTIMETER
I-REFER TO HYDRAULIC INFORMATION SYSTEM
M-METRIC PART

311-2772 **LINES GP-AIR CONDITIONER** *(contd.)* **i03400504**

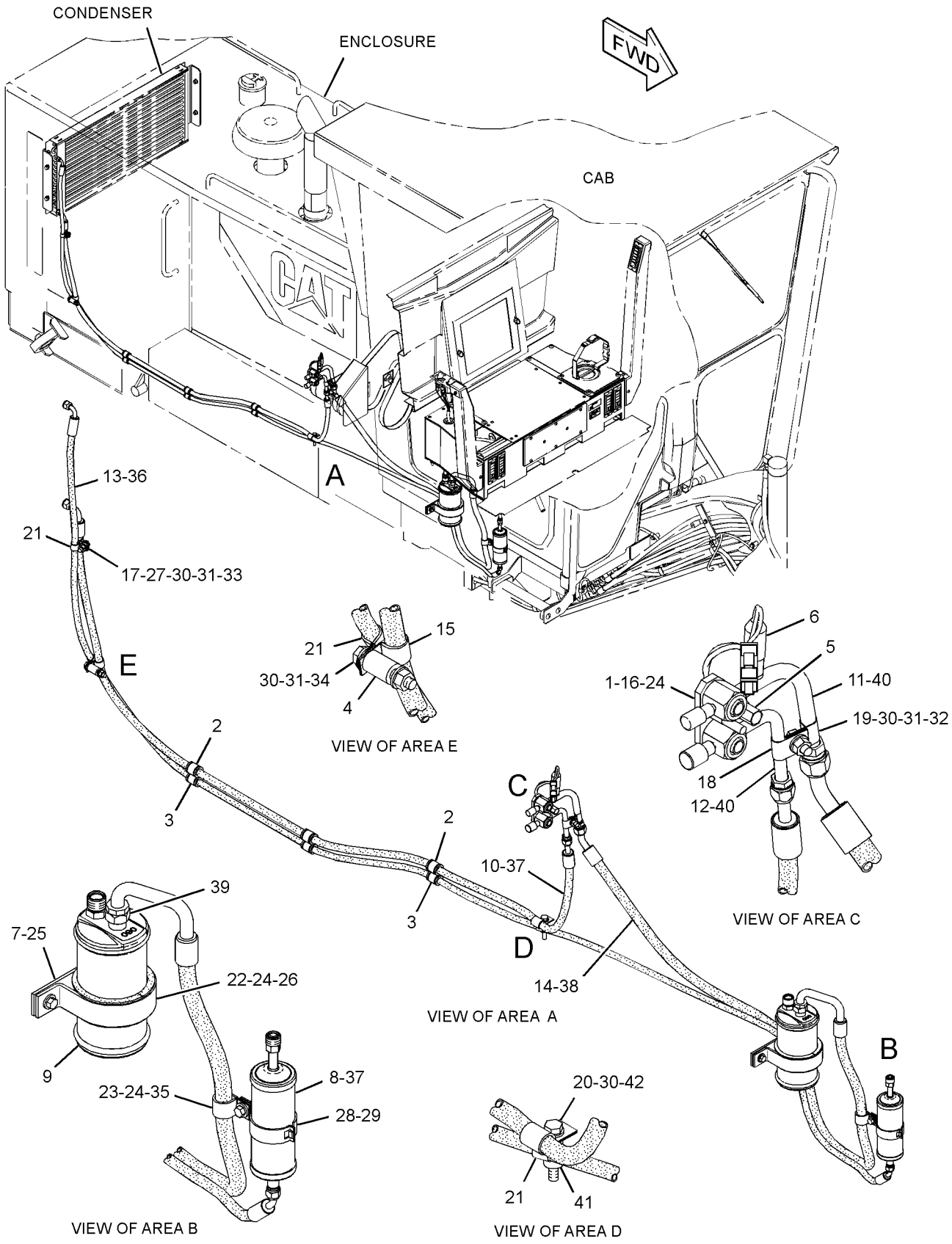

GRAPHIC #1 **<END>** g01768793

OPERATOR STATION

311-2773 LINES GP-HEATER

S/N: JPA1-UP
PART OF 311-2751 AIR CONDITIONER AR, 311-2753 HEATER AR-CAB
CANNOT BE USED WITH 108-1105 SCARIFIER AR
AN ATTACHMENT

SMCS-1812, 7304 **i03412780**

NOTE	REF NO	GRAPHIC REF	PART NUMBER	QTY	PART NAME 1 2 3 4 5 6 (PRODUCT LEVEL)	SEE PAGE
	1	1	**2H-1743**	1	CLIP	
	2	1	**5D-1026**	4	CLAMP-HOSE	
	3	1	*161-9916*	1	ADAPTER AS	
		1	**2M-9780**	1	SEAL-O-RING	
		1	**6V-7420**	1	ADAPTER	
	4	1	*170-0967*	1	ELBOW AS	
		1	**3K-0360**	1	SEAL-O-RING	
		1	**5P-4906**	1	ELBOW	
	5	1	**313-6546**	1	TUBE AS	
	6	1	**313-6547**	1	TUBE AS	
	7	1	*150-3037*	1	ELBOW AS	
		1	**3K-0360**	1	SEAL-O-RING	
		1	**7J-9108**	1	SEAL-O-RING	
		1	**8T-2530**	1	ELBOW	
	8	1	*208-0423*	2	CONNECTOR AS	
					(EACH INCLUDES)	
		1	**136-7226**	1	SEAL-O-RING	
		1	**150-7158**	1	CONNECTOR	
	9	1	**223-5916**	1	VALVE AS-MANUAL	
	10	1	**3S-8665**	1	CLIP	
	11	1	**5M-3062**	1	BOLT (3/8-16X0.75-IN)	
	12	1	**6D-1641**	1	CLIP	
	13	1	**8D-9671**	1	CLIP	
	14	1	**8T-4121**	1	WASHER-HARD (11X21X2.5-MM THK)	
M	15	1	**8T-4136**	1	BOLT (M10X1.5X25-MM)	
	16	1	**8T-4896**	1	WASHER-HARD (10.2X18.5X2.5-MM THK)	
E	18	1	**5P-0767**		HOSE (223-CM)	
E	18A	1	**5P-0767**		HOSE (228-CM)	

E-ORDER BY THE CENTIMETER
M-METRIC PART

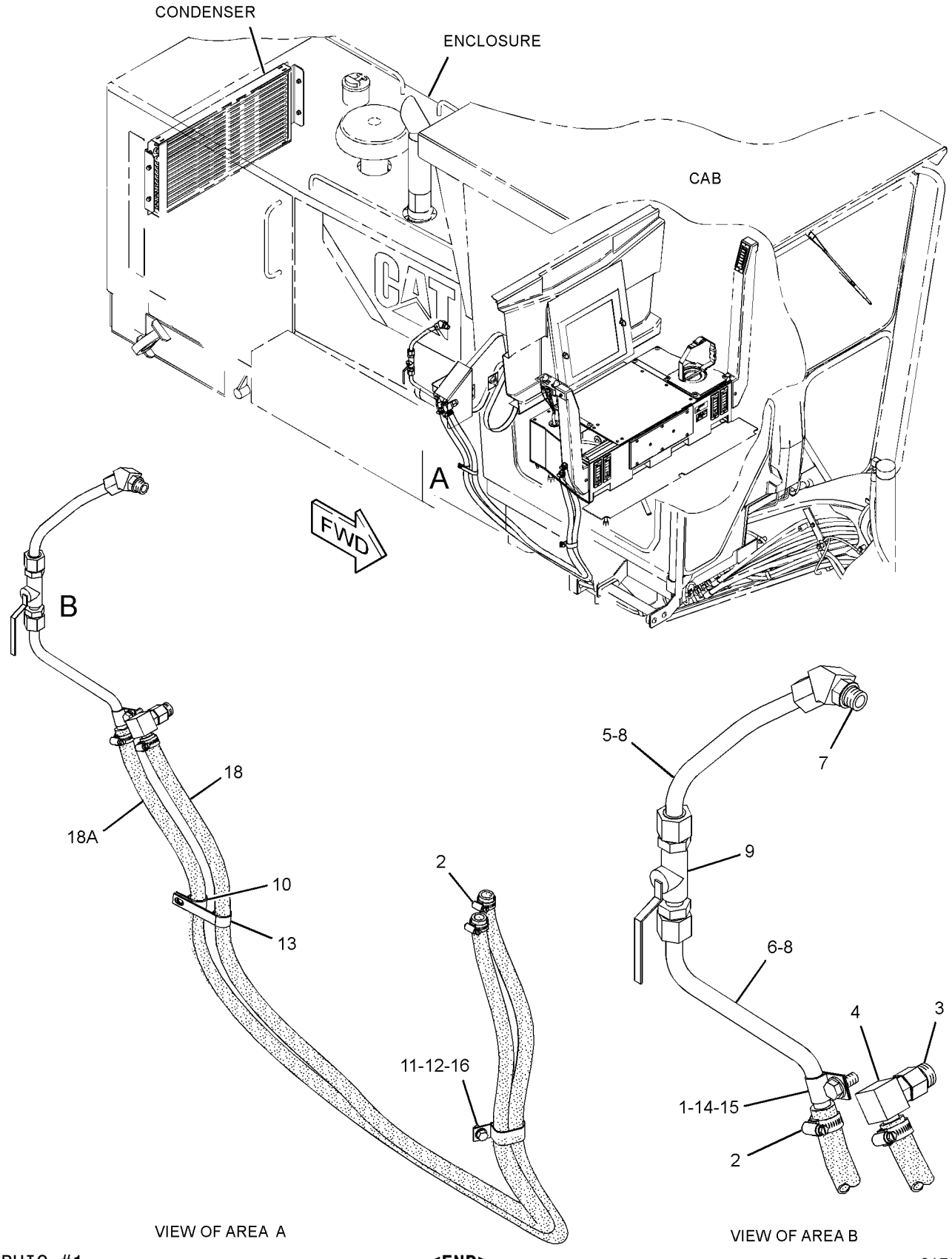

GRAPHIC #1 **<END>** g01768875

OPERATOR STATION

178-8603 LOUVER GP-CAB

S/N: JPA1-UP
PART OF 311-2753 HEATER AR-CAB
AN ATTACHMENT

SMCS-7301 **i01778669**

NOTE	REF NO	GRAPHIC REF	PART NUMBER	QTY	PART NAME 1 2 3 4 5 6 (PRODUCT LEVEL)	SEE PAGE
	1	1	**8Y-6388**	6	LOUVER AS-VENT	
	2	1	**164-8474**	2	LOUVER AS-VENT	
	3	1	**126-1135**	2	PLATE	
	4	1	**126-1136**	2	PLATE	
	5	1	**6V-2687**	4	SCREW-PAN HEAD (10-24X1-IN)	
BD	6	1	**5P-5969**		SEAL	

B-USE AS REQUIRED
D-ORDER BY THE METER

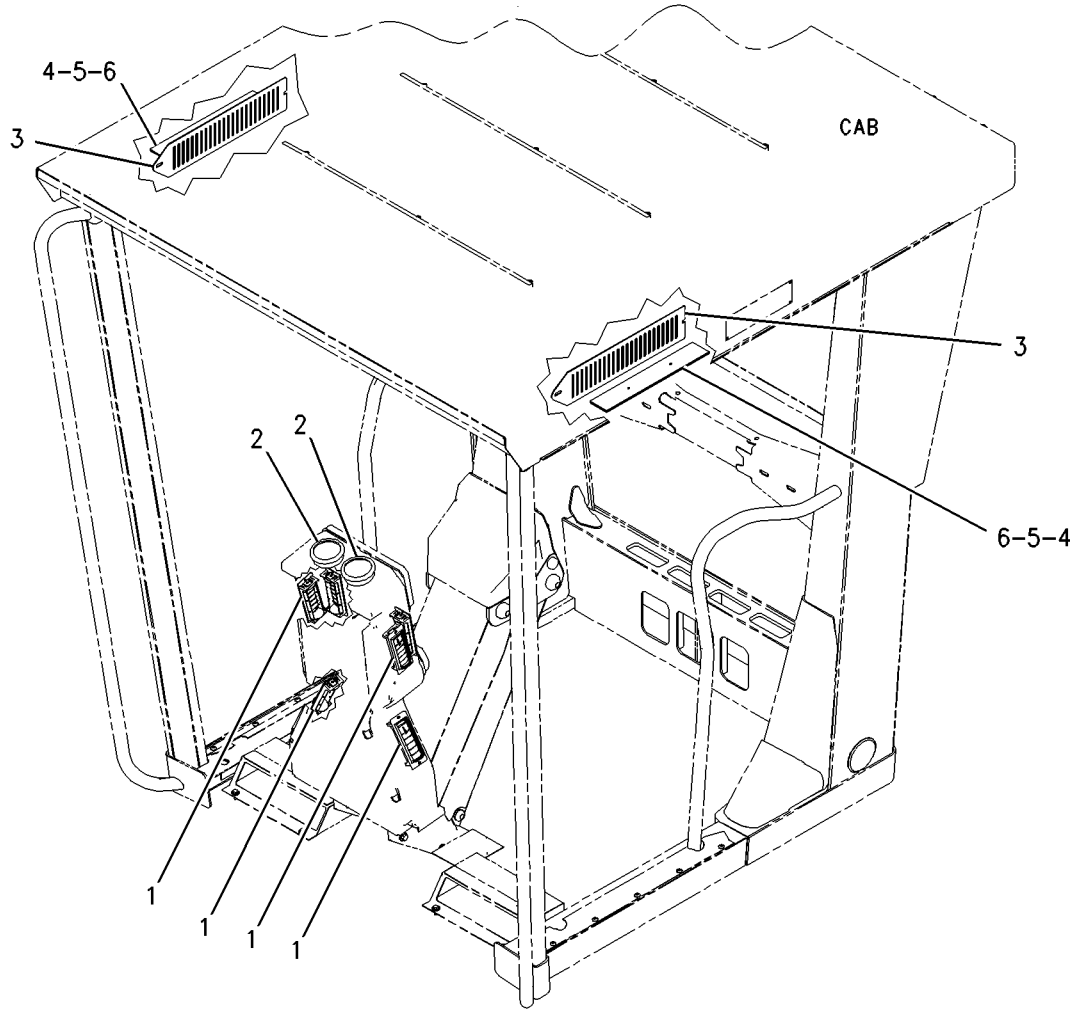

GRAPHIC #1 **<END>** g00940703

8X-2795 MIRROR GP-REAR VIEW–DUAL INSIDE

S/N: JPA1-UP

PART OF 290-1126, 320-0341 CAB AR, 284-5398 CANOPY AR, 284-5397 ROPS GP

AN ATTACHMENT

SMCS-7319 **i02585443**

NOTE	REF NO	GRAPHIC REF	PART NUMBER	QTY	PART NAME 1 2 3 4 5 6 (PRODUCT LEVEL)	SEE PAGE
	1	1	**8Y-4512**	1	MIRROR	
	2	1	**2G-8241**	2	CLAMP	
M	3	1	**9X-2046**	4	SCREW-TRUSS HEAD (M6X1X35-MM)	
	4	1	**2G-8572**	2	WASHER-SPECIAL (10X27.81X2.54-MM THK)	
	5	1	**2G-8573**	2	CAP	
	6	1	**2G-8242**	2	ARM	
	7	1	**5P-1075**	2	WASHER-HARD (10.2X22.5X3-MM THK)	
	8	1	**8H-1728**	2	NUT-ACORN (3/8-16-THD)	
	9	1	**5S-7379**	2	BOLT (3/8-16X0.875-IN)	
	10	1	**1P-2378**	2	CAP	

M-METRIC PART

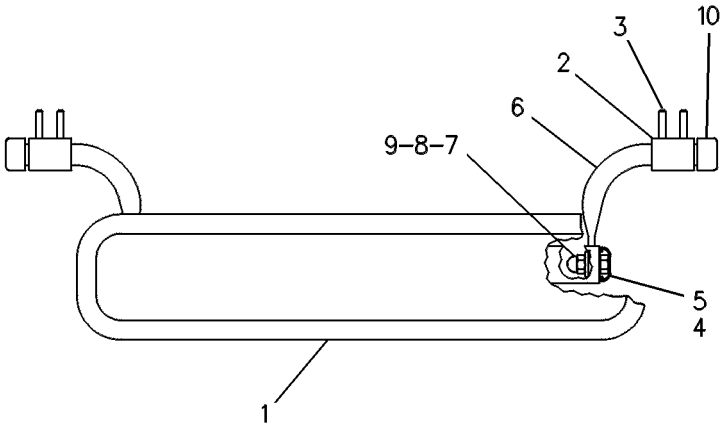

GRAPHIC #1 **<END>** g00084778

OPERATOR STATION

123-4358 MIRROR GP-REAR VIEW—EXTERIOR, HEATED

S/N: JPA1-UP

AN ATTACHMENT

SMCS-7319 **i00130904**

NOTE	REF NO	GRAPHIC REF	PART NUMBER	QTY	PART NAME 1 2 3 4 5 6 (PRODUCT LEVEL)	SEE PAGE
M	1	1	**8T-4133**	8	NUT (M10X1.5-THD)	
M	2	1	**8T-4137**	8	BOLT (M10X1.5X20-MM)	
	3	1	**8T-4121**	24	WASHER-HARD (11X21X2.5-MM THK)	
	4	1	**6G-8831**	4	CLAMP	
	5	1	**5P-6871**	2	MIRROR	
	6	1	**113-8218**	2	ARM	
	7	1	**123-4586**	4	BLOCK	
	8	1	**123-4587**	4	BRACKET	
M	9	1	**8T-4182**	8	BOLT (M10X1.5X45-MM)	
M	10	1	**8T-4195**	4	BOLT (M10X1.5X30-MM)	
M	11	1	**6V-7744**	4	LOCKNUT (M10X1.5-THD)	
	12	1	**9C-5928**	4	SPACER (10X19X5.15-MM THK)	

M-METRIC PART

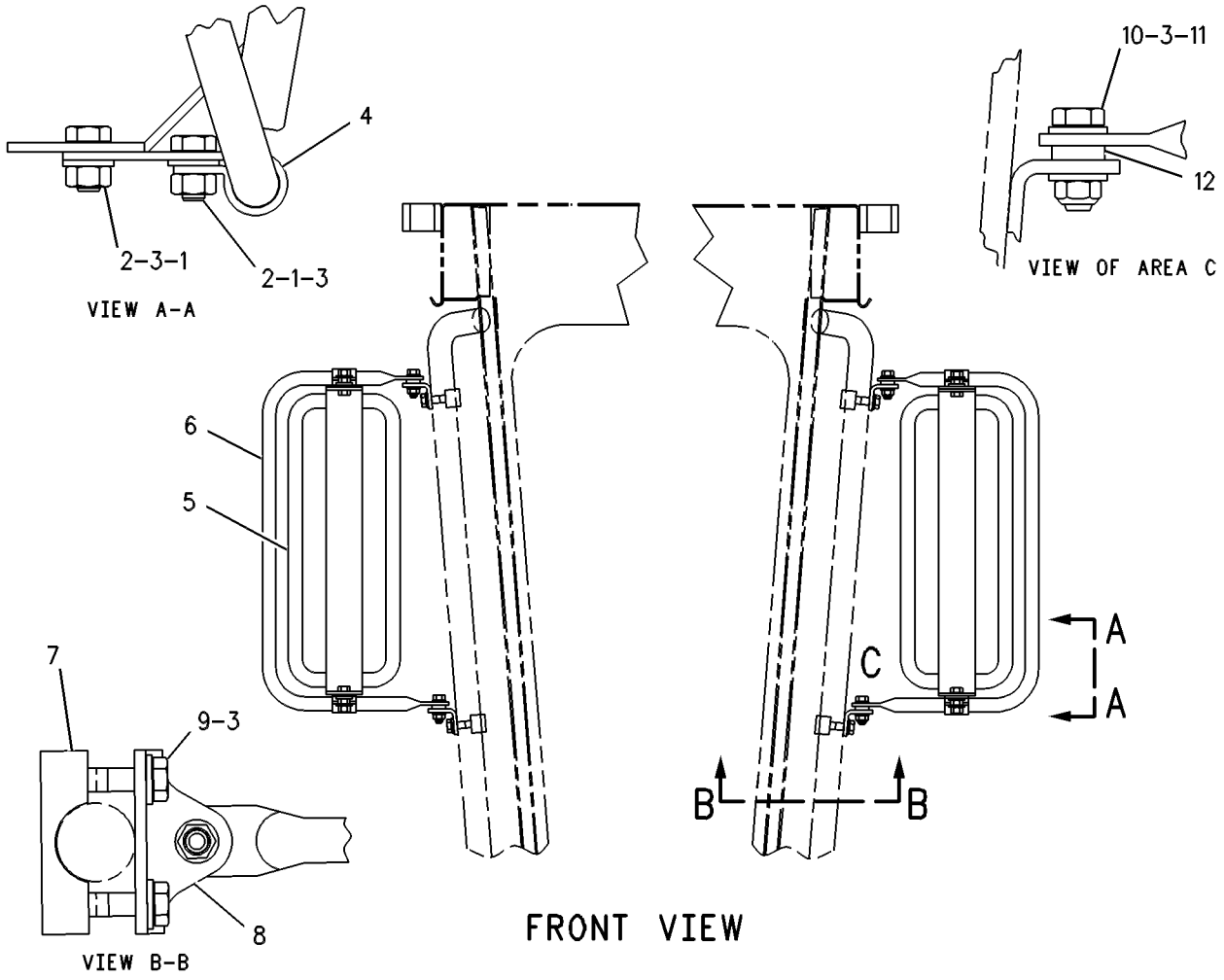

GRAPHIC #1 **<END>** g00109253

OPERATOR STATION

197-2066 MIRROR GP-REAR VIEW—DUAL INTERIOR

S/N: JPA1-UP
EUROPEAN MARKET
AN ATTACHMENT

SMCS-7319 **i02304669**

NOTE	REF NO	GRAPHIC REF	PART NUMBER	QTY	PART NAME 1 2 3 4 5 6 (PRODUCT LEVEL)	SEE PAGE
	1	1	**1P-2378**	4	CAP	
	2	1	**2G-8241**	2	CLAMP	
	3	1	**232-6114**	2	MIRROR AS (RH, LH)	
					(EACH INCLUDES)	
		1	**203-0780**	1	MIRROR	
M	4	1	**9X-2046**	4	SCREW-TRUSS HEAD (M6X1X35-MM)	

M-METRIC PART

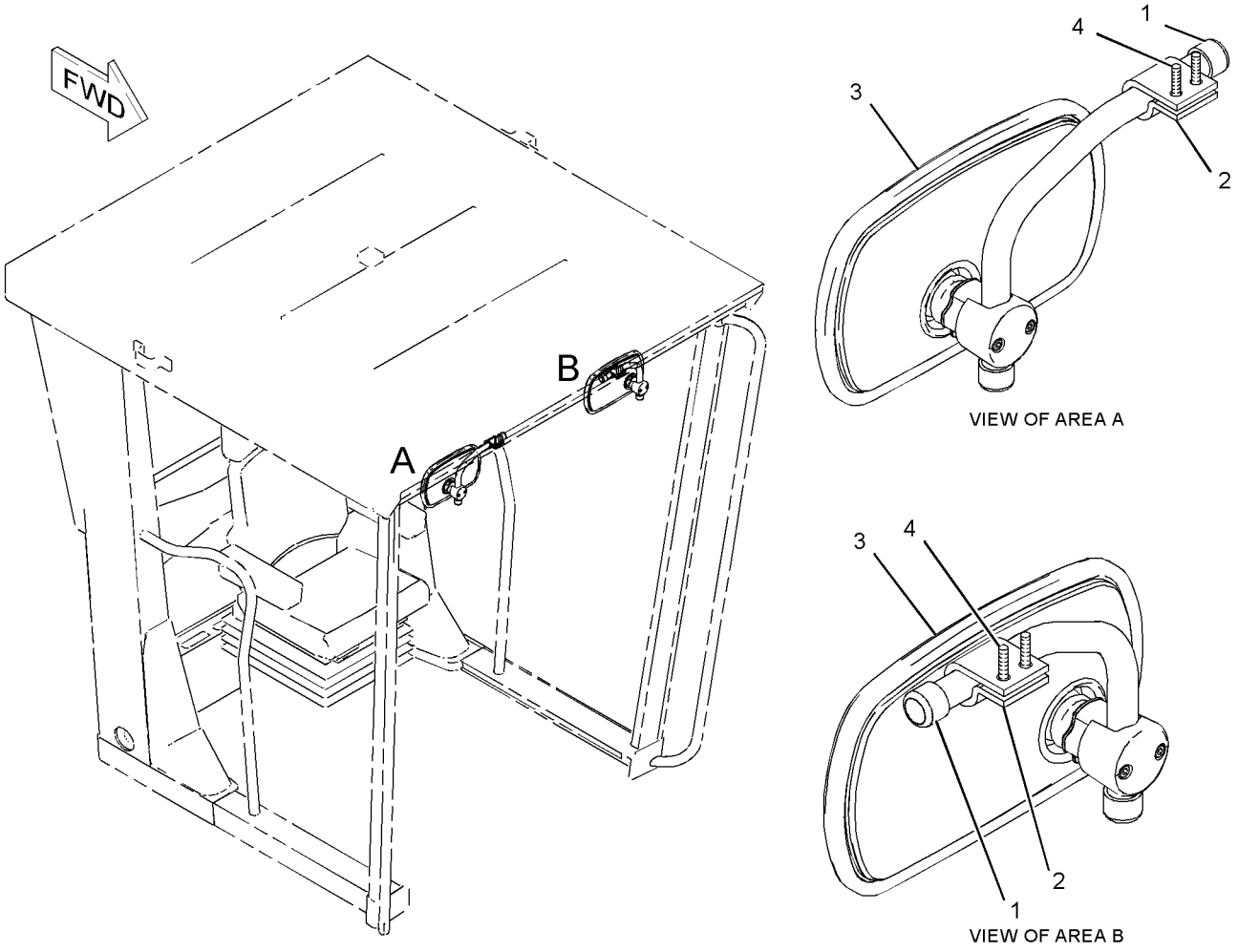

GRAPHIC #1 **<END>** g01118616

OPERATOR STATION

286-4798 MIRROR GP-REAR VIEW—HEATED

S/N: JPA1-UP

AN ATTACHMENT

SMCS-7319 **i03274183**

NOTE	REF NO	GRAPHIC REF	PART NUMBER	QTY	PART NAME 1 2 3 4 5 6 (PRODUCT LEVEL)	SEE PAGE
	1	1	**3E-0109**	5	PLUG (ROCKER SWITCH)	
B	2	1	**3S-2093**	8	STRAP-CABLE	
	3	1	**9W-1442**	1	FUSE (10-AMPERE)	
	4	1	**113-8218**	2	ARM	
	5	1	**123-4586**	4	BLOCK	
	6	1	**123-4587**	4	BRACKET	
	7	1	**145-3350**	1	PLATE	
	8	1	**153-2147**	1	PLATE	
	9	1	**168-8243**	1	HARNESS AS-PANEL	
	10	1	**172-6556**	1	PANEL	
	11	1	**188-3862**	1	BRACKET AS	
	12	1	**202-8649**	2	MIRROR AS (HEATED)	
					(EACH INCLUDES)	
		1	**102-8802**	1	KIT-RECEPTACLE (2-PIN)	
					(INCLUDES RECEPTACLE AS & WEDGE)	
		1	**186-3735**	2	PIN-CONNECTOR (16-GA TO 18-GA)	
		1	**200-1173**	1	MIRROR AS	
	13	1	*123-5858*	1	SWITCH AS-ROCKER	
		1	**3E-8766**	1	SWITCH AS (24-VOLT) (HEATED MIRRORS)	
		1	**3E-8825**	1	LAMP (24-VOLT)	
		1	**123-5857**	1	ACTUATOR-ROCKER	
	14	1	**130-5300**	2	CLIP	
	15	1	**6G-8831**	4	CLAMP	
M	16	1	**6V-7744**	4	LOCKNUT (M10X1.5-THD)	
	17	1	**8T-4121**	27	WASHER-HARD (11X21X2.5-MM THK)	
M	18	1	**8T-4133**	8	NUT (M10X1.5-THD)	
M	19	1	**8T-4137**	8	BOLT (M10X1.5X20-MM)	
M	20	1	**8T-4182**	8	BOLT (M10X1.5X45-MM)	
M	21	1	**8T-4186**	4	BOLT (M10X1.5X40-MM)	
M	22	1	**8T-4191**	2	BOLT (M10X1.5X16-MM)	
	23	1	**9C-5928**	8	SPACER (10X19X5.15-MM THK)	
	24	1	**9D-3768**	2	GROMMET	
M	25	1	**9X-2043**	6	SCREW-TRUSS HEAD (M6X1X14-MM)	

B-USE AS REQUIRED
M-METRIC PART

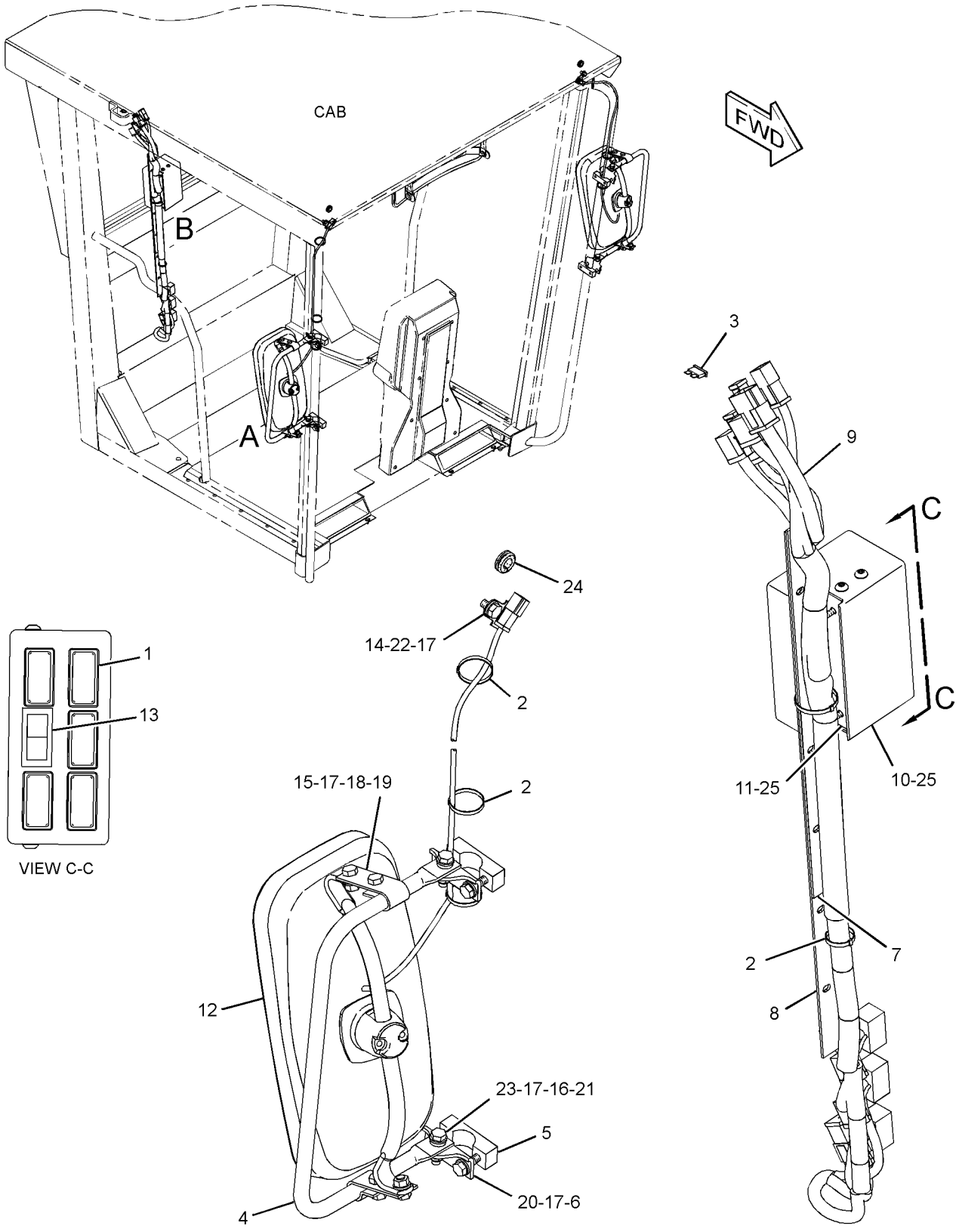

GRAPHIC #1 **<END>** g01762653

OPERATOR STATION

287-3260 MODULE GP-QUAD GAUGE

S/N: JPA1-UP
24-VOLT
PART OF 286-7853, 316-5237, 316-5238 PANEL GP-INSTRUMENT
ALSO AN ATTACHMENT

SMCS-7451, 7490 **i03246295**

NOTE	REF NO	GRAPHIC REF	PART NUMBER	QTY	PART NAME 1 2 3 4 5 6 (PRODUCT LEVEL)	SEE PAGE
	1	1	**9X-4284**	1	INDICATOR AS-COOLANT TEMP	
	2	1	**180-3833**	1	VOLTMETER GP	
	3	1	**180-3834**	1	INDICATOR AS-ARTICULATION	
	4	1	**180-3836**	1	INDICATOR AS-FUEL LEVEL	
	5	1	**186-3735**	6	PIN-CONNECTOR (16-GA TO 18-GA)	
	6	1	**102-8805**	1	KIT-RECEPTACLE (6-PIN)	
					(INCLUDES RECEPTACLE AS & WEDGE)	
F			**8M-6176**	2	LAMP (12-VOLT)	
					AVAILABLE REPAIR KIT(S):	
			116-4686	1	KIT-GAUGE CLUSTER BEZEL (QUAD GAUGE MODULE)	
					(INCLUDES BEZEL AS, PIPE, SEAL & SCREWS)	

F-NOT SHOWN

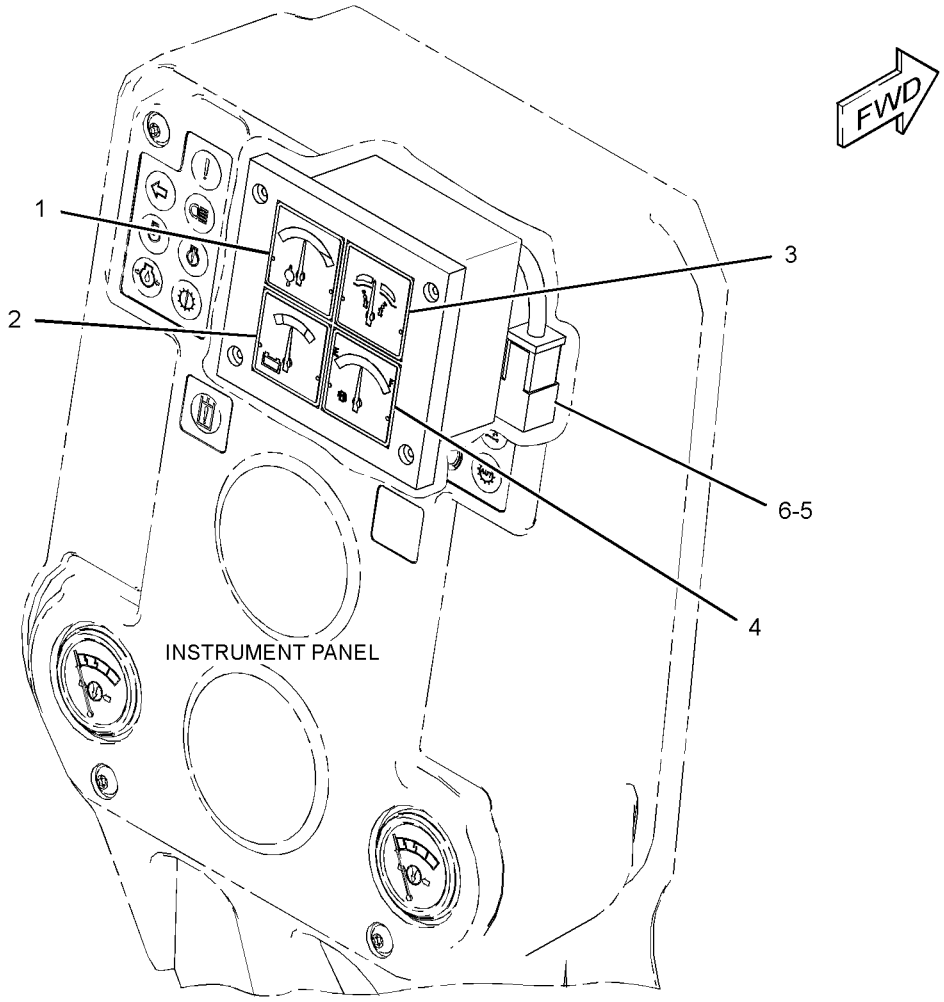

GRAPHIC #1

<END>

g01701214

OPERATOR STATION

293-4153 MODULE GP-SPEEDOMETER & TACH

S/N: JPA1-UP

AN ATTACHMENT

SMCS-7451, 7462, 7463, 7490 **i03346896**

NOTE	REF NO	GRAPHIC REF	PART NUMBER	QTY	PART NAME 1 2 3 4 5 6 (PRODUCT LEVEL)	SEE PAGE
	1	1	**274-8068**	1	MODULE GP-INTERFACE	
	2	1	**287-3259**	1	INDICATOR (SPEED)	
		1	**4B-2043**	2	NUT (8-32-THD)	
		1	**9B-7233**	2	LOCKWASHER	
	3	1	**293-4495**	1	PLATE	
	4	1	**335-8961**	1	HARNESS AS-WIRING	
	5	1	**288-5736**	1	INDICATOR (ENGINE RPM)	
		1	**4B-2043**	2	NUT (8-32-THD)	
		1	**9B-7233**	2	LOCKWASHER	
	6	1	**4B-4863**	2	WASHER (4.7X11X1.2-MM THK)	
M	7	1	**5C-8312**	2	NUT (M4X0.7-THD)	
M	8	1	**6V-9493**	2	SCREW-MACHINE (M4X0.7X45-MM)	
	9	1	**7K-1181**	1	STRAP-CABLE	

M-METRIC PART

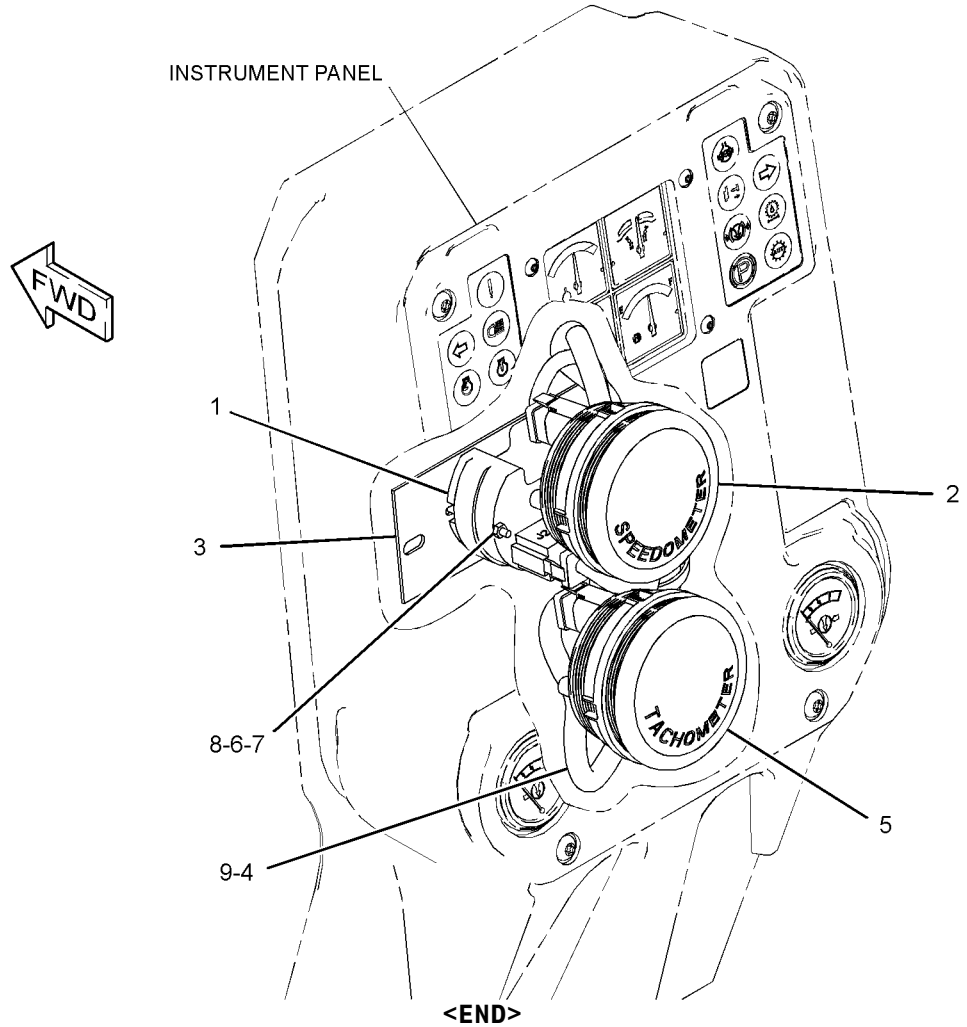

GRAPHIC #1 **<END>** g01756375

OPERATOR STATION

125-4344 MOUNTING GP-CAB—NON-ROPS, ENCLOSED

S/N: JPA1-UP
PART OF 320-0341 CAB AR
AN ATTACHMENT

SMCS-7266, 7301 **i02327863**

NOTE	REF NO	GRAPHIC REF	PART NUMBER	QTY	PART NAME 1 2 3 4 5 6 (PRODUCT LEVEL)	SEE PAGE
	1	1	**103-5515**	1	PAD-RH	
	2	1	**103-5516**	1	PAD-LH	
	3	1	**103-4953**	4	MOUNTING	
	4	1	**7X-0375**	4	BOLT (3/4-10X5-IN)	
	5	1	**8X-0674**	4	WASHER (22X100X10-MM THK)	
	6	1	**3V-9244**	2	WASHER (16.5X50X5-MM THK)	
	7	1	**4K-0367**	2	NUT-FULL (5/8-11-THD)	
	8	1	**7X-0354**	2	BOLT (5/8-11X4.5-IN)	
	9	1	**8T-4122**	2	WASHER-HARD (17X32X3.5-MM THK)	
	10	1	**8X-6131**	2	SEAL	
	11	1	**164-2465**	2	PAD	
	12	1	**9D-1589**	2	MOUNTING	
	13	1	**2G-7098**	2	PAD	
	14	1	**2G-7097**	1	PAD	
E	15	1	**123-6806**		SEAL (87-CM)	

E-ORDER BY THE CENTIMETER

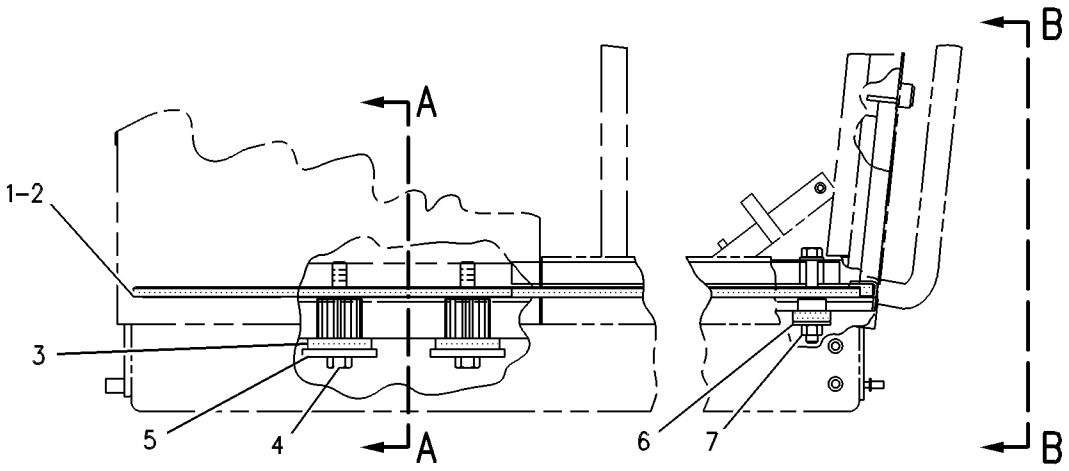

RIGHT SIDE VIEW

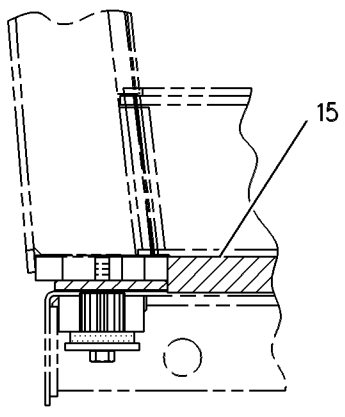

SECTION A-A

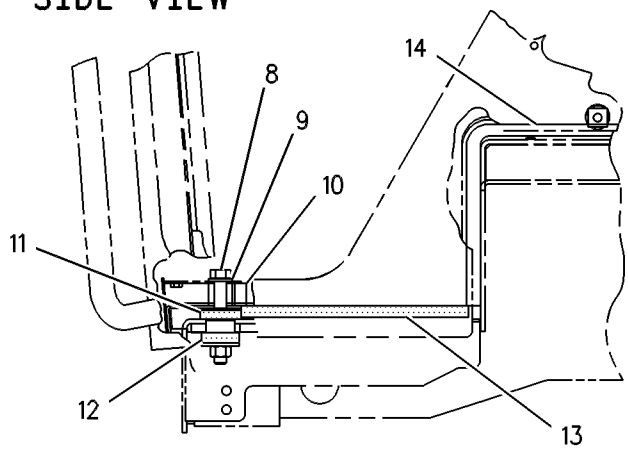

VIEW B-B

GRAPHIC #1 **<END>** g00109328

OPERATOR STATION

2A-6985 MOUNTING GP-ROPS

S/N: JPA1-UP
PART OF 320-0342 ROPS AR
AN ATTACHMENT

SMCS-7266 **i01938112**

NOTE	REF NO	GRAPHIC REF	PART NUMBER	QTY	PART NAME 1 2 3 4 5 6 (PRODUCT LEVEL)	SEE PAGE
	1	1	**3E-4048**	2	CAP-PLUG	
	2	1	**103-5515**	1	PAD-RH	
	3	1	**103-5516**	1	PAD-LH	
	4	1	**103-4953**	4	MOUNTING	
	5	1	**7X-0375**	4	BOLT (3/4-10X5-IN)	
	6	1	**8X-0674**	4	WASHER (22X100X10-MM THK)	
	7	1	**3V-9244**	2	WASHER (16.5X50X5-MM THK)	
	8	1	**4K-0367**	2	NUT-FULL (5/8-11-THD)	
	9	1	**7X-0354**	2	BOLT (5/8-11X4.5-IN)	
	10	1	**8T-4122**	4	WASHER-HARD (17X32X3.5-MM THK)	
	11	1	**8X-6131**	2	SEAL	
	12	1	**164-2465**	2	PAD	
	13	1	**9D-1589**	2	MOUNTING	
	14	1	**2G-7098**	2	PAD	
	15	1	**2G-7097**	1	PAD	
	16	1	**103-4771**	2	PIN AS	
	17	1	**030-8535**	2	BOLT-LOCKING (3/8-16XO.875-IN)	
	18	1	**8T-4896**	2	WASHER-HARD (10.2X18.5X2.5-MM THK)	
B	19	1	**166-1999**	2	SHIM (2.28-MM THK)	
BE	20	1	**123-6806**		SEAL (87-CM)	
B	21	1	**166-1997**	2	SHIM (1.2-MM THK)	

B-USE AS REQUIRED
E-ORDER BY THE CENTIMETER

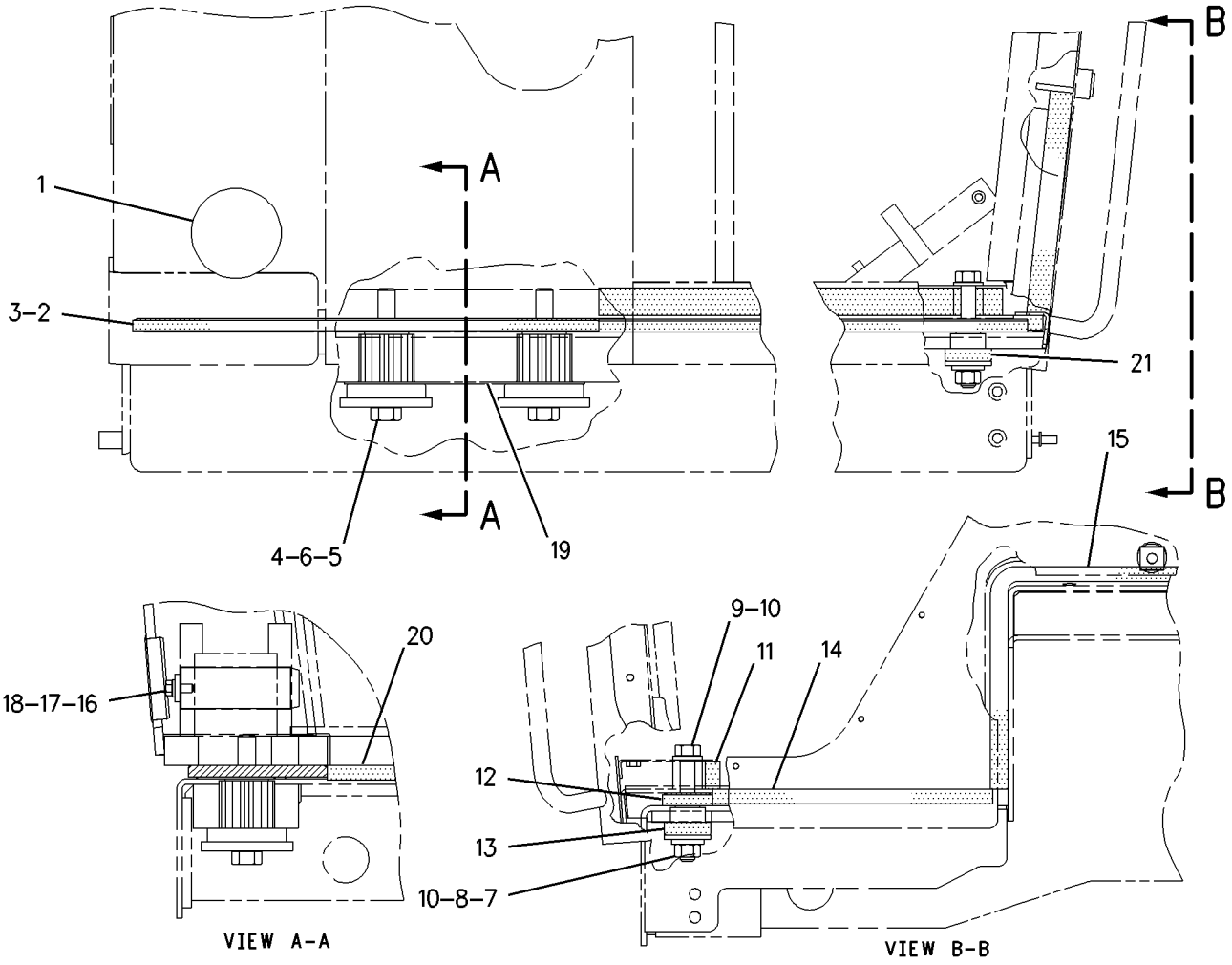

GRAPHIC #1 **<END>** g00752004

OPERATOR STATION

301-4173 PAN GP-BACKREST

S/N: JPA1-UP
PART OF 301-4174 SEAT GP
AN ATTACHMENT

SMCS-7312 **i02947678**

NOTE	REF NO	GRAPHIC REF	PART NUMBER	QTY	PART NAME 1 2 3 4 5 6 (PRODUCT LEVEL)	SEE PAGE
	1	1	**164-4883**	1	KNOB-LUMBAR	
	2	1	**250-4628**	3	PLUG	
	3	1	**292-6099**	1	CUSHION AS-BACK	
	4	1	*299-2277*	1	PAN GP-BACKREST	
		1	**4K-9429**	2	RIVET-POP	
		1	**136-1543**	1	PLATE AS-LUMBAR	
		1	**261-5694**	1	PAN AS-BACKREST	
	5	1	**5P-0537**	2	WASHER-HARD (7.2X14.5X2-MM THK)	
	6	1	**6V-8969**	2	SCREW-BUTTON HEAD (1/4-20X0.5-IN)	
	7	1	**8T-7566**	1	PIN-SPRING	

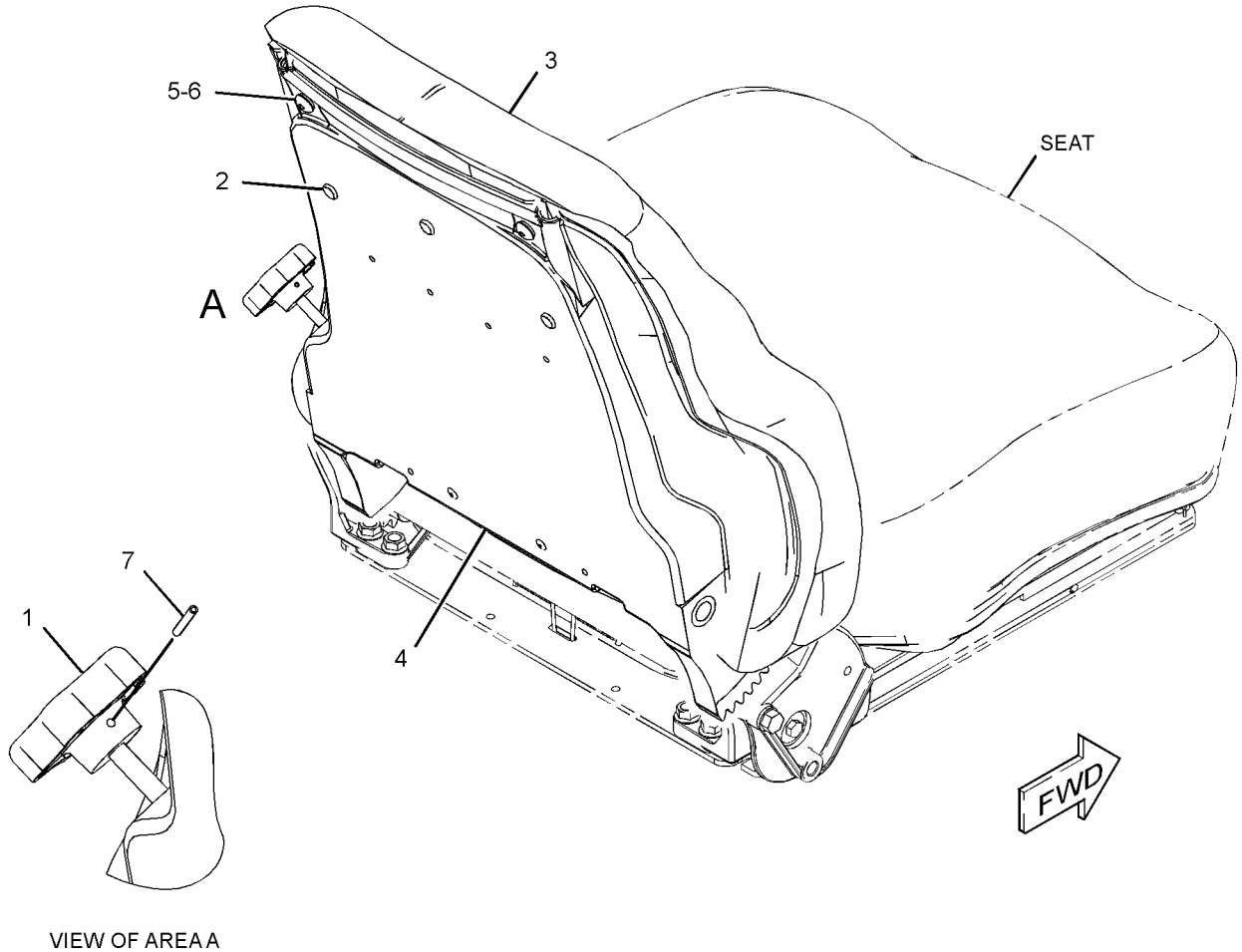

VIEW OF AREA A

GRAPHIC #1 **<END>** g01417150

OPERATOR STATION

8X-2385 PANEL GP-CAB—HIGH PROFILE

S/N: JPA1-UP
PART OF 320-0341 CAB AR, 320-0342 ROPS AR
AN ATTACHMENT

SMCS-7301 **i02585483**

NOTE	REF NO	GRAPHIC REF	PART NUMBER	QTY	PART NAME 1 2 3 4 5 6 (PRODUCT LEVEL)	SEE PAGE
	1	1	**115-6806**	2	GLASS (SIDE)	
	2	1	**8X-2228**	1	GLASS-FRONT	
D	3	1	**5P-5768**		SEAL (11.9-M)	
	4	1	**102-9372**	1	GLASS (REAR)	
	5	1	**149-3409**	2	GLASS	
E	6	1	**3E-9413**		SEAL (963-CM)	
	7	1	**166-2830**	1	FILM (SUNSHADE-CATERPILLAR)	

D-ORDER BY THE METER
E-ORDER BY THE CENTIMETER

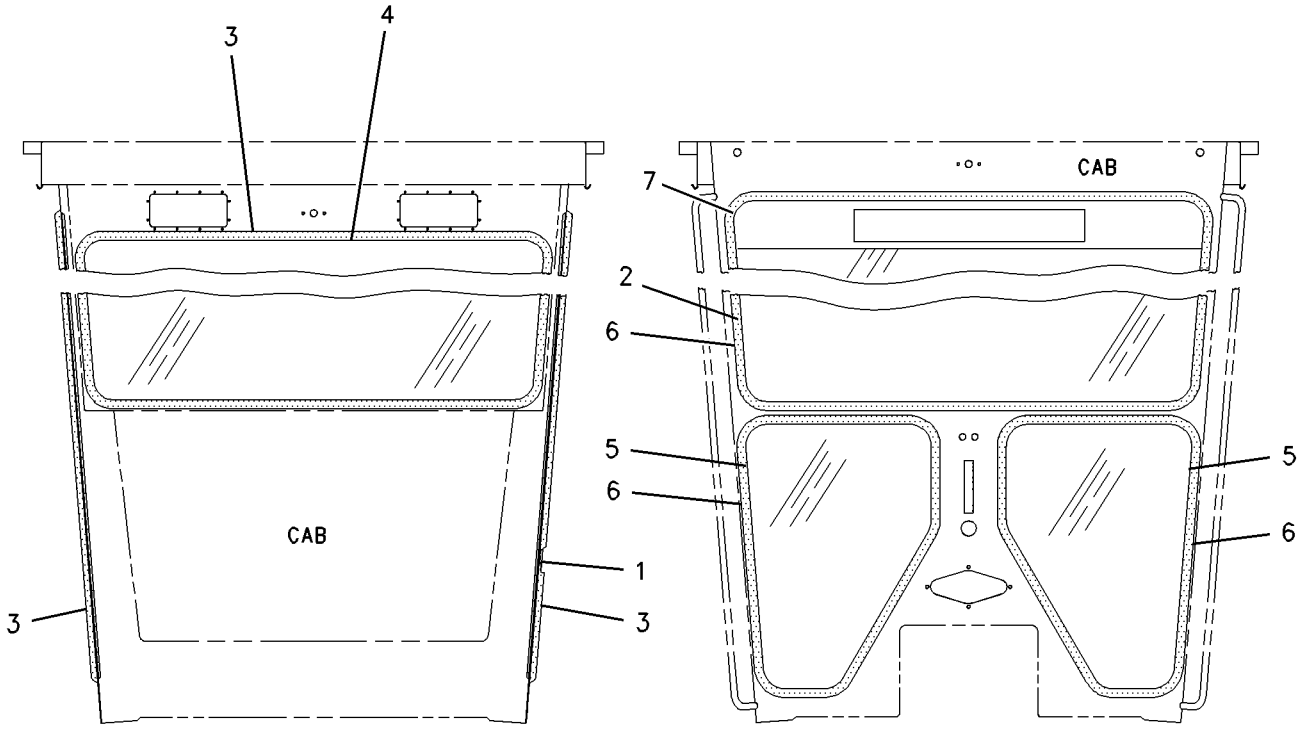

REAR VIEW FRONT VIEW

GRAPHIC #1 **<END>** g00693201

OPERATOR STATION

286-7853 PANEL GP-INSTRUMENT

S/N: JPA1-UP
PART OF 290-1126 CAB AR
AN ATTACHMENT

SMCS-7450, 7451 **i03255188**

NOTE	REF NO	GRAPHIC REF	PART NUMBER	QTY	PART NAME 1 2 3 4 5 6 (PRODUCT LEVEL)	SEE PAGE
	1	1	**5D-0269**	2	ELBOW	
	2	1	**5K-7577**	2	HOSE AS	
	3	1	**9M-8662**	2	COUPLING	
	4	1	**107-1983**	4	LAMP (24-VOLT)	
	5	1	**115-1748**	10	LAMP (24-VOLT, 3-WATT)	
	6	1	**117-9966**	2	PLUG	
	7	1	**122-7045**	6	COVER	
	8	1	**122-8146**	2	PLATE AS	
					(EACH INCLUDES)	
M		1	**6V-9632**	2	NUT-WELD (M6X1-THD)	
	9	1	**196-4150**	1	PANEL	
	10	1	**202-1138**	4	ELBOW	
	11	1	**285-3585**	1	HARNESS AS-CONTROL	
Y	12	1	**287-3260**	1	MODULE GP-QUAD GAUGE	702
	14	1	**288-5756**	1	FILM-PANEL (LH)	
	15	1	**288-5757**	1	FILM-PANEL (RH)	
	17	1	**304-6958**	2	GAUGE GP-AIR PRESSURE	
					(EACH INCLUDES)	
		1	**4B-2049**	2	NUT (10-32-THD)	
		1	**8F-1434**	2	LOCKWASHER	
	18	1	**096-6166**	4	WASHER-HARD (4.5X9X1-MM THK)	
	19	1	**104-2091**	12	SCREW-FLAT HEAD (NO 6X0.5-IN)	
	20	1	**134-2540**	1	RECEPTACLE AS (3-PIN)	
M	21	1	**213-7315**	4	SCREW-TRUSS HEAD (M4X0.7X25-MM)	
	22	1	**2H-3922**	2	LOCKWASHER	
	23	1	**310-1640**	1	FILM-IDENTIFICATION (HYDRAULIC SYSTEM MALFUNCTION)	
M	25	1	**3E-8020**	10	SCREW-TRUSS HEAD (M6X1X25-MM)	
M	26	1	**5C-8312**	4	NUT (M4X0.7-THD)	
	27	1	**9S-4968**	4	SLEEVE	
M	28	1	**9X-2043**	4	SCREW-TRUSS HEAD (M6X1X14-MM)	

M-METRIC PART
Y-SEPARATE ILLUSTRATION

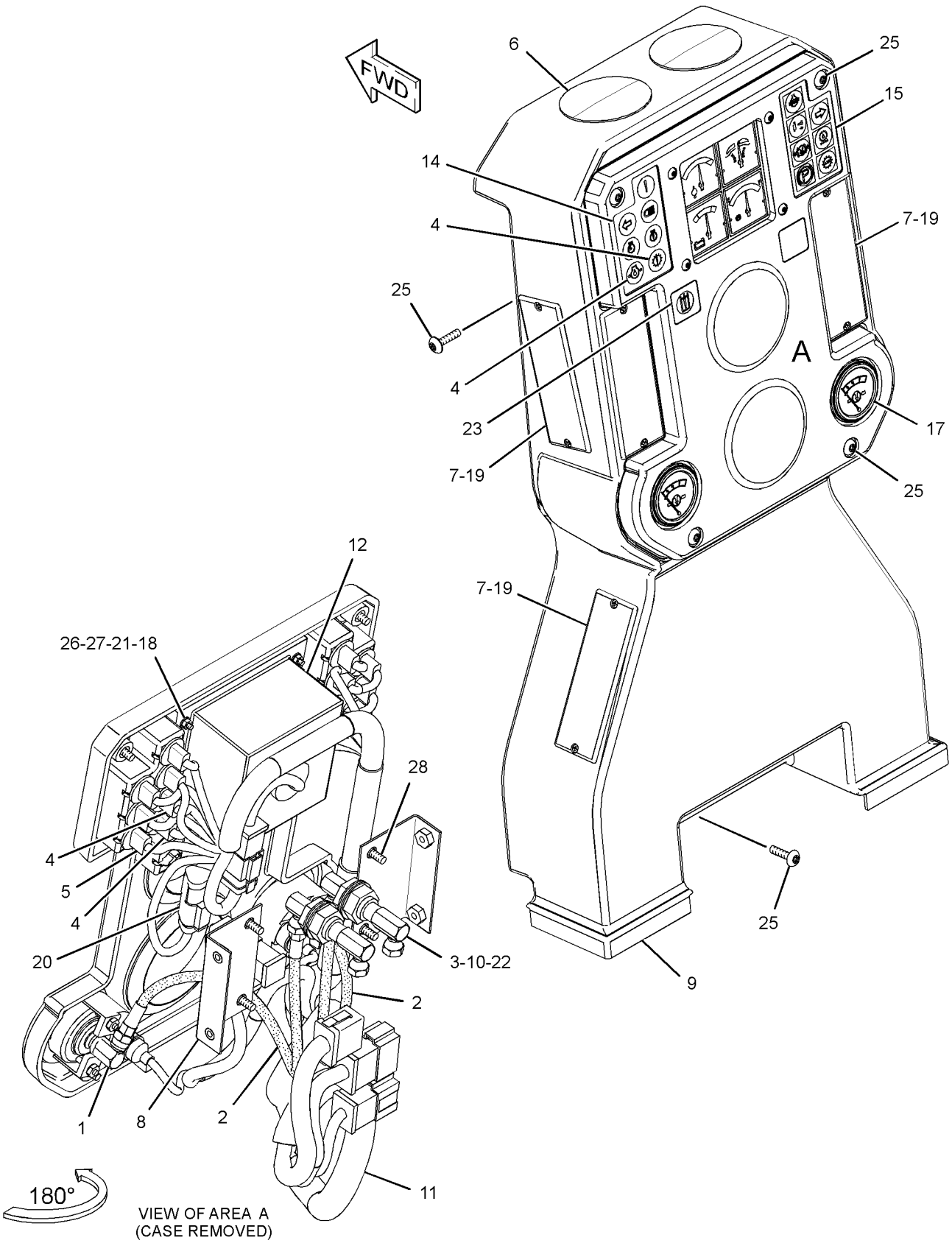

GRAPHIC #1 **<END>** g01786053

OPERATOR STATION

316-5237 PANEL GP-INSTRUMENT—FRONT CONSOLE

S/N: JPA1-UP

PART OF 320-0341 CAB AR, 320-0342 ROPS AR

AN ATTACHMENT

SMCS-7450, 7451 **i03434760**

NOTE	REF NO	GRAPHIC REF	PART NUMBER	QTY	PART NAME 1 2 3 4 5 6 (PRODUCT LEVEL)	SEE PAGE
	1	1	**5D-0269**	2	ELBOW	
	2	1	**5K-7577**	2	HOSE AS	
	3	1	**9M-8662**	2	COUPLING	
	4	1	**107-1983**	4	LAMP (24-VOLT)	
	5	1	**115-1748**	11	LAMP (24-VOLT, 3-WATT)	
	6	1	**117-9966**	2	PLUG	
	7	1	**122-7045**	6	COVER	
	8	1	**122-8146**	2	PLATE AS	
					(EACH INCLUDES)	
M		1	**6V-9632**	2	NUT-WELD (M6X1-THD)	
	9	1	**196-4150**	1	PANEL	
	10	1	**202-1138**	4	ELBOW	
Y	11	1	**287-3260**	1	MODULE GP-QUAD GAUGE	702
	13	1	**288-5756**	1	FILM-PANEL (LH) (INSTRUMENT CLUSTER)	
	14	1	**288-5757**	1	FILM-PANEL (RH) (INSTRUMENT CLUSTER)	
	16	1	**304-6958**	2	GAUGE GP-AIR PRESSURE (BRAKE)	
					(EACH INCLUDES)	
		1	**4B-2049**	2	NUT (10-32-THD)	
		1	**8F-1434**	2	LOCKWASHER	
	17	1	**335-9387**	1	HARNESS AS-PANEL	
	18	1	**096-6166**	4	WASHER-HARD (4.5X9X1-MM THK)	
	19	1	**104-2091**	12	SCREW-FLAT HEAD (NO 6X0.5-IN)	
	20	1	**134-2540**	1	RECEPTACLE AS (3-PIN)	
M	22	1	**213-7315**	4	SCREW-TRUSS HEAD (M4X0.7X25-MM)	
	23	1	**2H-3922**	2	LOCKWASHER	
	24	1	**310-1640**	1	FILM-IDENTIFICATION (HYDRAULIC SYSTEM MALFUNCTION) (INSTRUMENT CLUSTER)	
	25	1	**310-3568**	1	FILM-CONSOLE (BLANK) (INSTRUMENT CLUSTER)	
M	26	1	**3E-8020**	10	SCREW-TRUSS HEAD (M6X1X25-MM)	
M	27	1	**5C-8312**	4	NUT (M4X0.7-THD)	
	28	1	**9S-4968**	4	SLEEVE	
M	29	1	**9X-2043**	4	SCREW-TRUSS HEAD (M6X1X14-MM)	

M-METRIC PART
Y-SEPARATE ILLUSTRATION

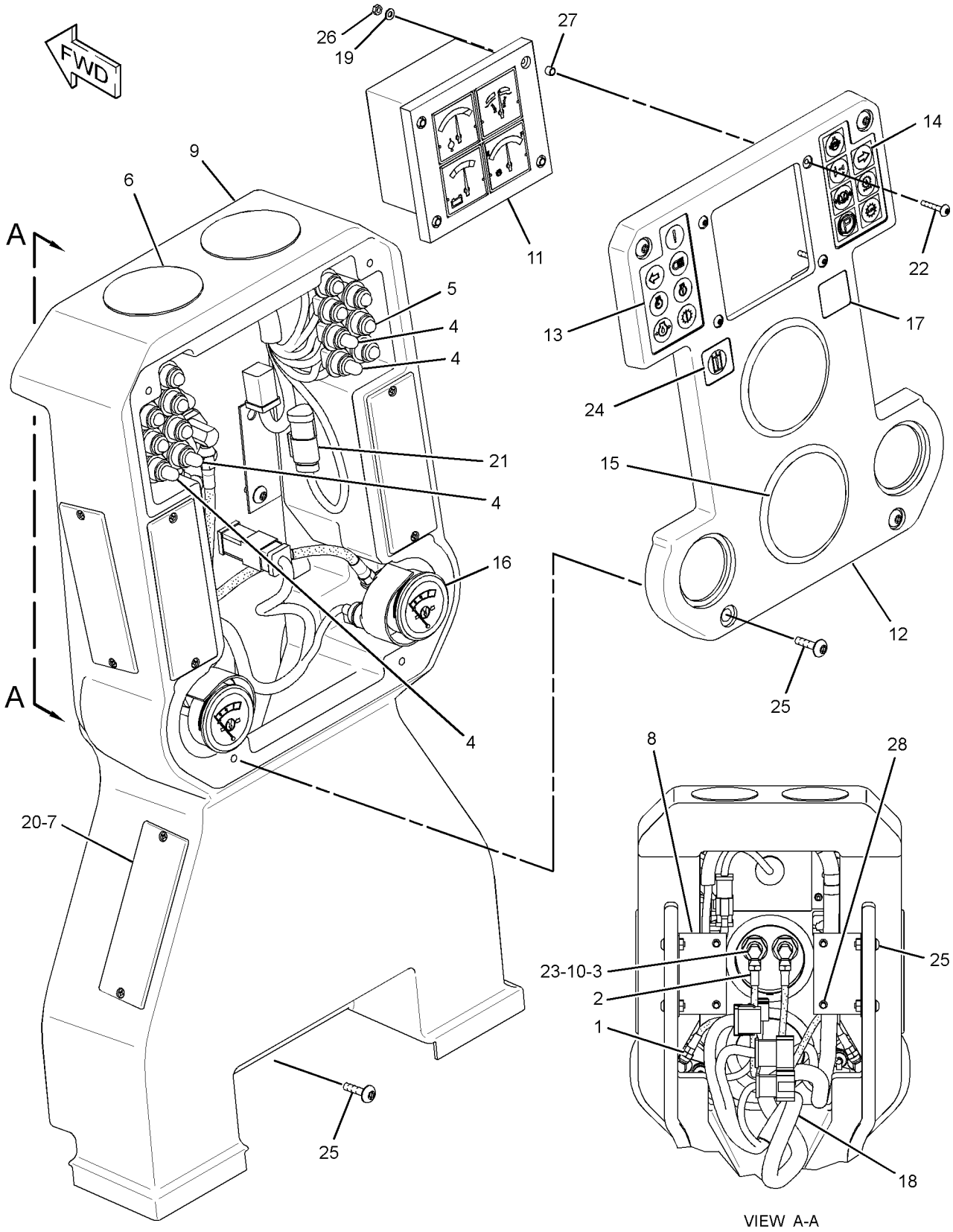

GRAPHIC #1 **<END>** g01786073

OPERATOR STATION

316-5238 PANEL GP-INSTRUMENT

S/N: JPA1-UP

PART OF 274-7940 GENERAL AR

SMCS-7450, 7451 **i03246370**

NOTE	REF NO	GRAPHIC REF	PART NUMBER	QTY	PART NAME 1 2 3 4 5 6 (PRODUCT LEVEL)	SEE PAGE
	1	1	**5D-0269**	2	ELBOW	
	2	1	**107-1983**	4	LAMP (24-VOLT)	
		1	**163-6508**	1	LAMP-LED (24-VOLT, WHITE)	
	3	1	**115-1748**	10	LAMP (24-VOLT, 3-WATT)	
		1	**163-6508**	1	LAMP-LED (24-VOLT, WHITE)	
Y	4	1	**287-3260**	1	MODULE GP-QUAD GAUGE	702
	9	1	**304-6958**	2	GAUGE GP-AIR PRESSURE	
		1	**4B-2049**	2	NUT (10-32-THD)	
		1	**8F-1434**	2	LOCKWASHER	
	11	1	**335-9387**	1	HARNESS AS-PANEL	
	12	1	**096-6166**	4	WASHER-HARD (4.5X9X1-MM THK)	
	13	1	**134-2540**	1	RECEPTACLE AS (3-PIN)	
M	14	1	**213-7315**	4	SCREW-TRUSS HEAD (M4X0.7X25-MM)	
M	16	1	**3E-8020**	4	SCREW-TRUSS HEAD (M6X1X25-MM)	
M	17	1	**5C-8312**	4	NUT (M4X0.7-THD)	
	18	1	**9S-4968**	4	SLEEVE	

M-METRIC PART
Y-SEPARATE ILLUSTRATION

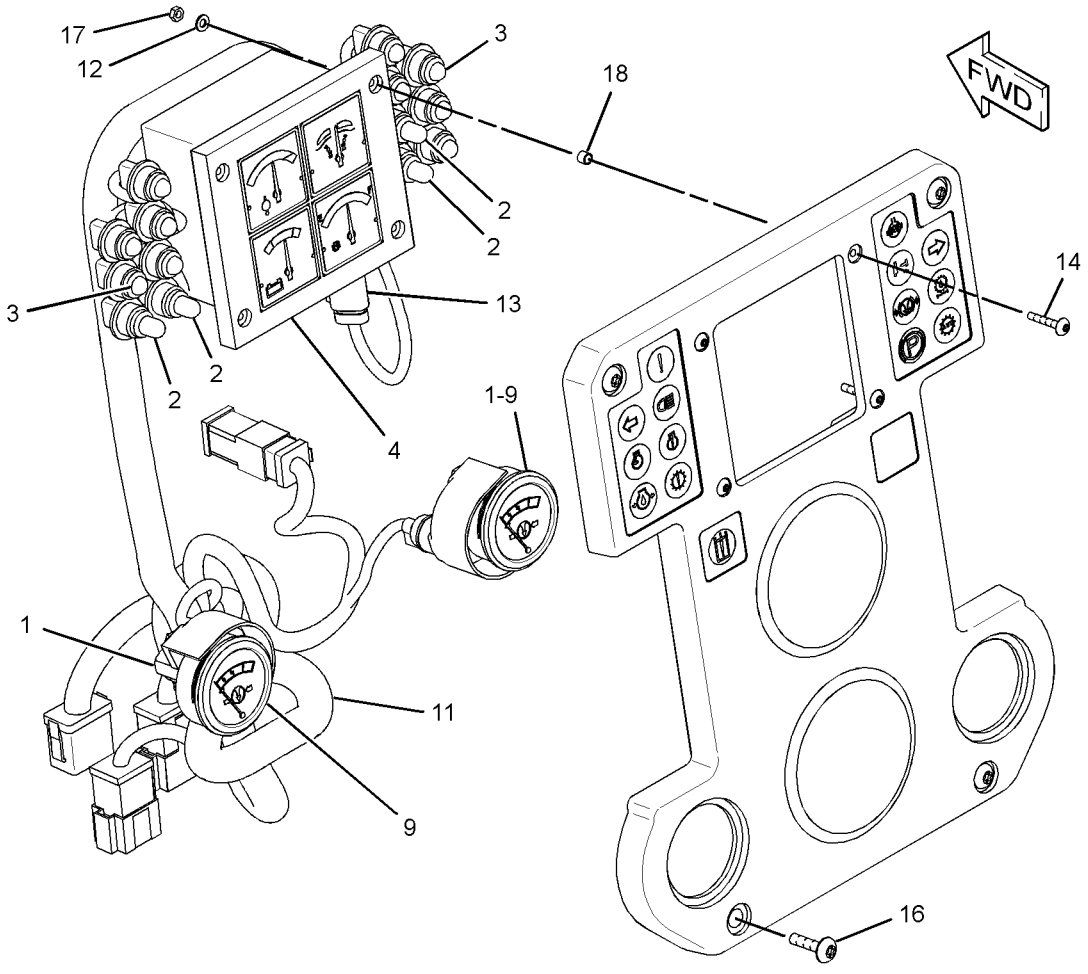

GRAPHIC #1 **<END>** g01689776

OPERATOR STATION

210-2270 RECLINER GP-SEAT

S/N: JPA1-UP
PART OF 301-4174 SEAT GP
AN ATTACHMENT

SMCS-7312 **i02733467**

NOTE	REF NO	GRAPHIC REF	PART NUMBER	QTY	PART NAME 1 2 3 4 5 6 (PRODUCT LEVEL)	SEE PAGE
	1	1	**177-1862**	1	BRACKET (SEAT BELT)	
	2	1	**210-2262**	1	BRACKET AS	
	3	1	**210-2263**	1	BRACKET AS	
	4	1	**210-2266**	1	GEAR-LOCK (14-TEETH)	
	5	1	**293-2911**	1	SHAFT AS	
		1	**2L-5893**	2	PIN-SPRING	
		1	**170-8590**	1	SPRING	
	6	1	**217-7933**	1	LATCH	
	7	1	**236-5197**	1	SPRING	
	8	1	**031-0214**	1	BOLT-LOCKING (1/4-20X0.5-IN)	
	9	1	**101-2867**	1	WASHER-HARD (7.2X25X2-MM THK)	
	10	1	**4M-6425**	1	BOLT (5/16-18X1-IN)	
	11	1	**5M-2894**	1	WASHER-HARD (10.2X18.5X2.5-MM THK)	
	12	1	**5S-7383**	1	BOLT (3/8-16X1.75-IN)	
	13	1	**8T-4224**	1	WASHER-HARD (8.8X16X2-MM THK)	

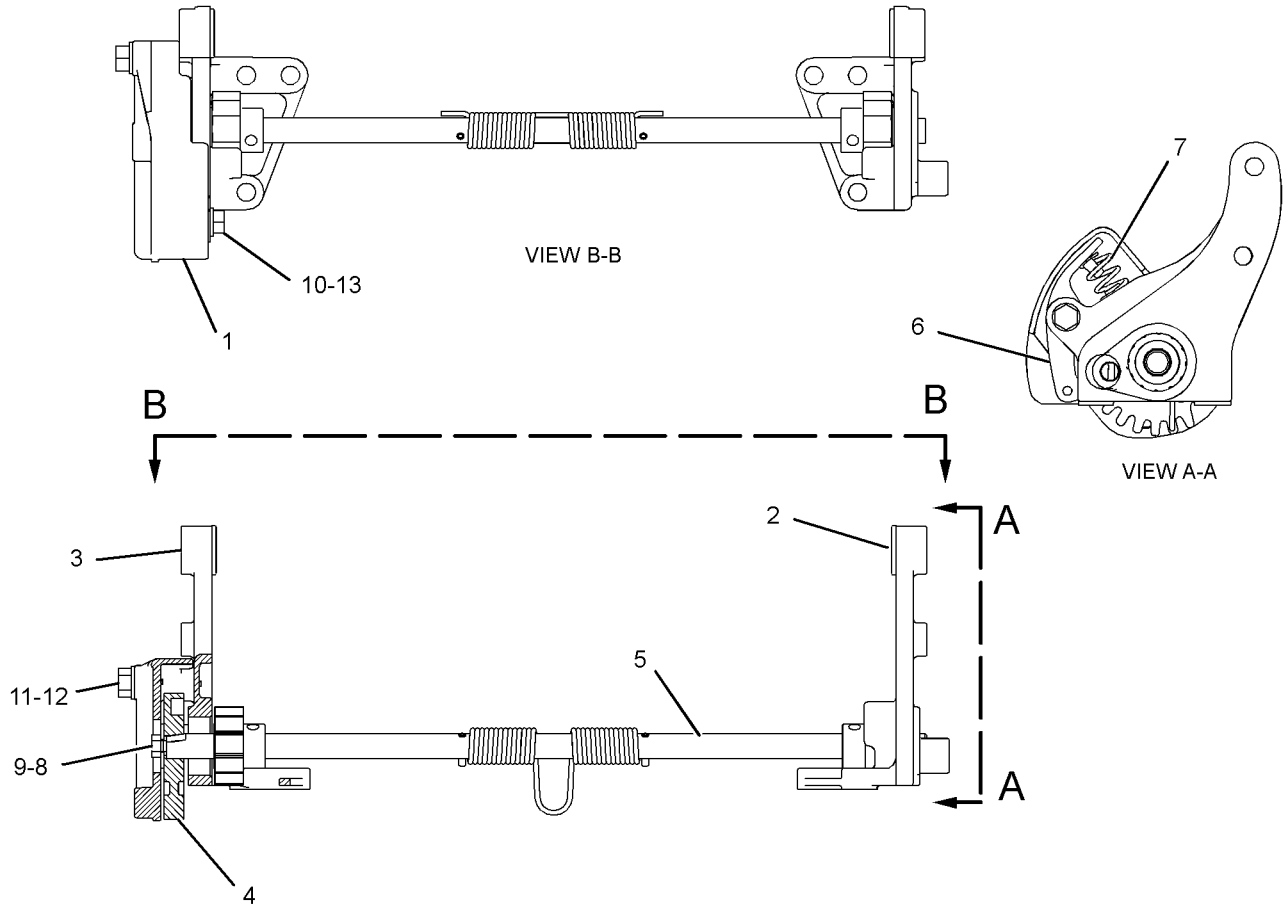

GRAPHIC #1 **<END>** g01296294

OPERATOR STATION

284-5400 ROPS AR—HIGH PROFILE

S/N: JPA1-UP

AN ATTACHMENT

SMCS-7177, 7323 **i03261422**

NOTE	REF NO	GRAPHIC REF	PART NUMBER	QTY	PART NAME 1 2 3 4 5 6 (PRODUCT LEVEL)	SEE PAGE
Y	1	1	*284-5397*	1	ROPS GP	718
Y	2	1	*290-1148*	1	GUARD GP-PLATFORM	333

Y-SEPARATE ILLUSTRATION

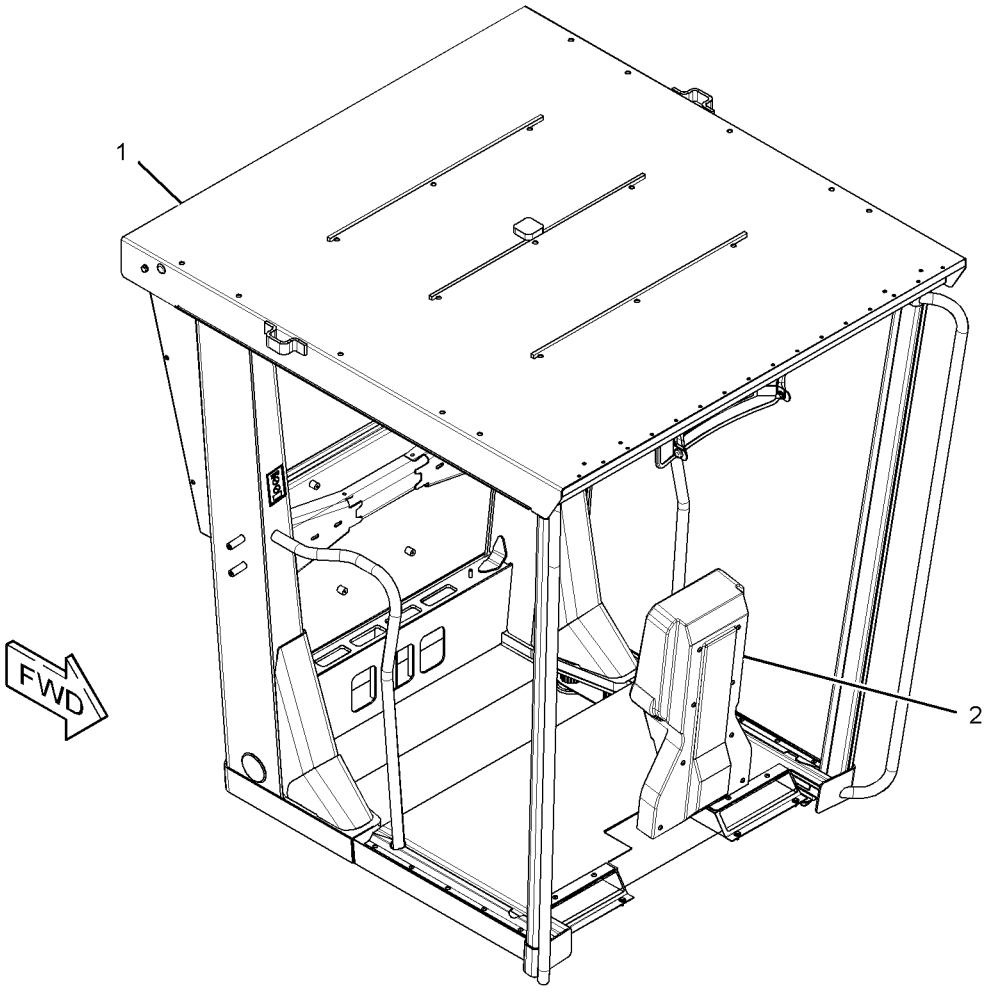

GRAPHIC #1 **<END>** g01664733

OPERATOR STATION

320-0342 ROPS AR-ENCLOSED–HIGH PROFILE

S/N: JPA1-UP

AN ATTACHMENT

SMCS-7177, 7323 **i03434850**

NOTE	REF NO	GRAPHIC REF	PART NUMBER	QTY	PART NAME 1 2 3 4 5 6 (PRODUCT LEVEL)	SEE PAGE
Y	1	1	*2A-6985*	1	MOUNTING GP-ROPS (ENCLOSED)	705
Y	2	1	*8X-2385*	1	PANEL GP-CAB (HIGH PROFILE)	708
Y	3	1	*8X-9675*	1	WASHER GP-WINDOW (FRONT)	746
Y	4	1	*172-5378*	1	INSULATION GP-WEATHER (COLD WEATHER)	683
Y	5	1	*172-6831*	1	WIPER GP-WINDOW (FRONT)	763
Y	6	1	*177-8781*	1	LINER GP-CAB (HIGH PROFILE) (ENCLOSED)	685
	7	1	*180-4656*	1	PLATE GP-CERTIFICATION	
		1	**156-6312**	1	PLATE-WARNING (ROPS, FOPS, OPS, READ OMM)	
		1	**4B-4158**	4	SCREW-DRIVE (NO 4X1/4-IN)	
	8	1	**219-0302**	2	FILM-WARNING (NO WELD, NO DRILL, READ OMM)	
Y	9	1	*285-3361*	1	WIRING GP-CAB	203
Y	10	1	*290-0349*	1	ROPS GP-ENCLOSED	719
Y	11	1	*316-5237*	1	PANEL GP-INSTRUMENT	711

Y-SEPARATE ILLUSTRATION

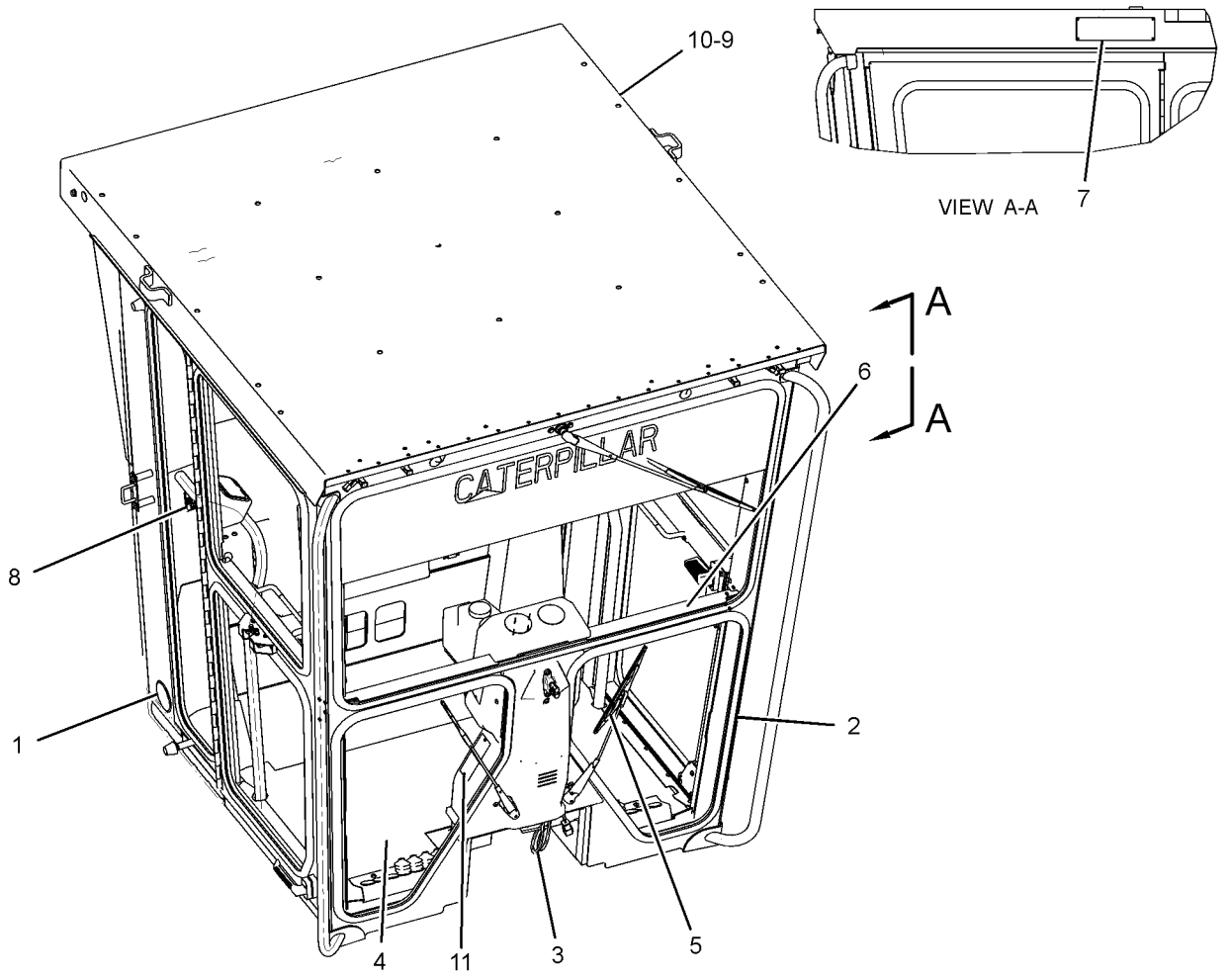

GRAPHIC #1 **<END>** g01781893

OPERATOR STATION

117-4698 ROPS GP—HIGH PROFILE

S/N: JPA1-UP
PART OF 284-5397 ROPS GP
AN ATTACHMENT

SMCS-7177, 7323 **i03096184**

NOTE	PART NUMBER	QTY	PART NAME 1 2 3 4 5 6 (PRODUCT LEVEL)	SEE PAGE
	180-4656	1	PLATE GP-CERTIFICATION	
	4B-4158	4	SCREW-DRIVE (NO 4X1/4-IN)	
	156-6312	1	PLATE-WARNING (ROPS, FOPS, OPS, READ OMM)	

<END>

173-6756 ROPS GP—HIGH PROFILE

S/N: JPA1-UP
PART OF 290-0349 ROPS GP
AN ATTACHMENT

SMCS-7177, 7323 **i03192986**

NOTE	PART NUMBER	QTY	PART NAME 1 2 3 4 5 6 (PRODUCT LEVEL)	SEE PAGE
	180-4656	1	PLATE GP-CERTIFICATION	
	156-6312	1	PLATE-WARNING (ROPS, FOPS, OPS, READ OMM)	
			(ON LH SIDE OF ROOF PANEL)	
	4B-4158	4	SCREW-DRIVE (NO 4X1/4-IN)	

<END>

OPERATOR STATION

284-5397 ROPS GP—HIGH PROFILE

S/N: JPA1-UP
PART OF 284-5400 ROPS AR
AN ATTACHMENT

SMCS-7177, 7323 **i03261440**

NOTE	PART NUMBER	QTY	PART NAME 1 2 3 4 5 6 (PRODUCT LEVEL)	SEE PAGE
Y	**8X-2795**	1	MIRROR GP-REAR VIEW	697
Y	**117-4698**	1	ROPS GP	717
	7X-0354	2	BOLT (5/8-11X4.5-IN)	
	7X-0375	4	BOLT (3/4-10X5-IN)	
M	**8T-4195**	1	BOLT (M10X1.5X30-MM)	
	030-8535	2	BOLT-LOCKING (3/8-16X0.875-IN)	
	3E-4048	2	CAP-PLUG	
	6G-2395	2	DOOR GP (AIR VENTED)	
			(EACH INCLUDES)	
	6G-7222	2	ROLLER	
	159-3759	2	FILM-INSTRUCTION (DO NOT DRILL, WELD ROPS)	
	6G-2396	2	GASKET	
	102-9372	1	GLASS (REAR)	
	9D-1589	2	MOUNTING	
	103-4953	4	MOUNTING	
	4K-0367	2	NUT-FULL (5/8-11-THD)	
	164-2465	2	PAD	
	103-5516	1	PAD-LH	
	103-5515	1	PAD-RH	
	103-4771	2	PIN AS	
	180-4656	1	PLATE GP-CERTIFICATION (ROPS, FOPS, OPS, READ OMM)	
	156-6312	1	PLATE-WARNING (ROPS, FOPS, OPS, READ OMM)	
	4B-4158	4	SCREW-DRIVE (NO 4X1/4-IN)	
	5P-7803	2	PLUG-BUTTON	
	6V-3928	4	PLUG-BUTTON	
	3G-3265	24	RIVET	
D	**5P-5768**		SEAL (4.3-M)	
B	**166-1997**	2	SHIM (1.2-MM THK)	
B	**166-1999**	2	SHIM (2.28-MM THK)	
	3V-9244	2	WASHER (16.5X50X5-MM THK)	
	8X-0674	4	WASHER (22X100X10-MM THK)	
	8T-4121	1	WASHER-HARD (11X21X2.5-MM THK)	
	8T-4122	4	WASHER-HARD (17X32X3.5-MM THK)	
	8T-4896	2	WASHER-HARD (10.2X18.5X2.5-MM THK)	

B-USE AS REQUIRED
D-ORDER BY THE METER
M-METRIC PART
Y-SEPARATE ILLUSTRATION

<END>

OPERATOR STATION

290-0349 ROPS GP-ENCLOSED

S/N: JPA1-UP
PART OF 320-0342 ROPS AR
AN ATTACHMENT

SMCS-7177, 7323 **i03254891**

NOTE	REF NO	GRAPHIC REF	PART NUMBER	QTY	PART NAME 1 2 3 4 5 6 (PRODUCT LEVEL)	SEE PAGE
Y	1	1	*8X-4413*	1	DOOR GP-CAB	657
Y	2	1	**173-6756**	1	ROPS GP	717

Y-SEPARATE ILLUSTRATION

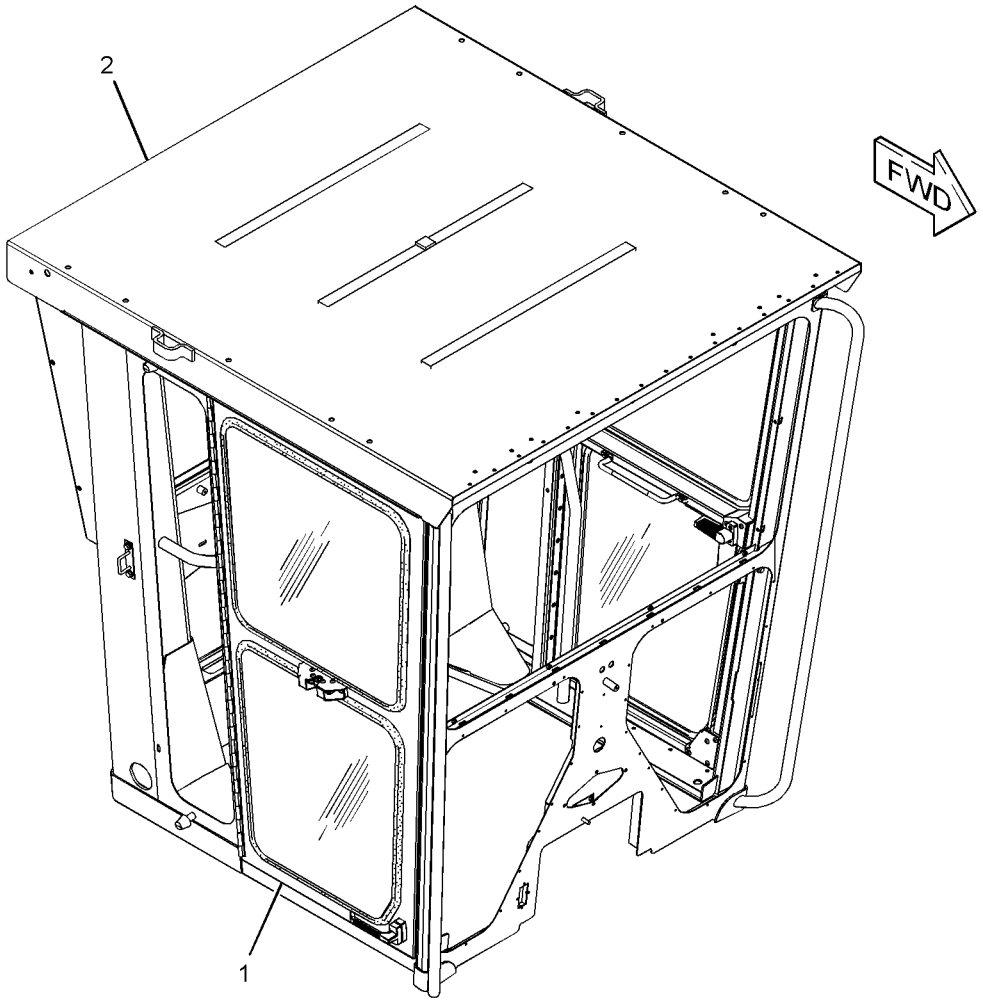

GRAPHIC #1 **<END>** g01763834

OPERATOR STATION

139-4612 SCREEN GP-SUN

S/N: JPA1-UP
AN ATTACHMENT

SMCS-7165 **i02200406**

NOTE	REF NO	GRAPHIC REF	PART NUMBER	QTY	PART NAME 1 2 3 4 5 6 (PRODUCT LEVEL)	SEE PAGE
BJ	1	1	**6V-5164**		SEAL	
	2	1	**137-5503**	1	SCREEN GP-SUN	
	3	1	**139-4605**	1	PLATE AS	
M		1	**6V-9632**	4	NUT-WELD (M6X1-THD)	
M	4	1	**5C-9553**	4	BOLT (M6X1X16-MM)	
	5	1	**9X-8256**	4	WASHER (6.6X12X2-MM THK)	

B-USE AS REQUIRED
J-SOLD BY THE DECIMETER
M-METRIC PART

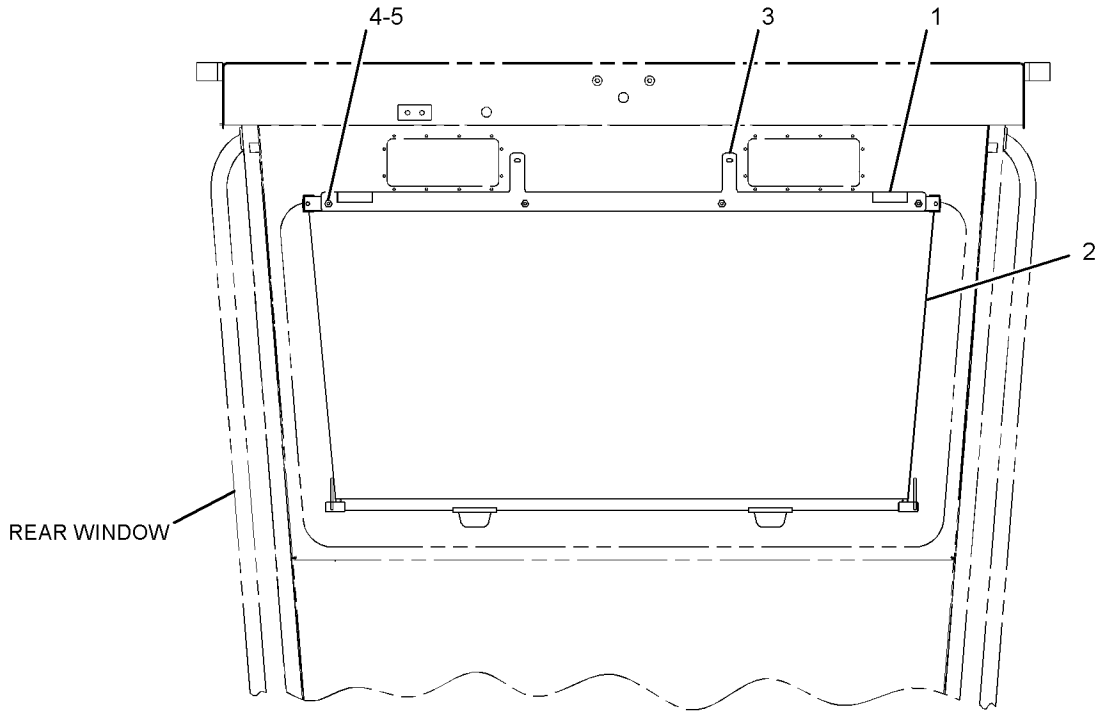

REAR VIEW

GRAPHIC #1 **<END>** g01070840

116-1965 SEAT BELT GP–RETRACTABLE

S/N: JPA1-UP

PART OF 126-2747 SEAT GP, 8X-8940 SEAT GP-STATIC

AN ATTACHMENT

SMCS-7327 **i03182243**

NOTE	REF NO	GRAPHIC REF	PART NUMBER	QTY	PART NAME 1 2 3 4 5 6 (PRODUCT LEVEL)	SEE PAGE
	1	1	**1A-4350**	1	BOLT (7/16-20X1.75-IN)	
	2	1	**4D-6432**	1	LOCKNUT (7/16-20-THD)	
	3	1	**8S-0934**	2	LOCKNUT-FLANGE (7/16-20-THD)	
	4	1	**8T-9381**	1	BOLT (7/16-20X1-IN)	

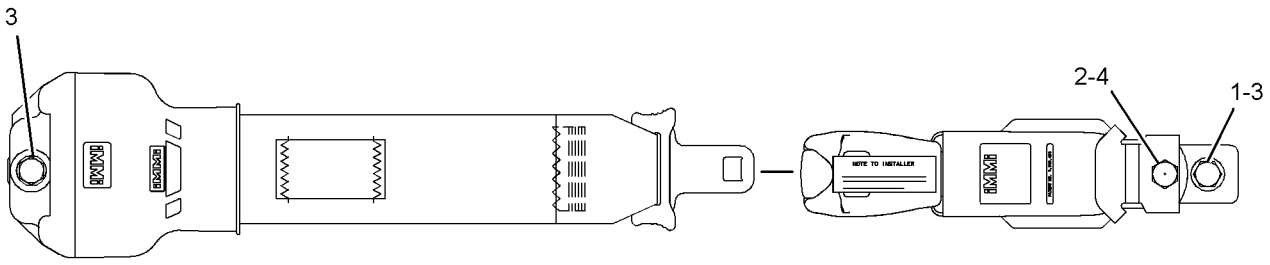

GRAPHIC #1 **<END>** g01286454

OPERATOR STATION

222-0345 SEAT BELT GP–RETRACTABLE

S/N: JPA1-UP
PART OF 175-1504 SEAT GP
AN ATTACHMENT

SMCS-7327 **i02947636**

NOTE	REF NO	GRAPHIC REF	PART NUMBER	QTY	PART NAME 1 2 3 4 5 6 (PRODUCT LEVEL)	SEE PAGE
					(NO SERVICED PARTS)	

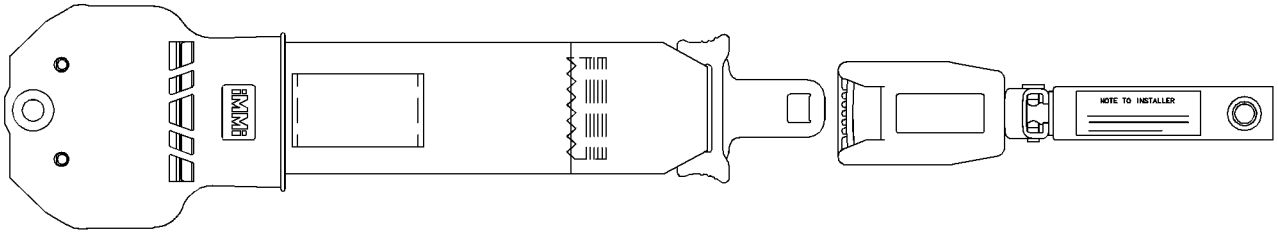

GRAPHIC #1 **<END>** g01196135

OPERATOR STATION

8Y-3912 SEAT GP–CLOTH

S/N: JPA1-UP

PART OF 8Y-6851 SEAT GP-STATIC

AN ATTACHMENT

SMCS-7312 **i02845630**

NOTE	REF NO	GRAPHIC REF	PART NUMBER	QTY	PART NAME 1 2 3 4 5 6 (PRODUCT LEVEL)	SEE PAGE
BE	1	1	**7X-7877**		STRIP-EDGING	
	2	1	**8Y-3913**	1	CUSHION AS-SEAT	
	3	1	**9C-5324**	1	CUSHION AS-BACK	
	4	1	**6W-1895**	1	BAR	
	5	1	**6W-1890**	1	BAR AS	
	6	1	**9C-1587**	1	LEVER	
	7	1	**9X-6624**	4	BOLT	
	8	1	**033-4843**	4	NUT (5/16-18-THD)	
	9	1	**6W-9693**	2	ADJUSTER AS	
	10	1	**6W-2373**	1	SPRING	
	11	1	**119-0036**	4	SCREW-FLAT HEAD (5/16-18X0.875-IN)	
	12	1	**9V-7437**	1	SHELL AS	
	13	1	**9S-2544**	4	SCREW-HEX HEAD (8-32X11.13-MM)	
	14	1	**6W-5757**	1	CLIP	
	15	1	**6W-3309**	1	HOLDER	
	16	1	**8T-7565**	7	RIVET-POP	
	17	1	**5P-7957**	1	LANYARD (SEAT)	
	18	1	**6W-5740**	1	CAP	
	19	1	**5B-6172**	4	WASHER (9.7X19X0.8-MM THK)	
	20	1	**7X-7739**	4	WASHER (9.7X25.4 X4-MM THK)	

B-USE AS REQUIRED
E-ORDER BY THE CENTIMETER

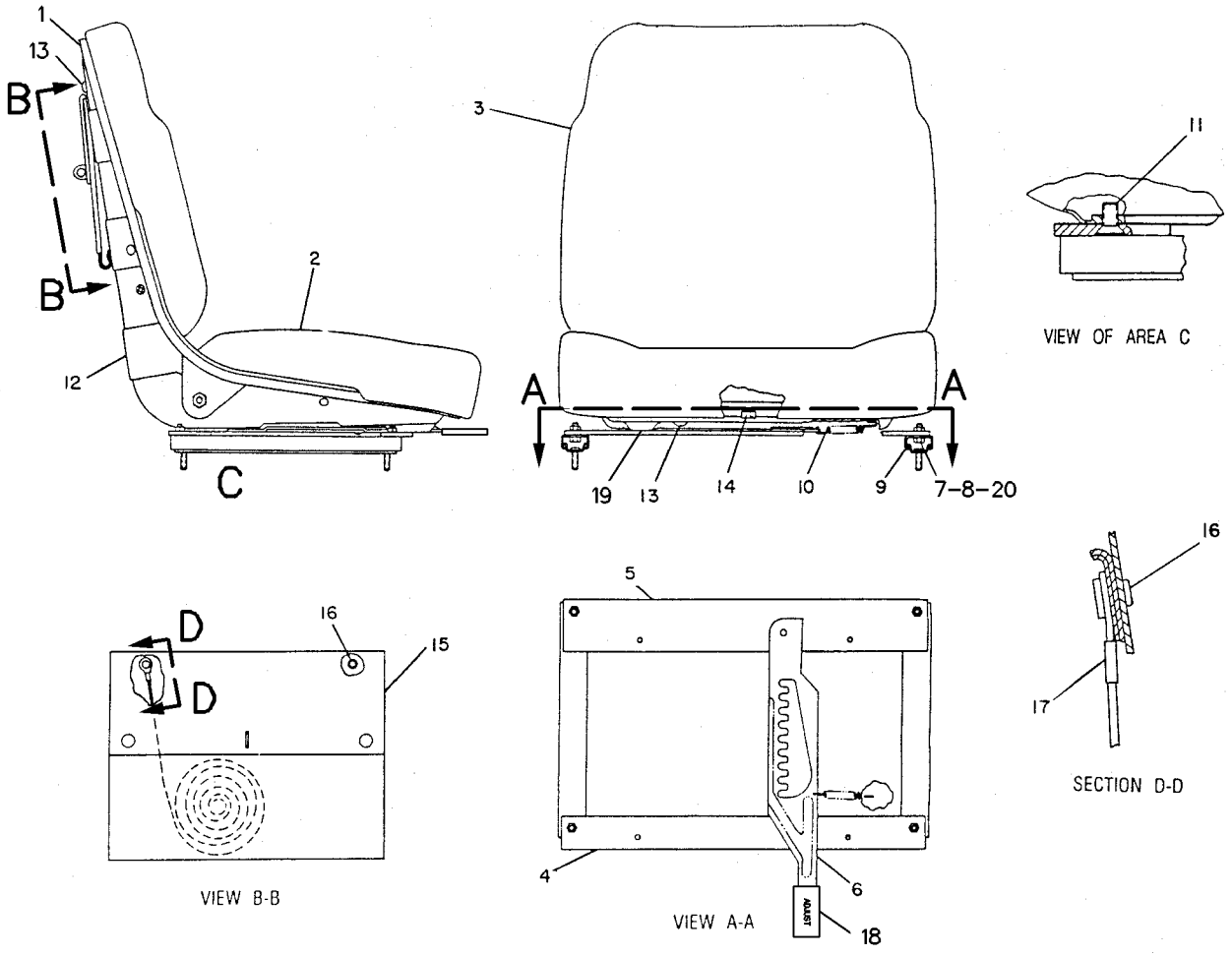

GRAPHIC #1 **<END>** g00108400

OPERATOR STATION

8Y-4005 SEAT GP—VINYL

S/N: JPA1-UP
PART OF 8Y-6852 SEAT GP-STATIC
AN ATTACHMENT

SMCS-7312 **i02845646**

NOTE	REF NO	GRAPHIC REF	PART NUMBER	QTY	PART NAME 1 2 3 4 5 6 (PRODUCT LEVEL)	SEE PAGE
BE	1	1	**7X-7877**		STRIP-EDGING	
	2	1	**8R-2057**	1	CUSHION AS-SEAT	
	3	1	**8R-2054**	1	CUSHION AS-BACK	
	4	1	**6W-1895**	1	BAR	
	5	1	**6W-1890**	1	BAR AS	
	6	1	**9C-1587**	1	LEVER	
	7	1	**8T-9043**	4	BOLT (5/16-18X0.875-IN)	
	8	1	**033-4843**	4	NUT (5/16-18-THD)	
	9	1	**6W-9693**	2	ADJUSTER AS	
	10	1	**6W-2373**	1	SPRING	
	11	1	**119-0036**	4	SCREW-FLAT HEAD (5/16-18X0.875-IN)	
	12	1	**9V-7437**	1	SHELL AS	
	13	1	**9S-2544**	4	SCREW-HEX HEAD (8-32X11.13-MM)	
	14	1	**6W-5757**	1	CLIP	
	15	1	**6W-3309**	1	HOLDER	
	16	1	**8T-7565**	7	RIVET-POP	
	17	1	**5P-7957**	1	LANYARD	
	18	1	**6W-5740**	1	CAP	
	19	1	**5B-6172**	4	WASHER (9.7X19X0.8-MM THK)	
	20	1	**7X-7739**	4	WASHER (9.7X25.4 X4-MM THK)	

B-USE AS REQUIRED
E-ORDER BY THE CENTIMETER

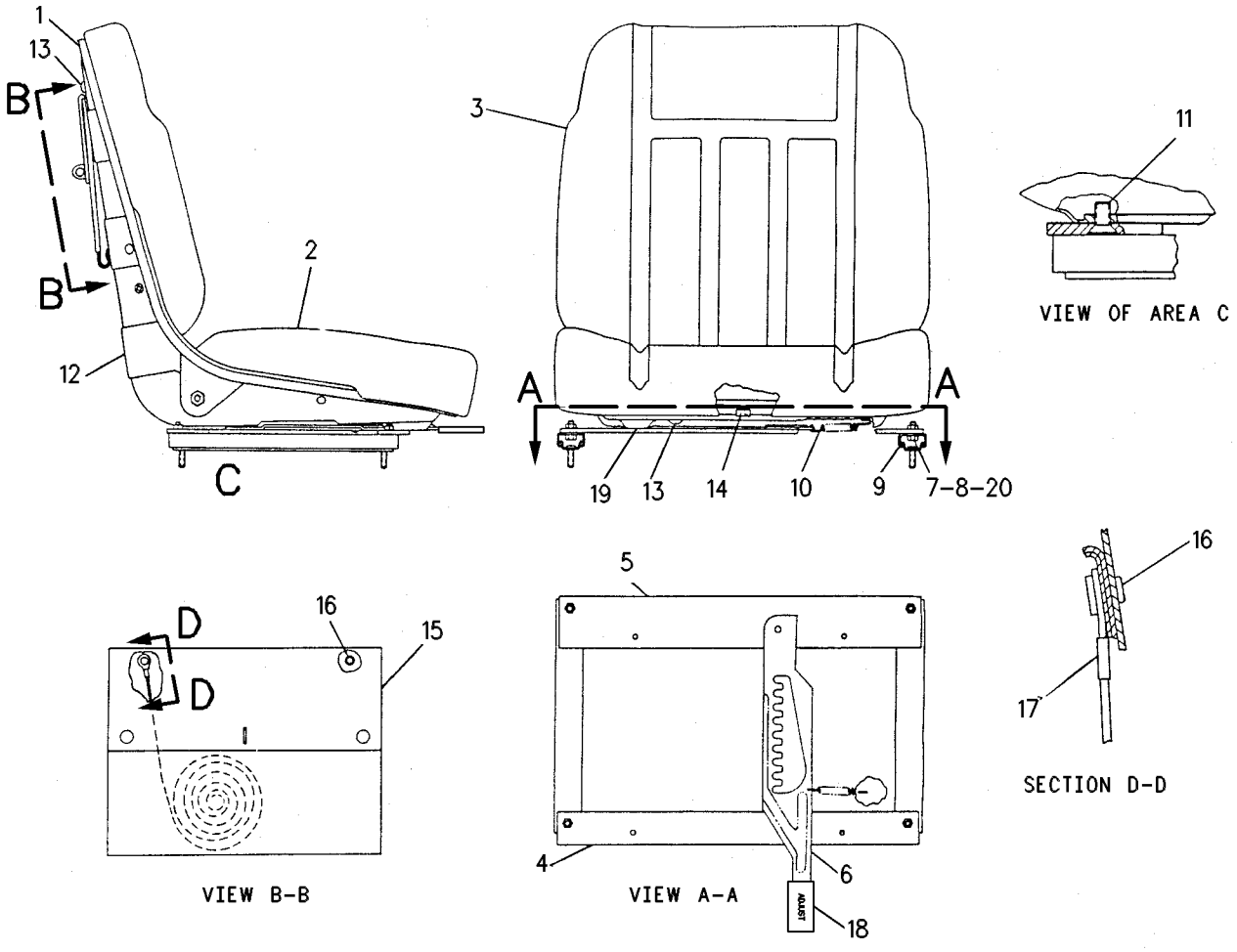

GRAPHIC #1 **<END>** g00109668

OPERATOR STATION

113-4254 SEAT GP–VINYL

S/N: JPA1-UP

PART OF 274-7940 GENERAL AR

SMCS-7312 **i01047988**

NOTE	PART NUMBER	QTY	PART NAME 1 2 3 4 5 6 (PRODUCT LEVEL)	SEE PAGE
	5P-8502	1	PADLOCK GP	
A	**5P-8500**	1	KEY	
A	**8Y-6364**	1	SLEEVE	
M	**9X-2041**	6	SCREW-TRUSS HEAD (M10X1.5X20-MM)	
	8Y-4030	1	SEAT BELT GP	
Y	*125-9856*	1	SEAT GP-STATIC	738

A-NOT PART OF THIS GROUP
M-METRIC PART
Y-SEPARATE ILLUSTRATION

<END>

OPERATOR STATION

125-9855 SEAT GP

S/N: JPA1-UP

PART OF 125-9856 SEAT GP-STATIC

SMCS-7312 **i00131050**

NOTE	REF NO	GRAPHIC REF	PART NUMBER	QTY	PART NAME 1 2 3 4 5 6 (PRODUCT LEVEL)	SEE PAGE
	1	1	**6W-5757**	1	CLIP	
	2	1	**1F-1599**	2	RIVET-HEAD	
	3	1	**9V-8788**	1	ROD	
	4	1	**8V-3208**	1	LEVER	
	5	1	**8R-2054**	1	CUSHION AS-BACK	
	6	1	**8R-2057**	1	CUSHION AS-SEAT	
	7	1	**033-4121**	4	BOLT (5/16-18X0.625-IN)	
	8	1	**9V-7437**	1	SHELL AS	
		1	**9V-7440**	4	NUT-WELD	
BE	9	1	**7X-7877**		STRIP-EDGING	
	10	1	**9S-2544**	4	SCREW-HEX HEAD (8-32X11.13-MM)	
	11	1	**6W-3309**	1	HOLDER	
	12	1	**8T-7565**	7	RIVET-POP	
	13	1	**5P-7957**	1	LANYARD	
	14	1	**9V-8789**	2	ADJUSTER AS	

B-USE AS REQUIRED
E-ORDER BY THE CENTIMETER

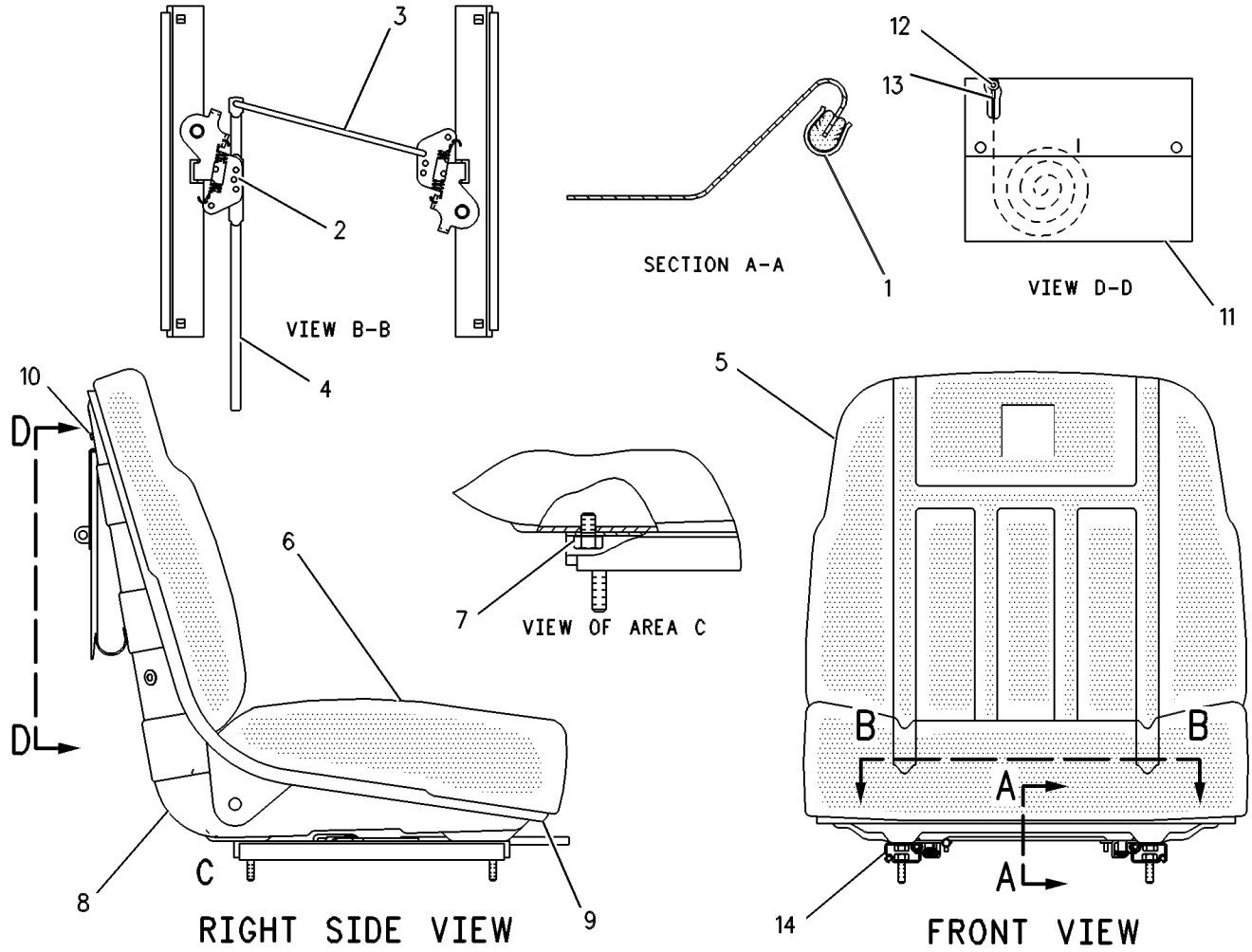

GRAPHIC #1 **<END>** g00109164

OPERATOR STATION

126-2747 SEAT GP—VINYL

S/N: JPA1-UP

AN ATTACHMENT

SMCS-7312 **i01047991**

NOTE	PART NUMBER	QTY	PART NAME 1 2 3 4 5 6 (PRODUCT LEVEL)	SEE PAGE
	5P-8502	1	PADLOCK GP	
A	**5P-8500**	1	KEY	
A	**8Y-6364**	1	SLEEVE	
M	**9X-2041**	6	SCREW-TRUSS HEAD (M10X1.5X20-MM)	
Y	**116-1965**	1	SEAT BELT GP	721
Y	**8Y-6852**	1	SEAT GP-STATIC	736

A-NOT PART OF THIS GROUP
M-METRIC PART
Y-SEPARATE ILLUSTRATION

<END>

OPERATOR STATION

175-1504 SEAT GP–CLOTH

S/N: JPA1-UP
PART OF 302-8814 SEAT GP-SUSPENSION
AN ATTACHMENT

SMCS-7312 **i02947579**

NOTE	REF NO	GRAPHIC REF	PART NUMBER	QTY	PART NAME 1 2 3 4 5 6 (PRODUCT LEVEL)	SEE PAGE
	1	1	**173-3084**	1	EXTENSION GP-BACKREST	
	2	1	**177-4937**	1	SPACER (11.7X19.8X20.3-MM THK)	
Y	3	1	**202-7666**	1	ARMREST GP (RH)	634
Y	4	1	**202-7668**	1	ARMREST GP (LH)	635
Y	5	1	**222-0345**	1	SEAT BELT GP (RETRACTABLE)	722
Y	6	1	**301-4174**	1	SEAT GP (CLOTH)	731
	7	1	**0T-0244**	1	BOLT (7/16-20X1.25-IN)	
	8	1	**205-6388**	1	BOLT (7/16-20X1.75-IN)	

Y-SEPARATE ILLUSTRATION

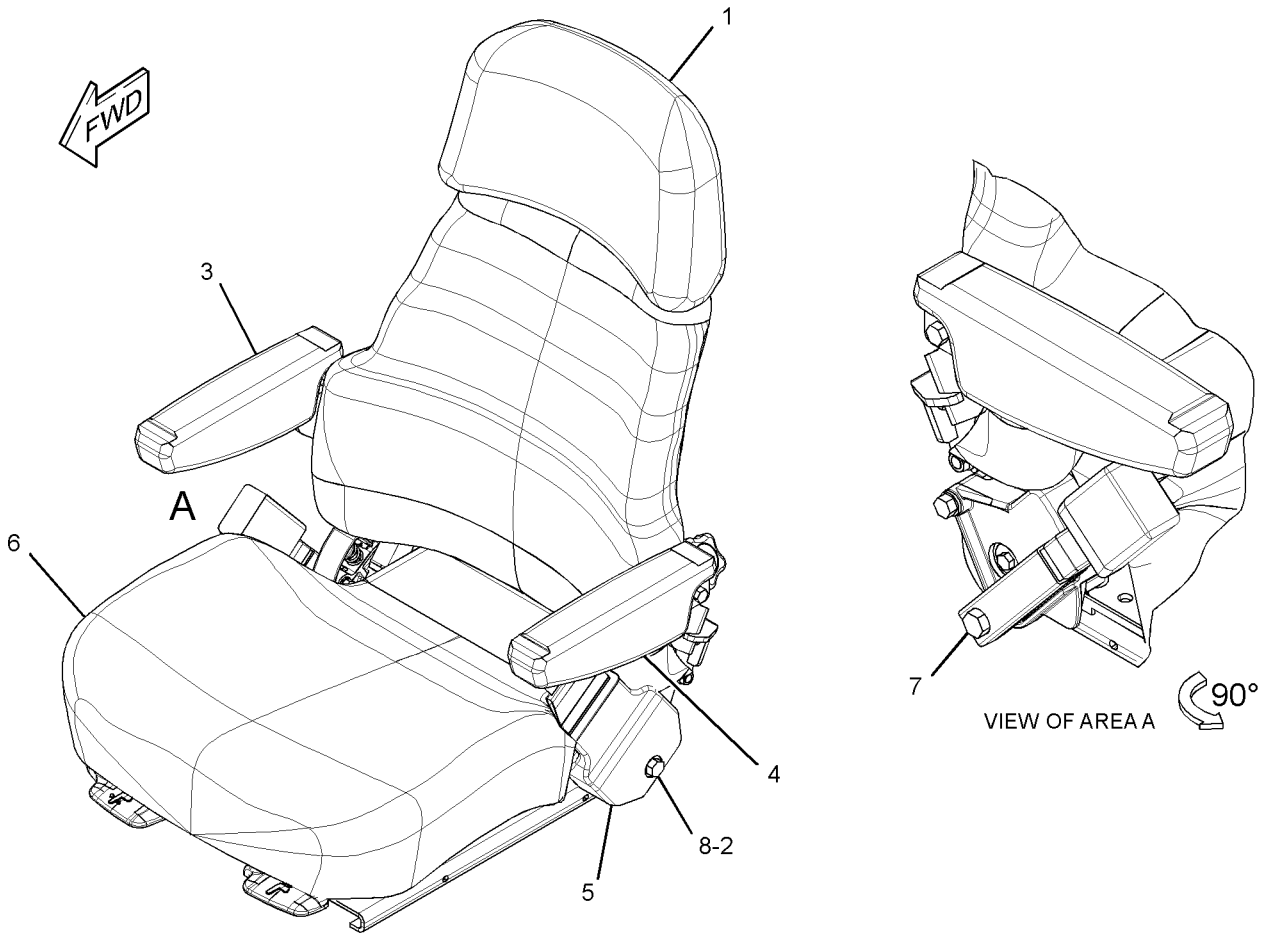

GRAPHIC #1 **<END>** g01415163

OPERATOR STATION

301-4174 SEAT GP–CLOTH

S/N: JPA1-UP
PART OF 175-1504 SEAT GP
AN ATTACHMENT

SMCS-7312 **i02947637**

NOTE	REF NO	GRAPHIC REF	PART NUMBER	QTY	PART NAME 1 2 3 4 5 6 (PRODUCT LEVEL)	SEE PAGE
	1	1	**143-1288**	8	LOCKNUT-FLANGE (3/8-16-THD)	
	2	1	**171-1230**	6	SCREW-BUTTON HEAD (3/8-16X1-IN)	
	3	1	**171-6682**	1	BAR	
	4	1	**172-2416**	2	PIN	
	5	1	**172-6581**	1	PAN AS	
		1	**6K-3273**	5	RIVET-POP	
		1	**169-1025**	1	CUSHION AS	
Y	6	1	*173-1028*	1	ADJUSTER GP-SEAT	627
	7	1	**177-1863**	2	BOLT-PIVOT (3/8-16X2.89-IN)	
	8	1	**184-2298**	1	ROD	
	9	1	**184-2299**	4	WASHER (7X25.4X2.54-MM THK)	
Y	10	1	*210-2270*	1	RECLINER GP-SEAT	714
	11	1	**294-5042**	2	SPACER (11.1X19.5X9.67-MM THK)	
Y	12	1	*301-4173*	1	PAN GP-BACKREST	707
	13	1	**095-0843**	2	PIN-COTTER	
	14	1	**5V-1496**	2	RETAINER	
	15	1	**6V-7646**	2	WASHER-HARD (7.2X25X2-MM THK)	
	16	1	**8T-0328**	1	WASHER-HARD (5.5X10X1-MM THK)	
	17	1	**8T-4205**	1	WASHER-HARD (7.2X14.5X2-MM THK)	

Y-SEPARATE ILLUSTRATION

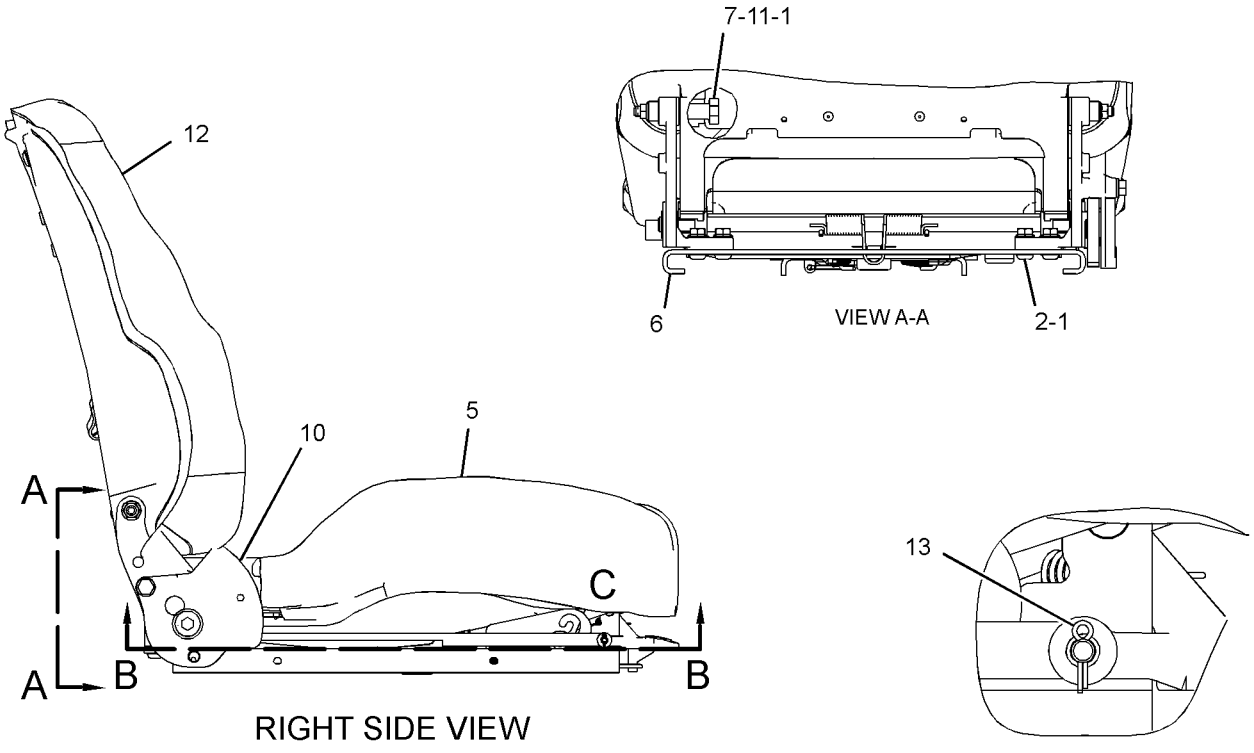

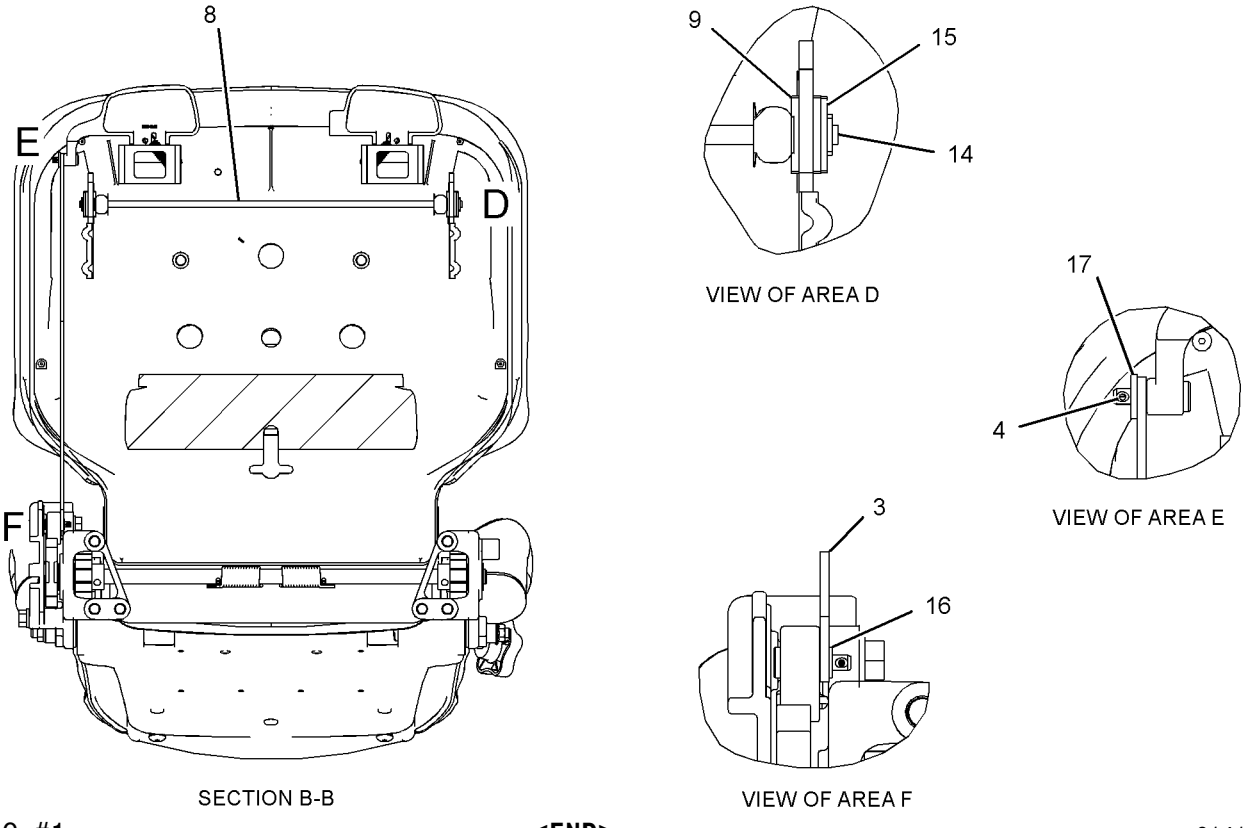

GRAPHIC #1 **<END>** g01416932

OPERATOR STATION

8X-8940 SEAT GP-STATIC—CLOTH

S/N: JPA1-UP
PART OF 290-1126 CAB AR
AN ATTACHMENT

SMCS-7312 **i03182143**

NOTE	PART NUMBER	QTY	PART NAME 1 2 3 4 5 6 (PRODUCT LEVEL)	SEE PAGE
Y	**116-1965**	1	SEAT BELT GP (RETRACTABLE)	721
Y	**8Y-6851**	1	SEAT GP-STATIC (CLOTH)	734
M	**9X-2041**	1	SCREW-TRUSS HEAD (M10X1.5X20-MM)	

M-METRIC PART
Y-SEPARATE ILLUSTRATION

<END>

OPERATOR STATION

8Y-6851 SEAT GP-STATIC—CLOTH

S/N: JPA1-UP

PART OF 8X-8940 SEAT GP-STATIC

AN ATTACHMENT

SMCS-7312 **i03182145**

NOTE	REF NO	GRAPHIC REF	PART NUMBER	QTY	PART NAME 1 2 3 4 5 6 (PRODUCT LEVEL)	SEE PAGE
Y	1	1	**116-2779**	1	ADJUSTER GP-SEAT	624
Y	2	1	**8Y-3912**	1	SEAT GP (CLOTH)	723
	3	1	**9L-9814**	4	LOCKNUT	
	4	1	**8S-4790**	2	SPACER (6.35-MM THK)	
	5	1	**119-6194**	1	BOOT AS	
	6	1	**089-7968**	2	WASHER (13X27.5X2.5-MM THK)	
	7	1	**8R-4519**	2	LOCKNUT	
	8	1	**6W-3628**	2	CABLE	
	9	1	**5M-2894**	4	WASHER-HARD (10.2X18.5X2.5-MM THK)	
	10	1	**9V-7446**	1	ARMREST AS (RH)	
		1	**2K-4973**	1	LOCKNUT (3/8-16-THD)	
		1	**2K-6061**	1	SCREW-MACHINE (3/8-16X1.5-IN)	
		1	**5S-7383**	1	BOLT (3/8-16X1.75-IN)	
		1	**8Y-6277**	2	SPACER (10.5X28.6X10-MM THK)	
		1	**9V-7447**	1	PAD AS	
		1	**1F-0750**	1	NUT-WELD (3/8-16-THD)	
		1	**9V-7453**	1	BRACKET	
	11	1	**9V-7454**	1	ARMREST AS (LH)	
		1	**2K-4973**	1	LOCKNUT (3/8-16-THD)	
		1	**2K-6061**	1	SCREW-MACHINE (3/8-16X1.5-IN)	
		1	**5S-7383**	1	BOLT (3/8-16X1.75-IN)	
		1	**8Y-6277**	2	SPACER (10.5X28.6X10-MM THK)	
		1	**9V-7447**	1	PAD AS	
		1	**1F-0750**	1	NUT-WELD (3/8-16-THD)	
		1	**9V-7458**	1	BRACKET	
	12	1	**8T-9381**	2	BOLT (7/16-20X1-IN)	
	13	1	**9X-8276**	4	BOLT	

Y-SEPARATE ILLUSTRATION

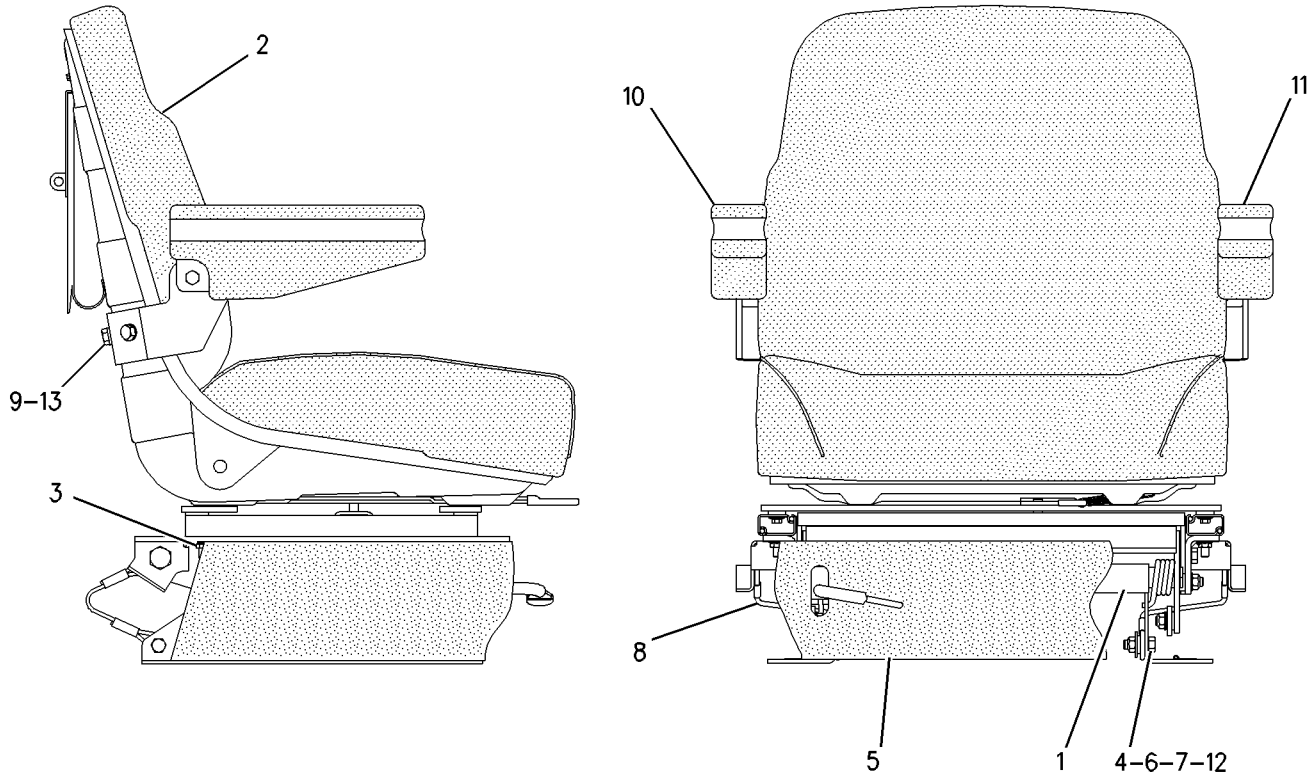

GRAPHIC #1 **<END>** g00898784

OPERATOR STATION

8Y-6852 SEAT GP-STATIC—VINYL

S/N: JPA1-UP
PART OF 126-2747 SEAT GP
AN ATTACHMENT

SMCS-7312 **i03182148**

NOTE	REF NO	GRAPHIC REF	PART NUMBER	QTY	PART NAME 1 2 3 4 5 6 (PRODUCT LEVEL)	SEE PAGE
Y	1	1	**116-2779**	1	ADJUSTER GP-SEAT (VINYL)	624
Y	2	1	**8Y-4005**	1	SEAT GP (VINYL)	725
	3	1	**9L-9814**	4	LOCKNUT	
	4	1	**8S-4790**	2	SPACER (6.35-MM THK)	
	5	1	**119-6194**	1	BOOT AS	
	6	1	**089-7968**	2	WASHER (13X27.5X2.5-MM THK)	
	7	1	**8R-4519**	2	LOCKNUT	
	8	1	**6W-3628**	2	CABLE	
	9	1	**5M-2894**	4	WASHER-HARD (10.2X18.5X2.5-MM THK)	
	10	1	**9V-7446**	1	ARMREST AS (RH)	
		1	**2K-4973**	1	LOCKNUT (3/8-16-THD)	
		1	**2K-6061**	1	SCREW-MACHINE (3/8-16X1.5-IN)	
		1	**5S-7383**	1	BOLT (3/8-16X1.75-IN)	
		1	**8Y-6277**	2	SPACER (10.5X28.6X10-MM THK)	
		1	**9V-7447**	1	PAD AS	
		1	**1F-0750**	1	NUT-WELD (3/8-16-THD)	
		1	**9V-7453**	1	BRACKET	
	11	1	**9V-7454**	1	ARMREST AS (LH)	
		1	**2K-4973**	1	LOCKNUT (3/8-16-THD)	
		1	**2K-6061**	1	SCREW-MACHINE (3/8-16X1.5-IN)	
		1	**5S-7383**	1	BOLT (3/8-16X1.75-IN)	
		1	**8Y-6277**	2	SPACER (10.5X28.6X10-MM THK)	
		1	**9V-7447**	1	PAD AS	
		1	**1F-0750**	1	NUT-WELD (3/8-16-THD)	
		1	**9V-7458**	1	BRACKET	
	12	1	**8T-9381**	2	BOLT (7/16-20X1-IN)	
	13	1	**9X-8276**	4	BOLT	

Y-SEPARATE ILLUSTRATION

8Y-6852 SEAT GP-STATIC *(contd.)* i03182148

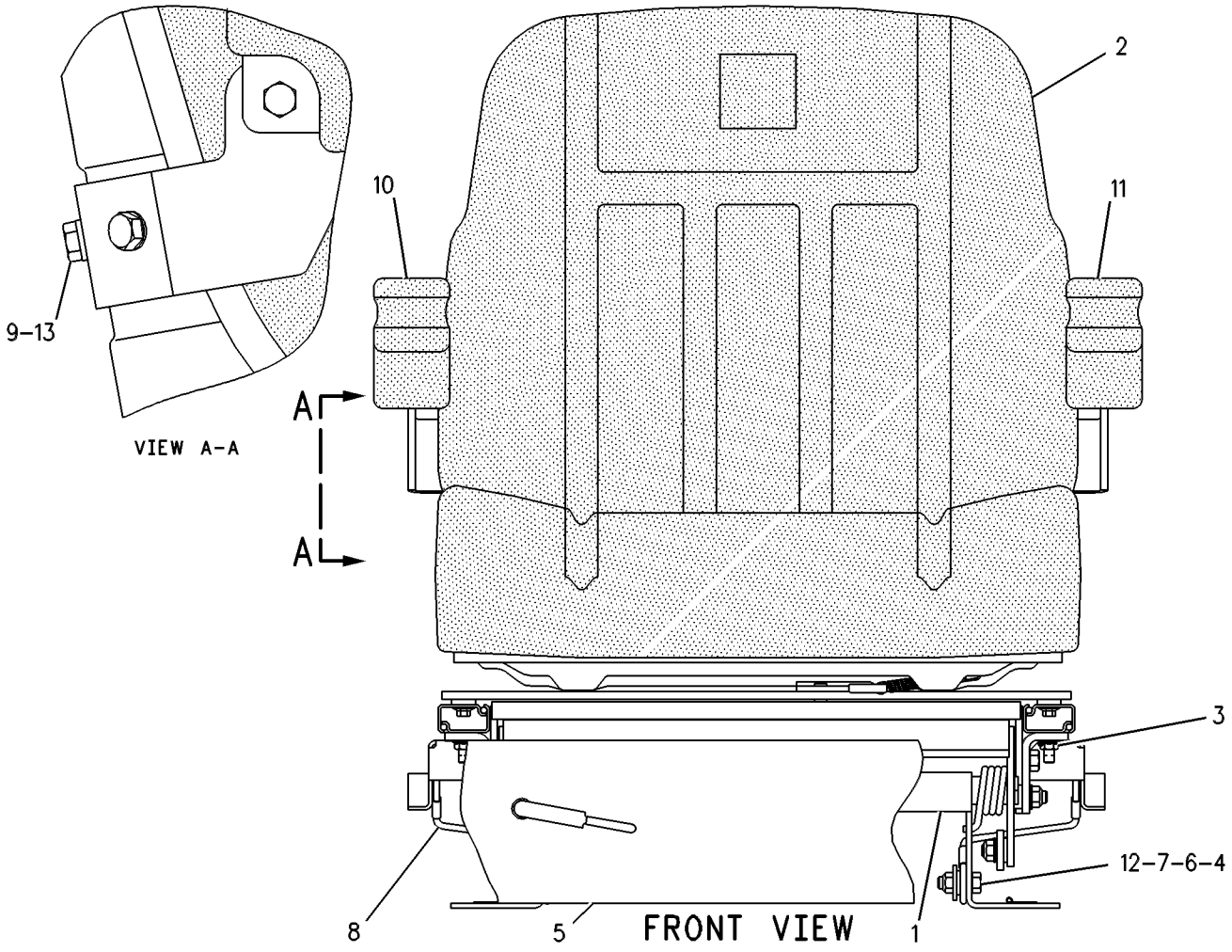

GRAPHIC #1 **<END>** g00109321

OPERATOR STATION

125-9856 SEAT GP-STATIC

S/N: JPA1-UP

PART OF 113-4254 SEAT GP

SMCS-7312 **i00131056**

NOTE	REF NO	GRAPHIC REF	PART NUMBER	QTY	PART NAME 1 2 3 4 5 6 (PRODUCT LEVEL)	SEE PAGE
Y	1	1	**125-9855**	1	SEAT GP	728
Y	2	1	**125-9854**	1	ADJUSTER GP-SEAT	626
	3	1	**031-4155**	4	LOCKNUT (5/16-18 THD)	
	4	1	**8T-4224**	4	WASHER-HARD (2MM THK)	

Y-SEPARATE ILLUSTRATION

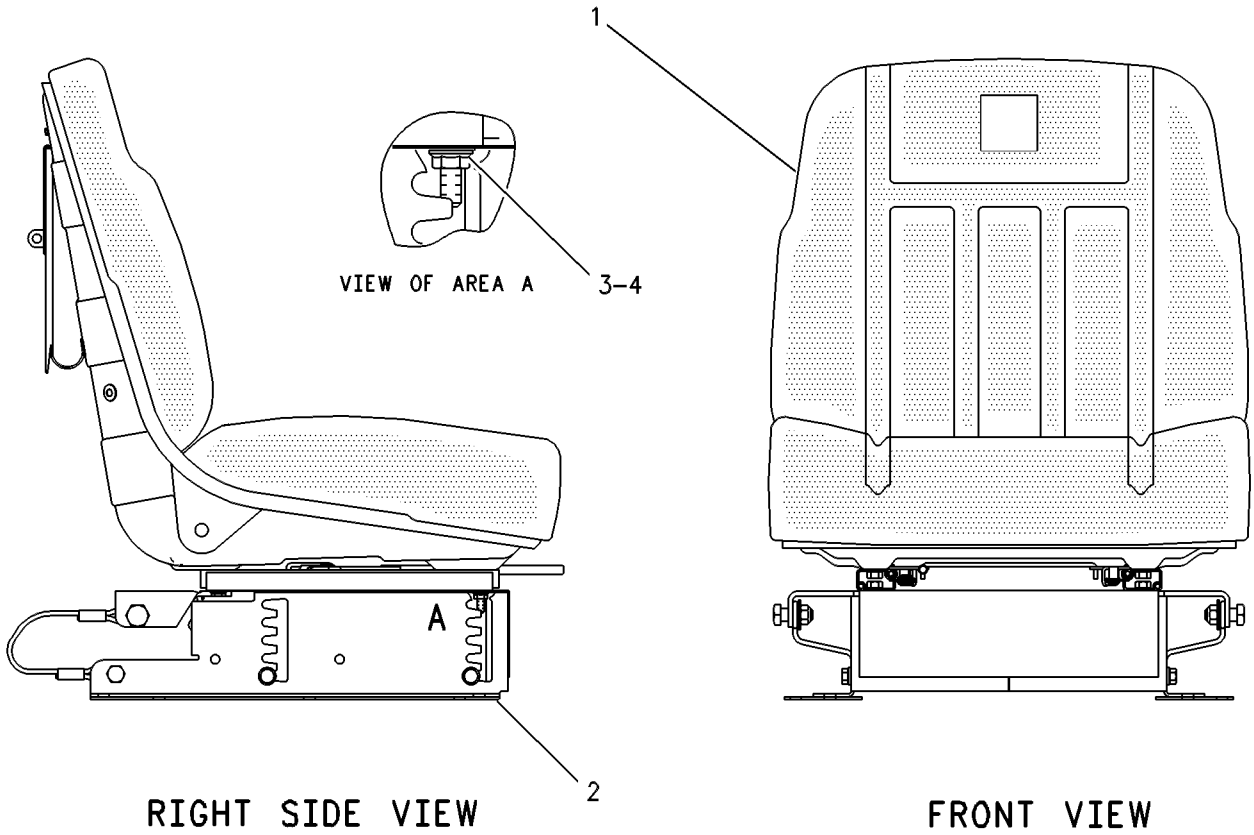

GRAPHIC #1 **<END>** g00109154

OPERATOR STATION

302-8814 SEAT GP-SUSPENSION—CLOTH

S/N: JPA1-UP

PART OF 322-8548 SEAT GP-SUSPENSION

AN ATTACHMENT

SMCS-7312 **i02946650**

NOTE	REF NO	GRAPHIC REF	PART NUMBER	QTY	PART NAME 1 2 3 4 5 6 (PRODUCT LEVEL)	SEE PAGE
J	1	1	**161-9289**	4	BLOCK-SLIDER	
J	2	1	**173-5787**	4	SETSCREW (1/4-20-THD)	
Y	3	1	**175-1504**	1	SEAT GP (CLOTH)	730
J	4	1	**203-7703**	2	WASHER-HARD (10.2X22.22X2.38-MM THK)	
Y	5	1	**302-7458**	1	SUSPENSION GP-SEAT	743
J	6	1	**4F-4879**	1	BOLT (3/8-16X0.5-IN)	
					AVAILABLE REPAIR KIT(S):	
J			**173-7035**	1	KIT-SLIDER BLOCK (SUSPENSION SEAT)	
					(INCLUDES BOLT, BLOCK-SLIDERS, SETSCREWS, & WASHERS)	

J-(KIT MARKED J SERVICES PART(S) MARKED J)
Y-SEPARATE ILLUSTRATION

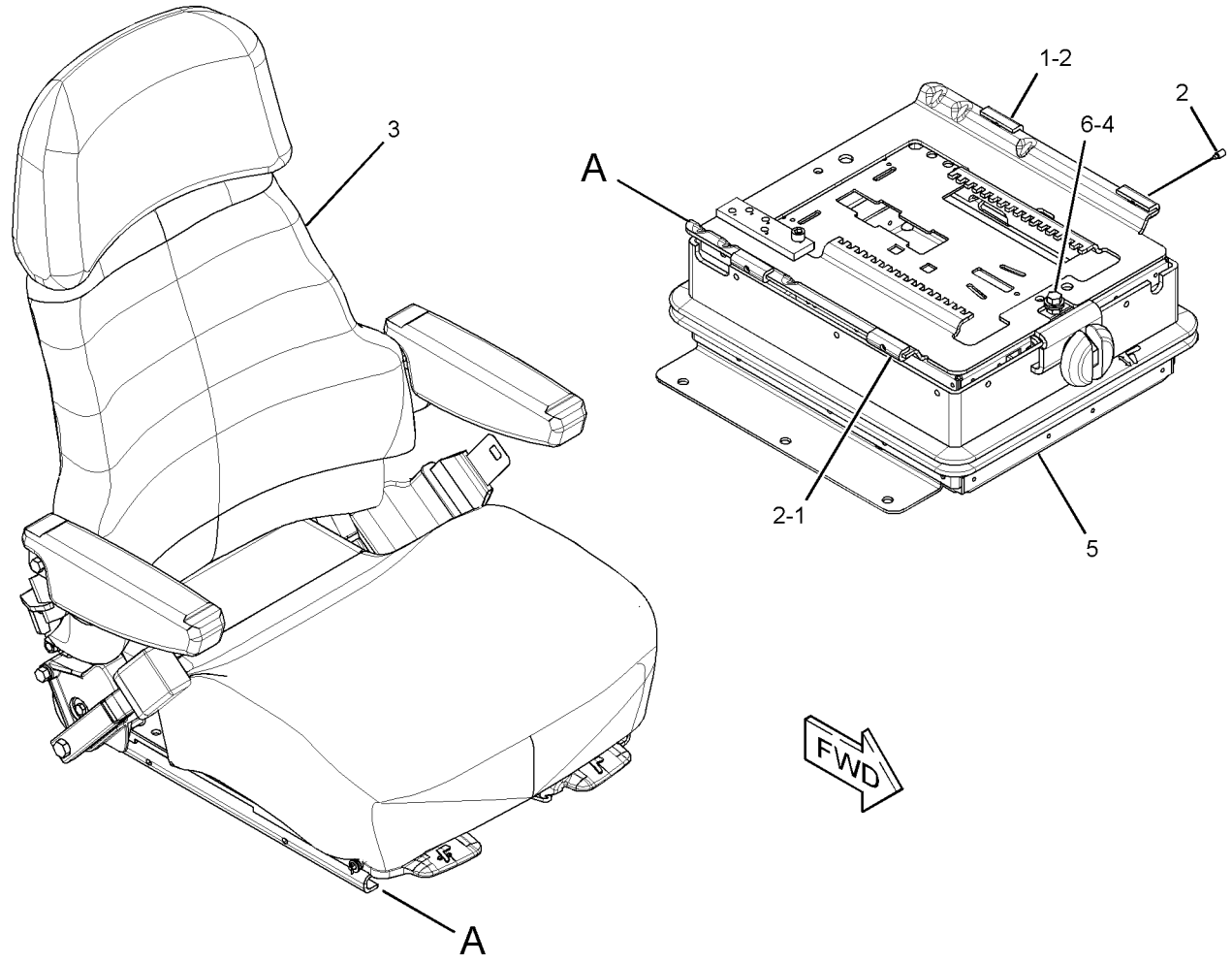

GRAPHIC #1 **<END>** g01451371

OPERATOR STATION

322-8548 SEAT GP-SUSPENSION—CLOTH

S/N: JPA1-UP
AN ATTACHMENT

SMCS-7312 **i03258802**

NOTE	REF NO	GRAPHIC REF	PART NUMBER	QTY	PART NAME 1 2 3 4 5 6 (PRODUCT LEVEL)	SEE PAGE
	1	1	**5P-7957**	1	LANYARD	
	2	1	**9M-5732**	4	RIVET-POP	
	3	1	**173-2052**	1	RETAINER	
	4	1	**178-7907**	1	HOLDER	
Y	5	1	**302-8814**	1	SEAT GP-SUSPENSION	739
	6	1	**4B-4863**	4	WASHER (4.7X11X1.2-MM THK)	
M	7	1	**9X-2041**	6	SCREW-TRUSS HEAD (M10X1.5X20-MM)	

M-METRIC PART
Y-SEPARATE ILLUSTRATION

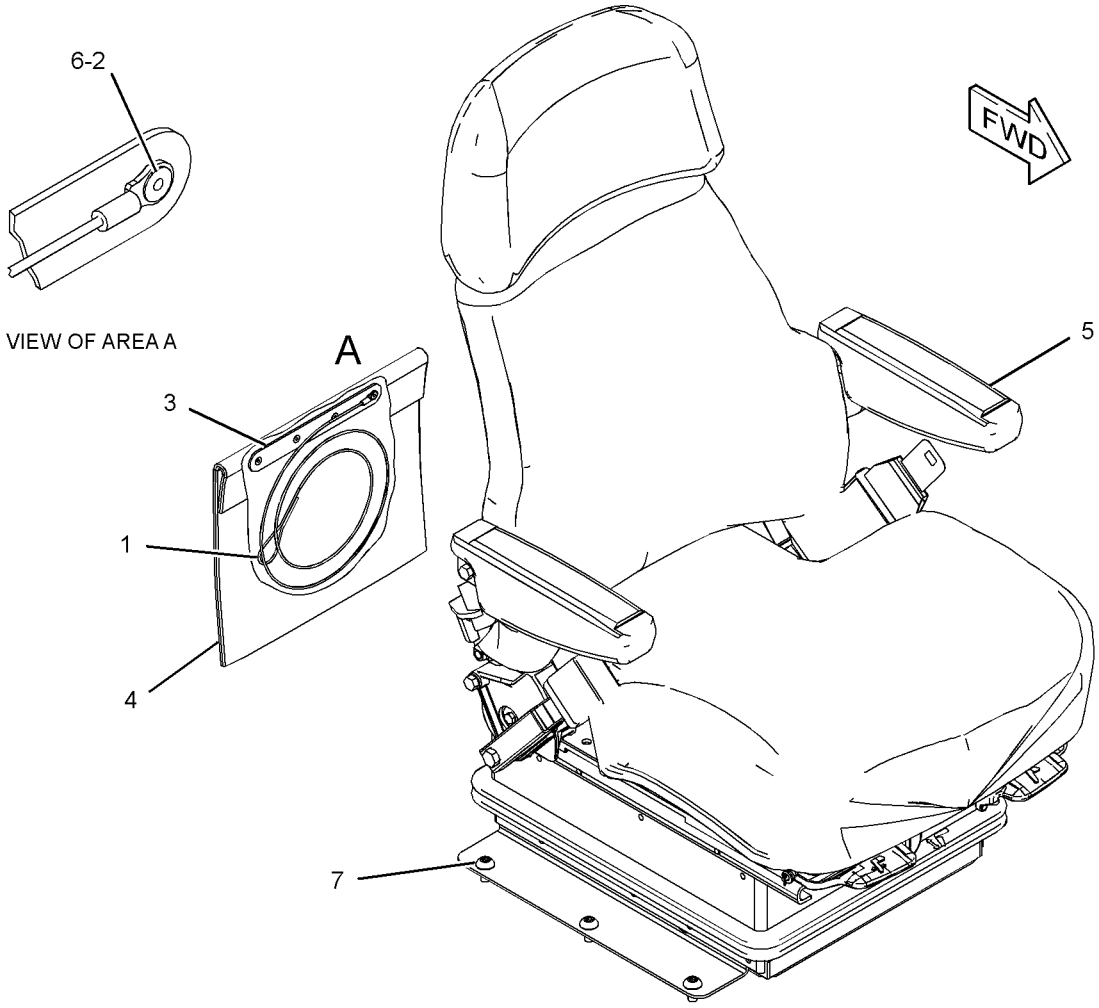

GRAPHIC #1 **<END>** g01662814

OPERATOR STATION

174-4546 SUPPORT GP-SEAT

S/N: JPA1-UP

PART OF 274-7940 GENERAL AR

SMCS-7321 **i01674709**

NOTE	REF NO	GRAPHIC REF	PART NUMBER	QTY	PART NAME 1 2 3 4 5 6 (PRODUCT LEVEL)	SEE PAGE
	1	1	**5P-7803**	2	PLUG-BUTTON	
	2	1	**7G-4824**	1	STRAP	
	4	1	**8E-7791**	1	STRAP	
	5	1	**8X-5536**	1	COVER	
	6	1	**8X-5538**	1	COVER AS	
M		1	**8T-3490**	4	NUT-WELD (M10X1.5-THD)	
	7	1	**8X-5540**	1	COVER	
	8	1	**123-4618**	1	COVER	
	9	1	**123-4701**	1	SEAL	
	10	1	**174-4492**	1	COVER	
	11	1	**174-6051**	1	SUPPORT AS	
		1	**5P-1075**	8	WASHER-HARD (10.2X22.5X3-MM THK)	
M		1	**6V-9632**	6	NUT-WELD (M6X1-THD)	
M		1	**8T-3490**	13	NUT-WELD (M10X1.5-THD)	
M		1	**9T-6001**	2	BOSS (M10X1.5-THD)	
		1	**123-8408**	2	TUBE AS	
	12	1	**174-6353**	1	PLATE	
	13	1	**176-5507**	1	PAD	
	14	1	**191-0027**	1	PAD	
	15	1	**5P-1075**	8	WASHER-HARD (10.2X22.5X3-MM THK)	
	16	1	**6V-8801**	8	NUT (3/8-16-THD)	
	17	1	**7X-0591**	2	WASHER-HARD (17X29X3-MM THK)	
M	18	1	**9X-2040**	4	SCREW-TRUSS HEAD (M10X1.5X25-MM)	
M	19	1	**9X-2041**	5	SCREW-TRUSS HEAD (M10X1.5X20-MM)	
M	20	1	**9X-2045**	6	SCREW-TRUSS HEAD (M6X1X20-MM)	

M-METRIC PART

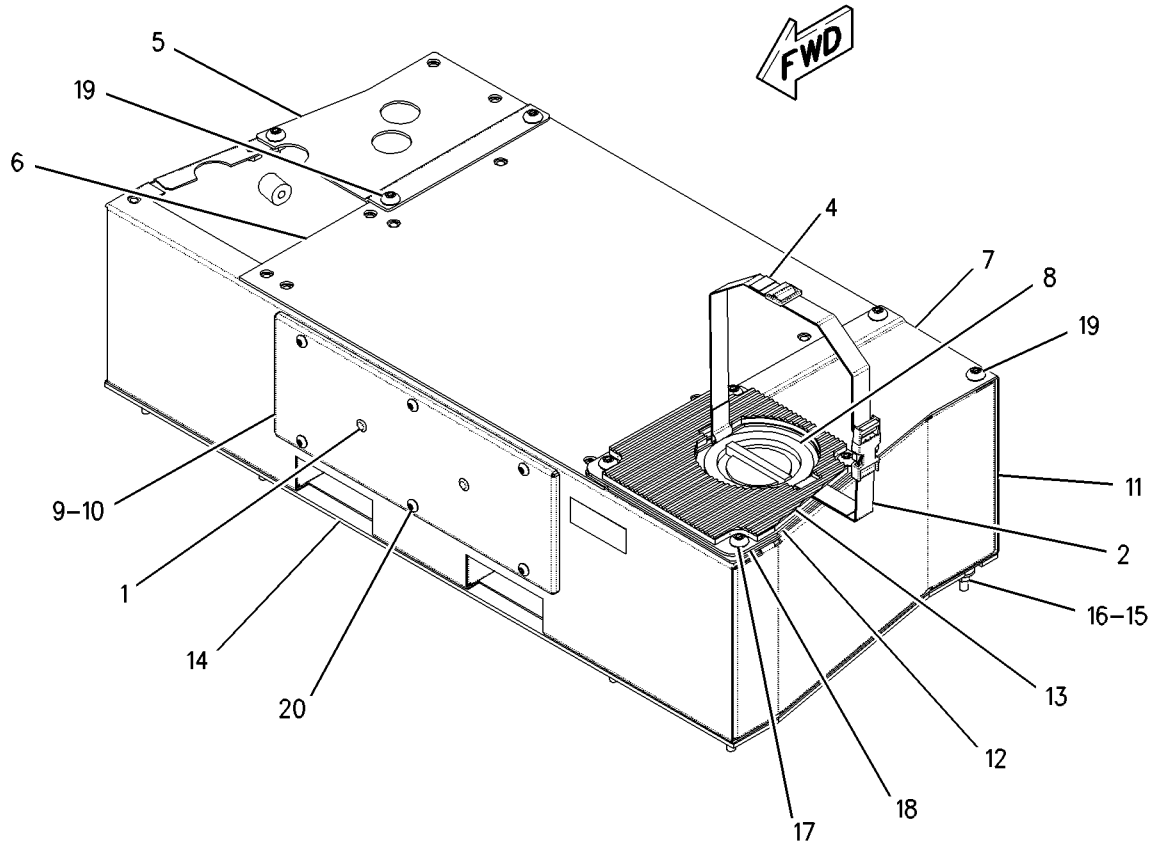

GRAPHIC #1 **<END>** g00865561

OPERATOR STATION

302-7458 SUSPENSION GP-SEAT

S/N: JPA1-UP

PART OF 302-8814 SEAT GP-SUSPENSION

AN ATTACHMENT

SMCS-7324 **i02947098**

NOTE	REF NO	GRAPHIC REF	PART NUMBER	QTY	PART NAME 1 2 3 4 5 6 (PRODUCT LEVEL)	SEE PAGE
	1	1	**2K-4973**	2	LOCKNUT (3/8-16-THD)	
	2	1	**4V-7884**	2	BEARING	
	3	1	**4V-8577**	4	BEARING	
	4	1	**5V-1497**	1	RETAINER	
	5	1	**124-0507**	1	ABSORBER AS-SHOCK	
	6	1	**8Y-6012**	1	ARM AS-SUSPENSION	
Y	7	1	**113-5808**	1	HOUSING GP-SEAT SUSPENSION	675
	8	1	**8Y-6024**	2	SHAFT AS	
J	9	1	**101-0003**	20	FASTENER	
J	10	1	**166-6781**	6	FASTENER	
J	11	1	**163-1146**	3	FASTENER	
	12	1	**145-0326**	1	FILM-INSTRUCTION (SEAT ADJUSTMENT)	
	13	1	**169-7380**	1	BOLT-SOCKET HEAD (3/8-16X0.375-IN)	
J	14	1	**197-7689**	3	FASTENER	
					AVAILABLE REPAIR KIT(S):	
J			**8Y-5944**	1	KIT-SUSPENSION BOOT (SEAT)	
					(INCLUDES BOOT, RETAINERS, & FASTENERS)	
			101-4194	1	BELT-TETHER (SUSPENSION SEAT)	
					(INCLUDES BELTS)	
			101-4195	1	KIT-SUSPENSION ROLLER (SUSPENSION SEAT)	
					(INCLUDES ROLLERS)	

J-(KIT MARKED J SERVICES PART(S) MARKED J)
Y-SEPARATE ILLUSTRATION

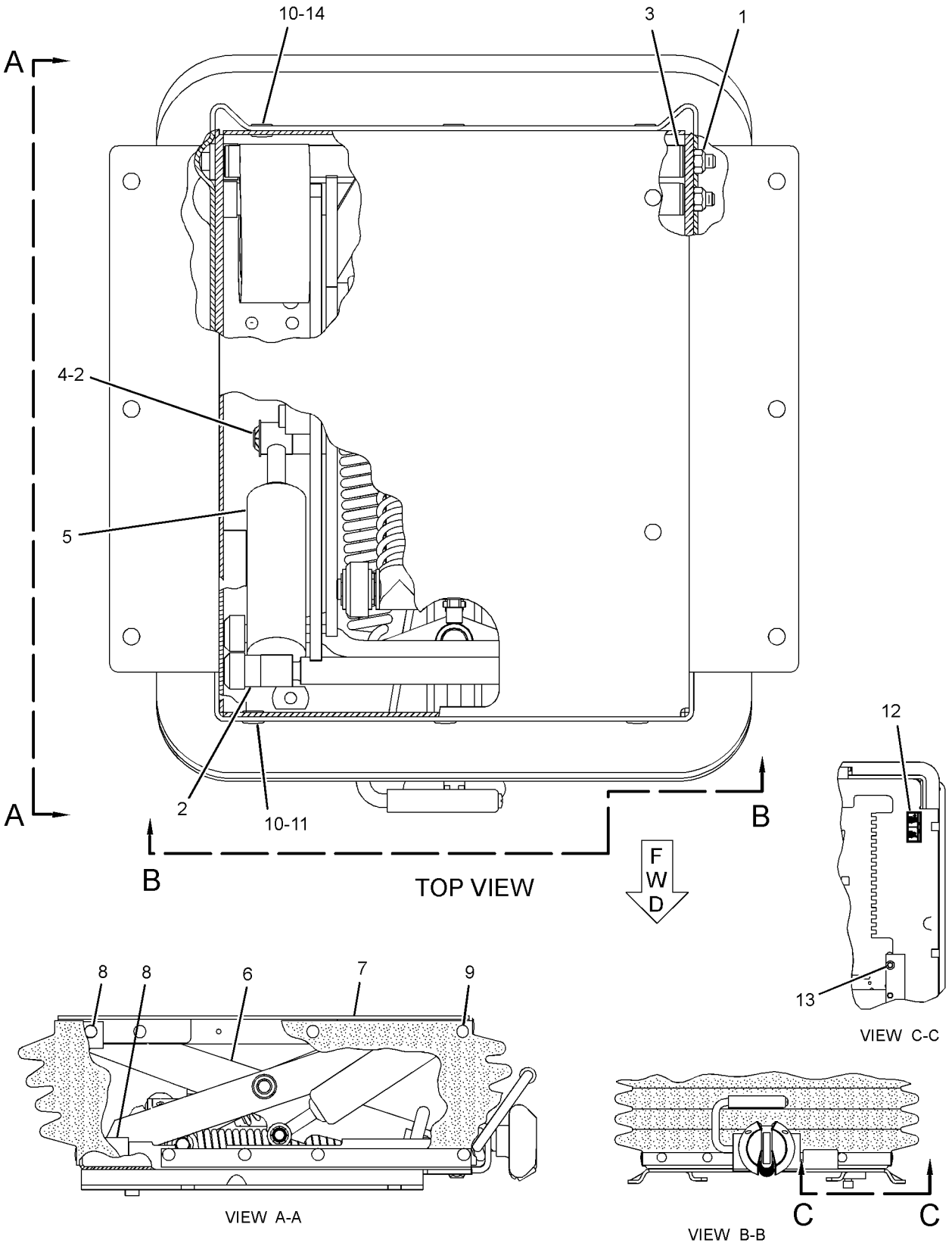

GRAPHIC #1 **<END>** g01453634

OPERATOR STATION

8X-2650 VALVE GP-AIR CONTROL

S/N: JPA1-UP

PART OF 283-3499 CONTROL GP-SERVICE BRAKE

SMCS-3123, 3272, 4265, 4282, 5506 **i02200392**

NOTE	REF NO	GRAPHIC REF	PART NUMBER	QTY	PART NAME 1 2 3 4 5 6 (PRODUCT LEVEL)	SEE PAGE
	1	1	**8X-2646**	1	LEVER AS	
	2	1	**9D-8121**	1	ROLLER	
	3	1	**3B-4607**	1	PIN-COTTER	
		1	**7B-9323**	1	PIN	
	4	1	**5D-3636**	1	BOOT	
	5	1	**2R-0719**	1	PLUNGER	
	6	1	**125-5321**	3	BOLT	
	7	1	**2R-0694**	1	PLATE-BRAKE VALVE	
	8	1	**2R-0724**	1	BUTTON-STOP	
	9	1	**2D-6006**	1	PIN	
	10	1	**3B-4610**	1	PIN-COTTER	
J	11	1	**8W-5651**	1	VALVE GP-CONTROL (AIR)	
		1	**5D-0768**	1	SPRING	
					AVAILABLE REPAIR KIT(S):	
J			**2G-6285**	1	KIT-AIR CONTROL VALVE	
					(INCLUDES SPRINGS, INLET & EXHAUST VALVES,O-RINGS, BOOT,SCREW,	
					LOCKNUT & FILTER)	

J-KIT MARKED J IS AVAILABLE FOR PART MARKED J

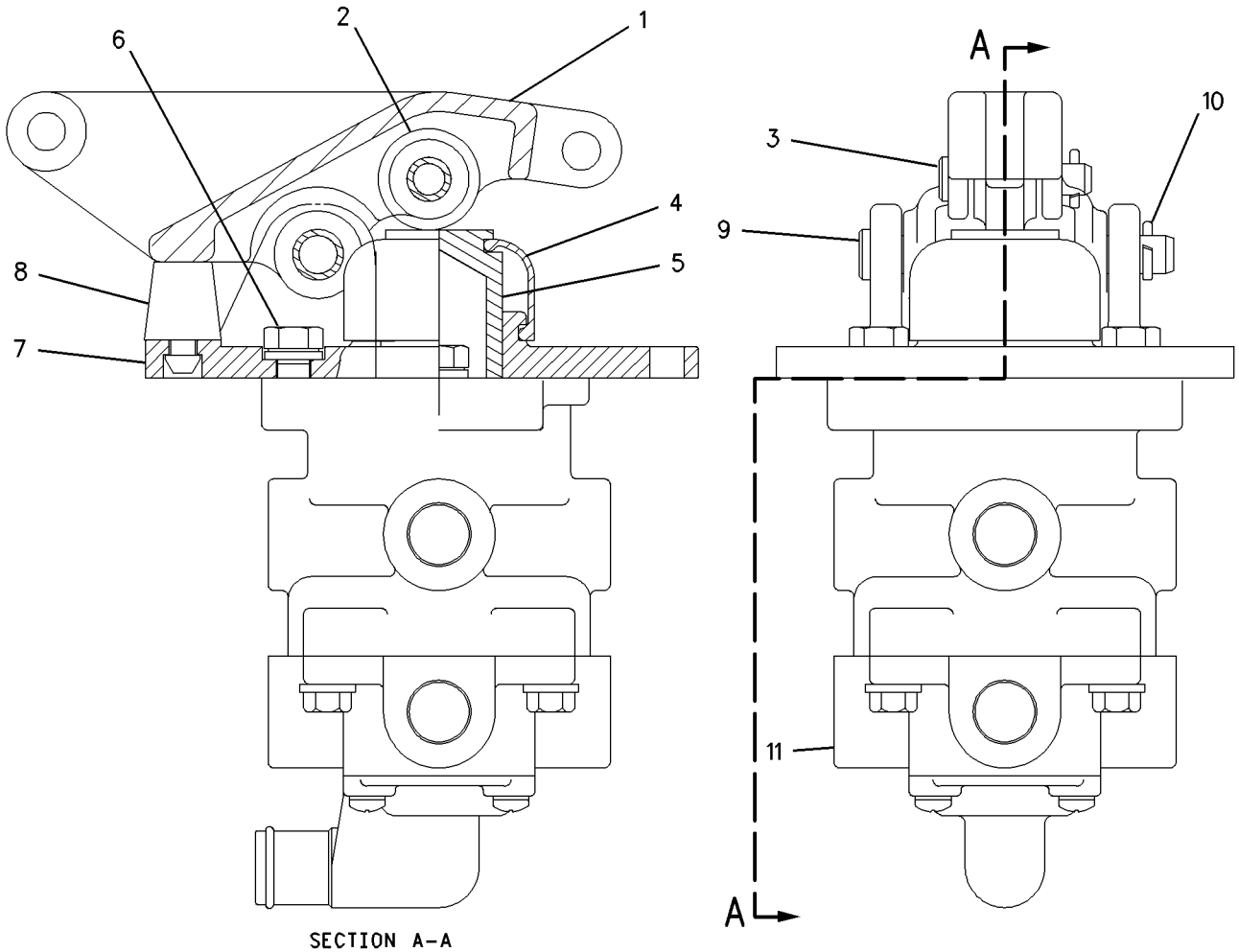

SECTION A-A

GRAPHIC #1 **<END>** g00688575

OPERATOR STATION

8X-9675 WASHER GP-WINDOW—FRONT

S/N: JPA1-UP
PART OF 320-0342 ROPS AR
AN ATTACHMENT

SMCS-7306 **i01193188**

NOTE	REF NO	GRAPHIC REF	PART NUMBER	QTY	PART NAME 1 2 3 4 5 6 (PRODUCT LEVEL)	SEE PAGE
BE	1	1	**144-0195**		HOSE	
	2	1	**8W-0935**	1	GASKET	
	3	1	**8W-0934**	1	BRACKET	
	4	1	**9P-2369**	1	JET AS-WASHER	
		1	**8Y-4408**	1	NOZZLE AS-JET	
	5	1	**8T-2901**	1	NOZZLE AS	
		1	**8Y-4409**	1	NOZZLE AS-JET	
M	7	1	**5C-2890**	2	NUT (M6X1-THD)	
	8	1	**5P-4115**	2	WASHER-HARD (7.2X19X2-MM THK)	
	9	1	**3S-2093**	3	STRAP-CABLE	
	10	1	**102-3645**	1	COVER	
M	11	1	**9X-2045**	5	SCREW-TRUSS HEAD (M6X1X20-MM)	
	12	1	**4D-7388**	2	CLIP	
	13	1	**5M-3062**	1	BOLT (3/8-16X0.75-IN)	
	14	1	**8T-4896**	2	WASHER-HARD (10.2X18.5X2.5-MM THK)	
	15	1	**7T-8891**	2	PUMP AS-WASHER	
	16	1	**8X-9405**	1	RESERVOIR AS	
	17	1	**8X-5280**	2	CONNECTOR	
	18	1	**6W-5698**	2	GROMMET	
	19	1	**7T-1961**	1	CAP	
	20	1	**8X-1135**	1	GASKET	
	21	1	**8X-9349**	1	PAD	
	22	1	**107-4865**	1	PAD	
	24	1	**4L-6454**	1	BOLT (3/8-16X1-IN)	
	25	1	**6V-8801**	1	NUT (3/8-16-THD)	
	26	1	**7G-4326**	1	PLATE	

B-USE AS REQUIRED
E-ORDER BY THE CENTIMETER
M-METRIC PART

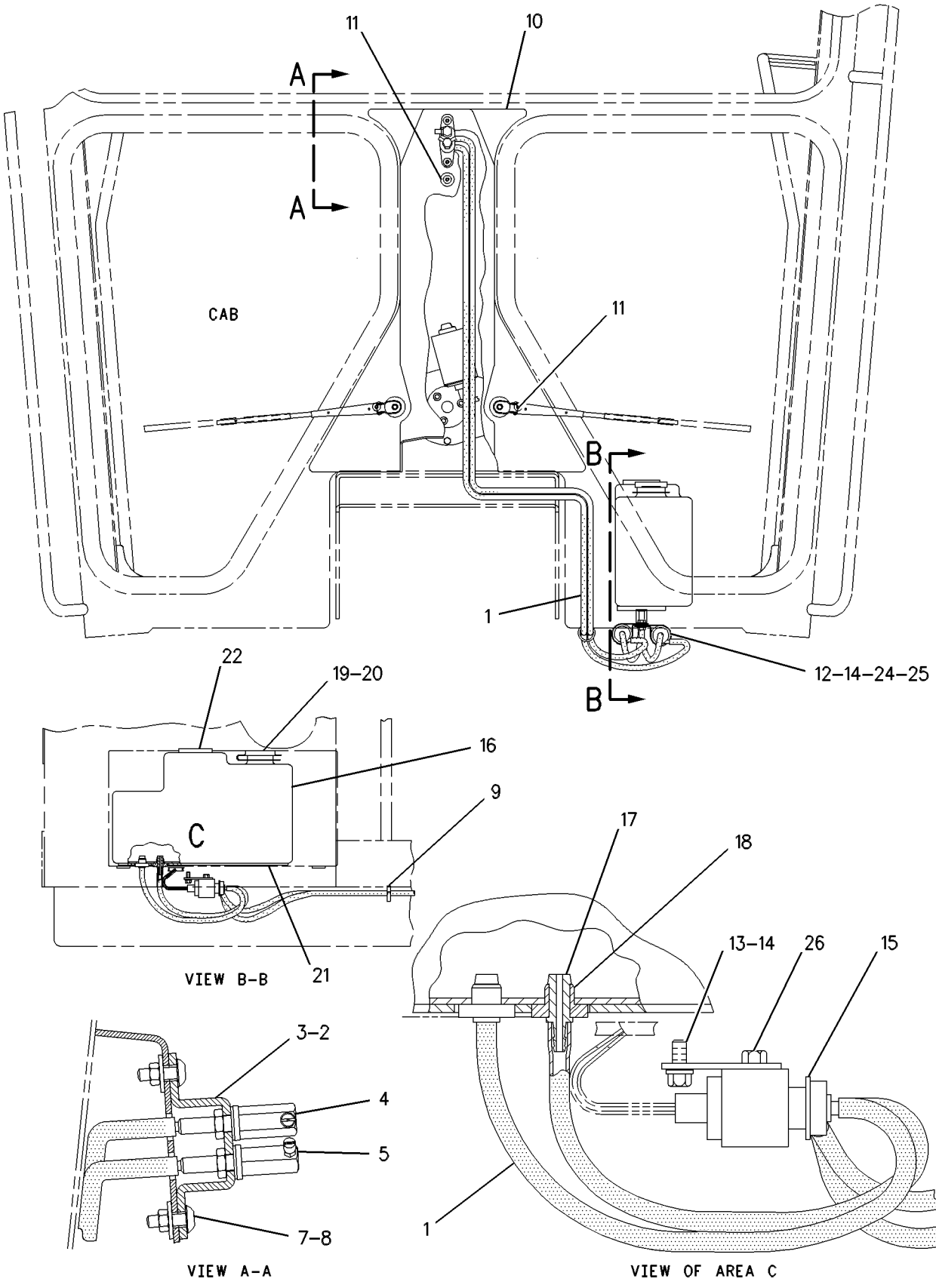

GRAPHIC #1 **<END>** g00638869

OPERATOR STATION

8X-9680 WASHER GP-WINDOW—REAR

S/N: JPA1-UP

PART OF 298-2425, 298-2426 WIPER AR-WINDOW

AN ATTACHMENT

SMCS-7306 **i02380619**

NOTE	REF NO	GRAPHIC REF	PART NUMBER	QTY	PART NAME 1 2 3 4 5 6 (PRODUCT LEVEL)	SEE PAGE
	1	1	**3V-3816**	1	NOZZLE AS	
	2	1	**7T-8891**	1	PUMP AS-WASHER	
	3	1	**4D-7388**	1	CLIP	
	4	1	**4D-7794**	4	CLIP	
	5	1	**5P-8167**	2	BOLT (3/8-16X0.625-IN)	
	6	1	**6K-9632**	1	TEE	
	7	1	**8T-4121**	3	WASHER-HARD (11X21X2.5-MM THK)	
M	8	1	**8T-4191**	3	BOLT (M10X1.5X16-MM)	
	9	1	**8T-4896**	2	WASHER-HARD (10.2X18.5X2.5-MM THK)	
E	10	1	**144-0195**		HOSE (188-CM)	
E	10A	1	**144-0195**		HOSE (20-CM)	
E	10B	1	**144-0195**		HOSE (10-CM)	

E-ORDER BY THE CENTIMETER
M-METRIC PART

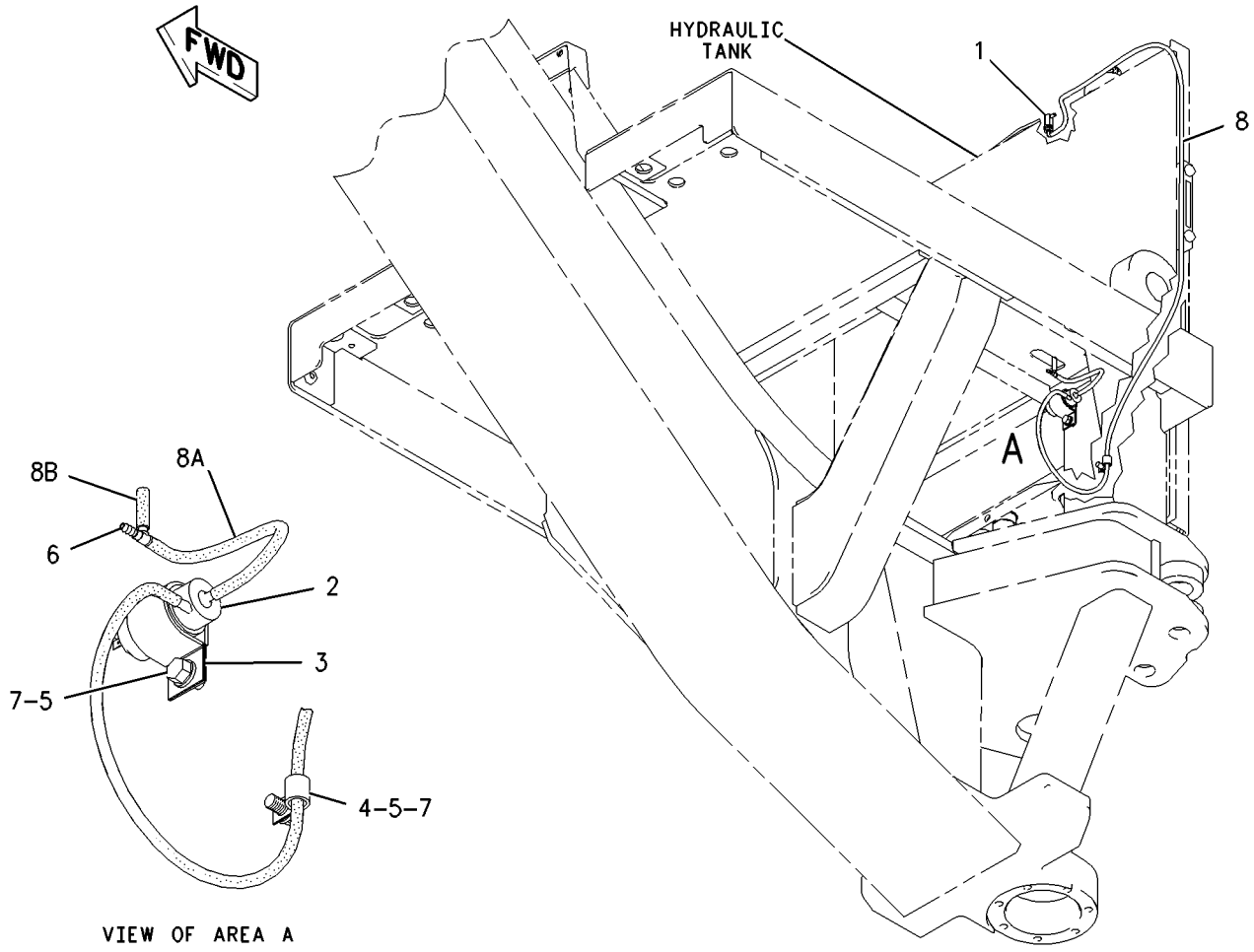

GRAPHIC #1 **<END>** g00898012

OPERATOR STATION

125-4342 WASHER GP-WINDOW—FRONT

S/N: JPA1-UP
PART OF 290-1126, 320-0341 CAB AR
AN ATTACHMENT

SMCS-7306 **i01193196**

NOTE	REF NO	GRAPHIC REF	PART NUMBER	QTY	PART NAME 1 2 3 4 5 6 (PRODUCT LEVEL)	SEE PAGE
	1	1	**8X-9405**	1	RESERVOIR AS	
		1	**6W-5698**	2	GROMMET	
		1	**7T-1961**	1	CAP	
		1	**8X-1135**	1	GASKET	
		1	**8X-5280**	2	CONNECTOR	
		1	**8X-9349**	1	PAD (RECTANGULAR)	
		1	**107-4865**	1	PAD (ROUND)	
	2	1	**8W-0935**	1	GASKET	
	3	1	**8W-0934**	1	BRACKET	
	4	1	**9P-2369**	1	JET AS-WASHER	
		1	**8Y-4408**	1	NOZZLE AS-JET	
M	5	1	**9X-2042**	2	SCREW-TRUSS HEAD (M6X1X12-MM)	
M	6	1	**5C-2890**	2	NUT (M6X1-THD)	
	7	1	**5P-4115**	2	WASHER-HARD (7.2X19X2-MM THK)	
	8	1	**3S-2093**	3	STRAP-CABLE	
	9	1	**102-3645**	1	COVER	
M	10	1	**9X-2045**	3	SCREW-TRUSS HEAD (M6X1X20-MM)	
	11	1	**4D-7388**	1	CLIP	
	12	1	**5M-3062**	1	BOLT (3/8-16X0.75-IN)	
	13	1	**6K-9632**	1	TEE	
	14	1	**7T-8891**	1	PUMP AS-WASHER	
BE	15	1	**144-0195**		HOSE	
	16	1	**6V-6467**	2	PLUG	
	17	1	**8T-4896**	2	WASHER-HARD (10.2X18.5X2.5-MM THK)	

B-USE AS REQUIRED
E-ORDER BY THE CENTIMETER
M-METRIC PART

125-4342 **WASHER GP-WINDOW** *(contd.)* **i01193196**

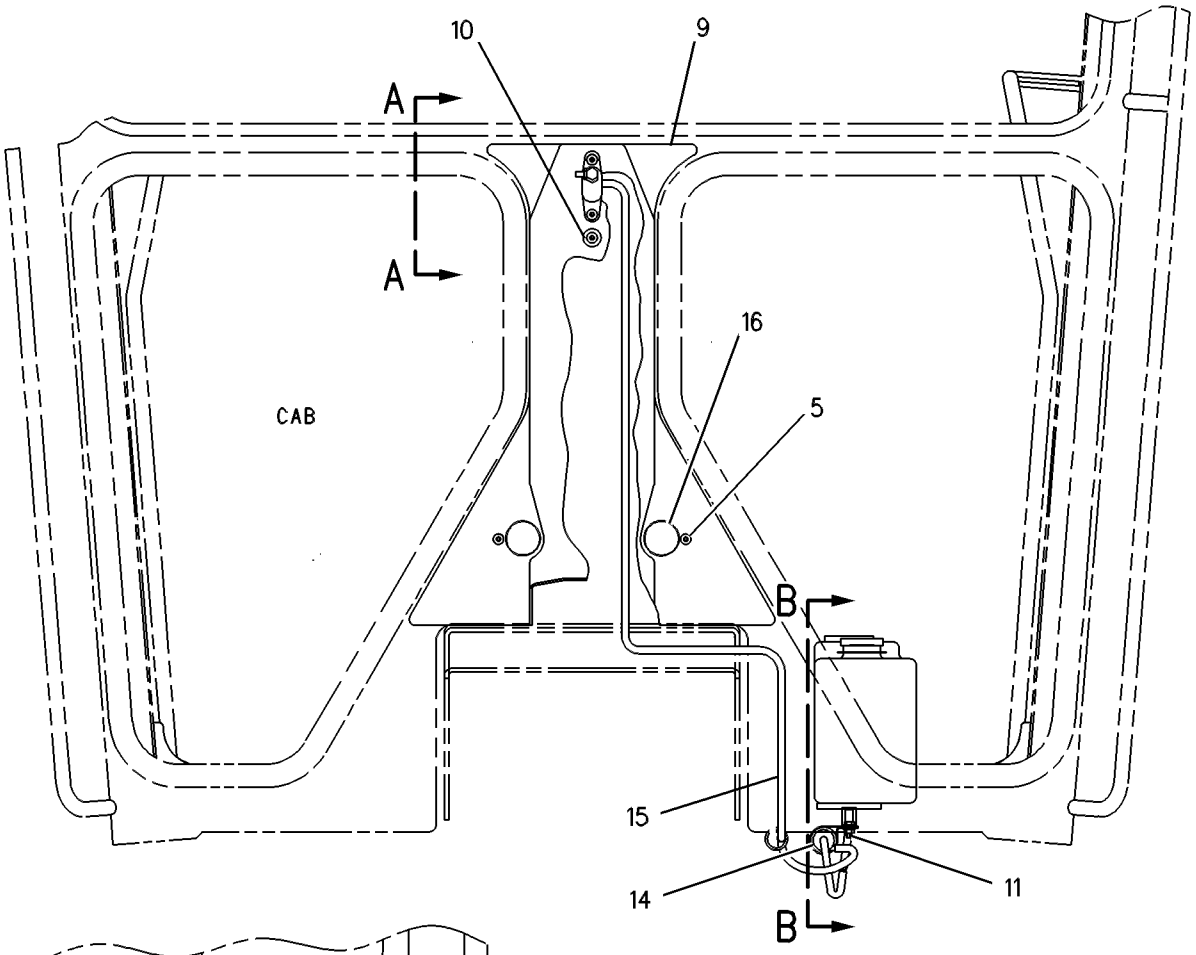

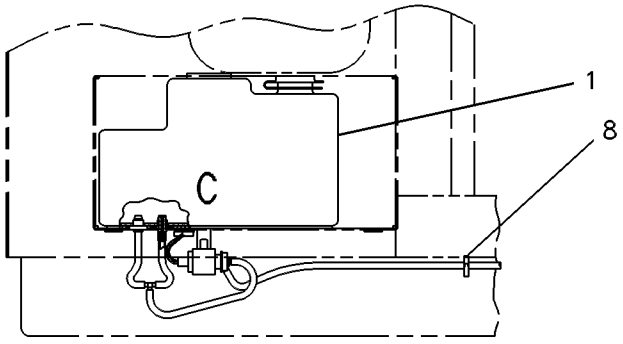

VIEW B-B

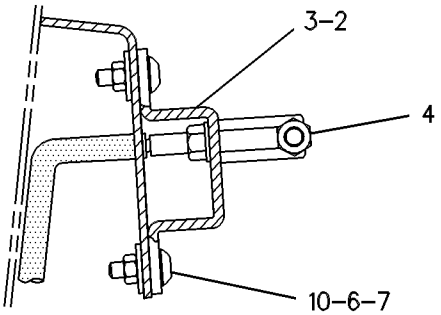

VIEW A-A

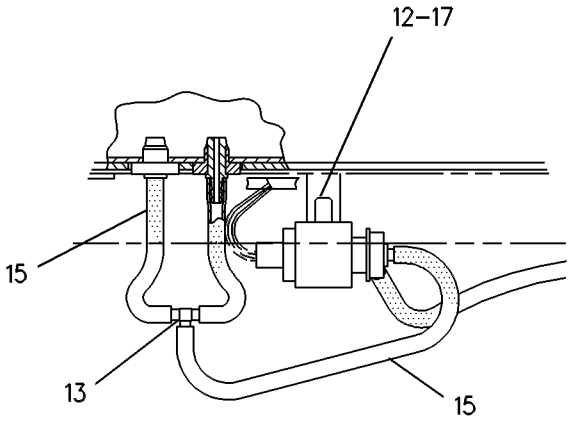

VIEW OF AREA C

GRAPHIC #1 **<END>** g00286150

OPERATOR STATION

134-8232 WINDOW GP-CAB–SIDE SLIDING–HIGH PROFILE

S/N: JPA1-UP
PART OF 139-6129 WINDOW GP-CAB
AN ATTACHMENT

SMCS-7310 **i02205497**

NOTE	REF NO	GRAPHIC REF	PART NUMBER	QTY	PART NAME 1 2 3 4 5 6 (PRODUCT LEVEL)	SEE PAGE
	1	1	**5M-9695**	4	SCREW (6-32X0.312-IN)	
	2	1	**5P-7162**	2	SCREW-MACHINE (10-32X0.5-IN)	
	3	1	**8C-6738**	2	SCREW-PAN HEAD (6-20X1-IN)	
	4	1	**9X-6019**	4	SCREW-LOCK (6-32-THD)	
	5	1	**104-5958**	2	NUT (10X32-MM)	
	6	1	**109-0146**	2	STOP-SLIDE	
	7	1	**139-9132**	1	LATCH AS	
	8	1	**139-9138**	1	GLASS-SLIDING	
	9	1	**139-9134**	1	POST-CENTER	
	10	1	**139-9135**	1	GLASS-FIXED	
	11	1	**139-9137**	1	CATCH	
BE	12	1	**8Y-6981**		SEAL	
BE	13	1	**139-9136**		SEAL-WEATHER	
BD	14	1	**5P-5627**		SEAL	
BE	15	1	**8Y-6982**		SEAL	

B-USE AS REQUIRED
D-ORDER BY THE METER
E-ORDER BY THE CENTIMETER

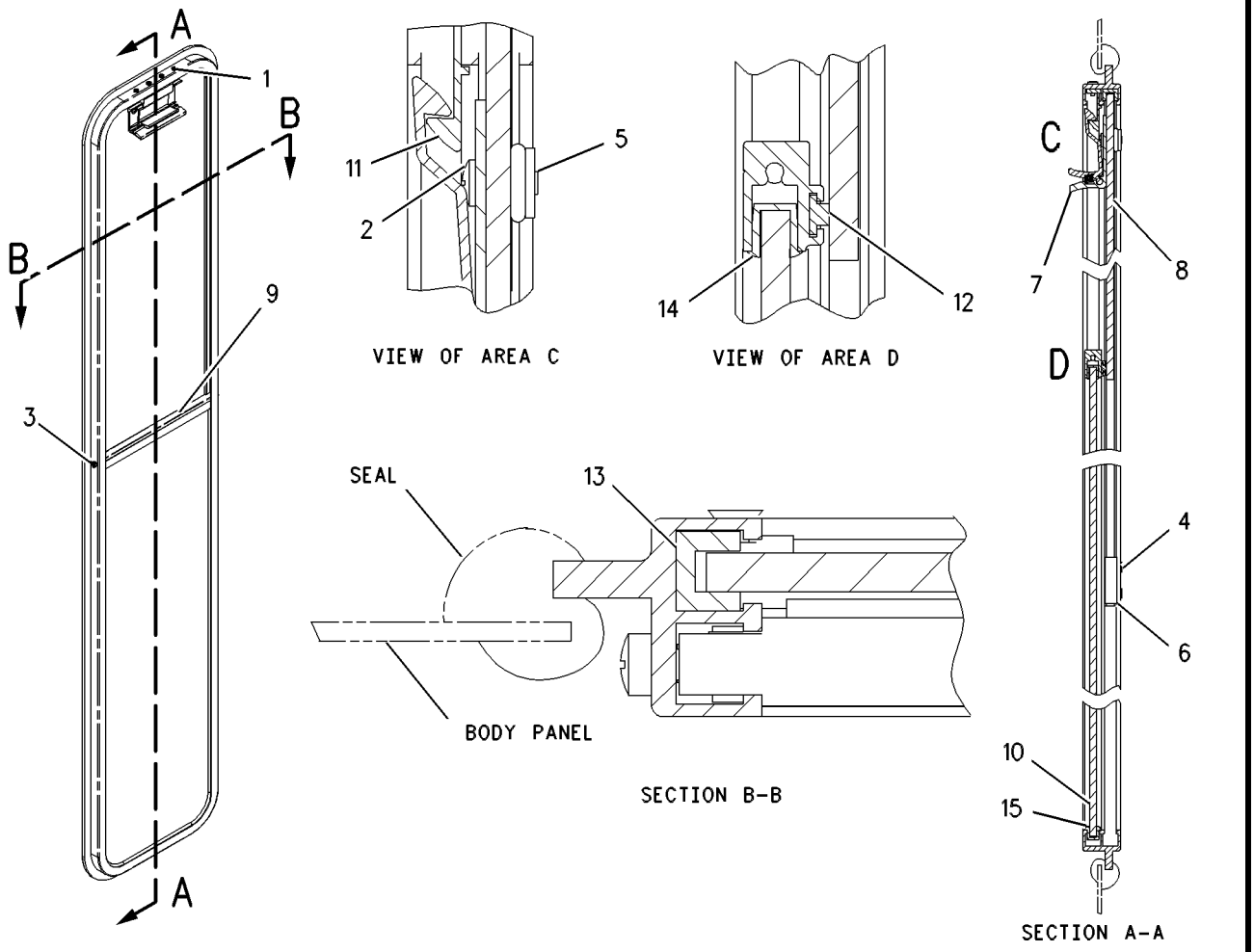

GRAPHIC #1 **<END>** g00545825

OPERATOR STATION

134-8233 WINDOW GP-CAB—SIDE SLIDING—LOW PROFILE

S/N: JPA1-UP
PART OF 139-6128 WINDOW GP-CAB
AN ATTACHMENT

SMCS-7310 **i02205498**

NOTE	REF NO	GRAPHIC REF	PART NUMBER	QTY	PART NAME 1 2 3 4 5 6 (PRODUCT LEVEL)	SEE PAGE
	1	1	**5M-9695**	4	SCREW (6-32X0.312-IN)	
	2	1	**5P-7162**	2	SCREW-MACHINE (10-32X0.5-IN)	
	3	1	**8C-6738**	2	SCREW-PAN HEAD (6-20X1-IN)	
	4	1	**9X-6019**	4	SCREW-LOCK (6-32-THD)	
	5	1	**104-5958**	2	NUT (10X32-MM)	
	6	1	**109-0146**	2	STOP-SLIDE	
	7	1	**139-9132**	1	LATCH AS	
	8	1	**139-9133**	1	GLASS-SLIDING	
	9	1	**139-9134**	1	POST-CENTER	
	10	1	**139-9135**	1	GLASS-FIXED	
	11	1	**139-9137**	1	CATCH	
BE	12	1	**8Y-6981**		SEAL	
BE	13	1	**139-9136**		SEAL-WEATHER	
BD	14	1	**5P-5627**		SEAL	
BE	15	1	**8Y-6982**		SEAL	

B-USE AS REQUIRED
D-ORDER BY THE METER
E-ORDER BY THE CENTIMETER

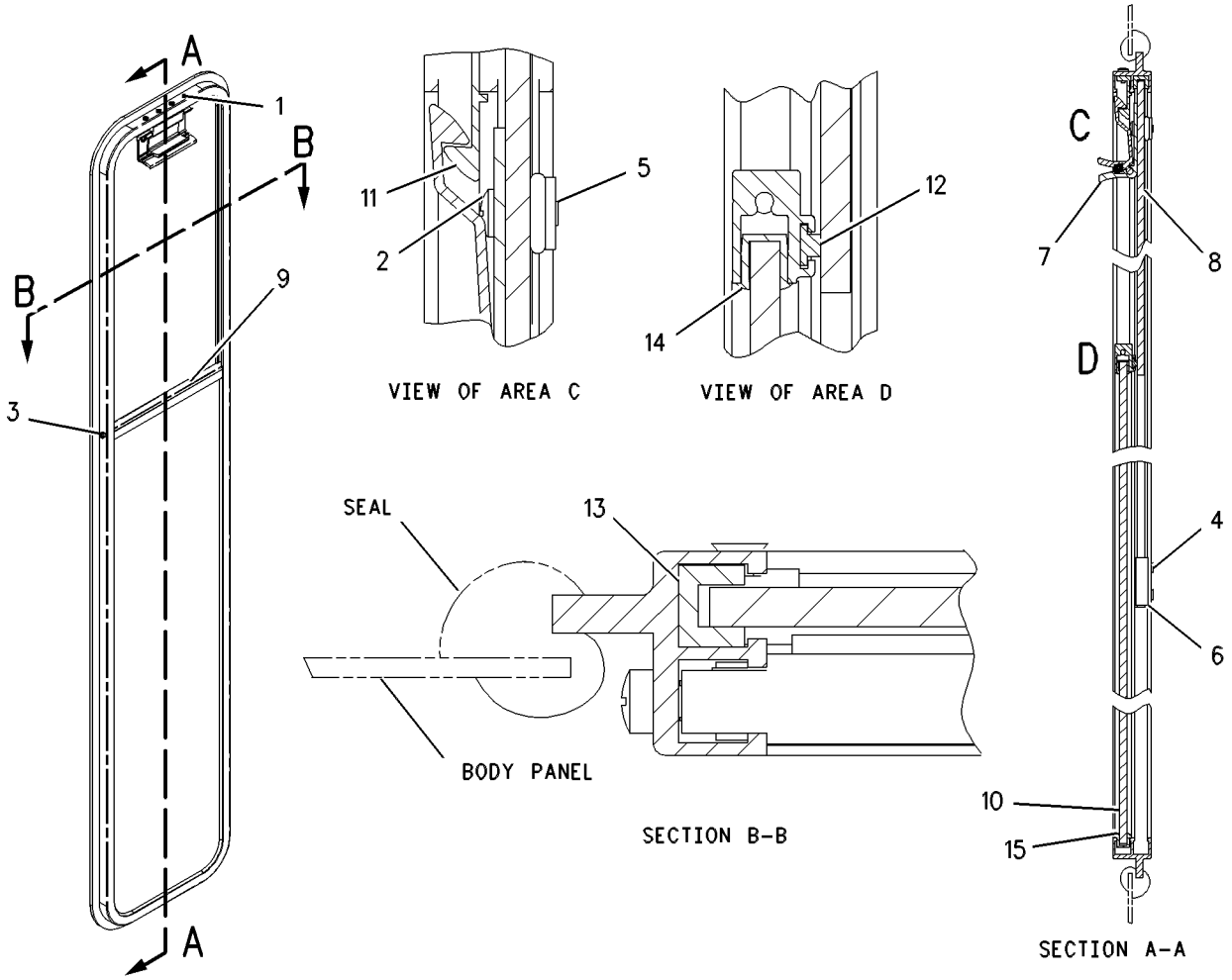

GRAPHIC #1 **<END>** g00548221

OPERATOR STATION

139-6128 WINDOW GP-CAB—SIDE SLIDING—LOW PROFILE

S/N: JPA1-UP

AN ATTACHMENT

SMCS-7310 **i02864083**

NOTE	REF NO	GRAPHIC REF	PART NUMBER	QTY	PART NAME 1 2 3 4 5 6 (PRODUCT LEVEL)	SEE PAGE
Y	1	1	**134-8233**	2	WINDOW GP-CAB (LOW PROFILE)	752

Y-SEPARATE ILLUSTRATION

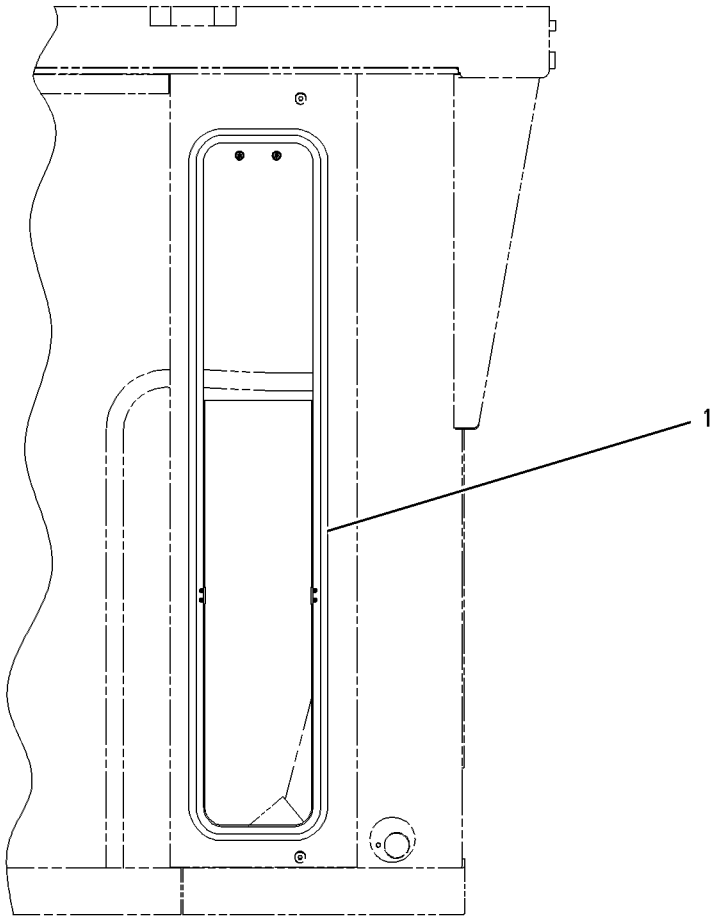

GRAPHIC #1 **<END>** g00301642

OPERATOR STATION

139-6129 WINDOW GP-CAB—SIDE SLIDING HIGH PROFILE

S/N: JPA1-UP

AN ATTACHMENT

SMCS-7310 **i03182166**

NOTE	REF NO	GRAPHIC REF	PART NUMBER	QTY	PART NAME 1 2 3 4 5 6 (PRODUCT LEVEL)	SEE PAGE
Y	1	1	**134-8232**	2	WINDOW GP-CAB (SIDE SLIDING HIGH PROFILE)	751

Y-SEPARATE ILLUSTRATION

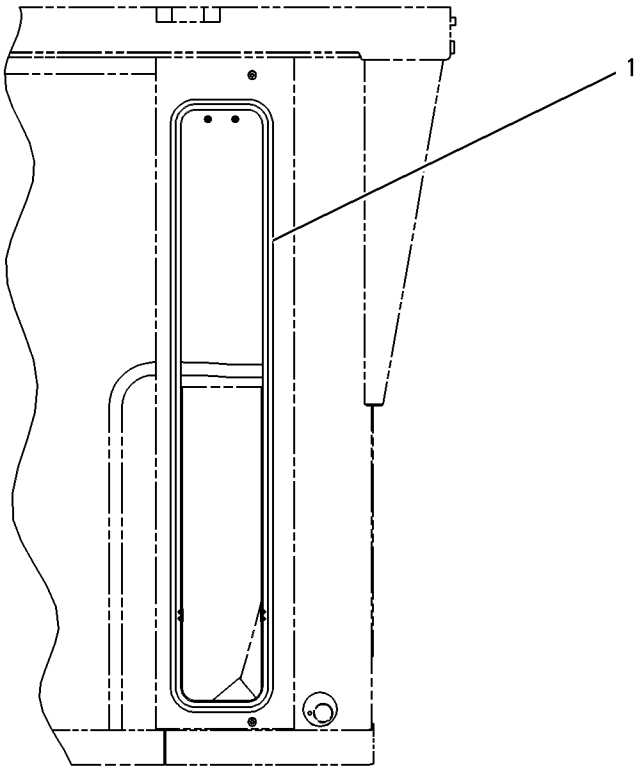

LEFT SIDE VIEW

GRAPHIC #1 **<END>** g00301585

OPERATOR STATION

150-5106 WINDOW GP-CAB—RH

S/N: JPA1-UP
PART OF 126-0961 WINDOW GP-VENT
AN ATTACHMENT

SMCS-7310 **i02592720**

NOTE	REF NO	GRAPHIC REF	PART NUMBER	QTY	PART NAME 1 2 3 4 5 6 (PRODUCT LEVEL)	SEE PAGE
J	1	1	**5T-1958**	1	IDLER AS	
		1	**5T-3144**	1	PIVOT AS-IDLER	
	2	1	**1H-3340**	12	BOLT (M10X24X25.4-MM)	
	3	1	**8W-1028**	1	HINGE AS	
	4	1	**126-1167**	1	BOLT (3/8-24X5.375-IN)	
	5	1	**126-0228**	1	CATCH-STOP	
	6	1	**5T-1969**	1	HANDLE	
	7	1	**1H-8456**	2	SCREW-MACHINE (10-24X0.884-IN)	
BD	8	1	**5T-5994**		SEAL	
	9	1	**150-5105**	1	GLASS	
	10	1	**126-1539**	1	HANDLE-PULL	
	11	1	**5T-1964**	1	SEAL	
	13	1	**126-0208**	1	SPACER (10.31X17.45X50.8-MM THK)	
	14	1	**126-0209**	1	PLATE	
	15	1	**126-0210**	1	PLATE	
	16	1	**5T-1972**	14	INSERT-SCREW (10-24-THD)	
M	17	1	**8T-0352**	3	BOLT (M5X0.8X45-MM)	
	18	1	**8T-0328**	6	WASHER-HARD (5.5X10X1-MM THK)	
M	19	1	**7Y-5226**	3	NUT (M5X0.8-THD)	
					AVAILABLE REPAIR KIT(S):	
J			**5T-3146**	1	KIT-IDLER HOUSING-RH (WINDOW)	
					(INCLUDES HOUSING, BEARING, & WASHER)	

B-USE AS REQUIRED
D-ORDER BY THE METER
J-KIT MARKED J SERVICES PARTS MARKED J
M-METRIC PART

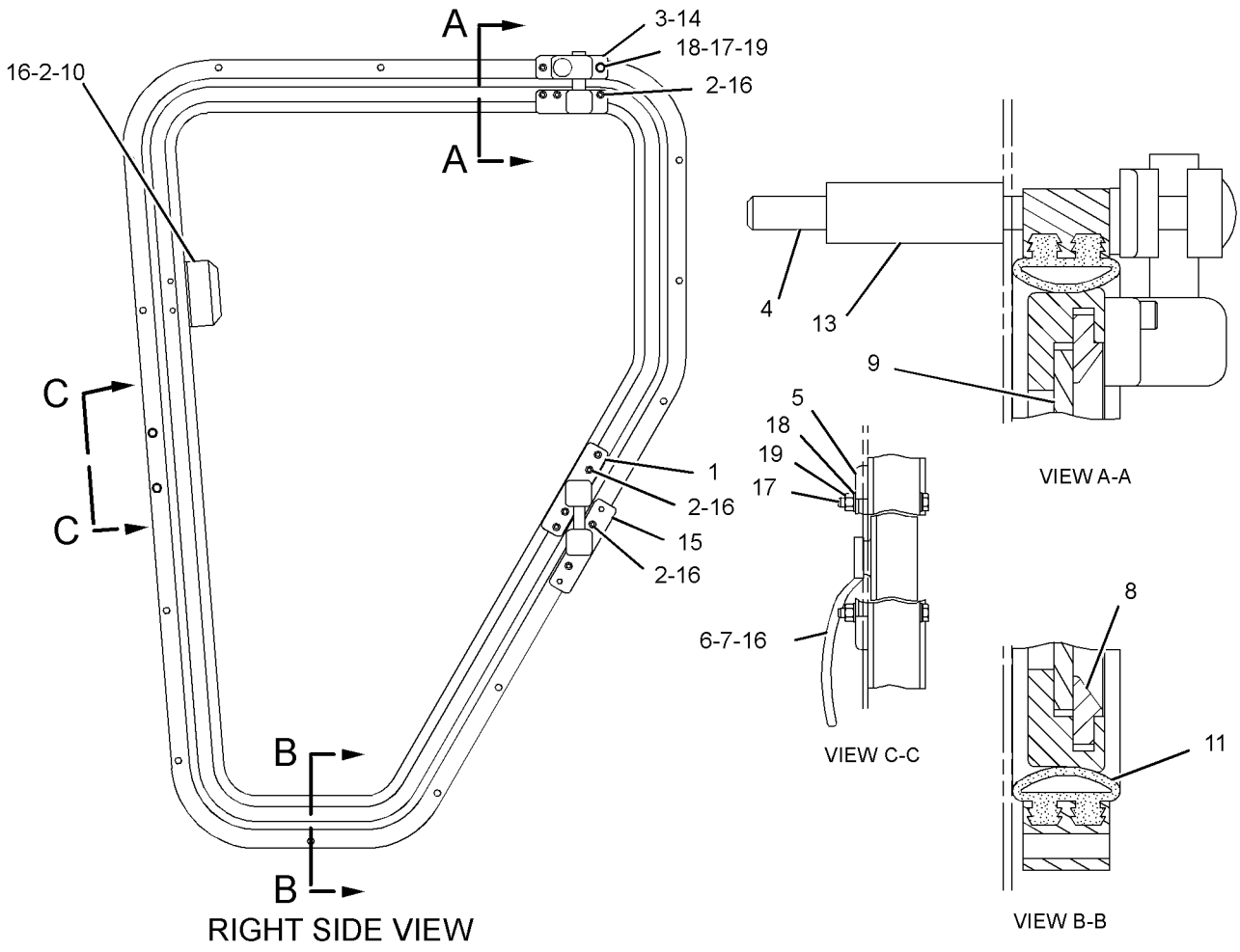

GRAPHIC #1 **<END>** g01297610

OPERATOR STATION

150-5107 WINDOW GP-CAB—LH

S/N: JPA1-UP
PART OF 126-0961 WINDOW GP-VENT
AN ATTACHMENT

SMCS-7310 **i02592731**

NOTE	REF NO	GRAPHIC REF	PART NUMBER	QTY	PART NAME 1 2 3 4 5 6 (PRODUCT LEVEL)	SEE PAGE
J	1	1	**5T-1959**	1	IDLER AS	
		1	**5T-3145**	1	PIVOT AS-IDLER	
	2	1	**1H-3340**	12	BOLT (M10X24X25.4-MM)	
	3	1	**8W-1029**	1	HINGE AS	
	4	1	**126-1167**	1	BOLT (3/8-24X5.375-IN)	
	5	1	**126-0228**	1	CATCH-STOP	
	6	1	**6G-2959**	1	HANDLE	
	7	1	**1H-8456**	2	SCREW-MACHINE (10-24X0.884-IN)	
	8	1	**5T-5994**	1	SEAL	
	9	1	**150-5105**	1	GLASS	
	10	1	**126-1539**	1	HANDLE-PULL	
	11	1	**5T-1964**	1	SEAL	
	13	1	**126-0208**	1	SPACER (10.31X17.45X50.8-MM THK)	
	14	1	**126-0209**	1	PLATE	
	15	1	**126-0210**	1	PLATE	
	16	1	**5T-1972**	14	INSERT-SCREW (10-24-THD)	
M	17	1	**8T-0352**	3	BOLT (M5X0.8X45-MM)	
	18	1	**8T-0328**	6	WASHER-HARD (5.5X10X1-MM THK)	
M	19	1	**7Y-5226**	3	NUT (M5X0.8-THD)	
					AVAILABLE REPAIR KIT(S):	
J			**5T-3147**	1	KIT-IDLER HOUSING-LH (WINDOW)	
					(INCLUDES HOUSING, BEARING, & WASHER)	

J-KIT MARKED J SERVICES PART MARKED J
M-METRIC PART

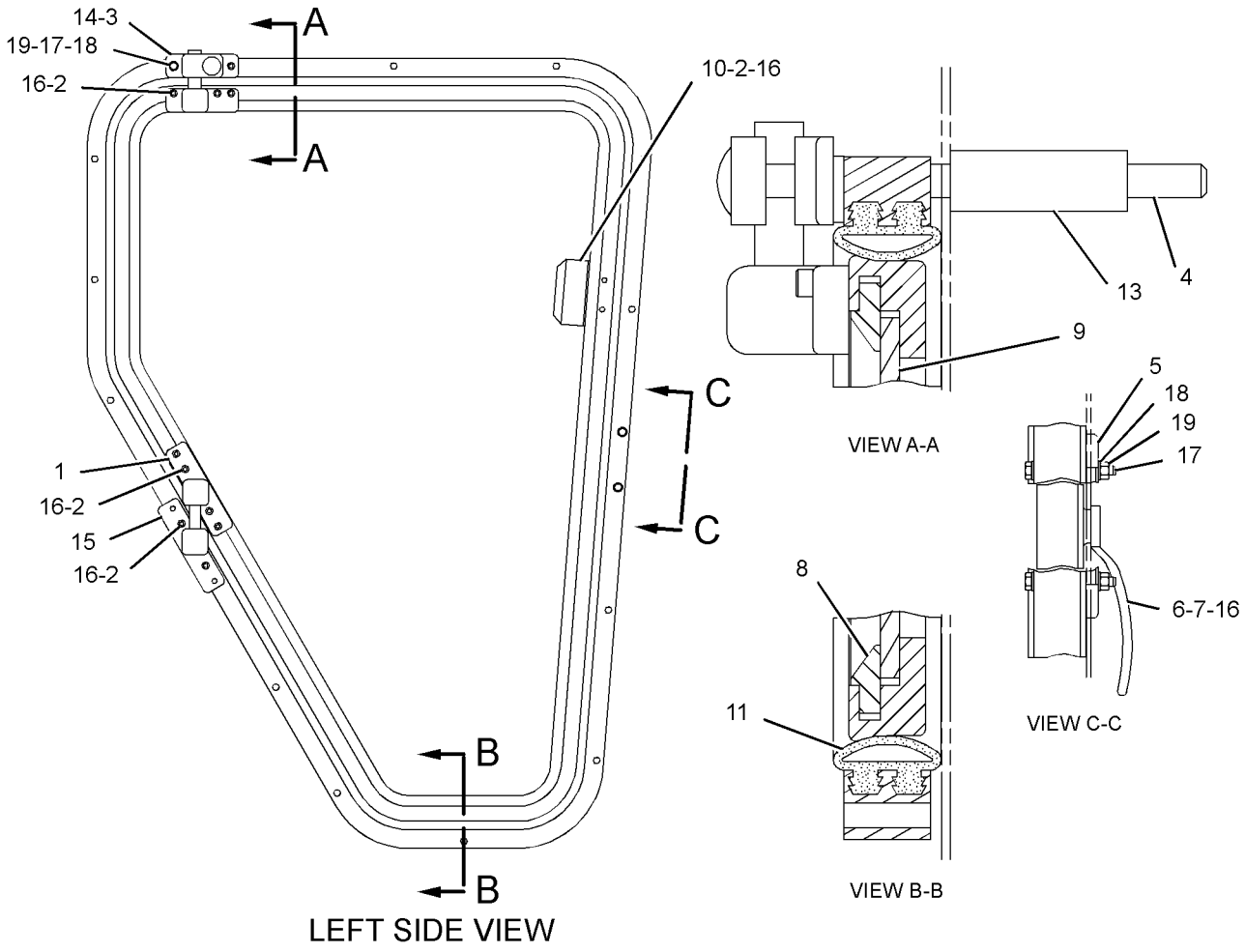

GRAPHIC #1 **<END>** g01297612

OPERATOR STATION

126-0961 WINDOW GP-VENT–CAB

S/N: JPA1-UP
AN ATTACHMENT

SMCS-7310 **i02205608**

NOTE	REF NO	GRAPHIC REF	PART NUMBER	QTY	PART NAME 1 2 3 4 5 6 (PRODUCT LEVEL)	SEE PAGE
CY	1	1	**150-5106**	1	WINDOW GP-CAB (RH)	755
CY	2	1	**150-5107**	1	WINDOW GP-CAB (LH)	757
	3	1	**5T-3093**	2	HANDLE	
BD	4	1	**5P-5969**		SEAL	
M	5	1	**8T-0352**	4	BOLT (M5X0.8X45-MM)	
	6	1	**8T-0328**	56	WASHER-HARD (5.5X10X1-MM THK)	
M	7	1	**7Y-5226**	28	NUT (M5X0.8-THD)	
M	8	1	**8T-0335**	24	BOLT (M5X0.8X40-MM)	
	9	1	**6V-8255**	2	BLADE AS-WIPER (255-MM)	

B-USE AS REQUIRED
C-CHANGE FROM PREVIOUS TYPE
D-ORDER BY THE METER
M-METRIC PART
Y-SEPARATE ILLUSTRATION

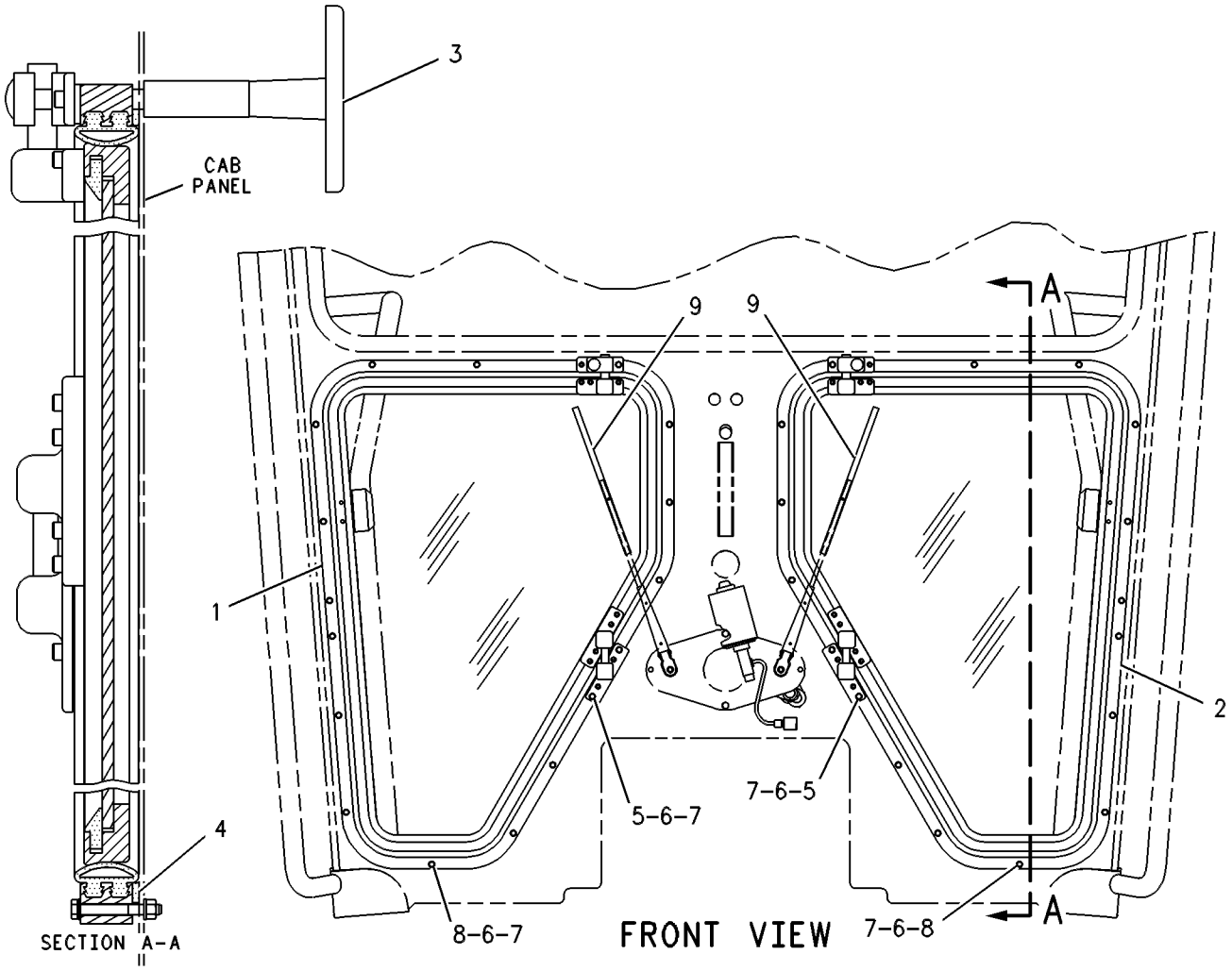

GRAPHIC #1 **<END>** g00108855

OPERATOR STATION

298-2425 WIPER AR-WINDOW—REAR

S/N: JPA1-UP
FOR USE WITH ENCLOSED CAB, LOW PROFILE
AN ATTACHMENT

SMCS-7305, 7306 **i03256353**

NOTE	REF NO	GRAPHIC REF	PART NUMBER	QTY	PART NAME 1 2 3 4 5 6 (PRODUCT LEVEL)	SEE PAGE
Y	1	1	*8X-9680*	1	WASHER GP-WINDOW (REAR)	748
Y	2	1	*286-4822*	1	WIPER GP-WINDOW	765

PARTS SHOWN IN GRAPHIC(S) WITHOUT A REFERENCE NUMBER ARE NOT SERVICED SEPARATELY

Y-SEPARATE ILLUSTRATION

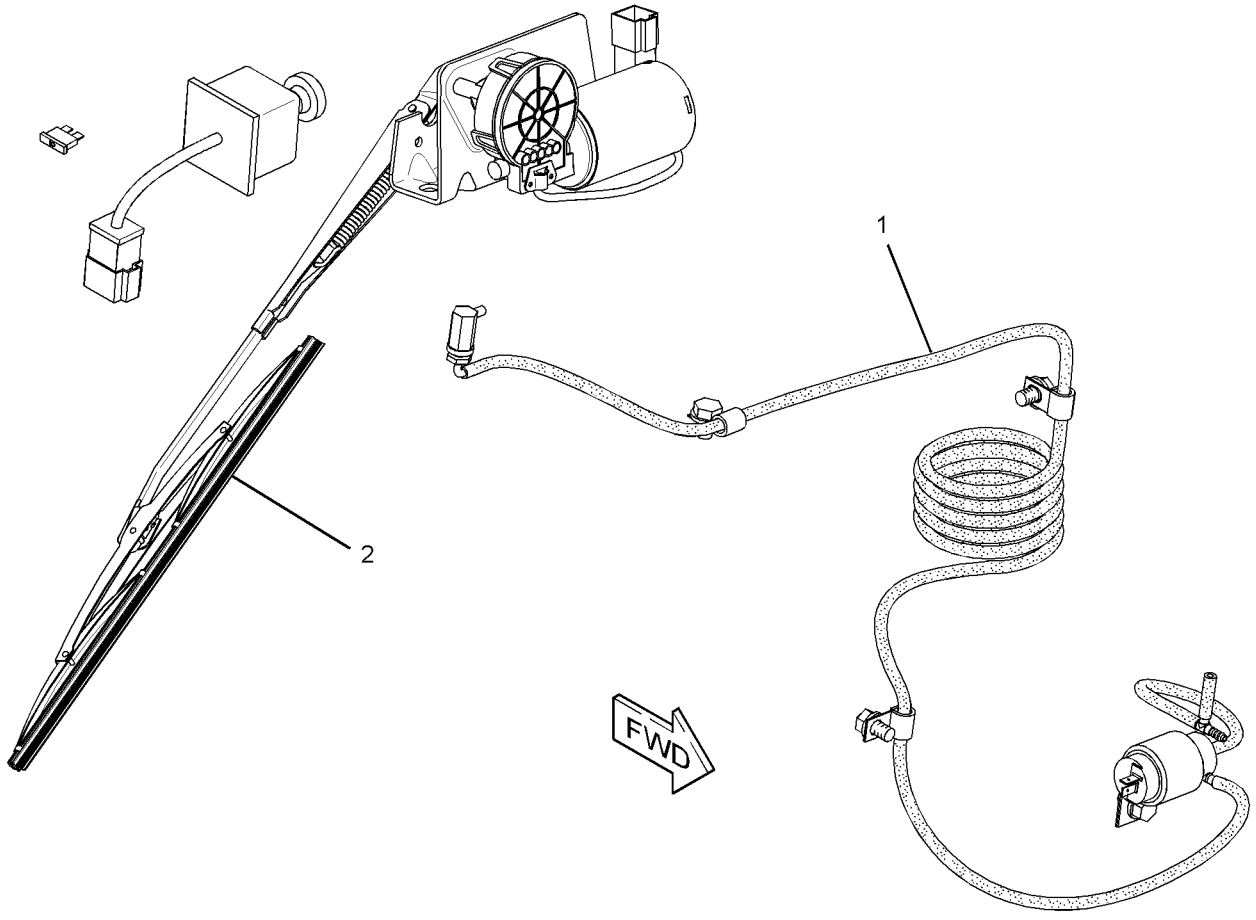

GRAPHIC #1 **<END>** g01685174

298-2426 WIPER AR-WINDOW–REAR

S/N: JPA1-UP
HIGH PROFILE
FOR USE WITH ENCLOSED CAB HIGH PROFILE
AN ATTACHMENT

SMCS-7305, 7306 **i03251442**

NOTE	REF NO	GRAPHIC REF	PART NUMBER	QTY	PART NAME 1 2 3 4 5 6 (PRODUCT LEVEL)	SEE PAGE
Y	1	1	*8X-9680*	1	WASHER GP-WINDOW (REAR)	748
Y	2	1	*286-4823*	1	WIPER GP-WINDOW (HIGH PROFILE)	766
					PARTS SHOWN IN GRAPHIC(S) WITHOUT A REFERENCE NUMBER ARE NOT SERVICED SEPARATELY	

Y-SEPARATE ILLUSTRATION

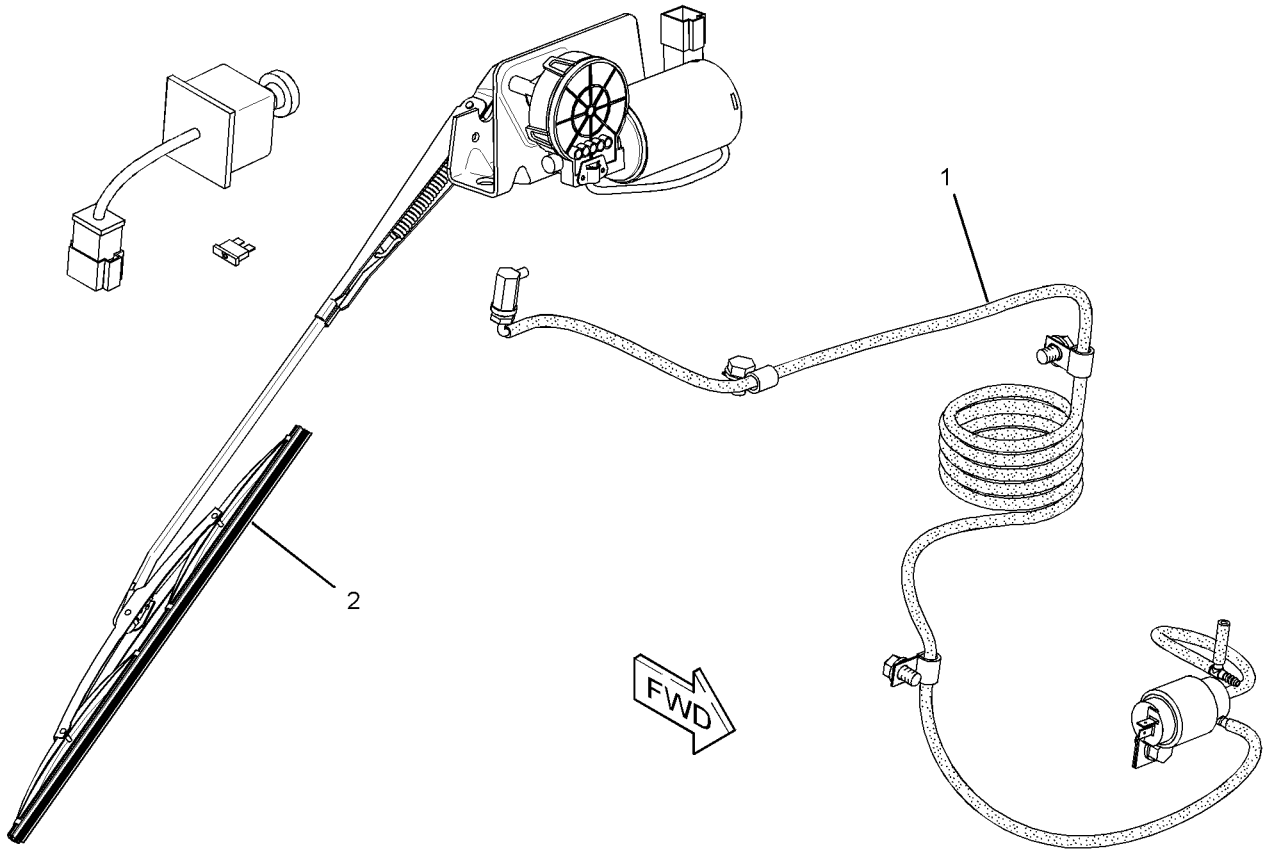

GRAPHIC #1 **<END>** g01685233

OPERATOR STATION

125-4345 WIPER GP-WINDOW–FRONT

S/N: JPA1-UP
PART OF 320-0341 CAB AR
AN ATTACHMENT

SMCS-7305 **i02363709**

NOTE	REF NO	GRAPHIC REF	PART NUMBER	QTY	PART NAME 1 2 3 4 5 6 (PRODUCT LEVEL)	SEE PAGE
C	1	1	**203-1107**	1	MOTOR GP-WINDOW WIPER (24-VOLT)	
		1	**3F-9556**	1	LOCKWASHER	
M		1	**5C-7261**	1	NUT (M8X1.25-THD)	
		1	**101-0744**	1	MOTOR GP-WINDOW WIPER (24-VOLT)	
		1	**7K-4474**	1	CONNECTOR AS	
		1	**7N-7779**	2	SOCKET-CONNECTOR (14-GA TO 18-GA)	
		1	**7N-7780**	2	PIN-CONNECTOR (14-GA TO 18-GA)	
		1	**7N-8204**	1	HOUSING-RECEPTACLE	
		1	**206-5823**	1	CAP	
CM	2	1	**8T-4171**	2	BOLT (M6X1X12-MM)	
	3	1	**5P-4115**	2	WASHER-HARD (7.2X19X2-MM THK)	
	4	1	**6V-8259**	1	ARM AS-WIPER	
	5	1	**6V-5853**	1	BLADE AS-WIPER (450-MM)	
B	6	1	**4B-4283**	2	WASHER (20.6X37.5X3.5-MM THK)	

B-USE AS REQUIRED
C-CHANGE FROM PREVIOUS TYPE
M-METRIC PART

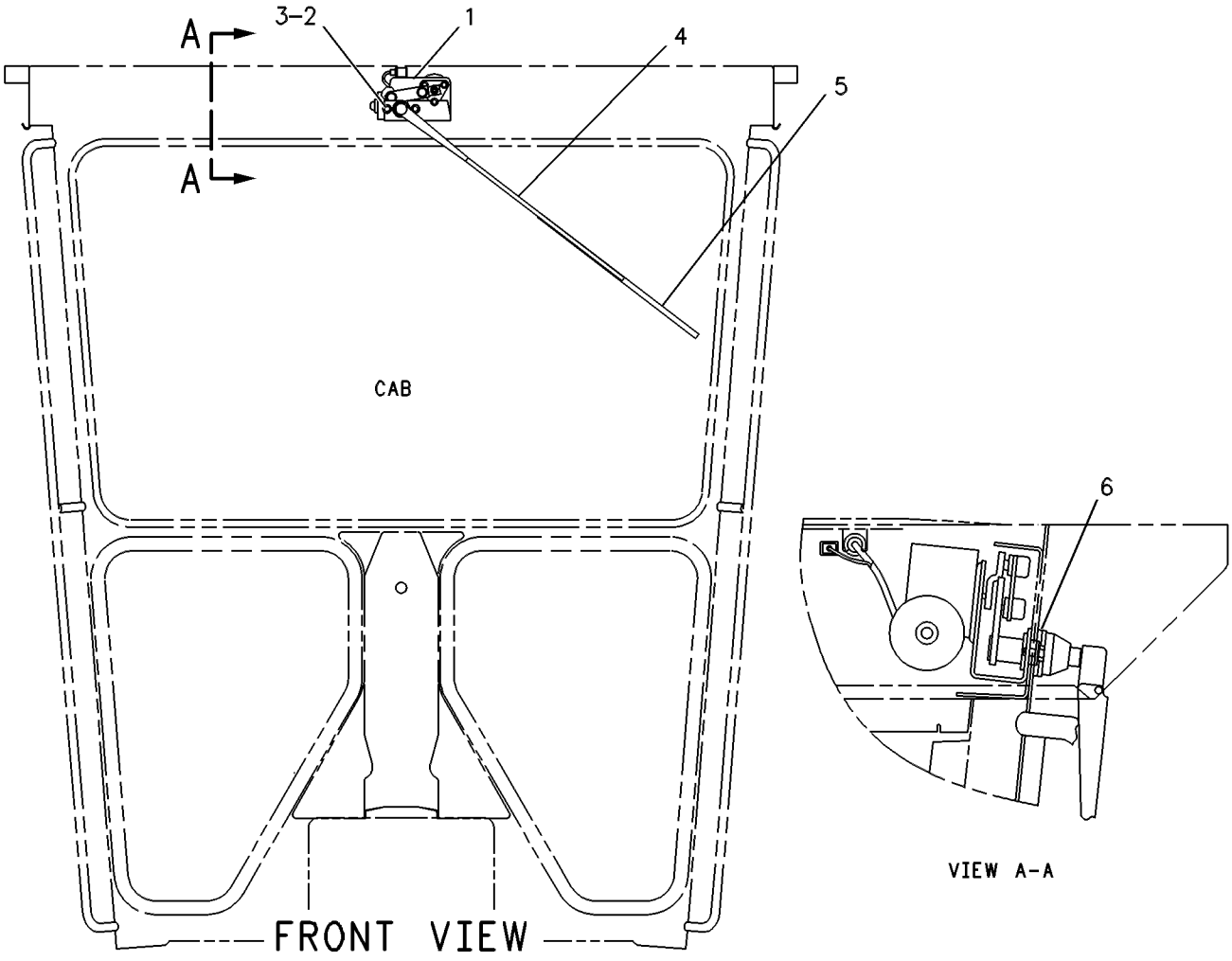

GRAPHIC #1 **<END>** g00109331

OPERATOR STATION

172-6831 WIPER GP-WINDOW—FRONT—HIGH PROFILE

S/N: JPA1-UP
PART OF 320-0342 ROPS AR
AN ATTACHMENT

SMCS-7305 **i02558327**

NOTE	REF NO	GRAPHIC REF	PART NUMBER	QTY	PART NAME 1 2 3 4 5 6 (PRODUCT LEVEL)	SEE PAGE
	1	1	**2A-6926**	1	LEVER AS	
	2	1	**2A-6928**	1	LINK	
	3	1	**2A-6929**	1	LINK	
C	4	1	**135-0611**	1	MOTOR GP-WINDOW WIPER (24-VOLT, 2-SPEED) (FRONT, LOWER)	
		1	**8T-8737**	1	PLUG-SEAL	
		1	**186-3735**	5	PIN-CONNECTOR (16-GA TO 18-GA)	
		1	**102-8805**	1	KIT-RECEPTACLE (6-PIN)	
					(INCLUDES RECEPTACLE AS & WEDGE)	
B	5	1	**4B-4283**	2	WASHER (20.6X37.5X3.5-MM THK)	
	6	1	**6V-5853**	1	BLADE AS-WIPER (450-MM) (FRONT)	
	7	1	**6V-6888**	1	WASHER-SPRING	
M	8	1	**6V-6889**	1	NUT (M8X1.25-THD)	
	9	1	**6V-8259**	1	ARM AS-WIPER (UPPER)	
	10	1	**8X-2556**	1	FLANGE	
	11	1	**8X-2663**	1	GASKET	
C	12	1	**203-1124**	1	MOTOR GP-WINDOW WIPER (24-VOLT) (FRONT UPPER)	
		1	**3F-9556**	1	LOCKWASHER	
M		1	**5C-7261**	1	NUT (M8X1.25-THD)	
		1	**135-0611**	1	MOTOR GP-WINDOW WIPER (24-VOLT, 2-SPEED)	
		1	**8T-8737**	1	PLUG-SEAL	
		1	**186-3735**	5	PIN-CONNECTOR (16-GA TO 18-GA)	
		1	**102-8805**	1	KIT-RECEPTACLE (6-PIN)	
					(INCLUDES RECEPTACLE AS & WEDGE)	
		1	**206-5823**	1	CAP	
	13	1	**123-4354**	2	ARM-WINDOW WIPER (LOWER)	
	14	1	**123-4355**	2	BLADE AS-WIPER (300-MM) (FRONT, LOWER)	
	15	1	**125-7003**	1	SHAFT AS	
		1	**3F-9556**	1	LOCKWASHER	
M		1	**5C-7261**	1	NUT (M8X1.25-THD)	
		1	**206-5823**	1	CAP	
	16	1	**125-7004**	1	SHAFT AS	
		1	**3F-9556**	1	LOCKWASHER	
M		1	**5C-7261**	1	NUT (M8X1.25-THD)	
		1	**206-5823**	1	CAP	
M	17	1	**5C-7423**	3	SCREW (M6X1X16-MM)	
	18	1	**5P-4115**	2	WASHER-HARD (7.2X19X2-MM THK)	
CM	19	1	**8T-4171**	2	BOLT (M6X1X12-MM)	
M	20	1	**8T-4138**	2	BOLT (M6X1X20-MM)	

B-USE AS REQUIRED
C-CHANGE FROM PREVIOUS TYPE
M-METRIC PART

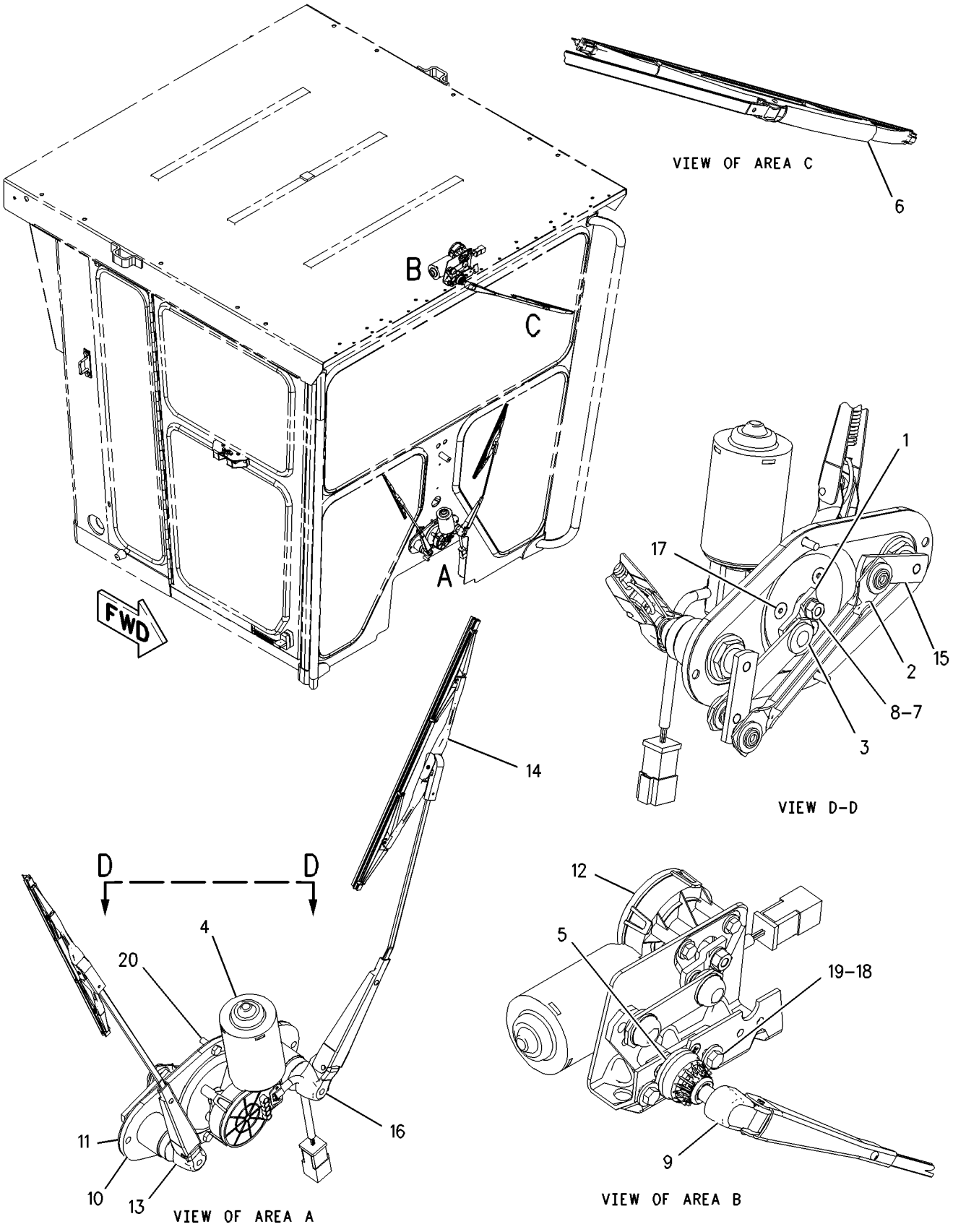

GRAPHIC #1 **<END>** g00913478

OPERATOR STATION

286-4822 WIPER GP-WINDOW–REAR

S/N: JPA1-UP
PART OF 298-2425 WIPER AR-WINDOW
AN ATTACHMENT

SMCS-7305 **i03256469**

NOTE	REF NO	GRAPHIC REF	PART NUMBER	QTY	PART NAME 1 2 3 4 5 6 (PRODUCT LEVEL)	SEE PAGE
B	1	1	**4B-4283**	2	WASHER (20.6X37.5X3.5-MM THK)	
	2	1	**6V-5849**	1	BLADE AS-WIPER (350-MM) (REAR)	
		1	**8C-5060**	1	KIT-WIPER BLADE (INCLUDES 2-BLADES)	
	3	1	**9W-1442**	1	FUSE (10-AMPERE)	
	4	1	**110-7885**	1	KNOB AS-WIPER SWITCH	
		1	**014-0816**	1	SETSCREW (8-32X0.5-IN)	
	5	1	**203-1124**	1	MOTOR GP-WINDOW WIPER (24-VOLT) (REAR)	
		1	**3F-9556**	1	LOCKWASHER	
M		1	**5C-7261**	1	NUT (M8X1.25-THD)	
		1	**135-0611**	1	MOTOR GP-WINDOW WIPER (24-VOLT, 2-SPEED)	
		1	**206-5823**	1	CAP	
Y	6	1	**275-7741**	1	SWITCH GP-WIPER (24-VOLT, INTERMITTENT)	193
	7	1	**5P-4115**	2	WASHER-HARD (7.2X19X2-MM THK)	
	8	1	**6V-8257**	1	ARM AS-WIPER	
M	9	1	**8T-4171**	2	BOLT (M6X1X12-MM)	

B-USE AS REQUIRED
M-METRIC PART
Y-SEPARATE ILLUSTRATION

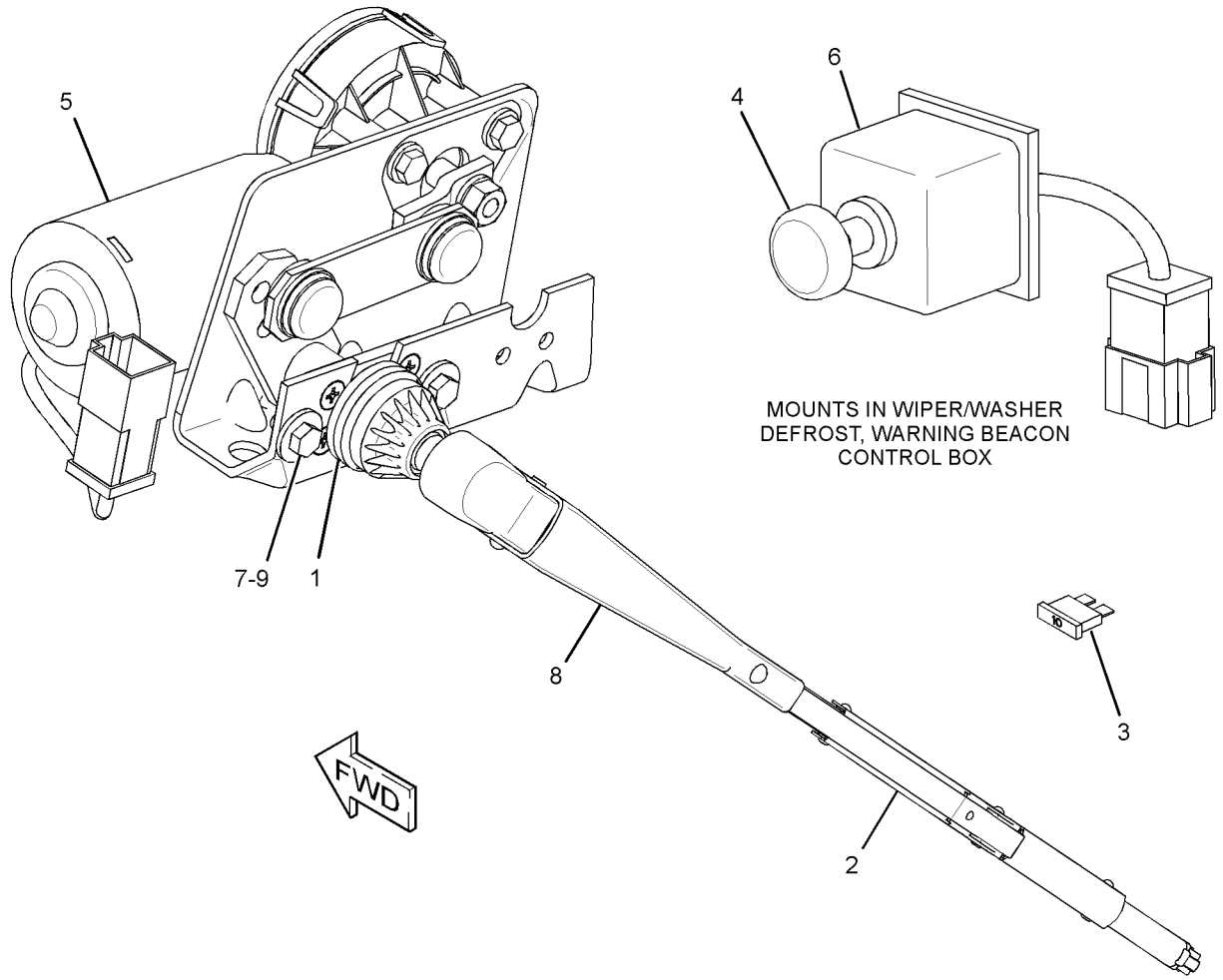

GRAPHIC #1 **<END>** g01687394

OPERATOR STATION

286-4823 WIPER GP-WINDOW—REAR

S/N: JPA1-UP
HIGH PROFILE
PART OF 298-2426 WIPER AR-WINDOW
AN ATTACHMENT

SMCS-7305 **i03251443**

NOTE	REF NO	GRAPHIC REF	PART NUMBER	QTY	PART NAME 1 2 3 4 5 6 (PRODUCT LEVEL)	SEE PAGE
B	1	1	**4B-4283**	2	WASHER (20.6X37.5X3.5-MM THK)	
	2	1	**6V-5853**	1	BLADE AS-WIPER (450-MM)	
	3	1	**6V-8258**	1	ARM AS-WIPER	
	4	1	**9W-1442**	1	FUSE (10-AMPERE)	
	5	1	**110-7885**	1	KNOB AS-WIPER SWITCH	
		1	**014-0816**	1	SETSCREW (8-32X0.5-IN)	
	6	1	**203-1124**	1	MOTOR GP-WINDOW WIPER (24-VOLT) (REAR)	
		1	**3F-9556**	1	LOCKWASHER	
M		1	**5C-7261**	1	NUT (M8X1.25-THD)	
		1	**135-0611**	1	MOTOR GP-WINDOW WIPER (24-VOLT, 2-SPEED) (REAR)	
		1	**8T-8737**	1	PLUG-SEAL	
		1	**186-3735**	5	PIN-CONNECTOR (16-GA TO 18-GA)	
		1	**102-8805**	1	KIT-RECEPTACLE (6-PIN)	
					(INCLUDES RECEPTACLE AS & WEDGE)	
		1	**206-5823**	1	CAP	
Y	7	1	**275-7741**	1	SWITCH GP-WIPER (24-VOLT, INTERMITTENT) (REAR)	193
	8	1	**5P-4115**	2	WASHER-HARD (7.2X19X2-MM THK)	
M	9	1	**8T-4171**	2	BOLT (M6X1X12-MM)	

B-USE AS REQUIRED
M-METRIC PART
Y-SEPARATE ILLUSTRATION

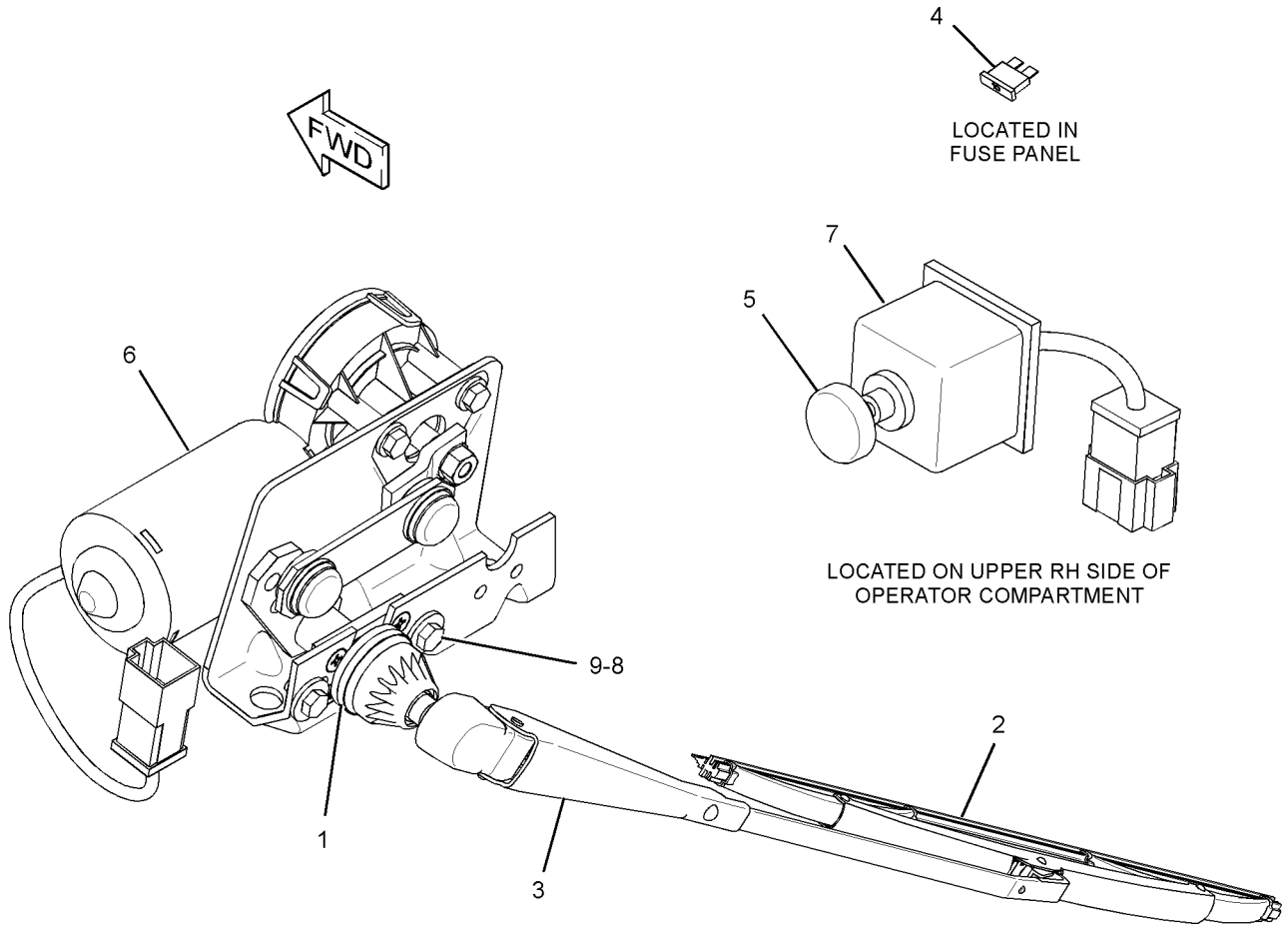

GRAPHIC #1 **<END>** g01694314

OPERATOR STATION

286-4825 WIPER GP-WINDOW—FRONT

S/N: JPA1-UP

AN ATTACHMENT

SMCS-7305 **i03261487**

NOTE	REF NO	GRAPHIC REF	PART NUMBER	QTY	PART NAME 1 2 3 4 5 6 (PRODUCT LEVEL)	SEE PAGE
Y	1	1	**275-7764**	2	SWITCH GP-WIPER (24-VOLT, INTERMITTENT) (FRONT WIPER)	194

Y-SEPARATE ILLUSTRATION

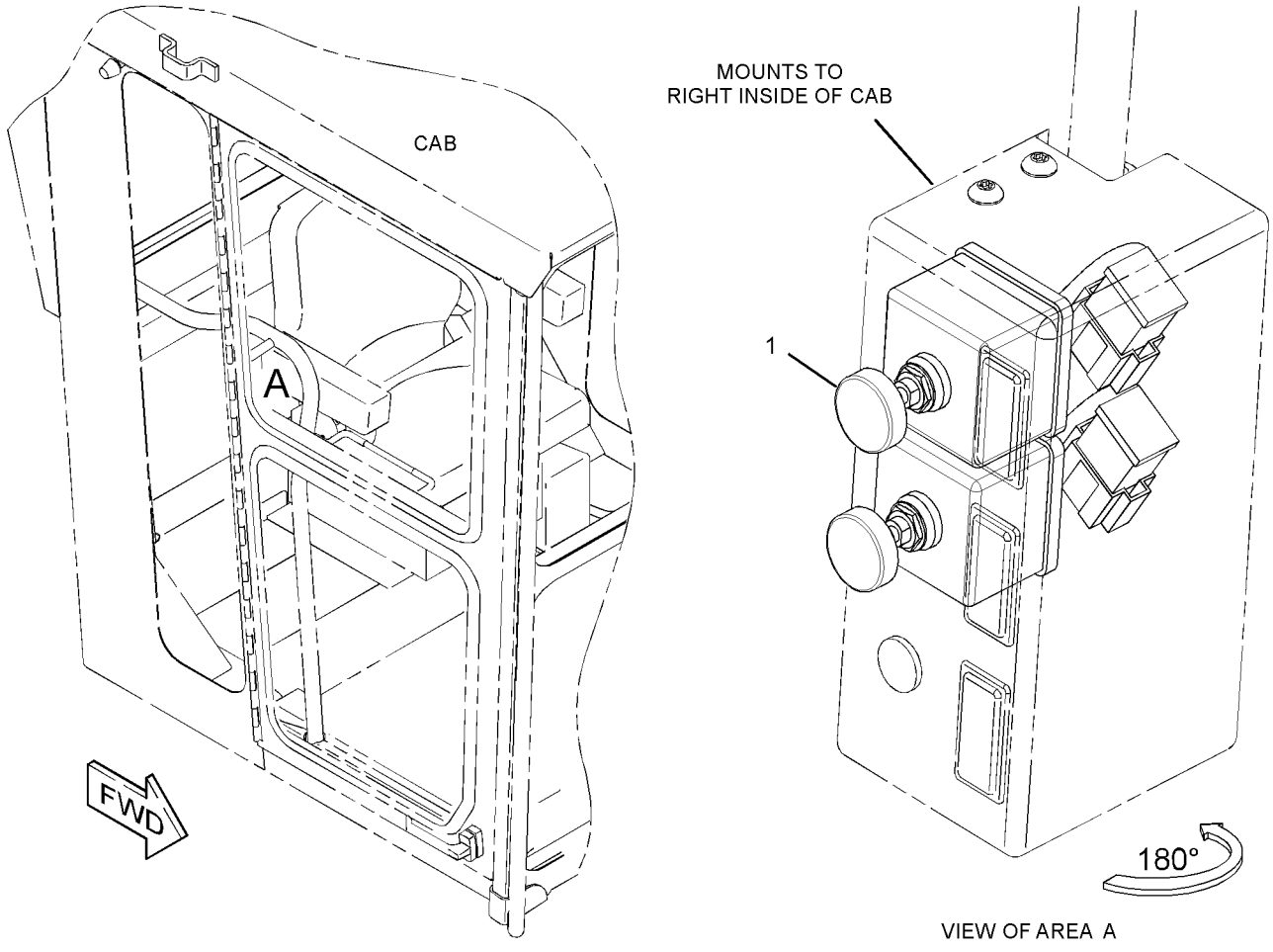

GRAPHIC #1 **<END>** g01681013

SERVICE EQUIPMENT AND SUPPLIES

111-1719 BOX GP-TOOL

S/N: JPA1-UP

PART OF 274-7940 GENERAL AR

SMCS-7259 **i01449464**

NOTE	REF NO	GRAPHIC REF	PART NUMBER	QTY	PART NAME 1 2 3 4 5 6 (PRODUCT LEVEL)	SEE PAGE
	1	1	**129-7249**	1	TOOL BOX	
	2	1	**5P-8502**	1	PADLOCK GP (TOOL BOX)	
A		1	**5P-8500**	1	KEY (TOOL BOX)	
A		1	**8Y-6364**	1	SLEEVE	
	3	1	**5K-9107**	4	BOLT-LOCKING (3/8-16X0.75-IN)	
	4	1	**5P-1075**	4	WASHER-HARD (10.2X22.5X3-MM THK)	

A-NOT PART OF THIS GROUP

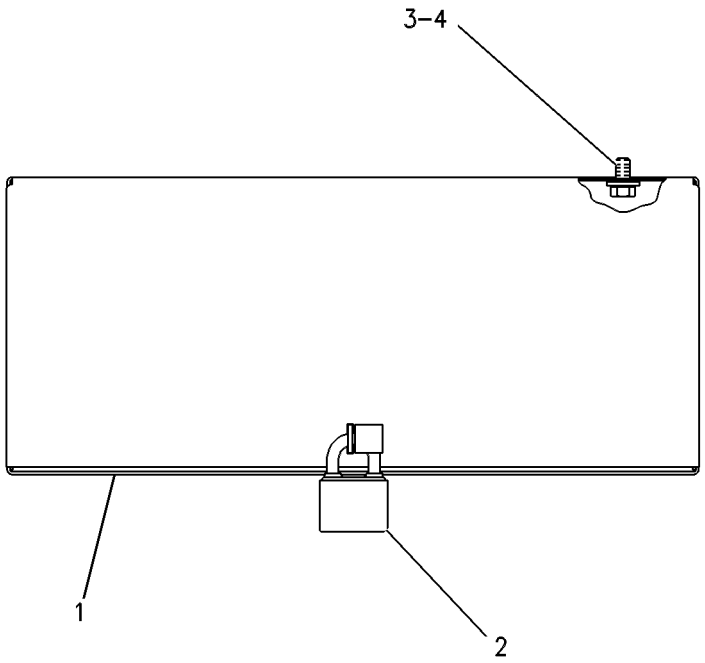

GRAPHIC #1 **<END>** g00109173

SERVICE EQUIPMENT AND SUPPLIES

300-5242 FILM GP

S/N: JPA1-UP

PART OF 285-4189 PLATE & FILM GP

SMCS-0375, 7000, 7405, 7557 **i03292710**

NOTE	REF NO	GRAPHIC REF	PART NUMBER	QTY	PART NAME 1 2 3 4 5 6 (PRODUCT LEVEL)	SEE PAGE
	1	1	**253-0861**	2	FILM-INFORMATION (CAT POWER, ACERT TECHNOLOGY)	
	2	1	**280-1480**	1	FILM-IDENTIFICATION (CATERPILLAR)	
	3	1	**296-6764**	1	FILM-IDENTIFICATION (CAT, RH)	
	4	1	**296-6765**	1	FILM-IDENTIFICATION (CAT, LH)	
	5	1	**296-6770**	2	FILM-IDENTIFICATION (VHP 185)	
	6	1	**302-1332**	2	FILM-IDENTIFICATION (140K)	

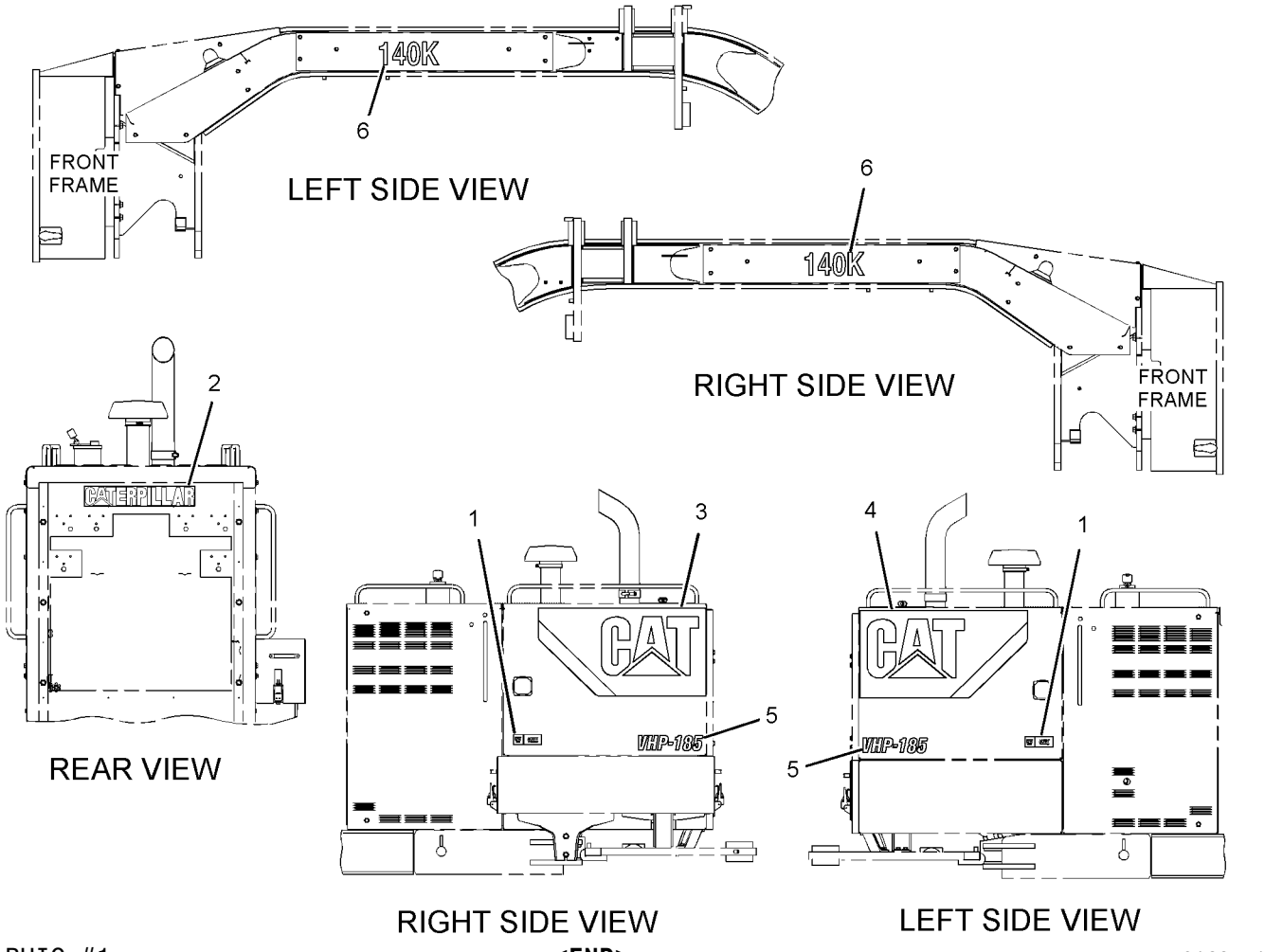

GRAPHIC #1

<END>

g01685715

SERVICE EQUIPMENT AND SUPPLIES

8F-9866 GREASE GUN GP

S/N: JPA1-UP

PART OF 211-0617 TOOL GP-HAND

AN ATTACHMENT

SMCS-0646 **i01440821**

NOTE	REF NO	GRAPHIC REF	PART NUMBER	QTY	PART NAME 1 2 3 4 5 6 (PRODUCT LEVEL)	SEE PAGE
C	1	1	**190-1669**	1	HOSE AS	
	2	1	**9F-2637**	1	FITTING	
C	3	1	**190-1668**	1	COUPLER-GREASE	

C-CHANGE FROM PREVIOUS TYPE

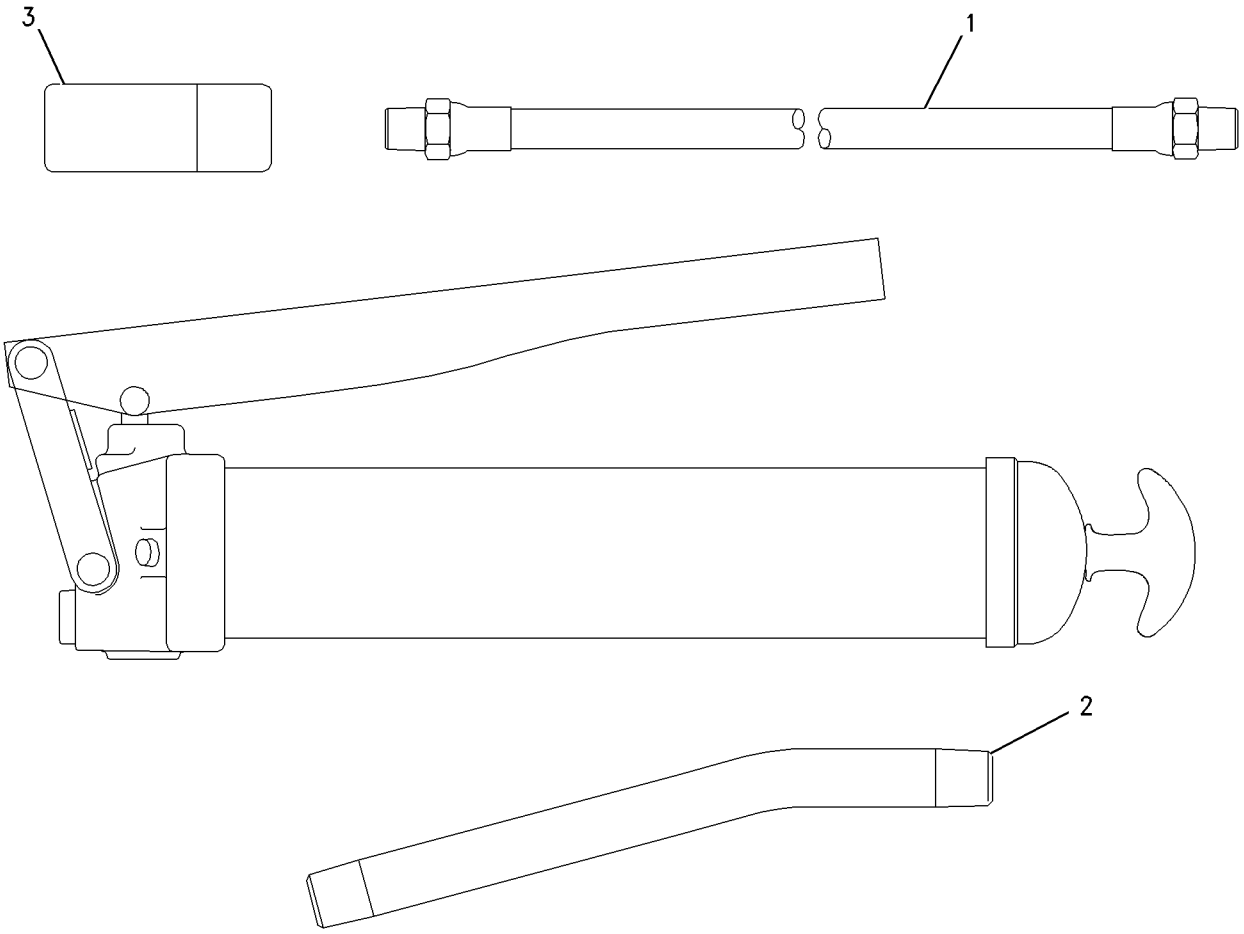

GRAPHIC #1 **<END>** g00752624

SERVICE EQUIPMENT AND SUPPLIES

285-4189 PLATE & FILM GP

S/N: JPA1-UP

PART OF 274-7940 GENERAL AR

SMCS-7405, 7557, 7620 **i03292644**

NOTE	PART NUMBER	QTY	PART NAME 1 2 3 4 5 6 (PRODUCT LEVEL)	SEE PAGE
Y	*300-5242*	1	FILM GP	770
A	**4W-1413**	1	PLATE-SERIAL NUMBER (ENGINE)	
			(ON RH SIDE OF CYLINDER BLOCK)	
	239-6989	1	PLATE-SERIAL NUMBER (MACHINE)	
			(ON FRONT OF OPERATOR CONSOLE. IF THE MACHINE EQUIPPED WITH CAB, LOCATE ON THE TOP SPEAKER PANEL)	
	225-4150	1	PLATE-SERVICE INFORMATION (MACHINE)	
			(ON PIN PLATE)	
	189-5804	2	FILM (EAME)	
			(1-ON COVER OF CONTROL GP-GOVERNOR)	
			(1-ON MAIN FRAME BELOW THE PLATE SERIAL)	
	220-3634	1	FILM (DRAIN, ENGINE COOLANT)	
			(ON ENGINE COOLANT DRAIN VALVE)	
	5P-1174	1	FILM-IDENTIFICATION (TRANSMISSION OIL FILL CAP)	
			(ON TRANSMISSION OIL FILLER CAP)	
	5P-1175	1	FILM-IDENTIFICATION (ENGINE OIL FILL)	
			(ON ENGINE OIL FILLER CAP)	
	8C-5897	1	FILM-IDENTIFICATION (SIGHT GAUGE)	
			(ON THE HYDRAULIC TANK ABOVE THE SIGHT GAGE)	
	125-2209	1	FILM-IDENTIFICATION (BLADE CENTERSHIFT)	
			(ON RH BLADE LIFT PIN)	
	329-5707	1	FILM-IDENTIFICATION (OIL GRADE, READ OMM)	
			(ON FRONT SURFACE OF HYDRAULIC TANK NEXT TO SIGHT GUAGE)	
	134-7258	1	FILM-INFORMATION (EXTENDED LIFE COOLANT,READ OMM)	
			(ON TOP OF RADIATOR SUPPORT NEAR RADIATOR FILL)	
	202-9824	1	FILM-INFORMATION (BRAZIL)	
			(ON SIDE OF RH ENCLOSURE SIDE PANEL)	
	248-5245	2	FILM-INFORMATION (LIFT EYE, TIE-DOWN LOCATION)	
			(ON OUTSIDE OF RH & LH REAR FRAME RAILS TO THE REAR OF THE LIFTING EYES)	
	252-2157	2	FILM-INFORMATION (TIE-DOWN)	
			(TOWARDS FRONT OF LH & RH SIDE OF AXLE TUBE IN BOLSTER)	
	309-8773	1	FILM-INFORMATION (FLUID LEVEL)	
			(ON WATER TANK BRACKET)	
	331-3892	1	FILM-INSTRUCTION (WASHER FILL)	
			(ON COVER FOR WINDOW WASHER FLUID BOTTLE WHEN ATTACHMENT ROPS ARE USED)	
	252-2156	2	FILM-INSTRUCTION (LIFT EYE LOCATION)	
			(ON OUTBOARD SIDE OF RH & LH BLADE LIFT ARMS)	
	254-6136	2	FILM-INSTRUCTION (AIR TANK, DRAIN)	
			(ON BOTH BRAKE AIR TANK WATER CONDENSATION DRAIN VALVES)	
	9X-6340	1	FILM-INSTRUCTION (ENGINE OIL)	
			(ON THE POWER TRAIN OIL FILTER)	
	225-4257	1	FILM-WARNING (HOT FLUID UNDER PRESS, INTL)	
			(ON THE WATER FILL TANK COVER)	
	224-0554	3	FILM-WARNING (UNIVERSAL, READ OMM, INTL)	

285-4189 **PLATE & FILM GP** ***(contd.)*** **i03292644**

NOTE	PART NUMBER	QTY	PART NAME 1 2 3 4 5 6 (PRODUCT LEVEL)	SEE PAGE
			(ON EACH SIDE OF ENGINE DASH - NEAR BOTTOM)	
			(ON REAR OF OPERATOR STEERING CONSOLE)	
	225-0312	2	FILM-WARNING (JUMP START, READ OMM)	
			(ON SIDE OF RH & LH BATTERY BOX)	
	226-1240	2	FILM-WARNING (CRUSH HAZARD, STAY BACK, INTL)	
			(ON SIDE OF RH HYDRAULIC TANK)	
	226-1274	1	FILM-WARNING (CRUSH HAZARD, READ OMM, INTL)	
			(ON LEFT SIDE OF ENGINE DASH - NEAR BOTTOM)	
	281-0547	4	FILM-WARNING (FAN, READ OMM)	
			(2-ON RH & LH FAN SIDE PANELS)	
			(2-ON RH & LH SIDES OF FUEL TANK)	
	249-8575	1	FILM-WARNING (NO DRILL, WELD, READ OMM)	
			(ON RH SIDE OF FRONT FRAME BEHIND LIFT CYCLE BRACKET)	
	230-4477	1	FILM-WARNING (NO STEP)	
			(ON BATTERY BOX)	
	221-8045	1	FILM-WARNING (SEAT BELT, INTERNATIONAL)	
			(ON RIGHT HAND B-POST)	

A-NOT PART OF THIS GROUP
Y-SEPARATE ILLUSTRATION

<END>

211-0617 TOOL GP-HAND

S/N: JPA1-UP
AN ATTACHMENT

SMCS-0600 **i03292567**

NOTE	PART NUMBER	QTY	PART NAME 1 2 3 4 5 6 (PRODUCT LEVEL)	SEE PAGE
Y	**8F-9866**	1	GREASE GUN GP	771
	8H-8581	1	GAUGE GP-FEELER	
	1P-0545	1	GAUGE GP-PRESSURE	
	185-3630	1	WRENCH AS-STRAP	
	1P-0551	1	PIN-SPRING	
	2P-8253	1	STRAP	
	6H-7378	2	RING-RETAINING	
	5F-4764	1	BAR-PRY	
	212-8144	1	SOCKET-SPECIAL	
	212-8145	1	SOCKET-SPECIAL	

Y-SEPARATE ILLUSTRATION

<END>

MEMORANDA

PART NUMBER INDEX

Part	Page
0	
0L-0478	436
0L-1026	271
0S-1566	347
0S-1571	436
0S-1573	368
0S-1579	274
0S-1585	311
	335
	390
0S-1587	335
0S-1589	335
0S-1592	311
	375
0S-1604	270
0S-1756	251
	260
	609
0S-1973	265
0T-0244	730
0V-0375	311
1	
1A-0224	616
1A-1415	390
1A-1460	335
1A-4350	721
1A-5822	432
1A-8063	616
1B-0676	88
	351
	647
1B-2713	661
	662
1B-2886	372
1B-3057	7
1B-4038	390
1B-4046	390
1B-4208	616
1B-4367	338
1B-5174	232
	390
1B-8704	88
	647
1B-8705	11
	18
1B-8737	432
1D-0503	586
	588
1D-4569	335
1D-4612	616
1D-4627	311
1D-4628	368
	370
1D-4675	627
1D-4689	339
1D-5119	591
1D-5120	432
1F-0748	108
	393
	442
	444
1F-0750	326
	634
	635
	734
	736
1F-1599	728
1F-4622	351
	647
1F-5339	314
	328
1F-7567	55
	93
1F-7958	390
	616
1H-0337	536
1H-1023	349
1H-3244	104
	106
	226
1H-3338	652
	655
1H-3340	755
	757
1H-3937	433
1H-7339	390
1H-7724	351
1H-8306	101
1H-8456	755
	757
1H-8720	415
1J-2860	251
	260
1J-4757	251
	260
1J-6762	216
1J-9671	72
	364
	536
1K-6870	216
1K-6872	339
	446
	448
1L-0509	262
1L-2279	351
1L-5072	439
1M-1230	661
	662
1M-3780	267
1M-4095	271
1M-6119	110
	113
1M-6120	110
	113
1M-6718	582
1N-5999	26
	386
	387
1P-0545	773
1P-0551	773
1P-0810	103
	113
	116
	117
1P-2378	697
	699
1P-2636	251
	260
1P-2662	251
	260
1P-3700	437
1P-4577	262
1P-4578	262
1P-4693	256
	347
1P-4694	256
1P-6356	692
1P-6872	433
1P-7009	69
	117
	216
1P-7115	358
1P-7521	345
1R-0762	93
1R-0774	439
1R-1807	53
1R-1809	259
	262
1S-0994	75
	352
	398
	402
	406
	409
	419
1S-1014	79
1S-2342	211
1S-2563	55
1S-3618	418
1S-7251	116
	185
1S-7252	110
	113
	116
	117
	185
1S-9110	256
1S-9593	282
	283
	583
	584
1T-0738	248
	284
1U-3998	386
	387
1U-8846	13
	37
	38
	81
	82
	198
	231
1V-1984	221
1V-7368	127
1W-2431	85
1W-2715	25
1W-7534	358
1W-8407	20
1Y-7927	675
2	
2A-1162	37
	221
2A-1538	372
2A-3211	579
	580
	581
2A-3398	319
2A-4429	25
2A-6684	680
	681
2A-6926	763
2A-6928	763
2A-6929	763
2A-6938	272
2A-6985	▶705
	716
2A-7081	398
	409
2A-7089	586
	588
	589
2A-7184	644
2B-0941	396
	398
	402
	406
	409
2B-0947	254
2B-2673	586
	588
2B-3147	272
2B-3148	272
2B-7410	390
2B-9373	267
2D-0193	351
2D-0626	613
2D-2507	292
	293
	294

▶ **PRIMARY REFERENCE**

PART NUMBER INDEX

Part	Page
	295
	296
	297
	298
	299
	300
	301
	302
	305
	306
	309
	310
2D-2508	292
	293
	294
	295
	296
	297
	298
	299
	300
	301
	302
	305
	306
	309
	310
2D-2509	292
	293
	294
	295
	296
	297
	298
	299
	300
	301
	302
	305
	306
	309
	310
2D-2511	292
	293
	294
	295
	305
	309
2D-2565	293
	294
	295
	296
	302
	306
	309
2D-2654	305
	307
2D-4202	439
2D-5238	319
2D-6006	745
2D-6235	661
	662
	675
2D-6642	39
	251
	254
2D-7325	351
2D-8009	267
2D-8154	390
2D-8652	381
2F-8057	338
	374
2G-0478	390
2G-0617	147
	153
2G-0659	147
	153
2G-0988	147
	153
2G-1034	358
2G-3219	586
	600
2G-3221	586
	600
2G-3865	311
2G-3967	369
2G-3971	589
2G-4332	616
2G-5493	398
	402
	406
	409
2G-5667	311
	375
2G-5673	311
2G-6285	745
2G-6337	347
2G-6595	296
	297
	298
	299
	300
	301
	302
	305
	306
	310
2G-6695	390
2G-6740	448
	452
	458
	463
	465
	485
2G-6747	450
	452
	454
	456
	458
	465
	467
	469
	471
	473
	475
	477
	479
	481
	485
	489
	492
	497
	500
	504
2G-6748	442
	444
	446
	448
	450
	452
	454
	456
	458
	461
	463
	465
	467
	469
	471
	473
	475
	477
	479
	481
	485
	489
	492
	497
	501
	504
2G-6749	444
	450
	452
	454
	456
	458
	461
	463
	465
	467
	469
	471
	473
	475
	477
	479
	481
	486
	489
	493
	497
	501
	504
2G-6751	442
	444
	446
	448
	450
	452
	454
	456
	458
	461
	463
	465
	467
	469
	471
	473
	475
	477
	479
	481
	485
	489
	493
	497
	501
	505
2G-6753	446
	450
	454
	461
	465
	467
	469
	471
	473
	475
	479
	482
	486
	489
	493
	497
	501
	505
2G-6754	454
	458
	467
	469
	471
	473
	479
	489
	493
	497
	501
2G-6755	442
	444
	446
	448

► **PRIMARY REFERENCE**

PART NUMBER INDEX

Part	Page	Part	Page	Part	Page	Part	Page
	450		477	2H-3928	437		548
	452		479	2H-3931	425		550
	454		482	2H-5001	251		552
	456		486	2H-6489	231		554
	458		489	2H-6490	271		556
	461		493	2H-9091	358		558
	463		497	2H-9247	390		560
	465		501	2H-9889	398		562
	467		505		402		564
	469	2G-7097	704		406		566
	471		705		409		568
	473	2G-7098	704	2J-0157	231		570
	475		705	2J-3505	311	2L-3331	351
	477	2G-7107	467	2J-3506	256	2L-5893	624
	479		473		390		714
	482		479		596	2L-6267	88
	486		489		597	2L-8050	116
	489		497		598	2L-8058	116
	493		501		599	2M-0849	368
	497	2G-7108	467		606		609
	501		473		608	2M-4453	72
	505		479		609	2M-4779	362
2G-6756	442		489		616	2M-6471	22
	444		497	2J-6089	578	2M-7819	675
	446		501		579	2M-9780	7
	448	2G-7728	616		580		22
	450	2G-8233	609		581		26
	452	2G-8241	697	2J-6274	345		53
	454		699	2J-7761	439		72
	456	2G-8242	697	2J-8163	311		92
	458	2G-8572	644	2K-0120	613		231
	461		685	2K-0419	586		272
	463		697		588		345
	465	2G-8573	644		600		358
	467		685	2K-0420	367		398
	469		697	2K-0703	613		406
	471	2G-8609	375	2K-1738	242		409
	473	2G-8615	311	2K-4821	106		536
	475	2G-8624	311	2K-4973	613		694
	477	2G-8626	311		624	2N-9421	88
	479	2G-8631	311		627	2P-1279	578
	482		388		634		579
	486	2G-8633	311		635		580
	489	2G-8741	311		734		581
	493	2G-8742	311		736	2P-2537	53
	497	2G-8767	680		743	2P-2717	266
	501		685	2K-5106	251	2P-4339	628
	505	2G-8768	311		260		670
2G-6757	442	2G-8777	311	2K-5109	251	2P-4358	9
	444	2G-9098	368		260	2P-8253	773
	446		370	2K-5232	692	2R-0694	745
	448	2G-9103	368	2K-5830	644	2R-0719	745
	450		370	2K-6061	634	2R-0724	745
	452	2G-9791	272		635	2R-1600	319
	454	2H-1743	694		734	2R-1922	358
	456	2H-3740	311		736	2R-6806	95
	458	2H-3746	616	2K-6413	620	2S-0115	606
	461	2H-3764	591	2K-6830	383		608
	463	2H-3786	374	2K-7471	616	2S-2053	54
	465	2H-3920	193	2K-7979	644	2S-3029	231
	467		203	2K-8199	538	2S-3440	356
	469	2H-3922	189		540	2S-4078	230
	471		198		542		414
	473		709		544		536
	475		711		546	2S-5100	439

► **PRIMARY REFERENCE**

PART NUMBER INDEX

Part	Page
2S-7010	69
2T-2991	7
2V-0099	628
	670
2V-1771	110
	112
	113
	117
2V-4331	335
2V-8259	206
2W-0027	43
2W-6544	13
2W-6546	12
2W-7213	22
2W-7381	28
2W-8147	18
2Y-3812	216
2Y-5829	49
	58
3	
3B-4501	629
3B-4508	600
3B-4607	745
3B-4610	439
	745
3B-4615	320
3B-4618	311
	374
3B-4628	398
	409
3B-4647	372
3B-5320	586
	588
3B-5325	620
3B-5329	369
3B-6753	591
	609
3B-6769	337
3B-6772	356
3B-7721	352
3B-7733	337
3B-7740	326
3B-8485	368
	370
3B-8489	311
	337
	375
	591
	613
	616
3B-8822	349
3B-8921	237
	240
3C-6969	226
3D-2239	309
3D-2824	7
	37
	44
	72
	188
	230
	249
	262
	394
	414
	415
	518
	536
3D-2975	675
3D-2981	272
3D-4245	276
	279
3D-4904	616
3D-6509	254
3D-6689	274
3D-7587	358
3D-8317	279
3D-8747	661
	662
3D-8748	661
	662
3D-8749	661
	662
3D-8752	661
	662
3D-8884	349
3D-8913	352
	358
3E-0109	152
	203
	206
	226
	700
3E-0400	628
	670
3E-2026	211
3E-3213	35
3E-3365	188
	282
	583
	584
3E-3368	178
3E-3371	167
	168
3E-3389	203
3E-3636	211
3E-3890	628
	670
3E-4048	705
	718
3E-4302	433
3E-4304	628
3E-4307	256
3E-4352	54
	165
3E-4353	56
3E-5169	221
3E-5239	145
	202
	206
	210
	221
3E-5454	104
3E-5464	628
3E-6328	▶102
	206
3E-6389	▶134
	203
3E-6477	226
3E-7401	69
3E-7417	433
3E-7852	186
3E-7853	186
3E-7855	186
3E-7857	186
3E-7858	186
3E-7860	186
3E-7861	186
3E-8005	248
3E-8006	284
3E-8017	87
3E-8020	709
	711
	713
3E-8700	▶178
	232
3E-8763	201
	226
	229
3E-8766	147
	152
	700
3E-8772	150
	153
	190
3E-8782	147
	152
3E-8784	229
3E-8812	201
3E-8815	150
3E-8817	206
3E-8821	664
	665
3E-8822	157
	158
3E-8825	147
	150
	152
	153
	157
	158
	190
	201
	206
	226
	229
	664
	665
	700
3E-9317	153
	190
3E-9319	226
3E-9323	226
3E-9326	153
	190
3E-9327	206
3E-9330	664
	665
3E-9412	48
	97
3E-9413	708
3E-9865	644
3F-1547	439
3F-7514	644
3F-9556	106
	442
	444
	446
	448
	450
	452
	454
	456
	458
	461
	463
	465
	467
	469
	471
	473
	475
	477
	479
	481
	485
	488
	492
	496
	500
	504
	762
	763
	765
	766
3G-0361	439
3G-1701	674
3G-2579	613
3G-2581	613
3G-3265	685
	690
	718
3G-3726	575
	576
3G-6659	337
3G-8175	583
3G-9190	314
3H-2900	629
	670
3H-5552	22
3H-7654	48
3H-8538	647
3J-1907	7
	9
	26
	42
	58
	60
	69
	79
	82
	92
	93
	95
	183
	198
	211

▶ **PRIMARY REFERENCE**

PART NUMBER INDEX

Part	Page	Part	Page	Part	Page	Part	Page
	231		272	3P-2404	216	3W-7256	611
	259		396	3P-3839	331	3Y-2806	644
	276		398		333	3Y-2888	183
	279		402	3P-9498	536		
	284		405	3R-2437	536		
	412		406	3R-8797	186	**4**	
	414		409	3S-0004	267		
	415		414	3S-0391	351	4B-0418	692
	421		418	3S-1349	616	4B-1281	226
	482		419	3S-2093	92	4B-2043	703
	486		421		127	4B-2049	709
	489		433		147		711
	493		481		152		713
	497		485		157	4B-2913	439
	501		488		158	4B-3604	591
	505		492		163	4B-4158	716
	536		496		202		717
	554		500		203		718
	572		504		206	4B-4274	221
	575		536		208		226
	576		538		226	4B-4283	762
	578		540		228		763
	579		542		402		765
	580		544		421		766
	581		546		628	4B-4314	266
	582		548		670		644
3J-3679	72		550		680	4B-4863	703
	536		552		681		740
3J-5390	74		554		700	4B-5059	675
	347		556		746	4B-5272	626
	356		558		749	4B-6060	352
3J-5696	624		560	3S-2713	351		647
3J-6956	284		562		647	4B-7270	347
3J-7354	7		564	3S-6049	116	4B-9302	692
	37		566	3S-6050	110	4B-9880	279
	67		568		117	4C-9612	12
	79		570	3S-7023	379		42
	92		574		382	4D-0577	352
	165		577		383		358
	246		694	3S-8664	117	4D-0582	352
	259	3K-0986	270		352	4D-1212	226
	260	3K-2527	588		412	4D-1322	284
	279	3K-2889	338	3S-8665	694	4D-2297	554
	345	3K-3257	185	3S-9557	629		568
	414	3K-6060	352	3T-0050	351		575
	421		439	3T-0849	435		576
	427		644	3T-3197	628		578
	429	3K-6113	518	3T-3198	628		579
	536		519	3T-4377	271		580
	577		526	3T-5760	117		581
3K-0196	270		527	3T-5763	320	4D-2560	358
3K-0360	7		529	3T-6354	104	4D-2886	418
	9		532	3T-6774	661	4D-3704	256
	45		533		662		311
	46		535	3T-6848	418		347
	53	3K-6116	276	3T-8236	536		375
	57	3K-8280	352	3T-9549	230	4D-4064	88
	67	3K-8460	165	3V-0613	320	4D-4375	585
	69	3K-9520	147	3V-2431	96		589
	72		153	3V-3816	748	4D-5292	251
	75	3L-8187	226	3V-9244	639	4D-5497	347
	81	3P-0337	240		704	4D-6086	616
	92	3P-1156	56		705	4D-6432	721
	93		63		718	4D-6585	349
	231	3P-1461	609	3W-7254	611	4D-6695	256

► **PRIMARY REFERENCE**

PART NUMBER INDEX

Part	Page	Part	Page	Part	Page	Part	Page
	284	4J-0522	262		570		473
4D-6885	352	4J-0524	72	4J-8922	352		479
4D-7388	69	4J-2506	246		647		493
	75		276	4J-9224	388		497
	211		279	4J-9225	381		501
	352	4J-5468	396		386	4M-0061	662
	358		398		387	4M-1751	276
	746		402	4J-9964	437		279
	748		406	4K-0367	251	4M-1831	186
	749		409		260	4M-2381	279
4D-7733	358		421		639	4M-5281	683
	412	4J-5477	7		704	4M-6107	242
4D-7735	352		246		705		244
	692		412		718	4M-6108	231
4D-7794	79		414	4K-1388	7	4M-6425	352
	153		421		536		714
	198		536	4K-2039	276	4M-6582	629
	206	4J-7533	276		279		671
	211		279	4K-3004	613	4M-6921	439
	216		427	4K-3150	613	4M-6953	265
	221		429	4K-3330	▶621	4N-2927	675
	337		508	4K-4879	297	4N-5091	362
	441		509		298	4P-4369	54
	748		510		299	4P-5918	13
4D-8123	221		511		300		82
4D-8128	314		512		301		208
4D-8148	319		513		302	4P-7048	358
4D-9986	538		514		310	4P-7581	196
	540		515	4K-4881	306		202
	542		516		308		206
	544		517	4K-6781	335		232
	546		518	4K-7463	335	4P-8134	208
	548		519	4K-7464	335		211
	550		520	4K-8302	216		246
	552		521	4K-8603	231	4S-1936	221
	554		522	4K-8659	335		358
	556		523	4K-8864	153	4S-1962	216
	558		524		211		221
	560		525		216		412
	562		526		221		692
	564		527		349	4S-4455	221
	566		529		358		356
	568		530		412		412
	570		531		692	4S-5719	198
4E-2392	421		532	4K-9097	320	4S-5780	108
4F-2294	191		533	4K-9429	707	4S-5838	345
4F-3657	594		534	4L-5966	628	4S-5879	248
4F-3658	594		535		670		347
4F-4879	739		536	4L-6454	153	4S-7529	349
4F-5695	24		538		206	4S-7606	349
4F-7389	262		540		211		358
4F-7390	345		542		402	4T-1700	577
4F-7952	268		544		418	4T-1860	536
4F-9029	60		546		422		▶582
4F-9653	96		548		626	4T-4509	577
	390		550		634	4T-4935	536
4H-6112	272		552		635		▶574
4H-6147	349		554		692	4T-4942	574
	358		556		746	4T-5074	577
4H-6520	251		558	4L-6459	201	4T-5613	379
	260		560		454		382
4H-6996	390		562		458		383
4H-9105	345		564		465		388
4J-0520	262		566		467	4T-6780	381
4J-0521	415		568		471	4T-6907	376

▶ **PRIMARY REFERENCE**

PART NUMBER INDEX

Part	Page	Part	Page	Part	Page	Part	Page
	377		202	5D-9629	314	5K-9107	769
	384		206		341	5K-9238	351
	385		220	5D-9844	251	5L-2030	251
4T-7571	574		226		260		260
4T-8050	328		352	5E-8769	9	5L-2031	251
4T-8054	388		629	5F-0149	609		260
	425		660	5F-0304	37	5L-3244	83
4V-0015	335		671	5F-4764	773	5L-4507	198
4V-7875	675		746	5F-5434	358	5L-7200	153
4V-7877	675		749	5F-8000	269		190
4V-7884	743	5C-6565	327	5F-8933	606	5M-2057	536
4V-7890	624		356		608	5M-2894	251
4V-7891	624	5C-7261	13	5F-9144	276		256
4V-8256	627		15		279		260
4V-8577	743		129		280		626
4V-9803	339		216	5H-4778	349		714
4V-9804	339		762		352		734
4V-9809	339		763	5H-4909	390		736
4W-0253	71		765	5H-7826	337	5M-3062	131
4W-1203	30		766	5H-8985	237		147
4W-1204	30	5C-7423	242		240		153
4W-1413	772		244		242		206
4W-2026	14		763		244		211
4W-2042	30	5C-8312	203	5I-4376	69		216
4W-2232	56		226	5J-1036	276		324
4W-3462	3		644		279		328
	▶12		703	5J-1086	345		349
4W-7592	71		709	5J-1246	437		352
4Y-9652	13		711	5J-4773	596		364
			713		597		624
		5C-9553	198		598		633
5			202		599		657
			206		606		694
5A-3604	9		210		608		746
5B-0577	616		216	5J-5402	383		749
5B-0841	254		226	5J-7010	381	5M-3724	202
	260		320	5J-7333	593		206
5B-1866	49		720	5K-0871	335	5M-6200	231
5B-6172	624	5D-0269	709	5K-0983	335	5M-6213	349
	723		711	5K-0984	335		352
	725		713	5K-0985	335	5M-8500	644
5B-9318	389	5D-0353	256	5K-0987	335	5M-9695	751
	538		258	5K-0988	335		752
	540		311	5K-0989	335	5P-0537	142
	542	5D-0398	588	5K-0991	335		276
	544	5D-0399	588	5K-1094	349		279
	546	5D-0768	745	5K-1458	616		661
	548	5D-1026	69		621		662
	550		75	5K-1459	616		707
	552		101		621	5P-0599	402
	554		262	5K-2408	349	5P-0721	101
	556		633	5K-5129	311	5P-0747	185
	558		694		347	5P-0765	263
	560	5D-1911	439		390	5P-0767	69
	562	5D-2645	398	5K-5288	311		352
	564		402		347		694
	566		409		390	5P-0810	402
	568	5D-3636	745	5K-5552	369	5P-0878	629
	570	5D-4822	675	5K-7577	709	5P-1046	69
5C-2890	79	5D-4988	402		711	5P-1075	88
	145	5D-5206	588	5K-8451	356		262
	153	5D-6644	586		358		311
	155	5D-8159	616	5K-8454	390		324
	156	5D-8161	616	5K-9090	262		327
	190	5D-9559	602		414		328

▶ **PRIMARY REFERENCE**

PART NUMBER INDEX

Part	Page	Part	Page	Part	Page	Part	Page
	331		489	5P-4401	356		201
	333		493	5P-4424	356		221
	349		497	5P-4483	231		324
	418		501	5P-4536	86		644
	422		505	5P-4868	414		748
	442	5P-1174	772	5P-4906	694	5P-8196	53
	444	5P-1175	772	5P-4961	69	5P-8244	347
	446	5P-1251	75	5P-5454	685	5P-8245	14
	448	5P-1295	414	5P-5623	145		34
	450	5P-2228	371	5P-5627	751		35
	452		613		752		254
	454	5P-2230	79	5P-5630	183		272
	456	5P-2424	442	5P-5637	629		335
	458		444		645		375
	461		446		671		390
	463		448	5P-5639	645		586
	465		450	5P-5678	652		616
	467		452	5P-5689	116	5P-8247	21
	469		454		198		106
	471		456	5P-5768	639		251
	473		458		655		254
	475		461		708		260
	477		463		718		335
	479		465	5P-5813	251		586
	482		467		260	5P-8248	251
	486		469	5P-5824	685		256
	489		471	5P-5905	671		260
	493		473	5P-5923	593		372
	497		475	5P-5931	398		390
	501		477		409		432
	505		479	5P-5969	324		609
	629		482		657		616
	644		486		683	5P-8249	368
	647		489		686		370
	657		493		690	5P-8250	616
	671		497		696	5P-8291	591
	692		501		759	5P-8309	74
	697		505	5P-6129	629		341
	741		613	5P-6652	591	5P-8347	67
	769	5P-2503	251	5P-6871	698	5P-8439	320
5P-1076	88		260	5P-6882	683	5P-8445	675
	108	5P-2566	437	5P-6920	104	5P-8500	2
	196	5P-3454	198	5P-7162	751		101
	339	5P-3490	256		752		266
	442	5P-3863	231	5P-7213	270		316
	444		269	5P-7462	93		340
	446	5P-3924	231	5P-7463	93		441
	448	5P-4115	226	5P-7464	93		667
	450		331	5P-7465	93		727
	452		333	5P-7803	628		729
	454		683		670		769
	456		685		685	5P-8502	441
	458		746		690		727
	461		749		718		729
	463		762		741		769
	465		763	5P-7814	165	5P-8525	152
	467		765	5P-7854	356		157
	469		766		422		158
	471	5P-4116	29	5P-7957	723		665
	473		79		725		680
	475		93		728		681
	477		183		740	5P-8842	311
	479		642	5P-7958	2		375
	482	5P-4135	216	5P-7970	55	5P-8843	311
	486	5P-4295	117	5P-8167	150	5P-8874	92

PART NUMBER INDEX

Part	Page
5P-8890	311
5P-8998	358
5P-9085	216
	221
	331
	333
5P-9118	347
5P-9135	629
	670
5P-9209	88
	647
5P-9299	232
5P-9436	249
5P-9617	67
5P-9810	394
5P-9938	262
5R-4787	432
5S-4246	131
	206
5S-4385	267
5S-7349	106
	186
5S-7379	150
	216
	311
	327
	374
	390
	398
	402
	406
	409
	697
5S-7382	328
5S-7383	358
	398
	402
	409
	634
	635
	644
	714
	734
	736
5S-9062	30
5T-0570	1
	▶390
5T-0906	311
5T-1362	436
5T-1958	755
5T-1959	757
5T-1964	755
	757
5T-1969	755
5T-1972	755
	757
5T-3093	759
5T-3144	755
5T-3145	757
5T-3146	755
5T-3147	757
5T-3889	585
	589
5T-3890	585
	589
5T-4030	674
5T-4267	585
	589
5T-5295	372
5T-5994	755
	757
5T-6775	161
	591
5T-7129	256
5T-7486	652
	655
5T-8285	349
	351
5T-8366	586
	600
5T-8417	372
5T-9313	153
5T-9903	421
5T-9986	398
5V-0770	675
5V-1496	731
5V-1497	743
5V-5262	626
6A-3591	358
6B-0933	442
	444
	446
	448
	450
	452
	454
	456
	458
	461
	463
	465
	467
	469
	471
	473
	475
	477
	479
	481
	485
	488
	492
	496
	500
	504
6B-3260	616
	621
6B-4540	206
6B-5072	272
6B-6684	270
6C-3246	299
	300
6C-7366	298
	299
6D-0580	246
6D-1004	9
6D-1432	349
6D-1641	694
6D-3033	216
6D-3479	221
6D-4244	216
	221
	226
	394
	398
	402
	406
	409
	422
6D-4246	110
	112
	113
	117
	211
	222
6D-4247	396
	419
6D-4636	211
	222
6D-6581	652
	655
6D-7889	9
6E-0775	383
6E-1131	379
	382
6E-1343	370
	▶379
6E-1344	379
6E-1346	379
6E-1560	367
	▶376
6E-1561	376
6E-1835	574
6E-1923	536
6E-1924	536
6E-1925	536
6E-1926	414
6E-3006	579
6E-3007	538
	540
	542
	544
	546
	548
	550
	552
	554
	556
	558
	560
	562
	564
	566
	568
	570
6E-3013	546
	548
	566
	568
6E-3019	538
	540
	542
	544
	546
	548
	550
	552
	554
	556
	558
	560
	562
	564
	566
	568
	570
6E-3028	512
	514
	519
	522
	523
	526
	531
	532
	▶538
6E-3029	512
	514
	519
	522
	523
	526
	531
	532
	▶540
6E-3030	512
	514
	519
	522
	523
	526
	531
	532
	▶542
6E-3031	512
	519
	522
	526
	531
	532
	▶544
6E-3032	469
	475
	477
	▶512
6E-3033	562
	566
	▶575
6E-3034	513
	515
	518
	520
	521
	524
	525
	527
	529
	530
	533

6

▶ **PRIMARY REFERENCE**

PART NUMBER INDEX

Part	Page	Part	Page	Part	Page	Part	Page
	534	6E-4224	433	6F-0698	251		282
	535	6E-4228	572		260	6G-5987	661
	▶546	6E-4230	572	6F-3930	292		662
6E-3035	508	6E-4502	538		293	6G-6122	390
	509		540		294	6G-7187	371
	510		542		295		375
	511		544		296	6G-7222	690
	513		546		297		718
	515		548		298	6G-8814	644
	516		550		299	6G-8831	698
	517		552		300		700
	518		554		301	6G-9428	588
	520		556		302	6G-9429	588
	521		558		305	6H-0211	372
	524		560		306	6H-1717	375
	525		562		309		390
	527		564		310		586
	529		566	6F-4855	276		600
	530		568		279	6H-3586	198
	533		570	6F-6992	616	6H-7378	773
	534	6E-4599	546	6F-7013	340	6H-9691	349
	535		554	6F-7045	189	6I-1418	211
	▶548		556		198	6I-8641	237
6E-3036	509		560	6F-7062	44	6I-8642	231
	513		566	6G-0417	335	6I-8911	242
	515	6E-4703	536	6G-0905	347	6I-8912	237
	516		▶576	6G-1631	236		240
	517	6E-4704	575	6G-1633	236		242
	518	6E-4940	381	6G-1755	1		244
	520	6E-4974	388		▶236	6I-9395	284
	521	6E-5047	272	6G-1908	390	6I-9502	240
	524	6E-5153	538	6G-1914	591		242
	525		540	6G-1915	591		244
	527		542	6G-2395	685	6J-0488	644
	529		544		690	6J-1972	376
	530		546		718		377
	533		548	6G-2396	685		379
	534		550		690		382
	535		552		718		384
	▶550		554	6G-2751	685		385
6E-3037	513		556	6G-2914	644	6J-2797	383
	518		558		685	6J-5731	376
	520		560	6G-2944	▶585		377
	521		562		588		379
	527		564	6G-2946	589		382
	529		566	6G-2947	588		384
	530		568	6G-2949	585		385
	533		570	6G-2959	757	6J-5733	376
	534	6E-5200	577	6G-3206	256		377
	535	6E-6140	572	6G-3212	256		379
	▶552	6E-6141	572	6G-3378	347		382
6E-3038	477	6E-6142	572	6G-4701	251		384
	▶513	6E-6419	572		260		385
6E-3043	544	6E-6420	572	6G-4703	251	6J-6439	574
	552	6E-6571	433		260	6K-0545	616
6E-3044	538		▶435	6G-5214	690	6K-3273	685
	540	6E-6594	433	6G-5442	591		731
	542	6E-6596	433	6G-5533	390	6K-3632	588
	548	6E-6597	433	6G-5534	390	6K-4076	324
6E-3058	550	6E-6599	433	6G-5537	390	6K-6826	351
6E-3059	558	6E-6600	433	6G-5538	390	6K-8178	69
6E-3136	432	6E-6601	433	6G-5539	390		117
	▶433	6E-6602	433	6G-5542	390		216
6E-4090	376	6E-6604	435	6G-5548	390		415
	377	6E-6605	435	6G-5979	275		422

▶ **PRIMARY REFERENCE**

PART NUMBER INDEX

Part	Page	Part	Page	Part	Page	Part	Page
6K-9632	748	6V-1230	75	6V-3965	246	6V-6703	121
	749	6V-1249	93		262	6V-6888	763
6L-1650	231	6V-1668	629		284	6V-6889	763
6L-1962	442		671		415	6V-6893	222
	444	6V-1720	232		536	6V-7357	198
	446	6V-1819	237	6V-4245	352		352
	448		240	6V-4248	56	6V-7420	694
	450		242		58	6V-7555	198
	452		244		231	6V-7636	652
	454	6V-1820	9	6V-4249	28		655
	456		231	6V-4283	198	6V-7646	731
	458		268	6V-4589	192	6V-7673	340
	461	6V-1889	57	6V-4604	66		433
	463		211		341	6V-7688	101
	465		216	6V-5048	26	6V-7699	198
	467		222		165	6V-7728	629
	469		262		171		671
	471		328		172	6V-7732	333
	473	6V-1911	270	6V-5049	100	6V-7744	698
	475	6V-1970	2		165		700
	477	6V-2202	104		170	6V-7981	97
	479	6V-2235	69	6V-5158	657		231
	481	6V-2313	88	6V-5163	686	6V-8004	30
	485		647	6V-5164	720	6V-8149	14
	488	6V-2317	13	6V-5217	38	6V-8182	216
	492		15		55	6V-8183	644
	496		33		231	6V-8185	226
	500		53		248	6V-8186	442
	504		55		284		444
	644		208	6V-5218	33		446
6L-5652	356	6V-2369	103	6V-5219	60		448
6M-5062	364		116		269		450
6M-9537	351		198	6V-5223	67		452
6N-1872	104	6V-2480	206	6V-5230	536		454
6N-9294	▶104	6V-2610	356	6V-5324	582		456
	108	6V-2686	183	6V-5556	577		458
6P-0205	622	6V-2687	331	6V-5645	203		461
	623		333	6V-5683	276		463
	685		696	6V-5684	340		465
	690	6V-2722	116	6V-5686	390		467
6P-3236	628		117	6V-5696	14		469
	670	6V-2773	652		48		471
6P-5647	611		655		415		473
6R-7669	414	6V-3250	67	6V-5698	13		475
6S-6251	74	6V-3259	675	6V-5815	62		477
6T-1999	219	6V-3265	149	6V-5834	680		479
6T-3631	221		211	6V-5839	9		481
6T-3632	221		222		15		485
6T-3633	221	6V-3538	12		27		488
6T-5345	628		20		58		492
	670	6V-3668	345		62		496
6T-6708	628	6V-3834	433		97		500
	670	6V-3918	38		250		504
6T-7695	680		71		345	6V-8187	104
	681		248	6V-5842	37	6V-8188	108
6V-0292	685	6V-3928	685		345		117
	690		690	6V-5843	36		186
6V-0505	686		718	6V-5849	765		442
6V-0683	93	6V-3940	11	6V-5853	762		444
6V-0852	246		12		763		446
	284		43		766		448
	414		56	6V-6467	749		450
	536		67	6V-6578	203		452
6V-0894	647		165	6V-6609	67		454
6V-1228	352		231		181		456

▶ **PRIMARY REFERENCE**

PART NUMBER INDEX

Part	Page	Part	Page	Part	Page	Part	Page
	458		489	6V-8638	92		650
	461		492	6V-8639	7		652
	463		493		398		660
	465		496		406		683
	467		497		409		690
	469		500		421		709
	471		501	6V-8647	246		711
	473		504		414		720
	475		505		421		741
	477	6V-8398	7		536	6V-9746	7
	479		72	6V-8716	262		57
	482		92	6V-8723	396		262
	486		394		398		263
	489		398		402		414
	493		402		418		415
	497		406		419		421
	501		409	6V-8724	58	6V-9748	30
	505		414		93	6V-9835	414
6V-8189	106		421		412	6V-9836	402
	320		481	6V-8730	92		482
	352		485	6V-8765	432		486
6V-8212	231		488	6V-8801	88		489
6V-8214	333		492		125		493
	433		496		153		497
6V-8225	142		500		201		501
	358		504		203		505
6V-8237	376		536		206	6V-9837	394
	377	6V-8523	69		211		421
	384	6V-8624	398		216	6V-9849	421
6V-8255	759		406		222	6V-9850	412
6V-8257	765		409		328	6V-9851	394
6V-8258	766	6V-8625	7		349	6V-9875	414
6V-8259	762		92		352	6V-9876	398
	763		398		358		402
6V-8336	34		402		362		406
6V-8337	33		406		398		409
	433		409		402	6W-0108	624
6V-8362	628		414		406	6W-0111	624
	670		421		409	6W-0590	624
6V-8367	69	6V-8627	7		418	6W-1496	626
6V-8369	193		412		422	6W-1497	626
	203		414		629	6W-1885	624
6V-8376	226	6V-8628	7		671	6W-1888	626
6V-8377	104		246		741	6W-1890	723
6V-8378	186	6V-8633	394		746		725
	221	6V-8634	396	6V-8918	352	6W-1895	723
6V-8397	58		398	6V-8928	685		725
	69		402	6V-8950	131	6W-2371	626
	92		405	6V-8969	707	6W-2373	723
	93		406	6V-8980	412		725
	246		409		419	6W-3309	723
	396		481	6V-9002	421		725
	398		485	6V-9004	415		728
	402		488	6V-9007	7	6W-3628	626
	405		492		414		734
	406		496	6V-9008	262		736
	409		500	6V-9027	67	6W-5698	746
	412		504	6V-9168	69		749
	418	6V-8635	262		412	6W-5740	723
	419	6V-8636	58		419		725
	481		92	6V-9326	131	6W-5757	723
	482		96	6V-9493	703		725
	485		412	6V-9632	216		728
	486	6V-8637	262		331	6W-5817	351
	488		414		333	6W-6672	117

► **PRIMARY REFERENCE**

PART NUMBER INDEX

Part	Page
6W-9693	723
	725
6Y-0309	620
6Y-0590	271
6Y-0591	271
6Y-0976	244
6Y-0982	237
6Y-1000	237
6Y-1007	231
6Y-1114	237
	240
	244
6Y-1115	237
	240
	242
	244
6Y-1116	242
6Y-1119	242
	244
6Y-1870	271
6Y-1878	237
6Y-1887	237
	240
	244
6Y-1888	244
6Y-1890	240
6Y-1891	237
	244
6Y-1895	237
	244
6Y-2300	▶271
	273
6Y-2303	▶237
	273
6Y-2307	244
6Y-2312	237
	240
6Y-2419	237
6Y-2425	237
	240
6Y-2428	240
6Y-2429	240
6Y-2584	284
6Y-2932	430
6Y-2933	430
6Y-2934	430
6Y-2935	430
6Y-3849	345
6Y-3850	345
6Y-3852	345
6Y-3860	269
6Y-3861	269
6Y-4638	276
	280
6Y-5010	267
6Y-5230	616
	621
6Y-5352	345
6Y-7916	347
6Y-7953	390
6Y-7954	254
6Y-7981	240
6Y-8285	237
6Y-8764	▶267
	268
6Y-8765	▶268
	273
6Y-9763	231
6Y-9960	5
7B-2499	588
7B-5037	585
7B-9323	745
7C-1493	53
7C-4354	58
	206
	211
	222
7C-6976	43
7C-6977	43
7C-7431	87
7C-7980	18
7C-8365	▶30
	31
7C-8366	30
7C-8369	30
7C-8370	30
7C-8634	30
7D-0035	256
7D-0215	356
7D-1158	605
7D-1195	439
7D-1553	196
7D-1576	603
7D-1577	604
7D-1649	311
	393
7D-2135	616
7D-2136	616
7D-2196	616
7D-3504	390
7D-4903	358
7D-5252	292
	293
	294
	295
	296
	297
	298
	299
	300
	301
	302
	305
	306
	309
	310
7D-6567	272
7D-7095	600
7D-7233	222
	358
7D-7496	326
7D-7889	256
7D-8185	254
7D-8225	254
7D-8226	254
7D-8245	616
7D-8347	251
	260
7D-8354	347
7D-8362	347
7D-8434	347
7D-8436	347
7D-8437	347
7D-8439	347
7D-8440	1
	▶347
7D-8441	347
7D-8636	311
7D-8637	311
7D-8643	311
7D-8825	616
7D-8826	616
7D-8875	609
7D-8876	609
7D-8877	609
7D-8878	609
7D-8879	609
7D-8881	609
7D-8882	609
7D-8883	609
7D-8884	609
7D-8889	609
7D-8891	609
7D-8983	390
7D-8984	390
7D-9267	436
7E-0759	67
7E-2968	21
7E-4761	69
7E-6794	39
7E-7589	47
7E-7590	3
	▶47
7E-7779	25
7F-0192	88
7F-0482	600
7F-1327	616
7F-8268	268
7F-9311	358
7G-0437	345
7G-1060	221
7G-4326	746
7G-4822	237
	240
	242
	244
7G-4824	628
	670
	685
	741
7G-4998	230
7G-5453	280
7G-7053	149
	206
7H-1447	439
7H-2423	386
	387
7H-2444	609
7H-3641	442
	444
	446
7I-4610	1
	▶337
7I-4696	674
7I-4698	674
7I-4699	674
7I-4718	1
	▶649
7I-4890	644
7I-4959	320
7I-4979	320
7I-4981	320
7I-5015	632
	▶660
7I-5405	422
7I-5412	418
7J-0204	26
	386
	387
7J-8611	69
	258
7J-9108	694
7J-9885	388
7J-9933	538
	540
	542
	544
	546
	548
	550
	552
	554
	556
	558
	560
	562
	564
	566
	568
	570
	574
7K-1181	117
	125

7

▶ **PRIMARY REFERENCE**

PART NUMBER INDEX

Part	Page
	131
	145
	149
	150
	153
	196
	198
	201
	210
	211
	216
	220
	222
	232
	414
	703
7K-4199	666
7K-4201	659
7K-4474	762
7K-6117	367
7K-9202	367
	371
7K-9203	613
7L-0811	221
7L-2894	186
7L-6326	79
7L-8170	627
7L-8316	661
	662
7L-9061	192
	433
7M-0706	650
7M-1297	230
7M-2360	390
7M-7219	675
7M-7410	352
7M-8485	231
	232
	262
	276
	279
	280
7M-9918	86
7N-0718	▶189
	198
7N-2059	183
7N-3718	211
	222
7N-5274	110
	113
	117
7N-5683	20
7N-5876	206
7N-7779	762
7N-7780	762
7N-7795	104
7N-7796	104
7N-7798	104
7N-7800	104
7N-7801	104
7N-7802	104
7N-7804	104
7N-7805	104
7N-7806	104
7N-7807	104
7N-7808	104
7N-7809	104
7N-7810	104
7N-7811	104
7N-8204	762
7N-9021	104
7N-9023	104
7N-9024	104
7N-9801	195
7N-9943	134
7S-4571	256
7S-6369	82
7T-0020	134
7T-0570	276
	279
7T-0582	661
	662
7T-1099	131
	216
	628
	670
7T-1159	246
7T-1961	746
	749
7T-3451	186
7T-3454	186
7T-4003	664
	665
7T-4515	283
7T-4532	641
7T-4897	237
	240
	242
	244
7T-6496	231
7T-6799	206
7T-7358	666
7T-8272	433
7T-8273	433
7T-8891	746
	748
	749
7T-9302	194
	203
7T-9793	629
7V-0446	88
	351
	647
7V-5191	675
7W-3872	13
	642
7W-5095	35
7W-5340	56
7W-5672	398
	402
	406
	409
7W-9737	61
7W-9738	61
7W-9740	61
7W-9930	61
7W-9943	221
7X-0288	402
7X-0289	394
	396
	402
	406
	422
7X-0291	467
	479
	497
7X-0325	108
	441
7X-0333	362
	613
7X-0334	393
	586
7X-0339	108
7X-0342	263
7X-0346	108
	367
	425
7X-0350	425
7X-0354	639
	704
	705
	718
7X-0375	639
	704
	705
	718
7X-0390	616
7X-0448	108
7X-0452	586
7X-0510	41
7X-0550	216
	320
	586
7X-0562	186
7X-0578	358
7X-0579	216
7X-0591	629
	671
	741
7X-0605	657
7X-0608	627
7X-0613	211
7X-0619	217
	412
7X-0818	31
	211
7X-0838	246
7X-0871	421
7X-1387	320
7X-1950	186
7X-1952	186
7X-2536	202
7X-2537	58
	642
7X-2538	642
7X-2539	93
	642
7X-2543	611
7X-2546	74
	508
	509
	510
	511
	512
	513
7X-2552	83
	263
7X-2553	31
7X-2566	101
7X-2575	317
	318
	341
7X-3353	104
7X-3373	186
7X-4736	349
7X-4743	206
7X-4776	536
7X-6315	121
7X-7478	196
7X-7700	101
7X-7729	57
	74
	115
	145
	320
	341
	352
	358
7X-7731	311
7X-7739	723
	725
7X-7877	125
	203
	723
	725
	728
7X-7910	692
7X-7911	692
7X-7958	57
7X-7961	35
7Y-0589	217
7Y-5226	755
	757
	759
	8
8B-1615	258

▶ **PRIMARY REFERENCE**

PART NUMBER INDEX

Part	Page	Part	Page	Part	Page	Part	Page
8C-0563	24	8D-5467	588		467		504
8C-2926	267	8D-5632	442		469	8D-5640	442
8C-3290	5		444		471		444
8C-3309	414		446		473		446
8C-3334	158		448		475		448
8C-3425	41		450		477		450
	432		452		479		452
8C-3442	644		454		481		454
8C-3446	421		456		485		456
8C-3447	263		458		488		458
8C-3451	422		461		492		461
8C-3681	75		463		496		463
8C-3756	628		465		500		465
	670		467		504		467
8C-4586	628		469	8D-5636	442		469
	670		471		444		471
8C-4984	248		473		446		473
8C-5060	765		475		448		475
8C-5608	131		477		450		477
8C-5897	772		479		452		479
8C-5917	110		481		454		481
	116		485		456		485
8C-6162	426		488		458		488
8C-6354	206		492		461		492
8C-6512	427		496		463		496
	429		500		465		500
8C-6712	79		504		467		504
	421	8D-5633	442		469	8D-5641	442
8C-6738	751		444		471		444
	752		446		473		446
8C-6857	217		448		475		448
8C-6913	617		450		477		450
8C-6920	57		452		479		452
8C-6959	93		454		481		454
8C-6965	276		456		485		456
	279		458		488		458
8C-7508	226		461		492		461
8C-8431	79		463		496		463
8C-8454	657		465		500		465
8C-9987	282		467		504		467
	583		469	8D-5637	442		469
	584		471		444		471
8D-1268	616		473		446		473
8D-1429	628		475		448		475
	670		477		450		477
8D-2429	374		479		452		479
8D-2638	374		481		454		481
8D-2811	311		485		456		485
	374		488		458		488
8D-3508	314		492		461		492
8D-3540	256		496		463		496
8D-3591	256		500		465		500
8D-3743	256		504		467		504
8D-3786	320	8D-5634	442		469		644
8D-3791	324		444		471	8D-5949	586
8D-3885	256		446		473	8D-6687	369
8D-3886	256		448		475	8D-7026	351
8D-3902	256		450		477	8D-7086	367
8D-4064	254		452		479		371
8D-4282	254		454		481	8D-7225	371
8D-4291	254		456		485	8D-7423	390
8D-4332	609		458		488	8D-7424	390
8D-4336	609		461		492	8D-7425	390
8D-4766	367		463		496	8D-7426	390
8D-5054	390		465		500	8D-7678	369

► **PRIMARY REFERENCE**

PART NUMBER INDEX

Part	Page
8D-7960	644
8D-7996	368
8D-8168	609
8D-8197	251
	260
8D-8852	442
	444
	446
	448
	461
	463
8D-9092	398
	409
8D-9159	324
8D-9671	222
	694
8D-9784	251
	260
8D-9804	390
8D-9882	585
	589
8D-9883	585
8D-9884	585
8D-9886	585
	589
8D-9887	585
	589
8E-1118	681
8E-1133	231
8E-1143	279
8E-1161	240
8E-1263	242
	244
8E-1909	237
8E-1910	237
8E-1913	240
8E-5529	596
	597
	598
	599
8E-5734	237
	240
	244
8E-5736	240
8E-5742	237
	240
	242
	244
8E-6130	611
8E-6570	279
8E-7713	280
8E-7714	279
8E-7791	628
	670
	685
	741
8E-8319	237
	240
	242
	244
8E-9316	▶240
	273
8E-9474	284
8E-9893	279
8E-9894	276
	279
8E-9895	276
	279
8E-9896	276
	279
8E-9897	279
8F-0492	685
8F-1434	104
	186
	221
	709
	711
	713
8F-1974	211
8F-3469	237
	240
	242
	244
8F-4102	369
8F-6230	284
8F-6437	442
	444
	446
	448
	450
	452
	454
	456
	458
	461
	463
	465
	467
	469
	471
	473
	475
	477
	479
	482
	486
	489
	493
	497
	501
	505
8F-9836	161
	591
8F-9866	▶771
	773
8G-1815	349
8H-1728	697
8H-2046	52
8H-4040	616
8H-5244	49
8H-5303	189
	198
8H-5306	189
	198
8H-8581	773
8I-1362	356
8J-0112	381
8J-1256	131
8J-1434	613
	▶620
8J-2331	437
8J-6384	382
8J-6815	536
8J-7008	613
8J-7024	612
	▶613
8J-9910	383
8J-9911	383
8K-0530	326
8L-2786	179
	180
8L-6005	351
8L-6521	226
8L-7905	644
8L-8413	113
	675
8L-8598	465
	471
	473
	475
	477
	479
	481
	485
	488
	492
	496
	500
	504
8M-2769	263
8M-2770	131
	147
	196
	211
8M-2773	69
	211
	217
	222
	246
	633
	692
8M-3175	536
8M-3368	358
8M-3837	319
8M-4295	240
8M-4437	538
	540
	546
	548
	550
	552
	554
	556
	558
	560
	562
	564
	566
	568
	570
8M-4438	246
8M-5860	24
8M-6176	702
8M-6521	231
8M-8489	267
8N-1725	113
	116
8N-2353	219
8N-2694	79
8P-5141	628
	670
8R-1778	666
8R-2054	725
	728
8R-2057	725
	728
8R-4519	626
	734
	736
8S-0934	721
8S-0948	113
	117
8S-4790	626
	734
	736
8S-5383	108
8S-6109	692
8S-6110	692
8S-7566	659
8S-7803	675
8S-9092	256
8S-9129	231
	269
8S-9130	231
	269
8T-0076	396
	398
	402
	405
	409
8T-0081	92
8T-0100	15
	32
	48
8T-0226	37
8T-0276	53
8T-0285	123
	124
8T-0292	82
8T-0293	44
8T-0328	88
	104
	186
	647
	731
	755
	757
	759
8T-0335	759
8T-0336	390
8T-0352	755
	757
	759
8T-0355	269
8T-0372	345
	433
8T-0389	113
	117
	135
	136

▶ **PRIMARY REFERENCE**

PART NUMBER INDEX

Part	Page	Part	Page	Part	Page	Part	Page
	137		29		461		349
	138		31		463		352
	611		40		465		356
8T-0639	228		57		467		358
	248		65		469		412
8T-0643	15		69		471		415
8T-0644	72		75		473		422
8T-0646	415		77		475		643
8T-0667	385		79		477		644
8T-1117	75		83		479		647
8T-1159	96		85		482		657
8T-1174	644		88		486		674
8T-1296	398		93		489		692
	402		110		493		698
	406		112		497		700
	409		113		501	8T-4136	5
8T-1683	402		117		505		40
	419		125		593		79
8T-1687	398		131		634		83
	402		135		635		85
	406		136		643		88
	409		137		647		115
	481		138		652		117
	485		145		655		147
	488		147		657		157
	492		150		674		158
	496		152		680		183
	500		155		681		198
	504		157		685		211
8T-1698	430		158		692		320
8T-2275	439		185		694		327
8T-2353	165		196		698		341
8T-2501	123		198		700		349
	124		206		718		352
	246		211		748		356
	349		217	8T-4122	108		358
	398		222		367		412
	402		231		425		415
	409		246		639		422
	681		249		704		442
8T-2502	398		253		705		444
	409		263		718		446
8T-2530	694		327	8T-4123	5		448
8T-2561	320		331		101		450
	644		333		217		452
8T-2901	746		341	8T-4133	69		454
8T-3282	27		349		74		456
	381		352		75		458
	386		356		77		461
	387		358		79		463
8T-3426	686		412		88		465
8T-3490	66		415		113		467
	340		419		117		469
	398		422		145		471
	593		439		147		473
	628		441		150		475
	652		442		196		477
	670		444		198		479
	741		446		211		482
8T-3612	216		448		217		486
8T-3653	41		450		222		489
8T-3666	28		452		232		493
8T-3957	415		454		246		497
8T-4121	5		456		249		501
	7		458		320		505

► **PRIMARY REFERENCE**

PART NUMBER INDEX

Part	Page
	593
	643
	647
	692
	694
8T-4137	57
	69
	75
	79
	93
	110
	112
	113
	117
	125
	131
	145
	155
	196
	198
	206
	211
	217
	222
	231
	246
	253
	320
	331
	333
	341
	349
	352
	356
	412
	415
	419
	422
	593
	652
	655
	680
	681
	698
	700
8T-4138	79
	131
	198
	331
	538
	540
	542
	544
	546
	548
	550
	552
	554
	556
	558
	560
	562
	564
	566
	568
	570
	763
8T-4139	93
	320
	593
8T-4167	5
8T-4171	629
	671
	762
	763
	765
	766
8T-4172	29
8T-4176	331
8T-4178	352
8T-4179	117
8T-4181	652
	655
8T-4182	88
	358
	647
	685
	698
	700
8T-4183	320
	326
	331
	339
8T-4185	7
	31
	352
8T-4186	352
	419
	508
	509
	512
	513
	514
	515
	518
	519
	700
8T-4189	249
	538
	540
	542
	544
	546
	548
	550
	552
	554
	556
	558
	560
8T-4191	79
	85
	110
	112
	185
	217
	441
	700
	748
8T-4192	327
8T-4194	74
	316
8T-4195	65
	75
	83
	85
	113
	117
	149
	211
	222
	249
	320
	341
	358
	439
	442
	444
	446
	448
	450
	452
	454
	456
	458
	461
	463
	465
	467
	469
	471
	473
	475
	477
	479
	482
	486
	489
	493
	497
	501
	505
	643
	647
	657
	674
	685
	692
	698
	718
8T-4196	5
	29
	31
	75
	77
	85
	88
	93
	198
	263
	341
	644
	647
8T-4198	117
8T-4200	93
	183
8T-4205	104
	106
	153
	155
	156
	186
	190
	198
	202
	222
	629
	660
	671
	731
8T-4223	7
	93
	108
	117
	147
	153
	217
	276
	279
	320
	326
	327
	331
	339
	356
	362
	371
	398
	409
	415
	425
	437
	441
	593
	609
8T-4224	9
	15
	16
	31
	55
	58
	106
	129
	145
	183
	202
	217
	220
	249
	263
	320
	352
	356
	538
	540

► **PRIMARY REFERENCE**

PART NUMBER INDEX

Part	Page	Part	Page	Part	Page	Part	Page
	542		519	8T-7008	398		501
	544		526		409		505
	546		527	8T-7044	84		725
	548		529	8T-7547	356	8T-9056	352
	550		532	8T-7565	723	8T-9364	222
	552		533		725	8T-9378	613
	554		535		728	8T-9381	626
	556		633	8T-7566	707		721
	558		647	8T-7876	433		734
	560		681	8T-7950	27		736
	562		686	8T-7971	327	8T-9655	92
	564		694		432		119
	566		705	8T-8442	48		211
	568		718		276		216
	570		746		279	8T-9658	217
	642		748	8T-8569	186	8T-9757	110
	714		749	8T-8729	584		116
	738	8T-4908	5	8T-8730	178	8T-9884	186
8T-4226	77		31	8T-8737	127	8U-5746	358
	88		75		163	8V-3208	728
	222		263		193	8W-0220	402
	352	8T-4910	320		203	8W-0225	421
	647		432		763	8W-0302	402
8T-4244	147	8T-4956	415		766	8W-0456	454
	153	8T-4970	145	8T-8827	103		458
	217	8T-4971	226		116		465
	331	8T-4983	262	8T-8883	251		467
8T-4647	211	8T-4994	398		260		471
8T-4648	398		409	8T-8915	328		473
	409	8T-5005	692	8T-8917	425		479
8T-4750	433	8T-5030	267	8T-8919	609		492
8T-4835	217	8T-5041	611	8T-8987	536		496
8T-4895	74	8T-5082	421	8T-9006	644		500
8T-4896	123	8T-5361	317	8T-9041	93	8W-0663	616
	124		318		482	8W-0681	601
	125	8T-5401	685		486	8W-0684	601
	127	8T-5412	147		489	8W-0934	746
	131		153		493		749
	147	8T-5429	414		497	8W-0935	746
	150	8T-5436	231		501		749
	153	8T-5439	326		505	8W-1028	755
	201	8T-6381	5	8T-9043	442	8W-1029	757
	203	8T-6430	5		444	8W-1592	270
	206		326		446	8W-1749	586
	211	8T-6466	77		448		600
	217		117		450	8W-1752	600
	222		263		452	8W-1753	600
	246		356		454	8W-2226	585
	258		692		456	8W-2227	585
	263	8T-6468	272		458	8W-2290	1
	324	8T-6472	347		461		▶374
	349	8T-6473	347		463	8W-2308	256
	352	8T-6631	629		465	8W-2737	1
	358	8T-6685	611		467		▶375
	362	8T-6757	358		469	8W-2842	368
	374	8T-6765	231		471	8W-2913	▶371
	390	8T-6868	7		473		615
	394	8T-6869	93		475	8W-3902	331
	396		217		477	8W-4141	256
	398		544		479	8W-4142	256
	402		552		482	8W-4193	398
	406		558		486		409
	409	8T-6871	367		489	8W-4194	398
	422	8T-6876	92		493		409
	518	8T-6912	74		497	8W-4368	1

▶ **PRIMARY REFERENCE**

PART NUMBER INDEX

Part	Page
	▶256
8W-4652	311
8W-4653	311
8W-5111	251
8W-5227	393
8W-5279	251
	260
8W-5293	311
8W-5394	2
	▶270
8W-5430	▶251
	253
8W-5597	616
8W-5651	745
8W-6061	683
8W-6476	312
8W-6497	312
8W-6626	326
8W-6627	326
8W-7030	▶393
	595
8W-7915	358
8W-8124	347
8W-8317	256
8W-8412	326
8W-8496	358
8W-8527	221
	351
	412
	419
	692
8W-8528	116
	349
	358
	692
8W-8575	358
8W-8903	351
8W-8909	117
	222
8W-9566	305
	307
8W-9594	306
	308
8X-0674	639
	704
	705
	718
8X-1032	339
8X-1135	746
	749
8X-1160	296
	297
	298
	299
	300
	301
	306
8X-1805	108
8X-1853	123
	124
	681
8X-1904	644
8X-1907	644
8X-1908	644
8X-1911	644
8X-1913	644
8X-1914	644
8X-1921	644
8X-1943	▶369
	594
8X-1944	1
	▶370
8X-1947	1
	▶368
8X-1960	1
	▶591
8X-2160	644
8X-2161	644
8X-2226	333
	683
8X-2228	708
8X-2308	251
8X-2385	637
	▶708
	716
8X-2528	254
8X-2534	251
	260
8X-2556	763
8X-2646	745
8X-2650	351
	▶745
8X-2663	763
8X-2680	351
8X-2795	636
	637
	639
	▶697
	718
8X-2893	644
8X-2913	331
	333
	683
8X-2925	632
	▶666
8X-3261	88
8X-3434	311
8X-3435	312
8X-3615	609
8X-3616	609
8X-3663	617
8X-3749	425
8X-3789	645
8X-3806	652
	655
8X-3938	652
	655
8X-3951	644
8X-3965	644
8X-4243	652
8X-4244	655
8X-4245	652
	655
8X-4262	652
8X-4263	655
8X-4276	442
	444
	446
	448
	450
	452
	454
	456
	458
	461
	463
	467
	469
8X-4277	465
	471
	473
	475
	477
	479
	481
	485
	488
	492
	496
	500
	504
8X-4317	▶652
	657
8X-4318	▶655
	657
8X-4413	638
	▶657
	719
8X-4448	652
	655
8X-4641	254
8X-4741	368
	370
8X-4879	650
8X-5005	270
	▶274
8X-5102	660
8X-5106	609
8X-5107	609
8X-5108	594
	609
8X-5109	594
8X-5110	609
8X-5111	609
8X-5121	262
8X-5123	644
8X-5147	314
8X-5153	153
	190
8X-5154	153
	190
8X-5155	320
8X-5160	349
8X-5280	746
	749
8X-5414	685
8X-5489	222
	412
8X-5498	442
	444
	456
	477
	504
8X-5499	446
	448
	450
	452
	454
	456
	458
	461
	463
	467
	469
	471
	473
	475
	477
	479
	481
	485
	488
	492
	496
	500
8X-5536	628
	670
	741
8X-5538	628
	670
	741
8X-5540	628
	670
	741
8X-6070	▶396
	615
8X-6075	616
8X-6080	615
	▶616
8X-6131	639
	704
	705
8X-6296	153
	190
8X-6419	331
8X-6475	331
	333
8X-6999	685
8X-7317	263
8X-7603	351
8X-7845	685
	690
8X-7951	161
	591
8X-7956	161
	591
8X-8055	683
8X-8096	650
8X-8351	683
8X-8377	256
8X-8406	591
8X-8407	591
8X-8408	591
8X-8409	591
8X-8450	352
8X-8505	331
	333
8X-8790	690
8X-8916	262
8X-8940	636
	▶733

▶ **PRIMARY REFERENCE**

PART NUMBER INDEX

Part	Page
8X-9349	746
	749
8X-9405	746
	749
8X-9464	331
8X-9675	716
	▶746
8X-9680	▶748
	760
	761
8X-9884	680
8Y-3912	▶723
	734
8Y-3913	723
8Y-4005	▶725
	736
8Y-4030	727
8Y-4398	652
	655
8Y-4399	655
8Y-4400	652
8Y-4401	652
	655
8Y-4408	746
	749
8Y-4409	746
8Y-4512	697
8Y-4619	652
	655
8Y-4620	652
	655
8Y-4801	652
	655
8Y-5944	743
8Y-6012	743
8Y-6024	743
8Y-6041	675
8Y-6045	675
8Y-6046	675
8Y-6047	675
8Y-6060	675
8Y-6062	675
8Y-6063	675
8Y-6064	675
8Y-6066	675
8Y-6067	675
8Y-6068	675
8Y-6069	675
8Y-6277	734
	736
8Y-6364	441
	727
	729
	769
8Y-6388	628
	659
	660
	696
8Y-6851	733
	▶734
8Y-6852	729
	▶736
8Y-6859	675
8Y-6860	675
8Y-6981	751
	752
8Y-6982	751
	752
8Y-9603	185
9B-0143	251
	260
9B-7233	104
	153
	190
	226
	628
	670
	703
9B-7237	352
	398
	402
	406
	409
	442
	444
	446
	448
	450
	452
	454
	456
	458
	461
	463
	465
	469
	471
	475
	477
	482
	486
	489
	493
	505
	692
9C-1587	723
	725
9C-2177	624
9C-5324	723
9C-5344	198
	262
9C-5347	624
9C-5928	698
	700
9C-8895	162
9C-9467	263
9D-0953	394
	398
	406
	409
	421
9D-1491	390
9D-1541	221
9D-1589	639
	704
	705
	718
9D-3075	347
9D-3311	324
9D-3523	312
9D-3583	609
9D-3767	341
9D-3768	155
	700
9D-5196	314
9D-5516	616
9D-5567	314
9D-5659	314
9D-6164	314
9D-6425	595
	▶600
9D-6584	324
	425
9D-6589	324
9D-6663	358
9D-7047	347
9D-8121	745
9D-8508	158
9D-9257	324
9D-9797	311
9F-2247	256
9F-2637	771
9F-5644	189
	198
9F-6705	536
9G-0003	110
	113
	116
9G-0004	110
	113
	116
9G-1307	155
9G-1950	628
	670
9G-2758	198
9G-2991	251
9G-4336	103
	116
9G-4343	103
	116
	198
9G-4344	116
9G-5127	258
9G-5211	311
9G-7101	692
9G-7132	276
	279
9G-8140	351
9G-8909	110
	113
	117
9G-9154	116
	412
9H-1031	591
9H-6454	439
9J-0096	613
9J-0403	546
	548
	552
	562
	564
9J-0404	546
	548
	552
	562
	564
	566
9J-1979	439
9J-3047	439
9J-3657	597
	599
9J-3658	596
	598
9J-4963	430
9J-5498	347
9J-6586	620
9J-8783	351
	647
9K-7951	292
	293
	294
	295
	296
	297
	298
	299
	300
	301
	302
	305
	306
	309
	310
9L-1566	150
	152
	211
	216
9L-2137	104
9L-2139	104
9L-2140	104
9L-3560	356
9L-6331	211
9L-6770	104
	106
9L-9068	284
9L-9814	734
	736
9M-0402	359
9M-1853	442
	444
	446
	448
	450
	452
	454
	456
	458
	461
	463
	465
	467
	469
	471
	473

9

▶ **PRIMARY REFERENCE**

PART NUMBER INDEX

Part	Page
	475
	477
	479
	481
	485
	488
	492
	496
	500
	504
9M-1974	12
	13
	33
	38
	48
	53
	56
	67
	71
	82
	119
	208
	627
	661
	662
9M-2042	231
9M-2092	311
9M-2904	54
9M-4335	345
9M-4594	358
9M-4972	222
	415
	422
9M-5590	645
9M-5732	740
9M-7394	439
9M-8406	147
	217
	246
	349
	355
	356
	358
	629
	671
9M-8662	709
	711
9N-0869	32
	52
	93
	119
9N-1995	685
9N-4156	267
9N-4158	267
9N-4159	267
9N-4161	267
9N-4162	267
9N-4163	267
9N-4498	279
9N-4500	279
9N-6152	345
9P-0356	274
9P-2369	746
	749
9P-2553	226
9P-7121	101
9P-9150	248
	284
9R-1183	398
9R-2613	131
	196
9R-2620	206
	685
9R-2672	131
9R-8870	402
9S-1240	108
9S-1302	351
9S-1322	591
9S-1366	609
9S-2437	104
9S-2544	104
	723
	725
	728
9S-4167	92
9S-4180	508
	509
	510
	511
	512
	513
	514
	515
	516
	517
	518
	519
	520
	521
	522
	523
	524
	525
	526
	527
	529
	530
	531
	532
	533
	534
	535
9S-4181	232
9S-4182	37
	67
	259
	260
	345
9S-4183	37
	536
9S-4185	9
	46
	67
	433
9S-4189	536
9S-4190	272
9S-4191	9
	42
	60
	93
	165
	259
	262
	284
	572
9S-4968	709
	711
	713
9S-7706	351
9S-8001	427
	429
	536
9S-8002	26
	165
	279
	536
9S-8003	72
	427
	429
	536
9S-8004	26
	82
	95
	97
	231
	259
	276
	279
9S-8005	45
	53
	67
	72
	81
	231
	538
	540
	542
	544
	546
	548
	550
	552
	554
	556
	558
	560
	562
	564
	566
	568
	570
9S-8006	22
	26
	72
	92
	231
9S-8008	44
	230
	518
9S-8009	536
9S-9334	24
	26
9T-1633	433
9T-1636	433
9T-1652	433
9T-1699	433
9T-1710	433
9T-1857	572
9T-2186	572
9T-2197	433
9T-2388	386
	387
9T-2452	377
9T-2457	381
9T-2482	385
9T-3133	383
9T-3727	386
	387
9T-4211	384
	385
9T-4213	376
	377
9T-5241	662
9T-5934	536
9T-5935	536
9T-5957	414
	▶536
9T-6001	741
9T-7750	572
9T-7754	435
9T-7755	435
9T-7756	435
9T-7757	435
9T-7759	435
9T-7761	435
9T-8051	430
9T-8053	430
9T-8054	430
9T-8056	430
9T-8058	430
9T-8059	430
9T-8061	430
9T-8063	430
9T-8065	430
9T-8067	430
9T-8069	430
9T-8070	430
9T-8784	367
	▶377
9T-8958	383
9T-9040	388
9T-9071	430
9T-9072	430
9U-8067	276
	279
9U-8068	276
	279
9U-8069	276
	279
9U-8263	680
	681
9U-8620	276
	279
9U-8668	279
9U-8669	279
9U-8815	242
	244
9U-9282	276
	279
9U-9316	276

▶ **PRIMARY REFERENCE**

PART NUMBER INDEX

Part	Page	Part	Page	Part	Page	Part	Page
	279	9W-6465	231		660	9X-6340	772
9U-9595	279	9W-6467	240		681	9X-6395	574
9U-9995	242	9W-6582	5		683		577
9V-3043	624	9W-6584	5		686	9X-6624	723
9V-7437	723	9W-7038	231		690	9X-6772	246
	725	9W-7385	5		700	9X-7380	692
	728	9W-7388	5		709	9X-7381	629
9V-7440	624	9W-7410	279		711		692
	728	9W-7412	276	9X-2045	629	9X-7382	629
9V-7446	734		280		650		692
	736	9W-7469	611		652	9X-7383	692
9V-7447	734	9W-7470	611		655	9X-7384	276
	736	9W-9371	242		657	9X-7385	641
9V-7453	734		244		665		692
	736	9W-9905	237		671	9X-7680	572
9V-7454	734		240		686	9X-7712	24
	736		242		690		26
9V-7458	734		244		741	9X-7743	345
	736	9W-9920	5		746	9X-7849	142
9V-7943	624	9X-0261	92		749	9X-8122	666
9V-8788	728	9X-0262	165	9X-2046	667	9X-8139	142
9V-8789	728	9X-1046	203		686	9X-8250	352
9W-0852	160		226		697		422
	629		664		699	9X-8256	79
	670		665	9X-2099	15		131
9W-0898	279	9X-1386	692		58		145
9W-1441	125	9X-1813	145	9X-2125	324		198
	150		169		331		206
	153		173	9X-2126	629		210
	190		175		671		217
	203		177	9X-2133	75		222
	226		178	9X-2185	628		226
	668		188		670		320
9W-1442	123		192	9X-2205	101		352
	124		221	9X-2305	61		358
	147	9X-2040	629	9X-2480	127		622
	150		671		131		623
	152		741	9X-2488	628		652
	153	9X-2041	629		670		655
	157		650	9X-2493	57		657
	158		670		93		686
	190		686	9X-2546	652		690
	219		727		655		720
	226		729	9X-2615	611	9X-8257	31
	344		733	9X-3068	133		83
	664		740	9X-3401	168		263
	665		741		175	9X-8276	734
	700	9X-2042	125	9X-3463	135		736
	765		203		136	9X-8355	594
	766		226		137	9X-8399	388
9W-1454	231		645		138	9X-8403	165
9W-1768	594		650	9X-4244	135	9X-8600	101
9W-2029	242		652		136	9X-8606	351
	244		655		137	9X-8875	617
9W-3072	680		686		138	9X-8880	251
9W-3073	681		749	9X-4271	186		260
9W-3155	613	9X-2043	152	9X-4284	702	9X-8881	586
9W-4430	345		153	9X-4493	133	9X-8883	586
9W-4431	345		158	9X-4609	231	9X-8885	606
9W-4452	345		190	9X-4821	186		608
9W-4453	345		331	9X-4824	186	9X-8887	390
9W-5132	273		333	9X-4825	186	9X-8898	588
	►345		639	9X-6019	751	9X-8916	21
9W-5134	►269		650		752	9X-9365	149
	273		659	9X-6165	131	9X-9629	201

► **PRIMARY REFERENCE**

PART NUMBER INDEX

Part	Page
9X-9632	150
9X-9634	206
9X-9638	664
	665
9X-9639	157
	158
9X-9653	628
9X-9689	661
	662
9X-9896	131
9Y-9854	56
0	
000-7246	262
002-3448	15
002-6453	272
	358
004-5933	358
004-9040	433
005-7898	262
005-8639	387
006-6586	101
006-8663	433
009-0008	88
009-2069	435
009-4184	674
009-4185	674
014-0816	194
	203
	765
	766
030-0060	311
030-0061	311
030-7962	92
030-8535	251
	256
	260
	644
	705
	718
030-9612	104
031-0214	714
031-2666	644
031-4155	662
	738
033-4121	728
033-4843	723
	725
033-6027	51
	572
033-6036	433
	572
033-8248	58
	75
	92
	150
	201
	216
034-1994	644
034-3557	251
	260
034-7044	340
036-9823	186
037-4838	628
061-9455	15
067-2551	216
	692
067-3045	358
069-4269	72
085-8091	692
086-0507	439
089-7968	734
	736
090-8247	131
091-8792	421
091-9071	674
092-3200	649
095-0843	731
095-0878	675
095-0888	433
095-1207	276
	280
096-6166	123
	124
	203
	211
	226
	644
	681
	709
	711
	713
098-7467	674
099-0492	690
099-3649	16
	79
1	
100-3224	675
100-4336	402
	419
100-5179	675
100-6021	536
	►577
100-6551	37
101-0003	743
101-0509	508
	509
	510
	511
	512
	513
	514
	515
	516
	517
	518
	519
	520
	521
	522
	523
	524
	525
	526
	527
	529
	530
	531
	532
	533
	534
	535
101-0744	762
101-0852	121
101-1148	538
	554
	556
101-1149	540
101-1154	542
101-1155	546
101-1970	538
	540
	542
	544
	558
	560
101-1971	538
	540
	542
	544
	546
	548
	550
	552
	554
	556
	558
	560
	562
	564
	566
	568
	570
101-1973	538
	540
	542
	544
	546
	548
	550
	552
	554
	556
	558
	560
	562
	564
	566
	568
	570
101-1974	389
101-1975	389
101-1978	538
	540
	542
	546
	548
	550
	554
101-1980	544
	552
	558
101-1982	546
	548
	550
	552
	554
101-1983	538
	540
	542
	544
	546
	548
	550
	552
	554
	556
	558
	560
	562
	564
	566
	568
	570
101-1984	538
	540
	542
	544
	546
	548
	550
	552
	554
	556
	558
	560
	562
101-2457	442
	444
	446
	448
	450
	452
	454
	456
	458
	461
	463
	465
	467

► **PRIMARY REFERENCE**

PART NUMBER INDEX

Part	Page	Part	Page	Part	Page	Part	Page
	469		517		525		496
	471		520		527		500
	473		521		529	103-4771	705
	475		522		530		718
	477		523		533	103-4953	639
	479		524		534		704
	481		525		535		705
	485		530	102-8704	116		718
	488		531	102-8705	116	103-5304	131
	492		534	102-8801	228	103-5515	639
	496	101-9754	276	102-8802	102		704
	500		280		133		705
	504	102-2384	433		141		718
101-2458	450	102-2385	433		142	103-5516	639
	452	102-2386	433		143		704
	454	102-3645	746		145		705
	456		749		160		718
	458	102-3659	414		175	103-5678	153
	465	102-4139	393		177		190
	467		586		188	103-9125	311
	469	102-4577	550		195	103-9425	681
	471		568		211		685
	473	102-4578	560		221	104-2091	629
	475		570		282		660
	477	102-5881	237		283		709
	479		240		583		711
	481		244		584	104-3122	433
	485	102-6238	512		622		►572
	488		514		623	104-3124	433
	492		519		629	104-3947	283
	496		522		641	104-4286	414
	500		523		670	104-4523	611
	504		526		692	104-5958	751
101-2480	538		531		700		752
	540		532	102-8803	134	104-7419	442
	542	102-7412	538		139		444
	544		540		140		446
	546		542		167		448
	548		544		168		450
	550		546		221		452
	552		548	102-8804	127		454
	554		550		196		456
	556		552		206		458
	558		554		211		461
	560		556	102-8805	671		463
	562		558		702		465
	564		560		763		467
	566		562		766		469
	568		564	102-8806	163		471
	570		566		193		473
101-2867	714		568		203		475
101-3055	681		570	102-8808	178		477
	685	102-7423	389	102-8813	178		479
101-3128	119	102-8385	508	102-9372	639		481
101-4194	743		509		708		485
101-4195	743		510		718		488
101-9346	508		511	102-9861	229		492
	509		513	102-9862	157		496
	510		515		158		500
	511		516	102-9863	186		504
	512		517	103-1592	153	104-7429	442
	513		518	103-1597	467		444
	514		520		473		446
	515		521		479		448
	516		524		488		450

► **PRIMARY REFERENCE**

PART NUMBER INDEX

Part	Page	Part	Page	Part	Page	Part	Page
	452		▶509	107-7694	11	108-5952	652
	454	105-1797	208	107-7708	18	108-6523	276
	456	105-2080	393	107-8140	402		279
	458		586	107-8141	402	109-0146	751
	461	105-3196	390	107-8142	402		752
	463		▶430	107-8143	398	109-0361	221
	465	106-3658	546	107-8144	398	109-1144	573
	467		548		409	109-2804	685
	469		562	107-8147	402	109-3036	584
	471		564	107-8148	402	109-3204	433
	473		566	107-8149	398	109-3207	91
	475	106-3659	538		406	109-4582	254
	477		540		409	109-4583	254
	479		542	107-8150	398	109-6776	611
	481		546		402	110-2985	1
	485		548		406		▶402
	488		550		409	110-3003	402
	492		554	107-8374	616	110-3326	351
	496		556	107-8375	616	110-4213	293
	500		560	107-9579	31		294
	504		568	107-9641	652		295
104-7740	442		570		655		296
	444	106-3660	544	108-0358	153		302
	446		552		190		306
	448		558	108-0706	394		309
	450	106-4496	660	108-0714	421	110-4214	293
	452	106-4787	▶398	108-1104	▶615		294
	454		594	108-1610	398		295
	456	106-4884	1		402		296
	458		▶335		421		302
	461	106-6553	657	108-2187	538		306
	463	106-7149	186		540		309
	465	106-7390	575		542	110-5161	284
	467		▶578		544	110-5334	606
	469	107-0543	510		546		608
	471		516		548	110-5335	608
	473		521		550	110-5336	606
	475		524		552	110-6078	260
	477		529		554	110-6241	644
	479		534		556	110-6393	628
	481		535		558	110-7618	13
	485		▶554		560	110-7723	237
	488	107-0545	511		562	110-7885	765
	492		517		564		766
	496		520		566	110-7887	206
	500		525		568	111-0343	282
	504		527		570		583
104-8645	469		▶556	108-2949	113		584
	▶520	107-0547	522		116	111-1719	1
104-8646	471		526	108-3129	280		▶769
	475		531	108-3612	15	111-3945	324
	▶521		532	108-4086	675	111-4275	3
104-8647	479		▶558	108-4087	675		▶185
	▶534	107-1983	709	108-4103	676	111-4871	216
104-8648	467		711	108-4814	572	111-5754	578
	473		713	108-4816	572	111-8233	538
	▶530	107-3393	▶602	108-4916	▶389		540
104-8655	586	107-3395	▶594		544		542
104-8671	471	107-4865	746		552		546
	473		749		558		548
	479	107-4932	157	108-5157	577		550
	▶522		158	108-5751	242		554
104-8672	442	107-5014	685	108-5949	655		556
	▶508		690	108-5950	652		560
104-8673	444	107-6813	657	108-5951	655		562

PART NUMBER INDEX

Part	Page	Part	Page	Part	Page	Part	Page
	564		743	116-2327	624		294
	566	113-6069	36	116-2779	▶624		295
	568	113-7745	232		734		305
	570	113-7754	▶383		736	123-3688	221
111-8234	544		612	116-4556	3	123-3689	221
	552	113-7755	383		▶34	123-3692	221
	558	113-7756	383	116-4686	702	123-3695	221
111-9110	364	113-8218	698	116-5710	88	123-3698	339
111-9321	508		700		152	123-3699	339
	509	113-8457	320		647	123-3793	382
	510	113-9048	262	117-0472	467	123-4003	251
	511	113-9422	1		488		260
	516		▶588	117-2311	622	123-4354	763
	517	114-0025	▶405		623	123-4355	763
112-1813	597	114-0027	405	117-3437	71	123-4358	▶698
	599	114-0359	620	117-3643	4	123-4511	82
112-1814	596	114-5333	692		▶63	123-4586	698
	598	114-6635	578	117-3855	▶409		700
112-2240	394		579		595	123-4587	698
	▶426		580	117-4486	627		700
112-2580	446		581	117-4492	627	123-4618	628
	▶510	114-9190	652	117-4698	▶717		670
112-2581	448		655		718		741
	▶511	114-9281	211	117-9683	414	123-4701	628
112-3199	396	115-0541	425	117-9966	709		670
112-3200	396	115-0632	1		711		741
112-3837	419		▶260	118-0424	262	123-5847	147
112-4159	432	115-0633	260	118-1727	3		152
112-4834	349	115-0634	260		▶14	123-5857	700
112-5060	586	115-0804	▶450	118-2558	685	123-5858	700
112-5061	586	115-0808	365	118-3534	198	123-6661	577
112-5361	1		▶452	118-7880	616	123-6806	704
	▶367	115-0810	▶454	118-7881	616		705
112-5575	372	115-0811	▶456	118-9573	185	123-7707	591
	▶385	115-0812	365		649	123-8187	609
112-5853	593		▶458	119-0036	723	123-8408	741
112-6174	203	115-1007	531		725	124-0435	609
112-6175	226		532	119-3025	71	124-0507	743
112-6795	2		▶560	119-3662	198	124-1431	628
	▶442	115-1008	467	119-5026	675		670
112-6799	▶444		▶531	119-6194	734	124-1432	628
112-6804	▶446	115-1748	215		736		670
112-6818	366		709	119-6723	79	124-1839	566
	▶448		711	121-3307	74	124-1840	562
112-7462	372		713		77		564
112-7463	▶372	115-3070	158	121-9242	375	124-2528	183
	594		202		▶388	124-2883	508
	595	115-3072	331	121-9245	388		509
112-7486	▶586		333	122-2228	657		510
	594	115-4072	36	122-7045	709		511
112-9035	385	115-4170	42		711		515
112-9119	104	115-4219	36	122-8146	709		516
112-9164	683	115-4223	67		711		517
112-9555	666	115-6806	708	122-8154	660		524
112-9813	295	115-6807	685	122-8155	660		525
	296	115-8078	1	122-8795	685		▶562
	302		▶406	122-8936	3	124-2884	514
113-0981	421	115-9923	685		▶42		523
113-4254	2	116-0379	▶601	122-9764	66		▶564
	▶727		615	123-0872	633	124-2885	523
113-5801	675	116-1965	▶721	123-1076	388		▶566
113-5805	675		729	123-1201	644	124-3137	628
113-5806	675		733	123-1373	117		670
113-5807	675	116-2015	624	123-3420	292	124-3138	628
113-5808	▶675	116-2016	624		293		670

▶ **PRIMARY REFERENCE**

PART NUMBER INDEX

Part	Page	Part	Page	Part	Page	Part	Page
124-3240	335		▶738		127	132-1340	589
124-3325	442	126-0208	755		145	132-4928	382
	444		757		153	132-4929	368
	446	126-0209	755		155		▶382
	448		757		156	132-5789	198
	450	126-0210	755		157		210
	452		757		158		221
	456	126-0228	755		196	132-7551	692
	461		757		198	132-8487	216
	463	126-0961	▶759		201	132-9625	242
	▶514	126-1135	696		206	132-9628	244
124-3326	454	126-1136	696		211	132-9635	240
	458	126-1167	755		216	133-2198	230
	▶523		757		220	133-3260	221
124-3327	456	126-1539	755		221	133-4995	27
	▶515		757		226	133-6379	48
124-3328	450	126-1757	15		232	134-0165	320
	454	126-1767	168		246	134-0744	394
	▶524		641		349	134-0746	394
124-3329	452	126-2729	251		629	134-0747	398
	458		260		647		402
	465	126-2747	▶729		670		406
	▶525	126-4966	657		700		409
124-3385	562	126-5466	67	130-5667	▶594	134-1080	1
	564	126-6933	127	130-5770	573		▶311
	566		▶328	130-7603	365	134-1081	311
124-5826	594	127-1647	7		▶463	134-2540	221
124-5836	609		72	130-7754	461		709
124-7792	29	128-0037	652		▶516		711
124-8843	657		655	130-7755	463		713
124-8949	333	128-0316	3		▶517	134-4126	121
124-9006	628		▶56	130-9041	374	134-4483	25
	670	128-5450	296		▶386	134-6474	639
124-9007	628		297	130-9042	374	134-7258	772
	670		303		▶387	134-8221	531
124-9633	198	128-5451	300	130-9044	386		532
125-0289	609		301	130-9045	387		533
125-0290	1	128-9654	591	131-1488	198	134-8232	▶751
	▶609	129-1170	71	131-3736	374		754
125-0438	628	129-2381	256	131-3737	338	134-8233	▶752
125-0439	670	129-3173	88	131-3738	338		753
125-0442	670		351	131-3739	338	135-0426	▶139
125-2209	772		647	131-3740	311		220
125-4342	636	129-3178	131		▶338	135-0427	▶140
	637		622	131-3919	240		153
	▶749		623		244		155
125-4344	637		629	131-4242	675	135-0450	402
	▶704		657	131-4428	311	135-0451	398
125-4345	637		671	131-5167	675		406
	▶762		685	131-5171	203		409
125-4388	690	129-3180	611	131-5492	666	135-0452	398
125-4389	690	129-4645	639	131-6009	685		406
125-5321	745	129-4646	639	131-7191	369		409
125-5520	690	129-4935	628		▶381	135-0453	402
125-6483	690		670	131-7194	381	135-0611	763
125-7003	763	129-5049	328	131-7195	381		765
125-7004	763	129-7249	769	131-8350	536		766
125-8797	196	129-7632	572		▶573	135-1979	662
125-9584	690	130-0111	639	131-8777	579	135-2543	103
125-9853	626	130-0229	259		580		116
125-9854	▶626		262		581		198
	738	130-0464	▶461	132-0338	627	135-3894	331
125-9855	▶728	130-2792	222	132-1143	338	135-7123	364
	738	130-3595	311		374	135-9819	7
125-9856	727	130-5300	88	132-1144	338		14

▶ **PRIMARY REFERENCE**

PART NUMBER INDEX

Part	Page	Part	Page	Part	Page	Part	Page
135-9941	246	137-6645	180	138-7599	365	142-6174	294
136-0822	15		181		▶465		295
136-1543	707	137-6715	25	138-8402	49		304
136-1544	627	137-6717	49	138-8403	49	142-6182	304
136-1953	629	137-6718	25	138-9868	49	142-6183	297
	671	137-6719	510	138-9910	685		298
136-4183	36		511	139-1118	685		303
136-6330	421		516	139-1153	623		304
136-6331	421		517	139-2116	221	142-6186	301
136-7226	694		520	139-2119	246		302
136-8308	620		521	139-3593	685		303
137-1602	86		522	139-3595	659	142-6203	2
137-4515	442		523	139-4081	▶39		▶265
	444		524		48	142-6226	293
	446		525	139-4084	39		294
	448		526	139-4605	720		295
	450		527	139-4612	▶720		296
	452		529	139-6128	▶753		302
	454	137-6720	508	139-6129	▶754		▶305
	456		509	139-8472	546		306
	458		510		550	142-6229	297
	461		511		556		298
	463		512		560		299
	465		513		568		300
	467		514		570		301
	469		515		▶579		302
	471		516	139-8474	564		▶306
	473		517		▶580	142-6297	▶292
	475		518	139-9132	751	142-6300	286
	477		519		752		▶292
	479		520	139-9133	752	142-6301	286
	481		521	139-9134	751		▶293
	485		522		752	142-6303	▶304
	488		523	139-9135	751	142-6304	305
	492		524		752		▶306
	496		525	139-9136	751	142-6305	▶305
	500		526		752	142-6306	286
	504		527	139-9137	751		▶293
137-4516	442		529		752	142-6307	286
	444		530	139-9138	751		▶294
	446		531	139-9476	39	142-6309	286
	448		532	140-3607	303		▶294
	450		533	140-6188	25	142-6310	287
	452		534	140-9670	25		▶295
	454		535	141-6343	88	142-6315	287
	456	137-6783	685	141-6787	583		▶295
	458	137-8065	685		584	142-6316	287
	461	137-8104	530	141-9661	439		▶296
	463		533	141-9784	629	142-6353	287
	465		534		671		▶296
	467		535	142-0308	387	142-6354	288
	469		▶568	142-0350	282		▶297
	471	137-8106	530	142-0485	88	142-6356	288
	473		533		647		▶297
	475		534	142-1767	284	142-6357	289
	477		535	142-4940	628		▶298
	479		▶570		670	142-6360	287
	481	137-8107	570	142-5787	425		▶298
	485	137-9410	147	142-6170	292	142-6361	289
	492		153	142-6171	292		▶299
	496	138-3252	27		293	142-6363	288
	500	138-4054	657	142-6172	304		▶299
	504	138-7026	685		▶305	142-6364	289
137-4517	488	138-7065	622	142-6173	293		▶300
137-5503	720	138-7198	49		294	142-6371	288

▶ **PRIMARY REFERENCE**

PART NUMBER INDEX

Part	Page
	▶300
142-6372	288
	▶301
142-6374	289
	▶301
142-6375	289
	▶302
142-6448	▶286
142-6449	▶286
142-6454	▶286
142-6455	▶286
142-6457	▶286
142-6458	▶287
142-6463	▶287
142-6464	▶287
142-7289	27
143-1288	627
	634
	635
	731
143-4654	52
143-4792	316
	340
143-5373	232
143-9290	650
143-9392	119
144-0195	746
	748
	749
144-1636	192
144-2161	324
144-4107	685
144-6695	649
145-0162	18
145-0164	18
145-0168	18
145-0170	18
145-0326	743
145-1849	7
145-2901	29
145-3350	152
	700
145-5968	324
145-5969	324
145-7376	49
145-7385	49
145-7390	25
145-8039	232
146-0705	465
	471
	473
	475
	477
	479
	481
	485
	488
	492
	496
	500
	504
146-1842	311
	312
146-1843	311
	312
146-7453	57
146-8121	7
146-9739	324
147-0385	150
	201
	216
	221
147-3310	347
147-3400	311
147-5088	71
147-6143	589
147-6144	589
147-6603	582
147-6604	582
147-6605	582
147-8211	25
147-8214	25
147-8218	24
147-8220	25
148-1925	231
148-2404	305
	▶306
148-2405	▶305
148-2516	275
148-2592	386
148-2593	379
	382
148-2903	91
148-7027	412
148-7906	548
148-8307	92
148-8316	246
	414
	421
148-8318	396
	405
	481
	485
	488
	492
	496
	500
	504
148-8323	414
148-8327	262
	414
148-8328	394
148-8335	262
148-8336	92
	412
148-8339	262
148-8340	7
	421
148-8345	92
148-8347	7
	414
148-8351	421
148-8354	421
148-8357	262
148-8364	7
	92
	414
	421
148-8365	92
148-8367	412
148-8368	7
	412
	414
148-8369	7
	246
148-8370	394
148-8374	396
	418
	419
148-8377	412
	419
148-8378	58
	412
148-8381	414
148-8383	419
148-8395	45
	53
	67
	72
	231
	538
	540
	542
	544
	546
	548
	550
	552
	554
	556
	558
	560
	570
148-8407	284
148-8408	536
148-8409	518
148-8411	46
148-8444	394
	421
149-2065	647
149-2610	426
	▶583
149-2611	583
149-3409	708
149-5240	91
149-6371	692
149-7226	675
149-7738	414
150-1280	385
150-3037	694
150-3058	79
150-4868	421
150-5105	755
	757
150-5106	▶755
	759
150-5107	▶757
	759
150-5968	414
150-7158	694
151-0364	▶287
151-0365	▶287
151-0366	▶288
151-0368	▶288
151-0371	▶288
151-0372	▶288
151-0378	▶288
151-0379	▶289
151-0380	▶289
151-0382	▶289
151-0388	▶289
151-0389	▶289
151-4957	226
151-9849	394
152-3952	71
152-6824	127
152-6825	127
152-8346	425
	▶584
152-8352	584
153-0185	589
153-0187	589
153-1794	3
	▶81
153-1818	481
	485
	504
153-2147	152
	700
153-2446	351
153-3580	586
153-5700	112
153-5710	110
	113
153-6237	415
153-7383	591
153-8467	49
153-8470	49
153-9360	162
	586
	▶589
154-0896	40
154-2687	251
	260
154-2688	251
	▶254
154-2689	254
154-2692	254
154-3064	275
	▶282
154-6306	284
154-6307	284
154-6309	276
154-6579	386
	387
154-7172	276
154-7175	277
154-7176	277
154-7177	277
154-9023	67
154-9025	69
155-2260	169
	173
155-2270	191
	228
	670
155-2276	173
155-2283	254
155-3624	259
155-6258	7

▶ **PRIMARY REFERENCE**

PART NUMBER INDEX

Part	Page
	72
156-4000	414
156-4281	246
156-5545	627
156-5970	361
156-6312	716
	717
	718
157-0670	67
	69
158-6072	86
159-0286	15
159-0303	3
	▶44
159-0308	242
	244
159-0927	242
	244
159-3759	718
159-8049	110
	113
	116
159-8050	110
	113
	116
	117
159-8127	586
160-5131	67
160-6382	203
	331
	333
161-1703	170
161-1704	172
161-1705	171
161-3932	226
161-4423	340
161-5967	675
161-6713	242
	244
161-6963	86
161-7055	279
161-7062	88
	647
161-7063	647
161-9289	739
161-9916	694
162-0177	82
	95
	231
	276
	279
162-3148	54
162-6448	386
	387
162-7449	362
162-7450	362
	363
	▶364
162-7451	▶362
	363
162-8068	3
	▶45
162-8218	88
	647
162-8219	88
163-0872	▶641
	642
163-1146	743
163-1201	674
163-2478	25
163-4720	586
163-4721	586
163-6074	586
163-6508	713
164-0210	52
164-2108	276
	361
164-2465	639
	704
	705
	718
164-4180	232
164-4531	627
164-4883	707
164-5562	69
164-5567	246
	262
	284
164-5570	92
164-5586	421
164-5590	421
164-5605	396
	405
164-5608	481
	485
	488
	492
	496
	500
	504
164-5619	72
	92
	231
164-6867	95
164-7556	135
	136
	137
	138
164-7577	▶188
	230
164-8462	1
	▶425
164-8474	659
	696
165-2510	371
	▶384
165-4446	4
	▶38
165-4927	7
165-7014	414
165-9928	246
166-1776	15
166-1781	15
166-1880	593
166-1997	705
	718
166-1999	705
	718
166-2830	708
166-3336	363
	▶394
166-6781	743
166-9913	635
166-9914	634
167-0566	277
167-1801	433
167-1802	433
167-2186	381
	386
	387
167-2190	376
	377
	384
	385
167-2195	379
	382
	383
	388
167-2294	381
	386
	387
167-2300	376
	377
	384
	385
167-2304	379
	382
	383
	388
167-2307	425
167-2452	376
167-7504	203
167-7505	203
167-8121	28
167-9002	1
	▶650
167-9524	276
168-8243	152
	700
168-8248	203
168-8683	88
168-8758	362
168-9108	384
168-9110	384
169-0921	88
	351
	647
169-0922	88
	647
169-1025	731
169-1548	251
	260
169-1549	254
	260
169-2621	650
169-3145	674
169-3264	622
	623
169-3380	650
169-5414	206
	211
	216
	331
	333
169-5861	165
169-5862	79
	421
169-7380	743
169-7443	196
169-8938	203
170-0271	92
170-0493	364
170-0503	364
170-0967	694
170-1112	627
170-1114	627
170-1115	627
170-4820	▶661
	665
170-5334	▶662
	664
170-5335	▶160
	661
	662
170-5632	681
170-8590	714
171-1230	731
171-2122	650
171-2212	198
171-5349	175
	177
171-5672	▶133
	145
171-6165	683
171-6466	394
171-6467	421
171-6682	731
171-6729	92
171-7091	242
171-7095	244
171-7185	122
	▶622
171-7186	122
	▶623
172-0165	88
172-1239	685
172-2416	731
172-4001	627
172-4211	88
	351
	647
172-5378	636
	637
	▶683
	716
172-6298	84
172-6555	203
172-6556	152
	700
172-6581	731
172-6831	716
	▶763
172-6833	221
172-7105	650
172-7106	650
172-8641	203
172-9316	203
172-9367	28
172-9389	120

▶ **PRIMARY REFERENCE**

PART NUMBER INDEX

Part	Page
	▶121
173-1007	437
173-1008	437
173-1009	437
173-1028	▶627
	731
173-1885	158
173-2052	740
173-3064	153
	190
173-3084	730
173-3993	536
173-5360	▶668
	669
173-5549	49
173-5787	739
173-6756	▶717
	719
173-7035	739
173-7223	92
173-7813	290
	▶302
173-7830	302
173-9683	379
	382
	383
	388
173-9685	381
	386
	387
173-9779	376
	377
	384
174-2304	▶290
174-2339	▶418
	612
174-3705	246
	▶275
174-4140	685
174-4181	74
174-4492	628
	670
	741
174-4546	2
	▶741
174-4547	668
	▶670
174-4971	628
174-5907	131
	211
	355
	356
	412
	415
174-6051	670
	741
174-6353	628
	670
	741
174-6819	254
174-8131	226
	644
174-9529	5
174-9570	▶90
	99
174-9692	216
175-1504	▶730
	739
175-3644	414
175-3893	276
175-7895	381
	386
	387
175-7896	376
	377
	379
	382
	384
	385
175-7898	388
175-7900	383
176-2945	351
176-5507	628
	670
	741
176-5642	606
	608
176-5643	606
	608
177-0581	83
177-1713	351
177-1862	714
177-1863	731
177-2215	116
	221
177-4118	320
177-4119	320
177-4120	320
177-4493	▶120
	211
177-4937	730
177-7448	644
177-7858	628
	670
177-7891	632
	▶659
177-8781	▶685
	716
178-1685	586
178-1686	586
178-1688	586
178-3086	591
178-3695	262
178-4190	683
178-7907	740
178-8455	586
178-8603	669
	▶696
178-8894	657
178-9961	412
178-9962	412
179-1298	276
179-1549	147
179-1550	147
	153
179-2138	683
179-2139	683
179-2140	683
179-2176	685
179-2179	685
179-4814	674
179-9398	▶363
180-3833	702
180-3834	702
180-3836	702
180-4027	351
	647
180-4028	226
180-4643	122
	▶123
180-4656	716
	717
	718
180-7033	226
180-7147	351
	647
180-7344	41
180-9324	▶228
	248
180-9327	276
180-9340	169
180-9933	246
183-1425	644
183-2136	206
183-2151	206
183-3399	58
	96
183-3406	93
	165
183-4365	49
183-6774	276
183-6775	276
183-6845	3
	▶84
183-6854	84
183-6856	84
183-7263	165
	279
	536
184-1130	▶276
	284
184-2298	731
184-2299	731
184-2420	69
184-2509	69
184-9843	376
	377
	384
	385
185-0008	349
	▶361
185-1122	351
185-2197	206
185-2274	650
185-2287	650
185-2638	106
185-2639	106
185-2644	106
185-2645	106
185-2647	106
185-2648	106
185-2650	106
185-2651	106
185-2653	106
185-2654	106
185-2655	106
185-2658	106
185-3630	773
185-6596	381
185-7025	377
	384
186-1526	276
	279
	▶283
186-3223	198
186-3735	102
	127
	133
	134
	139
	140
	141
	142
	143
	145
	167
	177
	188
	193
	195
	196
	203
	206
	211
	221
	282
	283
	583
	692
	700
	702
	763
	766
186-3736	191
187-0491	650
187-0953	613
187-1008	221
187-2034	104
187-6279	3
	▶58
187-6294	58
187-7738	162
188-3862	152
	700
188-9390	364
188-9644	216
189-0108	198
189-0189	282
189-1707	692
189-5804	772
189-8772	84
	262
189-8777	61
190-1668	771
190-1669	771
190-1684	231
190-1688	2
	▶272
190-1690	272
190-1691	272

▶ **PRIMARY REFERENCE**

PART NUMBER INDEX

Part	Page
190-3043	647
190-3850	364
190-5386	613
190-8970	99
190-8977	92
	▶99
191-0027	628
	671
	741
191-0461	4
	▶96
191-0522	51
191-0523	▶51
	96
191-1782	92
191-1783	92
191-3645	356
191-5236	633
191-5293	324
191-5973	256
191-9256	231
192-1298	93
192-7238	415
192-7357	5
193-2550	▶175
	221
193-7416	155
194-4046	113
	116
194-5131	55
194-5226	173
194-5227	173
194-6722	▶169
	198
195-0321	43
195-7218	616
	621
196-4150	709
	711
196-7268	206
196-9519	18
197-0416	82
197-2066	▶699
197-4977	231
197-5210	3
	▶37
197-7689	743
197-8393	165
	▶170
197-8394	165
	▶171
197-8419	58
197-8611	685
	690
197-8624	685
	690
197-8629	685
197-8630	685
197-8820	▶106
	109
197-9353	43
197-9371	43
197-9372	43
197-9386	43
198-2713	208
198-2714	3
	▶208
198-4768	256
198-4776	5
	75
	642
198-4777	5
	75
	85
	93
198-4778	316
	340
198-4780	425
198-4782	341
198-5438	351
198-5439	351
198-5440	351
198-7379	339
198-7380	339
198-7657	248
198-8588	331
	333
198-9811	616
198-9812	616
199-2677	652
	655
199-2712	652
	655
199-2739	652
199-2740	655
199-3368	▶141
	156
199-4317	9
199-7891	106
199-8436	106
	2
200-1173	700
200-3967	331
	333
200-4495	36
200-4497	▶61
	62
200-7929	256
200-8623	681
	685
201-0387	232
201-9774	53
202-1138	709
	711
202-6611	136
	138
202-6614	135
	137
202-7666	▶634
	730
202-7668	▶635
	730
202-8649	700
202-9824	772
203-0780	699
203-1107	762
203-1124	763
	765
	766
203-2389	343
203-2390	343
203-2391	343
203-2423	343
203-3337	351
203-3340	351
203-3341	351
203-3342	351
203-3768	84
203-3769	81
203-3940	176
	542
	544
203-5957	345
203-5958	345
203-7703	739
204-4376	628
	671
204-6488	644
204-8000	198
205-0626	106
205-1280	96
205-1320	36
205-1321	4
	▶36
205-4285	123
	124
	681
205-6388	730
205-7187	358
205-7299	358
205-8839	228
205-8847	228
206-1345	208
206-3599	88
	647
206-3600	88
206-4097	644
206-4202	104
206-4228	3
	▶67
206-4669	57
206-5122	481
	488
	492
	496
	500
	504
206-5123	481
	485
	488
	492
	496
	500
	504
206-5823	762
	763
	765
	766
206-6410	117
206-8784	186
206-9651	644
207-1517	185
	▶186
207-4922	647
207-4924	351
207-4927	88
207-6034	228
208-0423	694
208-4617	113
	116
208-6054	69
208-7782	123
	124
	681
209-4578	83
210-1747	165
	▶172
210-2262	714
210-2263	714
210-2266	714
210-2270	▶714
	731
210-3321	13
210-5590	4
	▶18
210-7722	84
210-9246	58
211-0617	▶773
211-4908	638
211-9274	5
211-9275	5
212-2270	4
	▶62
212-3652	4
	▶43
212-3706	96
212-4174	57
212-4288	11
212-4289	4
	▶11
212-4893	18
212-5081	78
212-6933	69
212-8144	773
212-8145	773
213-0064	92
213-3193	43
213-7315	709
	711
	713
213-9100	145
213-9842	228
214-1982	439
214-1983	2
	▶441
214-1984	▶439
	441
214-4863	▶167
	647
214-7567	174
214-7568	58
	93
	96
	97
	246
	259
	262

▶ **PRIMARY REFERENCE**

PART NUMBER INDEX

Part	Page	Part	Page	Part	Page	Part	Page
215-3005	▶343	222-7774	544	232-1732	666		▶60
	356		552	232-1754	48	237-9822	3
215-7066	69		558	232-2146	606		▶40
215-7067	69		▶581		608	238-0415	629
216-5586	22	223-0580	437	232-3717	4		671
217-2661	439	223-4296	130		▶48	238-0417	629
217-5213	24	223-5916	694	232-6114	699		671
217-7742	692	224-0554	772	233-0891	119	238-1029	▶230
217-7933	714	224-0807	79	233-7655	63		259
217-9060	67	224-3247	11	234-4323	▶135	238-2706	43
217-9946	42	224-3969	678		147	238-2720	43
218-2971	343	224-4536	▶173		149	238-4462	379
218-3339	240		174		150	239-0583	12
218-4406	256	224-5912	328		152	239-1134	183
219-0302	716	224-6638	43		153		▶195
219-0314	79	225-0312	773	234-4324	▶136	239-3902	125
219-2000	634	225-4150	772		153	239-5030	57
	635	225-4257	772	234-4325	▶137		93
219-3309	48	225-5222	7		150	239-6989	772
219-5844	▶24	226-0295	652		155	239-9893	▶427
	25		655	234-4326	▶138		518
219-5846	▶25	226-0342	652		155		527
	26		655	234-5013	92		529
219-5847	▶26	226-1240	328		▶179		533
	27		773	234-6666	283		535
219-5849	4	226-1274	773	234-7730	135	239-9894	▶429
	▶27	226-2870	439		136		519
220-1194	3	226-2871	439		137		526
	▶54	226-6621	231		138		532
220-1209	29	226-8202	381	234-7731	135	241-4194	183
220-3634	772		386		136	241-5645	15
220-4125	79		387		137	241-5889	427
220-8678	90	226-8696	60		138		429
221-3494	58	226-9622	276	235-2412	▶242	241-6185	249
	96	227-1200	24		273	241-8368	▶191
221-3676	544	227-5480	18	235-2413	▶244		198
	552	227-5904	97		273	241-8534	65
221-3678	558	227-5942	67	235-3937	▶142	242-3360	86
221-4482	4	228-3621	28		157	242-3864	53
	▶20	228-4766	29		158	242-7417	249
221-8045	773	228-5009	226	235-4765	147	242-9245	352
221-9361	9	228-8510	54	235-5527	49	243-3250	216
222-0345	▶722	229-5010	552	235-5528	48	243-5063	77
	730		558		▶49	243-6683	606
222-1185	49	229-5153	18	235-8200	3	243-6684	606
222-1186	49	229-5154	18		▶163	243-6685	▶606
222-3769	649	229-5155	18	235-9651	98	244-2584	504
222-4737	512	229-5156	18	236-0737	644	244-2585	481
	514	229-8841	3	236-1927	162		485
	518		▶13	236-2216	38		492
	519	229-8844	32	236-2356	216	244-2586	488
	520	229-9382	379	236-4413	▶71		500
	521		382		72	244-2587	496
	522		383	236-4420	71	244-2588	504
	526		388	236-4421	71	244-2589	481
	527	230-4011	192	236-4545	183		485
	529	230-4477	773	236-5197	714		492
	532	231-3539	377	236-6220	165	244-2590	488
	533		384		▶174		500
	535		385	236-6221	165	244-2591	496
222-5893	13	231-4486	666		▶176	244-2592	481
222-5915	67	231-4487	666	236-7724	256		485
222-5917	208	231-5251	328	236-8826	216		504
222-5946	3	232-0343	95	237-5176	67	244-2593	492
	▶52		▶100	237-8063	3		496

▶ **PRIMARY REFERENCE**

PART NUMBER INDEX

Part	Page
	500
244-2594	488
244-2596	481
	485
	504
244-2597	492
	496
	500
244-2598	488
244-3168	119
244-3712	259
	262
244-4486	16
244-4500	32
244-5880	216
245-3930	328
245-3933	328
245-4630	176
245-6375	78
245-6376	78
245-6796	16
245-7339	47
246-2641	101
	266
	316
	340
	667
246-2822	414
246-4561	414
246-4611	79
246-4615	78
246-6036	58
246-6561	127
246-6562	127
246-9345	3
	▶119
246-9353	163
247-1876	12
247-6449	127
	▶161
247-6457	215
247-8602	83
247-8629	242
	244
247-9711	242
	244
247-9730	78
248-1377	272
248-2886	244
248-5245	772
248-6772	629
	671
249-1054	414
249-3251	427
	429
249-8575	773
250-0543	504
	▶518
250-0544	481
	485
	504
	▶519
250-0548	492
	496
	500
	▶526
250-0550	485
	▶527
250-0565	488
	▶532
250-0567	488
	500
	▶533
250-0613	608
250-0614	608
250-0615	▶608
250-0841	▶86
	87
250-2984	79
250-4628	707
250-8309	3
	▶28
251-0982	643
251-2382	162
251-2383	216
251-3227	75
252-0098	309
252-0100	310
252-0102	▶307
	309
252-0104	▶308
	310
252-0106	304
	▶309
252-0108	302
	303
	▶309
252-0111	304
	▶310
252-0112	303
	▶310
252-0678	290
	▶302
252-0679	▶290
252-0707	290
	▶303
252-0708	▶290
252-0726	290
	▶303
252-0727	▶290
252-0730	290
	▶303
252-0731	▶290
252-0752	291
	▶303
252-0753	▶291
252-2156	772
252-2157	772
252-5709	127
	▶215
252-7947	291
	▶304
252-7948	▶291
253-0861	770
253-2697	▶126
	127
253-4006	1
	▶108
253-4019	650
253-4347	349
254-0095	4
	▶97
254-5960	127
	▶162
254-6136	772
254-6802	83
254-7947	291
	▶304
254-7948	291
	▶304
254-7963	▶291
254-7964	▶291
255-5284	119
255-6261	629
256-5308	74
256-6453	179
256-6803	130
256-6804	130
257-3227	692
257-8471	649
257-9363	130
258-0733	183
258-2403	4
	▶87
258-7286	681
258-8723	3
	▶32
260-6501	437
260-6502	398
	409
	▶437
260-7647	216
	▶229
260-8630	58
260-8631	58
260-9133	356
260-9171	93
261-3816	42
261-5694	707
261-8553	390
261-9287	86
262-1421	▶126
	130
262-7291	481
	492
	▶529
263-1786	29
263-3774	▶21
	22
263-3982	103
	▶109
263-6435	496
	▶535
263-6914	69
263-8218	91
263-8948	130
263-9088	130
	▶164
263-9657	554
264-3762	▶78
	79
264-4297	180
	181
265-5007	69
265-9125	256
266-1467	88
	▶168
266-1598	429
266-1599	427
	429
266-1600	427
266-4360	250
266-6026	642
266-6793	262
266-7650	69
266-7651	69
266-8568	66
267-3506	611
267-4743	63
267-5212	9
268-1530	92
268-1531	92
268-1839	4
	▶98
269-8788	58
269-9322	161
270-5320	90
271-2417	16
271-8090	9
272-0388	16
272-1956	84
272-3089	88
	647
272-9800	142
274-1704	341
274-5909	692
274-6719	92
274-7395	165
	▶180
274-7396	165
	▶181
274-7940	▶1
274-8068	703
275-0572	320
275-0595	3
	▶15
275-1253	92
	▶192
275-3634	183
275-6535	2
	▶273
275-7741	▶193
	194
	765
	766
275-7764	▶194
	768
275-8387	3
	▶35
275-9638	427
	429
276-3674	55
276-3681	3
	▶55
276-7462	31
277-1873	221
277-4421	13
277-4837	75
277-6430	231
277-6432	231

▶ **PRIMARY REFERENCE**

PART NUMBER INDEX

Part	Page
277-6433	▶231
	273
278-0642	232
280-1480	770
280-2748	43
280-4072	▶603
281-0547	773
281-3160	▶279
	284
281-3163	248
	▶284
281-3165	▶248
	273
281-5641	1
	▶249
282-0506	▶604
282-0508	▶605
282-2332	324
282-2469	1
	▶331
282-2472	1
	▶88
282-2473	1
	▶647
282-2475	1
	▶644
282-2496	1
	▶324
282-4350	256
283-0644	324
283-1099	250
283-1578	593
283-3499	1
	▶351
283-7190	▶317
284-0815	427
	429
284-0824	1
	▶65
284-3045	427
	429
284-3757	▶143
284-5343	2
	▶211
284-5346	2
	▶206
284-5347	2
	▶226
284-5348	2
	▶220
284-5352	▶201
	363
284-5353	144
	▶153
284-5354	144
	▶147
284-5355	144
	▶155
284-5356	▶202
284-5357	▶157
284-5358	▶110
284-5359	▶112
284-5362	144
	▶149
284-5363	144
284-5376	144
	▶150
284-5377	▶152
284-5378	1
	▶318
284-5379	318
284-5394	▶145
284-5397	715
	▶718
284-5398	▶639
284-5400	▶715
284-5771	1
	▶349
284-7774	79
285-3361	▶203
	637
	716
285-3585	709
285-4154	▶363
285-4183	▶612
285-4189	2
	▶772
285-6570	262
285-9066	29
286-4328	▶122
286-4329	▶122
286-4330	▶124
	679
286-4331	▶125
286-4415	▶664
286-4416	▶665
286-4430	▶158
286-4798	▶700
286-4822	760
	▶765
286-4823	761
	▶766
286-4825	▶768
286-7853	636
	▶709
287-1690	9
287-3259	703
287-3260	▶702
	709
	711
	713
288-1347	9
288-5508	216
288-5509	216
288-5736	703
288-5756	709
	711
288-5757	709
	711
289-7545	632
	▶633
289-7597	▶611
	612
289-9354	198
289-9355	198
289-9725	306
289-9726	308
290-0349	716
	▶719
290-1126	▶636
290-1127	636
	637
	▶638
290-1148	▶333
	639
	715
290-1505	307
290-1507	305
290-3979	202
290-5792	▶177
	232
291-1400	126
291-1401	126
291-2634	55
291-4051	642
291-5475	▶126
	229
291-6693	317
292-4772	358
292-6099	707
293-0648	1
	▶412
293-0730	91
293-2911	714
293-4153	▶703
293-4277	249
293-4285	262
293-4495	703
293-4500	643
293-5950	▶667
293-5951	667
293-5954	667
293-5959	667
293-6529	679
	▶680
293-7533	680
294-1136	31
294-2382	320
294-3542	127
	▶216
294-4619	320
294-4621	320
294-5042	634
	635
	731
294-8544	▶144
294-8545	▶144
294-8546	▶144
294-8547	▶144
294-8587	690
294-8588	637
	▶690
294-8620	100
294-8641	144
	▶190
294-9621	116
294-9622	116
295-1090	▶219
295-1138	110
	112
295-1139	116
295-1834	226
295-1835	226
295-2933	2
	▶339
295-3839	320
295-3849	219
295-4371	1
	▶674
295-4431	632
	▶643
295-6180	320
295-6224	320
295-7991	▶679
295-8089	316
295-8090	1
	▶316
295-8091	316
295-8278	▶229
296-1252	320
296-6764	770
296-6765	770
296-6770	770
297-1140	211
297-5355	3
	▶165
297-6867	3
	▶129
297-6979	425
297-8049	116
297-8448	▶127
297-8449	127
	▶314
298-2425	▶760
298-2426	▶761
298-3520	115
	▶340
298-3523	340
298-3529	340
298-5315	115
298-5592	▶113
	115
298-8895	1
	▶327
298-8898	327
299-2277	707
299-5543	2
	▶432
299-5544	1
	▶414
299-5545	432
299-7700	436
299-8249	327
299-8251	327
299-8294	▶266
299-8295	266
299-8296	266
299-8297	266
299-8298	266
299-8299	266
299-8300	266
299-8306	341
299-8307	2
	▶341
299-8311	64
	▶77
299-8318	341
299-9478	341

▶ **PRIMARY REFERENCE**

PART NUMBER INDEX

Part	Page
3	
300-1377	344
300-2688	436
300-5242	▶770
	772
300-6152	116
300-6203	412
300-6496	110
	112
300-7933	53
301-2322	415
301-3118	283
301-3170	356
301-4173	▶707
	731
301-4174	730
	▶731
301-4376	1
	▶421
301-4378	421
301-4379	421
301-4380	421
301-6395	351
301-6398	351
301-6664	113
	116
301-9593	327
302-1332	770
302-3908	352
	356
302-5210	131
302-5211	131
302-5212	131
302-5428	130
	▶131
302-5429	▶130
302-7139	365
	366
	▶419
302-7458	739
	▶743
302-8814	▶739
	740
303-5996	341
303-5998	341
303-5999	341
303-6003	▶66
	341
303-6008	249
303-6009	66
303-6010	66
303-6011	66
303-6012	66
303-6013	341
303-6014	341
303-6015	341
303-6017	341
303-6032	262
303-6034	643
303-6036	341
303-6037	66
303-6203	690
304-0607	97
304-5687	229
304-5794	145
304-5795	145
304-5880	149
304-6573	320
304-6958	709
	711
	713
304-7252	320
304-7415	320
304-7417	320
304-7418	320
304-7419	320
304-9957	▶115
305-0038	110
	112
305-8141	20
	▶22
307-1735	3
	▶16
307-1738	16
307-1958	390
307-1959	390
307-1960	390
307-1961	390
307-1962	390
307-6192	9
307-6200	9
307-6205	9
307-6209	9
307-6241	351
307-6242	351
307-6243	351
307-6260	240
307-7500	351
307-7501	351
307-7502	351
308-0291	221
308-5632	629
308-5633	▶628
	633
308-6403	221
308-9112	113
308-9113	113
308-9114	113
309-1876	279
309-1877	276
	279
309-1878	280
309-2995	276
	279
309-2996	276
	280
309-8773	772
310-1640	709
	711
310-3568	711
310-5881	1
	▶64
310-5882	64
	▶74
310-5883	74
310-5884	74
310-6437	1
	▶5
310-6459	1
	▶79
310-6469	1
	▶57
310-6472	2
	▶85
310-8005	412
311-0274	1
	▶69
311-0514	2
	▶436
311-0794	2
	▶221
311-0795	1
	▶116
311-0801	182
	▶210
311-0802	2
	▶198
311-0803	▶196
	632
311-0864	1
	▶83
311-1513	113
311-2737	▶344
311-2738	344
	▶355
311-2739	355
	▶356
311-2741	1
	▶320
311-2743	355
311-2749	2
	▶101
311-2751	▶632
311-2753	▶669
311-2766	2
	▶75
311-2770	1
	▶92
311-2771	182
	▶183
311-2772	632
	▶692
311-2773	632
	669
	▶694
311-2800	632
	▶642
311-3025	69
311-3026	69
311-3542	3
	▶41
311-4907	79
311-4908	79
311-4959	83
311-6573	116
311-7049	92
311-7210	35
311-8138	1
	▶319
311-8139	319
311-8756	92
311-9296	198
312-0254	3
	▶4
312-0255	1
	▶3
312-0377	103
312-0378	103
312-0379	116
312-0782	390
312-0970	▶103
312-3542	85
312-5109	101
312-8319	320
312-8434	83
312-8526	320
312-8528	320
312-8529	320
312-8530	320
313-2207	356
313-2208	356
313-2484	320
313-2656	1
	▶7
313-2762	7
313-3967	3
	▶95
313-4127	692
313-4131	692
313-4132	692
313-4181	351
313-4374	320
313-4384	3
	▶29
313-4537	5
313-4670	216
313-4694	4
313-5233	▶259
	262
313-5530	692
313-6096	79
313-6098	83
313-6100	7
313-6224	629
313-6546	694
313-6547	694
313-6976	246
313-6977	246
313-7755	196
313-9542	79
314-4018	641
314-5093	320
314-5094	320
314-6148	7
	▶9
314-7646	361
314-7803	126
314-7946	116
314-9368	358
314-9369	358
314-9370	2
	▶358
315-4118	1
	▶258
315-4150	7
315-5327	▶678
315-5329	▶467
315-5330	▶469
315-5331	▶471

▶ **PRIMARY REFERENCE**

PART NUMBER INDEX

Part	Page	Part	Page	Part	Page	Part	Page
315-5333	▶473	320-2748	599	331-1516	▶500		
315-5334	▶475	320-2749	597	331-1517	▶504		
315-5335	▶477	320-7431	594	331-3892	772		
315-5336	▶479		595	332-7657	198		
315-5378	1		▶596	333-0960	591		
	▶262	320-8203	211	333-1963	611		
315-5668	262	320-9924	594	333-8326	692		
315-6148	258		595	334-0575	221		
315-9792	262		▶597	334-0576	221		
316-1927	629	321-5967	259	334-0577	221		
	670	322-0245	3	334-0578	221		
316-4272	642		▶82	334-1429	196		
316-4351	92	322-0246	3	334-1431	196		
316-4404	29		▶33	334-5268	358		
316-5237	637	322-7341	221	334-5270	358		
	▶711	322-8548	▶740	334-5760	▶326		
	716	323-0327	216	334-6872	210		
316-5238	2	323-5592	216	334-7633	220		
	▶713	323-8936	3	334-9745	211		
316-5743	320		▶53	335-0806	198		
316-6682	5	323-8959	3	335-1875	▶366		
316-6686	5		▶46	335-1894	206		
316-6688	262	324-0150	▶598	335-1895	206		
316-6689	75	324-0151	1	335-2383	126		
316-6819	349		▶599	335-6210	632		
316-8363	▶246	324-3364	216		642		
	253	324-3366	216	335-8402	150		
316-8381	351	325-6423	538		201		
316-8469	▶253		540	335-8961	703		
317-1529	75		542	335-9387	711		
317-1533	92		544		713		
317-1534	341		550	336-0959	147		
317-1537	341		554		153		
317-1538	77		556	336-0960	147		
317-2757	85		560	336-0961	153		
317-2792	85		570	336-1559	▶593		
317-2835	125	326-1644	90	336-1561	593		
317-2836	125	326-3120	221	336-1963	593		
317-2837	125	326-3121	113	336-1964	593		
317-3164	116	327-0560	216	336-2259	158		
317-3165	116	327-0561	216	336-4099	152		
317-3166	116	328-2585	▶91	336-9456	216		
317-3168	116		98	337-3357	1		
317-3758	85	328-3496	69		▶250		
317-5601	77	329-3825	▶594	338-8423	226		
317-7250	320	329-3827	▶594	339-5313	▶681		
317-7375	349	329-3828	▶595	339-6124	681		
317-8063	57	329-3829	▶595				
317-8382	196	329-5707	772				
318-2063	116	330-3408	164				
318-2064	117	330-3409	126				
318-2076	3	330-3410	126				
	▶72	330-6877	616				
318-8124	414	331-1102	216				
318-9471	1	331-1499	▶365				
	▶31	331-1501	▶365				
318-9543	31	331-1503	▶365				
319-2228	591	331-1506	▶365				
319-6293	31	331-1507	▶366				
320-0341	▶637	331-1509	▶481				
320-0342	▶716	331-1510	366				
320-0924	341		▶485				
320-1340	▶182	331-1512	▶488				
320-2746	596	331-1514	▶492				
320-2747	598	331-1515	▶496				

▶ **PRIMARY REFERENCE**



© 2008 CATERPILLAR
ALL RIGHTS
RESERVED

CAT, CATERPILLAR, THEIR RESPECTIVE LOGOS, “CATERPILLAR YELLOW” AND THE POWER EDGE TRADE DRESS, AS WELL AS CORPORATE AND PRODUCT IDENTITY USED HEREIN, ARE TRADEMARKS OF CATERPILLAR AND MAY NOT BE USED WITHOUT PERMISSION.

PRINTED IN
U.S.A.