CATERPILLAR®

SEBP4976
July 2007

RUTHZIL TRATOR COMERCIAL DE PEÇAS LTDA 11 97083-6812 ROLANDO

Parts Manual

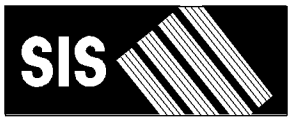

See "General Information" for New Parts Manual Features.

140M Motor Grader

B9D1-Up (Machine)
KHX238-Up (Engine)
CZM1-Up (Transmission)

Powered By C7 Engine
This Parts Manual is also Available in . PDF Format on Compact Disc (CD-ROM) - Caterpillar Form No. SERP4976

Product and Dealer Information

Note: For product identification plate locations, see the section “Product Identification Information” in the Operation and Maintenance Manual.

Delivery Date: _____

Product Information

Model: _____

Product Identification Number: _____

Engine Serial Number: _____

Transmission Serial Number: _____

Generator Serial Number: _____

Attachment Serial Numbers: _____

Attachment Information: _____

Customer Equipment Number: _____

Dealer Equipment Number: _____

Dealer Information

Name: _____ Branch: _____

Address: _____

_____

_____

	Dealer Contact	Phone Number	Hours
Sales:	_____	_____	_____
Parts:	_____	_____	_____
Service:	_____	_____	_____

Informations produit et concessionnaire

Nota: Voir l'emplacement de la plaque signalétique du produit au chapitre "Informations produit" du guide d'utilisation et d'entretien.

Date de livraison: _____

Informations produit

Modèle: _____

Numéro d'identification produit: _____

Numéro de série du moteur: _____

Numéro de série de la boîte de vitesses: _____

Numéro de série de l'alternateur: _____

Numéros de série d'équipement: _____

Informations sur l'équipement: _____

Numéro matériel client: _____

Numéro matériel concessionnaire: _____

Informations concessionnaire

Nom: _____ Agence: _____

Adresse: _____

_____

_____

	Contact concessionnaire	Numéro de téléphone	Heures
Ventes:			
Pièces:			
Service:			

Información del Producto/Distribuidor

Nota: Para saber la ubicación de las placas de identificación del producto, ver la sección “Información sobre identificación del producto” en el Manual de Operación y Mantenimiento.

Fecha de entrega: _____

Información del producto

Modelo: _____

Número de identificación del producto: _____

Número de serie del motor: _____

Número de serie de la transmisión: _____

Número de serie del generador: _____

Números de serie de los accesorios: _____

Información sobre los accesorios: _____

Número del equipo del cliente: _____

Número del equipo del distribuidor: _____

Información del distribuidor

Nombre: _____ Sucursal: _____

Dirección: _____

_____

_____

Comunicación con el distribuidor	Número de teléfono	Horas
Ventas: _____	_____	_____
Piezas: _____	_____	_____
Servicio: _____	_____	_____

Informações Sobre Produto e Revendedor

Nota: Para localizações da placa de identificação do produto, consulte a seção, “Informações Sobre Identificação do Produto” no Manual de Operação e Manutenção.

Data de Entrega: _____

Informações Sobre o Produto

Modelo: _____

Número de Identificação do Produto: _____

Número de Série do Motor: _____

Número de Série da Transmissão: _____

Número de Série do Gerador: _____

Números de Série de Acessórios: _____

Informações Sobre Acessórios: _____

Número do Equipamento do Cliente: _____

Número do Equipamento do Revendedor: _____

Informações Sobre o Revendedor

Nome: _____ Filial: _____

Endereço: _____

_____

_____

	Contato do Revendedor	Telefone	Horas
Vendas:	_____	_____	_____
Peças:	_____	_____	_____
Serviço:	_____	_____	_____

Produkt- und Händlerinformation

Anmerkung: Für die Lage der Produkt-Identnummer und Seriennummern siehe Abschnitt “Produkt-Identinformation” im Betriebs- und Wartungshandbuch.

Lieferdatum: _____

Produkt-Identinformation

Modell: _____

Produkt-Identnummer: _____

Seriennummer des Motors: _____

Seriennummer des Getriebes: _____

Seriennummer des Generators: _____

Seriennummern der Arbeitsgeräte: _____

Arbeitsgeräteinformation: _____

Kundennummer: _____

Händlernummer: _____

Händlerinformation

Name: _____ Niederlassung: _____

Adresse: _____

_____

_____

	Kontaktperson beim Händler	Telefon	Dienststunden
Verkauf:	_____	_____	_____
Ersatzteile:	_____	_____	_____
Service:	_____	_____	_____

MEMORANDA

TABLE OF CONTENTS

Name	Page
GENERAL INFORMATION	A28
REPAIR ALTERNATIVES	A47
SUPPLEMENTAL COOLANT ADDITIVES	A52
ENGLISH-PORTUGUESE PARTS NOMENCLATURE	A57
MAINTENANCE PARTS	A65
INDEX	A84
MACHINE ARRANGEMENT	1
COMMON AR	1
OPTION AR-EU	2
ROADING AR	2
SNOW AR-MOTOR GRADER	3
ENGINE ARRANGEMENT	4
ENGINE AR-COMPLETE	4
ENGINE AR-CORE	6
BASIC ENGINE	7
AIR COMPRESSOR AR	7
AIR COMPRESSOR GP	8
BELT TENSIONER GP	11
CAMSHAFT GP	12
COVER GP-CYLINDER BLOCK	13
COVER GP-FRONT HOUSING	14
COVER GP-VALVE MECHANISM	16
CRANKSHAFT GP	18
CYLINDER BLOCK GP	20
CYLINDER HEAD AS	24
CYLINDER HEAD GP	25
DAMPER & PULLEY GP	28
FASTENER GP-CYLINDER HEAD	29
FLYWHEEL GP	30
GEAR GP-FRONT	31
GEAR GP-REAR	32
HOUSING GP-FLYWHEEL	34
HOUSING GP-FRONT	38
LIFTER GP-VALVE	39
LIFTING GP-ENGINE	40
MOUNTING GP-ALTERNATOR	41
MOUNTING GP-ENGINE & TMSN	42
MOUNTING GP-FAN DRIVE	44
PAN GP-OIL	46
PISTON & ROD GP	47
PLUG GP-CYLINDER BLOCK	48
PLUG GP-ENGINE	49
PULLEY GP-IDLER	50
SEAL GP-CRANKSHAFT	51
SUPPORT GP-ENGINE	52
VALVE MECHANISM GP	53
LUBRICATION SYSTEM	56
ADAPTER GP-OIL LINE	56
BREATHER GP	57
FILTER GP-ENGINE OIL	58
FUMES DISPOSAL GP	60
GAUGE GP-OIL LEVEL (DIPSTICK)	61
LINES GP-ENGINE OIL	62
LINES GP-ENGINE OIL DRAIN	63
LINES GP-TURBOCHARGER OIL	64
MANIFOLD GP-ENGINE OIL	65
OIL CHANGE GP-HIGH SPEED	66
PUMP GP-ENGINE OIL	67
COOLING SYSTEM	69
COOLER GP-ENGINE OIL	69
COOLING AR	70
FAN & MOTOR GP	71
GUARD GP-FAN	73
LINES GP-WATER	74
PUMP GP-WATER	78
RADIATOR GP	80
TANK GP-COOLANT	82
AIR INLET AND EXHAUST SYSTEM	84
ADAPTER GP-TURBOCHARGER	84
AFTERCOOLER GP-AIR	85
AIR CLEANER GP	86
COVER GP-AIR INLET	88
ELBOW GP-AIR INLET	90
LINES GP-AIR	91
MANIFOLD GP-EXHAUST	95
MUFFLER & MOUNTING GP	96
PRECLEANER GP	98
TURBOCHARGER GP	99
FUEL SYSTEM	101
ADAPTER GP-FAST FILL FUEL	101
COVER GP-FUEL TANK	103
FASTENER GP-FUEL TANK	104
FILTER GP-FUEL	106
FILTER GP-WATER SEP & FUEL	108
INJECTOR GP-FUEL	109
LINES GP-FUEL	111
LINES GP-FUEL FILTER	113
LINES GP-INJECTOR HYD PUMP	115
MOUNTING GP-FUEL FILTER	116
PUMP & MTG GP-UNIT INJ HYD	117
PUMP GP-FUEL INJECTION	118
PUMP GP-FUEL PRM & PRIM FILTER	119
RECEIVER GP-FAST FILL FUEL	121
REGULATOR GP-FUEL PRESSURE	122
TANK GP-FUEL	123
WATER SEP & FUEL PRM PUMP GP	128

TABLE OF CONTENTS

Name	Page
ELECTRICAL AND STARTING SYSTEM	129
ALARM GP	129
ALTERNATOR GP-CHARGING	130
APPLICATION GP-COMMUNICATION	140
BATTERY & WIRING GP	141
CONTROL & MTG GP-ENGINE ELEK	150
CONTROL & MTG GP-IMPLEMENT	151
CONTROL GP-IMPLEMENT	152
CONTROL GP-POWER TRAIN	158
CONTROL GP-UNPROGRAMMED	160
CONVERTER GP-ELECTRICAL	162
ELECTRONICS GP-COMMUNICATION	164
ELECTRONICS GP-IMPLEMENT	165
ELECTRONICS GP-MONITOR	166
ELECTRONICS GP-POWER TRAIN	168
GRADE CONTROL AR	168
GRADE CONTROL GP	168
HEATER GP-JACKET WATER	169
INSTALLATION AR-COMMUNICATION	171
INSTALLATION GP-CAMERA	173
INSTALLATION GP-LIGHTING	174
INSTALLATION GP-SECURITY	175
INSTALLATION GP-WARNING BEACON	177
LAMP GP-DOME	178
LAMP GP-FLOOD	179
LAMP GP-HEAD	189
LAMP GP-HEAD & SIGNAL	190
LAMP GP-MARKER	192
LAMP GP-REGISTRATION PLATE	193
LAMP GP-SIGNAL	194
LAMP GP-WARNING BEACON	196
LIGHTING GP-BACKUP	197
LIGHTING GP-FLOOD	198
MAST GP	205
MOTOR GP-ELECTRIC	206
MOUNTING GP-GRADE CONTROL	207
MOUNTING GP-LAMP	208
MOUNTING GP-LIGHTING	209
MOUNTING GP-MAST	213
MOUNTING GP-RECEIVER	214
PANEL GP-CIRCUIT BREAKER	216
POWER SUPPLY GP	220
RADIO GP-COMMUNICATION	221
RECEIVER AR-LASER	221
RECEIVER AR-SATELLITE	221
RECEIVER GP-LASER	222
RECEIVER GP-SATELLITE	222
SENSOR GP-ENGINE	223
SENSOR GP-POSITION	225
SENSOR GP-PRESSURE	228
SENSOR GP-SONIC	238
SENSOR GP-SPEED	239
SENSOR GP-TEMPERATURE	240
STARTING AID GP-ETHER	243
STARTING MOTOR GP-ELECTRIC	244
SUPPORT GP-LIGHT	247
SWITCH GP-ALL WHEEL DRIVE	248
SWITCH GP-BYPASS	250
SWITCH GP-DISCONNECT	251
SWITCH GP-LIGHT	252
SWITCH GP-LIMIT	253
SWITCH GP-MAGNETIC	254
SWITCH GP-PRESSURE	258
SWITCH GP-ROADING	259
SWITCH GP-ROCKER	260
SWITCH GP-WIPER	261
VALVE GP-ETHER STARTING	262
WARNING GP-BACKUP	263
WIRING GP-AUXILIARY	264
WIRING GP-CAB	265
WIRING GP-CAMERA	270
WIRING GP-ELECTRONIC CONTROL	271
WIRING GP-ENGINE	273
WIRING GP-FRONT	275
WIRING GP-FRONT LIGHTING	279
WIRING GP-GRADE CONTROL	280
WIRING GP-HEATER	286
WIRING GP-LIGHTING	287
WIRING GP-MONITOR	291
WIRING GP-POWER RECEPTACLE	296
WIRING GP-REAR	299
WIRING GP-REAR LIGHTING	304
WIRING GP-SECONDARY STEERING	308
WIRING GP-SENSOR	310
WIRING GP-WIPER	315
POWER TRAIN	316
AUTOSHIFT AR	316
AXLE AR-FRONT	317
AXLE GP-FRONT	319
AXLE GP-REAR	323
BASE GP-OIL FILTER	325
CARRIER GP-FINAL DRIVE	326
CASE & PARTS GP-PLANETARY	327
CHAIN GP-DRIVE	331
CLUTCH GP-TRANSMISSION	332
CONTROL GP-DIFFERENTIAL LOCK	340
CONTROL GP-TRANSMISSION HYD	342
COOLER GP-TRANSMISSION OIL	345
COUPLING GP-TORSIONAL	346
COVER GP-SHIPPING	347
DIFFERENTIAL & BEVEL GEAR GP	349
DIFFERENTIAL GP	351
DRIVE GP-WHEEL	352
FILLER GP-POWER TRAIN OIL	353
FILTER & MTG GP-TRANSMISSION	354
FILTER GP-OIL	355
FINAL DRIVE GP	356

TABLE OF CONTENTS

Name	Page
GEAR GP-FRONT	360
LINES GP-ALL WHEEL DRIVE	362
LINES GP-POWER TAKE-OFF	371
LINES GP-TRANSMISSION OIL	372
MOTOR GP-PISTON	377
MOUNTING GP-WHEEL	382
MOUNTING GP-XMSN OIL COOLER	383
PUMP & MTG GP-ALL WHEEL DRIVE	384
PUMP & MTG GP-GEAR	385
PUMP GP-GEAR	386
PUMP GP-PISTON	388
SCREEN GP-MAGNETIC	390
SHAFT GP-DRIVE	391
SHAFT GP-INPUT	392
TANDEM & COVER GP	393
TRANSMISSION AR	394
UNIVERSAL JOINT GP	395
VALVE & MTG GP-SOLENOID	396
VALVE GP-MODULATING	397
VALVE GP-PUMP CONTROL	398
VALVE GP-RELIEF	399
WHEEL & TIRE AR	401
WHEEL & TIRE GP	416
WHEEL AR	436
WHEEL GP	439
FRAME AND BODY	447
AXLE AR-FRONT	447
AXLE GP-FRONT	449
COVER GP-CONTROL VALVE	455
COVER GP-PROTECTION	457
ENCLOSURE GP-ENGINE	458
FASTENER GP	463
FENDER & SUPPORT GP	465
FRAME GP-FRONT	471
FRAME GP-REAR	472
GUARD GP-BOTTOM	473
GUARD GP-BRAKE LINES	475
GUARD GP-DEBRIS	476
HITCH GP-ARTICULATING	477
HITCH GP-TOWING	479
HOOD GP	480
LINES GP-GREASE	481
LINK GP-STEERING	482
MOUNTING GP-AXLE	484
MOUNTING GP-VALVE	486
REFLECTOR GP	487
SERVICE CENTER AR	489
SHIELD GP-ENGINE COMPARTMENT	490
STEP GP	493
SUPPORT GP-RADIATOR	494
SUPPRESSION GP-SOUND	496
BRAKING SYSTEM	499
ACCUMULATOR GP-BRAKE	499
BRAKE GP-PARKING	502
BRAKE GP-SERVICE	504
CONTROL GP-SERVICE BRAKE	508
LINES GP-ACCUMULATOR	513
LINES GP-AIR TANK	515
LINES GP-SERVICE BRAKE	517
HYDRAULIC SYSTEM	522
ACCUMULATOR GP-BLADE CUSHION	522
BASE GP-OIL FILTER	523
CONTROL AR-HYDRAULIC	524
COOLER GP-HYDRAULIC OIL	532
CYLINDER & MTG GP-ARTICULATION	534
CYLINDER & MTG GP-BLADE LIFT	536
CYLINDER & MTG GP-BLADE TIP	537
CYLINDER & MTG GP-CENTERSHIFT	538
CYLINDER & MTG GP-SCARIFIER	539
CYLINDER & MTG GP-SIDESHIFT	540
CYLINDER & MTG GP-STEERING	541
CYLINDER & MTG GP-WHEEL LEAN	543
CYLINDER GP-ARTICULATION	544
CYLINDER GP-BLADE TIP	545
CYLINDER GP-CENTERSHIFT	546
CYLINDER GP-LIFT	547
CYLINDER GP-RIPPER	548
CYLINDER GP-SCARIFIER	549
CYLINDER GP-SIDESHIFT	550
CYLINDER GP-STEERING	551
CYLINDER GP-WHEEL LEAN	555
DRIVE GP-CIRCLE	557
FILTER & MTG GP-HYDRAULIC	560
FILTER GP-OIL	562
HYDRAULIC AR	564
LINES GP-CENTERSHIFT LOCK	565
LINES GP-HYDRAULIC	569
LINES GP-HYDRAULIC FAN	590
LINES GP-HYDRAULIC OIL COOLER	593
LINES GP-PUMP	595
LINES GP-RIPPER	605
LINES GP-SECONDARY STEERING	610
LINES GP-STEERING	612
LOCK GP-CENTERSHIFT	616
MANIFOLD GP-CONTROL	617
MANIFOLD GP-VALVE	625
MOTOR GP-GEROTOR	628
PUMP & MTG GP-ELECTRIC DRIVE	630
PUMP & MTG GP-PISTON	631
PUMP GP-ELECTRIC DRIVE	633
PUMP GP-PISTON	634
ROTATING GP-PUMP	638
STEERING AR-SECONDARY	640
SWASHPLATE GP	641
SWIVEL GP	642
TANK & MTG GP-HYDRAULIC	644

TABLE OF CONTENTS

Name	Page
TANK GP-HYDRAULIC	646
VALVE GP-BANK 3	647
VALVE GP-BANK 4	648
VALVE GP-BANK 5	649
VALVE GP-BANK 6	651
VALVE GP-BANK 7	654
VALVE GP-BANK 8	658
VALVE GP-CHECK	662
VALVE GP-CONTROL	663
VALVE GP-DIVERTER	689
VALVE GP-PRESSURE REDUCING	690
VALVE GP-PUMP CONTROL	691
VALVE GP-RELIEF	694
VALVE GP-SHUTTLE	696
VALVE GP-SOLENOID	697
VALVE GP-STEERING	701
IMPLEMENTS	703
CIRCLE GP	703
DRAWBAR GP	705
PLATE GP-PUSH	707
WORK TOOLS	708
BIT GP	708
BIT GP-END	711
BLADE GP	712
BLADE GP-BULLDOZER	715
BRACE GP	717
BRACKET GP-SCARIFIER	718
CYLINDER GP-HYDRAULIC	720
EDGE GP-CUTTING	721
EXTENSION GP-BLADE	724
LIFT GP-BLADE	729
LIFT GP-WORK TOOL	732
MOUNTING GP-RIPPER	735
MOUNTING GP-SNOW WING	737
RIPPER AR	739
RIPPER GP	740
SCARIFIER AR	742
SCARIFIER GP	743
TOOTH GP-RIPPER	753
TOOTH GP-SCARIFIER	755
OPERATOR STATION	756
ADJUSTER GP-SEAT	756
AIR COMPRESSOR GP-SEAT	757
AIR CONDITIONER & MOUNTING GP	759
AIR CONDITIONER AR	761
AIR CONDITIONER GP	762
ARMREST GP	765
BRACKET GP-MOUNTING	767
CAB AR	768
COIL GP-VALVE	769
COMPRESSOR GP-REFRIGERANT	772
CONDENSER & MTG GP-REFRIGERANT	774
CONTROL & MTG GP-JOYSTICK	775
CONTROL GP-AIR & TEMPERATURE	778
CONTROL GP-ELECTROHYDRAULIC	780
CONTROL GP-JOYSTICK	783
CONTROL GP-UNPRGMED MONITOR	785
COVER GP-CAB	786
CUSHION GP-ARM	787
DISPLAY AR-MONITOR	788
DISPLAY GP-MONITOR	789
DOOR GP-CAB	791
DUCT & FILTER GP-CAB AIR	797
FAN GP-CIRCULATING	798
HEATER & MTG GP-CAB	801
HEATER AR-CAB	802
HEATER GP-CAB	803
HOUSING GP-SEAT SUSPENSION	807
LINER GP-CAB	810
LINES GP-AIR CONDITIONER	812
LINES GP-HEATER	816
MIRROR GP-REAR VIEW	820
MONITOR AS	824
MOTOR GP-WINDOW WIPER	825
MOUNTING GP-ANTENNA	827
MOUNTING GP-CAB	828
MOUNTING GP-CONTROL VALVE	829
PAN AS-SEAT	831
PAN GP-BACKREST	832
PANEL GP-CAB	834
PANEL GP-CONTROL	842
PANEL GP-INSTRUMENT	846
PEDAL GP-BRAKE, TMSN & GOV	848
PRESSURIZER GP-CAB	849
RECLINER GP-SEAT	850
ROOF GP-CAB	851
SCREEN GP-SUN	852
SEAT & MOUNTING GP	853
SEAT GP	854
SEAT GP-SUSPENSION	857
SUPPORT GP-CONTROL	859
SUSPENSION GP-SEAT	863
TANK GP-WINDOW WASHER	867
WINDOW GP-CAB	868
WIPER & WASHER GP-WINDOW	877
WIPER GP-WINDOW	879
SERVICE EQUIPMENT AND SUPPLIES	885
BOX GP-TOOL	885
FILM GP	886
FILM GP-INTERNATIONAL	888
FILM GP-U.S.	889
PLATE & FILM GP	890
TANK GP-AIR	904

TABLE OF CONTENTS

Name	Page	Name	Page
PART NUMBER INDEX	B1		

TABLE DES MATIÈRES

Désignation	Page
GÉNÉRALITÉS	A31
OPTIONS DE RÉPARATION	A48
ADDITIFS POUR LIQUIDE DE REFROIDISSEMENT	A53
PIÈCES DE RECHANGE	A68
INDEX	A98
VERSION DE MACHINE	1
VERSION NORMALE	1
VERSION EN OPTION - EU	2
ÉQUIPEMENT POUR DÉPLACEMENT ROUTIER (VERSION)	2
VERSION NEIGE - NIVELEUSE	3
MOTEUR COMPLET	4
VERSION DE MOTEUR COMPLET	4
MOTEUR - PARTIE CENTRALE (VERSION)	6
MOTEUR STANDARD	7
VERSION DE COMPRESSEUR À AIR	7
COMPRESSEUR D'AIR (ASS)	8
TENDEUR DE COURROIE (ASS)	11
ARBRE A CAMES (ASS)	12
BLOC-CYLINDRES - COUVERCLE (ASS)	13
COUVERCLE DE CARTER AV (ASS)	14
CACHE-SOUPAPES (ASS)	16
VILEBREQUIN (ASS)	18
BLOC-CYLINDRES (ASS)	20
CULASSE (ENS)	24
CULASSE (ASS)	25
AMORTISSEUR DE VIBRATIONS ET POULIE (ASS)	28
BOULONNERIE DE LA CULASSE (ASS)	29
VOLANT MOTEUR (ASS)	30
PIGNONNERIE AV (ASS)	31
PIGNON AR (ASS)	32
CARTER DE VOLANT (ASS)	34
CARTER AV (ASS)	38
POUSSOIR DE SOUPAPE (ASS)	39
OEILLETONS DE LEVAGE MOTEUR (ASS)	40
MONTAGE D'ALTERNATEUR (ASS)	41
MONTAGE DE MOTEUR ET BOÎTE (ASS)	42
MONTAGE D'ENTRAÎNEMENT DE VENTILATEUR (ASS)	44
HUILE MOTEUR - CARTER (ASS)	46
PISTON ET BIELLE (ASS)	47
BOUCHON DE BLOC-CYLINDRES (ASS)	48
BOUCHON DE MOTEUR (ASS)	49
POULIE-ROUE AVANT (ASS)	50
JOINT DE VILEBREQUIN (ASS)	51
SUPPORT DE MOTEUR (ASS)	52
CULBUTERIE (ASS)	53
CIRCUIT DE GRAISSAGE	56
RACCORD DE CANALISATION D'HUILE (ASS)	56
RENIFLARD (ASS)	57
FILTRE À HUILE MOTEUR (ASS)	58
DISPOSITIF D'EVACUATION DES VAPEURS DE CARTER	60
JAUGE D'HUILE MOTEUR (BAIONNETTE) (ASS)	61
CANALISATIONS D'HUILE MOTEUR (ASS)	62
CANALISATIONS-VIDANGE D'HUILE DE MOTEUR (ASS)	63
CANALISATIONS D'HUILE DE TURBOCOMPRESSEUR (ASS)	64
COLLECTEUR (ASS)-HUILE MOTEUR	65
DISPOSITIF DE VIDANGE RAPIDE D'HUILE (ASS)	66
POMPE A HUILE MOTEUR (ASS)	67
CIRCUIT DE REFROIDISSEMENT	69
REFROIDISSEUR D'HUILE MOTEUR (ASS)	69
REFROIDISSEMENT (VERSION)	70
MOTEUR ET VENTILATEUR (ASS)	71
PROTECTION DE VENTILATEUR (ASS)	73
CANALISATIONS D'EAU (ASS)	74
POMPE A EAU (ASS)	78
RADIATEUR (ASS)	80
RÉSERVOIR DU LIQUIDE DE REFROIDISSEMENT (ASS)	82
CIRCUIT D'ADMISSION D'AIR ET D'ÉCHAPPEMENT	84
ADAPTATEUR DE TURBOCOMPRESSEUR (ASS)	84
REFROIDISSEUR D'ADMISSION D'AIR (ASS)	85
FILTRE A AIR (ASS)	86
COUVERCLE DE COLLECTEUR D'ADMISSION (ASS)	88
COUDE D'ADMISSION D'AIR (ASS)	90

* TRADUCTION NON DISPONIBLE AU MOMENT DE LA PUBLICATION

TABLE DES MATIÈRES

Désignation	Page
CANALISATIONS D'AIR (ASS)	91
COLLECTEUR D'ÉCHAPPEMENT (ASS)	95
SILENCIEUX ET MONTAGE (ASS)	96
PREFILTRE (ASS)	98
TURBOCOMPRESSEUR (ASS)	99
CIRCUIT DE CARBURANT	101
ADAPTATEUR DE REMPLIS. RAPIDE DE CARBURANT (ASS)	101
COUVERCLE-RÉSERVOIR DE CARBURANT (ASS)	103
RÉSERVOIR DE CARBURANT - BOULONNERIE (ASS)	104
FILTRE A CARBURANT (ASS)	106
FILTRE DE SÉPARATEUR D'EAU ET DE CARBURANT (ASS)	108
INJECTEUR DE CARBURANT (ASS)	109
CANALISATIONS DE CARBURANT (ASS)	111
CANALISATIONS DU FILTRE A CARBURANT (ASS)	113
CANALISATIONS - INJECTEURS-POMPES HYDRAULIQUES	115
MONTAGE DE FILTRE À CARBURANT (ASS)	116
POMPE D'INJECTEURS-POMPES HYDRAU. ET MONTAGE	117
POMPE D'INJECTION DE CARBURANT (ASS)	118
POMPE D'AMORÇAGE DE CARBURANT ET FILTRE PRINCIPAL	119
RÉCEPTEUR DE CARBURANT À REMPLISSAGE RAPIDE (ASS)	121
REGULATEUR DE PRESSION DE CARBURANT (ASS)	122
RÉSERVOIR DE CARBURANT (ASS)	123
POMPE DE SÉPARATEUR D'EAU ET D'AMORÇAGE DE CARBURANT (ASS)	128
CIRCUIT ÉLECTRIQUE ET DE DÉMARRAGE	129
AVERTISSEUR (ASS)	129
ALTERNATEUR DE CHARGE (ASS)	130
APPLICATION - COMMUNICATION (ASS)	140
BATTERIE ET CÂBLAGE	141
COMMANDE ET MONTAGE - MOTEUR	150
COMMANDE D'ÉQUIPEMENT	151
COMMANDE D'EQUIPEMENT (ASS)	152
COMMANDE DE TRANSMISSION (ASS)	158
COMMANDE NON PROGRAMMEE (ASS)	160
TRANSFORMATION ELECTRIQUE (ASS)	162
ÉLECTRONIQUE - COMMUNICATION (ASS)	164
COMMANDE ÉLECTRONIQUE D'ÉQUIPEMENT (ASS)	165
ÉLECTRONIQUE-MONITEUR (ASS)	166
ÉLECTRONIQUE DE TRANSMISSION (ASS)	168
VERSION DE COMMANDE DE PROFIL LONGITUDINAL	168
COMMANDE DE NIVELLEMENT (ASS)	168
EAU DES CHEMISES - RECHAUFFEUR (ASS)	169
VERSION DE MONTAGE-COMMUNICATION	171
POSE DE LA CAMÉRA (ASS)	173
MONTAGE D'ECLAIRAGE	174
MONTAGE-SÉCURITÉ (ASS)	175
MONTAGE - GYROPHARE (ASS)	177
PLAFONNIER (ASS)	178
LAMPE - PHARE (ASS)	179
PHARE AV (ASS)	189
LAMPE - PHARE ET CLIGNOTANT	190
REPÈRE DE LAMPE (ASS)	192
LAMPE-PLAQUE D'IMMATRICULATION (ASS)	193
LAMPE - CLIGNOTANT DE DIRECTION (ASS)	194
LAMPE - GYROPHARE (ASS)	196
ECLAIRAGE AR (ASS)	197
ÉCLAIRAGE - PROJECTEURS (ASS)	198
MÂT (ASS)	205
MOTEUR ELECTRIQUE (ASS)	206
MONTAGE DE COMMANDE DE PENTE (ASS)	207
MONTAGE-LAMPE (AS)	208
MONTAGE DE DISPOSITIF D'ÉCLAIRAGE (ASS)	209
MONTAGE DU MAT (ASS)	213
MONTAGE DE RÉCEPTEUR (ASS)	214
DISJONCTEUR DU PANNEAU DE COMMANDE (ASS)	216
ALIMENTATION (ASS)	220
RADIO -COMMUNICATION (ASS)	221
VERSION DE RÉCEPTEUR DE LASER	221
VERSION DE RÉCEPTEUR SATELLITE	221
RÉCEPTEUR LASER (ASS)	222
RÉCEPTEUR DE SATELLITE (ASS)	222
CAPTEUR - MOTEUR (ASS)	223

* TRADUCTION NON DISPONIBLE AU MOMENT DE LA PUBLICATION

TABLE DES MATIÈRES

Désignation	Page
SONDE - CIRCUIT DE CARBURANT	225
CAPTEUR DE PRESSION (ASS)	228
CAPTEUR SONIQUE (ASS)	238
CAPTEUR DE VITESSE (ASS)	239
CAPTEUR DE TEMPERATURE (ASS)	240
AUXILIAIRE DE DÉMARRAGE À L'ÉTHER	243
DÉMARREUR ÉLECTRIQUE (ASS)	244
SUPPORT DE LAMPE (ASS)	247
CONTACTEUR DE TRACTION INTÉGRALE (ASS)	248
INTERRUPTEUR - DÉRIVATION (ASS)	250
ROBINET DE BATTERIE (ASS)	251
INTERRUPTEUR D'ÉCLAIRAGE (ASS)	252
CONTACTEUR DE LIMITE (ASS)	253
CONTACTEUR MAGNETIQUE (ASS)	254
MANOCONTACT	258
INTERRUPTEUR - DÉPLACEMENT ROUTIER (ASS)	259
INTERRUPTEUR À BASCULE (ASS)	260
INTERRUPTEUR D'ESSUIE-GLACE (ASS)	261
SOUPAPE DE DÉMARRAGE À L'ÉTHER (ASS)	262
AVERTISSEUR DE RECUL (ASS)	263
CÂBLAGE AUXILIAIRE (ASS)	264
CABLAGE DE CABINE (ASS)	265
CÂBLAGE DE CAMÉRA (ASS)	270
COMMANDE ÉLECTRONIQUE - CABLAGE	271
CABLAGE DE MOTEUR (ASS)	273
CABLAGE AV (ASS)	275
*WIRING GP-FRONT LIGHTING	279
AVERTISSEMENT DE PROFIL LONGITUDINAL (ASS)	280
CABLAGE DU CHAUFFAGE DE CABINE (ASS)	286
CABLAGE D'ÉCLAIRAGE (ASS)	287
CABLAGE DU PANNEAU DE COMMANDE	291
CABLAGE DE PRISE DE FORCE	296
CABLAGE AR (ASS)	299
CABLAGE D'ECLAIRAGE ARRIERE (ASS)	304
CABLAGE DE DIRECTION AUXILIAIRE (ASS)	308
CABLAGE - CAPTEUR (ASS)	310
CABLAGE D'ESSUIE-GLACE	315
TRANSMISSION	316
CHANGEMENT DE VITESSES AUTOMATIQUE (VERSION)	316
ESSIEU AV (VERSION)	317
ESSIEU AV (ASS)	319
ESSIEU AR (ASS)	323
SUPPORT DE FILTRE À HUILE (ASS)	325
SUPPORT DE RÉDUCTEUR (ASS)	326
TRAINS PLANÉTAIRES - CARTER ET PIÈCES	327
ENTRAÎNEMENT DE CHAÎNE (ASS)	331
EMBRAYAGE DE BOÎTE DE VITESSES (ASS)	332
COMMANDE DE DIFFÉRENTIEL - VERROUILLAGE (ASS)	340
COMMANDE HYDRAULIQUE DE BOÎTE (ASS)	342
REFROIDISSEUR D'HUILE DE BOÎTE (ASS)	345
ACCOUPLEMENT DE TORSION (ASS)	346
COUVERCLES D'EXPEDITION (ASS)	347
COURONNE ET DIFFERENTIEL (ASS)	349
DIFFERENTIEL (ASS)	351
ENTRAÎNEMENT DE ROUE (ASS)	352
GOULOTTE DE REMPLISSAGE D'HUILE DE TRANSMISSION	353
FILTRE DE BOITE (TRANSMISSION) ET MONTAGE (ASS)	354
FILTRE A HUILE (ASS)	355
RÉDUCTEURS (ASS)	356
PIGNONNERIE AV (ASS)	360
CANALISATIONS DE TRACTION INTÉGRALE (ASS)	362
CANALISATIONS DE PRISE DE FORCE (ASS)	371
CANALISATIONS D'HUILE DE BOÎTE (ASS)	372
GROUPE DE MOTEUR A PISTONS	377
ROUE - GROUPE DE MONTAGE	382
SUPPORT DE REFROIDISSEUR D'HUILE DE TRANSMISSION (ASS)	383
POMPE ET MONTAGE DE TRACTION INTÉGRALE (ASS)	384
POMPE ET MONTAGE - PIGNON	385
POMPE A ENGRENAGES (ASS)	386
POMPE A PISTONS (ASS)	388
ÉCRAN MAGNÉTIQUE (ASS)	390
ARBRE D'ENTRAÎNEMENT (ASS)	391
ARBRE D'ENTRÉE (ASS)	392
TANDEM ET CARTER (ASS)	393
BOÎTE DE VITESSES (VERSION)	394
JOINT UNIVERSEL (ASS)	395
SOUPAPE ET MONTAGE - SOLÉNOÏDE	396
SOUPAPE DE MODULATION (ASS)	397
DISTRIBUTEUR DE POMPE (ASS)	398
CLAPET DE DECHARGE (ASS)	399

* TRADUCTION NON DISPONIBLE AU MOMENT DE LA PUBLICATION

TABLE DES MATIÈRES

Désignation	Page
ROUE ET PNEU (VERSION)	401
ROUE ET PNEU (ASS)	416
ROUE (VERSION)	436
JANTE (ASS)	439
CHÂSSIS ET BENNE	447
ESSIEU AV (VERSION)	447
ESSIEU AV (ASS)	449
COUVERCLE DE DISTRIBUTEUR (ASS)	455
COUVERCLE DE PROTECTION (ASS)	457
CARENAGE DE MOTEUR (ASS)	458
BOULONNERIE (ASS)	463
GARDE-BOUE ET SUPPORT (ASS)	465
CHÂSSIS AV (ASS)	471
BÂTI AR (ASS)	472
BLINDAGE INFÉRIEUR (ASS)	473
BLINDAGE DES CANALISATIONS DES FREINS	475
PROTECTION CONTRE LES DÉBRIS (ASS)	476
ATTELAGE D'ARTICULATION (ASS)	477
ATTELAGE-REMORQUAGE (ASS)	479
CAPOT (ASS)	480
CANALISATIONS DE GRAISSAGE (ASS)	481
ARTICULATION DE DIRECTION (ASS)	482
MONTAGE D'ESSIEU (ASS)	484
MONTAGE DE SOUPAPE (ASS)	486
RÉFLECTEUR (ASS)	487
VERSION DE CENTRE D'ENTRETIEN	489
ÉCRAN THERMIQUE DE COMPARTIMENT MOTEUR	490
MARCHEPIED (ASS)	493
SUPPORT DE RADIATEUR (ASS)	494
INSONORISATION (ASS)	496
CIRCUIT DE FREINAGE	499
ACCUMULATEUR - FREIN	499
FREIN DE STATIONNEMENT (ASS)	502
FREIN DE MANOEUVRE (ASS)	504
FREIN DE MANOEUVRE - COMMANDE (ASS)	508
CANALISATIONS D'ACCUMULATEUR (ASS)	513
CANALISATIONS DU RÉSERVOIR D'AIR (ASS)	515
CANALISATIONS DU FREIN DE MANOEUVRE (ASS)	517
CIRCUIT HYDRAULIQUE	522
ACCUMULATEUR D'AMORTISSEUR DE LAME	522
SUPPORT DE FILTRE À HUILE (ASS)	523
COMMANDE HYDRAULIQUE (VERSION)	524
REFROIDISSEUR D'HUILE HYDRAULIQUE (ASS)	532
VÉRIN D'ARTICULATION ET MONTAGE (ASS)	534
VÉRIN DE RELEVAGE DE LAME ET MONTAGE (ASS)	536
VÉRIN D'INCLINAISON DE LAME ET MONTAGE (ASS)	537
VÉRIN DE DÉPORT DE CERCLE ET MONTAGE (ASS)	538
VÉRIN DE SCARIFICATEUR ET MONTAGE (ASS)	539
VÉRIN DE DÉPORT DE LAME (ASS)	540
VERIN DE DIRECTION ET MONTAGE (ASS)	541
VÉRIN D'INCLINAISON DE ROUE ET MONTAGE (ASS)	543
VÉRIN D'ARTICULATION (ASS)	544
VÉRIN D'INCIDENCE DE LAME (ASS)	545
VÉRIN DE DÉPORT DE CERCLE (ASS)	546
VÉRIN DE LEVAGE (ASS)	547
VERIN DE RIPPER (ASS)	548
VÉRIN DE SCARIFICATEUR (ASS)	549
VÉRIN DE DÉPORT DE LAME (ASS)	550
VERIN DE DIRECTION (ASS)	551
VÉRIN D'INCLINAISON DE ROUE (ASS)	555
ENTRAÎNEMENT DE CERCLE (ASS)	557
FILTRE À HUILE HYDRAULIQUE ET MONTAGE (ASS)	560
FILTRE A HUILE (ASS)	562
VERSION HYDRAULIQUE	564
CANALISATIONS DE VERROUILLAGE DE DÉPORT DE CERCLE (ASS)	565
CANALISATIONS HYDRAULIQUES (ASS)	569
CANALISATIONS HYDRAULIQUES DE VENTILATEUR (ASS)	590
CANALISATIONS DE REFROIDISSEUR D'HUILE HYDR. (ASS)	593
CANALISATIONS DE POMPE (ASS)	595
CANALISATIONS DU RIPPER (ASS)	605
CANALISATION DE DIRECTION AUXILIAIRE	610
CANALISATIONS DE DIRECTION (ASS)	612
VERROUILLAGE DE DÉPORT DE CERCLE (ASS)	616
COLLECTEUR - COMMANDE (ASS)	617

* TRADUCTION NON DISPONIBLE AU MOMENT DE LA PUBLICATION

TABLE DES MATIÈRES

Désignation	Page
COLLECTEUR - SOUPAPE (ASS)	625
MOTEUR HYDRAULIQUE (ASS)	628
POMPE ET MONTAGE - ENTRAÎNEMENT ÉLECTRIQUE (ASS)	630
POMPE ET MONTAGE - PISTON (ASS)	631
POMPE - ENTRAÎNEMENT ÉLECTRIQUE (ASS)	633
POMPE A PISTONS (ASS)	634
GROUPE DE ROTATION DE POMPE	638
DIRECTION AUXILIAIRE (VERSION)	640
PLATEAU OSCILLANT (ASS)	641
GROUPE D'ORIENTATION	642
RÉSERVOIR HYDRAULIQUE ET MONTAGE (ASS)	644
RÉSERVOIR HYDRAULIQUE (ASS)	646
DISTRIBUTEUR TRIPLE ÉLÉMENT (ASS)	647
DISTRIBUTEUR 4 ÉLÉMENTS (ASS)	648
DISTRIBUTEUR 5 ÉLÉMENTS (ASS)	649
DISTRIBUTEUR 6 ÉLÉMENTS (ASS)	651
DISTRIBUTEUR 7 ÉLÉMENTS (ASS)	654
DISTRIBUTEUR 8 ÉLÉMENTS (ASS)	658
CLAPET DE RETENUE (ENS)	662
DISTRIBUTEUR (ASS)	663
SOUPAPE DE DERIVATION (ASS)	689
SOUPAPE RÉDUCTRICE DE PRESSION (ASS)	690
DISTRIBUTEUR DE POMPE (ASS)	691
CLAPET DE DECHARGE (ASS)	694
VANNE PILOTE (ASS)	696
SOUPAPE - SOLÉNOÏDE (ASS)	697
SOUPAPE DE DIRECTION (ASS)	701
ÉQUIPEMENTS	703
CERCLE (ASS)	703
BARRE D'ATTELAGE (ASS)	705
PLAQUE DE POUSSÉE (ASS)	707
OUTILS DE TRAVAIL	708
EMBOUT (ASS)	708
EMBOUT D'EXTRÉMITÉ (ASS)	711
LAME (ASS)	712
LAME - BULLDOZER (ASS)	715
TIRANT (ASS)	717
SUPPORT DE SCARIFICATEUR (ASS)	718
VÉRIN HYDRAULIQUE (ASS)	720
LAME DE COUPE (ASS)	721
RALLONGE DE LAME (ASS)	724
LEVAGE - LAME (ASS)	729
LEVAGE D'OUTIL DE TRAVAIL (ASS)	732
MONTAGE DE RIPPER (ASS)	735
MONTAGE D'AILERON CHASSE-NEIGE (ASS)	737
RIPPER (VERSION)	739
RIPPER (ASS)	740
SCARIFICATEUR (VERSION)	742
SCARIFICATEUR (ASS)	743
DENT DE RIPPER (ASS)	753
DENT DE SCARIFICATEUR (ASS)	755
POSTE DE CONDUITE	756
REGLAGE DE SIEGE (ASS)	756
SIÈGE - COMPRESSEUR D'AIR (ASS)	757
CLIMATISEUR ET MONTAGE (ASS)	759
CLIMATISEUR (VERSION)	761
CLIMATISEUR (ASS)	762
ACCOUDOIR (ASS)	765
SUPPORT - MONTAGE (ASS)	767
CABINE (VERSION)	768
BOBINE DE SOUOPAPE (ASS)	769
COMPRESSEUR DE REFRIGERANT (ASS)	772
CONDENSATEUR ET MONTAGE (RÉFRIGÉRANT)	774
COMMANDE ET MONTAGE - LEVIER (ASS)	775
COMMANDE - AIR ET TEMPERATURE (ASS)	778
COMMANDE ÉLECTROHYDRAULIQUE (ASS)	780
PALONNIER - GROUPE DE COMMANDE (ASS)	783
COMMANDE DE MONITEUR NON PROGRAMMÉE (ASS)	785
COUVERCLE - CABINE (ASS)	786
ACCOUDOIR (ASS)	787
VERSION D'AFFICHAGE DE MONITEUR	788
ÉCRAN DU MONITEUR (ASS)	789
PORTIÈRE DE CABINE (ASS)	791
CONDUIT ET FILTRE À AIR DE CABINE (ASS)	797
VENTILATEUR DE CABINE (ASS)	798
CHAUFFAGE ET MONTAGE - CABINE (ASS)	801
CHAUFFAGE DE CABINE (VERSION)	802
CHAUFFAGE DE CABINE (ASS)	803
SUSPENSION DE SIEGE - CARTER (ASS)	807
CABINE - REVÊTEMENT (ASS)	810
CANALISATIONS DE CLIMATISEUR (ASS)	812
CANALISATIONS DE CHAUFFAGE (ASS)	816
RÉTROVISEUR (ASS)	820
MONITEUR (ENS)	824

* TRADUCTION NON DISPONIBLE AU MOMENT DE LA PUBLICATION

TABLE DES MATIÈRES

Désignation	Page
MOTEUR D'ESSUIE-GLACE (ASS)	825
MONTAGE-ANTENNE (ASS)	827
MONTAGE DE CABINE (ASS)	828
DISTRIBUTEUR ET MONTAGE (ASS)	829
SIEGE - COUVERCLE INFERIEUR	831
COUVERCLE INFÉRIEUR-DOSSIER (ASS)	832
TABLEAU DE BORD (ASS)	834
PANNEAU DE COMMANDE (ASS)	842
TABLEAU DE BORD (ASS)	846
PÉDALE - FREIN, BOÎTE ET RÉGULATEUR (ASS)	848
SURPRESSEUR (ASS)	849
SIÈGE INCLINABLE (ASS)	850
TOIT - CABINE (ASS)	851
PARE-SOLEIL (ASS)	852
SIÈGE ET MONTAGE (ASS)	853
SIÈGE (ASS)	854
SIÈGE AVEC SUSPENSION (ASS)	857
SUPPORT - COMMANDE (ASS)	859
SIÈGE AVEC SUSPENSION (ASS)	863
RÉSERVOIR - LAVE-GLACE (ASS)	867
VITRE DE CABINE (ASS)	868
ESSUIE-GLACE ET LAVE-GLACE	877
ESSUIE-GLACE (ASS)	879
MATÉRIEL ET FOURNITURES D'ENTRETIEN	885
COFFRE A OUTILS (ASS)	885
PLAQUE SIGNALÉTIQUE (ASS)	886
AUTOCOLLANT (ASS)-INTERNATIONAL	888
AUTOCOLLANT (ASS)-ÉTATS-UNIS	889
PLAQUES SIGNALETIQUES ET AUTOCOLLANTS (ASS)	890
RÉSERVOIR PNEUMATIQUE (ASS)	904
INDEX DE NUMÉROS DE PIÈCES	B1

* TRADUCTION NON DISPONIBLE AU MOMENT DE LA PUBLICATION

CONTENIDO

Nombre	Página
INFORMACIÓN GENERAL	A35
ALTERNATIVAS DE REPARACIÓN	A49
ADITIVOS DE REFRIGERANTE SUPLEMENTARIOS	A54
PIEZAS DE MANTENIMIENTO	A72
INDICE	A113
CONFIGURACIÓN DE MÁQUINA	1
CONFIGURACIÓN COMÚN	1
CONFIGURACIÓN PARA LA UNIÓN EUROPEA	2
CONFIGURACIÓN PARA CARRETERA	2
MOTONIVELADORA PARA LA NIEVE (CONFIG)	3
CONFIGURACIÓN DE MOTOR	4
*ENGINE AR-COMPLETE	4
MOTOR - NÚCLEO (CONFIG)	6
MOTOR BÁSICO	7
*AIR COMPRESSOR AR	7
COMPRESOR DE AIRE (GR)	8
TENSOR DE CORREA (GR)	11
ÁRBOL DE LEVAS (GR)	12
TAPA DEL BLOQUE MOTOR (GR)	13
TAPA DE LA CAJA DELANTERA (GR)	14
TAPA DEL MECANISMO DE VÁLVULAS (GR)	16
CIGÜEÑAL (GR)	18
BLOQUE MOTOR (GR)	20
CULATA DE CILINDROS (CONJ)	24
CULATA DE CILINDROS (GR)	25
AMORTIGUADOR Y POLEA (GR)	28
CULATA DE CILINDROS - TORNILLERÍA DE LA (GR)	29
VOLANTE (GR)	30
ENGRANAJE DELANTERO (GR)	31
ENGRANAJE TRASERO (GR)	32
VOLANTE - CAJA DE (GR)	34
CAJA DELANTERA (GR)	38
VÁLVULA DE LEVANTAMIENTO (GR)	39
CÁNCAMOS DE LEVANTAMIENTO DEL MOTOR (GR)	40
MONTAJE DEL ALTERNADOR (GR)	41
MONTAJE DEL MOTOR Y LA TRANSMISIÓN (GR)	42
MONTAJE DEL MANDO DE VENTILADOR (GR)	44
CÁRTER - COLECTOR DEL (GR)	46
PISTÓN Y BIELA (GR)	47
TAPÓN DEL BLOQUE MOTOR (GR)	48
TAPÓN DEL MOTOR (GR)	49
POLEA DE RUEDA GUIA (GR)	50
SELLO DE CIGÜEÑAL (GR)	51
MOTOR - SOPORTE DEL (GR)	52
MECANISMO DE VÁLVULAS (GR)	53
SISTEMA DE LUBRICACIÓN	56
GRUPO ADAPTADOR-TUBERIA DE ACEITE	56
RESPIRADERO (GR)	57
FILTRO DE ACEITE DEL MOTOR (GR)	58
ESCAPE DE GASES (GR)	60
INDICADOR DEL NIVEL DE ACEITE (VARILLA) (GR)	61
TUBERÍAS DE ACEITE DEL MOTOR (GR)	62
TUBERIAS DE DRENAJE DE ACEITE DE MOTOR (GR)	63
TURBOCOMPRESOR - TUBERÍAS DE ACEITE DEL (GR)	64
MULTIPLE DE ACEITE DE MOTOR (GR)	65
CAMBIO RÁPIDO DE ACEITE (GR)	66
BOMBA DE ACEITE DEL MOTOR (GR)	67
SISTEMA DE ENFRIAMIENTO	69
ENFRIADOR DE ACEITE DEL MOTOR (GR)	69
CONFIGURACIÓN DE ENFRIAMIENTO	70
MOTOR Y VENTILADOR (GR)	71
PROTECTOR DEL VENTILADOR (GR)	73
TUBERÍAS DEL AGUA (GR)	74
BOMBA DE AGUA (GR)	78
RADIADOR (GR)	80
TANQUE DE REFRIGERANTE (GR)	82
SISTEMA DE ADMISIÓN Y ESCAPE DE AIRE	84
ADAPTADOR DEL TURBOCOMPRESOR (GR)	84
POSENFRIADOR DE AIRE (GR)	85
FILTRO DE AIRE (GR)	86
TAPA DE ADMISIÓN DE AIRE (GR)	88
CODO DE ADMISIÓN DE AIRE (GR)	90
AIRE - TUBERÍAS DE (GR)	91
MÚLTIPLE DE ESCAPE (GR)	95
SILENCIADOR Y MONTAJE GR	96
ANTEFILTRO (GR)	98
TURBOCOMPRESOR (GR)	99

* NO HAY TRADUCCION DISPONIBLE EN EL MOMENTO DE LA IMPRESION

CONTENIDO

Nombre	Página
SISTEMA DE COMBUSTIBLE	101
ADAPTADOR DE LLENADO RÁPIDO DE COMBUSTIBLE (GR)	101
TAPA DE TANQUE DE COMBUSTIBLE (GR)	103
TORNILLERÍA DEL TANQUE DE COMBUSTIBLE	104
FILTRO DE COMBUSTIBLE (GR)	106
FILTRO DE COMBUSTIBLE Y SEPARADOR DE AGUA (GR)	108
INYECTOR DE COMBUSTIBLE (GR)	109
TUBERÍAS DE COMBUSTIBLE (GR)	111
TUBERÍAS DEL FILTRO DE COMBUSTIBLE	113
TUBERÍAS DE BOMBA HIDRÁULICA DE INYECCIÓN (GR)	115
MONTAJE DE FILTRO DE COMBUSTIBLE (GR)	116
BOMBA HIDRÁULICA DEL INYECTOR UNITARIO Y MONTAJE	117
BOMBA DE INYECCIÓN DE COMBUSTIBLE (GR)	118
BOMBA DE CEBADO Y FILTRO PRIMARIO DE COMBUSTIBLE (GR)	119
*RECEIVER GP-FAST FILL FUEL	121
REGULADOR DE LA PRESION DE COMBUSTIBLE (GR)	122
COMBUSTIBLE - TANQUE DE (GR)	123
SEPARADOR DE AGUA Y BOMBA DE CEBADO DE COMBUSTIBLE (GR)	128
SISTEMA ELÉCTRICO Y DE ARRANQUE	129
ALARMA (GR)	129
CARGA - ALTERNADOR DE (GR)	130
*APPLICATION GP-COMMUNICATION	140
BATERÍA Y CABLES (GR)	141
CONTROL ELECTRÓNICO DEL MOTOR Y MONTAJE	150
CONTROL DE IMPLEMENTOS Y MONTAJE (GR)	151
CONTROL DE IMPLEMENTOS (GR)	152
CONTROL DE TREN DE FUERZA (GR)	158
CONTROL NO PROGRAMADO (GR)	160
CONVERTIDOR ELÉCTRICO (GR)	162
GRUPO ELECTRONICO-COMUNICACION	164
IMPLEMENTOS (GR ELECTRÓNICO)	165
ELECTRONICA DE MONITOR (GR)	166
TREN DE FUERZA-GRUPO ELECTRÓNICO	168
CONTROL DE GRADO, CONFIGURACIÓN	168
*GRADE CONTROL GP	168
AGUA DE LAS CAMISAS - CALENTADOR DEL (GR)	169
INSTALACION DE COMUNICATION (CONFIG)	171
*INSTALLATION GP-CAMERA	173
*INSTALLATION GP-LIGHTING	174
INSTALACION DE SEGURIDAD (GR)	175
BALIZA DE ADVERTENCIA (GR) - INSTALACIÓN	177
LÁMPARA DEL TECHO (GR)	178
REFLECTOR (GR)	179
LÁMPARA DE FARO DELANTERO (GR)	189
LÁMPARA DE LUZ DELANTERA Y DE SEÑAL (GR)	190
LAMPARA MARCADORA (GR)	192
LAMPARA DE PLACA DE REGISTRO (GR)	193
LUZ DE SEÑAL DE GIRO (GR)	194
LÁMPARA DE BALIZA DE ADVERTENCIA (GR)	196
LUCES DE RETROCESO (GR)	197
LUCES DE REFLECTOR (GR)	198
*MAST GP	205
MOTOR ELÉCTRICO (GR)	206
*MOUNTING GP-GRADE CONTROL	207
MONTAJE DE LAMPARA (GR)	208
GRUPO DE MONTAJE, LUCES	209
MASTIL - MONTAJE DEL (GR)	213
MONTAJE DEL RECEPTOR (GR)	214
PANEL DE DISYUNTORES (GR)	216
*POWER SUPPLY GP	220
*RADIO GP-COMMUNICATION	221
*RECEIVER AR-LASER	221
*RECEIVER AR-SATELLITE	221
*RECEIVER GP-LASER	222
*RECEIVER GP-SATELLITE	222
SENSOR DEL MOTOR (GR)	223
DETECTOR DE POSICIÓN (SISTEMA DE COMBUST.) (GR)	225
SENSOR DE PRESIÓN (GR)	228
DETECTOR SÓNICO (GR)	238
SENSOR DE VELOCIDAD (GR)	239
SENSOR DE TEMPERATURA (GR)	240
AUXILIAR DE ARRANQUE CON ÉTER (GR)	243
MOTOR DE ARRANQUE ELÉCTRICO (GR)	244
SOPORTE DE LAMPARA (GR)	247
GRUPO DE INTERRUPTOR-TRACCIÓN EN TODAS LAS RUEDAS	248
INTERRUPTOR DE DERIVACIÓN	250
DISYUNTOR (GR)	251

* NO HAY TRADUCCION DISPONIBLE EN EL MOMENTO DE LA IMPRESION

CONTENIDO

Nombre	Página
INTERRUPTOR DE LUZ (GR)	252
INTERRUPTOR LÍMITE (GR)	253
INTERRUPTOR MAGNÉTICO (GR)	254
INTERRUPTOR DE PRESIÓN (GR)	258
INTERRUPTOR DE DESPLAZAMIENTO POR CARRETERA (GR)	259
INTERRUPTOR DE VOLQUETE (GR)	260
INTERRUPTOR DEL LIMPIADOR (GR)	261
GRUPO DE VÁLVULA-ARRANQUE CON ÉTER	262
RETROCESO - ALARMA DE (GR)	263
CABLES AUXILIARES(GR)	264
CABLES DE LA CABINA (GR)	265
GRUPO DE CABLES DE CÁMARA	270
CABLES DEL CONTROL ELECTRÓNICO (GR)	271
CABLES DEL MOTOR (GR)	273
CABLES DELANTEROS (GR)	275
*WIRING GP-FRONT LIGHTING	279
CABLE GR-GRADO DE CONTROL	280
CABLES DE CALEFACCIÓN (GR)	286
CABLES DE LAS LUCES (GR)	287
CABLES DEL TABLERO MONITOR (GR)	291
CABLES DEL RECEPTÁCULO DE FUERZA (GR)	296
CABLES POSTERIORES (GR)	299
ALAMBRADO DE LUCES TRASERAS (GR)	304
CABLES DE LA DIRECCIÓN SECUNDARIA	308
CABLES DE SENSOR (GR)	310
CABLES DE LIMPIAPARABRISAS	315
TREN DE FUERZA	316
CAMBIO AUTOMÁTICO DE VELOCIDADES (CONFIG)	316
EJE DE DIRECCION (CONFIG)	317
EJE DELANTERO (GR)	319
EJE TRASERO (GR)	323
FILTRO DE ACEITE - BASE DEL (GR)	325
*CARRIER GP-FINAL DRIVE	326
CAJA Y PIEZAS DE LOS PLANETARIOS	327
CADENA DE IMPULSIÓN (GR)	331
EMBRAGUE DE LA TRANSMISIÓN (GR)	332
CONTROL DE TRABA DEL DIFERENCIAL (GR)	340
CONTROL HIDRÁULICO DE LA TRANSMISIÓN (GR)	342
ENFRIADOR DE ACEITE DE LA TRANSMISIÓN (GR)	345
ACOPLAMIENTO TORSIONAL (GR)	346
TAPAS PROTECTORAS DE EMBARQUE (GR)	347
DIFERENCIAL Y CORONA (GR)	349
DIFERENCIAL (GR)	351
MANDO DE LA RUEDA	352
TUBO DE LLENADO DE ACEITE DE LA TRANSMISIÓN (GR)	353
FILTRO DE LA TRANSMISIÓN Y MONTAJE (GR)	354
FILTRO DE ACEITE (GR)	355
MANDO FINAL (GR)	356
ENGRANAJE DELANTERO (GR)	360
GRUPO DE TUBERIAS, MANDO EN TODAS LAS RUEDAS	362
TUBERÍAS DE LA TOMA DE FUERZA (GR)	371
TUBERÍAS DE ACEITE DE LA TRANSMISIÓN (GR)	372
PISTONES DEL MOTOR (GR)	377
MONTAJE DE RUEDA (GR)	382
*MOUNTING GP-XMSN OIL COOLER	383
GRUPO DE BOMBA Y MONTAJE, MANDO DE TODAS LAS RUEDAS	384
BOMBA DE ENGRANJE Y MONTAJE (GR)	385
BOMBA DE ENGRANAJES (GR)	386
BOMBA DE PISTONES (GR)	388
REJILLA MAGNÉTICA (GR)	390
EJE DE MANDO (GR)	391
EJE DE ENTRADA (GR)	392
TÁNDEM Y CUBIERTA (GR)	393
TRANSMISION (CONFIG)	394
JUNTA UNIVERSAL (GR)	395
VALVULA DE SOLENOIDE Y MONTAJE (GR	396
VÁLVULA DE MODULACIÓN (GR)	397
VALVULA DE CONTROL DE LA BOMBA (GR)	398
VÁLVULA DE ALIVIO (GR)	399
RUEDA Y LLANTA (CONFIG)	401
RUEDA Y NEUMÁTICO (GR)	416
RUEDA (CONFIG)	436
RUEDA (GR)	439
BASTIDOR Y CAJA	447
EJE DE DIRECCION (CONFIG)	447
EJE DELANTERO (GR)	449
TAPA DE VÁLVULA DE CONTROL (GR)	455
CUBIERTA PROTECTORA (GR)	457
COMPARTIMIENTO DEL MOTOR (GR)	458
TORNILLERÍA (GR)	463

* NO HAY TRADUCCION DISPONIBLE EN EL MOMENTO DE LA IMPRESION

CONTENIDO

Nombre	Página
GUARDABARROS Y SOPORTE (GR)	465
BASTIDOR DELANTERO (GR)	471
BASTIDOR TRASERO (GR)	472
PROTECTOR INFERIOR (GR)	473
PROTECTOR DE LAS TUBERÍAS DE LOS FRENOS (GR)	475
*GUARD GP-DEBRIS	476
ENGANCHE ARTICULADO (GR)	477
ENGANCHE DE REMOLQUE (GR)	479
CAPÓ (GR)	480
TUBERÍAS DE ENGRASE (GR)	481
TIRANTE DE DIRECCIÓN (GR)	482
EJE - GRUPO DE MONTAJE	484
VÁLVULA - MONTAJE DE LA (GR)	486
REFLECTOR (GR)	487
*SERVICE CENTER AR	489
PROTECTOR TÉRMICO DEL COMPARTIMIENTO DEL MOTOR (GR)	490
ESTRIBO DEL OPERADOR (GR)	493
SOPORTE DEL RADIADOR (GR)	494
INSONORIZADOR (GR)	496
SISTEMA DE FRENOS	499
ACUMULADOR DEL FRENO (GR)	499
FRENO DE ESTACIONAMIENTO (GR)	502
FRENO DE SERVICIO (GR)	504
FRENO DE SERVICIO - CONTROL (GR)	508
TUBERÍAS DEL ACUMULADOR (GR)	513
TUBERÍAS DEL TANQUE DE AIRE (GR)	515
TUBERÍAS DEL FRENO DE SERVICIO (GR)	517
SISTEMA HIDRÁULICO	522
GRUPO DE ACUMULADOR DE AMORTIGUACIÓN DE LA HOJA	522
FILTRO DE ACEITE - BASE DEL (GR)	523
CONTROL HIDRÁULICO (CONFIG)	524
ENFRIADOR DEL ACEITE HIDRAULICO (GR)	532
CILINDRO DE ARTICULACIÓN Y MONTAJE (GR)	534
CILINDRO DE LEVANTAMIENTO DE HOJA Y MONTAJE (GR)	536
CILINDRO DE LA PUNTA DE LA HOJA Y MONTAJE (GR)	537
CILINDRO DE DESPLAZAMIENTO DEL CÍRCULO Y MONTAJE (GR)	538
CILINDRO DE ESCARIFICADOR Y MONTAJE (GR)	539
CILINDRO DE DESPLAZAMIENTO LATERAL Y MONTAJE (GR)	540
CILINDRO DE DIRECCIÓN Y MONTAJE (GR)	541
CILINDRO DE INCLINACIÓN DE RUEDA Y MONTAJE (GR)	543
ARTICULACIÓN DE CILINDRO (GR)	544
CILINDRO DE INCLINACIÓN DE LA HOJA (GR)	545
CILINDRO DE DESPLAZAMIENTO DEL CÍRCULO (GR)	546
CILINDRO DE LEVANTAMIENTO (GR)	547
CILINDRO DE DESGARRADOR (GR)	548
CILINDRO DE ESCARIFICADOR (GR)	549
CILINDRO DE DESPLAZAMIENTO LATERAL (GR)	550
CILINDRO DE DIRECCIÓN (GR)	551
CILINDRO DE INCLINACIÓN DE LAS RUEDAS (GR)	555
MANDO DEL CIRCULO (GR)	557
FILTRO DE ACEITE HIDRÁULICO Y MONTAJE (GR)	560
FILTRO DE ACEITE (GR)	562
HIDRÁULICA (CONFIG)	564
CABLES DE LA TRABA DEL DESPLAZADOR DEL CÍRCULO (GR)	565
TUBERÍAS HIDRÁULICAS (GR)	569
TUBERÍAS HIDRÁULICAS DEL VENTILADOR (GR)	590
TUBERÍAS DEL ENFRIADOR DE ACEITE HIDRÁULICO (GR)	593
BOMBA - TUBERÍAS DE (GR)	595
TUBERÍAS DEL DESGARRADOR (GR)	605
TUBERÍAS DE LA DIRECCIÓN SECUNDARIA (GR)	610
TUBERÍAS DE DIRECCIÓN (GR)	612
TRABA DE DESPLAZAMIENTO DEL CIRCULO (GR)	616
CONTROL DEL MULTIPLE (GR)	617
MULTIPLE DE VALVULA (GR)	625
MOTOR HIDRÁULICO DE ENGRANAJES (GR)	628
BOMBA DEL MANDO ELÉCTRICO Y MONTAJE (GR)	630
BOMBA Y MONTAJE DEL PISTÓN (GR)	631
MANDO ELÉCTRICO - BOMBA DE (GR)	633
BOMBA DE PISTONES (GR)	634
GRUPO GIRATORIO DE BOMBA	638
DIRECCIÓN SECUNDARIA (CONFIG)	640
PLATO OSCILANTE (GR)	641
UNIÓN GIRATORIA (GR)	642
TANQUE HIDRÁULICO Y MONTAJE (GR)	644

* NO HAY TRADUCCION DISPONIBLE EN EL MOMENTO DE LA IMPRESION

CONTENIDO

Nombre	Página
TANQUE HIDRÁULICO (GR)	646
GRUPO DE 3 VÁLVULAS HIDRÁULICAS	647
GRUPO DE 4 VÁLVULAS HIDRÁULICAS	648
BANCADA 5 (GR)	649
VÁLVULAS HIDRÁULICAS - GRUPO DE 6	651
VÁLVULAS HIDRÁULICAS - GRUPO DE 7	654
*VALVE GP-BANK 8	658
VÁLVULA DE RETENCIÓN (GR)	662
VÁLVULA DE CONTROL (GR)	663
VÁLVULA DE DERIVACIÓN (GR)	689
VÁLVULA REDUCTORA DE PRESIÓN (GR)	690
VALVULA DE CONTROL DE LA BOMBA (GR)	691
VÁLVULA DE ALIVIO (GR)	694
VÁLVULA DE LANZADERA (GR)	696
VÁLVULA DE SOLENOIDE (GR)	697
VÁLVULAS DE LA DIRECCIÓN (GR)	701
IMPLEMENTOS	703
CÍRCULO (GR)	703
BARRA DE TIRO (GR)	705
PLANCHA DE EMPUJE (GR)	707
HERRAMIENTAS	708
CANTONERA (GR)	708
CANTONERA DE EXTREMO (GR)	711
HOJA (GR)	712
HOJA TOPADORA (GR)	715
TIRANTE (GR)	717
SOPORTE DEL ESCARIFICADOR (GR)	718
CILINDRO HIDRÁULICO (GRUPO)	720
CUCHILLA (GR)	721
EXTENSIÓN DE LA HOJA (GR)	724
LEVANTAMIENTO - HOJA DE (GR)	729
*LIFT GP-WORK TOOL	732
MONTAJE DEL DESGARRADOR (GR)	735
GRUPO DE MONTAJE DE ALA PARA NIEVE	737
DESGARRADOR (CONFIG)	739
DESGARRADOR (GR)	740
ESCARIFICADOR (CONFIG)	742
GRUPO ESCARIFICADOR	743
DIENTE DE DESGARRADOR (GR)	753
DIENTE DE ESCARIFICADOR (GR)	755
PUESTO DEL OPERADOR	756
AJUSTADOR DEL ASIENTO (GR)	756
COMPRESOR DE AIRE DEL ASIENTO (GR)	757
ACONDICIONADOR DE AIRE Y MONTAJE (GR)	759
ACONDICIONADOR DE AIRE (CONFIG)	761
ACONDICIONADOR DE AIRE (GR)	762
POSABRAZOS (GR)	765
SOPORTE DE MONTAJE (GR)	767
CABINA (CONFIG)	768
*COIL GP-VALVE	769
COMPRESOR DE REFRIGERANTE (GR)	772
CONDENSADOR DEL REFRIGERANTE Y MONTAJE (GR)	774
PALANCA UNIVERSAL-CONTROL Y MONTAJE (GR)	775
CONTROL DE AIRE Y TEMPERATURA (GR)	778
CONTROL ELECTROHIDRAULICO (GR)	780
PALANCA UNIVERSAL DE CONTROL (GR)	783
GRUPO DE CONTROL-MONITOR NO PROGRAMADO	785
TAPA DE LA CABINA (GR)	786
BRAZO ACOJINADO (GR)	787
*DISPLAY AR-MONITOR	788
PANTALLA DEL MONITOR (GR)	789
PUERTA DE CABINA	791
*DUCT & FILTER GP-CAB AIR	797
VENTILADOR DE CIRCULACION	798
CALEFACCIÓN Y MONTAJE DE LA CABINA (GR)	801
CALEFACCIÓN DE LA CABINA (CONFIG)	802
CALEFACCIÓN DE LA CABINA (GR)	803
CAJA DE LA SUSPENSIÓN DEL ASIENTO (GR)	807
REVESTIMIENTO DE LA CABINA (GR)	810
TUBERÍAS DE ACONDICIONADOR DE AIRE (GR)	812
TUBERÍAS DE LA CALEFACCIÓN (GR)	816
RETROVISOR (GR)	820
MONITOR (CONJ)	824
MOTOR-LIMPIAPARABRISAS (GR)	825
MONTAJE DE ANTENA (GR)	827
GRUPO DE MONTAJE DE LA CABINA	828
MONTAJE DE LA VÁLVULA DE CONTROL (GR)	829
CUBIERTA INFERIOR DEL ASIENTO DEL OPERADOR (CONJ)	831

* NO HAY TRADUCCION DISPONIBLE EN EL MOMENTO DE LA IMPRESION

CONTENIDO

Nombre	Página
GRUPO DE SOPORTE DEL RESPALDO	832
PANEL DE LA CABINA (GR)	834
TABLERO DE CONTROL (GR)	842
TABLERO DE INSTRUMENTOS (GR)	846
PEDAL DEL FRENO, LA TRANSMISIÓN Y EL REGULADOR (GR)	848
PRESURIZADOR (GR)	849
RECLINACION DE ASIENTO (GR)	850
TECHO DE LA CABINA (GR)	851
PERSIANA PARA EL SOL (GR)	852
ASIENTO Y MONTAJE (GR)	853
ASIENTO (GR)	854
SUSPENSIÓN - ASIENTO CON (GR)	857
SOPORTE DE CONTROL (GR)	859
ASIENTO CON SUSPENSIÓN (GR)	863
TANQUE DEL LAVAPARABRISAS (GR)	867
VENTANA DE LA CABINA (GR)	868
LIMPIA Y LAVAPARABRISAS (GR)	877
LIMPIAPARABRISAS DE LA VENTANA (GR)	879
EQUIPO Y SUMINISTRO DE SERVICIOS	885
CAJA DE HERRAMIENTAS (GR)	885
ETIQUETA DE ADVERTENCIA (GR)	886
*FILM GP-INTERNATIONAL	888
*FILM GP-U.S.	889
CALCOMANÍAS Y PLACAS DE IDENTIFICACIÓN (GR)	890
TANQUE DE AIRE (GR)	904
INDICE DE NUMEROS DE PIEZA	B1

* NO HAY TRADUCCION DISPONIBLE EN EL MOMENTO DE LA IMPRESION

ÍNDICE

Designação	Página
INFORMAÇÃO GERAL	A39
ALTERNATIVAS DE REPARO	A50
ADITIVOS SUPLEMENTARES DO LÍQUIDO ARREFECEDOR	A55
NOMENCLATURA DE PEÇAS INGLÊS-PORTUGUÊS	A57
PEÇAS DE MANUTENÇÃO	A76
ÍNDICE	A128
MÁQUINA - ARRANJO	1
ARRANJO BÁSICO	1
OPÇÃO - UNIÃO EUROPÉIA - EU	2
ARRANJO RODOVIÁRIO	2
AR. PARA NEVE - MOTONIVELADORA	3
MOTOR - ARRANJO	4
MOTOR COMPLETO	4
MOTOR - NÚCLEO	6
MOTOR BÁSICO	7
COMPRESSOR DE AR	7
TENSOR DA CORREIA	11
EIXO-COMANDO DE VÁLVULA	12
TAMPA - BLOCO DO MOTOR	13
TAMPA - CAIXA DIANTEIRA	14
TAMPA - MECANISMO DAS VÁLVULAS	16
VIRABREQUIM	18
BLOCO DO MOTOR	20
CABEÇOTE DO MOTOR	24
AMORTECEDOR DE VIBRAÇÕES E POLIA	28
FIXADORES - CABEÇOTE DO MOTOR	29
VOLANTE DO MOTOR	30
ENGRENAGENS DE DISTRIBUIÇÃO	31
ENGRENAGENS DE COMANDO TRASEIRO	32
CAIXA DO VOLANTE DO MOTOR	34
CAIXA DIANTEIRA	38
TUCHO DA VÁLVULA	39
LEVANTAMENTO DO MOTOR	40
MONTAGEM - ALTERNADOR	41
MONTAGEM - MOTOR E TRANSMISSÃO	42
MONTAGEM - COMANDO DO VENTILADOR	44
CÁRTER DO ÓLEO DO MOTOR	46
PISTÃO E BIELA	47
BUJÃO DO BLOCO DO CILINDRO	48
BUJÃO DO MOTOR	49
POLIA DA RODA-GUIA	50
RETENTOR DO VIRABREQUIM	51
SUPORTE DO MOTOR	52
MECANISMO DAS VÁLVULAS	53
SISTEMA DE LUBRIFICAÇÃO	56
ADAPTADOR-TUBULAÇÃO DE ÓLEO	56
RESPIRO	57
FILTRO - ÓLEO DO MOTOR	58
ELIMINAÇÃO DE VAPORES DO CÁRTER	60
INDICADOR - NÍVEL DO ÓLEO (VARETA)	61
TUBOS - ÓLEO DO MOTOR	62
TUBULAÇÕES - DRENAGEM DE ÓLEO DO MOTOR	63
TUBOS - ÓLEO DO TURBOALIMENTADOR	64
COLETOR - ÓLEO DO MOTOR	65
ÓLEO - ARRANJO PARA TROCA RÁPIDA	66
BOMBA DE ÓLEO - MOTOR	67
SISTEMA DE ARREFECIMENTO	69
ARREFECEDOR - ÓLEO DO MOTOR	69
ARREFECIMENTO	70
MOTOR E VENTILADOR	71
PROTETOR DO VENTILADOR	73
TUBOS - ÁGUA	74
BOMBA DE ÁGUA	78
RADIADOR	80
TANQUE - LÍQUIDO ARREFECEDOR	82
SISTEMA DE ADMISSÃO DE AR E DE ESCAPE	84
ADAPTADOR DO TURBOALIMENTADOR	84
PÓS-ARREFECEDOR DA ADMISSÃO DE AR	85
PURIFICADOR DE AR	86
TAMPA - ADMISSÃO DE AR	88
COTOVELO DE ADMISSÃO DE AR	90
TUBOS - AR	91
COLETOR DE ESCAPE	95
AMORTECEDOR E MONTAGEM	96
PRÉ-PURIFICADOR	98
TURBOALIMENTADOR	99
SISTEMA DE COMBUSTÍVEL	101
ADAPTADOR - ABASTECIMENTO RÁPIDO DE COMBUSTÍVEL	101
TAMPA - TANQUE DE COMBUSTÍVEL	103
FIXADORES - TANQUE DE COMBUSTÍVEL	104
FILTRO - COMBUSTÍVEL	106

ÍNDICE

Designação	Página
FILTRO DE COMBUSTÍVEL E SEPARADOR DE ÁGUA	108
INJETOR DE COMBUSTÍVEL	109
TUBOS - COMBUSTÍVEL	111
TUBOS - FILTRO DO COMBUSTÍVEL	113
TUBOS - INJETOR DA BOMBA HIDRÁULICA	115
MONTAGEM DO FILTRO DE COMBUSTÍVEL	116
BOMBA HIDRÁULICA E MONTAGEM - UNIDADE INJETORA	117
BOMBA DE INJEÇÃO DO COMBUSTÍVEL	118
BOMBA DE ESCORVA DO COMBUSTÍVEL E DO FILTRO PRIMÁRIO	119
RECEPTOR-COMBUSTÍVEL DE ABASTECIMENTO RÁPIDO	121
REGULADOR DE PRESSÃO DO COMBUSTÍVEL	122
TANQUE DE COMBUSTÍVEL	123
SEPARADOR DE ÁGUA E BOMBA DE ESCORVA DE COMBUSTÍVEL	128
SISTEMA ELÉTRICO E DE PARTIDA	129
ALARME	129
ALTERNADOR DE CORRENTE	130
APLICAÇÃO-COMUNICAÇÃO	140
BATERIA E CABOS / FIOS ELÉTRICOS	141
CONTROLE ELETRÔNICO E MONTAGEM - MOTOR	150
CONTROLE DO ACESSÓRIO E MONTAGEM	151
CONTROLE - ACESSÓRIO	152
CONTROLE DO TREM DE FORÇA	158
CONTROLE - NÃO PROGRAMADO	160
CONVERSOR ELÉTRICO	162
SISTEMA ELETRÔNICO-COMUNICAÇÃO	164
SIST. ELETRÔNICO - ACESSÓRIO	165
SISTEMA ELETRÔNICO - MONITOR	166
SISTEMA ELETRÔNICO - TREM DE FORÇA	168
CONTROLE DO GRAU	168
CONTROLE DE INCLINAÇÃO	168
AQUECEDOR DA ÁGUA DO MOTOR	169
INSTALAÇÃO-COMUNICAÇÃO	171
INSTALAÇÃO - CÂMERA	173
INSTALAÇÃO DO SISTEMA DE ILUMINAÇÃO	174
INSTALAÇÃO-SEGURANÇA	175
INSTALAÇÃO DO PISCA-PISCA DE ADVERTÊNCIA	177
LÂMPADA - TETO	178
LÂMPADA - FAROL	179
FAROL DIANTEIRO	189
LÂMPADA DIANTEIRA E DE SINAL	190
LÀMPADA - MARCADORA	192
LAMPADA-PLACA DE REGISTRO	193
LÂMPADA - SINALIZAÇÃO	194
LUZ GIRATÓRIA DE ALARME	196
ILUMINAÇÃO - MARCHA A RÉ	197
SISTEMA DE ILUMINAÇÃO - FARÓIS	198
MASTRO	205
MOTOR ELÉTRICO	206
MONTAGEM-CONTROLE DO DECLIVE	207
MONTAGEM DA LÂMPADA	208
MONTAGEM - ILUMNAÇÃO	209
MONTAGEM - MASTRO	213
MONTAGEM - RECEPTOR	214
PAINEL - DISJUNTOR ELÉTRICO AUTOMÁTICO	216
SUPRIMENTO DE ENERGIA	220
RÁDIO - COMUNICAÇÃO	221
RECEPTOR-LASER	221
RECEPTOR-SATÉLITE	221
RECEPTOR-LASER	222
RECEPTOR-SATÉLITE	222
SENSOR DO MOTOR	223
EMISSOR - POSIÇÃO	225
SENSOR - PRESSÃO	228
SENSOR SÔNICO	238
SENSOR DE VELOCIDADE	239
SENSOR - TEMPERATURA	240
AUXILIAR DE PARTIDA A ÉTER	243
MOTOR ELÉTRICO DE PARTIDA	244
SUPORTE-LUZ	247
INTERRUPTOR-TRAÇÃO EM TODAS AS RODAS	248
INTERRUPTOR DE DERIVAÇÃO	250
CHAVE GERAL	251
INTERRUPTOR - LUZES	252
INTERRUPTOR - LIMITE	253
INTERRUPTOR - MAGNÉTICO	254
INTERRUPTOR - PRESSÃO	258
INTERRUPTOR - RODOVIÁRIO	259
INTERRUPTOR - BALANCIM	260
INTERRUPTOR - LIMPADOR DO PÁRA-BRISA	261
VALVULA - PARTIDA A ETER	262
ALARME DE MARCHA À RÉ	263
CABOS/FIOS ELÉTRICOS AUXILIARES	264
CABOS/FIOS ELÉTRICOS - CABINE	265
FIAÇÃO-CÂMERA	270
CABOS/FIOS ELÉTRICOS - CONTROLE ELETRÔNICO	271
CABOS/FIOS ELÉTRICOS - MOTOR	273
CABOS/FIOS ELÉTRICOS - DIANTEIROS	275

ÍNDICE

Designação	Página
FIAÇÃO-ILUMINAÇÃO DIANTEIRA	279
FIACAO - CONTROLE DO NIVEL	280
CABOS/FIOS ELÉTRICOS - AQUECEDOR	286
CABOS/FIOS ELÉTRICOS DE ILUMINAÇÃO	287
CABOS/FIOS ELÉTRICOS - PAINEL MONITOR	291
CABOS/FIOS ELÉTRICOS - TOMADA DE FORÇA	296
CABOS/FIOS ELÉTRICOS - TRASEIROS	299
CABOS E FIOS ELÉTRICOS-LUZES TRASEIRAS	304
CABOS/FIOS ELÉTRICOS - DIREÇÃO SECUNDÁRIA	308
CABOS/FIOS ELÉTRICOS - SENSOR	310
CABOS/FIOS ELÉTRICOS - LIMPADOR	315
TREM DE FORÇA	316
CONTROLE ELÉTRICO DAS MARCHAS	316
EIXO DIANTEIRO	317
SEMI-EIXO TRASEIRO	323
BASE DO FILTRO DE ÓLEO	325
SUPORTE-COMANDO FINAL	326
CARCAÇA DAS ENGRENAGENS PLANETÁRIAS E COMPONENTES	327
CORRENTE - COMANDO	331
EMBREAGEM DA TRANSMISSÃO	332
CONTROLE DA TRAVA DO DIFERENCIAL	340
CONTROLE HIDRÁULICO DA TRANSMISSÃO	342
ARREFECEDOR DE ÓLEO DA TRANSMISSÃO	345
ACOPLAMENTO TORSIONAL	346
TAMPA - EMBARQUE	347
DIFERENCIAL E COROA	349
DIFERENCIAL	351
RODA PROPULSORA	352
BOCAL DE ENCHIMENTO DE ÓLEO DO TREM DE FORÇA	353
FILTRO E MONTAGEM - TRANSMISSÃO	354
FILTRO - ÓLEO	355
COMANDO FINAL	356
ENGRENAGENS DE DISTRIBUIÇÃO	360
TUBULAÇÒES - TRAÇÃO EM TODAS AS RODAS	362
TUBOS - TOMADA DE FORÇA	371
TUBOS - ÓLEO DA TRANSMISSÃO	372
MOTOR - PISTÃO	377
MONTAGEM - RODA	382
MONTAGEM-ARREFECEDOR DO ÓLEO DA TRANSMISSÃO	383
BOMBA E MONTAGEM - TRAÇÃO EM TODAS AS RODAS	384
BOMBA DAS ENGRENAGENS E MONTAGEM	385
BOMBA DE ENGRENAGENS	386
BOMBA DE PISTÃO	388
FILTRO - MAGNÉTICO	390
EIXO DE TRANSMISSÃO	391
EIXO DE ENTRADA	392
TANDEM E TAMPA	393
TRANSMISSÃO	394
JUNTA UNIVERSAL	395
VALVULA DO SOLENOIDE E MONTAGEM	396
VÁLVULA DE MODULAÇÃO	397
VÁLVULA DE CONTROLE DA BOMBA	398
VÁLVULA DE ALÍVIO	399
RODA E PNEU	401
RODA	436
CHASSI E CARROCERIA	447
EIXO DIANTEIRO	447
TAMPA - VÁLVULA DE CONTROLE	455
TAMPA - PROTEÇÃO	457
COBERTURA DO MOTOR	458
FIXADORES	463
PÁRA-LAMA E SUPORTE	465
CHASSI DIANTEIRO	471
CHASSI TRASEIRO	472
PROTETOR INFERIOR	473
PROTETOR - TUBOS DO FREIO	475
PROTETOR-DETRITOS	476
ENGATE - ARTICULAÇÃO	477
ENGATE DO REBOQUE	479
CAPÔ	480
TUBOS - GRAXA	481
ELO - DIREÇÃO	482
MONTAGEM DO EIXO	484
MONTAGEM - VÁLVULA	486
REFLETOR	487
CENTRO DE SERVIÇO	489
BLINDAGEM DO COMPARTIMENTO DO MOTOR	490
DEGRAU	493
SUPORTE DO RADIADOR	494
REDUÇÃO DE RUÍDO	496
SISTEMA DE FREIO	499
ACUMULADOR - FREIO	499
FREIO DE ESTACIONAMENTO	502
FREIO DE SERVIÇO	504
CONTROLE DO FREIO DE SERVIÇO	508
TUBOS - ACUMULADOR	513

ÍNDICE

Designação	Página
TUBOS - TANQUE DE AR	515
TUBOS - FREIO DE SERVIÇO	517
SISTEMA HIDRÁULICO	522
ACUMULADOR - AMORTECEDOR DA LÂMINA	522
BASE DO FILTRO DE ÓLEO	523
CONTROLE HIDRÁULICO	524
ARREFECEDOR DO ÓLEO HIDRÁULICO	532
CILINDRO E MONTAGEM - ARTICULAÇÃO	534
CILINDRO E MONTAGEM - LEVANTAMENTO DA LÂMINA	536
CILINDRO E MONTAGEM - TOMBAMENTO DA LÂMINA	537
CILINDRO E MONTAGEM - DESLOCAMENTO DO CÍRCULO	538
CILINDRO E MONTAGEM - ESCARIFICADOR	539
CILINDRO E MONTAGEM - DESLOCAMENTO DA LÂMINA	540
CILINDRO DE DIREÇÃO E MONTAGEM	541
CILINDRO E MONTAGEM - INCLINAÇÃO DAS RODAS	543
CILINDRO DE ARTICULAÇÃO	544
CILINDRO DE TOMBAMENTO DA LÂMINA	545
CILINDRO DE DESLOCAMENTO LATERAL	546
CILINDRO DE LEVANTAMENTO	547
CILINDRO DO RÍPER	548
CILINDRO DO ESCARIFICADOR	549
CILINDRO DE DESLIZAMENTO LONGITUDINAL	550
CILINDRO DA DIREÇÃO	551
CILINDRO DE INCLINAÇÃO LATERAL DAS RODAS	555
MOTOR DE REVERSÃO DO CÍRCULO	557
FILTRO HIDRÁULICO E MONTAGEM	560
FILTRO - ÓLEO	562
COMANDO HIDRÁULICO	564
TUBOS - PINO MESTRE DE DESLOCAMENTO LATERAL	565
TUBOS - ÓLEO HIDRÁULICO	569
TUBOS - VENTILADOR HIDRÁULICOS	590
TUBOS - ARREFECEDOR DE ÓLEO HIDRÁULICO	593
TUBOS - BOMBA	595
TUBOS - RIPER	605
TUBOS - DIREÇÃO SECUNDÁRIA	610
TUBOS - DIREÇÃO	612
TRAVA - DESLOCAMENTO LATERAL	616
COLETOR - CONTROLE	617
COLETOR - VÁLVULA	625
MOTOR HIDRÁULICO DO GEROTOR	628
BOMBA DO COMANDO ELÉTRICO E MONTAGEM	630
BOMBA E MONTAGEM - PISTÃO	631
BOMBA DE COMANDO ELÉTRICO	633
BOMBA DE PISTÃO	634
GRUPO ROTATIVO DA BOMBA	638
DIREÇÃO SECUNDÁRIA	640
PLACA BASCULANTE	641
ARTICULAÇÃO GIRATÓRIA	642
TANQUE DE ÓLEO HIDRÁULICO E MONTAGEM	644
TANQUE HIDRÁULICO	646
GRUPO DE VÁLVULAS DE CONTROLE - TRIPLO	647
GRUPO DE VÁLVULAS DE CONTROLE - QUÁDRUPLO	648
GRUPO DE VÁLVULAS DE CONTROLE - CINCO	649
GRUPO DE VÁLVULAS DE CONTROLE - SEIS	651
GRUPO DE VÁLVULAS DE CONTROLE - SETE	654
GRUPO DE VÁLVULAS DE CONTROLE - OITO	658
VÁLVULA DE RETENÇÃO	662
VÁLVULA DE CONTROLE	663
VÁLVULA DESVIADORA	689
VÁLVULA DE REDUÇÃO DE PRESSÃO	690
VÁLVULA DE CONTROLE DA BOMBA	691
VÁLVULA DE ALÍVIO	694
VÁLVULA DE SEPARAÇÃO	696
VÁLVULA SOLENÓIDE	697
VÁLVULA DA DIREÇÃO	701
ACESSÓRIOS	703
CÍRCULO	703
BARRA DE TRAÇÃO	705
CHAPA DE EMPUXO	707
FERRAMENTAS DE TRABALHO	708
CANTO DE LÂMINA	708
LÂMINA	712
LÂMINA BULDOZER	715
TIRANTE	717
SUPORTE DO ESCARIFICADOR	718
CILINDRO HIDRÁULICO	720
BORDA CORTANTE	721
EXTENSÃO DA LÂMINA	724
LEVANTAMENTO DA LÂMINA	729
LEVANTAMENTO-FERRAMENTA DE TRABALHO	732
MONTAGEM - RIPER	735

ÍNDICE

Designação	Página
MONTAGEM - REMOVEDOR DE NEVE	737
RIPER	739
ESCARIFICADOR	742
DENTE DO RÍPER	753
DENTE DO ESCARIFICADOR	755
ESTAÇÃO DO OPERADOR	756
AJUSTADOR DO ASSENTO	756
COMPRESSOR DE AR - ASSENTO	757
CONDICIONADOR DE AR E MONTAGEM	759
CONDICIONADOR DE AR	761
BRAÇO DO ASSENTO	765
SUPORTE - MONTAGEM	767
CABINE	768
BOBINA-VÁLVULA	769
COMPRESSOR DE REFRIGERANTE	772
CONDENSADOR DO REFRIGERANTE E MONTAGEM	774
ALAVANCA DE CONTROLE E MONTAGEM	775
CONTROLE DO AR E TEMPERATURA	778
CONTROLE-ELETROIDRÁULICO	780
CONTROLE - ALAVANCA	783
CONTROLE-MONITOR NÃO PROGRAMADO	785
TAMPA - CABINE	786
BRAÇO DO ASSENTO	787
VISOR-MONITOR	788
VISOR - MONITOR	789
PORTA DA CABINE	791
DUTO E FILTRO-AR DA CABINE	797
VENTILADOR DE CIRCULAÇÃO DE AR DA CABINE	798
AQUECEDOR DA CABINE E MONTAGEM	801
AQUECEDOR DA CABINE	802
CAIXA - SUSPENSÃO DO ASSENTO	807
REVESTIMENTO DA CABINE	810
TUBOS - AR CONDICIONADO	812
TUBOS - AQUECEDOR	816
ESPELHO RETROVISOR	820
MONITOR	824
MOTOR - LIMPADOR DO VIDRO	825
MONTAGEM-ANTENA	827
MONTAGEM - CABINE	828
MONTAGEM - VÁLVULA DE CONTROLE	829
ASSENTO - FUNDO	831
FUNDO - ENCOSTO	832
PAINEL - CABINE	834
PAINEL DE CONTROLE	842
PAINEL DE INSTRUMENTOS	846
PEDAL - FREIO, TRANSMISSÃO E GOVERNADOR	848
PRESSURIZADOR	849
RECLINAÇÃO - ASSENTO	850
TETO - CABINE	851
TELA PÁRA-SOL	852
ASSENTO E MONTAGEM	853
ASSENTO	854
ASSENTO COM SUSPENSÃO	857
SUPORTE - CONTROLE	859
SUSPENSÃO - ASSENTO	863
TANQUE - LAVADOR DE JANELA	867
JANELA DA CABINE	868
LIMPADOR E LAVADOR - JANELA	877
LIMPADOR DO VIDRO	879
EQUIPAMENTOS DE SERVIÇO E SUPRIMENTOS	885
CAIXA DE FERRAMENTAS	885
DECALQUE	886
ADESIVO-INTERNACIONAL	888
ADESIVO-EUA	889
PLACA E DECALQUE	890
TANQUE DE AR	904
ÍNDICE DE NÚMERO DE PEÇA	B1

INHALTSVERZEICHNIS

Bezeichnung	Seite
ALLGEMEINE HINWEISE	A43
REPARATURALTERNATIVEN	A51
KÜHLMITTELZUSATZ	A56
WARTUNGSTEILE	A80
STICHWORTVERZEICHNIS	A143
MASCHINE	1
GRUNDAUSFÜHRUNG	1
SONDERAUSRÜSTUNG (EUROPÄISCHE GEMEINSCHAFT)	2
AUSRÜSTUNG FÜR STRASSEN-FAHRT	2
SCHNEERÄUMVORRICHTUNG	3
MOTOR	4
MOTOR, KOMPLETT	4
MOTORKÜHLERBLOCK	6
MOTOR - GRUNDAUSFÜHRUNG	7
DRUCKLUFTKOMPRESSOR	7
LUFTKOMPRESSOR	8
RIEMENSPANNER	11
NOCKENWELLE	12
MOTORBLOCKDECKEL	13
STIRNRADGEHÄUSEDECKEL	14
VENTILDECKEL	16
KURBELWELLE	18
MOTORBLOCK	20
ZYLINDERKOPF	24
DÄMPFER UND RIEMENSCHEIBE	28
ZYLINDERKOPF-HALTETEILE	29
SCHWUNGRAD	30
STIRNRAD	31
ZAHNRADVORGELEGE	32
SCHWUNGRADGEHÄUSE	34
STIRNRADGEHÄUSE	38
HUBVENTIL	39
MOTORHUBÖSE	40
DREHSTROMGENERATOR - BEFESTIGUNG	41
MOTOR- UND GETRIEBEAUFLAGER	42
LÜFTERANTRIEBSAUFHÄNGUNG	44
ÖLWANNE	46
PLEUELSTANGE UND KOLBEN	47
ZYLINDERBLOCKSCHRAUBE	48
MOTORSTOPFEN	49
RIEMENSPANNER	50
KURBELWELLENDICHTUNG	51
MOTORAUFHÄNGUNG	52
VENTILSTEUERUNG	53
SCHMIERSYSTEM	56
ADAPTER - ÖLLEITUNG	56
ENTLÜFTER	57
ÖLFILTER	58
ENTDUNSTER	60
ÖLMESSSTAB	61
MOTORÖLLEITUNGEN	62
MOTORÖLABLASSLEITUNGEN	63
TURBOLADERÖLLEITUNGEN	64
MOTORÖLKRÜMMER	65
ÖLSCHNELLWECHSELANSCHLUSS	66
SCHMIERPUMPE	67
KÜHLSYSTEM	69
MOTORÖLKÜHLER	69
KÜHLSYSTEM	70
MOTOR UND LÜFTER	71
LÜFTERVERKLEIDUNG	73
KÜHLWASSERLEITUNGEN	74
KÜHLWASSERPUMPE	78
KÜHLER	80
KÜHLMITTELBEHÄLTER	82
LUFTANSAUG- UND ABGASSYSTEM	84
TURBOLADERADAPTER	84
LADELUFTKÜHLER	85
LUFTREINIGER	86
LUFTEINLASSDECKEL	88
LUFTEINLASSBOGEN	90
DRUCKLUFTLEITUNGEN	91
AUSPUFFKRÜMMER	95
SCHALLDÄMPFER U. BEFESTIGUNG	96
VORREINIGER	98
TURBOLADER	99
KRAFTSTOFFSYSTEM	101
SCHNELLBETANKUNGSANSCHLUSS	101
KRAFTSTOFFTANKDECKEL	103
KRAFTSTOFFTANK-HALTETEILE	104
KRAFTSTOFFILTER	106
WASSERABSCHEIDER- U. KRAFTSTOFFIL-TER	108
KRAFTSTOFFEINSPRITZDÜSE	109
KRAFTSTOFFLEITUNGEN	111
KRAFTSTOFFILTERLEITUNGEN	113
EINSPRITZLEITUNGEN - HYDRAULIKPUM-PE	115
KRAFTSTOFFILTERBEFESTIGUNG	116
PUMPE UND BEFESTIGUNGSTEILE	117
KRAFTSTOFFEINSPRITZPUMPE	118

* ÜBERSETZUNG ZUM ZEITPUNKT DER DRUCKLEGUNG NICHT VORHANDEN

INHALTSVERZEICHNIS

Bezeichnung	Seite
KRAFTSTOFFENTLÜFTUNGSPUMPE UND -HAUPTFILTER	119
*RECEIVER GP-FAST FILL FUEL	121
KRAFTSTOFFDRUCKREGLER	122
KRAFTSTOFFTANK	123
WASSERABSCHEIDER U. KRAFTSTOFFENTLÜFTUNGSPUMPE	128
ELEKTRISCHE ANLAGE UND STARTSYSTEM	129
WARNVORRICHTUNG	129
DREHSTROMGENERATOR	130
*APPLICATION GP-COMMUNICATION	140
BATTERIE UND VERDRAHTUNG	141
STEUERUNGSEINHEIT, ELEKTRON. FÜR MOTOR UND BEFEST.	150
ARBEITSGERÄTEHEBEL UND BEFESTIGUNGSTEILE	151
ARBEITSGERÄTESTEUERUNG	152
KRAFTÜBERTRAGUNGSSTEUERUNG	158
STEUERUNG - NICHT PROGRAMMIERT	160
ELEKTR. UMFORMER	162
ELEKTRONIK, KOMMUNIKATION	164
ARBEITSGERÄTEELEKTRONIK	165
ELEKTRONIK - MONITOR	166
KRAFTÜBERTRAGUNGSELEKTRONIK	168
PLANIERSTEUERUNG	168
*GRADE CONTROL GP	168
UMLAUFKÜHLWASSERHEIZUNG	169
ÜBERTRAGUNGSEINBAUSATZ	171
*INSTALLATION GP-CAMERA	173
*INSTALLATION GP-LIGHTING	174
SICHERHEITSEINBAUSATZ	175
RUNDUMWARNLEUCHTE - EINBAUSATZ	177
FAHRERHAUSBELEUCHTUNG	178
ARBEITSLEUCHTEN	179
FRONTSCHEINWERFER	189
SCHEINWERFER U. RICHTUNGSLEUCHTE	190
MARKIERUNGSLEUCHTE	192
ZULASSUNGSSCHILDLEUCHTE	193
BLINKLEUCHTE	194
RUNDUM-KENNLEUCHTE	196
SCHEINWERFER, HINTEN	197
ARBEITSLEUCHTEN	198
*MAST GP	205
MOTOR, ELEKTR.	206
NIVELLIERAUTOMATIK	207
LEUCHTENBEFESTIGUNGSSATZ	208
BELEUCGHTUNGSBEFESTIGUNG	209
HUBMASTBEFESTIGUNG	213
EMPFÄNGERBEFESTIGUNG	214
UNTERBRECHER - INSTRUMENTENTAFEL	216
STROMVERSORGUNGSEINHEIT	220
RADIO - KOMMUNIKATION	221
*RECEIVER AR-LASER	221
*RECEIVER AR-SATELLITE	221
EMPFÄNGER, LASER	222
*RECEIVER GP-SATELLITE	222
MOTORSENSOR	223
STELLUNGSSENSOR	225
DRUCKSENSOR	228
SCHALLGEBER	238
DREHZAHLSENSOR	239
TEMPERATURSENSOR	240
ÄTHERSTARTHILFE	243
STARTERMOTOR	244
LEUCHTENBEFESTIGUNG	247
SCHALTER - ALLRADANTRIEB	248
UMGEHUNGSSCHALTER	250
TRENNSCHALTER	251
LICHTSCHALTER	252
BEGRENZUNGSSCHALTER	253
MAGNETSCHALTER	254
DRUCKSCHALTER	258
STRASSENFAHRTSCHALTER	259
KIPPSCHALTER	260
SCHEIBENWISCHERSCHALTER	261
ÄTHERSTARTVENTIL	262
RÜCKFAHRWARNHORN	263
*WIRING GP-AUXILIARY	264
FAHRERHAUSVERDRAHTUNG	265
KAMERA, VERDRAHTUNG	270
VERDRAHTUNG (ELEKTRON. STEUERUNG)	271
MOTORVERDRAHTUNG	273
VERDRAHTUNG, VORNE	275
*WIRING GP-FRONT LIGHTING	279
NIEGUNGSSTEUER VERDRAHTUNG	280
HEIZUNGSVERDRAHTUNG	286
BELEUCHTUNGSVERDRAHTUNG	287
ÜBERWACHUNGSTAFELVERDRAHTUNG	291
STECKDOSENVERDRAHTUNG	296
VERDRAHTUNG, HINTEN	299
HECKBELEUCHTUNGSVERDRAHTUNG	304
NOTLENKUNGSVERDRAHTUNG	308
SENSORVERDRAHTUNG	310
SCHEIBENWISCHERVERDRAHTUNG	315

* ÜBERSETZUNG ZUM ZEITPUNKT DER DRUCKLEGUNG NICHT VORHANDEN

INHALTSVERZEICHNIS

Bezeichnung	Seite
KRAFTÜBERTRAGUNG	316
SCHALTAUTOMATIK	316
VORDERACHSE	317
HINTERACHSE	323
ÖLFILTERSOCKEL	325
*CARRIER GP-FINAL DRIVE	326
PLANETENANTRIEBSGEHÄUSE U. TEILE	327
ANTRIEBSKETTE	331
GETRIEBEKUPPLUNG	332
DIFFERENTIALSPERRENGESTÄNGE	340
GETRIEBEHYDRAULIK	342
GETRIEBEÖLKÜHLER	345
TORSIONSKUPPLUNG	346
VERSANDDECKEL	347
DIFFERENTIAL UND TELLERRAD	349
DIFFERENTIAL	351
RADANTRIEB	352
GETRIEBEÖLFÜLLSTUTZEN	353
GETRIEBEFILTER UND -AUFHÄNGUNG	354
ÖLFILTER	355
SEITENANTRIEB	356
STIRNRAD	360
ALLRADANTRIEBSLEITUNGEN	362
ZAPFWELLENLEITUNGEN	371
GETRIEBEÖLLEITUNGEN	372
KOLBENMOTOR	377
RADAUFHAENGUNG	382
BEFESTIGUNG - GETRIEBEÖLKÜHLER	383
PUMPE U. BEFESTIGUNG - ALLRADANTRIEB	384
ZAHNRADPUMPE U. BEFESTIGUNGSTEILE	385
ZAHNRADPUMPE	386
KOLBENPUMPE	388
MAGNETSIEB	390
ANTRIEBSWELLE	391
TANDEMGEHÄUSE UND DECKEL	393
GETRIEBE	394
KREUZGELENK	395
SOLENOIDVENTIL U. BEFESTIGUNGSTEILE	396
MODULATORVENTIL	397
PUMPENSTEUERVENTIL	398
ÜBERDRUCKVENTIL	399
RAD UND REIFEN	401
RADSATZ	436
RAHMEN UND AUFBAU	447
VORDERACHSE	447
STEUERVENTILDECKEL	455
SCHUTZABDECKUNG	457
MOTORVERKLEIDUNG	458
HALTETEILE	463
SCHUTZBLECHE UND AUFHÄNGUNG	465
VORDERRAHMEN	471
RAHMEN, HINTEN	472
PANZERWANNE	473
BREMSLEITUNGSVERKLEIDUNG	475
*GUARD GP-DEBRIS	476
KNICKGELENK-ANHÄNGUNG	477
ANHÄNGEVORRICHTUNG	479
HAUBE	480
SCHMIERLEITUNGEN	481
LENKGESTÄNGE	482
ACHSENANBAUSATZ	484
VENTILAUFHÄNGUNG	486
REFLEKTOR	487
*SERVICE CENTER AR	489
MOTORRAUM-SCHUTZVERKLEIDUNG	490
STEIGLEITER	493
KÜHLERAUFHÄNGUNG	494
SCHALLDÄMPFUNG	496
BREMSSYSTEM	499
BREMSDRUCKSPEICHER	499
FESTSTELLBREMSE	502
BETRIEBSBREMSE	504
BREMSGESTÄNGE	508
DRUCKSPEICHERLEITUNGEN	513
DRUCKLUFTTANKLEITUNGEN	515
BETRIEBSBREMSLEITUNGEN	517
HYDRAULIKSYSTEM	522
DRUCKSPEICHER - SCHARDÄMPFUNG	522
ÖLFILTERSOCKEL	523
HYDRAULIKSTEUERUNG	524
HYDRAULIKÖLKÜHLER	532
GELENKZYLINDER UND BEFESTIGUNGSTEILE	534
SCHARHUBZYLINDER UND BEFESTIGUNGSTEILE	536
SCHARKIPPZYLINDER UND BEFESTIGUNGSTEILE	537
SEITENSCHUBZYLINDER UND BEFESTIGUNGSTEILE	538
AUFREISSERZYLINDER UND BEFESTIGUNGSTEILE	539
SEITENSCHIEBERZYLINDER UND BEFESTIGUNGSTEILE	540
LENKZYLINDER UND AUFHÄNGUNG	541

* ÜBERSETZUNG ZUM ZEITPUNKT DER DRUCKLEGUNG NICHT VORHANDEN

INHALTSVERZEICHNIS

Bezeichnung	Seite
RADSTURZZYLINDER UND BEFESTIGUNGSTEILE	543
KNICKLENKZYLINDER	544
SCHARNEIGEZYLINDER	545
SEITENSCHUBZYLINDER	546
HUBZYLINDER	547
AUFREISSERZYLINDER	548
FRONTAUFREISSERZYLINDER	549
SEITENSCHUBZYLINDER	550
LENKZYLINDER	551
RADSTURZZYLINDER	555
SCHARDREHWERK	557
HYDRAULIKFILTER UND BEFESTIGUNGSTEILE	560
ÖLFILTER	562
HYDRAULIKSYSTEM	564
SCHARDREHWERKSPERRENLEITUNGEN	565
HYDRAULIKLEITUNGEN	569
HYDRAULIKLÜFTERLEITUNGEN	590
HYDRAULIKÖLKÜHLERLEITUNGEN	593
HYDRAULIKPUMPE UND LEITUNGEN	595
AUFREISSERLEITUNGEN	605
NOTLENKUNGSLEITUNGEN	610
LENKÖLLEITUNGEN	612
SEITENSCHUBSPERRE	616
STEUERKRÜMMER	617
*MANIFOLD GP-VALVE	625
ZAHNRADANTRIEB	628
ANTRIEBSPUMPE, ELEKTR. U. BEFESTIGUNGSTEILE	630
KOLBENPUMPE UND BEFESTIGUNG	631
PUMPENANTRIEB ELEKTR.	633
KOLBENPUMPE	634
KOLBENPUMPENUMLAUFSATZ	638
NOTLENKUNG	640
SCHWENKSCHEIBE	641
SCHWENKBLOCK	642
HYDRAULIKTANK UND BEFESTIGUNGSTEILE	644
HYDRAULIKTANK	646
VENTILSATZ (3-VENTIL)	647
VENTILSATZ (4-VENTIL)	648
VENTILSATZ (5-VENTIL)	649
VENTILSATZ (6-VENTIL)	651
VENTILSATZ (7-VENTIL)	654
VENTILSATZ (8-VENTIL)	658
SPERRVENTIL	662
STEUERVENTIL	663
UMLEITVENTIL	689
DRUCKREDUZIERVENTIL	690
PUMPENSTEUERVENTIL	691
ÜBERDRUCKVENTIL	694
PENDELVENTIL	696
MAGNETVENTIL	697
LENKVENTIL	701
ARBEITSGERÄTE	703
SCHARDREHWERK	703
ZUGHAKEN	705
SCHUBPLATTE	707
ARBEITSGERÄTE	708
ECKMESSER	708
ENDMESSER	711
SCHAR	712
PLANIERSCHILD	715
STREBE	717
AUFREISSERTRÄGER	718
HYDRAULIKZYLINDER	720
SCHNEIDMESSER	721
SCHARVERLÄNGERUNG	724
SCHILDHUB	729
*LIFT GP-WORK TOOL	732
AUFREISSERBEFESTIGUNG	735
SCHNEEFLÜGEL-BEFESTIGUNG	737
AUFREISSER	739
FRONTAUFREISSER	742
AUFREISSERZAHN	753
FRONTAUFREISSERZAHN	755
FAHRERHAUS	756
FAHRERSITZVERSTELLER	756
LUFTKOMPRESSORSITZ	757
KLIMAANLAGE UND AUFHÄNGUNG	759
KLIMAANLAGE	761
ARMLEHNE	765
BEFESTIGUNGSHALTERUNG	767
FAHRERHAUS	768
*COIL GP-VALVE	769
KÄLTEMITTELKOMPRESSOR	772
KÄLTEMITTELKONDENSATOR U. BEFESTIGUNGSTEILE	774
JOYSTICKSTEUERUNG U. BEFESTIGUNG	775
LUFTTEMPERATURKONTROLLE	778
ELEKTROHYDRAULISCHE STEUERUNG	780
JOYSTICK -STEUERUNG	783
STEUERUNG, NICHT PROGRAMMIERTER MONITOR	785
FAHRERHAUSABDECKUNG	786
ARMSTÜTZE	787
*DISPLAY AR-MONITOR	788
MONITORDISPLAY	789
FAHRERHAUSTÜR	791

* ÜBERSETZUNG ZUM ZEITPUNKT DER DRUCKLEGUNG NICHT VORHANDEN

INHALTSVERZEICHNIS

Bezeichnung	Seite
LUFTKANAL & LUFTFILTER - FAHRERHAUS	797
UMLAUFLÜFTER	798
FAHRERHAUSHEIZUNG U. BEFESTIGUNGSTEILE	801
FAHRERHAUSHEIZUNG	802
FAHRERSITZFEDERUNGSGEHÄUSE	807
FAHRERHAUSAUSKLEIDUNG	810
KLIMAANLAGENLEITUNGEN	812
HEIZUNGSLEITUNGEN	816
RÜCKSPIEGEL	820
MONITOR	824
SCHEIBENWISCHERMOTOR	825
ANTENNENBEFESTIGUNG	827
FAHRERHAUSANBAUSATZ	828
STEUERVENTILBEFESTIGUNG	829
*PAN AS-SEAT	831
SCHALE - RÜCKENLEHNE	832
VERKLEIDUNG - FAHRERHAUS	834
SCHALTTAFEL	842
INSTRUMENTENTAFEL	846
BREMS-, KUPPLUNGS- U. GASPEDAL	848
FAHRERHAUSBELÜFTUNG	849
VERSTELLBARER SITZ	850
FAHRERHAUSDACH	851
SONNENBLENDE	852
FAHRERSITZ UND UNTERBAU	853
FAHRERSITZ	854
SCHWINGSITZ	857
STÜTZGRUPPE - STEUERUNG	859
FAHRERSITZFEDERUNG	863
SCHEIBENWASCHMITTELBEHÄLTER	867
FAHRERHAUSFENSTER	868
SCHEIBENWISCHER UND -WASCHANLAGE	877
SCHEIBENWISCHER	879
WARTUNGSAUSRÜSTUNG	885
WERKZEUGKASTEN	885
AUFKLEBER	886
*FILM GP-INTERNATIONAL	888
*FILM GP-U.S.	889
SCHILD UND AUFKLEBER	890
DRUCKLUFTBEHÄLTER	904
ERSATZTEILNUMMERNINDEX	B1

* ÜBERSETZUNG ZUM ZEITPUNKT DER DRUCKLEGUNG NICHT VORHANDEN

GENERAL INFORMATION

1. MACHINE IDENTIFICATION

Caterpillar machines are identified by Product Identification Numbers (PIN). Some components included in a machine may be identified by Serial Numbers (S/N). Typical components that will be serialized include engines, transmissions, bulldozers, and rippers. The machine and engine are further identified by arrangement numbers and in some cases modification numbers. These numbers are shown on the product identification plate(s) and on the master plate in the operator's compartment.

Caterpillar dealers need all of these numbers to determine accurate parts identification.

SIS *New Feature*

Effective First Quarter 2001 the Caterpillar Product Identification Number (PIN) changed from 8 to 17 characters. In an effort to provide uniform equipment identification, Caterpillar and other construction equipment manufacturers are moving to comply with the latest version of the product identification numbering standard. Non-road machine PINs are defined by ISO 10261. The new PIN format will apply to all Caterpillar machines and generator sets. The PIN plates and frame marking will display the 17 character PIN. The new format will look like the following:

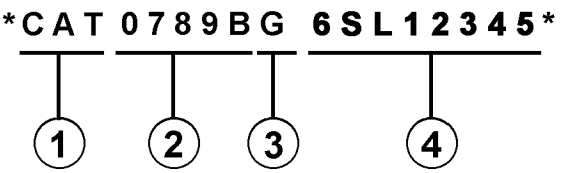

Where:

1. Caterpillar's World Manufacturing Code (characters 1-3)

2. Machine Descriptor (characters 4-8)

3. Check Character (character 9)

4. Machine Indicator Section (MIS) or Product Sequence Number (characters 10-17). These were previously referred to as the Serial Number.

Machines and generator sets produced before First Quarter 2001 will maintain their 8 character PIN format.

Components such as engines, transmissions, axles, etc. and work tools will continue to use an 8 character Serial Number (S/N).

2. ORDERING PARTS

⚠ WARNING

When replacement parts are required for this product Caterpillar recommends using Caterpillar replacement parts or parts with equivalent specifications including, but not limited to, physical dimensions, type, strength and material.

Failure to heed this warning can lead to premature failures, product damage, personal injury or death.

Quality Caterpillar replacement parts are available from Caterpillar dealers throughout the world. Their parts inventories are up to date and include all parts normally required to protect your investment in Caterpillar machines. Dealers may offer repair kits or remanufactured parts to allow selection of the most effective repair alternative for a particular situation. When ordering parts, your order should specify the quantity, part number, part name, and the serial number/product identification number of the machine for which the parts are needed.

3. PARTS MANUAL ORGANIZATION

Product information in this manual is presented as "information elements" that represent all of the components for the specific model. Engine Arrangement and Seat Group are examples of information elements. The information elements are organized alphabetically by part name and secondarily by part number within each major section of the manual.

4. TABLE OF CONTENTS

A table of contents (TOC) is found at the beginning of the manual. The TOC lists each section of the manual with a complete list of all information elements organized as they appear in the manual. Page numbers are provided for quick reference to detailed parts identification illustrations and serviceable consist lists.

5. MAINTENANCE PARTS INDEX

The Maintenance Parts Index, located near the beginning of the manual, references most frequently used maintenance part numbers, providing description, quantity, usage and page number. This information is organized alphabetically by part description.

6. INDEX

The index located near the front of the manual is an alphabetical listing of all information elements included in the manual. Page numbers are provided for quick reference to detailed parts identification illustrations and serviceable consist lists.

7. PART NUMBER INDEX

A numerical index listing all part numbers and the corresponding page number(s) appears at the back of the manual.

8. CAPTIONS

Captions located at the beginning of each information element identify the part number and part name along with additional descriptive information. PIN and S/N information found in each caption should be used to select correct information for a specific machine. Field replacement options, identification of optional attachment components, and where used ("part of") information is also provided.

The first line of a caption is shown in larger type font to indicate the beginning of an information element. Captions for additional pages that may be required to illustrate an information element will be shown in standard type font and will include the term *(contd.)* .

9. NON-SERVICED PARTS

In some instances it is necessary to display non-serviced parts that are a link to a lower level serviceable consist lists. These non-serviced part numbers are shown in *italic* type indicating that they are not available.

10. PARTS LIST REFERENCE NUMBERS

Numbers shown in the Ref No column correspond to numbers used in the associated graphic(s). An alphabetic suffix may be added to a reference number to identify lower level consist items. Numbers shown in the Graphic Ref column refer to the graphic number identifier displayed in the lower left corner of each illustration. The Graphic Ref number may be used in combination with the item Ref No to determine the correct part number. There may be intentional omission of a Ref No in a consist list as information is updated to reflect the latest serviceable part numbers.

11. INDENTED PART NAMES

When a part name is indented in a parts list, it is part of (included in) the group or assembly under which it is indented.

12. ILLUSTRATION REFERENCE LETTERS

When necessary, illustrations contain reference letters (A, B, C etc.) that are intended to track lines and harnesses from one point to another. They are also used to show where to reconnect illustrations that have been separated.

13. ABBREVIATIONS AND SYMBOLS

O.D. – Outside Diameter
I.D. – Inside Diameter
A – Not Part Of This Group
B – Use As Required
C – Change From Previous Type
D – Order By The Meter
E – Order By The Centimeter
F – Not Shown
G – Order By The Inch
I – Refer To Hydraulic Information System
M – Metric Part
R – Remfg Part May Be Available
Y – Separate Illustration
Z – Not Serviced Separately

SIS *New Feature*

14. DESCRIPTION OF TYPE CHANGES

Type - A type is defined as any configuration change that requires an additional Information Element for an Arrangement, Group, or Assembly. If serial number breaks for types are not available, a type # (Type 1, Type 2, etc.) will be displayed in the caption. These "type" changes are identified with a "C" note (change from previous type) in the Parts List. Only the "types" that apply to this Parts Manual will be included. Additional types may exist causing "C" notes to appear on an Information Element when no other types are shown.

15.<END>

This symbol indicates the end of an information element.

NOTE:

Continuing improvement and advancement of product design may cause changes to your machine which may not be included in this publication. Whenever a question arises regarding your caterpillar product or this publication, please consult your caterpillar dealer for the latest available information.

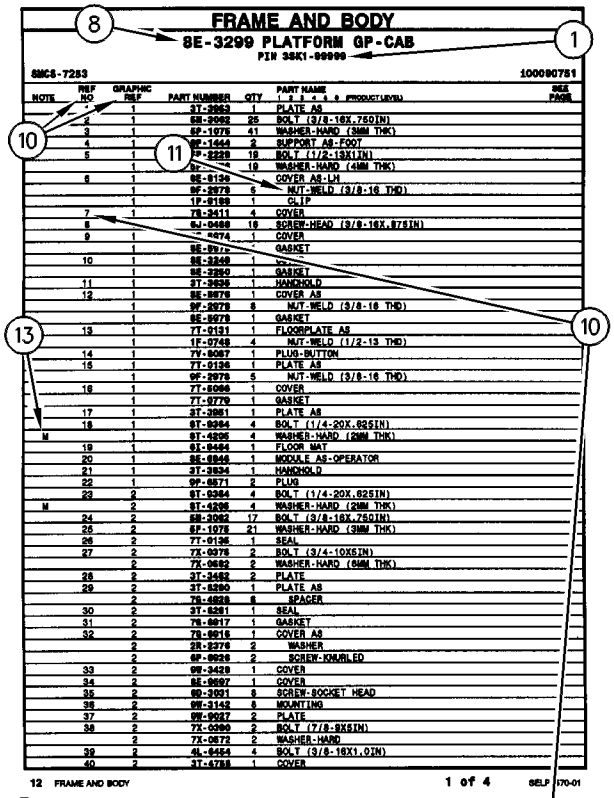

FRAME AND BODY

8E-3299 PLATFORM GP-CAB

PIN 3SK1-99999

SMCS-7283 100090751

NOTE	REF NO	GRAPHIC REF	PART NUMBER	QTY	PART NAME 1 2 3 4 5 6 (PRODUCT LEVEL)	SEE PAGE
	*	1	3T-3963	1	PLATE AS	
	2	1	5M-2062	25	BOLT (3/8-16X.750IN)	
	3	1	6P-1075	41	WASHER-HARD (3MM THK)	
	4	1	8E-1443	2	SUPPORT AS-FOOT	
	5	1	9P-2229	19	BOLT (1/2-13X1IN)	
		1	9P-[illegible]	19	WASHER-HARD (4MM THK)	
	6	1	8E-9136	*	COVER AS-LH	
		1	9F-2979	6	NUT-WELD (3/8-16 THD)	
		1	1F-0189	1	CLIP	
	7	1	7X-3411	4	COVER	
	8	1	9J-0468	18	SCREW-HEAD (3/8-16X.87SIN)	
	9	1	[illegible]-0274	1	COVER	
		1	8E-9[illegible]	*	GASKET	
	10	1	8E-3248	1	[illegible]	
		1	8E-3250	1	GASKET	
	11	1	3T-3636	1	HANDHOLD	
	12	1	8E-9076	1	COVER AS	
		1	9F-2979	8	NUT-WELD (3/8-16 THD)	
		1	8E-9078	1	GASKET	
	13	1	7T-9131	1	FLOORPLATE AS	
		1	1F-0748	4	NUT-WELD (1/2-13 THD)	
	14	1	7V-8067	1	PLUG-BUTTON	
	15	1	7T-9136	1	PLATE AS	
		1	9F-2979	5	NUT-WELD (3/8-16 THD)	
	16	1	7T-5066	1	COVER	
		1	7T-9779	1	GASKET	
	17	1	3T-3951	1	PLATE AS	
	18	1	9T-0264	4	BOLT (1/4-20X.62SIN)	
M		1	9T-4295	4	WASHER-HARD (2MM THK)	
	19	1	6I-8464	1	FLOOR MAT	
	20	1	8E-6848	1	MODULE AS-OPERATOR	
	21	1	3T-3934	1	HANDHOLD	
	22	1	9P-0671	2	PLUG	
	23	2	9T-0264	4	BOLT (1/4-20X.62SIN)	
M		2	9T-4295	4	WASHER-HARD (2MM THK)	
	24	2	5M-2062	17	BOLT (3/8-16X.750IN)	
	25	2	6P-1075	21	WASHER-HARD (3MM THK)	
	26	2	7T-9136	1	SEAL	
	27	2	7X-0078	2	BOLT (3/4-10X5IN)	
		2	7X-0682	2	WASHER-HARD (6MM THK)	
	28	2	3T-3482	2	PLATE	
	29	2	3T-5290	1	PLATE AS	
		2	7S-4828	6	SPACER	
	30	2	3T-5291	1	SEAL	
	31	2	7S-8817	1	GASKET	
	32	2	7S-8818	1	COVER AS	
		2	5R-2276	2	WASHER	
		2	9F-9026	2	SCREW-KNURLED	
	33	2	9W-3429	1	COVER	
	34	2	8E-9697	1	COVER	
	35	2	9D-3031	8	SCREW-SOCKET HEAD	
	36	2	9W-3143	8	MOUNTING	
	37	2	9W-9037	2	PLATE	
	38	2	7X-0360	2	BOLT (7/8-9X5IN)	
		2	7X-0672	2	WASHER-HARD	
	39	2	4L-8454	4	BOLT (3/8-16X1.0IN)	
	40	2	3T-4788	1	COVER	

12 FRAME AND BODY 1 of 4 SELP4570-01

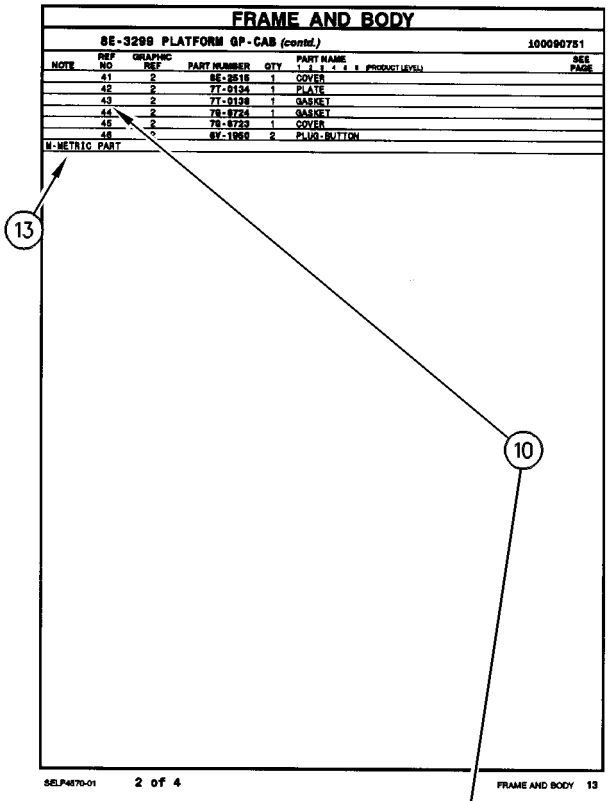

FRAME AND BODY

8E-3299 PLATFORM GP-CAB (contd.) 100090751

NOTE	REF NO	GRAPHIC REF	PART NUMBER	QTY	PART NAME 1 2 3 4 5 6 (PRODUCT LEVEL)	SEE PAGE
	41	2	8E-2515	1	COVER	
	42	2	7T-9134	1	PLATE	
	43	2	7T-9138	1	GASKET	
	44	2	7S-8724	1	GASKET	
	45	2	7S-8723	1	COVER	
	46	*	8Y-1950	2	PLUG-BUTTON	

M-METRIC PART

SELP4570-01 2 of 4 FRAME AND BODY 13

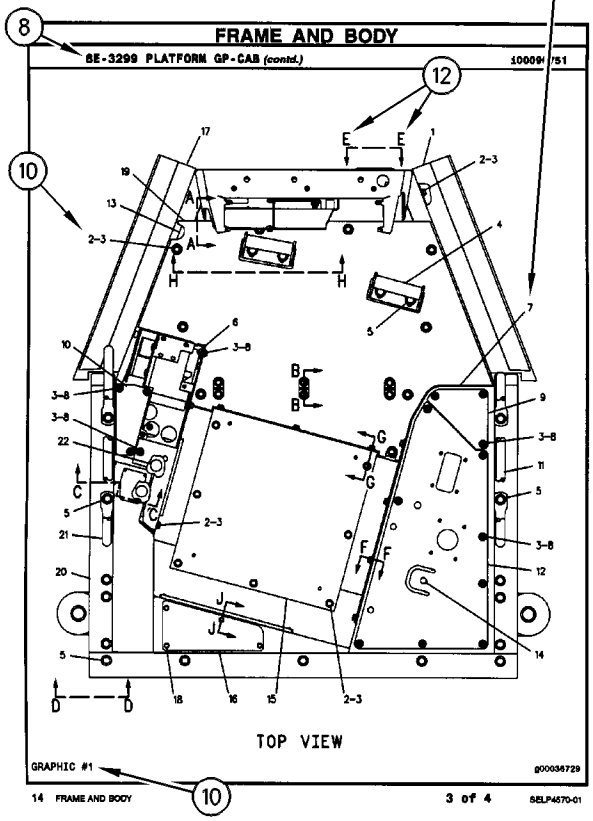

FRAME AND BODY

8E-3299 PLATFORM GP-CAB (contd.) 100090751

14 FRAME AND BODY 3 of 4 SELP4570-01

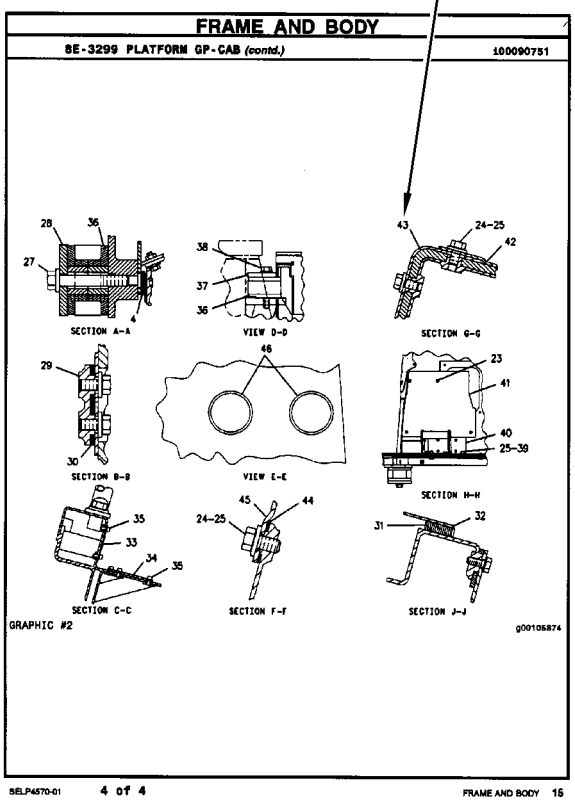

FRAME AND BODY

8E-3299 PLATFORM GP-CAB (contd.) 100090751

SELP4570-01 4 of 4 FRAME AND BODY 15

GÉNÉRALITÉS

1. IDENTIFICATION DE LA MACHINE

Toutes les machines Caterpillar portent un numéro d'identification (PIN). Certains composants des machines peuvent porter des numéros de série (S/N). En général, parmi les composants qui portent des numéros de série il y a les moteurs, les transmissions, les bulldozers et les rippers. En plus, la machine et le moteur peuvent recevoir des numéros de version, et dans certains cas, de modification. Ces numéros figurent sur les plaques de numéro de série et sur la plaque signalétique principale qui se trouve dans le poste de conduite.

Les concessionnaires Caterpillar doivent connaître tous ces numéros pour identifier correctement les pièces.

SIS *Nouvelle Caractéristique*

À partir du premier trimestre 2001, le numéro d'identification produit (PIN) Caterpillar passe de 8 à 17 caractères. Afin de permettre une identification uniforme des matériels, Caterpillar et d'autres constructeurs de machines de travaux publics s'efforcent de se conformer à la norme la plus récente portant sur les numéros d'identification des produits. Les numéros d'identification (PIN) de machines de chantier sont définis par la norme ISO 10261. Le nouveau format du numéro d'identification est valable pour toutes les machines et tous les groupes électrogènes Caterpillar. Le numéro d'identification produit (PIN) figurant sur la plaque et sur le châssis se composera de 17 caractères. Le nouveau format ressemblera à ceci:

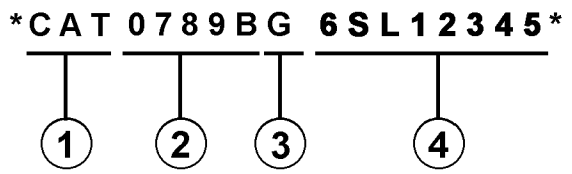

Il se décomposera de la façon suivante:

1. Code international de fabrication de Caterpillar (caractères 1 à 3)

2. Descriptif de la machine (caractères 4 à 8)

3. Contrôle (caractère 9)

4. Indicateur machine (MIS) ou numéro de séquence produit (caractères 10 à 17). Ceux-ci étaient auparavant désignés sous le terme de numéro de série.

Les machines et les groupes électrogènes construits avant le premier trimestre 2001 garderont le format à 8 caractères du numéro d'identification produit (PIN).

Les organes tels que les moteurs, les boîtes de vitesses, les essieux, etc., continueront d'être désignés par un numéro de série (S/N) à 8 caractères.

2. COMMANDE DE PIÈCES

⚠ DANGER

Lorsqu'il faut remplacer des pièces de rechange pour ce produit Caterpillar recommande d'utiliser les pièces de rechange Caterpillar ou les pièces qui ont des spécifications équivalentes dont les dimensions physiques, le type, la force et le matériau. Ces équivalences ne se limitent pas à l'énoncé précédent.

L'inobservation de cette mise en garde peut entraîner des défaillances prématurées, des dommages au produit, des blessures ou même la mort.

Les concessionnaires Caterpillar fournissent dans le monde entier des pièces de rechange de qualité Caterpillar. Leurs stocks de pièces sont constamment réapprovisionnés et comptent toutes les pièces nécessaires pour assurer la bonne marche de vos machines Caterpillar. Certains concessionnaires proposent également des kits de réparation ou des pièces rénovées, ce qui permet de choisir la solution la plus économique dans une situation donnée. Lors des commandes de pièces, mentionner la quantité, le numéro et la désignation des pièces ainsi que le numéro de série ou le numéro d'identification (PIN) de la machine pour laquelle ces pièces sont requises.

3. ORGANISATION DU CATALOGUE DE PIÈCES

Les renseignements sur les produits sont présentés sous forme de "Information element" (élément d'information) représentant tous les composants d'un modèle donné. "Engine Arrangement" (version de moteur) et "Seat Group" (assemblage de siège)" sont des exemples d'éléments d'information. Les éléments d'information sont classés par ordre alphabétique par la désignation standard des pièces et par numéros de pièces dans chaque partie importante du manuel.

4. TABLE DES MATIÈRES

SIS *Nouvelle Caractéristique*

La table des matières se trouve au début du manuel. La table des matières fournit la liste de tous les chapitres du manuel avec une liste complète de tous les éléments d'information classés par ordre d'apparition dans le manuel. Les numéros de page sont fournis afin que l'utilisateur puisse trouver rapidement les illustrations détaillées concernant l'identification des pièces et les listes des pièces d'entretien.

5. INDEX DES PIÈCES D'ENTRETIEN

La rubrique "Index des pièces d'entretien" qui se trouve au début du manuel renvoie aux pièces d'entretien les plus fréquemment utilisées en précisant la désignation, la quantité, là où la pièce est utilisée et le numéro de page. Ces pièces sont classés par ordre alphabétique.

6. INDEX

L'index qui se trouve vers le début du manuel est une liste alphabétique de tous les éléments d'information du manuel. Les numéros de page sont fournis afin que l'utilisateur puisse trouver rapidement les illustrations détaillées concernant l'identification des pièces et les listes des pièces d'entretien.

7. INDEX DES NUMÉROS DE PIÈCES

Une liste numérique de tous les numéros de pièces et des pages correspondantes se trouve à la fin du manuel.

8. LÉGENDES

Les légendes qui se trouvent en haut de chaque page de chaque élément d'information fournissent le numéro de pièce, la désignation ainsi que des renseignements supplémentaires sur les pièces. Les renseignements concernant les numéros de série (S/N) qui se trouvent dans chaque légende doivent être utilisés pour sélectionner les informations correctes pour un moteur donné. Les informations concernant les options de remplacement sur le chantier, l'identification des composants des équipements offerts en option et les lieux d'application sont aussi fournies.

SIS *Nouvelle Caractéristique*

Les lettres de la première ligne d'une légende sont présentées en police plus grande afin d'indiquer le début d'une unité d'information. Les légendes qui pourraient être requises pour des pages supplémentaires afin d'illustrer une unité d'information seront présentées en police standard et comprendront le terme (à suivre).

9. PIÈCES NON FOURNIES

SIS *Nouvelle Caractéristique*

Dans certains cas, il est nécessaire d'indiquer les pièces non fournies qui sont en aval de la liste des pièces d'entretien. Les numéros des pièces non fournies dans la liste des pièces et les légendes seront en italique pour signaler qu'ils ne sont pas disponibles.

10. NUMÉROS DE RÉFÉRENCE DE LA LISTE DES PIÈCES

SIS *Nouvelle Caractéristique*

Les numéros indiqués dans la colonne des numéros de références correspondent aux numéros utilisés dans les illustrations auxquelles ils sont associés. Un suffixe alphabétique peut être ajouté à un numéro de référence pour identifier la liste des articles en aval. Les numéros indiqués dans la colonne de référence de l'illustration renvoient à l'identification du numéro affiché dans le coin inférieur gauche de chaque illustration. Le numéro de référence de l'illustration pourrait être utilisé avec le numéro de référence de l'article pour déterminer le numéro de pièce correct. Il peut y avoir une omission intentionnelle d'un numéro de référence dans une liste de pièces suite à la mise à jour des informations en vue de refléter les numéros de pièces les plus récentes.

11. DÉSIGNATIONS DE PIÈCES EN RETRAIT

Lorsqu'une désignation de pièce est en retrait, cela veut dire que l'article en regard fait partie de l'ensemble sous lequel il figure.

12. LETTRES DE RÉFÉRENCE DES ILLUSTRATIONS

Quand cela est nécessaire, les illustrations comportent des lettres de référence (A, B, C, etc.) pour montrer le trajet des canalisations et faisceaux de câbles d'un point à l'autre. Elles sont utilisées également pour indiquer où relier les illustrations séparées auparavant.

13. ABRÉVIATIONS ET SYMBOLES

O.D. – Diamètre extérieur
I.D. – Diamètre intérieur
A – Ne fait pas partie de ce groupe
B – Utiliser selon besoin
C – Modification
D – Commander par mètre
E – Commander par centimètre
F – Non représenté
G – Commander par pouce
I – Voir "Hydraulic Information System"
M – Pièce métrique
R – Pièce rénovée éventuellement disponible
Y – Illustration séparée
Z – Non fourni séparément

NOTA:

En raison du progrès technique et des améliorations continuelles apportées au matériel, votre machine comporte peut-être des modifications qui n'apparaissent pas dans la présente publication. En cas de doute sur un détail de votre machine Caterpillar ou sur le texte de la présente publication, adressez-vous à votre concessionnaire Caterpillar.

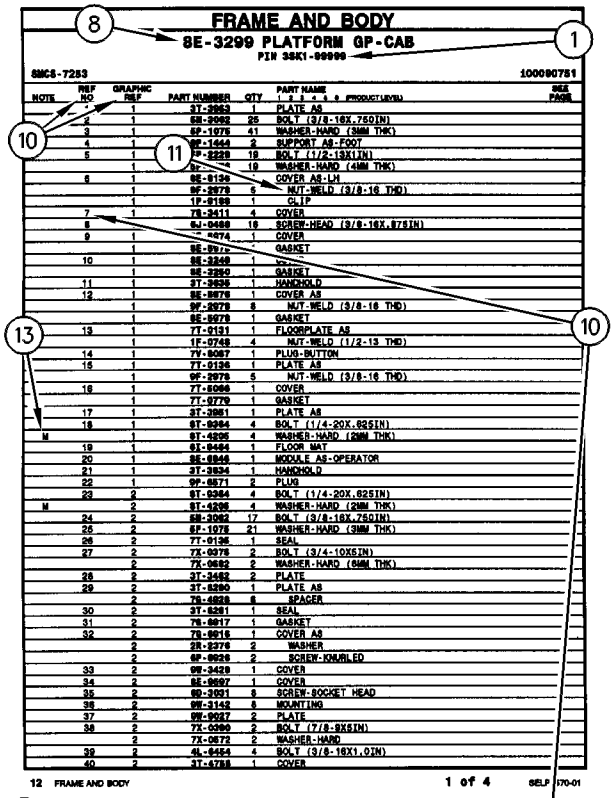
FRAME AND BODY
8E-3299 PLATFORM GP-CAB
PIN 3SK1-99999
SMCS-7283
100090751
1 of 4
SELP4570-01

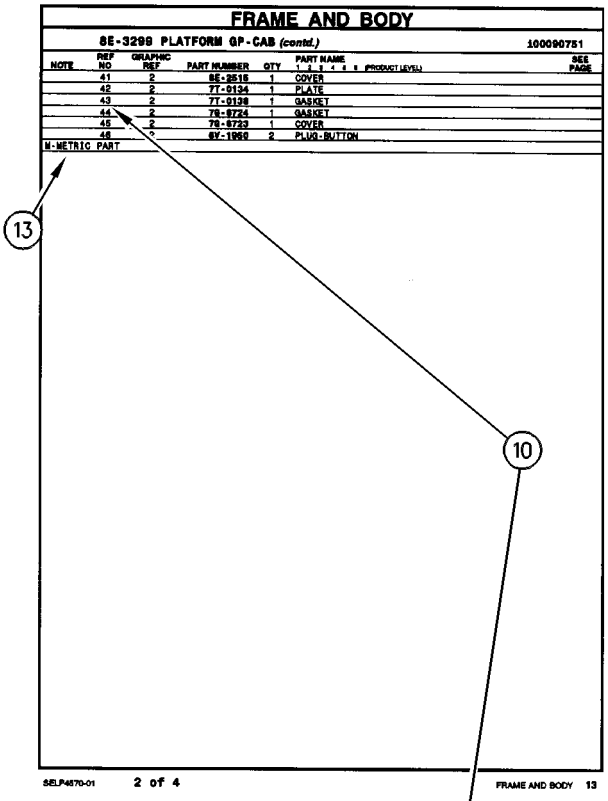
FRAME AND BODY
8E-3299 PLATFORM GP-CAB (contd.)
100090751
2 of 4
SELP4570-01

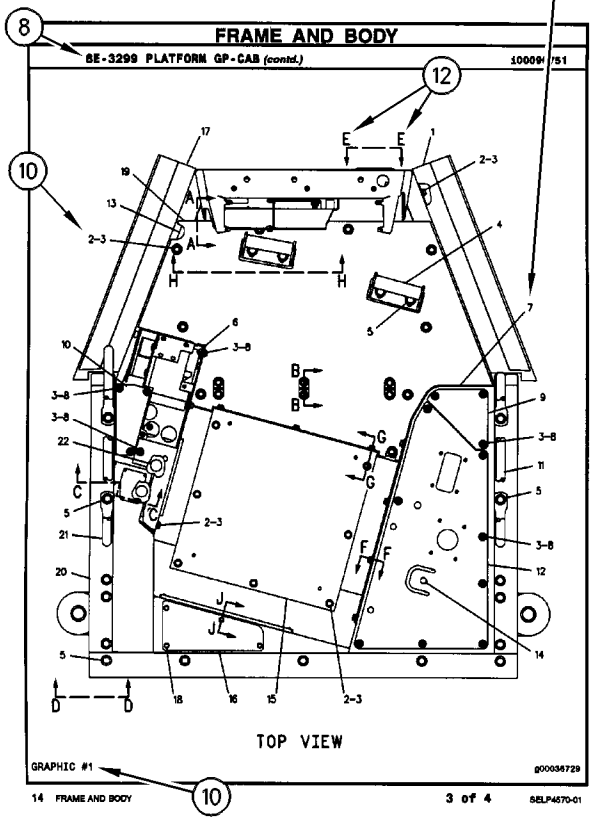
FRAME AND BODY
8E-3299 PLATFORM GP-CAB (contd.)
TOP VIEW
GRAPHIC #1
g00036729
3 of 4
SELP4570-01

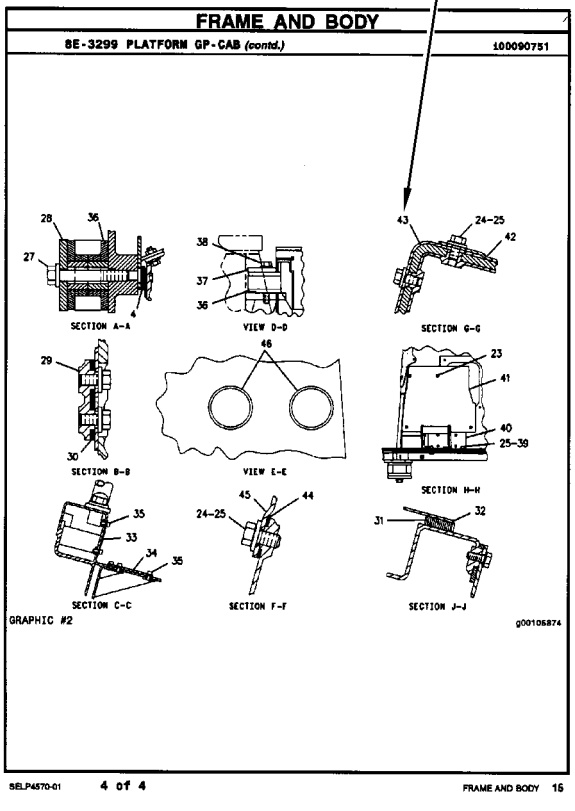
FRAME AND BODY
8E-3299 PLATFORM GP-CAB (contd.)
100090751
SECTION A-A
VIEW D-D
SECTION G-G
SECTION B-B
VIEW E-E
SECTION H-H
SECTION C-C
SECTION F-F
SECTION J-J
GRAPHIC #2
g00105874
4 of 4
SELP4570-01

INFORMACIÓN GENERAL

1. MÁQUINAS

Las máquinas Caterpillar se identifican con Números de Identificación del Producto (PIN). Algunos componentes incluídos en la máquina pueden estar identificados con Números de Serie (N/S). Los componentes que tienen típicamente esta identificación incluyen motores, transmisiones, hojas topadoras y desgarradores. La máquina y el motor se identifican además con Números de Configuración y en algunos casos, Números de Modificación. Estos números están en las placas de identificación del producto o en la placa principal en la cabina del operador.

Los distribuidores Caterpillar necesitan estos números para identificar con exactitud los números de piezas de repuesto.

SIS *Nueva Característica*

A partir del primer trimestre del 2001, el Número de Identificación de Producto (PIN) de Caterpillar cambió de 8 a 17 caracteres. Para hacer más uniforme el método de identificación de equipos, Caterpillar y otros fabricantes de equipo de construcción han tomado medidas para cumplir con la versión más reciente de la norma de numeración de identificación de productos. Los Números de Identificación de Producto para máquinas que no se operan en carreteras son definidos por la norma ISO 10261. El nuevo formato PIN corresponderá a todas las máquinas y grupos electrógenos Caterpillar. Las placas y los caracteres PIN estampados en el bastidor mostrarán el PIN de 17 caracteres. El nuevo formato tendrá la apariencia siguiente:

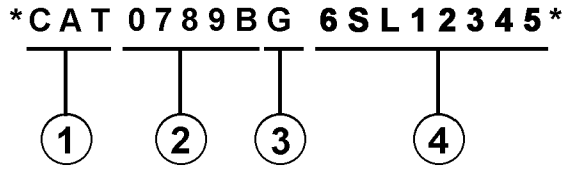

Significado de los caracteres:

1. Código de Fabricación Mundial de Caterpillar (caracteres 1-3)

2. Sección Descriptor de la Máquina (caracteres 4-8)

3. Carácter de Verificación (carácter 9)

4. Sección Indicador de la Máquina (MIS) o Número de Secuencia de Producto (caracteres 10-17). Anteriormente, estos caracteres constituían el Número de Serie.

Las máquinas y grupos electrógenos producidos antes del primer semestre del 2001 mantendrán su formato PIN de 8 caracteres.

Los componentes como motores, transmisiones, ejes, herramientas de trabajo, etc., continuarán usando un Número de Serie (S/N) de 8 caracteres.

2. COMO PEDIR REPUESTOS

⚠ ADVERTENCIA

Cuando se necesiten piezas de repuesto para este producto, Caterpillar recomienda usar piezas de repuesto Caterpillar o piezas que tengan especificaciones equivalentes incluyendo, pero sin estar limitadas a, dimensiones físicas, tipo, fortaleza y material.

El no hacer caso de esta advertencia puede llevar a fallas prematuras, daños al producto y lesiones graves o mortales.

Las piezas de repuesto Caterpillar de calidad están a la disposición de los distribuidores Caterpillar en todo el mundo. Sus existencias actualizadas incluyen todas las piezas normalmente requeridas para proteger su inversión en máquinas Caterpillar. Los distribuidores pueden tener juegos de reparación o piezas remanufacturadas para permitir la selección de la mejor alternativa de reparación en un caso en particular. Al pedir piezas de repuesto, especifique en su pedido la cantidad, el número de pieza, el nombre de la pieza y el número de serie/número de identificación del producto, de la máquina para la cual se necesitan estas piezas.

3. ORGANIZACION DEL MANUAL DE PIEZAS

La información sobre el producto, se presenta en este manual, como "elementos de información" que representan todos los componentes de un modelo específico. Las configuraciones de motores y los grupos de asientos son ejemplos de elementos de información. Los elementos de información están organizados primeramente por nombres de piezas en orden alfabético y en segundo lugar, por el número de pieza dentro de cada sección principal del manual.

4. CONTENIDO

La página de Contenido se encuentra al principio del manual. El Contenido indica cada sección del manual con una lista completa de todos los elementos de información organizados en el orden que aparecen en el manual. Los números de página proporcionan una referencia rápida a las ilustraciones detalladas de identificación de piezas y a las listas de componentes de repuesto de dichas piezas.

5. ÍNDICE DE PIEZAS DE MANTENIMIENTO

Al principio de este catálogo se encuentra un índice de los números de piezas utilizadas más frecuentemente para el mantenimiento, que incluye descripción, cantidad necesaria, lugar de utilización y número de página. Esta información está organizada alfabéticamente, por descripción de la pieza.

6. ÍNDICE

El Índice, ubicado cerca del principio del manual, es una lista en orden alfabético de todos los elementos de información incluídos en el manual. Los números de página proporcionan una referencia rápida a las ilustraciones detalladas de identificación de piezas y a las listas de componentes de repuesto de dichas piezas.

7. INDICE NUMÉRICO DE PIEZAS

Un índice numérico de piezas con el correspondiente número de página aparece al final de este catálogo.

8. TÍTULOS

Los títulos ubicados al principio de cada elemento de información identifican el número y el nombre de la pieza junto con información descriptiva. Se debe usar información sobre los Números de Identificación de Pieza (PIN) y los números de serie (S/N) para seleccionar la información que corresponda a una máquina en particular. También se suministra información sobre las opciones de reparación en el campo, la identificación de componentes de accesorios optativos y el lugar de ubicación de la pieza ("es parte de").

La primera línea del título se muestra con un tipo de letra más grande para indicar el comienzo de un elemento de información. Si se requieren páginas adicionales para ilustrar un elemento de información, los títulos se muestran con un tipo de letra normal y la continuación se indica entre paréntesis.

9. PIEZAS QUE NO SE SUMINISTRAN COMO REPUESTO

En algunos casos es necesario indicar piezas que no se suministran como repuesto pero que pueden estar conectadas a listas de componentes de otras piezas de repuesto. En tal caso, dichas piezas se muestran en cursiva para indicar que no son piezas disponibles.

10. NÚMEROS DE REFERENCIA

Los números en la columna de No. de Referencia corresponden a los números indicados en la ilustración que pertenece a ese número de pieza. Los números que tienen un sufijo alfabético identifican artículos de las listas de componentes de piezas. Los números en la columna de Referencia de la ilustración se identifican en la esquina inferior izquierda de cada ilustración. Para determinar el número de pieza correcto se puede utilizar tanto el No. de Referencia de la ilustración como el No. de Referencia del artículo. A medida que se actualiza la información para indicar los más recientes números de piezas de repuesto, puede omitirse intencionalmente un No. de Referencia en una lista de componentes de piezas.

11. NOMBRES DE PIEZA SANGRADOS

Cuando el nombre de una pieza está sangrado en una lista, significa que esta pieza forma parte del grupo o conjunto del renglón inmediatamente superior.

12. LETRAS DE REFERENCIA DE ILUSTRACIONES

Las ilustraciones contienen algunas veces letras de referencia (A, B, C etc.) cuyo propósito es seguir el trayecto de líneas y mazos de cables de un punto a otro. También se utilizan para mostrar dónde volver a unir ilustraciones que se habían separado.

13. ABREVIATURAS Y SIMBOLOS

O.D. – Diámetro exterior
I.D. – Diámetro interior
A – No es pieza de este grupo
B – Utilizado según la demanda
C – Indica cambio
D – Se pide por metro
E – Se pide por centímetro
F – No se muestra
G – Se pide por pulgada
I – Consulte el sistema de información hidráulica
M – Pieza métrica
R – Puede estar disponible como pieza remanufacturada
Y – Ilustración separada
Z – No se suministra por separado

SIS *Nueva Característica*

14. DESCRIPCIÓN DE LOS CAMBIOS DE TIPO

Tipo – Un tipo se define como cualquier cambio de configuración que requiere un Elemento de información adicional de una Configuración, Grupo o Conjunto. Si el número de serie se clasifica por tipos que no están disponibles, se mostrará un número de tipo (Tipo 1,Tipo 2,etc.) en el comentario de la fotografía. Estos cambios de "tipo" se identifican con una nota "C" (cambio con respecto al tipo anterior) en la Lista de Piezas. Se incluirían sólo los "tipos" que aplican a este Manual de Piezas. Es posible que haya tipos adicionales que causen la aparición de notas "C" en el Elemento de Información cuando no se muestran otros tipos."

15.<END>

Este símbolo indica el final de un elemento de información.

NOTA:

Las contínuas mejoras y adelantos en diseño podrían originar cambios a su máquina que no se incluyen en esta publicación. Cuando tenga alguna pregunta acerca de su producto Caterpillar o de esta publicación, consulte al distribuidor Caterpillar para obtener la información más reciente.

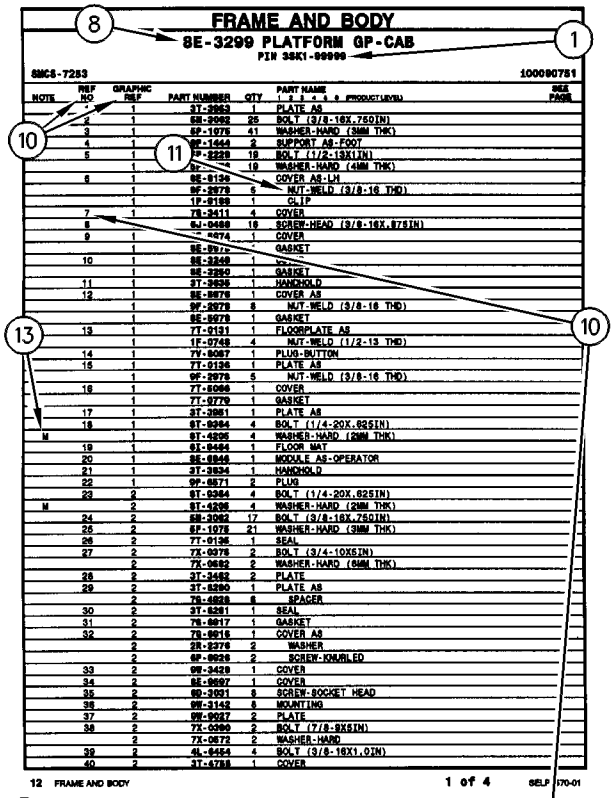

FRAME AND BODY

8E-3299 PLATFORM GP-CAB

PIN 3SK1-99999

SMCS-7283 100090751

NOTE	REF NO	GRAPHIC REF	PART NUMBER	QTY	PART NAME (1 2 3 4 5 6 PRODUCT LEVEL)	SEE PAGE
	*	1	3T-3963	1	PLATE AS	
	2	1	5M-2062	25	BOLT (3/8-16X.750IN)	
	3	1	6P-1075	41	WASHER-HARD (3MM THK)	
	4	1	9E-1443	2	SUPPORT AS-FOOT	
	5	1	9P-2229	18	BOLT (1/2-13X1IN)	
		1	9P-[illegible]	18	WASHER-HARD (4MM THK)	
	6	1	9E-9136	*	COVER AS-LH	
		1	9F-2979	6	NUT-WELD (3/8-16 THD)	
		1	1P-0189	1	CLIP	
	7	1	7X-3411	4	COVER	
	8	1	6J-0468	18	SCREW-HEAD (3/8-16X.87SIN)	
	9	1	[illegible]-0274	1	COVER	
		1	9E-9[illegible]	*	GASKET	
	10	1	9E-3248	1	[illegible]	
		1	9E-2950	1	GASKET	
	11	1	3T-3936	1	HANDHOLD	
	12	1	9E-9976	1	COVER AS	
		1	9F-2979	8	NUT-WELD (3/8-16 THD)	
		1	9E-9978	1	GASKET	
	13	1	7T-9131	1	FLOORPLATE AS	
		1	1F-0748	4	NUT-WELD (1/2-13 THD)	
	14	1	7V-8067	1	PLUG-BUTTON	
	15	1	7T-9136	1	PLATE AS	
		1	9F-2979	5	NUT-WELD (3/8-16 THD)	
	16	1	7T-5066	1	COVER	
		1	7T-9779	1	GASKET	
	17	1	3T-3951	1	PLATE AS	
	18	1	9T-0264	4	BOLT (1/4-20X.62SIN)	
M		1	9T-4295	4	WASHER-HARD (2MM THK)	
	19	1	6I-9454	1	FLOOR MAT	
	20	1	9E-6946	1	MODULE AS-OPERATOR	
	21	1	3T-3934	1	HANDHOLD	
	22	1	9P-0671	2	PLUG	
	23	2	9T-0264	4	BOLT (1/4-20X.62SIN)	
M		2	9T-4295	4	WASHER-HARD (2MM THK)	
	24	2	5M-2062	17	BOLT (3/8-16X.75QIN)	
	25	2	6P-1075	21	WASHER-HARD (3MM THK)	
	26	2	7T-9136	1	SEAL	
	27	2	7X-0075	2	BOLT (3/4-10X5IN)	
		2	7X-0682	2	WASHER-HARD (6MM THK)	
	28	2	3T-3482	2	PLATE	
	29	2	3T-5290	1	PLATE AS	
		2	7E-4828	6	SPACER	
	30	2	3T-5291	1	SEAL	
	31	2	7E-9817	1	GASKET	
	32	2	7E-9816	1	COVER AS	
		2	5R-2276	2	WASHER	
		2	9F-9926	2	SCREW-KNURLED	
	33	2	9W-3429	1	COVER	
	34	2	9E-9697	1	COVER	
	35	2	9D-3931	8	SCREW-SOCKET HEAD	
	36	2	9W-3142	8	MOUNTING	
	37	2	9W-9937	2	PLATE	
	38	2	7X-0360	2	BOLT (7/8-9X5IN)	
		2	7X-0672	2	WASHER-HARD	
	39	2	4L-9454	4	BOLT (3/8-16X1.0IN)	
	40	2	3T-4788	1	COVER	

12 FRAME AND BODY 1 of 4 SELP4570-01

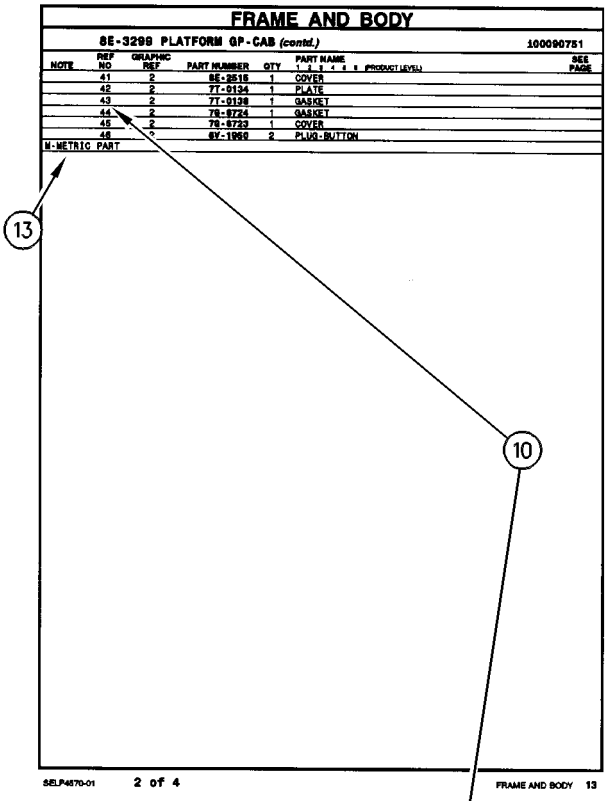

FRAME AND BODY

8E-3299 PLATFORM GP-CAB (contd.) 100090751

NOTE	REF NO	GRAPHIC REF	PART NUMBER	QTY	PART NAME (1 2 3 4 5 6 PRODUCT LEVEL)	SEE PAGE
	41	2	9E-2515	1	COVER	
	42	2	7T-9134	1	PLATE	
	43	2	7T-9138	1	GASKET	
	44	2	7E-9724	1	GASKET	
	45	2	7E-9723	1	COVER	
	46	*	8Y-1950	2	PLUG-BUTTON	

M-METRIC PART

SELP4570-01 2 of 4 FRAME AND BODY 13

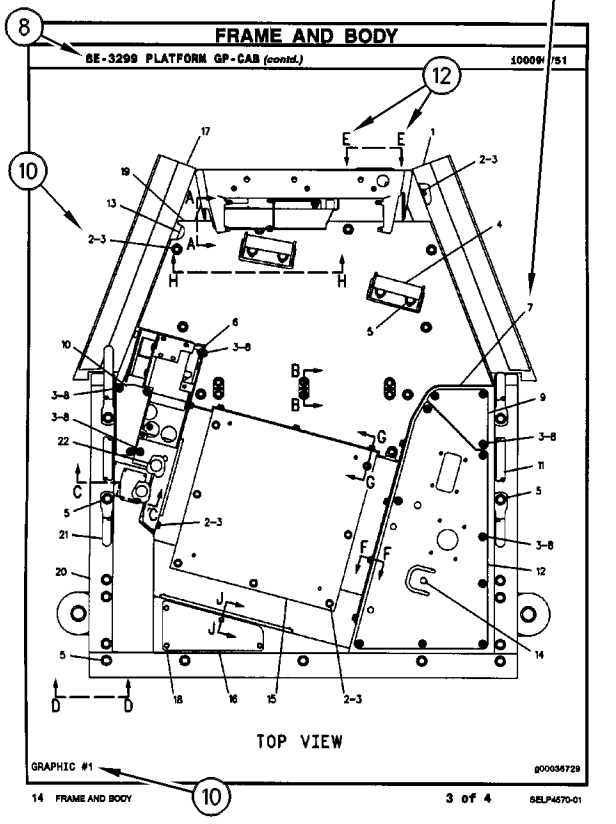

FRAME AND BODY

8E-3299 PLATFORM GP-CAB (contd.) 100090751

14 FRAME AND BODY 3 of 4 SELP4570-01

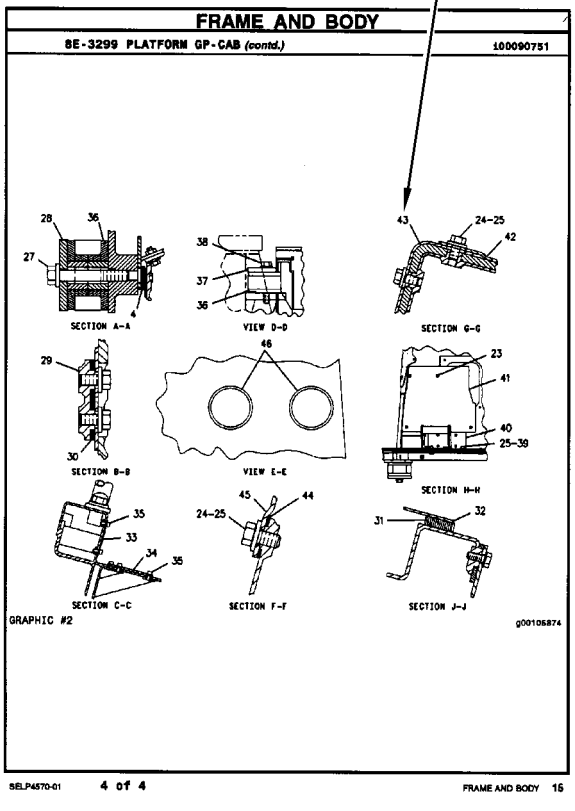

FRAME AND BODY

8E-3299 PLATFORM GP-CAB (contd.) 100090751

SELP4570-01 4 of 4 FRAME AND BODY 15

INFORMAÇÃO GERAL

1. IDENTIFICAÇÃO DA MÁQUINA

As máquinas Caterpillar são identificadas pelos Números de Informação do Produto (PIN). Alguns componentes incluídos numa máquina podem ser identificados por Números de Série (S/N). Componentes típicos que serão enumerados com números de série incluem motores, transmissões, lâminas e ríperes. Além do número de série, a máquina e o motor são ainda identificados por números de arranjo e, em alguns casos, números de modificações. Tais números encontram-se na(s) placa(s) de identificação do produto e na placa mestre no compartimento do operador.

SIS *Novidades*

A partir do primeiro trimestre de 2001 o Número de Identificação de Produto da Caterpillar (PIN) precisa ser mudado de 8 para 17 caracteres. Esforçando-se para fornecer uma identificação uniforme de equipamentos, a Caterpillar e outros fabricantes de equipamento de construção estão mudando para atender a versão mais atualizada do padrão de identificação de produtos. Os números de PIN para produtos de aplicações não rodoviárias são definidos pela ISO 10261. O novo formato de número PIN será adotado em todas as máquinas e grupos geradores Caterpillar. As placas e as marcações do chassi mostrarão os 17 dígitos de PIN. O novo formato terá a seguinte disposição:

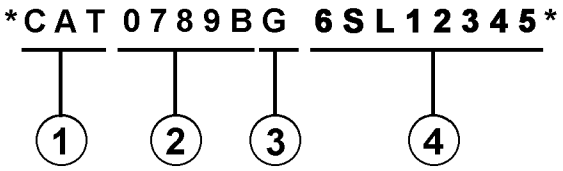

Onde:

1. Código de Fabricação Mundial da Caterpillar (dígitos 1-3)

2. Descrição da Máquina (dígitos 4-8)

3. Dígito de Verificação (dígito 9)

4. Seção de Indicador da Máquina (MIS) ou Número de Seqüência de Produto (dígitos 10-17). Estes eram anteriormente chamados de Número de Série.

Máquinas e grupos geradores produzidos antes do primeiro trimestre de 2001 manterão o formato de 8 caracteres de PIN.

Componentes como motores, transmissões, eixos, ferramentas de trabalho, etc. continuarão a usar Número de Série (S/N) com oito caracteres.

2. COMO OBTER PEÇAS

⚠ CUIDADO

Quando peças de substituição são exigidas para este produto, a Caterpillar recomenda a utilização de peças de substituição Caterpillar ou peças com as especificações equivalentes incluindo, mas não limitadas, à dimensões físicas, tipos, resistência e materiais.

A inobservância desta advertência poderá resultar em falhas prematuras, danos ao produto, ferimentos ou morte.

As Peças de Reposição de Qualidade Caterpillar encontram-se disponíveis nos revendedores Caterpillar no mundo inteiro. Seus estoques de peças são atualizados e incluem todas as peças normalmente necessárias para proteger seu investimento em máquinas Caterpillar. Alguns revendedores podem oferecer jogos de reparo ou peças de troca/remanufaturadas disponíveis como uma opção da alternativa de reparo mais eficaz para uma situação específica. Ao encomendar peças, seu pedido deve especificar a quantidade, o número e o nome da peça e o número de série/número de identificação do produto referentes à máquina para a qual as peças se destinam.

3. ORGANIZAÇÃO DO MANUAL DE PEÇAS

A informação do produto neste manual é apresentada em forma de "elementos de informação" que representam todos os componentes para o modelo específico. Arranjo de Motor e Grupo de Assento são exemplos de elementos de informação. Os elementos de informação são organizados em ordem alfabética por nome de peça ou secundariamente, por número de peça incluído em cada seção principal do manual.

4. LISTA DE CONTEÚDOS

A Lista de Conteúdos (TOC) se encontra no princípio do manual. A Lista de Conteúdos (TOC) relaciona em cada seção do manual uma lista completa com todos os elementos de informação organizados conforme aparecem no manual. Números de página são fornecidos para que se tenha referência rápida de ilustrações de peças detalhadas e listas de conteúdos que podem receber serviço de manutenção.

INFORMAÇÃO GERAL

5. ÍNDICE DE PEÇAS DE MANUTENÇÃO

O Índice de Peças de Manutenção, localizado perto do princípio do manual, faz referência aos números de peça de manutenção usados com maior frequência, fornecendo uma descrição, a quantidade, o uso e o número de página. Esta informação é organizada com a descrição da peça em ordem alfabética.

6. ÍNDICE

O Índice localizado perto do princípio do manual, consiste de uma lista em ordem alfabética de todos os elementos de informação incluídos no manual. Números de página são fornecidos para que se tenha referência rápida de ilustrações de peças detalhadas e listas de conteúdos que podem receber serviço de manutenção.

7. ÍNDICE DE NÚMERO DE PEÇA

Um índice numérico relacionando todos os números de peça e a(s) página(s) correspondentes, aparece no final do manual.

8. LEGENDAS

As legendas localizadas no início de cada elemento de informação identificam o número e o nome de peça, juntamente com informação descritiva adicional. Informações sobre o Número de Informação do Produto (PIN) e o Número de Série (S/N) encontradas em cada legenda devem ser usadas para selecionar a informação correta sobre uma máquina específica. Opções de substituição no campo, identificação de componentes de acessórios opcionais e informações sobre onde são utilizados ("parte de") são também fornecidas.

A primeira linha de uma legenda é indicada em tipo maior para indicar o princípio de um elemento de informação. Legendas para páginas adicionais que podem ser necessárias para ilustrar um elemento de informação serão apresentadas em tipo padrão e incluirão o termo *(continua)* .

9. NÃO DISPONÍVEL SEPARADAMENTE

Em alguns casos, é necessário mostrar peças não disponíveis separadamente que têm uma ligação com listas de conteúdos de nível inferior que podem receber serviço de manutenção. Os números de peça destes componentes não disponíveis aparecerão em *itálico* , a fim de indicar que não estão disponíveis.

10. NÙMEROS DE REFERÊNCIA À LISTA DE PEÇAS

Os números indicados na coluna Ref No (No. de Referência) correspondem-se aos números usados no(s) gráfico(s) correspondente(s). Um sufixo com letras pode ser acrescentado a um número de referência para identificar itens de conteúdo de nível inferior. Os números indicados na coluna Graphic Ref (Referência de Gráfico) referem-se ao identificador de número de gráfico presente no canto esquerdo inferior de cada ilustração. O número de Referência de Gráfico pode ser usado em combinação com o item Ref No para determinar-se o número de peça correto. Poderá haver omissão intencional de um número de referência (Ref No) de uma lista de conteúdos uma vez que as informações são atualizadas para refletir os números de peça mais recentes que podem receber serviço de manutenção.

11. NOMES DE PEÇAS DESALINHADOS

Quando um nome de peça encontra-se desalinhado numa lista de peças, significa que tal item faz parte do (está incluído no) grupo ou conjunto sob o qual está relacionado.

12. LETRAS DE REFERÊNCIA NAS ILUSTRAÇÕES

Quando necessário, as ilustrações contêm letras de referência (A, B, C, etc.) que são utilizadas para seguir tubulações e cabos elétricos de um ponto a outro. Também foram utilizadas para indicar onde se pode reconectar as ilustrações que foram separadas.

13. ABREVIAÇÕES E SÍMBOLOS

O.D. – "Outside Diameter" (Diâmetro Externo)
I.D. – "Inside Diameter" (Diâmetro Interno)
A – Não faz parte deste grupo
B – Use conforme necessário
C – Indica modificação
D – Vendido por metro
E – Vendido por centímetro
F – Não ilustrado
G – Vendido por polegada
I – Consultar o Sistema de Informações Hidráulicas
M – Peça métrica
R – Peça remanufaturada pode estar disponível; consulte o seu revendedor Cat
Y – Ilustração separada
Z – Não disponível separadamente

SIS *Novidades*

14. <END>

Este símbolo indica o final de um elemento de informação.

INFORMAÇÃO GERAL

NOTA:

Os contínuos aperfeiçoamentos e avanços no projeto do produto podem ocasionar modificações em sua máquina que talvez ainda não estejam incluídas nesta publicação. Sempre que surgirem dúvidas quanto a um produto Caterpillar ou quanto à presente publicação, consulte o seu revendedor Caterpillar para obter as informações mais recentes disponíveis.

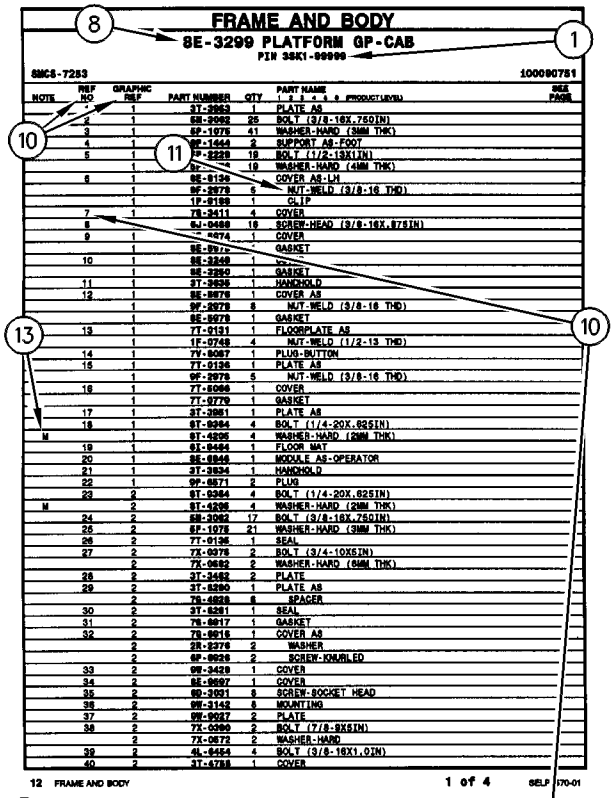

FRAME AND BODY

8E-3299 PLATFORM GP-CAB

PIN 3SK1-99999

SMCS-7283 100090751

NOTE	REF NO	GRAPHIC REF	PART NUMBER	QTY	PART NAME 1 2 3 4 5 6 (PRODUCT LEVEL)	SEE PAGE
	*	1	3T-3963	1	PLATE AS	
	2	1	5M-2062	25	BOLT (3/8-16X.750IN)	
	3	1	6P-1075	41	WASHER-HARD (3MM THK)	
	4	1	9E-1443	2	SUPPORT AS-FOOT	
	5	1	9P-2229	19	BOLT (1/2-13X1IN)	
		1	9P-[illegible]	19	WASHER-HARD (4MM THK)	
	6	1	9E-9136	*	COVER AS-LH	
		1	9F-2979	6	NUT-WELD (3/8-16 THD)	
		1	1P-0189	1	CLIP	
	7	1	7S-2411	4	COVER	
	8	1	6J-0468	18	SCREW-HEAD (3/8-16X.87SIN)	
	9	1	[illegible]074	1	COVER	
		1	9E-9[illegible]	*	GASKET	
	10	1	9E-3248	1	[illegible]	
		1	9E-2950	1	GASKET	
	11	1	3T-3936	1	HANDHOLD	
	12	1	9E-9976	1	COVER AS	
		1	9F-2979	8	NUT-WELD (3/8-16 THD)	
		1	9E-9978	1	GASKET	
	13	1	7T-9131	1	FLOORPLATE AS	
		1	1F-0748	4	NUT-WELD (1/2-13 THD)	
	14	1	7V-9067	1	PLUG-BUTTON	
	15	1	7T-9136	1	PLATE AS	
		1	9F-2979	5	NUT-WELD (3/8-16 THD)	
	16	1	7T-5066	1	COVER	
		1	7T-9779	1	GASKET	
	17	1	3T-3951	1	PLATE AS	
	18	1	9T-0264	4	BOLT (1/4-20X.62SIN)	
M		1	9T-4296	4	WASHER-HARD (2MM THK)	
	19	1	9I-9464	1	FLOOR MAT	
	20	1	9E-6946	1	MODULE AS-OPERATOR	
	21	1	3T-3934	1	HANDHOLD	
	22	1	9P-0671	2	PLUG	
	23	2	9T-0264	4	BOLT (1/4-20X.62SIN)	
M		2	9T-4296	4	WASHER-HARD (2MM THK)	
	24	2	5M-2062	17	BOLT (3/8-16X.750IN)	
	25	2	6P-1075	21	WASHER-HARD (3MM THK)	
	26	2	7T-9136	1	SEAL	
	27	2	7X-0075	2	BOLT (3/4-10X5IN)	
		2	7X-0682	2	WASHER-HARD (6MM THK)	
	28	2	3T-3482	2	PLATE	
	29	2	3T-5290	1	PLATE AS	
		2	7S-4828	6	SPACER	
	30	2	3T-5291	1	SEAL	
	31	2	7S-9917	1	GASKET	
	32	2	7S-9916	1	COVER AS	
		2	5R-2276	2	WASHER	
		2	9F-9928	2	SCREW-KNURLED	
	33	2	9W-3429	1	COVER	
	34	2	8E-9697	1	COVER	
	35	2	9D-3931	8	SCREW-SOCKET HEAD	
	36	2	9W-3143	8	MOUNTING	
	37	2	9W-9937	2	PLATE	
	38	2	7X-0360	2	BOLT (7/8-9X5IN)	
		2	7X-0672	2	WASHER-HARD	
	39	2	4L-9454	4	BOLT (3/8-16X1.0IN)	
	40	2	3T-4788	1	COVER	

12 FRAME AND BODY 1 of 4 SELP4570-01

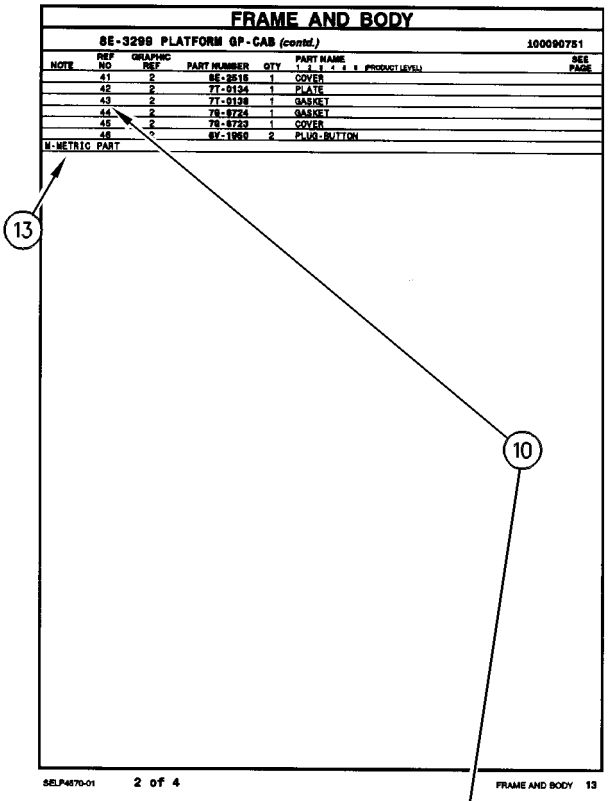

FRAME AND BODY

8E-3299 PLATFORM GP-CAB (contd.) 100090751

NOTE	REF NO	GRAPHIC REF	PART NUMBER	QTY	PART NAME 1 2 3 4 5 6 (PRODUCT LEVEL)	SEE PAGE
	41	2	8E-2515	1	COVER	
	42	2	7T-9134	1	PLATE	
	43	2	7T-9138	1	GASKET	
	44	2	7S-9724	1	GASKET	
	45	2	7S-9723	1	COVER	
	46	*	8Y-1950	2	PLUG-BUTTON	

M-METRIC PART

SELP4570-01 2 of 4 FRAME AND BODY 13

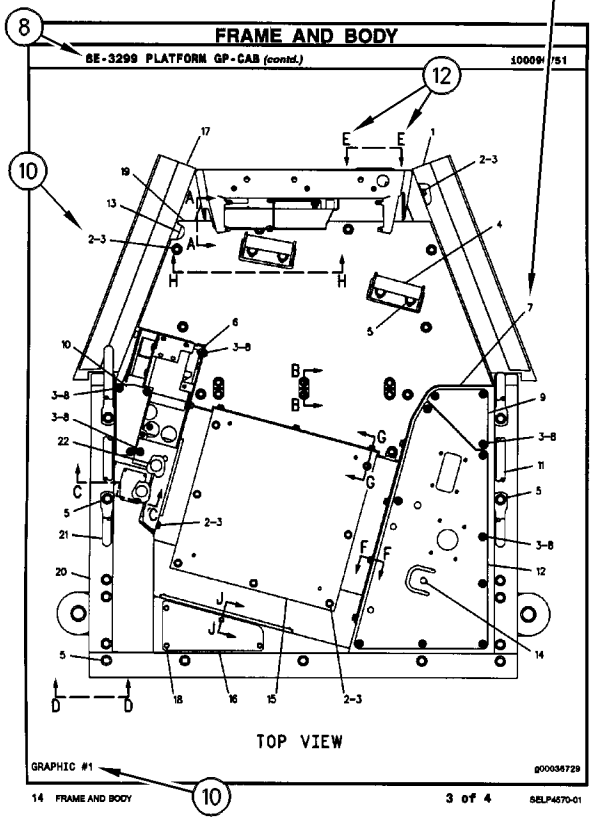

FRAME AND BODY

8E-3299 PLATFORM GP-CAB (contd.) 100090751

TOP VIEW

GRAPHIC #1 g00036729

14 FRAME AND BODY 3 of 4 SELP4570-01

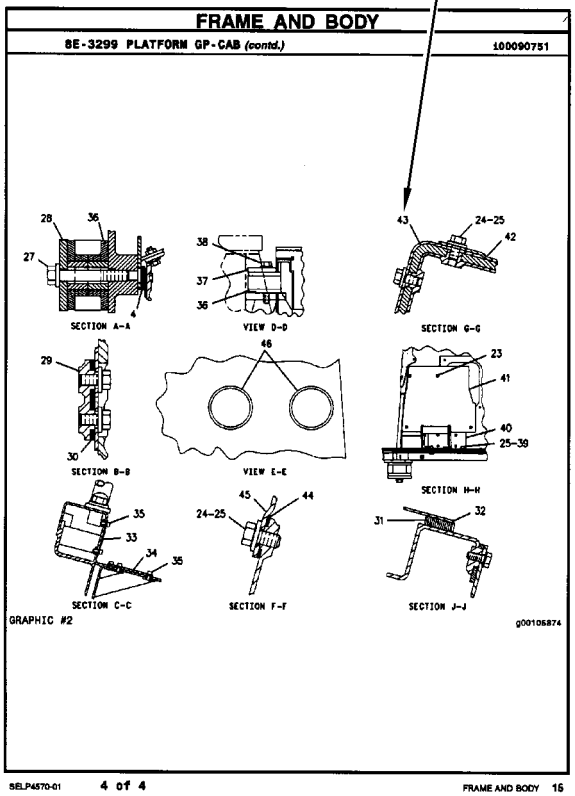

FRAME AND BODY

8E-3299 PLATFORM GP-CAB (contd.) 100090751

SECTION A-A VIEW D-D SECTION G-G

SECTION B-B VIEW E-E SECTION H-H

SECTION C-C SECTION F-F SECTION J-J

GRAPHIC #2 g00105874

SELP4570-01 4 of 4 FRAME AND BODY 15

ALLGEMEINE HINWEISE

1. MASCHINENKENNZEICHNUNG

Caterpillar-Maschinen sind mit PRODUCT IDENTIFICATION NUMBERS (PIN) (Produkt-Identnummern) gekennzeichnet. Einige Baugruppen, z.B. Motoren, Getriebe, Planierschilde und Aufreißer, sind mit SERIAL NUMBERS (S/N) (Seriennummern) gekennzeichnet. An der Maschine und am Motor befinden sich außerdem ARRANGEMENT NUMBERS (Ausrüstungsnummern) sowie in einigen Fällen MODIFICATION NUMBERS (Änderungsnummern). Sie befinden sich auf den PIN-Schildern und auf dem Typenschild im Fahrerhaus.

Bei Ersatzteilbestellungen müssen dem Händler alle diese Nummern zur Verfügung gestellt werden.

SIS *Neu im Parts Manual*

Vom ersten Quartal 2001 ab wurde die Caterpillar Produkt-Identnummer (PIN) von 8 auf 17 Zeichen geändert. Um zur Standardisierung der Produkt-Identnummer beizutragen, sind Caterpillar und andere Baumaschinenhersteller bestrebt, die aktuellste Norm zur Produkt-Identnummerierung einzuführen. Produkt-Identnummern für Baumaschinen sind durch ISO 10261 definiert. Das neue Format der Produkt-Identnummern gilt für alle Caterpillar-Maschinen und -Stromaggregate. Die Produkt-Identschilder und -Identrahmenmarkierung enthalten die aus 17 Zeichen bestehende Identnummer. Das neue Format hat folgende Abschnitte:

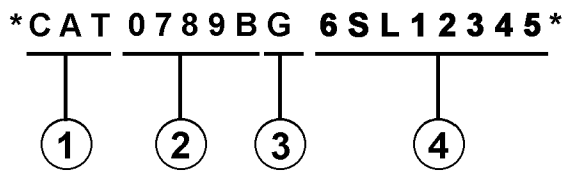

Abschnitte:

1. Caterpillars weltweiter Herstellungscode (Zeichen 1-3)

2. Modell (Zeichen 4-8)

3. Kontrollzeichen (Zeichen 9)

4. Maschinenspezifische Kennung (MIS) oder Produktsequenznummer (Zeichen 10-17). Diese wurde früher als Seriennummer bezeichnet.

Für vor dem ersten Quartal 2001 hergestellte Maschinen und Stromaggregate wird das aus 8 Zeichen bestehende PIN-Format beibehalten.

Bauteile wie z.B. Motoren, Getriebe, Achsen sowie Arbeitsgeräte werden weiterhin eine aus 8 Zeichen bestehende Seriennummer (S/N) aufweisen.

2. BESTELLEN VON ERSATZTEILEN

⚠ WARNUNG

Wenn für diese Maschine Ersatzteile benötigt werden, empfiehlt Caterpillar, ausschließlich Caterpillar-Ersatzteile oder solche zu verwenden, die die gleichen technischen Merkmale hinsichtlich Typ, Festigkeit, Werkzeugeigenschaften und die gleichen Maße aufweisen.

Bei Nichtbeachtung dieser Warnung besteht Verletzungs- oder sogar Lebensgefahr! Ferner kann Nichtbeachtung vorzeitige Ausfälle der Teile und Beschädigung der Maschine zur Folge haben.

Original Caterpillar-Ersatzteile können weltweit bei jedem Caterpillar-Händlern bestellt werden. Die umfangreichen Händlerlager enthalten normalerweise alle Teile, die Sie für Ihre Caterpillar-Maschine benötigen. Einige Händler bieten Reparatursätze, Austausch- oder werküberholte Teile an, so daß Sie eine Auswahl unter verschiedenen Reparaturmöglichkeiten treffen können. Ihre Bestellung muß folgende Angaben enthalten: Anzahl der benötigten Teile, Bestellnummer, Bezeichnung des Teils, Serien-Nr./Produkt-Ident-Nr., Ausrüstungs-Nr. und Änderungs-Nr. der Maschine, für die diese Teile benötigt werden.

3. AUFBAU DES PARTS MANUAL

Die Produktinformationen für alle Komponenten eines bestimmten Modells sind in INFORMATION ELEMENTS (Informationseinheiten) gegliedert. ENGINE ARRANGEMENT (Motorausführung) und SEAT GROUP (Fahrersitz) sind Beispiele für solche Informationseinheiten. Sie sind innerhalb jeder Gruppe alphabetisch, entsprechend der Ersatzteilbezeichnung, und zusätzlich numerisch, entsprechend der Ersatzteilnummer, geordnet.

4. INHALTSVERZEICHNIS

Das Inhaltsverzeichnis befindet sich am Anfang des Buches. Im Inhaltsverzeichnis werden die einzelnen Abschnitte des Buches aufgeführt. Die Abschnitte enthalten eine vollständige Aufstellung aller Informationseinheiten. Diese sind entsprechend ihrem Erscheinen im Buch geordnet. Das Inhaltsverzeichnis enthält Seitenangaben für Schnellverweise auf detaillierte Abbildungen und Teillisten.

ALLGEMEINE HINWEISE

5. INDEX FÜR WARTUNGSTEILE

Der Index für Wartungsteile vorn im Buch enthält die Bestellnummern, Seitenangaben, Mengenangaben und Informationen über den Einsatzbereich für die am häufigsten benötigten Ersatzteile. Die Angaben sind alphabetisch entsprechend der Teilebezeichnung geordnet.

6. INDEX

Der Index vorn im Buch enthält eine alphabetische Liste aller Informationseinheiten. Er enthält Seitenangaben für Schnellverweise auf detaillierte Abbildungen und Teillisten.

7. INDEX FÜR BESTELLNUMMERN

Hinten im Buch befindet sich ein numerischer Index, mit allen Bestellnummern und dem Hinweis auf die Seite, auf der sich die betreffende Abbildung befindet.

8. ÜBERSCHRIFTEN

Die Überschriften, die sich am Anfang jeder der Informationseinheiten befinden, enthalten Bestellnummern, Ersatzteilbezeichnungen und zusätzliche beschreibende Informationen. Produkt-Ident- und Seriennummern in den Überschriften sollten zur Auswahl der richtigen Informationen für die betreffende Maschine verwendet werden. Die Überschriften enthalten außerdem Informationen über möglichen Außendienstersatz, mögliche Baugerätekomponenten und die Baugruppe, zu der das Teil gehört.

Die erste Zeile einer Überschrift erscheint in einer größeren Schriftart, um den Anfang einer Informationseinheit zu kennzeichnen. Überschriften für zusätzliche Seiten, die zur Erläuterung einer Informationseinheit notwendig sind, erscheinen in normaler Schriftart und enthalten den Begriff "(contd.)".

9. NICHT EINZELN LIEFERBARE TEILE

In einigen Fällen ist es notwendig nicht lieferbare Teile, die selbst mit einer eigenen Teilliste im Buch vertreten sind, aufzuführen. Die Bestellnummern dieser nicht einzeln lieferbaren Teile erscheinen kursiv, wodurch angezeigt wird, daß sie nur in Verbindung mit anderen Teilen lieferbar sind.

10. REFERENZNUMMER FÜR ERSATZTEILE

Die Zahlen, die in der Spalte "Ref No" aufgeführt sind, stimmen mit den Zahlen in den beigefügten Abbildungen überein. Ein Buchstaben-Suffix kann zu einer Referenznummer hinzugefügt werden, um zu kennzeichnen, daß das Teil mit einer eigenen Teilliste im Buch aufgeführt ist. Die in der Spalte "Graphic Ref" angeführten Zahlen verweisen auf die Identifikationsnummer der Abbildung, die sich in der linken unteren Ecke der Abbildung befindet. Diese Nummer kann zusammen mit der Referenznummer des Teils angegeben werden, um die richtige Ersatzteilnummer zu ermitteln. Referenznummern können absichtlich weggelassen werden, da die Nummern der lieferbaren Ersatzteile ständig aktualisiert werden.

11. EINGERÜCKTE BEZEICHNUNGEN

Wenn eine Bezeichnung eingerückt ist, wird dadurch angezeigt, daß das Teil zu einer Baugruppe gehört, unter deren Bezeichnung es eingerückt ist.

12. REFERENZBUCHSTABEN

Falls erforderlich sind in den Abbildungen Referenzbuchstaben enthalten (z.B. A, B, C, usw.), die Leitungen und Kabelbäume von einem Punkt zum anderen verfolgen. Außerdem geben sie die Stelle an, an der getrennte Abbildungen fortgesetzt werden.

13. ABKÜRZUNGEN UND SYMBOLE

O.D. – Außendurchmesser
I.D. – Innendurchmesser
A – kein Teil dieser Gruppe
B – nach Bedarf verwenden
C – Hinweis auf eine Änderung
D – in Meter-Länge bestellen
E – in Zentimeter-Länge bestellen
F – nicht gezeigt
G – in Zoll-Länge bestellen
I – siehe Hydraulikinformationssystem
M – metrisches Teil
R – werküberholtes Teil unter Umständen lieferbar
Y – separate Abbildung
Z – nicht einzeln lieferbar

Neu im Parts Manual

14. BESCHREIBUNG DER TYPENÄNDERUNGEN

Typ-A bezieht sich auf alle Konfigurationsänderungen, die ein zusätzliches Informationselement für Ausführung, Gruppe oder Einheit benötigen. Wenn kein Seriennummernumbruch für Typen erhältlich ist, wird in der Überschrift eine Typennummer (Typ 1, Typ 2, etc.) angegeben. Diese "Typenänderungen" sind in der Teileliste mit der Anmerkung "C" (Änderung des vorherigen Typs) versehen. Es werden nur die für dieses Ersatzteilhandbuch relevanten "Typen" angegeben. Es können zusätzliche Typen vorhanden sein, was zu "C" Anmerkungen zu einem Informationselement führen kann, wenn keine anderen Typen angegeben werden.

15. <END>

Dieses Symbol zeigt das Ende eines Informationselements an.

ANMERKUNG:

Ständig vorgenommene Verbesserungen und Weiterentwicklungen an Ihrer Maschine können Änderungen verursachen, die in der vorliegenden Ausgabe noch nicht berücksichtigt sind. Fragen zu Ihrer Caterpillar-Maschine oder diesem Ersatzteilbuch beantwortet Ihr Caterpillar-Händler.

ALLGEMEINE HINWEISE

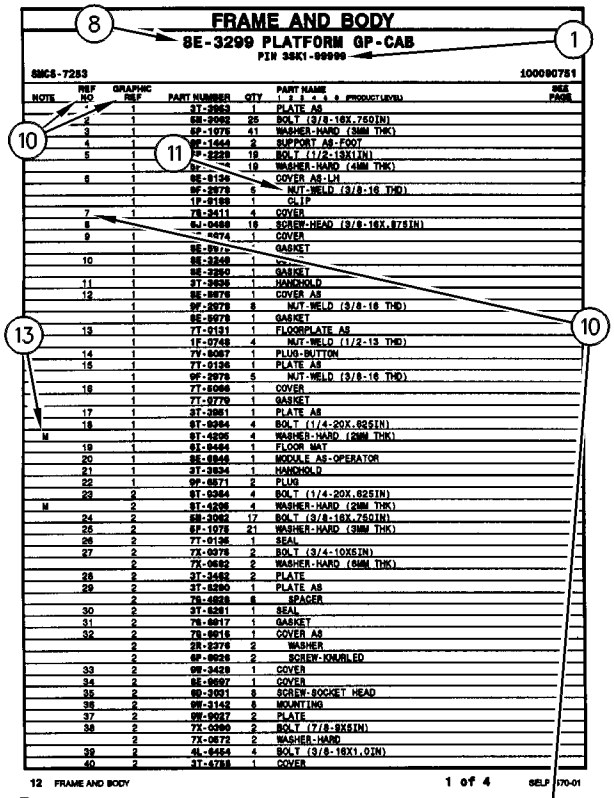

NOTE	REF NO	GRAPHIC REF	PART NUMBER	QTY	PART NAME (1 2 3 4 5 6 PRODUCT LEVEL)	SEE PAGE
	1	1	3T-3963	1	PLATE AS	
	2	1	5M-2062	25	BOLT (3/8-16X.750IN)	
	3	1	6P-1075	41	WASHER-HARD (3MM THK)	
	4	1	8E-1443	2	SUPPORT AS-FOOT	
	5	1	9P-2228	18	BOLT (1/2-13X1IN)	
		1	9P-[illegible]	18	WASHER-HARD (4MM THK)	
	6	1	8E-9136	1	COVER AS-LH	
		1	9F-2979	6	NUT-WELD (3/8-16 THD)	
		1	1F-0189	1	CLIP	
	7	1	7X-3411	4	COVER	
	8	1	6J-0468	18	SCREW-HEAD (3/8-16X.87SIN)	
	9	1	[illegible]-0274	1	COVER	
		1	8E-9[illegible]	1	GASKET	
	10	1	8E-3248	1	[illegible]	
		1	8E-3250	1	GASKET	
	11	1	3T-3636	1	HANDHOLD	
	12	1	8E-9076	1	COVER AS	
		1	9F-2979	8	NUT-WELD (3/8-16 THD)	
		1	8E-9078	1	GASKET	
	13	1	7T-9131	1	FLOORPLATE AS	
		1	1F-0748	4	NUT-WELD (1/2-13 THD)	
	14	1	7V-8067	1	PLUG-BUTTON	
	15	1	7T-9136	1	PLATE AS	
		1	9F-2979	5	NUT-WELD (3/8-16 THD)	
	16	1	7T-5066	1	COVER	
		1	7T-9779	1	GASKET	
	17	1	3T-3951	1	PLATE AS	
	18	1	9T-0264	4	BOLT (1/4-20X.62SIN)	
M		1	9T-4295	4	WASHER-HARD (2MM THK)	
	19	1	9I-8464	1	FLOOR MAT	
	20	1	8E-6848	1	MODULE AS-OPERATOR	
	21	1	3T-3934	1	HANDHOLD	
	22	1	9P-8571	2	PLUG	
	23	2	9T-0264	4	BOLT (1/4-20X.62SIN)	
M		2	9T-4295	4	WASHER-HARD (2MM THK)	
	24	2	5M-2062	17	BOLT (3/8-16X.75QIN)	
	25	2	6P-1075	21	WASHER-HARD (3MM THK)	
	26	2	7T-9136	1	SEAL	
	27	2	7X-0078	2	BOLT (3/4-10X5IN)	
		2	7X-0682	2	WASHER-HARD (6MM THK)	
	28	2	3T-3482	2	PLATE	
	29	2	3T-5290	1	PLATE AS	
		2	7S-4828	6	SPACER	
	30	2	3T-5291	1	SEAL	
	31	2	7S-8817	1	GASKET	
	32	2	7S-8816	1	COVER AS	
		2	5R-2276	2	WASHER	
		2	9F-9026	2	SCREW-KNURLED	
	33	2	9W-3429	1	COVER	
	34	2	8E-9697	1	COVER	
	35	2	9D-3031	8	SCREW-SOCKET HEAD	
	36	2	9W-3143	8	MOUNTING	
	37	2	9W-9037	2	PLATE	
	38	2	7X-0360	2	BOLT (7/8-9X5IN)	
		2	7X-0672	2	WASHER-HARD	
	39	2	4L-8454	4	BOLT (3/8-16X1.0IN)	
	40	2	3T-4788	1	COVER	

12 FRAME AND BODY 1 of 4 SELP4570-01

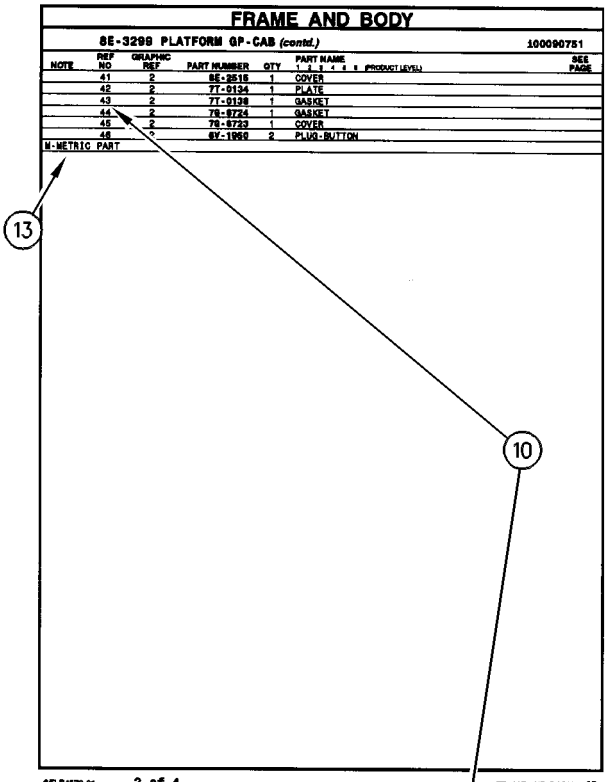

NOTE	REF NO	GRAPHIC REF	PART NUMBER	QTY	PART NAME (1 2 3 4 5 6 PRODUCT LEVEL)	SEE PAGE
	41	2	8E-2515	1	COVER	
	42	2	7T-9134	1	PLATE	
	43	2	7T-9138	1	GASKET	
	44	2	7S-8724	1	GASKET	
	45	2	7S-8723	1	COVER	
	46	*	8Y-1950	2	PLUG-BUTTON	

M-METRIC PART

SELP4570-01 2 of 4 FRAME AND BODY 13

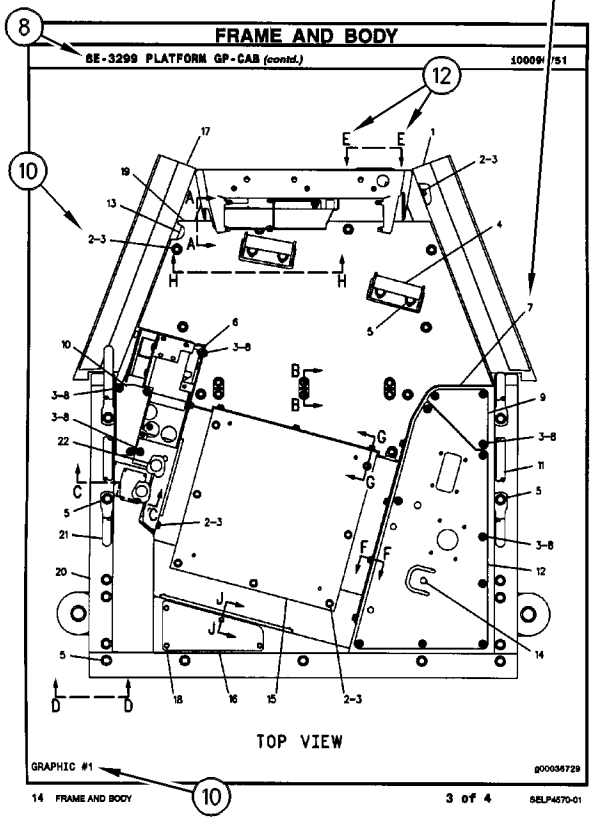

14 FRAME AND BODY 3 of 4 SELP4570-01

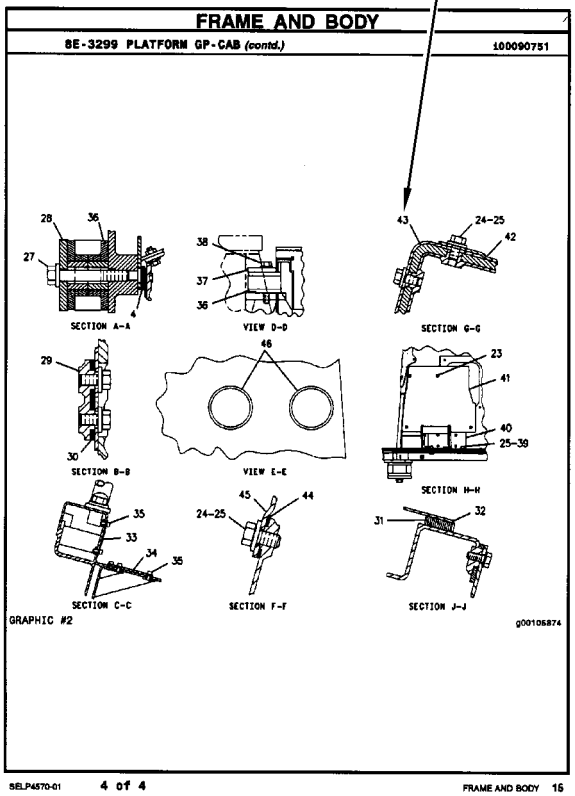

SELP4570-01 4 of 4 FRAME AND BODY 15

REMANUFACTURED COMPONENTS

As an option when making repairs consider Caterpillar Remanufactured Components. Components that are available through the Caterpillar Remanufactured Program are identified three ways in the parts book:

- with the letter R in the note field of the parts list
- with an R* at the beginning of the first line of the caption
- with an *R at the end of the first line of the caption

Typical components included in the Remanufacturing Program include:

ALTERNATORS
CONNECTING RODS
CRANKSHAFTS - UNDERSIZE
CRANKSHAFTS - UPGRADE TO NEW
CYLINDER HEADS
ELECTRONIC CONTROL MODULES (ECM)
ELECTRONIC SENSORS
FUEL INJECTORS
FUEL NOZZLES
FUEL PUMPS
GOVERNORS
OIL PUMPS
PISTONS
SHORT BLOCKS
STARTERS
TURBOCHARGERS - COMPLETE
TURBOCHARGER CARTRIDGES
WATER PUMPS

Caterpillar Remanufactured engines for many engine arrangements are also available.

OPTIONS DE RÉPARATION

COMPOSANTS RÉNOVÉS

Comme option de réparation, considérer les composants rénovés Caterpillar. Les composants disponibles dans le cadre du programme Caterpillar de composants rénovés sont identifiés de trois façons dans le catalogue de pièces:

- avec la lettre "R" dans l'espace note de la liste des pièces
- avec R* au début de la première ligne des légendes
- avec *R à la fin de la première ligne des légendes

Les composants suivants figurent parmi les composants typiques du programme de rénovation:

ALTERNATEURS
BIELLES
VILEBREQUINS - SOUS-DIMENSIONNÉS
VILEBREQUINS - REMIS À NEUF
CULASSES
MODULES DE COMMANDE ÉLECTRONIQUE (ECM)
CAPTEURS ÉLECTRONIQUES
INJECTEURS
TÊTES D'INJECTEURS
POMPES À CARBURANT
RÉGULATEURS
POMPES À HUILE
PISTONS
BLOCS EMBIELLÉS
DÉMARREURS
TURBOCOMPRESSEURS - COMPLETS
CARTOUCHES DE TURBOCOMPRESSEUR
POMPES À EAU

Des moteurs rénovés sont aussi disponibles pour plusieurs versions de moteur.

ALTERNATIVAS DE REPARACIÓN

COMPONENTES REMANUFACTURADOS

Al hacer reparaciones, tenga en cuenta la opción de Componentes Remanufacturados Caterpillar. Los componentes que están disponibles por medio del programa de Productos Remanufacturados Caterpillar se identifican de tres maneras en el manual de piezas:

- con la letra R en el espacio de Nota de la lista de piezas
- con una R* al comienzo de la primera línea de la leyenda
- con una *R al final de la primera línea de la leyenda

Los componentes que se incluyen típicamente en el Programa de Productos Remanufacturados son:

ALTERNADORES
BIELAS
CIGÜEÑALES - BAJOMEDIDA
CIGÜEÑALES - REMANUFACTURADOS A NUEVO
CULATAS
MÓDULOS DE CONTROL ELECTRÓNICO (ECM)
SENSORES ELECTRONICOS
INYECTORES
BOQUILLAS
BOMBAS DE COMBUSTIBLE
REGULADORES
BOMBAS DE ACEITE
PISTONES
MONOBLOQUES
MOTORES DE ARRANQUE
TURBOCOMPRESORES - COMPLETOS
NÚCLEOS DE TURBOCOMPRESOR
BOMBAS DE AGUA

También hay disponibles motores Remanufacturados Caterpillar para muchas de las configuraciones de motores.

ALTERNATIVAS DE REPARO

COMPONENTES REMANUFATURADOS

Considere o uso de Componentes Remanufaturados Caterpillar ao efetuar reparos. Os componentes disponíveis através do Programa de Remanufatura Caterpillar são identificados de três formas no manual de peças:

- com um R na área da nota da lista de peças
- com um R* no princípio da primeira linha da legenda
- com um *R no final da primeira linha da legenda

Os componentes típicos que constam no Programa de Remanufatura incluem:

ALTERNADORES
BIELAS
VIRABREQUINS - SUBMEDIDAS
VIRABREQUINS - ATUALIZAÇÃO
CABEÇOTES
MÓDULOS DE CONTROLE ELETRÔNICO (ECM)
SENSORES ELETRÔNICOS
INJETORES DE COMBUSTÍVEL
BICOS DE ABASTECIMENTO DE COMBUSTÍVEL
BOMBAS DE COMBUSTÍVEL
GOVERNADORES
BOMBAS DE ÓLEO
PISTÕES
BLOCOS BÁSICOS DO MOTOR
MOTORES DE PARTIDA
TURBOALIMENTADORES - COMPLETOS
CARTUCHOS DE TURBOALIMENTADORES
BOMBAS D'ÁGUA

Motores Remanufaturados Caterpillar também encontram-se disponíveis para diversos arranjos de motor.

REPARATURALTERNATIVEN

WERKÜBERHOLTE AT-PRODUKTE

Bei Reparaturen sollten werküberholte AT-Produkte von Caterpillar in Betracht gezogen werden. Die durch das AT-Programm von Caterpillar erhältlichen Teile sind im Parts Book auf drei verschiedene Arten gekennzeichnet:

- mit dem Buchstaben R in der Spalte NOTE der Ersatzteilliste
- mit einem R* am Anfang der ersten Zeile der Überschrift
- mit einem *R am Ende der ersten Zeile der Überschrift

Das AT-Programm umfaßt u.a. folgende Produkte:

DREHSTROMGENERATOREN
PLEUELSTANGEN
KURBELWELLEN - MIT UNTERMASS
KURBELWELLEN - MIT ORIGINALMASS
ZYLINDERKÖPFE
ELEKTRONISCHE STEUEREINHEITEN (EMC)
ELEKTRONISCHE SENSOREN
PUMPENDÜSEN
EINSPRITZDÜSEN
KRAFTSTOFFPUMPEN
DREHZAHLREGLER
ÖLPUMPEN
KOLBEN
TEILMOTOREN
ANLASSER
TURBOLADER - KOMPLETT
TURBOLADERLAUFZEUGE
KÜHLWASSERPUMPEN

Viele Motoren können durch werküberholte AT-Motoren von Caterpillar ersetzt werden.

SUPPLEMENTAL COOLANT ADDITIVES

CUSTOMER BENEFITS:

Protects against cavitation, foam, erosion, corrosion, and scale buildup in cooling systems.

- Provides measured coolant conditioner.

DESCRIPTION:

Additives deplete from the coolant with normal operation. For this reason, Supplemental Coolant Additives (SCA) must be added to all heavy duty coolants at regular intervals. In addition, when not using a fully formulated, pre-charged antifreeze, like Caterpillar's DEAC, an initial charge of SCA must be added to the cooling system. The amount of SCA added to the system is dependent on the capacity of the system.

The SCA for initial fill is provided as a liquid. SCA's for maintenance intervals are available in liquid form and as a spin-on element. (No Spin-on available for 3600 Family of Engines)

NOTE:

The amount of SCA added at initial fill is not the same as the amount added at maintenance intervals.

The coolant additive elements can be used with any ethylene or propylene glycol type antifreeze which meets ASTM D4985 or ASTM D5345 Specifications.

NOTE:

For use with standard heavy duty coolant only, not for use with Extended Life Coolant.

PARTS NEEDED:

Cooling System Capacity		Liquid SCA at Initial Fill	Liquid SCA at Maintenance*	Spin-on SCA Maintenance Element*
Liters	Gallons			
22-30	(6-8)	3P-2044 (1)	6V-3542 (1)	111-2370 (1)
30-38	(8-10)	3P-2044 (1) 6V-3542 (1)	111-2372 (1)	111-2369 (1)
38-49	(10-13)	3P-2044 (1) 8T-1589 (1)	111-2372 (1)	111-2369 (1)
49-64	(13-17)	3P-2044 (2)	8T-1589 (1)	9N-3368 (1)
64-83	(17-22)	3P-2044 (2) 8T-1589 (1)	111-2372 (1) 6V-3542 (1)	111-2371 (1)
83-114	(22-30)	3P-2044 (3) 8T-1589 (1)	3P-2044 (1)	9N-3718 (1)
114-163	(30-43)	3P-2044 (5)	3P-2044 (1) 6V-3542 (1)	111-2371 (2)
163-242	(43-64)	3P-2044 (8)	3P-2044 (2)	9N-3718 (2)

** Normal maintenance period is 250 hrs. See your Operation and Maintenance Manual for complete coolant maintenance instructions.*

( ) Indicates quantity required.

ADDITIFS POUR LIQUIDE DE REFROIDISSEMENT

AVANTAGES POUR LE CLIENT

L'additif protège contre la cavitation, la mousse, l'érosion, la corrosion et l'accumulation de dépôts dans le circuit de refroidissement.

- L'additif complémentaire fournit une quantité mesurée d'additif.

DESCRIPTION:

Les additifs s'épuisent pendant l'utilisation du moteur. C'est pourquoi l'on doit ajouter de l'additif au liquide de refroidissement/antigel pour moteurs diesel à intervalles réguliers. En plus, si l'on n'utilise pas de l'antigel entièrement formulé et pré-chargé comme le liquide de refroidissement/antigel Caterpillar pour moteurs diesel, une quantité initiale d'additif doit être ajoutée au circuit de refroidissement. La quantité d'additif à ajouter au circuit dépend de la contenance du circuit.

L'additif pour le remplissage initial est fourni sous forme liquide. L'additif pour l'entretien ultérieur est disponible sous forme liquide et sous forme d'élément à visser. (Il n'y a pas d'élément à visser pour les moteurs de la famille 3600).

NOTA:

La quantité d'additif à ajouter au remplissage initial diffère de la quantité à ajouter aux intervalles d'entretien.

Les éléments d'additif peuvent être utilisés avec tout antigel de type éthylène ou propylène-glycol conforme à la norme ASTM D4985 ou ASTM D5345.

NOTA:

A utiliser uniquement avec du liquide de refroidissement pour moteurs diesel et non avec le liquide de refroidissement longue durée.

PIÈCES NÉCESSAIRES:

Contenance du circuit de refroidissement		Additif liquide au remplissage initial	Additif liquide aux intervalles d'entretien*	Elément d'additif à visser aux intervalles d'entretien*
Litres	Gallons U.S.			
22-30	(6-8)	3P-2044 (1)	6V-3542 (1)	111-2370 (1)
30-38	(8-10)	3P-2044 (1) 6V-3542 (1)	111-2372 (1)	111-2369 (1)
38-49	(10-13)	3P-2044 (1) 8T-1589 (1)	111-2372 (1)	111-2369 (1)
49-64	(13-17)	3P-2044 (2)	8T-1589 (1)	9N-3368 (1)
64-83	(17-22)	3P-2044 (2) 8T-1589 (1)	111-2372 (1) 6V-3542 (1)	111-2371 (1)
83-114	(22-30)	3P-2044 (3) 8T-1589 (1)	3P-2044 (1)	9N-3718 (1)
114-163	(30-43)	3P-2044 (5)	3P-2044 (1) 6V-3542 (1)	111-2371 (2)
163-242	(43-64)	3P-2044 (8)	3P-2044 (2)	9N-3718 (2)

** L'intervalle d'entretien normal est de 250 heures-service. Voir le Guide d'utilisation et d'entretien pour de plus amples renseignements concernant l'entretien du circuit de refroidissement.*

( ) Indique la quantité exigée.

ADITIVOS DE REFRIGERANTE SUPLEMENTARIOS

VENTAJAS PARA EL USUARIO:

Protegen contra la cavitación, la formación de espuma, la corrosión y la acumulación de escamas en los sistemas de enfriamiento.

- Suministra un acondicionador dosificado de refrigerante.

DESCRIPCIÓN:

Los aditivos en el refrigerante se agotan con la operación normal. Por esta razón, se debe agregar Aditivo de refrigerante suplementario (SCA) a todos los refrigerantes para servicio pesado, a intervalos regulares. Además, cuando no se usa un anticongelante de precarga completo, tal como el DEAC de Caterpillar, es necesario agregar una cantidad de aditivo de refrigerante suplementario inicial al sistema de enfriamiento. La cantidad de aditivo que se debe agregar depende de la capacidad del sistema.

El SCA de llenado inicial es líquido. El que se usa para el mantenimiento está disponible tanto en líquido como en un elemento enroscable. (No hay elemento enroscable disponible para la Familia de Motores 3600).

NOTA:

La cantidad de aditivo de llenado inicial no es la misma que se agrega en los intervalos de mantenimiento.

Los elementos de aditivo de refrigerante se pueden usar con cualquier anticongelante de tipo glicol etilénico o propílico que esté de acuerdo con las especificaciones de las normas ASTM D4985 o ASTM D5345.

NOTA:

Se debe utilizar únicamente con refrigerante estándar para servicio pesado; no se debe usar con Refrigerante de Larga Duración.

PIEZAS NECESARIAS:

Capacidad del Sistema de Enfriamiento		SCA líquido de llenado inicial	SCA líquido de mantenimiento*	Elemento de mantenimiento enroscable*
litros	gal EE.UU.			
22-30	6-8	3P-2044 (1)	6V-3542 (1)	111-2370 (1)
30-38	8-10	3P-2044 (1) 6V-3542 (1)	111-2372 (1)	111-2369 (1)
38-49	10-13	3P-2044 (1) 8T-1589 (1)	111-2372 (1)	111-2369 (1)
49-64	13-17	3P-2044 (2)	8T-1589 (1)	9N-3368 (1)
64-83	17-22	3P-2044 (2) 8T-1589 (1)	111-2372 (1) 6V-3542 (1)	111-2371 (1)
83-114	22-30	3P-2044 (3) 8T-1589 (1)	3P-2044 (1)	9N-3718 (1)
114-163	30-43	3P-2044 (5)	3P-2044 (1) 6V-3542 (1)	111-2371 (2)
163-242	43-64	3P-2044 (8)	3P-2044 (2)	9N-3718 (2)

** El período normal de mantenimiento es de 250 horas. Para ver las instrucciones completas sobre el mantenimiento del refrigerante, consulte el Manual de Operación y Mantenimiento.*

( ) Indica la cantidad necesaria.

ADITIVOS SUPLEMENTARES DO LÍQUIDO ARREFECEDOR

BENEFÍCIOS PARA O CLIENTE:

Protege contra cavitação, espuma, erosão, corrosão e acúmulo de crostas nos sistemas de arrefecimento.

- Fornece uma quantidade pré-determinada de condicionador de arrefecimento.

DESCRIÇÃO:

Com a operação normal, os aditivos se esgotam do líquido arrefecedor. Por isso, Aditivos Suplementares do Líquido Arrefecedor (SCA) devem ser acrescentados a todos os líquidos arrefecedores para serviço pesado em intervalos regulares. Além disso, quando um anticongelante pré-carregado, totalmente formulado não for usado, como o DEAC Caterpillar, uma carga inicial de SCA deve ser acrescentada ao sistema de arrefecimento. A quantidade de SCA acrescentada ao sistema depende da capacidade do sistema.

O SCA para abastecimento inicial é fornecido em forma de líquido. Os aditivos suplementares (SCA) para intervalos de manutenção estão à disposição em forma líquida e como um elemento com roscas. (Exceto os Motores da Família 3600)

NOTA:

A quantidade de SCA adicionada no abastecimento inicial não é a mesma que a acrescentada nos intervalos de manutenção.

Os elementos do aditivo do líquido arrefecedor podem ser usados com qualquer tipo de anticongelante etileno ou propileno que satisfaz as Especificações ASTM D4985 ou ASTM D5345.

NOTA:

Para uso apenas com líquido arrefecedor para serviço pesado padrão, não deve ser usado com Líquido Arrefecedor de Vida Longa.

PEÇAS NECESSÁRIAS:

Capacidade do Sistema de Arrefecimento		Líquido SCA Durante Abastecimento Inicial	Líquido SCA Durante Manutenção*	Elemento de Manutenção de SCA com Roscas*
Litros	Galões			
22-30	6-8	3P-2044 (1)	6V-3542 (1)	111-2370 (1)
30-38	8-10	3P-2044 (1) 6V-3542 (1)	111-2372 (1)	111-2369 (1)
38-49	10-13	3P-2044 (1) 8T-1589 (1)	111-2372 (1)	111-2369 (1)
49-64	13-17	3P-2044 (2)	8T-1589 (1)	9N-3368 (1)
64-83	17-22	3P-2044 (2) 8T-1589 (1)	111-2372 (1) 6V-3542 (1)	111-2371 (1)
83-114	22-30	3P-2044 (3) 8T-1589 (1)	3P-2044 (1)	9N-3718 (1)
114-163	30-43	3P-2044 (5)	3P-2044 (1) 6V-3542 (1)	111-2371 (2)
163-242	43-64	3P-2044 (8)	3P-2044 (2)	9N-3718 (2)

** O período normal de manutenção é de 250 horas. Consulte o Manual de Operação e Manutenção para obter instruções completas quanto à manutenção do líquido arrefecedor.*

( ) Indica a quantidade exigida.

KÜHLMITTELZUSATZ

VORTEILE FÜR DEN KUNDEN:

Schutz gegen Kavitation, Schaumbildung, Erosion, Korrosion und Kesselsteinbildung in Kühlsystemen.

- Richtig dosierter Kühlmittelzusatz

BESCHREIBUNG:

Additive erschöpfen sich während des Motorbetriebs. Deshalb muß allen HD-Kühlmitteln regelmäßig Kühlmittelzusatz beigefügt werden. Wenn bei Erstfüllung kein vollwertiges Fertigkühlmittel, wie das Frostschutz- und Kühlmittel für Dieselmotoren von Caterpiller (DEAC), verwendet wird, muß bei Erstfüllung Kühlmittelzusatz beigefügt werden. Wieviel Kühlmittelzusatz beigefügt werden muß, hängt vom Inhalt des Kühlsystems ab.

Für Erstfüllung ist Kühlmittelzusatz nur in flüssiger Form erhältlich. Für Wartungsintervalle ist Kühlmittelzusatz in flüssiger Form und als Zusatzelement erhältlich. (Für die Motorbaureihe 3600 sind keine Zusatzelemente erhältlich.)

ANMERKUNG:

Die Kühlmittelmenge bei Erstfüllung ist nicht die gleiche Menge, die bei Wartungsintervallen beigefügt werden muß.

Die Kühlmittelzusatzelemente können mit allen Frostschutzmitteln auf Ethylen- oder Propylenglykolbasis verwendet werden, die den Standards nach ASTM D4985 oder ASTM D5345 entsprechen.

ANMERKUNG:

Den Kühlmittelzusatz nicht mit Langzeitkühlmittel (ELC) von Caterpillar verwenden. Der Kühlmittelzusatz ist nur für HD-Kühlmittel bestimmt.

TEILEBEZEICHNUNG:

Kühlsysteminhalt		Kühlmittelzusatz bei Erstfüllung	Flüssiger Kühlmittelzusatz bei Wartung*	Kühlmittelzusatzelement bei Wartung*
Liter	US-Gall.			
22-30	(6-8)	3P-2044 (1)	6V-3542 (1)	111-2370 (1)
30-38	(8-10)	3P-2044 (1) 6V-3542 (1)	111-2372 (1)	111-2369 (1)
38-49	(10-13)	3P-2044 (1) 8T-1589 (1)	111-2372 (1)	111-2369 (1)
49-64	(13-17)	3P-2044 (2)	8T-1589 (1)	9N-3368 (1)
64-83	(17-22)	3P-2044 (2) 8T-1589 (1)	111-2372 (1) 6V-3542 (1)	111-2371 (1)
83-114	(22-30)	3P-2044 (3) 8T-1589 (1)	3P-2044 (1)	9N-3718 (1)
114-163	(30-43)	3P-2044 (5)	3P-2044 (1) 6V-3542 (1)	111-2371 (2)
163-242	(43-64)	3P-2044 (8)	3P-2044 (2)	9N-3718 (2)

** Der normale Wartungsintervall beträgt 250 Betriebsstunden. Für vollständige Anweisungen zur Wartung des Kühlsystems, siehe Betriebs- und Wartungshandbuch.*

( ) Erforderliche Anzahl

NOMENCLATURA DE PEÇAS INGLÊS-PORTUGUÊS

INGLÊS	PORTUGUÊS
ABOVE	Acima
ABSORBER	Amortecedor
ACCESSORY	Acessório
ACTUATOR	Acionador
ADAPTER	Adaptador
ADHESIVE	Adesivo
ADJUSTER	Adjustador
AFTERCOOLER	Pós-resfriador
AIR	Ar
AIR CLEANER	Purificador de ar
AIR SYSTEM	Sistema de ar
ALARM	Alarme
ALTERNATOR	Alternador
AMMETER	Amperímetro
ANCHOR	Âncora, fixador
ANGLE	Ângulo, canto
ANVIL A.	Bigorna conj.
ARBOR	Mandril, eixo
ARM	Braço
ARMATURE	Armadura, Induzida
ARM REST	Apoio para braço
ARRESTER	Detentor
ASSEM. = ASSEMBLY	Conjunto
ATTACHMENT	Acessório
AVAILABLE	Disponível
AXLE	Eixo
AXLE SHAFT	Semi-eixo, ponta
BACK-UP ALARM	Alarme de marcha à ré
BACK-UP LIGHT	Luz da marcha à ré
BACK-UP SWITCH	Interruptor de marcha à ré
BACKBOARD	Prancha traseira
BACK CUSHION	Encosto
BACKHOE	Retroescavadeira
BAFFLE	Defletor
BAG	Saco, sacola
BAIL	Alça
BALANCER	Balanceador
BALL	Esfera
BALLCHECK ASSEMBLY	Conjunto de (válvula) de esfera de retenção
BALL JOINT	Junta esférica
BALLSTUD	Munhão esférica
BAND	Banda, cinta, tira
BAND & LINING	Banda e revestimento
BAR	Barra
BARREL	Cilindro
BARRIER	Barreira
BASE	Base
BASIN	Bacia, coletor
BATTERY	Bateria
BEAM	Barra, viga, trave
BEARING	Mancal, rolamento
BEARING BALL	Rolamento de esferas
BEARING-SLEEVE	Mancal tipo luva
BEARING-NEEDLE	Rolamento de agulha
BEARING-ROLLER	Rolamento tipo roletes
BELL	Campânula
BELLCRANK	Alavanca angular
BELLOWS	Fole
BELOW	Abaixo
BELT	Correia, cinto
BELT TIGHTENER	Ajustador de correia
BEVEL GEAR	Coroa
BIT-CUTTER	Broca, fresa
BLACK	Preto
BLADE	Lâmina
BLEEDER	Sangrador
BLOCK	Bloco, calço
BLOWER	Ventilador
BLUE	Azul
BOARD	Prancha, tábua
BODY	Corpo
BOLT	Parafuso
BONNET	Tampa
BOOM	Lança
BOOSTER	Reforçador
BOOT	Protetor contra poeira
BORE	Furo
BOSS	Ressalto
BOTH	Ambos (as)
BOTTOM	Fundo
BOWL	Caçamba
BOX	Caixa
BRACE	Tirante
BRACKET	Suporte
BRAKE	Freio
BREAKER	Interruptor
BREATHER	Respiro
BRIDGE	Braço
BROWN	Marrom
BRUSH	Escova
BUCKET	Caçamba
BULB	Bulbo
BULLDOZER	Bulldozer
BUMPER	Pára-choque
BUSHING	Bucha
BUTTON	Botão
BUZZER WARNING	Alarme sonoro
C = CHANGE	Alteração
CAB	Cabina
CABINET	Gabinete
CABLE	Cabo
CAGE	Alojamento
CALIPER	Calibrador
CAM	Excêntrico, ressalto
CAMSHAFT	Eixo-comando-de-válvulas
CANOPY	Coberta, toldo

NOMENCLATURA DE PEÇAS INGLÊS-PORTUGUÊS

INGLÊS	PORTUGUÊS
CAP	Tampa
CAPACITOR	Capacitor, condensador
CARBURETOR	Caburador
CARCASS	Carcaça
CARRIER	Suporte
CARTON	Caixa de papelão
CARTRIDGE	Cartucho
CASE	Caixa, alojamento
CASING	Invólucro, revestimento
CASTER	Rolete, roldana
CAST IRON	Ferro fundido
CATWALK	Passadiço
CENTER	Centro
CHAIN	Corrente
CHAMBER	Câmara
CHANGEOVER	Modificação
CHANNEL	Canal
CHASSIS	Chassi, armação
CHECK-VALVE	Válvula de retenção
CIRCUIT	Circuito
CIRCUIT BREAKER	Interruptor de circuito
CLAMP	Braçadeira
CLASP	Fecho, grampo
CLEANER	Purificador
CLEVIS	Forquilha, garfo
CLIP	Clipe, presilha, grampo
CLOSURE	Fecho
CLUTCH	Embreagem
COARSE	Grosso, áspero
COATING	Capa, revestimento
COCK	Torneira
COIL	Bobina, serpentina
COLLAR	Colar
COLLECTOR	Coletor
COLLET	Mandril
COLUMN	Coluna
COMPACTOR	Compactador
COMPARTMENT	Compartimento
COMPLETE	Completo
COMPOUND	Composto
COMPRESSOR	Compressor
CONCAVE	Côncavo
CONDITIONER	Condicionador
CONDUIT	Conduite, eletroduto
CONE	Cone
CONNECTING	Ligação
CONNECTED ROD	Biela
CONNECTION	Conexão
CONNECTOR	Conetor
CONSISTS OF	Consiste de
CONSOLE	Consolo
CONTACT	Contato, platinado
CONTACTOR	Contactador
CONTINUED FROM	Continuação de
CONTROL	Controle
CONVERSION	Conversão
CONVERTER	Conversor
COOLER	Arrefecedor
COOLING	Arrefecimento
CORK	Cortiça
CORE	Núcleo
CORNER	Canto
COTTER PIN	Contrapino
COUNTER	Contador, tacômetro
COUNTERWEIGHT	Contrapeso
COUPLER	Acoplador, engate
COUPLING	Acoplamento, conexão
COVER	Tampa
COWL	Capota
COWLING	Capota
CRADLE	Armação, suporte
CRANK	Manivela
CRANKCASE	Cárter
CRANKSHAFT	Virabrequim
CROSS UNION	Junta transversal
CROSSBAR	Barra transversal
CUP	Capa, anel externa
CURTAIN	Cortina
CUSHION	Almofada, amortecedor
CUTTER	Fresa, cortador
CUTTING EDGE	Borda cortante
CYLINDER	Cilindro
CYLINDER BLOCK	Bloco do motor
CYLINDER HEAD	Cabeçote
DAMPER	Amortecedor
DARK GREEN	Verde escuro
DASH	Painel
DASH PANEL	Painel de Instrumento
DECELERATOR	Desacelerador
DEFLECTOR	Defletor
DETENT	Retém, pino de trava
DIAGRAM-WIRING	Diagrama dos circuitos elétricos
DIAL	Medidor de dial
DIAPHRAGM	Diafragma
DIESEL ENGINE COMPLETE	Motor diesel completo
DIFFERENTIAL	Diferencial
DIFFUSER	Difusor
DIMMER	Redutor de luminosidade
DIODE	Diodo
DIRECTOR	Diretor
DISC	Disco
DISCONNECT	Desligar
DISPOSABLE	Disponível, substituível
DISSIPATOR	Dissipador de calor
DISTRIBUTOR	Distribuidor
DM = DECIMETER	dm = decímetro

NOMENCLATURA DE PEÇAS INGLÊS-PORTUGUÊS

INGLÊS	PORTUGUÊS
DOME LIGHT	Lâmpada do teto
DOOR	Porta
DOWEL	Pino-guia, cavilha
DOWNSHIFT	Mudança para marcha mais baixa
DOZER	Bulldozer (lâmina)
DRAIN	Dreno
DRAWBAR	Barra de tração
DRILL	Broca
DRILLED	Broqueado, perturado
DRIVE	Comando, acionamento, propulsão
DRIVER	Acionador, mecanismo propulsor
DRIVESHAFT	Eixo acionador, eixo de transmissão
DRUM	Tambor
DUCT	Conduto, canal
EACH	Cada
EDGE	Borda, canto
EFFECTIVE WITH	Efetivo a partir de
EJECTOR	Ejetor
ELBOW	Cotovelo
ELEMENT	Elemento
ENCLOSURE	Cobertura
END	Extremidade
END BIT	Canto de lâmina
END VIEW	Vista traseira
ENGINE	Motor
ENGINE ARRANGEMENT	Arranjo do motor
EXCEPT	Exceto
EXHAUST	Escape
EXHAUST PIPE	Cano de escape
EXPANDER	Expansor
EXPANSION PLUG	Bujão de expansão
EXTENSION	Extensão
EXTINGUISHER	Extintor
EXTRACTOR	Extrator
EYE	Olhal
EYEBOLT	Parafuso de olhal
FABRIC	Tecido, tela textura
FACING	Revestimento, forro
FAN	Ventilador
FASTENED	Fixo, preso
FASTENER	Fixador, prendedor
FENDER	Pára-lamas
FERRULE	Virola
FIELD COIL	Bobina indutora, ou de campo
FIELD REPLACEMENT	Reposicão ou substituicão no campo
FILLER	Bocal de enchimento
FILM	Película
FILTER	Filtro
FINAL DRIVE	Comando final
FINGER	Dedo
FIREWALL	Parede contra fogo
FITTING	Graxeira, conexão
FIXTURE	Dispositivo, Aparelho
FLANGE	Flange
FLASHER	Luz intermitente
FLOAT	Flutuar, livre
FLOOD-LAMP	Farol
FLOOR	Piso
FLOORMAT	Tapete
FLOORPLATE	Chapa do piso
FLYWEIGHT	Peso volante
FLYWHEEL	Volante
FOLLOWER	Seguidor
FOOT	Pé
FORK	Garfo
FOR USE WITH	Para usar com
FOUNDATION	Assentamento, alicerce
FRAME	Armacão, chassi
FRONT	Frente, dianteiro
FT = FOOT	Pé
FUEL INJECTION	Injecão de combustível
FUEL PUMP	Bomba de combustível
FUEL RATIO	Limitador de combustível
FUEL SYSTEM	Sistema do combustível
FUEL TANK	Tanque do combustível
FUMES DISPOSAL	Eliminação de vapores do cárter
FUSE	Fusível
G = GROUP	Grupo
GAGE	Indicador, manômetro
GAP	Folga, lacuna, intervalo
GASKET	Junta
GASKET KIT	Jogo de junta
GATE	Entrada, trava
GAUGE	Indicador, manômetro
GEAR	Engrenagem, marcha
GEAR BOX	Caixa de engrenagem
GEAR PUMP	Bomba de engrenagem
GENERATOR	Gerador
GLAND	Junta, gaxeta, vedacão sobreposta
GLASS	Vidro
GLOW PLUG	Vela incandescente
GOVERNOR	Governador
GRAB IRON	Balaústre corrimão
GRATE	Grade, grelha
GRAY	Cinza
GRID	Grade, grelha
GRILL	Grade, grelha
GRIP	Pega, garra, cabo

NOMENCLATURA DE PEÇAS INGLÊS-PORTUGUÊS

INGLÊS	PORTUGUÊS
GROMMET	Ilhós
GROUND BRUSH	Escova-terra
GROUND (ELECTRIC)	Terra (eletricidade)
GROUSER	Garra (de sapata)
GUARD	Protetor
GUIDE	Guia
GUSSET	Cantoneira
HACKSAW	Serra para metais
HALF	Metade, meio (a)
HALF LINK	Semi-elo
HAMMER	Martelo
HAND CONTROL	Controle manual
HANDLE	Cabo, alça
HANDRAIL	Corrimão, balaústre
HANGER	Suporte, dispositivo de suspensão
HARDWARE	Ferragem
HARDWARE KIT	Jogo de ferragem
HARNESS	Chicote
HEAD = HD	Cabeça
HEADER	Coletor
HEADLAMP	Farol dianteiro
HEADLIGHT	Farol dianteiro
HEAT SINK	Difusor de calor
HEATER	Aquecedor
HIGH-IDLE	Marcha acelerada em vazio
HINGE	Dobradiça, articulacão
HITCH	Engate
HOIST	Guincho, talha
HOLD	Suporte, fixador
HOLD DOWN	Fixar, reter, manter abaixado
HOLDER	Fixador, suporte
HOLE	Furo, buraco
HOOD	Capô
HOOD & DASH	Capô e painel
HOOK	Gancho
HORN	Buzina
HOSE	Mangueira
HOUSING	Alojamento
HUB	Cubo
HYDRAULIC	Hidráulico
ID = INSIDE DIAMETER	Diâmetro interno
IDLER	Roda-guia
IDLER & SHAFT	Roda-guia e eixo
IDLER GEAR	Engrenagem intermediária
IDLER PULLEY	Polia intermediária
IMPELLER	Impulsor, rotor
IN = INCH	Polegada
INCLUDES	Inclui
INDICATE	Indicam
INDICATOR	Indicador
INLAY	Incrustação
INLET	Admissão, entrada
INPUT	Entrada
INSERT	Inserção
INSTALLATION	Instalação
INSTALLED ON MODEL	Instalação no modelo
INSTRUCTION	Instrução
INSTRUMENT	Instrumento
INSULATED BRUSH	Escova isolada
INSULATION	Isolação, isolamento
INSULATOR	Isolante, isolador
INTAKE	Admissão
INTERLOCK	Trava interna
INTERMEDIATE	Intermediário
INTERNAL	Interno
INVERTER	Inversor
IRON	Ferro
JACK	Macaco
JAW	Mandíbula, garra
JET	Jato, vaporizador
JOINT	Junta, articulação
JUNCTION	Junção
KEY	Chaveta
KINGBOLT	Pino de engate
KNIFE	Faca, lâmina
KNOB	Maçaneta, botão
LADDER	Escada
LAMP	Lâmpada
LARGE	Grande
LATCH	Trinco, lingüeta
LEAD	Condutor, cabo
LEG	Perna
LENS	Lente
LEVEL	Nível
LEVER	Alavanca
L.H. = LEFT HAND	Lado esquerdo
LID	Placa, tampa
LIFT	Levantar
LIFT CYLINDER	Cilindro de levantamento
LIFTER	Tucho
LIFTING EYE	Olhal de levantamento
LIGHT GREEN	Verde claro
LIGHTING	Sistema de iluminação
LINE	Tubulação
LINER	Camisa
LINES & PUMP	Tubulação e bomba
LINES & VALVE	Tubulação e válvula
LINING	Revestimento, lona
LINK	Elo
LINKAGE	Articulação
LIP	Lábio, borda
LISTED	Relacionamento
LITERATURE	Literatura
LOCATED	Localizado

NOMENCLATURA DE PEÇAS INGLÊS-PORTUGUÊS

INGLÊS	PORTUGUÊS
LOCATOR	Localizador
LOCK	Trava
LOCKNUT	Contraporca
LOCKWASHER	Arruela de pressão
LOCKWIRE	Arame de trava
LONG	Longo
LOOM	Tubo isolador
LOW IDLE	Marcha lenta
LOUVER	Persiana
LOWER	Abaixar, inferior
LUBRICANT	Lubrificante
LUG	Ressalto, orelha
MACHINE SCREW	Parafuso de fenda
MAGNET	Imã magneto
MAIN	Principal
MAINTENANCE	Manutenção
MANIFOLD	Coletor
MARKED	Marcado (a)
MARKER	Marcador
MASTER PIN	Pino mestre
MAT	Capacho, esteira
METER	Medidor, contador
MINOR	Menor
MIRROR	Espelho
MISCELLANEOUS	Miscelânea
MODIFICATION	Modificação
MOLDBOARD	Armação da lâmina
MOTOR	Motor
MOULDING	Moldura
MOUNT	Montar
MOUNTED	Montado (a)
MOUNTING	Montagem
MUFFLER	Silenciador
NAMEPLATE	Plaqueta de identificação
N.C. (THREAD)	Rosca grossa
NEEDLE	Agulha
N.F. (THREAD)	Rosca fina
NIB	Ponta, bico
NIPPLE	Conexão
NONE	Nenhum (a)
NORMALIZING	Normalização
NOT PART OF	Não faz parte de
NOZZLE	Bocal, bico injetor
N/S = NOT SERVICED	Não vendável
NUMBER (No)	Número (No)
NUT	Porca
NUT-WING	Porca borboleta
NUT-CASTLE	Porca acastelada
NUT-WELD	Porca-soldada
NUT-CAP	Porca cega
NUT-HEX	Porca sextavada
NUT-LOCK	Contraporca
NUT-IMPERIAL	Porca imperial
NUT-JAM	Porca de trava, contraporca
NUT-LOW CROWN	Porca de meia coroa
NUT-RETAINING	Porca de retenção
NUT-SELF LOCK	Porca de autotravamento
NUT-SLOTTED	Porca fendada
NUT-SPANNER	Porca para chaves
O.D. = OUTSIDE DIAMETER	Diâmetro externo
O-RING	Anel "O"
OIL	Óleo
OILPAN	Cárter
OIL PUMP	Bomba de óleo
OIL SYSTEM	Sistema de lubrificação
OILER	Almotolia, lubrificador
ORANGE	Laranja
TO ORDER	Para pedir
ORIFICE	Orifício
OUTER	Externo
OUTER RACE	Anel externo
OUTPUT	Saída
OVERALL	Geral, total
OVERHAUL	Revisão
OVER SIZE	Sobremedida
PACKING	Embalagem, gaxeta
PAD	Coxim, calço
PADLOCK	Cadeado
PAINT	Pintura
PAN	Cárter
PANEL	Painel
PARKING BRAKE	Freio de estacionamento
PARTITION	Separacão
PARTS G	Grupo de peças
PARTS OF	Peça de
PARTS OF ALL ENGINE ARRANGEMENTS	Peças de todos os arranjos do motor exceto
PAWL	Garra
PEDAL	Pedal
PEDESTAL	Pedestal
PERFORMANCE	Desempenho
PILOT	Piloto
PIN	Pino
PIN & BUSHING	Pino e bucha
PIN-COTTER	Contrapino
PINCH BAR	Pé de cabra
PINION	Pinhão
PIPE	Tubo
PISTON	Pistão
PIVOT	Articulação, pivô
PLANETARY	Planetário
PLATE	Placa
PLATFORM	Plataforma
PLUG	Bujão
PLUNGER	Pistão, êmbolo

NOMENCLATURA DE PEÇAS INGLÊS-PORTUGUÊS

INGLÊS	PORTUGUÊS
POINT	Ponta, ponto
POINTER	Ponteiro
POLE & COIL	Polo e bobina
POLE	Polo, lança, vara
POPPET	Gatilho
POST	Poste, coluna
POTENTIOMETER	Potenciômetro
POWER TAKE OFF	Tomada de força
POWER TRAIN	Trem de força
PRE-SCREENER	Tela protetora
PRECHAMBER	Câmara de pré-combustão
PRECLEANER	Pré-purificador
PRECOMBUSTION	Pré-combustão
PRESS	Prensa
PRESS = PRESSURE	Pressão
PREVIOUS	Prévio, anterior
PRIMARY	Primário, principal
PROBE	Prova
PROJECTOR	Projeter
PROTECTION	Proteção
PROTECTOR	Proteter
PULLER	Extrator, sacador
PULLEY	Polia
PUMP	Bomba
PURPLE	Roxo
PUSHROD	Haste de empuxo
QTY = QUANTITY	Quantidade
RACE	Pista
RACE & ROLLER	Pista e rolete
RACK	Cremalheira
RADIATOR	Radiador
RAIL	Trilho, guia
RANGE TRANSM	Transmissão manual
RATCHET	Catraca
REAR	Traseiro (a)
REBORED	Escareado, alargado
REBUILD KIT	Jogo de recondicionamento
RECEPTACLE	Recipiente
RECTIFIER	Retificador
RED	Vermelho
REDUCER	Redutor
REFER	Referir
REGULATOR	Regulador
RELATED REPAIR ITEMS	Itens de reparos relacionados
RELAY	Relé
RELIEF VALVE	Válvula de alívio
REPAIR G	Grupo de reparo
REPAIR KIT	Jogo de reparo
REPAIR ITEMS	Itens de reparo
REPLACEMENT	Reposição, substituição
REQUIRED	Necessário
RESERVOIR A	Reservatôrio
RESIN	Resina
RESISTOR	Resistência
RETAINER	Fixador
RETARDER	Retardador
REVERSIBLE	Reversível
R.H. = RIGHT HAND	Lado direito
RIM	Aro
RIM & TIRE	Aro e pneu
RING	Anel
RIVET	Rebite
ROCKET	Balancim
ROD	Haste
ROD END	Extremidade da haste
ROLLER	Rolete
ROPE-STARTING	Partida à corda
ROTATOR	Girador
ROTOCHAMBER	Càmara pneumática
ROTOCOIL	Girador de válvula
ROTOR	Rotor
RUST INHIBITOR	Antioxidante
SADDLE	Sela, assento
SAFETY	Segurança
SAFETY TREAD	Tiras antiderrapante
SCRAPER	Tampa
SCREEN	Tela
SCREW	Parafuso
SCREW-HEX HD	Parafuso de cabeça hexagonal
SCREW-KIT	Jogos de parafuso
SCREW-MACHINE	Parafuso de fenda
SCREW-ROUND HD	Parafuso de cabeça redonda
SCREW-FLANGED	Parafuso com flange
SCREW-LOCKING	Parafuso de trava
SCREW-THUMB	Parafuso de orelhas
SCREWDRIVER	Chave de fenda
SEAL	Retentor
SEALED UNIT	Unidade vedada
SEALER	Vedador isolante
SEAT	Assento
SECONDARY	Secundário
SECTION	Seção
SEGMENT	Segmento
SENDER	Emissor
SENSOR	Sensor
SEPARATE	Separar, separado
SEPARATOR	Separador
SERIAL NUMBER PLATE	Placa de número de série
SERVICE	Serviço, manutenção
SERVICE KIT	Jogo de manutenção
SERVICE METER	Horômetro
SETSCREW	Parafuso de fixação
SHACKLE	Grilheto, anel, manilha
SHAFT	Eixo

NOMENCLATURA DE PEÇAS INGLÊS-PORTUGUÊS

INGLÊS	PORTUGUÊS
SHANK	Porta-ponta do escarificador
SHEAVE	Polia, roldana
SHEET	Folha, lâmina
SHELL	Invólucro, cápsula, casquilho
SHIELD	Blindagem, protetor
SHIFT	Mudança
SHIM	Calço
SHIPPING	Embarque
SHOCK ABSORBER	Amortecedor de choques
SHOCKMOUNT	Montagem a prova de choques
SHOE	Sapata
SHORT	Curto
SHOWN	Ilustrado, mostrado
SHROUD	Tampa de proteção
SHUNT	Derivação
SHUT OFF	Desligar, parada
SHUTTLE	Pistão de vaivém
SIDE	Lateral
SIDE VIEW	Vista lateral
SILICONE	Silicone
SINK	Absorvente de calor
SKIVING	Desbaste
SLACK ADJUSTER	Adjustador de folga
SLEEVE	Luva, manga, camisa
SLIDER	Cursor, deslizador
SLIDE RAIL	Trilho deslizante
SLING	Cabos, amarras, linga
SLINGER	Defletor
SLUG	Pistão de reação, pistãozinho
SMALL	Pequeno
SNAP RING	Anel de retenção, anel de pressão
SNUBBER	Amortecedor
SOCKET	Soquete, tomada
SOLENOID	Solenóide
SPACER	Espaçador
SPARE	Sobressalente
SPARK PLUG	Vela de ignição
SPECIAL	Especial
SPEEDOMETER	Velocimetro
SPIDER	Cruzeta
SPINDLE	Ponta de eixo
SPLINE	Estria
SPOOL	Carretel
SPOUT	Calha, tubo
SPRING	Mola
SPROCKET	Roda motriz, roda dentada
STABILIZER	Estabilizador
STACK	Chaminé, cano de escapamento
STAND	Suporte, cavalete
STANDPIPE	Suporte vertical de sucção
STAPLE	Grampo
STARTER	Arranque motor de partida
STATOR	Estator
STEERING	Direção
STEM	Haste
STEP	Degrau
STICK	Vareta
STOP	Parar
STORAGE	Armazenagem
STRAINER	Tela filtrante
STRAP	Tira, cinta, suporte de fixação
STREET ELL	Conexão cotovelo
STRIP	Tira, fita, listra
STROKE	Curso do pistão
STUD	Prisioneiro
SUMP	Tanque, reservatório
SUPPLY VALVE	Válvula de suprimento
SUPPORT	Suporte
SUSPENSION	Suspensão
SWITCH	Interruptor
SWIVEL	Articulação giratória
TAB	Tira, aba, lingüeta
TABLE	Mesa
TACHOGRAPH	Tacógrafo
TACHOMETER	Tacômetro
TAG	Etiqueta
TAIL LAMP	Farol traseiro
TAN	Castanho
TANG	Lingüeta
TANK	Tanque
TAP	Macho
TAPE	Fita
TAPPET	Tucho
TEE	Conexão em "T"
TEMP. = TEMPERATURE	Temperatura
TERMINAL	Terminal
TEST UNIT	Unidade de teste
TESTER	Aparelho de teste
THERMISTOR	Termistor
THERMOCOUPLE	Termopar
THERMOMETER	Termômetro
THERMOSTAT	Termostato
THERMOSWITCH	Interruptor térmico
THICK	Grosso (a) espesso (a)
TIE	Ligação, tirante
THREAD (OF NUT)	Rosca (de porca)
THROTTLE	Acelerador de
THROWER	Defletor
THRU = THROUGH	Através de
TIGHTENER	Tensor
TILT CYLINDER	Cilindro de inclinação
TIMING	Sincronização, Distribuição

NOMENCLATURA DE PEÇAS INGLÊS-PORTUGUÊS

INGLÊS	PORTUGUÊS
TIP	Ponta
TIRE	Pneu
TIRE & RIM	Pneu e aro
TONGUE	Língua, lingueta
TOOL	Ferramenta
TOOLCABINET	Armário para ferramenta
TOOTH/TEETH	Dente/dentes
TOP	Topo, parte superior
TORQUE	Torque
TORQ. CONV.	Conversor de torque
TORQ. DIVIDER	Divisor de torque
TOWER	Torre
TRACK	Esteira
TRACK PIN	Pino de esteira
TRACTOR	Trator
TRAILING UNIT	Unidade rebocada
TRANSFER	Decalcomania
TRANSFORMER	Transformador
TRANSISTOR	Transistor
TRANSMISSION	Transmissão
TRANSMISSION OVERHAUL	Revisão da transmissão
TREAD	Piso, banda de rodagem
TREADLE	Pedal
TROLLY	Carrinho
TRUCK	Caminhão
TRUNNION	Munhão
TUBE	Tubo, cano
TUBING	Tubulagem canalização
TURBINE	Turbina
TURBOCHARGER	Turboalimentador
U-BOLT	Parafuso em "U"
U-JOINT	Junta universal
UNDERSIZE	Submedida
UNION	União
UPPER	Superior
USE AS REQUIRED	Usar conforme necessitar
VALUE	Valor
VALVE	Válvula
VALVE GRINDING	Retificação das válvulas
VEE BELT	Correia "V"
VEE BELT SET	Jogo de correia em "V"
VENT	Respiro
VIEW	Vista
VISE	Morsa, torno
VISOR	Pára-sol
WALKWAY	Passadiço, corredor
WARNING G.	Grupo de alarma
WASHER	Arruela
WATER PUMP	Bomba d'água
WEARPLATE	Placa de desgaste
WEDGE	Cunha
WEIGHT	Peso
WELD	Solda
WELDNUT	Porca soldada
WHEEL	Roda
WHITE	Branco
WICK	Mecha, pavio
WINCH	Guincho
WINDOW	Janela
WINDSHIELD	Pára-brisa
WIPER	Limpador
WIRE	Fio
WIRING	Sistema elétrico
WIRING DIAGRAM	Diagrama do sistema elétrico
WITH	Com
WRAPPER	Invólucro, envoltório
WRENCH	Chave
YELLOW	Amarelo
YOKE	Garfo

MAINTENANCE PARTS

DESCRIPTION	PART NUMBER	QTY	WHERE USED	PAGE
AIR INLET AND EXHAUST SYSTEM				
FILTER ELEMENT-AIR (PRIMARY)	245-6375	1	AIR CLEANER GP	87
FILTER ELEMENT AS-AIR (SECONDARY)	245-6376	1	AIR CLEANER GP	87
BASIC ENGINE				
CAP AS-FILLER (ENGINE OIL)	241-5645	1	COVER GP-FRONT HOUSING	15
PLUG-DRAIN	5F-0304	1	HOUSING GP-FLYWHEEL	34
		1	HOUSING GP-FLYWHEEL	36
SEAL-VALVE COVER	272-0388	1	COVER GP-VALVE MECHANISM	16
COOLING SYSTEM				
CAP AS-COOLANT TANK	251-3227	1	TANK GP-COOLANT	82
FILTER (WATER) (PUMP)	119-3025	1	PUMP GP-WATER	78
GASKET (TEMPERATURE REGULATOR HOUSING)	222-5915	1	LINES GP-WATER	74
REGULATOR-WATER TEMPERATURE (97-DEG C)	115-4223	2	LINES GP-WATER	74
ELECTRICAL AND STARTING SYSTEM				
BATTERY (12-VOLT, MAINTENANCE FREE)	153-5710	2	BATTERY & WIRING GP	143
	230-6368	2	BATTERY & WIRING GP	141
BATTERY (12-VOLT, MAINTENANCE FREE) (WET)	153-5700	2	BATTERY & WIRING GP	146
BELT-DRIVE	9X-8139	1	LAMP GP-WARNING BEACON	196
BELT-SERPENTINE	293-3908	1	ALTERNATOR GP-CHARGING	132
		1	ALTERNATOR GP-CHARGING	134
	293-3909	1	ALTERNATOR GP-CHARGING	136
		1	ALTERNATOR GP-CHARGING	138
CIRCUIT BREAKER AS (15-AMPERE) (FLOODLIGHTS, LH)	3T-2662	1	PANEL GP-CIRCUIT BREAKER	216
CIRCUIT BREAKER AS (15-AMPERE) (FLOODLIGHTS, RH)	3T-2662	1	PANEL GP-CIRCUIT BREAKER	217
CIRCUIT BREAKER AS (15-AMPERE) (KEY SWITCH)	230-9174	1	PANEL GP-CIRCUIT BREAKER	216
CIRCUIT BREAKER AS (15-AMPERE) (TRANSMISSION CONTROL)	230-9174	1	PANEL GP-CIRCUIT BREAKER	216
CIRCUIT BREAKER AS (150-AMPERE) (ALTERNATOR)	171-2215	1	PANEL GP-CIRCUIT BREAKER	216
CIRCUIT BREAKER AS (20-AMPERE)	6T-3644	1	WIRING GP-CAB	266
CIRCUIT BREAKER AS (20-AMPERE) (ACCUGRADE)	288-3687	1	PANEL GP-CIRCUIT BREAKER	216
CIRCUIT BREAKER AS (20-AMPERE) (ENGINE CONTROL)	288-3687	1	PANEL GP-CIRCUIT BREAKER	216
CIRCUIT BREAKER AS (80-AMPERE) (LOAD)	171-2210	1	PANEL GP-CIRCUIT BREAKER	216
CIRCUIT BREAKER AS (80-AMPERE) (MAIN)	171-2210	1	PANEL GP-CIRCUIT BREAKER	216
ELEMENT AS-JACKET WATER HEATER (120-VOLT, 1000-WATT)	246-8628	1	HEATER GP-JACKET WATER	170
ELEMENT AS-JACKET WATER HEATER (240-VOLT, 1000-WATT)	246-8627	1	HEATER GP-JACKET WATER	169

MAINTENANCE PARTS

DESCRIPTION	PART NUMBER	QTY	WHERE USED	PAGE
FUSE (10-AMPERE)	9W-1442	21	WIRING GP-CAB	265
FUSE (15-AMPERE)	9W-1441	19	WIRING GP-CAB	265
KEY AS-ELECTRONIC (SECURITY)	206-5162	2	INSTALLATION GP-SECURITY	175
KEY (BATTERY DISCONNECT)	8H-5306	1	SWITCH GP-DISCONNECT	251
LAMP AS (24-VOLT, GREEN)	279-5308	1	CONTROL GP-IMPLEMENT	153
		1	CONTROL GP-IMPLEMENT	154
		1	CONTROL GP-IMPLEMENT	156
		1	CONTROL GP-IMPLEMENT	157
LAMP AS (24-VOLT, GREEN) (GREEN)	279-5308	1	WIRING GP-CAB	265
LAMP-HALOGEN (24-VOLT, 35-WATT)	209-6638	1	LAMP GP-FLOOD	179
LAMP-HALOGEN (24-VOLT, 65-WATT)	9X-3463	1	LAMP GP-FLOOD	180
		1	LAMP GP-FLOOD	183
		1	LAMP GP-FLOOD	184
		1	LAMP GP-HEAD	189
LAMP-LED (GREEN, 24-VOLT)	250-2299	1	CONTROL GP-POWER TRAIN	158
		1	SWITCH GP-ROCKER	260
LAMP-LED (RED, 24-VOLT)	242-3282	1	INSTALLATION GP-SECURITY	175
		1	CONTROL GP-POWER TRAIN	158
LAMP (24-VOLT)	7N-9943	1	LAMP GP-DOME	178
LAMP (24-VOLT) (CAB POSITION)	9X-4494	1	LAMP GP-MARKER	192
LAMP (24-VOLT, HID)	290-8160	1	LAMP GP-FLOOD	186
LAMP (24-VOLT, 21-WATT)	9X-4493	1	LIGHTING GP-BACKUP	197
LAMP (24-VOLT, 5-WATT)	5C-9583	1	LAMP GP-REGISTRATION PLATE	193
	130-3515	1	LAMP GP-HEAD & SIGNAL	190
		1	LAMP GP-HEAD & SIGNAL	191
LAMP (24-VOLT, 70-WATT)	9X-7849	1	LAMP GP-WARNING BEACON	196
LAMP (24-VOLT, 75/70-WATT)	9X-3465	1	LAMP GP-HEAD & SIGNAL	190
		1	LAMP GP-HEAD & SIGNAL	191
FUEL SYSTEM				
CAP AS-FILLER (FUEL TANK)	7X-7700	1	TANK GP-FUEL	124
		1	TANK GP-FUEL	126
FILTER AS-FUEL (ADVANCED EFFICIENCY)	1R-0762	1	FILTER GP-FUEL	106
FILTER AS-WATER SEP & FUEL (PRIMARY)	1R-0770	1	FILTER GP-WATER SEP & FUEL	108
STRAINER-FUEL	199-9907	1	TANK GP-FUEL	124
		1	TANK GP-FUEL	126
HYDRAULIC SYSTEM				
CAP AS-FILLER (HYDRAULIC TANK)	142-8937	1	TANK GP-HYDRAULIC	646
FILTER AS-OIL (ADVANCED EFFICIENCY)	1G-8878	1	FILTER GP-OIL	562
FILTER-BREATHER (HYDRAULIC TANK)	9R-9925	1	TANK & MTG GP-HYDRAULIC	644
FILTER ELEMENT AS-OIL (ULTRA HIGH EFFICIENCY) (HYDRAULIC TANK)	1R-1809	1	FILTER GP-OIL	563
LUBRICATION SYSTEM				
BREATHER AS (CRANKCASE)	164-0210	1	BREATHER GP	57
FILTER AS-ENGINE OIL	1R-1807	1	FILTER GP-ENGINE OIL	58

MAINTENANCE PARTS

DESCRIPTION	PART NUMBER	QTY	WHERE USED	PAGE
OPERATOR STATION				
BLADE AS-WIPER (400-MM) (FRONT)	6V-5851	2	WIPER GP-WINDOW	880
BLADE AS-WIPER (400-MM) (LOWER DOOR WINDOW, LH)	6V-5851	1	WIPER GP-WINDOW	883
BLADE AS-WIPER (450-MM) (FRONT)	6V-5853	1	WIPER & WASHER GP-WINDOW	877
BLADE AS-WIPER (500-MM) (DOOR, RH)	146-6433	1	WIPER GP-WINDOW	882
BLADE AS-WIPER (500-MM) (REAR)	146-6433	1	WIPER GP-WINDOW	879
BLADE AS-WIPER (500-MM) (UPPER DOOR WINDOW, LH)	5C-8811	1	WIPER GP-WINDOW	883
CAP-VENTED (WASHER TANK)	276-3884	1	WIPER & WASHER GP-WINDOW	877
FILTER AS-AIR (CAB) (ACTIVATED CHARCOAL)	220-8800	1	DUCT & FILTER GP-CAB AIR	797
FILTER AS-AIR (CAB HEATER, AIR CONDITIONER)	149-1912	1	DUCT & FILTER GP-CAB AIR	797
	211-2660	1	DUCT & FILTER GP-CAB AIR	797
FUSE (15-AMPERE)	133-9012	1	AIR CONDITIONER GP	763
		1	HEATER GP-CAB	804
LAMP AS (24-VOLT)	250-8335	2	LINER GP-CAB	810
LAMP GP-DOME (24-VOLT)	3E-6389	1	LINER GP-CAB	810
RECEIVER DRYER AS (REFRIGERANT)	257-3226	1	LINES GP-AIR CONDITIONER	812
SEAT BELT GP (RETRACTABLE)	222-0345	1	SEAT GP	854
POWER TRAIN				
BREATHER AS (POWER TRAIN OIL FILLER)	9G-5127	1	FILLER GP-POWER TRAIN OIL	353
BREATHER AS (TANDEM)	9G-5127	2	TANDEM & COVER GP	393
BREATHER (AWD, GEAR)	295-2585	1	GEAR GP-FRONT	360
		1	GEAR GP-FRONT	361
FILTER AS-OIL (ADVANCED EFFICIENCY)	1G-8878	1	LINES GP-ALL WHEEL DRIVE	362
FILTER AS-OIL (FIRE RESISTANT FLUID)	156-0214	1	LINES GP-ALL WHEEL DRIVE	362
FILTER AS-OIL (ULTRA HIGH EFFICIENCY)	102-2828	1	LINES GP-ALL WHEEL DRIVE	362
FILTER ELEMENT AS-OIL (ULTRA HIGH EFFICIENCY)	1R-1809	1	LINES GP-TRANSMISSION OIL	372
FILTER ELEMENT AS-OIL (ULTRA HIGH EFFICIENCY) (TRANSMISSION)	1R-1809	1	FILTER GP-OIL	355
FILTER GP-OIL (ALL WHEEL DRIVE)	196-1803	2	LINES GP-ALL WHEEL DRIVE	362
FILTER-MAGNETIC (TRANSMISSION)	8S-9129	1	SCREEN GP-MAGNETIC	390
	251-6673	1	CASE & PARTS GP-PLANETARY	327
PLUG-MAGNETIC (TRANSMISSION)	5P-4484	2	CASE & PARTS GP-PLANETARY	328
SCREEN-SUCTION (TRANSMISSION)	8S-9130	1	SCREEN GP-MAGNETIC	390
SCREEN-SUCTION (TRANSMISSION SCAVENGE)	251-6674	1	CASE & PARTS GP-PLANETARY	327

PIÈCES DE RECHANGE

DESCRIPTION	NUMÉRO DE PIECÈS	QTÉ	DOMAINE D'APPLICATION	PAGE
CIRCUIT D'ADMISSION D'AIR ET D'ÉCHAPPEMENT				
ÉLÉMENT DE FILTRE À AIR (ENS) (SECONDAIRE)	245-6376	1	FILTRE A AIR (ASS)	87
ÉLÉMENT DE FILTRE À AIR (PRINCIPAL)	245-6375	1	FILTRE A AIR (ASS)	87
CIRCUIT DE CARBURANT				
BOUCHON DE GOULOTTE DE REMPLISSAGE (ENS) (RÉSERVOIR DE CARBURANT)	7X-7700	1	RÉSERVOIR DE CARBURANT (ASS)	124
		1	RÉSERVOIR DE CARBURANT (ASS)	126
FILTRE - SÉPARATEUR D'EAU ET DE CARBURANT (ENS) (PRINCIPAL)	1R-0770	1	FILTRE DE SÉPARATEUR D'EAU ET DE CARBURANT (ASS)	108
FILTRE À CARBURANT	199-9907	1	RÉSERVOIR DE CARBURANT (ASS)	124
		1	RÉSERVOIR DE CARBURANT (ASS)	126
FILTRE A CARBURANT (ENS) (EFFICACITÉ AVANCÉE)	1R-0762	1	FILTRE A CARBURANT (ASS)	106
CIRCUIT DE GRAISSAGE				
FILTRE A HUILE MOTEUR (ENS)	1R-1807	1	FILTRE À HUILE MOTEUR (ASS)	58
RENIFLARD (ENS) (CARTER)	164-0210	1	RENIFLARD (ASS)	57
CIRCUIT DE REFROIDISSEMENT				
BOUCHON DE RÉSERVOIR DE LIQUIDE DE REFROIDISSEMENT (ENS)	251-3227	1	RÉSERVOIR DU LIQUIDE DE REFROIDISSEMENT (ASS)	82
FILTRE (EAU) (POMPE)	119-3025	1	POMPE A EAU (ASS)	78
JOINT PLAT (BOÎTIER DE RÉGULATEUR DE TEMPÉRATURE)	222-5915	1	CANALISATIONS D'EAU (ASS)	74
THERMOSTAT-TEMPÉRATURE D'EAU (97-DEG C)	115-4223	2	CANALISATIONS D'EAU (ASS)	74
CIRCUIT ÉLECTRIQUE ET DE DÉMARRAGE				
AMPOULE (24 VOLTS)	7N-9943	1	PLAFONNIER (ASS)	178
AMPOULE (24 VOLTS) (POSITION DE CABINE)	9X-4494	1	REPÈRE DE LAMPE (ASS)	192
AMPOULE (24-VOLTS, XÉNON)	290-8160	1	LAMPE - PHARE (ASS)	186
AMPOULE (24V, 21W)	9X-4493	1	ECLAIRAGE AR (ASS)	197
AMPOULE (24V, 5W)	5C-9583	1	LAMPE-PLAQUE D'IMMATRICULATION (ASS)	193
	130-3515	1	LAMPE - PHARE ET CLIGNOTANT	190
		1	LAMPE - PHARE ET CLIGNOTANT	191
AMPOULE (24V, 70W)	9X-7849	1	LAMPE - GYROPHARE (ASS)	196
AMPOULE (24V, 75/70W)	9X-3465	1	LAMPE - PHARE ET CLIGNOTANT	190
		1	LAMPE - PHARE ET CLIGNOTANT	191
BATTERIE (12V, SANS ENTRETIEN)	153-5710	2	BATTERIE ET CÂBLAGE	143
	230-6368	2	BATTERIE ET CÂBLAGE	141
BATTERIE (12V, SANS ENTRETIEN) (HUMIDE)	153-5700	2	BATTERIE ET CÂBLAGE	146
CLÉ (COUPE-BATTERIE)	8H-5306	1	ROBINET DE BATTERIE (ASS)	251
CLÉ ÉLECTRONIQUE (ENS) (SÉCURITÉ)	206-5162	2	MONTAGE-SÉCURITÉ (ASS)	175
COURROIE MULTIPLE	293-3908	1	ALTERNATEUR DE CHARGE (ASS)	132
		1	ALTERNATEUR DE CHARGE (ASS)	134
	293-3909	1	ALTERNATEUR DE CHARGE (ASS)	136
		1	ALTERNATEUR DE CHARGE (ASS)	138

PIÈCES DE RECHANGE

DESCRIPTION	NUMÉRO DE PIECÈS	QTÉ	DOMAINE D'APPLICATION	PAGE
DIODE (ROUGE, 24-VOLTS)	242-3282	1	MONTAGE-SÉCURITÉ (ASS)	175
		1	COMMANDE DE TRANSMISSION (ASS)	158
DIODE (VERT, 24-VOLTS)	250-2299	1	INTERRUPTEUR À BASCULE (ASS)	260
		1	COMMANDE DE TRANSMISSION (ASS)	158
DISJONCTEUR (ENS) (15A) (COMMANDE DE BOÎTE DE VITESSES)	230-9174	1	DISJONCTEUR DU PANNEAU DE COMMANDE (ASS)	216
DISJONCTEUR (ENS) (15A) (INTERRUPTEUR À CLÉ)	230-9174	1	DISJONCTEUR DU PANNEAU DE COMMANDE (ASS)	216
DISJONCTEUR (ENS) (15A) (PROJECTEURS, CÔTÉ DROIT)	3T-2662	1	DISJONCTEUR DU PANNEAU DE COMMANDE (ASS)	217
DISJONCTEUR (ENS) (15A) (PROJECTEURS, CÔTÉ GAUCHE)	3T-2662	1	DISJONCTEUR DU PANNEAU DE COMMANDE (ASS)	216
DISJONCTEUR (ENS) (150A) (ALTERNATEUR)	171-2215	1	DISJONCTEUR DU PANNEAU DE COMMANDE (ASS)	216
DISJONCTEUR (ENS) (20A)	6T-3644	1	CABLAGE DE CABINE (ASS)	266
DISJONCTEUR (ENS) (20A) (ACCUGRADE)	288-3687	1	DISJONCTEUR DU PANNEAU DE COMMANDE (ASS)	216
DISJONCTEUR (ENS) (20A) (COMMANDE DU MOTEUR)	288-3687	1	DISJONCTEUR DU PANNEAU DE COMMANDE (ASS)	216
DISJONCTEUR (ENS) (80A) (CHARGE)	171-2210	1	DISJONCTEUR DU PANNEAU DE COMMANDE (ASS)	216
DISJONCTEUR (ENS) (80A) (PRINCIPAL)	171-2210	1	DISJONCTEUR DU PANNEAU DE COMMANDE (ASS)	216
ÉLÉMENT DU RÉCHAUFFEUR D'EAU DES CHEMISES (ENS) (120-VOLT, 1000-WATT)	246-8628	1	EAU DES CHEMISES - RECHAUFFEUR (ASS)	170
ÉLÉMENT DU RÉCHAUFFEUR D'EAU DES CHEMISES (ENS) (240V, 1000W)	246-8627	1	EAU DES CHEMISES - RECHAUFFEUR (ASS)	169
ENTRAÎNEMENT POUR COURROIE	9X-8139	1	LAMPE - GYROPHARE (ASS)	196
FUSIBLE (10A)	9W-1442	21	CABLAGE DE CABINE (ASS)	265
FUSIBLE (15A)	9W-1441	19	CABLAGE DE CABINE (ASS)	265
LAMPE (ENS) (24-VOLTS, VERT)	279-5308	1	COMMANDE D'EQUIPEMENT (ASS)	153
		1	COMMANDE D'EQUIPEMENT (ASS)	154
		1	COMMANDE D'EQUIPEMENT (ASS)	156
		1	COMMANDE D'EQUIPEMENT (ASS)	157
LAMPE (ENS) (24-VOLTS, VERT) (VERTE)	279-5308	1	CABLAGE DE CABINE (ASS)	265
LAMPE HALOGÈNE (24-VOLTS, 35-WATTS)	209-6638	1	LAMPE - PHARE (ASS)	179
LAMPE HALOGÈNE (24V, 65W)	9X-3463	1	LAMPE - PHARE (ASS)	180
		1	LAMPE - PHARE (ASS)	183
		1	LAMPE - PHARE (ASS)	184
		1	PHARE AV (ASS)	189

PIÈCES DE RECHANGE

DESCRIPTION	NUMÉRO DE PIECÈS	QTÉ	DOMAINE D'APPLICATION	PAGE
CIRCUIT HYDRAULIQUE				
BOUCHON DE GOULOTTE DE REMPLISSAGE (ENS) (RÉSERVOIR HYDRAULIQUE)	142-8937	1	RÉSERVOIR HYDRAULIQUE (ASS)	646
ÉLÉMENT DE FILTRE À HUILE (ENS) (ULTRA-GRANDE EFFICACITÉ) (RÉSERVOIR HYDRAULIQUE)	1R-1809	1	FILTRE A HUILE (ASS)	563
FILTRE - RENIFLARD (RÉSERVOIR HYDRAULIQUE)	9R-9925	1	RÉSERVOIR HYDRAULIQUE ET MONTAGE (ASS)	644
FILTRE À HUILE (ENS) (EFFICACITÉ AVANCÉE)	1G-8878	1	FILTRE A HUILE (ASS)	562
MOTEUR STANDARD				
BOUCHON DE GOULOTTE DE REMPLISSAGE (ENS) (HUILE MOTEUR)	241-5645	1	COUVERCLE DE CARTER AV (ASS)	15
BOUCHON DE VIDANGE	5F-0304	1	CARTER DE VOLANT (ASS)	34
		1	CARTER DE VOLANT (ASS)	36
JOINT DE CACHE-SOUPAPES	272-0388	1	CACHE-SOUPAPES (ASS)	16
POSTE DE CONDUITE				
BALAI D'ESSUIE-GLACE (ENS) (400-M) (AVANT)	6V-5851	2	ESSUIE-GLACE (ASS)	880
BALAI D'ESSUIE-GLACE (ENS) (400-M) (VITRE INFÉRIEURE DE PORTE, CÔTÉ GAUCHE)	6V-5851	1	ESSUIE-GLACE (ASS)	883
BALAI D'ESSUIE-GLACE (ENS) (450-MM) (AVANT)	6V-5853	1	ESSUIE-GLACE ET LAVE-GLACE	877
BALAI D'ESSUIE-GLACE (ENS) (500-MM) (ARRIÈRE)	146-6433	1	ESSUIE-GLACE (ASS)	879
BALAI D'ESSUIE-GLACE (ENS) (500-MM) (PORTE, DROITE)	146-6433	1	ESSUIE-GLACE (ASS)	882
BALAI D'ESSUIE-GLACE (ENS) (500-MM) (VITRE SUPÉRIEURE DE PORTE, CÔTÉ GAUCHE)	5C-8811	1	ESSUIE-GLACE (ASS)	883
BOUCHON À ÉVENT (RÉSERVOIR DE LAVE-GLACE)	276-3884	1	ESSUIE-GLACE ET LAVE-GLACE	877
CEINTURE DE SECURITE (ASS) (RÉTRACTABLE)	222-0345	1	SIÈGE (ASS)	854
FILTRE A HUILE (ENS) (CABINE) (CHARBON ACTIVÉ)	220-8800	1	CONDUIT ET FILTRE À AIR DE CABINE (ASS)	797
FILTRE A HUILE (ENS) (CHAUFFAGE, CLIMATISEUR DE CABINE)	149-1912	1	CONDUIT ET FILTRE À AIR DE CABINE (ASS)	797
	211-2660	1	CONDUIT ET FILTRE À AIR DE CABINE (ASS)	797
FUSIBLE (15A)	133-9012	1	CHAUFFAGE DE CABINE (ASS)	804
		1	CLIMATISEUR (ASS)	763
LAMPE (ENS) (24 VOLTS)	250-8335	2	CABINE - REVÊTEMENT (ASS)	810
PLAFONNIER (ASS) (24 VOLTS)	3E-6389	1	CABINE - REVÊTEMENT (ASS)	810
RÉCEPTEUR-DÉSHYDRATEUR (ENS) (RÉFRIGÉRANT)	257-3226	1	CANALISATIONS DE CLIMATISEUR (ASS)	812

PIÈCES DE RECHANGE

DESCRIPTION	NUMÉRO DE PIECÈS	QTÉ	DOMAINE D'APPLICATION	PAGE
TRANSMISSION				
BOUCHON AIMANTÉ (BOîTE DE VITESSES)	5P-4484	2	TRAINS PLANÉTAIRES - CARTER ET PIÈCES	328
ÉCRAN MAGNÉTIQUE (BOîTE DE VITESSES)	8S-9129	1	ÉCRAN MAGNÉTIQUE (ASS)	390
	251-6673	1	TRAINS PLANÉTAIRES - CARTER ET PIÈCES	327
ÉLÉMENT DE FILTRE À HUILE (ENS) (ULTRA-GRANDE EFFICACITÉ)	1R-1809	1	CANALISATIONS D'HUILE DE BOÎTE (ASS)	372
ÉLÉMENT DE FILTRE À HUILE (ENS) (ULTRA-GRANDE EFFICACITÉ) (BOîTE DE VITESSES)	1R-1809	1	FILTRE A HUILE (ASS)	355
FILTRE A HUILE (ASS) (TRACTION INTÉGRALE)	196-1803	2	CANALISATIONS DE TRACTION INTÉGRALE (ASS)	362
FILTRE À HUILE (ENS) (EFFICACITÉ AVANCÉE)	1G-8878	1	CANALISATIONS DE TRACTION INTÉGRALE (ASS)	362
FILTRE À HUILE (ENS) (LIQUIDE RÉSISTANT AU FEU)	156-0214	1	CANALISATIONS DE TRACTION INTÉGRALE (ASS)	362
FILTRE À HUILE (ENS) (ULTRA-GRANDE EFFICACITÉ)	102-2828	1	CANALISATIONS DE TRACTION INTÉGRALE (ASS)	362
RENIFLARD (ENS) (REMPLISSAGE D'HUILE DE TRANSMISSION)	9G-5127	1	GOULOTTE DE REMPLISSAGE D'HUILE DE TRANSMISSION	353
RENIFLARD (ENS) (TANDEM)	9G-5127	2	TANDEM ET CARTER (ASS)	393
RENIFLARD (RAPPORT, TRACTION INTÉGRALE)	295-2585	1	PIGNONNERIE AV (ASS)	360
		1	PIGNONNERIE AV (ASS)	361
TAMIS D'ASPIRATION (BOîTE DE VITESSES)	8S-9130	1	ÉCRAN MAGNÉTIQUE (ASS)	390
TAMIS D'ASPIRATION (REPRISE DE BOÎTE)	251-6674	1	TRAINS PLANÉTAIRES - CARTER ET PIÈCES	327

PIEZAS DE MANTENIMIENTO

DESCRIPCION	NUMERO DE PIEZA	CANT	SE UTILIZA EN	PAGINA
MOTOR BÁSICO				
*SEAL-VALVE COVER	272-0388	1	TAPA DEL MECANISMO DE VÁLVULAS (GR)	16
TAPA DE LLENADO (CONJ) (ACEITE DEL MOTOR)	241-5645	1	TAPA DE LA CAJA DELANTERA (GR)	15
TAPÓN DE DRENAJE	5F-0304	1	VOLANTE - CAJA DE (GR)	34
		1	VOLANTE - CAJA DE (GR)	36
PUESTO DEL OPERADOR				
CINTURÓN DE SEGURIDAD (GR) (RETRACTIL)	222-0345	1	ASIENTO (GR)	854
FILTRO DE AIRE (CONJ) (*CAB HEATER, AIR CONDITIONER)	149-1912	1	*DUCT & FILTER GP-CAB AIR	797
	211-2660	1	*DUCT & FILTER GP-CAB AIR	797
FILTRO DE AIRE (CONJ) (CABINA) (CARBÓN ACTIVADO)	220-8800	1	*DUCT & FILTER GP-CAB AIR	797
FUSIBLE (15 AMPERIOS)	133-9012	1	ACONDICIONADOR DE AIRE (GR)	763
		1	CALEFACCIÓN DE LA CABINA (GR)	804
HOJA DE LIMPIAPARABRISAS (CONJ) (*400-MM) (DELANTERO)	6V-5851	2	LIMPIAPARABRISAS DE LA VENTANA (GR)	880
HOJA DE LIMPIAPARABRISAS (CONJ) (*400-MM) (*LOWER DOOR WINDOW, LH)	6V-5851	1	LIMPIAPARABRISAS DE LA VENTANA (GR)	883
HOJA DE LIMPIAPARABRISAS (CONJ) (*450-MM) (DELANTERO)	6V-5853	1	LIMPIA Y LAVAPARABRISAS (GR)	877
HOJA DE LIMPIAPARABRISAS (CONJ) (*500-MM) (PARTE TRASERA)	146-6433	1	LIMPIAPARABRISAS DE LA VENTANA (GR)	879
HOJA DE LIMPIAPARABRISAS (CONJ) (*500-MM) (PUERTA, DERECHA)	146-6433	1	LIMPIAPARABRISAS DE LA VENTANA (GR)	882
HOJA DE LIMPIAPARABRISAS (CONJ) (*500-MM) (*UPPER DOOR WINDOW, LH)	5C-8811	1	LIMPIAPARABRISAS DE LA VENTANA (GR)	883
LÁMPARA (CONJ) (24 VOLTIOS)	250-8335	2	REVESTIMIENTO DE LA CABINA (GR)	810
LÁMPARA DEL TECHO (GR) (24 VOLTIOS)	3E-6389	1	REVESTIMIENTO DE LA CABINA (GR)	810
SECADOR DE RECEPTOR (CONJ) (REFRIGERANTE)	257-3226	1	TUBERÍAS DE ACONDICIONADOR DE AIRE (GR)	812
TAPA CON RESPIRADERO (TANQUE DE LIQUIDO LIMPIAPARABRISAS)	276-3884	1	LIMPIA Y LAVAPARABRISAS (GR)	877
SISTEMA DE ADMISIÓN Y ESCAPE DE AIRE				
ELEMENTO DE FILTRO DE AIRE (PRIMARIO)	245-6375	1	FILTRO DE AIRE (GR)	87
ELEMENTO DEL FILTRO DE AIRE (CONJ) (SECUNDARIO)	245-6376	1	FILTRO DE AIRE (GR)	87

* NO HAY TRADUCCION DISPONIBLE EN EL MOMENTO DE LA IMPRESION

PIEZAS DE MANTENIMIENTO

DESCRIPCION	NUMERO DE PIEZA	CANT	SE UTILIZA EN	PAGINA
SISTEMA DE COMBUSTIBLE				
COLADOR DE COMBUSTIBLE	199-9907	1	COMBUSTIBLE - TANQUE DE (GR)	124
		1	COMBUSTIBLE - TANQUE DE (GR)	126
FILTRO DE COMBUSTIBLE (CONJ) (EFICIENCIA AVANZADA)	1R-0762	1	FILTRO DE COMBUSTIBLE (GR)	106
FILTRO DE COMBUSTIBLE Y SEPARADOR DE AGUA (CONJ) (PRIMARIO)	1R-0770	1	FILTRO DE COMBUSTIBLE Y SEPARADOR DE AGUA (GR)	108
TAPA DE LLENADO (CONJ) (TANQUE DE COMBUSTIBLE)	7X-7700	1	COMBUSTIBLE - TANQUE DE (GR)	124
		1	COMBUSTIBLE - TANQUE DE (GR)	126
SISTEMA DE ENFRIAMIENTO				
*CAP AS-COOLANT TANK	251-3227	1	TANQUE DE REFRIGERANTE (GR)	82
EMPAQUETADURA (CAJA DEL REGULADOR DE TEMPERATURA)	222-5915	1	TUBERÍAS DEL AGUA (GR)	74
FILTRO (AGUA) (BOMBA)	119-3025	1	BOMBA DE AGUA (GR)	78
REGULADOR DE TEMPERATURA DEL AGUA (97 GRADOS C)	115-4223	2	TUBERÍAS DEL AGUA (GR)	74
SISTEMA DE LUBRICACIÓN				
FILTRO DE ACEITE DEL MOTOR (CONJ)	1R-1807	1	FILTRO DE ACEITE DEL MOTOR (GR)	58
RESPIRADERO (CONJ) (CÁRTER DEL MOTOR)	164-0210	1	RESPIRADERO (GR)	57
SISTEMA ELÉCTRICO Y DE ARRANQUE				
BATERÍA (12-VOLTIOS, LIBRE DE MANTENIMIENTO)	153-5710	2	BATERÍA Y CABLES (GR)	143
	230-6368	2	BATERÍA Y CABLES (GR)	141
BATERÍA (12-VOLTIOS, LIBRE DE MANTENIMIENTO) (HUMEDO)	153-5700	2	BATERÍA Y CABLES (GR)	146
CONJUNTO DE LLAVE, ELECTRONICA (SEGURIDAD)	206-5162	2	INSTALACION DE SEGURIDAD (GR)	175
CORREA-SERPENTIN	293-3908	1	CARGA - ALTERNADOR DE (GR)	132
		1	CARGA - ALTERNADOR DE (GR)	134
	293-3909	1	CARGA - ALTERNADOR DE (GR)	136
		1	CARGA - ALTERNADOR DE (GR)	138
DISYUNTOR (CONJ) (15 AMPERIOS) (CONTROL DE LA TRANSMISIÓN)	230-9174	1	PANEL DE DISYUNTORES (GR)	216
DISYUNTOR (CONJ) (15 AMPERIOS) (*FLOODLIGHTS, LH)	3T-2662	1	PANEL DE DISYUNTORES (GR)	216
DISYUNTOR (CONJ) (15 AMPERIOS) (*FLOODLIGHTS, RH)	3T-2662	1	PANEL DE DISYUNTORES (GR)	217
DISYUNTOR (CONJ) (15 AMPERIOS) (INTERRUPTOR DE LLAVE)	230-9174	1	PANEL DE DISYUNTORES (GR)	216
DISYUNTOR (CONJ) (150-AMPERIOS) (ALTERNADOR)	171-2215	1	PANEL DE DISYUNTORES (GR)	216
DISYUNTOR (CONJ) (20-AMPERIOS)	6T-3644	1	CABLES DE LA CABINA (GR)	266
DISYUNTOR (CONJ) (20-AMPERIOS) (ACCUGRADE)	288-3687	1	PANEL DE DISYUNTORES (GR)	216
DISYUNTOR (CONJ) (20-AMPERIOS) (CONTROL DEL MOTOR)	288-3687	1	PANEL DE DISYUNTORES (GR)	216

* NO HAY TRADUCCION DISPONIBLE EN EL MOMENTO DE LA IMPRESION

PIEZAS DE MANTENIMIENTO

DESCRIPCION	NUMERO DE PIEZA	CANT	SE UTILIZA EN	PAGINA
DISYUNTOR (CONJ) (80 AMPERIOS) (CARGA)	171-2210	1	PANEL DE DISYUNTORES (GR)	216
DISYUNTOR (CONJ) (80 AMPERIOS) (PRINCIPAL)	171-2210	1	PANEL DE DISYUNTORES (GR)	216
ELEMENTO DEL CALENTADOR DEL AGUA DE LAS CAMISAS (120 VOLTIOS, 1000 VATIOS)	246-8628	1	AGUA DE LAS CAMISAS - CALENTADOR DEL (GR)	170
ELEMENTO DEL CALENTADOR DEL AGUA DE LAS CAMISAS (240 VOLTIOS, 1000 VATIOS)	246-8627	1	AGUA DE LAS CAMISAS - CALENTADOR DEL (GR)	169
FUSIBLE (10-AMPERIOS)	9W-1442	21	CABLES DE LA CABINA (GR)	265
FUSIBLE (15 AMPERIOS)	9W-1441	19	CABLES DE LA CABINA (GR)	265
LÁMPARA (CONJ) (24 VOLTIOS, VERDE)	279-5308	1	CONTROL DE IMPLEMENTOS (GR)	153
		1	CONTROL DE IMPLEMENTOS (GR)	154
		1	CONTROL DE IMPLEMENTOS (GR)	156
		1	CONTROL DE IMPLEMENTOS (GR)	157
LÁMPARA (CONJ) (24 VOLTIOS, VERDE) (VERDE)	279-5308	1	CABLES DE LA CABINA (GR)	265
LAMPARA-LED (*GREEN, 24-VOLT)	250-2299	1	CONTROL DE TREN DE FUERZA (GR)	158
		1	INTERRUPTOR DE VOLQUETE (GR)	260
LAMPARA-LED (*RED, 24-VOLT)	242-3282	1	CONTROL DE TREN DE FUERZA (GR)	158
		1	INSTALACION DE SEGURIDAD (GR)	175
LÁMPARA (*24-VOLT, HID)	290-8160	1	REFLECTOR (GR)	186
LÁMPARA (24 VOLTIOS)	7N-9943	1	LÁMPARA DEL TECHO (GR)	178
LÁMPARA (24 VOLTIOS) (POSICIÓN DE LA CABINA)	9X-4494	1	LAMPARA MARCADORA (GR)	192
LÁMPARA (24-VOLTIOS, 21 VATIOS)	9X-4493	1	LUCES DE RETROCESO (GR)	197
LÁMPARA (24 VOLTIOS, 5 VATIOS)	5C-9583	1	LAMPARA DE PLACA DE REGISTRO (GR)	193
	130-3515	1	LÁMPARA DE LUZ DELANTERA Y DE SEÑAL (GR)	190
		1	LÁMPARA DE LUZ DELANTERA Y DE SEÑAL (GR)	191
LÁMPARA (24-VOLTIOS, 70-VATIOS)	9X-7849	1	LÁMPARA DE BALIZA DE ADVERTENCIA (GR)	196
LÁMPARA (24 VOLTIOS, 75/70 VATIOS)	9X-3465	1	LÁMPARA DE LUZ DELANTERA Y DE SEÑAL (GR)	190
		1	LÁMPARA DE LUZ DELANTERA Y DE SEÑAL (GR)	191
LLAVE (INTERRUPTOR GENERAL)	8H-5306	1	DISYUNTOR (GR)	251
LUCES DE ALÓGENO (*24-VOLT, 35-WATT)	209-6638	1	REFLECTOR (GR)	179
LUCES DE ALÓGENO (24 VOLTIOS, 65 VATIOS)	9X-3463	1	LÁMPARA DE FARO DELANTERO (GR)	189
		1	REFLECTOR (GR)	180
		1	REFLECTOR (GR)	183
		1	REFLECTOR (GR)	184
MANDO DE CORREA	9X-8139	1	LÁMPARA DE BALIZA DE ADVERTENCIA (GR)	196

* NO HAY TRADUCCION DISPONIBLE EN EL MOMENTO DE LA IMPRESION

PIEZAS DE MANTENIMIENTO

DESCRIPCION	NUMERO DE PIEZA	CANT	SE UTILIZA EN	PAGINA
SISTEMA HIDRÁULICO				
ELEMENTO DE FILTRO DE ACEITE (CONJ) (EFICIENCIA ULTRA ALTA) (TANQUE HIDRÁULICO)	1R-1809	1	FILTRO DE ACEITE (GR)	563
*FILTER-BREATHER (TANQUE HIDRÁULICO)	9R-9925	1	TANQUE HIDRÁULICO Y MONTAJE (GR)	644
FILTRO DE ACEITE (CONJ) (EFICIENCIA AVANZADA)	1G-8878	1	FILTRO DE ACEITE (GR)	562
TAPA DE LLENADO (CONJ) (TANQUE HIDRAULICO)	142-8937	1	TANQUE HIDRÁULICO (GR)	646
TREN DE FUERZA				
ELEMENTO DE FILTRO DE ACEITE (CONJ) (EFICIENCIA ULTRA ALTA)	1R-1809	1	TUBERÍAS DE ACEITE DE LA TRANSMISIÓN (GR)	372
ELEMENTO DE FILTRO DE ACEITE (CONJ) (EFICIENCIA ULTRA ALTA) (TRANSMISION)	1R-1809	1	FILTRO DE ACEITE (GR)	355
FILTRO DE ACEITE (CONJ) (EFICIENCIA AVANZADA)	1G-8878	1	GRUPO DE TUBERIAS, MANDO EN TODAS LAS RUEDAS	362
FILTRO DE ACEITE (CONJ) (EFICIENCIA ULTRA ALTA)	102-2828	1	GRUPO DE TUBERIAS, MANDO EN TODAS LAS RUEDAS	362
FILTRO DE ACEITE (CONJ) (FLUÍDO RESISTENTE AL FUEGO)	156-0214	1	GRUPO DE TUBERIAS, MANDO EN TODAS LAS RUEDAS	362
FILTRO DE ACEITE (GR) (MANDO DE TODAS LAS RUEDAS)	196-1803	2	GRUPO DE TUBERIAS, MANDO EN TODAS LAS RUEDAS	362
FILTRO MAGNÉTICO (TRANSMISION)	8S-9129	1	REJILLA MAGNÉTICA (GR)	390
	251-6673	1	CAJA Y PIEZAS DE LOS PLANETARIOS	327
REJILLA DE SUCCIÓN (BARRIDO DE TRANSMISION)	251-6674	1	CAJA Y PIEZAS DE LOS PLANETARIOS	327
REJILLA DE SUCCIÓN (TRANSMISION)	8S-9130	1	REJILLA MAGNÉTICA (GR)	390
RESPIRADERO (*AWD, GEAR)	295-2585	1	ENGRANAJE DELANTERO (GR)	360
		1	ENGRANAJE DELANTERO (GR)	361
RESPIRADERO (CONJ) (TANDEM)	9G-5127	2	TÁNDEM Y CUBIERTA (GR)	393
RESPIRADERO (CONJ) (TUBO DE LLENADO DE TREN DE FUERZA)	9G-5127	1	TUBO DE LLENADO DE ACEITE DE LA TRANSMISIÓN (GR)	353
TAPÓN MAGNÉTICO (TRANSMISION)	5P-4484	2	CAJA Y PIEZAS DE LOS PLANETARIOS	328

* NO HAY TRADUCCION DISPONIBLE EN EL MOMENTO DE LA IMPRESION

PEÇAS DE MANUTENÇÃO

DESCRIÇÃO	NÚMERO DE PEÇA	QUANT	UTILIZADA EM	PÁGINA
ESTAÇÃO DO OPERADOR				
CINTO DE SEGURANÇA (RETRÁTIL)	222-0345	1	ASSENTO	854
FILTRO - AR (AQUECEDOR, CONDICIONADOR DE AR DA CABINE)	149-1912	1	DUTO E FILTRO-AR DA CABINE	797
	211-2660	1	DUTO E FILTRO-AR DA CABINE	797
FILTRO - AR (CABINE) (CARVÃO ATIVADO)	220-8800	1	DUTO E FILTRO-AR DA CABINE	797
FUSÍVEL (15 AMPERES)	133-9012	1	AQUECEDOR DA CABINE	804
		1	CONDICIONADOR DE AR	763
LÂMINA DO LIMPADOR DE PÁRA-BRISA (400 MM) (DIANTEIRO)	6V-5851	2	LIMPADOR DO VIDRO	880
LÂMINA DO LIMPADOR DE PÁRA-BRISA (400 MM) (VIDRO DA PORTA INFERIOR, ESQUERDO)	6V-5851	1	LIMPADOR DO VIDRO	883
LÂMINA DO LIMPADOR DE PÁRA-BRISA (450 MM) (DIANTEIRO)	6V-5853	1	LIMPADOR E LAVADOR - JANELA	877
LÂMINA DO LIMPADOR DE PÁRA-BRISA (500 MM) (PORTA, LADO DIREITO)	146-6433	1	LIMPADOR DO VIDRO	882
LÂMINA DO LIMPADOR DE PÁRA-BRISA (500 MM) (TRASEIRO)	146-6433	1	LIMPADOR DO VIDRO	879
LÂMINA DO LIMPADOR DE PÁRA-BRISA (500 MM) (VIDRO DA PORTA SUPERIOR, ESQUERDO)	5C-8811	1	LIMPADOR DO VIDRO	883
LÂMPADA - TETO (24 VOLTS)	3E-6389	1	REVESTIMENTO DA CABINE	810
LÂMPADA (24 VOLTS)	250-8335	2	REVESTIMENTO DA CABINE	810
RECEPTOR SECADOR (REFRIGERANTE)	257-3226	1	TUBOS - AR CONDICIONADO	812
TAMPA COM RESPIRO (TANQUE DO LAVADOR DO PÁRA-BRISA)	276-3884	1	LIMPADOR E LAVADOR - JANELA	877
MOTOR BÁSICO				
BUJÃO DO DRENO	5F-0304	1	CAIXA DO VOLANTE DO MOTOR	34
		1	CAIXA DO VOLANTE DO MOTOR	36
RETENTOR - TAMPA DA VÁLVULA	272-0388	1	TAMPA - MECANISMO DAS VÁLVULAS	16
TAMPA - BOCAL DE ENCHIMENTO (ÓLEO DO MOTOR)	241-5645	1	TAMPA - CAIXA DIANTEIRA	15
SISTEMA DE ADMISSÃO DE AR E DE ESCAPE				
ELEMENTO DO FILTRO DE AR (SECUNDÁRIO)	245-6376	1	PURIFICADOR DE AR	87
ELEMENTO FILTRANTE - AR (PRIMÁRIO)	245-6375	1	PURIFICADOR DE AR	87
SISTEMA DE ARREFECIMENTO				
FILTRO (ÁGUA) (BOMBA)	119-3025	1	BOMBA DE ÁGUA	78
JUNTA (ALOJAMENTO DO REGULADOR DE TEMPERATURA)	222-5915	1	TUBOS - ÁGUA	74
REGULADOR DE TEMPERATURA DA ÁGUA (97 GRAUS C)	115-4223	2	TUBOS - ÁGUA	74
TAMPA-TANQUE DO LÍQUIDO ARREFECEDOR	251-3227	1	TANQUE - LÍQUIDO ARREFECEDOR	82

PEÇAS DE MANUTENÇÃO

DESCRIÇÃO	NÚMERO DE PEÇA	QUANT	UTILIZADA EM	PÁGINA
SISTEMA DE COMBUSTÍVEL				
FILTRO - COMBUSTÍVEL	199-9907	1	TANQUE DE COMBUSTÍVEL	124
		1	TANQUE DE COMBUSTÍVEL	126
FILTRO - COMBUSTÍVEL (EFICIÊNCIA AVANÇADA)	1R-0762	1	FILTRO - COMBUSTÍVEL	106
FILTRO - SEPARADOR DE ÁGUA E COMBUSTÍVEL (PRIMÁRIO)	1R-0770	1	FILTRO DE COMBUSTÍVEL E SEPARADOR DE ÁGUA	108
TAMPA - BOCAL DE ENCHIMENTO (TANQUE DE COMBUSTÍVEL)	7X-7700	1	TANQUE DE COMBUSTÍVEL	124
		1	TANQUE DE COMBUSTÍVEL	126
SISTEMA DE LUBRIFICAÇÃO				
FILTRO - ÓLEO DO MOTOR	1R-1807	1	FILTRO - ÓLEO DO MOTOR	58
RESPIRO (CÁRTER DO MOTOR)	164-0210	1	RESPIRO	57
SISTEMA ELÉTRICO E DE PARTIDA				
BATERIA (12 VOLTS, ISENTO DE MANUTENÇÃO)	153-5710	2	BATERIA E CABOS / FIOS ELÉTRICOS	143
	230-6368	2	BATERIA E CABOS / FIOS ELÉTRICOS	141
BATERIA (12 VOLTS, ISENTO DE MANUTENÇÃO) (MOLHADO)	153-5700	2	BATERIA E CABOS / FIOS ELÉTRICOS	146
CHAVE - ELETRÔNICO (SEGURANÇA)	206-5162	2	INSTALAÇÃO-SEGURANÇA	175
CHAVE (DESCONEXÃO DA BATERIA)	8H-5306	1	CHAVE GERAL	251
CORREIA- SERPENTINA	293-3908	1	ALTERNADOR DE CORRENTE	132
		1	ALTERNADOR DE CORRENTE	134
	293-3909	1	ALTERNADOR DE CORRENTE	136
		1	ALTERNADOR DE CORRENTE	138
CORREIA DE COMANDO	9X-8139	1	LUZ GIRATÓRIA DE ALARME	196
DISJUNTOR AUTOMÁTICO DE CIRCUITO (15 AMPERES) (CHAVE INTERRUPTORA)	230-9174	1	PAINEL - DISJUNTOR ELÉTRICO AUTOMÁTICO	216
DISJUNTOR AUTOMÁTICO DE CIRCUITO (15 AMPERES) (HOLOFOTES, LADO DIREITO)	3T-2662	1	PAINEL - DISJUNTOR ELÉTRICO AUTOMÁTICO	217
DISJUNTOR AUTOMÁTICO DE CIRCUITO (15 AMPERES) (HOLOFOTES, LADO ESQUERDO)	3T-2662	1	PAINEL - DISJUNTOR ELÉTRICO AUTOMÁTICO	216
DISJUNTOR AUTOMÁTICO DE CIRCUITO (15 AMPERES) (TRANSMISSÃO - CONTRÔLE DAS MARCHAS)	230-9174	1	PAINEL - DISJUNTOR ELÉTRICO AUTOMÁTICO	216
DISJUNTOR AUTOMÁTICO DE CIRCUITO (150 AMPÈRES) (ALTERNADOR)	171-2215	1	PAINEL - DISJUNTOR ELÉTRICO AUTOMÁTICO	216
DISJUNTOR AUTOMÁTICO DE CIRCUITO (20-AMPERES)	6T-3644	1	CABOS/FIOS ELÉTRICOS - CABINE	266
DISJUNTOR AUTOMÁTICO DE CIRCUITO (20-AMPERES) (ACCUGRADE)	288-3687	1	PAINEL - DISJUNTOR ELÉTRICO AUTOMÁTICO	216
DISJUNTOR AUTOMÁTICO DE CIRCUITO (20-AMPERES) (CONTROLE DO MOTOR)	288-3687	1	PAINEL - DISJUNTOR ELÉTRICO AUTOMÁTICO	216
DISJUNTOR AUTOMÁTICO DE CIRCUITO (80 AMPERES) (CARGA)	171-2210	1	PAINEL - DISJUNTOR ELÉTRICO AUTOMÁTICO	216

PEÇAS DE MANUTENÇÃO

DESCRIÇÃO	NÚMERO DE PEÇA	QUANT	UTILIZADA EM	PÁGINA
DISJUNTOR AUTOMÁTICO DE CIRCUITO (80 AMPERES) (PRINCIPAL)	171-2210	1	PAINEL - DISJUNTOR ELÉTRICO AUTOMÁTICO	216
ELEMENTO - AQUECEDOR DE ÁGUA DA CAMISA (120 VOLTS, 1.000 WATTS)	246-8628	1	AQUECEDOR DA ÁGUA DO MOTOR	170
ELEMENTO - AQUECEDOR DE ÁGUA DA CAMISA (240 VOLTS, 1.000 WATTS)	246-8627	1	AQUECEDOR DA ÁGUA DO MOTOR	169
FUSÍVEL (10 AMPERES)	9W-1442	21	CABOS/FIOS ELÉTRICOS - CABINE	265
FUSÍVEL (15 AMPERES)	9W-1441	19	CABOS/FIOS ELÉTRICOS - CABINE	265
LÂMPADA - HALOGÊNEO (24 VOLTS, 35 WATTS)	209-6638	1	LÂMPADA - FAROL	179
LÂMPADA - HALOGÊNEO (24 VOLTS, 65 WATTS)	9X-3463	1	FAROL DIANTEIRO	189
		1	LÂMPADA - FAROL	180
		1	LÂMPADA - FAROL	183
		1	LÂMPADA - FAROL	184
LÂMPADA - LED (VERDE, 24 VOLTS)	250-2299	1	CONTROLE DO TREM DE FORÇA	158
		1	INTERRUPTOR - BALANCIM	260
LÂMPADA - LED (VERMELHA, 24 VOLTS)	242-3282	1	CONTROLE DO TREM DE FORÇA	158
		1	INSTALAÇÃO-SEGURANÇA	175
LÂMPADA (24 VOLTS)	7N-9943	1	LÂMPADA - TETO	178
LÂMPADA (24 VOLTS, HID)	290-8160	1	LÂMPADA - FAROL	186
LÂMPADA (24 VOLTS) (POSIÇÃO DA CABINE)	9X-4494	1	LÀMPADA - MARCADORA	192
LÂMPADA (24-VOLTS, VERDE)	279-5308	1	CONTROLE - ACESSÓRIO	153
		1	CONTROLE - ACESSÓRIO	154
		1	CONTROLE - ACESSÓRIO	156
		1	CONTROLE - ACESSÓRIO	157
LÂMPADA (24-VOLTS, VERDE) (VERDE)	279-5308	1	CABOS/FIOS ELÉTRICOS - CABINE	265
LÂMPADA (24 VOLTS, 21 WATTS)	9X-4493	1	ILUMINAÇÃO - MARCHA A RÉ	197
LÂMPADA (24 VOLTS, 5 WATTS)	5C-9583	1	LAMPADA-PLACA DE REGISTRO	193
	130-3515	1	LÂMPADA DIANTEIRA E DE SINAL	190
		1	LÂMPADA DIANTEIRA E DE SINAL	191
LÂMPADA (24 VOLTS, 70 WATTS)	9X-7849	1	LUZ GIRATÓRIA DE ALARME	196
LÂMPADA (24 VOLTS, 75-70 WATTS)	9X-3465	1	LÂMPADA DIANTEIRA E DE SINAL	190
		1	LÂMPADA DIANTEIRA E DE SINAL	191
SISTEMA HIDRÁULICO				
ELEMENTO FILTRANTE - ÓLEO (EXTREMA EFICIÊNCIA) (TANQUE HIDRÁULICO)	1R-1809	1	FILTRO - ÓLEO	563
FILTRO - ÓLEO (EFICIÊNCIA AVANÇADA)	1G-8878	1	FILTRO - ÓLEO	562
FILTRO - RESPIRO (TANQUE HIDRÁULICO)	9R-9925	1	TANQUE DE ÓLEO HIDRÁULICO E MONTAGEM	644
TAMPA - BOCAL DE ENCHIMENTO (TANQUE HIDRÁULICO)	142-8937	1	TANQUE HIDRÁULICO	646

PEÇAS DE MANUTENÇÃO

DESCRIÇÃO	NÚMERO DE PEÇA	QUANT	UTILIZADA EM	PÁGINA
TREM DE FORÇA				
BUJÃO MAGNÉTICO (TRANSMISSÃO)	5P-4484	2	CARCAÇA DAS ENGRENAGENS PLANETÁRIAS E COMPONENTES	328
ELEMENTO FILTRANTE - ÓLEO (EXTREMA EFICIÊNCIA)	1R-1809	1	TUBOS - ÓLEO DA TRANSMISSÃO	372
ELEMENTO FILTRANTE - ÓLEO (EXTREMA EFICIÊNCIA) (TRANSMISSÃO)	1R-1809	1	FILTRO - ÓLEO	355
FILTRO - MAGNÉTICO (TRANSMISSÃO)	8S-9129	1	FILTRO - MAGNÉTICO	390
	251-6673	1	CARCAÇA DAS ENGRENAGENS PLANETÁRIAS E COMPONENTES	327
FILTRO - ÓLEO (EFICIÊNCIA AVANÇADA)	1G-8878	1	TUBULAÇÒES - TRAÇÃO EM TODAS AS RODAS	362
FILTRO - ÓLEO (EXTREMA EFICIÊNCIA)	102-2828	1	TUBULAÇÒES - TRAÇÃO EM TODAS AS RODAS	362
FILTRO - ÓLEO (FLUIDO À PROVA DE FOGO)	156-0214	1	TUBULAÇÒES - TRAÇÃO EM TODAS AS RODAS	362
FILTRO - ÓLEO (TRAÇÃO EM TODAS AS RODAS)	196-1803	2	TUBULAÇÒES - TRAÇÃO EM TODAS AS RODAS	362
RESPIRO (AWD, ENGRENAGEM)	295-2585	1	ENGRENAGENS DE DISTRIBUIÇÃO	360
		1	ENGRENAGENS DE DISTRIBUIÇÃO	361
RESPIRO (BOCAL DE ENCHIMENTO DE ÓLEO DE TREM DE FORÇA)	9G-5127	1	BOCAL DE ENCHIMENTO DE ÓLEO DO TREM DE FORÇA	353
RESPIRO (TANDEM)	9G-5127	2	TANDEM E TAMPA	393
TELA DE SUCÇÃO (RETORNO - TRANSMISSÃO)	251-6674	1	CARCAÇA DAS ENGRENAGENS PLANETÁRIAS E COMPONENTES	327
TELA DE SUCÇÃO (TRANSMISSÃO)	8S-9130	1	FILTRO - MAGNÉTICO	390

WARTUNGSTEILE

BESCHREIBUNG	ERSATZTEIL-NUMMER	MENGE	VERWENDET IN	SEITE
ELEKTRISCHE ANLAGE UND STARTSYSTEM				
BATTERIE (12 V, WARTUNGSFREI)	153-5710	2	BATTERIE UND VERDRAHTUNG	143
	230-6368	2	BATTERIE UND VERDRAHTUNG	141
BATTERIE (12 V, WARTUNGSFREI) (NASS)	153-5700	2	BATTERIE UND VERDRAHTUNG	146
BELEUCHTUNGSANLAGE (24 V, GRÜN)	279-5308	1	ARBEITSGERÄTESTEUERUNG	153
		1	ARBEITSGERÄTESTEUERUNG	154
		1	ARBEITSGERÄTESTEUERUNG	156
		1	ARBEITSGERÄTESTEUERUNG	157
BELEUCHTUNGSANLAGE (24 V, GRÜN) (GRÜN)	279-5308	1	FAHRERHAUSVERDRAHTUNG	265
ELEKTRONISCHER SCHLÜSSEL (SICHERHEIT)	206-5162	2	SICHERHEITSEINBAUSATZ	175
HALOGENSCHINWERFER (*24-VOLT, 35-WATT)	209-6638	1	ARBEITSLEUCHTEN	179
HALOGENSCHINWERFER (24V)(65W)	9X-3463	1	ARBEITSLEUCHTEN	180
		1	ARBEITSLEUCHTEN	183
		1	ARBEITSLEUCHTEN	184
		1	FRONTSCHEINWERFER	189
LAUFBAND UND ANTRIEB	9X-8139	1	RUNDUM-KENNLEUCHTE	196
LEUCHTE, ROT (*GREEN, 24-VOLT)	250-2299	1	KIPPSCHALTER	260
		1	KRAFTÜBERTRAGUNGSSTEUERUNG	158
LEUCHTE, ROT (*RED, 24-VOLT)	242-3282	1	KRAFTÜBERTRAGUNGSSTEUERUNG	158
		1	SICHERHEITSEINBAUSATZ	175
LEUCHTE (24 V)	7N-9943	1	FAHRERHAUSBELEUCHTUNG	178
LEUCHTE (24 V) (FAHRERHAUSSTELLUNG)	9X-4494	1	MARKIERUNGSLEUCHTE	192
LEUCHTE (24 V, 5 W)	5C-9583	1	ZULASSUNGSSCHILDLEUCHTE	193
	130-3515	1	SCHEINWERFER U. RICHTUNGSLEUCHTE	190
		1	SCHEINWERFER U. RICHTUNGSLEUCHTE	191
LEUCHTE (24 V, 70 W)	9X-7849	1	RUNDUM-KENNLEUCHTE	196
LEUCHTE (24 V, 75/70 W)	9X-3465	1	SCHEINWERFER U. RICHTUNGSLEUCHTE	190
		1	SCHEINWERFER U. RICHTUNGSLEUCHTE	191
LEUCHTE (*24-VOLT, HID)	290-8160	1	ARBEITSLEUCHTEN	186
LEUCHTE (24V, 21W)	9X-4493	1	SCHEINWERFER, HINTEN	197
SCHLÜSSEL (ELEKTRISCHER HAUPTSCHALTER)	8H-5306	1	TRENNSCHALTER	251
SERPENTINENFÖRMIGER RIEMEN	293-3908	1	DREHSTROMGENERATOR	132
		1	DREHSTROMGENERATOR	134
	293-3909	1	DREHSTROMGENERATOR	136
		1	DREHSTROMGENERATOR	138
SICHERUNG (10 A)	9W-1442	21	FAHRERHAUSVERDRAHTUNG	265
SICHERUNG (15 A)	9W-1441	19	FAHRERHAUSVERDRAHTUNG	265
UMLAUFKÜHLWASSERHEIZUNGSELEMENT (120 V, 1000 W)	246-8628	1	UMLAUFKÜHLWASSERHEIZUNG	170
UMLAUFKÜHLWASSERHEIZUNGSELEMENT (240 V, 1000 W)	246-8627	1	UMLAUFKÜHLWASSERHEIZUNG	169

* ÜBERSETZUNG ZUM ZEITPUNKT DER DRUCKLEGUNG NICHT VORHANDEN

WARTUNGSTEILE

BESCHREIBUNG	ERSATZTEIL-NUMMER	MENGE	VERWENDET IN	SEITE
UNTERBRECHER (15 A) (*FLOODLIGHTS, LH)	3T-2662	1	UNTERBRECHER - INSTRUMENTEN-TAFEL	216
UNTERBRECHER (15 A) (*FLOODLIGHTS, RH)	3T-2662	1	UNTERBRECHER - INSTRUMENTEN-TAFEL	217
UNTERBRECHER (15 A) (GETRIEBES-TEUERUNG)	230-9174	1	UNTERBRECHER - INSTRUMENTEN-TAFEL	216
UNTERBRECHER (15 A) (STARTSCHAL-TERSCHLÜSSEL)	230-9174	1	UNTERBRECHER - INSTRUMENTEN-TAFEL	216
UNTERBRECHER (150 A) (DREH-STROMGENERATOR)	171-2215	1	UNTERBRECHER - INSTRUMENTEN-TAFEL	216
UNTERBRECHER (20 A)	6T-3644	1	FAHRERHAUSVERDRAHTUNG	266
UNTERBRECHER (20 A) (ACCUGRADE)	288-3687	1	UNTERBRECHER - INSTRUMENTEN-TAFEL	216
UNTERBRECHER (20 A) (MOTOR-STEUERUNG)	288-3687	1	UNTERBRECHER - INSTRUMENTEN-TAFEL	216
UNTERBRECHER (80 A) (HAUPTUN-TERBRECHER)	171-2210	1	UNTERBRECHER - INSTRUMENTEN-TAFEL	216
UNTERBRECHER (80 A) (LADEN)	171-2210	1	UNTERBRECHER - INSTRUMENTEN-TAFEL	216
FAHRERHAUS				
BELEUCHTUNGSANLAGE (24 V)	250-8335	2	FAHRERHAUSAUSKLEIDUNG	810
FAHRERHAUSBELEUCHTUNG (24 V)	3E-6389	1	FAHRERHAUSAUSKLEIDUNG	810
KAPPE MIT ENTLÜFTER (WASCHMIT-TELBEHÄLTER)	276-3884	1	SCHEIBENWISCHER UND -WASCHANLAGE	877
LUFTFILTER (FAHRERHAUS) (AKTIVIERTE KOHLE)	220-8800	1	LUFTKANAL & LUFTFILTER - FAHRERHAUS	797
LUFTFILTER (FAHRERHAUSHEIZUNG U. KLIMAANALGE)	211-2660	1	LUFTKANAL & LUFTFILTER - FAHRERHAUS	797
	149-1912	1	LUFTKANAL & LUFTFILTER - FAHRERHAUS	797
SCHEIBENWISCHERBLATT (*400-MM) (*LOWER DOOR WINDOW, LH)	6V-5851	1	SCHEIBENWISCHER	883
SCHEIBENWISCHERBLATT (*400-MM) (VORNE)	6V-5851	2	SCHEIBENWISCHER	880
SCHEIBENWISCHERBLATT (*450-MM) (VORNE)	6V-5853	1	SCHEIBENWISCHER UND -WASCHANLAGE	877
SCHEIBENWISCHERBLATT (*500-MM) (HINTEN)	146-6433	1	SCHEIBENWISCHER	879
SCHEIBENWISCHERBLATT (*500-MM) (TÜR, RECHTS)	146-6433	1	SCHEIBENWISCHER	882
SCHEIBENWISCHERBLATT (*500-MM) (*UPPER DOOR WINDOW, LH)	5C-8811	1	SCHEIBENWISCHER	883
SICHERHEITSGURT ((AUTOMATIKSICHERHEITSGURT))	222-0345	1	FAHRERSITZ	854
SICHERUNG (15 A)	133-9012	1	KLIMAANLAGE	763
		1	FAHRERHAUSHEIZUNG	804
TROCKNERSAMMLER (KÜHLMITTEL)	257-3226	1	KLIMAANLAGENLEITUNGEN	812

* ÜBERSETZUNG ZUM ZEITPUNKT DER DRUCKLEGUNG NICHT VORHANDEN

WARTUNGSTEILE

BESCHREIBUNG	ERSATZTEIL-NUMMER	MENGE	VERWENDET IN	SEITE
HYDRAULIKSYSTEM				
EINFÜLLKAPPE (HYDRAULIKTANK)	142-8937	1	HYDRAULIKTANK	646
ENTLÜFTERFILTER (HYDRAULIKTANK)	9R-9925	1	HYDRAULIKTANK UND BEFESTIGUNGSTEILE	644
ÖLFILTER (HOCHLEISTUNG)	1G-8878	1	ÖLFILTER	562
ÖLFILTERELEMENT (FEINSTFILTER) (HYDRAULIKTANK)	1R-1809	1	ÖLFILTER	563
KRAFTSTOFFSYSTEM				
EINFÜLLKAPPE (KRAFTSTOFFTANK)	7X-7700	1	KRAFTSTOFFTANK	124
		1	KRAFTSTOFFTANK	126
KRAFTSTOFFILTER (HOCHLEISTUNG)	1R-0762	1	KRAFTSTOFFILTER	106
KRAFTSTOFFSIEB	199-9907	1	KRAFTSTOFFTANK	124
		1	KRAFTSTOFFTANK	126
WASSERABSCHEIDER UND KRAFTSTOFFILTER (HAUPTELEMENT)	1R-0770	1	WASSERABSCHEIDER- U. KRAFTSTOFFILTER	108
KRAFTÜBERTRAGUNG				
ANSAUGSIEB (GETRIEBE)	8S-9130	1	MAGNETSIEB	390
ANSAUGSIEB (GETRIEBESPÜLUNG)	251-6674	1	PLANETENANTRIEBSGEHÄUSE U. TEILE	327
ENTLÜFTER (*AWD, GEAR)	295-2585	1	STIRNRAD	360
		1	STIRNRAD	361
ENTLÜFTER (KRAFTSÜBERTRAGUNG - ÖLEINFÜLLUNG)	9G-5127	1	GETRIEBEÖLFÜLLSTUTZEN	353
ENTLÜFTER (TANDEM)	9G-5127	2	TANDEMGEHÄUSE UND DECKEL	393
MAGNETFILTER (GETRIEBE)	8S-9129	1	MAGNETSIEB	390
	251-6673	1	PLANETENANTRIEBSGEHÄUSE U. TEILE	327
MAGNETSTOPFEN (GETRIEBE)	5P-4484	2	PLANETENANTRIEBSGEHÄUSE U. TEILE	328
ÖLFILTER (ALLRADANTRIEB)	196-1803	2	ALLRADANTRIEBSLEITUNGEN	362
ÖLFILTER (FEINSTFILTER)	102-2828	1	ALLRADANTRIEBSLEITUNGEN	362
ÖLFILTER (HOCHLEISTUNG)	1G-8878	1	ALLRADANTRIEBSLEITUNGEN	362
ÖLFILTER (NICHT BRENNBARE FLÜSSIGKEIT)	156-0214	1	ALLRADANTRIEBSLEITUNGEN	362
ÖLFILTERELEMENT (FEINSTFILTER)	1R-1809	1	GETRIEBEÖLLEITUNGEN	372
ÖLFILTERELEMENT (FEINSTFILTER) (GETRIEBE)	1R-1809	1	ÖLFILTER	355
KÜHLSYSTEM				
*CAP AS-COOLANT TANK	251-3227	1	KÜHLMITTELBEHÄLTER	82
DICHTUNG (TEMPERATURREGELGEHÄUSE)	222-5915	1	KÜHLWASSERLEITUNGEN	74
FILTER (WASSER) (PUMPE)	119-3025	1	KÜHLWASSERPUMPE	78
WASSERTEMPERATURREGLER (97 GRAD CELSIUS)	115-4223	2	KÜHLWASSERLEITUNGEN	74
LUFTANSAUG- UND ABGASSYSTEM				
LUFTFILTER (HILFSELEMENT)	245-6376	1	LUFTREINIGER	87
LUFTTFILTERELEMENT (HAUPTELEMENT)	245-6375	1	LUFTREINIGER	87

* ÜBERSETZUNG ZUM ZEITPUNKT DER DRUCKLEGUNG NICHT VORHANDEN

WARTUNGSTEILE

BESCHREIBUNG	ERSATZTEIL-NUMMER	MENGE	VERWENDET IN	SEITE
MOTOR - GRUNDAUSFÜHRUNG				
ABLASSSTOPFEN	5F-0304	1	SCHWUNGRADGEHÄUSE	34
		1	SCHWUNGRADGEHÄUSE	36
EINFÜLLKAPPE (MOTORÖL)	241-5645	1	STIRNRADGEHÄUSEDECKEL	15
VENTILDECKELDICHTUNG	272-0388	1	VENTILDECKEL	16
SCHMIERSYSTEM				
ENTLÜFTER (KURBELGEHÄUSE)	164-0210	1	ENTLÜFTER	57
ÖLFILTER	1R-1807	1	ÖLFILTER	58

* ÜBERSETZUNG ZUM ZEITPUNKT DER DRUCKLEGUNG NICHT VORHANDEN

INDEX

Name	Page

A

ACCUMULATOR GP-BLADE CUSHION–CHARGED 522
ACCUMULATOR GP-BRAKE–CHARGED 499, 500
ACCUMULATOR GP-BRAKE–UNCHARGED 501
ACCUMULATOR-REFRIGERANT 812
ADAPTER GP-FAST FILL FUEL 101
ADAPTER GP-OIL LINE–ENGINE 56
ADAPTER GP-TURBOCHARGER 84
ADJUSTER GP-SEAT 756
AFTERCOOLER GP-AIR 85
AIR CLEANER GP 86, 87
AIR COMPRESSOR AR 7
AIR COMPRESSOR GP 8, 9
AIR COMPRESSOR GP-SEAT 758, 865
AIR COMPRESSOR GP-SEAT–HEAVY-DUTY . . . 757
AIR CONDITIONER & MOUNTING GP 759
AIR CONDITIONER AR 761
AIR CONDITIONER GP 762, 763
ALARM GP 129
ALTERNATOR GP-CHARGING 130
ALTERNATOR GP-CHARGING–WITH AIR CONDITIONER 136, 138
ALTERNATOR GP-CHARGING–WITHOUT AIR CONDITIONER 132, 134
ALTERNATOR GP-CHARGING (24-VOLT, 150-AMPERE) 134, 138
APPLICATION GP-COMMUNICATION–PRODUCT LINK 300 140
ARM AS-WIPER (RH) 880
ARM GP-WINDOW WIPER (DOOR, RH) 882
ARM GP-WINDOW WIPER (FRONT) 877
ARM GP-WINDOW WIPER (LOWER DOOR WINDOW, LH) 883
ARM GP-WINDOW WIPER (UPPER DOOR WINDOW, LH) 883
ARMREST GP–LH 766
ARMREST GP–RH 765
AUTOSHIFT AR 316
AXLE AR-FRONT 447, 448
AXLE AR-FRONT–ALL WHEEL DRIVE 317, 318
AXLE GP-FRONT 322, 449
AXLE GP-FRONT–ALL WHEEL DRIVE 319
AXLE GP-FRONT–NON-AWD 453
AXLE GP-REAR 323

B

BASE GP-OIL FILTER 325
BASE GP-OIL FILTER–INTERNAL BYPASS 523
BATTERY & WIRING GP 141
BATTERY & WIRING GP–EXTREME SERVICE 143
BATTERY & WIRING GP–HEAVY-DUTY 146
BATTERY (12-VOLT, MAINTENANCE FREE) 141, 143
BATTERY (12-VOLT, MAINTENANCE FREE) (WET) 146
BEARING GP 732
BEARING GP-MAIN 18
BELT-DRIVE 196
BELT-SERPENTINE 132, 134, 136, 138
BELT TENSIONER GP 11
BIT GP 708, 709, 710, 711
BIT GP-END 711
BLADE AS-WIPER (400-MM) (FRONT) 880
BLADE AS-WIPER (400-MM) (LOWER DOOR WINDOW, LH) 883
BLADE AS-WIPER (450-MM) (FRONT) 877
BLADE AS-WIPER (500-MM) (DOOR, RH) 882
BLADE AS-WIPER (500-MM) (REAR) 879
BLADE AS-WIPER (500-MM) (UPPER DOOR WINDOW, LH) 883
BLADE GP 712, 713, 714
BLADE GP-BULLDOZER 716
BLADE GP-BULLDOZER–STRAIGHT BLADE . . . 715
BOX GP-TOOL 885
BRACE GP–WORK TOOL LIFT 717
BRACKET GP-MOUNTING–FUSE PANEL 767
BRACKET GP-SCARIFIER 718, 719
BRAKE GP-PARKING 502
BRAKE GP-SERVICE–FRONT TANDEM 504
BRAKE GP-SERVICE–REAR TANDEM 506
BREATHER AS (CRANKCASE) 57
BREATHER AS (POWER TRAIN OIL FILLER) . . . 353
BREATHER AS (TANDEM) 393
BREATHER (AWD, GEAR) 360, 361
BREATHER GP 57

INDEX

Name	Page

C

CAB AR 768
CAMSHAFT GP 12
CAP AS-COOLANT TANK 82
CAP AS-FILLER (ENGINE OIL) 15
CAP AS-FILLER (FUEL TANK) 124
126
CAP AS-FILLER (HYDRAULIC TANK) 646
CAP-VENTED (WASHER TANK) 877
CARRIER GP-FINAL DRIVE 326
CASE & PARTS GP-PLANETARY 327
CHAIN GP-DRIVE–TANDEM 331
CIRCLE GP 703
CIRCUIT BREAKER AS (15-AMPERE) (FLOODLIGHTS, LH) 216
CIRCUIT BREAKER AS (15-AMPERE) (FLOODLIGHTS, RH) 217
CIRCUIT BREAKER AS (15-AMPERE) (KEY SWITCH) 216
CIRCUIT BREAKER AS (15-AMPERE) (TRANSMISSION CONTROL) 216
CIRCUIT BREAKER AS (150-AMPERE) (ALTERNATOR) 216
CIRCUIT BREAKER AS (20-AMPERE) 266
CIRCUIT BREAKER AS (20-AMPERE) (ACCUGRADE) 216
CIRCUIT BREAKER AS (20-AMPERE) (ENGINE CONTROL) 216
CIRCUIT BREAKER AS (80-AMPERE) (LOAD) . . . 216
CIRCUIT BREAKER AS (80-AMPERE) (MAIN) . . . 216
CLUTCH GP-TRANSMISSION–FORWARD 332
CLUTCH GP-TRANSMISSION–HIGH, LOW 338
CLUTCH GP-TRANSMISSION– REVERSE, SECOND 334
CLUTCH GP-TRANSMISSION–1ST, 3RD 336
COIL AS-SOLENOID (12-VOLT) 620
COIL GP-VALVE 769
COIL GP-VALVE– AIR CONDITIONER, HEATER 771
COMMON AR 1
COMPRESSOR GP-REFRIGERANT 772
773
CONDENSER & MTG GP-REFRIGERANT 774
CONTROL & MTG GP-ENGINE ELEK 150
CONTROL & MTG GP-IMPLEMENT 151
CONTROL & MTG GP-JOYSTICK 775
CONTROL AR-HYDRAULIC 524
CONTROL AR-HYDRAULIC– DOZER ANGLE, FR LFT, SCARIFIER 529
CONTROL AR-HYDRAULIC– DOZER, FRONT LIFT, SNOW WING 527
CONTROL AR-HYDRAULIC– FR LFT, DOZER ANGLE, RIPPER 526

Name	Page

CONTROL AR-HYDRAULIC–FR LFT, DOZER ANGLE, RIPPER, SNOW PLOW 530
CONTROL AR-HYDRAULIC– FR LFT, RIPPER, SNOW PLOW 527
528
CONTROL AR-HYDRAULIC– FR LFT, SCARIFIER, SNOW PLOW 529
CONTROL AR-HYDRAULIC–FR LFT, SCARIFIER, SNOW PLOW, DOZER ANGLE . . . 530
CONTROL AR-HYDRAULIC–FRONT LIFT 524
CONTROL AR-HYDRAULIC– FRONT LIFT, DOZER ANGLE 528
CONTROL AR-HYDRAULIC– FRONT LIFT, RIPPER 525
CONTROL AR-HYDRAULIC– FRONT LIFT, RIPPER, SCARIFIER 531
CONTROL AR-HYDRAULIC– FRONT LIFT, SCARIFIER 525
CONTROL AR-HYDRAULIC– FRONT LIFT, SNOW PLOW 526
CONTROL AR-HYDRAULIC–RIPPER 524
CONTROL AR-HYDRAULIC– RIPPER, SNOW WING 528
CONTROL AR-HYDRAULIC–SCARIFIER 525
CONTROL GP-AIR & TEMPERATURE 778
CONTROL GP-AIR & TEMPERATURE– HEATER 779
CONTROL GP-DIFFERENTIAL LOCK 340
CONTROL GP-ELECTROHYDRAULIC 781
782
CONTROL GP-ELECTROHYDRAULIC– WITH AUXILIARY LEVER 780
782
CONTROL GP-ELECTROHYDRAULIC– WITHOUT AUXILIARY LEVER 780
781
CONTROL GP-IMPLEMENT 155
CONTROL GP-IMPLEMENT–FRONT LIFT 153
156
CONTROL GP-IMPLEMENT–FRONT, REAR 154
CONTROL GP-IMPLEMENT–RIPPER 152
CONTROL GP-IMPLEMENT– WITH ENCLOSURE 157
CONTROL GP-JOYSTICK–LH 784
CONTROL GP-JOYSTICK–RH 783
CONTROL GP-JOYSTICK (ELECTRONIC CONTROL) 782
CONTROL GP-MONITOR (MESSENGER) 785
CONTROL GP-POWER TRAIN 342
CONTROL GP-POWER TRAIN– ALL WHEEL DRIVE 158
CONTROL GP-SERVICE BRAKE 508
510
511
CONTROL GP-TRANSMISSION HYD 342

INDEX

Name	Page
CONTROL GP-UNPRGMED MONITOR–MESSENGER	785
CONTROL GP-UNPROGRAMMED	160
CONTROL GP-UNPROGRAMMED–IMPLEMENT	161
CONTROL GP-UNPROGRAMMED–IMPLEMENT 2	161
CONTROL GP-UNPROGRAMMED (ALL WHEEL DRIVE)	158
CONTROL GP-UNPROGRAMMED (HYDRAULIC ELECTRONIC)	271
CONTROL GP-UNPROGRAMMED (IMPLEMENT)	161
CONTROL GP-UNPROGRAMMED (IMPLEMENT 2)	161
CONTROL GP-UNPROGRAMMED (TRANSMISSION)	342
CONVERTER GP-ELECTRICAL	163
CONVERTER GP-ELECTRICAL–RADIO	162
COOLANT HEATER LINES	816 817 819
COOLER GP-ENGINE OIL	69
COOLER GP-HYDRAULIC OIL	532
COOLER GP-TRANSMISSION OIL	345
COOLING AR	70
CORE AS-ENGINE OIL COOLER	69
CORE AS-HEATER	769 771
CORE AS-OIL COOLER (HYDRAULIC)	532 593
CORE AS-RADIATOR	80
CORE AS-TRANSMISSION COOLER	345
COUPLING GP-TORSIONAL	346
COVER GP-AIR INLET	89
COVER GP-AIR INLET–STARTING AID HEATER	88
COVER GP-CAB–BULKHEAD	786
COVER GP-CONTROL VALVE	455
COVER GP-CYLINDER BLOCK	13
COVER GP-FRONT HOUSING	14 15
COVER GP-FUEL TANK–W/O FAST FILL FUEL ADAPTER	103
COVER GP-PROTECTION	457
COVER GP-SHIPPING–TRANSMISSION	347
COVER GP-VALVE MECHANISM	16
CRANKSHAFT GP	18
CUSHION GP-ARM	787
CYLINDER & MTG GP-ARTICULATION	534
CYLINDER & MTG GP-BLADE LIFT	536
CYLINDER & MTG GP-BLADE TIP	537
CYLINDER & MTG GP-CENTERSHIFT	538
CYLINDER & MTG GP-SCARIFIER	539
CYLINDER & MTG GP-SIDESHIFT	540
CYLINDER & MTG GP-STEERING	541 542
CYLINDER & MTG GP-WHEEL LEAN	543
CYLINDER BLOCK GP	20 21 22
CYLINDER GP-ARTICULATION	544
CYLINDER GP-BLADE TIP	545
CYLINDER GP-CENTERSHIFT	546
CYLINDER GP-HYDRAULIC–WORK TOOL LIFT	720
CYLINDER GP-LIFT–BLADE	547
CYLINDER GP-RIPPER	548
CYLINDER GP-SCARIFIER	549
CYLINDER GP-SIDESHIFT	550
CYLINDER GP-STEERING	551 553
CYLINDER GP-WHEEL LEAN	555
CYLINDER HEAD AS	24
CYLINDER HEAD GP	25 26 27

D

Name	Page
DAMPER & PULLEY GP	28
DIFFERENTIAL & BEVEL GEAR GP	349
DIFFERENTIAL GP	351
DISPLAY AR-MONITOR–CD610	788
DISPLAY AR-MONITOR–CD700	788
DISPLAY GP-MONITOR–CD610	790
DISPLAY GP-MONITOR–CD700	790
DISPLAY GP-MONITOR–WORK AREA VISUAL SYSTEM	789
DISPLAY GP-MONITOR (CD610)	790
DISPLAY GP-MONITOR (CD700)	790
DOOR GP-CAB–ALTERNATE EXIT	791
DOOR GP-CAB–LH	794
DRAIN GP-ECOLOGY (DIFFERENTIAL CASE)	323
DRAWBAR GP	705
DRIVE GP-CIRCLE	557
DRIVE GP-WHEEL–ALL WHEEL DRIVE	352
DUCT & FILTER GP-CAB AIR	797

E

Name	Page
EDGE GP-CUTTING	721 722 723
ELBOW GP-AIR INLET	90
ELECTRONICS GP-COMMUNICATION–PRODUCT LINK 300	164
ELECTRONICS GP-IMPLEMENT	165

INDEX

Name	Page
ELECTRONICS GP-IMPLEMENT–IMPLEMENT 3	165
ELECTRONICS GP-MONITOR	166
ELECTRONICS GP-MONITOR–ARABIC, CHINESE, ENGLISH, PORTUGUESE, RUSSIAN	167
ELECTRONICS GP-MONITOR–DANISH, ENGLISH, FINNISH, NORWEGIAN, PORTUGUESE, SWEDISH	166
ELECTRONICS GP-MONITOR–DUTCH, ENGLISH, FRENCH, GERMAN, PORTUGUESE, SPANISH	166
ELECTRONICS GP-MONITOR–ENGLISH, GREEK, HEBREW, ITALIAN, PORTUGUESE, TURKISH	167
ELECTRONICS GP-MONITOR–ENGLISH, PORTUGUESE, ROMANIAN, SLOVENIAN	167
ELECTRONICS GP-POWER TRAIN	168
ELECTRONICS GP-POWER TRAIN–ALL WHEEL DRIVE	168
ELEMENT AS-JACKET WATER HEATER (120-VOLT, 1000-WATT)	170
ELEMENT AS-JACKET WATER HEATER (240-VOLT, 1000-WATT)	169
ENCLOSURE GP-ENGINE	458
ENGINE AR-COMPLETE	4
	5
ENGINE AR-CORE	6
EXTENSION GP-BLADE–LH	728
EXTENSION GP-BLADE–LH–2 FT	725
EXTENSION GP-BLADE–RH	726
EXTENSION GP-BLADE–RH–2 FT	724

F

Name	Page
FAN & MOTOR GP	71
FAN GP-CIRCULATING	800
FAN GP-CIRCULATING–FRONT	798
FASTENER GP	464
FASTENER GP–SONIC SENSOR	463
FASTENER GP-CYLINDER HEAD	27
	29
FASTENER GP-FUEL TANK	104
FENDER & SUPPORT GP	467
FENDER & SUPPORT GP–FRONT	465
FENDER & SUPPORT GP–REAR	469
FILLER GP-POWER TRAIN OIL	353
FILM-FUSE PANEL (FUSE IDENTIFICATION)	767
FILM GP	887
FILM GP–VARIABLE HORSEPOWER	886
FILM GP–VARIABLE HORSEPOWER PLUS	886
FILM GP-INTERNATIONAL	888
FILM GP-U.S.	889
FILM-IDENTIFICATION (AWD)	318
FILM-IDENTIFICATION (FAST FILL FUEL, READ OMM)	126
FILM-IDENTIFICATION (FILL, DRAIN)	66
FILM-IDENTIFICATION (FUSE PANEL)	217
FILM-IDENTIFICATION (HORN)	775
FILM-IDENTIFICATION (IGNITION SWITCH)	175
FILM-IDENTIFICATION (LOWER)	834
FILM-IDENTIFICATION (PANEL SWITCHES) (BLADE CONTROL)	842
FILM-IDENTIFICATION (ROUND RED REFLECTIVE)	740
FILM-IDENTIFICATION (UPPER)	834
FILM-IDENTIFICATION (12-VOLT)	163
FILM-INFORMATION (CONSOLE, LH)	846
FILM-INFORMATION (CONSOLE, RH)	846
FILM-INFORMATION (EXTENDED LIFE COOLANT-READ OMM)	891
	895
FILM-INFORMATION (LAMINATE) (ENGINE)	890
FILM-INFORMATION (ROPS, FOPS, READ OMM)	768
FILM-INFORMATION (SILVER ULTRAPLATE) (ENGINE)	890
FILM-INSTRUCTION (ALL WHEEL DRIVE)	158
FILM-INSTRUCTION (AUXILIARY)	781
	782
FILM-INSTRUCTION (BELT ROUTING)	132
	136
FILM-INSTRUCTION (BELT ROUTING)	134
	138
FILM-INSTRUCTION (ENGINE OIL DRAIN)	63
FILM-INSTRUCTION (EXIT)	791
FILM-INSTRUCTION (FLOAT)	156
FILM-INSTRUCTION (FLOAT) (FRONT IMPLEMENT)	153
FILM-INSTRUCTION (FLOAT/NO FLOAT)	157
FILM-INSTRUCTION (FLOAT/NO FLOAT) (IMPLEMENT)	154
FILM-INSTRUCTION (HVAC WATER, DRAINING, FILLING)	763
	804
	816
	819
FILM-INSTRUCTION (MACHINE SECURITY, READ OMM)	175
FILM-INSTRUCTION (NO FLOAT)	155
FILM-INSTRUCTION (NO FLOAT) (IMPLEMENT)	152
FILM-INSTRUCTION (OPERATOR CONSOLE, LH)	775
FILM-INSTRUCTION (OPERATOR CONSOLE, RH)	775
FILM-INSTRUCTION (SEAT ADJUSTMENT)	863
	865

INDEX

Name	Page
FILM-INSTRUCTION (SWITCH PANEL) (BLADE CONTROL)	844
FILM-INSTRUCTION (WIPER)	810
FILM-STRIPE (YELLOW, REFLECTIVE)	469
FILM-WARNING (BLADE, DO NOT CLIMB, READ OMM)	205 213
FILM-WARNING (CRUSH HAZARD)	508 732 889
FILM-WARNING (CRUSH HAZARD, READ MANUAL)	511 888 891
FILM-WARNING (HAND CRUSH HAZARD, STAY BACK)	304
FILM-WARNING (HIGH PRESSURE, READ OMM)	522
FILM-WARNING (HIGH PRESSURE, READ OMM)	500 501
FILM-WARNING (JUMP START, READ OMM, INTL)	489
FILM-WARNING (JUMP START, READ OMM, U.S.)	489
FILM-WARNING (LASER TRANSMITTER)	213
FILM-WARNING (RECOIL SPRING)	502
FILM-WARNING (SEAT BELT)	508 889
FILTER & MTG GP-HYDRAULIC	560
FILTER & MTG GP-TRANSMISSION	354
FILTER AS-AIR (CAB) (ACTIVATED CHARCOAL)	797
FILTER AS-AIR (CAB HEATER, AIR CONDITIONER)	797
FILTER AS-ENGINE OIL	58
FILTER AS-FUEL (ADVANCED EFFICIENCY)	106
FILTER AS-OIL (ADVANCED EFFICIENCY)	362 562
FILTER AS-OIL (FIRE RESISTANT FLUID)	362
FILTER AS-OIL (ULTRA HIGH EFFICIENCY)	362
FILTER AS-WATER SEP & FUEL (PRIMARY)	108
FILTER-BREATHER (HYDRAULIC TANK)	644
FILTER ELEMENT-AIR (PRIMARY)	87
FILTER ELEMENT AS-AIR (SECONDARY)	87
FILTER ELEMENT AS-OIL (ULTRA HIGH EFFICIENCY)	372
FILTER ELEMENT AS-OIL (ULTRA HIGH EFFICIENCY) (HYDRAULIC TANK)	563
FILTER ELEMENT AS-OIL (ULTRA HIGH EFFICIENCY) (TRANSMISSION)	355
FILTER GP-ENGINE OIL	58
FILTER GP-FUEL	106
FILTER GP-OIL–HYDRAULIC TANK RETURN	563
FILTER GP-OIL–STEERING LINES	562
FILTER GP-OIL–TRANSMISSION	355
FILTER GP-OIL (ALL WHEEL DRIVE)	362
FILTER GP-WATER SEP & FUEL	108
FILTER-MAGNETIC (TRANSMISSION)	327 390
FILTER (WATER) (PUMP)	78
FINAL DRIVE GP–LH	358
FINAL DRIVE GP–RH	356
FLOOR MAT	834 838
FLOOR MAT (CAB)	846
FLYWHEEL GP	30
FRAME GP-FRONT	471
FRAME GP-REAR	472
FUMES DISPOSAL GP	60
FUSE (10-AMPERE)	265
FUSE (15-AMPERE)	265 763 804

G

GASKET (TEMPERATURE REGULATOR HOUSING)	74
GAUGE AS-OIL LEVEL (DIPSTICK) (ENGINE)	61
GAUGE AS-OIL LEVEL (DIPSTICK) (POWER TRAIN OIL)	353
GAUGE GP-OIL LEVEL (DIPSTICK)	61
GAUGE GP-SIGHT (HYDRAULIC TANK OIL)	646
GEAR GP-FRONT	31
GEAR GP-FRONT–ALL WHEEL DRIVE, LH	360
GEAR GP-FRONT–ALL WHEEL DRIVE, RH	361
GEAR GP-REAR	32 33
GRADE CONTROL AR–ACCUGRADE	168
GRADE CONTROL GP–ACCUGRADE	168
GUARD GP-BOTTOM	473
GUARD GP-BRAKE LINES–TANDEM	475
GUARD GP-DEBRIS	476
GUARD GP-FAN	73
GUARD GP-FAN (RADIATOR COOLING)	71

H

HARNESS AS-BOX	216
HARNESS AS-CAB	265
HARNESS AS-CAB (WIPER, RH DOOR)	791
HARNESS AS-CHASSIS (GRADE CONTROL)	282
HARNESS AS-CHASSIS (MACHINE SECURITY SYSTEM)	175
HARNESS AS-CONTROL (ACCUGRADE)	280
HARNESS AS-CONTROL (ALL WHEEL DRIVE)	158

INDEX

Name	Page
HARNESS AS-CONTROL (HYDRAULIC ELECTRONIC)	271
HARNESS AS-ENGINE (ELECTRONIC CONTROL MODULE)	273
HARNESS AS-ENGINE (FUEL INJECTION)	273
HARNESS AS-FRONT	310
HARNESS AS-FRONT CHASSIS	275
	279
	291
HARNESS AS-FRONT LIGHTING	209
	211
HARNESS AS-HEATER & AIR COND	300
HARNESS AS-HEATER (AIR INLET HEATER RELAY)	273
HARNESS AS-LIGHTING	275
	288
	289
HARNESS AS-MONITOR	294
HARNESS AS-MOTOR	763
HARNESS AS-MOTOR (THERMOSTAT)	804
HARNESS AS-PANEL	842
	844
HARNESS AS-POWER (PRODUCT LINK RADIO)	171
HARNESS AS-PUMP	310
HARNESS AS-PUMP (FUEL)	300
HARNESS AS-RADIO	291
HARNESS AS-REAR	299
	310
HARNESS AS-REAR CHASSIS	299
HARNESS AS-REAR LIGHTING	304
	306
HARNESS AS-REAR LIGHTING (REGISTRATION PLATE)	193
HARNESS AS-SENSOR	106
	342
HARNESS AS-SENSOR (ANGLE)	282
HARNESS AS-SENSOR (MOTOR SPEED, LH)	310
HARNESS AS-SENSOR (MOTOR SPEED, RH)	310
HARNESS AS-SENSOR (ROTATION)	282
HARNESS AS-SENSOR (STEERING, LH)	313
	314
HARNESS AS-SENSOR (STEERING, RH)	313
	314
HARNESS AS-SWITCH	842
HARNESS AS-SWITCH (HEATED SEAT)	831
HARNESS AS-TRANSMISSION	216
	342
HARNESS AS-VALVE	264
HARNESS AS-VALVE (SEAT AIR COMPRESSOR)	865
HARNESS AS-WINDOW WIPER	315
	794
	871
	876
HARNESS AS-WIRING (INCLINATION)	282
HARNESS AS-WIRING (LIGHT BAR)	291
HEATER & MTG GP-CAB	801
HEATER AR-CAB	802
HEATER GP-CAB	803
	804
HEATER GP-JACKET WATER	169
	170
HITCH GP-ARTICULATING	477
HITCH GP-TOWING	479
HOOD GP–ENGINE	480
HOUSING GP-FLYWHEEL	34
	36
HOUSING GP-FRONT	38
HOUSING GP-SEAT SUSPENSION	807
HYDRAULIC AR–ALL WHEEL DRIVE	564
HYDRAULIC AR–NON-AWD	564

I

INJECTOR GP-FUEL	109
	110
INSTALLATION AR-COMMUNICATION–PRODUCT LINK 321SR	171
INSTALLATION GP-CAMERA–WORK AREA VISUAL SYSTEM	173
INSTALLATION GP-LIGHTING	174
INSTALLATION GP-SECURITY	175
INSTALLATION GP-WARNING BEACON	177

K

KEY AS-ELECTRONIC (SECURITY)	175
KEY (BATTERY DISCONNECT)	251
KIT-BEARING (ALTERNATOR)	130
KIT-BEARING (SUSPENSION SEAT)	808
KIT-BUMPER (WEIGHT ADJUSTMENT) (SUSPENSION SEAT)	808
KIT-CONNECTING PLUG (12-PIN)	171
	288
	289
	306
KIT-FOLLOWER (SUSPENSION SEAT)	808
KIT-HARDWARE (ALTERNATOR)	130
KIT-INDICATOR (WEIGHT ADJUSTMENT) (SUSPENSION SEAT)	807
KIT-RECEPTACLE (12-PIN)	171
	288
KIT-RECEPTACLE (2-PIN)	260
	306
	810
	823
KIT-RECEPTACLE (2-PIN)	288

INDEX

Name	Page
KIT-SEAL	545, 549
KIT-SPRING (HEIGHT ADJUSTMENT) (SUSPENSION SEAT)	807
KIT-SPRING (SUSPENSION SEAT)	807
KIT-SUSPENSION KNOB (HEIGHT ADJUSTMENT) (SUSPENSION SEAT)	807
KIT-TERMINAL (ALTERNATOR)	130

L

Name	Page
LAMP AS (24-VOLT)	810
LAMP AS (24-VOLT, GREEN)	153, 154, 156, 157
LAMP AS (24-VOLT, GREEN) (GREEN)	265
LAMP GP-DOME	178
LAMP GP-DOME (24-VOLT)	810
LAMP GP-FLOOD	180, 181, 183, 184
LAMP GP-FLOOD–HID	179, 182, 185, 186, 187, 188
LAMP GP-HEAD–HIGH BEAM	189
LAMP GP-HEAD & SIGNAL–LH	190
LAMP GP-HEAD & SIGNAL–RH	191
LAMP GP-MARKER	192
LAMP GP-REGISTRATION PLATE	193
LAMP GP-SIGNAL–STOP/TAIL	194
LAMP GP-SIGNAL–24-VOLT, TURN	195
LAMP GP-WARNING BEACON–AMBER	196
LAMP-HALOGEN (24-VOLT, 35-WATT)	179
LAMP-HALOGEN (24-VOLT, 65-WATT)	180, 183, 184, 189
LAMP-LED (GREEN, 24-VOLT)	158
LAMP-LED (GREEN, 24-VOLT)	260
LAMP-LED (RED, 24-VOLT)	158, 175
LAMP (24-VOLT)	178
LAMP (24-VOLT) (CAB POSITION)	192
LAMP (24-VOLT, HID)	186
LAMP (24-VOLT, 21-WATT)	197
LAMP (24-VOLT, 5-WATT)	190, 191, 193
LAMP (24-VOLT, 70-WATT)	196
LAMP (24-VOLT, 75/70-WATT)	190, 191
LIFT GP-BLADE	729
LIFT GP-WORK TOOL	732, 734
LIFTER GP-VALVE	39
LIFTING GP-ENGINE	40
LIGHTING GP-BACKUP	197
LIGHTING GP-FLOOD–CAB	205
LIGHTING GP-FLOOD–CAB, FRONT, RH, LH	202, 203
LIGHTING GP-FLOOD–CAB ROOF	204
LIGHTING GP-FLOOD–FRONT FRAME	198, 199
LIGHTING GP-FLOOD–FRONT FRAME, REAR	200, 201
LINER GP-CAB	810
LINES GP-ACCUMULATOR	513
LINES GP-AIR	91, 93, 94
LINES GP-AIR CONDITIONER	812, 814
LINES GP-AIR TANK	515
LINES GP-ALL WHEEL DRIVE	362
LINES GP-CENTERSHIFT LOCK	565, 567
LINES GP-ENGINE OIL	62
LINES GP-ENGINE OIL DRAIN	63
LINES GP-FUEL	111
LINES GP-FUEL FILTER	113
LINES GP-GREASE–ARTICULATION HITCH BEARING	481
LINES GP-HEATER	816, 817, 819
LINES GP-HYDRAULIC	589
LINES GP-HYDRAULIC–FRONT LIFT	577
LINES GP-HYDRAULIC–PLOW, BULLDOZER ANGLE	586, 588
LINES GP-HYDRAULIC–SCARIFIER	569
LINES GP-HYDRAULIC–WITH ACCUMULATOR	579
LINES GP-HYDRAULIC–WITHOUT ACCUMULATOR	571
LINES GP-HYDRAULIC FAN	590
LINES GP-HYDRAULIC OIL COOLER	593
LINES GP-INJECTOR HYD PUMP	115
LINES GP-POWER TAKE-OFF	371
LINES GP-PUMP–SECONDARY STEERING	595
LINES GP-RIPPER	605, 607, 609

INDEX

Name	Page
LINES GP-SECONDARY STEERING	610
LINES GP-SERVICE BRAKE	517, 519
LINES GP-STEERING	612
LINES GP-STEERING–ALL WHEEL DRIVE	614
LINES GP-TRANSMISSION OIL	372, 375
LINES GP-TURBOCHARGER OIL	64
LINES GP-WATER	74, 76
LINK GP-STEERING	482, 483
LOCK GP-CENTERSHIFT	616

M

MANIFOLD GP-CONTROL–ALL WHEEL DRIVE	623
MANIFOLD GP-CONTROL–BLADE CUSHION	619
MANIFOLD GP-CONTROL–BRAKE, HYDRAULIC FAN	617
MANIFOLD GP-CONTROL–IMPLEMENT, STEERING–SECONDARY STEERING	621
MANIFOLD GP-CONTROL–STEERING BACKUP	620
MANIFOLD GP-ENGINE OIL	65
MANIFOLD GP-EXHAUST	95
MANIFOLD GP-VALVE–INLET	625, 626
MAST GP	205
MAST GP–LASER RECEIVER	205
MIRROR GP-REAR VIEW	820
MIRROR GP-REAR VIEW–EXTERIOR	822
MIRROR GP-REAR VIEW–HEATED	823
MIRROR GP-REAR VIEW–INTERIOR	821
MODULE AS-POWER SUPPLY	220
MODULE GP-INTERFACE (KEY) (MACHINE SECURITY SYSTEM)	175
MONITOR AS–LIGHT BAR	824
MOTOR GP-ELECTRIC–CIRCULATING FAN	206
MOTOR GP-GEAR (RADIATOR COOLING)	71
MOTOR GP-GEROTOR	628
MOTOR GP-PISTON–ALL WHEEL DRIVE	377, 378
MOTOR GP-WINDOW WIPER	825
MOTOR GP-WINDOW WIPER–FRONT	826
MOTOR GP-WINDOW WIPER (REAR)	879
MOTOR GP-WINDOW WIPER (RH)	882
MOTOR GP-WINDOW WIPER (24-VOLT) (LH)	880
MOTOR GP-WINDOW WIPER (24-VOLT) (RH)	880
MOTOR GP-WINDOW WIPER (24-VOLT, 2-SPEED)	883
MOTOR GP-WINDOW WIPER (24-VOLT, 2-SPEED)	882
MOTOR GP-WINDOW WIPER (24-VOLT, 2-SPEED) (FRONT)	826
MOUNTING GP-ALTERNATOR	41
MOUNTING GP-ANTENNA	827
MOUNTING GP-AXLE–FRONT	485
MOUNTING GP-AXLE–REAR	484
MOUNTING GP-CAB	828
MOUNTING GP-CONTROL VALVE–WITH ENCLOSURE	829, 830
MOUNTING GP-ENGINE & TMSN	42
MOUNTING GP-FAN DRIVE	44
MOUNTING GP-FUEL FILTER	116
MOUNTING GP-GRADE CONTROL	207
MOUNTING GP-LAMP	208
MOUNTING GP-LIGHTING	209, 211
MOUNTING GP-MAST	213
MOUNTING GP-MAST–LASER RECEIVER	213
MOUNTING GP-RECEIVER–MAST	214
MOUNTING GP-RIPPER	735
MOUNTING GP-SNOW WING	737, 738
MOUNTING GP-VALVE–FRONT FRAME	486
MOUNTING GP-WHEEL–NON-AWD	382
MOUNTING GP-XMSN OIL COOLER	383
MUFFLER & MOUNTING GP	96

O

OIL CHANGE GP-HIGH SPEED–POWER TRAIN OIL	66
OPTION AR-EU	2
ORIFICE AS-AIR CONDITIONER	812

P

PAN AS-SEAT	831
PAN GP-BACKREST	832, 833
PAN GP-OIL	46
PANEL GP-CAB	834, 838
PANEL GP-CIRCUIT BREAKER	216
PANEL GP-CONTROL–LH	842
PANEL GP-CONTROL–RH	844
PANEL GP-INSTRUMENT–FRONT CONSOLE	846
PEDAL GP-BRAKE, TMSN & GOV	848
PISTON & ROD GP	47
PLATE & FILM GP	890, 891, 895

INDEX

Name	Page
PLATE & FILM GP–ARABIC, WITH MONITOR SOFTWARE	903
PLATE & FILM GP–BRITISH, WITH MONITOR SOFTWARE	899
PLATE & FILM GP–CHINESE, WITH MONITOR SOFTWARE	903
PLATE & FILM GP–DANISH, WITH MONITOR SOFTWARE	900
PLATE & FILM GP–DUTCH, WITH MONITOR SOFTWARE	900
PLATE & FILM GP–ENGLISH, WITH MONITOR SOFTWARE	899
PLATE & FILM GP–FINNISH, WITH MONITOR SOFTWARE	901
PLATE & FILM GP–FRENCH, WITH MONITOR SOFTWARE	900
PLATE & FILM GP–GERMAN, WITH MONITOR SOFTWARE	900
PLATE & FILM GP–GREEK, WITH MONITOR SOFTWARE	902
PLATE & FILM GP–HEBREW, WITH MONITOR SOFTWARE	902
PLATE & FILM GP–ITALIAN, WITH MONITOR SOFTWARE	901
PLATE & FILM GP–NORWEGIAN, WITH MONITOR SOFTWARE	901
PLATE & FILM GP–PORTUGUESE, WITH MONITOR SOFTWARE	899
PLATE & FILM GP–ROMANIAN, WITH MONITOR SOFTWARE	903
PLATE & FILM GP–RUSSIAN, WITH MONITOR SOFTWARE	902
PLATE & FILM GP–SLOVENIAN, WITH MONITOR SOFTWARE	903
PLATE & FILM GP–SPANISH, WITH MONITOR SOFTWARE	899
PLATE & FILM GP–SWEDISH, WITH MONITOR SOFTWARE	901
PLATE & FILM GP–TURKISH, WITH MONITOR SOFTWARE	902
PLATE GP-PUSH	707
PLATE-IDENTIFICATION (SERIAL NUMBER)	763
PLATE-IDENTIFICATION (WORK TOOL)	715 732 750 751
PLATE-INSTRUCTION (AIR CONDITIONER)	761
PLATE-SERIAL NUMBER (TRANSMISSION)	327
PLUG-DRAIN	34 36
PLUG GP-CYLINDER BLOCK	48
PLUG GP-ENGINE	49
PLUG-MAGNETIC (TRANSMISSION)	328
POWER SUPPLY GP–GRADE CONTROL	220
PRECLEANER GP	98
PRECLEANER GP (TURBINE)	98
PRESSURIZER GP-CAB	849
PULLEY GP-IDLER	50
PUMP & MTG GP-ALL WHEEL DRIVE	384
PUMP & MTG GP-ELECTRIC DRIVE–SECONDARY STEERING	630
PUMP & MTG GP-GEAR–POWER TRAIN	385
PUMP & MTG GP-PISTON–BRAKE, HYDRAULIC FAN	632
PUMP & MTG GP-PISTON–IMPLEMENT, STEERING–IMPLEMENT	631
PUMP & MTG GP-UNIT INJ HYD	117
PUMP GP-ELECTRIC DRIVE–SECONDARY STEERING	633
PUMP GP-ENGINE OIL	67 68
PUMP GP-FUEL INJECTION	118
PUMP GP-FUEL PRM & PRIM FILTER	119 120
PUMP GP-FUEL PRM & WATER SEP	128
PUMP GP-GEAR–TRANSMISSION	386
PUMP GP-GEAR (AWD CHARGE)	388
PUMP GP-PISTON–ALL WHEEL DRIVE	388
PUMP GP-PISTON–BRAKE, HYDRAULIC FAN	636
PUMP GP-PISTON–IMPLEMENT, STEERING	634
PUMP GP-PISTON (ALL WHEEL DRIVE)	388
PUMP GP-UNIT INJECTOR HYD	117
PUMP GP-WATER	78 79

R

Name	Page
RADIATOR GP	80
RADIO GP-COMMUNICATION–PRODUCT LINK 121SR	221
RECEIVER AR-LASER–DUAL	221
RECEIVER AR-LASER–SINGLE	221
RECEIVER AR-SATELLITE–SINGLE GNSS, MS990	221
RECEIVER DRYER AS (REFRIGERANT)	812
RECEIVER GP-FAST FILL FUEL	121
RECEIVER GP-LASER–GRADE CONTROL	222
RECEIVER GP-LASER (LR410)	222
RECEIVER GP-SATELLITE–SINGLE GNSS, MS990	222
RECLINER GP-SEAT	850
REFLECTOR GP–MACHINE	488
REFLECTOR GP–RIPPER	487
REGULATOR AS-VOLTAGE (24-VOLT)	130
REGULATOR GP-FUEL PRESSURE	122
REGULATOR-PRESSURE (FUEL)	119
REGULATOR-WATER TEMPERATURE (97-DEG C)	74

INDEX

Name	Page
RELAY AS (24-VDC, 20-AMPERE) (HEATED MIRROR TIMER)	823
RELAY AS (24-VOLT)	265
RELAY AS (24-VOLT) (A/C CLUTCH SOLENOID)	300
RELAY AS (24-VOLT) (BACKUP ALARM)	300
RELAY AS (24-VOLT) (FUEL PUMP RELAY)	300
RELAY AS (24-VOLT) (SECONDARY STEERING)	300
RIPPER AR	739
RIPPER GP	740
ROADING AR–EUROPEAN MARKET	2
ROCKER ARM GP (EXHAUST)	54
ROCKER ARM GP (INTAKE)	54
ROOF GP-CAB	851
ROTATING GP-PUMP	639
ROTATING GP-PUMP–IMPLEMENT	638

S

Name	Page
SCARIFIER AR–STRAIGHT	742
SCARIFIER AR–VEE TYPE	742
SCARIFIER GP	752
SCARIFIER GP–STRAIGHT TYPE	747
SCARIFIER GP–VEE TYPE	743
SCARIFIER GP–11-TEETH	750
SCARIFIER GP–5-TEETH	751
SCREEN GP-MAGNETIC–TRANSMISSION	390
SCREEN GP-SUN	852
SCREEN-SUCTION (TRANSMISSION)	390
SCREEN-SUCTION (TRANSMISSION SCAVENGE)	327
SEAL GP-CRANKSHAFT	51
SEAL GP-DUO-CONE	557
SEAL-VALVE COVER	16
SEAT & MOUNTING GP	853
SEAT & MOUNTING GP–AIR	853
SEAT BELT GP (RETRACTABLE)	854
SEAT GP–CLOTH	854 855
SEAT GP-SUSPENSION	858
SEAT GP-SUSPENSION–AIR	857
SENDER AS-FUEL	124 126
SENSOR AS-PRESSURE	231
SENSOR AS-TEMPERATURE	240
SENSOR GP-ENGINE	223
SENSOR GP-POSITION	225 226 227
SENSOR GP-POSITION (ALL WHEEL DRIVE)	248
SENSOR GP-POSITION (ROTARY) (ARTICULATION)	299
SENSOR GP-POSITION (ROTARY) (THROTTLE POSITION SENSOR)	848
SENSOR GP-POSITION (ROTARY) (TMSN MODULATOR CONTROL)	848
SENSOR GP-POSITION (STEERING CYLINDER)	551 553
SENSOR GP-PRESSURE	228 229 230 231 232 233 234 235 236 237
SENSOR GP-PRESSURE–FUEL	237
SENSOR GP-PRESSURE (ATMOSPHERIC)	223
SENSOR GP-PRESSURE (AWD SENSOR CONTROL, LH)	623
SENSOR GP-PRESSURE (AWD SENSOR CONTROL, RH)	623
SENSOR GP-PRESSURE (BOOST)	223
SENSOR GP-PRESSURE (BRAKE ACCUMULATOR)	617
SENSOR GP-PRESSURE (ENGINE OIL)	223
SENSOR GP-PRESSURE (FUEL)	106
SENSOR GP-PRESSURE (RAIL)	223
SENSOR GP-PRESSURE (TURBOCHARGER INLET)	299
SENSOR GP-SONIC–DUAL	238
SENSOR GP-SONIC–SINGLE	238
SENSOR GP-SPEED	239
SENSOR GP-SPEED (ALL WHEEL DRIVE)	378
SENSOR GP-SPEED (TRANSMISSION INPUT)	342
SENSOR GP-SPEED (TRANSMISSION INTERMEDIATE 1)	342
SENSOR GP-SPEED (TRANSMISSION INTERMEDIATE 2)	342
SENSOR GP-SPEED (TRANSMISSION OUTPUT)	342
SENSOR GP-TEMPERATURE	240 241 242
SENSOR GP-TEMPERATURE (AIR INLET MANIFOLD)	223
SENSOR GP-TEMPERATURE (ENGINE COOLANT)	223
SENSOR GP-TEMPERATURE (FUEL)	106
SENSOR GP-TEMPERATURE (HYDRAULIC FAN OIL)	71
SENSOR GP-TEMPERATURE (HYDRAULIC OIL)	310
SENSOR GP-TEMPERATURE (TRANSMISSION OIL)	342

INDEX

Name	Page
SERVICE CENTER AR	489
SERVICE GP-IMPLEMENT	165
SHAFT GP-DRIVE	391
SHAFT GP-INPUT–TRANSMISSION	392
SHIELD GP-ENGINE COMPARTMENT	490
SNOW AR-MOTOR GRADER	3
SOFTWARE GP-COMMUNICATION (PRODUCT LINK 121SR)	221
SOFTWARE GP-IMPLEMENT	165
SOFTWARE GP-IMPLEMENT (IMPLEMENT 2)	165
SOFTWARE GP-IMPLEMENT (IMPLEMENT 3)	165
SOFTWARE GP (MAST)	205
SOFTWARE GP-MONITOR	166 167 222 790
SOFTWARE GP-POWER TRAIN	168
SOFTWARE GP-POWER TRAIN (ALL WHEEL DRIVE)	168
SOFTWARE (RECEIVER)	222
SOFTWARE (RECEIVER, LOADER)	222
SOLENOID AS (24-VOLT) (STARTING MOTOR)	244
STARTING AID GP-ETHER	243
STARTING MOTOR GP-ELECTRIC	244 246
STEERING AR-SECONDARY	640
STEP GP	493
STRAINER-FUEL	124 126
SUPPORT GP-CONTROL–JOYSTICK, LH	859
SUPPORT GP-CONTROL–JOYSTICK, RH	861
SUPPORT GP-ENGINE	52
SUPPORT GP-LIGHT–CAB ROOF	247
SUPPORT GP-RADIATOR	494
SUPPRESSION GP-SOUND	497
SUPPRESSION GP-SOUND–ENGINE ENCLOSURE	496
SUSPENSION GP-SEAT	863
SUSPENSION GP-SEAT–AIR	865
SWASHPLATE GP	641
SWITCH AS-BALL (CENTERSHIFT INDICATOR)	275
SWITCH AS-LIMIT (BRAKE LIGHT)	848
SWITCH AS-LIMIT (SEAT ADJUSTMENT)	831
SWITCH AS-PRESSURE (AWD OIL FILTER BYPASS)	362
SWITCH AS-PRESSURE (COMPRESSOR, HIGH SIDE)	814
SWITCH AS-PRESSURE (COMPRESSOR, LOW SIDE)	814
SWITCH AS-PRESSURE (FILTER BYPASS)	562
SWITCH AS-PRESSURE (PARKING BRAKE)	342
SWITCH AS-PUSH BUTTON (BLADE LIFT, LOWER)	842 844
SWITCH AS-PUSH BUTTON (HORN)	775
SWITCH AS-PUSH BUTTON (SIDESHIFT)	844
SWITCH AS-ROCKER (AIR CONDITIONER ON, OFF)	778
SWITCH AS-ROCKER (AUTOSHIFT)	260
SWITCH AS-ROCKER (BLADE CUSHION)	265
SWITCH AS-ROCKER (CAB FLOODLIGHTS)	288
SWITCH AS-ROCKER (FAN BLOWER SPEED)	800
SWITCH AS-ROCKER (HAZARD)	265
SWITCH AS-ROCKER (HEADLIGHTS, TAIL LIGHTS)	265
SWITCH AS-ROCKER (HEATED MIRRORS)	823
SWITCH AS-ROCKER (IMPLEMENT LOCKOUT)	265
SWITCH AS-ROCKER (PARKING BRAKE ON, OFF)	265
SWITCH AS-ROCKER (QUICK COUPLER)	265
SWITCH AS-ROCKER (SECONDARY STEERING)	265
SWITCH AS-ROCKER (SPEED CONTROL REGULATOR)	265
SWITCH AS-ROCKER (THROTTLE LOCK)	265
SWITCH AS-ROCKER (TURN SIGNAL)	775
SWITCH AS-ROCKER (WARNING BEACON)	177
SWITCH AS-ROCKER (WORK LIGHT)	174 252
SWITCH AS-ROCKER (24-VOLT) (INCREMENT, DECREMENT, LH)	842
SWITCH AS-ROCKER (24-VOLT) (INCREMENT, DECREMENT, RH)	842
SWITCH AS-ROCKER (24-VOLT) (OFFSET, RH)	844
SWITCH AS-ROCKER (24-VOLT) (ROADING LIGHTS)	259
SWITCH AS-ROTARY (24-VOLT) (ALL WHEEL DRIVE CONTROL)	248
SWITCH AS-START (KEY)	265
SWITCH AS-TEMPERATURE (AIR CONDITIONER, HEATER)	763
SWITCH AS-TOGGLE (GROUND LEVEL SHUTDOWN)	299
SWITCH AS-3 POSITION (FLOAT CONTROL)	155
SWITCH AS-3 POSITION (FRONT IMPLEMENT)	153 154 156 157
SWITCH AS-3 POSITION (REAR IMPLEMENT)	152 154

INDEX

Name	Page
SWITCH AS-3 POSITION (REAR IMPLEMENT)	157
SWITCH GP-ALL WHEEL DRIVE	248
SWITCH GP-BYPASS	250
SWITCH GP-DISCONNECT–BATTERY	251
SWITCH GP-LIGHT–WORK LIGHT	252
SWITCH GP-LIMIT	253
SWITCH GP-MAGNETIC	254 255 256 257
SWITCH GP-PRESSURE	258
SWITCH GP-ROADING–HEADLIGHT DIMMER	259
SWITCH GP-ROCKER–AUTOSHIFT	260
SWITCH GP-WIPER–INTERMITTENT	261
SWITCH GP-WIPER (24-VOLT, INTERMITTENT)	265 879
SWIVEL GP	642

T

TANDEM & COVER GP	393
TANK & MTG GP-HYDRAULIC	644
TANK GP-AIR	904
TANK GP-COOLANT	82
TANK GP-FUEL	124
TANK GP-FUEL–CROSSOVER	123
TANK GP-FUEL–FAST FILL	126
TANK GP-HYDRAULIC	646
TANK GP-WINDOW WASHER	867
TOOTH GP-RIPPER	753 754
TOOTH GP-SCARIFIER	755
TRANSMISSION AR	394
TURBOCHARGER GP	99 100

U

UNIVERSAL JOINT GP	395

V

VALVE & MTG GP-SOLENOID	396
VALVE AS-CHECK	877 880
VALVE AS-CHECK (WINDOW WASHER)	879
VALVE AS (COOLANT)	76
VALVE GP-ACTUATOR (STEERING SIGNAL)	701
VALVE GP-BANK 3–FRONT FRAME, REAR	647
VALVE GP-BANK 4–FRONT FRAME, REAR	648
VALVE GP-BANK 5–FRONT FRAME	649
VALVE GP-BANK 5–FRONT FRAME, REAR	650
VALVE GP-BANK 6–FRONT FRAME	652 653
VALVE GP-BANK 6–FRONT FRAME, REAR	651
VALVE GP-BANK 7–FRONT FRAME	654 656
VALVE GP-BANK 8–FRONT FRAME	658 660
VALVE GP-CHECK	595 662
VALVE GP-CHECK & RELIEF (LINE, BLADE SIDESHIFT)	671
VALVE GP-CHECK & RELIEF (LINE, BLADE TIP)	667
VALVE GP-CHECK & RELIEF (LINE, LIFT)	665
VALVE GP-CHECK & RELIEF (LINE, PLOW ANGLE)	685
VALVE GP-CHECK & RELIEF (LINE, PLOW, BULLDOZER LIFT)	683
VALVE GP-CHECK & RELIEF (LINE, RIPPER)	677
VALVE GP-CHECK & RELIEF (LINE, SCARIFIER)	687
VALVE GP-CHECK & RELIEF (LINE, TILT)	679
VALVE GP-CHECK & RELIEF (LINE, WING LIFT)	681
VALVE GP-CONTROL–ARTICULATION	663
VALVE GP-CONTROL–BLADE CENTERSHIFT	669
VALVE GP-CONTROL–BLADE LIFT	665
VALVE GP-CONTROL–BLADE SIDESHIFT	671
VALVE GP-CONTROL–BLADE TIP	667
VALVE GP-CONTROL–BULLDOZER LIFT, PLOW	683
VALVE GP-CONTROL–CIRCLE DRIVE	673
VALVE GP-CONTROL–PLOW ANGLE	685
VALVE GP-CONTROL–RIPPER	677
VALVE GP-CONTROL–SCARIFIER	687
VALVE GP-CONTROL–WHEEL LEAN	675
VALVE GP-CONTROL–WING LIFT	681
VALVE GP-CONTROL–WING TILT	679
VALVE GP-CONTROL (BRAKE)	510
VALVE GP-DIVERTER–FAN DRIVE	689
VALVE GP-ETHER STARTING	262
VALVE GP-MODULATING	397
VALVE GP-PRESSURE REDUCING–PRIMARY STEERING	690
VALVE GP-PUMP CONTROL–HYDRAULIC PUMP	691
VALVE GP-PUMP CONTROL–PRESSURE, FLOW COMPENSATOR	398 693
VALVE GP-RELIEF	694
VALVE GP-RELIEF–BRAKE ACCUMULATOR	695
VALVE GP-RELIEF–TRANSMISSION	399
VALVE GP-RELIEF (ALL WHEEL DRIVE)	378
VALVE GP-RELIEF (COLD OIL STARTUP)	388

INDEX

Name	Page
VALVE GP-RELIEF (MAIN)	626
VALVE GP-RELIEF (MAXIMUM PRESSURE, AWD)	388
VALVE GP-RELIEF (PUMP CASE PRESSURE)	388
VALVE GP-RELIEF (REFRIGERANT COMPRESSOR)	772
VALVE GP-RELIEF (SECONDARY STEERING)	610
VALVE GP-RELIEF (STEERING PRESSURE)	701
VALVE GP-SHUTTLE	696
VALVE GP-SHUTTLE (AWD, PISTON MOTOR)	623
VALVE GP-SHUTTLE (HYDRAULIC FAN)	617
VALVE GP-SOLENOID	697
	698
	699
	700
VALVE GP-SOLENOID (ALL WHEEL DRIVE, LH)	623
VALVE GP-SOLENOID (ALL WHEEL DRIVE, RH)	623
VALVE GP-SOLENOID (ARTICULATION)	663
VALVE GP-SOLENOID (BLADE CENTERSHIFT)	669
VALVE GP-SOLENOID (BLADE CUSHION)	619
VALVE GP-SOLENOID (BLADE SIDESHIFT)	671
VALVE GP-SOLENOID (BLADE TIP)	667
VALVE GP-SOLENOID (CENTERSHIFT)	616
VALVE GP-SOLENOID (CIRCLE DRIVE)	673
VALVE GP-SOLENOID (DIFFERENTIAL LOCK)	396
VALVE GP-SOLENOID (FORWARD, LH)	623
VALVE GP-SOLENOID (FORWARD, RH)	623
VALVE GP-SOLENOID (HYDRAULIC FAN)	617
VALVE GP-SOLENOID (PARKING BRAKE CONTROL)	621
VALVE GP-SOLENOID (PILOT PROPORTIONING)	665
VALVE GP-SOLENOID (PLOW ANGLE)	685
VALVE GP-SOLENOID (PLOW, BULLDOZER LIFT)	683
VALVE GP-SOLENOID (REVERSE, LH)	623
VALVE GP-SOLENOID (REVERSE, RH)	623
VALVE GP-SOLENOID (RIPPER)	677
VALVE GP-SOLENOID (SCARIFIER)	687
VALVE GP-SOLENOID (STEERING)	620
VALVE GP-SOLENOID (WHEEL LEAN)	675
VALVE GP-SOLENOID (WING LIFT)	681
VALVE GP-SOLENOID (WING TILT)	679
VALVE GP-SOLENOID (24-VOLT DC) (PARKING BRAKE)	342
VALVE GP-STEERING	701
VALVE GP-TIRE (BASIC)	444
VALVE GP-TIRE (TIRE INFLATION)	444
	445
	446
VALVE MECHANISM GP	53
	54

W

Name	Page
WARNING GP-BACKUP	263
WATER SEP & FUEL PRM PUMP GP	128
WHEEL & TIRE AR	401
	402
	403
	404
	405
	406
	407
	408
	409
	410
	411
	412
	413
	414
	415
	416
WHEEL & TIRE GP	416
	417
	418
	419
	420
	421
	422
	423
	424
	425
	426
	427
	428
	429
	430
	431
	432
	433
	434
	435
	436
WHEEL AR	436
	437
	438
WHEEL GP	439
	440
	441
	442
	443
	444

INDEX

Name	Page	Name	Page
	445		
	446		
WINDOW GP-CAB	871		
WINDOW GP-CAB–FRONT	869		
	874		
WINDOW GP-CAB–REAR, LH, RH	868		
WINDOW GP-CAB–REAR, LH, RH, SIDE WIPERS	876		
WINDOW GP-CAB–SIDE, REAR, RH, LH	875		
WINDOW GP-CAB–VENT	872		
WINDOW GP-CAB–VENT, FRONT	870		
WIPER & WASHER GP-WINDOW–FRONT	877		
WIPER GP-WINDOW	879		
WIPER GP-WINDOW–DOOR, LH	883		
WIPER GP-WINDOW–DOOR, RH	882		
WIPER GP-WINDOW–SIDE, RH, LH	880		
WIRING GP-AUXILIARY	264		
WIRING GP-CAB	265		
WIRING GP-CAMERA–WORK AREA VISUAL SYSTEM	270		
WIRING GP-ELECTRONIC CONTROL	271		
WIRING GP-ENGINE	273		
WIRING GP-FRONT	275		
WIRING GP-FRONT LIGHTING	279		
WIRING GP-GRADE CONTROL	280		
	282		
WIRING GP-HEATER	286		
WIRING GP-LIGHTING–FLOODLIGHTS, WARNING BEACON	288		
WIRING GP-LIGHTING–MARKER LIGHTS	287		
WIRING GP-LIGHTING–WORK LIGHTS	289		
WIRING GP-MONITOR–CD610 DISPLAY	294		
WIRING GP-MONITOR–CD700 DISPLAY	291		
WIRING GP-POWER RECEPTACLE	296		
WIRING GP-REAR	299		
WIRING GP-REAR LIGHTING–RADIATOR	306		
WIRING GP-REAR LIGHTING–STOP, TAIL, TURN, BACKUP	304		
WIRING GP-SECONDARY STEERING	308		
WIRING GP-SENSOR	310		
WIRING GP-SENSOR–AWD, STEERING CYLINDER POSITION	313		
WIRING GP-SENSOR–NON-AWD, STEERING CYLINDER POSITION	314		
WIRING GP-WIPER	315		

INDEX

Désignation	Page

A

ACCOUDOIR (ASS)	765 766 787
ACCOUPLEMENT DE TORSION (ASS)	346
ACCUMULATEUR - FREIN	499 500 501
ACCUMULATEUR - RÉFRIGÉRANT	812
ACCUMULATEUR D'AMORTISSEUR DE LAME	522
ADAPTATEUR DE REMPLIS. RAPIDE DE CARBURANT (ASS)	101
ADAPTATEUR DE TURBOCOMPRESSEUR (ASS)	84
ALIMENTATION (ASS)	220
ALTERNATEUR DE CHARGE (ASS)	130 132 134 136 138
ALTERNATEUR DE CHARGE (ASS) (24-VOLTS, 150-AMPÈRES)	134 138
AMORTISSEUR DE VIBRATIONS ET POULIE (ASS)	28
AMPOULE (24 VOLTS)	178
AMPOULE (24 VOLTS) (POSITION DE CABINE)	192
AMPOULE (24-VOLTS, XÉNON)	186
AMPOULE (24V, 21W)	197
AMPOULE (24V, 5W)	190 191 193
AMPOULE (24V, 70W)	196
AMPOULE (24V, 75/70W)	190 191
APPLICATION - COMMUNICATION (ASS)	140
ARBRE A CAMES (ASS)	12
ARBRE D'ENTRAÎNEMENT (ASS)	391
ARBRE D'ENTRÉE (ASS)	392
ARTICULATION DE DIRECTION (ASS)	482 483
ATTELAGE D'ARTICULATION (ASS)	477
ATTELAGE-REMORQUAGE (ASS)	479
AUTOCOLLANT (ASS)- INTERNATIONAL	888
AUTOCOLLANT (ASS)-ÉTATS-UNIS	889
AUTOCOLLANT DE MISE EN GARDE (CEINTURE DE SÉCURITÉ)	889
AUTOCOLLANT DE MISE EN GARDE (CEINTURE DE SÉCURITÉ)	508
AUTOCOLLANT DE MISE EN GARDE (DÉMARRAGE AVEC CÂBLES VOLANTS, LIRE LE GUIDE D'UTILISATION ET D'ENTRETIEN, INTERNE)	489
AUTOCOLLANT DE MISE EN GARDE (DÉMARRAGE CABLE VOLANT, LIRE LE GUIDE D'UTILISATION ET D'ENTRETIEN, ÉTATS-UNIS)	489
AUTOCOLLANT DE MISE EN GARDE (HAUTE PRESSION, LIRE LE GUIDE D'UTILISATION ET D'ENTRETIEN)	500 501 522
AUTOCOLLANT DE MISE EN GARDE (LAME, NE PAS MONTER, LIRE LE MANUEL)	205
AUTOCOLLANT DE MISE EN GARDE (LAME, NE PAS MONTER, LIRE LE MANUEL)	213
AUTOCOLLANT DE MISE EN GARDE (RESSORT AMORTISSEUR)	502
AUTOCOLLANT DE MISE EN GARDE (RISQUE D'ÉCRASEMENT)	732 889
AUTOCOLLANT DE MISE EN GARDE (RISQUE D'ÉCRASEMENT)	508
AUTOCOLLANT DE MISE EN GARDE (RISQUE D'ÉCRASEMENT DES MAINS, RESTER À L'ÉCART)	304
AUTOCOLLANT DE MISE EN GARDE (RISQUE D'ÉCRASEMENT, LIRE LE MANUEL)	888 891
AUTOCOLLANT DE MISE EN GARDE (RISQUE D'ÉCRASEMENT, LIRE LE MANUEL)	511
AUTOCOLLANT DE MISE EN GARDE (TRANSMETTEUR AU LASER)	213
AUTOCOLLANT DE PANNEAU DE FUSIBLES (IDENTIFICATION DE FUSIBLE)	767
AUTOCOLLANT D'IDENTIFICATION (CARBURANT À REMPLISSAGE RAPIDE, LIRE LE GUIDE D'UTILISATION ET D'ENTRETIEN)	126
AUTOCOLLANT D'IDENTIFICATION (CONTACTEUR D'ALLUMAGE)	175
AUTOCOLLANT D'IDENTIFICATION (CONTACTEURS DE PANNEAU) (COMMANDE DE LAME)	842
AUTOCOLLANT D'IDENTIFICATION (INFÉRIEUR)	834
AUTOCOLLANT D'IDENTIFICATION (KLAXON)	775
AUTOCOLLANT D'IDENTIFICATION (PANNEAU DE FUSIBLES)	217
AUTOCOLLANT D'IDENTIFICATION (RÉFLECTEUR ROND ROUGE)	740

* TRADUCTION NON DISPONIBLE AU MOMENT DE LA PUBLICATION

INDEX

Désignation	Page
AUTOCOLLANT D'IDENTIFICATION (REMPLISSAGE, VIDANGE)	66
AUTOCOLLANT D'IDENTIFICATION (SUPÉRIEUR)	834
AUTOCOLLANT D'IDENTIFICATION (TRACTION INTÉGRALE)	318
AUTOCOLLANT D'IDENTIFICATION (12 VOLTS)	163
AUTOCOLLANT-INFORMATION (AUTOCOLLANT ARGENT) (MOTEUR)	890
AUTOCOLLANT-INFORMATION (CONSOLE DE DROITE)	846
AUTOCOLLANT-INFORMATION (CONSOLE DE GAUCHE)	846
AUTOCOLLANT-INFORMATION (LAMINÉ) (MOTEUR)	890
AUTOCOLLANT-INFORMATION (LIQUIDE DE REFROIDISSEMENT LONGUE DURÉE-LIRE LE GUIDE D'UTILISATION ET D'ENTRETIEN)	891 895
AUTOCOLLANT-INFORMATION (ROPS, FOPS, LIRE LE GUIDE D'UTILISATION ET D'ENTRETIEN)	768
AUXILIAIRE DE DÉMARRAGE À L'ÉTHER	243
AVERTISSEMENT DE PROFIL LONGITUDINAL (ASS)	280 282
AVERTISSEUR (ASS)	129
AVERTISSEUR DE RECUL (ASS)	263
AXE DE CULBUTEUR (ASS) (ADMISSION)	54
AXE DE CULBUTEUR (ASS) (ÉCHAPPEMENT)	54

B

Désignation	Page
BALAI D'ESSUIE-GLACE (ENS) (400-M) (AVANT)	880
BALAI D'ESSUIE-GLACE (ENS) (400-M) (VITRE INFÉRIEURE DE PORTE, CÔTÉ GAUCHE)	883
BALAI D'ESSUIE-GLACE (ENS) (450-MM) (AVANT)	877
BALAI D'ESSUIE-GLACE (ENS) (500-MM) (ARRIÈRE)	879
BALAI D'ESSUIE-GLACE (ENS) (500-MM) (PORTE, DROITE)	882
BALAI D'ESSUIE-GLACE (ENS) (500-MM) (VITRE SUPÉRIEURE DE PORTE, CÔTÉ GAUCHE)	883
BANDE AUTOCOLLANTE (JAUNE, RÉFLÉCHISSANT)	469
BARRE D'ATTELAGE (ASS)	705
BÂTI AR (ASS)	472
BATTERIE ET CÂBLAGE	141 143 146
BATTERIE (12V, SANS ENTRETIEN)	141 143
BATTERIE (12V, SANS ENTRETIEN) (HUMIDE)	146
BLINDAGE DES CANALISATIONS DES FREINS	475
BLINDAGE INFÉRIEUR (ASS)	473
BLOC-CYLINDRES - COUVERCLE (ASS)	13
BLOC-CYLINDRES (ASS)	20 21 22
BOBINE DE SOLÉNOÏDE (ENS) (12 VOLTS)	620
BOBINE DE SOUOPAPE (ASS)	769 771
BOÎTE DE VITESSES (VERSION)	394
BOUCHON À ÉVENT (RÉSERVOIR DE LAVE-GLACE)	877
BOUCHON AIMANTÉ (BOÎTE DE VITESSES)	328
BOUCHON DE BLOC-CYLINDRES (ASS)	48
BOUCHON DE GOULOTTE DE REMPLISSAGE (ENS) (HUILE MOTEUR)	15
BOUCHON DE GOULOTTE DE REMPLISSAGE (ENS) (RÉSERVOIR DE CARBURANT)	124 126
BOUCHON DE GOULOTTE DE REMPLISSAGE (ENS) (RÉSERVOIR HYDRAULIQUE)	646
BOUCHON DE MOTEUR (ASS)	49
BOUCHON DE RÉSERVOIR DE LIQUIDE DE REFROIDISSEMENT (ENS)	82
BOUCHON DE VIDANGE	34 36
BOULONNERIE (ASS)	463 464
BOULONNERIE DE LA CULASSE (ASS)	27 29
BRAS D'ESSUIE-GLACE (ASS) (AVANT)	877
BRAS D'ESSUIE-GLACE (ASS) (PORTE, DROITE)	882
BRAS D'ESSUIE-GLACE (ASS) (VITRE INFÉRIEURE DE PORTE, CÔTÉ GAUCHE)	883
BRAS D'ESSUIE-GLACE (ASS) (VITRE SUPÉRIEURE DE PORTE, CÔTÉ GAUCHE)	883
BRAS D'ESSUIE-GLACE (ENS) (DROITE)	880

C

Désignation	Page
CABINE - REVÊTEMENT (ASS)	810
CABINE-FAISCEAU DE CÂBLES (ENS)	265

* TRADUCTION NON DISPONIBLE AU MOMENT DE LA PUBLICATION

INDEX

Désignation	Page
CABINE-FAISCEAU DE CÂBLES (ENS) (ESSUIE-GLACE, PORTE DE DROITE)	791
CABINE (VERSION)	768
CABLAGE - CAPTEUR (ASS)	310
	313
	314
CABLAGE AR (ASS)	299
CÂBLAGE AUXILIAIRE (ASS)	264
CABLAGE AV (ASS)	275
CABLAGE DE CABINE (ASS)	265
CÂBLAGE DE CAMÉRA (ASS)	270
CABLAGE DE DIRECTION AUXILIAIRE (ASS)	308
CABLAGE DE MOTEUR (ASS)	273
CABLAGE DE PRISE DE FORCE	296
CABLAGE D'ECLAIRAGE ARRIERE (ASS)	304
CABLAGE D'ECLAIRAGE ARRIERE (ASS)	306
CABLAGE D'ÉCLAIRAGE (ASS)	287
	288
	289
CABLAGE D'ESSUIE-GLACE	315
CABLAGE DU CHAUFFAGE DE CABINE (ASS)	286
CABLAGE DU PANNEAU DE COMMANDE	291
	294
CÂBLAGE-MONITEUR	294
CABLAGE MOTEUR (ENS) (INJECTION DE CARBURANT)	273
CABLAGE MOTEUR (ENS) (MODULE DE COMMANDE ÉLECTRONIQUE)	273
CACHE-SOUPAPES (ASS)	16
CANALISATION DE DIRECTION AUXILIAIRE	610
CANALISATIONS - INJECTEURS-POMPES HYDRAULIQUES	115
CANALISATIONS D'ACCUMULATEUR (ASS)	513
CANALISATIONS D'AIR (ASS)	91
	93
	94
CANALISATIONS DE CARBURANT (ASS)	111
CANALISATIONS DE CHAUFFAGE (ASS)	817
	819
CANALISATIONS DE CHAUFFAGE (ASS)	816
CANALISATIONS DE CLIMATISEUR (ASS)	812
	814
CANALISATIONS DE DIRECTION (ASS)	612
	614
CANALISATIONS DE GRAISSAGE (ASS)	481
CANALISATIONS DE POMPE (ASS)	595
CANALISATIONS DE PRISE DE FORCE (ASS)	371
CANALISATIONS DE RÉCHAUFFEUR DE LIQUIDE DE REFROIDISSEMENT	816
	817
	819
CANALISATIONS DE REFROIDISSEUR D'HUILE HYDR. (ASS)	593
CANALISATIONS DE TRACTION INTÉGRALE (ASS)	362
CANALISATIONS DE VERROUILLAGE DE DÉPORT DE CERCLE (ASS)	565
	567
CANALISATIONS D'EAU (ASS)	74
	76
CANALISATIONS D'HUILE DE BOÎTE (ASS)	372
	375
CANALISATIONS D'HUILE DE TURBOCOMPRESSEUR (ASS)	64
CANALISATIONS D'HUILE MOTEUR (ASS)	62
CANALISATIONS DU FILTRE A CARBURANT (ASS)	113
CANALISATIONS DU FREIN DE MANOEUVRE (ASS)	517
	519
CANALISATIONS DU RÉSERVOIR D'AIR (ASS)	515
CANALISATIONS DU RIPPER (ASS)	605
	607
	609
CANALISATIONS HYDRAULIQUES (ASS)	569
	571
	577
	579
	586
	588
	589
CANALISATIONS HYDRAULIQUES DE VENTILATEUR (ASS)	590
CANALISATIONS-VIDANGE D'HUILE DE MOTEUR (ASS)	63
CAPOT (ASS)	480
CAPTEUR - MOTEUR (ASS)	223
CAPTEUR DE PRESSION (ASS)	228
	229
	230
	231
	232
	233
	234
	235
	236
	237
CAPTEUR DE PRESSION (ASS) (ACCUMULATEUR DE FREIN)	617
CAPTEUR DE PRESSION (ASS) (ADMISSION DE TURBOCOMPRESSEUR)	299
CAPTEUR DE PRESSION (ASS) (ATMOSPHÉRIQUE)	223

* TRADUCTION NON DISPONIBLE AU MOMENT DE LA PUBLICATION

INDEX

Désignation	Page
CAPTEUR DE PRESSION (ASS) (CARBURANT)	106
CAPTEUR DE PRESSION (ASS) (COMMANDE DE CAPTEUR DE TRACTION INTÉGRALE, CÔTÉ DROIT)	623
CAPTEUR DE PRESSION (ASS) (COMMANDE DE CAPTEUR DE TRACTION INTÉGRALE, CÔTÉ GAUCHE)	623
CAPTEUR DE PRESSION (ASS) (HUILE MOTEUR)	223
CAPTEUR DE PRESSION (ASS) (RAIL)	223
CAPTEUR DE PRESSION (ASS) (SURALIMENTATION)	223
CAPTEUR DE PRESSION (ENS)	231
CAPTEUR DE TEMPERATURE (ASS)	240 241 242
CAPTEUR DE TEMPERATURE (ASS) (CARBURANT)	106
CAPTEUR DE TEMPERATURE (ASS) (COLLECTEUR D'ADMISSION D'AIR)	223
CAPTEUR DE TEMPERATURE (ASS) (HUILE DE BOÎTE)	342
CAPTEUR DE TEMPERATURE (ASS) (HUILE DE VENTILATEUR HYDRAULIQUE)	71
CAPTEUR DE TEMPERATURE (ASS) (HUILE HYDRAULIQUE)	310
CAPTEUR DE TEMPERATURE (ASS) (LIQUIDE DE REFROIDISSEMENT DU MOTEUR)	223
CAPTEUR DE TEMPÉRATURE (ENS)	240
CAPTEUR DE VITESSE (ASS)	239
CAPTEUR DE VITESSE (ASS) (DONNÉES DE BOÎTE)	342
CAPTEUR DE VITESSE (ASS) (SORTIE DE TRANSMISSION)	342
CAPTEUR DE VITESSE (ASS) (TRACTION INTÉGRALE)	378
CAPTEUR DE VITESSE (ASS) (TRANSMISSION INTERMÉDIAIRE 1)	342
CAPTEUR DE VITESSE (ASS) (TRANSMISSION INTERMÉDIAIRE 2)	342
CAPTEUR SONIQUE (ASS)	238
CARENAGE DE MOTEUR (ASS)	458
CARTER AV (ASS)	38
CARTER DE VOLANT (ASS)	34 36
CEINTURE DE SECURITE (ASS) (RÉTRACTABLE)	854
CERCLE (ASS)	703
CHANGEMENT DE VITESSES AUTOMATIQUE (VERSION)	316
CHÂSSIS AV (ASS)	471
CHAUFFAGE DE CABINE (ASS)	803 804
CHAUFFAGE DE CABINE (VERSION)	802
CHAUFFAGE ET MONTAGE - CABINE (ASS)	801
CLAPET DE DECHARGE (ASS)	399 694 695
CLAPET DE DECHARGE (ASS) (*COLD OIL STARTUP)	388
CLAPET DE DECHARGE (ASS) (COMPRESSEUR DE RÉFRIGÉRANT)	772
CLAPET DE DECHARGE (ASS) (DIRECTION AUXILIAIRE)	610
CLAPET DE DECHARGE (ASS) (*MAXIMUM PRESSURE, AWD)	388
CLAPET DE DECHARGE (ASS) (PRESSION DE DIRECTION)	701
CLAPET DE DECHARGE (ASS) (PRINCIPAL)	626
CLAPET DE DECHARGE (ASS) (*PUMP CASE PRESSURE)	388
CLAPET DE DECHARGE (ASS) (TRACTION INTÉGRALE)	378
CLAPET DE DECHARGE ET ANTI-RETOUR (CANALISATION, ANGLE DE CHARRUE)	685
CLAPET DE DECHARGE ET ANTI-RETOUR (CANALISATION DE RIPPER)	677
CLAPET DE DECHARGE ET ANTI-RETOUR (CANALISATION, DÉPORT DE LAME)	671
CLAPET DE DECHARGE ET ANTI-RETOUR (CANALISATION D'INCLINAISON)	679
CLAPET DE DECHARGE ET ANTI-RETOUR (CANALISATION, LEVAGE)	665
CLAPET DE DECHARGE ET ANTI-RETOUR (CANALISATION, POINTE DE LAME)	667
CLAPET DE DECHARGE ET ANTI-RETOUR (*LINE, PLOW, BULLDOZER LIFT)	683
CLAPET DE DECHARGE ET ANTI-RETOUR (*LINE, SCARIFIER)	687
CLAPET DE DECHARGE ET ANTI-RETOUR (*LINE, WING LIFT)	681
CLAPET DE RETENUE (ENS)	595 877 880
CLAPET DE RETENUE (ENS)	662
CLAPET DE RETENUE (ENS) (LAVE-GLACE)	879
CLAPET (ENS) (LIQUIDE DE REFROIDISSEMENT)	76
CLÉ (COUPE-BATTERIE)	251
CLÉ ÉLECTRONIQUE (ENS) (SÉCURITÉ)	175
CLIMATISEUR (ASS)	762 763
CLIMATISEUR ET MONTAGE (ASS)	759
CLIMATISEUR (VERSION)	761
COFFRE A OUTILS (ASS)	885

* TRADUCTION NON DISPONIBLE AU MOMENT DE LA PUBLICATION

INDEX

Désignation	Page
COLLECTEUR - COMMANDE (ASS)	617, 619, 620, 621, 623
COLLECTEUR - SOUPAPE (ASS)	625, 626
COLLECTEUR (ASS)-HUILE MOTEUR	65
COLLECTEUR D'ÉCHAPPEMENT (ASS)	95
COMMANDE - AIR ET TEMPERATURE (ASS)	778
COMMANDE - AIR ET TEMPERATURE (ASS)	779
COMMANDE DE DIFFÉRENTIEL - VERROUILLAGE (ASS)	340
COMMANDE DE FAISCEAU (ENS) (ACCUGRADE)	280
COMMANDE DE FAISCEAU (ENS) (DIRECTION INTÉGRALE)	158
COMMANDE DE FAISCEAU (ENS) (HYDRAULIQUE ÉLECTRONIQUE)	271
COMMANDE DE MONITEUR NON PROGRAMMÉE (ASS)	785
COMMANDE DE NIVELLEMENT (ASS)	168
COMMANDE DE TRANSMISSION (ASS)	158, 342
COMMANDE D'ÉQUIPEMENT	151
COMMANDE D'EQUIPEMENT (ASS)	152, 153, 154, 155, 156, 157
COMMANDE ÉLECTROHYDRAULIQUE (ASS)	780, 781, 782
COMMANDE ÉLECTRONIQUE - CABLAGE	271
COMMANDE ÉLECTRONIQUE D'ÉQUIPEMENT (ASS)	165
COMMANDE ÉLECTRONIQUE D'ÉQUIPEMENT (ASS)	165
COMMANDE ÉLECTRONIQUE D'ÉQUIPEMENT (ASS)	165
COMMANDE ET MONTAGE - LEVIER (ASS)	775
COMMANDE ET MONTAGE - MOTEUR	150
COMMANDE HYDRAULIQUE DE BOÎTE (ASS)	342
COMMANDE HYDRAULIQUE (VERSION)	524, 525, 526, 527, 528, 529, 530, 531
COMMANDE NON PROGRAMMEE (ASS)	160, 161
COMMANDE NON PROGRAMMEE (ASS) (BOÎTE DE VITESSES)	342
COMMANDE NON PROGRAMMEE (ASS) (ÉQUIPEMENT)	161
COMMANDE NON PROGRAMMEE (ASS) (ÉQUIPEMENT 2)	161
COMMANDE NON PROGRAMMEE (ASS) (HYDRAULIQUE ÉLECTRONIQUE)	271
COMMANDE NON PROGRAMMEE (ASS) (TRACTION INTÉGRALE)	158
COMPRESSEUR D'AIR (ASS)	8, 9
COMPRESSEUR DE REFRIGERANT (ASS)	772, 773
CONDENSATEUR ET MONTAGE (RÉFRIGÉRANT)	774
CONDUIT ET FILTRE À AIR DE CABINE (ASS)	797
CONTACTEUR DE LIMITE (ASS)	253
CONTACTEUR DE TRACTION INTÉGRALE (ASS)	248
CONTACTEUR MAGNETIQUE (ASS)	254, 255, 256, 257
COUDE D'ADMISSION D'AIR (ASS)	90
COURONNE ET DIFFERENTIEL (ASS)	349
COURROIE MULTIPLE	132, 134, 136, 138
COUVERCLE - CABINE (ASS)	786
COUVERCLE DE CARTER AV (ASS)	14, 15
COUVERCLE DE COLLECTEUR D'ADMISSION (ASS)	88, 89
COUVERCLE DE DISTRIBUTEUR (ASS)	455
COUVERCLE DE PROTECTION (ASS)	457
COUVERCLE INFÉRIEUR-DOSSIER (ASS)	832, 833
COUVERCLE-RÉSERVOIR DE CARBURANT (ASS)	103
COUVERCLES D'EXPEDITION (ASS)	347
CULASSE (ASS)	25, 26, 27
CULASSE (ENS)	24
CULBUTERIE (ASS)	53, 54

* TRADUCTION NON DISPONIBLE AU MOMENT DE LA PUBLICATION

INDEX

Désignation	Page

D

DÉMARREUR ÉLECTRIQUE (ASS)	246
DÉMARREUR ÉLECTRIQUE (ASS)	244
DENT DE RIPPER (ASS)	753
	754
DENT DE SCARIFICATEUR (ASS)	755
DIFFERENTIEL (ASS)	351
DIODE (ROUGE, 24-VOLTS)	158
DIODE (ROUGE, 24-VOLTS)	175
DIODE (VERT, 24-VOLTS)	260
DIODE (VERT, 24-VOLTS)	158
DIRECTION AUXILIAIRE (VERSION)	640
DISJONCTEUR DE SECURITE (ENS) (ÉCLAIRAGE DE FREIN)	848
DISJONCTEUR DE SECURITE (ENS) (RÉGLAGE DU SIÈGE)	831
DISJONCTEUR DU PANNEAU DE COMMANDE (ASS)	216
DISJONCTEUR (ENS) (15A) (COMMANDE DE BOÎTE DE VITESSES)	216
DISJONCTEUR (ENS) (15A) (INTERRUPTEUR À CLÉ)	216
DISJONCTEUR (ENS) (15A) (PROJECTEURS, CÔTÉ DROIT)	217
DISJONCTEUR (ENS) (15A) (PROJECTEURS, CÔTÉ GAUCHE)	216
DISJONCTEUR (ENS) (150A) (ALTERNATEUR)	216
DISJONCTEUR (ENS) (20A)	266
DISJONCTEUR (ENS) (20A) (ACCUGRADE)	216
DISJONCTEUR (ENS) (20A) (COMMANDE DU MOTEUR)	216
DISJONCTEUR (ENS) (80A) (CHARGE)	216
DISJONCTEUR (ENS) (80A) (PRINCIPAL)	216
DISPOSITIF DE VIDANGE RAPIDE D'HUILE (ASS)	66
DISPOSITIF D'EVACUATION DES VAPEURS DE CARTER	60
DISTRIBUTEUR (ASS)	663
	665
	667
	669
	671
	673
	675
	677
	679
	681
	683
	685
	687
DISTRIBUTEUR (ASS) (FREIN)	510
DISTRIBUTEUR DE POMPE (ASS)	691
	693
DISTRIBUTEUR DE POMPE (ASS)	398
DISTRIBUTEUR ET MONTAGE (ASS)	829
	830
DISTRIBUTEUR TRIPLE ÉLÉMENT (ASS)	647
DISTRIBUTEUR 4 ÉLÉMENTS (ASS)	648
DISTRIBUTEUR 5 ÉLÉMENTS (ASS)	649
	650
DISTRIBUTEUR 6 ÉLÉMENTS (ASS)	651
	652
	653
DISTRIBUTEUR 7 ÉLÉMENTS (ASS)	654
	656
DISTRIBUTEUR 8 ÉLÉMENTS (ASS)	658
	660

E

EAU DES CHEMISES - RECHAUFFEUR (ASS)	169
	170
ÉCLAIRAGE - PROJECTEURS (ASS)	198
	199
	200
	201
	202
	203
	204
	205
ECLAIRAGE AR (ASS)	197
ÉCRAN DU MONITEUR (ASS)	789
	790
ÉCRAN DU MONITEUR (ASS) (CD610)	790
ÉCRAN DU MONITEUR (ASS) (CD700)	790
ÉCRAN MAGNÉTIQUE (ASS)	390
ÉCRAN MAGNÉTIQUE (BOÎTE DE VITESSES)	327
	390
ÉCRAN THERMIQUE DE COMPARTIMENT MOTEUR	490
ÉLECTRONIQUE - COMMUNICATION (ASS)	164
ÉLECTRONIQUE DE TRANSMISSION (ASS)	168
ÉLECTRONIQUE-MONITEUR (ASS)	166
	167
ÉLECTRONIQUE-MONITEUR (ASS)	166
ÉLÉMENT DE FILTRE À AIR (ENS) (SECONDAIRE)	87
ÉLÉMENT DE FILTRE À AIR (PRINCIPAL)	87
ÉLÉMENT DE FILTRE À HUILE (ENS) (ULTRA-GRANDE EFFICACITÉ)	372
ÉLÉMENT DE FILTRE À HUILE (ENS) (ULTRA-GRANDE EFFICACITÉ) (BOÎTE DE VITESSES)	355

* TRADUCTION NON DISPONIBLE AU MOMENT DE LA PUBLICATION

INDEX

Désignation	Page
ÉLÉMENT DE FILTRE À HUILE (ENS) (ULTRA-GRANDE EFFICACITÉ) (RÉSERVOIR HYDRAULIQUE)	563
ÉLÉMENT DU RÉCHAUFFEUR D'EAU DES CHEMISES (ENS) (120-VOLT, 1000-WATT)	170
ÉLÉMENT DU RÉCHAUFFEUR D'EAU DES CHEMISES (ENS) (240V, 1000W)	169
EMBOUT (ASS)	708 709 710 711
EMBOUT D'EXTRÉMITÉ (ASS)	711
EMBRAYAGE DE BOÎTE DE VITESSES (ASS)	332 334 336 338
ENTRAÎNEMENT DE CERCLE (ASS)	557
ENTRAÎNEMENT DE CHAÎNE (ASS)	331
ENTRAÎNEMENT DE ROUE (ASS)	352
ENTRAÎNEMENT POUR COURROIE	196
ENTRETIEN D'ÉQUIPEMENT (ASS)	165
ÉQUIPEMENT POUR DÉPLACEMENT ROUTIER (VERSION)	2
ESSIEU AR (ASS)	323
ESSIEU AV (ASS)	319 322 449 453
ESSIEU AV (VERSION)	317 318 447 448
ESSUIE-GLACE (ASS)	879 882 883
ESSUIE-GLACE (ASS)	880
ESSUIE-GLACE ET LAVE-GLACE	877

F

Désignation	Page
FAISCEAU ARRIÈRE (ENS)	299 310
FAISCEAU-BOÎTE DE TRANSMISSION	216 342
FAISCEAU DE BOÎTE (ENS)	216
FAISCEAU DE CABLES - CAPTEUR (ENS)	106 342
FAISCEAU DE CABLES - CAPTEUR (ENS) (ANGLE)	282
FAISCEAU DE CABLES - CAPTEUR (ENS) (DIRECTION, CÔTÉ DROIT)	313 314
FAISCEAU DE CABLES - CAPTEUR (ENS) (DIRECTION, CÔTÉ GAUCHE)	313 314
FAISCEAU DE CABLES - CAPTEUR (ENS) (ROTATION)	282
FAISCEAU DE CABLES - CAPTEUR (ENS) (VITESSE DU MOTEUR, CÔTÉ DROIT)	310
FAISCEAU DE CABLES - CAPTEUR (ENS) (VITESSE DU MOTEUR, CÔTÉ GAUCHE)	310
FAISCEAU DE CÂBLES AVANT (ENS)	310
FAISCEAU DE CABLES (ENS) (BARRE LUMINEUSE)	291
FAISCEAU DE CABLES (ENS) (INCLINAISON)	282
FAISCEAU DE CHÂSSIS ARRIÈRE	299
FAISCEAU DE CHÂSSIS AVANT (ENS)	291
FAISCEAU DE CHÂSSIS AVANT (ENS)	275 279
FAISCEAU DE CHÂSSIS (ENS) (COMMANDE DE PENTE)	282
FAISCEAU DE CHÂSSIS (ENS) (SYSTÈME DE SÉCURITÉ DE LA MACHINE)	175
FAISCEAU DE CHAUFFAGE ET CLIMATISATION	300
FAISCEAU DE CONTACTEUR (ENS)	842
FAISCEAU DE CONTACTEUR (ENS) (SIÈGE CHAUFFANT)	831
FAISCEAU DE MOTEUR (ENS)	763
FAISCEAU DE MOTEUR (ENS) (THERMOSTAT)	804
FAISCEAU DE RADIO (ENS)	291
FAISCEAU DE RÉCHAUFFEUR (ENS)	769 771
FAISCEAU DE REFROIDISSEUR DE TRANSMISSION (ENS)	345
FAISCEAU DE REFROIDISSEUR D'HUILE MOTEUR (ENS)	69
FAISCEAU DE SOUPAPE (ENS)	264
FAISCEAU DE SOUPAPE (ENS) (COMPRESSEUR PNEUMATIQUE DE SIÈGE)	865
FAISCEAU D'ÉCLAIRAGE ARRIÈRE (ENS)	304 306
FAISCEAU D'ÉCLAIRAGE ARRIÈRE (ENS) (PLAQUE D'ENREGISTREMENT)	193
FAISCEAU D'ÉCLAIRAGE AVANT (ENS)	209 211
FAISCEAU D'ÉCLAIRAGE (ENS)	289
FAISCEAU D'ÉCLAIRAGE (ENS)	275 288
FAISCEAU D'ESSUIE-GLACE (ENS)	315 871 876

* TRADUCTION NON DISPONIBLE AU MOMENT DE LA PUBLICATION

INDEX

Désignation	Page
FAISCEAU D'ESSUIE-GLACE (ENS)	794
FAISCEAU DU REFROIDISSEUR D'HUILE (ENS) (HYDRAULIQUE)	532
FAISCEAU DU REFROIDISSEUR D'HUILE (ENS) (HYDRAULIQUE)	593
FILTRE - RENIFLARD (RÉSERVOIR HYDRAULIQUE)	644
FILTRE - SÉPARATEUR D'EAU ET DE CARBURANT (ENS) (PRINCIPAL)	108
FILTRE A AIR (ASS)	86, 87
FILTRE À CARBURANT	124, 126
FILTRE A CARBURANT (ASS)	106
FILTRE A CARBURANT (ENS) (EFFICACITÉ AVANCÉE)	106
FILTRE A HUILE (ASS)	562, 563
FILTRE A HUILE (ASS)	355
FILTRE A HUILE (ASS) (TRACTION INTÉGRALE)	362
FILTRE A HUILE (ENS) (CABINE) (CHARBON ACTIVÉ)	797
FILTRE A HUILE (ENS) (CHAUFFAGE, CLIMATISEUR DE CABINE)	797
FILTRE À HUILE (ENS) (EFFICACITÉ AVANCÉE)	362, 562
FILTRE À HUILE (ENS) (LIQUIDE RÉSISTANT AU FEU)	362
FILTRE À HUILE (ENS) (ULTRA-GRANDE EFFICACITÉ)	362
FILTRE À HUILE HYDRAULIQUE ET MONTAGE (ASS)	560
FILTRE À HUILE MOTEUR (ASS)	58
FILTRE A HUILE MOTEUR (ENS)	58
FILTRE DE BOITE (TRANSMISSION) ET MONTAGE (ASS)	354
FILTRE DE SÉPARATEUR D'EAU ET DE CARBURANT (ASS)	108
FILTRE (EAU) (POMPE)	78
FREIN DE MANOEUVRE - COMMANDE (ASS)	508, 510, 511
FREIN DE MANOEUVRE (ASS)	504, 506
FREIN DE STATIONNEMENT (ASS)	502
FUSIBLE (10A)	265
FUSIBLE (15A)	265, 804
FUSIBLE (15A)	763

G

Désignation	Page
GARDE-BOUE ET SUPPORT (ASS)	465, 467, 469
GOULOTTE DE REMPLISSAGE D'HUILE DE TRANSMISSION	353
GROUPE DE CONTROLE (MESSENGER)	785
GROUPE DE MOTEUR A PISTONS	377, 378
GROUPE DE ROTATION DE POMPE	638, 639
GROUPE D'ORIENTATION	642

H

Désignation	Page
HUILE MOTEUR - CARTER (ASS)	46

I

Désignation	Page
INJECTEUR DE CARBURANT (ASS)	109, 110
INJECTEURS-POMPES HYDRAULIQUES (ENS)	117
INSONORISATION (ASS)	496, 497
INTERRUPTEUR - BOUTON-POUSSOIR (ENS) (DÉPORT LATÉRAL)	844
INTERRUPTEUR - BOUTON-POUSSOIR (ENS) (KLAXON)	775
INTERRUPTEUR - BOUTON-POUSSOIR (ENS) (LEVAGE, ABAISSEMENT DE LAME)	842, 844
INTERRUPTEUR - DÉPLACEMENT ROUTIER (ASS)	259
INTERRUPTEUR - DÉRIVATION (ASS)	250
INTERRUPTEUR - 3 POSITIONS (ENS) (COMMANDE DE POSITION LIBRE)	155
INTERRUPTEUR - 3 POSITIONS (ENS) (ÉQUIPEMENT ARRIÈRE)	152, 154, 157
INTERRUPTEUR - 3 POSITIONS (ENS) (ÉQUIPEMENT AVANT)	153, 154, 156, 157
INTERRUPTEUR À BASCULE (ASS)	260
INTERRUPTEUR À BASCULE (ENS) (ARRÊT DEPUIS LE SOL)	299
INTERRUPTEUR BALANCIER (ENS) (AMORTISSEUR DE LAME)	265
INTERRUPTEUR BALANCIER (ENS) (CHANG. AUTOMATIQUE VITESSE)	260

* TRADUCTION NON DISPONIBLE AU MOMENT DE LA PUBLICATION

INDEX

Désignation	Page
INTERRUPTEUR BALANCIER (ENS) (CLIGNOTANT DE DIRECTION)	775
INTERRUPTEUR BALANCIER (ENS) (COUPLEUR EXPRESS)	265
INTERRUPTEUR BALANCIER (ENS) (DIRECTION AUXILIAIRE)	265
INTERRUPTEUR BALANCIER (ENS) (FEUX DE DÉTRESSE)	265
INTERRUPTEUR BALANCIER (ENS) (FEUX DE MARCHE)	174 252
INTERRUPTEUR BALANCIER (ENS) (GYROPHARE)	177
INTERRUPTEUR BALANCIER (ENS) (MARCHE, ARRÊT DE CLIMATISEUR)	778
INTERRUPTEUR BALANCIER (ENS) (PHARES AVANT, FEUX ARRIÈRE)	265
INTERRUPTEUR BALANCIER (ENS) (PROJECTEURS DE CABINE)	288
INTERRUPTEUR BALANCIER (ENS) (RÉGULATEUR DE COMMADNE DE VITESSE)	265
INTERRUPTEUR BALANCIER (ENS) (RÉTROVISEURS À CHAUFFAGE INTÉGRÉ)	823
INTERRUPTEUR BALANCIER (ENS) (SERRAGE, DESSERRAGE DES FREINS DE STATIONNEMENT)	265
INTERRUPTEUR BALANCIER (ENS) (VERROUILLAGE D'ÉQUIPEMENT)	265
INTERRUPTEUR BALANCIER (ENS) (VERROUILLAGE DU PAPILLON DES GAZ)	265
INTERRUPTEUR BALANCIER (ENS) (VITESSE DU VENTILATEUR SOUFFLANT)	800
INTERRUPTEUR BALANCIER (ENS) (24 VOLTS) (AUGMENTATION, DIMINUTION, CÔTÉ DROIT)	842
INTERRUPTEUR BALANCIER (ENS) (24 VOLTS) (AUGMENTATION, DIMINUTION, CÔTÉ GAUCHE)	842
INTERRUPTEUR BALANCIER (ENS) (24 VOLTS) (FEUX DE ROUTE)	259
INTERRUPTEUR BALANCIER (ENS) (24 VOLTS) (*OFFSET, RH)	844
INTERRUPTEUR DE DEMARRAGE (ENS) (CLAVETTE)	265
INTERRUPTEUR D'ÉCLAIRAGE (ASS)	252
INTERRUPTEUR D'ESSUIE-GLACE (ASS)	261
INTERRUPTEUR D'ESSUIE-GLACE (ASS) (24-VOLTS, INTERMITTENT)	879
INTERRUPTEUR D'ESSUIE-GLACE (ASS) (24-VOLTS, INTERMITTENT)	265
INTERRUPTEUR ROTATIF (ENS) (24 VOLTS) (COMMANDE DE TRACTION INTÉGRALE)	248
INTERRUPTEUR SPHÉRIQUE (ENS) (INDICATEUR DE DÉPORT DE CERCLE)	275

J

JANTE (ASS)	439 440 441 442 443 444 445 446
JAUGE D'HUILE MOTEUR (BAIONNETTE) (ASS)	61
JAUGE D'HUILE MOTEUR (BAÏONNETTE) (ENS) (HUILE DE TRANSMISSION)	353
JAUGE D'HUILE MOTEUR (BAÏONNETTE) (ENS) (MOTEUR)	61
JOINT DE CACHE-SOUPAPES	16
JOINT DE VILEBREQUIN (ASS)	51
JOINT DUO-CONE (ASS)	557
JOINT PLAT (BOÎTIER DE RÉGULATEUR DE TEMPÉRATURE)	74
JOINT UNIVERSEL (ASS)	395

K

KIT DE BORNE (ALTERNATEUR)	130
KIT DE BOUGIE (12 BROCHES)	171 288 306
KIT DE BOUGIE (12 BROCHES)	289
KIT DE BOULONNERIE (ALTERNATEUR)	130
KIT DE BOUTON (REGLAGE DE HAUTEUR) (SIEGE A SUSPENSION)	807
KIT DE COUSSINET (ALTERNATEUR)	130
KIT DE COUSSINET (SIEGE A SUSPENSION)	808
KIT DE JOINTS	545 549
KIT DE PARE-CHOCS (RÉGLAGE DU POIDS) (SIEGE A SUSPENSION)	808
KIT DE POUSSOIR (SIEGE A SUSPENSION)	808
KIT DE PRISE FEMELLE (12 BROCHES)	171 288
KIT DE PRISE FEMELLE (2 BROCHES)	260 306 810 823
KIT DE PRISE FEMELLE (2 BROCHES)	288

* TRADUCTION NON DISPONIBLE AU MOMENT DE LA PUBLICATION

INDEX

Désignation	Page
KIT DE RESSORTS (REGLAGE DE HAUTEUR) (SIEGE A SUSPENSION)	807
KIT DE RESSORTS (SIEGE A SUSPENSION)	807
KIT D'INDICATEUR (RÉGLAGE DU POIDS) (SIEGE A SUSPENSION)	807

L

LAME - BULLDOZER (ASS)	715
LAME - BULLDOZER (ASS)	716
LAME (ASS)	712
	713
	714
LAME DE COUPE (ASS)	721
	722
	723
LAMPE - CLIGNOTANT DE DIRECTION (ASS)	194
	195
LAMPE - GYROPHARE (ASS)	196
LAMPE - PHARE (ASS)	179
	187
	188
LAMPE - PHARE (ASS)	180
LAMPE - PHARE (ASS)	181
	182
	183
	184
	185
	186
LAMPE - PHARE ET CLIGNOTANT	190
	191
LAMPE (ENS) (24 VOLTS)	810
LAMPE (ENS) (24-VOLTS, VERT)	153
	156
LAMPE (ENS) (24-VOLTS, VERT)	154
	157
LAMPE (ENS) (24-VOLTS, VERT) (VERTE)	265
LAMPE HALOGÈNE (24-VOLTS, 35-WATTS)	179
LAMPE HALOGÈNE (24V, 65W)	180
	183
	184
	189
LAMPE-PLAQUE D'IMMATRICULATION (ASS)	193
LEVAGE - LAME (ASS)	729
LEVAGE D'OUTIL DE TRAVAIL (ASS)	732
	734
LOGICIEL - ÉLECTROMODULE (ASS)	166
	167
LOGICIEL - ÉLECTROMODULE (ASS)	222
LOGICIEL - ÉLECTROMODULE (ASS)	790
LOGICIEL - TRANSMISSION (ENS)	168
LOGICIEL - TRANSMISSION (ENS) (DIRECTION INTÉGRALE)	168
LOGICIEL (ASS) (MÂT)	205
LOGICIEL DE COMMUNICATION (ASS) (PRODUCT LINK 121SR)	221
LOGICIEL-ÉQUIPEMENT (ASS)	165
LOGICIEL-ÉQUIPEMENT (ASS) (ÉQUIPEMENT 2)	165
LOGICIEL-ÉQUIPEMENT (ASS) (ÉQUIPEMENT 3)	165
LOGICIEL (RÉCEPTEUR)	222
LOGICIEL (RÉCEPTEUR, CHARGEUSE)	222

M

MANOCONTACT	258
MANOCONTACT (ENS) (COMPRESSEUR, CÔTÉ ÉLEVÉ)	814
MANOCONTACT (ENS) (COMPRESSEUR, CÔTÉ INFÉRIEUR)	814
MANOCONTACT (ENS) (DÉRIVATION DE FILTRE À HUILE POUR TRACTION INTÉGRALE)	362
MANOCONTACT (ENS) (FILTRE DE DÉRIVATION)	562
MANOCONTACT (ENS) (FREIN DE STATIONNEMENT)	342
MARCHEPIED (ASS)	493
MÂT (ASS)	205
MÉCANISME DE COMMANDE - SOUPAPE (ASS) (SIGNAL DE DIRECTION)	701
MODULE D'ALIMENTATION (ENS)	220
MODULE-INTERFACE (ASS) (CLAVETTE) (SYSTÈME DE SÉCURITÉ DE LA MACHINE)	175
MONITEUR (ENS)	824
MONTAGE - GYROPHARE (ASS)	177
MONTAGE-ANTENNE (ASS)	827
MONTAGE D'AILERON CHASSE-NEIGE (ASS)	737
	738
MONTAGE D'ALTERNATEUR (ASS)	41
MONTAGE DE CABINE (ASS)	828
MONTAGE DE COMMANDE DE PENTE (ASS)	207
MONTAGE DE DISPOSITIF D'ÉCLAIRAGE (ASS)	209
	211
MONTAGE DE FILTRE À CARBURANT (ASS)	116
MONTAGE DE MOTEUR ET BOÎTE (ASS)	42
MONTAGE DE RÉCEPTEUR (ASS)	214
MONTAGE DE RIPPER (ASS)	735
MONTAGE DE SOUPAPE (ASS)	486
MONTAGE D'ECLAIRAGE	174

* TRADUCTION NON DISPONIBLE AU MOMENT DE LA PUBLICATION

INDEX

Désignation	Page
MONTAGE D'ENTRAÎNEMENT DE VENTILATEUR (ASS)	44
MONTAGE D'ESSIEU (ASS)	484
	485
MONTAGE DU MAT (ASS)	213
MONTAGE-LAMPE (AS)	208
MONTAGE-SÉCURITÉ (ASS)	175
MOTEUR - PARTIE CENTRALE (VERSION)	6
MOTEUR À ENGRENAGES (ASS) (REFROIDISSEMENT DU RADIATEUR)	71
MOTEUR D'ESSUIE-GLACE (ASS)	825
	826
MOTEUR D'ESSUIE-GLACE (ASS) (ARRIÈRE)	879
MOTEUR D'ESSUIE-GLACE (ASS) (DROITE)	882
MOTEUR D'ESSUIE-GLACE (ASS) (24 VOLTS) (DROITE)	880
MOTEUR D'ESSUIE-GLACE (ASS) (24 VOLTS) (GAUCHE)	880
MOTEUR D'ESSUIE-GLACE (ASS) (24V, 2 VITESSES)	882
MOTEUR D'ESSUIE-GLACE (ASS) (24V, 2 VITESSES)	883
MOTEUR D'ESSUIE-GLACE (ASS) (24V, 2 VITESSES) (AVANT)	826
MOTEUR ELECTRIQUE (ASS)	206
MOTEUR ET VENTILATEUR (ASS)	71
MOTEUR HYDRAULIQUE (ASS)	628

O

Désignation	Page
OEILLETONS DE LEVAGE MOTEUR (ASS)	40
ORIFICE DE CLIMATISEUR (ENS)	812

P

Désignation	Page
PALIER PRINCIPAL (ASS)	18
PALONNIER - GROUPE DE COMMANDE (ASS)	783
	784
PALONNIER - GROUPE DE COMMANDE (ASS) (COMMANDE ÉLECTRONIQUE)	782
PANNEAU DE COMMANDE (ASS)	844
PANNEAU DE COMMANDE (ASS)	842
PANNEAU DE FAISCEAU (ENS)	842
	844
PARE-SOLEIL (ASS)	852
PÉDALE - FREIN, BOÎTE ET RÉGULATEUR (ASS)	848
PHARE AV (ASS)	189
PIGNON AR (ASS)	32
	33
PIGNONNERIE AV (ASS)	31
	361
PIGNONNERIE AV (ASS)	360
PISTON ET BIELLE (ASS)	47
PLAFONNIER (ASS)	178
PLAFONNIER (ASS) (24 VOLTS)	810
PLAQUE DE NUMÉRO DE SÉRIE (BOITE DE VITESSE)	327
PLAQUE DE POUSSÉE (ASS)	707
PLAQUE D'INSTRUCTIONS (CLIMATISEUR)	761
PLAQUE (IDENTIFICATION) (NUMERO DE SERIE)	763
PLAQUE (IDENTIFICATION) (OUTIL DE TRAVAIL)	750
	751
PLAQUE (IDENTIFICATION) (OUTIL DE TRAVAIL)	715
PLAQUE (IDENTIFICATION) (OUTIL DE TRAVAIL)	732
PLAQUE SIGNALÉTIQUE (ASS)	886
	887
PLAQUES SIGNALETIQUES ET AUTOCOLLANTS (ASS)	899
	900
	901
	902
	903
PLAQUES SIGNALETIQUES ET AUTOCOLLANTS (ASS)	891
PLAQUES SIGNALETIQUES ET AUTOCOLLANTS (ASS)	890
	895
PLATEAU OSCILLANT (ASS)	641
PNEU - GROUPE DE VALVE (FONDAMENTAL)	444
PNEU - GROUPE DE VALVE (GONFLAGE DES PNEUS)	444
	445
	446
POMPE - ENTRAÎNEMENT ÉLECTRIQUE (ASS)	633
POMPE A EAU (ASS)	78
	79
POMPE A ENGRENAGES (ASS)	386
POMPE A ENGRENAGES (ASS) (*AWD CHARGE)	388
POMPE A HUILE MOTEUR (ASS)	67
	68
POMPE A PISTONS (ASS)	388
	634
	636
POMPE A PISTONS (ASS) (TRACTION INTÉGRALE)	388

* TRADUCTION NON DISPONIBLE AU MOMENT DE LA PUBLICATION

INDEX

Désignation	Page
POMPE D'AMORÇAGE DE CARBURANT ET FILTRE PRINCIPAL	119, 120
POMPE D'AMORÇAGE DE CARBURANT ET SÉPARATEUR D'EAU (ASS)	128
POMPE DE FAISCEAU (ENS)	310
POMPE DE FAISCEAU (ENS) (CARBURANT)	300
POMPE DE SÉPARATEUR D'EAU ET D'AMORÇAGE DE CARBURANT (ASS)	128
POMPE D'INJECTEURS-POMPES HYDRAU. ET MONTAGE	117
POMPE D'INJECTION DE CARBURANT (ASS)	118
POMPE ET MONTAGE - ENTRAÎNEMENT ÉLECTRIQUE (ASS)	630
POMPE ET MONTAGE - PIGNON	385
POMPE ET MONTAGE - PISTON (ASS)	631, 632
POMPE ET MONTAGE DE TRACTION INTÉGRALE (ASS)	384
PORTIÈRE DE CABINE (ASS)	794
PORTIÈRE DE CABINE (ASS)	791
POSE DE LA CAMÉRA (ASS)	173
POULIE-ROUE AVANT (ASS)	50
POUSSOIR DE SOUPAPE (ASS)	39
PREFILTRE (ASS)	98
PREFILTRE (ASS) (TURBINE)	98
PROTECTION CONTRE LES DÉBRIS (ASS)	476
PROTECTION DE VENTILATEUR (ASS)	73
PROTECTION DE VENTILATEUR (ASS) (REFROIDISSEMENT DU RADIATEUR)	71
PUISSANCE DE FAISCEAU (ENS) (RADIO PRODUCT LINK)	171

R

Désignation	Page
RACCORD DE CANALISATION D'HUILE (ASS)	56
RADIATEUR (ASS)	80
RADIATEUR-CORPS (ENS)	80
RADIO -COMMUNICATION (ASS)	221
RALLONGE DE LAME (ASS)	724, 725, 726, 728
RÉCEPTEUR DE CARBURANT À REMPLISSAGE RAPIDE (ASS)	121
RÉCEPTEUR DE SATELLITE (ASS)	222
RÉCEPTEUR-DÉSHYDRATEUR (ENS) (RÉFRIGÉRANT)	812
RÉCEPTEUR LASER (ASS)	222
RÉCEPTEUR LASER (ASS) (LR410)	222
RÉCHAUFFEUR DE FAISCEAU (ENS) (RELAIS D'ENTREE D'AIR - CHAUFFAGE)	273
RÉDUCTEURS (ASS)	356, 358
RÉFLECTEUR (ASS)	487, 488
REFROIDISSEMENT (VERSION)	70
REFROIDISSEUR D'ADMISSION D'AIR (ASS)	85
REFROIDISSEUR D'HUILE DE BOÎTE (ASS)	345
REFROIDISSEUR D'HUILE HYDRAULIQUE (ASS)	532
REFROIDISSEUR D'HUILE MOTEUR (ASS)	69
REGARD DE NIVEAU (ASS) (HUILE DE RÉSERVOIR HYDRAULIQUE)	646
REGLAGE DE SIEGE (ASS)	756
REGULATEUR DE LA TENSION (ENS) (24 VOLTS)	130
REGULATEUR DE PRESSION DE CARBURANT (ASS)	122
RÉGULATEUR-PRESSION (CARBURANT)	119
RELAIS (ENS) (24-VCC, 20A) (MINUTERIE DE RÉTROVISEUR À CHAUFFAGE INTÉGRÉ)	823
RELAIS (ENS) (24 VOLTS)	265
RELAIS (ENS) (24 VOLTS) (AVERTISSEUR DE RECUL)	300
RELAIS (ENS) (24 VOLTS) (DIRECTION AUXILIAIRE)	300
RELAIS (ENS) (24 VOLTS) (RELAIS DE POMPE D'ALIMENTATION)	300
RELAIS (ENS) (24 VOLTS) (SOLÉNOÏDE D'EMBRAYAGE - CLIMATISEUR)	300
RENIFLARD (ASS)	57
RENIFLARD (ENS) (CARTER)	57
RENIFLARD (ENS) (REMPLISSAGE D'HUILE DE TRANSMISSION)	353
RENIFLARD (ENS) (TANDEM)	393
RENIFLARD (RAPPORT, TRACTION INTÉGRALE)	360, 361
REPÈRE DE LAMPE (ASS)	192
RÉSERVOIR - LAVE-GLACE (ASS)	867
RÉSERVOIR DE CARBURANT - BOULONNERIE (ASS)	104
RÉSERVOIR DE CARBURANT (ASS)	123, 124, 126
RÉSERVOIR DU LIQUIDE DE REFROIDISSEMENT (ASS)	82
RÉSERVOIR HYDRAULIQUE (ASS)	646
RÉSERVOIR HYDRAULIQUE ET MONTAGE (ASS)	644
RÉSERVOIR PNEUMATIQUE (ASS)	904
RÉTROVISEUR (ASS)	820

* TRADUCTION NON DISPONIBLE AU MOMENT DE LA PUBLICATION

INDEX

Désignation	Page
	821
	822
	823
RIPPER (ASS)	740
RIPPER (VERSION)	739
ROBINET DE BATTERIE (ASS)	251
ROTATION DE LA ROUE DU VENTILATEUR SOUFFLANT (ACHEMINEMENT DE COURROIE)	134
	136
	138
ROTATION DE LA ROUE DU VENTILATEUR SOUFFLANT (ACHEMINEMENT DE COURROIE)	132
ROTATION DE LA ROUE DU VENTILATEUR SOUFFLANT (AUXILIAIRE)	781
	782
ROTATION DE LA ROUE DU VENTILATEUR SOUFFLANT (CONSOLE, CÔTÉ DROIT)	775
ROTATION DE LA ROUE DU VENTILATEUR SOUFFLANT (CONSOLE, CÔTÉ GAUCHE)	775
ROTATION DE LA ROUE DU VENTILATEUR SOUFFLANT (DIRECTION INTÉGRALE)	158
ROTATION DE LA ROUE DU VENTILATEUR SOUFFLANT (EAU HVAC, VIDANGE, REMPLISSAGE)	763
ROTATION DE LA ROUE DU VENTILATEUR SOUFFLANT (EAU HVAC, VIDANGE, REMPLISSAGE)	804
	816
	819
ROTATION DE LA ROUE DU VENTILATEUR SOUFFLANT (ESSUIE-GLACE)	810
ROTATION DE LA ROUE DU VENTILATEUR SOUFFLANT (LIBRE)	156
ROTATION DE LA ROUE DU VENTILATEUR SOUFFLANT (LIBRE) (ÉQUIPEMENT AVANT)	153
ROTATION DE LA ROUE DU VENTILATEUR SOUFFLANT (PANNEAU DE CONTACTEURS) (COMMANDE DE LAME)	844
ROTATION DE LA ROUE DU VENTILATEUR SOUFFLANT (POSITION LIBRE/ NON LIBRE)	157
ROTATION DE LA ROUE DU VENTILATEUR SOUFFLANT (POSITION LIBRE/ NON LIBRE) (ÉQUIPEMENT)	154
ROTATION DE LA ROUE DU VENTILATEUR SOUFFLANT (POSITION NON LIBRE)	155
ROTATION DE LA ROUE DU VENTILATEUR SOUFFLANT (POSITION NON LIBRE) (ÉQUIPEMENT)	152
ROTATION DE LA ROUE DU VENTILATEUR SOUFFLANT (RÉGLAGE DU SIÈGE)	863
	865
ROTATION DE LA ROUE DU VENTILATEUR SOUFFLANT (ROBINET DE VIDANGE D'HUILE MOTEUR)	63
ROTATION DE LA ROUE DU VENTILATEUR SOUFFLANT (SÉCURITÉ MACHINE, LIRE LE GUIDE D'UTILISATION ET D'ENTRETIEN)	175
ROTATION DE LA ROUE DU VENTILATEUR SOUFFLANT (SORTIE)	791
ROUE - GROUPE DE MONTAGE	382
ROUE ET PNEU (ASS)	416
	417
	418
	419
	420
	421
	422
	423
	424
	425
	426
	427
	428
	429
	430
	431
	432
	433
	434
	435
	436
ROUE ET PNEU (VERSION)	401
	402
	403
	404
	405
	406
	407
	408
	409
	410
	411
	412
	413
	414
	415
	416
ROUE (VERSION)	436
	437
	438
ROULEMENT (ASS)	732

* TRADUCTION NON DISPONIBLE AU MOMENT DE LA PUBLICATION

INDEX

Désignation	Page
S	
SCARIFICATEUR (ASS)	743, 747, 750, 751, 752
SCARIFICATEUR (VERSION)	742
SIÈGE - COMPRESSEUR D'AIR (ASS)	865
SIÈGE - COMPRESSEUR D'AIR (ASS)	757, 758
SIEGE - COUVERCLE INFERIEUR	831
SIÈGE (ASS)	854, 855
SIÈGE AVEC SUSPENSION (ASS)	857, 858, 863, 865
SIÈGE ET MONTAGE (ASS)	853
SIÈGE INCLINABLE (ASS)	850
SILENCIEUX ET MONTAGE (ASS)	96
SOLÉNOÏDE (ENS) (24 VOLTS) (DÉMARREUR)	244
SONDE - CIRCUIT DE CARBURANT	225, 226, 227
SONDE - CIRCUIT DE CARBURANT (ROTATIF) (ARTICULATION)	299
SONDE - CIRCUIT DE CARBURANT (ROTATIF) (CAPTEUR DE POSITION DU PAPILLON DES GAZ)	848
SONDE - CIRCUIT DE CARBURANT (ROTATIF) (*TMSN MODULATOR CONTROL)	848
SONDE - CIRCUIT DE CARBURANT (TRACTION INTÉGRALE)	248
SONDE - CIRCUIT DE CARBURANT (VÉRIN DE DIRECTION)	551, 553
SONDE CARBURANT (ENS)	124, 126
SOUPAPE - SOLÉNOÏDE (ASS)	697, 698, 699, 700
SOUPAPE - SOLÉNOÏDE (ASS) (AMORTISSEUR DE LAME)	619
SOUPAPE - SOLÉNOÏDE (ASS) (ANGLE DE CHARRUE)	685
SOUPAPE - SOLÉNOÏDE (ASS) (ARTICULATION)	663
SOUPAPE - SOLÉNOÏDE (ASS) (COMMANDE DE FREIN DE STATIONNEMENT)	621
SOUPAPE - SOLÉNOÏDE (ASS) (DÉPORT DE CERCLE)	616
SOUPAPE - SOLÉNOÏDE (ASS) (DÉPORT DE LAME)	669, 671
SOUPAPE - SOLÉNOÏDE (ASS) (DIRECTION)	620
SOUPAPE - SOLÉNOÏDE (ASS) (ENTRAÎNEMENT DE CERCLE)	673
SOUPAPE - SOLÉNOÏDE (ASS) (INCLINAISON DE L'AILERON)	679
SOUPAPE - SOLÉNOÏDE (ASS) (INCLINAISON DE ROUE)	675
SOUPAPE - SOLÉNOÏDE (ASS) (LEVAGE D'AILERON)	681
SOUPAPE - SOLÉNOÏDE (ASS) (LEVAGE DE LAME DE CHARRUE)	683
SOUPAPE - SOLÉNOÏDE (ASS) (MARCHE ARRIÈRE, CÔTÉ DROIT)	623
SOUPAPE - SOLÉNOÏDE (ASS) (MARCHE ARRIÈRE, CÔTÉ GAUCHE)	623
SOUPAPE - SOLÉNOÏDE (ASS) (MARCHE AVANT, CÔTÉ DROIT)	623
SOUPAPE - SOLÉNOÏDE (ASS) (MARCHE AVANT, CÔTÉ GAUCHE)	623
SOUPAPE - SOLÉNOÏDE (ASS) (POINTE DE LAME)	667
SOUPAPE - SOLÉNOÏDE (ASS) (RÉPARTITION PROPORTIONNELLE PILOTE)	665
SOUPAPE - SOLÉNOÏDE (ASS) (RIPPER)	677
SOUPAPE - SOLÉNOÏDE (ASS) (SCARIFICATEUR)	687
SOUPAPE - SOLÉNOÏDE (ASS) (TRACTION INTÉGRALE, CÔTÉ DROIT)	623
SOUPAPE - SOLÉNOÏDE (ASS) (TRACTION INTÉGRALE, CÔTÉ GAUCHE)	623
SOUPAPE - SOLÉNOÏDE (ASS) (VENTILATEUR HYDRAULIQUE)	617
SOUPAPE - SOLÉNOÏDE (ASS) (VERROUILLAGE DE DIFFÉRENTIEL)	396
SOUPAPE - SOLÉNOÏDE (ASS) (24 V CC) (FREIN DE STATIONNEMENT)	342
SOUPAPE DE DÉMARRAGE À L'ÉTHER (ASS)	262
SOUPAPE DE DERIVATION (ASS)	689
SOUPAPE DE DIRECTION (ASS)	701
SOUPAPE DE MODULATION (ASS)	397
SOUPAPE ET MONTAGE - SOLÉNOÏDE	396
SOUPAPE RÉDUCTRICE DE PRESSION (ASS)	690
SUPPORT - COMMANDE (ASS)	859, 861
SUPPORT - MONTAGE (ASS)	767
SUPPORT DE FILTRE À HUILE (ASS)	325, 523
SUPPORT DE LAMPE (ASS)	247

* TRADUCTION NON DISPONIBLE AU MOMENT DE LA PUBLICATION

INDEX

Désignation	Page
SUPPORT DE MOTEUR (ASS)	52
SUPPORT DE RADIATEUR (ASS)	494
SUPPORT DE RÉDUCTEUR (ASS)	326
SUPPORT DE REFROIDISSEUR D'HUILE DE TRANSMISSION (ASS)	383
SUPPORT DE SCARIFICATEUR (ASS)	718
	719
SURPRESSEUR (ASS)	849
SUSPENSION DE SIEGE - CARTER (ASS)	807

T

TABLEAU DE BORD (ASS)	834
	838
	846
TAMIS D'ASPIRATION (BOÎTE DE VITESSES)	390
TAMIS D'ASPIRATION (REPRISE DE BOÎTE)	327
TANDEM ET CARTER (ASS)	393
TAPIS DE PLANCHER	834
	838
TAPIS DE PLANCHER (CABINE)	846
TENDEUR DE COURROIE (ASS)	11
THERMOCONTACT (ENS) (CLIMATISATION, CHAUFFAGE)	763
THERMOSTAT-TEMPÉRATURE D'EAU (97-DEG C)	74
TIRANT (ASS)	717
TOIT - CABINE (ASS)	851
TRAINS PLANÉTAIRES - CARTER ET PIÈCES	327
TRANSFORMATION ELECTRIQUE (ASS)	162
	163
TURBOCOMPRESSEUR (ASS)	99
	100

V

VANNE PILOTE (ASS)	696
VANNE PILOTE (ASS) (PISTON MOTEUR DE TRACTION INTÉGRALE)	623
VANNE PILOTE (ASS) (VENTILATEUR HYDRAULIQUE)	617
VENTILATEUR DE CABINE (ASS)	798
	800
VÉRIN D'ARTICULATION (ASS)	544
VÉRIN D'ARTICULATION ET MONTAGE (ASS)	534
VÉRIN DE DÉPORT DE CERCLE (ASS)	546
VÉRIN DE DÉPORT DE CERCLE ET MONTAGE (ASS)	538
VÉRIN DE DÉPORT DE LAME (ASS)	540
	550
VERIN DE DIRECTION (ASS)	551
	553
VERIN DE DIRECTION ET MONTAGE (ASS)	541
	542
VÉRIN DE LEVAGE (ASS)	547
VÉRIN DE RELEVAGE DE LAME ET MONTAGE (ASS)	536
VERIN DE RIPPER (ASS)	548
VÉRIN DE SCARIFICATEUR (ASS)	549
VÉRIN DE SCARIFICATEUR ET MONTAGE (ASS)	539
VÉRIN D'INCIDENCE DE LAME (ASS)	545
VÉRIN D'INCLINAISON DE LAME ET MONTAGE (ASS)	537
VÉRIN D'INCLINAISON DE ROUE (ASS)	555
VÉRIN D'INCLINAISON DE ROUE ET MONTAGE (ASS)	543
VÉRIN HYDRAULIQUE (ASS)	720
VERROUILLAGE DE DÉPORT DE CERCLE (ASS)	616
VERSION D'AFFICHAGE DE MONITEUR	788
VERSION DE CENTRE D'ENTRETIEN	489
VERSION DE COMMANDE DE PROFIL LONGITUDINAL	168
VERSION DE COMPRESSEUR À AIR	7
VERSION DE MONTAGE-COMMUNICATION	171
VERSION DE MOTEUR COMPLET	4
	5
VERSION DE RÉCEPTEUR DE LASER	221
VERSION DE RÉCEPTEUR SATELLITE	221
VERSION EN OPTION - EU	2
VERSION HYDRAULIQUE	564
VERSION NEIGE - NIVELEUSE	3
VERSION NORMALE	1
VIDANGE-ÉCOLOGIE (ASS) (CARTER DE DIFFÉRENTIEL)	323
VILEBREQUIN (ASS)	18
VITRE DE CABINE (ASS)	868
	869
	870
	871
	872
	874
	875
	876
VOLANT MOTEUR (ASS)	30

W

*WIRING GP-FRONT LIGHTING	279

* TRADUCTION NON DISPONIBLE AU MOMENT DE LA PUBLICATION

INDICE

Nombre	Página

A

ACONDICIONADOR DE AIRE (CONFIG)	761
ACONDICIONADOR DE AIRE (GR)	762 763
ACONDICIONADOR DE AIRE Y MONTAJE (GR)	759
ACOPLAMIENTO TORSIONAL (GR)	346
ACUMULADOR DE REFRIGERANTE	812
ACUMULADOR DEL FRENO (GR)	499 500
ACUMULADOR DEL FRENO (GR)	501
ADAPTADOR DE LLENADO RÁPIDO DE COMBUSTIBLE (GR)	101
ADAPTADOR DEL TURBOCOMPRESOR (GR)	84
AGUA DE LAS CAMISAS - CALENTADOR DEL (GR)	169 170
*AIR COMPRESSOR AR	7
AIRE - TUBERÍAS DE (GR)	91 93 94
AJUSTADOR DEL ASIENTO (GR)	756
ALAMBRADO DE LUCES TRASERAS (GR)	306
ALAMBRADO DE LUCES TRASERAS (GR)	304
ALARMA (GR)	129
ALFOMBRILLA DEL PISO	834 838
ALFOMBRILLA DEL PISO (CABINA)	846
AMORTIGUADOR Y POLEA (GR)	28
ANTEFILTRO (GR)	98
ANTEFILTRO (GR) (TURBINA)	98
*APPLICATION GP-COMMUNICATION	140
ÁRBOL DE LEVAS (GR)	12
*ARM GP-WINDOW WIPER (DELANTERO)	877
*ARM GP-WINDOW WIPER (*LOWER DOOR WINDOW, LH)	883
*ARM GP-WINDOW WIPER (PUERTA, DERECHA)	882
*ARM GP-WINDOW WIPER (*UPPER DOOR WINDOW, LH)	883
ARTICULACIÓN DE CILINDRO (GR)	544
ASIENTO CON SUSPENSIÓN (GR)	863 865
ASIENTO (GR)	854 855
ASIENTO Y MONTAJE (GR)	853
AUXILIAR DE ARRANQUE CON ÉTER (GR)	243

B

BALANCÍN (GR) (ADMISION)	54
BALANCÍN (GR) (ESCAPE)	54
BALIZA DE ADVERTENCIA (GR) - INSTALACIÓN	177
BANCADA 5 (GR)	649 650
BARRA DE TIRO (GR)	705
BASTIDOR DELANTERO (GR)	471
BASTIDOR TRASERO (GR)	472
BATERÍA Y CABLES (GR)	141 143 146
BATERÍA (12-VOLTIOS, LIBRE DE MANTENIMIENTO)	141 143
BATERÍA (12-VOLTIOS, LIBRE DE MANTENIMIENTO) (HUMEDO)	146
*BEARING GP	732
BLOQUE MOTOR (GR)	20 21 22
BOMBA - TUBERÍAS DE (GR)	595
BOMBA DE ACEITE DEL MOTOR (GR)	67 68
BOMBA DE AGUA (GR)	78 79
BOMBA DE CEBADO Y FILTRO PRIMARIO DE COMBUSTIBLE (GR)	119 120
BOMBA DE ENGRANAJES (GR)	386
BOMBA DE ENGRANAJES (GR) (*AWD CHARGE)	388
BOMBA DE ENGRANJE Y MONTAJE (GR)	385
BOMBA DE INYECCIÓN DE COMBUSTIBLE (GR)	118
BOMBA DE PISTONES (GR)	388 634 636
BOMBA DE PISTONES (GR) (MANDO DE TODAS LAS RUEDAS)	388
BOMBA DE SEPARADOR DE AGUA Y CEBADO DE COMBUSTIBLE (GR)	128
BOMBA DEL MANDO ELÉCTRICO Y MONTAJE (GR)	630
BOMBA HIDRÁULICA DEL INYECTOR UNITARIO (GR)	117
BOMBA HIDRÁULICA DEL INYECTOR UNITARIO Y MONTAJE	117
BOMBA Y MONTAJE DEL PISTÓN (GR)	631 632
BRAZO ACOJINADO (GR)	787

* NO HAY TRADUCCION DISPONIBLE EN EL MOMENTO DE LA IMPRESION

INDICE

Nombre	Página

C

CABINA - MAZO DE CABLES DE LA	265
CABINA - MAZO DE CABLES DE LA (LIMPIAPARABRISAS DE LA PUERTA DERECHA)	791
CABINA (CONFIG)	768
CABLE GR-GRADO DE CONTROL	280, 282
CABLES AUXILIARES(GR)	264
CABLES CONJ. -LIMPIADOR DE VENTANAS	315, 794, 871, 876
CABLES DE CALEFACCIÓN (GR)	286
CABLES DE LA CABINA (GR)	265
CABLES DE LA DIRECCIÓN SECUNDARIA	308
CABLES DE LA TRABA DEL DESPLAZADOR DEL CÍRCULO (GR)	565, 567
CABLES DE LAS LUCES (GR)	287, 288, 289
CABLES DE LIMPIAPARABRISAS	315
CABLES DE SENSOR (GR)	310, 313, 314
CABLES DEL CONTROL ELECTRÓNICO (GR)	271
CABLES DEL MOTOR (GR)	273
CABLES DEL RECEPTÁCULO DE FUERZA (GR)	296
CABLES DEL TABLERO MONITOR (GR)	291, 294
CABLES DELANTEROS (GR)	275
CABLES POSTERIORES (GR)	299
CADENA DE IMPULSIÓN (GR)	331
CAJA DE HERRAMIENTAS (GR)	885
CAJA DE LA SUSPENSIÓN DEL ASIENTO (GR)	807
CAJA DELANTERA (GR)	38
CAJA Y PIEZAS DE LOS PLANETARIOS	327
CALCOMANÍA DE ADVERTENCIA (ASIENTO AJUSTABLE)	863, 865
CALCOMANÍA DE ADVERTENCIA (AUXILIAR)	781, 782
CALCOMANÍA DE ADVERTENCIA (*BELT ROUTING)	132, 134, 136, 138
CALCOMANÍA DE ADVERTENCIA (CINTURÓN DE SEGURIDAD)	508, 889
CALCOMANÍA DE ADVERTENCIA (*CRUSH HAZARD, READ MANUAL)	511, 888, 891
CALCOMANÍA DE ADVERTENCIA (DRENAJE DE ACEITE DE MOTOR)	63
CALCOMANÍA DE ADVERTENCIA (*FLOAT/NO FLOAT)	157
CALCOMANÍA DE ADVERTENCIA (*FLOAT/NO FLOAT) (IMPLEMENTO)	154
CALCOMANÍA DE ADVERTENCIA (FLOTANTE)	156
CALCOMANÍA DE ADVERTENCIA (FLOTANTE) (*FRONT IMPLEMENT)	153
CALCOMANÍA DE ADVERTENCIA (*HAND CRUSH HAZARD, STAY BACK)	304
CALCOMANÍA DE ADVERTENCIA (HOJA, NO ESCALAR, LEER OMM)	213
CALCOMANÍA DE ADVERTENCIA (HOJA, NO ESCALAR, LEER OMM)	205
CALCOMANÍA DE ADVERTENCIA (*HVAC WATER, DRAINING, FILLING)	763
CALCOMANÍA DE ADVERTENCIA (*HVAC WATER, DRAINING, FILLING)	804
CALCOMANÍA DE ADVERTENCIA (*HVAC WATER, DRAINING, FILLING)	816, 819
CALCOMANÍA DE ADVERTENCIA (*JUMP START, READ OMM, INTL)	489
CALCOMANÍA DE ADVERTENCIA (*JUMP START, READ OMM, U.S.)	489
CALCOMANÍA DE ADVERTENCIA (LIMPIAPARABRISA)	810
CALCOMANÍA DE ADVERTENCIA (MANDO EN TODAS LAS RUEDAS)	158
CALCOMANÍA DE ADVERTENCIA (*NO FLOAT)	155
CALCOMANÍA DE ADVERTENCIA (*NO FLOAT) (IMPLEMENTO)	152
CALCOMANÍA DE ADVERTENCIA (*OPERATOR CONSOLE, LH)	775
CALCOMANÍA DE ADVERTENCIA (*OPERATOR CONSOLE, RH)	775
CALCOMANÍA DE ADVERTENCIA (PELIGRO DE APLASTAMIENTO)	732, 889
CALCOMANÍA DE ADVERTENCIA (PELIGRO DE APLASTAMIENTO)	508
CALCOMANÍA DE ADVERTENCIA (PRESIÓN ALTA, LEA EL OMM)	500

* NO HAY TRADUCCION DISPONIBLE EN EL MOMENTO DE LA IMPRESION

INDICE

Nombre	Página
	501
CALCOMANÍA DE ADVERTENCIA (PRESIÓN ALTA, LEA EL OMM)	522
CALCOMANÍA DE ADVERTENCIA (RESORTE DE AMORTIGUACION)	502
CALCOMANÍA DE ADVERTENCIA (SALIDA)	791
CALCOMANÍA DE ADVERTENCIA (SEGURIDAD DE LA MÁQUINA, LEA EL OMM)	175
CALCOMANÍA DE ADVERTENCIA (TABLERO DE INTERRUPTORES) (CONTROL DE LA HOJA)	844
CALCOMANÍA DE ADVERTENCIA (TRANSMISOR DE LASER)	213
CALCOMANÍA DE IDENTIFICACIÓN (*AWD)	318
CALCOMANÍA DE IDENTIFICACIÓN (BOCINA)	775
CALCOMANÍA DE IDENTIFICACIÓN (*FAST FILL FUEL, READ OMM)	126
CALCOMANÍA DE IDENTIFICACIÓN (*FILL, DRAIN)	66
CALCOMANÍA DE IDENTIFICACIÓN (INFERIOR)	834
CALCOMANÍA DE IDENTIFICACIÓN (INTERRUPTOR DE ENCENDIDO)	175
CALCOMANÍA DE IDENTIFICACIÓN (*PANEL SWITCHES) (CONTROL DE LA HOJA)	842
CALCOMANÍA DE IDENTIFICACIÓN (RODEADO DE ROJO REFLECTIVO)	740
CALCOMANÍA DE IDENTIFICACIÓN (SUPERIOR)	834
CALCOMANÍA DE IDENTIFICACIÓN (TABLERO DE FUSIBLES)	217
CALCOMANÍA DE IDENTIFICACIÓN (12 VOLTIOS)	163
CALCOMANÍA DE RAYAS (*YELLOW, REFLECTIVE)	469
CALCOMANIA, TABLERO DE FUSIBLE (*FUSE IDENTIFICATION)	767
CALCOMANÍAS Y PLACAS DE IDENTIFICACIÓN (GR)	890
	891
	899
	900
	901
	902
	903
CALCOMANÍAS Y PLACAS DE IDENTIFICACIÓN (GR)	895
CALEFACCIÓN DE LA CABINA (CONFIG)	802
CALEFACCIÓN DE LA CABINA (GR)	803
	804
CALEFACCIÓN Y MONTAJE DE LA CABINA (GR)	801
CAMBIO AUTOMÁTICO DE VELOCIDADES (CONFIG)	316
CAMBIO RÁPIDO DE ACEITE (GR)	66
CÁNCAMOS DE LEVANTAMIENTO DEL MOTOR (GR)	40
CANTONERA DE EXTREMO (GR)	711
CANTONERA (GR)	708
	709
	710
	711
*CAP AS-COOLANT TANK	82
CAPÓ (GR)	480
CARGA - ALTERNADOR DE (GR)	130
	132
	134
	136
	138
CARGA - ALTERNADOR DE (GR) (*24-VOLT, 150-AMPERE)	134
	138
*CARRIER GP-FINAL DRIVE	326
CÁRTER - COLECTOR DEL (GR)	46
CIGÜEÑAL (GR)	18
CILINDRO DE ARTICULACIÓN Y MONTAJE (GR)	534
CILINDRO DE DESGARRADOR (GR)	548
CILINDRO DE DESPLAZAMIENTO DEL CÍRCULO (GR)	546
CILINDRO DE DESPLAZAMIENTO DEL CÍRCULO Y MONTAJE (GR)	538
CILINDRO DE DESPLAZAMIENTO LATERAL (GR)	550
CILINDRO DE DESPLAZAMIENTO LATERAL Y MONTAJE (GR)	540
CILINDRO DE DIRECCIÓN (GR)	551
	553
CILINDRO DE DIRECCIÓN Y MONTAJE (GR)	541
	542
CILINDRO DE ESCARIFICADOR (GR)	549
CILINDRO DE ESCARIFICADOR Y MONTAJE (GR)	539
CILINDRO DE INCLINACIÓN DE LA HOJA (GR)	545
CILINDRO DE INCLINACIÓN DE LAS RUEDAS (GR)	555
CILINDRO DE INCLINACIÓN DE RUEDA Y MONTAJE (GR)	543
CILINDRO DE LA PUNTA DE LA HOJA Y MONTAJE (GR)	537
CILINDRO DE LEVANTAMIENTO DE HOJA Y MONTAJE (GR)	536
CILINDRO DE LEVANTAMIENTO (GR)	547
CILINDRO HIDRÁULICO (GRUPO)	720

* NO HAY TRADUCCION DISPONIBLE EN EL MOMENTO DE LA IMPRESION

INDICE

Nombre	Página
CINTURÓN DE SEGURIDAD (GR) (RETRACTIL)	854
CÍRCULO (GR)	703
CODO DE ADMISIÓN DE AIRE (GR)	90
*COIL AS-SOLENOID (12 VOLTIOS)	620
*COIL GP-VALVE	769
	771
COLADOR DE COMBUSTIBLE	124
	126
COMBUSTIBLE - TANQUE DE (GR)	123
	124
	126
COMPARTIMIENTO DEL MOTOR (GR)	458
COMPRESOR DE AIRE DEL ASIENTO (GR)	757
	758
	865
COMPRESOR DE AIRE (GR)	8
	9
COMPRESOR DE REFRIGERANTE (GR)	773
COMPRESOR DE REFRIGERANTE (GR)	772
CONDENSADOR DEL REFRIGERANTE Y MONTAJE (GR)	774
(CONFIG) CABLERIA, CHASIS DELANTERO	275
	279
	291
CONFIGURACIÓN COMÚN	1
CONFIGURACIÓN DE CABLERIA, CALENTADOR Y ACONDICIONADOR DE AIRE	300
CONFIGURACIÓN DE ENFRIAMIENTO	70
CONFIGURACIÓN PARA CARRETERA	2
CONFIGURACIÓN PARA LA UNIÓN EUROPEA	2
CONJ. NÚCLEO-CALENTADOR	769
	771
CONJ. ORIFICIO-AIRE ACONDICIONADO	812
CONJUNTO DE BRAZO-LIMPIAPARABRISAS (LADO DERECHO)	880
CONJUNTO DE CABLERIA, CHASIS TRASERO	299
CONJUNTO DE CABLERIA, RADIO	291
CONJUNTO DE CABLES-BOMBA	310
CONJUNTO DE CABLES-BOMBA (COMBUSTIBLE)	300
CONJUNTO DE CABLES-CALENTADOR (RELE DEL CALENTADOR DE LA ENTRADA DE AIRE)	273
CONJUNTO DE CABLES, VÁLVULA	264
CONJUNTO DE CABLES, VÁLVULA (COMPRESOR DE AIRE DEL ASIENTO)	865
CONJUNTO DE LLAVE, ELECTRONICA (SEGURIDAD)	175
CONJUNTO DE MAZO DE CABLES DE LA CAJA	216
CONJUNTO, MAZO DE CABLES, LUCES DELANTERAS	209
	211
CONMUTADOR DE 3 POSICIONES (CONJ) (*FLOAT CONTROL)	155
CONMUTADOR DE 3 POSICIONES (CONJ) (*FRONT IMPLEMENT)	153
	154
	156
	157
CONMUTADOR DE 3 POSICIONES (CONJ) (IMPLEMENTO TRASERO)	152
	154
	157
CONTROL DE AIRE Y TEMPERATURA (GR)	778
	779
CONTROL DE GRADO, CONFIGURACIÓN	168
CONTROL DE IMPLEMENTOS (GR)	152
	153
	154
	155
	156
	157
CONTROL DE IMPLEMENTOS Y MONTAJE (GR)	151
CONTROL DE MONITOR (GR) (*MESSENGER)	785
CONTROL DE TRABA DEL DIFERENCIAL (GR)	340
CONTROL DE TREN DE FUERZA (GR)	342
CONTROL DE TREN DE FUERZA (GR)	158
CONTROL DEL MULTIPLE (GR)	617
	621
	623
CONTROL DEL MULTIPLE (GR)	619
	620
CONTROL ELECTROHIDRAULICO (GR)	780
	781
	782
CONTROL ELECTRÓNICO DEL MOTOR Y MONTAJE	150
CONTROL HIDRÁULICO (CONFIG)	524
	525
	526
	527
	528
	529
	530
	531
CONTROL HIDRÁULICO DE LA TRANSMISIÓN (GR)	342

* NO HAY TRADUCCION DISPONIBLE EN EL MOMENTO DE LA IMPRESION

INDICE

Nombre	Página
CONTROL NO PROGRAMADO (GR)	160, 161
CONTROL NO PROGRAMADO (GR) (*HYDRAULIC ELECTRONIC)	271
CONTROL NO PROGRAMADO (GR) (*IMPLEMENT 2)	161
CONTROL NO PROGRAMADO (GR) (IMPLEMENTO)	161
CONTROL NO PROGRAMADO (GR) (MANDO DE TODAS LAS RUEDAS)	158
CONTROL NO PROGRAMADO (GR) (TRANSMISION)	342
CONVERTIDOR ELÉCTRICO (GR)	162, 163
CORREA-SERPENTIN	132, 134, 136, 138
CUBIERTA INFERIOR DEL ASIENTO DEL OPERADOR (CONJ)	831
CUBIERTA PROTECTORA (GR)	457
CUCHILLA (GR)	721, 722, 723
CULATA DE CILINDROS - TORNILLERÍA DE LA (GR)	27, 29
CULATA DE CILINDROS (CONJ)	24
CULATA DE CILINDROS (GR)	25, 26, 27

D

DESGARRADOR (CONFIG)	739
DESGARRADOR (GR)	740
DETECTOR DE POSICIÓN (SISTEMA DE COMBUST.) (GR)	225, 226, 227
DETECTOR DE POSICIÓN (SISTEMA DE COMBUST.) (GR) (CILINDRO DE DIRECCION)	551, 553
DETECTOR DE POSICIÓN (SISTEMA DE COMBUST.) (GR) (MANDO DE TODAS LAS RUEDAS)	248
DETECTOR DE POSICIÓN (SISTEMA DE COMBUST.) (GR) (ROTATORIO) (ARTICULACIÓN)	299
DETECTOR DE POSICIÓN (SISTEMA DE COMBUST.) (GR) (ROTATORIO) (SENSOR DE POSICION DE ACELERADOR)	848
DETECTOR DE POSICIÓN (SISTEMA DE COMBUST.) (GR) (ROTATORIO) (*TMSN MODULATOR CONTROL)	848
DETECTOR DE PRESIÓN (CONJ)	231
DETECTOR SÓNICO (GR)	238
DIENTE DE DESGARRADOR (GR)	753, 754
DIENTE DE ESCARIFICADOR (GR)	755
DIFERENCIAL (GR)	351
DIFERENCIAL Y CORONA (GR)	349
DIRECCIÓN SECUNDARIA (CONFIG)	640
*DISPLAY AR-MONITOR	788
DISYUNTOR (CONJ) (15 AMPERIOS) (CONTROL DE LA TRANSMISIÓN)	216
DISYUNTOR (CONJ) (15 AMPERIOS) (*FLOODLIGHTS, LH)	216
DISYUNTOR (CONJ) (15 AMPERIOS) (*FLOODLIGHTS, RH)	217
DISYUNTOR (CONJ) (15 AMPERIOS) (INTERRUPTOR DE LLAVE)	216
DISYUNTOR (CONJ) (150-AMPERIOS) (ALTERNADOR)	216
DISYUNTOR (CONJ) (20-AMPERIOS)	266
DISYUNTOR (CONJ) (20-AMPERIOS) (ACCUGRADE)	216
DISYUNTOR (CONJ) (20-AMPERIOS) (CONTROL DEL MOTOR)	216
DISYUNTOR (CONJ) (80 AMPERIOS) (CARGA)	216
DISYUNTOR (CONJ) (80 AMPERIOS) (PRINCIPAL)	216
DISYUNTOR (GR)	251
DRENAJE DE SEGURIDAD ECOLÓGICA (GR) (*DIFFERENTIAL CASE)	323
*DUCT & FILTER GP-CAB AIR	797

E

EJE - GRUPO DE MONTAJE	484, 485
EJE DE DIRECCION (CONFIG)	317, 318
EJE DE DIRECCION (CONFIG)	447, 448
EJE DE ENTRADA (GR)	392
EJE DE MANDO (GR)	391
EJE DELANTERO (GR)	319, 322, 449, 453
EJE TRASERO (GR)	323
ELECTRONICA DE MONITOR (GR)	166, 167

* NO HAY TRADUCCION DISPONIBLE EN EL MOMENTO DE LA IMPRESION

INDICE

Nombre	Página
ELEMENTO DE FILTRO DE ACEITE (CONJ) (EFICIENCIA ULTRA ALTA)	372
ELEMENTO DE FILTRO DE ACEITE (CONJ) (EFICIENCIA ULTRA ALTA) (TANQUE HIDRÁULICO)	563
ELEMENTO DE FILTRO DE ACEITE (CONJ) (EFICIENCIA ULTRA ALTA) (TRANSMISION)	355
ELEMENTO DE FILTRO DE AIRE (PRIMARIO)	87
ELEMENTO DEL CALENTADOR DEL AGUA DE LAS CAMISAS (120 VOLTIOS, 1000 VATIOS)	170
ELEMENTO DEL CALENTADOR DEL AGUA DE LAS CAMISAS (240 VOLTIOS, 1000 VATIOS)	169
ELEMENTO DEL FILTRO DE AIRE (CONJ) (SECUNDARIO)	87
EMBRAGUE DE LA TRANSMISIÓN (GR)	332 334 336 338
EMISOR DE COMBUSTIBLE (CONJ)	124
EMISOR DE COMBUSTIBLE (CONJ)	126
EMPAQUETADURA (CAJA DEL REGULADOR DE TEMPERATURA)	74
ENFRIADOR DE ACEITE DE LA TRANSMISIÓN (GR)	345
ENFRIADOR DE ACEITE DEL MOTOR (GR)	69
ENFRIADOR DEL ACEITE HIDRAULICO (GR)	532
ENGANCHE ARTICULADO (GR)	477
ENGANCHE DE REMOLQUE (GR)	479
*ENGINE AR-COMPLETE	4 5
ENGRANAJE DELANTERO (GR)	31 360 361
ENGRANAJE TRASERO (GR)	32 33
ESCAPE DE GASES (GR)	60
ESCARIFICADOR (CONFIG)	742
ESTRIBO DEL OPERADOR (GR)	493
ETIQUETA DE ADVERTENCIA (GR)	886 887
EXTENSIÓN DE LA HOJA (GR)	724 725 726 728
FILTRO (AGUA) (BOMBA)	78
FILTRO DE ACEITE - BASE DEL (GR)	325 523
FILTRO DE ACEITE (CONJ) (EFICIENCIA AVANZADA)	562
FILTRO DE ACEITE (CONJ) (EFICIENCIA AVANZADA)	362
FILTRO DE ACEITE (CONJ) (EFICIENCIA ULTRA ALTA)	362
FILTRO DE ACEITE (CONJ) (FLUÍDO RESISTENTE AL FUEGO)	362
FILTRO DE ACEITE DEL MOTOR (CONJ)	58
FILTRO DE ACEITE DEL MOTOR (GR)	58
FILTRO DE ACEITE (GR)	355 562 563
FILTRO DE ACEITE (GR) (MANDO DE TODAS LAS RUEDAS)	362
FILTRO DE ACEITE HIDRÁULICO Y MONTAJE (GR)	560
FILTRO DE AIRE (CONJ) (*CAB HEATER, AIR CONDITIONER)	797
FILTRO DE AIRE (CONJ) (CABINA) (CARBÓN ACTIVADO)	797
FILTRO DE AIRE (GR)	86 87
FILTRO DE COMBUSTIBLE (CONJ) (EFICIENCIA AVANZADA)	106
FILTRO DE COMBUSTIBLE (GR)	106
FILTRO DE COMBUSTIBLE Y SEPARADOR DE AGUA (CONJ) (PRIMARIO)	108
FILTRO DE COMBUSTIBLE Y SEPARADOR DE AGUA (GR)	108
FILTRO DE LA TRANSMISIÓN Y MONTAJE (GR)	354
FILTRO MAGNÉTICO (TRANSMISION)	327 390
FRENO DE ESTACIONAMIENTO (GR)	502
FRENO DE SERVICIO - CONTROL (GR)	508 510
FRENO DE SERVICIO - CONTROL (GR)	511
FRENO DE SERVICIO (GR)	504 506
FUSIBLE (10-AMPERIOS)	265
FUSIBLE (15 AMPERIOS)	265 763 804

F

*FILM GP-INTERNATIONAL	888
*FILM GP-U.S.	889
*FILTER-BREATHER (TANQUE HIDRÁULICO)	644

G

*GRADE CONTROL GP	168
GRUPO ADAPTADOR-TUBERIA DE ACEITE	56

* NO HAY TRADUCCION DISPONIBLE EN EL MOMENTO DE LA IMPRESION

INDICE

Nombre	Página
GRUPO DE ACUMULADOR DE AMORTIGUACIÓN DE LA HOJA	522
GRUPO DE BOMBA Y MONTAJE, MANDO DE TODAS LAS RUEDAS	384
GRUPO DE CABLES DE CÁMARA	270
GRUPO DE COJINETES DE BANCADA	18
GRUPO DE CONTROL-MONITOR NO PROGRAMADO	785
GRUPO DE INTERRUPTOR-TRACCIÓN EN TODAS LAS RUEDAS	248
GRUPO DE MONTAJE DE ALA PARA NIEVE	737 738
GRUPO DE MONTAJE DE LA CABINA	828
GRUPO DE MONTAJE, LUCES	209 211
GRUPO DE SOFTWARE, COMUNICACIÓN (PRODUCT LINK 121SR)	221
GRUPO DE SOPORTE DEL RESPALDO	832 833
GRUPO DE TUBERIAS, MANDO EN TODAS LAS RUEDAS	362
GRUPO DE VÁLVULA-ARRANQUE CON ÉTER	262
GRUPO DE 3 VÁLVULAS HIDRÁULICAS	647
GRUPO DE 4 VÁLVULAS HIDRÁULICAS	648
GRUPO ELECTRONICO-COMUNICACION	164
GRUPO ESCARIFICADOR	743 747 750 751 752
GRUPO GIRATORIO DE BOMBA	638 639
*GUARD GP-DEBRIS	476
GUARDABARROS Y SOPORTE (GR)	465 467 469
HOJA (GR)	712 713 714
HOJA TOPADORA (GR)	715 716

H

Nombre	Página
HIDRÁULICA (CONFIG)	564
HOJA DE LIMPIAPARABRISAS (CONJ) (*400-MM) (DELANTERO)	880
HOJA DE LIMPIAPARABRISAS (CONJ) (*400-MM) (*LOWER DOOR WINDOW, LH)	883
HOJA DE LIMPIAPARABRISAS (CONJ) (*450-MM) (DELANTERO)	877
HOJA DE LIMPIAPARABRISAS (CONJ) (*500-MM) (PARTE TRASERA)	879
HOJA DE LIMPIAPARABRISAS (CONJ) (*500-MM) (PUERTA, DERECHA)	882
HOJA DE LIMPIAPARABRISAS (CONJ) (*500-MM) (*UPPER DOOR WINDOW, LH)	883

I

Nombre	Página
IMPLEMENTOS (GR ELECTRÓNICO)	165
INDICADOR DEL NIVEL DE ACEITE (VARILLA) (GR)	61
INDICADOR DEL NIVEL DEL ACEITE (VARILLA) (CONJ) (ACEITE DEL TREN DE FUERZA)	353
INDICADOR DEL NIVEL DEL ACEITE (VARILLA) (CONJ) (MOTOR)	61
INSONORIZADOR (GR)	496 497
INSTALACION DE COMUNICATION (CONFIG)	171
INSTALACION DE SEGURIDAD (GR)	175
*INSTALLATION GP-CAMERA	173
*INSTALLATION GP-LIGHTING	174
INTERRUPTOR DE ARRANQUE (CONJ) (LLAVE)	265
INTERRUPTOR DE BOLA (CONJ) (INDICADOR DEL DESPLAZADOR DEL CÍRCULO)	275
INTERRUPTOR DE DERIVACIÓN	250
INTERRUPTOR DE DESPLAZAMIENTO POR CARRETERA (GR)	259
INTERRUPTOR DE LÍMITE (CONJ) (AJUSTE DE ASIENTO)	831
INTERRUPTOR DE LÍMITE (CONJ) (LUZ DEL FRENO)	848
INTERRUPTOR DE LUZ (GR)	252
INTERRUPTOR DE PRESIÓN (CONJ) (*AWD OIL FILTER BYPASS)	362
INTERRUPTOR DE PRESIÓN (CONJ) (COMPRESOR, LADO ALTO)	814
INTERRUPTOR DE PRESIÓN (CONJ) (COMPRESOR, LADO BAJO)	814
INTERRUPTOR DE PRESIÓN (CONJ) (FILTRO DE DERIVACIÓN)	562
INTERRUPTOR DE PRESIÓN (CONJ) (FRENO DE ESTACIONAMIENTO)	342
INTERRUPTOR DE PRESIÓN (GR)	258
INTERRUPTOR DE TEMPERATURA (CONJ) (AIRE ACONDICIONADO, CALENTADOR)	763
INTERRUPTOR DE VOLQUETE (CONJ) (ACONDICIONADOR DE AIRE ACTIVO, INACTIVO)	778
INTERRUPTOR DE VOLQUETE (CONJ) (ACOPLADOR RAPIDO)	265

* NO HAY TRADUCCION DISPONIBLE EN EL MOMENTO DE LA IMPRESION

INDICE

Nombre	Página
INTERRUPTOR DE VOLQUETE (CONJ) (AMORTIGUADOR DE LA HOJA)	265
INTERRUPTOR DE VOLQUETE (CONJ) (APAGADO A NIVEL DEL SUELO)	299
INTERRUPTOR DE VOLQUETE (CONJ) (BALIZA DE ADVERTENCIA)	177
INTERRUPTOR DE VOLQUETE (CONJ) (CAMBIO AUTOMÁTICO)	260
INTERRUPTOR DE VOLQUETE (CONJ) (DIRECCIÓN SECUNDARIA)	265
INTERRUPTOR DE VOLQUETE (CONJ) (ESPEJO CON CALENTAMIENTO)	823
INTERRUPTOR DE VOLQUETE (CONJ) (FAROS DELANTEROS, LUCES DE COLA)	265
INTERRUPTOR DE VOLQUETE (CONJ) (FRENOS DE ESTACIONAMIENTO ACTIVO, INACTIVO)	265
INTERRUPTOR DE VOLQUETE (CONJ) (IMPLEMENTO DE LA TRABA)	265
INTERRUPTOR DE VOLQUETE (CONJ) (LUZ DE TRABAJO)	252
INTERRUPTOR DE VOLQUETE (CONJ) (LUZ DE TRABAJO)	174
INTERRUPTOR DE VOLQUETE (CONJ) (PELIGRO)	265
INTERRUPTOR DE VOLQUETE (CONJ) (REFLECTORES DE CABINA)	288
INTERRUPTOR DE VOLQUETE (CONJ) (SEÑAL DE VIRAJE)	775
INTERRUPTOR DE VOLQUETE (CONJ) (*SPEED CONTROL REGULATOR)	265
INTERRUPTOR DE VOLQUETE (CONJ) (TRABA DEL ACELERADOR)	265
INTERRUPTOR DE VOLQUETE (CONJ) (VELOCIDAD DEL VENTILADOR SOPLADOR)	800
INTERRUPTOR DE VOLQUETE (CONJ) (24 VOLTIOS) (*INCREMENT, DECREMENT, LH)	842
INTERRUPTOR DE VOLQUETE (CONJ) (24 VOLTIOS) (*INCREMENT, DECREMENT, RH)	842
INTERRUPTOR DE VOLQUETE (CONJ) (24 VOLTIOS) (LUCES DE DESPLAZAMIENTO)	259
INTERRUPTOR DE VOLQUETE (CONJ) (24 VOLTIOS) (*OFFSET, RH)	844
INTERRUPTOR DE VOLQUETE (GR)	260
INTERRUPTOR DEL LIMPIADOR (GR)	261
INTERRUPTOR DEL LIMPIADOR (GR) (*24-VOLT, INTERMITTENT)	265
INTERRUPTOR DEL LIMPIADOR (GR) (*24-VOLT, INTERMITTENT)	879
INTERRUPTOR LÍMITE (GR)	253
INTERRUPTOR MAGNÉTICO (GR)	254
	255
	256
	257
INTERRUPTOR PULSADOR (CONJ) (BOCINA)	775
INTERRUPTOR PULSADOR (CONJ) (DESPLAZAMIENTO LATERAL)	844
INTERRUPTOR PULSADOR (CONJ) (LEVANTAMIENTO DE LA HOJA, BAJAR)	842
	844
INTERRUPTOR ROTATIVO (CONJ) (24 VOLTIOS) (*ALL WHEEL DRIVE CONTROL)	248
INYECTOR DE COMBUSTIBLE (GR)	109
	110

J

JUEGO DE BOTÓN (AJUSTE DE ALTURA) (ASIENTO DE SUSPENSION)	807
JUEGO DE COJINETES (ALTERNADOR)	130
JUEGO DE COJINETES (ASIENTO DE SUSPENSION)	808
JUEGO DE ENCHUFE (12-CLAVIJAS)	171
	288
	289
	306
JUEGO DE INDICADOR (AJUSTE DE PESO) (ASIENTO DE SUSPENSION)	807
JUEGO DE PARAGOLPES (AJUSTE DE PESO) (ASIENTO DE SUSPENSION)	808
JUEGO DE RECEPTÁCULO (12-CLAVIJAS)	171
	288
JUEGO DE RECEPTÁCULO (2 CLAVIJAS)	260
	306
	810
	823
JUEGO DE RECEPTÁCULO (2 CLAVIJAS)	288
JUEGO DE RESORTES (AJUSTE DE ALTURA) (ASIENTO DE SUSPENSION)	807
JUEGO DE RESORTES (ASIENTO DE SUSPENSION)	807
JUEGO DE SEGUIDOR (ASIENTO DE SUSPENSION)	808
JUEGO DE SELLOS	545
	549
JUEGO DE TERMINAL (ALTERNADOR)	130
JUEGO DE TERMINAL (ALTERNADOR)	130
JUEGO DE TORNILLERÍA (ALTERNADOR)	130
JUNTA UNIVERSAL (GR)	395

* NO HAY TRADUCCION DISPONIBLE EN EL MOMENTO DE LA IMPRESION

INDICE

Nombre	Página

L

LÁMPARA (CONJ) (24 VOLTIOS)	810
LÁMPARA (CONJ) (24 VOLTIOS, VERDE)	153
	154
	156
	157
LÁMPARA (CONJ) (24 VOLTIOS, VERDE) (VERDE)	265
LÁMPARA DE BALIZA DE ADVERTENCIA (GR)	196
LÁMPARA DE FARO DELANTERO (GR)	189
LÁMPARA DE LUZ DELANTERA Y DE SEÑAL (GR)	190
	191
LAMPARA DE PLACA DE REGISTRO (GR)	193
LÁMPARA DEL TECHO (GR)	178
LÁMPARA DEL TECHO (GR) (24 VOLTIOS)	810
LAMPARA-LED (*GREEN, 24-VOLT)	158
LAMPARA-LED (*GREEN, 24-VOLT)	260
LAMPARA-LED (*RED, 24-VOLT)	158
	175
LAMPARA MARCADORA (GR)	192
LÁMPARA (*24-VOLT, HID)	186
LÁMPARA (24 VOLTIOS)	178
LÁMPARA (24 VOLTIOS) (POSICIÓN DE LA CABINA)	192
LÁMPARA (24-VOLTIOS, 21 VATIOS)	197
LÁMPARA (24 VOLTIOS, 5 VATIOS)	190
	191
	193
LÁMPARA (24-VOLTIOS, 70-VATIOS)	196
LÁMPARA (24 VOLTIOS, 75/70 VATIOS)	190
	191
LEVANTAMIENTO - HOJA DE (GR)	729
*LIFT GP-WORK TOOL	732
	734
LIMPIA Y LAVAPARABRISAS (GR)	877
LIMPIAPARABRISAS DE LA VENTANA (GR)	879
	880
	882
	883
LLAVE (INTERRUPTOR GENERAL)	251
LUCES DE ALÓGENO (*24-VOLT, 35-WATT)	179
LUCES DE ALÓGENO (24 VOLTIOS, 65 VATIOS)	180
	183
	184
LUCES DE ALÓGENO (24 VOLTIOS, 65 VATIOS)	189
LUCES DE REFLECTOR (GR)	198
	199
	200
	201
	202
	203
	204
	205
LUCES DE RETROCESO (GR)	197
LUZ DE SEÑAL DE GIRO (GR)	194
	195

M

MANDO DE CORREA	196
MANDO DE LA RUEDA	352
MANDO DEL CIRCULO (GR)	557
MANDO ELÉCTRICO - BOMBA DE (GR)	633
MANDO FINAL (GR)	356
	358
*MAST GP	205
MASTIL - MONTAJE DEL (GR)	213
MAZO DE CABLES (CONJ) (*INCLINATION)	282
MAZO DE CABLES (CONJ) (*LIGHT BAR)	291
MAZO DE CABLES DE CONTROL (CONJ) (ACCUGRADE)	280
MAZO DE CABLES DE CONTROL (CONJ) (*HYDRAULIC ELECTRONIC)	271
MAZO DE CABLES DE CONTROL (CONJ) (MANDO EN TODAS LAS RUEDAS)	158
MAZO DE CABLES DE LA TRANSMISION	216
	342
MAZO DE CABLES DE LUCES TRASERAS (CONJ)	304
	306
MAZO DE CABLES DE LUCES TRASERAS (CONJ) (*REGISTRATION PLATE)	193
MAZO DE CABLES DE POTENCIA (CONJ) (*PRODUCT LINK RADIO)	171
MAZO DE CABLES DE SENSOR (CONJ)	106
	342
MAZO DE CABLES DE SENSOR (CONJ) (ÁNGULO)	282
MAZO DE CABLES DE SENSOR (CONJ) (*MOTOR SPEED, LH)	310
MAZO DE CABLES DE SENSOR (CONJ) (*MOTOR SPEED, RH)	310
MAZO DE CABLES DE SENSOR (CONJ) (*ROTATION)	282
MAZO DE CABLES DE SENSOR (CONJ) (*STEERING, LH)	313
	314
MAZO DE CABLES DE SENSOR (CONJ) (*STEERING, RH)	313
	314
MAZO DE CABLES DEL CHASIS (CONJ) (CONTROL DE PENDIENTE)	282

* NO HAY TRADUCCION DISPONIBLE EN EL MOMENTO DE LA IMPRESION

INDICE

Nombre	Página
MAZO DE CABLES DEL CHASIS (CONJ) (SISTEMA DE SEGURIDAD DE LA MÁQUINA)	175
MAZO DE CABLES DEL INTERRUPTOR (CONFIG)	842
MAZO DE CABLES DEL INTERRUPTOR (CONFIG) (*HEATED SEAT)	831
MAZO DE CABLES DEL MONITOR (CONJ)	294
MAZO DE CABLES DEL MOTOR (CONJ) (INYECCIÓN DE COMBUSTIBLE)	273
MAZO DE CABLES DEL MOTOR (CONJ) (MODULO DE CONTROL ELECTRONICO)	273
MAZO DE CABLES DEL TABLERO (CONJ)	842 844
MAZO DE CABLES DELANTERO (CONJ)	310
MAZO DE CABLES, LUCES	275 288 289
MAZO DE CABLES-MOTOR	763
MAZO DE CABLES-MOTOR (TERMOSTATO)	804
MAZO DE CABLES TRASERO (CONJ)	299 310
MECANISMO DE VÁLVULAS (GR)	53 54
MIRILLA DE MEDIDOR (GR) (ACEITE DEL TANQUE HIDRAULICO)	646
*MODULE AS-POWER SUPPLY	220
MODULO DE INTERFAZ (GR) (LLAVE) (SISTEMA DE SEGURIDAD DE LA MÁQUINA)	175
MONITOR (CONJ)	824
MONTAJE DE ANTENA (GR)	827
MONTAJE DE FILTRO DE COMBUSTIBLE (GR)	116
MONTAJE DE LA VÁLVULA DE CONTROL (GR)	829 830
MONTAJE DE LAMPARA (GR)	208
MONTAJE DE RUEDA (GR)	382
MONTAJE DEL ALTERNADOR (GR)	41
MONTAJE DEL DESGARRADOR (GR)	735
MONTAJE DEL MANDO DE VENTILADOR (GR)	44
MONTAJE DEL MOTOR Y LA TRANSMISIÓN (GR)	42
MONTAJE DEL RECEPTOR (GR)	214
MOTONIVELADORA PARA LA NIEVE (CONFIG)	3
MOTOR - NÚCLEO (CONFIG)	6
MOTOR - SOPORTE DEL (GR)	52
MOTOR DE ARRANQUE ELÉCTRICO (GR)	244 246
MOTOR DE ENGRANAJES (GR) (*RADIATOR COOLING)	71
MOTOR ELÉCTRICO (GR)	206
MOTOR HIDRÁULICO DE ENGRANAJES (GR)	628
MOTOR-LIMPIAPARABRISAS (GR)	825 826
MOTOR-LIMPIAPARABRISAS (GR) (LADO DERECHO)	882
MOTOR-LIMPIAPARABRISAS (GR) (PARTE TRASERA)	879
MOTOR-LIMPIAPARABRISAS (GR) (24 VOLTIOS) (LADO DERECHO)	880
MOTOR-LIMPIAPARABRISAS (GR) (24 VOLTIOS) (LADO IZQUIERDO)	880
MOTOR-LIMPIAPARABRISAS (GR) (24 VOLTIOS, 2 VELOCIDADES)	882 883
MOTOR-LIMPIAPARABRISAS (GR) (24 VOLTIOS, 2 VELOCIDADES) (DELANTERO)	826
MOTOR Y VENTILADOR (GR)	71
*MOUNTING GP-GRADE CONTROL	207
*MOUNTING GP-XMSN OIL COOLER	383
MULTIPLE DE ACEITE DE MOTOR (GR)	65
MÚLTIPLE DE ESCAPE (GR)	95
MULTIPLE DE VALVULA (GR)	625 626

N

Nombre	Página
NÚCLEO CONJ-ENFRIAMIENTO DE TRANSMISION	345
NUCLEO DE ENFRIADOR DE ACEITE DE MOTOR (CONJ)	69
NUCLEO DE RADIADOR (CONJ)	80
NÚCLEO DEL ENFRIADOR DE ACEITE (CONJ) (HIDRÁULICO)	593
NÚCLEO DEL ENFRIADOR DE ACEITE (CONJ) (HIDRÁULICO)	532

P

Nombre	Página
PALANCA UNIVERSAL-CONTROL Y MONTAJE (GR)	775
PALANCA UNIVERSAL DE CONTROL (GR)	783 784
PALANCA UNIVERSAL DE CONTROL (GR) (CONTROL ELECTRONICO)	782
PANEL DE DISYUNTORES (GR)	216
PANEL DE LA CABINA (GR)	834 838
PANTALLA DEL MONITOR (GR)	789 790
PANTALLA DEL MONITOR (GR) (*CD610)	790

* NO HAY TRADUCCION DISPONIBLE EN EL MOMENTO DE LA IMPRESION

INDICE

Nombre	Página
PANTALLA DEL MONITOR (GR) (*CD700)	790
PEDAL DEL FRENO, LA TRANSMISIÓN Y EL REGULADOR (GR)	848
PERSIANA PARA EL SOL (GR)	852
PISTÓN Y BIELA (GR)	47
PISTONES DEL MOTOR (GR)	377
	378
PLACA DE IDENTIFICACION (HERRAMIENTA)	750
	751
PLACA DE IDENTIFICACION (HERRAMIENTA)	715
	732
PLACA DE IDENTIFICACION (NUMERO DE SERIE)	763
PLACA DE INFORMACION (CONSOLA IZQUIERDA)	846
PLACA DE INFORMACION (CONSOLA, MANO DERECHA)	846
PLACA DE INFORMACION (*EXTENDED LIFE COOLANT-READ OMM)	891
	895
PLACA DE INFORMACION (LAMINADO) (MOTOR)	890
PLACA DE INFORMACION (PLACA PLATEADA) (MOTOR)	890
PLACA DE INFORMACION (ROPS, FOPS, LEA EL OMM)	768
PLACA DE INSTRUCCIONES (ACONDICIONADOR DE AIRE)	761
PLACA DEL NÚMERO DE SERIE (TRANSMISION)	327
PLANCHA DE EMPUJE (GR)	707
PLATO OSCILANTE (GR)	641
POLEA DE RUEDA GUIA (GR)	50
POSABRAZOS (GR)	765
	766
POSENFRIADOR DE AIRE (GR)	85
*POWER SUPPLY GP	220
PRESURIZADOR (GR)	849
PROTECTOR DE LAS TUBERÍAS DE LOS FRENOS (GR)	475
PROTECTOR DEL VENTILADOR (GR)	73
PROTECTOR DEL VENTILADOR (GR) (*RADIATOR COOLING)	71
PROTECTOR INFERIOR (GR)	473
PROTECTOR TÉRMICO DEL COMPARTIMIENTO DEL MOTOR (GR)	490
PUERTA DE CABINA	791
	794

R

Nombre	Página
RADIADOR (GR)	80
*RADIO GP-COMMUNICATION	221
*RECEIVER AR-LASER	221
*RECEIVER AR-SATELLITE	221
*RECEIVER GP-FAST FILL FUEL	121
*RECEIVER GP-LASER	222
*RECEIVER GP-LASER (*LR410)	222
*RECEIVER GP-SATELLITE	222
RECLINACION DE ASIENTO (GR)	850
REFLECTOR (GR)	179
	180
	181
	182
	183
	184
	185
	186
	187
	188
	487
	488
REGULADOR DE LA PRESION DE COMBUSTIBLE (GR)	122
REGULADOR DE PRESION (COMBUSTIBLE)	119
REGULADOR DE TEMPERATURA DEL AGUA (97 GRADOS C)	74
REGULADOR DE VOLTAJE (24 VOLTIOS)	130
REJILLA DE SUCCIÓN (BARRIDO DE TRANSMISION)	327
REJILLA DE SUCCIÓN (TRANSMISION)	390
REJILLA MAGNÉTICA (GR)	390
RELÉ (CONJ) (*24-VDC, 20-AMPERE) (*HEATED MIRROR TIMER)	823
RELÉ (CONJ) (24 VOLTIOS)	265
RELÉ (CONJ) (24 VOLTIOS) (ALARMA DE RETROCESO)	300
RELÉ (CONJ) (24 VOLTIOS) (DIRECCIÓN SECUNDARIA)	300
RELÉ (CONJ) (24 VOLTIOS) (EMBRAGUE DE SOLENOIDE A/C)	300
RELÉ (CONJ) (24 VOLTIOS) (RELE DE LA BOMBA DE COMBUSTIBLE)	300
RESPIRADERO (*AWD, GEAR)	360
	361
RESPIRADERO (CONJ) (CÁRTER DEL MOTOR)	57
RESPIRADERO (CONJ) (TANDEM)	393
RESPIRADERO (CONJ) (TUBO DE LLENADO DE TREN DE FUERZA)	353
RESPIRADERO (GR)	57
RETROCESO - ALARMA DE (GR)	263
RETROVISOR (GR)	820

* NO HAY TRADUCCION DISPONIBLE EN EL MOMENTO DE LA IMPRESION

INDICE

Nombre	Página
	821
	822
	823
REVESTIMIENTO DE LA CABINA (GR)	810
RUEDA (CONFIG)	436
	437
	438
RUEDA (GR)	439
	440
	441
	442
	443
	444
	445
	446
RUEDA Y LLANTA (CONFIG)	401
	402
	403
	404
	405
	406
	407
	408
	409
	410
	411
	412
	413
	414
	415
	416
RUEDA Y NEUMÁTICO (GR)	416
	417
	418
	419
	420
	421
	422
	423
	424
	425
	426
	427
	428
	429
	430
	431
	432
	433
	434
	435
	436

S

Nombre	Página
*SEAL-VALVE COVER	16
SECADOR DE RECEPTOR (CONJ) (REFRIGERANTE)	812
SELLO DE CIGÜEÑAL (GR)	51
SELLO DUOCONE (GR)	557
SENSOR DE PRESIÓN (GR)	228
	229
	230
	231
	232
	233
	234
	235
	236
	237
SENSOR DE PRESIÓN (GR) (ACEITE DEL MOTOR)	223
SENSOR DE PRESIÓN (GR) (ACUMULADOR DEL FRENO)	617
SENSOR DE PRESIÓN (GR) (ATMOSFERICA)	223
SENSOR DE PRESIÓN (GR) (*AWD SENSOR CONTROL, LH)	623
SENSOR DE PRESIÓN (GR) (*AWD SENSOR CONTROL, RH)	623
SENSOR DE PRESIÓN (GR) (COMBUSTIBLE)	106
SENSOR DE PRESIÓN (GR) (ENTRADA DE TURBOALIMENTADOR)	299
SENSOR DE PRESIÓN (GR) (REFUERZO)	223
SENSOR DE PRESIÓN (GR) (RIEL)	223
SENSOR DE TEMPERATURA (CONJ)	240
SENSOR DE TEMPERATURA (GR)	240
	241
	242
SENSOR DE TEMPERATURA (GR) (ACEITE DE LA TRANSMISIÓN)	342
SENSOR DE TEMPERATURA (GR) (ACEITE DE VENTILADOR HIDRÁULICO)	71
SENSOR DE TEMPERATURA (GR) (ACEITE HIDRÁULICO)	310
SENSOR DE TEMPERATURA (GR) (COMBUSTIBLE)	106
SENSOR DE TEMPERATURA (GR) (MÚLTIPLE DE ADMISIÓN DE AIRE)	223
SENSOR DE TEMPERATURA (GR) (REFRIGERANTE DEL MOTOR)	223
SENSOR DE VELOCIDAD (GR)	239
SENSOR DE VELOCIDAD (GR) (ENTRADA DE TRANSMISIÓN)	342
SENSOR DE VELOCIDAD (GR) (MANDO DE TODAS LAS RUEDAS)	378

* NO HAY TRADUCCION DISPONIBLE EN EL MOMENTO DE LA IMPRESION

INDICE

Nombre	Página
SENSOR DE VELOCIDAD (GR) (SALIDA DE LA TRANSMISION)	342
SENSOR DE VELOCIDAD (GR) (*TRANSMISSION INTERMEDIATE 1)	342
SENSOR DE VELOCIDAD (GR) (*TRANSMISSION INTERMEDIATE 2)	342
SENSOR DEL MOTOR (GR)	223
SEPARADOR DE AGUA Y BOMBA DE CEBADO DE COMBUSTIBLE (GR)	128
*SERVICE CENTER AR	489
SERVICIO DE IMPLEMENTO (GR)	165
SILENCIADOR Y MONTAJE GR	96
SOFTWARE DE IMPLEMENTO (GR)	165
SOFTWARE DE IMPLEMENTO (GR) (*IMPLEMENT 2)	165
SOFTWARE DE IMPLEMENTO (GR) (*IMPLEMENT 3)	165
SOFTWARE DEL MONITOR (GR)	166 167 222
SOFTWARE DEL MONITOR (GR)	790
SOFTWARE DEL TREN DE FUERZA (GR)	168
SOFTWARE DEL TREN DE FUERZA (GR) (MANDO EN TODAS LAS RUEDAS)	168
SOFTWARE (GR) (MÁSTIL)	205
SOFTWARE (*RECEIVER, LOADER)	222
SOFTWARE (RECEPTOR)	222
SOLENOIDE (CONJ) (24 VOLTIOS) (MOTOR DE ARRANQUE)	244
SOPORTE DE CONTROL (GR)	859 861
SOPORTE DE LAMPARA (GR)	247
SOPORTE DE MONTAJE (GR)	767
SOPORTE DEL ESCARIFICADOR (GR)	718 719
SOPORTE DEL RADIADOR (GR)	494
SUSPENSIÓN - ASIENTO CON (GR)	857 858

T

Nombre	Página
TABLERO DE CONTROL (GR)	842 844
TABLERO DE INSTRUMENTOS (GR)	846
TÁNDEM Y CUBIERTA (GR)	393
TANQUE DE AIRE (GR)	904
TANQUE DE REFRIGERANTE (GR)	82
TANQUE DEL LAVAPARABRISAS (GR)	867
TANQUE HIDRÁULICO (GR)	646
TANQUE HIDRÁULICO Y MONTAJE (GR)	644
TAPA CON RESPIRADERO (TANQUE DE LIQUIDO LIMPIAPARABRISAS)	877
TAPA DE ADMISIÓN DE AIRE (GR)	88 89
TAPA DE LA CABINA (GR)	786
TAPA DE LA CAJA DELANTERA (GR)	14 15
TAPA DE LLENADO (CONJ) (ACEITE DEL MOTOR)	15
TAPA DE LLENADO (CONJ) (TANQUE DE COMBUSTIBLE)	124 126
TAPA DE LLENADO (CONJ) (TANQUE HIDRAULICO)	646
TAPA DE TANQUE DE COMBUSTIBLE (GR)	103
TAPA DE VÁLVULA DE CONTROL (GR)	455
TAPA DEL BLOQUE MOTOR (GR)	13
TAPA DEL MECANISMO DE VÁLVULAS (GR)	16
TAPAS PROTECTORAS DE EMBARQUE (GR)	347
TAPÓN DE DRENAJE	34 36
TAPÓN DEL BLOQUE MOTOR (GR)	48
TAPÓN DEL MOTOR (GR)	49
TAPÓN MAGNÉTICO (TRANSMISION)	328
TECHO DE LA CABINA (GR)	851
TENSOR DE CORREA (GR)	11
TIRANTE DE DIRECCIÓN (GR)	482 483
TIRANTE (GR)	717
TORNILLERÍA DEL TANQUE DE COMBUSTIBLE	104
TORNILLERÍA (GR)	463 464
TRABA DE DESPLAZAMIENTO DEL CIRCULO (GR)	616
TRANSMISION (CONFIG)	394
TREN DE FUERZA-GRUPO ELECTRÓNICO	168
TUBERÍAS DE ACEITE DE LA TRANSMISIÓN (GR)	372
TUBERÍAS DE ACEITE DE LA TRANSMISIÓN (GR)	375
TUBERÍAS DE ACEITE DEL MOTOR (GR)	62
TUBERÍAS DE ACONDICIONADOR DE AIRE (GR)	812 814
TUBERÍAS DE BOMBA HIDRÁULICA DE INYECCIÓN (GR)	115
TUBERIAS DE CALEFACCION	816 817 819
TUBERÍAS DE COMBUSTIBLE (GR)	111
TUBERÍAS DE DIRECCIÓN (GR)	612

* NO HAY TRADUCCION DISPONIBLE EN EL MOMENTO DE LA IMPRESION

INDICE

Nombre	Página
	614
TUBERIAS DE DRENAJE DE ACEITE DE MOTOR (GR)	63
TUBERÍAS DE ENGRASE (GR)	481
TUBERÍAS DE LA CALEFACCIÓN (GR)	817
	819
TUBERÍAS DE LA CALEFACCIÓN (GR)	816
TUBERÍAS DE LA DIRECCIÓN SECUNDARIA (GR)	610
TUBERÍAS DE LA TOMA DE FUERZA (GR)	371
TUBERÍAS DEL ACUMULADOR (GR)	513
TUBERÍAS DEL AGUA (GR)	74
	76
TUBERÍAS DEL DESGARRADOR (GR)	605
	607
	609
TUBERÍAS DEL ENFRIADOR DE ACEITE HIDRÁULICO (GR)	593
TUBERÍAS DEL FILTRO DE COMBUSTIBLE	113
TUBERÍAS DEL FRENO DE SERVICIO (GR)	517
	519
TUBERÍAS DEL TANQUE DE AIRE (GR)	515
TUBERÍAS HIDRÁULICAS DEL VENTILADOR (GR)	590
TUBERÍAS HIDRÁULICAS (GR)	569
	571
	577
	579
	586
	588
	589
TUBO DE LLENADO DE ACEITE DE LA TRANSMISIÓN (GR)	353
TURBOCOMPRESOR - TUBERÍAS DE ACEITE DEL (GR)	64
TURBOCOMPRESOR (GR)	99
	100

U

UNIÓN GIRATORIA (GR)	642

V

*VALVE GP-BANK 8	658
	660
VÁLVULA - MONTAJE DE LA (GR)	486
VÁLVULA (CONJ) (REFRIGERANTE)	76
VÁLVULA DE ACTIVADOR (GR) (*STEERING SIGNAL)	701
VÁLVULA DE ALIVIO (GR)	399
	694
	695
VÁLVULA DE ALIVIO (GR) (*COLD OIL STARTUP)	388
VÁLVULA DE ALIVIO (GR) (COMPRESOR DEL REFRIGERANTE)	772
VÁLVULA DE ALIVIO (GR) (DIRECCIÓN SECUNDARIA)	610
VÁLVULA DE ALIVIO (GR) (MANDO DE TODAS LAS RUEDAS)	378
VÁLVULA DE ALIVIO (GR) (*MAXIMUM PRESSURE, AWD)	388
VÁLVULA DE ALIVIO (GR) (PRESIÓN DE DIRECCIÓN)	701
VÁLVULA DE ALIVIO (GR) (PRINCIPAL)	626
VÁLVULA DE ALIVIO (GR) (*PUMP CASE PRESSURE)	388
VALVULA DE CONTROL DE LA BOMBA (GR)	398
	691
	693
VÁLVULA DE CONTROL (GR)	663
	665
	667
	669
	671
	673
	675
	677
	679
	681
	683
	685
	687
VÁLVULA DE CONTROL (GR) (FRENO)	510
VÁLVULA DE DERIVACIÓN (GR)	689
VÁLVULA DE LANZADERA (GR)	696
VÁLVULA DE LANZADERA (GR) (*AWD, PISTON MOTOR)	623
VÁLVULA DE LANZADERA (GR) (VENTILADOR HIDRAULICO)	617
VÁLVULA DE LEVANTAMIENTO (GR)	39
VÁLVULA DE MODULACIÓN (GR)	397
VÁLVULA DE RETENCIÓN (CONJ)	877
	880
VÁLVULA DE RETENCIÓN (CONJ) (LIMPIAPARABRISAS)	879
VÁLVULA DE RETENCIÓN (GR)	595
	662
VALVULA DE RETENCIÓN Y ALIVIO (GR) (*LINE, BLADE SIDESHIFT)	671
VALVULA DE RETENCIÓN Y ALIVIO (GR) (*LINE, BLADE TIP)	667
VALVULA DE RETENCIÓN Y ALIVIO (GR) (*LINE, LIFT)	665

* NO HAY TRADUCCION DISPONIBLE EN EL MOMENTO DE LA IMPRESION

INDICE

Nombre	Página
VALVULA DE RETENCIÓN Y ALIVIO (GR) (*LINE, PLOW ANGLE)	685
VALVULA DE RETENCIÓN Y ALIVIO (GR) (*LINE, PLOW, BULLDOZER LIFT)	683
VALVULA DE RETENCIÓN Y ALIVIO (GR) (*LINE, RIPPER)	677
VALVULA DE RETENCIÓN Y ALIVIO (GR) (*LINE, SCARIFIER)	687
VALVULA DE RETENCIÓN Y ALIVIO (GR) (*LINE, TILT)	679
VALVULA DE RETENCIÓN Y ALIVIO (GR) (*LINE, WING LIFT)	681
VÁLVULA DE SOLENOIDE (GR)	697
	698
	699
	700
VÁLVULA DE SOLENOIDE (GR) (*ALL WHEEL DRIVE, LH)	623
VÁLVULA DE SOLENOIDE (GR) (*ALL WHEEL DRIVE, RH)	623
VÁLVULA DE SOLENOIDE (GR) (AMORTIGUADOR DE LA HOJA)	619
VÁLVULA DE SOLENOIDE (GR) (ARTICULACIÓN)	663
VÁLVULA DE SOLENOIDE (GR) (*BLADE CENTERSHIFT)	669
VÁLVULA DE SOLENOIDE (GR) (*BLADE SIDESHIFT)	671
VÁLVULA DE SOLENOIDE (GR) (*CENTERSHIFT)	616
VÁLVULA DE SOLENOIDE (GR) (*CIRCLE DRIVE)	673
VÁLVULA DE SOLENOIDE (GR) (DESGARRADOR)	677
VÁLVULA DE SOLENOIDE (GR) (DIRECCIÓN)	620
VÁLVULA DE SOLENOIDE (GR) (ESCARIFICADOR)	687
VÁLVULA DE SOLENOIDE (GR) (*FORWARD, LH)	623
VÁLVULA DE SOLENOIDE (GR) (*FORWARD, RH)	623
VÁLVULA DE SOLENOIDE (GR) (INCLINACION DE RUEDA)	675
VÁLVULA DE SOLENOIDE (GR) (LEVANT. DE ALA)	681
VÁLVULA DE SOLENOIDE (GR) (*PARKING BRAKE CONTROL)	621
VÁLVULA DE SOLENOIDE (GR) (*PILOT PROPORTIONING)	665
VÁLVULA DE SOLENOIDE (GR) (*PLOW ANGLE)	685
VÁLVULA DE SOLENOIDE (GR) (*PLOW, BULLDOZER LIFT)	683
VÁLVULA DE SOLENOIDE (GR) (PUNTA DE LA HOJA)	667
VÁLVULA DE SOLENOIDE (GR) (*REVERSE, LH)	623
VÁLVULA DE SOLENOIDE (GR) (*REVERSE, RH)	623
VÁLVULA DE SOLENOIDE (GR) (TRABA DE DIFERENCIAL)	396
VÁLVULA DE SOLENOIDE (GR) (VENTILADOR HIDRAULICO)	617
VÁLVULA DE SOLENOIDE (GR) (*WING TILT)	679
VÁLVULA DE SOLENOIDE (GR) (24 VOLTIOS CC) (FRENO DE ESTACIONAMIENTO)	342
VALVULA DE SOLENOIDE Y MONTAJE (GR	396
VÁLVULA DEL NEUMÁTICO (GR) (BASICO)	444
VÁLVULA DEL NEUMÁTICO (GR) (INFLADO DE NEUMÁTICOS)	444
	446
VÁLVULA DEL NEUMÁTICO (GR) (PRESIÓN DE LOS NEUMÁTICOS)	445
	446
VÁLVULA REDUCTORA DE PRESIÓN (GR)	690
VÁLVULAS DE LA DIRECCIÓN (GR)	701
VÁLVULAS HIDRÁULICAS - GRUPO DE 6	651
	652
	653
VÁLVULAS HIDRÁULICAS - GRUPO DE 7	654
	656
VENTANA DE LA CABINA (GR)	872
	874
	875
	876
VENTANA DE LA CABINA (GR)	868
	869
	870
	871
VENTILADOR DE CIRCULACION	798
	800
VOLANTE - CAJA DE (GR)	34
	36
VOLANTE (GR)	30

W

*WIRING GP-FRONT LIGHTING	279

* NO HAY TRADUCCION DISPONIBLE EN EL MOMENTO DE LA IMPRESION

ÍNDICE

Designação	Página

A

ACOPLAMENTO TORSIONAL 346
ACUMULADOR - AMORTECEDOR DA LÂMINA 522
ACUMULADOR - FREIO 499, 500, 501
ACUMULADOR - REFRIGERANTE 812
ADAPTADOR - ABASTECIMENTO RÁPIDO DE COMBUSTÍVEL 101
ADAPTADOR DO TURBOALIMENTADOR 84
ADAPTADOR-TUBULAÇÃO DE ÓLEO 56
ADESIVO - PAINEL DE FUSÍVEIS (IDENTIFICAÇÃO DE FUSIVEL) 767
ADESIVO-EUA 889
ADESIVO-INTERNACIONAL 888
AJUSTADOR DO ASSENTO 756
ALARME 129
ALARME DE MARCHA À RÉ 263
ALAVANCA DE CONTROLE E MONTAGEM 775
ALTERNADOR DE CORRENTE 130, 132, 134, 136, 138
ALTERNADOR DE CORRENTE (24 VOLTS, 150 AMPÈRES) 134, 138
AMORTECEDOR DE VIBRAÇÕES E POLIA 28
AMORTECEDOR E MONTAGEM 96
APLICAÇÃO-COMUNICAÇÃO 140
AQUECEDOR DA ÁGUA DO MOTOR 169, 170
AQUECEDOR DA CABINE 802, 803, 804
AQUECEDOR DA CABINE E MONTAGEM 801
AR. PARA NEVE - MOTONIVELADORA 3
ARRANJO BÁSICO 1
ARRANJO RODOVIÁRIO 2
ARREFECEDOR - ÓLEO DO MOTOR 69
ARREFECEDOR DE ÓLEO DA TRANSMISSÃO 345
ARREFECEDOR DO ÓLEO HIDRÁULICO 532
ARREFECIMENTO 70
ARTICULAÇÃO GIRATÓRIA 642
ASSENTO 854, 855
ASSENTO - FUNDO 831
ASSENTO COM SUSPENSÃO 857, 858
ASSENTO E MONTAGEM 853
AUXILIAR DE PARTIDA A ÉTER 243

B

BALANCIM (ADMISSÃO) 54
BALANCIM (ESCAPE) 54
BARRA DE TRAÇÃO 705
BASE DO FILTRO DE ÓLEO 325, 523
BATERIA E CABOS / FIOS ELÉTRICOS 141, 143, 146
BATERIA (12 VOLTS, ISENTO DE MANUTENÇÃO) 141, 143
BATERIA (12 VOLTS, ISENTO DE MANUTENÇÃO) (MOLHADO) 146
BLINDAGEM DO COMPARTIMENTO DO MOTOR 490
BLOCO DO MOTOR 20, 21, 22
BOBINA-SOLENÓIDE (12-VOLTS) 620
BOBINA-VÁLVULA 769, 771
BOCAL DE ENCHIMENTO DE ÓLEO DO TREM DE FORÇA 353
BOMBA - ESCORVA DE COMBUSTÍVEL E SEPARADOR DE ÁGUA 128
BOMBA DAS ENGRENAGENS E MONTAGEM . . . 385
BOMBA DE ÁGUA 78, 79
BOMBA DE COMANDO ELÉTRICO 633
BOMBA DE ENGRENAGENS 386
BOMBA DE ENGRENAGENS (CARGA AWD) . . . 388
BOMBA DE ESCORVA DO COMBUSTÍVEL E DO FILTRO PRIMÁRIO 119, 120
BOMBA DE INJEÇÃO DO COMBUSTÍVEL 118
BOMBA DE ÓLEO - MOTOR 67, 68
BOMBA DE PISTÃO 388, 634, 636
BOMBA DE PISTÃO (TRAÇÃO EM TODAS AS RODAS) 388
BOMBA DO COMANDO ELÉTRICO E MONTAGEM 630
BOMBA E MONTAGEM - PISTÃO 631, 632
BOMBA E MONTAGEM - TRAÇÃO EM TODAS AS RODAS 384
BOMBA HIDRÁULICA - UNIDADE INJETORA . . . 117
BOMBA HIDRÁULICA E MONTAGEM - UNIDADE INJETORA 117

* TRADUÇÃO NÃO DISPONÍVEL NO MOMENTO DA IMPRESSÃO

ÍNDICE

Designação	Página
BORDA CORTANTE	721, 722, 723
BRAÇO DO ASSENTO	765, 766, 787
BRAÇO DO LIMPADOR (DIANTEIRO)	877
BRACO DO LIMPADOR (DIREITO)	880
BRAÇO DO LIMPADOR (PORTA, LADO DIREITO)	882
BRAÇO DO LIMPADOR (VIDRO DA PORTA INFERIOR, ESQUERDO)	883
BRAÇO DO LIMPADOR (VIDRO DA PORTA SUPERIOR, ESQUERDO)	883
BUJÃO DO BLOCO DO CILINDRO	48
BUJÃO DO DRENO	34, 36
BUJÃO DO MOTOR	49
BUJÃO MAGNÉTICO (TRANSMISSÃO)	328
CABEÇOTE DO MOTOR	24, 25, 26, 27
CABINE	768
CABOS E FIOS ELÉTRICOS-LUZES TRASEIRAS	304, 306
CABOS/FIOS ELÉTRICOS - AQUECEDOR	286
CABOS/FIOS ELÉTRICOS - CABINE	265
CABOS/FIOS ELÉTRICOS - CONTROLE ELETRÔNICO	271
CABOS/FIOS ELÉTRICOS - DIANTEIROS	275
CABOS/FIOS ELÉTRICOS - DIREÇÃO SECUNDÁRIA	308
CABOS/FIOS ELÉTRICOS - LIMPADOR	315
CABOS/FIOS ELÉTRICOS - MOTOR	273
CABOS/FIOS ELÉTRICOS - PAINEL MONITOR	291, 294
CABOS/FIOS ELÉTRICOS - SENSOR	310, 313, 314
CABOS/FIOS ELÉTRICOS - TOMADA DE FORÇA	296
CABOS/FIOS ELÉTRICOS - TRASEIROS	299
CABOS/FIOS ELÉTRICOS AUXILIARES	264
CABOS/FIOS ELÉTRICOS DE ILUMINAÇÃO	287, 288, 289
CAIXA - SUSPENSÃO DO ASSENTO	807
CAIXA DE FERRAMENTAS	885
CAIXA DIANTEIRA	38
CAIXA DO VOLANTE DO MOTOR	34, 36
CANTO DE LÂMINA	708, 709, 710, 711
CAPÔ	480
CARCAÇA DAS ENGRENAGENS PLANETÁRIAS E COMPONENTES	327
CÁRTER DO ÓLEO DO MOTOR	46
CENTRO DE SERVIÇO	489
CHAPA DE EMPUXO	707
CHASSI DIANTEIRO	471
CHASSI TRASEIRO	472
CHAVE - ELETRÔNICO (SEGURANÇA)	175
CHAVE (DESCONEXÃO DA BATERIA)	251
CHAVE GERAL	251
CHICOTE - CABINE	265
CHICOTE - CABINE (LIMPADOR, PORTA DIREITA)	791
CHICOTE - CABOS ELÉTRICOS (BARRA DE LUZ)	291
CHICOTE - CABOS ELÉTRICOS (INCLINAÇÃO)	282
CHICOTE - CHASSI (CONTROLE DA INCLINAÇÃO)	282
CHICOTE - CHASSI (SISTEMA DE SEGURANÇA DA MÁQUINA)	175
CHICOTE - DIANTEIRO	310
CHICOTE - ILUMINAÇÃO	275, 288, 289
CHICOTE - MONITOR	294
CHICOTE - MOTOR (INJEÇÃO DE COMBUSTÍVEL)	273
CHICOTE - MOTOR (MÓDULO DE CONTROLE ELETRÔNICO)	273
CHICOTE - SENSOR	106, 342
CHICOTE - SENSOR (ÂNGULO)	282
CHICOTE - SENSOR (DIREÇÃO, DIREITA)	313, 314
CHICOTE - SENSOR (DIREÇÃO, LADO ESQUERDO)	313, 314
CHICOTE - SENSOR (ROTAÇÃO)	282
CHICOTE - SENSOR (ROTAÇÃO DO MOTOR, DIREITO)	310
CHICOTE - SENSOR (ROTAÇÃO DO MOTOR, ESQUERDO)	310
CHICOTE - TRANSMISSÃO	216

* TRADUÇÃO NÃO DISPONÍVEL NO MOMENTO DA IMPRESSÃO

ÍNDICE

Designação	Página
	342
CHICOTE - TRASEIRO	299
	310
CHICOTE - VÁLVULA	264
CHICOTE - VÁLVULA (COMPRESSOR DE AR DO ASSENTO)	865
CHICOTE-CHASSI DIANTEIRO	275
	279
	291
CHICOTE-CHASSI TRASEIRO	299
CILINDRO DA DIREÇÃO	551
	553
CILINDRO DE ARTICULAÇÃO	544
CILINDRO DE DESLIZAMENTO LONGITUDINAL	550
CILINDRO DE DESLOCAMENTO LATERAL	546
CILINDRO DE DIREÇÃO E MONTAGEM	541
	542
CILINDRO DE INCLINAÇÃO LATERAL DAS RODAS	555
CILINDRO DE LEVANTAMENTO	547
CILINDRO DE TOMBAMENTO DA LÂMINA	545
CILINDRO DO ESCARIFICADOR	549
CILINDRO DO RÍPER	548
CILINDRO E MONTAGEM - ARTICULAÇÃO	534
CILINDRO E MONTAGEM - DESLOCAMENTO DA LÂMINA	540
CILINDRO E MONTAGEM - DESLOCAMENTO DO CÍRCULO	538
CILINDRO E MONTAGEM - ESCARIFICADOR	539
CILINDRO E MONTAGEM - INCLINAÇÃO DAS RODAS	543
CILINDRO E MONTAGEM - LEVANTAMENTO DA LÂMINA	536
CILINDRO E MONTAGEM - TOMBAMENTO DA LÂMINA	537
CILINDRO HIDRÁULICO	720
CINTO DE SEGURANÇA (RETRÁTIL)	854
CÍRCULO	703
COBERTURA DO MOTOR	458
COLETOR - CONTROLE	617
	619
	620
	621
	623
COLETOR - ÓLEO DO MOTOR	65
COLETOR - VÁLVULA	625
	626
COLETOR DE ESCAPE	95
COLMÉIA - ARREFECEDOR DE ÓLEO (HIDRÁULICO)	532
	593
COLMÉIA-AQUECEDOR	769
	771
COLMÉIA-ARREFECEDOR DA TRANSMISSÃO	345
COLMÉIA-ARREFECEDOR DE ÓLEO DO MOTOR	69
COLMEIA DO RADIADOR	80
COMANDO FINAL	356
	358
COMANDO HIDRÁULICO	564
COMPRESSOR DE AR	7
	8
	9
COMPRESSOR DE AR - ASSENTO	757
	758
	865
COMPRESSOR DE REFRIGERANTE	772
	773
CONDENSADOR DO REFRIGERANTE E MONTAGEM	774
CONDICIONADOR DE AR	761
	762
	763
CONDICIONADOR DE AR E MONTAGEM	759
CONTROLE - ACESSÓRIO	152
	153
	154
	155
	156
	157
CONTROLE - ALAVANCA	783
	784
CONTROLE - ALAVANCA (CONTROLE ELETRÔNICO)	782
CONTROLE - NÃO PROGRAMADO	160
	161
CONTROLE - NÃO PROGRAMADO (IMPLEMENTO)	161
CONTROLE - NÃO PROGRAMADO (IMPLEMENTO 2)	161
CONTROLE - NÃO PROGRAMADO (SISTEMA HIDRÁULICO ELETRÔNICO)	271
CONTROLE - NÃO PROGRAMADO (TRAÇÃO EM TODAS AS RODAS)	158
CONTROLE - NÃO PROGRAMADO (TRANSMISSÃO)	342
CONTROLE DA TRAVA DO DIFERENCIAL	340
CONTROLE DE INCLINAÇÃO	168
CONTROLE DO ACESSÓRIO E MONTAGEM	151
CONTROLE DO AR E TEMPERATURA	778
	779
CONTROLE DO FREIO DE SERVIÇO	508
	510
	511

* TRADUÇÃO NÃO DISPONÍVEL NO MOMENTO DA IMPRESSÃO

ÍNDICE

Designação	Página
CONTROLE DO GRAU	168
CONTROLE DO PAINEL MONITOR (MENSAGEIRO)	785
CONTROLE DO TREM DE FORÇA	158, 342
CONTROLE ELÉTRICO DAS MARCHAS	316
CONTROLE-ELETROIDRÁULICO	780, 781, 782
CONTROLE ELETRÔNICO E MONTAGEM - MOTOR	150
CONTROLE HIDRÁULICO	524, 525, 526, 527, 528, 529, 530, 531
CONTROLE HIDRÁULICO DA TRANSMISSÃO	342
CONTROLE-MONITOR NÃO PROGRAMADO	785
CONVERSOR ELÉTRICO	162, 163
CORREIA- SERPENTINA	132, 134, 136, 138
CORREIA DE COMANDO	196
CORRENTE - COMANDO	331
COTOVELO DE ADMISSÃO DE AR	90

D

Designação	Página
DECALQUE	886, 887
DECALQUE - ADVERTÊNCIA (ALTA PRESSÃO, CONSULTAR OMM)	500, 501, 522
DECALQUE - ADVERTÊNCIA (CABO AUXILIAR DE PARTIDA, CONSULTAR OMM, INTERNACIONAL)	489
DECALQUE - ADVERTÊNCIA (CINTO DE SEGURANÇA)	508, 889
DECALQUE - ADVERTÊNCIA (LÂMINA, NÃO SUBA, LEIA O OMM)	205, 213
DECALQUE - ADVERTÊNCIA (MOLA TENSORA)	502
DECALQUE - ADVERTÊNCIA (PARTIDA COM CABO AUXILIAR DE PARTIDA, CONSULTAR OMM, EUA)	489
DECALQUE - ADVERTÊNCIA (PERIGO DE ESMAGAMENTO)	508, 889
DECALQUE - ADVERTÊNCIA (PERIGO DE ESMAGAMENTO)	732
DECALQUE - ADVERTÊNCIA (PERIGO DE ESMAGAMENTO, CONSULTAR MANUAL)	511, 888, 891
DECALQUE - ADVERTÊNCIA (PERIGO DE ESMAGAMENTO DA MÃO, MANTENHA DISTÂNCIA)	304
DECALQUE - ADVERTÊNCIA (TRANSMISSOR A LASER)	213
DECALQUE - IDENTIFICAÇÃO (BUZINA)	775
DECALQUE - IDENTIFICAÇÃO (COMBUSTÍVEL DE ABASTECIMENTO RÁPIDO, CONSULTAR OMM)	126
DECALQUE - IDENTIFICAÇÃO (ENCHIMENTO, DRENAGEM)	66
DECALQUE - IDENTIFICAÇÃO (IGNIÇÃO)	175
DECALQUE - IDENTIFICAÇÃO (INFERIOR)	834
DECALQUE - IDENTIFICAÇÃO (PAINEL DE FUSÍVEIS)	217
DECALQUE - IDENTIFICAÇÃO (*PANEL SWITCHES) (CONTROLE DA LÀMINA)	842
DECALQUE - IDENTIFICAÇÃO (REFLETORA REDONDA VERMELHA)	740
DECALQUE - IDENTIFICAÇÃO (SUPERIOR)	834
DECALQUE - IDENTIFICAÇÃO (TRAÇÃO EM TODAS AS RODAS)	318
DECALQUE - IDENTIFICAÇÃO (12-VOLTS)	163
DECALQUE - INFORMAÇÕES (CONSOLE, ESQUERDO)	846
DECALQUE - INFORMAÇÕES (CONSOLE, LADO DIREITO)	846
DECALQUE - INFORMAÇÕES (LAMINADO) (MOTOR)	890
DECALQUE - INFORMAÇÕES (LÍQUIDO ARREFECEDOR DE VIDA PROLONGADA - CONSULTE OMM)	891, 895
DECALQUE - INFORMAÇÕES (ROPS, FOPS, CONSULTAR OMM)	768
DECALQUE - INFORMAÇÕES (ULTRAPLACA DE PRATA) (MOTOR)	890
DECALQUE - INSTRUÇÃO (ÁGUA DO HVAC, DRENAGEM, ENCHIMENTO)	804
DECALQUE - INSTRUÇÃO (ÁGUA DO HVAC, DRENAGEM, ENCHIMENTO)	763

* TRADUÇÃO NÃO DISPONÍVEL NO MOMENTO DA IMPRESSÃO

ÍNDICE

Designação	Página
DECALQUE - INSTRUÇÃO (ÁGUA DO HVAC, DRENAGEM, ENCHIMENTO)	816 819
DECALQUE - INSTRUÇÃO (AJUSTE DO ASSENTO)	863 865
DECALQUE - INSTRUÇÃO (AUXILIAR)	781 782
DECALQUE - INSTRUÇÃO (CONSOLE DO OPERADOR, DIREITO)	775
DECALQUE - INSTRUÇÃO (CONSOLE DO OPERADOR, ESQUERDO)	775
DECALQUE - INSTRUÇÃO (DRENO DO ÓLEO DO MOTOR)	63
DECALQUE - INSTRUÇÃO (ENCAMINHAMENTO DA CORREIA)	132 134 136 138
DECALQUE - INSTRUÇÃO (FLUTUAR)	156
DECALQUE - INSTRUÇÃO (FLUTUAR - NÃO FLUTUAR)	157
DECALQUE - INSTRUÇÃO (FLUTUAR - NÃO FLUTUAR) (IMPLEMENTO)	154
DECALQUE - INSTRUÇÃO (FLUTUAR) (IMPLEMENTO DIANTEIRO)	153
DECALQUE - INSTRUÇÃO (LIMPADOR)	810
DECALQUE - INSTRUÇÃO (PAINEL DE INTERRUPTORES) (CONTROLE DA LÀMINA)	844
DECALQUE - INSTRUÇÃO (SAÍDA)	791
DECALQUE - INSTRUÇÃO (SEGURANÇA DA MÁQUINA, CONSULTAR OMM)	175
DECALQUE - INSTRUÇÃO (SEM FLUTUAÇÃO)	155
DECALQUE - INSTRUÇÃO (SEM FLUTUAÇÃO) (IMPLEMENTO)	152
DECALQUE - INSTRUÇÃO (TRAÇÃO EM TODAS AS RODAS)	158
DECALQUE - TIRA (AMARELO, REFLETOR)	469
DEGRAU	493
DENTE DO ESCARIFICADOR	755
DENTE DO RÍPER	753 754
DIFERENCIAL	351
DIFERENCIAL E COROA	349
DIREÇÃO SECUNDÁRIA	640
DISJUNTOR AUTOMÁTICO DE CIRCUITO (15 AMPERES) (CHAVE INTERRUPTORA)	216
DISJUNTOR AUTOMÁTICO DE CIRCUITO (15 AMPERES) (HOLOFOTES, LADO DIREITO)	217
DISJUNTOR AUTOMÁTICO DE CIRCUITO (15 AMPERES) (HOLOFOTES, LADO ESQUERDO)	216
DISJUNTOR AUTOMÁTICO DE CIRCUITO (15 AMPERES) (TRANSMISSÃO - CONTRÔLE DAS MARCHAS)	216
DISJUNTOR AUTOMÁTICO DE CIRCUITO (150 AMPÈRES) (ALTERNADOR)	216
DISJUNTOR AUTOMÁTICO DE CIRCUITO (20-AMPERES)	266
DISJUNTOR AUTOMÁTICO DE CIRCUITO (20-AMPERES) (ACCUGRADE)	216
DISJUNTOR AUTOMÁTICO DE CIRCUITO (20-AMPERES) (CONTROLE DO MOTOR)	216
DISJUNTOR AUTOMÁTICO DE CIRCUITO (80 AMPERES) (CARGA)	216
DISJUNTOR AUTOMÁTICO DE CIRCUITO (80 AMPERES) (PRINCIPAL)	216
DRENO - ECOLOGIA (CAIXA DO DIFERENCIAL)	323
DUTO E FILTRO-AR DA CABINE	797

E

EIXO-COMANDO DE VÁLVULA	12
EIXO DE ENTRADA	392
EIXO DE TRANSMISSÃO	391
EIXO DIANTEIRO	317 318 319 322 447 448 449 453
ELEMENTO - AQUECEDOR DE ÁGUA DA CAMISA (120 VOLTS, 1.000 WATTS)	170
ELEMENTO - AQUECEDOR DE ÁGUA DA CAMISA (240 VOLTS, 1.000 WATTS)	169
ELEMENTO DO FILTRO DE AR (SECUNDÁRIO)	87
ELEMENTO FILTRANTE - AR (PRIMÁRIO)	87
ELEMENTO FILTRANTE - ÓLEO (EXTREMA EFICIÊNCIA)	372
ELEMENTO FILTRANTE - ÓLEO (EXTREMA EFICIÊNCIA) (TANQUE HIDRÁULICO)	563
ELEMENTO FILTRANTE - ÓLEO (EXTREMA EFICIÊNCIA) (TRANSMISSÃO)	355
ELIMINAÇÃO DE VAPORES DO CÁRTER	60
ELO - DIREÇÃO	482 483
EMBREAGEM DA TRANSMISSÃO	332

* TRADUÇÃO NÃO DISPONÍVEL NO MOMENTO DA IMPRESSÃO

ÍNDICE

Designação	Página
	334
	336
	338
EMISSOR - COMBUSTÍVEL	124
	126
EMISSOR - POSIÇÃO	225
	226
	227
EMISSOR - POSIÇÃO (CILINDRO DA DIREÇÃO)	551
	553
EMISSOR - POSIÇÃO (GIRATÓRIO) (ARTICULAÇÃO)	299
EMISSOR - POSIÇÃO (GIRATÓRIO) (CONTROLE MODULADOR DA TRANSMISSÃO)	848
EMISSOR - POSIÇÃO (GIRATÓRIO) (SENSOR DA POSIÇÃO DO ACELERADOR)	848
EMISSOR - POSIÇÃO (TRAÇÃO EM TODAS AS RODAS)	248
ENGATE - ARTICULAÇÃO	477
ENGATE DO REBOQUE	479
ENGRENAGENS DE COMANDO TRASEIRO	32
	33
ENGRENAGENS DE DISTRIBUIÇÃO	31
	360
	361
ESCARIFICADOR	742
	743
	747
	750
	751
	752
ESPELHO RETROVISOR	820
	821
	822
	823
EXTENSÃO DA LÂMINA	724
	725
	726
	728

F

FAROL DIANTEIRO	189
FIAÇÃO - AQUECEDOR E AR CONDICIONADO	300
FIACAO - BOMBA	310
FIACAO - BOMBA (COMBUSTÍVEL)	300
FIAÇÃO - CONTROLE (ACCUGRADE)	280
FIACAO - CONTROLE DO NIVEL	280
	282
FIAÇÃO - CONTROLE (SISTEMA HIDRÁULICO ELETRÔNICO)	271
FIAÇÃO - CONTROLE (TRAÇÃO EM TODAS AS RODAS)	158
FIAÇÃO - INTERRUPTOR	842
FIAÇÃO - INTERRUPTOR (ASSENTO AQUECIDO)	831
FIAÇÃO - LUZES TRASEIRAS	304
	306
FIAÇÃO - LUZES TRASEIRAS (PLACA DE REGISTRO)	193
FIAÇÃO - PAINEL	842
	844
FIAÇÃO -LUZES DIANTEIRAS	209
	211
FIAÇÃO-CAIXA	216
FIAÇÃO-CÂMERA	270
FIAÇÃO ELÉTRICA-AQUECEDOR (RELÉ DO AQUECEDOR DA ADMISSÃO DE AR)	273
FIAÇÃO ELÉTRICA (RÁDIO DO PRODUCT LINK)	171
FIAÇÃO-ILUMINAÇÃO DIANTEIRA	279
FIAÇÃO-LIMPADOR DE VIDROS	315
	794
	871
	876
FIAÇÃO-MOTOR	763
FIAÇÃO-MOTOR (TERMOSTATO)	804
FIAÇÃO-RÁDIO	291
FILTRO - AR (AQUECEDOR, CONDICIONADOR DE AR DA CABINE)	797
FILTRO - AR (CABINE) (CARVÃO ATIVADO)	797
FILTRO - COMBUSTÍVEL	106
	124
	126
FILTRO - COMBUSTÍVEL (EFICIÊNCIA AVANÇADA)	106
FILTRO - MAGNÉTICO	390
FILTRO - MAGNÉTICO (TRANSMISSÃO)	327
	390
FILTRO - ÓLEO	355
	562
	563
FILTRO - ÓLEO DO MOTOR	58
FILTRO - ÓLEO (EFICIÊNCIA AVANÇADA)	362
	562
FILTRO - ÓLEO (EXTREMA EFICIÊNCIA)	362
FILTRO - ÓLEO (FLUIDO À PROVA DE FOGO)	362
FILTRO - ÓLEO (TRAÇÃO EM TODAS AS RODAS)	362
FILTRO - RESPIRO (TANQUE HIDRÁULICO)	644
FILTRO - SEPARADOR DE ÁGUA E COMBUSTÍVEL (PRIMÁRIO)	108

* TRADUÇÃO NÃO DISPONÍVEL NO MOMENTO DA IMPRESSÃO

ÍNDICE

Designação	Página
FILTRO (ÁGUA) (BOMBA)	78
FILTRO DE COMBUSTÍVEL E SEPARADOR DE ÁGUA	108
FILTRO E MONTAGEM - TRANSMISSÃO	354
FILTRO HIDRÁULICO E MONTAGEM	560
FIXADORES	463, 464
FIXADORES - CABEÇOTE DO MOTOR	27, 29
FIXADORES - TANQUE DE COMBUSTÍVEL	104
FREIO DE ESTACIONAMENTO	502
FREIO DE SERVIÇO	504, 506
FUNDO - ENCOSTO	832, 833
FUSÍVEL (10 AMPERES)	265
FUSÍVEL (15 AMPERES)	265, 763, 804

G

GR. DE SERVIÇO - ACESSÓRIO	165
GRUPO DE VÁLVULAS DE CONTROLE - CINCO	649, 650
GRUPO DE VÁLVULAS DE CONTROLE - OITO	658, 660
GRUPO DE VÁLVULAS DE CONTROLE - QUÁDRUPLO	648
GRUPO DE VÁLVULAS DE CONTROLE - SEIS	651, 652, 653
GRUPO DE VÁLVULAS DE CONTROLE - SETE	654, 656
GRUPO DE VÁLVULAS DE CONTROLE - TRIPLO	647
GRUPO ROTATIVO DA BOMBA	638, 639

I

ILUMINAÇÃO - MARCHA A RÉ	197
INDICADOR - NÍVEL DO ÓLEO (VARETA)	61
INDICADOR - VARETA DO NÍVEL DE ÓLEO (MOTOR)	61
INDICADOR - VARETA DO NÍVEL DE ÓLEO (ÓLEO DO TREM DE FORÇA)	353
INJETOR DE COMBUSTÍVEL	109, 110
INSTALAÇÃO - CÂMERA	173
INSTALAÇÃO-COMUNICAÇÃO	171
INSTALAÇÃO DO PISCA-PISCA DE ADVERTÊNCIA	177
INSTALAÇÃO DO SISTEMA DE ILUMINAÇÃO	174
INSTALAÇÃO-SEGURANÇA	175
INTERRUPTOR - BALANCIM	260
INTERRUPTOR - BALANCIM (ACOPLADOR RÁPIDO)	265
INTERRUPTOR - BALANCIM (AMORTECEDOR DA LÂMINA)	265
INTERRUPTOR - BALANCIM (AQUECIMENTO DOS ESPELHOS)	823
INTERRUPTOR - BALANCIM (CONDICIONADOR DE AR, LIGAR-DESLIGAR)	778
INTERRUPTOR - BALANCIM (DIREÇÃO SECUNDÁRIA)	265
INTERRUPTOR - BALANCIM (FARÓIS DA CABINE)	288
INTERRUPTOR - BALANCIM (FARÓIS DIANTEIROS, LUZES TRASEIRAS)	265
INTERRUPTOR - BALANCIM (FREIO DE ESTACIONAMENTO - LIGAR-DESLIGAR)	265
INTERRUPTOR - BALANCIM (LUZ DE OPERAÇÃO)	174, 252
INTERRUPTOR - BALANCIM (MUDANÇA AUTOMÁTICA)	260
INTERRUPTOR - BALANCIM (PARADA A NÍVEL DO SOLO)	299
INTERRUPTOR - BALANCIM (PERIGO)	265
INTERRUPTOR - BALANCIM (PISCA-ALERTA)	177
INTERRUPTOR - BALANCIM (REGULADOR DO CONTROLE DA VELOCIDADE)	265
INTERRUPTOR - BALANCIM (SETA DE DIREÇÃO)	775
INTERRUPTOR - BALANCIM (TRAVA DO ACELERADOR)	265
INTERRUPTOR - BALANCIM (TRAVA DO ACESSÓRIO)	265
INTERRUPTOR - BALANCIM (VELOCIDADE DO VENTILADOR)	800
INTERRUPTOR - BALANCIM (24 VOLTS) (DESLOCAMENTO, DIREITO)	844
INTERRUPTOR - BALANCIM (24 VOLTS) (ILUMINAÇÃO RODOVIÁRIA)	259
INTERRUPTOR - BALANCIM (24 VOLTS) (INCREMENTO, DIMINUIÇÃO, DIREITO)	842
INTERRUPTOR - BALANCIM (24 VOLTS) (INCREMENTO, DIMINUIÇÃO, ESQUERDO)	842
INTERRUPTOR - BOTÃO (BUZINA)	775

* TRADUÇÃO NÃO DISPONÍVEL NO MOMENTO DA IMPRESSÃO

ÍNDICE

Designação	Página
INTERRUPTOR - BOTÃO (DESLOCAMENTO LATERAL)	844
INTERRUPTOR - BOTÃO (LEVANTAMENTO DA LÂMINA, INFERIOR)	842
INTERRUPTOR - BOTÃO (LEVANTAMENTO DA LÂMINA, INFERIOR)	844
INTERRUPTOR - ESFERA (INDICADOR DE DESLOCAMENTO LATERAL)	275
INTERRUPTOR - LIMITADOR (AJUSTE DO ASSENTO)	831
INTERRUPTOR - LIMITADOR (LUZ DE FREIO)	848
INTERRUPTOR - LIMITE	253
INTERRUPTOR - LIMPADOR DO PÁRA-BRISA	261
INTERRUPTOR - LIMPADOR DO PÁRA-BRISA (24 VOLTS, INTERMITENTE)	265
INTERRUPTOR - LIMPADOR DO PÁRA-BRISA (24 VOLTS, INTERMITENTE)	879
INTERRUPTOR - LUZES	252
INTERRUPTOR - MAGNÉTICO	254 255 256 257
INTERRUPTOR - PARTIDA (CHAVE)	265
INTERRUPTOR - PRESSÃO	258
INTERRUPTOR - PRESSÃO (COMPRESSOR, LADO ALTO)	814
INTERRUPTOR - PRESSÃO (COMPRESSOR, LADO BAIXO)	814
INTERRUPTOR - PRESSÃO (DERIVAÇÃO DO FILTRO)	562
INTERRUPTOR - PRESSÃO (DERIVAÇÃO DO FILTRO DE ÓLEO DA TRAÇÃO EM TODAS AS RODAS)	362
INTERRUPTOR - PRESSÃO (FREIO DE ESTACIONAMENTO)	342
INTERRUPTOR - RODOVIÁRIO	259
INTERRUPTOR - ROTATIVO (24 VOLTS) (CONTROLE DA TRAÇÃO EM TODAS AS RODAS)	248
INTERRUPTOR - TEMPERATURA (CONDICIONADOR DE AR, AQUECEDOR)	763
INTERRUPTOR - 3 POSIÇÕES (CONTROLE DE FLUTUAÇÃO)	155
INTERRUPTOR - 3 POSIÇÕES (IMPLEMENTO DIANTEIRO)	153 154
INTERRUPTOR - 3 POSIÇÕES (IMPLEMENTO DIANTEIRO)	156 157
INTERRUPTOR - 3 POSIÇÕES (IMPLEMENTO TRASEIRO)	152 154
INTERRUPTOR - 3 POSIÇÕES (IMPLEMENTO TRASEIRO)	157
INTERRUPTOR DE DERIVAÇÃO	250
INTERRUPTOR-TRAÇÃO EM TODAS AS RODAS	248

J

Designação	Página
JANELA DA CABINE	868 869 870 871 872 874 875 876
JOGO DE BOTÃO DE SUSPENSÃO (AJUSTE DE ALTURA) (ASSENTO DA SUSPENSÃO)	807
JOGO DE FIXADORES (ALTERNADOR)	130
JOGO DE INDICADOR (AJUSTAGEM DO PESO) (ASSENTO DA SUSPENSÃO)	807
JOGO DE MANCAL (ALTERNADOR)	130
JOGO DE MANCAL (ASSENTO DA SUSPENSÃO)	808
JOGO DE MOLA (AJUSTE DE ALTURA) (ASSENTO DA SUSPENSÃO)	807
JOGO DE MOLA (ASSENTO DA SUSPENSÃO)	807
JOGO DE PÁRA-CHOQUE (AJUSTAGEM DO PESO) (ASSENTO DA SUSPENSÃO)	808
JOGO DE RECEPTÁCULO (12 PINOS)	171 288
JOGO DE RECEPTÁCULO (2 PINOS)	260 306 810 823
JOGO DE RECEPTÁCULO (2 PINOS)	288
JOGO DE RETENTOR	545 549
JOGO DE SEGUIDOR (ASSENTO DA SUSPENSÃO)	808
JOGO DE TERMINAL (ALTERNADOR)	130
JOGO DE TOMADA DE CONEXÃO (12 PINOS)	171 288 289 306
JUNTA (ALOJAMENTO DO REGULADOR DE TEMPERATURA)	74
JUNTA UNIVERSAL	395

* TRADUÇÃO NÃO DISPONÍVEL NO MOMENTO DA IMPRESSÃO

ÍNDICE

Designação	Página

L

LÂMINA 712
713
714
LÂMINA BULDOZER 715
716
LÂMINA DO LIMPADOR DE PÁRA-BRISA (400 MM) (DIANTEIRO) 880
LÂMINA DO LIMPADOR DE PÁRA-BRISA (400 MM) (VIDRO DA PORTA INFERIOR, ESQUERDO) 883
LÂMINA DO LIMPADOR DE PÁRA-BRISA (450 MM) (DIANTEIRO) 877
LÂMINA DO LIMPADOR DE PÁRA-BRISA (500 MM) (PORTA, LADO DIREITO) 882
LÂMINA DO LIMPADOR DE PÁRA-BRISA (500 MM) (TRASEIRO) 879
LÂMINA DO LIMPADOR DE PÁRA-BRISA (500 MM) (VIDRO DA PORTA SUPERIOR, ESQUERDO) 883
LÂMPADA - FAROL 179
180
181
182
183
184
185
186
187
188
LÂMPADA - HALOGÊNEO (24 VOLTS, 35 WATTS) 179
LÂMPADA - HALOGÊNEO (24 VOLTS, 65 WATTS) 180
183
184
189
LÂMPADA - LED (VERDE, 24 VOLTS) 158
260
LÂMPADA - LED (VERMELHA, 24 VOLTS) 158
175
LÀMPADA - MARCADORA 192
LÂMPADA - SINALIZAÇÃO 194
195
LÂMPADA - TETO 178
LÂMPADA - TETO (24 VOLTS) 810
LÂMPADA DIANTEIRA E DE SINAL 190
191
LAMPADA-PLACA DE REGISTRO 193
LÂMPADA (24 VOLTS) 178
810
LÂMPADA (24 VOLTS, HID) 186

Designação	Página

LÂMPADA (24 VOLTS) (POSIÇÃO DA CABINE) 192
LÂMPADA (24-VOLTS, VERDE) 153
154
156
157
LÂMPADA (24-VOLTS, VERDE) (VERDE) 265
LÂMPADA (24 VOLTS, 21 WATTS) 197
LÂMPADA (24 VOLTS, 5 WATTS) 190
191
193
LÂMPADA (24 VOLTS, 70 WATTS) 196
LÂMPADA (24 VOLTS, 75-70 WATTS) 190
191
LEVANTAMENTO DA LÂMINA 729
LEVANTAMENTO DO MOTOR 40
LEVANTAMENTO-FERRAMENTA DE TRABALHO 732
734
LIMPADOR DO VIDRO 879
880
882
883
LIMPADOR E LAVADOR - JANELA 877
LUZ GIRATÓRIA DE ALARME 196

M

MANCAL 732
MANCAL - PRINCIPAL 18
MASTRO 205
MECANISMO DAS VÁLVULAS 53
54
MÓDULO - INTERFACE (CHAVE) (SISTEMA DE SEGURANÇA DA MÁQUINA) 175
MÓDULO-SUPRIMENTO DE FORÇA 220
MONITOR 824
MONTAGEM - ALTERNADOR 41
MONTAGEM - CABINE 828
MONTAGEM - COMANDO DO VENTILADOR 44
MONTAGEM - ILUMNAÇÃO 209
211
MONTAGEM - MASTRO 213
MONTAGEM - MOTOR E TRANSMISSÃO 42
MONTAGEM - RECEPTOR 214
MONTAGEM - REMOVEDOR DE NEVE 737
738
MONTAGEM - RIPER 735
MONTAGEM - RODA 382
MONTAGEM - VÁLVULA 486
MONTAGEM - VÁLVULA DE CONTROLE 829
830
MONTAGEM-ANTENA 827

* TRADUÇÃO NÃO DISPONÍVEL NO MOMENTO DA IMPRESSÃO

ÍNDICE

Designação	Página
MONTAGEM-ARREFECEDOR DO ÓLEO DA TRANSMISSÃO	383
MONTAGEM-CONTROLE DO DECLIVE	207
MONTAGEM DA LÂMPADA	208
MONTAGEM DO EIXO	484
	485
MONTAGEM DO FILTRO DE COMBUSTÍVEL	116
MOTOR - ENGRENAGENS (ARREFECIMENTO DO RADIADOR)	71
MOTOR - LIMPADOR DO VIDRO	825
	826
MOTOR - LIMPADOR DO VIDRO (DIREITO)	882
MOTOR - LIMPADOR DO VIDRO (TRASEIRO)	879
MOTOR - LIMPADOR DO VIDRO (24 VOLTS) (DIREITO)	880
MOTOR - LIMPADOR DO VIDRO (24 VOLTS) (ESQUERDO)	880
MOTOR - LIMPADOR DO VIDRO (24 VOLTS, 2 VELOCIDADES)	882
	883
MOTOR - LIMPADOR DO VIDRO (24 VOLTS, 2 VELOCIDADES) (DIANTEIRO)	826
MOTOR - NÚCLEO	6
MOTOR - PISTÃO	377
	378
MOTOR COMPLETO	4
	5
MOTOR DE REVERSÃO DO CÍRCULO	557
MOTOR E VENTILADOR	71
MOTOR ELÉTRICO	206
MOTOR ELÉTRICO DE PARTIDA	244
	246
MOTOR HIDRÁULICO DO GEROTOR	628

O

ÓLEO - ARRANJO PARA TROCA RÁPIDA	66
OPÇÃO - UNIÃO EUROPÉIA - EU	2
ORIFÍCIO-CONDICIONADOR DE AR	812

P

PAINEL - CABINE	834
	838
PAINEL - DISJUNTOR ELÉTRICO AUTOMÁTICO	216
PAINEL DE CONTROLE	842
	844
PAINEL DE INSTRUMENTOS	846
PÁRA-LAMA E SUPORTE	465
	467
	469
PEDAL - FREIO, TRANSMISSÃO E GOVERNADOR	848
PISTÃO E BIELA	47
PLACA - NÚMERO DE SÉRIE (TRANSMISSÃO)	327
PLACA BASCULANTE	641
PLACA DE IDENTIFICAÇÃO (FERRAMENTA DE TRABALHO)	715
	732
	750
	751
PLACA DE IDENTIFICAÇÃO (NÚMERO DE SÉRIE)	763
PLACA DE INSTRUÇÃO (CONDICIONADOR DE AR)	761
PLACA E DECALQUE	890
	891
	895
	899
	900
	901
	902
	903
POLIA DA RODA-GUIA	50
PORTA DA CABINE	791
	794
PÓS-ARREFECEDOR DA ADMISSÃO DE AR	85
PRÉ-PURIFICADOR	98
PRÉ-PURIFICADOR (TURBINA)	98
PRESSURIZADOR	849
PROTETOR - TUBOS DO FREIO	475
PROTETOR-DETRITOS	476
PROTETOR DO VENTILADOR	73
PROTETOR DO VENTILADOR (ARREFECIMENTO DO RADIADOR)	71
PROTETOR INFERIOR	473
PURIFICADOR DE AR	86
	87

R

RADIADOR	80
RÁDIO - COMUNICAÇÃO	221
RECEPTOR-COMBUSTÍVEL DE ABASTECIMENTO RÁPIDO	121
RECEPTOR-LASER	221
	222
RECEPTOR-LASER (LR410)	222
RECEPTOR-SATÉLITE	221
	222
RECEPTOR SECADOR (REFRIGERANTE)	812
RECLINAÇÃO - ASSENTO	850
REDUÇÃO DE RUÍDO	496

* TRADUÇÃO NÃO DISPONÍVEL NO MOMENTO DA IMPRESSÃO

ÍNDICE

Designação	Página
	497
REFLETOR	487
	488
REGULADOR DE PRESSÃO (COMBUSTÍVEL)	119
REGULADOR DE PRESSÃO DO COMBUSTÍVEL	122
REGULADOR DE TEMPERATURA DA ÁGUA (97 GRAUS C)	74
REGULADOR DE VOLTAGEM (24 VOLTS)	130
RELÉ (CONJ) (24 VDC, 20 AMPÈRES) (SINCRONIZADOR DE AQUECIMENTO DOS ESPELHOS)	823
RELÉ (CONJ) (24 VOLTS)	265
RELÉ (CONJ) (24 VOLTS) (ALARME DE MARCHA-À-RÉ)	300
RELÉ (CONJ) (24 VOLTS) (DIREÇÃO SECUNDÁRIA)	300
RELÉ (CONJ) (24 VOLTS) (RELÉ DA BOMBA DE COMBUSTÍVEL)	300
RELÉ (CONJ) (24 VOLTS) (SOLENÓIDE DA EMBREAGEM DO ALT. DE CORR.)	300
RESPIRO	57
RESPIRO (AWD, ENGRENAGEM)	360
	361
RESPIRO (BOCAL DE ENCHIMENTO DE ÓLEO DE TREM DE FORÇA)	353
RESPIRO (CÁRTER DO MOTOR)	57
RESPIRO (TANDEM)	393
RETENTOR - TAMPA DA VÁLVULA	16
RETENTOR DO VIRABREQUIM	51
RETENTOR DUO-CONE	557
REVESTIMENTO DA CABINE	810
RIPER	739
	740
RODA	436
	437
	438
	439
	440
	441
	442
	443
	444
	445
	446
RODA E PNEU	401
	402
	403
	404
	405
	406
	407
	408
	409
	410
	411
	412
	413
	414
	415
	416
	417
	418
	419
	420
	421
	422
	423
	424
	425
	426
	427
	428
	429
	430
	431
	432
	433
	434
	435
	436
RODA PROPULSORA	352

S

SEMI-EIXO TRASEIRO	323
SENSOR - PRESSÃO	228
	229
	230
	231
	232
	233
	234
	235
	236
	237
SENSOR - PRESSÃO (ACUMULADOR DO FREIO)	617
SENSOR - PRESSÃO (ADMISSÃO DO TURBOALIMENTADOR)	299
SENSOR - PRESSÃO (ATMOSFÉRICA)	223
SENSOR - PRESSÃO (COMBUSTÍVEL)	106
SENSOR - PRESSÃO (CONTROLE DO SENSOR AWD, ESQUERDO)	623

* TRADUÇÃO NÃO DISPONÍVEL NO MOMENTO DA IMPRESSÃO

ÍNDICE

Designação	Página
SENSOR - PRESSÃO (COTROLE DO SENSOR AWD, DIREITO)	623
SENSOR - PRESSÃO (ÓLEO DO MOTOR)	223
SENSOR - PRESSÃO (REFORÇAR)	223
SENSOR - PRESSÃO (TRILHO)	223
SENSOR - TEMPERATURA	240 241 242
SENSOR - TEMPERATURA (COLETOR DA ADMISSÃO DE AR)	223
SENSOR - TEMPERATURA (COMBUSTÍVEL)	106
SENSOR - TEMPERATURA (LÍQUIDO ARREFECEDOR DO MOTOR)	223
SENSOR - TEMPERATURA (ÓLEO DA TRANSMISSÃO)	342
SENSOR - TEMPERATURA (ÓLEO DO VENTILADOR HIDRÁULICO)	71
SENSOR - TEMPERATURA (ÓLEO HIDRÁULICO)	310
SENSOR DE PRESSÃO	231
SENSOR DE TEMPERATURA	240
SENSOR DE VELOCIDADE	239
SENSOR DE VELOCIDADE (ENTRADA DA TRANSMISSÃO)	342
SENSOR DE VELOCIDADE (SAÍDA DA TRANSMISSÃO)	342
SENSOR DE VELOCIDADE (TRAÇÃO EM TODAS AS RODAS)	378
SENSOR DE VELOCIDADE (TRANSMISSÃO INTERMEDIÁRIA 1)	342
SENSOR DE VELOCIDADE (TRANSMISSÃO INTERMEDIÁRIA 2)	342
SENSOR DO MOTOR	223
SENSOR SÔNICO	238
SEPARADOR DE ÁGUA E BOMBA DE ESCORVA DE COMBUSTÍVEL	128
SIST. ELETRÔNICO - ACESSÓRIO	165
SISTEMA DE ILUMINAÇÃO - FARÓIS	198 199 200 201 202 203 204 205
SISTEMA ELETRÔNICO - MONITOR	166 167
SISTEMA ELETRÔNICO - TREM DE FORÇA	168
SISTEMA ELETRÔNICO-COMUNICAÇÃO	164
SOFTWARE - ACESSÓRIO	165
SOFTWARE - ACESSÓRIO (IMPLEMENTO 2)	165
SOFTWARE - ACESSÓRIO (IMPLEMENTO 3)	165
SOFTWARE - COMUNICAÇÃO (PRODUCT LINK 121SR)	221
SOFTWARE - MONITOR	166 167 222 790
SOFTWARE - TREM DE FORÇA	168
SOFTWARE - TREM DE FORÇA (TRAÇÃO EM TODAS AS RODAS)	168
SOFTWARE (MASTRO)	205
SOFTWARE (RECEPTOR)	222
SOFTWARE (RECEPTOR, CARREGADEIRA)	222
SOLENÓIDE (24 VOLTS) (MOTOR DE PARTIDA)	244
SUPORTE - CONTROLE	859 861
SUPORTE - MONTAGEM	767
SUPORTE-COMANDO FINAL	326
SUPORTE DO ESCARIFICADOR	718 719
SUPORTE DO MOTOR	52
SUPORTE DO RADIADOR	494
SUPORTE-LUZ	247
SUPRIMENTO DE ENERGIA	220
SUSPENSÃO - ASSENTO	863 865

T

TAMPA - ADMISSÃO DE AR	88 89
TAMPA - BLOCO DO MOTOR	13
TAMPA - BOCAL DE ENCHIMENTO (ÓLEO DO MOTOR)	15
TAMPA - BOCAL DE ENCHIMENTO (TANQUE DE COMBUSTÍVEL)	124 126
TAMPA - BOCAL DE ENCHIMENTO (TANQUE HIDRÁULICO)	646
TAMPA - CABINE	786
TAMPA - CAIXA DIANTEIRA	14 15
TAMPA - EMBARQUE	347
TAMPA - MECANISMO DAS VÁLVULAS	16
TAMPA - PROTEÇÃO	457
TAMPA - TANQUE DE COMBUSTÍVEL	103
TAMPA - VÁLVULA DE CONTROLE	455
TAMPA COM RESPIRO (TANQUE DO LAVADOR DO PÁRA-BRISA)	877
TAMPA-TANQUE DO LÍQUIDO ARREFECEDOR	82
TANDEM E TAMPA	393
TANQUE - LAVADOR DE JANELA	867

* TRADUÇÃO NÃO DISPONÍVEL NO MOMENTO DA IMPRESSÃO

ÍNDICE

Designação	Página
TANQUE - LÍQUIDO ARREFECEDOR	82
TANQUE DE AR	904
TANQUE DE COMBUSTÍVEL	123
	124
	126
TANQUE DE ÓLEO HIDRÁULICO E MONTAGEM	644
TANQUE HIDRÁULICO	646
TAPETE	834
	838
TAPETE (CABINE)	846
TELA DE SUCÇÃO (RETORNO - TRANSMISSÃO)	327
TELA DE SUCÇÃO (TRANSMISSÃO)	390
TELA PÁRA-SOL	852
TENSOR DA CORREIA	11
TETO - CABINE	851
TIRANTE	717
TRANSMISSÃO	394
TRAVA - DESLOCAMENTO LATERAL	616
TUBOS - ACUMULADOR	513
TUBOS - ÁGUA	74
	76
TUBOS - AQUECEDOR	816
	817
	819
TUBOS - AR	91
	93
	94
TUBOS - AR CONDICIONADO	812
	814
TUBOS - ARREFECEDOR DE ÓLEO HIDRÁULICO	593
TUBOS - BOMBA	595
TUBOS - COMBUSTÍVEL	111
TUBOS - DIREÇÃO	612
	614
TUBOS - DIREÇÃO SECUNDÁRIA	610
TUBOS - FILTRO DO COMBUSTÍVEL	113
TUBOS - FREIO DE SERVIÇO	517
	519
TUBOS - GRAXA	481
TUBOS - INJETOR DA BOMBA HIDRÁULICA	115
TUBOS - ÓLEO DA TRANSMISSÃO	372
	375
TUBOS - ÓLEO DO MOTOR	62
TUBOS - ÓLEO DO TURBOALIMENTADOR	64
TUBOS - ÓLEO HIDRÁULICO	569
	571
	577
	579
	586
	588
	589
TUBOS - PINO MESTRE DE DESLOCAMENTO LATERAL	565
	567
TUBOS - RIPER	605
	607
	609
TUBOS - TANQUE DE AR	515
TUBOS - TOMADA DE FORÇA	371
TUBOS - VENTILADOR HIDRÁULICOS	590
TUBOS DO AQUECEDOR	816
	817
	819
TUBULAÇÕES - DRENAGEM DE ÓLEO DO MOTOR	63
TUBULAÇÒES - TRAÇÃO EM TODAS AS RODAS	362
TUCHO DA VÁLVULA	39
TURBOALIMENTADOR	99
	100

V

VALVULA - PARTIDA A ETER	262
VÁLVULA ACIONADORA (SINAL DE DIREÇÃO)	701
VÁLVULA DA DIREÇÃO	701
VÁLVULA DE ALÍVIO	399
	694
	695
VÁLVULA DE ALÍVIO (COMPRESSOR DO REFRIGERANTE)	772
VÁLVULA DE ALÍVIO (DIREÇÃO SECUNDÁRIA)	610
VÁLVULA DE ALÍVIO (PARTIDA COM ÓLEO FRIO)	388
VÁLVULA DE ALÍVIO (PRESSAO DA CAIXA DA BOMBA)	388
VÁLVULA DE ALÍVIO (PRESSÃO DA DIREÇÃO)	701
VÁLVULA DE ALÍVIO (PRESSÃO MÁXIMA, AWD)	388
VÁLVULA DE ALÍVIO (PRINCIPAL)	626
VÁLVULA DE ALÍVIO (TRAÇÃO EM TODAS AS RODAS)	378
VÁLVULA DE CONTROLE	663
	665
	667
	669
	671
	673
	675
	677

* TRADUÇÃO NÃO DISPONÍVEL NO MOMENTO DA IMPRESSÃO

ÍNDICE

Designação	Página
	679
	681
	683
	685
	687
VÁLVULA DE CONTROLE DA BOMBA	398
	691
	693
VÁLVULA DE CONTROLE (FREIO)	510
VÁLVULA DE MODULAÇÃO	397
VÁLVULA DE PNEU (BÁSICO)	444
VÁLVULA DE PNEU (CALIBRAGEM DO PNEU)	445
	446
VÁLVULA DE PNEU (INFLAÇÃO DO PNEU)	444
	446
VÁLVULA DE REDUÇÃO DE PRESSÃO	690
VÁLVULA DE RETENÇÃO	595
	662
	877
	880
VÁLVULA DE RETENÇÃO E DE ALÍVIO (TUBULAÇÃO, ÂNGULO DO ARADO)	685
VÁLVULA DE RETENÇÃO E DE ALÍVIO (TUBULAÇÃO, ARADO, LEVANTAMENTO DA LÂMINA)	683
VÁLVULA DE RETENÇÃO E DE ALÍVIO (TUBULAÇÃO, DESLIZAMENTO LATERAL DA LÂMINA)	671
VÁLVULA DE RETENÇÃO E DE ALÍVIO (TUBULAÇÃO, ESCARIFICADOR)	687
VÁLVULA DE RETENÇÃO E DE ALÍVIO (TUBULAÇÃO, INCLINAÇÃO)	679
VÁLVULA DE RETENÇÃO E DE ALÍVIO (TUBULAÇÃO, LEVANTAMENTO)	665
VÁLVULA DE RETENÇÃO E DE ALÍVIO (TUBULAÇÃO, LEVANTAMENTO DA ASA)	681
VÁLVULA DE RETENÇÃO E DE ALÍVIO (TUBULAÇÃO, PONTA DA LÂMINA)	667
VÁLVULA DE RETENÇÃO E DE ALÍVIO (TUBULAÇÃO, RÍPER)	677
VÁLVULA DE RETENÇÃO (LAVADOR DO VIDRO)	879
VÁLVULA DE SEPARAÇÃO	696
VÁLVULA DE SEPARAÇÃO (AWD. MOTOR DO PISTÃO)	623
VÁLVULA DE SEPARAÇÃO (VENTILADOR HIDRÁULICO)	617
VÁLVULA DESVIADORA	689
VALVULA DO SOLENOIDE E MONTAGEM	396
VÁLVULA (LÍQUIDO ARREFECEDOR)	76
VÁLVULA SOLENÓIDE	697
	698
	699
	700
VÁLVULA SOLENÓIDE (AMORTECEDOR DA LÂMINA)	619
VÁLVULA SOLENÓIDE (ÂNGULO DO ARADO)	685
VÁLVULA SOLENÓIDE (ARADO, LEVANTAMENTO DA LÂMINA)	683
VÁLVULA SOLENÓIDE (ARTICULAÇÃO)	663
VÁLVULA SOLENÓIDE (AVANTE, DIREITA)	623
VÁLVULA SOLENÓIDE (AVANTE, ESQUERDA)	623
VÁLVULA SOLENÓIDE (COMANDO DO CÍRCULO)	673
VÁLVULA SOLENÓIDE (CONTROLE DO FREIO DE ESTACIONAMENTO)	621
VÁLVULA SOLENÓIDE (DESLIZAMNTO LONGITUDINAL DA LÂMINA)	671
VÁLVULA SOLENÓIDE (DESLOCAMENTO LATERAL DA LÂMINA)	669
VÁLVULA SOLENÓIDE (DIREÇÃO)	620
VÁLVULA SOLENÓIDE (ESCARIFICADOR)	687
VÁLVULA SOLENÓIDE (INCLINAÇÃO DA ASA)	679
VÁLVULA SOLENÓIDE (INCLINAÇÃO DA RODA)	675
VÁLVULA SOLENÓIDE (LEVANTAR ASA)	681
VÁLVULA SOLENÓIDE (MARCHA À RÉ. DIREITA)	623
VÁLVULA SOLENÓIDE (MARCHA À RÉ, ESQUERDA)	623
VÁLVULA SOLENÓIDE (MUDANÇA CENTRAL)	616
VÁLVULA SOLENÓIDE (PONTA DA LÂMINA)	667
VÁLVULA SOLENÓIDE (PROPORCIONADOR PILOTO)	665
VÁLVULA SOLENÓIDE (RIPER)	677
VÁLVULA SOLENÓIDE (TRAÇÃO EM TODAS AS RODAS, DIREITA)	623
VÁLVULA SOLENÓIDE (TRAÇÃO EM TODAS AS RODAS, ESQUERDA)	623
VÁLVULA SOLENÓIDE (TRAVA DO DIFERENCIAL)	396
VÁLVULA SOLENÓIDE (VENTILADOR HIDRÁULICO)	617
VÁLVULA SOLENÓIDE (24 VOLTS CC) (FREIO DE ESTACIONAMENTO)	342
VENTILADOR DE CIRCULAÇÃO DE AR DA CABINE	798
	800
VIRABREQUIM	18
VISOR - MONITOR	789
	790

* TRADUÇÃO NÃO DISPONÍVEL NO MOMENTO DA IMPRESSÃO

ÍNDICE

Designação	Página	Designação	Página
VISOR - MONITOR (CD610)	790		
VISOR - MONITOR (CD700)	790		
VISOR DE NÍVEL (ÓLEO DO TANQUE HIDRÁULICO)	646		
VISOR-MONITOR	788		
VOLANTE DO MOTOR	30		

* TRADUÇÃO NÃO DISPONÍVEL NO MOMENTO DA IMPRESSÃO

STICHWORTVERZEICHNIS

Bezeichnung	Seite
A	
ABLASS (UMWELTFREUNDLICH) (*DIFFERENTIAL CASE)	323
ABLASSSTOPFEN	34, 36
ACHSENANBAUSATZ	484, 485
ADAPTER - ÖLLEITUNG	56
ALLRADANTRIEBSLEITUNGEN	362
ANHÄNGEVORRICHTUNG	479
ANSAUGSIEB (GETRIEBE)	390
ANSAUGSIEB (GETRIEBESPÜLUNG)	327
ANSCHLUSSKLEMMENSATZ (DREHSTROM-GENERATOR)	130
ANSCHLUSSKLEMMENSATZ (DREHSTROM-GENERATOR)	130
ANTENNENBEFESTIGUNG	827
ANTRIEBSKETTE	331
ANTRIEBSPUMPE, ELEKTR. U. BEFESTIGUNGSTEILE	630
ANTRIEBSWELLE	391, 392
ANZEIGEN-EINBAUSATZ (GEWICHTSEINSTELLUNG) (SCHWINGSITZ)	807
*APPLICATION GP-COMMUNICATION	140
ARBEITSGERÄTE-SOFTWARE	165
ARBEITSGERÄTE-SOFTWARE (*IMPLEMENT 2)	165
ARBEITSGERÄTE-SOFTWARE (*IMPLEMENT 3)	165
ARBEITSGERÄTEELEKTRONIK	165
ARBEITSGERÄTEHEBEL UND BEFESTIGUNGSTEILE	151
ARBEITSGERÄTESTEUERUNG	152, 153, 154, 155, 156, 157
ARBEITSLEUCHTEN	179, 180, 181, 182, 183, 184, 185, 186, 187, 188, 198, 199, 200, 201, 202, 203, 204, 205
ARMLEHNE	765, 766
ARMSTÜTZE	787
ÄTHERSTARTHILFE	243
ÄTHERSTARTVENTIL	262
AUFKLEBER	886, 887
AUFKLEBER - INFORMATION (*CONSOLE, LH)	846
AUFKLEBER - INFORMATION (KONSOLE, RECHTS)	846
AUFKLEBER - INFORMATION (LAMINIEREN) (MOTOR)	890
AUFKLEBER - INFORMATION (LANGZEITKÜHLMITTEL - HANDBUCH LESEN)	891, 895
AUFKLEBER - INFORMATION (SILBER - ULTRAPLATTE) (MOTOR)	890
AUFKLEBER - INFORMATION (ÜBERROLLSCHUTZ, STEINSCHLAGSCHUTZ, HANDBUCH LESEN)	768
AUFKLEBER - SICHERUNGSTAFEL (*FUSE IDENTIFICATION)	767
AUFKLEBER (*YELLOW, REFLECTIVE)	469
AUFREISSER	739, 740
AUFREISSERBEFESTIGUNG	735
AUFREISSERLEITUNGEN	605, 607, 609
AUFREISSERTRÄGER	718, 719
AUFREISSERZAHN	753, 754
AUFREISSERZYLINDER	548
AUFREISSERZYLINDER UND BEFESTIGUNGSTEILE	539
AUSLÖSERVENTIL (*STEERING SIGNAL)	701
AUSPUFFKRÜMMER	95
AUSRÜSTUNG FÜR STRASSENFAHRT	2
B	
BATTERIE UND VERDRAHTUNG	141, 143, 146
BATTERIE (12 V, WARTUNGSFREI)	141, 143
BATTERIE (12 V, WARTUNGSFREI) (NASS)	146

* ÜBERSETZUNG ZUM ZEITPUNKT DER DRUCKLEGUNG NICHT VORHANDEN

STICHWORTVERZEICHNIS

Bezeichnung	Seite
BEFESTIGUNG - GETRIEBEÖLKÜHLER	383
BEFESTIGUNGSHALTERUNG	767
BEFESTIGUNGSTEILE (DREHSTROMGENERATOR)	130
BEGRENZUNGSSCHALTER	253
BELEUCGHTUNGSBEFESTIGUNG	209
	211
BELEUCHTUNGSANLAGE (24 V)	810
BELEUCHTUNGSANLAGE (24 V, GRÜN)	154
	157
BELEUCHTUNGSANLAGE (24 V, GRÜN)	153
	156
BELEUCHTUNGSANLAGE (24 V, GRÜN) (GRÜN)	265
BELEUCHTUNGSKABELSTRANG	275
	288
	289
BELEUCHTUNGSVERDRAHTUNG	287
	288
	289
BETRIEBSBREMSE	504
	506
BETRIEBSBREMSLEITUNGEN	517
	519
BLINKLEUCHTE	194
	195
BREMS-, KUPPLUNGS- U. GASPEDAL	848
BREMSDRUCKSPEICHER	499
	500
	501
BREMSGESTÄNGE	508
	510
	511
BREMSLEITUNGSVERKLEIDUNG	475

C

*CAP AS-COOLANT TANK	82
*CARRIER GP-FINAL DRIVE	326
*COIL GP-VALVE	769
	771

D

DÄMPFER UND RIEMENSCHEIBE	28
DICHTUNG (TEMPERATURREGELGEHÄUSE)	74
DICHTUNGSSATZ	545
	549
DIFFERENTIAL	351
DIFFERENTIAL UND TELLERRAD	349
DIFFERENTIALSPERRENGESTÄNGE	340
*DISPLAY AR-MONITOR	788
DREHKNOPFSCHALTER (24 V) (*ALL WHEEL DRIVE CONTROL)	248
DREHSCHALTER (SEITENSCHUBANZEIGE)	275
DREHSTROMGENERATOR	130
	132
	134
	136
	138
DREHSTROMGENERATOR - BEFESTIGUNG	41
DREHSTROMGENERATOR (*24-VOLT, 150-AMPERE)	134
	138
DREHZAHLSENSOR	239
DREHZAHLSENSOR (ALLRADANTRIEB)	378
DREHZAHLSENSOR (GETRIEBEAUSGANG)	342
DREHZAHLSENSOR (GETRIEBEEINGABE)	342
DREHZAHLSENSOR (*TRANSMISSION INTERMEDIATE 1)	342
DREHZAHLSENSOR (*TRANSMISSION INTERMEDIATE 2)	342
DREIWEGESCHALTER (*FLOAT CONTROL)	155
DREIWEGESCHALTER (*FRONT IMPLEMENT)	153
	154
	156
	157
DREIWEGESCHALTER (HINTERES ARBEITSGERÄT)	152
	154
	157
DRUCKKNOPFSCHALTER (HUPE)	775
DRUCKKNOPFSCHALTER (SCHILDHUB, ABSENKEN)	842
	844
DRUCKKNOPFSCHALTER (*SIDESHIFT)	844
DRUCKLUFTBEHÄLTER	904
DRUCKLUFTKOMPRESSOR	7
DRUCKLUFTLEITUNGEN	91
	93
	94
DRUCKLUFTTANKLEITUNGEN	515
DRUCKREDUZIERVENTIL	690
DRUCKREGLER (KRAFTSTOFF)	119
DRUCKSCHALTER	258
DRUCKSCHALTER (*AWD OIL FILTER BYPASS)	362
DRUCKSCHALTER (FESTSTELLBREMSE)	342
DRUCKSCHALTER (KOMPRESSOR, OBERE SEITE)	814
DRUCKSCHALTER (KOMPRESSOR, UNTERE SEITE)	814
DRUCKSCHALTER (NEBENSTROMFILTER)	562
DRUCKSENSOR	228

* ÜBERSETZUNG ZUM ZEITPUNKT DER DRUCKLEGUNG NICHT VORHANDEN

STICHWORTVERZEICHNIS

Bezeichnung	Seite
	229
	230
	231
	232
	233
	234
	235
	236
	237
DRUCKSENSOR (ATMOSPHÄRISCH)	223
DRUCKSENSOR (*AWD SENSOR CONTROL, LH)	623
DRUCKSENSOR (*AWD SENSOR CONTROL, RH)	623
DRUCKSENSOR (BREMSDRUCKSPEICHER)	617
DRUCKSENSOR (KRAFTSTOFF)	106
DRUCKSENSOR (LADUNG)	223
DRUCKSENSOR (MOTORÖL)	223
DRUCKSENSOR (SCHIENE)	223
DRUCKSENSOR (TURBILADEREINLASS)	299
DRUCKSPEICHER - SCHARDÄMPFUNG	522
DRUCKSPEICHERLEITUNGEN	513

E

ECKMESSER	708
	709
	710
	711
EINFÜLLKAPPE (HYDRAULIKTANK)	646
EINFÜLLKAPPE (KRAFTSTOFFTANK)	124
	126
EINFÜLLKAPPE (MOTORÖL)	15
EINSPRITZLEITUNGEN - HYDRAULIKPUMPE	115
ELEKTR. UMFORMER	162
	163
ELEKTROHYDRAULISCHE STEUERUNG	780
	781
	782
ELEKTRONIK - MONITOR	166
	167
ELEKTRONIK, KOMMUNIKATION	164
ELEKTRONISCHER SCHLÜSSEL (SICHERHEIT)	175
EMPFÄNGER, LASER	222
EMPFÄNGER, LASER (*LR410)	222
EMPFÄNGERBEFESTIGUNG	214
ENDMESSER	711
ENDSCHALTER (BREMSLEUCHTE)	848
ENDSCHALTER (SITZEINSTELLUNG)	831
ENTDUNSTER	60
ENTLÜFTER	57
ENTLÜFTER (*AWD, GEAR)	360
	361
ENTLÜFTER (KRAFTSÜBERTRAGUNG - ÖLEINFÜLLUNG)	353
ENTLÜFTER (KURBELGEHÄUSE)	57
ENTLÜFTER (TANDEM)	393
ENTLÜFTERFILTER (HYDRAULIKTANK)	644

F

FAHRERHAUS	768
FAHRERHAUS-KABELBAUM	265
FAHRERHAUS-KABELBAUM (WISCHER, RECHTE TÜR)	791
FAHRERHAUSABDECKUNG	786
FAHRERHAUSANBAUSATZ	828
FAHRERHAUSAUSKLEIDUNG	810
FAHRERHAUSBELEUCHTUNG	178
FAHRERHAUSBELEUCHTUNG (24 V)	810
FAHRERHAUSBELÜFTUNG	849
FAHRERHAUSDACH	851
FAHRERHAUSFENSTER	868
	869
	870
	871
	872
	874
	875
	876
FAHRERHAUSHEIZUNG	802
	803
	804
FAHRERHAUSHEIZUNG U. BEFESTIGUNGSTEILE	801
FAHRERHAUSTÜR	791
	794
FAHRERHAUSVERDRAHTUNG	265
FAHRERSITZ	854
	855
FAHRERSITZ UND UNTERBAU	853
FAHRERSITZFEDERUNG	863
	865
FAHRERSITZFEDERUNGSGEHÄUSE	807
FAHRERSITZVERSTELLER	756
FAHRWERK-KABELBAUM (MASCHINENSICHERHEITSSYSTEM)	175
FAHRWERK-KABELBAUM (NEIGUNGSSTEUERUNG)	282
FEDER-EINBAUSATZ (HÖHENEINSTELLUNG) (SCHWINGSITZ)	807
FEDER-EINBAUSATZ (SCHWINGSITZ)	807

* ÜBERSETZUNG ZUM ZEITPUNKT DER DRUCKLEGUNG NICHT VORHANDEN

STICHWORTVERZEICHNIS

Bezeichnung	Seite
FEDERUNGS-EINBAUSATZ (EINSTELLKNOPF) (HÖHENEINSTELLUNG) (SCHWINGSITZ)	807
FESTSTELLBREMSE	502
*FILM GP-INTERNATIONAL	888
*FILM GP-U.S.	889
FILTER (WASSER) (PUMPE)	78
FRONTAUFREISSER	742
	743
	747
	750
	751
	752
FRONTAUFREISSERZAHN	755
FRONTAUFREISSERZYLINDER	549
FRONTSCHEINWERFER	189
FUSSMATTE	834
	838
FUSSMATTE (FAHRERHAUS)	846

G

GELENKZYLINDER UND BEFESTIGUNGSTEILE	534
GETRIEBE	394
GETRIEBE-KABELBAUM	216
	342
GETRIEBEFILTER UND -AUFHÄNGUNG	354
GETRIEBEHYDRAULIK	342
GETRIEBEKÜHLERBLOCK	345
GETRIEBEKUPPLUNG	332
	334
	336
	338
GETRIEBEÖLFÜLLSTUTZEN	353
GETRIEBEÖLKÜHLER	345
GETRIEBEÖLLEITUNGEN	372
	375
GLEITRINGDICHTUNG	557
*GRADE CONTROL GP	168
GRUNDAUSFÜHRUNG	1
*GUARD GP-DEBRIS	476

H

HALOGENSCHINWERFER (*24-VOLT, 35-WATT)	179
HALOGENSCHINWERFER (24V)(65W)	180
	183
	184
	189
HALTETEILE	463
	464
HAUBE	480
HAUPTLAGER	18
HECKBELEUCHTUNGSVERDRAHTUNG	304
	306
HEIZUNGSBLOCK	769
	771
HEIZUNGSKABELSTRANG (ANSAUGLUFT - VORWÄRMANLAGENRELAIS)	273
HEIZUNGSLEITUNGEN	816
	817
	819
HEIZUNGSVERDRAHTUNG	286
HINTERACHSE	323
HINTERER KABELSTRANG	299
	310
HUBMASTBEFESTIGUNG	213
HUBVENTIL	39
HUBZYLINDER	547
HYDRAULIKFILTER UND BEFESTIGUNGSTEILE	560
HYDRAULIKLEITUNGEN	569
	571
	577
	579
	586
	588
	589
HYDRAULIKLÜFTERLEITUNGEN	590
HYDRAULIKÖLKÜHLER	532
HYDRAULIKÖLKÜHLERLEITUNGEN	593
HYDRAULIKPUMPE UND LEITUNGEN	595
HYDRAULIKSTEUERUNG	524
	525
	526
	527
	528
	529
	530
	531
HYDRAULIKSYSTEM	564
HYDRAULIKTANK	646
HYDRAULIKTANK UND BEFESTIGUNGSTEILE	644
HYDRAULIKZYLINDER	720

I

IDENTIFIKATIONSSCHILD (ARBEITSGERÄT)	715
	732
	750
	751
IDENTIFIKATIONSSCHILD (SERIENNUMMER)	763
IDENTIFIZIERUNGS-AUFKLEBER (*AWD)	318

* ÜBERSETZUNG ZUM ZEITPUNKT DER DRUCKLEGUNG NICHT VORHANDEN

STICHWORTVERZEICHNIS

Bezeichnung	Seite
IDENTIFIZIERUNGS-AUFKLEBER (*FAST FILL FUEL, READ OMM)	126
IDENTIFIZIERUNGS-AUFKLEBER (*FILL, DRAIN)	66
IDENTIFIZIERUNGS-AUFKLEBER (OBEN)	834
IDENTIFIZIERUNGS-AUFKLEBER (*PANEL SWITCHES) (SCHILDSTEUERUNG)	842
IDENTIFIZIERUNGS-AUFKLEBER (RUND, ROT REFEKTIEREND)	740
IDENTIFIZIERUNGS-AUFKLEBER (SICHERUNGSTAFEL)	217
IDENTIFIZIERUNGS-AUFKLEBER (START-SCHLÜSSELSCHALTER)	175
IDENTIFIZIERUNGS-AUFKLEBER (UNTEN)	834
IDENTIFIZIERUNGS-AUFKLEBER (WARNHORN)	775
IDENTIFIZIERUNGS-AUFKLEBER (12 V)	163
*INSTALLATION GP-CAMERA	173
*INSTALLATION GP-LIGHTING	174
INSTRUKTIONS-AUFKLEBER (ALLRADANTRIEB)	158
INSTRUKTIONS-AUFKLEBER (*BELT ROUTING)	134 136 138
INSTRUKTIONS-AUFKLEBER (*BELT ROUTING)	132
INSTRUKTIONS-AUFKLEBER (*EXIT)	791
INSTRUKTIONS-AUFKLEBER (*FLOAT/NO FLOAT)	157
INSTRUKTIONS-AUFKLEBER (*FLOAT/NO FLOAT) (ARBEITSGERÄT)	154
INSTRUKTIONS-AUFKLEBER (FÜR SITZVERSTELLUNG)	863 865
INSTRUKTIONS-AUFKLEBER (*HVAC WATER, DRAINING, FILLING)	804 816 819
INSTRUKTIONS-AUFKLEBER (*HVAC WATER, DRAINING, FILLING)	763
INSTRUKTIONS-AUFKLEBER (MASCHINENSICHERHEIT, HANDBUCH LESEN)	175
INSTRUKTIONS-AUFKLEBER (MOTORÖLABLASS)	63
INSTRUKTIONS-AUFKLEBER (*NO FLOAT)	155
INSTRUKTIONS-AUFKLEBER (*NO FLOAT) (ARBEITSGERÄT)	152
INSTRUKTIONS-AUFKLEBER (*OPERATOR CONSOLE, LH)	775
INSTRUKTIONS-AUFKLEBER (*OPERATOR CONSOLE, RH)	775
INSTRUKTIONS-AUFKLEBER (SCHALTTAFEL) (SCHILDSTEUERUNG)	844
INSTRUKTIONS-AUFKLEBER (SCHEIBENWISCHER)	810
INSTRUKTIONS-AUFKLEBER (SCHWIMMEN)	156
INSTRUKTIONS-AUFKLEBER (SCHWIMMEN) (*FRONT IMPLEMENT)	153
INSTRUKTIONS-AUFKLEBER (ZUSATZ)	781 782
INSTRUKTONSSCHILD (KLIMAANLAGE)	761
INSTRUMENTENTAFEL	846
INSTRUMENTENTAFEL-KABELSTRANG	842 844

J

JOYSTICK -STEUERUNG	783 784
JOYSTICK -STEUERUNG (ELEKTRONIK-STEUERUNG)	782
JOYSTICKSTEUERUNG U. BEFESTIGUNG	775

K

KABELBAUM, VORNE	310
KABELSTRANG - HECKBELEUCHTUNG	304 306
KABELSTRANG - HECKBELEUCHTUNG (*REGISTRATION PLATE)	193
KABELSTRANG - HEIZUNG U. KLIMAANLAGE	300
KABELSTRANG - HINTERES FAHRWERK	299
KABELSTRANG - KASTEN	216
KABELSTRANG - MOTOR	763
KABELSTRANG - MOTOR (THERMOSTAT)	804
KABELSTRANG - VORDERE BELEUCHTUNG	209 211
KABELSTRANG - VORDERES FAHRWERK	275 279 291
KABELSTRANG (*PRODUCT LINK RADIO)	171
KÄLTEMITTEL-DRUCKSPEICHER	812
KÄLTEMITTELKOMPRESSOR	772 773
KÄLTEMITTELKONDENSATOR U. BEFESTIGUNGSTEILE	774
KAMERA, VERDRAHTUNG	270
KAPPE MIT ENTLÜFTER (WASCHMITTELBEHÄLTER)	877
KIPPSCHALTER	260

* ÜBERSETZUNG ZUM ZEITPUNKT DER DRUCKLEGUNG NICHT VORHANDEN

STICHWORTVERZEICHNIS

Bezeichnung	Seite
KIPPSCHALTER (ABSTELLUNG AUF STANDEBENE)	299
KIPPSCHALTER (ARBEITSGERÄTESPERRE)	265
KIPPSCHALTER (ARBEITSLEUCHTE)	174, 252
KIPPSCHALTER (AUTOMATIKSCHALTUNG)	260
KIPPSCHALTER (BEHEIZTE SPIEGEL)	823
KIPPSCHALTER (FAHRERHAUS - ARBEITSSCHEINWERFER)	288
KIPPSCHALTER (FAHRSCHEINWERFER, HECKLEUCHTEN)	265
KIPPSCHALTER (FAHRTRICHTUNGSANZEIGER)	775
KIPPSCHALTER (FESTSTELLBREMSE EIN/AUS)	265
KIPPSCHALTER (GASREGELSPERRE)	265
KIPPSCHALTER (GEBLÄSEGESCHWINDIGKEIT)	800
KIPPSCHALTER (GEFAHR)	265
KIPPSCHALTER (KLIMAANLAGE EIN/AUS)	778
KIPPSCHALTER (NOTLENKUNG)	265
KIPPSCHALTER (RUNDUM-KENNLEUCHTE)	177
KIPPSCHALTER (SCHARDÄMPFUNG)	265
KIPPSCHALTER (SCHNELLWECHSELEINRICHTUNG)	265
KIPPSCHALTER (*SPEED CONTROL REGULATOR)	265
KIPPSCHALTER (24 V) (FAHRLEUCHTEN)	259
KIPPSCHALTER (24 V) (*INCREMENT, DECREMENT, LH)	842
KIPPSCHALTER (24 V) (*INCREMENT, DECREMENT, RH)	842
KIPPSCHALTER (24 V) (*OFFSET, RH)	844
KLIMAANLAGE	761, 762, 763
KLIMAANLAGE UND AUFHÄNGUNG	759
KLIMAANLAGENLEITUNGEN	812, 814
KNICKGELENK-ANHÄNGUNG	477
KNICKLENKZYLINDER	544
KOLBENMOTOR	377, 378
KOLBENPUMPE	388, 634, 636
KOLBENPUMPE (ALLRADANTRIEB)	388
KOLBENPUMPE UND BEFESTIGUNG	631, 632
KOLBENPUMPENUMLAUFSATZ	638, 639
KRAFTSTOFFDRUCKREGLER	122
KRAFTSTOFFEINSPRITZDÜSE	109, 110
KRAFTSTOFFEINSPRITZPUMPE	118
KRAFTSTOFFENTLÜFTUNGSPUMPE UND -HAUPTFILTER	119, 120
KRAFTSTOFFILTER	106
KRAFTSTOFFILTER (HOCHLEISTUNG)	106
KRAFTSTOFFILTERBEFESTIGUNG	116
KRAFTSTOFFILTERLEITUNGEN	113
KRAFTSTOFFLEITUNGEN	111
KRAFTSTOFFSIEB	124, 126
KRAFTSTOFFSTANDGEBER	124, 126
KRAFTSTOFFTANK	123, 124, 126
KRAFTSTOFFTANK-HALTETEILE	104
KRAFTSTOFFTANKDECKEL	103
KRAFTÜBERTRAGUNGSELEKTRONIK	168
KRAFTÜBERTRAGUNGSSTEUERUNG	158, 342
KREUZGELENK	395
KÜHLER	80
KÜHLERAUFHÄNGUNG	494
KÜHLERBLOCK	80
KÜHLMITTELBEHÄLTER	82
KÜHLSYSTEM	70
KÜHLWASSERLEITUNGEN	74, 76
KÜHLWASSERPUMPE	78, 79
KURBELWELLE	18
KURBELWELLENDICHTUNG	51

L

LADELUFTKÜHLER	85
LAGERSATZ	732
LAGERSATZ (DREHSTROMGENERATOR)	130
LAGERSATZ (SCHWINGSITZ)	808
LAUFBAND UND ANTRIEB	196
LENKGESTÄNGE	482, 483
LENKÖLLEITUNGEN	612, 614
LENKVENTIL	701
LENKZYLINDER	551, 553
LENKZYLINDER UND AUFHÄNGUNG	541, 542
LEUCHTE, ROT (*GREEN, 24-VOLT)	158

* ÜBERSETZUNG ZUM ZEITPUNKT DER DRUCKLEGUNG NICHT VORHANDEN

STICHWORTVERZEICHNIS

Bezeichnung	Seite
	260
LEUCHTE, ROT (*RED, 24-VOLT)	158
LEUCHTE, ROT (*RED, 24-VOLT)	175
LEUCHTE (24 V)	178
LEUCHTE (24 V) (FAHRERHAUSSTELLUNG)	192
LEUCHTE (24 V, 5 W)	190
	191
	193
LEUCHTE (24 V, 70 W)	196
LEUCHTE (24 V, 75/70 W)	190
	191
LEUCHTE (*24-VOLT, HID)	186
LEUCHTE (24V, 21W)	197
LEUCHTENBEFESTIGUNG	247
LEUCHTENBEFESTIGUNGSSATZ	208
LICHTSCHALTER	252
*LIFT GP-WORK TOOL	732
	734
LUFTEINLASSBOGEN	90
LUFTEINLASSDECKEL	88
	89
LÜFTERANTRIEBSAUFHÄNGUNG	44
LÜFTERVERKLEIDUNG	73
LÜFTERVERKLEIDUNG (*RADIATOR COOLING)	71
LUFTFILTER (FAHRERHAUS) (AKTIVIERTE KOHLE)	797
LUFTFILTER (FAHRERHAUSHEIZUNG U. KLIMAANALGE)	797
LUFTFILTER (HILFSELEMENT)	87
LUFTKANAL & LUFTFILTER - FAHRERHAUS	797
LUFTKOMPRESSOR	8
	9
LUFTKOMPRESSORSITZ	757
	758
	865
LUFTREINIGER	86
	87
LUFTTEMPERATURKONTROLLE	778
	779
LUFTTFILTERELEMENT (HAUPTELEMENT)	87

M

Bezeichnung	Seite
MAGNETFILTER (GETRIEBE)	327
	390
MAGNETSCHALTER	254
	255
	256
	257
MAGNETSIEB	390
MAGNETSPULE (24 V) (STARTERMOTOR)	244
MAGNETSTOPFEN (GETRIEBE)	328
MAGNETVENTIL	697
	698
	699
	700
MAGNETVENTIL (*ALL WHEEL DRIVE, LH)	623
MAGNETVENTIL (*ALL WHEEL DRIVE, RH)	623
MAGNETVENTIL (AUFREISSER)	677
	687
MAGNETVENTIL (*BLADE CENTERSHIFT)	669
MAGNETVENTIL (*BLADE SIDESHIFT)	671
MAGNETVENTIL (*BLADE TIP)	667
MAGNETVENTIL (*CENTERSHIFT)	616
MAGNETVENTIL (*CIRCLE DRIVE)	673
MAGNETVENTIL (DIFFERENTIALSPERRE)	396
MAGNETVENTIL (FLÜGELHUB)	681
MAGNETVENTIL (*FORWARD, LH)	623
MAGNETVENTIL (*FORWARD, RH)	623
MAGNETVENTIL (HYDRAULIKLÜFTER)	617
MAGNETVENTIL (KNICKGELENK)	663
MAGNETVENTIL (LENKUNG)	620
MAGNETVENTIL (*PARKING BRAKE CONTROL)	621
MAGNETVENTIL (*PILOT PROPORTIONING)	665
MAGNETVENTIL (*PLOW ANGLE)	685
MAGNETVENTIL (*PLOW, BULLDOZER LIFT)	683
MAGNETVENTIL (RADSTURZ)	675
MAGNETVENTIL (*REVERSE, LH)	623
MAGNETVENTIL (*REVERSE, RH)	623
MAGNETVENTIL (SCHARDÄMPFUNG)	619
MAGNETVENTIL (*WING TILT)	679
MAGNETVENTIL (24 V DC) (FESTSTELLBREMSE)	342
*MANIFOLD GP-VALVE	625
	626
MARKIERUNGSLEUCHTE	192
*MAST GP	205
MODULATORVENTIL	397
*MODULE AS-POWER SUPPLY	220
MONITOR	824
MONITOR - KABELBAUM	294
MONITOR - SOFTWARE	166
	167
	222
	790
MONITORDISPLAY	789
	790
MONITORDISPLAY (*CD610)	790
MONITORDISPLAY (*CD700)	790
MONITORSTEUERUNG (MELDEVORRICHTUNG)	785
MOTOR- UND GETRIEBEAUFLAGER	42
MOTOR, ELEKTR.	206
MOTOR, KOMPLETT	4

* ÜBERSETZUNG ZUM ZEITPUNKT DER DRUCKLEGUNG NICHT VORHANDEN

STICHWORTVERZEICHNIS

Bezeichnung	Seite
	5
MOTOR UND LÜFTER	71
MOTORANTRIEB (*RADIATOR COOLING)	71
MOTORAUFHÄNGUNG	52
MOTORBLOCK	20
	21
	22
MOTORBLOCKDECKEL	13
MOTORHUBÖSE	40
MOTORKABELSTRANG (ELEKTRON. STEUERMODUL)	273
MOTORKABELSTRANG (KRAFTSTOFFEIN-SPRITZUNG)	273
MOTORKÜHLERBLOCK	6
MOTORÖLABLASSLEITUNGEN	63
MOTORÖLKRÜMMER	65
MOTORÖLKÜHLER	69
MOTORÖLKÜHLERBLOCK	69
MOTORÖLLEITUNGEN	62
MOTORRAUM-SCHUTZVERKLEIDUNG	490
MOTORSENSOR	223
MOTORSTOPFEN	49
MOTORVERDRAHTUNG	273
MOTORVERKLEIDUNG	458

N

NIEGUNGSSTEUER VERDRAHTUNG	280
	282
NIVELLIERAUTOMATIK	207
NOCKENWELLE	12
NOTLENKUNG	640
NOTLENKUNGSLEITUNGEN	610
NOTLENKUNGSVERDRAHTUNG	308

O

ÖFFNUNG - KLIMAANLAGE	812
ÖLFILTER	58
	355
	562
	563
ÖLFILTER (ALLRADANTRIEB)	362
ÖLFILTER (FEINSTFILTER)	362
ÖLFILTER (HOCHLEISTUNG)	562
ÖLFILTER (HOCHLEISTUNG)	362
ÖLFILTER (NICHT BRENNBARE FLÜSSIG-KEIT)	362
ÖLFILTERELEMENT (FEINSTFILTER)	372
ÖLFILTERELEMENT (FEINSTFILTER) (GETRIEBE)	355
ÖLFILTERELEMENT (FEINSTFILTER) (HYDRAULIKTANK)	563
ÖLFILTERSOCKEL	325
	523
ÖLKÜHLERBLOCK (HYDRAULIK)	532
	593
ÖLMESSSTAB	61
ÖLMESSSTAB (KRAFTÜBERTRAGUNGSÖL)	353
ÖLMESSSTAB (MOTOR)	61
ÖLSCHNELLWECHSELANSCHLUSS	66
ÖLWANNE	46

P

*PAN AS-SEAT	831
PANZERWANNE	473
PENDELVENTIL	696
PENDELVENTIL (*AWD, PISTON MOTOR)	623
PENDELVENTIL (HYDRAULIKLÜFTER)	617
PLANETENANTRIEBSGEHÄUSE U. TEILE	327
PLANIERSCHILD	715
	716
PLANIERSTEUERUNG	168
PLEUELSTANGE UND KOLBEN	47
PUMPE FÜR KRAFTSTOFFENTLÜFTUNG U. WASSERABSCHEIDER	128
PUMPE U. BEFESTIGUNG - ALLRADAN-TRIEB	384
PUMPE UND BEFESTIGUNGSTEILE	117
PUMPENANTRIEB ELEKTR.	633
PUMPENDÜSE, HYDRAULISCH	117
PUMPENKABELSTRANG	310
PUMPENKABELSTRANG (KRAFTSTOFF)	300
PUMPENSTEUERVENTIL	398
	691
	693

R

RAD UND REIFEN	401
	402
	403
	404
	405
	406
	407
	408
	409
	410
	411
	412
	413
	414
	415
	416

* ÜBERSETZUNG ZUM ZEITPUNKT DER DRUCKLEGUNG NICHT VORHANDEN

STICHWORTVERZEICHNIS

Bezeichnung	Seite
	417
	418
	419
	420
	421
	422
	423
	424
	425
	426
	427
	428
	429
	430
	431
	432
	433
	434
	435
	436
RADANTRIEB	352
RADAUFHAENGUNG	382
RADIO - KABELSTRANG	291
RADIO - KOMMUNIKATION	221
RADSATZ	436
	437
	438
	439
	440
	441
	442
	443
	444
	445
	446
RADSTURZZYLINDER	555
RADSTURZZYLINDER UND BEFESTIGUNGS-TEILE	543
RAHMEN, HINTEN	472
*RECEIVER AR-LASER	221
*RECEIVER AR-SATELLITE	221
*RECEIVER GP-FAST FILL FUEL	121
*RECEIVER GP-SATELLITE	222
REFLEKTOR	487
	488
REIFENVENTIL (GRUNDAUSFÜHRUNG)	444
REIFENVENTIL (REIFENFÜLLUNG)	444
	445
	446
RELAIS (24 V)	265
RELAIS (24 V) (KLIMAANLAGENKUPPLUNGS-SOLENOID)	300
RELAIS (24 V) (KRAFTSTOFFÖRDERPUMPEN-RELAIS)	300
RELAIS (24 V) (NOTLENKUNG)	300
RELAIS (24 V) (RÜCKFAHRALARM)	300
RELAIS (*24-VDC, 20-AMPERE) (*HEATED MIRROR TIMER)	823
RIEMENSPANNER	11
	50
RÜCKFAHRWARNHORN	263
RÜCKSCHLAG- U. DRUCKBEGRENZUNGS-VENTIL (*LINE, BLADE SIDESHIFT)	671
RÜCKSCHLAG- U. DRUCKBEGRENZUNGS-VENTIL (*LINE, BLADE TIP)	667
RÜCKSCHLAG- U. DRUCKBEGRENZUNGS-VENTIL (*LINE, LIFT)	665
RÜCKSCHLAG- U. DRUCKBEGRENZUNGS-VENTIL (*LINE, PLOW ANGLE)	685
RÜCKSCHLAG- U. DRUCKBEGRENZUNGS-VENTIL (*LINE, PLOW, BULLDOZER LIFT)	683
RÜCKSCHLAG- U. DRUCKBEGRENZUNGS-VENTIL (*LINE, RIPPER)	677
RÜCKSCHLAG- U. DRUCKBEGRENZUNGS-VENTIL (*LINE, SCARIFIER)	687
RÜCKSCHLAG- U. DRUCKBEGRENZUNGS-VENTIL (*LINE, TILT)	679
RÜCKSCHLAG- U. DRUCKBEGRENZUNGS-VENTIL (*LINE, WING LIFT)	681
RÜCKSPIEGEL	820
	821
	822
	823
RUNDUM-KENNLEUCHTE	196
RUNDUMWARNLEUCHTE - EINBAUSATZ	177

S

SCHALE - RÜCKENLEHNE	832
	833
SCHALLDÄMPFER U. BEFESTIGUNG	96
SCHALLDÄMPFUNG	496
	497
SCHALLGEBER	238
SCHALTAUTOMATIK	316
SCHALTER - ALLRADANTRIEB	248
SCHALTERKABELSTRANG	842
SCHALTERKABELSTRANG (*HEATED SEAT)	831
SCHALTTAFEL	842
	844
SCHAR	712
	713
	714
SCHARDREHWERK	557
	703

* ÜBERSETZUNG ZUM ZEITPUNKT DER DRUCKLEGUNG NICHT VORHANDEN

STICHWORTVERZEICHNIS

Bezeichnung	Seite
SCHARDREHWERKSPERRENLEITUNGEN	565, 567
SCHARHUBZYLINDER UND BEFESTIGUNGSTEILE	536
SCHARKIPPZYLINDER UND BEFESTIGUNGSTEILE	537
SCHARNEIGEZYLINDER	545
SCHARVERLÄNGERUNG	724, 725, 726, 728
SCHAUGLAS (HYDRAULIKTANKÖL)	646
SCHEIBENWASCHMITTELBEHÄLTER	867
SCHEIBENWISCHER	879, 880, 882, 883
SCHEIBENWISCHER UND -WASCHANLAGE	877
SCHEIBENWISCHERARM (*LOWER DOOR WINDOW, LH)	883
SCHEIBENWISCHERARM (TÜR, RECHTS)	882
SCHEIBENWISCHERARM (*UPPER DOOR WINDOW, LH)	883
SCHEIBENWISCHERARM (VORNE)	877
SCHEIBENWISCHERBLATT (*400-MM) (*LOWER DOOR WINDOW, LH)	883
SCHEIBENWISCHERBLATT (*400-MM) (VORNE)	880
SCHEIBENWISCHERBLATT (*450-MM) (VORNE)	877
SCHEIBENWISCHERBLATT (*500-MM) (HINTEN)	879
SCHEIBENWISCHERBLATT (*500-MM) (TÜR, RECHTS)	882
SCHEIBENWISCHERBLATT (*500-MM) (*UPPER DOOR WINDOW, LH)	883
SCHEIBENWISCHERKABELSTRANG	315, 794, 871, 876
SCHEIBENWISCHERMOTOR	825, 826
SCHEIBENWISCHERMOTOR (HINTEN)	879
SCHEIBENWISCHERMOTOR (RECHTS)	882
SCHEIBENWISCHERMOTOR (24 V) (LINKS)	880
SCHEIBENWISCHERMOTOR (24 V) (RECHTS)	880
SCHEIBENWISCHERMOTOR (24V, 2 GESCHWINDIGKEITEN)	882, 883
SCHEIBENWISCHERMOTOR (24V, 2 GESCHWINDIGKEITEN) (VORNE)	826
SCHEIBENWISCHERSCHALTER	261
SCHEIBENWISCHERSCHALTER (24 V, INTERMITTIEREND)	879
SCHEIBENWISCHERSCHALTER (24 V, INTERMITTIEREND)	265
SCHEIBENWISCHERVERDRAHTUNG	315
SCHEINWERFER, HINTEN	197
SCHEINWERFER U. RICHTUNGSLEUCHTE	190, 191
SCHILD UND AUFKLEBER	890, 891, 895, 899, 900, 901, 902, 903
SCHILDHUB	729
SCHLÜSSEL (ELEKTRISCHER HAUPTSCHALTER)	251
SCHMIERLEITUNGEN	481
SCHMIERPUMPE	67, 68
SCHNEEFLÜGEL-BEFESTIGUNG	737, 738
SCHNEERÄUMVORRICHTUNG	3
SCHNEIDMESSER	721, 722, 723
SCHNELLBETANKUNGSANSCHLUSS	101
SCHNITTSTELLENMODUL (TASTE) (MASCHINENSICHERHEITSSYSTEM)	175
SCHUBPLATTE	707
SCHUTZABDECKUNG	457
SCHUTZBLECHE UND AUFHÄNGUNG	465, 467, 469
SCHWENKBLOCK	642
SCHWENKSCHEIBE	641
SCHWINGSITZ	857, 858
SCHWUNGRAD	30
SCHWUNGRADGEHÄUSE	34, 36
SEITENANTRIEB	356, 358
SEITENSCHIEBERZYLINDER UND BEFESTIGUNGSTEILE	540
SEITENSCHUBSPERRE	616
SEITENSCHUBZYLINDER	546, 550
SEITENSCHUBZYLINDER UND BEFESTIGUNGSTEILE	538
SENSOR, KABELSTRANG	106

* ÜBERSETZUNG ZUM ZEITPUNKT DER DRUCKLEGUNG NICHT VORHANDEN

STICHWORTVERZEICHNIS

Bezeichnung	Seite
	342
SENSOR, KABELSTRANG (*MOTOR SPEED, LH)	310
SENSOR, KABELSTRANG (*MOTOR SPEED, RH)	310
SENSOR, KABELSTRANG (*ROTATION)	282
SENSOR, KABELSTRANG (*STEERING, LH)	313
	314
SENSOR, KABELSTRANG (*STEERING, RH)	313
	314
SENSOR, KABELSTRANG (WINKEL)	282
SENSORANSCHLUSSSATZ (12 STIFTE)	171
SENSORANSCHLUSSSATZ (12 STIFTE)	288
	289
	306
SENSORVERDRAHTUNG	310
	313
	314
SERIENNUMMERNSCHILD (GETRIEBE)	327
SERPENTINENFÖRMIGER RIEMEN	132
	134
	136
	138
*SERVICE CENTER AR	489
*SERVICE GP-IMPLEMENT	165
SICHERHEITSEINBAUSATZ	175
SICHERHEITSGURT ((AUTOMATIKSICHERHEITSGURT))	854
SICHERUNG (10 A)	265
SICHERUNG (15 A)	265
	763
	804
SOFTWARE - KOMMUNIKATION (PRODUCT LINK 212SR)	221
SOFTWARE - KRAFTÜBERTRAGUNG	168
SOFTWARE - KRAFTÜBERTRAGUNG (ALLRADANTRIEB)	168
SOFTWARE (EMPFÄNGER)	222
SOFTWARE (MAST)	205
SOFTWARE (*RECEIVER, LOADER)	222
SOLENOIDSPULE (12 V)	620
SOLENOIDVENTIL U. BEFESTIGUNGSTEILE	396
SONDERAUSRÜSTUNG (EUROPÄISCHE GEMEINSCHAFT)	2
SONNENBLENDE	852
SPANNUNGSREGLER (24 V)	130
SPERRVENTIL	595
	662
	877
	880
SPERRVENTIL (SCHEIBENWASCHER)	879
STARTERMOTOR	244
	246
STARTSCHALTER (TASTE)	265
STECKDOSEN - EINBAUSATZ (12 STIFTE)	171
	288
STECKDOSEN - EINBAUSATZ (2POLIG)	260
	288
	306
	823
STECKDOSEN - EINBAUSATZ (2POLIG)	810
STECKDOSENVERDRAHTUNG	296
STEIGLEITER	493
STELLUNGSSENSOR	225
	226
	227
STELLUNGSSENSOR (ALLRADANTRIEB)	248
STELLUNGSSENSOR (LENKUNGSZYLINDER)	551
	553
STELLUNGSSENSOR (ROTIEREND) (KNICKGELENK)	299
STELLUNGSSENSOR (ROTIEREND) (*THROTTLE POSITION SENSOR)	848
STELLUNGSSENSOR (ROTIEREND) (*TMSN MODULATOR CONTROL)	848
STEUERKRÜMMER	617
	619
	620
	621
	623
STEUERUNG - NICHT PROGRAMMIERT	160
	161
STEUERUNG - NICHT PROGRAMMIERT (ALLRADANTRIEB)	158
STEUERUNG - NICHT PROGRAMMIERT (ARBEITSGERÄT)	161
STEUERUNG - NICHT PROGRAMMIERT (GETRIEBE)	342
STEUERUNG - NICHT PROGRAMMIERT (*HYDRAULIC ELECTRONIC)	271
STEUERUNG - NICHT PROGRAMMIERT (*IMPLEMENT 2)	161
STEUERUNG, NICHT PROGRAMMIERTER MONITOR	785
STEUERUNGS-KABELSTRANG (ACCUGRADE)	280
STEUERUNGS-KABELSTRANG (ALLRADANTRIEB)	158
STEUERUNGS-KABELSTRANG (*HYDRAULIC ELECTRONIC)	271
STEUERUNGSEINHEIT, ELEKTRON. FÜR MOTOR UND BEFEST.	150
STEUERVENTIL	663
	665
	667

* ÜBERSETZUNG ZUM ZEITPUNKT DER DRUCKLEGUNG NICHT VORHANDEN

STICHWORTVERZEICHNIS

Bezeichnung	Seite
	669
	671
	673
	675
	677
	679
	681
	683
	685
	687
STEUERVENTIL (BREMSE)	510
STEUERVENTILBEFESTIGUNG	829
	830
STEUERVENTILDECKEL	455
STIRNRAD	31
	360
	361
STIRNRADGEHÄUSE	38
STIRNRADGEHÄUSEDECKEL	14
	15
STOSSSTANGEN-EINBAUSATZ (GEWICHTSEINSTELLUNG) (SCHWINGSITZ)	808
STRASSENFAHRTSCHALTER	259
STREBE	717
STROMVERSORGUNGSEINHEIT	220
STÜTZGRUPPE - STEUERUNG	859
	861

T

TANDEMGEHÄUSE UND DECKEL	393
TEMPERATURSCHALTER (KLIMAANLAGE, HEIZUNG)	763
TEMPERATURSENSOR	240
	241
	242
TEMPERATURSENSOR (GETRIEBEÖL)	342
TEMPERATURSENSOR (HYDRAULIKLÜFTERÖL)	71
TEMPERATURSENSOR (HYDRAULIKÖL)	310
TEMPERATURSENSOR (KRAFTSTOFF)	106
TEMPERATURSENSOR (LUFTEINLASSKRÜMMER)	223
TEMPERATURSENSOR (MOTORKÜHLMITTEL)	223
TORSIONSKUPPLUNG	346
TRENNSCHALTER	251
TROCKNERSAMMLER (KÜHLMITTEL)	812
TURBOLADER	99
	100
TURBOLADERADAPTER	84
TURBOLADERÖLLEITUNGEN	64

U

ÜBERDRUCKVENTIL	399
	694
	695
ÜBERDRUCKVENTIL (ALLRADANTRIEB)	378
ÜBERDRUCKVENTIL (*COLD OIL STARTUP)	388
ÜBERDRUCKVENTIL (HAUPTUNTERBRECHER)	626
ÜBERDRUCKVENTIL (KÄLTEMITTELKOMPRESSOR)	772
ÜBERDRUCKVENTIL (LENKDRUCK)	701
ÜBERDRUCKVENTIL (*MAXIMUM PRESSURE, AWD)	388
ÜBERDRUCKVENTIL (NOTLENKUNG)	610
ÜBERDRUCKVENTIL (*PUMP CASE PRESSURE)	388
ÜBERTRAGUNGSEINBAUSATZ	171
ÜBERWACHUNGSTAFELVERDRAHTUNG	291
	294
UMGEHUNGSSCHALTER	250
UMLAUFKÜHLWASSERHEIZUNG	169
	170
UMLAUFKÜHLWASSERHEIZUNGS-ELEMENT (120 V, 1000 W)	170
UMLAUFKÜHLWASSERHEIZUNGS-ELEMENT (240 V, 1000 W)	169
UMLAUFLÜFTER	798
	800
UMLEITVENTIL	689
UNTERBRECHER - INSTRUMENTENTAFEL	216
UNTERBRECHER (15 A) (*FLOODLIGHTS, LH)	216
UNTERBRECHER (15 A) (*FLOODLIGHTS, RH)	217
UNTERBRECHER (15 A) (GETRIEBESTEUERUNG)	216
UNTERBRECHER (15 A) (STARTSCHALTERSCHLÜSSEL)	216
UNTERBRECHER (150 A) (DREHSTROMGENERATOR)	216
UNTERBRECHER (20 A)	266
UNTERBRECHER (20 A) (ACCUGRADE)	216
UNTERBRECHER (20 A) (MOTORSTEUERUNG)	216
UNTERBRECHER (80 A) (HAUPTUNTERBRECHER)	216
UNTERBRECHER (80 A) (LADEN)	216

V

VENTIL (KÜHLMITTEL)	76
VENTILAUFHÄNGUNG	486
VENTILDECKEL	16

* ÜBERSETZUNG ZUM ZEITPUNKT DER DRUCKLEGUNG NICHT VORHANDEN

STICHWORTVERZEICHNIS

Bezeichnung	Seite
VENTILDECKELDICHTUNG	16
VENTILKABELSTRANG	264
VENTILKABELSTRANG (SITZ LUFTKOMPRESSOR)	865
VENTILKIPPHEBEL (AUSLASS)	54
VENTILKIPPHEBEL (EINLASS)	54
VENTILSATZ (3-VENTIL)	647
VENTILSATZ (4-VENTIL)	648
VENTILSATZ (5-VENTIL)	649
	650
VENTILSATZ (6-VENTIL)	651
	652
	653
VENTILSATZ (7-VENTIL)	654
	656
VENTILSATZ (8-VENTIL)	658
	660
VENTILSTEUERUNG	53
	54
VENTILSTÖSSELSATZ (SCHWINGSITZ)	808
VERDRAHTUNG (ELEKTRON. STEUERUNG)	271
VERDRAHTUNG, HINTEN	299
VERDRAHTUNG, VORNE	275
VERDRAHTUNGSKABELBAUM (*INCLINATION)	282
VERDRAHTUNGSKABELBAUM (LEUCHTBALKEN)	291
VERKLEIDUNG - FAHRERHAUS	834
	838
VERSANDDECKEL	347
VERSTELLBARER SITZ	850
VORDERACHSE	317
	318
	319
	322
	447
	448
	449
	453
VORDERRAHMEN	471
VORREINIGER	98
VORREINIGER (TURBINE)	98

W

Bezeichnung	Seite
WARNAUFKLEBER (*CRUSH HAZARD)	508
	732
	889
WARNAUFKLEBER (*CRUSH HAZARD, READ MANUAL)	891
WARNAUFKLEBER (*CRUSH HAZARD, READ MANUAL)	888
WARNAUFKLEBER (*CRUSH HAZARD, READ MANUAL)	511
WARNAUFKLEBER (FREMDSTART, HANDBUCH LESEN, US)	489
WARNAUFKLEBER (HOCHDRUCK, HANDBUCH LESEN)	500
	501
	522
WARNAUFKLEBER (KETTENSPANNFEDER)	502
WARNAUFKLEBER (LASERSENDER)	213
WARNAUFKLEBER (QUETSCHGEFAHR, FERNHALTEN)	304
WARNAUFKLEBER (SCHILD, NICHT BESTEIGEN, BETRIEBS- UND WARTUNGS-HANDBUCH LESEN)	213
WARNAUFKLEBER (SCHILD, NICHT BESTEIGEN, BETRIEBS- UND WARTUNGS-HANDBUCH LESEN)	205
WARNAUFKLEBER (SICHERHEITSGURT)	889
WARNAUFKLEBER (SICHERHEITSGURT)	508
WARNAUFKLEBER (ÜBERBRÜCKUNGSKABEL, HANDBUCH LESEN, INTL)	489
WARNVORRICHTUNG	129
WASSERABSCHEIDER- U. KRAFTSTOFFILTER	108
WASSERABSCHEIDER U. KRAFTSTOFFENTLÜFTUNGSPUMPE	128
WASSERABSCHEIDER UND KRAFTSTOFFILTER (HAUPTELEMENT)	108
WASSERTEMPERATURREGLER (97 GRAD CELSIUS)	74
WERKZEUGKASTEN	885
*WIRING GP-AUXILIARY	264
*WIRING GP-FRONT LIGHTING	279
WISCHERARM (RECHTS)	880

Z

Bezeichnung	Seite
ZAHNRADANTRIEB	628
ZAHNRADPUMPE	386
ZAHNRADPUMPE (*AWD CHARGE)	388
ZAHNRADPUMPE U. BEFESTIGUNGSTEILE	385
ZAHNRADVORGELEGE	32
	33
ZAPFWELLENLEITUNGEN	371
ZUGHAKEN	705
ZULASSUNGSSCHILDLEUCHTE	193
ZYLINDERBLOCKSCHRAUBE	48
ZYLINDERKOPF	24
	25
	26
	27
ZYLINDERKOPF-HALTETEILE	27

* ÜBERSETZUNG ZUM ZEITPUNKT DER DRUCKLEGUNG NICHT VORHANDEN

STICHWORTVERZEICHNIS

Bezeichnung	Seite	Bezeichnung	Seite
	29		

* ÜBERSETZUNG ZUM ZEITPUNKT DER DRUCKLEGUNG NICHT VORHANDEN

MACHINE ARRANGEMENT

234-7721 COMMON AR

S/N: B9D1-UP

SMCS-7000 **i02796742**

NOTE	PART NUMBER	QTY	PART NAME 1 2 3 4 5 6 (PRODUCT LEVEL)	SEE PAGE
Y	*231-2114*	1	AIR CLEANER GP	86
Y	*284-5013*	1	AXLE GP-REAR	323
Y	*247-8622*	1	BOX GP-TOOL	885
Y	*254-5399*	1	CAB AR	768
Y	*289-1417*	1	FRAME GP-REAR	472
Y	*297-8776*	1	CHAIN GP-DRIVE (TANDEM)	331
Y	*243-6660*	1	CIRCLE GP	703
Y	*231-1511*	1	CONTROL GP-DIFFERENTIAL LOCK	340
Y	*262-8360*	1	MOUNTING GP-XMSN OIL COOLER	383
Y	*268-6570*	1	COOLING AR	70
Y	*8E-3366*	1	COUPLING GP-TORSIONAL	346
Y	*290-3527*	1	COVER GP-PROTECTION	457
Y	*238-1916*	1	COVER GP-CONTROL VALVE	455
Y	*233-7721*	1	CYLINDER & MTG GP-ARTICULATION	534
Y	*263-2787*	1	CYLINDER & MTG GP-BLADE LIFT	536
Y	*233-7723*	1	CYLINDER & MTG GP-BLADE TIP	537
Y	*263-2788*	1	CYLINDER & MTG GP-CENTERSHIFT	538
Y	*246-6115*	1	CYLINDER & MTG GP-SIDESHIFT	540
Y	*253-4630*	1	DRAWBAR GP	705
Y	*253-4677*	1	DRIVE GP-CIRCLE	557
Y	*288-8988*	1	ENCLOSURE GP-ENGINE	458
Y	*231-2313*	1	FAN & MOTOR GP	71
Y	*270-6986*	1	FASTENER GP-FUEL TANK	104
Y	*247-4025*	1	FILLER GP-POWER TRAIN OIL	353
Y	*246-6350*	1	FRAME GP-FRONT	471
Y	*266-2423*	1	GUARD GP-BRAKE LINES (TANDEM)	475
Y	*232-2678*	1	HITCH GP-ARTICULATING	477
Y	*261-8536*	1	LIFT GP-BLADE	729
Y	*246-6704*	1	LINES GP-AIR	91
Y	*231-1515*	1	LINES GP-CENTERSHIFT LOCK	565
Y	*246-6706*	1	LINES GP-FUEL FILTER	113
Y	*266-3724*	1	LINES GP-HYDRAULIC FAN	590
Y	*236-8921*	1	LINES GP-GREASE	481
Y	*255-1244*	1	LINES GP-POWER TAKE-OFF	371
Y	*237-6423*	1	LINES GP-PUMP (SECONDARY STEERING)	595
Y	*231-1531*	1	LINES GP-SECONDARY STEERING	610
Y	*271-5397*	1	LINES GP-SERVICE BRAKE	519
Y	*231-1512*	1	LINES GP-STEERING	612
Y	*255-1243*	1	LINES GP-TRANSMISSION OIL	372
Y	*246-6707*	1	LINES GP-WATER	76
Y	*246-4477*	1	LOCK GP-CENTERSHIFT	616
Y	*284-5025*	1	MOUNTING GP-AXLE	484
Y	*231-2156*	1	MOUNTING GP-ENGINE & TMSN	42
Y	*233-3366*	1	MOUNTING GP-VALVE	486
Y	*246-6709*	1	MUFFLER & MOUNTING GP	96
Y	*250-1170*	1	PUMP & MTG GP-ELECTRIC DRIVE (SECONDARY STEERING)	630
Y	*235-8552*	1	PUMP & MTG GP-PISTON (BRAKE, HYDRAULIC FAN)	632
Y	*231-1535*	1	PUMP & MTG GP-PISTON (IMPLEMENT)	631
Y	*233-6370*	1	SHAFT GP-DRIVE	391
Y	*238-8758*	1	STEP GP	493
Y	*231-5061*	1	SERVICE CENTER AR	489
Y	*285-0592*	1	TANDEM & COVER GP	393
Y	*254-6997*	1	TANK GP-COOLANT	82
Y	**253-8405**	1	TRANSMISSION AR	394
Y	*257-7224*	1	WARNING GP-BACKUP	263
Y	*284-5019*	1	WHEEL AR	438

MACHINE ARRANGEMENT

234-7721 **COMMON AR** ***(contd.)*** **i02796742**

NOTE	PART NUMBER	QTY	PART NAME 1 2 3 4 5 6 (PRODUCT LEVEL)	SEE PAGE
Y	*233-4613*	1	WIRING GP-AUXILIARY	264
Y	*233-4600*	1	WIRING GP-FRONT	275
Y	*269-4152*	1	WIRING GP-POWER RECEPTACLE	296
Y	*264-7522*	1	WIRING GP-REAR	299
Y	*269-4150*	1	WIRING GP-SECONDARY STEERING	308
	6V-1970	1	LITERATURE GP (MACHINE)	
	5P-8500	2	KEY	
	5P-7958	1	SLEEVE-CABLE SPLICE	
Y-SEPARATE ILLUSTRATION				

<END>

261-0182 OPTION AR-EU

S/N: B9D1-UP

SMCS-7000 **i02786131**

NOTE	PART NUMBER	QTY	PART NAME 1 2 3 4 5 6 (PRODUCT LEVEL)	SEE PAGE
Y	*252-1810*	1	CONTROL GP-SERVICE BRAKE	511
Y	*296-0012*	1	REFLECTOR GP (RIPPER)	487
Y	*306-6511*	1	REFLECTOR GP (MACHINE)	488
Y	*231-5055*	1	SUPPRESSION GP-SOUND (ENGINE ENCLOSURE)	496
Y	*272-1540*	1	SUPPRESSION GP-SOUND	497
Y-SEPARATE ILLUSTRATION				

<END>

250-3818 ROADING AR—EUROPEAN MARKET

S/N: B9D1-UP

SMCS-7000 **i02783257**

NOTE	PART NUMBER	QTY	PART NAME 1 2 3 4 5 6 (PRODUCT LEVEL)	SEE PAGE
Y	*262-0413*	1	FENDER & SUPPORT GP (REAR)	469
Y	*233-4631*	1	LAMP GP-REGISTRATION PLATE	193
Y	*262-4972*	1	WIRING GP-LIGHTING (MARKER LIGHTS)	287
Y-SEPARATE ILLUSTRATION				

<END>

MACHINE ARRANGEMENT

261-0187 SNOW AR-MOTOR GRADER

S/N: B9D1-UP

SMCS-7000 **i02786176**

NOTE	PART NUMBER	QTY	PART NAME 1 2 3 4 5 6 (PRODUCT LEVEL)	SEE PAGE
Y	*261-0775*	1	AIR CONDITIONER AR	761
Y	*253-2724*	1	ALTERNATOR GP-CHARGING (150-AMPERE) (WITH AIR CONDITIONER)	138
Y	*248-6925*	1	AUTOSHIFT AR	316
Y	*233-4611*	1	BATTERY & WIRING GP	143
Y	*233-3137*	1	FAN GP-CIRCULATING	800
Y	*9X-3294*	1	HEATER GP-JACKET WATER	170
Y	*233-3127*	1	INSTALLATION GP-WARNING BEACON	177
Y	*233-3296*	1	MIRROR GP-REAR VIEW (HEATED)	823
Y	*238-9561*	1	STARTING AID GP-ETHER	243
Y	*238-8825*	1	SUPPORT GP-LIGHT (CAB ROOF)	247
Y	*238-8763*	1	SWITCH GP-LIGHT	252
Y	*300-1873*	1	WINDOW GP-CAB (REAR, LH, RH, SIDE WIPERS)	876
Y	*233-3139*	1	WIPER GP-WINDOW (REAR)	879

Y-SEPARATE ILLUSTRATION

<END>

ENGINE ARRANGEMENT

231-0878 ENGINE AR-COMPLETE

S/N: KHX238-UP

PART OF 261-0153 AXLE AR-FRONT

SMCS-1000 **i02785793**

NOTE	PART NUMBER	QTY	PART NAME 1 2 3 4 5 6 (PRODUCT LEVEL)	SEE PAGE
Y	*250-8318*	1	ADAPTER GP-TURBOCHARGER	84
Y	*110-0361*	1	BELT TENSIONER GP	11
Y	*222-5946*	1	BREATHER GP	57
Y	*246-9345*	1	CONTROL & MTG GP-ENGINE ELEK	150
Y	*189-8780*	1	COVER GP-AIR INLET (STARTING AID HEATER)	88
Y	*229-8841*	1	COVER GP-CYLINDER BLOCK	13
Y	*275-0595*	1	COVER GP-FRONT HOUSING	15
Y	*118-1727*	1	COVER GP-FRONT HOUSING (ACCESSORY DRIVE)	14
Y	*307-1735*	1	COVER GP-VALVE MECHANISM	16
Y	*250-8309*	1	DAMPER & PULLEY GP	28
Y	*275-1307*	1	ELBOW GP-AIR INLET	90
Y	*231-0879*	1	ENGINE AR-CORE	6
Y	*297-6867*	1	FASTENER GP	464
Y	*258-8723*	1	FASTENER GP-CYLINDER HEAD	29
Y	*267-6599*	1	FILTER GP-ENGINE OIL	58
Y	*250-8313*	1	FILTER GP-FUEL	106
Y	*250-8312*	1	FLYWHEEL GP	30
Y	*220-1194*	1	FUMES DISPOSAL GP	60
Y	*276-3681*	1	GAUGE GP-OIL LEVEL (DIPSTICK) (ENGINE)	61
Y	*250-8308*	1	GEAR GP-REAR	32
Y	*251-1135*	1	HOUSING GP-FLYWHEEL	34
Y	*196-1912*	1	LIFTING GP-ENGINE	40
Y	*7C-9279*	1	LINES GP-ENGINE OIL	62
Y	*250-8314*	1	LINES GP-FUEL	111
Y	*250-8315*	1	LINES GP-TURBOCHARGER OIL	64
Y	*206-4228*	1	LINES GP-WATER (ENGINE)	74
Y	*237-8063*	1	MANIFOLD GP-ENGINE OIL	65
Y	*257-8467*	1	MANIFOLD GP-EXHAUST	95
Y	*293-4622*	1	MOUNTING GP-FAN DRIVE	44
Y	*250-8306*	1	MOUNTING GP-FUEL FILTER	116
Y	*250-8320*	1	PAN GP-OIL	46
Y	*159-0303*	1	PLUG GP-CYLINDER BLOCK	48
Y	*162-8068*	1	PLUG GP-ENGINE	49
Y	*264-1434*	1	PUMP GP-WATER	79
Y	*7E-7590*	1	SEAL GP-CRANKSHAFT	51
Y	*297-5355*	1	SENSOR GP-ENGINE	223
Y	*248-0716*	1	STARTING MOTOR GP-ELECTRIC (24-VOLT)	246
Y	*247-0270*	1	SUPPORT GP-ENGINE	52
Y	*276-4107*	1	WIRING GP-ENGINE	273
Y	*275-0596*	1	WIRING GP-HEATER	286
			PLEASE USE THE GASKET KIT LINK IN SIS OR CONTACT YOUR LOCAL DEALER FOR THE LATEST GASKET KIT INFORMATION	

Y-SEPARATE ILLUSTRATION

ENGINE ARRANGEMENT

278-9732 ENGINE AR-COMPLETE

S/N: KHX2911-UP
166 BRAKE KW (223 BHP) @ 2000 RPM
PART OF 278-3419 AXLE AR-FRONT

SMCS-1000 **i02792068**

NOTE	PART NUMBER	QTY	PART NAME 1 2 3 4 5 6 (PRODUCT LEVEL)	SEE PAGE
Y	*250-8318*	1	ADAPTER GP-TURBOCHARGER	84
Y	*222-5946*	1	BREATHER GP	57
Y	**246-9345**	1	CONTROL & MTG GP-ENGINE ELEK	150
Y	*189-8780*	1	COVER GP-AIR INLET (STARTING AID HEATER)	88
Y	*229-8841*	1	COVER GP-CYLINDER BLOCK	13
Y	*275-0595*	1	COVER GP-FRONT HOUSING	15
Y	*118-1727*	1	COVER GP-FRONT HOUSING (ACCESSORY DRIVE)	14
Y	*307-1735*	1	COVER GP-VALVE MECHANISM	16
Y	*250-8309*	1	DAMPER & PULLEY GP	28
Y	*275-1307*	1	ELBOW GP-AIR INLET	90
Y	*231-0879*	1	ENGINE AR-CORE	6
Y	*297-6867*	1	FASTENER GP	464
Y	*258-8723*	1	FASTENER GP-CYLINDER HEAD	29
Y	*267-6599*	1	FILTER GP-ENGINE OIL	58
Y	*250-8313*	1	FILTER GP-FUEL	106
Y	*250-8312*	1	FLYWHEEL GP	30
Y	*220-1194*	1	FUMES DISPOSAL GP	60
Y	*276-3681*	1	GAUGE GP-OIL LEVEL (DIPSTICK) (ENGINE)	61
Y	*279-5645*	1	GEAR GP-REAR	33
Y	*279-5644*	1	HOUSING GP-FLYWHEEL	36
Y	*196-1912*	1	LIFTING GP-ENGINE	40
Y	*7C-9279*	1	LINES GP-ENGINE OIL	62
Y	*250-8314*	1	LINES GP-FUEL	111
Y	*250-8315*	1	LINES GP-TURBOCHARGER OIL	64
Y	*206-4228*	1	LINES GP-WATER (ENGINE)	74
Y	*237-8063*	1	MANIFOLD GP-ENGINE OIL	65
Y	*257-8467*	1	MANIFOLD GP-EXHAUST	95
Y	*293-4622*	1	MOUNTING GP-FAN DRIVE	44
Y	*250-8306*	1	MOUNTING GP-FUEL FILTER	116
Y	*250-8320*	1	PAN GP-OIL	46
Y	*159-0303*	1	PLUG GP-CYLINDER BLOCK	48
Y	*162-8068*	1	PLUG GP-ENGINE	49
Y	*264-1434*	1	PUMP GP-WATER	79
Y	*7E-7590*	1	SEAL GP-CRANKSHAFT	51
Y	*297-5355*	1	SENSOR GP-ENGINE	223
Y	*248-0716*	1	STARTING MOTOR GP-ELECTRIC (24-VOLT)	246
Y	*247-0270*	1	SUPPORT GP-ENGINE	52
Y	*276-4107*	1	WIRING GP-ENGINE	273
Y	*275-0596*	1	WIRING GP-HEATER	286

Y-SEPARATE ILLUSTRATION

ENGINE ARRANGEMENT

231-0879 ENGINE AR-CORE

S/N: KHX238-UP

PART OF 231-0878, 278-9732 ENGINE AR-COMPLETE

SMCS-1000 **i02789605**

NOTE	PART NUMBER	QTY	PART NAME 1 2 3 4 5 6 (PRODUCT LEVEL)	SEE PAGE
Y	*212-4289*	1	CAMSHAFT GP	12
Y	*117-3643*	1	COOLER GP-ENGINE OIL	69
Y	*210-5590*	1	CRANKSHAFT GP	18
Y	*221-4482*	1	CYLINDER BLOCK GP	20
Y	*219-5849*	1	CYLINDER HEAD GP	27
Y	*205-1321*	1	GEAR GP-FRONT	31
Y	*165-4446*	1	HOUSING GP-FRONT	38
Y	*191-0461*	1	LINES GP-INJECTOR HYD PUMP	115
Y	*212-3652*	6	PISTON & ROD GP	47
Y	*254-0095*	1	PUMP & MTG GP-UNIT INJ HYD	117
Y	*212-2270*	1	PUMP GP-ENGINE OIL	68
Y	*268-1839*	6	PUMP GP-FUEL INJECTION	118
Y	*254-3813*	1	TURBOCHARGER GP	100
Y	*232-3717*	1	VALVE MECHANISM GP	53
	231-0303	1	ELECTRONICS GP-ENGINE RATINGS	

Y-SEPARATE ILLUSTRATION

BASIC ENGINE

261-0610 AIR COMPRESSOR AR

S/N: B9D1-UP

SMCS-1803, 1804, 5502 **i02786527**

NOTE	PART NUMBER	QTY	PART NAME 1 2 3 4 5 6 (PRODUCT LEVEL)	SEE PAGE
Y	*246-6719*	1	AIR COMPRESSOR GP	9
Y	*255-1283*	1	LINES GP-AIR	93
Y	*255-1250*	1	LINES GP-AIR TANK	515
Y	*236-8922*	1	TANK GP-AIR	904

Y-SEPARATE ILLUSTRATION

<END>

BASIC ENGINE

224-0003 AIR COMPRESSOR GP

S/N: B9D1-UP
10.9 CFM AT 1250 RPM
PART OF 246-6719 AIR COMPRESSOR GP

SMCS-1803 **i01871813**

NOTE	REF NO	GRAPHIC REF	PART NUMBER	QTY	PART NAME 1 2 3 4 5 6 (PRODUCT LEVEL)	SEE PAGE
	2	1	**2P-4358**	1	FLANGE	
	3	1	**179-7383**	1	SEAL-O-RING	
	4	1	**3K-0360**	1	SEAL-O-RING	
	5	1	**6D-1004**	1	GASKET	
M	6	1	**6V-1820**	2	BOLT (M10X1.5X30-MM)	
M	7	1	**6V-5221**	4	BOLT (M8X1.25X80-MM)	
	8	1	**6V-5839**	2	WASHER (11X21X2.5-MM THK)	
M	9	1	**8T-2396**	2	BOLT (M6X1X60-MM)	
	10	1	**9M-1974**	4	WASHER-HARD (8.8X16X2-MM THK)	
	11	1	**9S-8005**	1	PLUG-O RING	
	12	1	**9X-8267**	2	WASHER (6.6X12X2-MM THK)	

M-METRIC PART

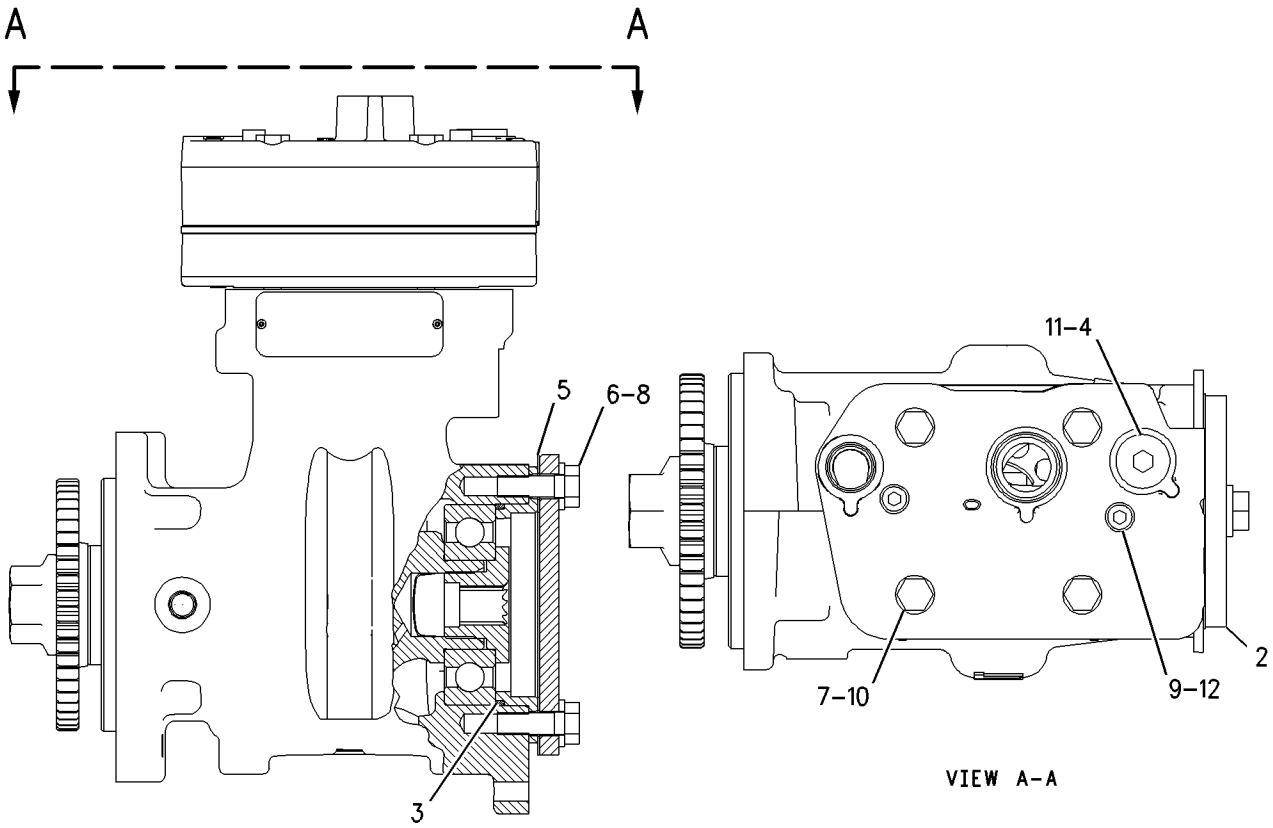

VIEW A-A

GRAPHIC #1 **<END>** g00939344

BASIC ENGINE

246-6719 AIR COMPRESSOR GP

S/N: B9D1-UP

PART OF 261-0610 AIR COMPRESSOR AR

SMCS-1803 **i02786535**

NOTE	REF NO	GRAPHIC REF	PART NUMBER	QTY	PART NAME 1 2 3 4 5 6 (PRODUCT LEVEL)	SEE PAGE
	1	1	**135-9819**	1	SEAL-INTEGRAL	
Y	2	1	**224-0003**	1	AIR COMPRESSOR GP	8
I	3	1	**265-4043**	1	HOSE AS	
I	4	1	**265-4049**	1	HOSE AS	
I	5	1	**235-2448**	1	HOSE AS	
	6	1	**269-6275**	1	TUBE AS	
	7	1	*148-8340*	2	CONNECTOR AS	
					(EACH INCLUDES)	
		1	**6V-8639**	1	CONNECTOR	
		1	**3K-0360**	1	SEAL-O-RING	
		1	**6V-8398**	1	SEAL-O-RING	
	8	1	*148-8364*	1	ELBOW AS	
		1	**6V-8625**	1	ELBOW	
		1	**3K-0360**	1	SEAL-O-RING	
		1	**6V-8398**	1	SEAL-O-RING	
	9	1	*148-8368*	1	ELBOW AS	
		1	**6V-8627**	1	ELBOW	
		1	**3J-1907**	1	SEAL-O-RING	
		1	**4J-5477**	1	SEAL-O-RING	
	10	1	*148-8369*	1	ELBOW AS	
		1	**6V-8628**	1	ELBOW	
		1	**3J-7354**	1	SEAL-O-RING	
		1	**4J-5477**	1	SEAL-O-RING	
	11	1	*153-6237*	2	ELBOW AS	
					(EACH INCLUDES)	
		1	**6V-9004**	1	ELBOW	
		1	**3D-2824**	1	SEAL-O-RING	
		1	**6V-9746**	1	SEAL-O-RING	
	12	1	**4D-7735**	1	CLIP	
	13	1	**7X-0632**	1	WASHER-HARD (11X36X6-MM THK)	
	14	1	**8T-4121**	1	WASHER-HARD (11X21X2.5-MM THK)	
M	15	1	**8T-4136**	1	BOLT (M10X1.5X25-MM)	
	16	1	**8T-4223**	2	WASHER-HARD (13.5X25.5X3-MM THK)	
M	17	1	**8T-6868**	2	BOLT (M12X1.75X80-MM)	

I-REFER TO HYDRAULIC INFORMATION SYSTEM
M-METRIC PART
Y-SEPARATE ILLUSTRATION

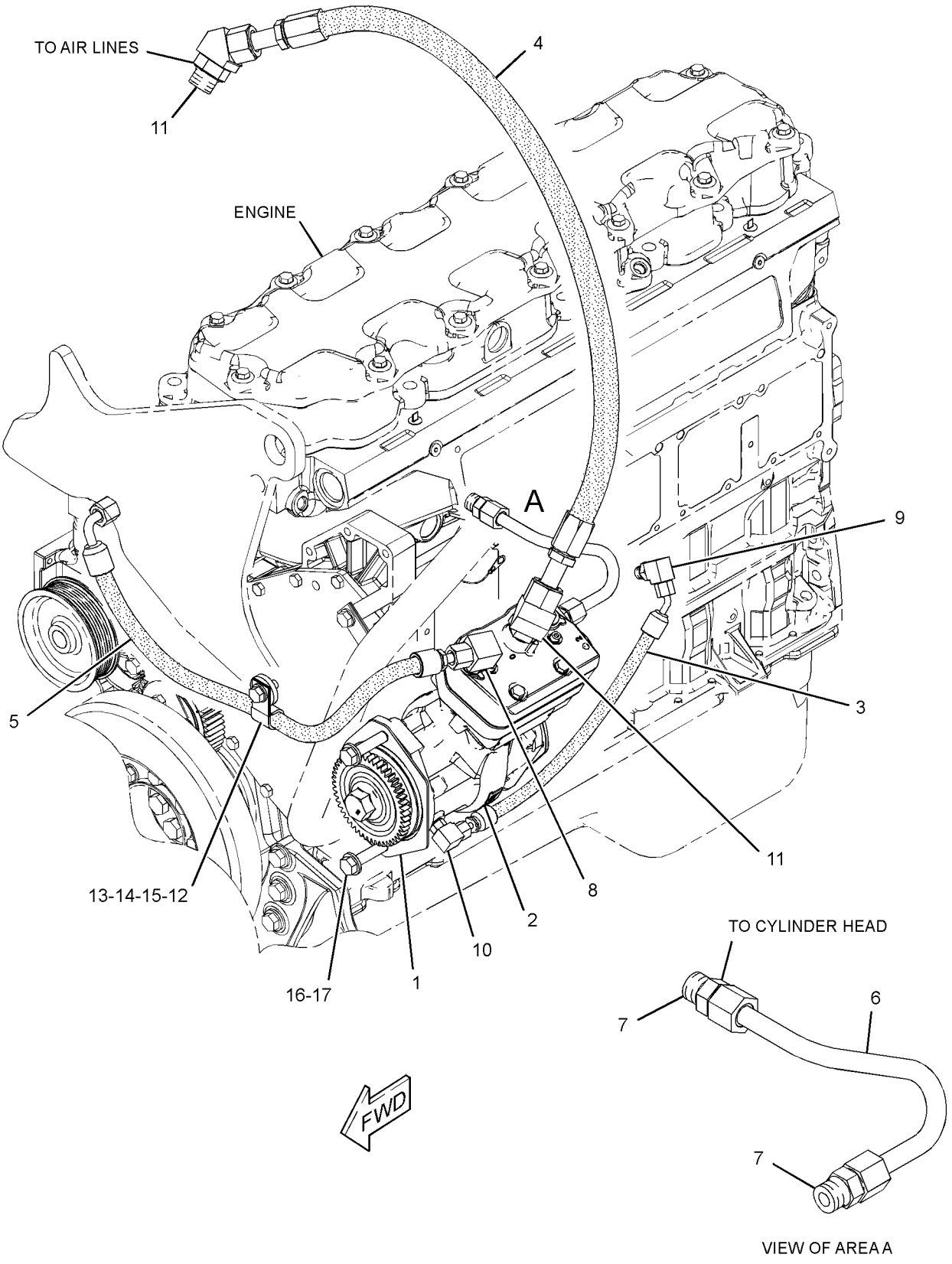

GRAPHIC #1 **<END>** g01374169

BASIC ENGINE

110-0361 BELT TENSIONER GP

S/N: KHX238-UP

PART OF 231-0878 ENGINE AR-COMPLETE

SMCS-1358 **i02789599**

NOTE	REF NO	GRAPHIC REF	PART NUMBER	QTY	PART NAME 1 2 3 4 5 6 (PRODUCT LEVEL)	SEE PAGE
	1	1	**135-2142**	1	BELT TENSIONER	
M	2	1	**8T-0643**	1	BOLT (M10X1.5X80-MM)	
	3	1	**6V-5839**	1	WASHER (11X21X2.5-MM THK)	

M-METRIC PART

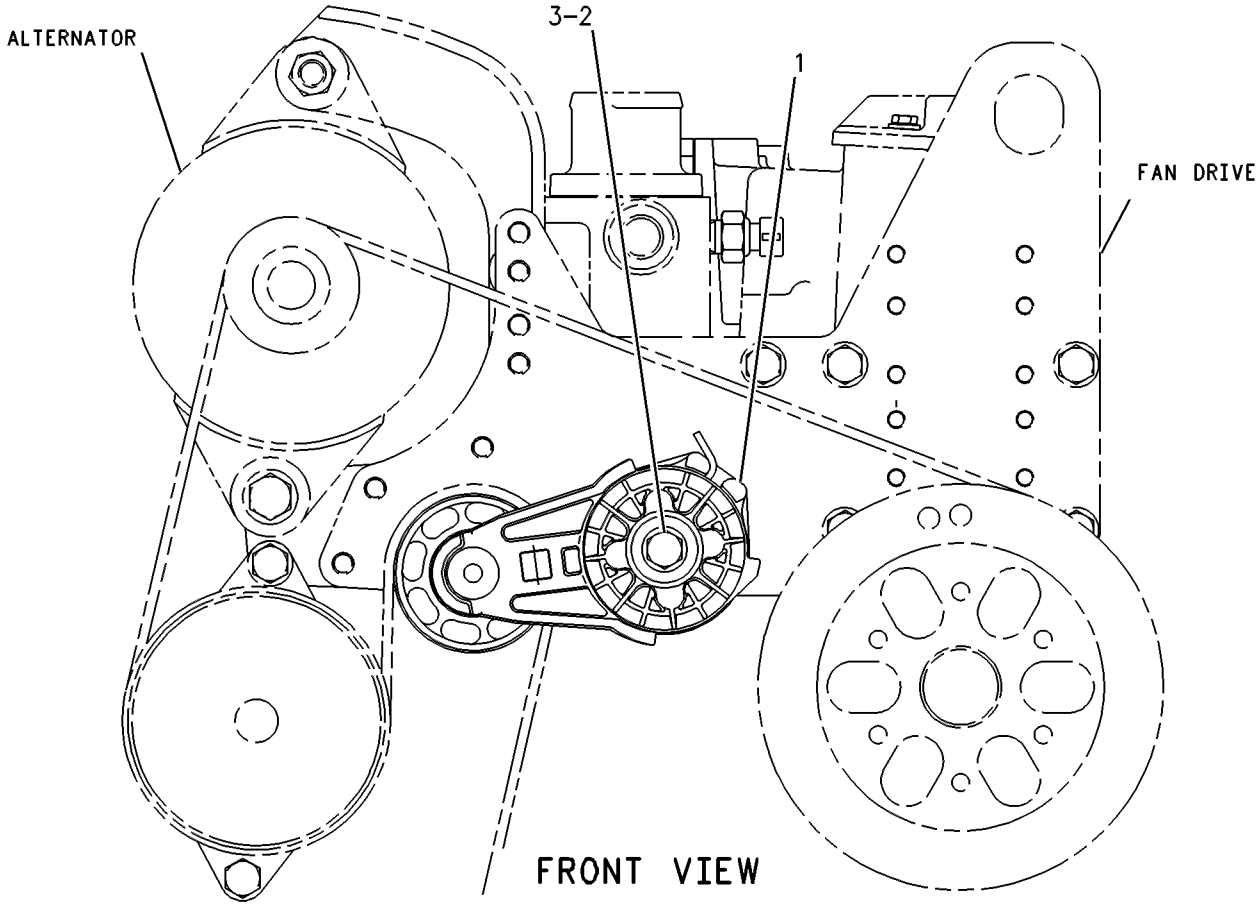

GRAPHIC #1 **<END>** g00260825

BASIC ENGINE

212-4289 CAMSHAFT GP

S/N: KHX238-UP

PART OF 231-0879 ENGINE AR-CORE

SMCS-1210 **i02215726**

NOTE	REF NO	GRAPHIC REF	PART NUMBER	QTY	PART NAME 1 2 3 4 5 6 (PRODUCT LEVEL)	SEE PAGE
	1	1	**107-7694**	1	PLATE-THRUST	
	2	1	**212-4288**	1	CAMSHAFT AS	
	2A	1	**1B-8705**	1	KEY-WOODRUFF	
	2B	1	**224-3247**	1	GEAR (100-TEETH)	
M	3	1	**6V-3940**	2	BOLT (M8X1.25X25-MM)	

M-METRIC PART

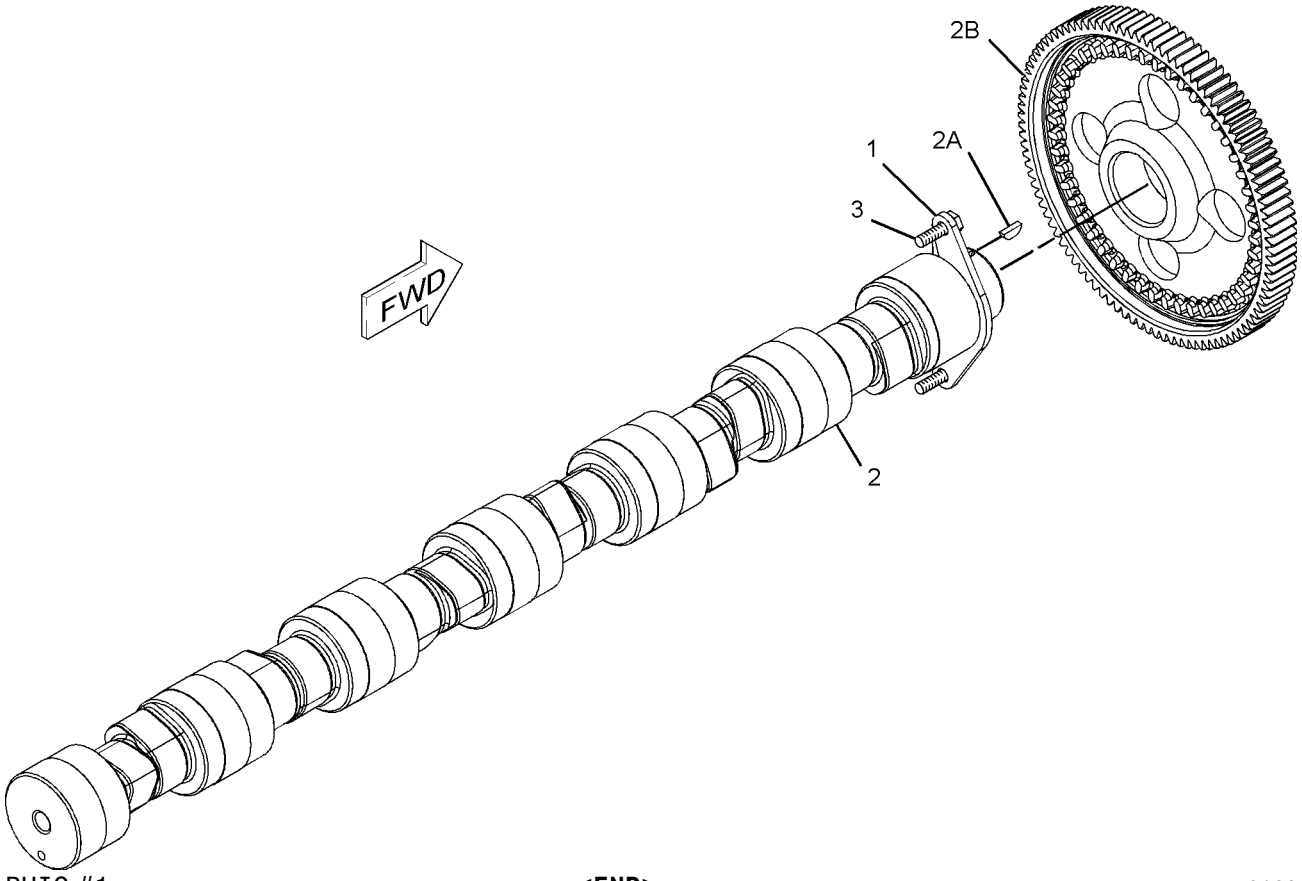

GRAPHIC #1 **<END>** g01099239

229-8841 COVER GP-CYLINDER BLOCK

S/N: KHX238-UP

PART OF 231-0878, 278-9732 ENGINE AR-COMPLETE

SMCS-1201 **i02789604**

NOTE	REF NO	GRAPHIC REF	PART NUMBER	QTY	PART NAME 1 2 3 4 5 6 (PRODUCT LEVEL)	SEE PAGE
	1	1	**2W-6544**	1	COVER	
	2	1	**4P-5918**	3	CLIP	
	3	1	**4Y-9652**	3	GASKET	
	4	1	**277-4421**	2	COVER-SIDE	
	5	1	**7W-3872**	6	SLEEVE	
	6	1	**110-7618**	4	BOLT AS (M8X1.25X16-MM)	
	8	1	**222-5893**	1	COVER AS	
M	8A	1	**6V-5698**	2	SCREW-BUTTON HEAD (M4X0.7X10-MM)	
	9	1	**210-3321**	1	STUD (M8X1.25-THD)	
M	10	1	**5C-7261**	1	NUT (M8X1.25-THD)	
M	11	1	**6V-2317**	23	BOLT (M8X1.25X30-MM)	
	12	1	**9M-1974**	22	WASHER-HARD (8.8X16X2-MM THK)	
B	13	1	**1U-8846**		SEALANT-GASKET	

B-USE AS REQUIRED
M-METRIC PART

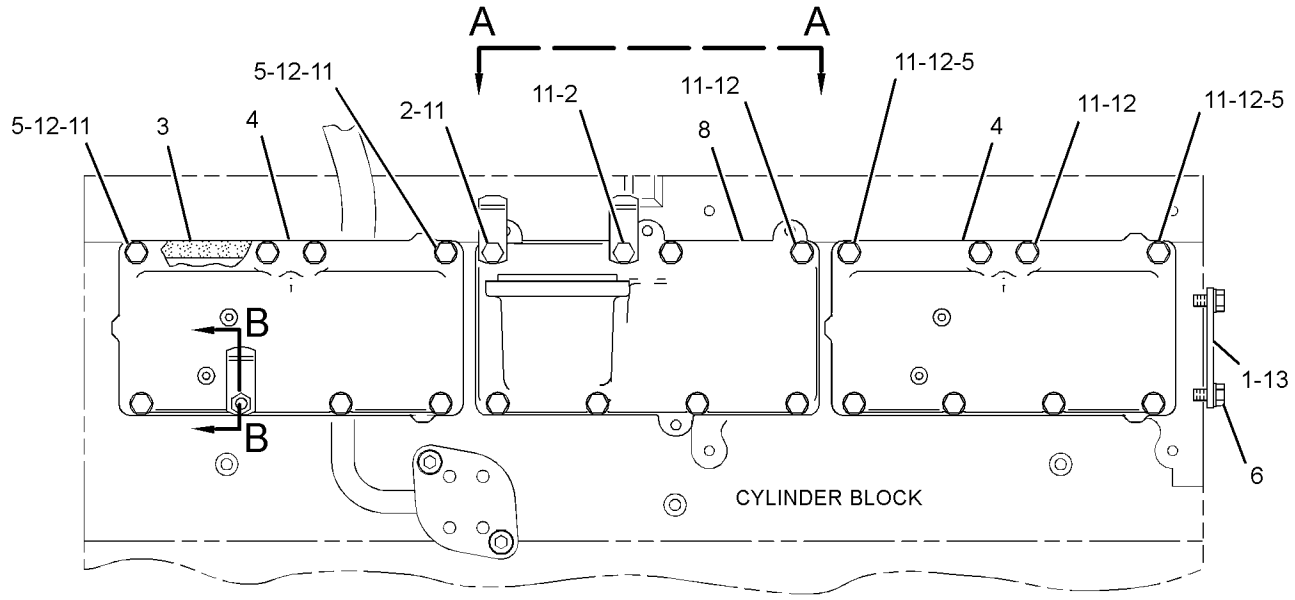

LEFT SIDE VIEW OF ENGINE

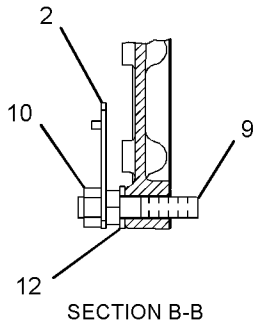

SECTION B-B

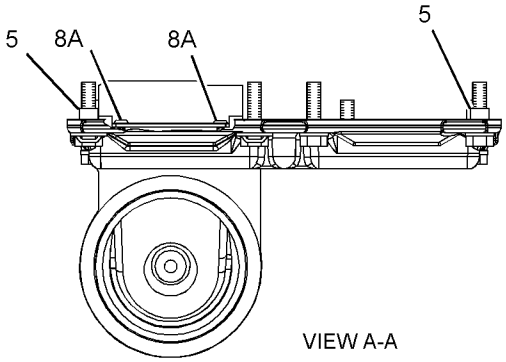

VIEW A-A

GRAPHIC #1 **<END>** g01331079

118-1727 COVER GP-FRONT HOUSING

S/N: KHX238-UP

PART OF 231-0878, 278-9732 ENGINE AR-COMPLETE

SMCS-1151, 1166 **i01671188**

NOTE	REF NO	GRAPHIC REF	PART NUMBER	QTY	PART NAME 1 2 3 4 5 6 (PRODUCT LEVEL)	SEE PAGE
	1	1	**5P-8245**	4	WASHER-HARD (13.5X25.5X3-MM THK)	
M	2	1	**6V-5696**	2	BOLT (M12X1.75X80-MM)	
	3	1	**4W-2026**	1	COVER	
	4	1	**135-9819**	1	SEAL-INTEGRAL	
M	5	1	**6V-8149**	2	NUT (M12X1.75-THD)	

M-METRIC PART

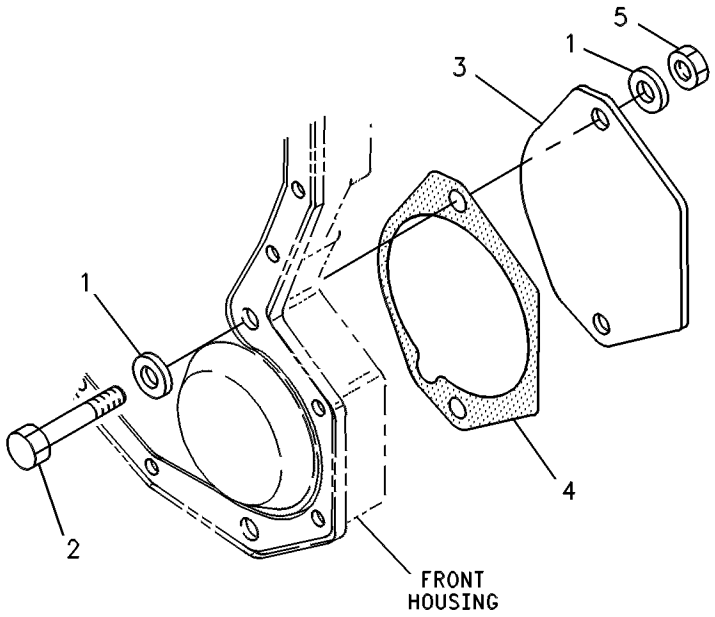

GRAPHIC #1 **<END>** g00245495

275-0595 COVER GP-FRONT HOUSING

S/N: KHX238-UP

PART OF 231-0878, 278-9732 ENGINE AR-COMPLETE

SMCS-1151, 1166 **i02791451**

NOTE	REF NO	GRAPHIC REF	PART NUMBER	QTY	PART NAME 1 2 3 4 5 6 (PRODUCT LEVEL)	SEE PAGE
M	1	1	**9X-2099**	1	STUD (M8X1.25-THD)	
	2	1	**002-3448**	1	CLIP	
	3	1	**108-3612**	1	SPACER (11.13X19.05X53-MM THK)	
	4	1	**159-0286**	1	TUBE AS-FILLER	
	5	1	**166-1776**	1	COVER AS-FRONT	
		1	**126-1757**	2	WASHER (10.85X19.3X1.27-MM THK)	
		1	**136-0822**	2	STUD	
	6	1	**166-1781**	1	GASKET	
	7	1	**241-5645**	1	CAP AS-FILLER (ENGINE OIL)	
	8	1	**061-9455**	1	SEAL-O-RING	
M	9	1	**5C-7261**	2	NUT (M8X1.25-THD)	
M	10	1	**6V-2317**	10	BOLT (M8X1.25X30-MM)	
	11	1	**6V-5839**	1	WASHER (11X21X2.5-MM THK)	
M	12	1	**8T-0100**	2	BOLT (M8X1.25X60-MM)	
M	13	1	**8T-0643**	1	BOLT (M10X1.5X80-MM)	
	14	1	**8T-4224**	2	WASHER-HARD (8.8X16X2-MM THK)	

M-METRIC PART

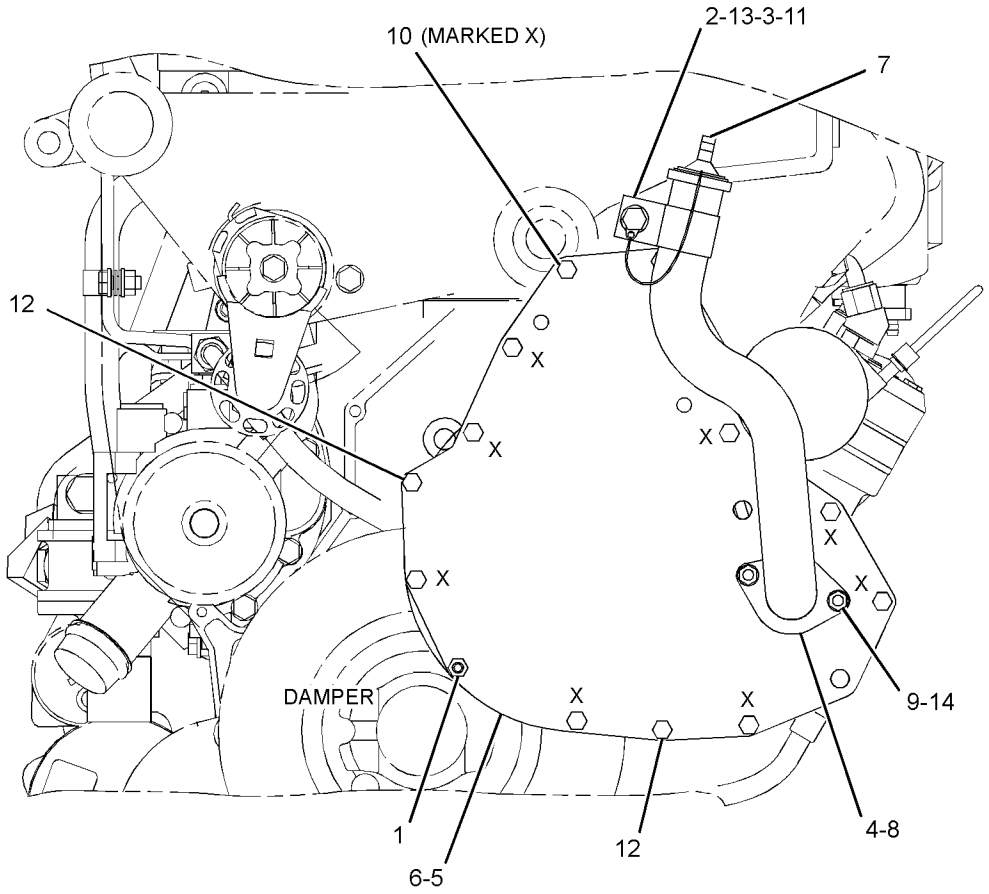

FRONT VIEW OF ENGINE

GRAPHIC #1 **<END>** g01312839

307-1735 COVER GP-VALVE MECHANISM

S/N: KHX238-UP

PART OF 231-0878, 278-9732 ENGINE AR-COMPLETE

SMCS-1107, 1120 **i02791485**

NOTE	REF NO	GRAPHIC REF	PART NUMBER	QTY	PART NAME 1 2 3 4 5 6 (PRODUCT LEVEL)	SEE PAGE
	1	1	**271-2417**	1	COVER GP-VALVE MECHANISM	
	1A	1	**244-4486**	1	SEAL-COVER	
		1	**245-6796**	1	COVER AS-BASE	
	2	1	**307-1738**	1	COVER GP-VALVE MECHANISM	
	2A	1	**272-0388**	1	SEAL-VALVE COVER	
M	3	1	**099-3649**	13	BOLT (M8X1.25X40-MM)	
	4	1	**8T-4224**	13	WASHER-HARD (8.8X16X2-MM THK)	

M-METRIC PART

307-1735 **COVER GP-VALVE MECHANISM** *(contd.)* **i02791485**

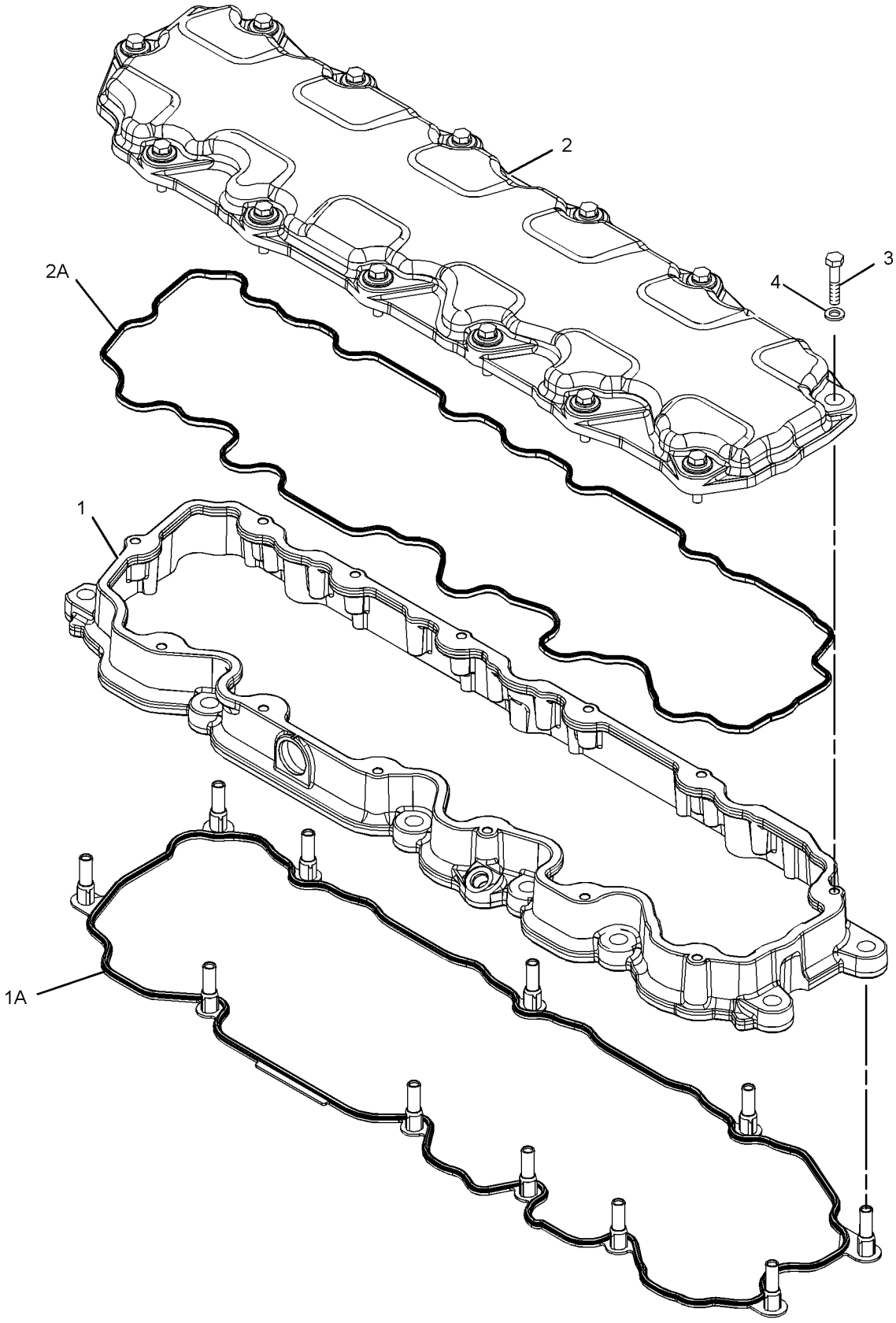

GRAPHIC #1 **<END>** g01348109

BASIC ENGINE

210-5590 CRANKSHAFT GP

S/N: KHX238-UP

PART OF 231-0879 ENGINE AR-CORE

SMCS-1202, 1203, 1204, 1232 **i02215729**

NOTE	REF NO	GRAPHIC REF	PART NUMBER	QTY	PART NAME 1 2 3 4 5 6 (PRODUCT LEVEL)	SEE PAGE
	1	1	**227-5480**	1	CRANKSHAFT AS	
	1A	1	**1B-8705**	1	KEY-WOODRUFF	
	1B	1	**2W-8147**	1	GEAR (50-TEETH)	
J	2	1	**212-4893**	1	BEARING-THRUST (STANDARD)	
AB		1	**229-5153**		BEARING-THRUST (0.25-MM US)	
AB		1	**229-5154**		BEARING-THRUST (0.5-MM US)	
AB		1	**229-5155**		BEARING-THRUST (0.5-MM OS)	
AB		1	**229-5156**		BEARING-THRUST (0.5-MM US - 0.5-MM OS)	
J	3	1	**107-7708**	6	BEARING-MAIN (STANDARD)	
AB		1	**145-0168**		BEARING-MAIN (0.5-MM OS)	
AB		1	**145-0170**		BEARING-MAIN (0.5-MM US - 0.5-MM OS)	
AB		1	**145-0162**		BEARING-MAIN (0.25-MM US)	
AB		1	**145-0164**		BEARING-MAIN (0.5-MM US)	
ABF		1	**7C-7980**	1	SLEEVE-OIL SEAL	
					(THIS WEAR SLEEVE IS USED ONLY TO SALVAGE (REPAIR) THE REAR SEAL SURFACE OF THE CRANKSHAFT)	
					AVAILABLE REPAIR KIT(S):	
AJ			**196-9519**		BEARING GP-MAIN	

A-NOT PART OF THIS GROUP
B-USE AS REQUIRED
F-NOT SHOWN
J-KIT MARKED J SERVICES PARTS MARKED J

210-5590 **CRANKSHAFT GP** *(contd.)* **i02215729**

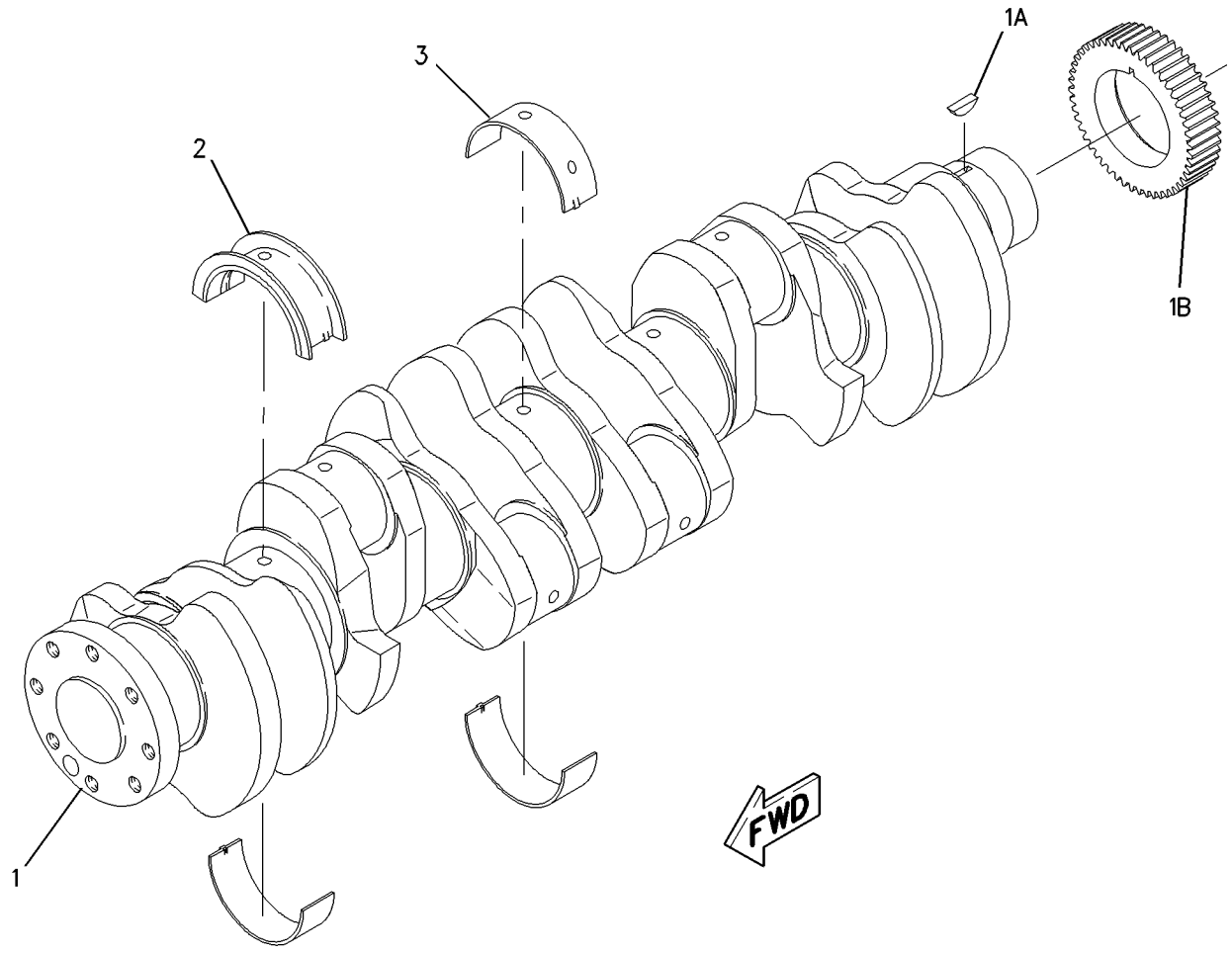

GRAPHIC #1 **<END>** g00977492

BASIC ENGINE

221-4482 CYLINDER BLOCK GP

S/N: KHX238-UP

PART OF 231-0879 ENGINE AR-CORE

SMCS-1201 **i02690900**

NOTE	REF NO	GRAPHIC REF	PART NUMBER	QTY	PART NAME 1 2 3 4 5 6 (PRODUCT LEVEL)	SEE PAGE
CY	1	1	**305-8141**	1	CYLINDER BLOCK GP	22
	2	1	**7N-5683**	2	DOWEL	
	3	1	**1W-8407**	2	SLEEVE	
	4	1	**6V-3538**	2	DOWEL	

C-CHANGE FROM PREVIOUS TYPE
Y-SEPARATE ILLUSTRATION

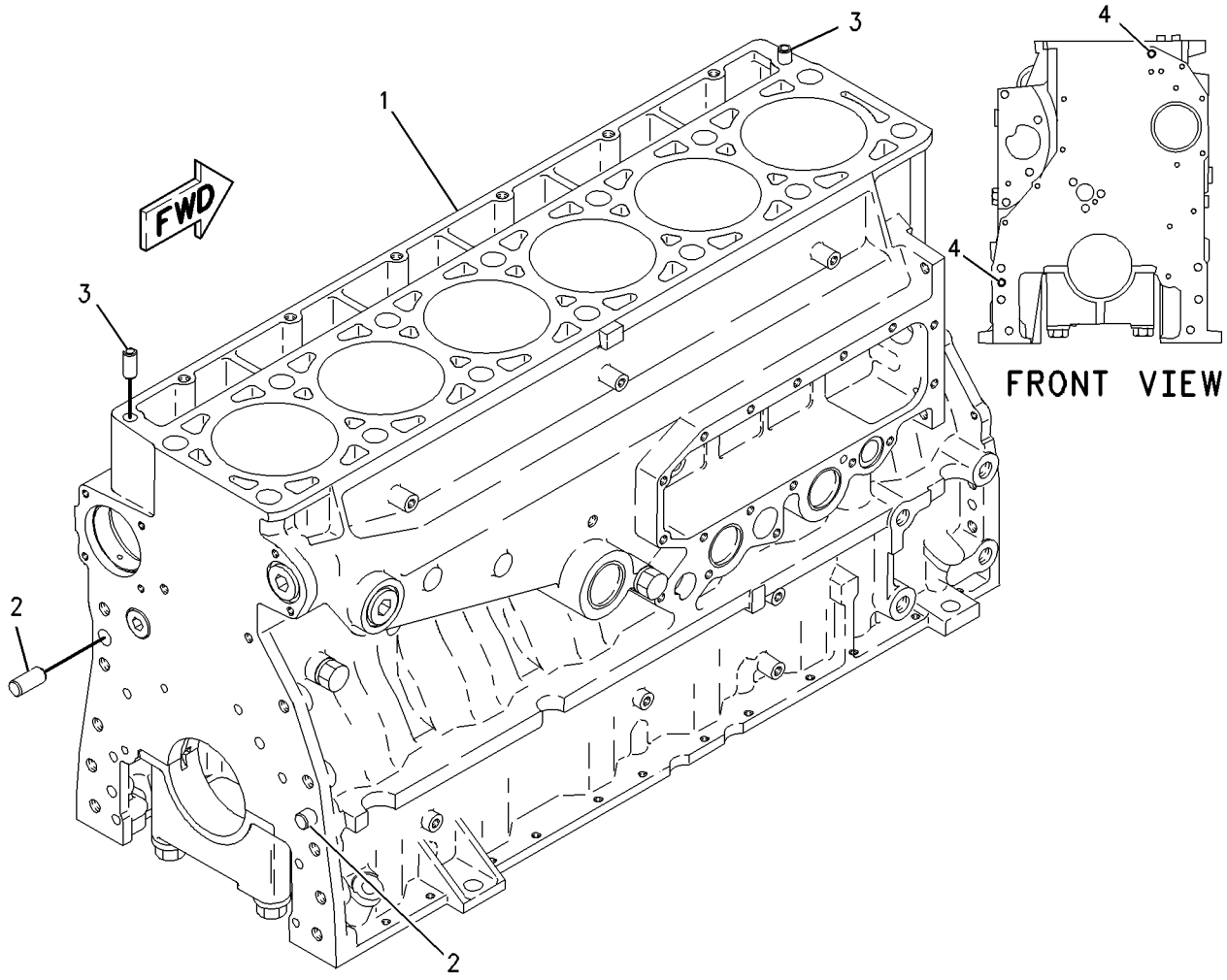

GRAPHIC #1 **<END>** g00800849

263-3774 CYLINDER BLOCK GP

S/N: KHX238-UP

PART OF 305-8141 CYLINDER BLOCK GP

SMCS-1201 **i02696326**

NOTE	REF NO	GRAPHIC REF	PART NUMBER	QTY	PART NAME 1 2 3 4 5 6 (PRODUCT LEVEL)	SEE PAGE
	1	1	**7E-2968**	7	CAP-CRANKSHAFT BEARING	
M	2	1	**9X-8916**	14	BOLT (M16X2X140-MM)	
	3	1	**5P-8247**	14	WASHER-HARD (17X32X3.5-MM THK)	

M-METRIC PART

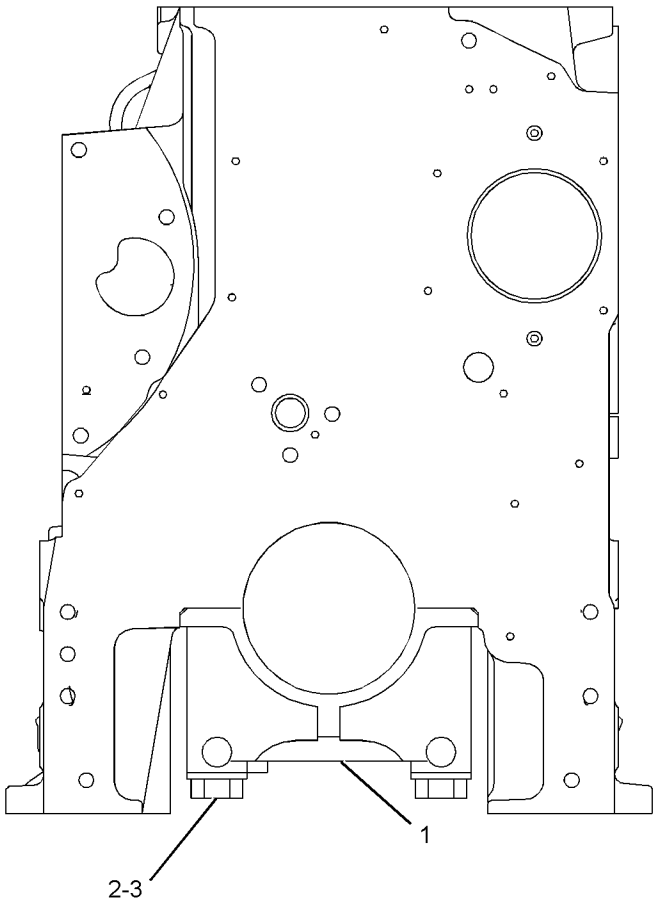

FRONT VIEW

GRAPHIC #1

<END>

g01352581

BASIC ENGINE

305-8141 CYLINDER BLOCK GP

S/N: KHX238-UP

PART OF 221-4482 CYLINDER BLOCK GP

SMCS-1201 **i02690909**

NOTE	REF NO	GRAPHIC REF	PART NUMBER	QTY	PART NAME 1 2 3 4 5 6 (PRODUCT LEVEL)	SEE PAGE
Y	1	1	*263-3774*	1	CYLINDER BLOCK GP	21
	2	1	**2M-6471**	2	PLUG-CUP	
	3	1	**3H-5552**	1	PLUG-CUP	
	4	1	**9S-8006**	1	PLUG-O-RING	
	5	1	**2M-9780**	1	SEAL-O-RING	
	6	1	**216-5586**	1	BEARING-SLEEVE (CAMSHAFT)	
	7	1	**2W-7213**	6	BEARING-SLEEVE (CAMSHAFT)	

Y-SEPARATE ILLUSTRATION

305-8141 **CYLINDER BLOCK GP** *(contd.)* **i02690909**

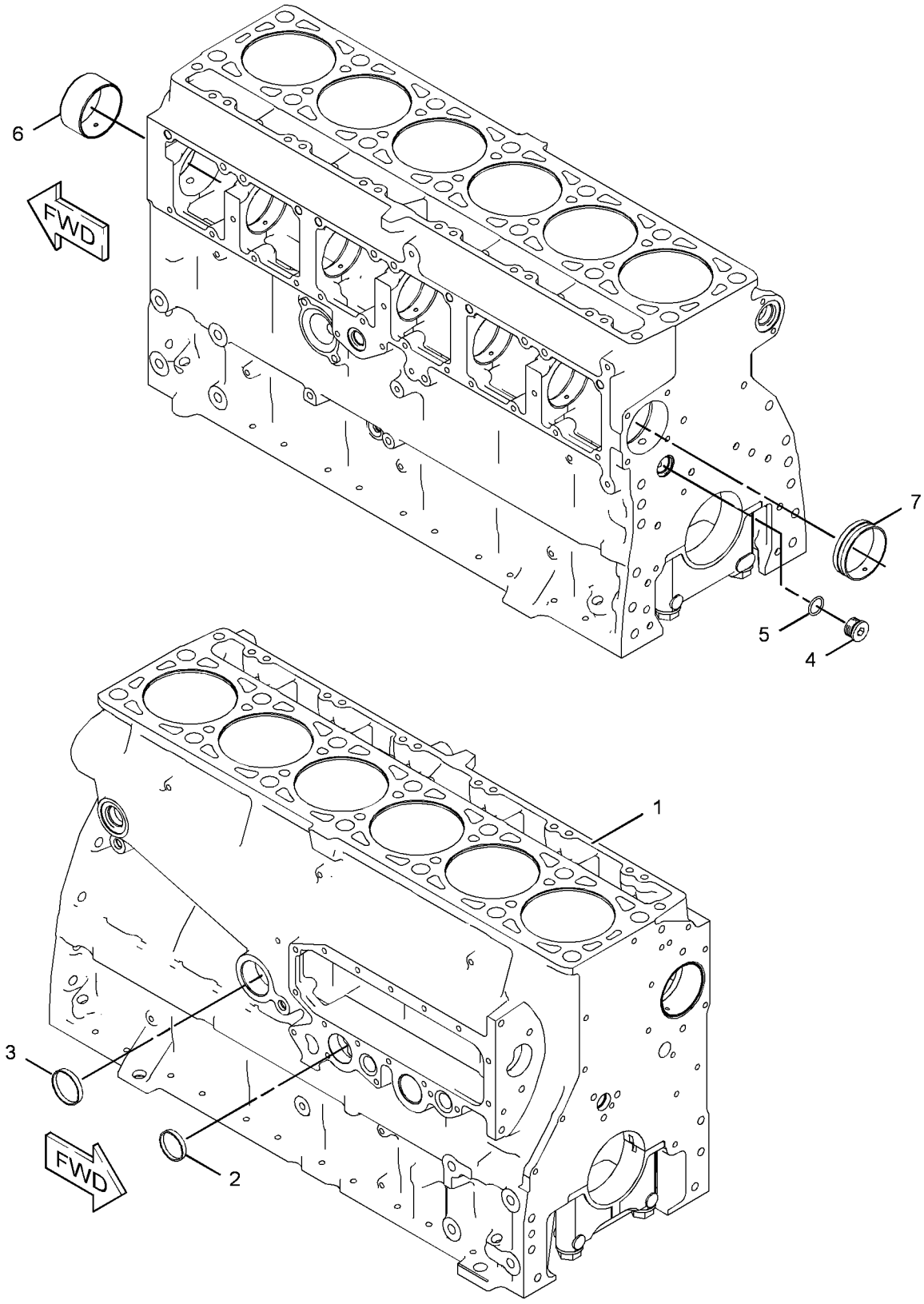

GRAPHIC #1 **<END>** g01348114

BASIC ENGINE

219-5844 CYLINDER HEAD AS

S/N: KHX238-UP

PART OF 219-5846 CYLINDER HEAD GP

SMCS-1100 **i02215799**

NOTE	REF NO	GRAPHIC REF	PART NUMBER	QTY	PART NAME 1 2 3 4 5 6 (PRODUCT LEVEL)	SEE PAGE
	2	1	**8M-5860**	12	PLUG-CUP	
	3	1	**4F-5695**	2	PLUG-CUP	
	4	1	**227-1200**	6	SLEEVE-INJECTOR	
	5	1	**217-5213**	12	INSERT-VALVE SEAT (INLET)	
	6	1	**147-8218**	6	INSERT-VALVE SEAT (EXHAUST)	
	7	1	**8C-0563**	12	SEAL-O-RING	
	8	1	**9S-9334**	1	PLUG	
	9	1	**9X-7712**	1	SEAL-O-RING	

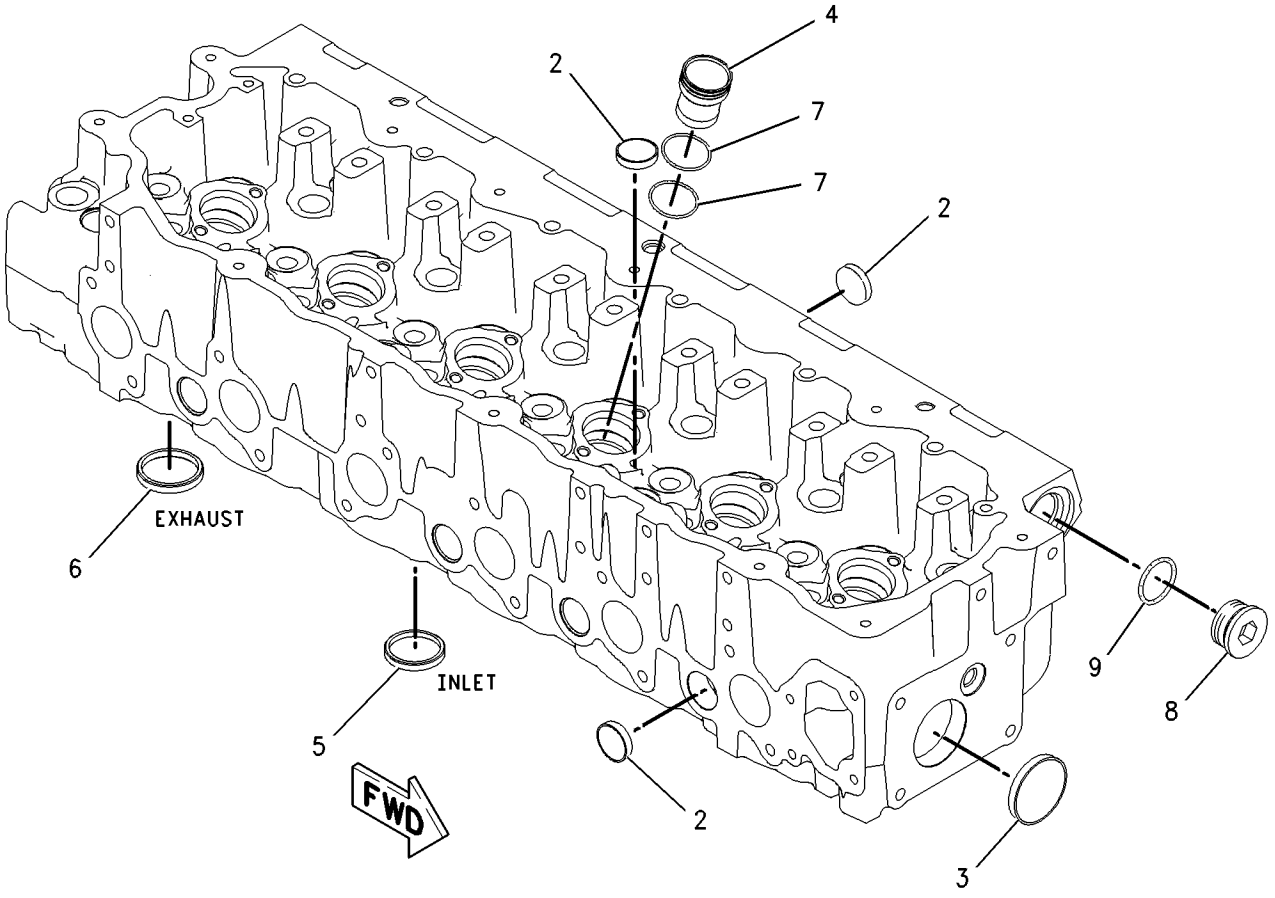

GRAPHIC #1 **<END>** g00948980

219-5846 CYLINDER HEAD GP*R

S/N: KHX238-UP

PART OF 219-5847 CYLINDER HEAD GP

SMCS-1100 **i02215801**

NOTE	REF NO	GRAPHIC REF	PART NUMBER	QTY	PART NAME 1 2 3 4 5 6 (PRODUCT LEVEL)	SEE PAGE
Y	1	1	*219-5844*	1	CYLINDER HEAD AS	24
	2	1	**145-7390**	12	VALVE-INLET	
	3	1	**147-8211**	6	VALVE-EXHAUST	
	4	1	**1W-2715**	24	LOCK-RETAINER	
	5	1	**7E-7779**	12	RETAINER-SPRING	
	6	1	**147-8214**	12	SEAL-VALVE STEM	
	7	1	**140-9670**	12	GUIDE-VALVE	
	8	1	**137-6718**	6	SPRING-VALVE	
	9	1	**140-6188**	12	SPRING-VALVE	
	10	1	**2A-4429**	12	LOCK-RETAINER	
	11	1	**134-4483**	6	RETAINER-SPRING	
	12	1	**147-8220**	6	GUIDE-VALVE	
	13	1	**163-2478**	6	SEAL-VALVE STEM	
	14	1	**137-6715**	6	SEAT-VALVE SPRING	

Y-SEPARATE ILLUSTRATION

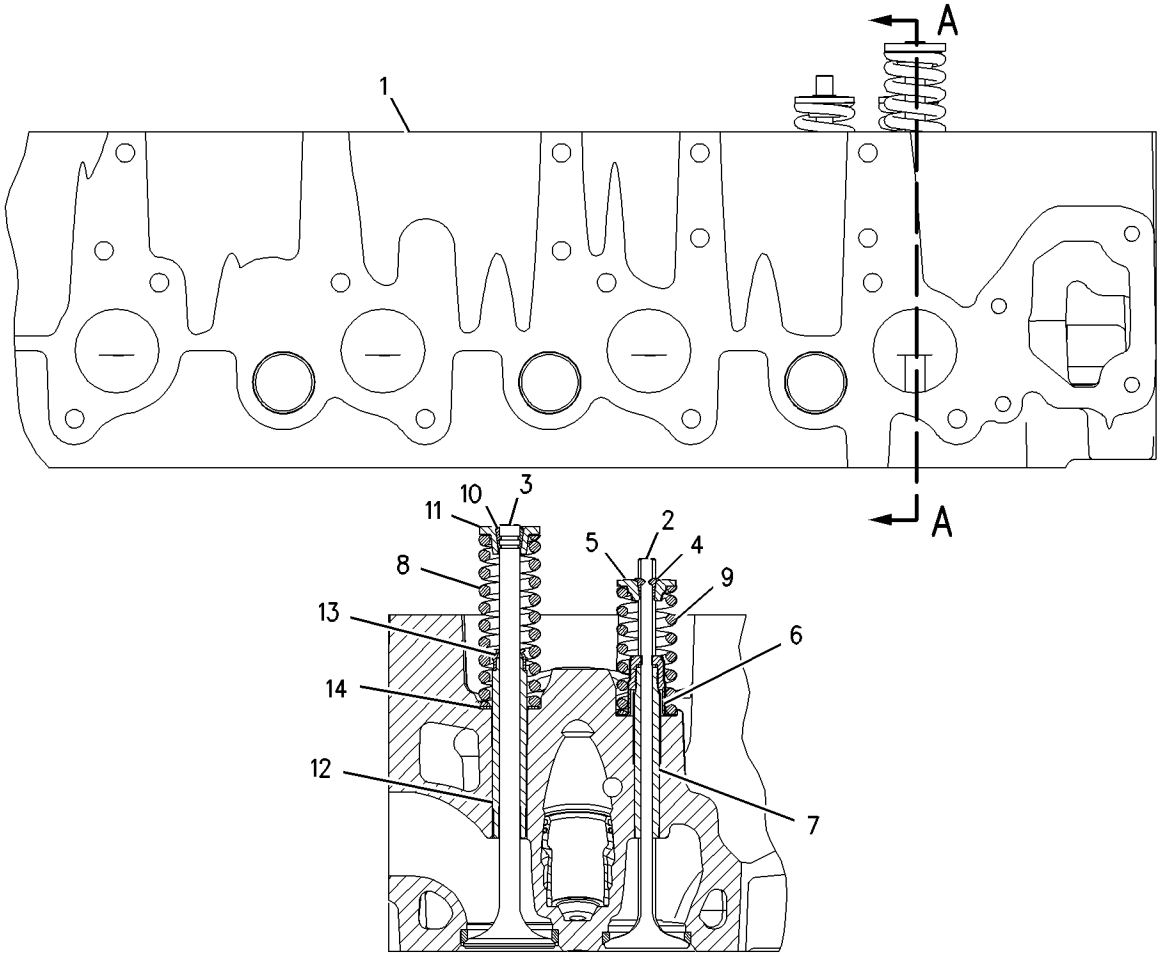

SECTION A-A

GRAPHIC #1 **<END>** g00947786

BASIC ENGINE

219-5847 CYLINDER HEAD GP*R

S/N: KHX238-UP

PART OF 219-5849 CYLINDER HEAD GP

SMCS-1100 **i02215791**

NOTE	REF NO	GRAPHIC REF	PART NUMBER	QTY	PART NAME 1 2 3 4 5 6 (PRODUCT LEVEL)	SEE PAGE
YR	1	1	**219-5846**	1	CYLINDER HEAD GP	25
	2	1	**1N-5999**	2	PLUG	
	3	1	**2M-9780**	1	SEAL-O-RING	
	4	1	**3J-1907**	2	SEAL-O-RING	
	5	1	**6V-5048**	6	SEAL-O-RING	
	6	1	**7J-0204**	2	SEAL-O-RING	
	7	1	**9S-8002**	6	PLUG-O-RING	
	8	1	**9S-8004**	2	PLUG-O-RING	
	9	1	**9S-8006**	1	PLUG-O-RING	
	10	1	**9S-9334**	1	PLUG	
	11	1	**9X-7712**	1	SEAL-O-RING	

R-REMFG PART MAY BE AVAILABLE
Y-SEPARATE ILLUSTRATION

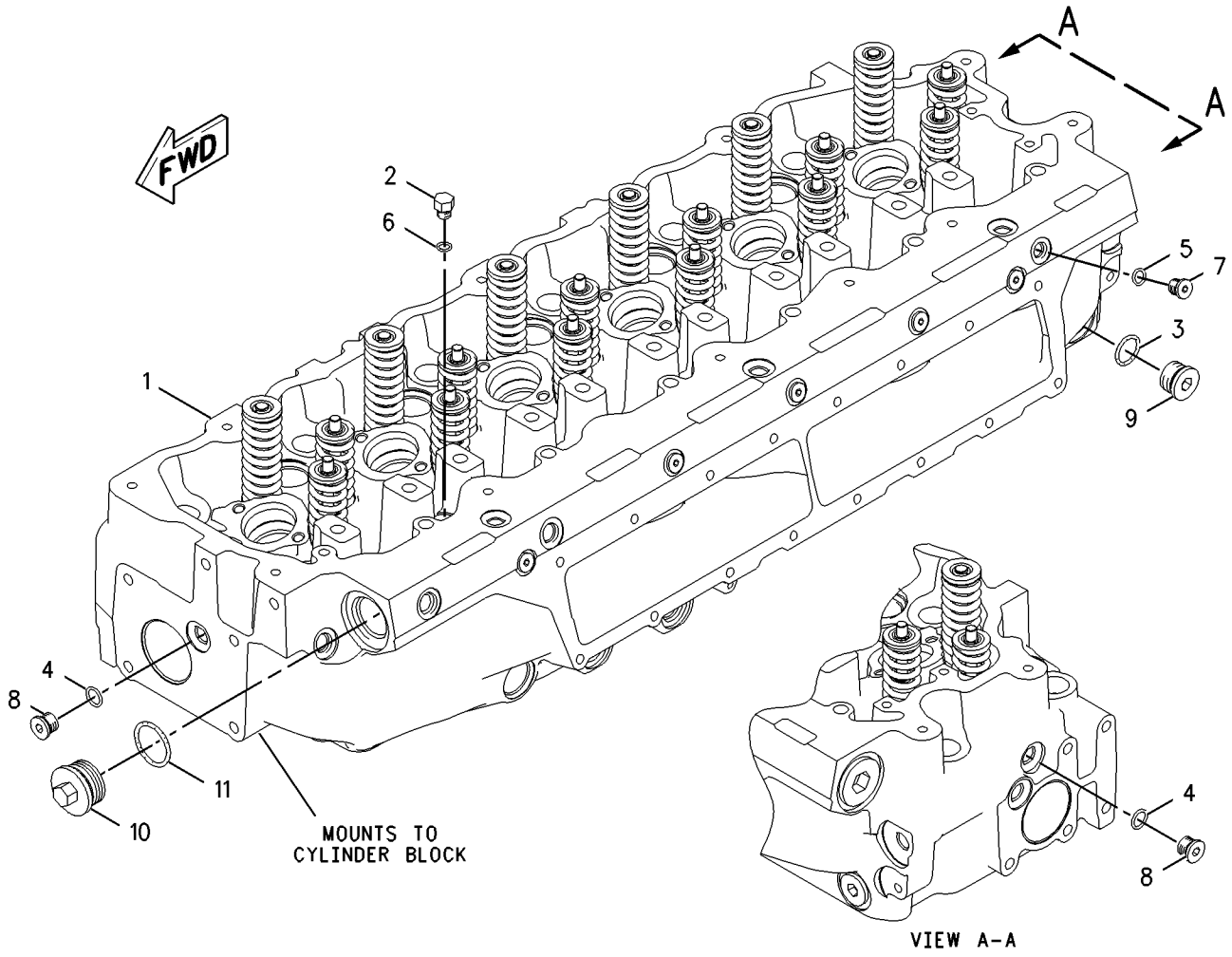

GRAPHIC #1 **<END>** g00947578

219-5849 CYLINDER HEAD GP

S/N: KHX238-UP

PART OF 231-0879 ENGINE AR-CORE

SMCS-1100 **i02260856**

NOTE	REF NO	GRAPHIC REF	PART NUMBER	QTY	PART NAME 1 2 3 4 5 6 (PRODUCT LEVEL)	SEE PAGE
Y	1	1	*219-5847*	1	CYLINDER HEAD GP	26
	2	1	**133-4995**	1	GASKET-CYLINDER HEAD	
	3	1	*142-7289*	14	FASTENER GP-CYLINDER HEAD	
					(EACH INCLUDES)	
		1	**138-3252**	1	BOLT-12 POINT HEAD	
		1	**8T-3282**	1	WASHER-HARD (22X35X3.5-MM THK)	
M	4	1	**8T-7950**	6	BOLT (M10X1.5X180-MM)	
	5	1	**6V-5839**	6	WASHER (11X21X2.5-MM THK)	

M-METRIC PART
Y-SEPARATE ILLUSTRATION

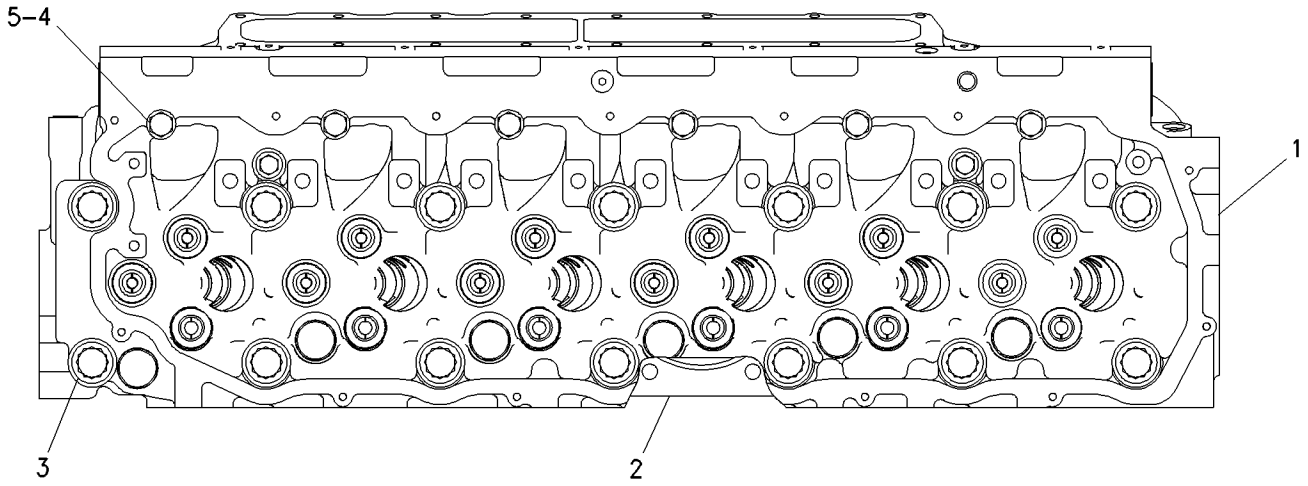

TOP VIEW

GRAPHIC #1 **<END>** g00760746

250-8309 DAMPER & PULLEY GP

S/N: KHX238-UP

PART OF 231-0878, 278-9732 ENGINE AR-COMPLETE

SMCS-1205 **i02789612**

NOTE	REF NO	GRAPHIC REF	PART NUMBER	QTY	PART NAME 1 2 3 4 5 6 (PRODUCT LEVEL)	SEE PAGE
	1	1	**2W-7381**	1	WASHER	
	2	1	**167-8121**	1	DAMPER AS	
	3	1	**172-9367**	1	PULLEY-CRANKSHAFT	
	4	1	**228-3621**	1	SPACER (101.5X167X8-MM THK)	
M	5	1	**6V-4249**	8	BOLT (M10X1.5X50-MM)	
M	6	1	**8T-3666**	4	BOLT (M14X2X60-MM)	

M-METRIC PART

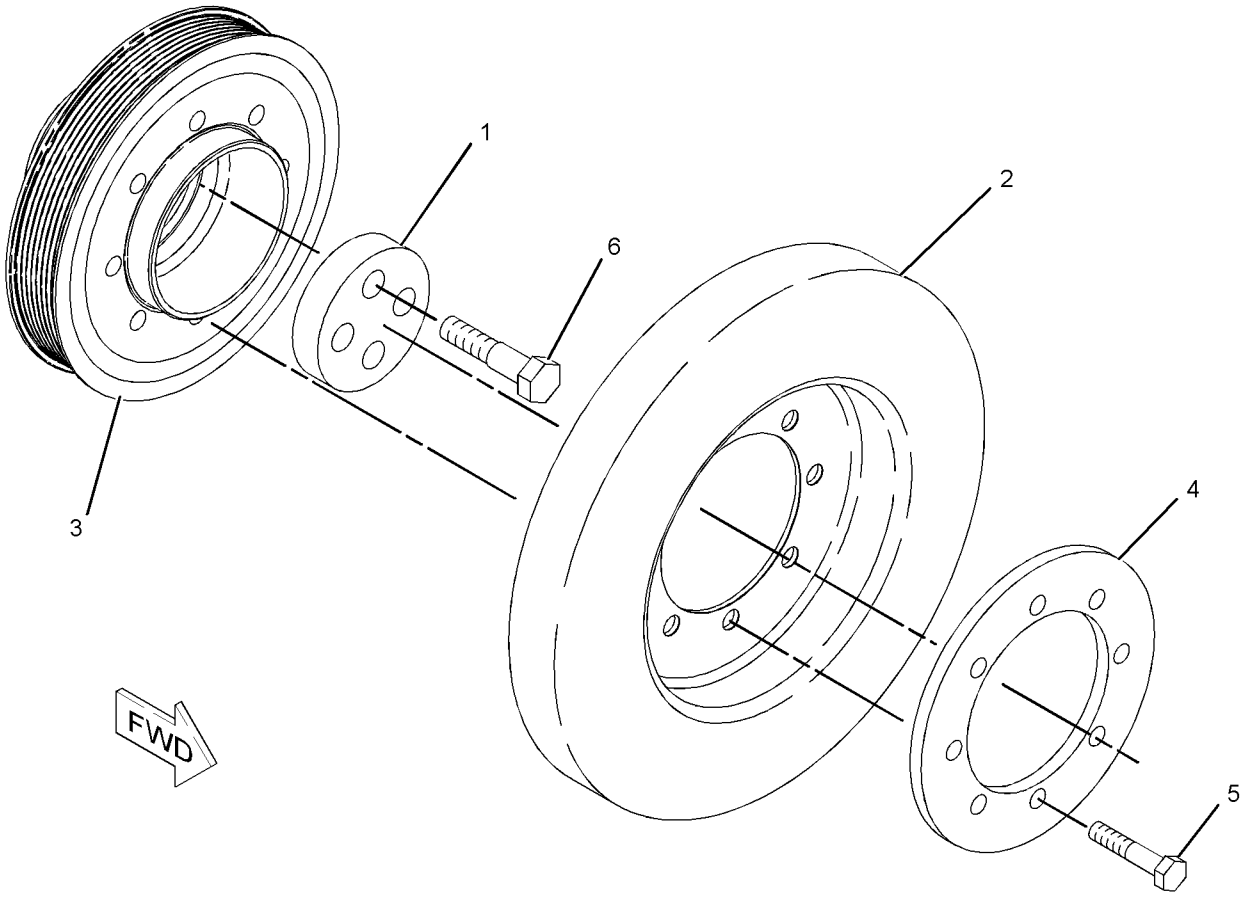

GRAPHIC #1 **<END>** g01148400

258-8723 FASTENER GP-CYLINDER HEAD

S/N: KHX238-UP

PART OF 231-0878, 278-9732 ENGINE AR-COMPLETE

SMCS-1100 **i02310961**

NOTE	REF NO	GRAPHIC REF	PART NUMBER	QTY	PART NAME 1 2 3 4 5 6 (PRODUCT LEVEL)	SEE PAGE
	1	1	**229-8844**	3	CLIP	
	2	1	**244-4500**	11	SPRING	
M	3	1	**8T-0100**	11	BOLT (M8X1.25X60-MM)	
	4	1	**9N-0869**	11	WASHER-HARD (8.8X25.5X2-MM THK)	

M-METRIC PART

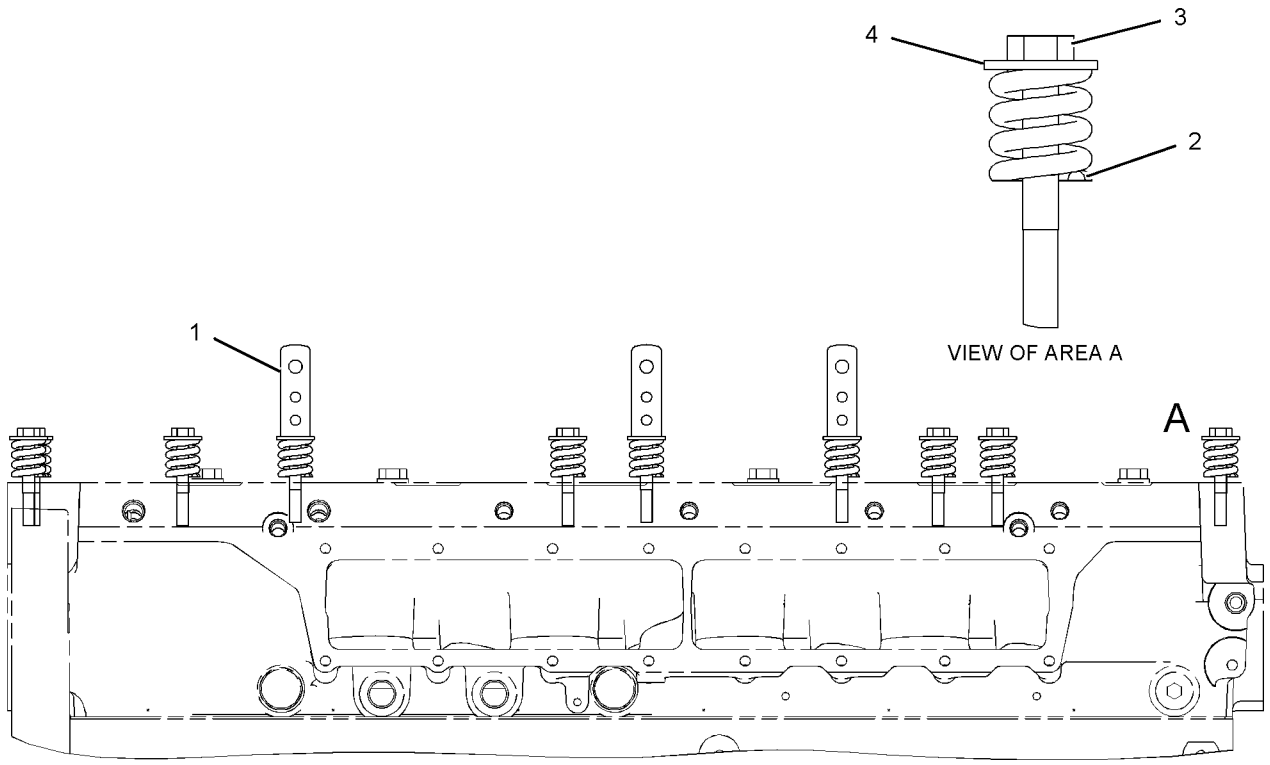

VIEW OF AREA A

RIGHT SIDE VIEW

GRAPHIC #1 **<END>** g01125046

BASIC ENGINE

250-8312 FLYWHEEL GP

S/N: KHX238-UP

PART OF 231-0878, 278-9732 ENGINE AR-COMPLETE

SMCS-1156, 1158 **i02791660**

NOTE	REF NO	GRAPHIC REF	PART NUMBER	QTY	PART NAME 1 2 3 4 5 6 (PRODUCT LEVEL)	SEE PAGE
	1	1	**250-8305**	1	FLYWHEEL AS	
		1	**256-9651**	1	GEAR-FLYWHEEL (113-TEETH)	
	2	1	**256-6070**	8	BOLT (M12X1.75X150-MM)	
	3	1	**5P-8245**	8	WASHER-HARD (13.5X25.5X3-MM THK)	

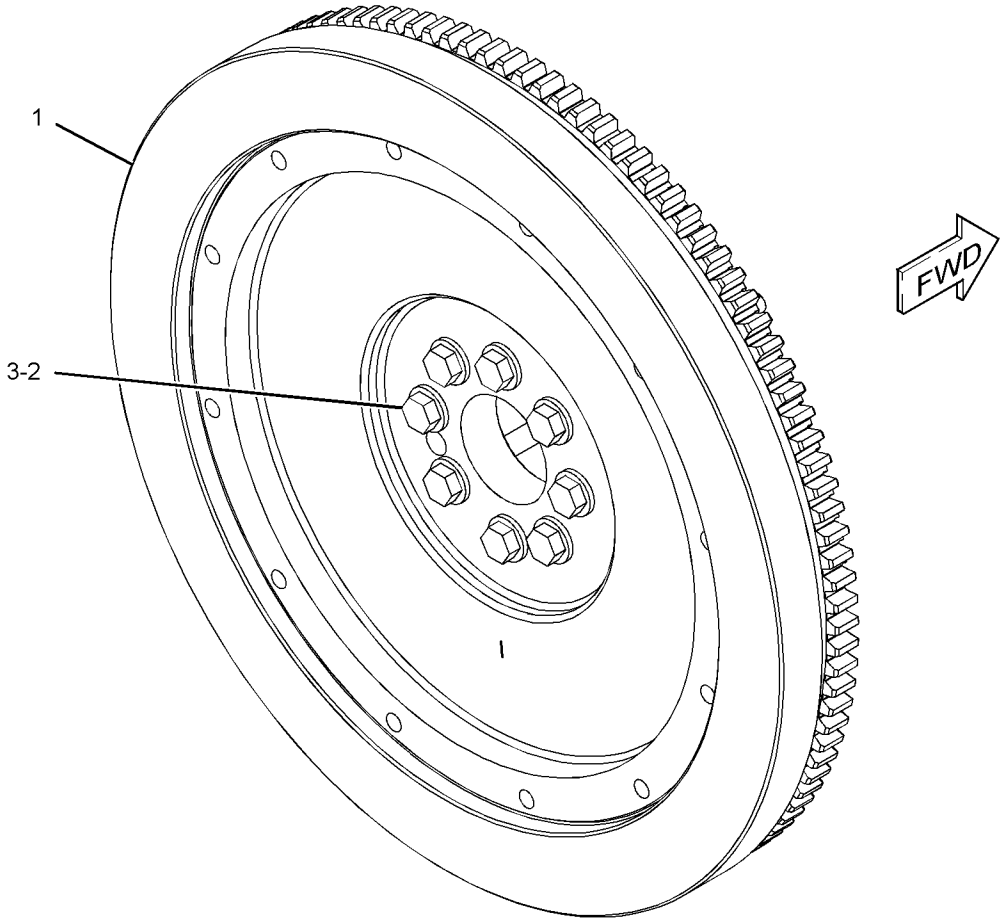

GRAPHIC #1 **<END>** g01152658

BASIC ENGINE

205-1321 GEAR GP-FRONT

S/N: KHX238-UP

PART OF 231-0879 ENGINE AR-CORE

SMCS-1151, 1162, 1206 **i01696307**

NOTE	REF NO	GRAPHIC REF	PART NUMBER	QTY	PART NAME 1 2 3 4 5 6 (PRODUCT LEVEL)	SEE PAGE
	1	1	**113-6069**	1	PLATE-THRUST	
	2	1	**115-4219**	1	PLATE-RETAINING	
	3	1	**200-4495**	1	SHAFT-IDLER	
	4	1	**205-1320**	1	GEAR AS-IDLER (50 TEETH)	
	4A	1	**115-4072**	1	BEARING	
M	5	1	**136-4183**	1	BOLT-12 POINT HEAD (M10X1.5X30MM)	
M	6	1	**6V-5843**	2	BOLT (M10X1.50X45MM)	

M-METRIC PART

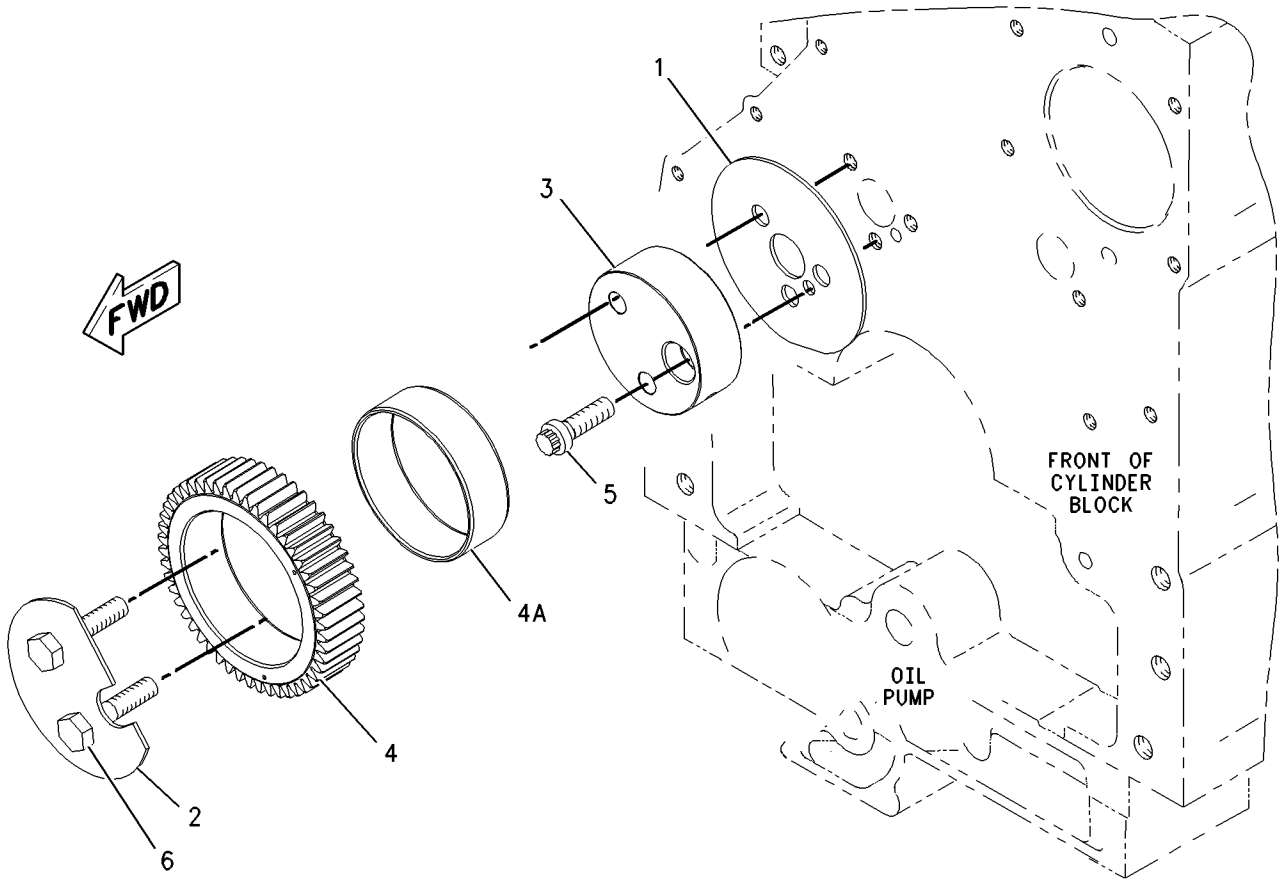

GRAPHIC #1 **<END>** g00873940

BASIC ENGINE

250-8308 GEAR GP-REAR

S/N: KHX238-UP

PART OF 231-0878 ENGINE AR-COMPLETE

SMCS-1204, 1206 **i02789611**

NOTE	REF NO	GRAPHIC REF	PART NUMBER	QTY	PART NAME 1 2 3 4 5 6 (PRODUCT LEVEL)	SEE PAGE
	1	1	**1W-4741**	2	GEAR AS-IDLER (70-TEETH)	
					(EACH INCLUDES)	
		1	**1W-4738**	1	BEARING-SLEEVE	
	2	1	**1W-4746**	2	RETAINER-GEAR	
	3	1	**187-8194**	1	GEAR AS-DRIVE (64-TEETH)	
	3A	1	**4F-6024**	1	PIN	
	4	1	**245-1739**	2	ADAPTER AS	
					(EACH INCLUDES)	
		1	**160-8184**	1	BEARING-SLEEVE	
	5	1	**251-2305**	1	GEAR	
	6	1	**287-8358**	1	GEAR AS-PUMP DRIVE	
	6A	1	**4F-6024**	1	PIN	
	7	1	**4N-1230**	2	SEAL-O-RING	
M	8	1	**6V-1820**	12	BOLT (M10X1.5X30-MM)	
	9	1	**6V-5839**	12	WASHER (11X21X2.5-MM THK)	
M	10	1	**6V-7673**	6	BOLT (M12X1.75X50-MM)	

M-METRIC PART

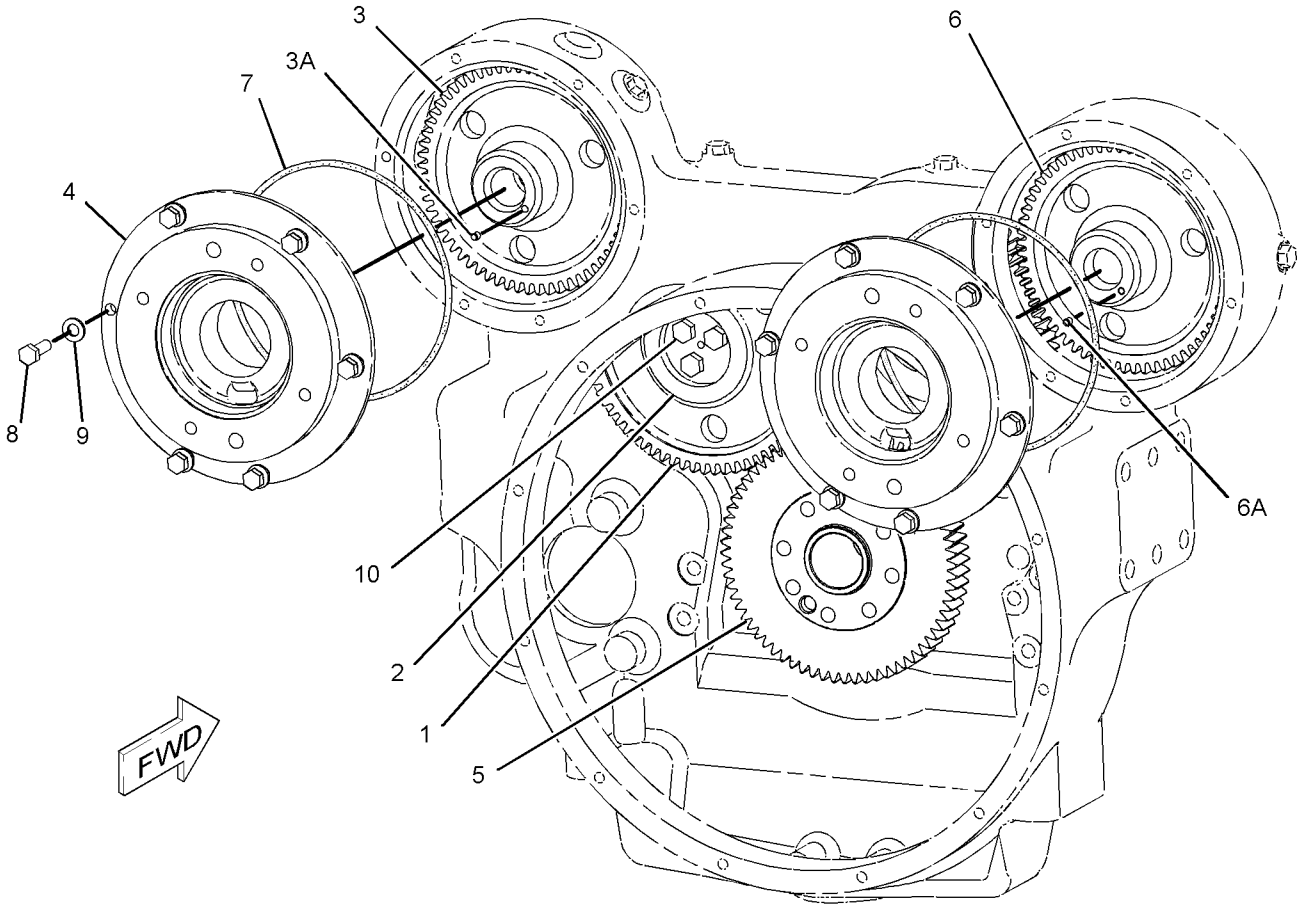

GRAPHIC #1 **<END>** g01148859

BASIC ENGINE

279-5645 GEAR GP-REAR

S/N: KHX2911-UP

PART OF 278-9732 ENGINE AR-COMPLETE

SMCS-1204, 1206 **i02792187**

NOTE	REF NO	GRAPHIC REF	PART NUMBER	QTY	PART NAME 1 2 3 4 5 6 (PRODUCT LEVEL)	SEE PAGE
	1	1	**1W-4741**	1	GEAR AS-IDLER (70-TEETH)	
		1	**1W-4738**	1	BEARING-SLEEVE	
	2	1	**1W-4746**	1	RETAINER-GEAR	
	3	1	**187-8194**	1	GEAR AS-DRIVE (64-TEETH)	
		1	**4F-6024**	1	PIN	
	4	1	**245-1739**	1	ADAPTER AS	
		1	**160-8184**	1	BEARING-SLEEVE	
	5	1	**251-2305**	1	GEAR	
	6	1	**277-8283**	1	COVER	
	7	1	**4N-1230**	2	SEAL-O-RING	
M	8	1	**6V-1820**	6	BOLT (M10X1.5X30-MM)	
	9	1	**6V-5839**	12	WASHER (11X21X2.5-MM THK)	
M	10	1	**6V-6317**	6	BOLT (M10X1.5X20-MM)	
M	11	1	**6V-7673**	3	BOLT (M12X1.75X50-MM)	

M-METRIC PART

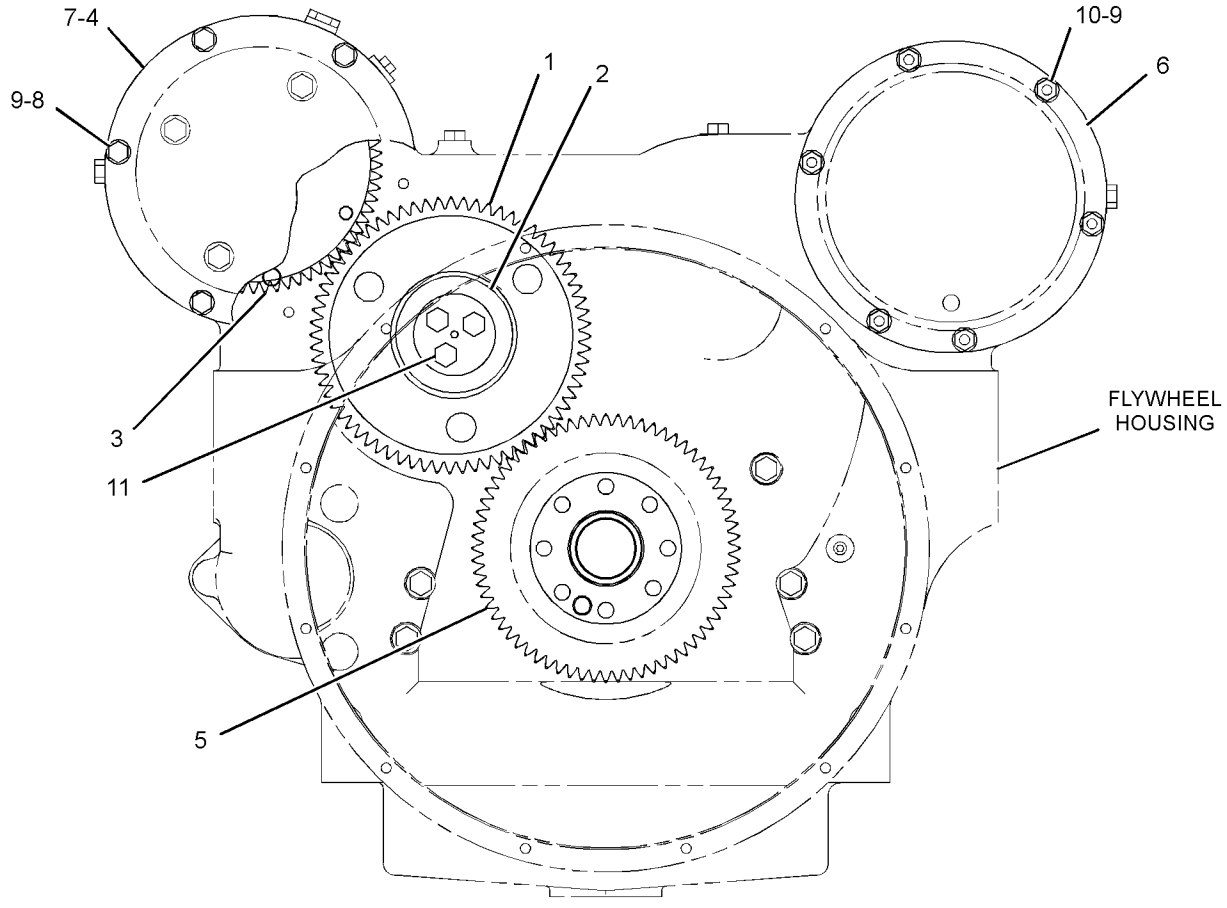

REAR VIEW OF ENGINE

GRAPHIC #1

<END>

g01349085

BASIC ENGINE

251-1135 HOUSING GP-FLYWHEEL

S/N: KHX238-UP

PART OF 231-0878 ENGINE AR-COMPLETE

SMCS-1157 **i02789767**

NOTE	REF NO	GRAPHIC REF	PART NUMBER	QTY	PART NAME 1 2 3 4 5 6 (PRODUCT LEVEL)	SEE PAGE
	1	1	**175-3721**	1	COVER	
	2	1	**101-3934**	1	COVER	
	3	1	**251-1139**	1	HOUSING AS	
		1	**2A-1162**	1	GASKET	
		1	**5F-0304**	1	PLUG-DRAIN	
		1	**8M-9315**	2	BEARING-SLEEVE	
		1	*148-8395*	2	PLUG AS	
					(EACH INCLUDES)	
		1	**3K-0360**	1	SEAL-O-RING	
		1	**9S-8005**	1	PLUG-O-RING	
		1	*148-8405*	1	PLUG AS	
		1	**1J-9671**	1	SEAL-O-RING	
		1	**3K-8460**	1	PLUG	
		1	*148-8407*	4	PLUG AS	
					(EACH INCLUDES)	
		1	**3J-1907**	1	SEAL-O-RING	
		1	**9S-4191**	1	PLUG-O-RING	
		1	*155-3624*	1	PLUG AS	
		1	**3J-7354**	1	SEAL-O-RING	
		1	**9S-4182**	1	PLUG-O-RING	
	4	1	**4M-0189**	1	SEAL-O-RING	
	5	1	**3F-5792**	1	SEAL-O-RING	
	6	1	**5P-8245**	2	WASHER-HARD (13.5X25.5X3-MM THK)	
	7	1	**5P-8246**	10	WASHER-HARD (15.5X29X3-MM THK)	
M	8	1	**6A-5591**	2	BOLT (M12X1.75X25-MM)	
M	9	1	**6V-5192**	1	BOLT-SOCKET HEAD (M8X1.25X30-MM)	
	10	1	**6V-5839**	2	WASHER (11X21X2.5-MM THK)	
M	11	1	**6V-5844**	2	BOLT (M16X2X35-MM)	
M	12	1	**8C-0537**	10	BOLT (M14X2X90-MM)	
M	13	1	**8T-0643**	2	BOLT (M10X1.5X80-MM)	
	14	1	**9X-8268**	2	WASHER (17.5X30X3.5-MM THK)	
B	15	1	**1U-8846**		SEALANT-GASKET	

B-USE AS REQUIRED
M-METRIC PART

251-1135 **HOUSING GP-FLYWHEEL** *(contd.)* **i02789767**

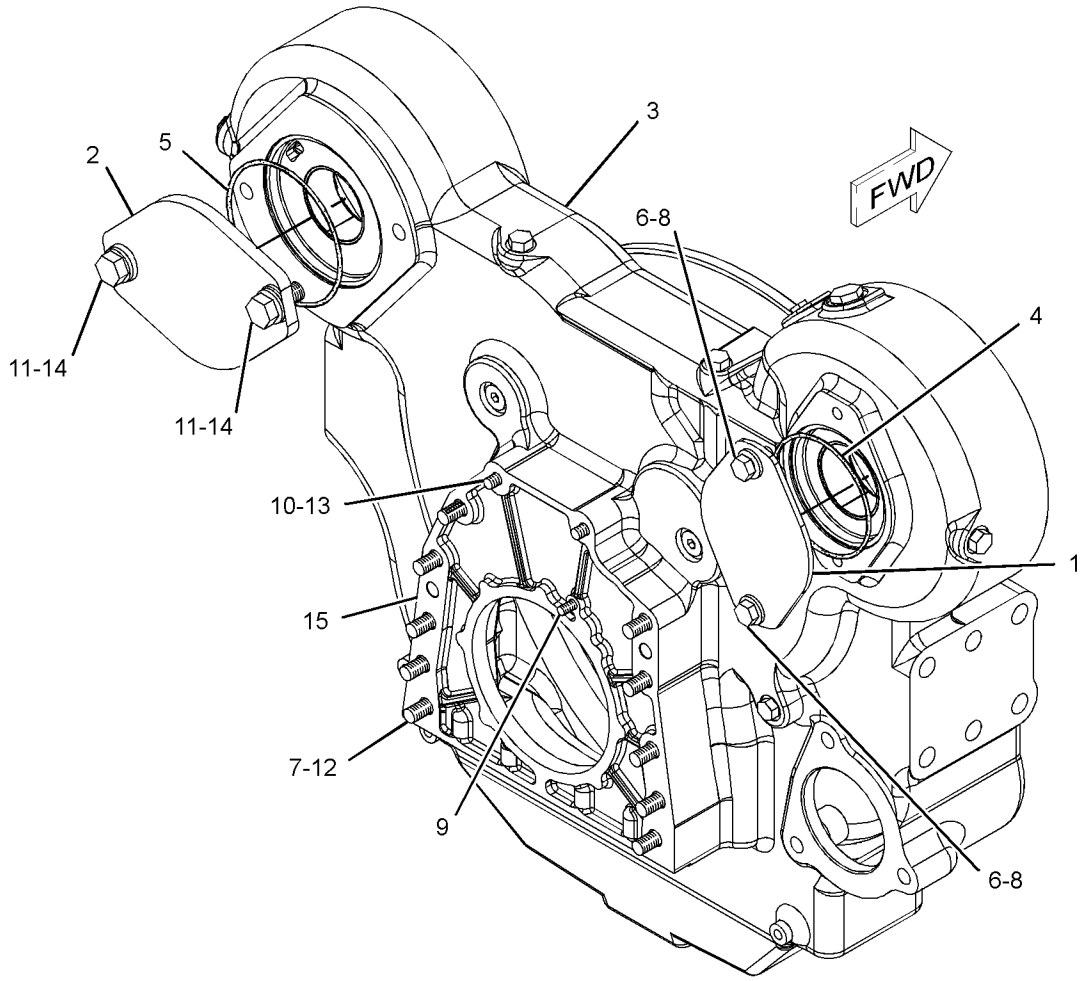

GRAPHIC #1 **<END>** g01299026

BASIC ENGINE

279-5644 HOUSING GP-FLYWHEEL

S/N: KHX2911-UP

PART OF 278-9732 ENGINE AR-COMPLETE

SMCS-1157 **i02792197**

NOTE	REF NO	GRAPHIC REF	PART NUMBER	QTY	PART NAME 1 2 3 4 5 6 (PRODUCT LEVEL)	SEE PAGE
	1	1	**175-3721**	1	COVER	
	2	1	**101-3934**	1	COVER	
	3	1	*279-5643*	1	HOUSING AS-FLYWHEEL	
		1	**2A-1162**	1	GASKET	
		1	**5F-0304**	1	PLUG-DRAIN	
		1	**8M-9315**	1	BEARING-SLEEVE	
		1	*148-8395*	1	PLUG AS	
		1	**3K-0360**	1	SEAL-O-RING	
		1	**9S-8005**	1	PLUG-O-RING	
		1	*148-8405*	1	PLUG AS	
		1	**1J-9671**	1	SEAL-O-RING	
		1	**3K-8460**	1	PLUG	
		1	*148-8407*	2	PLUG AS	
					(EACH INCLUDES)	
		1	**3J-1907**	1	SEAL-O-RING	
		1	**9S-4191**	1	PLUG-O-RING	
		1	*155-3624*	1	PLUG AS	
		1	**3J-7354**	1	SEAL-O-RING	
		1	**9S-4182**	1	PLUG-O-RING	
		1	**279-5648**	1	HOUSING-FLYWHEEL	
	4	1	**4M-0189**	1	SEAL-O-RING	
	5	1	**3F-5792**	1	SEAL-O-RING	
	6	1	**5P-8245**	2	WASHER-HARD (13.5X25.5X3-MM THK)	
	7	1	**5P-8246**	10	WASHER-HARD (15.5X29X3-MM THK)	
M	8	1	**6A-5591**	2	BOLT (M12X1.75X25-MM)	
M	9	1	**6V-5192**	1	BOLT-SOCKET HEAD (M8X1.25X30-MM)	
	10	1	**6V-5839**	2	WASHER (11X21X2.5-MM THK)	
M	11	1	**6V-5844**	2	BOLT (M16X2X35-MM)	
M	12	1	**8C-0537**	10	BOLT (M14X2X90-MM)	
M	13	1	**8T-0643**	2	BOLT (M10X1.5X80-MM)	
	14	1	**9X-8268**	2	WASHER (17.5X30X3.5-MM THK)	
B	15	1	**1U-8846**		SEALANT-GASKET	

B-USE AS REQUIRED
M-METRIC PART

279-5644 **HOUSING GP-FLYWHEEL** *(contd.)* **i02792197**

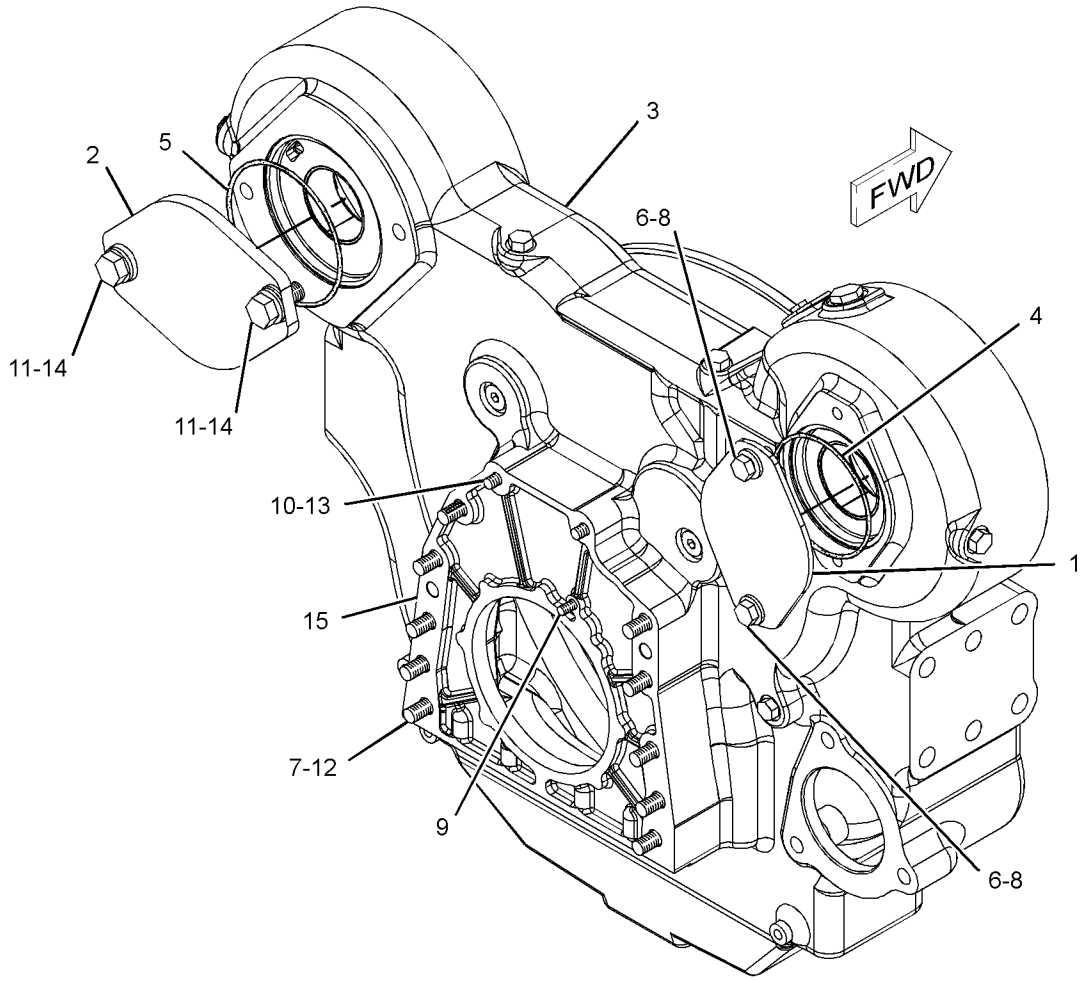

GRAPHIC #1 **<END>** g01299026

BASIC ENGINE

165-4446 HOUSING GP-FRONT

S/N: KHX238-UP

PART OF 231-0879 ENGINE AR-CORE

SMCS-1151, 1162, 1206 **i02061168**

NOTE	REF NO	GRAPHIC REF	PART NUMBER	QTY	PART NAME 1 2 3 4 5 6 (PRODUCT LEVEL)	SEE PAGE
	1	1	**236-2216**	1	HOUSING-FRONT	
M	2	1	**6V-3918**	4	BOLT (M8X1.25X50-MM)	
M	3	1	**6V-5217**	8	BOLT (M8X1.25X20-MM)	
	4	1	**9M-1974**	12	WASHER-HARD (8.8X16X2-MM THK)	
B	5	1	**1U-8846**		SEALANT-GASKET	

B-USE AS REQUIRED
M-METRIC PART

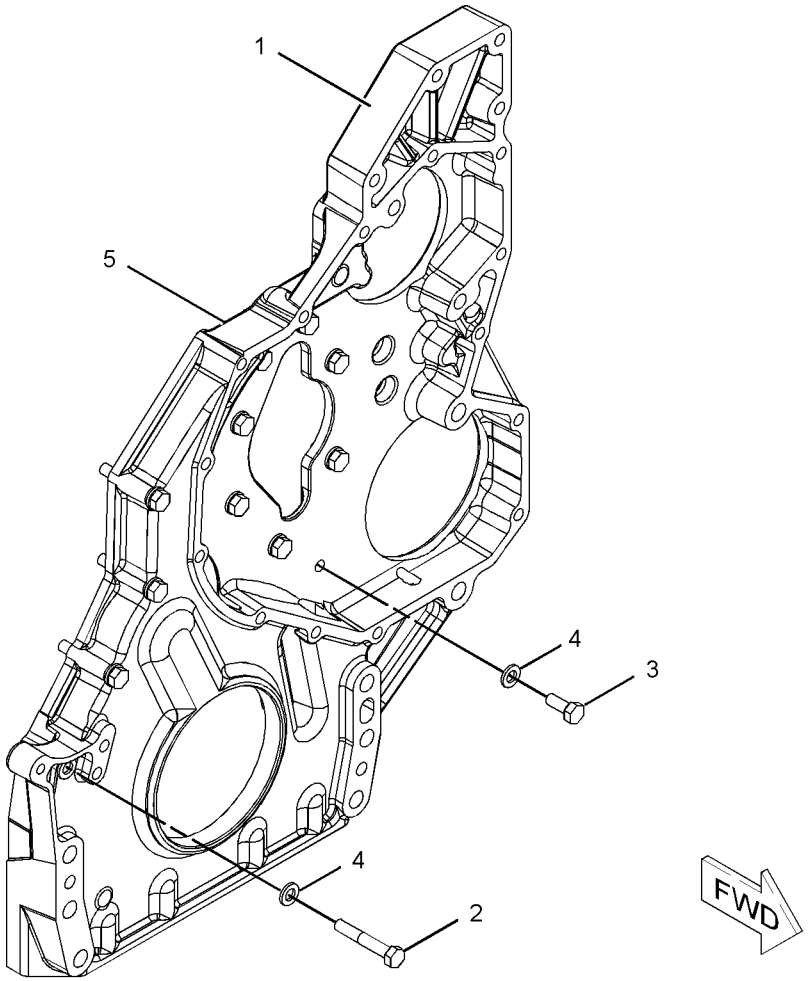

GRAPHIC #1 **<END>** g01060731

139-4081 LIFTER GP-VALVE

S/N: KHX238-UP

PART OF 232-3717 VALVE MECHANISM GP

SMCS-1209 **i01615435**

NOTE	REF NO	GRAPHIC REF	PART NUMBER	QTY	PART NAME 1 2 3 4 5 6 (PRODUCT LEVEL)	SEE PAGE
	1	1	**139-9476**	1	SHAFT AS-LIFTER	
		1	**2D-6642**	2	BALL (0.25-IN DIA)	
	2	1	**7E-6794**	4	ARM AS-LIFTER	
	3	1	**139-4084**	2	SPACER	

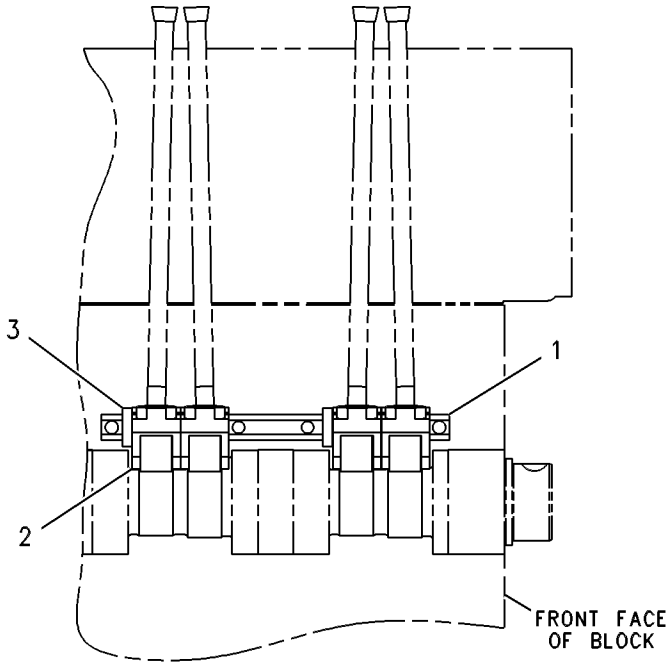

RIGHT SIDE VIEW

GRAPHIC #1 **<END>** g00288708

196-1912 LIFTING GP-ENGINE

S/N: KHX238-UP

PART OF 231-0878, 278-9732 ENGINE AR-COMPLETE

SMCS-1122 **i01695052**

NOTE	REF NO	GRAPHIC REF	PART NUMBER	QTY	PART NAME 1 2 3 4 5 6 (PRODUCT LEVEL)	SEE PAGE
M	1	1	**8T-4136**	4	BOLT (M10X1.5X25-MM)	
	2	1	**8T-4121**	4	WASHER-HARD (11X21X2.5-MM THK)	
	3	1	**196-1914**	1	PLATE	

M-METRIC PART

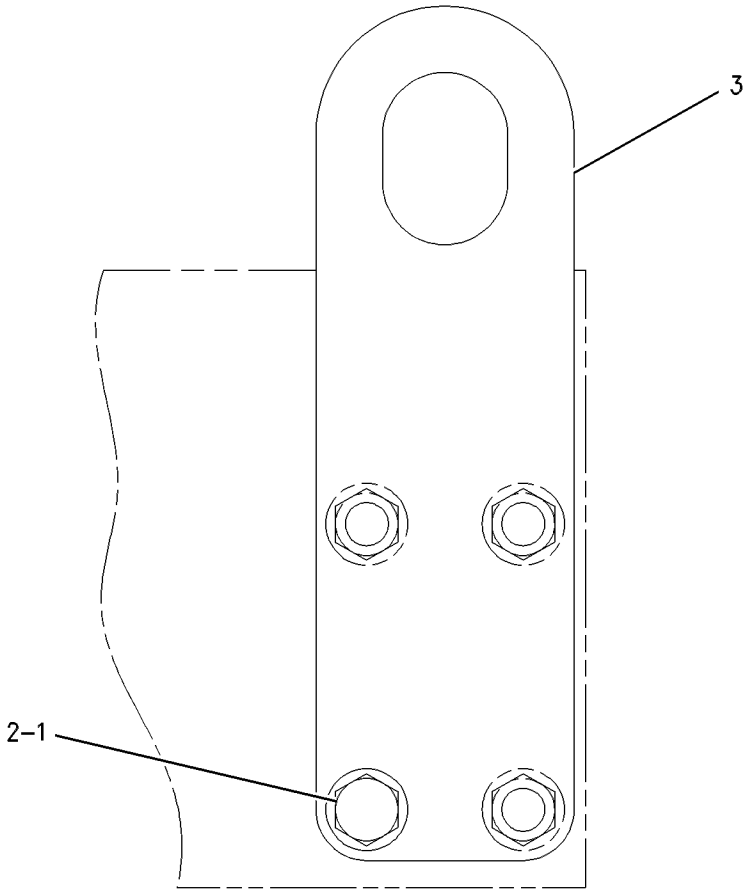

REAR VIEW

GRAPHIC #1 **<END>** g00441547

169-3130 MOUNTING GP-ALTERNATOR

S/N: B9D1-UP

PART OF 253-2723, 253-2724 ALTERNATOR GP-CHARGING

SMCS-1154, 1405 **i02785145**

NOTE	REF NO	GRAPHIC REF	PART NUMBER	QTY	PART NAME 1 2 3 4 5 6 (PRODUCT LEVEL)	SEE PAGE
	1	1	**131-2182**	1	SUPPORT-ALTERNATOR	
	2	1	**126-8240**	1	SUPPORT-ALTERNATOR	
	3	1	**8T-4121**	6	WASHER-HARD (11X21X2.5-MM THK)	
M	4	1	**8T-4186**	2	BOLT (M10X1.5X40-MM)	
M	5	1	**8T-4195**	4	BOLT (M10X1.5X30-MM)	

M-METRIC PART

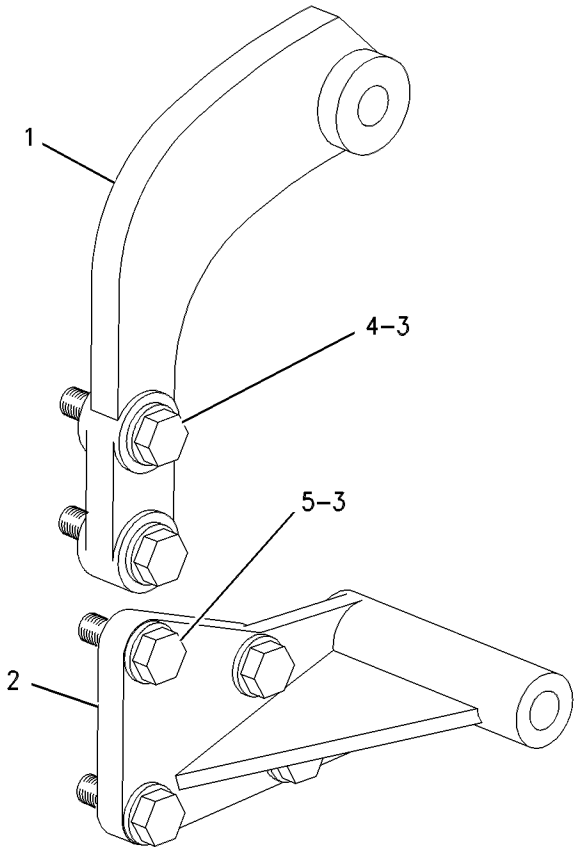

GRAPHIC #1 **<END>** g00642006

BASIC ENGINE

231-2156 MOUNTING GP-ENGINE & TMSN

S/N: B9D1-UP

PART OF 234-7721 COMMON AR

SMCS-1152, 1153, 1154, 3082 **i02771781**

NOTE	REF NO	GRAPHIC REF	PART NUMBER	QTY	PART NAME 1 2 3 4 5 6 (PRODUCT LEVEL)	SEE PAGE
	1	1	**9W-9920**	2	MOUNT AS	
	1A	1	**9W-6582**	2	SLEEVE	
	1B	1	**9W-6584**	2	WASHER (20.5X114X10-MM THK)	
	2	1	**252-2177**	2	MOUNT AS	
					(EACH INCLUDES)	
	2A	1	**3E-4887**	2	SLEEVE	
	2B	1	**3E-4888**	4	WASHER (32X144X12-MM THK)	
		1	**6Y-9960**	2	MOUNT AS	
					(EACH INCLUDES)	
		1	**9W-8095**	1	PAD-REBOUND	
	3	1	**293-9619**	2	SUPPORT	
	4	1	**198-4781**	8	WASHER-HARD (22X40X10-MM THK)	
M	5	1	**7X-2565**	8	BOLT (M20X2.5X100-MM)	
M	6	1	**7X-2585**	2	BOLT (M30X3.5X160-MM)	
	7	1	**8T-4123**	2	WASHER (22X35X3.5-MM THK)	
M	8	1	**8T-4183**	10	BOLT (M12X1.75X40-MM)	
M	9	1	**8T-4194**	2	BOLT (M12X1.75X50-MM)	
M	10	1	**8T-6381**	2	BOLT (M20X2.5X120-MM)	
	11	1	**8T-7971**	12	WASHER-HARD (13.5X25.5X5-MM THK)	
	12	1	**9X-8258**	2	WASHER (33X56X6-MM THK)	

M-METRIC PART

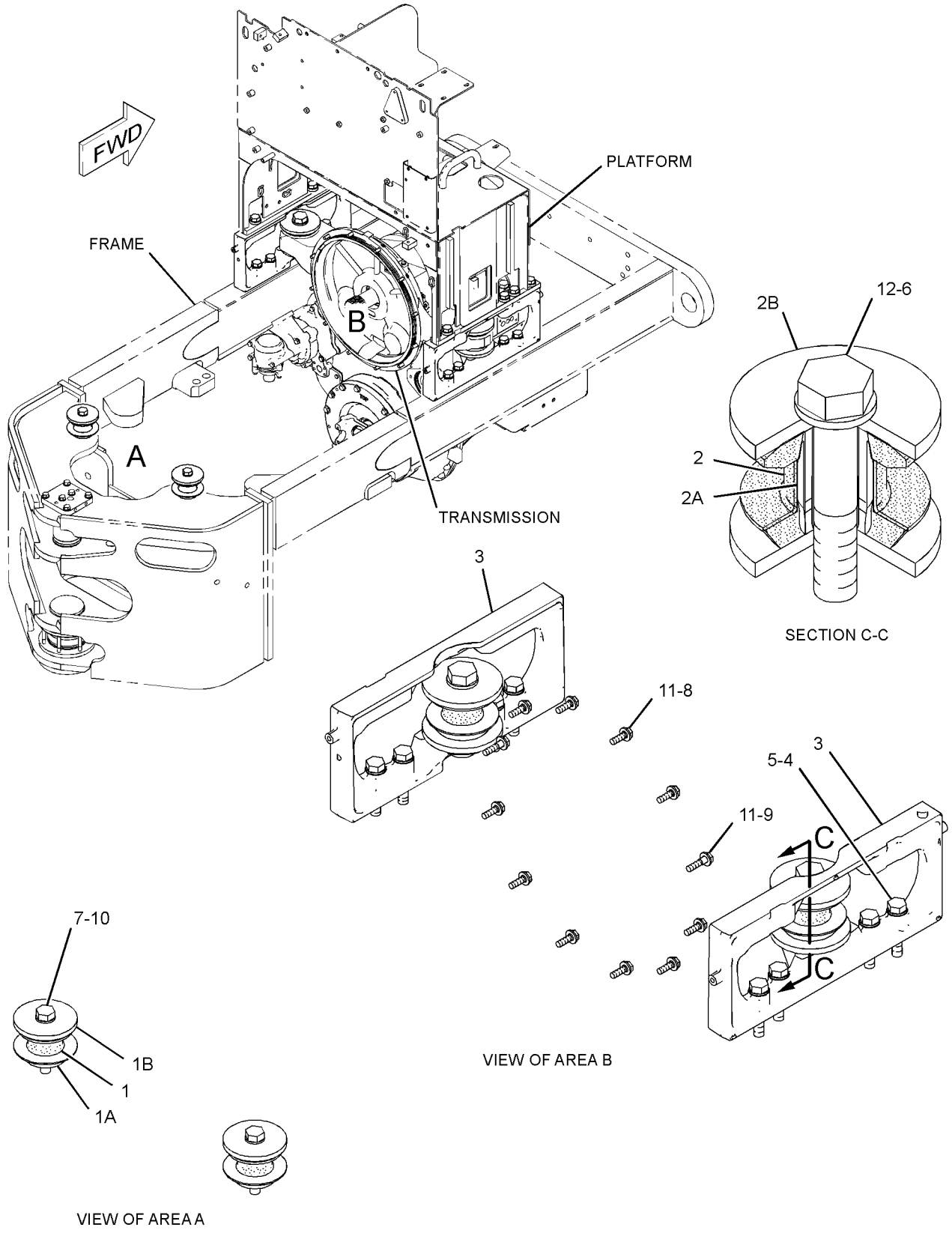

GRAPHIC #1 **<END>** g01336597

BASIC ENGINE

293-4622 MOUNTING GP-FAN DRIVE

S/N: KHX238-UP

PART OF 231-0878, 278-9732 ENGINE AR-COMPLETE

SMCS-1359 **i02791453**

NOTE	REF NO	GRAPHIC REF	PART NUMBER	QTY	PART NAME 1 2 3 4 5 6 (PRODUCT LEVEL)	SEE PAGE
	1	1	**7E-1313**	1	BRACKET	
	2	1	**284-2721**	1	SUPPORT AS-FAN	
	3	1	**8T-4121**	7	WASHER-HARD (11X21X2.5-MM THK)	
M	4	1	**8T-4195**	2	BOLT (M10X1.5X30-MM)	
M	5	1	**8T-4196**	5	BOLT (M10X1.5X35-MM)	

M-METRIC PART

293-4622 **MOUNTING GP-FAN DRIVE** *(contd.)* **i02791453**

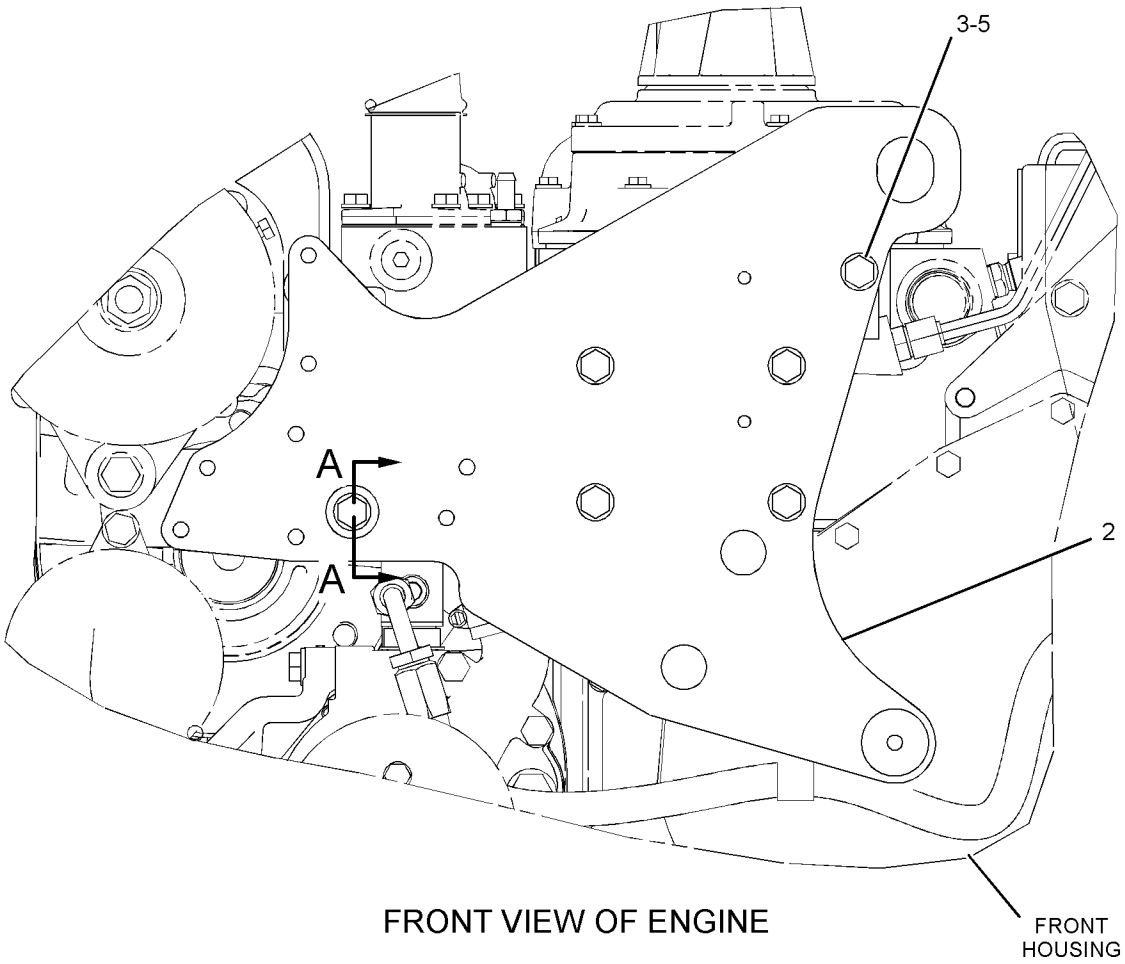

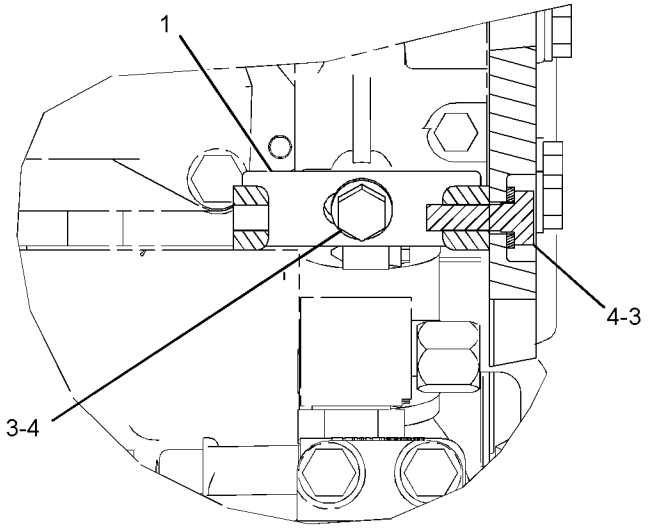

GRAPHIC #1 **<END>** g01347314

BASIC ENGINE

250-8320 PAN GP-OIL

S/N: KHX238-UP

PART OF 231-0878, 278-9732 ENGINE AR-COMPLETE

SMCS-1302 **i02789726**

NOTE	REF NO	GRAPHIC REF	PART NUMBER	QTY	PART NAME 1 2 3 4 5 6 (PRODUCT LEVEL)	SEE PAGE
	1	1	**166-2905**	1	SEAL-INTEGRAL	
	2	1	*256-0193*	1	PAN GP-OIL (ENGINE)	
	2A	1	**3D-2824**	2	SEAL-O-RING	
	2B	1	**9S-8008**	2	PLUG-O-RING	
M	3	1	**175-3676**	36	BOLT (M8X1.25X19.5-MM)	
B	4	1	**4C-9612**		SEALANT-SILICONE	

B-USE AS REQUIRED
M-METRIC PART

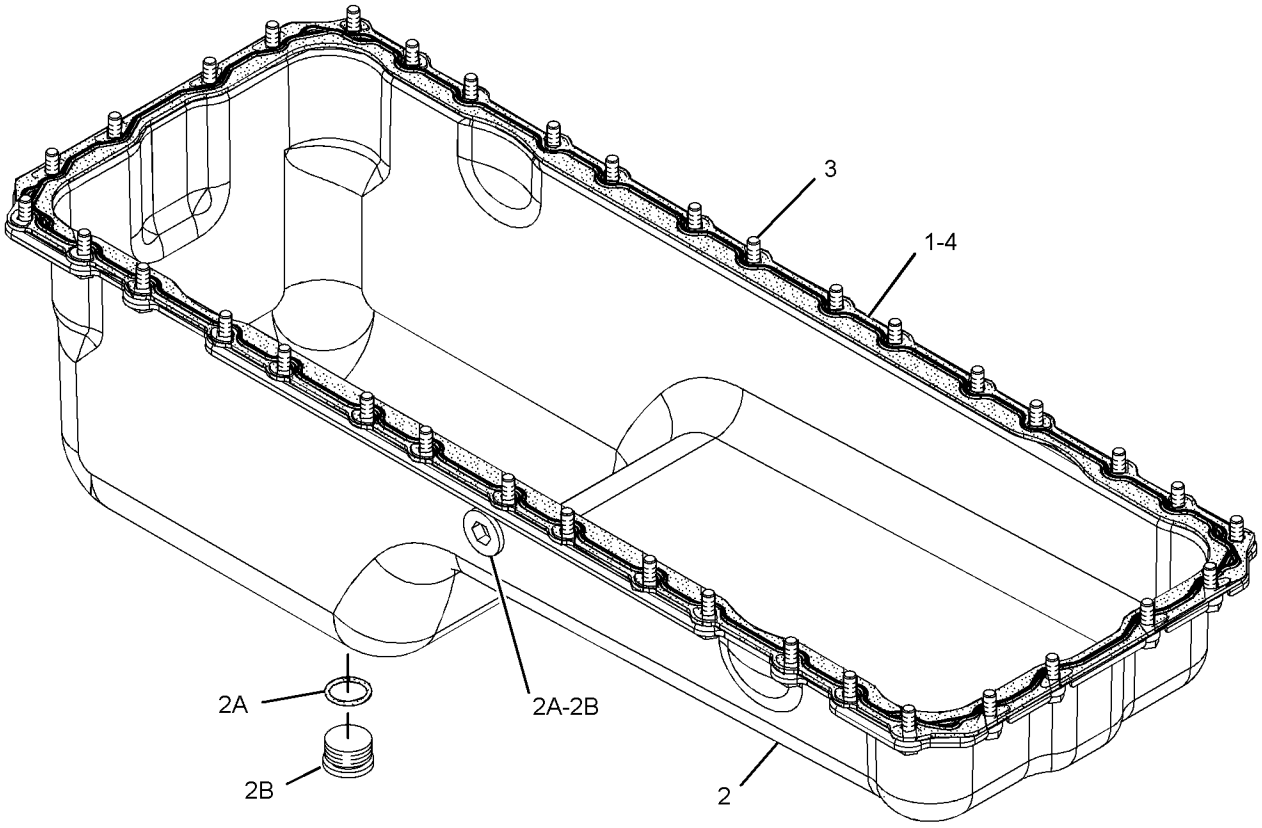

GRAPHIC #1 **<END>** g01283115

212-3652 PISTON & ROD GP

S/N: KHX238-UP
16.5:1 COMPRESSION RATIO
PART OF 231-0879 ENGINE AR-CORE

SMCS-1225 **i02421065**

NOTE	REF NO	GRAPHIC REF	PART NUMBER	QTY	PART NAME 1 2 3 4 5 6 (PRODUCT LEVEL)	SEE PAGE
R	1	1	**213-3193**	1	ROD AS-CONNECTING (NON-DRILLED)	
	1A	1	**2W-0027**	1	BEARING (EYE END)	
	1B	1	**195-0321**	2	BOLT	
	2	1	**224-6638**	1	BEARING-CONNECTING ROD (STANDARD)	
AB		1	**7C-6976**		BEARING-CONNECTING ROD (0.25-MM US)	
AB		1	**7C-6977**		BEARING-CONNECTING ROD (0.5-MM US)	
	3	1	**238-2706**	1	RING-PISTON-OIL	
	4	1	**197-9353**	1	RING-PISTON (INTERMEDIATE)	
	5	1	**197-9386**	1	RING-PISTON-TOP	
	6	1	**197-9371**	1	PIN-PISTON	
	7	1	**280-2748**	1	TUBE AS-OIL JET	
	8	1	**238-2720**	1	BODY AS-PISTON	
M	9	1	**6V-3940**	1	BOLT (M8X1.25X25-MM)	
	10	1	**197-9372**	2	RETAINER-PIN	

A-NOT PART OF THIS GROUP
B-USE AS REQUIRED
M-METRIC PART
R-REMFG PART MAY BE AVAILABLE

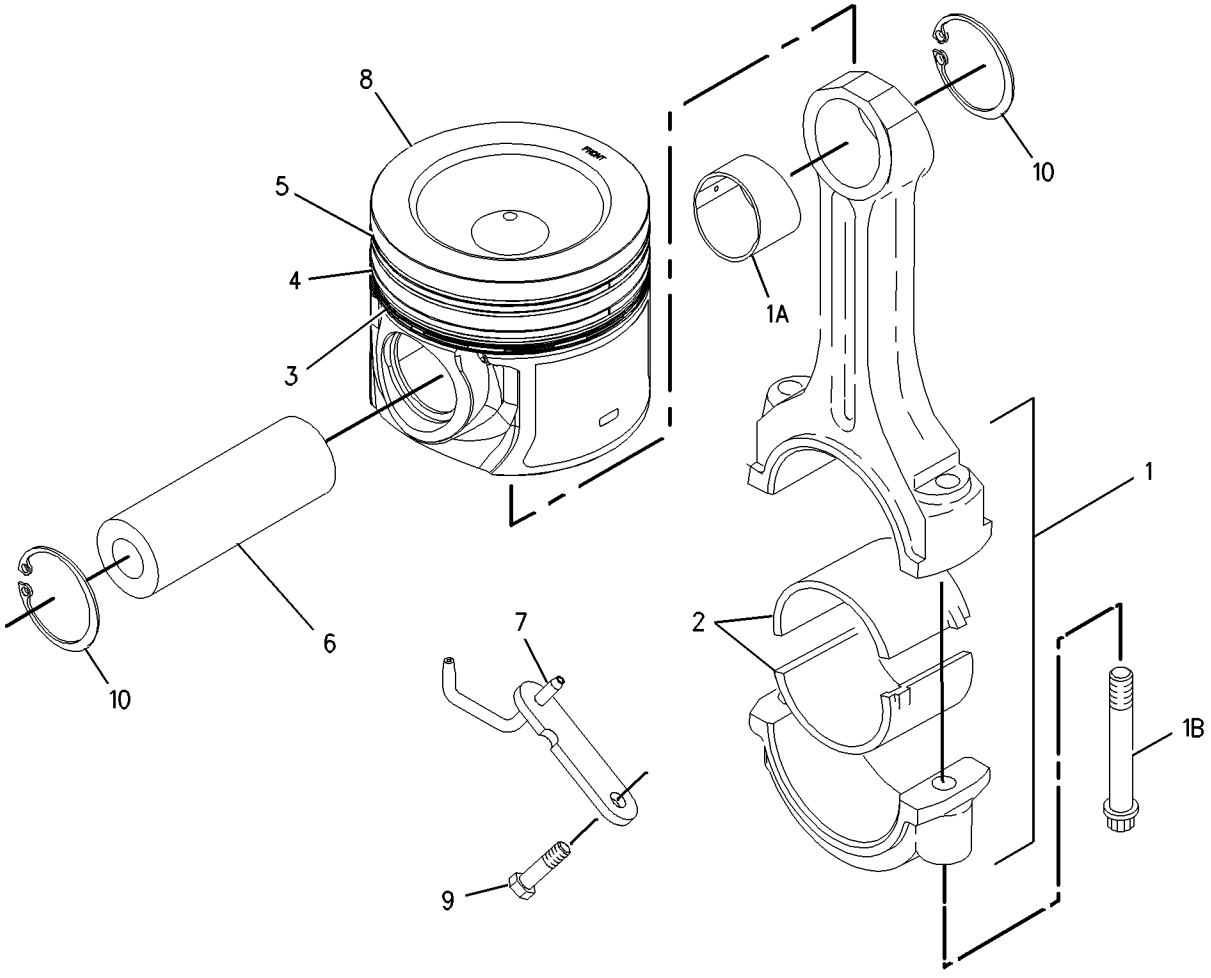

GRAPHIC #1 **<END>** g00903037

BASIC ENGINE

159-0303 PLUG GP-CYLINDER BLOCK

S/N: KHX238-UP

PART OF 231-0878, 278-9732 ENGINE AR-COMPLETE

SMCS-1201 **i01370005**

NOTE	REF NO	GRAPHIC REF	PART NUMBER	QTY	PART NAME 1 2 3 4 5 6 (PRODUCT LEVEL)	SEE PAGE
M	1	1	**8T-0293**	1	BOLT (M12X1.75X20-MM)	
	2	1	**6F-7062**	1	WASHER (12.7X19.05X1.83-MM THK)	
	3	1	**9S-8008**	2	PLUG-O RING	
	4	1	**3D-2824**	2	SEAL-O-RING	

M-METRIC PART

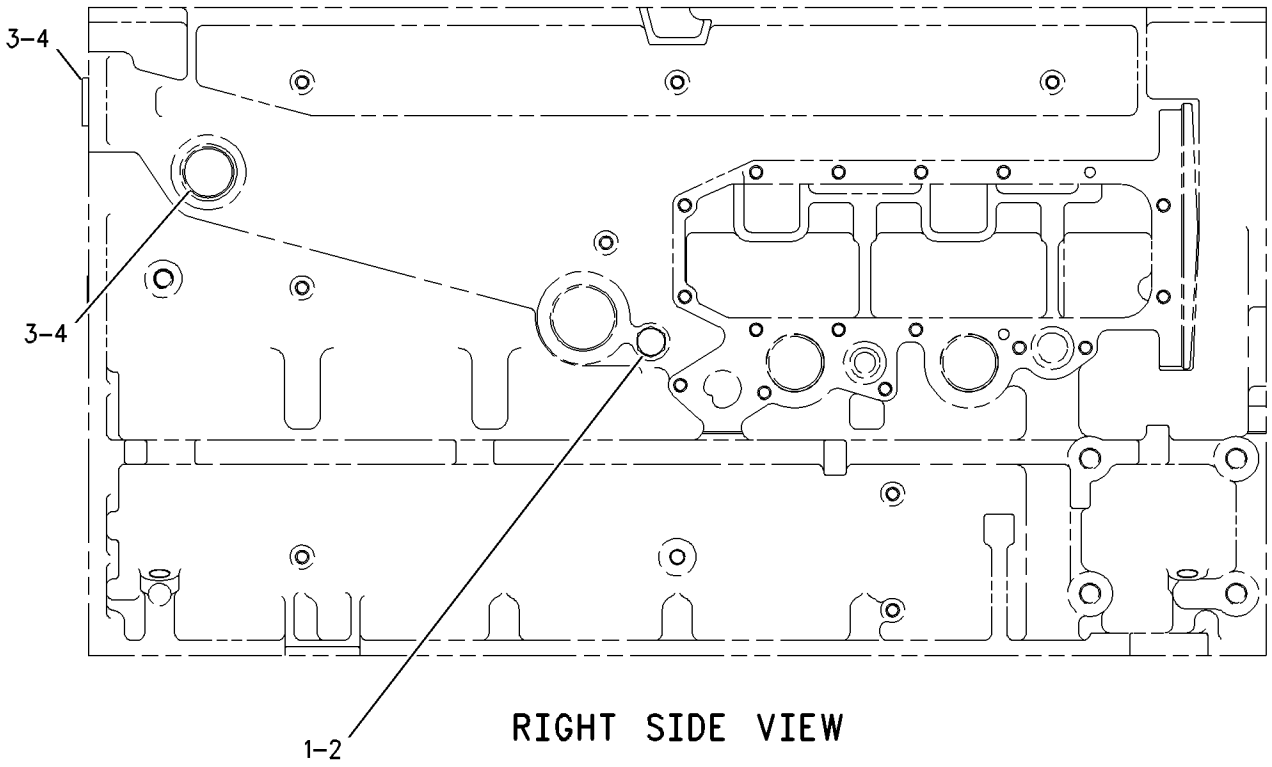

RIGHT SIDE VIEW

GRAPHIC #1 **<END>** g00677138

162-8068 PLUG GP-ENGINE

S/N: KHX238-UP

PART OF 231-0878, 278-9732 ENGINE AR-COMPLETE

SMCS-1000, 1201 **i01743134**

NOTE	REF NO	GRAPHIC REF	PART NUMBER	QTY	PART NAME 1 2 3 4 5 6 (PRODUCT LEVEL)	SEE PAGE
	1	1	**9S-8005**	1	PLUG-O RING	
	2	1	**3K-0360**	1	SEAL-O-RING	

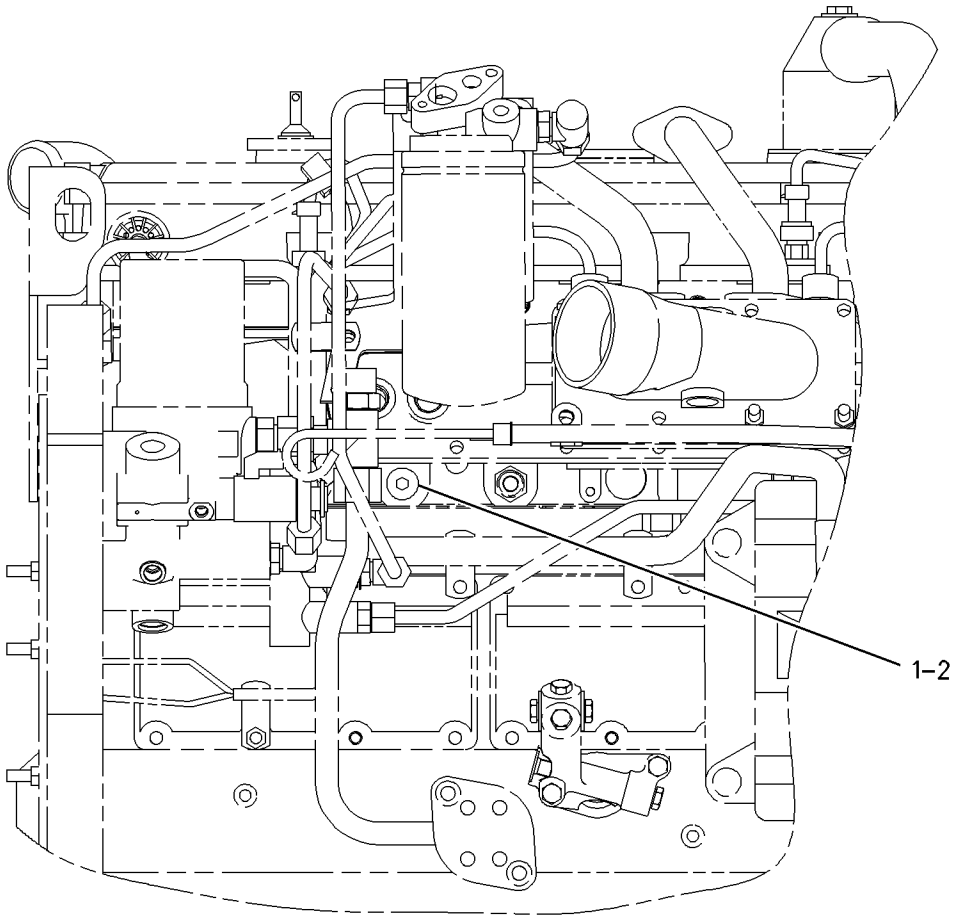

LEFT SIDE VIEW

GRAPHIC #1 **<END>** g00892422

175-3223 PULLEY GP-IDLER

S/N: B9D1-UP

PART OF 246-6701, 246-6715 ALTERNATOR GP-CHARGING

SMCS-1358 **i02782518**

NOTE	REF NO	GRAPHIC REF	PART NUMBER	QTY	PART NAME 1 2 3 4 5 6 (PRODUCT LEVEL)	SEE PAGE
	1	1	**124-7792**	1	PULLEY AS-IDLER	
	2	1	**124-7791**	1	COVER-DUST	
M	3	1	**124-7790**	1	BOLT-SPECIAL (M10X1.5X40-MM)	
	4	1	**145-2901**	1	COVER-DUST (REAR)	

M-METRIC PART

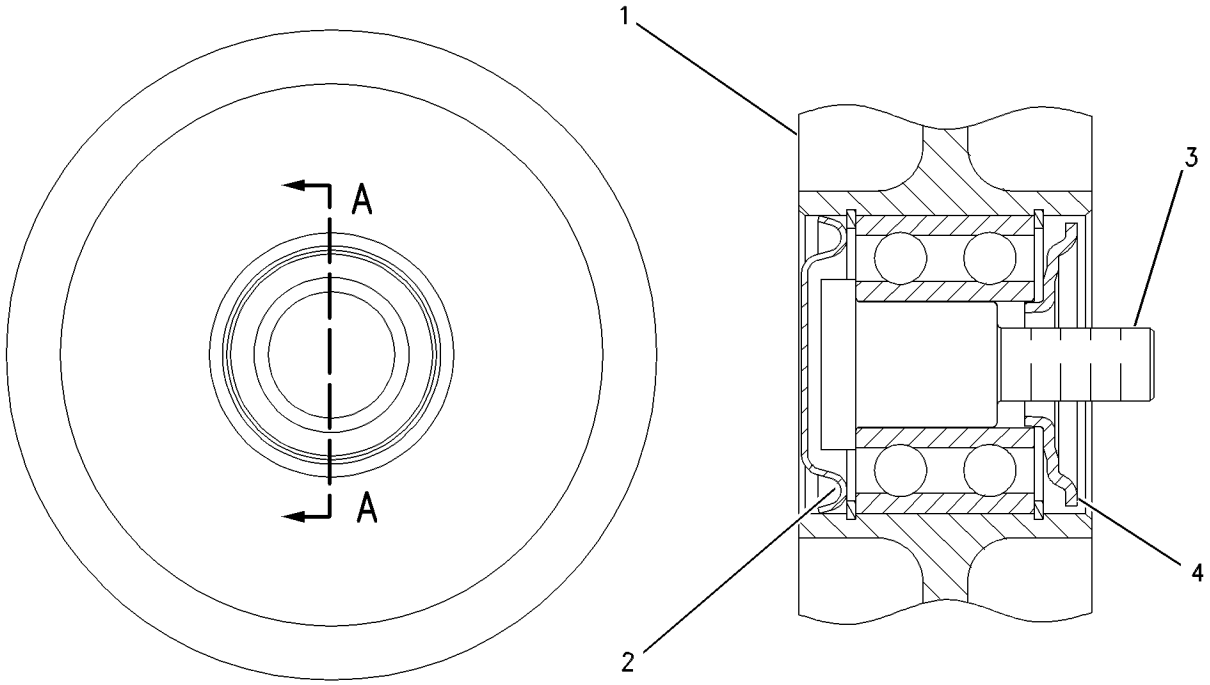

SECTION A-A

GRAPHIC #1 **<END>** g00614102

7E-7590 SEAL GP-CRANKSHAFT

S/N: KHX238-UP

PART OF 231-0878, 278-9732 ENGINE AR-COMPLETE

SMCS-1160, 1161 **i02519935**

NOTE	REF NO	GRAPHIC REF	PART NUMBER	QTY	PART NAME 1 2 3 4 5 6 (PRODUCT LEVEL)	SEE PAGE
	1	1	**7E-7589**	1	SEAL GP-CRANKSHAFT (REAR)	
	2	1	**245-7339**	1	SEAL-CRANKSHAFT (FRONT)	

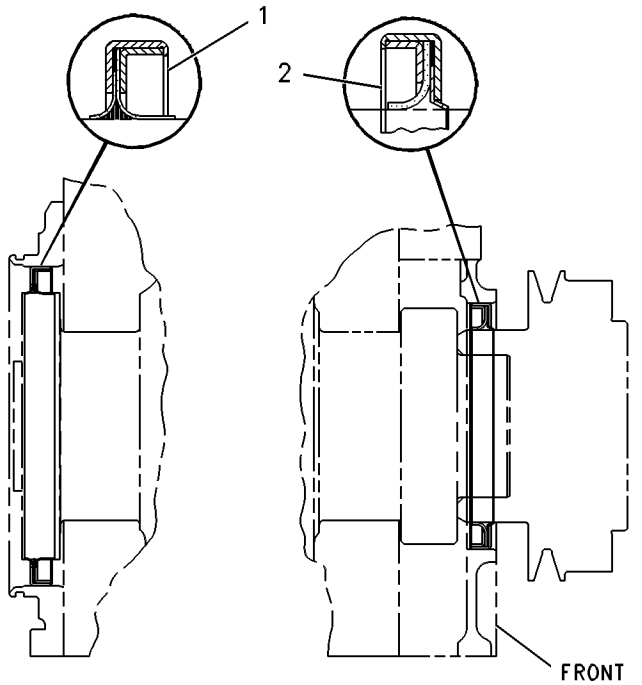

RIGHT SIDE VIEW

GRAPHIC #1

<END>

g00109225

BASIC ENGINE

247-0270 SUPPORT GP-ENGINE

S/N: KHX238-UP

PART OF 231-0878, 278-9732 ENGINE AR-COMPLETE

SMCS-1152, 1153, 1154 **i02789608**

NOTE	REF NO	GRAPHIC REF	PART NUMBER	QTY	PART NAME 1 2 3 4 5 6 (PRODUCT LEVEL)	SEE PAGE
	1	1	**247-0271**	1	SUPPORT-FRONT	
	2	1	**5P-8245**	1	WASHER-HARD (13.5X25.5X3-MM THK)	
M	3	1	**6V-5696**	1	BOLT (M12X1.75X80-MM)	
	4	1	**7D-1649**	5	WASHER-HARD (13.5X32X5-MM THK)	
M	5	1	**8T-0106**	5	BOLT (M12X1.75X100-MM)	

M-METRIC PART

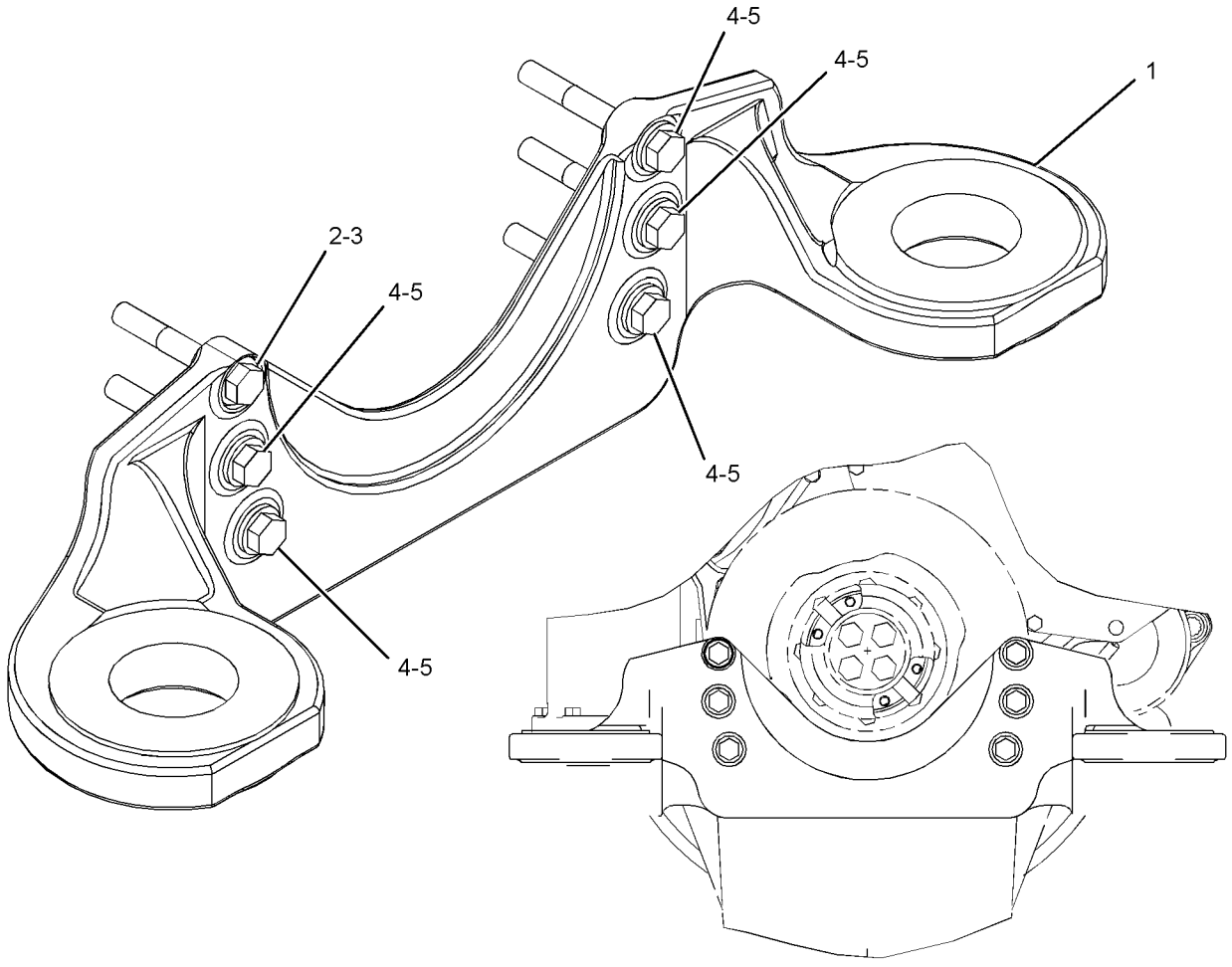

GRAPHIC #1 **<END>** g01394036

232-3717 VALVE MECHANISM GP

S/N: KHX238-UP

PART OF 231-0879 ENGINE AR-CORE

SMCS-1102 **i02215717**

NOTE	REF NO	GRAPHIC REF	PART NUMBER	QTY	PART NAME 1 2 3 4 5 6 (PRODUCT LEVEL)	SEE PAGE
	1	1	**133-6379**	12	ROD-VALVE PUSH	
	2	1	**219-3309**	6	BRIDGE-VALVE	
Y	3	1	*139-4081*	3	LIFTER GP-VALVE	39
M	4	1	**8T-8442**	12	BOLT-SOCKET HEAD (M6X1X30-MM)	
	5	1	**3E-9412**	6	DOWEL	
Y	6	1	*235-5528*	1	VALVE MECHANISM GP	54
M	7	1	**6V-5696**	11	BOLT (M12X1.75X80-MM)	
	8	1	**9M-1974**	2	WASHER-HARD (8.8X16X2-MM THK)	
	9	1	**3H-7654**	9	WASHER-HARD (13.5X22.5X3-MM THK)	
M	10	1	**8T-0100**	2	BOLT (M8X1.25X60-MM)	
	11	1	**232-1754**	1	CLIP	

M-METRIC PART
Y-SEPARATE ILLUSTRATION

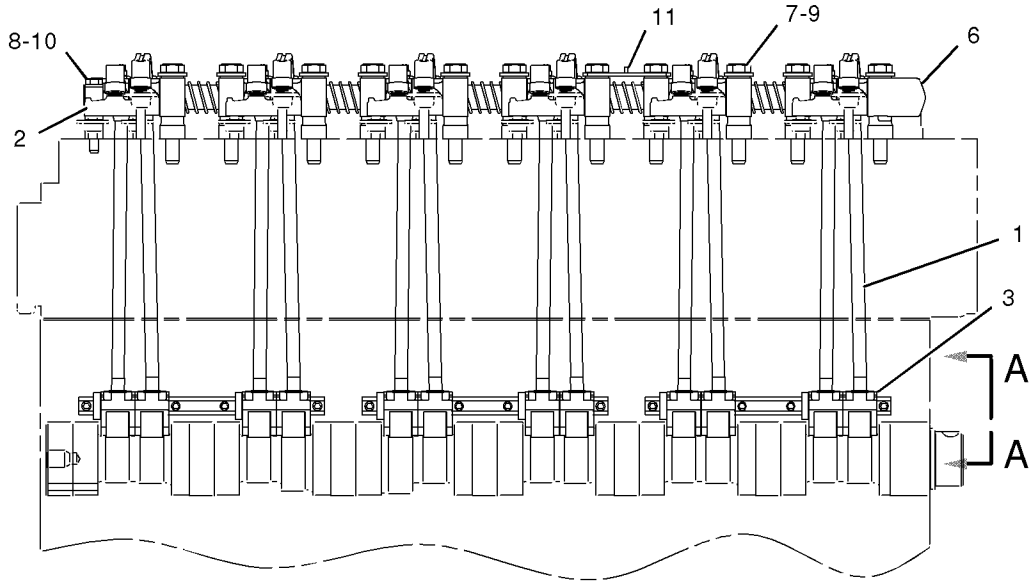

RIGHT SIDE VIEW

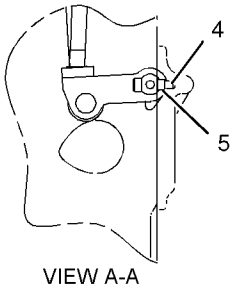

VIEW A-A

GRAPHIC #1

<END>

g01028897

BASIC ENGINE

235-5528 VALVE MECHANISM GP

S/N: KHX238-UP

PART OF 232-3717 VALVE MECHANISM GP

SMCS-1102 **i02215718**

NOTE	REF NO	GRAPHIC REF	PART NUMBER	QTY	PART NAME 1 2 3 4 5 6 (PRODUCT LEVEL)	SEE PAGE
	1	1	**137-6717**	5	SPRING	
	2	1	*222-1185*	6	ROCKER ARM GP (INTAKE)	
					(EACH INCLUDES)	
M	2A	1	**2Y-5829**	1	NUT (M10X1.15-THD)	
M		1	**183-4365**	1	SCREW-ADJUSTMENT (M10X1.15-THD)	
R	2B	1	**153-8467**	1	ROCKER ARM AS	
	2C	1	**173-5549**	1	SEAL-O-RING	
	2D	1	**145-7376**	1	INSERT	
	2E	1	**145-7385**	1	SOCKET	
	3	1	**138-8403**	1	STAND	
	4	1	*222-1186*	6	ROCKER ARM GP (EXHAUST)	
					(EACH INCLUDES)	
M	4A	1	**2Y-5829**	1	NUT (M10X1.15-THD)	
M		1	**183-4365**	1	SCREW-ADJUSTMENT (M10X1.15-THD)	
R	4B	1	**153-8470**	1	ROCKER ARM AS	
	4C	1	**173-5549**	1	SEAL-O-RING	
	4D	1	**145-7376**	1	INSERT	
	4E	1	**145-7385**	1	SOCKET	
	5	1	**235-5527**	10	STAND	
	6	1	**138-8402**	1	STAND (END)	
	7	1	**138-9868**	1	RING-RETAINING	
	8	1	**8H-5244**	1	DOWEL	
	9	1	**138-7198**	1	SHAFT AS	
		1	**5B-1866**	1	PLUG-CUP	

M-METRIC PART
R-REMFG PART MAY BE AVAILABLE

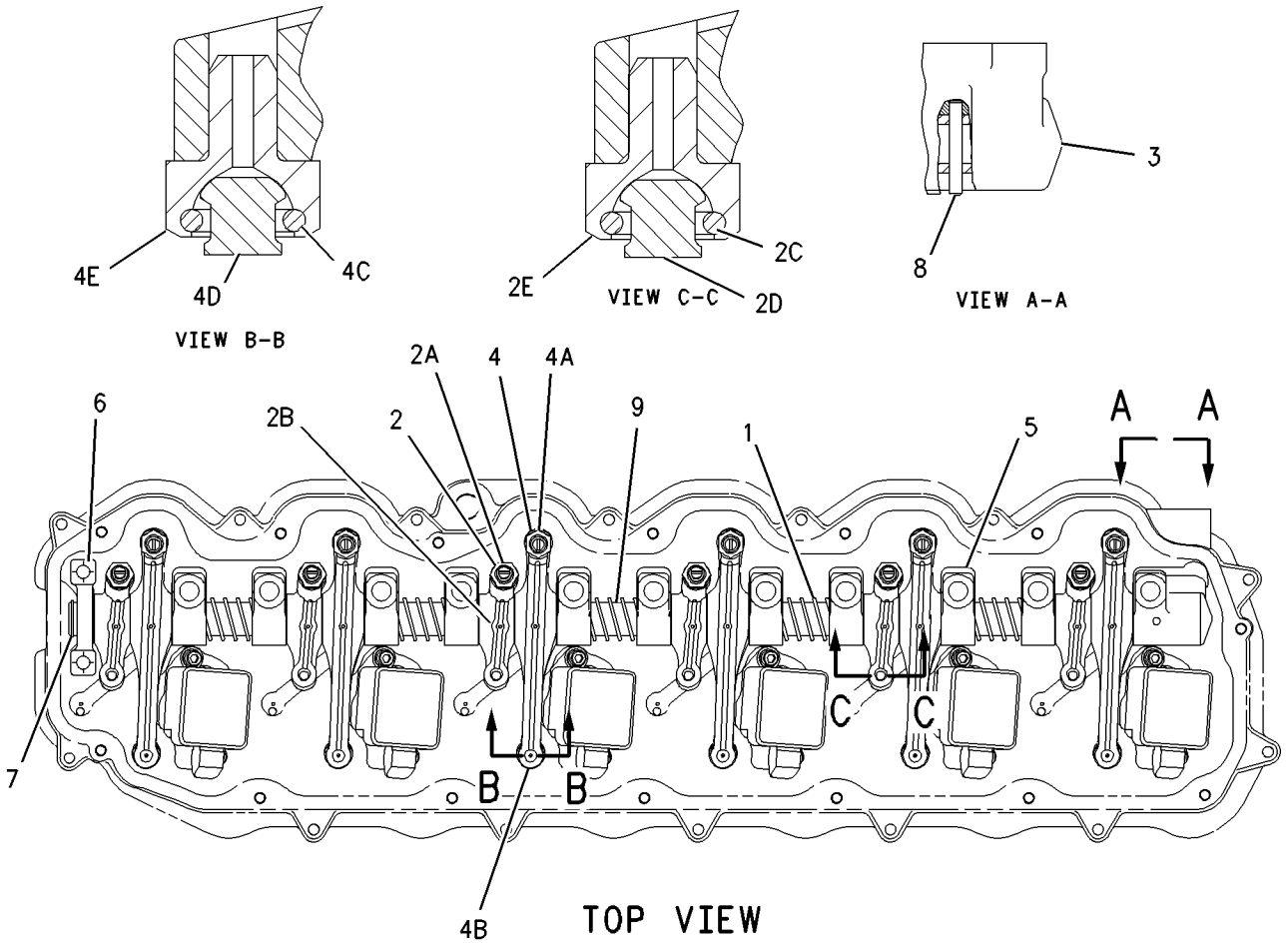

GRAPHIC #1 **<END>** g00901133

191-0523 ADAPTER GP-OIL LINE–ENGINE

S/N: KHX238-UP

PART OF 191-0461 LINES GP-INJECTOR HYD PUMP

SMCS-1307 **i02215823**

NOTE	REF NO	GRAPHIC REF	PART NUMBER	QTY	PART NAME 1 2 3 4 5 6 (PRODUCT LEVEL)	SEE PAGE
	1	1	**191-0522**	1	ADAPTER	
	2	1	**033-6027**	1	SEAL-O-RING	

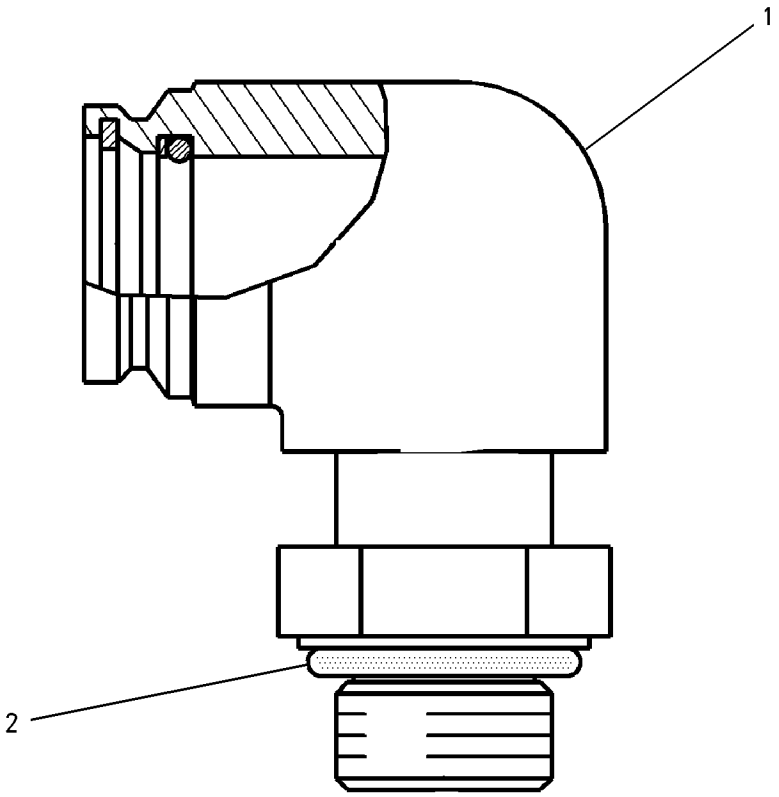

GRAPHIC #1 **<END>** g00807476

LUBRICATION SYSTEM

222-5946 BREATHER GP

S/N: KHX238-UP

PART OF 231-0878, 278-9732 ENGINE AR-COMPLETE

SMCS-1317 **i02214598**

NOTE	REF NO	GRAPHIC REF	PART NUMBER	QTY	PART NAME 1 2 3 4 5 6 (PRODUCT LEVEL)	SEE PAGE
	1	1	**164-0210**	1	BREATHER AS (CRANKCASE)	
M	2	1	**143-4654**	1	BOLT (M8X1.25X105-MM)	
	3	1	**8H-2046**	1	SEAL-O-RING (BREATHER)	
	4	1	**9N-0869**	1	WASHER-HARD (8.8X25.5X2-MM THK)	

M-METRIC PART

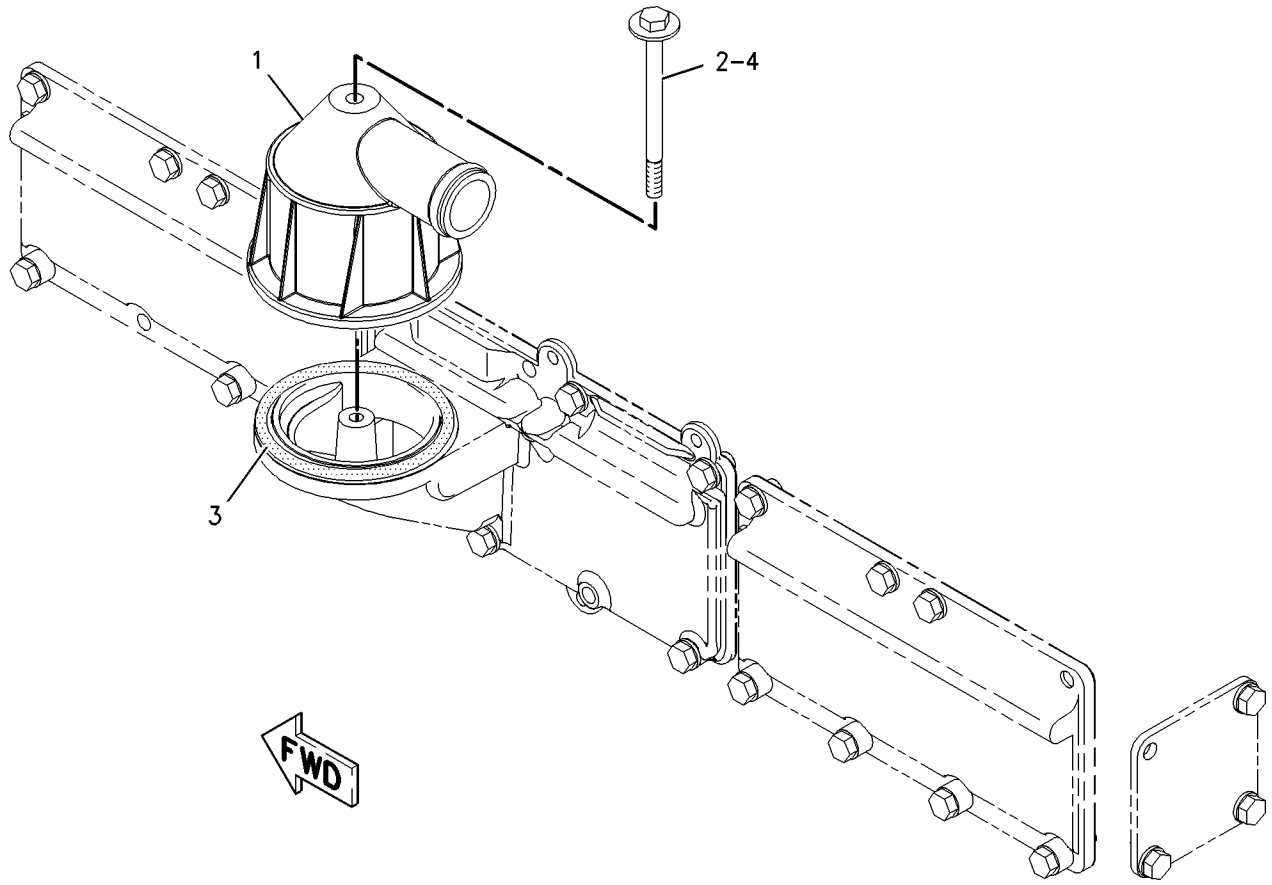

GRAPHIC #1 **<END>** g00947923

LUBRICATION SYSTEM

267-6599 FILTER GP-ENGINE OIL

S/N: KHX238-UP

PART OF 231-0878, 278-9732 ENGINE AR-COMPLETE

SMCS-1308 **i02791387**

NOTE	REF NO	GRAPHIC REF	PART NUMBER	QTY	PART NAME 1 2 3 4 5 6 (PRODUCT LEVEL)	SEE PAGE
	1	1	**7C-1493**	2	VALVE AS-BYPASS (ENGINE OIL FILTER)	
	2	1	**8C-3445**	1	CAP-DUST	
	3	1	*150-4036*	1	TEE AS	
		1	**3K-0360**	1	SEAL-O-RING	
		1	**118-0911**	1	TEE-O-RING PORT	
	4	1	**201-9774**	1	BASE AS-OIL FILTER	
		1	**2P-2537**	1	STUD-HOLLOW	
	6	1	**233-7654**	1	GASKET	
	7	1	**242-3864**	2	SPRING	
	8	1	**1R-1807**	1	FILTER AS-ENGINE OIL	
	9	1	**2M-9780**	2	SEAL-O-RING	
	10	1	**3J-7354**	1	SEAL-O-RING	
	11	1	**3K-0360**	1	SEAL-O-RING	
	12	1	**3P-1932**	1	ADAPTER	
M	13	1	**5P-8196**	2	PLUG	
M	14	1	**6V-2317**	10	BOLT (M8X1.25X30-MM)	
	15	1	**8C-3446**	1	VALVE-FLUID SAMPLING	
	16	1	**8L-2786**	1	SEAL-O-RING	
CM	17	1	**8T-0276**	5	BOLT (M8X1.25X45-MM)	
	18	1	**9M-1974**	15	WASHER-HARD (8.8X16X2-MM THK)	
	19	1	**9S-4185**	1	PLUG-O-RING	

C-CHANGE FROM PREVIOUS TYPE
M-METRIC PART

267-6599 **FILTER GP-ENGINE OIL** *(contd.)* **i02791387**

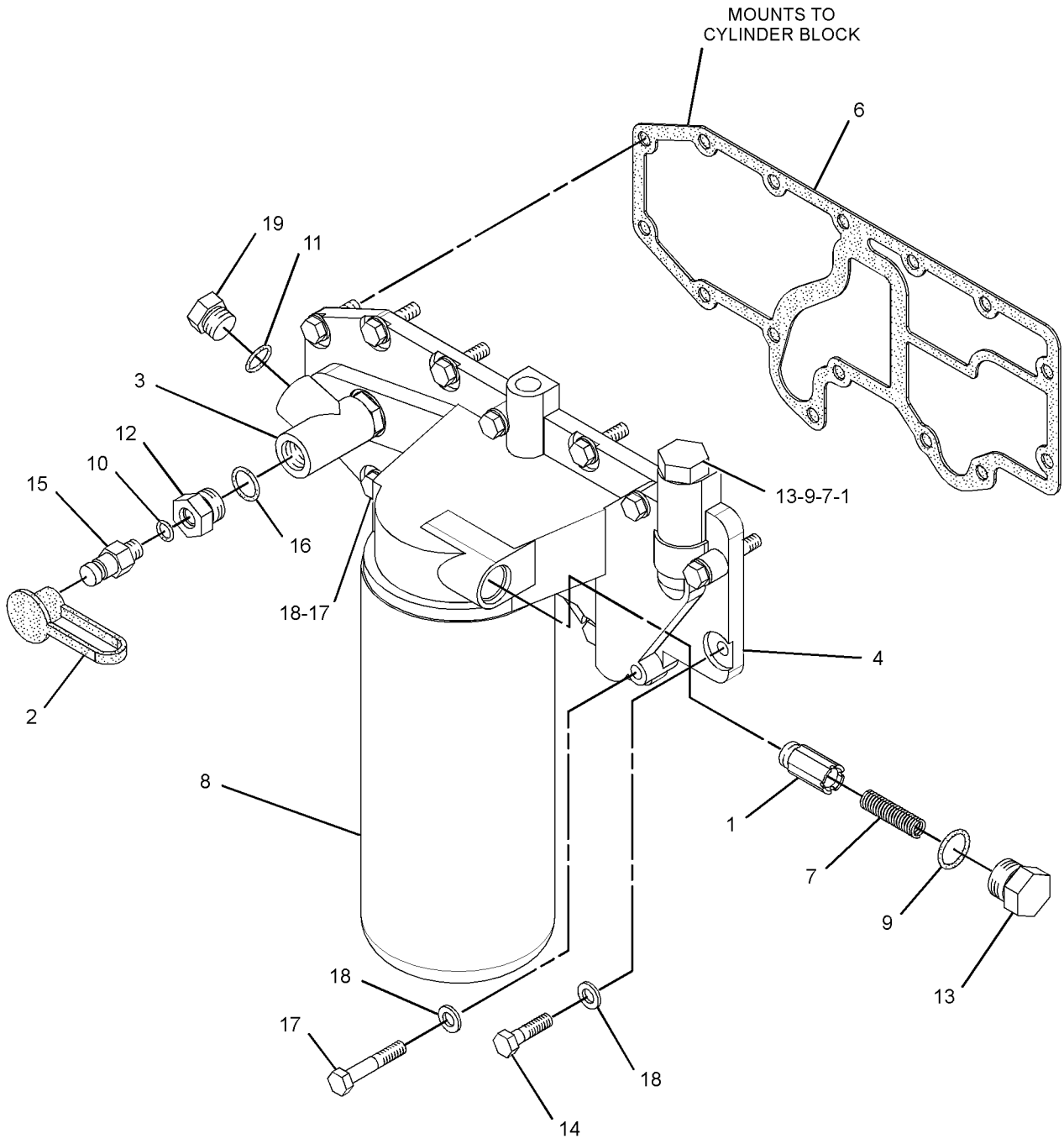

GRAPHIC #1 **<END>** g01318718

LUBRICATION SYSTEM

220-1194 FUMES DISPOSAL GP

S/N: KHX238-UP

PART OF 231-0878, 278-9732 ENGINE AR-COMPLETE

SMCS-1317 **i02789603**

NOTE	REF NO	GRAPHIC REF	PART NUMBER	QTY	PART NAME 1 2 3 4 5 6 (PRODUCT LEVEL)	SEE PAGE
	1	1	**4P-4369**	1	SPACER (12X19X23.5-MM THK)	
	2	1	**9M-2904**	1	CLAMP-HOSE	
	3	1	**228-8510**	1	HOSE-DISPOSAL (FUMES)	
	4	1	**2S-2053**	1	CLIP	
	5	1	**3E-4352**	1	WASHER-HARD (8.8X20.5X2.5-MM THK)	
	6	1	**162-3148**	1	STUD (M8X1.25X62.75-MM)	

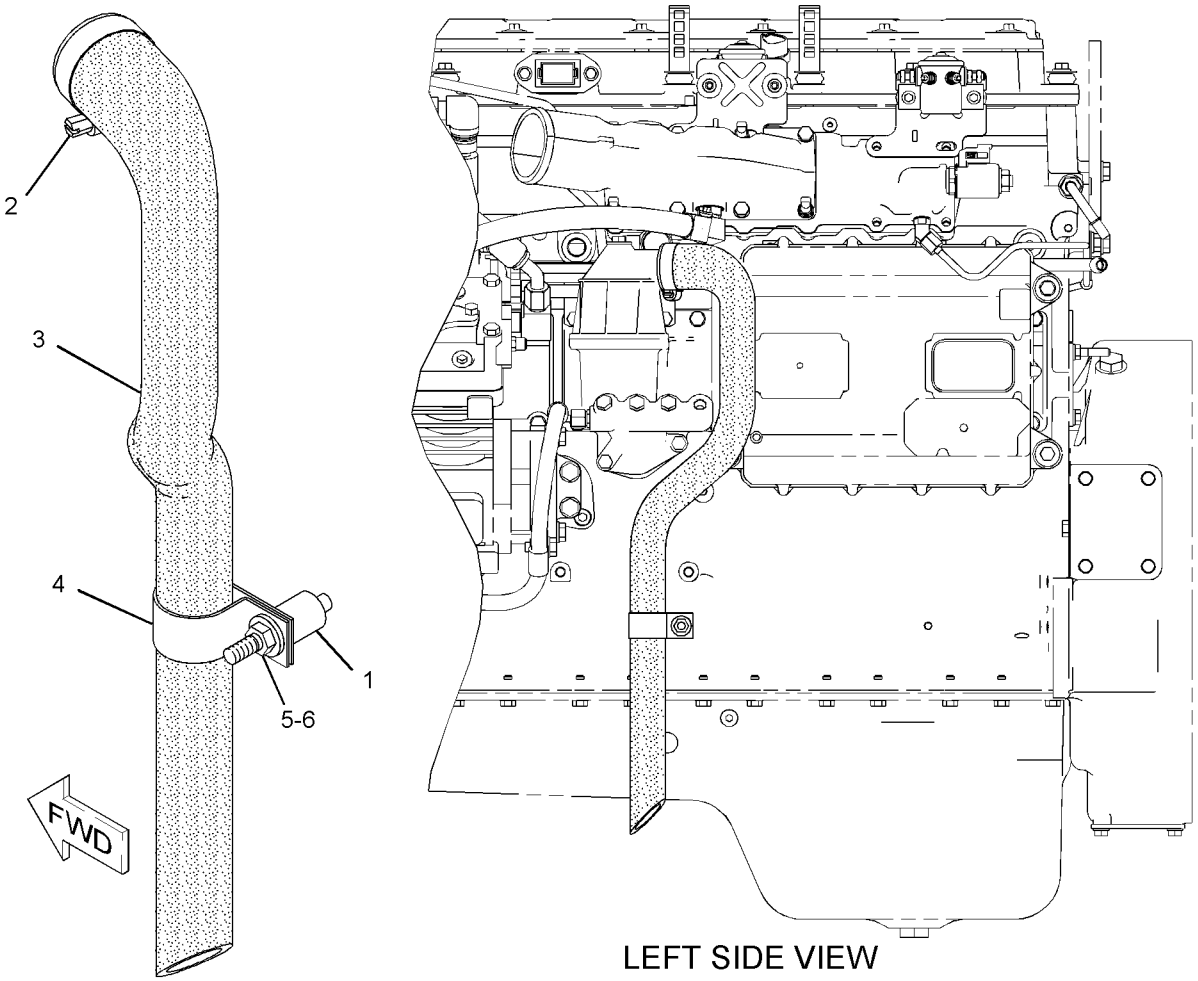

LEFT SIDE VIEW

GRAPHIC #1 **<END>** g01095248

276-3681 GAUGE GP-OIL LEVEL (DIPSTICK)

S/N: KHX238-UP

PART OF 231-0878, 278-9732 ENGINE AR-COMPLETE

SMCS-1326 **i02791440**

NOTE	REF NO	GRAPHIC REF	PART NUMBER	QTY	PART NAME 1 2 3 4 5 6 (PRODUCT LEVEL)	SEE PAGE
	1	1	**1S-2563**	3	PLUG	
	2	1	**194-5131**	1	CLIP	
	3	1	**276-3674**	1	TUBE AS	
	4	1	**291-2634**	1	GAUGE AS-OIL LEVEL (DIPSTICK) (ENGINE)	
	5	1	**1F-7567**	1	CLIP	
M	6	1	**5P-7970**	1	NUT (M8X1.25-THD)	
M	7	1	**6V-2317**	1	BOLT (M8X1.25X30-MM)	
M	8	1	**6V-5217**	1	BOLT (M8X1.25X20-MM)	
	9	1	**8T-4224**	2	WASHER-HARD (8.8X16X2-MM THK)	

M-METRIC PART

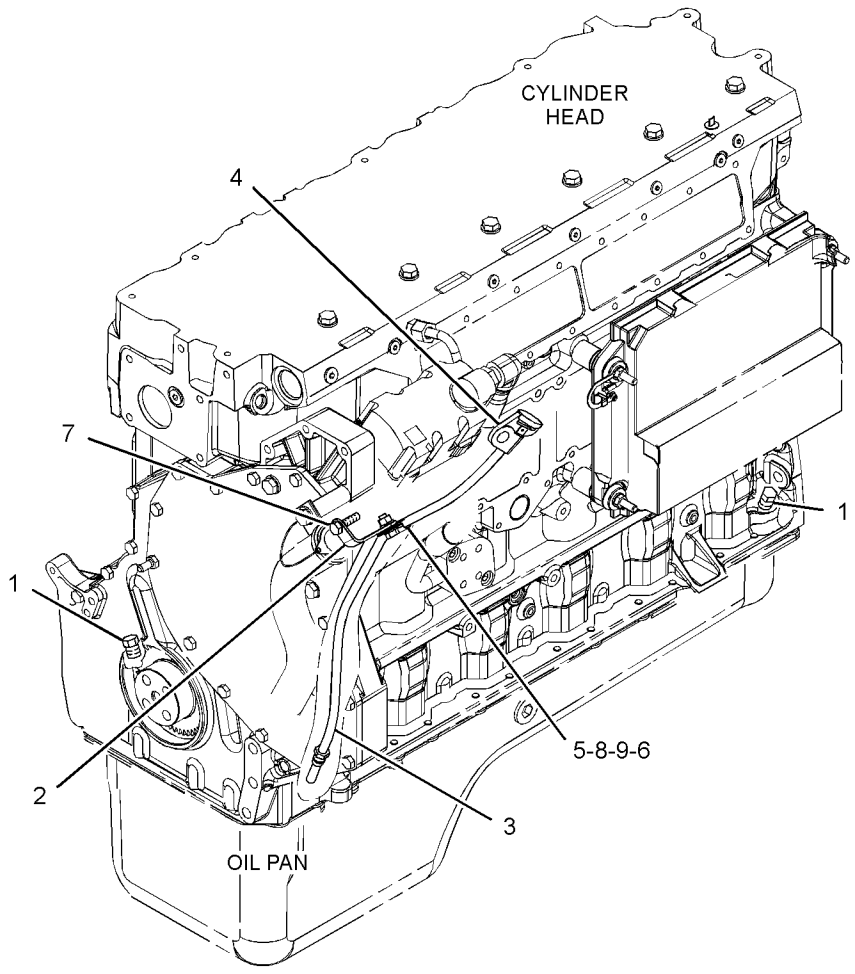

GRAPHIC #1 **<END>** g01319304

LUBRICATION SYSTEM

7C-9279 LINES GP-ENGINE OIL

S/N: KHX238-UP

PART OF 231-0878, 278-9732 ENGINE AR-COMPLETE

SMCS-1307 **i02791632**

NOTE	REF NO	GRAPHIC REF	PART NUMBER	QTY	PART NAME 1 2 3 4 5 6 (PRODUCT LEVEL)	SEE PAGE
	1	1	**7C-9280**	1	TUBE AS-SUCTION	
	2	1	**6V-5839**	1	WASHER (11X21X2.5-MM THK)	
M	3	1	**6V-4248**	1	BOLT (M10X1.5X25-MM)	
	4	1	**7W-5340**	1	GASKET	
M	5	1	**6V-3940**	4	BOLT (M8X1.25X25-MM)	
	6	1	**9M-1974**	2	WASHER-HARD (8.8X16X2-MM THK)	
	7	1	**4W-2232**	1	ELBOW-OUTLET	
	8	1	**3P-1156**	2	SEAL-O-RING	

M-METRIC PART

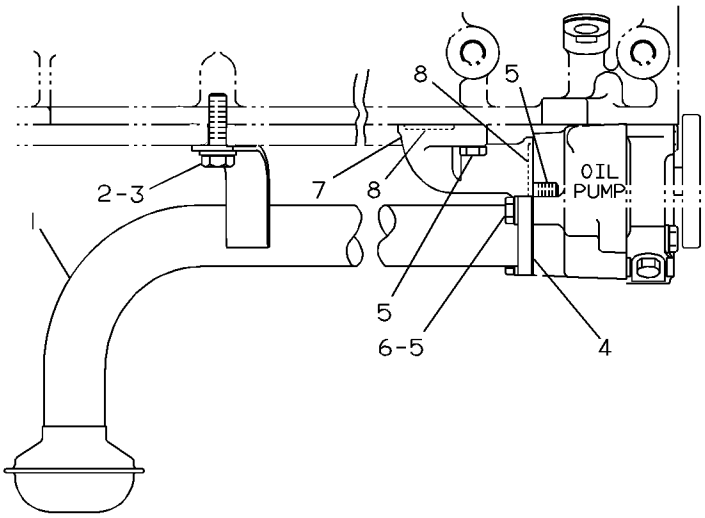

SIDE VIEW

GRAPHIC #1 **<END>** g00210804

246-6705 LINES GP-ENGINE OIL DRAIN

S/N: B9D1-UP

SMCS-1307 **i02782554**

NOTE	REF NO	GRAPHIC REF	PART NUMBER	QTY	PART NAME 1 2 3 4 5 6 (PRODUCT LEVEL)	SEE PAGE
I	1	1	**4I-8897**	1	HOSE AS	
	2	1	**7X-7958**	1	CLAMP-HOSE	
	3	1	**129-7679**	1	FILM-INSTRUCTION (ENGINE OIL DRAIN)	
	4	1	**206-4669**	1	VALVE-DRAIN (ENGINE OIL)	
	5	1	**212-4174**	1	LOCKWASHER	
	6	1	**249-8540**	1	PLATE	
	7	1	*148-8347*	1	ELBOW AS	
		1	**6V-9007**	1	ELBOW	
		1	**3D-2824**	1	SEAL-O-RING	
		1	**6V-9746**	1	SEAL-O-RING	
	8	1	**8T-4121**	2	WASHER-HARD (11X21X2.5-MM THK)	
M	9	1	**8T-4136**	2	BOLT (M10X1.5X25-MM)	
E	10	1	**146-7453**		HOSE (13-CM)	

E-ORDER BY THE CENTIMETER
I-REFER TO HYDRAULIC INFORMATION SYSTEM
M-METRIC PART

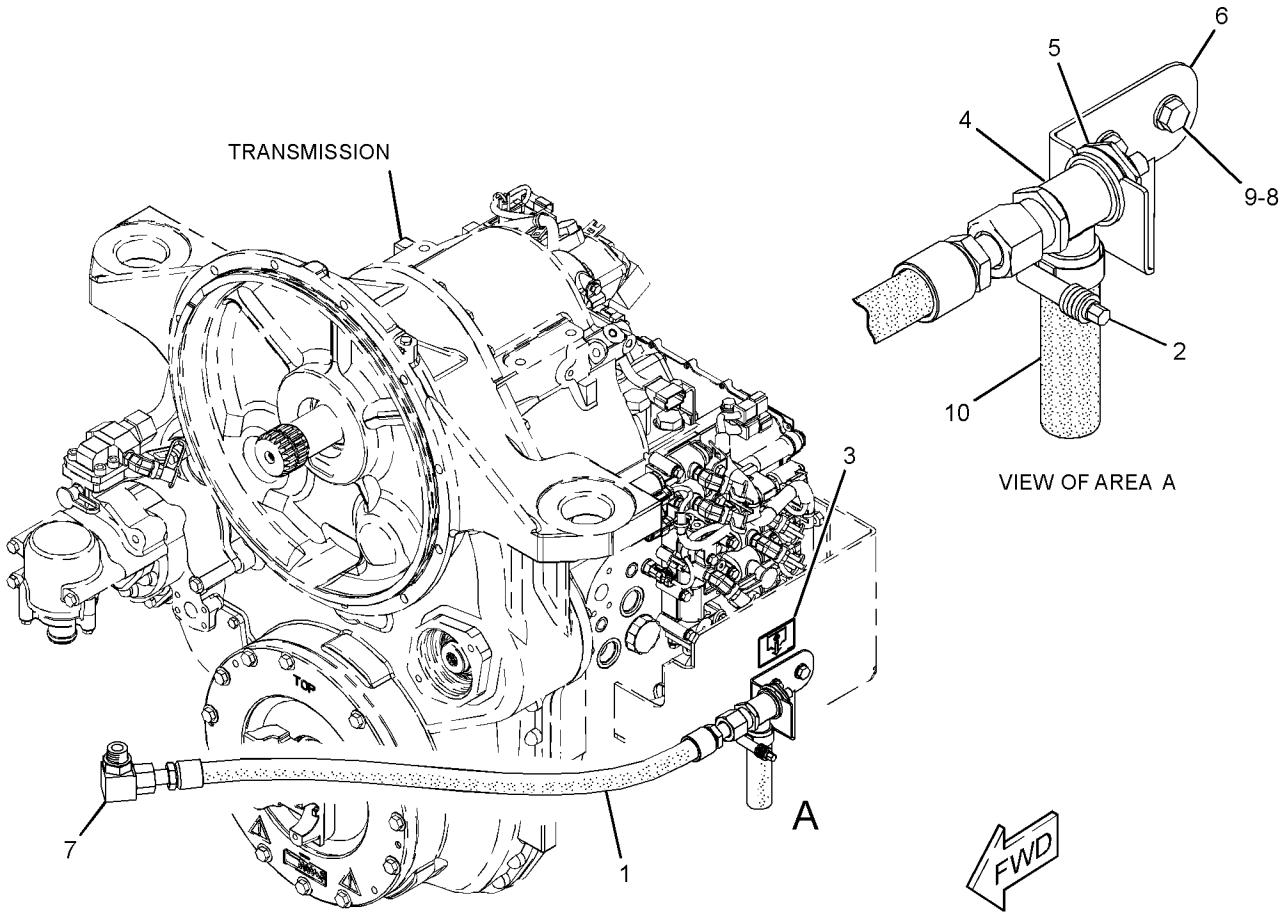

GRAPHIC #1 **<END>** g01365818

LUBRICATION SYSTEM

250-8315 LINES GP-TURBOCHARGER OIL

S/N: KHX238-UP

PART OF 231-0878, 278-9732 ENGINE AR-COMPLETE

SMCS-1052, 1307 **i02789616**

NOTE	REF NO	GRAPHIC REF	PART NUMBER	QTY	PART NAME 1 2 3 4 5 6 (PRODUCT LEVEL)	SEE PAGE
	1	1	**119-2942**	1	ADAPTER	
	2	1	*183-3399*	2	CONNECTOR AS	
					(EACH INCLUDES)	
		1	**214-7568**	1	SEAL-O-RING	
		1	**221-3494**	1	SEAL-O-RING	
	3	1	**197-8419**	1	GASKET (TURBOCHARGER OIL)	
	4	1	**250-8316**	1	TUBE AS	
	5	1	**250-8317**	1	TUBE AS	
	6	1	**114-2687**	1	SEAL-O-RING	
	7	1	**1F-7567**	1	CLIP	
M	8	1	**2Y-5829**	1	NUT (M10X1.15-THD)	
	9	1	**4L-3641**	1	CLIP	
	10	1	**5P-8066**	1	SEAL-O-RING	
M	11	1	**6V-4248**	1	BOLT (M10X1.5X25-MM)	
M	12	1	**6V-5218**	4	BOLT (M8X1.25X35-MM)	
	13	1	**6V-5839**	2	WASHER (11X21X2.5-MM THK)	
	14	1	**9M-1974**	2	WASHER-HARD (8.8X16X2-MM THK)	

M-METRIC PART

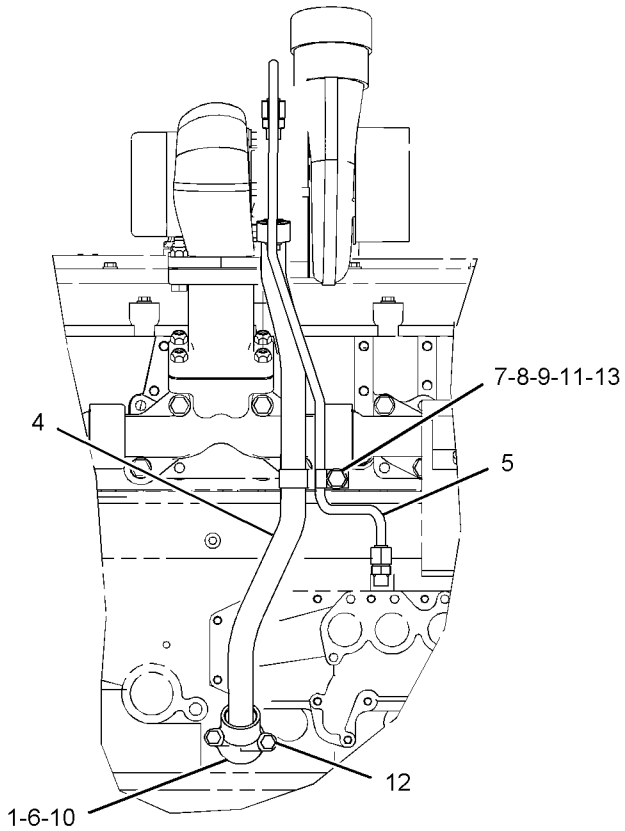

RIGHT SIDE VIEW

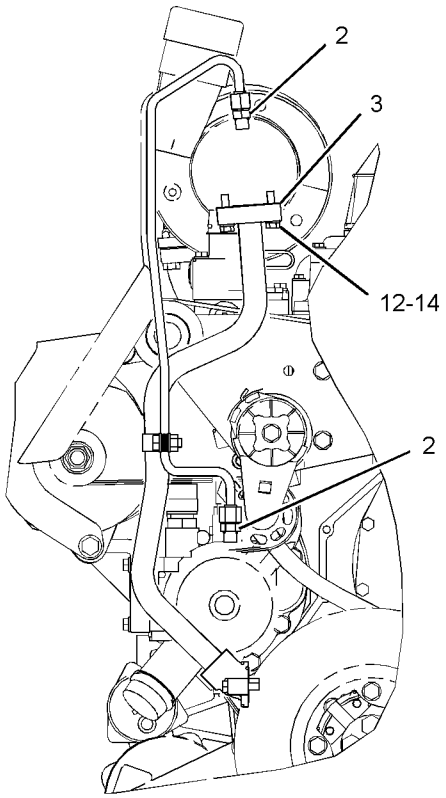

FRONT VIEW

GRAPHIC #1 **<END>** g01148815

237-8063 MANIFOLD GP-ENGINE OIL

S/N: KHX238-UP

PART OF 231-0878, 278-9732 ENGINE AR-COMPLETE

SMCS-1307 **i02789607**

NOTE	REF NO	GRAPHIC REF	PART NUMBER	QTY	PART NAME 1 2 3 4 5 6 (PRODUCT LEVEL)	SEE PAGE
	1	1	**226-8696**	1	MANIFOLD-OIL (ENGINE)	
	2	1	**3J-1907**	4	SEAL-O-RING	
	3	1	**4F-9029**	1	SEAL	
M	4	1	**6V-5219**	2	BOLT (M8X1.25X40-MM)	
	5	1	**9S-4191**	4	PLUG-O-RING	

M-METRIC PART

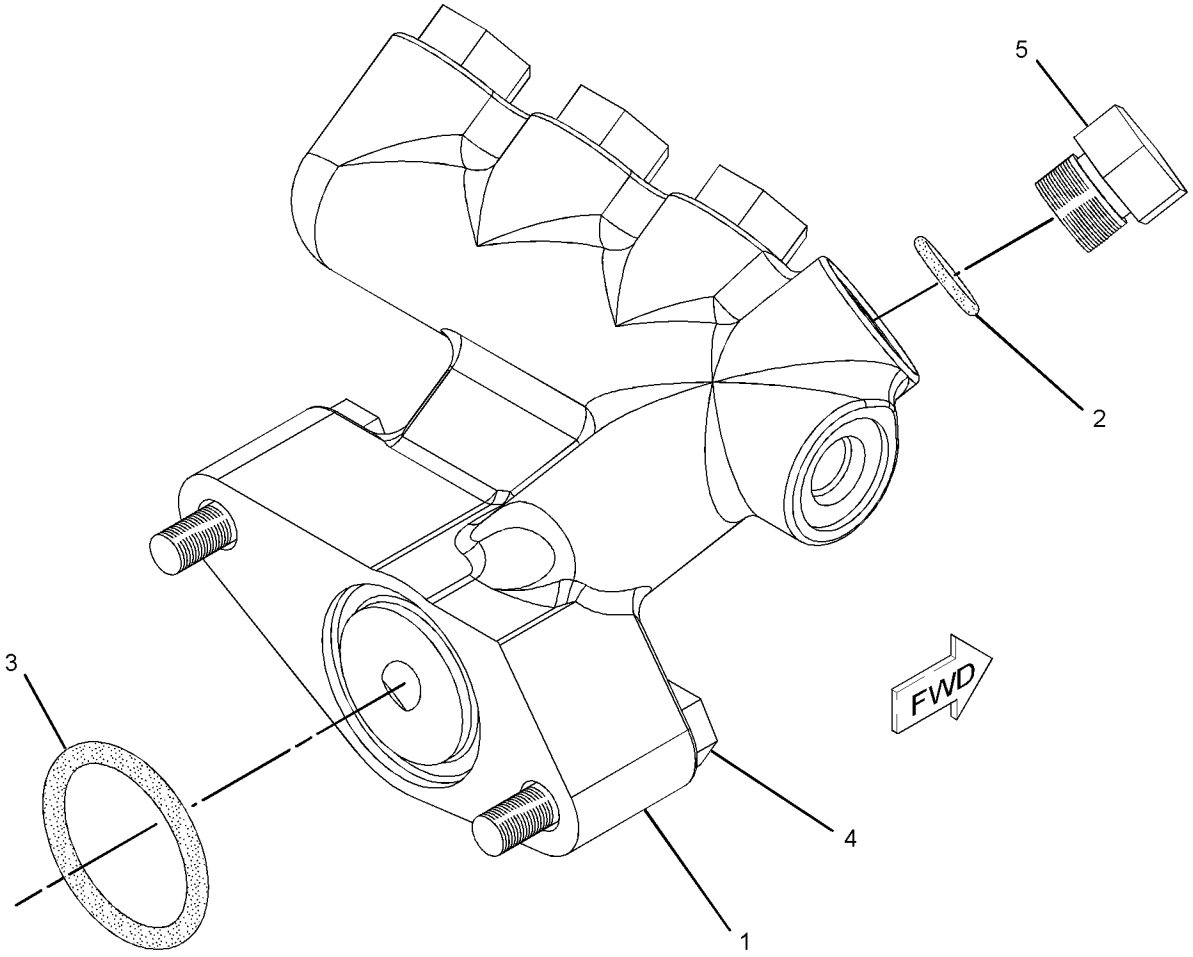

GRAPHIC #1 **<END>** g01099259

LUBRICATION SYSTEM

246-6712 OIL CHANGE GP-HIGH SPEED—POWER TRAIN OIL

S/N: B9D1-UP

PART OF 276-1425 STEERING AR-SECONDARY

SMCS-1325 **i02782721**

NOTE	REF NO	GRAPHIC REF	PART NUMBER	QTY	PART NAME 1 2 3 4 5 6 (PRODUCT LEVEL)	SEE PAGE
	1	1	**2V-2043**	1	LOCKNUT-FLARED (1-5/8-12-THD)	
	2	1	**110-8827**	1	FITTING AS (QUICK DISCONNECT)	
		1	**110-8826**	1	CAP-DUST	
I	3	1	**9C-1078**	1	HOSE AS	
	4	1	**261-4377**	1	FILM-IDENTIFICATION (FILL, DRAIN)	
	5	1	**271-3959**	1	BRACKET	
	6	1	*148-8347*	1	ELBOW AS	
		1	**6V-9007**	1	ELBOW	
		1	**3D-2824**	1	SEAL-O-RING	
		1	**6V-9746**	1	SEAL-O-RING	
	7	1	*148-8360*	1	ELBOW AS	
		1	**6V-9182**	1	ELBOW (FACE SEAL)	
		1	**6V-9746**	1	SEAL-O-RING	
		1	**7M-8485**	1	SEAL-O-RING	
	8	1	**8T-4121**	2	WASHER-HARD (11X21X2.5-MM THK)	
M	9	1	**8T-4137**	2	BOLT (M10X1.5X20-MM)	

I-REFER TO HYDRAULIC INFORMATION SYSTEM
M-METRIC PART

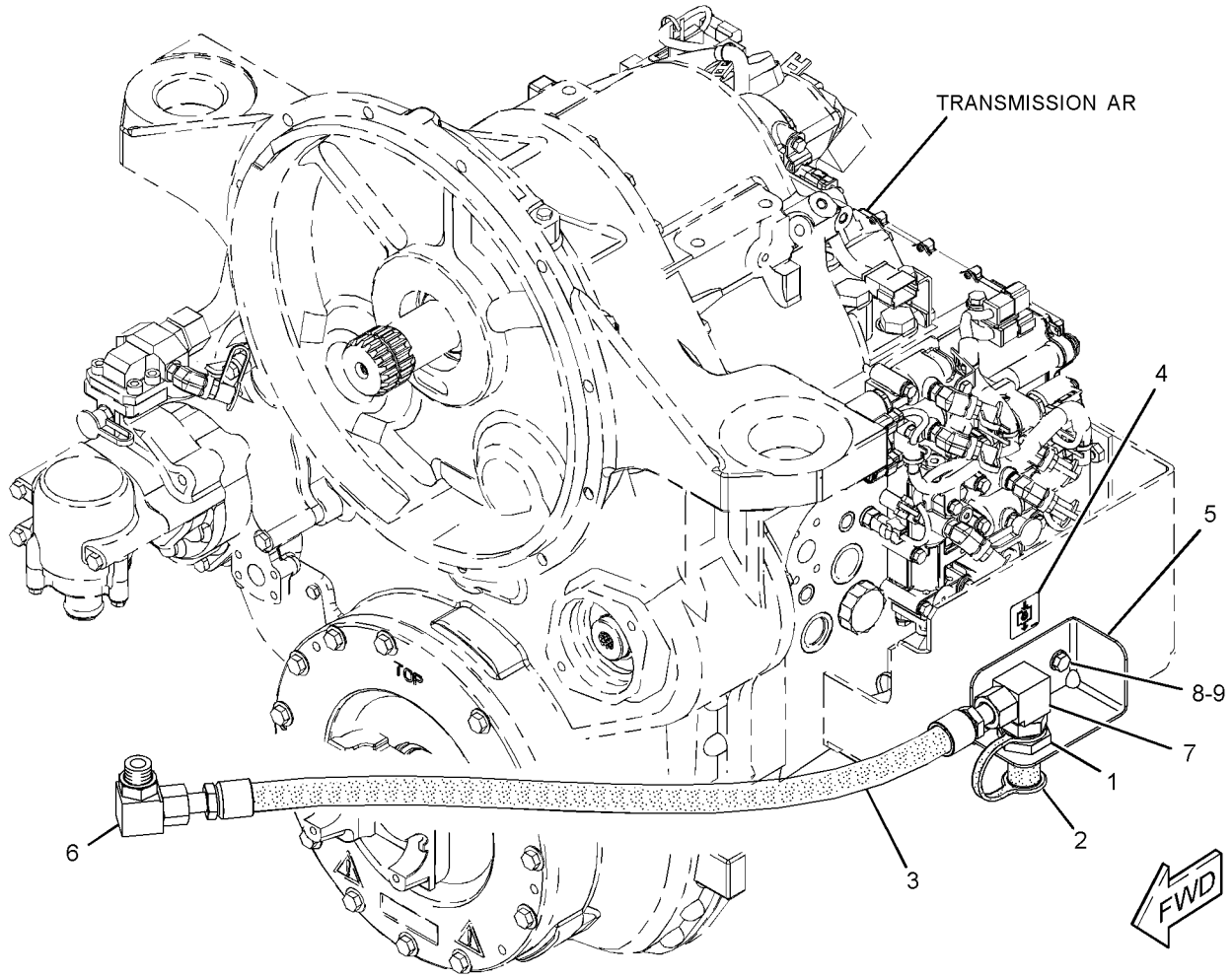

GRAPHIC #1 **<END>** g01366329

200-4497 PUMP GP-ENGINE OIL

S/N: KHX238-UP

PART OF 212-2270 PUMP GP-ENGINE OIL

SMCS-1304, 1315 **i02120062**

NOTE	REF NO	GRAPHIC REF	PART NUMBER	QTY	PART NAME 1 2 3 4 5 6 (PRODUCT LEVEL)	SEE PAGE
	1	1	**7W-9737**	1	SHAFT	
	2	1	**7W-9738**	1	WASHER (10.5X38X1.6-MM THK)	
	3	1	**7W-9740**	1	GEAR AS-IDLER (43-TEETH)	
	3A	1	**7W-9930**	1	BEARING-SLEEVE	
M	4	1	**9X-2305**	1	BOLT-LOCKING (M10X1.5X50-MM)	
	5	1	**189-8777**	1	PUMP GP-ENGINE OIL	

M-METRIC PART

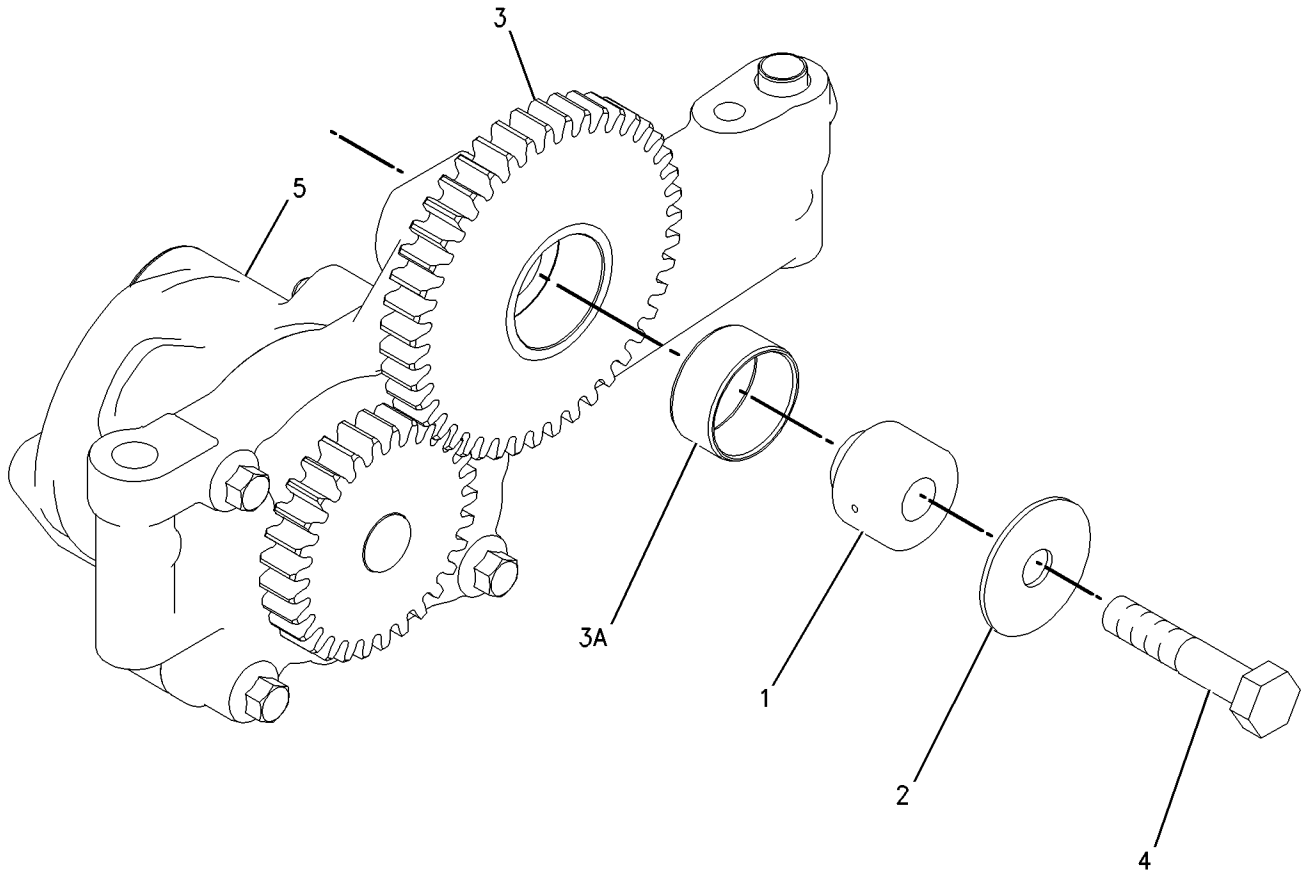

GRAPHIC #1 **<END>** g00775788

LUBRICATION SYSTEM

212-2270 PUMP GP-ENGINE OIL

S/N: KHX238-UP

PART OF 231-0879 ENGINE AR-CORE

SMCS-1304, 1315 **i02294171**

NOTE	REF NO	GRAPHIC REF	PART NUMBER	QTY	PART NAME 1 2 3 4 5 6 (PRODUCT LEVEL)	SEE PAGE
Y	1	1	**200-4497**	1	PUMP GP-ENGINE OIL	67
M	2	1	**6V-5815**	2	BOLT (M10X1.5X75-MM)	
	3	1	**6V-5839**	2	WASHER (11X21X2.5-MM THK)	

M-METRIC PART
Y-SEPARATE ILLUSTRATION

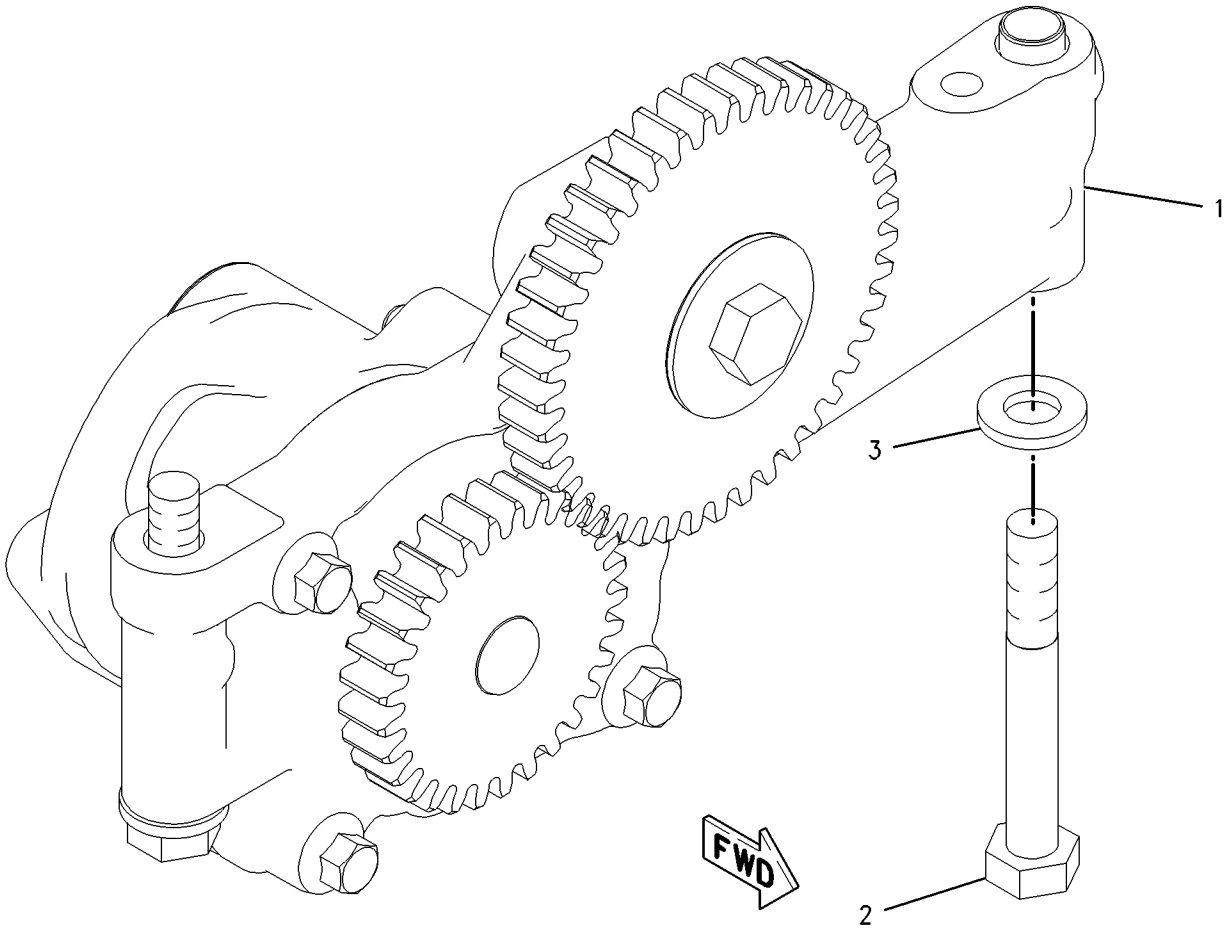

GRAPHIC #1 **<END>** g00849437

117-3643 COOLER GP-ENGINE OIL

S/N: KHX238-UP

PART OF 231-0879 ENGINE AR-CORE

SMCS-1378 **i02756787**

NOTE	REF NO	GRAPHIC REF	PART NUMBER	QTY	PART NAME 1 2 3 4 5 6 (PRODUCT LEVEL)	SEE PAGE
R	1	1	**267-4743**	1	CORE AS-ENGINE OIL COOLER	
	2	1	**240-2767**	1	GASKET	
	3	1	**3P-1156**	2	SEAL-O-RING	

R-REMFG PART MAY BE AVAILABLE

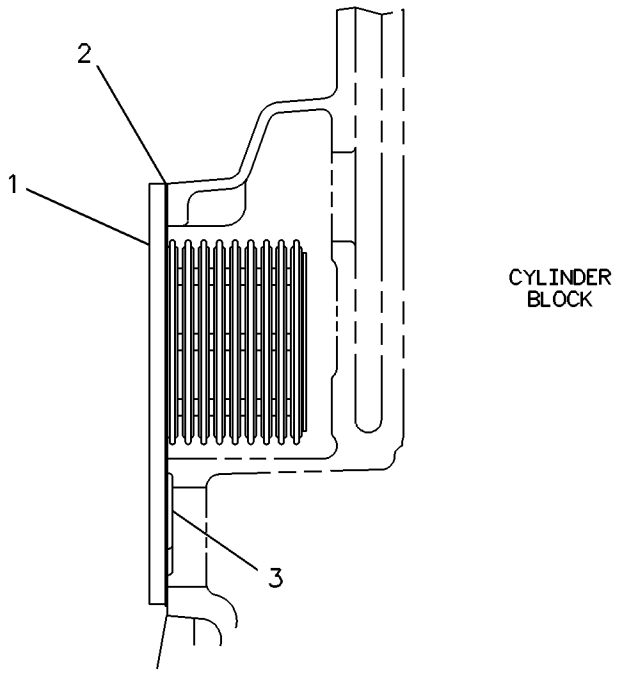

GRAPHIC #1 **<END>** g00117316

COOLING SYSTEM

268-6570 COOLING AR

S/N: B9D1-UP

PART OF 234-7721 COMMON AR

SMCS-1350 **i02780883**

NOTE	REF NO	GRAPHIC REF	PART NUMBER	QTY	PART NAME 1 2 3 4 5 6 (PRODUCT LEVEL)	SEE PAGE
Y	1	1	*231-2311*	1	AFTERCOOLER GP-AIR	85
Y	2	1	*231-2315*	1	RADIATOR GP	80
Y	3	1	*231-2316*	1	SUPPORT GP-RADIATOR	494
	4	1	**198-4782**	4	WASHER-HARD (26X47X12-MM THK)	
M	5	1	**7X-2576**	4	BOLT (M24X3X70-MM)	

M-METRIC PART
Y-SEPARATE ILLUSTRATION

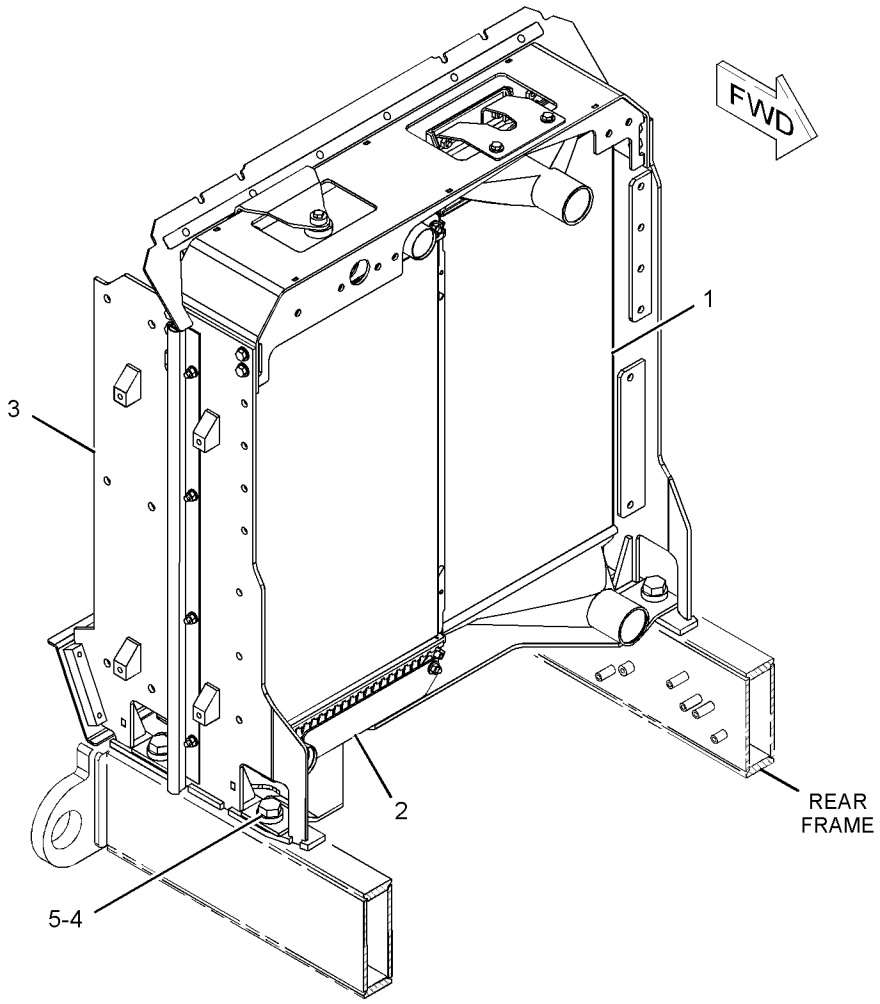

GRAPHIC #1 **<END>** g01150518

COOLING SYSTEM

231-2313 FAN & MOTOR GP

S/N: B9D1-UP

PART OF 234-7721 COMMON AR

SMCS-1356, 1386 **i02772084**

NOTE	REF NO	GRAPHIC REF	PART NUMBER	QTY	PART NAME 1 2 3 4 5 6 (PRODUCT LEVEL)	SEE PAGE
	1	1	**241-8534**	1	SPIDER AS (8-BLADE)	
	2	1	**248-0409**	1	ADAPTER-FAN	
Y	3	1	*248-0671*	1	GUARD GP-FAN (RADIATOR COOLING)	73
J	4	1	**250-9831**	1	MOTOR GP-GEAR (RADIATOR COOLING)	
	5	1	**252-1272**	2	BRACKET AS	
	6	1	**252-9513**	1	SUPPORT AS	
	7	1	**264-4297**	1	SENSOR GP-TEMPERATURE (HYDRAULIC FAN OIL)	
		1	**137-6645**	1	PAD	
	8	1	**266-7711**	1	BAFFLE	
	9	1	**266-7712**	1	BAFFLE	
	10	1	**266-7713**	2	STRIP	
	11	1	**291-1348**	1	BLOCK	
	12	1	**295-2349**	1	PLATE AS	
I	13	1	**296-3491**	1	HOSE AS	
	14	1	*148-8339*	1	CONNECTOR AS	
		1	**6V-8716**	1	CONNECTOR	
		1	**6V-9746**	1	SEAL-O-RING	
		1	**7M-8485**	1	SEAL-O-RING	
	15	1	*148-8360*	1	ELBOW AS	
		1	**6V-9182**	1	ELBOW (FACE SEAL)	
		1	**6V-9746**	1	SEAL-O-RING	
		1	**7M-8485**	1	SEAL-O-RING	
	16	1	*148-8408*	1	PLUG AS	
		1	**9S-4183**	1	PLUG-O-RING	
		1	**3D-2824**	1	SEAL-O-RING	
	17	1	*153-6237*	1	ELBOW AS	
		1	**6V-9004**	1	ELBOW	
		1	**3D-2824**	1	SEAL-O-RING	
		1	**6V-9746**	1	SEAL-O-RING	
	18	1	**3K-0360**	1	SEAL-O-RING	
	19	1	**5P-1076**	16	WASHER-HARD (13.5X30X4-MM THK)	
	20	1	**5P-8245**	1	WASHER-HARD (13.5X25.5X3-MM THK)	
	21	1	**6B-6684**	1	NUT-FULL (1/2-20-THD)	
	22	1	**6V-4604**	8	RIVET-POP	
	23	1	**7X-7729**	2	WASHER (11X25X3-MM THK)	
	24	1	**8T-4121**	10	WASHER-HARD (11X21X2.5-MM THK)	
M	25	1	**8T-4136**	2	BOLT (M10X1.5X25-MM)	
M	26	1	**8T-4137**	6	BOLT (M10X1.5X20-MM)	
M	27	1	**8T-4139**	4	BOLT (M12X1.75X30-MM)	
M	28	1	**8T-4172**	2	BOLT (M10X1.5X80-MM)	
M	29	1	**8T-4195**	2	BOLT (M10X1.5X30-MM)	
M	30	1	**8T-4956**	12	BOLT (M12X1.75X35-MM)	
E	31	1	**112-9736**		SEAL (8-CM EACH)	
E	32	1	**266-8568**		SEAL-BULK (3-CM EACH)	
E	32A	1	**266-8568**		SEAL-BULK (9-CM)	
E	32B	1	**266-8568**		SEAL-BULK (6-CM)	
					AVAILABLE REPAIR KIT	
J			**248-1385**	1	KIT-SEAL (GEAR MOTOR)	
					(INCLUDES RETAINING RING, SHAFT SEAL, BACK-UP RING, E-SEAL, & O-RING)	

E-ORDER BY THE CENTIMETER
I-REFER TO HYDRAULIC INFORMATION SYSTEM
J-KIT MARKED J SERVICES PART(S) MARKED J
M-METRIC PART
Y-SEPARATE ILLUSTRATION

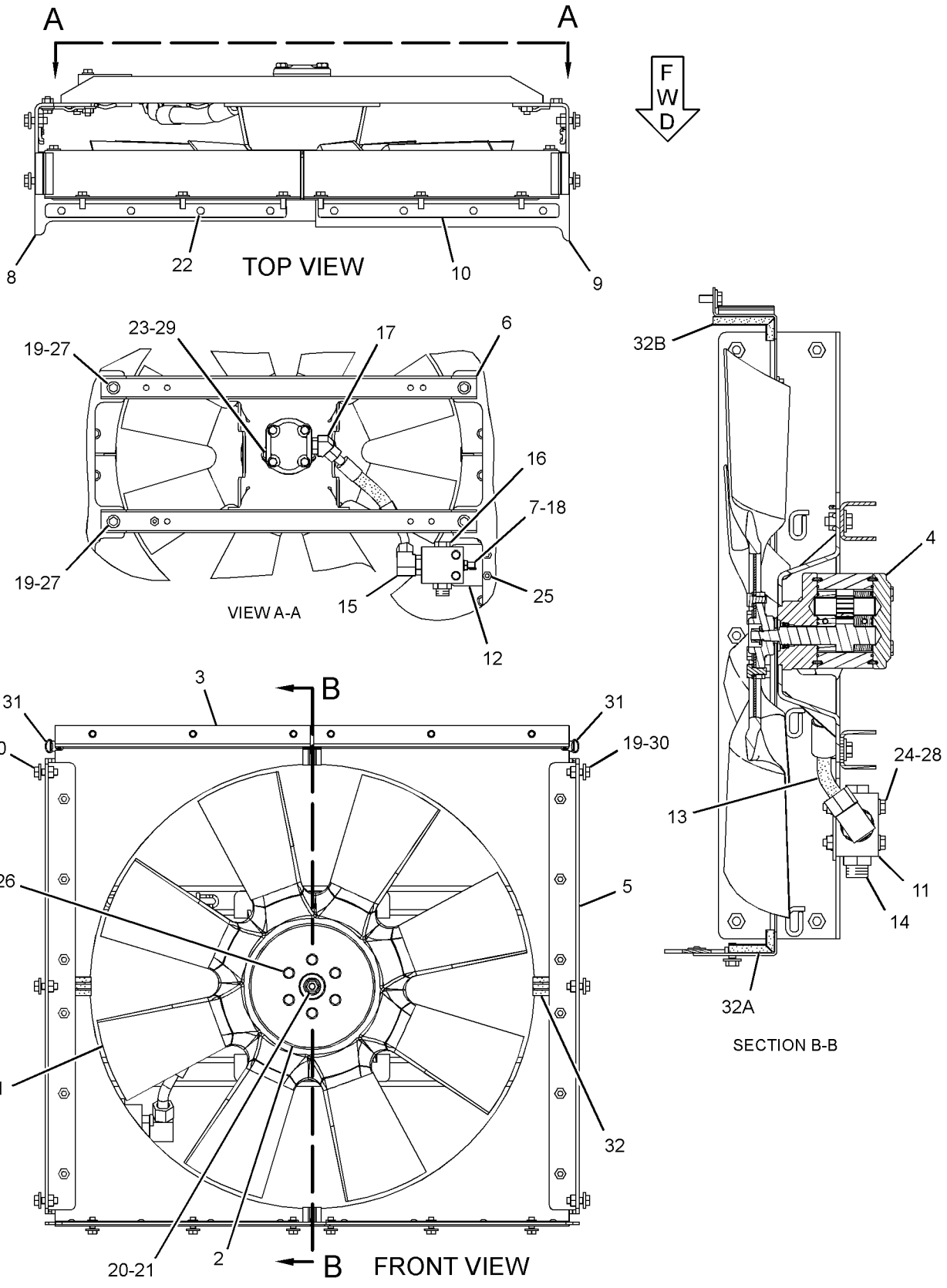

GRAPHIC #1 **<END>** g01339284

COOLING SYSTEM

248-0671 GUARD GP-FAN

S/N: B9D1-UP

PART OF 231-2313 FAN & MOTOR GP

SMCS-1360 **i02787117**

NOTE	REF NO	GRAPHIC REF	PART NUMBER	QTY	PART NAME 1 2 3 4 5 6 (PRODUCT LEVEL)	SEE PAGE
	1	1	**309-1833**	1	SHIELD-FAN	
	2	1	**309-1834**	1	SHIELD-FAN	
	3	1	**309-1835**	1	SHIELD AS	
	4	1	**309-1836**	1	SHIELD AS	
					(EACH SHIELD AS INCLUDES)	
M		1	**8T-3490**	3	NUT-WELD (M10X1.5-THD)	
	5	1	**7X-7729**	24	WASHER (11X25X3-MM THK)	
M	6	1	**8T-4136**	24	BOLT (M10X1.5X25-MM)	

M-METRIC PART

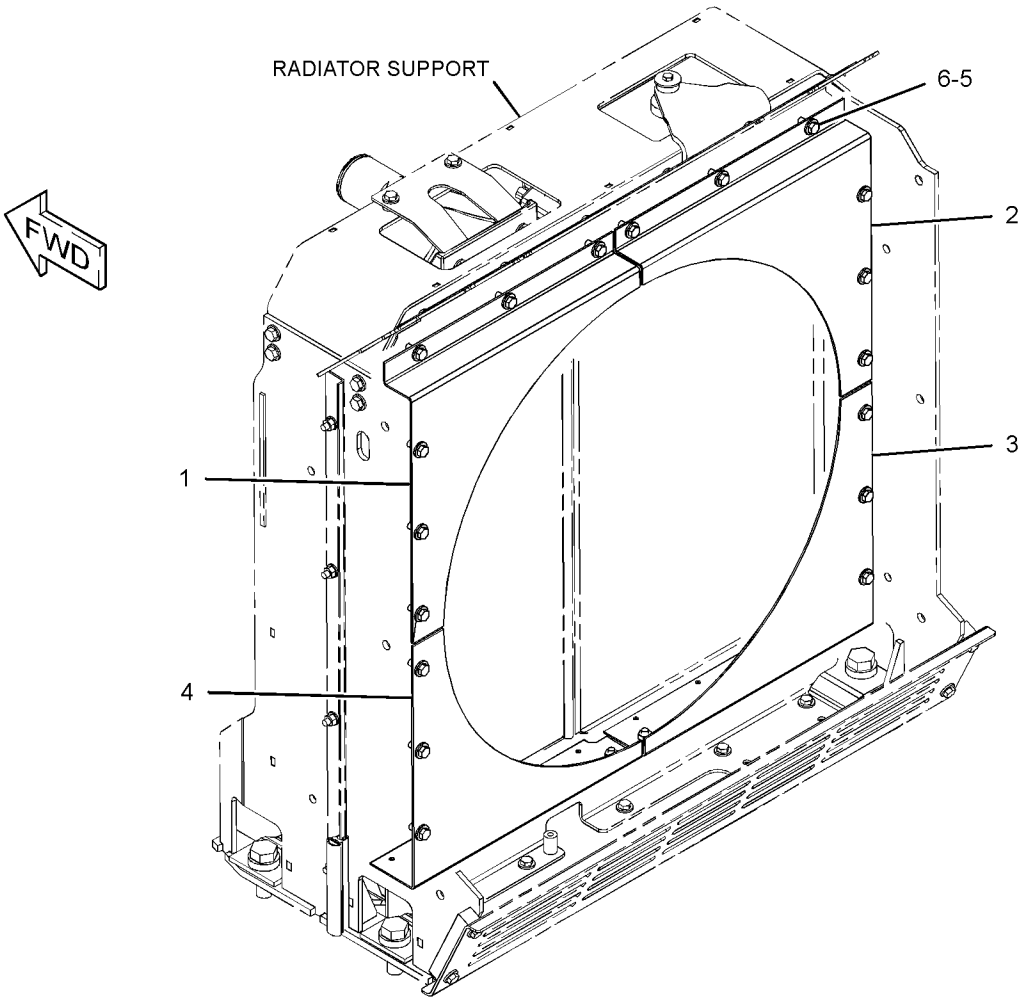

GRAPHIC #1 **<END>** g01369630

COOLING SYSTEM

206-4228 LINES GP-WATER

S/N: KHX238-UP

PART OF 231-0878, 278-9732 ENGINE AR-COMPLETE

SMCS-1355, 1380, 1393 **i02789897**

NOTE	REF NO	GRAPHIC REF	PART NUMBER	QTY	PART NAME 1 2 3 4 5 6 (PRODUCT LEVEL)	SEE PAGE
	1	1	**7E-0759**	1	HOSE	
	3	1	**115-4223**	2	REGULATOR-WATER TEMPERATURE (97-DEG C)	
	4	1	**126-5466**	1	GASKET	
	5	1	**157-0670**	1	CAP-DUST	
	6	1	**160-5131**	1	PIPE (OUTLET)	
	7	1	*217-9060*	1	VALVE AS-FLUID SAMPLING (ENGINE COOLANT)	
	7A	1	**3J-7354**	1	SEAL-O-RING	
	7B	1	**154-9023**	1	VALVE-SAMPLING (ENGINE COOLANT)	
	8	1	**222-5915**	1	GASKET (TEMPERATURE REGULATOR HOUSING)	
	9	1	**227-5942**	1	HOUSING-WATER REGULATOR	
	10	1	**237-5176**	2	CLAMP-BAND	
	11	1	**3K-0360**	1	SEAL-O-RING	
M	12	1	**5P-8347**	2	BOLT (M8X1.25X70-MM)	
	13	1	**5P-9617**	1	ADAPTER	
	14	1	**6V-3250**	1	SEAL-O-RING	
M	15	1	**6V-3940**	6	BOLT (M8X1.25X25-MM)	
M	16	1	**6V-5223**	1	BOLT (M8X1.25X100-MM)	
	17	1	**6V-6609**	3	SEAL-O-RING	
	18	1	**6V-9027**	1	SEAL-O-RING	
	19	1	**9M-1974**	6	WASHER-HARD (8.8X16X2-MM THK)	
	20	1	**9S-4182**	1	PLUG-O-RING	
	21	1	**9S-4185**	3	PLUG-O-RING	
	22	1	**9S-8005**	1	PLUG-O-RING	

M-METRIC PART

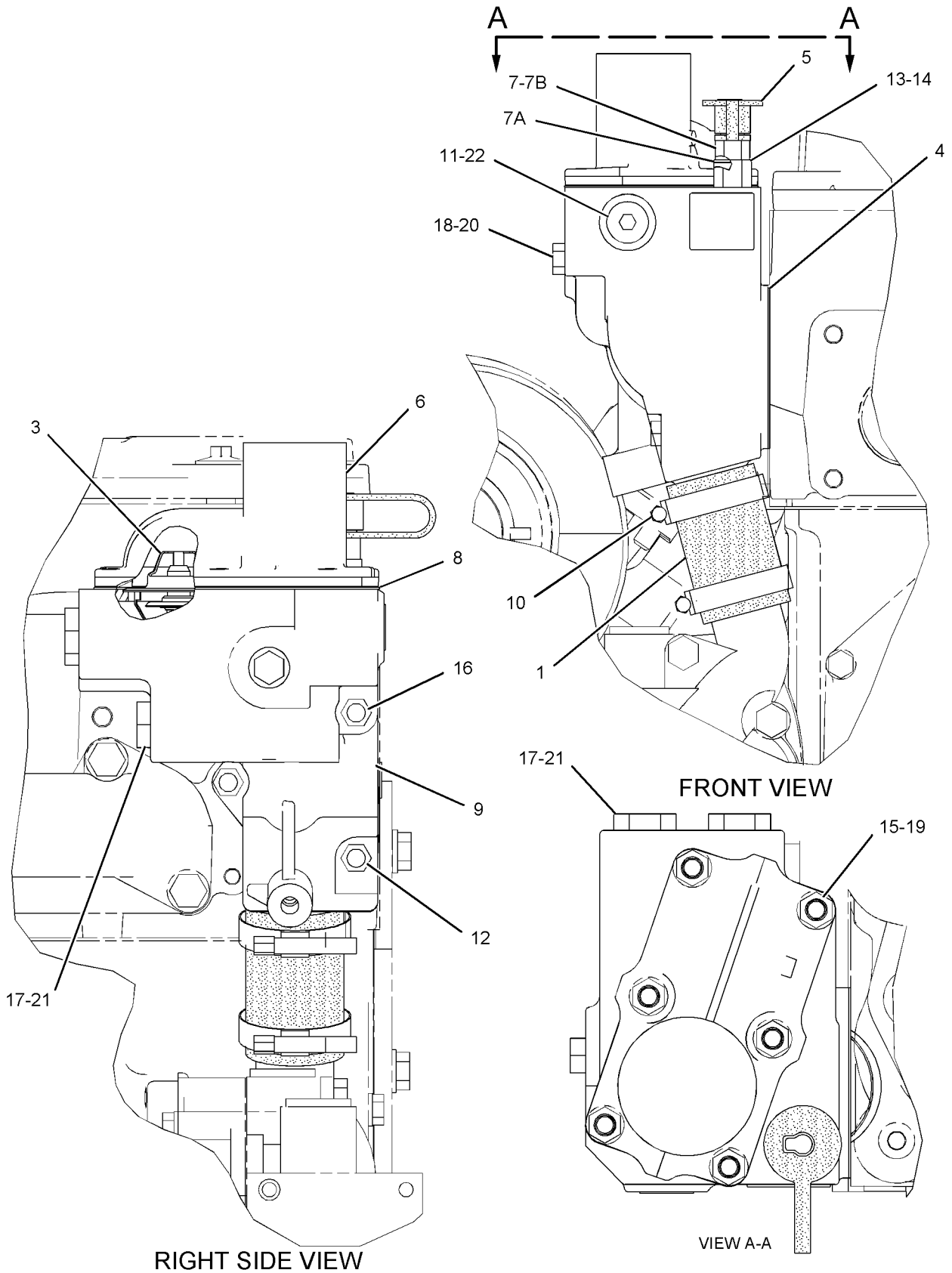

GRAPHIC #1 **<END>** g01099572

COOLING SYSTEM

246-6707 LINES GP-WATER

S/N: B9D1-UP

PART OF 234-7721 COMMON AR

SMCS-1355, 1380, 1393 **i02774449**

NOTE	REF NO	GRAPHIC REF	PART NUMBER	QTY	PART NAME 1 2 3 4 5 6 (PRODUCT LEVEL)	SEE PAGE
	1	1	**5P-4961**	4	CLAMP-HOSE	
E	2	1	**5P-1262**		HOSE (16-CM)	
	3	1	**9X-3982**	1	ELBOW (90-DEG)	
	4	1	**149-8142**	1	CONNECTOR	
	5	1	**157-0670**	1	CAP-DUST	
	6	1	*184-2420*	2	ADAPTER AS	
					(EACH INCLUDES)	
		1	**3E-7401**	1	ADAPTER	
		1	**6V-8397**	1	SEAL-O-RING	
	7	1	*184-2509*	2	VALVE AS (COOLANT)	
					(EACH INCLUDES)	
		1	**7E-4761**	1	VALVE-SHUTOFF	
		1	**3K-0360**	1	SEAL-O-RING	
	8	1	**262-7687**	1	TUBE AS	
	9	1	**262-7688**	1	TUBE AS	
	10	1	**262-7689**	1	TUBE AS	
	11	1	**262-7692**	1	BRACKET AS	
M		1	**8T-3490**	1	NUT-WELD (M10X1.5-THD)	
	12	1	**265-9385**	1	HOSE	
	13	1	**266-7650**	1	ELBOW	
	14	1	**266-7651**	1	HOSE	
	15	1	**269-6650**	2	COUPLING AS	
	16	1	**292-4417**	1	PLATE AS	
	17	1	**295-7612**	1	BRACKET AS	
	18	1	*148-8367*	1	ELBOW AS	
		1	**6V-9850**	1	ELBOW	
		1	**6V-8397**	1	SEAL-O-RING	
	19	1	**154-9025**	1	VALVE-FLUID SAMPLING (COOLANT)	
	20	1	**208-6054**	4	CLAMP	
	21	1	**212-6933**	8	CLAMP	
	22	1	**3K-0360**	2	SEAL-O-RING	
	23	1	**4D-7388**	1	CLIP	
	24	1	**5P-4116**	2	WASHER-HARD (8.8X20.5X2-MM THK)	
	25	1	**5P-7468**	1	CLIP (SLOT)	
	26	1	**5P-7469**	1	CLIP (TAB)	
	27	1	**6V-1581**	1	CLIP (SLOT)	
	28	1	**6V-1582**	1	CLIP (TAB)	
	29	1	**6V-9168**	2	NUT (11/16-16-THD)	
	30	1	**7X-7729**	4	WASHER (11X25X3-MM THK)	
	31	1	**8M-2773**	1	CLIP	
	32	1	**8T-4121**	4	WASHER-HARD (11X21X2.5-MM THK)	
M	33	1	**8T-4133**	1	NUT (M10X1.5-THD)	
M	34	1	**8T-4136**	1	BOLT (M10X1.5X25-MM)	
M	35	1	**8T-4137**	3	BOLT (M10X1.5X20-MM)	
M	36	1	**8T-4189**	2	BOLT (M8X1.25X20-MM)	
M	37	1	**8T-4195**	1	BOLT (M10X1.5X30-MM)	
M	38	1	**8T-4196**	2	BOLT (M10X1.5X35-MM)	
	39	1	**9D-6196**	1	CLIP (SLOT)	
	40	1	**9D-6197**	1	CLIP (TAB)	
E	41	1	**6V-8523**		HOSE (20-CM)	
E	41A	1	**6V-8523**		HOSE (60-CM)	
E	42	1	**5P-1259**		HOSE (13-CM EACH)	

E-ORDER BY THE CENTIMETER
M-METRIC PART

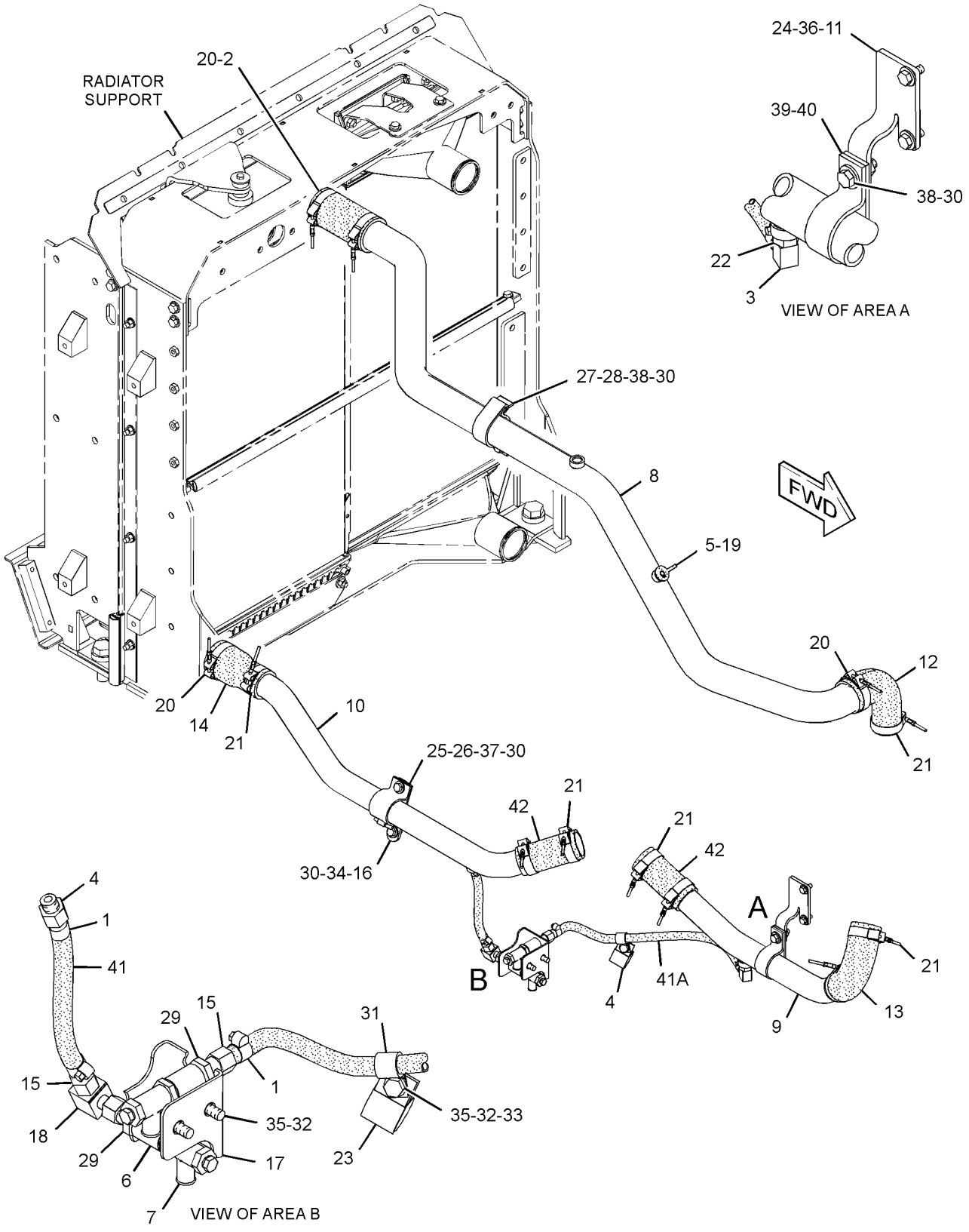

GRAPHIC #1 **<END>** g01360744

COOLING SYSTEM

236-4413 PUMP GP-WATER

S/N: KHX238-UP

PART OF 264-1434 PUMP GP-WATER

SMCS-1361 **i02130103**

NOTE	REF NO	GRAPHIC REF	PART NUMBER	QTY	PART NAME 1 2 3 4 5 6 (PRODUCT LEVEL)	SEE PAGE
	1	1	**4W-0253**	1	COVER	
	2	1	**4W-7592**	1	GASKET	
R	3	1	**236-4420**	1	PUMP AS-WATER	
		1	**117-3437**	1	PULLEY	
		1	**119-3025**	1	FILTER (WATER) (PUMP)	
		1	**129-1170**	1	SHAFT AS	
		1	**147-5088**	1	SEAL AS-WATER PUMP	
		1	**152-3952**	1	IMPELLER-PUMP	
		1	**236-4421**	1	HOUSING-PUMP	
M	4	1	**6V-3918**	4	BOLT (M8X1.25X50-MM)	
	5	1	**9M-1974**	4	WASHER-HARD (8.8X16X2-MM THK)	

M-METRIC PART
R-REMFG PART MAY BE AVAILABLE

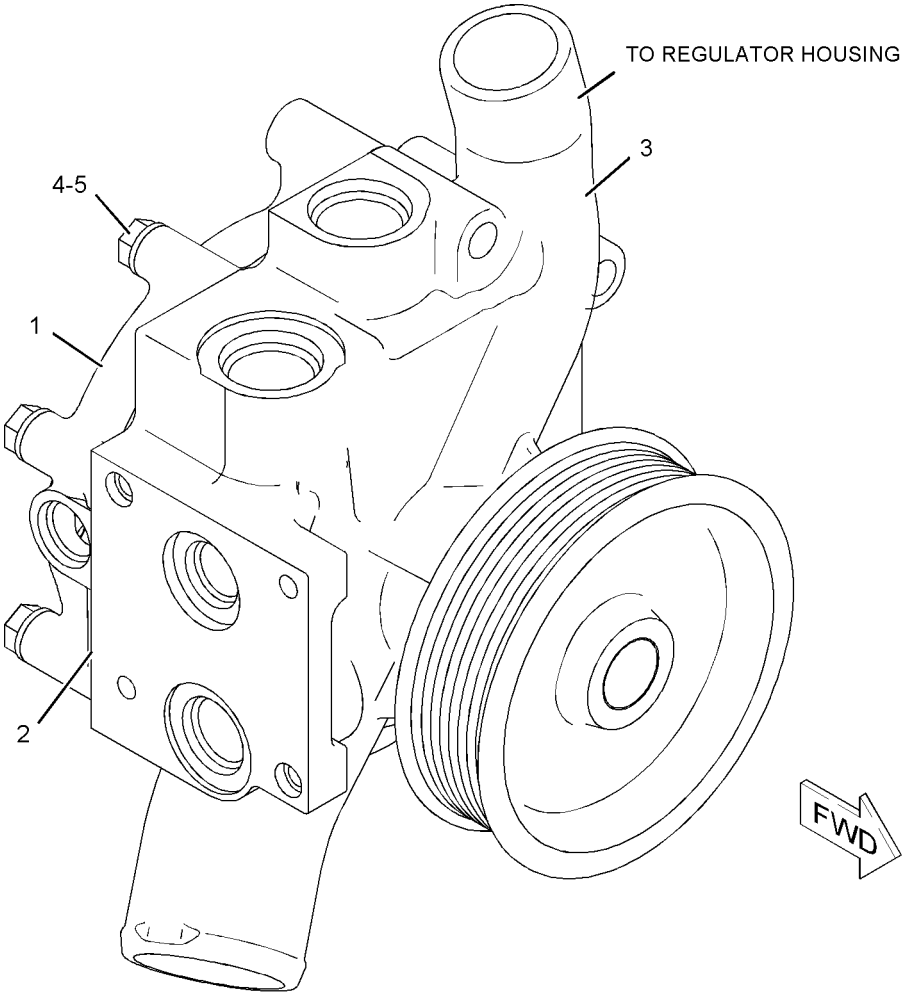

GRAPHIC #1 **<END>** g01040531

COOLING SYSTEM

264-1434 PUMP GP-WATER

S/N: KHX238-UP

PART OF 231-0878, 278-9732 ENGINE AR-COMPLETE

SMCS-1361 **i02789776**

NOTE	REF NO	GRAPHIC REF	PART NUMBER	QTY	PART NAME 1 2 3 4 5 6 (PRODUCT LEVEL)	SEE PAGE
YR	2	1	**236-4413**	1	PUMP GP-WATER	78
	3	1	*148-8395*	2	PLUG AS	
					(EACH INCLUDES)	
		1	**3K-0360**	1	SEAL-O-RING	
		1	**9S-8005**	1	PLUG-O-RING	
	4	1	**164-5619**	1	PLUG AS	
		1	**2M-9780**	1	SEAL-O-RING	
		1	**9S-8006**	1	PLUG-O-RING	
	5	1	**167-1795**	1	ELBOW AS	
	6	1	**2M-4453**	1	SEAL-O-RING	
	7	1	**3D-2824**	1	SEAL-O-RING	
	8	1	*3J-3679*	1	PLUG AS	
		1	**1J-9671**	2	SEAL-O-RING	
		1	**9S-8003**	2	PLUG	
	9	1	**4J-0524**	1	SEAL-O-RING	
	10	1	**6V-5049**	1	SEAL-O-RING	
M	11	1	**8T-0644**	4	BOLT (M10X1.5X90-MM)	
	12	1	**8T-5429**	1	ELBOW	

M-METRIC PART
R-REMFG PART MAY BE AVAILABLE
Y-SEPARATE ILLUSTRATION

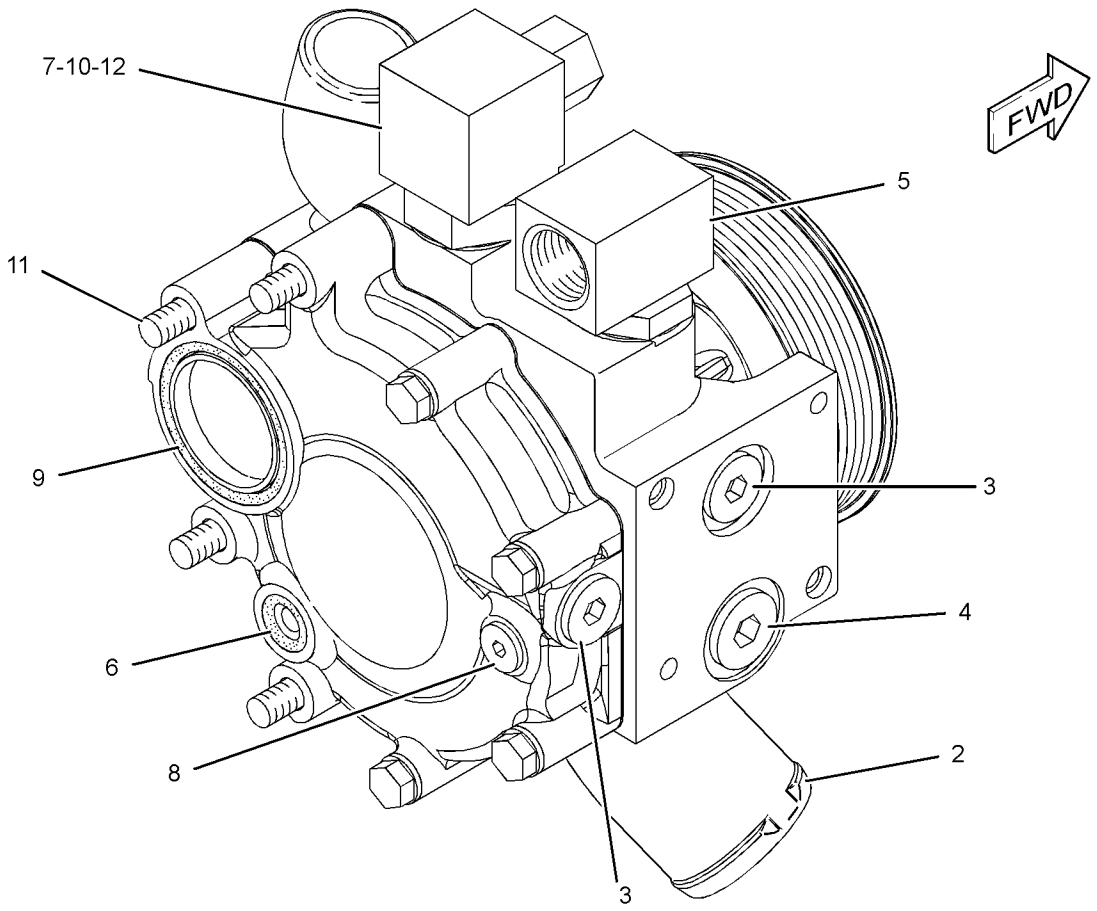

GRAPHIC #1 **<END>** g01151727

COOLING SYSTEM

231-2315 RADIATOR GP

S/N: B9D1-UP

PART OF 268-6570 COOLING AR

SMCS-1353 **i02780882**

NOTE	REF NO	GRAPHIC REF	PART NUMBER	QTY	PART NAME 1 2 3 4 5 6 (PRODUCT LEVEL)	SEE PAGE
	1	1	**243-2289**	2	MOUNT AS	
	2	1	**248-0677**	1	BRACKET AS	
	3	1	**249-7386**	1	BRACKET AS	
	4	1	**275-3393**	1	BRACKET	
	5	1	**256-5308**	1	CORE AS-RADIATOR	
	6	1	**198-4778**	2	WASHER-HARD (13.5X30X12-MM THK)	
	7	1	**3J-5390**	1	PLUG	
M	8	1	**7X-2546**	4	BOLT (M10X1.5X180-MM)	
	9	1	**7X-7729**	10	WASHER (11X25X3-MM THK)	
M	10	1	**8T-4133**	4	NUT (M10X1.5-THD)	
M	11	1	**8T-4186**	2	BOLT (M10X1.5X40-MM)	
M	12	1	**8T-4182**	2	BOLT (M10X1.5X45-MM)	
	13	1	**8T-4226**	2	WASHER-PLATED (10.5X45X3-MM THK)	
D	14	1	**5P-8309**		SEAL (0.9-M EACH)	
M	15	1	**8T-6912**	1	BOLT (M8X1.25X50-MM)	
M	16	1	**174-4181**	1	WASHER-HARD (8.5X40X3-MM THK)	
	17	1	**121-3307**	1	MOUNT AS-RESILIENT	

D-ORDER BY THE METER
M-METRIC PART

231-2315 **RADIATOR GP** *(contd.)* **i02780882**

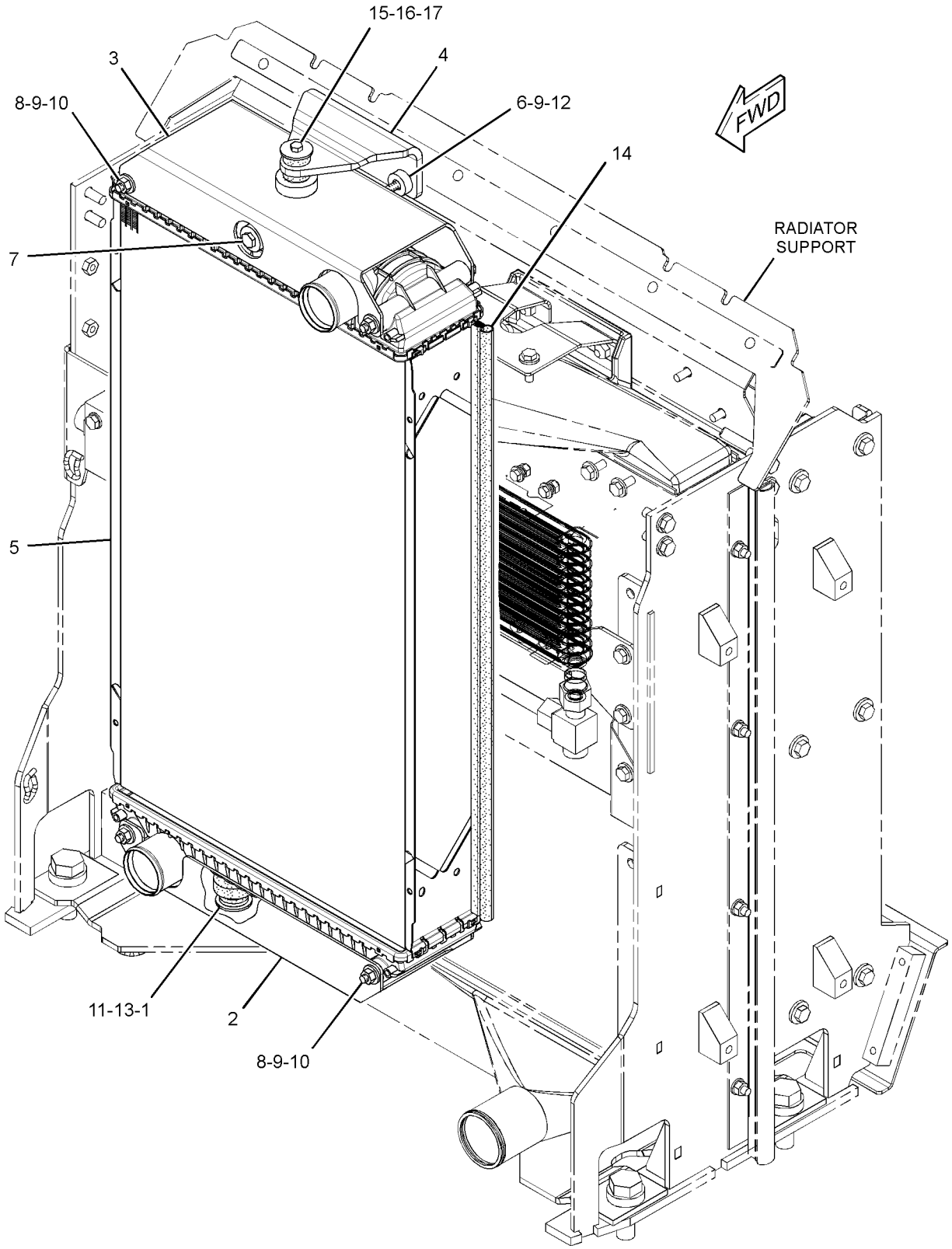

GRAPHIC #1 **<END>** g01346681

COOLING SYSTEM

254-6997 TANK GP-COOLANT

S/N: B9D1-UP

PART OF 234-7721 COMMON AR

SMCS-1377 **i02779909**

NOTE	REF NO	GRAPHIC REF	PART NUMBER	QTY	PART NAME 1 2 3 4 5 6 (PRODUCT LEVEL)	SEE PAGE
	1	1	**5P-1230**	1	CONNECTOR	
	2	1	*150-3026*	1	ELBOW AS	
		1	**6V-4292**	1	ELBOW	
		1	**3K-0360**	1	SEAL-O-RING	
	3	1	**277-4837**	1	TANK GP-COOLANT	
		1	**251-3227**	1	CAP AS-COOLANT TANK	
	4	1	**266-7589**	1	PLATE	
	5	1	**144-8344**	1	SPACER (11X19X20-MM THK)	
	6	1	**1S-0994**	1	CLIP	
	7	1	**3D-2824**	1	SEAL-O-RING	
	8	1	**5D-1026**	2	CLAMP-HOSE	
	9	1	**7D-7233**	1	CLIP	
M	10	1	**7X-2536**	4	BOLT (M8X1.25X14-MM)	
	11	1	**033-8248**	1	CLIP	
	12	1	**8T-1117**	2	CLAMP-HOSE	
	13	1	**8T-4121**	7	WASHER-HARD (11X21X2.5-MM THK)	
M	14	1	**8T-4133**	1	NUT (M10X1.5-THD)	
M	15	1	**8T-4136**	2	BOLT (M10X1.5X25-MM)	
M	16	1	**8T-4137**	3	BOLT (M10X1.5X20-MM)	
M	17	1	**8T-4186**	1	BOLT (M10X1.5X40-MM)	
	18	1	**8T-4224**	4	WASHER-HARD (8.8X16X2-MM THK)	
E	19	1	**9X-2133**		HOSE (40-CM)	
E	20	1	**5P-1251**		HOSE (73-CM)	
E	21	1	**8C-3681**		HOSE (186-CM)	
	22	1	**5K-3294**	1	CLIP	
	23	1	**147-0385**	1	CLIP	

E-ORDER BY THE CENTIMETER
M-METRIC PART

254-6997 **TANK GP-COOLANT** *(contd.)* **i02779909**

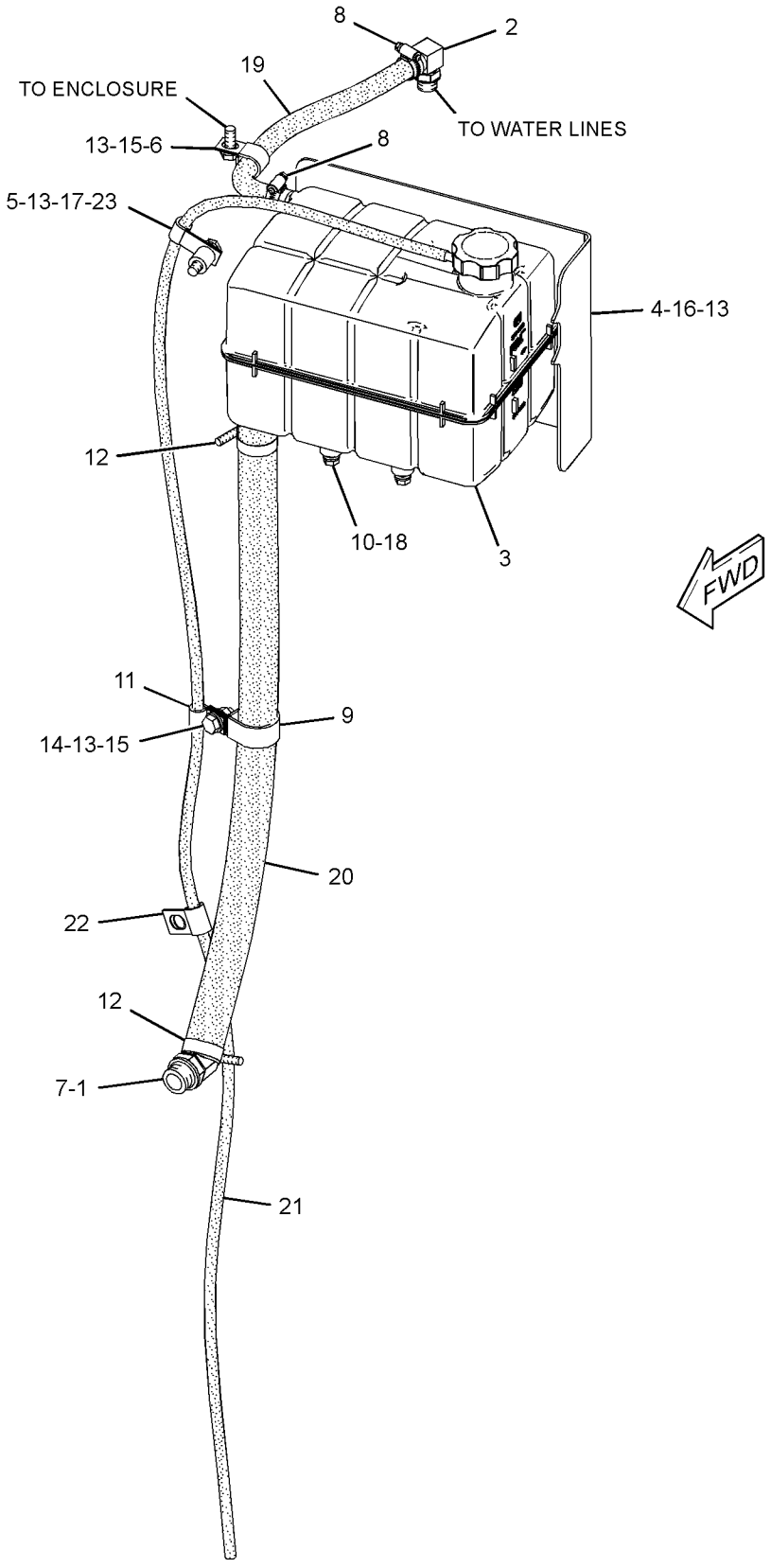

GRAPHIC #1 **<END>** g01360144

AIR INLET AND EXHAUST SYSTEM

250-8318 ADAPTER GP-TURBOCHARGER

S/N: KHX238-UP

PART OF 231-0878, 278-9732 ENGINE AR-COMPLETE

SMCS-1052 **i02789620**

NOTE	REF NO	GRAPHIC REF	PART NUMBER	QTY	PART NAME 1 2 3 4 5 6 (PRODUCT LEVEL)	SEE PAGE
	1	1	**257-5703**	1	ELBOW	
M	2	1	**3E-8017**	4	LOCKNUT (M10X1.5-THD)	
	3	1	**7C-7431**	1	GASKET	

M-METRIC PART

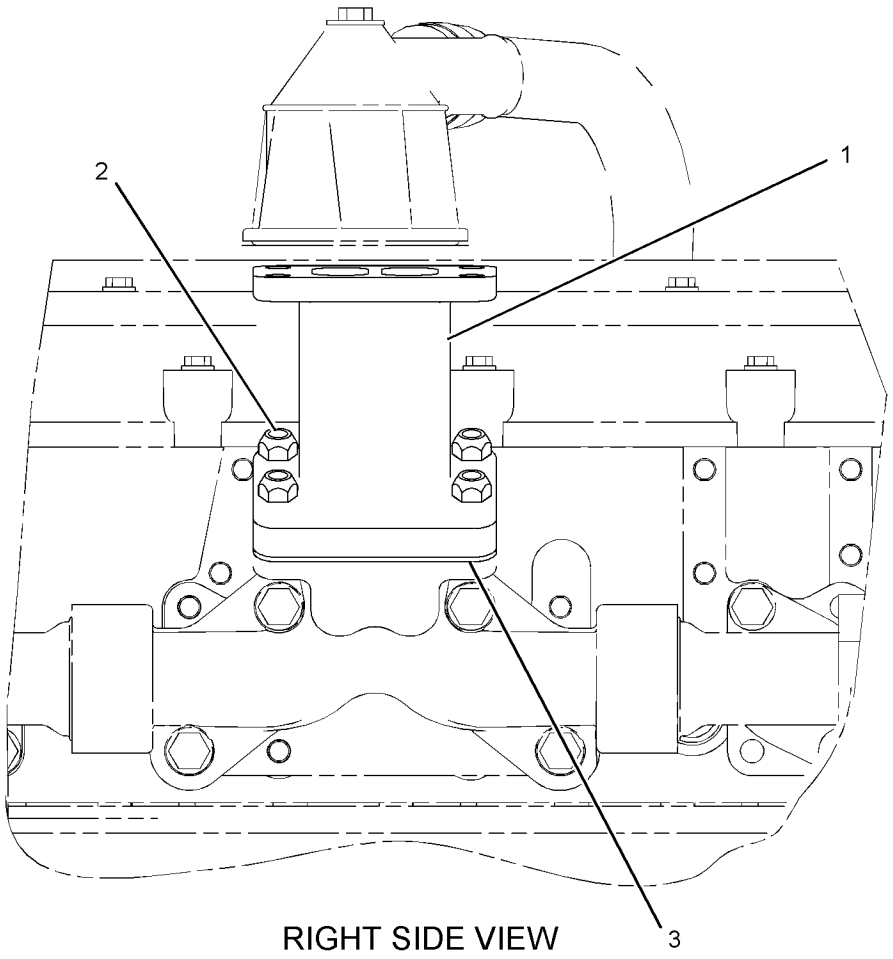

RIGHT SIDE VIEW

GRAPHIC #1 **<END>** g01148265

AIR INLET AND EXHAUST SYSTEM

231-2311 AFTERCOOLER GP-AIR

S/N: B9D1-UP

PART OF 268-6570 COOLING AR

SMCS-1063, 1064, 1079 **i02780878**

NOTE	REF NO	GRAPHIC REF	PART NUMBER	QTY	PART NAME 1 2 3 4 5 6 (PRODUCT LEVEL)	SEE PAGE
	1	1	**121-3307**	2	MOUNT AS-RESILIENT	
	2	1	**243-5063**	1	AFTERCOOLER AS	
	3	1	**248-0676**	1	BRACKET AS	
	4	1	**198-4777**	2	WASHER-HARD (11X25X10-MM THK)	
	5	1	**7X-7729**	4	WASHER (11X25X3-MM THK)	
M	6	1	**8T-4185**	2	BOLT (M10X1.5X50-MM)	
M	7	1	**8T-4195**	2	BOLT (M10X1.5X30-MM)	
M	8	1	**8T-4196**	2	BOLT (M10X1.5X35-MM)	
	9	1	**8T-4226**	2	WASHER-PLATED (10.5X45X3-MM THK)	

M-METRIC PART

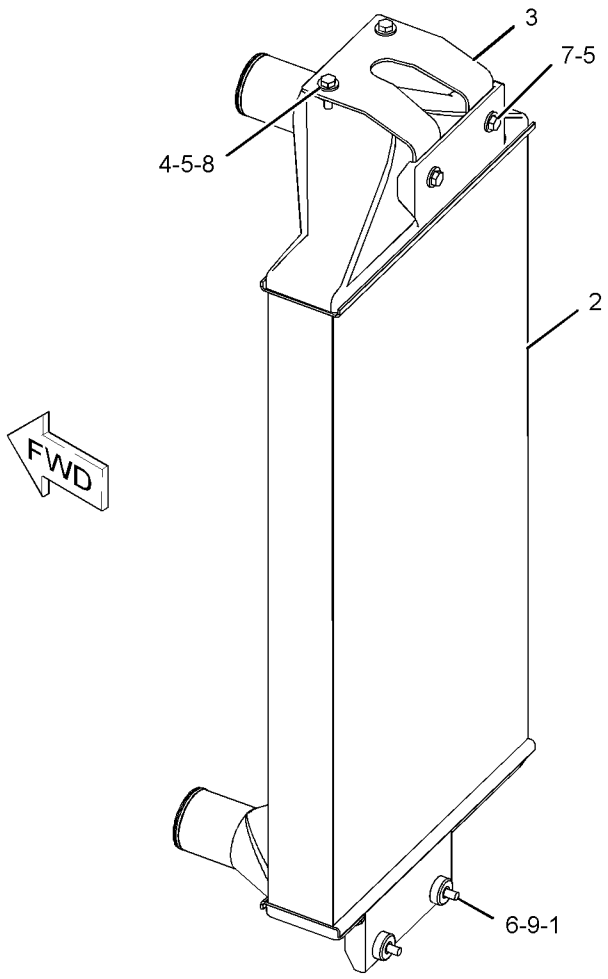

GRAPHIC #1 **<END>** g01109137

AIR INLET AND EXHAUST SYSTEM

231-2114 AIR CLEANER GP

S/N: B9D1-UP

PART OF 234-7721 COMMON AR

SMCS-1051, 1054 **i02771747**

NOTE	REF NO	GRAPHIC REF	PART NUMBER	QTY	PART NAME 1 2 3 4 5 6 (PRODUCT LEVEL)	SEE PAGE
	1	1	**246-4611**	1	CAP AS-AIR CLEANER	
Y	2	1	**247-9729**	1	AIR CLEANER GP	87
	3	1	**250-2984**	1	PIPE-EXTENSION	
M	4	1	**099-3649**	4	BOLT (M8X1.25X40-MM)	
	5	1	**219-0314**	1	CLAMP	
	6	1	**8T-4224**	4	WASHER-HARD (8.8X16X2-MM THK)	

M-METRIC PART
Y-SEPARATE ILLUSTRATION

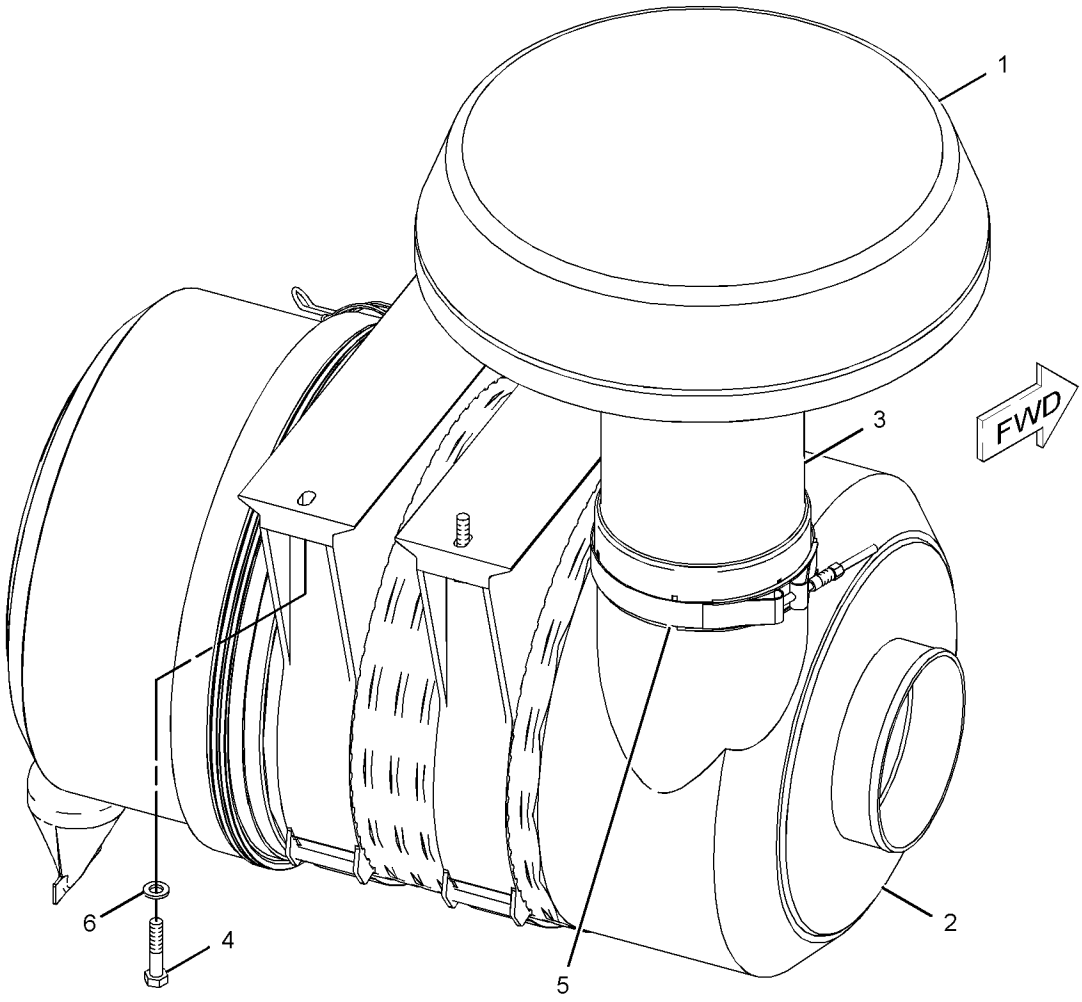

GRAPHIC #1 **<END>** g01131034

247-9729 AIR CLEANER GP

S/N: B9D1-UP

PART OF 231-2114 AIR CLEANER GP

SMCS-1051, 1054 **i02771749**

NOTE	REF NO	GRAPHIC REF	PART NUMBER	QTY	PART NAME 1 2 3 4 5 6 (PRODUCT LEVEL)	SEE PAGE
	1	1	**245-6375**	1	FILTER ELEMENT-AIR (PRIMARY)	
	2	1	**245-6376**	1	FILTER ELEMENT AS-AIR (SECONDARY)	
	3	1	**247-9730**	1	VALVE AS-CHECK (AIR CLEANER)	
	4	1	**246-4615**	2	BRACKET AS	
	5	1	**262-0568**	1	COVER AS	

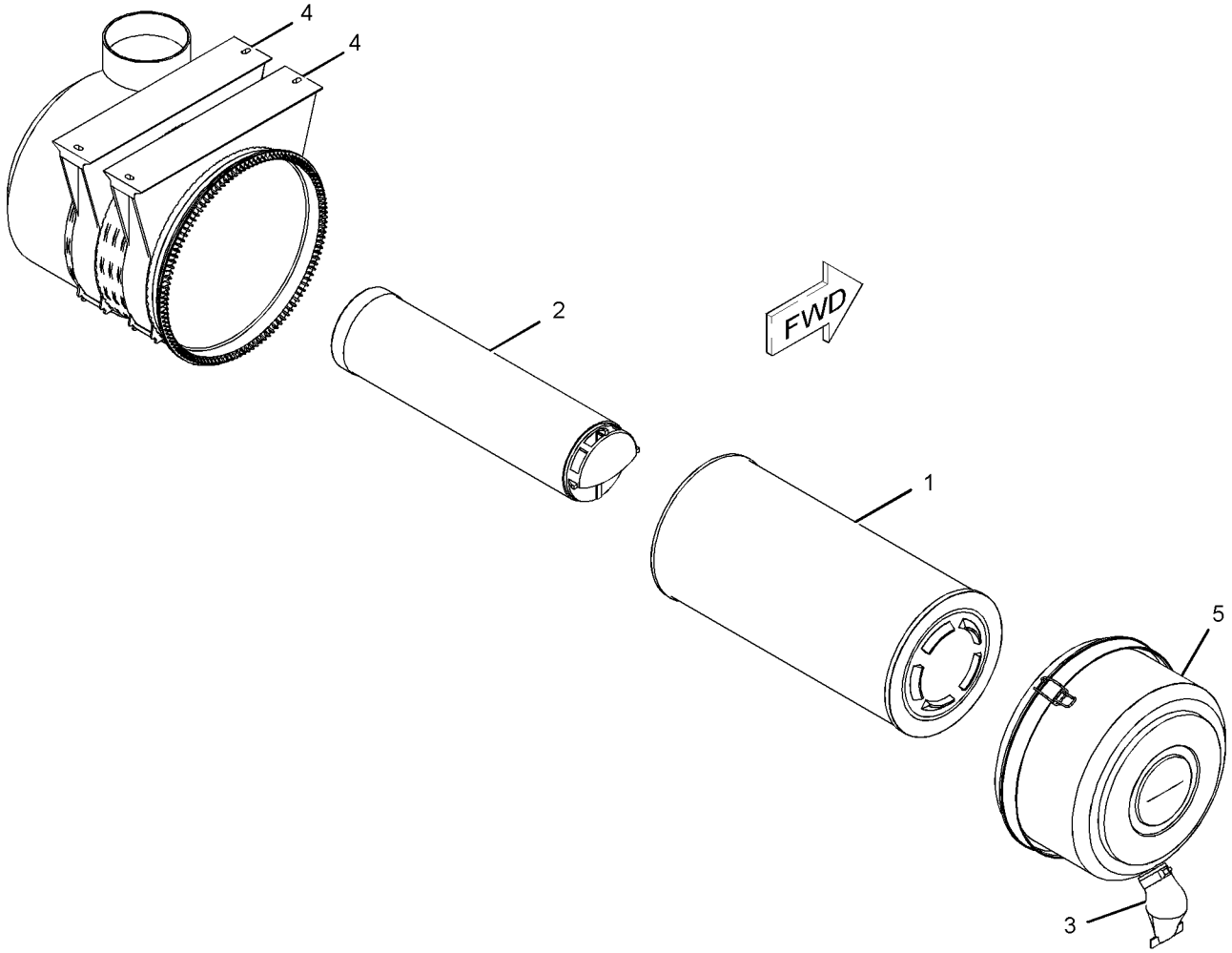

GRAPHIC #1 **<END>** g01132754

AIR INLET AND EXHAUST SYSTEM

189-8780 COVER GP-AIR INLET—STARTING AID HEATER

S/N: KHX238-UP

PART OF 231-0878, 278-9732 ENGINE AR-COMPLETE

SMCS-1087 **i02674840**

NOTE	REF NO	GRAPHIC REF	PART NUMBER	QTY	PART NAME 1 2 3 4 5 6 (PRODUCT LEVEL)	SEE PAGE
CY	1	1	**294-7675**	1	COVER GP-AIR INLET (STARTING AID HEATER)	89
B	2	1	**1U-8846**		SEALANT-GASKET	

B-USE AS REQUIRED
C-CHANGE FROM PREVIOUS TYPE
Y-SEPARATE ILLUSTRATION

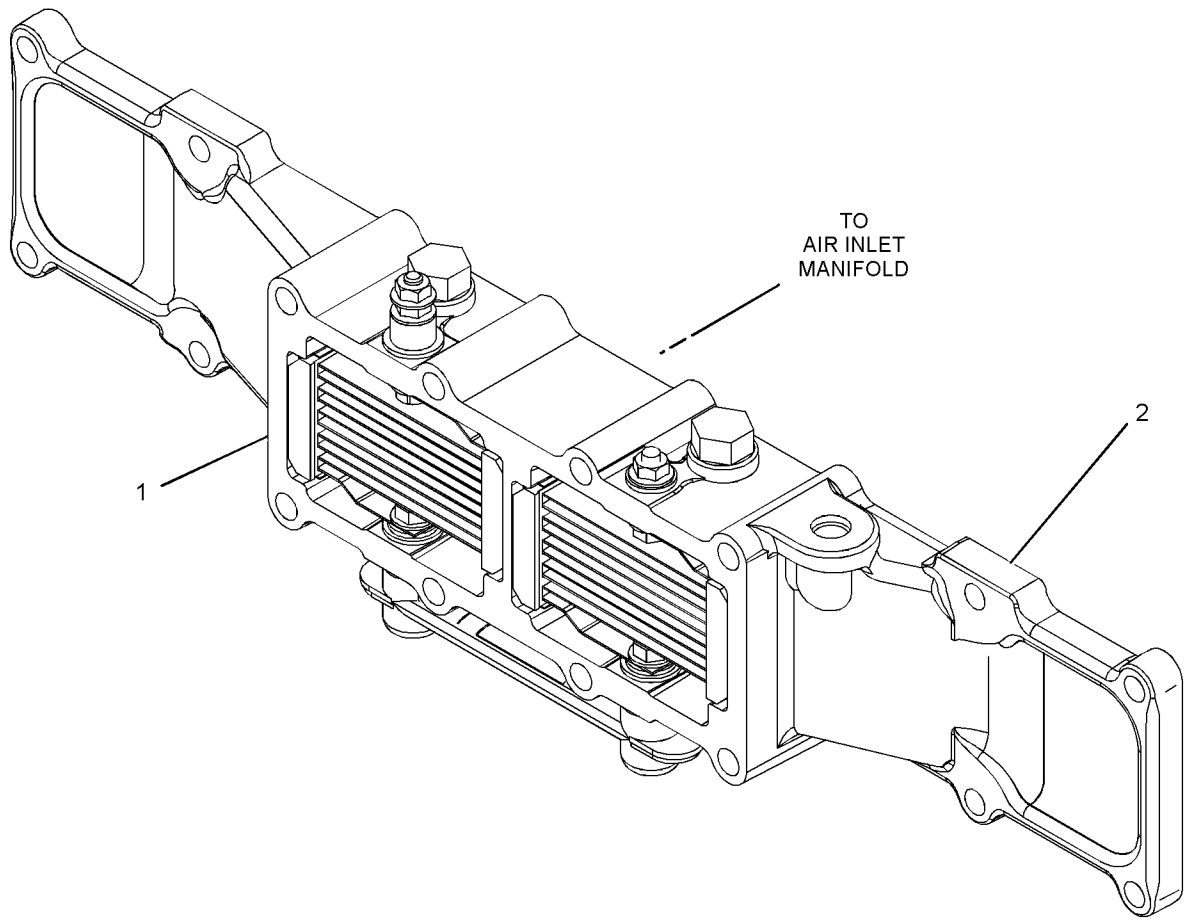

GRAPHIC #1 **<END>** g01350757

294-7675 COVER GP-AIR INLET

S/N: KHX238-UP

PART OF 189-8780 COVER GP-AIR INLET

SMCS-1087 **i02674844**

NOTE	REF NO	GRAPHIC REF	PART NUMBER	QTY	PART NAME 1 2 3 4 5 6 (PRODUCT LEVEL)	SEE PAGE
	1	1	**9S-4191**	2	PLUG-O-RING	
	2	1	**3J-1907**	2	SEAL-O-RING	
	3	1	**245-6795**	1	INSULATOR	

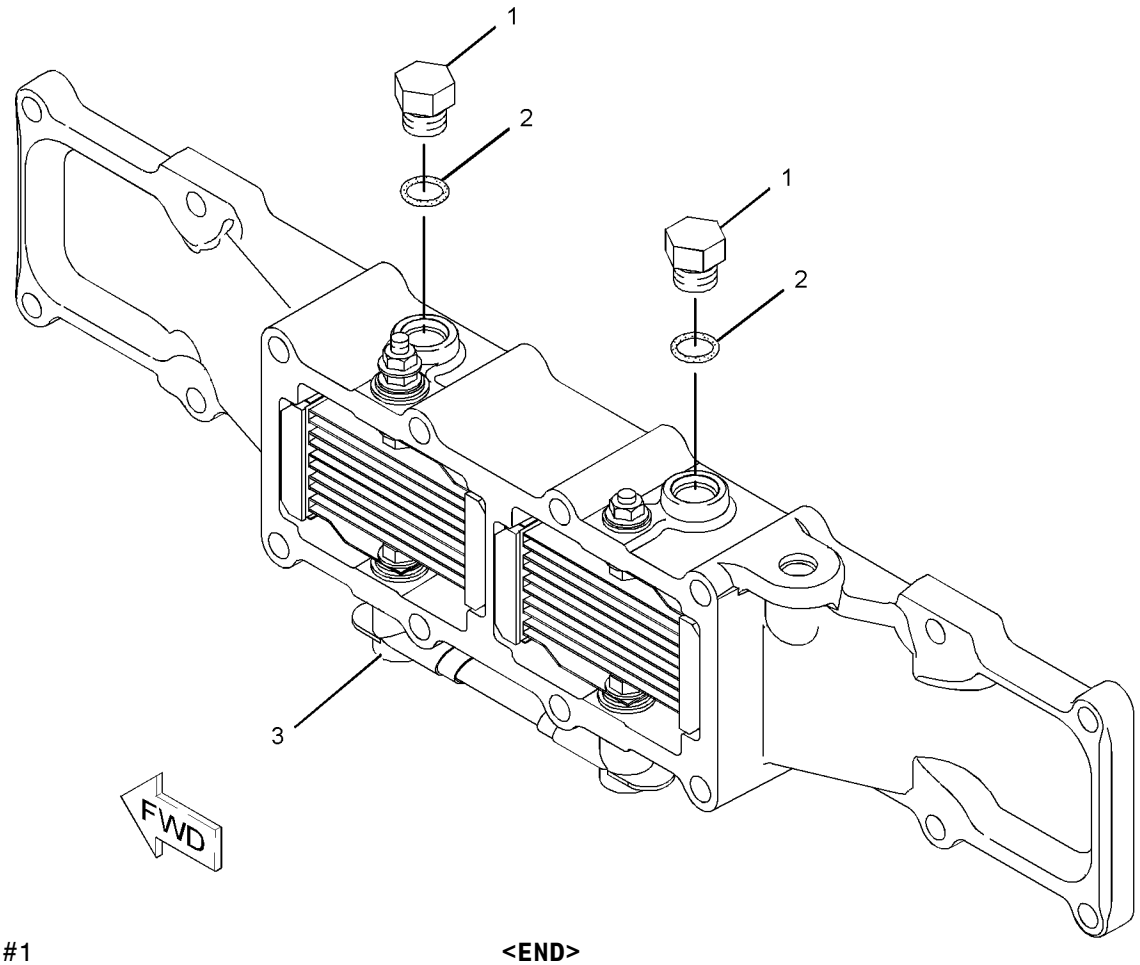

GRAPHIC #1 **<END>** g01071181

AIR INLET AND EXHAUST SYSTEM

275-1307 ELBOW GP-AIR INLET

S/N: KHX238-UP

PART OF 231-0878, 278-9732 ENGINE AR-COMPLETE

SMCS-1087 **i02791430**

NOTE	REF NO	GRAPHIC REF	PART NUMBER	QTY	PART NAME 1 2 3 4 5 6 (PRODUCT LEVEL)	SEE PAGE
M	1	1	**192-4594**	4	STUD	
B	2	1	**1U-8846**		SEALANT-GASKET	
	3	1	**257-8299**	1	ELBOW-AIR INLET	
	4	1	**2M-9780**	1	SEAL-O-RING	
	5	1	**3K-0360**	1	SEAL-O-RING	
M	6	1	**6V-5221**	4	BOLT (M8X1.25X80-MM)	
	7	1	**9M-1974**	8	WASHER-HARD (8.8X16X2-MM THK)	
	8	1	**9S-8005**	1	PLUG-O-RING	
	9	1	**9S-8006**	1	PLUG-O-RING	

B-USE AS REQUIRED
M-METRIC PART

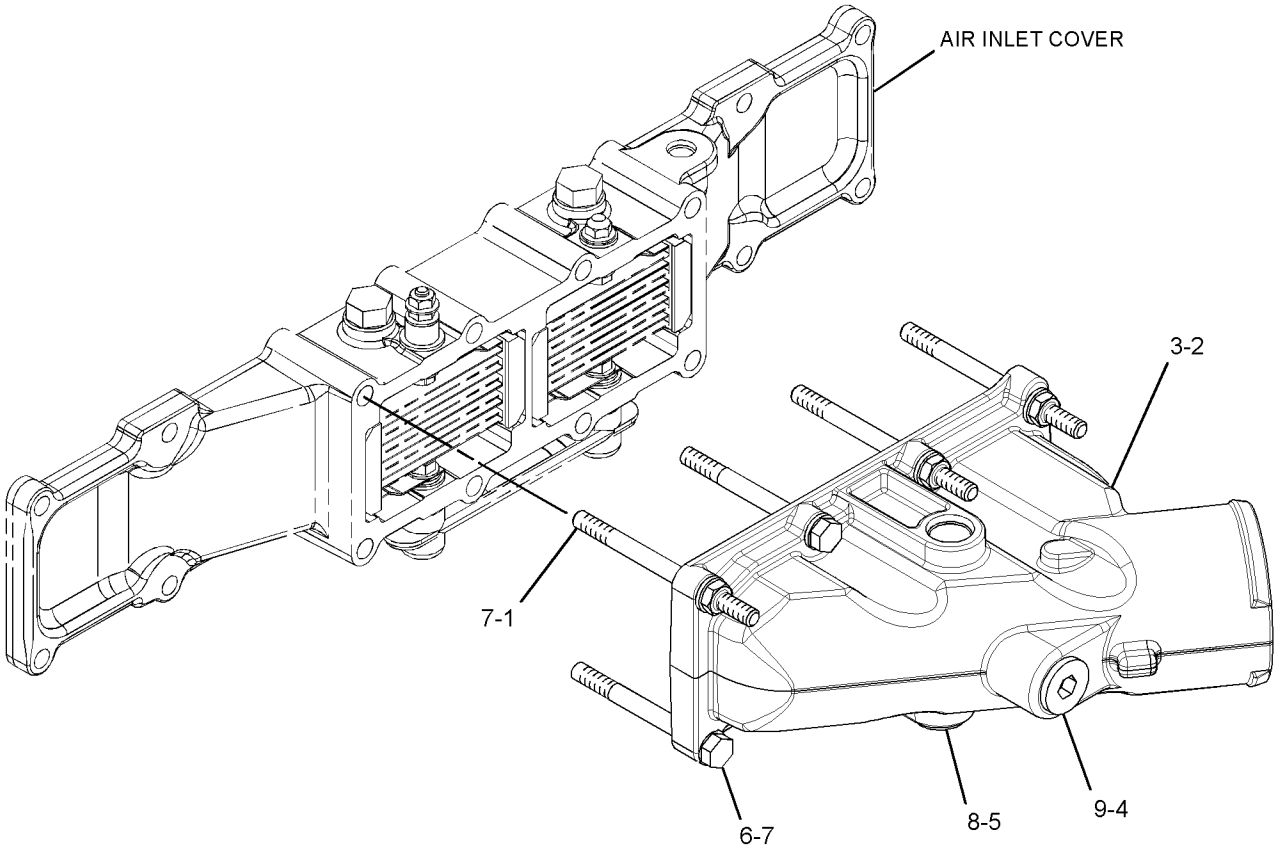

GRAPHIC #1 **<END>** g01313214

AIR INLET AND EXHAUST SYSTEM

246-6704 LINES GP-AIR

S/N: B9D1-UP

PART OF 234-7721 COMMON AR

SMCS-1071 **i02773828**

NOTE	REF NO	GRAPHIC REF	PART NUMBER	QTY	PART NAME 1 2 3 4 5 6 (PRODUCT LEVEL)	SEE PAGE
	1	1	**9R-5008**	2	SPACER (11X20X6-MM THK)	
	2	1	**131-6143**	4	CLAMP-HOSE	
	3	1	**177-0581**	1	HOSE	
	4	1	**209-4578**	8	CLAMP	
	5	1	**247-8602**	1	HOSE-ELBOW	
	6	1	**248-6364**	1	HOSE-ELBOW	
	7	1	**253-7536**	1	SHIELD-HEAT	
	8	1	**254-6802**	1	HOSE-ELBOW	
	9	1	**262-8057**	1	TUBE	
	10	1	**262-8058**	1	TUBE	
	11	1	**267-9386**	1	BRACKET AS	
M		1	**8T-3490**	1	NUT-WELD (M10X1.5-THD)	
	12	1	**2A-3034**	2	CLAMP-AIR CLEANER	
	13	1	**8T-4121**	2	WASHER-HARD (11X21X2.5-MM THK)	
	14	1	**8T-4123**	2	WASHER (22X35X3.5-MM THK)	
M	15	1	**8T-4182**	2	BOLT (M10X1.5X45-MM)	
M	16	1	**8T-4780**	2	BOLT (M20X2.5X30-MM)	

M-METRIC PART

246-6704 **LINES GP-AIR** *(contd.)* **i02773828**

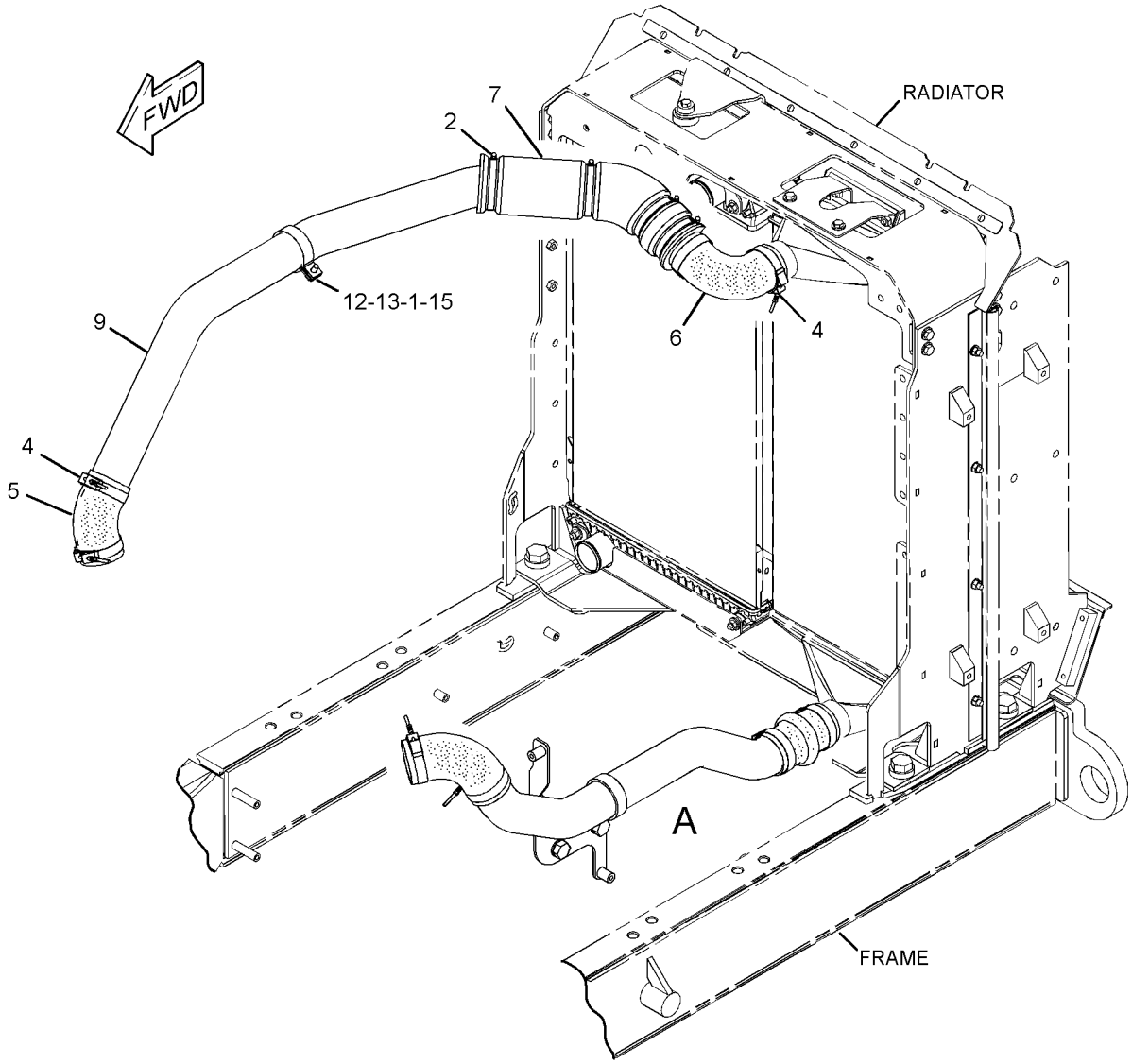

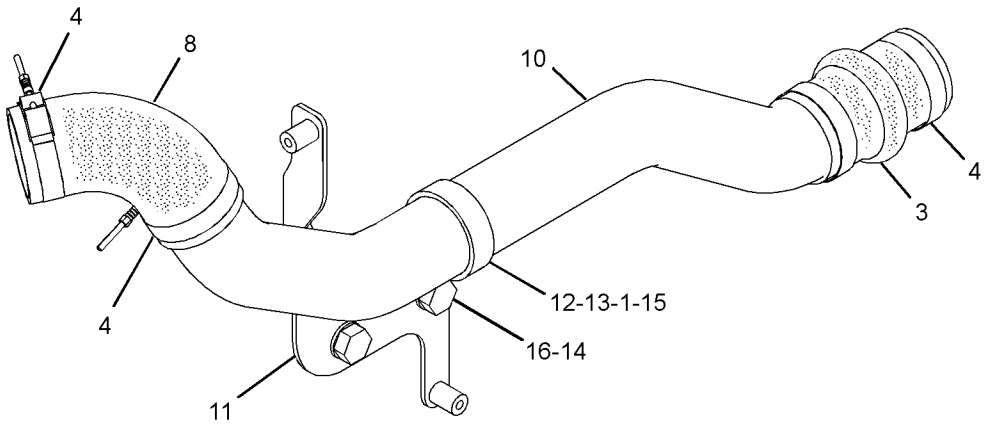

VIEW OF AREA A

GRAPHIC #1 **<END>** g01157852

AIR INLET AND EXHAUST SYSTEM

255-1283 LINES GP-AIR

S/N: B9D1-UP

PART OF 261-0610 AIR COMPRESSOR AR

SMCS-1071 **i02786532**

NOTE	REF NO	GRAPHIC REF	PART NUMBER	QTY	PART NAME 1 2 3 4 5 6 (PRODUCT LEVEL)	SEE PAGE
	1	1	**216-2211**	2	CLAMP	
	2	1	**220-4125**	1	CLAMP	
	3	1	**252-1462**	1	TUBE AS	
	4	1	**263-3350**	1	ELBOW	
	5	1	**263-3351**	1	ELBOW	
	6	1	**230-3671**	1	CLAMP	

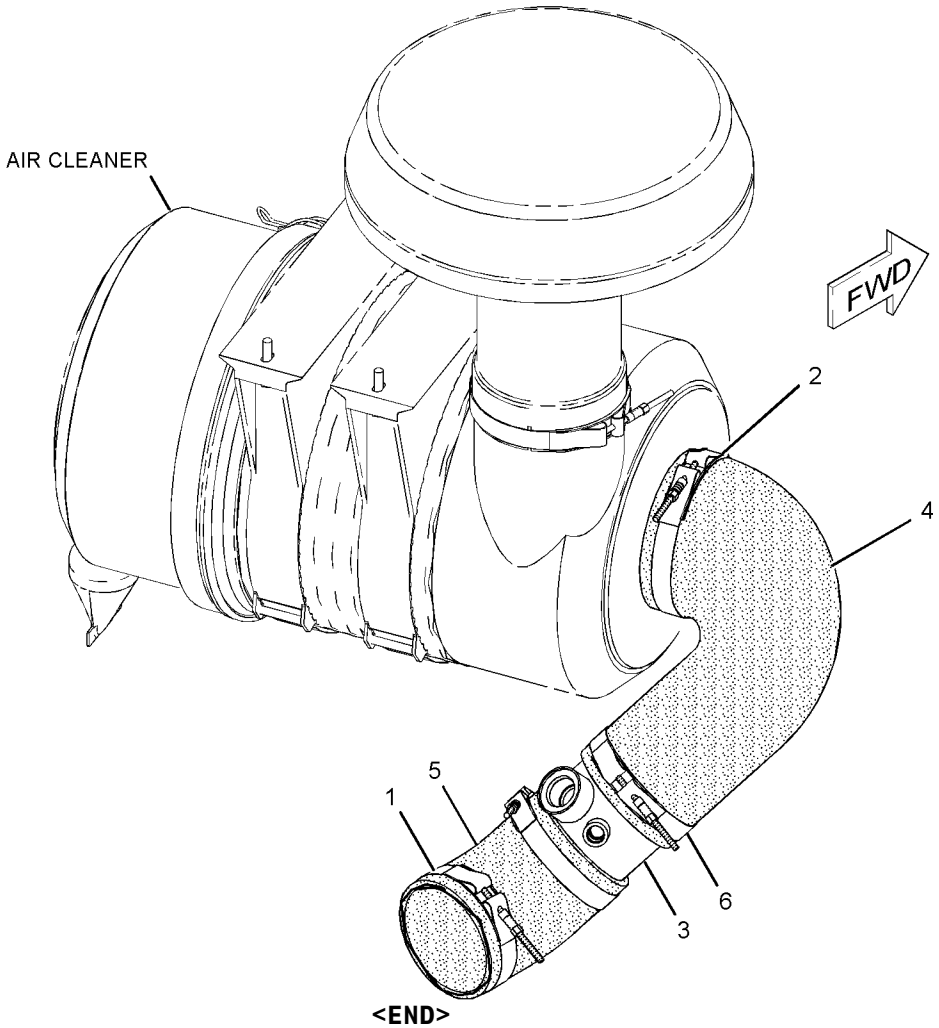

GRAPHIC #1 **<END>** g01360194

AIR INLET AND EXHAUST SYSTEM

255-1284 LINES GP-AIR

S/N: B9D1-UP

SMCS-1071 **i02785215**

NOTE	REF NO	GRAPHIC REF	PART NUMBER	QTY	PART NAME 1 2 3 4 5 6 (PRODUCT LEVEL)	SEE PAGE
	1	1	**216-2211**	2	CLAMP	
	2	1	**220-4125**	1	CLAMP	
	3	1	**252-1462**	1	TUBE AS	
	4	1	**263-3350**	1	ELBOW	
	5	1	**263-3351**	1	ELBOW	
	6	1	**230-3671**	1	CLAMP	
	7	1	*241-6185*	1	PLUG AS	
		1	**5P-9436**	2	PLUG-THREADED O-RING	
		1	**3D-2824**	2	SEAL-O-RING	

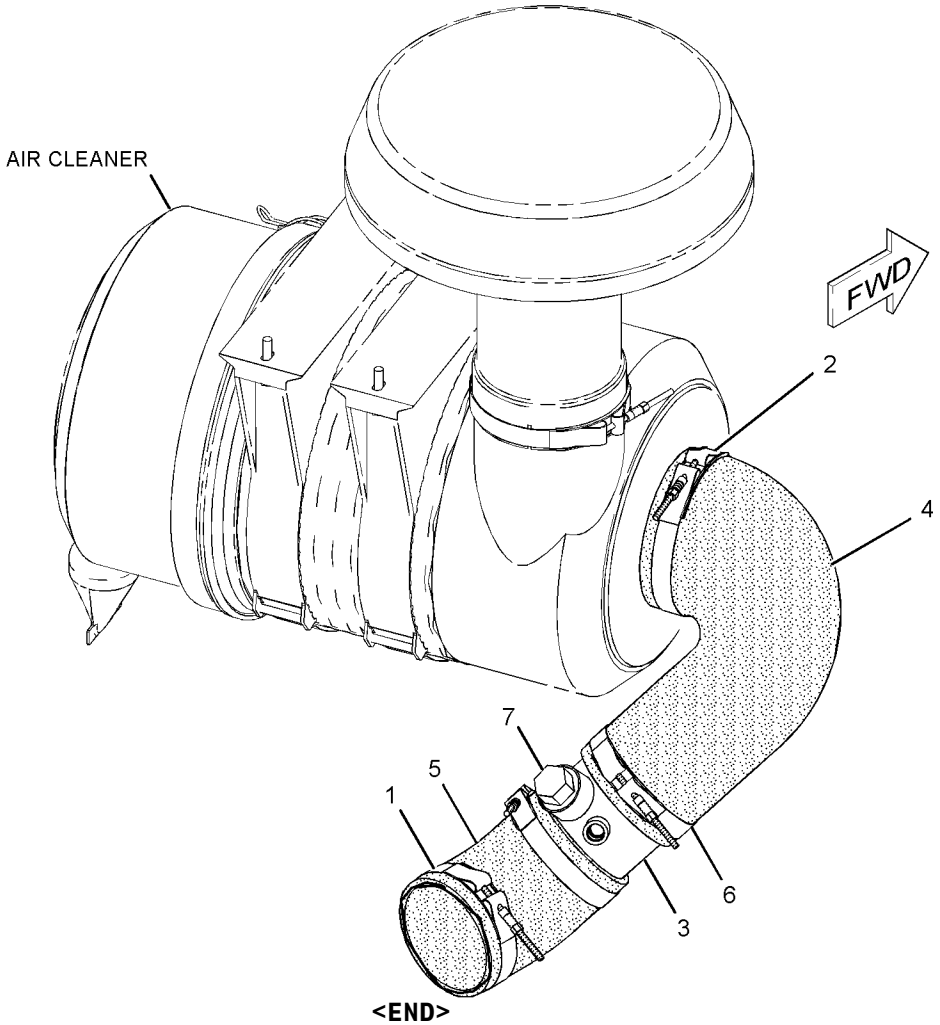

GRAPHIC #1

<END>

g01360253

AIR INLET AND EXHAUST SYSTEM

257-8467 MANIFOLD GP-EXHAUST

S/N: KHX238-UP

PART OF 231-0878, 278-9732 ENGINE AR-COMPLETE

SMCS-1059 **i02789769**

NOTE	REF NO	GRAPHIC REF	PART NUMBER	QTY	PART NAME 1 2 3 4 5 6 (PRODUCT LEVEL)	SEE PAGE
M	2	1	**172-6298**	10	BOLT-FLANGE HEAD (M10)	
	3	1	**183-6854**	1	MANIFOLD-EXHAUST (CENTER)	
	4	1	**183-6856**	2	MANIFOLD-EXHAUST (END)	
	5	1	**189-8772**	10	SPACER (11X16X35-MM THK)	
	6	1	**203-3768**	2	SPACER (11X16X60-MM THK)	
	7	1	**210-7722**	2	BOLT-FLANGE HEAD (M10)	
M	8	1	**180-3998**	4	STUD (M10X1.5X55-MM)	
	9	1	**272-1956**	6	GASKET (EXHAUST MANIFOLD)	

M-METRIC PART

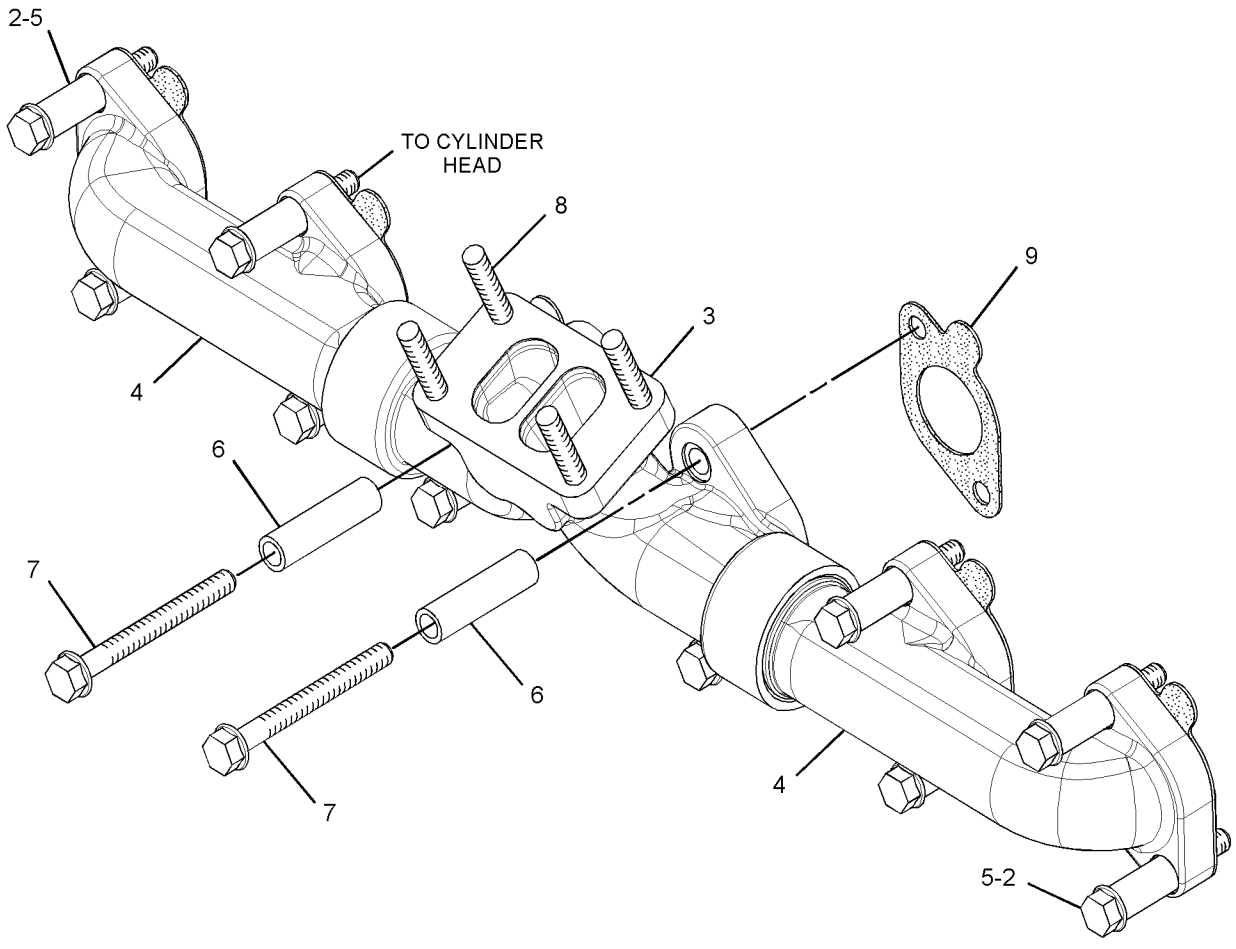

GRAPHIC #1 **<END>** g01332593

AIR INLET AND EXHAUST SYSTEM

246-6709 MUFFLER & MOUNTING GP

S/N: B9D1-UP

PART OF 234-7721 COMMON AR

SMCS-1062 **i02774524**

NOTE	REF NO	GRAPHIC REF	PART NUMBER	QTY	PART NAME 1 2 3 4 5 6 (PRODUCT LEVEL)	SEE PAGE
	1	1	**1W-2431**	1	CLAMP-BAND	
	2	1	**5P-2230**	2	CLAMP-HOSE	
	3	1	**141-1480**	1	CLAMP AS	
	4	1	**261-7575**	1	BRACKET AS	
	5	1	**264-3152**	1	BRACKET AS	
	6	1	**292-0620**	1	HOSE	
	7	1	**299-7985**	1	MUFFLER AS	
	8	1	**299-8231**	1	EJECTOR AS	
	9	1	**198-4777**	7	WASHER-HARD (11X25X10-MM THK)	
	10	1	**198-4778**	2	WASHER-HARD (13.5X30X12-MM THK)	
	11	1	**5P-2369**	1	CLIP	
M	12	1	**6V-8212**	1	BOLT (M10X1.5X16-MM)	
	13	1	**8T-4121**	1	WASHER-HARD (11X21X2.5-MM THK)	
M	14	1	**8T-4183**	2	BOLT (M12X1.75X40-MM)	
M	15	1	**8T-4195**	3	BOLT (M10X1.5X30-MM)	
M	16	1	**8T-4196**	4	BOLT (M10X1.5X35-MM)	
	17	1	**308-6409**	1	HEAT SHIELD	

M-METRIC PART

246-6709 **MUFFLER & MOUNTING GP** *(contd.)* **i02774524**

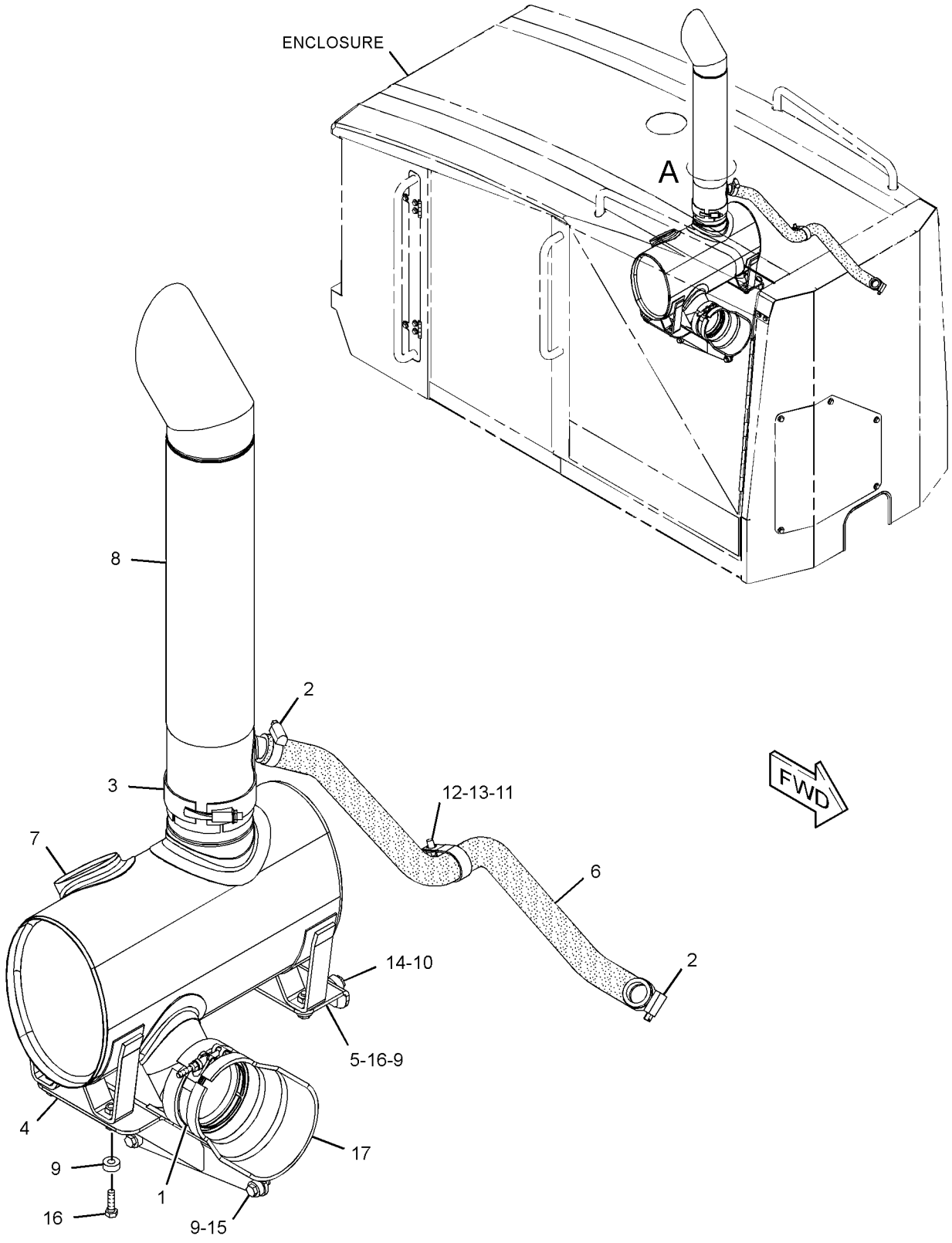

VIEW OF AREA A

GRAPHIC #1 **<END>** g01365580

AIR INLET AND EXHAUST SYSTEM

233-3387 PRECLEANER GP

S/N: B9D1-UP

FOR USE WITH SNOW AR

SMCS-1055 **i02776067**

NOTE	REF NO	GRAPHIC REF	PART NUMBER	QTY	PART NAME 1 2 3 4 5 6 (PRODUCT LEVEL)	SEE PAGE
	1	1	**070-0107**	1	PRECLEANER GP (TURBINE)	
		1	**174-5415**	1	CLAMP	
	2	1	**251-5743**	1	DAMPER	

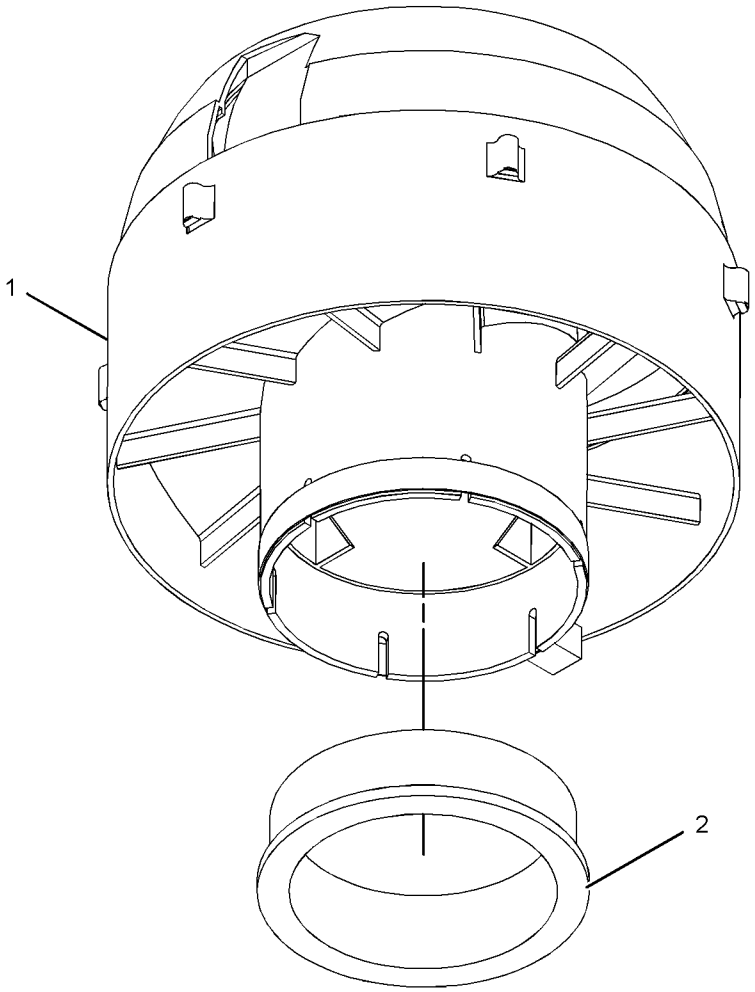

GRAPHIC #1 **<END>** g01132481

AIR INLET AND EXHAUST SYSTEM

250-0841 TURBOCHARGER GP

S/N: KHX238-UP

PART OF 254-3813 TURBOCHARGER GP

SMCS-1052, 1053 **i02795533**

NOTE	REF NO	GRAPHIC REF	PART NUMBER	QTY	PART NAME 1 2 3 4 5 6 (PRODUCT LEVEL)	SEE PAGE
	1	1	**137-1602**	1	CLAMP AS (TURBINE)	
		1	**7M-9918**	1	LOCKNUT (1/4-28-THD)	
	2	1	**158-6072**	1	CLAMP AS (COMPRESSOR)	
	3	1	**161-6963**	2	CLAMP	
	4	1	**261-9287**	1	CARTRIDGE GP-TURBOCHARGER	
	5	1	**5P-4536**	1	ELBOW	
	6	1	**242-3360**		HOSE (44-CM)	

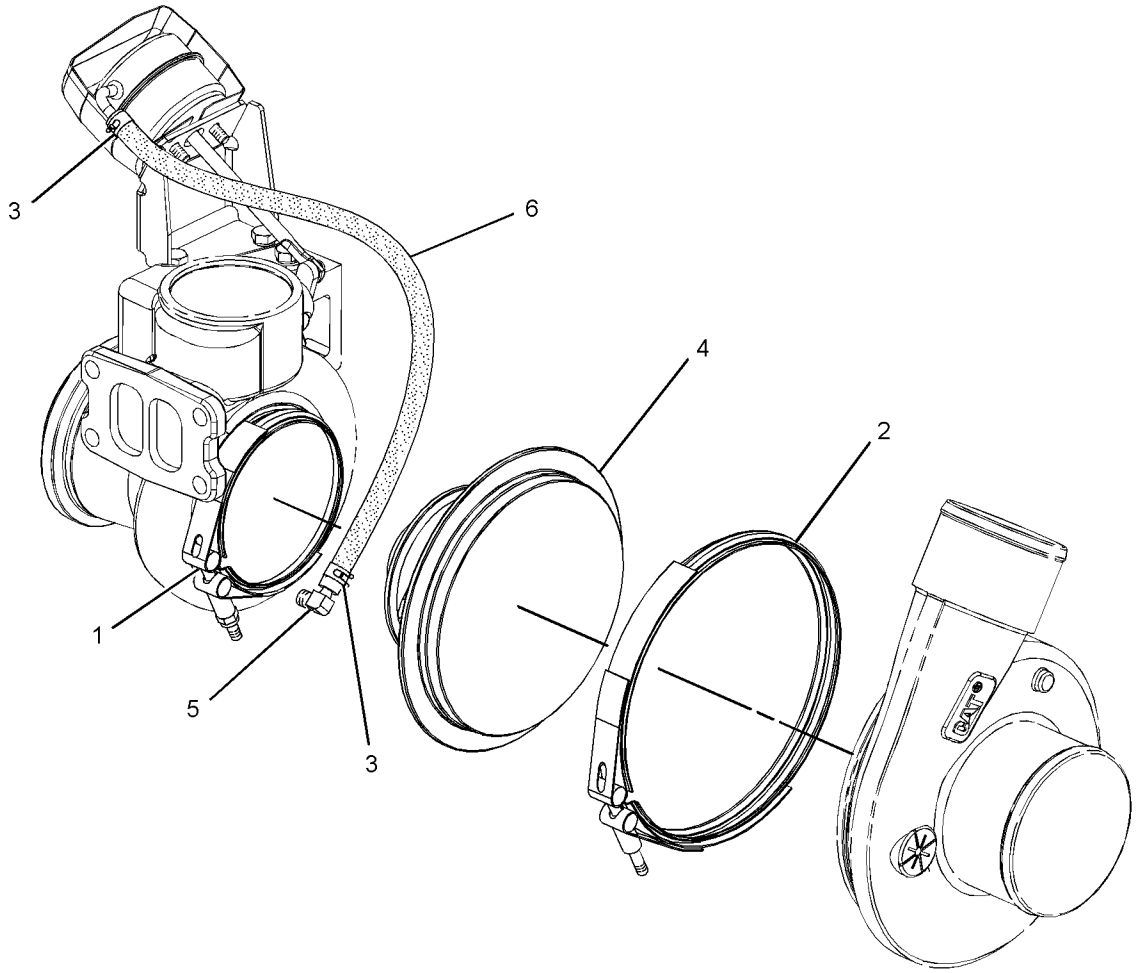

GRAPHIC #1 **<END>** g01370583

AIR INLET AND EXHAUST SYSTEM

254-3813 TURBOCHARGER GP

S/N: KHX238-UP

PART OF 231-0879 ENGINE AR-CORE

SMCS-1052, 1053 **i02791857**

NOTE	REF NO	GRAPHIC REF	PART NUMBER	QTY	PART NAME 1 2 3 4 5 6 (PRODUCT LEVEL)	SEE PAGE
	1	1	**7C-7431**	1	GASKET	
	2	1	**8T-4121**	8	WASHER-HARD (11X21X2.5-MM THK)	
	3	1	**225-0947**	4	BOLT (M10X1.5X40-MM)	
Y	4	1	*250-0841*	1	TURBOCHARGER GP	99
M	5	1	**3E-8017**	4	LOCKNUT (M10X1.5-THD)	

M-METRIC PART
Y-SEPARATE ILLUSTRATION

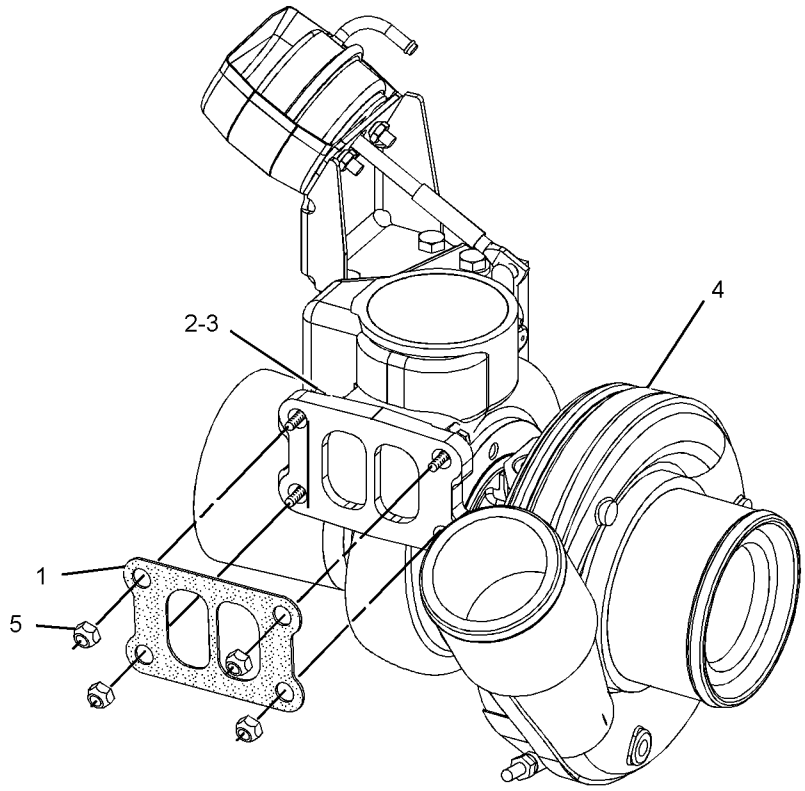

GRAPHIC #1 **<END>** g01149784

281-6780 ADAPTER GP-FAST FILL FUEL

S/N: B9D1-UP

PART OF 270-6988 TANK GP-FUEL

SMCS-1710 **i02787515**

NOTE	REF NO	GRAPHIC REF	PART NUMBER	QTY	PART NAME 1 2 3 4 5 6 (PRODUCT LEVEL)	SEE PAGE
	1	1	**9D-0630**	1	CAP-DUST (FAST FILL FUEL)	
	2	1	**212-4669**	1	VENT AS	
Y	3	1	**250-9200**	1	RECEIVER GP-FAST FILL FUEL	121
	4	1	**251-1217**	2	HOSE AS	
	5	1	**276-3276**	1	GASKET	
	6	1	**277-4844**	1	GASKET	
	7	1	**277-4845**	1	GASKET	
	8	1	**285-3806**	1	FLOAT AS	
		1	**212-4621**	1	MOUNT AS	
		1	**212-4670**	1	FLOAT AS	
	9	1	**287-3754**	1	TUBE	
M	10	1	**162-2165**	6	BOLT-SOCKET HEAD (M4X0.7X16-MM)	
	11	1	**4B-4863**	6	WASHER (4.7X11X1.2-MM THK)	
	12	1	**5P-2618**	2	CONNECTOR	
	13	1	**5P-4295**	1	CLIP	
	14	1	**7K-4129**	1	UNION-FLARED	
M	15	1	**8T-0309**	4	SCREW-MACHINE (M4X0.7X10-MM)	
M	16	1	**8T-4189**	6	BOLT (M8X1.25X20-MM)	
M	17	1	**8T-4908**	12	BOLT (M8X1.25X25-MM)	
	18	1	**9M-1974**	18	WASHER-HARD (8.8X16X2-MM THK)	

M-METRIC PART
Y-SEPARATE ILLUSTRATION

281-6780 **ADAPTER GP-FAST FILL FUEL** *(contd.)* **i02787515**

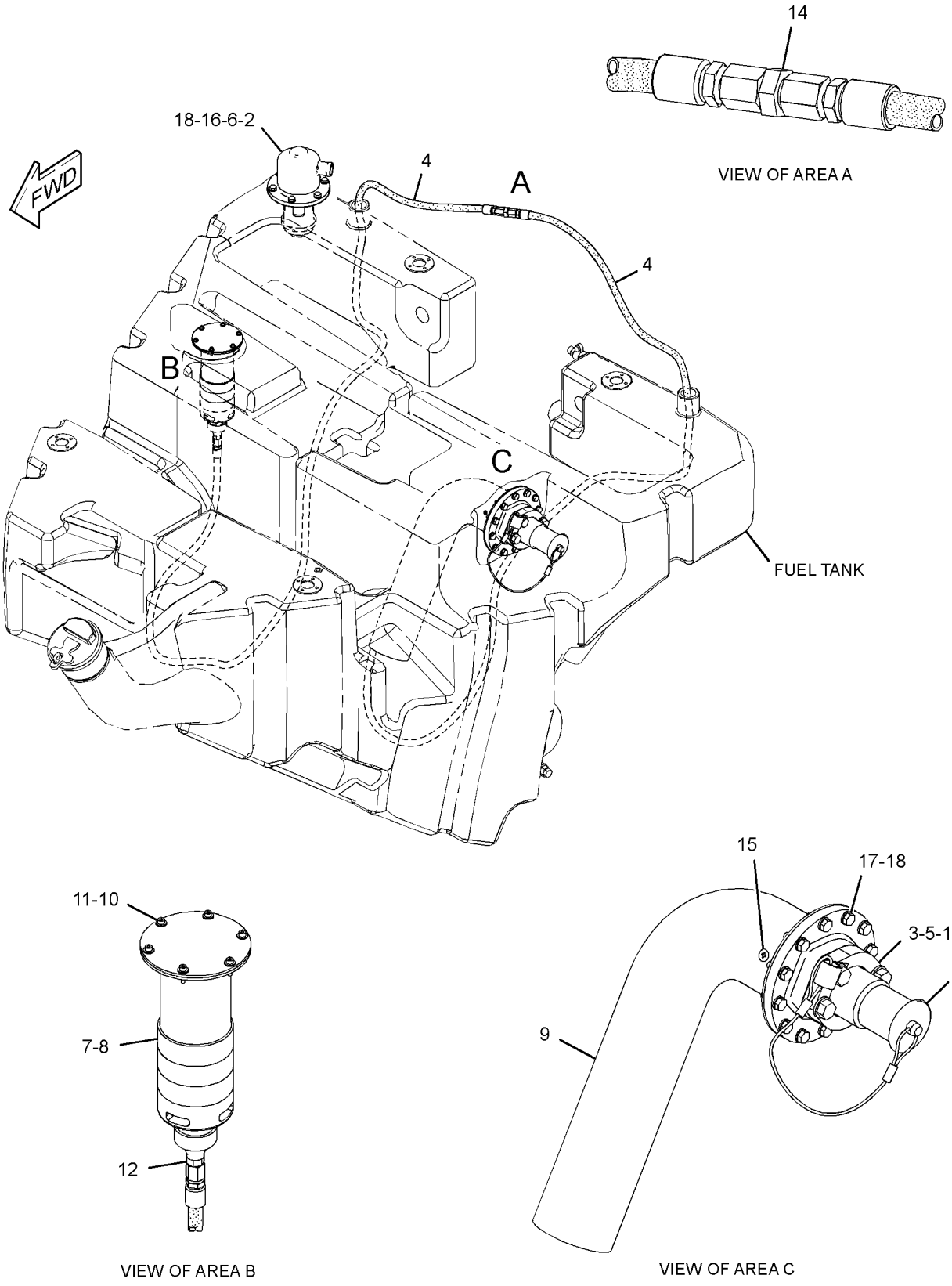

GRAPHIC #1 **<END>** g01340416

241-9585 COVER GP-FUEL TANK–W/O FAST FILL FUEL ADAPTER

S/N: B9D1-UP

PART OF 270-6987 TANK GP-FUEL

SMCS-1273 **i02787535**

NOTE	REF NO	GRAPHIC REF	PART NUMBER	QTY	PART NAME 1 2 3 4 5 6 (PRODUCT LEVEL)	SEE PAGE
	1	1	**199-9985**	1	PLATE	
	2	1	**221-0318**	1	PLATE	
	3	1	**250-9304**	1	PLATE	
	4	1	**276-3276**	1	GASKET	
	5	1	**277-4844**	1	GASKET	
	6	1	**277-4845**	1	GASKET	
M	7	1	**162-2165**	6	BOLT-SOCKET HEAD (M4X0.7X16-MM)	
	8	1	**4B-4863**	6	WASHER (4.7X11X1.2-MM THK)	
M	9	1	**8T-4189**	18	BOLT (M8X1.25X20-MM)	
	10	1	**8T-4224**	18	WASHER-HARD (8.8X16X2-MM THK)	

M-METRIC PART

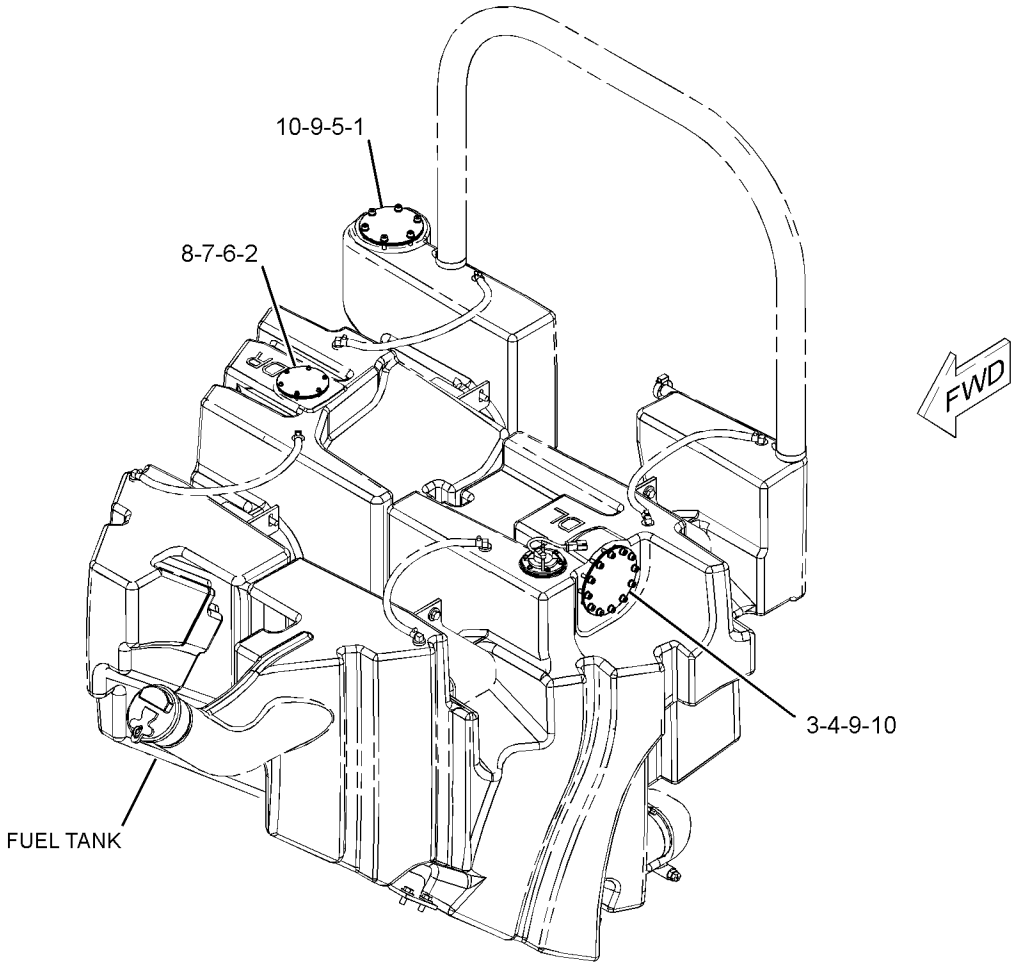

GRAPHIC #1 **<END>** g01276314

270-6986 FASTENER GP-FUEL TANK

S/N: B9D1-UP

PART OF 234-7721 COMMON AR

SMCS-1273, 7553 **i02780953**

NOTE	REF NO	GRAPHIC REF	PART NUMBER	QTY	PART NAME 1 2 3 4 5 6 (PRODUCT LEVEL)	SEE PAGE
	1	1	**6G-7187**	1	LOCK	
	2	1	**7J-6356**	2	TUBE	
	3	1	**216-2211**	4	CLAMP	
	4	1	**217-6885**	4	CLAMP	
	5	1	**258-8699**	2	HOSE	
	6	1	**266-7532**	1	GUARD	
	7	1	**270-3651**	2	PLATE AS	
					(EACH INCLUDES)	
M		1	**8T-3597**	4	NUT-WELD (M12X1.75-THD)	
	8	1	**270-9583**	6	PLATE	
	9	1	**281-3431**	1	BRACKET AS	
M		1	**8Y-4489**	1	BOSS-THREADED (M10X1.5-THD)	
	10	1	**281-3432**	1	TUBE	
	11	1	**281-3433**	2	HOSE	
	12	1	**299-4762**	2	GUARD	
	13	1	**303-2253**	1	PLATE AS	
	14	1	**1V-7801**	2	SPACER (0.546X0.840X2.38-IN THK)	
	15	1	**3E-4369**	2	WASHER (20.6X50.8X5-MM THK)	
	16	1	**5P-1076**	10	WASHER-HARD (13.5X30X4-MM THK)	
	17	1	**5P-7470**	1	CLIP (SLOT)	
	18	1	**5P-7471**	1	CLIP (TAB)	
	19	1	**5P-7703**	1	GROMMET	
M	20	1	**7X-2549**	2	BOLT (M12X1.75X100-MM)	
M	21	1	**7X-2557**	2	BOLT (M16X2X140-MM)	
	22	1	**7X-7729**	7	WASHER (11X25X3-MM THK)	
M	23	1	**8T-0389**	1	LOCKNUT (M10X1.15-THD)	
	24	1	**8T-4121**	3	WASHER-HARD (11X21X2.5-MM THK)	
M	25	1	**8T-4136**	1	BOLT (M10X1.5X25-MM)	
M	26	1	**8T-4139**	4	BOLT (M12X1.75X30-MM)	
M	27	1	**8T-4179**	8	BOLT (M12X1.75X20-MM)	
M	28	1	**8T-4189**	6	BOLT (M8X1.25X20-MM)	
M	29	1	**8T-4192**	4	BOLT (M12X1.75X25-MM)	
M	30	1	**8T-4196**	8	BOLT (M10X1.5X35-MM)	
	31	1	**8T-4223**	12	WASHER-HARD (13.5X25.5X3-MM THK)	
	32	1	**8T-4224**	6	WASHER-HARD (8.8X16X2-MM THK)	
M	33	1	**8T-4956**	4	BOLT (M12X1.75X35-MM)	
	34	1	**8C-0620**	8	PROTECTOR-THREAD	

M-METRIC PART

270-6986 **FASTENER GP-FUEL TANK** *(contd.)* **i02780953**

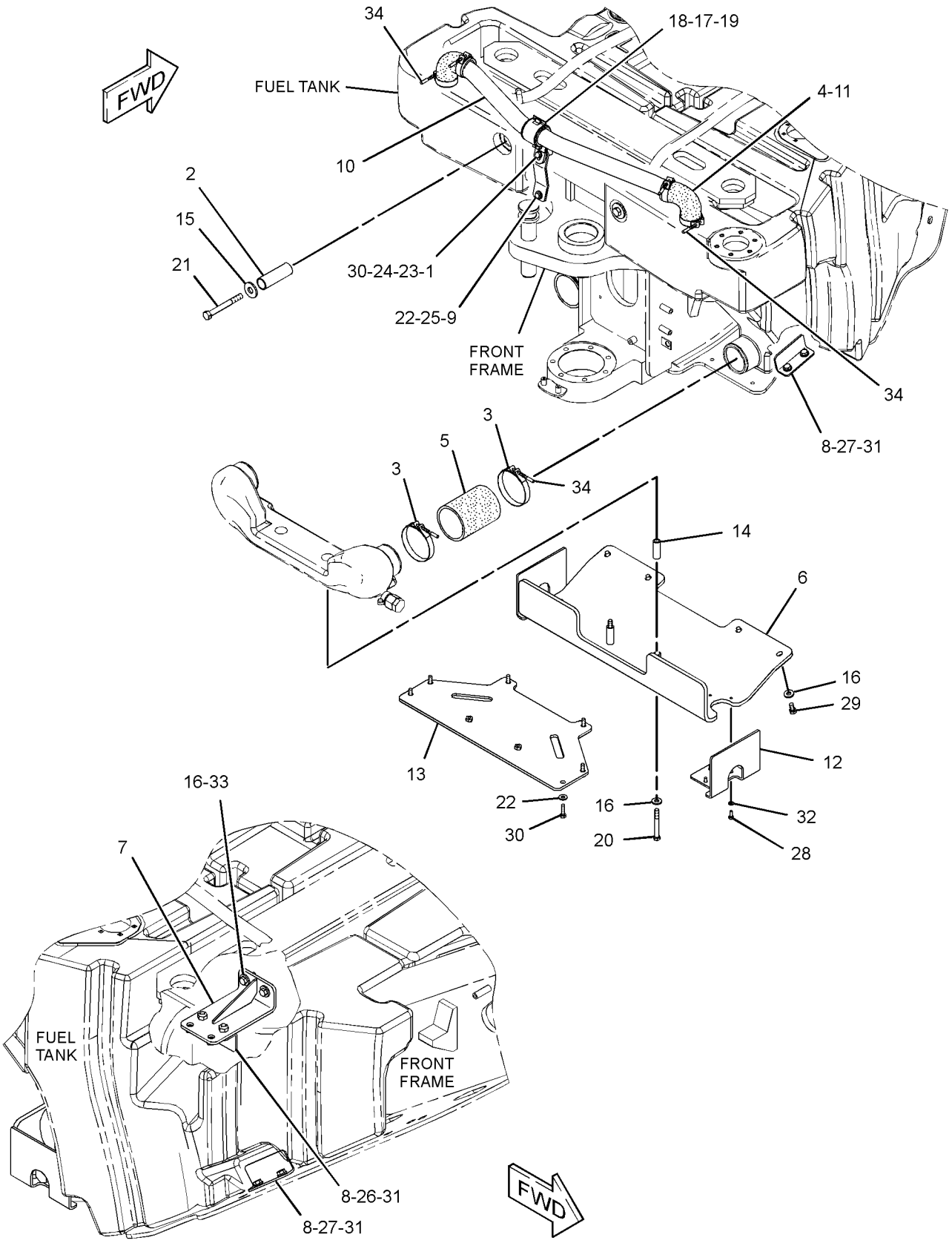

GRAPHIC #1 **<END>** g01372079

250-8313 FILTER GP-FUEL

S/N: KHX238-UP

PART OF 231-0878, 278-9732 ENGINE AR-COMPLETE

SMCS-1261 **i02789613**

NOTE	REF NO	GRAPHIC REF	PART NUMBER	QTY	PART NAME 1 2 3 4 5 6 (PRODUCT LEVEL)	SEE PAGE
	1	1	**1R-0762**	1	FILTER AS-FUEL (ADVANCED EFFICIENCY)	
	2	1	**3S-2093**	2	STRAP-CABLE	
	3	1	**8S-4950**	1	CAP	
	4	1	**9X-0261**	1	ADAPTER	
	5	1	**213-0064**	1	BASE AS	
	5A	1	**9S-4167**	1	STUD-HOLLOW (1-14X1.47-IN)	
Y	6	1	*234-5013*	1	SENSOR GP-TEMPERATURE (FUEL)	240
Y	7	1	*239-2396*	1	SENSOR GP-PRESSURE (FUEL)	237
Y	8	1	**275-1253**	1	SWITCH GP-PRESSURE (DIFFERENTIAL) (FUEL)	258
	9	1	**312-2688**	1	HARNESS AS-SENSOR	
	10	1	*148-8307*	1	ADAPTER AS	
		1	**3J-1907**	1	SEAL-O-RING	
		1	**5P-8874**	1	ADAPTER	
	11	1	*183-3406*	2	PLUG AS	
					(EACH INCLUDES)	
		1	**6V-5049**	1	SEAL-O-RING	
		1	**9S-4191**	1	PLUG-O-RING	
	12	1	**2R-6806**	2	CONNECTOR-O-RING	
	13	1	**3J-1907**	1	SEAL-O-RING	
	14	1	**4P-7581**	2	CLIP	
	15	1	**6V-5049**	2	SEAL-O-RING	
	16	1	**8T-4896**	4	WASHER-HARD (10.2X18.5X2.5-MM THK)	
	17	1	**9B-7237**	4	BOLT (3/8-16X1.25-IN)	

Y-SEPARATE ILLUSTRATION

250-8313 **FILTER GP-FUEL** *(contd.)* **i02789613**

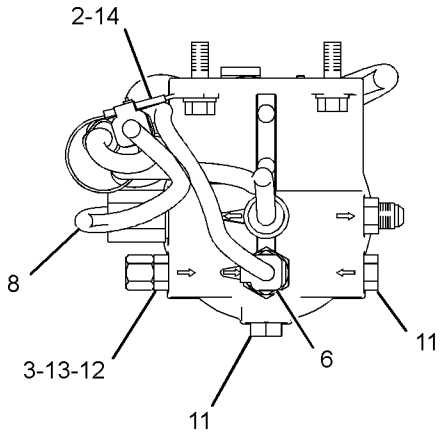

TOP VIEW OF ENGINE

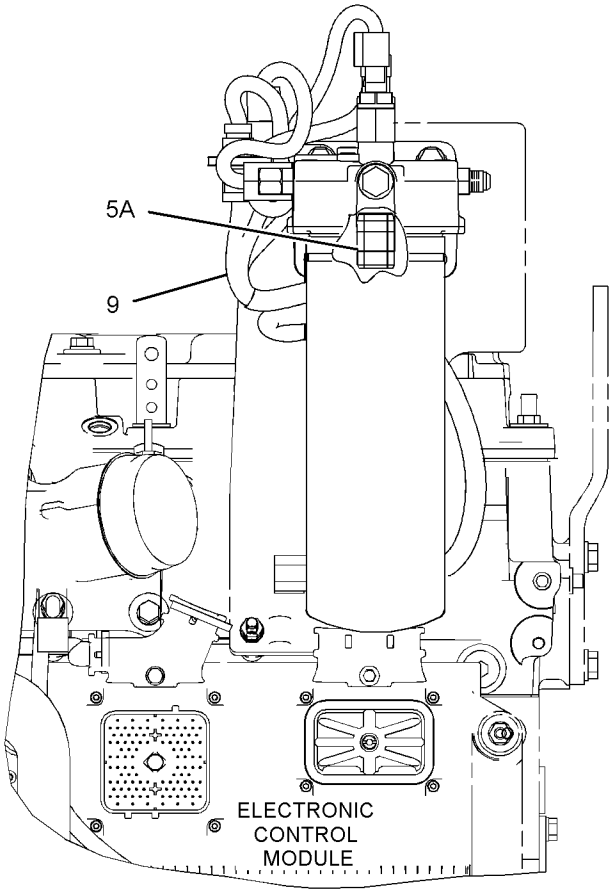

LEFT SIDE VIEW OF ENGINE

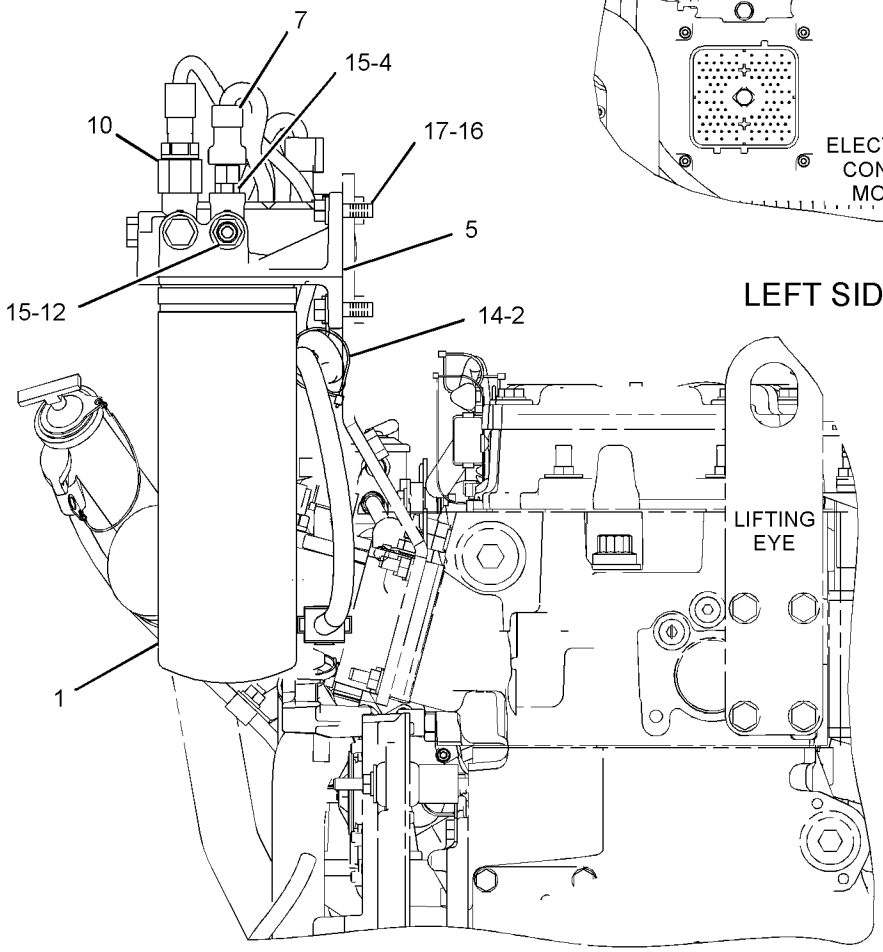

REAR VIEW OF ENGINE

GRAPHIC #1 **<END>** g01397265

174-9570 FILTER GP-WATER SEP & FUEL

S/N: B9D1-UP

PART OF 190-8977 WATER SEP & FUEL PRM PUMP GP

SMCS-1261, 1263 **i02390251**

NOTE	REF NO	GRAPHIC REF	PART NUMBER	QTY	PART NAME 1 2 3 4 5 6 (PRODUCT LEVEL)	SEE PAGE
	1	1	**1R-0770**	1	FILTER AS-WATER SEP & FUEL (PRIMARY)	
	1A	1	**220-8678**	1	SEAL-RING	
	2	1	**270-5320**	1	BOWL AS (FUEL, WATER SEPARATOR)	

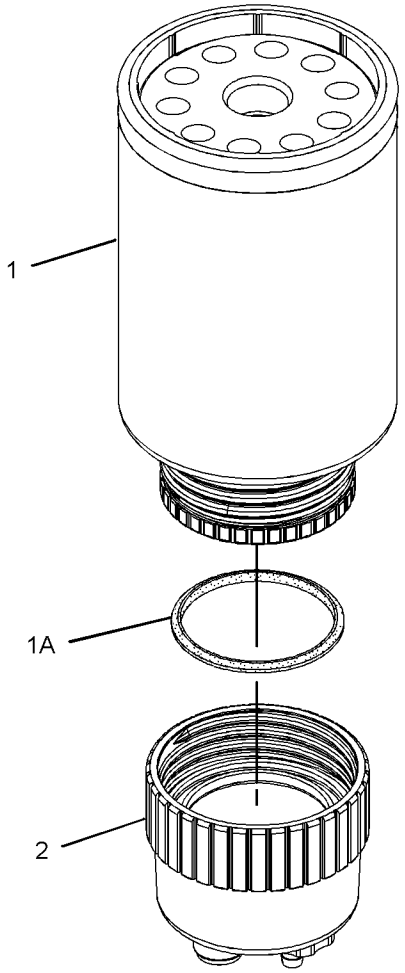

GRAPHIC #1

<END>

g01179858

293-4066 INJECTOR GP-FUEL*R

S/N: B9D1-UP

SMCS-1251, 1254, 1290, 1713 **i02576806**

NOTE	REF NO	GRAPHIC REF	PART NUMBER	QTY	PART NAME 1 2 3 4 5 6 (PRODUCT LEVEL)	SEE PAGE
	1	1	**149-5240**	1	RING-BACKUP	
	2	1	**293-0730**	1	RING-BACKUP	
	3	1	**109-3207**	1	SEAL-O-RING	
	4	1	**148-2903**	2	SEAL-O-RING	

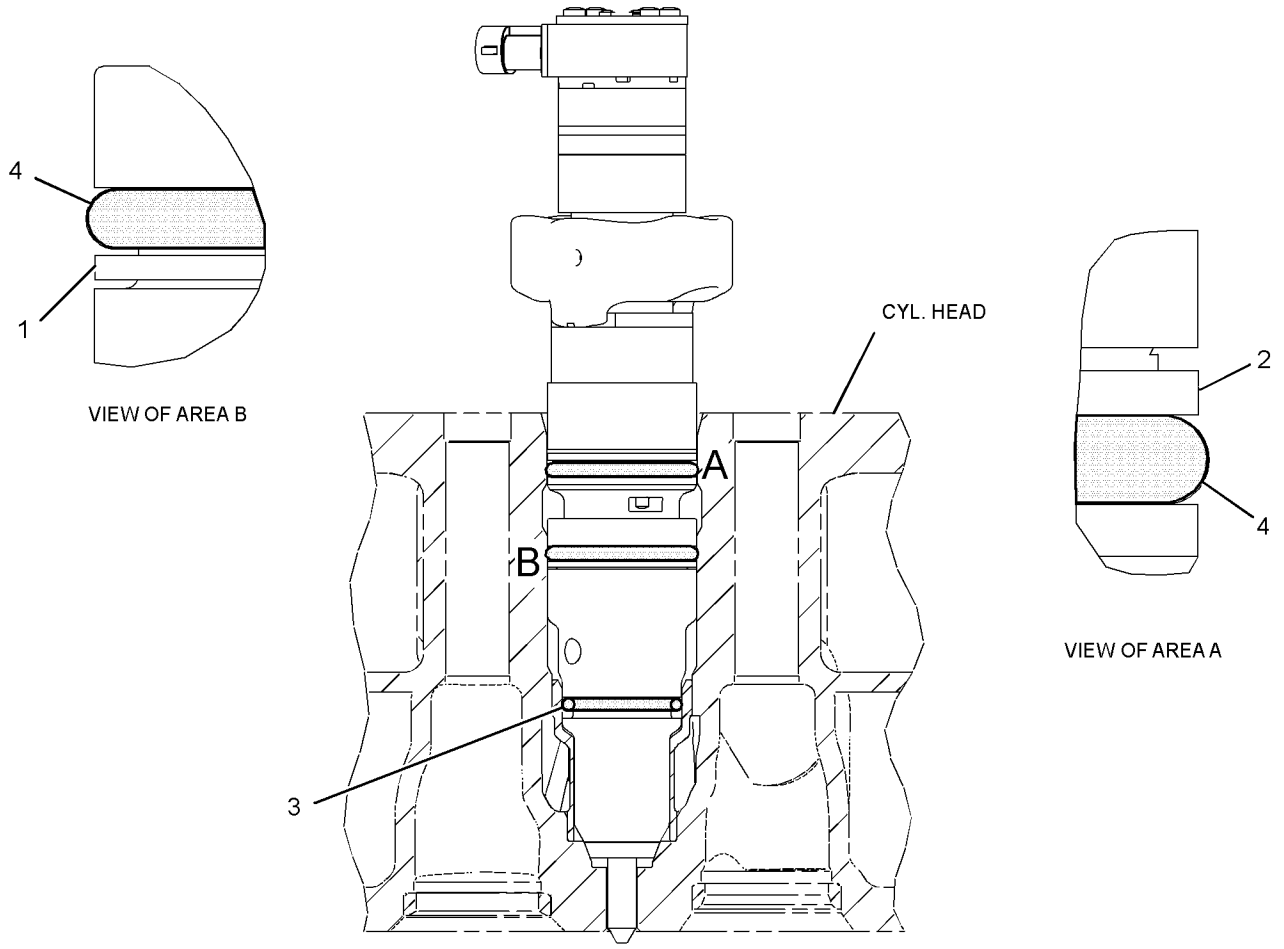

GRAPHIC #1

<END>

g01291147

295-1411 INJECTOR GP-FUEL

S/N: KHX238-UP

PART OF 268-1839 PUMP GP-FUEL INJECTION

SMCS-1251, 1254, 1290, 1713 **i02572712**

NOTE	REF NO	GRAPHIC REF	PART NUMBER	QTY	PART NAME 1 2 3 4 5 6 (PRODUCT LEVEL)	SEE PAGE
	1	1	**149-5240**	1	RING-BACKUP	
	2	1	**293-0730**	1	RING-BACKUP	
	3	1	**109-3207**	1	SEAL-O-RING	
	4	1	**148-2903**	2	SEAL-O-RING	

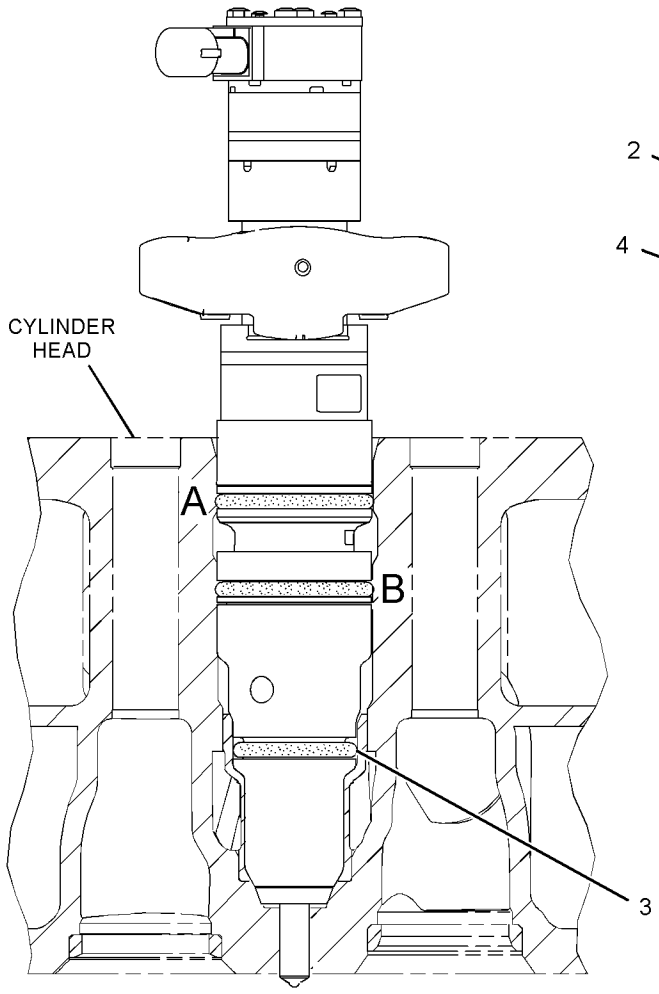

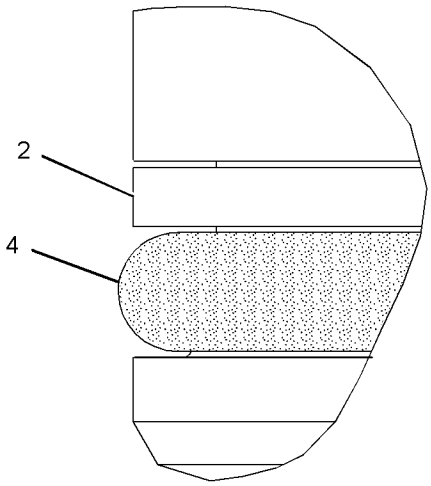

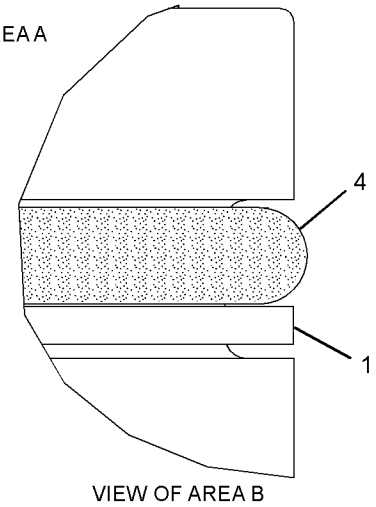

GRAPHIC #1 **<END>** g01290525

FUEL SYSTEM

250-8314 LINES GP-FUEL

S/N: KHX238-UP

PART OF 231-0878, 278-9732 ENGINE AR-COMPLETE

SMCS-1274 **i02791257**

NOTE	REF NO	GRAPHIC REF	PART NUMBER	QTY	PART NAME 1 2 3 4 5 6 (PRODUCT LEVEL)	SEE PAGE
	1	1	**3S-2093**	1	STRAP-CABLE	
	3	1	**231-3047**	1	TUBE AS	
Y	4	1	*232-0343*	1	REGULATOR GP-FUEL PRESSURE	122
I	5	1	**281-4619**	1	HOSE AS	
	6	1	**2R-6806**	2	CONNECTOR-O-RING	
	7	1	**3J-1907**	3	SEAL-O-RING	
M	8	1	**5C-7261**	1	NUT (M8X1.25-THD)	
	9	1	**6V-3265**	1	CLIP	
	10	1	**7K-4129**	1	UNION-FLARED	
	11	1	**8M-2773**	1	CLIP	
	12	1	**9M-1974**	1	WASHER-HARD (8.8X16X2-MM THK)	
	13	1	**9S-8004**	1	PLUG-O-RING	

I-REFER TO HYDRAULIC INFORMATION SYSTEM
M-METRIC PART
Y-SEPARATE ILLUSTRATION

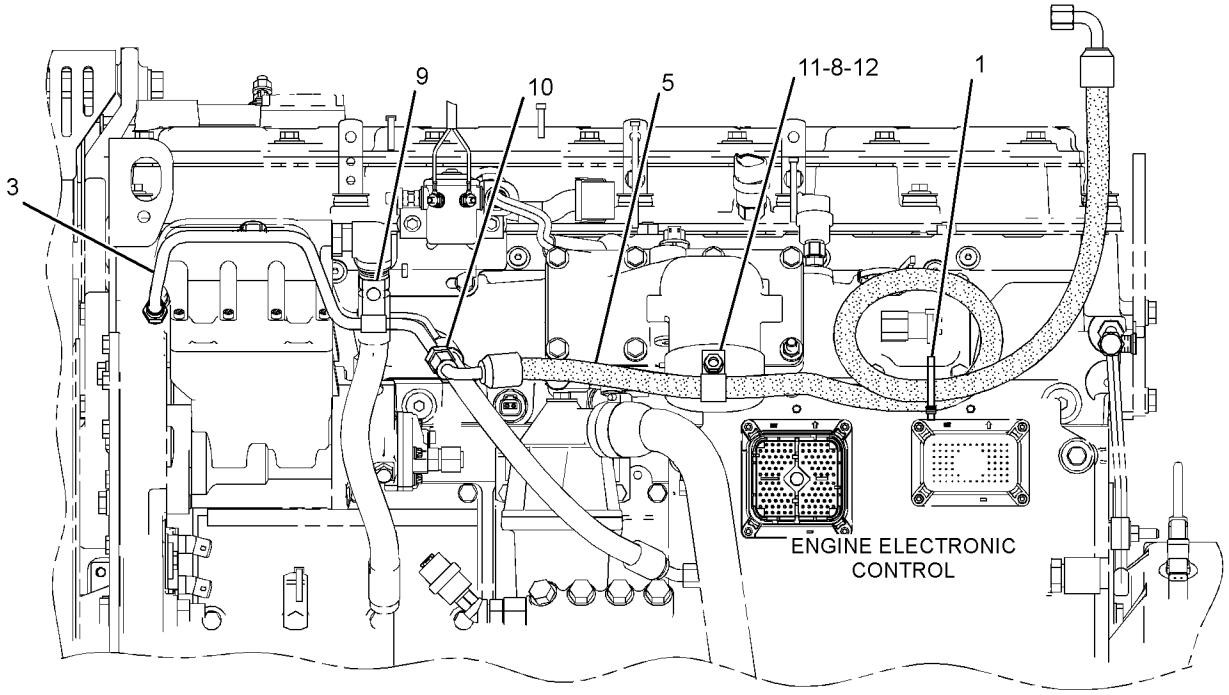

LEFT SIDE VIEW OF ENGINE

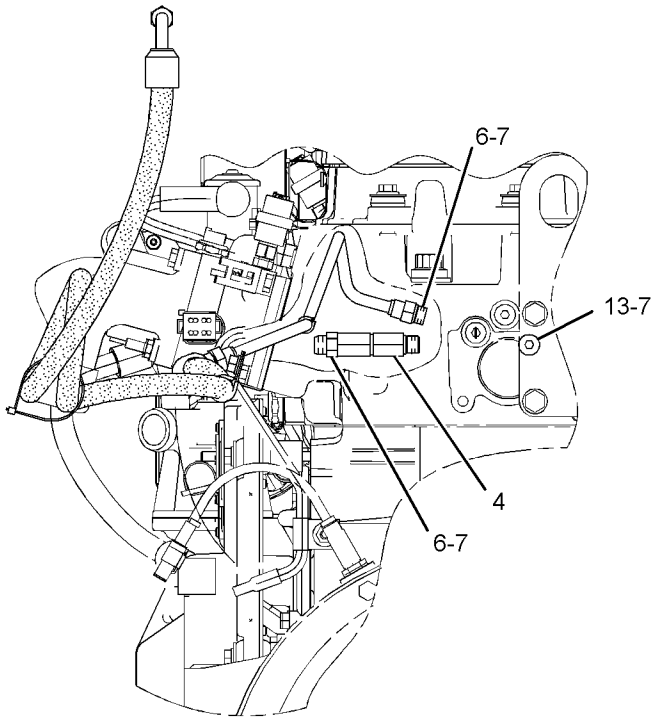

REAR VIEW OF ENGINE

GRAPHIC #1 **<END>** g01337974

246-6706 LINES GP-FUEL FILTER

S/N: B9D1-UP

PART OF 234-7721 COMMON AR

SMCS-1261, 1274 **i02774393**

NOTE	REF NO	GRAPHIC REF	PART NUMBER	QTY	PART NAME 1 2 3 4 5 6 (PRODUCT LEVEL)	SEE PAGE
	1	1	**3S-2093**	1	STRAP-CABLE	
	2	1	**184-5394**	1	CLIP	
Y	3	1	*190-1105*	1	PUMP GP-FUEL PRM & PRIM FILTER	120
	4	1	**253-0472**	1	PLATE AS	
	5	1	**273-4919**	1	BRACKET AS	
M		1	**9R-2821**	1	BOSS (M10X1.5X15-MM)	
M		1	**8T-3490**	4	NUT-WELD (M10X1.5-THD)	
I	6	1	**276-9873**	1	HOSE AS	
I	7	1	**277-5431**	1	HOSE AS	
	8	1	**289-0213**	1	BRACKET	
	9	1	**296-2977**	1	PLATE AS	
M		1	**8T-3490**	1	NUT-WELD (M10X1.5-THD)	
	10	1	**030-7962**	1	ELBOW	
	11	1	**067-2551**	1	CLIP	
	12	1	*148-8372*	1	ELBOW AS	
		1	**6V-8721**	1	ELBOW	
		1	**6V-8398**	1	SEAL-O-RING	
		1	**2M-9780**	1	SEAL-O-RING	
	13	1	*148-8378*	1	ELBOW AS	
		1	**6V-8724**	1	ELBOW	
		1	**3J-1907**	1	SEAL-O-RING	
		1	**6V-8397**	1	SEAL-O-RING	
	14	1	*164-5557*	1	CONNECTOR AS	
		1	**5I-4370**	1	CONNECTOR	
		1	**2M-9780**	1	SEAL-O-RING	
		1	**6V-8398**	1	SEAL-O-RING	
	15	1	*164-5624*	1	ELBOW AS	
		1	**9X-2085**	1	ELBOW	
		1	**3J-1907**	1	SEAL-O-RING	
		1	**6V-8398**	1	SEAL-O-RING	
	16	1	**198-4777**	1	WASHER-HARD (11X25X10-MM THK)	
I	17	1	**310-4213**	1	HOSE AS	
	18	1	**1S-0994**	2	CLIP	
	19	1	**4D-7735**	3	CLIP	
M	20	1	**5C-7261**	1	NUT (M8X1.25-THD)	
	21	1	**5P-4116**	2	WASHER-HARD (8.8X20.5X2-MM THK)	
	22	1	**5P-9299**	1	CLIP	
	23	1	**7X-7729**	15	WASHER (11X25X3-MM THK)	
	24	1	**8M-2773**	1	CLIP	
	25	1	**8T-4121**	8	WASHER-HARD (11X21X2.5-MM THK)	
M	26	1	**8T-4133**	4	NUT (M10X1.5-THD)	
M	27	1	**8T-4136**	8	BOLT (M10X1.5X25-MM)	
M	28	1	**8T-4137**	2	BOLT (M10X1.5X20-MM)	
M	29	1	**8T-4195**	4	BOLT (M10X1.5X30-MM)	
M	30	1	**8T-4196**	5	BOLT (M10X1.5X35-MM)	
E	31	1	**8C-6959**		HOSE (111-CM)	

E-ORDER BY THE CENTIMETER
I-REFER TO HYDRAULIC INFORMATION SYSTEM
M-METRIC PART
Y-SEPARATE ILLUSTRATION

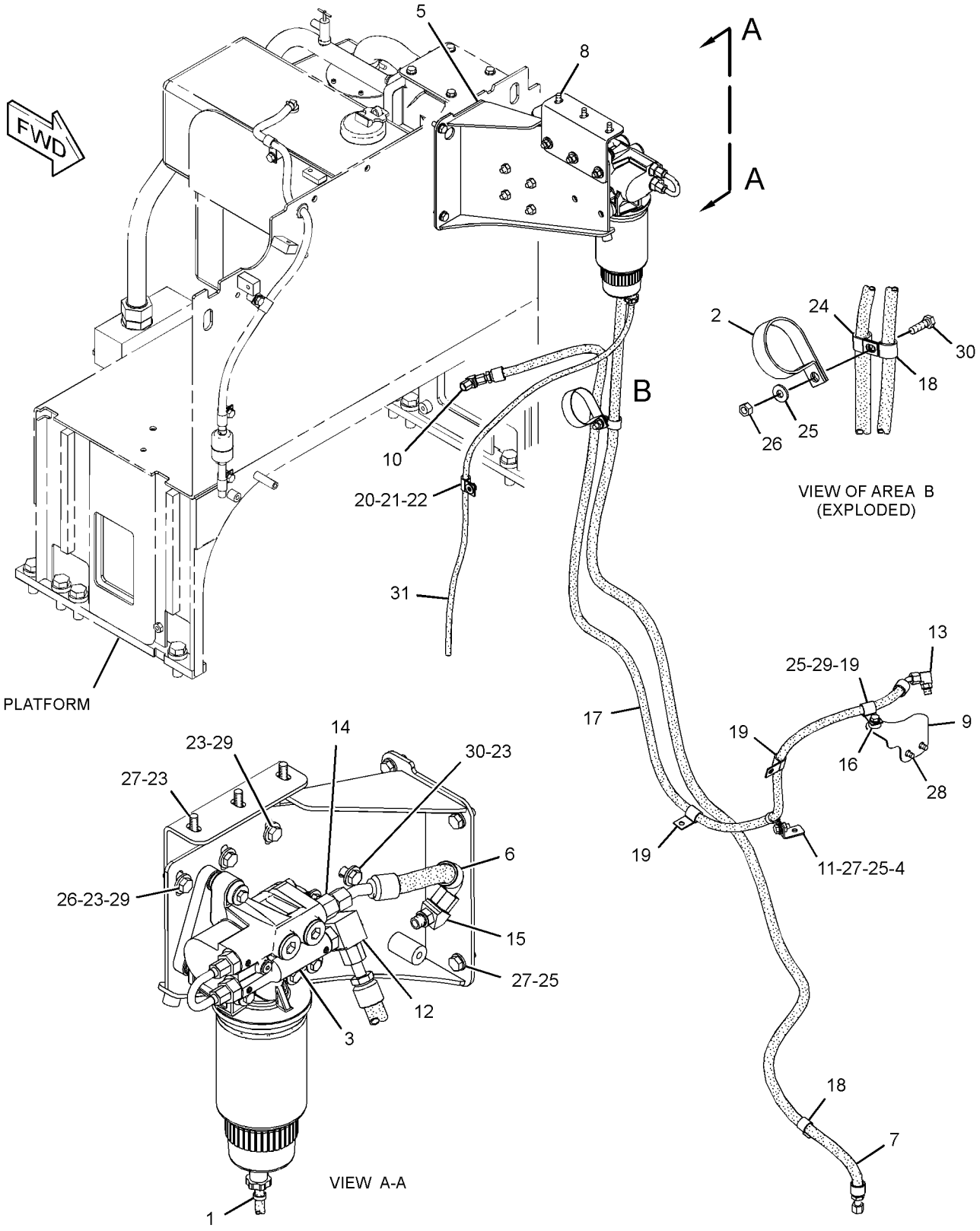

GRAPHIC #1 **<END>** g01394359

191-0461 LINES GP-INJECTOR HYD PUMP

S/N: KHX238-UP

PART OF 231-0879 ENGINE AR-CORE

SMCS-1714 **i02215817**

NOTE	REF NO	GRAPHIC REF	PART NUMBER	QTY	PART NAME 1 2 3 4 5 6 (PRODUCT LEVEL)	SEE PAGE
	1	1	*183-3399*	2	CONNECTOR AS	
					(EACH INCLUDES)	
		1	**6V-8636**	1	CONNECTOR	
		1	**214-7568**	1	SEAL-O-RING	
		1	**221-3494**	1	SEAL-O-RING	
Y	2	1	*191-0523*	1	ADAPTER GP-OIL LINE	56
	3	1	**205-1280**	1	HOSE AS	
	4	1	**212-3706**	1	TUBE AS	
	5	1	**3V-2431**	2	WASHER (10.2X16X2-MM THK)	
	6	1	**4F-9653**	1	SEAL-O-RING	
M	7	1	**8T-1159**	2	BOLT-SOCKET HEAD (M10X1.5X25-MM)	

M-METRIC PART
Y-SEPARATE ILLUSTRATION

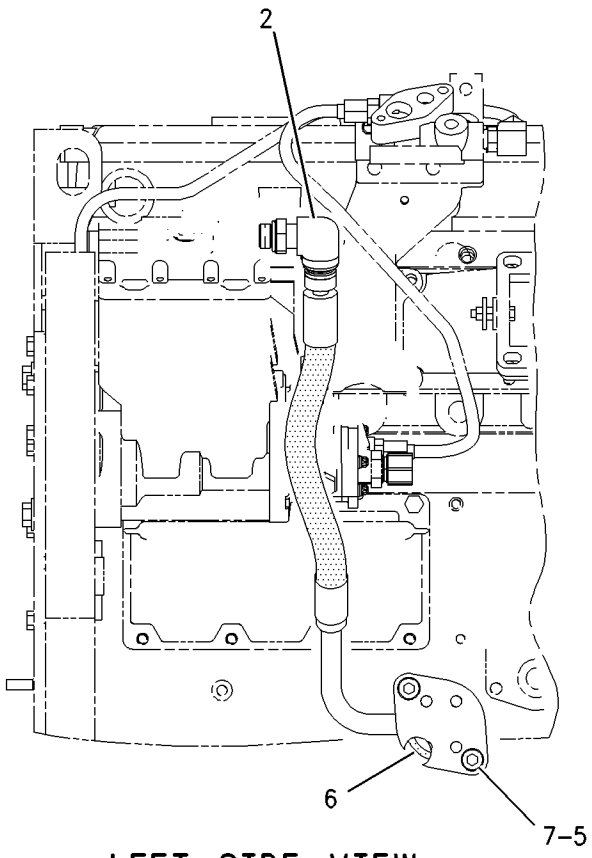

LEFT SIDE VIEW

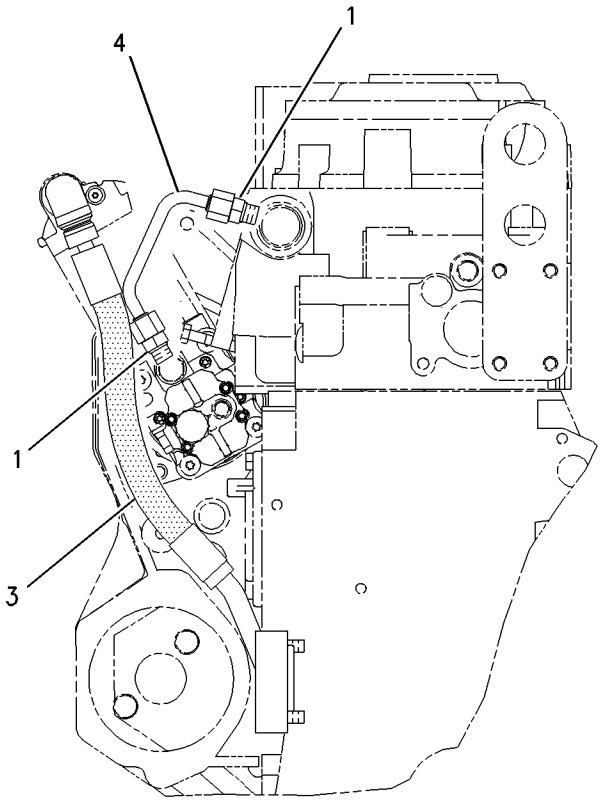

REAR VIEW

GRAPHIC #1 **<END>** g00881566

FUEL SYSTEM

250-8306 MOUNTING GP-FUEL FILTER

S/N: KHX238-UP

PART OF 231-0878, 278-9732 ENGINE AR-COMPLETE

SMCS-1261, 1262 **i02789610**

NOTE	REF NO	GRAPHIC REF	PART NUMBER	QTY	PART NAME 1 2 3 4 5 6 (PRODUCT LEVEL)	SEE PAGE
M	1	1	**241-0542**	4	STUD (M8X1.25X30-MM)	
	2	1	**250-8307**	1	BRACKET AS	
		1	**1F-0750**	4	NUT-WELD (3/8-16-THD)	
M		1	**8T-3490**	1	NUT-WELD (M10X1.5-THD)	
	3	1	**4P-8134**	1	CLIP	
M	4	1	**5P-7970**	4	NUT (M8X1.25-THD)	
	5	1	**9M-1974**	8	WASHER-HARD (8.8X16X2-MM THK)	

M-METRIC PART

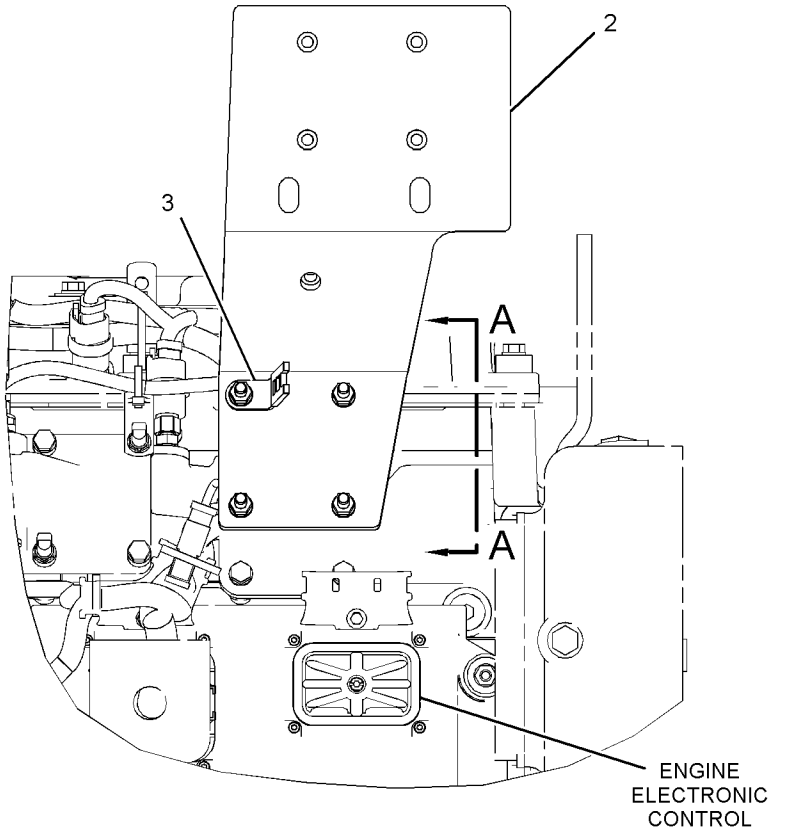

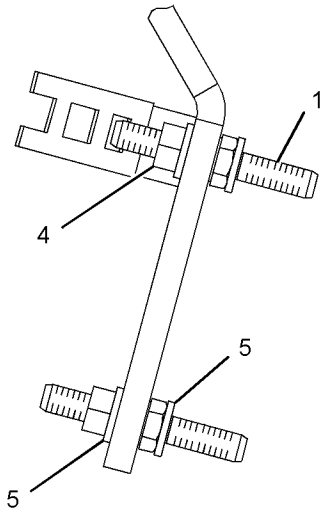

VIEW A-A

LEFT SIDE VIEW OF ENGINE

GRAPHIC #1 **<END>** g01330159

254-0095 PUMP & MTG GP-UNIT INJ HYD

S/N: KHX238-UP

PART OF 231-0879 ENGINE AR-CORE

SMCS-1714 **i02791863**

NOTE	REF NO	GRAPHIC REF	PART NUMBER	QTY	PART NAME 1 2 3 4 5 6 (PRODUCT LEVEL)	SEE PAGE
	1	1	**214-7568**	2	SEAL-O-RING	
	2	1	**227-5904**	1	SEAL-O-RING (UNIT INJECTION HYD PUMP)	
	3	1	**304-0607**	1	PUMP GP-UNIT INJECTOR HYD	
	4	1	**3E-9412**	1	DOWEL	
	5	1	**6V-5839**	2	WASHER (11X21X2.5-MM THK)	
M	6	1	**6V-7981**	2	BOLT (M10X1.5X70-MM)	
	7	1	**9S-8004**	2	PLUG-O-RING	

M-METRIC PART

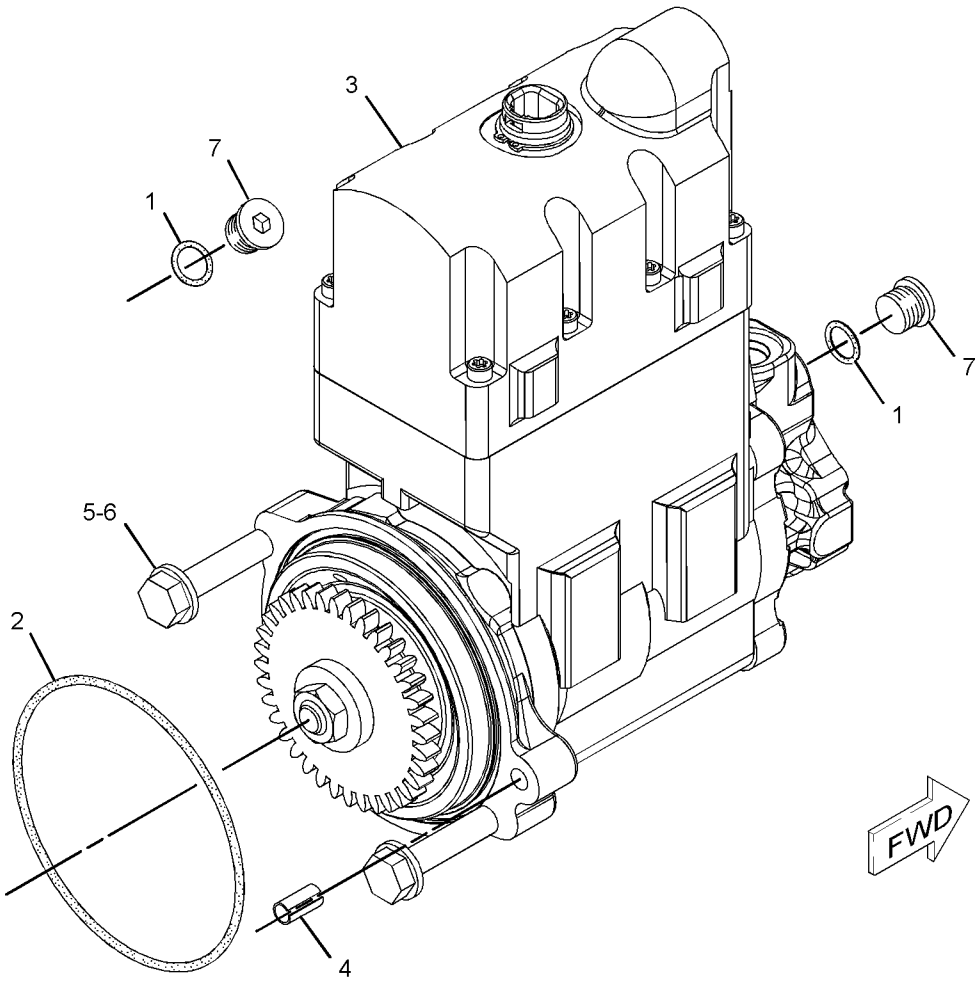

GRAPHIC #1 **<END>** g01108902

268-1839 PUMP GP-FUEL INJECTION

S/N: KHX238-UP

PART OF 231-0879 ENGINE AR-CORE

SMCS-1251, 1290 **i02572542**

NOTE	REF NO	GRAPHIC REF	PART NUMBER	QTY	PART NAME 1 2 3 4 5 6 (PRODUCT LEVEL)	SEE PAGE
	1	1	**235-9651**	2	BOLT-SOCKET HEAD (M8X1.25X65-MM)	
Y	2	1	**295-1411**	1	INJECTOR GP-FUEL	110

Y-SEPARATE ILLUSTRATION

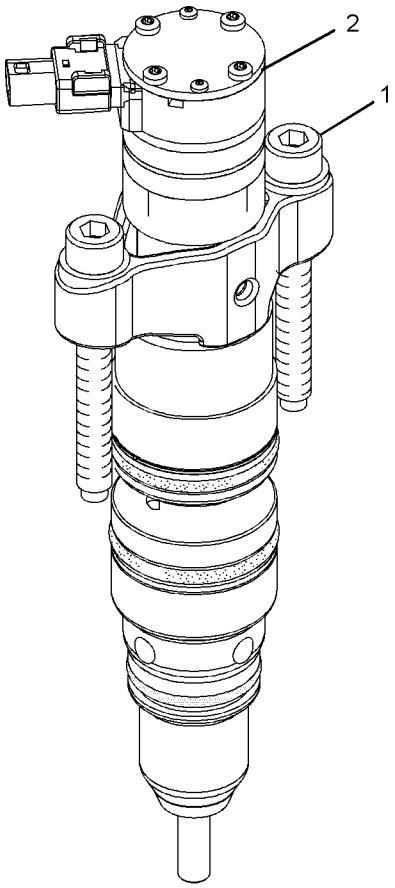

ISOMETRIC VIEW

GRAPHIC #1

<END>

g01038652

188-6121 PUMP GP-FUEL PRM & PRIM FILTER

S/N: B9D1-UP

PART OF 190-1105 PUMP GP-FUEL PRM & PRIM FILTER

SMCS-1258, 1260, 1261 **i01891413**

NOTE	REF NO	GRAPHIC REF	PART NUMBER	QTY	PART NAME 1 2 3 4 5 6 (PRODUCT LEVEL)	SEE PAGE
Y	1	1	**190-8977**	1	WATER SEP & FUEL PRM PUMP GP	128
	2	1	**209-9234**	1	REGULATOR-PRESSURE (FUEL)	
	3	1	**211-7730**	1	TUBE AS	
	4	1	**030-8194**	1	CONNECTOR	
	5	1	**136-7227**	2	SEAL-O-RING	

Y-SEPARATE ILLUSTRATION

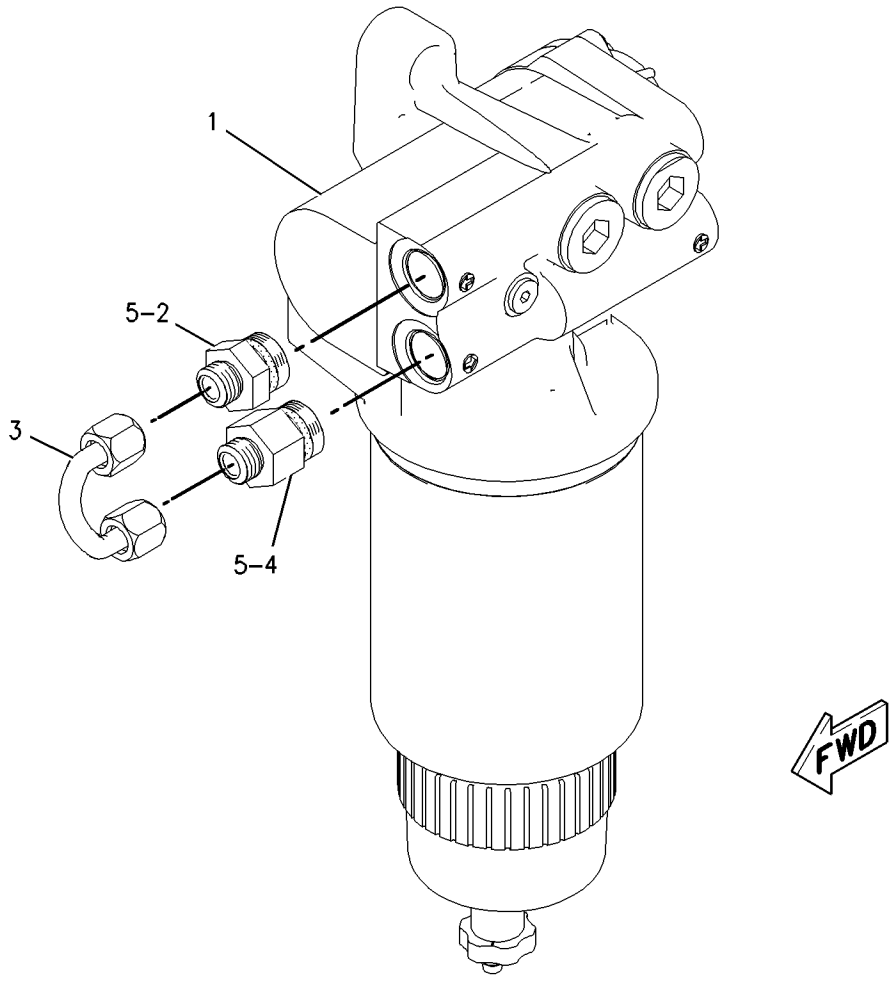

GRAPHIC #1 **<END>** g00850001

190-1105 PUMP GP-FUEL PRM & PRIM FILTER

S/N: B9D1-UP

PART OF 246-6706 LINES GP-FUEL FILTER

SMCS-1258, 1260, 1261 **i01871447**

NOTE	REF NO	GRAPHIC REF	PART NUMBER	QTY	PART NAME 1 2 3 4 5 6 (PRODUCT LEVEL)	SEE PAGE
	1	1	**8T-9655**	6	MOUNT-ISOLATION	
Y	2	1	**188-6121**	1	PUMP GP-FUEL PRM & PRIM FILTER (WITH WATER SEPARATOR)	119
	3	1	**191-1782**	1	SPACER (8.5X12.7X38.2-MM THK)	
	4	1	**191-1783**	2	SPACER (8.5X12.7X87.3-MM THK)	
M	5	1	**7X-2539**	2	BOLT (M8X1.25X110-MM)	
M	6	1	**8T-6869**	1	BOLT (M8X1.25X60-MM)	
	7	1	**9N-0869**	6	WASHER-HARD (8.8X25.5X2-MM THK)	

M-METRIC PART
Y-SEPARATE ILLUSTRATION

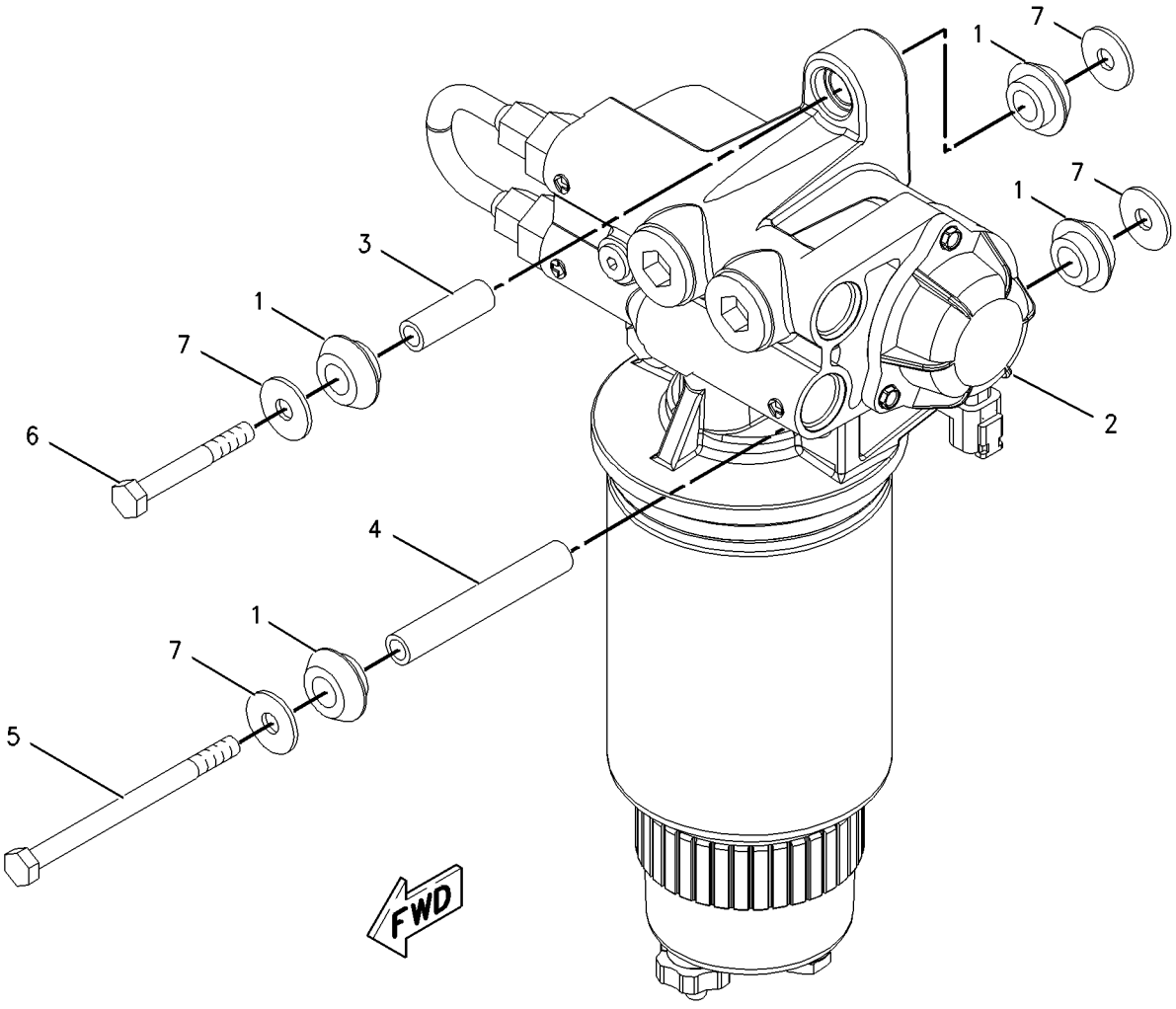

GRAPHIC #1 **<END>** g00859337

250-9200 RECEIVER GP-FAST FILL FUEL

S/N: B9D1-UP

PART OF 281-6780 ADAPTER GP-FAST FILL FUEL

SMCS-1710 **i02787518**

NOTE	REF NO	GRAPHIC REF	PART NUMBER	QTY	PART NAME 1 2 3 4 5 6 (PRODUCT LEVEL)	SEE PAGE
	1	1	**232-1767**	1	RECEIVER AS (FAST FILL FUEL)	
	2	1	**250-3865**	1	VALVE AS-SHUTOFF (FAST FILL FUEL)	
	3	1	**1P-4582**	2	FLANGE-HALF	
	4	1	**4J-0527**	1	SEAL-O-RING	
	5	1	**8T-4223**	4	WASHER-HARD (13.5X25.5X3-MM THK)	
	6	1	**8T-8919**	4	BOLT (1/2-13X1.75-IN)	

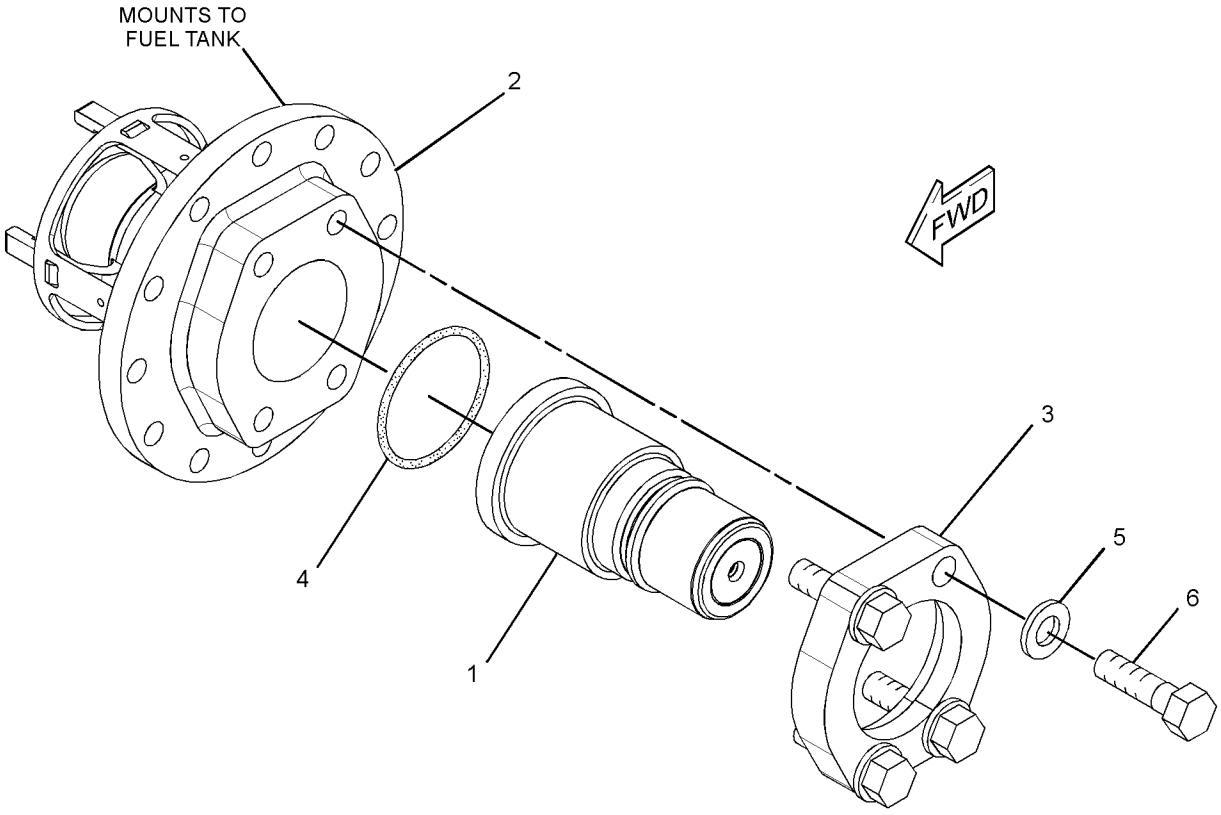

GRAPHIC #1 **<END>** g01393122

232-0343 REGULATOR GP-FUEL PRESSURE

S/N: KHX238-UP

PART OF 250-8314 LINES GP-FUEL

SMCS-1715 **i02676270**

NOTE	REF NO	GRAPHIC REF	PART NUMBER	QTY	PART NAME 1 2 3 4 5 6 (PRODUCT LEVEL)	SEE PAGE
	1	1	**6V-5049**	1	SEAL-O-RING	
	2	1	**294-8620**	1	REGULATOR AS (FUEL PRESSURE)	

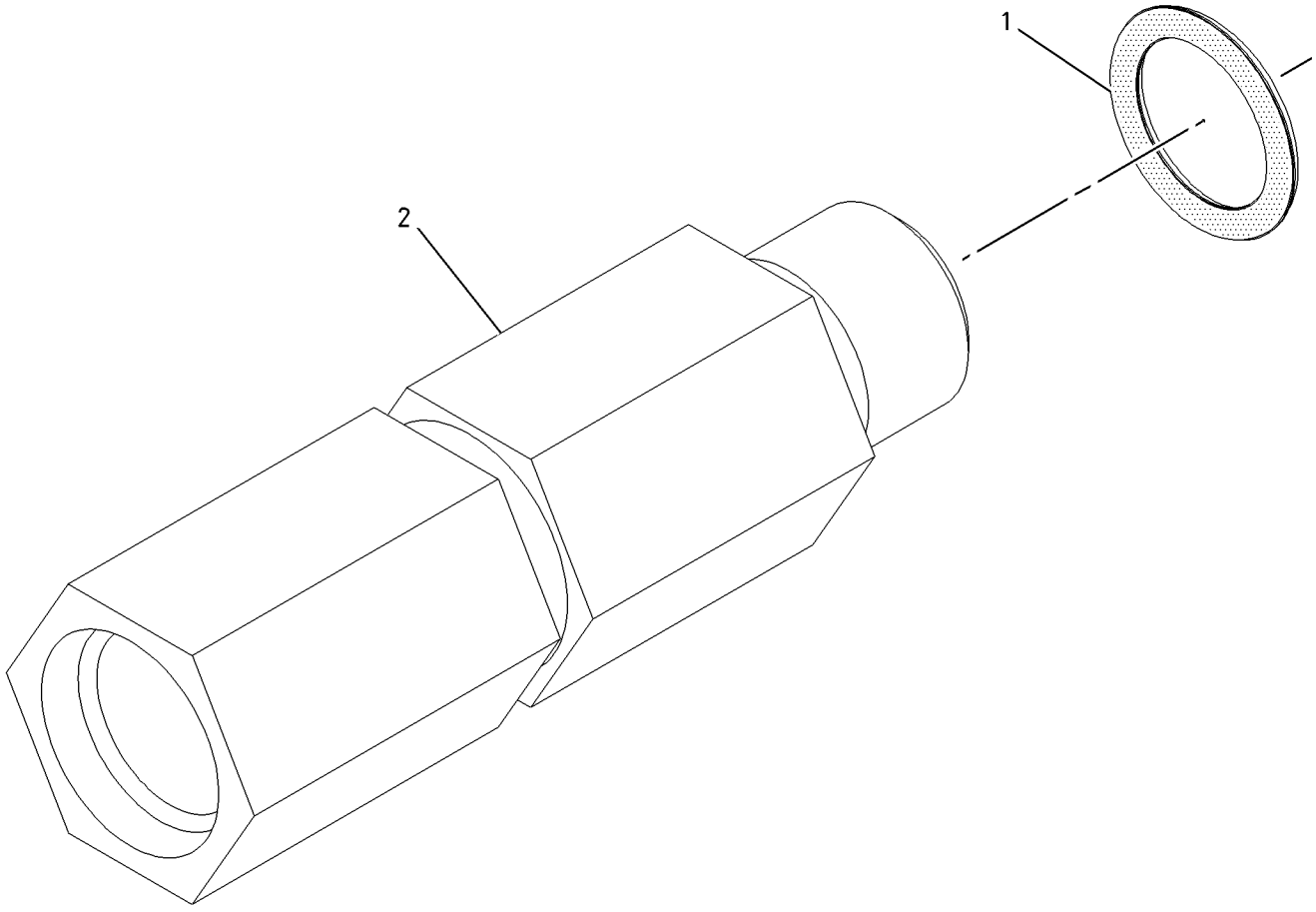

GRAPHIC #1 **<END>** g01004480

248-4765 TANK GP-FUEL–CROSSOVER

S/N: B9D1-UP

PART OF 270-6987, 270-6988 TANK GP-FUEL

SMCS-1273 **i02787483**

NOTE	REF NO	GRAPHIC REF	PART NUMBER	QTY	PART NAME 1 2 3 4 5 6 (PRODUCT LEVEL)	SEE PAGE
	1	1	**8C-5053**	1	ADAPTER (O-RING)	
	2	1	**250-9305**	1	BUSHING	
	3	1	*268-1543*	1	ELBOW AS	
		1	**2T-1925**	1	ELBOW (90-DEG)	
		1	**6V-8397**	1	SEAL-O-RING	
	4	1	**3J-1907**	1	SEAL-O-RING	
	5	1	**7M-8485**	1	SEAL-O-RING	
	6	1	**9M-7958**	3	CLAMP-HOSE	
	7	1	**9S-4181**	1	PLUG-O-RING	
	8	1	**9S-4191**	1	PLUG-O-RING	

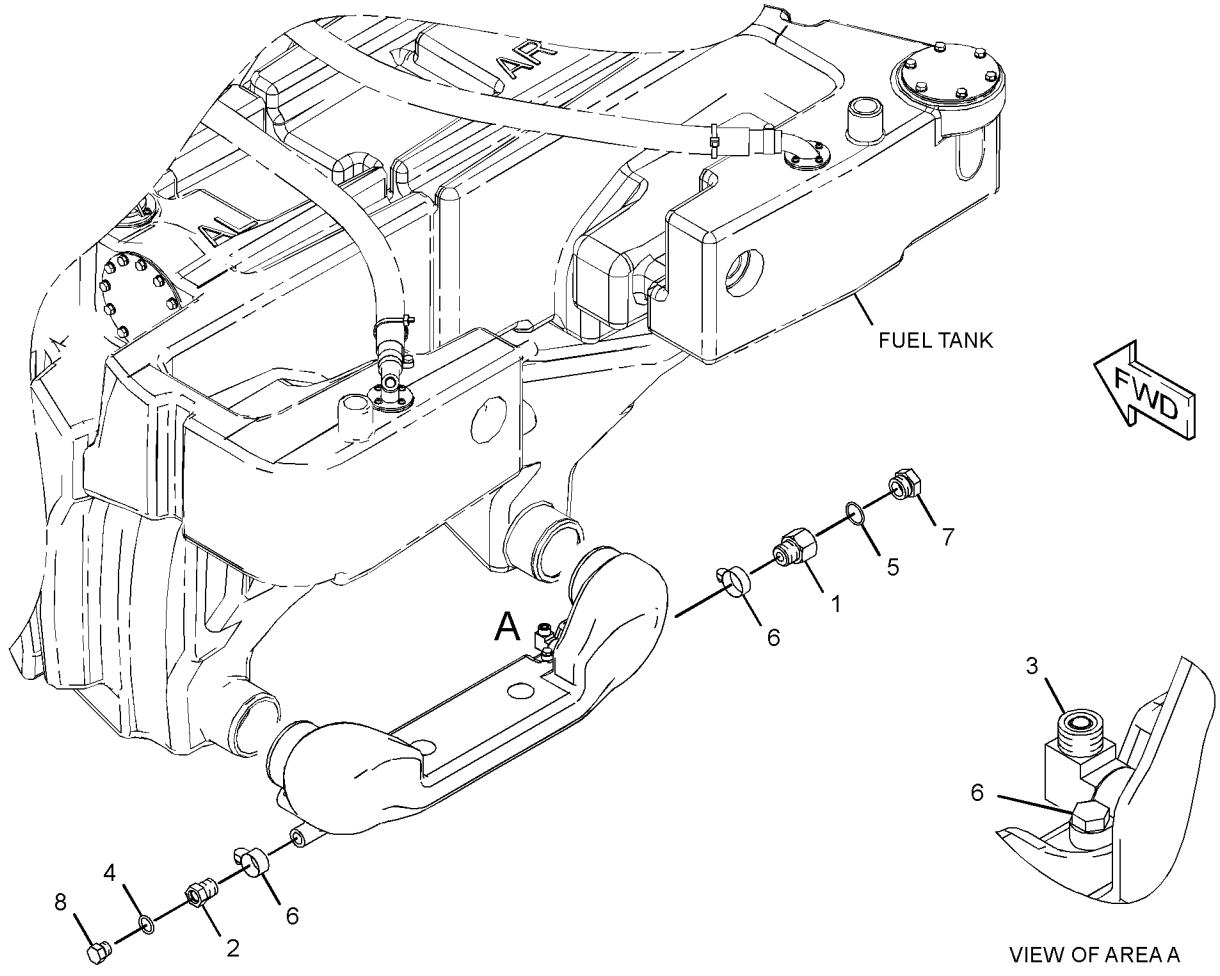

GRAPHIC #1 **<END>** g01373950

FUEL SYSTEM

270-6987 TANK GP-FUEL

S/N: B9D1-UP

SMCS-1273 **i02787538**

NOTE	REF NO	GRAPHIC REF	PART NUMBER	QTY	PART NAME 1 2 3 4 5 6 (PRODUCT LEVEL)	SEE PAGE
	1	1	**7K-1181**	4	STRAP-CABLE	
	2	1	**7X-7700**	1	CAP AS-FILLER (FUEL TANK)	
		1	**9X-2205**	1	KIT-CAP FILTER (FUEL TANK)	
					(INCLUDES FILTER AS, SCREWS, GASKETS, & VALVE)	
		1	**9X-8600**	1	SEAL-O-RING	
	3	1	**199-9907**	1	STRAINER-FUEL	
	4	1	**203-9807**	4	GASKET	
	5	1	**208-0800**	1	GASKET	
Y	6	1	*241-9585*	1	COVER GP-FUEL TANK (W/O FAST FILL FUEL ADAPTER)	103
Y	7	1	**248-4765**	1	TANK GP-FUEL (CROSSOVER)	123
	8	1	**258-8675**	1	TANK AS-FUEL (LH)	
	9	1	**258-8676**	1	TANK AS-FUEL (RH)	
	10	1	**288-7312**	3	VENT AS	
	11	1	**296-1302**	1	VENT AS	
	12	1	**103-2006**	1	SCREW-PAN HEAD (6-19X0.37-IN)	
M	13	1	**162-2165**	22	BOLT-SOCKET HEAD (M4X0.7X16-MM)	
	14	1	**194-6523**	1	ADAPTER	
	15	1	**269-1021**	1	SENDER AS-FUEL	
		1	**283-9503**	1	KIT-DIAL SENSOR (FUEL LEVEL GAUGE)	
					(INCLUDES SENSOR AS & GASKET)	
	16	1	**4B-4863**	22	WASHER (4.7X11X1.2-MM THK)	
	17	1	**9M-7958**	4	CLAMP-HOSE	
E	18	1	**146-7453**		HOSE (113-CM EACH)	
G	19	1	**160-2246**		SLEEVE-ABRASION (41-IN EACH)	

E-ORDER BY THE CENTIMETER
G-ORDER BY THE INCH
M-METRIC PART
Y-SEPARATE ILLUSTRATION

270-6987 **TANK GP-FUEL** *(contd.)* **i02787538**

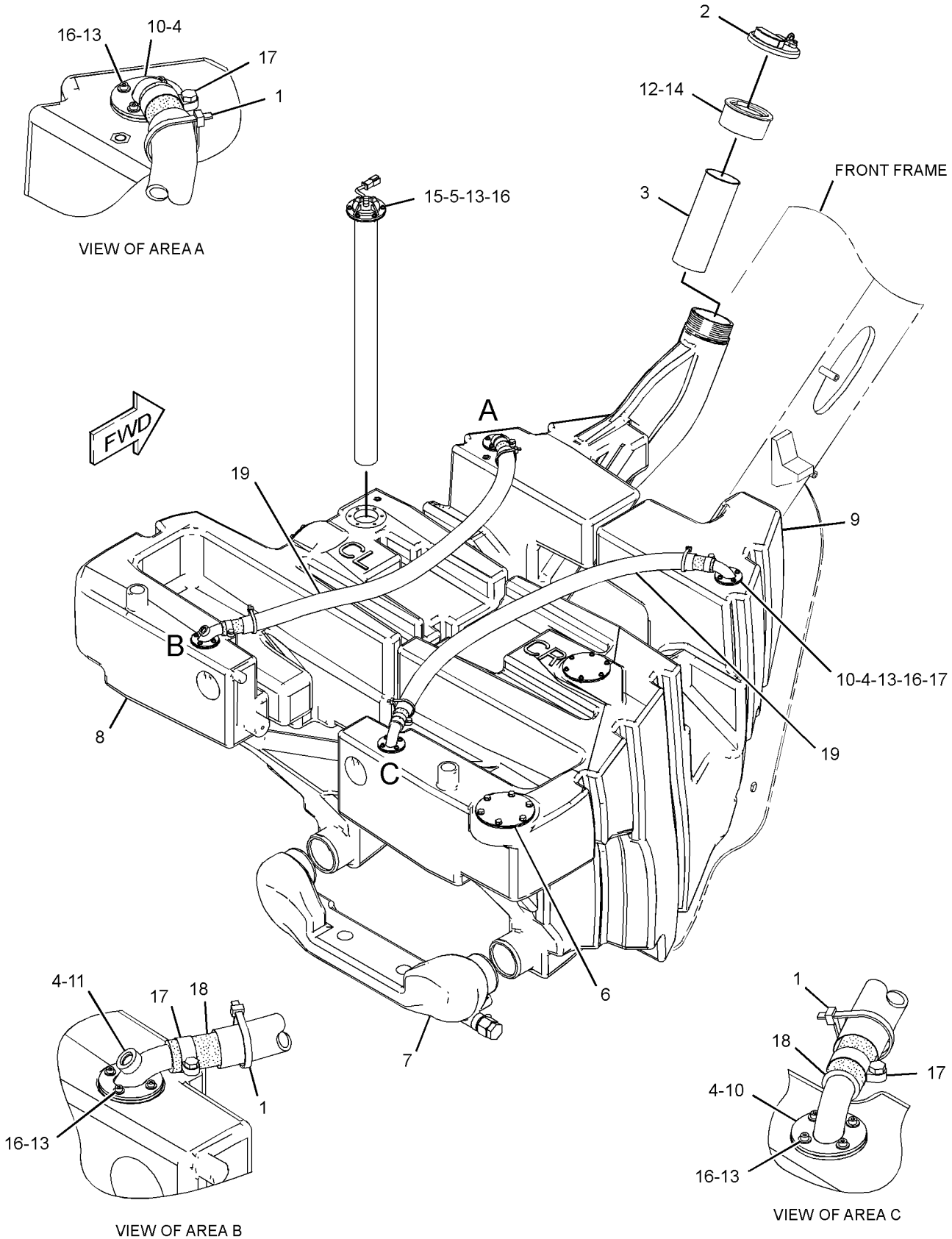

GRAPHIC #1 **<END>** g01368011

FUEL SYSTEM

270-6988 TANK GP-FUEL—FAST FILL

S/N: B9D1-UP

SMCS-1273 **i02787513**

NOTE	REF NO	GRAPHIC REF	PART NUMBER	QTY	PART NAME 1 2 3 4 5 6 (PRODUCT LEVEL)	SEE PAGE
	1	1	**7K-1181**	4	STRAP-CABLE	
	2	1	**7X-7700**	1	CAP AS-FILLER (FUEL TANK)	
		1	**9X-2205**	1	KIT-CAP FILTER (FUEL TANK)	
					(KIT INCLUDES FILTER AS, SCREWS, GASKETS & VALVE)	
		1	**9X-8600**	1	SEAL-O-RING	
	3	1	**199-9907**	1	STRAINER-FUEL	
	4	1	**203-9807**	4	GASKET	
	5	1	**208-0800**	1	GASKET	
Y	6	1	**248-4765**	1	TANK GP-FUEL (CROSSOVER)	123
	7	1	**258-8675**	1	TANK AS-FUEL (LH)	
	8	1	**258-8676**	1	TANK AS-FUEL (RH)	
Y	9	1	*281-6780*	1	ADAPTER GP-FAST FILL FUEL	101
	10	1	**288-7312**	3	VENT AS	
	11	1	**296-1302**	1	VENT AS	
	12	1	**103-2006**	1	SCREW-PAN HEAD (6-19X0.37-IN)	
M	13	1	**162-2165**	22	BOLT-SOCKET HEAD (M4X0.7X16-MM)	
	14	1	**194-6523**	1	ADAPTER	
	15	1	**249-7742**	1	FILM-IDENTIFICATION (FAST FILL FUEL, READ OMM)	
	16	1	**269-1021**	1	SENDER AS-FUEL	
		1	**283-9503**	1	KIT-DIAL SENSOR (FUEL LEVEL GAUGE)	
					(KIT INCLUDES SENSOR AS & SCREWS)	
	17	1	**4B-4863**	22	WASHER (4.7X11X1.2-MM THK)	
	18	1	**9M-7958**	4	CLAMP-HOSE	
E	19	1	**146-7453**		HOSE (113-CM EACH)	
G	20	1	**160-2246**		SLEEVE-ABRASION (41-IN EACH)	

E-ORDER BY THE CENTIMETER
G-ORDER BY THE INCH
M-METRIC PART
Y-SEPARATE ILLUSTRATION

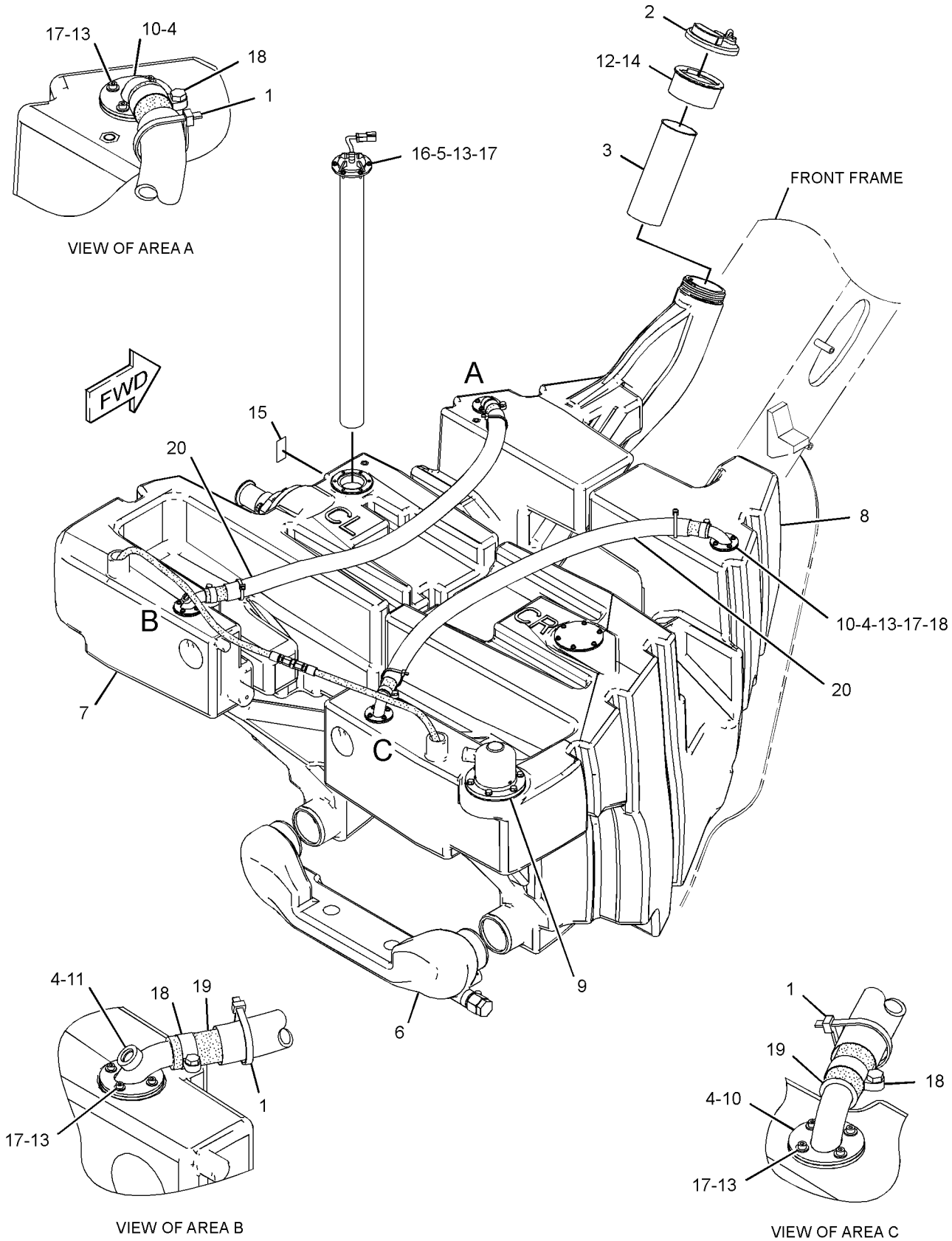

GRAPHIC #1 **<END>** g01368413

190-8977 WATER SEP & FUEL PRM PUMP GP

S/N: B9D1-UP

PART OF 188-6121 PUMP GP-FUEL PRM & PRIM FILTER

SMCS-1258, 1263 **i01934929**

NOTE	REF NO	GRAPHIC REF	PART NUMBER	QTY	PART NAME 1 2 3 4 5 6 (PRODUCT LEVEL)	SEE PAGE
Y	1	1	*174-9570*	1	FILTER GP-WATER SEP & FUEL (PRIMARY)	108
	2	1	**190-8970**	1	BASE AS (FUEL PRIMING PUMP)	

Y-SEPARATE ILLUSTRATION

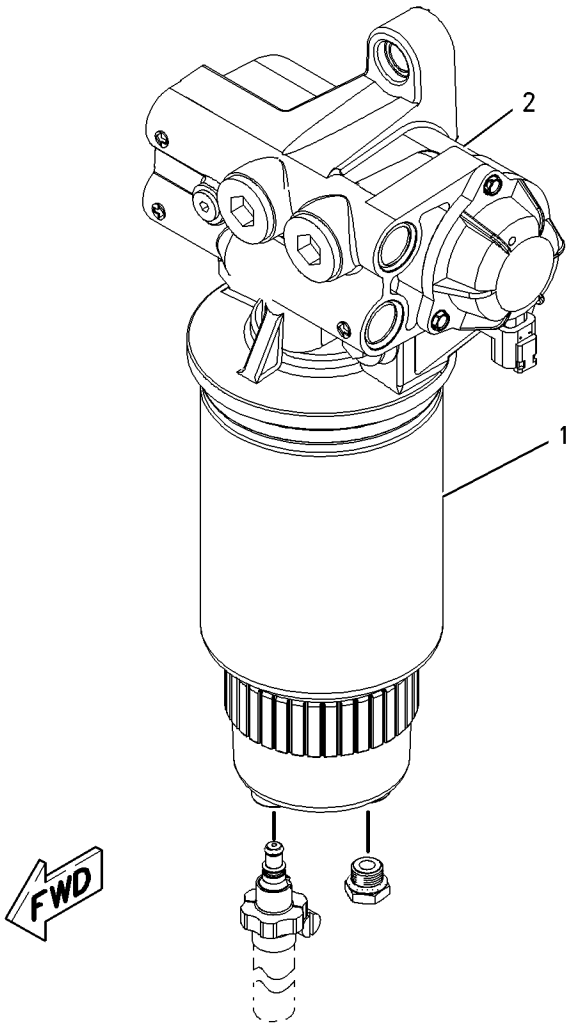

GRAPHIC #1 **<END>** g00904493

3E-6328 ALARM GP

S/N: B9D1-UP
24 VOLT
PART OF 291-2910 WIRING GP-CAB

SMCS-7400, 7402, 7407 **i02021590**

NOTE	REF NO	GRAPHIC REF	PART NUMBER	QTY	PART NAME 1 2 3 4 5 6 (PRODUCT LEVEL)	SEE PAGE
	1	1	**102-8802**	1	KIT-RECEPTACLE (2-PIN)	
					(INCLUDES RECEPTACLE AS & WEDGE)	
	2	1	**186-3735**	2	PIN-CONNECTOR (16-GA TO 18-GA)	

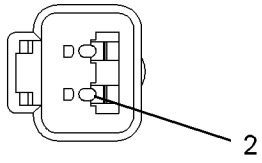

VIEW A–A

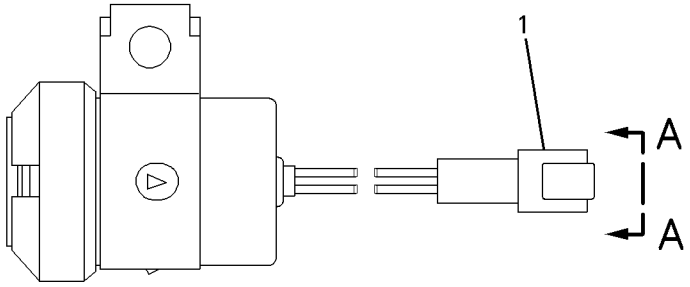

GRAPHIC #1 **<END>** g00697818

177-9953 ALTERNATOR GP-CHARGING*R

S/N: B9D1-UP
24 VOLT, 80 AMP
PART OF 246-6701, 253-2723 ALTERNATOR GP-CHARGING

SMCS-1405 **i01820527**

NOTE	REF NO	GRAPHIC REF	PART NUMBER	QTY	PART NAME 1 2 3 4 5 6 (PRODUCT LEVEL)	SEE PAGE
	1	1	**185-2653**	1	FRAME	
	2	1	**5S-7349**	1	BOLT (1/4-20X0.5-IN)	
	3	1	**185-2639**	1	FAN AS	
	4	1	**1H-3244**	1	LOCKWASHER	
	5	1	**185-2645**	1	FRAME	
	6	1	**2K-4821**	1	LOCKNUT (5/8-18-THD)	
	7	1	**5P-8247**	1	WASHER-HARD (17X32X3.5-MM THK)	
	8	1	**185-2651**	1	COVER	
	9	1	**8T-4205**	1	WASHER-HARD (7.2X14.5X2-MM THK)	
	10	1	**185-2647**	1	GROMMET	
	11	1	**9L-6770**	1	CAP	
	12	1	**185-2643**	1	STATOR AS	
	13	1	**185-2638**	2	COLLAR	
	14	1	**185-2654**	1	PLATE	
	15	1	**185-2650**	1	ROTOR AS	
	16	1	**185-2644**	1	COIL AS	
	17	1	**185-2648**	1	REGULATOR AS-VOLTAGE (24-VOLT)	
J	18	1	**6V-8189**	1	NUT (5/16-18-THD)	
J	19	1	**8T-4224**	1	WASHER-HARD (8.8X16X2-MM THK)	
J	20	1	**3F-9556**	1	LOCKWASHER	
					AVAILABLE REPAIR KIT(S):	
J			**199-7891**		KIT-TERMINAL (ALTERNATOR)	
					(INCLUDES INSULATORS, WASHERS, NUT, STEP NUT)	
			185-2655		KIT-BEARING (ALTERNATOR)	
					(INCLUDES 3 BEARINGS)	
			199-8436		KIT-TERMINAL (ALTERNATOR)	
					(INCLUDES HOLDER AS, PLATE, INSULATOR, PIN, BOLT, GROMMET, NUT)	
			185-2658		KIT-HARDWARE (ALTERNATOR)	
					(INCLUDES BOLTS)	

J-KIT MARKED J AVAILABLE FOR PARTS MARKED J

177-9953 ALTERNATOR GP-CHARGING *(contd.)* **i01820527**

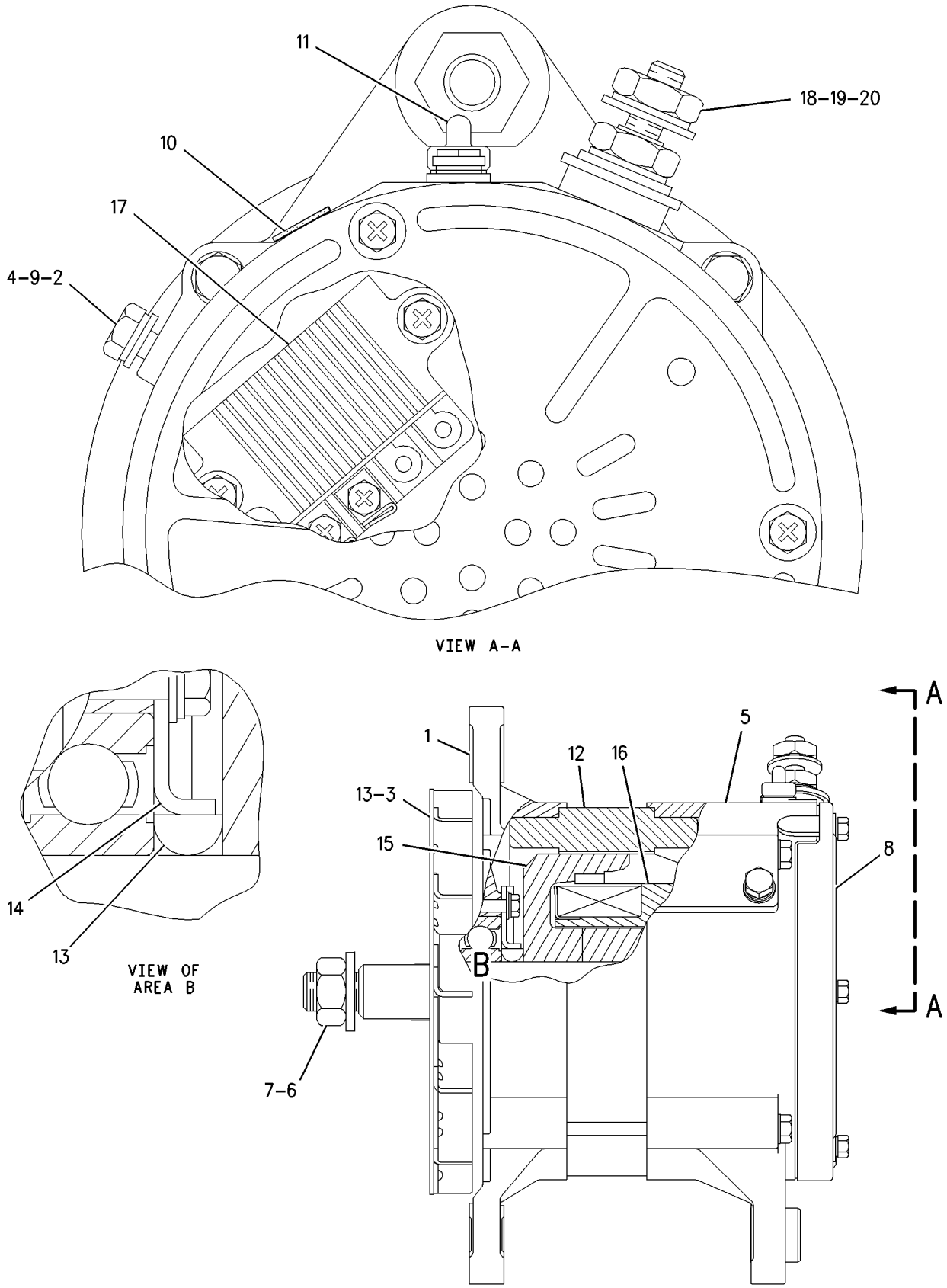

GRAPHIC #1 **<END>** g00795850

246-6701 ALTERNATOR GP-CHARGING—WITHOUT AIR CONDITIONER

S/N: B9D1-UP

80-AMPERE

SMCS-1405 **i02796263**

NOTE	REF NO	GRAPHIC REF	PART NUMBER	QTY	PART NAME 1 2 3 4 5 6 (PRODUCT LEVEL)	SEE PAGE
	1	1	**7E-3443**	1	BUSHING-TERMINAL	
	2	1	**7W-3872**	2	SLEEVE	
	3	1	**124-7792**	1	PULLEY AS-IDLER	
	4	1	**126-8237**	1	SUPPORT-COMPRESSOR	
	5	1	**126-8240**	1	SUPPORT-ALTERNATOR	
	6	1	**129-5096**	1	PULLEY-ALTERNATOR	
	7	1	**131-2182**	1	SUPPORT-ALTERNATOR	
	8	1	**145-2901**	1	COVER-DUST	
Y	9	1	**175-3223**	1	PULLEY GP-IDLER	50
	10	1	**175-3225**	1	BRACKET-PULLEY	
YR	11	1	**177-9953**	1	ALTERNATOR GP-CHARGING (24-VOLT, 80-AMPERE)	130
	12	1	**263-1786**	1	SPACER	
	13	1	**264-6870**	1	BRACKET AS	
	14	1	**264-7021**	1	GUARD AS-BELT	
	14A	1	**8R-8088**	2	SPACER (11.66X15.88X18-MM THK)	
	15	1	**266-7531**	1	PLATE	
	16	1	**268-5817**	1	FILM-INSTRUCTION (BELT ROUTING)	
	17	1	**293-3908**	1	BELT-SERPENTINE	
M	18	1	**227-6715**	2	STUD (M10X1.15-THD)	
	19	1	**285-9066**	1	BOLT (M8X1.25X65-MM)	
	20	1	**5P-4116**	1	WASHER-HARD (8.8X20.5X2-MM THK)	
	21	1	**6V-8188**	1	NUT (1/2-13-THD)	
	22	1	**7X-0481**	1	BOLT (1/2-13X8-IN)	
M	23	1	**7X-2537**	4	BOLT (M8X1.25X35-MM)	
	24	1	**8T-4121**	17	WASHER-HARD (11X21X2.5-MM THK)	
M	25	1	**8T-4133**	4	NUT (M10X1.5-THD)	
M	26	1	**8T-4185**	2	BOLT (M10X1.5X50-MM)	
M	27	1	**8T-4186**	4	BOLT (M10X1.5X40-MM)	
M	28	1	**8T-4195**	2	BOLT (M10X1.5X30-MM)	
	29	1	**8T-4223**	3	WASHER-HARD (13.5X25.5X3-MM THK)	
	30	1	**8T-4224**	4	WASHER-HARD (8.8X16X2-MM THK)	
	31	1	**8T-4835**	1	BOLT (1/2-13X2-IN)	
M	32	1	**8T-6466**	1	BOLT (M10X1.5X60-MM)	

M-METRIC PART
R-REMFG PART MAY BE AVAILABLE
Y-SEPARATE ILLUSTRATION

246-6701 **ALTERNATOR GP-CHARGING** *(contd.)* **i02796263**

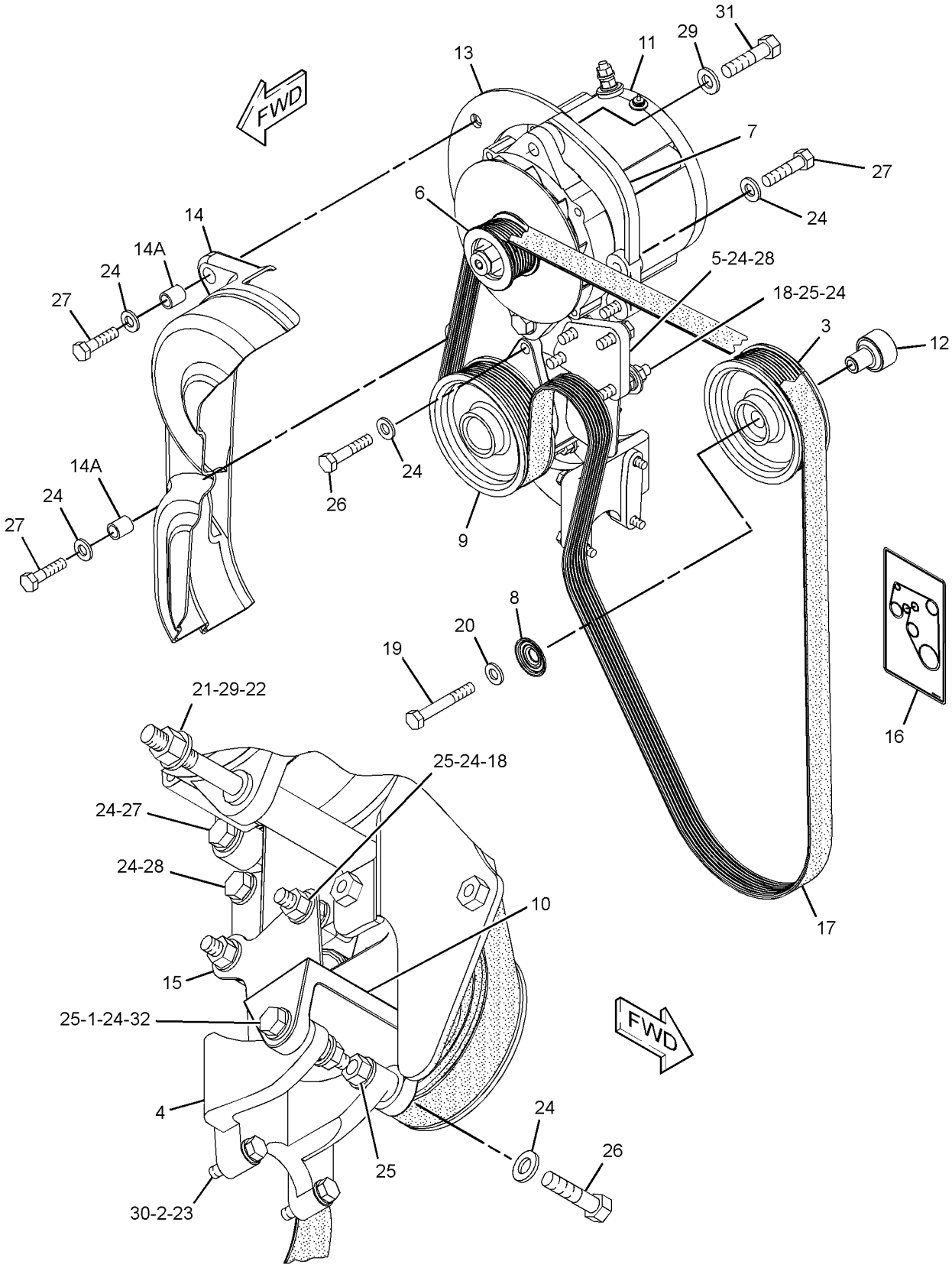

GRAPHIC #1 **<END>** g01393196

246-6715 ALTERNATOR GP-CHARGING—WITHOUT AIR CONDITIONER

S/N: B9D1-UP

150-AMPERE

SMCS-1405 **i02796268**

NOTE	REF NO	GRAPHIC REF	PART NUMBER	QTY	PART NAME 1 2 3 4 5 6 (PRODUCT LEVEL)	SEE PAGE
	1	1	**7E-3443**	1	BUSHING-TERMINAL	
	2	1	**7W-3872**	2	SLEEVE	
	3	1	**129-5096**	1	PULLEY-ALTERNATOR	
	4	1	**124-7792**	1	PULLEY AS-IDLER	
	5	1	**126-8237**	1	SUPPORT-COMPRESSOR	
	6	1	**126-8240**	1	SUPPORT-ALTERNATOR	
	7	1	**131-2182**	1	SUPPORT-ALTERNATOR	
Y	8	1	**175-3223**	1	PULLEY GP-IDLER	50
	9	1	**175-3225**	1	BRACKET-PULLEY	
	10	1	**249-0313**	1	ALTERNATOR GP-CHARGING (24-VOLT, 150-AMPERE)	
	11	1	**263-1786**	1	SPACER	
	12	1	**293-3908**	1	BELT-SERPENTINE	
	13	1	**264-6870**	1	BRACKET AS	
	14	1	**264-7021**	1	GUARD AS-BELT	
	14A	1	**8R-8088**	2	SPACER (11.66X15.88X18-MM THK)	
	15	1	**266-7531**	1	PLATE	
	16	1	**268-5817**	1	FILM-INSTRUCTION (BELT ROUTING)	
M	17	1	**227-6715**	2	STUD (M10X1.15-THD)	
	18	1	**6V-8188**	1	NUT (1/2-13-THD)	
	19	1	**7X-0481**	1	BOLT (1/2-13X8-IN)	
M	20	1	**7X-2537**	4	BOLT (M8X1.25X35-MM)	
	21	1	**8T-4121**	17	WASHER-HARD (11X21X2.5-MM THK)	
M	22	1	**8T-4133**	4	NUT (M10X1.5-THD)	
M	23	1	**8T-4185**	2	BOLT (M10X1.5X50-MM)	
M	24	1	**8T-4186**	4	BOLT (M10X1.5X40-MM)	
M	25	1	**8T-4195**	2	BOLT (M10X1.5X30-MM)	
	26	1	**8T-4223**	3	WASHER-HARD (13.5X25.5X3-MM THK)	
	27	1	**8T-4224**	4	WASHER-HARD (8.8X16X2-MM THK)	
	28	1	**8T-4835**	1	BOLT (1/2-13X2-IN)	
	29	1	**285-9066**	1	BOLT (M8X1.25X65-MM)	
M	30	1	**8T-6466**	1	BOLT (M10X1.5X60-MM)	
	31	1	**5P-4116**	1	WASHER-HARD (8.8X20.5X2-MM THK)	
	32	1	**145-2901**	1	COVER-DUST	

M-METRIC PART
Y-SEPARATE ILLUSTRATION

246-6715 **ALTERNATOR GP-CHARGING** *(contd.)* **i02796268**

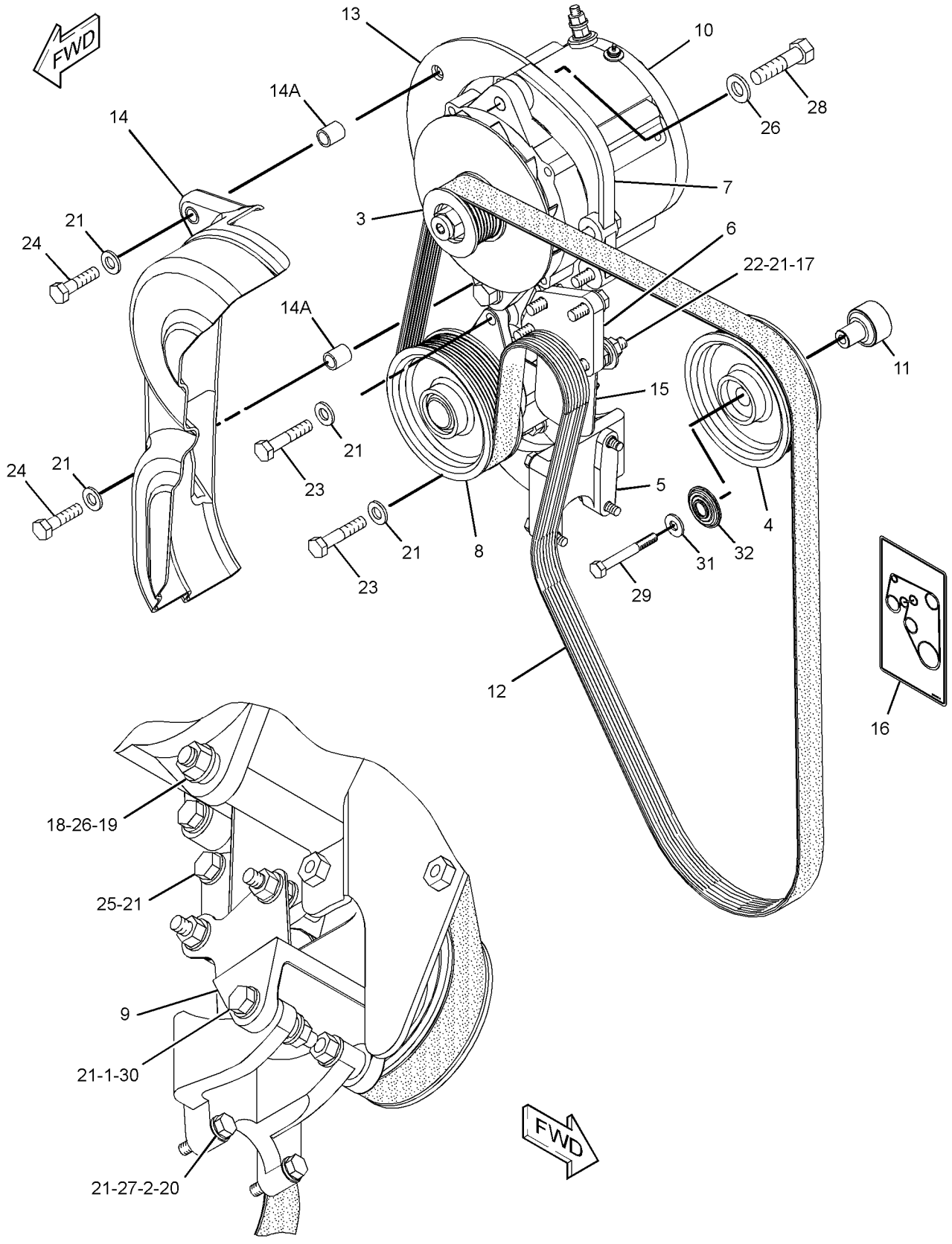

GRAPHIC #1 **<END>** g01373815

253-2723 ALTERNATOR GP-CHARGING—WITH AIR CONDITIONER

S/N: B9D1-UP
80-AMPERE

SMCS-1405 **i02796301**

NOTE	REF NO	GRAPHIC REF	PART NUMBER	QTY	PART NAME 1 2 3 4 5 6 (PRODUCT LEVEL)	SEE PAGE
	1	1	**129-5096**	1	PULLEY-ALTERNATOR	
	2	1	**124-7792**	1	PULLEY AS-IDLER	
Y	3	1	*169-3130*	1	MOUNTING GP-ALTERNATOR	41
YR	4	1	**177-9953**	1	ALTERNATOR GP-CHARGING (24-VOLT, 80-AMPERE)	130
	5	1	**263-1786**	1	SPACER	
	6	1	**293-3909**	1	BELT-SERPENTINE	
	7	1	**264-7021**	1	GUARD AS-BELT	
		1	**8R-8088**	2	SPACER (11.66X15.88X18-MM THK)	
	8	1	**266-6025**	1	BRACKET AS	
	9	1	**268-5817**	1	FILM-INSTRUCTION (BELT ROUTING)	
	10	1	**6V-8188**	1	NUT (1/2-13-THD)	
	11	1	**7X-0481**	1	BOLT (1/2-13X8-IN)	
	12	1	**8T-4121**	2	WASHER-HARD (11X21X2.5-MM THK)	
M	13	1	**8T-4186**	2	BOLT (M10X1.5X40-MM)	
	14	1	**8T-4223**	3	WASHER-HARD (13.5X25.5X3-MM THK)	
	15	1	**8T-4835**	1	BOLT (1/2-13X2-IN)	
	16	1	**285-9066**	1	BOLT (M8X1.25X65-MM)	
	17	1	**5P-4116**	1	WASHER-HARD (8.8X20.5X2-MM THK)	
	18	1	**145-2901**	1	COVER-DUST	

M-METRIC PART
R-REMFG PART MAY BE AVAILABLE
Y-SEPARATE ILLUSTRATION

253-2723 **ALTERNATOR GP-CHARGING** *(contd.)* **i02796301**

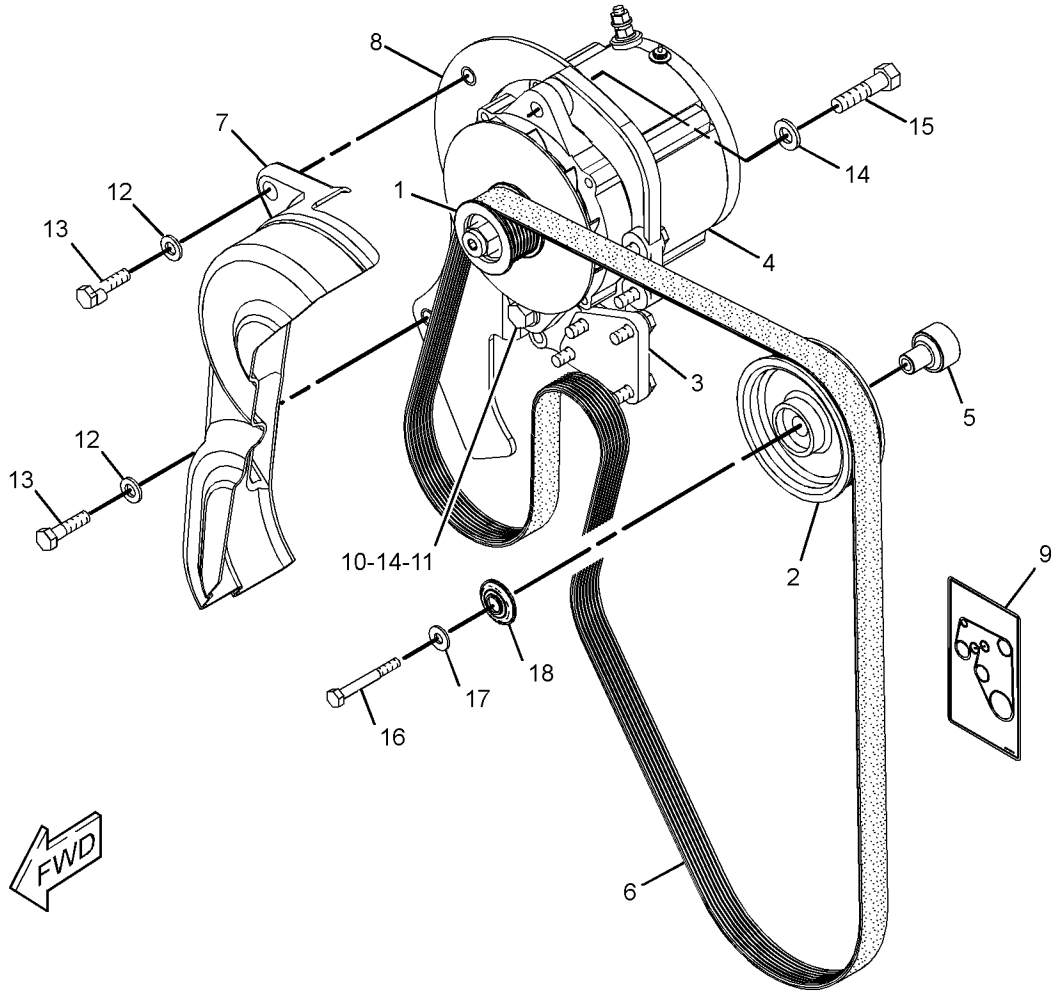

GRAPHIC #1 **<END>** g01360508

253-2724 ALTERNATOR GP-CHARGING—WITH AIR CONDITIONER

S/N: B9D1-UP
150-AMPERE
PART OF 261-0187 SNOW AR-MOTOR GRADER

SMCS-1405 **i02796305**

NOTE	REF NO	GRAPHIC REF	PART NUMBER	QTY	PART NAME 1 2 3 4 5 6 (PRODUCT LEVEL)	SEE PAGE
	1	1	**129-5096**	1	PULLEY-ALTERNATOR	
	2	1	**124-7792**	1	PULLEY AS-IDLER	
Y	3	1	*169-3130*	1	MOUNTING GP-ALTERNATOR	41
	4	1	**249-0313**	1	ALTERNATOR GP-CHARGING (24-VOLT, 150-AMPERE)	
	5	1	**263-1786**	1	SPACER	
	6	1	**293-3909**	1	BELT-SERPENTINE	
	7	1	**264-7021**	1	GUARD AS-BELT	
		1	**8R-8088**	2	SPACER (11.66X15.88X18-MM THK)	
	8	1	**266-6025**	1	BRACKET AS	
	9	1	**268-5817**	1	FILM-INSTRUCTION (BELT ROUTING)	
	10	1	**6V-8188**	1	NUT (1/2-13-THD)	
	11	1	**7X-0481**	1	BOLT (1/2-13X8-IN)	
	12	1	**8T-4121**	2	WASHER-HARD (11X21X2.5-MM THK)	
M	13	1	**8T-4186**	2	BOLT (M10X1.5X40-MM)	
	14	1	**8T-4223**	3	WASHER-HARD (13.5X25.5X3-MM THK)	
	15	1	**8T-4835**	1	BOLT (1/2-13X2-IN)	
	16	1	**285-9066**	1	BOLT (M8X1.25X65-MM)	
	17	1	**5P-4116**	1	WASHER-HARD (8.8X20.5X2-MM THK)	
	18	1	**145-2901**	1	COVER-DUST	

M-METRIC PART
Y-SEPARATE ILLUSTRATION

253-2724 **ALTERNATOR GP-CHARGING** *(contd.)* **i02796305**

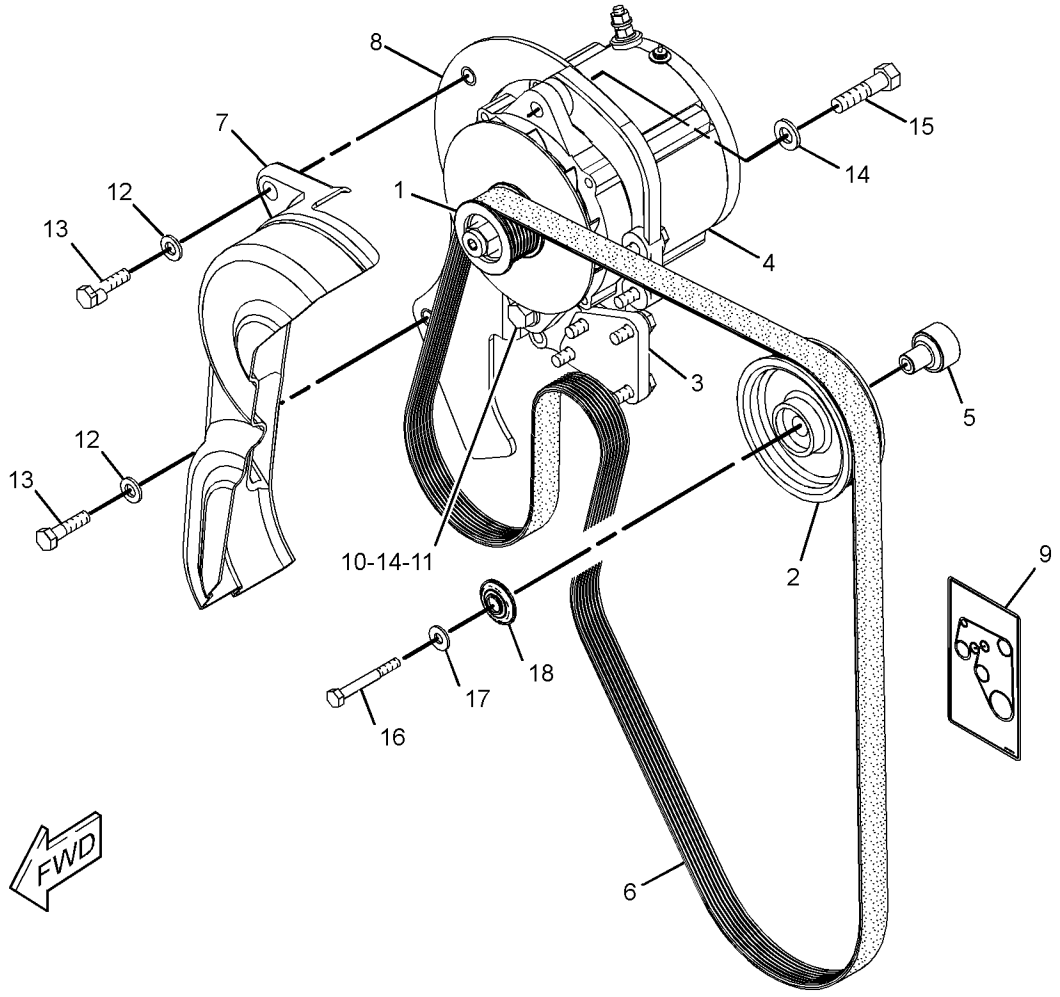

GRAPHIC #1 **<END>** g01360617

275-9651 APPLICATION GP-COMMUNICATION–

PRODUCT LINK 300

S/N: B9D1-UP

PART OF 235-6188 INSTALLATION AR-COMMUNICATION

SMCS-7606, 7610, 7620 **i02779008**

NOTE	PART NUMBER	QTY	PART NAME 1 2 3 4 5 6 (PRODUCT LEVEL)	SEE PAGE
Y	**239-9954**	1	CONTROL GP-UNPROGRAMMED (PRODUCT LINK 300)	160

Y-SEPARATE ILLUSTRATION

<END>

ELECTRICAL AND STARTING SYSTEM

233-4603 BATTERY & WIRING GP

S/N: B9D1-UP

SMCS-1401, 1402, 1408 **i02776072**

NOTE	REF NO	GRAPHIC REF	PART NUMBER	QTY	PART NAME 1 2 3 4 5 6 (PRODUCT LEVEL)	SEE PAGE
	1	1	**3S-2093**	6	STRAP-CABLE	
Y	2	1	**7N-0718**	1	SWITCH GP-DISCONNECT (BATTERY)	251
	3	1	**9G-2758**	1	LOCKOUT AS-SWITCH	
	4	1	**230-6368**	2	BATTERY (12-VOLT, MAINTENANCE FREE)	
	5	1	**236-2340**	1	CABLE AS	
E		1	**159-8049**		CABLE (00-GA, RED) (17-CM)	
		1	**8C-5918**	1	TERMINAL AS (NEGATIVE)	
		1	**8T-9756**	1	TERMINAL AS (POSITIVE)	
		1	**1M-6119**	1	BOLT (5/16-18X1.375-IN)	
		1	**1M-6120**	1	NUT (5/16-18-THD) (X)	
		1	**9G-0002**	1	COVER-TERMINAL (RED)	
		1	**9G-0005**	1	COVER-TERMINAL (BLACK)	
	6	1	**247-6440**	2	HOLD-DOWN AS	
	7	1	**247-6441**	1	HOLD-DOWN AS	
	8	1	**265-6631**	1	RECEPTACLE AS	
D		1	**6V-2722**		TUBE-HEAT SHRINK (25.4-MM DIA) (0.1-M)	
		1	**1S-7251**	1	TERMINAL-RING (FOR 1/2-IN BOLT)	
		1	**1S-7252**	1	TERMINAL-RING (FOR 3/8-IN BOLT)	
E		1	**159-8049**		CABLE (00-GA, RED) (44-CM)	
E		1	**159-8050**		CABLE (00-GA, BLACK) (9-CM)	
	9	1	**267-2099**	1	CABLE AS	
E		1	**159-8049**		CABLE (00-GA, RED) (75-CM)	
		1	**1S-7251**	1	TERMINAL-RING (FOR 1/2-IN BOLT)	
		1	**8N-0869**	1	COVER-TERMINAL (RED)	
		1	**9G-0002**	1	COVER-TERMINAL (RED)	
		1	**8T-9756**		TERMINAL AS (POSITIVE)	
		1	**1M-6119**	1	BOLT (5/16-18X1.375-IN)	
		1	**1M-6120**	1	NUT (5/16-18-THD)	
	10	1	**272-7239**	1	BLOCK AS-JUNCTION	
	11	1	**292-4304**	1	CABLE AS	
E		1	**159-8050**		CABLE (00-GA, BLACK) (90-CM)	
		1	**1S-7252**	1	TERMINAL-RING (FOR 3/8-IN BOLT)	
		1	**9G-0005**	1	COVER-TERMINAL (BLACK)	
		1	**9G-8909**	1	COVER-TERMINAL (BLACK)	
		1	**8C-5918**	1	TERMINAL AS (NEGATIVE)	
		1	**1M-6119**	1	BOLT (5/16-18X1.375-IN)	
		1	**1M-6120**	1	NUT (5/16-18-THD)	
	12	1	**096-6166**	4	WASHER-HARD (4.5X9X1-MM THK)	
	13	1	**134-3344**	1	STRAP AS	
	14	1	**174-5907**	7	CLIP	
	15	1	**245-8842**	2	CLIP	
	16	1	**5P-4116**	4	WASHER-HARD (8.8X20.5X2-MM THK)	
M	17	1	**6V-8202**	4	BOLT-SOCKET HEAD (M8X1.25X16-MM)	
	18	1	**8S-2634**	1	COVER AS	
		1	**2P-2975**	2	SEAL-O-RING	
	19	1	**8T-4121**	6	WASHER-HARD (11X21X2.5-MM THK)	
M	20	1	**8T-4136**	5	BOLT (M10X1.5X25-MM)	
M	21	1	**8T-4137**	1	BOLT (M10X1.5X20-MM)	
M	22	1	**8T-4179**	1	BOLT (M12X1.75X20-MM)	
M	23	1	**8T-4189**	3	BOLT (M8X1.25X20-MM)	
	24	1	**8T-4223**	1	WASHER-HARD (13.5X25.5X3-MM THK)	
	25	1	**8T-4224**	3	WASHER-HARD (8.8X16X2-MM THK)	
M	26	1	**8T-9405**	4	BOLT-SOCKET HEAD (M4X0.7X16-MM)	

D-ORDER BY THE METER
E-ORDER BY THE CENTIMETER
M-METRIC PART
Y-SEPARATE ILLUSTRATION

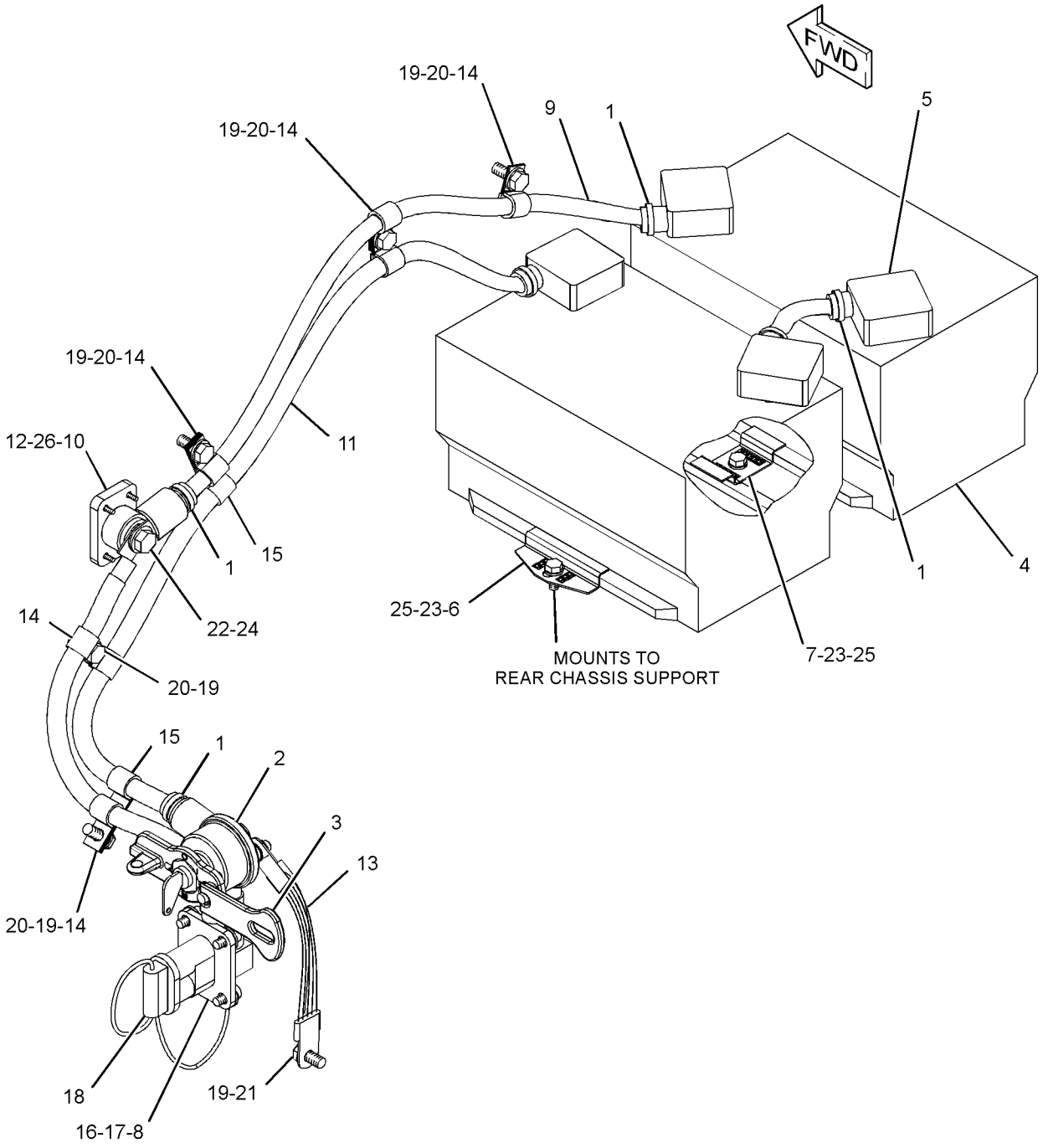

GRAPHIC #1 **<END>** g01343572

233-4611 BATTERY & WIRING GP–EXTREME SERVICE

S/N: B9D1-UP

PART OF 261-0187 SNOW AR-MOTOR GRADER

SMCS-1401, 1402, 1408 **i02776079**

NOTE	REF NO	GRAPHIC REF	PART NUMBER	QTY	PART NAME 1 2 3 4 5 6 (PRODUCT LEVEL)	SEE PAGE
Y	1	1	**7N-0718**	1	SWITCH GP-DISCONNECT (BATTERY)	251
J	2	1	**9G-2758**	1	LOCKOUT AS-SWITCH	
	3	1	**153-5710**	2	BATTERY (12-VOLT, MAINTENANCE FREE)	
	4	1	**188-3959**	1	BRACKET	
	5	1	**236-2340**	1	CABLE AS	
		1	**8T-9756**	1	TERMINAL AS (POSITIVE)	
		1	**8C-5918**	1	TERMINAL AS (NEGATIVE)	
					(EACH TERMINAL AS INCLUDES)	
		1	**1M-6119**	1	BOLT (5/16-18X1.375-IN)	
		1	**1M-6120**	1	NUT (5/16-18-THD)	
		1	**9G-0002**	1	COVER-TERMINAL (RED)	
		1	**9G-0005**	1	COVER-TERMINAL (BLACK)	
E		1	**159-8049**		CABLE (00-GA, RED) (17-CM)	
	6	1	**236-2341**	1	CABLE AS	
		1	**1S-7251**	1	TERMINAL-RING (FOR 1/2-IN BOLT)	
		1	**3S-6049**	1	TERMINAL AS-BATTERY (POSITIVE)	
		1	**1M-6119**	1	BOLT (5/16-18X1.375-IN)	
		1	**1M-6120**	1	NUT (5/16-18-THD)	
		1	**8N-0869**	1	COVER-TERMINAL (RED)	
		1	**8N-1725**	1	COVER-TERMINAL (RED)	
E		1	**159-8049**		CABLE (00-GA, RED) (85-CM)	
	7	1	**292-4305**	1	CABLE AS	
		1	**1S-7252**	1	TERMINAL-RING (FOR 3/8-IN BOLT)	
		1	**3S-6050**	1	TERMINAL AS-BATTERY (NEGATIVE)	
		1	**1M-6119**	1	BOLT (5/16-18X1.375-IN)	
		1	**1M-6120**	1	NUT (5/16-18-THD)	
		1	**7N-5274**	1	COVER-TERMINAL (BLACK)	
		1	**9G-8909**	1	COVER-TERMINAL (BLACK)	
E		1	**159-8050**		CABLE (00-GA, BLACK) (153-CM)	
	8	1	**246-1670**	1	BAR	
	9	1	**263-6891**	1	HOLD-DOWN AS	
	10	1	**265-6631**	1	RECEPTACLE AS	
		1	**1S-7251**	1	TERMINAL-RING (FOR 1/2-IN BOLT)	
		1	**1S-7252**	1	TERMINAL-RING (FOR 3/8-IN BOLT)	
D		1	**6V-2722**		TUBE-HEAT SHRINK (25.4-MM DIA) (0.1-M)	
E		1	**159-8049**		CABLE (00-GA, RED) (44-CM)	
E		1	**159-8050**		CABLE (00-GA, BLACK) (9-CM)	
	11	1	**272-7239**	1	BLOCK AS-JUNCTION	
	12	1	**096-6166**	4	WASHER-HARD (4.5X9X1-MM THK)	
	13	1	**134-3344**	1	STRAP AS	
	14	1	**174-5907**	9	CLIP	
	15	1	**245-8842**	2	CLIP	
	16	1	**5P-4116**	4	WASHER-HARD (8.8X20.5X2-MM THK)	
M	17	1	**6V-8202**	4	BOLT-SOCKET HEAD (M8X1.25X16-MM)	
	18	1	**3S-2093**	6	STRAP-CABLE	
	19	1	**7X-7729**	2	WASHER (11X25X3-MM THK)	
	20	1	**8S-2634**	1	COVER AS	
M	21	1	**8T-0389**	2	LOCKNUT (M10X1.15-THD)	
	22	1	**8T-4121**	11	WASHER-HARD (11X21X2.5-MM THK)	
M	23	1	**8T-4137**	1	BOLT (M10X1.5X20-MM)	
M	24	1	**8T-4179**	1	BOLT (M12X1.75X20-MM)	
M	25	1	**8T-4185**	2	BOLT (M10X1.5X50-MM)	
M	26	1	**8T-4136**	8	BOLT (M10X1.5X25-MM)	
	27	1	**8T-4223**	1	WASHER-HARD (13.5X25.5X3-MM THK)	
M	28	1	**8T-9405**	4	BOLT-SOCKET HEAD (M4X0.7X16-MM)	
	29	1	**9R-6414**	2	ROD	

D-ORDER BY THE METER
E-ORDER BY THE CENTIMETER
J-REQUIRES CORPORATE KEY
M-METRIC PART
Y-SEPARATE ILLUSTRATION

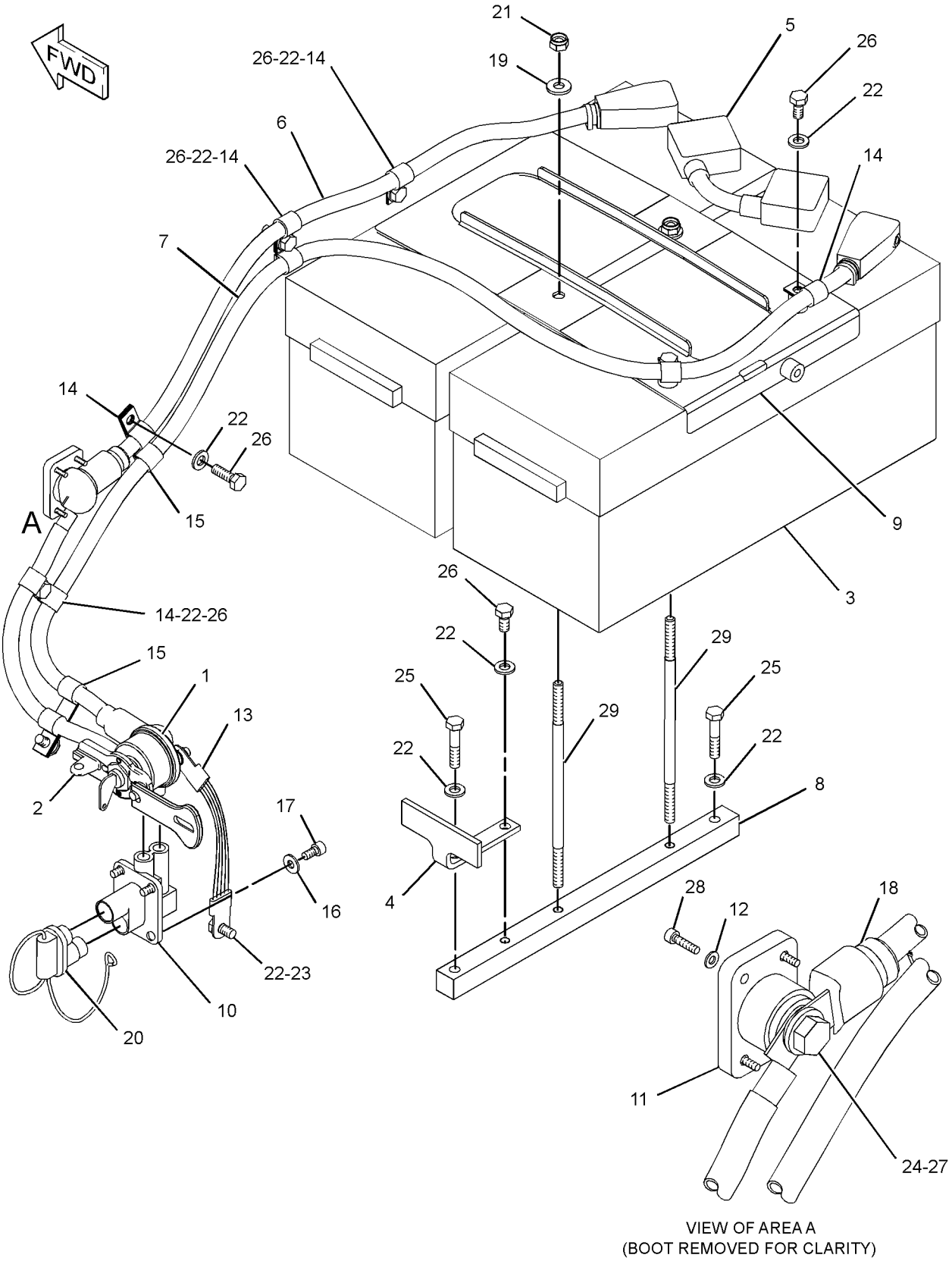

VIEW OF AREA A
(BOOT REMOVED FOR CLARITY)

GRAPHIC #1 **<END>** g01341814

ELECTRICAL AND STARTING SYSTEM

236-1924 BATTERY & WIRING GP—HEAVY-DUTY

S/N: B9D1-UP

SMCS-1401, 1402, 1408 **i02778973**

NOTE	REF NO	GRAPHIC REF	PART NUMBER	QTY	PART NAME 1 2 3 4 5 6 (PRODUCT LEVEL)	SEE PAGE
	1	1,2	**3S-2093**	6	STRAP-CABLE	
Y	2	1	**7N-0718**	1	SWITCH GP-DISCONNECT (BATTERY)	251
J	3	1	**9G-2758**	1	LOCKOUT AS-SWITCH (BATTERY DISCONNECT)	
	4	2	**153-5700**	2	BATTERY (12-VOLT, MAINTENANCE FREE) (WET)	
	5	2	**188-3959**	1	BRACKET	
	6	2	**236-2340**	1	CABLE AS	
		2	**8C-5918**	1	TERMINAL AS (NEGATIVE)	
		2	**8T-9756**	1	TERMINAL AS (POSITIVE)	
					(EACH TERMINAL AS INCLUDES)	
		2	**1M-6119**	1	BOLT (5/16-18X1.375-IN)	
		2	**1M-6120**	1	NUT (5/16-18-THD)	
		2	**9G-0002**	1	COVER-TERMINAL (RED)	
		2	**9G-0005**	1	COVER-TERMINAL (BLACK)	
E		2	**159-8049**		CABLE (OO-GA, RED) (17-CM)	
	7	2	**236-2341**	1	CABLE AS	
		2	**1S-7251**	1	TERMINAL-RING (FOR 1/2-IN BOLT)	
		2	**3S-6049**	1	TERMINAL AS-BATTERY (POSITIVE)	
		2	**1M-6119**	1	BOLT (5/16-18X1.375-IN)	
		2	**1M-6120**	1	NUT (5/16-18-THD)	
		2	**8N-0869**	1	COVER-TERMINAL (RED)	
		2	**8N-1725**	1	COVER-TERMINAL (RED)	
E		2	**159-8049**		CABLE (OO-GA, RED) (85-CM)	
	8	2	**246-1670**	1	BAR	
	9	2	**263-6891**	1	HOLD-DOWN AS	
M		2	**9R-2821**	1	BOSS (M10X1.5X15-MM)	
	10	1	**265-6631**	1	RECEPTACLE AS	
		1	**1S-7251**	1	TERMINAL-RING (FOR 1/2-IN BOLT)	
		1	**1S-7252**	1	TERMINAL-RING (FOR 3/8-IN BOLT)	
D		1	**6V-2722**		TUBE-HEAT SHRINK (25.4-MM DIA) (0.1-M)	
E		1	**159-8049**		CABLE (OO-GA, RED) (44-CM)	
E		1	**159-8050**		CABLE (OO-GA, BLACK) (9-CM)	
	11	1	**272-7239**	1	BLOCK AS-JUNCTION	
	12	2	**292-4305**	1	CABLE AS	
		2	**1S-7252**	1	TERMINAL-RING (FOR 3/8-IN BOLT)	
		2	**3S-6050**	1	TERMINAL AS-BATTERY (NEGATIVE)	
		2	**1M-6119**	1	BOLT (5/16-18X1.375-IN)	
		2	**1M-6120**	1	NUT (5/16-18-THD)	
		2	**7N-5274**	1	COVER-TERMINAL (BLACK)	
		2	**9G-8909**	1	COVER-TERMINAL (BLACK)	
E		2	**159-8050**		CABLE (OO-GA, BLACK) (149-CM)	
	13	1	**096-6166**	4	WASHER-HARD (4.5X9X1-MM THK)	
	14	1	**134-3344**	1	STRAP AS	
	15	1,2	**174-5907**	9	CLIP	
	16	1	**245-8842**	2	CLIP	
	17	1	**5P-4116**	4	WASHER-HARD (8.8X20.5X2-MM THK)	
M	18	1	**6V-8202**	4	BOLT-SOCKET HEAD (M8X1.25X16-MM)	
	19	2	**7X-7729**	2	WASHER (11X25X3-MM THK)	
	20	1	**8S-2634**	1	COVER AS	
		1	**2P-2975**	2	SEAL-O-RING	
M	21	2	**8T-0389**	2	LOCKNUT (M10X1.15-THD)	
	22	1,2	**8T-4121**	11	WASHER-HARD (11X21X2.5-MM THK)	
M	23	1,2	**8T-4136**	8	BOLT (M10X1.5X25-MM)	
M	24	1	**8T-4137**	1	BOLT (M10X1.5X20-MM)	
M	25	1	**8T-4179**	1	BOLT (M12X1.75X20-MM)	
M	26	2	**8T-4185**	2	BOLT (M10X1.5X50-MM)	
	27	1	**8T-4223**	1	WASHER-HARD (13.5X25.5X3-MM THK)	
M	28	1	**8T-9405**	4	BOLT-SOCKET HEAD (M4X0.7X16-MM)	

236-1924 **BATTERY & WIRING GP** *(contd.)* **i02778973**

NOTE	REF NO	GRAPHIC REF	PART NUMBER	QTY	PART NAME 1 2 3 4 5 6 (PRODUCT LEVEL)	SEE PAGE
	29	2	**9R-6414**	2	ROD	

D-ORDER BY THE METER
E-ORDER BY THE CENTIMETER
J-REQUIRES CORPORATE KEY
M-METRIC PART
Y-SEPARATE ILLUSTRATION

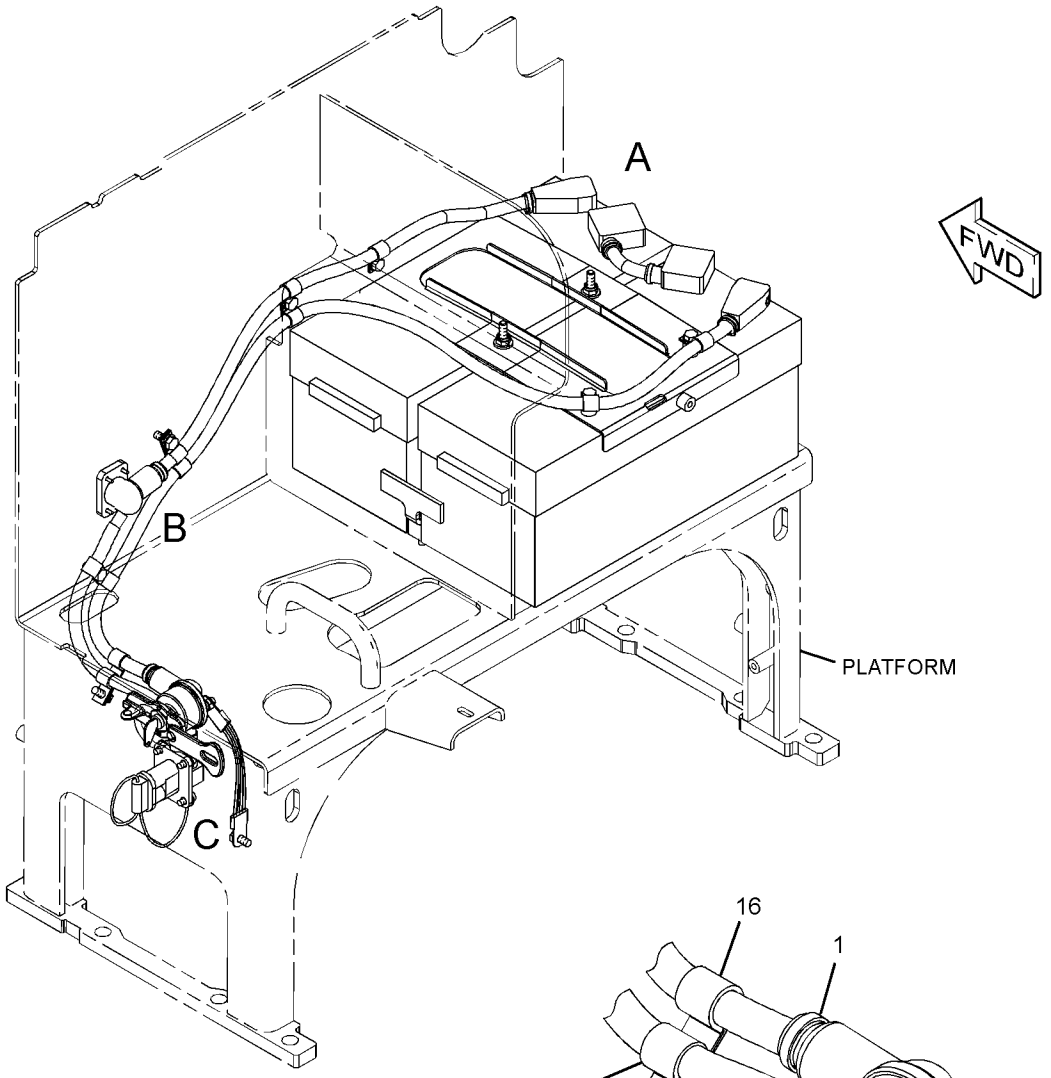

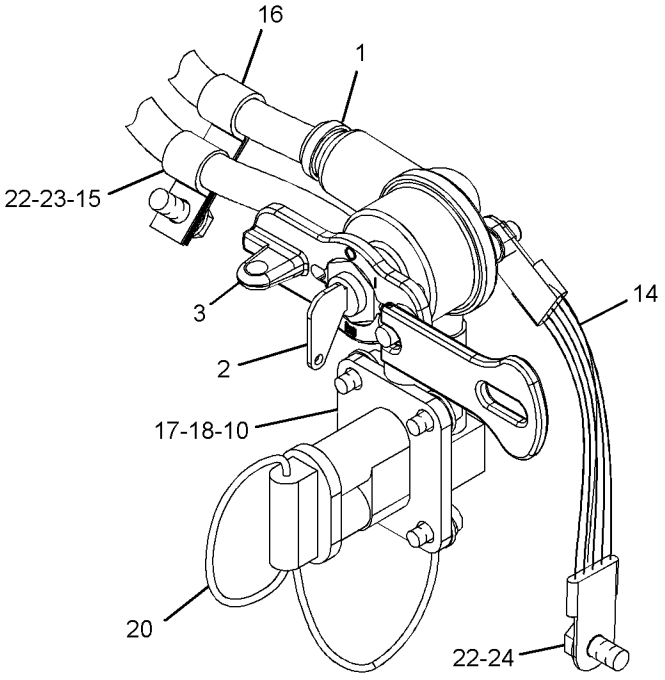

VIEW OF AREA C

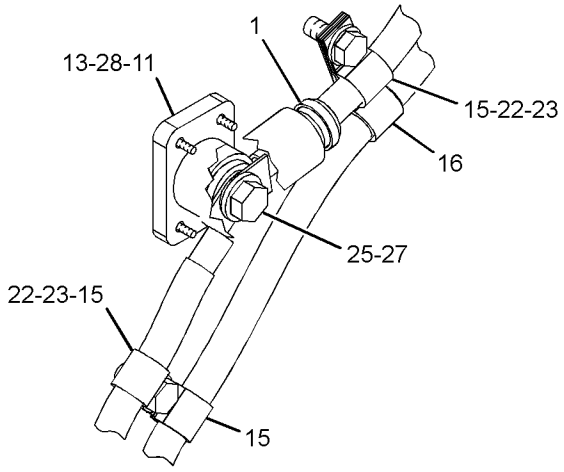

VIEW OF AREA B

GRAPHIC #1

g01340661

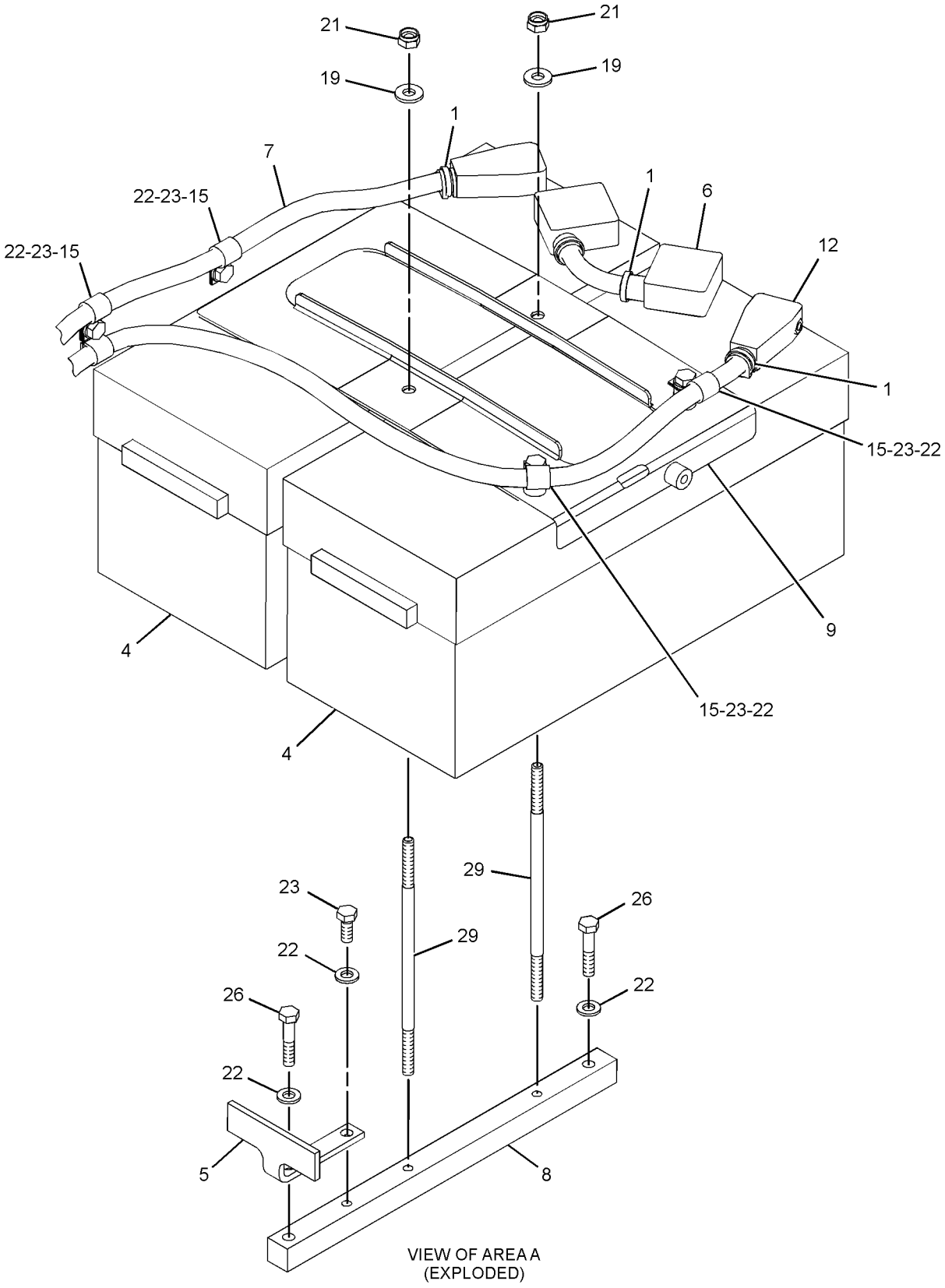

VIEW OF AREA A
(EXPLODED)

GRAPHIC #2 **<END>** g01340662

ELECTRICAL AND STARTING SYSTEM

246-9345 CONTROL & MTG GP-ENGINE ELEK

S/N: KHX238-UP

PART OF 231-0878, 278-9732 ENGINE AR-COMPLETE

SMCS-1901 **i02320629**

NOTE	REF NO	GRAPHIC REF	PART NUMBER	QTY	PART NAME 1 2 3 4 5 6 (PRODUCT LEVEL)	SEE PAGE
	1	1	**8T-9655**	8	MOUNT-ISOLATION	
	2	1	**101-3128**	4	SPACER-SPECIAL	
M	3	1	**143-9392**	4	STUD (M8X1.25-THD)	
	4	1	**255-5284**	1	CONTROL GP-UNPROGRAMMED (ENGINE)	
	6	1	**244-3168**	1	BRACKET AS	
	7	1	**233-0891**	1	BRACKET AS	
	8	1	**9M-1974**	4	WASHER-HARD (8.8X16X2-MM THK)	
	9	1	**9N-0869**	4	WASHER-HARD (8.8X25.5X2-MM THK)	

M-METRIC PART

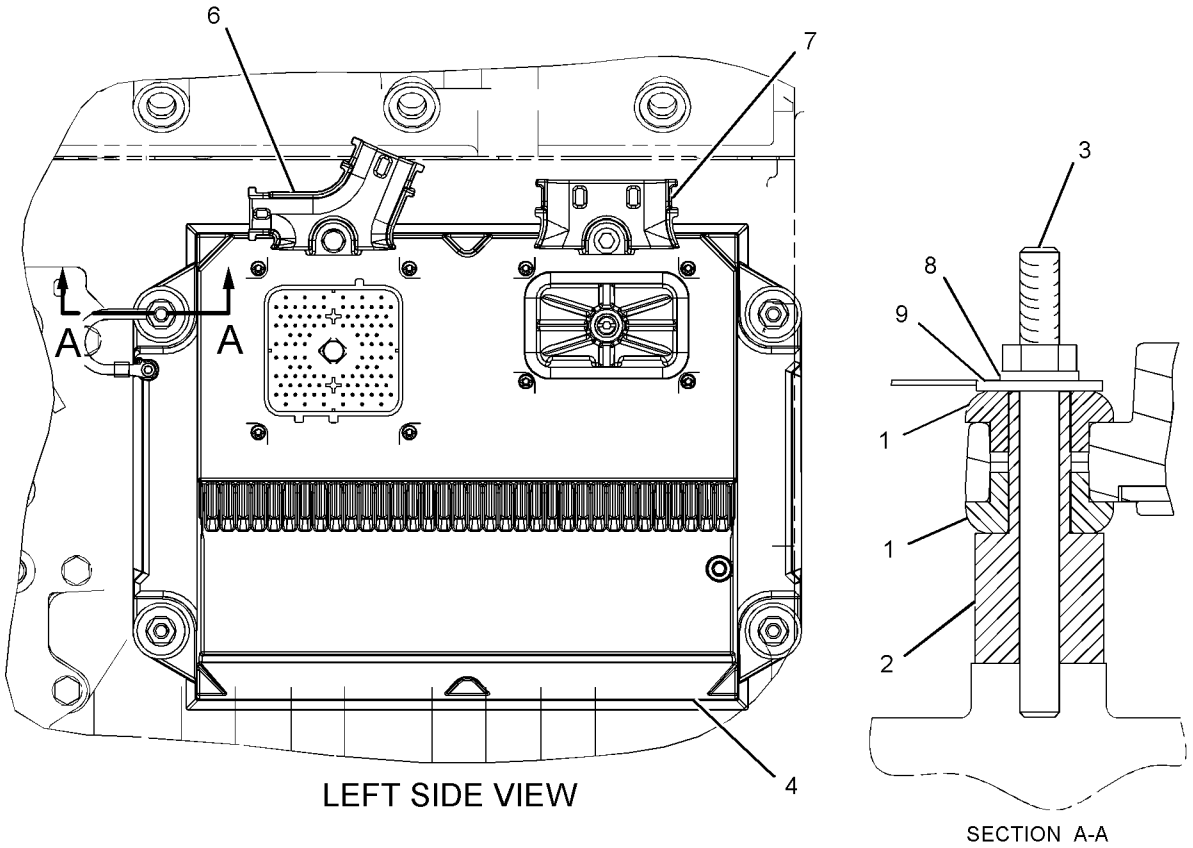

GRAPHIC #1 **<END>** g01093182

233-3145 CONTROL & MTG GP-IMPLEMENT

S/N: B9D1-UP

PART OF 254-5399 CAB AR

SMCS-5063, 5700 **i02775589**

NOTE	REF NO	GRAPHIC REF	PART NUMBER	QTY	PART NAME 1 2 3 4 5 6 (PRODUCT LEVEL)	SEE PAGE
	1	1	**6I-1418**	8	SPACER (8.2X12.7X28.7-MM THK)	
	2	1	**8T-9655**	16	MOUNT-ISOLATION	
	3	1	**238-8818**	1	PLATE AS	
Y	4	1	*275-8969*	1	CONTROL GP-UNPROGRAMMED (IMPLEMENT 2)	161
Y	5	1	*275-8970*	1	CONTROL GP-UNPROGRAMMED (IMPLEMENT)	161
	6	1	**8T-4121**	8	WASHER-HARD (11X21X2.5-MM THK)	
M	7	1	**8T-4137**	8	BOLT (M10X1.5X20-MM)	
M	8	1	**8T-6912**	8	BOLT (M8X1.25X50-MM)	
	9	1	**9N-0869**	8	WASHER-HARD (8.8X25.5X2-MM THK)	

M-METRIC PART
Y-SEPARATE ILLUSTRATION

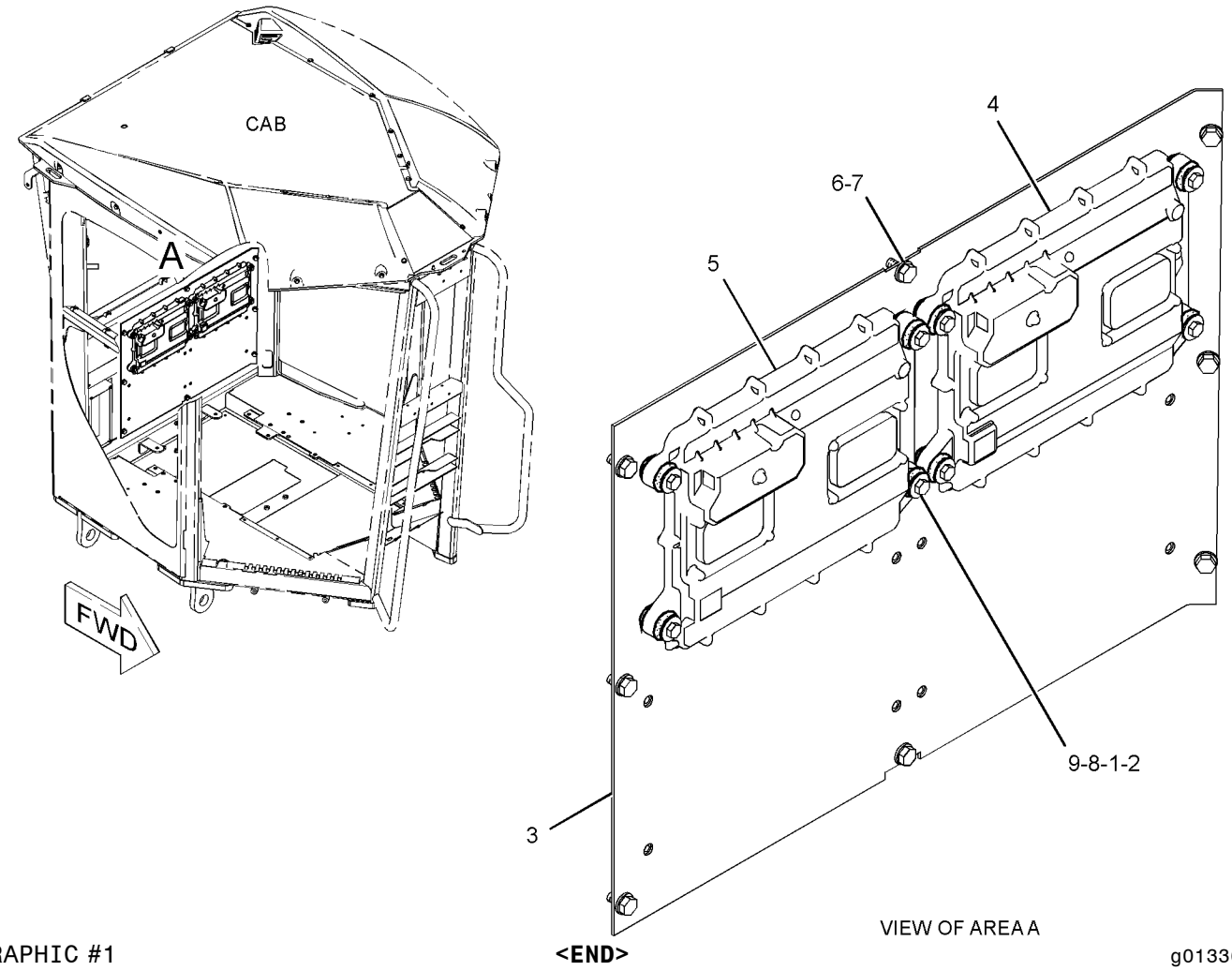

GRAPHIC #1

<END>

g01336041

277-5405 CONTROL GP-IMPLEMENT–RIPPER

S/N: B9D1-UP

SMCS-4490, 5700 **i02787638**

NOTE	REF NO	GRAPHIC REF	PART NUMBER	QTY	PART NAME 1 2 3 4 5 6 (PRODUCT LEVEL)	SEE PAGE
	1	1	**247-0740**	1	SWITCH AS-3 POSITION (REAR IMPLEMENT)	
		1	**281-3136**	1	RECEPTACLE AS-CONNECTOR (6-PIN)	
		1	**9X-3401**	5	PIN-CONNECTOR (16-GA TO 18-GA)	
		1	**8T-8737**	1	PLUG-SEAL	
Y	2	1	*281-0429*	1	MOUNTING GP-CONTROL VALVE (WITH ENCLOSURE)	829
	3	1	**281-0431**	1	PLATE AS	
	4	1	**286-0277**	1	FILM-INSTRUCTION (NO FLOAT) (IMPLEMENT)	

Y-SEPARATE ILLUSTRATION

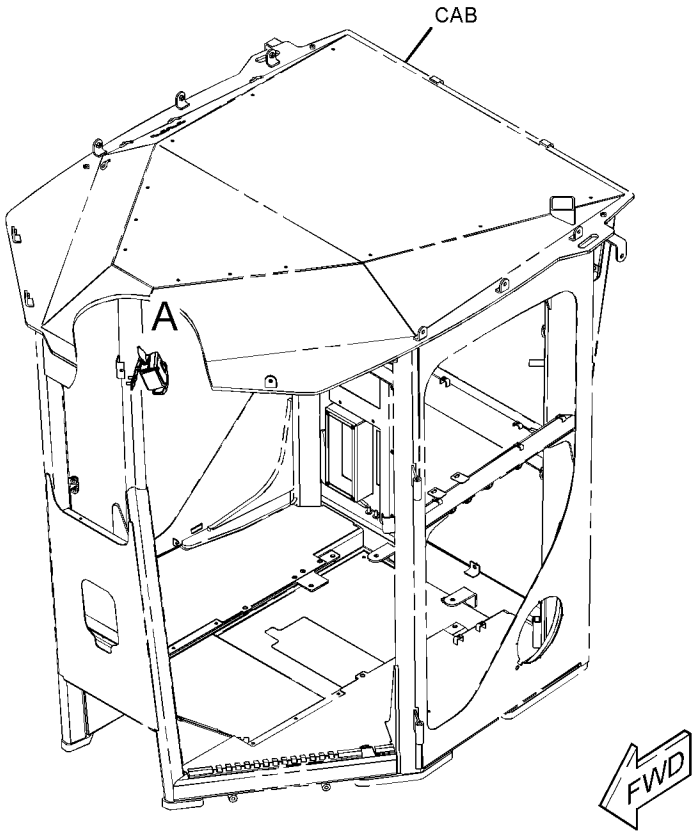

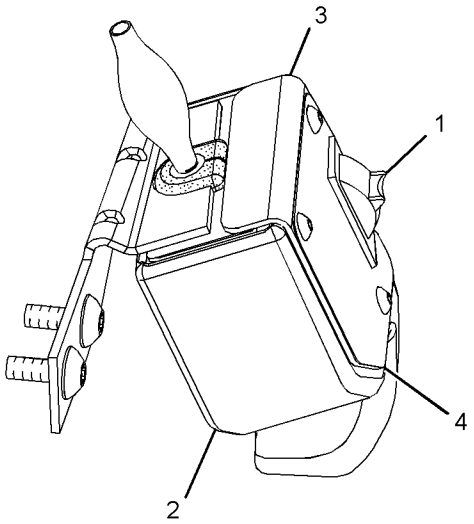

VIEW OF AREA A

GRAPHIC #1 **<END>** g01363290

277-5406 CONTROL GP-IMPLEMENT–FRONT LIFT

S/N: B9D1-UP

SMCS-4490, 5700 **i02787703**

NOTE	REF NO	GRAPHIC REF	PART NUMBER	QTY	PART NAME 1 2 3 4 5 6 (PRODUCT LEVEL)	SEE PAGE
	1	1	**230-4012**	1	RECEPTACLE AS-CONNECTOR (2-PIN)	
	2	1	**279-5308**	1	LAMP AS (24-VOLT, GREEN)	
		1	**186-3735**	2	PIN-CONNECTOR (16-GA TO 18-GA)	
	3	1	**279-9675**	1	SWITCH AS-3 POSITION (FRONT IMPLEMENT)	
		1	**281-3137**	1	RECEPTACLE AS-CONNECTOR (6-PIN)	
		1	**9X-3401**	5	PIN-CONNECTOR (16-GA TO 18-GA)	
		1	**8T-8737**	1	PLUG-SEAL	
Y	4	1	*281-0429*	1	MOUNTING GP-CONTROL VALVE (WITH ENCLOSURE)	829
	5	1	**281-0431**	1	PLATE AS	
	6	1	**286-0276**	1	FILM-INSTRUCTION (FLOAT) (FRONT IMPLEMENT)	

Y-SEPARATE ILLUSTRATION

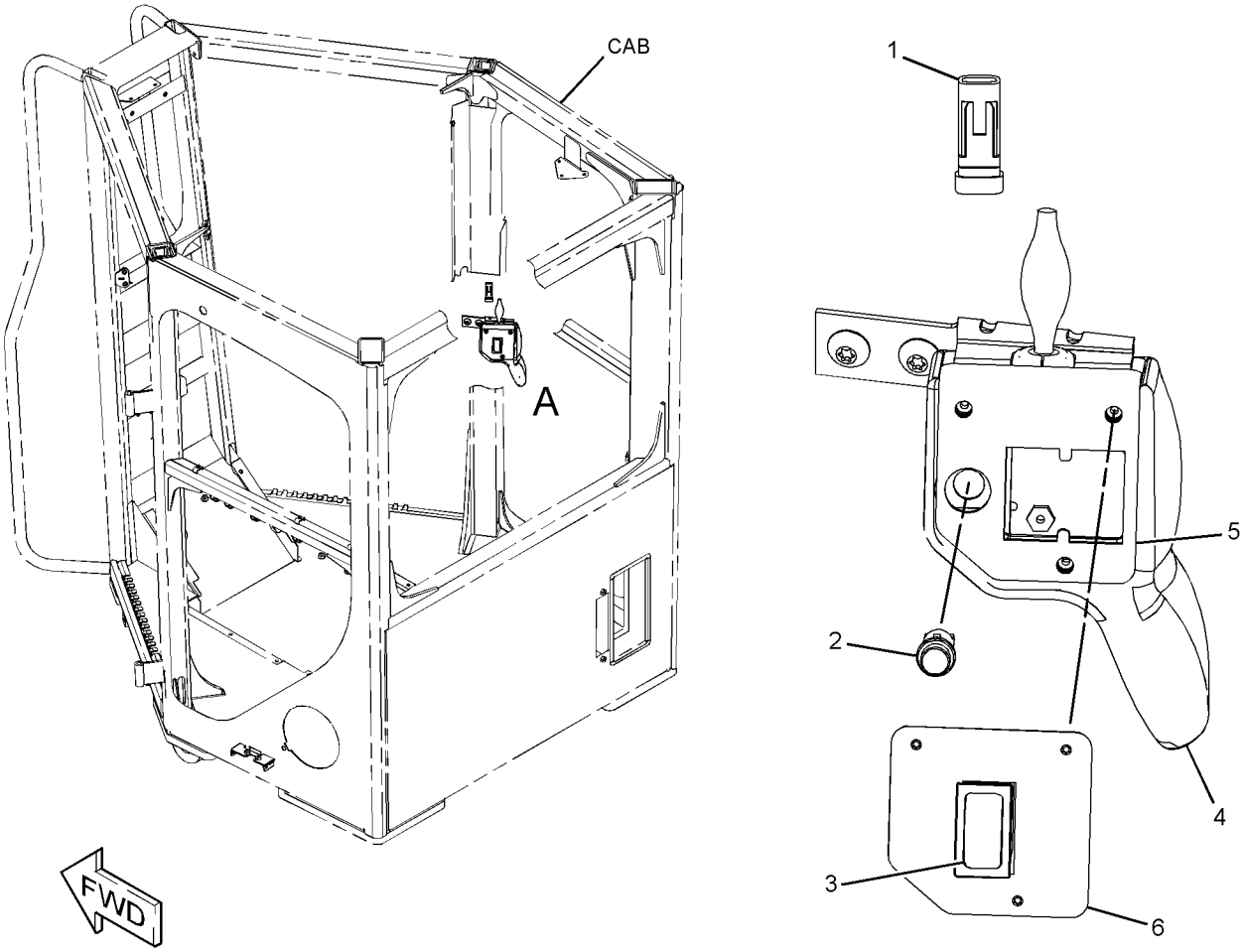

GRAPHIC #1 **<END>** g01365950

277-5408 CONTROL GP-IMPLEMENT–FRONT, REAR

S/N: B9D1-UP

SMCS-4490, 5700 **i02796316**

NOTE	REF NO	GRAPHIC REF	PART NUMBER	QTY	PART NAME 1 2 3 4 5 6 (PRODUCT LEVEL)	SEE PAGE
	1	1	**230-4012**	1	RECEPTACLE AS-CONNECTOR (2-PIN)	
	2	1	**247-0740**	1	SWITCH AS-3 POSITION (REAR IMPLEMENT)	
		1	**281-3136**	1	RECEPTACLE AS-CONNECTOR (6-PIN)	
		1	**9X-3401**	5	PIN-CONNECTOR (16-GA TO 18-GA)	
		1	**8T-8737**	1	PLUG-SEAL	
	3	1	**279-5308**	1	LAMP AS (24-VOLT, GREEN)	
		1	**186-3735**	2	PIN-CONNECTOR (16-GA TO 18-GA)	
	4	1	**279-9675**	1	SWITCH AS-3 POSITION (FRONT IMPLEMENT)	
		1	**281-3137**	1	RECEPTACLE AS-CONNECTOR (6-PIN)	
		1	**9X-3401**	5	PIN-CONNECTOR (16-GA TO 18-GA)	
		1	**8T-8737**	1	PLUG-SEAL	
Y	5	1	*281-0429*	1	MOUNTING GP-CONTROL VALVE (WITH ENCLOSURE)	829
	6	1	**281-0431**	1	PLATE AS	
	7	1	**286-0274**	1	FILM-INSTRUCTION (FLOAT/NO FLOAT) (IMPLEMENT)	

Y-SEPARATE ILLUSTRATION

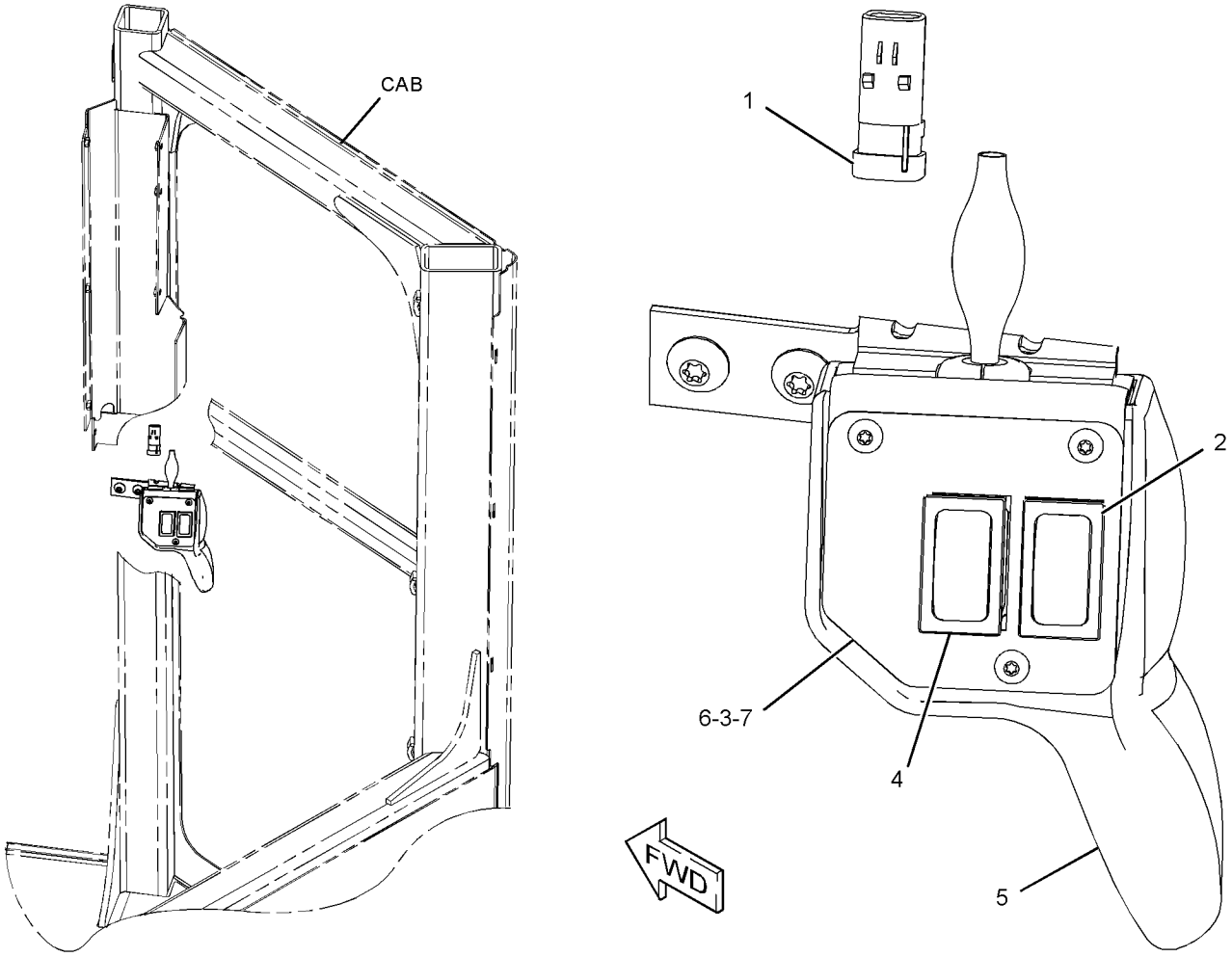

GRAPHIC #1 **<END>** g01365921

299-0874 CONTROL GP-IMPLEMENT

S/N: B9D1-UP

PART OF 242-5057, 242-5059, 242-5062, 242-5066, 242-6107, 242-6109, 242-6110, 242-6112 CONTROL AR-HYDRAULIC

SMCS-4490, 5700 **i02779254**

NOTE	REF NO	GRAPHIC REF	PART NUMBER	QTY	PART NAME 1 2 3 4 5 6 (PRODUCT LEVEL)	SEE PAGE
	1	1	**247-0740**	1	SWITCH AS-3 POSITION (FLOAT CONTROL)	
		1	**8T-8737**	1	PLUG-SEAL	
		1	**9X-3401**	5	PIN-CONNECTOR (16-GA TO 18-GA)	
		1	**281-3136**	1	RECEPTACLE AS-CONNECTOR (6-PIN)	
	2	1	**281-0431**	1	PLATE AS	
	3	1	**286-0277**	1	FILM-INSTRUCTION (NO FLOAT)	
	4	1	**299-0877**	1	BRACKET	
Y	5	1	*299-0881*	1	MOUNTING GP-CONTROL VALVE (WITH ENCLOSURE)	830
M	6	1	**127-2170**	2	SCREW-TRUSS HEAD (M8X1.25X20-MM)	

M-METRIC PART
Y-SEPARATE ILLUSTRATION

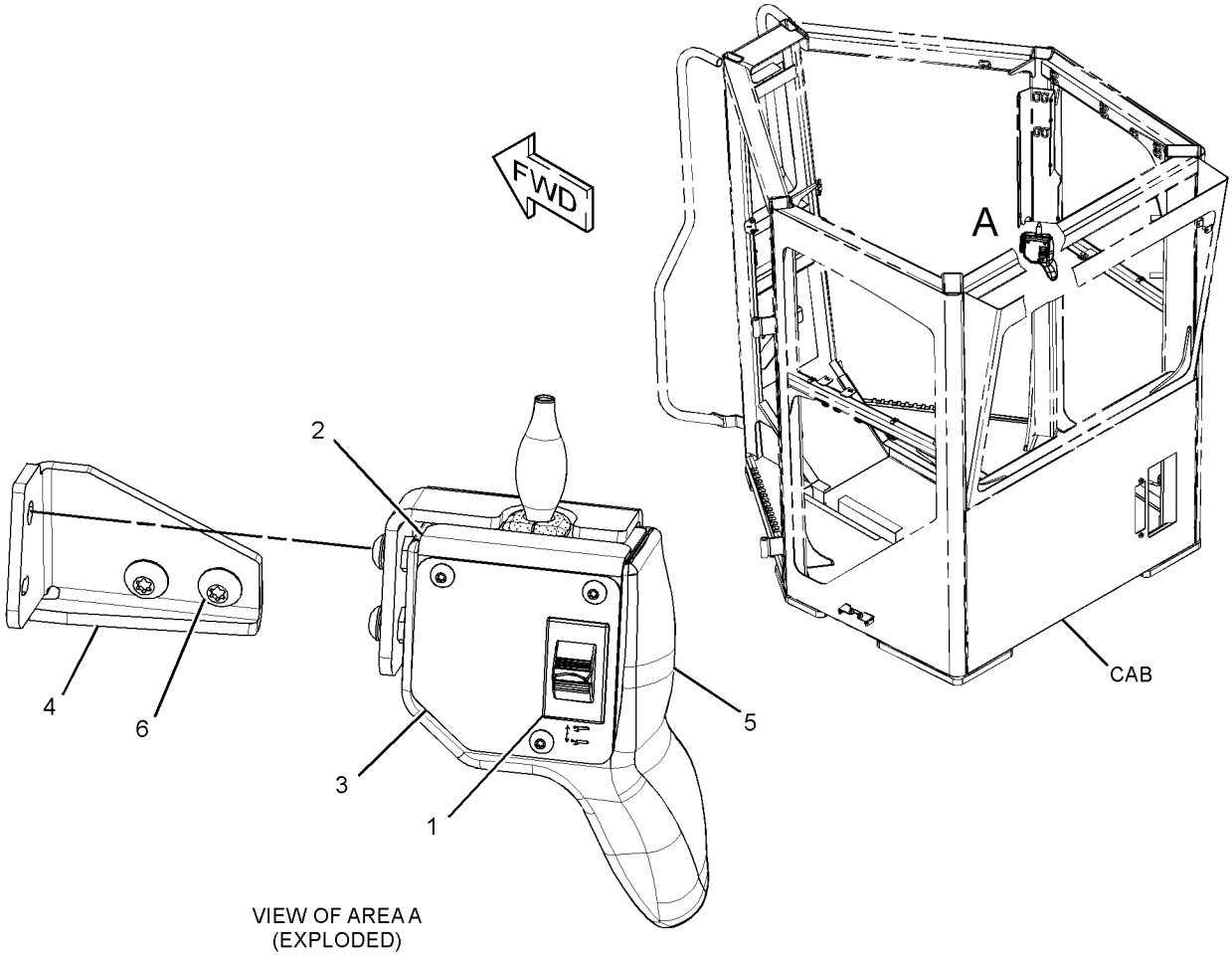

VIEW OF AREA A
(EXPLODED)

GRAPHIC #1 **<END>** g01374106

ELECTRICAL AND STARTING SYSTEM

299-0875 CONTROL GP-IMPLEMENT–FRONT LIFT

S/N: B9D1-UP

PART OF 242-5058 CONTROL AR-HYDRAULIC

SMCS-4490, 5700 **i02796315**

NOTE	REF NO	GRAPHIC REF	PART NUMBER	QTY	PART NAME 1 2 3 4 5 6 (PRODUCT LEVEL)	SEE PAGE
	1	1	**230-4012**	1	RECEPTACLE AS-CONNECTOR (2-PIN)	
	2	1	**279-5308**	1	LAMP AS (24-VOLT, GREEN)	
		1	**186-3735**	2	PIN-CONNECTOR (16-GA TO 18-GA)	
	3	1	**279-9675**	1	SWITCH AS-3 POSITION (FRONT IMPLEMENT)	
		1	**8T-8737**	1	PLUG-SEAL	
		1	**9X-3401**	5	PIN-CONNECTOR (16-GA TO 18-GA)	
		1	**281-3137**	1	RECEPTACLE AS-CONNECTOR (6-PIN)	
	4	1	**281-0431**	1	PLATE AS	
	5	1	**286-0276**	1	FILM-INSTRUCTION (FLOAT)	
	6	1	**299-0877**	1	BRACKET	
Y	7	1	*299-0881*	1	MOUNTING GP-CONTROL VALVE (WITH ENCLOSURE)	830
M	8	1	**127-2170**	2	SCREW-TRUSS HEAD (M8X1.25X20-MM)	

M-METRIC PART
Y-SEPARATE ILLUSTRATION

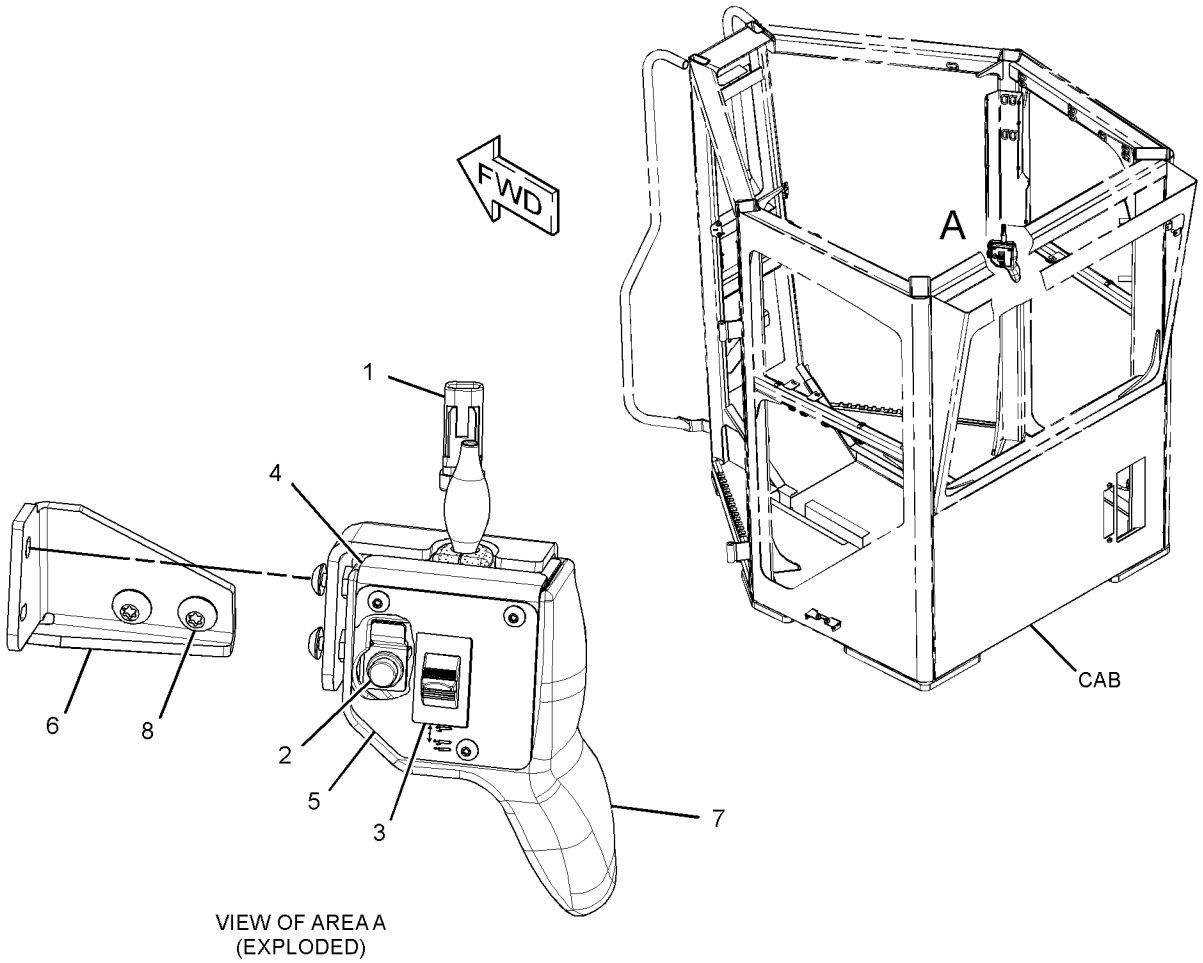

VIEW OF AREA A
(EXPLODED)

GRAPHIC #1 **<END>** g01376136

299-0876 CONTROL GP-IMPLEMENT—WITH ENCLOSURE

S/N: B9D1-UP

PART OF 242-5060, 242-5061, 309-7551 CONTROL AR-HYDRAULIC

SMCS-4490, 5700 **i02780530**

NOTE	REF NO	GRAPHIC REF	PART NUMBER	QTY	PART NAME 1 2 3 4 5 6 (PRODUCT LEVEL)	SEE PAGE
	1	1	**230-4012**	1	RECEPTACLE AS-CONNECTOR (2-PIN)	
	2	1	**247-0740**	1	SWITCH AS-3 POSITION (REAR IMPLEMENT)	
		1	**8T-8737**	1	PLUG-SEAL	
		1	**9X-3401**	5	PIN-CONNECTOR (16-GA TO 18-GA)	
		1	**281-3137**	1	RECEPTACLE AS-CONNECTOR (6-PIN)	
	3	1	**279-5308**	1	LAMP AS (24-VOLT, GREEN)	
		1	**186-3735**	2	PIN-CONNECTOR (16-GA TO 18-GA)	
	4	1	**279-9675**	1	SWITCH AS-3 POSITION (FRONT IMPLEMENT)	
		1	**8T-8737**	1	PLUG-SEAL	
		1	**9X-3401**	5	PIN-CONNECTOR (16-GA TO 18-GA)	
		1	**281-3137**	1	RECEPTACLE AS-CONNECTOR (6-PIN)	
	5	1	**281-0431**	1	PLATE AS	
	6	1	**286-0274**	1	FILM-INSTRUCTION (FLOAT/NO FLOAT)	
	7	1	**299-0877**	1	BRACKET	
Y	8	1	*299-0881*	1	MOUNTING GP-CONTROL VALVE (WITH ENCLOSURE)	830
M	9	1	**127-2170**	2	SCREW-TRUSS HEAD (M8X1.25X20-MM)	

M-METRIC PART
Y-SEPARATE ILLUSTRATION

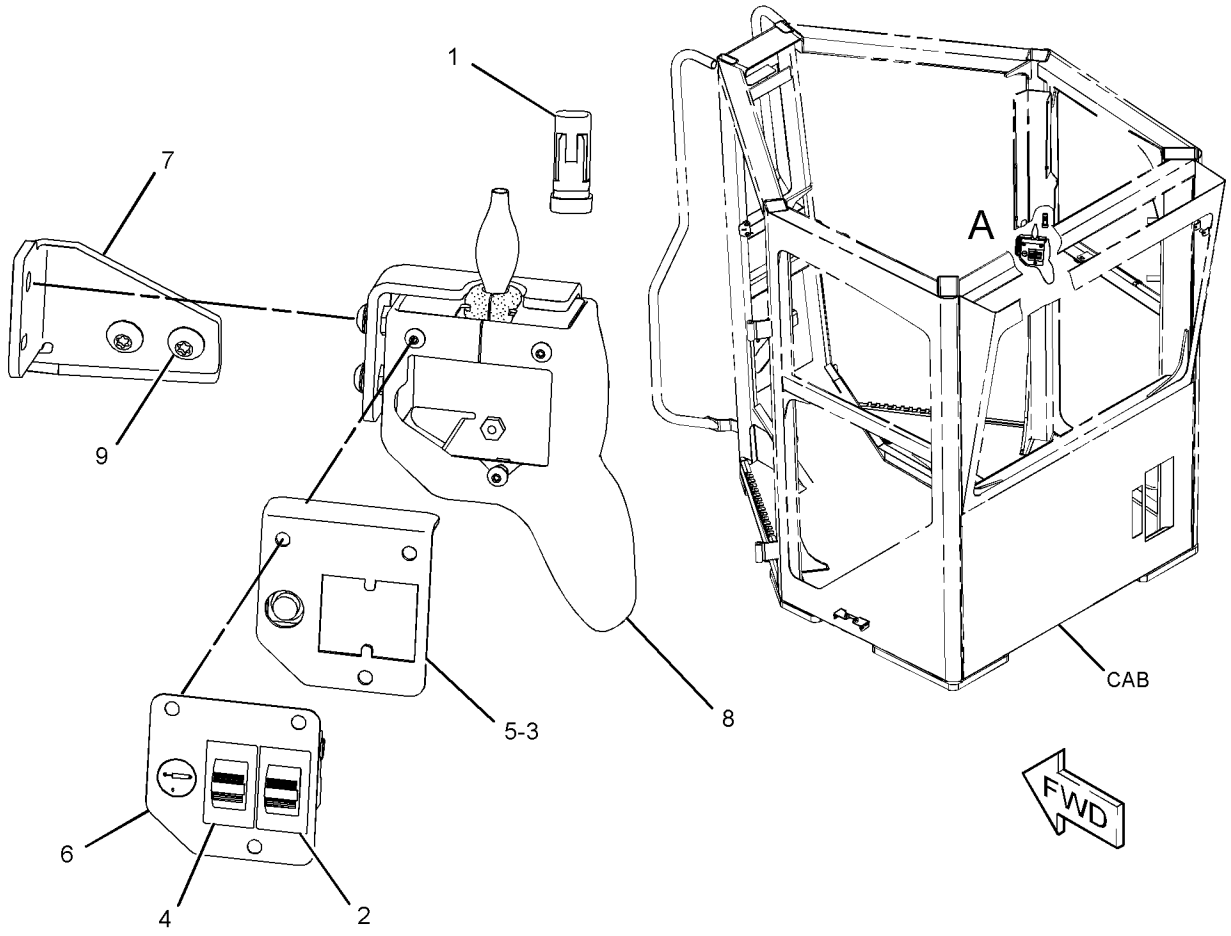

VIEW OF AREA A
(EXPLODED)

GRAPHIC #1 **<END>** g01393160

ELECTRICAL AND STARTING SYSTEM

238-8808 CONTROL GP-POWER TRAIN–ALL WHEEL DRIVE

S/N: B9D1-UP

PART OF 261-0153 AXLE AR-FRONT

SMCS-4808, 7610 **i02785764**

NOTE	REF NO	GRAPHIC REF	PART NUMBER	QTY	PART NAME 1 2 3 4 5 6 (PRODUCT LEVEL)	SEE PAGE
	1	1	**3S-2093**	1	STRAP-CABLE	
	2	1	**6I-1418**	4	SPACER (8.2X12.7X28.7-MM THK)	
	3	1	**8T-9655**	8	MOUNT-ISOLATION	
	4	1	**110-6109**	2	KNOB-CONTROL (AWD MODE)	
	5	1	**114-6658**	3	WASHER (6.5X17X1-MM THK)	
	6	1	**235-6177**	1	HARNESS AS-CONTROL (ALL WHEEL DRIVE)	
		1	**3S-2093**	4	STRAP-CABLE	
		1	**126-1774**	2	COVER-CONNECTOR	
		1	**9X-7143**	1	RECEPTACLE AS-CONNECTOR (24-PIN)	
		1	**147-1445**	1	PLUG AS-CONNECTOR (70-PIN)	
		1	**147-1446**	1	PLUG AS-CONNECTOR (70-PIN)	
		1	**102-8802**	2	KIT-RECEPTACLE (2-PIN)	
					(EACH INCLUDES RECEPTACLE AS & WEDGE)	
		1	**155-2274**	1	KIT-CONNECTING PLUG (6-PIN)	
		1	**155-2270**	2	KIT-CONNECTING PLUG (2-PIN)	
		1	**155-2260**	1	KIT-CONNECTING PLUG (3-PIN)	
		1	**155-2255**	1	KIT-CONNECTING PLUG (12-PIN)	
		1	**155-2271**	1	KIT-CONNECTING PLUG (4-PIN)	
					(EACH PLUG KIT INCLUDES PLUG AS, WEDGE, & INTERFACE SEAL)	
Y	7	1	**238-8809**	1	SWITCH GP-ALL WHEEL DRIVE	248
	8	1	**242-3282**	1	LAMP-LED (RED, 24-VOLT)	
	9	1	**250-2299**	1	LAMP-LED (GREEN, 24-VOLT)	
	10	1	**297-4156**	1	PANEL-COVER	
	11	1	**276-8488**	1	FILM-INSTRUCTION (ALL WHEEL DRIVE)	
	12	1	**297-4159**	1	PLATE AS	
M		1	**6V-9632**	1	NUT-WELD (M6X1-THD)	
	13	1	**225-3109**	4	SCREW-TRUSS HEAD (M4X0.7X14-MM)	
R	14	1	**262-1408**	1	CONTROL GP-UNPROGRAMMED (ALL WHEEL DRIVE)	
	15	1	**102-8802**	2	KIT-RECEPTACLE (2-PIN)	
					(EACH INCLUDES RECEPTACLE AS & WEDGE)	
	17	1	**5P-4116**	4	WASHER-HARD (8.8X20.5X2-MM THK)	
	18	1	**8T-4121**	1	WASHER-HARD (11X21X2.5-MM THK)	
M	19	1	**8T-4191**	1	BOLT (M10X1.5X16-MM)	
M	20	1	**8T-6912**	4	BOLT (M8X1.25X50-MM)	
M	21	1	**9X-2045**	3	SCREW-TRUSS HEAD (M6X1X20-MM)	

M-METRIC PART
R-REMFG PART MAY BE AVAILABLE
Y-SEPARATE ILLUSTRATION

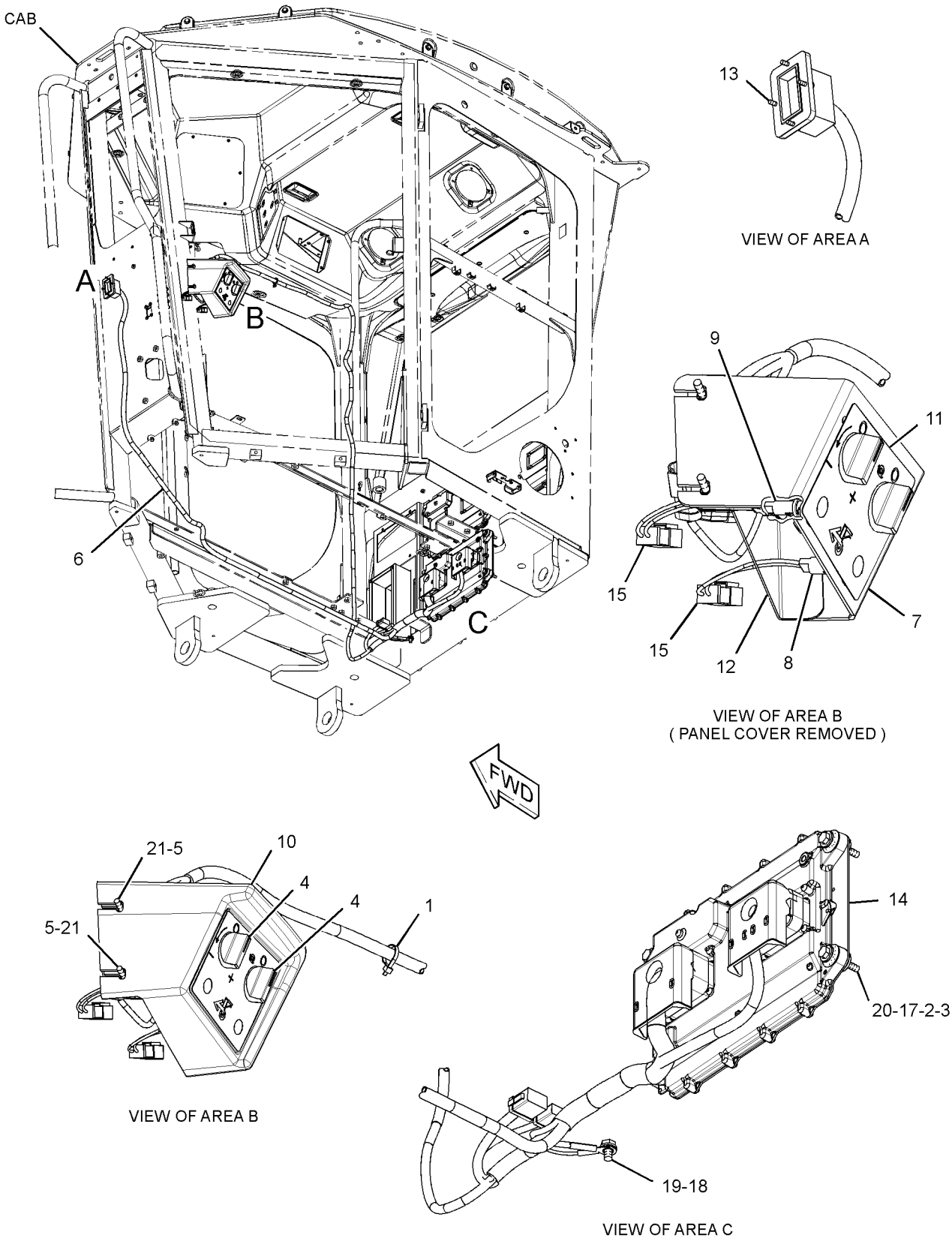

GRAPHIC #1 **<END>** g01348420

ELECTRICAL AND STARTING SYSTEM

239-9954 CONTROL GP-UNPROGRAMMED

S/N: B9D1-UP

PART OF 275-9651 APPLICATION GP-COMMUNICATION

SMCS-7610 **i02363021**

NOTE	REF NO	GRAPHIC REF	PART NUMBER	QTY	PART NAME 1 2 3 4 5 6 (PRODUCT LEVEL)	SEE PAGE
	1	1	**7X-6315**	1	STRAP AS-GROUND	
	2	1	**126-7574**	1	SCREW-PAN HEAD (8-32X9.52-MM)	
	3	1	**134-4126**	1	WASHER (4.52X8.28X0.76-MM THK)	

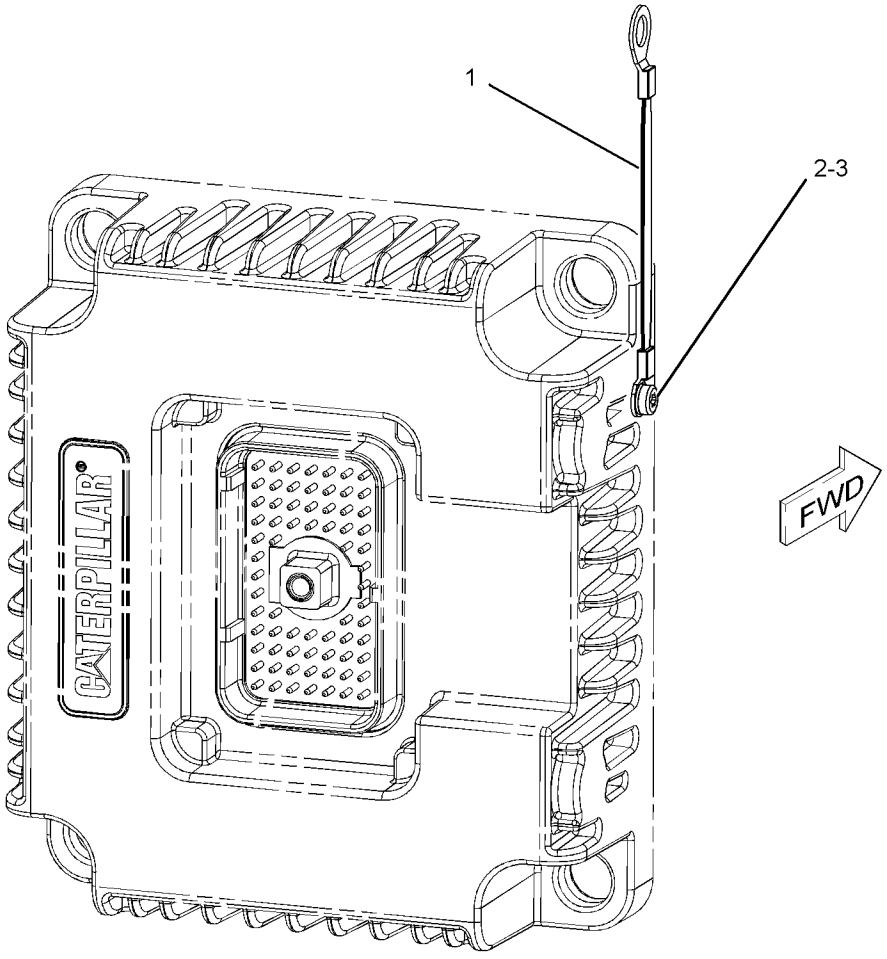

GRAPHIC #1 **<END>** g01145801

275-8969 CONTROL GP-UNPROGRAMMED–IMPLEMENT 2

S/N: B9D1-UP

PART OF 233-3145 CONTROL & MTG GP-IMPLEMENT

SMCS-7610 **i02775592**

NOTE	PART NUMBER	QTY	PART NAME 1 2 3 4 5 6 (PRODUCT LEVEL)	SEE PAGE
R	**262-1408**	1	CONTROL GP-UNPROGRAMMED (IMPLEMENT 2)	

R-REMFG PART MAY BE AVAILABLE

<END>

275-8970 CONTROL GP-UNPROGRAMMED–IMPLEMENT

S/N: B9D1-UP

PART OF 233-3145 CONTROL & MTG GP-IMPLEMENT

SMCS-7610 **i02775593**

NOTE	PART NUMBER	QTY	PART NAME 1 2 3 4 5 6 (PRODUCT LEVEL)	SEE PAGE
R	**262-1408**	1	CONTROL GP-UNPROGRAMMED (IMPLEMENT)	

R-REMFG PART MAY BE AVAILABLE

<END>

233-3134 CONVERTER GP-ELECTRICAL–RADIO

S/N: B9D1-UP

SMCS-1421 **i02772967**

NOTE	REF NO	GRAPHIC REF	PART NUMBER	QTY	PART NAME 1 2 3 4 5 6 (PRODUCT LEVEL)	SEE PAGE
	1	1	**184-3579**	1	CONVERTER-POWER (20-AMPERE)	
M	2	1	**174-8131**	4	SCREW-TRUSS HEAD (M4X0.7X12-MM)	
	3	1	**8T-0328**	4	WASHER-HARD (5.5X10X1-MM THK)	

M-METRIC PART

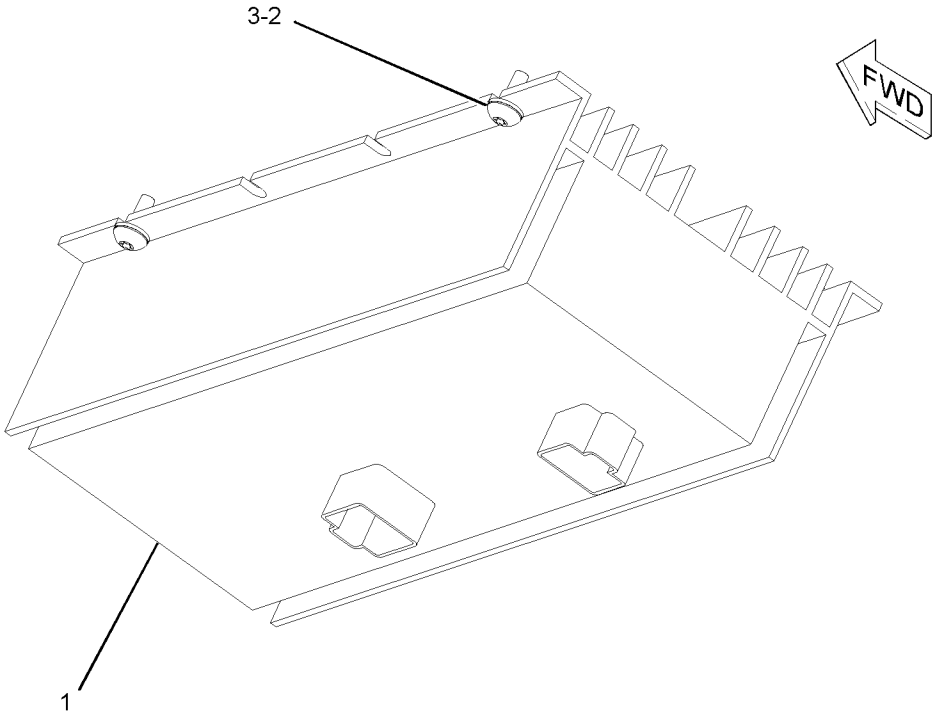

GRAPHIC #1 **<END>** g01110748

233-3135 CONVERTER GP-ELECTRICAL

S/N: B9D1-UP

PART OF 254-5399 CAB AR

SMCS-1421 **i02772954**

NOTE	REF NO	GRAPHIC REF	PART NUMBER	QTY	PART NAME 1 2 3 4 5 6 (PRODUCT LEVEL)	SEE PAGE
	1	1	**117-2311**	1	RECEPTACLE AS-POWER (12-VOLT) (AUXILIARY)	
	2	1	**169-2876**	1	FILM-IDENTIFICATION (12-VOLT)	
	3	1	**209-0381**	1	CONVERTER-POWER (24-VOLT TO 12-VOLT)	
M	4	1	**174-8131**	4	SCREW-TRUSS HEAD (M4X0.7X12-MM)	
	5	1	**8T-0328**	4	WASHER-HARD (5.5X10X1-MM THK)	

M-METRIC PART

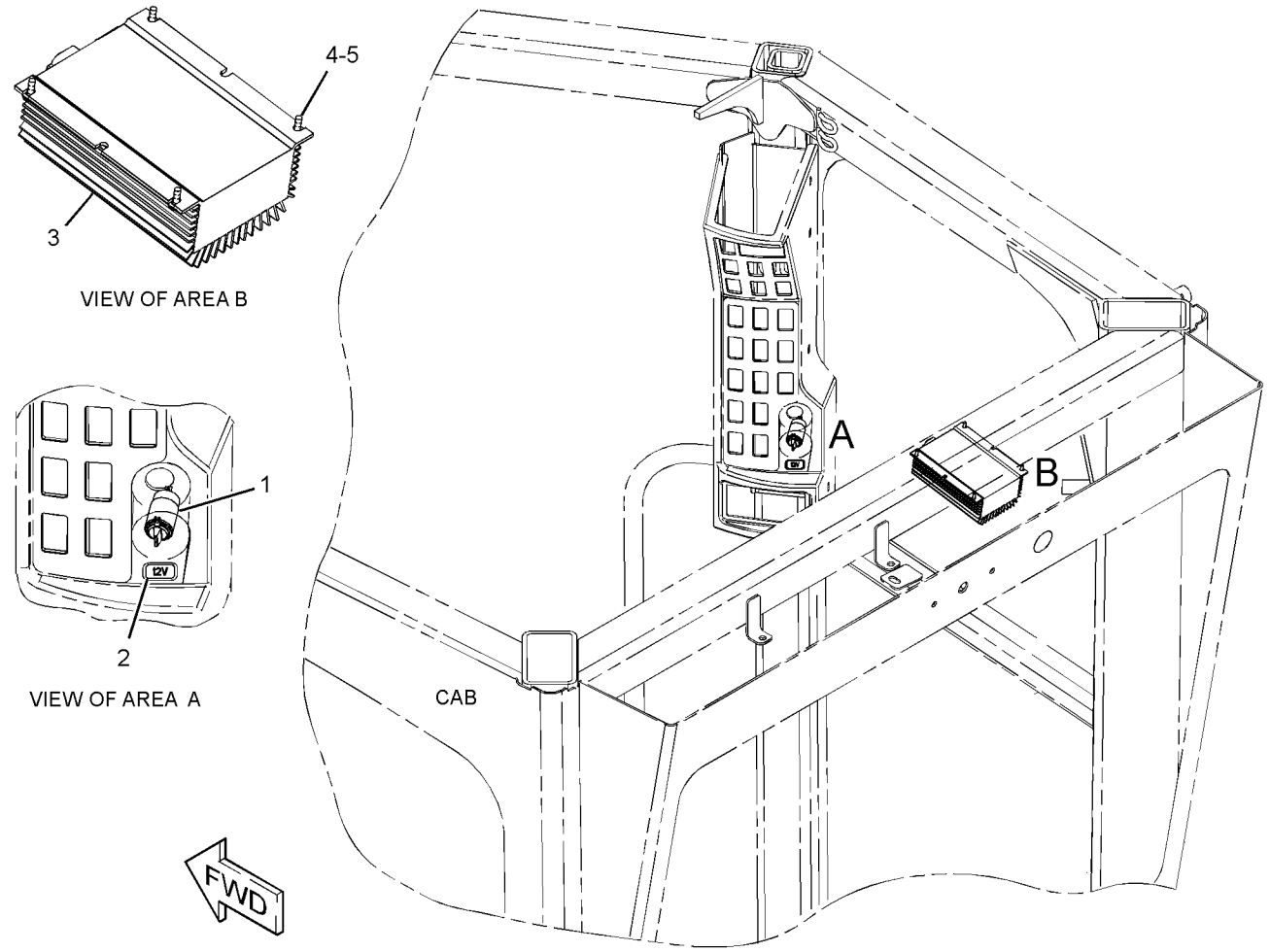

GRAPHIC #1 **<END>** g01372060

262-2043 ELECTRONICS GP-COMMUNICATION–

PRODUCT LINK 300

S/N: B9D1-UP

PART OF 235-6188 INSTALLATION AR-COMMUNICATION

SMCS-7606, 7610, 7620 **i02308909**

NOTE	REF NO	GRAPHIC REF	PART NUMBER	QTY	PART NAME 1 2 3 4 5 6 (PRODUCT LEVEL)	SEE PAGE
	1	1	**265-9642**	1	SOFTWARE GP-COMMUNICATION (PRODUCT LINK 300)	
					-OR-	
					(OPTIONAL SERVICE REPLACEMENT)	
	2	1	**265-9643**	1	SERVICE GP-COMMUNICATION (PRODUCT LINK 300)	
					(INCLUDES CONTROL GP AND SOFTWARE)	
	3	1	**7X-6315**	1	STRAP AS-GROUND	
	4	1	**126-7574**	1	SCREW-PAN HEAD (8-32X9.52-MM)	
	5	1	**134-4126**	1	WASHER (4.52X8.28X0.76-MM THK)	

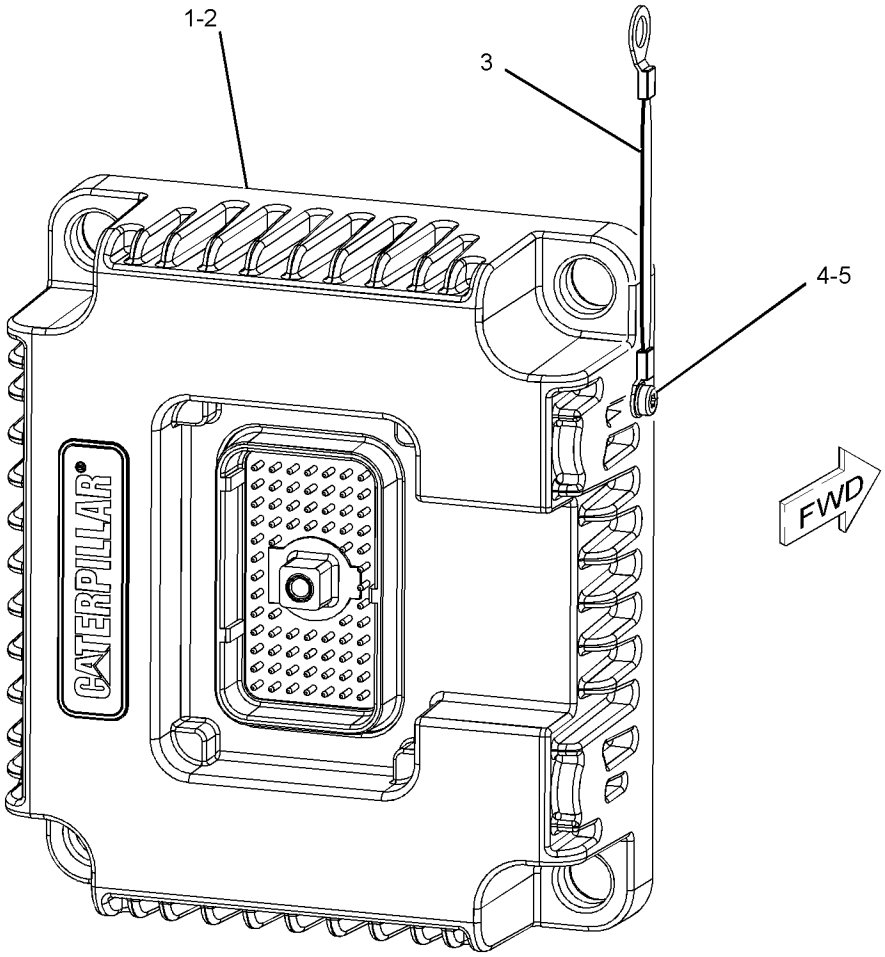

GRAPHIC #1 **<END>** g01157176

250-9257 ELECTRONICS GP-IMPLEMENT

S/N: B9D1-UP

PART OF 254-5399 CAB AR

SMCS-5701, 7610, 7620 **i02775860**

NOTE	PART NUMBER	QTY	PART NAME 1 2 3 4 5 6 (PRODUCT LEVEL)	SEE PAGE
	301-2943	1	SOFTWARE GP-IMPLEMENT	
			(SOFTWARE ONLY)	
			—OR—	
	301-2944	1	SERVICE GP-IMPLEMENT	
			(OPTIONAL SERVICE REPLACEMENT)	
			(INCLUDES CONTROL GP & SOFTWARE)	

<END>

250-9258 ELECTRONICS GP-IMPLEMENT

S/N: B9D1-UP

PART OF 254-5399 CAB AR

SMCS-5701, 7610, 7620 **i02775861**

NOTE	PART NUMBER	QTY	PART NAME 1 2 3 4 5 6 (PRODUCT LEVEL)	SEE PAGE
	310-4142	1	SOFTWARE GP-IMPLEMENT (IMPLEMENT 2)	
			—OR—	
	310-4143	1	SERVICE GP-IMPLEMENT (IMPLEMENT 2)	
			(OPTIONAL SERVICE REPLACEMENT)(INCLUDES CONTROL GP & SOFTWARE)	

<END>

250-9259 ELECTRONICS GP-IMPLEMENT—IMPLEMENT 3

S/N: B9D1-UP

PART OF 242-5061, 242-5062, 242-5063, 242-5064, 242-5066, 242-6107, 242-6108, 242-6109, 242-6110, 242-6111, 242-6112, 242-6146 CONTROL AR-HYDRAULIC

SMCS-5701, 7610, 7620 **i02780633**

NOTE	PART NUMBER	QTY	PART NAME 1 2 3 4 5 6 (PRODUCT LEVEL)	SEE PAGE
	270-7566	1	SOFTWARE GP-IMPLEMENT (IMPLEMENT 3)	
			—OR—	
	270-7567	1	SERVICE GP-IMPLEMENT (IMPLEMENT 3)	
			(OPTIONAL SERVICE REPLACEMENT)(INCLUDES CONTROL GP & SOFTWARE)	

<END>

250-9254 ELECTRONICS GP-MONITOR–
DUTCH, ENGLISH, FRENCH, GERMAN, PORTUGUESE, SPANISH
S/N: B9D1-UP
PART OF 302-5133, 302-8669, 302-8670, 302-8671, 302-8672, 302-8673, 302-8674 PLATE & FILM GP

SMCS-7490, 7610, 7620 **i02788749**

NOTE	PART NUMBER	QTY	PART NAME 1 2 3 4 5 6 (PRODUCT LEVEL)	SEE PAGE
	310-0815	1	SOFTWARE GP-MONITOR	
			–OR–	
	310-0816	1	SERVICE GP-MONITOR	
			(OPTIONAL SERVICE REPLACEMENT)(INCLUDES CONTROL GP & SOFTWARE)	
	156-6198	4	SCREW-MACHINE (6-20X0.37-IN)	
	208-8375	2	BRACKET	
	242-2461	1	BEZEL	

<END>

275-9650 ELECTRONICS GP-MONITOR
S/N: B9D1-UP
PART OF 291-2910 WIRING GP-CAB

SMCS-7490, 7610, 7620 **i02783484**

NOTE	PART NUMBER	QTY	PART NAME 1 2 3 4 5 6 (PRODUCT LEVEL)	SEE PAGE
Y	**239-5025**	1	CONTROL GP-UNPRGMED MONITOR (MESSENGER)	785
Y-SEPARATE ILLUSTRATION				

<END>

302-0359 ELECTRONICS GP-MONITOR–
DANISH, ENGLISH, FINNISH, NORWEGIAN, PORTUGUESE, SWEDISH
S/N: B9D1-UP
PART OF 302-8675, 302-8676, 302-8677, 302-8678 PLATE & FILM GP

SMCS-7490, 7610, 7620 **i02788689**

NOTE	PART NUMBER	QTY	PART NAME 1 2 3 4 5 6 (PRODUCT LEVEL)	SEE PAGE
	310-0817	1	SOFTWARE GP-MONITOR	
			–OR–	
	310-0818	1	SERVICE GP-MONITOR	
			(OPTIONAL SERVICE REPLACEMENT)	
			(INCLUDES CONTROL GP & SOFTWARE)	
	156-5025	4	PLATE-UPPER STATOR	
	208-8375	2	BRACKET	
	242-2461	1	BEZEL	

<END>

302-0360 ELECTRONICS GP-MONITOR–
ENGLISH, GREEK, HEBREW, ITALIAN, PORTUGUESE, TURKISH
S/N: B9D1-UP
PART OF 302-8679, 302-8680, 302-8681, 302-8682 PLATE & FILM GP

SMCS-7490, 7610, 7620 **i02788688**

NOTE	PART NUMBER	QTY	PART NAME 1 2 3 4 5 6 (PRODUCT LEVEL)	SEE PAGE
	310-0819	1	SOFTWARE GP-MONITOR	
			–OR–	
	310-0820	1	SERVICE GP-MONITOR	
			(OPTIONAL SERVICE REPLACEMENT) (INCLUDES CONTROL GP & SOFTWARE)	
	156-6198	4	SCREW-MACHINE (6-20X0.37-IN)	
	208-8375	2	BRACKET	
	242-2461	1	BEZEL	

<END>

302-0361 ELECTRONICS GP-MONITOR–
ARABIC, CHINESE, ENGLISH, PORTUGUESE, RUSSIAN
S/N: B9D1-UP
PART OF 302-8683, 302-8684, 302-8685 PLATE & FILM GP

SMCS-7490, 7610, 7620 **i02788744**

NOTE	PART NUMBER	QTY	PART NAME 1 2 3 4 5 6 (PRODUCT LEVEL)	SEE PAGE
	310-0821	1	SOFTWARE GP-MONITOR	
			–OR–	
	310-0822	1	SERVICE GP-MONITOR	
			(OPTIONAL SERVICE REPLACEMENT)(INCLUDES CONTROL GP & SOFTWARE)	
	156-6198	4	SCREW-MACHINE (6-20X0.37-IN)	
	208-8375	2	BRACKET	
	242-2461	1	BEZEL	

<END>

302-0362 ELECTRONICS GP-MONITOR–
ENGLISH, PORTUGUESE, ROMANIAN, SLOVENIAN
S/N: B9D1-UP
PART OF 302-8686, 302-8687 PLATE & FILM GP

SMCS-7490, 7610, 7620 **i02790203**

NOTE	PART NUMBER	QTY	PART NAME 1 2 3 4 5 6 (PRODUCT LEVEL)	SEE PAGE
	310-0823	1	SOFTWARE GP-MONITOR	
			–OR–	
	310-0824	1	SERVICE GP-MONITOR	
			(OPTIONAL SERVICE REPLACEMENT)(INCLUDES CONTROL GP & SOFTWARE)	

<END>

250-9260 ELECTRONICS GP-POWER TRAIN—ALL WHEEL DRIVE

S/N: B9D1-UP

PART OF 261-0153 AXLE AR-FRONT

SMCS-4800, 4808, 7610, 7620 **i02785839**

NOTE	PART NUMBER	QTY	PART NAME 1 2 3 4 5 6 (PRODUCT LEVEL)	SEE PAGE
	299-4005	1	SOFTWARE GP-POWER TRAIN (ALL WHEEL DRIVE)	
			—OR—	
	299-4006	1	SERVICE GP-POWER TRAIN (ALL WHEEL DRIVE)	
			(OPTIONAL SERVICE REPLACEMENT)(INCLUDES CONTROL GP & SOFTWARE)	

<END>

310-3221 ELECTRONICS GP-POWER TRAIN

S/N: CZM1-UP

PART OF 253-8405 TRANSMISSION AR

SMCS-4800, 4808, 7610, 7620 **i02784057**

NOTE	PART NUMBER	QTY	PART NAME 1 2 3 4 5 6 (PRODUCT LEVEL)	SEE PAGE
	301-2940	1	SOFTWARE GP-POWER TRAIN	
			-OR-	
	301-2941	1	SERVICE GP-POWER TRAIN	
			(OPTIONAL SERVICE REPLACEMENT)(INCLUDES CONTROL GP & SOFTWARE)	

<END>

263-7415 GRADE CONTROL AR—ACCUGRADE

S/N: B9D1-UP

SMCS-7220 **i02786908**

NOTE	PART NUMBER	QTY	PART NAME 1 2 3 4 5 6 (PRODUCT LEVEL)	SEE PAGE
Y	*302-9097*	1	GRADE CONTROL GP	168
Y	**298-3643**	1	MOUNTING GP-GRADE CONTROL	207
Y	**239-6383**	1	WIRING GP-GRADE CONTROL (FRONT)	282

Y-SEPARATE ILLUSTRATION

<END>

302-9097 GRADE CONTROL GP—ACCUGRADE

S/N: B9D1-UP

PART OF 263-7415 GRADE CONTROL AR

SMCS-7220 **i02787073**

NOTE	PART NUMBER	QTY	PART NAME 1 2 3 4 5 6 (PRODUCT LEVEL)	SEE PAGE
Y	**249-4103**	1	PANEL GP-CONTROL (LH)	842
Y	**249-4104**	1	PANEL GP-CONTROL (RH)	844
Y	**283-7960**	1	POWER SUPPLY GP (GRADE CONTROL)	220

Y-SEPARATE ILLUSTRATION

<END>

3T-8724 HEATER GP-JACKET WATER

S/N: B9D1-UP
240 VOLT/1000 WATT
CANNOT BE USED WITH 9X-3294—PAGE 170

SMCS-1383 **i02433206**

NOTE	REF NO	GRAPHIC REF	PART NUMBER	QTY	PART NAME 1 2 3 4 5 6 (PRODUCT LEVEL)	SEE PAGE
C	1	1	**246-8630**	1	CORD AS-HEATER	
C	2	1	**246-8627**	1	ELEMENT AS-JACKET WATER HEATER (240-VOLT, 1000-WATT)	
	2A	1	**5F-9657**	1	SEAL-O-RING	
	3	1	**6N-1604**	1	CAP AS-DUST	

C-CHANGE FROM PREVIOUS TYPE

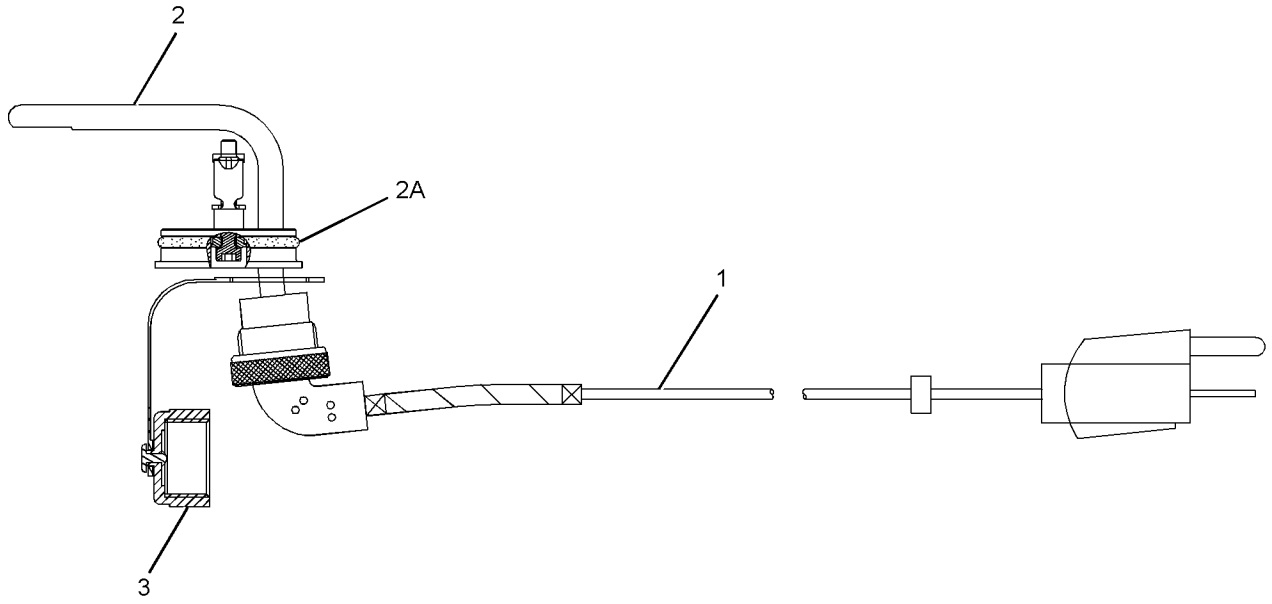

GRAPHIC #1 **<END>** g01226211

9X-3294 HEATER GP-JACKET WATER

S/N: B9D1-UP
120-VOLT/1000-WATT
PART OF 261-0187 SNOW AR-MOTOR GRADER
CANNOT BE USED WITH 3T-8724—PAGE 169

SMCS-1383 **i02444899**

NOTE	REF NO	GRAPHIC REF	PART NUMBER	QTY	PART NAME 1 2 3 4 5 6 (PRODUCT LEVEL)	SEE PAGE
	1	1	**246-8631**	1	CORD AS-HEATER	
	2	1	**246-8628**	1	ELEMENT AS-JACKET WATER HEATER (120-VOLT, 1000-WATT)	
	2A	1	**5F-9657**	1	SEAL-O-RING	
	3	1	**6N-1604**	1	CAP AS-DUST	

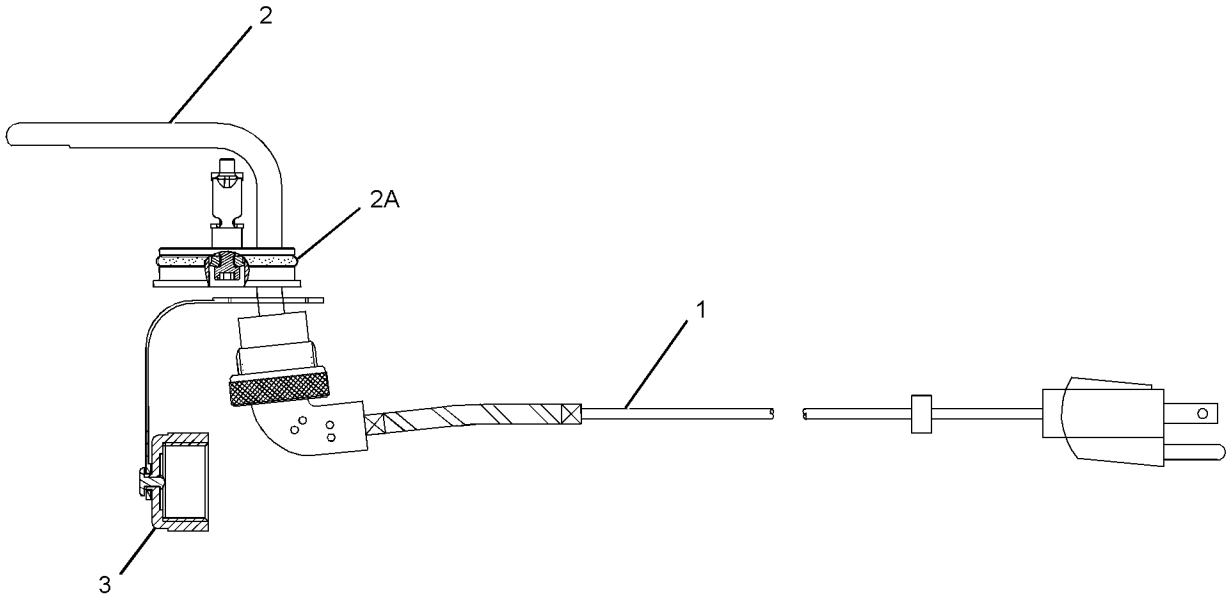

GRAPHIC #1 **<END>** g01225799

235-6188 INSTALLATION AR-COMMUNICATION–
PRODUCT LINK 321SR
S/N: B9D1-UP

SMCS-7606 **i02778980**

NOTE	REF NO	GRAPHIC REF	PART NUMBER	QTY	PART NAME 1 2 3 4 5 6 (PRODUCT LEVEL)	SEE PAGE
	1	1	**8C-5607**	8	MOUNT-ISOLATION	
	2	1	**8C-5608**	4	SPACER (6.5X9.5X25.4-MM THK)	
	3	1	**261-9391**	1	HARNESS AS-POWER (PRODUCT LINK RADIO)	
		1	**102-8801**	1	KIT-RECEPTACLE (12-PIN)	
					(INCLUDES RECEPTACLE AS & WEDGE)	
		1	**155-2255**	1	KIT-CONNECTING PLUG (12-PIN)	
					(INCLUDES PLUG AS, WEDGE, & INTERFACE SEAL)	
		1	**160-7690**	1	PLUG AS-CONNECTOR (70-PIN)	
		1	**9X-6772**	2	STRAP-CABLE	
		1	**126-1774**	1	COVER-CONNECTOR	
	4	1	**263-8948**	1	ANTENNA AS	
		1	**223-4296**	1	ANTENNA (WHIP)	
Y	5	1	**263-9088**	1	RADIO GP-COMMUNICATION (PRODUCT LINK 121SR)	221
	6	1	**272-8325**	1	PLATE AS	
	7	1	**272-8326**	1	PLATE AS	
Y	8	1	*275-9651*	1	APPLICATION GP-COMMUNICATION (PRODUCT LINK 300)	140
	9	1	**251-2247**	1	GROMMET	
M	10	1	**8T-2947**	4	BOLT (M6X1X45-MM)	
M	11	1	**8T-4138**	8	BOLT (M6X1X20-MM)	
	12	1	**9X-6165**	4	WASHER (6.5X22X2.5-MM THK)	
	13	1	**9X-8256**	8	WASHER (6.6X12X2-MM THK)	
	14	1	**3S-2093**	1	STRAP-CABLE	
Y	15	1	*262-2043*	1	ELECTRONICS GP-COMMUNICATION (PRODUCT LINK 300)	164

M-METRIC PART
Y-SEPARATE ILLUSTRATION

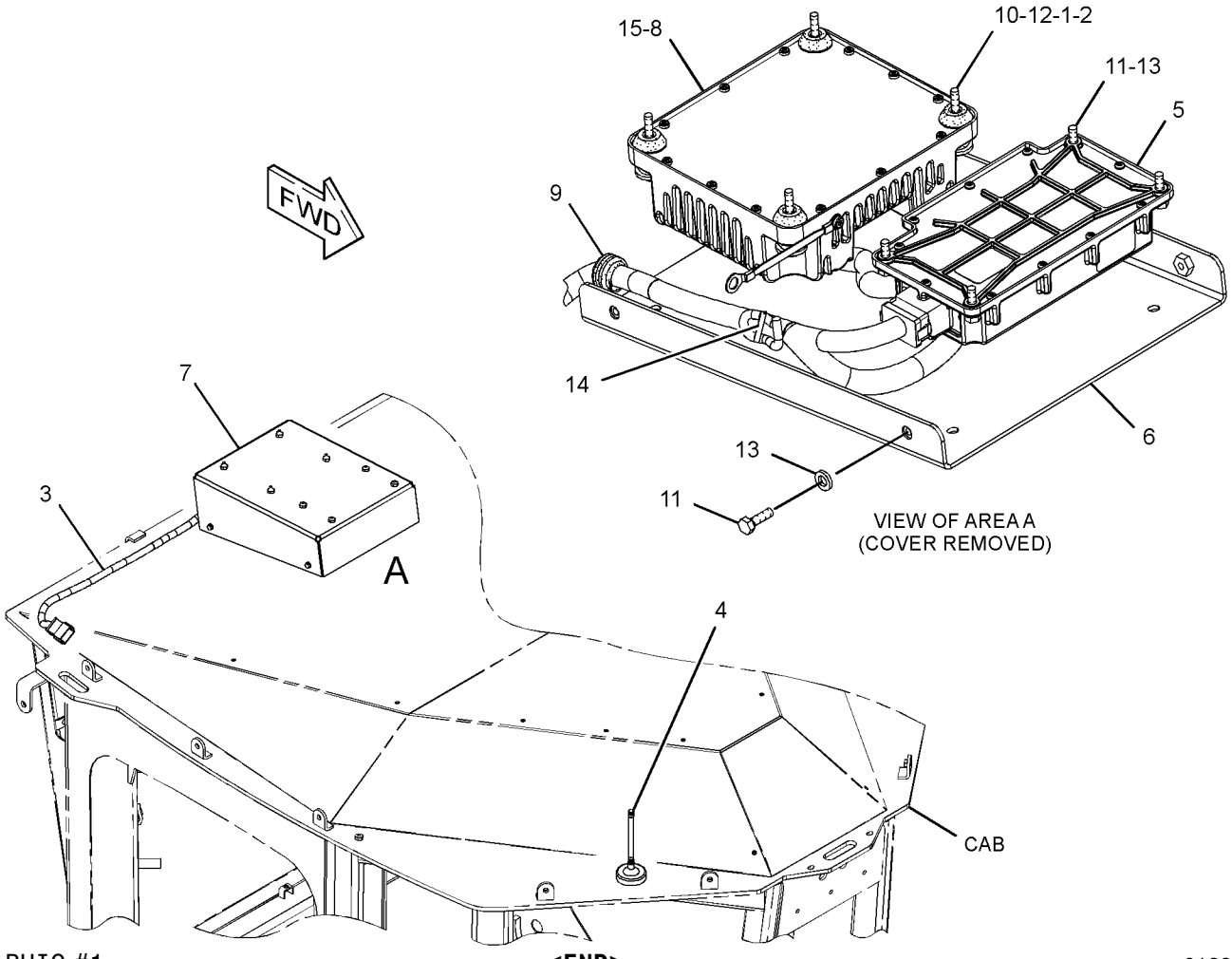

GRAPHIC #1 **<END>** g01335121

278-1842 INSTALLATION GP-CAMERA–WORK AREA VISUAL SYSTEM

S/N: B9D1-UP

SMCS-1408, 7348 **i02787747**

NOTE	PART NUMBER	QTY	PART NAME 1 2 3 4 5 6 (PRODUCT LEVEL)	SEE PAGE
Y	*278-0668*	1	DISPLAY GP-MONITOR (WORK AREA VISUAL SYSTEM)	789
Y	*252-8000*	1	WIRING GP-CAMERA (WORK AREA VISUAL SYSTEM)	270

Y-SEPARATE ILLUSTRATION

<END>

ELECTRICAL AND STARTING SYSTEM

233-3126 INSTALLATION GP-LIGHTING

S/N: B9D1-UP

SMCS-1429, 7553 **i02796324**

NOTE	REF NO	GRAPHIC REF	PART NUMBER	QTY	PART NAME 1 2 3 4 5 6 (PRODUCT LEVEL)	SEE PAGE
	1	1	**5H-9695**	1	GROMMET	
Y	2	1	**234-4326**	1	LAMP GP-FLOOD (24-VOLT)	184
	3	1	**249-5480**	1	SWITCH AS-ROCKER (WORK LIGHT)	
Y	4	1	*290-2016*	1	MOUNTING GP-LAMP	208

Y-SEPARATE ILLUSTRATION

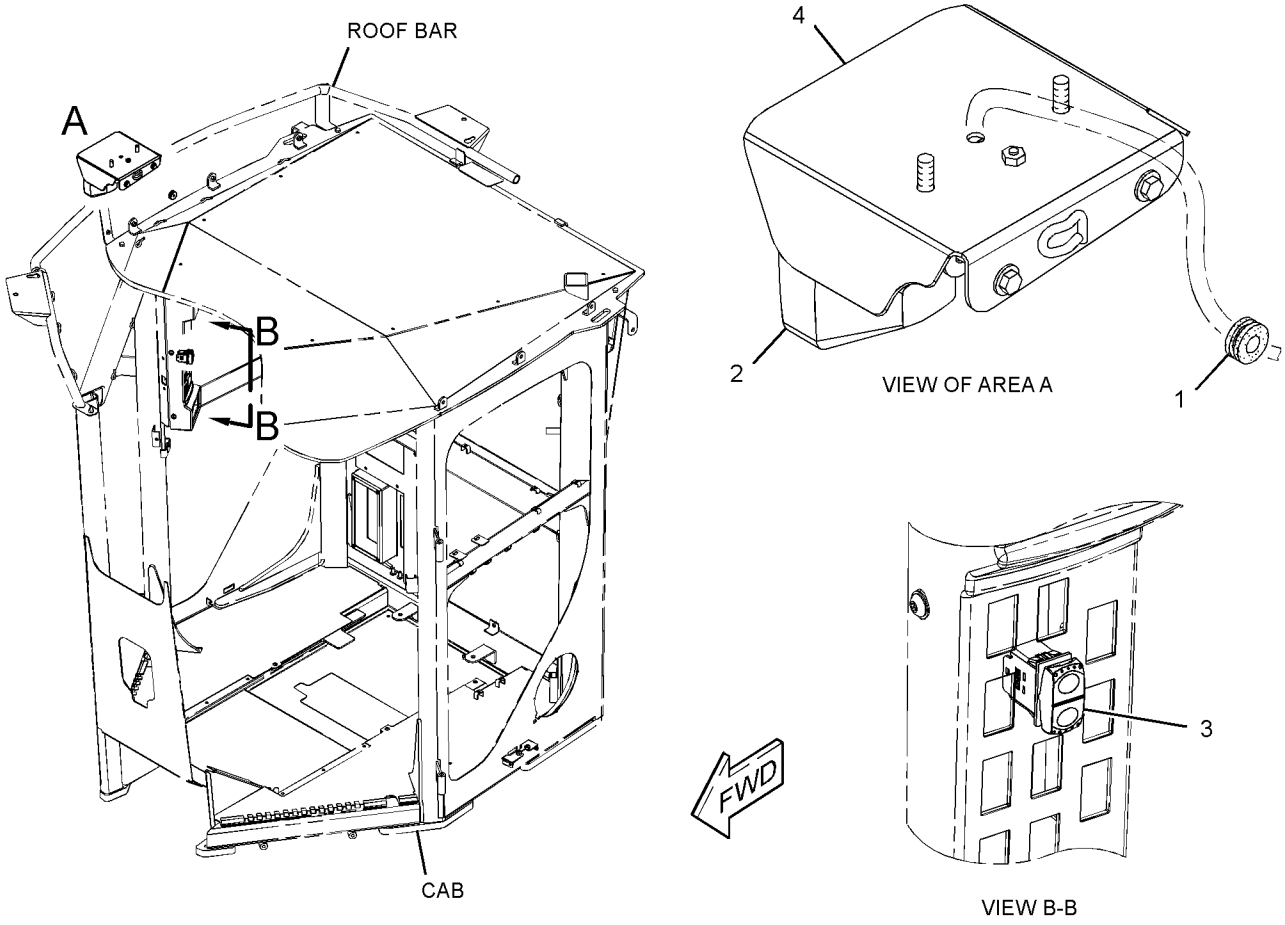

GRAPHIC #1 **<END>** g01289817

238-8827 INSTALLATION GP-SECURITY

S/N: B9D1-UP

SMCS-7631 **i02796330**

NOTE	REF NO	GRAPHIC REF	PART NUMBER	QTY	PART NAME 1 2 3 4 5 6 (PRODUCT LEVEL)	SEE PAGE
	1	1	**102-8803**	1	KIT-RECEPTACLE (3-PIN)	
					(INCLUDES RECEPTACLE AS & WEDGE)	
	2	1	**3S-2093**	2	STRAP-CABLE	
	3	1	**198-5389**	1	FILM-IDENTIFICATION (IGNITION SWITCH)	
	4	1	**205-0826**	1	FILM-INSTRUCTION (MACHINE SECURITY, READ OMM)	
J	5	1	**206-5162**	2	KEY AS-ELECTRONIC (SECURITY)	
	6	1	**206-5208**	1	COIL AS (EXCITER)	
		1	**102-8802**	2	KIT-RECEPTACLE (2-PIN)	
					(EACH INCLUDES RECEPTACLE AS & WEDGE)	
		1	**205-8257**	1	COIL AS (EXCITER)	
	7	1	**218-0404**	1	MODULE GP-INTERFACE (KEY) (MACHINE SECURITY SYSTEM)	
	8	1	**219-6314**	2	KEY RING (IDENTIFICATION)	
	11	1	**238-8813**	1	HARNESS AS-CHASSIS (MACHINE SECURITY SYSTEM)	
		1	**102-8805**	1	KIT-RECEPTACLE (6-PIN)	
					(INCLUDES RECEPTACLE AS & WEDGE)	
		1	**155-2265**	1	KIT-CONNECTING PLUG (8-PIN)	
		1	**155-2270**	2	KIT-CONNECTING PLUG (2-PIN)	
					(EACH PLUG KIT INCLUDES PLUG AS, WEDGE, & INTERFACE SEAL)	
	12	1	**242-3282**	1	LAMP-LED (RED, 24-VOLT)	
	13	1	**251-2253**	1	BRACKET AS	
M	14	1	**132-0111**	2	SCREW (M6X1X35-MM)	
	15	1	**102-8802**	1	KIT-RECEPTACLE (2-PIN)	
					(INCLUDES RECEPTACLE AS & WEDGE)	
	16	1	**8C-5607**	4	MOUNT-ISOLATION	
	17	1	**8C-5608**	2	SPACER (6.5X9.5X25.4-MM THK)	
	18	1	**9X-6165**	2	WASHER (6.5X22X2.5-MM THK)	

J-REQUIRES CORPORATE KEY
M-METRIC PART

238-8827 **INSTALLATION GP-SECURITY** *(contd.)* **i02796330**

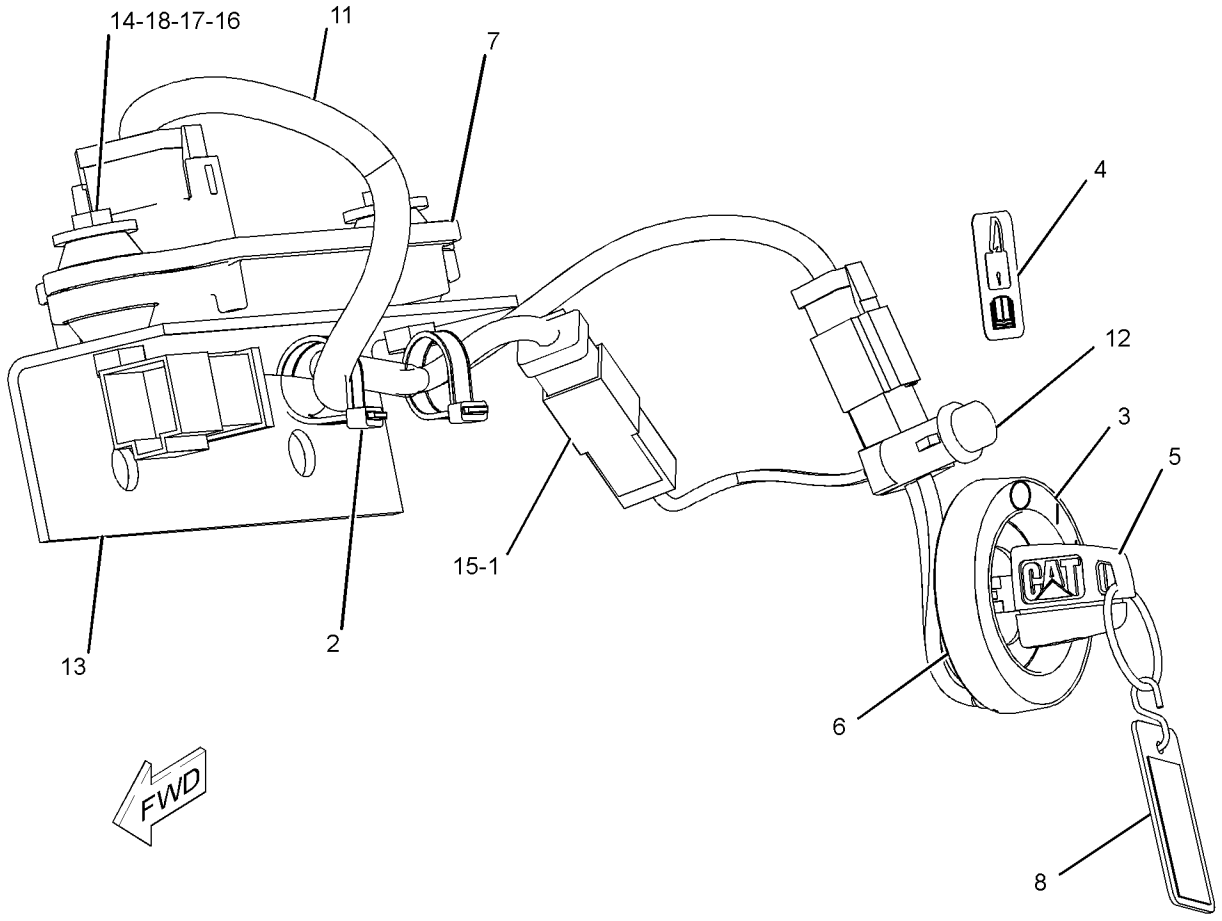

GRAPHIC #1 **<END>** g01366065

233-3127 INSTALLATION GP-WARNING BEACON

S/N: B9D1-UP

PART OF 261-0187 SNOW AR-MOTOR GRADER

SMCS-1408, 1431 **i02773156**

NOTE	REF NO	GRAPHIC REF	PART NUMBER	QTY	PART NAME 1 2 3 4 5 6 (PRODUCT LEVEL)	SEE PAGE
	1	1	**235-6195**	1	BRACKET AS	
	2	1	**237-9736**	1	SWITCH AS-ROCKER (WARNING BEACON)	

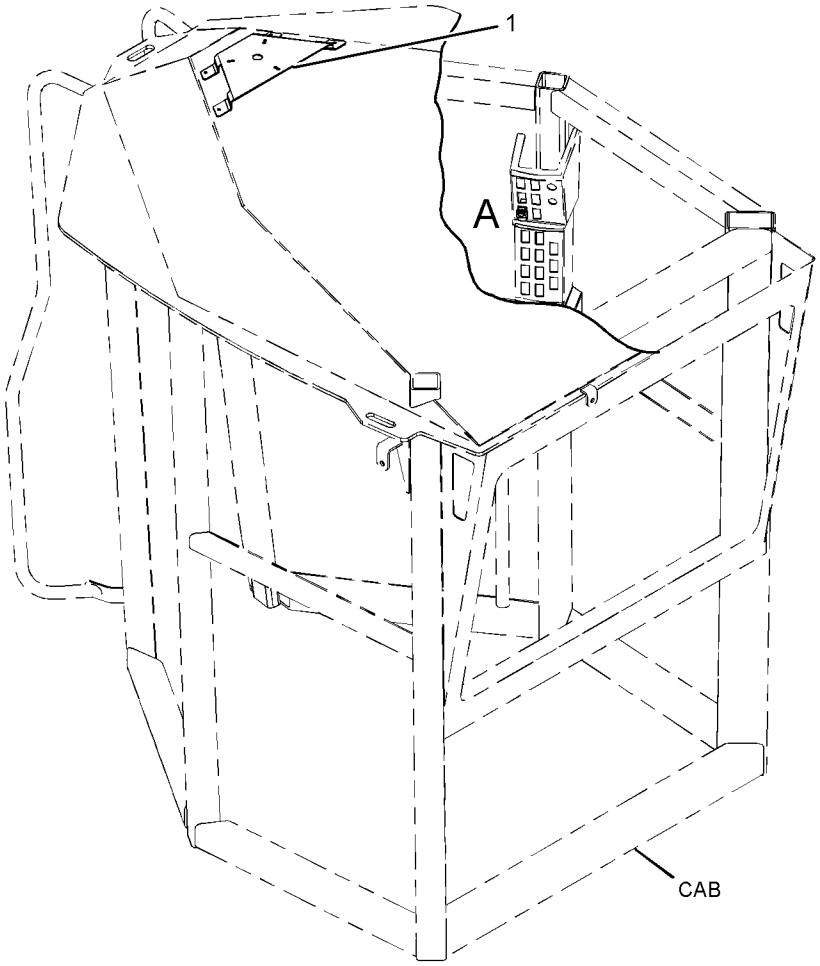

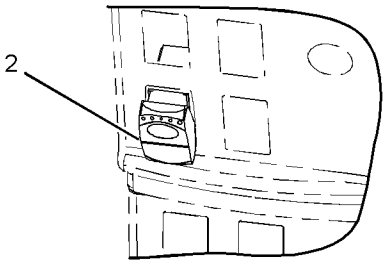

VIEW OF AREA A



GRAPHIC #1 **<END>** g01153634

3E-6389 LAMP GP-DOME

S/N: B9D1-UP
24-VOLT, WITH SWITCH
PART OF 294-0987 LINER GP-CAB

SMCS-1433 **i02561652**

NOTE	REF NO	GRAPHIC REF	PART NUMBER	QTY	PART NAME 1 2 3 4 5 6 (PRODUCT LEVEL)	SEE PAGE
	1	1	**7N-9943**	1	LAMP (24-VOLT)	
	2	1	**102-8803**	1	KIT-RECEPTACLE (3-PIN)	
					(INCLUDES RECEPTACLE AS & WEDGE)	
	3	1	**186-3735**	3	PIN-CONNECTOR (16-GA TO 18-GA)	
	4	1	**7T-0020**	1	LENS-DOME LAMP	

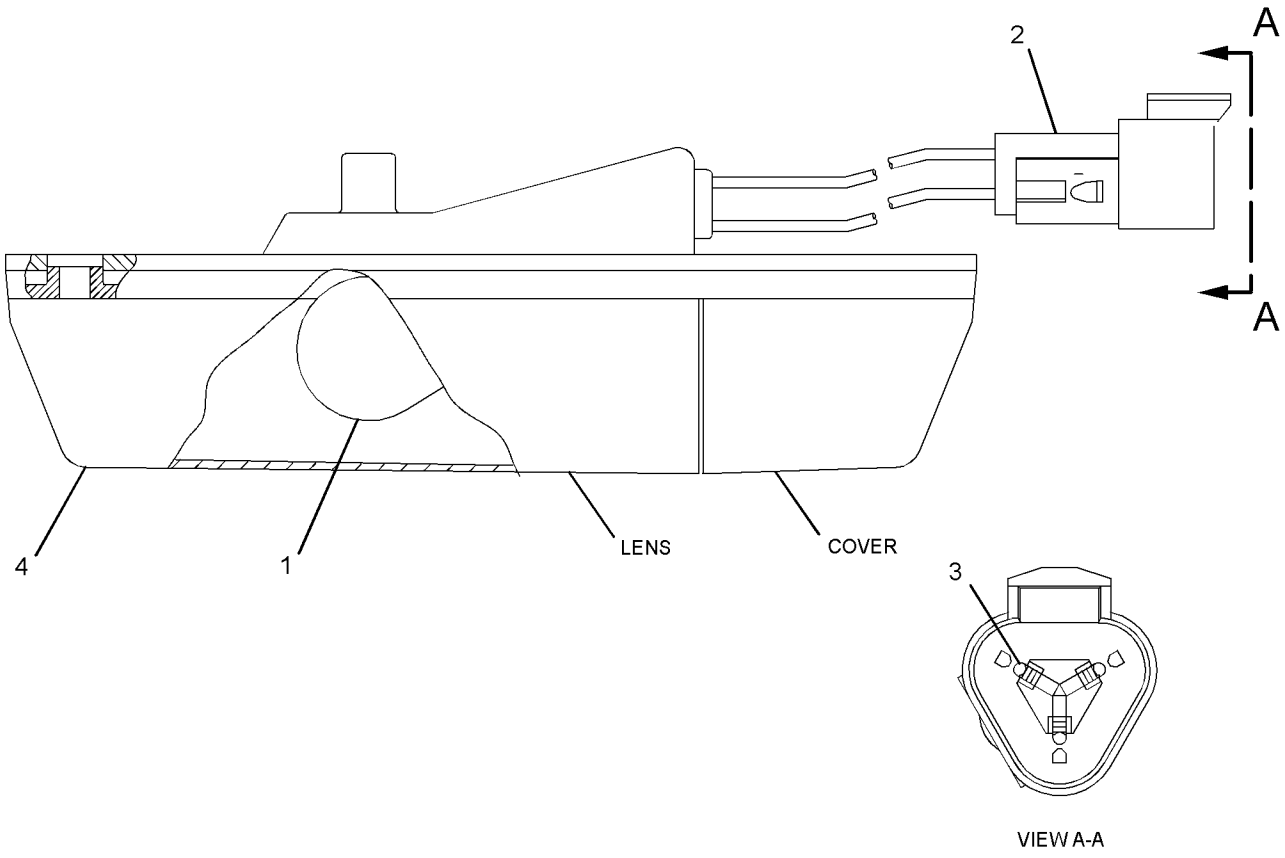

GRAPHIC #1 **<END>** g01270113

210-8422 LAMP GP-FLOOD–HID

S/N: B9D1-UP
24-VOLT,35-WATT
PART OF 233-4619 LIGHTING GP-FLOOD

SMCS-1434 **i02790367**

NOTE	REF NO	GRAPHIC REF	PART NUMBER	QTY	PART NAME 1 2 3 4 5 6 (PRODUCT LEVEL)	SEE PAGE
	1	1	**229-9969**	1	LENS AS	
	2	1	**209-6638**	1	LAMP-HALOGEN (24-VOLT, 35-WATT)	
M	3	1	**120-9027**	4	SCREW-PAN HEAD (M3X0.5X16-MM)	
CM	4	1	**8T-6869**	1	BOLT (M8X1.25X60-MM)	
CM	5	1	**6V-9189**	1	LOCKNUT (M8X1.25-THD)	
C	6	1	**296-7759**	1	BRACKET	
	7	1	**229-9974**	1	BEZEL	

C-CHANGE FROM PREVIOUS TYPE
M-METRIC PART

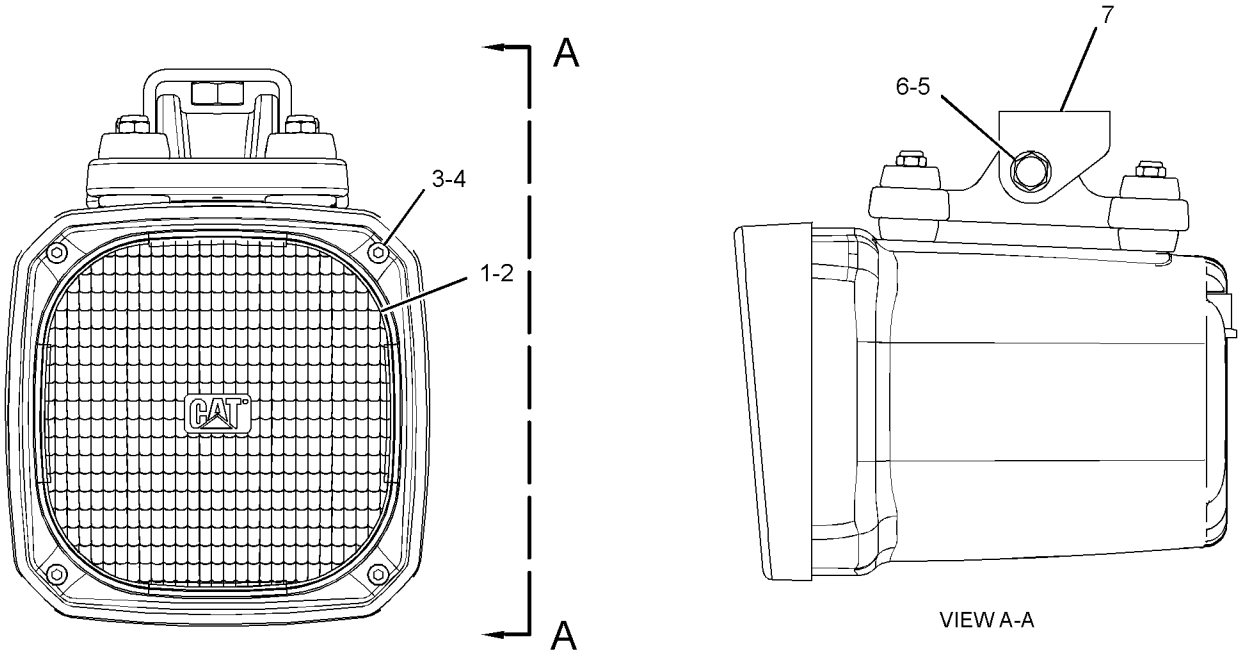

GRAPHIC #1 **<END>** g01395838

219-6486 LAMP GP-FLOOD

S/N: B9D1-UP
24-VOLT
PART OF 291-4038 LIGHTING GP-FLOOD

SMCS-1434 **i02788285**

NOTE	REF NO	GRAPHIC REF	PART NUMBER	QTY	PART NAME 1 2 3 4 5 6 (PRODUCT LEVEL)	SEE PAGE
	1	1	**9X-3463**	1	LAMP-HALOGEN (24-VOLT, 65-WATT)	
	2	1	**9X-4244**	2	SCREW-SPECIAL	
	3	1	**202-6611**	1	LENS AS (FLOODLIGHT)	
	4	1	**175-4292**	1	BODY AS	
	5	1	**164-7556**	1	CLIP (LAMP RETAINING)	
M	6	1	**6V-2317**	1	BOLT (M8X1.25X30-MM)	
M	7	1	**6V-9189**	1	LOCKNUT (M8X1.25-THD)	
	8	1	**8T-4224**	2	WASHER-HARD (8.8X16X2-MM THK)	
	9	1	**175-4291**	1	BRACKET AS	

M-METRIC PART

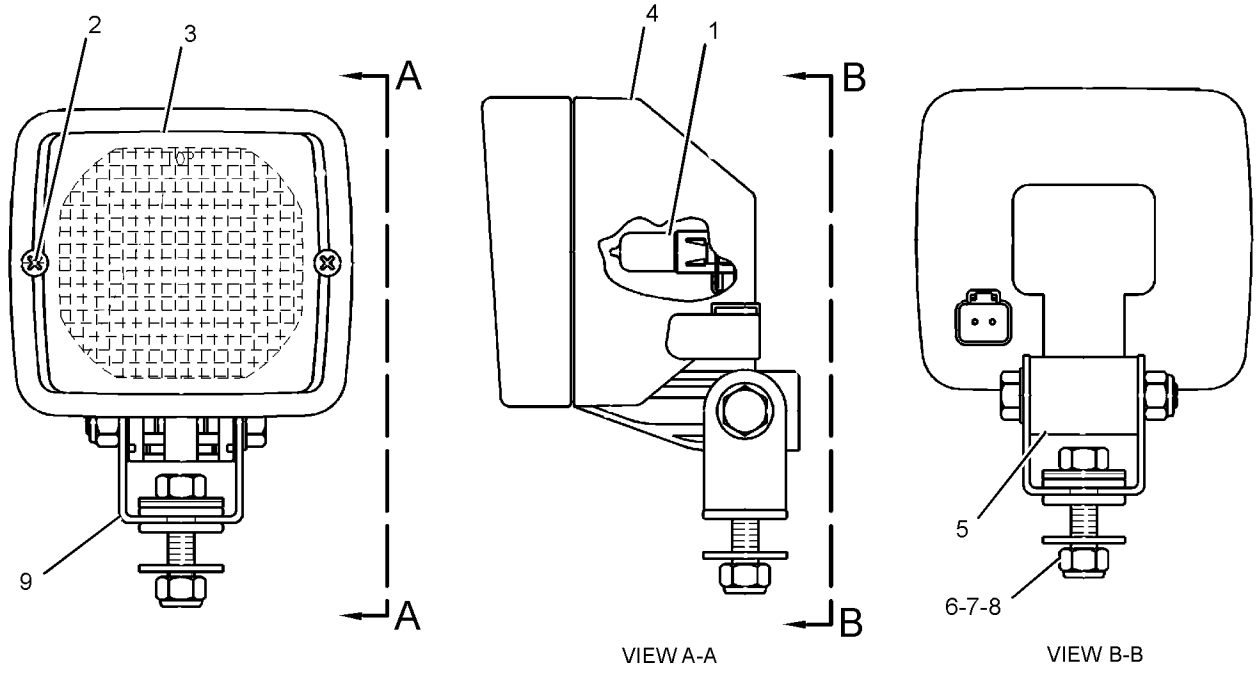

VIEW A-A VIEW B-B

GRAPHIC #1 **<END>** g01307925

233-4620 LAMP GP-FLOOD

S/N: B9D1-UP
24-VOLT
CANNOT BE USED WITH 233-4621—PAGE 182

SMCS-1434 **i02776350**

NOTE	REF NO	GRAPHIC REF	PART NUMBER	QTY	PART NAME 1 2 3 4 5 6 (PRODUCT LEVEL)	SEE PAGE
	1	1	**9X-9365**	2	BRACKET	
Y	2	1	**234-4325**	2	LAMP GP-FLOOD (24-VOLT)	183
	3	1	**8T-4121**	2	WASHER-HARD (11X21X2.5-MM THK)	
M	4	1	**8T-4137**	2	BOLT (M10X1.5X20-MM)	
	5	1	**9X-7345**	2	GROMMET	

M-METRIC PART
Y-SEPARATE ILLUSTRATION

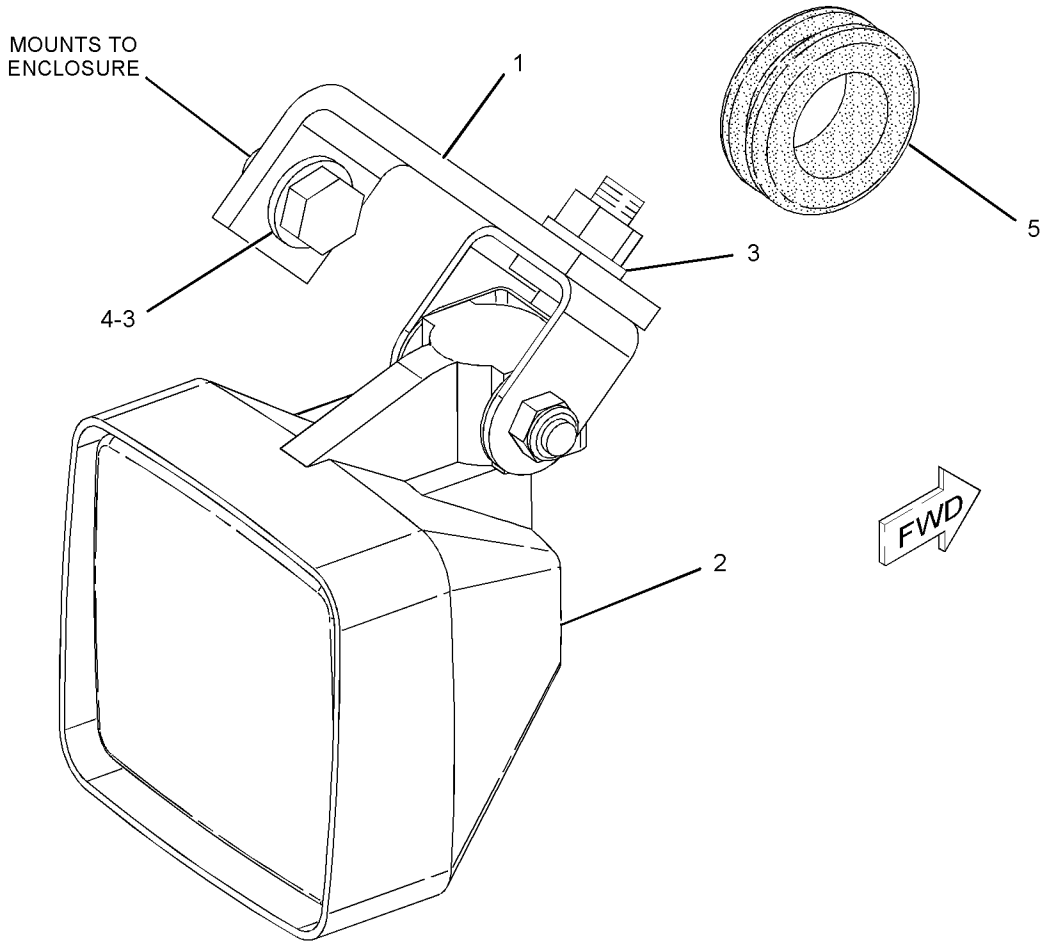

GRAPHIC #1 **<END>** g01133514

233-4621 LAMP GP-FLOOD–HID

S/N: B9D1-UP
24-VOLT, 35-WATT
CANNOT BE USED WITH 233-4620–PAGE 181

SMCS-1434 **i02776373**

NOTE	REF NO	GRAPHIC REF	PART NUMBER	QTY	PART NAME 1 2 3 4 5 6 (PRODUCT LEVEL)	SEE PAGE
	1	1	**261-3613**	2	BRACKET AS	
Y	2	1	**283-8145**	2	LAMP GP-FLOOD (24-VOLT, 35-WATT, HID)	186
	3	1	**130-5300**	2	CLIP	
	4	1	**8T-4121**	4	WASHER-HARD (11X21X2.5-MM THK)	
M	5	1	**8T-4137**	4	BOLT (M10X1.5X20-MM)	
	6	1	**9X-7345**	2	GROMMET	

M-METRIC PART
Y-SEPARATE ILLUSTRATION

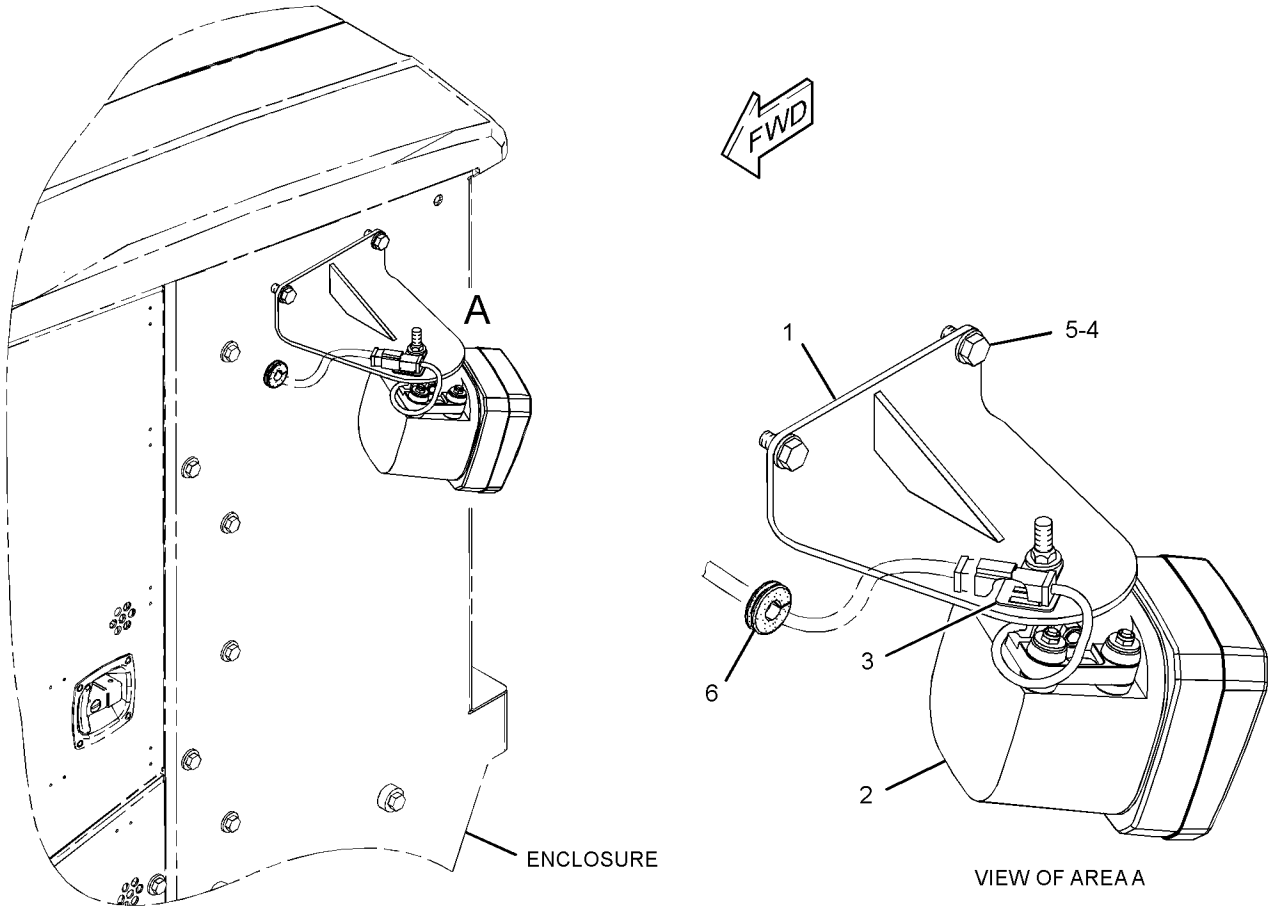

GRAPHIC #1 **<END>** g01340655

234-4325 LAMP GP-FLOOD

S/N: B9D1-UP

24-VOLT

PART OF 233-4620 LAMP GP-FLOOD, 233-4615, 233-4618, 286-7909 LIGHTING GP-FLOOD

SMCS-1434 **i02648057**

NOTE	REF NO	GRAPHIC REF	PART NUMBER	QTY	PART NAME 1 2 3 4 5 6 (PRODUCT LEVEL)	SEE PAGE
	1	1	**9X-3463**	1	LAMP-HALOGEN (24-VOLT, 65-WATT)	
M	2	1	**8T-0389**	1	LOCKNUT (M10X1.15-THD)	
	3	1	**9X-4244**	2	SCREW-SPECIAL	
	4	1	**202-6614**	1	LENS AS (FLOODLIGHT)	
	5	1	**234-7730**	1	BODY AS	
	6	1	**164-7556**	1	CLIP (LAMP RETAINING)	
	7	1	**234-7731**	1	BRACKET AS	
	8	1	**8T-4121**	1	WASHER-HARD (11X21X2.5-MM THK)	

M-METRIC PART

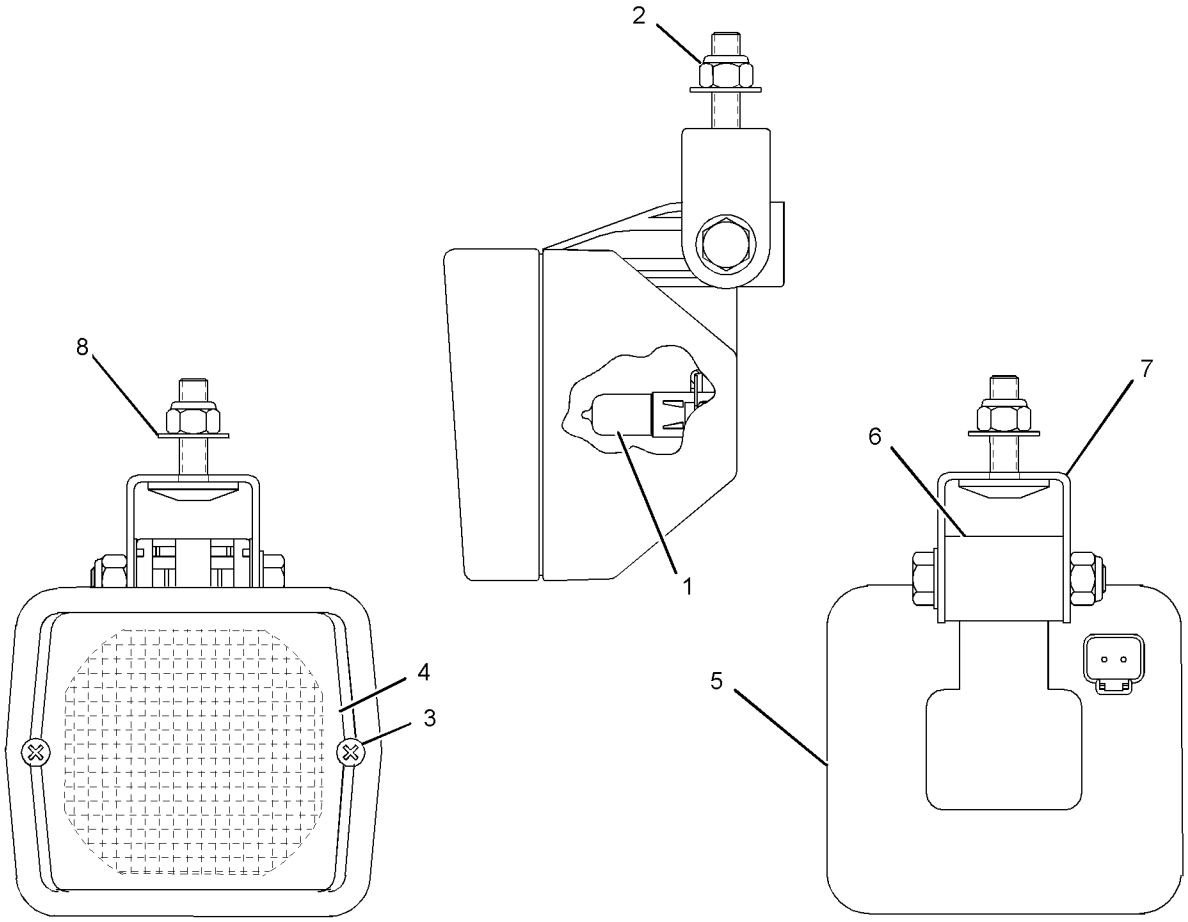

GRAPHIC #1 **<END>** g01329238

234-4326 LAMP GP-FLOOD

S/N: B9D1-UP

24 VOLT

PART OF 233-3126 INSTALLATION GP-LIGHTING, 291-4038 LIGHTING GP-FLOOD

SMCS-1434 **i02549179**

NOTE	REF NO	GRAPHIC REF	PART NUMBER	QTY	PART NAME 1 2 3 4 5 6 (PRODUCT LEVEL)	SEE PAGE
	1	1	**9X-3463**	1	LAMP-HALOGEN (24-VOLT, 65-WATT)	
M	2	1	**8T-0389**	1	LOCKNUT (M10X1.15-THD)	
	3	1	**9X-4244**	2	SCREW-SPECIAL	
	4	1	**202-6611**	1	LENS AS (FLOODLIGHT)	
	5	1	**234-7730**	1	BODY AS	
	6	1	**164-7556**	1	CLIP (LAMP RETAINING)	
	7	1	**234-7731**	1	BRACKET AS	
	8	1	**8T-4121**	1	WASHER-HARD (11X21X2.5-MM THK)	

M-METRIC PART

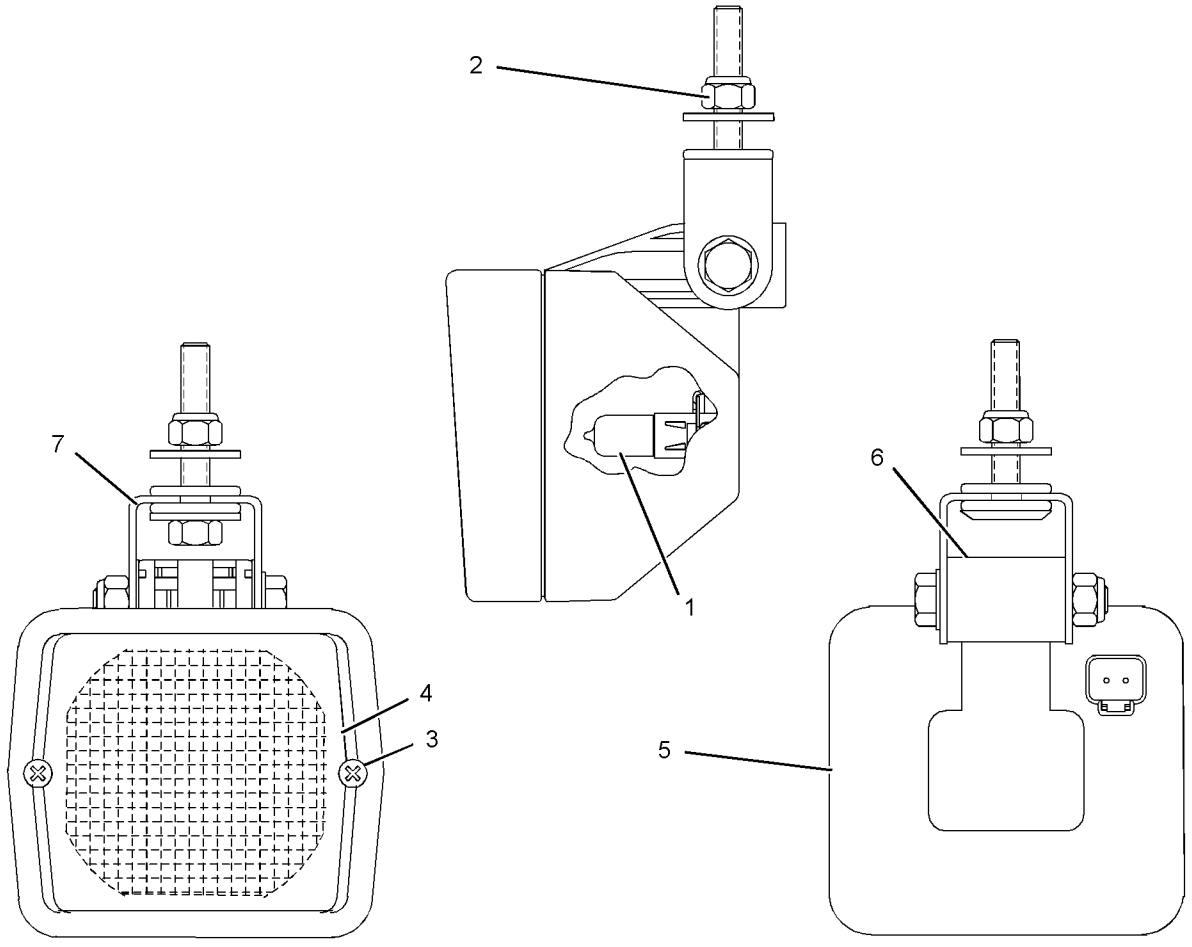

GRAPHIC #1 **<END>** g01276026

269-4800 LAMP GP-FLOOD–HID

S/N: B9D1-UP
24-VOLT, 35-WATT
PART OF 291-4039 LIGHTING GP-FLOOD

SMCS-1434 **i02788337**

NOTE	REF NO	GRAPHIC REF	PART NUMBER	QTY	PART NAME 1 2 3 4 5 6 (PRODUCT LEVEL)	SEE PAGE
	1	1	**291-2943**	1	LENS (LONG RANGE)	
	2	1	**290-8160**	1	LAMP (24-VOLT, HID)	
	3	1	**8T-4121**	1	WASHER-HARD (11X21X2.5-MM THK)	
	4	1	**9X-4244**	2	SCREW-SPECIAL	
	5	1	**291-2939**	1	BRACKET	
	6	1	**229-9974**	1	BEZEL	
	7	1	**290-8159**	1	BALLAST AS (24-VOLT, 35-WATT, HID)	
M	8	1	**151-8754**	1	BOLT (M10X1.5X40-MM)	
M	9	1	**8T-4189**	1	BOLT (M8X1.25X20-MM)	
M	10	1	**6V-9189**	1	LOCKNUT (M8X1.25-THD)	

M-METRIC PART

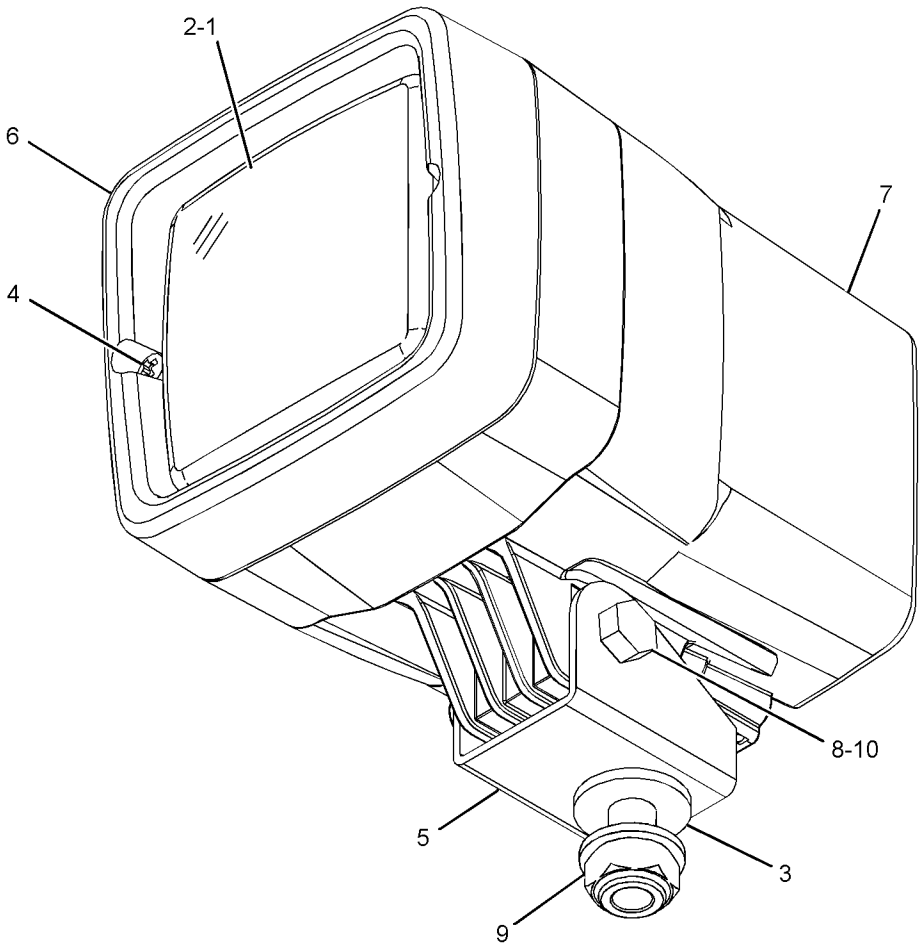

GRAPHIC #1 **<END>** g01290852

283-8145 LAMP GP-FLOOD–HID

S/N: B9D1-UP

24-VOLT, 35-WATT

PART OF 233-4621 LAMP GP-FLOOD, 233-4616, 286-7910 LIGHTING GP-FLOOD

SMCS-1434 **i02776178**

NOTE	REF NO	GRAPHIC REF	PART NUMBER	QTY	PART NAME 1 2 3 4 5 6 (PRODUCT LEVEL)	SEE PAGE
	1	1	**277-3082**	1	LENS AS (FLOODLIGHT)	
	2	1	**290-8160**	1	LAMP (24-VOLT, HID)	
M	3	1	**151-8754**	1	BOLT (M10X1.5X40-MM)	
	4	1	**8T-4121**	1	WASHER-HARD (11X21X2.5-MM THK)	
M	5	1	**120-9027**	4	SCREW-PAN HEAD (M3X0.5X16-MM)	
M	6	1	**5P-8347**	1	BOLT (M8X1.25X70-MM)	
M	7	1	**6V-9189**	1	LOCKNUT (M8X1.25-THD)	
	8	1	**290-8996**	1	BRACKET	
	9	1	**229-9974**	1	BEZEL	
	10	1	**290-8159**	1	BALLAST AS (24-VOLT, 35-WATT, HID)	

M-METRIC PART

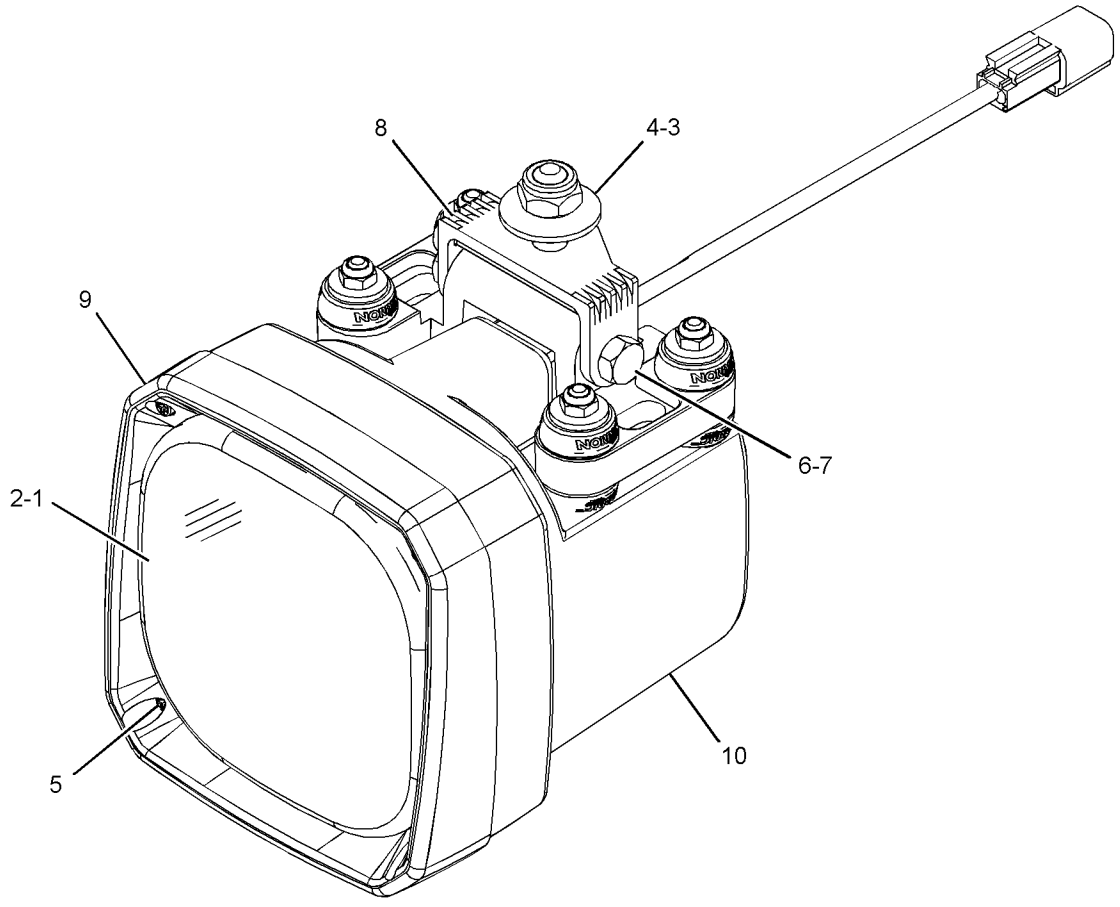

GRAPHIC #1 **<END>** g01290797

286-3077 LAMP GP-FLOOD–HID

S/N: B9D1-UP
24-VOLT
PART OF 291-4039 LIGHTING GP-FLOOD

SMCS-1434 **i02788329**

NOTE	REF NO	GRAPHIC REF	PART NUMBER	QTY	PART NAME 1 2 3 4 5 6 (PRODUCT LEVEL)	SEE PAGE
	1	1	**291-2941**	1	LENS	
	2	1	**290-8160**	1	LAMP (24-VOLT, HID)	
	3	1	**8T-4121**	1	WASHER-HARD (11X21X2.5-MM THK)	
	4	1	**9X-4244**	2	SCREW-SPECIAL	
	5	1	**291-2939**	1	BRACKET	
	6	1	**229-9974**	1	BEZEL	
	7	1	**290-8159**	1	BALLAST AS (24-VOLT, 35-WATT, HID)	

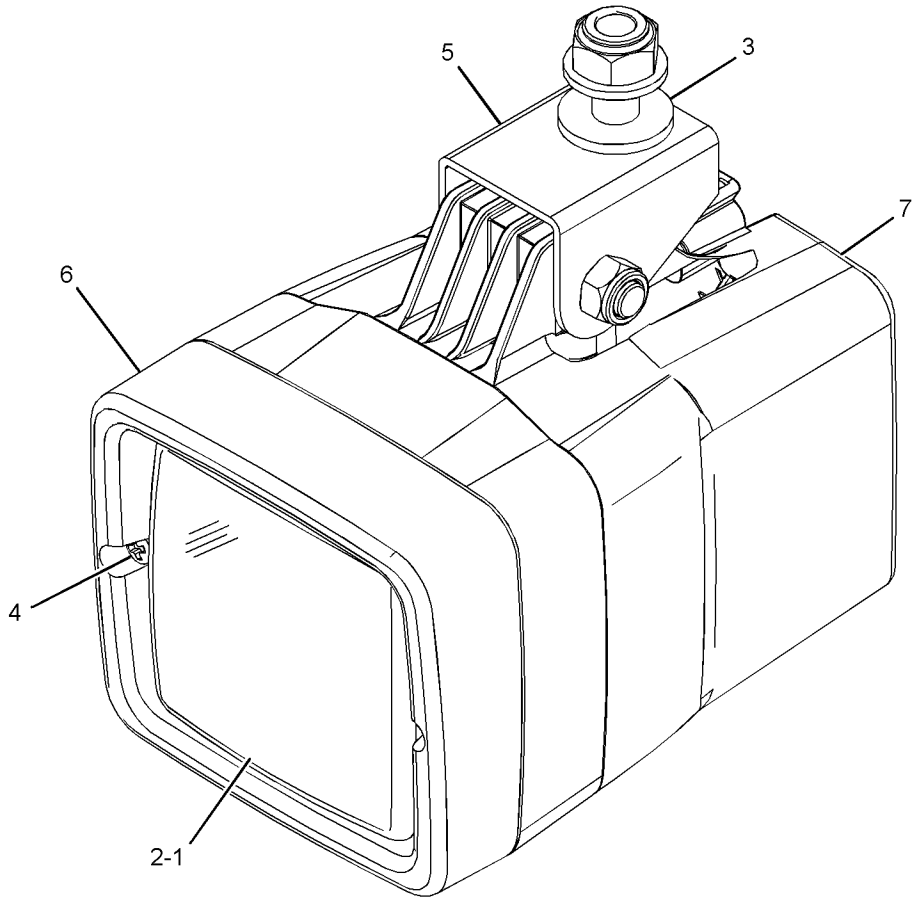

GRAPHIC #1 **<END>** g01290743

289-3820 LAMP GP-FLOOD–HID

S/N: B9D1-UP
24-VOLT
PART OF 291-4039 LIGHTING GP-FLOOD

SMCS-1434 **i02788318**

NOTE	REF NO	GRAPHIC REF	PART NUMBER	QTY	PART NAME 1 2 3 4 5 6 (PRODUCT LEVEL)	SEE PAGE
	1	1	**291-2943**	1	LENS	
	2	1	**290-8160**	1	LAMP (24-VOLT, HID)	
	3	1	**8T-4121**	1	WASHER-HARD (11X21X2.5-MM THK)	
	4	1	**9X-4244**	2	SCREW-SPECIAL	
	5	1	**291-2939**	1	BRACKET	
	6	1	**229-9974**	1	BEZEL	
	7	1	**290-8159**	1	BALLAST AS (24-VOLT, 35-WATT, HID)	

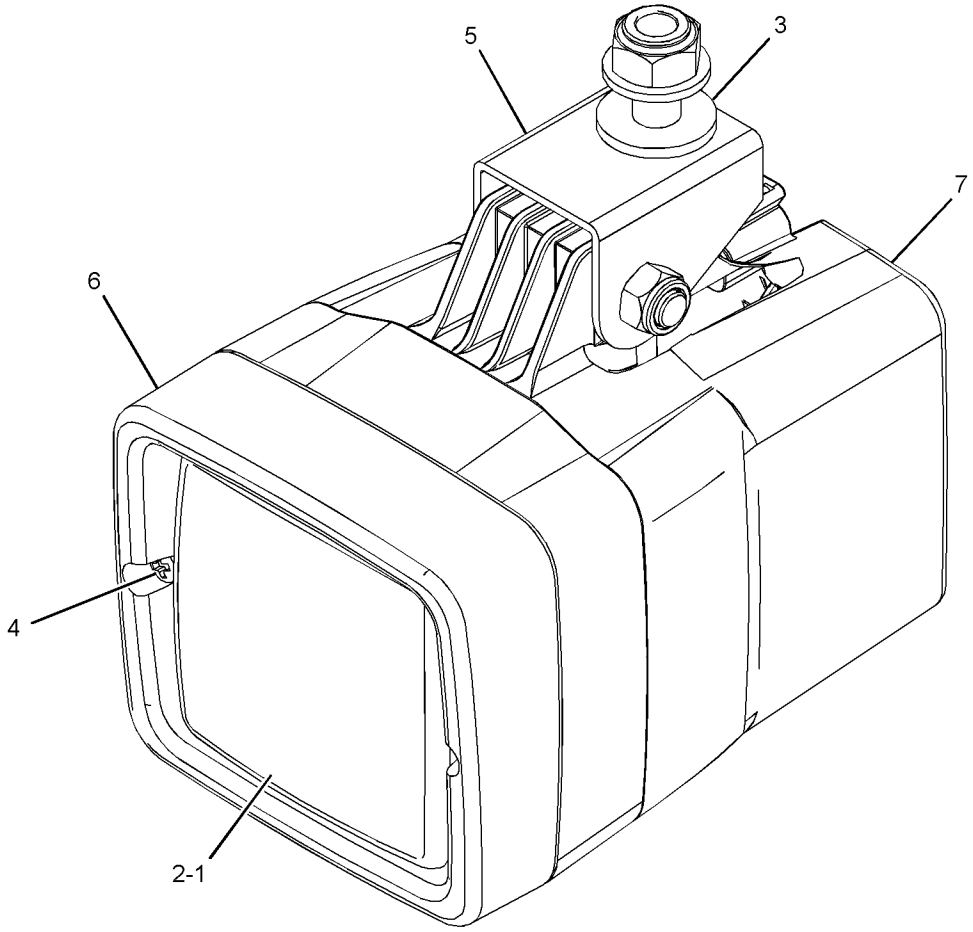

GRAPHIC #1 **<END>** g01290829

290-5749 LAMP GP-HEAD–HIGH BEAM

S/N: B9D1-UP
24-VOLT
PART OF 291-4038 LIGHTING GP-FLOOD

SMCS-1429 **i02788296**

NOTE	REF NO	GRAPHIC REF	PART NUMBER	QTY	PART NAME 1 2 3 4 5 6 (PRODUCT LEVEL)	SEE PAGE
	1	1	**308-2129**	1	BRACKET-LIGHT	
M	2	1	**3E-9854**	1	BOLT (M8X1.25X20-MM)	
M	3	1	**6V-9189**	2	LOCKNUT (M8X1.25-THD)	
M	4	1	**8C-5748**	1	BOLT (M8X1.25X55-MM)	
	5	1	**8T-4224**	1	WASHER-HARD (8.8X16X2-MM THK)	
	6	1	**9X-3463**	1	LAMP-HALOGEN (24-VOLT, 65-WATT)	

M-METRIC PART

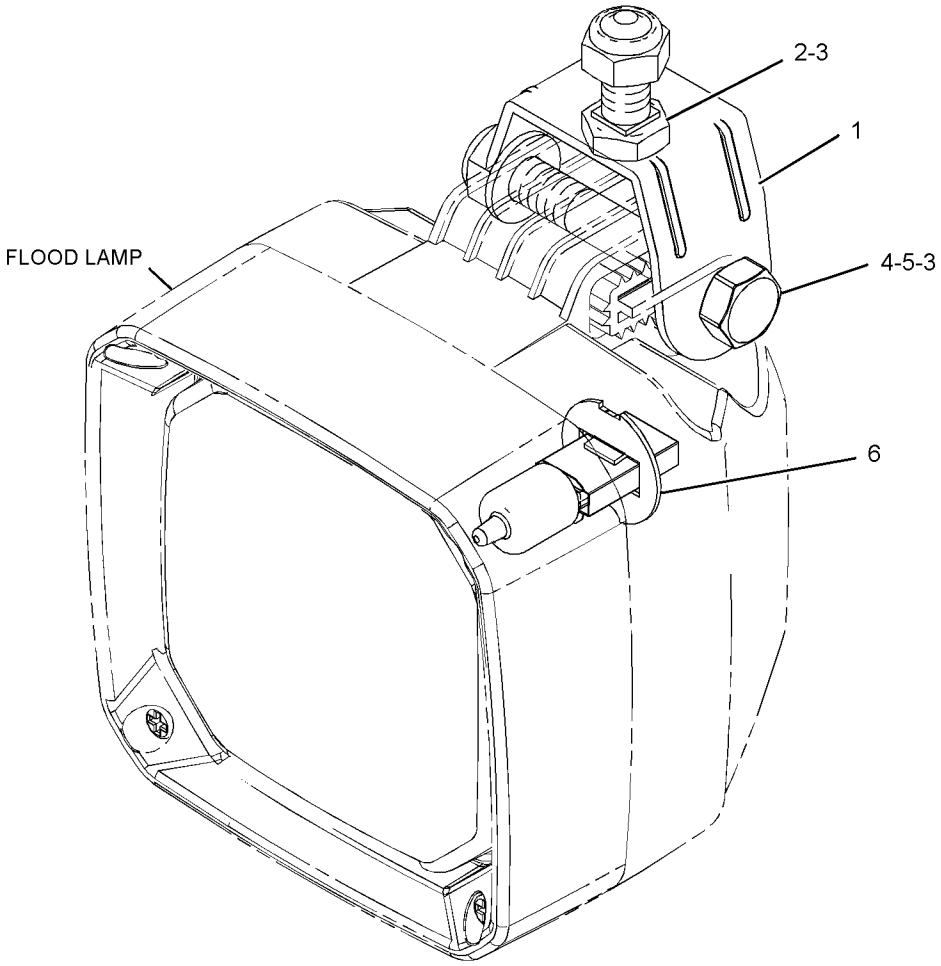

GRAPHIC #1 **<END>** g01364236

259-9287 LAMP GP-HEAD & SIGNAL–LH

S/N: B9D1-UP
24-VOLT
PART OF 233-4610, 233-4624 MOUNTING GP-LIGHTING

SMCS-1429, 1430 **i02776117**

NOTE	REF NO	GRAPHIC REF	PART NUMBER	QTY	PART NAME 1 2 3 4 5 6 (PRODUCT LEVEL)	SEE PAGE
	1	1	**228-6053**	1	BODY AS	
	2	1	**228-6054**	1	BEZEL	
	3	1	**228-6051**	1	LENS AS (HEADLIGHT)	
	4	1	**272-9850**	1	LENS AS (TURN SIGNAL)	
	5	1	**228-6056**	6	SCREW (4-32X1.26-IN)	
	6	1	**9X-3465**	1	LAMP (24-VOLT, 75/70-WATT)	
	7	1	**130-3515**	1	LAMP (24-VOLT, 5-WATT)	
M	8	1	**8T-0389**	1	LOCKNUT (M10X1.15-THD)	
	9	1	**100-3253**	1	SPACER (SPHERICAL)	
	10	1	**100-3254**	1	SPACER (SPHERICAL)	
	11	1	**100-3255**	1	WASHER (SPHERICAL)	
	12	1	**102-8805**	1	KIT-RECEPTACLE (6-PIN)	
					(INCLUDES RECEPTACLE AS & WEDGE)	
	13	1	**186-3735**	5	PIN-CONNECTOR (16-GA TO 18-GA)	
	14	1	**8T-8737**	1	PLUG-SEAL	

M-METRIC PART

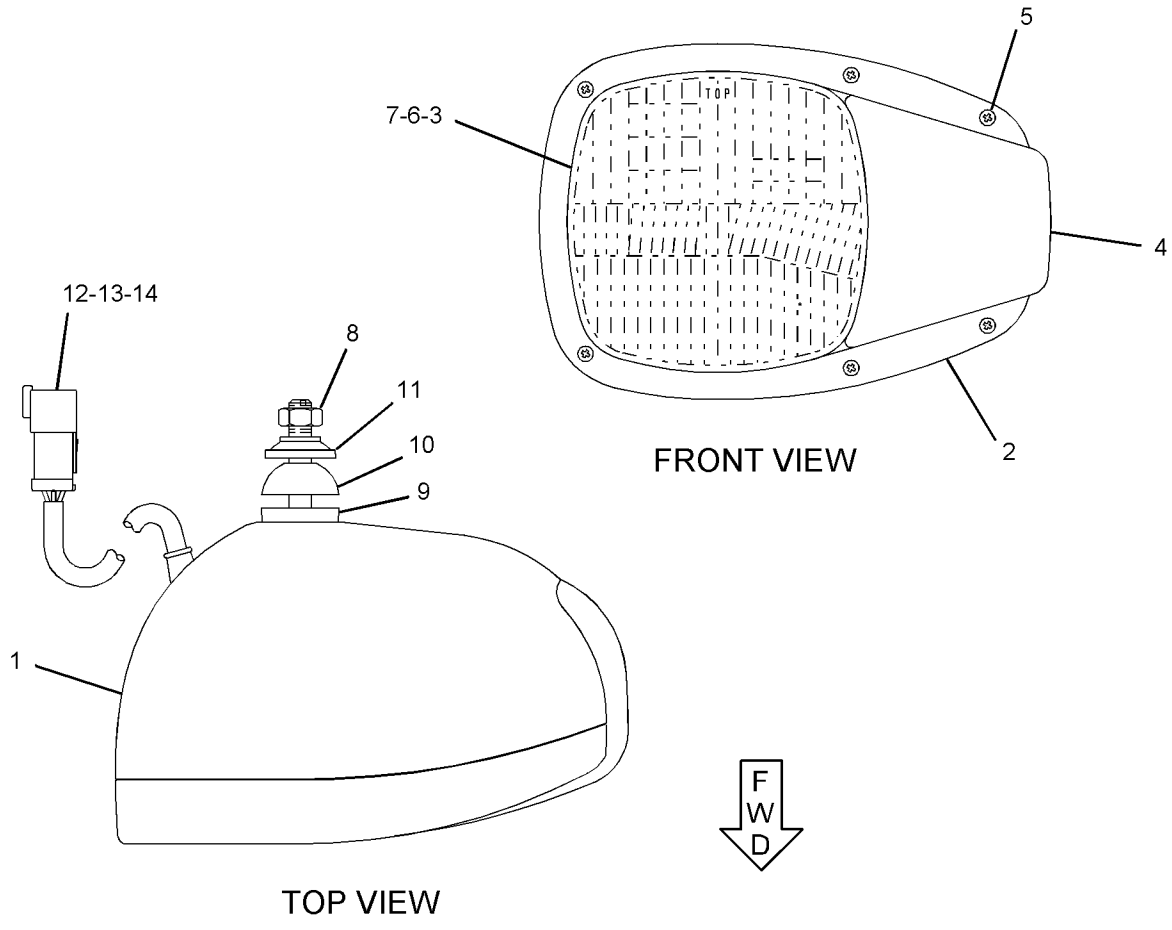

GRAPHIC #1 **<END>** g01261592

259-9288 LAMP GP-HEAD & SIGNAL–RH

S/N: B9D1-UP
24-VOLT
PART OF 233-4610, 233-4624 MOUNTING GP-LIGHTING

SMCS-1429, 1430 **i02776119**

NOTE	REF NO	GRAPHIC REF	PART NUMBER	QTY	PART NAME 1 2 3 4 5 6 (PRODUCT LEVEL)	SEE PAGE
	1	1	**228-6053**	1	BODY AS	
	2	1	**228-6054**	1	BEZEL	
	3	1	**228-6051**	1	LENS AS (HEADLIGHT)	
	4	1	**272-9850**	1	LENS AS (TURN SIGNAL)	
	5	1	**228-6056**	6	SCREW (4-32X1.26-IN)	
	6	1	**9X-3465**	1	LAMP (24-VOLT, 75/70-WATT)	
	7	1	**130-3515**	1	LAMP (24-VOLT, 5-WATT)	
M	8	1	**8T-0389**	1	LOCKNUT (M10X1.15-THD)	
	9	1	**100-3253**	1	SPACER (SPHERICAL)	
	10	1	**100-3254**	1	SPACER (SPHERICAL)	
	11	1	**100-3255**	1	WASHER (SPHERICAL)	
	12	1	**102-8805**	1	KIT-RECEPTACLE (6-PIN)	
					(INCLUDES RECEPTACLE AS & WEDGE)	
	13	1	**186-3735**	5	PIN-CONNECTOR (16-GA TO 18-GA)	
	14	1	**8T-8737**	1	PLUG-SEAL	

M-METRIC PART

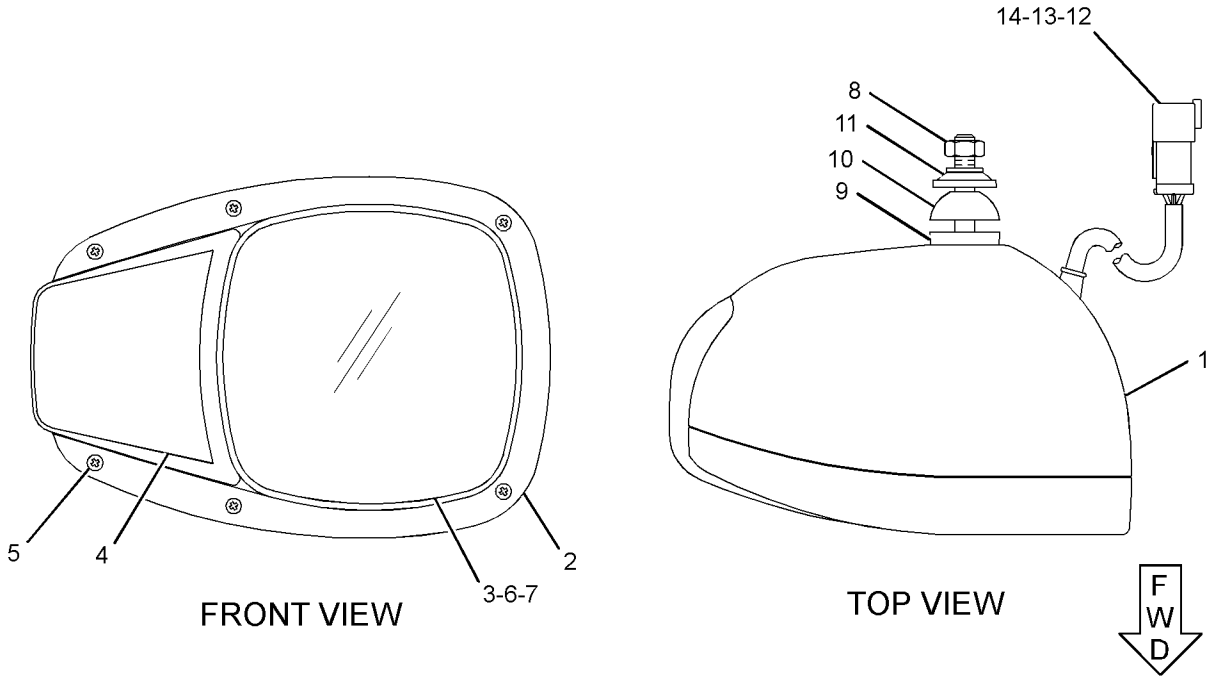

GRAPHIC #1 **<END>** g01259951

212-3924 LAMP GP-MARKER

S/N: B9D1-UP

PART OF 262-4972 WIRING GP-LIGHTING

SMCS-1429 **i01745446**

NOTE	REF NO	GRAPHIC REF	PART NUMBER	QTY	PART NAME 1 2 3 4 5 6 (PRODUCT LEVEL)	SEE PAGE
	1	1	**102-8802**	1	KIT-RECEPTACLE (2-PIN)	
					(INCLUDES RECEPTACLE AS. & WEDGE)	
	2	1	**3E-3365**	1	WEDGE-RECEPTACLE LOCK (2-PIN)	
	3	1	**186-3735**	2	PIN-CONNECTOR (16-GA TO 18-GA)	
	4	1	**9X-4494**	1	LAMP (24-VOLT) (CAB POSITION)	
M	5	1	**104-3601**	2	SCREW-MACHINE (M5X0.8X25-MM)	
	6	1	**8H-3481**	2	LOCKWASHER	

M-METRIC PART

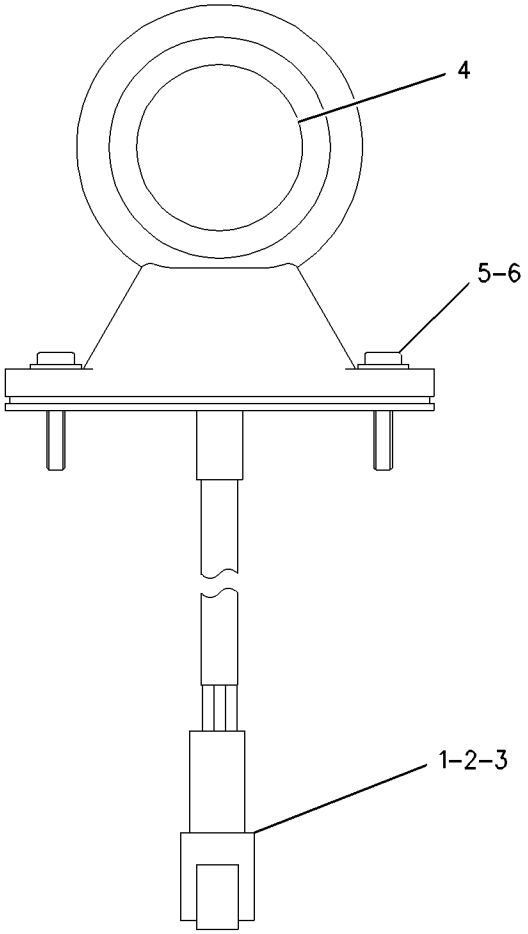

GRAPHIC #1 **<END>** g00939448

233-4631 LAMP GP-REGISTRATION PLATE

S/N: B9D1-UP

PART OF 250-3818 ROADING AR

SMCS-1429 **i02783262**

NOTE	REF NO	GRAPHIC REF	PART NUMBER	QTY	PART NAME 1 2 3 4 5 6 (PRODUCT LEVEL)	SEE PAGE
	1	1	**3S-2093**	6	STRAP-CABLE	
	2	1	**213-3733**	1	PLATE	
	3	1	**224-2821**	4	PLATE AS	
	4	1	**246-1685**	1	HARNESS AS-REAR LIGHTING (REGISTRATION PLATE)	
		1	**102-8802**	1	KIT-RECEPTACLE (2-PIN)	
					(INCLUDES RECEPTACLE AS & WEDGE)	
		1	**155-2270**	1	KIT-CONNECTING PLUG (2-PIN)	
					(INCLUDES PLUG AS, WEDGE, & INTERFACE SEAL)	
	5	1	**259-0134**	1	LAMP GP-REGISTRATION PLATE	
		1	**5C-9583**	1	LAMP (24-VOLT, 5-WATT)	
		1	**102-8802**	1	KIT-RECEPTACLE (2-PIN)	
					(INCLUDES RECEPTACLE AS & WEDGE)	
		1	**186-3735**	2	PIN-CONNECTOR (16-GA TO 18-GA)	
	6	1	**5P-4116**	4	WASHER-HARD (8.8X20.5X2-MM THK)	
M	7	1	**8T-4908**	4	BOLT (M8X1.25X25-MM)	

M-METRIC PART

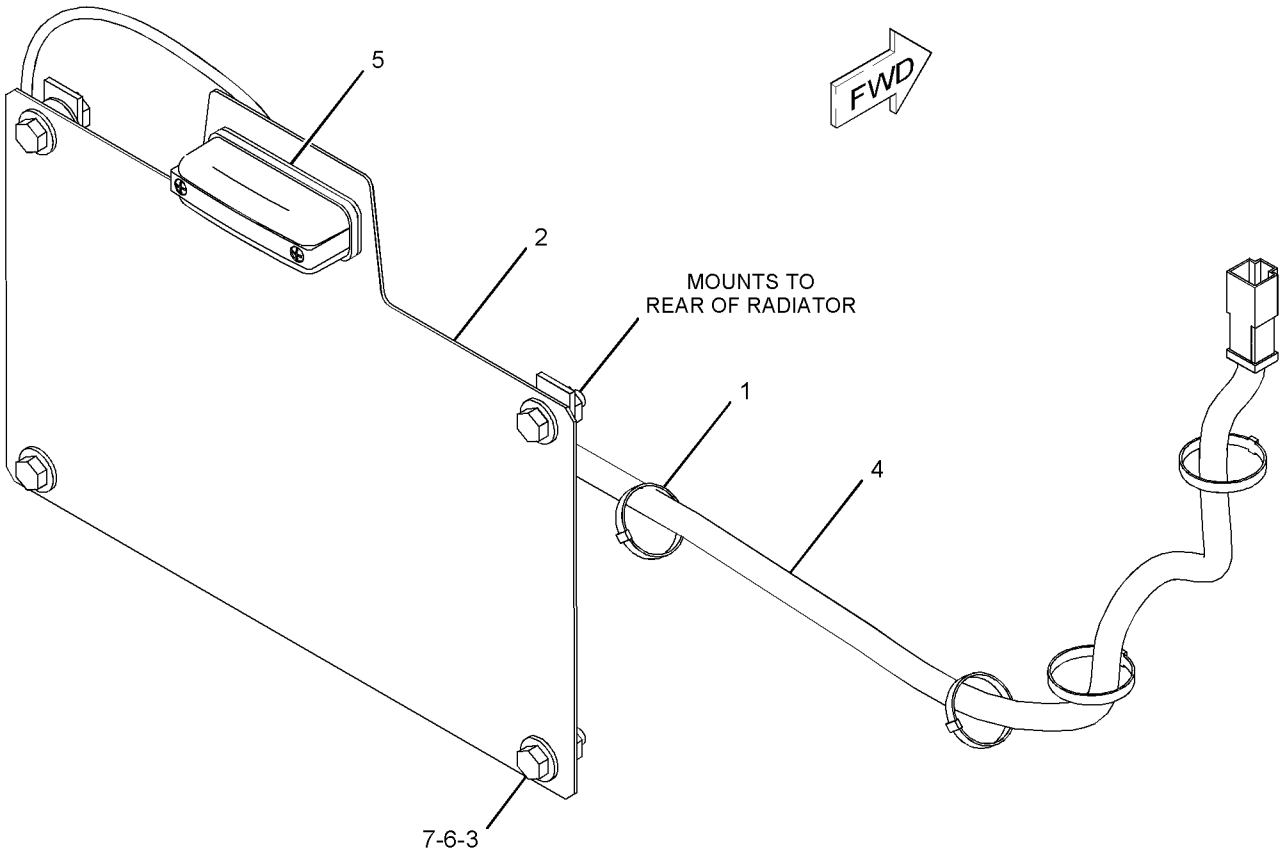

GRAPHIC #1 **<END>** g01110134

135-0426 LAMP GP-SIGNAL–STOP/TAIL

S/N: B9D1-UP
24 VOLT
PART OF 233-4623, 247-6430 WIRING GP-REAR LIGHTING

SMCS-1430 **i02443767**

NOTE	REF NO	GRAPHIC REF	PART NUMBER	QTY	PART NAME 1 2 3 4 5 6 (PRODUCT LEVEL)	SEE PAGE
	1	1	**102-8803**	1	KIT-RECEPTACLE (3-PIN)	
					(INCLUDES RECEPTACLE AS & WEDGE)	
	2	1	**186-3735**	3	PIN-CONNECTOR (16-GA TO 18-GA)	

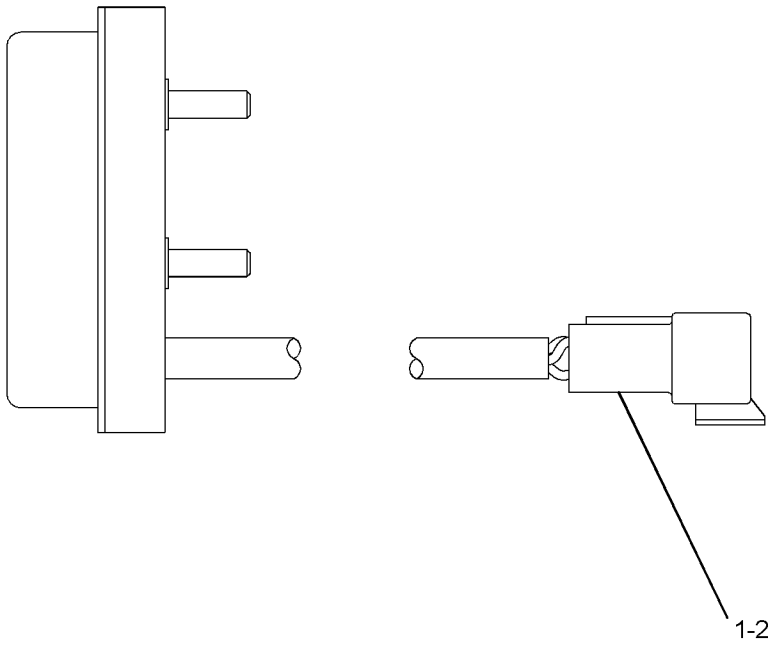

GRAPHIC #1 **<END>** g01213248

199-3368 LAMP GP-SIGNAL–24-VOLT, TURN

S/N: B9D1-UP

PART OF 233-4623 WIRING GP-REAR LIGHTING

SMCS-1430 **i02561657**

NOTE	REF NO	GRAPHIC REF	PART NUMBER	QTY	PART NAME 1 2 3 4 5 6 (PRODUCT LEVEL)	SEE PAGE
	1	1	**102-8802**	1	KIT-RECEPTACLE (2-PIN)	
					(INCLUDES RECEPTACLE AS AND WEDGE)	
	2	1	**186-3735**	2	PIN-CONNECTOR (16-GA TO 18-GA)	

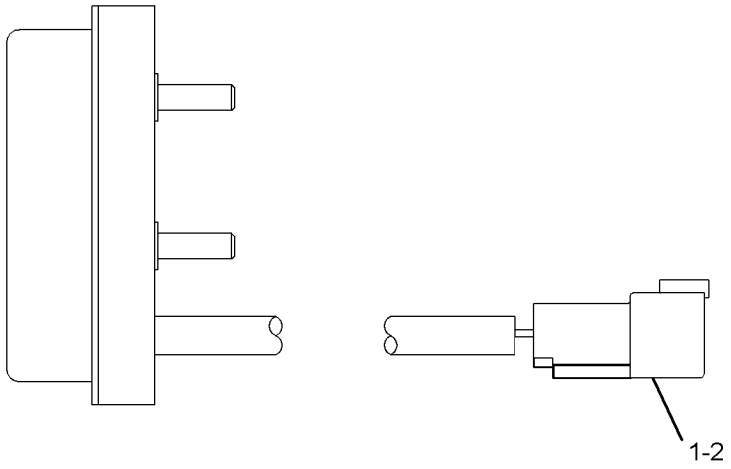

GRAPHIC #1 **<END>** g01217868

235-3937 LAMP GP-WARNING BEACON–AMBER

S/N: B9D1-UP

24-VOLT. ROTATING

SMCS-1431 **i02585409**

NOTE	REF NO	GRAPHIC REF	PART NUMBER	QTY	PART NAME 1 2 3 4 5 6 (PRODUCT LEVEL)	SEE PAGE
	1	1	**272-9800**	1	LENS (AMBER, WARNING BEACON)	
	2	1	**9X-7849**	1	LAMP (24-VOLT, 70-WATT)	
	3	1	**9X-8139**	1	BELT-DRIVE	
M	5	1	**6V-8225**	3	NUT (M6X1-THD)	
	6	1	**5P-0537**	3	WASHER-HARD (7.2X14.5X2-MM THK)	
	7	1	**102-8802**	1	KIT-RECEPTACLE (2-PIN)	
					(INCLUDES RECEPTACLE AS & WEDGE)	
	9	1	**186-3735**	2	PIN-CONNECTOR (16-GA TO 18-GA)	

M-METRIC PART

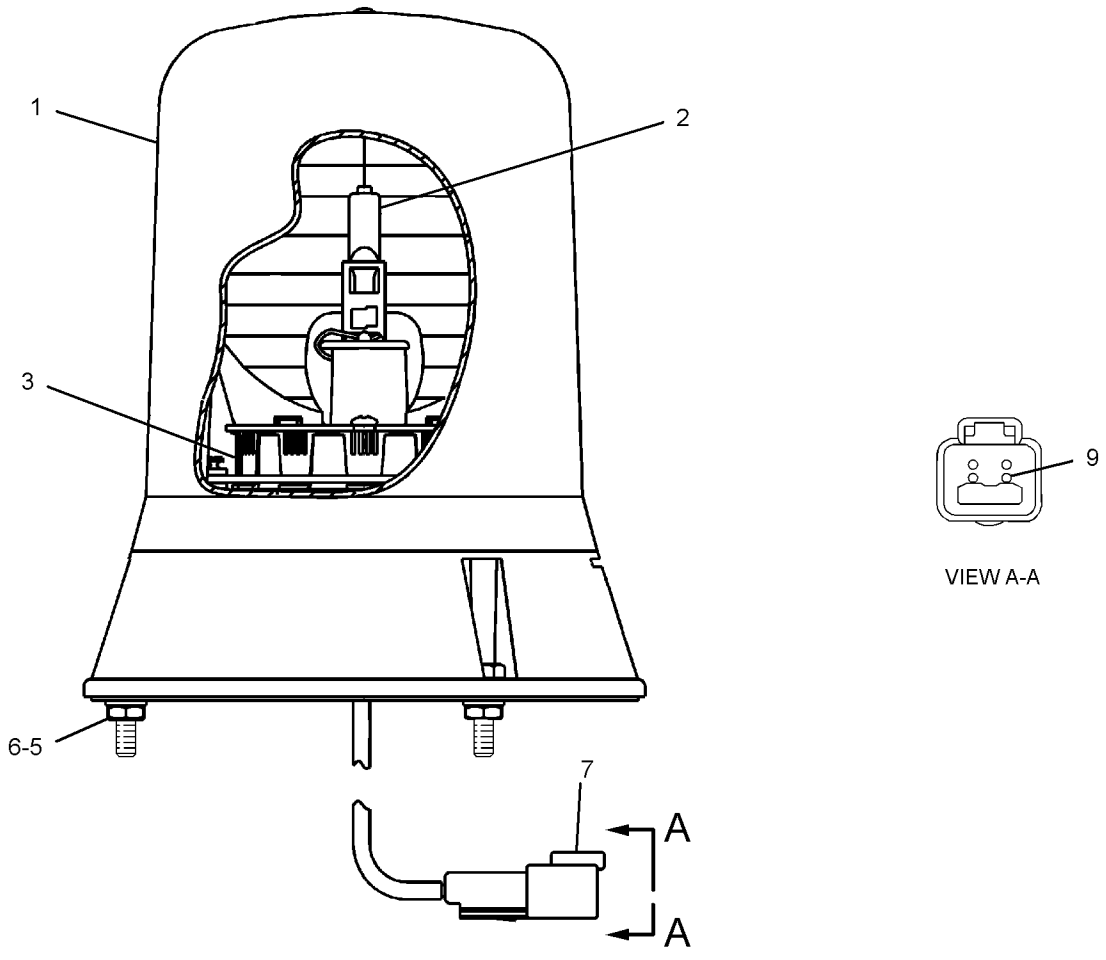

GRAPHIC #1 **<END>** g01199570

261-1502 LIGHTING GP-BACKUP

S/N: B9D1-UP
24-VOLT
PART OF 233-4623, 247-6430 WIRING GP-REAR LIGHTING

SMCS-1408 **i02776445**

NOTE	REF NO	GRAPHIC REF	PART NUMBER	QTY	PART NAME 1 2 3 4 5 6 (PRODUCT LEVEL)	SEE PAGE
	1	1	**264-5346**	1	LENS-CLEAR	
	2	1	**9X-4493**	1	LAMP (24-VOLT, 21-WATT)	
	3	1	**186-3735**	2	PIN-CONNECTOR (16-GA TO 18-GA)	
	4	1	**102-8802**	1	KIT-RECEPTACLE (2-PIN)	
					(INCLUDES RECEPTACLE AS & WEDGE)	
FM			**5C-2890**	3	NUT (M6X1-THD)	
F			**8T-4205**	3	WASHER-HARD (7.2X14.5X2-MM THK)	

F-NOT SHOWN
M-METRIC PART

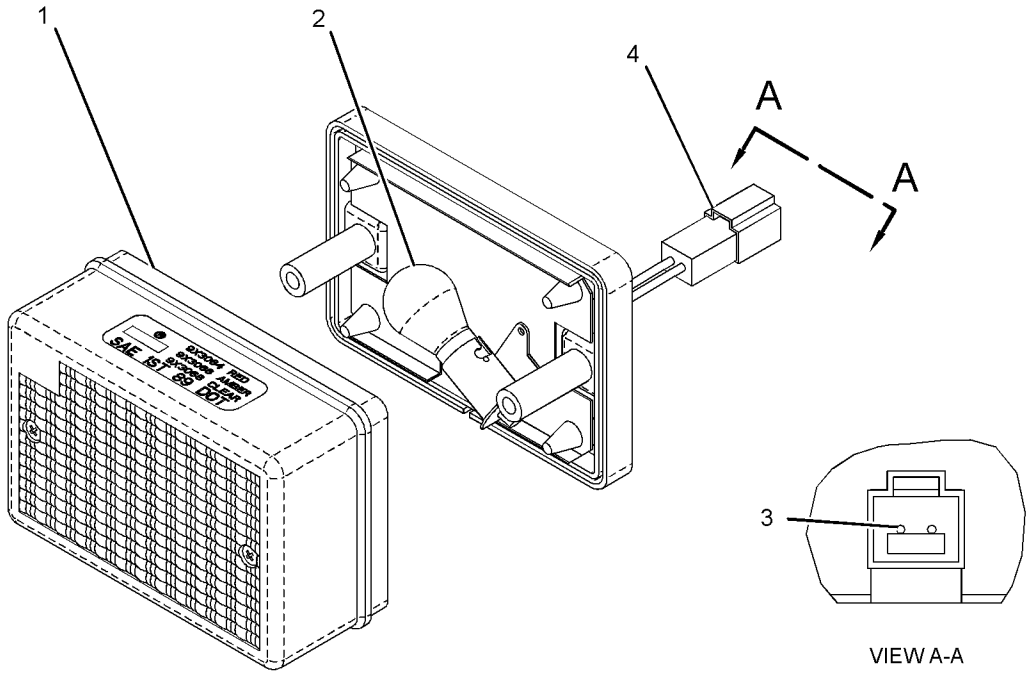

GRAPHIC #1 **<END>** g01279825

233-4615 LIGHTING GP-FLOOD—FRONT FRAME

S/N: B9D1-UP

CANNOT BE USED WITH 233-4616—PAGE 199

SMCS-1434 **i02776086**

NOTE	REF NO	GRAPHIC REF	PART NUMBER	QTY	PART NAME 1 2 3 4 5 6 (PRODUCT LEVEL)	SEE PAGE
	1	1	**3S-2093**	2	STRAP-CABLE	
Y	2	1	**234-4325**	2	LAMP GP-FLOOD (24-VOLT)	183
	3	1	**243-1352**	2	BRACKET AS	
	4	1	**4P-7581**	2	CLIP	
	5	1	**8T-4121**	4	WASHER-HARD (11X21X2.5-MM THK)	
M	6	1	**8T-4136**	4	BOLT (M10X1.5X25-MM)	

M-METRIC PART
Y-SEPARATE ILLUSTRATION

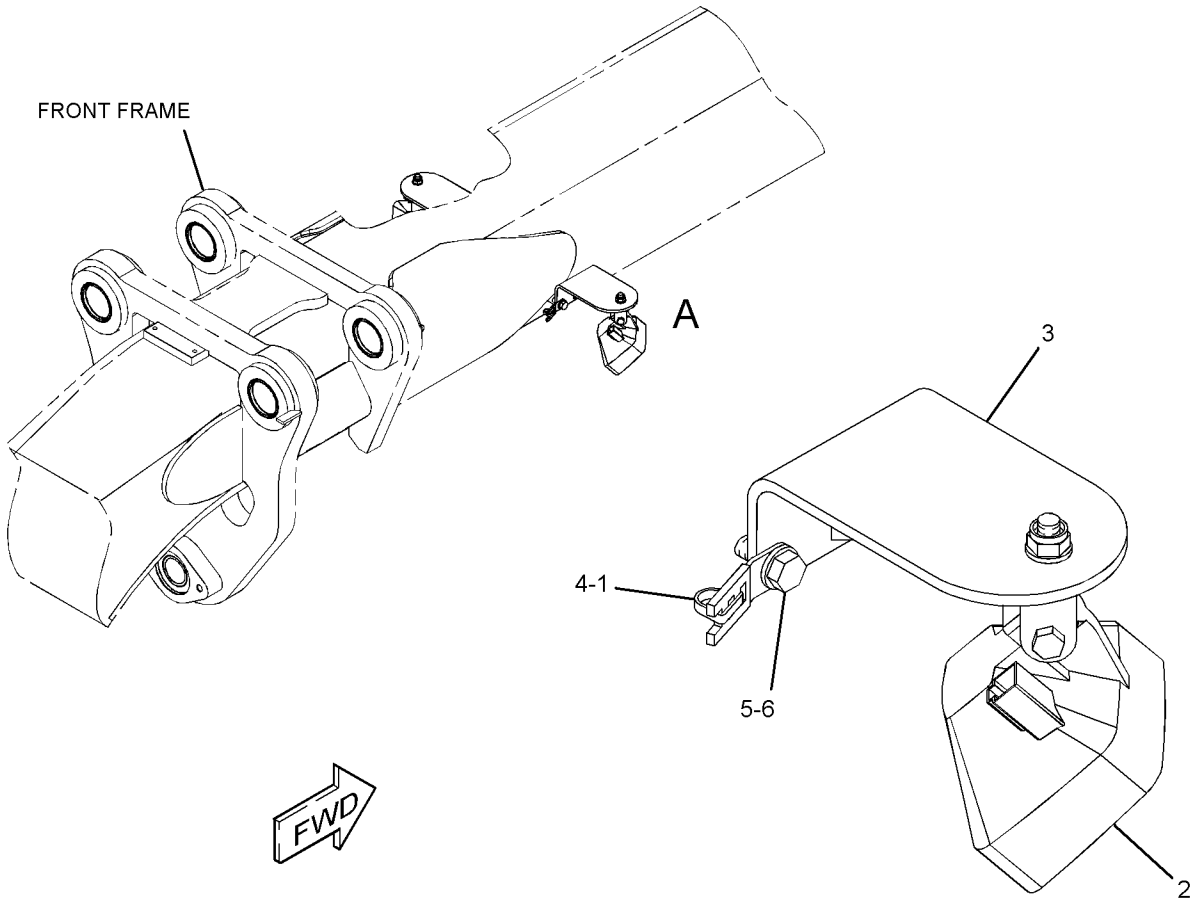

VIEW OF AREA A

GRAPHIC #1 **<END>** g01341350

233-4616 LIGHTING GP-FLOOD–FRONT FRAME

S/N: B9D1-UP

CANNOT BE USED WITH 233-4615–PAGE 198

SMCS-1434 **i02786530**

NOTE	REF NO	GRAPHIC REF	PART NUMBER	QTY	PART NAME 1 2 3 4 5 6 (PRODUCT LEVEL)	SEE PAGE
	1	1	**3S-2093**	2	STRAP-CABLE	
	2	1	**243-1352**	2	BRACKET AS	
Y	3	1	**283-8145**	2	LAMP GP-FLOOD (24-VOLT, 35-WATT, HID)	186
	4	1	**130-5300**	2	CLIP	
	5	1	**4P-7581**	2	CLIP	
	6	1	**8T-4121**	4	WASHER-HARD (11X21X2.5-MM THK)	
M	7	1	**8T-4136**	4	BOLT (M10X1.5X25-MM)	

M-METRIC PART
Y-SEPARATE ILLUSTRATION

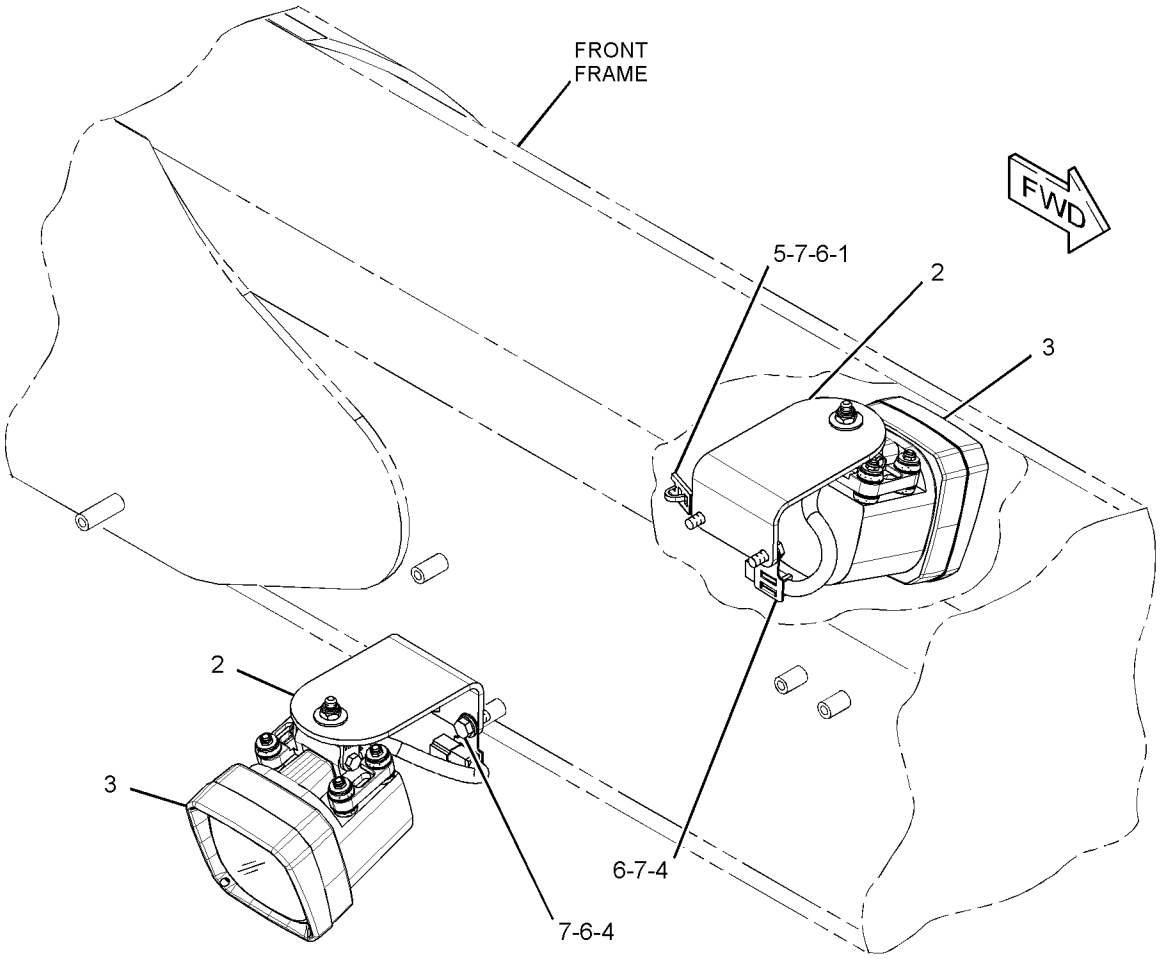

GRAPHIC #1 **<END>** g01345753

233-4618 LIGHTING GP-FLOOD—FRONT FRAME, REAR

S/N: B9D1-UP

CANNOT BE USED WITH 233-4619—PAGE 201

SMCS-1434 **i02776185**

NOTE	REF NO	GRAPHIC REF	PART NUMBER	QTY	PART NAME 1 2 3 4 5 6 (PRODUCT LEVEL)	SEE PAGE
	1	1	**279-4724**	1	BRACKET	
Y	2	1	**234-4325**	2	LAMP GP-FLOOD (24-VOLT)	183
	3	1	**8T-4121**	4	WASHER-HARD (11X21X2.5-MM THK)	
M	4	1	**8T-4136**	2	BOLT (M10X1.5X25-MM)	

M-METRIC PART
Y-SEPARATE ILLUSTRATION

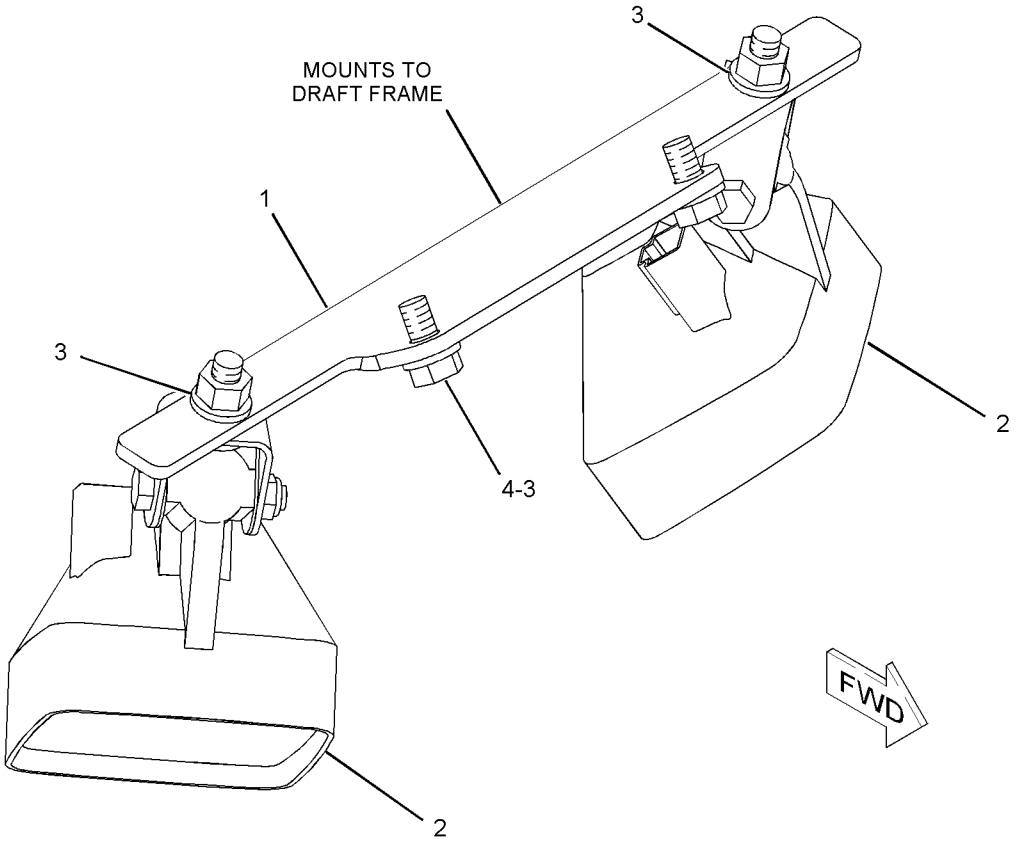

GRAPHIC #1 **<END>** g01115349

233-4619 LIGHTING GP-FLOOD—FRONT FRAME, REAR

S/N: B9D1-UP

CANNOT BE USED WITH 233-4618—PAGE 200

SMCS-1434 **i02776205**

NOTE	REF NO	GRAPHIC REF	PART NUMBER	QTY	PART NAME 1 2 3 4 5 6 (PRODUCT LEVEL)	SEE PAGE
Y	1	1	**210-8422**	2	LAMP GP-FLOOD (24-VOLT, 35-WATT, HID)	179
	2	1	**246-1674**	1	BRACKET AS	
	3	1	**132-7551**	2	SPACER (11X19X6-MM THK)	
	4	1	**8T-4121**	2	WASHER-HARD (11X21X2.5-MM THK)	
M	5	1	**8T-4137**	2	BOLT (M10X1.5X20-MM)	

M-METRIC PART
Y-SEPARATE ILLUSTRATION

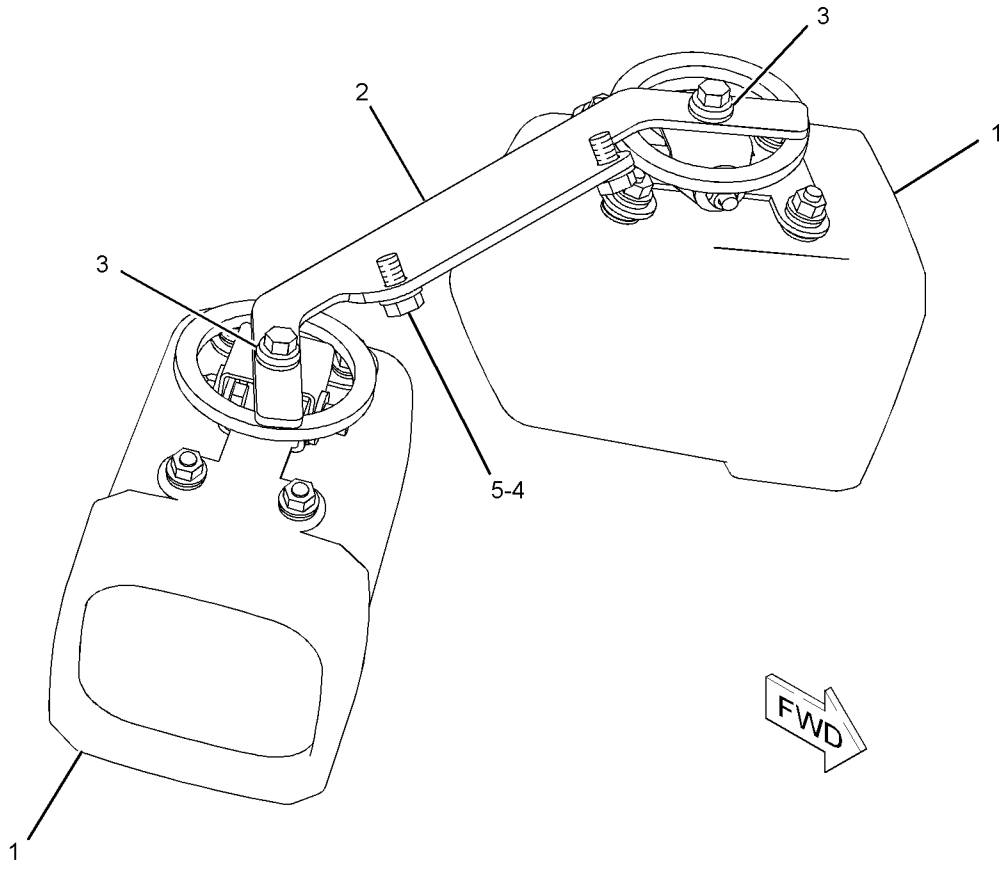

GRAPHIC #1 **<END>** g01115456

286-7909 LIGHTING GP-FLOOD—CAB, FRONT, RH, LH

S/N: B9D1-UP

SMCS-1434 **i02788249**

NOTE	REF NO	GRAPHIC REF	PART NUMBER	QTY	PART NAME 1 2 3 4 5 6 (PRODUCT LEVEL)	SEE PAGE
Y	1	1	**234-4325**	2	LAMP GP-FLOOD (24-VOLT)	183
	2	1	**281-0228**	2	PLATE	
	3	1	**5P-9085**	2	CLIP	
	4	1	**8T-4121**	6	WASHER-HARD (11X21X2.5-MM THK)	
M	5	1	**8T-4133**	2	NUT (M10X1.5-THD)	
M	6	1	**8T-4136**	2	BOLT (M10X1.5X25-MM)	
M	7	1	**8T-4195**	2	BOLT (M10X1.5X30-MM)	

M-METRIC PART
Y-SEPARATE ILLUSTRATION

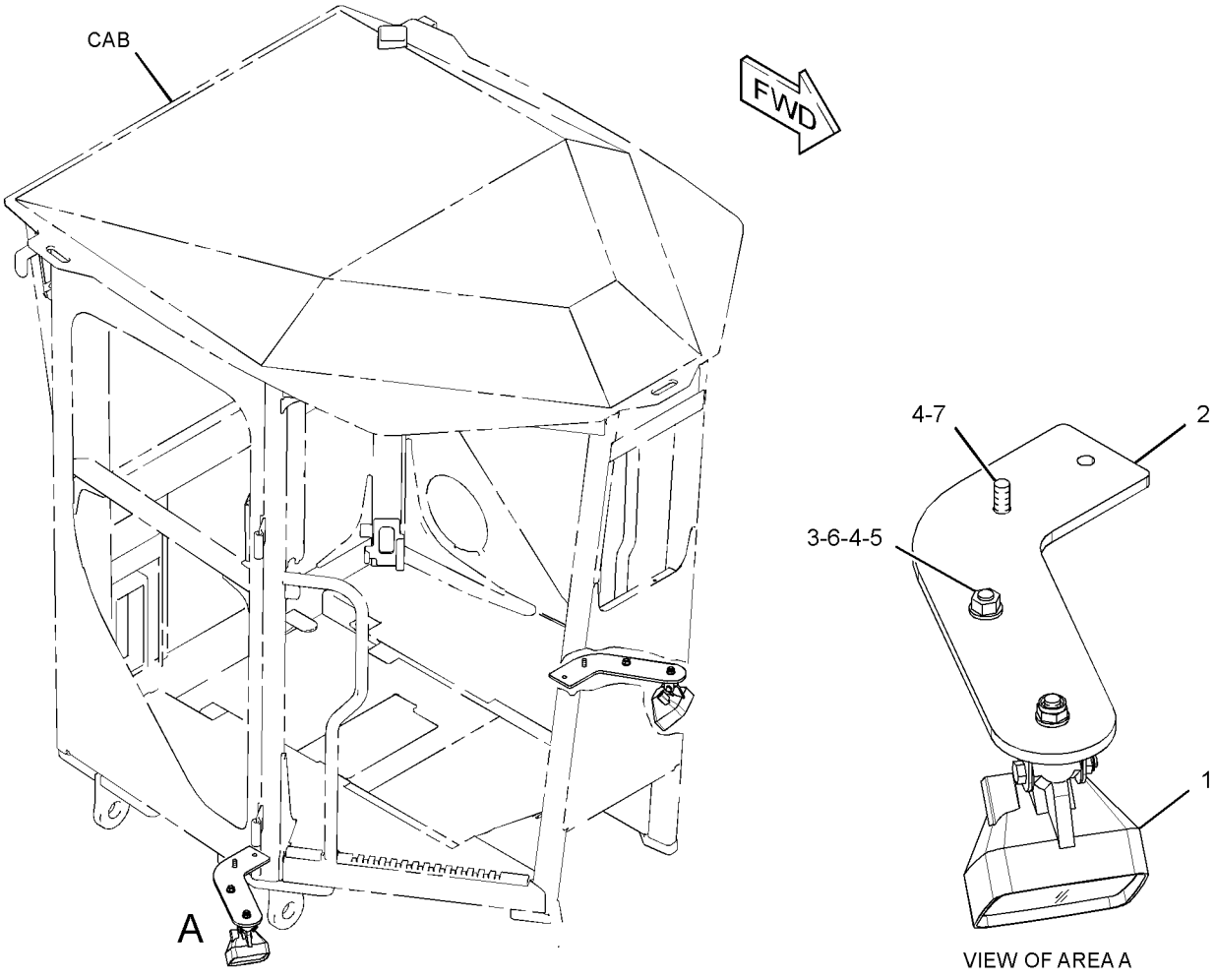

GRAPHIC #1 **<END>** g01343039

286-7910 LIGHTING GP-FLOOD—CAB, FRONT, RH, LH

S/N: B9D1-UP

SMCS-1434 **i02788245**

NOTE	REF NO	GRAPHIC REF	PART NUMBER	QTY	PART NAME 1 2 3 4 5 6 (PRODUCT LEVEL)	SEE PAGE
	1	1	**281-0228**	2	PLATE	
Y	2	1	**283-8145**	2	LAMP GP-FLOOD (24-VOLT, 35-WATT, HID)	186
	3	1	**130-5300**	2	CLIP	
	5	1	**8T-4121**	6	WASHER-HARD (11X21X2.5-MM THK)	
M	6	1	**8T-4133**	2	NUT (M10X1.5-THD)	
M	7	1	**8T-4136**	2	BOLT (M10X1.5X25-MM)	
M	8	1	**8T-4195**	2	BOLT (M10X1.5X30-MM)	

M-METRIC PART
Y-SEPARATE ILLUSTRATION

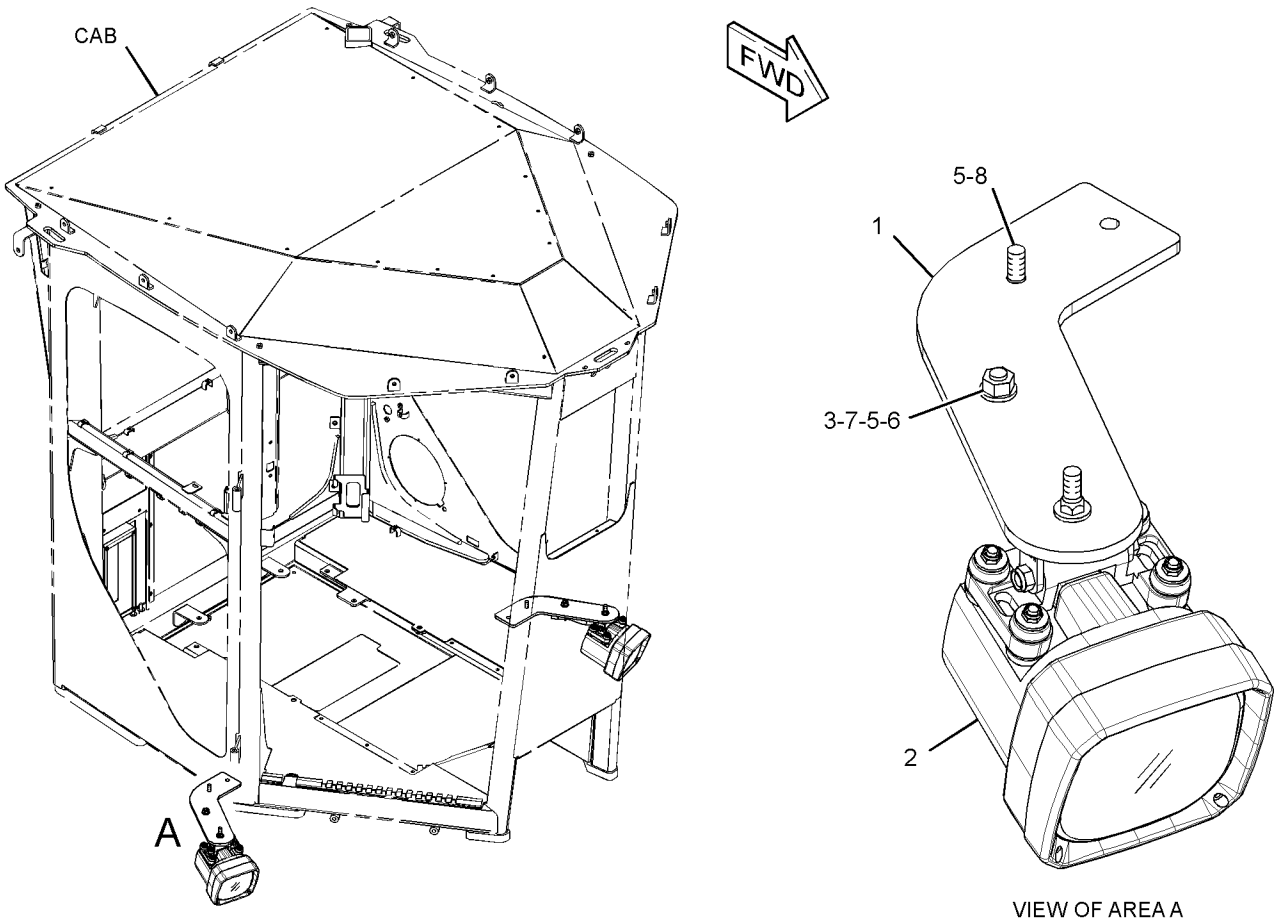

VIEW OF AREA A

GRAPHIC #1 **<END>** g01345755

291-4038 LIGHTING GP-FLOOD—CAB ROOF

S/N: B9D1-UP

SMCS-1434 **i02788298**

NOTE	REF NO	GRAPHIC REF	PART NUMBER	QTY	PART NAME 1 2 3 4 5 6 (PRODUCT LEVEL)	SEE PAGE
	1	1	**9R-6307**	2	SPACER (11X28X12-MM THK)	
Y	2	1	**234-4326**	2	LAMP GP-FLOOD (24-VOLT)	184
Y	3	1	**290-5749**	2	LAMP GP-HEAD (24-VOLT) (HIGH BEAM)	189
Y	4	1	**219-6486**	2	LAMP GP-FLOOD (24-VOLT)	180

Y-SEPARATE ILLUSTRATION

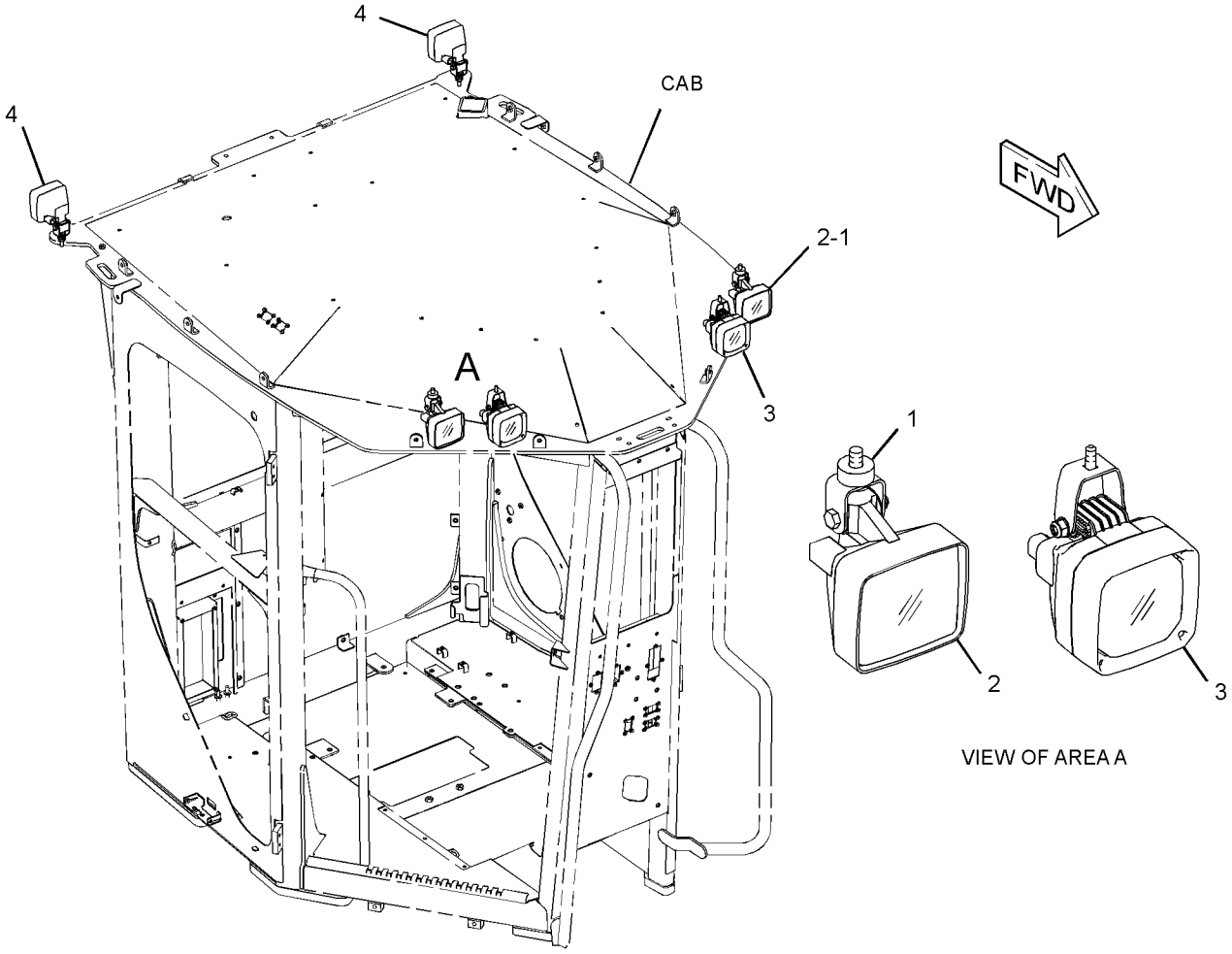

GRAPHIC #1 **<END>** g01372567

291-4039 LIGHTING GP-FLOOD—CAB

S/N: B9D1-UP

SMCS-1434 **i02788300**

NOTE	PART NUMBER	QTY	PART NAME 1 2 3 4 5 6 (PRODUCT LEVEL)	SEE PAGE
Y	**269-4800**	2	LAMP GP-FLOOD (24-VOLT, HID)	185
Y	**286-3077**	2	LAMP GP-FLOOD (24-VOLT, HID)	187
Y	**289-3820**	2	LAMP GP-FLOOD (24-VOLT, HID)	188
Y-SEPARATE ILLUSTRATION				

<END>

292-0281 MAST GP—LASER RECEIVER

S/N: B9D1-UP

PART OF 292-0301, 292-0310 RECEIVER AR-LASER

SMCS-79NS **i02649289**

NOTE	PART NUMBER	QTY	PART NAME 1 2 3 4 5 6 (PRODUCT LEVEL)	SEE PAGE
Y	*292-0302*	1	MOUNTING GP-MAST (LASER RECEIVER)	213
Y	**234-9970**	1	MOUNTING GP-RECEIVER (MAST)	214
	226-2333	1	MAST AS	
	245-4747	1	KIT-ADAPTER (MAST) (GRADE CONTROL)	
			(INCLUDES ADAPTER BLOCK, BOLTS, & WASHER)	
	239-9271	1	SOFTWARE GP (MAST)	
Y-SEPARATE ILLUSTRATION				

<END>

292-0907 MAST GP

S/N: B9D1-UP

PART OF 292-7971 RECEIVER AR-SATELLITE

SMCS-79NS **i02790905**

NOTE	PART NUMBER	QTY	PART NAME 1 2 3 4 5 6 (PRODUCT LEVEL)	SEE PAGE
	254-9136	1	CABLE-COILED (RECEIVER)	
	248-1503	1	BRACKET GP-MOUNTING	
	7X-0343	4	BOLT (5/8-11X1.25-IN)	
	7X-0366	3	BOLT (3/4-10X2-IN)	
	8T-4122	4	WASHER-HARD (17X32X3.5-MM THK)	
	8T-4994	3	WASHER-HARD (20X36.5X3.5-MM THK)	
	252-8744	1	FILM-WARNING (BLADE, DO NOT CLIMB, READ OMM)	
	271-6373	1	MAST AS	
	248-1502	1	RISER (ANGLE)	

<END>

170-5335 MOTOR GP-ELECTRIC—CIRCULATING FAN

S/N: B9D1-UP

PART OF 170-5334 FAN GP-CIRCULATING

SMCS-5927 **i02463158**

NOTE	REF NO	GRAPHIC REF	PART NUMBER	QTY	PART NAME 1 2 3 4 5 6 (PRODUCT LEVEL)	SEE PAGE
	1	1	**102-8802**	1	KIT-RECEPTACLE (2-PIN)	
					(INCLUDES RECEPTACLE AS & WEDGE)	
	2	1	**9W-0852**	2	PIN-CONNECTOR (14-GA)	

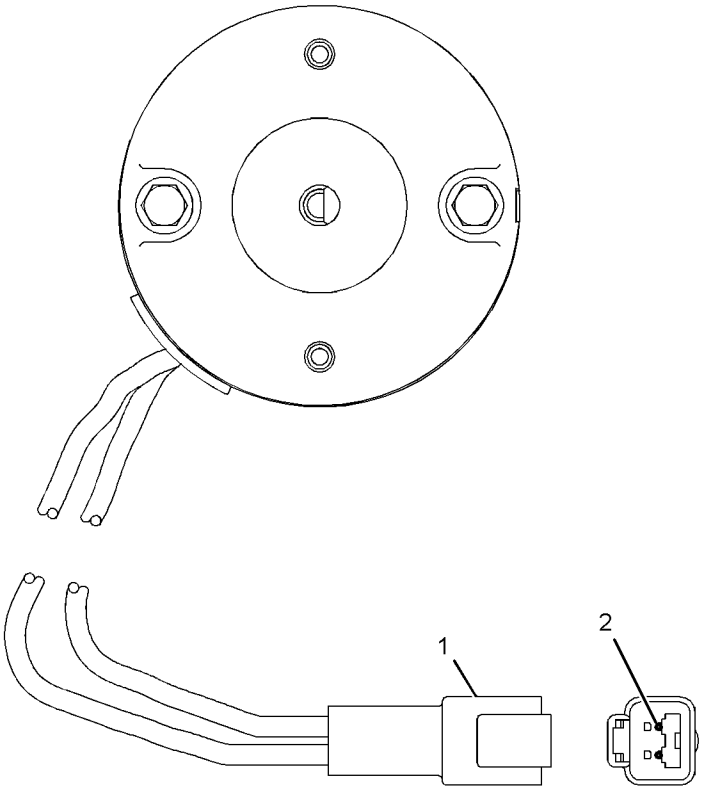

GRAPHIC #1 **<END>** g01240075

298-3643 MOUNTING GP-GRADE CONTROL

S/N: B9D1-UP

PART OF 263-7415 GRADE CONTROL AR

FOR USE WITH 261-0153—PAGE 318, 263-7415—PAGE 168

SMCS-7220 **i02787075**

NOTE	REF NO	GRAPHIC REF	PART NUMBER	QTY	PART NAME 1 2 3 4 5 6 (PRODUCT LEVEL)	SEE PAGE
	1	1	**287-6688**	2	PLATE	
	2	1	**288-0693**	4	BLOCK	
	3	1	**288-5515**	1	PLATE AS	
M		1	**8T-4185**	2	BOLT (M10X1.5X50-MM)	
	4	1	**288-5516**	1	PLATE AS	
M		1	**8T-4185**	2	BOLT (M10X1.5X50-MM)	
	5	1	**298-3644**	1	BRACKET AS	
M		1	**8T-3490**	1	NUT-WELD (M10X1.5-THD)	
M	6	1	**096-4883**	4	LOCKNUT (M10X1.15-THD)	
	7	1	**8T-4121**	11	WASHER-HARD (11X21X2.5-MM THK)	
M	8	1	**8T-4137**	6	BOLT (M10X1.5X20-MM)	
M	9	1	**8T-4186**	1	BOLT (M10X1.5X40-MM)	
	10	1	**9C-5344**	1	SPACER (10.5X20X18-MM THK)	

M-METRIC PART

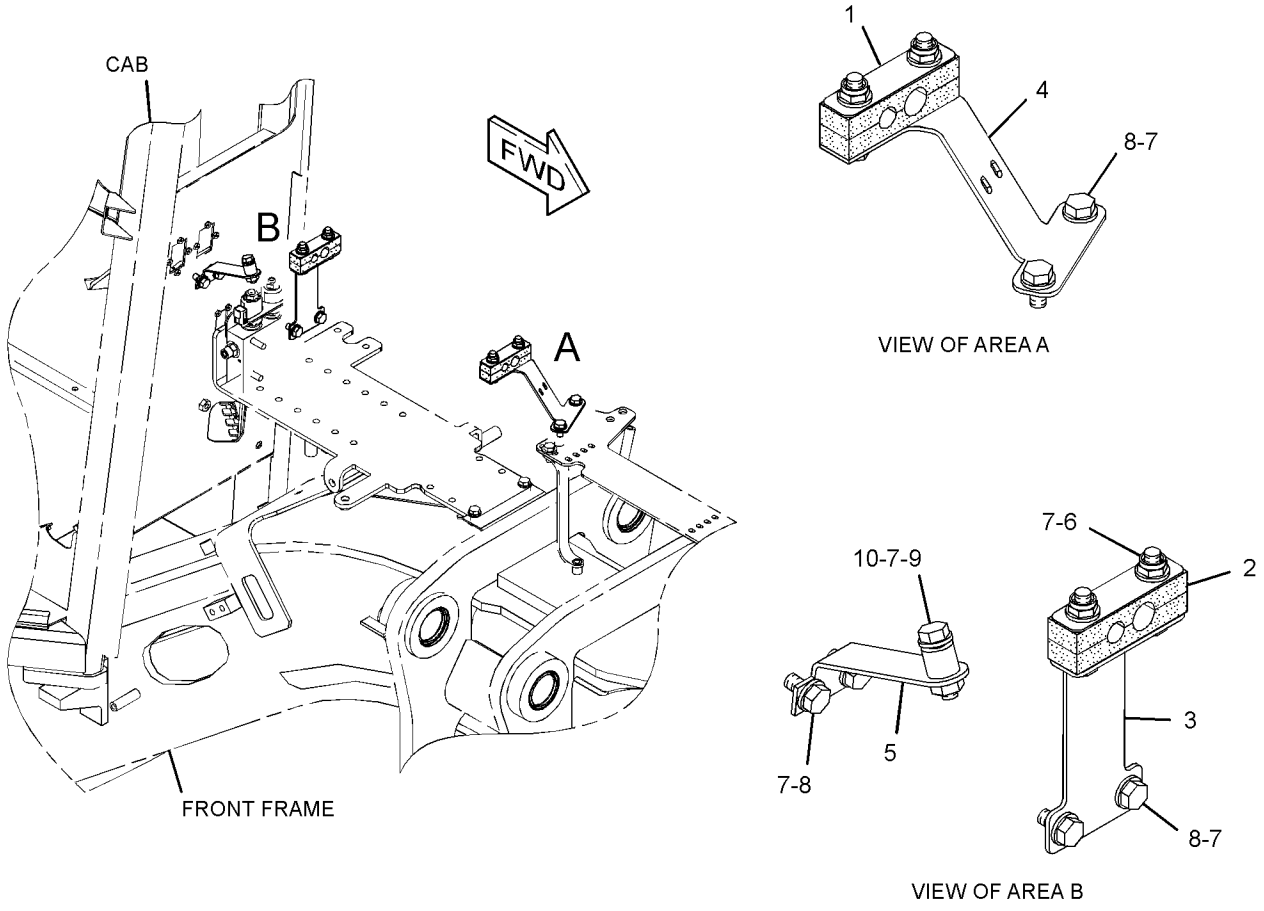

GRAPHIC #1 **<END>** g01329368

290-2016 MOUNTING GP-LAMP

S/N: B9D1-UP

PART OF 233-3126 INSTALLATION GP-LIGHTING

SMCS-1429 **i02773169**

NOTE	REF NO	GRAPHIC REF	PART NUMBER	QTY	PART NAME 1 2 3 4 5 6 (PRODUCT LEVEL)	SEE PAGE
	1	1	**114-6658**	1	WASHER (6.5X17X1-MM THK)	
	2	1	**290-2015**	1	PLATE AS	
	3	1	**290-2018**	1	PLATE AS	
	4	1	**5P-4116**	2	WASHER-HARD (8.8X20.5X2-MM THK)	
M	5	1	**8T-6912**	2	BOLT (M8X1.25X50-MM)	
M	6	1	**9X-2043**	1	SCREW-TRUSS HEAD (M6X1X14-MM)	

M-METRIC PART

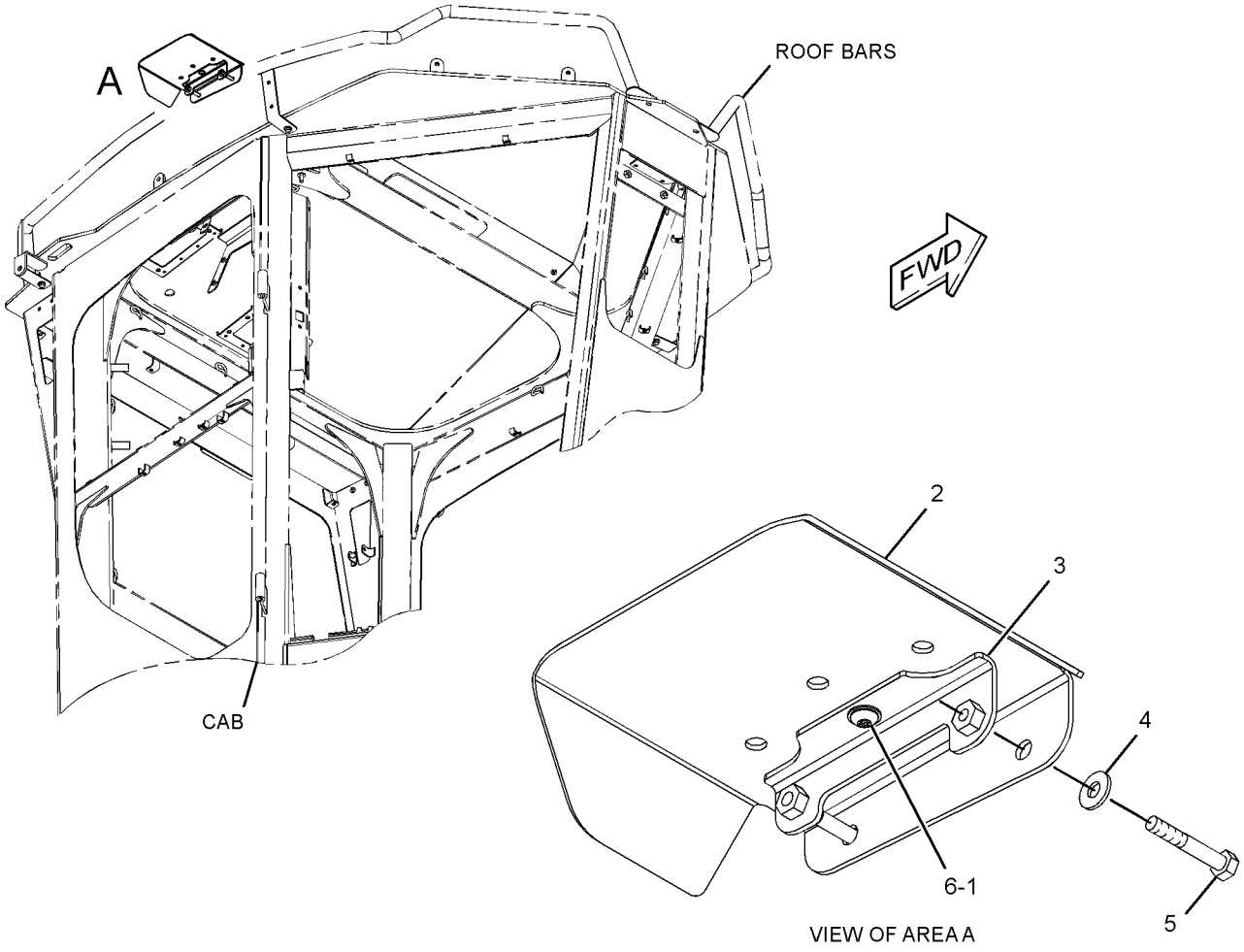

GRAPHIC #1 **<END>** g01289677

233-4610 MOUNTING GP-LIGHTING

S/N: B9D1-UP

CANNOT BE USED WITH 233-4624—PAGE 211

SMCS-1429 **i02776103**

NOTE	REF NO	GRAPHIC REF	PART NUMBER	QTY	PART NAME 1 2 3 4 5 6 (PRODUCT LEVEL)	SEE PAGE
	1	1	**2G-0617**	2	CLAMP	
	2	1	**2G-0988**	2	CAP	
	3	1	**3K-9520**	3	GROMMET	
	4	1	**137-9410**	2	CLAMP	
	5	1	**236-2335**	1	HARNESS AS-FRONT LIGHTING	
		1	**102-8802**	1	KIT-RECEPTACLE (2-PIN)	
		1	**102-8805**	1	KIT-RECEPTACLE (6-PIN)	
					(EACH INCLUDES RECEPTACLE AS & WEDGE)	
		1	**155-2274**	2	KIT-CONNECTING PLUG (6-PIN)	
					(EACH INCLUDES PLUG AS, WEDGE, & INTERFACE SEAL)	
	6	1	**250-4330**	1	TUBE	
Y	7	1	**259-9287**	1	LAMP GP-HEAD & SIGNAL (24-VOLT, LH)	190
Y	8	1	**259-9288**	1	LAMP GP-HEAD & SIGNAL (24-VOLT, RH)	191
	9	1	**284-8379**	2	BRACKET	
	10	1	**130-5300**	2	CLIP	
	11	1	**130-5301**	2	CLIP	
	12	1	**5K-3294**	1	CLIP	
	13	1	**5P-9135**	1	GROMMET	
	14	1	**8T-4121**	4	WASHER-HARD (11X21X2.5-MM THK)	
M	15	1	**8T-4133**	2	NUT (M10X1.5-THD)	
M	16	1	**8T-4195**	2	BOLT (M10X1.5X30-MM)	
	17	1	**8T-4223**	4	WASHER-HARD (13.5X25.5X3-MM THK)	
M	18	1	**8T-5412**	4	BOLT (M12X1.75X140-MM)	

M-METRIC PART
Y-SEPARATE ILLUSTRATION

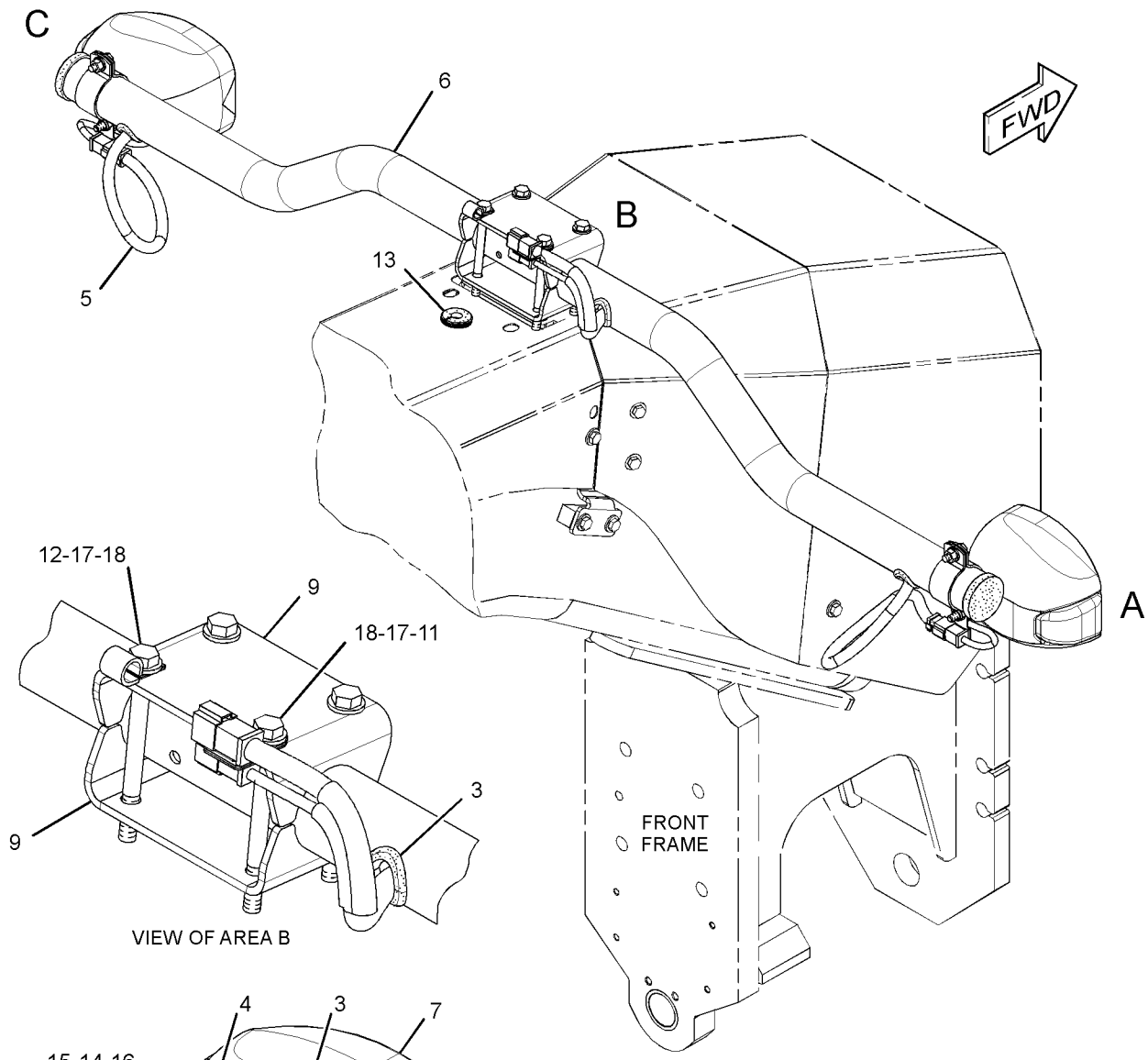

VIEW OF AREA B

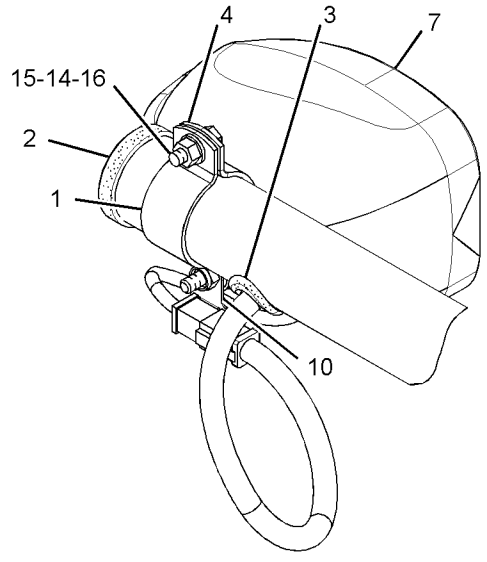

VIEW OF AREA C

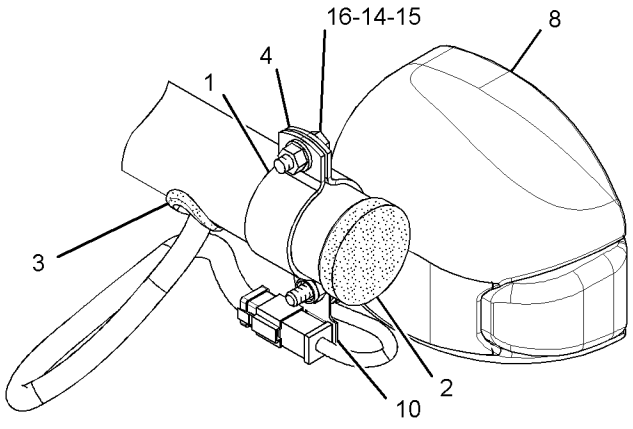

VIEW OF AREA A

GRAPHIC #1 **<END>** g01368969

233-4624 MOUNTING GP-LIGHTING

S/N: B9D1-UP

CANNOT BE USED WITH 233-4610—PAGE 209

SMCS-1429 **i02778745**

NOTE	REF NO	GRAPHIC REF	PART NUMBER	QTY	PART NAME 1 2 3 4 5 6 (PRODUCT LEVEL)	SEE PAGE
	1	1	**2G-0617**	2	CLAMP	
	2	1	**2G-0988**	2	CAP	
	3	1	**3K-9520**	3	GROMMET	
	4	1	**137-9410**	2	CLAMP	
	5	1	**236-2335**	1	HARNESS AS-FRONT LIGHTING	
		1	**102-8802**	1	KIT-RECEPTACLE (2-PIN)	
		1	**102-8805**	1	KIT-RECEPTACLE (6-PIN)	
					(EACH RECEPTACLE KIT INCLUDES RECEPTACLE AS & WEDGE)	
		1	**155-2274**	2	KIT-CONNECTING PLUG (6-PIN)	
					(EACH INCLUDES PLUG AS, WEDGE, & INTERFACE SEAL)	
	6	1	**246-1672**	1	TUBE	
	7	1	**130-5300**	2	CLIP	
	8	1	**130-5301**	2	CLIP	
	9	1	**284-8379**	2	BRACKET	
Y	10	1	**259-9288**	1	LAMP GP-HEAD & SIGNAL (24-VOLT, RH)	191
Y	11	1	**259-9287**	1	LAMP GP-HEAD & SIGNAL (24-VOLT, LH)	190
	12	1	**8T-4121**	4	WASHER-HARD (11X21X2.5-MM THK)	
M	13	1	**8T-4133**	2	NUT (M10X1.5-THD)	
M	14	1	**8T-4195**	2	BOLT (M10X1.5X30-MM)	
	15	1	**8T-4223**	4	WASHER-HARD (13.5X25.5X3-MM THK)	
M	16	1	**8T-5412**	4	BOLT (M12X1.75X140-MM)	
	17	1	**5K-3294**	1	CLIP	
	18	1	**5P-9135**	1	GROMMET	

M-METRIC PART
Y-SEPARATE ILLUSTRATION

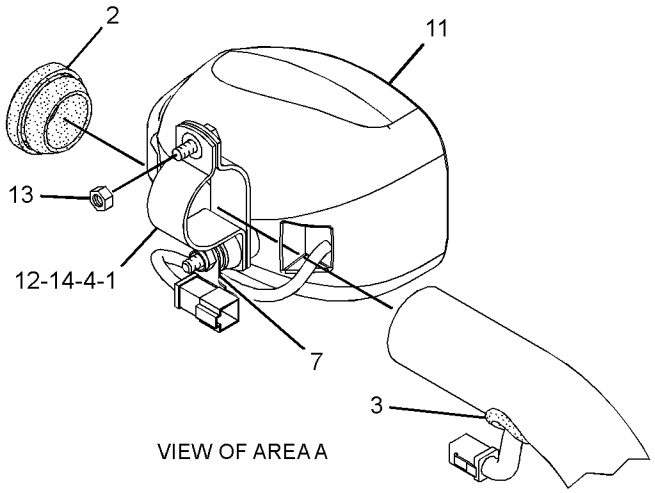

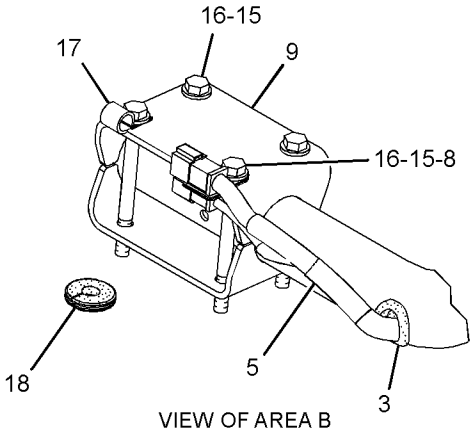

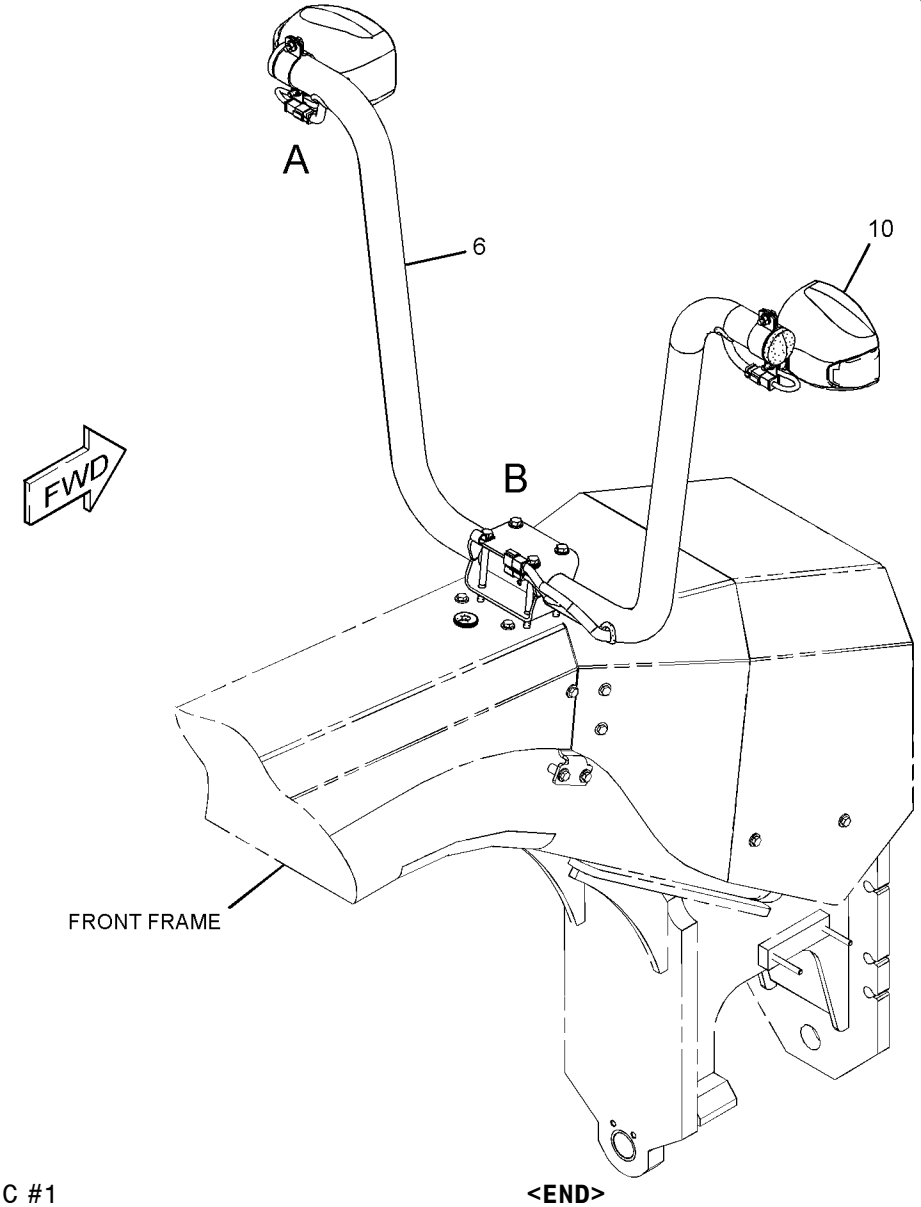

GRAPHIC #1

<END>

g01341194

292-0302 MOUNTING GP-MAST—LASER RECEIVER

S/N: B9D1-UP

PART OF 292-0281 MAST GP

SMCS-79NS **i02649290**

NOTE	PART NUMBER	QTY	PART NAME 1 2 3 4 5 6 (PRODUCT LEVEL)	SEE PAGE
M	**8T-4648**	4	BOLT (M12X1.75X70-MM)	
	237-7552	3	FILM-WARNING (LASER TRANSMITTER)	
	252-8744	1	FILM-WARNING (BLADE, DO NOT CLIMB, READ OMM)	
M	**8T-4244**	4	NUT (M12X1.75-THD)	
	8T-4223	8	WASHER-HARD (13.5X25.5X3-MM THK)	

M-METRIC PART

<END>

292-0908 MOUNTING GP-MAST

S/N: B9D1-UP

PART OF 292-0301, 292-0310 RECEIVER AR-LASER

SMCS-79NS **i02788373**

NOTE	PART NUMBER	QTY	PART NAME 1 2 3 4 5 6 (PRODUCT LEVEL)	SEE PAGE
	248-1503	1	BRACKET GP-MOUNTING	
	7X-0343	4	BOLT (5/8-11X1.25-IN)	
	7X-0366	3	BOLT (3/4-10X2-IN)	
	8T-4122	4	WASHER-HARD (17X32X3.5-MM THK)	
	8T-4994	3	WASHER-HARD (20X36.5X3.5-MM THK)	
	231-0049	1	CABLE-COILED (MAST)	
	248-1496	1	RISER AS (MAST)	
	3B-4512	1	LOCKWASHER	
	9S-1362	1	BOLT (3/4-16X2-IN)	

<END>

234-9970 MOUNTING GP-RECEIVER–MAST

S/N: B9D1-UP

PART OF 292-0281 MAST GP

SMCS-7009, 7010 **i02649980**

NOTE	REF NO	GRAPHIC REF	PART NUMBER	QTY	PART NAME 1 2 3 4 5 6 (PRODUCT LEVEL)	SEE PAGE
	1	2	**253-8967**	1	ROD-THREADED	
	2	2	**253-8969**	1	BRACKET	
	3	2	**237-4132**	4	MOUNT-FLEXIBLE	
	4	1	**237-4133**	2	GASKET	
	5	1	**237-4134**	1	CLAMP	
	6	1	**237-4135**	1	MOUNT-FLEXIBLE	
	7	2	**237-7252**	1	BOLT (3/4-16X1.25-IN)	
	8	2	**3B-4508**	4	LOCKWASHER	
	9	2	**3B-4512**	1	LOCKWASHER	
	10	2	**4M-6425**	2	BOLT (5/16-18X1-IN)	
	11	2	**5W-1437**	2	LOCKWASHER	
	12	2	**8T-9383**	2	BOLT (1/2-13X0.75-IN)	
	13	2	**9B-0453**	2	LOCKWASHER	
	14	2	**253-8981**	4	ROD-THREADED	
	15	2	**6V-8188**	6	NUT (1/2-13-THD)	

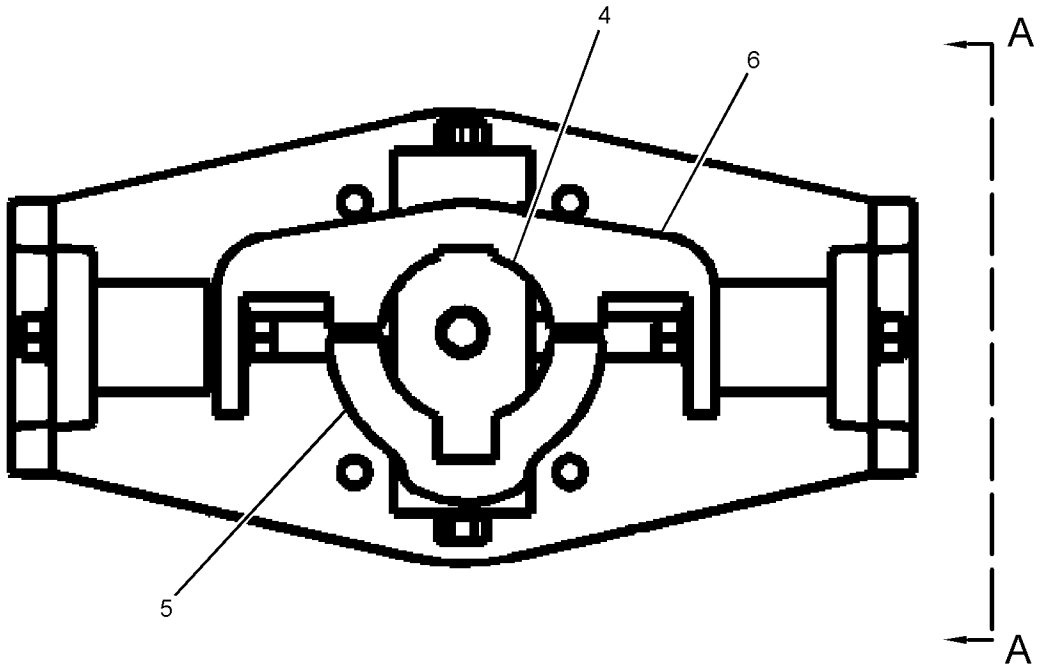

REFER TO ALL ILLUSTRATIONS OF
THIS GROUP FOR AUXILIARY VIEWS

GRAPHIC #1 g01186401

234-9970 **MOUNTING GP-RECEIVER** *(contd.)* **i02649980**

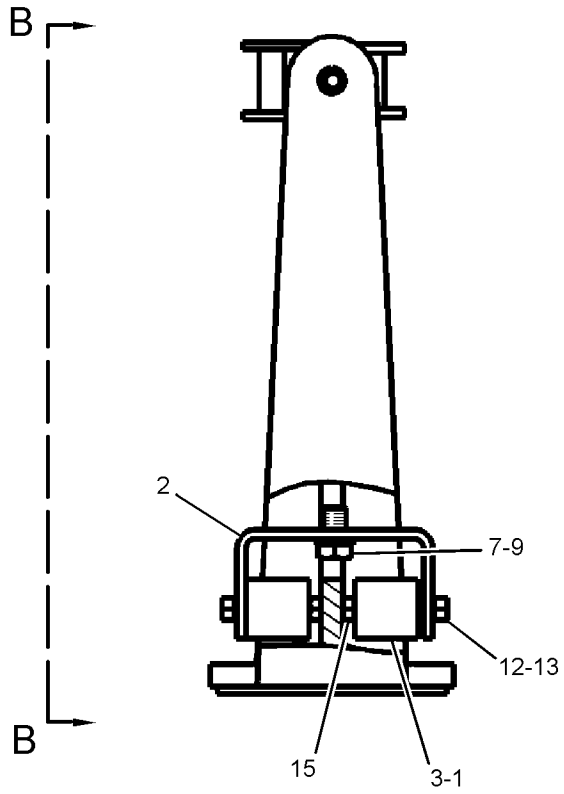

VIEW A-A

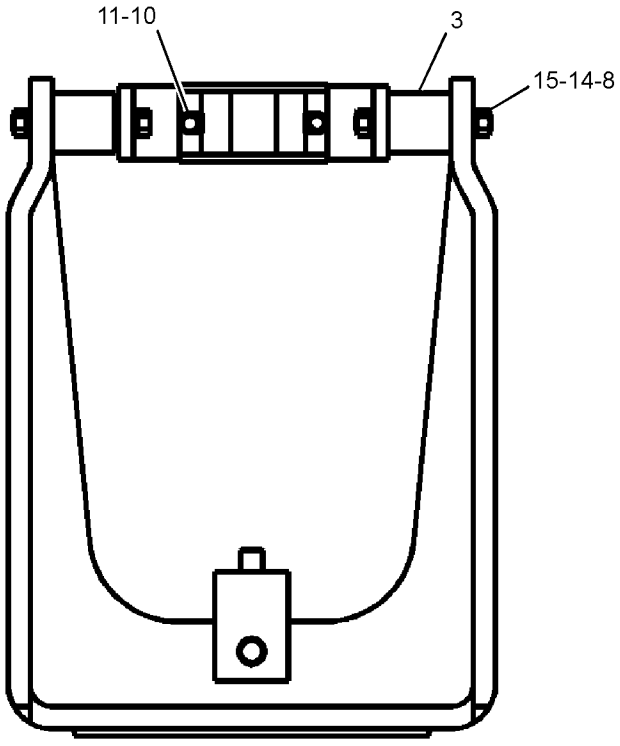

VIEW B-B

GRAPHIC #2 **<END>** g01186365

ELECTRICAL AND STARTING SYSTEM

280-8969 PANEL GP-CIRCUIT BREAKER

S/N: B9D1-UP

PART OF 269-4152 WIRING GP-POWER RECEPTACLE

SMCS-1417, 1420, 1422 **i02780954**

NOTE	REF NO	GRAPHIC REF	PART NUMBER	QTY	PART NAME 1 2 3 4 5 6 (PRODUCT LEVEL)	SEE PAGE
	1	2	**3S-2093**	2	STRAP-CABLE	
	2	2	**9X-0352**	1	RECEPTACLE AS	
Y	3	2	**125-1302**	1	SWITCH GP-MAGNETIC (24-VOLT) (START RELAY)	254
	4	1	**171-2210**	1	CIRCUIT BREAKER AS (80-AMPERE) (MAIN)	
	4A	1	**171-2210**	1	CIRCUIT BREAKER AS (80-AMPERE) (LOAD)	
	5	1	**171-2215**	1	CIRCUIT BREAKER AS (150-AMPERE) (ALTERNATOR)	
					(EACH CIRCUIT BREAKER AS INCLUDES)	
		1	**253-2111**	2	LOCKWASHER	
		1	**6V-8187**	2	NUT (1/4-28-THD)	
		1	**8T-4205**	2	WASHER-HARD (7.2X14.5X2-MM THK)	
	6	2	**172-4863**	1	JUNCTION BLOCK	
Y	7	2	**241-8368**	1	SWITCH GP-MAGNETIC (24-VOLT) (MAIN POWER RELAY)	257
	8	2	**280-8973**	1	BRACKET AS	
M		2	**8T-3490**	6	NUT-WELD (M10X1.5-THD)	
	9	1	**280-8974**	1	BOX AS	
M		1	**6V-9632**	1	NUT-WELD (M6X1-THD)	
M		1	**8T-3490**	7	NUT-WELD (M10X1.5-THD)	
M		1	**9R-2672**	1	BOSS-THREADED (M10X1.5-THD)	
M		1	**9R-2821**	2	BOSS (M10X1.5X15-MM)	
	10	1	**280-8976**	1	HARNESS AS-BOX	
		1	**8N-1523**	1	LOCKWASHER	
		1	**189-3158**	1	SUPPRESSOR-ARC	
		1	**8N-1517**	1	RECEPTACLE AS-CONNECTOR (25-PIN)	
		1	**102-8802**	1	KIT-RECEPTACLE (2-PIN)	
					(INCLUDES RECEPTACLE AS & WEDGE)	
		1	**155-2270**	2	KIT-CONNECTING PLUG (2-PIN)	
					(EACH INCLUDES PLUG AS, WEDGE, & INTERFACE SEAL)	
	11	2	**306-9997**	1	PLATE	
	12	2	**280-9455**	1	PLATE	
	13	1	**281-5825**	1	COVER	
	14	2	**306-9998**	1	PLATE	
	15	2	**287-1686**	1	WIRE AS	
	16	2	**287-1687**	1	WIRE AS	
	17	1	**287-1688**	1	HARNESS AS-TRANSMISSION	
		1	**155-2270**	1	KIT-CONNECTING PLUG (2-PIN)	
					(INCLUDES PLUG AS, WEDGE, & INTERFACE SEAL)	
	18	2	**289-2527**	1	WIRE AS	
	19	2	**289-2528**	1	WIRE AS	
	20	1	**113-8373**	6	SCREW-BUTTON HEAD (10-32X0.75-IN)	
	21	2	**130-5300**	2	CLIP	
	22	1	**230-9174**	1	CIRCUIT BREAKER AS (15-AMPERE) (TRANSMISSION CONTROL)	
	22A	1	**230-9174**	1	CIRCUIT BREAKER AS (15-AMPERE) (KEY SWITCH)	
					(EACH CIRCUIT BREAKER AS INCLUDES)	
		1	**8F-1434**	2	LOCKWASHER	
		1	**6V-8378**	2	NUT (10-32-THD)	
		1	**8T-0328**	2	WASHER-HARD (5.5X10X1-MM THK)	
	23	1	**288-3687**	1	CIRCUIT BREAKER AS (20-AMPERE) (ACCUGRADE)	
	23A	1	**288-3687**	1	CIRCUIT BREAKER AS (20-AMPERE) (ENGINE CONTROL)	
					(EACH CIRCUIT BREAKER INCLUDES)	
		1	**8F-1434**	2	LOCKWASHER	
		1	**6V-8378**	2	NUT (10-32-THD)	
		1	**8T-0328**	2	WASHER-HARD (5.5X10X1-MM THK)	
	24	1	**3T-2662**	1	CIRCUIT BREAKER AS (15-AMPERE) (FLOODLIGHTS, LH)	

280-8969 **PANEL GP-CIRCUIT BREAKER** *(contd.)* **i02780954**

NOTE	REF NO	GRAPHIC REF	PART NUMBER	QTY	PART NAME 1 2 3 4 5 6 (PRODUCT LEVEL)	SEE PAGE
	24A	1	**3T-2662**	1	CIRCUIT BREAKER AS (15-AMPERE) (FLOODLIGHTS, RH)	
					(EACH CIRCUIT BREAKER AS INCLUDES)	
		1	**9B-7233**	2	LOCKWASHER	
		1	**6V-8376**	2	SCREW-MACHINE (8-32X0.25-IN)	
	25	1	**4B-4274**	6	WASHER (5.5X13X1.2-MM THK)	
M	26	2	**5C-2890**	4	NUT (M6X1-THD)	
M	27	2	**6V-7744**	1	LOCKNUT (M10X1.15-THD)	
	28	1,2	**7K-1181**	3	STRAP-CABLE	
	29	1	**9X-6016**	12	SCREW-HEX SOCKET (NO 8-32-MM)	
M	30	2	**8T-4179**	1	BOLT (M12X1.75X20-MM)	
M	31	2	**8C-8580**	3	BOLT-SOCKET HEAD (M5X0.8X16-MM)	
	32	2	**8T-0328**	3	WASHER-HARD (5.5X10X1-MM THK)	
	33	1,2	**8T-4121**	12	WASHER-HARD (11X21X2.5-MM THK)	
M	34	1,2	**8T-4137**	10	BOLT (M10X1.5X20-MM)	
M	35	2	**8T-4138**	1	BOLT (M6X1X20-MM)	
	37	2	**8T-4205**	1	WASHER-HARD (7.2X14.5X2-MM THK)	
	38	2	**8T-4223**	1	WASHER-HARD (13.5X25.5X3-MM THK)	
	39	1	**9B-7233**	12	LOCKWASHER	
	40	1,2	**9X-8256**	8	WASHER (6.6X12X2-MM THK)	
	41	2	**296-9931**	1	PLATE AS	
M		2	**8T-8874**	3	NUT-WELD (M5X0.8-THD)	
	42	1	**262-2827**	1	FILM-IDENTIFICATION (FUSE PANEL)	
	43	2	**253-2111**	1	LOCKWASHER	
M	44	2	**8T-4136**	1	BOLT (M10X1.5X25-MM)	

M-METRIC PART
Y-SEPARATE ILLUSTRATION

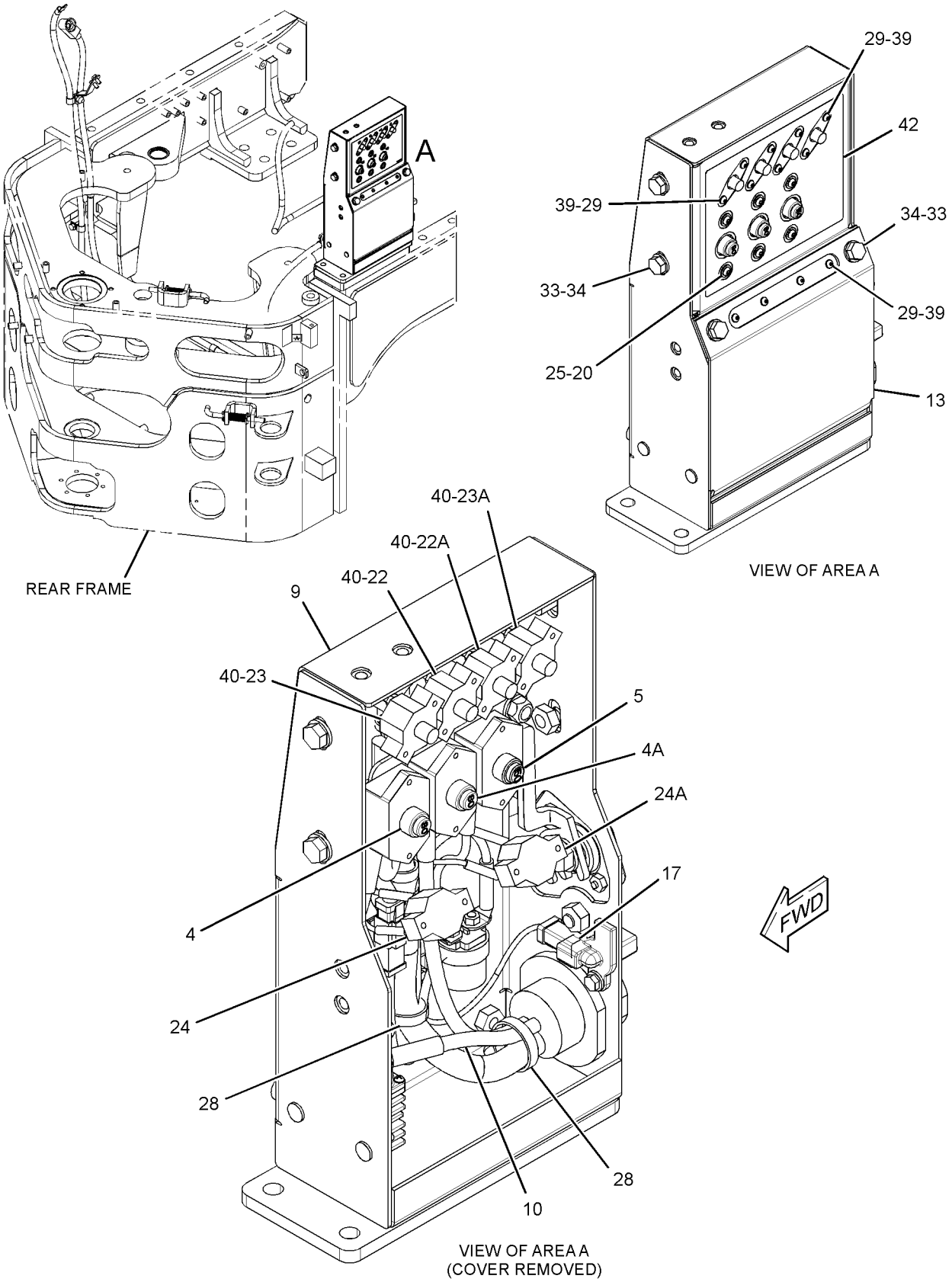

GRAPHIC #1

g01369756

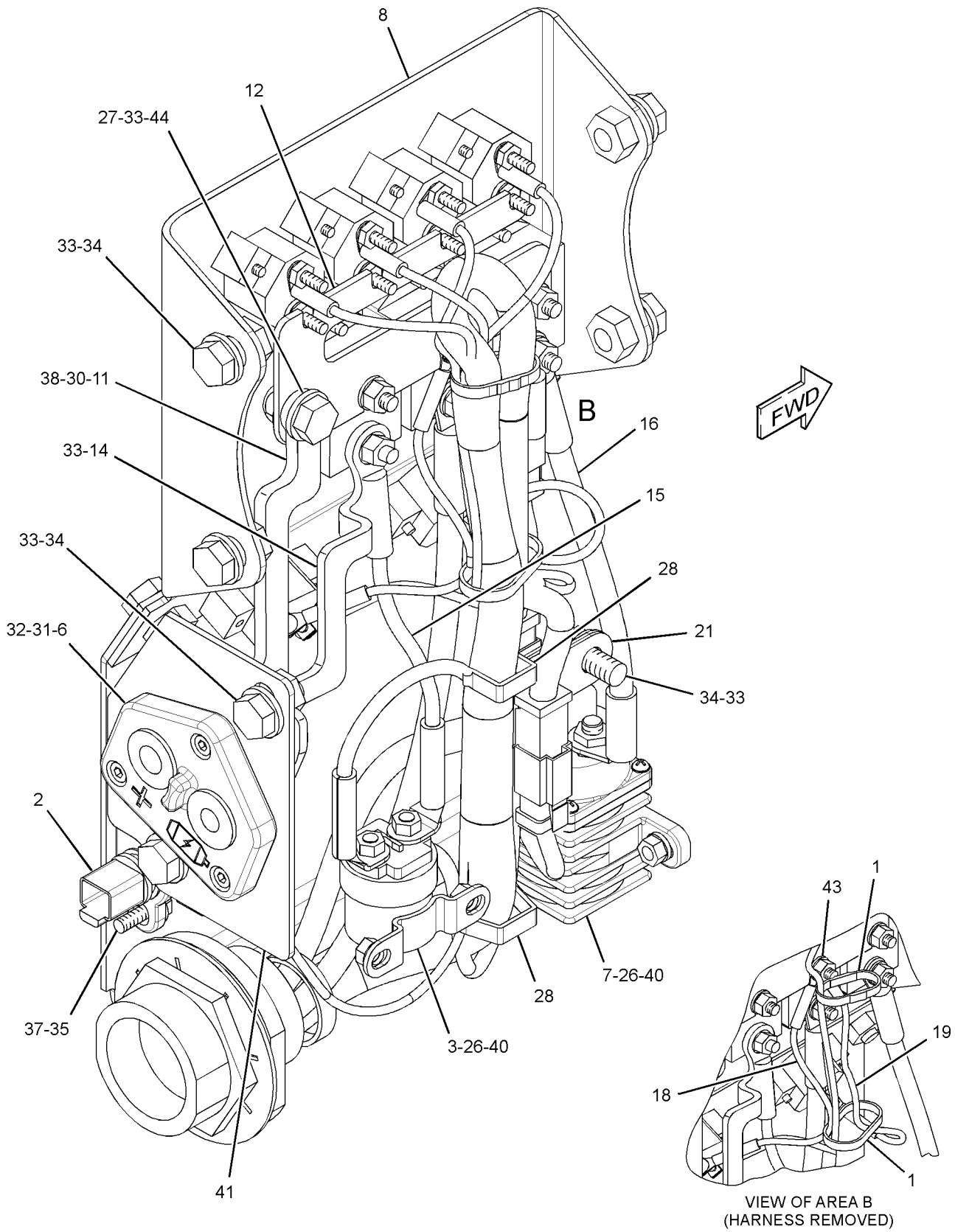

GRAPHIC #2

<END>

g01369757

283-7960 POWER SUPPLY GP–GRADE CONTROL

S/N: B9D1-UP

PART OF 302-9097 GRADE CONTROL GP

SMCS-5201, 7220 **i02787076**

NOTE	REF NO	GRAPHIC REF	PART NUMBER	QTY	PART NAME 1 2 3 4 5 6 (PRODUCT LEVEL)	SEE PAGE
	1	1	**226-9169**	1	MODULE AS-POWER SUPPLY	
	2	1	**8T-4224**	4	WASHER-HARD (8.8X16X2-MM THK)	
M	3	1	**8T-4189**	4	BOLT (M8X1.25X20-MM)	

M-METRIC PART

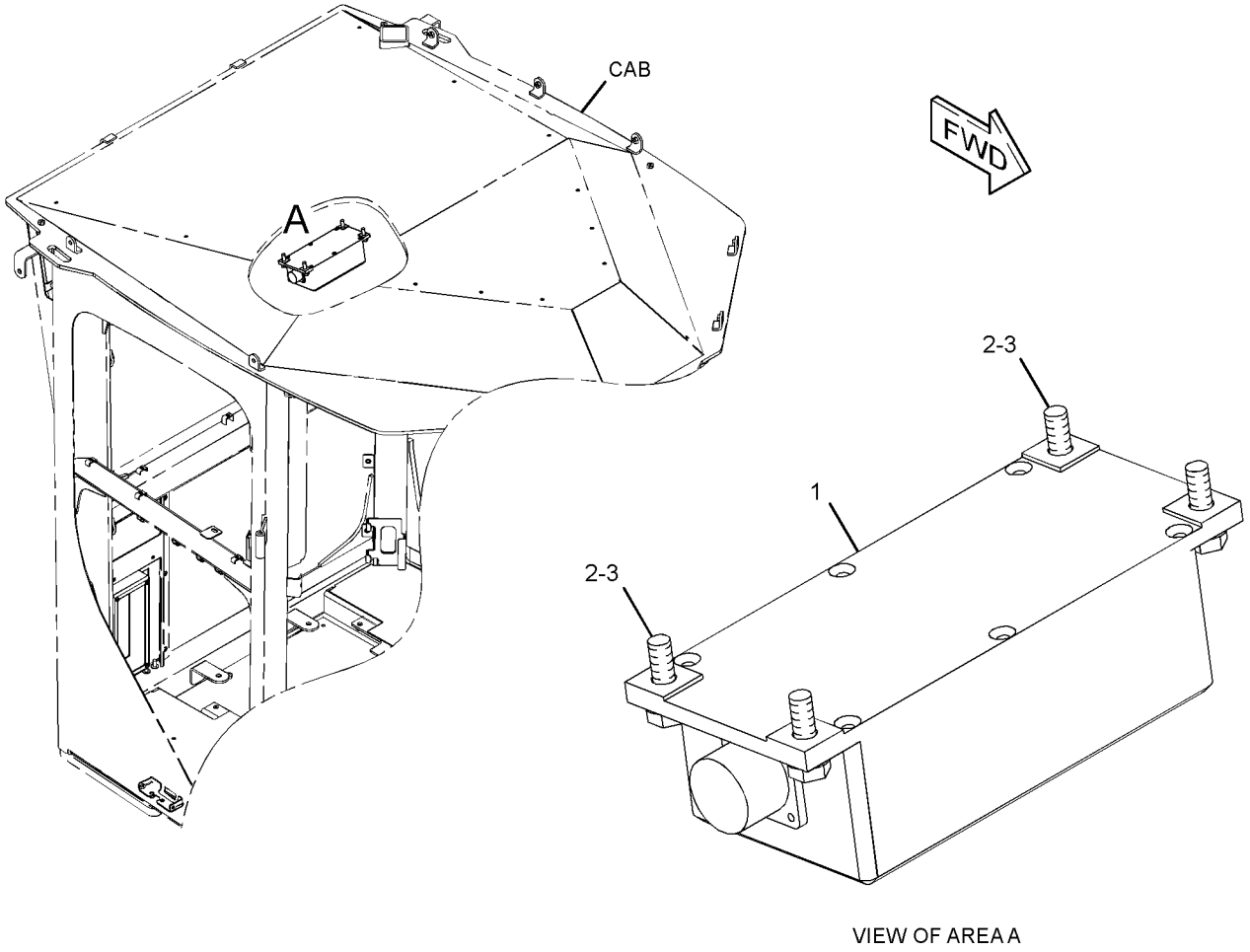

VIEW OF AREA A

GRAPHIC #1 **<END>** g01288314

263-9088 RADIO GP-COMMUNICATION—PRODUCT LINK 121SR

S/N: B9D1-UP

PART OF 235-6188 INSTALLATION AR-COMMUNICATION

SMCS-733T **i02794877**

NOTE	PART NUMBER	QTY	PART NAME 1 2 3 4 5 6 (PRODUCT LEVEL)	SEE PAGE
	311-8377	1	SOFTWARE GP-COMMUNICATION (PRODUCT LINK 121SR)	

<END>

292-0301 RECEIVER AR-LASER—SINGLE

S/N: B9D1-UP

FOR USE WITH MOTOR GRADER

SMCS-7009 **i02788364**

NOTE	PART NUMBER	QTY	PART NAME 1 2 3 4 5 6 (PRODUCT LEVEL)	SEE PAGE
Y	*292-0281*	1	MAST GP (LASER RECEIVER)	205
Y	*292-0908*	1	MOUNTING GP-MAST	213
Y	*292-0285*	1	RECEIVER GP-LASER	222
Y-SEPARATE ILLUSTRATION				

<END>

292-0310 RECEIVER AR-LASER—DUAL

S/N: B9D1-UP

FOR USE WITH MOTOR GRADER

SMCS-7009 **i02788369**

NOTE	PART NUMBER	QTY	PART NAME 1 2 3 4 5 6 (PRODUCT LEVEL)	SEE PAGE
Y	*292-0281*	2	MAST GP (LASER RECEIVER)	205
Y	*292-0908*	2	MOUNTING GP-MAST	213
Y	*292-0285*	2	RECEIVER GP-LASER	222
Y-SEPARATE ILLUSTRATION				

<END>

292-7971 RECEIVER AR-SATELLITE—SINGLE GNSS, MS990

S/N: B9D1-UP

FOR USE WITH MOTOR GRADER

SMCS-7010 **i02788457**

NOTE	PART NUMBER	QTY	PART NAME 1 2 3 4 5 6 (PRODUCT LEVEL)	SEE PAGE
Y	*292-0907*	1	MAST GP (SATELLITE RECEIVER)	205
Y	*292-0292*	1	RECEIVER GP-SATELLITE (SINGLE GNSS, MS990)	222
Y-SEPARATE ILLUSTRATION				

<END>

292-0285 RECEIVER GP-LASER—GRADE CONTROL

S/N: B9D1-UP

PART OF 292-0301, 292-0310 RECEIVER AR-LASER

SMCS-7009 **i02649292**

NOTE	PART NUMBER	QTY	PART NAME 1 2 3 4 5 6 (PRODUCT LEVEL)	SEE PAGE
	276-0764	1	CABLE-COILED (LASER RECEIVER)	
	253-8329	1	RECEIVER GP-LASER (LR410)	
	292-1268	1	SOFTWARE GP-MONITOR	

<END>

292-0292 RECEIVER GP-SATELLITE—SINGLE GNSS, MS990

S/N: B9D1-UP

PART OF 292-7971 RECEIVER AR-SATELLITE

SMCS-7010 **i02619929**

NOTE	PART NUMBER	QTY	PART NAME 1 2 3 4 5 6 (PRODUCT LEVEL)	SEE PAGE
	252-9628	1	BRACKET AS (RECEIVER)	
	8R-1803	5	WASHER (10.5X18X1-MM THK)	
M	**8T-9388**	4	BOLT (M10X1.5X25-MM)	
	113-0693	5	LOCKWASHER	
	289-8449	1	HANDLE AS	
	255-0939	1	CASE-PLASTIC (RECEIVER)	
	291-1913	1	RECEIVER AS-SATELLITE (GNSS, MS990)	
	300-9517	1	SOFTWARE (RECEIVER)	
	301-4136	1	SOFTWARE (RECEIVER, LOADER)	

M-METRIC PART

<END>

297-5355 SENSOR GP-ENGINE

S/N: KHX238-UP

PART OF 231-0878, 278-9732 ENGINE AR-COMPLETE

SMCS-1052, 1087, 1439, 1906, 1912, 1917, 1923, 1924, 1925

i02789817

NOTE	REF NO	GRAPHIC REF	PART NUMBER	QTY	PART NAME 1 2 3 4 5 6 (PRODUCT LEVEL)	SEE PAGE
	1	1	**9X-0262**	1	ADAPTER	
	2	1	**9X-8403**	1	ELBOW	
Y	3	1	*197-8393*	1	SENSOR GP-PRESSURE (ATMOSPHERIC)	230
Y	4	1	*197-8394*	1	SENSOR GP-PRESSURE (ENGINE OIL)	231
Y	5	1	*210-1747*	1	SENSOR GP-PRESSURE (BOOST)	232
Y	6	1	*236-6220*	1	SENSOR GP-PRESSURE (RAIL)	235
Y	7	1	*236-6221*	1	SENSOR GP-SPEED (ENGINE TIMING)	239
Y	8	1	*274-7395*	1	SENSOR GP-TEMPERATURE (AIR INLET MANIFOLD)	241
Y	9	1	*274-7396*	1	SENSOR GP-TEMPERATURE (ENGINE COOLANT)	242
	10	1	*169-5861*	1	PLUG AS	
		1	**3K-8460**	1	PLUG	
		1	**5P-7814**	1	SEAL-O-RING	
	11	1	*183-3406*	1	PLUG AS	
		1	**6V-5049**	1	SEAL-O-RING	
		1	**9S-4191**	1	PLUG-O-RING	
	12	1	*183-7263*	1	PLUG AS	
		1	**3J-7354**	1	SEAL-O-RING	
		1	**9S-8002**	1	PLUG-O-RING	
	13	1	**3E-4352**	1	WASHER-HARD (8.8X20.5X2.5-MM THK)	
M	14	1	**6V-3940**	1	BOLT (M8X1.25X25-MM)	
	15	1	**6V-5048**	2	SEAL-O-RING	
	16	1	**6V-5049**	1	SEAL-O-RING	
	17	1	**8T-2353**	1	ADAPTER	

M-METRIC PART
Y-SEPARATE ILLUSTRATION

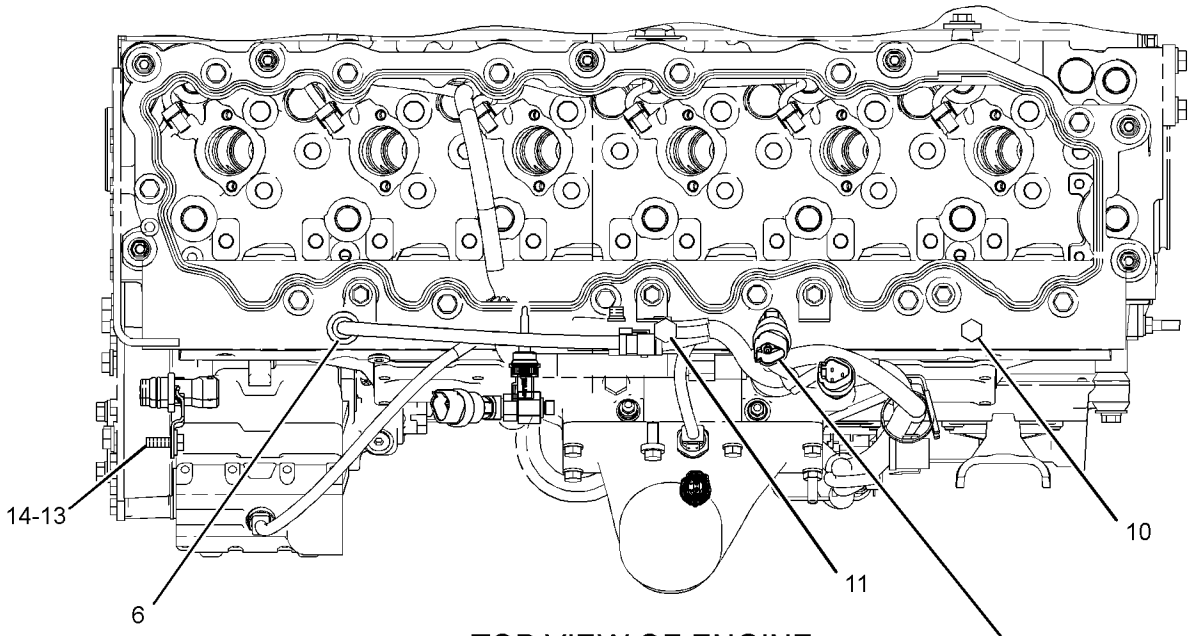

TOP VIEW OF ENGINE

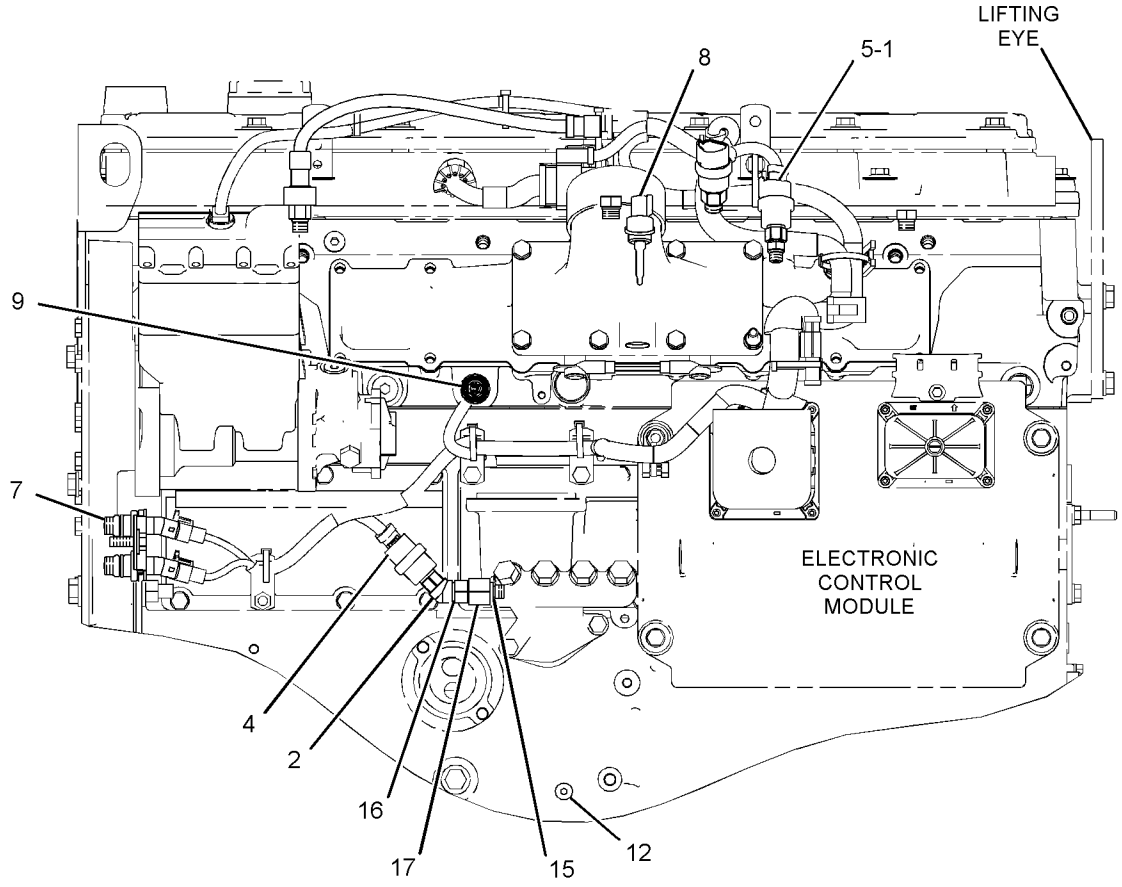

LEFT SIDE VIEW OF ENGINE

GRAPHIC #1

<END>

g01335124

160-2443 SENSOR GP-POSITION

S/N: B9D1-UP
ROTARY
PART OF 265-8943 PEDAL GP-BRAKE, TMSN & GOV

SMCS-1439, 1913, 3050, 5258 **i01431988**

NOTE	REF NO	GRAPHIC REF	PART NUMBER	QTY	PART NAME 1 2 3 4 5 6 (PRODUCT LEVEL)	SEE PAGE
	1	1	**102-8803**	1	KIT-RECEPTACLE (3-PIN)	
					(INCLUDES RECEPTACLE AS & WEDGE)	
	2	1	**8T-8729**	3	PIN-CONNECTOR	
	3	1	**3E-3371**	1	WEDGE-RECEPTACLE LOCK (3-PIN)	

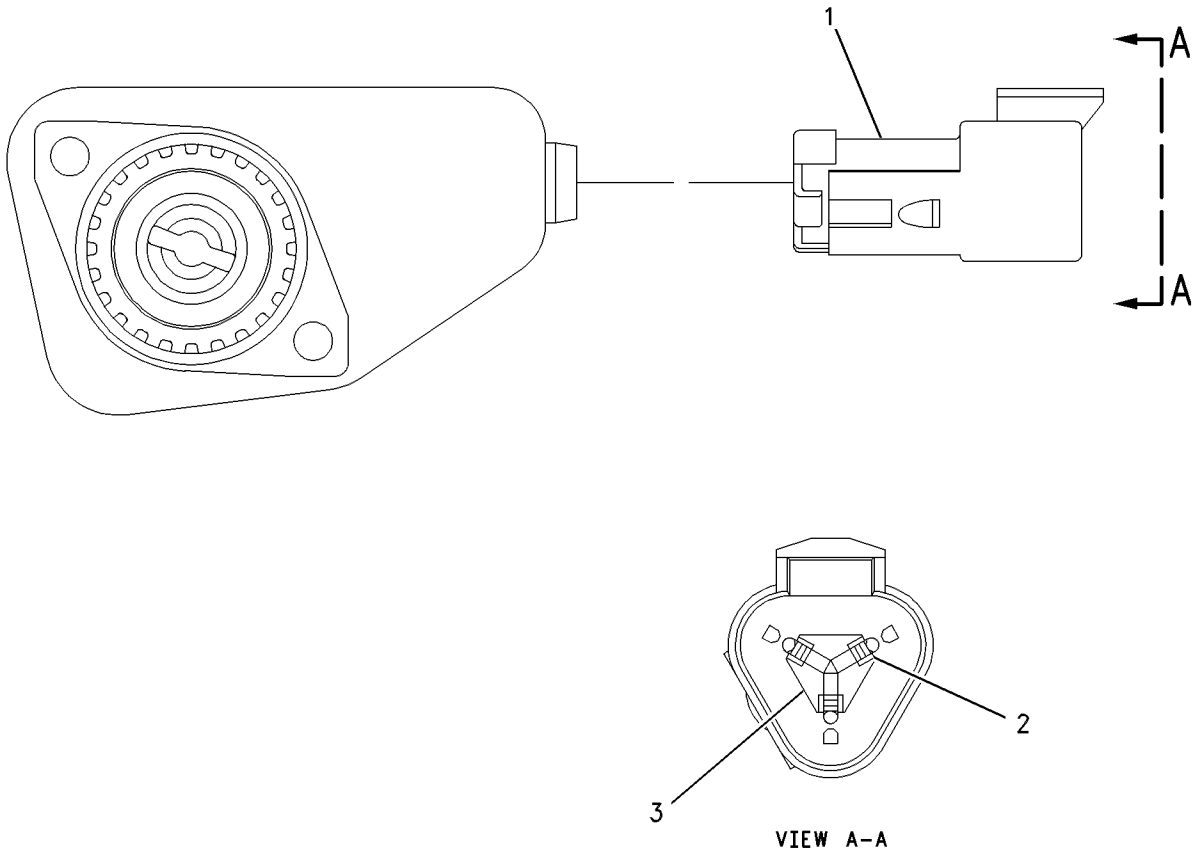

GRAPHIC #1 **<END>** g00637818

219-2392 SENSOR GP-POSITION

S/N: B9D1-UP

PART OF 238-8809 SWITCH GP-ALL WHEEL DRIVE

SMCS-1439, 1913, 3050, 5258 **i02785762**

NOTE	REF NO	GRAPHIC REF	PART NUMBER	QTY	PART NAME 1 2 3 4 5 6 (PRODUCT LEVEL)	SEE PAGE
	1	1	**102-8803**	1	KIT-RECEPTACLE (3-PIN)	
					(INCLUDES RECEPTACLE AS & WEDGE)	
	2	1	**186-3735**	3	PIN-CONNECTOR (16-GA TO 18-GA)	
	3	1	**3E-3371**	1	WEDGE-RECEPTACLE LOCK (3-PIN)	

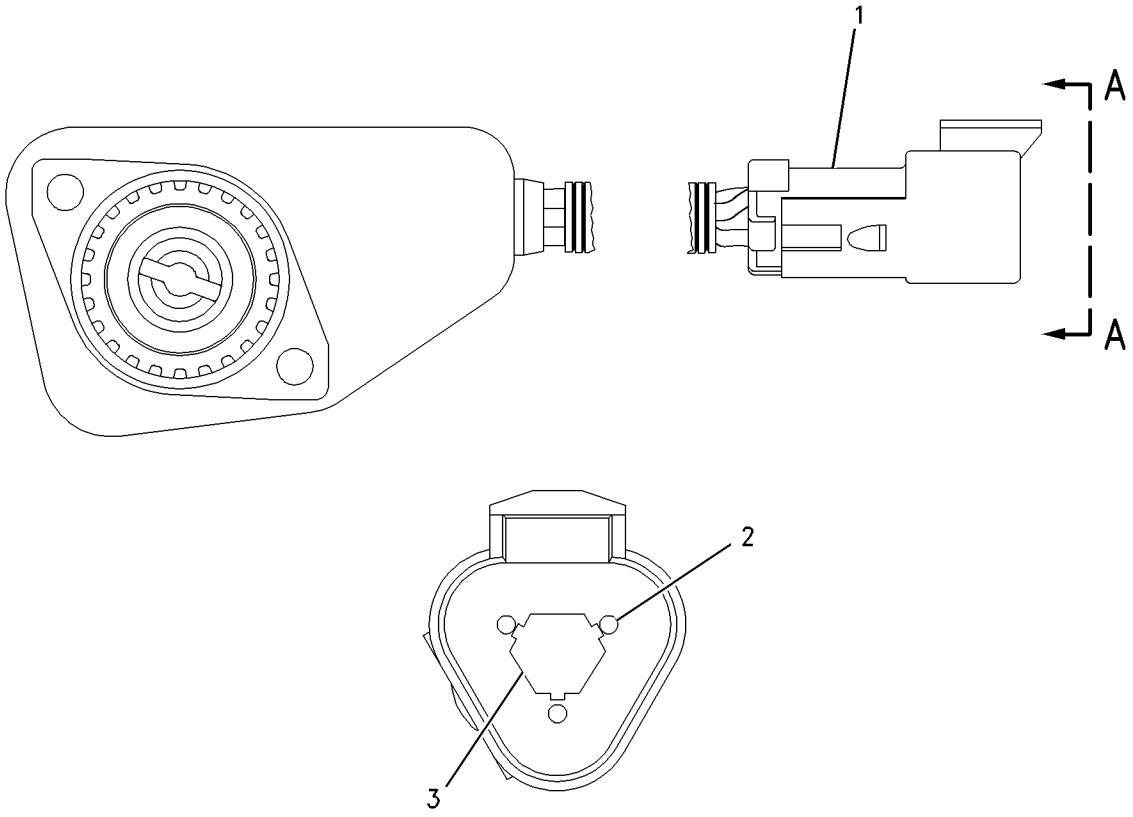

GRAPHIC #1 **<END>** g00931978

266-1467 SENSOR GP-POSITION

S/N: B9D1-UP

PART OF 264-7522 WIRING GP-REAR

SMCS-1439, 1913, 3050, 5258 **i02801595**

NOTE	REF NO	GRAPHIC REF	PART NUMBER	QTY	PART NAME 1 2 3 4 5 6 (PRODUCT LEVEL)	SEE PAGE
	1	1	**9X-3401**	3	PIN-CONNECTOR (16-GA TO 18-GA)	
					—OR—	
		1	**126-1767**	3	PIN-CONNECTOR (14-GA)	
	2	1	**102-8803**	1	KIT-RECEPTACLE (3-PIN)	
					(INCLUDES RECEPTACLE AS & WEDGE)	
	3	1	**3E-3371**	1	WEDGE-RECEPTACLE LOCK (3-PIN)	
	4	1	**3E-9375**		CONDUIT (13-CM)	

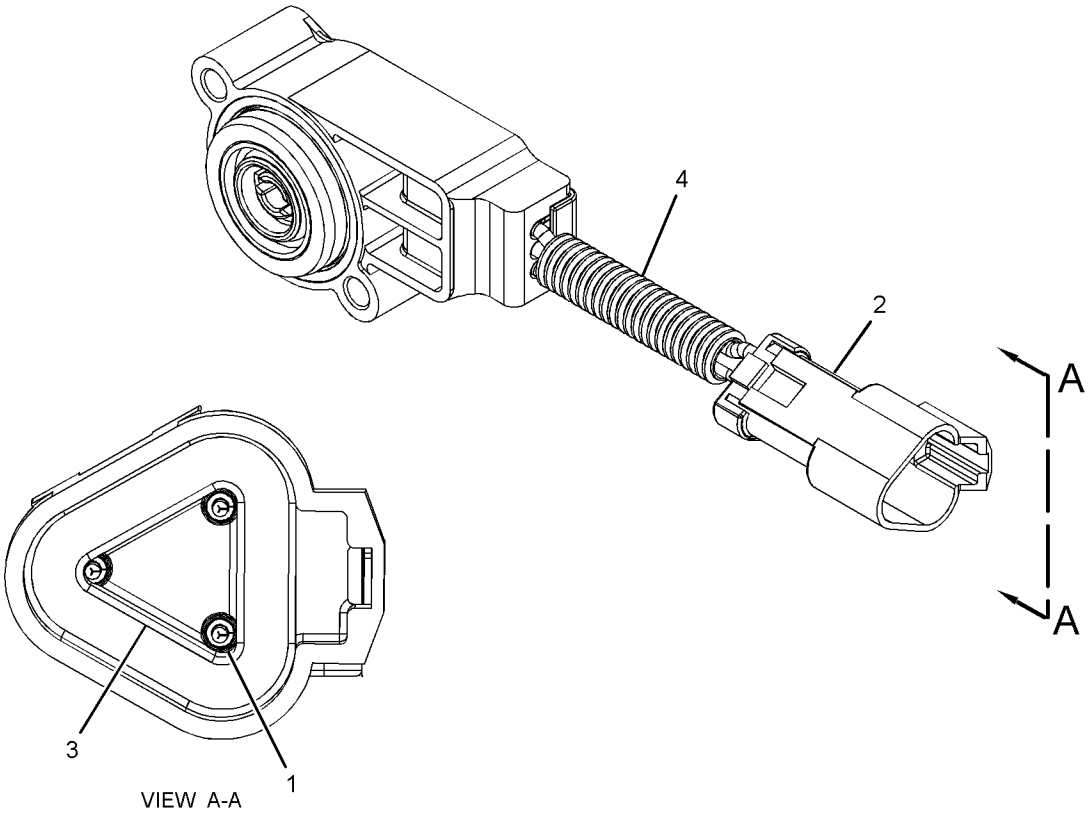

GRAPHIC #1 **<END>** g01400100

194-6722 SENSOR GP-PRESSURE

S/N: B9D1-UP

PART OF 264-7522 WIRING GP-REAR

SMCS-1052, 1058, 1439, 1718, 1917, 1923, 1924, 1925 **i01821083**

NOTE	REF NO	GRAPHIC REF	PART NUMBER	QTY	PART NAME 1 2 3 4 5 6 (PRODUCT LEVEL)	SEE PAGE
E	1	1	**9X-1813**		SLEEVE (34CM)	
	2	1	**155-2260**	1	KIT-CONNECTING PLUG (3-PIN)	
					(INCLUDES PLUG AS AND WEDGE)	
	3	1	*180-9340*	3	SOCKET-CONNECTOR	
	4	1	**3E-3368**	1	WEDGE-PLUG LOCK (3-PIN)	

E-ORDER BY THE CENTIMETER

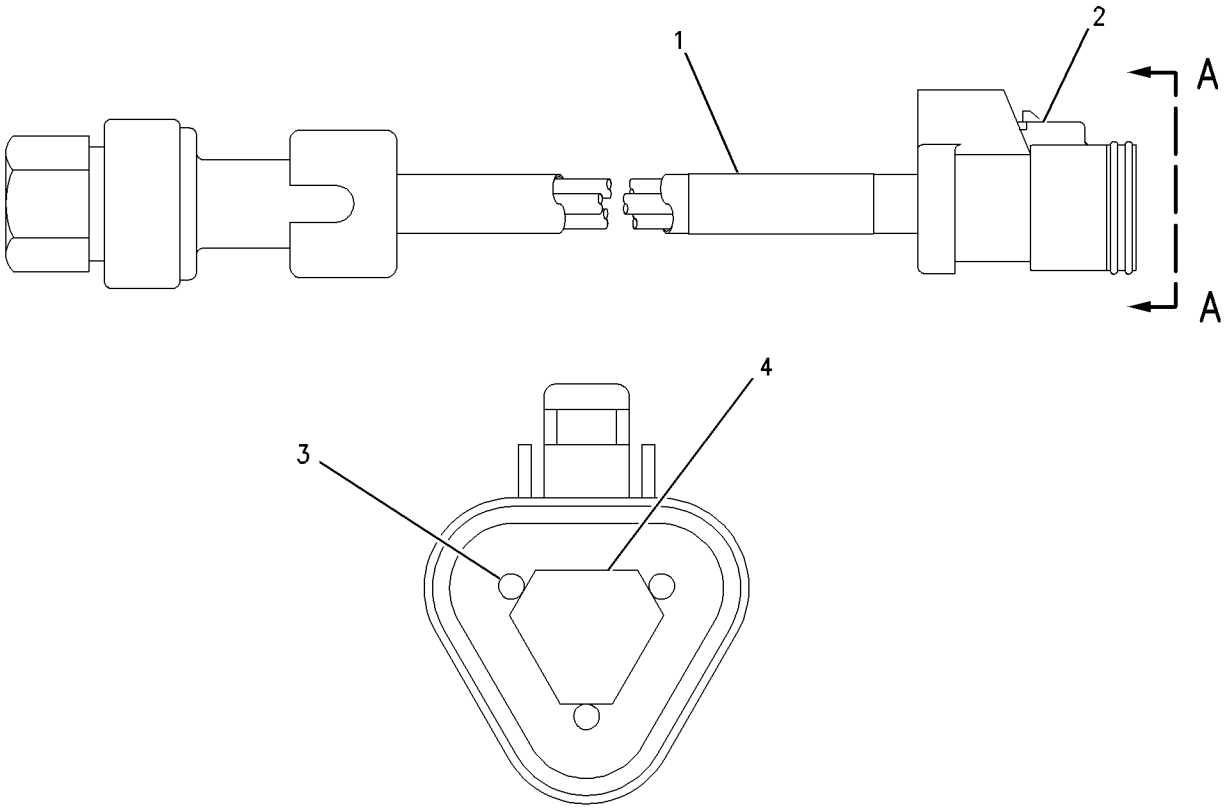

VIEW A-A

GRAPHIC #1 **<END>** g00851220

194-6725 SENSOR GP-PRESSURE

S/N: KHX238-UP

PART OF 239-2396 SENSOR GP-PRESSURE

SMCS-1052, 1058, 1439, 1718, 1917, 1923, 1924, 1925 **i01681907**

NOTE	REF NO	GRAPHIC REF	PART NUMBER	QTY	PART NAME 1 2 3 4 5 6 (PRODUCT LEVEL)	SEE PAGE
BE	1	1	**9X-1813**		SLEEVE (34 CM)	
	2	1	**155-2260**	1	KIT-CONNECTING PLUG (3-PIN)	
					(INCLUDES PLUG AS AND WEDGE)	
	3	1	**180-9340**	3	SOCKET-CONNECTOR	
	4	1	**3E-3368**	1	WEDGE-PLUG LOCK (3-PIN)	

B-USE AS REQUIRED
E-ORDER BY THE CENTIMETER

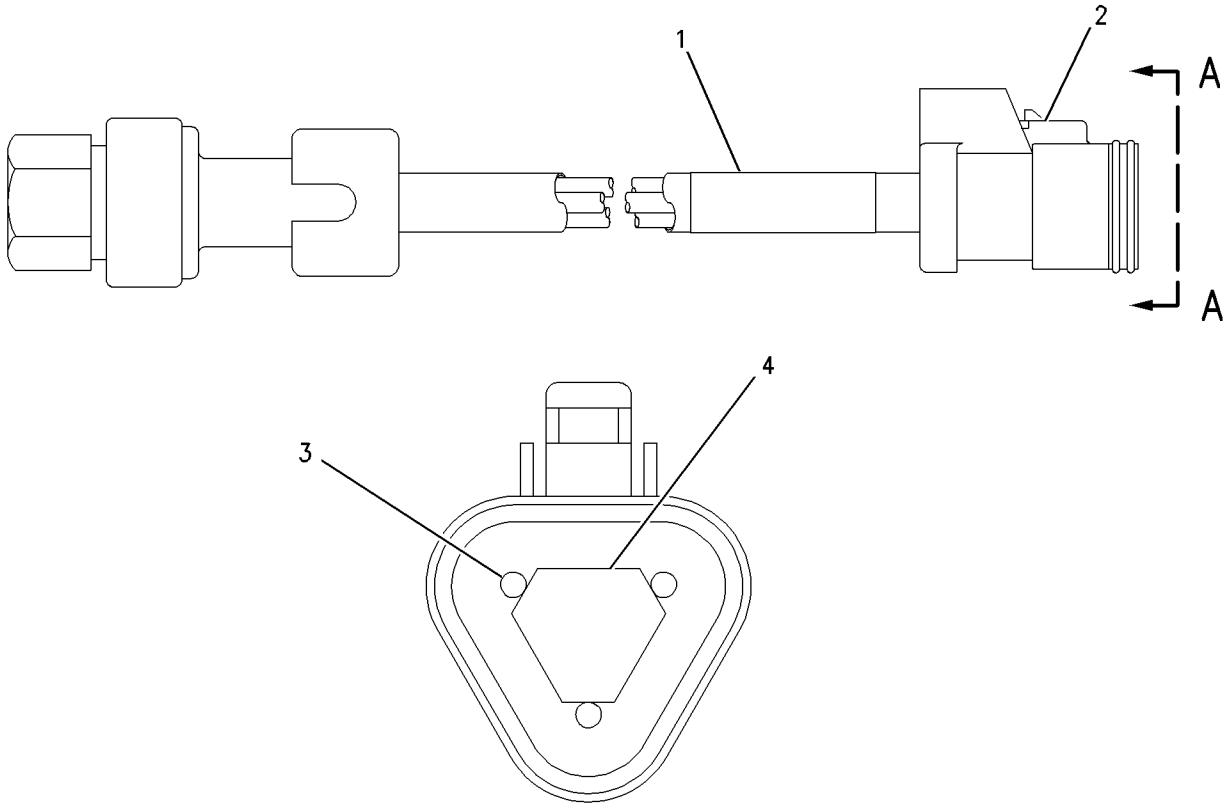

VIEW A-A

GRAPHIC #1 **<END>** g00851220

197-8393 SENSOR GP-PRESSURE

S/N: KHX238-UP

PART OF 297-5355 SENSOR GP-ENGINE

SMCS-1052, 1058, 1439, 1718, 1917, 1923, 1924, 1925 **i01855744**

NOTE	REF NO	GRAPHIC REF	PART NUMBER	QTY	PART NAME 1 2 3 4 5 6 (PRODUCT LEVEL)	SEE PAGE
	1	1	**161-1703**	1	SENSOR GP-PRESSURE	
	2	1	**6V-5049**	1	SEAL-O-RING	

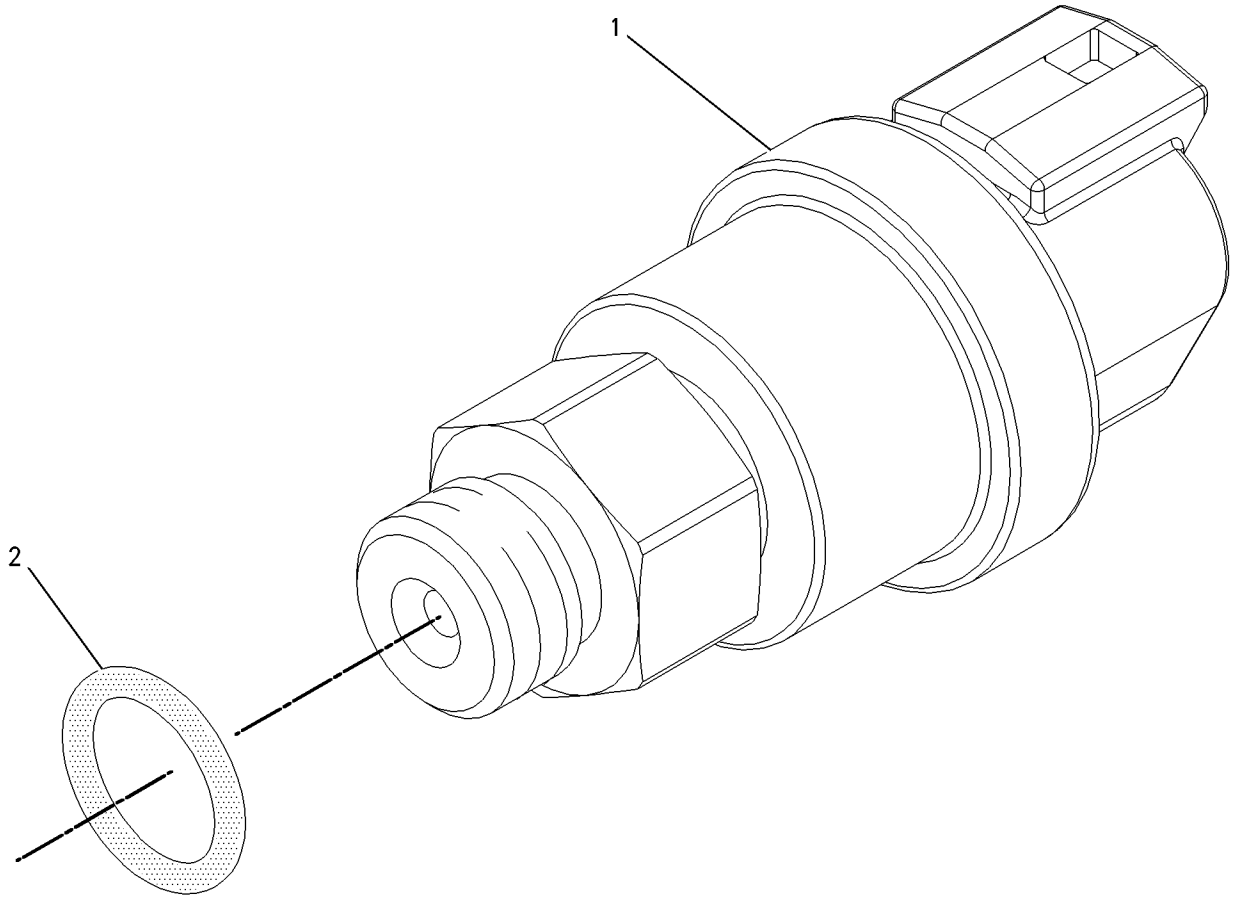

GRAPHIC #1 **<END>** g00855973

197-8394 SENSOR GP-PRESSURE

S/N: KHX238-UP

PART OF 297-5355 SENSOR GP-ENGINE

SMCS-1052, 1058, 1439, 1718, 1917, 1923, 1924, 1925 **i01855745**

NOTE	REF NO	GRAPHIC REF	PART NUMBER	QTY	PART NAME 1 2 3 4 5 6 (PRODUCT LEVEL)	SEE PAGE
	1	1	**161-1705**	1	SENSOR AS-PRESSURE	
	2	1	**6V-5048**	1	SEAL-O-RING	

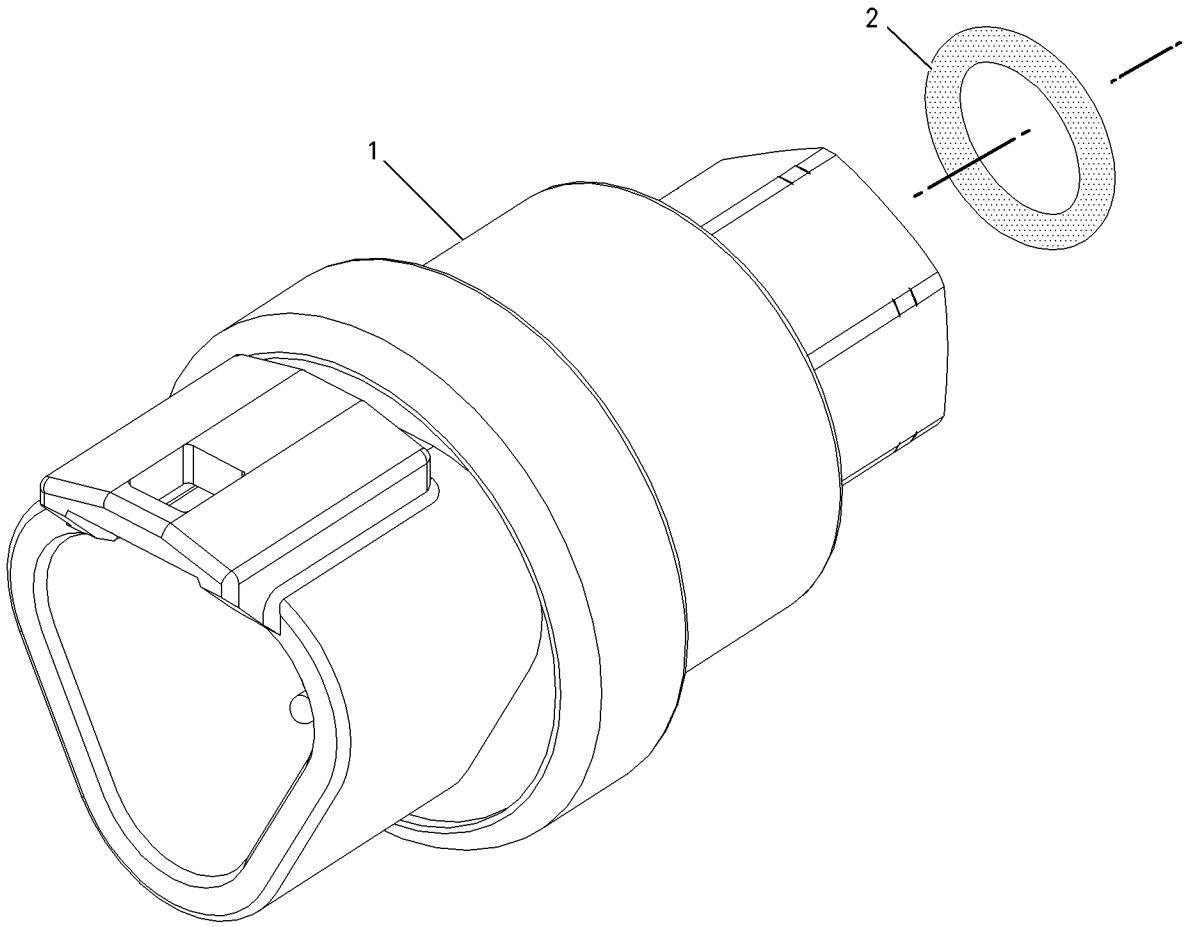

GRAPHIC #1 **<END>** g00856107

210-1747 SENSOR GP-PRESSURE

S/N: KHX238-UP

PART OF 297-5355 SENSOR GP-ENGINE

SMCS-1052, 1058, 1439, 1718, 1917, 1923, 1924, 1925 **i02147083**

NOTE	REF NO	GRAPHIC REF	PART NUMBER	QTY	PART NAME 1 2 3 4 5 6 (PRODUCT LEVEL)	SEE PAGE
	1	1	**161-1704**	1	SENSOR GP-PRESSURE	
	2	1	**6V-5048**	1	SEAL-O-RING	

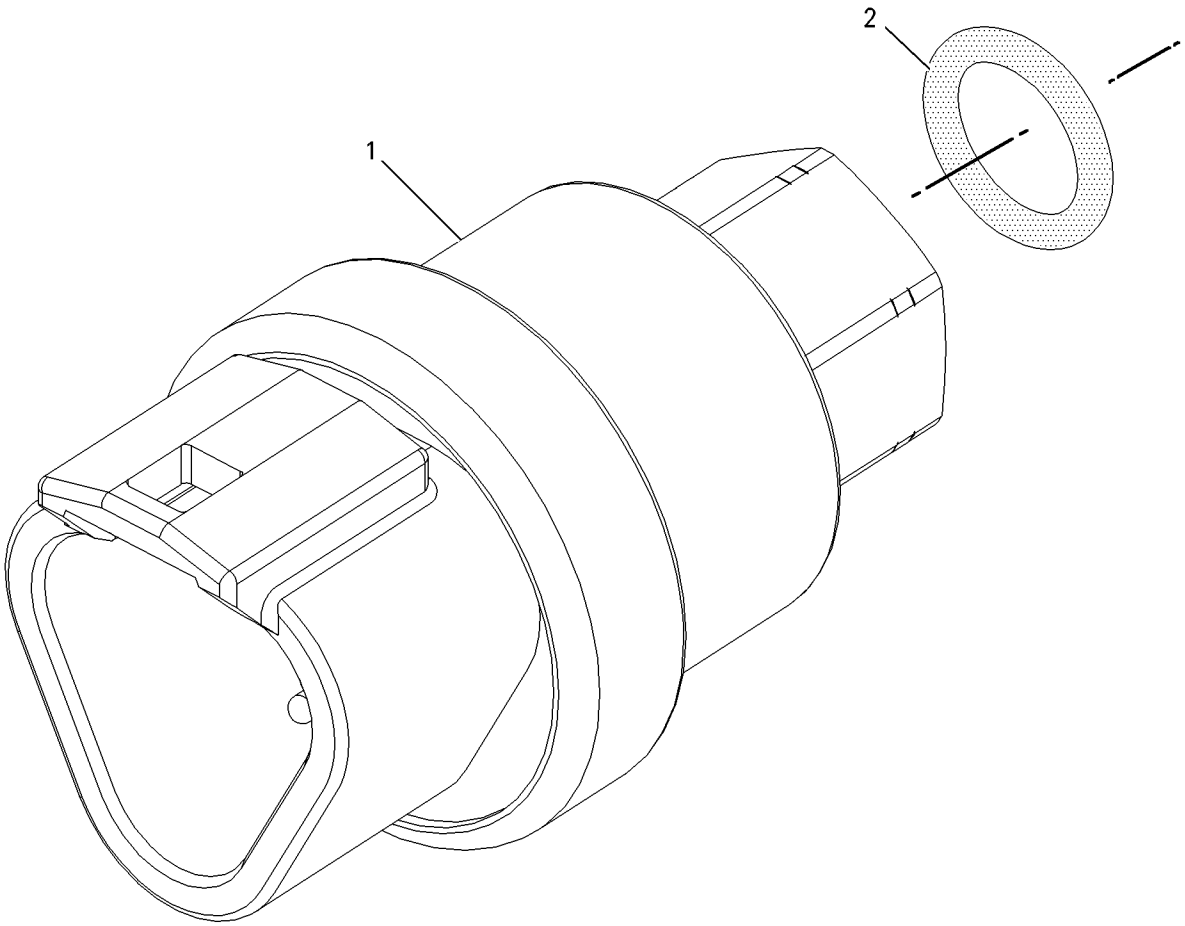

GRAPHIC #1 **<END>** g00856107

214-6863 SENSOR GP-PRESSURE

S/N: B9D1-UP

PART OF 294-1109 MANIFOLD GP-CONTROL

SMCS-1052, 1058, 1439, 1718, 1917, 1923, 1924, 1925 **i02785668**

NOTE	REF NO	GRAPHIC REF	PART NUMBER	QTY	PART NAME 1 2 3 4 5 6 (PRODUCT LEVEL)	SEE PAGE
	1	1	**155-2260**	1	KIT-CONNECTING PLUG (3-PIN)	
					(INCLUDES PLUG AS, WEDGE, & INTERFACE SEAL)	
	2	1	**180-9340**	3	SOCKET-CONNECTOR	

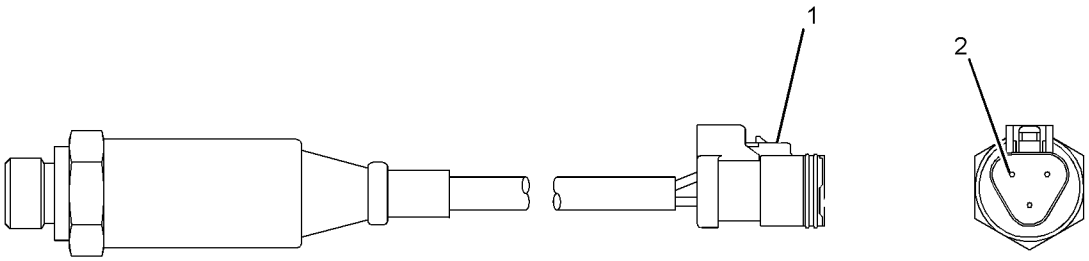

GRAPHIC #1 **<END>** g01392060

224-4536 SENSOR GP-PRESSURE

S/N: KHX238-UP

PART OF 236-6220 SENSOR GP-PRESSURE

SMCS-1052, 1058, 1439, 1718, 1917, 1923, 1924, 1925 **i02154692**

NOTE	REF NO	GRAPHIC REF	PART NUMBER	QTY	PART NAME 1 2 3 4 5 6 (PRODUCT LEVEL)	SEE PAGE
E	1	1	**9X-1813**		SLEEVE (35-CM)	
	2	1	**155-2260**	1	KIT-CONNECTING PLUG (3-PIN)	
					(INCLUDES PLUG AS AND WEDGE)	
	3	1	**194-5226**	1	WIRE AS-HARNESS (16-GA TO 18-GA) (INJECTION ACTUATION)	
					—OR—	
		1	**194-5227**	1	WIRE AS-HARNESS (14-GA WIRE) (INJECTION ACTUATION)	
	4	1	**155-2276**	1	WEDGE-PLUG LOCK (3-PIN)	

E-ORDER BY THE CENTIMETER

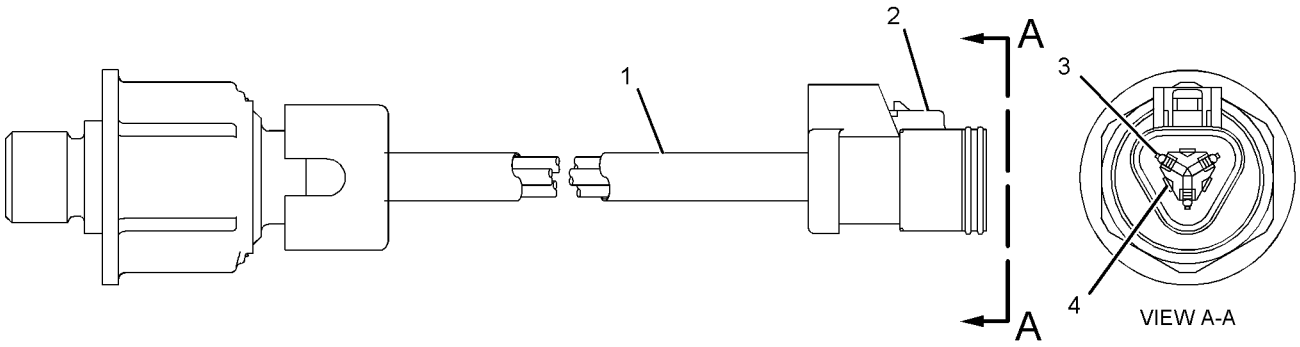

GRAPHIC #1 **<END>** g01040301

236-6220 SENSOR GP-PRESSURE

S/N: KHX238-UP

PART OF 297-5355 SENSOR GP-ENGINE

SMCS-1052, 1058, 1439, 1718, 1917, 1923, 1924, 1925 **i02455849**

NOTE	REF NO	GRAPHIC REF	PART NUMBER	QTY	PART NAME 1 2 3 4 5 6 (PRODUCT LEVEL)	SEE PAGE
	1	1	**214-7567**	1	SEAL-O-RING	
Y	2	1	**224-4536**	1	SENSOR GP-PRESSURE (INJECTION ACTUATION)	234

Y-SEPARATE ILLUSTRATION

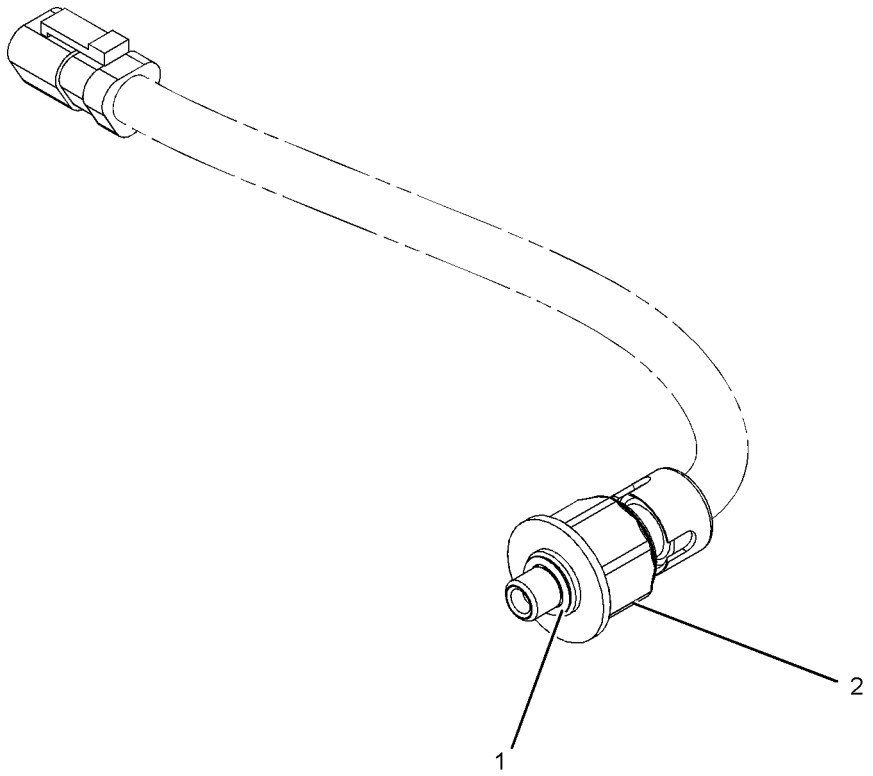

GRAPHIC #1 **<END>** g01054528

237-0957 SENSOR GP-PRESSURE

S/N: B9D1-UP

PART OF 251-8256, 263-1790 MANIFOLD GP-CONTROL

SMCS-1052, 1058, 1439, 1718, 1917, 1923, 1924, 1925 **i02234198**

NOTE	REF NO	GRAPHIC REF	PART NUMBER	QTY	PART NAME 1 2 3 4 5 6 (PRODUCT LEVEL)	SEE PAGE
E	1	1	**9X-1813**		SLEEVE (35-CM)	
	2	1	**155-2260**	1	KIT-CONNECTING PLUG (3-PIN)	
					(INCLUDES PLUG AS & WEDGE)	

E-ORDER BY THE CENTIMETER

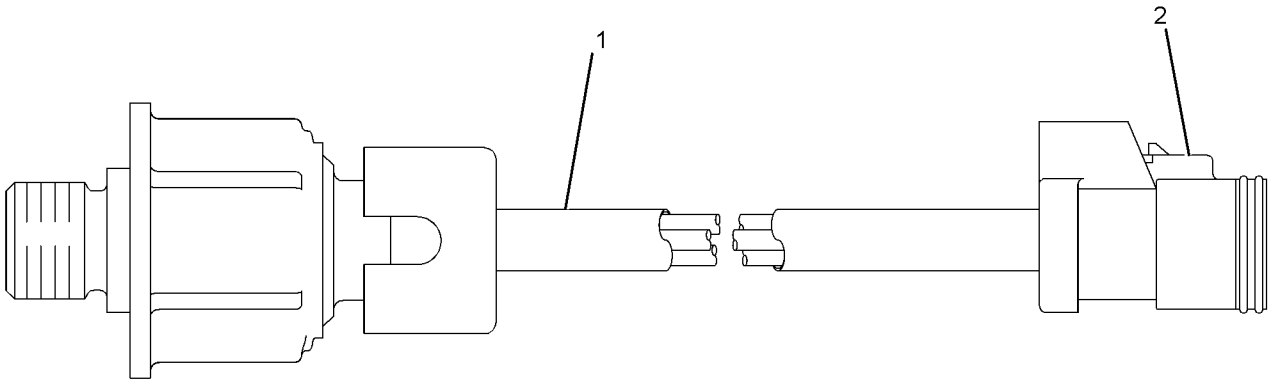

GRAPHIC #1 **<END>** g01126987

239-2396 SENSOR GP-PRESSURE–FUEL

S/N: KHX238-UP

PART OF 250-8313 FILTER GP-FUEL

SMCS-1052, 1058, 1439, 1718, 1917, 1923, 1924, 1925 **i02421732**

NOTE	REF NO	GRAPHIC REF	PART NUMBER	QTY	PART NAME 1 2 3 4 5 6 (PRODUCT LEVEL)	SEE PAGE
Y	1	1	**194-6725**	1	SENSOR GP-PRESSURE	229
	2	1	**6V-5048**	1	SEAL-O-RING	

Y-SEPARATE ILLUSTRATION

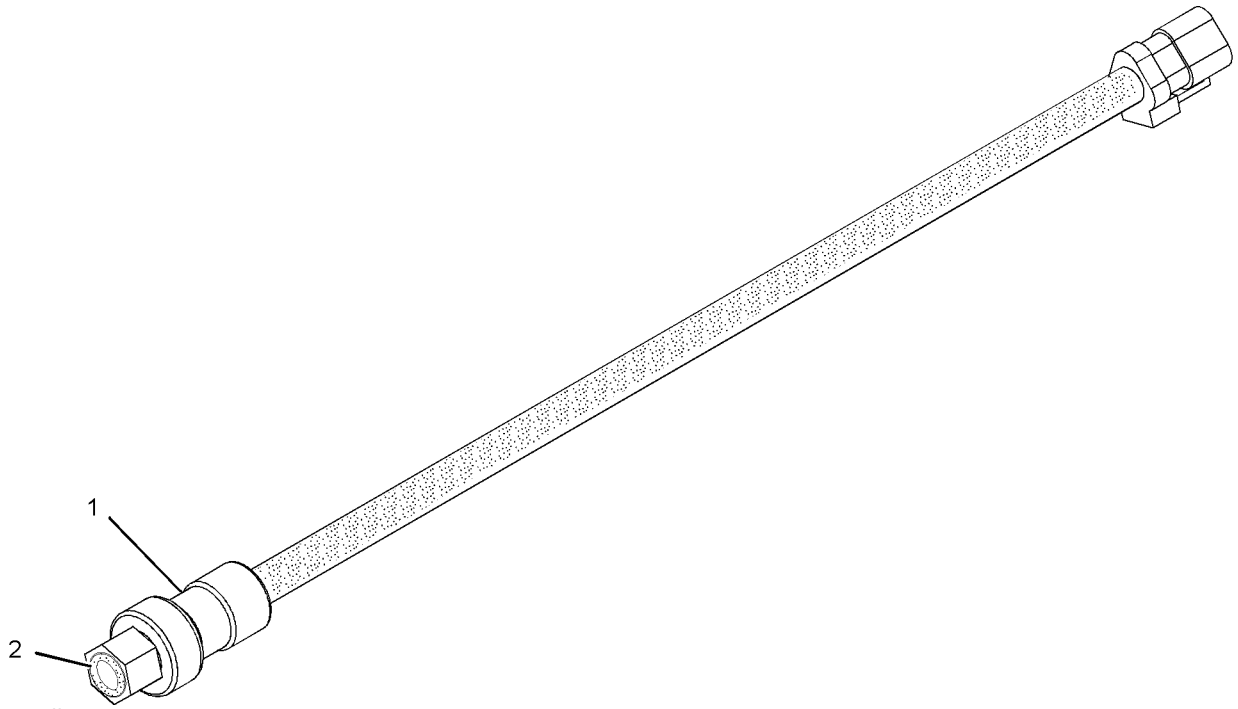

GRAPHIC #1 **<END>** g01019323

286-0132 SENSOR GP-SONIC—DUAL

S/N: B9D1-UP

SMCS-1408, 5645 **i02794287**

NOTE	PART NUMBER	QTY	PART NAME 1 2 3 4 5 6 (PRODUCT LEVEL)	SEE PAGE
Y	*258-1536*	1	FASTENER GP	463
	248-1484	2	BASE AS	
			(EACH INCLUDES)	
	5P-1076	2	WASHER-HARD (13.5X30X4-MM THK)	
	5S-7385	2	LOCKWASHER	
	6V-8188	2	NUT (1/2-13-THD)	
	8T-8917	2	BOLT (1/2-13X1.25-IN)	
	8T-9389	2	BOLT (1/2-13X2.75-IN)	
	256-6944	1	CASE-CARRYING	

Y-SEPARATE ILLUSTRATION

<END>

286-0133 SENSOR GP-SONIC—SINGLE

S/N: B9D1-UP

SMCS-1408, 5645 **i02794288**

NOTE	PART NUMBER	QTY	PART NAME 1 2 3 4 5 6 (PRODUCT LEVEL)	SEE PAGE
Y	*258-1536*	1	FASTENER GP	463
	248-1484	2	BASE AS	
			(EACH INCLUDES)	
	5P-1076	2	WASHER-HARD (13.5X30X4-MM THK)	
	5S-7385	2	LOCKWASHER	
	6V-8188	2	NUT (1/2-13-THD)	
	8T-8917	2	BOLT (1/2-13X1.25-IN)	
	8T-9389	2	BOLT (1/2-13X2.75-IN)	
	256-6944	1	CASE-CARRYING	

Y-SEPARATE ILLUSTRATION

<END>

236-6221 SENSOR GP-SPEED

S/N: KHX238-UP

PART OF 297-5355 SENSOR GP-ENGINE

SMCS-1439, 1907, 1912, 3141, 3175, 4803 **i02421726**

NOTE	REF NO	GRAPHIC REF	PART NUMBER	QTY	PART NAME 1 2 3 4 5 6 (PRODUCT LEVEL)	SEE PAGE
	1	1	**203-3940**	2	SEAL-O-RING	
	2	1	**245-4630**	1	SENSOR GP-SPEED	

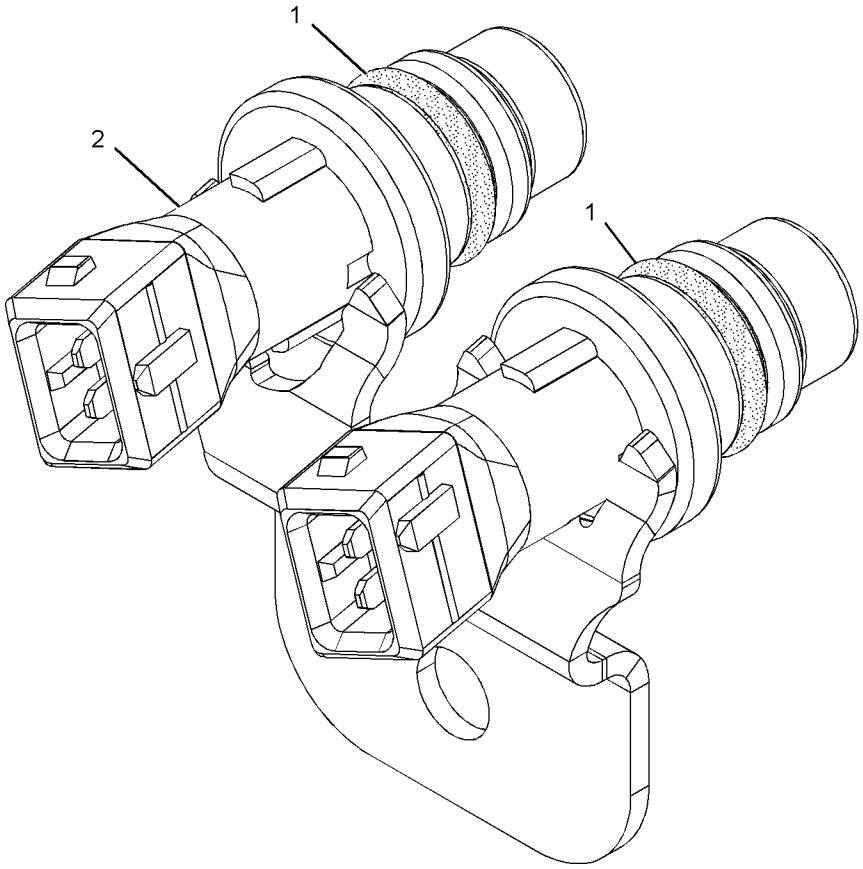

GRAPHIC #1 **<END>** g01013894

234-5013 SENSOR GP-TEMPERATURE

S/N: KHX238-UP
AMPSEAL CONNECTOR
PART OF 250-8313 FILTER GP-FUEL

SMCS-1087, 1439, 1906, 1919, 1921, 1922, 1928, 1929, 192T, 1932, 301T, 3194, 3290, 429T, 509T, 7344 **i02434804**

NOTE	REF NO	GRAPHIC REF	PART NUMBER	QTY	PART NAME 1 2 3 4 5 6 (PRODUCT LEVEL)	SEE PAGE
	1	1	**256-6453**	1	SENSOR AS-TEMPERATURE	
	2	1	**8L-2786**	1	SEAL-O-RING	

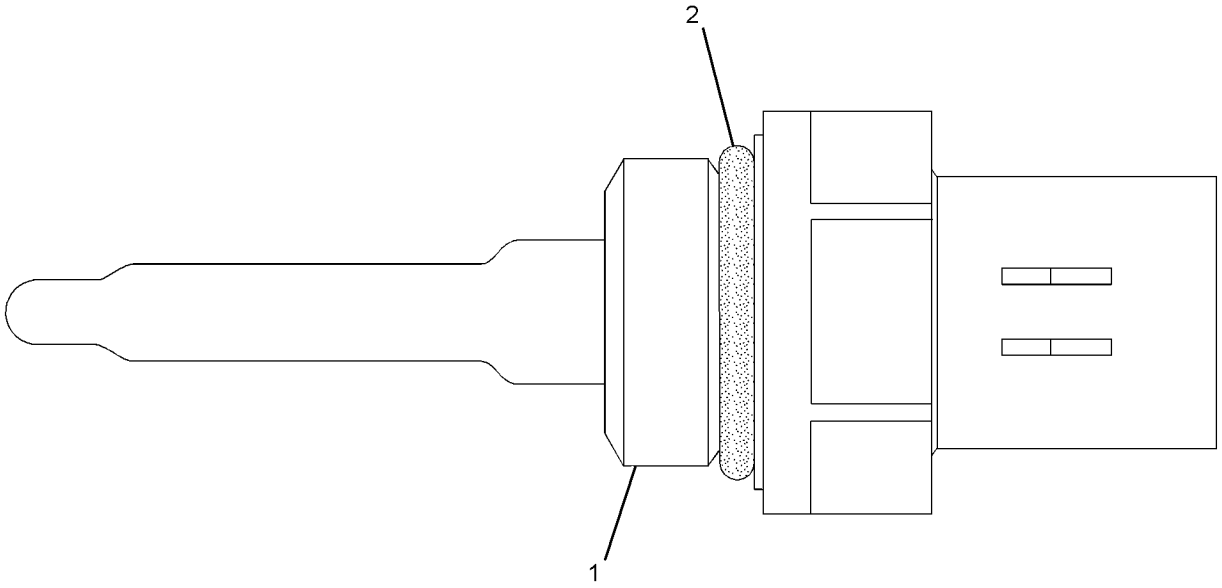

GRAPHIC #1 **<END>** g01164268

274-7395 SENSOR GP-TEMPERATURE

S/N: KHX238-UP

PART OF 297-5355 SENSOR GP-ENGINE

SMCS-1087, 1439, 1906, 1919, 1921, 1922, 1928, 1929, 192T, 1932, 301T, 3194, 3290, 429T, 509T, 7344

i02379156

NOTE	REF NO	GRAPHIC REF	PART NUMBER	QTY	PART NAME 1 2 3 4 5 6 (PRODUCT LEVEL)	SEE PAGE
	1	1	**130-9811**	1	SENSOR GP-TEMPERATURE	
	2	1	**8L-2786**	1	SEAL-O-RING	

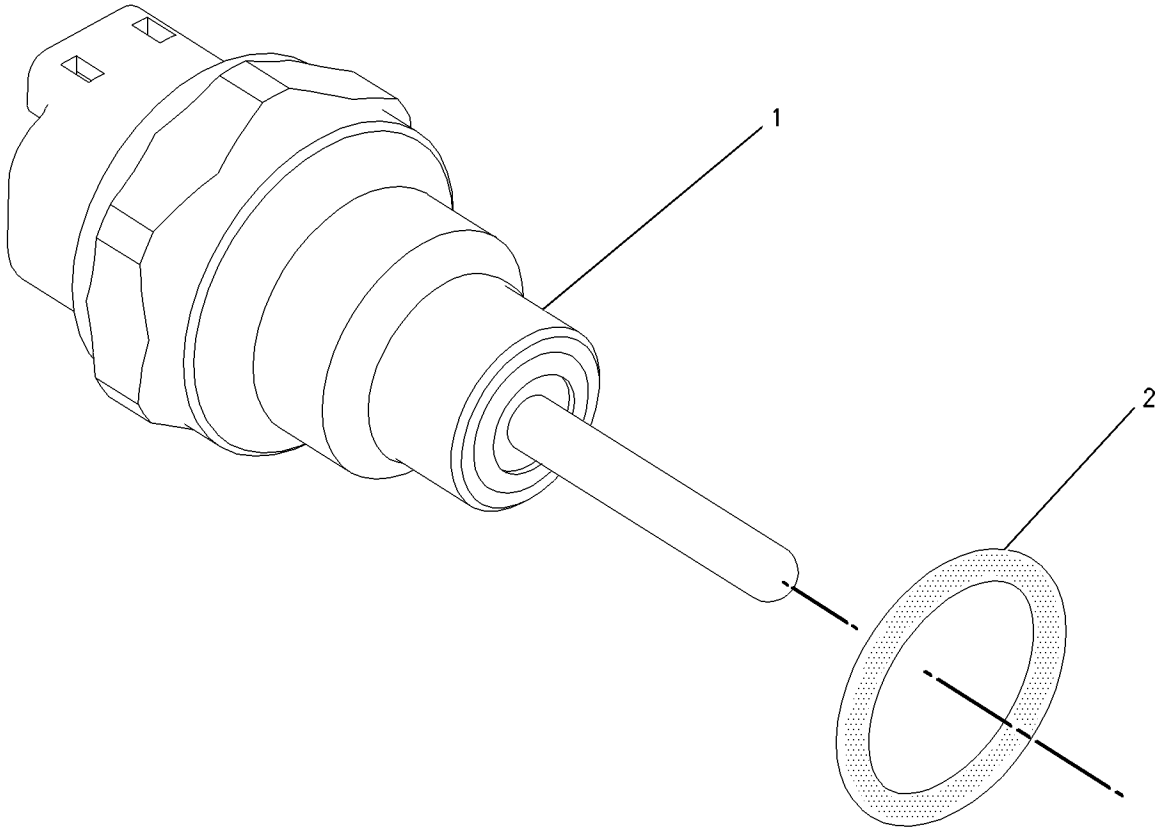

GRAPHIC #1

<END>

g00856011

274-7396 SENSOR GP-TEMPERATURE

S/N: KHX238-UP

PART OF 297-5355 SENSOR GP-ENGINE

SMCS-1087, 1439, 1906, 1919, 1921, 1922, 1928, 1929, 192T, 1932, 301T, 3194, 3290, 429T, 509T, 7344

i02379018

NOTE	REF NO	GRAPHIC REF	PART NUMBER	QTY	PART NAME 1 2 3 4 5 6 (PRODUCT LEVEL)	SEE PAGE
	1	1	**130-9811**	1	SENSOR GP-TEMPERATURE	
	2	1	**6V-6609**	1	SEAL-O-RING	

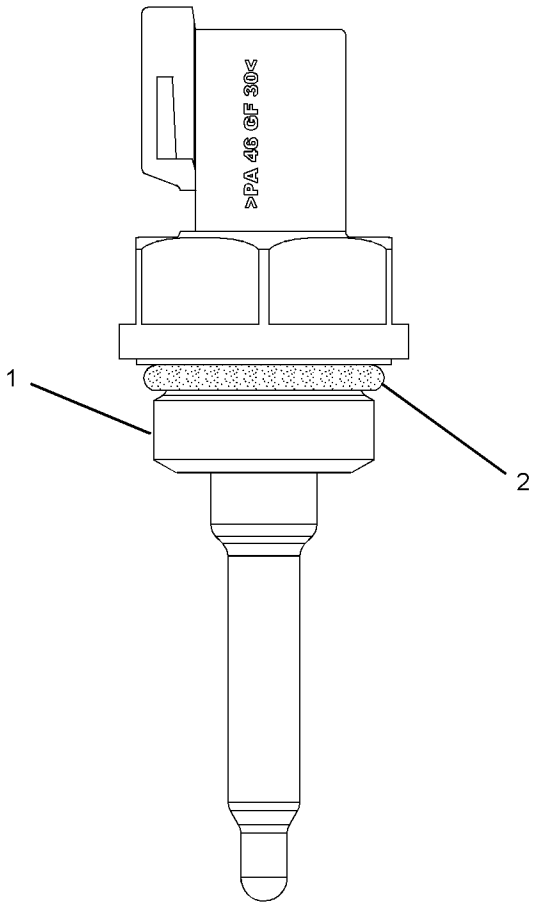

GRAPHIC #1

<END>

g01193032

ELECTRICAL AND STARTING SYSTEM

238-9561 STARTING AID GP-ETHER

S/N: B9D1-UP

PART OF 261-0187 SNOW AR-MOTOR GRADER

SMCS-1456 **i02779633**

NOTE	REF NO	GRAPHIC REF	PART NUMBER	QTY	PART NAME 1 2 3 4 5 6 (PRODUCT LEVEL)	SEE PAGE
	1	1	**3P-0764**	1	PLUG	
	2	1	**7N-2059**	1	CLAMP AS	
Y	3	1	**239-1134**	1	VALVE GP-ETHER STARTING (24-VOLT)	262
	4	1	**241-4194**	1	FITTING AS (CONTROL)	
		1	**236-4545**	1	NUT-SLEEVE (5/16-24-THD)	
	5	1	**250-2177**	1	ATOMIZER AS	
	6	1	**6V-2686**	1	CLIP	
	7	1	**6V-4589**	1	SEAL-O-RING	
M	8	1	**8T-4200**	4	BOLT (M8X1.25X16-MM)	
	9	1	**8T-4224**	4	WASHER-HARD (8.8X16X2-MM THK)	
D	10	1	**5P-5630**		TUBE (1.0-M)	
A			**275-3634**	1	CYLINDER AS-ETHER (U.S.)	
					(MUST BE PROCURED LOCALLY FROM YOUR CATERPILLAR DEALER)	

A-NOT PART OF THIS GROUP
D-ORDER BY THE METER
M-METRIC PART
Y-SEPARATE ILLUSTRATION

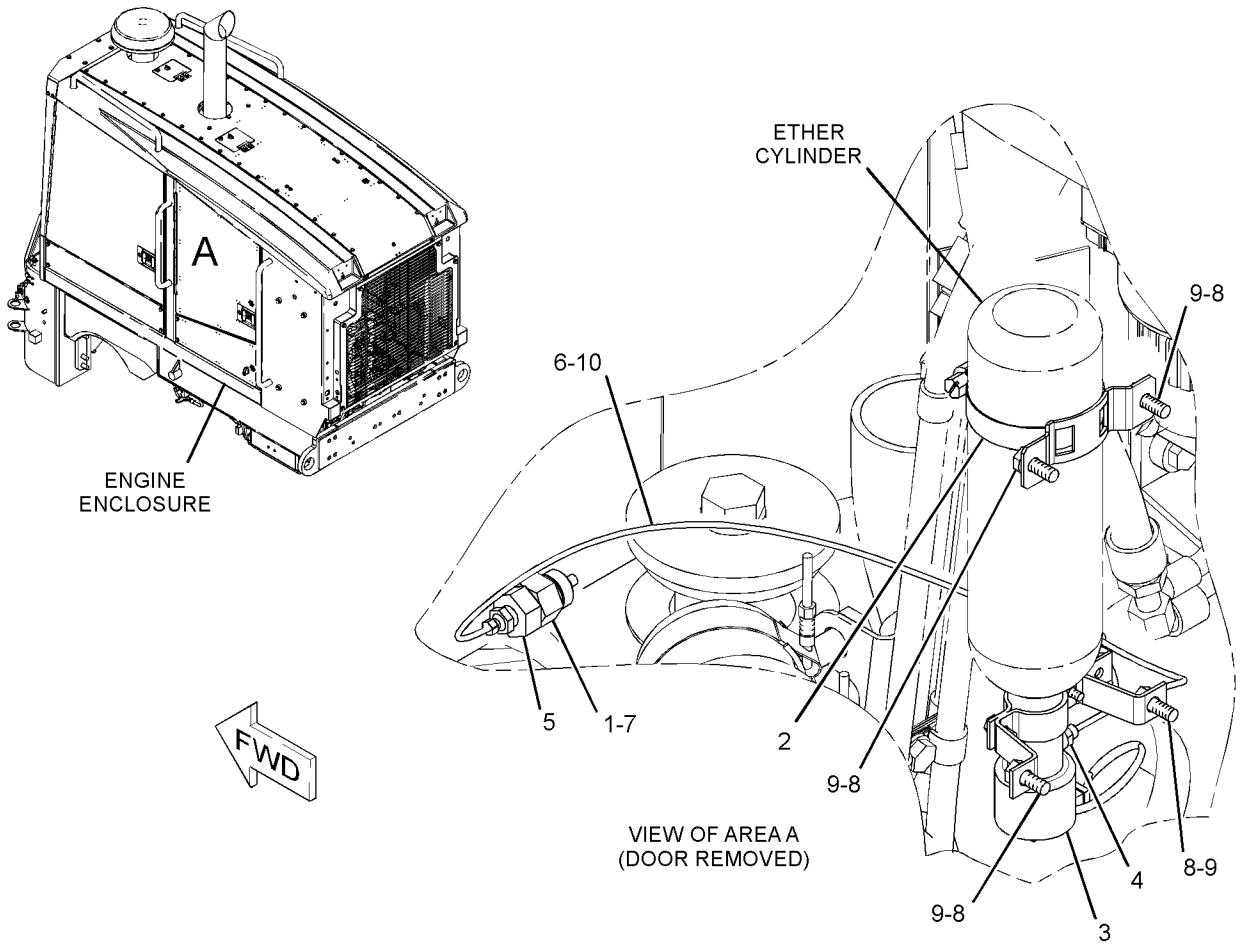

GRAPHIC #1 **<END>** g01360887

ELECTRICAL AND STARTING SYSTEM

207-1556 STARTING MOTOR GP-ELECTRIC*R

S/N: KHX238-UP

24-VOLT

PART OF 248-0716 STARTING MOTOR GP-ELECTRIC

SMCS-1453 **i02738904**

NOTE	REF NO	GRAPHIC REF	PART NUMBER	QTY	PART NAME 1 2 3 4 5 6 (PRODUCT LEVEL)	SEE PAGE
	1	1	**3T-3434**	6	PLUG	
	2	1	**7T-3279**	1	HOUSING AS	
	3	1	**8T-8566**	1	TERMINAL AS	
	4	1	**6V-8188**	4	NUT (1/2-13-THD)	
	5	1	**7X-0562**	4	WASHER-HARD (13.5X19X0.8-MM THK)	
	6	1	**3T-3422**	1	WIRE AS	
	7	1	**7T-3278**	1	HOLDER AS-BRUSH	
	8	1	**7T-3277**	1	COIL AS-FIELD	
	9	1	**7T-3454**	1	INSULATOR	
	10	1	**283-1107**	1	KIT-WIRING	
	11	1	**7T-3451**	1	INSULATOR-TERMINAL	
	12	1	**8T-8569**	1	INSULATOR-TERMINAL	
	13	1	**5S-7349**	4	BOLT (1/4-20X0.5-IN)	
	14	1	**8T-4205**	4	WASHER-HARD (7.2X14.5X2-MM THK)	
	15	1	**8H-1141**	4	SHOE-POLE	
	16	1	**3R-8797**	8	SCREW & WASHER AS	
	17	1	**7T-3276**	1	ARMATURE AS (24-VOLT)	
	18	1	**3E-7775**	1	HOUSING AS	
	19	1	**4M-1831**	1	PLUG-LEVER HOUSING	
	20	1	**7L-2894**	1	GASKET	
	21	1	**036-9823**	5	BOLT (1/4-28X1-IN)	
	22	1	**6N-3826**	1	DRIVE AS-MOTOR	
	23	1	**7T-3974**	1	HOUSING AS-DRIVE	
	24	1	**7X-3373**	6	BOLT (5/16-18X0.88-IN)	
	25	1	**193-8570**	1	SOLENOID AS (24-VOLT) (STARTING MOTOR)	
	26	1	**6V-8378**	3	NUT (10-32-THD)	
	27	1	**8F-1434**	2	LOCKWASHER	
	28	1	**8T-0328**	3	WASHER-HARD (5.5X10X1-MM THK)	
	29	1	**9X-4824**	1	COVER-STARTING MOTOR	
					AVAILABLE REPAIR KIT(S):	
			7T-3268	1	KIT-LEVER (STARTING MOTOR)	
					(INCLUDES LEVER ASSEMBLIES, SEALS, NUT, GASKET & RETAINER)	
			7T-3267	1	KIT-BUSHING (STARTING MOTOR)	
					(INCLUDES BUSHINGS, WICKS, CUPS, SEALS, GASKET, SCREW AS, WASHERS, SPACER & NUT)	
			8C-3655	1	KIT-BRUSH (STARTING MOTOR)	
					(INCLUDES BRUSHES, SPRINGS, SCREWS, SCREW AS & SEAL)	
			8T-9884	1	KIT-INSULATOR (STARTING MOTOR)	
					(INCLUDES INSULATORS & BUSHING)	

207-1556 STARTING MOTOR GP-ELECTRIC *(contd.)* **i02738904**

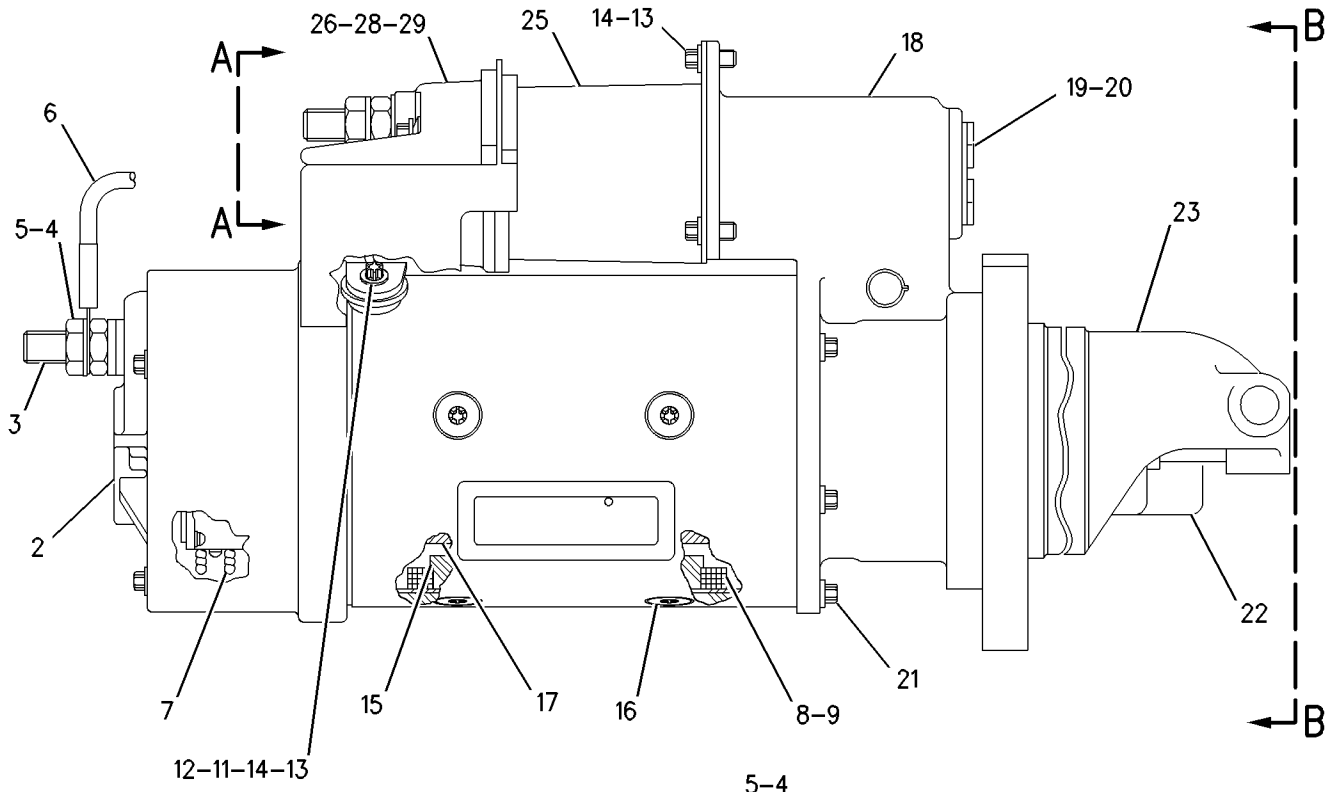

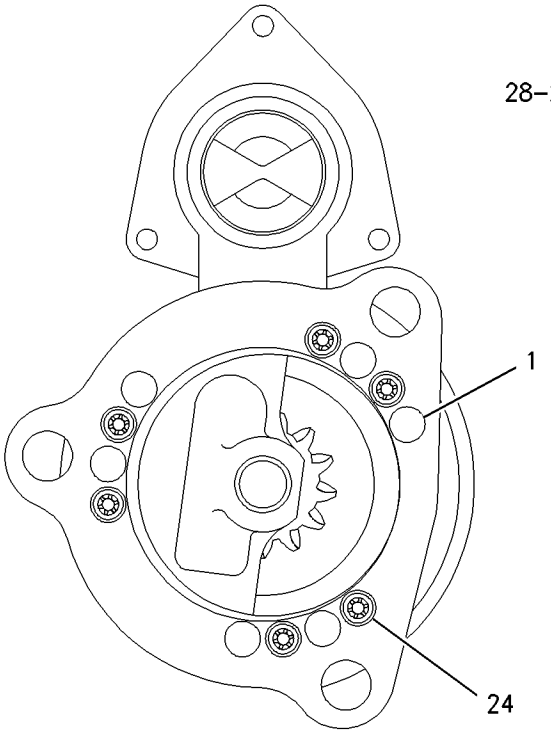

VIEW B-B

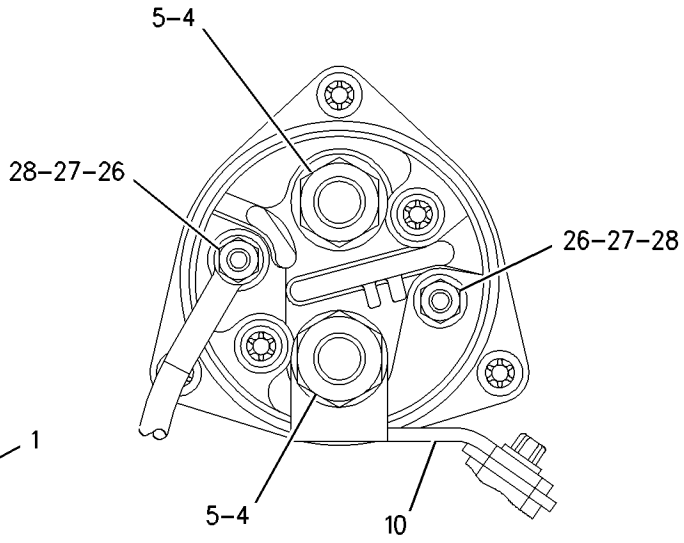

VIEW A-A

GRAPHIC #1 **<END>** g00826583

ELECTRICAL AND STARTING SYSTEM

248-0716 STARTING MOTOR GP-ELECTRIC

S/N: KHX238-UP

PART OF 231-0878, 278-9732 ENGINE AR-COMPLETE

SMCS-1453 **i02789609**

NOTE	REF NO	GRAPHIC REF	PART NUMBER	QTY	PART NAME 1 2 3 4 5 6 (PRODUCT LEVEL)	SEE PAGE
	1	1	**4H-7869**	1	GASKET	
	2	1	**8Y-9603**	1	CABLE AS-STARTING MOTOR	
		1	**1S-7251**	1	TERMINAL-RING (FOR 1/2-IN BOLT)	
		1	**1S-7252**	1	TERMINAL-RING (FOR 3/8-IN BOLT)	
E		1	**5P-0747**	28	CABLE (00-GA, BLACK)	
YR	3	1	**207-1556**	1	STARTING MOTOR GP-ELECTRIC	244
	4	1	**220-0771**	3	BOLT-12 POINT HEAD (M16X2X45-MM)	

E-ORDER BY THE CENTIMETER
R-REMFG PART MAY BE AVAILABLE
Y-SEPARATE ILLUSTRATION

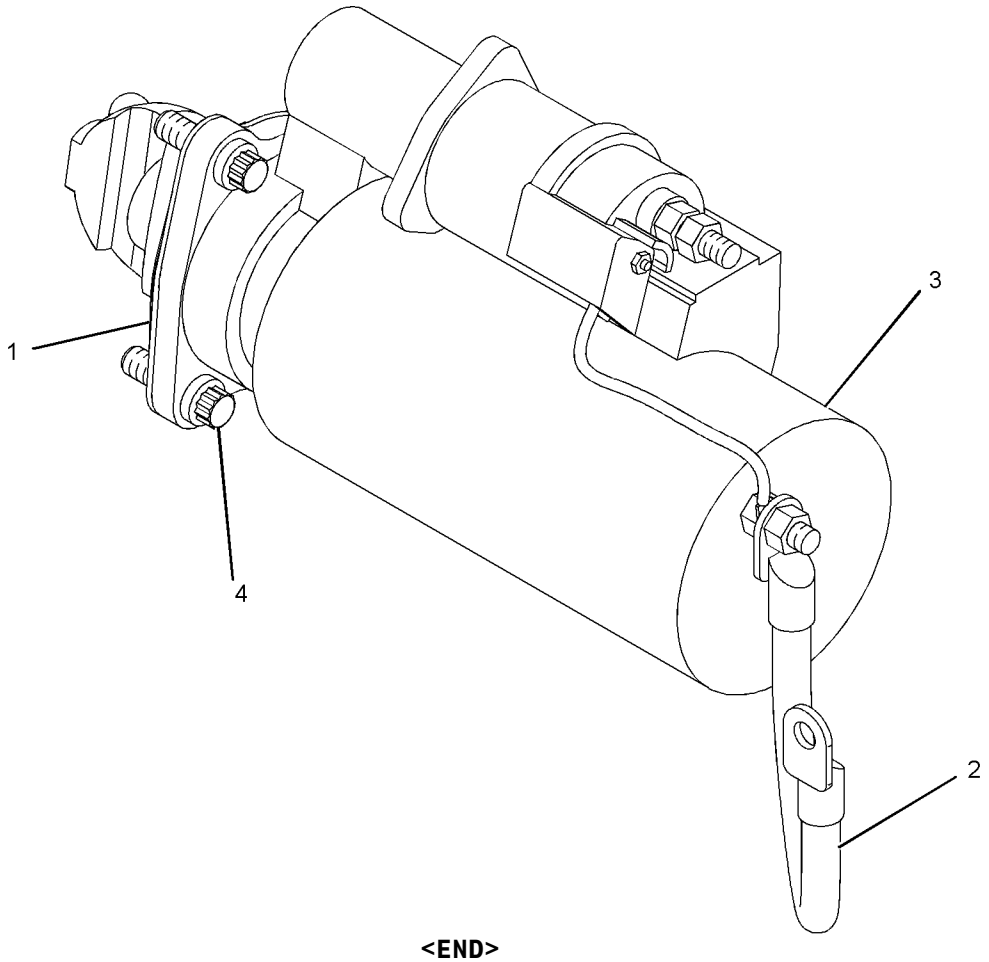

GRAPHIC #1 **<END>** g01097831

238-8825 SUPPORT GP-LIGHT–CAB ROOF

S/N: B9D1-UP

PART OF 261-0187 SNOW AR-MOTOR GRADER

SMCS-1429, 1434 **i02779402**

NOTE	REF NO	GRAPHIC REF	PART NUMBER	QTY	PART NAME 1 2 3 4 5 6 (PRODUCT LEVEL)	SEE PAGE
	1	1	**244-2713**	1	BAR AS (RH)	
	2	1	**244-2714**	1	BAR AS (LH)	
	3	1	**290-2014**	1	TUBE AS	
	4	1	**5P-4116**	8	WASHER-HARD (8.8X20.5X2-MM THK)	
	5	1	**8T-4224**	4	WASHER-HARD (8.8X16X2-MM THK)	
M	6	1	**8T-4908**	12	BOLT (M8X1.25X25-MM)	

M-METRIC PART

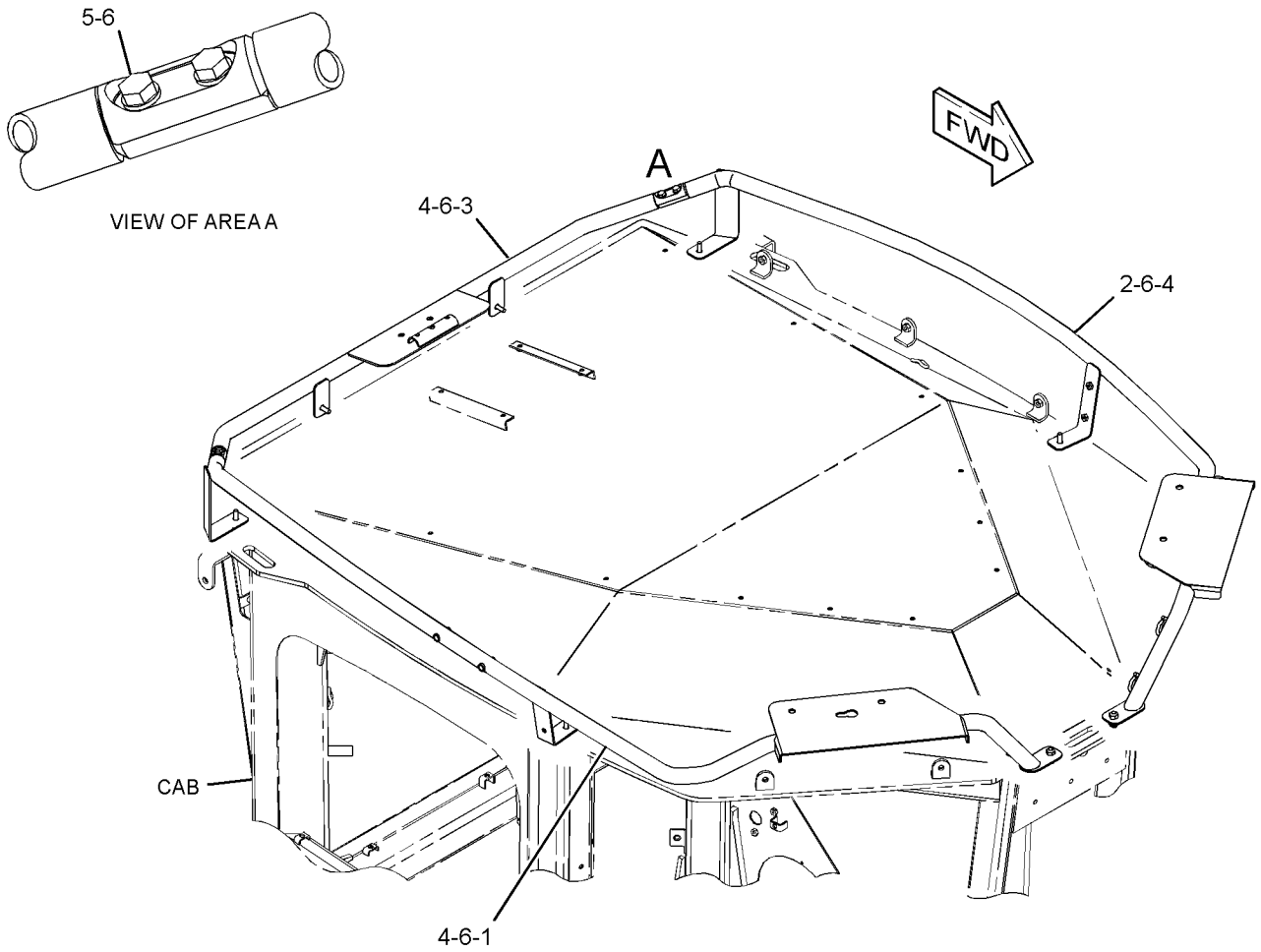

GRAPHIC #1 **<END>** g01297815

238-8809 SWITCH GP-ALL WHEEL DRIVE

S/N: B9D1-UP

PART OF 238-8808 CONTROL GP-POWER TRAIN

SMCS-1435 **i02785766**

NOTE	REF NO	GRAPHIC REF	PART NUMBER	QTY	PART NAME 1 2 3 4 5 6 (PRODUCT LEVEL)	SEE PAGE
	1	1	**6V-8369**	1	NUT (7/16-28-THD)	
	2	1	**112-0858**	2	BEARING	
	3	1	**127-3008**	1	SPRING	
	4	1	**142-2527**	2	GASKET	
	5	1	**185-6335**	1	SWITCH AS-ROTARY (24-VOLT) (ALL WHEEL DRIVE CONTROL)	
		1	**8T-8737**	2	PLUG-SEAL	
		1	**9W-0852**	4	PIN-CONNECTOR (14-GA)	
		1	**102-8805**	1	KIT-RECEPTACLE (6-PIN)	
					(INCLUDES RECEPTACLE AS & WEDGE)	
		1	**3E-3383**	1	WEDGE-RECEPTACLE LOCK (6-PIN)	
Y	6	1	**219-2392**	1	SENSOR GP-POSITION (ALL WHEEL DRIVE)	226
	7	1	**244-2710**	1	BLOCK	
	8	1	**244-2711**	1	SHAFT	
	9	1	**244-2712**	1	DETENT	
	10	1	**249-4099**	1	PLATE	
	11	1	**276-8489**	1	PLATE AS	
		1	**091-4537**	2	SPACER (12-MM THK)	
	12	1	**127-4838**	1	SETSCREW-SOCKET (NO 8X1.26-IN)	
	13	1	**1M-6718**	1	BALL	
	14	1	**2H-3920**	1	LOCKWASHER	
M	15	1	**3T-0849**	2	BOLT-SOCKET HEAD (M6X1X25-MM)	
	16	1	**8T-0328**	2	WASHER-HARD (5.5X10X1-MM THK)	
	17	1	**8T-5410**	1	SEAL-LIP TYPE	
M	18	1	**8T-6699**	2	BOLT-SOCKET HEAD (M5X0.8X35-MM)	
	19	1	**8T-7566**	2	PIN-SPRING	
	20	1	**9X-8256**	2	WASHER (6.6X12X2-MM THK)	

M-METRIC PART
Y-SEPARATE ILLUSTRATION

238-8809 SWITCH GP-ALL WHEEL DRIVE *(contd.)* **i02785766**

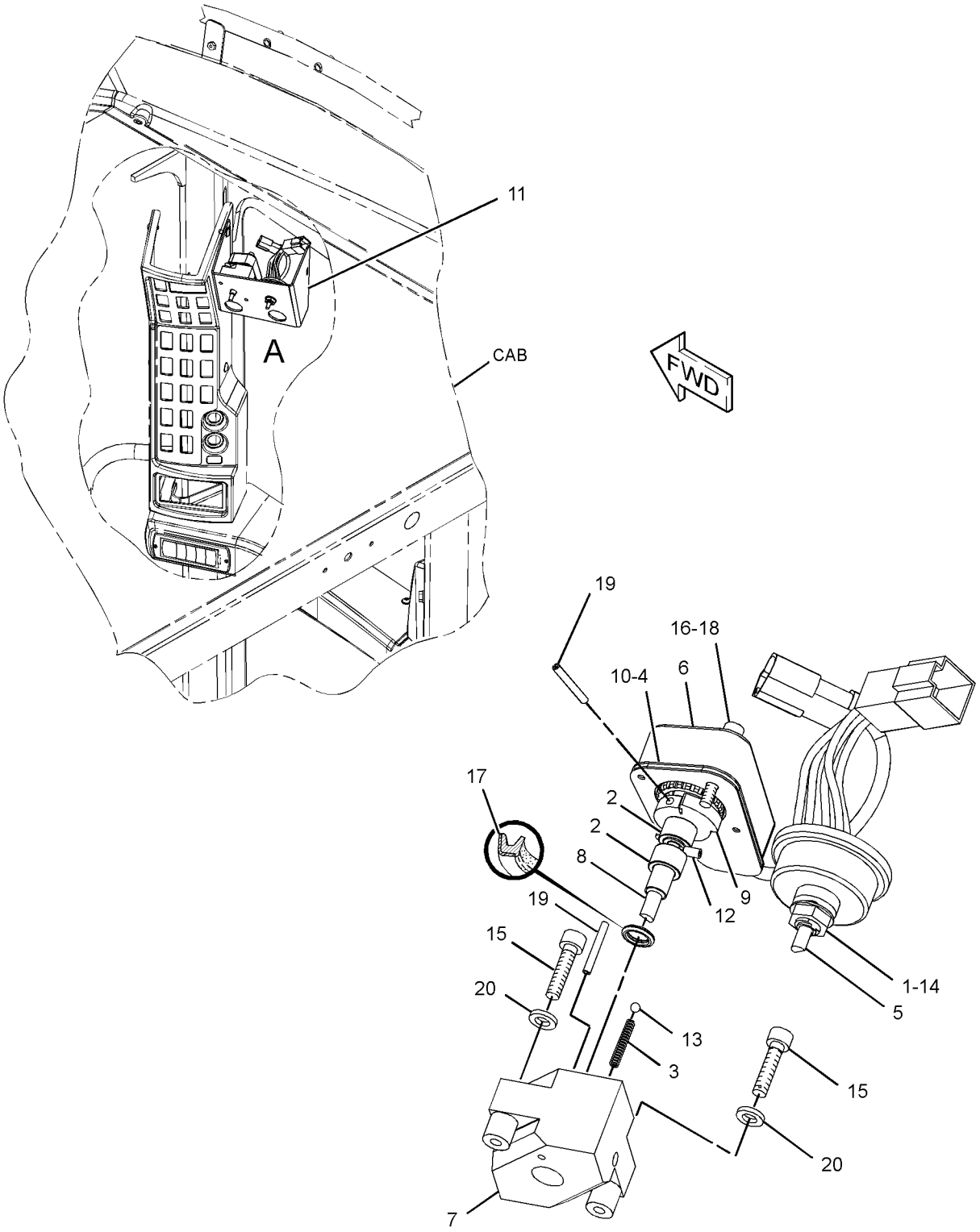

VIEW OF AREA A
(PLATE REMOVED)

GRAPHIC #1 **<END>** g01338707

164-7577 SWITCH GP-BYPASS

S/N: CZM1-UP

PART OF 238-1029 BASE GP-OIL FILTER

SMCS-1408, 1435 **i02204195**

NOTE	REF NO	GRAPHIC REF	PART NUMBER	QTY	PART NAME 1 2 3 4 5 6 (PRODUCT LEVEL)	SEE PAGE
E	1	1	**9X-1813**		SLEEVE (19-CM)	
	2	1	**102-8802**	1	KIT-RECEPTACLE (2-PIN)	
					(INCLUDES RECEPTACLE AS & WEDGE)	
	3	1	**186-3735**	2	PIN-CONNECTOR (16-GA TO 18-GA)	
	4	1	**3E-3365**	1	WEDGE-RECEPTACLE LOCK (2-PIN)	
	5	1	**3D-2824**	1	SEAL-O-RING	
Z	6	1		1	SWITCH AS	

E-ORDER BY THE CENTIMETER
Z-NOT SERVICED SEPARATELY

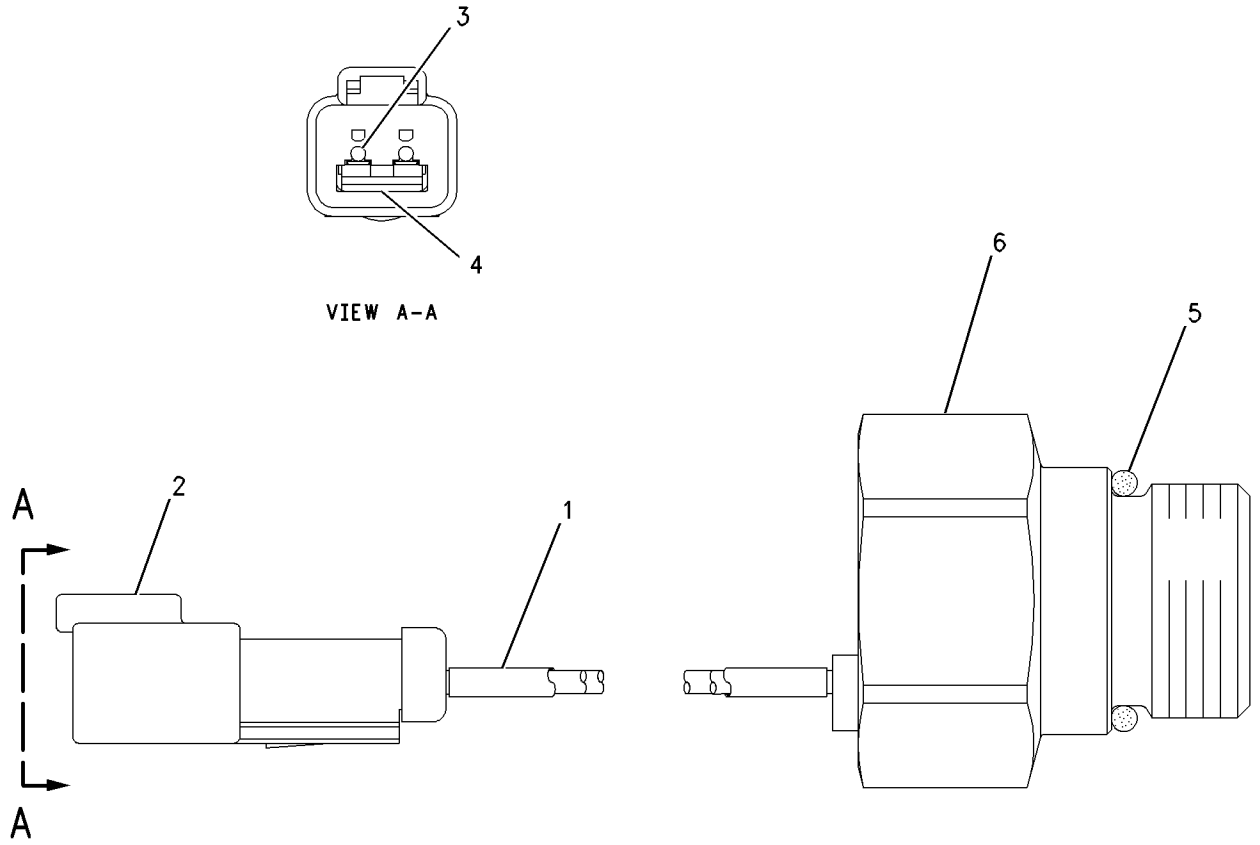

GRAPHIC #1 **<END>** g00750019

7N-0718 SWITCH GP-DISCONNECT–BATTERY

S/N: B9D1-UP

PART OF 233-4603, 233-4611, 236-1924 BATTERY & WIRING GP

SMCS-1411 **i02587657**

NOTE	REF NO	GRAPHIC REF	PART NUMBER	QTY	PART NAME 1 2 3 4 5 6 (PRODUCT LEVEL)	SEE PAGE
	1	1	**8H-5306**	1	KEY (BATTERY DISCONNECT)	
	2	1	**8H-5303**	1	NUT (3/4-16-THD)	
	3	1	**2H-3922**	2	LOCKWASHER	
	4	1	**9F-5644**	2	LOCKWASHER	
	5	1	**6F-7045**	2	NUT-FULL (3/8-24-THD)	

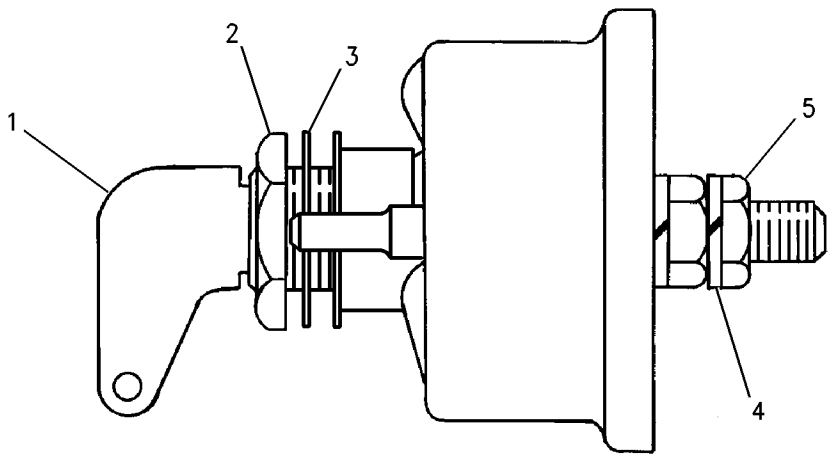

GRAPHIC #1 **<END>** g00715584

238-8763 SWITCH GP-LIGHT–WORK LIGHT

S/N: B9D1-UP

PART OF 261-0187 SNOW AR-MOTOR GRADER

SMCS-1429, 1435, 7332 **i02779028**

NOTE	PART NUMBER	QTY	PART NAME 1 2 3 4 5 6 (PRODUCT LEVEL)	SEE PAGE
	249-5488	1	SWITCH AS-ROCKER (WORK LIGHT)	

<END>

171-3759 SWITCH GP-LIMIT

S/N: B9D1-UP

PART OF 265-8943 PEDAL GP-BRAKE, TMSN & GOV

SMCS-1435, 7332 **i02790505**

NOTE	REF NO	GRAPHIC REF	PART NUMBER	QTY	PART NAME 1 2 3 4 5 6 (PRODUCT LEVEL)	SEE PAGE
	2	1	**9X-3401**	3	PIN-CONNECTOR (16-GA TO 18-GA)	
	3	1	**3E-3377**	1	WEDGE-RECEPTACLE LOCK (4-PIN)	
	4	1	**102-8804**	1	KIT-RECEPTACLE (4-PIN)	
					(INCLUDES RECEPTACLE AS & WEDGE)	
E	5	1	**9X-1386**		SLEEVE (17-CM)	
E	6	1	**125-7874**		TUBE-HEAT SHRINK (5.72-MM DIA) (8-CM)	
D	7	1	**6V-1614**		TUBE-HEAT SHRINK (9.52-MM DIA) (0.1-M)	
D	8	1	**5P-5677**		WIRE (18-GA, BLACK) (0.8-M)	
	9	1	**9G-3695**	1	PLUG (GROMMET SEALING)	

D-ORDER BY THE METER
E-ORDER BY THE CENTIMETER

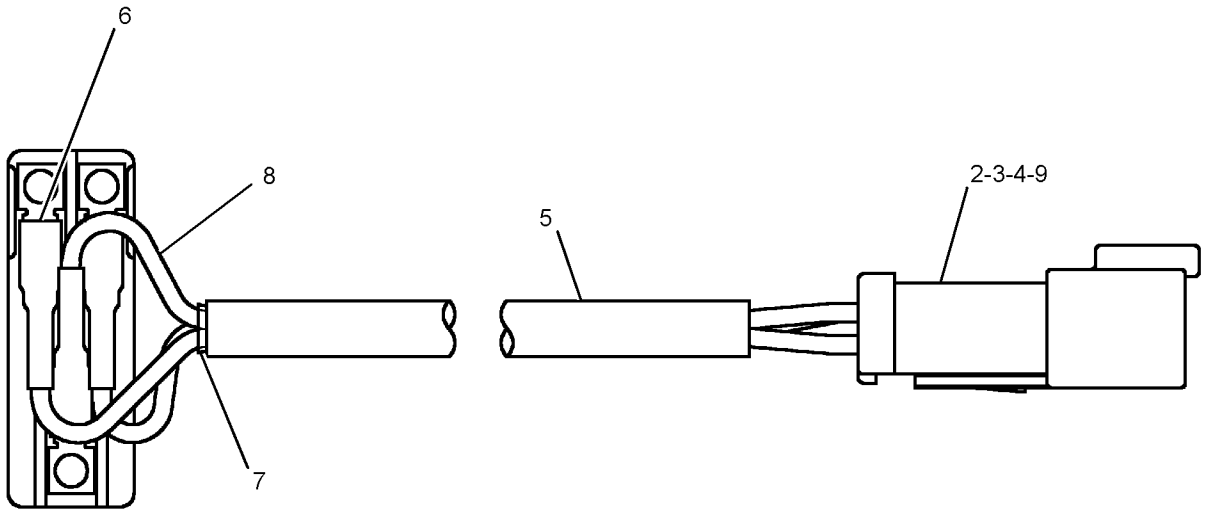

GRAPHIC #1 **<END>** g01231938

125-1302 SWITCH GP-MAGNETIC

S/N: B9D1-UP

PART OF 280-8969 PANEL GP-CIRCUIT BREAKER

SMCS-7499 **i01896616**

NOTE	REF NO	GRAPHIC REF	PART NUMBER	QTY	PART NAME 1 2 3 4 5 6 (PRODUCT LEVEL)	SEE PAGE
	1	1	**102-8802**	1	KIT-RECEPTACLE (2-PIN)	
					(INCLUDES RECEPTACLE AS & WEDGE)	
	2	1	**186-3735**	2	PIN-CONNECTOR (16-GA TO 18-GA)	
	3	1	**1H-3338**	2	LOCKWASHER	
	4	1	**012-0380**	2	LOCKWASHER	
M	5	1	**5C-2890**	2	NUT (M6X1-THD)	
E	6	1	**9X-1813**		SLEEVE (16CM)	

E-ORDER BY THE CENTIMETER
M-METRIC PART

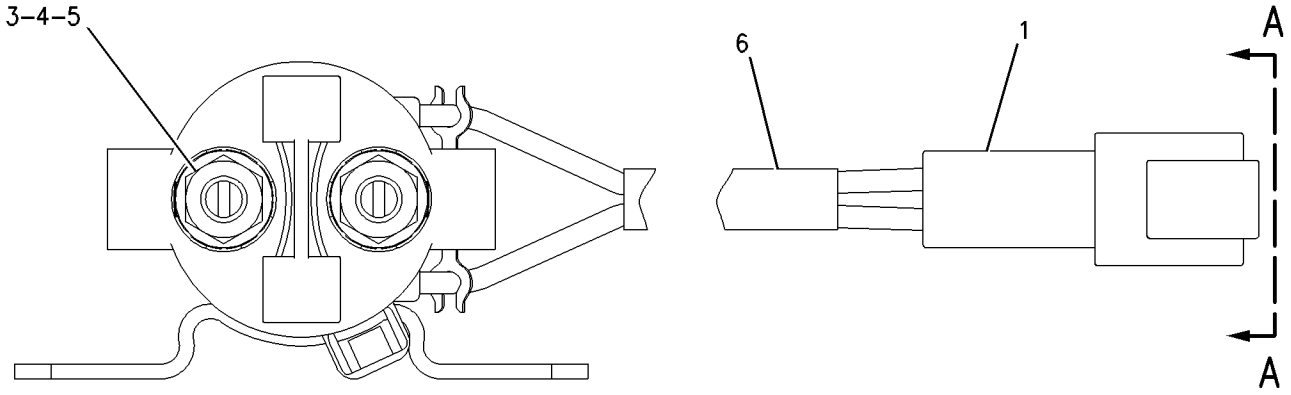

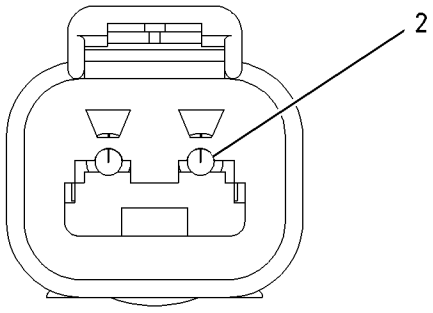

VIEW A–A

GRAPHIC #1 **<END>** g00987986

179-0006 SWITCH GP-MAGNETIC

S/N: B9D1-UP

PART OF 269-4150 WIRING GP-SECONDARY STEERING

SMCS-7499 **i02645472**

NOTE	REF NO	GRAPHIC REF	PART NUMBER	QTY	PART NAME 1 2 3 4 5 6 (PRODUCT LEVEL)	SEE PAGE
	1	1	**7X-0620**	2	WASHER-HARD (5.5X13X1.6-MM THK)	
	2	1	**8F-1434**	2	LOCKWASHER	
	3	1	**6V-8378**	2	NUT (10-32-THD)	
	4	1	**4L-6499**	2	WASHER (0.38X0.88X0.06-IN THK)	
	5	1	**4D-1326**	2	LOCKWASHER	
	6	1	**1B-2578**	2	NUT (3/8-16-THD)	

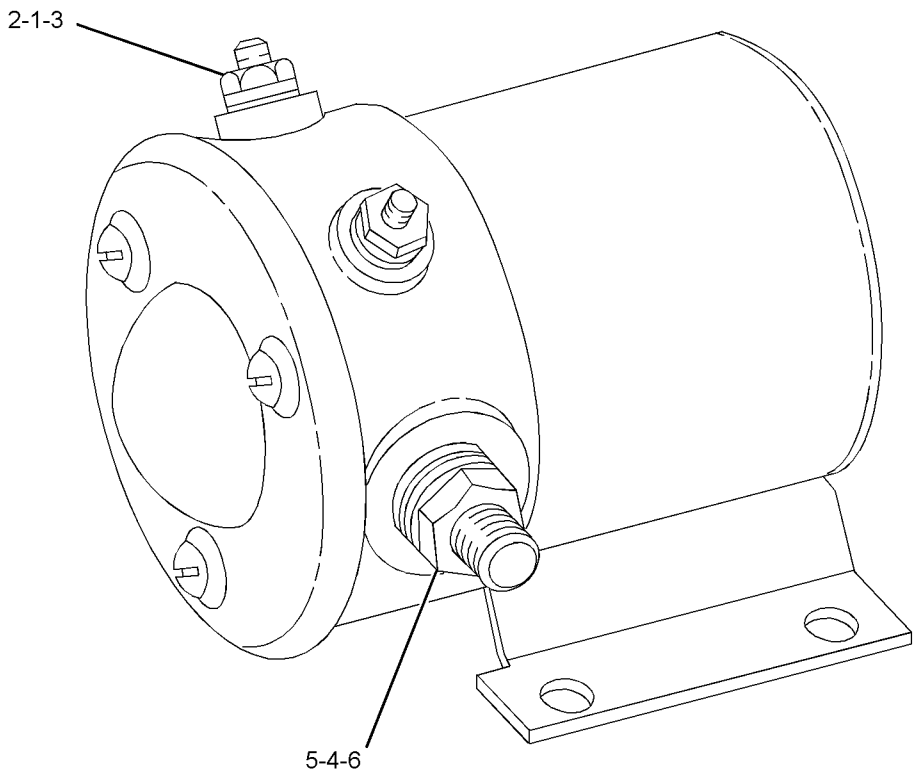

GRAPHIC #1 **<END>** g01132022

223-7577 SWITCH GP-MAGNETIC

S/N: KHX238-UP
24 VOLT
PART OF 275-0596 WIRING GP-HEATER

SMCS-7499 **i02534328**

NOTE	REF NO	GRAPHIC REF	PART NUMBER	QTY	PART NAME 1 2 3 4 5 6 (PRODUCT LEVEL)	SEE PAGE
	1	1	**209-5582**	1	SWITCH GP-MAGNETIC (24-VOLT) (AIR INLET HEATER RELAY)	
	1A	1	**102-8802**	1	KIT-RECEPTACLE (2-PIN) (AIR INLET HEATER SWITCH)	
					(INCLUDES RECEPTACLE AS AND WEDGE)	
	1B	1	**186-3735**	2	PIN-CONNECTOR (16-GA TO 18-GA)	
	1C	1	**3F-9556**	2	LOCKWASHER	
	1D	1	**6V-8186**	2	NUT-FULL (5/16-24-THD)	
	1E	1	**6V-8378**	2	NUT (10-32-THD)	
	1F	1	**8F-1434**	2	LOCKWASHER	
	2	1	**283-1224**	1	BRACKET AS	
	3	1	**208-9277**	2	BOLT-FLANGE HEAD (M8X1X25-MM)	

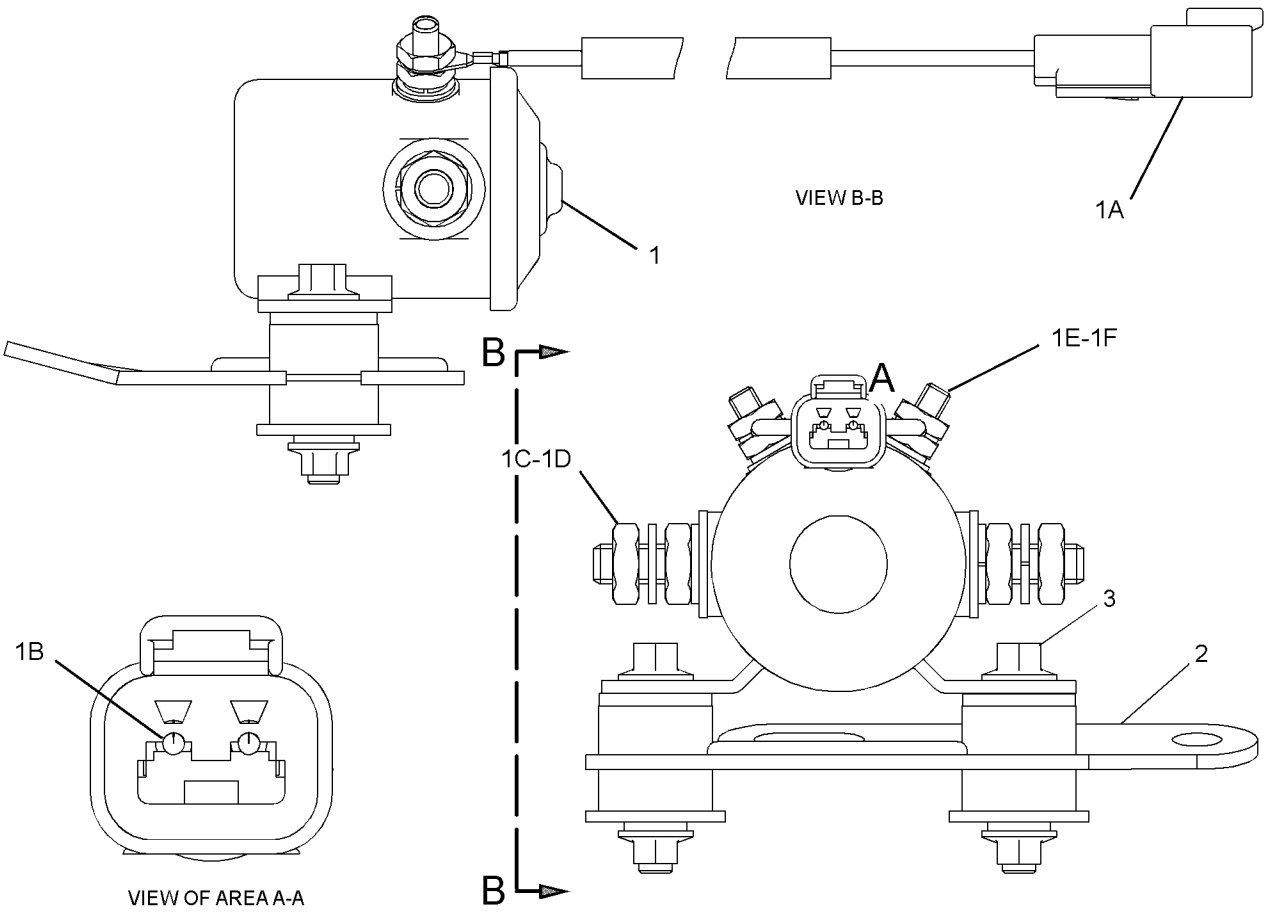

GRAPHIC #1 **<END>** g01269556

241-8368 SWITCH GP-MAGNETIC

S/N: B9D1-UP

PART OF 280-8969 PANEL GP-CIRCUIT BREAKER

SMCS-7499 **i02290099**

NOTE	REF NO	GRAPHIC REF	PART NUMBER	QTY	PART NAME 1 2 3 4 5 6 (PRODUCT LEVEL)	SEE PAGE
	1	1	**155-2270**	1	KIT-CONNECTING PLUG (2-PIN)	
					(INCLUDES PLUG AS, WEDGE & INTERFACE SEAL)	
	2	1	**4F-2294**	2	NUT-JAM (5/16-24-THD)	
	3	1	**186-3736**	2	SOCKET-CONNECTOR (16-GA TO 18-GA)	

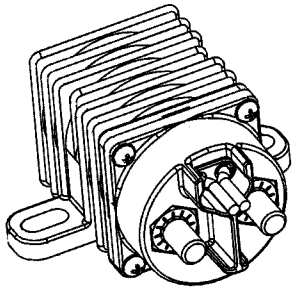

ISOMETRIC VIEW

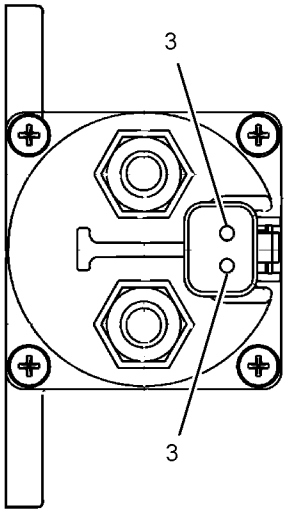

VIEW A-A

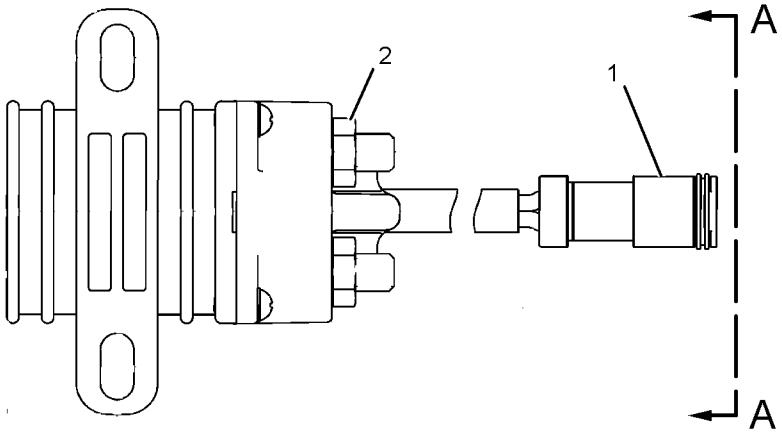

GRAPHIC #1 **<END>** g01077362

275-1253 SWITCH GP-PRESSURE

S/N: KHX238-UP
AMPSEAL CONNECTOR
PART OF 250-8313 FILTER GP-FUEL

SMCS-1435 **i02434807**

NOTE	REF NO	GRAPHIC REF	PART NUMBER	QTY	PART NAME 1 2 3 4 5 6 (PRODUCT LEVEL)	SEE PAGE
	1	1	**230-4011**	1	PLUG AS-CONNECTOR (2-PIN)	
E	2	1	**9X-1813**		SLEEVE (14-CM)	
	3	1	**6V-4589**	1	SEAL-O-RING	
	4	1	**7L-9061**	1	SEAL-O-RING	
	5	1	**144-1636**	2	PIN-CONNECTOR (14-GA TO 18-GA)	

E-ORDER BY THE CENTIMETER

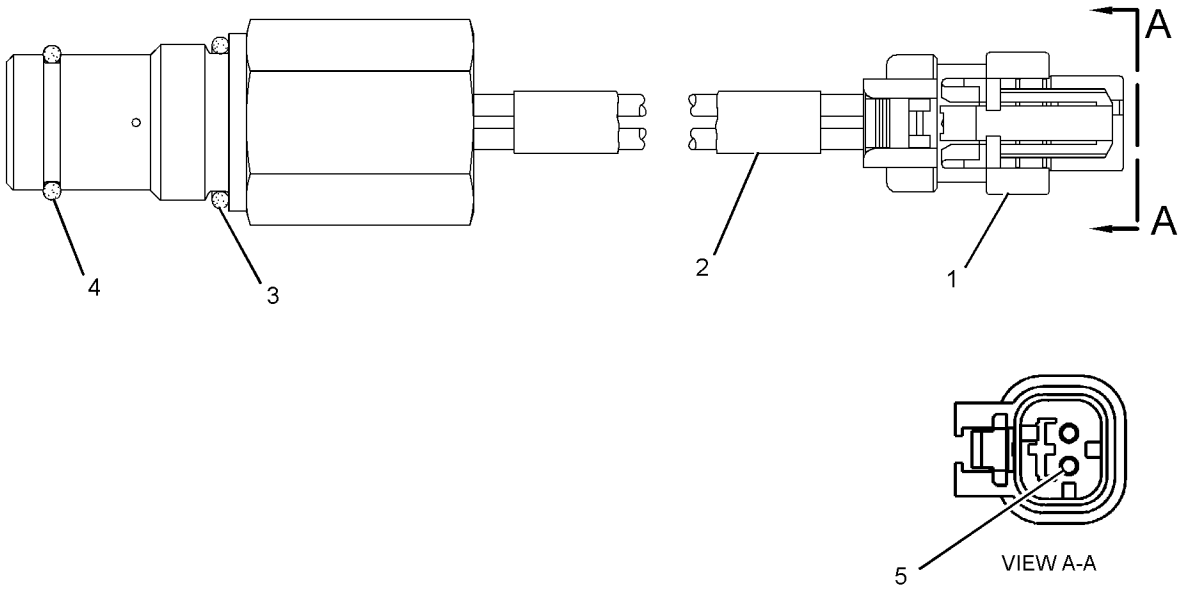

GRAPHIC #1 **<END>** g01238534

233-3124 SWITCH GP-ROADING–HEADLIGHT DIMMER

S/N: B9D1-UP

SMCS-7332 **i02773279**

NOTE	REF NO	GRAPHIC REF	PART NUMBER	QTY	PART NAME 1 2 3 4 5 6 (PRODUCT LEVEL)	SEE PAGE
	1	1	**249-5479**	1	SWITCH AS-ROCKER (24-VOLT) (ROADING LIGHTS)	

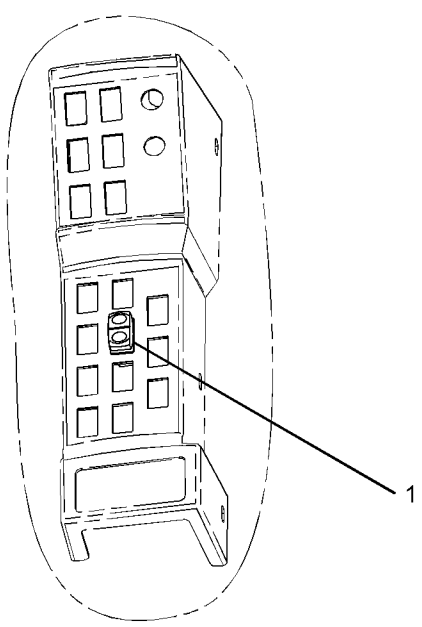

VIEW OF AREA A

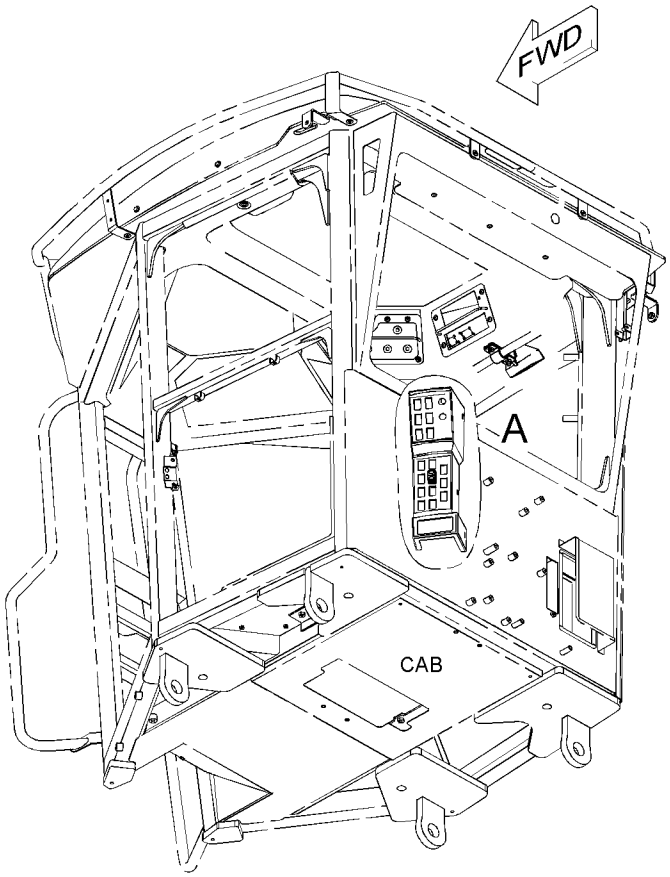

GRAPHIC #1

<END>

g01287016

238-8824 SWITCH GP-ROCKER–AUTOSHIFT

S/N: B9D1-UP

PART OF 248-6925 AUTOSHIFT AR

SMCS-7332 **i02783100**

NOTE	REF NO	GRAPHIC REF	PART NUMBER	QTY	PART NAME 1 2 3 4 5 6 (PRODUCT LEVEL)	SEE PAGE
	1	1	**102-8802**	1	KIT-RECEPTACLE (2-PIN)	
					(INCLUDES RECEPTACLE AS & WEDGE)	
	2	1	**249-5478**	1	SWITCH AS-ROCKER (AUTOSHIFT)	
	3	1	**250-2299**	1	LAMP-LED (GREEN, 24-VOLT)	

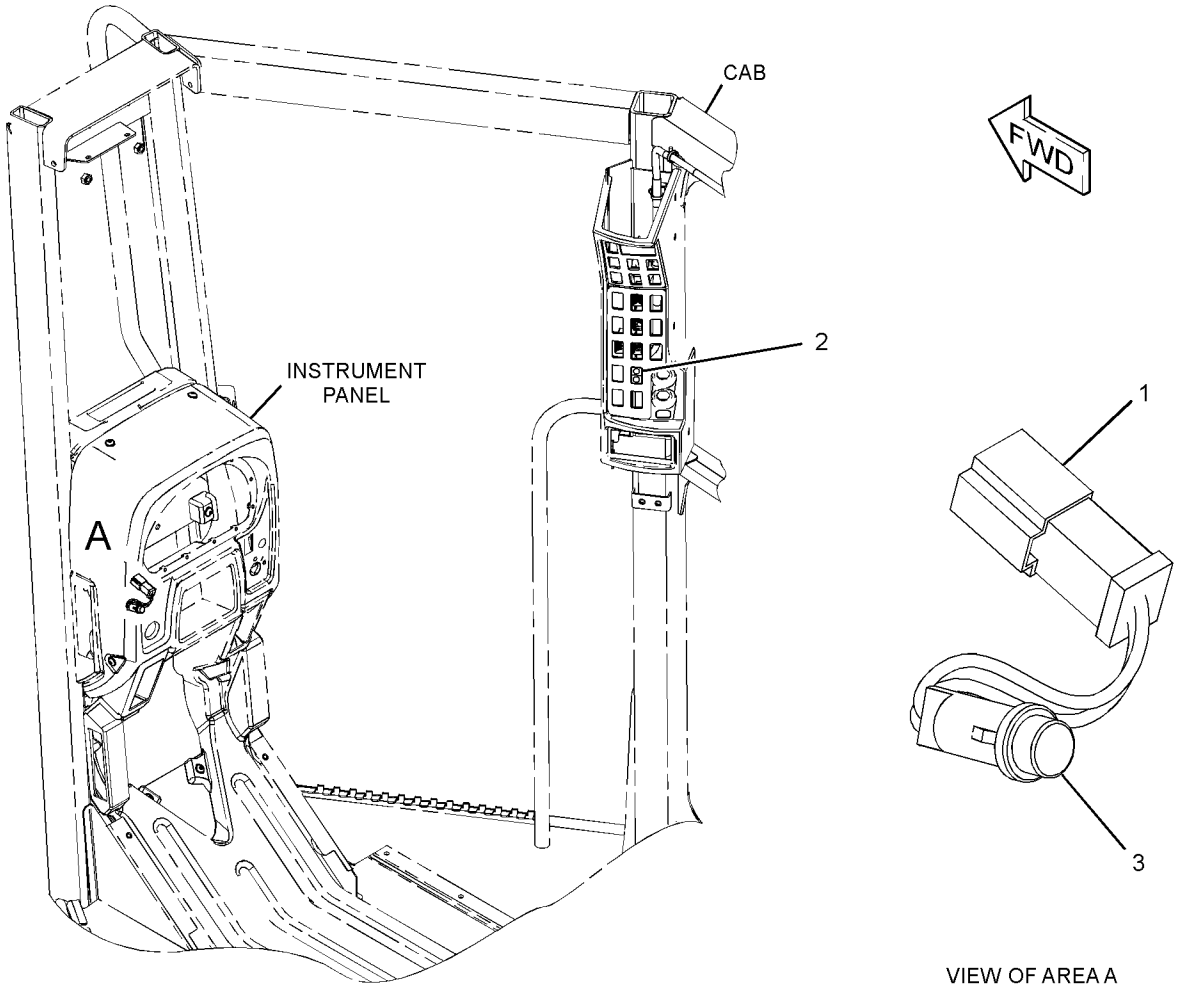

GRAPHIC #1 **<END>** g01313358

3E-0155 SWITCH GP-WIPER–INTERMITTENT

S/N: B9D1-UP

PART OF 233-3139 WIPER GP-WINDOW, 291-2910 WIRING GP-CAB

SMCS-7305, 7332 **i01864892**

NOTE	REF NO	GRAPHIC REF	PART NUMBER	QTY	PART NAME 1 2 3 4 5 6 (PRODUCT LEVEL)	SEE PAGE
C	1	1	**102-8806**	1	KIT-RECEPTACLE (8-PIN)	
					(INCLUDES RECEPTACLE AS & WEDGE)	
	2	1	**7T-9302**	1	KNOB (WIPER, WASHER)	
		1	**014-0816**	1	SETSCREW (8-32X0.5-IN)	
	3	1	**8T-8737**	1	PLUG-SEAL	
	4	1	**3E-3389**	1	WEDGE-RECEPTACLE LOCK	
C	5	1	**8T-8729**	3	PIN-CONNECTOR	
	6	1	**6V-8369**	1	NUT (7/16-28-THD)	
	7	1	**2H-3920**	1	LOCKWASHER	
C	8	1	**9W-0852**	4	PIN-CONNECTOR (14-GA)	

C-CHANGE FROM PREVIOUS TYPE

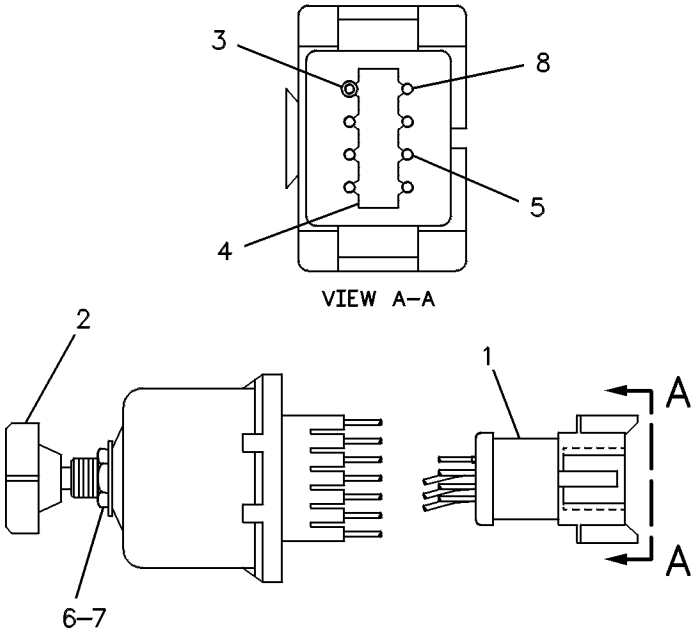

GRAPHIC #1 **<END>** g00120668

239-1134 VALVE GP-ETHER STARTING

S/N: B9D1-UP
24-VOLT
PART OF 238-9561 STARTING AID GP-ETHER

SMCS-1456 **i02743316**

NOTE	REF NO	GRAPHIC REF	PART NUMBER	QTY	PART NAME 1 2 3 4 5 6 (PRODUCT LEVEL)	SEE PAGE
	1	1	**7N-9801**	1	GASKET	
	2	1	**102-8802**	1	KIT-RECEPTACLE (2-PIN)	
					(INCLUDES RECEPTACLE AS & WEDGE)	
	3	1	**186-3735**	2	PIN-CONNECTOR (16-GA TO 18-GA)	

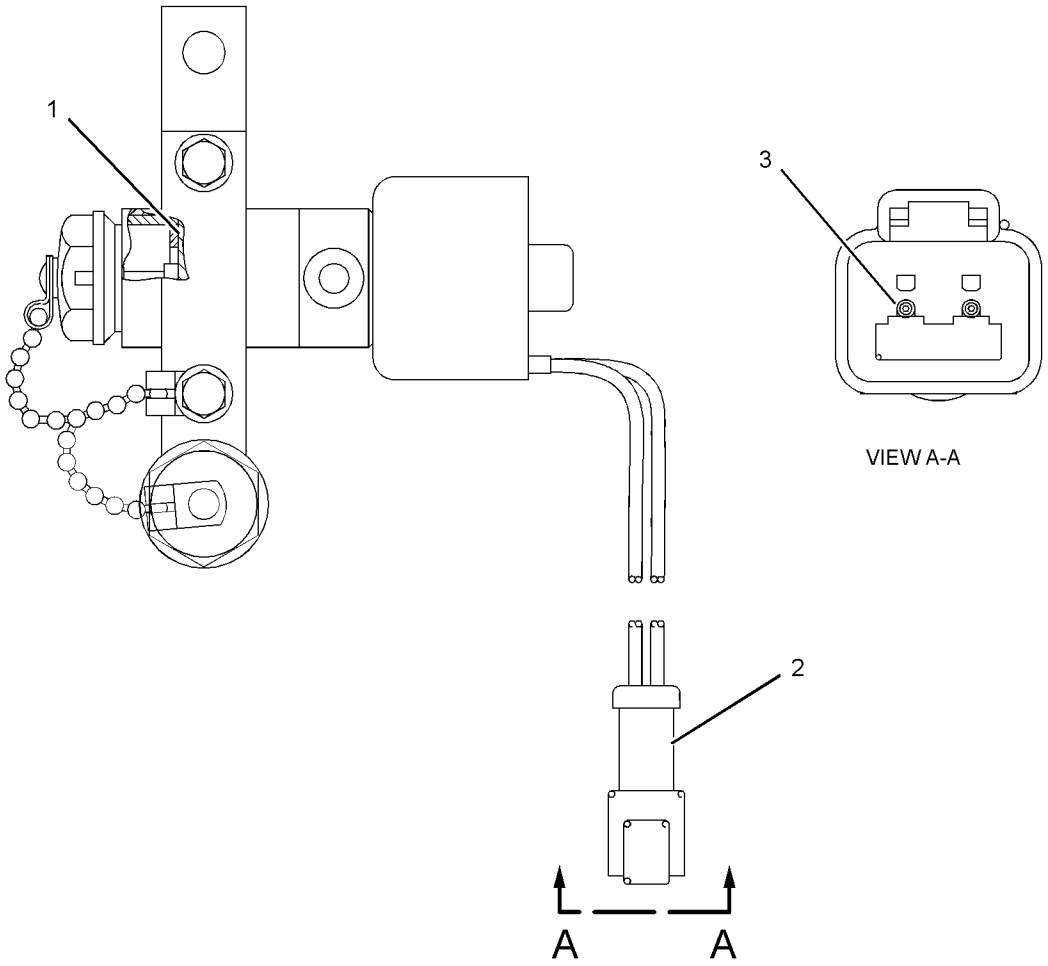

GRAPHIC #1 **<END>** g01375620

ELECTRICAL AND STARTING SYSTEM

257-7224 WARNING GP-BACKUP

S/N: B9D1-UP

PART OF 234-7721 COMMON AR

SMCS-7406 **i02780364**

NOTE	REF NO	GRAPHIC REF	PART NUMBER	QTY	PART NAME 1 2 3 4 5 6 (PRODUCT LEVEL)	SEE PAGE
	1	1	**3S-2093**	1	STRAP-CABLE	
	2	1	**213-9100**	1	ALARM AS (BACKUP)	
		1	**186-3735**	2	PIN-CONNECTOR (16-GA TO 18-GA)	
E		1	**9X-1813**		SLEEVE (31-CM)	
		1	**102-8802**	1	KIT-RECEPTACLE (2-PIN)	
					(INCLUDES RECEPTACLE AS & WEDGE)	
	3	1	**5P-4116**	4	WASHER-HARD (8.8X20.5X2-MM THK)	
M	4	1	**8T-4189**	4	BOLT (M8X1.25X20-MM)	

E-ORDER BY THE CENTIMETER
M-METRIC PART

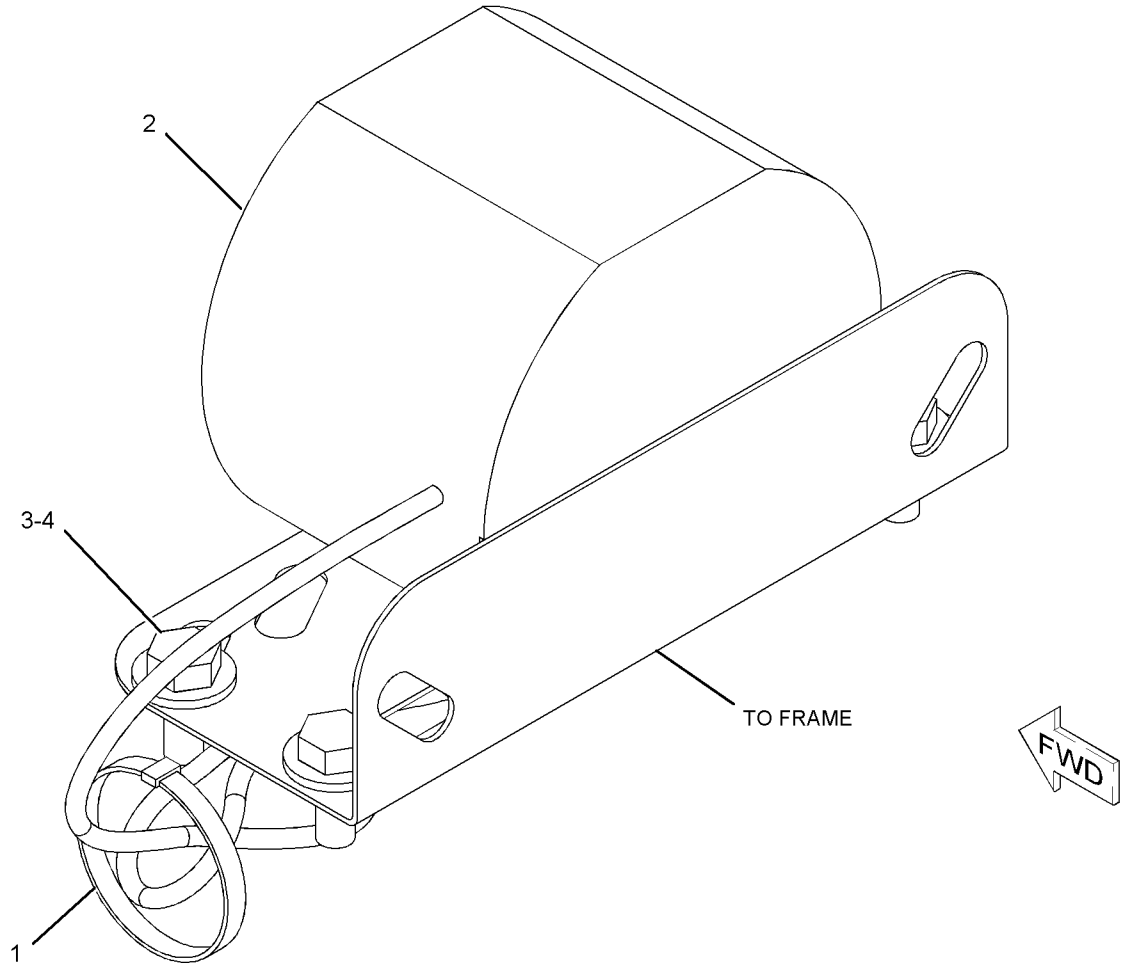

GRAPHIC #1 **<END>** g01109906

233-4613 WIRING GP-AUXILIARY

S/N: B9D1-UP

PART OF 234-7721 COMMON AR

SMCS-1408 **i02773177**

NOTE	REF NO	GRAPHIC REF	PART NUMBER	QTY	PART NAME 1 2 3 4 5 6 (PRODUCT LEVEL)	SEE PAGE
	1	1	**299-1057**	1	HARNESS AS-VALVE	
		1	**102-8801**	1	KIT-RECEPTACLE (12-PIN)	
		1	**102-8802**	11	KIT-RECEPTACLE (2-PIN)	
		1	**102-8805**	1	KIT-RECEPTACLE (6-PIN)	
		1	**102-8806**	1	KIT-RECEPTACLE (8-PIN)	
					(EACH RECEPTACLE KIT INCLUDES RECEPTACLE AS & WEDGE)	
		1	**155-2256**	1	KIT-CONNECTING PLUG (12-PIN)	
		1	**155-2265**	1	KIT-CONNECTING PLUG (8-PIN)	
		1	**155-2270**	11	KIT-CONNECTING PLUG (2-PIN)	
		1	**155-2274**	1	KIT-CONNECTING PLUG (6-PIN)	
					(EACH PLUG KIT INCLUDES PLUG AS, WEDGE, & INTERFACE SEAL)	
	2	1	**033-8248**	1	CLIP	
	3	1	**7N-3718**	2	CLIP	
	4	1	**4D-7735**	1	CLIP	
	5	1	**4D-7794**	2	CLIP	
	6	1	**4K-8864**	1	CLIP	
	7	1	**7K-1181**	17	STRAP-CABLE	
	8	1	**8M-2773**	2	CLIP	

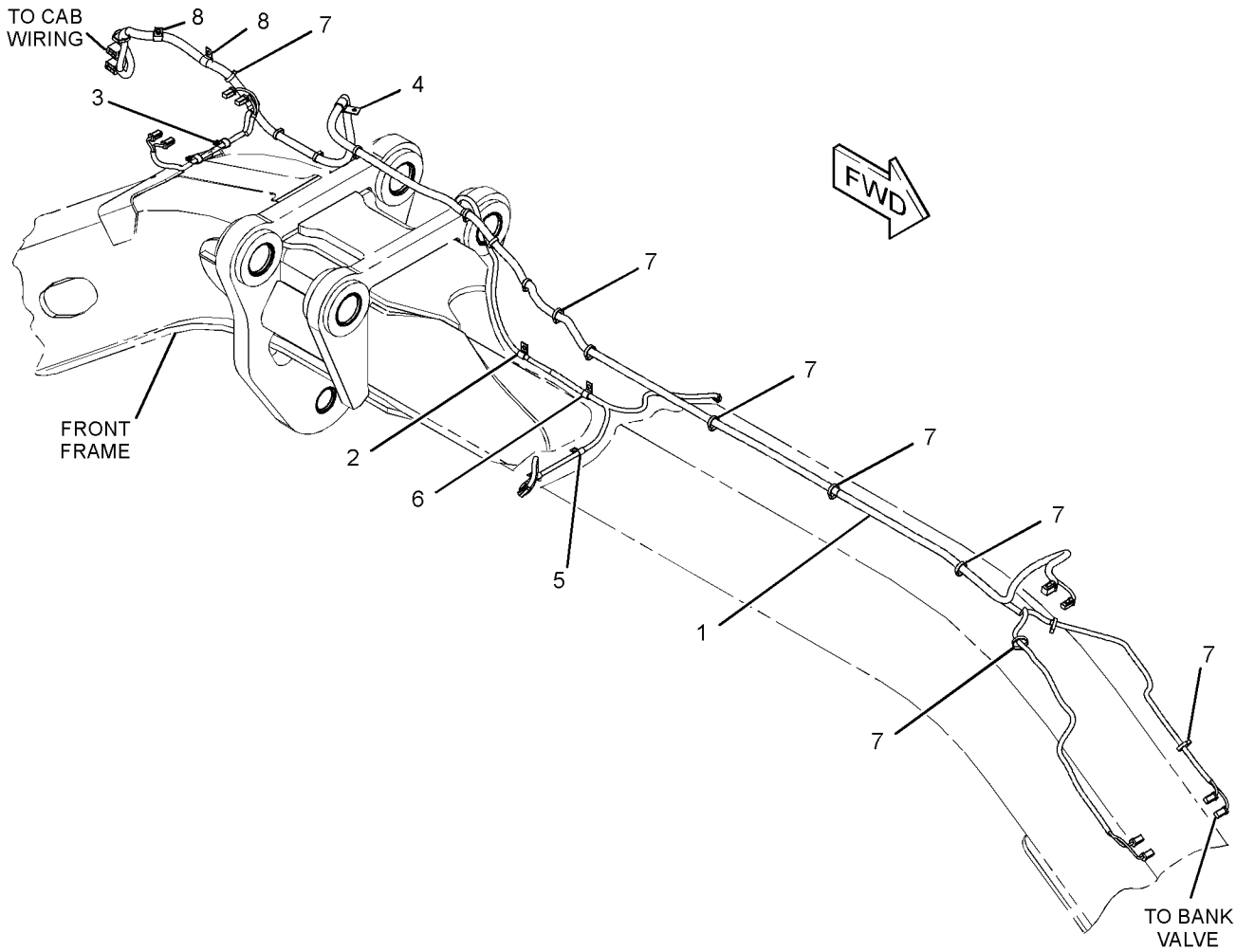

GRAPHIC #1 **<END>** g01338703

291-2910 WIRING GP-CAB

S/N: B9D1-UP

PART OF 254-5399 CAB AR

SMCS-1408, 7301 **i02779052**

NOTE	REF NO	GRAPHIC REF	PART NUMBER	QTY	PART NAME 1 2 3 4 5 6 (PRODUCT LEVEL)	SEE PAGE
Y	1	2	**3E-0155**	3	SWITCH GP-WIPER (24-VOLT, INTERMITTENT)	261
	2	2	**102-8802**	1	KIT-RECEPTACLE (2-PIN)	
					(INCLUDES RECEPTACLE AS & WEDGE)	
	3	1,2	**3E-5239**	15	RELAY AS (24-VOLT)	
Y	4	2	**3E-6328**	1	ALARM GP (24-VOLT)	129
	5	1,2	**3S-2093**	34	STRAP-CABLE	
	6	2	**7U-4891**	8	SCREW (10-32X1-IN)	
	7	2	**9W-1441**	19	FUSE (15-AMPERE)	
	8	2	**9W-1442**	21	FUSE (10-AMPERE)	
J	9	2	**110-7887**	1	SWITCH AS-START (KEY)	
		2	**102-8804**	1	KIT-RECEPTACLE (4-PIN)	
					(INCLUDES RECEPTACLE AS & WEDGE)	
		2	**186-3735**	4	PIN-CONNECTOR (16-GA TO 18-GA)	
		2	**7T-6799**	1	NUT-MOUNTING (1-32-THD)	
	10	2	**128-6157**	1	PLATE	
	11	2	**149-5262**	2	BRACKET AS	
	12	2	**180-9900**	1	CAP AS	
		2	**5P-7958**	1	SLEEVE-CABLE SPLICE	
		2	**8C-6354**	1	CAP-RECEPTACLE	
		2	**179-9392**	1	LANYARD	
	13	2	**195-7988**	1	GASKET	
	14	2	**222-7890**	1	SWITCH AS-ROCKER (PARKING BRAKE ON, OFF)	
	15	2	**228-6089**	14	PLUG (ROCKER SWITCH)	
	16	2	**229-2580**	1	SWITCH AS-ROCKER (THROTTLE LOCK)	
	17	2	**236-4615**	1	SWITCH AS-ROCKER (SECONDARY STEERING)	
	18	2	**236-4616**	1	SWITCH AS-ROCKER (HAZARD)	
	19	2	**246-4311**	2	GUARD (SWITCH)	
	20	2	**248-5081**	1	SWITCH AS-ROCKER (QUICK COUPLER)	
	21	2	**249-5486**	1	SWITCH AS-ROCKER (HEADLIGHTS, TAIL LIGHTS)	
	22	2	**249-5487**	1	SWITCH AS-ROCKER (BLADE CUSHION)	
	23	2	**249-5493**	1	SWITCH AS-ROCKER (SPEED CONTROL REGULATOR)	
	24	2	**251-1197**	1	SWITCH AS-ROCKER (IMPLEMENT LOCKOUT)	
	25	2	**252-5224**	1	FLASHER AS	
	26	2	*253-3491*	1	COVER AS-ACCESS	
M		2	**8T-0285**	4	SCREW-MACHINE (M4X0.7X12-MM)	
		2	**8T-0328**	4	WASHER-HARD (5.5X10X1-MM THK)	
		2	**253-3489**	1	PLATE	
	27	2	**262-4961**	1	PLATE	
Y	28	1	*265-8937*	1	BRACKET GP-MOUNTING (FUSE PANEL)	767
Y	29	2	*275-9650*	1	ELECTRONICS GP-MONITOR (MESSENGER)	166
	30	2	**279-3221**	1	PLATE AS	
	31	1	**279-3222**	1	PLATE AS	
	32	2	**279-5308**	1	LAMP AS (24-VOLT, GREEN) (GREEN)	
		2	**186-3735**	2	PIN-CONNECTOR (16-GA TO 18-GA)	
	33	1,2	**286-0323**	4	GASKET	
	34	2	**287-3252**	1	MODULE GP-INSTRUMENT PANEL	
	35	1	**288-1401**	4	BRACKET	
	36	2	**288-1402**	1	GASKET	
	37	1	**291-2907**	1	HARNESS AS-CAB	
		1	**102-8801**	3	KIT-RECEPTACLE (12-PIN)	
		1	**102-8802**	7	KIT-RECEPTACLE (2-PIN)	
		1	**102-8803**	2	KIT-RECEPTACLE (3-PIN)	
		1	**102-8804**	3	KIT-RECEPTACLE (4-PIN)	
		1	**102-8805**	4	KIT-RECEPTACLE (6-PIN)	
		1	**102-8806**	2	KIT-RECEPTACLE (8-PIN)	
		1	**194-4254**	2	KIT-RECEPTACLE (8-PIN)	

291-2910 **WIRING GP-CAB** *(contd.)* **i02779052**

NOTE	REF NO	GRAPHIC REF	PART NUMBER	QTY	PART NAME 1 2 3 4 5 6 (PRODUCT LEVEL)	SEE PAGE
		1	**166-5229**	2	KIT-RECEPTACLE (12-PIN)	
					(EACH RECEPTACLE KIT INCLUDES RECEPTACLE AS & WEDGE)	
		1	**155-2255**	7	KIT-CONNECTING PLUG (12-PIN)	
		1	**155-2256**	3	KIT-CONNECTING PLUG (12-PIN)	
		1	**155-2257**	2	KIT-CONNECTING PLUG (12-PIN)	
		1	**155-2265**	11	KIT-CONNECTING PLUG (8-PIN)	
		1	**155-2260**	11	KIT-CONNECTING PLUG (3-PIN)	
		1	**155-2270**	11	KIT-CONNECTING PLUG (2-PIN)	
		1	**155-2271**	7	KIT-CONNECTING PLUG (4-PIN)	
		1	**155-2274**	9	KIT-CONNECTING PLUG (6-PIN)	
		1	**177-9648**	1	KIT-CONNECTING PLUG (2-PIN)	
		1	**177-9656**	1	KIT-CONNECTING PLUG (4-PIN)	
					(EACH PLUG KIT INCLUDES PLUG AS, WEDGE, & INTERFACE SEAL)	
		1	**190-7613**	1	RECEPTACLE AS-CONNECTOR (12-PIN)	
		1	**8N-1517**	1	RECEPTACLE AS-CONNECTOR (25-PIN)	
		1	**9X-0145**	1	RECEPTACLE AS-CONNECTOR (24-PIN)	
		1	**103-0213**	2	RECEPTACLE AS-CONNECTOR (70-PIN)	
		1	**230-4012**	1	RECEPTACLE AS-CONNECTOR (2-PIN)	
		1	**230-5011**	1	RECEPTACLE AS-CONNECTOR (6-PIN)	
		1	**239-7353**	1	RECEPTACLE AS-CONNECTOR (6-PIN)	
		1	**230-4011**	1	PLUG AS-CONNECTOR (2-PIN)	
		1	**3E-5519**	2	PLUG AS-CONNECTOR (5-PIN)	
		1	**7X-6222**	1	PLUG AS-CONNECTOR (24-PIN)	
		1	**9X-1054**	13	PLUG AS-CONNECTOR (4-PIN)	
		1	**147-1445**	2	PLUG AS-CONNECTOR (70-PIN)	
		1	**147-1446**	2	PLUG AS-CONNECTOR (70-PIN)	
		1	**230-5010**	1	PLUG AS-CONNECTOR (6-PIN)	
		1	**239-7352**	1	PLUG AS-CONNECTOR (6-PIN)	
		1	**250-9819**	2	BLOCK AS-FUSE	
		1	**1H-3244**	2	LOCKWASHER	
		1	**6V-8185**	2	NUT (1/4-20-THD)	
		1	**8T-4205**	2	WASHER-HARD (7.2X14.5X2-MM THK)	
		1	**151-1398**	2	KIT-TERMINAL (LOCK)	
		1	**200-8788**	1	SEAL (FUSE BLOCK)	
		1	**250-9830**	1	BLOCK AS-FUSE	
		1	**8C-6354**	1	CAP-RECEPTACLE	
		1	**8N-1521**	1	BELL AS-END (2-GA)	
		1	**126-1774**	4	COVER-CONNECTOR (WIRE ROUTER)	
		1	**3S-2093**	8	STRAP-CABLE	
		1	**9X-6772**	1	STRAP-CABLE	
		1	**9X-0196**	7	TERMINAL AS	
		1	**9W-4050**	1	WIRE AS	
	38	1,2	**096-6166**	36	WASHER-HARD (4.5X9X1-MM THK)	
M	39	2	**112-8372**	3	BOLT (M4X16-MM)	
	40	1,2	**130-5300**	4	CLIP	
	41	2	**132-5789**	4	CLIP	
	42	1,2	**134-2540**	5	RECEPTACLE AS (3-PIN)	
	43	2	**189-3158**	1	SUPPRESSOR-ARC	
	44	2	**1H-4393**	2	LOCKWASHER	
	45	2	**102-8802**	1	KIT-RECEPTACLE (2-PIN)	
					(INCLUDES RECEPTACLE AS & WEDGE)	
	46	2	**3S-9557**	4	SCREW-PAN HEAD (4-40X0.5-IN)	
M	47	1,2	**5C-9553**	23	BOLT (M6X1X16-MM)	
	48	2	**6T-3644**	1	CIRCUIT BREAKER AS (20-AMPERE)	
		2	**6V-8376**	2	SCREW-MACHINE (8-32X0.25-IN)	
		2	**9B-7233**	2	LOCKWASHER	
	49	1,2	**7K-1181**	13	STRAP-CABLE	
	50	2	**7U-4892**	2	SCREW (8-32X0.75-IN)	

291-2910 **WIRING GP-CAB** ***(contd.)*** **i02779052**

NOTE	REF NO	GRAPHIC REF	PART NUMBER	QTY	PART NAME 1 2 3 4 5 6 (PRODUCT LEVEL)	SEE PAGE
	51	2	**8N-1523**	1	LOCKWASHER	
	52	2	**8T-0328**	2	WASHER-HARD (5.5X10X1-MM THK)	
	53	1,2	**8T-4121**	5	WASHER-HARD (11X21X2.5-MM THK)	
M	54	1,2	**8T-4133**	3	NUT (M10X1.5-THD)	
M	55	2	**8T-4137**	2	BOLT (M10X1.5X20-MM)	
M	56	2	**8T-4171**	1	BOLT (M6X1X12-MM)	
M	57	1	**8T-4189**	2	BOLT (M8X1.25X20-MM)	
	58	1	**8T-4224**	2	WASHER-HARD (8.8X16X2-MM THK)	
M	59	1,2	**8T-9405**	32	BOLT-SOCKET HEAD (M4X0.7X16-MM)	
	60	2	**9W-0335**	1	LIGHTER AS-CIGAR (24-VOLT)	
M	61	2	**9X-1046**	12	SCREW (M4X0.7X18-MM)	
	62	2	**9X-2026**	1	WASHER (6.5X17X1-MM THK)	
	63	1,2	**9X-8256**	23	WASHER (6.6X12X2-MM THK)	

J-REQUIRES CORPORATE KEY
M-METRIC PART
Y-SEPARATE ILLUSTRATION

291-2910 **WIRING GP-CAB** *(contd.)* **i02779052**

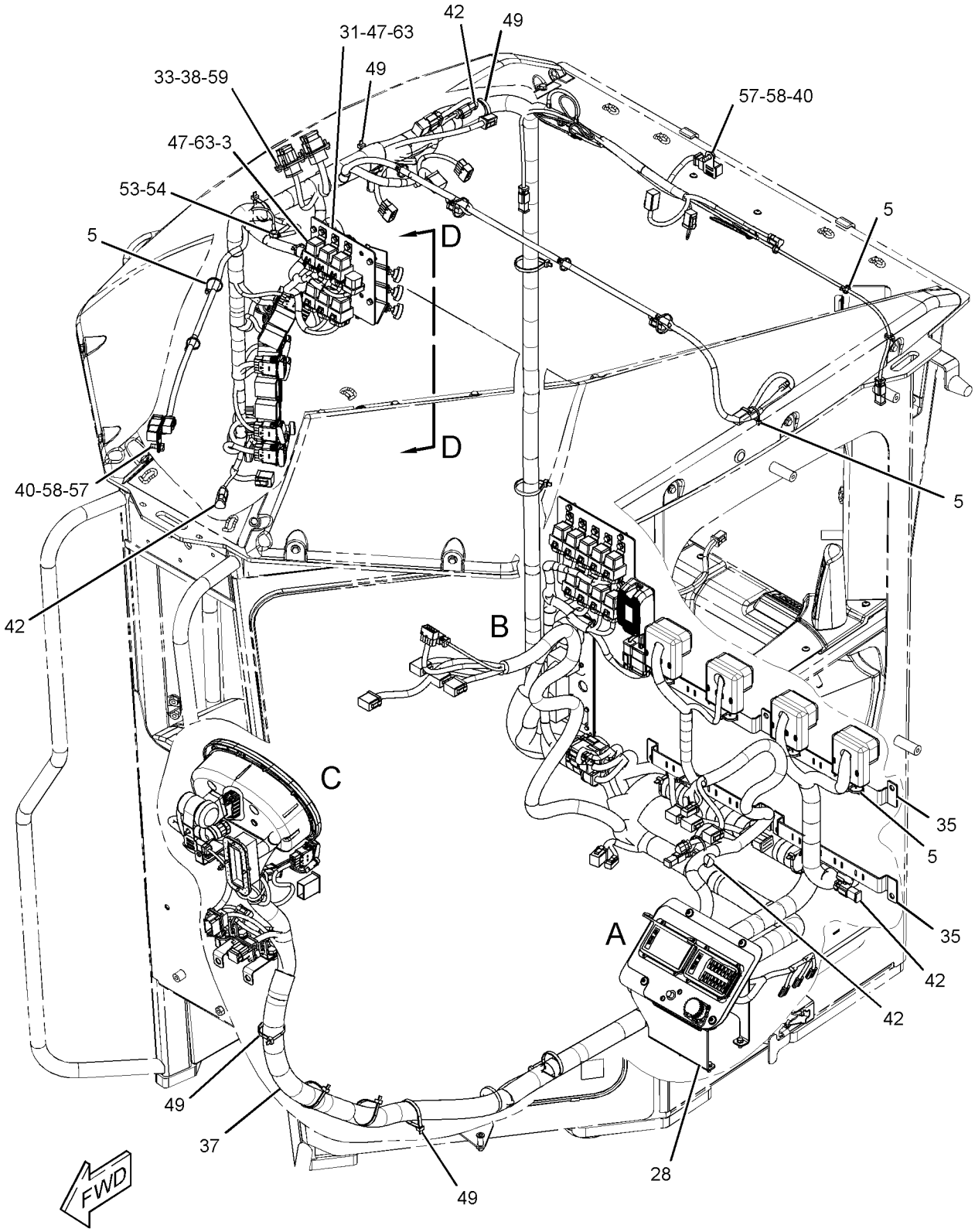

REFER TO ALL ILLUSTRATIONS OF
THIS GROUP FOR AUXILIARY VIEWS

GRAPHIC #1

g01320608

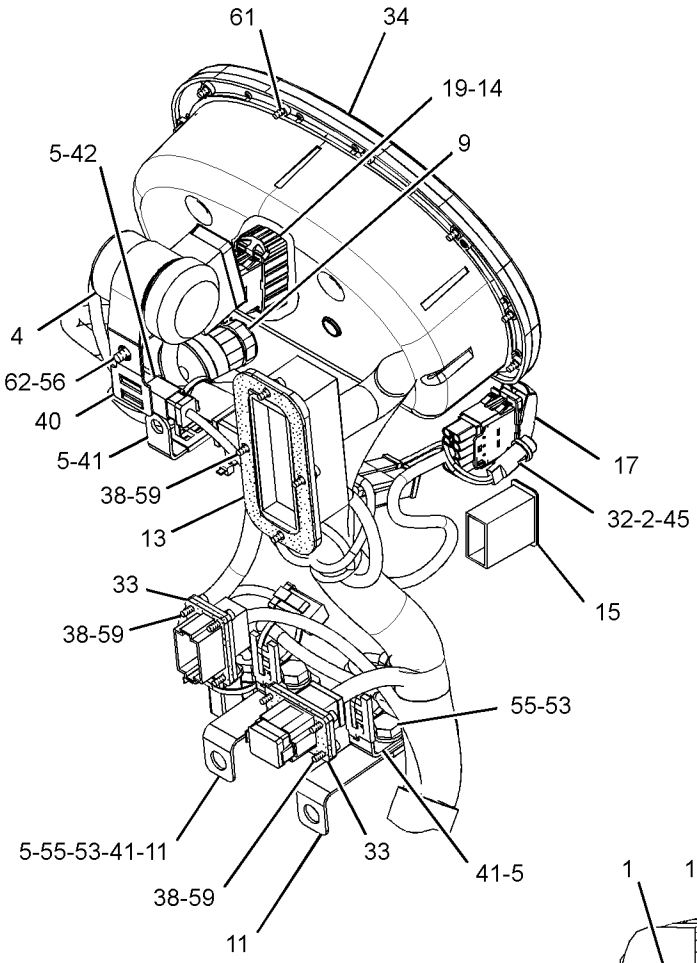

VIEW OF AREA C

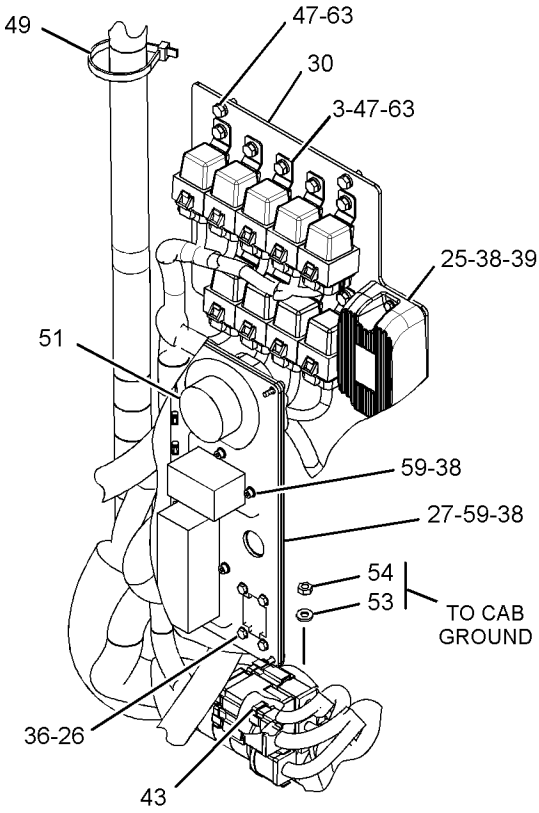

VIEW OF AREA B

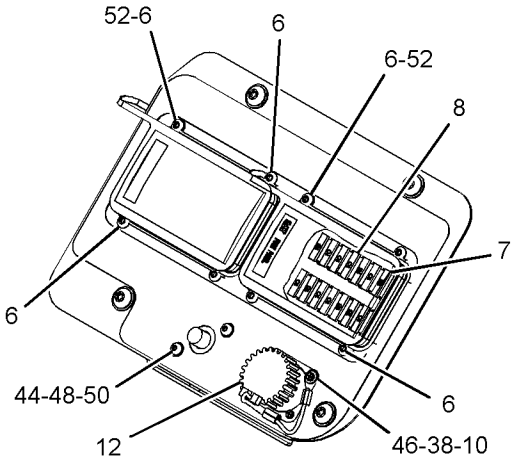

VIEW OF AREA A

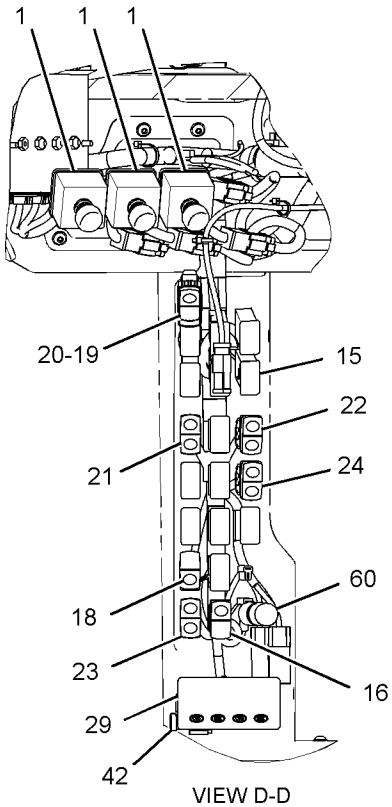

VIEW D-D

GRAPHIC #2 **<END>** g01320609

252-8000 WIRING GP-CAMERA–WORK AREA VISUAL SYSTEM

S/N: B9D1-UP

PART OF 278-1842 INSTALLATION GP-CAMERA

SMCS-1408, 7348 **i02787750**

NOTE	REF NO	GRAPHIC REF	PART NUMBER	QTY	PART NAME 1 2 3 4 5 6 (PRODUCT LEVEL)	SEE PAGE
	1	1	**268-8080**	1	MOUNTING AS	
M		1	**6V-9632**	4	NUT-WELD (M6X1-THD)	
		1	**160-2169**	4	SPACER (7X11X8.4-MM THK)	
	2	1	**268-8082**	1	COVER	
J	3	1	**251-4160**	1	CAMERA GP (115-DEG, COLOR) (REAR VIEW)	
	4	1	**251-8248**	1	CABLE AS-COMMUNICATION (5-M)	
	5	1	**261-3223**	1	CABLE AS-COMMUNICATION (3-M)	
M	6	1	**5C-2890**	2	NUT (M6X1-THD)	
	7	1	**5P-8525**	2	GROMMET	
	8	1	**7K-1181**	18	STRAP-CABLE	
M	9	1	**8T-4138**	8	BOLT (M6X1X20-MM)	
M	10	1	**8T-4970**	2	BOLT (M6X1X14-MM)	
	11	1	**9X-2026**	2	WASHER (6.5X17X1-MM THK)	
	12	1	**9X-8256**	8	WASHER (6.6X12X2-MM THK)	
					AVAILABLE REPAIR KIT(S):	
J			**251-4162**	1	KIT-BRACKET (CAMERA)	
					(INCLUDES BRACKET, BOLTS, LOCKNUTS, BOLT-SOCKETS, GASKET, & ALLENKEY)	

J-KIT MARKED J SERVICE(S) PART MARKED J
M-METRIC PART

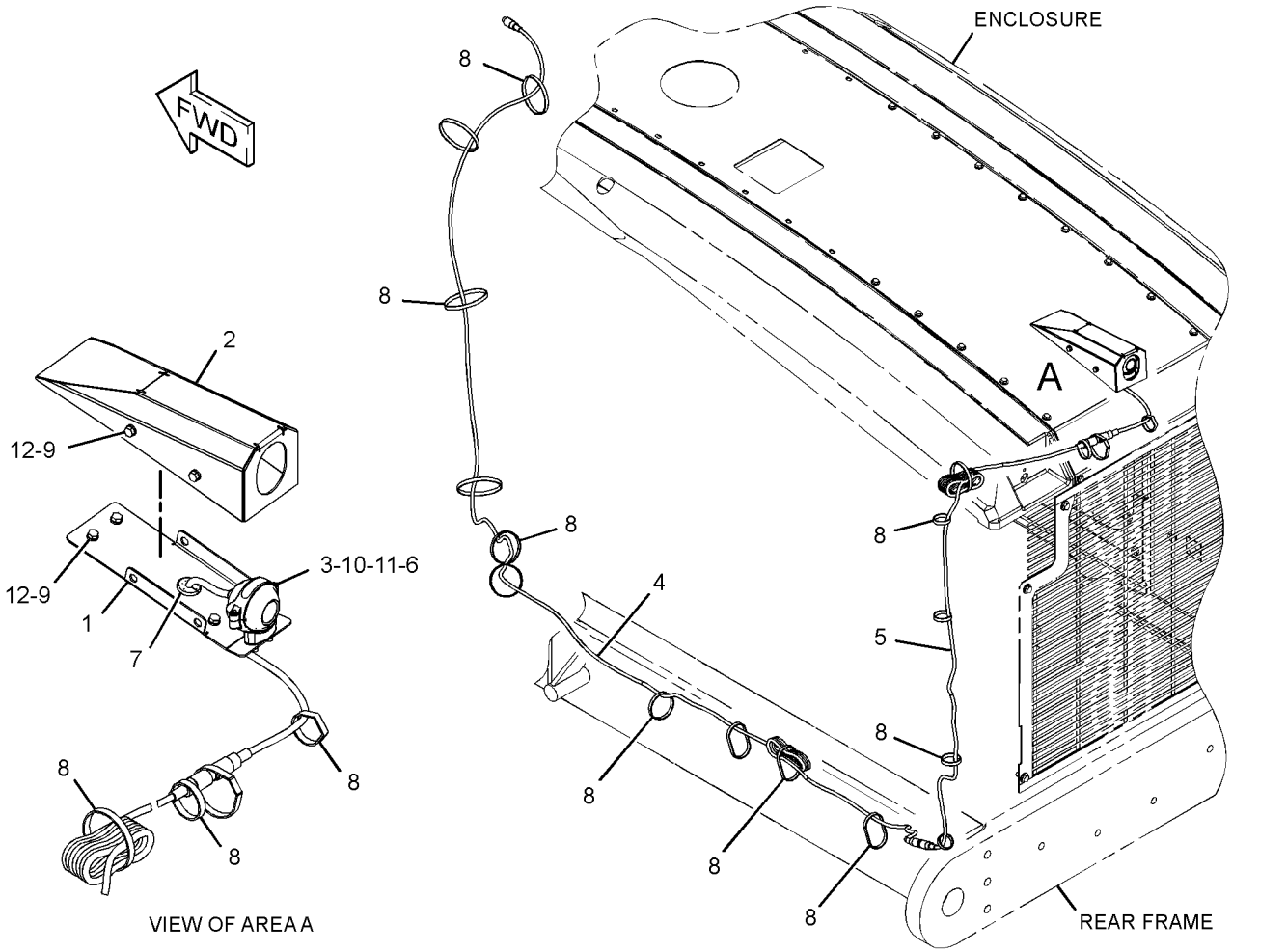

GRAPHIC #1 **<END>** g01306652

238-8828 WIRING GP-ELECTRONIC CONTROL

S/N: B9D1-UP

PART OF 242-5061, 242-5062, 242-5063, 242-5064, 242-5066, 242-6107, 242-6108, 242-6109, 242-6110, 242-6111, 242-6112, 242-6146 CONTROL AR-HYDRAULIC

SMCS-1408, 1900 **i02780623**

NOTE	REF NO	GRAPHIC REF	PART NUMBER	QTY	PART NAME 1 2 3 4 5 6 (PRODUCT LEVEL)	SEE PAGE
	1	1	**3S-2093**	3	STRAP-CABLE	
	2	1	**6I-1418**	4	SPACER (8.2X12.7X28.7-MM THK)	
	3	1	**8T-9655**	8	MOUNT-ISOLATION	
	4	1	**235-6183**	1	HARNESS AS-CONTROL (HYDRAULIC ELECTRONIC)	
		1	**3S-2093**	5	STRAP-CABLE	
		1	**126-1774**	2	COVER-CONNECTOR	
		1	**147-1445**	1	PLUG AS-CONNECTOR (70-PIN)	
		1	**147-1446**	1	PLUG AS-CONNECTOR (70-PIN)	
		1	**155-2272**	1	PLUG AS-CONNECTOR (4-PIN)	
		1	**190-7613**	1	RECEPTACLE AS-CONNECTOR (12-PIN)	
		1	**102-8804**	1	KIT-RECEPTACLE (4-PIN)	
		1	**166-5229**	1	KIT-RECEPTACLE (12-PIN)	
					(EACH INCLUDES RECEPTACLE AS & WEDGE)	
	5	1	*275-8967*	1	APPLICATION GP-IMPLEMENT	
R		1	**262-1408**	1	CONTROL GP-UNPROGRAMMED (HYDRAULIC ELECTRONIC)	
	6	1	**096-6166**	4	WASHER-HARD (4.5X9X1-MM THK)	
	7	1	**5P-4116**	4	WASHER-HARD (8.8X20.5X2-MM THK)	
M	8	1	**8T-6912**	4	BOLT (M8X1.25X50-MM)	
M	9	1	**8T-9405**	4	BOLT-SOCKET HEAD (M4X0.7X16-MM)	

M-METRIC PART
R-REMFG PART MAY BE AVAILABLE

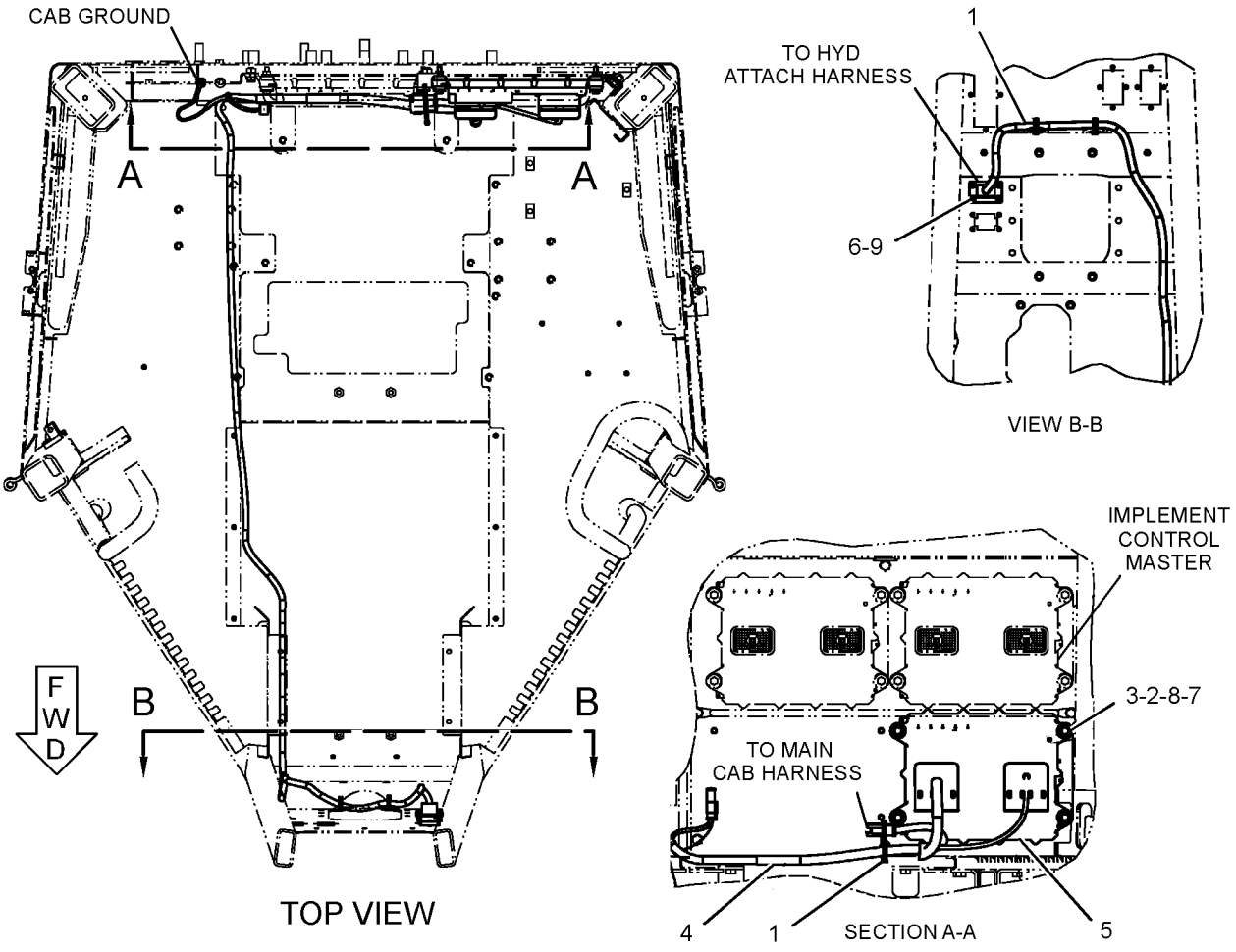

GRAPHIC #1 **<END>** g01163594

276-4107 WIRING GP-ENGINE

S/N: KHX238-UP

PART OF 231-0878, 278-9732 ENGINE AR-COMPLETE

SMCS-1408 **i02791447**

NOTE	REF NO	GRAPHIC REF	PART NUMBER	QTY	PART NAME 1 2 3 4 5 6 (PRODUCT LEVEL)	SEE PAGE
	1	1	**3S-2093**	18	STRAP-CABLE	
	2	1	**4P-5918**	1	CLIP	
	3	1	**105-1797**	7	MOUNT	
	4	1	**198-2713**	1	HARNESS AS-ENGINE (ELECTRONIC CONTROL MODULE)	
		1	**102-8802**	1	KIT-RECEPTACLE (2-PIN)	
		1	**102-8803**	1	KIT-RECEPTACLE (3-PIN)	
		1	**102-8801**	1	KIT-RECEPTACLE (12-PIN)	
					(EACH RECEPTCLE KIT INCLUDES RECEPTACLE AS & WEDGE)	
		1	**100-3320**	1	PLUG AS-CONNECTOR (2-PIN)	
		1	**126-5011**	1	SEAL-CONNECTOR	
		1	**111-2416**	1	PLUG AS-CONNECTOR (2-PIN)	
		1	**126-5011**	1	SEAL-CONNECTOR	
		1	**155-2265**	1	KIT-CONNECTING PLUG (8-PIN)	
		1	**155-2270**	5	KIT-CONNECTING PLUG (2-PIN)	
		1	**155-2260**	3	KIT-CONNECTING PLUG (3-PIN)	
					(EACH PLUG KIT INCLUDES PLUG AS & WEDGE)	
		1	**264-5732**	3	PLUG AS-CONNECTOR (*)	
	5	1	**206-1345**	2	STRAP-CABLE	
	6	1	**215-2315**	1	HARNESS AS-HEATER (AIR INLET HEATER RELAY)	
		1	**135-2543**	1	BOOT	
	7	1	**222-5917**	1	HARNESS AS-ENGINE (FUEL INJECTION)	
		1	**6N-7523**	1	WASHER (6.48X11.9X1.57-MM THK)	
		1	**135-5975**	1	GROMMET-WIRING	
		1	**155-2255**	1	KIT-CONNECTING PLUG (12-PIN)	
					(INCLUDES PLUG AS AND WEDGE)	
	8	1	**4D-7794**	1	CLIP	
M	9	1	**5C-7261**	1	NUT (M8X1.25-THD)	
	10	1	**8T-4224**	1	WASHER-HARD (8.8X16X2-MM THK)	

M-METRIC PART

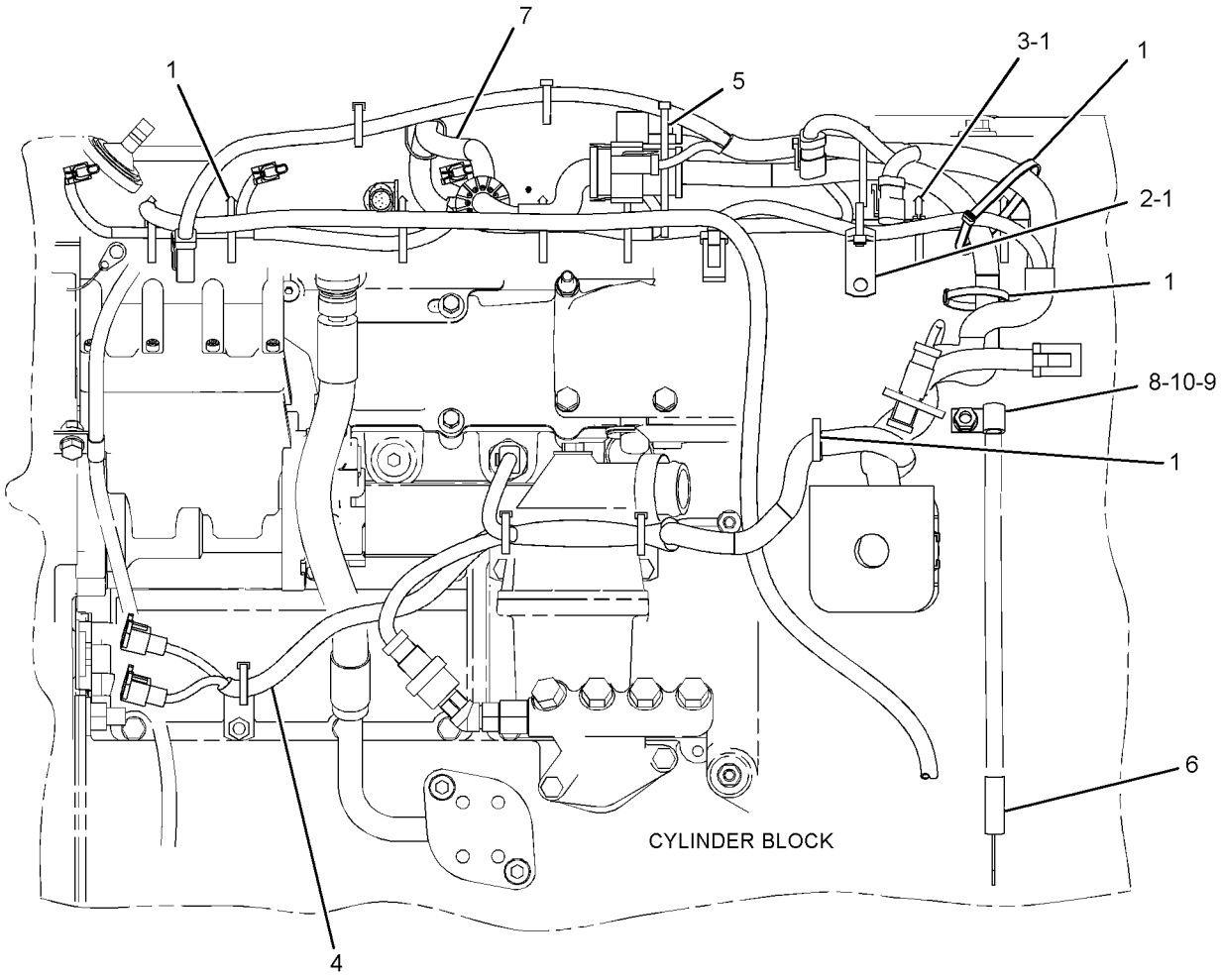

LEFT SIDE VIEW OF ENGINE

GRAPHIC #1 **<END>** g01303761

233-4600 WIRING GP-FRONT

S/N: B9D1-UP

PART OF 234-7721 COMMON AR

SMCS-1408 **i02773043**

NOTE	REF NO	GRAPHIC REF	PART NUMBER	QTY	PART NAME 1 2 3 4 5 6 (PRODUCT LEVEL)	SEE PAGE
	1	1	**3E-3636**	1	SWITCH AS-BALL (CENTERSHIFT INDICATOR)	
		1	**3E-3377**	1	WEDGE-RECEPTACLE LOCK (4-PIN)	
		1	**186-3735**	4	PIN-CONNECTOR (16-GA TO 18-GA)	
		1	**102-8804**	1	KIT-RECEPTACLE (4-PIN)	
					(INCLUDES RECEPTACLE AS & WEDGE)	
	2	1	**3S-2093**	4	STRAP-CABLE	
	3	1	**134-3344**	1	STRAP AS	
	4	2	**163-5382**	3	SPACER (10.5X25X0.25-MM THK)	
	5	2	**174-7875**	1	HORN AS (24-VOLT, HIGH TONE)	
	6	1	**240-7193**	1	RESISTOR AS (500-OHM, 2-WATT)	
		1	**186-3735**	1	PIN-CONNECTOR (16-GA TO 18-GA)	
		1	**102-8802**	1	KIT-RECEPTACLE (2-PIN)	
					(INCLUDES RECEPTACLE AS & WEDGE)	
	7	1	**283-5830**	1	BRACKET AS	
	8	1	**287-6642**	1	HARNESS AS-LIGHTING	
		1	**102-8802**	2	KIT-RECEPTACLE (2-PIN)	
		1	**102-8804**	1	KIT-RECEPTACLE (4-PIN)	
					(EACH INCLUDES RECEPTACLE AS & WEDGE)	
		1	**155-2270**	3	KIT-CONNECTING PLUG (2-PIN)	
					(EACH INCLUDES PLUG AS, WEDGE & INTERFACE SEAL)	
	9	2	**291-4826**	1	CHANNEL	
	10	1	**291-4827**	1	CHANNEL	
	11	2	**297-8049**	2	GROMMET	
	12	1	**298-3645**	1	BRACKET AS	
	13	1	**298-3646**	1	CHANNEL AS	
	14	1	**299-1056**	1	HARNESS AS-FRONT CHASSIS	
		1	**155-2255**	1	KIT-CONNECTING PLUG (12-PIN)	
		1	**155-2270**	29	KIT-CONNECTING PLUG (2-PIN)	
		1	**155-2271**	2	KIT-CONNECTING PLUG (4-PIN)	
		1	**155-2274**	1	KIT-CONNECTING PLUG (6-PIN)	
					(EACH INCLUDES PLUG AS, WEDGE & INTERFASE SEAL)	
		1	**102-8802**	8	KIT-RECEPTACLE (2-PIN)	
		1	**102-8803**	1	KIT-RECEPTACLE (3-PIN)	
		1	**102-8804**	1	KIT-RECEPTACLE (4-PIN)	
					(EACH INCLUDES RECEPTACLE AS & WEDGE)	
		1	**9X-4391**	1	PLUG AS-CONNECTOR (70-PIN)	
	15	2	**033-8248**	1	CLIP	
	16	2	**091-0081**	2	SPACER (10.5X20X10-MM THK)	
M	17	2	**096-4883**	8	LOCKNUT (M10X1.15-THD)	
	18	1,2	**130-5300**	6	CLIP	
	19	1,2	**132-5789**	5	CLIP	
	20	1	**149-7738**	2	CLIP	
	21	2	**164-1404**	4	SPACER (10.67X16.95X23-MM THK)	
	22	1	**2K-5232**	1	SPACER (0.406X0.75X1.81-IN THK)	
	23	1	**3J-1907**	1	SEAL-O-RING	
	24	1	**4D-1432**	2	SPACER (1.8-IN THK)	
	25	1	**4D-7794**	1	CLIP	
	26	1	**4K-8864**	2	CLIP	
	27	2	**4P-7428**	1	CLIP	
	28	1,2	**4P-7581**	5	CLIP	
	29	2	**5P-9297**	3	CLIP	
	30	2	**7D-1728**	2	CLIP	
	31	1,2	**7K-1181**	34	STRAP-CABLE	
B	32	1	**8F-1974**	10	SHIM (0.13-MM THK)	

233-4600 **WIRING GP-FRONT** ***(contd.)*** **i02773043**

NOTE	REF NO	GRAPHIC REF	PART NUMBER	QTY	PART NAME 1 2 3 4 5 6 (PRODUCT LEVEL)	SEE PAGE
	33	1,2	**8M-2772**	3	CLIP	
	34	1,2	**8T-4121**	52	WASHER-HARD (11X21X2.5-MM THK)	
M	35	1	**8T-4133**	2	NUT (M10X1.5-THD)	
M	36	1,2	**8T-4137**	28	BOLT (M10X1.5X20-MM)	
M	37	2	**8T-4186**	7	BOLT (M10X1.5X40-MM)	
M	38	1,2	**8T-4195**	4	BOLT (M10X1.5X30-MM)	
M	39	1	**8T-5005**	3	BOLT (M10X1.5X70-MM)	
	40	2	**9M-8406**	2	CLIP	
	41	1	**9X-8250**	1	CLIP	

B-USE AS REQUIRED
M-METRIC PART

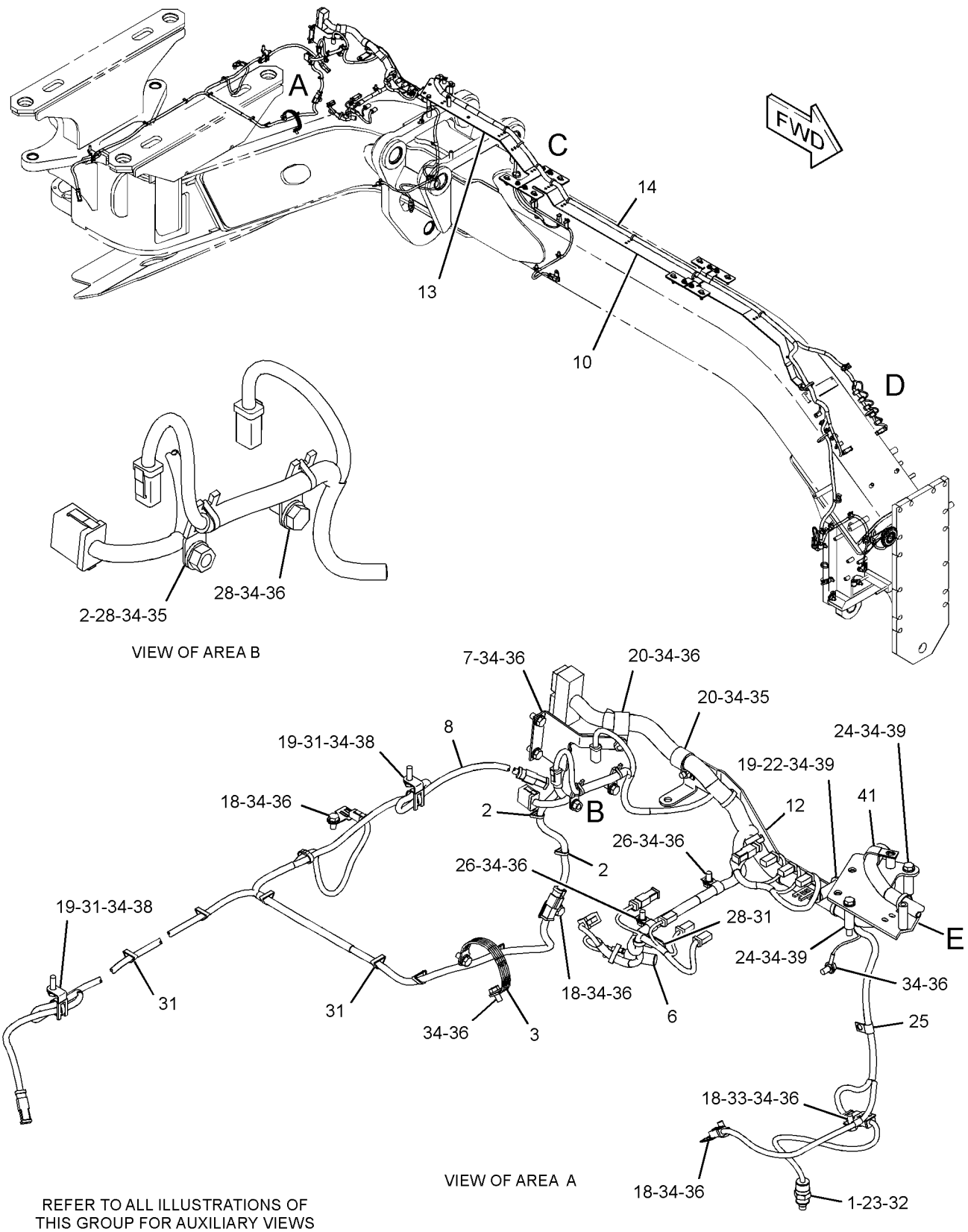

GRAPHIC #1 g01370752

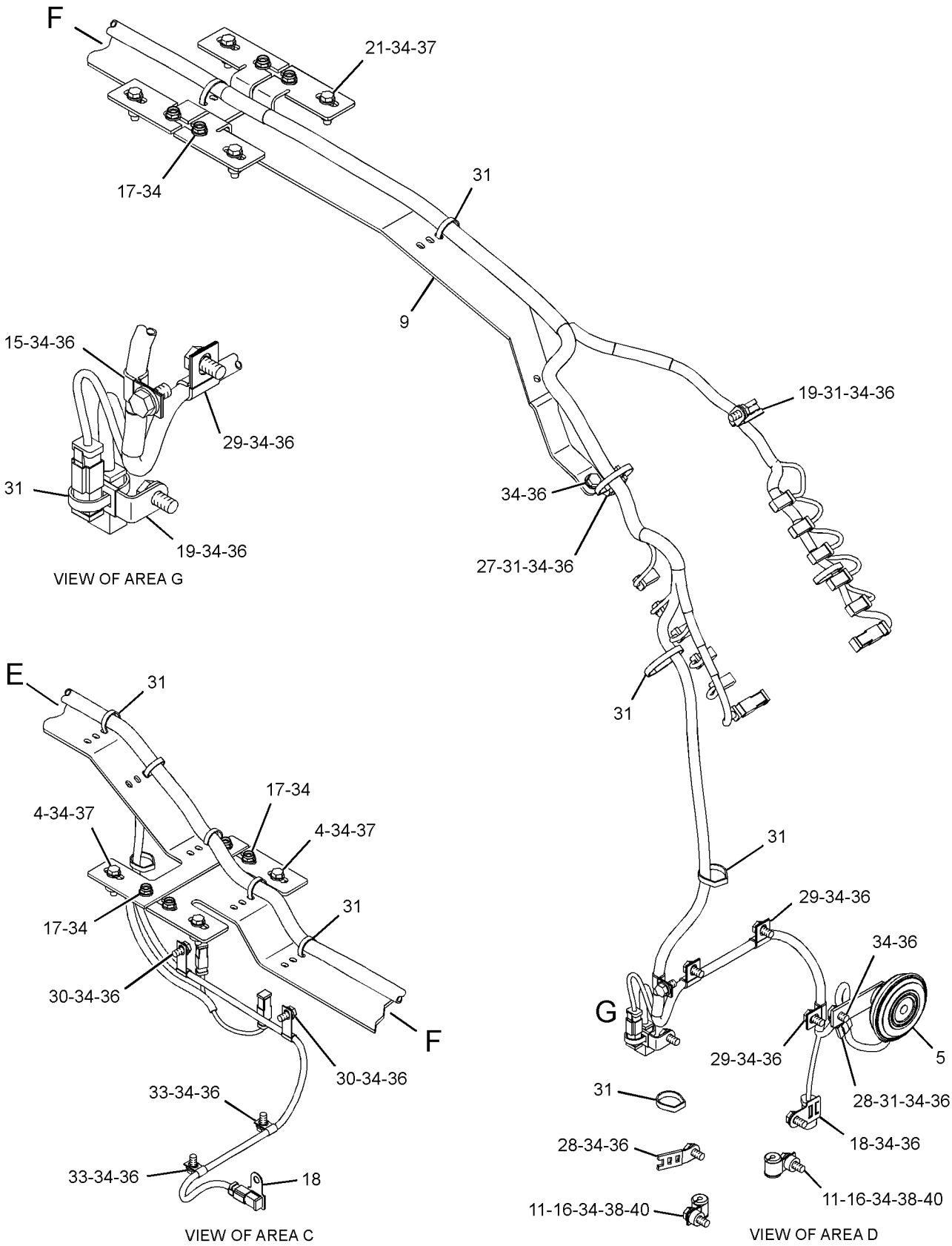

GRAPHIC #2 **<END>** g01370074

233-4637 WIRING GP-FRONT LIGHTING

S/N: B9D1-UP

SMCS-1408 **i02778773**

NOTE	REF NO	GRAPHIC REF	PART NUMBER	QTY	PART NAME 1 2 3 4 5 6 (PRODUCT LEVEL)	SEE PAGE
	1	1	**3S-2093**	2	STRAP-CABLE	
	2	1	**250-5744**	1	HARNESS AS-FRONT CHASSIS	
		1	**102-8802**	1	KIT-RECEPTACLE (2-PIN)	
		1	**102-8805**	1	KIT-RECEPTACLE (6-PIN)	
					(EACH INCLUDES RECEPTACLE AS & WEDGE)	
		1	**155-2265**	1	KIT-CONNECTING PLUG (8-PIN)	
		1	**155-2270**	1	KIT-CONNECTING PLUG (2-PIN)	
		1	**155-2274**	1	KIT-CONNECTING PLUG (6-PIN)	
					(EACH INCLUDES PLUG AS & WEDGE)	
	3	1	**033-8248**	1	CLIP	
	4	1	**174-5907**	2	CLIP	
	5	1	**4D-7794**	2	CLIP	
	6	1	**4K-8864**	1	CLIP	
	7	1	**5P-9135**	1	GROMMET	
	8	1	**7K-1181**	13	STRAP-CABLE	
	9	1	**8T-4121**	4	WASHER-HARD (11X21X2.5-MM THK)	
M	10	1	**8T-4137**	4	BOLT (M10X1.5X20-MM)	

M-METRIC PART

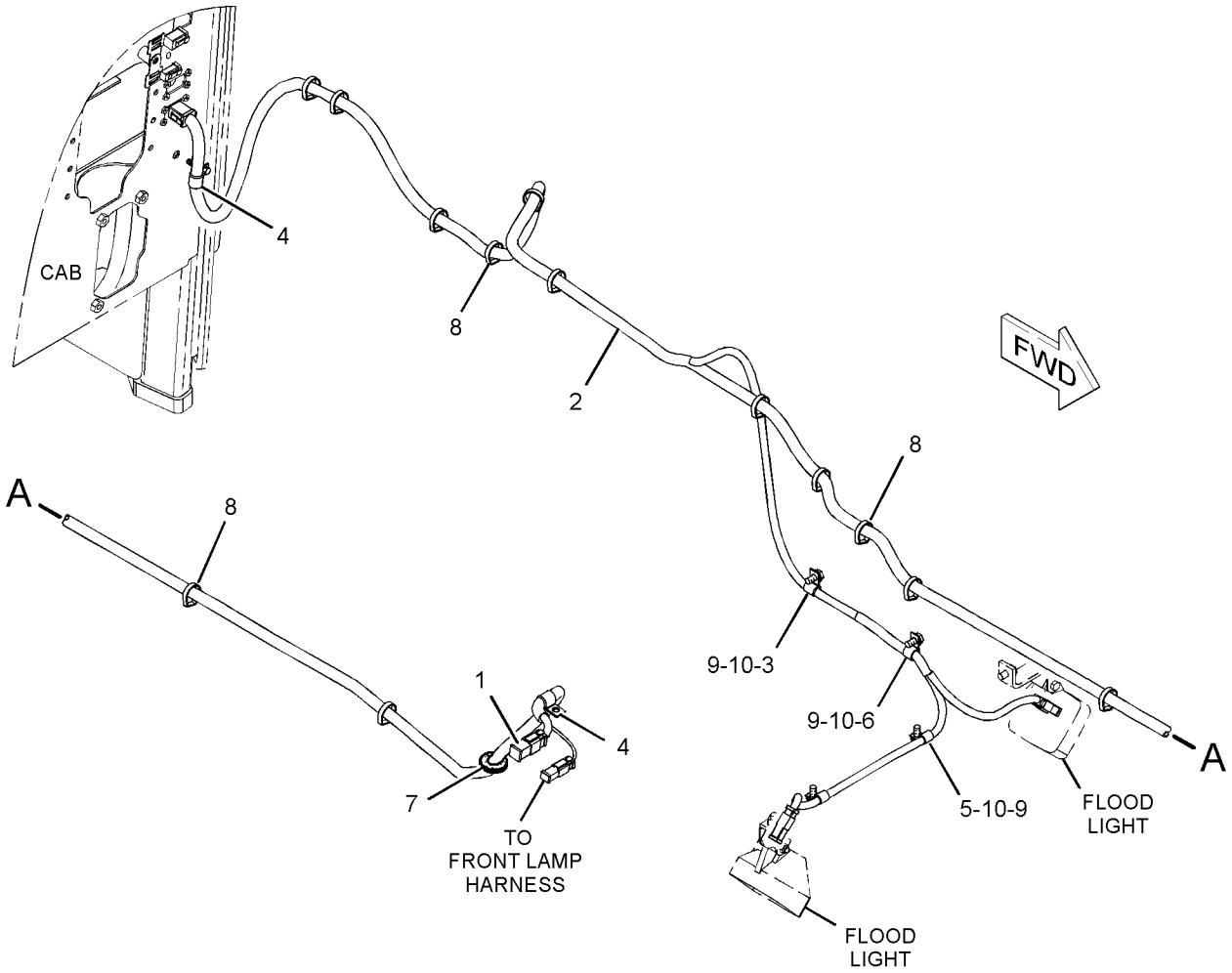

GRAPHIC #1 **<END>** g01143174

ELECTRICAL AND STARTING SYSTEM

233-3288 WIRING GP-GRADE CONTROL

S/N: B9D1-UP

PART OF 254-5399 CAB AR

SMCS-1408 **i02775846**

NOTE	REF NO	GRAPHIC REF	PART NUMBER	QTY	PART NAME 1 2 3 4 5 6 (PRODUCT LEVEL)	SEE PAGE
	1	1	**3S-2093**	17	STRAP-CABLE	
	2	1	**296-4925**	1	HARNESS AS-CONTROL (ACCUGRADE)	
		1	**3R-9965**	1	PLUG AS-CONNECTOR (8-PIN)	
		1	**6D-5257**	1	PLUG AS-CONNECTOR (8-PIN)	
		1	**9X-1054**	1	PLUG AS-CONNECTOR (4-PIN)	
		1	**155-2256**	1	KIT-CONNECTING PLUG (12-PIN)	
		1	**155-2265**	1	KIT-CONNECTING PLUG (8-PIN)	
		1	**155-2255**	2	KIT-CONNECTING PLUG (12-PIN)	
		1	**155-2271**	1	KIT-CONNECTING PLUG (4-PIN)	
		1	**174-0503**	1	KIT-CONNECTING PLUG (3-PIN)	
					(EACH INCLUDES PLUG AS, WEDGE, & INTERFACE SEAL)	
		1	**9X-7145**	1	RECEPTACLE AS-CONNECTOR (24-PIN)	
		1	**102-8801**	1	KIT-RECEPTACLE (12-PIN)	
		1	**102-8804**	1	KIT-RECEPTACLE (4-PIN)	
		1	**102-8806**	1	KIT-RECEPTACLE (8-PIN)	
		1	**190-7614**	1	KIT-RECEPTACLE (12-PIN)	
					(EACH INCLUDES RECEPTACLE AS & WEDGE)	
	3	1	**096-6166**	4	WASHER-HARD (4.5X9X1-MM THK)	
	4	1	**130-5300**	1	CLIP	
	5	1	**134-2540**	1	RECEPTACLE AS (3-PIN)	
M	6	1	**8T-9405**	4	BOLT-SOCKET HEAD (M4X0.7X16-MM)	

M-METRIC PART

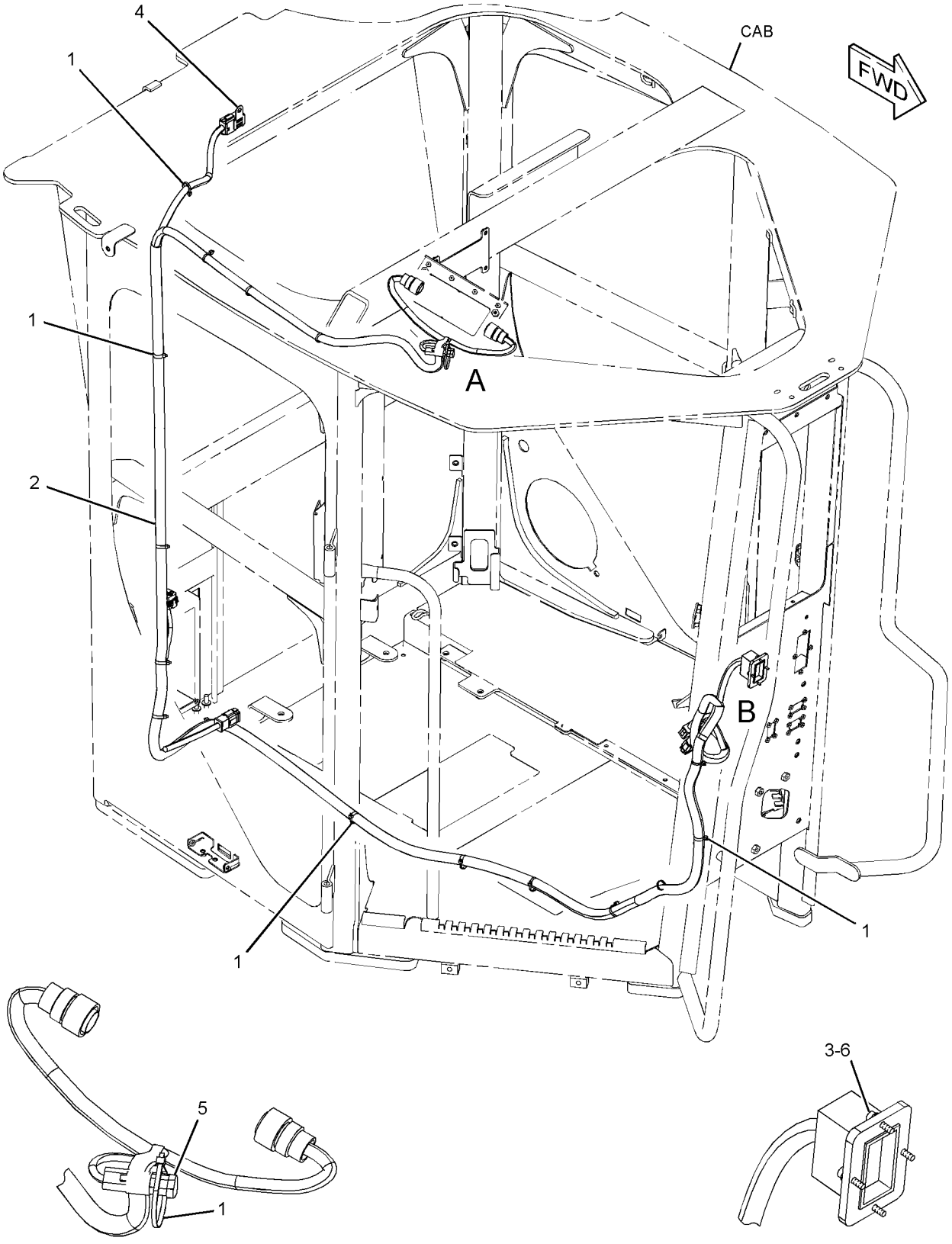

VIEW OF AREA A

VIEW OF AREA B

GRAPHIC #1 **<END>** g01324176

ELECTRICAL AND STARTING SYSTEM

239-6383 WIRING GP-GRADE CONTROL

S/N: B9D1-UP

PART OF 263-7415 GRADE CONTROL AR

SMCS-1408 **i02787079**

NOTE	REF NO	GRAPHIC REF	PART NUMBER	QTY	PART NAME 1 2 3 4 5 6 (PRODUCT LEVEL)	SEE PAGE
	1	2	**3S-2093**	3	STRAP-CABLE	
	2	1	**6D-3033**	16	SCREW-SOCKET HEAD (4-40X0.5-IN)	
	3	2	**6V-7555**	2	STRAP-CABLE	
	4	2	**9G-7101**	1	SPACER (10.5X20X30-MM THK)	
	5	2	**9L-1775**	1	BRACKET	
	6	1	**132-8487**	4	NUT-RING	
	7	2	**236-2356**	1	HARNESS AS-SENSOR (ANGLE)	
		2	**9X-4385**	1	PLUG AS-CONNECTOR (6-PIN)	
		2	**243-5362**	1	CAP-DUST	
		2	**102-8804**	1	KIT-RECEPTACLE (4-PIN)	
					(INCLUDES RECEPTACLE AS & WEDGE)	
	8	1	**236-8826**	4	BOSS (1-1/8-18X0.708-IN)	
	9	2	**243-3250**	1	HARNESS AS-SENSOR (ROTATION)	
		2	**9X-4385**	1	PLUG AS-CONNECTOR (6-PIN)	
		2	**243-5362**	1	CAP-DUST	
		2	**155-2271**	1	KIT-CONNECTING PLUG (4-PIN)	
					(INCLUDES PLUG AS, WEDGE, INTERFACE SEAL)	
	10	2	**251-1133**	1	TUBE	
	11	1	**255-3482**	1	BRACKET	
	12	1	**275-8532**	1	BRACKET (RH)	
	13	1	**275-8533**	1	BRACKET (LH)	
	14	1	**288-5508**	1	BRACKET AS (LH)	
	15	1	**288-5509**	1	BRACKET AS (RH)	
	16	1	**291-4845**	1	HARNESS AS-WIRING (INCLINATION)	
		1	**102-8804**	2	KIT-RECEPTACLE (4-PIN)	
					(EACH INCLUDES RECEPTACLE AS & WEDGE)	
		1	**155-2271**	3	KIT-CONNECTING PLUG (4-PIN)	
		1	**174-0503**	1	KIT-CONNECTING PLUG (3-PIN)	
					(EACH INCLUDES PLUG AS, WEDGE, & INTERFACE SEAL)	
	17	1	**299-9002**	1	HARNESS AS-CHASSIS (GRADE CONTROL)	
		1	**9X-4385**	1	PLUG AS-CONNECTOR (6-PIN)	
		1	**9X-7146**	1	PLUG AS-CONNECTOR (24-PIN)	
		1	**228-3323**	4	CLIP-SPRING	
		1	**102-8804**	1	KIT-RECEPTACLE (4-PIN)	
					(INCLUDES RECEPTACLE AS & WEDGE)	
		1	**174-0503**	1	KIT-CONNECTING PLUG (3-PIN)	
					(INCLUDES PLUG AS, WEDGE, & INTERFACE SEAL)	
	18	2	**305-7994**	1	BRACKET AS	
M		2	**8T-3490**	1	NUT-WELD (M10X1.5-THD)	
	19	2	**033-8248**	3	CLIP	
M	20	2	**092-5524**	2	BOLT (M12X1.75X80-MM)	
	21	1,2	**130-5300**	3	CLIP	
	22	2	**134-2540**	2	RECEPTACLE AS (3-PIN)	
	23	1	**6D-4244**	2	CLIP	
	24	1	**174-9692**	4	SPACER (20.5X35X16-MM THK)	
M	25	1	**188-9644**	4	SCREW-FLAT HEAD (M8X1.25X25-MM)	
	26	1	**2J-3506**	4	NUT-FULL (3/4-10-THD)	
	27	2	**4P-7429**	2	CLIP	
	28	2	**4P-7581**	2	CLIP	
	29	1	**5F-8933**	4	BOLT-PLOW (3/4-10X3.75-IN)	
	30	1	**5P-1076**	8	WASHER-HARD (13.5X30X4-MM THK)	
	31	1	**6V-1228**	1	CLIP	
M	32	1	**8T-4194**	4	BOLT (M12X1.75X50-MM)	
	33	1	**7K-1181**	14	STRAP-CABLE	
	34	1	**8C-6857**	4	BOLT (3/4-10X2.75-IN)	

239-6383 **WIRING GP-GRADE CONTROL** ***(contd.)*** **i02787079**

NOTE	REF NO	GRAPHIC REF	PART NUMBER	QTY	PART NAME 1 2 3 4 5 6 (PRODUCT LEVEL)	SEE PAGE
	35	1,2	**8M-2773**	5	CLIP	
	36	1,2	**8T-4121**	14	WASHER-HARD (11X21X2.5-MM THK)	
	37	1	**8T-4123**	4	WASHER (22X35X3.5-MM THK)	
M	38	2	**8T-4133**	1	NUT (M10X1.5-THD)	
M	39	1,2	**8T-4137**	13	BOLT (M10X1.5X20-MM)	
M	40	2	**8T-4185**	1	BOLT (M10X1.5X50-MM)	
	41	2	**8T-4223**	2	WASHER-HARD (13.5X25.5X3-MM THK)	
M	42	2	**8T-4244**	2	NUT (M12X1.75-THD)	
	43	2	**9M-8406**	3	CLIP	

M-METRIC PART

239-6383 **WIRING GP-GRADE CONTROL** *(contd.)* **i02787079**

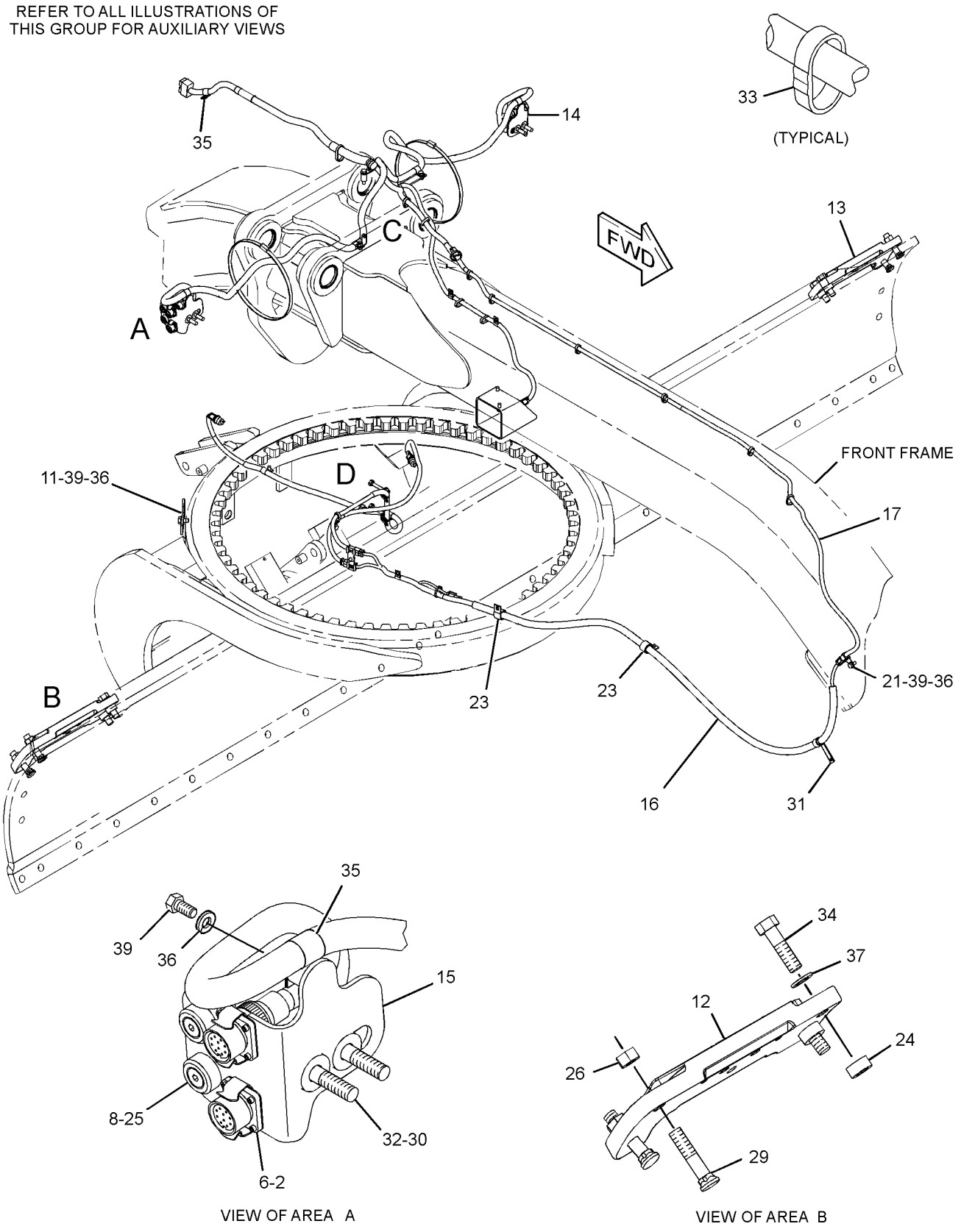

GRAPHIC #1

g01393673

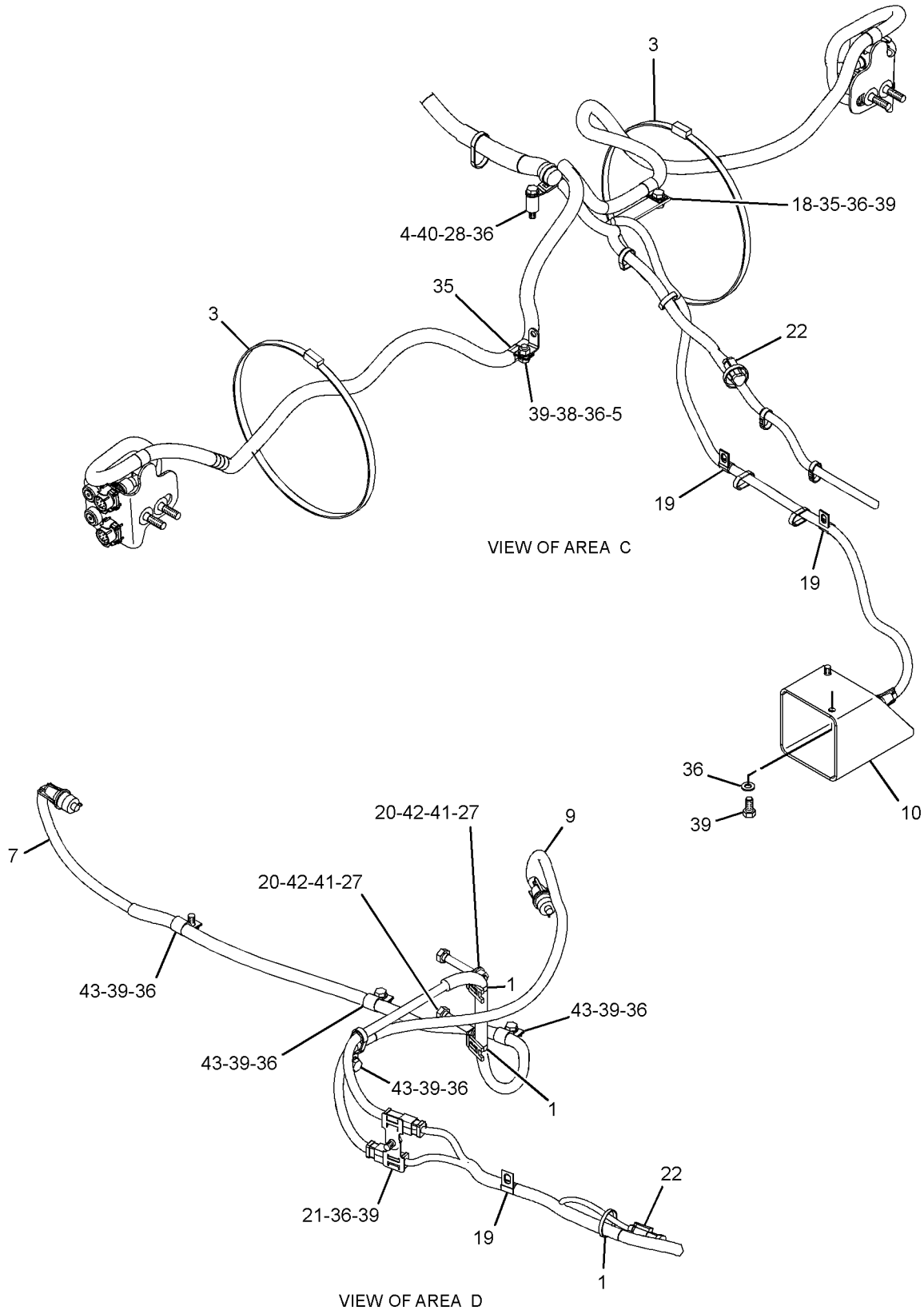

GRAPHIC #2 **<END>** g01393675

275-0596 WIRING GP-HEATER

S/N: KHX238-UP

PART OF 231-0878, 278-9732 ENGINE AR-COMPLETE

SMCS-1090, 1408 **i02791419**

NOTE	REF NO	GRAPHIC REF	PART NUMBER	QTY	PART NAME 1 2 3 4 5 6 (PRODUCT LEVEL)	SEE PAGE
	1	1	**229-8851**	1	CABLE AS	
E		1	**6V-9023**		TUBE-HEAT SHRINK (12.7-MM DIA) (3-CM)	
		1	**030-1712**	1	TERMINAL-RING (2-GA, 6.35-MM)	
		1	**135-2543**	1	BOOT	
Y	2	1	**223-7577**	1	SWITCH GP-MAGNETIC	256
M	3	1	**6V-2317**	3	BOLT (M8X1.25X30-MM)	
M	4	1	**6V-5192**	1	BOLT-SOCKET HEAD (M8X1.25X30-MM)	
	5	1	**9M-1974**	4	WASHER-HARD (8.8X16X2-MM THK)	

E-ORDER BY THE CENTIMETER
M-METRIC PART
Y-SEPARATE ILLUSTRATION

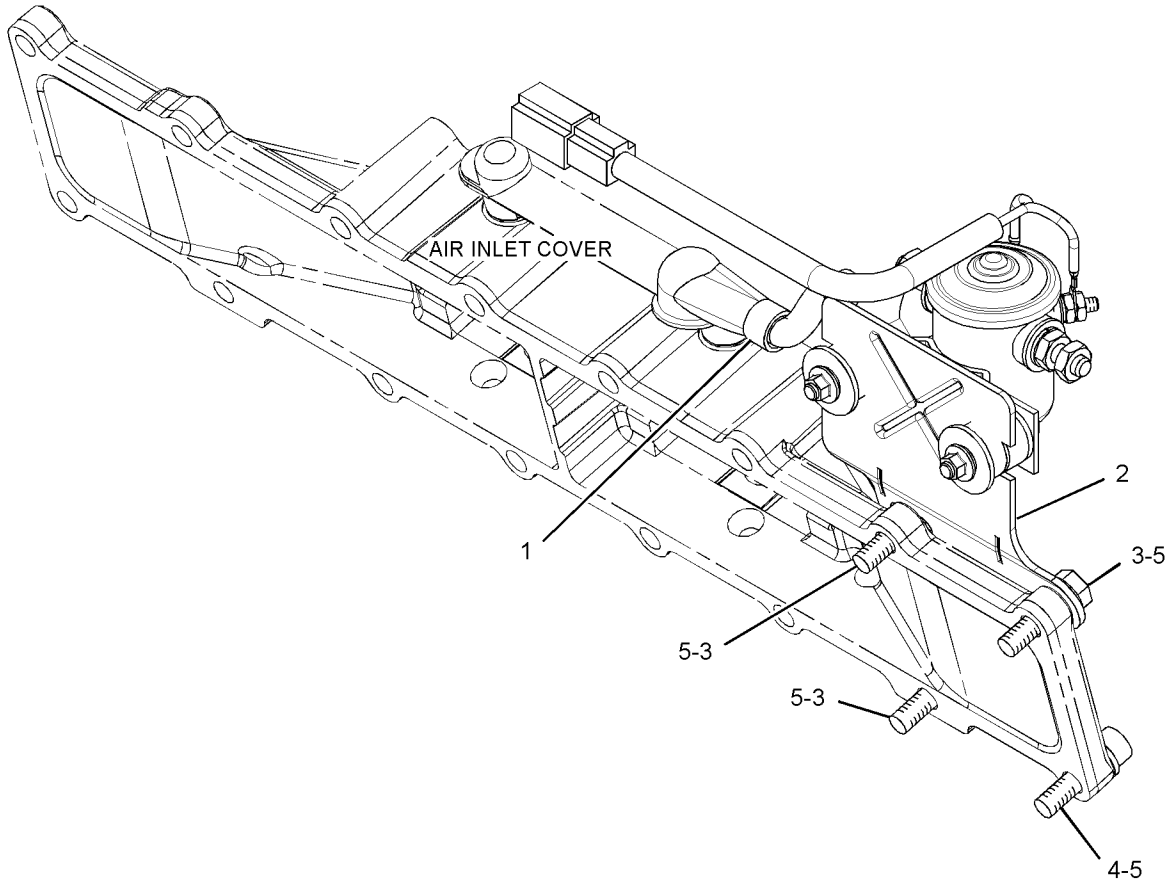

GRAPHIC #1 **<END>** g01314441

262-4972 WIRING GP-LIGHTING–MARKER LIGHTS

S/N: B9D1-UP

PART OF 250-3818 ROADING AR

SMCS-1408, 1429 **i02783260**

NOTE	REF NO	GRAPHIC REF	PART NUMBER	QTY	PART NAME 1 2 3 4 5 6 (PRODUCT LEVEL)	SEE PAGE
	1	1	**114-6658**	4	WASHER (6.5X17X1-MM THK)	
Y	2	1	**212-3924**	2	LAMP GP-MARKER	192
	3	1	**263-2571**	2	PLATE AS	
	4	1	**032-9828**	2	GROMMET	
M	5	1	**9X-2044**	4	SCREW-TRUSS HEAD (M6X1X16-MM)	

M-METRIC PART
Y-SEPARATE ILLUSTRATION

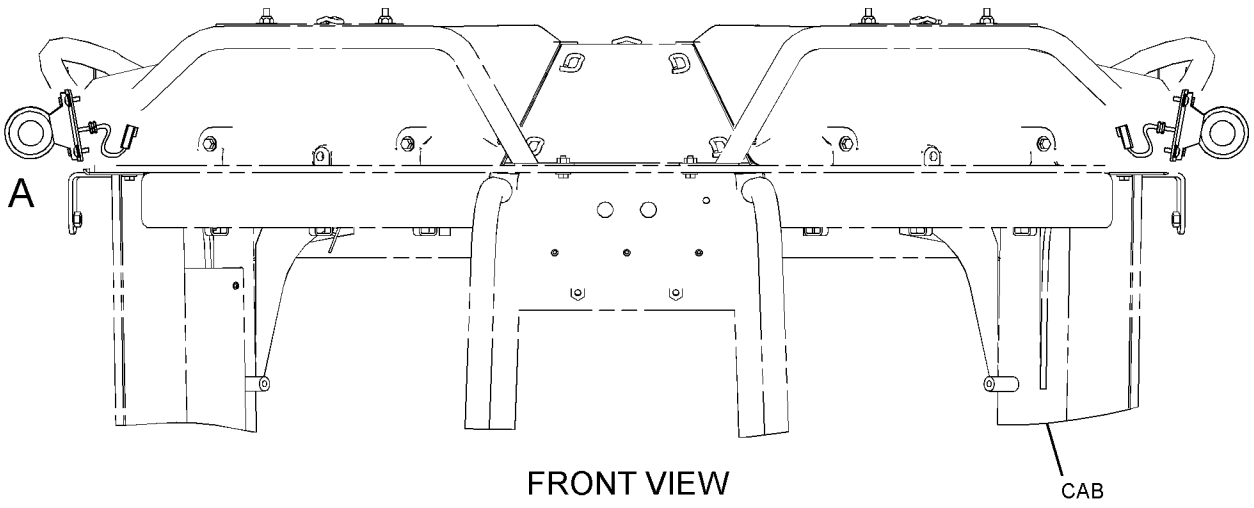

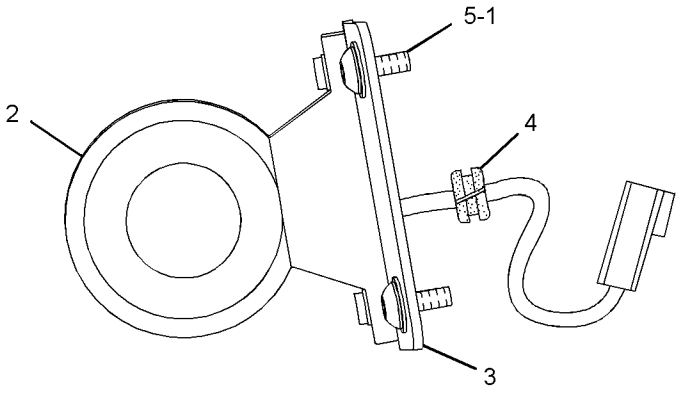

VIEW OF AREA A

GRAPHIC #1 **<END>** g01284539

291-2909 WIRING GP-LIGHTING—FLOODLIGHTS, WARNING BEACON

S/N: B9D1-UP

PART OF 254-5399 CAB AR

SMCS-1408, 1429 **i02779049**

NOTE	REF NO	GRAPHIC REF	PART NUMBER	QTY	PART NAME 1 2 3 4 5 6 (PRODUCT LEVEL)	SEE PAGE
	1	1	**3S-2093**	34	STRAP-CABLE	
	2	1	**249-5480**	1	SWITCH AS-ROCKER (CAB FLOODLIGHTS)	
	3	1	**291-2908**	1	HARNESS AS-LIGHTING	
		1	**102-8801**	1	KIT-RECEPTACLE (12-PIN)	
		1	**102-8802**	14	KIT-RECEPTACLE (2-PIN)	
					(EACH INCLUDES RECEPTACLE AS & WEDGE)	
		1	**155-2255**	2	KIT-CONNECTING PLUG (12-PIN)	
		1	**155-2265**	1	KIT-CONNECTING PLUG (8-PIN)	
		1	**155-2270**	14	KIT-CONNECTING PLUG (2-PIN)	
					(EACH INCLUDES PLUG AS, WEDGE, & INTERFACE SEAL)	

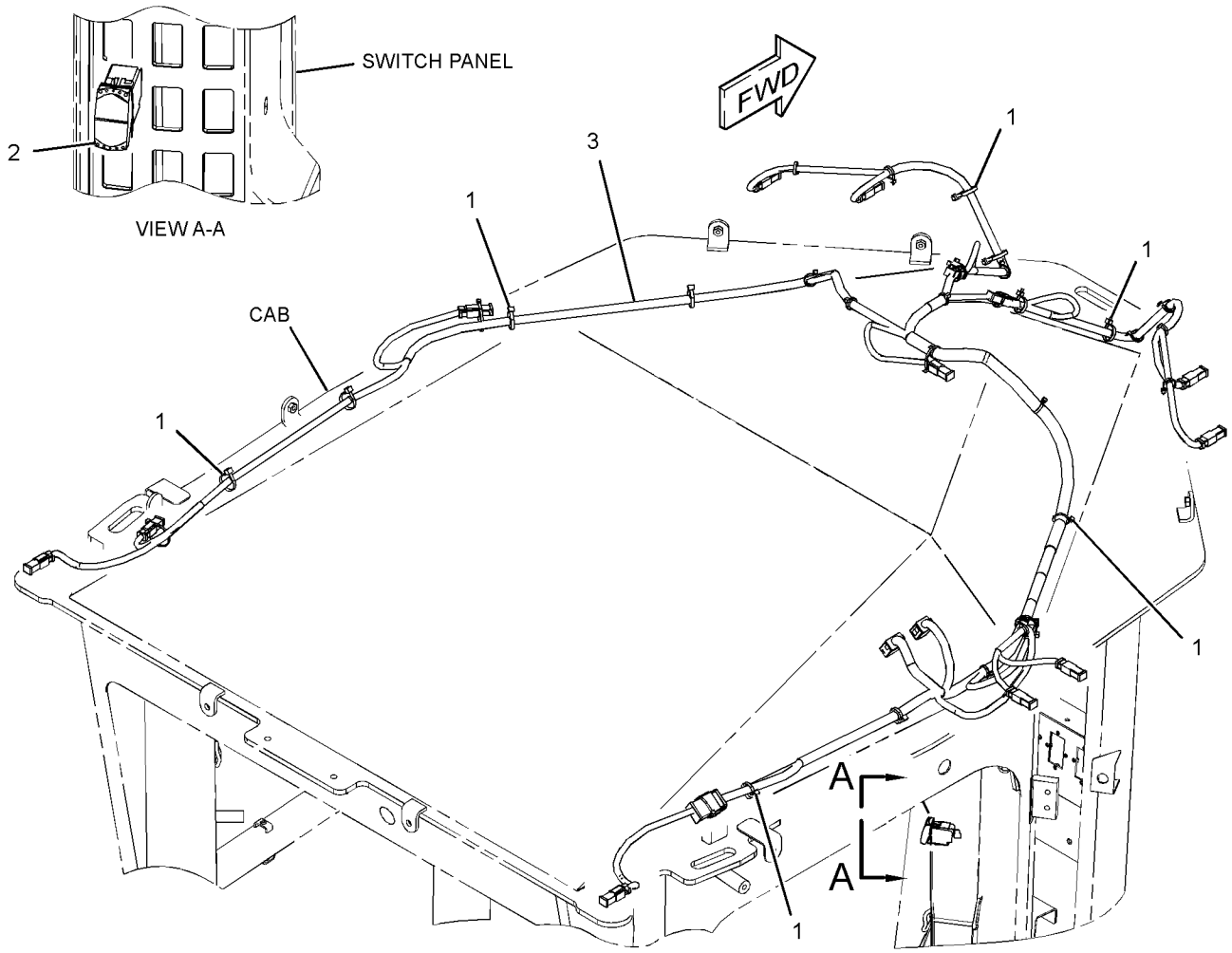

GRAPHIC #1 **<END>** g01322726

292-1874 WIRING GP-LIGHTING—WORK LIGHTS

S/N: B9D1-UP

PART OF 254-5399 CAB AR

SMCS-1408, 1429 **i02779191**

NOTE	REF NO	GRAPHIC REF	PART NUMBER	QTY	PART NAME 1 2 3 4 5 6 (PRODUCT LEVEL)	SEE PAGE
	1	1	**3S-2093**	7	STRAP-CABLE	
	2	1	**292-1868**	1	HARNESS AS-LIGHTING	
		1	**155-2255**	1	KIT-CONNECTING PLUG (12-PIN)	
		1	**155-2274**	1	KIT-CONNECTING PLUG (6-PIN)	
					(EACH PLUG KIT INCLUDES PLUG AS, WEDGE, & INTERFACE SEAL)	

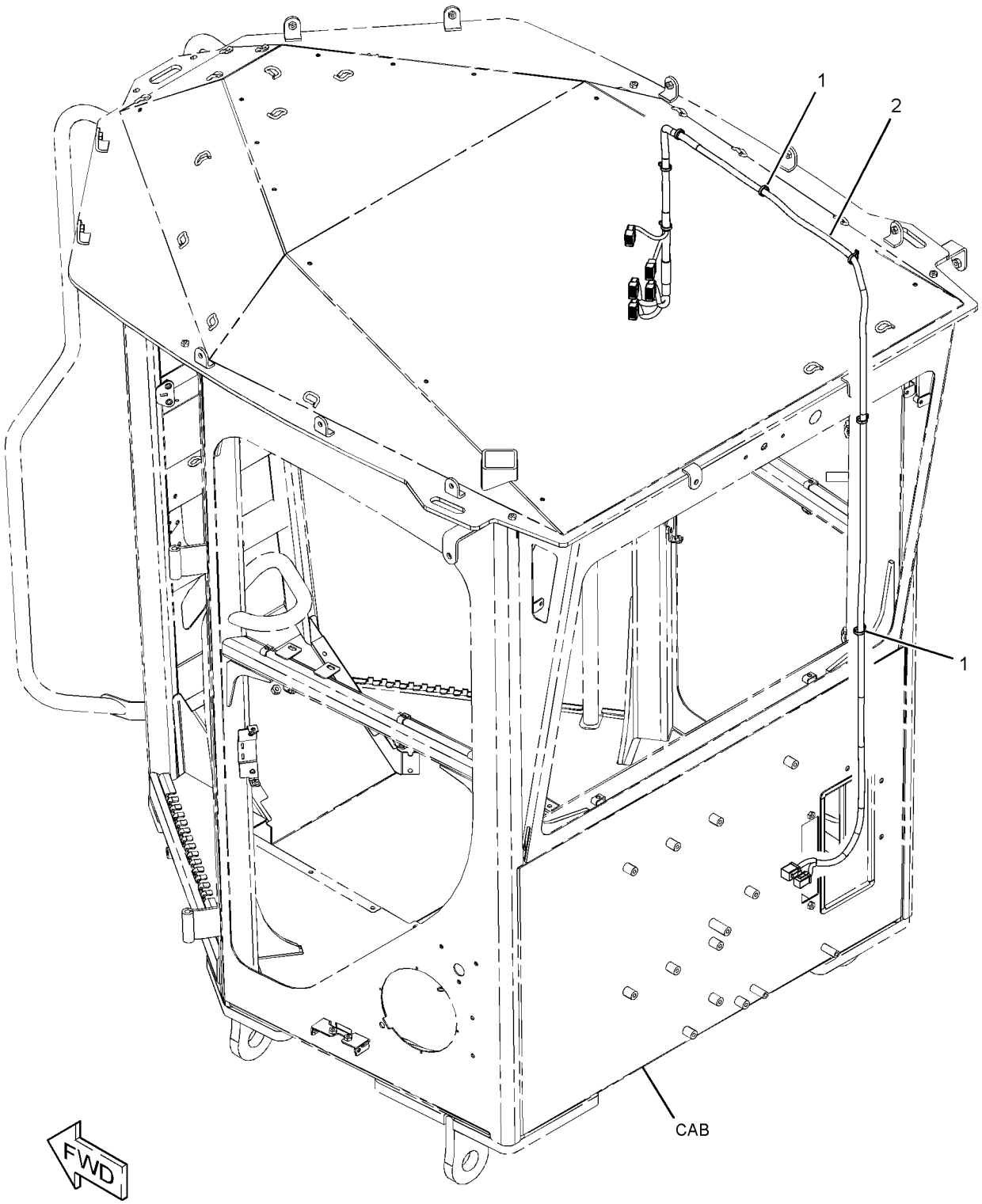

GRAPHIC #1 **<END>** g01161537

ELECTRICAL AND STARTING SYSTEM

253-1964 WIRING GP-MONITOR—CD700 DISPLAY

S/N: B9D1-UP

PART OF 292-7975 DISPLAY AR-MONITOR

SMCS-1408 **i02788465**

NOTE	REF NO	GRAPHIC REF	PART NUMBER	QTY	PART NAME 1 2 3 4 5 6 (PRODUCT LEVEL)	SEE PAGE
	1	2	**7K-1181**	1	STRAP-CABLE	
	2	1	**114-6658**	2	WASHER (6.5X17X1-MM THK)	
	3	1	**140-7480**	1	BRACKET-MOUNTING	
	4	2	**167-8610**	1	BRACKET AS	
	5	2	**222-9151**	2	WASHER-HARD (11X32X5-MM THK)	
	6	2	**245-8334**	2	KNOB	
	7	2	**252-5190**	1	HARNESS AS-FRONT CHASSIS	
		2	**102-8801**	1	KIT-RECEPTACLE (12-PIN)	
					(INCLUDES RECEPTACLE AS & WEDGE)	
		2	**248-5358**	1	PLUG AS-CONNECTOR (39-PIN)	
		2	**155-2255**	1	KIT-CONNECTING PLUG (12-PIN)	
					(INCLUDES PLUG AS, WEDGE, & INTERFACE SEAL)	
	8	2	**253-1963**	1	BRACKET AS	
	9	2	**253-7461**	1	HARNESS AS-RADIO	
		2	**190-7614**	1	KIT-RECEPTACLE (12-PIN)	
					(INCLUDES RECEPTACLE AS & WEDGE)	
		2	**167-8987**	1	PLUG AS-CONNECTOR (8-PIN)	
	10	1	**273-1719**	1	BRACKET AS	
	11	2	**273-5924**	1	KNOB	
	12	1	**300-7909**	1	BRACKET AS	
		1	**205-7047**	2	INSERT-THREADED (M4X7-6H-THD)	
	13	2	**295-8369**	1	PLATE	
	14	1	**295-8370**	1	BRACKET AS	
		1	**7T-1099**	2	LINK	
M		1	**6V-9632**	1	NUT-WELD (M6X1-THD)	
M		1	**8T-3490**	2	NUT-WELD (M10X1.5-THD)	
M		1	**9X-2032**	4	NUT-WELD (M4X0.7-THD)	
	15	2	**295-8381**	1	PLATE AS	
	16	2	**296-1067**	1	HARNESS AS-WIRING (LIGHT BAR)	
		2	**102-8804**	1	KIT-RECEPTACLE (4-PIN)	
					(INCLUDES RECEPTACLE AS & WEDGE)	
		2	**230-5008**	3	PLUG AS-CONNECTOR (4-PIN)	
	17	2	**096-6166**	6	WASHER-HARD (4.5X9X1-MM THK)	
	18	2	**117-8929**	1	WASHER (6.6X22X2-MM THK)	
	19	1	**130-5300**	2	CLIP	
	20	2	**6B-8193**	2	PIN-CLEVIS	
	21	2	**204-0813**	3	BOLT (M6X1X40-MM)	
	22	2	**225-3109**	4	SCREW-TRUSS HEAD (M4X0.7X14-MM)	
	23	2	**3B-4610**	2	PIN-COTTER	
	24	1	**4L-7125**	4	LOCKWASHER	
M	25	2	**5C-7261**	2	NUT (M8X1.25-THD)	
	26	2	**5P-4116**	6	WASHER-HARD (8.8X20.5X2-MM THK)	
	27	2	**5P-6419**	1	GROMMET	
	28	1	**5S-7349**	2	BOLT (1/4-20X0.5-IN)	
M	29	2	**7X-2537**	2	BOLT (M8X1.25X35-MM)	
	30	2	**8C-5607**	6	MOUNT-ISOLATION	
	31	2	**8C-5608**	3	SPACER (6.5X9.5X25.4-MM THK)	
	32	1	**8T-4205**	2	WASHER-HARD (7.2X14.5X2-MM THK)	
	33	2	**8T-4224**	4	WASHER-HARD (8.8X16X2-MM THK)	
M	34	2	**8T-4908**	2	BOLT (M8X1.25X25-MM)	
M	35	2	**8T-7852**	6	BOLT (M4X0.7X10-MM)	
	36	1	**8T-9394**	2	BOLT-SOCKET HEAD (10-24-2AX0.5-IN)	
M	37	1	**9X-2045**	2	SCREW-TRUSS HEAD (M6X1X20-MM)	
	38	2	**9X-6165**	3	WASHER (6.5X22X2.5-MM THK)	
D	39	2	**5P-7657**		SEAL (0.2-M)	

D-ORDER BY THE METER
M-METRIC PART

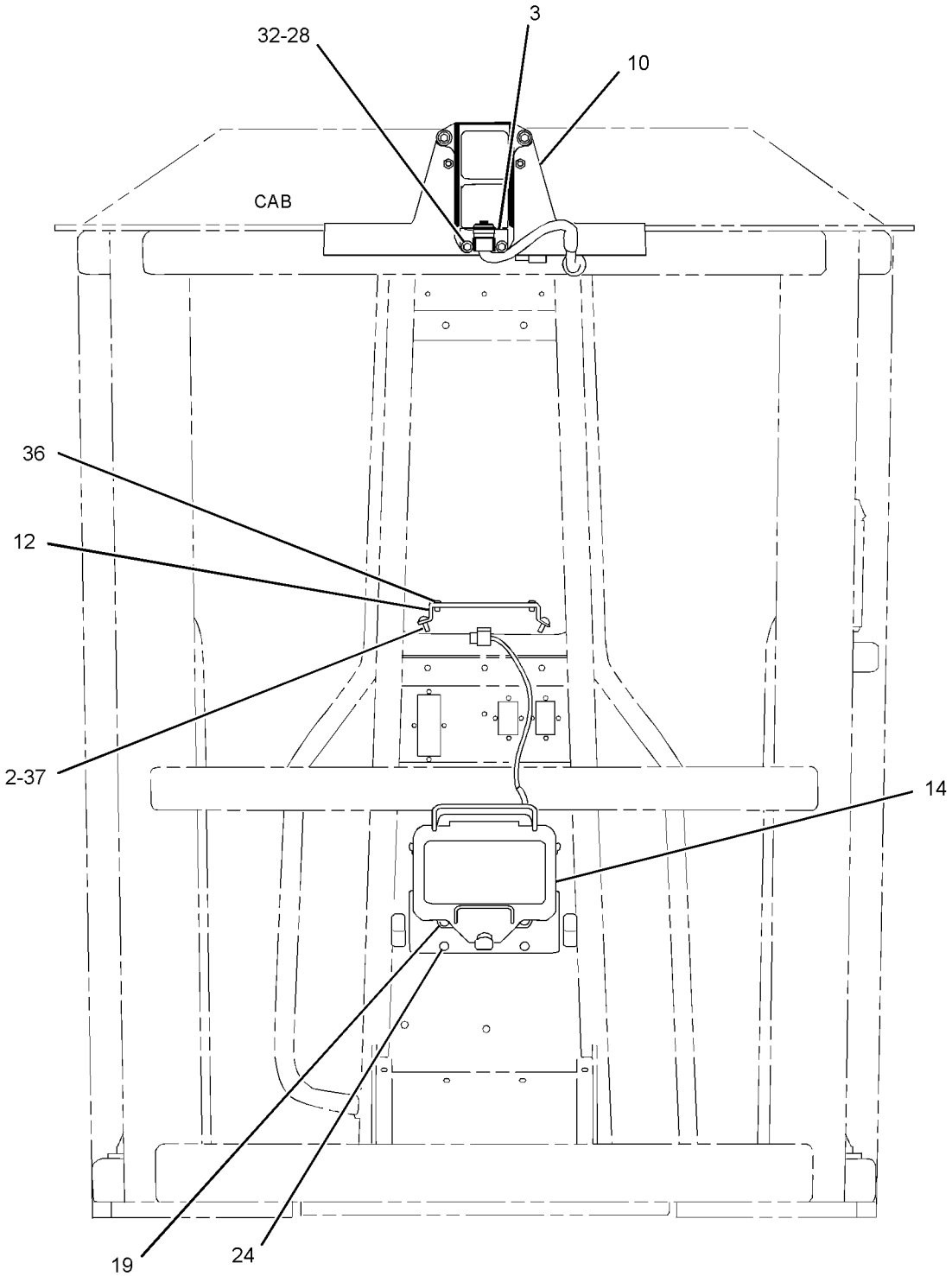

REAR VIEW

GRAPHIC #1 g01337998

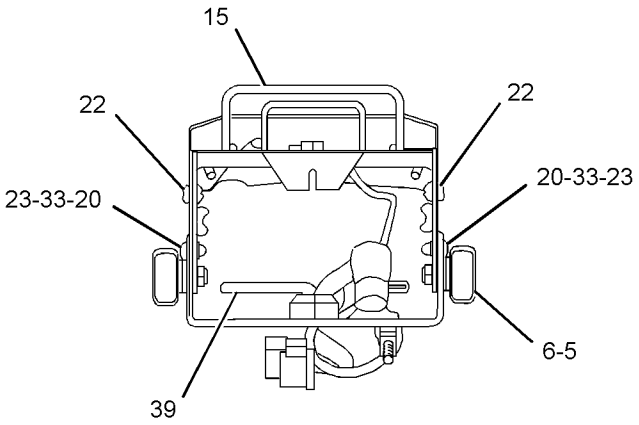

SECTION A-A

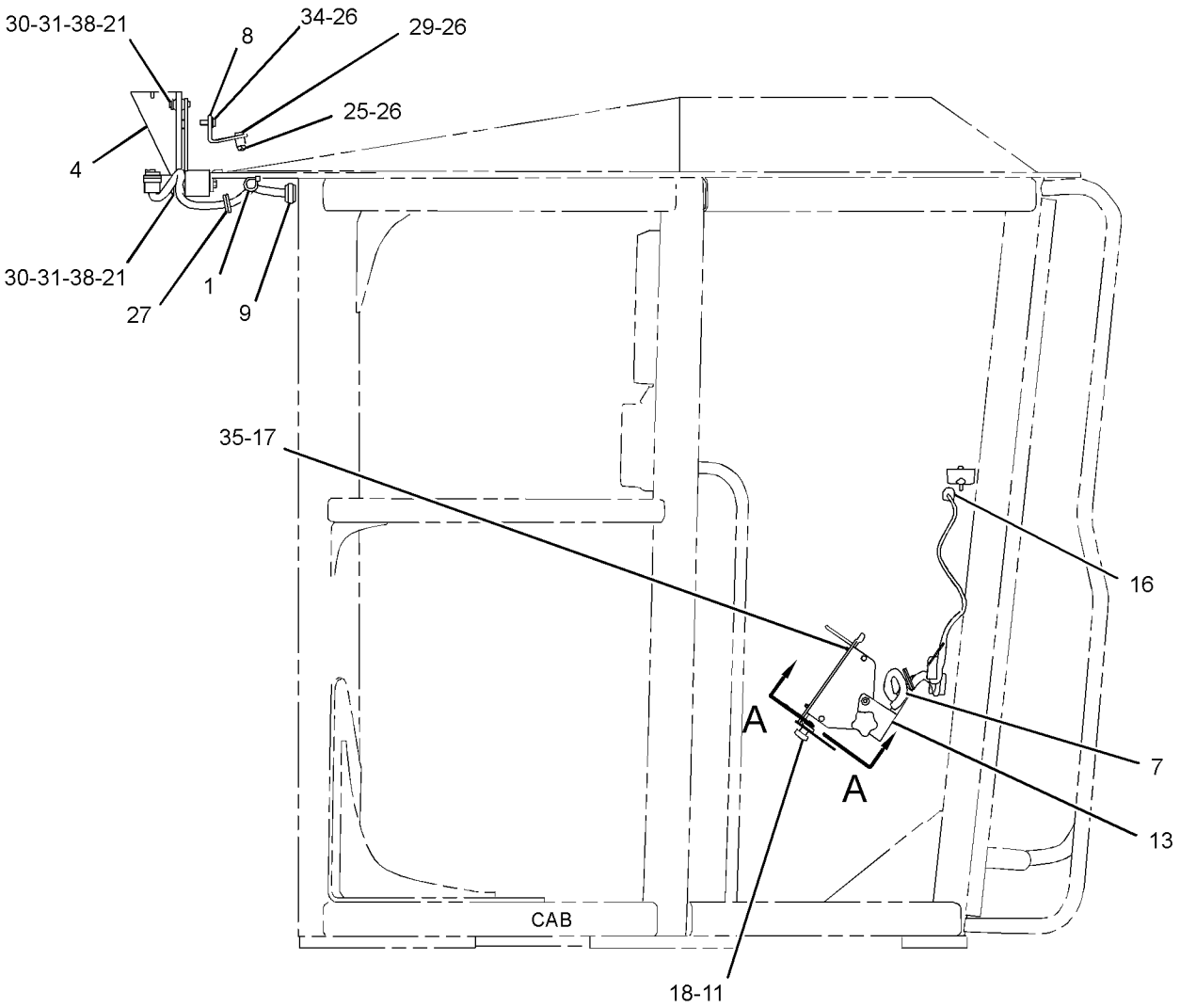

RIGHT SIDE VIEW

GRAPHIC #2 **<END>** g01337999

253-1967 WIRING GP-MONITOR–CD610 DISPLAY

S/N: B9D1-UP

PART OF 292-7980 DISPLAY AR-MONITOR

SMCS-1408 **i02788460**

NOTE	REF NO	GRAPHIC REF	PART NUMBER	QTY	PART NAME 1 2 3 4 5 6 (PRODUCT LEVEL)	SEE PAGE
	1	1	**095-0817**	2	LOCKWASHER	
	2	1	**167-8712**	1	ALARM (CAES)	
	3	1	**167-8713**	1	BAFFLE AS	
	4	1	**167-8714**	1	WIRE AS	
	5	1	**248-2284**	2	KNOB-CONTROL	
	6	1	**251-0077**	1	BRACKET AS	
	7	1	**251-9571**	1	BRACKET AS	
					(EACH BRACKET AS INCLUDES)	
M		1	**8T-3490**	1	NUT-WELD (M10X1.5-THD)	
	8	1	**295-8963**	1	PLATE	
	9	1	**296-4922**	1	HARNESS AS-MONITOR	
		1	**102-8801**	1	KIT-RECEPTACLE (12-PIN)	
					(INCLUDES RECEPTACLE AS & WEDGE)	
		1	**9X-6772**	2	STRAP-CABLE	
		1	**126-1774**	1	COVER-CONNECTOR	
		1	**147-1444**	1	PLUG AS-CONNECTOR (70-PIN)	
		1	**155-2255**	1	KIT-CONNECTING PLUG (12-PIN)	
		1	**155-2270**	1	KIT-CONNECTING PLUG (2-PIN)	
					(EACH INCLUDES PLUG AS, WEDGE, & INTERFACE SEAL)	
	10	1	**130-5300**	3	CLIP	
	11	1	**4L-7125**	4	LOCKWASHER	
	12	1	**8T-4121**	2	WASHER-HARD (11X21X2.5-MM THK)	
M	13	1	**8T-4171**	4	BOLT (M6X1X12-MM)	
	14	1	**8T-4205**	4	WASHER-HARD (7.2X14.5X2-MM THK)	
D	15	1	**5P-7657**		SEAL (0.2-M)	

D-ORDER BY THE METER
M-METRIC PART

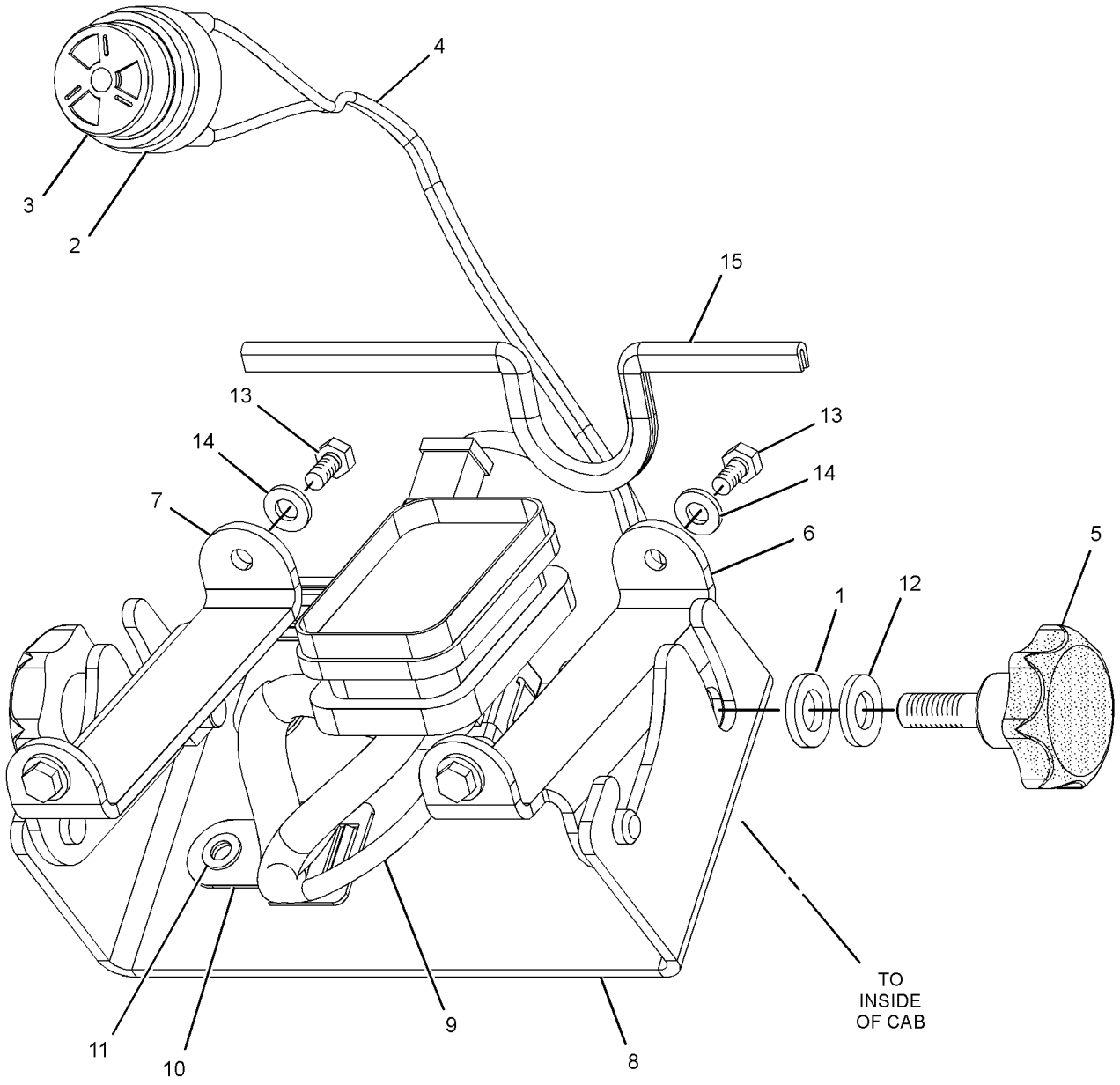

GRAPHIC #1 **<END>** g01332375

ELECTRICAL AND STARTING SYSTEM

269-4152 WIRING GP-POWER RECEPTACLE

S/N: B9D1-UP

PART OF 234-7721 COMMON AR

SMCS-1408, 1463 **i02780952**

NOTE	REF NO	GRAPHIC REF	PART NUMBER	QTY	PART NAME 1 2 3 4 5 6 (PRODUCT LEVEL)	SEE PAGE
	1	1	**8V-9708**	1	SPACER (14.3X25.4X35-MM THK)	
	2	1	**8W-8528**	1	SLEEVE	
	3	1	**097-4896**	2	SPACER (12X20X23-MM THK)	
	4	1	**160-0564**	3	BRACKET AS	
	5	1	**269-4157**	1	CABLE AS	
		1	**1S-7251**	1	TERMINAL-RING (FOR 1/2-IN BOLT)	
		1	**1S-7252**	1	TERMINAL-RING (FOR 3/8-IN BOLT)	
E		1	**159-8050**		CABLE (00-GA, BLACK) (33-CM)	
Y	6	1	*280-8969*	1	PANEL GP-CIRCUIT BREAKER	216
	7	1	**287-6436**	1	BRACKET	
	8	1	**287-8828**	1	PLATE	
	9	1	**291-1881**	1	CABLE AS	
		1	**1S-7251**	2	TERMINAL-RING (FOR 1/2-IN BOLT)	
		1	**8N-0869**	2	COVER-TERMINAL (RED)	
E		1	**159-8049**		CABLE (00-GA, RED) (234-CM)	
	10	1	**291-1884**	1	CABLE AS	
		1	**9G-8909**	1	COVER-TERMINAL (BLACK)	
		1	**170-3794**	1	RING-TERMINAL	
	11	1	**291-1889**	1	CABLE AS	
D		1	**6V-2722**		TUBE-HEAT SHRINK (25.4-MM DIA) (0.2-M)	
		1	**1S-7251**	1	TERMINAL-RING (FOR 1/2-IN BOLT)	
		1	**8N-0869**	1	COVER-TERMINAL (RED)	
		1	**9X-9825**	1	TERMINAL-CABLE (FOR 1/2-IN BOLT)	
E		1	**159-8048**		CABLE-ELECTRICAL (00-GA, BLACK) (142-CM)	
	12	1	**291-1891**	1	CABLE AS	
D		1	**6V-2722**		TUBE-HEAT SHRINK (25.4-MM DIA) (0.1-M)	
		1	**1S-7251**	2	TERMINAL-RING (FOR 1/2-IN BOLT)	
E		1	**159-8049**		CABLE (00-GA, RED) (76-CM)	
M	13	1	**139-4613**	1	BOLT (M10X1.5X16-MM)	
	14	1	**140-0860**	1	STRAP AS-GROUND	
	15	1	**144-8344**	2	SPACER (11X19X20-MM THK)	
M	16	1	**172-4013**	2	SCREW-FLAT HEAD (M12X1.75-THD)	
	17	1	**2V-1771**	4	GROMMET	
	18	1	**3S-8664**	1	CLIP	
	19	1	**4D-1432**	1	SPACER (1.8-IN THK)	
	20	1	**4K-8302**	2	CLIP	
	21	1	**4K-8864**	10	CLIP	
	22	1	**7K-1181**	5	STRAP-CABLE	
	23	1	**7X-0605**	2	WASHER-HARD (13X28X1.6-MM THK)	
M	24	1	**7X-2548**	1	BOLT (M12X1.75X16-MM)	
	25	1	**8D-9671**	1	CLIP	
	26	1	**8S-0948**	2	CLIP	
	27	1	**8T-4121**	25	WASHER-HARD (11X21X2.5-MM THK)	
M	28	1	**8T-4136**	5	BOLT (M10X1.5X25-MM)	
M	29	1	**8T-4137**	9	BOLT (M10X1.5X20-MM)	
M	30	1	**8T-4179**	3	BOLT (M12X1.75X20-MM)	
M	31	1	**8T-4182**	1	BOLT (M10X1.5X45-MM)	
M	32	1	**8T-4191**	1	BOLT (M10X1.5X16-MM)	
M	33	1	**8T-4194**	2	BOLT (M12X1.75X50-MM)	
M	34	1	**8T-4195**	2	BOLT (M10X1.5X30-MM)	
M	35	1	**8T-4196**	2	BOLT (M10X1.5X35-MM)	
	36	1	**8T-4223**	1	WASHER-HARD (13.5X25.5X3-MM THK)	
M	37	1	**8T-5005**	1	BOLT (M10X1.5X70-MM)	

D-ORDER BY THE METER
E-ORDER BY THE CENTIMETER
M-METRIC PART
Y-SEPARATE ILLUSTRATION

269-4152 **WIRING GP-POWER RECEPTACLE** *(contd.)* **i02780952**

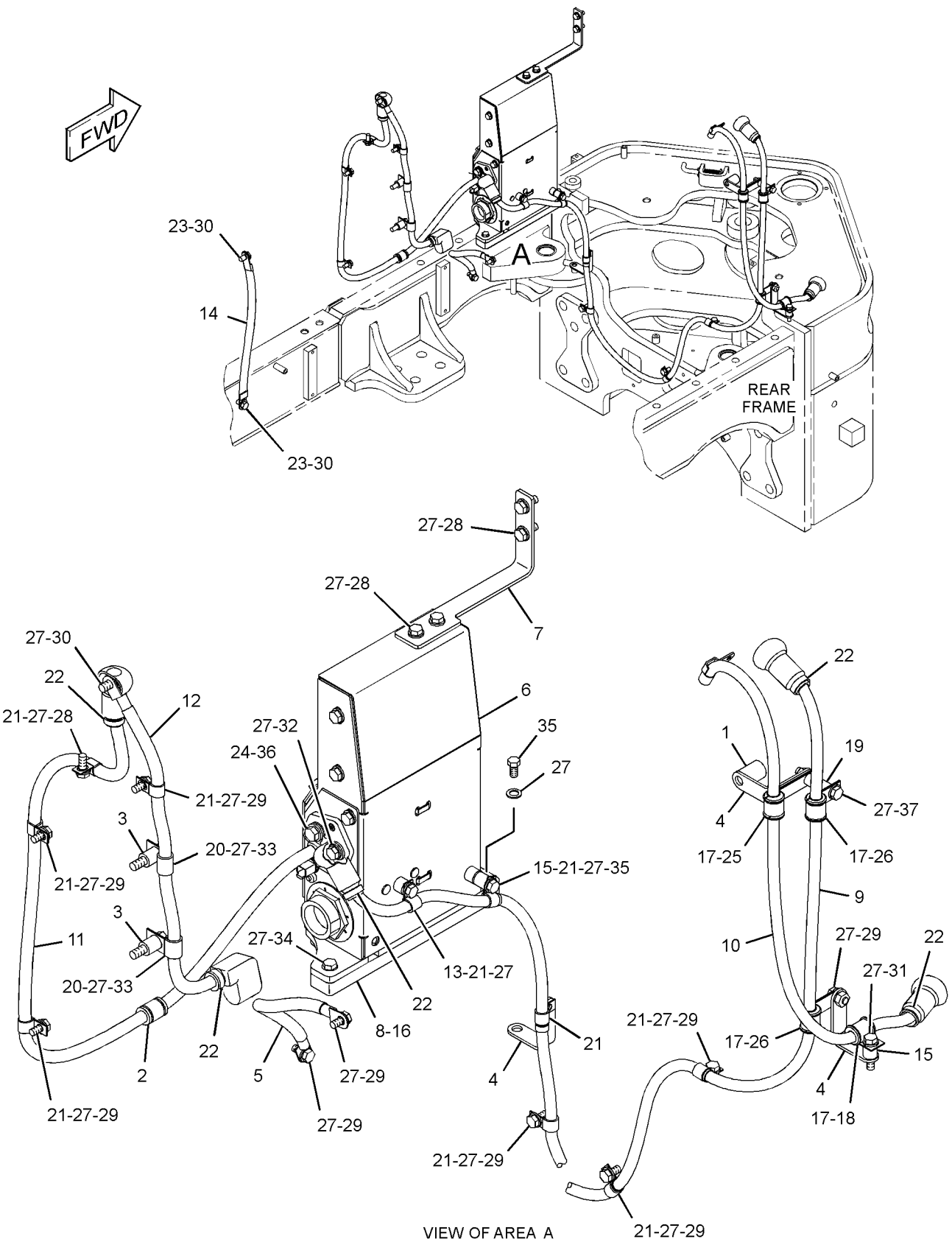

GRAPHIC #1

<END>

g01374799

264-7522 WIRING GP-REAR

S/N: B9D1-UP

PART OF 234-7721 COMMON AR

SMCS-1408 **i02780469**

NOTE	REF NO	GRAPHIC REF	PART NUMBER	QTY	PART NAME 1 2 3 4 5 6 (PRODUCT LEVEL)	SEE PAGE
	1	1	**3S-2093**	1	STRAP-CABLE	
	2	1	**9R-5008**	2	SPACER (11X20X6-MM THK)	
	3	1	**139-2116**	1	SWITCH AS-TOGGLE (GROUND LEVEL SHUTDOWN)	
		1	**3E-3371**	1	WEDGE-RECEPTACLE LOCK (3-PIN)	
		1	**6T-3631**	2	NUT-HEX (15/32-32-THD)	
		1	**6T-3632**	1	LOCKWASHER	
		1	**6T-3633**	1	RING-LOCKING	
		1	**186-3735**	3	PIN-CONNECTOR (16-GA TO 18-GA)	
		1	**102-8803**	1	KIT-RECEPTACLE (3-PIN)	
					(INCLUDES RECEPTACLE AS & WEDGE)	
	4	1,2	**189-3158**	2	SUPPRESSOR-ARC	
Y	5	2	**194-6722**	1	SENSOR GP-PRESSURE (TURBOCHARGER INLET)	228
	6	1	**235-9778**	1	HARNESS AS-REAR	
		1	**102-8803**	1	KIT-RECEPTACLE (3-PIN)	
		1	**102-8805**	1	KIT-RECEPTACLE (6-PIN)	
					(EACH INCLUDES RECEPTACLE AS & WEDGE)	
		1	**155-2270**	1	KIT-CONNECTING PLUG (2-PIN)	
					(INCLUDES PLUG AS, WEDGE, & INTERFACE SEAL)	
	7	2	**240-7193**	1	RESISTOR AS (500-OHM, 2-WATT)	
		2	**102-8802**	1	KIT-RECEPTACLE (2-PIN)	
					(INCLUDES RECEPTACLE AS & WEDGE)	
		2	**186-3735**	1	PIN-CONNECTOR (16-GA TO 18-GA)	
	8	2	**251-3265**	2	LINK AS	
		2	**6F-0612**	1	NUT-JAM (1/4-28-THD)	
		2	**8S-7048**	1	ROD END	
		2	**9L-3334**	1	NUT-PLATED (1/4-28-THD, LH)	
		2	**036-7232**	1	ROD END	
	9	2	**258-8949**	4	SPACER (7.5X12X56-MM THK)	
Y	10	2	**266-1467**	2	SENSOR GP-POSITION (ROTARY) (ARTICULATION)	227
	11	1	**269-4156**	1	BRACKET	
	12	1	**279-6798**	1	HARNESS AS-REAR CHASSIS	
		1	**3S-2093**	4	STRAP-CABLE	
		1	**9X-6772**	4	STRAP-CABLE	
		1	**8N-1521**	2	BELL AS-END (2-GA)	
		1	**126-1774**	3	COVER-CONNECTOR	
		1	**7X-6222**	1	PLUG AS-CONNECTOR (24-PIN)	
		1	**8N-1518**	2	PLUG AS-CONNECTOR (25-PIN)	
		1	**9X-1054**	3	PLUG AS-CONNECTOR (4-PIN)	
		1	**9X-4391**	1	PLUG AS-CONNECTOR (70-PIN)	
		1	**147-1445**	1	PLUG AS-CONNECTOR (70-PIN)	
		1	**147-1446**	1	PLUG AS-CONNECTOR (70-PIN)	
		1	**160-7689**	1	PLUG AS-CONNECTOR (70-PIN)	
		1	**102-8802**	2	KIT-RECEPTACLE (2-PIN)	
		1	**102-8803**	1	KIT-RECEPTACLE (3-PIN)	
		1	**102-8801**	3	KIT-RECEPTACLE (12-PIN)	
					(EACH INCLUDES RECEPTACLE AS & WEDGE)	
		1	**155-2255**	3	KIT-CONNECTING PLUG (12-PIN)	
		1	**155-2260**	3	KIT-CONNECTING PLUG (3-PIN)	
		1	**155-2270**	9	KIT-CONNECTING PLUG (2-PIN)	
		1	**155-2274**	3	KIT-CONNECTING PLUG (6-PIN)	
		1	**174-0503**	1	KIT-CONNECTING PLUG (3-PIN)	
					(EACH INCLUDES PLUG AS, WEDGE, & INTERFACE SEAL)	
	13	2	**279-9658**	2	LEVER	
	14	1	**288-5507**	1	PLATE AS	
	15	1	**289-9520**	1	BRACKET AS	

264-7522 **WIRING GP-REAR** *(contd.)* **i02780469**

NOTE	REF NO	GRAPHIC REF	PART NUMBER	QTY	PART NAME 1 2 3 4 5 6 (PRODUCT LEVEL)	SEE PAGE
M		1	**8T-3490**	1	NUT-WELD (M10X1.5-THD)	
		1	**289-9519**	1	BRACKET	
	16	2	**291-2161**	1	HARNESS AS-HEATER & AIR COND	
		2	**102-8802**	4	KIT-RECEPTACLE (2-PIN)	
		2	**102-8803**	1	KIT-RECEPTACLE (3-PIN)	
					(EACH INCLUDES RECEPTACLE AS & WEDGE)	
		2	**155-2255**	1	KIT-CONNECTING PLUG (12-PIN)	
		2	**155-2270**	5	KIT-CONNECTING PLUG (2-PIN)	
					(EACH INCLUDES PLUG AS, WEDGE, & INTERFACE SEAL)	
	17	1	**291-2162**	1	BRACKET AS	
M		1	**8T-3490**	2	NUT-WELD (M10X1.5-THD)	
	18	1	**292-0970**	1	HARNESS AS-PUMP (FUEL)	
		1	**9X-1054**	1	PLUG AS-CONNECTOR (4-PIN)	
		1	**102-8802**	1	KIT-RECEPTACLE (2-PIN)	
		1	**102-8805**	1	KIT-RECEPTACLE (6-PIN)	
					(EACH INCLUDES RECEPTACLE AS & WEDGE)	
		1	**155-2270**	2	KIT-CONNECTING PLUG (2-PIN)	
					(EACH INCLUDES PLUG AS, WEDGE, & INTERFACE SEAL)	
	19	1,2	**033-8248**	3	CLIP	
	20	1,2	**130-5300**	12	CLIP	
	21	2	**130-5301**	1	CLIP	
	22	1	**132-5789**	3	CLIP	
	23	1	**134-2540**	1	RECEPTACLE AS (3-PIN)	
	24	2	**134-3355**	1	STRAP AS	
	25	1	**134-3987**	2	CLIP	
	26	2	**144-8344**	1	SPACER (11X19X20-MM THK)	
	27	2	**166-0690**	2	BLOCK AS-MOUNTING	
	28	1	**1S-0994**	1	CLIP	
	29	2	**2F-7888**	4	SCREW-MACHINE (10-32X1.25-IN)	
	30	2	**2K-8467**	2	PIN-SPRING	
	31	2	**2N-9421**	2	SPRING-DISC	
	32	1	**2V-3216**	1	CLIP	
	33	1,2	**3E-5169**	1	GUARD-SWITCH	
	34	1	**3E-5239**	1	RELAY AS (24-VOLT) (FUEL PUMP RELAY)	
	34A	1	**3E-5239**	1	RELAY AS (24-VOLT) (A/C CLUTCH SOLENOID)	
	34B	1	**3E-5239**	1	RELAY AS (24-VOLT) (BACKUP ALARM)	
	34C	2	**3E-5239**	1	RELAY AS (24-VOLT) (SECONDARY STEERING)	
	35	2	**4B-4274**	4	WASHER (5.5X13X1.2-MM THK)	
	36	1	**4D-7794**	1	CLIP	
	37	2	**4D-9517**	1	CLIP	
	38	2	**4P-7581**	2	CLIP	
	39	2	**4P-7582**	1	CLIP	
	40	2	**4P-8134**	1	CLIP	
	41	1	**4S-1962**	1	CLIP	
M	42	1	**5C-7261**	1	NUT (M8X1.25-THD)	
M	43	1,2	**5C-9553**	4	BOLT (M6X1X16-MM)	
	44	2	**5P-0537**	4	WASHER-HARD (7.2X14.5X2-MM THK)	
	45	1	**5P-4116**	1	WASHER-HARD (8.8X20.5X2-MM THK)	
	46	1,2	**5P-9297**	8	CLIP	
	47	2	**6D-3479**	2	CLIP	
	48	1	**6D-4244**	1	CLIP	
	49	2	**6V-0894**	2	SEAL-O-RING	
	50	1	**6V-3265**	2	CLIP	
	51	1	**7C-4355**	1	CLIP	
	52	1,2	**7D-7233**	5	CLIP	
	53	1	**7K-1181**	19	STRAP-CABLE	
	54	2	**7X-0605**	2	WASHER-HARD (13X28X1.6-MM THK)	
	55	2	**8F-6302**	4	BOLT (1/4-20X3.75-IN)	

264-7522 **WIRING GP-REAR** ***(contd.)*** **i02780469**

NOTE	REF NO	GRAPHIC REF	PART NUMBER	QTY	PART NAME 1 2 3 4 5 6 (PRODUCT LEVEL)	SEE PAGE
	56	1	**8M-2770**	2	CLIP	
	57	1,2	**8M-2773**	4	CLIP	
	58	1,2	**8T-4121**	34	WASHER-HARD (11X21X2.5-MM THK)	
M	59	1	**8T-4133**	1	NUT (M10X1.5-THD)	
M	60	1	**8T-4136**	4	BOLT (M10X1.5X25-MM)	
M	61	1,2	**8T-4137**	24	BOLT (M10X1.5X20-MM)	
M	62	2	**8T-4138**	2	BOLT (M6X1X20-MM)	
M	63	2	**8T-4182**	1	BOLT (M10X1.5X45-MM)	
M	64	1	**8T-4189**	3	BOLT (M8X1.25X20-MM)	
M	65	1	**8T-4192**	1	BOLT (M12X1.75X25-MM)	
M	66	1,2	**8T-4195**	3	BOLT (M10X1.5X30-MM)	
	67	2	**8T-4205**	2	WASHER-HARD (7.2X14.5X2-MM THK)	
	68	1	**8T-4224**	3	WASHER-HARD (8.8X16X2-MM THK)	
	69	2	**9M-4972**	4	CLIP	
	70	1,2	**9X-8256**	4	WASHER (6.6X12X2-MM THK)	

M-METRIC PART
Y-SEPARATE ILLUSTRATION

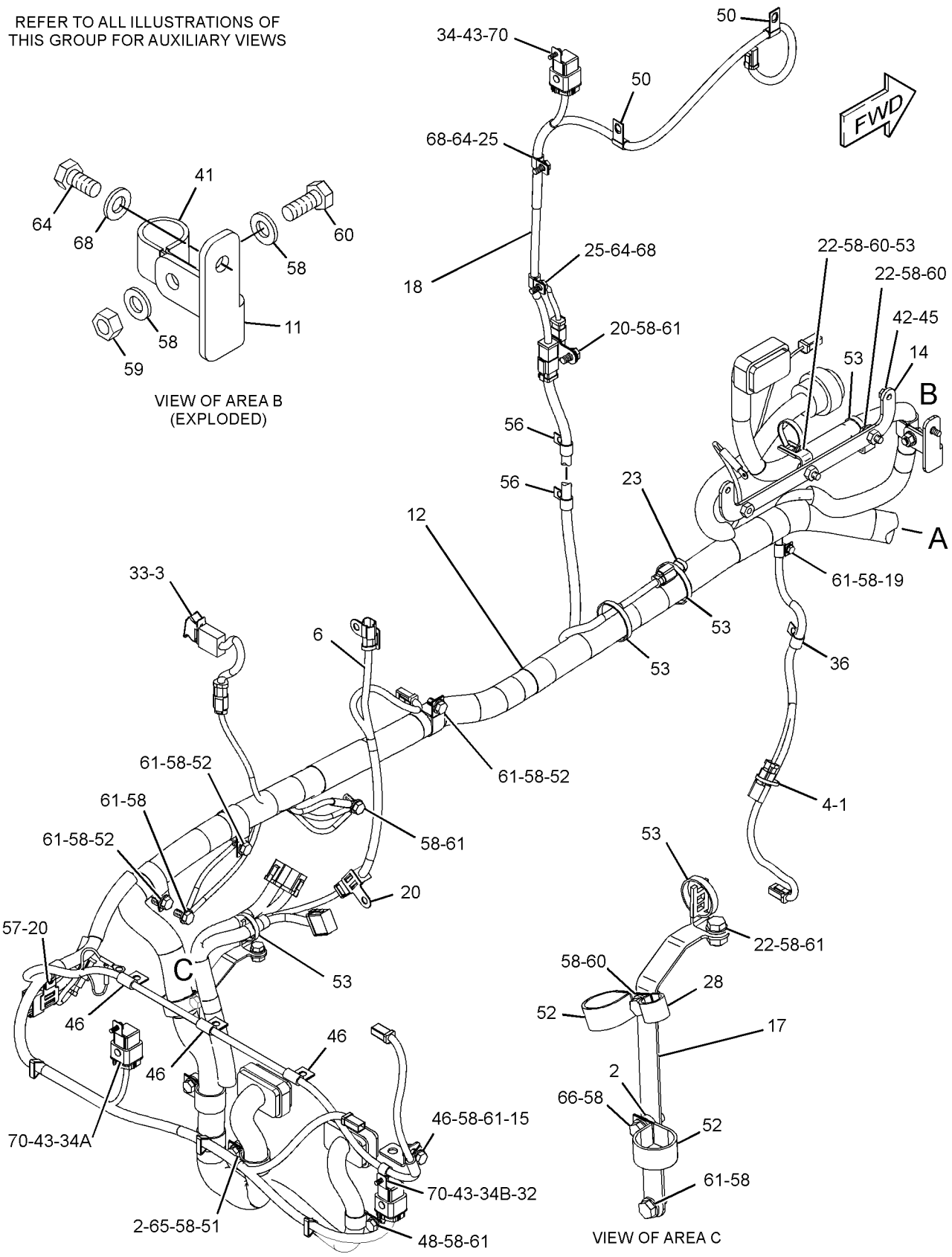

GRAPHIC #1

g01391200

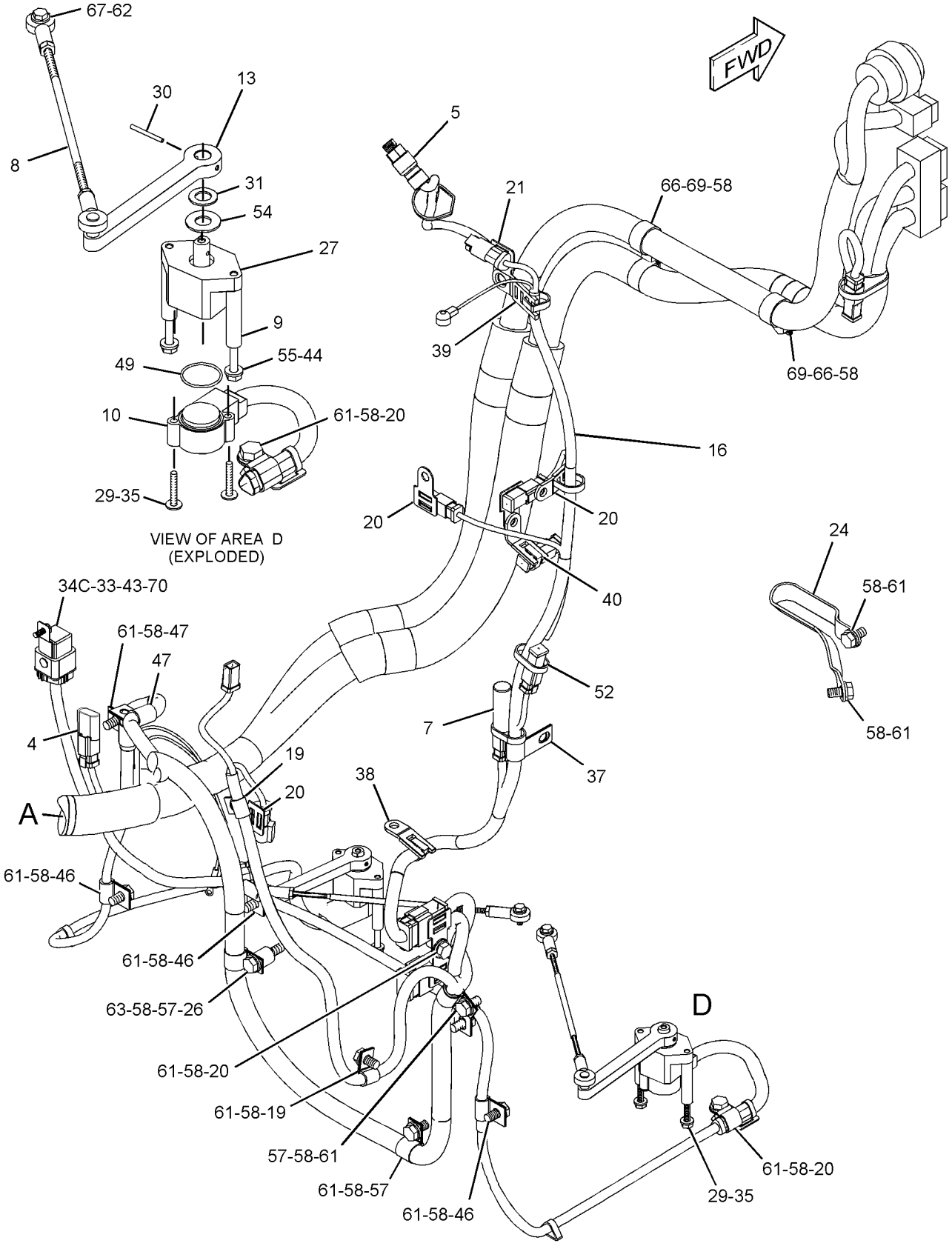

GRAPHIC #2 **<END>** g01391207

233-4623 WIRING GP-REAR LIGHTING–
STOP, TAIL, TURN, BACKUP
S/N: B9D1-UP

SMCS-1408, 1429 **i02776425**

NOTE	REF NO	GRAPHIC REF	PART NUMBER	QTY	PART NAME 1 2 3 4 5 6 (PRODUCT LEVEL)	SEE PAGE
	1	1	**3S-2093**	22	STRAP-CABLE	
	2	1	**7X-2393**	4	BUMPER-CONICAL	
	3	1	**9S-1316**	2	SPRING	
	4	1	**116-0118**	2	CLIP	
Y	5	1	**135-0426**	2	LAMP GP-SIGNAL (24-VOLT, STOP, TAIL)	194
Y	6	1	**199-3368**	2	LAMP GP-SIGNAL (24-VOLT, TURN)	195
	7	1	**245-2810**	1	BRACKET AS (RH)	
	8	1	**245-2811**	1	BRACKET AS (LH)	
	9	1	**245-2812**	1	ARM AS (RH)	
		1	**5D-9629**	2	ROD	
	10	1	**245-2813**	1	ARM AS (LH)	
		1	**5D-9629**	3	ROD	
	11	1	**245-2814**	2	ROD	
Y	12	1	**261-1502**	2	LIGHTING GP-BACKUP (24-VOLT)	197
	13	1	**286-9718**	1	HARNESS AS-REAR LIGHTING	
		1	**102-8802**	5	KIT-RECEPTACLE (2-PIN)	
		1	**102-8803**	4	KIT-RECEPTACLE (3-PIN)	
					(EACH RECEPTACLE KIT INCLUDES RECEPTACLE AS & WEDGE)	
		1	**155-2255**	1	KIT-CONNECTING PLUG (12-PIN)	
		1	**155-2260**	4	KIT-CONNECTING PLUG (3-PIN)	
		1	**155-2270**	7	KIT-CONNECTING PLUG (2-PIN)	
					(EACH PLUG KIT INCLUDES PLUG AS, WEDGE, & INTERFACE SEAL)	
	14	1	**117-9409**	2	GROMMET	
	16	1	**156-6175**	2	CLIP	
	17	1	**1V-6688**	1	GROMMET	
	18	1	**292-9390**	2	FILM-WARNING (HAND CRUSH HAZARD, STAY BACK)	
	19	1	**3B-5301**	2	PIN-COTTER	
M	20	1	**5C-2890**	18	NUT (M6X1-THD)	
	21	1	**5P-1076**	4	WASHER-HARD (13.5X30X4-MM THK)	
	22	1	**5P-4115**	6	WASHER-HARD (7.2X19X2-MM THK)	
	23	1	**5P-8441**	4	GROMMET	
M	24	1	**6V-7687**	2	LOCKNUT (M12X1.75-THD)	
	25	1	**7X-7729**	4	WASHER (11X25X3-MM THK)	
M	26	1	**8T-4136**	4	BOLT (M10X1.5X25-MM)	
M	27	1	**8T-4176**	2	BOLT (M12X1.75X90-MM)	
	28	1	**8T-4223**	2	WASHER-HARD (13.5X25.5X3-MM THK)	
	29	1	**9X-8256**	12	WASHER (6.6X12X2-MM THK)	
	30	1	**292-9391**	2	FILM-WARNING (HAND CRUSH HAZARD, STAY BACK)	
B	31	1	**8D-5641**	8	BEARING	

B-USE AS REQUIRED
M-METRIC PART
Y-SEPARATE ILLUSTRATION

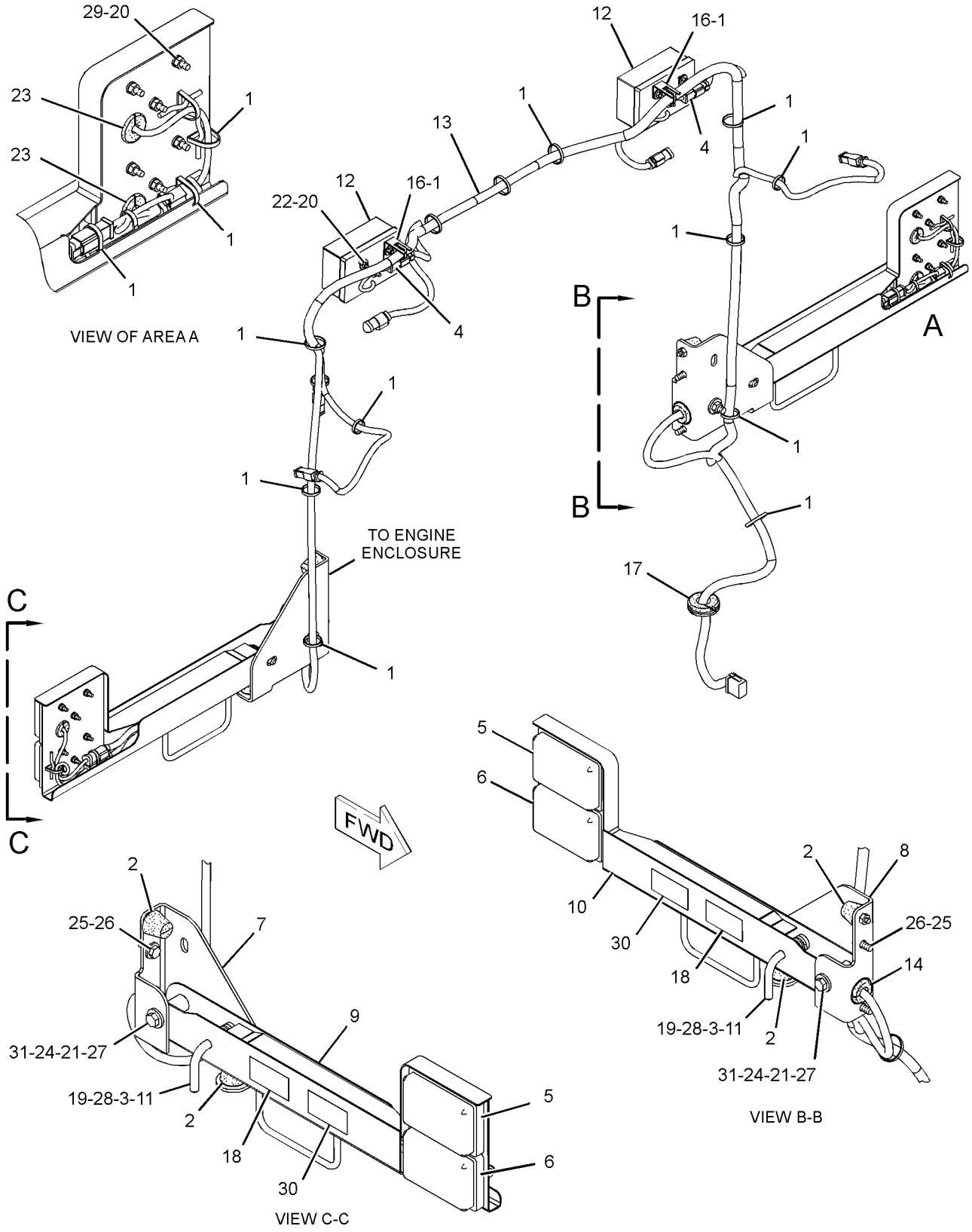

GRAPHIC #1 **<END>** g01344412

247-6430 WIRING GP-REAR LIGHTING–RADIATOR

S/N: B9D1-UP

CANNOT BE USED WITH 233-4610–PAGE 209, 233-4624–PAGE 211

SMCS-1408, 1429 **i02783026**

NOTE	REF NO	GRAPHIC REF	PART NUMBER	QTY	PART NAME 1 2 3 4 5 6 (PRODUCT LEVEL)	SEE PAGE
	1	1	**3S-2093**	25	STRAP-CABLE	
	2	1	**116-0118**	2	CLIP	
Y	3	1	**135-0426**	2	LAMP GP-SIGNAL (24-VOLT, STOP, TAIL) (REAR LIGHTS)	194
	4	1	**236-1928**	1	BRACKET AS	
	5	1	**239-6379**	1	BRACKET AS	
Y	6	1	**261-1502**	2	LIGHTING GP-BACKUP (24-VOLT)	197
	7	1	**286-9718**	1	HARNESS AS-REAR LIGHTING	
		1	**102-8802**	5	KIT-RECEPTACLE (2-PIN)	
		1	**102-8803**	4	KIT-RECEPTACLE (3-PIN)	
					(EACH RECEPTACLE KIT INCLUDES RECEPTACLE AS & WEDGE)	
		1	**155-2255**	1	KIT-CONNECTING PLUG (12-PIN)	
		1	**155-2260**	4	KIT-CONNECTING PLUG (3-PIN)	
		1	**155-2270**	7	KIT-CONNECTING PLUG (2-PIN)	
					(EACH PLUG KIT INCLUDES PLUG AS, WEDGE & INTERFACE SEAL)	
	8	1	**156-6175**	2	CLIP	
	9	1	**1V-6688**	1	GROMMET	
M	10	1	**5C-2890**	12	NUT (M6X1-THD)	
	11	1	**5P-4115**	6	WASHER-HARD (7.2X19X2-MM THK)	
	12	1	**5P-8441**	2	GROMMET	
	13	1	**8T-4121**	6	WASHER-HARD (11X21X2.5-MM THK)	
M	14	1	**8T-4172**	6	BOLT (M10X1.5X80-MM)	
	15	1	**9X-8256**	6	WASHER (6.6X12X2-MM THK)	

M-METRIC PART
Y-SEPARATE ILLUSTRATION

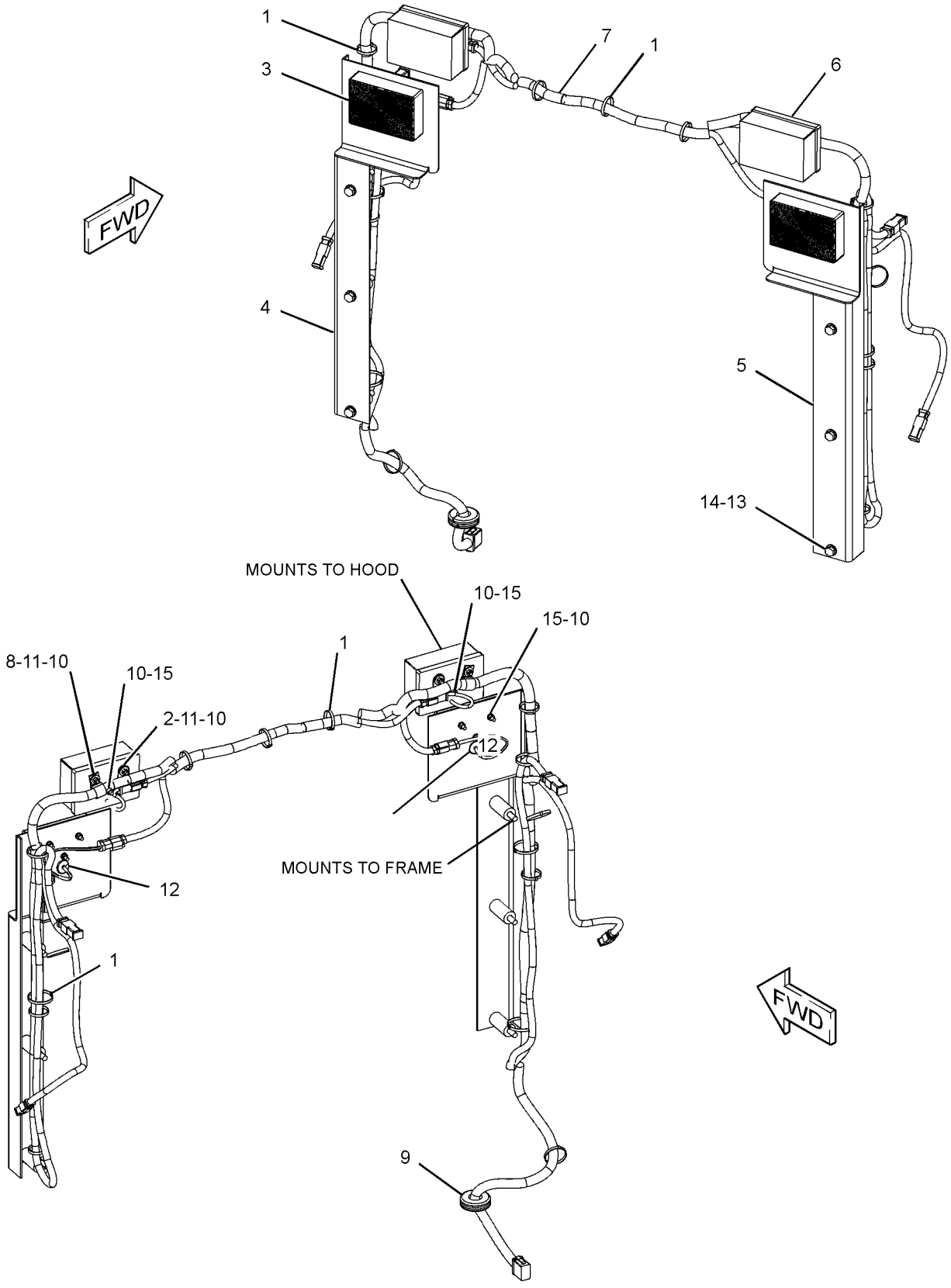

GRAPHIC #1 **<END>** g01279907

ELECTRICAL AND STARTING SYSTEM

269-4150 WIRING GP-SECONDARY STEERING

S/N: B9D1-UP

PART OF 234-7721 COMMON AR, 276-1425 STEERING AR-SECONDARY

SMCS-1408, 4334 **i02780950**

NOTE	REF NO	GRAPHIC REF	PART NUMBER	QTY	PART NAME 1 2 3 4 5 6 (PRODUCT LEVEL)	SEE PAGE
	1	1	**3S-2093**	6	STRAP-CABLE	
	2	1	**286-2439**	1	CABLE AS	
		1	**1S-7252**	1	TERMINAL-RING (FOR 3/8-IN BOLT)	
		1	**8N-0869**	1	COVER-TERMINAL (RED)	
		1	**8S-3020**	1	TERMINAL-CABLE	
		1	**9X-9120**	1	BOOT (RED)	
E		1	**159-8049**		CABLE (00-GA, RED) (62-CM)	
	3	1	**291-3817**	1	CABLE AS	
		1	**1S-7252**	1	TERMINAL-RING (FOR 3/8-IN BOLT)	
		1	**8N-0869**	1	COVER-TERMINAL (RED)	
		1	**190-3849**	1	COVER-TERMINAL (RED)	
E		1	**159-8049**		CABLE (00-GA, RED) (103-CM)	
	4	1	**144-8344**	1	SPACER (11X19X20-MM THK)	
Y	5	1	**179-0006**	1	SWITCH GP-MAGNETIC (24-VOLT TO 32-VOLT) (SECONDARY STEERING RELAY)	255
	6	1	**260-3404**	1	CABLE AS	
		1	**1S-7252**	2	TERMINAL-RING (FOR 3/8-IN BOLT)	
E		1	**5P-0747**		CABLE (00-GA, BLACK) (29-CM)	
		1	**9G-8909**	2	COVER-TERMINAL (BLACK)	
	7	1	**8T-4121**	2	WASHER-HARD (11X21X2.5-MM THK)	
M	8	1	**8T-4137**	1	BOLT (M10X1.5X20-MM)	
M	9	1	**8T-4171**	4	BOLT (M6X1X12-MM)	
M	10	1	**8T-4186**	1	BOLT (M10X1.5X40-MM)	
	11	1	**9M-8406**	4	CLIP	
	12	1	**9X-8256**	4	WASHER (6.6X12X2-MM THK)	

E-ORDER BY THE CENTIMETER
M-METRIC PART
Y-SEPARATE ILLUSTRATION

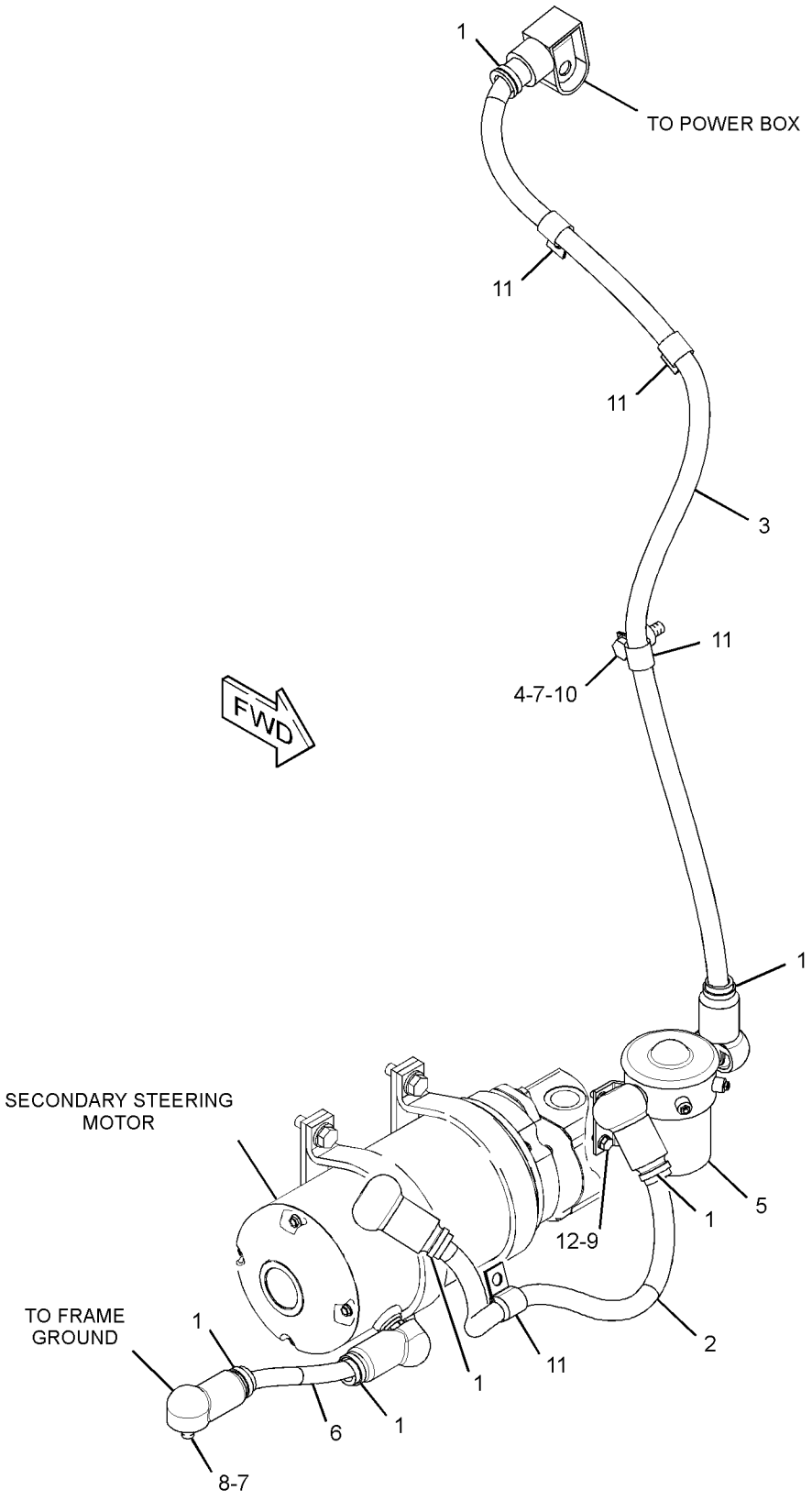

GRAPHIC #1 **<END>** g01343047

235-6194 WIRING GP-SENSOR

S/N: B9D1-UP

PART OF 261-0153 AXLE AR-FRONT

FOR USE WITH ALL WHEEL DRIVE ARRANGEMENT

SMCS-1408 **i02785669**

NOTE	REF NO	GRAPHIC REF	PART NUMBER	QTY	PART NAME 1 2 3 4 5 6 (PRODUCT LEVEL)	SEE PAGE
	1	2	**264-4297**	1	SENSOR GP-TEMPERATURE (HYDRAULIC OIL)	
		2	**137-6645**	1	PAD	
	2	1	**288-3901**	1	GUARD AS-SENSOR	
	3	1	**288-3902**	1	GUARD AS	
	4	1	**289-8436**	1	HARNESS AS-SENSOR (MOTOR SPEED, RH)	
		1	**102-8804**	1	KIT-RECEPTACLE (4-PIN)	
					(INCLUDES RECEPTACLE AS & WEDGE)	
		1	**155-2271**	1	KIT-CONNECTING PLUG (4-PIN)	
					(INCLUDES PLUG AS, WEDGE, & INTERFACE SEAL)	
	5	1	**289-8439**	1	HARNESS AS-SENSOR (MOTOR SPEED, LH)	
		1	**102-8804**	1	KIT-RECEPTACLE (4-PIN)	
					(INCLUDES RECEPTACLE AS & WEDGE)	
		1	**155-2271**	1	KIT-CONNECTING PLUG (4-PIN)	
					(INCLUDES PLUG AS, WEDGE, & INTERFACE SEAL)	
	6	2	**291-4848**	1	HARNESS AS-PUMP	
		2	**102-8805**	1	KIT-RECEPTACLE (6-PIN)	
					(INCLUDES RECEPTACLE AS & WEDGE)	
		2	**155-2270**	4	KIT-CONNECTING PLUG (2-PIN)	
					(EACH INCLUDES PLUG AS, WEDGE, & INTERFACE SEAL)	
	7	1	**299-9001**	1	HARNESS AS-FRONT	
		1	**9X-7144**	1	PLUG AS-CONNECTOR (24-PIN)	
		1	**102-8803**	2	KIT-RECEPTACLE (3-PIN)	
					(EACH INCLUDES RECEPTACLE AS & WEDGE)	
		1	**155-2270**	6	KIT-CONNECTING PLUG (2-PIN)	
		1	**155-2271**	2	KIT-CONNECTING PLUG (4-PIN)	
					(EACH PLUG KIT INCLUDES PLUG AS, WEDGE, & INTERFACE SEAL)	
	8	2	**300-1276**	1	HARNESS AS-REAR	
		2	**155-2255**	1	KIT-CONNECTING PLUG (12-PIN)	
		2	**155-2255**	1	KIT-CONNECTING PLUG (12-PIN)	
		2	**155-2270**	1	KIT-CONNECTING PLUG (2-PIN)	
		2	**155-2274**	1	KIT-CONNECTING PLUG (6-PIN)	
					(EACH PLUG KIT INCLUDES PLUG AS, WEDGE, & INTERFACE SEAL)	
	9	1,2	**130-5300**	3	CLIP	
	10	1	**149-7738**	2	CLIP	
	12	2	**3K-0360**	1	SEAL-O-RING	
	13	2	**4D-7794**	2	CLIP	
	14	1	**4K-8864**	1	CLIP	
	15	1,2	**4P-7581**	2	CLIP	
	16	2	**6D-3479**	1	CLIP	
	17	2	**6V-3265**	2	CLIP	
	18	1,2	**7K-1181**	18	STRAP-CABLE	
	20	1,2	**8T-4121**	20	WASHER-HARD (11X21X2.5-MM THK)	
M	21	1	**8T-4133**	3	NUT (M10X1.5-THD)	
M	22	1,2	**8T-4136**	5	BOLT (M10X1.5X25-MM)	
M	23	1,2	**8T-4137**	12	BOLT (M10X1.5X20-MM)	
	24	1	**9M-8406**	3	CLIP	
	25	1	**9X-8250**	3	CLIP	
	26	1	**132-5789**	1	CLIP	

M-METRIC PART

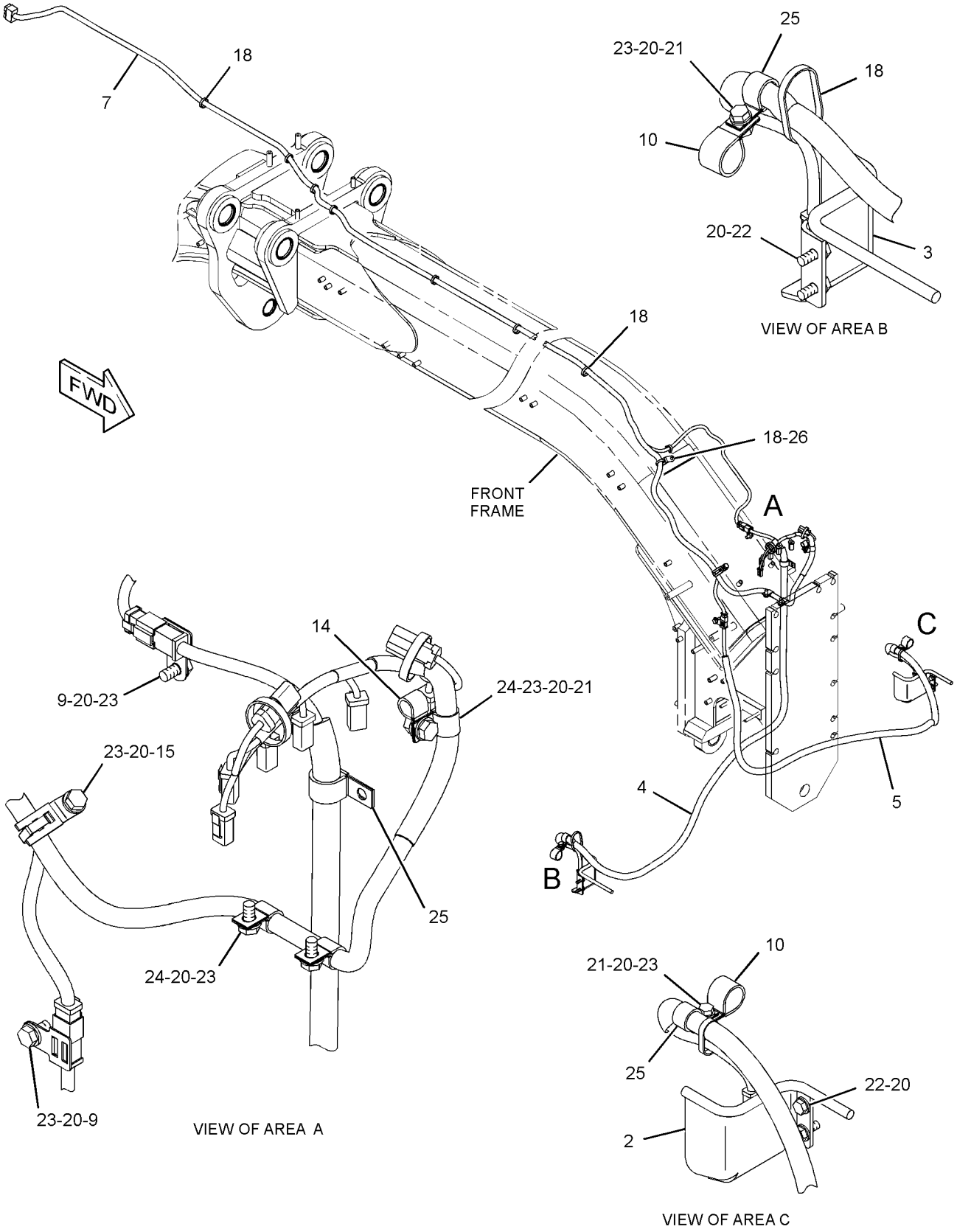

GRAPHIC #1

g01393691

235-6194 **WIRING GP-SENSOR** *(contd.)* **i02785669**

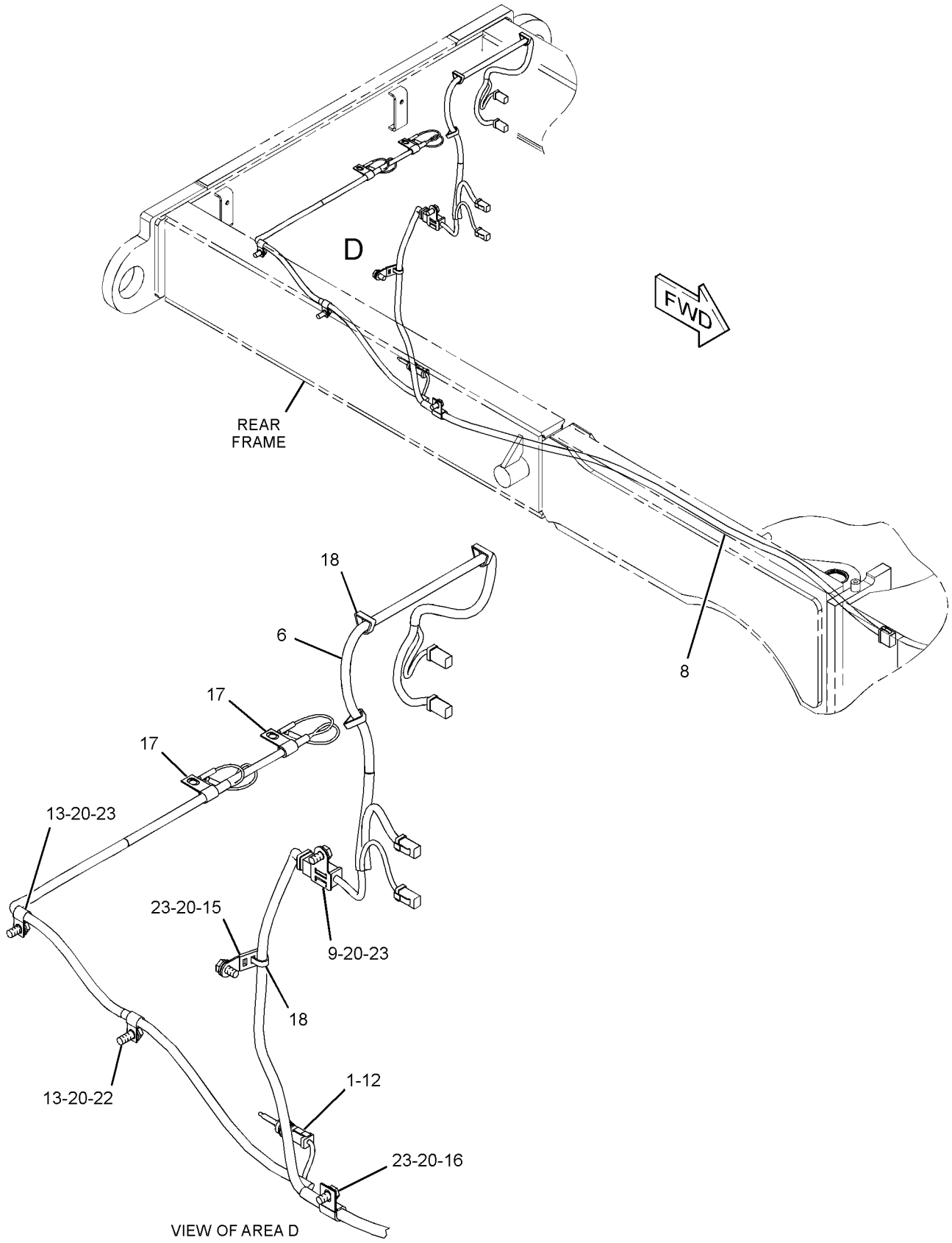

GRAPHIC #2 **<END>** g01394429

296-5909 WIRING GP-SENSOR—AWD, STEERING CYLINDER POSITION

S/N: B9D1-UP

PART OF 261-0153 AXLE AR-FRONT

SMCS-1408 **i02786512**

NOTE	REF NO	GRAPHIC REF	PART NUMBER	QTY	PART NAME 1 2 3 4 5 6 (PRODUCT LEVEL)	SEE PAGE
	1	1	**296-5905**	1	HARNESS AS-SENSOR (STEERING, LH)	
		1	**155-2260**	1	KIT-CONNECTING PLUG (3-PIN)	
		1	**155-2271**	1	KIT-CONNECTING PLUG (4-PIN)	
					(EACH INCLUDES PLUG AS, WEDGE, & INTERFACE SEAL)	
	2	1	**296-5906**	1	HARNESS AS-SENSOR (STEERING, RH)	
		1	**155-2271**	2	KIT-CONNECTING PLUG (4-PIN)	
					(EACH INCLUDES PLUG AS, WEDGE, & INTERFACE SEAL)	
	3	1	**297-8049**	2	GROMMET	
	4	1	**7K-1181**	4	STRAP-CABLE	
	5	1	**9M-8406**	2	CLIP	

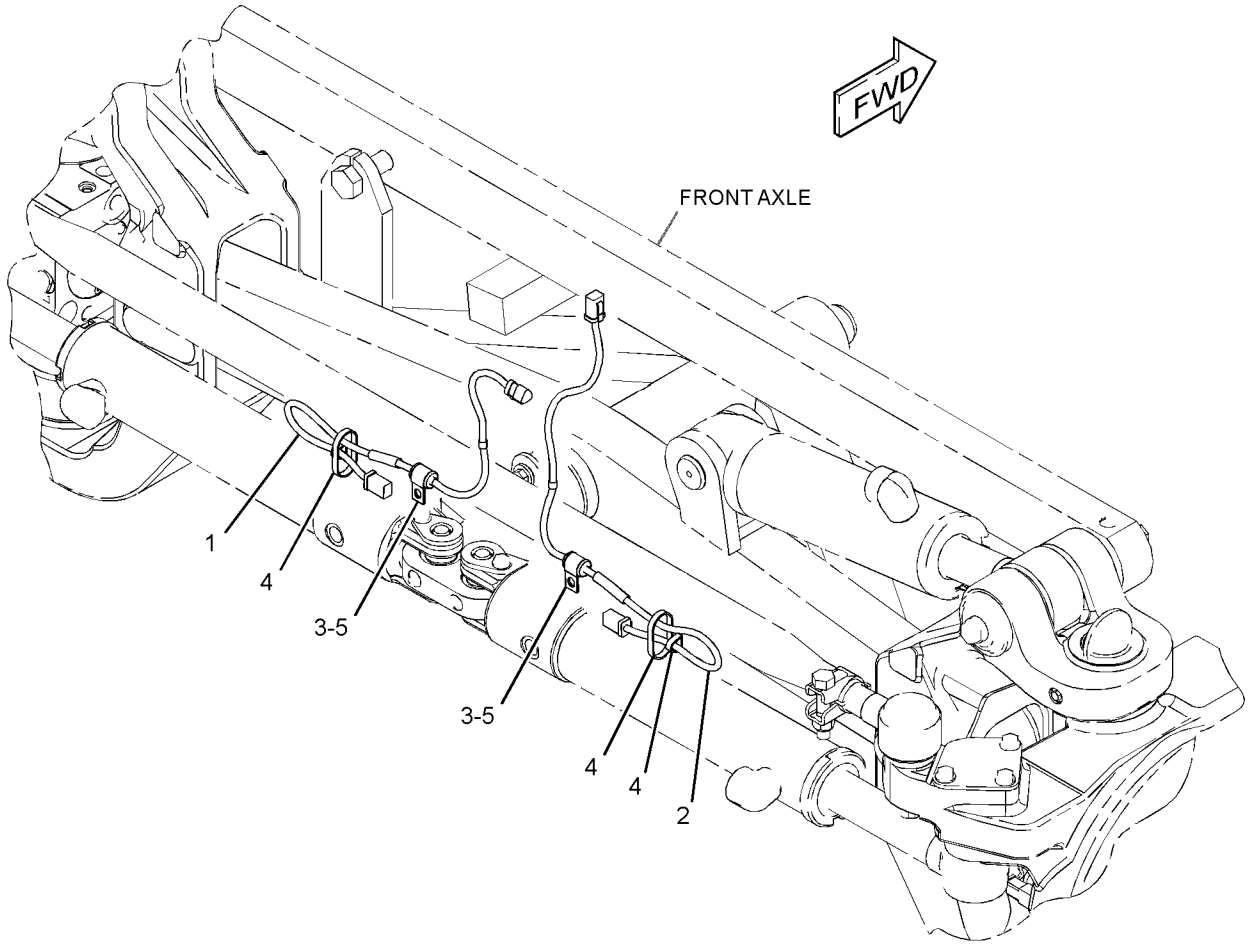

GRAPHIC #1 **<END>** g01339869

296-5910 WIRING GP-SENSOR–
NON-AWD, STEERING CYLINDER POSITION
S/N: B9D1-UP
PART OF 278-3419 AXLE AR-FRONT

SMCS-1408 **i02787946**

NOTE	REF NO	GRAPHIC REF	PART NUMBER	QTY	PART NAME 1 2 3 4 5 6 (PRODUCT LEVEL)	SEE PAGE
	1	1	**296-5907**	1	HARNESS AS-SENSOR (STEERING, LH)	
	2	1	**296-5908**	1	HARNESS AS-SENSOR (STEERING, RH)	
	3	1	**297-8049**	2	GROMMET	
	4	1	**7K-1181**	4	STRAP-CABLE	
	5	1	**9M-8406**	2	CLIP	

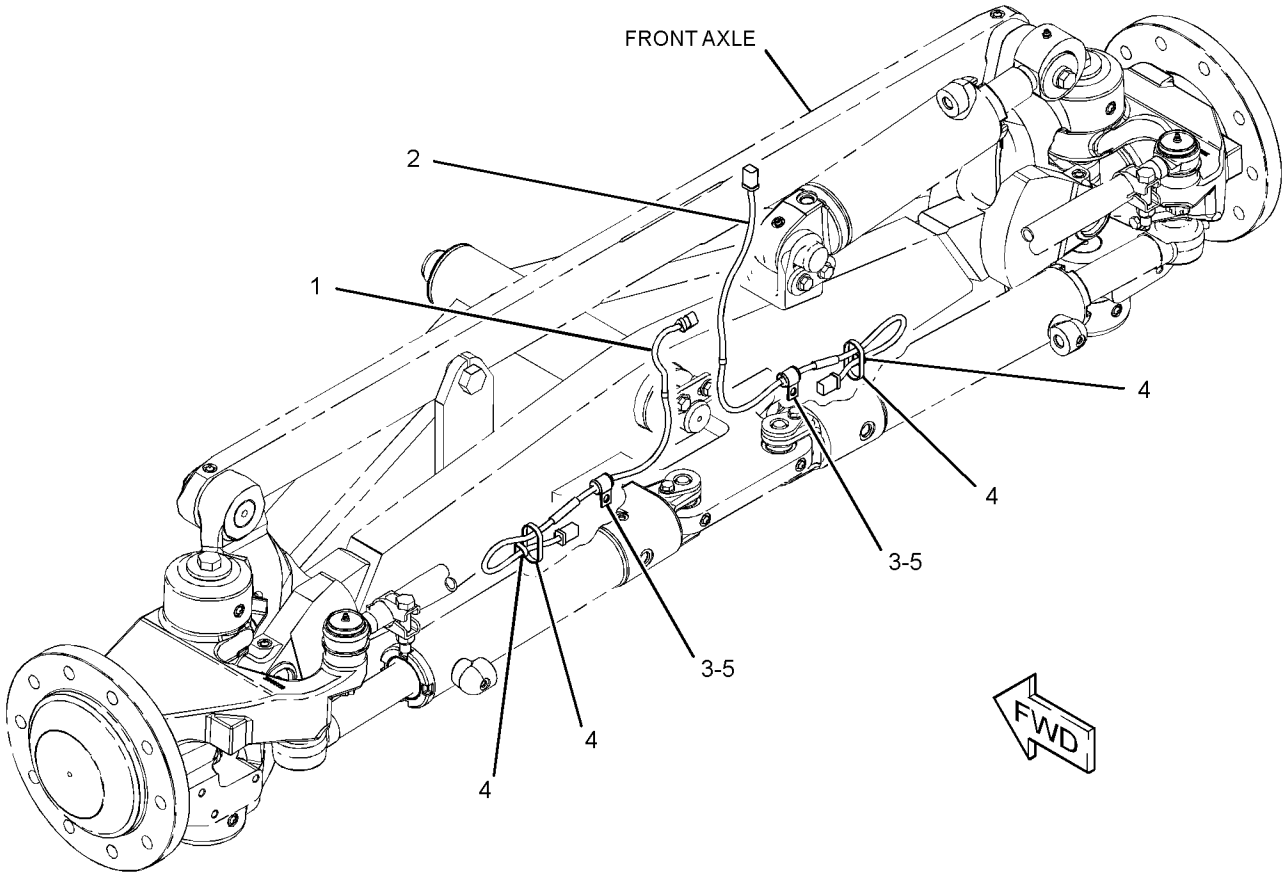

GRAPHIC #1 **<END>** g01340683

233-3189 WIRING GP-WIPER

S/N: B9D1-UP

SMCS-1408, 7305 **i02775561**

NOTE	REF NO	GRAPHIC REF	PART NUMBER	QTY	PART NAME 1 2 3 4 5 6 (PRODUCT LEVEL)	SEE PAGE
	1	1	**3S-2093**	6	STRAP-CABLE	
	2	1	**235-6175**	1	HARNESS AS-WINDOW WIPER	
		1	**102-8804**	1	KIT-RECEPTACLE (4-PIN)	
					(INCLUDES RECEPTACLE AS & WEDGE)	
		1	**155-2260**	2	KIT-CONNECTING PLUG (3-PIN)	
					(EACH INCLUDES PLUG AS, WEDGE, & INTERFACE SEAL)	

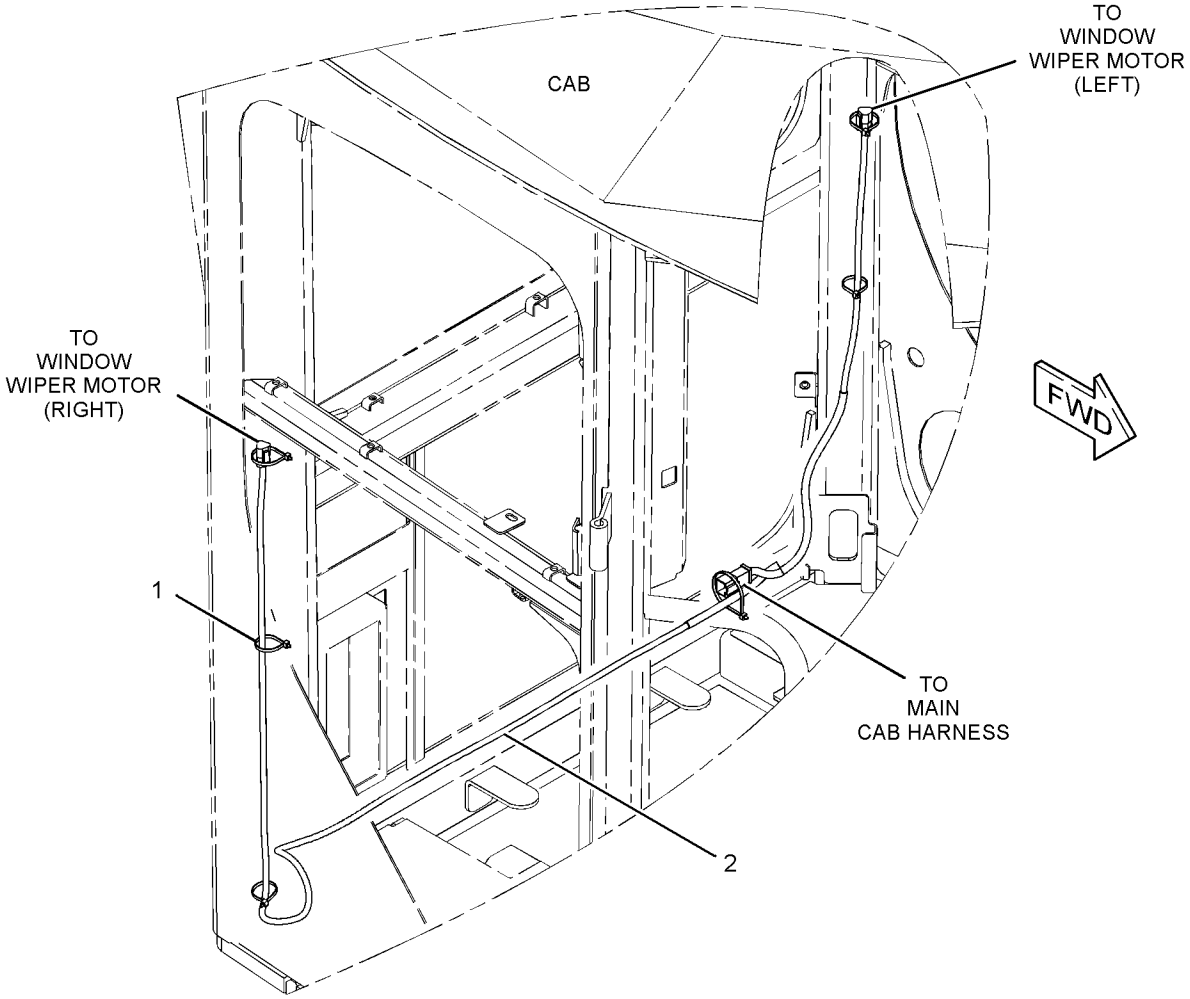

GRAPHIC #1 **<END>** g01153969

248-6925 AUTOSHIFT AR

S/N: B9D1-UP

PART OF 261-0187 SNOW AR-MOTOR GRADER

SMCS-3168 **i02783102**

NOTE	PART NUMBER	QTY	PART NAME 1 2 3 4 5 6 (PRODUCT LEVEL)	SEE PAGE
Y	*238-8824*	1	SWITCH GP-ROCKER (AUTOSHIFT)	260
	214-2470	1	CONFIGURATION-PREMIUM	
			(DLR INSTALL CONFIG: SEE IRM: EES03-01)	

Y-SEPARATE ILLUSTRATION

<END>

260-8696 AXLE AR-FRONT—ALL WHEEL DRIVE

S/N: B9D1-UP

PART OF 261-0153 AXLE AR-FRONT

SMCS-3020, 3278, 4303, 4305, 5225 **i02785832**

NOTE	REF NO	GRAPHIC REF	PART NUMBER	QTY	PART NAME 1 2 3 4 5 6 (PRODUCT LEVEL)	SEE PAGE
Y	1	1	*260-8698*	1	AXLE GP-FRONT (ALL WHEEL DRIVE)	319
Y	2	1	*290-3921*	1	MOUNTING GP-AXLE (FRONT)	485

Y-SEPARATE ILLUSTRATION

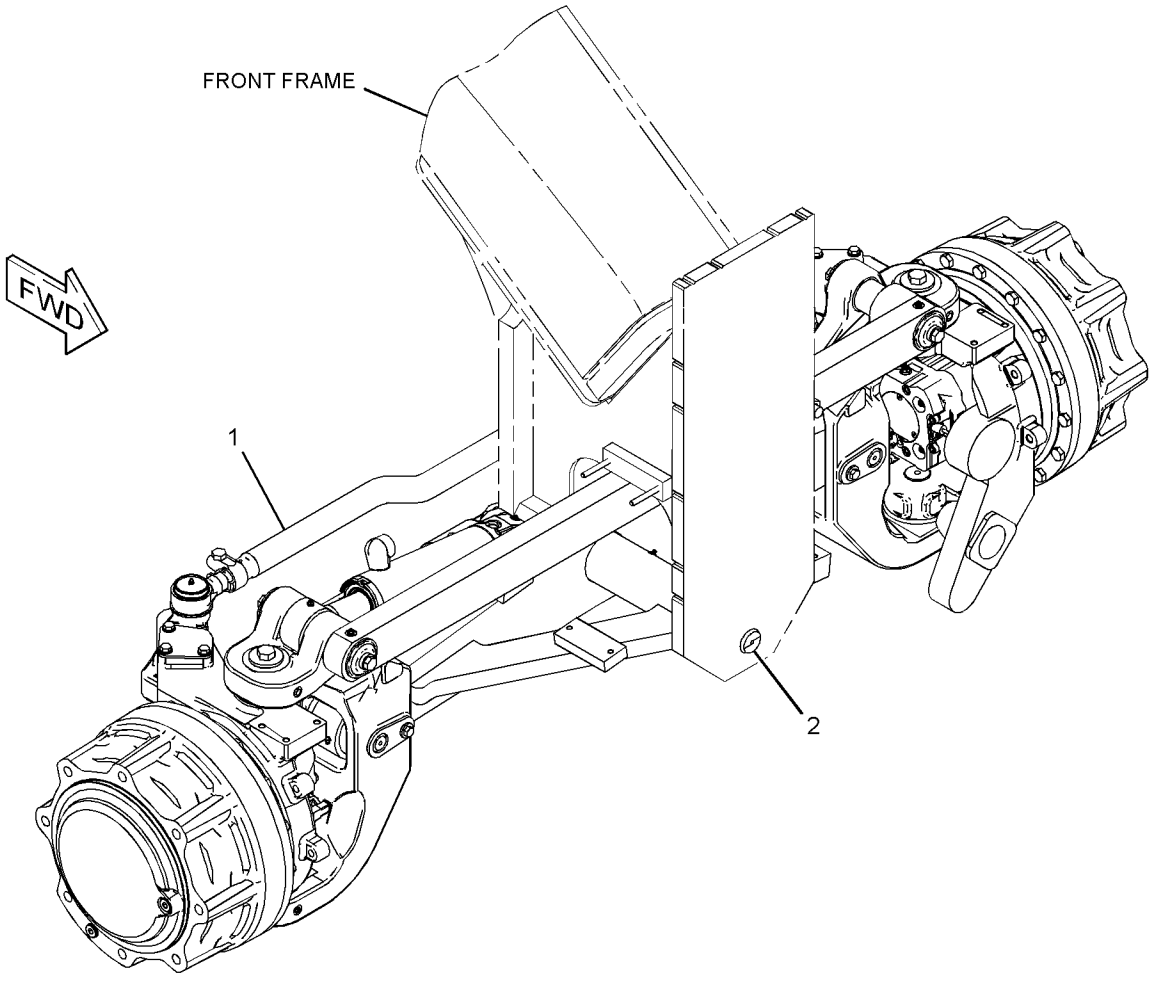

GRAPHIC #1 **<END>** g01339436

261-0153 AXLE AR-FRONT—ALL WHEEL DRIVE

S/N: B9D1-UP

SMCS-3020, 3278, 4303, 4305, 5225 **i02785239**

NOTE	PART NUMBER	QTY	PART NAME 1 2 3 4 5 6 (PRODUCT LEVEL)	SEE PAGE
Y	*260-8696*	1	AXLE AR-FRONT (ALL WHEEL DRIVE)	317
Y	*238-8808*	1	CONTROL GP-POWER TRAIN (ALL WHEEL DRIVE)	158
Y	*241-8528*	1	COOLER GP-HYDRAULIC OIL	532
Y	*250-9260*	1	ELECTRONICS GP-POWER TRAIN (ALL WHEEL DRIVE)	168
Y	**231-0878**	1	ENGINE AR-COMPLETE	4
Y	*231-8164*	1	LINES GP-ALL WHEEL DRIVE	362
Y	*264-2994*	1	LINES GP-STEERING (ALL WHEEL DRIVE)	614
Y	*231-8159*	1	PUMP & MTG GP-ALL WHEEL DRIVE	384
Y	*235-6194*	1	WIRING GP-SENSOR (ALL WHEEL DRIVE)	310
Y	*296-5909*	1	WIRING GP-SENSOR (AWD, STEERING CYLINDER POSN)	313
	250-2002	1	MOUNTING GP-WHEEL (ALL WHEEL DRIVE)	
M	**9X-2615**	56	BOLT (M24X3X60-MM)	
	267-3507	56	WASHER-HARD (26X47X12-MM THK)	
	280-1032	2	FILM-IDENTIFICATION (AWD)	
			ON RH & LH COVER GP BELOW 140M FILM	

M-METRIC PART
Y-SEPARATE ILLUSTRATION

<END>

260-8698 AXLE GP-FRONT—ALL WHEEL DRIVE

S/N: B9D1-UP

PART OF 260-8696 AXLE AR-FRONT

SMCS-3020, 3282, 4303, 4305, 5225 **i02785827**

NOTE	REF NO	GRAPHIC REF	PART NUMBER	QTY	PART NAME 1 2 3 4 5 6 (PRODUCT LEVEL)	SEE PAGE
	1	1,2	**2G-5667**	4	RETAINER	
	2	1	**2G-8615**	4	WASHER-THRUST (2.015X3.625X0.11-IN THK)	
	3	1	**2G-8626**	2	WASHER-THRUST (2.02X3.63X0.16-IN THK)	
	4	1,2	**2G-8741**	4	RING-METAL SEAL	
	5	1,2	**2G-8777**	4	SEAL	
	6	1	**3B-8485**	4	FITTING-GREASE	
	7	1	**3B-8686**	1	FITTING-GREASE	
	8	1,2	**257-9799**	4	PIN	
Y	9	2	*260-4802*	2	MOTOR GP-PISTON (ALL WHEEL DRIVE)	377
Y	10	1	*260-4803*	1	DRIVE GP-WHEEL (ALL WHEEL DRIVE)	352
Y	11	1	**260-8699**	1	AXLE GP-FRONT (ALL WHEEL DRIVE)	322
	12	1	**260-8703**	2	ARM AS	
					(EACH INCLUDES)	
		1	**146-1842**	2	BEARING-SLEEVE	
	13	1	**260-8704**	1	BAR AS	
		1	**2G-8631**	2	BEARING-SLEEVE	
		1	**7K-9202**	4	SEAL-LIP TYPE	
Y	14	1	*260-8709*	1	CYLINDER & MTG GP-STEERING (ALL WHEEL DRIVE)	541
Y	15	1	*260-8713*	1	CYLINDER & MTG GP-WHEEL LEAN	543
	16	1,2	**260-8719**	2	PIN	
	17	2	**260-8721**	1	SPACER (47.66X63.5X50-MM THK)	
Y	18	1	**276-2954**	1	LINK GP-STEERING (ALL WHEEL DRIVE)	483
	19	1	**295-0775**	2	PIN AS	
	20	1	**295-0782**	2	SPACER (17.46X28.58X14-MM THK)	
	21	1,2	**198-4768**	4	WASHER-HARD (17.5X32X8-MM THK)	
	22	1	**266-7315**	2	WASHER-HARD (22X65X6-MM THK)	
	23	2	**3B-4629**	2	PIN-COTTER	
	24	1,2	**3B-8489**	8	FITTING-GREASE	
	25	1,2	**5M-6214**	4	PLUG-PIPE	
	26	1	**5P-7197**	2	WASHER (17X45X6-MM THK)	
	27	2	**5P-8890**	2	SEAL-LIP TYPE	
M	28	1,2	**6V-5844**	4	BOLT (M16X2X35-MM)	
M	29	1,2	**7X-2561**	4	BOLT (M20X2.5X35-MM)	
M	30	1	**8T-0375**	2	BOLT (M16X2X45-MM)	
	31	1,2	**9M-2092**	4	SEAL-O-RING	

M-METRIC PART
Y-SEPARATE ILLUSTRATION

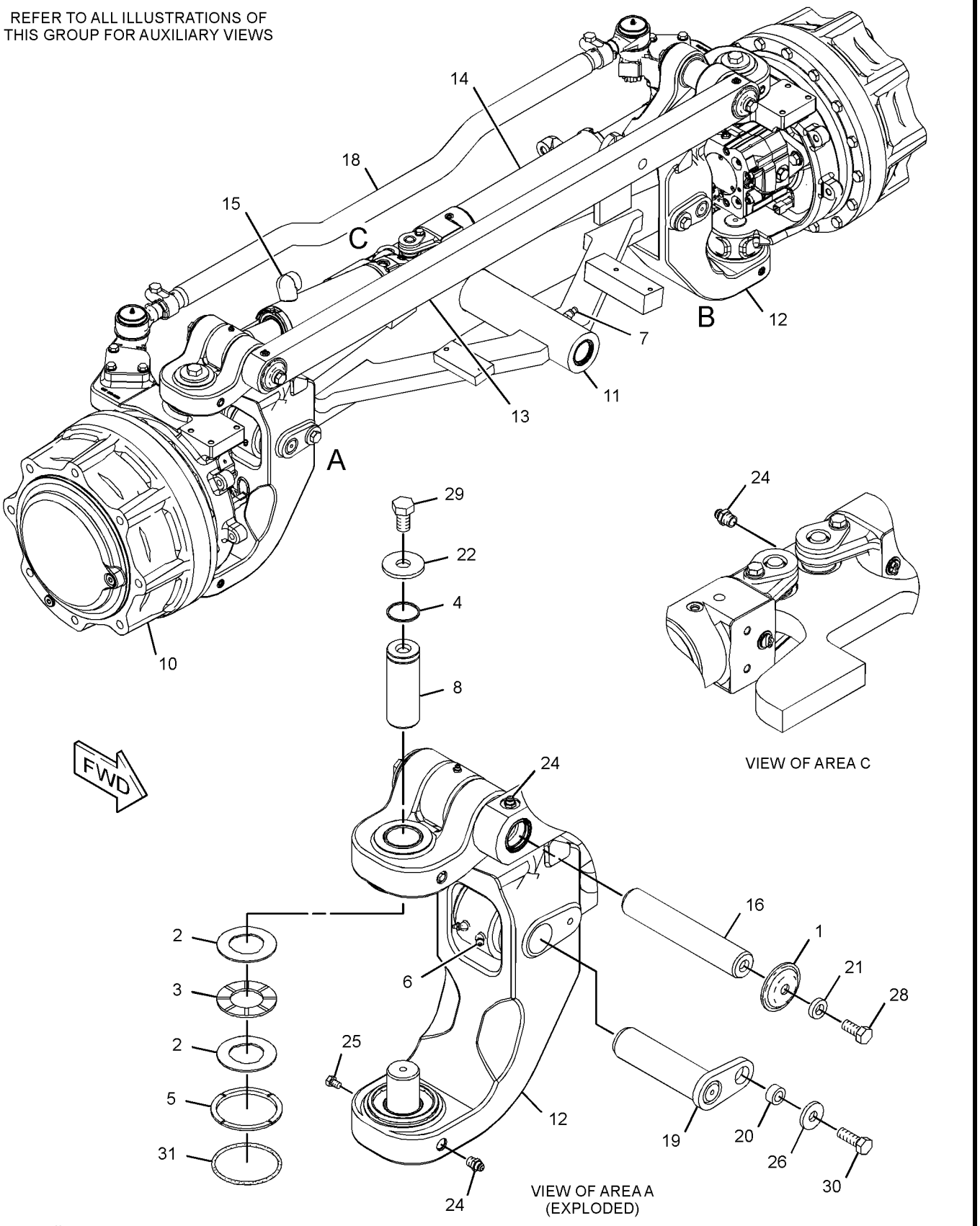

GRAPHIC #1 g01350384

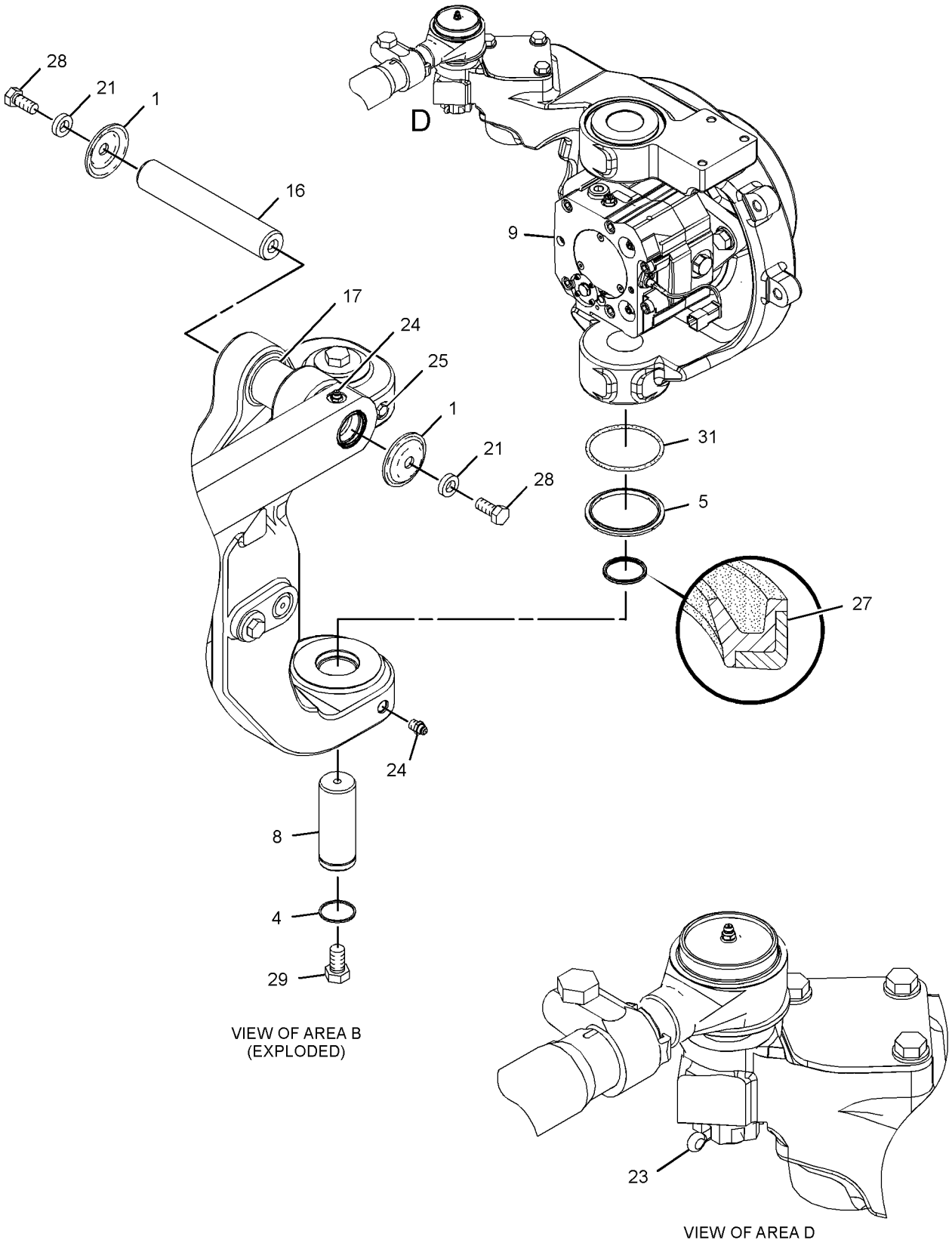

GRAPHIC #2 **<END>** g01350386

260-8699 AXLE GP-FRONT

S/N: B9D1-UP

PART OF 260-8698 AXLE GP-FRONT

FOR USE WITH ALL WHEEL DRIVE ARRANGEMENT

SMCS-3020, 3282, 4303, 4305, 5225 **i02786101**

NOTE	REF NO	GRAPHIC REF	PART NUMBER	QTY	PART NAME 1 2 3 4 5 6 (PRODUCT LEVEL)	SEE PAGE
	1	1	**2D-8652**	2	BEARING	
	2	1	**131-4428**	2	BEARING-SLEEVE	
	3	1	*260-8700*	1	AXLE AS (FRONT)	
	4	1	**2G-8793**	4	BEARING-SLEEVE	
	5	1	**5P-8843**	6	SEAL-LIP TYPE	

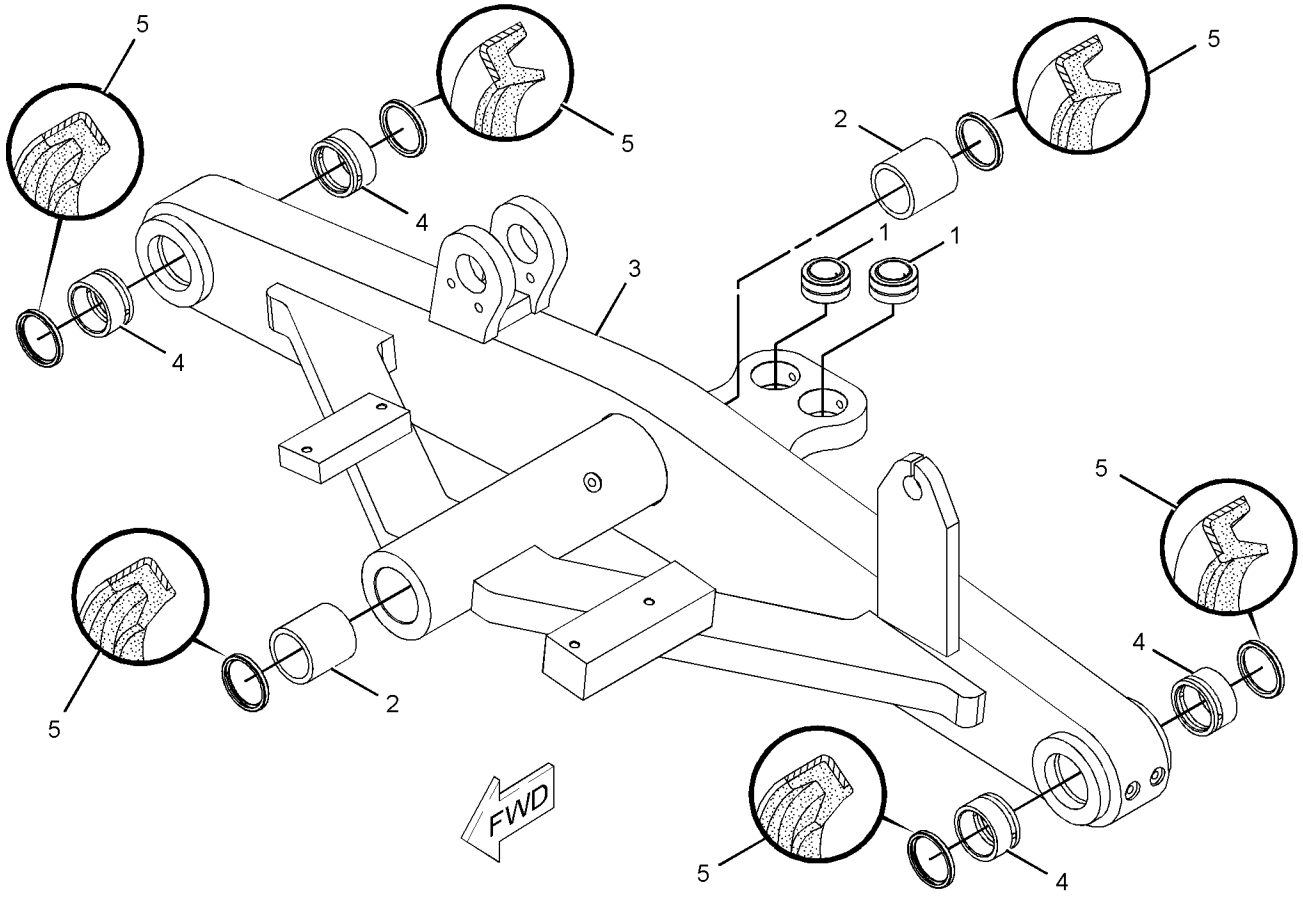

GRAPHIC #1 **<END>** g01135623

POWER TRAIN

284-5013 AXLE GP-REAR

S/N: B9D1-UP

PART OF 234-7721 COMMON AR

SMCS-3278, 3282, 4068 **i02781067**

NOTE	REF NO	GRAPHIC REF	PART NUMBER	QTY	PART NAME 1 2 3 4 5 6 (PRODUCT LEVEL)	SEE PAGE
	1	1	**8L-5189**	1	SEAL-O-RING	
B	2	1	**194-8742**	1	SHIM (2.65-MM THK)	
	3	1	**201-8478**	1	PISTON	
	4	1	**209-0229**	1	SEAL-BRAKE	
	5	1	**209-0230**	1	SEAL-BRAKE	
B	6	1	**209-4527**	1	SHIM (4.3-MM THK)	
	7	1	**244-5682**	1	BEARING-SPECIAL	
	8	1	**248-0833**	1	DRAIN GP-ECOLOGY (DIFFERENTIAL CASE)	
		1	**259-7138**	1	PLUG	
		1	**3S-9233**	1	SEAL-O-RING	
		1	**5L-4759**	1	SEAL-O-RING	
	9	1	**311-1502**	48	STUD (M20X2.5X225-MM)	
Y	10	1	*271-8594*	1	DIFFERENTIAL & BEVEL GEAR GP	349
	11	1	**277-4453**	2	SHAFT-AXLE	
	12	1	**279-4346**	1	BEARING AS-NEEDLE	
		1	**6I-9248**	1	BEARING-THRUST	
		1	**6I-9249**	2	RACE-THRUST BEARING	
	13	1	**280-4432**	1	TUBE AS	
	14	1	**280-4437**	1	WASHER (18X35X10-MM THK)	
	15	1	**280-4438**	1	PLUG	
Y	16	1	*288-6508*	1	FINAL DRIVE GP (RH)	356
Y	17	1	*288-6509*	1	FINAL DRIVE GP (LH)	358
	18	1	**288-9251**	1	HOUSING AS	
		1	**6V-5839**	4	WASHER (11X21X2.5-MM THK)	
M		1	**6V-5842**	4	BOLT (M10X1.5X40-MM)	
M		1	**8T-8441**	4	BOLT-SOCKET HEAD (M12X1.75X25-MM)	
	19	1	**289-2143**	2	GEAR-SUN (18-TEETH)	
	20	1	*148-8369*	1	ELBOW AS	
		1	**6V-8628**	1	ELBOW	
		1	**3J-7354**	1	SEAL-O-RING	
		1	**4J-5477**	1	SEAL-O-RING	
	21	1	**198-4769**	48	WASHER (22X40X10-MM THK)	
	22	1	**2K-5340**	2	RING-RETAINING	
	23	1	**3S-6931**	2	RING-RETAINING	
	24	1	**4B-3365**	4	DOWEL	
	25	1	**4J-5351**	1	SEAL-O-RING	
	26	1	**4K-1388**	1	SEAL-O-RING	
M	27	1	**6V-5686**	8	BOLT (M16X2X50-MM)	
M	28	1	**6V-7742**	48	NUT-FULL (M20X2.5-THD)	
	29	1	**6V-8397**	1	SEAL-O-RING	
	30	1	**6V-9168**	1	NUT (11/16-16-THD)	
	31	1	**7M-8485**	1	SEAL-O-RING	
M	32	1	**8T-0088**	6	BOLT (M16X2X65-MM)	
	33	1	**9X-8268**	14	WASHER (17.5X30X3.5-MM THK)	

B-USE AS REQUIRED
M-METRIC PART
Y-SEPARATE ILLUSTRATION

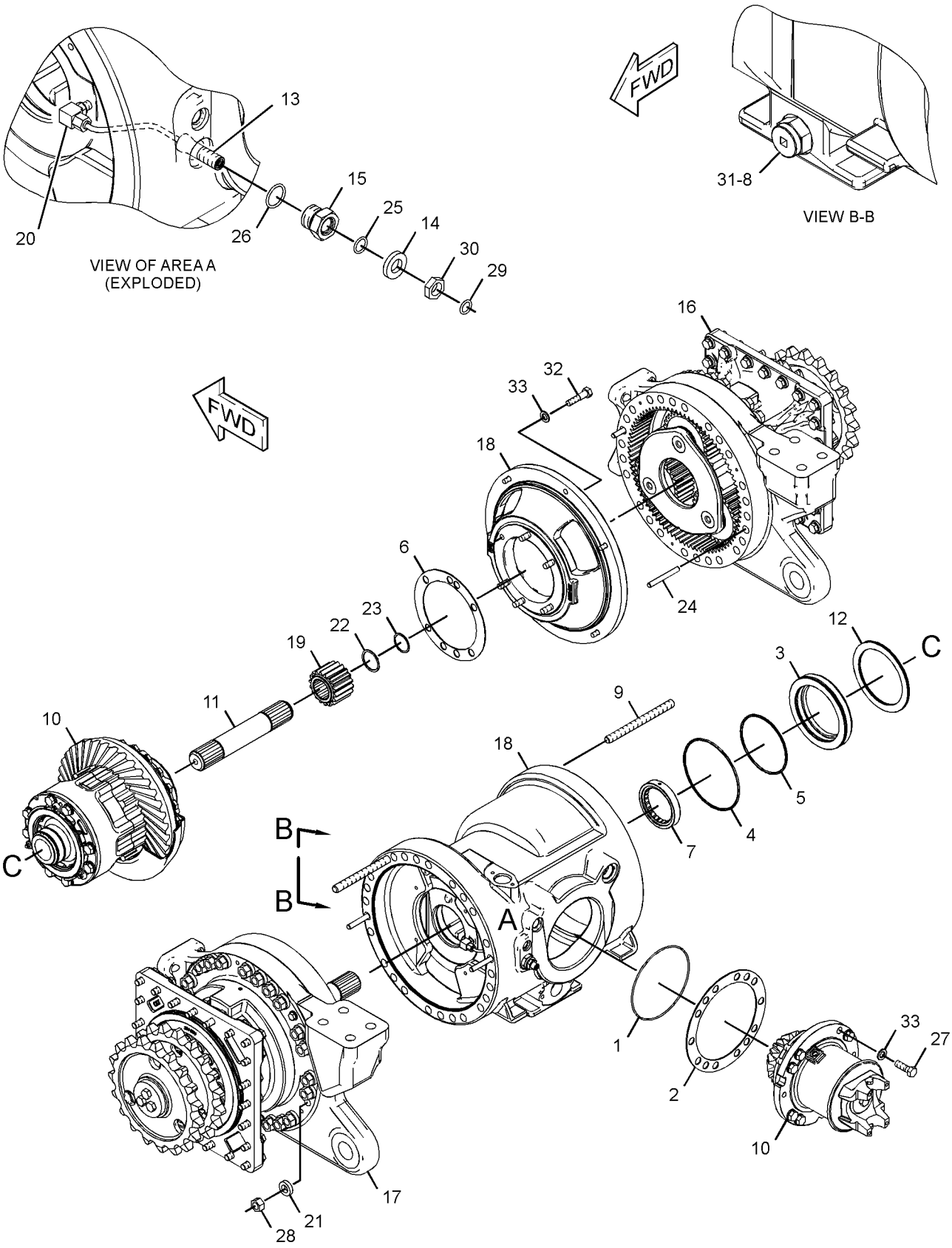

GRAPHIC #1 **<END>** g01361382

238-1029 BASE GP-OIL FILTER

S/N: CZM1-UP

PART OF 287-1512 FILTER GP-OIL

SMCS-3004, 3067 **i02721527**

NOTE	REF NO	GRAPHIC REF	PART NUMBER	QTY	PART NAME 1 2 3 4 5 6 (PRODUCT LEVEL)	SEE PAGE
	1	1	**3T-9549**	1	ADAPTER	
	2	1	**7G-4998**	1	SPOOL-BYPASS	
	3	1	**7M-1297**	1	SPRING	
	4	1	**133-2198**	1	SPRING	
Y	5	1	**164-7577**	1	SWITCH GP-BYPASS (POWER TRAIN OIL FILTER)	250
	7	1	**2S-4078**	1	SEAL-O-RING	
	8	1	**3D-2824**	1	SEAL-O-RING	
	9	1	**9S-8008**	1	PLUG-O-RING	
					PARTS SHOWN IN GRAPHIC(S) WITHOUT A REFERENCE NUMBER ARE NOT SERVICED SEPARATELY	

Y-SEPARATE ILLUSTRATION

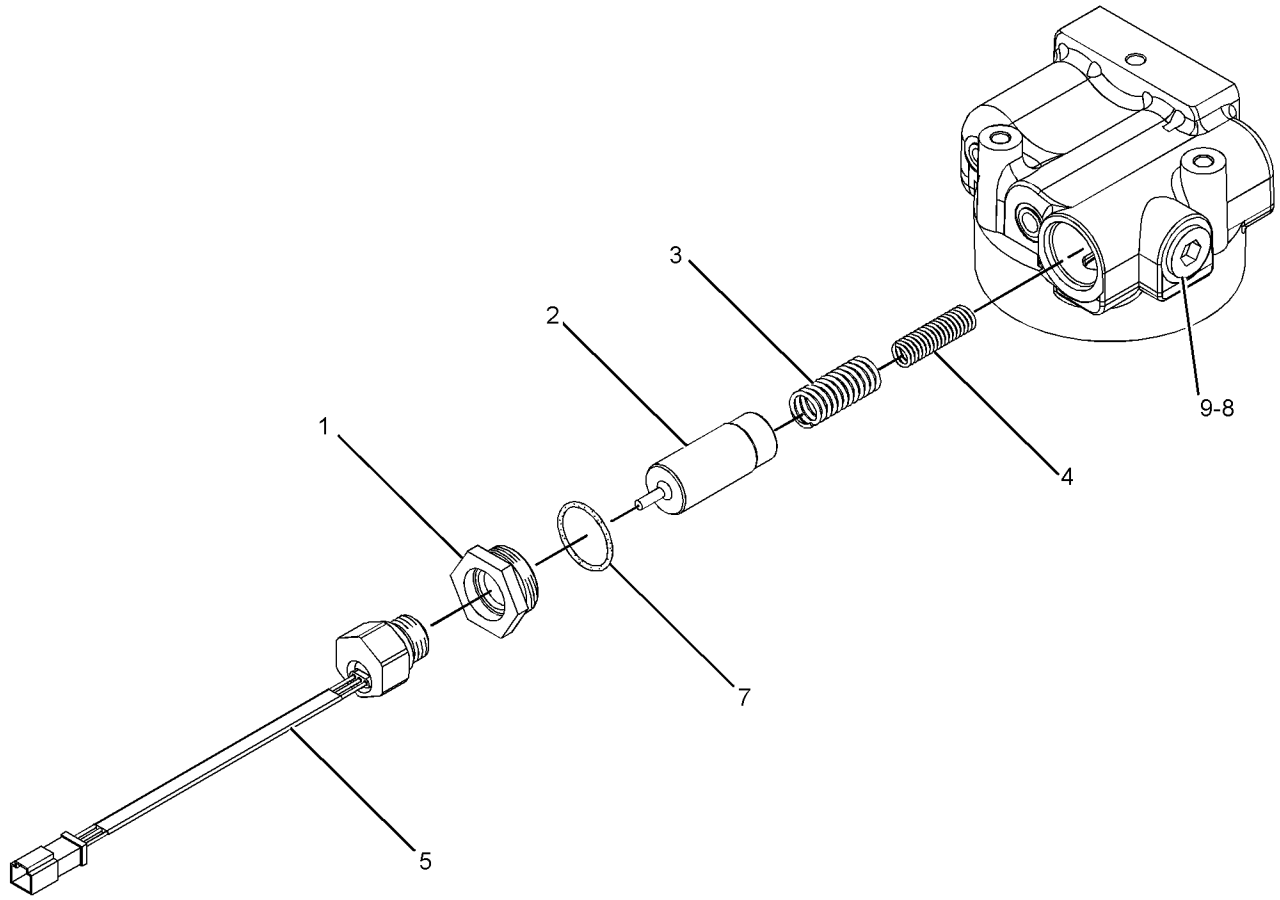

GRAPHIC #1 **<END>** g01366115

272-8009 CARRIER GP-FINAL DRIVE

S/N: B9D1-UP

PART OF 288-6508, 288-6509 FINAL DRIVE GP

SMCS-4050 **i02781096**

NOTE	REF NO	GRAPHIC REF	PART NUMBER	QTY	PART NAME 1 2 3 4 5 6 (PRODUCT LEVEL)	SEE PAGE
	1	1	**1S-9110**	6	ROLLER AS	
	2	1	**265-9125**	3	RETAINER	
	3	1	**272-5444**	1	CARRIER-PLANETARY	
	4	1	**272-5446**	3	SHAFT	
	5	1	**272-5449**	3	SPACER (51.5X65.86X5.3-MM THK)	
	6	1	**289-2144**	3	GEAR-PLANETARY (32-TEETH)	
	7	1	**3E-4353**	6	WASHER-HARD (11X25X3-MM THK)	
M	8	1	**6V-7732**	6	BOLT (M10X1.5X25-MM)	
	9	1	**8X-8377**	6	WASHER (47.57X82.55X2.92-MM THK)	

M-METRIC PART

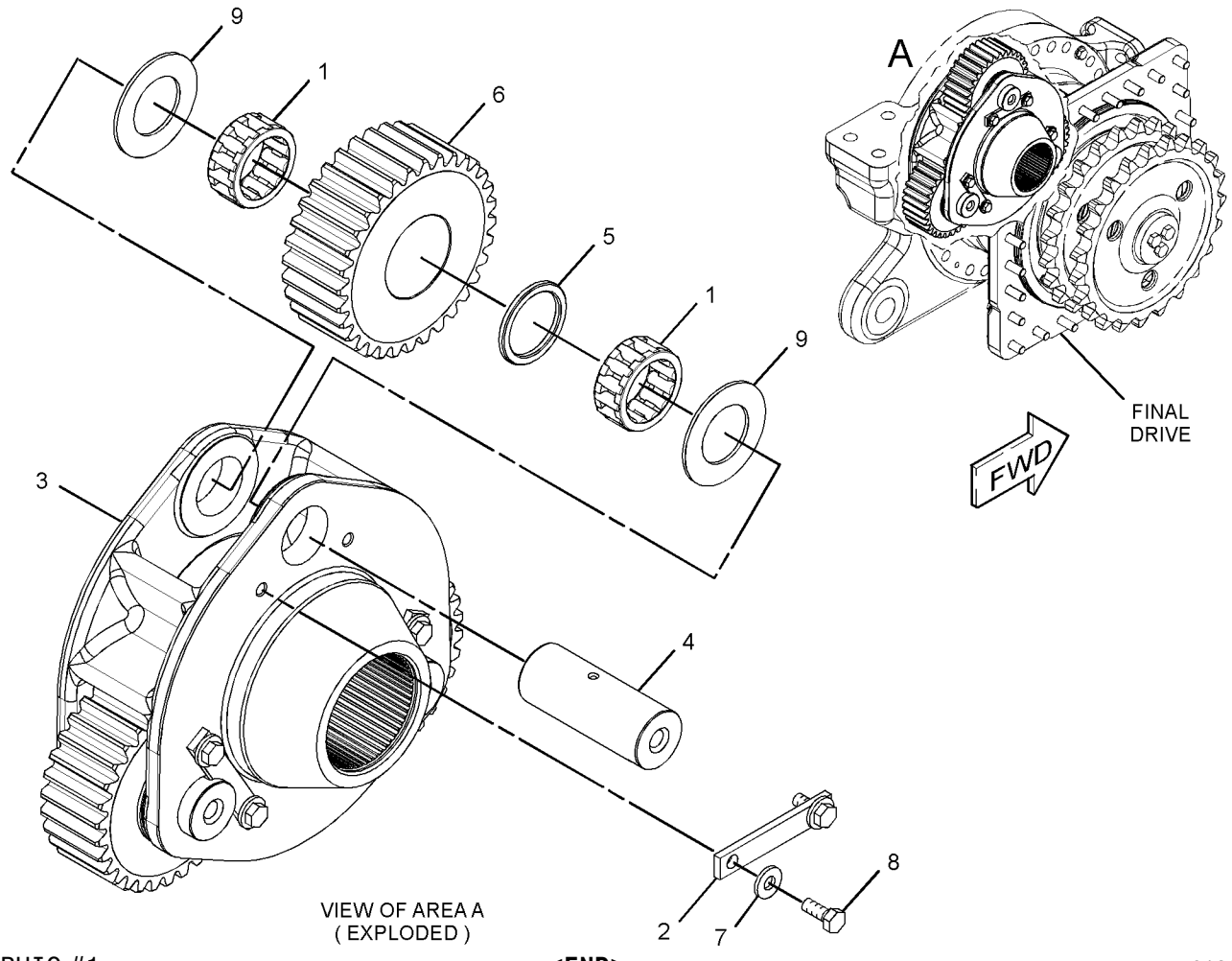

GRAPHIC #1 **<END>** g01330173

POWER TRAIN

253-8426 CASE & PARTS GP-PLANETARY

S/N: CZM1-UP

PART OF 253-8405 TRANSMISSION AR

SMCS-3030, 3064, 3160 **i02788410**

NOTE	REF NO	GRAPHIC REF	PART NUMBER	QTY	PART NAME 1 2 3 4 5 6 (PRODUCT LEVEL)	SEE PAGE
	1	1	**6I-8642**	4	RACE-BEARING OUTER	
	2	1	**9M-2042**	1	RACE-BEARING OUTER	
	3	2	**1T-0043**	1	BALL BEARING	
	4	2	**2H-6489**	1	RACE-BEARING OUTER	
	5	2	**2S-3029**	1	BALL BEARING	
	6	2	**4M-6108**	2	RACE-BEARING OUTER	
	7	2	**5P-3924**	2	RACE-BEARING OUTER	
	8	2	**1T-0205**	1	RING-SNAP	
	9	2	**5H-0793**	1	RING-LOCK	
B	10	2	**5P-3413**	1	SEALANT-PIPE (50-ML TUBE)	
	11	1	**6V-0852**	1	CAP-DUST	
	12	1	**6V-1720**	1	PLATE-SERIAL NUMBER (TRANSMISSION)	
	13	1	**9W-1454**	4	COVER	
	14	2	**9W-6465**	1	RETAINER-BEARING	
	15	2	**9W-7038**	1	RING-SNAP	
	16	2	**145-8039**	3	LOCK	
	17	1	*148-8309*	1	ADAPTER AS	
		1	**2P-8421**	1	ADAPTER-O-RING	
		1	**3D-2824**	1	SEAL-O-RING	
	18	2	**188-2162**	1	COVER	
	19	2	*197-4977*	1	PLUG AS	
		2	**5P-4483**	1	PLUG (O-RING)	
		2	**7M-8485**	1	SEAL-O-RING	
	20	2	**233-8134**	1	GEAR AS (44-TEETH)	
		2	**4K-8603**	1	PLUG-CUP	
	21	2	**251-6673**	1	FILTER-MAGNETIC (TRANSMISSION)	
	22	2	**251-6674**	1	SCREEN-SUCTION (TRANSMISSION SCAVENGE)	
	23	1	**253-5303**	1	GUARD	
	24	1	**253-5322**	1	GUARD	
	25	2	**253-5326**	1	GUARD	
	26	2	**284-2425**	1	COVER AS (TRANSMISSION)	
		2	**5M-7937**	2	DOWEL	
		2	**7T-6496**	1	PLUG	
	27	1	**284-2430**	1	CASE AS-TRANSMISSION	
		1	**6Y-3083**	6	PLUG	
		1	**7T-6496**	2	PLUG	
		1	**8M-6521**	2	DOWEL	
	28	2	**290-3263**	1	PLATE	
	29	1	**295-8062**	1	BRACKET AS	
	30	1	**299-8904**	1	PLATE AS	
M		1	**8T-3490**	2	NUT-WELD (M10X1.5-THD)	
	31	1	**299-8905**	1	PLATE AS	
M		1	**8T-3490**	6	NUT-WELD (M10X1.5-THD)	
	32	2	**306-4148**	1	GEAR (38-TEETH) (38-TEETH)	
	33	1	*148-8406*	6	PLUG AS	
					(EACH INCLUDES)	
		1	**7M-8485**	1	SEAL-O-RING	
		1	**9S-9334**	1	PLUG	
	34	1	*148-8409*	6	PLUG AS	
					(EACH INCLUDES)	
		1	**3D-2824**	1	SEAL-O-RING	
		1	**9S-8008**	1	PLUG-O-RING	
M	35	2	**160-8492**	1	BOLT (M10X1.5X85-MM)	
	36	1	*164-5567*	1	FITTING AS (QUICK DISCONNECT, MALE)	
		1	**3J-1907**	1	SEAL-O-RING	
		1	**6V-3965**	1	FITTING-COUPLER	

253-8426 CASE & PARTS GP-PLANETARY *(contd.)* i02788410

NOTE	REF NO	GRAPHIC REF	PART NUMBER	QTY	PART NAME 1 2 3 4 5 6 (PRODUCT LEVEL)	SEE PAGE
	37	1	*164-5619*	5	PLUG AS	
					(EACH INCLUDES)	
		1	**2M-9780**	1	SEAL-O-RING	
		1	**9S-8006**	1	PLUG-O-RING	
	38	1	*183-7262*	1	PLUG AS	
		1	**9S-8010**	1	PLUG (STRAIGHT THREAD O-RING)	
		1	**2S-4078**	1	SEAL-O-RING	
	39	2	**1B-5170**	1	PLUG-PIPE	
	40	2	**263-7429**	1	TUBE AS	
	41	2	**3K-0715**	1	SEAL-O-RING	
	42	2	**4J-8996**	1	SEAL-O-RING	
	43	2	**5F-3092**	1	SEAL-O-RING	
	44	1	**5P-3863**	4	SEAL-O-RING	
	45	1	**5P-4484**	2	PLUG-MAGNETIC (TRANSMISSION)	
M	46	2	**6V-1820**	1	BOLT (M10X1.5X30-MM)	
M	47	2	**6V-3940**	4	BOLT (M8X1.25X25-MM)	
	48	2	**6V-5839**	2	WASHER (11X21X2.5-MM THK)	
M	49	2	**6V-6317**	2	BOLT (M10X1.5X20-MM)	
M	50	2	**6V-8212**	1	BOLT (M10X1.5X16-MM)	
	51	1	**7M-8485**	2	SEAL-O-RING	
M	52	2	**8C-3210**	2	BOLT (M6X1X16-MM)	
	53	2	**8M-4992**	1	SEAL-O-RING	
	54	1	**8T-4121**	50	WASHER-HARD (11X21X2.5-MM THK)	
M	55	1	**8T-4137**	7	BOLT (M10X1.5X20-MM)	
M	56	1,2	**8T-4189**	4	BOLT (M8X1.25X20-MM)	
M	57	1	**8T-4196**	43	BOLT (M10X1.5X35-MM)	
M	58	1	**8T-4908**	12	BOLT (M8X1.25X25-MM)	
	59	1	**9M-1974**	1	WASHER-HARD (8.8X16X2-MM THK)	
	60	2	**9X-8256**	2	WASHER (6.6X12X2-MM THK)	
B	61	1	**1U-8846**		SEALANT-GASKET (BLUE)	

B-USE AS REQUIRED
M-METRIC PART

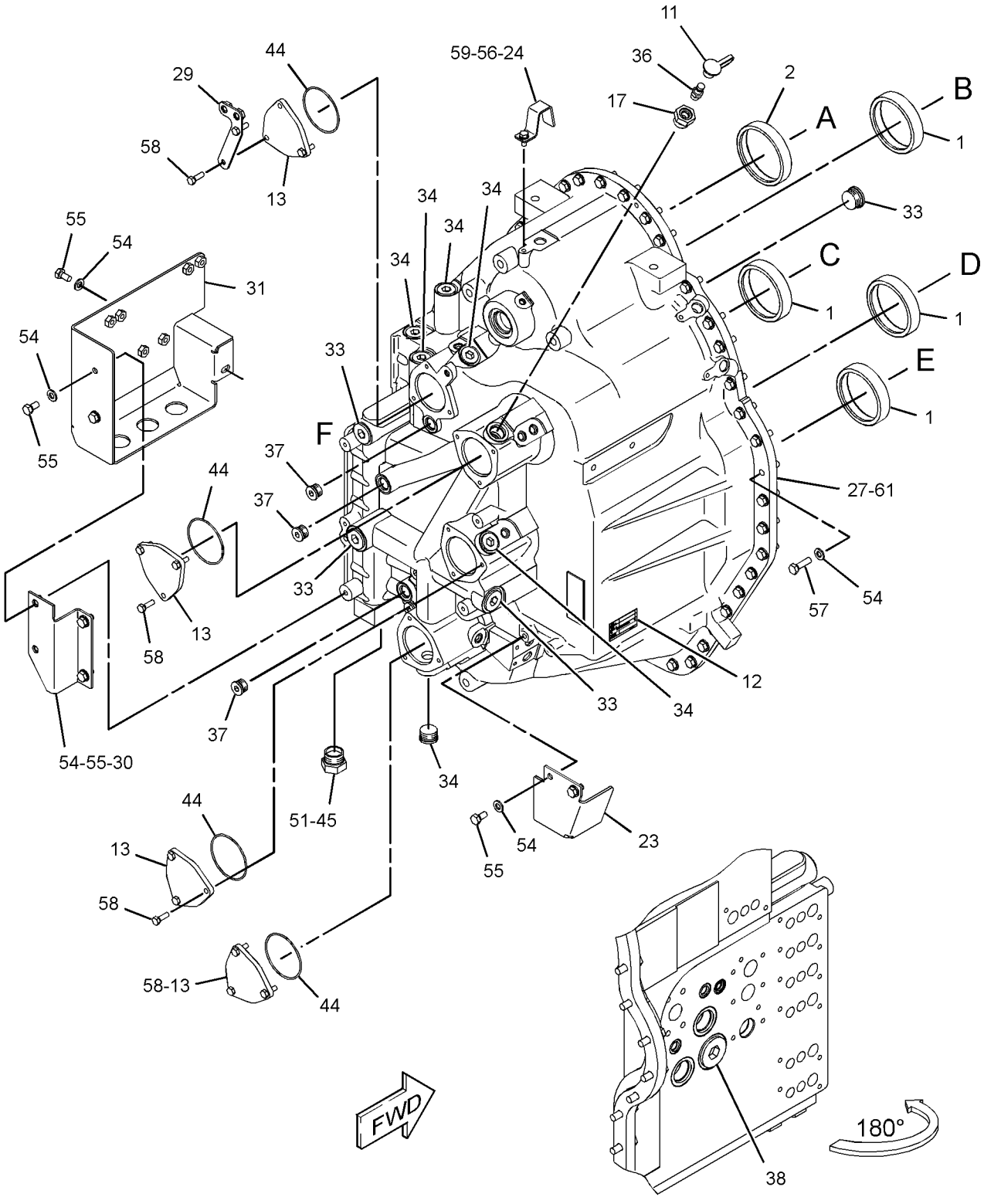

VIEW OF AREA F
COVER PLATE REMOVED
(299-8905)

REFER TO ALL ILLUSTRATIONS OF
THIS GROUP FOR AUXILIARY VIEWS

GRAPHIC #1

g01394206

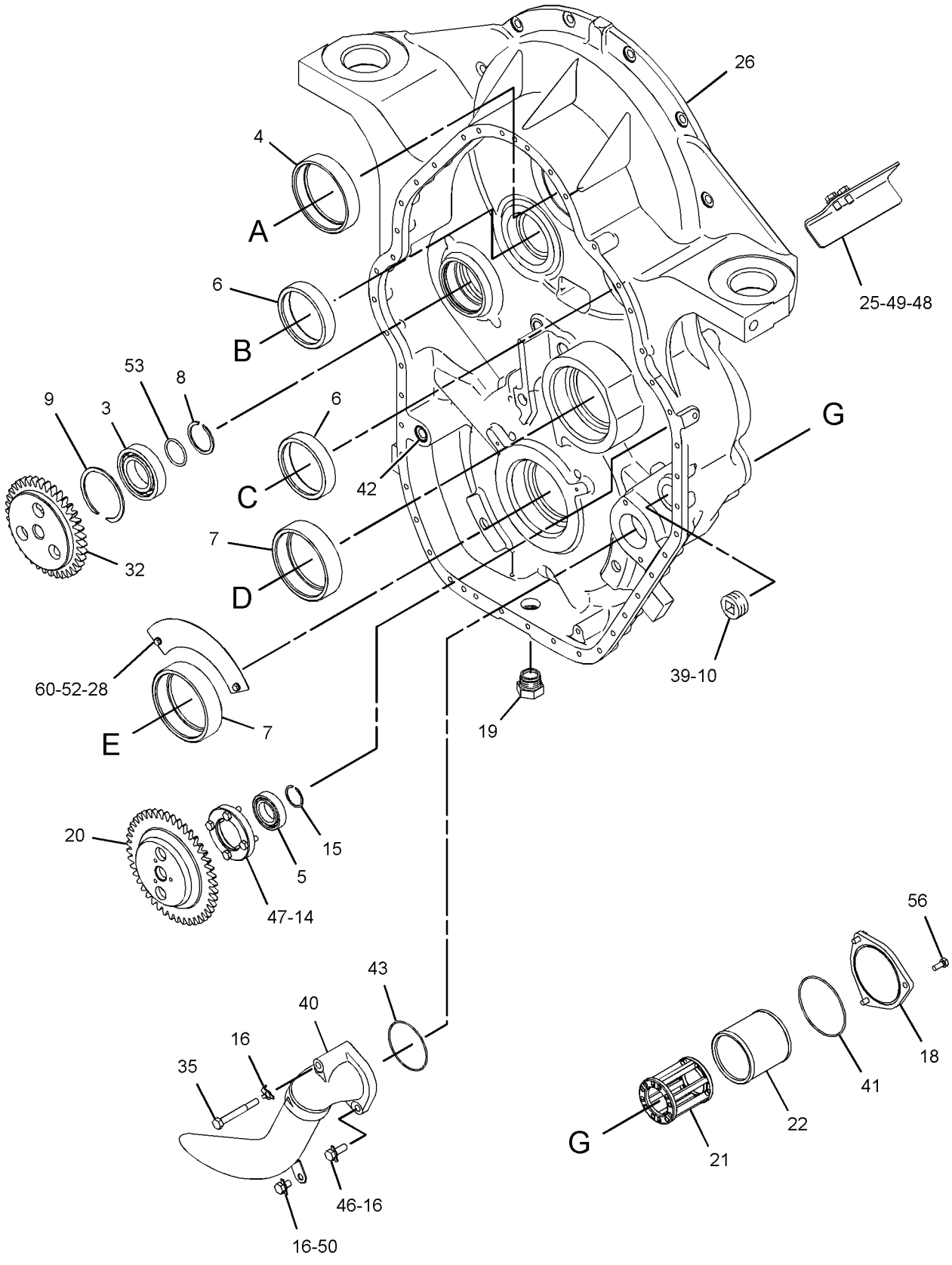

GRAPHIC #2 **<END>** g01394394

297-8776 CHAIN GP-DRIVE–TANDEM

S/N: B9D1-UP

PART OF 234-7721 COMMON AR

SMCS-3261, 4063 **i02796713**

NOTE	REF NO	GRAPHIC REF	PART NUMBER	QTY	PART NAME 1 2 3 4 5 6 (PRODUCT LEVEL)	SEE PAGE
	1	1	**297-8777**	4	CHAIN	
					(EACH INCLUDES)	
		1	**297-8778**	1	LINK-CONNECTING	

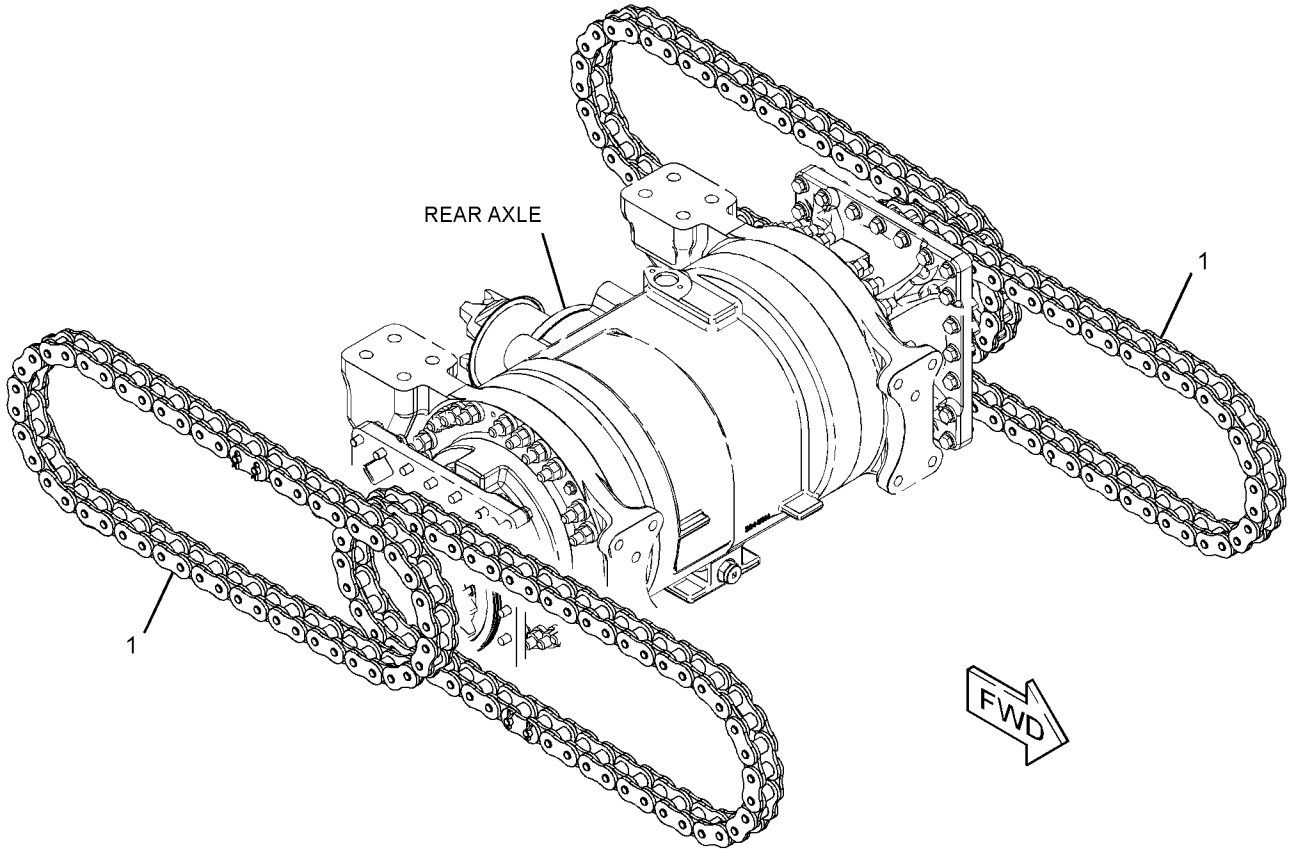

GRAPHIC #1 **<END>** g01374263

235-2412 CLUTCH GP-TRANSMISSION—FORWARD

S/N: CZM1-UP

PART OF 253-8405 TRANSMISSION AR

SMCS-3063, 3155, 3170 **i02774944**

NOTE	REF NO	GRAPHIC REF	PART NUMBER	QTY	PART NAME 1 2 3 4 5 6 (PRODUCT LEVEL)	SEE PAGE
	1	1	**6I-8911**	5	DISC-FRICTION	
	2	1	**6I-8912**	6	DISC-FRICTION	
	3	1	**6I-9502**	6	PLATE-CLUTCH	
	4	1	**6Y-1115**	4	RING-HALF	
	5	1	**6Y-1116**	1	GEAR AS (43-TEETH)	
	6	1	**6Y-1119**	1	CARRIER-SEAL	
	7	1	**7G-4822**	3	RING-SEAL	
	8	1	**7T-4897**	2	DISC-THRUST	
	9	1	**8E-5742**	2	RING-SEAL	
	10	1	**8E-8319**	4	DISC-THRUST	
	11	1	**8F-3469**	4	SEAL-O-RING	
	12	1	**9U-8815**	2	SPRING	
	13	1	**9U-9995**	6	PLATE-CLUTCH	
	14	1	**9W-2029**	1	RACE-THRUST BEARING	
	15	1	**9W-9371**	2	RING-SEAL	
	16	1	**9W-9905**	4	RING-LOCK	
	17	1	**108-5751**	2	DISC-FRICTION	
	18	1	**132-9625**	1	GEAR AS (50-TEETH)	
	19	1	**159-0308**	2	PISTON	
	20	1	**159-0927**	1	DISC-FRICTION	
	21	1	**161-6713**	2	PLATE-LOCK	
	22	1	**171-7091**	1	SHAFT AS	
	23	1	**247-8629**	2	VALVE AS	
	24	1	**247-9711**	2	HUB AS	
	25	1	**2K-1738**	1	BEARING-INNER	
	26	1	**4M-6107**	1	BEARING-INNER	
M	27	1	**5C-7423**	4	SCREW (M6X1X16-MM)	
	28	1	**5H-8985**	1	PIN-SPRING	
M	29	1	**6V-1819**	2	BOLT (M10X1.5X100-MM)	
	30	1	**8E-1263**	2	BEARING-ROLLER	

M-METRIC PART

235-2412 **CLUTCH GP-TRANSMISSION** *(contd.)* **i02774944**

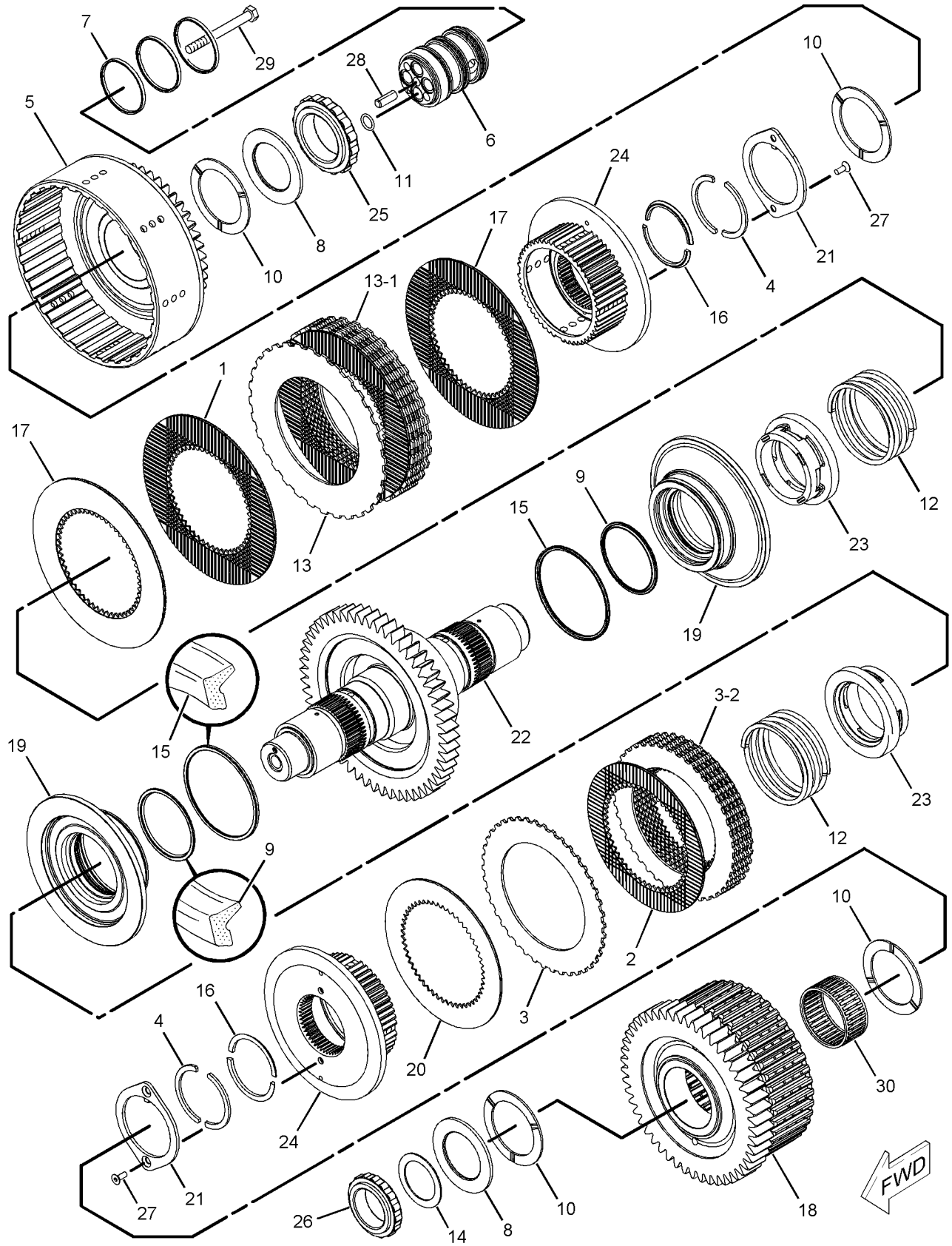

GRAPHIC #1 **<END>** g01137840

235-2413 CLUTCH GP-TRANSMISSION–REVERSE, SECOND

S/N: CZM1-UP

PART OF 253-8405 TRANSMISSION AR

SMCS-3063, 3155, 3170 **i02774946**

NOTE	REF NO	GRAPHIC REF	PART NUMBER	QTY	PART NAME 1 2 3 4 5 6 (PRODUCT LEVEL)	SEE PAGE
	1	1	**131-3919**	1	BEARING-ROLLER	
	2	1	**4M-6107**	1	BEARING-INNER	
	3	1	**8E-1263**	1	BEARING-ROLLER	
	4	1	**6I-8912**	10	DISC-FRICTION	
	5	1	**6I-9502**	9	PLATE-CLUTCH	
	6	1	**6Y-0976**	1	GEAR (29-TEETH)	
	7	1	**6Y-1114**	1	LOCKWASHER	
	8	1	**6Y-1115**	4	RING-HALF	
	9	1	**6Y-1119**	1	CARRIER-SEAL	
	10	1	**6Y-1887**	1	PISTON	
	11	1	**6Y-1888**	1	PLATE-CLUTCH	
	12	1	**6Y-1891**	1	HUB AS	
	13	1	**6Y-2307**	1	SPACER (61X82.55X43.88-MM THK)	
	14	1	**7G-4822**	3	RING-SEAL	
	15	1	**7T-4897**	1	DISC-THRUST	
	16	1	**8E-5734**	1	RING-SEAL EXTENSION	
	17	1	**8E-5742**	2	RING-SEAL	
	18	1	**8E-8319**	4	DISC-THRUST	
	19	1	**8F-3469**	4	SEAL-O-RING	
	20	1	**9U-8815**	1	SPRING	
	21	1	**9W-2029**	1	RACE-THRUST BEARING	
	22	1	**9W-9371**	1	RING-SEAL	
	23	1	**9W-9905**	4	RING-LOCK	
	24	1	**102-5881**	1	SPRING-WAVE	
	25	1	**132-9628**	1	GEAR AS (44-TEETH)	
		1	**6Y-1895**	1	BEARING-SLEEVE	
	26	1	**159-0308**	1	PISTON	
	27	1	**159-0927**	1	DISC-FRICTION	
	28	1	**161-6713**	1	PLATE-LOCK	
	29	1	**171-7095**	1	SHAFT AS	
	30	1	**247-8629**	1	VALVE AS	
	31	1	**247-9711**	1	HUB AS	
	32	1	**248-2886**	1	GEAR AS (46-TEETH)	
M	33	1	**5C-7423**	2	SCREW (M6X1X16-MM)	
	34	1	**5H-8985**	1	PIN-SPRING	
M	35	1	**6V-1819**	2	BOLT (M10X1.5X100-MM)	

M-METRIC PART

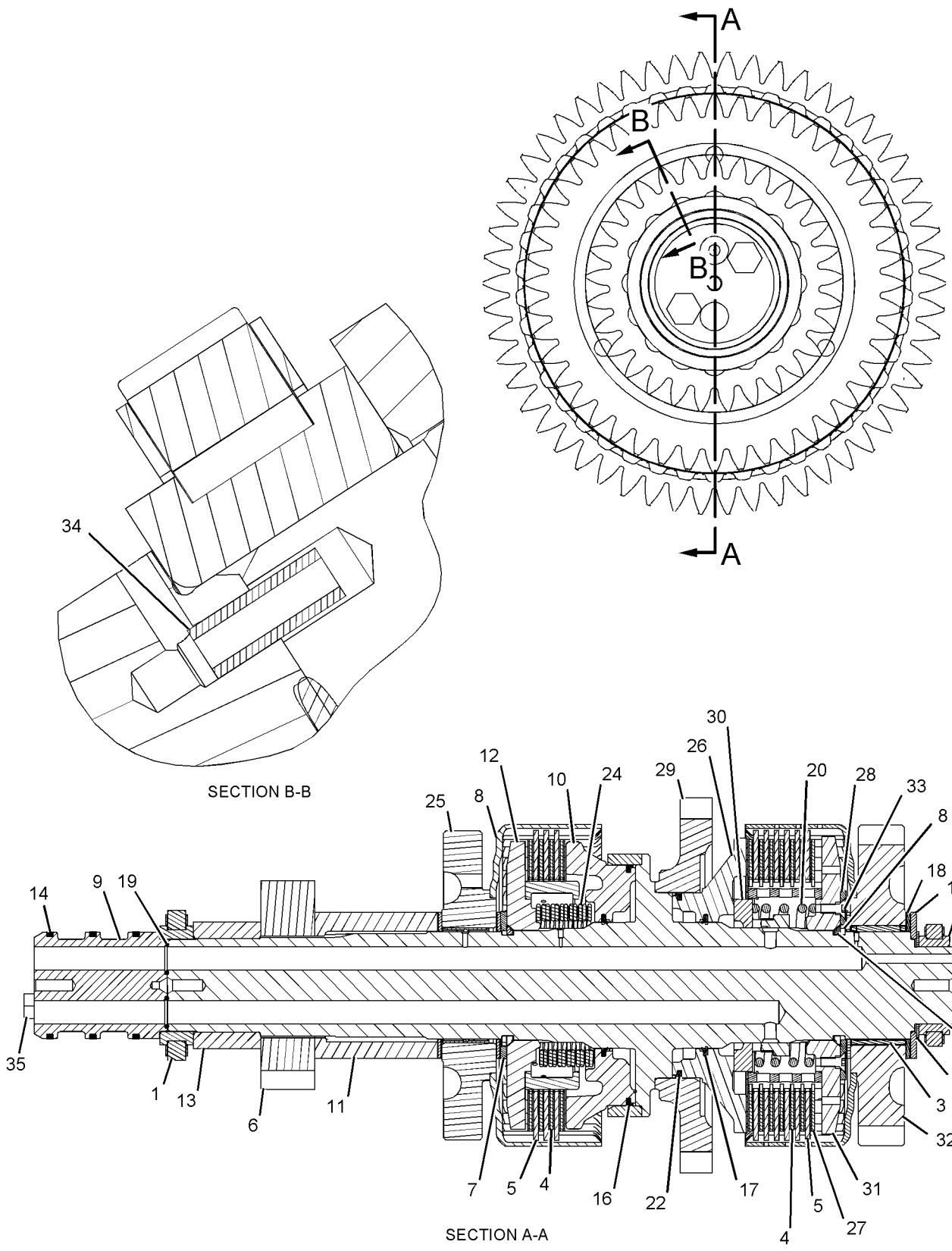

GRAPHIC #1 **<END>** g01132487

235-2414 CLUTCH GP-TRANSMISSION–1ST, 3RD

S/N: CZM1-UP

PART OF 253-8405 TRANSMISSION AR

SMCS-3063, 3155, 3170 **i02774949**

NOTE	REF NO	GRAPHIC REF	PART NUMBER	QTY	PART NAME 1 2 3 4 5 6 (PRODUCT LEVEL)	SEE PAGE
	1	1	**131-3919**	1	BEARING-ROLLER	
	2	1	**3B-8921**	1	BEARING-INNER	
	3	1	**6I-8912**	10	DISC-FRICTION	
	4	1	**6I-9502**	8	PLATE-CLUTCH	
	5	1	**6Y-0983**	1	GEAR (32-TEETH)	
	6	1	**6Y-1001**	1	GEAR (71-TEETH)	
	7	1	**6Y-1114**	2	LOCKWASHER	
	8	1	**6Y-1115**	4	RING-HALF	
	9	1	**6Y-1887**	2	PISTON	
	10	1	**6Y-1891**	1	HUB AS	
	11	1	**6Y-2312**	1	HUB AS	
	12	1	**6Y-2425**	1	CARRIER-SEAL	
	13	1	**7G-4822**	3	RING-SEAL	
	14	1	**7T-4897**	2	DISC-THRUST	
	15	1	**8E-5734**	2	RING-SEAL EXTENSION	
	16	1	**8E-5742**	2	RING-SEAL	
	17	1	**8E-8319**	4	DISC-THRUST	
	18	1	**8F-3469**	3	SEAL-O-RING	
	19	1	**9W-9905**	4	RING-LOCK	
	20	1	**102-5881**	2	SPRING-WAVE	
	21	1	**132-9630**	1	GEAR AS (54-TEETH)	
		1	**6Y-1895**	1	BEARING-SLEEVE	
	22	1	**132-9633**	1	GEAR AS (79-TEETH)	
		1	**6Y-2419**	1	BEARING-SLEEVE	
	23	1	**249-6718**	1	SHAFT AS	
	24	1	**5H-8985**	1	PIN-SPRING	
M	25	1	**6V-1819**	2	BOLT (M10X1.5X100-MM)	

M-METRIC PART

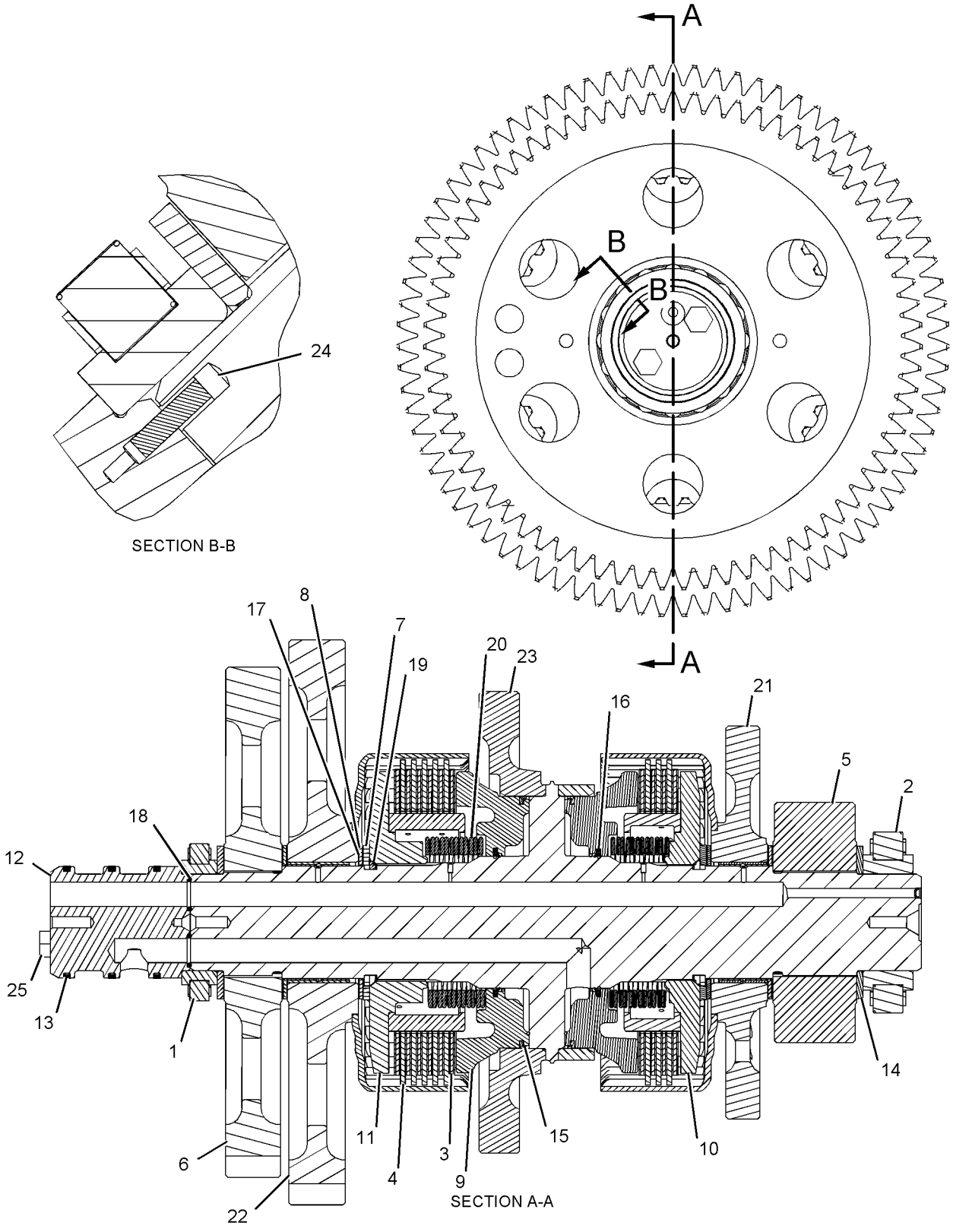

GRAPHIC #1 **<END>** g01132548

247-8303 CLUTCH GP-TRANSMISSION–HIGH, LOW

S/N: CZM1-UP

PART OF 253-8405 TRANSMISSION AR

SMCS-3063, 3155, 3170 **i02774953**

NOTE	REF NO	GRAPHIC REF	PART NUMBER	QTY	PART NAME 1 2 3 4 5 6 (PRODUCT LEVEL)	SEE PAGE
	1	1	**131-3919**	1	BEARING-ROLLER	
	2	1	**3B-8921**	1	BEARING-INNER	
	3	1	**3P-0337**	8	PLATE-CLUTCH	
	4	1	**6I-8912**	6	DISC-FRICTION	
	5	1	**6I-9502**	5	PLATE-CLUTCH	
	6	1	**6Y-1114**	2	LOCKWASHER	
	7	1	**6Y-1115**	4	RING-HALF	
	8	1	**6Y-1887**	1	PISTON	
	9	1	**6Y-1890**	1	RING-RETAINING	
	10	1	**6Y-2312**	1	HUB AS	
	11	1	**6Y-2425**	1	CARRIER-SEAL	
	12	1	**6Y-2428**	1	PISTON	
	13	1	**6Y-2429**	1	PISTON-BALANCE	
	14	1	**6Y-7981**	7	DISC-FRICTION	
	15	1	**7G-4822**	3	RING-SEAL	
	16	1	**7T-4897**	1	DISC-THRUST	
	17	1	**260-7596**	1	ROTOR	
	18	1	**8E-1911**	1	GEAR AS (82-TEETH)	
		1	**9W-6467**	2	BEARING-SLEEVE	
	19	1	**8E-5734**	1	RING-SEAL EXTENSION	
	20	1	**8E-5736**	2	RING-SEAL EXTENSION	
	21	1	**8E-5742**	2	RING-SEAL	
	22	1	**8E-8319**	4	DISC-THRUST	
	23	1	**8F-3469**	3	SEAL-O-RING	
	24	1	**8M-4295**	15	SPRING	
	25	1	**9W-9905**	4	RING-LOCK	
	26	1	**102-5881**	1	SPRING-WAVE	
	27	1	**132-9637**	1	GEAR AS (43-TEETH)	
		1	**9W-6467**	2	BEARING-SLEEVE	
	28	1	**218-3339**	1	HUB AS	
	29	1	**247-9930**	1	SHAFT AS	
		1	**1P-0604**	1	PLUG-CUP	
	30	1	**5H-8985**	1	PIN-SPRING	
M	31	1	**6V-1819**	2	BOLT (M10X1.5X100-MM)	

M-METRIC PART

247-8303 **CLUTCH GP-TRANSMISSION** *(contd.)* **i02774953**

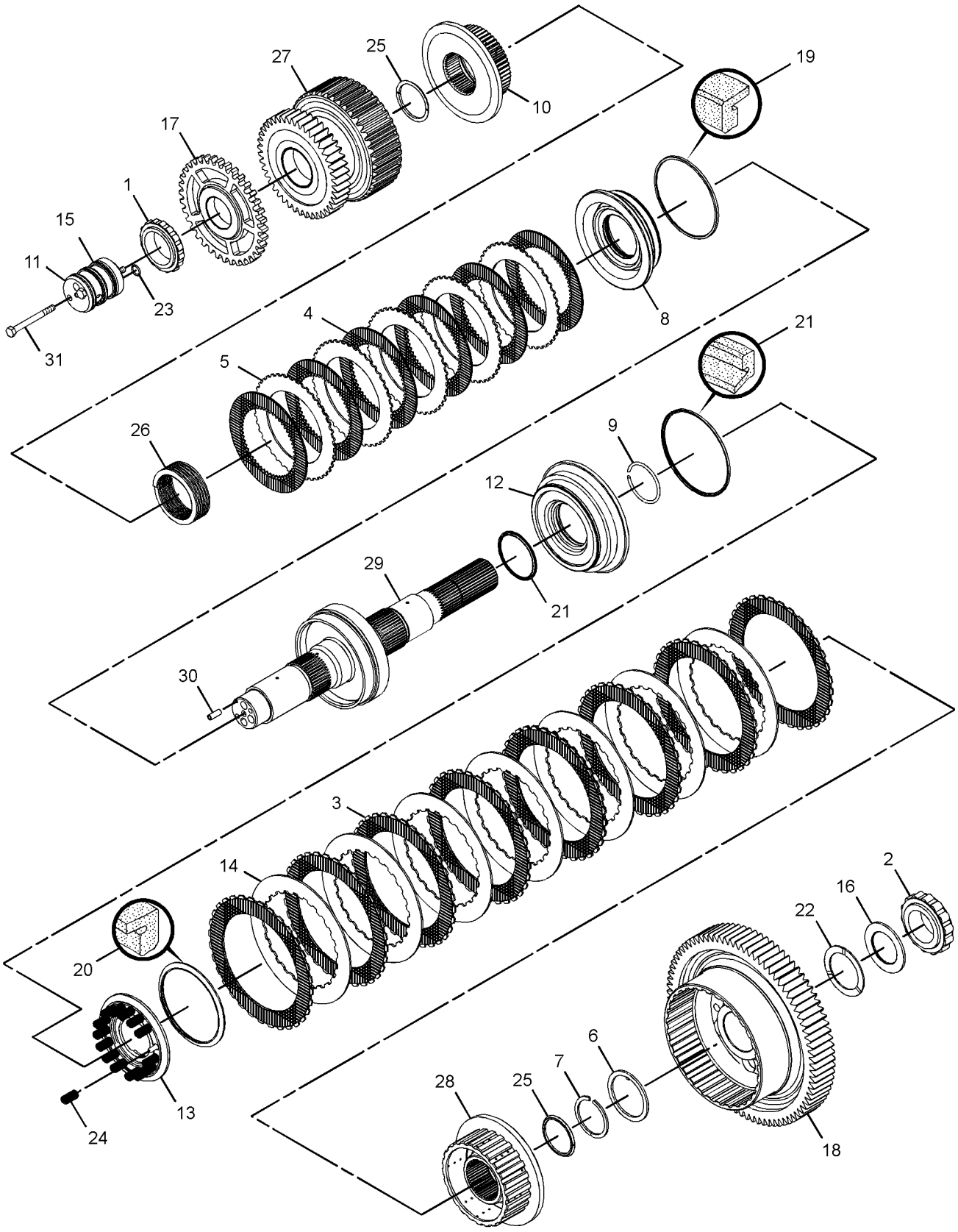

GRAPHIC #1 **<END>** g01372355

231-1511 CONTROL GP-DIFFERENTIAL LOCK

S/N: B9D1-UP

PART OF 234-7721 COMMON AR

SMCS-3264 **i02759291**

NOTE	REF NO	GRAPHIC REF	PART NUMBER	QTY	PART NAME 1 2 3 4 5 6 (PRODUCT LEVEL)	SEE PAGE
	1	1	**6V-0852**	1	CAP-DUST	
	2	1	*148-8423*	1	TEE AS	
		1	**8T-3311**	1	TEE	
		1	**3J-1907**	1	SEAL-O-RING	
		1	**4J-5477**	1	SEAL-O-RING	
	3	1	*164-5567*	1	FITTING AS (QUICK DISCONNECT, MALE)	
		1	**6V-3965**	1	FITTING-COUPLER	
		1	**3J-1907**	1	SEAL-O-RING	
I	4	1	**215-2693**	1	HOSE AS	
	5	1	**276-2171**	1	PLATE AS	
	6	1	**290-3421**	1	TUBE AS	
	7	1	**290-3422**	1	TUBE AS	
	8	1	*148-8325*	1	CONNECTOR AS	
		1	**6V-8641**	1	CONNECTOR	
		1	**3J-1907**	1	SEAL-O-RING	
		1	**4J-5477**	1	SEAL-O-RING	
	9	1	*148-8368*	1	ELBOW AS	
		1	**6V-8627**	1	ELBOW	
		1	**3J-1907**	1	SEAL-O-RING	
		1	**4J-5477**	1	SEAL-O-RING	
	10	1	*148-8374*	1	ELBOW AS	
		1	**6V-8723**	1	ELBOW	
		1	**3K-0360**	1	SEAL-O-RING	
		1	**6V-8397**	1	SEAL-O-RING	
	11	1	*148-8378*	1	ELBOW AS	
		1	**6V-8724**	1	ELBOW	
		1	**3J-1907**	1	SEAL-O-RING	
		1	**6V-8397**	1	SEAL-O-RING	
Y	12	1	**250-2139**	1	VALVE & MTG GP-SOLENOID (DIFFERENTIAL LOCK)	396
	13	1	**6D-3479**	1	CLIP	
	14	1	**7D-7233**	1	CLIP	
	15	1	**8T-4121**	4	WASHER-HARD (11X21X2.5-MM THK)	
M	16	1	**8T-4133**	1	NUT (M10X1.5-THD)	
M	17	1	**8T-4136**	1	BOLT (M10X1.5X25-MM)	
M	18	1	**8T-5005**	2	BOLT (M10X1.5X70-MM)	

I-REFER TO HYDRAULIC INFORMATION SYSTEM
M-METRIC PART
Y-SEPARATE ILLUSTRATION

231-1511 **CONTROL GP-DIFFERENTIAL LOCK** *(contd.)* **i02759291**

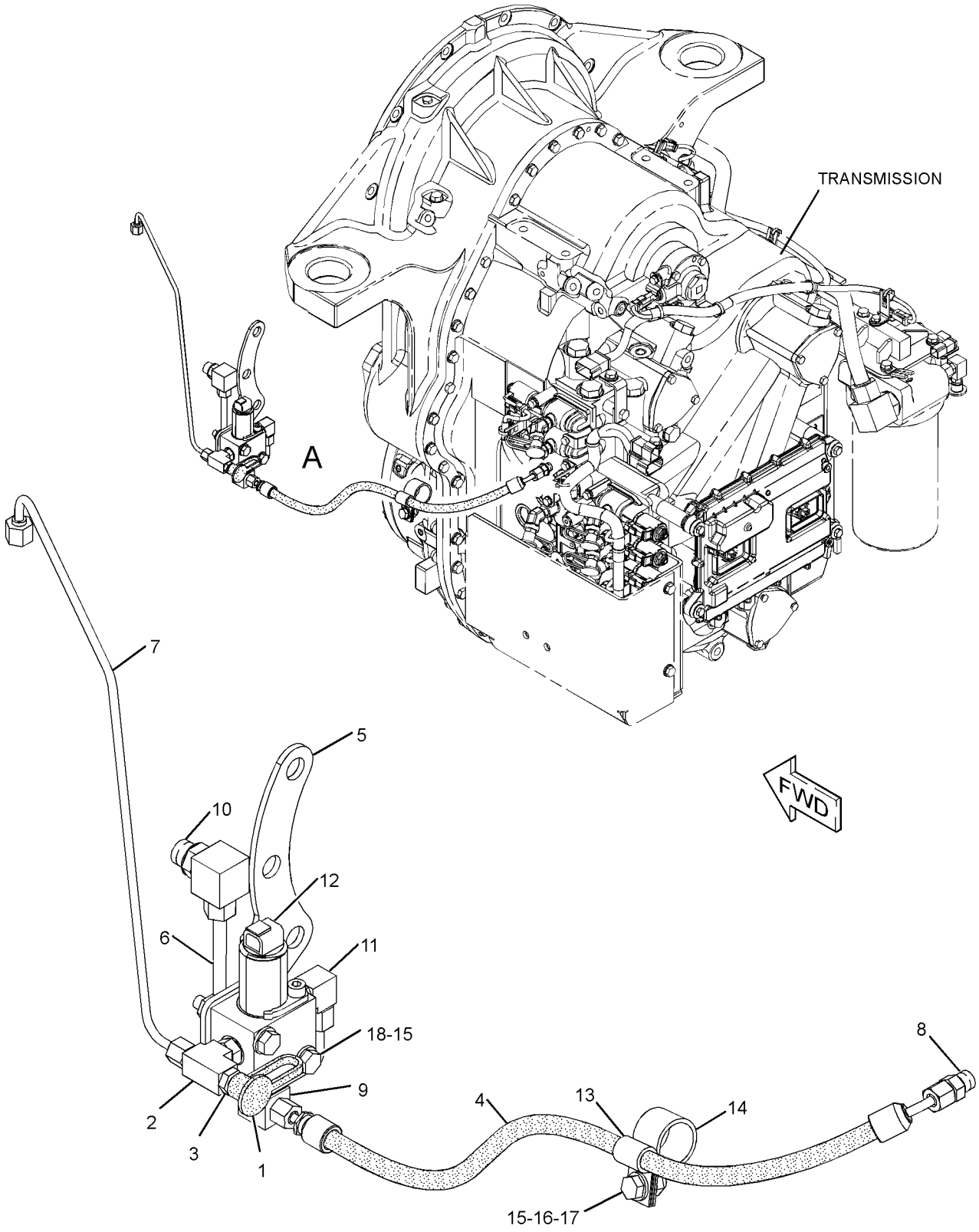

VIEW OF AREA A

GRAPHIC #1 **<END>** g01367293

POWER TRAIN

253-8425 CONTROL GP-TRANSMISSION HYD

S/N: CZM1-UP

PART OF 253-8405 TRANSMISSION AR

SMCS-3073, 3167 **i02775104**

NOTE	REF NO	GRAPHIC REF	PART NUMBER	QTY	PART NAME 1 2 3 4 5 6 (PRODUCT LEVEL)	SEE PAGE
	1	1	**2P-1692**	1	SEAL-O-RING	
	2	1	**3K-0360**	1	SEAL-O-RING	
	3	1	**3S-2093**	23	STRAP-CABLE	
	4	1	**6V-0852**	8	CAP-DUST	
	5	1	**6V-8077**	4	ELBOW	
	6	1	**8S-0768**	8	SEAL-O-RING	
	7	1	**148-1925**	2	VALVE-RELIEF	
	8	1	**155-5114**	3	SPACER	
	9	1	**191-8303**	2	SENSOR GP-SPEED (TRANSMISSION OUTPUT)	
	10	1	**191-8304**	1	SENSOR GP-SPEED (TRANSMISSION INPUT)	
	10A	1	**191-8304**	1	SENSOR GP-SPEED (TRANSMISSION INTERMEDIATE 1)	
	10B	1	**191-8304**	1	SENSOR GP-SPEED (TRANSMISSION INTERMEDIATE 2)	
					(EACH SENSOR GP INCLUDES)	
		1	**137-6645**	1	PAD	
	11	1	**229-1537**	1	SWITCH AS-PRESSURE (PARKING BRAKE)	
		1	**102-8803**	1	KIT-RECEPTACLE (3-PIN)	
					(INCLUDES RECEPTACLE AS & WEDGE)	
		1	**3E-3371**	1	WEDGE-RECEPTACLE LOCK (3-PIN)	
		1	**186-3735**	3	PIN-CONNECTOR (16-GA TO 18-GA)	
E		1	**9X-1813**		SLEEVE (15-CM)	
Y	12	1	**235-3530**	1	VALVE GP-RELIEF (TRANSMISSION)	399
	13	1	**238-0112**	1	SENSOR GP-TEMPERATURE (TRANSMISSION OIL)	
Y	14	1	**244-3114**	8	VALVE GP-MODULATING (24-VOLT) (TRANSMISSION CLUTCH)	397
	15	1	**247-4993**	1	SPACER	
	16	1	**248-5523**	1	VALVE GP-SOLENOID (24-VOLT DC) (PARKING BRAKE)	
		1	**245-1181**	1	FLANGE	
		1	**286-8172**	1	KIT-SEAL (SOLENOID VALVE)	
	17	1	**253-5306**	1	HARNESS AS-SENSOR	
		1	**102-8801**	1	KIT-RECEPTACLE (12-PIN)	
					(INCLUDES RECEPTACLE AS & WEDGE)	
		1	**155-2270**	6	KIT-CONNECTING PLUG (2-PIN)	
					(EACH INCLUDES PLUG AS, WEDGE, & INTERFACE SEAL)	
	18	1	**253-5323**	1	HARNESS AS-TRANSMISSION	
		1	**230-4011**	1	PLUG AS-CONNECTOR (2-PIN)	
		1	**102-8805**	1	KIT-RECEPTACLE (6-PIN)	
		1	**102-8801**	1	KIT-RECEPTACLE (12-PIN)	
					(EACH RECEPTACLE KIT INCLUDES RECEPTACLE AS & WEDGE)	
		1	**155-2260**	1	KIT-CONNECTING PLUG (3-PIN)	
		1	**155-2270**	9	KIT-CONNECTING PLUG (2-PIN)	
					(EACH PLUG KIT INCLUDES PLUG AS, WEDGE, & INTERFACE SEAL)	
	19	1	*275-8971*	1	CONTROL GP-POWER TRAIN	
R		1	**262-1408**	1	CONTROL GP-UNPROGRAMMED (TRANSMISSION)	
	20	1	**288-5507**	1	PLATE AS	
	21	1	**117-1385**	5	SEAL-O-RING	
	22	1	**130-5300**	4	CLIP	
	23	1	**132-5789**	8	CLIP	
	24	1	**3J-1907**	4	SEAL-O-RING	
	25	1	**4P-7429**	2	CLIP	
	26	1	**4P-7581**	10	CLIP	
	27	1	**4P-7582**	1	CLIP	
M	28	1	**5P-8347**	2	BOLT (M8X1.25X70-MM)	
M	29	1	**6V-5215**	6	BOLT (M8X1.25X16-MM)	
M	30	1	**6V-5222**	3	BOLT (M8X1.25X85-MM)	

253-8425 **CONTROL GP-TRANSMISSION HYD** *(contd.)* **i02775104**

NOTE	REF NO	GRAPHIC REF	PART NUMBER	QTY	PART NAME 1 2 3 4 5 6 (PRODUCT LEVEL)	SEE PAGE
	31	1	**6V-5839**	2	WASHER (11X21X2.5-MM THK)	
M	32	1	**6V-6317**	2	BOLT (M10X1.5X20-MM)	
	33	1	**6V-9028**	1	SEAL-O-RING	
	34	1	**8C-3428**	1	RING-RETAINING	
M	35	1	**8C-5748**	1	BOLT (M8X1.25X55-MM)	
M	36	1	**8T-0100**	20	BOLT (M8X1.25X60-MM)	
M	37	1	**8T-1158**	1	BOLT-SOCKET HEAD (M8X1.25X20-MM)	
	38	1	**8T-4224**	1	WASHER-HARD (8.8X16X2-MM THK)	
	39	1	**8T-9655**	8	MOUNT-ISOLATION	
	40	1	**9M-1974**	27	WASHER-HARD (8.8X16X2-MM THK)	
	41	1	**9N-0869**	4	WASHER-HARD (8.8X25.5X2-MM THK)	
	42	1	**9X-4609**	2	SEAL-O-RING	

E-ORDER BY THE CENTIMETER
M-METRIC PART
R-REMFG PART MAY BE AVAILABLE
Y-SEPARATE ILLUSTRATION

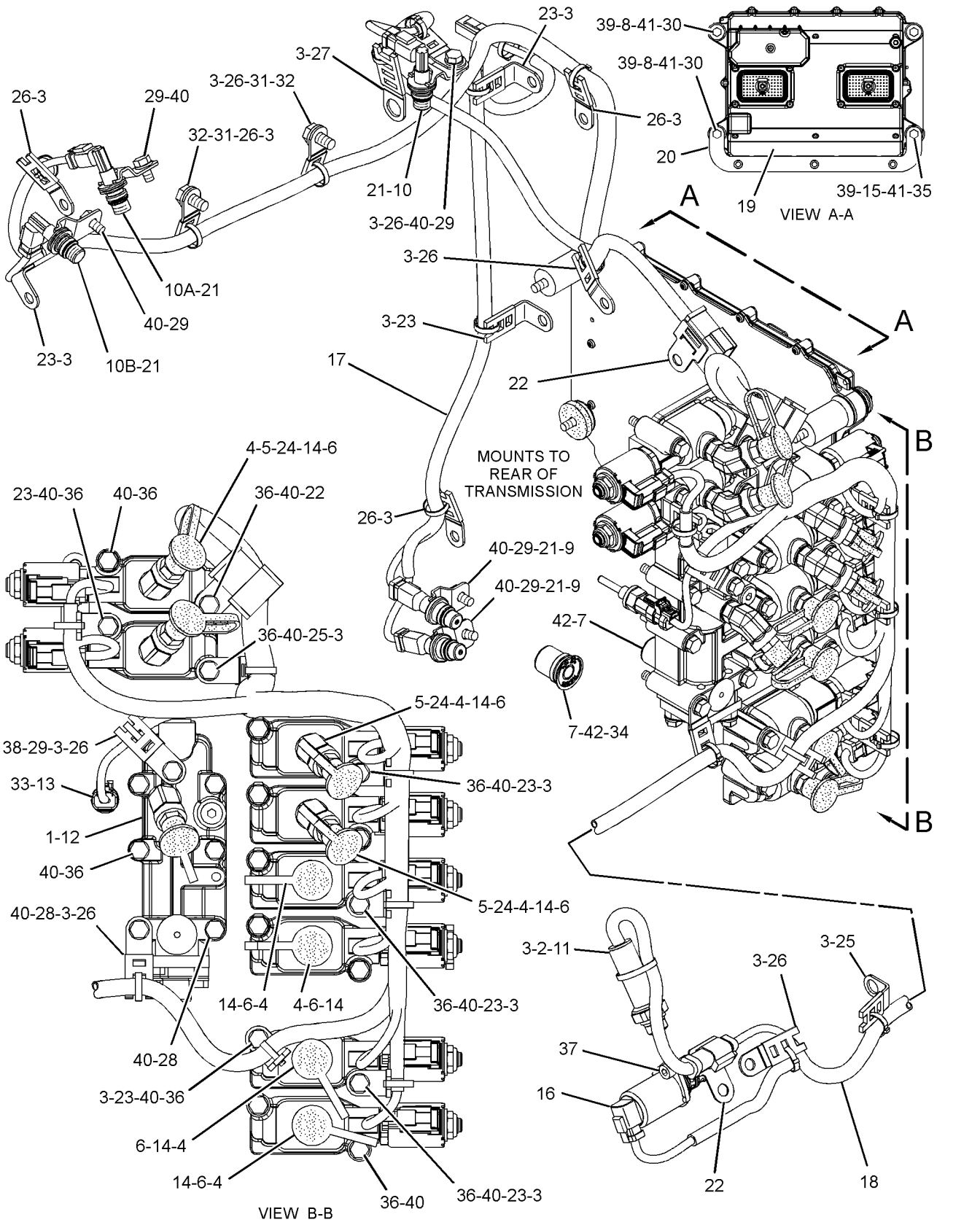

GRAPHIC #1 **<END>** g01394539

272-1045 COOLER GP-TRANSMISSION OIL

S/N: B9D1-UP

PART OF 262-8360 MOUNTING GP-XMSN OIL COOLER

SMCS-1375 **i02796715**

NOTE	REF NO	GRAPHIC REF	PART NUMBER	QTY	PART NAME 1 2 3 4 5 6 (PRODUCT LEVEL)	SEE PAGE
	1	1	**7E-8570**	1	BONNET	
	2	1	**175-7453**	1	CORE AS-TRANSMISSION COOLER	
	3	1	**262-7721**	1	BONNET	
	4	1	**262-7857**	1	BRACKET AS	
	5	1	**129-2861**	2	GASKET	
M	8	1	**5C-7261**	2	NUT (M8X1.25-THD)	
	9	1	**5P-4116**	2	WASHER-HARD (8.8X20.5X2-MM THK)	
	10	1	**6V-9027**	1	SEAL-O-RING	
	11	1	**7X-7729**	2	WASHER (11X25X3-MM THK)	
M	12	1	**8T-4136**	2	BOLT (M10X1.5X25-MM)	
M	13	1	**8T-6870**	2	BOLT (M8X1.25X70-MM)	
M	14	1	**8T-7547**	6	BOLT (M8X1.25X30-MM)	
	16	1	**9S-4182**	1	PLUG-O-RING	

M-METRIC PART

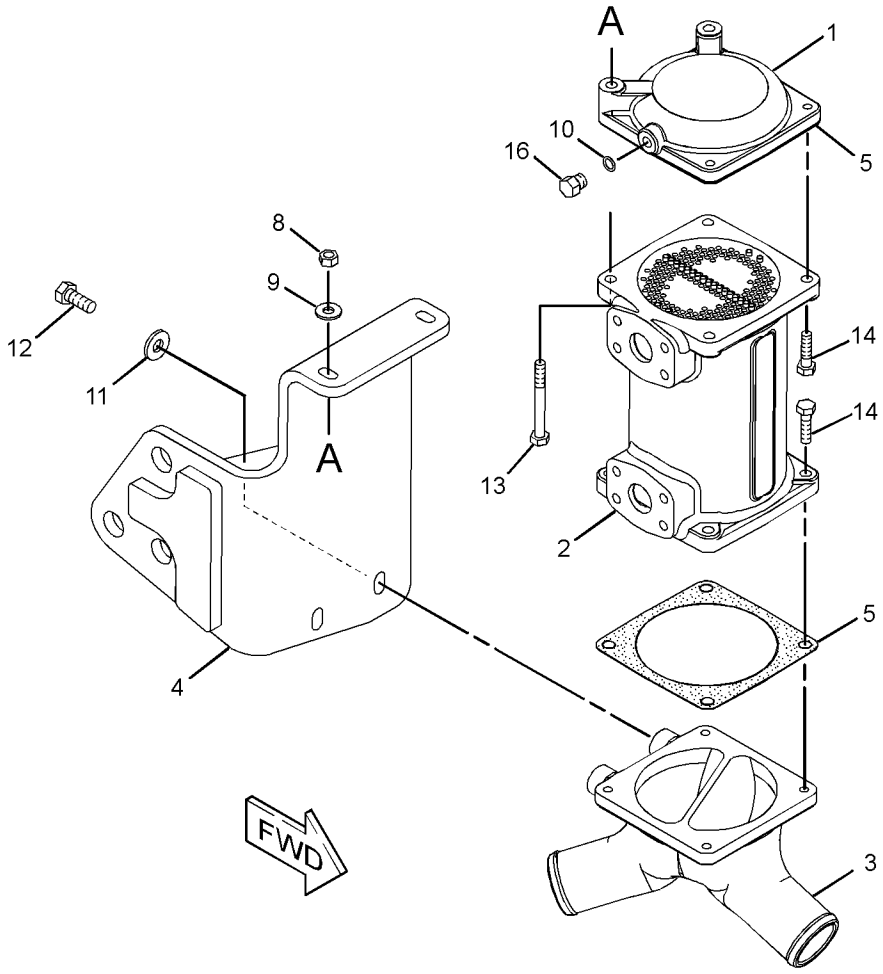

GRAPHIC #1 **<END>** g01157248

8E-3366 COUPLING GP-TORSIONAL

S/N: B9D1-UP
DRIVE
PART OF 234-7721 COMMON AR

SMCS-3252, 3279 **i02591118**

NOTE	REF NO	GRAPHIC REF	PART NUMBER	QTY	PART NAME 1 2 3 4 5 6 (PRODUCT LEVEL)	SEE PAGE
	1	1	**283-1099**	1	COUPLING AS	
	2	1	**165-3928**	12	BOLT (3/8-16-THD)	
	3	1	**5M-2894**	12	WASHER-HARD (10.2X18.5X2.5-MM THK)	

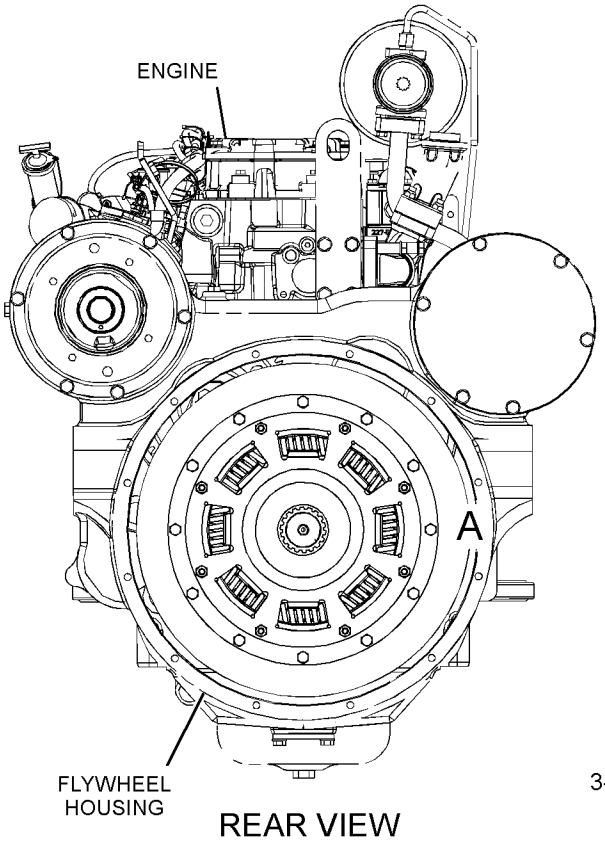

REAR VIEW

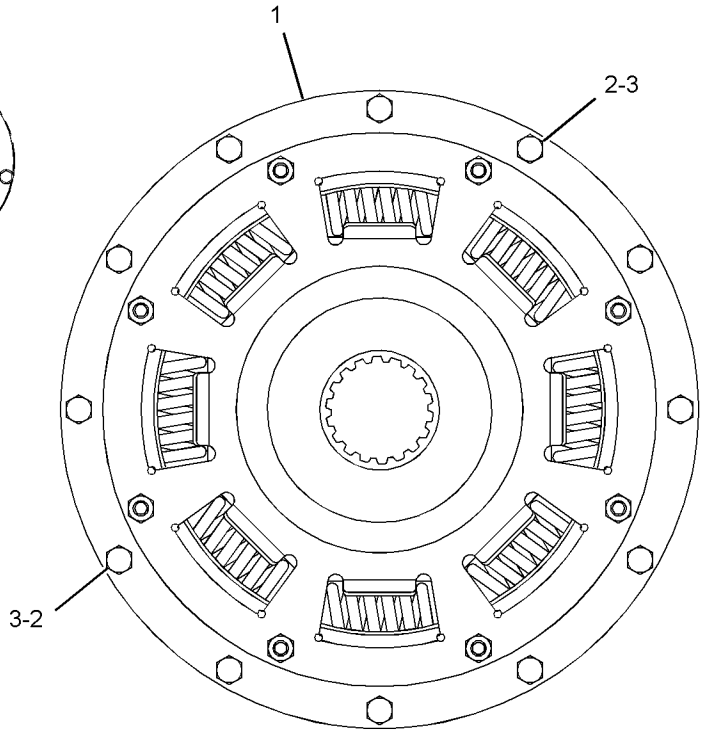

VIEW OF AREA A

GRAPHIC #1 **<END>** g01293620

263-7434 COVER GP-SHIPPING—TRANSMISSION

S/N: CZM1-UP

PART OF 253-8405 TRANSMISSION AR

SMCS-3030, 3064 **i02775355**

NOTE	REF NO	GRAPHIC REF	PART NUMBER	QTY	PART NAME 1 2 3 4 5 6 (PRODUCT LEVEL)	SEE PAGE
	1	1	**7J-3554**	1	COVER	
	3	1	**8T-8737**	30	PLUG-SEAL	
	4	1	**9H-0846**	1	SEAL-O-RING	
	5	1	**117-2927**	1	COVER-SHIPPING	
	6	1	**126-1773**	2	CAP-CONNECTOR	
	7	1	**155-2258**	2	WEDGE-PLUG LOCK (12-PIN)	
	8	1	**155-2263**	1	WEDGE-PLUG LOCK (6-PIN)	
	9	1	**175-3721**	1	COVER	
	12	1	*148-8406*	2	PLUG AS	
					(EACH INCLUDES)	
		1	**9S-9334**	1	PLUG	
		1	**7M-8485**	1	SEAL-O-RING	
	13	1	*148-8407*	2	PLUG AS	
					(EACH INCLUDES)	
		1	**9S-4191**	1	PLUG-O-RING	
		1	**3J-1907**	1	SEAL-O-RING	
	14	1	*148-8408*	1	PLUG AS	
		1	**9S-4183**	1	PLUG-O-RING	
		1	**3D-2824**	1	SEAL-O-RING	
	15	1	**155-2255**	2	KIT-CONNECTING PLUG (12-PIN)	
	16	1	**155-2274**	1	KIT-CONNECTING PLUG (6-PIN)	
					(EACH INCLUDES PLUG AS, WEDGE, & INTERFACE SEAL)	
	17	1	**2D-0094**	1	GASKET	
	18	1	**4M-0189**	1	SEAL-O-RING	
	19	1	**5P-8245**	14	WASHER-HARD (13.5X25.5X3-MM THK)	
M	20	1	**6V-3823**	10	BOLT (M12X1.75X60-MM)	
M	21	1	**6V-8149**	10	NUT (M12X1.75-THD)	
M	22	1	**8T-0293**	4	BOLT (M12X1.75X20-MM)	
M	23	1	**8T-4137**	2	BOLT (M10X1.5X20-MM)	

M-METRIC PART

263 - 7434 **COVER GP-SHIPPING** *(contd.)* **i02775355**

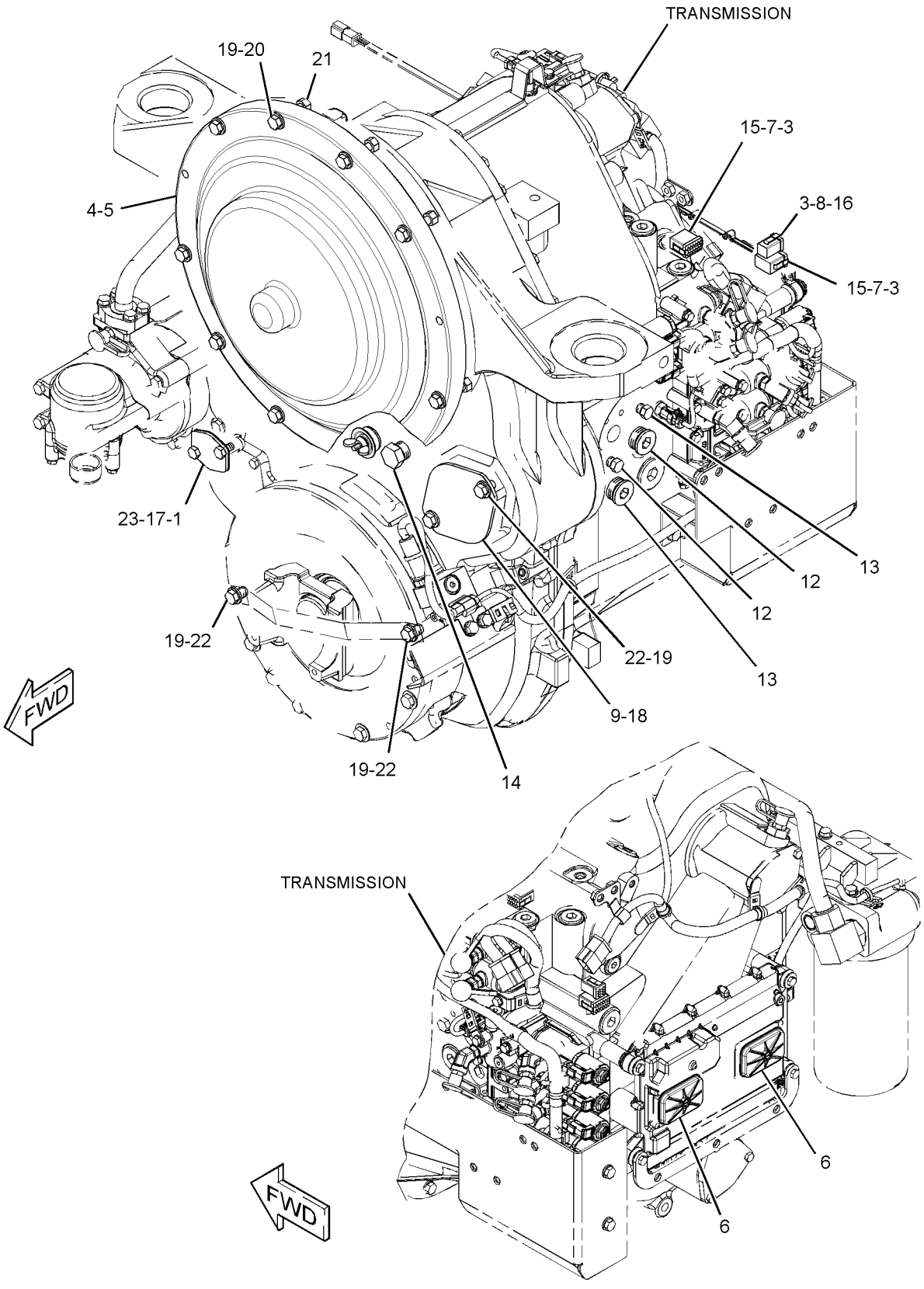

GRAPHIC #1 **<END>** g01394445

271-8594 DIFFERENTIAL & BEVEL GEAR GP

S/N: B9D1-UP

PART OF 284-5013 AXLE GP-REAR

SMCS-3256, 3258 **i02781069**

NOTE	REF NO	GRAPHIC REF	PART NUMBER	QTY	PART NAME 1 2 3 4 5 6 (PRODUCT LEVEL)	SEE PAGE
	1	1	**7D-1677**	1	RACE-BEARING INNER	
	2	1	**1J-2860**	1	CUP-BEARING	
	3	1	**2D-9455**	1	CONE-BEARING	
	4	1	**7S-4001**	1	SEAL-O-RING	
	5	1	**201-7713**	1	BEARING AS	
	6	1	**201-8481**	1	LOCKNUT AS	
		1	**159-3046**	4	BOLT (M8X1.25X20-MM)	
	7	1	**222-7843**	1	SHROUD	
	8	1	**264-0575**	1	SEAL-LIP TYPE	
	9	1	**271-8523**	1	YOKE AS	
		1	**271-8680**	1	GUARD	
B	10	1	**271-8528**	1	SHIM PACK (INCLUDES 18-SHIMS)	
	11	1	**271-8529**	1	RETAINER	
	12	1	**272-7116**	1	HOUSING-PINION	
Y	13	1	**287-8223**	1	DIFFERENTIAL GP	351
	14	1	**290-6101**	1	SHAFT-BEVEL PINION	
	15	1	**290-7296**	20	BOLT (M16X2X40-MM)	
	16	1	**290-9989**	1	GEAR-BEVEL (44-TEETH)	
	17	1	**159-3046**	3	BOLT (M8X1.25X20-MM)	
	18	1	**1J-4757**	1	CONE-BEARING	
	19	1	**2D-9454**	1	CUP-BEARING (TAPERED ROLLER)	
	20	1	**8C-0622**	1	RING-RETAINING	
M	21	1	**8T-0282**	1	BOLT (M16X2X120-MM)	
	22	1	**9X-8268**	20	WASHER (17.5X30X3.5-MM THK)	

B-USE AS REQUIRED
M-METRIC PART
Y-SEPARATE ILLUSTRATION

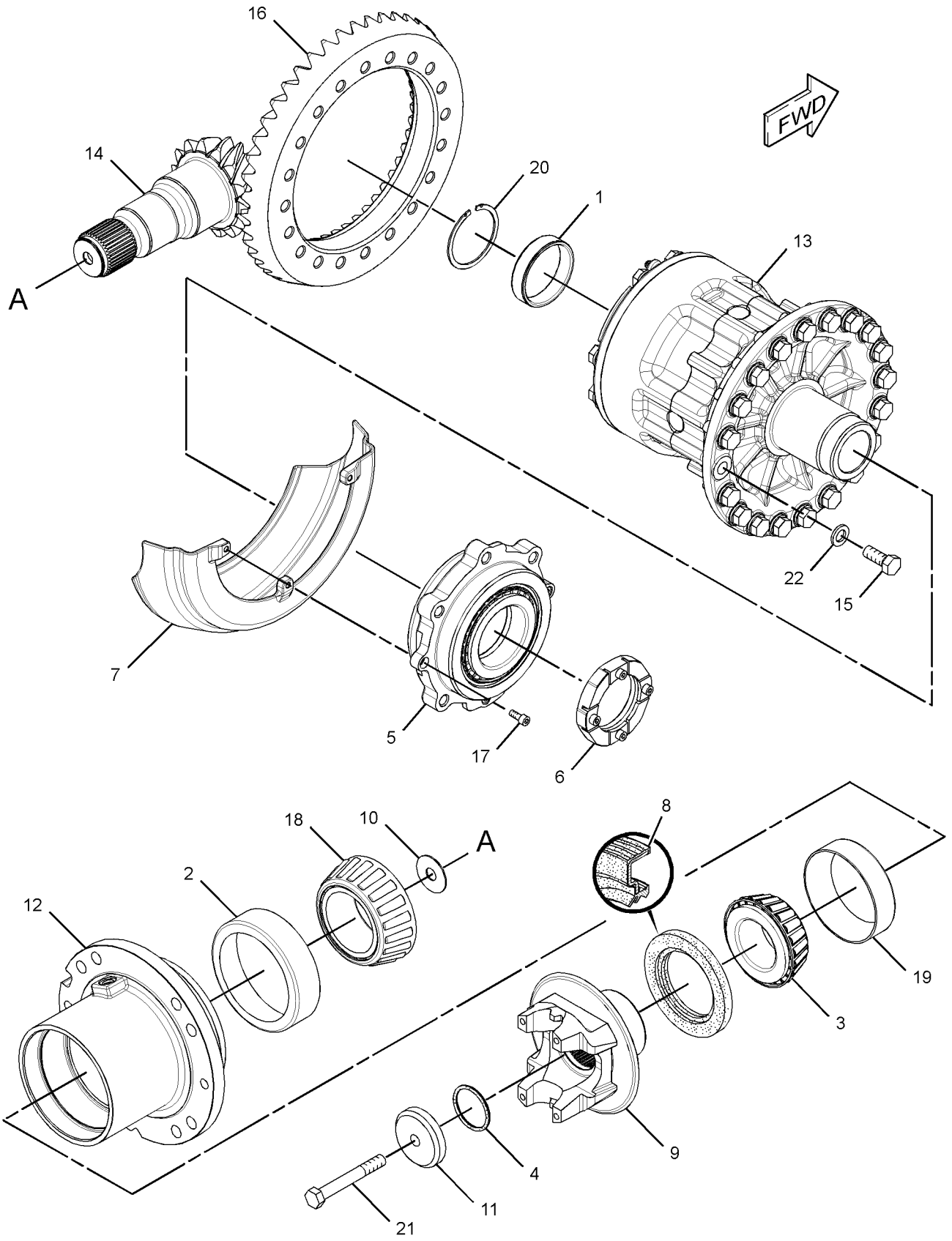

GRAPHIC #1

<END>

g01372183

287-8223 DIFFERENTIAL GP

S/N: B9D1-UP

PART OF 271-8594 DIFFERENTIAL & BEVEL GEAR GP

SMCS-3258 **i02781065**

NOTE	REF NO	GRAPHIC REF	PART NUMBER	QTY	PART NAME 1 2 3 4 5 6 (PRODUCT LEVEL)	SEE PAGE
	1	1	**5F-9144**	3	SEAL-O-RING	
	2	1	**148-7841**	3	SPRING	
	3	1	**201-8476**	9	PLATE-SEPARATOR	
	4	1	**201-8477**	9	DISC-FRICTION	
	5	1	**201-8480**	1	PLATE-THRUST	
	6	1	**221-8040**	3	DOWEL	
	7	1	**239-3105**	1	RING-THRUST	
	8	1	**287-8222**	1	CASE AS-DIFFERENTIAL	
M	8A	1	**8T-5002**	8	BOLT (M16X180-MM)	
	8B	1	**9X-8268**	8	WASHER (17.5X30X3.5-MM THK)	
	9	1	**293-5368**	4	BEARING-SLEEVE	
	10	1	**305-3351**	2	WASHER-THRUST	
	11	1	**305-3352**	4	WASHER-THRUST	
	12	1	**306-5622**	1	SPIDER	
	13	1	**306-5628**	1	GEAR-DIFFERENTIAL BEVEL (44-TEETH)	
	14	1	**306-5629**	1	GEAR-DIFFERENTIAL BEVEL (16-TEETH)	
	15	1	**306-5635**	4	PINION-DIFFERENTIAL	
					PARTS SHOWN IN GRAPHIC(S) WITHOUT A REFERENCE NUMBER ARE NOT SERVICED SEPARATELY	

M-METRIC PART

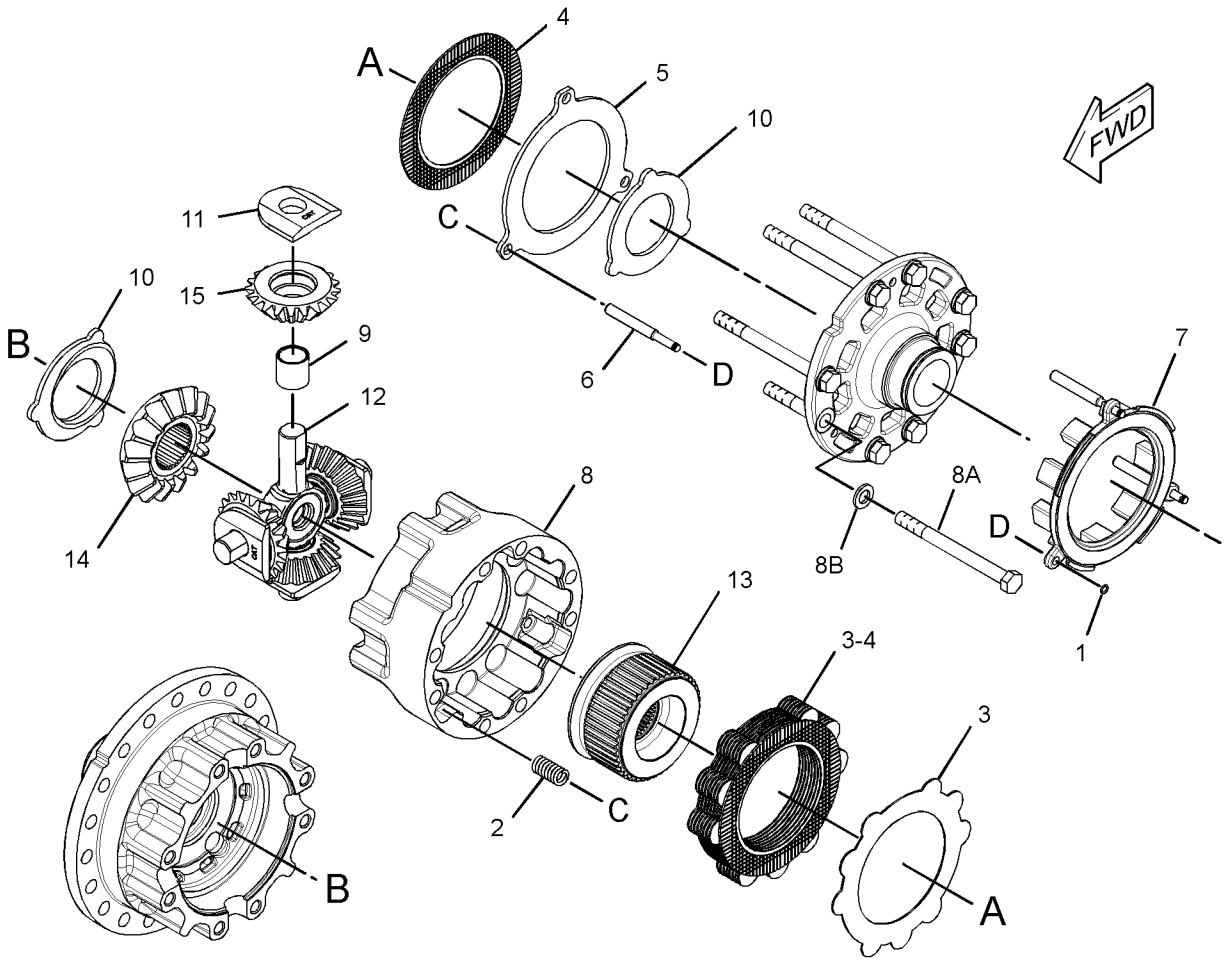

GRAPHIC #1 **<END>** g01332550

260-4803 DRIVE GP-WHEEL–ALL WHEEL DRIVE

S/N: B9D1-UP

PART OF 260-8698 AXLE GP-FRONT

SMCS-4205, 4208, 4350, 4351, 4355 **i02786104**

NOTE	REF NO	GRAPHIC REF	PART NUMBER	QTY	PART NAME 1 2 3 4 5 6 (PRODUCT LEVEL)	SEE PAGE
Y	1	1	**292-3482**	1	GEAR GP-FRONT (ALL WHEEL DRIVE, LH)	360
Y	2	1	**292-3483**	1	GEAR GP-FRONT (ALL WHEEL DRIVE, RH)	361
	3	1	**260-8722**	2	COVER	
	4	1	**7X-0622**	6	WASHER (13X24X2.5-MM THK)	
M	5	1	**8T-4139**	6	BOLT (M12X1.75X30-MM)	

M-METRIC PART
Y-SEPARATE ILLUSTRATION

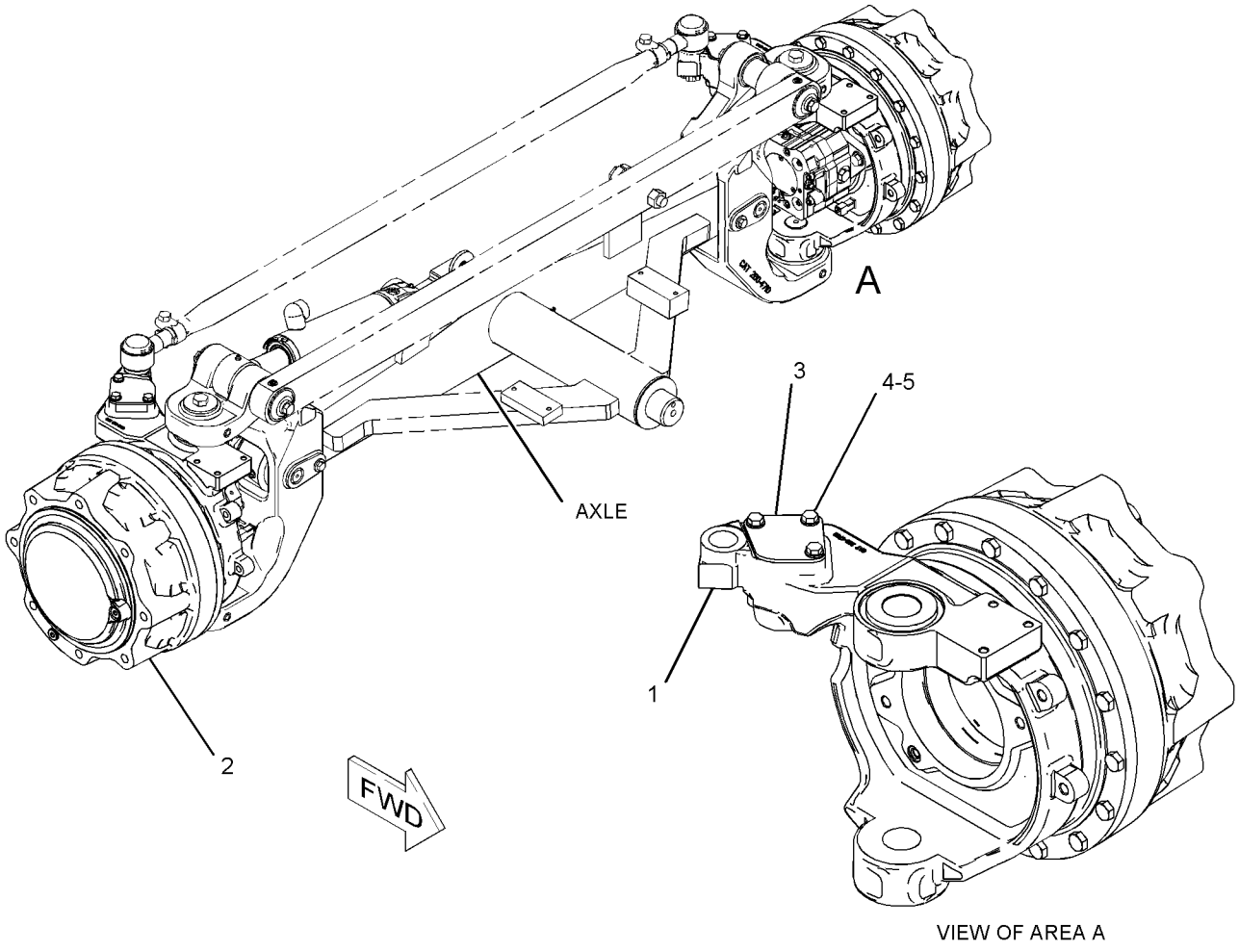

GRAPHIC #1 **<END>** g01138323

247-4025 FILLER GP-POWER TRAIN OIL

S/N: B9D1-UP

PART OF 234-7721 COMMON AR

SMCS-3005, 3081, 7513 **i02774558**

NOTE	REF NO	GRAPHIC REF	PART NUMBER	QTY	PART NAME 1 2 3 4 5 6 (PRODUCT LEVEL)	SEE PAGE
	1	1	**9G-5127**	1	BREATHER AS (POWER TRAIN OIL FILLER)	
	2	1	**254-3286**	1	GAUGE AS-OIL LEVEL (DIPSTICK) (POWER TRAIN OIL)	
	3	1	**259-2620**	1	TUBE AS	
	4	1	**265-9383**	1	TUBE AS	
	5	1	**6V-5839**	2	WASHER (11X21X2.5-MM THK)	
	6	1	**7J-8611**	1	ELBOW-PIPE	
	7	1	**8B-1615**	2	GASKET	
M	8	1	**8T-4196**	2	BOLT (M10X1.5X35-MM)	

M-METRIC PART

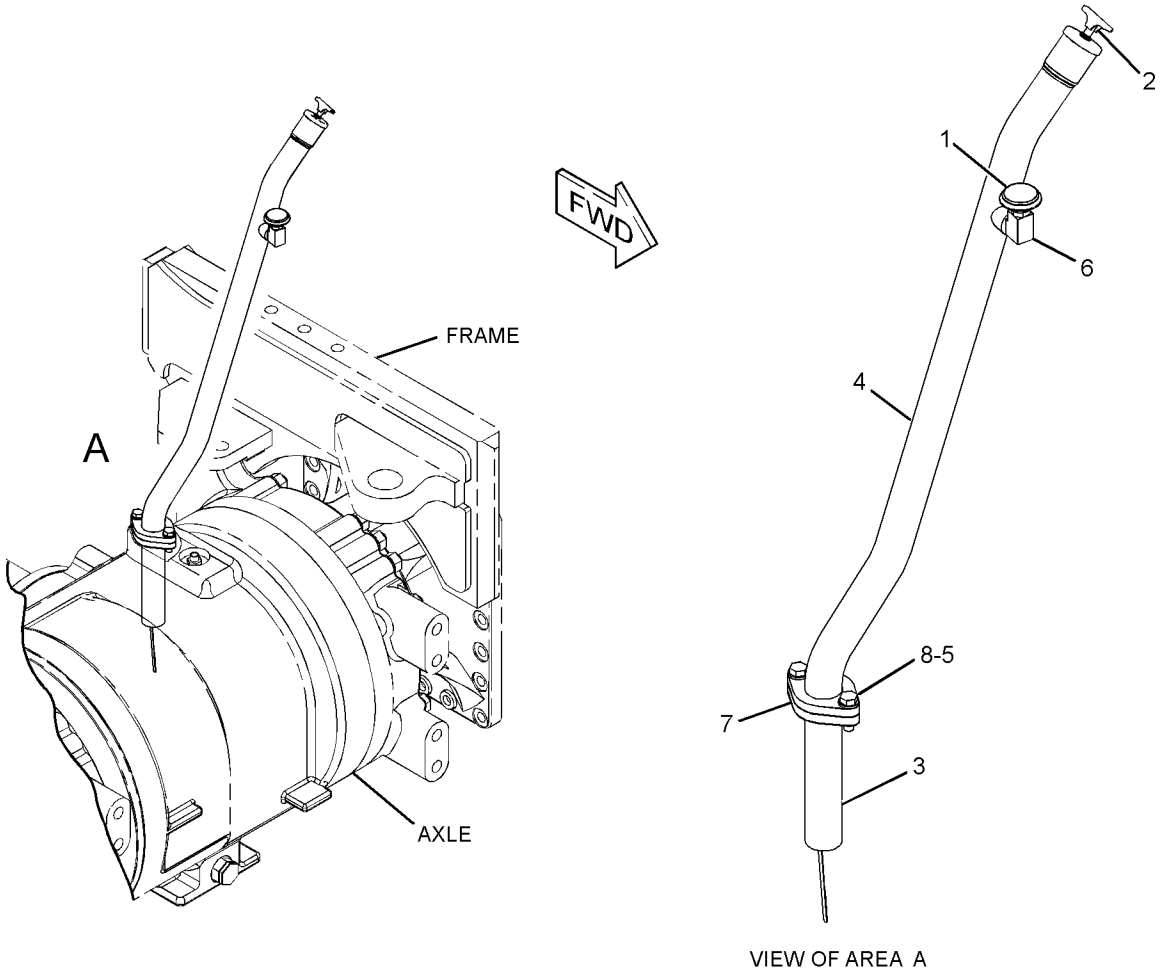

GRAPHIC #1 **<END>** g01154052

250-8292 FILTER & MTG GP-TRANSMISSION

S/N: CZM1-UP

PART OF 253-8405 TRANSMISSION AR

SMCS-3067 **i02775007**

NOTE	REF NO	GRAPHIC REF	PART NUMBER	QTY	PART NAME 1 2 3 4 5 6 (PRODUCT LEVEL)	SEE PAGE
Y	1	1	**287-1512**	1	FILTER GP-OIL (TRANSMISSION)	355
	2	1	**289-2047**	1	PLATE AS	
	3	1	**130-5300**	1	CLIP	
	4	1	**4P-7581**	1	CLIP	
	5	1	**8T-4121**	3	WASHER-HARD (11X21X2.5-MM THK)	
M	6	1	**8T-4184**	2	BOLT (M12X1.75X45-MM)	
M	7	1	**8T-4195**	2	BOLT (M10X1.5X30-MM)	
	8	1	**8T-4223**	2	WASHER-HARD (13.5X25.5X3-MM THK)	
M	9	1	**8T-5035**	1	BOLT (M10X1.5X65-MM)	

M-METRIC PART
Y-SEPARATE ILLUSTRATION

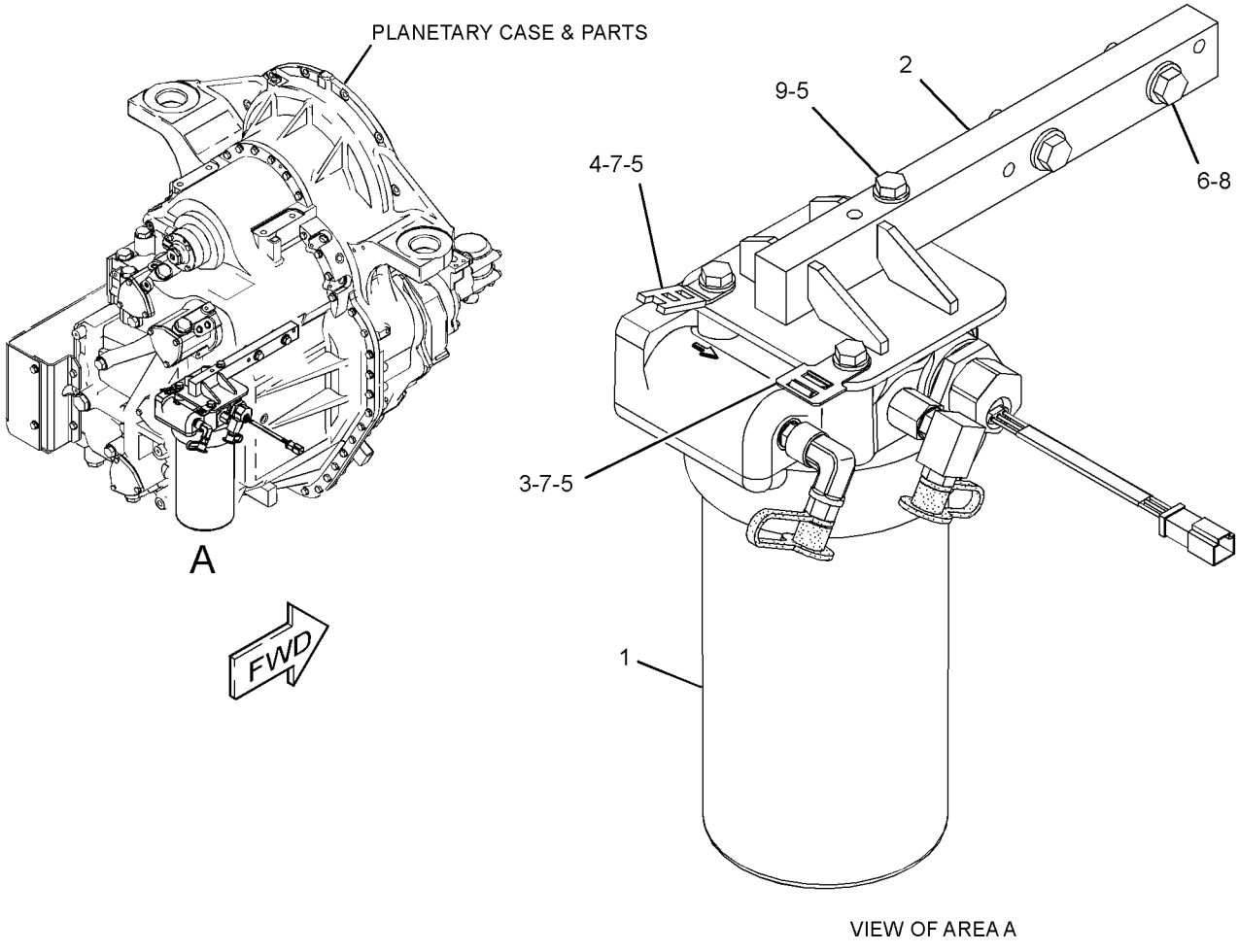

GRAPHIC #1 **<END>** g01345361

287-1512 FILTER GP-OIL–TRANSMISSION

S/N: CZM1-UP

PART OF 250-8292 FILTER & MTG GP-TRANSMISSION

SMCS-3004, 3067 **i02775008**

NOTE	REF NO	GRAPHIC REF	PART NUMBER	QTY	PART NAME 1 2 3 4 5 6 (PRODUCT LEVEL)	SEE PAGE
	1	1	**1R-1809**	1	FILTER ELEMENT AS-OIL (ULTRA HIGH EFFICIENCY) (TRANSMISSION)	
		1	**130-0229**	1	SEAL-O-RING	
	2	1	**6V-0852**	1	CAP-DUST	
	3	1	**8C-3447**	1	CAP-DUST	
Y	4	1	*238-1029*	1	BASE GP-OIL FILTER (TRANSMISSION)	325
	5	1	**241-3352**	1	HOUSING AS	
		1	**3J-1907**	1	SEAL-O-RING	
		1	**9S-8004**	1	PLUG-O-RING	
	6	1	**253-5327**	1	ELBOW	
	7	1	**3J-1907**	3	SEAL-O-RING	
	8	1	**3J-7354**	2	SEAL-O-RING	
	9	1	**6V-0484**	1	ADAPTER-O-RING	
	10	1	**6V-3965**	1	FITTING-COUPLER	
	11	1	**7W-7381**	1	FITTING-OUTLET	
	12	1	**8C-3446**	1	VALVE-FLUID SAMPLING (POWER TRAIN OIL)	
	13	1	**130-0229**	1	SEAL-O-RING	

Y-SEPARATE ILLUSTRATION

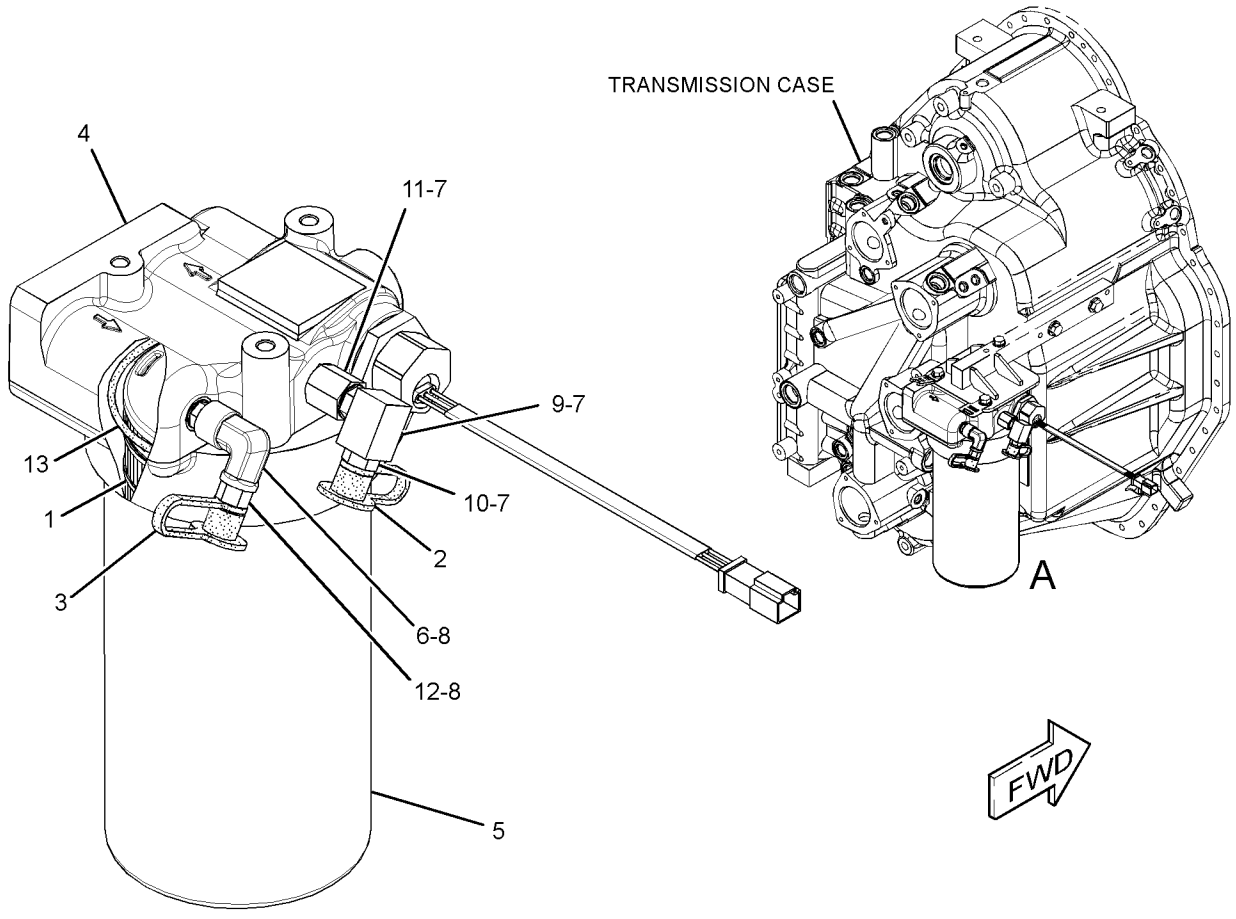

VIEW OF AREA A

GRAPHIC #1 **<END>** g01350283

POWER TRAIN

288-6508 FINAL DRIVE GP—RH

S/N: B9D1-UP

PART OF 284-5013 AXLE GP-REAR

SMCS-4050 **i02781095**

NOTE	REF NO	GRAPHIC REF	PART NUMBER	QTY	PART NAME 1 2 3 4 5 6 (PRODUCT LEVEL)	SEE PAGE
	1	1	**4B-8394**	2	CUP-BEARING	
	2	1	**6G-3206**	2	WASHER-THRUST (131.75X154.79X1.6-MM THK)	
B	3	1	**7D-8439**	5	SHIM (0.007-MM THK)	
B	4	1	**7D-8441**	5	SHIM (0.005-MM THK)	
	5	1	**8D-3902**	1	SEAL-LIP TYPE	
	6	1	**9D-3075**	1	RETAINER	
B	7	1	**9D-7047**	2	SHIM (0.02-MM THK)	
M	8	1	**202-6473**	18	BOLT (M16X2X60-MM)	
	9	1	**255-8575**	1	SHAFT-DRIVE	
	10	1	**264-0194**	1	RETAINER	
B	11	1	**264-0196**	1	SHIM PACK (INCLUDES 10-SHIMS)	
	12	1	**266-0199**	2	RING-WEAR	
M	13	1	**267-8628**	12	BOLT-LOCKING (M16X2X60-MM)	
Y	14	1	**272-8009**	1	CARRIER GP-FINAL DRIVE	326
	15	1	**278-3320**	2	SPROCKET	
	16	1	**279-2568**	1	GEAR-RING (84-TEETH)	
	17	1	**282-4350**	1	SEAL-LIP TYPE	
	18	1	**284-5016**	1	HOUSING	
	19	1	**291-6874**	1	HOUSING-FINAL DRIVE	
M	20	1	**103-6169**	3	BOLT (M16X2X60-MM)	
	21	1	**198-4768**	24	WASHER-HARD (17.5X32X8-MM THK)	
	22	1	**2B-9174**	1	BEARING AS-TAPERED ROLLER	
	23	1	**4D-3704**	18	WASHER-HARD (17X30X5-MM THK)	
	24	1	**4D-6695**	1	SEAL-O-RING	
	25	1	**5P-8245**	3	WASHER-HARD (13.5X25.5X3-MM THK)	
	26	1	**6V-2449**	1	CONE-BEARING	
M	27	1	**8T-0372**	3	BOLT (M12X1.75X90-MM)	
	28	1	**8T-3727**	1	RING-RETAINING	
	29	1	**9F-2247**	1	PLUG-PIPE	
M	30	1	**160-8509**	12	BOLT (M16X2X50-MM)	

B-USE AS REQUIRED
M-METRIC PART
Y-SEPARATE ILLUSTRATION

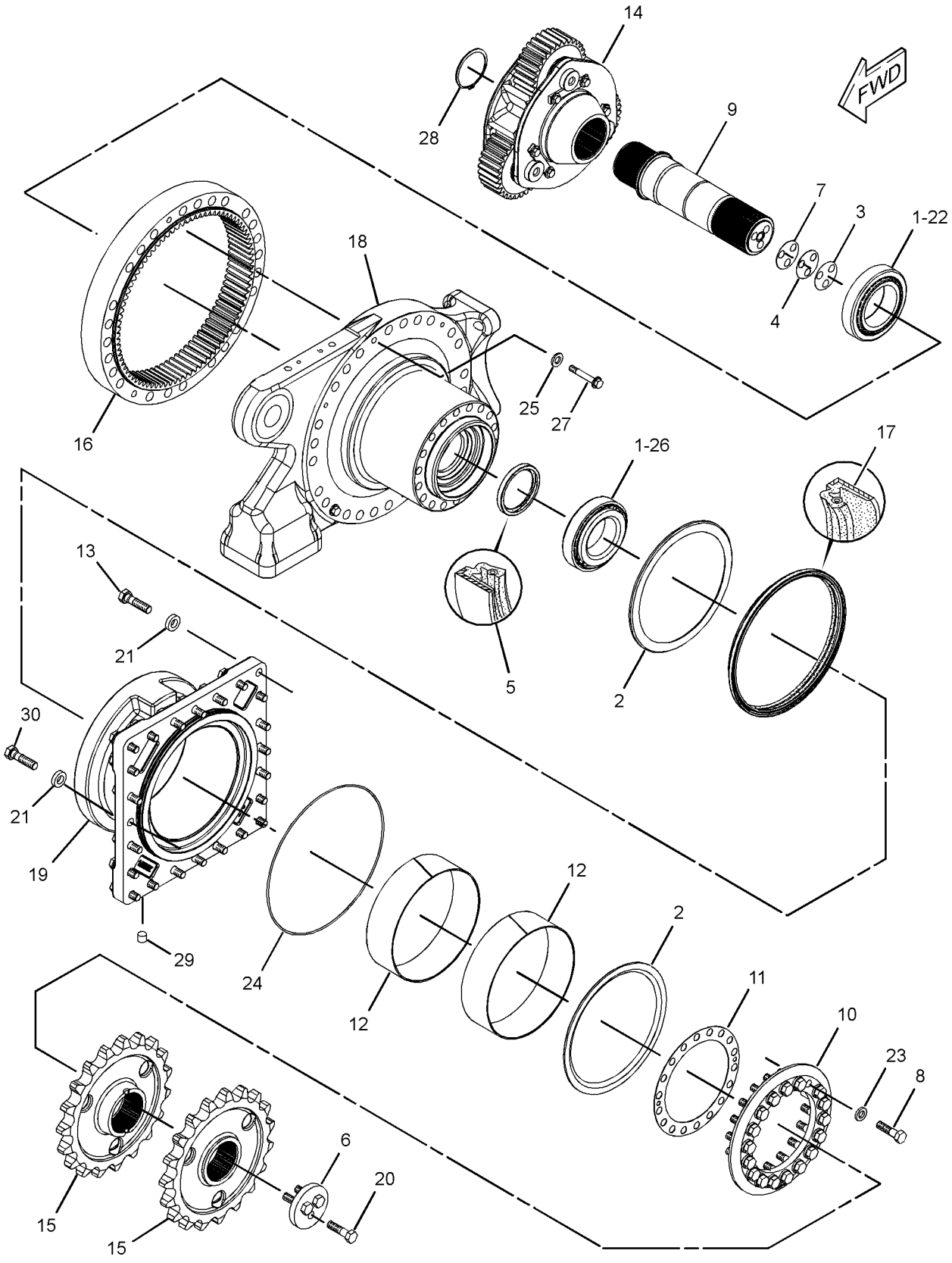

GRAPHIC #1 **<END>** g01391824

288-6509 FINAL DRIVE GP–LH

S/N: B9D1-UP

PART OF 284-5013 AXLE GP-REAR

SMCS-4050 **i02781094**

NOTE	REF NO	GRAPHIC REF	PART NUMBER	QTY	PART NAME 1 2 3 4 5 6 (PRODUCT LEVEL)	SEE PAGE
	1	1	**4B-8394**	2	CUP-BEARING	
	2	1	**6G-3206**	2	WASHER-THRUST (131.75X154.79X1.6-MM THK)	
B	3	1	**7D-8439**	5	SHIM (0.007-MM THK)	
B	4	1	**7D-8441**	5	SHIM (0.005-MM THK)	
	5	1	**8D-3902**	1	SEAL-LIP TYPE	
	6	1	**9D-3075**	1	RETAINER	
B	7	1	**9D-7047**	2	SHIM (0.02-MM THK)	
M	8	1	**202-6473**	18	BOLT (M16X2X60-MM)	
	9	1	**255-8575**	1	SHAFT-DRIVE	
	10	1	**264-0194**	1	RETAINER	
B	11	1	**264-0196**	1	SHIM PACK (INCLUDES 10-SHIMS)	
	12	1	**266-0199**	2	RING-WEAR	
M	13	1	**267-8628**	12	BOLT-LOCKING (M16X2X60-MM)	
Y	14	1	**272-8009**	1	CARRIER GP-FINAL DRIVE	326
	15	1	**278-3320**	2	SPROCKET	
	16	1	**279-2568**	1	GEAR-RING (84-TEETH)	
	17	1	**282-4350**	1	SEAL-LIP TYPE	
	18	1	**284-5018**	1	HOUSING	
	19	1	**291-6874**	1	HOUSING-FINAL DRIVE	
M	20	1	**103-6169**	3	BOLT (M16X2X60-MM)	
	21	1	**198-4768**	24	WASHER-HARD (17.5X32X8-MM THK)	
	22	1	**2B-9174**	1	BEARING AS-TAPERED ROLLER	
	23	1	**4D-3704**	18	WASHER-HARD (17X30X5-MM THK)	
	24	1	**4D-6695**	1	SEAL-O-RING	
	25	1	**5P-8245**	3	WASHER-HARD (13.5X25.5X3-MM THK)	
	26	1	**6V-2449**	1	CONE-BEARING	
M	27	1	**8T-0372**	3	BOLT (M12X1.75X90-MM)	
	28	1	**8T-3727**	1	RING-RETAINING	
	29	1	**9F-2247**	1	PLUG-PIPE	
M	30	1	**160-8509**	12	BOLT (M16X2X50-MM)	

B-USE AS REQUIRED
M-METRIC PART
Y-SEPARATE ILLUSTRATION

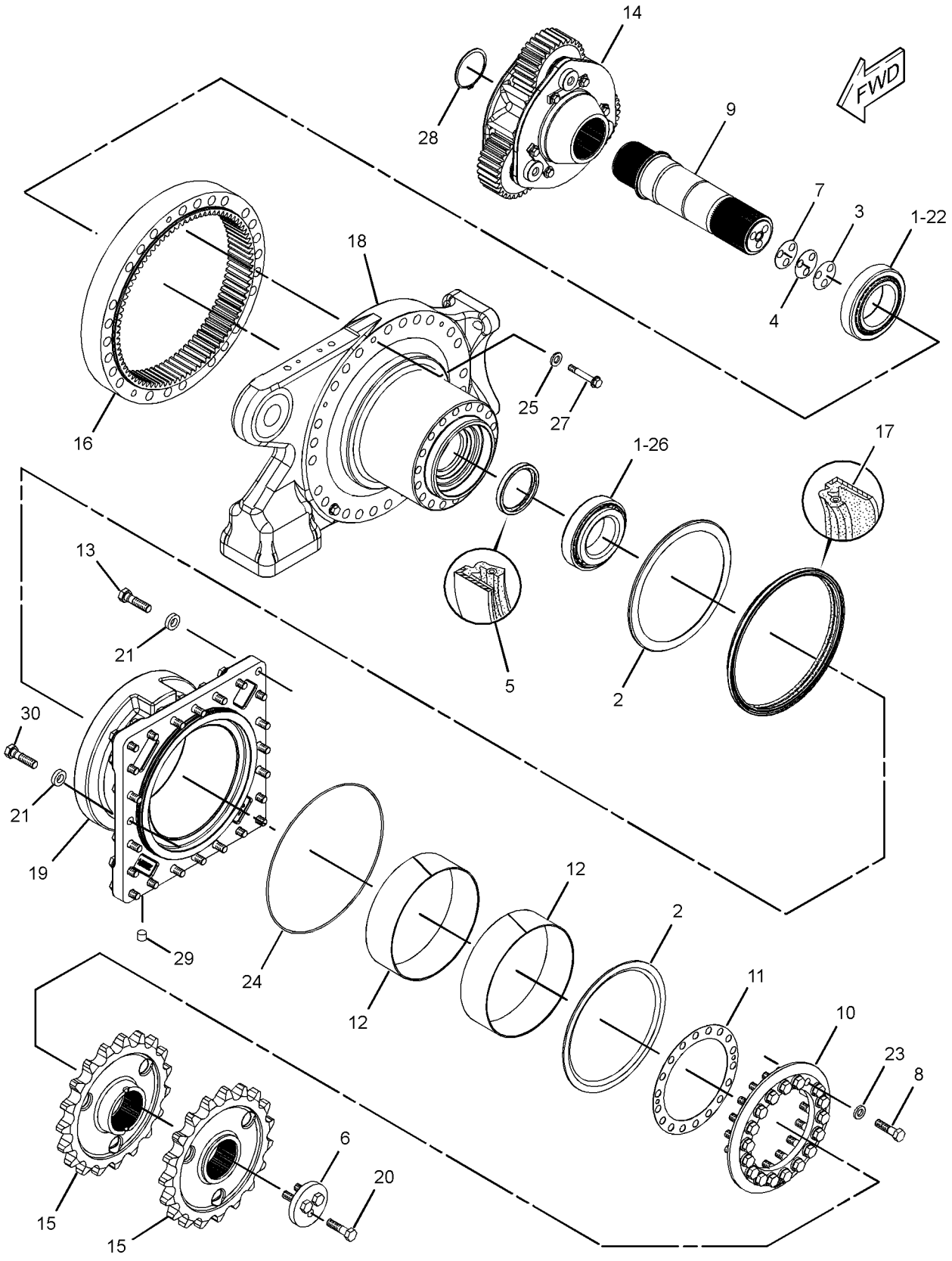

GRAPHIC #1 **<END>** g01391824

292-3482 GEAR GP-FRONT—ALL WHEEL DRIVE, LH

S/N: B9D1-UP

PART OF 260-4803 DRIVE GP-WHEEL

SMCS-4053 **i02793221**

NOTE	REF NO	GRAPHIC REF	PART NUMBER	QTY	PART NAME 1 2 3 4 5 6 (PRODUCT LEVEL)	SEE PAGE
	1	1	**295-2570**	1	SPINDLE AS (ALL WHEEL DRIVE, LH)	
	2	1	**295-2572**	1	KIT-BEARING (AWD, GEAR)	
	3	1	**295-2573**	1	COVER AS	
	3A	1	**295-2582**	2	PLUG AS	
	4	1	**295-2574**	1	HOUSING AS-CLUTCH	
	4A	1	**295-2578**	1	KIT-SEAL (GEAR CASE)	
					(INCLUDES SEAL RINGS)	
	4B	1	**295-2579**	4	DOWEL	
	4C	1	**295-2580**	6	DISC-FRICTION	
	4D	1	**295-2581**	5	PLATE	
M			**8C-8729**	8	BOLT-SOCKET HEAD (M12X1.75X80-MM)	
	5	1	**295-2576**	1	KIT-PLANETARY GEAR (ALL WHEEL DRIVE)	
					(INCLUDES FIRST REDUCTION, SECOND REDUCTION, GEAR-SUN, COUPLING, PADS, CIRCLIP, & BOLTS)	
	7	1	**7S-8561**	1	SEAL-O-RING	
M	8	1	**7X-2554**	16	BOLT (M16X2X70-MM)	
M	9	1	**8T-1447**	12	BOLT-SOCKET HEAD (M16X2X70-MM)	
	10	1	**4J-5309**	11	SEAL-O-RING	
	11	1	**305-7976**	1	SEAL GP-DUO-CONE	
	12	1	**295-2585**	1	BREATHER (AWD, GEAR)	

M-METRIC PART

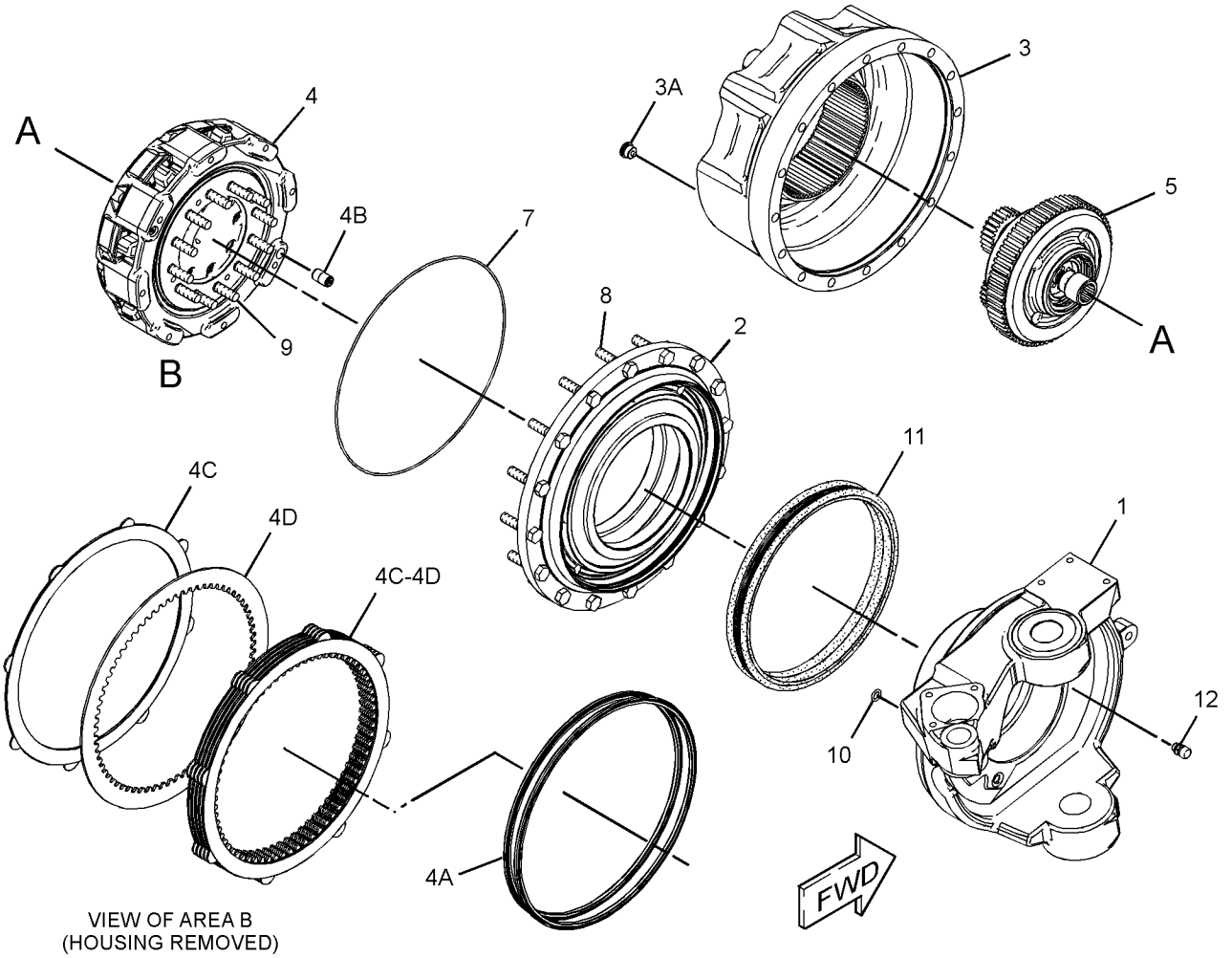

VIEW OF AREA B
(HOUSING REMOVED)

GRAPHIC #1 **<END>** g01394450

292-3483 GEAR GP-FRONT–ALL WHEEL DRIVE, RH

S/N: B9D1-UP

PART OF 260-4803 DRIVE GP-WHEEL

SMCS-4053 **i02793217**

NOTE	REF NO	GRAPHIC REF	PART NUMBER	QTY	PART NAME 1 2 3 4 5 6 (PRODUCT LEVEL)	SEE PAGE
	1	1	**295-2571**	1	SPINDLE AS (ALL WHEEL DRIVE, RH)	
	2	1	**295-2572**	1	KIT-BEARING (AWD, GEAR)	
	3	1	**295-2573**	1	COVER AS	
	3A	1	**295-2582**	2	PLUG AS	
	4	1	**295-2574**	1	HOUSING AS-CLUTCH	
	4A	1	**295-2578**	1	KIT-SEAL (GEAR CASE)	
					(INCLUDES SEAL RINGS)	
	4B	1	**295-2579**	2	DOWEL	
	4C	1	**295-2580**	6	DISC-FRICTION	
	4D	1	**295-2581**	5	PLATE	
M			**8C-8729**	8	BOLT-SOCKET HEAD (M12X1.75X80-MM)	
	5	1	**295-2576**	1	KIT-PLANETARY GEAR (ALL WHEEL DRIVE)	
					(INCLUDES FIRST REDUCTION, SECOND REDUCTION, GEAR-SUN, COUPLING, PADS, CIRCLIP, & BOLTS)	
	7	1	**7S-8561**	1	SEAL-O-RING	
M	8	1	**7X-2554**	16	BOLT (M16X2X70-MM)	
M	9	1	**8T-1447**	12	BOLT-SOCKET HEAD (M16X2X70-MM)	
	10	1	**4J-5309**	11	SEAL-O-RING	
	11	1	**305-7976**	1	SEAL GP-DUO-CONE	
	12	1	**295-2585**	1	BREATHER (AWD, GEAR)	

M-METRIC PART

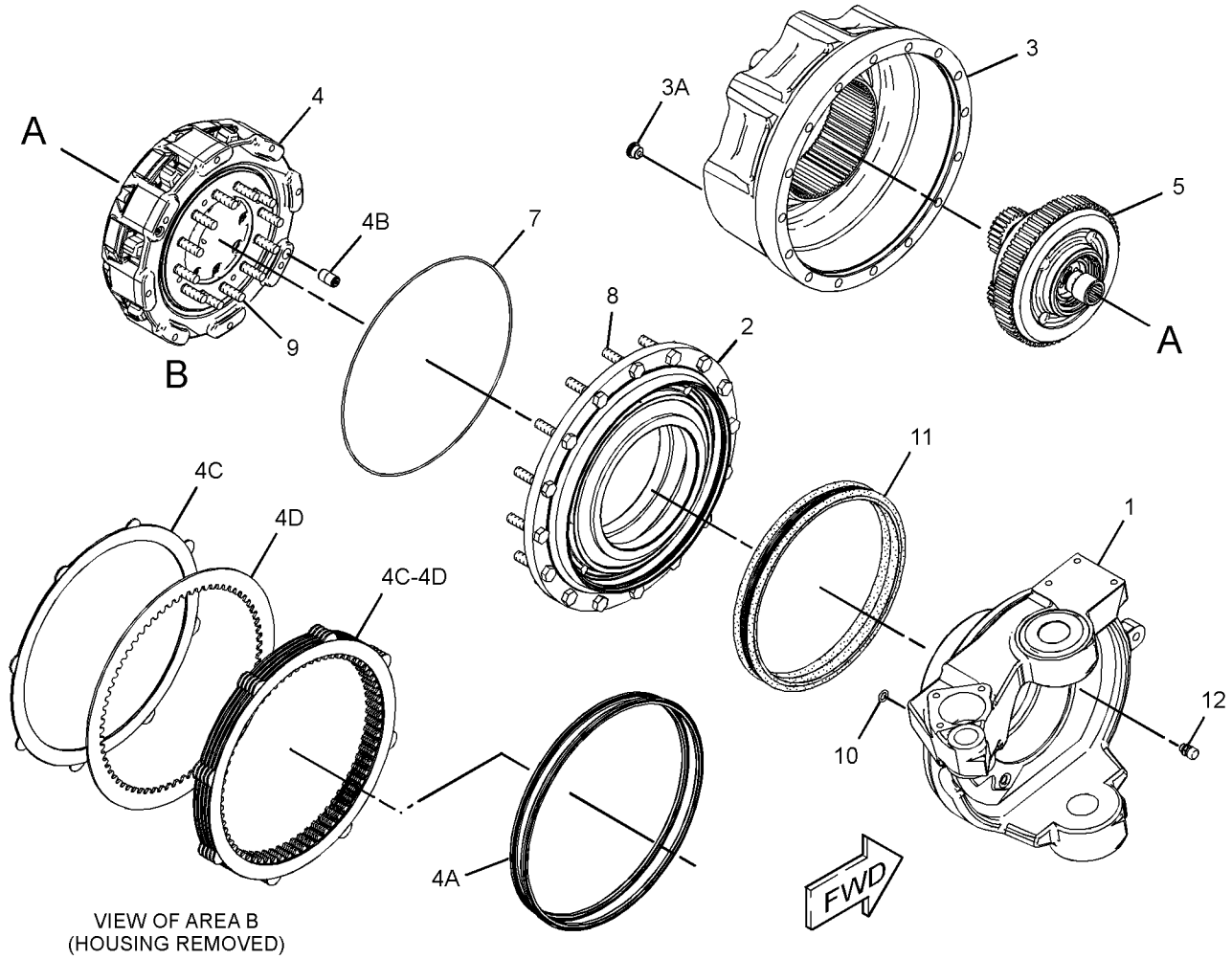

VIEW OF AREA B
(HOUSING REMOVED)

GRAPHIC #1 **<END>** g01394443

POWER TRAIN

231-8164 LINES GP-ALL WHEEL DRIVE

S/N: B9D1-UP

PART OF 261-0153 AXLE AR-FRONT

SMCS-5057 **i02785664**

NOTE	REF NO	GRAPHIC REF	PART NUMBER	QTY	PART NAME 1 2 3 4 5 6 (PRODUCT LEVEL)	SEE PAGE
	1	3	**6V-0852**	2	CAP-DUST	
	2	3	**8M-6678**	1	CLIP	
	3	4	**9X-6578**	1	NUT-FACE SEAL (1-11/16-12-THD)	
	4	4	*164-6873*	2	CONNECTOR AS	
					(EACH INCLUDES)	
		4	**113-9234**	1	CONNECTOR	
		4	**3J-1907**	1	SEAL-O-RING	
		4	**6V-8397**	1	SEAL-O-RING	
I	5	3	**173-7546**	1	HOSE AS	
	6	3	*177-1061*	1	ELBOW GP	
		3	**142-0038**	1	ELBOW	
		3	**5K-9090**	1	SEAL-O-RING	
	7	2	**178-0572**	6	STUD-TAPERLOCK (M10X1.15-THD)	
	8	4	*188-2008*	2	ELBOW AS	
					(EACH INCLUDES)	
		4	**8T-7970**	1	ELBOW	
		4	**3D-2824**	1	SEAL-O-RING	
		4	**5K-9090**	1	SEAL-O-RING	
	9	3	**188-8726**	1	VALVE-BYPASS	
	10	3	**196-1803**	2	FILTER GP-OIL (ALL WHEEL DRIVE)	
					(EACH INCLUDES)	
		3	**1G-8878**	1	FILTER AS-OIL (ADVANCED EFFICIENCY)	
					—OR—	
		3	**102-2828**	1	FILTER AS-OIL (ULTRA HIGH EFFICIENCY)	
					—OR—	
		3	**156-0214**	1	FILTER AS-OIL (FIRE RESISTANT FLUID)	
		3	**134-0404**	1	SWITCH AS-PRESSURE (AWD OIL FILTER BYPASS)	
		3	**3J-1907**	1	SEAL-O-RING	
	11	2,4	*197-8940*	2	CONNECTOR AS	
					(EACH INCLUDES)	
		2,4	**8T-1576**	1	CONNECTOR (FACE SEAL)	
		2,4	**2M-9780**	1	SEAL-O-RING	
		2,4	**7J-9108**	1	SEAL-O-RING	
	12	3	*205-2357*	1	CONNECTOR AS	
		3	**8T-7968**	1	CONNECTOR	
		3	**3D-2824**	1	SEAL-O-RING	
		3	**6V-8398**	1	SEAL-O-RING	
I	13	3	**223-6472**	1	HOSE AS	
	14	3	**228-4710**	2	SPACER (14X30X20-MM THK)	
	15	2	**246-3343**	1	BLOCK	
	16	2	**246-3344**	1	BLOCK	
	17	2	**246-3345**	1	BLOCK	
	18	2	**246-3346**	1	BLOCK	
I	19	3	**246-3353**	1	HOSE AS	
	20	2	**246-3375**	2	PLATE	
	21	2	**246-3377**	2	PLATE	
I	22	2	**246-4424**	1	HOSE AS	
I	23	3	**246-4441**	1	HOSE AS	
	24	3	**248-4037**	1	TUBE AS	
	25	2	**257-9182**	1	TUBE AS	
	26	4	*260-9143*	1	ELBOW AS	
		4	**109-5825**	1	ELBOW	
		4	**6V-9746**	1	SEAL-O-RING	
	27	3	**262-6658**	1	PLATE AS	
M		3	**8T-3490**	1	NUT-WELD (M10X1.5-THD)	
	28	2	**265-7346**	2	PLATE	

NOTE	REF NO	GRAPHIC REF	PART NUMBER	QTY	PART NAME 1 2 3 4 5 6 (PRODUCT LEVEL)	SEE PAGE
	29	2	**265-7347**	2	PLATE	
	30	3	*268-1516*	1	TEE AS	
		3	**268-1515**	1	TEE	
		3	**6V-8400**	1	SEAL-O-RING	
		3	**7M-8485**	1	SEAL-O-RING	
E	31	2	**160-2251**		SLEEVE-ABRASION (90-CM EACH)	
	32	3	**277-2473**	1	TUBE AS	
I	33	3	**282-3650**	1	HOSE AS	
	34	2	**284-7630**	1	TUBE AS	
	35	2	**286-4497**	2	PLATE	
	36	2	**286-4498**	2	PLATE AS	
					(EACH INCLUDES)	
M		2	**8T-3490**	1	NUT-WELD (M10X1.5-THD)	
	37	2	**286-4500**	2	GROMMET	
	38	2	**287-2643**	1	BLOCK	
	39	2,4	**287-7978**	1	PLATE AS	
M		2,4	**8T-3490**	2	NUT-WELD (M10X1.5-THD)	
		2,4	**144-5629**	2	SPACER (18X32X12-MM THK)	
	40	2	**287-7980**	1	PLATE AS	
M		2	**8T-3490**	2	NUT-WELD (M10X1.5-THD)	
		2	**144-5629**	2	SPACER (18X32X12-MM THK)	
	41	2	**287-8826**	1	BLOCK	
	42	2	**287-8829**	1	BLOCK	
	43	2	**287-8830**	1	BLOCK	
	44	2	**287-8831**	1	BLOCK	
	45	2	**287-8832**	1	BLOCK	
	46	3	**288-0743**	1	PLATE AS	
M		3	**8T-3490**	2	NUT-WELD (M10X1.5-THD)	
	47	2	**289-5189**	1	TUBE AS	
	48	2	**289-5190**	1	TUBE AS	
	49	2	**289-5191**	1	TUBE AS	
	50	2	**289-5192**	1	TUBE AS	
	51	2	**289-5193**	1	TUBE AS	
	52	2	**289-5194**	1	TUBE AS	
	53	2	**289-5195**	1	TUBE AS	
	54	2	**289-5196**	1	TUBE AS	
	55	2	**289-5197**	1	TUBE AS	
	56	2	**289-5198**	1	TUBE AS	
	57	3	**293-9387**	1	TUBE AS	
I	58	2	**293-9647**	1	HOSE AS	
I	59	2	**293-9648**	1	HOSE AS	
I	60	2	**293-9649**	1	HOSE AS	
	61	3	**293-9650**	1	TUBE AS	
I	62	4	**293-9963**	1	HOSE AS	
I	63	3	**294-9879**	1	HOSE AS	
I	64	3	**294-9880**	1	HOSE AS	
	65	2	**296-4400**	2	STRAP AS	
	66	2	**297-2653**	1	BLOCK	
	67	2	**297-2654**	1	BLOCK	
	68	2	**297-2655**	1	BLOCK	
	69	2	**297-2656**	1	BLOCK	
	70	2	**297-4074**	2	PLATE	
	71	4	**297-8530**	1	TUBE AS	
	72	2	**298-2011**	2	SPACER (11X30X30-MM THK)	
I	73	4	**299-4608**	1	HOSE AS	
I	74	2	**299-4612**	1	HOSE AS	
I	75	2	**299-4615**	1	HOSE AS	
	76	2	**299-4622**	1	HOSE AS	
I	77	4	**299-4646**	1	HOSE AS	

231-8164 **LINES GP-ALL WHEEL DRIVE** ***(contd.)*** **i02785664**

NOTE	REF NO	GRAPHIC REF	PART NUMBER	QTY	PART NAME 1 2 3 4 5 6 (PRODUCT LEVEL)	SEE PAGE
I	78	4	**299-4649**	1	HOSE AS	
I	79	2	**299-4650**	1	HOSE AS	
I	80	4	**299-4653**	1	HOSE AS	
	81	2	**299-4654**	1	HOSE AS	
	82	2	**299-4657**	1	HOSE AS	
I	83	2	**299-6181**	1	HOSE AS	
I	84	3	**307-4801**	1	HOSE AS	
E	85	2	**6R-2051**		SLEEVE (90-CM)	
I	86	2	**308-9534**	1	HOSE AS	
I	87	3	**308-9535**	1	HOSE AS	
I	88	3	**308-9536**	1	HOSE AS	
	89	2	**309-1905**	2	STUD-TAPERLOCK	
I	90	4	**309-4629**	1	HOSE AS	
	91	2	**092-7385**	3	CLIP	
	92	3	**100-4336**	1	CLIP	
	93	4	**128-6841**	4	ELBOW	
M	94	2,4	**135-3241**	4	SCREW-FLAT HEAD (M16X2X40-MM)	
	95	2	*148-8316*	2	CONNECTOR AS	
					(EACH INCLUDES)	
		2	**6V-8647**	1	CONNECTOR	
		2	**3J-7354**	1	SEAL-O-RING	
		2	**4J-5477**	1	SEAL-O-RING	
	96	3	*148-8317*	1	CONNECTOR AS	
		3	**6V-8714**	1	CONNECTOR	
		3	**3D-2824**	1	SEAL-O-RING	
		3	**5K-9090**	1	SEAL-O-RING	
	97	3	*148-8322*	1	CONNECTOR AS	
		3	**6V-8640**	1	CONNECTOR	
		3	**2M-9780**	1	SEAL-O-RING	
		3	**6V-9746**	1	SEAL-O-RING	
	98	3	*148-8327*	2	CONNECTOR AS	
					(EACH INCLUDES)	
		3	**6V-8637**	1	CONNECTOR	
		3	**3D-2824**	1	SEAL-O-RING	
		3	**6V-9746**	1	SEAL-O-RING	
	99	3	*148-8328*	2	CONNECTOR AS	
					(EACH INCLUDES)	
		3	**6V-8633**	1	CONNECTOR	
		3	**3D-2824**	1	SEAL-O-RING	
		3	**6V-8398**	1	SEAL-O-RING	
	100	3	*148-8335*	1	CONNECTOR AS	
		3	**6V-8635**	1	CONNECTOR	
		3	**5K-9090**	1	SEAL-O-RING	
		3	**7M-8485**	1	SEAL-O-RING	
	101	4	*148-8336*	2	CONNECTOR AS	
					(EACH INCLUDES)	
		4	**6V-8636**	1	CONNECTOR	
		4	**6V-8397**	1	SEAL-O-RING	
		4	**3J-1907**	1	SEAL-O-RING	
	102	4	*148-8338*	1	CONNECTOR AS	
		4	**8T-0075**	1	CONNECTOR	
		4	**3J-1907**	1	SEAL-O-RING	
		4	**6V-8397**	1	SEAL-O-RING	
	103	2,4	*148-8353*	2	ELBOW AS	
					(EACH INCLUDES)	
		2,4	**6V-9001**	1	ELBOW	
		2,4	**6V-8397**	1	SEAL-O-RING	
		2,4	**3J-1907**	1	SEAL-O-RING	
	104	3	*148-8355*	1	ELBOW AS	

231-8164 **LINES GP-ALL WHEEL DRIVE** *(contd.)* **i02785664**

NOTE	REF NO	GRAPHIC REF	PART NUMBER	QTY	PART NAME 1 2 3 4 5 6 (PRODUCT LEVEL)	SEE PAGE
		3	**6V-9005**	1	ELBOW	
		3	**5K-9090**	1	SEAL-O-RING	
		3	**7M-8485**	1	SEAL-O-RING	
	105	3	*148-8357*	1	ELBOW AS	
		3	**6V-9008**	1	ELBOW	
		3	**5K-9090**	1	SEAL-O-RING	
		3	**7M-8485**	1	SEAL-O-RING	
	106	3	*148-8358*	1	ELBOW AS	
		3	**6V-8624**	1	ELBOW	
		3	**6V-8398**	1	SEAL-O-RING	
		3	**2M-9780**	1	SEAL-O-RING	
	107	3,4	*148-8362*	3	ELBOW AS	
					(EACH INCLUDES)	
		3,4	**8T-6684**	1	ELBOW	
		3,4	**3D-2824**	1	SEAL-O-RING	
		3,4	**5K-9090**	1	SEAL-O-RING	
	108	4	*148-8367*	4	ELBOW AS	
					(EACH INCLUDES)	
		4	**6V-9850**	1	ELBOW	
		4	**6V-8397**	1	SEAL-O-RING	
	109	2	*148-8369*	2	ELBOW AS	
					(EACH INCLUDES)	
		2	**6V-8628**	1	ELBOW	
		2	**3J-7354**	1	SEAL-O-RING	
		2	**4J-5477**	1	SEAL-O-RING	
	110	3	*148-8381*	2	ELBOW AS	
					(EACH INCLUDES)	
		3	**8T-5429**	1	ELBOW	
		3	**6V-8398**	1	SEAL-O-RING	
		3	**3D-2824**	1	SEAL-O-RING	
	111	3	*148-8388*	1	ELBOW AS	
		3	**6V-8629**	1	ELBOW	
		3	**2M-9780**	1	SEAL-O-RING	
		3	**6V-9746**	1	SEAL-O-RING	
	112	3,4	*148-8392*	4	ELBOW AS	
					(EACH INCLUDES)	
		3,4	**6V-9853**	1	ELBOW	
		3,4	**6V-9746**	1	SEAL-O-RING	
	113	3	*148-8429*	2	TEE AS	
					(EACH INCLUDES)	
		3	**6V-9840**	1	TEE-SWIVEL	
		3	**5K-9090**	2	SEAL-O-RING	
	114	4	*148-8433*	1	TEE AS	
		4	**6V-9836**	1	TEE-SWIVEL	
		4	**6V-8397**	2	SEAL-O-RING	
	115	4	*148-8434*	1	TEE AS	
		4	**6V-9843**	1	TEE-SWIVEL	
		4	**6V-8397**	2	SEAL-O-RING	
	116	4	*148-8453*	1	TEE AS	
		4	**8T-5907**	1	TEE-UNION	
		4	**5K-9090**	1	SEAL-O-RING	
		4	**6V-8400**	2	SEAL-O-RING	
	117	2,3	**149-7738**	5	CLIP	
	118	2,4	*150-3035*	2	ELBOW AS	
					(EACH INCLUDES)	
		2,4	**8T-1718**	1	ELBOW	
		2,4	**6V-9746**	1	SEAL-O-RING	
	119	3	*153-6241*	1	ELBOW AS	
		3	**8C-8989**	1	ELBOW	

231-8164 **LINES GP-ALL WHEEL DRIVE** ***(contd.)*** **i02785664**

NOTE	REF NO	GRAPHIC REF	PART NUMBER	QTY	PART NAME 1 2 3 4 5 6 (PRODUCT LEVEL)	SEE PAGE
		3	**6V-8398**	1	SEAL-O-RING	
	120	3	*153-6262*	1	UNION AS	
		3	**6V-8734**	1	UNION	
		3	**5K-9090**	2	SEAL-O-RING	
	121	3	*155-6258*	1	ELBOW AS	
		3	**127-1647**	1	ELBOW	
		3	**3D-2824**	1	SEAL-O-RING	
		3	**6V-8398**	1	SEAL-O-RING	
	122	3	*164-5567*	2	FITTING AS (QUICK DISCONNECT, MALE)	
					(EACH INCLUDES)	
		3	**6V-3965**	1	FITTING-COUPLER	
		3	**3J-1907**	1	SEAL-O-RING	
	123	2	*164-5570*	1	UNION AS	
		2	**6V-8730**	1	UNION (FACE SEAL)	
		2	**6V-8397**	2	SEAL-O-RING	
	124	3	*164-6872*	1	TEE AS	
		3	**115-8634**	1	TEE-O-RING	
		3	**6V-8398**	2	SEAL-O-RING	
		3	**2M-9780**	2	SEAL-O-RING	
	125	2	**173-2090**	2	SPACER (11X20X15-MM THK)	
	126	3	**1P-3702**	4	SEAL-RECTANGULAR	
	127	2,4	**1P-3703**	4	SEAL-RECTANGULAR	
	128	3	**1S-0994**	1	CLIP	
	129	2	**1S-6420**	2	CLIP	
	130	4	*205-3096*	2	CONNECTOR AS	
					(EACH INCLUDES)	
		4	**8C-8498**	1	CONNECTOR	
		4	**3D-2824**	1	SEAL-O-RING	
		4	**6V-9746**	1	SEAL-O-RING	
	131	4	**231-0336**	1	STUD-TAPERLOCK (M10X1.75X70-MM)	
	132	3	*260-9189*	2	ELBOW AS-SWIVEL	
					(EACH INCLUDES)	
		3	**109-5825**	1	ELBOW	
		3	**6V-9746**	1	SEAL-O-RING	
Y	133	4	**294-1109**	1	MANIFOLD GP-CONTROL (ALL WHEEL DRIVE)	623
	134	4	**3D-2824**	4	SEAL-O-RING	
	135	3	**3E-4321**	1	CLIP	
	136	3	**3S-8665**	7	CLIP	
	137	2,3	**4S-1962**	5	CLIP	
	138	2,4	**4S-4455**	3	CLIP	
	139	3	**5K-5338**	1	CLIP	
	140	2	**5K-9090**	7	SEAL-O-RING	
	141	2	**5P-2369**	2	CLIP	
	142	4	**5P-7854**	1	CLIP	
	143	2	**5P-9297**	1	CLIP	
	144	4	**5P-9299**	2	CLIP	
	145	2,4	**6V-0400**	8	FLANGE-HALF	
	146	2	**6V-8397**	1	SEAL-O-RING	
	147	2	**6V-8400**	1	SEAL-O-RING	
	148	4	**6V-8947**	1	REDUCER	
	149	2,3,4	**6V-9746**	16	SEAL-O-RING	
	150	2	**7X-7729**	2	WASHER (11X25X3-MM THK)	
	151	3	**8M-2773**	5	CLIP	
M	152	2	**8T-0389**	12	LOCKNUT (M10X1.15-THD)	
	153	2,3,4	**8T-4121**	66	WASHER-HARD (11X21X2.5-MM THK)	
	154	3	**8T-4123**	1	WASHER (22X35X3.5-MM THK)	
M	155	3,4	**8T-4133**	10	NUT (M10X1.5-THD)	
M	156	3,4	**8T-4136**	13	BOLT (M10X1.5X25-MM)	
M	157	3	**8T-4137**	10	BOLT (M10X1.5X20-MM)	

231-8164 **LINES GP-ALL WHEEL DRIVE** *(contd.)* **i02785664**

NOTE	REF NO	GRAPHIC REF	PART NUMBER	QTY	PART NAME 1 2 3 4 5 6 (PRODUCT LEVEL)	SEE PAGE
M	158	3	**8T-4172**	1	BOLT (M10X1.5X80-MM)	
M	159	2	**8T-4178**	3	BOLT (M10X1.5X90-MM)	
M	160	3	**8T-4182**	16	BOLT (M10X1.5X45-MM)	
M	161	2,4	**8T-4184**	16	BOLT (M12X1.75X45-MM)	
M	162	2,3	**8T-4195**	3	BOLT (M10X1.5X30-MM)	
	163	2,3,4	**8T-4223**	18	WASHER-HARD (13.5X25.5X3-MM THK)	
M	164	3	**8T-4648**	2	BOLT (M12X1.75X70-MM)	
M	165	3	**8T-4780**	1	BOLT (M20X2.5X30-MM)	
	166	3	**8T-7934**	1	WASHER-HARD (11X21X5-MM THK)	
	167	3	**8T-9403**	8	FLANGE-HALF	
	168	3	**9X-8250**	1	CLIP	
E	170	2	**6R-2052**		SLEEVE (80-CM EACH)	

E-ORDER BY THE CENTIMETER
I-REFER TO HYDRAULIC INFORMATION SYSTEM
M-METRIC PART
Y-SEPARATE ILLUSTRATION

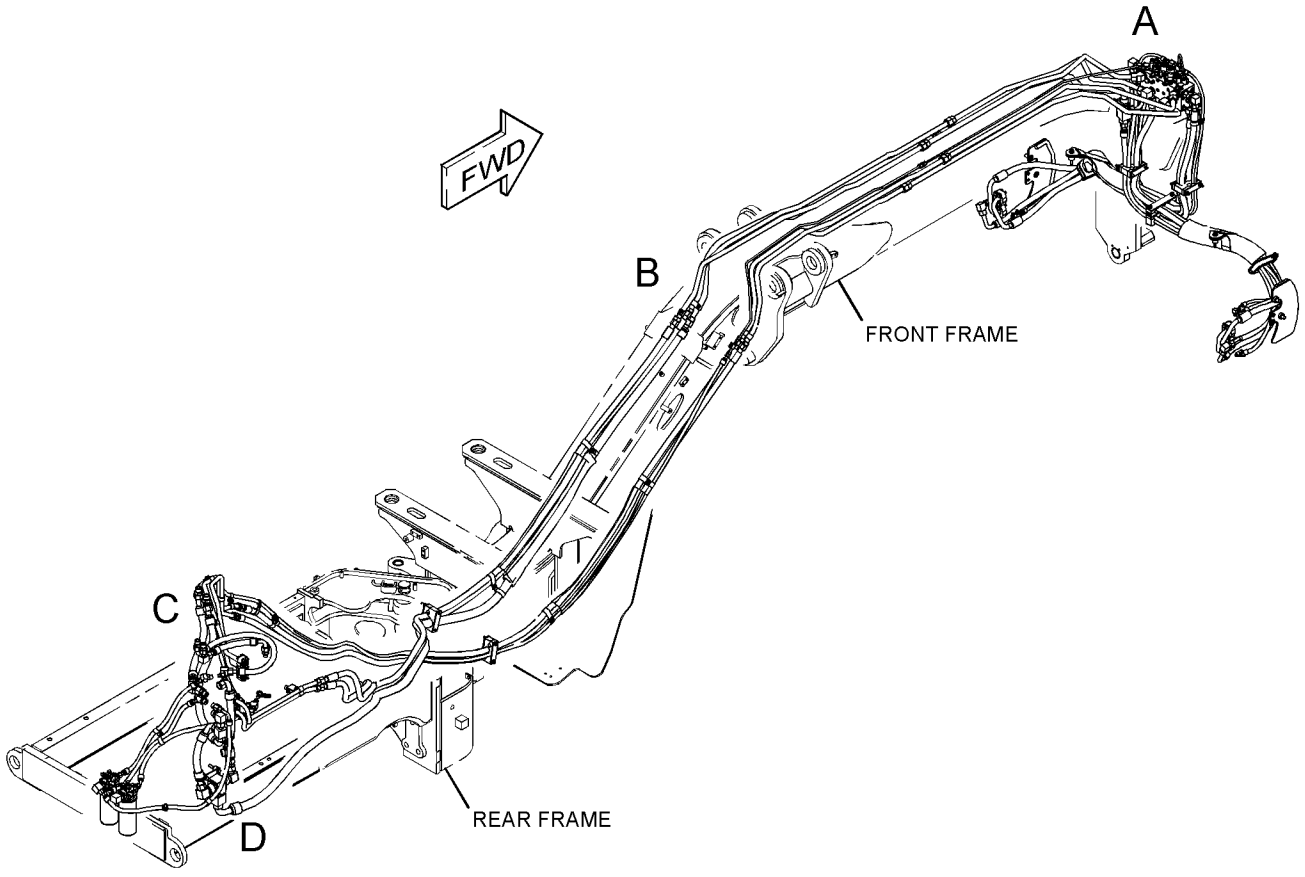

REFER TO ALL ILLUSTRATIONS OF THIS GROUP FOR AUXILIARY VIEWS

GRAPHIC #1

g01398498

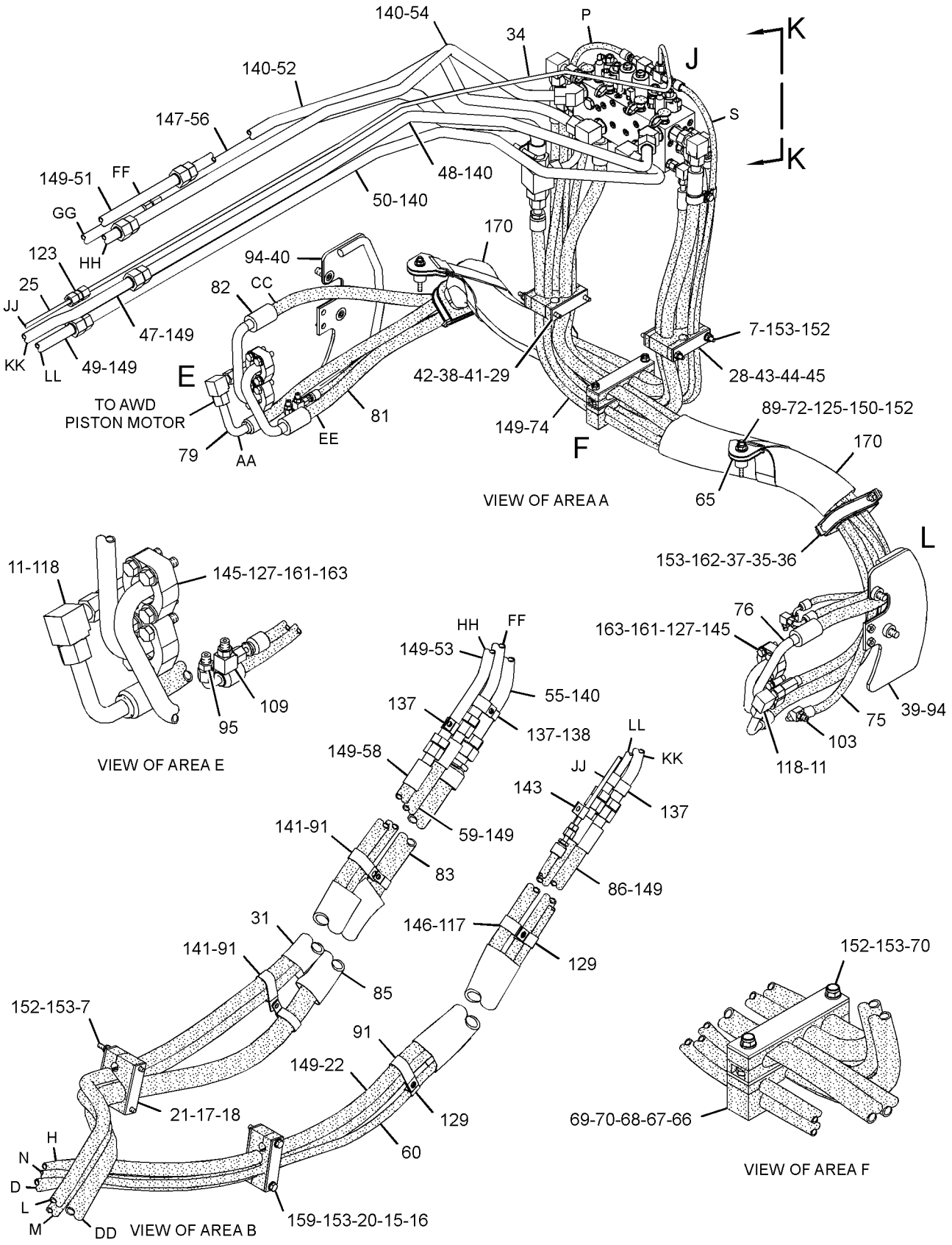

GRAPHIC #2

g01398499

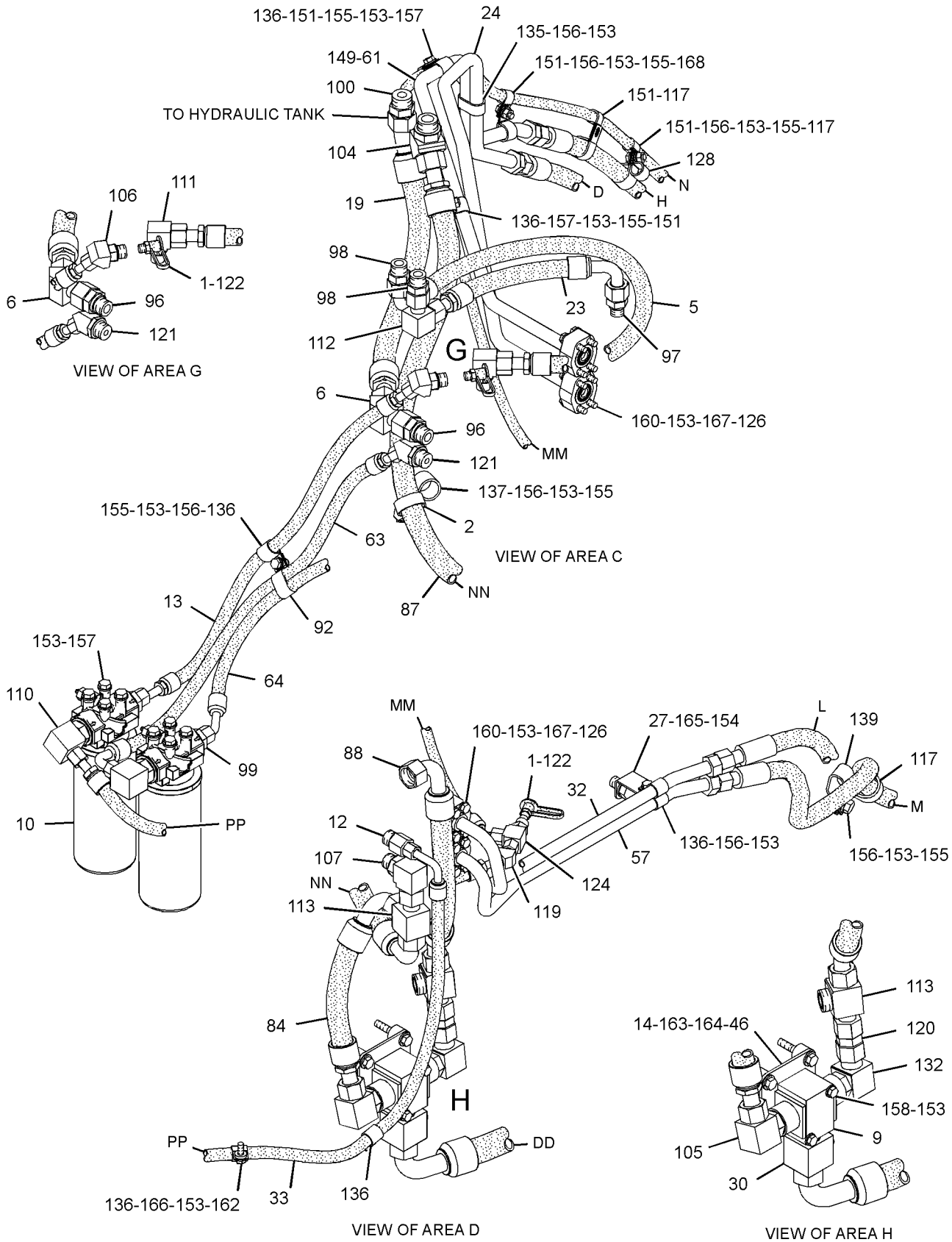

GRAPHIC #3

g01398500

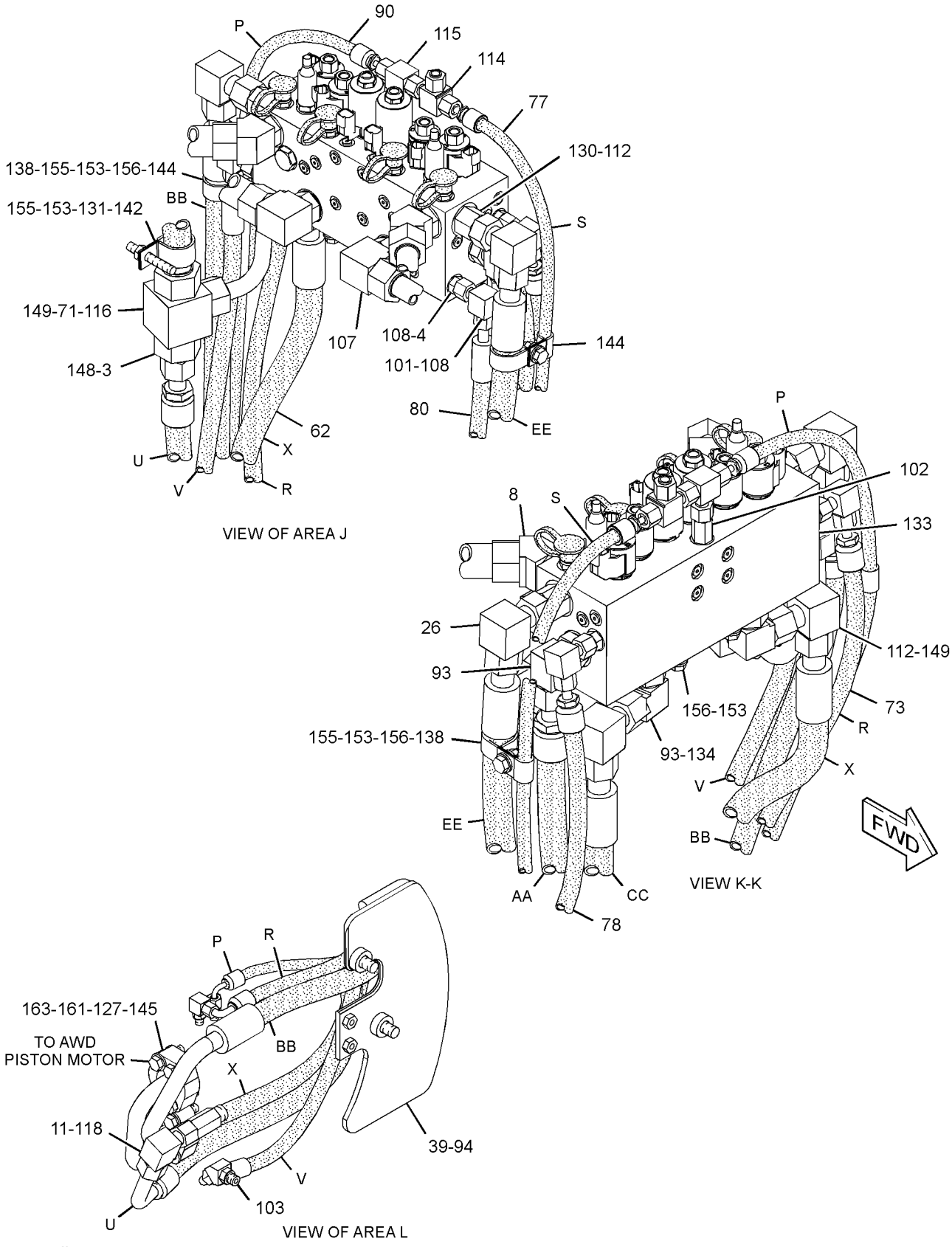

GRAPHIC #4 **<END>** g01398501

255-1244 LINES GP-POWER TAKE-OFF

S/N: B9D1-UP

PART OF 234-7721 COMMON AR

SMCS-3016 **i02780361**

NOTE	REF NO	GRAPHIC REF	PART NUMBER	QTY	PART NAME 1 2 3 4 5 6 (PRODUCT LEVEL)	SEE PAGE
I	1	1	**145-4496**	1	HOSE AS	
	2	1	*148-8336*	1	CONNECTOR AS	
		1	**6V-8636**	1	CONNECTOR	
		1	**3J-1907**	1	SEAL-O-RING	
		1	**6V-8397**	1	SEAL-O-RING	
	3	1	**160-1744**	1	BRACKET	
	4	1	*148-8378*	1	ELBOW AS	
		1	**6V-8724**	1	ELBOW	
		1	**3J-1907**	1	SEAL-O-RING	
		1	**6V-8397**	1	SEAL-O-RING	
	5	1	*148-8367*	1	ELBOW AS	
		1	**6V-9850**	1	ELBOW	
		1	**6V-8397**	1	SEAL-O-RING	
M	6	1	**8T-4136**	1	BOLT (M10X1.5X25-MM)	
M	7	1	**8T-4133**	1	NUT (M10X1.5-THD)	
	8	1	**8T-4121**	2	WASHER-HARD (11X21X2.5-MM THK)	
	9	1	**8M-2773**	1	CLIP	

I-REFER TO HYDRAULIC INFORMATION SYSTEM
M-METRIC PART

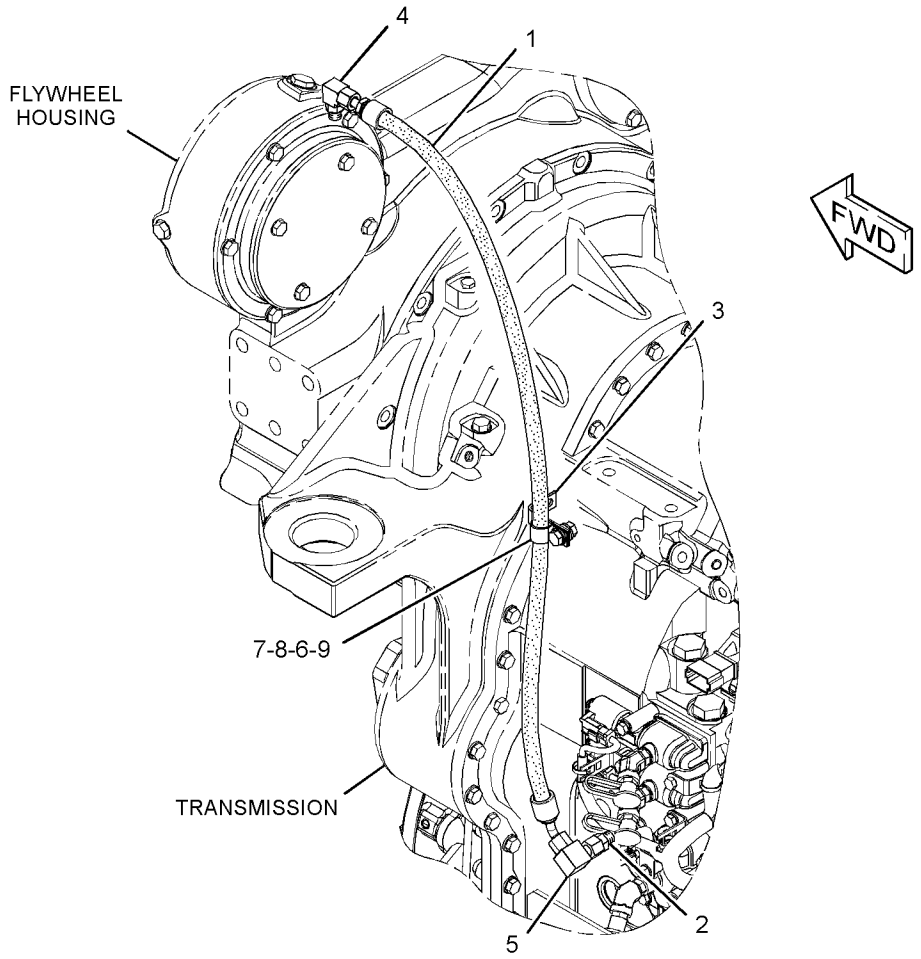

GRAPHIC #1 **<END>** g01345747

POWER TRAIN

255-1243 LINES GP-TRANSMISSION OIL

S/N: B9D1-UP

PART OF 234-7721 COMMON AR

SMCS-3154 **i02779995**

NOTE	REF NO	GRAPHIC REF	PART NUMBER	QTY	PART NAME 1 2 3 4 5 6 (PRODUCT LEVEL)	SEE PAGE
	1	1	**1R-1809**	1	FILTER ELEMENT AS-OIL (ULTRA HIGH EFFICIENCY)	
		1	**130-0229**	1	SEAL-O-RING	
	2	1	**3E-7445**	2	CLAMP-HOSE	
	3	1	**8T-4983**	2	CLAMP-HOSE	
	4	1	**9J-3866**	1	ADAPTER	
	5	1	**033-6783**	2	FITTING	
I	6	1	**145-3757**	1	HOSE AS	
	7	1	**210-4458**	1	ELBOW	
	8	1	**246-6654**	1	HOSE	
	9	1	**269-6974**	1	TUBE AS	
	10	1	**280-1766**	1	SLEEVE	
I	11	1	**291-1965**	1	HOSE AS	
	12	1	**297-8332**	1	TUBE AS	
	13	1	**297-8333**	1	TUBE AS	
	14	1	**297-8334**	1	TUBE AS	
	15	1	**297-8335**	1	TUBE AS	
	16	1	**297-8336**	1	PLATE AS	
M		1	**8T-3490**	1	NUT-WELD (M10X1.5-THD)	
I	17	1	**308-0398**	1	HOSE AS	
	18	1	**312-2361**	1	TUBE AS	
	19	1	**130-9984**	2	CLIP	
	20	1	*148-8323*	1	CONNECTOR AS	
		1	**6V-9875**	1	CONNECTOR	
		1	**2S-4078**	1	SEAL-O-RING	
		1	**5K-9090**	1	SEAL-O-RING	
	21	1	*148-8335*	2	CONNECTOR AS	
					(EACH INCLUDES)	
		1	**6V-8635**	1	CONNECTOR	
		1	**5K-9090**	1	SEAL-O-RING	
		1	**7M-8485**	1	SEAL-O-RING	
	22	1	*148-8336*	1	CONNECTOR AS	
		1	**3J-1907**	1	SEAL-O-RING	
		1	**6V-8397**	1	SEAL-O-RING	
		1	**6V-8636**	1	CONNECTOR	
	23	1	*148-8352*	2	ELBOW AS	
					(EACH INCLUDES)	
		1	**6V-9854**	1	ELBOW (SWIVEL)	
		1	**5K-9090**	1	SEAL-O-RING	
	24	1	*148-8378*	1	ELBOW AS	
		1	**6V-8724**	1	ELBOW	
		1	**3J-1907**	1	SEAL-O-RING	
		1	**6V-8397**	1	SEAL-O-RING	
	25	1	*155-2026*	2	UNION AS	
					(EACH INCLUDES)	
		1	**6V-8998**	1	UNION	
		1	**5K-9090**	2	SEAL-O-RING	
	26	1	**165-4854**	2	SEAL-O-RING	
	27	1	**1P-4577**	4	FLANGE-HALF	
	28	1	**1P-4578**	2	FLANGE-HALF	
	29	1	**1S-9799**	1	SEAL-O-RING	
	30	1	**3D-2824**	2	SEAL-O-RING	
	31	1	**4J-0520**	4	SEAL-O-RING	
	32	1	**4J-0522**	1	SEAL-O-RING	
	33	1	**4J-0524**	1	SEAL-O-RING	
	34	1	**5S-7382**	8	BOLT (3/8-16X1.375-IN)	
	35	1	**6V-8400**	1	SEAL-O-RING	

255-1243 **LINES GP-TRANSMISSION OIL** *(contd.)* **i02779995**

NOTE	REF NO	GRAPHIC REF	PART NUMBER	QTY	PART NAME 1 2 3 4 5 6 (PRODUCT LEVEL)	SEE PAGE
	36	1	**6V-9172**	2	NUT (1-7/16-12-THD)	
	37	1	**8C-3206**	2	FLANGE-HALF	
	38	1	**8T-4121**	12	WASHER-HARD (11X21X2.5-MM THK)	
M	39	1	**8T-4133**	1	NUT (M10X1.5-THD)	
M	40	1	**8T-4136**	3	BOLT (M10X1.5X25-MM)	
M	41	1	**8T-4196**	4	BOLT (M10X1.5X35-MM)	
	42	1	**8T-4223**	2	WASHER-HARD (13.5X25.5X3-MM THK)	
M	43	1	**8T-4779**	1	BOLT (M16X2X35-MM)	
	44	1	**8T-4896**	8	WASHER-HARD (10.2X18.5X2.5-MM THK)	
M	45	1	**8T-4956**	2	BOLT (M12X1.75X35-MM)	
M	46	1	**8T-5005**	4	BOLT (M10X1.5X70-MM)	
	47	1	**9X-8257**	1	WASHER (17.5X30X3.5-MM THK)	
E	48	1	**5P-0765**		HOSE (54-CM)	

E-ORDER BY THE CENTIMETER
I-REFER TO HYDRAULIC INFORMATION SYSTEM
M-METRIC PART

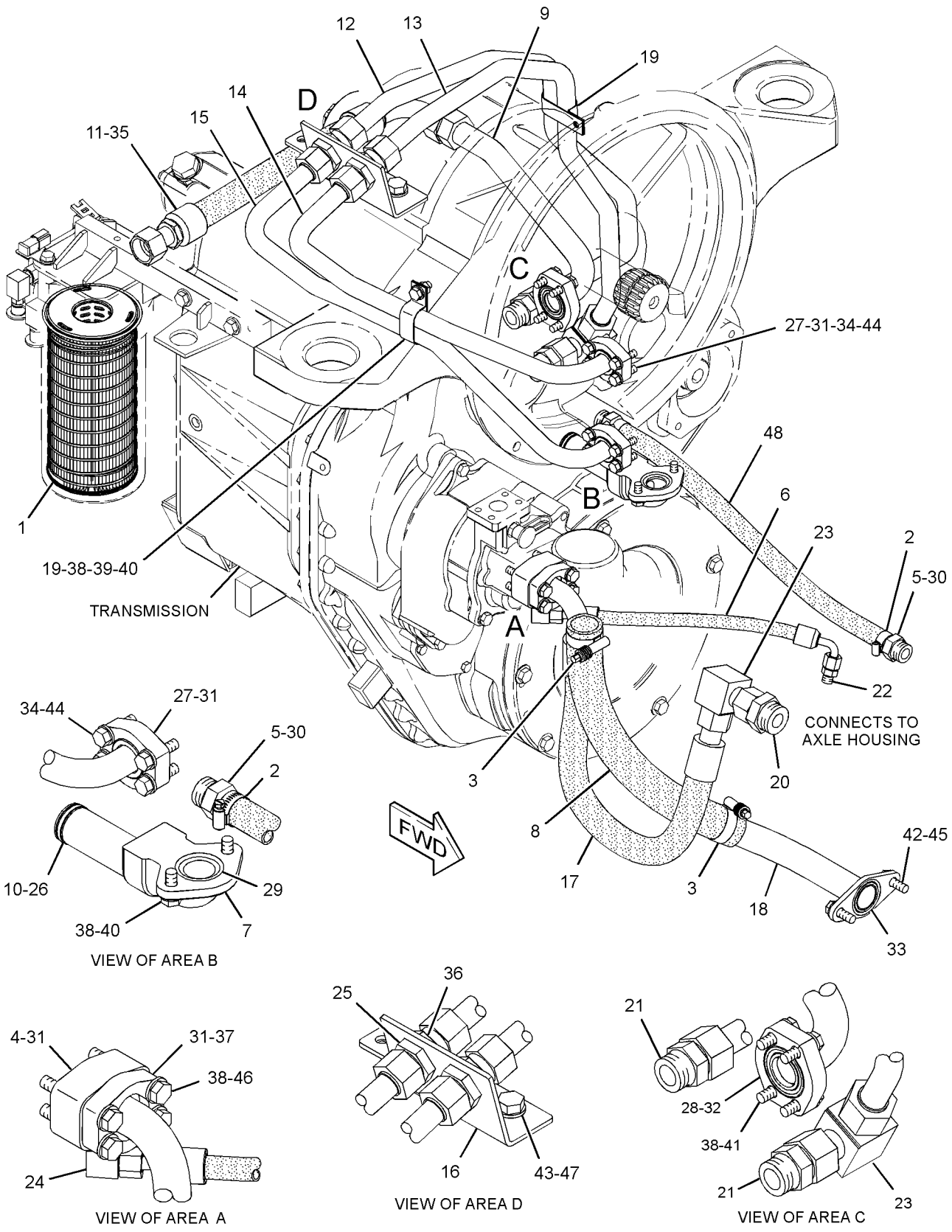

GRAPHIC #1

<END>

g01392405

262-6674 LINES GP-TRANSMISSION OIL

S/N: CZM1-UP

PART OF 253-8405 TRANSMISSION AR

SMCS-3154 **i02775335**

NOTE	REF NO	GRAPHIC REF	PART NUMBER	QTY	PART NAME 1 2 3 4 5 6 (PRODUCT LEVEL)	SEE PAGE
	1	1	**269-6974**	1	TUBE AS	
	2	1	**286-3197**	1	TUBE AS	
I	3	1	**291-1965**	1	HOSE AS	
	4	1	*148-8335*	1	CONNECTOR AS	
		1	**6V-8635**	1	CONNECTOR	
		1	**5K-9090**	1	SEAL-O-RING	
		1	**7M-8485**	1	SEAL-O-RING	
	5	1	*148-8357*	1	ELBOW AS	
		1	**6V-9008**	1	ELBOW	
		1	**5K-9090**	1	SEAL-O-RING	
		1	**7M-8485**	1	SEAL-O-RING	
	6	1	**1P-4578**	2	FLANGE-HALF	
	7	1	**4J-0520**	1	SEAL-O-RING	
	8	1	**4J-0522**	1	SEAL-O-RING	
	9	1	**4S-1962**	1	CLIP	
	10	1	**6V-8400**	1	SEAL-O-RING	
	11	1	**8C-3206**	2	FLANGE-HALF	
	12	1	**8T-4121**	9	WASHER-HARD (11X21X2.5-MM THK)	
M	13	1	**8T-4137**	1	BOLT (M10X1.5X20-MM)	
M	14	1	**8T-4196**	8	BOLT (M10X1.5X35-MM)	

I-REFER TO HYDRAULIC INFORMATION SYSTEM
M-METRIC PART

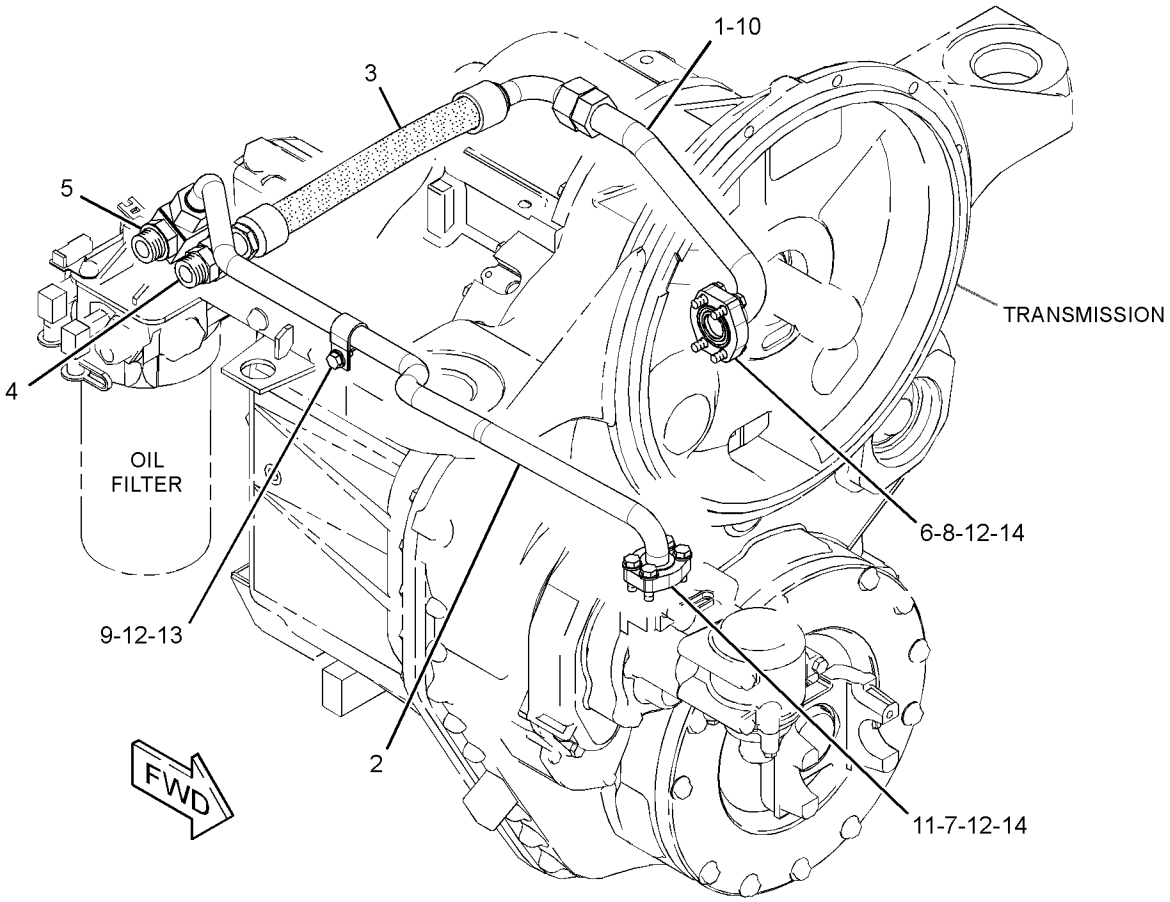

GRAPHIC #1 **<END>** g01339919

260-4802 MOTOR GP-PISTON—ALL WHEEL DRIVE

S/N: B9D1-UP

PART OF 260-8698 AXLE GP-FRONT

SMCS-4351 **i02786106**

NOTE	REF NO	GRAPHIC REF	PART NUMBER	QTY	PART NAME 1 2 3 4 5 6 (PRODUCT LEVEL)	SEE PAGE
Y	1	1	**287-1893**	1	MOTOR GP-PISTON (ALL WHEEL DRIVE)	378
	2	1	**4H-6520**	1	SEAL-O-RING	
M	3	1	**8T-4193**	2	BOLT (M16X2X50-MM)	
	4	1	**9X-8257**	2	WASHER (17.5X30X3.5-MM THK)	

M-METRIC PART
Y-SEPARATE ILLUSTRATION

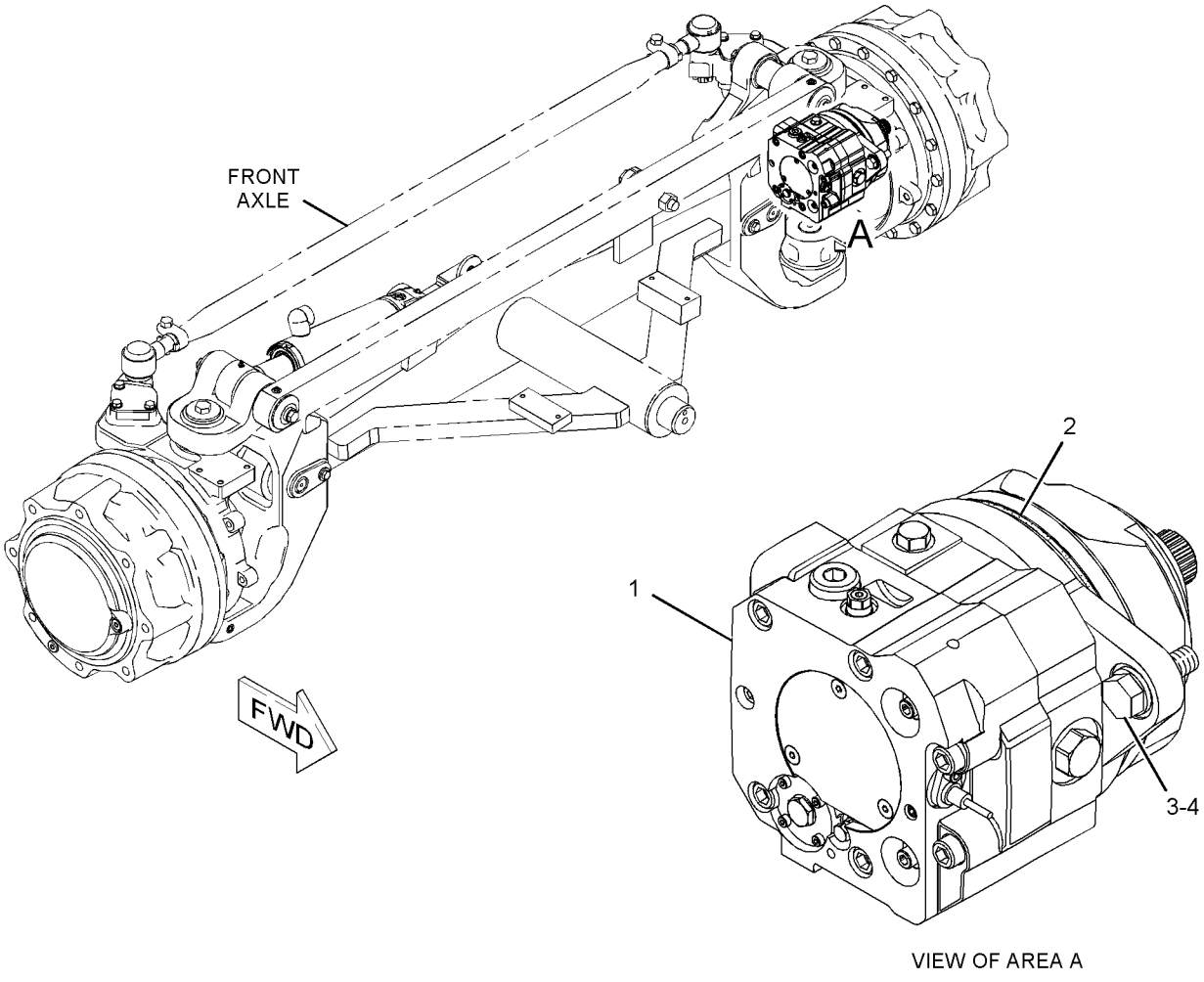

GRAPHIC #1 **<END>** g01135531

POWER TRAIN

287-1893 MOTOR GP-PISTON—ALL WHEEL DRIVE

S/N: B9D1-UP

PART OF 260-4802 MOTOR GP-PISTON

SMCS-4351 **i02786093**

NOTE	REF NO	GRAPHIC REF	PART NUMBER	QTY	PART NAME 1 2 3 4 5 6 (PRODUCT LEVEL)	SEE PAGE
M	1	1	**9T-4901**	2	NUT (M12X1-THD)	
	2	2	**116-3195**	1	PLUG AS	
	2A	2	**8C-3093**	1	SEAL-O-RING	
	4	2	**095-0939**	1	RING-RETAINING	
	5	2	**271-6864**	1	SHAFT-DRIVE	
	6	2	**8U-9480**	2	PIN	
	7	2	**271-6866**	2	BEARING-CRADLE	
	8	2	**280-0134**	1	SWASHPLATE	
	9	2	**121-9915**	4	SLEEVE	
	10	2	**271-6869**	9	PISTON AS	
	11	2	**121-9917**	1	WASHER (66.5X133X5.5-MM THK)	
B	12	2	**271-6871**	1	PLATE-SHIM (0.05-MM THK)	
B			**271-6872**	1	PLATE-SHIM (0.075-MM THK)	
B			**271-6873**	1	PLATE-SHIM (0.1-MM THK)	
	15	2	**271-6874**	1	PLATE	
M	16	2	**231-3627**	4	BOLT-SOCKET HEAD (M8X1.25X25-MM)	
B	17	2	**271-6876**	1	PLATE-SHIM (0.05-MM THK)	
B			**271-6877**	1	PLATE-SHIM (0.075-MM THK)	
B			**271-6878**	1	PLATE-SHIM (0.1-MM THK)	
	20	2	**271-6879**	1	PLATE	
	21	2	**271-6862**	1	RACE-BEARING	
	22	2	**271-6881**	1	WASHER-SPECIAL	
	23	2	**271-6882**	1	SPRING	
	24	2	**271-6883**	1	WASHER (33X49.9X3.5-MM THK)	
B	25	2	**271-6884**	1	SHIM (0.1-MM THK)	
B			**271-6885**	1	SHIM (0.3-MM THK)	
B			**271-6886**	1	SHIM (0.3-MM THK)	
	28	2	**034-5677**	1	RING-RETAINING	
	29	2	**271-6889**	1	WASHER-SPECIAL	
	30	2	**271-6890**	1	BEARING	
B	31	2	**271-6891**	1	SHIM (1.0-MM THK)	
B			**271-6892**	1	SHIM (1.05-MM THK)	
B			**271-6893**	1	SHIM (1.1-MM THK)	
B			**271-6894**	1	SHIM (1.15-MM THK)	
B			**271-6895**	1	SHIM (1.2-MM THK)	
B			**271-6896**	1	SHIM (1.25-MM THK)	
B			**271-6897**	1	SHIM (1.5-MM THK)	
B			**271-6898**	1	SHIM (1.75-MM THK)	
	39	2	**271-6899**	1	PLATE	
	40	2	**222-9238**	4	PIN	
	41	2	**8U-2564**	1	SEAL	
	42	1	**271-6954**	1	ROD	
	45	1	**8C-3131**	4	SEAL-O-RING	
	46	1	**121-9941**	4	RING	
	47	1	**121-9942**	4	PIPE	
	49	1	**271-6928**	1	PISTON	
	50	1	**271-6929**	1	PISTON	
	51	1	**105-6148**	1	VALVE GP-SHUTTLE (PISTON MOTOR)	
	52	1	**106-9586**	1	SEAL-O-RING	
			192-7515	1	SEAL-O-RING	
	53	1	**190-9752**	1	PLUG	
	54	1	**284-3790**	1	VALVE GP-RELIEF (ALL WHEEL DRIVE)	
	54A	1	**192-7515**	1	SEAL-O-RING	
	59	1	**284-3965**	3	SCREW (M6X16-MM)	
	60	1	**291-8521**	3	PLUG	
	61	1	**276-8172**	1	SENSOR GP-SPEED (ALL WHEEL DRIVE)	

287-1893 MOTOR GP-PISTON *(contd.)* i02786093

NOTE	REF NO	GRAPHIC REF	PART NUMBER	QTY	PART NAME 1 2 3 4 5 6 (PRODUCT LEVEL)	SEE PAGE
		1	**3E-3377**	1	WEDGE-RECEPTACLE LOCK (4-PIN)	
		1	**102-8804**	1	KIT-RECEPTACLE (4-PIN)	
					(INCLUDES RECEPTACLE AS & WEDGE)	
E		1	**9X-1813**		SLEEVE (13-CM)	
		1	**9X-7408**	1	SEAL-O-RING	
		1	**171-5349**	1	STRAP-MARKER	
		1	**9X-3401**	4	PIN-CONNECTOR (16-GA TO 18-GA)	
M	62	1	**6V-8213**	1	BOLT-SOCKET HEAD (M8X1.25X70-MM)	
M	63	1	**8T-8443**	6	BOLT-SOCKET HEAD (M12X1.75X77-MM)	
	64	1	**244-2240**	1	SPRING	
	65	1	**244-2246**	1	RING-RETAINING	
	66	1	**244-2248**	1	RING	
	67	1	**271-6959**	1	SPRING	
	68	1	**244-2317**	1	RETAINER-SPRING	
	69	1	**271-6961**	1	BUSHING	
	70	1	**244-2331**	1	WASHER (4X8X1-MM THK)	
	71	1	**271-6963**	1	PILOT	
	72	1	**271-6964**	1	PISTON	
	73	1	**271-6965**	1	SPRING	
	74	1	**271-6966**	1	RETAINER-RING	
	75	1	**5W-7479**	3	WASHER (3X6X0.5-MM THK)	
	76	1	**118-5068**	1	SEAL-O-RING	
	77	1	**136-3377**	1	SEAL-O-RING	
	78	1	**271-6970**	1	COVER	
M	79	1	**150-1293**	3	SCREW-BUTTON HEAD (M4X0.7X12-MM)	
	80	1	**271-6972**	1	PLUG	
	81	1	**271-6974**	1	GEAR	
M	82	1	**8T-9515**	1	BOLT-SOCKET HEAD (M10X1.5X40-MM)	
	83	1	**192-7120**	1	SEAL-O-RING	
	84	1	**271-6977**	1	COVER	
M	85	1	**127-9831**	1	SETSCREW (M12X1X50-MM)	
	86	1	**121-9946**	1	PIN	
	87	2	**6Y-2736**	1	CONE-BEARING	
	88	2	**6Y-2737**	1	CUP-BEARING	
BF			**223-2321**	1	SHIM PACK (INCLUDES 21 SHIMS)	
F			**224-8184**	1	COUPLER	
F			**224-8185**	7	STUD	
F			**3E-6762**	7	SEAL-O-RING	
FM			**175-2447**	7	PLUG GP	
					(EACH INCLUDES)	
			196-7308	1	SEAL	
F			**224-8186**	7	NUT-CAP (M14X18-MM THD)	
F			**224-8181**	4	SEAL-O-RING	
					PARTS SHOWN IN GRAPHIC(S) WITHOUT A REFERENCE NUMBER ARE NOT SERVICED SEPARATELY	

B-USE AS REQUIRED
E-ORDER BY THE CENTIMETER
F-NOT SHOWN
M-METRIC PART

287-1893 MOTOR GP-PISTON *(contd.)* i02786093

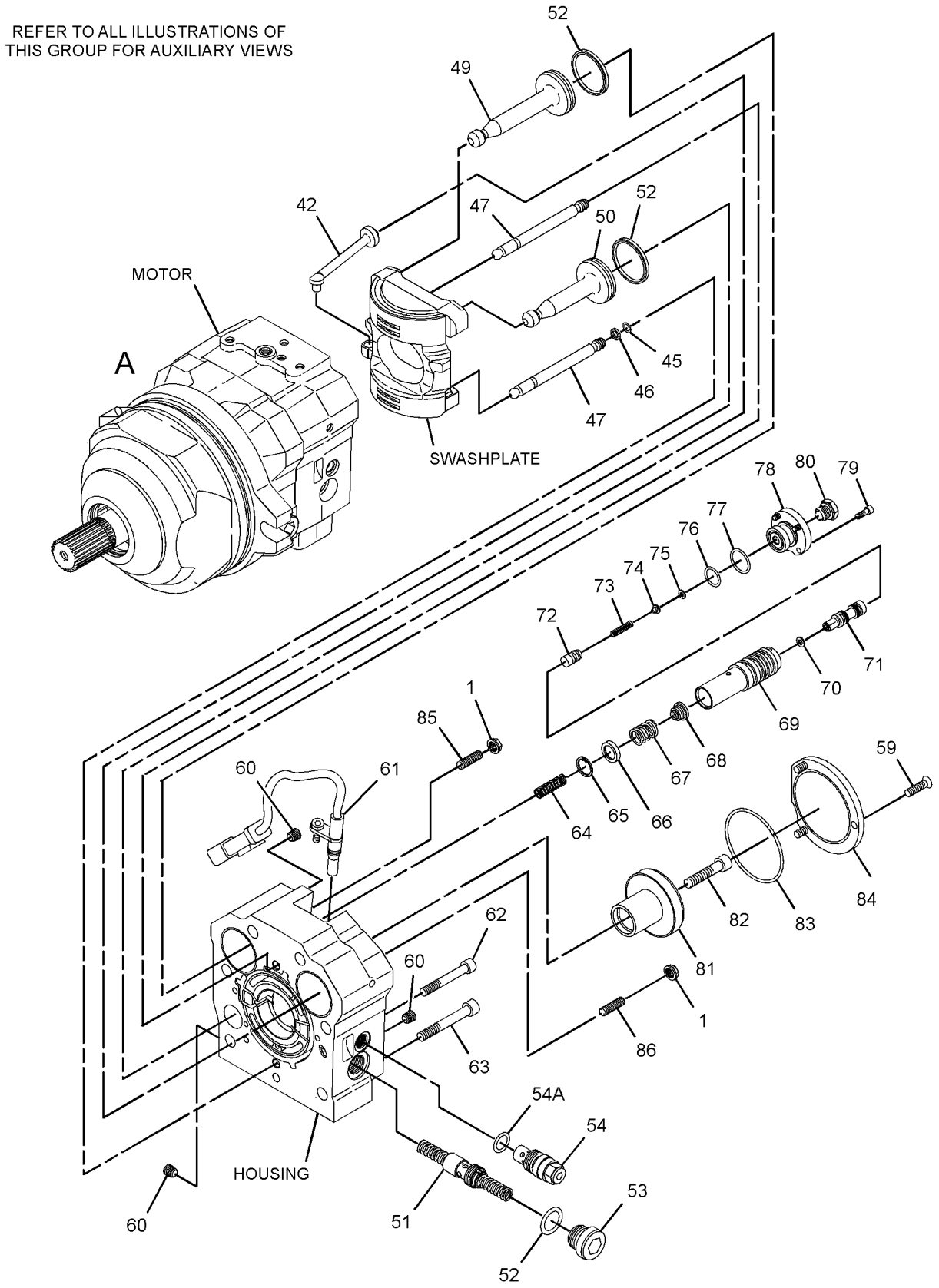

GRAPHIC #1 g01382401

287-1893 MOTOR GP-PISTON *(contd.)* **i02786093**

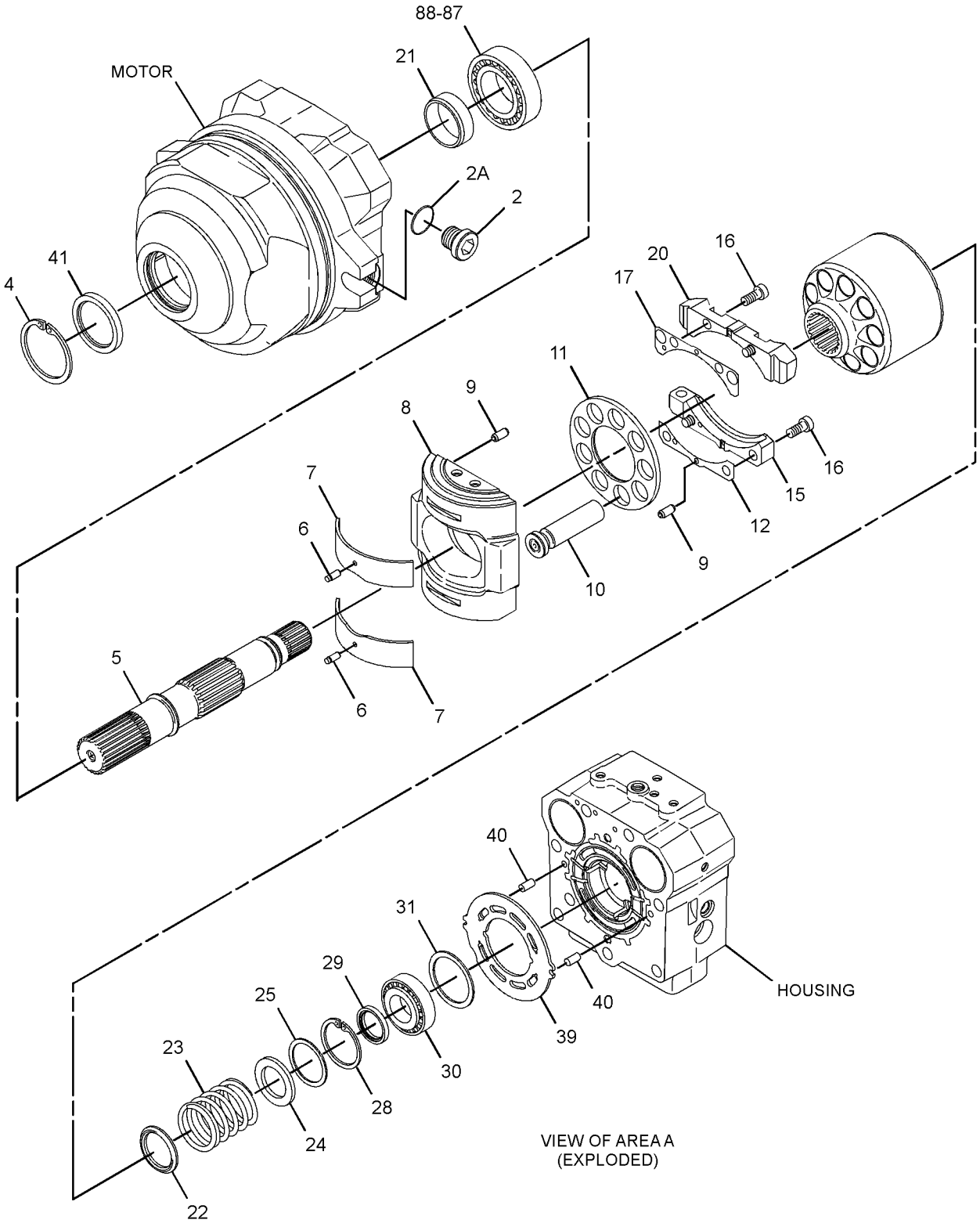

GRAPHIC #2 **<END>** g01382403

255-1566 MOUNTING GP-WHEEL—NON-AWD

S/N: B9D1-UP

PART OF 278-3419 AXLE AR-FRONT

SMCS-4201 **i02788016**

NOTE	REF NO	GRAPHIC REF	PART NUMBER	QTY	PART NAME 1 2 3 4 5 6 (PRODUCT LEVEL)	SEE PAGE
	1	1	**267-3507**	60	WASHER-HARD (26X47X12-MM THK)	
M	2	1	**9X-2615**	60	BOLT (M24X3X60-MM)	

M-METRIC PART

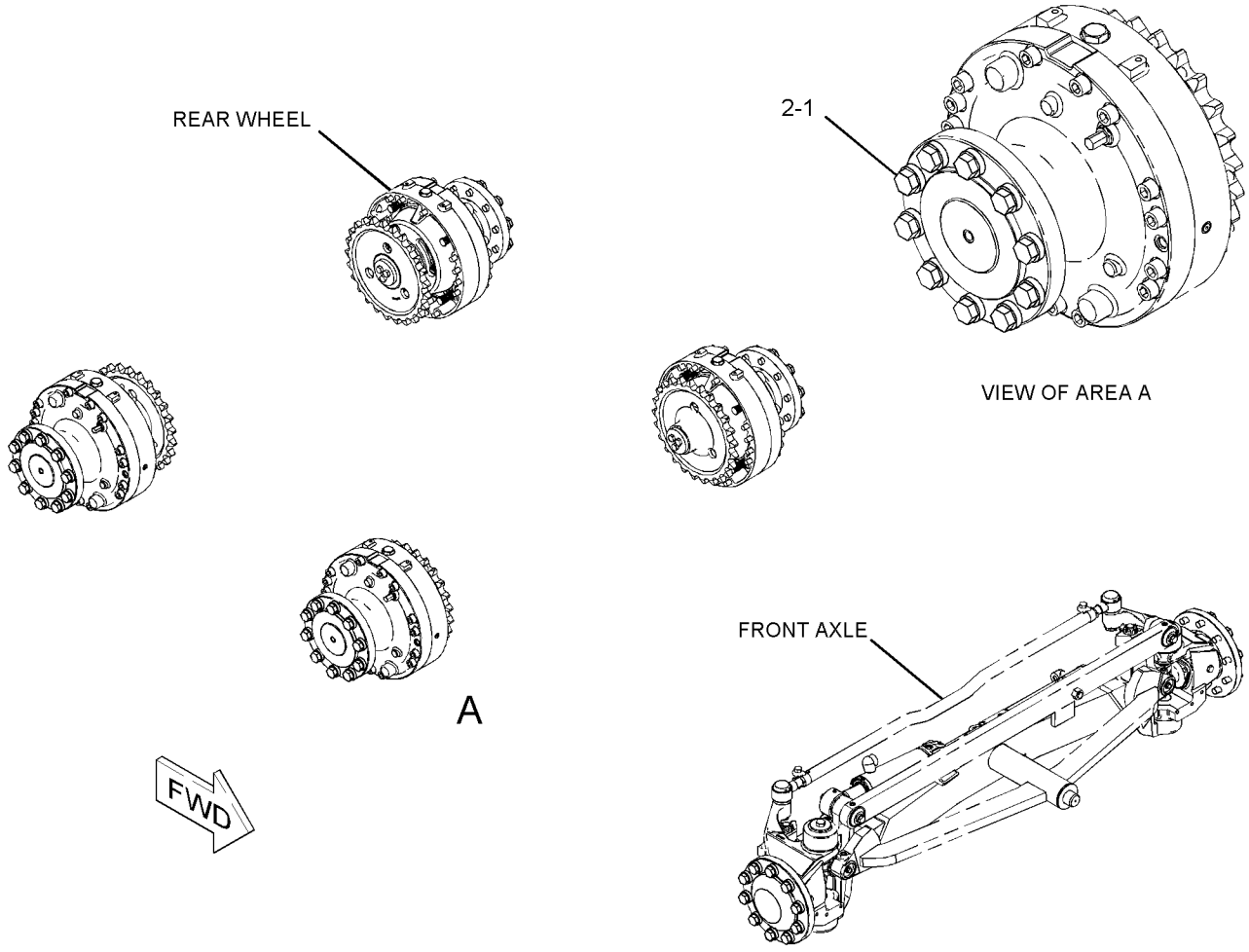

GRAPHIC #1 **<END>** g01133872

262-8360 MOUNTING GP-XMSN OIL COOLER

S/N: B9D1-UP

PART OF 234-7721 COMMON AR

SMCS-1375 **i02780416**

NOTE	REF NO	GRAPHIC REF	PART NUMBER	QTY	PART NAME 1 2 3 4 5 6 (PRODUCT LEVEL)	SEE PAGE
Y	1	1	**272-1045**	1	COOLER GP-TRANSMISSION OIL	345
M	2	1	**7X-2562**	3	BOLT (M20X2.5X45-MM)	
	3	1	**8T-4123**	3	WASHER (22X35X3.5-MM THK)	

M-METRIC PART
Y-SEPARATE ILLUSTRATION

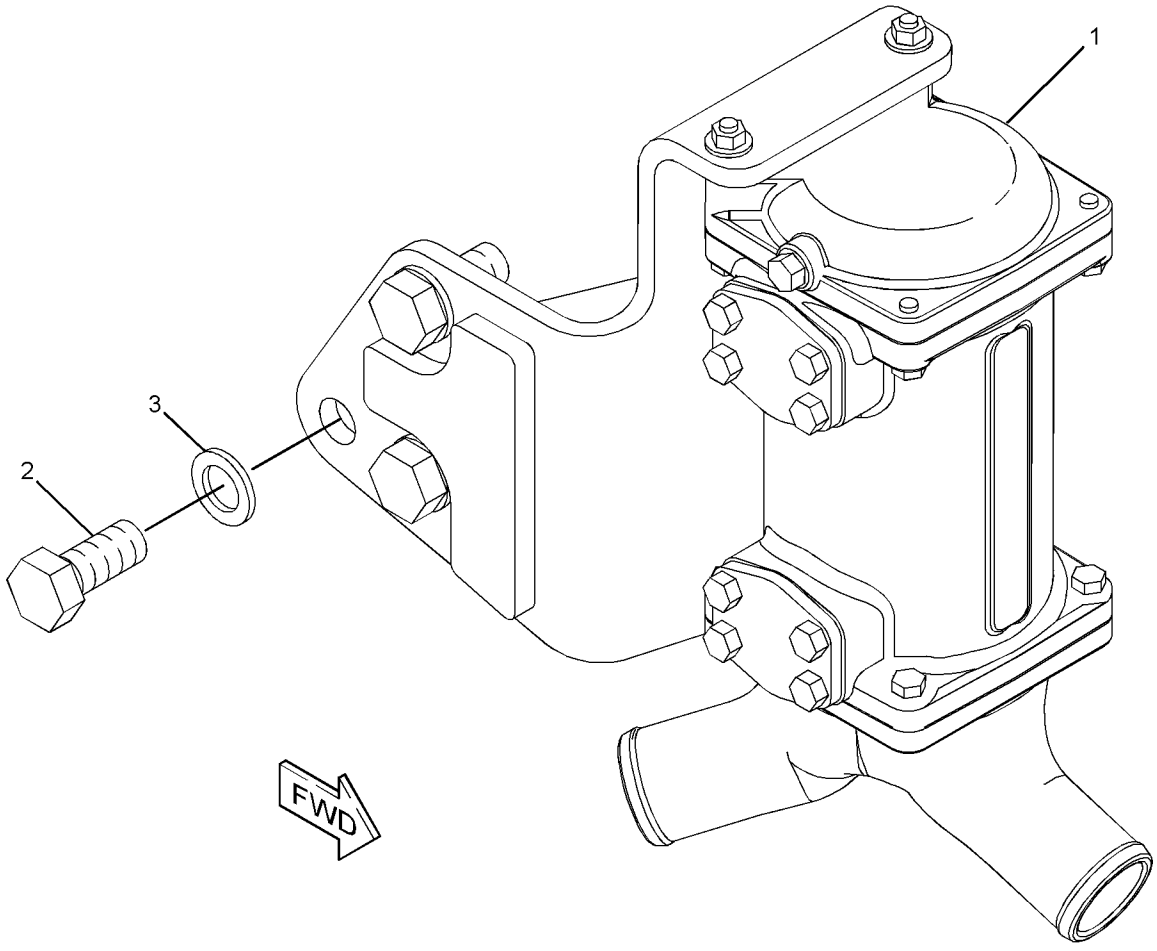

GRAPHIC #1 **<END>** g01157066

231-8159 PUMP & MTG GP-ALL WHEEL DRIVE

S/N: B9D1-UP

PART OF 261-0153 AXLE AR-FRONT

SMCS-3203 **i02785429**

NOTE	REF NO	GRAPHIC REF	PART NUMBER	QTY	PART NAME 1 2 3 4 5 6 (PRODUCT LEVEL)	SEE PAGE
Y	1	1	**246-4490**	1	PUMP GP-PISTON (ALL WHEEL DRIVE)	388
M	2	1	**8T-4193**	2	BOLT (M16X2X50-MM)	
	3	1	**9X-7371**	1	SEAL-O-RING	
	4	1	**9X-8257**	2	WASHER (17.5X30X3.5-MM THK)	

M-METRIC PART
Y-SEPARATE ILLUSTRATION

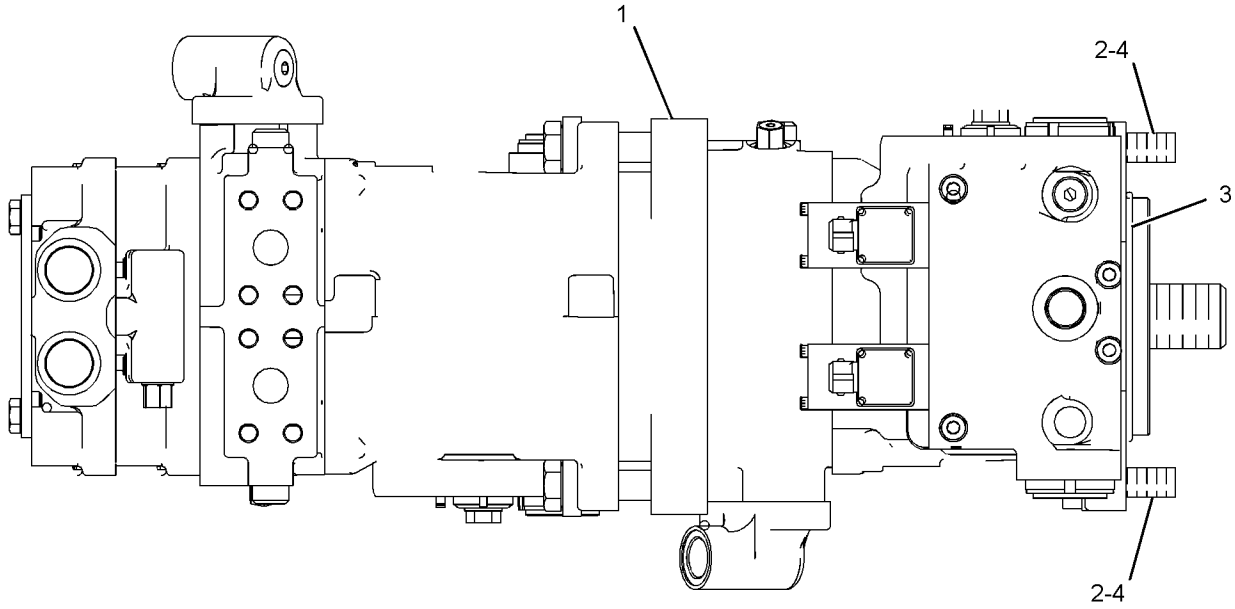

GRAPHIC #1 **<END>** g01341077

262-6672 PUMP & MTG GP-GEAR—POWER TRAIN

S/N: CZM1-UP

PART OF 253-8405 TRANSMISSION AR

SMCS-3066, 3115 **i02775280**

NOTE	REF NO	GRAPHIC REF	PART NUMBER	QTY	PART NAME 1 2 3 4 5 6 (PRODUCT LEVEL)	SEE PAGE
	1	1	**6V-0852**	1	CAP-DUST	
Y	2	1	**263-7431**	1	PUMP GP-GEAR (TRANSMISSION)	386
	3	1	**112-1574**	1	SEAL-O-RING	
	4	1	**3J-1907**	1	SEAL-O-RING	
	5	1	**4F-7952**	1	SEAL-O-RING	
	6	1	**6V-3965**	1	FITTING-COUPLER	
M	7	1	**6V-5842**	2	BOLT (M10X1.5X40-MM)	
M	8	1	**8T-0644**	1	BOLT (M10X1.5X90-MM)	

M-METRIC PART
Y-SEPARATE ILLUSTRATION

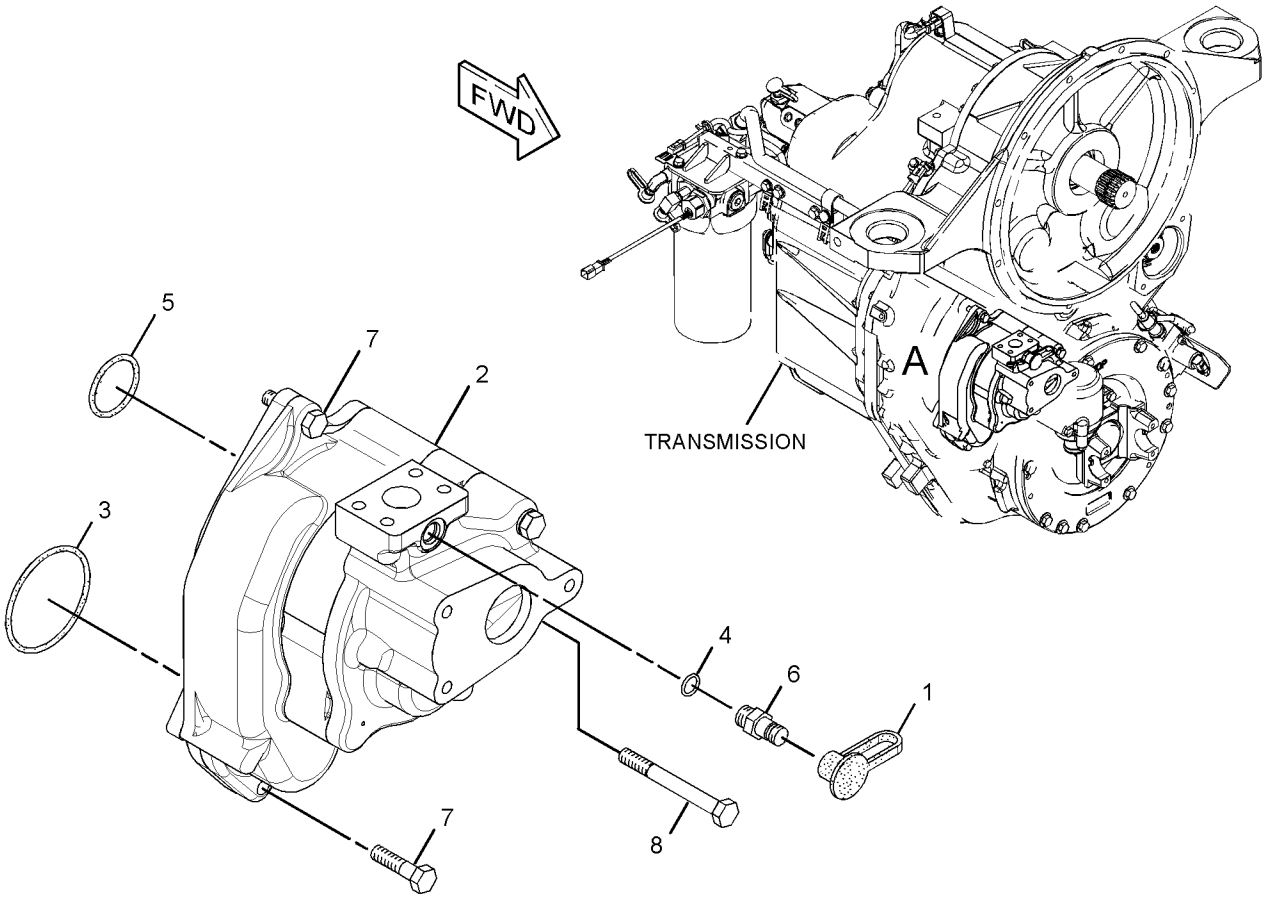

VIEW OF AREA A
(EXPLODED)

GRAPHIC #1 **<END>** g01394071

263-7431 PUMP GP-GEAR—TRANSMISSION

S/N: CZM1-UP

PART OF 262-6672 PUMP & MTG GP-GEAR

SMCS-3066, 3115, 3203, 5073 **i02775276**

NOTE	REF NO	GRAPHIC REF	PART NUMBER	QTY	PART NAME 1 2 3 4 5 6 (PRODUCT LEVEL)	SEE PAGE
	1	1	**3S-0004**	5	WASHER (0.406X0.728X0.09-IN THK)	
	2	1	**6Y-5010**	8	WASHER (10.16X19X0.84-MM THK)	
	4	1	**116-4627**	2	GEAR (8-TEETH)	
	5	1	**234-0819**	1	BODY AS-OIL PUMP	
		1	**5M-3320**	2	BEARING-SLEEVE (1.25X1.38X1.25-IN)	
	6	1	**234-0821**	1	MANIFOLD AS-OIL PUMP	
		1	**8M-8489**	2	DOWEL	
		1	**9N-4155**	1	ADAPTER	
	7	1	**234-0823**	1	GEAR AS-OIL PUMP (12-TEETH)	
	8	1	**234-0826**	1	GEAR AS-OIL PUMP (12-TEETH)	
	9	1	**263-7428**	1	COVER AS-OIL PUMP	
		1	**5M-3320**	2	BEARING-SLEEVE (1.25X1.38X1.25-IN)	
	11	1	**293-4386**	1	BODY AS-OIL PUMP	
		1	**8M-8489**	4	DOWEL	
	12	1	**112-1574**	1	SEAL-O-RING	
	13	1	**2B-9373**	1	KEY-WOODRUFF	
	14	1	**2D-8009**	3	SEAL-O-RING	
M	15	1	**8C-2926**	4	BOLT (M10X1.5X140-MM)	
M	16	1	**8T-0355**	1	BOLT (M10X1.5X110-MM)	

M-METRIC PART

263-7431 **PUMP GP-GEAR** *(contd.)* **i02775276**

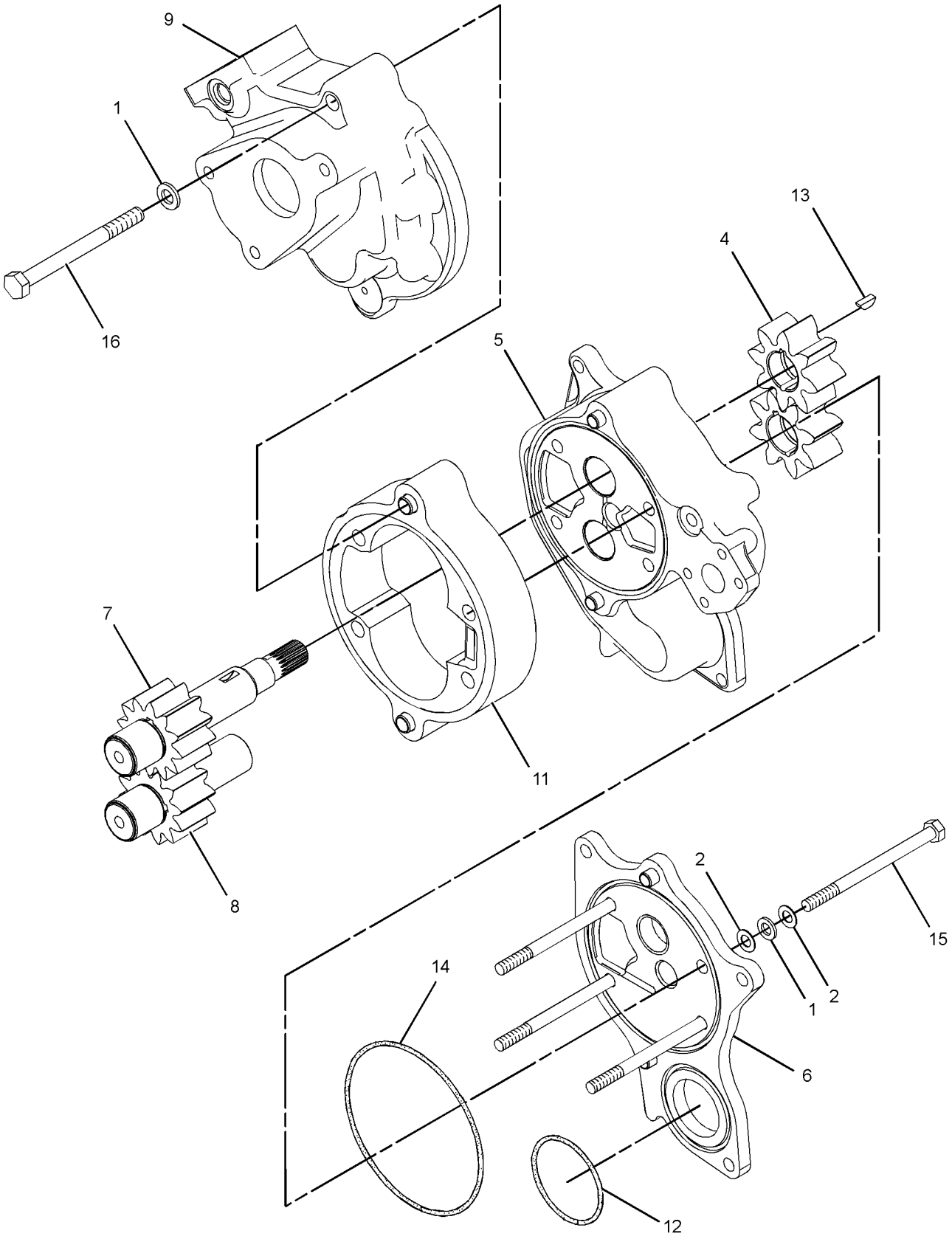

GRAPHIC #1 **<END>** g01342978

246-4490 PUMP GP-PISTON—ALL WHEEL DRIVE

S/N: B9D1-UP

PART OF 231-8159 PUMP & MTG GP-ALL WHEEL DRIVE

SMCS-3203 **i02785415**

NOTE	REF NO	GRAPHIC REF	PART NUMBER	QTY	PART NAME 1 2 3 4 5 6 (PRODUCT LEVEL)	SEE PAGE
	1	1	**273-5454**	1	PUMP GP-PISTON (ALL WHEEL DRIVE)	
	2	1	**283-7728**	1	PUMP GP-PISTON (ALL WHEEL DRIVE)	
	3	1	**273-5492**	1	PUMP GP-GEAR (AWD CHARGE)	
	4	1	**273-5500**	1	PUMP GP-GEAR (AWD CHARGE)	
Y	5	1	**273-5510**	2	VALVE GP-PUMP CONTROL (PRESSURE, FLOW COMPENSATOR) (ALL WHEEL DRIVE)	398
	6	1	**277-7751**	1	SEAL-O-RING	
	7	1	**171-3010**	2	WASHER-HARD (17.5X32X7-MM THK)	
M	8	1	**203-1074**	2	BOLT-SOCKET HEAD (M16X2X55-MM)	
	9	1	**107-6279**	1	SEAL-O-RING	
M	10	1	**178-7838**	2	BOLT (M12X1.75X75-MM)	
	11	1	**273-5499**	1	COUPLING	
	12	1	**224-4829**	2	VALVE GP-RELIEF (COLD OIL STARTUP)	
	13	1	**301-4371**	2	FLANGE	
	14	1	**273-5470**	4	VALVE GP-RELIEF (MAXIMUM PRESSURE, AWD)	
		1	**222-9289**	1	SEAL-O-RING	
	15	1	**224-3223**	2	VALVE GP-RELIEF (PUMP CASE PRESSURE)	
	16	1	**224-3217**	2	KIT-SHUTTLE VALVE (FORWARD, REVERSE)	
					(EACH INCLUDES SPOOL,BUSHINGS,SPRINGS,SPRING PLATES,SEAL-O-RINGS,PLUGS,SCREWS, & NUTS)	
	17	1	**9T-4893**	2	VALVE-RELIEF (AWD, OPERATING PRESSURE)	
	18	1	**222-9299**	2	SEAL-O-RING	
					AVAILABLE REPAIR KIT(S):	
			278-6045	1	KIT-SEAL (DOUBLE PISTON)	
					(INCLUDES SEALS & RINGS)	

M-METRIC PART
Y-SEPARATE ILLUSTRATION

246-4490 **PUMP GP-PISTON** *(contd.)* **i02785415**

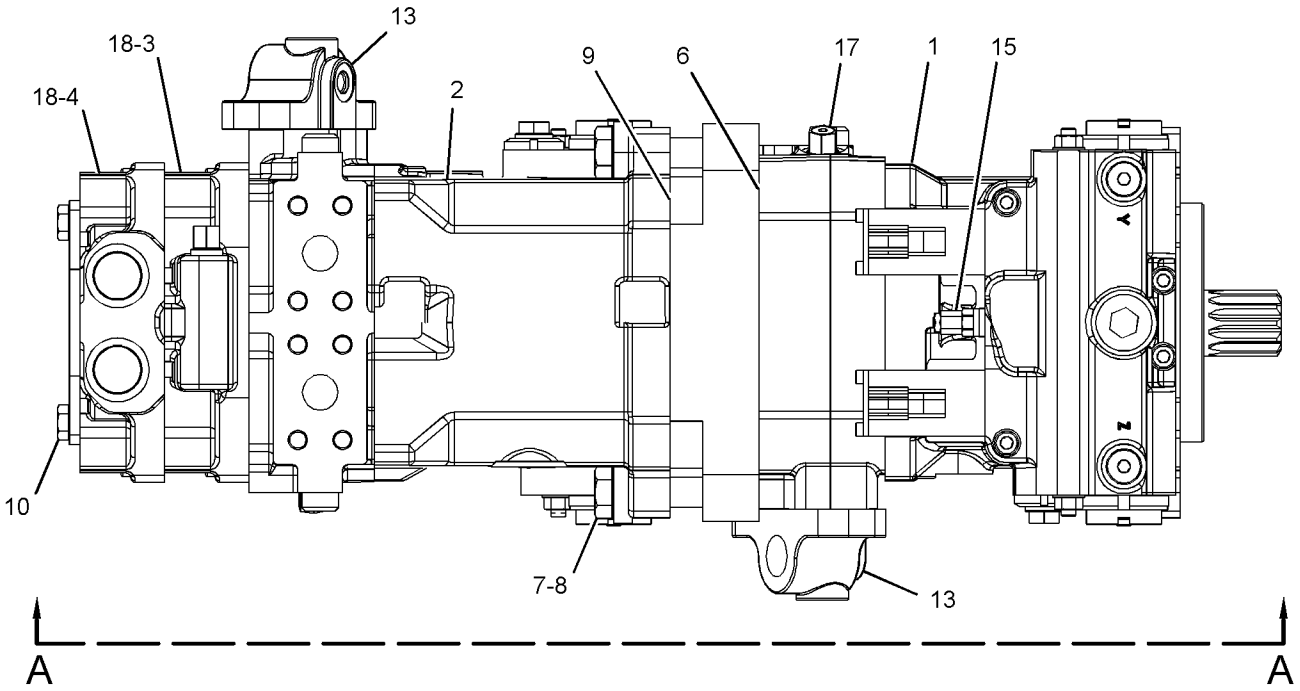

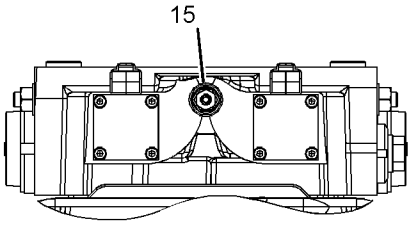

VIEW B-B

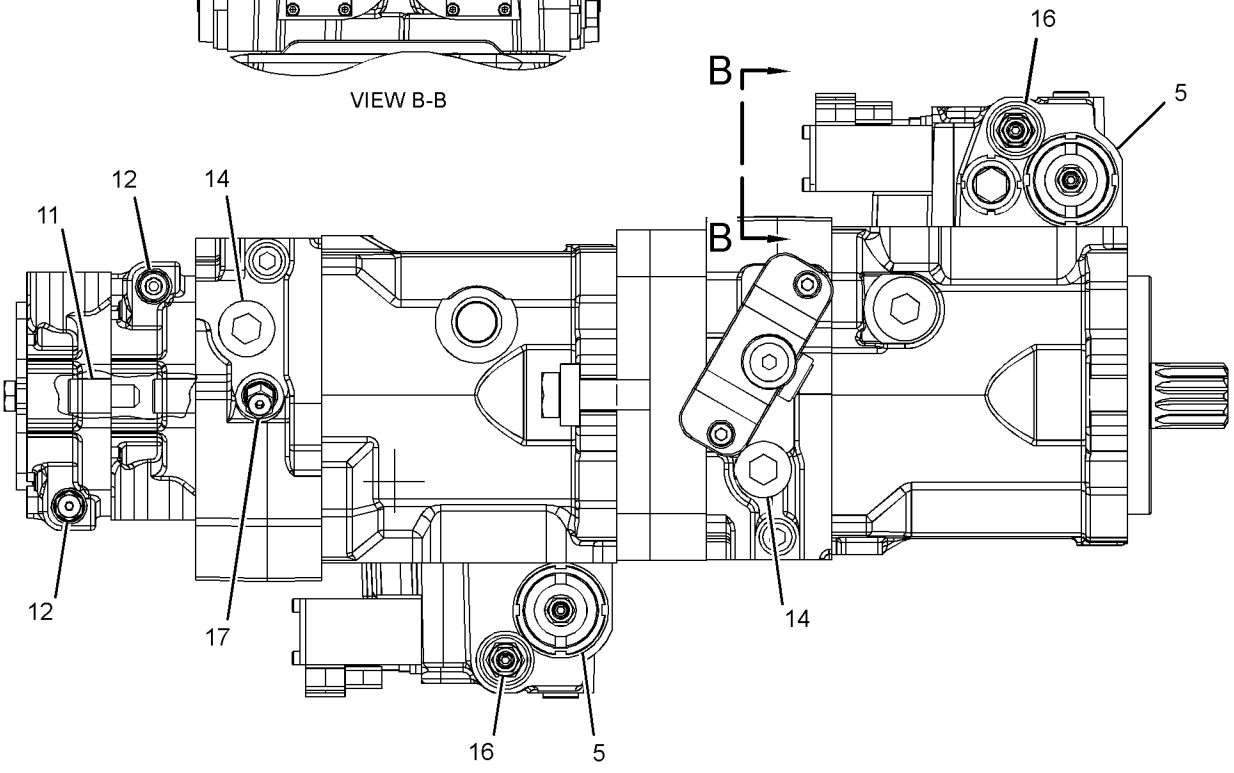

VIEW A-A

GRAPHIC #1 **<END>** g01381095

9W-5134 SCREEN GP-MAGNETIC–TRANSMISSION

S/N: CZM1-UP

PART OF 253-8405 TRANSMISSION AR

SMCS-3067 **i01623693**

NOTE	REF NO	GRAPHIC REF	PART NUMBER	QTY	PART NAME 1 2 3 4 5 6 (PRODUCT LEVEL)	SEE PAGE
	1	1	**6Y-3861**	1	COVER AS	
	2	1	**6Y-3860**	1	HOUSING-FILTER	
	3	1	**8S-9130**	1	SCREEN-SUCTION (TRANSMISSION)	
	4	1	**8S-9129**	1	FILTER-MAGNETIC (TRANSMISSION)	
	5	1	**5P-3863**	1	SEAL-O-RING	
M	6	1	**6V-5219**	3	BOLT (M8X1.25X40-MM)	
	7	1	**5F-8000**	1	SEAL-O-RING	
M	8	1	**8T-0355**	3	BOLT (M10X1.5X110-MM)	

M-METRIC PART

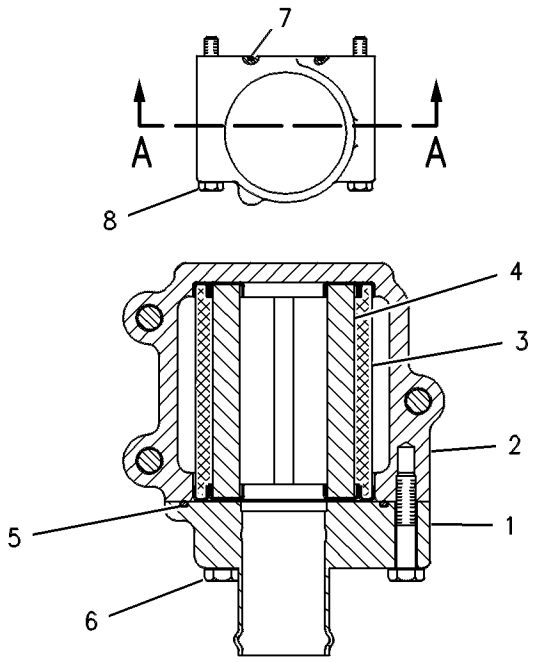

VIEW A–A

GRAPHIC #1 **<END>** g00108551

233-6370 SHAFT GP-DRIVE

S/N: B9D1-UP

PART OF 234-7721 COMMON AR

SMCS-3253 **i02773179**

NOTE	REF NO	GRAPHIC REF	PART NUMBER	QTY	PART NAME 1 2 3 4 5 6 (PRODUCT LEVEL)	SEE PAGE
	1	1	**4E-3273**	4	STRAP	
Y	2	1	**246-6465**	1	UNIVERSAL JOINT GP	395
M	3	1	**4E-5985**	8	BOLT-12 POINT HEAD (M10X1.25X20-MM)	

M-METRIC PART
Y-SEPARATE ILLUSTRATION

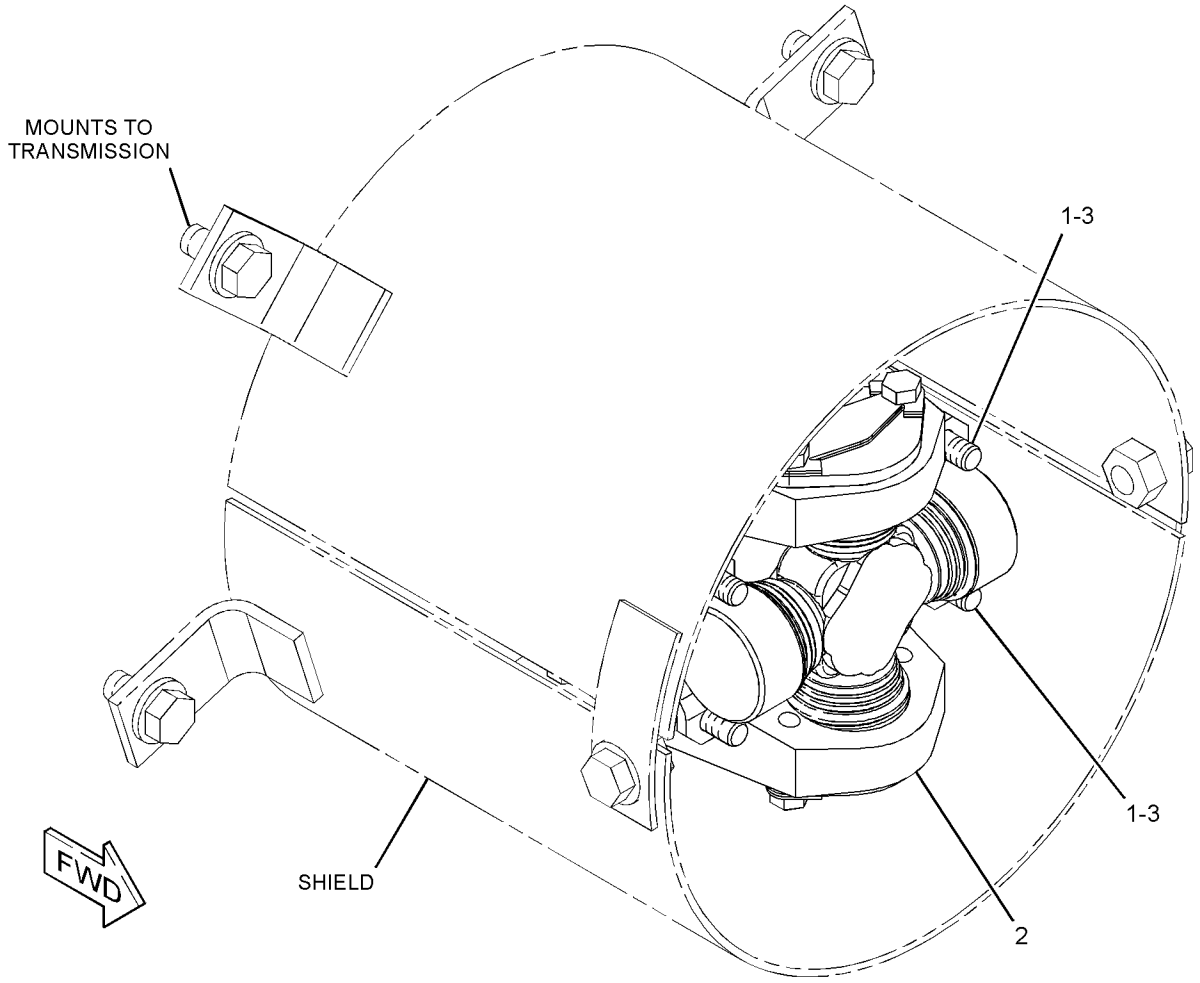

GRAPHIC #1 **<END>** g01347509

305-2148 SHAFT GP-INPUT–TRANSMISSION

S/N: CZM1-UP

PART OF 253-8405 TRANSMISSION AR

SMCS-3063 **i02775356**

NOTE	REF NO	GRAPHIC REF	PART NUMBER	QTY	PART NAME 1 2 3 4 5 6 (PRODUCT LEVEL)	SEE PAGE
	1	1	**1M-4095**	1	BEARING-INNER	
	2	1	**3T-4377**	1	SEAL-RING	
	3	1	**246-8746**	1	GEAR (38-TEETH)	
	4	1	**246-8752**	1	GEAR (45-TEETH)	
	5	1	**304-9224**	1	SHAFT	
	6	1	**2H-6490**	1	BEARING-INNER	

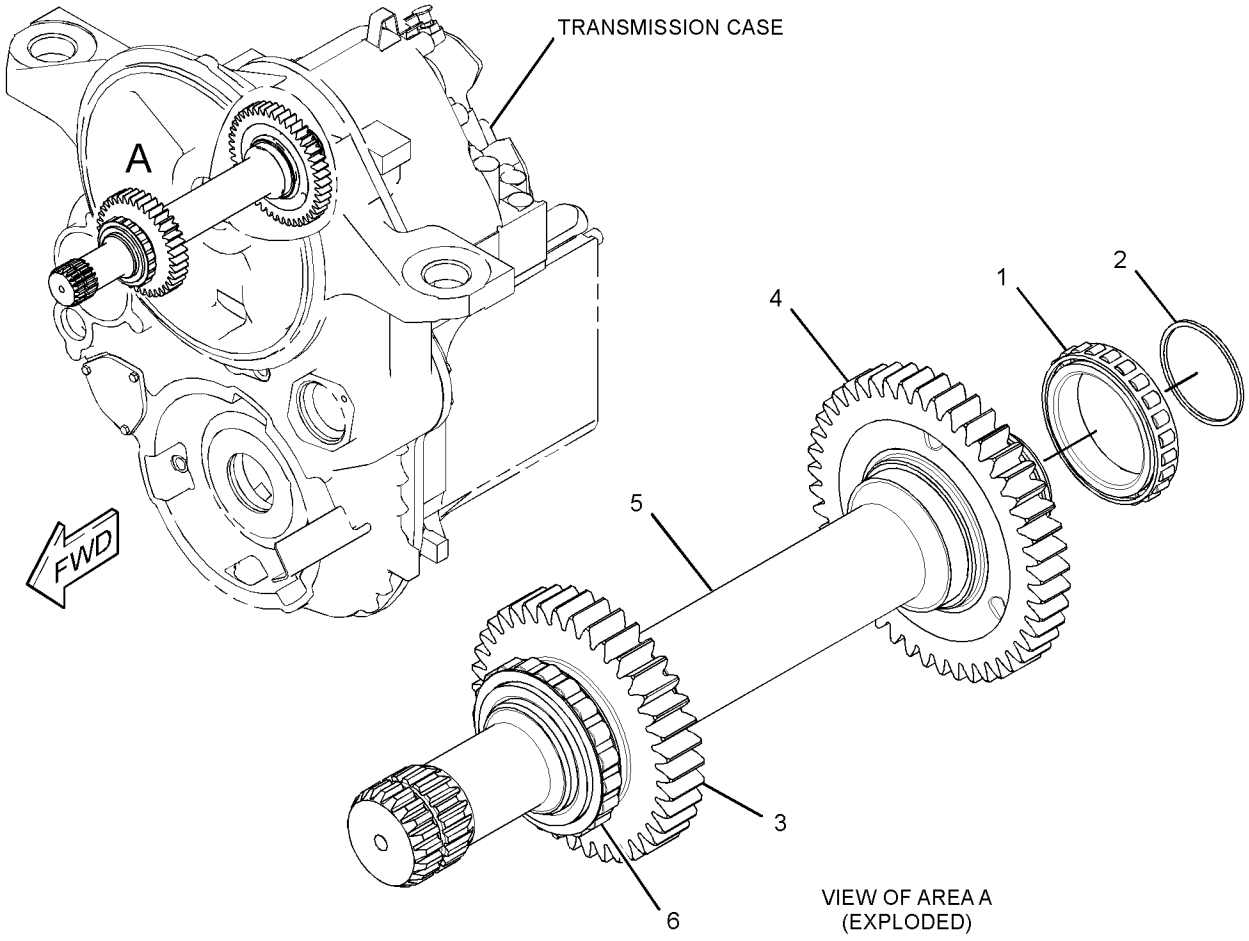

GRAPHIC #1 **<END>** g01393166

285-0592 TANDEM & COVER GP

S/N: B9D1-UP

PART OF 234-7721 COMMON AR

SMCS-4062, 4064 **i02781174**

NOTE	REF NO	GRAPHIC REF	PART NUMBER	QTY	PART NAME 1 2 3 4 5 6 (PRODUCT LEVEL)	SEE PAGE
	1	1	**3D-2981**	4	GASKET	
	2	1	**9G-5127**	2	BREATHER AS (TANDEM)	
	3	1	**248-2378**	8	COVER	
	4	1	**248-6201**	4	COVER	
	5	1	**250-4091**	8	GASKET	
	6	1	**285-0593**	1	HOUSING AS-TANDEM DRIVE (RH)	
	7	1	**285-0594**	1	HOUSING AS-TANDEM DRIVE (LH)	
	8	1	**2M-9780**	2	SEAL-O-RING	
	9	1	**3K-0360**	2	SEAL-O-RING	
	10	1	**6E-5047**	2	PLUG	
M	11	1	**8T-4192**	32	BOLT (M12X1.75X25-MM)	
	12	1	**8T-4223**	32	WASHER-HARD (13.5X25.5X3-MM THK)	
	13	1	**9S-4190**	2	PLUG-O-RING	

M-METRIC PART

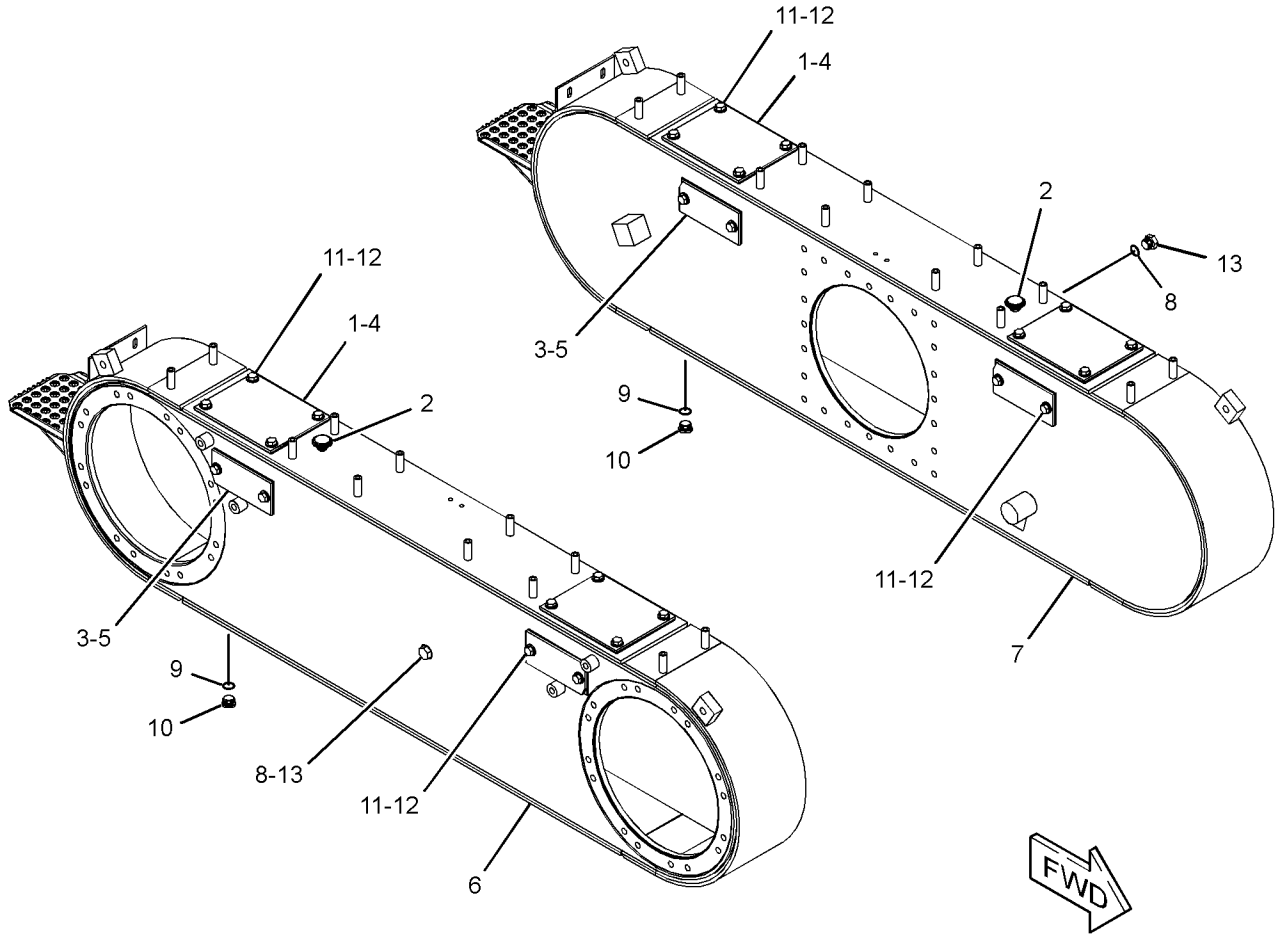

GRAPHIC #1 **<END>** g01374824

POWER TRAIN

253-8405 TRANSMISSION AR

S/N: CZM1-UP

PART OF 234-7721 COMMON AR

SMCS-3030 **i02774662**

NOTE	PART NUMBER	QTY	PART NAME 1 2 3 4 5 6 (PRODUCT LEVEL)	SEE PAGE
Y	*253-8424*	1	BRAKE GP-PARKING	502
Y	*253-8426*	1	CASE & PARTS GP-PLANETARY	327
Y	*235-2412*	1	CLUTCH GP-TRANSMISSION (FORWARD)	332
Y	*235-2413*	1	CLUTCH GP-TRANSMISSION (REVERSE, SECOND)	334
Y	*235-2414*	1	CLUTCH GP-TRANSMISSION (1ST, 3RD)	336
Y	*247-8303*	1	CLUTCH GP-TRANSMISSION (HIGH, LOW)	338
Y	*253-8425*	1	CONTROL GP-TRANSMISSION HYD	342
Y	*263-7434*	1	COVER GP-SHIPPING	347
Y	*310-3221*	1	ELECTRONICS GP-POWER TRAIN	168
Y	*250-8292*	1	FILTER & MTG GP-TRANSMISSION	354
Y	*262-6674*	1	LINES GP-TRANSMISSION OIL	375
Y	*262-6672*	1	PUMP & MTG GP-GEAR (POWER TRAIN)	385
Y	*9W-5134*	1	SCREEN GP-MAGNETIC (TRANSMISSION)	390
Y	*305-2148*	1	SHAFT GP-INPUT (TRANSMISSION)	392

Y-SEPARATE ILLUSTRATION

<END>

246-6465 UNIVERSAL JOINT GP

S/N: B9D1-UP

PART OF 233-6370 SHAFT GP-DRIVE

SMCS-3251, 3253 **i02773182**

NOTE	REF NO	GRAPHIC REF	PART NUMBER	QTY	PART NAME 1 2 3 4 5 6 (PRODUCT LEVEL)	SEE PAGE
	1	1	*235-5201*	2	SPIDER & BEARING GP	
					(EACH INCLUDES)	
M		1	**3E-4315**	4	BOLT-LOCKING (M8X1X14-MM)	
		1	**6W-4126**	2	STRAP-LOCKING	

M-METRIC PART

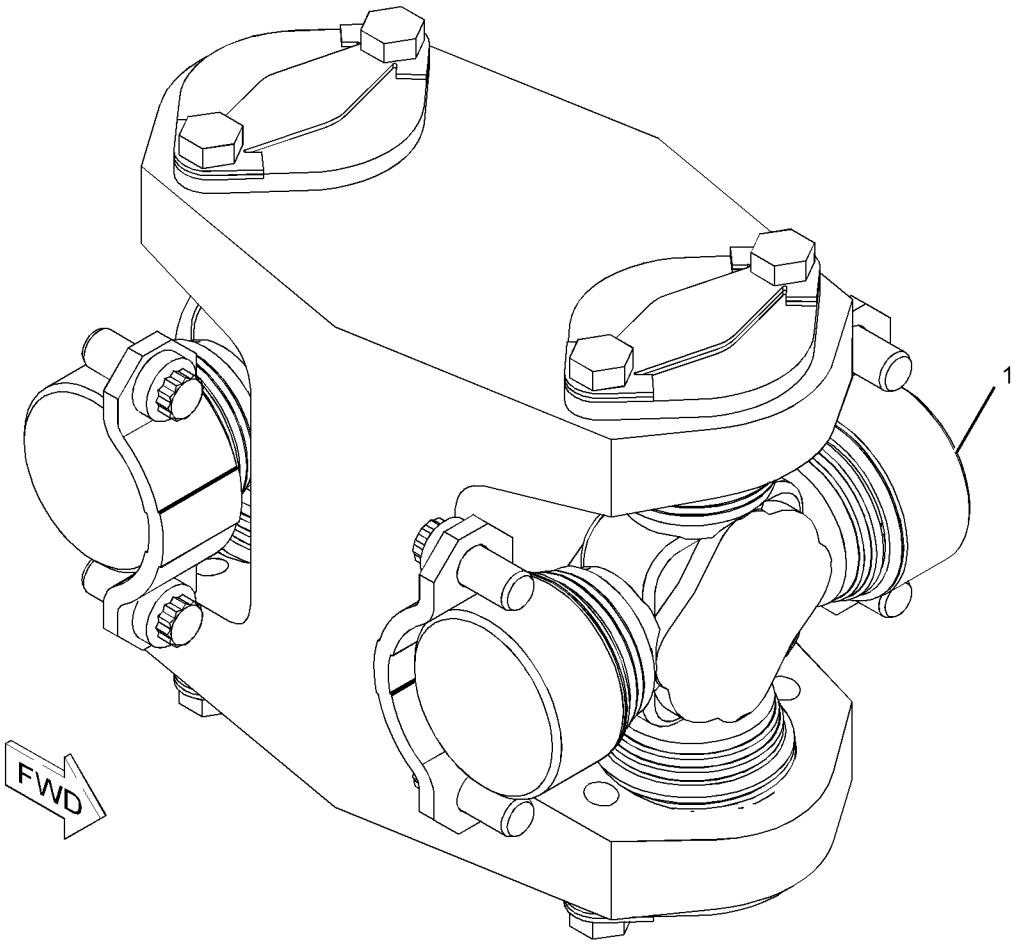

GRAPHIC #1 **<END>** g01133418

250-2139 VALVE & MTG GP-SOLENOID

S/N: B9D1-UP

PART OF 231-1511 CONTROL GP-DIFFERENTIAL LOCK

SMCS-5479 **i02759309**

NOTE	REF NO	GRAPHIC REF	PART NUMBER	QTY	PART NAME 1 2 3 4 5 6 (PRODUCT LEVEL)	SEE PAGE
M	1	1	**8T-1158**	1	BOLT-SOCKET HEAD (M8X1.25X20-MM)	
	2	1	**245-1181**	1	FLANGE	
	3	1	**245-3555**	1	VALVE GP-SOLENOID (DIFFERENTIAL LOCK)	
		1	**245-1811**	1	COVER-BASE	
		1	**245-1912**	1	KIT-SEAL (SOLENOID VALVE)	
					(INCLUDES SEAL-O-RINGS)	
	4	1	**250-2138**	1	MANIFOLD	

M-METRIC PART

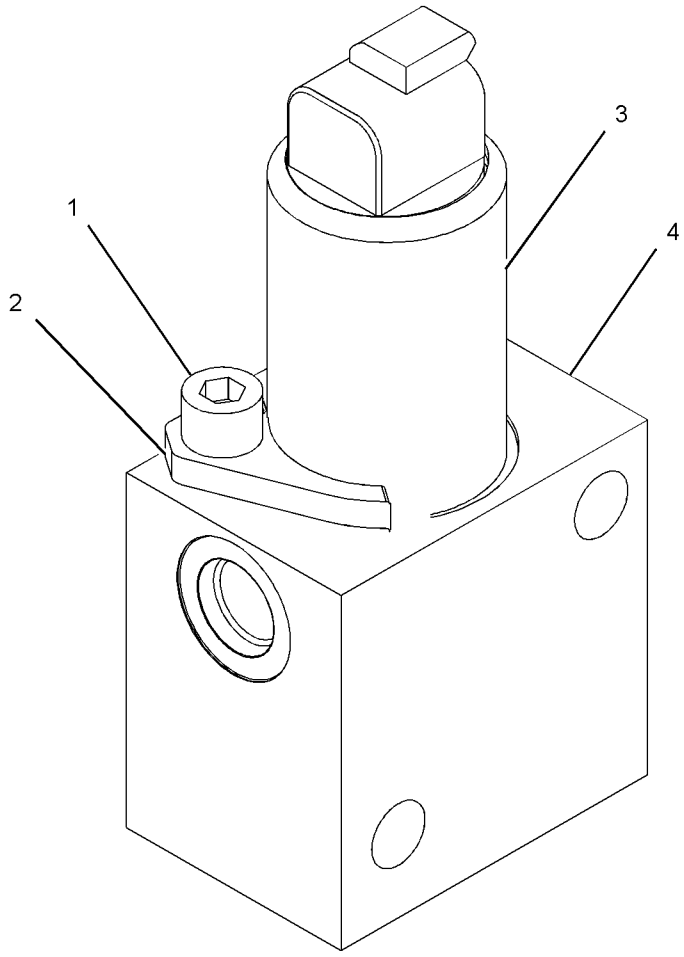

GRAPHIC #1 **<END>** g01109363

244-3114 VALVE GP-MODULATING

S/N: CZM1-UP

24-VOLT

PART OF 253-8425 CONTROL GP-TRANSMISSION HYD

SMCS-3139 **i02288028**

NOTE	REF NO	GRAPHIC REF	PART NUMBER	QTY	PART NAME 1 2 3 4 5 6 (PRODUCT LEVEL)	SEE PAGE
	1	1	**6V-3965**	1	FITTING-COUPLER	
	2	1	**145-1144**	1	COIL AS	
	3	1	**3J-1907**	1	SEAL-O-RING	
	4	1	**164-2108**	1	WASHER (13.03X25.4X2.38-MM THK)	
	5	1	**167-9524**	1	NUT-SELF-LOCKING (1/2-28-THD)	

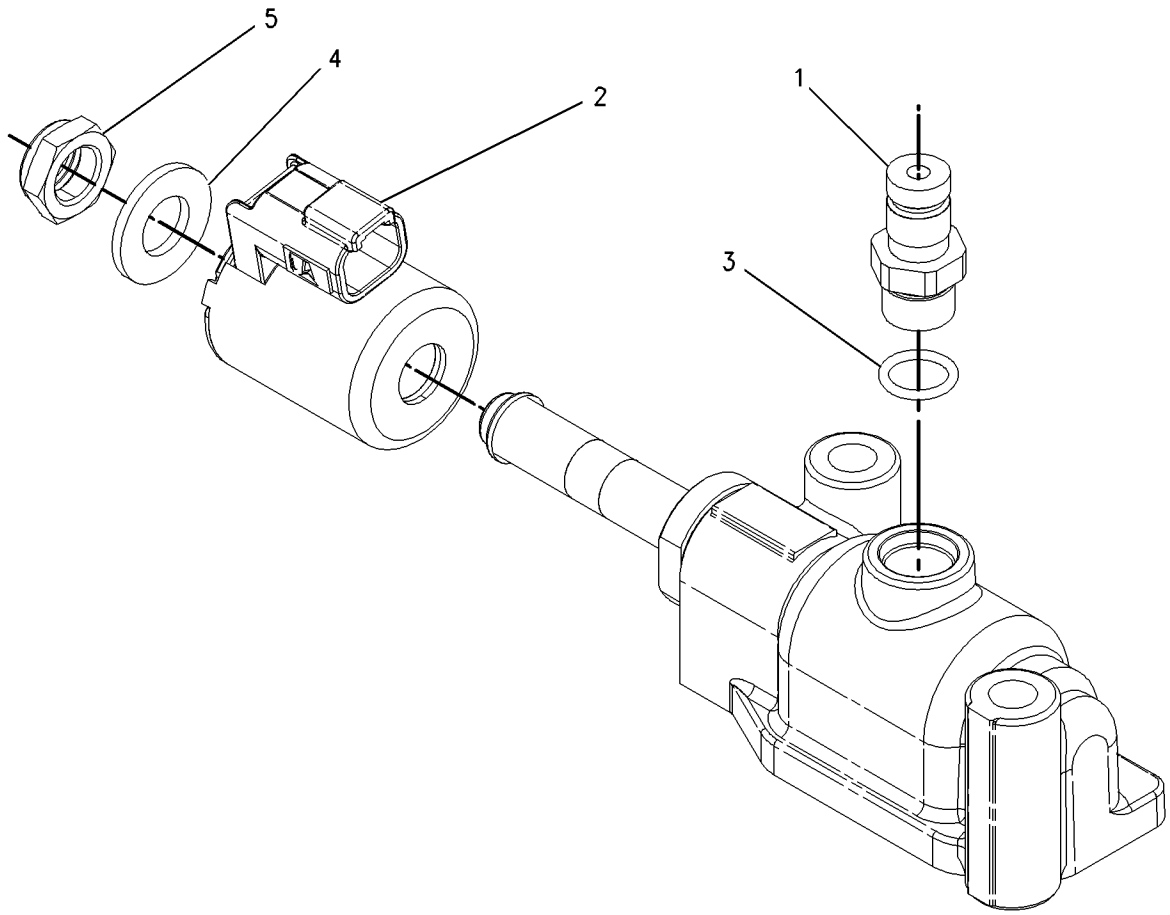

GRAPHIC #1 **<END>** g00919065

273-5510 VALVE GP-PUMP CONTROL–
PRESSURE, FLOW COMPENSATOR
S/N: B9D1-UP
PART OF 246-4490 PUMP GP-PISTON
FOR USE WITH ALL WHEEL DRIVE ARRANGEMENT

SMCS-5455 **i02785459**

NOTE	REF NO	GRAPHIC REF	PART NUMBER	QTY	PART NAME 1 2 3 4 5 6 (PRODUCT LEVEL)	SEE PAGE
	1	1	**273-5511**	2	ORIFICE	
	2	1	**8U-3875**	2	PLUG	
	3	1	**8T-9525**	1	SEAL-O-RING	
	4	1	**8U-0599**	8	SEAL-O-RING	
M	5	1	**096-0001**	2	BOLT-SOCKET HEAD (M8X1.25X40-MM)	
M	6	1	**171-2039**	2	BOLT-SOCKET HEAD (M8X1.25X30-MM)	
	7	1	**266-7599**	2	SOLENOID	
	8	1	**219-3016**	2	SEAL-O-RING	
	9	1	**222-9321**	1	SPACER	
	10	1	**222-9320**	4	DOWEL	
M	11	1	**231-3627**	2	BOLT-SOCKET HEAD (M8X1.25X25-MM)	
	12	1	**222-9322**	1	WASHER (12X18X0.1-MM THK)	
	14	1	**222-9324**	1	RING-RETAINING	

M-METRIC PART

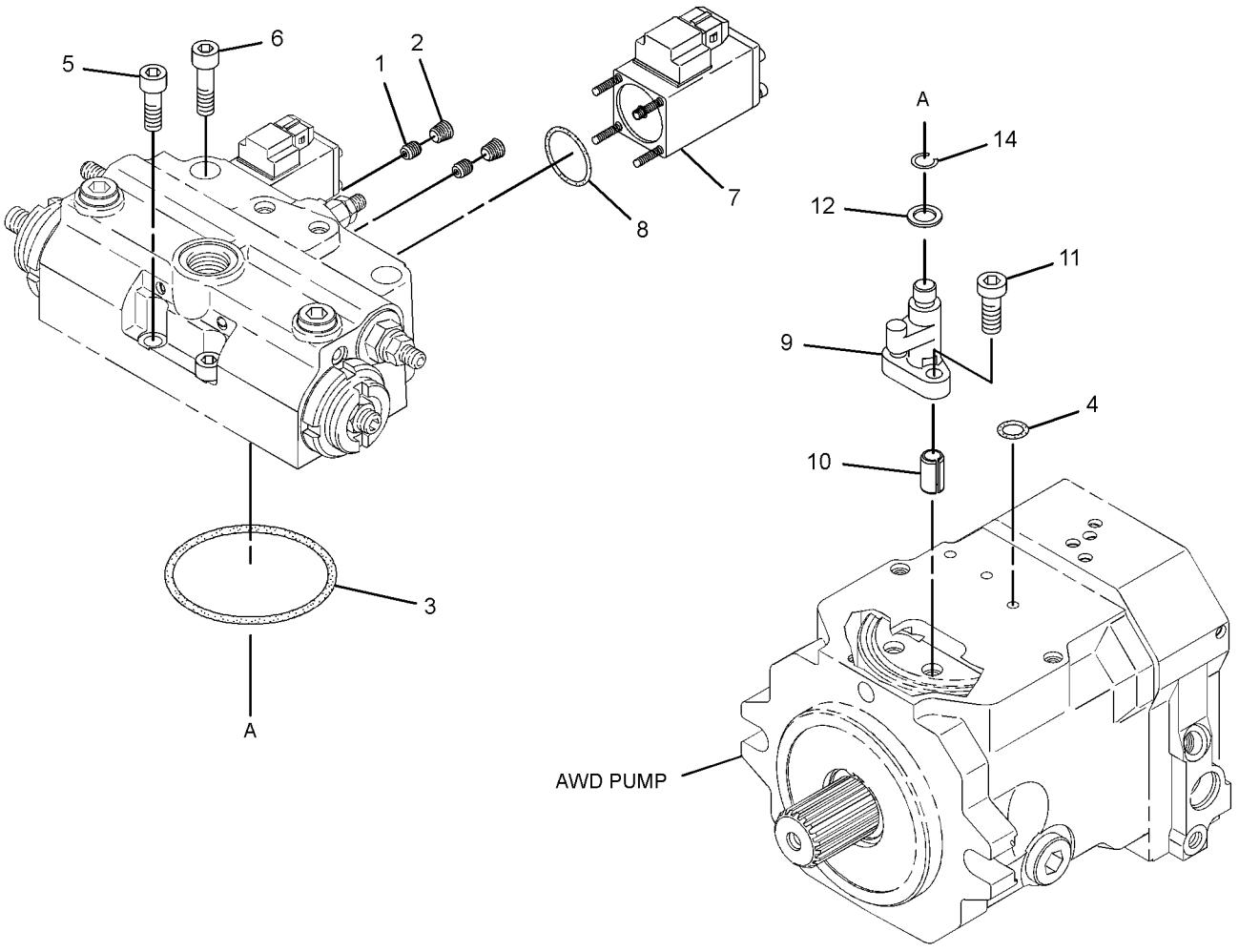

GRAPHIC #1 **<END>** g01350411

235-3530 VALVE GP-RELIEF—TRANSMISSION

S/N: CZM1-UP

PART OF 253-8425 CONTROL GP-TRANSMISSION HYD

SMCS-3133 **i02775119**

NOTE	REF NO	GRAPHIC REF	PART NUMBER	QTY	PART NAME 1 2 3 4 5 6 (PRODUCT LEVEL)	SEE PAGE
	1	1	**2S-4663**	1	SEAL-O-RING	
	2	1	**2S-5835**	1	PISTON-LOAD	
	3	1	**4M-5905**	1	SCREW-ADJUSTMENT (5/16-18X1-IN)	
	4	1	**6V-0852**	1	CAP-DUST	
	6	1	**8E-1143**	1	SLUG	
	7	1	**8M-5253**	1	SEAL-O-RING	
	8	1	**9M-2110**	1	COVER-ADJUSTMENT	
	9	1	**115-4550**	1	COVER	
	10	1	**172-7966**	1	BODY	
	11	1	**172-7968**	1	SPOOL AS	
		1	**3D-8317**	1	RING-RETAINING	
		1	**4B-9880**	1	BALL (0.31-IN DIA)	
		1	**4M-2381**	1	SPRING	
		1	**9U-8669**	1	RETAINER	
	12	1	**174-7449**	1	SPRING	
	13	1	*241-6218*	1	PLUG AS	
		1	**241-6205**	1	PLUG	
		1	**3K-0360**	1	SEAL-O-RING	
	15	1	*162-0177*	1	PLUG AS	
		1	**9S-8004**	1	PLUG-O-RING	
		1	**3J-1907**	1	SEAL-O-RING	
	16	1	*164-5567*	1	FITTING AS (QUICK DISCONNECT, MALE)	
		1	**3J-1907**	1	SEAL-O-RING	
		1	**6V-3965**	1	FITTING-COUPLER	
	17	1	*165-4931*	1	ELBOW AS	
		1	**6V-8077**	1	ELBOW	
		1	**3J-1907**	1	SEAL-O-RING	
M	18	1	**6V-3940**	2	BOLT (M8X1.25X25-MM)	
M	19	1	**6V-5218**	2	BOLT (M8X1.25X35-MM)	
	20	1	**9M-1974**	2	WASHER-HARD (8.8X16X2-MM THK)	

M-METRIC PART

235-3530 **VALVE GP-RELIEF** *(contd.)* **i02775119**

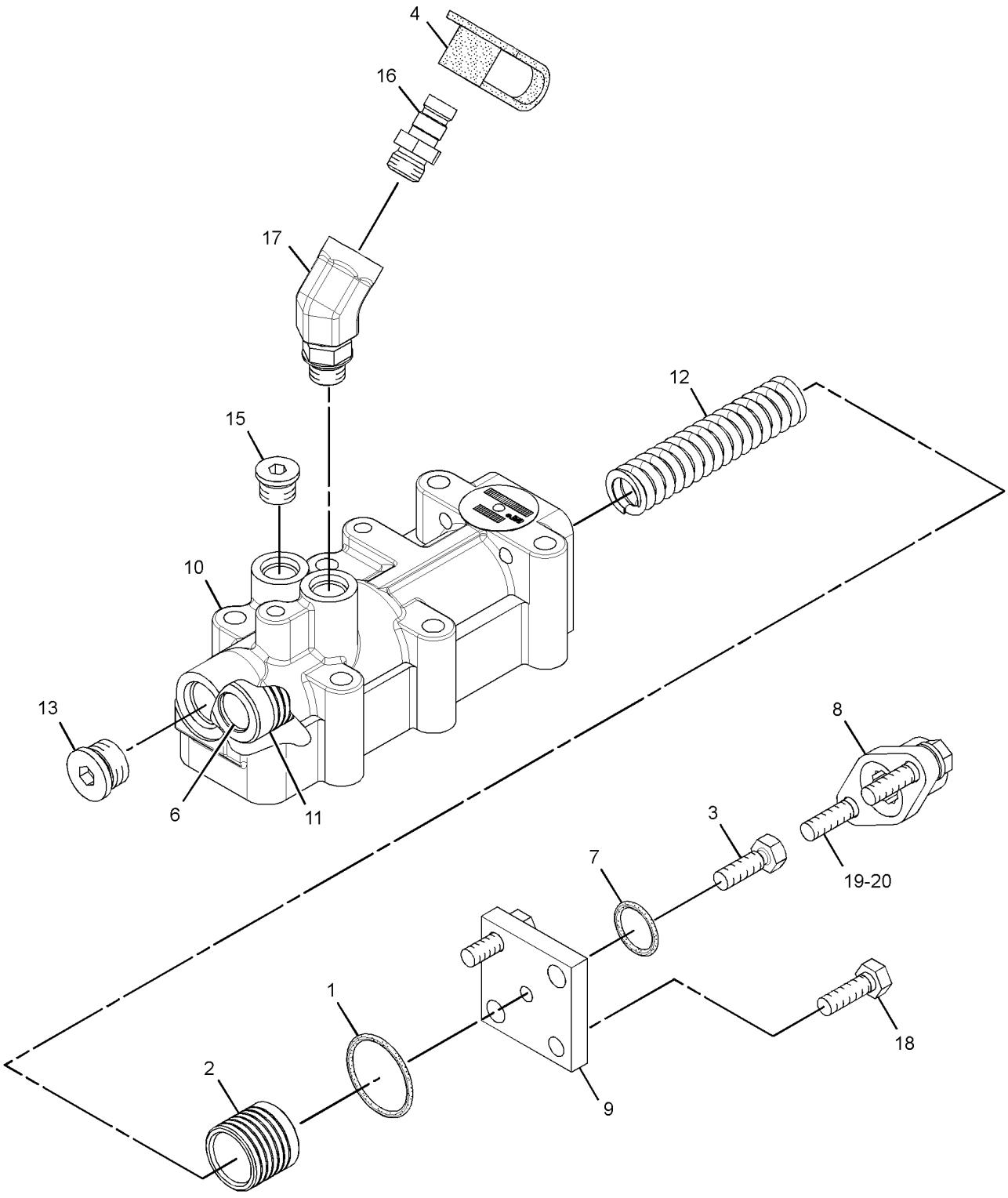

GRAPHIC #1 **<END>** g01347076

249-7841 WHEEL & TIRE AR

S/N: B9D1-UP

SMCS-4200 **i02783133**

NOTE	PART NUMBER	QTY	PART NAME 1 2 3 4 5 6 (PRODUCT LEVEL)	SEE PAGE
Y	*252-0774*	4	WHEEL & TIRE AR	408
Y	*250-9691*	2	WHEEL & TIRE AR	401

Y-SEPARATE ILLUSTRATION

<END>

249-7842 WHEEL & TIRE AR

S/N: B9D1-UP

SMCS-4200 **i02783172**

NOTE	PART NUMBER	QTY	PART NAME 1 2 3 4 5 6 (PRODUCT LEVEL)	SEE PAGE
Y	*252-0766*	4	WHEEL & TIRE GP	425
Y	*250-9779*	2	WHEEL & TIRE GP	416

Y-SEPARATE ILLUSTRATION

<END>

250-9691 WHEEL & TIRE AR

S/N: B9D1-UP

PART OF 249-7841 WHEEL & TIRE AR

SMCS-4200 **i02783140**

NOTE	PART NUMBER	QTY	PART NAME 1 2 3 4 5 6 (PRODUCT LEVEL)	SEE PAGE
Y	*252-0113*	1	WHEEL GP	446
	105-3249	1	TIRE (17.5-R25)	

Y-SEPARATE ILLUSTRATION

<END>

252-0667 WHEEL & TIRE AR

S/N: B9D1-UP

SMCS-4200 **i02781912**

NOTE	PART NUMBER	QTY	PART NAME 1 2 3 4 5 6 (PRODUCT LEVEL)	SEE PAGE
Y	*252-0666*	6	WHEEL & TIRE GP	417

Y-SEPARATE ILLUSTRATION

<END>

252-0675 WHEEL & TIRE AR

S/N: B9D1-UP

SMCS-4200 **i02782135**

NOTE	PART NUMBER	QTY	PART NAME 1 2 3 4 5 6 (PRODUCT LEVEL)	SEE PAGE
Y	*252-0674*	6	WHEEL & TIRE GP	417

Y-SEPARATE ILLUSTRATION

<END>

252-0677 WHEEL & TIRE AR

S/N: B9D1-UP

FOR USE WITH ALL WHEEL DRIVE ARRANGEMENT

SMCS-4200 **i02783316**

NOTE	PART NUMBER	QTY	PART NAME 1 2 3 4 5 6 (PRODUCT LEVEL)	SEE PAGE
Y	*252-0674*	4	WHEEL & TIRE GP	417
Y	*252-0676*	2	WHEEL & TIRE GP	417

Y-SEPARATE ILLUSTRATION

<END>

252-0679 WHEEL & TIRE AR

S/N: B9D1-UP

SMCS-4200 **i02783324**

NOTE	PART NUMBER	QTY	PART NAME 1 2 3 4 5 6 (PRODUCT LEVEL)	SEE PAGE
Y	*252-0678*	6	WHEEL & TIRE GP	417

Y-SEPARATE ILLUSTRATION

<END>

252-0681 WHEEL & TIRE AR

S/N: B9D1-UP

FOR USE WITH ALL WHEEL DRIVE ARRANGEMENT

SMCS-4200 **i02783360**

NOTE	PART NUMBER	QTY	PART NAME 1 2 3 4 5 6 (PRODUCT LEVEL)	SEE PAGE
Y	*252-0678*	4	WHEEL & TIRE GP	417
Y	*252-0680*	2	WHEEL & TIRE GP	418

Y-SEPARATE ILLUSTRATION

<END>

252-0683 WHEEL & TIRE AR

S/N: B9D1-UP

FOR USE WITH ALL WHEEL DRIVE ARRANGEMENT

SMCS-4200 **i02783495**

NOTE	PART NUMBER	QTY	PART NAME 1 2 3 4 5 6 (PRODUCT LEVEL)	SEE PAGE
Y	*252-0682*	6	WHEEL & TIRE GP	418

Y-SEPARATE ILLUSTRATION

<END>

252-0685 WHEEL & TIRE AR

S/N: B9D1-UP

SMCS-4200 **i02783723**

NOTE	PART NUMBER	QTY	PART NAME 1 2 3 4 5 6 (PRODUCT LEVEL)	SEE PAGE
Y	*252-0682*	4	WHEEL & TIRE GP	418
Y	*252-0684*	2	WHEEL & TIRE GP	418

Y-SEPARATE ILLUSTRATION

<END>

252-0687 WHEEL & TIRE AR

S/N: B9D1-UP

SMCS-4200 **i02783658**

NOTE	PART NUMBER	QTY	PART NAME 1 2 3 4 5 6 (PRODUCT LEVEL)	SEE PAGE
Y	*252-0686*	6	WHEEL & TIRE GP	418

Y-SEPARATE ILLUSTRATION

<END>

252-0690 WHEEL & TIRE AR

S/N: B9D1-UP

FOR USE WITH ALL WHEEL DRIVE ARRANGEMENT

SMCS-4200 **i02783654**

NOTE	PART NUMBER	QTY	PART NAME 1 2 3 4 5 6 (PRODUCT LEVEL)	SEE PAGE
Y	*252-0686*	4	WHEEL & TIRE GP	418
Y	*252-0688*	2	WHEEL & TIRE GP	419

Y-SEPARATE ILLUSTRATION

<END>

252-0693 WHEEL & TIRE AR

S/N: B9D1-UP

SMCS-4200 **i02783646**

NOTE	PART NUMBER	QTY	PART NAME 1 2 3 4 5 6 (PRODUCT LEVEL)	SEE PAGE
Y	*252-0692*	6	WHEEL & TIRE GP	419

Y-SEPARATE ILLUSTRATION

<END>

252-0695 WHEEL & TIRE AR

S/N: B9D1-UP

FOR USE WITH ALL WHEEL DRIVE ARRANGEMENT

SMCS-4200 **i02783643**

NOTE	PART NUMBER	QTY	PART NAME 1 2 3 4 5 6 (PRODUCT LEVEL)	SEE PAGE
Y	*252-0692*	4	WHEEL & TIRE GP	419
Y	*252-0694*	2	WHEEL & TIRE GP	419

Y-SEPARATE ILLUSTRATION

<END>

252-0697 WHEEL & TIRE AR

S/N: B9D1-UP

SMCS-4200 **i02783638**

NOTE	PART NUMBER	QTY	PART NAME 1 2 3 4 5 6 (PRODUCT LEVEL)	SEE PAGE
Y	*252-0696*	6	WHEEL & TIRE GP	419

Y-SEPARATE ILLUSTRATION

<END>

252-0699 WHEEL & TIRE AR

S/N: B9D1-UP

FOR USE WITH ALL WHEEL DRIVE ARRANGEMENT

SMCS-4200 **i02784131**

NOTE	PART NUMBER	QTY	PART NAME 1 2 3 4 5 6 (PRODUCT LEVEL)	SEE PAGE
Y	*252-0696*	4	WHEEL & TIRE GP	419
Y	*252-0698*	2	WHEEL & TIRE GP	420

Y-SEPARATE ILLUSTRATION

<END>

252-0701 WHEEL & TIRE AR

S/N: B9D1-UP

SMCS-4200 **i02784190**

NOTE	PART NUMBER	QTY	PART NAME 1 2 3 4 5 6 (PRODUCT LEVEL)	SEE PAGE
Y	*252-0700*	6	WHEEL & TIRE GP	420

Y-SEPARATE ILLUSTRATION

<END>

252-0708 WHEEL & TIRE AR

S/N: B9D1-UP

SMCS-4200 **i02784458**

NOTE	PART NUMBER	QTY	PART NAME 1 2 3 4 5 6 (PRODUCT LEVEL)	SEE PAGE
Y	*252-0707*	6	WHEEL & TIRE GP	420

Y-SEPARATE ILLUSTRATION

<END>

252-0710 WHEEL & TIRE AR

S/N: B9D1-UP

FOR USE WITH ALL WHEEL DRIVE ARRANGEMENT

SMCS-4200 **i02784447**

NOTE	PART NUMBER	QTY	PART NAME 1 2 3 4 5 6 (PRODUCT LEVEL)	SEE PAGE
Y	*252-0707*	4	WHEEL & TIRE GP	420
Y	*252-0709*	2	WHEEL & TIRE GP	420

Y-SEPARATE ILLUSTRATION

<END>

252-0714 WHEEL & TIRE AR

S/N: B9D1-UP

SMCS-4200 **i02784621**

NOTE	PART NUMBER	QTY	PART NAME 1 2 3 4 5 6 (PRODUCT LEVEL)	SEE PAGE
Y	*252-0713*	6	WHEEL & TIRE GP	421

Y-SEPARATE ILLUSTRATION

<END>

252-0716 WHEEL & TIRE AR

S/N: B9D1-UP

SMCS-4200 **i02784637**

NOTE	PART NUMBER	QTY	PART NAME 1 2 3 4 5 6 (PRODUCT LEVEL)	SEE PAGE
Y	*252-0713*	4	WHEEL & TIRE GP	421
Y	*252-0715*	2	WHEEL & TIRE GP	421

Y-SEPARATE ILLUSTRATION

<END>

252-0720 WHEEL & TIRE AR

S/N: B9D1-UP

SMCS-4200 **i02784648**

NOTE	PART NUMBER	QTY	PART NAME 1 2 3 4 5 6 (PRODUCT LEVEL)	SEE PAGE
Y	*252-0719*	6	WHEEL & TIRE GP	421

Y-SEPARATE ILLUSTRATION

<END>

252-0722 WHEEL & TIRE AR

S/N: B9D1-UP

FOR USE WITH ALL WHEEL DRIVE ARRANGEMENT

SMCS-4200 **i02784669**

NOTE	PART NUMBER	QTY	PART NAME 1 2 3 4 5 6 (PRODUCT LEVEL)	SEE PAGE
Y	*252-0719*	4	WHEEL & TIRE GP	421
Y	*252-0721*	2	WHEEL & TIRE GP	421

Y-SEPARATE ILLUSTRATION

<END>

252-0731 WHEEL & TIRE AR

S/N: B9D1-UP

SMCS-4200 **i02784689**

NOTE	PART NUMBER	QTY	PART NAME 1 2 3 4 5 6 (PRODUCT LEVEL)	SEE PAGE
Y	*252-0730*	6	WHEEL & TIRE GP	422

Y-SEPARATE ILLUSTRATION

<END>

252-0735 WHEEL & TIRE AR

S/N: B9D1-UP

SMCS-4200 **i02784890**

NOTE	PART NUMBER	QTY	PART NAME 1 2 3 4 5 6 (PRODUCT LEVEL)	SEE PAGE
Y	*252-0734*	6	WHEEL & TIRE GP	423

Y-SEPARATE ILLUSTRATION

<END>

252-0747 WHEEL & TIRE AR

S/N: B9D1-UP

FOR USE WITH ALL WHEEL DRIVE ARRANGEMENT

SMCS-4200 **i02784888**

NOTE	PART NUMBER	QTY	PART NAME 1 2 3 4 5 6 (PRODUCT LEVEL)	SEE PAGE
Y	*252-0734*	4	WHEEL & TIRE GP	423
Y	*252-0746*	2	WHEEL & TIRE GP	423

Y-SEPARATE ILLUSTRATION

<END>

252-0751 WHEEL & TIRE AR

S/N: B9D1-UP

SMCS-4200 **i02784885**

NOTE	PART NUMBER	QTY	PART NAME 1 2 3 4 5 6 (PRODUCT LEVEL)	SEE PAGE
Y	*252-0748*	4	WHEEL & TIRE GP	423
Y	*252-0750*	2	WHEEL & TIRE GP	423

Y-SEPARATE ILLUSTRATION

<END>

252-0753 WHEEL & TIRE AR

S/N: B9D1-UP

SMCS-4200 **i02784880**

NOTE	PART NUMBER	QTY	PART NAME 1 2 3 4 5 6 (PRODUCT LEVEL)	SEE PAGE
Y	*252-0752*	6	WHEEL & TIRE GP	424

Y-SEPARATE ILLUSTRATION

<END>

252-0755 WHEEL & TIRE AR

S/N: B9D1-UP

FOR USE WITH ALL WHEEL DRIVE ARRANGEMENT

SMCS-4200 **i02784871**

NOTE	PART NUMBER	QTY	PART NAME 1 2 3 4 5 6 (PRODUCT LEVEL)	SEE PAGE
Y	*252-0752*	4	WHEEL & TIRE GP	424
Y	*252-0754*	2	WHEEL & TIRE GP	424

Y-SEPARATE ILLUSTRATION

<END>

252-0758 WHEEL & TIRE AR

S/N: B9D1-UP

SMCS-4200 **i02784865**

NOTE	PART NUMBER	QTY	PART NAME 1 2 3 4 5 6 (PRODUCT LEVEL)	SEE PAGE
Y	*252-0757*	6	WHEEL & TIRE GP	424

Y-SEPARATE ILLUSTRATION

<END>

252-0761 WHEEL & TIRE AR

S/N: B9D1-UP

FOR USE WITH ALL WHEEL DRIVE ARRANGEMENT

SMCS-4200 **i02784855**

NOTE	PART NUMBER	QTY	PART NAME 1 2 3 4 5 6 (PRODUCT LEVEL)	SEE PAGE
Y	*252-0757*	4	WHEEL & TIRE GP	424
Y	*252-0760*	2	WHEEL & TIRE GP	424

Y-SEPARATE ILLUSTRATION

<END>

252-0763 WHEEL & TIRE AR

S/N: B9D1-UP

SMCS-4200 **i02784852**

NOTE	PART NUMBER	QTY	PART NAME 1 2 3 4 5 6 (PRODUCT LEVEL)	SEE PAGE
Y	*252-0762*	6	WHEEL & TIRE GP	425

Y-SEPARATE ILLUSTRATION

<END>

252-0765 WHEEL & TIRE AR

S/N: B9D1-UP

FOR USE WITH ALL WHEEL DRIVE ARRANGEMENT

SMCS-4200 **i02784846**

NOTE	PART NUMBER	QTY	PART NAME 1 2 3 4 5 6 (PRODUCT LEVEL)	SEE PAGE
Y	*252-0762*	4	WHEEL & TIRE GP	425
Y	*252-0764*	2	WHEEL & TIRE GP	425

Y-SEPARATE ILLUSTRATION

<END>

252-0767 WHEEL & TIRE AR

S/N: B9D1-UP

SMCS-4200 **i02784845**

NOTE	PART NUMBER	QTY	PART NAME 1 2 3 4 5 6 (PRODUCT LEVEL)	SEE PAGE
Y	*252-0766*	6	WHEEL & TIRE GP	425

Y-SEPARATE ILLUSTRATION

<END>

252-0771 WHEEL & TIRE AR

S/N: B9D1-UP

SMCS-4200 **i02785042**

NOTE	PART NUMBER	QTY	PART NAME 1 2 3 4 5 6 (PRODUCT LEVEL)	SEE PAGE
Y	*252-0770*	6	WHEEL & TIRE GP	425

Y-SEPARATE ILLUSTRATION

<END>

252-0773 WHEEL & TIRE AR

S/N: B9D1-UP

FOR USE WITH ALL WHEEL DRIVE ARRANGEMENT

SMCS-4200 **i02785048**

NOTE	PART NUMBER	QTY	PART NAME 1 2 3 4 5 6 (PRODUCT LEVEL)	SEE PAGE
Y	*252-0770*	4	WHEEL & TIRE GP	425
Y	*252-0772*	2	WHEEL & TIRE GP	426

Y-SEPARATE ILLUSTRATION

<END>

252-0774 WHEEL & TIRE AR

S/N: B9D1-UP

PART OF 249-7841, 252-0775 WHEEL & TIRE AR

SMCS-4200 **i02783145**

NOTE	PART NUMBER	QTY	PART NAME 1 2 3 4 5 6 (PRODUCT LEVEL)	SEE PAGE
Y	*252-0112*	1	WHEEL GP	446
	105-3249	1	TIRE (17.5-R25)	

Y-SEPARATE ILLUSTRATION

<END>

252-0775 WHEEL & TIRE AR

S/N: B9D1-UP

SMCS-4200 **i02785051**

NOTE	PART NUMBER	QTY	PART NAME 1 2 3 4 5 6 (PRODUCT LEVEL)	SEE PAGE
Y	*252-0774*	6	WHEEL & TIRE AR	408

Y-SEPARATE ILLUSTRATION

<END>

252-0777 WHEEL & TIRE AR

S/N: B9D1-UP

SMCS-4200 **i02785057**

NOTE	PART NUMBER	QTY	PART NAME 1 2 3 4 5 6 (PRODUCT LEVEL)	SEE PAGE
Y	*252-0776*	6	WHEEL & TIRE GP	426

Y-SEPARATE ILLUSTRATION

<END>

252-0779 WHEEL & TIRE AR

S/N: B9D1-UP

FOR USE WITH ALL WHEEL DRIVE ARRANGEMENT

SMCS-4200 **i02785078**

NOTE	PART NUMBER	QTY	PART NAME 1 2 3 4 5 6 (PRODUCT LEVEL)	SEE PAGE
Y	*252-0776*	4	WHEEL & TIRE GP	426
Y	*252-0778*	2	WHEEL & TIRE GP	426

Y-SEPARATE ILLUSTRATION

<END>

252-0792 WHEEL & TIRE AR

S/N: B9D1-UP

SMCS-4200 **i02785094**

NOTE	PART NUMBER	QTY	PART NAME 1 2 3 4 5 6 (PRODUCT LEVEL)	SEE PAGE
Y	*252-0791*	6	WHEEL & TIRE GP	426
Y-SEPARATE ILLUSTRATION				

<END>

254-7902 WHEEL & TIRE AR

S/N: B9D1-UP

SMCS-4200 **i02787508**

NOTE	PART NUMBER	QTY	PART NAME 1 2 3 4 5 6 (PRODUCT LEVEL)	SEE PAGE
Y	*254-7888*	6	WHEEL & TIRE GP	427
Y-SEPARATE ILLUSTRATION				

<END>

254-7903 WHEEL & TIRE AR

S/N: B9D1-UP

SMCS-4200 **i02787532**

NOTE	PART NUMBER	QTY	PART NAME 1 2 3 4 5 6 (PRODUCT LEVEL)	SEE PAGE
Y	*254-7889*	6	WHEEL & TIRE GP	427
Y-SEPARATE ILLUSTRATION				

<END>

254-7904 WHEEL & TIRE AR

S/N: B9D1-UP

SMCS-4200 **i02787571**

NOTE	PART NUMBER	QTY	PART NAME 1 2 3 4 5 6 (PRODUCT LEVEL)	SEE PAGE
Y	*254-7890*	6	WHEEL & TIRE GP	427
Y-SEPARATE ILLUSTRATION				

<END>

254-7905 WHEEL & TIRE AR

S/N: B9D1-UP

SMCS-4200 **i02787569**

NOTE	PART NUMBER	QTY	PART NAME 1 2 3 4 5 6 (PRODUCT LEVEL)	SEE PAGE
Y	*254-7891*	6	WHEEL & TIRE GP	428
Y-SEPARATE ILLUSTRATION				

<END>

254-7906 WHEEL & TIRE AR

S/N: B9D1-UP

SMCS-4200 **i02787568**

NOTE	PART NUMBER	QTY	PART NAME 1 2 3 4 5 6 (PRODUCT LEVEL)	SEE PAGE
Y	*254-7892*	6	WHEEL & TIRE GP	428

Y-SEPARATE ILLUSTRATION

<END>

254-7907 WHEEL & TIRE AR

S/N: B9D1-UP

SMCS-4200 **i02787566**

NOTE	PART NUMBER	QTY	PART NAME 1 2 3 4 5 6 (PRODUCT LEVEL)	SEE PAGE
Y	*254-7893*	6	WHEEL & TIRE GP	428

Y-SEPARATE ILLUSTRATION

<END>

254-7908 WHEEL & TIRE AR

S/N: B9D1-UP

SMCS-4200 **i02787574**

NOTE	PART NUMBER	QTY	PART NAME 1 2 3 4 5 6 (PRODUCT LEVEL)	SEE PAGE
Y	*254-7894*	6	WHEEL & TIRE GP	428

Y-SEPARATE ILLUSTRATION

<END>

254-7957 WHEEL & TIRE AR

S/N: B9D1-UP

SMCS-4200 **i02787655**

NOTE	PART NUMBER	QTY	PART NAME 1 2 3 4 5 6 (PRODUCT LEVEL)	SEE PAGE
Y	*254-7941*	6	WHEEL & TIRE GP	429

Y-SEPARATE ILLUSTRATION

<END>

254-7958 WHEEL & TIRE AR

S/N: B9D1-UP

SMCS-4200 **i02787653**

NOTE	PART NUMBER	QTY	PART NAME 1 2 3 4 5 6 (PRODUCT LEVEL)	SEE PAGE
Y	*254-7942*	6	WHEEL & TIRE GP	429

Y-SEPARATE ILLUSTRATION

<END>

254-7960 WHEEL & TIRE AR

S/N: B9D1-UP

SMCS-4200 **i02787649**

NOTE	PART NUMBER	QTY	PART NAME 1 2 3 4 5 6 (PRODUCT LEVEL)	SEE PAGE
Y	*254-7944*	6	WHEEL & TIRE GP	429

Y-SEPARATE ILLUSTRATION

<END>

254-7961 WHEEL & TIRE AR

S/N: B9D1-UP

SMCS-4200 **i02787652**

NOTE	PART NUMBER	QTY	PART NAME 1 2 3 4 5 6 (PRODUCT LEVEL)	SEE PAGE
Y	*254-7945*	6	WHEEL & TIRE GP	429

Y-SEPARATE ILLUSTRATION

<END>

254-7964 WHEEL & TIRE AR

S/N: B9D1-UP

SMCS-4200 **i02787646**

NOTE	PART NUMBER	QTY	PART NAME 1 2 3 4 5 6 (PRODUCT LEVEL)	SEE PAGE
Y	*254-7948*	6	WHEEL & TIRE GP	430

Y-SEPARATE ILLUSTRATION

<END>

254-7965 WHEEL & TIRE AR

S/N: B9D1-UP

SMCS-4200 **i02787651**

NOTE	PART NUMBER	QTY	PART NAME 1 2 3 4 5 6 (PRODUCT LEVEL)	SEE PAGE
Y	*254-7949*	6	WHEEL & TIRE GP	430

Y-SEPARATE ILLUSTRATION

<END>

254-7967 WHEEL & TIRE AR

S/N: B9D1-UP

SMCS-4200 **i02787644**

NOTE	PART NUMBER	QTY	PART NAME 1 2 3 4 5 6 (PRODUCT LEVEL)	SEE PAGE
Y	*254-7951*	6	WHEEL & TIRE GP	430

Y-SEPARATE ILLUSTRATION

<END>

254-7968 WHEEL & TIRE AR

S/N: B9D1-UP

SMCS-4200 **i02787707**

NOTE	PART NUMBER	QTY	PART NAME 1 2 3 4 5 6 (PRODUCT LEVEL)	SEE PAGE
Y	*254-7952*	6	WHEEL & TIRE GP	430
Y-SEPARATE ILLUSTRATION				

<END>

254-7969 WHEEL & TIRE AR

S/N: B9D1-UP

SMCS-4200 **i02787643**

NOTE	PART NUMBER	QTY	PART NAME 1 2 3 4 5 6 (PRODUCT LEVEL)	SEE PAGE
Y	*254-7953*	6	WHEEL & TIRE GP	431
Y-SEPARATE ILLUSTRATION				

<END>

254-7970 WHEEL & TIRE AR

S/N: B9D1-UP

SMCS-4200 **i02787728**

NOTE	PART NUMBER	QTY	PART NAME 1 2 3 4 5 6 (PRODUCT LEVEL)	SEE PAGE
Y	*254-7954*	6	WHEEL & TIRE GP	431
Y-SEPARATE ILLUSTRATION				

<END>

254-7971 WHEEL & TIRE AR

S/N: B9D1-UP

SMCS-4200 **i02787730**

NOTE	PART NUMBER	QTY	PART NAME 1 2 3 4 5 6 (PRODUCT LEVEL)	SEE PAGE
Y	*254-7955*	6	WHEEL & TIRE GP	431
Y-SEPARATE ILLUSTRATION				

<END>

254-7972 WHEEL & TIRE AR

S/N: B9D1-UP

SMCS-4200 **i02787731**

NOTE	PART NUMBER	QTY	PART NAME 1 2 3 4 5 6 (PRODUCT LEVEL)	SEE PAGE
Y	*254-7956*	6	WHEEL & TIRE GP	431
Y-SEPARATE ILLUSTRATION				

<END>

305-6159 WHEEL & TIRE AR

S/N: B9D1-UP

SMCS-4200 **i02788599**

NOTE	PART NUMBER	QTY	PART NAME 1 2 3 4 5 6 (PRODUCT LEVEL)	SEE PAGE
Y	*305-6155*	6	WHEEL & TIRE GP	432

Y-SEPARATE ILLUSTRATION

<END>

305-6160 WHEEL & TIRE AR

S/N: B9D1-UP

SMCS-4200 **i02787755**

NOTE	PART NUMBER	QTY	PART NAME 1 2 3 4 5 6 (PRODUCT LEVEL)	SEE PAGE
Y	*305-6155*	4	WHEEL & TIRE GP	432
Y	*305-6161*	2	WHEEL & TIRE GP	432

Y-SEPARATE ILLUSTRATION

<END>

305-6233 WHEEL & TIRE AR

S/N: B9D1-UP

SMCS-4200 **i02787757**

NOTE	PART NUMBER	QTY	PART NAME 1 2 3 4 5 6 (PRODUCT LEVEL)	SEE PAGE
Y	*305-6227*	6	WHEEL & TIRE GP	432

Y-SEPARATE ILLUSTRATION

<END>

305-6236 WHEEL & TIRE AR

S/N: B9D1-UP

SMCS-4200 **i02787756**

NOTE	PART NUMBER	QTY	PART NAME 1 2 3 4 5 6 (PRODUCT LEVEL)	SEE PAGE
Y	*305-6230*	6	WHEEL & TIRE GP	432

Y-SEPARATE ILLUSTRATION

<END>

310-7320 WHEEL & TIRE AR

S/N: B9D1-UP

SMCS-4200 **i02788051**

NOTE	PART NUMBER	QTY	PART NAME 1 2 3 4 5 6 (PRODUCT LEVEL)	SEE PAGE
Y	*310-7301*	6	WHEEL & TIRE GP	433

Y-SEPARATE ILLUSTRATION

<END>

310-7323 WHEEL & TIRE AR

S/N: B9D1-UP

SMCS-4200 **i02788054**

NOTE	PART NUMBER	QTY	PART NAME 1 2 3 4 5 6 (PRODUCT LEVEL)	SEE PAGE
Y	*310-7305*	6	WHEEL & TIRE GP	433

Y-SEPARATE ILLUSTRATION

<END>

310-7324 WHEEL & TIRE AR

S/N: B9D1-UP

SMCS-4200 **i02788056**

NOTE	PART NUMBER	QTY	PART NAME 1 2 3 4 5 6 (PRODUCT LEVEL)	SEE PAGE
Y	*310-7306*	6	WHEEL & TIRE GP	433

Y-SEPARATE ILLUSTRATION

<END>

310-7325 WHEEL & TIRE AR

S/N: B9D1-UP

SMCS-4200 **i02788096**

NOTE	PART NUMBER	QTY	PART NAME 1 2 3 4 5 6 (PRODUCT LEVEL)	SEE PAGE
Y	*310-7307*	6	WHEEL & TIRE GP	433

Y-SEPARATE ILLUSTRATION

<END>

310-7326 WHEEL & TIRE AR

S/N: B9D1-UP

SMCS-4200 **i02788070**

NOTE	PART NUMBER	QTY	PART NAME 1 2 3 4 5 6 (PRODUCT LEVEL)	SEE PAGE
Y	*310-7308*	6	WHEEL & TIRE GP	434

Y-SEPARATE ILLUSTRATION

<END>

310-7327 WHEEL & TIRE AR

S/N: B9D1-UP

FOR USE WITH ALL WHEEL DRIVE ARRANGEMENT

SMCS-4200 **i02788085**

NOTE	PART NUMBER	QTY	PART NAME 1 2 3 4 5 6 (PRODUCT LEVEL)	SEE PAGE
Y	*310-7309*	6	WHEEL & TIRE GP	434

Y-SEPARATE ILLUSTRATION

<END>

310-7328 WHEEL & TIRE AR

S/N: B9D1-UP

SMCS-4200 **i02788073**

NOTE	PART NUMBER	QTY	PART NAME 1 2 3 4 5 6 (PRODUCT LEVEL)	SEE PAGE
Y	*310-7310*	6	WHEEL & TIRE GP	434

Y-SEPARATE ILLUSTRATION

<END>

310-7329 WHEEL & TIRE AR

S/N: B9D1-UP

FOR USE WITH ALL WHEEL DRIVE ARRANGEMENT

SMCS-4200 **i02788090**

NOTE	PART NUMBER	QTY	PART NAME 1 2 3 4 5 6 (PRODUCT LEVEL)	SEE PAGE
Y	*310-7311*	6	WHEEL & TIRE GP	434

Y-SEPARATE ILLUSTRATION

<END>

310-7330 WHEEL & TIRE AR

S/N: B9D1-UP

SMCS-4200 **i02788108**

NOTE	PART NUMBER	QTY	PART NAME 1 2 3 4 5 6 (PRODUCT LEVEL)	SEE PAGE
Y	*310-7312*	6	WHEEL & TIRE GP	435

Y-SEPARATE ILLUSTRATION

<END>

310-7331 WHEEL & TIRE AR

S/N: B9D1-UP

SMCS-4200 **i02788105**

NOTE	PART NUMBER	QTY	PART NAME 1 2 3 4 5 6 (PRODUCT LEVEL)	SEE PAGE
Y	*310-7313*	6	WHEEL & TIRE GP	435

Y-SEPARATE ILLUSTRATION

<END>

310-7332 WHEEL & TIRE AR

S/N: B9D1-UP

FOR USE WITH ALL WHEEL DRIVE ARRANGEMENT

SMCS-4200 **i02788103**

NOTE	PART NUMBER	QTY	PART NAME 1 2 3 4 5 6 (PRODUCT LEVEL)	SEE PAGE
Y	*310-7314*	6	WHEEL & TIRE GP	435

Y-SEPARATE ILLUSTRATION

<END>

POWER TRAIN

311-6086 WHEEL & TIRE AR

S/N: B9D1-UP

SMCS-4200 **i02788297**

NOTE	PART NUMBER	QTY	PART NAME 1 2 3 4 5 6 (PRODUCT LEVEL)	SEE PAGE
Y	*311-6078*	6	WHEEL & TIRE GP	435
Y-SEPARATE ILLUSTRATION				

<END>

311-6087 WHEEL & TIRE AR

S/N: B9D1-UP

FOR USE WITH ALL WHEEL DRIVE ARRANGEMENT

SMCS-4200 **i02788304**

NOTE	PART NUMBER	QTY	PART NAME 1 2 3 4 5 6 (PRODUCT LEVEL)	SEE PAGE
Y	*311-6079*	6	WHEEL & TIRE GP	436
Y-SEPARATE ILLUSTRATION				

<END>

311-6088 WHEEL & TIRE AR

S/N: B9D1-UP

SMCS-4200 **i02788309**

NOTE	PART NUMBER	QTY	PART NAME 1 2 3 4 5 6 (PRODUCT LEVEL)	SEE PAGE
Y	*311-6080*	6	WHEEL & TIRE GP	436
Y-SEPARATE ILLUSTRATION				

<END>

250-9709 WHEEL & TIRE GP

S/N: B9D1-UP

SMCS-4200 **i02781292**

NOTE	PART NUMBER	QTY	PART NAME 1 2 3 4 5 6 (PRODUCT LEVEL)	SEE PAGE
Y	*252-0110*	1	WHEEL GP	445
	141-0360	1	TIRE (14-R24)	
Y-SEPARATE ILLUSTRATION				

<END>

250-9779 WHEEL & TIRE GP

S/N: B9D1-UP

PART OF 249-7842 WHEEL & TIRE AR

SMCS-4200 **i02783189**

NOTE	PART NUMBER	QTY	PART NAME 1 2 3 4 5 6 (PRODUCT LEVEL)	SEE PAGE
Y	*252-0113*	1	WHEEL GP	446
	6C-3246	1	TIRE (17.5-R25)	
Y-SEPARATE ILLUSTRATION				

<END>

252-0666 WHEEL & TIRE GP

S/N: B9D1-UP

PART OF 252-0667 WHEEL & TIRE AR

SMCS-4200 **i02781913**

NOTE	PART NUMBER	QTY	PART NAME 1 2 3 4 5 6 (PRODUCT LEVEL)	SEE PAGE
Y	*252-0108*	1	WHEEL GP	444
	142-6173	1	TIRE (14-24)	

Y-SEPARATE ILLUSTRATION

<END>

252-0674 WHEEL & TIRE GP

S/N: B9D1-UP

PART OF 252-0675, 252-0677 WHEEL & TIRE AR

SMCS-4200 **i02781933**

NOTE	PART NUMBER	QTY	PART NAME 1 2 3 4 5 6 (PRODUCT LEVEL)	SEE PAGE
Y	*252-0108*	1	WHEEL GP	444
	142-6175	1	TIRE (14-24)	

Y-SEPARATE ILLUSTRATION

<END>

252-0676 WHEEL & TIRE GP

S/N: B9D1-UP

PART OF 252-0677 WHEEL & TIRE AR

FOR USE WITH ALL WHEEL DRIVE ARRANGEMENT

SMCS-4200 **i02783284**

NOTE	PART NUMBER	QTY	PART NAME 1 2 3 4 5 6 (PRODUCT LEVEL)	SEE PAGE
Y	*252-0110*	1	WHEEL GP	445
	142-6175	1	TIRE (14-24)	

Y-SEPARATE ILLUSTRATION

<END>

252-0678 WHEEL & TIRE GP

S/N: B9D1-UP

PART OF 252-0679, 252-0681 WHEEL & TIRE AR

SMCS-4200 **i02783317**

NOTE	PART NUMBER	QTY	PART NAME 1 2 3 4 5 6 (PRODUCT LEVEL)	SEE PAGE
Y	*252-0108*	1	WHEEL GP	444
	112-9813	1	TIRE (14-R24)	

Y-SEPARATE ILLUSTRATION

<END>

252-0680 WHEEL & TIRE GP

S/N: B9D1-UP

PART OF 252-0681 WHEEL & TIRE AR

FOR USE WITH ALL WHEEL DRIVE ARRANGEMENT

SMCS-4200 **i02783354**

NOTE	PART NUMBER	QTY	PART NAME 1 2 3 4 5 6 (PRODUCT LEVEL)	SEE PAGE
Y	*252-0110*	1	WHEEL GP	445
	112-9813	1	TIRE (14-R24)	

Y-SEPARATE ILLUSTRATION

<END>

252-0682 WHEEL & TIRE GP

S/N: B9D1-UP

PART OF 252-0683, 252-0685 WHEEL & TIRE AR

SMCS-4200 **i02783474**

NOTE	PART NUMBER	QTY	PART NAME 1 2 3 4 5 6 (PRODUCT LEVEL)	SEE PAGE
Y	*252-0108*	1	WHEEL GP	444
	123-3178	1	TIRE (14-R24)	

Y-SEPARATE ILLUSTRATION

<END>

252-0684 WHEEL & TIRE GP

S/N: B9D1-UP

PART OF 252-0685 WHEEL & TIRE AR

FOR USE WITH ALL WHEEL DRIVE ARRANGEMENT

SMCS-4200 **i02783506**

NOTE	PART NUMBER	QTY	PART NAME 1 2 3 4 5 6 (PRODUCT LEVEL)	SEE PAGE
Y	*252-0110*	1	WHEEL GP	445
	123-3178	1	TIRE (14-R24)	

Y-SEPARATE ILLUSTRATION

<END>

252-0686 WHEEL & TIRE GP

S/N: B9D1-UP

PART OF 252-0687, 252-0690 WHEEL & TIRE AR

FOR USE WITH ALL WHEEL DRIVE ARRANGEMENT

SMCS-4200 **i02783701**

NOTE	PART NUMBER	QTY	PART NAME 1 2 3 4 5 6 (PRODUCT LEVEL)	SEE PAGE
Y	*252-0108*	1	WHEEL GP	444
	106-1567	1	TIRE (14-R24)	

Y-SEPARATE ILLUSTRATION

<END>

252-0688 WHEEL & TIRE GP

S/N: B9D1-UP

PART OF 252-0690 WHEEL & TIRE AR

FOR USE WITH ALL WHEEL DRIVE ARRANGEMENT

SMCS-4200 **i02783656**

NOTE	PART NUMBER	QTY	PART NAME 1 2 3 4 5 6 (PRODUCT LEVEL)	SEE PAGE
Y	*252-0110*	1	WHEEL GP	445
	106-1567	1	TIRE (14-R24)	

Y-SEPARATE ILLUSTRATION

<END>

252-0692 WHEEL & TIRE GP

S/N: B9D1-UP

PART OF 252-0693, 252-0695 WHEEL & TIRE AR

SMCS-4200 **i02783649**

NOTE	PART NUMBER	QTY	PART NAME 1 2 3 4 5 6 (PRODUCT LEVEL)	SEE PAGE
Y	*252-0108*	1	WHEEL GP	444
	129-5454	1	TIRE (14-R24)	

Y-SEPARATE ILLUSTRATION

<END>

252-0694 WHEEL & TIRE GP

S/N: B9D1-UP

PART OF 252-0695 WHEEL & TIRE AR

SMCS-4200 **i02783645**

NOTE	PART NUMBER	QTY	PART NAME 1 2 3 4 5 6 (PRODUCT LEVEL)	SEE PAGE
Y	*252-0110*	1	WHEEL GP	445
	129-5454	1	TIRE (14-R24)	

Y-SEPARATE ILLUSTRATION

<END>

252-0696 WHEEL & TIRE GP

S/N: B9D1-UP

PART OF 252-0697, 252-0699 WHEEL & TIRE AR

SMCS-4200 **i02783640**

NOTE	PART NUMBER	QTY	PART NAME 1 2 3 4 5 6 (PRODUCT LEVEL)	SEE PAGE
Y	*252-0108*	1	WHEEL GP	444
	184-1681	1	TIRE (14XR24)	

Y-SEPARATE ILLUSTRATION

<END>

252-0698 WHEEL & TIRE GP

S/N: B9D1-UP
PART OF 252-0699 WHEEL & TIRE AR
FOR USE WITH ALL WHEEL DRIVE ARRANGEMENT

SMCS-4200 **i02783636**

NOTE	PART NUMBER	QTY	PART NAME 1 2 3 4 5 6 (PRODUCT LEVEL)	SEE PAGE
Y	*252-0110*	1	WHEEL GP	445
	184-1681	1	TIRE (14XR24)	

Y-SEPARATE ILLUSTRATION

<END>

252-0700 WHEEL & TIRE GP

S/N: B9D1-UP
PART OF 252-0701 WHEEL & TIRE AR

SMCS-4200 **i02784173**

NOTE	PART NUMBER	QTY	PART NAME 1 2 3 4 5 6 (PRODUCT LEVEL)	SEE PAGE
Y	*252-0108*	1	WHEEL GP	444
	141-0360	1	TIRE (14-R24)	

Y-SEPARATE ILLUSTRATION

<END>

252-0707 WHEEL & TIRE GP

S/N: B9D1-UP
PART OF 252-0708, 252-0710 WHEEL & TIRE AR

SMCS-4200 **i02784220**

NOTE	PART NUMBER	QTY	PART NAME 1 2 3 4 5 6 (PRODUCT LEVEL)	SEE PAGE
Y	*252-0108*	1	WHEEL GP	444
	140-3607	1	TIRE (14-R24)	

Y-SEPARATE ILLUSTRATION

<END>

252-0709 WHEEL & TIRE GP

S/N: B9D1-UP
PART OF 252-0710 WHEEL & TIRE AR
FOR USE WITH ALL WHEEL DRIVE ARRANGEMENT

SMCS-4200 **i02784457**

NOTE	PART NUMBER	QTY	PART NAME 1 2 3 4 5 6 (PRODUCT LEVEL)	SEE PAGE
Y	*252-0110*	1	WHEEL GP	445
	140-3607	1	TIRE (14-R24)	

Y-SEPARATE ILLUSTRATION

<END>

252-0713 WHEEL & TIRE GP

S/N: B9D1-UP

PART OF 252-0714, 252-0716 WHEEL & TIRE AR

SMCS-4200 **i02784618**

NOTE	PART NUMBER	QTY	PART NAME 1 2 3 4 5 6 (PRODUCT LEVEL)	SEE PAGE
Y	*252-0108*	1	WHEEL GP	444
	8W-7957	1	TIRE (14XR24)	

Y-SEPARATE ILLUSTRATION

<END>

252-0715 WHEEL & TIRE GP

S/N: B9D1-UP

PART OF 252-0716 WHEEL & TIRE AR

SMCS-4200 **i02784632**

NOTE	PART NUMBER	QTY	PART NAME 1 2 3 4 5 6 (PRODUCT LEVEL)	SEE PAGE
Y	*252-0110*	1	WHEEL GP	445
	8W-7957	1	TIRE (14XR24)	

Y-SEPARATE ILLUSTRATION

<END>

252-0719 WHEEL & TIRE GP

S/N: B9D1-UP

PART OF 252-0720, 252-0722 WHEEL & TIRE AR

SMCS-4200 **i02784639**

NOTE	PART NUMBER	QTY	PART NAME 1 2 3 4 5 6 (PRODUCT LEVEL)	SEE PAGE
Y	*252-0108*	1	WHEEL GP	444
	173-7830	1	TIRE (14XR24)	

Y-SEPARATE ILLUSTRATION

<END>

252-0721 WHEEL & TIRE GP

S/N: B9D1-UP

PART OF 252-0722 WHEEL & TIRE AR

FOR USE WITH ALL WHEEL DRIVE ARRANGEMENT

SMCS-4200 **i02784655**

NOTE	PART NUMBER	QTY	PART NAME 1 2 3 4 5 6 (PRODUCT LEVEL)	SEE PAGE
Y	*252-0110*	1	WHEEL GP	445
	173-7830	1	TIRE (14XR24)	

Y-SEPARATE ILLUSTRATION

<END>

252-0726 WHEEL & TIRE GP

S/N: B9D1-UP

SMCS-4200 **i02784676**

NOTE	PART NUMBER	QTY	PART NAME 1 2 3 4 5 6 (PRODUCT LEVEL)	SEE PAGE
Y	*252-0112*	1	WHEEL GP	446
	128-5450	1	TIRE (17.5-25)	

Y-SEPARATE ILLUSTRATION

<END>

252-0728 WHEEL & TIRE GP

S/N: B9D1-UP

FOR USE WITH ALL WHEEL DRIVE ARRANGEMENT

SMCS-4200 **i02784681**

NOTE	PART NUMBER	QTY	PART NAME 1 2 3 4 5 6 (PRODUCT LEVEL)	SEE PAGE
Y	*252-0113*	1	WHEEL GP	446
	128-5450	1	TIRE (17.5-25)	

Y-SEPARATE ILLUSTRATION

<END>

252-0730 WHEEL & TIRE GP

S/N: B9D1-UP

PART OF 252-0731 WHEEL & TIRE AR

SMCS-4200 **i02784687**

NOTE	PART NUMBER	QTY	PART NAME 1 2 3 4 5 6 (PRODUCT LEVEL)	SEE PAGE
Y	*252-0112*	1	WHEEL GP	446
	142-6183	1	TIRE (17.5-25)	

Y-SEPARATE ILLUSTRATION

<END>

252-0732 WHEEL & TIRE GP

S/N: B9D1-UP

FOR USE WITH ALL WHEEL DRIVE ARRANGEMENT

SMCS-4200 **i02784893**

NOTE	PART NUMBER	QTY	PART NAME 1 2 3 4 5 6 (PRODUCT LEVEL)	SEE PAGE
Y	*252-0113*	1	WHEEL GP	446
	142-6183	1	TIRE (17.5-25)	

Y-SEPARATE ILLUSTRATION

<END>

252-0734 WHEEL & TIRE GP

S/N: B9D1-UP

PART OF 252-0735, 252-0747 WHEEL & TIRE AR

SMCS-4200 **i02784891**

NOTE	PART NUMBER	QTY	PART NAME 1 2 3 4 5 6 (PRODUCT LEVEL)	SEE PAGE
Y	*252-0112*	1	WHEEL GP	446
	142-6184	1	TIRE (17.5-25)	

Y-SEPARATE ILLUSTRATION

<END>

252-0746 WHEEL & TIRE GP

S/N: B9D1-UP

PART OF 252-0747 WHEEL & TIRE AR

SMCS-4200 **i02784889**

NOTE	PART NUMBER	QTY	PART NAME 1 2 3 4 5 6 (PRODUCT LEVEL)	SEE PAGE
Y	*252-0113*	1	WHEEL GP	446
	142-6184	1	TIRE (17.5-25)	

Y-SEPARATE ILLUSTRATION

<END>

252-0748 WHEEL & TIRE GP

S/N: B9D1-UP

PART OF 252-0751 WHEEL & TIRE AR

SMCS-4200 **i02786227**

NOTE	PART NUMBER	QTY	PART NAME 1 2 3 4 5 6 (PRODUCT LEVEL)	SEE PAGE
Y	*252-0112*	1	WHEEL GP	446
	128-5451	1	TIRE (17.5-25)	

Y-SEPARATE ILLUSTRATION

<END>

252-0750 WHEEL & TIRE GP

S/N: B9D1-UP

PART OF 252-0751 WHEEL & TIRE AR

FOR USE WITH ALL WHEEL DRIVE ARRANGEMENT

SMCS-4200 **i02784887**

NOTE	PART NUMBER	QTY	PART NAME 1 2 3 4 5 6 (PRODUCT LEVEL)	SEE PAGE
Y	*252-0113*	1	WHEEL GP	446
	128-5451	1	TIRE (17.5-25)	

Y-SEPARATE ILLUSTRATION

<END>

252-0752 WHEEL & TIRE GP

S/N: B9D1-UP

PART OF 252-0753, 252-0755 WHEEL & TIRE AR

SMCS-4200 **i02784882**

NOTE	PART NUMBER	QTY	PART NAME 1 2 3 4 5 6 (PRODUCT LEVEL)	SEE PAGE
Y	*252-0112*	1	WHEEL GP	446
	142-6186	1	TIRE (17.5-25)	

Y-SEPARATE ILLUSTRATION

<END>

252-0754 WHEEL & TIRE GP

S/N: B9D1-UP

PART OF 252-0755 WHEEL & TIRE AR

FOR USE WITH ALL WHEEL DRIVE ARRANGEMENT

SMCS-4200 **i02784874**

NOTE	PART NUMBER	QTY	PART NAME 1 2 3 4 5 6 (PRODUCT LEVEL)	SEE PAGE
Y	*252-0113*	1	WHEEL GP	446
	142-6186	1	TIRE (17.5-25)	

Y-SEPARATE ILLUSTRATION

<END>

252-0757 WHEEL & TIRE GP

S/N: B9D1-UP

PART OF 252-0758, 252-0761 WHEEL & TIRE AR

SMCS-4200 **i02784867**

NOTE	PART NUMBER	QTY	PART NAME 1 2 3 4 5 6 (PRODUCT LEVEL)	SEE PAGE
Y	*252-0112*	1	WHEEL GP	446
	142-6187	1	TIRE (17.5-25)	

Y-SEPARATE ILLUSTRATION

<END>

252-0760 WHEEL & TIRE GP

S/N: B9D1-UP

PART OF 252-0761 WHEEL & TIRE AR

FOR USE WITH ALL WHEEL DRIVE ARRANGEMENT

SMCS-4200 **i02784862**

NOTE	PART NUMBER	QTY	PART NAME 1 2 3 4 5 6 (PRODUCT LEVEL)	SEE PAGE
Y	*252-0113*	1	WHEEL GP	446
	142-6187	1	TIRE (17.5-25)	

Y-SEPARATE ILLUSTRATION

<END>

252-0762 WHEEL & TIRE GP

S/N: B9D1-UP

PART OF 252-0763, 252-0765 WHEEL & TIRE AR

SMCS-4200 **i02784853**

NOTE	PART NUMBER	QTY	PART NAME 1 2 3 4 5 6 (PRODUCT LEVEL)	SEE PAGE
Y	*252-0112*	1	WHEEL GP	446
	6C-7366	1	TIRE (17.5-R25)	

Y-SEPARATE ILLUSTRATION

<END>

252-0764 WHEEL & TIRE GP

S/N: B9D1-UP

PART OF 252-0765 WHEEL & TIRE AR

FOR USE WITH ALL WHEEL DRIVE ARRANGEMENT

SMCS-4200 **i02784850**

NOTE	PART NUMBER	QTY	PART NAME 1 2 3 4 5 6 (PRODUCT LEVEL)	SEE PAGE
Y	*252-0113*	1	WHEEL GP	446
	6C-7366	1	TIRE (17.5-R25)	

Y-SEPARATE ILLUSTRATION

<END>

252-0766 WHEEL & TIRE GP

S/N: B9D1-UP

PART OF 249-7842, 252-0767 WHEEL & TIRE AR

SMCS-4200 **i02783190**

NOTE	PART NUMBER	QTY	PART NAME 1 2 3 4 5 6 (PRODUCT LEVEL)	SEE PAGE
Y	*252-0112*	1	WHEEL GP	446
	6C-3246	1	TIRE (17.5-R25)	

Y-SEPARATE ILLUSTRATION

<END>

252-0770 WHEEL & TIRE GP

S/N: B9D1-UP

PART OF 252-0771, 252-0773 WHEEL & TIRE AR

SMCS-4200 **i02784844**

NOTE	PART NUMBER	QTY	PART NAME 1 2 3 4 5 6 (PRODUCT LEVEL)	SEE PAGE
Y	*252-0112*	1	WHEEL GP	446
	106-4835	1	TIRE (17.5-R25)	

Y-SEPARATE ILLUSTRATION

<END>

252-0772 WHEEL & TIRE GP

S/N: B9D1-UP
PART OF 252-0773 WHEEL & TIRE AR
FOR USE WITH ALL WHEEL DRIVE ARRANGEMENT

SMCS-4200 **i02785045**

NOTE	PART NUMBER	QTY	PART NAME 1 2 3 4 5 6 (PRODUCT LEVEL)	SEE PAGE
Y	*252-0113*	1	WHEEL GP	446
	106-4835	1	TIRE (17.5-R25)	

Y-SEPARATE ILLUSTRATION

<END>

252-0776 WHEEL & TIRE GP

S/N: B9D1-UP
PART OF 252-0777, 252-0779 WHEEL & TIRE AR

SMCS-4200 **i02785053**

NOTE	PART NUMBER	QTY	PART NAME 1 2 3 4 5 6 (PRODUCT LEVEL)	SEE PAGE
Y	*252-0112*	1	WHEEL GP	446
	154-0051	1	TIRE (17.5-R25)	

Y-SEPARATE ILLUSTRATION

<END>

252-0778 WHEEL & TIRE GP

S/N: B9D1-UP
PART OF 252-0779 WHEEL & TIRE AR
FOR USE WITH ALL WHEEL DRIVE ARRANGEMENT

SMCS-4200 **i02785066**

NOTE	PART NUMBER	QTY	PART NAME 1 2 3 4 5 6 (PRODUCT LEVEL)	SEE PAGE
Y	*252-0113*	1	WHEEL GP	446
	154-0051	1	TIRE (17.5-R25)	

Y-SEPARATE ILLUSTRATION

<END>

252-0791 WHEEL & TIRE GP

S/N: B9D1-UP
PART OF 252-0792 WHEEL & TIRE AR

SMCS-4200 **i02785085**

NOTE	PART NUMBER	QTY	PART NAME 1 2 3 4 5 6 (PRODUCT LEVEL)	SEE PAGE
Y	*252-0112*	1	WHEEL GP	446
	180-9853	1	TIRE (17.5-25)	

Y-SEPARATE ILLUSTRATION

<END>

252-7947 WHEEL & TIRE GP

S/N: B9D1-UP

SMCS-4200 **i02785102**

NOTE	PART NUMBER	QTY	PART NAME 1 2 3 4 5 6 (PRODUCT LEVEL)	SEE PAGE
Y	*252-0106*	1	WHEEL GP	444
	142-6174	1	TIRE (14-24)	

Y-SEPARATE ILLUSTRATION

<END>

254-7888 WHEEL & TIRE GP

S/N: B9D1-UP

PART OF 254-7902 WHEEL & TIRE AR

SMCS-4200 **i02787462**

NOTE	PART NUMBER	QTY	PART NAME 1 2 3 4 5 6 (PRODUCT LEVEL)	SEE PAGE
Y	*252-0106*	1	WHEEL GP	444
	142-6173	1	TIRE (14-24)	

Y-SEPARATE ILLUSTRATION

<END>

254-7889 WHEEL & TIRE GP

S/N: B9D1-UP

PART OF 254-7903 WHEEL & TIRE AR

SMCS-4200 **i02787465**

NOTE	PART NUMBER	QTY	PART NAME 1 2 3 4 5 6 (PRODUCT LEVEL)	SEE PAGE
Y	*252-0106*	1	WHEEL GP	444
	142-6175	1	TIRE (14-24)	

Y-SEPARATE ILLUSTRATION

<END>

254-7890 WHEEL & TIRE GP

S/N: B9D1-UP

PART OF 254-7904 WHEEL & TIRE AR

SMCS-4200 **i02787485**

NOTE	PART NUMBER	QTY	PART NAME 1 2 3 4 5 6 (PRODUCT LEVEL)	SEE PAGE
Y	*252-0106*	1	WHEEL GP	444
	112-9813	1	TIRE (14-R24)	

Y-SEPARATE ILLUSTRATION

<END>

POWER TRAIN

254-7891 WHEEL & TIRE GP

S/N: B9D1-UP

PART OF 254-7905 WHEEL & TIRE AR

SMCS-4200 **i02787484**

NOTE	PART NUMBER	QTY	PART NAME 1 2 3 4 5 6 (PRODUCT LEVEL)	SEE PAGE
Y	*252-0106*	1	WHEEL GP	444
	123-3178	1	TIRE (14-R24)	

Y-SEPARATE ILLUSTRATION

<END>

254-7892 WHEEL & TIRE GP

S/N: B9D1-UP

PART OF 254-7906 WHEEL & TIRE AR

SMCS-4200 **i02787487**

NOTE	PART NUMBER	QTY	PART NAME 1 2 3 4 5 6 (PRODUCT LEVEL)	SEE PAGE
Y	*252-0106*	1	WHEEL GP	444
	106-1567	1	TIRE (14-R24)	

Y-SEPARATE ILLUSTRATION

<END>

254-7893 WHEEL & TIRE GP

S/N: B9D1-UP

PART OF 254-7907 WHEEL & TIRE AR

SMCS-4200 **i02787486**

NOTE	PART NUMBER	QTY	PART NAME 1 2 3 4 5 6 (PRODUCT LEVEL)	SEE PAGE
Y	*252-0106*	1	WHEEL GP	444
	129-5454	1	TIRE (14-R24)	

Y-SEPARATE ILLUSTRATION

<END>

254-7894 WHEEL & TIRE GP

S/N: B9D1-UP

PART OF 254-7908 WHEEL & TIRE AR

SMCS-4200 **i02787488**

NOTE	PART NUMBER	QTY	PART NAME 1 2 3 4 5 6 (PRODUCT LEVEL)	SEE PAGE
Y	*252-0106*	1	WHEEL GP	444
	184-1681	1	TIRE (14-R24)	

Y-SEPARATE ILLUSTRATION

<END>

254-7941 WHEEL & TIRE GP

S/N: B9D1-UP

PART OF 254-7957 WHEEL & TIRE AR

SMCS-4200 **i02787560**

NOTE	PART NUMBER	QTY	PART NAME 1 2 3 4 5 6 (PRODUCT LEVEL)	SEE PAGE
Y	*252-0111*	1	WHEEL GP	445
	142-6176	1	TIRE (15.5-25)	

Y-SEPARATE ILLUSTRATION

<END>

254-7942 WHEEL & TIRE GP

S/N: B9D1-UP

PART OF 254-7958 WHEEL & TIRE AR

SMCS-4200 **i02787565**

NOTE	PART NUMBER	QTY	PART NAME 1 2 3 4 5 6 (PRODUCT LEVEL)	SEE PAGE
Y	*252-0111*	1	WHEEL GP	445
	142-6177	1	TIRE (15.5-25)	

Y-SEPARATE ILLUSTRATION

<END>

254-7944 WHEEL & TIRE GP

S/N: B9D1-UP

PART OF 254-7960 WHEEL & TIRE AR

SMCS-4200 **i02787562**

NOTE	PART NUMBER	QTY	PART NAME 1 2 3 4 5 6 (PRODUCT LEVEL)	SEE PAGE
Y	*252-0111*	1	WHEEL GP	445
	142-6179	1	TIRE (15.5-25)	

Y-SEPARATE ILLUSTRATION

<END>

254-7945 WHEEL & TIRE GP

S/N: B9D1-UP

PART OF 254-7961 WHEEL & TIRE AR

SMCS-4200 **i02787559**

NOTE	PART NUMBER	QTY	PART NAME 1 2 3 4 5 6 (PRODUCT LEVEL)	SEE PAGE
Y	*252-0111*	1	WHEEL GP	445
	256-6019	1	TIRE (15.5-25)	

Y-SEPARATE ILLUSTRATION

<END>

254-7948 WHEEL & TIRE GP

S/N: B9D1-UP

PART OF 254-7964 WHEEL & TIRE AR

SMCS-4200 **i02787563**

NOTE	PART NUMBER	QTY	PART NAME 1 2 3 4 5 6 (PRODUCT LEVEL)	SEE PAGE
Y	*252-0111*	1	WHEEL GP	445
	142-6183	1	TIRE (17.5-25)	

Y-SEPARATE ILLUSTRATION

<END>

254-7949 WHEEL & TIRE GP

S/N: B9D1-UP

PART OF 254-7965 WHEEL & TIRE AR

SMCS-4200 **i02787525**

NOTE	PART NUMBER	QTY	PART NAME 1 2 3 4 5 6 (PRODUCT LEVEL)	SEE PAGE
Y	*252-0111*	1	WHEEL GP	445
	142-6184	1	TIRE (17.5-25)	

Y-SEPARATE ILLUSTRATION

<END>

254-7951 WHEEL & TIRE GP

S/N: B9D1-UP

PART OF 254-7967 WHEEL & TIRE AR

SMCS-4200 **i02787657**

NOTE	PART NUMBER	QTY	PART NAME 1 2 3 4 5 6 (PRODUCT LEVEL)	SEE PAGE
Y	*252-0111*	1	WHEEL GP	445
	142-6186	1	TIRE (17.5-25)	

Y-SEPARATE ILLUSTRATION

<END>

254-7952 WHEEL & TIRE GP

S/N: B9D1-UP

PART OF 254-7968 WHEEL & TIRE AR

SMCS-4200 **i02787706**

NOTE	PART NUMBER	QTY	PART NAME 1 2 3 4 5 6 (PRODUCT LEVEL)	SEE PAGE
Y	*252-0111*	1	WHEEL GP	445
	142-6187	1	TIRE (17.5-25)	

Y-SEPARATE ILLUSTRATION

<END>

254-7953 WHEEL & TIRE GP

S/N: B9D1-UP

PART OF 254-7969 WHEEL & TIRE AR

SMCS-4200 **i02787656**

NOTE	PART NUMBER	QTY	PART NAME 1 2 3 4 5 6 (PRODUCT LEVEL)	SEE PAGE
Y	*252-0111*	1	WHEEL GP	445
	6C-7366	1	TIRE (17.5-R25)	

Y-SEPARATE ILLUSTRATION

<END>

254-7954 WHEEL & TIRE GP

S/N: B9D1-UP

PART OF 254-7970 WHEEL & TIRE AR

SMCS-4200 **i02787658**

NOTE	PART NUMBER	QTY	PART NAME 1 2 3 4 5 6 (PRODUCT LEVEL)	SEE PAGE
Y	*252-0111*	1	WHEEL GP	445
	6C-3246	1	TIRE (17.5-R25)	

Y-SEPARATE ILLUSTRATION

<END>

254-7955 WHEEL & TIRE GP

S/N: B9D1-UP

PART OF 254-7971 WHEEL & TIRE AR

SMCS-4200 **i02787662**

NOTE	PART NUMBER	QTY	PART NAME 1 2 3 4 5 6 (PRODUCT LEVEL)	SEE PAGE
Y	*252-0111*	1	WHEEL GP	445
	106-4835	1	TIRE (17.5-R25)	

Y-SEPARATE ILLUSTRATION

<END>

254-7956 WHEEL & TIRE GP

S/N: B9D1-UP

PART OF 254-7972 WHEEL & TIRE AR

SMCS-4200 **i02787660**

NOTE	PART NUMBER	QTY	PART NAME 1 2 3 4 5 6 (PRODUCT LEVEL)	SEE PAGE
Y	*252-0111*	1	WHEEL GP	445
	105-3249	1	TIRE (17.5-R25)	

Y-SEPARATE ILLUSTRATION

<END>

POWER TRAIN

305-6155 WHEEL & TIRE GP

S/N: B9D1-UP

PART OF 305-6159, 305-6160 WHEEL & TIRE AR

SMCS-4200 **i02787784**

NOTE	PART NUMBER	QTY	PART NAME 1 2 3 4 5 6 (PRODUCT LEVEL)	SEE PAGE
Y	*252-0108*	1	WHEEL GP	444
	150-7955	1	TIRE (14-24)	

Y-SEPARATE ILLUSTRATION

<END>

305-6161 WHEEL & TIRE GP

S/N: B9D1-UP

PART OF 305-6160 WHEEL & TIRE AR

SMCS-4200 **i02787753**

NOTE	PART NUMBER	QTY	PART NAME 1 2 3 4 5 6 (PRODUCT LEVEL)	SEE PAGE
Y	*252-0110*	1	WHEEL GP	445
	150-7955	1	TIRE (14-24)	

Y-SEPARATE ILLUSTRATION

<END>

305-6227 WHEEL & TIRE GP

S/N: B9D1-UP

PART OF 305-6233 WHEEL & TIRE AR

SMCS-4200 **i02787754**

NOTE	PART NUMBER	QTY	PART NAME 1 2 3 4 5 6 (PRODUCT LEVEL)	SEE PAGE
Y	*252-0112*	1	WHEEL GP	446
	180-9853	1	TIRE (17.5-25)	

Y-SEPARATE ILLUSTRATION

<END>

305-6230 WHEEL & TIRE GP

S/N: B9D1-UP

PART OF 305-6236 WHEEL & TIRE AR

SMCS-4200 **i02787758**

NOTE	PART NUMBER	QTY	PART NAME 1 2 3 4 5 6 (PRODUCT LEVEL)	SEE PAGE
Y	*252-0112*	1	WHEEL GP	446
	174-6899	1	TIRE (17.5-25)	

Y-SEPARATE ILLUSTRATION

<END>

310-7301 WHEEL & TIRE GP

S/N: B9D1-UP

PART OF 310-7320 WHEEL & TIRE AR

SMCS-4200 **i02787883**

NOTE	PART NUMBER	QTY	PART NAME 1 2 3 4 5 6 (PRODUCT LEVEL)	SEE PAGE
Y	*252-0111*	1	WHEEL GP	445
	154-0051	1	TIRE (17.5-R25)	

Y-SEPARATE ILLUSTRATION

<END>

310-7305 WHEEL & TIRE GP

S/N: B9D1-UP

PART OF 310-7323 WHEEL & TIRE AR

SMCS-4200 **i02787886**

NOTE	PART NUMBER	QTY	PART NAME 1 2 3 4 5 6 (PRODUCT LEVEL)	SEE PAGE
Y	*252-0111*	1	WHEEL GP	445
	6C-3248	1	TIRE (15.5-R25)	

Y-SEPARATE ILLUSTRATION

<END>

310-7306 WHEEL & TIRE GP

S/N: B9D1-UP

PART OF 310-7324 WHEEL & TIRE AR

SMCS-4200 **i02787881**

NOTE	PART NUMBER	QTY	PART NAME 1 2 3 4 5 6 (PRODUCT LEVEL)	SEE PAGE
Y	*142-6230*	1	WHEEL GP	439
	6C-3248	1	TIRE (15.5-R25)	

Y-SEPARATE ILLUSTRATION

<END>

310-7307 WHEEL & TIRE GP

S/N: B9D1-UP

PART OF 310-7325 WHEEL & TIRE AR

SMCS-4200 **i02787891**

NOTE	PART NUMBER	QTY	PART NAME 1 2 3 4 5 6 (PRODUCT LEVEL)	SEE PAGE
Y	*252-0111*	1	WHEEL GP	445
	180-9852	1	TIRE (17.5-R25)	

Y-SEPARATE ILLUSTRATION

<END>

310-7308 WHEEL & TIRE GP

S/N: B9D1-UP

PART OF 310-7326 WHEEL & TIRE AR

SMCS-4200 **i02787879**

NOTE	PART NUMBER	QTY	PART NAME 1 2 3 4 5 6 (PRODUCT LEVEL)	SEE PAGE
Y	*252-0104*	1	WHEEL GP	443
	180-9852	1	TIRE (17.5-R25)	

Y-SEPARATE ILLUSTRATION

<END>

310-7309 WHEEL & TIRE GP

S/N: B9D1-UP

PART OF 310-7327 WHEEL & TIRE AR

SMCS-4200 **i02787889**

NOTE	PART NUMBER	QTY	PART NAME 1 2 3 4 5 6 (PRODUCT LEVEL)	SEE PAGE
Y	*250-9788*	1	WHEEL GP	441
	180-9852	1	TIRE (17.5-R25)	

Y-SEPARATE ILLUSTRATION

<END>

310-7310 WHEEL & TIRE GP

S/N: B9D1-UP

PART OF 310-7328 WHEEL & TIRE AR

SMCS-4200 **i02787875**

NOTE	PART NUMBER	QTY	PART NAME 1 2 3 4 5 6 (PRODUCT LEVEL)	SEE PAGE
Y	*252-0104*	1	WHEEL GP	443
	226-0733	1	TIRE (17.5-R25)	

Y-SEPARATE ILLUSTRATION

<END>

310-7311 WHEEL & TIRE GP

S/N: B9D1-UP

PART OF 310-7329 WHEEL & TIRE AR

SMCS-4200 **i02787878**

NOTE	PART NUMBER	QTY	PART NAME 1 2 3 4 5 6 (PRODUCT LEVEL)	SEE PAGE
Y	*250-9788*	1	WHEEL GP	441
	226-0733	1	TIRE (17.5-R25)	

Y-SEPARATE ILLUSTRATION

<END>

310-7312 WHEEL & TIRE GP

S/N: B9D1-UP

PART OF 310-7330 WHEEL & TIRE AR

SMCS-4200 **i02787873**

NOTE	PART NUMBER	QTY	PART NAME 1 2 3 4 5 6 (PRODUCT LEVEL)	SEE PAGE
Y	*252-0111*	1	WHEEL GP	445
	170-0432	1	TIRE (17.5-R25)	

Y-SEPARATE ILLUSTRATION

<END>

310-7313 WHEEL & TIRE GP

S/N: B9D1-UP

PART OF 310-7331 WHEEL & TIRE AR

SMCS-4200 **i02788044**

NOTE	PART NUMBER	QTY	PART NAME 1 2 3 4 5 6 (PRODUCT LEVEL)	SEE PAGE
Y	*252-0104*	1	WHEEL GP	443
	170-0432	1	TIRE (17.5-R25)	

Y-SEPARATE ILLUSTRATION

<END>

310-7314 WHEEL & TIRE GP

S/N: B9D1-UP

PART OF 310-7332 WHEEL & TIRE AR

FOR USE WITH ALL WHEEL DRIVE ARRANGEMENT

SMCS-4200 **i02788045**

NOTE	PART NUMBER	QTY	PART NAME 1 2 3 4 5 6 (PRODUCT LEVEL)	SEE PAGE
Y	*250-9788*	1	WHEEL GP	441
	170-0432	1	TIRE (17.5-R25)	

Y-SEPARATE ILLUSTRATION

<END>

311-6078 WHEEL & TIRE GP

S/N: B9D1-UP

PART OF 311-6086 WHEEL & TIRE AR

SMCS-4200 **i02788267**

NOTE	PART NUMBER	QTY	PART NAME 1 2 3 4 5 6 (PRODUCT LEVEL)	SEE PAGE
Y	*252-0111*	1	WHEEL GP	445
	308-8636	1	TIRE (17.5-R25)	

Y-SEPARATE ILLUSTRATION

<END>

POWER TRAIN

311-6079 WHEEL & TIRE GP

S/N: B9D1-UP

PART OF 311-6087 WHEEL & TIRE AR

FOR USE WITH ALL WHEEL DRIVE ARRANGEMENT

SMCS-4200 **i02788283**

NOTE	PART NUMBER	QTY	PART NAME 1 2 3 4 5 6 (PRODUCT LEVEL)	SEE PAGE
Y	*252-0113*	1	WHEEL GP	446
	308-8636	1	TIRE (17.5-R25)	

Y-SEPARATE ILLUSTRATION

<END>

311-6080 WHEEL & TIRE GP

S/N: B9D1-UP

PART OF 311-6088 WHEEL & TIRE AR

SMCS-4200 **i02788291**

NOTE	PART NUMBER	QTY	PART NAME 1 2 3 4 5 6 (PRODUCT LEVEL)	SEE PAGE
Y	*252-0112*	1	WHEEL GP	446
	308-8636	1	TIRE (17.5-R25)	

Y-SEPARATE ILLUSTRATION

<END>

252-0114 WHEEL AR

S/N: B9D1-UP

SMCS-4208 **i02781349**

NOTE	PART NUMBER	QTY	PART NAME 1 2 3 4 5 6 (PRODUCT LEVEL)	SEE PAGE
Y	*252-0106*	6	WHEEL GP	444

Y-SEPARATE ILLUSTRATION

<END>

252-0115 WHEEL AR

S/N: B9D1-UP

SMCS-4208 **i02781848**

NOTE	PART NUMBER	QTY	PART NAME 1 2 3 4 5 6 (PRODUCT LEVEL)	SEE PAGE
Y	*252-0108*	6	WHEEL GP	444

Y-SEPARATE ILLUSTRATION

<END>

252-0116 WHEEL AR

S/N: B9D1-UP

FOR USE WITH ALL WHEEL DRIVE ARRANGEMENT

SMCS-4208 **i02781856**

NOTE	PART NUMBER	QTY	PART NAME 1 2 3 4 5 6 (PRODUCT LEVEL)	SEE PAGE
Y	*252-0108*	4	WHEEL GP	444
Y	*252-0110*	2	WHEEL GP	445

Y-SEPARATE ILLUSTRATION

<END>

252-0117 WHEEL AR

S/N: B9D1-UP

SMCS-4208 **i02781889**

NOTE	PART NUMBER	QTY	PART NAME 1 2 3 4 5 6 (PRODUCT LEVEL)	SEE PAGE
Y	*252-0111*	6	WHEEL GP	445

Y-SEPARATE ILLUSTRATION

<END>

252-0118 WHEEL AR

S/N: B9D1-UP

SMCS-4208 **i02781890**

NOTE	PART NUMBER	QTY	PART NAME 1 2 3 4 5 6 (PRODUCT LEVEL)	SEE PAGE
Y	*252-0112*	6	WHEEL GP	446

Y-SEPARATE ILLUSTRATION

<END>

252-0119 WHEEL AR

S/N: B9D1-UP

FOR USE WITH ALL WHEEL DRIVE ARRANGEMENT

SMCS-4208 **i02781893**

NOTE	PART NUMBER	QTY	PART NAME 1 2 3 4 5 6 (PRODUCT LEVEL)	SEE PAGE
Y	*252-0112*	4	WHEEL GP	446
Y	*252-0113*	2	WHEEL GP	446

Y-SEPARATE ILLUSTRATION

<END>

POWER TRAIN

284-5019 WHEEL AR

S/N: B9D1-UP

PART OF 234-7721 COMMON AR

SMCS-4208 **i02781124**

NOTE	REF NO	GRAPHIC REF	PART NUMBER	QTY	PART NAME 1 2 3 4 5 6 (PRODUCT LEVEL)	SEE PAGE
Y	1	1	*284-5020*	2	BRAKE GP-SERVICE (FRONT TANDEM)	504
Y	2	1	*284-5021*	2	BRAKE GP-SERVICE (REAR TANDEM)	506

Y-SEPARATE ILLUSTRATION

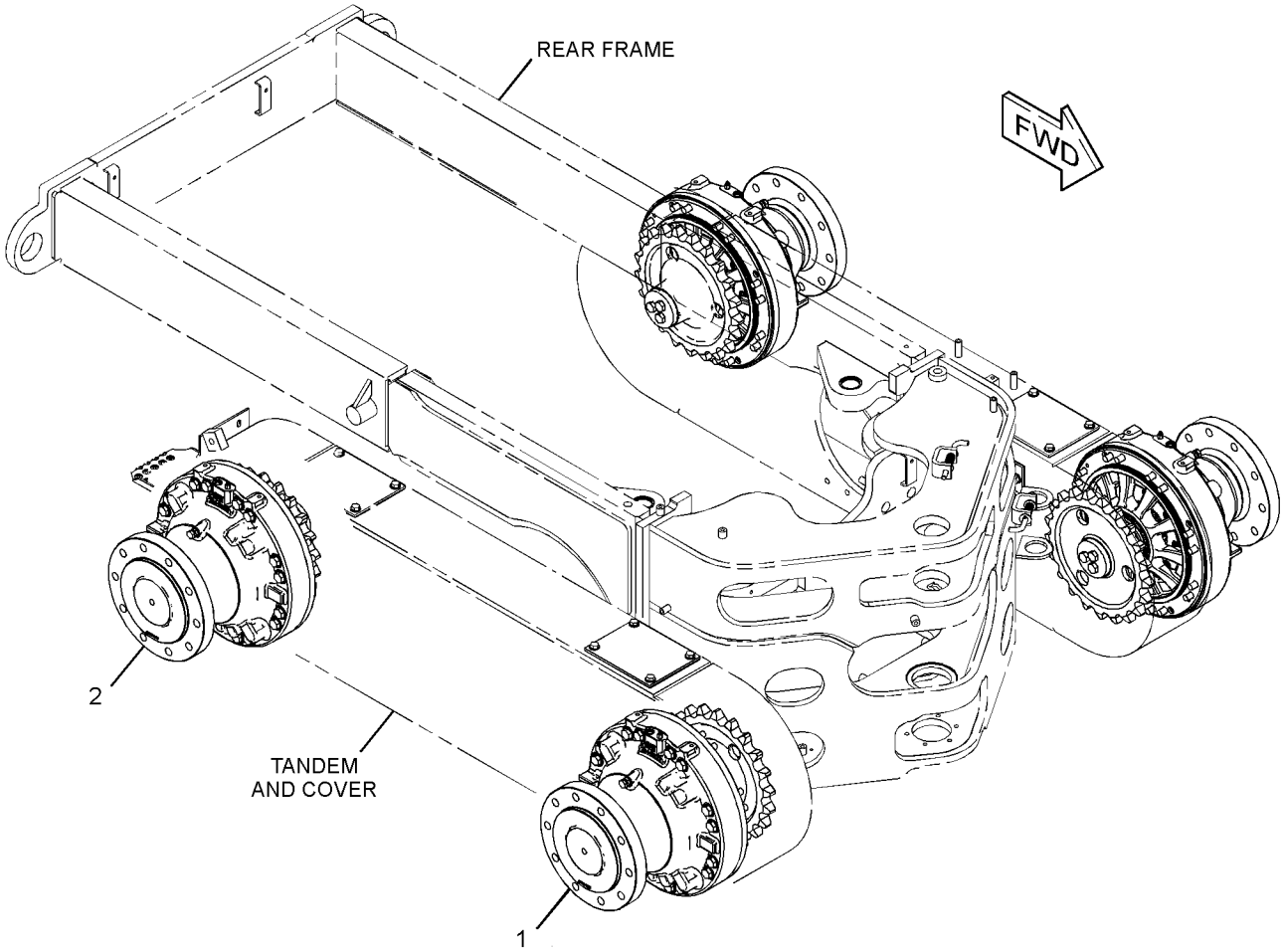

GRAPHIC #1 **<END>** g01374941

142-6230 WHEEL GP

S/N: B9D1-UP

(12X25)

PART OF 310-7306 WHEEL & TIRE GP

SMCS-4006, 4201, 4208 **i02237305**

NOTE	PART NUMBER	QTY	PART NAME 1 2 3 4 5 6 (PRODUCT LEVEL)	SEE PAGE
	8W-9582	1	FLANGE AS	
	6G-1527	1	RIM AS	
	4K-4881	1	RING-LOCK	

<END>

POWER TRAIN

250-9786 WHEEL GP

S/N: B9D1-UP
(10X24)
PART OF 252-0110 WHEEL GP

SMCS-4006, 4201, 4208 **i02781695**

NOTE	REF NO	GRAPHIC REF	PART NUMBER	QTY	PART NAME 1 2 3 4 5 6 (PRODUCT LEVEL)	SEE PAGE
	1	1	**2D-2654**	1	RING-LOCK	
	2	1	**8W-9566**	1	FLANGE AS	
	3	1	**290-1508**	1	RIM AS	

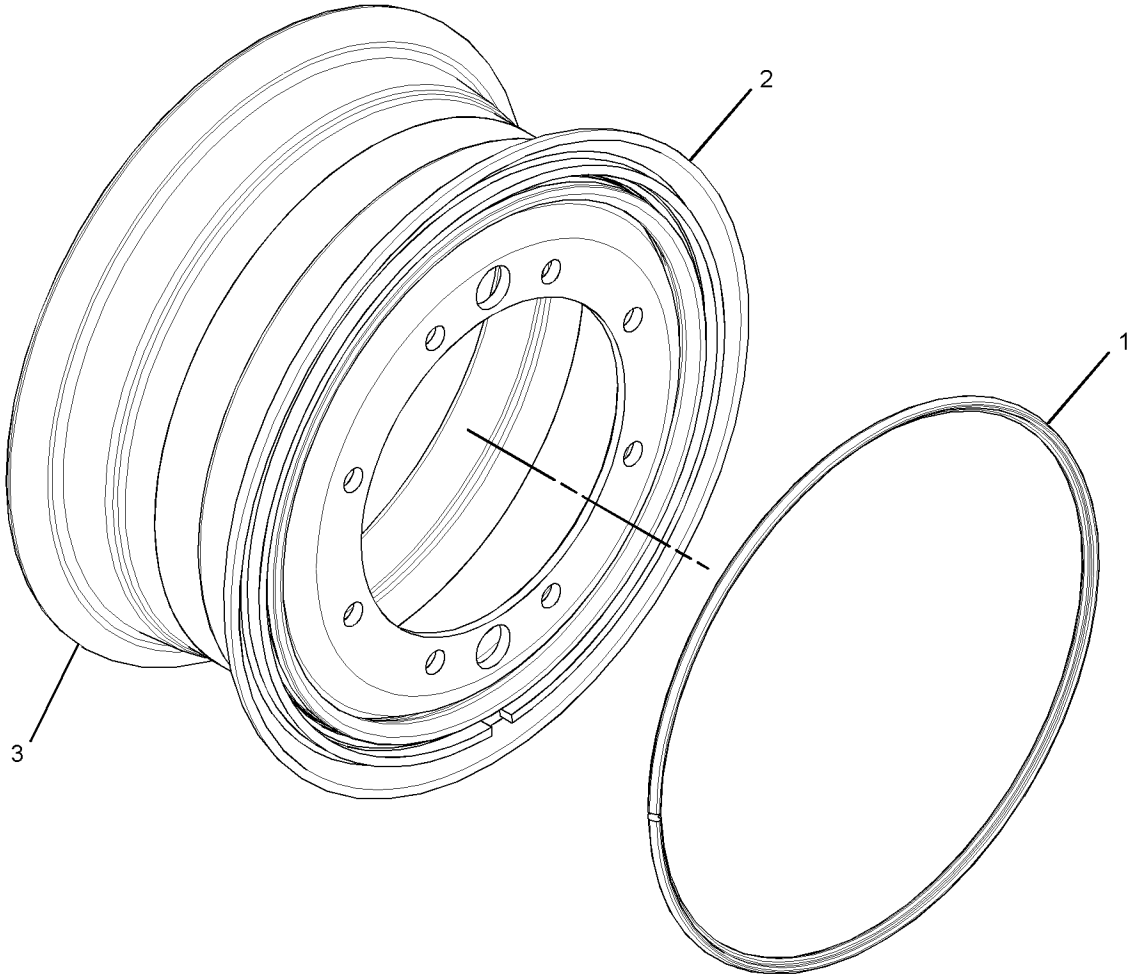

GRAPHIC #1 **<END>** g01393138

250-9788 WHEEL GP

S/N: B9D1-UP

(14X25)

PART OF 310-7309, 310-7311, 310-7314 WHEEL & TIRE GP, 252-0113 WHEEL GP

SMCS-4006, 4201, 4208 **i02781306**

NOTE	REF NO	GRAPHIC REF	PART NUMBER	QTY	PART NAME 1 2 3 4 5 6 (PRODUCT LEVEL)	SEE PAGE
	1	1	**4K-4881**	1	RING-LOCK	
	2	1	**8W-9594**	1	FLANGE AS	
	3	1	**290-1511**	1	RIM AS	

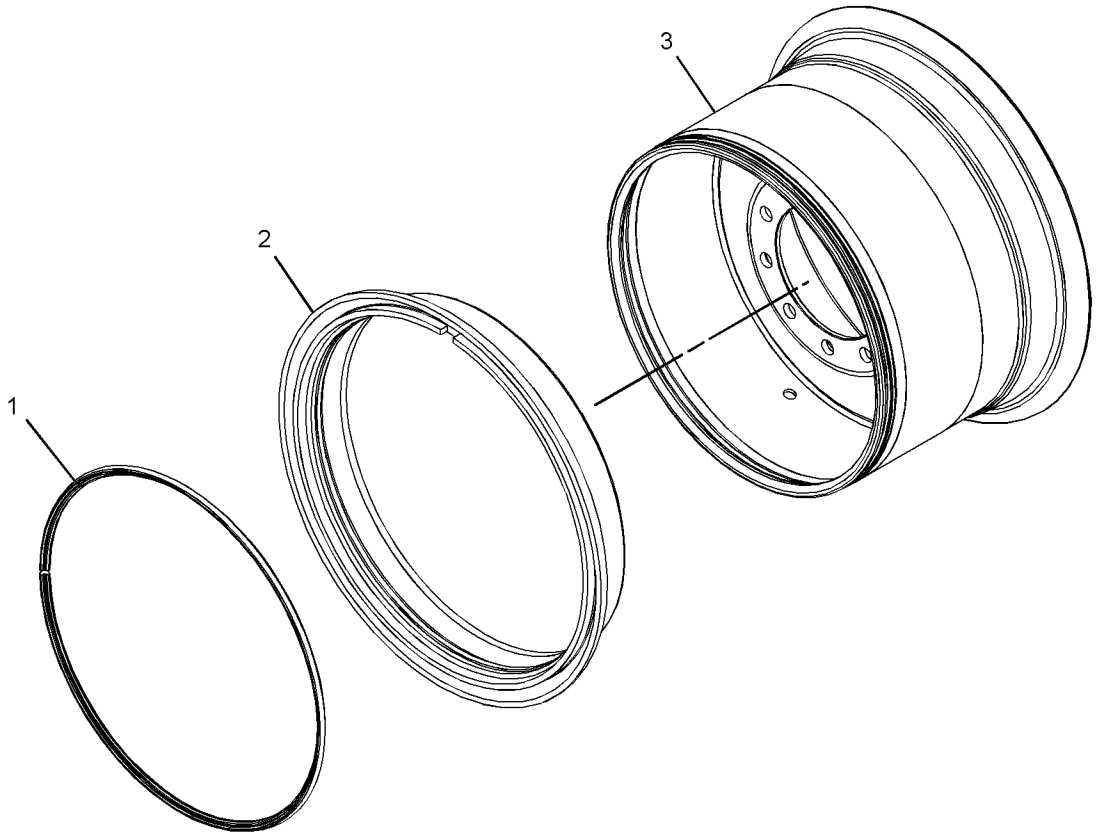

GRAPHIC #1 **<END>** g01392485

POWER TRAIN

252-0102 WHEEL GP

S/N: B9D1-UP
(10X24)
PART OF 252-0108 WHEEL GP

SMCS-4006, 4201, 4208 **i02781649**

NOTE	REF NO	GRAPHIC REF	PART NUMBER	QTY	PART NAME 1 2 3 4 5 6 (PRODUCT LEVEL)	SEE PAGE
	1	1	**2D-2654**	1	RING-LOCK	
	2	1	**8W-9566**	1	FLANGE AS	
	3	1	**290-1505**	1	RIM AS	

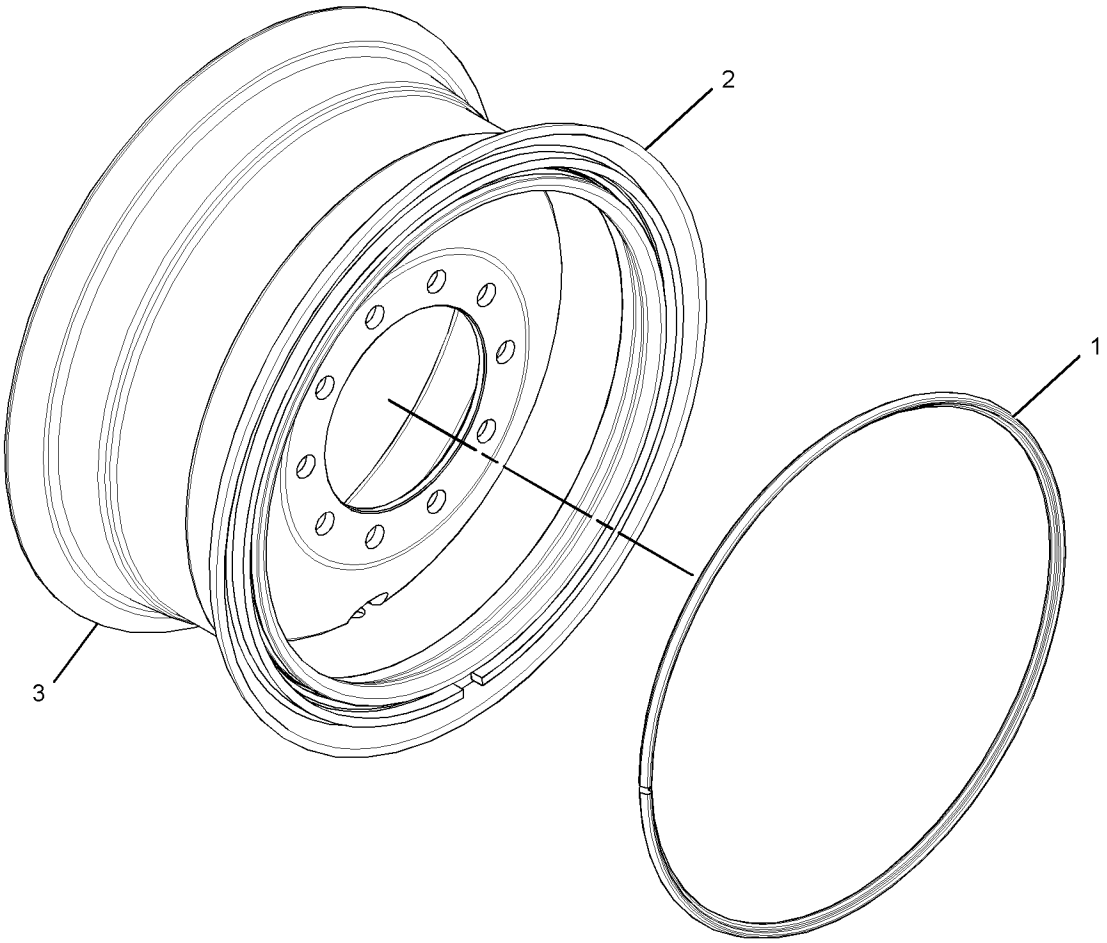

GRAPHIC #1 **<END>** g01393131

252-0104 WHEEL GP

S/N: B9D1-UP

(14X25)

PART OF 310-7308, 310-7310, 310-7313 WHEEL & TIRE GP, 252-0112 WHEEL GP

SMCS-4006, 4201, 4208 **i02781823**

NOTE	REF NO	GRAPHIC REF	PART NUMBER	QTY	PART NAME 1 2 3 4 5 6 (PRODUCT LEVEL)	SEE PAGE
	1	1	**4K-4881**	1	RING-LOCK	
	2	1	**8W-9594**	1	FLANGE AS	
	3	1	**289-9726**	1	RIM AS	

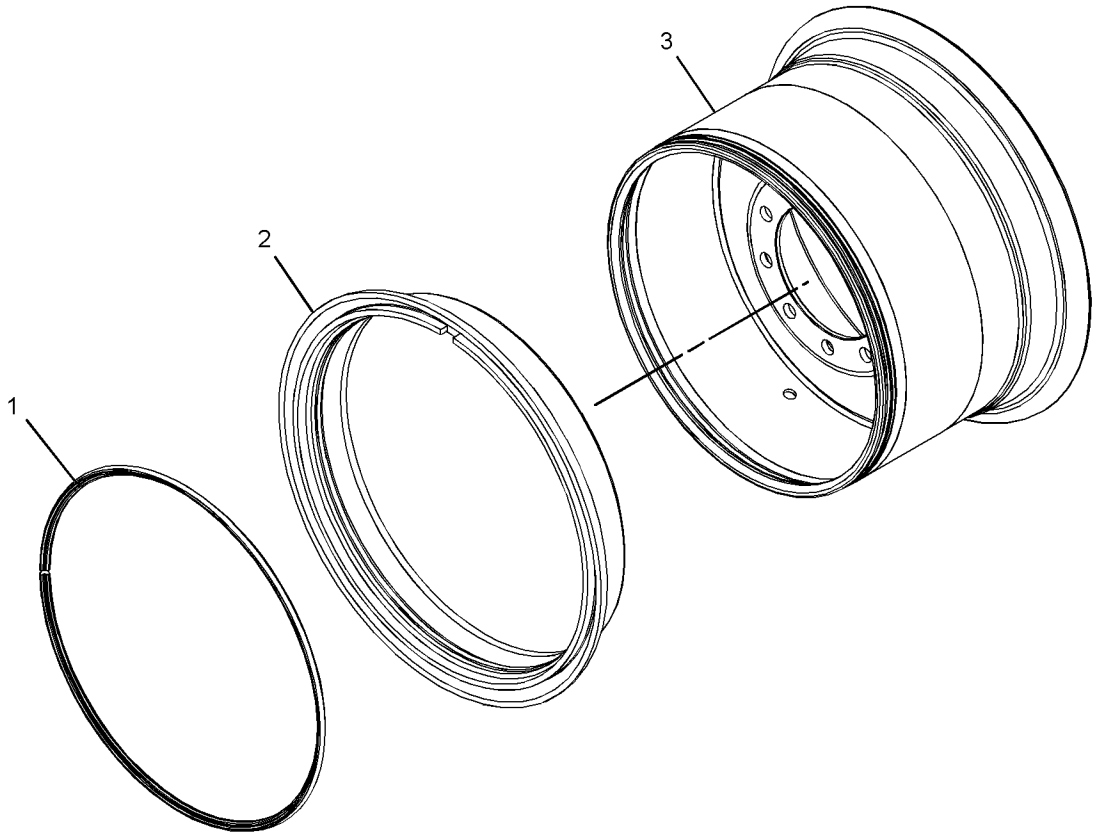

GRAPHIC #1 **<END>** g01392485

252-0106 WHEEL GP

S/N: B9D1-UP

(9X24)

PART OF 252-7947, 254-7888, 254-7889, 254-7890, 254-7891, 254-7892, 254-7893, 254-7894 WHEEL & TIRE GP, 252-0114 WHEEL AR

SMCS-4006, 4201, 4208 **i02781471**

NOTE	PART NUMBER	QTY	PART NAME 1 2 3 4 5 6 (PRODUCT LEVEL)	SEE PAGE
	252-0098	1	RIM AS	
	2D-2511	1	VALVE GP-TIRE (BASIC)	
	3D-2239	1	VALVE AS-TIRE (TIRE INFLATION)	
	6F-3930	1	CORE-VALVE	
	9K-7951	1	CAP-VALVE (STEM)	
	7D-5252	1	SPUD AS	
	2D-2507	1	SPUD	
	2D-2508	1	GROMMET	
	2D-2509	1	LOCKNUT (11/16-16-THD)	

<END>

252-0108 WHEEL GP

S/N: B9D1-UP

PART OF 252-0666, 252-0674, 252-0678, 252-0682, 252-0686, 252-0692, 252-0696, 252-0700, 252-0707, 252-0713, 252-0719, 305-6155 WHEEL & TIRE GP, 252-0115, 252-0116 WHEEL AR

SMCS-4006, 4201, 4208 **i02781628**

NOTE	PART NUMBER	QTY	PART NAME 1 2 3 4 5 6 (PRODUCT LEVEL)	SEE PAGE
Y	*252-0102*	1	WHEEL GP	442
	2D-2565	1	SEAL-O-RING	
	110-4213	1	VALVE GP-TIRE (TIRE INFLATION)	
	7D-5252	1	SPUD AS	
	2D-2507	1	SPUD	
	2D-2508	1	GROMMET	
	2D-2509	1	LOCKNUT (11/16-16-THD)	
	110-4214	1	STEM AS	
	6F-3930	1	CORE-VALVE	
	9K-7951	1	CAP-VALVE (STEM)	

Y-SEPARATE ILLUSTRATION

<END>

252-0110 WHEEL GP

S/N: B9D1-UP

PART OF 250-9709, 252-0676, 252-0680, 252-0684, 252-0688, 252-0694, 252-0698, 252-0709, 252-0715, 252-0721, 305-6161 WHEEL & TIRE GP, 252-0116 WHEEL AR

SMCS-4006, 4201, 4208 **i02781680**

NOTE	PART NUMBER	QTY	PART NAME 1 2 3 4 5 6 (PRODUCT LEVEL)	SEE PAGE
Y	*250-9786*	1	WHEEL GP	440
	2D-2565	1	SEAL-O-RING	
	280-7327	1	VALVE GP-TIRE	
	7D-5252	1	SPUD AS	
	2D-2507	1	SPUD	
	2D-2508	1	GROMMET	
	2D-2509	1	LOCKNUT (11/16-16-THD)	
	280-7329	1	STEM AS	
	6F-3930	1	CORE-VALVE	
	9K-7951	1	CAP-VALVE (STEM)	

Y-SEPARATE ILLUSTRATION

<END>

252-0111 WHEEL GP

S/N: B9D1-UP

(13X25)

PART OF 254-7941, 254-7942, 254-7944, 254-7945, 254-7948, 254-7949, 254-7951, 254-7952, 254-7953, 254-7954, 254-7955, 254-7956, 310-7301, 310-7305, 310-7307, 310-7312, 311-6078 WHEEL & TIRE GP, 252-0117 WHEEL AR

SMCS-4006, 4201, 4208 **i02781762**

NOTE	PART NUMBER	QTY	PART NAME 1 2 3 4 5 6 (PRODUCT LEVEL)	SEE PAGE
	252-0100	1	RIM AS	
	2G-6595	1	VALVE GP-TIRE (TIRE INFLATION)	
	6F-3930	1	CORE-VALVE	
	9K-7951	1	CAP-VALVE (STEM)	
	7D-5252	1	SPUD AS	
	2D-2507	1	SPUD	
	2D-2508	1	GROMMET	
	2D-2509	1	LOCKNUT (11/16-16-THD)	

<END>

252-0112 WHEEL GP

S/N: B9D1-UP

PART OF 252-0774 WHEEL & TIRE AR, 252-0726, 252-0730, 252-0734, 252-0748, 252-0752, 252-0757, 252-0762, 252-0766, 252-0770, 252-0776, 252-0791, 305-6227, 305-6230, 311-6080 WHEEL & TIRE GP, 252-0118, 252-0119 WHEEL AR

SMCS-4006, 4201, 4208 **i02781820**

NOTE	PART NUMBER	QTY	PART NAME 1 2 3 4 5 6 (PRODUCT LEVEL)	SEE PAGE
Y	*252-0104*	1	WHEEL GP	443
	4K-4879	1	SEAL-O-RING	
	2G-6595	1	VALVE GP-TIRE (TIRE INFLATION)	
	6F-3930	1	CORE-VALVE	
	9K-7951	1	CAP-VALVE (STEM)	
	7D-5252	1	SPUD AS	
	2D-2507	1	SPUD	
	2D-2508	1	GROMMET	
	2D-2509	1	LOCKNUT (11/16-16-THD)	

Y-SEPARATE ILLUSTRATION

<END>

252-0113 WHEEL GP

S/N: B9D1-UP

PART OF 250-9691 WHEEL & TIRE AR, 250-9779, 252-0728, 252-0732, 252-0746, 252-0750, 252-0754, 252-0760, 252-0764, 252-0772, 252-0778, 311-6079 WHEEL & TIRE GP, 252-0119 WHEEL AR

SMCS-4006, 4201, 4208 **i02781303**

NOTE	PART NUMBER	QTY	PART NAME 1 2 3 4 5 6 (PRODUCT LEVEL)	SEE PAGE
Y	*250-9788*	1	WHEEL GP	441
	4K-4879	1	SEAL-O-RING	
	264-8214	1	VALVE GP-TIRE (TIRE INFLATION)	
	264-8233	1	STEM AS-VALVE	
	6F-3930	1	CORE-VALVE	
	9K-7951	1	CAP-VALVE (STEM)	
	7D-5252	1	SPUD AS	
	2D-2507	1	SPUD	
	2D-2508	1	GROMMET	
	2D-2509	1	LOCKNUT (11/16-16-THD)	

Y-SEPARATE ILLUSTRATION

<END>

FRAME AND BODY

260-7451 AXLE AR-FRONT

S/N: B9D1-UP

PART OF 278-3419 AXLE AR-FRONT

SMCS-4303, 4305, 4313, 5225 **i02788001**

NOTE	REF NO	GRAPHIC REF	PART NUMBER	QTY	PART NAME 1 2 3 4 5 6 (PRODUCT LEVEL)	SEE PAGE
Y	1	1	*260-7453*	1	AXLE GP-FRONT	449
Y	2	1	*290-3921*	1	MOUNTING GP-AXLE (FRONT)	485

Y-SEPARATE ILLUSTRATION

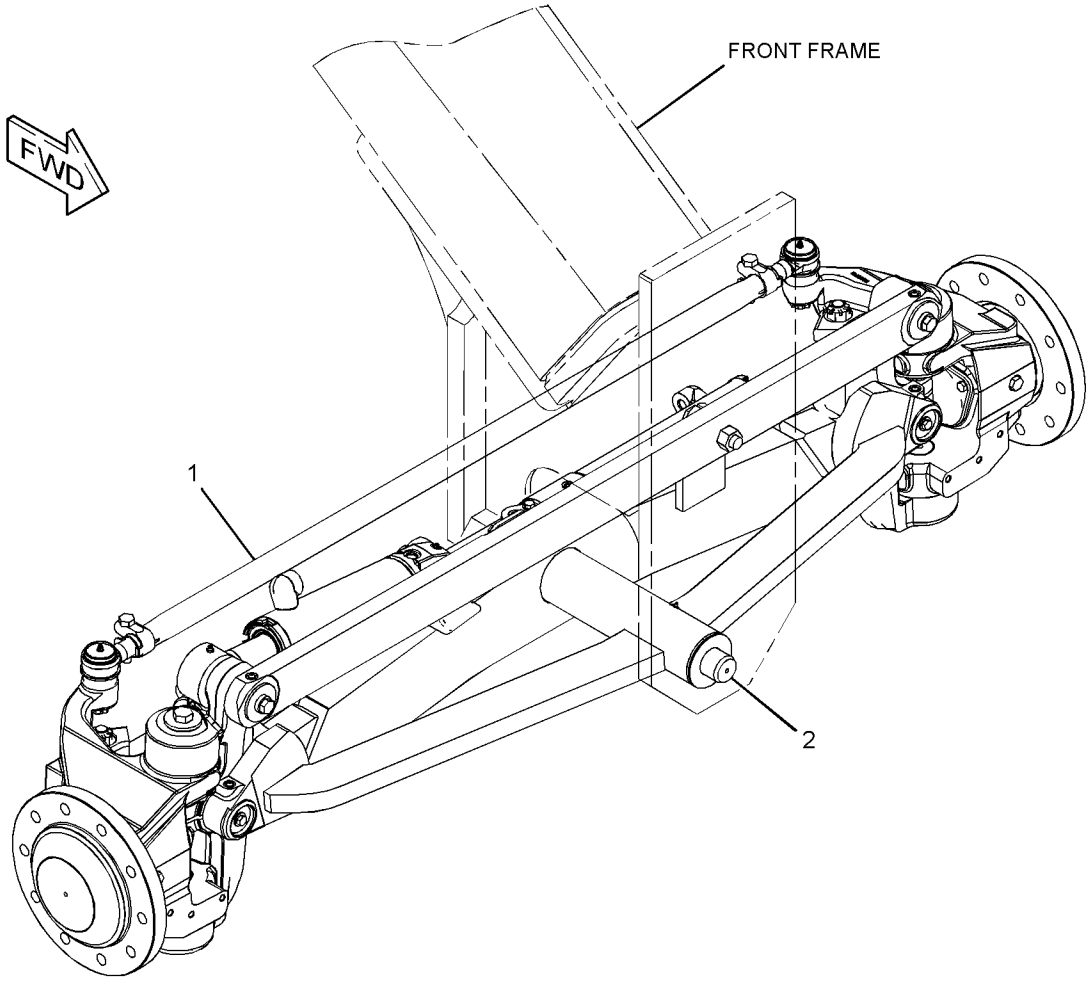

GRAPHIC #1 **<END>** g01339299

FRAME AND BODY

278-3419 AXLE AR-FRONT

S/N: B9D1-UP

SMCS-4303, 4305, 4313, 5225 **i02787817**

NOTE	PART NUMBER	QTY	PART NAME 1 2 3 4 5 6 (PRODUCT LEVEL)	SEE PAGE
Y	*260-7451*	1	AXLE AR-FRONT	447
Y	**278-9732**	1	ENGINE AR-COMPLETE	5
Y	*264-2993*	1	LINES GP-CENTERSHIFT LOCK	567
Y	*289-2081*	1	LINES GP-HYDRAULIC OIL COOLER	593
Y	*255-1566*	1	MOUNTING GP-WHEEL	382
Y	*296-5910*	1	WIRING GP-SENSOR (STEERING CYLINDER POSITION)	314

Y-SEPARATE ILLUSTRATION

<END>

FRAME AND BODY

260-7453 AXLE GP-FRONT

S/N: B9D1-UP

PART OF 260-7451 AXLE AR-FRONT

SMCS-4305, 4313, 5225 **i02787999**

NOTE	REF NO	GRAPHIC REF	PART NUMBER	QTY	PART NAME 1 2 3 4 5 6 (PRODUCT LEVEL)	SEE PAGE
	1	1	**2G-8615**	4	WASHER-THRUST (2.015X3.625X0.11-IN THK)	
	2	1	**2G-8626**	2	WASHER-THRUST (2.02X3.63X0.16-IN THK)	
	3	1	**2G-8741**	4	RING-METAL SEAL	
	4	1	**2G-8777**	4	SEAL	
	5	1	**3B-8486**	2	FITTING-GREASE	
	6	2	**3B-8489**	11	FITTING-GREASE	
R	7	1	**5K-5288**	2	SEAL GP-DUO-CONE	
					(EACH INCLUDES)	
		1	**5K-5129**	2	RING-SEALING	
	8	1	**5T-0906**	2	COVER	
	9	1	**7D-8636**	2	CONE-BEARING	
	10	1	**7D-8637**	2	CUP-BEARING	
	11	1	**7D-8643**	2	RETAINER	
	12	2	**7K-9202**	4	SEAL-LIP TYPE	
	13	1	**030-0060**	2	CUP-BEARING	
	14	1	**030-0061**	2	CONE-BEARING	
	15	2	**155-1142**	3	WASHER (17X71X5-MM THK)	
	16	1	**248-6225**	2	SPINDLE	
	17	1	**257-9799**	4	PIN	
Y	18	2	**260-7455**	1	AXLE GP-FRONT	453
	19	1	**260-7486**	2	PIN	
	20	1	**260-8602**	4	WASHER (11X53.8X3-MM THK)	
Y	21	2	*260-8713*	1	CYLINDER & MTG GP-WHEEL LEAN	543
	22	2	**266-9731**	1	HOUSING-SPINDLE	
	23	1	**266-9732**	1	HOUSING-SPINDLE	
Y	24	2	**274-6816**	1	LINK GP-STEERING	482
	25	2	**279-4353**	1	ARM AS (LH)	
		2	**146-1842**	1	BEARING-SLEEVE	
		2	**146-1843**	1	BEARING-SLEEVE	
		2	**279-4355**	1	PIN	
	26	1	**279-4354**	1	ARM AS (RH)	
		1	**146-1842**	1	BEARING-SLEEVE	
		1	**146-1843**	1	BEARING-SLEEVE	
		1	**279-4356**	1	PIN	
	27	2	**279-4357**	1	BAR AS (WHEEL LEAN)	
		2	**2G-8624**	2	BEARING-SLEEVE	
Y	28	2	*279-5746*	1	CYLINDER & MTG GP-STEERING	542
	29	1	**297-2537**	2	LOCK	
	30	1	*148-8395*	2	PLUG AS	
					(EACH INCLUDES)	
		1	**3K-0360**	1	SEAL-O-RING	
		1	**9S-8005**	1	PLUG-O-RING	
	31	2	**198-4768**	3	WASHER-HARD (17.5X32X8-MM THK)	
	32	1	**266-7315**	2	WASHER-HARD (22X65X6-MM THK)	
	33	1	**2J-8163**	2	SEAL-O-RING	
	34	2	**3B-4618**	2	PIN-COTTER	
	35	1	**5P-8890**	2	SEAL-LIP TYPE	
M	36	1	**6V-5696**	6	BOLT (M12X1.75X80-MM)	
M	37	2	**6V-5844**	3	BOLT (M16X2X35-MM)	
M	38	1	**6V-8133**	2	BOLT (M24X3X80-MM)	
M	39	1	**7X-0851**	2	NUT (M24X3-THD)	
M	40	1	**7X-2561**	4	BOLT (M20X2.5X35-MM)	
	41	1	**7X-7729**	4	WASHER (11X25X3-MM THK)	
M	42	1	**8T-4137**	4	BOLT (M10X1.5X20-MM)	
	43	1	**9M-2092**	4	SEAL-O-RING	
M	44	1	**9X-2125**	4	BOLT-LOCKING (M10X1.5X25-MM)	

NOTE	REF NO	GRAPHIC REF	PART NUMBER	QTY	PART NAME 1 2 3 4 5 6 (PRODUCT LEVEL)	SEE PAGE
B	45	1	**2G-3865**	6	SHIM (0.127-MM THK)	

B-USE AS REQUIRED
M-METRIC PART
R-REMFG PART MAY BE AVAILABLE
Y-SEPARATE ILLUSTRATION

260-7453 **AXLE GP-FRONT** *(contd.)* **i02787999**

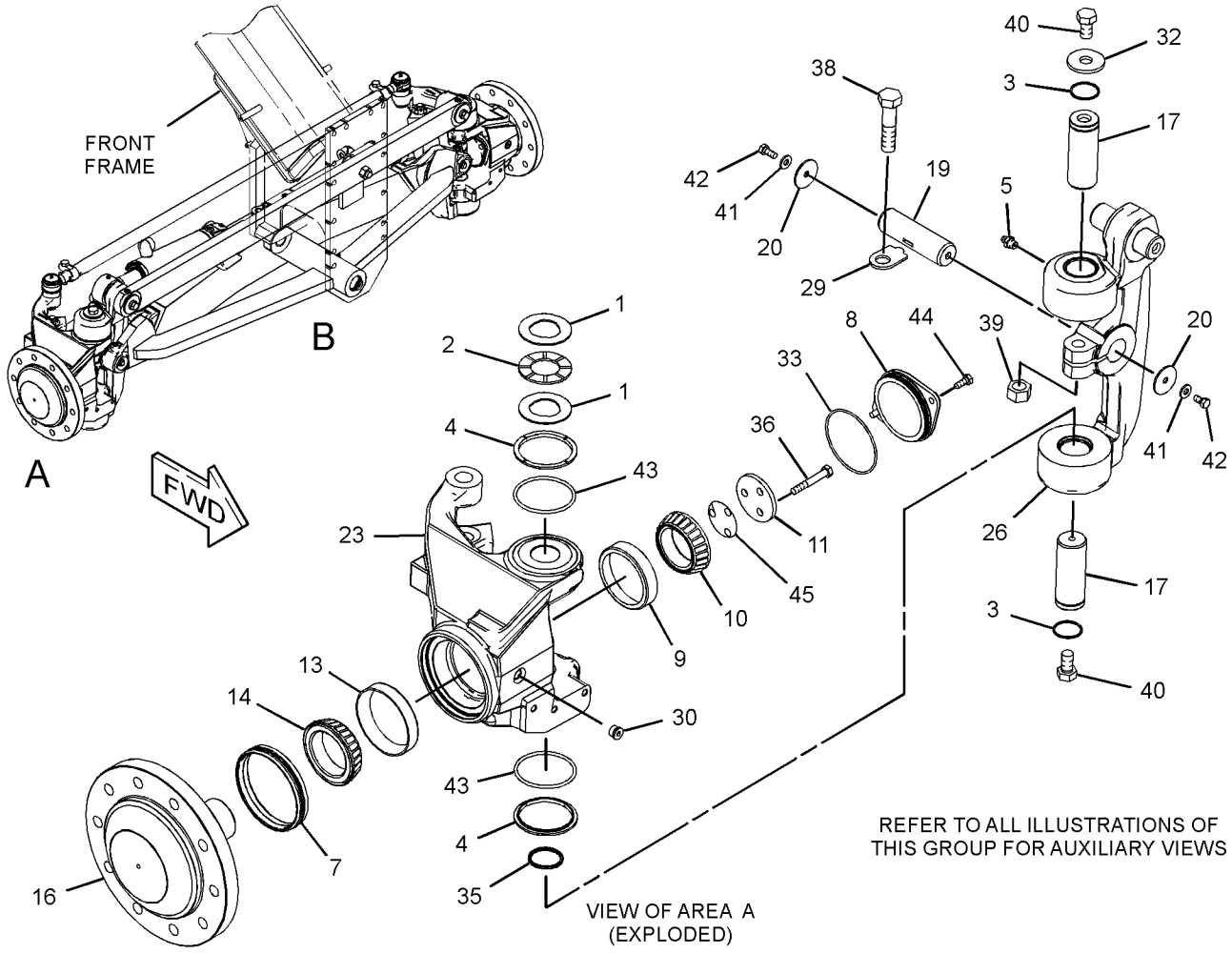

GRAPHIC #1 g01355228

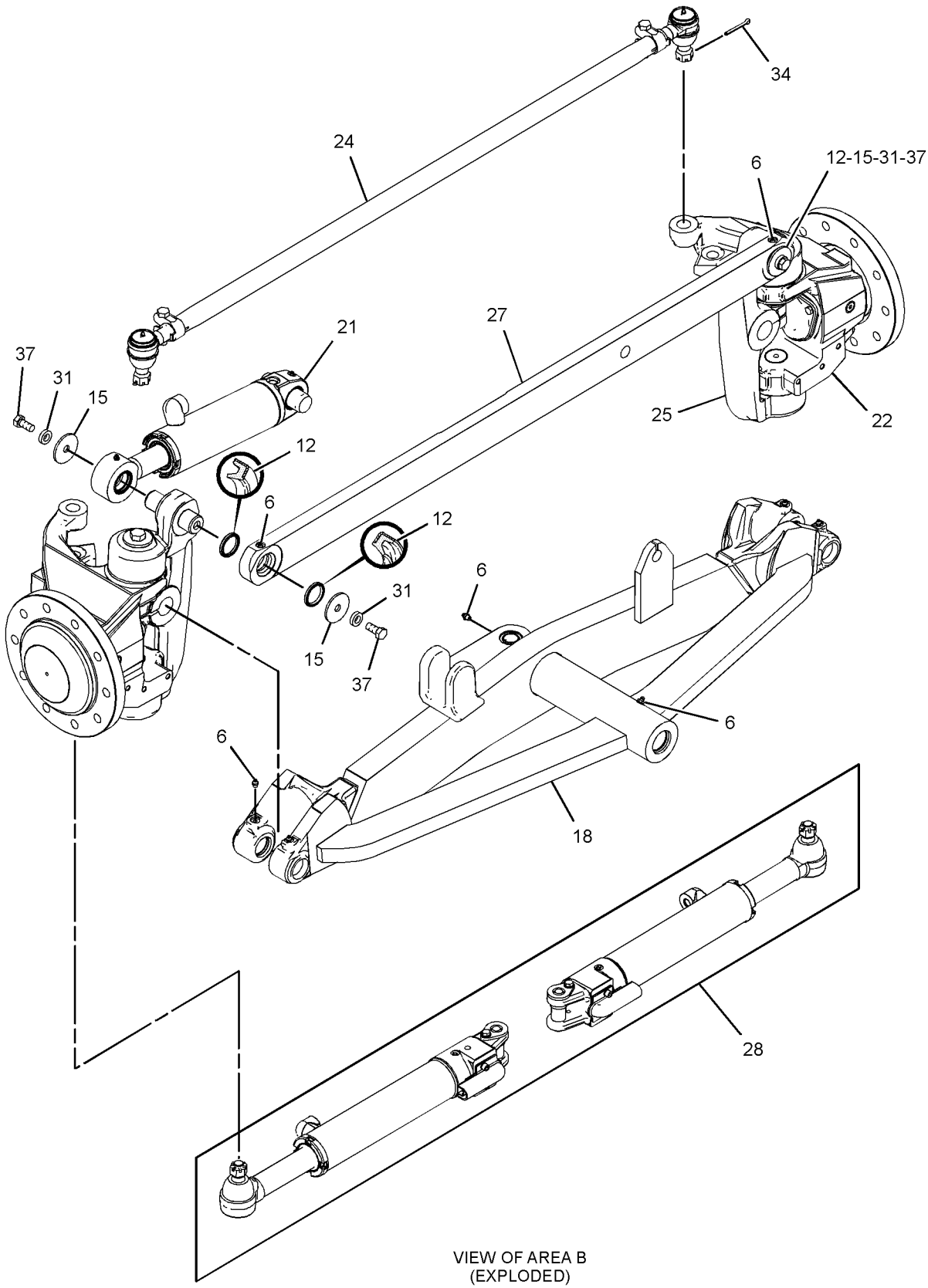

VIEW OF AREA B
(EXPLODED)

GRAPHIC #2 **<END>** g01355250

260-7455 AXLE GP-FRONT—NON-AWD

S/N: B9D1-UP

PART OF 260-7453 AXLE GP-FRONT

SMCS-4305, 4313, 5225 **i02787964**

NOTE	REF NO	GRAPHIC REF	PART NUMBER	QTY	PART NAME 1 2 3 4 5 6 (PRODUCT LEVEL)	SEE PAGE
	1	1	**2D-8652**	2	BEARING	
	2	1	**2G-8631**	4	BEARING-SLEEVE	
	3	1	**7K-9202**	4	SEAL-LIP TYPE	
	4	1	**131-4428**	2	BEARING-SLEEVE	
	5	1	*260-7456*	1	AXLE AS	
		1	**8W-6466**	2	END-AXLE	
		1	**8W-6469**	1	BRACKET	
	6	1	**5P-8843**	2	SEAL-LIP TYPE	

260-7455 AXLE GP-FRONT *(contd.)* **i02787964**

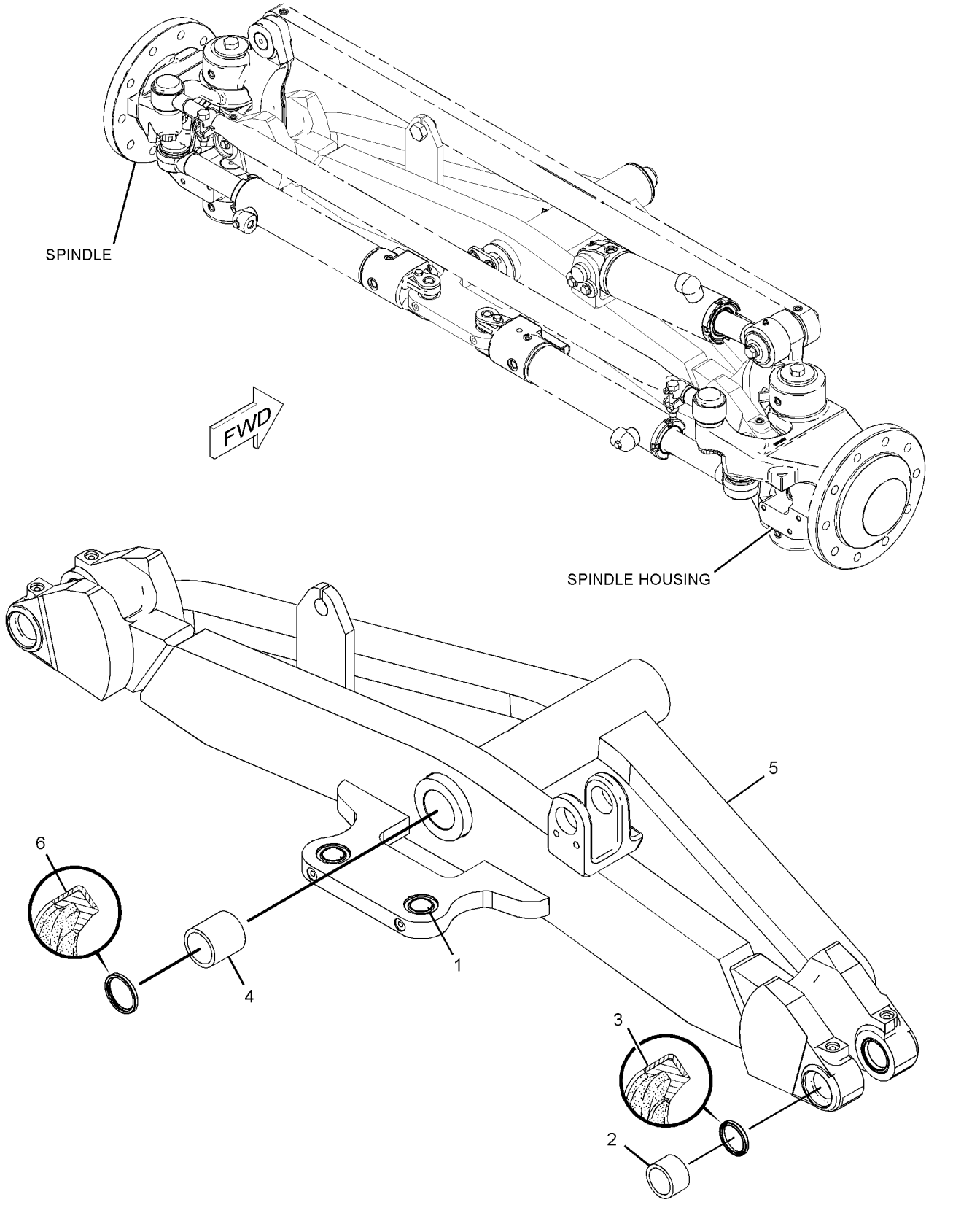

GRAPHIC #1 **<END>** g01394389

238-1916 COVER GP-CONTROL VALVE

S/N: B9D1-UP

PART OF 234-7721 COMMON AR

SMCS-7150 **i02773439**

NOTE	REF NO	GRAPHIC REF	PART NUMBER	QTY	PART NAME 1 2 3 4 5 6 (PRODUCT LEVEL)	SEE PAGE
	1	1	**244-4924**	1	COVER	
	2	1	**248-0322**	2	BRACKET AS	
	3	1	**260-3226**	1	BRACKET AS	
	4	1	**276-3196**	1	BRACKET AS	
	5	1	**290-2160**	1	BRACKET AS	
	6	1	**290-2219**	1	COVER AS	
	7	1	**294-5568**	21	SPACER-SPECIAL	
	8	1	**295-1544**	1	COVER (LH)	
	9	1	**295-1545**	1	COVER (RH)	
	10	1	**295-1550**	1	BRACKET AS	
	11	1	**297-7129**	1	BRACKET AS	
	12	1	**297-7130**	1	BRACKET AS	
	13	1	**297-7131**	1	BRACKET AS	
	14	1	**7X-7729**	42	WASHER (11X25X3-MM THK)	
M	15	1	**8C-8585**	10	SCREW-BUTTON HEAD (M10X1.5X20-MM)	
M	16	1	**8T-4136**	22	BOLT (M10X1.5X25-MM)	
M	17	1	**8T-4137**	27	BOLT (M10X1.5X20-MM)	
M	18	1	**8T-4195**	4	BOLT (M10X1.5X30-MM)	

M-METRIC PART

238-1916 **COVER GP-CONTROL VALVE** *(contd.)* **i02773439**

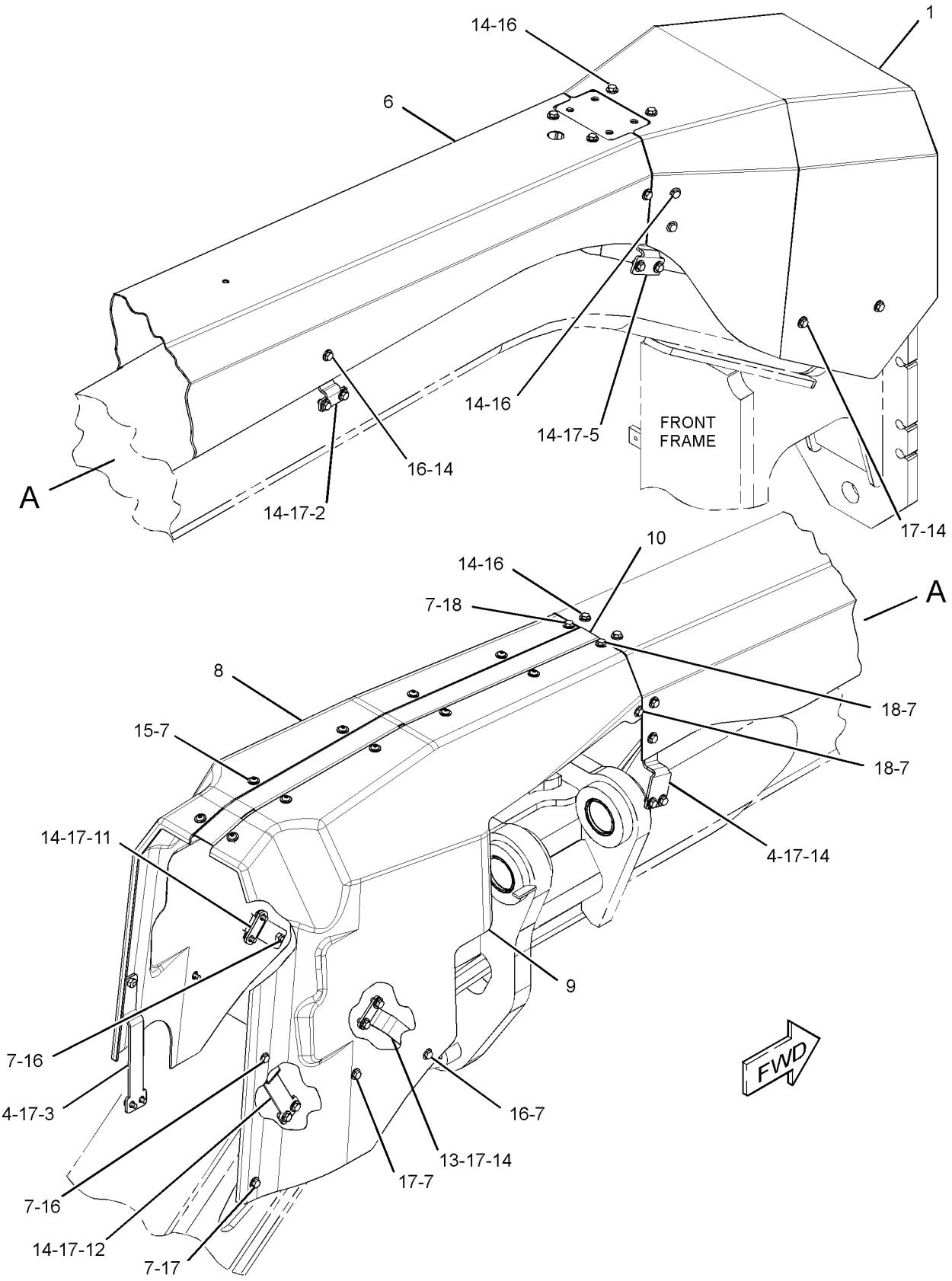

GRAPHIC #1 **<END>** g01337786

290-3527 COVER GP-PROTECTION

S/N: B9D1-UP

PART OF 234-7721 COMMON AR

SMCS-7315 **i02781263**

NOTE	REF NO	GRAPHIC REF	PART NUMBER	QTY	PART NAME 1 2 3 4 5 6 (PRODUCT LEVEL)	SEE PAGE
	1	1	**296-2989**	2	PLATE	
	2	1	**296-2990**	4	BRACKET AS	
					(EACH INCLUDES)	
M		1	**8T-3490**	2	NUT-WELD (M10X1.5-THD)	
	3	1	**8T-4121**	8	WASHER-HARD (11X21X2.5-MM THK)	
M	4	1	**8T-4195**	8	BOLT (M10X1.5X30-MM)	

M-METRIC PART

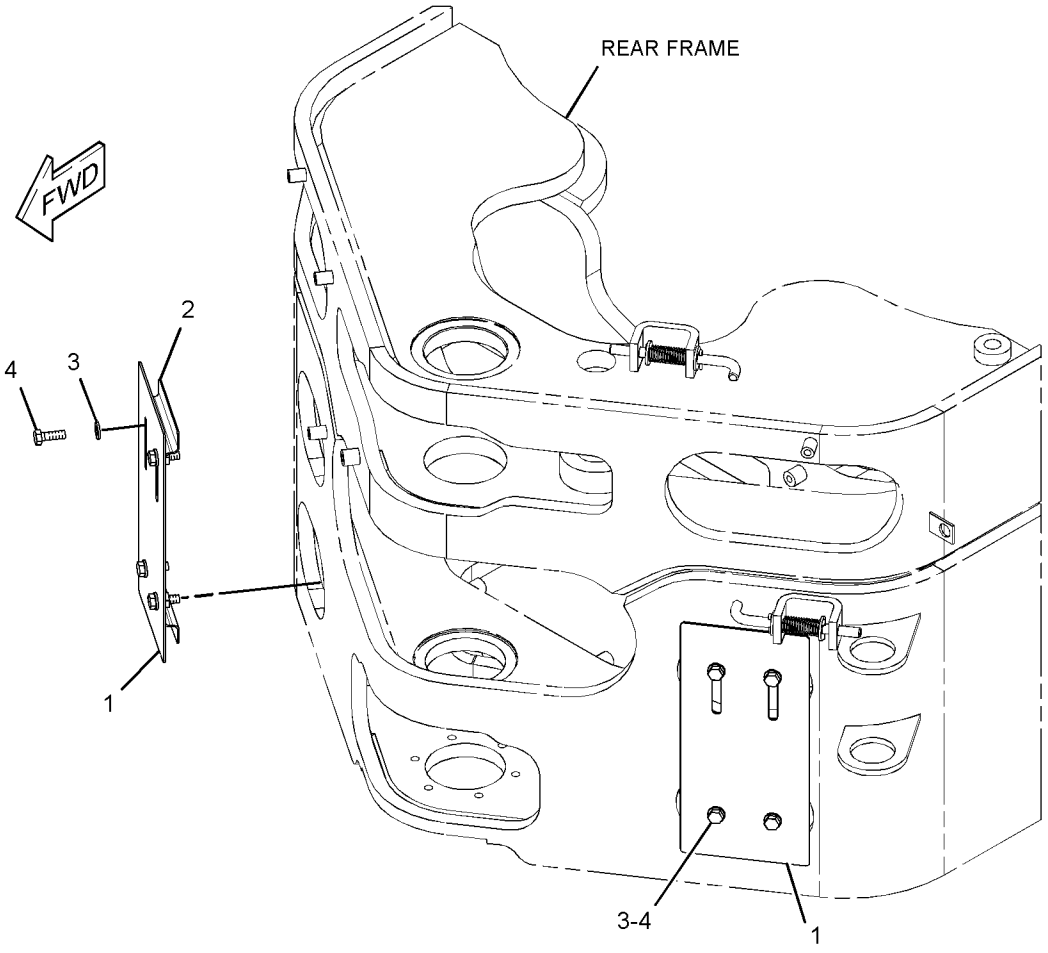

GRAPHIC #1 **<END>** g01330615

FRAME AND BODY

288-8988 ENCLOSURE GP-ENGINE

S/N: B9D1-UP

PART OF 234-7721 COMMON AR

SMCS-7263 **i02781176**

NOTE	REF NO	GRAPHIC REF	PART NUMBER	QTY	PART NAME 1 2 3 4 5 6 (PRODUCT LEVEL)	SEE PAGE
	1	3	**7X-1387**	9	WASHER (10.26X22.22X1.9-MM THK)	
	2	2,3	**227-3101**	2	STRIKER AS	
	3	2,3	**227-3103**	2	PLATE	
	4	1,2	**245-2806**	2	HANDHOLD	
	5	1	**245-2807**	1	BRACKET AS	
M		1	**8T-3490**	6	NUT-WELD (M10X1.5-THD)	
M		1	**8T-3612**	4	NUT-WELD (M8X1.25-THD)	
	6	1,2	**245-2827**	2	HANDRAIL	
	7	1	**267-5503**	2	HANDRAIL	
	8	1	**283-9428**	1	PLATE AS	
M		1	**8T-3490**	4	NUT-WELD (M10X1.5-THD)	
	9	1	**283-9433**	1	FRAME AS	
		1	**1V-8284**	2	HINGE	
		1	**7T-1099**	7	LINK	
M		1	**8T-3490**	11	NUT-WELD (M10X1.5-THD)	
		1	**087-5841**	1	PLATE	
		1	**130-5300**	1	CLIP	
	10	1	**283-9484**	2	HINGE AS	
	11	2	**284-0424**	1	PANEL AS	
		2	**304-7620**	4	BUMPER	
	12	1	**284-0438**	1	PANEL AS	
	13	2	**284-0525**	1	PLATE AS	
		2	**1V-8284**	2	HINGE	
		2	**7T-1099**	4	LINK	
M		2	**8T-3490**	11	NUT-WELD (M10X1.5-THD)	
		2	**087-5841**	1	PLATE	
		2	**130-5300**	1	CLIP	
	14	3	**284-0565**	1	GUARD AS	
	15	2	**284-7994**	1	PANEL AS	
	16	1	**285-8940**	1	DASH AS	
	17	2,3	**285-9034**	2	ROD AS	
	18	3	**285-9036**	1	ROD AS	
	19	1	**286-5626**	1	BRACKET AS	
	20	2,3	**286-8292**	3	PLATE-STRIKER	
	21	2,3	**288-8990**	1	FRAME AS	
M		2,3	**8T-3490**	17	NUT-WELD (M10X1.5-THD)	
M		2,3	**8T-3612**	9	NUT-WELD (M8X1.25-THD)	
		2,3	**9G-9155**	1	CLIP	
	22	1	**288-9007**	1	FRAME AS	
M		1	**8T-3490**	17	NUT-WELD (M10X1.5-THD)	
M		1	**8T-3612**	2	NUT-WELD (M8X1.25-THD)	
	23	1	**288-9013**	1	DOOR AS	
M		1	**8T-3490**	2	NUT-WELD (M10X1.5-THD)	
		1	**288-9014**	1	DOOR	
		1	**304-7620**	4	BUMPER	
	24	2	**288-9017**	1	DOOR AS	
M		2	**8T-3490**	2	NUT-WELD (M10X1.5-THD)	
		2	**304-7620**	4	BUMPER	
	25	1	**288-9022**	1	BRACKET AS	
M		1	**8T-3490**	10	NUT-WELD (M10X1.5-THD)	
Y	26	1	*288-9588*	1	HOOD GP (ENGINE)	480
	27	1	**289-8674**	1	PLATE AS	
	28	2	**291-0911**	1	PANEL AS	
	29	1	**291-0927**	1	PANEL AS	
	30	2	**292-3091**	2	BAR	
	31	1	**292-3092**	1	COVER AS	

288-8988 **ENCLOSURE GP-ENGINE** ***(contd.)*** **i02781176**

NOTE	REF NO	GRAPHIC REF	PART NUMBER	QTY	PART NAME 1 2 3 4 5 6 (PRODUCT LEVEL)	SEE PAGE
M		1	**8T-3490**	3	NUT-WELD (M10X1.5-THD)	
	32	2,3	**294-2382**	3	LATCH AS	
	33	3	**295-1578**	2	BRACKET AS	
	34	2,3	**295-3839**	3	PAWL	
	35	1,2	**198-4777**	10	WASHER-HARD (11X25X10-MM THK)	
	36	1,2	**198-4778**	12	WASHER-HARD (13.5X30X12-MM THK)	
	37	2,3	**198-4780**	8	WASHER-HARD (17.5X32X8-MM THK)	
	38	3	**3B-4615**	9	PIN-COTTER	
M	39	1	**5C-7261**	4	NUT (M8X1.25-THD)	
	40	1,2,3,3	**5P-4116**	15	WASHER-HARD (8.8X20.5X2-MM THK)	
	41	3	**5P-8439**	3	GROMMET	
M	42	3	**7X-2555**	1	BOLT (M16X2X80-MM)	
	43	1,2,3	**7X-7729**	130	WASHER (11X25X3-MM THK)	
M	44	1,2	**8T-4133**	18	NUT (M10X1.5-THD)	
M	45	1,2,3	**8T-4136**	79	BOLT (M10X1.5X25-MM)	
M	46	1	**8T-4137**	5	BOLT (M10X1.5X20-MM)	
M	47	2,3	**8T-4140**	7	BOLT (M16X2X60-MM)	
M	48	2	**8T-4184**	4	BOLT (M12X1.75X45-MM)	
M	49	1,2	**8T-4185**	8	BOLT (M10X1.5X50-MM)	
M	50	1,2	**8T-4189**	31	BOLT (M8X1.25X20-MM)	
M	51	1,2,3	**8T-4195**	18	BOLT (M10X1.5X30-MM)	
M	52	1,2	**8T-4196**	12	BOLT (M10X1.5X35-MM)	
	53	1,2,3	**8T-4224**	37	WASHER-HARD (8.8X16X2-MM THK)	
M	54	1,2,3	**8T-4908**	17	BOLT (M8X1.25X25-MM)	
M	55	1,2	**8T-4956**	8	BOLT (M12X1.75X35-MM)	
	56	1,2	**308-7777**	2	PLATE	
D	57	1	**6V-5746**		TRIM (0.6-M)	

D-ORDER BY THE METER
M-METRIC PART
Y-SEPARATE ILLUSTRATION

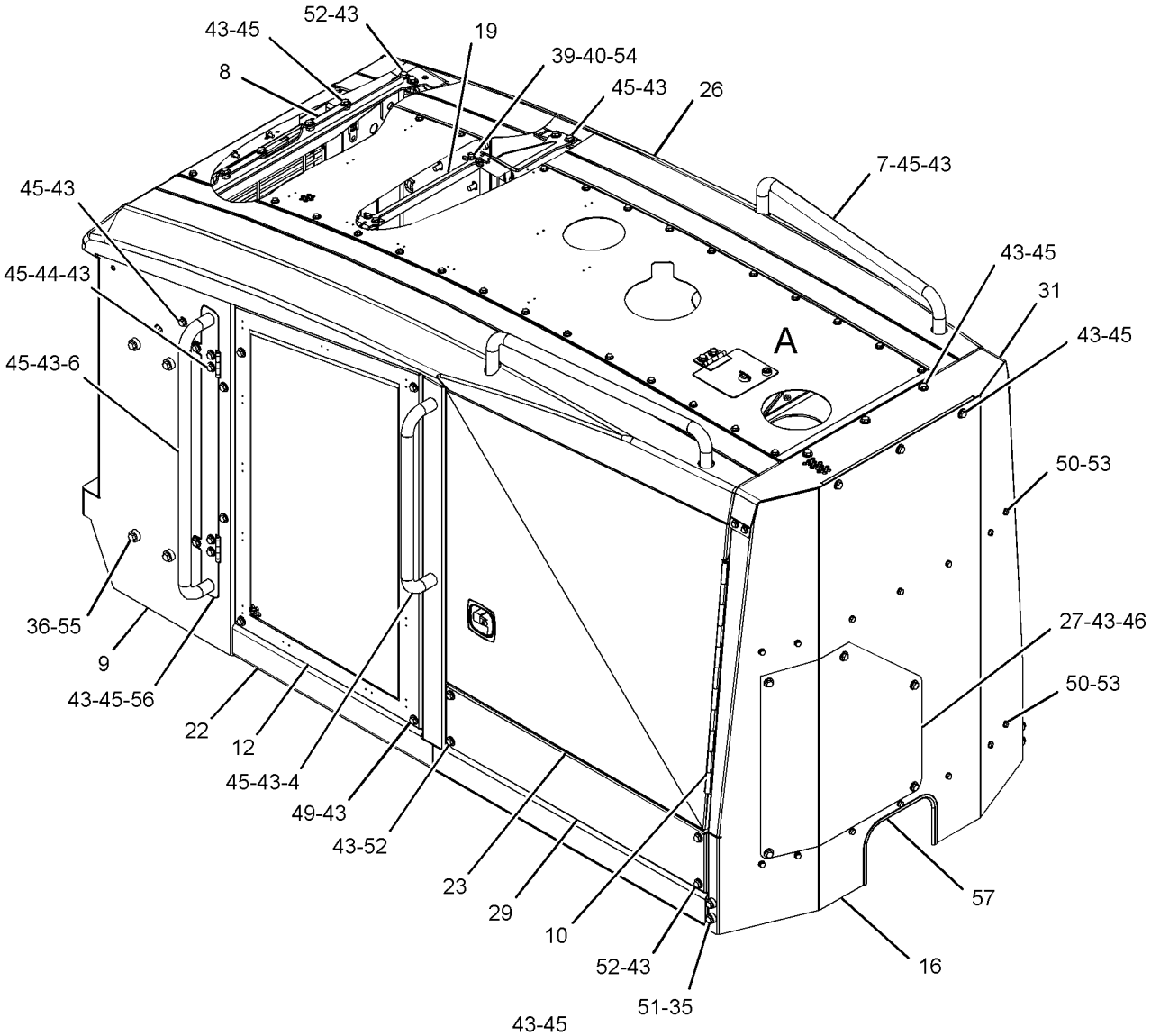

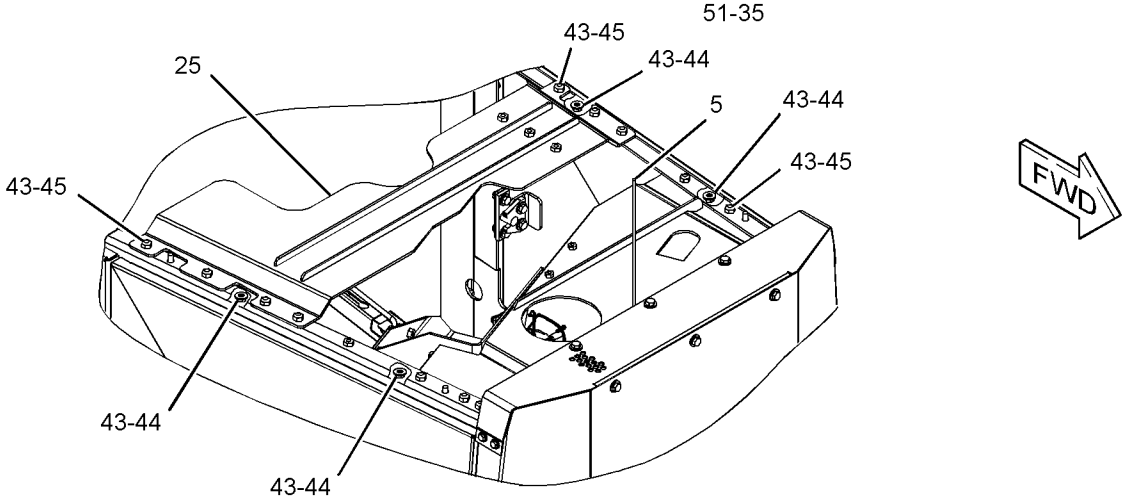

VIEW OF AREA A
(HOOD REMOVED)

GRAPHIC #1

g01369065

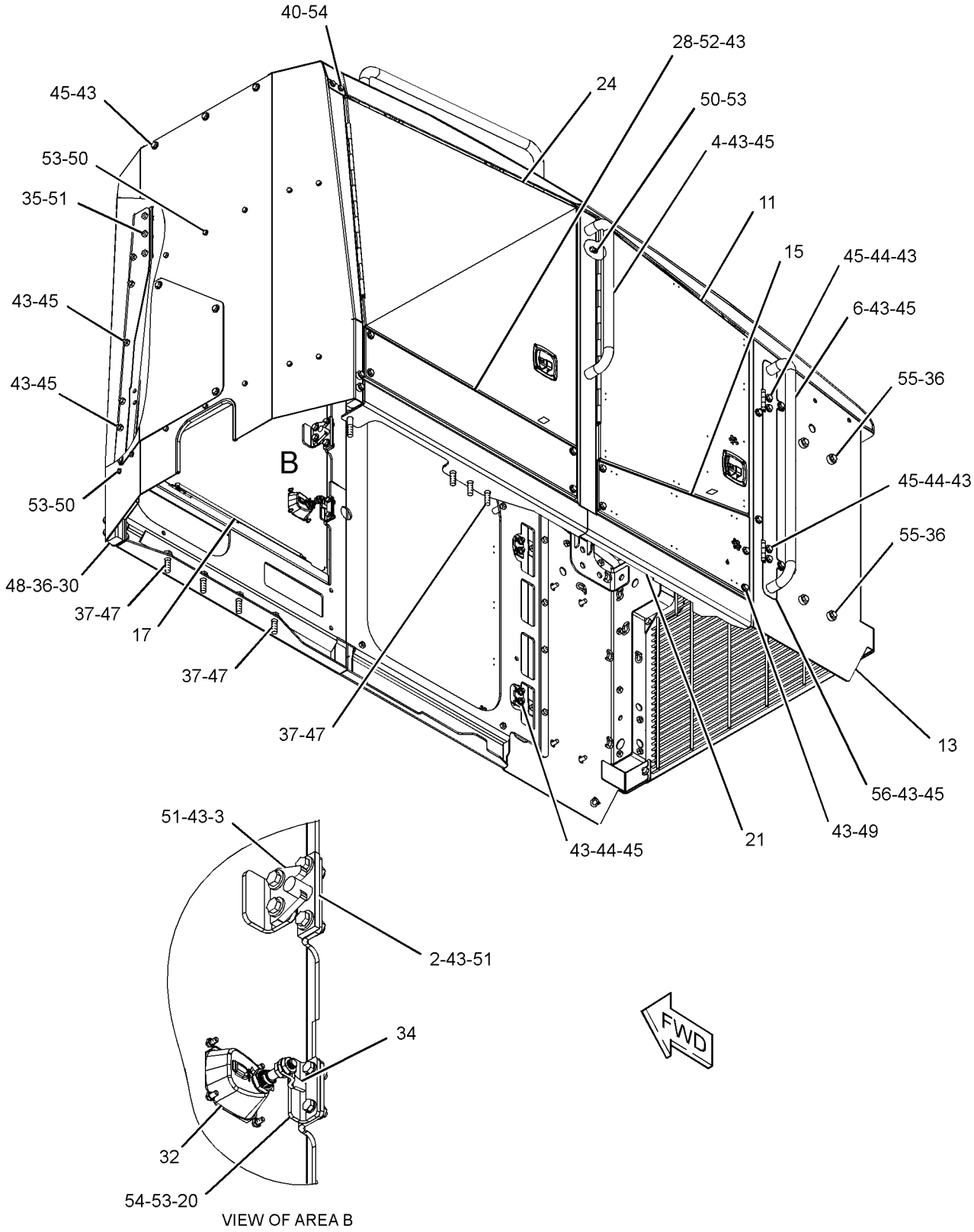

GRAPHIC #2 g01369066

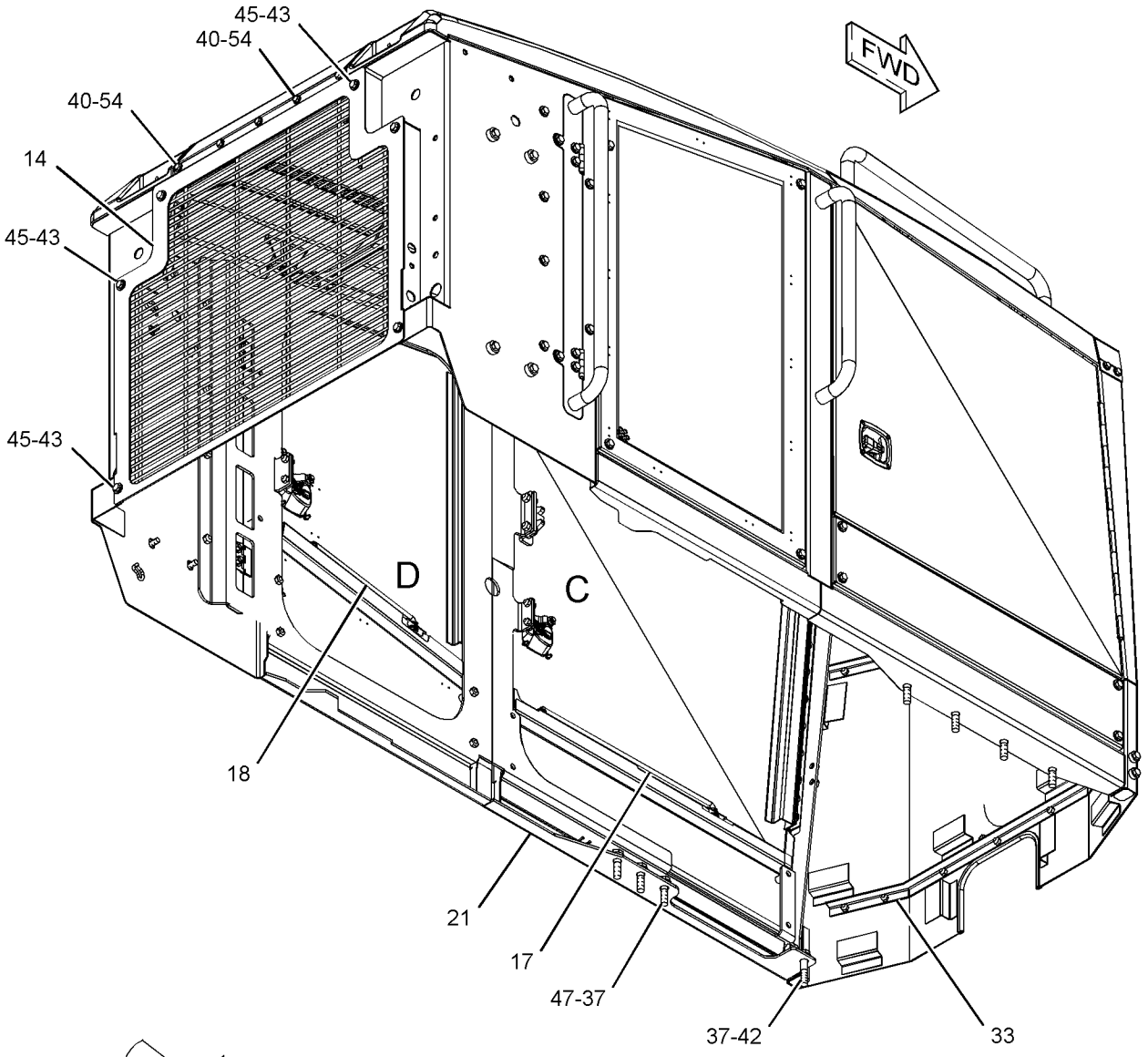

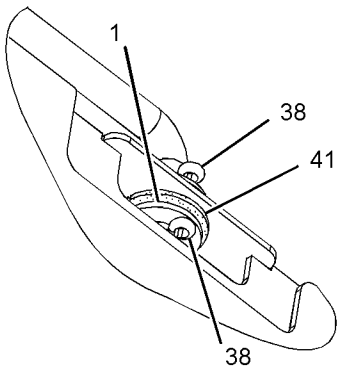

VIEW OF AREA D

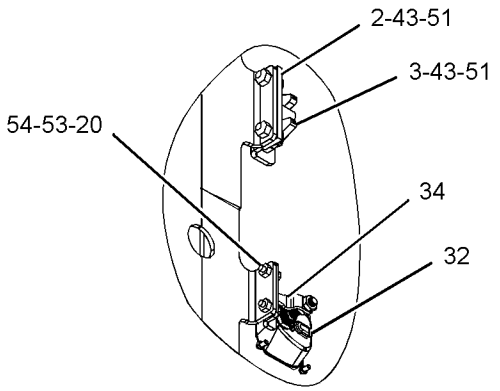

VIEW OF AREA C

GRAPHIC #3 **<END>** g01369068

258-1536 FASTENER GP–SONIC SENSOR

S/N: B9D1-UP

PART OF 286-0132, 286-0133 SENSOR GP-SONIC

SMCS-7510 **i02788719**

NOTE	REF NO	GRAPHIC REF	PART NUMBER	QTY	PART NAME 1 2 3 4 5 6 (PRODUCT LEVEL)	SEE PAGE
	1	1	**8T-8917**	4	BOLT (1/2-13X1.25-IN)	
	2	1	**5S-7385**	4	LOCKWASHER	

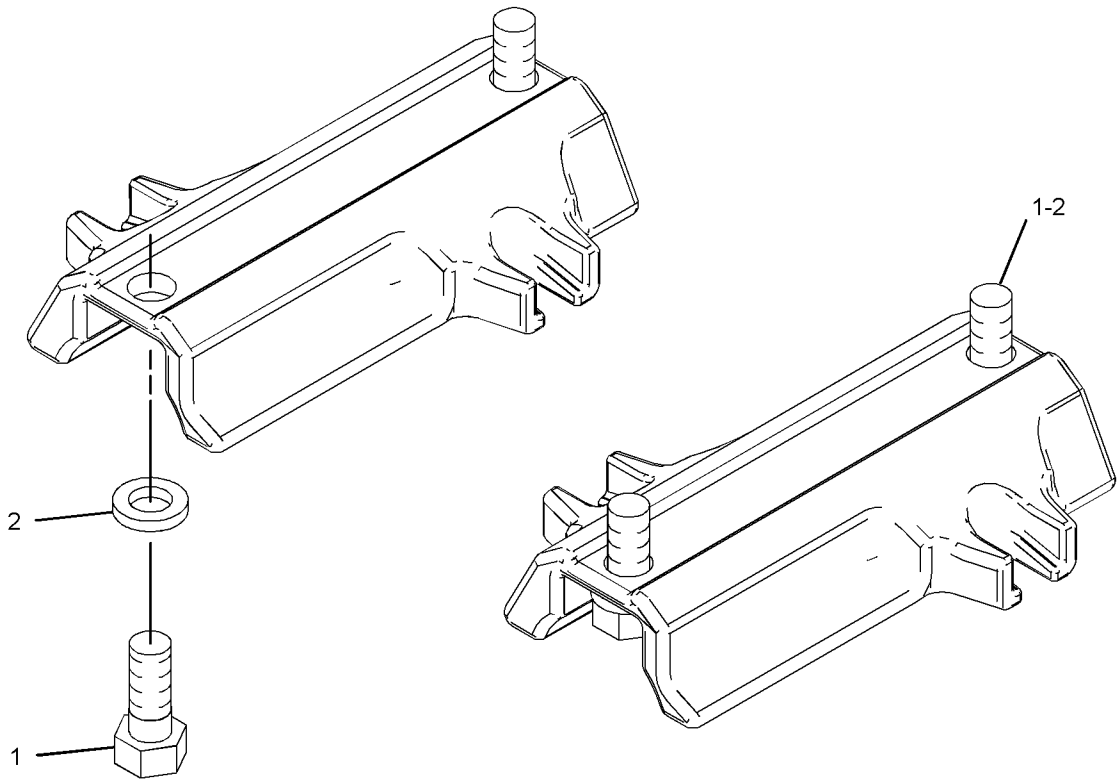

GRAPHIC #1 **<END>** g01394847

FRAME AND BODY

297-6867 FASTENER GP

S/N: KHX238-UP

PART OF 231-0878, 278-9732 ENGINE AR-COMPLETE

SMCS-7510 **i02789819**

NOTE	REF NO	GRAPHIC REF	PART NUMBER	QTY	PART NAME 1 2 3 4 5 6 (PRODUCT LEVEL)	SEE PAGE
M	1	1	**5C-7261**	1	NUT (M8X1.25-THD)	
	2	1	**8T-4224**	2	WASHER-HARD (8.8X16X2-MM THK)	

M-METRIC PART

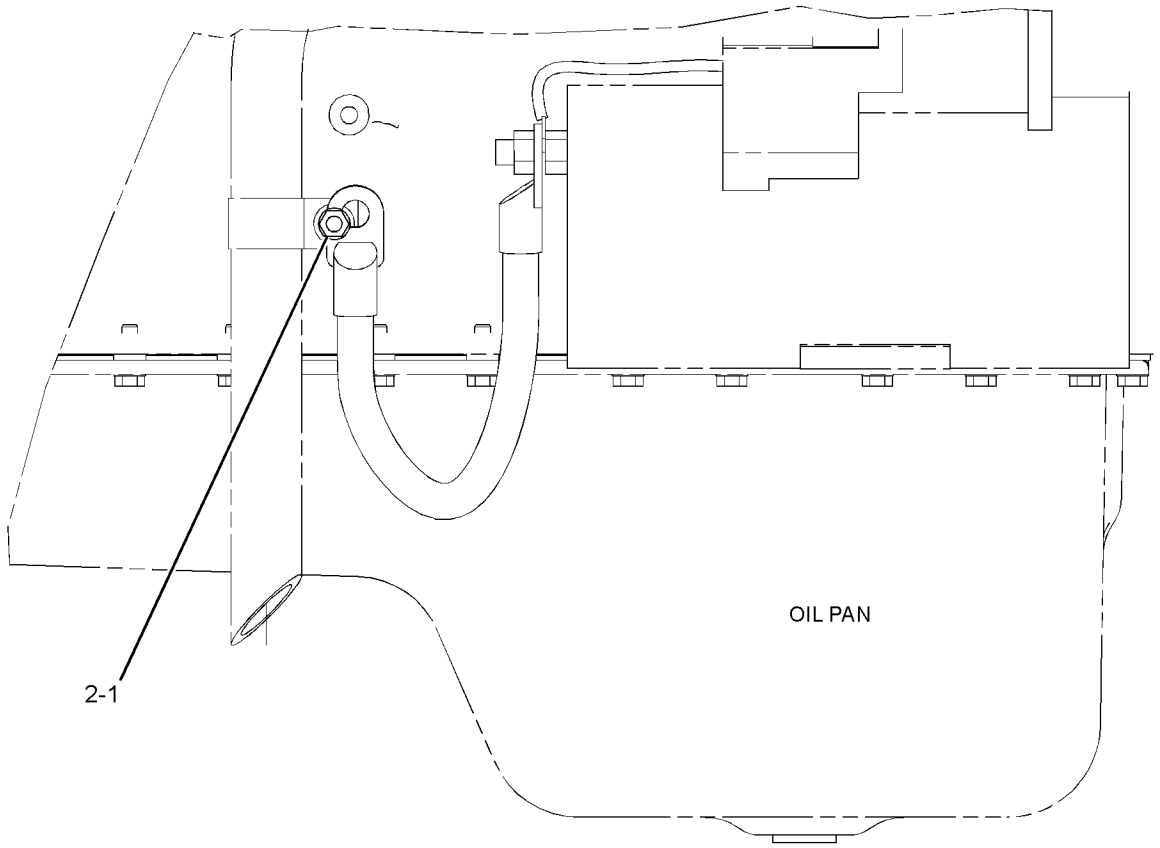

LEFT SIDE VIEW OF ENGINE

GRAPHIC #1 **<END>** g01352470

231-5052 FENDER & SUPPORT GP–FRONT

S/N: B9D1-UP

CANNOT BE USED WITH 262-0412–PAGE 467

SMCS-7252 **i02773408**

NOTE	REF NO	GRAPHIC REF	PART NUMBER	QTY	PART NAME 1 2 3 4 5 6 (PRODUCT LEVEL)	SEE PAGE
	1	1	**246-3486**	2	FENDER	
	2	1	**246-3511**	8	PLATE AS	
	3	1	**262-3963**	2	SUPPORT AS	
	4	1	**263-5526**	1	TUBE AS (RH)	
	5	1	**263-5527**	1	TUBE AS (LH)	
	6	1	**263-5528**	1	TUBE AS (RH)	
	7	1	**263-5529**	1	TUBE AS (LH)	
	8	1	**263-7814**	1	BRACKET AS (RH)	
	9	1	**263-7815**	1	BRACKET AS (LH)	
M	10	1	**096-5866**	16	BOLT (M8X1.25X75-MM)	
M	11	1	**160-8492**	16	BOLT (M10X1.5X85-MM)	
	12	1	**7X-0622**	18	WASHER (13X24X2.5-MM THK)	
	13	1	**8T-4121**	32	WASHER-HARD (11X21X2.5-MM THK)	
M	14	1	**8T-4133**	16	NUT (M10X1.5-THD)	
M	15	1	**8T-4139**	6	BOLT (M12X1.75X30-MM)	
M	16	1	**8T-4184**	12	BOLT (M12X1.75X45-MM)	
	17	1	**8T-4224**	16	WASHER-HARD (8.8X16X2-MM THK)	

M-METRIC PART

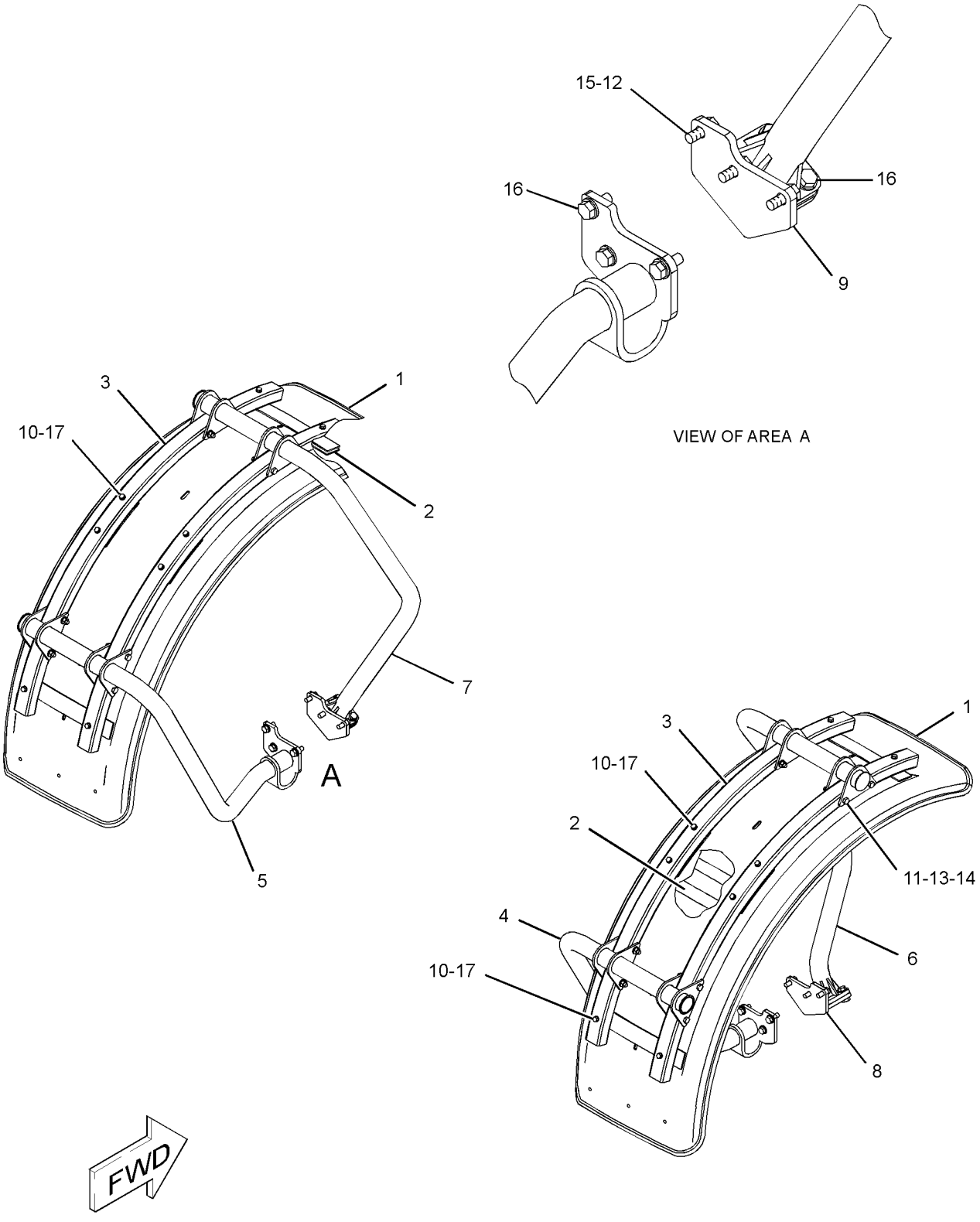

GRAPHIC #1 **<END>** g01341120

FRAME AND BODY

262-0412 FENDER & SUPPORT GP

S/N: B9D1-UP

FOR USE WITH ALL WHEEL DRIVE ARRANGEMENT

SMCS-7252 **i02786761**

NOTE	REF NO	GRAPHIC REF	PART NUMBER	QTY	PART NAME 1 2 3 4 5 6 (PRODUCT LEVEL)	SEE PAGE
	1	1	**246-3483**	8	PLATE	
	2	1	**246-3486**	2	FENDER	
	3	1	**262-3963**	2	SUPPORT AS	
	4	1	**262-3969**	1	TUBE AS (RH)	
	5	1	**262-3970**	1	TUBE AS (RH)	
	6	1	**262-3971**	1	TUBE AS (LH)	
	7	1	**262-3972**	1	TUBE AS (LH)	
	8	1	**271-3567**	16	BOLT (M10X1.5X86-MM)	
	9	1	**145-5181**	12	SPACER (13.5X25X12-MM THK)	
M	10	1	**6V-9189**	16	LOCKNUT (M8X1.25-THD)	
	11	1	**8T-4121**	32	WASHER-HARD (11X21X2.5-MM THK)	
M	12	1	**8T-4133**	16	NUT (M10X1.5-THD)	
M	13	1	**8T-4183**	12	BOLT (M12X1.75X40-MM)	
	14	1	**8T-4224**	32	WASHER-HARD (8.8X16X2-MM THK)	
M	15	1	**8T-6870**	16	BOLT (M8X1.25X70-MM)	

M-METRIC PART

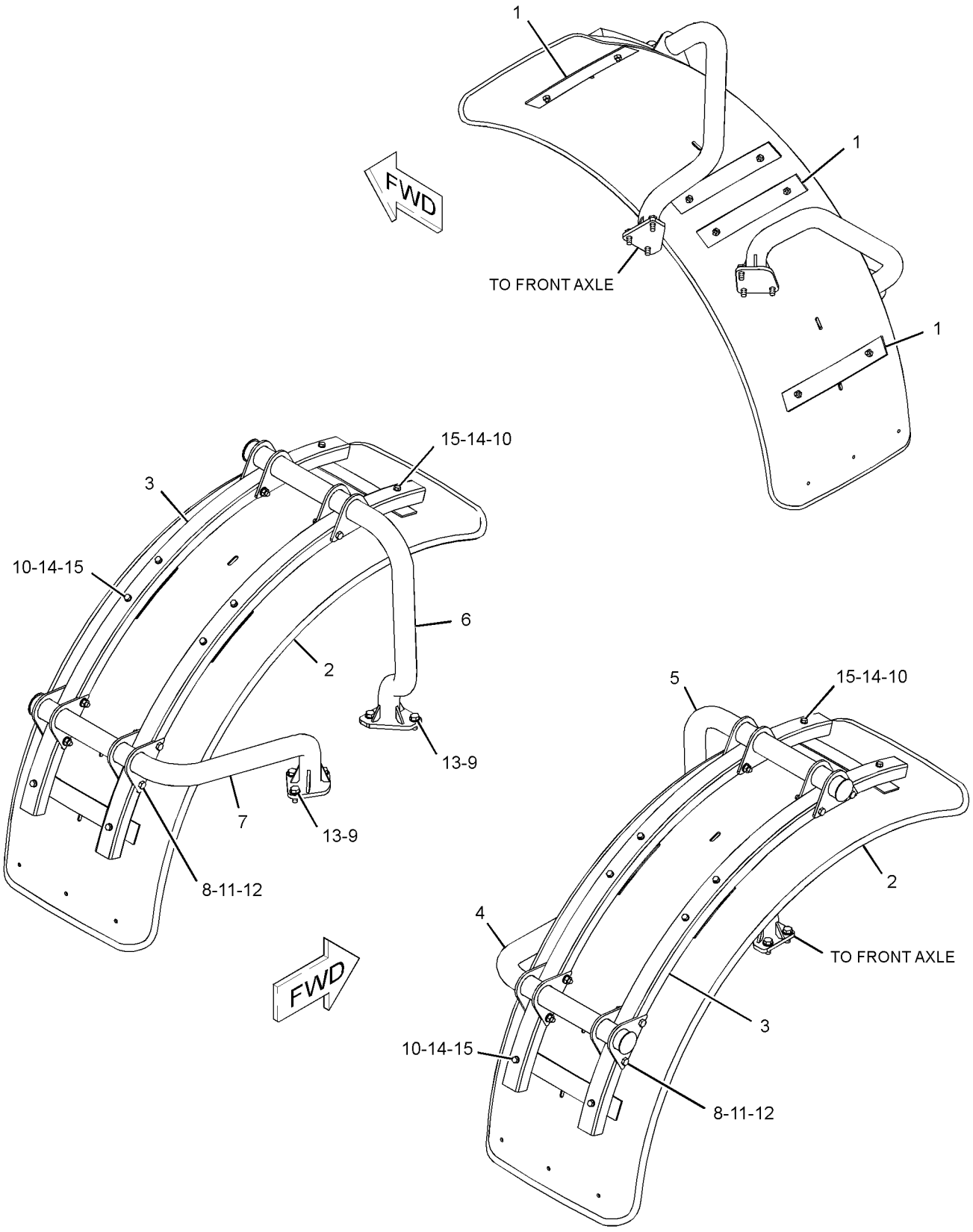

GRAPHIC #1

<END>

g01342335

262-0413 FENDER & SUPPORT GP–REAR

S/N: B9D1-UP

PART OF 250-3818 ROADING AR

SMCS-7252 **i02783261**

NOTE	REF NO	GRAPHIC REF	PART NUMBER	QTY	PART NAME 1 2 3 4 5 6 (PRODUCT LEVEL)	SEE PAGE
	1	1	**195-2274**	2	FILM-STRIPE (YELLOW, REFLECTIVE)	
	2	1	**248-3303**	1	SUPPORT AS	
M		1	**8T-3490**	4	NUT-WELD (M10X1.5-THD)	
M		1	**8T-3612**	3	NUT-WELD (M8X1.25-THD)	
	3	1	**248-3304**	1	SUPPORT AS	
M		1	**8T-3490**	4	NUT-WELD (M10X1.5-THD)	
M		1	**8T-3612**	3	NUT-WELD (M8X1.25-THD)	
	4	1	**248-6883**	1	SUPPORT AS	
M		1	**8T-3490**	6	NUT-WELD (M10X1.5-THD)	
M		1	**8T-3612**	5	NUT-WELD (M8X1.25-THD)	
	5	1	**248-6884**	1	SUPPORT AS	
M		1	**8T-3490**	6	NUT-WELD (M10X1.5-THD)	
M		1	**8T-3612**	5	NUT-WELD (M8X1.25-THD)	
	6	1	**251-1140**	2	FENDER	
	7	1	**251-1141**	1	COVER	
	8	1	**251-1142**	1	COVER	
	9	1	**284-8450**	10	SUPPORT AS	
	10	1	**251-1151**	1	BRACKET AS	
	11	1	**251-1153**	2	PLATE AS	
					(EACH INCLUDES)	
M		1	**8T-3612**	4	NUT-WELD (M8X1.25-THD)	
	12	1	**251-1154**	1	BRACKET AS	
	13	1	**251-2449**	2	PLATE AS	
					(EACH INCLUDES)	
M		1	**8T-3612**	5	NUT-WELD (M8X1.25-THD)	
	14	1	**251-4378**	2	FENDER	
	15	1	**251-4383**	2	BRACKET AS	
	16	1	**251-4385**	1	COVER	
	17	1	**251-4386**	1	COVER	
M	18	1	**099-3649**	10	BOLT (M8X1.25X40-MM)	
	19	1	**5P-4116**	54	WASHER-HARD (8.8X20.5X2-MM THK)	
M	20	1	**7X-2554**	4	BOLT (M16X2X70-MM)	
M	21	1	**8T-4189**	20	BOLT (M8X1.25X20-MM)	
M	22	1	**8T-4779**	8	BOLT (M16X2X35-MM)	
M	23	1	**8T-4908**	24	BOLT (M8X1.25X25-MM)	
	24	1	**9X-8257**	12	WASHER (17.5X30X3.5-MM THK)	
	25	1	**7X-7729**	20	WASHER (11X25X3-MM THK)	
M	26	1	**8T-4182**	20	BOLT (M10X1.5X45-MM)	

M-METRIC PART

262-0413 **FENDER & SUPPORT GP** *(contd.)* **i02783261**

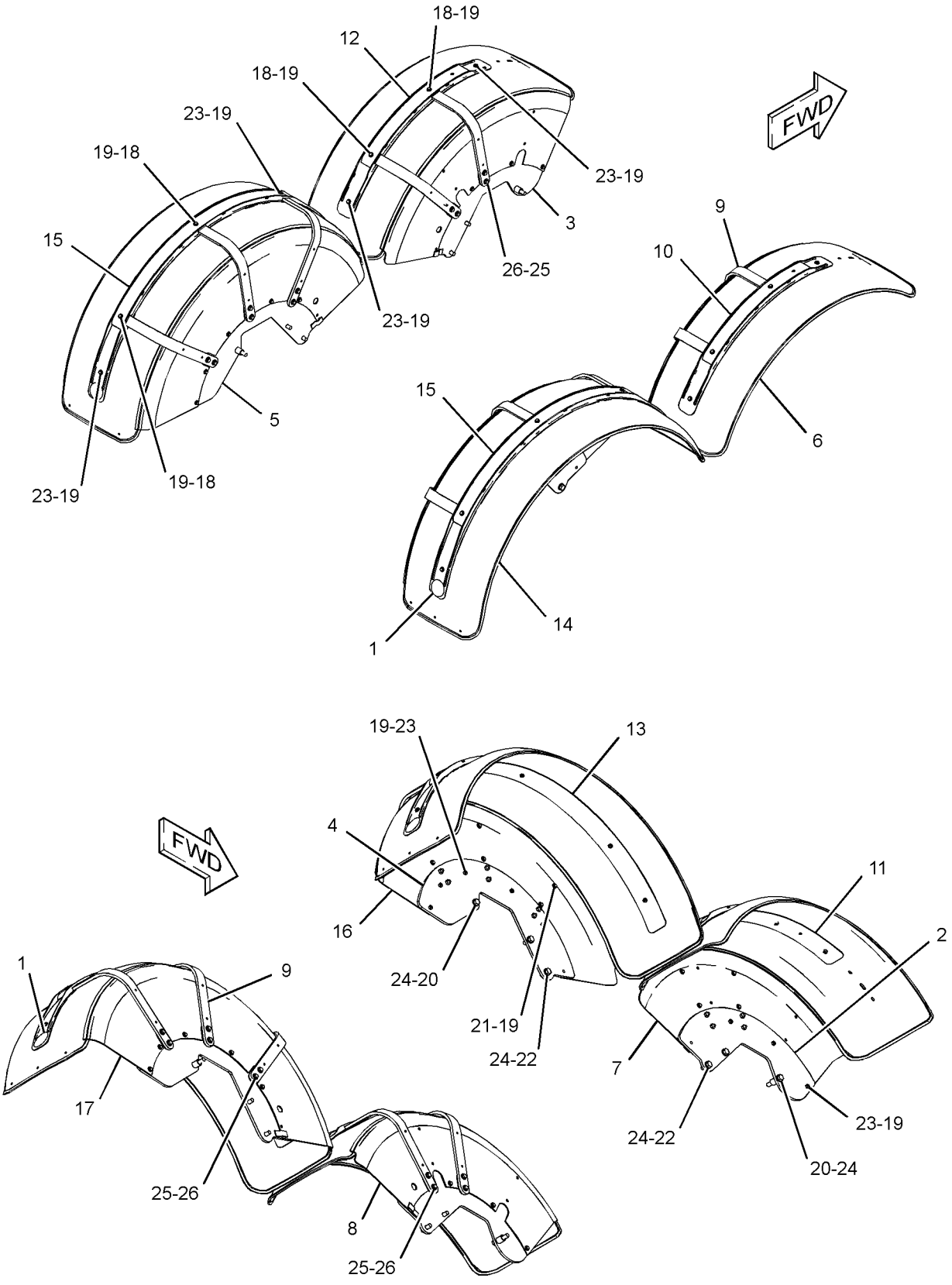

GRAPHIC #1 **<END>** g01340470

FRAME AND BODY

246-6350 FRAME GP-FRONT

S/N: B9D1-UP

PART OF 234-7721 COMMON AR

SMCS-7050, 7051 **i02773772**

NOTE	REF NO	GRAPHIC REF	PART NUMBER	QTY	PART NAME 1 2 3 4 5 6 (PRODUCT LEVEL)	SEE PAGE
	1	1	**7K-9202**	4	SEAL-LIP TYPE	
	2	1	**9D-6584**	1	SEAL-LIP TYPE	
	3	1	**9D-6589**	8	SEAL-LIP TYPE	
	4	1	**252-0828**	1	FRAME & MOUNTING AS	
	5	1	**252-0977**	1	PIN	
	6	1	**6K-4076**	1	BEARING-SLEEVE	
	7	1	**8D-7086**	2	BEARING	
	8	1	**8D-9159**	4	BEARING-SLEEVE	
	9	1	**9D-3311**	1	BEARING-SLEEVE	

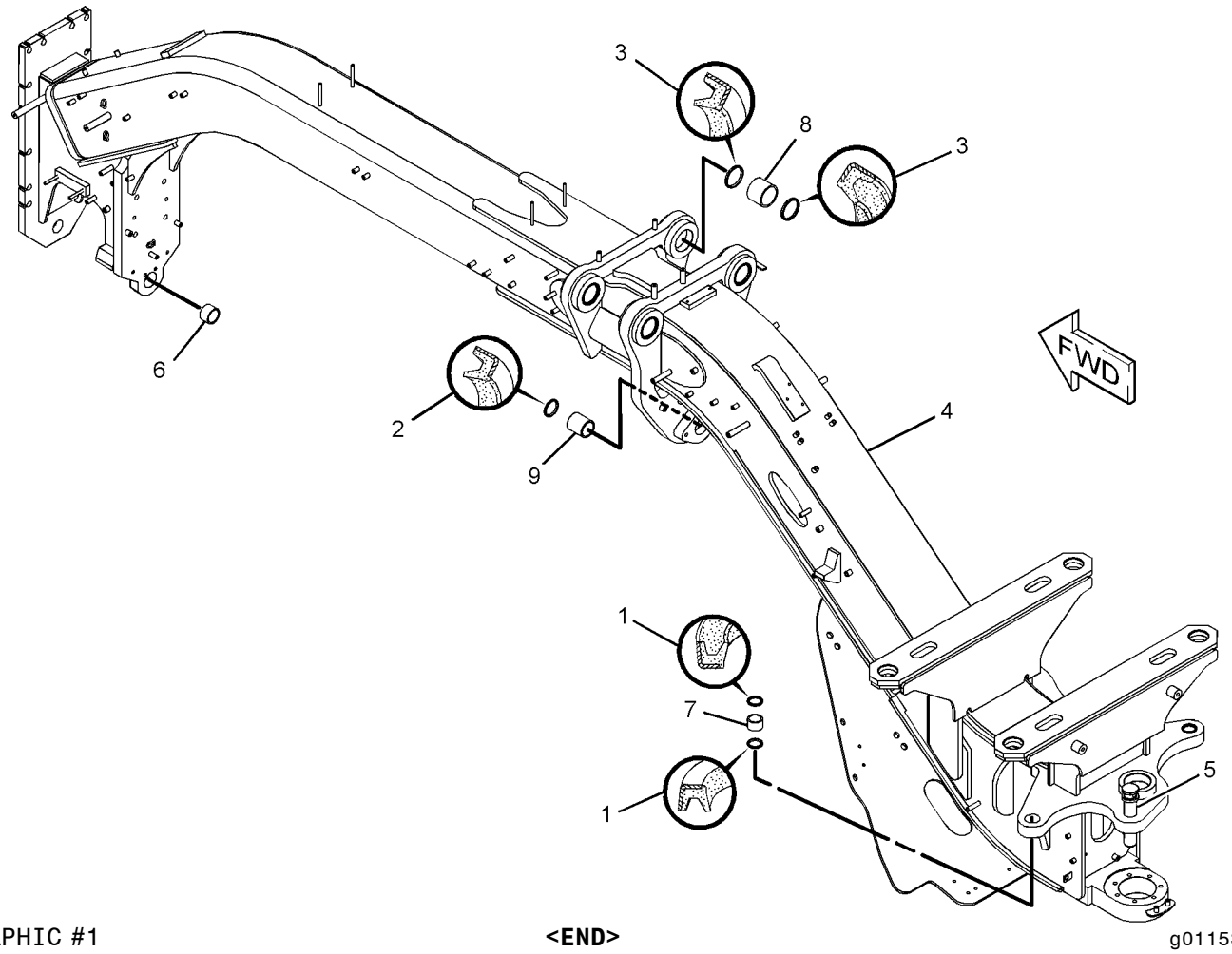

GRAPHIC #1 **<END>** g01153003

FRAME AND BODY

289-1417 FRAME GP-REAR

S/N: B9D1-UP

PART OF 234-7721 COMMON AR

SMCS-7050, 7051 **i02781261**

NOTE	REF NO	GRAPHIC REF	PART NUMBER	QTY	PART NAME 1 2 3 4 5 6 (PRODUCT LEVEL)	SEE PAGE
	1	1	**5D-3887**	2	ROD	
	2	1	**6F-8499**	2	SPRING	
	3	1	**054-3788**	4	ORIFICE	
	4	1	**289-1416**	1	FRAME AS	
	5	1	**3B-4615**	4	PIN-COTTER	
	6	1	**7K-9202**	4	SEAL-LIP TYPE	
	7	1	**8D-7086**	2	BEARING	

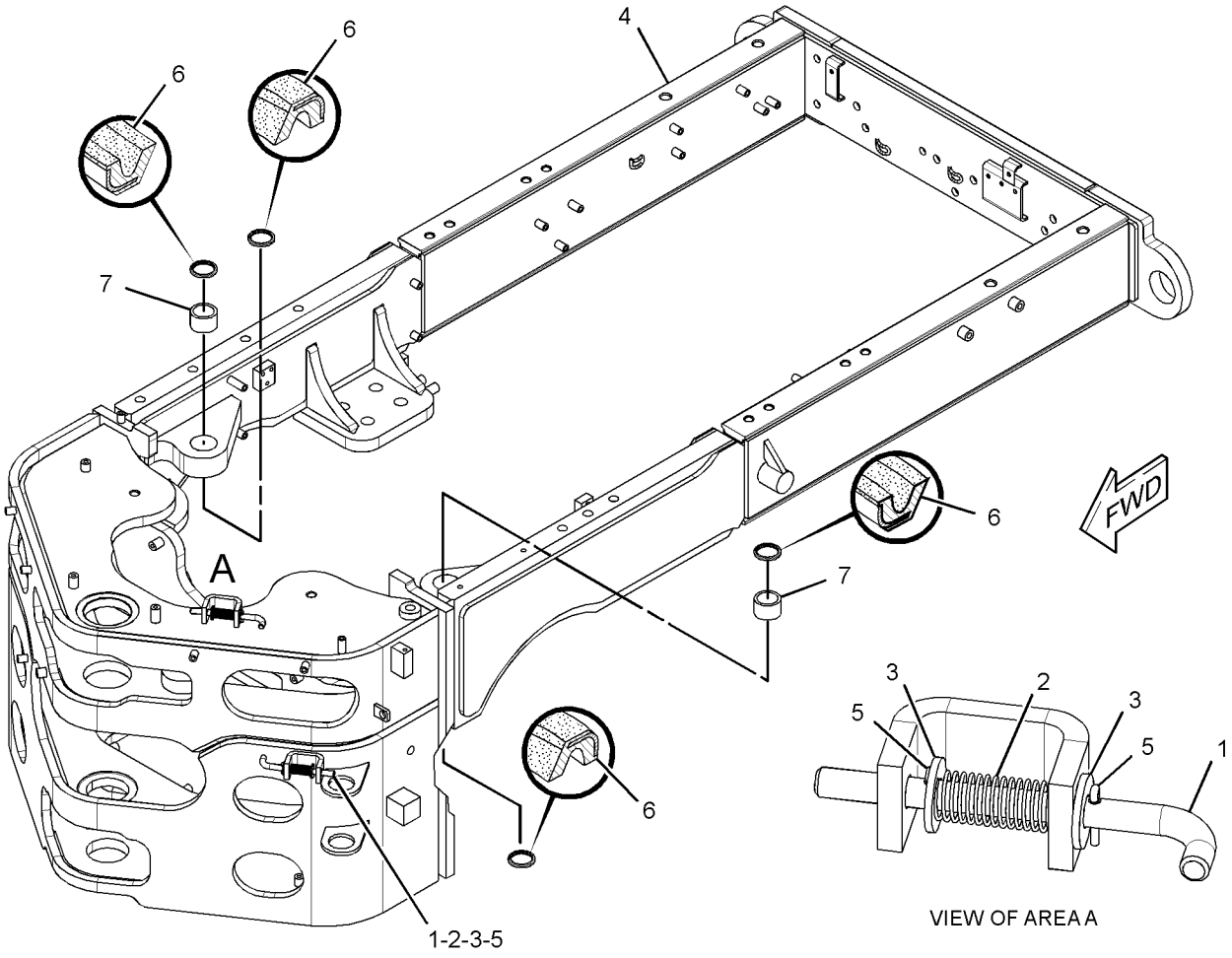

GRAPHIC #1 **<END>** g01345790

285-8739 GUARD GP-BOTTOM

S/N: B9D1-UP

SMCS-7153 **i02788251**

NOTE	REF NO	GRAPHIC REF	PART NUMBER	QTY	PART NAME 1 2 3 4 5 6 (PRODUCT LEVEL)	SEE PAGE
	1	1	**7D-7496**	2	PIN AS	
	2	1	**8W-6626**	2	CAP	
	3	1	**259-2569**	1	SUPPORT AS	
	4	1	**291-6848**	1	GUARD AS	
		1	**291-6849**	1	BAR	
		1	**291-6850**	1	PLATE	
		1	**291-6851**	1	PLATE	
		1	**291-6852**	1	PLATE	
		1	**295-2619**	4	PLATE	
		1	**295-9949**	1	PLATE	
		1	**295-9950**	3	PLATE	
	5	1	**291-6853**	1	PLATE AS	
		1	**8Y-3925**	4	BOSS (3/8-16X1.2-IN)	
	6	1	**296-0727**	1	PLATE	
	7	1	**7X-7729**	3	WASHER (11X25X3-MM THK)	
	8	1	**8K-0530**	2	PIN-CABLE SOCKET	
	9	1	**8T-4121**	4	WASHER-HARD (11X21X2.5-MM THK)	
M	10	1	**8T-4136**	3	BOLT (M10X1.5X25-MM)	
M	11	1	**8T-4139**	8	BOLT (M12X1.75X30-MM)	
M	12	1	**8T-4175**	4	BOLT (M16X2X90-MM)	
M	13	1	**8T-4185**	4	BOLT (M10X1.5X50-MM)	
	14	1	**8T-4223**	8	WASHER-HARD (13.5X25.5X3-MM THK)	
	15	1	**9X-8257**	4	WASHER (17.5X30X3.5-MM THK)	

M-METRIC PART

285-8739 **GUARD GP-BOTTOM** *(contd.)* **i02788251**

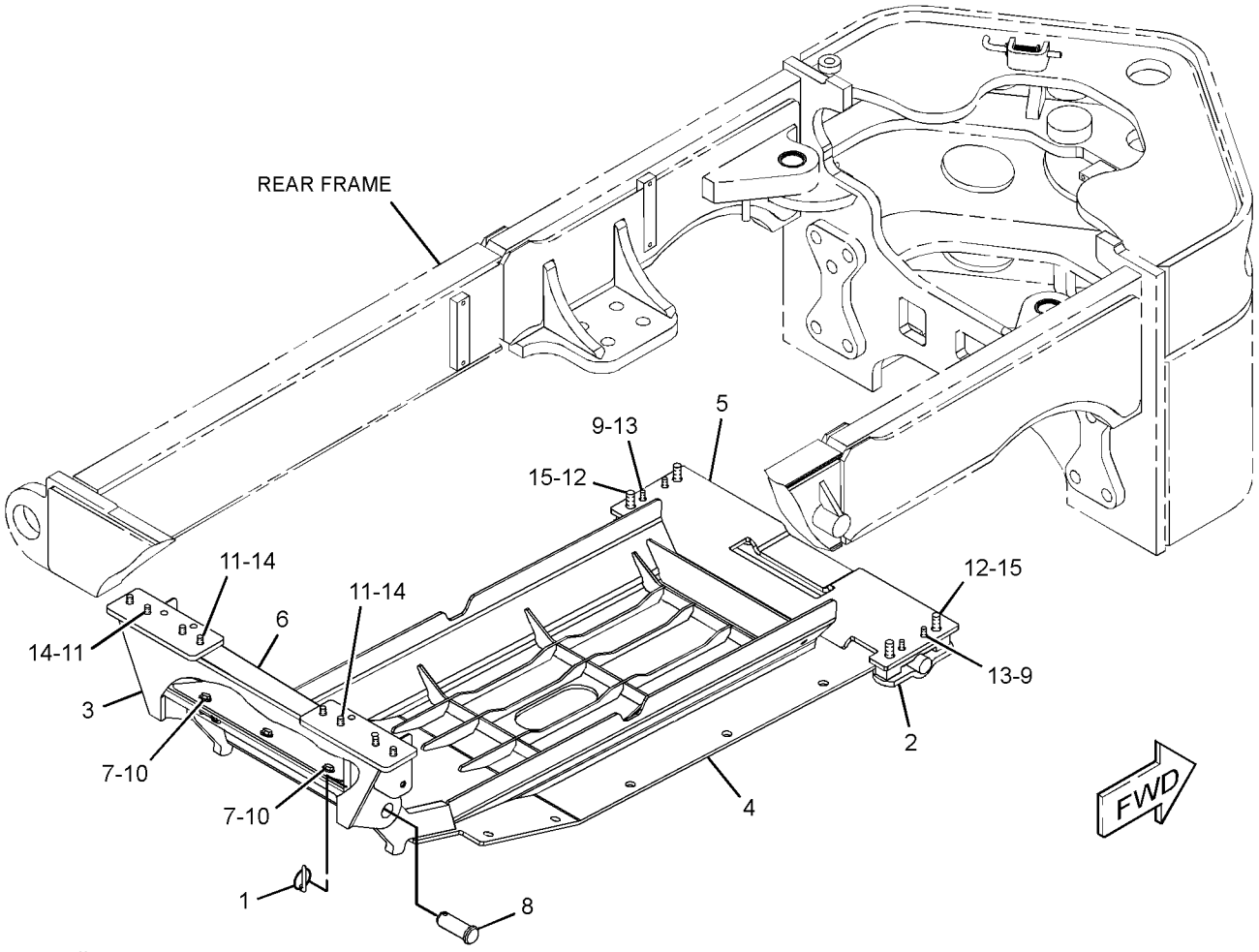

GRAPHIC #1 **<END>** g01328232

266-2423 GUARD GP-BRAKE LINES–TANDEM

S/N: B9D1-UP

PART OF 234-7721 COMMON AR

SMCS-7166 **i02780472**

NOTE	REF NO	GRAPHIC REF	PART NUMBER	QTY	PART NAME 1 2 3 4 5 6 (PRODUCT LEVEL)	SEE PAGE
	1	1	**292-0666**	2	PLATE	
	2	1	**292-3757**	2	PLATE AS	
	3	1	**238-0251**	4	SCREW-BUTTON HEAD (M10X1.5X25-MM)	
M	4	1	**8C-8585**	24	SCREW-BUTTON HEAD (M10X1.5X20-MM)	
	5	1	**8T-4121**	28	WASHER-HARD (11X21X2.5-MM THK)	

M-METRIC PART

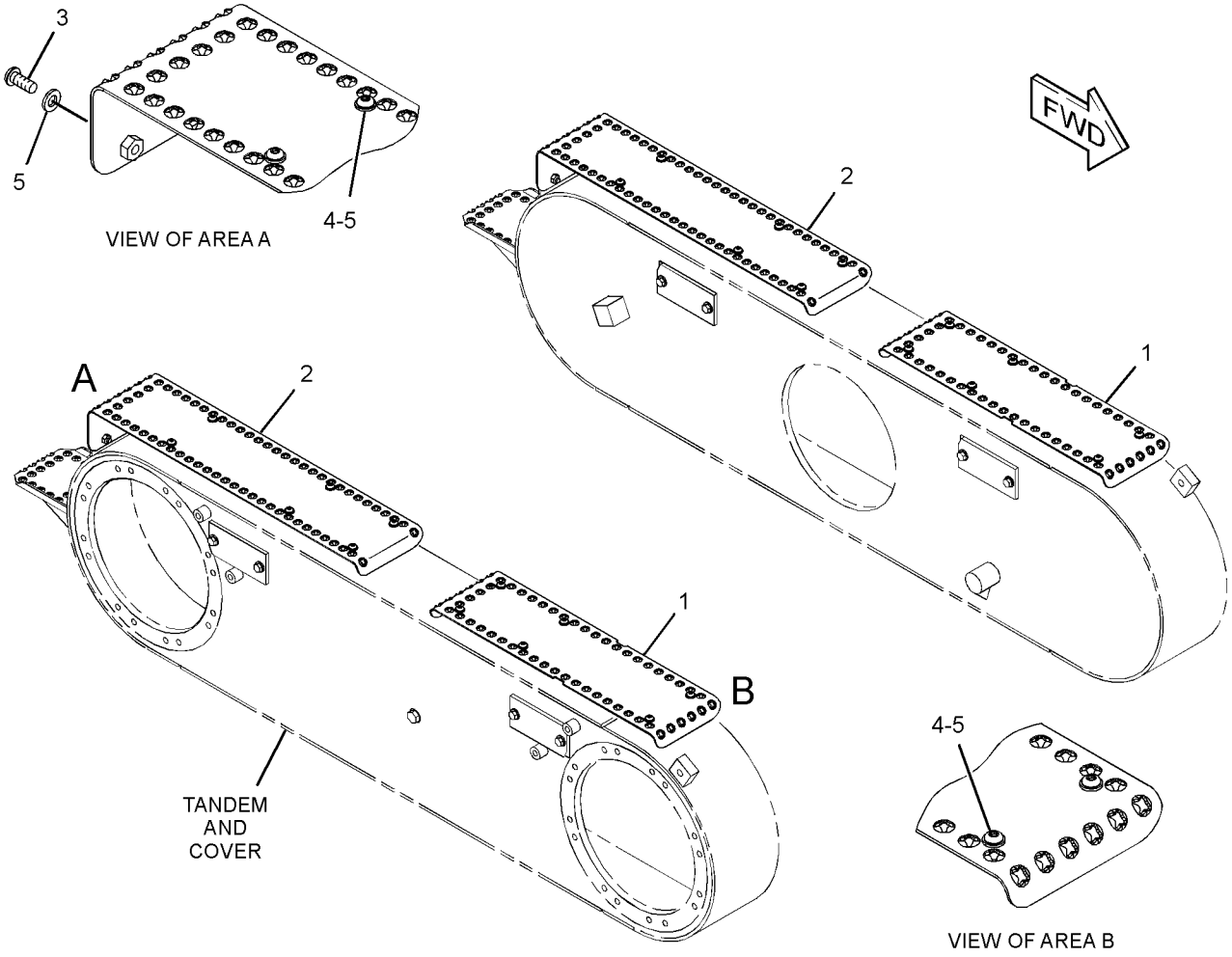

GRAPHIC #1 **<END>** g01373984

FRAME AND BODY

249-6692 GUARD GP-DEBRIS

S/N: B9D1-UP

SMCS-7158 **i02783107**

NOTE	REF NO	GRAPHIC REF	PART NUMBER	QTY	PART NAME 1 2 3 4 5 6 (PRODUCT LEVEL)	SEE PAGE
	1	1	**199-4318**	44	TURNBUCKLE	
	2	1	**250-4357**	1	COVER (TOP)	
	3	1	**250-4358**	1	COVER (DOOR, RH)	
	4	1	**250-4359**	1	GUARD AS-SCREEN (DOOR, LH)	
	5	1	**250-4360**	1	COVER (LOWER, LH)	
	6	1	**9N-1995**	88	RIVET-POP	

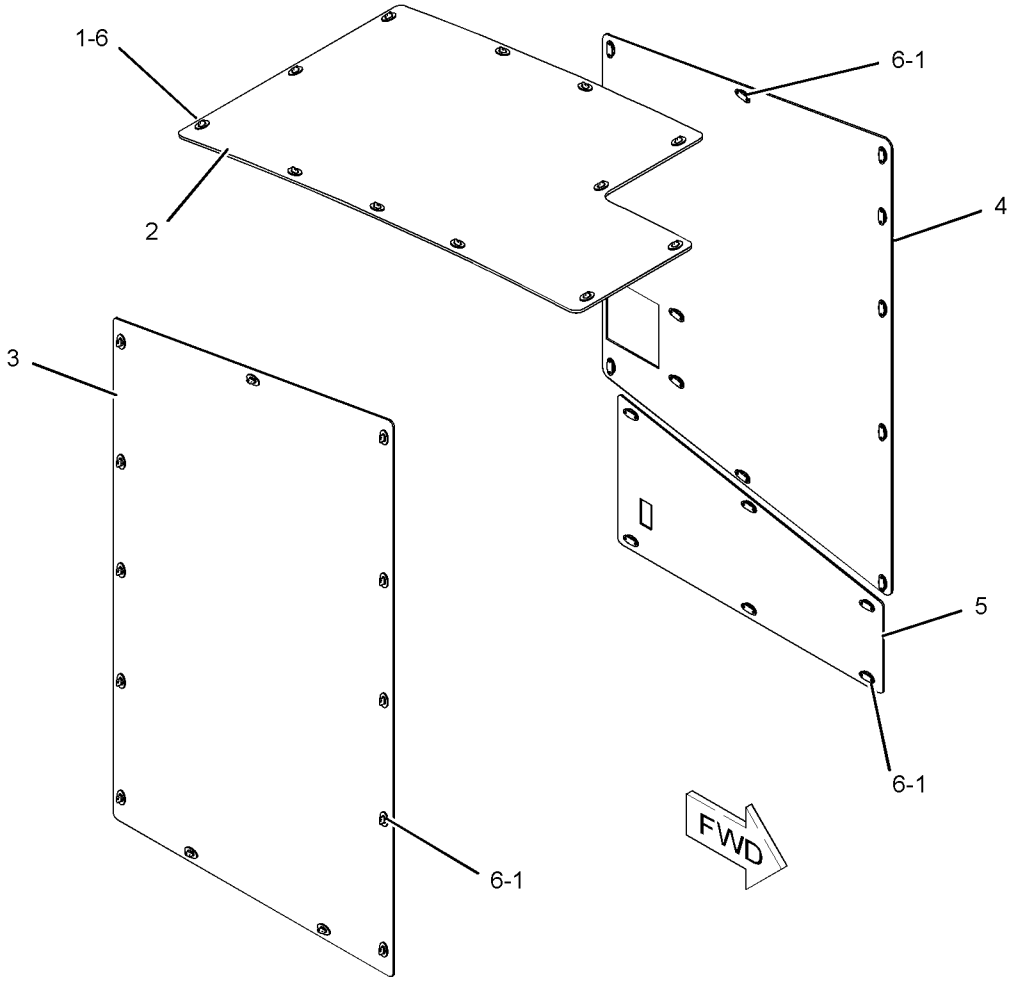

GRAPHIC #1 **<END>** g01126962

232-2678 HITCH GP-ARTICULATING

S/N: B9D1-UP

PART OF 234-7721 COMMON AR

SMCS-7057, 7100 **i02772827**

NOTE	REF NO	GRAPHIC REF	PART NUMBER	QTY	PART NAME 1 2 3 4 5 6 (PRODUCT LEVEL)	SEE PAGE
	1	1	**2V-4332**	1	COLLAR	
	2	1	**4K-6781**	1	SPACER	
B	3	1	**4K-7464**	1	SHIM PACK (INCLUDES 19-SHIMS)	
	4	1	**4V-0015**	1	PLATE-LOCK	
	5	1	**276-3622**	1	PIN-LOWER	
	6	1	**143-7356**	1	BEARING-TAPERED ROLLER	
	7	1	**5K-0987**	1	SPACER	
B	8	1	**5K-0988**	1	SHIM PACK (INCLUDES 35-SHIMS)	
	9	1	**5K-0989**	1	CAP-UPPER	
	10	1	**276-3620**	1	CAP-LOWER	
	11	1	**252-0990**	1	BEARING-SLEEVE	
	12	1	**252-1824**	1	PIN	
	13	1	**259-9283**	1	COVER	
	14	1	**4K-7463**	2	SEAL-LIP TYPE	
	15	1	**4K-8734**	1	BEARING (SLEEVE)	
	16	1	**5K-0983**	2	SEAL-LIP TYPE	
	17	1	**5P-8245**	19	WASHER-HARD (13.5X25.5X3-MM THK)	
M	18	1	**6V-3823**	4	BOLT (M12X1.75X60-MM)	
M	19	1	**6V-5684**	2	BOLT (M12X1.75X45-MM)	
M	20	1	**6V-8197**	6	BOLT (M12X1.75X40-MM)	
M	21	1	**8T-0375**	4	BOLT (M16X2X45-MM)	
M	22	1	**8T-0646**	7	BOLT (M12X1.75X110-MM)	
	23	1	**9X-8268**	4	WASHER (17.5X30X3.5-MM THK)	

B-USE AS REQUIRED
M-METRIC PART

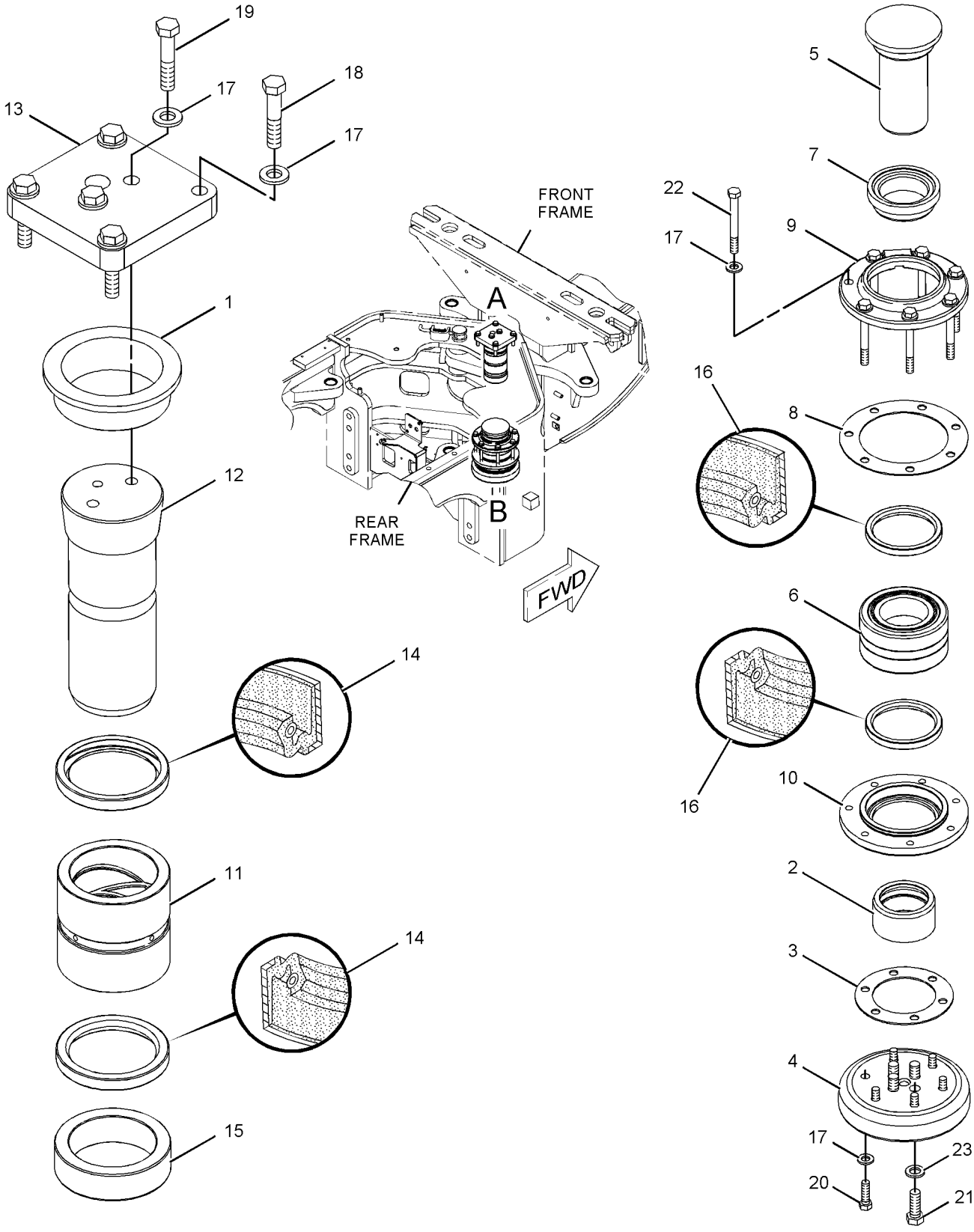

VIEW OF AREA A

VIEW OF AREA B

GRAPHIC #1

<END>

g01134586

FRAME AND BODY

264-2392 HITCH GP-TOWING

S/N: B9D1-UP

SMCS-7116 **i02787171**

NOTE	REF NO	GRAPHIC REF	PART NUMBER	QTY	PART NAME 1 2 3 4 5 6 (PRODUCT LEVEL)	SEE PAGE
	1	1	**264-2393**	1	HITCH AS	
M	2	1	**106-4175**	2	BOLT (M20X2.5X60-MM)	
	3	1	**267-3506**	6	WASHER-HARD (26X44X4-MM THK)	
M	4	1	**9X-2615**	6	BOLT (M24X3X60-MM)	
	5	1	**267-3508**	2	WASHER-HARD (35X22X3.5-MM THK)	

M-METRIC PART

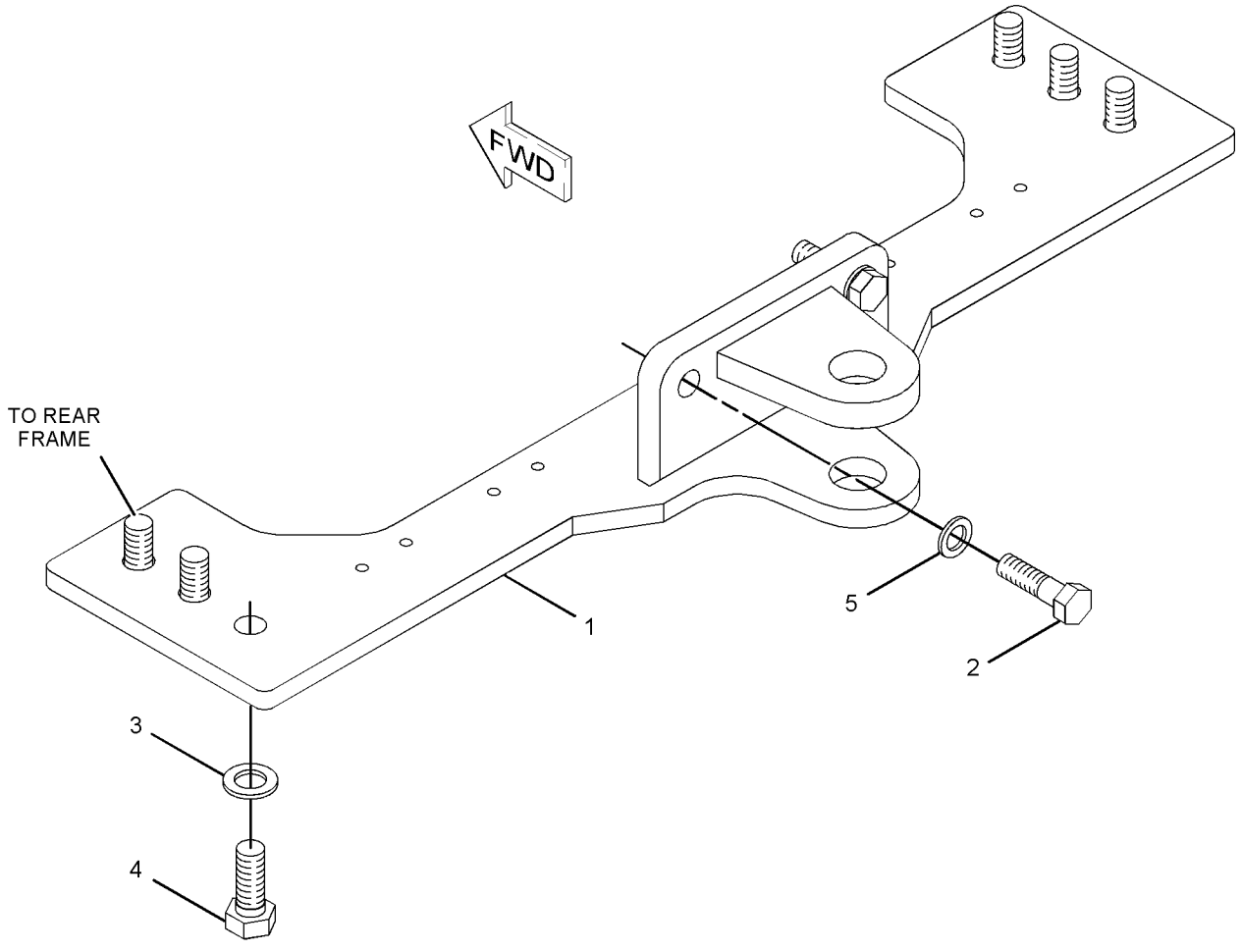

GRAPHIC #1 **<END>** g01142885

FRAME AND BODY

288-9588 HOOD GP–ENGINE

S/N: B9D1-UP

PART OF 288-8988 ENCLOSURE GP-ENGINE

SMCS-7251 **i02781181**

NOTE	REF NO	GRAPHIC REF	PART NUMBER	QTY	PART NAME 1 2 3 4 5 6 (PRODUCT LEVEL)	SEE PAGE
	1	1	*201-9109*	1	DOOR GP-ACCESS (BREAKERS, 24-VOLT OUTLET)	
		1	**203-6066**	1	LATCH AS	
		1	**226-0295**	1	LOCK AS	
		1	**233-4871**	1	CAM	
		1	**219-6036**	1	DOOR AS	
		1	**1V-8284**	1	HINGE	
	2	1	**245-2797**	1	CORNER AS (RH)	
	3	1	**245-2798**	1	CORNER AS (LH)	
	4	1	**288-9589**	1	SHEET AS	
	5	1	**5P-4116**	32	WASHER-HARD (8.8X20.5X2-MM THK)	
	6	1	**7X-7729**	2	WASHER (11X25X3-MM THK)	
M	7	1	**8T-4137**	2	BOLT (M10X1.5X20-MM)	
M	8	1	**8T-4908**	32	BOLT (M8X1.25X25-MM)	

M-METRIC PART

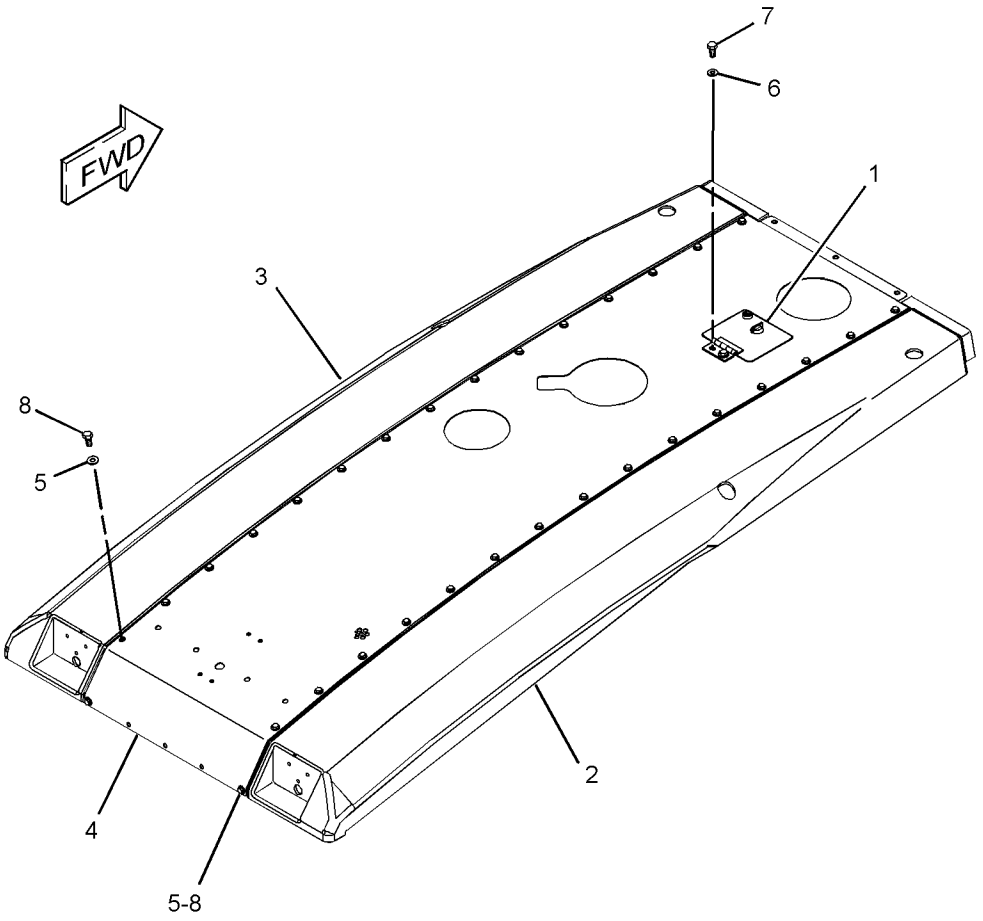

GRAPHIC #1 **<END>** g01374708

236-8921 LINES GP-GREASE–ARTICULATION HITCH BEARING

S/N: B9D1-UP

PART OF 234-7721 COMMON AR

SMCS-7510 **i02773235**

NOTE	REF NO	GRAPHIC REF	PART NUMBER	QTY	PART NAME 1 2 3 4 5 6 (PRODUCT LEVEL)	SEE PAGE
	1	1	**3B-8489**	2	FITTING-GREASE	
	2	1	**5D-0269**	2	ELBOW	
	3	1	**295-1902**	1	HOSE AS	
	4	1	**2Y-5882**	1	ELBOW	
	5	1	**308-3510**	1	HOSE AS	
	6	1	**3B-7733**	1	FITTING	
	7	1	**3B-7896**	2	ELBOW-STREET	
	8	1	**4D-8123**	1	CLIP	
	9	1	**5H-7826**	1	NIPPLE-PIPE	
	10	1	**5P-6629**	1	GROMMET	
	11	1	**5P-9085**	2	CLIP	
	12	1	**8T-4121**	2	WASHER-HARD (11X21X2.5-MM THK)	
M	13	1	**8T-4137**	2	BOLT (M10X1.5X20-MM)	

M-METRIC PART

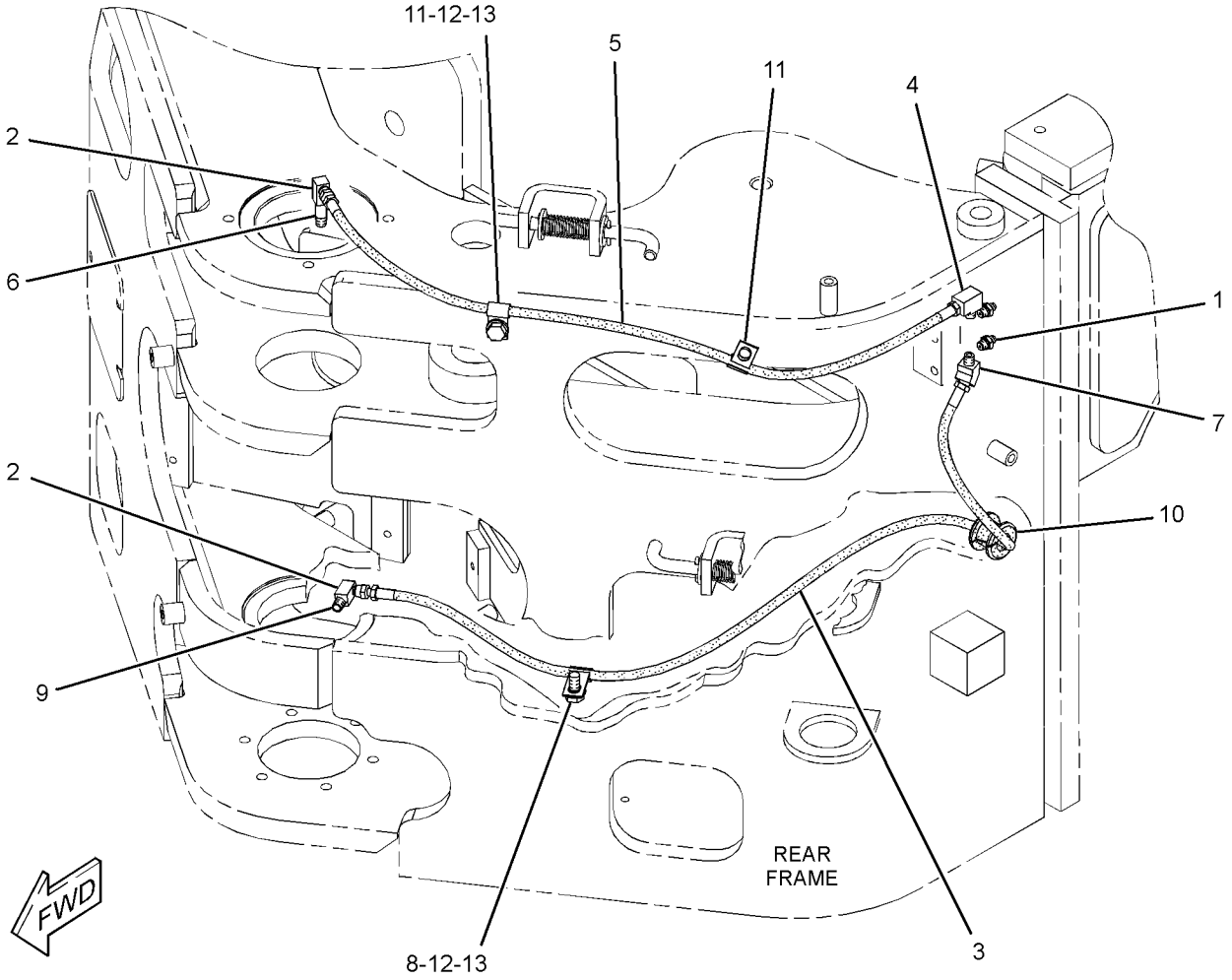

GRAPHIC #1 **<END>** g01366089

274-6816 LINK GP-STEERING

S/N: B9D1-UP

PART OF 260-7453 AXLE GP-FRONT

SMCS-4305 **i02787962**

NOTE	REF NO	GRAPHIC REF	PART NUMBER	QTY	PART NAME 1 2 3 4 5 6 (PRODUCT LEVEL)	SEE PAGE
	1	1	**141-6141**	2	CLAMP	
	2	1	**276-8722**	1	ROD	
	3	1	**276-8723**	1	SOCKET GP-TIE ROD (LH)	
		1	**2F-8057**	1	NUT-SLOTTED	
		1	**277-0648**	1	SEAL-BOOT	
	4	1	**276-8724**	1	SOCKET GP-TIE ROD (RH)	
		1	**2F-8057**	1	NUT-SLOTTED	
		1	**277-0648**	1	SEAL-BOOT	
M	5	1	**8T-0281**	2	BOLT (M16X2X80-MM)	
M	6	1	**8T-4778**	2	LOCKNUT (M16X2-THD)	

M-METRIC PART

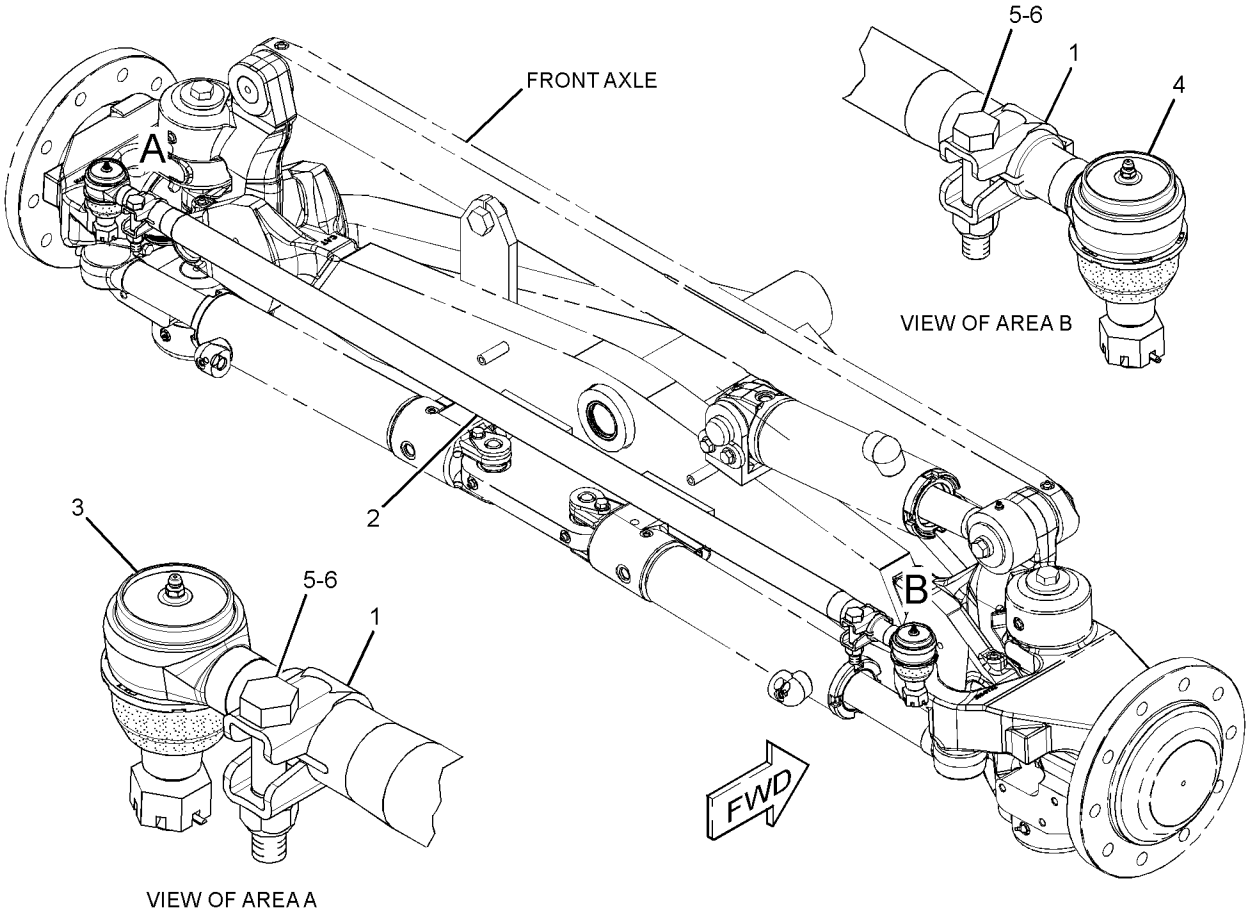

GRAPHIC #1 **<END>** g01346716

276-2954 LINK GP-STEERING

S/N: B9D1-UP
PART OF 260-8698 AXLE GP-FRONT
FOR USE WITH ALL WHEEL DRIVE ARRANGEMENT

SMCS-4305 **i02786094**

NOTE	REF NO	GRAPHIC REF	PART NUMBER	QTY	PART NAME 1 2 3 4 5 6 (PRODUCT LEVEL)	SEE PAGE
	1	1	**274-6809**	2	CLAMP	
	2	1	**274-6810**	1	TIE ROD GP (LH)	
	3	1	**274-6811**	1	TIE ROD GP (RH)	
					(EACH TIE ROD GP INCLUDES)	
		1	**1D-0906**	1	NUT-SLOTTED	
		1	**199-7819**	1	SEAL-BOOT	
	4	1	**276-8229**	1	ROD	
M	5	1	**8T-0281**	2	BOLT (M16X2X80-MM)	
M	6	1	**8T-4778**	2	LOCKNUT (M16X2-THD)	

M-METRIC PART

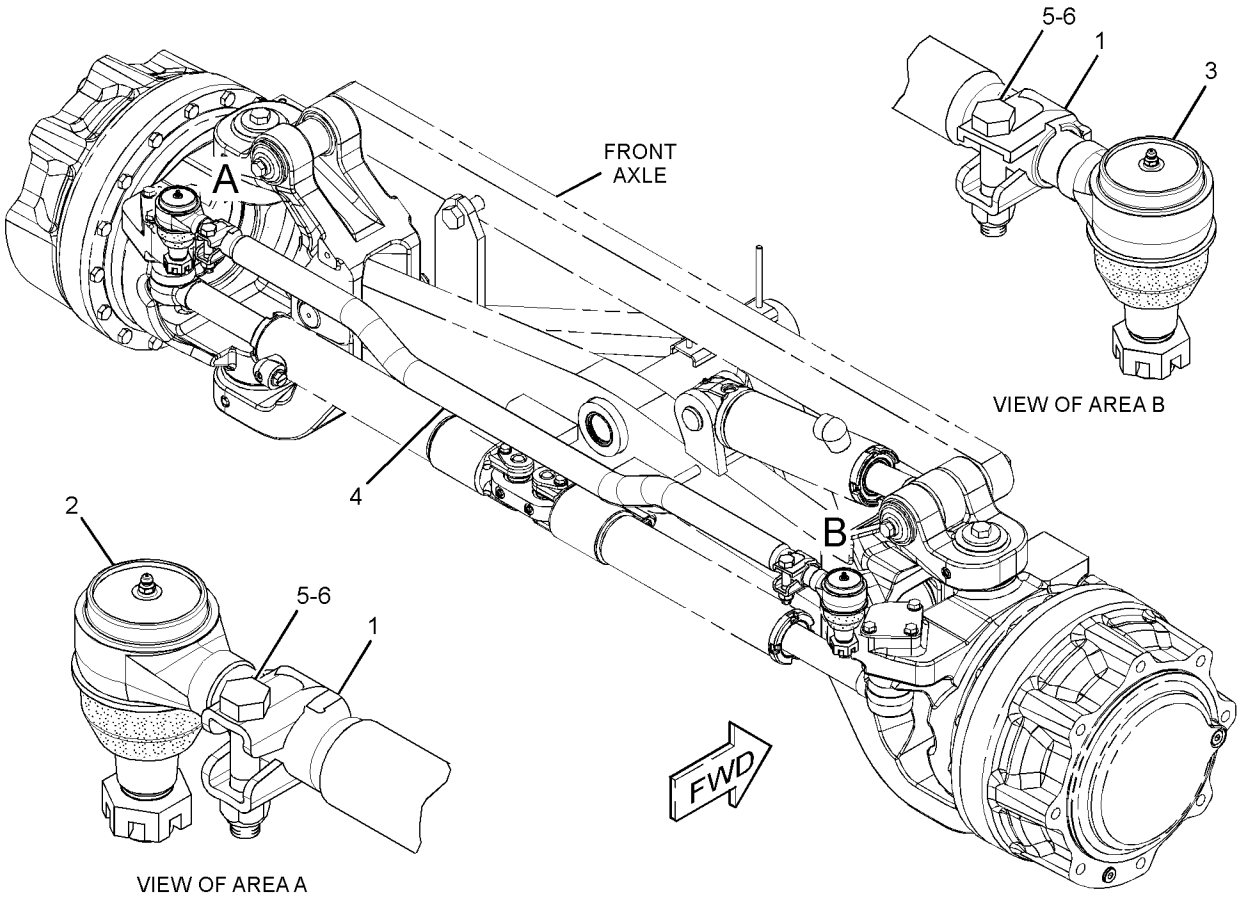

GRAPHIC #1 **<END>** g01346673

FRAME AND BODY

284-5025 MOUNTING GP-AXLE–REAR

S/N: B9D1-UP

PART OF 234-7721 COMMON AR

SMCS-3268, 3278 **i02781144**

NOTE	REF NO	GRAPHIC REF	PART NUMBER	QTY	PART NAME 1 2 3 4 5 6 (PRODUCT LEVEL)	SEE PAGE
	1	1	**293-8335**	10	SPACER (26X60X23-MM THK)	
M	2	1	**112-3931**	18	BOLT (M24X3X120-MM)	
	3	1	**267-3507**	18	WASHER-HARD (26X47X12-MM THK)	

M-METRIC PART

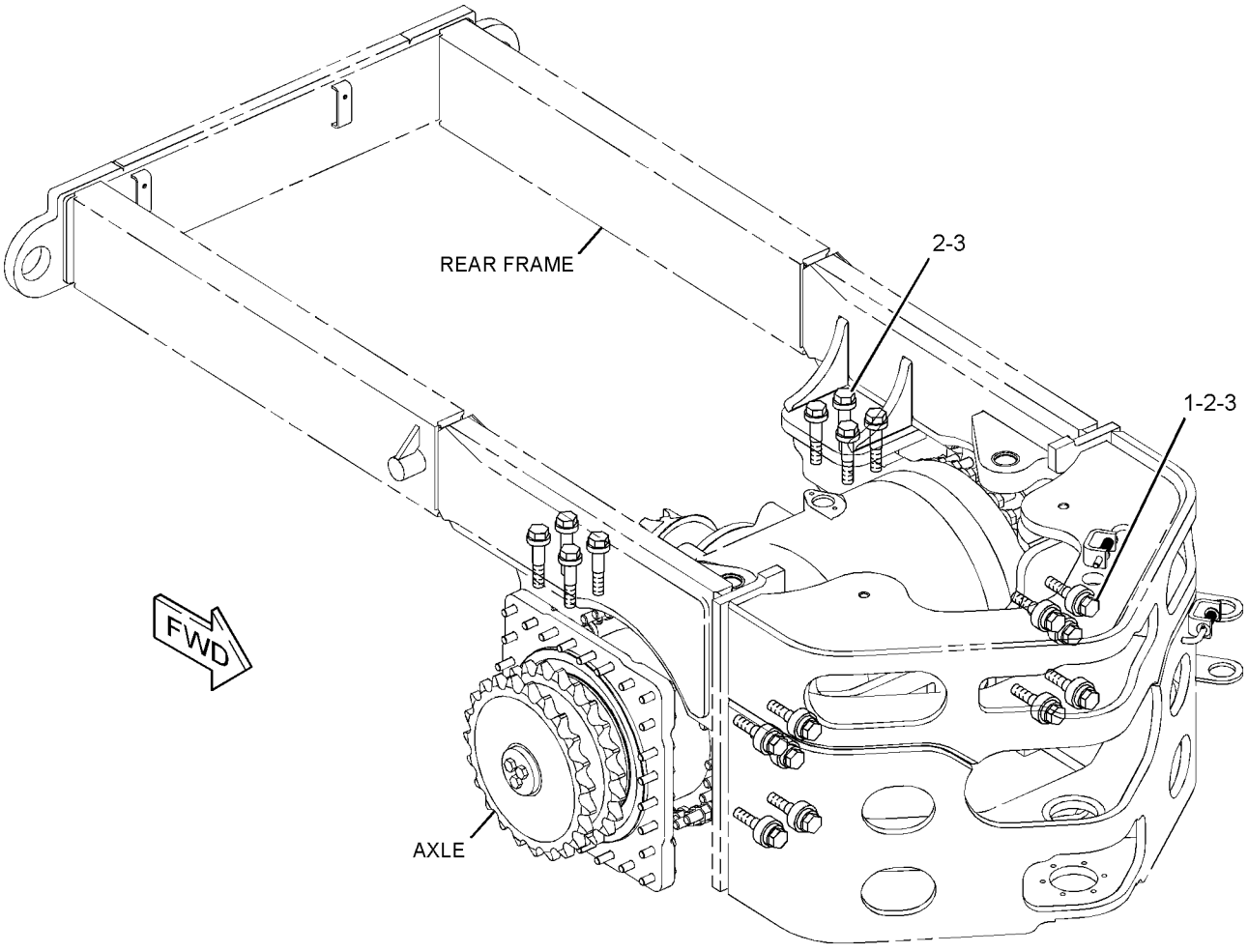

GRAPHIC #1 **<END>** g01328364

FRAME AND BODY

290-3921 MOUNTING GP-AXLE–FRONT

S/N: B9D1-UP

PART OF 260-7451, 260-8696 AXLE AR-FRONT

SMCS-3268, 3278 **i02785836**

NOTE	REF NO	GRAPHIC REF	PART NUMBER	QTY	PART NAME 1 2 3 4 5 6 (PRODUCT LEVEL)	SEE PAGE
	1	1	**2G-5673**	2	WASHER (2.031X4X0.06-IN THK)	
	2	1	**6G-7187**	1	LOCK	
	3	1	**9D-3523**	2	WASHER (2.062X4X0.188-MM THK)	
	4	1	**264-1180**	1	PIN	
M	5	1	**8T-4139**	2	BOLT (M12X1.75X30-MM)	
	6	1	**8T-4223**	2	WASHER-HARD (13.5X25.5X3-MM THK)	

M-METRIC PART

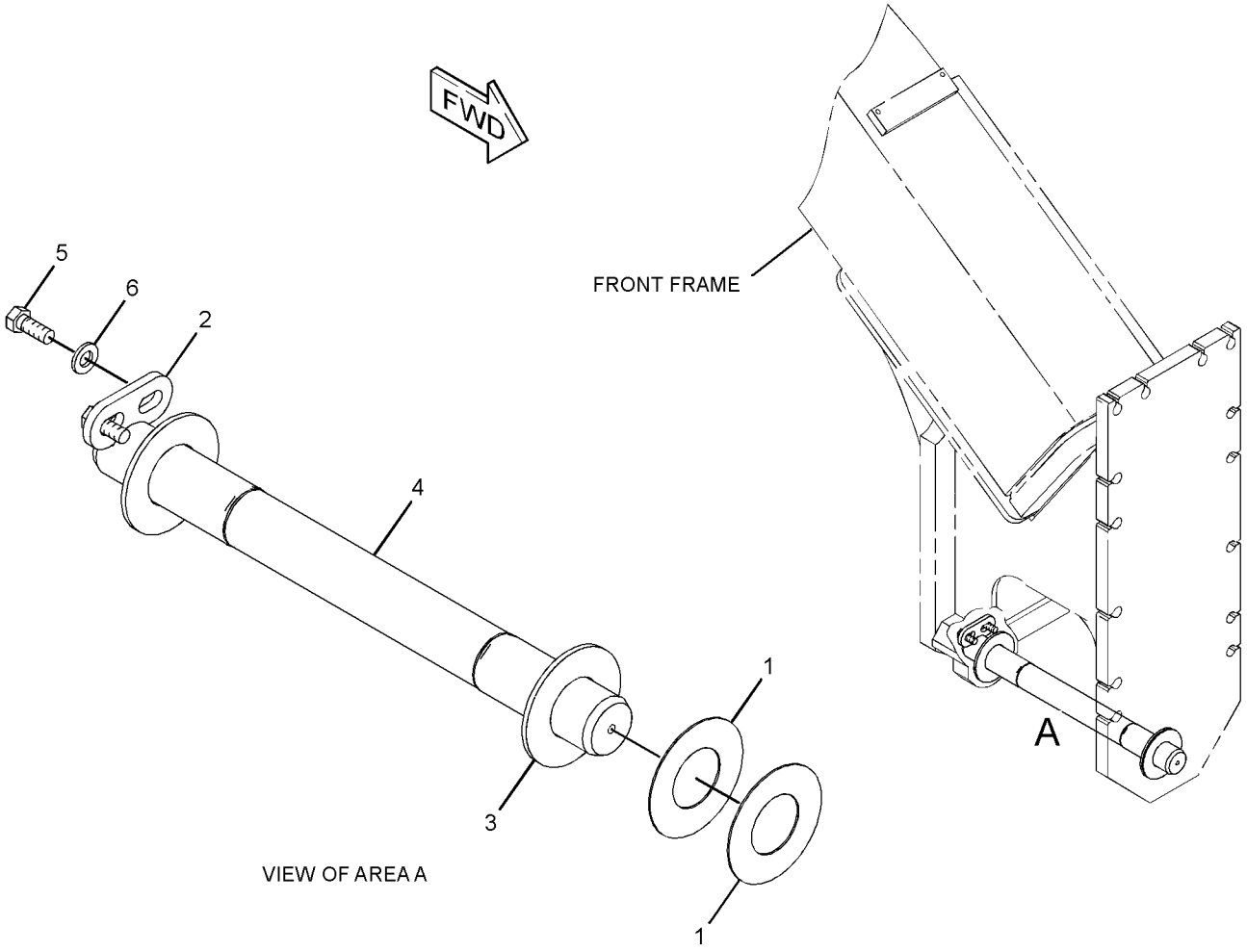

GRAPHIC #1 **<END>** g01339113

233-3366 MOUNTING GP-VALVE—FRONT FRAME

S/N: B9D1-UP

PART OF 234-7721 COMMON AR

SMCS-5051 **i02772840**

NOTE	REF NO	GRAPHIC REF	PART NUMBER	QTY	PART NAME 1 2 3 4 5 6 (PRODUCT LEVEL)	SEE PAGE
	1	1	**285-3667**	1	PLATE AS	
M		1	**8T-3490**	5	NUT-WELD (M10X1.5-THD)	
M		1	**8Y-4489**	2	BOSS-THREADED (M10X1.5-THD)	
M		1	**9R-2613**	2	BOSS-WELD (M10X1.5X25-MM OAL)	
M		1	**9R-2821**	2	BOSS (M10X1.5X15-MM)	
	2	1	**285-3668**	1	PLATE AS	
		1	**7T-1099**	1	LINK	
M		1	**8T-3490**	7	NUT-WELD (M10X1.5-THD)	
M		1	**9R-2672**	1	BOSS-THREADED (M10X1.5-THD)	
	3	1	**8T-4121**	9	WASHER-HARD (11X21X2.5-MM THK)	
M	4	1	**8T-4136**	9	BOLT (M10X1.5X25-MM)	

M-METRIC PART

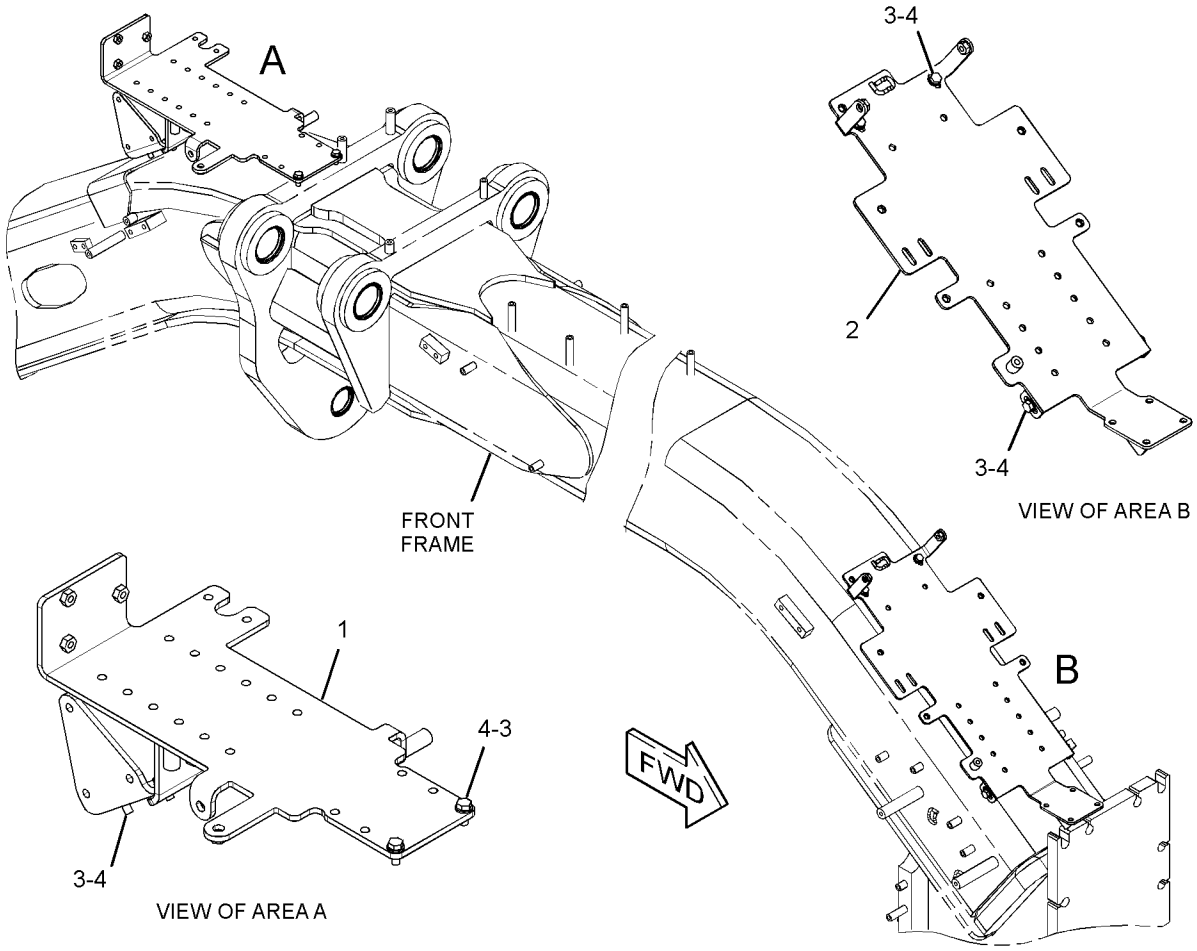

GRAPHIC #1 **<END>** g01347155

FRAME AND BODY

296-0012 REFLECTOR GP–RIPPER

S/N: B9D1-UP

PART OF 261-0182 OPTION AR-EU

SMCS-7430 **i02786142**

NOTE	REF NO	GRAPHIC REF	PART NUMBER	QTY	PART NAME 1 2 3 4 5 6 (PRODUCT LEVEL)	SEE PAGE
	1	1	**9R-2404**	2	REFLECTOR-AMBER	

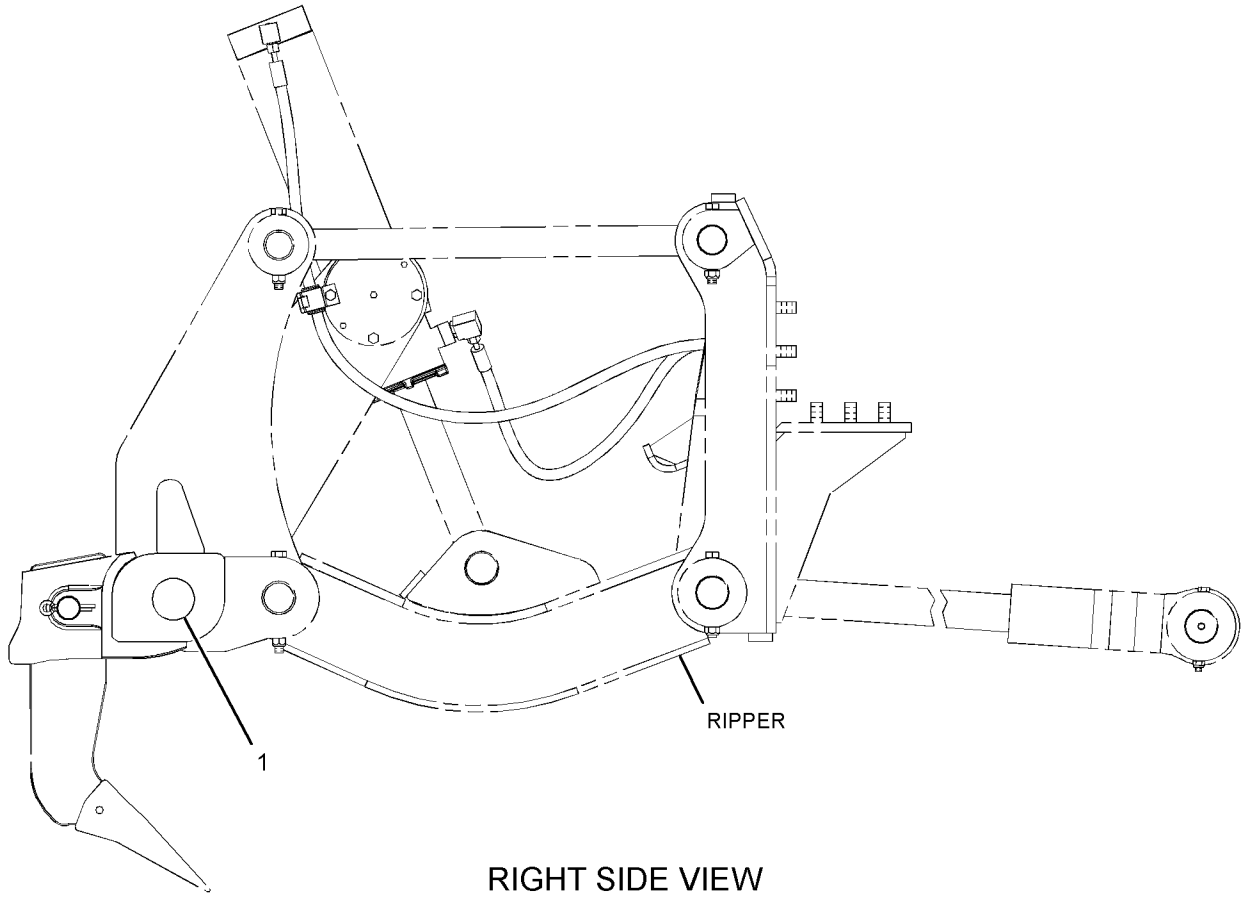

RIGHT SIDE VIEW

GRAPHIC #1 **<END>** g01336382

FRAME AND BODY

306-6511 REFLECTOR GP—MACHINE

S/N: B9D1-UP

PART OF 261-0182 OPTION AR-EU

SMCS-7430 **i02786141**

NOTE	REF NO	GRAPHIC REF	PART NUMBER	QTY	PART NAME 1 2 3 4 5 6 (PRODUCT LEVEL)	SEE PAGE
	1	1	**9R-1499**	2	REFLECTOR	
	2	1	**9R-2404**	8	REFLECTOR-AMBER	

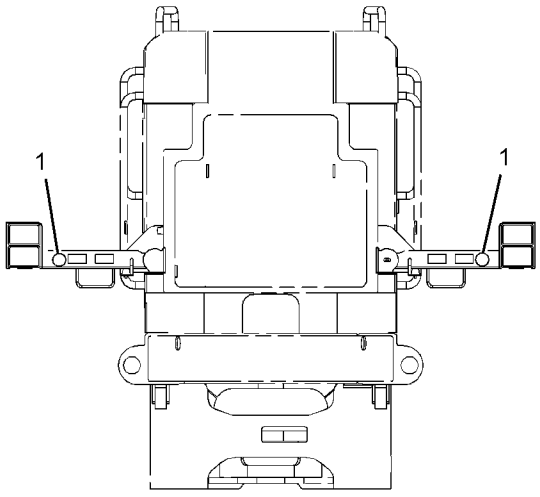

REAR VIEW

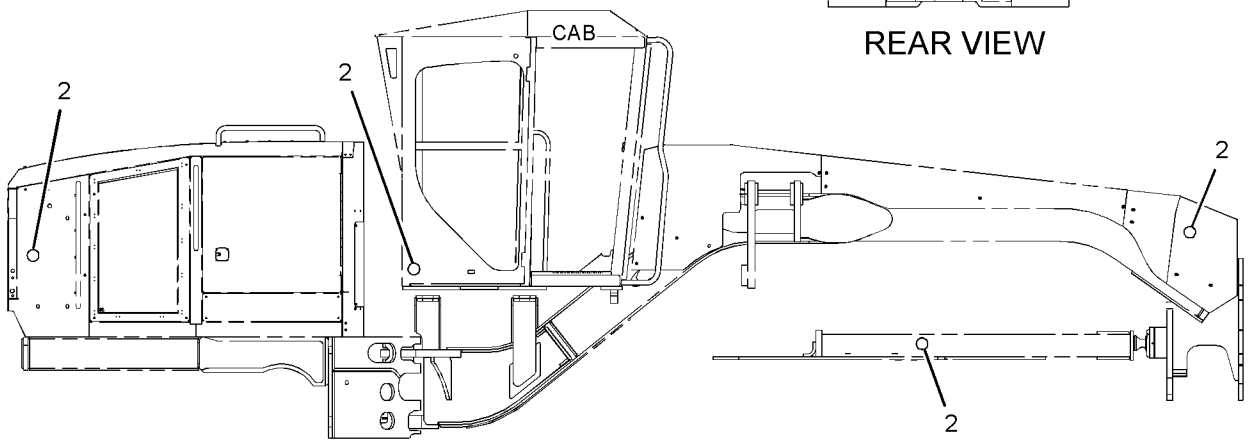

RIGHT SIDE VIEW

GRAPHIC #1

<END>

g01392442

FRAME AND BODY

231-5061 SERVICE CENTER AR

S/N: B9D1-UP

PART OF 234-7721 COMMON AR

SMCS-7513 **i02772085**

NOTE	REF NO	GRAPHIC REF	PART NUMBER	QTY	PART NAME 1 2 3 4 5 6 (PRODUCT LEVEL)	SEE PAGE
	1	1	**225-0312**	1	FILM-WARNING (JUMP START, READ OMM, INTL)	
	2	1	**225-0313**	1	FILM-WARNING (JUMP START, READ OMM, U.S.)	
Y	3	1	*233-4259*	1	TANK & MTG GP-HYDRAULIC	644
Y	4	1	*250-3507*	1	FILTER & MTG GP-HYDRAULIC	560
	5	1	**295-4661**	1	PLATFORM AS	
	6	1	**198-4781**	6	WASHER-HARD (22X40X10-MM THK)	
M	7	1	**7X-2563**	6	BOLT (M20X2.5X60-MM)	

M-METRIC PART
Y-SEPARATE ILLUSTRATION

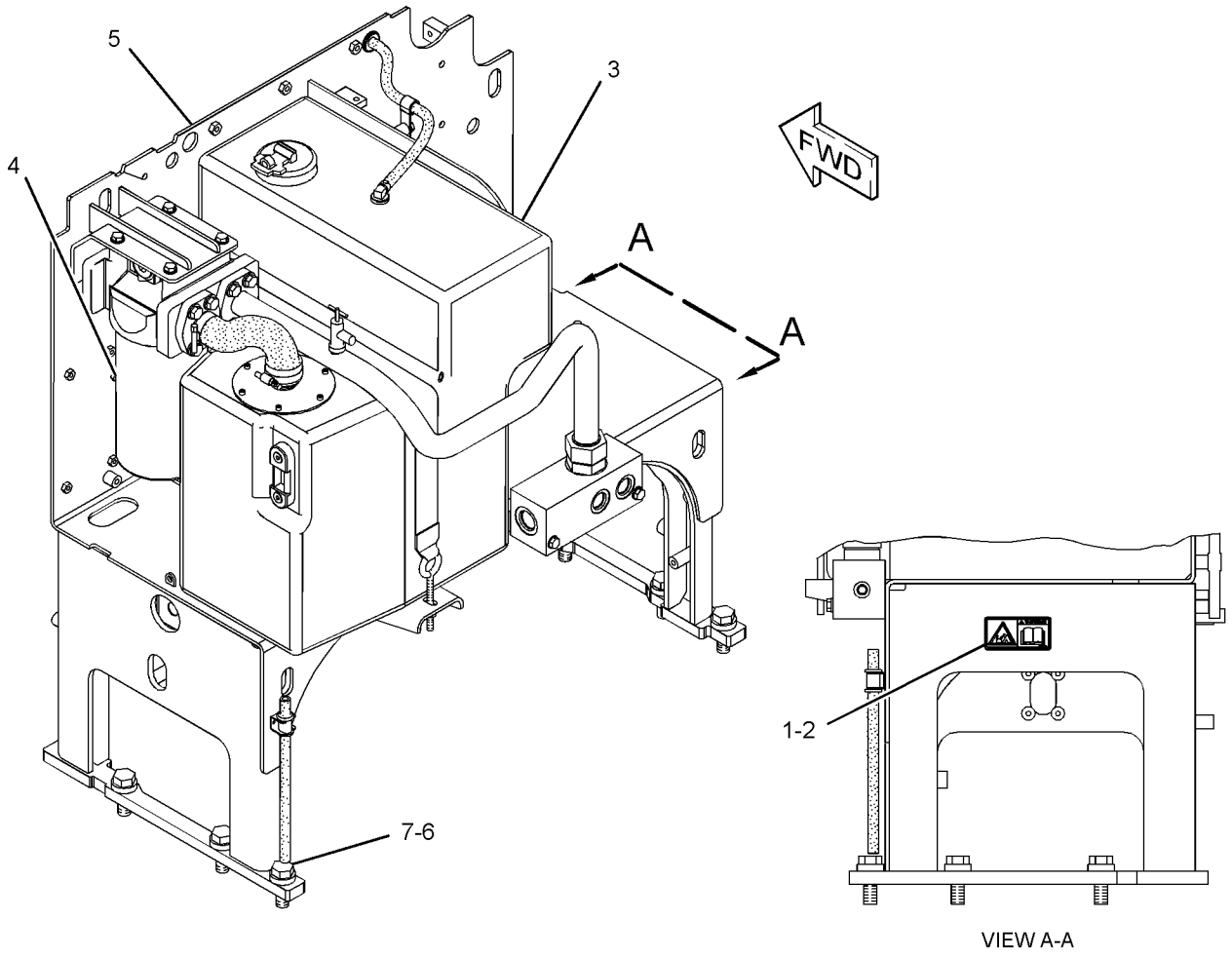

GRAPHIC #1 **<END>** g01370264

270-6989 SHIELD GP-ENGINE COMPARTMENT

S/N: B9D1-UP

SMCS-7263 **i02787542**

NOTE	REF NO	GRAPHIC REF	PART NUMBER	QTY	PART NAME 1 2 3 4 5 6 (PRODUCT LEVEL)	SEE PAGE
	1	2	**183-4000**	18	SHIM (1.5-MM THK)	
	2	2	**270-8407**	1	PLATE	
	3	2	**286-1278**	1	BRUSH AS	
	4	2	**286-9714**	1	BLOCK-FOAM	
	5	2	**286-9715**	1	COVER	
	6	2	**286-9725**	1	BRUSH AS	
	7	2	**297-5874**	1	GUARD	
	8	2	**297-5875**	1	GUARD	
	9	2	**297-5876**	1	GUARD	
	10	2	**297-5877**	1	PLATE	
	11	2	**297-5878**	1	GUARD	
	12	2	**297-5879**	1	GUARD	
	13	2	**297-5880**	1	GUARD	
	14	2	**297-8035**	1	PLATE AS	
M		2	**8T-3490**	4	NUT-WELD (M10X1.5-THD)	
	15	2	**6K-3273**	13	RIVET-POP	
	16	2	**7X-7729**	20	WASHER (11X25X3-MM THK)	
M	17	2	**8T-4133**	2	NUT (M10X1.5-THD)	
M	18	2	**8T-4136**	7	BOLT (M10X1.5X25-MM)	
M	19	2	**8T-4186**	6	BOLT (M10X1.5X40-MM)	
M	20	2	**8T-4195**	4	BOLT (M10X1.5X30-MM)	
M	21	2	**8T-4196**	1	BOLT (M10X1.5X35-MM)	

M-METRIC PART

270-6989 **SHIELD GP-ENGINE COMPARTMENT** *(contd.)* **i02787542**

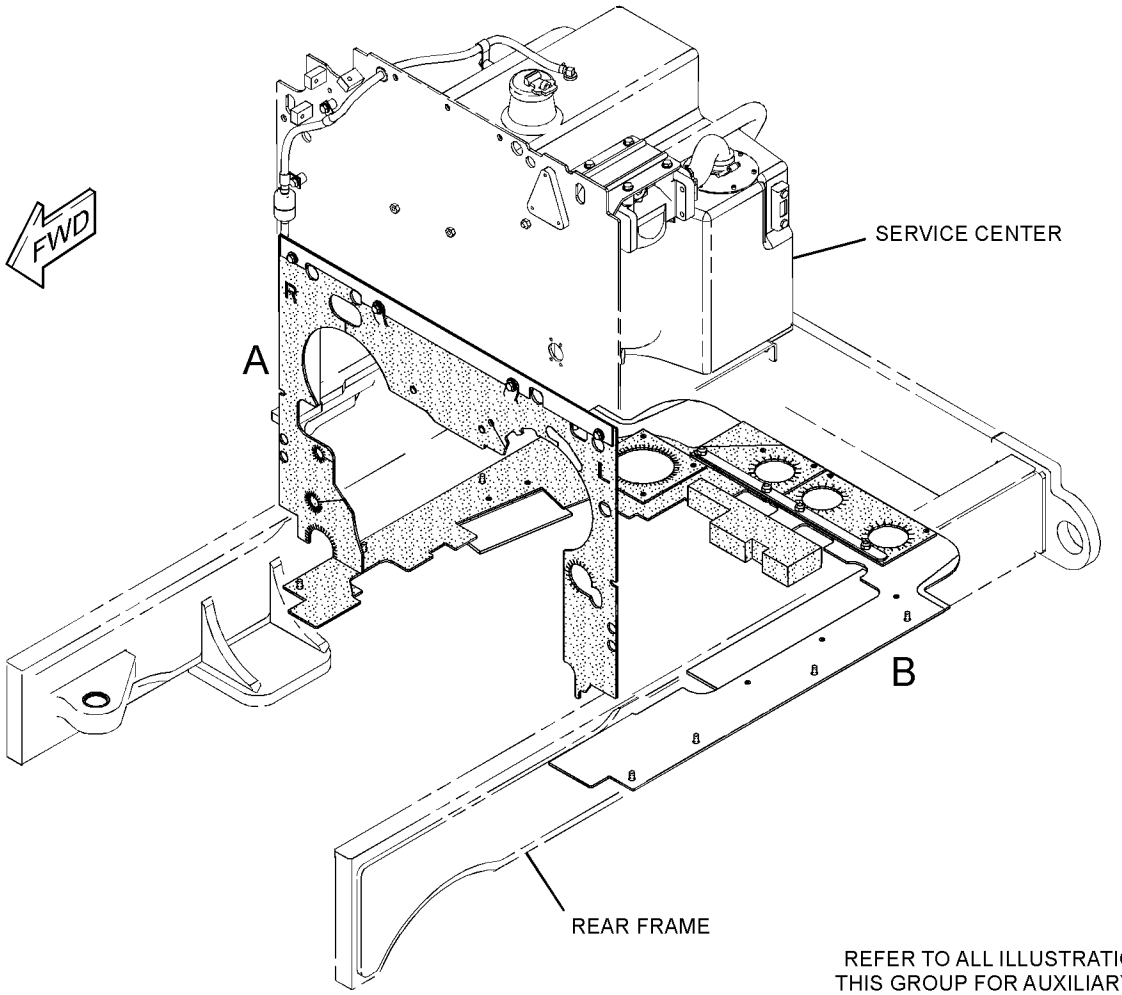

REFER TO ALL ILLUSTRATIONS OF
THIS GROUP FOR AUXILIARY VIEWS

GRAPHIC #1

g01361837

270-6989 **SHIELD GP-ENGINE COMPARTMENT** *(contd.)* **i02787542**

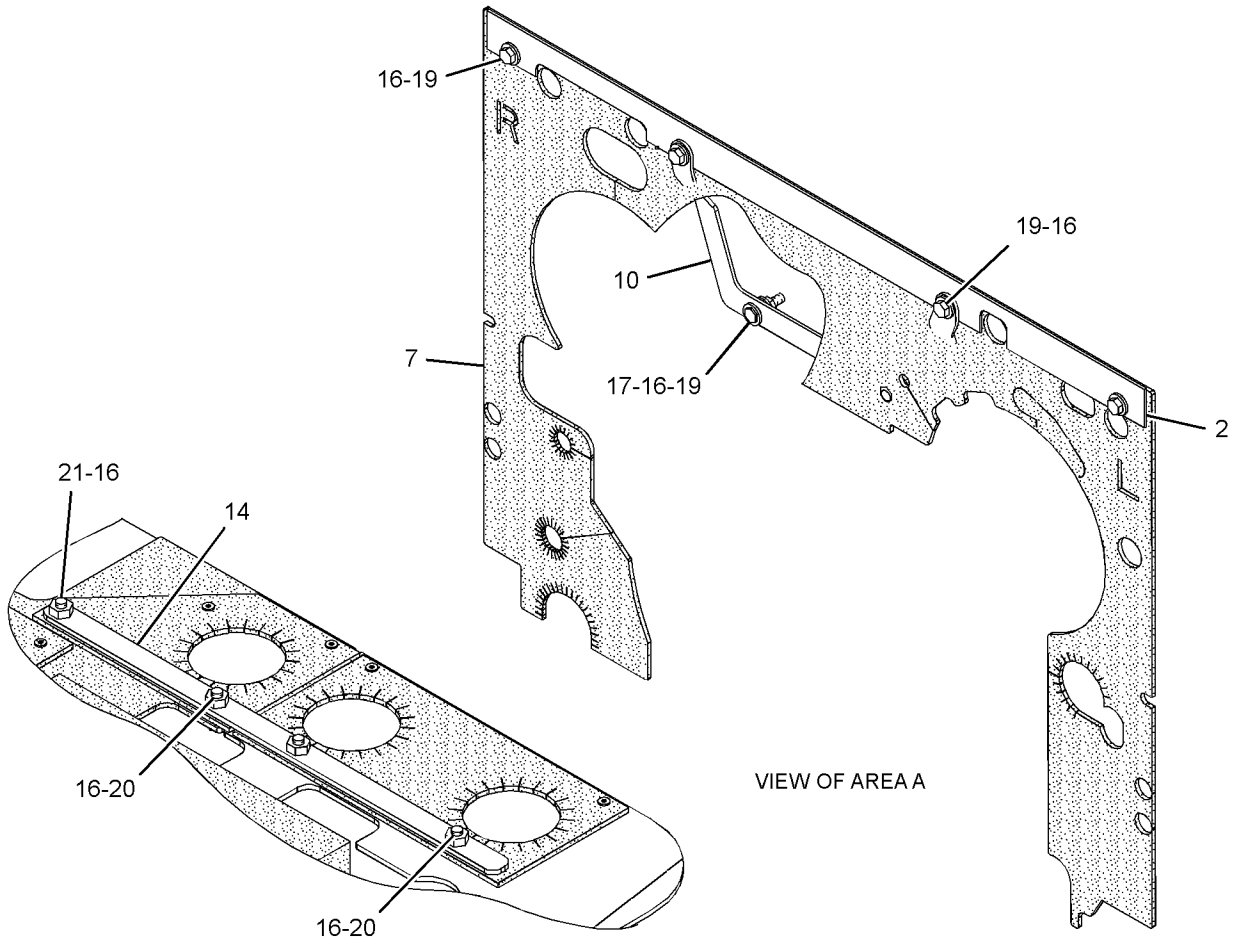

GRAPHIC #2

<END>

g01361839

FRAME AND BODY

238-8758 STEP GP

S/N: B9D1-UP

PART OF 234-7721 COMMON AR

SMCS-7254 **i02773457**

NOTE	REF NO	GRAPHIC REF	PART NUMBER	QTY	PART NAME 1 2 3 4 5 6 (PRODUCT LEVEL)	SEE PAGE
	1	1	**4V-9804**	6	PLATE	
	2	1	**244-2729**	3	STEP	
	3	1	**251-2290**	2	SUPPORT-STEP (RUBBER) (STEP ACCESS)	
	4	1	**252-6307**	4	BOLT-ROUND HEAD (M12X1.75X65-MM)	
	5	1	**254-5389**	1	PLATE	
M	6	1	**156-4974**	8	BOLT-ROUND HEAD (M12X1.75X60-MM)	
	7	1	**5P-1076**	3	WASHER-HARD (13.5X30X4-MM THK)	
M	8	1	**6V-7687**	12	LOCKNUT (M12X1.75-THD)	
	9	1	**8T-4223**	12	WASHER-HARD (13.5X25.5X3-MM THK)	
M	10	1	**8T-4956**	3	BOLT (M12X1.75X35-MM)	

M-METRIC PART

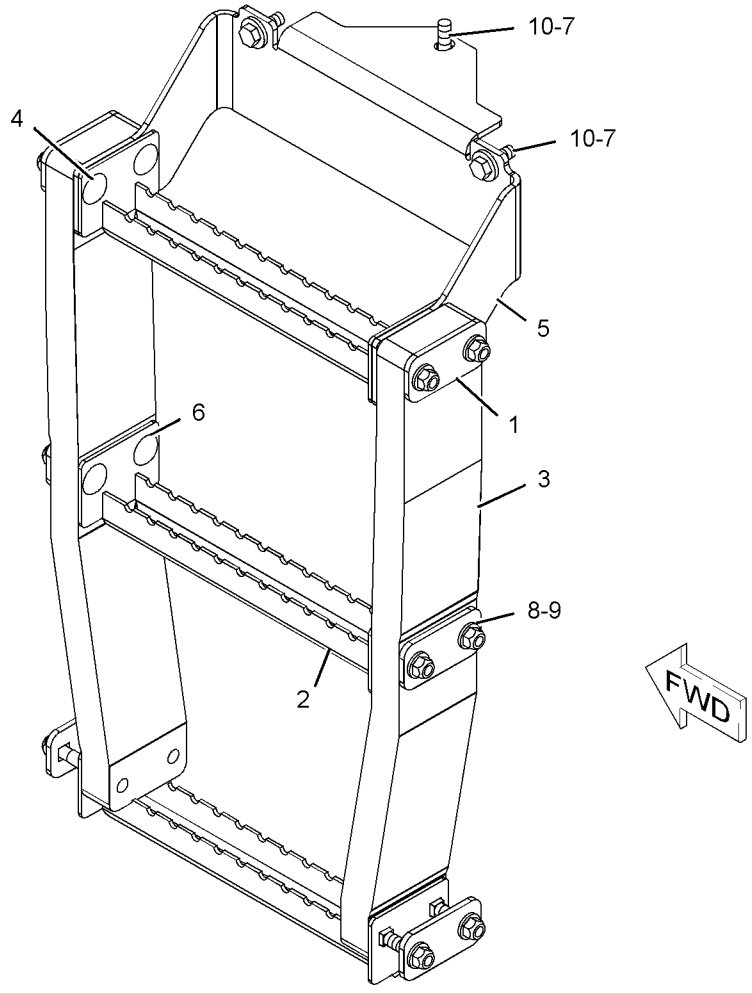

GRAPHIC #1 **<END>** g01134706

231-2316 SUPPORT GP-RADIATOR

S/N: B9D1-UP

PART OF 268-6570 COOLING AR

SMCS-1353 **i02780879**

NOTE	REF NO	GRAPHIC REF	PART NUMBER	QTY	PART NAME 1 2 3 4 5 6 (PRODUCT LEVEL)	SEE PAGE
	1	1	**247-9764**	1	SUPPORT AS (LH)	
	2	1	**247-9765**	1	SUPPORT AS (RH)	
	3	1	**247-9766**	1	BRACKET AS	
	4	1	**247-9769**	1	BRACKET AS	
	5	1	**248-0679**	1	BRACKET AS	
	6	1	**250-0683**	2	PLATE	
	7	1	**250-0684**	1	BAFFLE AS	
	8	1	**260-6878**	1	PLATE AS	
	9	1	**7X-7729**	11	WASHER (11X25X3-MM THK)	
	10	1	**8T-4121**	14	WASHER-HARD (11X21X2.5-MM THK)	
M	11	1	**8T-4133**	8	NUT (M10X1.5-THD)	
M	12	1	**8T-4136**	2	BOLT (M10X1.5X25-MM)	
M	13	1	**8T-4137**	10	BOLT (M10X1.5X20-MM)	
M	14	1	**8T-4195**	5	BOLT (M10X1.5X30-MM)	
	15	1	**8T-4223**	8	WASHER-HARD (13.5X25.5X3-MM THK)	
M	16	1	**8T-4139**	8	BOLT (M12X1.75X30-MM)	
E	17	1	**112-9736**		SEAL (102-CM EACH)	
E	17A	1	**112-9736**		SEAL (51-CM)	
E	17B	1	**112-9736**		SEAL (46-CM EACH)	
E	17C	1	**112-9736**		SEAL (93-CM)	
E	18	1	**247-5838**		SEAL (8-CM)	
E	19	1	**103-2543**		SEAL (93-CM)	
E	20	1	**3E-6697**		SEAL (49-CM)	
	21	1	**275-5387**	1	PLATE	

E-ORDER BY THE CENTIMETER
M-METRIC PART

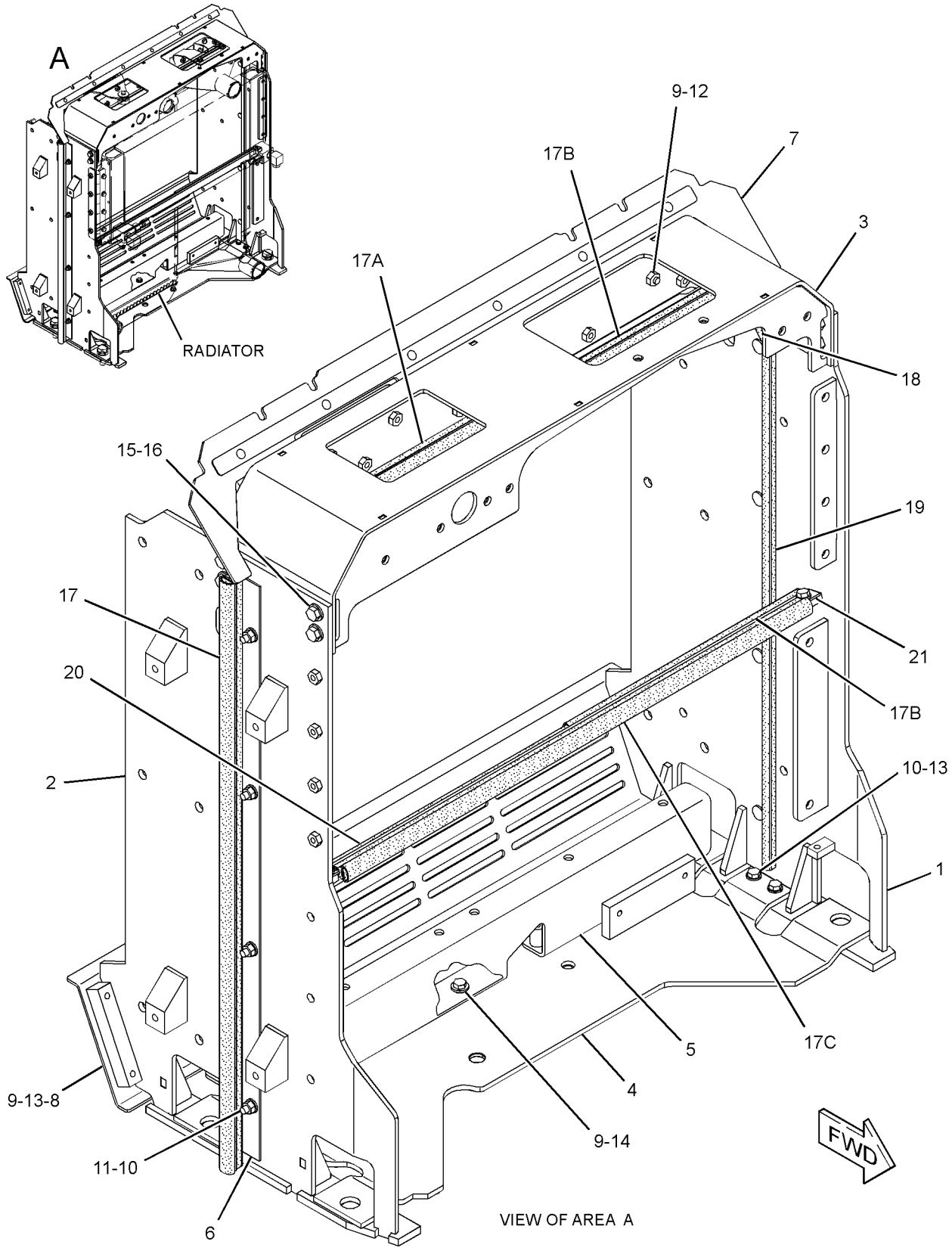

GRAPHIC #1 **<END>** g01367570

231-5055 SUPPRESSION GP-SOUND–ENGINE ENCLOSURE

S/N: B9D1-UP

PART OF 261-0182 OPTION AR-EU

SMCS-1801, 7076 **i02773207**

NOTE	REF NO	GRAPHIC REF	PART NUMBER	QTY	PART NAME 1 2 3 4 5 6 (PRODUCT LEVEL)	SEE PAGE
	1	1	**245-2815**	2	INSULATION	
	2	1	**289-4086**	1	INSULATION	
	3	1	**289-4087**	1	INSULATION	
	4	1	**289-4088**	1	INSULATION	
	5	1	**289-4089**	1	INSULATION	
	6	1	**291-1339**	1	INSULATION	
	7	1	**291-1340**	1	INSULATION	
	8	1	**296-7739**	2	INSULATION	

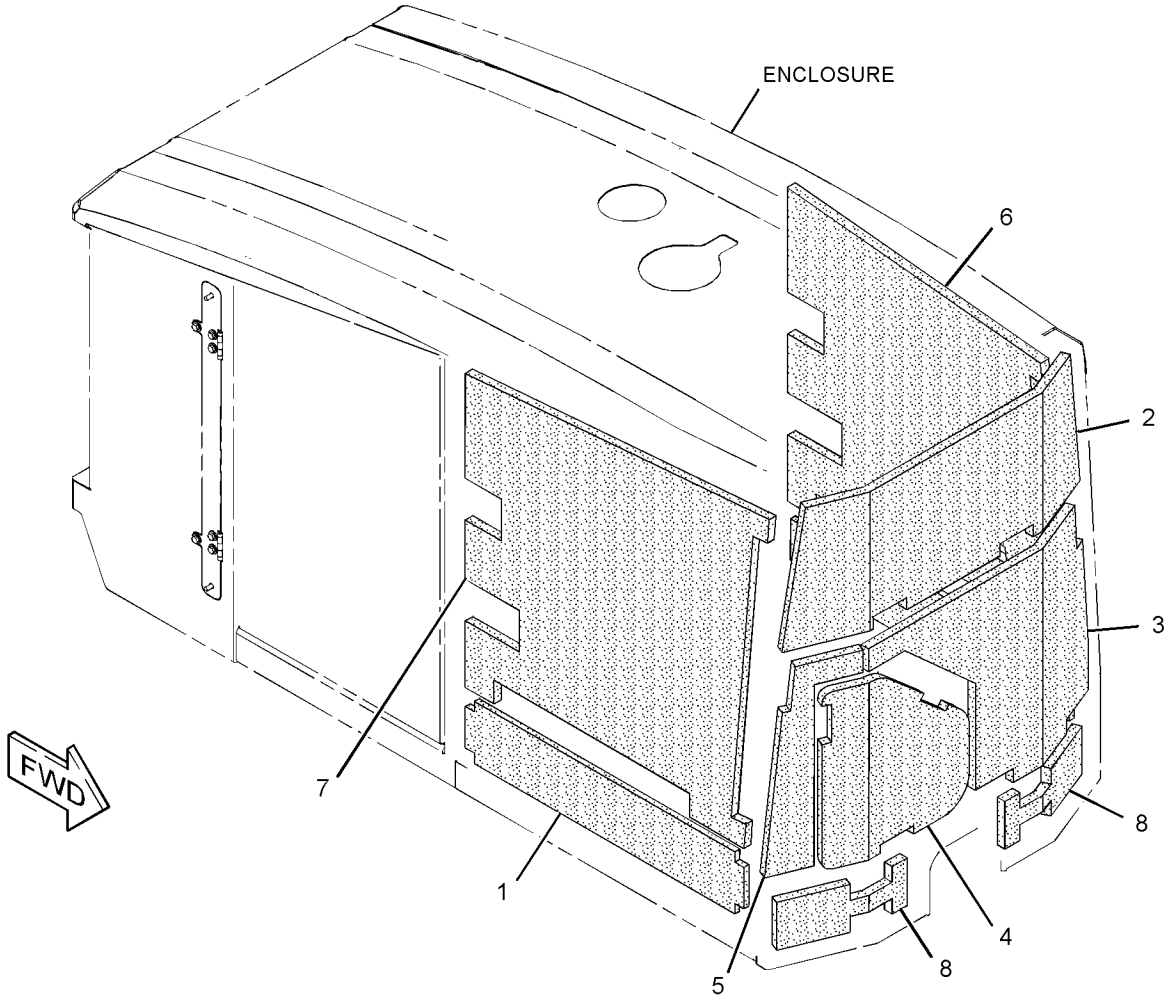

GRAPHIC #1 **<END>** g01366864

272-1540 SUPPRESSION GP-SOUND

S/N: B9D1-UP

PART OF 261-0182 OPTION AR-EU

SMCS-1801, 7076 **i02786143**

NOTE	REF NO	GRAPHIC REF	PART NUMBER	QTY	PART NAME 1 2 3 4 5 6 (PRODUCT LEVEL)	SEE PAGE
	1	1	**272-1541**	1	PLATE	
	2	1	**295-8385**	1	INSULATION	
	3	1	**295-8386**	1	INSULATION	
	4	1	**295-8387**	1	INSULATION	
	5	1	**295-8388**	1	INSULATION	
	6	1	**295-8389**	1	INSULATION	
	7	1	**295-8390**	1	PLATE AS (LH)	
M		1	**8T-3490**	5	NUT-WELD (M10X1.5-THD)	
M		1	**8T-3612**	5	NUT-WELD (M8X1.25-THD)	
	8	1	**295-8391**	1	PLATE AS (RH)	
M		1	**8T-3490**	5	NUT-WELD (M10X1.5-THD)	
M		1	**8T-3612**	5	NUT-WELD (M8X1.25-THD)	
	9	1	**295-8392**	1	PLATE AS (RH)	
	10	1	**295-8393**	1	PLATE AS (LH)	
	11	1	**295-8397**	2	PLATE	
	12	1	**295-8427**	1	PLATE AS (LH)	
M		1	**8T-3612**	5	NUT-WELD (M8X1.25-THD)	
	13	1	**295-8428**	1	PLATE AS (RH)	
M		1	**8T-3612**	5	NUT-WELD (M8X1.25-THD)	
	14	1	**296-2710**	1	INSULATION	
	15	1	**296-4119**	1	PLATE AS (LH)	
	16	1	**296-4120**	1	PLATE AS (RH)	
	17	1	**296-4355**	2	INSULATION	
	18	1	**5P-4116**	20	WASHER-HARD (8.8X20.5X2-MM THK)	
	19	1	**7X-7729**	28	WASHER (11X25X3-MM THK)	
M	20	1	**8T-4136**	16	BOLT (M10X1.5X25-MM)	
M	21	1	**8T-4189**	10	BOLT (M8X1.25X20-MM)	
M	22	1	**8T-4195**	10	BOLT (M10X1.5X30-MM)	
M	23	1	**8T-4196**	2	BOLT (M10X1.5X35-MM)	
M	24	1	**8T-4908**	10	BOLT (M8X1.25X25-MM)	

M-METRIC PART

272-1540 **SUPPRESSION GP-SOUND** *(contd.)* **i02786143**

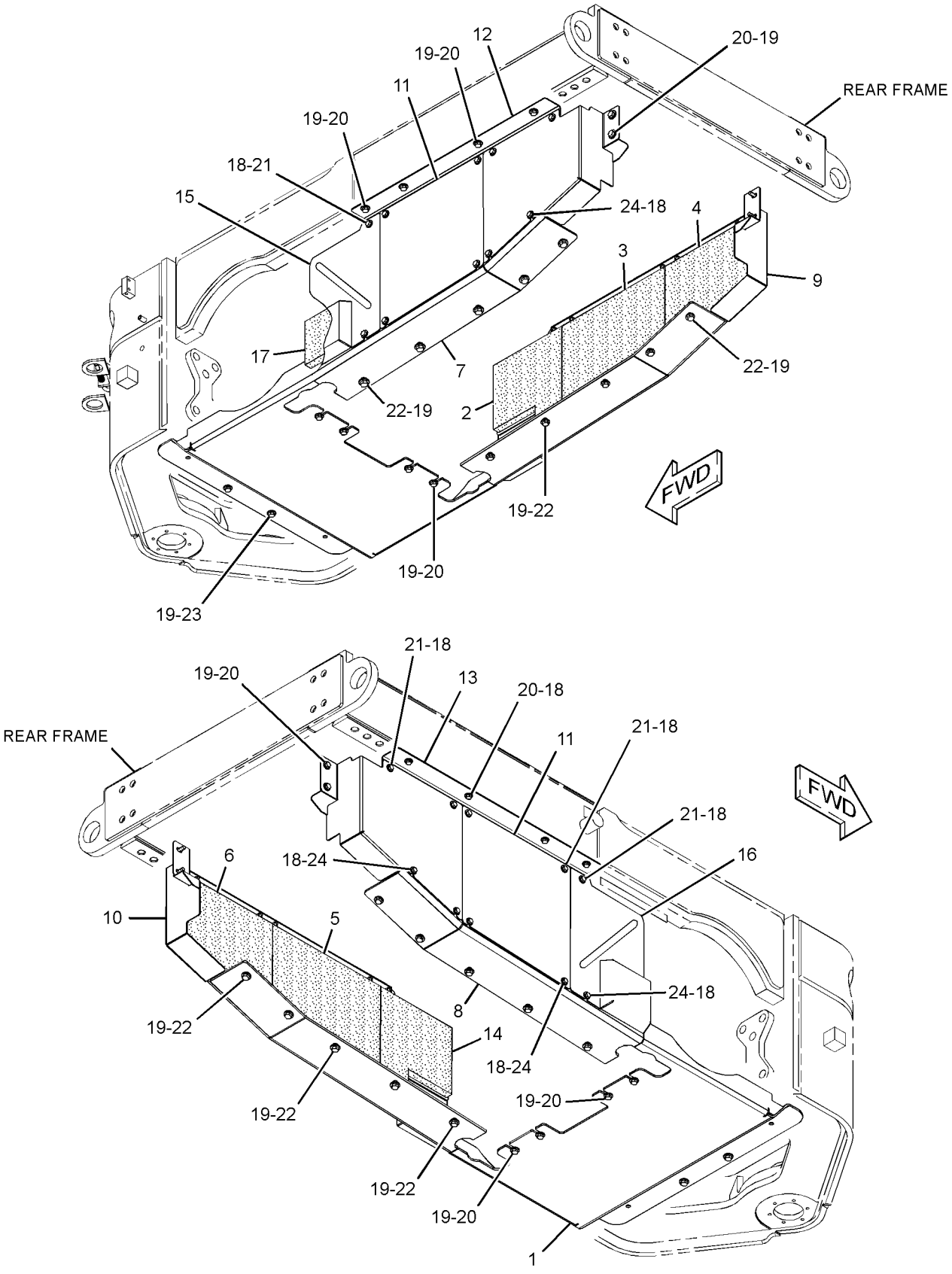

GRAPHIC #1 **<END>** g01328156

249-3860 ACCUMULATOR GP-BRAKE–CHARGED

S/N: B9D1-UP

PART OF 251-2243 LINES GP-ACCUMULATOR

SMCS-4263, 4264 **i02774529**

NOTE	REF NO	GRAPHIC REF	PART NUMBER	QTY	PART NAME 1 2 3 4 5 6 (PRODUCT LEVEL)	SEE PAGE
	1	1	**158-2336**	1	VALVE-GAS	
	2	1	**111-9110**	1	PROTECTOR-GAS VALVE	
J	3	1	**1J-9671**	1	SEAL-O-RING	
	4	1	**5M-3062**	2	BOLT (3/8-16X0.75-IN)	
					AVAILABLE REPAIR KIT(S):	
J			**203-1558**	1	KIT-SEAL (BRAKE ACCUMULATOR)	
					(INCLUDES SEAL)	

J-KIT MARKED J INCLUDES PART MARKED J

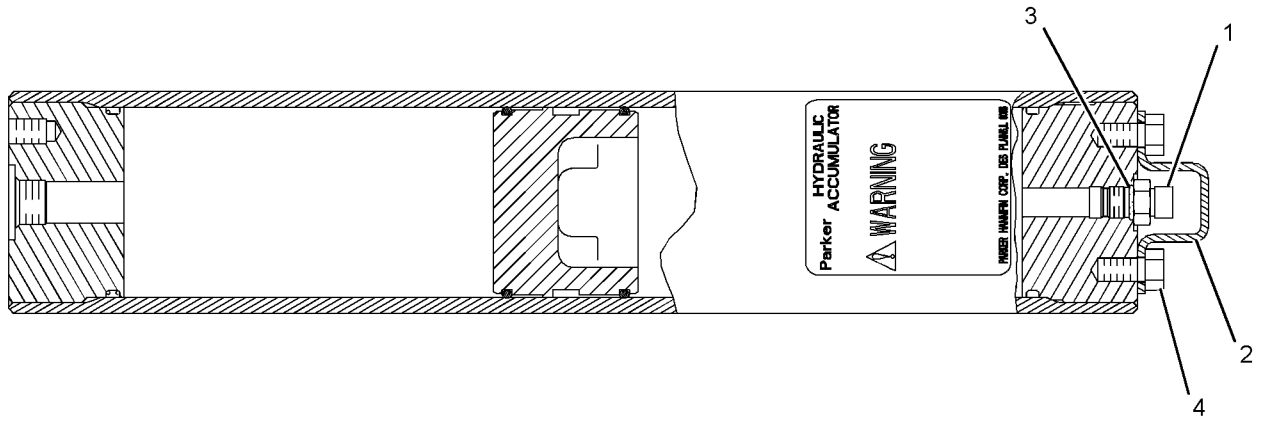

GRAPHIC #1 **<END>** g01110741

249-3862 ACCUMULATOR GP-BRAKE–CHARGED

S/N: B9D1-UP

PART OF 252-1811 LINES GP-SERVICE BRAKE

FIELD REPLACEMENT ORDER 249-3863–PAGE 501

SMCS-4263, 4264 **i02790833**

NOTE	REF NO	GRAPHIC REF	PART NUMBER	QTY	PART NAME 1 2 3 4 5 6 (PRODUCT LEVEL)	SEE PAGE
	1	1	**158-2336**	1	VALVE-GAS	
	2	1	**111-9110**	1	PROTECTOR-GAS VALVE	
	3	1	**1J-9671**	1	SEAL-O-RING	
	4	1	**5M-3062**	2	BOLT (3/8-16X0.75-IN)	
	5	1	**241-0037**	1	FILM-WARNING (HIGH PRESSURE, READ OMM)	
					AVAILABLE REPAIR KIT(S):	
			203-1558	1	KIT-SEAL (BRAKE ACCUMULATOR)	

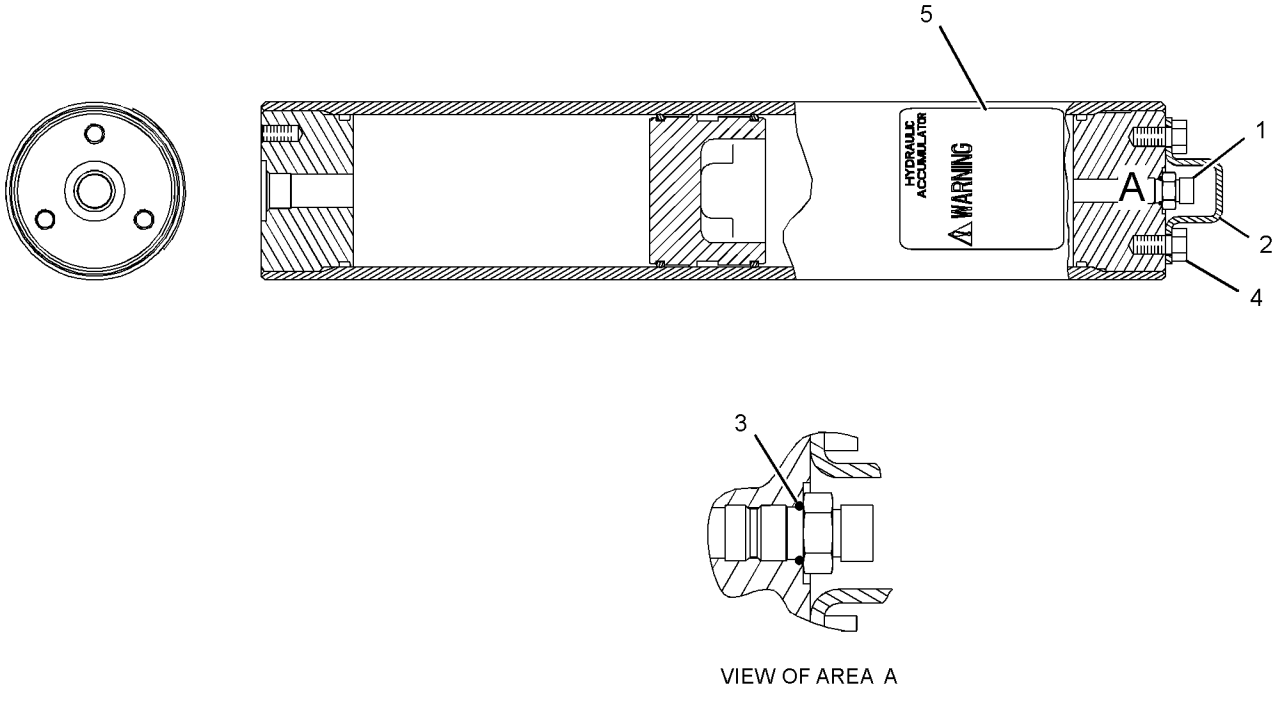

GRAPHIC #1 **<END>** g01394269

249-3863 ACCUMULATOR GP-BRAKE–UNCHARGED

S/N: B9D1-UP

FIELD REPLACEMENT FOR 249-3862–PAGE 500

SMCS-4263, 4264 **i02790830**

NOTE	REF NO	GRAPHIC REF	PART NUMBER	QTY	PART NAME 1 2 3 4 5 6 (PRODUCT LEVEL)	SEE PAGE
	1	1	**158-2336**	1	VALVE-GAS	
	2	1	**241-0037**	1	FILM-WARNING (HIGH PRESSURE, READ OMM)	
					AVAILABLE REPAIR KIT(S):	
			203-1558	1	KIT-SEAL (BRAKE ACCUMULATOR)	
					(KIT INCLUDES SEALS, END CAPS & GAS VALVE)	

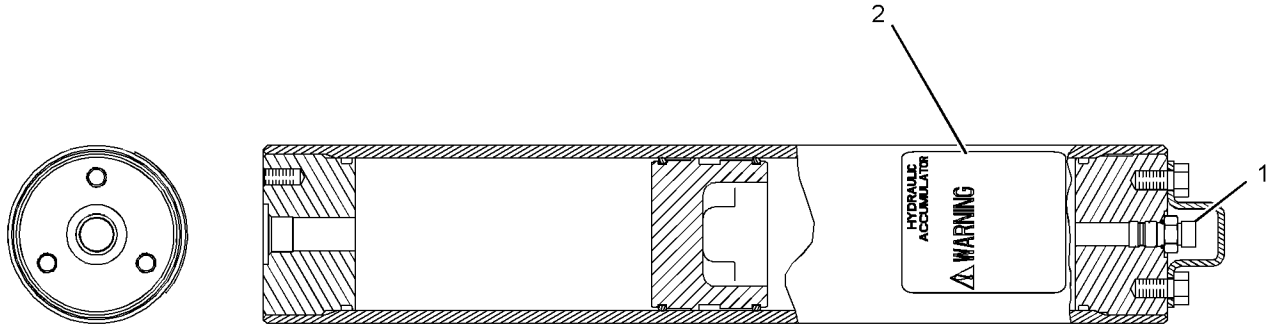

GRAPHIC #1 **<END>** g01394260

BRAKING SYSTEM

253-8424 BRAKE GP-PARKING

S/N: CZM1-UP

PART OF 253-8405 TRANSMISSION AR

SMCS-3077, 4267 **i02775009**

NOTE	REF NO	GRAPHIC REF	PART NUMBER	QTY	PART NAME 1 2 3 4 5 6 (PRODUCT LEVEL)	SEE PAGE
	1	1	**064-3843**	1	RING-SNAP	
	2	1	**171-9375**	1	SEAL-O-RING	
	3	1	**187-3369**	2	SPRING	
	4	1	**188-0633**	1	SEAL-BRAKE	
	5	1	**193-2200**	1	SEAL-LIP TYPE	
	6	1	**241-3722**	1	FILM-WARNING (RECOIL SPRING)	
	7	1	**246-8777**	1	SEAL-BRAKE	
	8	1	**246-8779**	5	DISC-FRICTION	
	9	1	**246-8780**	6	PLATE-CLUTCH	
	10	1	**246-8784**	1	PISTON	
	11	1	**246-8786**	1	HUB	
	12	1	**246-8787**	1	YOKE AS	
	13	1	**253-8867**	3	DOWEL	
	14	1	**297-2823**	1	HOUSING AS	
		1	**9W-6068**	2	PLUG	
		1	**124-1555**	4	PLUG	
	15	1	**297-2825**	1	PLATE AS	
		1	**5M-7937**	2	DOWEL	
M	16	1	**129-3181**	3	BOLT-SOCKET HEAD (M10X1.5X55-MM)	
	17	1	*148-8395*	1	PLUG AS	
		1	**9S-8005**	1	PLUG-O-RING	
		1	**3K-0360**	1	SEAL-O-RING	
	18	1	**4J-8996**	1	SEAL-O-RING	
	19	1	**5P-5297**	1	RING-RETAINING (EXTERNAL)	
	20	1	**6V-5759**	2	SEAL-O-RING	
	21	1	**7X-0605**	12	WASHER-HARD (13X28X1.6-MM THK)	
M	22	1	**7X-2549**	12	BOLT (M12X1.75X100-MM)	
BJ	23	1	**1U-8846**		SEALANT-GASKET (50-ML)	

B-USE AS REQUIRED
J-SOLD BY THE MILLILITRE
M-METRIC PART

253-8424 **BRAKE GP-PARKING** *(contd.)* **i02775009**

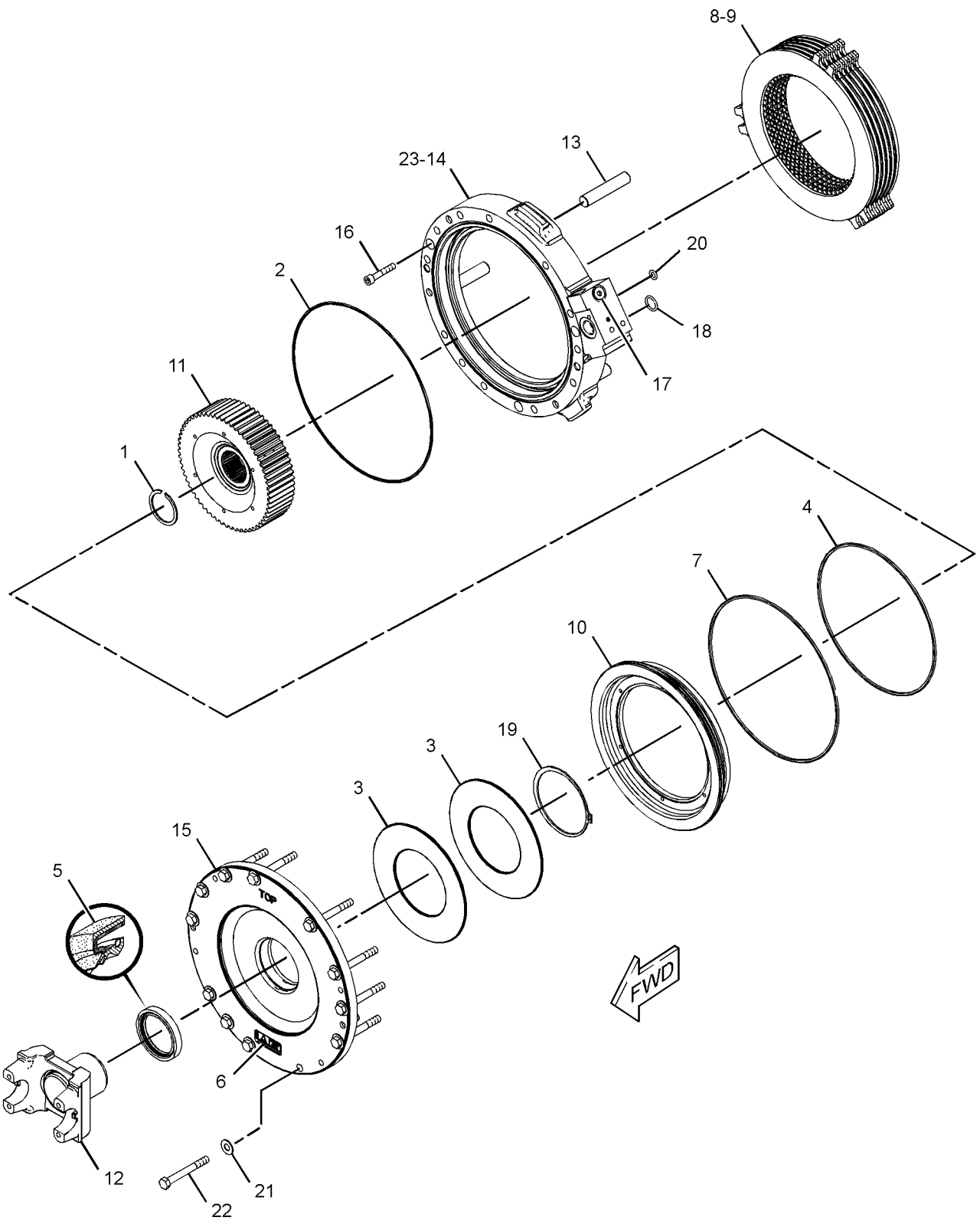

GRAPHIC #1 **<END>** g01339675

284-5020 BRAKE GP-SERVICE—FRONT TANDEM

S/N: B9D1-UP

PART OF 284-5019 WHEEL AR

SMCS-4251 **i02781128**

NOTE	REF NO	GRAPHIC REF	PART NUMBER	QTY	PART NAME 1 2 3 4 5 6 (PRODUCT LEVEL)	SEE PAGE
	1	1	**5H-3701**	1	SCREW-PURGE (7/16-20-THD)	
R	2	1	**5K-5288**	1	SEAL GP-DUO-CONE	
	2A	1	**5K-5129**	2	RING-SEALING	
	3	1	**6B-3223**	2	CUP-BEARING	
	4	1	**7D-8439**	4	SHIM (0.007-MM THK)	
	5	1	**7D-8441**	1	SHIM (0.005-MM THK)	
	6	1	**9D-3075**	1	RETAINER	
	7	1	**9D-7047**	4	SHIM (0.02-MM THK)	
	8	1	**110-7149**	1	RING-RETAINING	
	9	1	**220-4335**	1	SEAL-BRAKE	
	10	1	**220-4336**	1	SEAL-BRAKE	
	11	1	**257-1702**	1	PISTON	
	12	1	**259-6836**	6	DISC-FRICTION	
	13	1	**262-5610**	1	HUB-BRAKE	
	14	1	**278-3319**	1	SPROCKET	
	15	1	**284-5022**	1	HOUSING	
	16	1	**284-5023**	1	SPINDLE	
	17	1	**284-8959**	1	WASHER (13X22X2-MM THK)	
	18	1	**284-8960**	2	WASHER (13X22X0.5-MM THK)	
	19	1	**284-9552**	1	COMPENSATOR (SERVICE BRAKE)	
	20	1	**284-9553**	4	SPRING	
	21	1	**284-9554**	4	DOWEL	
	22	1	**284-9555**	4	DOWEL	
	23	1	**284-9556**	4	SPACER-SPECIAL	
	24	1	**284-9557**	7	PLATE	
	25	1	**285-0610**	1	COVER	
M	26	1	**286-9155**	16	BOLT-SELF-LOCKING (M16X2X120-MM)	
M	27	1	**103-6169**	3	BOLT (M16X2X60-MM)	
	28	1	**198-4768**	16	WASHER-HARD (17.5X32X8-MM THK)	
	29	1	**4B-7270**	1	CONE-BEARING	
M	30	1	**4I-0755**	1	NUT (M12X1.25-THD)	
	31	1	**4S-5879**	1	SEAL-O-RING	
	32	1	**7D-8437**	1	CONE-BEARING	
	33	1	**8F-9538**	1	SEAL-O-RING	
M	34	1	**8T-1159**	4	BOLT-SOCKET HEAD (M10X1.5X25-MM)	

M-METRIC PART
R-REMFG PART MAY BE AVAILABLE

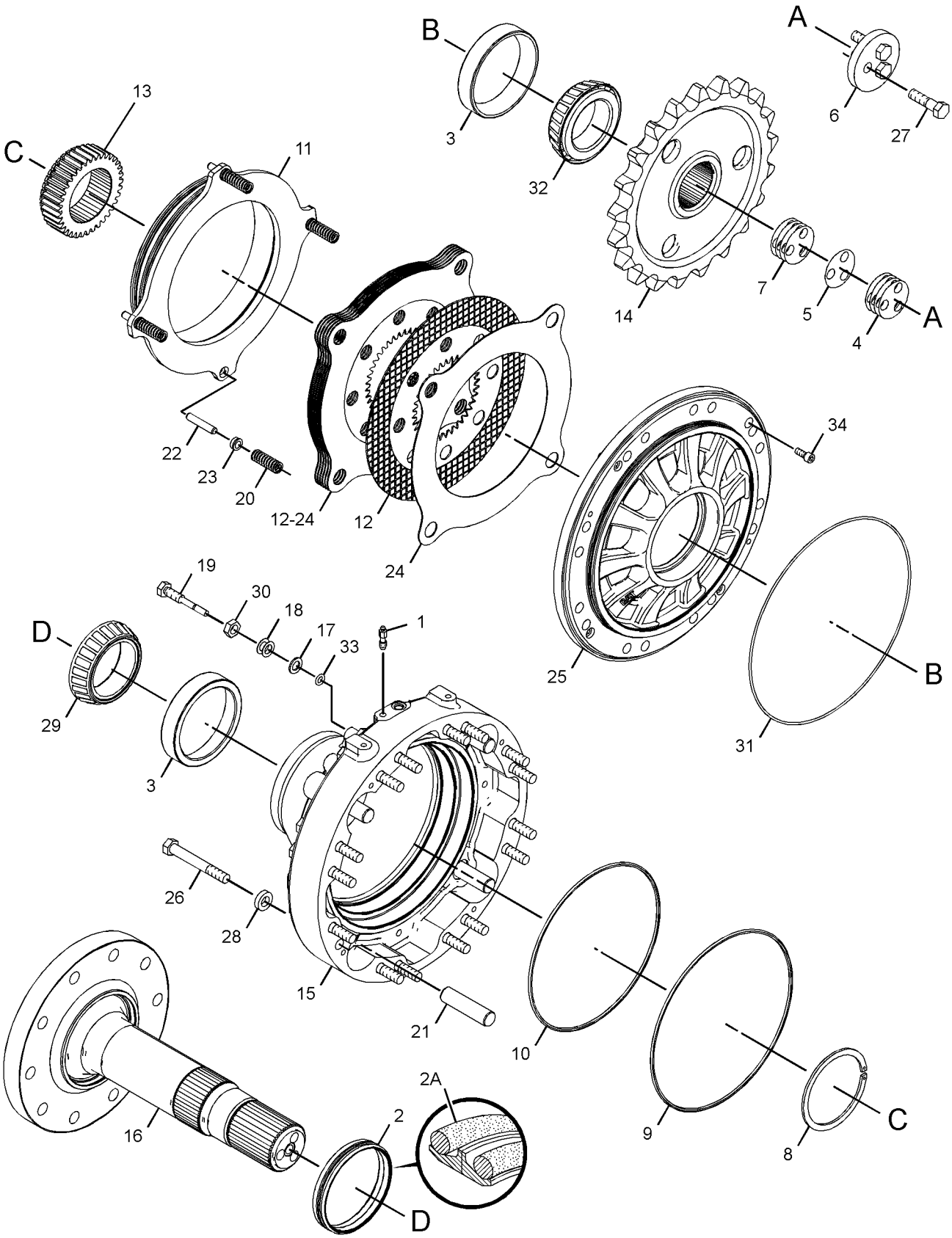

GRAPHIC #1 **<END>** g01374995

284-5021 BRAKE GP-SERVICE–REAR TANDEM

S/N: B9D1-UP

PART OF 284-5019 WHEEL AR

SMCS-4251 **i02781129**

NOTE	REF NO	GRAPHIC REF	PART NUMBER	QTY	PART NAME 1 2 3 4 5 6 (PRODUCT LEVEL)	SEE PAGE
	1	1	**5H-3701**	1	SCREW-PURGE (7/16-20-THD)	
R	2	1	**5K-5288**	1	SEAL GP-DUO-CONE	
	2A	1	**5K-5129**	2	RING-SEALING	
	3	1	**6B-3223**	2	CUP-BEARING	
	4	1	**7D-8439**	4	SHIM (0.007-MM THK)	
	5	1	**7D-8441**	1	SHIM (0.005-MM THK)	
	6	1	**9D-3075**	1	RETAINER	
	7	1	**9D-7047**	4	SHIM (0.02-MM THK)	
	8	1	**110-7149**	1	RING-RETAINING	
	9	1	**220-4335**	1	SEAL-BRAKE	
	10	1	**220-4336**	1	SEAL-BRAKE	
	11	1	**257-1702**	1	PISTON	
	12	1	**259-6836**	6	DISC-FRICTION	
	13	1	**262-5610**	1	HUB-BRAKE	
	14	1	**278-3319**	1	SPROCKET	
	15	1	**284-5022**	1	HOUSING	
	16	1	**284-5023**	1	SPINDLE	
	17	1	**284-8959**	1	WASHER (13X22X2-MM THK)	
	18	1	**284-8960**	2	WASHER (13X22X0.5-MM THK)	
	19	1	**284-9552**	1	COMPENSATOR (SERVICE BRAKE)	
	20	1	**284-9553**	4	SPRING	
	21	1	**284-9554**	4	DOWEL	
	22	1	**284-9555**	4	DOWEL	
	23	1	**284-9556**	4	SPACER-SPECIAL	
	24	1	**284-9557**	7	PLATE	
	25	1	**285-0610**	1	COVER	
M	26	1	**286-9155**	16	BOLT-SELF-LOCKING (M16X2X120-MM)	
M	27	1	**103-6169**	3	BOLT (M16X2X60-MM)	
	28	1	**198-4768**	16	WASHER-HARD (17.5X32X8-MM THK)	
	29	1	**4B-7270**	1	CONE-BEARING	
M	30	1	**4I-0755**	1	NUT (M12X1.25-THD)	
	31	1	**4S-5879**	1	SEAL-O-RING	
	32	1	**7D-8437**	1	CONE-BEARING	
	33	1	**8F-9538**	1	SEAL-O-RING	
M	34	1	**8T-1159**	4	BOLT-SOCKET HEAD (M10X1.5X25-MM)	

M-METRIC PART
R-REMFG PART MAY BE AVAILABLE

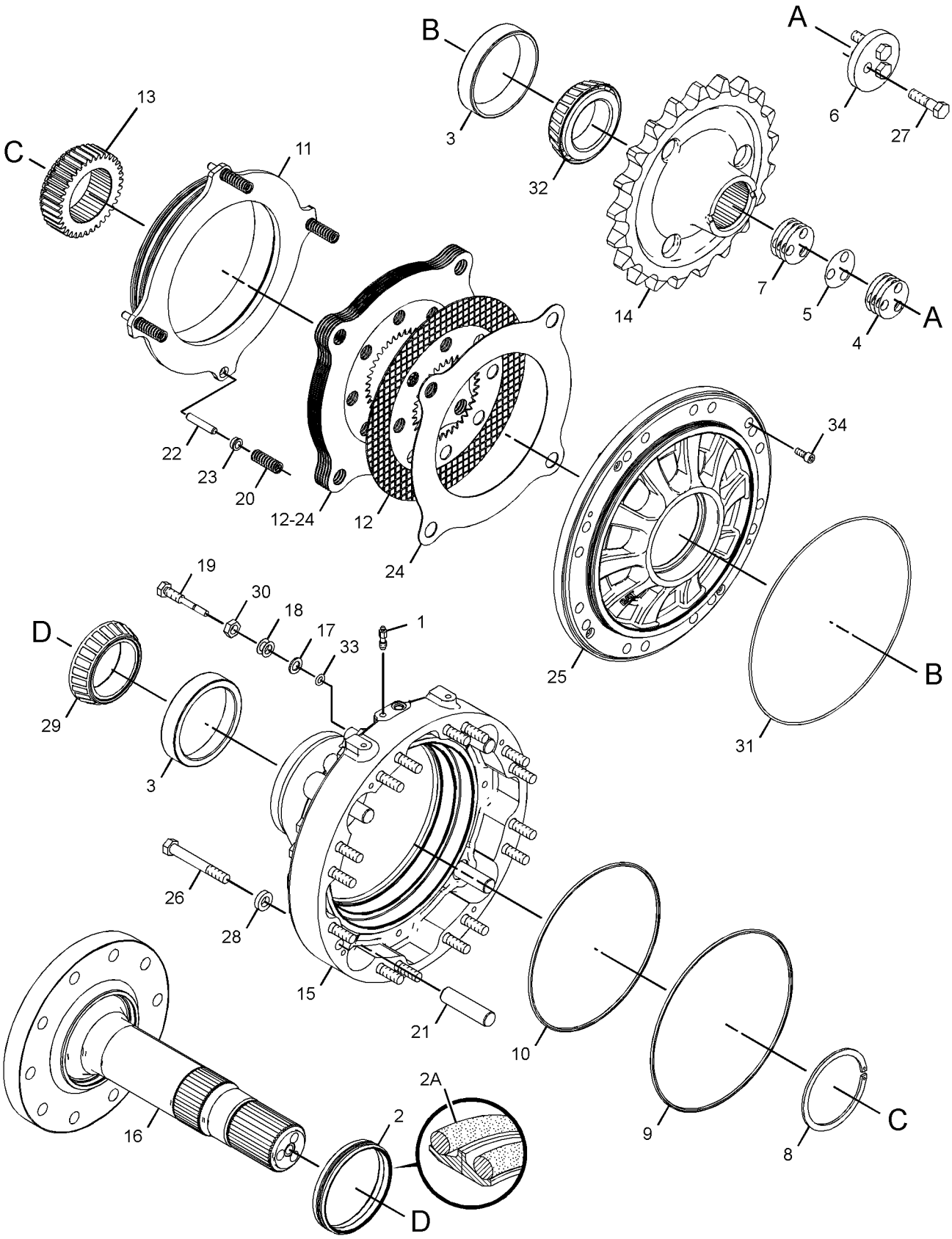

GRAPHIC #1 **<END>** g01374997

BRAKING SYSTEM

233-3142 CONTROL GP-SERVICE BRAKE

S/N: B9D1-UP

SMCS-4265, 4269 **i02772794**

NOTE	REF NO	GRAPHIC REF	PART NUMBER	QTY	PART NAME 1 2 3 4 5 6 (PRODUCT LEVEL)	SEE PAGE
	1	1	**219-0302**	1	FILM-WARNING (NO WELD, NO DRILL, READ OMM)	
	2	2	**225-3305**	1	FILM-WARNING (UNIVERSAL, READ OMM)	
	3	1	**227-7390**	1	FILM-WARNING (SEAT BELT)	
Y	4	2	**249-4080**	1	CONTROL GP-SERVICE BRAKE	510
	5	2	**249-4091**	4	BLOCK	
	6	2	**249-6687**	1	FILM-WARNING (CRUSH HAZARD)	
Y	7	1	*251-2243*	1	LINES GP-ACCUMULATOR (BRAKE)	513
	8	2	**253-3476**	1	PLATE	
	9	2	**281-9356**	2	PLATE	
	10	2	**286-5672**	1	PLATE AS	
	11	2	**128-5924**	4	CLAMP	
	12	2	**5P-9299**	5	CLIP	
	13	2	**8R-3393**	4	STRAP	
	14	2	**8T-4121**	21	WASHER-HARD (11X21X2.5-MM THK)	
M	15	2	**8T-4137**	9	BOLT (M10X1.5X20-MM)	
M	16	2	**8T-4185**	4	BOLT (M10X1.5X50-MM)	
M	17	2	**8T-4195**	4	BOLT (M10X1.5X30-MM)	
M	18	2	**8T-6466**	3	BOLT (M10X1.5X60-MM)	

M-METRIC PART
Y-SEPARATE ILLUSTRATION

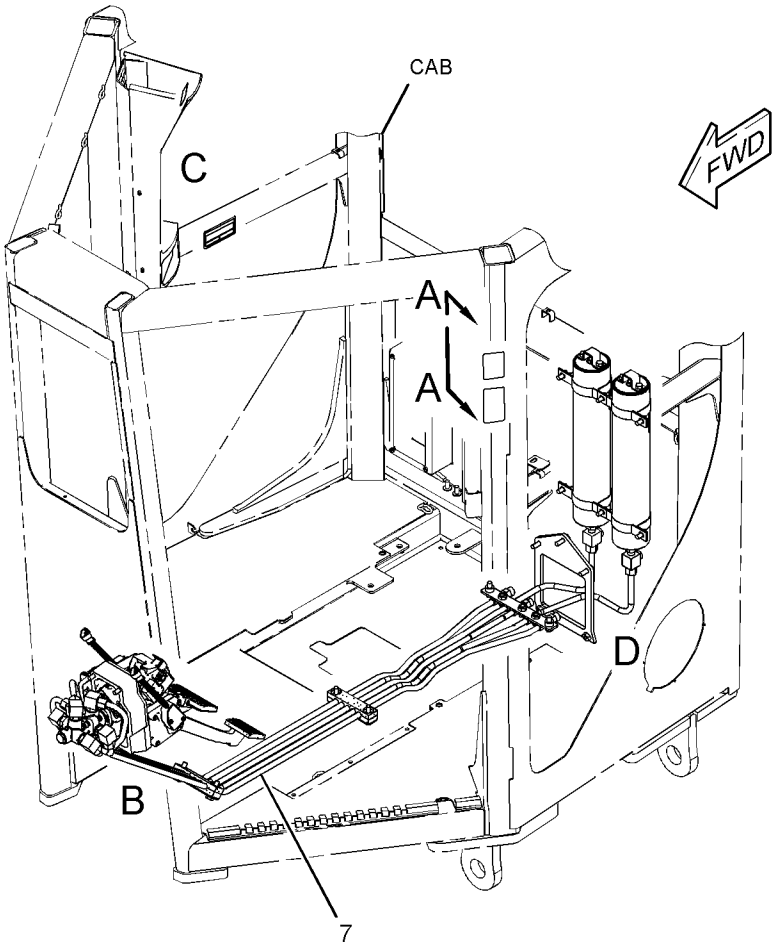

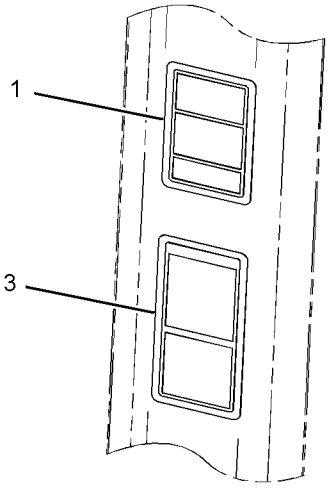

VIEW A-A

REFER TO ALL ILLUSTRATIONS OF THIS GROUP FOR AUXILIARY VIEWS

GRAPHIC #1 g01285169

233-3142 **CONTROL GP-SERVICE BRAKE** *(contd.)* **i02772794**

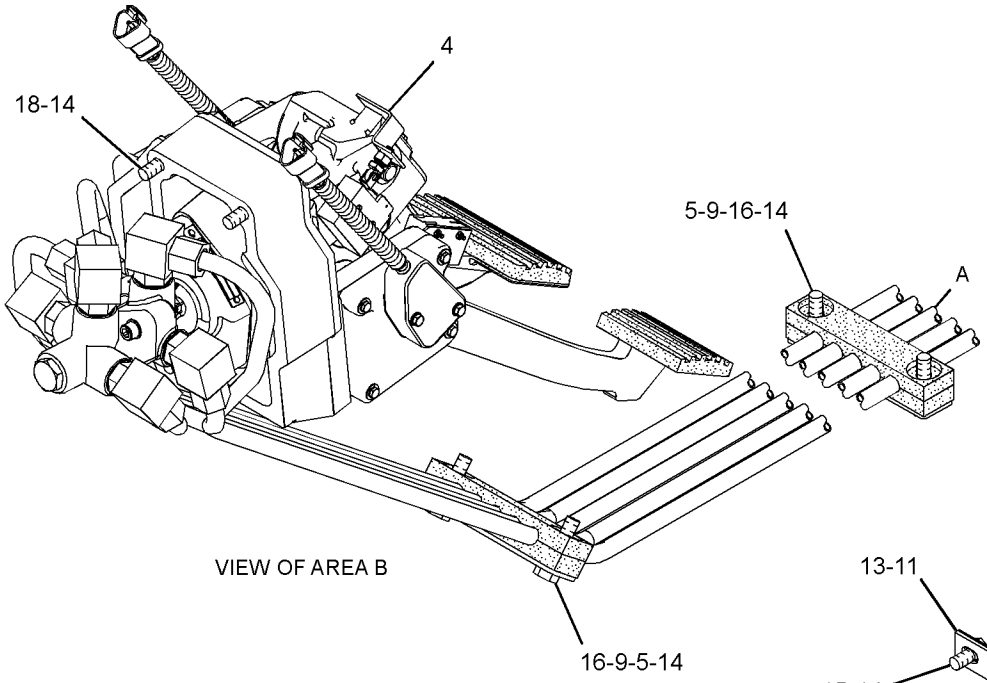

VIEW OF AREA B

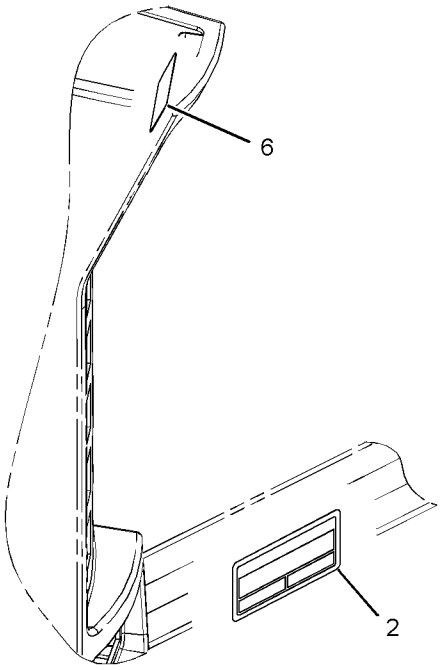

VIEW OF AREA C

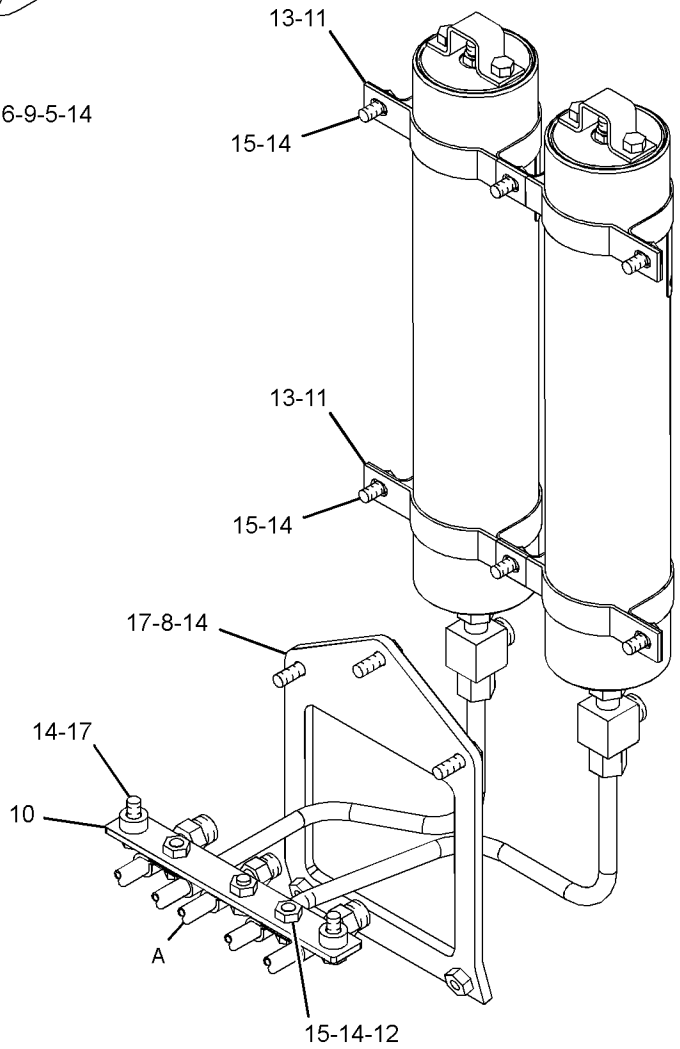

VIEW OF AREA D

GRAPHIC #2 **<END>** g01385766

249-4080 CONTROL GP-SERVICE BRAKE

S/N: B9D1-UP

PART OF 233-3142, 252-1810 CONTROL GP-SERVICE BRAKE

SMCS-4265, 4269 **i02774397**

NOTE	REF NO	GRAPHIC REF	PART NUMBER	QTY	PART NAME 1 2 3 4 5 6 (PRODUCT LEVEL)	SEE PAGE
Y	1	1	**265-8943**	1	PEDAL GP-BRAKE, TMSN & GOV	848
	2	1	**301-4129**	1	VALVE GP-CONTROL (BRAKE)	
		1	**117-7798**	1	BOOT	
		1	**117-7799**	1	KIT-SEAL (BRAKE VALVE)	
					(INCLUDES BOOT, O-RINGS, QUAD RING, & CUP)	

Y-SEPARATE ILLUSTRATION

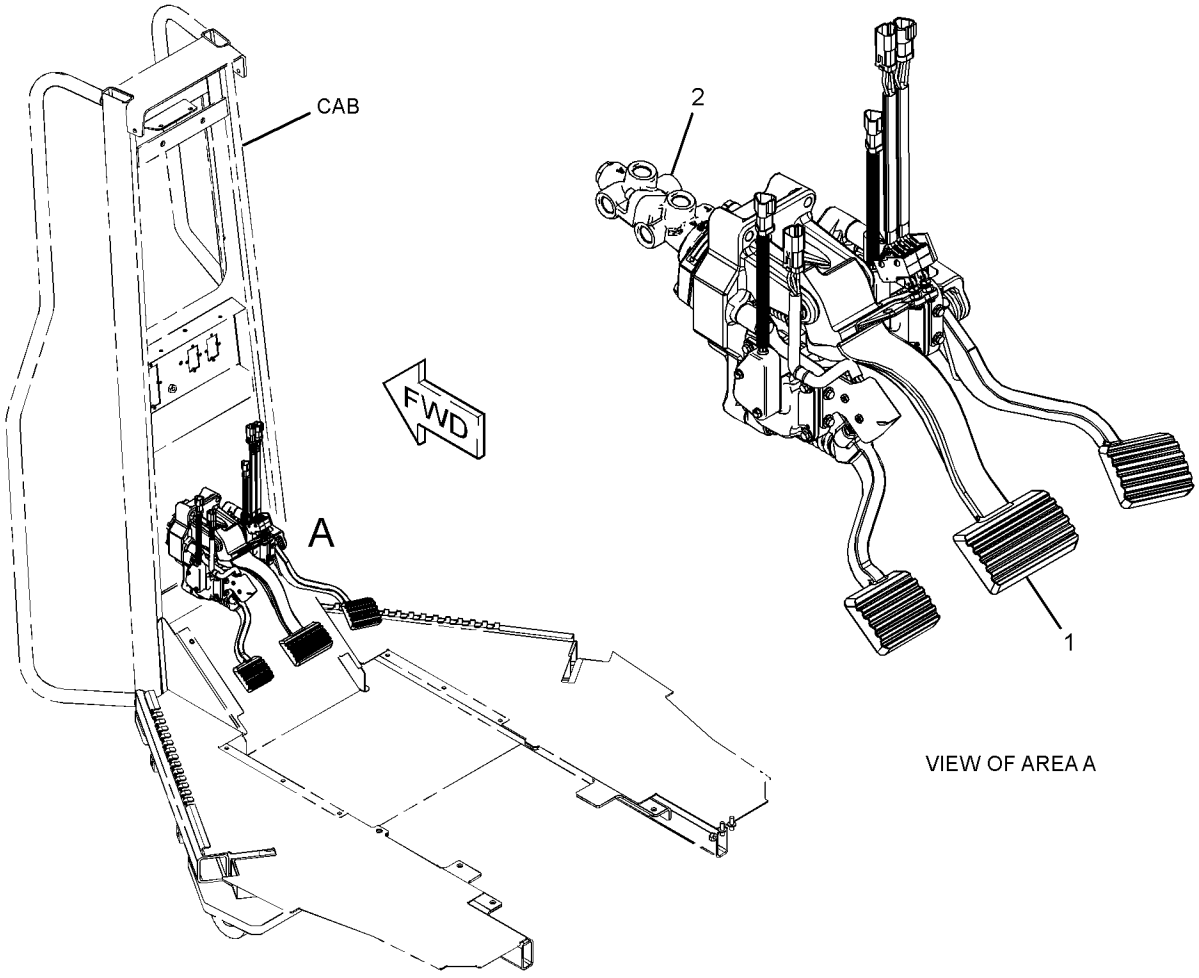

GRAPHIC #1 **<END>** g01331214

252-1810 CONTROL GP-SERVICE BRAKE

S/N: B9D1-UP

PART OF 261-0182 OPTION AR-EU

SMCS-4265, 4269 **i02786144**

NOTE	REF NO	GRAPHIC REF	PART NUMBER	QTY	PART NAME 1 2 3 4 5 6 (PRODUCT LEVEL)	SEE PAGE
	1	2	**219-0302**	1	FILM-WARNING (NO WELD, NO DRILL, READ OMM)	
	2	1	**224-0554**	1	FILM-WARNING (UNIVERSAL, READ OMM)	
	3	2	**227-7391**	1	FILM-WARNING (SEAT BELT)	
Y	4	2	**249-4080**	1	CONTROL GP-SERVICE BRAKE	510
	5	2	**249-4091**	4	BLOCK	
	6	1	**249-6688**	1	FILM-WARNING (CRUSH HAZARD, READ MANUAL)	
Y	7	2	*252-1811*	1	LINES GP-SERVICE BRAKE	517
	8	2	**253-3476**	1	PLATE	
	9	2	**281-9356**	2	PLATE	
	10	2	**286-5672**	1	PLATE AS	
	11	2	**128-5924**	4	CLAMP	
	12	2	**5P-9299**	5	CLIP	
	13	2	**8R-3393**	4	STRAP	
	14	2	**8T-4121**	5	WASHER-HARD (11X21X2.5-MM THK)	
M	15	2	**8T-4137**	9	BOLT (M10X1.5X20-MM)	
M	16	2	**8T-4186**	4	BOLT (M10X1.5X40-MM)	
M	17	2	**8T-4195**	5	BOLT (M10X1.5X30-MM)	
M	18	2	**8T-5005**	3	BOLT (M10X1.5X70-MM)	

M-METRIC PART
Y-SEPARATE ILLUSTRATION

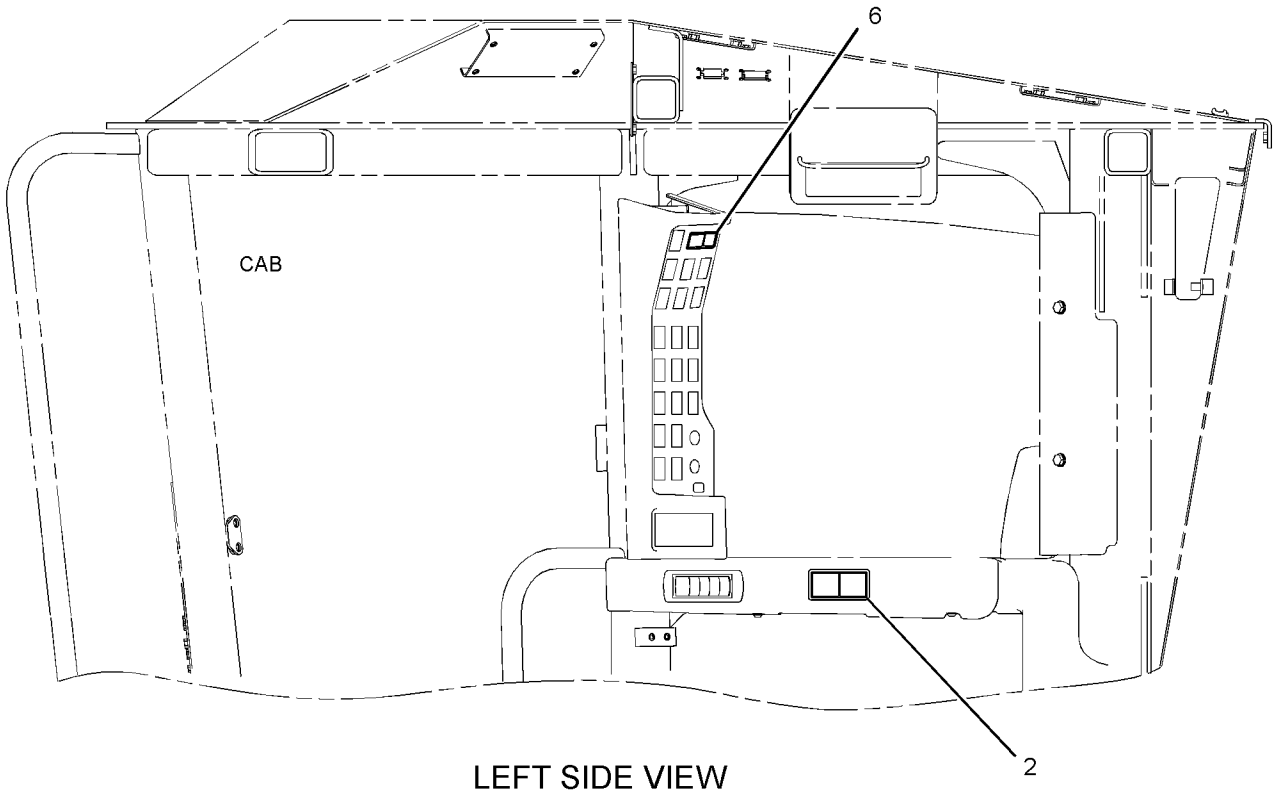

LEFT SIDE VIEW

GRAPHIC #1 g01303693

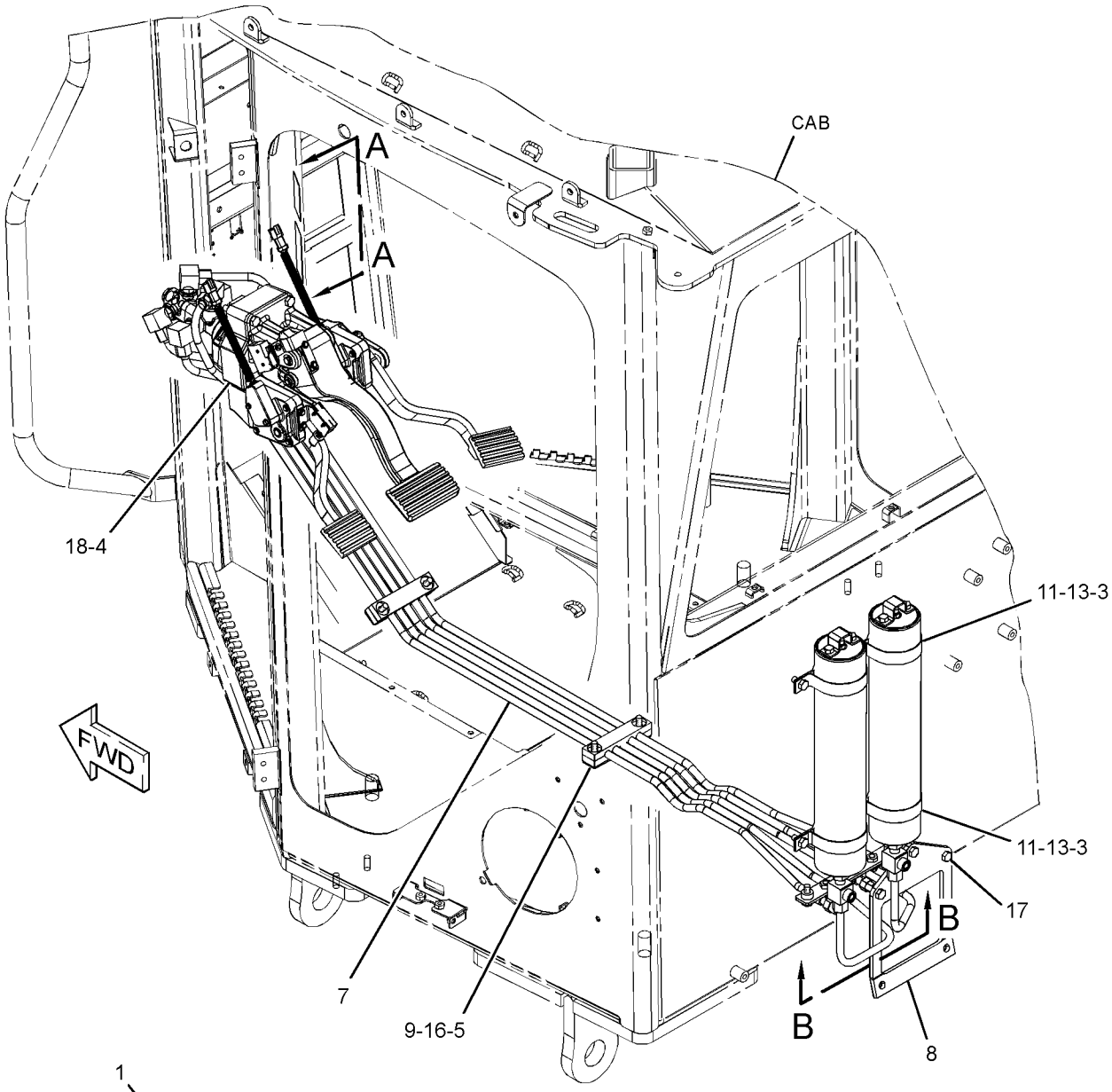

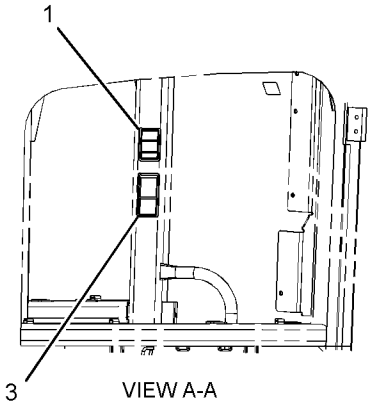

VIEW A-A

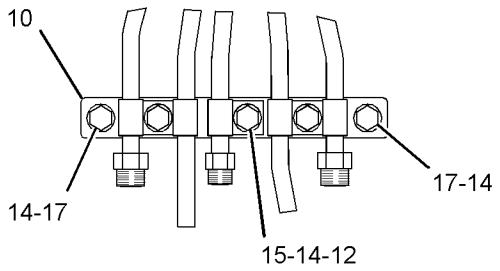

VIEW B-B

GRAPHIC #2 **<END>** g01303695

251-2243 LINES GP-ACCUMULATOR

S/N: B9D1-UP

PART OF 233-3142 CONTROL GP-SERVICE BRAKE

SMCS-4257, 4263 **i02774401**

NOTE	REF NO	GRAPHIC REF	PART NUMBER	QTY	PART NAME 1 2 3 4 5 6 (PRODUCT LEVEL)	SEE PAGE
	1	1	**246-3303**	1	TUBE AS	
	2	1	**246-3304**	1	TUBE AS	
	3	1	**246-3305**	1	TUBE AS	
	4	1	**246-3306**	1	TUBE AS	
	5	1	**246-3307**	1	TUBE AS	
	6	1	**249-4088**	1	TUBE AS	
	7	1	*148-8340*	2	CONNECTOR AS	
					(EACH INCLUDES)	
		1	**6V-8639**	1	CONNECTOR	
		1	**3K-0360**	1	SEAL-O-RING	
		1	**6V-8398**	1	SEAL-O-RING	
	8	1	*148-8364*	5	ELBOW AS	
					(EACH INCLUDES)	
		1	**6V-8625**	1	ELBOW (90-DEG)	
		1	**3K-0360**	1	SEAL-O-RING	
		1	**6V-8398**	1	SEAL-O-RING	
	9	1	*148-8428*	1	TEE AS (ORFS)	
		1	**6V-8782**	1	TEE (FACE SEAL)	
		1	**3K-0360**	1	SEAL-O-RING	
		1	**6V-8398**	2	SEAL-O-RING	
	10	1	*148-8444*	2	TEE AS-SWIVEL	
					(EACH INCLUDES)	
		1	**6V-9837**	1	TEE-SWIVEL	
		1	**6V-8398**	2	SEAL-O-RING	
Y	11	1	*249-3860*	2	ACCUMULATOR GP-BRAKE (CHARGED)	499

Y-SEPARATE ILLUSTRATION

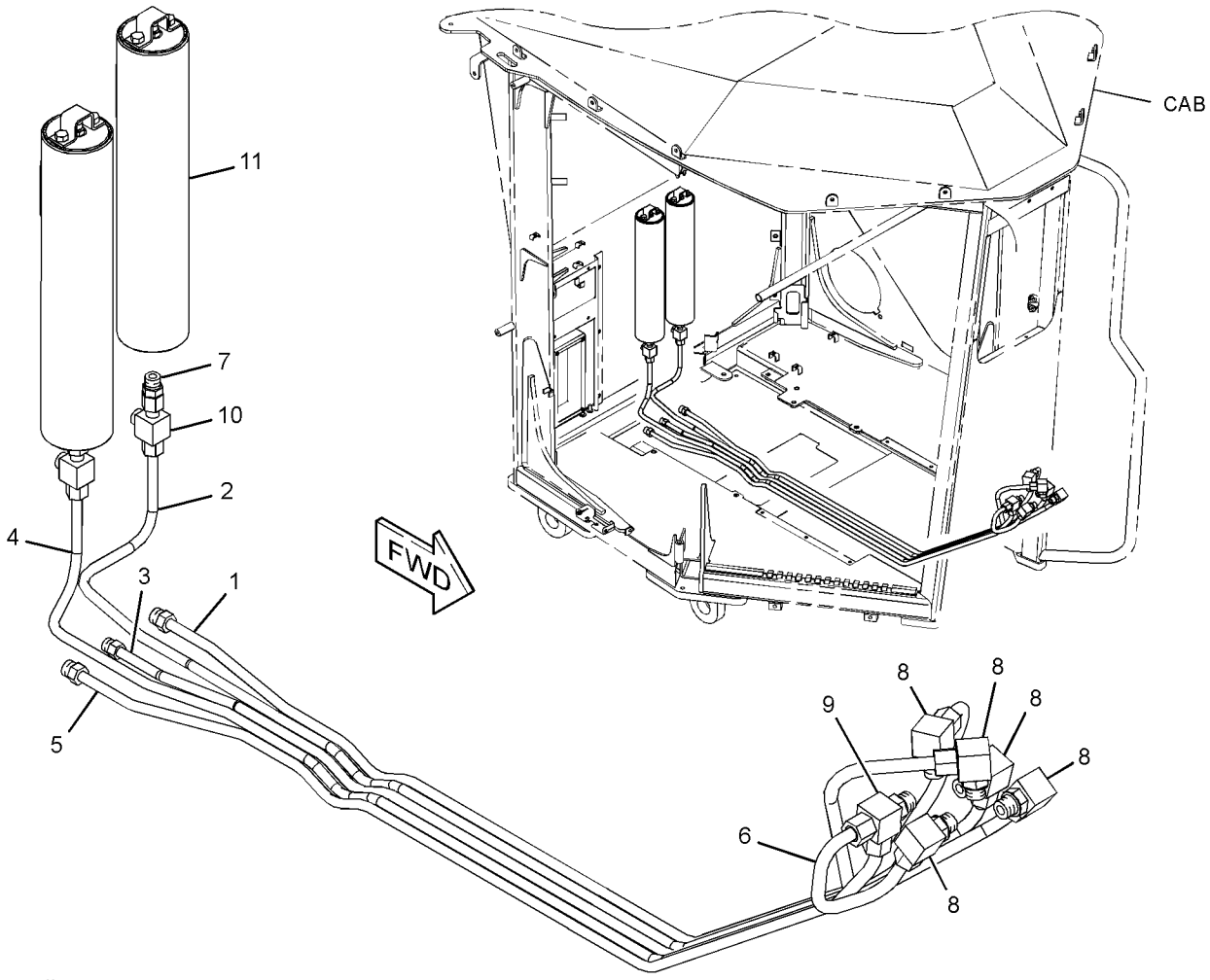

GRAPHIC #1 **<END>** g01291447

BRAKING SYSTEM

255-1250 LINES GP-AIR TANK

S/N: B9D1-UP

PART OF 261-0610 AIR COMPRESSOR AR

SMCS-4272 **i02786533**

NOTE	REF NO	GRAPHIC REF	PART NUMBER	QTY	PART NAME 1 2 3 4 5 6 (PRODUCT LEVEL)	SEE PAGE
	1	1	**2D-8910**	1	ELBOW	
I	2	1	**270-2675**	1	HOSE AS	
	3	1	**290-2294**	1	HOSE AS	
	4	1	**149-7738**	1	CLIP	
	5	1	**3D-2824**	1	SEAL-O-RING	
	6	1	**3D-5279**	1	GROMMET	
	7	1	**4D-2560**	1	CONNECTOR-PIPE	
	8	1	**4D-7388**	1	CLIP	
	9	1	**4D-7733**	3	CLIP	
	10	1	**4H-2558**	1	GROMMET	
	11	1	**4S-7606**	1	ELBOW	
	12	1	**6D-4492**	1	CONNECTOR	
	13	1	**8T-4121**	5	WASHER-HARD (11X21X2.5-MM THK)	
M	14	1	**8T-4133**	2	NUT (M10X1.5-THD)	
M	15	1	**8T-4137**	3	BOLT (M10X1.5X20-MM)	
	16	1	**8M-3368**	1	VALVE-CHECK (SERVICE BRAKE, RETARDER)	

I-REFER TO HYDRAULIC INFORMATION SYSTEM
M-METRIC PART

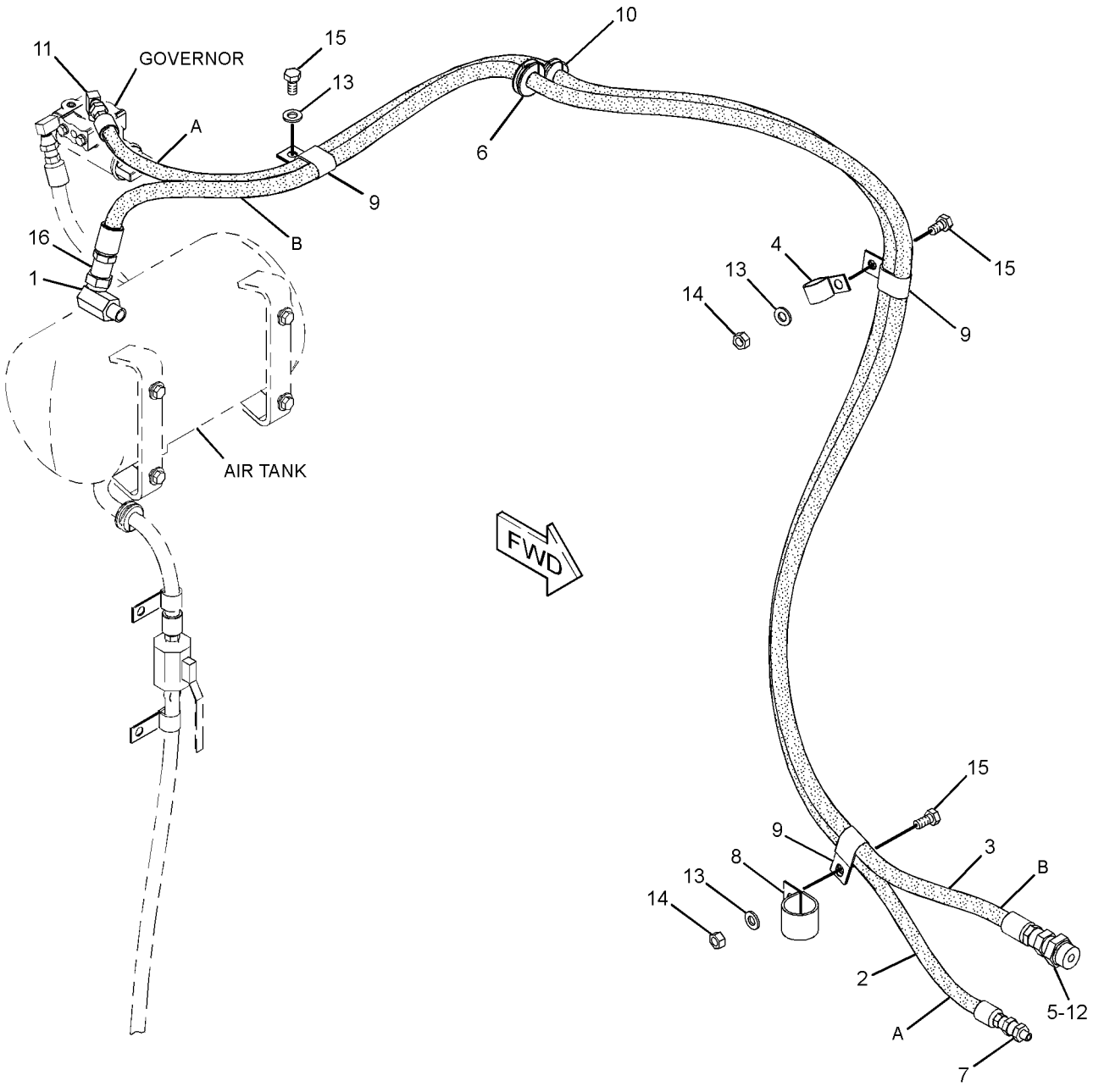

GRAPHIC #1 **<END>** g01392699

252-1811 LINES GP-SERVICE BRAKE

S/N: B9D1-UP

PART OF 252-1810 CONTROL GP-SERVICE BRAKE

SMCS-4257 **i02786146**

NOTE	REF NO	GRAPHIC REF	PART NUMBER	QTY	PART NAME 1 2 3 4 5 6 (PRODUCT LEVEL)	SEE PAGE
	1	1	**246-3303**	1	TUBE AS	
	2	1	**246-3304**	1	TUBE AS	
	3	1	**246-3305**	1	TUBE AS	
	4	1	**246-3306**	1	TUBE AS	
	5	1	**246-3307**	1	TUBE AS	
	6	1	**249-4088**	1	TUBE AS	
	8	1	*148-8340*	2	CONNECTOR AS	
					(EACH INCLUDES)	
		1	**6V-8639**	1	CONNECTOR	
		1	**3K-0360**	1	SEAL-O-RING	
		1	**6V-8398**	1	SEAL-O-RING	
	9	1	*148-8364*	5	ELBOW AS	
					(EACH INCLUDES)	
		1	**6V-8625**	1	ELBOW	
		1	**3K-0360**	1	SEAL-O-RING	
		1	**6V-8398**	1	SEAL-O-RING	
	11	1	*148-8444*	2	TEE AS-SWIVEL	
					(EACH INCLUDES)	
		1	**6V-9837**	1	TEE-SWIVEL	
		1	**6V-8398**	2	SEAL-O-RING	
	12	1	*148-8428*	1	TEE AS	
		1	**6V-8782**	1	TEE	
		1	**3K-0360**	1	SEAL-O-RING	
		1	**6V-8398**	2	SEAL-O-RING	
Y	13	1	*249-3862*	2	ACCUMULATOR GP-BRAKE (CHARGED)	500

Y-SEPARATE ILLUSTRATION

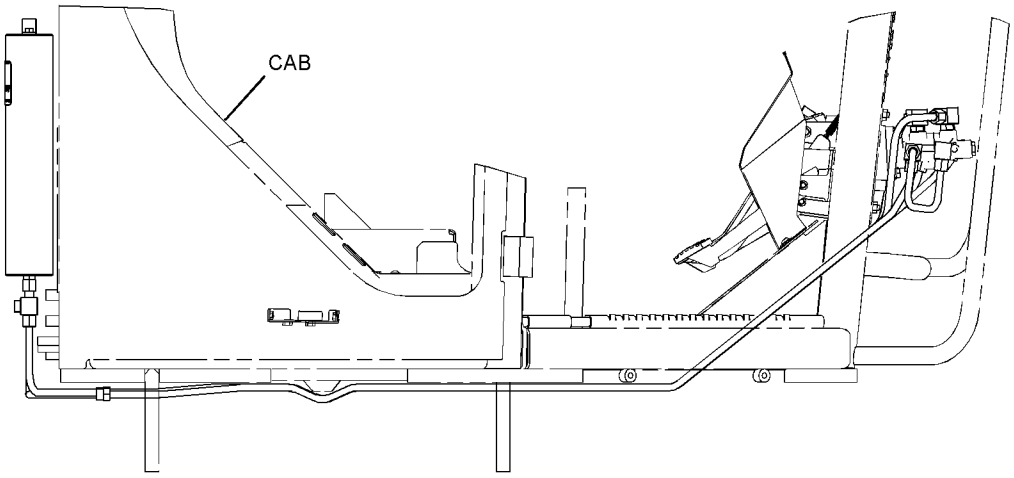

RIGHT SIDE VIEW

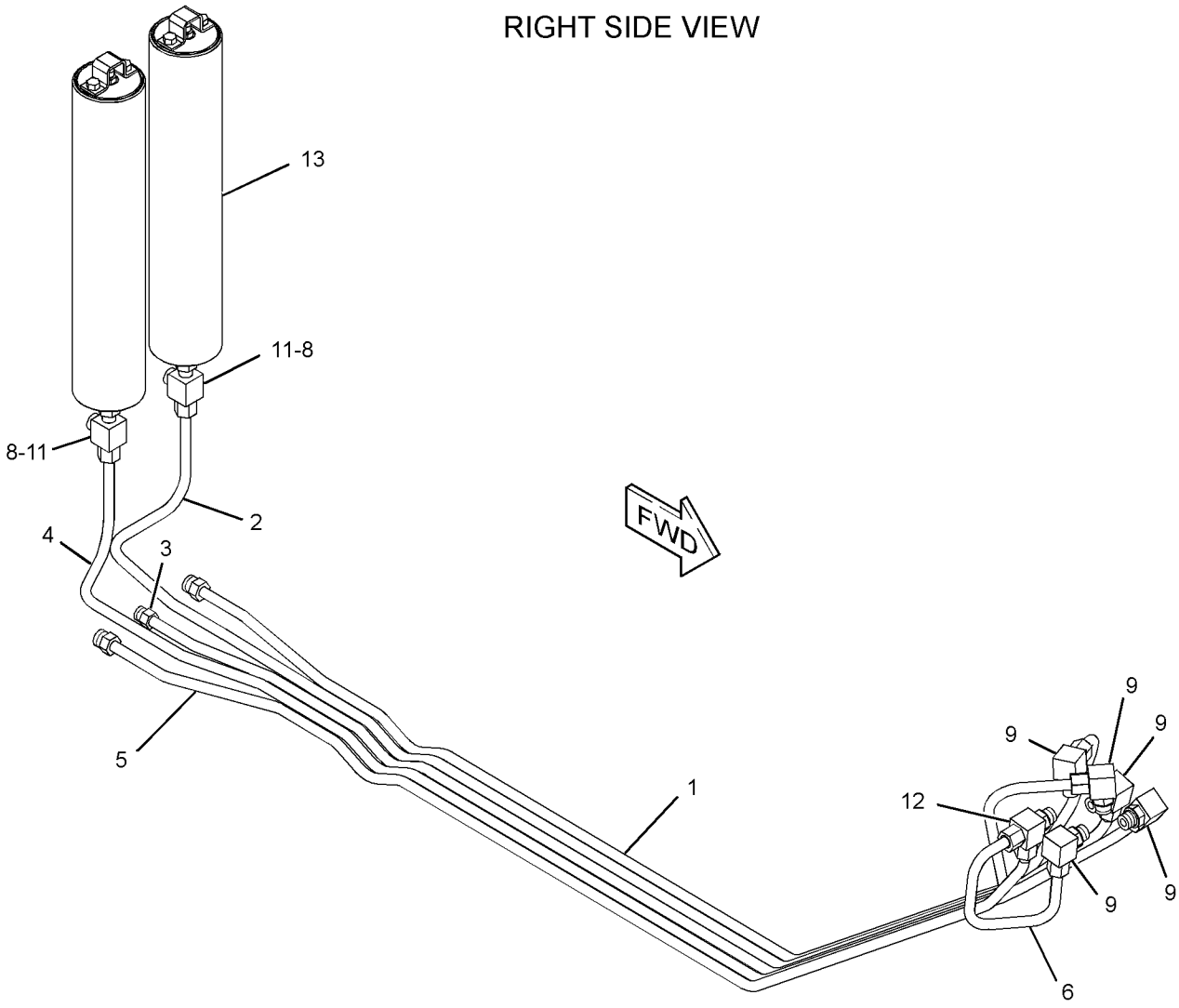

GRAPHIC #1 **<END>** g01299663

BRAKING SYSTEM

271-5397 LINES GP-SERVICE BRAKE

S/N: B9D1-UP

PART OF 234-7721 COMMON AR

SMCS-4257 **i02781072**

NOTE	REF NO	GRAPHIC REF	PART NUMBER	QTY	PART NAME 1 2 3 4 5 6 (PRODUCT LEVEL)	SEE PAGE
	1	1	**127-9323**	1	BRACKET AS	
I	2	1	**246-3298**	1	HOSE AS	
	3	1	**246-3314**	2	BLOCK	
	4	1	**247-4247**	1	PLATE AS	
M		1	**9R-2672**	1	BOSS-THREADED (M10X1.5-THD)	
	5	1	**280-7911**	1	BLOCK	
	6	1	**280-7912**	1	BLOCK	
	7	1	**280-7913**	1	BLOCK	
	8	1	**286-5299**	1	PLATE AS	
M		1	**7X-2543**	2	BOLT (M10X1.5X120-MM)	
I	9	1	**288-9469**	1	HOSE AS	
I	10	1	**288-9473**	1	HOSE AS	
I	11	1	**297-1225**	2	HOSE AS	
	12	1	**301-0960**	2	PLATE	
	13	1	**309-6887**	4	GUARD	
	14	1	**310-6175**	1	TUBE AS	
	15	1	**310-6176**	1	TUBE AS	
	16	1	**310-6177**	1	TUBE AS	
	17	1	**310-6178**	1	TUBE AS	
	18	1	**310-6179**	2	PLATE	
	19	1	*148-8336*	2	CONNECTOR AS	
					(EACH INCLUDES)	
		1	**3J-1907**	1	SEAL-O-RING	
		1	**6V-8397**	1	SEAL-O-RING	
		1	**6V-8636**	1	CONNECTOR	
	20	1	*148-8353*	2	ELBOW AS	
					(EACH INCLUDES)	
		1	**3J-1907**	1	SEAL-O-RING	
		1	**6V-8397**	1	SEAL-O-RING	
		1	**6V-9001**	1	ELBOW	
	21	1	*148-8365*	4	ELBOW AS	
					(EACH INCLUDES)	
		1	**3J-1907**	1	SEAL-O-RING	
		1	**6V-8398**	1	SEAL-O-RING	
		1	**8T-6876**	1	ELBOW	
	22	1	*148-8366*	2	ELBOW AS	
					(EACH INCLUDES)	
		1	**6V-8397**	2	SEAL-O-RING	
		1	**6V-8987**	1	ELBOW	
	23	1	*148-8370*	2	ELBOW AS	
					(EACH INCLUDES)	
		1	**6V-8398**	1	SEAL-O-RING	
		1	**6V-9851**	1	ELBOW	
	24	1	*148-8407*	4	PLUG AS	
					(EACH INCLUDES)	
		1	**3J-1907**	1	SEAL-O-RING	
		1	**9S-4191**	1	PLUG-O-RING	
	25	1	*150-4043*	4	CONNECTOR AS	
					(EACH INCLUDES)	
		1	**3J-1907**	1	SEAL-O-RING	
		1	**6V-8398**	1	SEAL-O-RING	
		1	**6V-9873**	1	CONNECTOR	
	26	1	*153-6241*	1	ELBOW AS	
		1	**6V-8398**	1	SEAL-O-RING	
		1	**8C-8989**	1	ELBOW	
I	27	1	**166-9130**	1	HOSE AS	

271-5397 LINES GP-SERVICE BRAKE *(contd.)* i02781072

NOTE	REF NO	GRAPHIC REF	PART NUMBER	QTY	PART NAME 1 2 3 4 5 6 (PRODUCT LEVEL)	SEE PAGE
I	28	1	**178-2176**	1	HOSE AS	
	29	1	**3G-8054**	1	CLIP (TAB)	
	30	1	**3G-8057**	1	CLIP (SLOT)	
	31	1	**4D-7735**	1	CLIP	
E	32	1	**5P-1268**		HOSE (18-CM EACH)	
	33	1	**5K-3294**	8	CLIP	
	34	1	**5K-5338**	1	CLIP	
	35	1	**5P-7462**	1	CLIP (SLOT)	
	36	1	**5P-7463**	1	CLIP (TAB)	
	37	1	**6D-4246**	8	CLIP	
	38	1	**6V-0683**	1	GROMMET	
	39	1	**6V-0974**	1	GROMMET	
	40	1	**6V-9168**	2	NUT (11/16-16-THD)	
	41	1	**7D-7233**	1	CLIP	
	42	1	**7K-1181**	4	STRAP-CABLE	
	43	1	**7X-7729**	3	WASHER (11X25X3-MM THK)	
M	44	1	**8T-0389**	2	LOCKNUT (M10X1.15-THD)	
	45	1	**8T-1887**	3	CLIP (SLOT)	
	46	1	**8T-1888**	3	CLIP (TAB)	
	47	1	**8T-4121**	35	WASHER-HARD (11X21X2.5-MM THK)	
M	48	1	**8T-4133**	4	NUT (M10X1.5-THD)	
M	49	1	**8T-4136**	17	BOLT (M10X1.5X25-MM)	
M	50	1	**8T-4137**	8	BOLT (M10X1.5X20-MM)	
M	51	1	**8T-4186**	4	BOLT (M10X1.5X40-MM)	
M	52	1	**8T-4195**	1	BOLT (M10X1.5X30-MM)	
M	53	1	**8T-4196**	2	BOLT (M10X1.5X35-MM)	

E-ORDER BY THE CENTIMETER
I-REFER TO HYDRAULIC INFORMATION SYSTEM
M-METRIC PART

271-5397 **LINES GP-SERVICE BRAKE** *(contd.)* **i02781072**

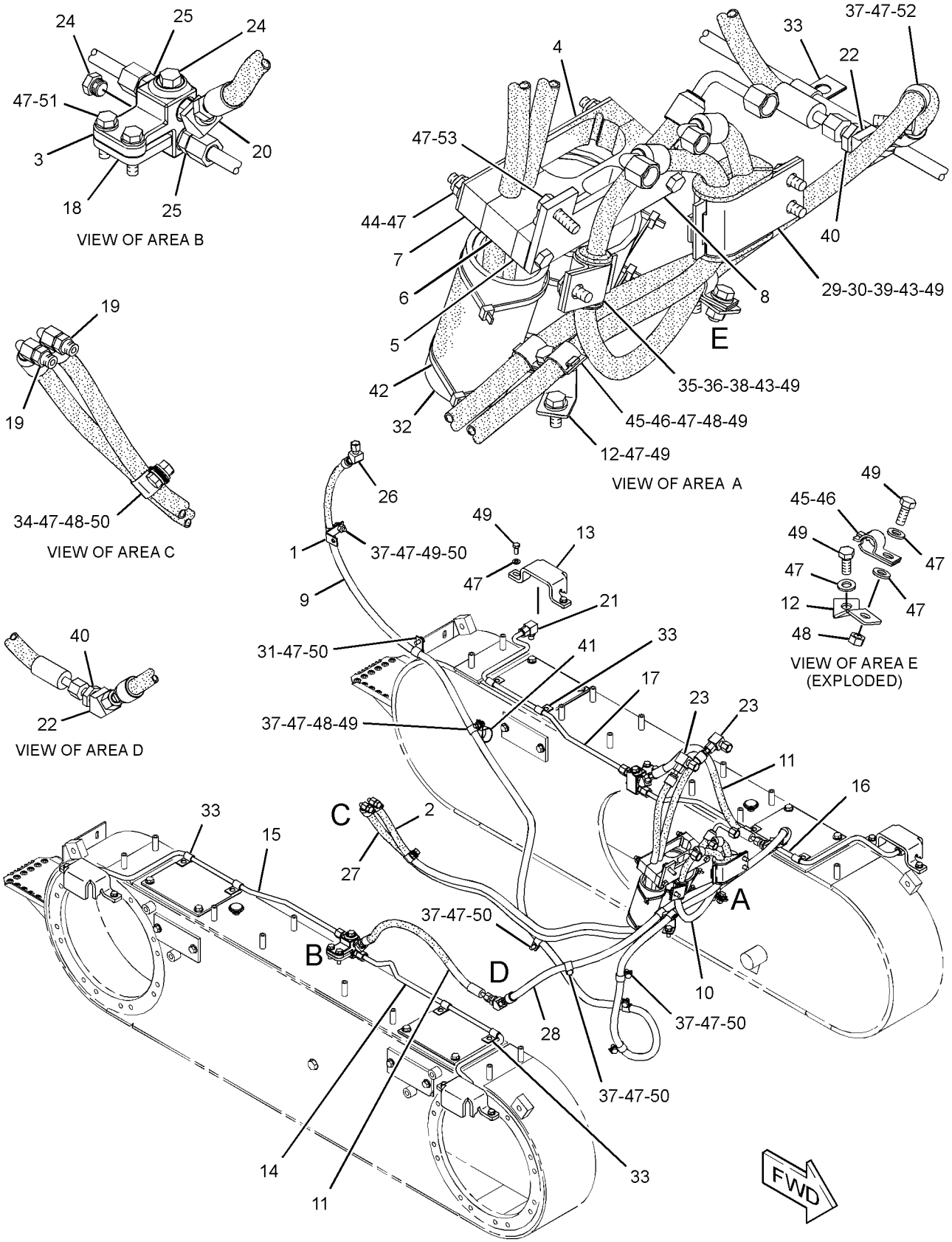

GRAPHIC #1 **<END>** g01392007

219-7265 ACCUMULATOR GP-BLADE CUSHION–CHARGED

S/N: B9D1-UP

PART OF 231-1532 LINES GP-HYDRAULIC

SMCS-5077 **i02773522**

NOTE	REF NO	GRAPHIC REF	PART NUMBER	QTY	PART NAME 1 2 3 4 5 6 (PRODUCT LEVEL)	SEE PAGE
J	1	1	**222-2367**	1	VALVE AS-GAS (HYDRAULIC ACCUMULATOR)	
		1	**190-3850**	1	CORE	
F			**241-0037**	1	FILM-WARNING (HIGH PRESSURE, READ OMM)	
					AVAILABLE REPAIR KIT(S):	
J			**170-0493**	1	KIT-SEAL (HYDRAULIC ACCUMULATOR)	
					(INCLUDES SEALS, WASHERS, & RINGS)	

F-NOT SHOWN
J-KIT MARKED J SERVICES PART(S) MARKED J

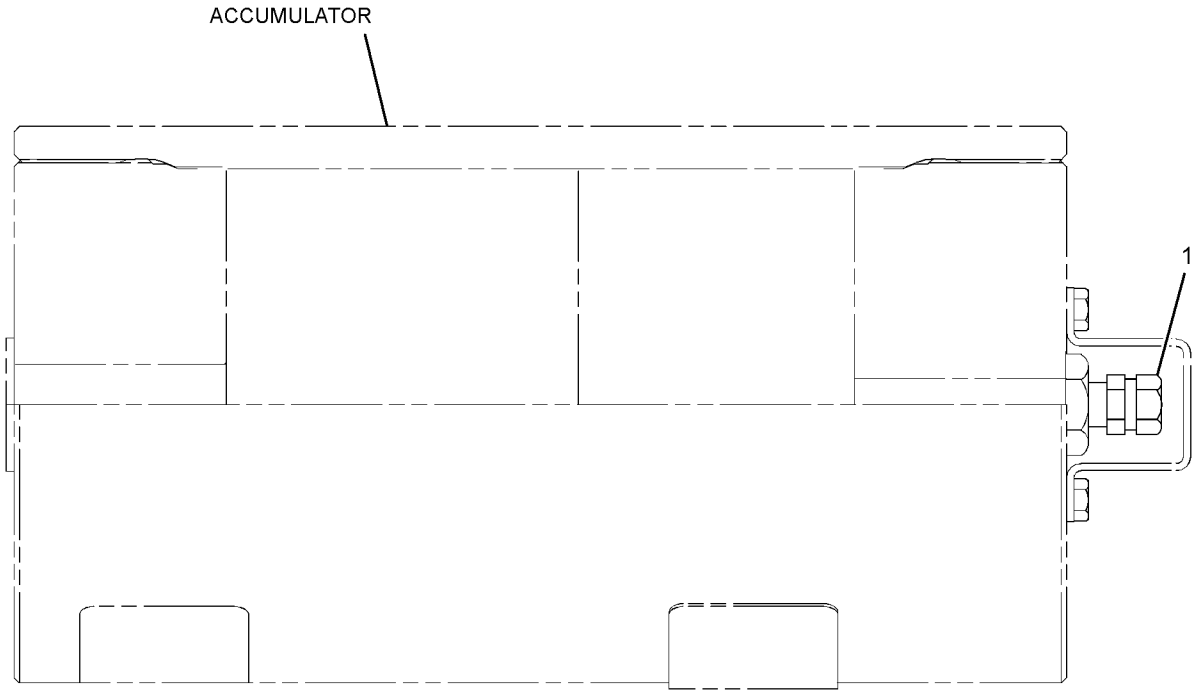

GRAPHIC #1 **<END>** g01341399

249-2308 BASE GP-OIL FILTER—INTERNAL BYPASS

S/N: B9D1-UP

PART OF 249-2307 FILTER GP-OIL

SMCS-5068 **i02772799**

NOTE	REF NO	GRAPHIC REF	PART NUMBER	QTY	PART NAME 1 2 3 4 5 6 (PRODUCT LEVEL)	SEE PAGE
	1	1	**7G-4998**	1	SPOOL-BYPASS	
	2	1	**7M-1297**	1	SPRING	
	3	1	**2S-4078**	1	SEAL-O-RING	
	4	1	**7M-8485**	1	SEAL-O-RING	
	5	1	**9S-8010**	1	PLUG (STRAIGHT THREAD O-RING)	
	6	1	**9S-9334**	1	PLUG	

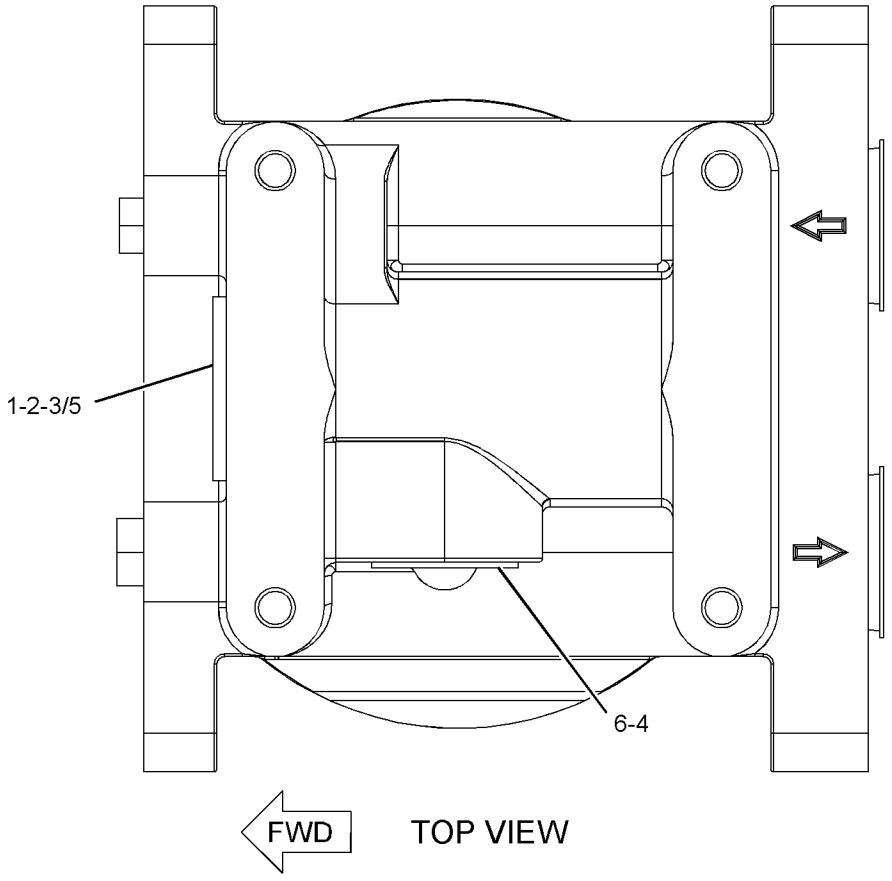

GRAPHIC #1 **<END>** g01391696

HYDRAULIC SYSTEM

242-5056 CONTROL AR-HYDRAULIC

S/N: B9D1-UP

SMCS-5050 **i02779403**

NOTE	PART NUMBER	QTY	PART NAME 1 2 3 4 5 6 (PRODUCT LEVEL)	SEE PAGE
Y	**249-7298**	1	VALVE GP-BANK 3 (FRONT FRAME, REAR)	647
Y	**248-6168**	1	VALVE GP-BANK 5 (FRONT FRAME)	649
M	**8T-4136**	8	BOLT (M10X1.5X25-MM)	
	8T-4121	8	WASHER-HARD (11X21X2.5-MM THK)	

M-METRIC PART
Y-SEPARATE ILLUSTRATION

<END>

242-5057 CONTROL AR-HYDRAULIC—RIPPER

S/N: B9D1-UP

CANNOT BE USED WITH 242-5056—PAGE 524

SMCS-5050 **i02779404**

NOTE	PART NUMBER	QTY	PART NAME 1 2 3 4 5 6 (PRODUCT LEVEL)	SEE PAGE
Y	*299-0874*	1	CONTROL GP-IMPLEMENT	155
Y	**248-6169**	1	VALVE GP-BANK 4 (FRONT FRAME, REAR)	648
Y	**248-6168**	1	VALVE GP-BANK 5 (FRONT FRAME)	649
M	**8T-4136**	8	BOLT (M10X1.5X25-MM)	
	8T-4121	8	WASHER-HARD (11X21X2.5-MM THK)	

M-METRIC PART
Y-SEPARATE ILLUSTRATION

<END>

242-5058 CONTROL AR-HYDRAULIC—FRONT LIFT

S/N: B9D1-UP

SMCS-5050 **i02780076**

NOTE	PART NUMBER	QTY	PART NAME 1 2 3 4 5 6 (PRODUCT LEVEL)	SEE PAGE
Y	*299-0875*	1	CONTROL GP-IMPLEMENT (FRONT LIFT)	156
Y	*231-1520*	1	LINES GP-HYDRAULIC (FRONT LIFT)	577
Y	**249-7298**	1	VALVE GP-BANK 3 (FRONT FRAME, REAR)	647
Y	**249-7294**	1	VALVE GP-BANK 6 (FRONT FRAME)	652
M	**8T-4136**	8	BOLT (M10X1.5X25-MM)	
	8T-4121	8	WASHER-HARD (11X21X2.5-MM THK)	

M-METRIC PART
Y-SEPARATE ILLUSTRATION

<END>

242-5059 CONTROL AR-HYDRAULIC—SCARIFIER

S/N: B9D1-UP

CANNOT BE USED WITH 242-5056—PAGE 524, 242-5057—PAGE 524

SMCS-5050 **i02780497**

NOTE	PART NUMBER	QTY	PART NAME 1 2 3 4 5 6 (PRODUCT LEVEL)	SEE PAGE
Y	*299-0874*	1	CONTROL GP-IMPLEMENT	155
Y	**249-7298**	1	VALVE GP-BANK 3 (FRONT FRAME, REAR)	647
Y	**249-7295**	1	VALVE GP-BANK 6 (FRONT FRAME)	653
M	**8T-4136**	8	BOLT (M10X1.5X25-MM)	
	8T-4121	8	WASHER-HARD (11X21X2.5-MM THK)	

M-METRIC PART
Y-SEPARATE ILLUSTRATION

<END>

242-5060 CONTROL AR-HYDRAULIC—FRONT LIFT, RIPPER

S/N: B9D1-UP

SMCS-5050 **i02780528**

NOTE	PART NUMBER	QTY	PART NAME 1 2 3 4 5 6 (PRODUCT LEVEL)	SEE PAGE
Y	*299-0876*	1	CONTROL GP-IMPLEMENT (FRONT LIFT, RIPPER)	157
Y	*231-1520*	1	LINES GP-HYDRAULIC (FRONT LIFT)	577
Y	**248-6169**	1	VALVE GP-BANK 4 (FRONT FRAME, REAR)	648
Y	**249-7294**	1	VALVE GP-BANK 6 (FRONT FRAME)	652
M	**8T-4136**	8	BOLT (M10X1.5X25-MM)	
	8T-4121	8	WASHER-HARD (11X21X2.5-MM THK)	

M-METRIC PART
Y-SEPARATE ILLUSTRATION

<END>

242-5061 CONTROL AR-HYDRAULIC—FRONT LIFT, SCARIFIER

S/N: B9D1-UP

SMCS-5050 **i02780617**

NOTE	PART NUMBER	QTY	PART NAME 1 2 3 4 5 6 (PRODUCT LEVEL)	SEE PAGE
Y	*299-0876*	1	CONTROL GP-IMPLEMENT (FRONT LIFT, SCARIFIER)	157
Y	*250-9259*	1	ELECTRONICS GP-IMPLEMENT (IMPLEMENT 3)	165
Y	*231-1520*	1	LINES GP-HYDRAULIC (FRONT LIFT)	577
Y	**249-7298**	1	VALVE GP-BANK 3 (FRONT FRAME, REAR)	647
Y	**249-7296**	1	VALVE GP-BANK 7 (FRONT FRAME)	656
Y	*238-8828*	1	WIRING GP-ELECTRONIC CONTROL	271
M	**8T-4136**	8	BOLT (M10X1.5X25-MM)	
	8T-4121	8	WASHER-HARD (11X21X2.5-MM THK)	

M-METRIC PART
Y-SEPARATE ILLUSTRATION

<END>

242-5062 CONTROL AR-HYDRAULIC–FR LFT, DOZER ANGLE, RIPPER

S/N: B9D1-UP

FOR USE WITH 231-1518–PAGE 605

SMCS-5050 **i02781143**

NOTE	PART NUMBER	QTY	PART NAME 1 2 3 4 5 6 (PRODUCT LEVEL)	SEE PAGE
Y	*238-8756*	1	CONTROL GP-ELECTROHYDRAULIC (WITHOUT AUXILIARY LEVER)	780
Y	*299-0874*	1	CONTROL GP-IMPLEMENT (RIPPER)	155
Y	*250-9259*	1	ELECTRONICS GP-IMPLEMENT (IMPLEMENT 3)	165
Y	*231-1520*	1	LINES GP-HYDRAULIC (FRONT LIFT)	577
Y	**248-6169**	1	VALVE GP-BANK 4 (FRONT FRAME, REAR)	648
Y	**249-5328**	1	VALVE GP-BANK 7 (FRONT FRAME)	654
Y	*238-8828*	1	WIRING GP-ELECTRONIC CONTROL	271
M	**8T-4136**	8	BOLT (M10X1.5X25-MM)	
	8T-4121	8	WASHER-HARD (11X21X2.5-MM THK)	

M-METRIC PART
Y-SEPARATE ILLUSTRATION

<END>

242-5063 CONTROL AR-HYDRAULIC–FRONT LIFT, SNOW PLOW

S/N: B9D1-UP

SMCS-5050 **i02780659**

NOTE	PART NUMBER	QTY	PART NAME 1 2 3 4 5 6 (PRODUCT LEVEL)	SEE PAGE
Y	*233-3147*	1	CONTROL GP-ELECTROHYDRAULIC (WITH AUXILIARY LEVER)	780
Y	*250-9259*	1	ELECTRONICS GP-IMPLEMENT (IMPLEMENT 3)	165
Y	*231-1520*	1	LINES GP-HYDRAULIC (FRONT LIFT)	577
Y	**249-7299**	1	VALVE GP-BANK 5 (FRONT FRAME, REAR)	650
Y	**249-7294**	1	VALVE GP-BANK 6 (FRONT FRAME)	652
Y	*238-8828*	1	WIRING GP-ELECTRONIC CONTROL	271
M	**8T-4136**	8	BOLT (M10X1.5X25-MM)	
	8T-4121	8	WASHER-HARD (11X21X2.5-MM THK)	

M-METRIC PART
Y-SEPARATE ILLUSTRATION

<END>

HYDRAULIC SYSTEM

242-5064 CONTROL AR-HYDRAULIC–
DOZER, FRONT LIFT, SNOW WING
S/N: B9D1-UP

SMCS-5050 **i02781252**

NOTE	PART NUMBER	QTY	PART NAME 1 2 3 4 5 6 (PRODUCT LEVEL)	SEE PAGE
Y	*233-3147*	1	CONTROL GP-ELECTROHYDRAULIC (WITH AUXILIARY LEVER)	780
Y	*250-9259*	1	ELECTRONICS GP-IMPLEMENT (IMPLEMENT 3)	165
Y	*231-1520*	1	LINES GP-HYDRAULIC (FRONT LIFT)	577
Y	**249-7299**	1	VALVE GP-BANK 5 (FRONT FRAME, REAR)	650
Y	**249-5328**	1	VALVE GP-BANK 7 (FRONT FRAME)	654
Y	*238-8828*	1	WIRING GP-ELECTRONIC CONTROL	271
M	**8T-4136**	8	BOLT (M10X1.5X25-MM)	
	8T-4121	8	WASHER-HARD (11X21X2.5-MM THK)	

M-METRIC PART
Y-SEPARATE ILLUSTRATION

<END>

242-5066 CONTROL AR-HYDRAULIC–FR LFT, RIPPER, SNOW PLOW
S/N: B9D1-UP

SMCS-5050 **i02781264**

NOTE	PART NUMBER	QTY	PART NAME 1 2 3 4 5 6 (PRODUCT LEVEL)	SEE PAGE
Y	*233-3147*	1	CONTROL GP-ELECTROHYDRAULIC (WITH AUXILIARY LEVER)	780
Y	*299-0874*	1	CONTROL GP-IMPLEMENT	155
Y	*250-9259*	1	ELECTRONICS GP-IMPLEMENT (IMPLEMENT 3)	165
Y	*231-1520*	1	LINES GP-HYDRAULIC (FRONT LIFT)	577
Y	**249-5330**	1	VALVE GP-BANK 6 (FRONT FRAME, REAR)	651
Y	**249-7294**	1	VALVE GP-BANK 6 (FRONT FRAME)	652
Y	*238-8828*	1	WIRING GP-ELECTRONIC CONTROL	271
M	**8T-4136**	8	BOLT (M10X1.5X25-MM)	
	8T-4121	8	WASHER-HARD (11X21X2.5-MM THK)	

M-METRIC PART
Y-SEPARATE ILLUSTRATION

<END>

HYDRAULIC SYSTEM

242-6107 CONTROL AR-HYDRAULIC—FR LFT, RIPPER, SNOW PLOW

S/N: B9D1-UP

SMCS-5050 **i02796931**

NOTE	PART NUMBER	QTY	PART NAME 1 2 3 4 5 6 (PRODUCT LEVEL)	SEE PAGE
Y	*233-3147*	1	CONTROL GP-ELECTROHYDRAULIC (WITH AUXILIARY LEVER)	780
Y	*299-0874*	1	CONTROL GP-IMPLEMENT (RIPPER)	155
Y	*250-9259*	1	ELECTRONICS GP-IMPLEMENT (IMPLEMENT 3)	165
Y	*231-1520*	1	LINES GP-HYDRAULIC (FRONT LIFT)	577
Y	**249-5330**	1	VALVE GP-BANK 6 (FRONT FRAME, REAR)	651
Y	**249-5329**	1	VALVE GP-BANK 8 (FRONT FRAME)	658
Y	*238-8828*	1	WIRING GP-ELECTRONIC CONTROL	271
M	**8T-4136**	8	BOLT (M10X1.5X25-MM)	
	8T-4121	8	WASHER-HARD (11X21X2.5-MM THK)	

M-METRIC PART
Y-SEPARATE ILLUSTRATION

<END>

242-6108 CONTROL AR-HYDRAULIC—FRONT LIFT, DOZER ANGLE

S/N: B9D1-UP

SMCS-5050 **i02781521**

NOTE	PART NUMBER	QTY	PART NAME 1 2 3 4 5 6 (PRODUCT LEVEL)	SEE PAGE
Y	*238-8756*	1	CONTROL GP-ELECTROHYDRAULIC (WITHOUT AUXILIARY LEVER)	780
Y	*250-9259*	1	ELECTRONICS GP-IMPLEMENT (IMPLEMENT 3)	165
Y	*231-1520*	1	LINES GP-HYDRAULIC (FRONT LIFT)	577
Y	**249-7298**	1	VALVE GP-BANK 3 (FRONT FRAME, REAR)	647
Y	**249-5328**	1	VALVE GP-BANK 7 (FRONT FRAME)	654
Y	*238-8828*	1	WIRING GP-ELECTRONIC CONTROL	271
M	**8T-4136**	8	BOLT (M10X1.5X25-MM)	
	8T-4121	8	WASHER-HARD (11X21X2.5-MM THK)	

M-METRIC PART
Y-SEPARATE ILLUSTRATION

<END>

242-6109 CONTROL AR-HYDRAULIC—RIPPER, SNOW WING

S/N: B9D1-UP

SMCS-5050 **i02781638**

NOTE	PART NUMBER	QTY	PART NAME 1 2 3 4 5 6 (PRODUCT LEVEL)	SEE PAGE
Y	*233-3147*	1	CONTROL GP-ELECTROHYDRAULIC (WITH AUXILIARY LEVER)	780
Y	*299-0874*	1	CONTROL GP-IMPLEMENT	155
Y	*250-9259*	1	ELECTRONICS GP-IMPLEMENT (IMPLEMENT 3)	165
Y	**248-6168**	1	VALVE GP-BANK 5 (FRONT FRAME)	649
Y	**249-5330**	1	VALVE GP-BANK 6 (FRONT FRAME, REAR)	651
Y	*238-8828*	1	WIRING GP-ELECTRONIC CONTROL	271
M	**8T-4136**	8	BOLT (M10X1.5X25-MM)	
	8T-4121	8	WASHER-HARD (11X21X2.5-MM THK)	

M-METRIC PART
Y-SEPARATE ILLUSTRATION

<END>

242-6110 CONTROL AR-HYDRAULIC–
DOZER ANGLE, FR LFT, SCARIFIER
S/N: B9D1-UP

SMCS-5050 **i02786775**

NOTE	PART NUMBER	QTY	PART NAME 1 2 3 4 5 6 (PRODUCT LEVEL)	SEE PAGE
Y	*233-3147*	1	CONTROL GP-ELECTROHYDRAULIC (WITH AUXILIARY LEVER)	780
Y	*299-0874*	1	CONTROL GP-IMPLEMENT (SCARIFIER)	155
Y	*250-9259*	1	ELECTRONICS GP-IMPLEMENT (IMPLEMENT 3)	165
Y	*231-1520*	1	LINES GP-HYDRAULIC (FRONT LIFT)	577
Y	**249-7298**	1	VALVE GP-BANK 3 (FRONT FRAME, REAR)	647
Y	**249-7297**	1	VALVE GP-BANK 8 (FRONT FRAME)	660
Y	*238-8828*	1	WIRING GP-ELECTRONIC CONTROL	271
M	**8T-4136**	8	BOLT (M10X1.5X25-MM)	
	8T-4121	8	WASHER-HARD (11X21X2.5-MM THK)	

M-METRIC PART
Y-SEPARATE ILLUSTRATION

<END>

242-6111 CONTROL AR-HYDRAULIC–
FR LFT, SCARIFIER, SNOW PLOW
S/N: B9D1-UP

SMCS-5050 **i02782145**

NOTE	PART NUMBER	QTY	PART NAME 1 2 3 4 5 6 (PRODUCT LEVEL)	SEE PAGE
Y	*233-3147*	1	CONTROL GP-ELECTROHYDRAULIC (WITH AUXILIARY LEVER)	780
Y	*250-9259*	1	ELECTRONICS GP-IMPLEMENT (IMPLEMENT 3)	165
Y	*231-1520*	1	LINES GP-HYDRAULIC (FRONT LIFT)	577
Y	**249-7299**	1	VALVE GP-BANK 5 (FRONT FRAME, REAR)	650
Y	**249-7296**	1	VALVE GP-BANK 7 (FRONT FRAME)	656
Y	*238-8828*	1	WIRING GP-ELECTRONIC CONTROL (HYDRAULIC IMPLEMENT)	271
M	**8T-4136**	8	BOLT (M10X1.5X25-MM)	
	8T-4121	8	WASHER-HARD (11X21X2.5-MM THK)	

M-METRIC PART
Y-SEPARATE ILLUSTRATION

<END>

242-6112 CONTROL AR-HYDRAULIC–
FR LFT, DOZER ANGLE, RIPPER, SNOW PLOW
S/N: B9D1-UP

SMCS-5050 **i02782158**

NOTE	PART NUMBER	QTY	PART NAME 1 2 3 4 5 6 (PRODUCT LEVEL)	SEE PAGE
Y	*233-3147*	1	CONTROL GP-ELECTROHYDRAULIC (WITH AUXILIARY LEVER)	780
Y	*299-0874*	1	CONTROL GP-IMPLEMENT (RIPPER)	155
Y	*250-9259*	1	ELECTRONICS GP-IMPLEMENT (IMPLEMENT 3)	165
Y	*231-1520*	1	LINES GP-HYDRAULIC (FRONT LIFT)	577
Y	**249-5330**	1	VALVE GP-BANK 6 (FRONT FRAME, REAR)	651
Y	**249-5328**	1	VALVE GP-BANK 7 (FRONT FRAME)	654
Y	*238-8828*	1	WIRING GP-ELECTRONIC CONTROL (HYDRAULIC IMPLEMENT)	271
M	**8T-4136**	8	BOLT (M10X1.5X25-MM)	
	8T-4121	8	WASHER-HARD (11X21X2.5-MM THK)	

M-METRIC PART
Y-SEPARATE ILLUSTRATION

<END>

242-6146 CONTROL AR-HYDRAULIC–
FR LFT, SCARIFIER, SNOW PLOW, DOZER ANGLE
S/N: B9D1-UP

SMCS-5050 **i02782174**

NOTE	PART NUMBER	QTY	PART NAME 1 2 3 4 5 6 (PRODUCT LEVEL)	SEE PAGE
Y	*233-3147*	1	CONTROL GP-ELECTROHYDRAULIC (WITH AUXILIARY LEVER)	780
Y	*250-9259*	1	ELECTRONICS GP-IMPLEMENT (IMPLEMENT 3)	165
Y	*231-1520*	1	LINES GP-HYDRAULIC (FRONT LIFT)	577
Y	**249-7299**	1	VALVE GP-BANK 5 (FRONT FRAME, REAR)	650
Y	**249-7297**	1	VALVE GP-BANK 8 (FRONT FRAME)	660
Y	*238-8828*	1	WIRING GP-ELECTRONIC CONTROL (HYDRAULIC IMPLEMENT)	271
M	**8T-4136**	8	BOLT (M10X1.5X25-MM)	
	8T-4121	8	WASHER-HARD (11X21X2.5-MM THK)	

M-METRIC PART
Y-SEPARATE ILLUSTRATION

<END>

HYDRAULIC SYSTEM

309-7551 CONTROL AR-HYDRAULIC–
FRONT LIFT, RIPPER, SCARIFIER
S/N: B9D1-UP

FOR USE WITH 231-1518–PAGE 605, 250-4226–PAGE 607. CANNOT BE USED WITH ALL OTHER CONTROL AR

SMCS-5050 **i02788370**

NOTE	PART NUMBER	QTY	PART NAME 1 2 3 4 5 6 (PRODUCT LEVEL)	SEE PAGE
Y	*299-0876*	1	CONTROL GP-IMPLEMENT	157
Y	*231-1520*	1	LINES GP-HYDRAULIC (FRONT LIFT)	577
Y	**248-6169**	1	VALVE GP-BANK 4 (FRONT FRAME, REAR)	648
Y	**249-7296**	1	VALVE GP-BANK 7 (FRONT FRAME)	656
M	**8T-4136**	8	BOLT (M10X1.5X25-MM)	
	8T-4121	8	WASHER-HARD (11X21X2.5-MM THK)	

M-METRIC PART
Y-SEPARATE ILLUSTRATION

<END>

HYDRAULIC SYSTEM

241-8528 COOLER GP-HYDRAULIC OIL

S/N: B9D1-UP

PART OF 261-0153 AXLE AR-FRONT

SMCS-1374 **i02785781**

NOTE	REF NO	GRAPHIC REF	PART NUMBER	QTY	PART NAME 1 2 3 4 5 6 (PRODUCT LEVEL)	SEE PAGE
	1	1	*188-2008*	1	ELBOW AS	
		1	**8T-7970**	1	ELBOW	
		1	**5K-9090**	1	SEAL-O-RING	
		1	**3D-2824**	1	SEAL-O-RING	
I	2	1	**190-4164**	1	HOSE AS	
I	3	1	**253-1167**	1	HOSE AS	
	4	1	**266-1595**	1	VALVE GP-CHECK	
		1	**5K-9090**	1	SEAL-O-RING	
		1	**7M-8485**	1	SEAL-O-RING	
	5	1	**267-2776**	1	CORE AS-OIL COOLER (HYDRAULIC)	
	6	1	**275-5739**	1	PLATE	
I	7	1	**307-6384**	1	HOSE AS	
	8	1	*148-8335*	2	CONNECTOR AS	
					(EACH INCLUDES)	
		1	**6V-8635**	1	CONNECTOR	
		1	**5K-9090**	1	SEAL-O-RING	
		1	**7M-8485**	1	SEAL-O-RING	
	9	1	*148-8357*	1	ELBOW AS	
		1	**6V-9008**	1	ELBOW	
		1	**5K-9090**	1	SEAL-O-RING	
		1	**7M-8485**	1	SEAL-O-RING	
	10	1	*148-8411*	1	PLUG AS	
		1	**9S-4185**	1	PLUG-O-RING	
		1	**3K-0360**	1	SEAL-O-RING	
	11	1	*164-4180*	2	PLUG AS	
					(EACH INCLUDES)	
		1	**9S-4181**	1	PLUG-O-RING	
		1	**7M-8485**	1	SEAL-O-RING	
	12	1	**8T-4121**	14	WASHER-HARD (11X21X2.5-MM THK)	
M	13	1	**8T-4137**	6	BOLT (M10X1.5X20-MM)	
M	14	1	**8T-4195**	4	BOLT (M10X1.5X30-MM)	
M	15	1	**8T-4196**	4	BOLT (M10X1.5X35-MM)	
E	16	1	**112-9736**		SEAL (99-CM)	

E-ORDER BY THE CENTIMETER
I-REFER TO HYDRAULIC INFORMATION SYSTEM
M-METRIC PART

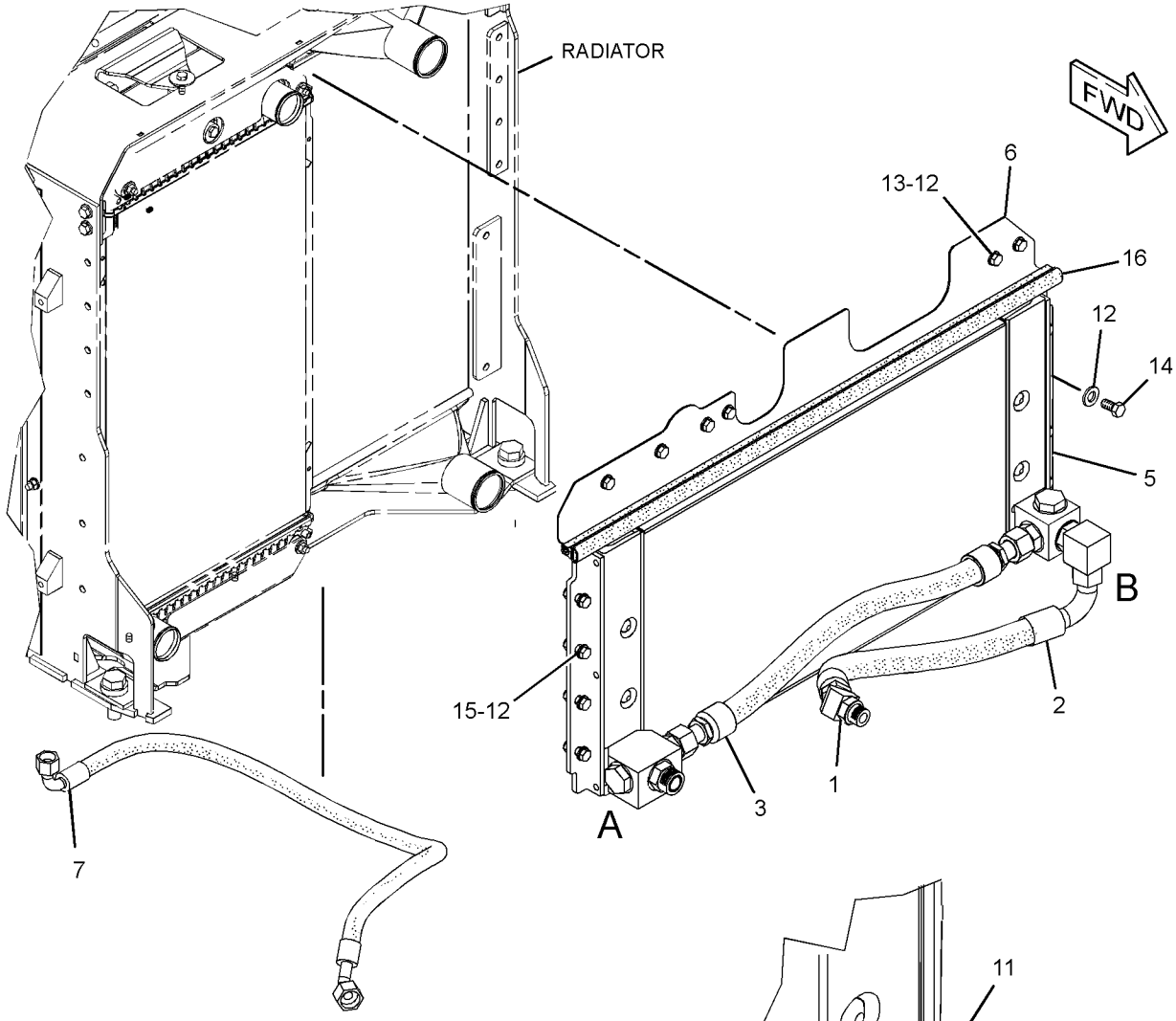

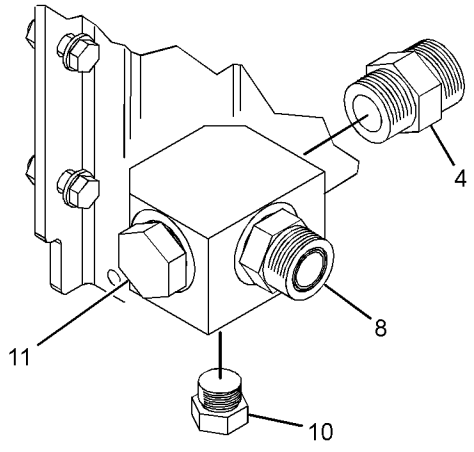

VIEW OF AREA A

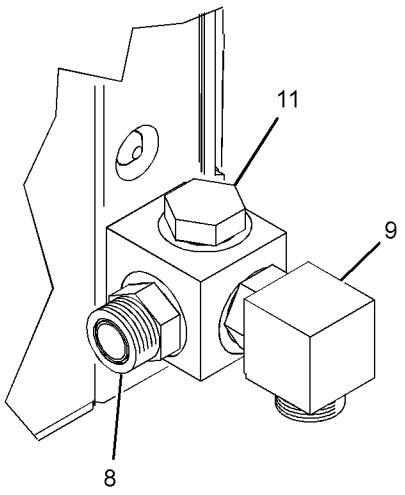

VIEW OF AREA B

GRAPHIC #1 **<END>** g01372086

HYDRAULIC SYSTEM

233-7721 CYLINDER & MTG GP-ARTICULATION

S/N: B9D1-UP

PART OF 234-7721 COMMON AR

SMCS-5265 **i02773199**

NOTE	REF NO	GRAPHIC REF	PART NUMBER	QTY	PART NAME 1 2 3 4 5 6 (PRODUCT LEVEL)	SEE PAGE
B	1	1	**2K-0420**	12	WASHER (1.766X3.5X0.032-IN THK)	
Y	2	1	**247-0096**	2	CYLINDER GP-ARTICULATION	544
	3	1	**305-3384**	4	PIN AS	
	4	1	**170-3093**	4	BUSHING	
	5	1	**3B-5316**	4	PIN-COTTER	
	6	1	**5P-1076**	4	WASHER-HARD (13.5X30X4-MM THK)	
M	7	1	**8T-4956**	4	BOLT (M12X1.75X35-MM)	

B-USE AS REQUIRED
M-METRIC PART
Y-SEPARATE ILLUSTRATION

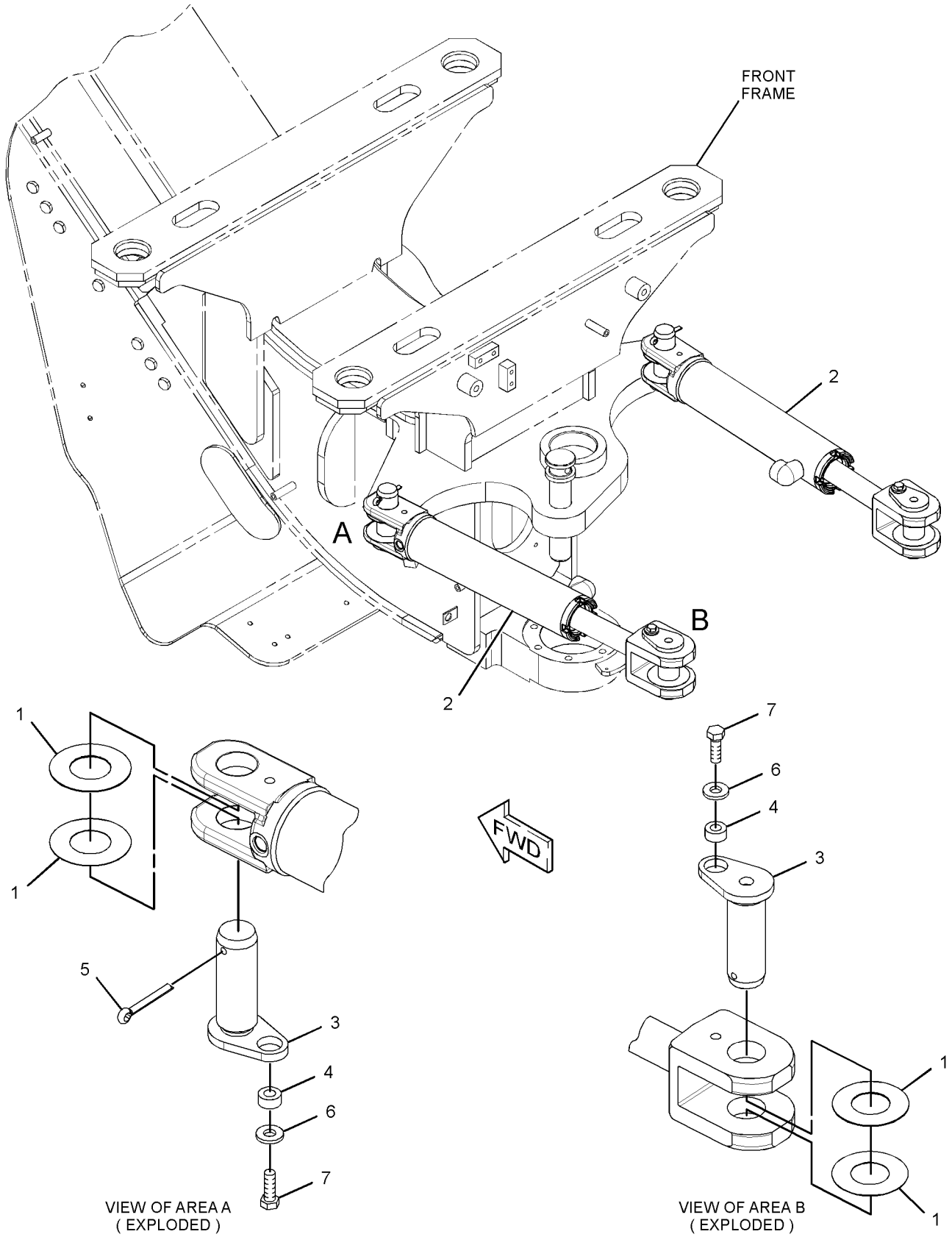

GRAPHIC #1 **<END>** g01343410

263-2787 CYLINDER & MTG GP-BLADE LIFT

S/N: B9D1-UP

PART OF 234-7721 COMMON AR

SMCS-5102 **i02780419**

NOTE	REF NO	GRAPHIC REF	PART NUMBER	QTY	PART NAME 1 2 3 4 5 6 (PRODUCT LEVEL)	SEE PAGE
	1	1	**3B-8485**	2	FITTING-GREASE	
	2	1	**8W-2842**	4	CAP AS	
					(EACH INCLUDES)	
	2A	1	**3P-1461**	1	SEAL-LIP TYPE	
	2B	1	**8D-7996**	1	BEARING-SLEEVE	
Y	3	1	**262-1900**	2	CYLINDER GP-LIFT (BLADE)	547
	4	1	**266-6149**	2	CAP	
	5	1	**279-5267**	4	INSERT	
	6	1	**279-5268**	8	SHIM (0.5-MM THK)	
M	7	1	**114-6099**	4	BOLT (M24X3X80-MM)	
	8	1	**267-3506**	4	WASHER-HARD (26X44X4-MM THK)	
	9	1	**279-6631**	8	BOLT (M12X1.75X100-MM) (M12X1.75X100-MM)	
	10	1	**279-6632**	8	WASHER (13.5X25.5X3-MM THK)	

M-METRIC PART
Y-SEPARATE ILLUSTRATION

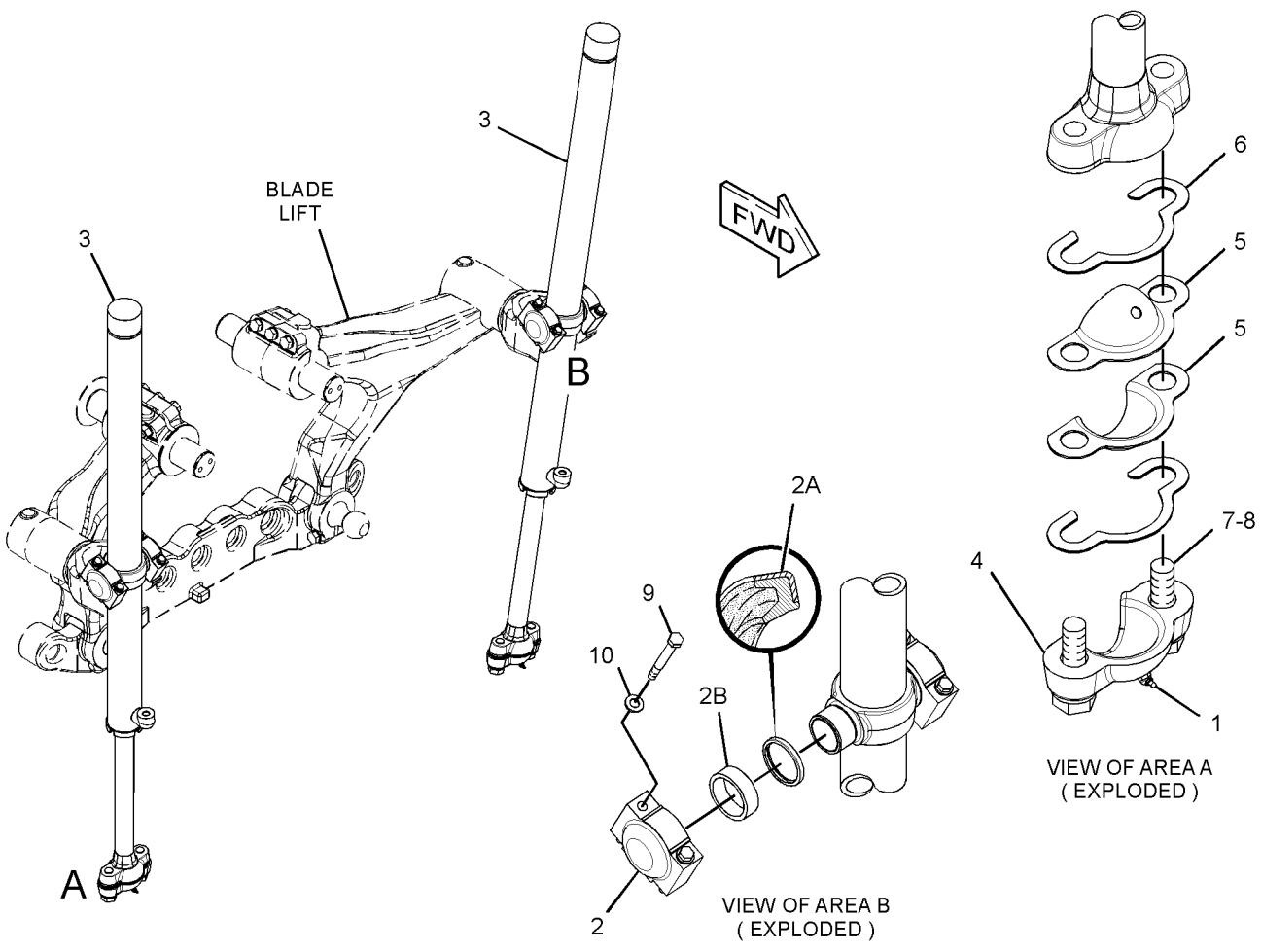

GRAPHIC #1 **<END>** g01347120

233-7723 CYLINDER & MTG GP-BLADE TIP

S/N: B9D1-UP

PART OF 234-7721 COMMON AR

SMCS-5106 **i02773224**

NOTE	REF NO	GRAPHIC REF	PART NUMBER	QTY	PART NAME 1 2 3 4 5 6 (PRODUCT LEVEL)	SEE PAGE
	1	1	**291-0339**	2	WASHER-HARD	
	2	1	**8F-4102**	2	PLATE-SEAL	
Y	3	1	**131-7191**	1	CYLINDER GP-BLADE TIP	545
	4	1	**4J-1888**	1	PIN-COTTER	
	5	1	**293-7546**	1	PIN	
	6	1	**293-7547**	1	PIN	
	7	1	**8T-4121**	2	WASHER-HARD (11X21X2.5-MM THK)	
M	8	1	**8T-4133**	1	NUT (M10X1.5-THD)	
M	9	1	**8T-4198**	1	BOLT (M10X1.5X100-MM)	
	10	1	*148-8374*	1	ELBOW AS	
		1	**6V-8723**	1	ELBOW	
		1	**3K-0360**	1	SEAL-O-RING	
		1	**6V-8397**	1	SEAL-O-RING	
	11	1	*148-8363*	1	ELBOW AS	
		1	**6V-9876**	1	ELBOW	
		1	**3K-0360**	1	SEAL-O-RING	
		1	**6V-8397**	1	SEAL-O-RING	

M-METRIC PART
Y-SEPARATE ILLUSTRATION

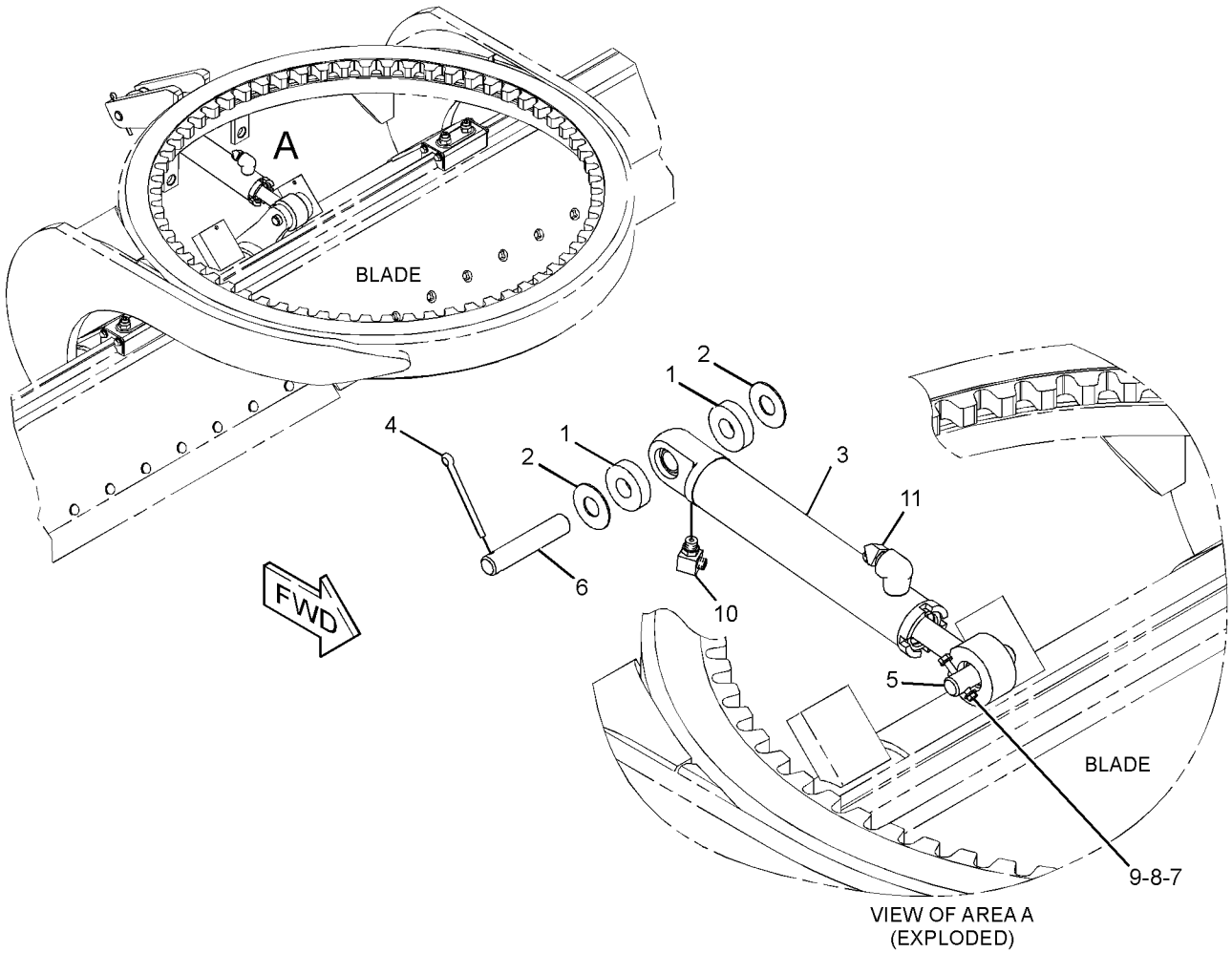

VIEW OF AREA A
(EXPLODED)

GRAPHIC #1 **<END>** g01348820

HYDRAULIC SYSTEM

263-2788 CYLINDER & MTG GP-CENTERSHIFT

S/N: B9D1-UP

PART OF 234-7721 COMMON AR

SMCS-5223 **i02780464**

NOTE	REF NO	GRAPHIC REF	PART NUMBER	QTY	PART NAME 1 2 3 4 5 6 (PRODUCT LEVEL)	SEE PAGE
	1	1	**3B-8485**	2	FITTING-GREASE	
Y	2	1	**262-1907**	1	CYLINDER GP-CENTERSHIFT	546
	3	1	**266-6149**	2	CAP	
	4	1	**279-5267**	4	INSERT	
B	5	1	**279-5268**	8	SHIM (0.5-MM THK)	
M	6	1	**114-6099**	4	BOLT (M24X3X80-MM)	
	7	1	**267-3506**	4	WASHER-HARD (26X44X4-MM THK)	

B-USE AS REQUIRED
M-METRIC PART
Y-SEPARATE ILLUSTRATION

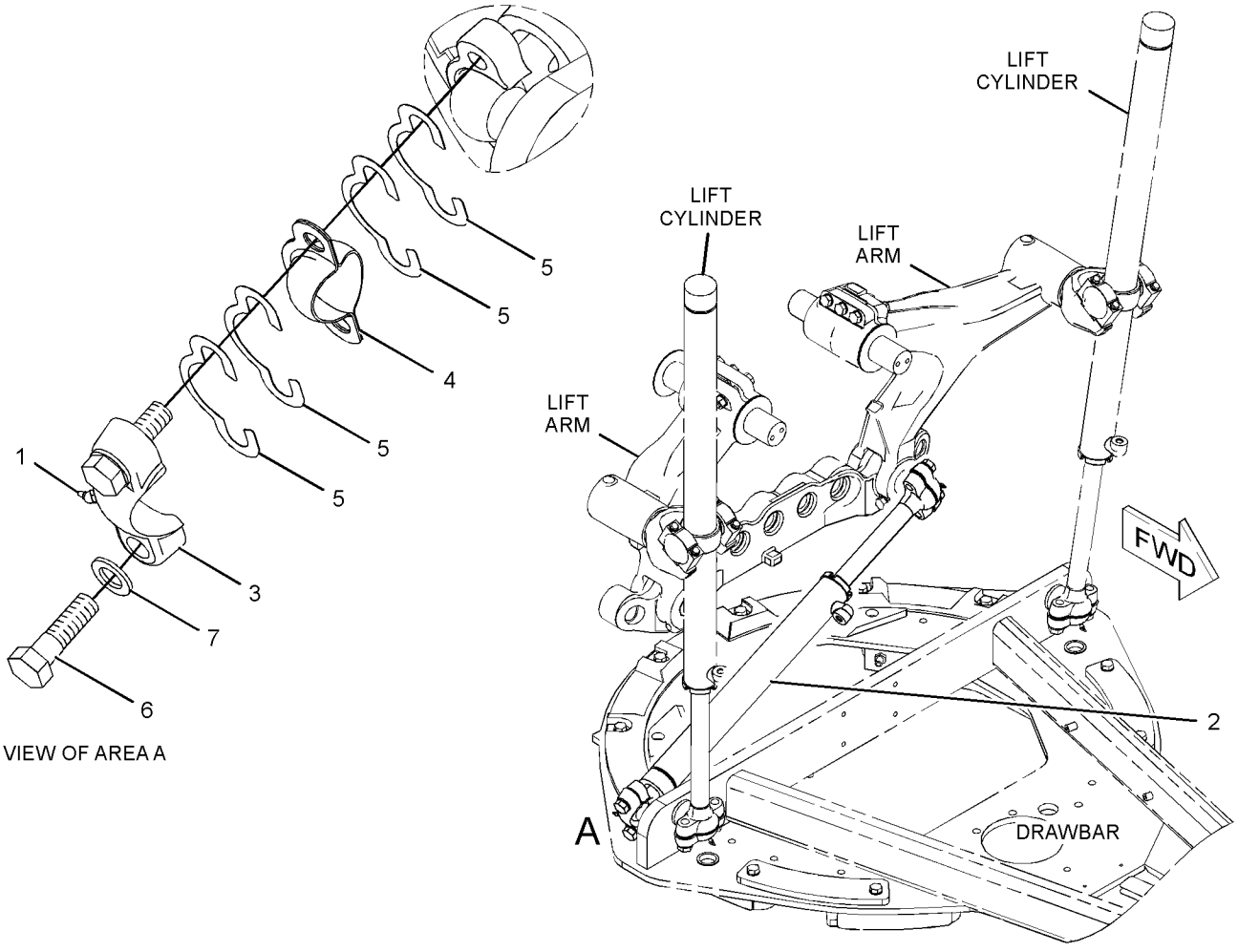

GRAPHIC #1 **<END>** g01339337

8W-2913 CYLINDER & MTG GP-SCARIFIER

S/N: B9D1-UP

PART OF 108-1104, 113-0704 SCARIFIER AR

SMCS-5213, 6165 **i01755262**

NOTE	REF NO	GRAPHIC REF	PART NUMBER	QTY	PART NAME 1 2 3 4 5 6 (PRODUCT LEVEL)	SEE PAGE
	1	1	**7K-9202**	4	SEAL-LIP TYPE	
	2	1	**8D-7086**	2	BEARING	
Y	3	1	**165-2510**	1	CYLINDER GP-SCARIFIER	549
	4	1	**6G-7187**	2	LOCK	
	5	1	**8D-7225**	2	PIN	
	6	1	**0S-1621**	4	BOLT (1/2-13X1-IN)	
		1	**5P-8245**	4	WASHER-HARD (13.5X25.5X3-MM THK)	

Y-SEPARATE ILLUSTRATION

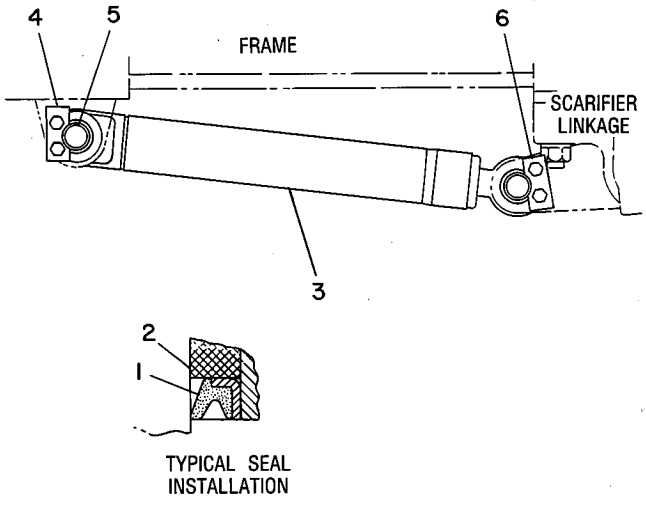

GRAPHIC #1 **<END>** g00108274

HYDRAULIC SYSTEM

246-6115 CYLINDER & MTG GP-SIDESHIFT

S/N: B9D1-UP

PART OF 234-7721 COMMON AR

SMCS-5229 **i02773500**

NOTE	REF NO	GRAPHIC REF	PART NUMBER	QTY	PART NAME 1 2 3 4 5 6 (PRODUCT LEVEL)	SEE PAGE
	1	1	**248-5627**	1	BRACKET	
Y	2	1	**249-4116**	1	CYLINDER GP-SIDESHIFT	550
	3	1	**249-5643**	1	PIN	
	4	1	**3B-4647**	2	PIN-COTTER	
	5	1	**267-3508**	4	WASHER-HARD (35X22X3.5-MM THK)	
	6	1	**5T-8417**	1	PIN	
	7	1	**6H-0211**	6	WASHER (1.563X2.75X0.06-IN THK)	
M	8	1	**106-4175**	4	BOLT (M20X2.5X60-MM)	

M-METRIC PART
Y-SEPARATE ILLUSTRATION

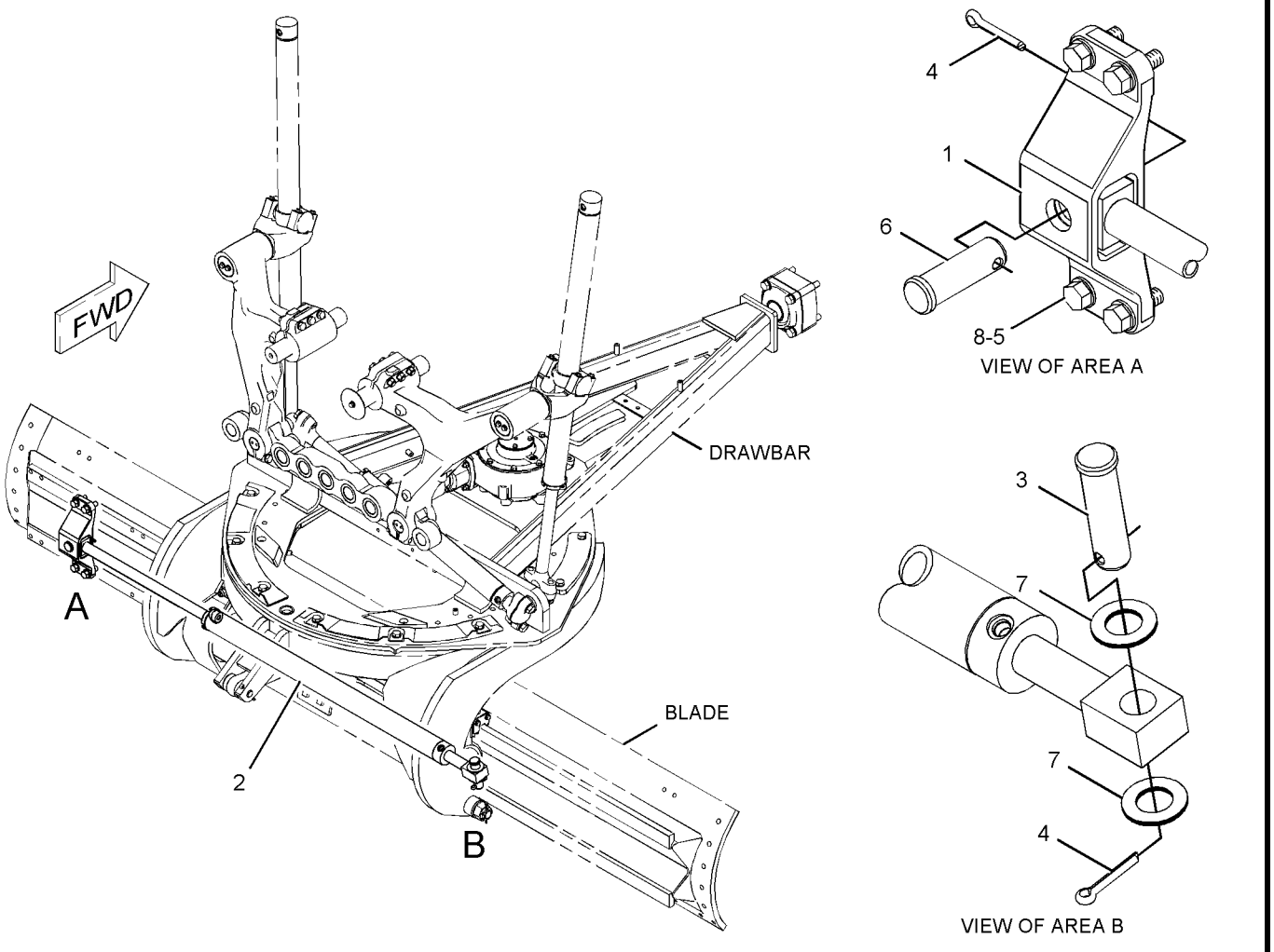

GRAPHIC #1 **<END>** g01134787

260-8709 CYLINDER & MTG GP-STEERING

S/N: B9D1-UP

PART OF 260-8698 AXLE GP-FRONT

FOR USE WITH ALL WHEEL DRIVE ARRANGEMENT

SMCS-4303 **i02786099**

NOTE	REF NO	GRAPHIC REF	PART NUMBER	QTY	PART NAME 1 2 3 4 5 6 (PRODUCT LEVEL)	SEE PAGE
	1	1	**3D-4904**	2	LOCKNUT (1-1/8-12-THD)	
	2	1	**249-3505**	2	RACE-BEARING	
	3	1	**257-2758**	2	PIN AS	
	4	1	**258-9981**	2	SPACER (32.16X38.1X8.65-MM THK)	
	5	1	**260-6117**	2	BALL STUD	
YR	6	1	**262-5766**	2	CYLINDER GP-STEERING (ALL WHEEL DRIVE)	553
	7	1	**285-0612**	2	CAP AS-DUST	
	8	1	**294-9580**	2	SEAL-BOOT	
	9	1	**3B-8489**	2	FITTING-GREASE	
	10	1	**3J-8500**	2	RING-RETAINING	
	11	1	**4F-8824**	2	SEAL-O-RING	
	12	1	**8T-4121**	2	WASHER-HARD (11X21X2.5-MM THK)	
M	13	1	**8T-4137**	2	BOLT (M10X1.5X20-MM)	

M-METRIC PART
R-REMFG PART MAY BE AVAILABLE
Y-SEPARATE ILLUSTRATION

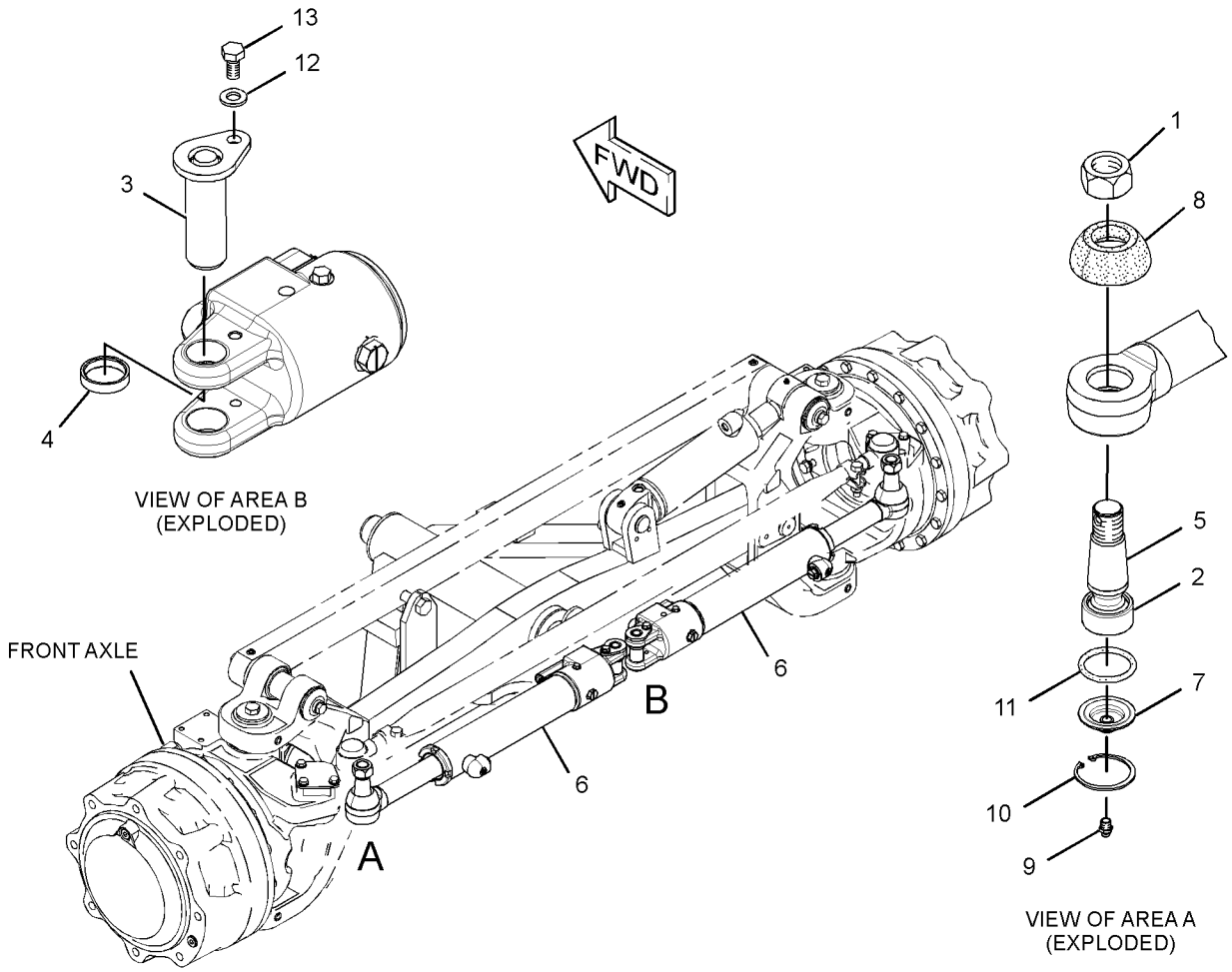

GRAPHIC #1 **<END>** g01343454

HYDRAULIC SYSTEM

279-5746 CYLINDER & MTG GP-STEERING

S/N: B9D1-UP

PART OF 260-7453 AXLE GP-FRONT

SMCS-4303 **i02787944**

NOTE	REF NO	GRAPHIC REF	PART NUMBER	QTY	PART NAME 1 2 3 4 5 6 (PRODUCT LEVEL)	SEE PAGE
	1	1	**249-3505**	2	RACE-BEARING	
YR	2	1	**255-8715**	2	CYLINDER GP-STEERING	551
	3	1	**257-2758**	2	PIN AS	
	4	1	**258-9981**	2	SPACER (32.16X38.1X8.65-MM THK)	
	5	1	**274-6808**	2	BALL STUD	
	6	1	**285-0612**	2	CAP AS-DUST	
	7	1	**297-2628**	2	SEAL-BOOT	
	8	1	**2F-8057**	2	NUT-SLOTTED	
	9	1	**3B-4618**	2	PIN-COTTER	
	10	1	**3B-8489**	2	FITTING-GREASE	
	11	1	**3J-8500**	2	RING-RETAINING	
	12	1	**4F-8824**	2	SEAL-O-RING	
	13	1	**8T-4121**	2	WASHER-HARD (11X21X2.5-MM THK)	
M	14	1	**8T-4137**	2	BOLT (M10X1.5X20-MM)	

M-METRIC PART
R-REMFG PART MAY BE AVAILABLE
Y-SEPARATE ILLUSTRATION

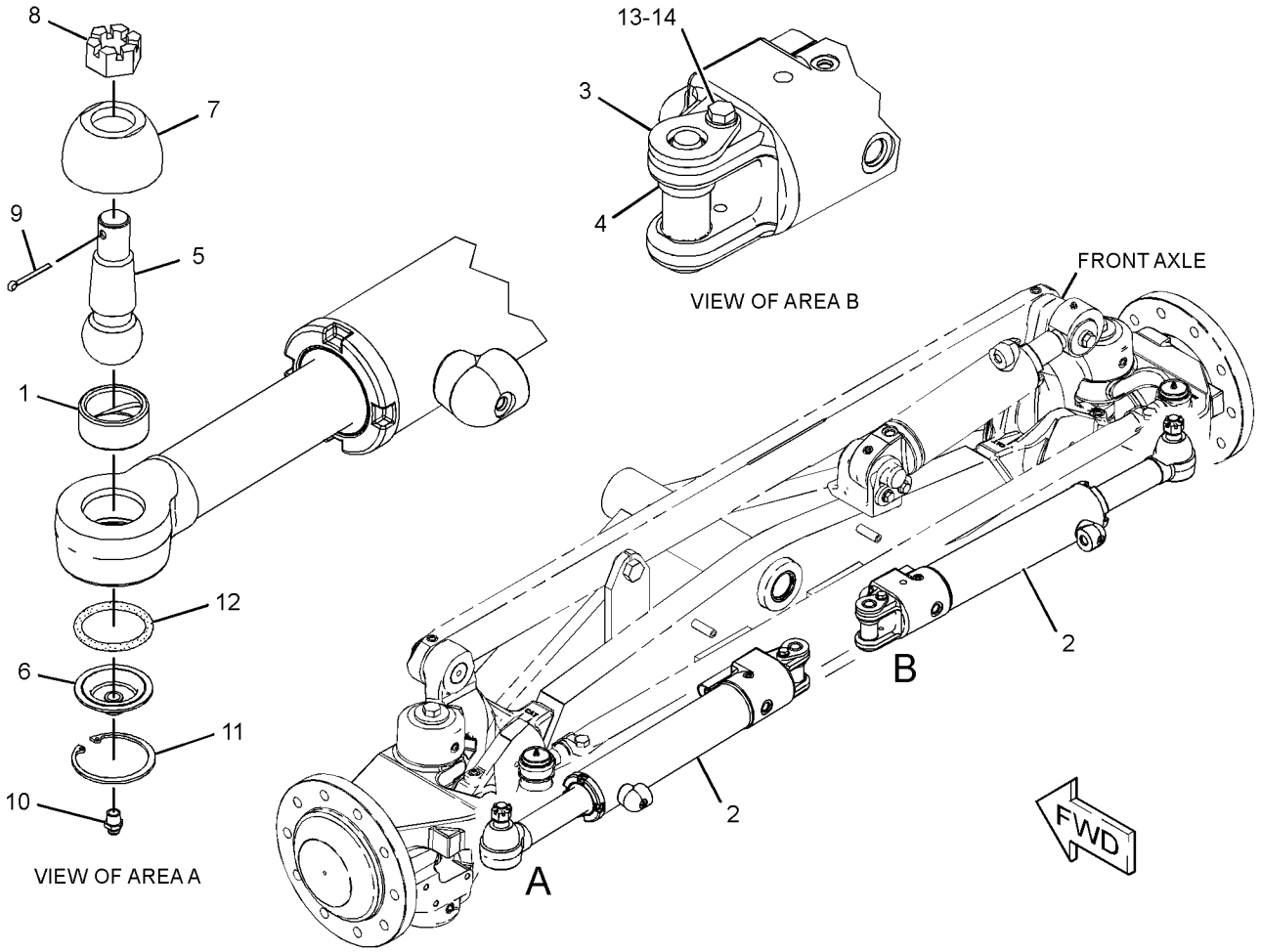

GRAPHIC #1 **<END>** g01340143

260-8713 CYLINDER & MTG GP-WHEEL LEAN

S/N: B9D1-UP

PART OF 260-7453, 260-8698 AXLE GP-FRONT

SMCS-5211 **i02786097**

NOTE	REF NO	GRAPHIC REF	PART NUMBER	QTY	PART NAME 1 2 3 4 5 6 (PRODUCT LEVEL)	SEE PAGE
	1	1	**264-9726**	1	PIN	
	2	1	**6G-7187**	1	LOCK	
	3	1	**7K-9202**	4	SEAL-LIP TYPE	
Y	4	1	**249-5299**	2	CYLINDER GP-WHEEL LEAN	555
	5	1	**3B-8489**	2	FITTING-GREASE	
	6	1	**5P-8245**	2	WASHER-HARD (13.5X25.5X3-MM THK)	
M	7	1	**6V-3668**	2	BOLT (M12X1.75X30-MM)	

M-METRIC PART
Y-SEPARATE ILLUSTRATION

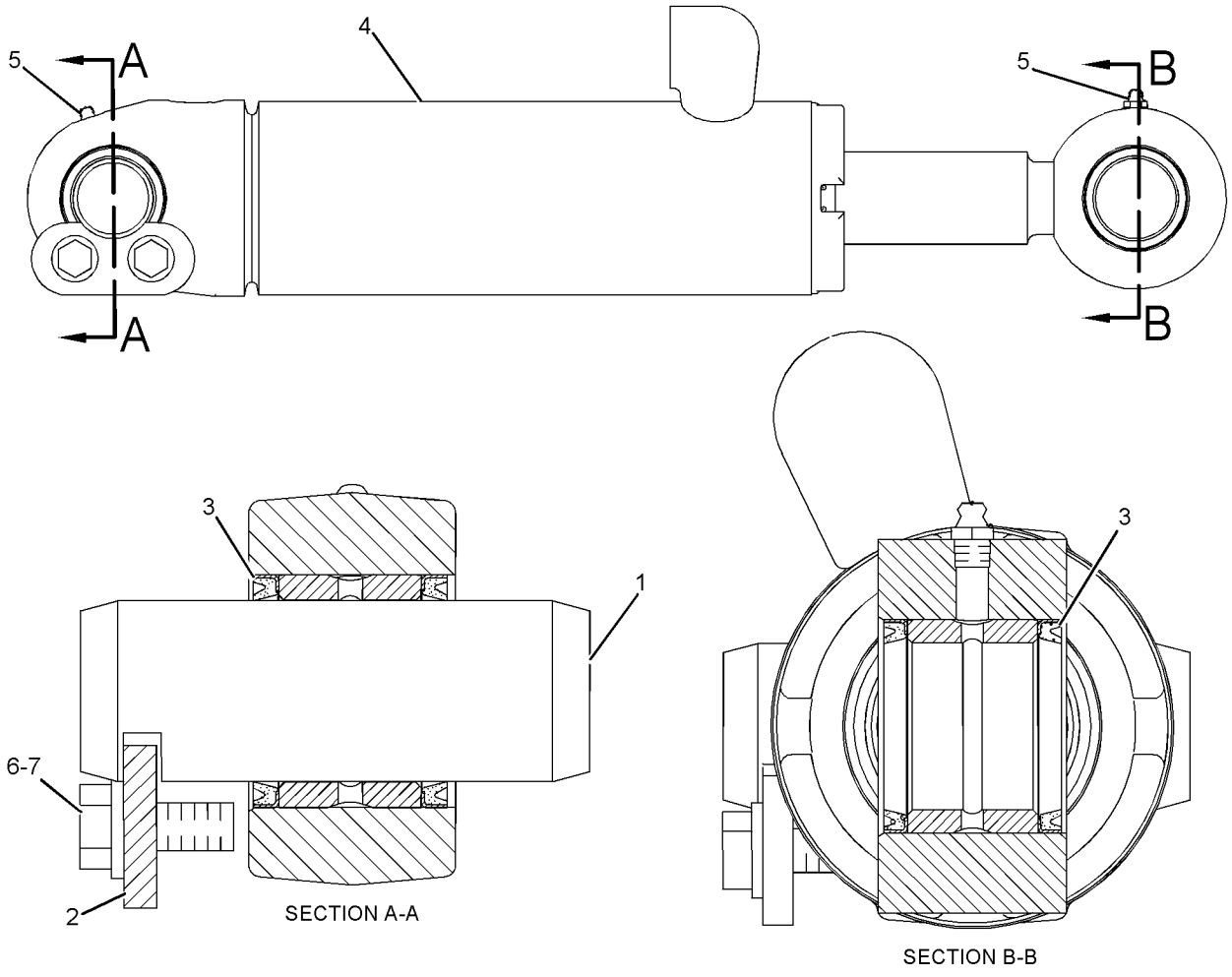

GRAPHIC #1 **<END>** g01112178

HYDRAULIC SYSTEM

247-0096 CYLINDER GP-ARTICULATION

S/N: B9D1-UP
82.6-MM (3.3-IN) BORE X 282.3-MM (11.1-IN) STROKE
PART OF 233-7721 CYLINDER & MTG GP-ARTICULATION

SMCS-5265 **i02773198**

NOTE	REF NO	GRAPHIC REF	PART NUMBER	QTY	PART NAME 1 2 3 4 5 6 (PRODUCT LEVEL)	SEE PAGE
	1	1	**6E-0123**	1	HEAD	
	2	1	**249-5300**	1	CYLINDER AS	
	3	1	**249-5303**	1	PISTON	
	4	1	**249-5304**	1	ROD AS	
	5	1	**167-2192**	1	SEAL AS-BUFFER	
	6	1	**167-2302**	1	SEAL-U-CUP	
M	7	1	**173-9683**	1	BOLT (M30X3.5X90-MM)	
	8	1	**175-7897**	1	SEAL-O-RING	
	9	1	**227-1143**	1	SEAL-WIPER	
	10	1	**4T-6779**	1	RING	
	11	1	**6J-0793**	1	SEAL AS	
		1	**6J-0789**	1	RING-EXPANDER	
		1	**6J-0790**	1	SEAL	
	12	1	**6J-1381**	1	RING-BACKUP	
	13	1	**8J-6371**	1	RING-WEAR	
	14	1	**9X-8399**	1	WASHER (33X56X6-MM THK)	

M-METRIC PART

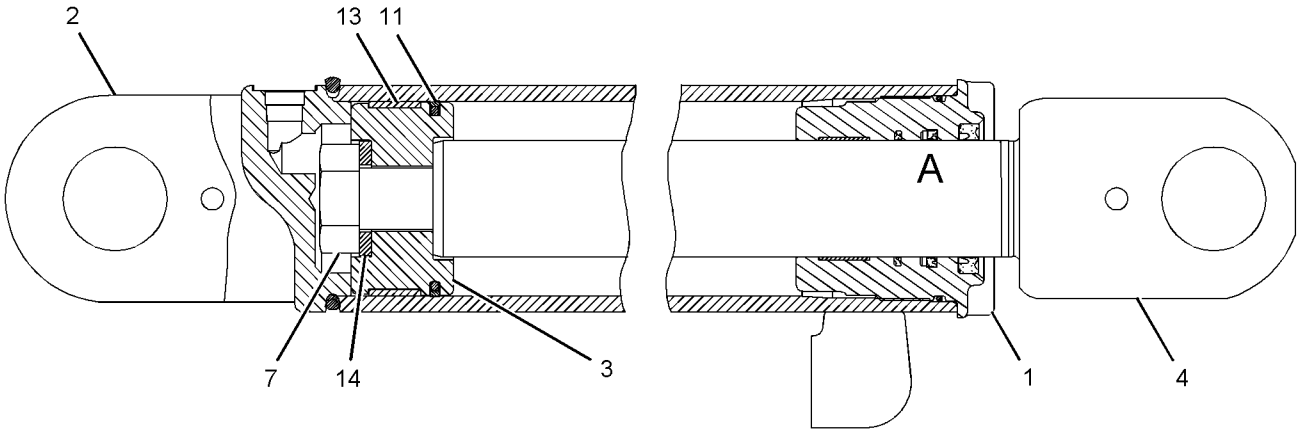

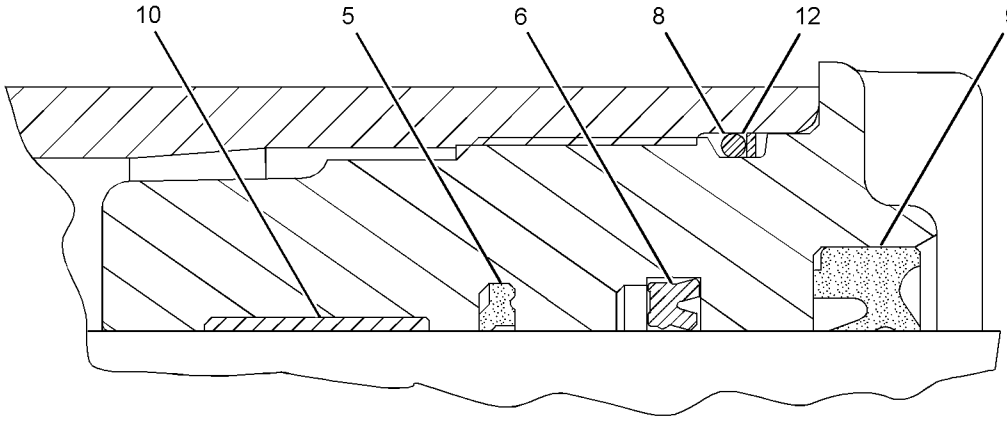

VIEW OF AREA A

GRAPHIC #1 **<END>** g01134839

131-7191 CYLINDER GP-BLADE TIP

S/N: B9D1-UP
69.85 MM BORE X 307.00 MM STROKE
PART OF 233-7723 CYLINDER & MTG GP-BLADE TIP

SMCS-5106 **i02108889**

NOTE	REF NO	GRAPHIC REF	PART NUMBER	QTY	PART NAME 1 2 3 4 5 6 (PRODUCT LEVEL)	SEE PAGE
	1	1	**131-7194**	1	CYLINDER AS	
		1	**2D-8652**	1	BEARING	
M	2	1	**173-9685**	1	BOLT (M20X2.5X70-MM)	
	3	1	**8T-3282**	1	WASHER-HARD (22X35X3.5-MM THK)	
J	4	1	**5J-7010**	1	SEAL AS	
J	5	1	**8J-0112**	1	RING-WEAR	
	6	1	**9T-2457**	1	PISTON	
J	7	1	**175-7895**	1	SEAL-O-RING	
J	8	1	**4J-9225**	1	RING-BACKUP	
	9	1	**6E-4940**	1	HEAD	
	10	1	**131-7195**	1	ROD AS	
		1	**2D-8652**	1	BEARING	
J	11	1	**4T-6780**	1	RING-WEAR	
J	12	1	**167-2186**	1	SEAL AS-BUFFER	
J	13	1	**167-2294**	1	SEAL-U-CUP	
J	14	1	**226-8202**	1	SEAL-WIPER	
					AVAILABLE REPAIR KIT(S):	
AJ			**185-6596**	1	KIT-SEAL	
					(INCLUDES SEALS & RINGS)	

A-NOT PART OF THIS GROUP
J-KIT MARKED J INCLUDES PARTS MARKED J
M-METRIC PART

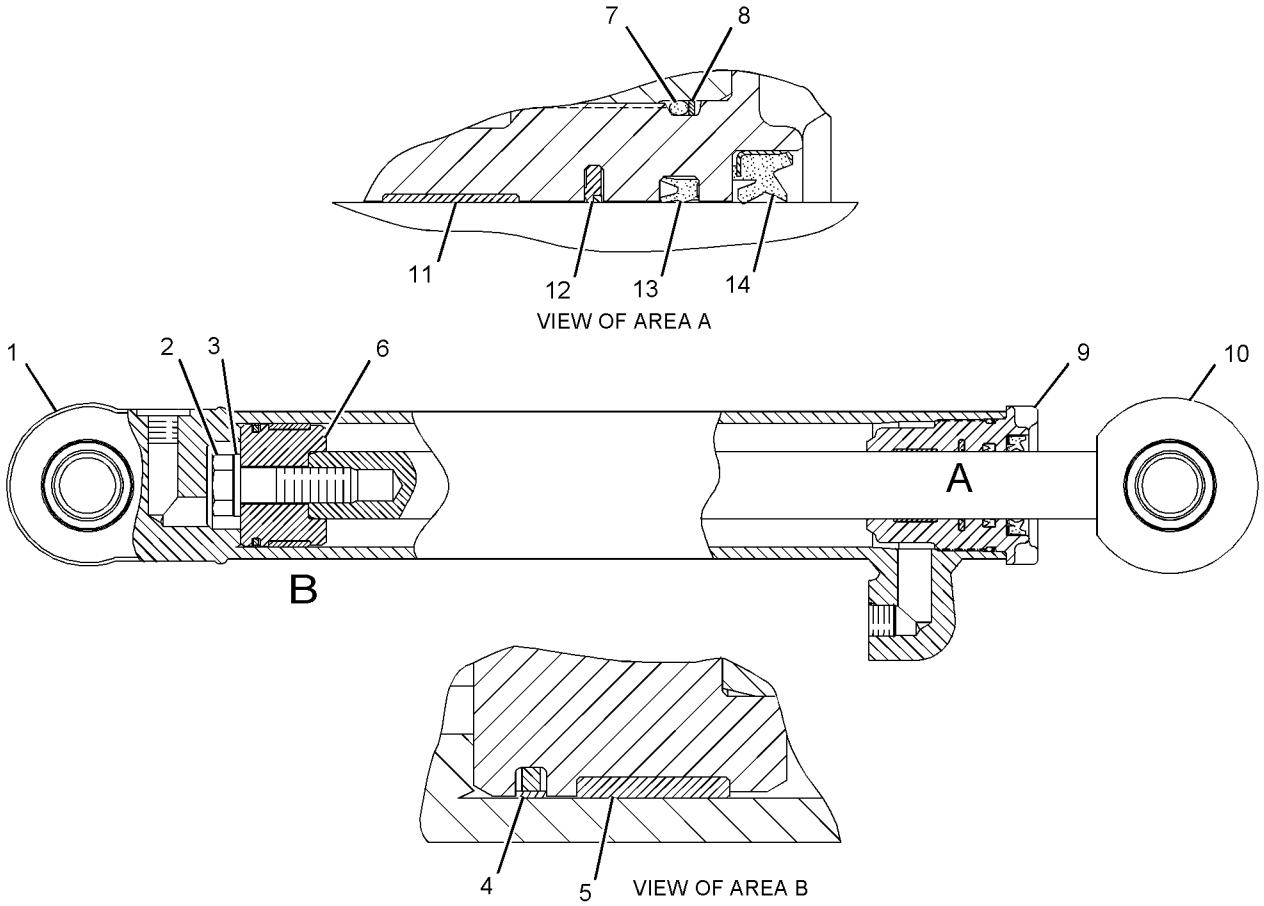

GRAPHIC #1 **<END>** g01097877

HYDRAULIC SYSTEM

262-1907 CYLINDER GP-CENTERSHIFT

S/N: B9D1-UP
76.2-MM (3-IN) BORE X 630-MM (25-IN) STROKE
PART OF 263-2788 CYLINDER & MTG GP-CENTERSHIFT

SMCS-5223 **i02780462**

NOTE	REF NO	GRAPHIC REF	PART NUMBER	QTY	PART NAME 1 2 3 4 5 6 (PRODUCT LEVEL)	SEE PAGE
	1	1	**6E-1131**	1	PISTON	
	2	1	**148-2593**	1	HEAD	
	3	1	**262-1920**	1	ROD AS	
	4	1	**262-1926**	1	CYLINDER AS	
	5	1	**167-2195**	1	SEAL AS-BUFFER	
	6	1	**167-2304**	1	SEAL-U-CUP	
M	7	1	**173-9683**	1	BOLT (M30X3.5X90-MM)	
	8	1	**175-7896**	1	SEAL-O-RING	
	9	1	**229-9382**	1	SEAL-WIPER	
	10	1	**3S-7023**	1	WASHER (34X57X6-MM THK)	
	11	1	**4T-5613**	1	RING-WEAR	
	12	1	**6J-1972**	1	SEAL AS	
	13	1	**6J-5731**	1	RING-BACKUP	
	14	1	**6J-5733**	1	RING-WEAR	

M-METRIC PART

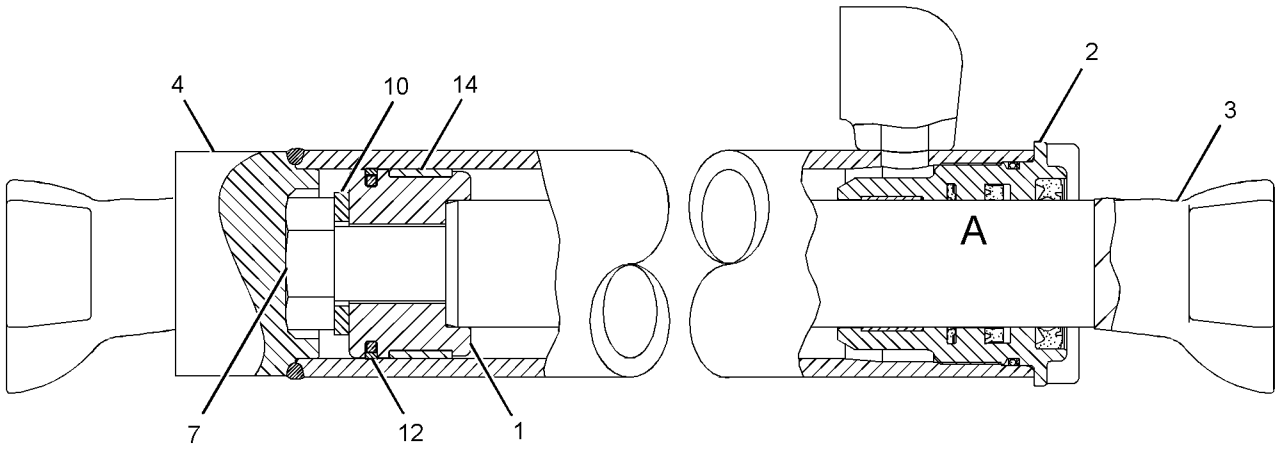

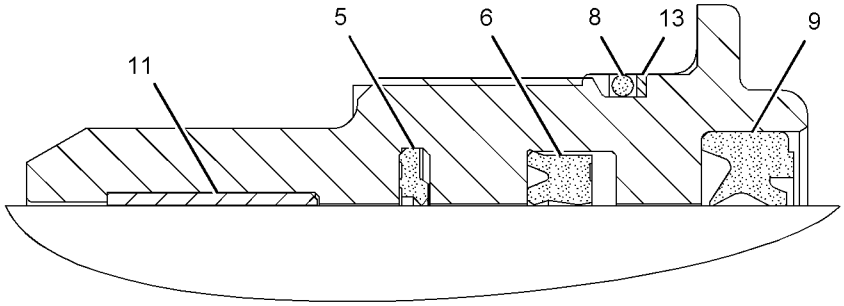

VIEW OF AREA A

GRAPHIC #1 **<END>** g01137549

262-1900 CYLINDER GP-LIFT–BLADE

S/N: B9D1-UP

76.2-MM (3-IN) BORE X 1245-MM (49-IN) STROKE

PART OF 263-2787 CYLINDER & MTG GP-BLADE LIFT

SMCS-5102 **i02780415**

NOTE	REF NO	GRAPHIC REF	PART NUMBER	QTY	PART NAME 1 2 3 4 5 6 (PRODUCT LEVEL)	SEE PAGE
	1	1	**6E-1131**	1	PISTON	
R	2	1	**132-4928**	1	CYLINDER AS	
		1	**8J-6384**	2	BEARING-SLEEVE	
	3	1	**148-2593**	1	HEAD	
	4	1	**262-1919**	1	ROD AS	
	5	1	**167-2195**	1	SEAL AS-BUFFER	
	6	1	**167-2304**	1	SEAL-U-CUP	
M	7	1	**173-9683**	1	BOLT (M30X3.5X90-MM)	
	8	1	**175-7896**	1	SEAL-O-RING	
	9	1	**229-9382**	1	SEAL-WIPER	
	10	1	**3S-7023**	1	WASHER (34X57X6-MM THK)	
	11	1	**4T-5613**	1	RING-WEAR	
	12	1	**6J-1972**	1	SEAL AS	
	13	1	**6J-5731**	1	RING-BACKUP	
	14	1	**6J-5733**	1	RING-WEAR	

M-METRIC PART
R-REMFG PART MAY BE AVAILABLE

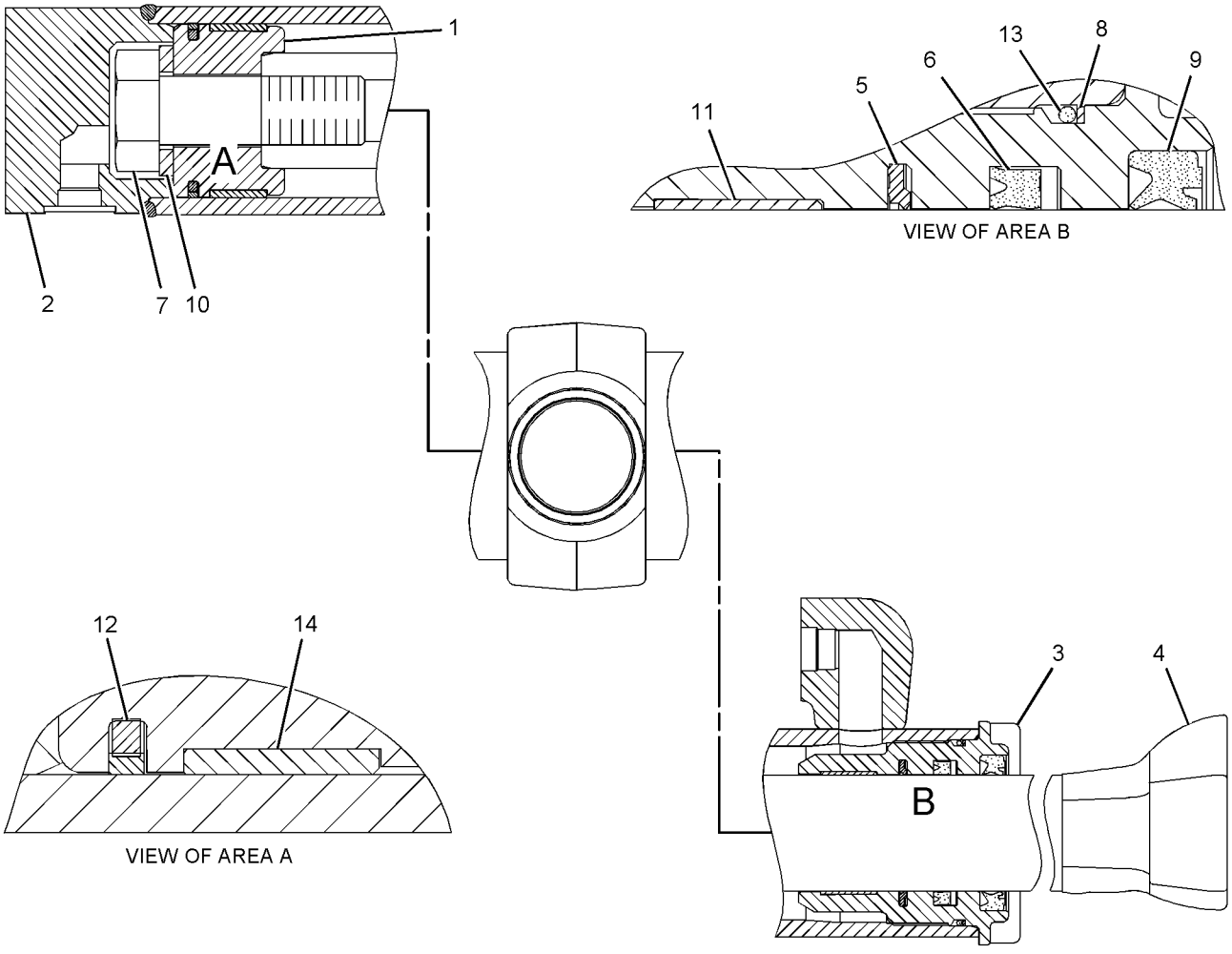

GRAPHIC #1 **<END>** g01139264

HYDRAULIC SYSTEM

113-7754 CYLINDER GP-RIPPER

S/N: B9D1-UP
101.6 MM BORE X 482.6 MM STROKE
PART OF 248-1322 RIPPER AR

SMCS-5352, 5356 **i01988942**

NOTE	REF NO	GRAPHIC REF	PART NUMBER	QTY	PART NAME 1 2 3 4 5 6 (PRODUCT LEVEL)	SEE PAGE
R	1	1	**113-7755**	1	CYLINDER AS	
	1A	1	**8J-9911**	2	BEARING-SLEEVE	
	1B	1	**9T-8958**	1	TRUNNION	
M	2	1	**173-9683**	1	BOLT (M30X3.5X90-MM)	
	3	1	**3S-7023**	1	WASHER (34X57X6-MM THK)	
	4	1	**5J-5402**	1	SEAL AS	
	5	1	**6J-2797**	1	RING-WEAR	
	6	1	**9T-3133**	1	PISTON	
R	7	1	**113-7756**	1	ROD AS	
	7A	1	**8J-9910**	1	BEARING-SLEEVE	
	8	1	**175-7900**	1	SEAL-O-RING	
	9	1	**2K-6830**	1	RING-BACKUP	
	10	1	**6E-0775**	1	HEAD	
	11	1	**4T-5613**	1	RING-WEAR	
	12	1	**167-2195**	1	SEAL AS-BUFFER	
	13	1	**167-2304**	1	SEAL-U-CUP	
	14	1	**229-9382**	1	SEAL-WIPER	

M-METRIC PART
R-REMFG PART MAY BE AVAILABLE

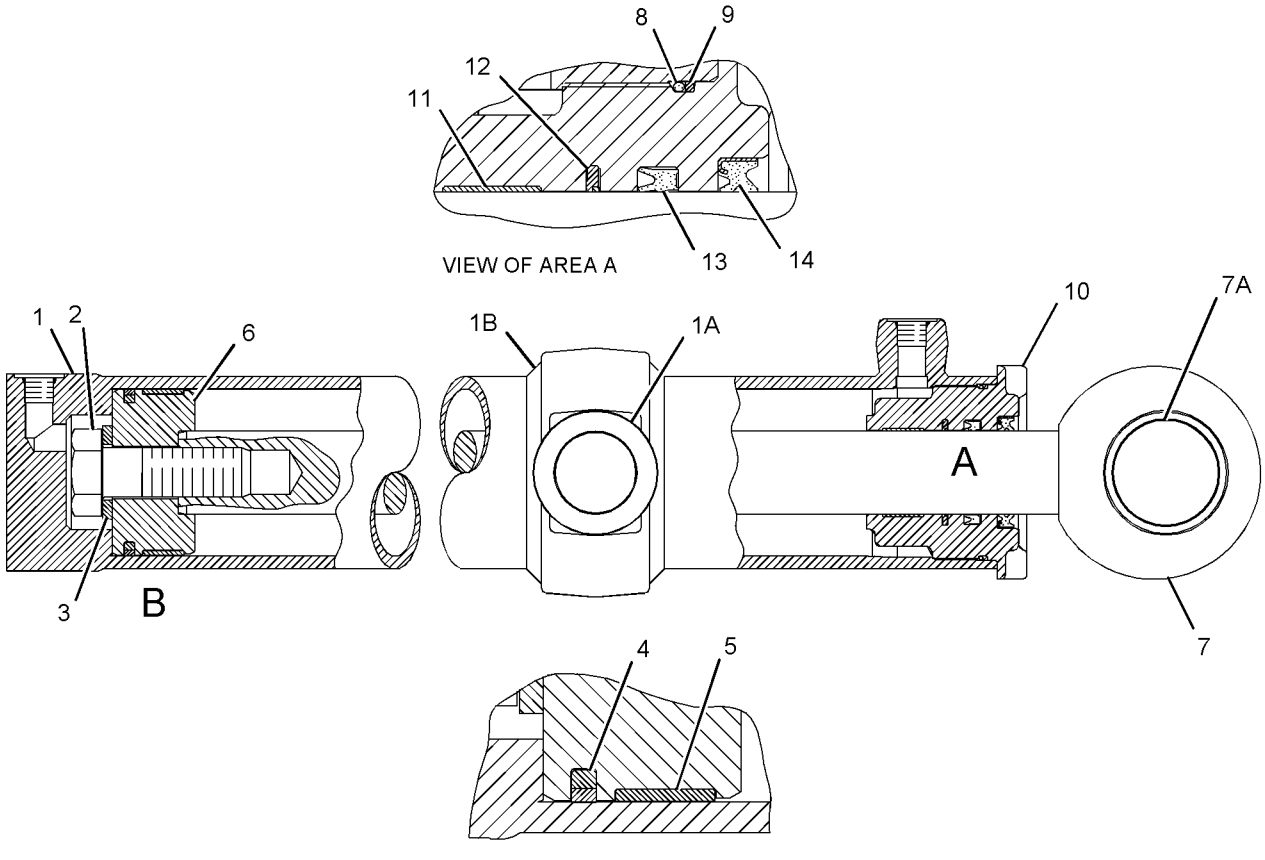

GRAPHIC #1

<END>

g01069015

165-2510 CYLINDER GP-SCARIFIER

S/N: B9D1-UP
76.2 MM BORE X 406.5 MM STROKE
PART OF 8W-2913 CYLINDER & MTG GP-SCARIFIER

SMCS-5213 **i01963757**

NOTE	REF NO	GRAPHIC REF	PART NUMBER	QTY	PART NAME 1 2 3 4 5 6 (PRODUCT LEVEL)	SEE PAGE
	1	1	**9T-4211**	1	PISTON	
	2	1	**168-9108**	1	CYLINDER AS	
	3	1	**168-9110**	1	ROD AS	
	4	1	**184-9843**	1	HEAD	
J	5	1	**167-2190**	1	SEAL AS-BUFFER	
J	6	1	**167-2300**	1	SEAL-U-CUP	
J	7	1	**231-3539**	1	SEAL-WIPER	
M	8	1	**173-9779**	1	BOLT (M24X3X80-MM)	
J	9	1	**175-7896**	1	SEAL-O-RING	
J	10	1	**4T-6907**	1	RING-WEAR	
J	11	1	**6J-1972**	1	SEAL AS	
J	12	1	**6J-5731**	1	RING-BACKUP	
J	13	1	**6J-5733**	1	RING-WEAR	
	14	1	**6V-8237**	1	WASHER (26X44X4-MM THK)	
					AVAILABLE REPAIR KIT(S):	
AJ			**185-7025**	1	KIT-SEAL	
					(INCLUDES SEAL-O-RING)	

A-NOT PART OF THIS GROUP
J-KIT MARKED J INCLUDES PARTS MARKED J
M-METRIC PART

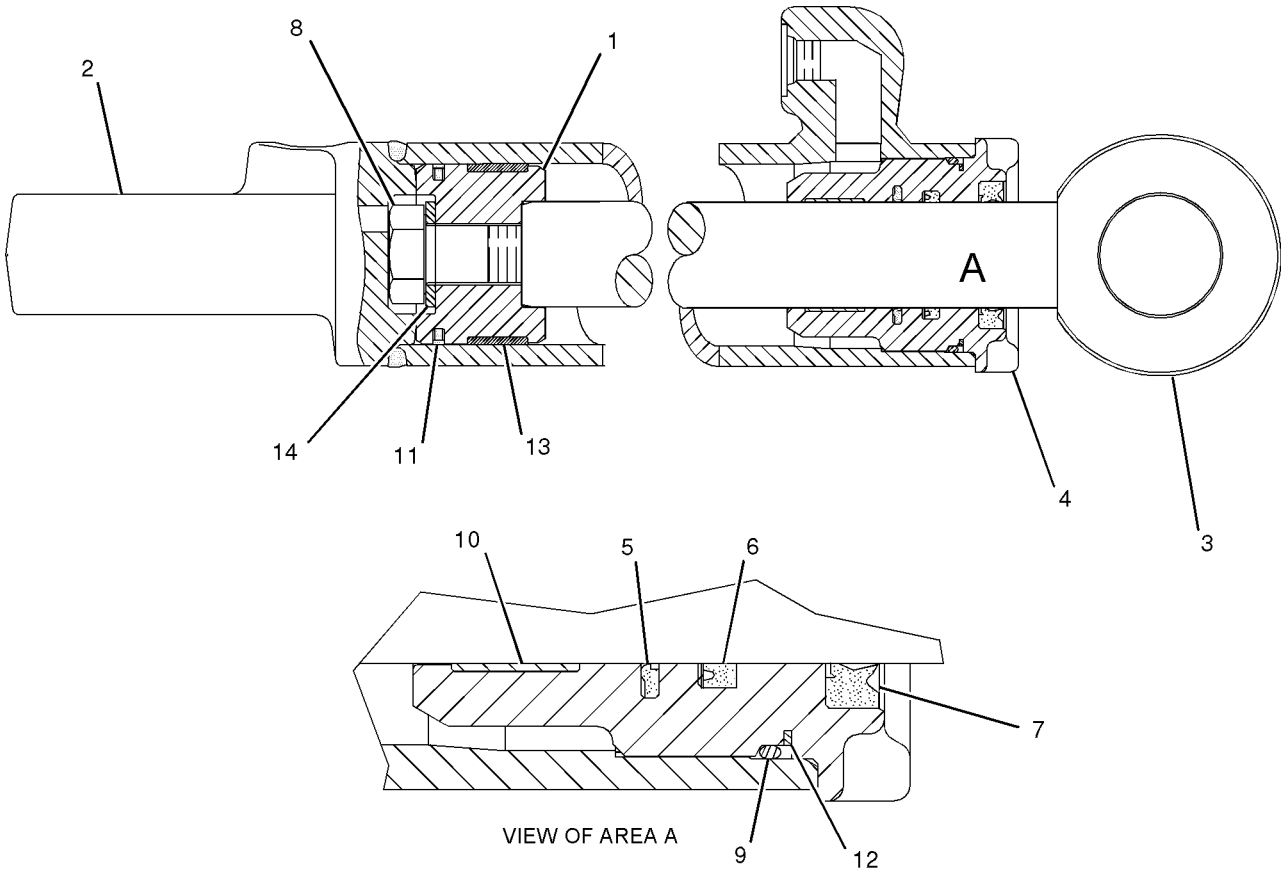

GRAPHIC #1 **<END>** g01045248

249-4116 CYLINDER GP-SIDESHIFT

S/N: B9D1-UP
76.2-MM(3-IN) BORE X 1175-MM(46-IN) STROKE
PART OF 246-6115 CYLINDER & MTG GP-SIDESHIFT

SMCS-5229 **i02773514**

NOTE	REF NO	GRAPHIC REF	PART NUMBER	QTY	PART NAME 1 2 3 4 5 6 (PRODUCT LEVEL)	SEE PAGE
	1	1	**249-4117**	1	CYLINDER AS	
M	2	1	**8T-0667**	1	BOLT (M24X3X100-MM)	
	3	1	**150-1280**	1	WASHER-HARD (26X44X22-MM THK)	
	4	1	**9T-4211**	1	PISTON	
	5	1	**175-7896**	1	SEAL-O-RING	
	6	1	**6J-5731**	1	RING-BACKUP	
	7	1	**249-4120**	1	ROD AS	
	8	1	**184-9843**	1	HEAD	
	9	1	**231-3539**	1	SEAL-WIPER	
	10	1	**167-2300**	1	SEAL-U-CUP	
	11	1	**167-2190**	1	SEAL AS-BUFFER	
	12	1	**4T-6907**	1	RING-WEAR	
	13	1	**6J-5733**	1	RING-WEAR	
	14	1	**6J-1972**	1	SEAL AS	

M-METRIC PART

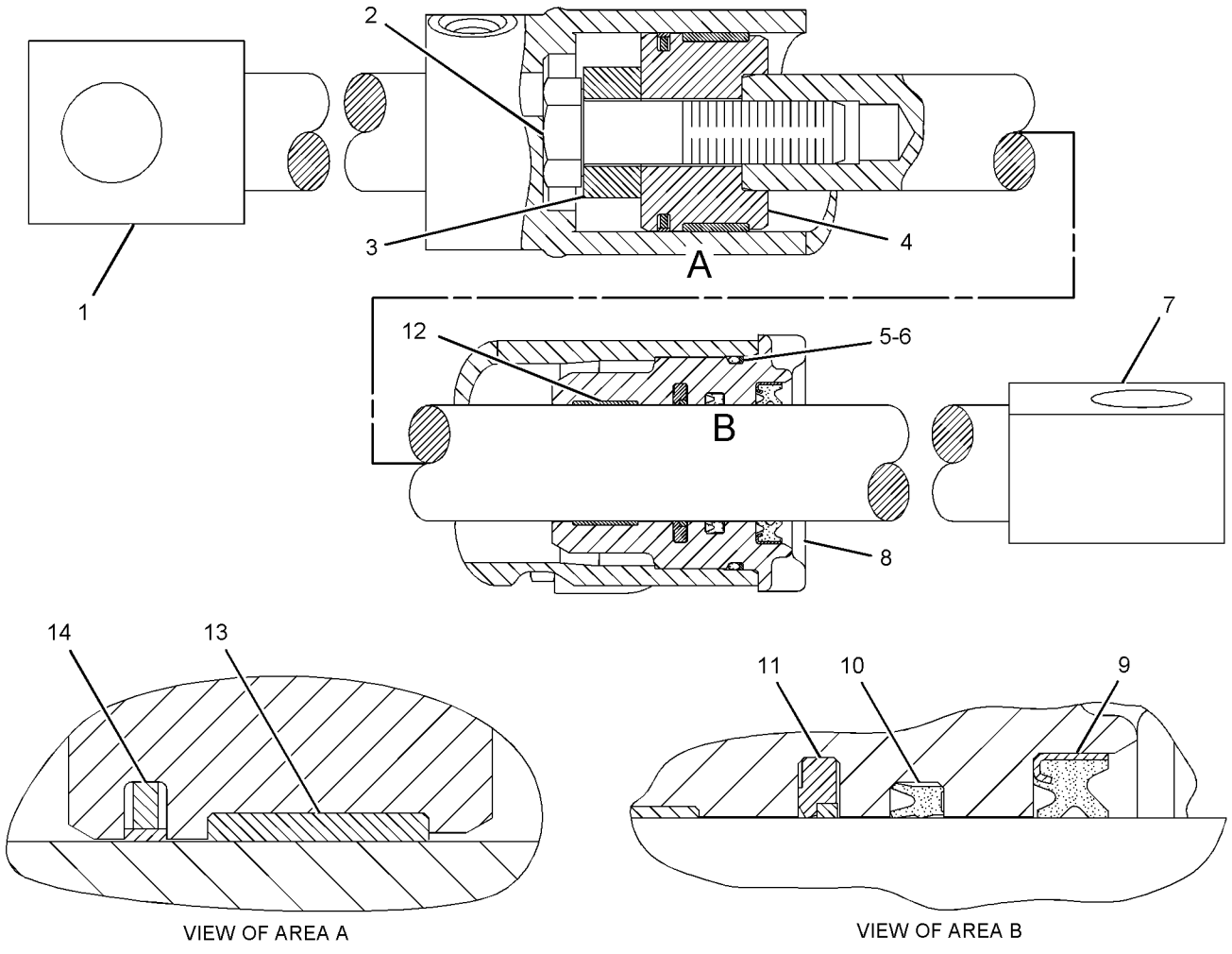

GRAPHIC #1 **<END>** g01139212

255-8715 CYLINDER GP-STEERING*R

S/N: B9D1-UP

76.2-MM (3-IN) BORE X 287-MM (11.3-IN) STROKE

PART OF 279-5746 CYLINDER & MTG GP-STEERING

SMCS-4303 **i02788003**

NOTE	REF NO	GRAPHIC REF	PART NUMBER	QTY	PART NAME 1 2 3 4 5 6 (PRODUCT LEVEL)	SEE PAGE
	1	1	**3E-3377**	1	WEDGE-RECEPTACLE LOCK (4-PIN)	
	2	1	**102-2244**	1	GROMMET	
	3	1	**151-7038**	1	HEAD	
	4	1	**212-0907**	1	PLATE-CONNECTOR	
	5	1	**214-6480**	1	PISTON	
	6	1	**217-3311**	1	MAGNET	
	7	1	**276-1816**	1	GUARD	
	8	1	**242-9514**	1	CARRIER	
	9	1	**242-9515**	1	RING-RETAINING	
	10	1	**248-8805**	1	ROD AS	
	11	1	**249-5193**	1	SENSOR GP-POSITION (STEERING CYLINDER)	
		1	**9X-3401**	3	PIN-CONNECTOR (16-GA TO 18-GA)	
	12	1	**258-9864**	1	CYLINDER AS	
		1	**095-0879**	1	PIN-SPRING	
		1	**310-4759**	1	BOSS AS	
	13	1	**167-2195**	1	SEAL AS-BUFFER	
	14	1	**167-2304**	1	SEAL-U-CUP	
	15	1	**188-2199**	1	SEAL-O-RING	
	16	1	**1H-7339**	1	SEAL-O-RING	
	17	1	**215-1942**	1	RING-BACKUP	
	18	1	**223-3353**	1	RING-WEAR	
	19	1	**229-9382**	1	SEAL-WIPER	
	20	1	**102-8804**	1	KIT-RECEPTACLE (4-PIN)	
					(INCLUDES RECEPTACLE AS & WEDGE)	
	21	1	**3V-2431**	2	WASHER (10.2X16X2-MM THK)	
	22	1	**4S-5565**	2	BOLT (3/8-16X0.875-IN)	
	23	1	**4T-5613**	1	RING-WEAR	
	24	1	**5J-4561**	1	LOCKNUT (1-14-THD)	
	25	1	**6J-1972**	1	SEAL AS	
	27	1	**6J-5731**	1	RING-BACKUP	
	28	1	**8T-5070**	1	SETSCREW-SOCKET (3/8-16X0.5-IN)	
	29	1	**8T-8737**	1	PLUG-SEAL	
E	30	1	**9X-1386**		SLEEVE (3-CM)	
E	30A	1	**9X-1386**		SLEEVE (9-CM)	

E-ORDER BY THE CENTIMETER

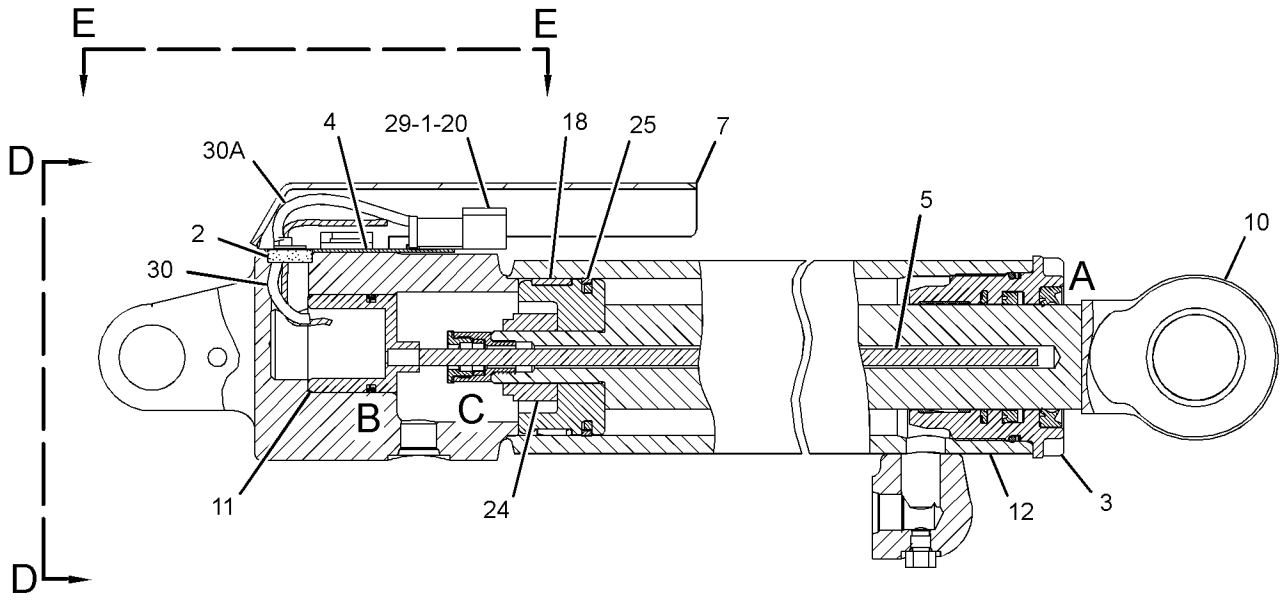

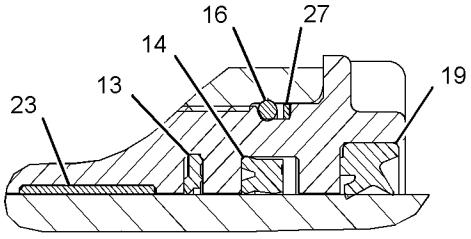

VIEW OF AREA A

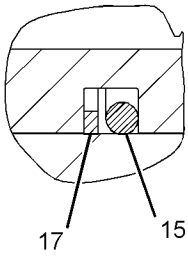

VIEW OF AREA B

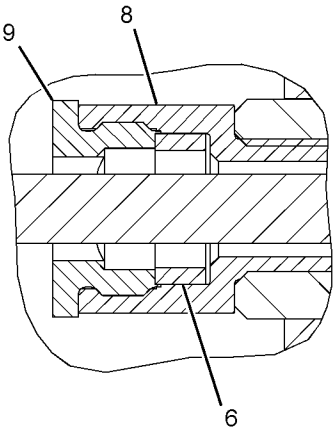

VIEW OF AREA C

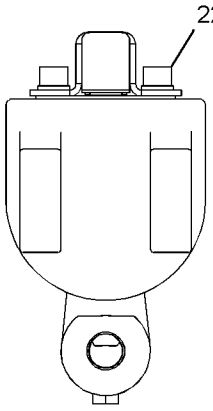

VIEW D-D

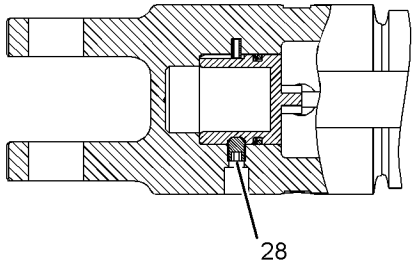

VIEW E-E

GRAPHIC #1 **<END>** g01340254

HYDRAULIC SYSTEM

262-5766 CYLINDER GP-STEERING*R

S/N: B9D1-UP

76.2-MM (3-IN) X 305-MM (12-IN) STROKE

PART OF 260-8709 CYLINDER & MTG GP-STEERING

SMCS-4303 **i02786096**

NOTE	REF NO	GRAPHIC REF	PART NUMBER	QTY	PART NAME 1 2 3 4 5 6 (PRODUCT LEVEL)	SEE PAGE
	1	1	**3E-3377**	1	WEDGE-RECEPTACLE LOCK (4-PIN)	
	2	1	**102-2244**	1	GROMMET	
	3	1	**151-7038**	1	HEAD	
	4	1	**212-0907**	1	PLATE-CONNECTOR	
	5	1	**214-6480**	1	PISTON	
	6	1	**217-3311**	1	MAGNET	
	7	1	**276-1816**	1	GUARD	
	8	1	**242-9514**	1	CARRIER	
	9	1	**242-9515**	1	RING-RETAINING	
	10	1	**262-5768**	1	CYLINDER AS	
	11	1	**262-5769**	1	ROD AS	
	12	1	**167-2195**	1	SEAL AS-BUFFER	
	13	1	**167-2304**	1	SEAL-U-CUP	
	14	1	**188-2199**	1	SEAL-O-RING	
	15	1	**1H-7339**	1	SEAL-O-RING	
	16	1	**215-1942**	1	RING-BACKUP	
	17	1	**223-3353**	1	RING-WEAR	
	18	1	**229-9382**	1	SEAL-WIPER	
	19	1	**262-5906**	1	SENSOR GP-POSITION (STEERING CYLINDER)	
		1	**9X-3401**	3	PIN-CONNECTOR (16-GA TO 18-GA)	
	20	1	**102-8804**	1	KIT-RECEPTACLE (4-PIN) (INCLUDES RECEPTACLE AS & WEDGE)	
	21	1	**3V-2431**	2	WASHER (10.2X16X2-MM THK)	
	22	1	**4S-5565**	2	BOLT (3/8-16X0.875-IN)	
	23	1	**4T-5613**	1	RING-WEAR	
	24	1	**5J-4561**	1	LOCKNUT (1-14-THD)	
	25	1	**6J-1972**	2	SEAL AS	
	27	1	**6J-5731**	1	RING-BACKUP	
	28	1	**8T-5070**	1	SETSCREW-SOCKET (3/8-16X0.5-IN)	
	29	1	**8T-8737**	1	PLUG-SEAL	
E	30	1	**9X-1386**		SLEEVE (8.5-CM)	
E	30A	1	**9X-1386**		SLEEVE (3-CM)	

E-ORDER BY THE CENTIMETER

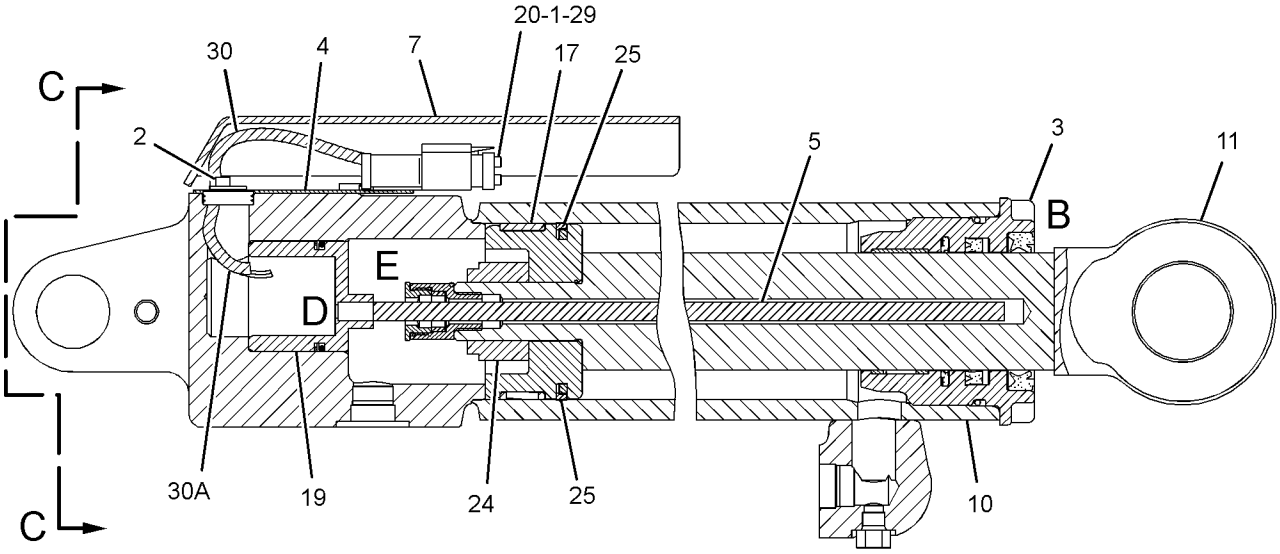

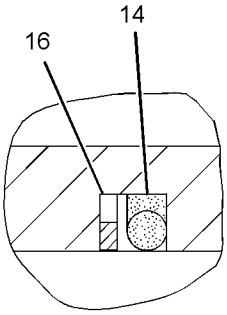

VIEW OF AREA D

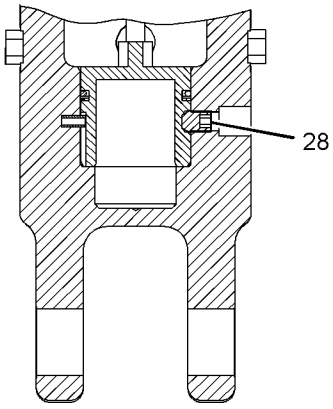

SECTION A-A

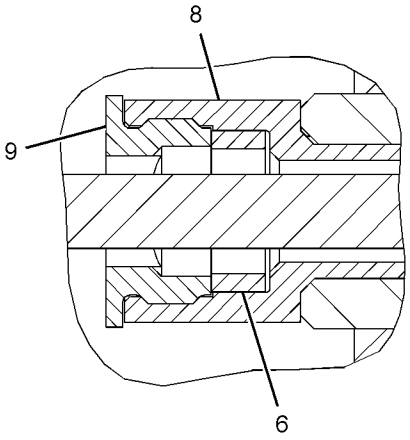

VIEW OF AREA E

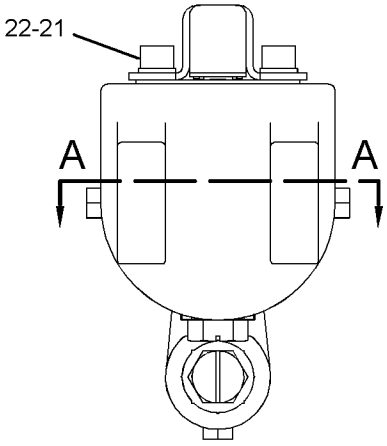

VIEW C-C

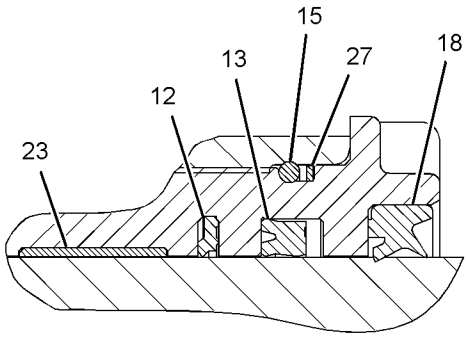

VIEW OF AREA B

GRAPHIC #1 **<END>** g01392146

249-5299 CYLINDER GP-WHEEL LEAN

S/N: B9D1-UP
88.9-MM (3.5-IN) BORE X 149-MM (5.8-IN) STROKE
PART OF 260-8713 CYLINDER & MTG GP-WHEEL LEAN

SMCS-5211 **i02786109**

NOTE	REF NO	GRAPHIC REF	PART NUMBER	QTY	PART NAME 1 2 3 4 5 6 (PRODUCT LEVEL)	SEE PAGE
	1	1	**251-1550**	1	CYLINDER AS	
	1A	1	**2G-8631**	1	BEARING-SLEEVE	
M	2	1	**173-9683**	1	BOLT (M30X3.5X90-MM)	
	3	1	**9X-8399**	1	WASHER (33X56X6-MM THK)	
	4	1	**5J-7013**	1	SEAL AS	
		1	**5J-7011**	1	SEAL	
	5	1	**7J-9885**	1	RING-WEAR	
	6	1	**9T-9040**	1	PISTON	
	7	1	**175-7898**	1	SEAL-O-RING	
	8	1	**4J-9224**	1	RING-BACKUP	
	9	1	**6E-4974**	1	HEAD	
		1	**229-9382**	1	SEAL-WIPER	
R	10	1	**121-9245**	1	ROD AS	
	10A	1	**2G-8631**	1	BEARING-SLEEVE	
	11	1	**229-9382**	1	SEAL-WIPER	
	12	1	**167-2304**	1	SEAL-U-CUP	
	13	1	**167-2195**	1	SEAL AS-BUFFER	
	14	1	**4T-5613**	1	RING-WEAR	

M-METRIC PART
R-REMFG PART MAY BE AVAILABLE

249-5299 CYLINDER GP-WHEEL LEAN *(contd.)* **i02786109**

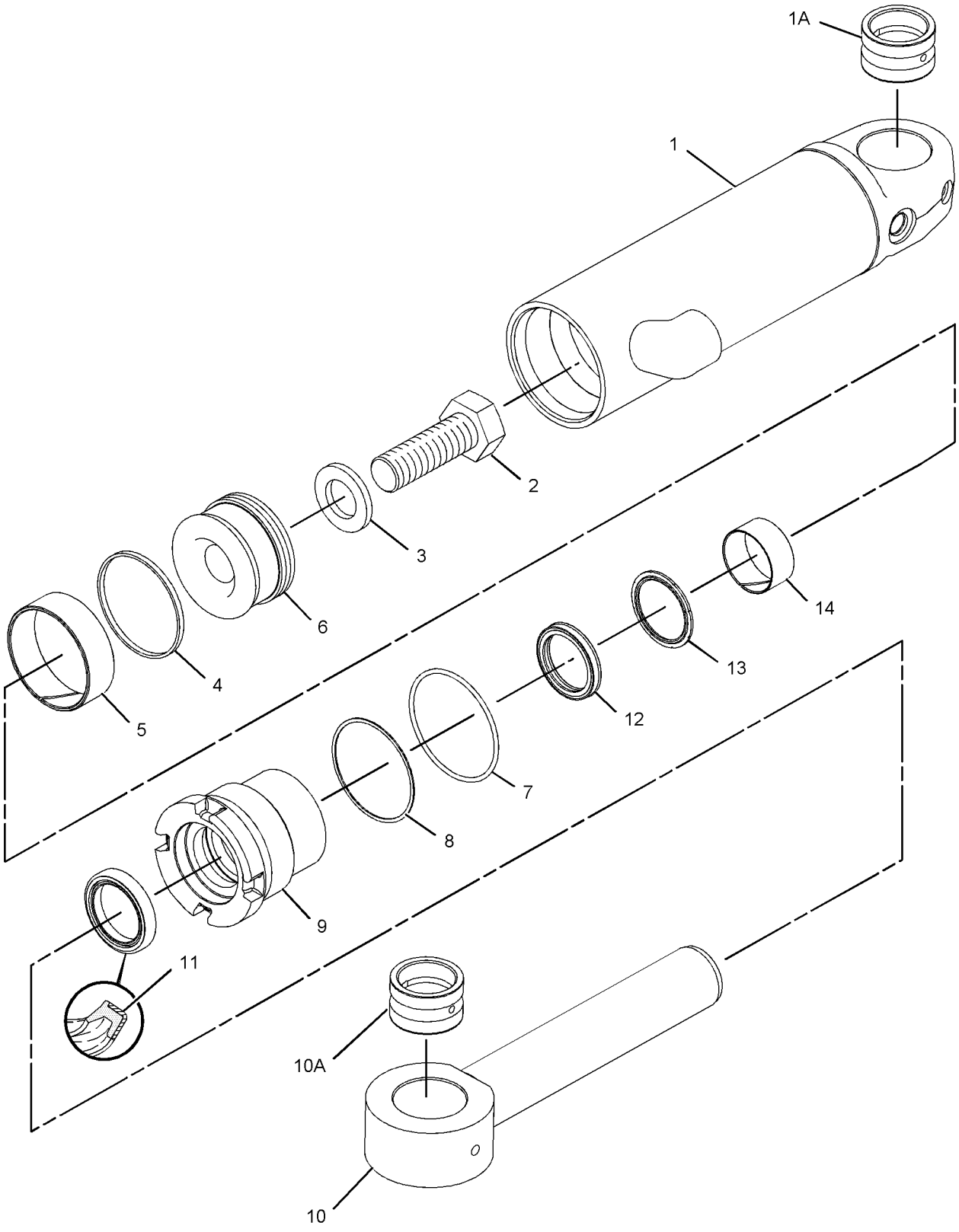

GRAPHIC #1 **<END>** g01111067

253-4677 DRIVE GP-CIRCLE

S/N: B9D1-UP

PART OF 234-7721 COMMON AR

SMCS-5207 **i02774654**

NOTE	REF NO	GRAPHIC REF	PART NUMBER	QTY	PART NAME 1 2 3 4 5 6 (PRODUCT LEVEL)	SEE PAGE
	1	2	**1B-4038**	2	CUP-BEARING	
	2	2	**1B-4046**	2	CONE-BEARING	
	3	1	**2G-0478**	5	DISC-FRICTION	
	4	2	**2G-6695**	1	BRACKET	
R	5	1	**5K-5288**	1	SEAL GP-DUO-CONE	
		1	**5K-5129**	2	RING-SEALING	
	6	1	**6G-5532**	1	SHAFT-DRIVE PINION	
	7	1	**6G-5533**	1	GEAR-WORM (36-TEETH)	
	8	1	**6G-5534**	1	COVER AS	
		1	**6G-5537**	1	BEARING	
	9	1	**6G-5538**	1	COVER	
	10	1	**6G-5542**	2	SPACER (119.2X178X9.3-MM THK)	
B	11	1	**6G-5543**	6	SHIM (0.13-MM THK)	
B	12	1	**6G-5544**	9	SHIM (0.25-MM THK)	
	13	1	**6G-5547**	1	PLATE	
	14	1	**6G-6122**	1	SPRING-DISC	
	15	1	**6Y-7953**	6	DISC-FRICTION	
B	16	2	**7D-8983**	10	SHIM (0.127-MM THK)	
B	17	2	**7D-8984**	6	SHIM (0.178-MM THK)	
	18	1	**8D-7423**	1	WASHER-SPECIAL (1.906X3.19X1.6-MM THK)	
	19	1	**8D-7424**	1	SPACER (48X81X6-MM THK)	
	20	1	**8T-0336**	1	FITTING-PRESSURE RELIEF	
	21	1	**261-8553**	1	PINION-CIRCLE DRIVE	
	22	2	**9D-1142**	1	WORM-CIRCLE DRIVE	
	23	2	**9D-1491**	1	COUPLING	
Y	24	2	**105-3196**	1	MOTOR GP-GEROTOR (CIRCLE DRIVE)	628
	25	1	**253-4678**	1	HOUSING AS-DRIVE	
		1	**2D-8154**	4	STUD-TAPERLOCK (1/2-13X2.36-IN)	
		1	**8D-7426**	1	BEARING-SLEEVE	
M		1	**160-0011**	4	STUD-TAPERLOCK (M20X2.5X85-MM)	
	26	1,2	**0S-1585**	7	BOLT (1/2-13X1.5-IN)	
	28	1	**1A-1415**	1	NUT (23/4X17/8-THD)	
	29	1	**1B-5174**	1	PLUG-PIPE	
	30	2	**1F-7958**	4	NUT-FULL (1/2-13-THD)	
	31	2	**1H-7339**	1	SEAL-O-RING	
	32	1	**2B-7410**	1	PLUG-PIPE (OIL DRAIN)	
	33	2	**2H-9247**	1	SEAL-O-RING	
	34	1	**4F-9653**	1	SEAL-O-RING	
	35	2	**4H-6996**	1	PIN-SPRING	
	36	1	**5H-4909**	1	SEAL-O-RING	
	37	1	**5K-8454**	3	BOLT (1/2-13X1.12-IN)	
	38	1,2	**5P-8245**	19	WASHER-HARD (13.5X25.5X3-MM THK)	
	39	1	**5S-7379**	4	BOLT (3/8-16X0.875-IN)	
	40	1	**6G-5539**	1	GASKET	
	41	1	**6G-5548**	1	SPACER (69.5X89X0.8-MM THK)	
	42	1	**6H-1717**	5	BOLT (1/2-13X1.125-IN)	
	45	1	**8D-7425**	2	WASHER-THRUST (2.8X4.25X0.12-MM THK)	
	47	1	**8T-4896**	4	WASHER-HARD (10.2X18.5X2.5-MM THK)	

B-USE AS REQUIRED
M-METRIC PART
R-REMFG PART MAY BE AVAILABLE
Y-SEPARATE ILLUSTRATION

253-4677 **DRIVE GP-CIRCLE** *(contd.)* **i02774654**

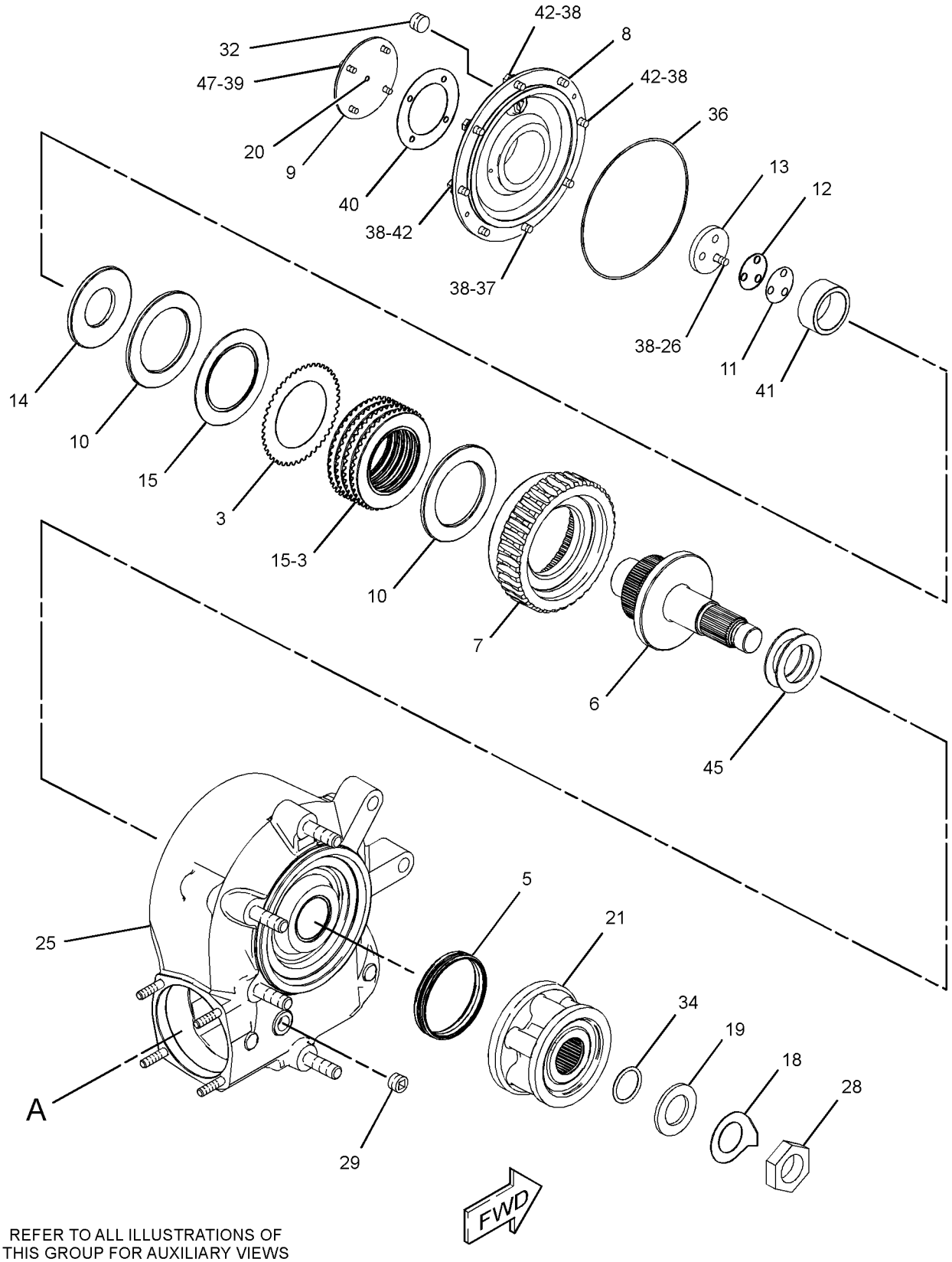

REFER TO ALL ILLUSTRATIONS OF
THIS GROUP FOR AUXILIARY VIEWS

GRAPHIC #1 g01345483

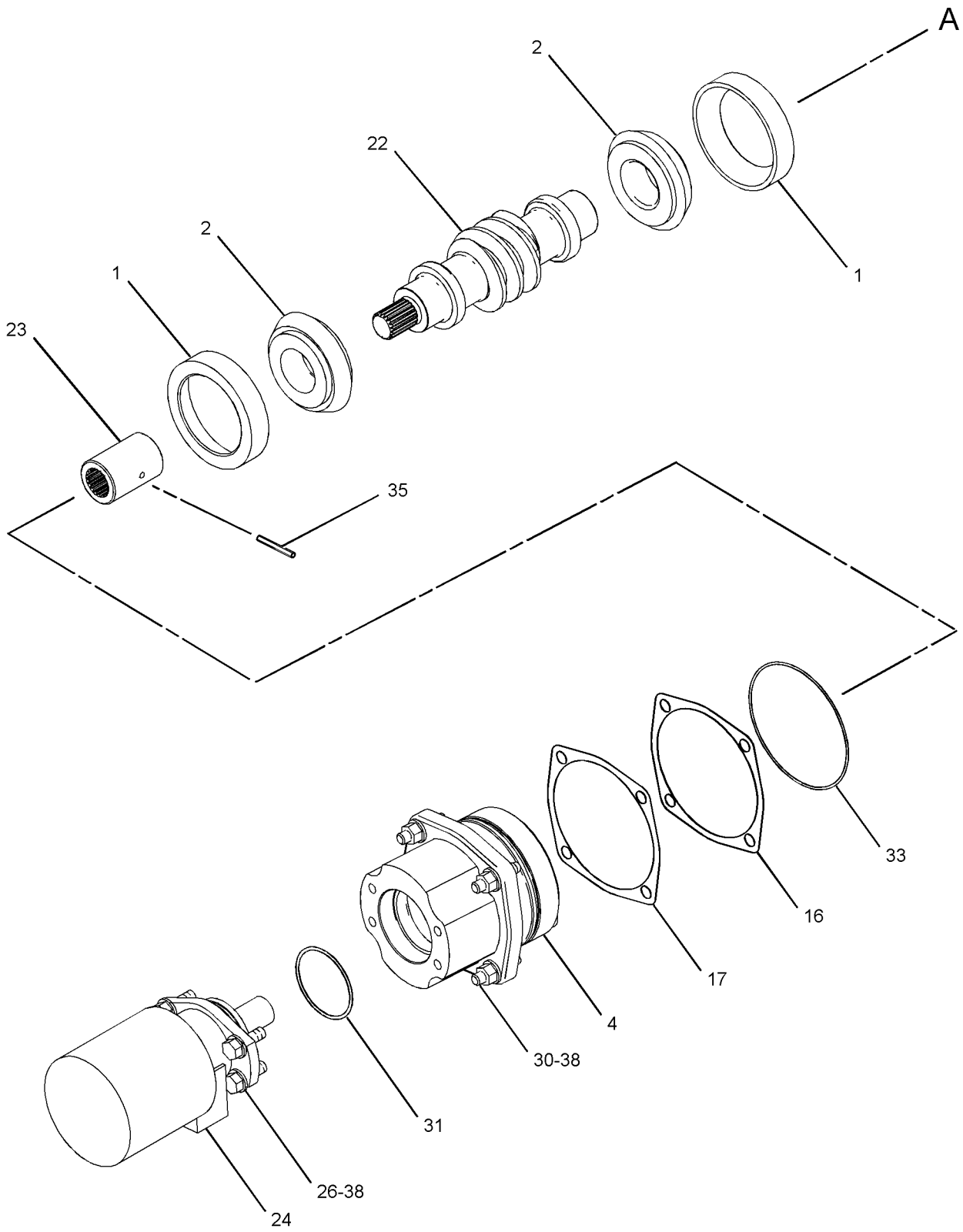

GRAPHIC #2 **<END>** g01156759

HYDRAULIC SYSTEM

250-3507 FILTER & MTG GP-HYDRAULIC

S/N: B9D1-UP

PART OF 231-5061 SERVICE CENTER AR

SMCS-5068 **i02772669**

NOTE	REF NO	GRAPHIC REF	PART NUMBER	QTY	PART NAME 1 2 3 4 5 6 (PRODUCT LEVEL)	SEE PAGE
	1	1	**6V-0852**	1	CAP-DUST	
	2	1	*164-5567*	1	FITTING AS (QUICK DISCONNECT, MALE)	
		1	**6V-3965**	1	FITTING-COUPLER	
		1	**3J-1907**	1	SEAL-O-RING	
	3	1	**242-0407**	1	VALVE-DRAIN (HYDRAULIC FILTER)	
	4	1	**245-7603**	1	TUBE AS	
	5	1	**245-8964**	1	BLOCK	
Y	6	1	**249-2307**	1	FILTER GP-OIL (HYDRAULIC TANK RETURN)	563
	7	1	**257-8897**	1	HOSE-MOLDED	
	8	1	*148-8408*	2	PLUG AS	
					(EACH INCLUDES)	
		1	**9S-4183**	1	PLUG-O-RING	
		1	**3D-2824**	1	SEAL-O-RING	
	9	1	*156-4283*	1	CONNECTOR AS	
		1	**8T-7926**	1	CONNECTOR	
		1	**6K-6307**	1	SEAL-O-RING	
		1	**8T-0315**	1	SEAL-O-RING	
	10	1	**294-9701**	1	TUBE AS	
	11	1	**294-9702**	1	TUBE AS	
	12	1	**4J-0524**	2	SEAL-O-RING	
M	13	1	**7X-2543**	2	BOLT (M10X1.5X120-MM)	
	14	1	**8T-4121**	8	WASHER-HARD (11X21X2.5-MM THK)	
M	15	1	**8T-4133**	2	NUT (M10X1.5-THD)	
M	16	1	**8T-4183**	8	BOLT (M12X1.75X40-MM)	
M	17	1	**8T-4195**	4	BOLT (M10X1.5X30-MM)	
	18	1	**8T-4223**	8	WASHER-HARD (13.5X25.5X3-MM THK)	
	19	1	**8T-6703**	4	CLAMP-HOSE	
	20	1	**8X-5489**	1	SLEEVE	
EI	21	1	**122-6908**		HOSE-HYDRAULIC (16-CM)	
E	22	1	**9X-2023**		HOSE (31-CM)	

E-ORDER BY THE CENTIMETER
I-REFER TO HYDRAULIC INFORMATION SYSTEM
M-METRIC PART
Y-SEPARATE ILLUSTRATION

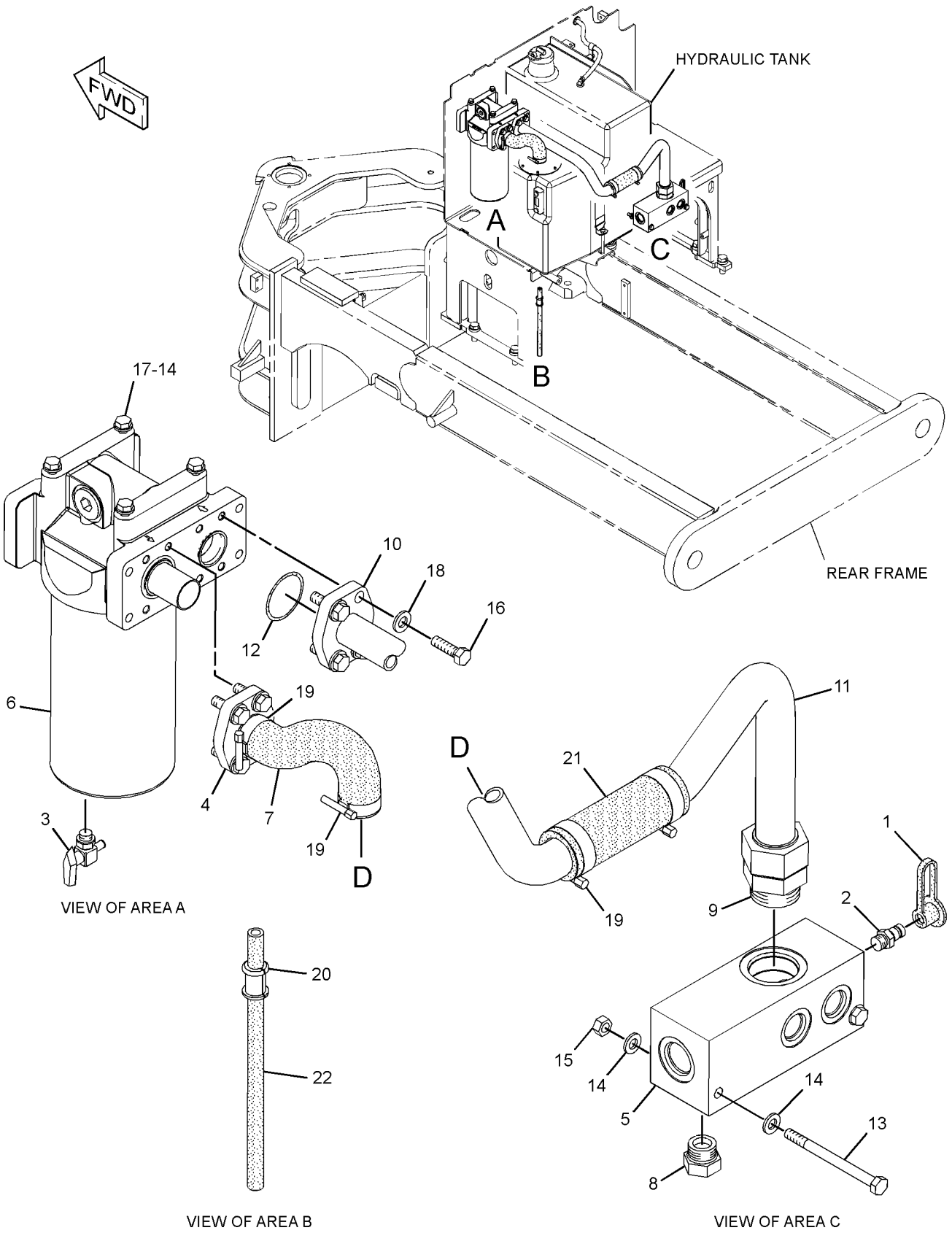

GRAPHIC #1

<END>

g01291448

HYDRAULIC SYSTEM

191-9784 FILTER GP-OIL–STEERING LINES

S/N: B9D1-UP

PART OF 237-6423 LINES GP-PUMP

SMCS-5068, 5093 **i02773400**

NOTE	REF NO	GRAPHIC REF	PART NUMBER	QTY	PART NAME 1 2 3 4 5 6 (PRODUCT LEVEL)	SEE PAGE
	1	1	**1G-8878**	1	FILTER AS-OIL (ADVANCED EFFICIENCY)	
	2	1	**7X-8549**	1	SWITCH AS-PRESSURE (FILTER BYPASS)	
		1	**3J-1907**	1	SEAL-O-RING	
	3	1	**8C-3451**	1	CAP-DUST	
	4	1	**183-7264**	1	VALVE AS-FLUID SAMPLING	
	5	1	**3J-1907**	1	SEAL-O-RING	

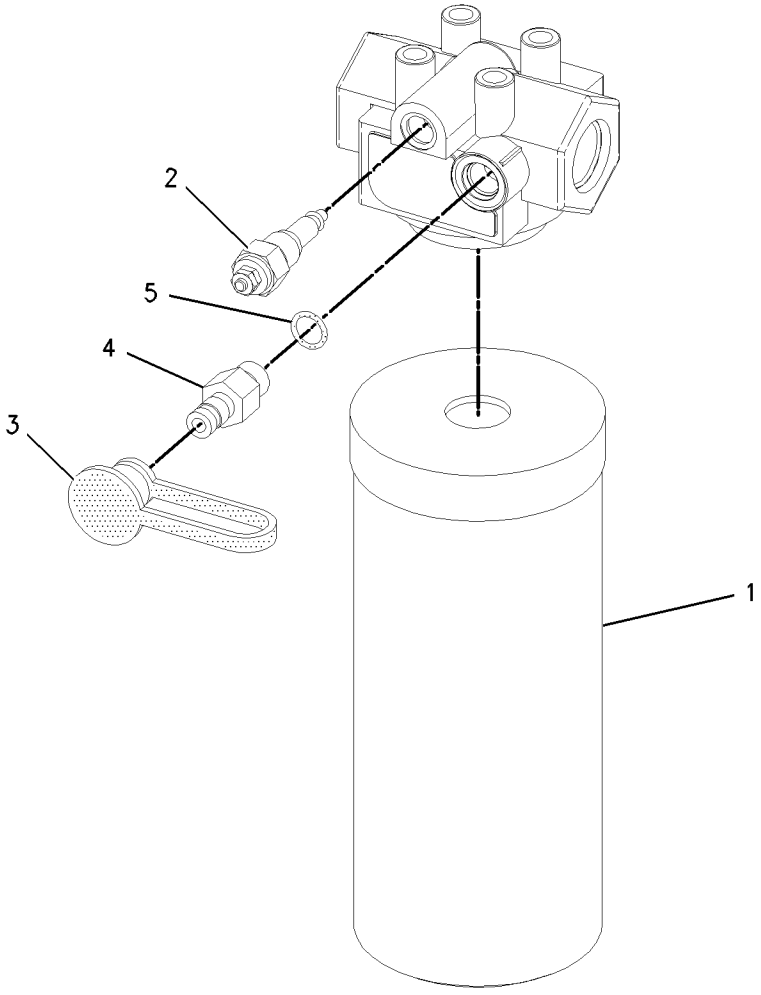

GRAPHIC #1 **<END>** g00977327

249-2307 FILTER GP-OIL–HYDRAULIC TANK RETURN

S/N: B9D1-UP

PART OF 250-3507 FILTER & MTG GP-HYDRAULIC

SMCS-5068, 5093 **i02772812**

NOTE	REF NO	GRAPHIC REF	PART NUMBER	QTY	PART NAME 1 2 3 4 5 6 (PRODUCT LEVEL)	SEE PAGE
	1	1	**1R-1809**	1	FILTER ELEMENT AS-OIL (ULTRA HIGH EFFICIENCY) (HYDRAULIC TANK)	
		1	**130-0229**	1	SEAL-O-RING	
	2	1	**241-3352**	1	HOUSING AS (OIL FILTER)	
		1	**3J-1907**	1	SEAL-O-RING	
		1	**9S-4191**	1	PLUG-O-RING	
Y	3	1	**249-2308**	1	BASE GP-OIL FILTER (INTERNAL BYPASS)	523
	4	1	**3J-1907**	1	SEAL-O-RING	
	5	1	**3J-7354**	1	SEAL-O-RING	
	6	1	**9S-4182**	1	PLUG-O-RING	
	7	1	**9S-4191**	1	PLUG-O-RING	
	8	1	**130-0229**	1	SEAL-O-RING	

Y-SEPARATE ILLUSTRATION

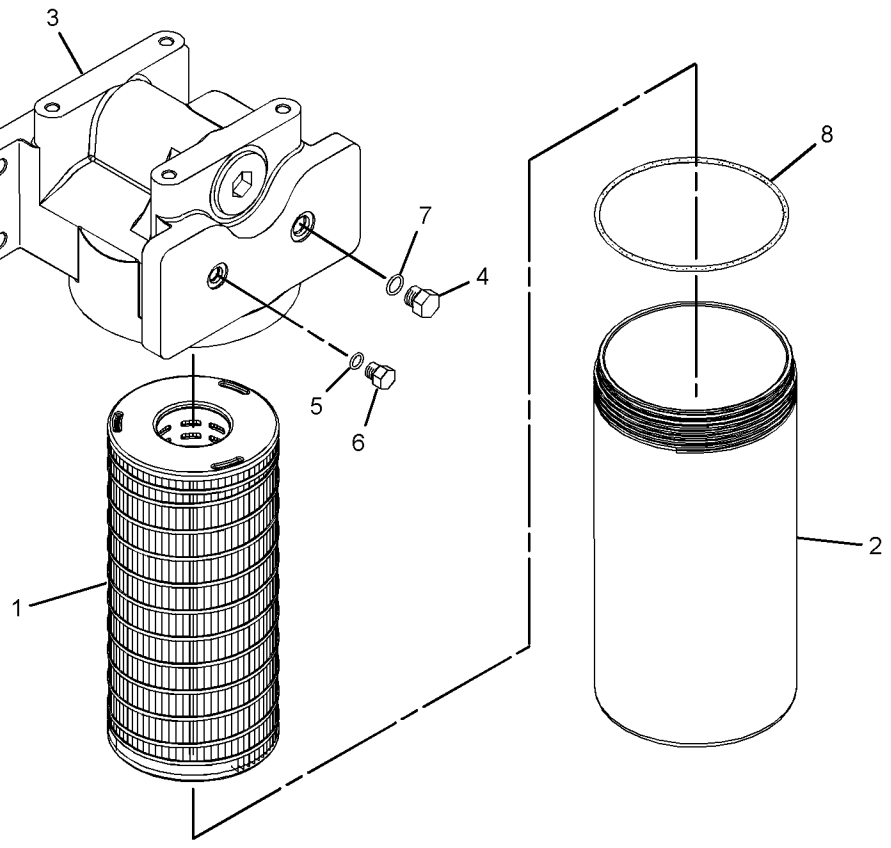

GRAPHIC #1 **<END>** g01315355

248-0442 HYDRAULIC AR—NON-AWD

S/N: B9D1-UP

SMCS-5050 **i02783038**

NOTE	PART NUMBER	QTY	PART NAME 1 2 3 4 5 6 (PRODUCT LEVEL)	SEE PAGE
	141-6968	1	FILM-IDENTIFICATION (BIODEGRADABLE HYDRAULIC OIL)	
			(ATTACH FILM NEAR IMPLEMENT OIL FILL)	

<END>

248-0443 HYDRAULIC AR—ALL WHEEL DRIVE

S/N: B9D1-UP

SMCS-5050 **i02783035**

NOTE	PART NUMBER	QTY	PART NAME 1 2 3 4 5 6 (PRODUCT LEVEL)	SEE PAGE
	141-6968	1	FILM-IDENTIFICATION (BIODEGRADABLE HYDRAULIC OIL)	
			(ATTACH FILM NEAR IMPLEMENT OIL FILL)	

<END>

HYDRAULIC SYSTEM

231-1515 LINES GP-CENTERSHIFT LOCK

S/N: B9D1-UP

PART OF 234-7721 COMMON AR

SMCS-5221 **i02771612**

NOTE	REF NO	GRAPHIC REF	PART NUMBER	QTY	PART NAME 1 2 3 4 5 6 (PRODUCT LEVEL)	SEE PAGE
I	1	1	**125-0327**	1	HOSE AS	
	2	1	*150-3074*	1	ORIFICE AS	
		1	**110-5266**	1	ORIFICE AS	
		1	**3J-1907**	1	SEAL-O-RING	
		1	**6V-8397**	1	SEAL-O-RING	
	3	1	**205-5596**	2	SPACER (11X15X35-MM THK) (11X15X35-MM THK)	
M	4	1	**259-7140**	2	STUD-TAPERLOCK (M10X1.5X80-MM)	
I	5	1	**266-9737**	1	HOSE AS	
M	6	1	**096-4883**	2	LOCKNUT (M10X1.15-THD)	
I	7	1	**112-9442**	1	HOSE AS	
	8	1	*148-8336*	2	CONNECTOR AS	
					(EACH INCLUDES)	
		1	**6V-8636**	1	CONNECTOR	
		1	**3J-1907**	1	SEAL-O-RING	
		1	**6V-8397**	1	SEAL-O-RING	
	9	1	*148-8367*	1	ELBOW AS (45-DEG)	
		1	**6V-9850**	1	ELBOW	
		1	**6V-8397**	1	SEAL-O-RING	
	10	1	*148-8378*	1	ELBOW AS (90-DEG)	
		1	**6V-8724**	1	ELBOW (90-DEG)	
		1	**3J-1907**	1	SEAL-O-RING	
		1	**6V-8397**	1	SEAL-O-RING	
	11	1	**1S-0994**	1	CLIP	
	12	1	**4D-7735**	2	CLIP	
	13	1	**8T-4121**	3	WASHER-HARD (11X21X2.5-MM THK)	
M	14	1	**8T-4136**	1	BOLT (M10X1.5X25-MM)	

I-REFER TO HYDRAULIC INFORMATION SYSTEM
M-METRIC PART

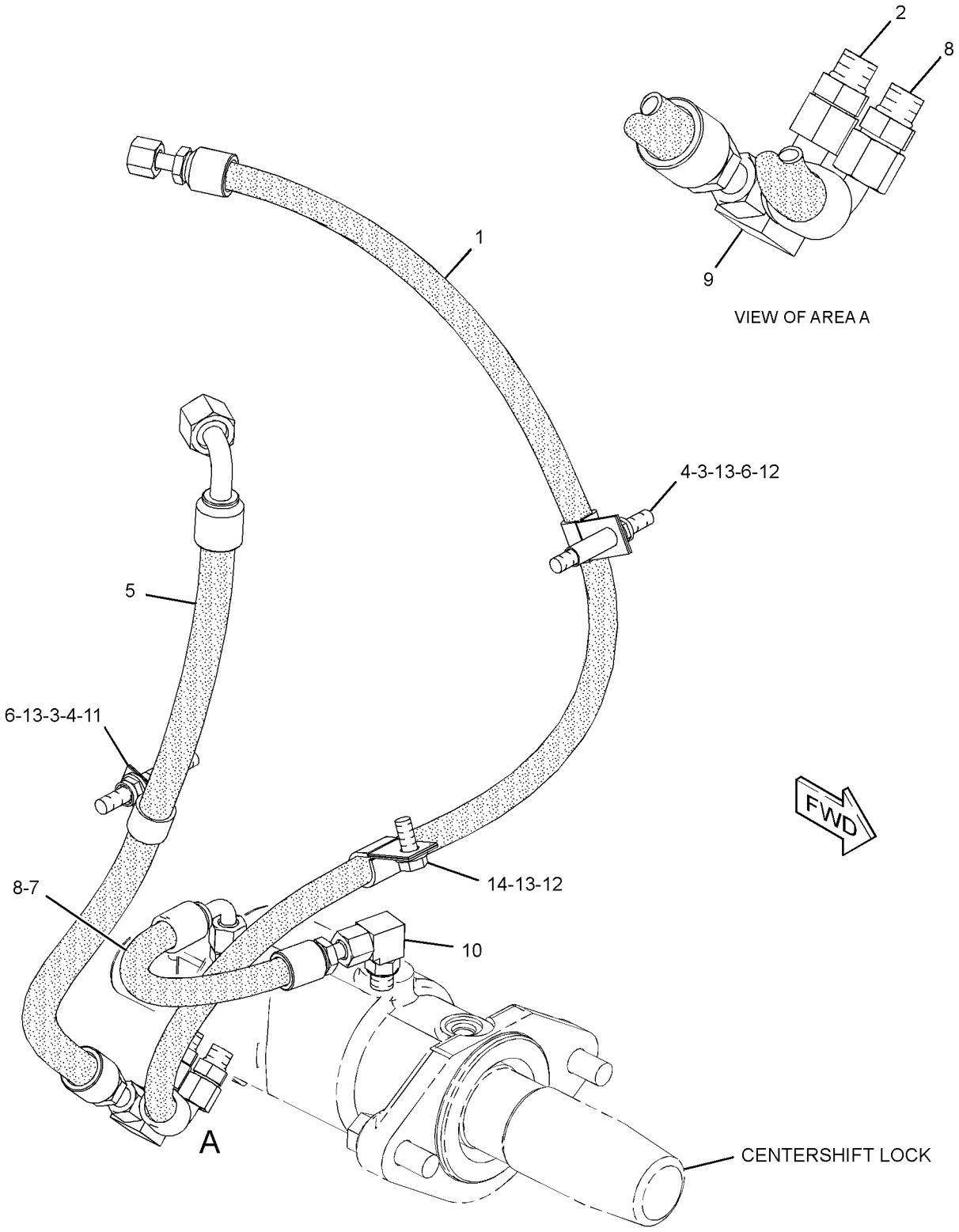

GRAPHIC #1 **<END>** g01366760

HYDRAULIC SYSTEM

264-2993 LINES GP-CENTERSHIFT LOCK

S/N: B9D1-UP

PART OF 278-3419 AXLE AR-FRONT

SMCS-5221 **i02790508**

NOTE	REF NO	GRAPHIC REF	PART NUMBER	QTY	PART NAME 1 2 3 4 5 6 (PRODUCT LEVEL)	SEE PAGE
	1	1	**144-4613**	1	ANGLE AS	
I	2	1	**265-5098**	1	HOSE AS	
I	3	1	**265-5100**	1	HOSE AS	
I	4	1	**281-8268**	2	HOSE AS	
	5	1	**288-6370**	1	TUBE AS	
	6	1	**288-6371**	1	TUBE AS	
I	7	1	**300-6576**	2	HOSE AS	
	8	1	*148-8318*	2	CONNECTOR AS	
					(EACH INCLUDES)	
		1	**6V-8634**	1	CONNECTOR	
		1	**3K-0360**	1	SEAL-O-RING	
		1	**6V-8397**	1	SEAL-O-RING	
	9	1	*148-8340*	5	CONNECTOR AS	
					(EACH INCLUDES)	
		1	**6V-8639**	1	CONNECTOR	
		1	**3K-0360**	1	SEAL-O-RING	
		1	**6V-8398**	1	SEAL-O-RING	
	10	1	*148-8374*	1	ELBOW AS	
		1	**6V-8723**	1	ELBOW	
		1	**3K-0360**	1	SEAL-O-RING	
		1	**6V-8397**	1	SEAL-O-RING	
	11	1	*148-8444*	2	TEE AS-SWIVEL	
					(EACH INCLUDES)	
		1	**6V-9837**	1	TEE-SWIVEL	
		1	**6V-8398**	2	SEAL-O-RING	
	12	1	**231-0336**	1	STUD-TAPERLOCK (M10X1.75X70-MM)	
	13	1	**1S-0994**	3	CLIP	
	14	1	**4V-4125**	2	CLIP	
	15	1	**5G-3676**	2	GROMMET	
	16	1	**5P-7464**	4	CLIP (SLOT)	
	17	1	**5P-7465**	4	CLIP (TAB)	
	18	1	**6D-4246**	2	CLIP	
	19	1	**6V-1249**	4	GROMMET	
	20	1	**6V-8398**	2	SEAL-O-RING	
	21	1	**8T-1889**	2	CLIP (SLOT)	
	22	1	**8T-1890**	2	CLIP (TAB)	
	23	1	**8T-4121**	14	WASHER-HARD (11X21X2.5-MM THK)	
M	24	1	**8T-4133**	3	NUT (M10X1.5-THD)	
M	25	1	**8T-4136**	7	BOLT (M10X1.5X25-MM)	
M	26	1	**8T-4137**	4	BOLT (M10X1.5X20-MM)	

I-REFER TO HYDRAULIC INFORMATION SYSTEM
M-METRIC PART

264 - 2993 **LINES GP - CENTERSHIFT LOCK** *(contd.)* **i02790508**

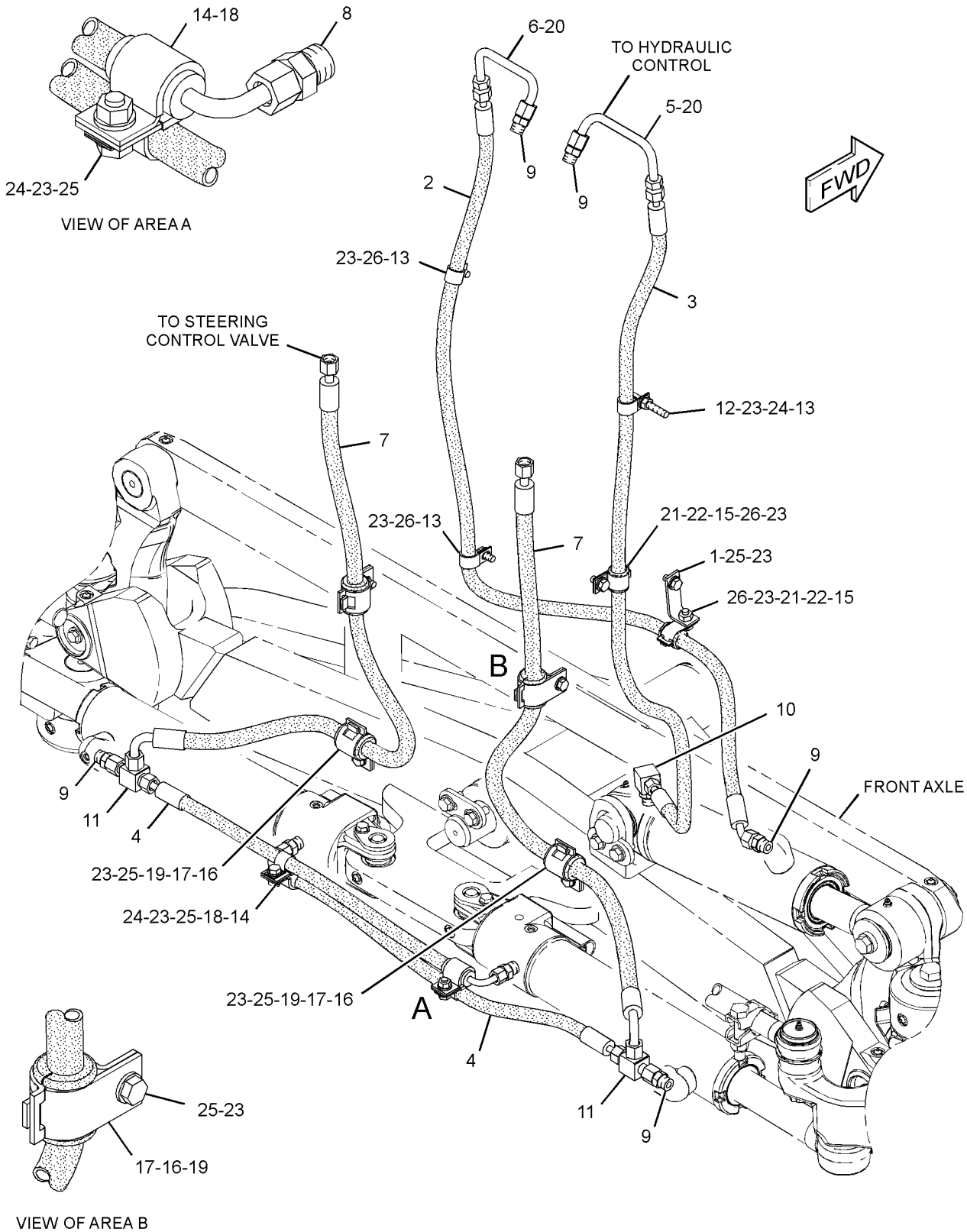

GRAPHIC #1 **<END>** g01366531

HYDRAULIC SYSTEM

8X-6070 LINES GP-HYDRAULIC—SCARIFIER

S/N: B9D1-UP

PART OF 108-1104, 113-0704 SCARIFIER AR

SMCS-5057 **i01459260**

NOTE	REF NO	GRAPHIC REF	PART NUMBER	QTY	PART NAME 1 2 3 4 5 6 (PRODUCT LEVEL)	SEE PAGE
	1	1	**2B-0941**	1	SPACER (10.5X19X19-MM THK)	
	2	1	**4J-5468**	1	CLAMP	
I	3	1	**112-3199**	1	HOSE AS	
I	4	1	**112-3200**	1	HOSE AS	
	5	1	*164-5605*	1	CONNECTOR AS	
		1	**3K-0360**	1	SEAL-O-RING	
		1	**6V-8397**	1	SEAL-O-RING	
		1	**8T-0076**		CONNECTOR	
	6	1	*148-8318*	2	CONNECTOR AS	
					(EACH INCLUDES)	
		1	**3K-0360**	1	SEAL-O-RING	
		1	**6V-8397**	1	SEAL-O-RING	
		1	**6V-8634**	1	CONNECTOR	
	7	1	*148-8374*	1	ELBOW AS	
		1	**3K-0360**	1	SEAL-O-RING	
		1	**6V-8397**	1	SEAL-O-RING	
		1	**6V-8723**	1	ELBOW	
	8	1	**6D-4247**	1	CLIP	
	9	1	**7X-0289**	1	BOLT (3/8-16X1.875-IN)	
	10	1	**8T-4896**	1	WASHER-HARD (10.2X18.5X2.5-MM THK)	

I-REFER TO HYDRAULIC INFORMATION SYSTEM

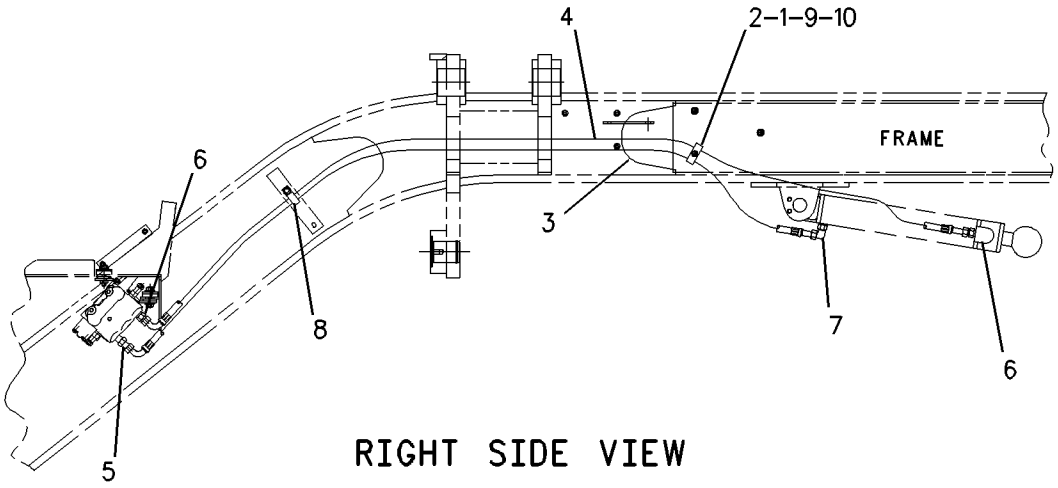

RIGHT SIDE VIEW

GRAPHIC #1 **<END>** g00633579

HYDRAULIC SYSTEM

231-1516 LINES GP-HYDRAULIC—WITHOUT ACCUMULATOR

S/N: B9D1-UP

SMCS-5057 **i02774913**

NOTE	REF NO	GRAPHIC REF	PART NUMBER	QTY	PART NAME 1 2 3 4 5 6 (PRODUCT LEVEL)	SEE PAGE
	1	4	**2G-5493**	2	CLAMP	
	2	2,3	**5P-0599**	4	CLAMP-BAND	
I	3	3	**5T-9686**	1	HOSE AS	
	4	2	**7C-6921**	2	SPACER (11X20X22.8-MM THK)	
I	5	2	**8E-4563**	1	HOSE AS	
I	6	2	**8R-7887**	1	HOSE AS	
	7	3,4	**8W-3991**	2	JUNCTION BLOCK	
	8	3	**9M-4594**	4	SPACER (0.406X0.875X0.75-IN THK)	
I	9	4	**9R-1183**	1	HOSE AS	
	10	3	**9R-8870**	2	BLOCK	
	11	2	**091-0081**	2	SPACER (10.5X20X10-MM THK)	
	12	4	**163-4195**	2	SLEEVE	
	13	3,4	*164-5605*	3	CONNECTOR AS	
					(EACH INCLUDES)	
		3,4	**8T-0076**	1	CONNECTOR	
		3,4	**3K-0360**	1	SEAL-O-RING	
		3,4	**6V-8397**	1	SEAL-O-RING	
I	14	2	**194-2150**	2	HOSE AS	
I	15	2	**199-8161**	1	HOSE AS	
I	16	2	**241-4602**	1	HOSE AS	
	17	4	**245-1375**	1	GUIDE AS-HOSE	
	18	2	**246-3349**	2	BLOCK	
I	19	2	**246-6311**	1	HOSE AS	
	20	3	**246-6341**	2	CLAMP	
	21	3	**246-6342**	8	CLAMP	
	22	3,4	**250-5719**	2	CLAMP AS	
	23	2	**265-2122**	1	TUBE AS	
	24	2	**265-2123**	1	TUBE AS	
G	25	2	**160-2247**		SLEEVE-ABRASION (35-IN EACH)	
I	26	2	**271-7495**	2	HOSE AS	
I	27	4	**286-8181**	1	HOSE AS	
I	28	4	**286-8183**	2	HOSE AS	
I	29	4	**286-8184**	1	HOSE AS	
I	30	4	**286-8185**	1	HOSE AS	
I	31	4	**286-8187**	1	HOSE AS	
I	32	3,4	**287-2512**	2	HOSE AS	
	33	2	**293-4711**	1	TUBE AS	
	34	2	**293-4712**	1	TUBE AS	
I	35	2	**296-2876**	1	HOSE AS	
	36	4	**296-4308**	1	TUBE AS	
	37	3	**296-4309**	1	TUBE AS	
I	38	4	**296-5121**	1	HOSE AS	
I	39	4	**296-5122**	1	HOSE AS	
	40	4	**297-2813**	4	TUBE AS	
	41	4	**297-2814**	4	TUBE AS	
	42	2	**309-1906**	4	STUD-TAPERLOCK (M10X1.5X55-MM)	
	43	2	**100-4336**	2	CLIP	
	44	2,3,4	*148-8340*	17	CONNECTOR AS	
					(EACH INCLUDES)	
		2,3,4	**6V-8639**	1	CONNECTOR	
		2,3,4	**3K-0360**	1	SEAL-O-RING	
		2,3,4	**6V-8398**	1	SEAL-O-RING	
	45	3,4	*148-8354*	2	ELBOW AS	
					(EACH INCLUDES)	
		3,4	**6V-9002**	1	ELBOW (45-DEG)	
		3,4	**3K-0360**	1	SEAL-O-RING	
		3,4	**6V-8398**	1	SEAL-O-RING	

231-1516 **LINES GP-HYDRAULIC** ***(contd.)*** **i02774913**

NOTE	REF NO	GRAPHIC REF	PART NUMBER	QTY	PART NAME 1 2 3 4 5 6 (PRODUCT LEVEL)	SEE PAGE
	46	3	*148-8358*	1	ELBOW AS	
		3	**6V-8624**	1	ELBOW (45-DEG)	
		3	**2M-9780**	1	SEAL-O-RING	
		3	**6V-8398**	1	SEAL-O-RING	
	47	2,4	*148-8363*	4	ELBOW AS	
					(EACH INCLUDES)	
		2,4	**6V-9876**	1	ELBOW	
		2,4	**3K-0360**	1	SEAL-O-RING	
		2,4	**6V-8397**	1	SEAL-O-RING	
	48	2,3,4	*148-8364*	5	ELBOW AS	
					(EACH INCLUDES)	
		2,3,4	**6V-8625**	1	ELBOW (90-DEG)	
		2,3,4	**3K-0360**	1	SEAL-O-RING	
		2,3,4	**6V-8398**	1	SEAL-O-RING	
	49	3	*148-8372*	1	ELBOW AS	
		3	**6V-8721**	1	ELBOW (90-DEG)	
		3	**2M-9780**	1	SEAL-O-RING	
		3	**6V-8398**	1	SEAL-O-RING	
	50	2,3,4	*148-8374*	7	ELBOW AS (90-DEG)	
					(EACH INCLUDES)	
		2,3,4	**6V-8723**	1	ELBOW	
		2,3,4	**3K-0360**	1	SEAL-O-RING	
		2,3,4	**6V-8397**	1	SEAL-O-RING	
	51	4	*153-6241*	1	ELBOW AS	
		4	**8C-8989**	1	ELBOW (45-DEG)	
		4	**6V-8398**	1	SEAL-O-RING	
	52	2	*153-6246*	2	TEE AS	
					(EACH INCLUDES)	
		2	**7X-0820**	1	TEE-UNION	
		2	**6V-8397**	3	SEAL-O-RING	
	53	2,3,4	**1S-0994**	21	CLIP	
Y	54	4	**260-6502**	1	SWIVEL GP (CIRCLE DRIVE)	642
	55	3	**3B-4628**	2	PIN-COTTER	
	56	3	**5P-7462**	2	CLIP (SLOT)	
	57	3	**5P-7463**	2	CLIP (TAB)	
	58	4	**6D-4244**	2	CLIP	
	59	3	**6D-4246**	2	CLIP	
	60	2,3	**6D-4247**	7	CLIP	
	61	3	**6V-0683**	2	GROMMET	
	62	2,4	**6V-8398**	12	SEAL-O-RING	
	63	2	**6V-9168**	2	NUT (11/16-16-THD)	
	64	4	**7X-7729**	2	WASHER (11X25X3-MM THK)	
	65	3	**8D-9092**	1	PIN	
	66	2	**8M-2770**	2	CLIP	
M	67	2	**8T-0389**	4	LOCKNUT (M10X1.15-THD)	
	68	2,3,4	**8T-4121**	45	WASHER-HARD (11X21X2.5-MM THK)	
M	69	2,3,4	**8T-4133**	12	NUT (M10X1.5-THD)	
M	70	3	**8T-4136**	1	BOLT (M10X1.5X25-MM)	
M	71	2,3,4	**8T-4137**	15	BOLT (M10X1.5X20-MM)	
M	72	2	**8T-4182**	2	BOLT (M10X1.5X45-MM)	
M	73	3	**8T-4186**	4	BOLT (M10X1.5X40-MM)	
M	74	4	**8T-4189**	1	BOLT (M8X1.25X20-MM)	
M	75	2,3,4	**8T-4195**	4	BOLT (M10X1.5X30-MM)	
M	76	2	**8T-4196**	1	BOLT (M10X1.5X35-MM)	
M	77	4	**8T-4198**	2	BOLT (M10X1.5X100-MM)	
	78	4	**8T-4223**	4	WASHER-HARD (13.5X25.5X3-MM THK)	
	79	4	**8T-4224**	1	WASHER-HARD (8.8X16X2-MM THK)	
M	80	4	**8T-4648**	4	BOLT (M12X1.75X70-MM)	
	81	3	**8T-4994**	2	WASHER-HARD (20X36.5X3.5-MM THK)	

231-1516 **LINES GP-HYDRAULIC** *(contd.)* **i02774913**

NOTE	REF NO	GRAPHIC REF	PART NUMBER	QTY	PART NAME 1 2 3 4 5 6 (PRODUCT LEVEL)	SEE PAGE
M	82	3,4	**8T-5005**	2	BOLT (M10X1.5X70-MM)	
	83	2	**9X-8250**	1	CLIP	

G-ORDER BY THE INCH
I-REFER TO HYDRAULIC INFORMATION SYSTEM
M-METRIC PART
Y-SEPARATE ILLUSTRATION

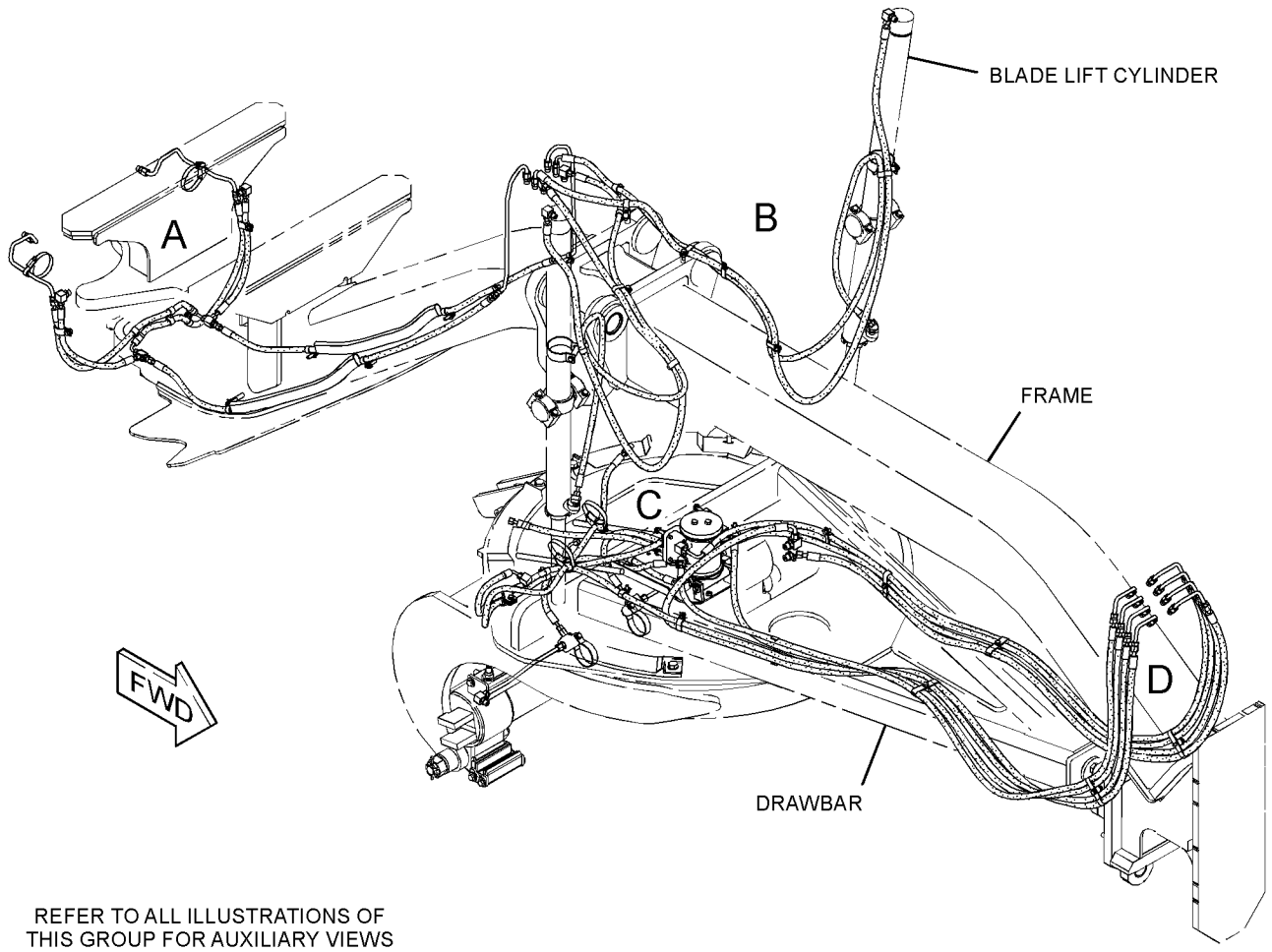

REFER TO ALL ILLUSTRATIONS OF
THIS GROUP FOR AUXILIARY VIEWS

GRAPHIC #1 g01371211

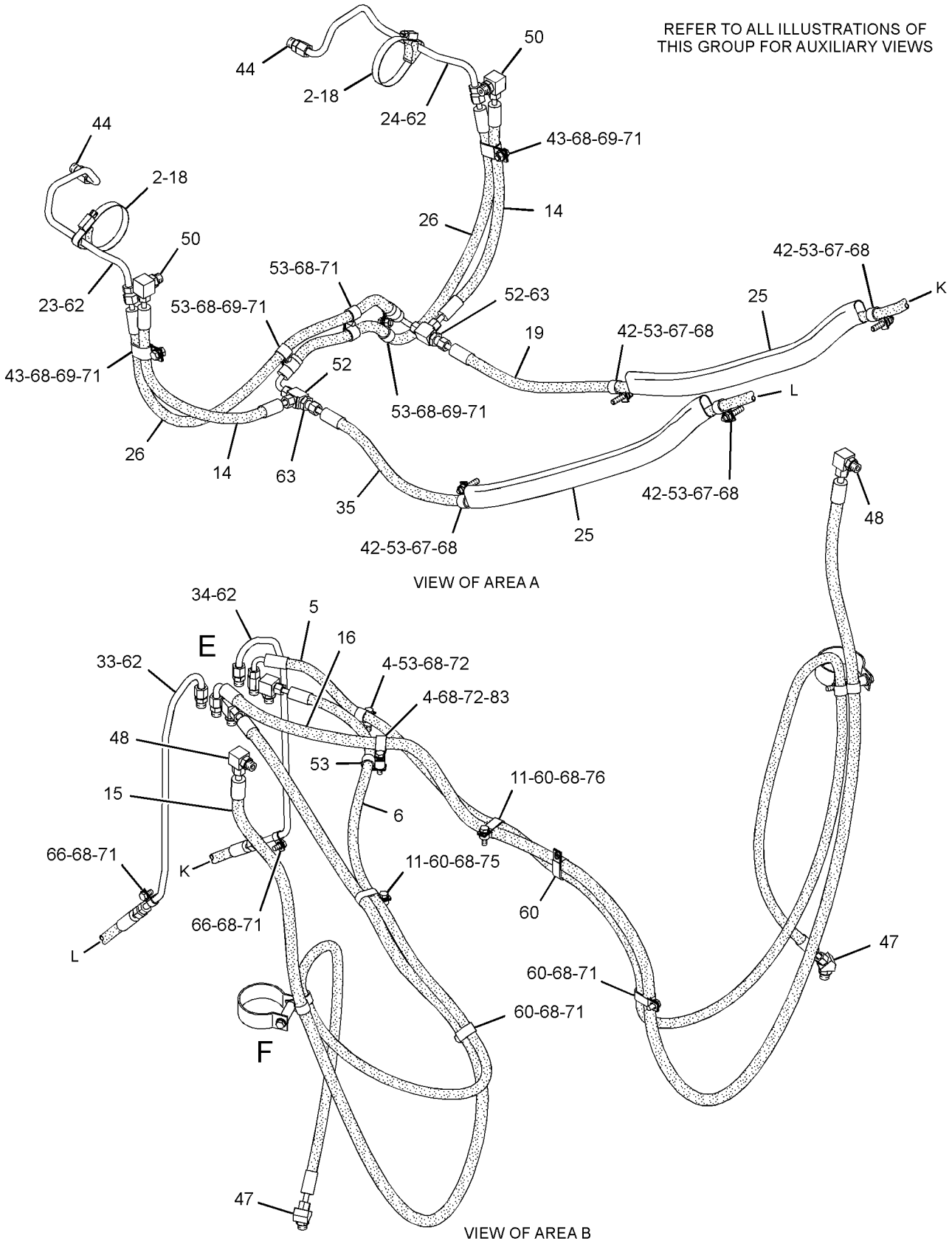

GRAPHIC #2

g01371212

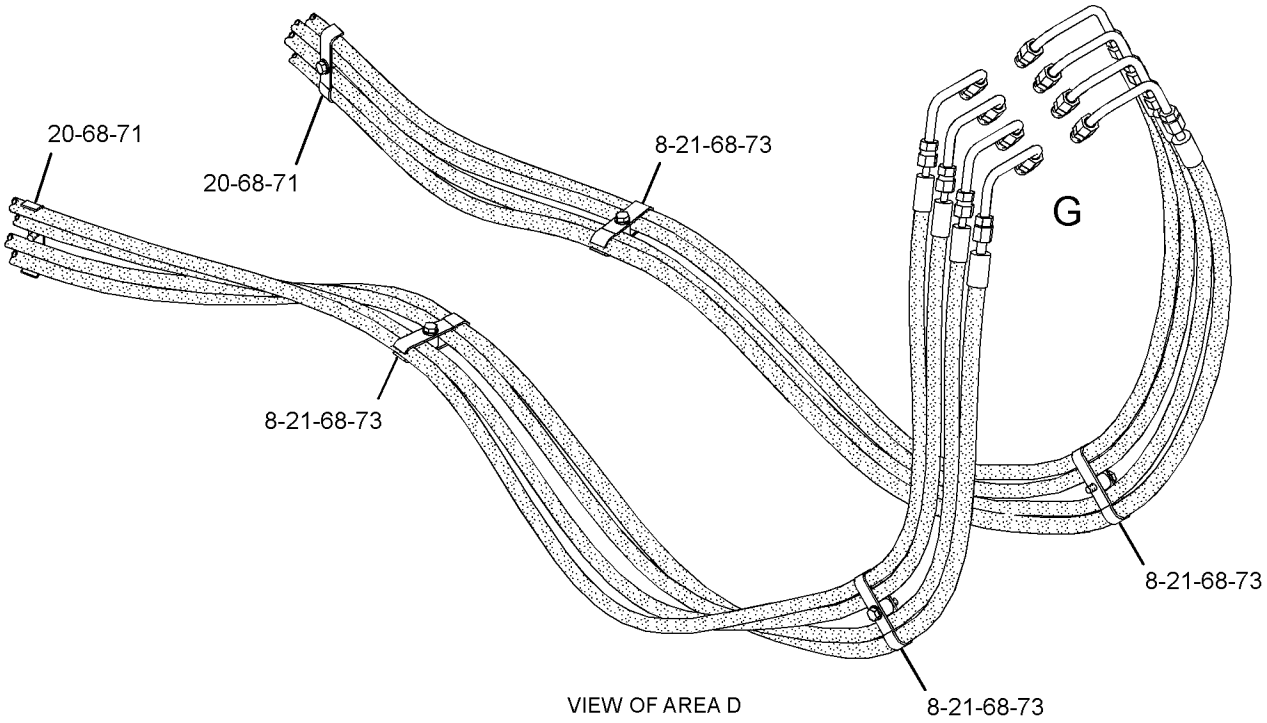

VIEW OF AREA D

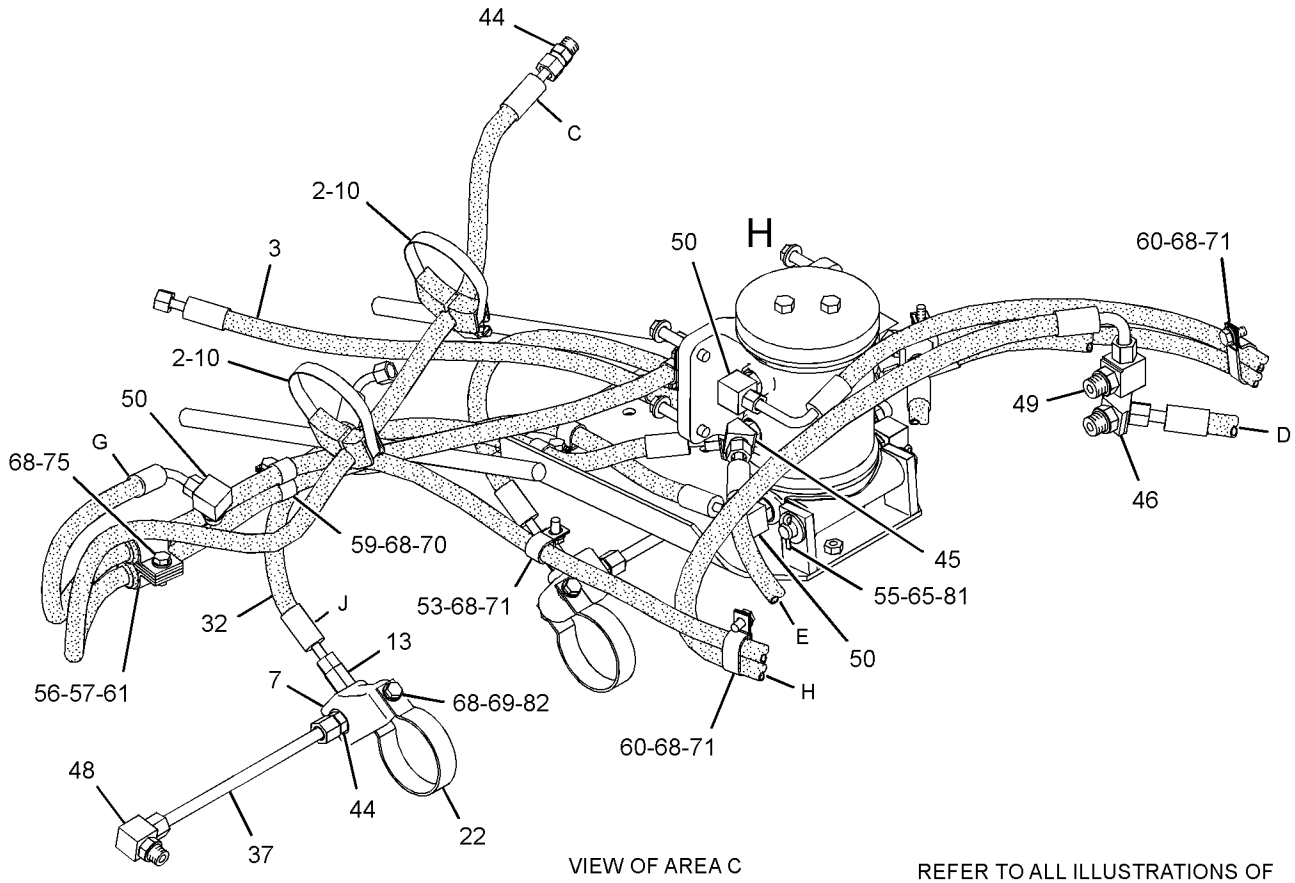

VIEW OF AREA C

REFER TO ALL ILLUSTRATIONS OF THIS GROUP FOR AUXILIARY VIEWS

GRAPHIC #3

g01371214

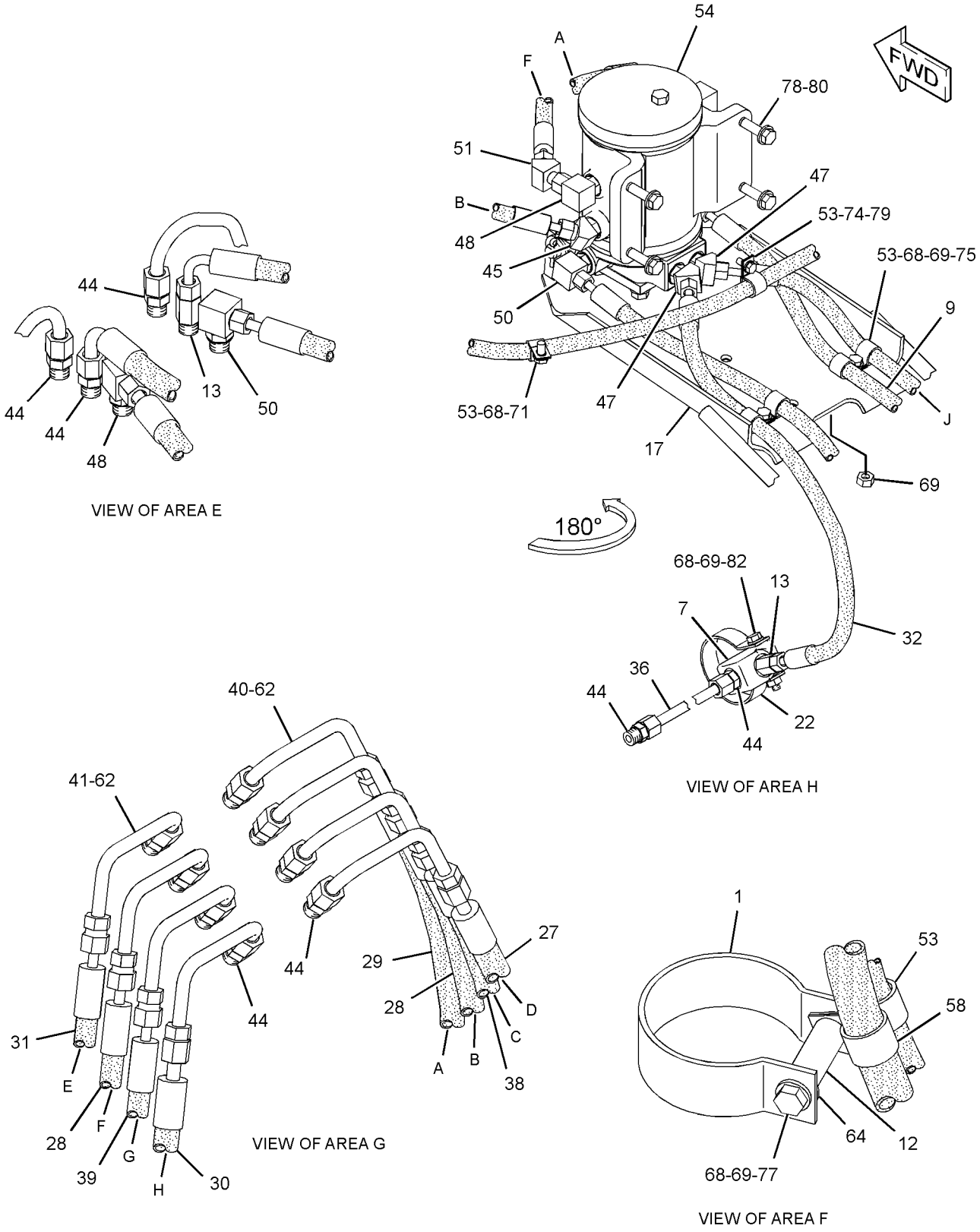

GRAPHIC #4 **<END>** g01371215

231-1520 LINES GP-HYDRAULIC—FRONT LIFT

S/N: B9D1-UP
1 CIRCUIT
PART OF 242-5058, 242-5060, 242-5061, 242-5062, 242-5063, 242-5064, 242-5066, 242-6107, 242-6108, 242-6110, 242-6111, 242-6112, 242-6146, 309-7551 CONTROL AR-HYDRAULIC

SMCS-5057 **i02774684**

NOTE	REF NO	GRAPHIC REF	PART NUMBER	QTY	PART NAME 1 2 3 4 5 6 (PRODUCT LEVEL)	SEE PAGE
I	1	1	**9R-9926**	1	HOSE AS	
	2	1	**133-3260**	1	SPACER (11X19X10-MM THK)	
I	3	1	**186-2793**	1	HOSE AS	
	4	1	*148-8340*	2	CONNECTOR AS	
					(EACH INCLUDES)	
		1	**6V-8639**	1	CONNECTOR	
		1	**6V-8398**	1	SEAL-O-RING	
		1	**3K-0360**	1	SEAL-O-RING	
	5	1	*150-4043*	2	CONNECTOR AS	
					(EACH INCLUDES)	
		1	**6V-9873**	1	CONNECTOR	
		1	**6V-8398**	1	SEAL-O-RING	
		1	**3J-1907**	1	SEAL-O-RING	
BM	6	1	**180-3998**	1	STUD (M10X1.5X55-MM)	
B	7	1	**218-0054**	1	SPACER (11X25X100-MM THK)	
	8	1	**3S-7608**	1	CLIP	
	9	1	**6D-4244**	1	CLIP	
M	10	1	**7X-2543**	1	BOLT (M10X1.5X120-MM)	
B	11	1	**8T-4121**	3	WASHER-HARD (11X21X2.5-MM THK)	
BM	12	1	**8T-4133**	1	NUT (M10X1.5-THD)	
BM	13	1	**8T-4136**	1	BOLT (M10X1.5X25-MM)	
	14	1	**9X-8250**	2	CLIP	

B-USE AS REQUIRED
I-REFER TO HYDRAULIC INFORMATION SYSTEM
M-METRIC PART

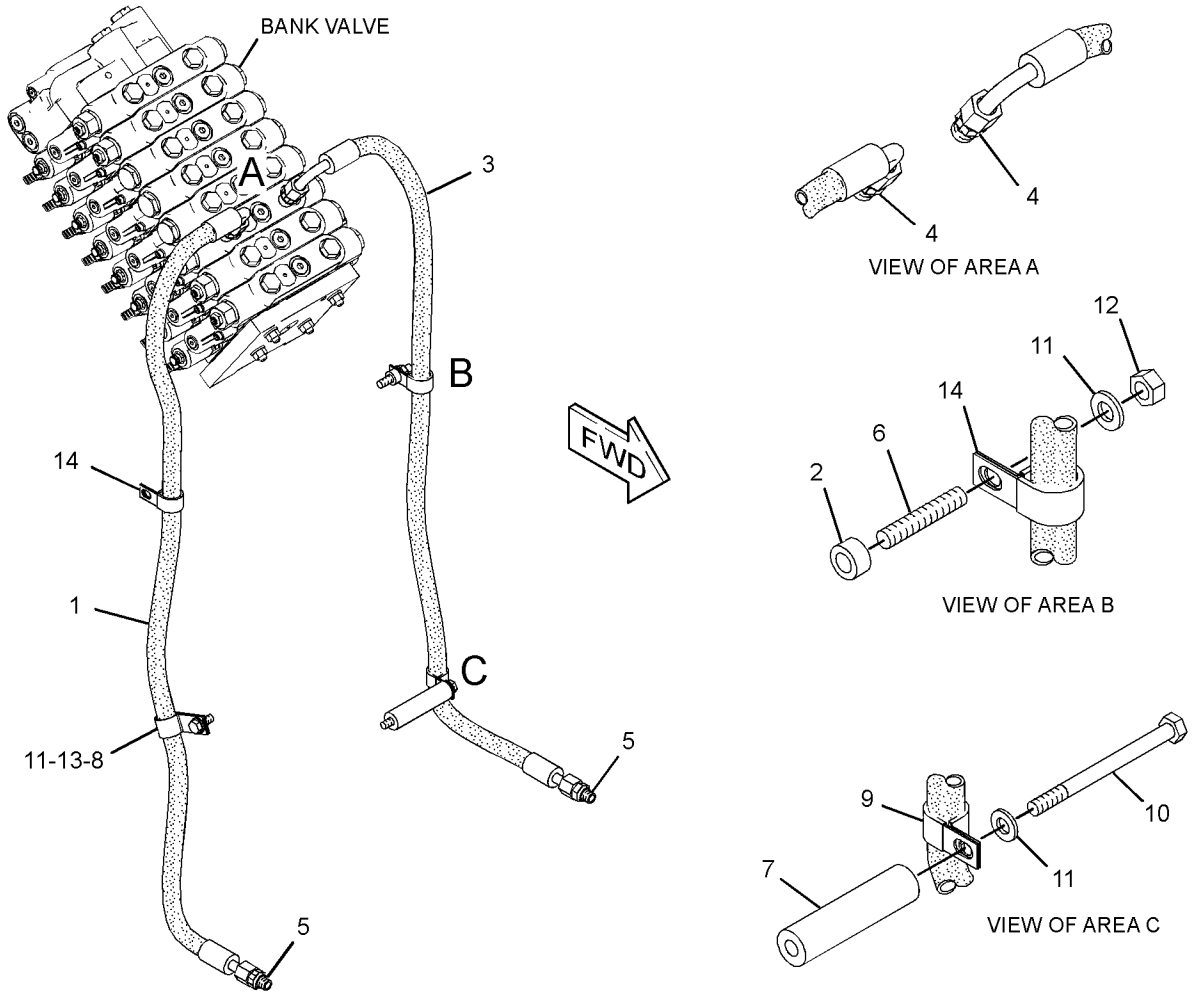

GRAPHIC #1 **<END>** g01340484

HYDRAULIC SYSTEM

231-1532 LINES GP-HYDRAULIC—WITH ACCUMULATOR

S/N: B9D1-UP

SMCS-5057 **i02773490**

NOTE	REF NO	GRAPHIC REF	PART NUMBER	QTY	PART NAME 1 2 3 4 5 6 (PRODUCT LEVEL)	SEE PAGE
	1	3	**2G-5493**	2	CLAMP	
	2	4	**4N-5091**	2	SPACER (0.53X1X3.375-IN THK)	
	3	2,4	**5P-0599**	4	CLAMP-BAND	
I	4	2	**5T-9686**	1	HOSE AS	
	5	3	**7C-6921**	2	SPACER (11X20X22.8-MM THK)	
	6	2	**8W-3991**	2	JUNCTION BLOCK	
	7	1	**9M-4594**	4	SPACER (0.406X0.875X0.75-IN THK)	
I	8	2	**9R-1183**	1	HOSE AS	
	9	2	**9R-8870**	2	BLOCK	
	10	3	**091-0081**	2	SPACER (10.5X20X10-MM THK)	
I	11	3	**134-0744**	1	HOSE AS	
	12	4	**162-7449**	2	CLAMP	
	13	3	**163-4195**	2	SLEEVE	
	14	2,3	*164-5605*	3	CONNECTOR AS	
					(EACH INCLUDES)	
		2,3	**8T-0076**	1	CONNECTOR	
		2,3	**6V-8397**	1	SEAL-O-RING	
		2,3	**3K-0360**	1	SEAL-O-RING	
	15	4	*171-6466*	2	UNION AS	
					(EACH INCLUDES)	
		4	**5P-9810**	1	UNION	
		4	**3D-2824**	2	SEAL-O-RING	
I	16	4	**194-2150**	2	HOSE AS	
Y	17	4	*219-7265*	2	ACCUMULATOR GP-BLADE CUSHION (CHARGED)	522
	18	2	**245-1375**	1	GUIDE AS-HOSE	
M		2	**8T-3490**	3	NUT-WELD (M10X1.5-THD)	
		2	**246-6657**	1	GUIDE-HOSE	
	19	4	**246-3349**	2	BLOCK	
I	20	4	**246-6311**	1	HOSE AS	
I	21	3	**246-6324**	1	HOSE AS	
	22	1	**246-6341**	2	CLAMP	
	23	1	**246-6342**	8	CLAMP	
	24	2	**250-5719**	2	CLAMP AS	
Y	25	4	**253-1320**	2	MANIFOLD GP-CONTROL (BLADE CUSHION)	619
	26	4	**253-5366**	1	PLATE AS	
		4	**1F-0748**	2	NUT-WELD (1/2-13-THD)	
	27	4	**265-2122**	1	TUBE AS	
	28	4	**265-2123**	1	TUBE AS	
E	29	4	**160-2247**	2	SLEEVE-ABRASION (90-CM EACH)	
I	30	4	**271-7495**	2	HOSE AS	
I	31	4	**286-8181**	1	HOSE AS	
I	32	4	**312-8383**	2	HOSE AS	
I	33	4	**286-8184**	1	HOSE AS	
I	34	4	**312-8384**	1	HOSE AS	
I	35	4	**312-8382**	1	HOSE AS	
	36	3	**293-4711**	1	TUBE AS	
	37	3	**293-4712**	1	TUBE AS	
I	38	4	**296-2876**	1	HOSE AS	
	39	2	**296-4308**	1	TUBE AS	
	40	2	**296-4309**	1	TUBE AS	
I	41	4	**312-8373**	1	HOSE AS	
I	42	4	**312-8381**	1	HOSE AS	
	43	4	**297-2813**	4	TUBE AS	
	44	4	**297-2814**	4	TUBE AS	
	45	4	**309-1906**	4	STUD-TAPERLOCK (M10X1.5X55-MM)	
	46	4	**100-4336**	2	CLIP	
I	47	3	**112-3200**	1	HOSE AS	

231-1532 **LINES GP-HYDRAULIC** ***(contd.)*** **i02773490**

NOTE	REF NO	GRAPHIC REF	PART NUMBER	QTY	PART NAME 1 2 3 4 5 6 (PRODUCT LEVEL)	SEE PAGE
	48	4	*148-8328*	2	CONNECTOR AS	
					(EACH INCLUDES)	
		4	**6V-8633**	1	CONNECTOR	
		4	**6V-8398**	1	SEAL-O-RING	
		4	**3D-2824**	1	SEAL-O-RING	
	49	2,3,4	*148-8340*	17	CONNECTOR AS	
					(EACH INCLUDES)	
		2,3,4	**6V-8639**	1	CONNECTOR	
		2,3,4	**6V-8398**	1	SEAL-O-RING	
		2,3,4	**3K-0360**	1	SEAL-O-RING	
	50	2	*148-8354*	2	ELBOW AS	
					(EACH INCLUDES)	
		2	**6V-9002**	1	ELBOW (45-DEG)	
		2	**6V-8398**	1	SEAL-O-RING	
		2	**3K-0360**	1	SEAL-O-RING	
	51	2	*148-8358*	1	ELBOW AS	
		2	**6V-8624**	1	ELBOW (45-DEG)	
		2	**6V-8398**	1	SEAL-O-RING	
		2	**2M-9780**	1	SEAL-O-RING	
	52	2,3	*148-8363*	4	ELBOW AS	
					(EACH INCLUDES)	
		2,3	**6V-9876**	1	ELBOW	
		2,3	**6V-8397**	1	SEAL-O-RING	
		2,3	**3K-0360**	1	SEAL-O-RING	
	53	2,3	*148-8364*	5	ELBOW AS	
					(EACH INCLUDES)	
		2,3	**6V-8625**	1	ELBOW (90-DEG)	
		2,3	**6V-8398**	1	SEAL-O-RING	
		2,3	**3K-0360**	1	SEAL-O-RING	
	54	2	*148-8372*	1	ELBOW AS	
		2	**6V-8721**	1	ELBOW (90-DEG)	
		2	**6V-8398**	1	SEAL-O-RING	
		2	**2M-9780**	1	SEAL-O-RING	
	55	2,3,4	*148-8374*	7	ELBOW AS	
					(EACH INCLUDES)	
		2,3,4	**6V-8723**	1	ELBOW	
		2,3,4	**3K-0360**	1	SEAL-O-RING	
		2,3,4	**6V-8397**	1	SEAL-O-RING	
	56	4	*148-8444*	2	TEE AS-SWIVEL	
					(EACH INCLUDES)	
		4	**6V-9837**	1	TEE-SWIVEL	
		4	**6V-8398**	2	SEAL-O-RING	
	57	2	*153-6241*	1	ELBOW AS	
		2	**8C-8989**	1	ELBOW (45-DEG)	
		2	**6V-8398**	1	SEAL-O-RING	
	58	4	*153-6246*	2	TEE AS	
					(EACH INCLUDES)	
		4	**7X-0820**	1	TEE-UNION	
		4	**6V-8397**	3	SEAL-O-RING	
M	59	4	**180-3998**	3	STUD (M10X1.5X55-MM)	
	60	2,3,4	**1S-0994**	21	CLIP	
I	61	3	**244-1018**	1	HOSE AS	
I	62	3	**255-2755**	1	HOSE AS	
Y	63	2	**260-6502**	1	SWIVEL GP (CIRCLE DRIVE)	642
I	64	2	**287-2512**	2	HOSE AS	
	65	2	**3B-4628**	2	PIN-COTTER	
	66	3	**3E-4321**	1	CLIP	
	67	3	**4S-1962**	1	CLIP	
	68	2	**5P-7462**	2	CLIP (SLOT)	

231-1532 **LINES GP-HYDRAULIC** *(contd.)* **i02773490**

NOTE	REF NO	GRAPHIC REF	PART NUMBER	QTY	PART NAME 1 2 3 4 5 6 (PRODUCT LEVEL)	SEE PAGE
	69	2	**5P-7463**	2	CLIP (TAB)	
	70	3	**6D-4244**	2	CLIP	
	71	2	**6D-4246**	4	CLIP	
	72	2,3,4	**6D-4247**	7	CLIP	
	73	2	**6V-0683**	2	GROMMET	
	74	3,4	**6V-8398**	12	SEAL-O-RING	
	75	4	**6V-9168**	2	NUT (11/16-16-THD)	
	76	4	**7X-0334**	2	BOLT (1/2-13X5-IN)	
	77	3	**7X-7729**	2	WASHER (11X25X3-MM THK)	
	78	2	**8D-9092**	1	PIN	
	79	3	**8M-2770**	2	CLIP	
I	80	3	**8R-7887**	1	HOSE AS	
M	81	4	**8T-0389**	4	LOCKNUT (M10X1.15-THD)	
M	82	2,3,4	**8T-4133**	14	NUT (M10X1.5-THD)	
	83	1,2,3,4	**8T-4121**	51	WASHER-HARD (11X21X2.5-MM THK)	
M	84	2	**8T-4136**	1	BOLT (M10X1.5X25-MM)	
M	85	1,1,2, 3,4	**8T-4137**	17	BOLT (M10X1.5X20-MM)	
M	86	3	**8T-4182**	2	BOLT (M10X1.5X45-MM)	
M	87	1	**8T-4186**	4	BOLT (M10X1.5X40-MM)	
M	88	2	**8T-4189**	1	BOLT (M8X1.25X20-MM)	
M	89	2,3	**8T-4195**	4	BOLT (M10X1.5X30-MM)	
M	90	3	**8T-4196**	1	BOLT (M10X1.5X35-MM)	
M	91	3	**8T-4198**	2	BOLT (M10X1.5X100-MM)	
	92	2,4	**8T-4223**	8	WASHER-HARD (13.5X25.5X3-MM THK)	
	93	2	**8T-4224**	1	WASHER-HARD (8.8X16X2-MM THK)	
M	94	2	**8T-4648**	4	BOLT (M12X1.75X70-MM)	
	95	2	**8T-4994**	2	WASHER-HARD (20X36.5X3.5-MM THK)	
M	96	2	**8T-5005**	2	BOLT (M10X1.5X70-MM)	

E-ORDER BY THE CENTIMETER
I-REFER TO HYDRAULIC INFORMATION SYSTEM
M-METRIC PART
Y-SEPARATE ILLUSTRATION

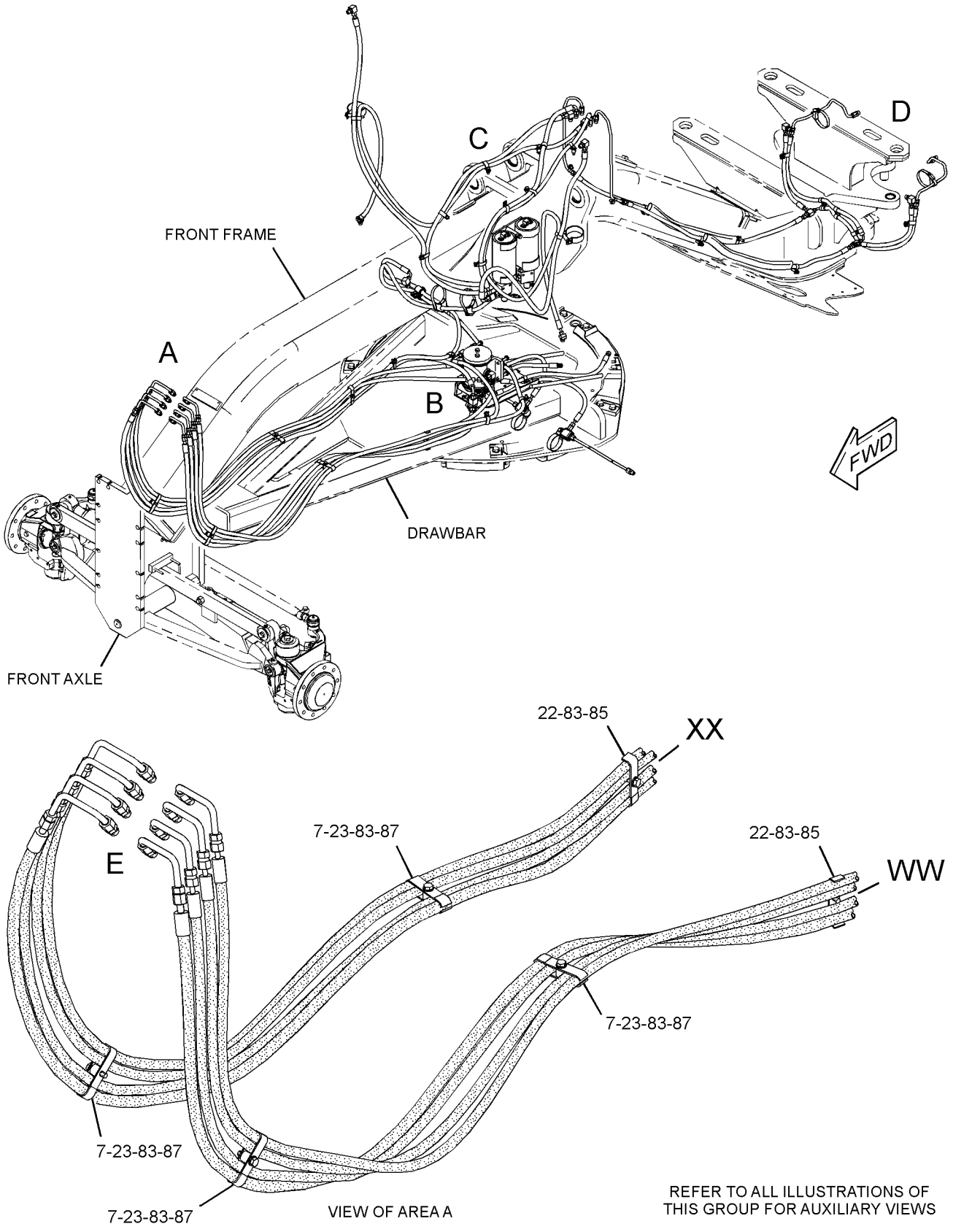

GRAPHIC #1

g01341650

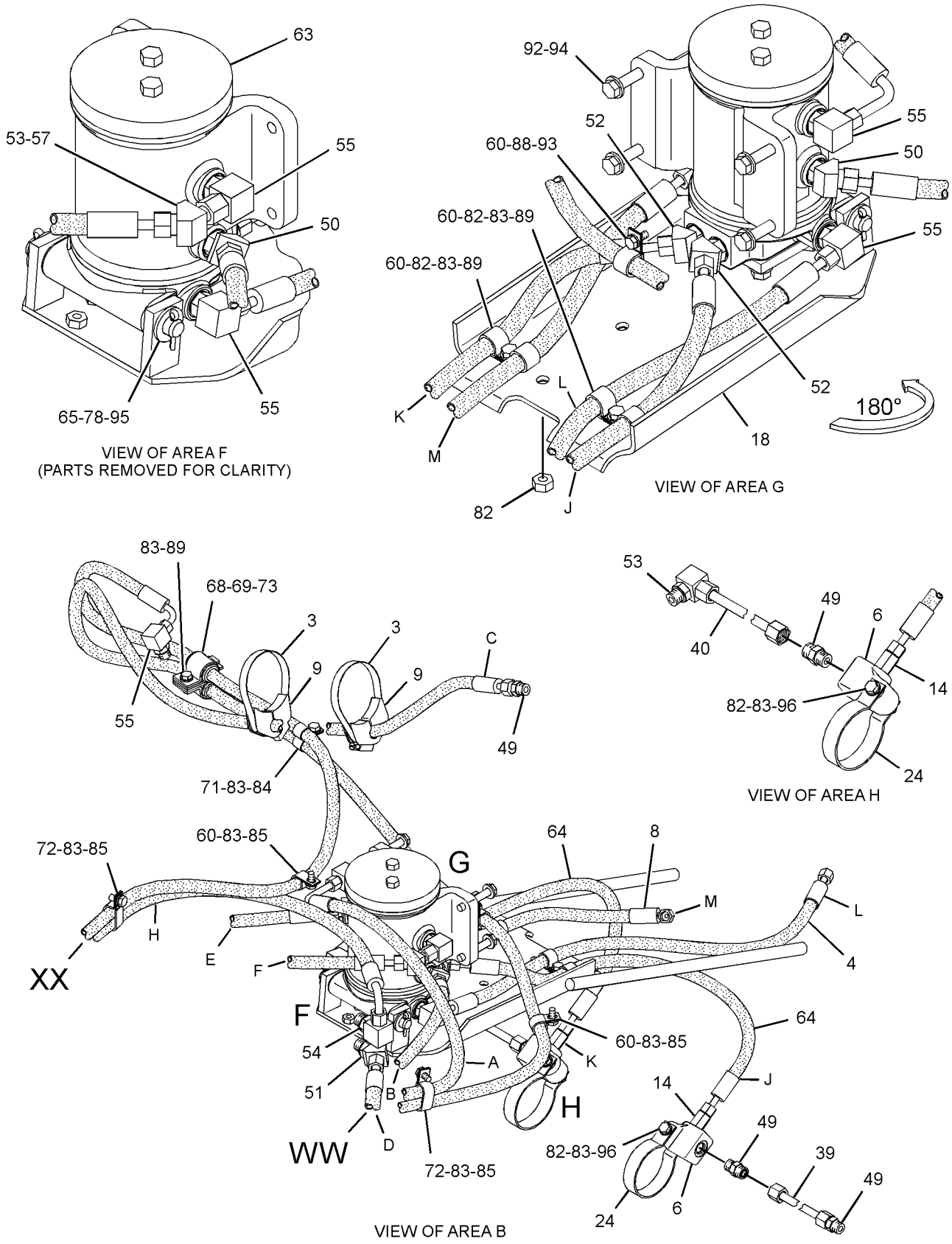

GRAPHIC #2

g01341651

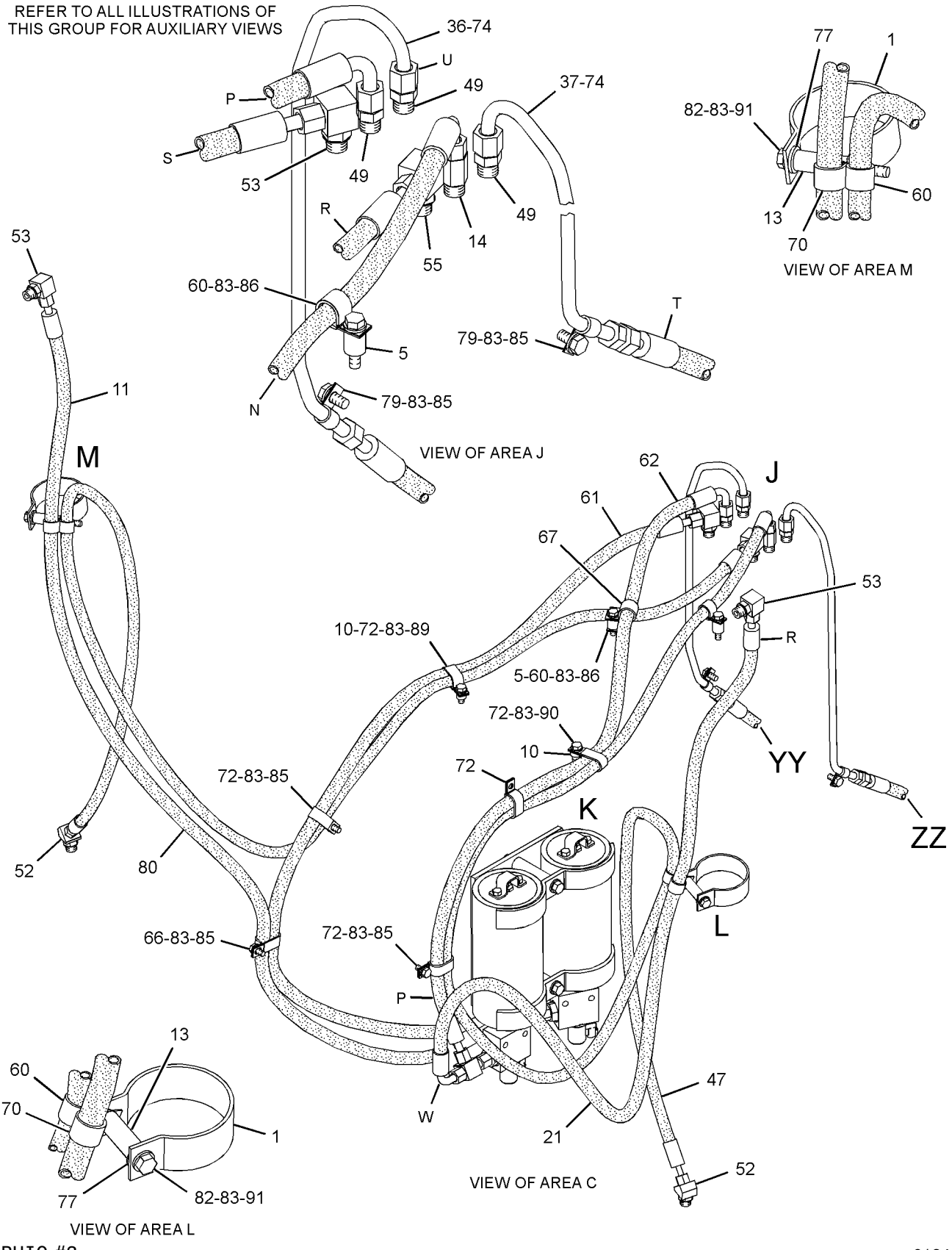

GRAPHIC #3

g01341652

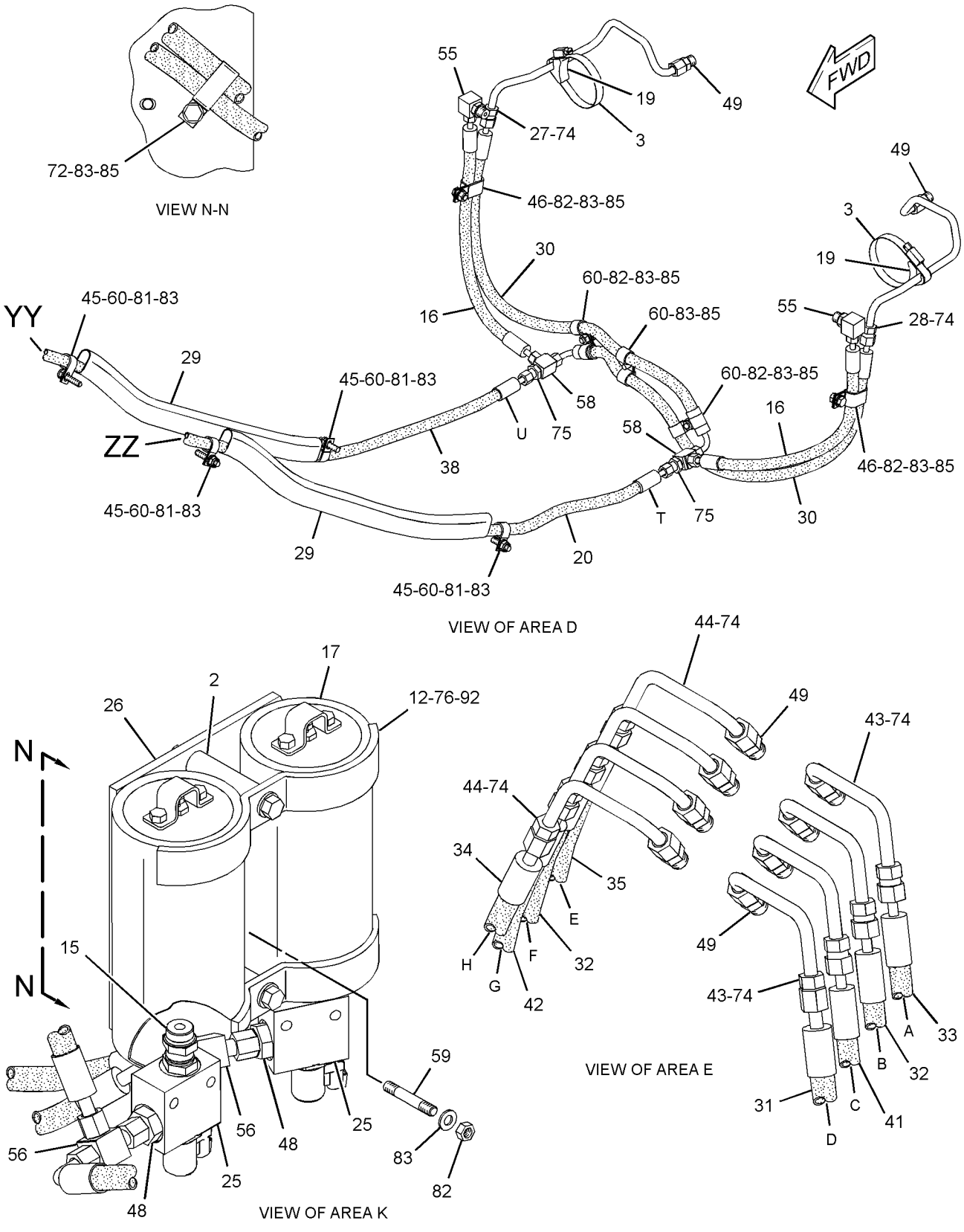

GRAPHIC #4 **<END>** g01341653

HYDRAULIC SYSTEM

231-1536 LINES GP-HYDRAULIC—PLOW, BULLDOZER ANGLE

S/N: B9D1-UP
2 CIRCUITS

SMCS-5057 **i02773425**

NOTE	REF NO	GRAPHIC REF	PART NUMBER	QTY	PART NAME 1 2 3 4 5 6 (PRODUCT LEVEL)	SEE PAGE
I	1	1	**9W-4363**	1	HOSE AS	
I	2	1	**153-8085**	1	HOSE AS	
I	3	1	**293-5536**	1	HOSE AS	
I	4	1	**293-5704**	1	HOSE AS	
	5	1	**091-0081**	1	SPACER (10.5X20X10-MM THK)	
	6	1	*148-8340*	4	CONNECTOR AS	
					(EACH INCLUDES)	
		1	**6V-8639**	1	CONNECTOR	
		1	**3K-0360**	1	SEAL-O-RING	
		1	**6V-8398**	1	SEAL-O-RING	
	7	1	*150-4043*	1	CONNECTOR AS	
					(EACH INCLUDES)	
		1	**6V-9873**	1	CONNECTOR	
		1	**3J-1907**	1	SEAL-O-RING	
		1	**6V-8398**	1	SEAL-O-RING	
	8	1	*164-5624*	3	ELBOW AS	
					(EACH INCLUDES)	
		1	**9X-2085**	1	ELBOW	
		1	**3J-1907**	1	SEAL-O-RING	
		1	**6V-8398**	1	SEAL-O-RING	
	9	1	**3E-4321**	2	CLIP	
	10	1	**4L-3641**	1	CLIP	
	11	1	**6V-1228**	2	CLIP	

I-REFER TO HYDRAULIC INFORMATION SYSTEM

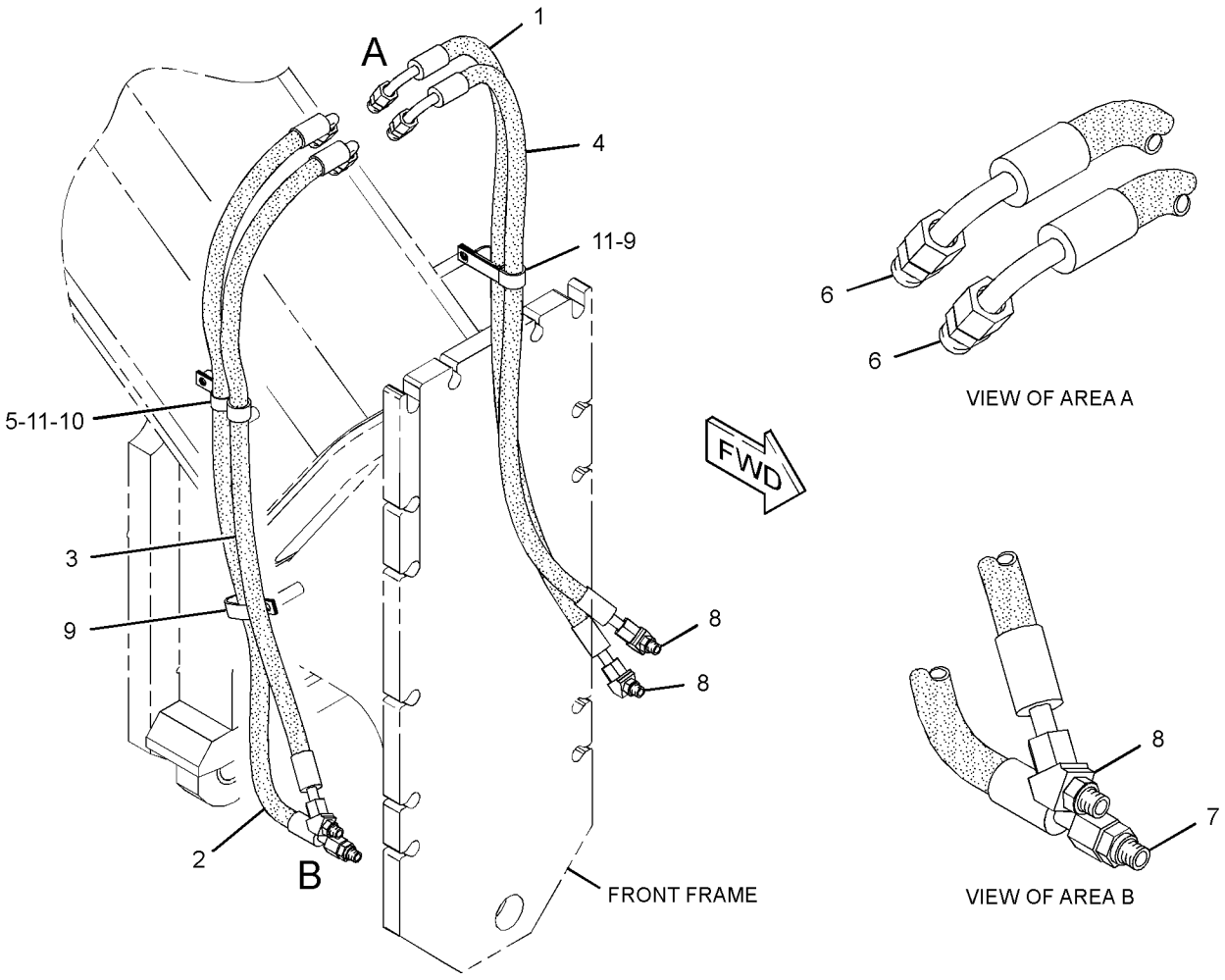

GRAPHIC #1 **<END>** g01340590

HYDRAULIC SYSTEM

231-1593 LINES GP-HYDRAULIC—PLOW, BULLDOZER ANGLE

S/N: B9D1-UP

CANNOT BE USED WITH 231-1536—PAGE 586

SMCS-5057 **i02772879**

NOTE	REF NO	GRAPHIC REF	PART NUMBER	QTY	PART NAME 1 2 3 4 5 6 (PRODUCT LEVEL)	SEE PAGE
I	1	1	**5T-9722**	1	HOSE AS	
	2	1	**091-0081**	1	SPACER (10.5X20X10-MM THK)	
	3	1	*148-8340*	2	CONNECTOR AS	
					(EACH INCLUDES)	
		1	**6V-8639**	1	CONNECTOR	
		1	**3K-0360**	1	SEAL-O-RING	
		1	**6V-8398**	1	SEAL-O-RING	
	4	1	*150-4043*	1	CONNECTOR AS	
		1	**6V-9873**	1	CONNECTOR	
		1	**3J-1907**	1	SEAL-O-RING	
		1	**6V-8398**	1	SEAL-O-RING	
	5	1	*164-5624*	1	ELBOW AS	
		1	**9X-2085**	1	ELBOW	
		1	**6V-8398**	1	SEAL-O-RING	
		1	**3J-1907**	1	SEAL-O-RING	
	6	1	**3E-4321**	2	CLIP	
	7	1	**4L-3641**	1	CLIP	
I	8	1	**9W-4363**	1	HOSE AS	

I-REFER TO HYDRAULIC INFORMATION SYSTEM

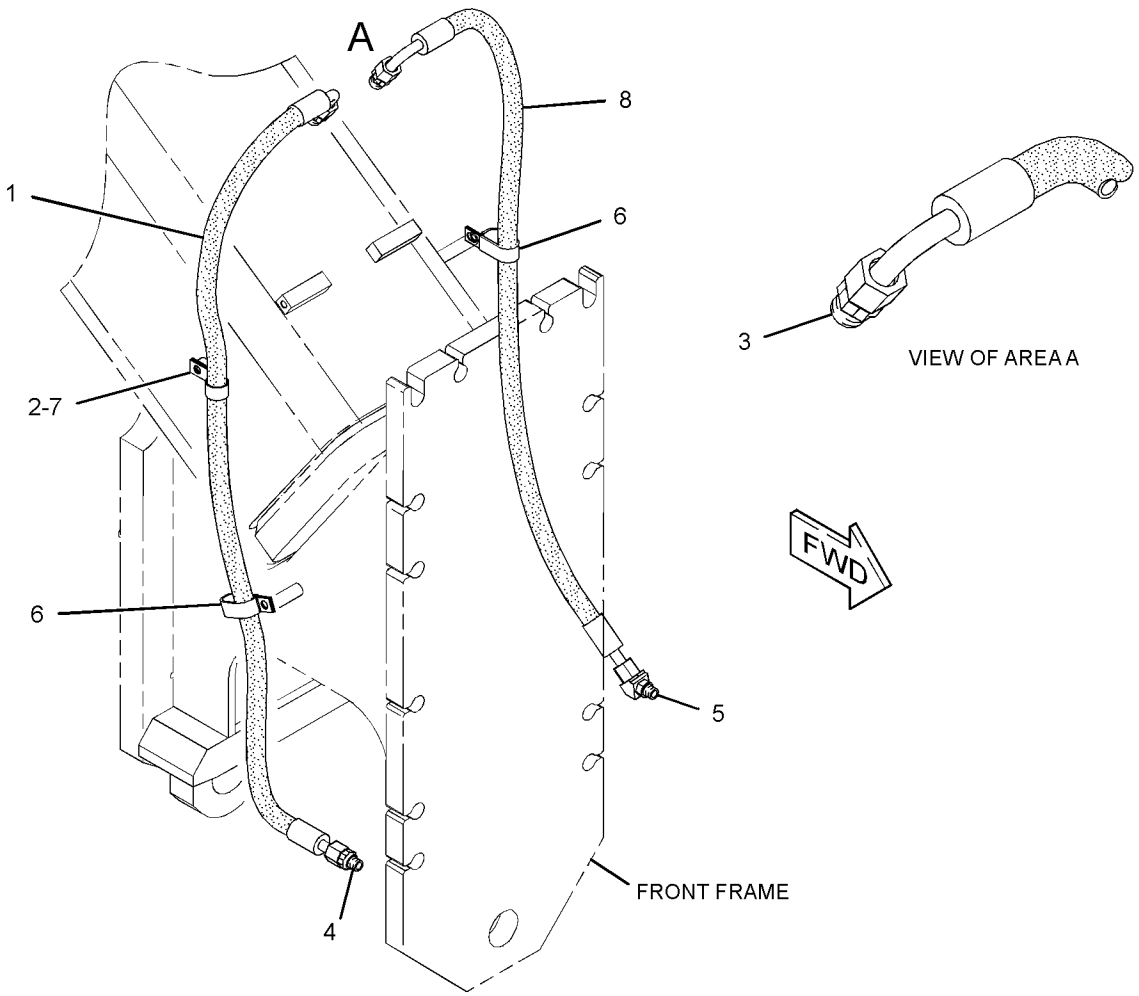

GRAPHIC #1 **<END>** g01340090

HYDRAULIC SYSTEM

309-6989 LINES GP-HYDRAULIC

S/N: B9D1-UP

CANNOT BE USED WITH ALL WHEEL DRIVE

SMCS-5057 **i02788645**

NOTE	REF NO	GRAPHIC REF	PART NUMBER	QTY	PART NAME 1 2 3 4 5 6 (PRODUCT LEVEL)	SEE PAGE
I	1	1	**310-1627**	1	HOSE AS	
I	2	1	**310-1629**	1	HOSE AS	
	3	1	*148-8318*	3	CONNECTOR AS	
					(EACH INCLUDES)	
		1	**6V-8634**	1	CONNECTOR	
		1	**3K-0360**	1	SEAL-O-RING	
		1	**6V-8397**	1	SEAL-O-RING	
	4	1	*148-8374*	1	ELBOW AS	
		1	**6V-8723**	1	ELBOW	
		1	**3K-0360**	1	SEAL-O-RING	
		1	**6V-8397**	1	SEAL-O-RING	
	5	1	**1S-0994**	6	CLIP	
	6	1	**8T-4121**	6	WASHER-HARD (11X21X2.5-MM THK)	
M	7	1	**8T-4133**	1	NUT (M10X1.5-THD)	
M	8	1	**8T-4136**	5	BOLT (M10X1.5X25-MM)	

I-REFER TO HYDRAULIC INFORMATION SYSTEM
M-METRIC PART

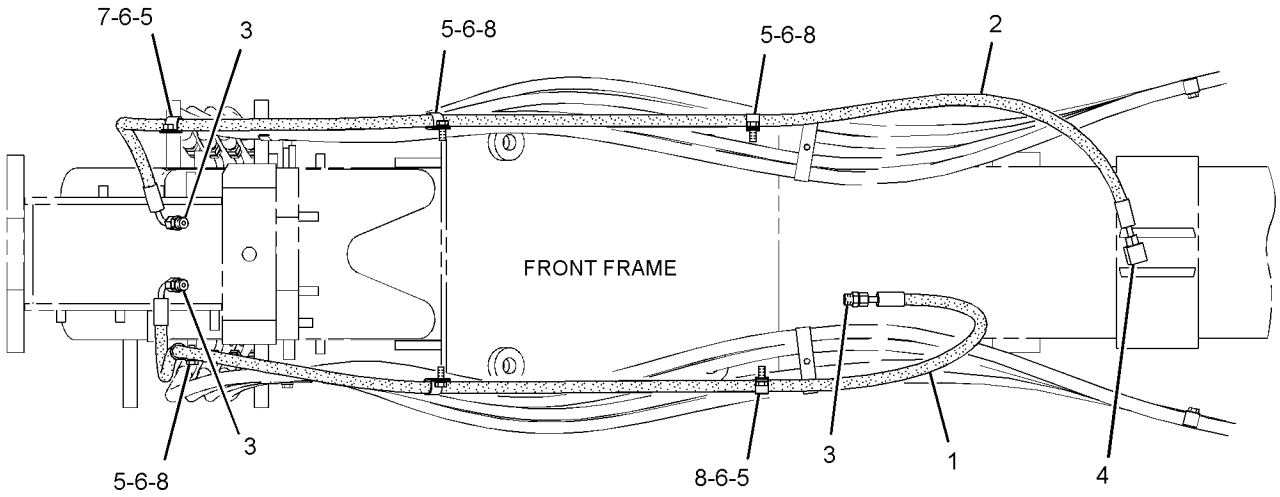

BOTTOM VIEW

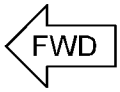

GRAPHIC #1 **<END>** g01393385

HYDRAULIC SYSTEM

266-3724 LINES GP-HYDRAULIC FAN

S/N: B9D1-UP

PART OF 234-7721 COMMON AR

SMCS-1386, 1387, 5057 **i02780503**

NOTE	REF NO	GRAPHIC REF	PART NUMBER	QTY	PART NAME 1 2 3 4 5 6 (PRODUCT LEVEL)	SEE PAGE
	1	1	**6V-0852**	1	CAP-DUST	
	2	1	*148-8430*	1	TEE AS	
		1	**7X-0873**	1	TEE	
		1	**6V-9746**	1	SEAL-O-RING	
I	3	1	**186-2506**	1	HOSE AS	
	4	1	*241-2443*	1	ELBOW AS	
		1	**241-2451**	1	ELBOW	
		1	**3J-1907**	1	SEAL-O-RING	
		1	**7J-9108**	1	SEAL-O-RING	
I	5	1	**250-5701**	1	HOSE AS	
Y	6	1	**251-8256**	1	MANIFOLD GP-CONTROL (BRAKE, HYDRAULIC FAN)	617
	7	1	**284-0009**	1	TUBE AS	
	8	1	**297-9843**	1	PLATE AS	
I	9	1	**310-1758**	1	HOSE AS	
	10	1	**105-1866**	2	CLIP	
	11	1	**120-8234**	1	BRACE	
I	12	1	**134-4772**	1	HOSE AS	
	13	1	*148-8315*	1	CONNECTOR AS	
		1	**6V-8642**	1	CONNECTOR	
		1	**2M-9780**	1	SEAL-O-RING	
		1	**7J-9108**	1	SEAL-O-RING	
	14	1	*148-8322*	2	CONNECTOR AS	
					(EACH INCLUDES)	
		1	**6V-8640**	1	CONNECTOR	
		1	**2M-9780**	1	SEAL-O-RING	
		1	**6V-9746**	1	SEAL-O-RING	
	15	1	*148-8336*	1	CONNECTOR AS	
		1	**6V-8636**	1	CONNECTOR	
		1	**3J-1907**	1	SEAL-O-RING	
		1	**6V-8397**	1	SEAL-O-RING	
	16	1	*148-8341*	1	CONNECTOR AS	
		1	**6V-8713**	1	CONNECTOR	
		1	**3D-2824**	1	SEAL-O-RING	
		1	**7J-9108**	1	SEAL-O-RING	
	17	1	*148-8361*	1	ELBOW AS	
		1	**6V-9200**	1	ELBOW	
		1	**3J-7354**	1	SEAL-O-RING	
		1	**6V-8397**	1	SEAL-O-RING	
	18	1	*148-8393*	1	ELBOW AS	
		1	**6V-9852**	1	ELBOW	
		1	**7J-9108**	1	SEAL-O-RING	
	19	1	**149-7738**	1	CLIP	
	20	1	*164-5567*	1	FITTING AS (QUICK DISCONNECT, MALE)	
		1	**6V-3965**	1	FITTING-COUPLER	
		1	**3J-1907**	1	SEAL-O-RING	
	21	1	**1P-4578**	2	FLANGE-HALF	
	22	1	**3S-8664**	1	CLIP	
	23	1	**4J-0522**	1	SEAL-O-RING	
	24	1	**4J-5267**	1	SEAL-O-RING	
	25	1	**4S-1962**	4	CLIP	
	26	1	**4S-4455**	6	CLIP	
	27	1	**5N-2840**	1	CLIP	
	28	1	**5P-2369**	1	CLIP	
	29	1	**7D-7233**	2	CLIP	
M	30	1	**7X-2543**	2	BOLT (M10X1.5X120-MM)	
	31	1	**7X-7729**	1	WASHER (11X25X3-MM THK)	

266-3724 **LINES GP-HYDRAULIC FAN** *(contd.)* **i02780503**

NOTE	REF NO	GRAPHIC REF	PART NUMBER	QTY	PART NAME 1 2 3 4 5 6 (PRODUCT LEVEL)	SEE PAGE
	32	1	**8C-3205**	2	FLANGE-HALF	
	33	1	**8T-4121**	27	WASHER-HARD (11X21X2.5-MM THK)	
M	34	1	**8T-4133**	7	NUT (M10X1.5-THD)	
M	35	1	**8T-4136**	5	BOLT (M10X1.5X25-MM)	
M	36	1	**8T-4137**	5	BOLT (M10X1.5X20-MM)	
M	37	1	**8T-4195**	1	BOLT (M10X1.5X30-MM)	
M	38	1	**8T-4196**	8	BOLT (M10X1.5X35-MM)	
	39	1	**8T-6703**	2	CLAMP-HOSE	
	40	1	**9D-1829**	1	CLIP	
GI	41	1	**122-6908**		HOSE-HYDRAULIC (25.2-IN)	

G-ORDER BY THE INCH
I-REFER TO HYDRAULIC INFORMATION SYSTEM
M-METRIC PART
Y-SEPARATE ILLUSTRATION

266-3724 **LINES GP-HYDRAULIC FAN** *(contd.)* **i02780503**

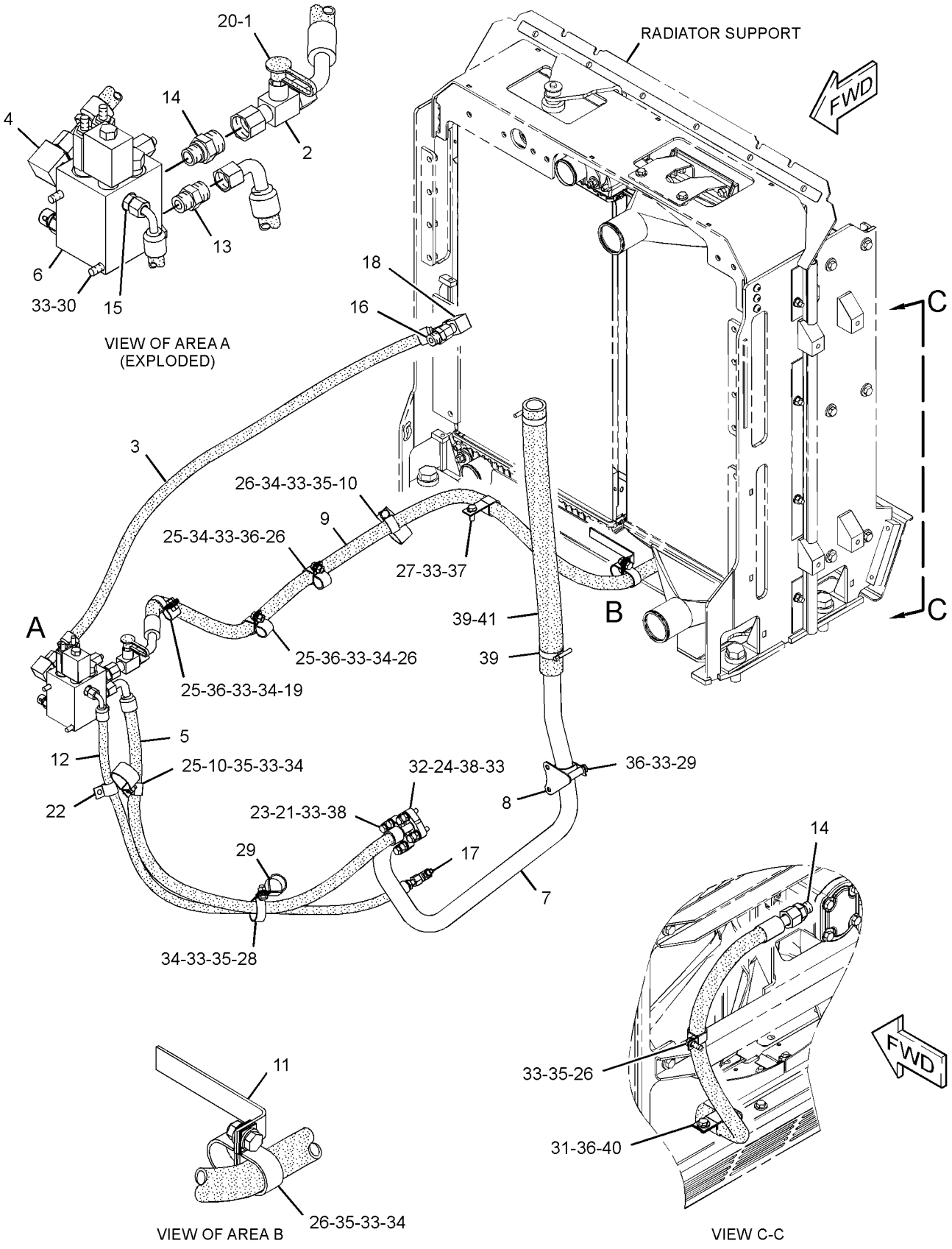

GRAPHIC #1 **<END>** g01374642

289-2081 LINES GP-HYDRAULIC OIL COOLER

S/N: B9D1-UP

PART OF 278-3419 AXLE AR-FRONT

SMCS-1374, 5057 **i02787943**

NOTE	REF NO	GRAPHIC REF	PART NUMBER	QTY	PART NAME 1 2 3 4 5 6 (PRODUCT LEVEL)	SEE PAGE
I	1	1	**147-3069**	1	HOSE AS	
	2	1	*148-8362*	1	ELBOW AS	
		1	**8T-6684**	1	ELBOW	
		1	**3D-2824**	1	SEAL-O-RING	
		1	**5K-9090**	1	SEAL-O-RING	
	3	1	**217-9174**	1	CORE AS-OIL COOLER (HYDRAULIC)	
	5	1	**266-1595**	1	VALVE GP-CHECK (HYDRAULIC OIL COOLER BYPASS)	
		1	**5K-9090**	1	SEAL-O-RING	
		1	**7M-8485**	1	SEAL-O-RING	
	6	1	**291-1348**	1	BLOCK	
I	7	1	**294-0115**	1	HOSE AS	
I	8	1	**295-1965**	1	HOSE AS	
	9	1	**295-1967**	1	TUBE AS	
	10	1	**295-1969**	1	PLATE AS	
	11	1	*148-8327*	1	CONNECTOR AS	
		1	**6V-8637**	1	CONNECTOR	
		1	**3D-2824**	1	SEAL-O-RING	
		1	**6V-9746**	1	SEAL-O-RING	
	12	1	*148-8335*	1	CONNECTOR AS	
		1	**6V-8635**	1	CONNECTOR	
		1	**5K-9090**	1	SEAL-O-RING	
		1	**7M-8485**	1	SEAL-O-RING	
	13	1	*148-8347*	1	ELBOW AS	
		1	**6V-9007**	1	ELBOW	
		1	**3D-2824**	1	SEAL-O-RING	
		1	**6V-9746**	1	SEAL-O-RING	
	14	1	*148-8411*	1	PLUG AS	
		1	**9S-4185**	1	PLUG-O-RING	
		1	**3K-0360**	1	SEAL-O-RING	
	15	1	*148-8431*	1	TEE GP	
		1	**6V-8785**	1	TEE	
		1	**5K-9090**	2	SEAL-O-RING	
		1	**7M-8485**	1	SEAL-O-RING	
	16	1	**190-4885**	1	SPACER (11X22X50-MM THK)	
	17	1	**3D-2824**	1	SEAL-O-RING	
	18	1	**6V-5258**	1	ADAPTER	
	19	1	**7X-7729**	4	WASHER (11X25X3-MM THK)	
	20	1	**8T-4121**	9	WASHER-HARD (11X21X2.5-MM THK)	
M	21	1	**8T-4136**	4	BOLT (M10X1.5X25-MM)	
M	22	1	**8T-4178**	2	BOLT (M10X1.5X90-MM)	
M	23	1	**8T-4195**	6	BOLT (M10X1.5X30-MM)	
M	24	1	**8T-5005**	1	BOLT (M10X1.5X70-MM)	
	25	1	**308-6308**	1	PLATE	

I-REFER TO HYDRAULIC INFORMATION SYSTEM
M-METRIC PART

289-2081 **LINES GP-HYDRAULIC OIL COOLER** *(contd.)* **i02787943**

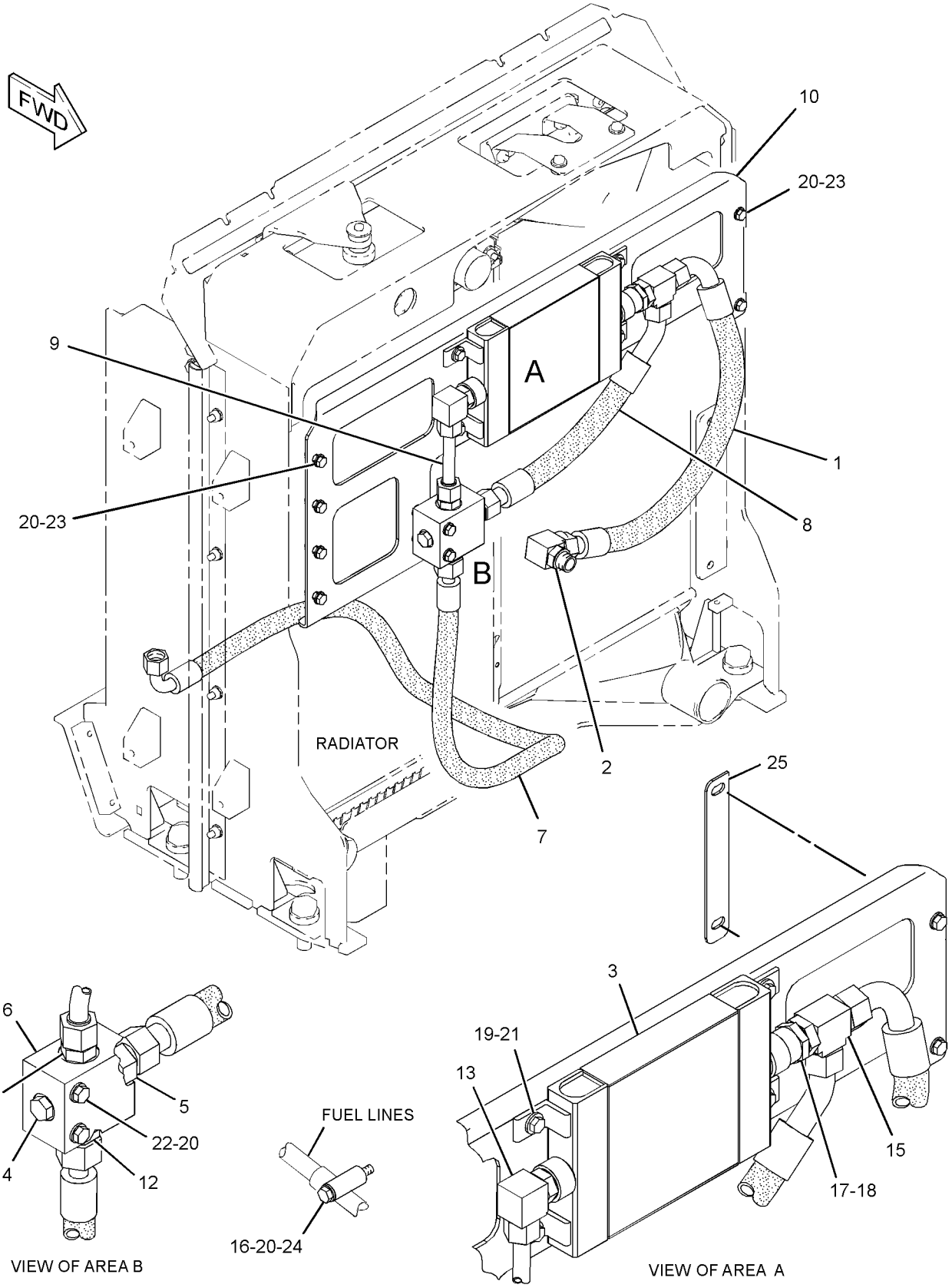

GRAPHIC #1

<END>

g01393845

HYDRAULIC SYSTEM

237-6423 LINES GP-PUMP—SECONDARY STEERING

S/N: B9D1-UP

PART OF 234-7721 COMMON AR, 276-1425 STEERING AR-SECONDARY

SMCS-5057 **i02773401**

NOTE	REF NO	GRAPHIC REF	PART NUMBER	QTY	PART NAME 1 2 3 4 5 6 (PRODUCT LEVEL)	SEE PAGE
	1	3	**5D-1026**	1	CLAMP-HOSE	
	2	5	**5P-4868**	2	CLAMP-HOSE	
	3	5	**6N-6984**	2	MOUNT-RUBBER	
	4	4	**6R-7605**	1	VALVE-SHUTTLE	
	5	5	**6V-0852**	1	CAP-DUST	
	6	3	**6V-7238**	1	VALVE-SHUTOFF	
	7	5	**160-1744**	1	BRACKET	
	8	3	*184-2420*	1	ADAPTER AS	
		3	**3E-7401**	1	ADAPTER	
		3	**6V-8397**	1	SEAL-O-RING	
	9	3	**184-5394**	1	CLIP	
Y	10	5	**191-9784**	1	FILTER GP-OIL (HYDRAULIC) (STEERING LINES)	562
	11	5	**193-9230**	1	VALVE GP-CHECK	
	12	4	**245-7601**	1	TUBE AS	
	13	4	**246-3350**	1	TUBE AS	
	14	5	**246-3352**	1	TUBE AS	
I	15	3	**246-3356**	1	HOSE AS	
I	16	3	**246-3358**	1	HOSE AS	
I	17	5	**246-3359**	1	HOSE AS	
	18	4	**246-3361**	1	TUBE AS	
	19	5	**246-3372**	1	HOSE	
I	20	4	**246-6328**	1	HOSE AS	
	21	1	**246-6332**	1	TUBE AS	
	22	1	**246-6333**	1	TUBE AS	
	23	4	**246-6334**	1	TUBE AS	
	24	4	**246-6335**	1	TUBE AS	
	25	2	**247-4243**	1	BLOCK	
	26	2	**247-4244**	1	BLOCK	
	27	2	**247-4245**	1	BLOCK	
	28	2	**247-4250**	1	PLATE	
	29	1,4	**250-1420**	2	CONNECTOR AS	
					(EACH INCLUDES)	
		1,4	**250-1419**	1	CONNECTOR	
		1,4	**3K-0360**	1	SEAL-O-RING	
		1,4	**7J-9108**	1	SEAL-O-RING	
	30	4	**252-1867**	2	SEAL	
	31	4	**254-4486**	1	BLOCK	
	32	3	**255-0683**	1	PLATE	
	33	2	**255-0686**	1	PLATE	
	34	5	**255-3631**	1	VALVE GP-CHECK	
	35	3	**257-7066**	1	BRACKET AS	
	36	2	**262-8361**	1	BLOCK	
	37	2	**262-8364**	1	BLOCK	
	38	2	**262-8365**	1	BLOCK	
	39	2	**262-8366**	1	BLOCK	
	40	3	**262-8370**	1	BLOCK	
	41	3	**262-8371**	1	BLOCK	
	42	3	**262-8372**	1	BLOCK	
Y	43	5	**263-1790**	1	MANIFOLD GP-CONTROL (IMPLEMENT, STEERING)	621
	44	2	**264-0638**	1	PLATE	
	45	3	**266-8804**	1	PLATE	
	46	5	**268-1647**	1	ELBOW	
	47	2	**270-7103**	1	PLATE AS	
	48	1	**271-6369**	1	TUBE AS	
	49	1	**271-6370**	1	TUBE AS	
	50	3	**271-8510**	1	PLATE	

NOTE	REF NO	GRAPHIC REF	PART NUMBER	QTY	PART NAME 1 2 3 4 5 6 (PRODUCT LEVEL)	SEE PAGE
	51	2	**279-6612**	1	PLATE	
	52	2	**279-9022**	1	BLOCK	
	53	2	**279-9023**	1	BLOCK	
	54	1	**280-2064**	1	PLATE AS	
	55	5	**281-4271**	1	TUBE AS	
	56	2	**282-2953**	1	PLATE AS	
	57	2	**282-9913**	1	PLATE AS	
	58	1	**291-3919**	1	BLOCK	
	59	1	**291-3920**	1	BLOCK	
	60	1	**291-3921**	1	BLOCK	
	61	1	**291-3922**	1	BLOCK	
	62	1	**291-3923**	1	BLOCK	
	63	1	**291-3924**	1	BLOCK	
	64	1	**291-3925**	1	BLOCK	
	65	1	**291-3926**	1	BLOCK	
	66	1	**292-1923**	1	PLATE AS	
	67	1	**292-2492**	1	TUBE AS	
	68	1	**292-2493**	1	TUBE AS	
	69	2	**293-4664**	1	PLATE	
	70	2	**293-4667**	1	PLATE AS	
	71	2	**293-4668**	1	PLATE AS	
	72	4	**293-4706**	1	TUBE AS	
	73	2	**293-4906**	1	PLATE	
	74	2	**293-4908**	1	BLOCK	
	75	2	**293-4909**	1	BLOCK	
	76	2	**293-4910**	1	BLOCK	
	77	2	**293-4911**	1	BLOCK	
	78	2	**293-4912**	1	BLOCK	
	79	2	**293-4913**	1	BLOCK	
	80	2	**293-4914**	1	BLOCK	
	81	2	**293-4915**	1	BLOCK	
	82	2	**293-4916**	1	BLOCK	
	83	3	**294-4636**	1	BLOCK	
	84	3	**294-4637**	1	BLOCK	
	85	3	**294-4638**	1	BLOCK	
	86	3	**294-4695**	1	BLOCK	
	87	3	**294-4696**	1	BLOCK	
	88	2	**294-4827**	1	PLATE AS	
	89	3	**294-7809**	1	PLATE AS	
	90	2	**294-7811**	1	PLATE AS	
	91	5	**294-7814**	1	PLATE AS	
I	92	4	**295-1488**	1	HOSE AS	
	93	2	**295-7914**	1	BLOCK	
	94	2	**295-7915**	1	BLOCK	
	95	5	**296-6012**	1	BRACKET AS	
	96	2	**296-6859**	1	PLATE AS	
M		2	**8T-3490**	2	NUT-WELD (M10X1.5-THD)	
	97	2	**299-5783**	1	BLOCK	
	98	2	**299-5784**	1	BLOCK	
	99	2	**299-5786**	1	BLOCK	
	100	2	**299-5787**	1	BLOCK	
	101	1	**301-7318**	1	BRACKET	
I	102	5	**308-9532**	1	HOSE AS	
	103	3	**309-1905**	2	STUD-TAPERLOCK	
	104	3	**309-5244**	1	PLATE AS	
M	105	2,3	**096-4883**	18	LOCKNUT (M10X1.15-THD)	
I	106	5	**103-4660**	1	HOSE AS	
	107	5	**126-6872**	1	TEE	

237-6423 **LINES GP-PUMP** ***(contd.)*** **i02773401**

NOTE	REF NO	GRAPHIC REF	PART NUMBER	QTY	PART NAME 1 2 3 4 5 6 (PRODUCT LEVEL)	SEE PAGE
	108	3,4,5	*148-8315*	3	CONNECTOR AS	
					(EACH INCLUDES)	
		3,4,5	**6V-8642**	1	CONNECTOR	
		3,4,5	**2M-9780**	1	SEAL-O-RING	
		3,4,5	**7J-9108**	1	SEAL-O-RING	
	109	5	*148-8334*	1	CONNECTOR AS	
		5	**8T-3611**	1	CONNECTOR	
		5	**2S-4078**	1	SEAL-O-RING	
		5	**6V-8400**	1	SEAL-O-RING	
	110	4	*148-8335*	5	CONNECTOR AS	
					(EACH INCLUDES)	
		4	**6V-8635**	1	CONNECTOR	
		4	**5K-9090**	1	SEAL-O-RING	
		4	**7M-8485**	1	SEAL-O-RING	
	111	1,4	*148-8336*	4	CONNECTOR AS	
					(EACH INCLUDES)	
		1,4	**6V-8636**	1	CONNECTOR	
		1,4	**3J-1907**	1	SEAL-O-RING	
		1,4	**6V-8397**	1	SEAL-O-RING	
	112	1,4	*148-8340*	3	CONNECTOR AS	
					(EACH INCLUDES)	
		1,4	**6V-8639**	1	CONNECTOR	
		1,4	**3K-0360**	1	SEAL-O-RING	
		1,4	**6V-8398**	1	SEAL-O-RING	
	113	5	*148-8341*	1	CONNECTOR AS	
		5	**6V-8713**	1	CONNECTOR	
		5	**3D-2824**	1	SEAL-O-RING	
		5	**7J-9108**	1	SEAL-O-RING	
	114	4	*148-8342*	1	CONNECTOR AS	
		4	**6V-8632**	1	CONNECTOR	
		4	**3K-0360**	1	SEAL-O-RING	
		4	**7J-9108**	1	SEAL-O-RING	
	115	5	*148-8347*	1	ELBOW AS	
		5	**6V-9007**	1	ELBOW	
		5	**3D-2824**	1	SEAL-O-RING	
		5	**6V-9746**	1	SEAL-O-RING	
	116	5	*148-8352*	1	ELBOW AS	
		5	**6V-9854**	1	ELBOW (SWIVEL)	
		5	**5K-9090**	1	SEAL-O-RING	
	117	4	*148-8353*	1	ELBOW AS	
		4	**6V-9001**	1	ELBOW	
		4	**3J-1907**	1	SEAL-O-RING	
		4	**6V-8397**	1	SEAL-O-RING	
	118	4	*148-8355*	1	ELBOW AS	
		4	**6V-9005**	1	ELBOW	
		4	**5K-9090**	1	SEAL-O-RING	
		4	**7M-8485**	1	SEAL-O-RING	
	119	3	*148-8357*	1	ELBOW AS	
		3	**6V-9008**	1	ELBOW	
		3	**5K-9090**	1	SEAL-O-RING	
		3	**7M-8485**	1	SEAL-O-RING	
	120	4	*148-8361*	1	ELBOW AS	
		4	**6V-9200**	1	ELBOW	
		4	**3J-7354**	1	SEAL-O-RING	
		4	**6V-8397**	1	SEAL-O-RING	
	121	5	*148-8370*	1	ELBOW AS	
		5	**6V-9851**	1	ELBOW	
		5	**6V-8398**	1	SEAL-O-RING	
	122	4	*148-8378*	1	ELBOW AS	

237-6423 **LINES GP-PUMP** ***(contd.)*** **i02773401**

NOTE	REF NO	GRAPHIC REF	PART NUMBER	QTY	PART NAME 1 2 3 4 5 6 (PRODUCT LEVEL)	SEE PAGE
		4	**6V-8724**	1	ELBOW	
		4	**3J-1907**	1	SEAL-O-RING	
		4	**6V-8397**	1	SEAL-O-RING	
	123	5	*148-8387*	1	ELBOW AS	
		5	**6V-9855**	1	ELBOW	
		5	**6V-8400**	1	SEAL-O-RING	
	124	5	*148-8390*	1	ELBOW AS	
		5	**6V-8626**	1	ELBOW	
		5	**2M-9780**	1	SEAL-O-RING	
		5	**7J-9108**	1	SEAL-O-RING	
	125	5	*148-8392*	1	ELBOW AS	
		5	**6V-9853**	1	ELBOW	
		5	**6V-9746**	1	SEAL-O-RING	
	126	3	*148-8393*	1	ELBOW AS	
		3	**6V-9852**	1	ELBOW	
		3	**7J-9108**	1	SEAL-O-RING	
	127	5	*148-8428*	2	TEE AS	
					(EACH INCLUDES)	
		5	**6V-8782**	1	TEE	
		5	**3K-0360**	1	SEAL-O-RING	
		5	**6V-8398**	2	SEAL-O-RING	
	128	4	*148-8446*	1	TEE AS-SWIVEL	
		4	**6V-9838**	1	TEE-SWIVEL	
		4	**7J-9108**	2	SEAL-O-RING	
	129	5	*148-8449*	1	TEE AS-SWIVEL	
		5	**6V-9839**	1	TEE-SWIVEL	
		5	**6V-9746**	2	SEAL-O-RING	
	130	5	*150-3065*	1	ADAPTER AS	
		5	**3J-1907**	1	SEAL-O-RING	
		5	**6V-0484**	1	ADAPTER-O-RING	
	131	4	*150-4031*	2	TEE AS	
					(EACH INCLUDES)	
		4	**6V-9845**	1	TEE-SWIVEL	
		4	**7J-9108**	2	SEAL-O-RING	
	132	4	*150-4048*	1	ELBOW AS	
		4	**6V-8722**	1	ELBOW	
		4	**3K-0360**	1	SEAL-O-RING	
		4	**7J-9108**	1	SEAL-O-RING	
	133	5	*150-4049*	1	ELBOW AS	
		5	**8T-4149**	1	ELBOW	
		5	**6V-9746**	1	SEAL-O-RING	
		5	**7M-8485**	1	SEAL-O-RING	
	134	3	**158-0851**	1	CLIP	
	135	5	*164-4058*	1	REDUCER AS	
		5	**6V-8948**	1	REDUCER	
		5	**5K-9090**	1	SEAL-O-RING	
	136	5	*164-5567*	1	FITTING AS (QUICK DISCONNECT, MALE)	
		5	**6V-3965**	1	FITTING-COUPLER	
		5	**3J-1907**	1	SEAL-O-RING	
	137	4	*164-5615*	2	ELBOW AS	
					(EACH INCLUDES)	
		4	**8T-8986**	1	ELBOW	
		4	**4K-1388**	1	SEAL-O-RING	
		4	**5K-9090**	1	SEAL-O-RING	
	138	1	*198-0143*	1	ELBOW AS	
		1	**157-2348**	1	ELBOW	
		1	**7J-9108**	1	SEAL-O-RING	
I	139	5	**211-4038**	1	HOSE AS	
I	140	4	**293-4941**	1	HOSE AS	

237-6423 **LINES GP-PUMP** *(contd.)* **i02773401**

NOTE	REF NO	GRAPHIC REF	PART NUMBER	QTY	PART NAME 1 2 3 4 5 6 (PRODUCT LEVEL)	SEE PAGE
I	141	3	**293-4942**	1	HOSE AS	
	142	2	**299-5785**	1	BLOCK	
	143	4	**1P-7009**	1	CLIP	
	144	5	**1S-0994**	1	CLIP	
	145	4	**2M-9780**	1	SEAL-O-RING	
	146	5	**3J-1907**	1	SEAL-O-RING	
	147	3	**3K-0360**	1	SEAL-O-RING	
	148	5	**4J-0519**	1	SEAL-O-RING	
	149	4	**4J-0520**	2	SEAL-O-RING	
	150	4	**4S-1962**	1	CLIP	
	151	5	**5H-8848**	1	SEAL-O-RING	
	152	5	**5P-7468**	1	CLIP (SLOT)	
	153	5	**5P-7469**	1	CLIP (TAB)	
	154	5	**5P-8444**	1	GROMMET	
	155	1	**6D-1641**	1	CLIP	
	156	3	**6D-3479**	2	CLIP	
	157	1,4,5	**6V-8397**	3	SEAL-O-RING	
	158	3	**6V-9168**	1	NUT (11/16-16-THD)	
	159	1,3	**7D-7233**	4	CLIP	
M	160	2	**7X-2544**	2	BOLT (M10X1.5X104-MM)	
	161	4	**8C-3206**	2	FLANGE-HALF	
	162	5	**8M-4069**	4	WASHER (10.3X38.1X5-MM THK)	
M	163	5	**8T-2223**	4	BOLT-SOCKET HEAD (M10X1.5X45-MM)	
	164	1,2,3, 4,5	**8T-4121**	85	WASHER-HARD (11X21X2.5-MM THK)	
M	165	1,3,5	**8T-4133**	7	NUT (M10X1.5-THD)	
M	166	1,2,3,4	**8T-4136**	19	BOLT (M10X1.5X25-MM)	
M	167	1,2,3,5	**8T-4137**	23	BOLT (M10X1.5X20-MM)	
M	168	5	**8T-4178**	2	BOLT (M10X1.5X90-MM)	
M	169	5	**8T-4186**	2	BOLT (M10X1.5X40-MM)	
M	170	2,3,4	**8T-4195**	6	BOLT (M10X1.5X30-MM)	
M	171	4	**8T-4196**	8	BOLT (M10X1.5X35-MM)	
	172	5	**8T-4223**	4	WASHER-HARD (13.5X25.5X3-MM THK)	
M	173	5	**8T-4779**	3	BOLT (M16X2X35-MM)	
M	174	5	**8T-4956**	4	BOLT (M12X1.75X35-MM)	
	175	4	**9S-1350**	1	CLIP	
	176	4	**9X-2134**	1	ELBOW	
	177	1	**9X-8250**	2	CLIP	
	178	5	**9X-8257**	3	WASHER (17.5X30X3.5-MM THK)	
G	179	3	**122-6871**		HOSE-HYDRAULIC (4.7-IN)	

G-ORDER BY THE INCH
I-REFER TO HYDRAULIC INFORMATION SYSTEM
M-METRIC PART
Y-SEPARATE ILLUSTRATION

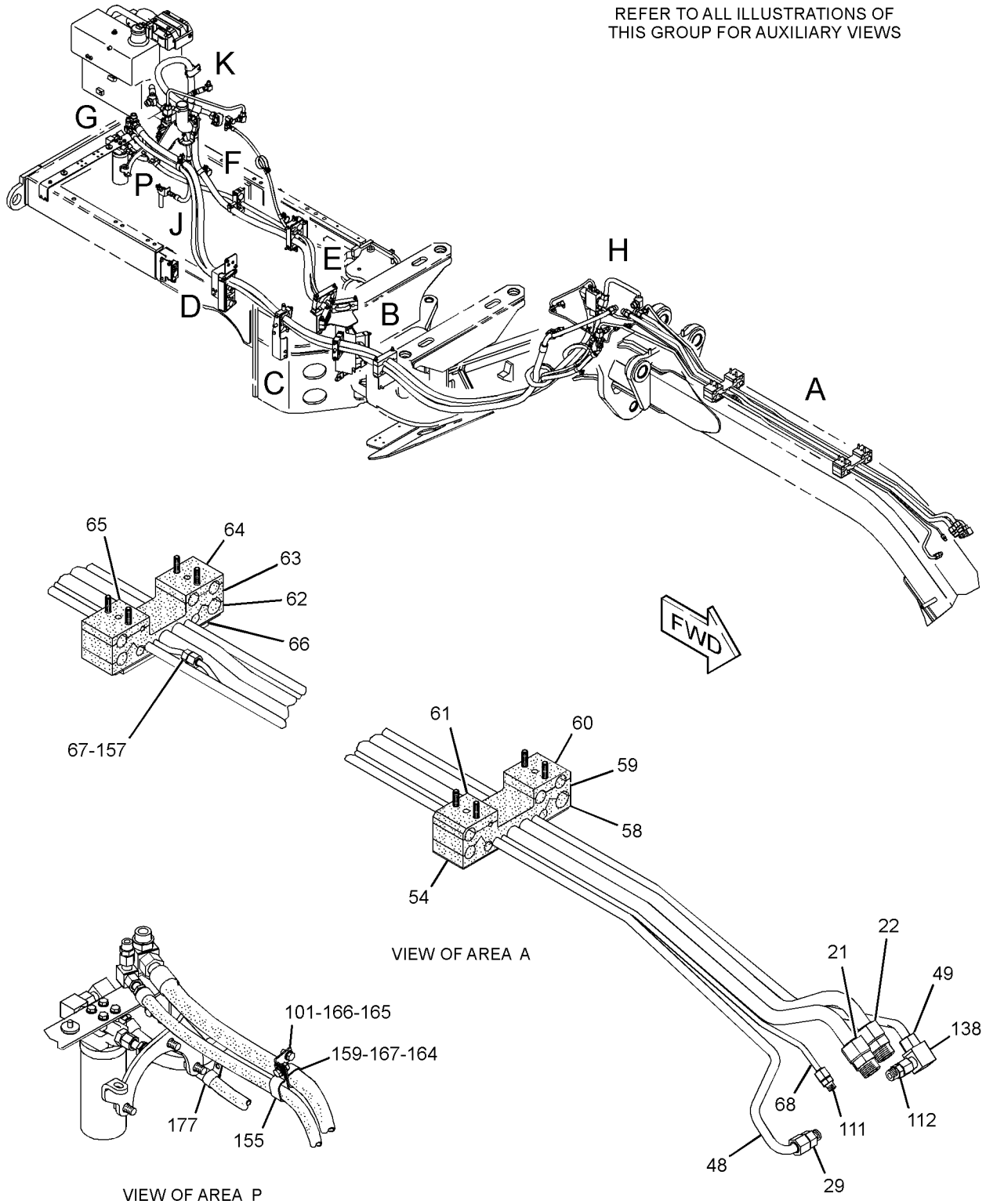

GRAPHIC #1

g01372321

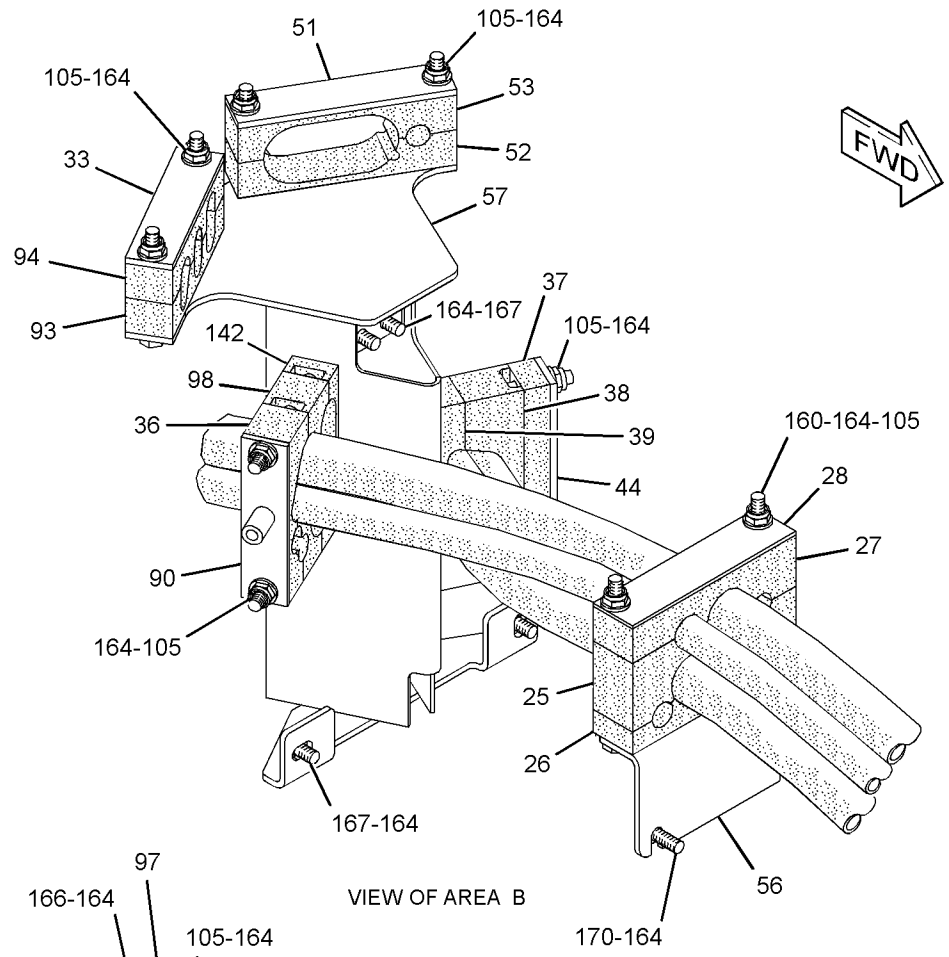

VIEW OF AREA B

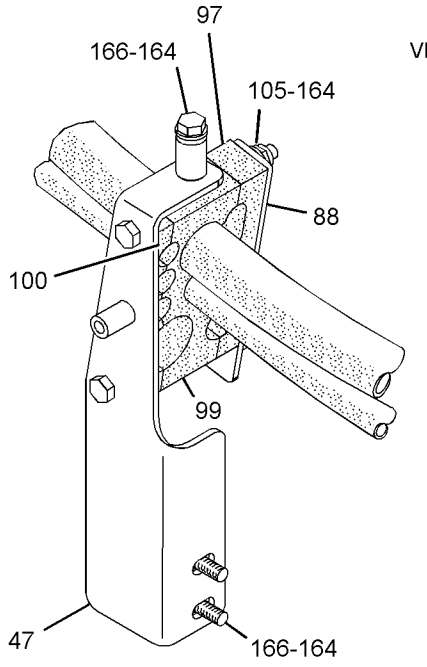

VIEW OF AREA C

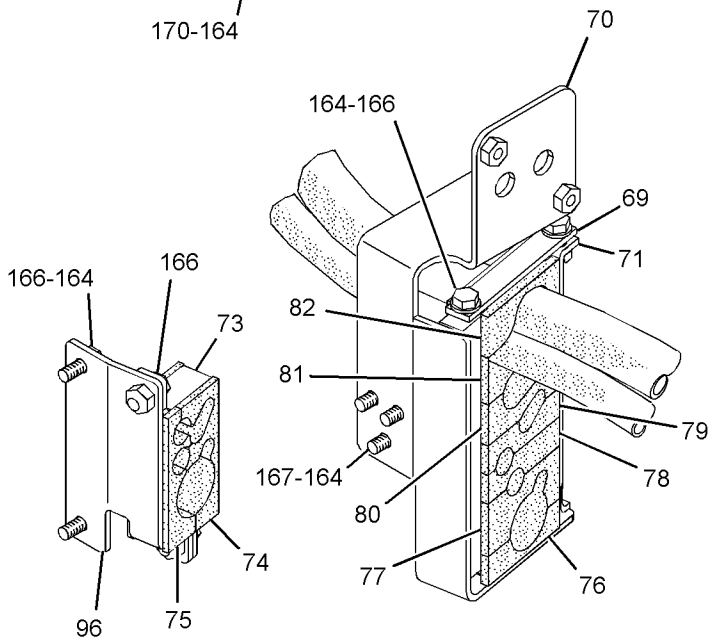

VIEW OF AREA D

GRAPHIC #2

g01372329

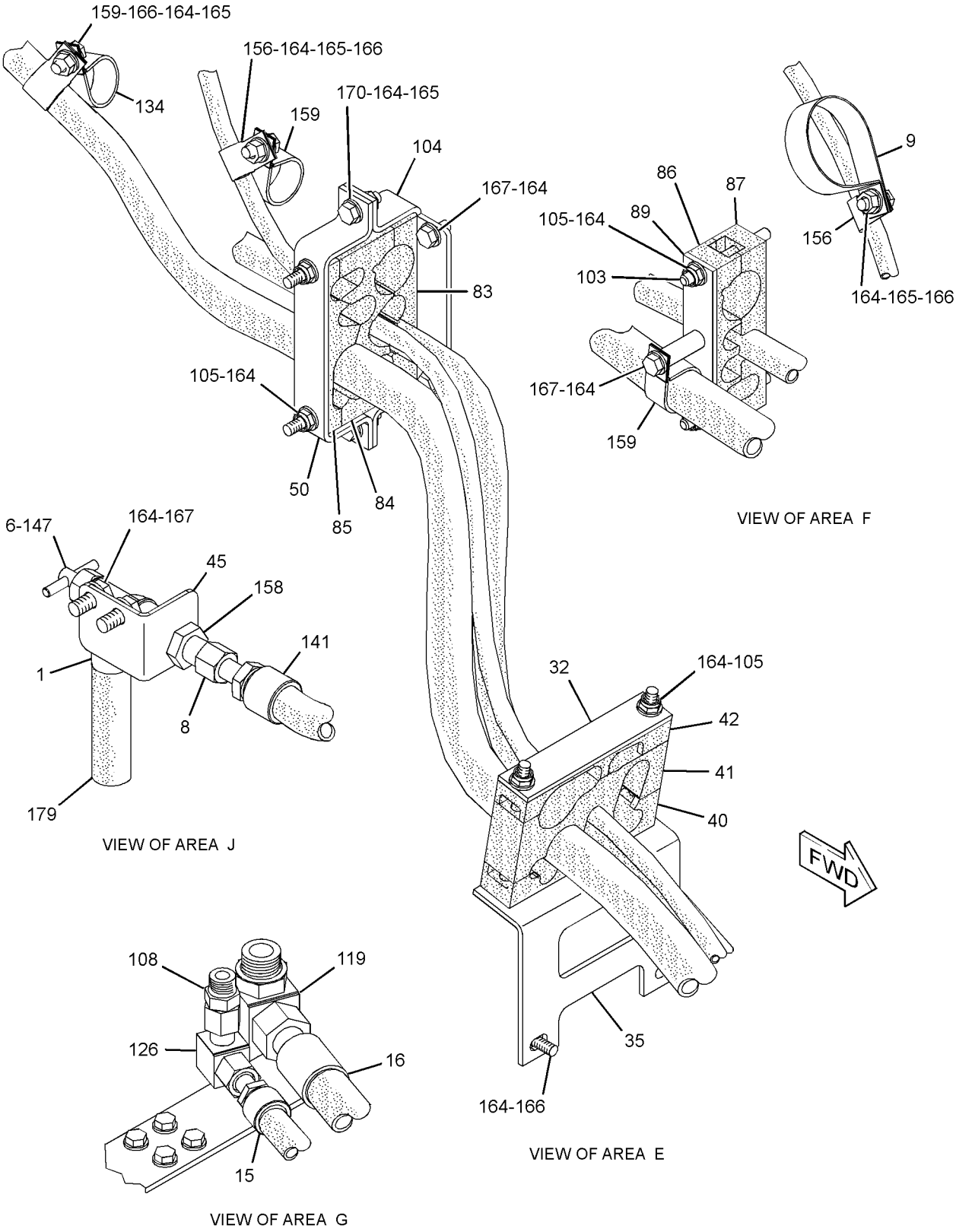

GRAPHIC #3

g01372424

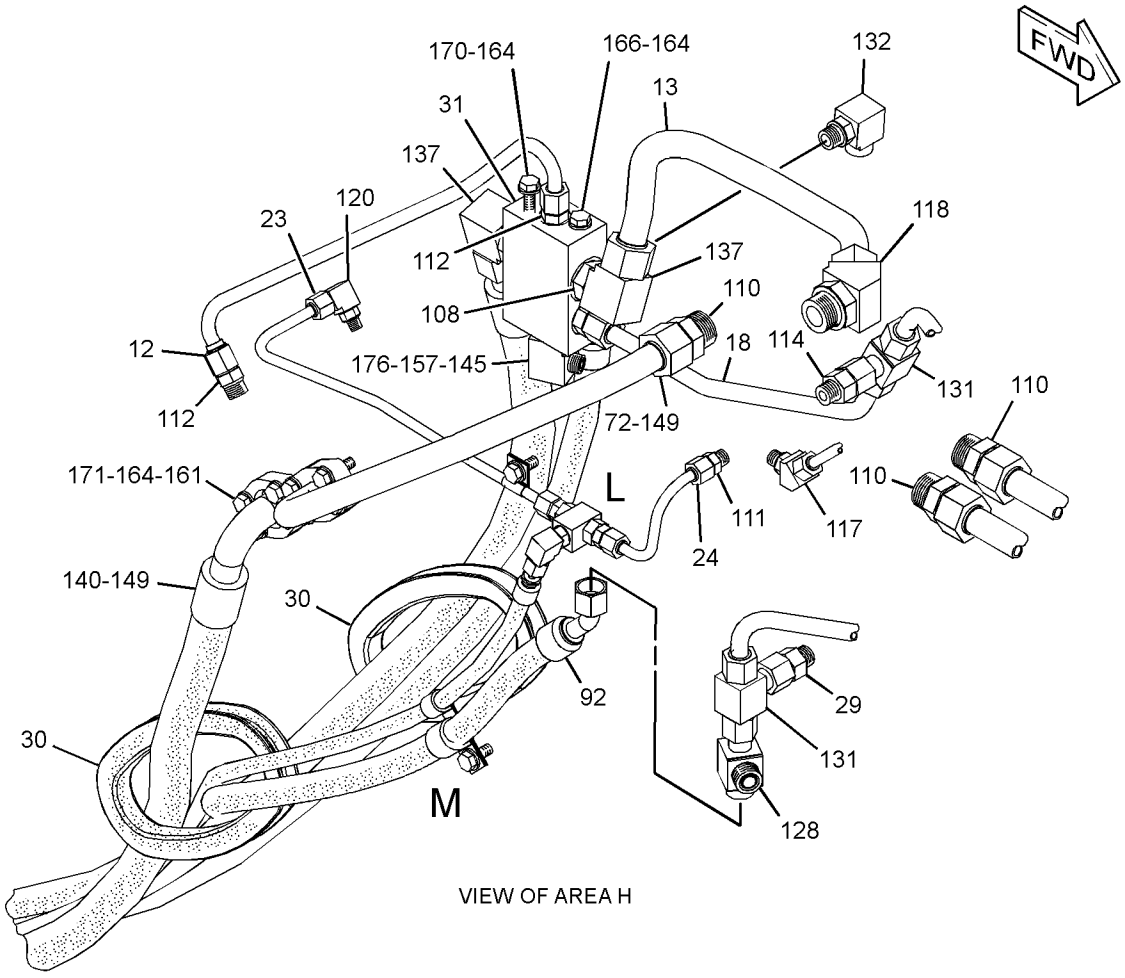

VIEW OF AREA H

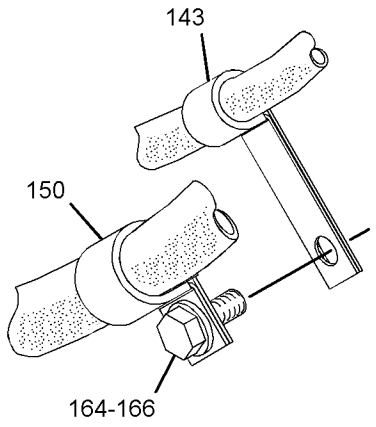

VIEW OF AREA M

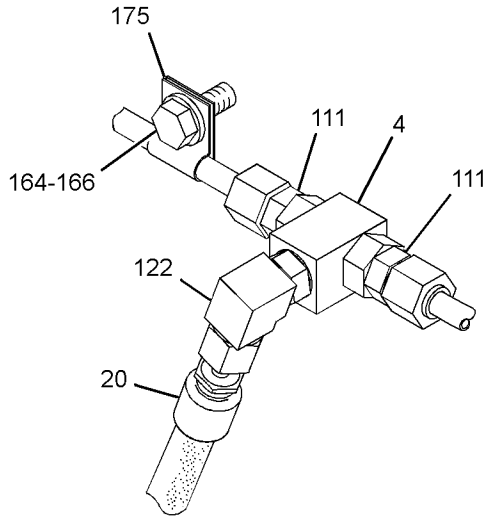

VIEW OF AREA L

GRAPHIC #4

g01372682

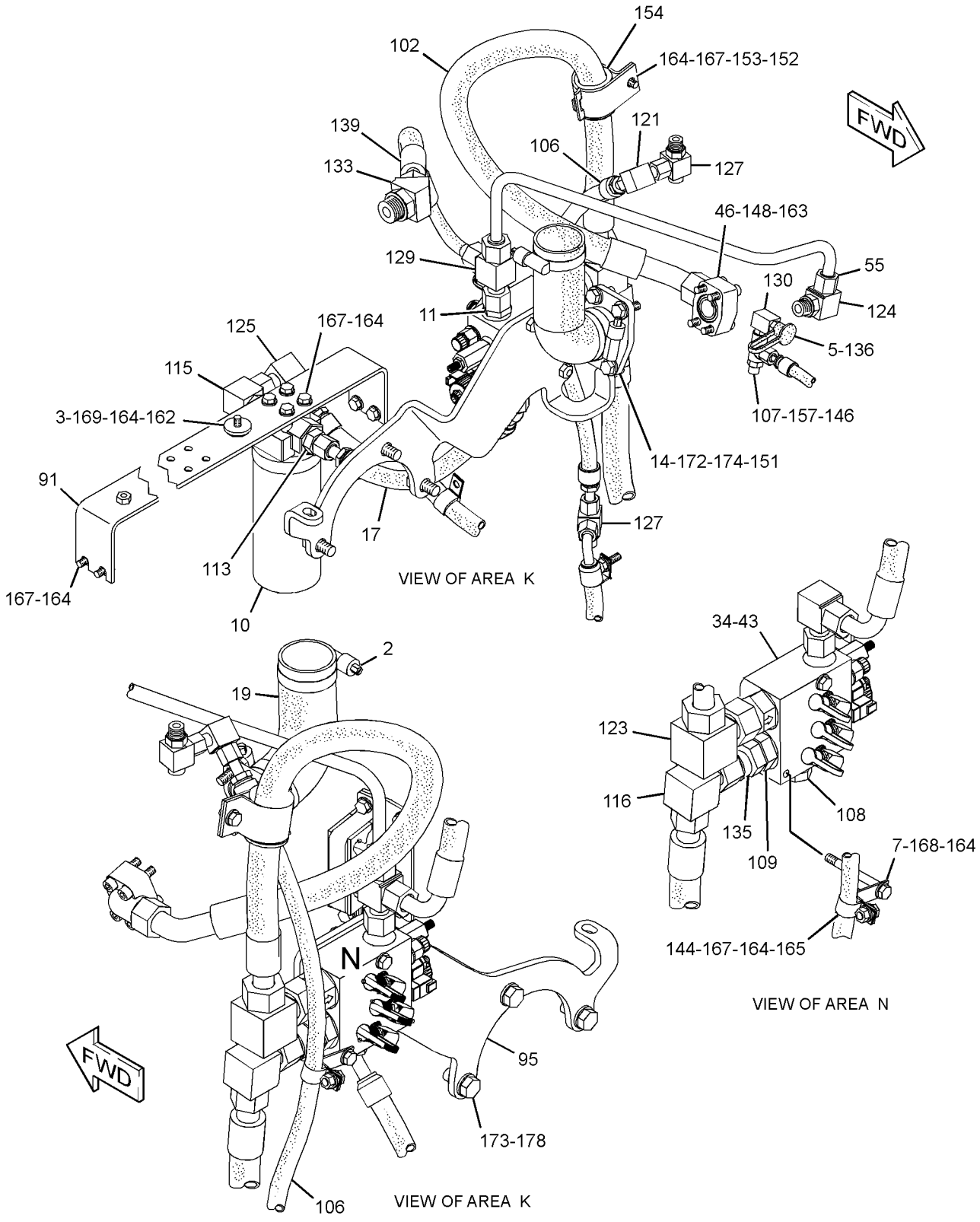

GRAPHIC #5 **<END>** g01372845

HYDRAULIC SYSTEM

231-1518 LINES GP-RIPPER

S/N: B9D1-UP

SMCS-5057 **i02774898**

NOTE	REF NO	GRAPHIC REF	PART NUMBER	QTY	PART NAME 1 2 3 4 5 6 (PRODUCT LEVEL)	SEE PAGE
	1	1	*105-7167*	2	ADAPTER GP (UNION)	
					(EACH INCLUDES)	
		1	**8T-5890**	1	UNION	
		1	**6V-8397**	2	SEAL-O-RING	
I	2	1	**238-5592**	1	HOSE AS	
I	3	1	**246-4389**	1	HOSE AS	
	4	1	**293-4707**	1	TUBE AS	
	5	1	**293-4708**	1	TUBE AS	
	6	1	**111-9251**	2	WASHER-HARD (20X35X1.6-MM THK)	
	7	1	*148-8340*	2	CONNECTOR AS	
					(EACH INCLUDES)	
		1	**6V-8639**	1	CONNECTOR	
		1	**3K-0360**	1	SEAL-O-RING	
		1	**6V-8398**	1	SEAL-O-RING	
	8	1	**1S-0994**	4	CLIP	
	9	1	**5P-9299**	2	CLIP	
	10	1	**6V-8398**	2	SEAL-O-RING	
	11	1	**6V-9168**	2	NUT (11/16-16-THD)	
	12	1	**6V-9829**	2	CAP AS	
	13	1	**8T-4121**	5	WASHER-HARD (11X21X2.5-MM THK)	
M	14	1	**8T-4136**	1	BOLT (M10X1.5X25-MM)	
M	15	1	**8T-4137**	3	BOLT (M10X1.5X20-MM)	

I-REFER TO HYDRAULIC INFORMATION SYSTEM
M-METRIC PART

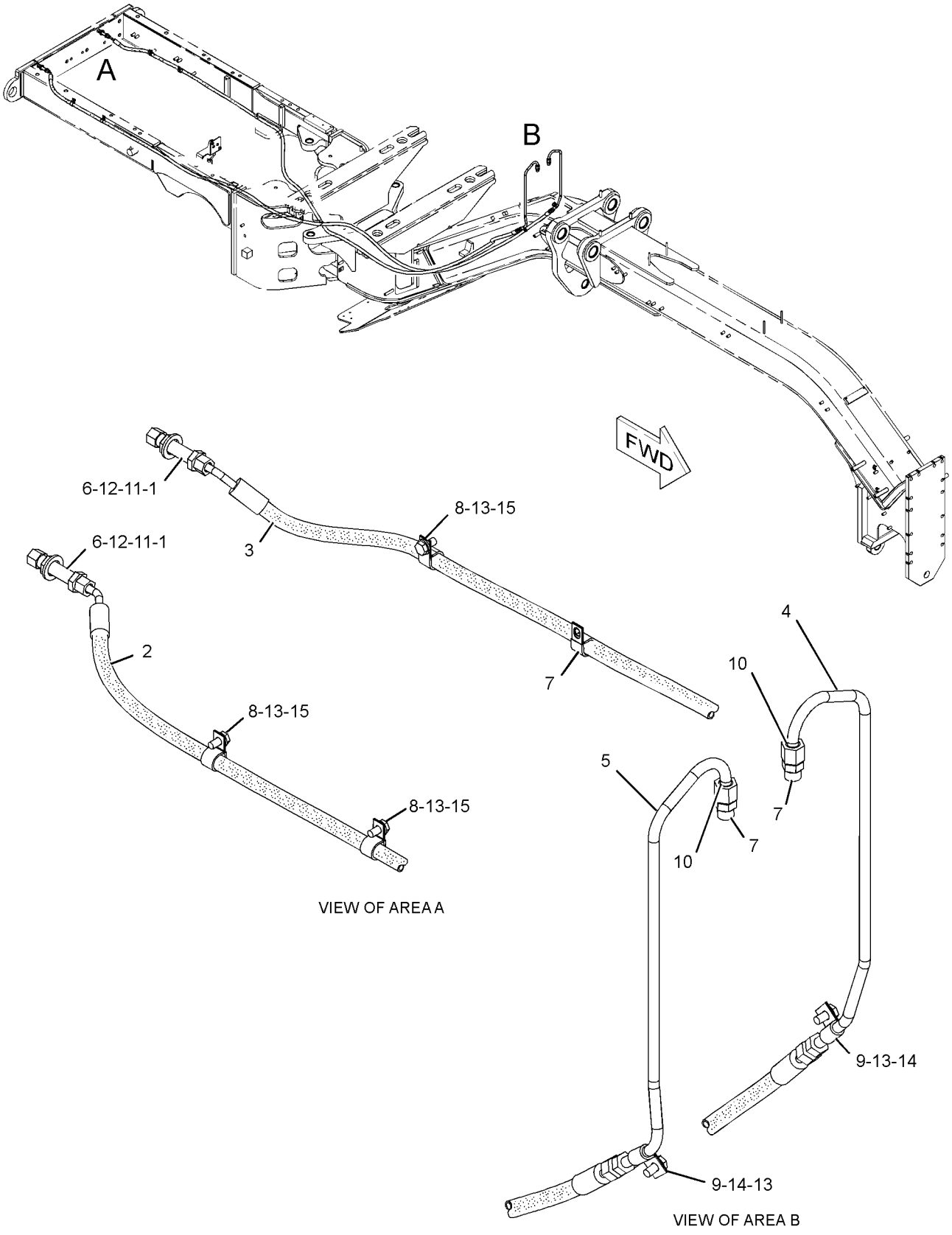

GRAPHIC #1 **<END>** g01337872

HYDRAULIC SYSTEM

250-4226 LINES GP-RIPPER

S/N: B9D1-UP

SMCS-5057 **i02783271**

NOTE	REF NO	GRAPHIC REF	PART NUMBER	QTY	PART NAME 1 2 3 4 5 6 (PRODUCT LEVEL)	SEE PAGE
	1	1	*105-7167*	4	ADAPTER GP (UNION)	
					(EACH INCLUDES)	
		1	**8T-5890**	1	UNION	
		1	**6V-8397**	2	SEAL-O-RING	
I	2	1	**238-5592**	2	HOSE AS	
I	3	1	**246-4389**	2	HOSE AS	
	4	1	**293-4707**	1	TUBE AS	
	5	1	**293-4708**	1	TUBE AS	
	6	1	**293-4709**	1	TUBE AS	
	7	1	**299-7620**	1	TUBE AS	
	8	1	**111-9251**	4	WASHER-HARD (20X35X1.6-MM THK)	
	9	1	*148-8340*	4	CONNECTOR AS	
					(EACH INCLUDES)	
		1	**6V-8639**	1	CONNECTOR	
		1	**3K-0360**	1	SEAL-O-RING	
		1	**6V-8398**	1	SEAL-O-RING	
	10	1	**1S-0994**	3	CLIP	
	11	1	**4D-9517**	1	CLIP	
	12	1	**4I-7889**	1	SPACER (11X25X45-MM THK)	
	13	1	**5P-9299**	2	CLIP	
	14	1	**6D-4247**	7	CLIP	
	15	1	**6V-8398**	4	SEAL-O-RING	
	16	1	**6V-9168**	4	NUT (11/16-16-THD)	
	17	1	**6V-9829**	4	CAP AS	
	18	1	**7C-6921**	1	SPACER (11X20X22.8-MM THK)	
	19	1	**8M-2770**	1	CLIP	
	20	1	**8T-4121**	8	WASHER-HARD (11X21X2.5-MM THK)	
M	21	1	**8T-4136**	1	BOLT (M10X1.5X25-MM)	
M	22	1	**8T-4137**	5	BOLT (M10X1.5X20-MM)	
M	23	1	**8T-4186**	1	BOLT (M10X1.5X40-MM)	
M	24	1	**8T-6466**	1	BOLT (M10X1.5X60-MM)	

I-REFER TO HYDRAULIC INFORMATION SYSTEM
M-METRIC PART

250-4226 **LINES GP-RIPPER** *(contd.)* **i02783271**

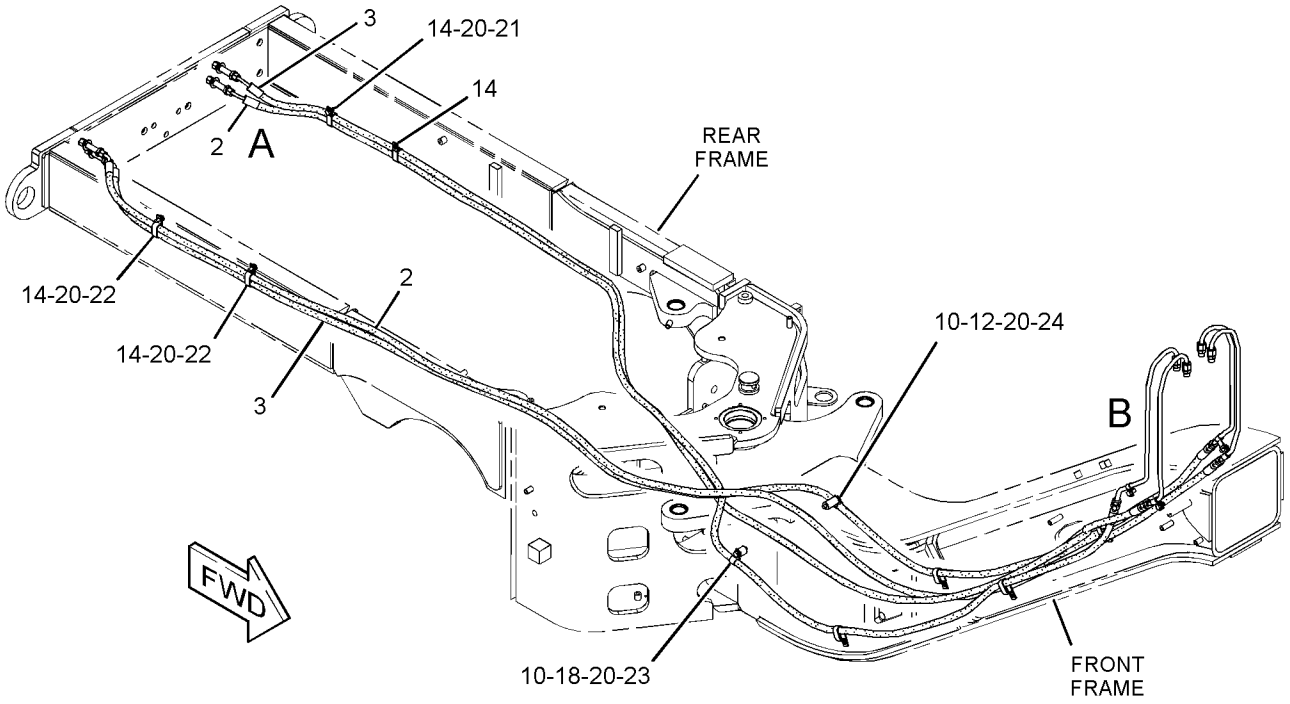

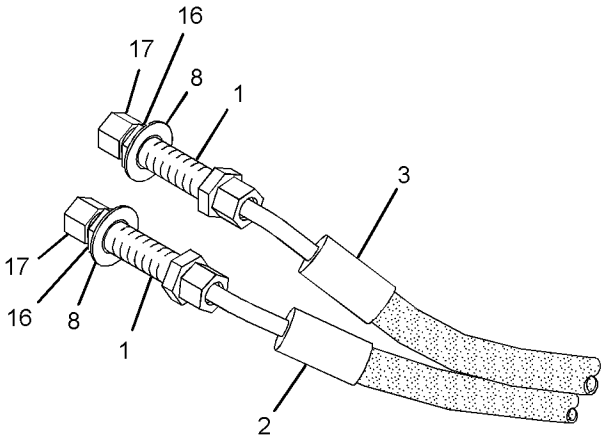

VIEW OF AREA A

VIEW OF AREA B

GRAPHIC #1 **<END>** g01366698

250-6181 LINES GP-RIPPER

S/N: B9D1-UP

PART OF 248-1322 RIPPER AR

SMCS-5057 **i02783082**

NOTE	REF NO	GRAPHIC REF	PART NUMBER	QTY	PART NAME 1 2 3 4 5 6 (PRODUCT LEVEL)	SEE PAGE
I	1	1	**3T-6848**	1	HOSE AS	
I	2	1	**7I-5412**	1	HOSE AS	
	3	1	*148-8374*	2	ELBOW AS	
					(EACH INCLUDES)	
		1	**6V-8723**	1	ELBOW	
		1	**3K-0360**	1	SEAL-O-RING	
		1	**6V-8397**	1	SEAL-O-RING	
	4	1	**1S-3618**	1	CLIP	
	5	1	**4D-2886**	1	CLIP	
	6	1	**7X-7729**	2	WASHER (11X25X3-MM THK)	
M	7	1	**8T-4133**	1	NUT (M10X1.5-THD)	
M	8	1	**8T-4195**	1	BOLT (M10X1.5X30-MM)	

I-REFER TO HYDRAULIC INFORMATION SYSTEM
M-METRIC PART

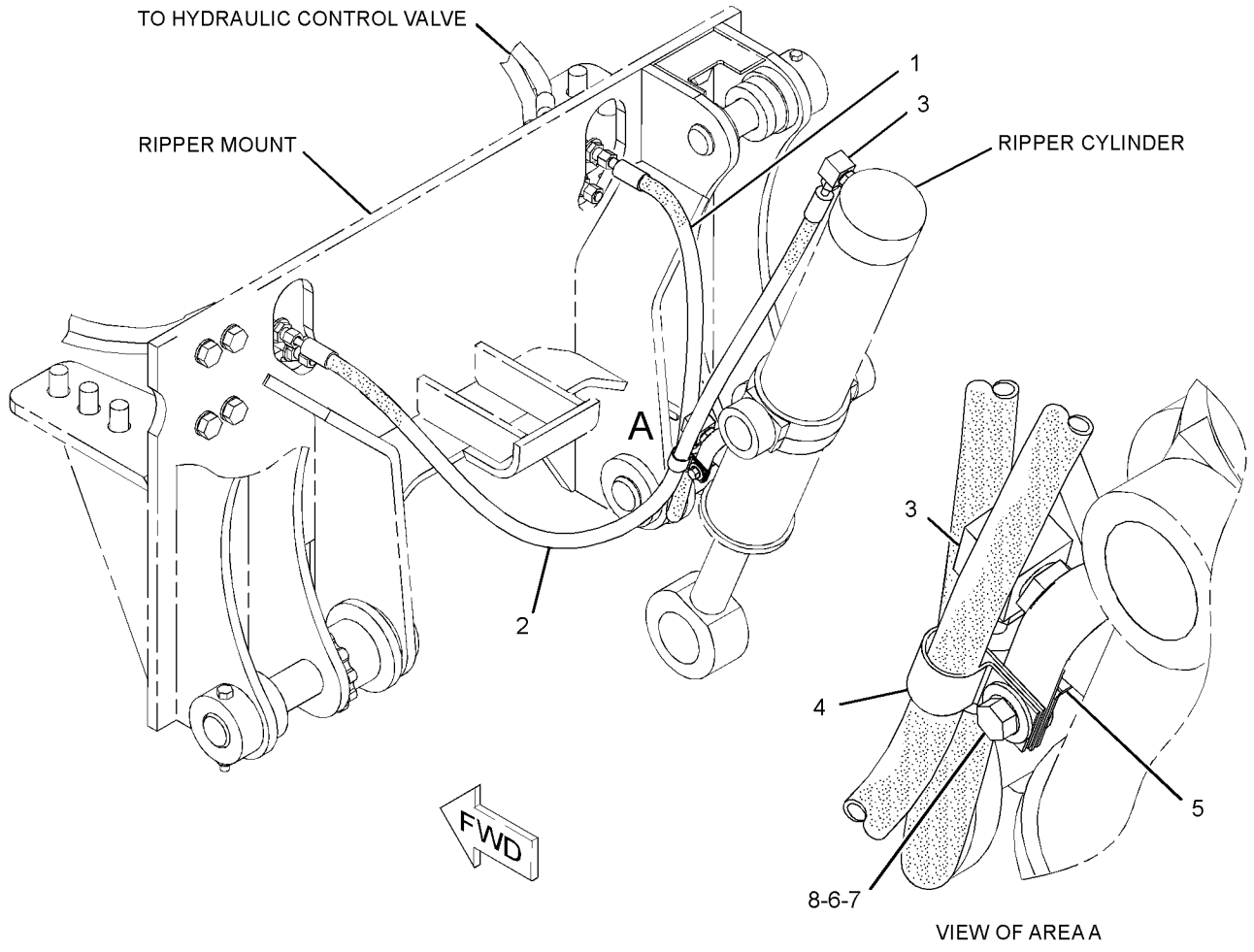

GRAPHIC #1 **<END>** g01337722

HYDRAULIC SYSTEM

231-1531 LINES GP-SECONDARY STEERING

S/N: B9D1-UP

PART OF 234-7721 COMMON AR, 276-1425 STEERING AR-SECONDARY

SMCS-4304 **i02771632**

NOTE	REF NO	GRAPHIC REF	PART NUMBER	QTY	PART NAME 1 2 3 4 5 6 (PRODUCT LEVEL)	SEE PAGE
I	1	1	**8Y-8694**	1	HOSE AS	
	2	1	**9T-1013**	1	VALVE AS-CHECK	
		1	**3K-0360**	1	SEAL-O-RING	
		1	**6V-8398**	1	SEAL-O-RING	
	3	1	**9T-8071**	1	VALVE GP-RELIEF (SECONDARY STEERING)	
	4	1	**127-9323**	1	BRACKET AS	
I	5	1	**138-9403**	1	HOSE AS	
I	6	1	**293-4243**	1	HOSE AS	
	7	1	**053-0558**	1	CLIP	
	8	1	*148-8322*	1	CONNECTOR AS	
		1	**6V-8640**	1	CONNECTOR	
		1	**2M-9780**	1	SEAL-O-RING	
		1	**6V-9746**	1	SEAL-O-RING	
	9	1	*148-8340*	1	CONNECTOR AS	
		1	**6V-8639**	1	CONNECTOR	
		1	**3K-0360**	1	SEAL-O-RING	
		1	**6V-8398**	1	SEAL-O-RING	
	10	1	*148-8428*	1	TEE AS	
		1	**6V-8782**	1	TEE	
		1	**3K-0360**	1	SEAL-O-RING	
		1	**6V-8398**	2	SEAL-O-RING	
	11	1	*153-6244*	1	ELBOW AS	
		1	**8T-5389**	1	ELBOW	
		1	**2M-9780**	1	SEAL-O-RING	
		1	**6V-9746**	1	SEAL-O-RING	
	12	1	*155-7321*	1	ADAPTER AS	
		1	**6V-1722**	1	ADAPTER-O-RING	
		1	**3D-2824**	1	SEAL-O-RING	
	13	1	**6V-1889**	3	CLIP	
	14	1	**8T-4121**	5	WASHER-HARD (11X21X2.5-MM THK)	
M	15	1	**8T-4133**	1	NUT (M10X1.5-THD)	
M	16	1	**8T-4136**	1	BOLT (M10X1.5X25-MM)	
M	17	1	**8T-4137**	1	BOLT (M10X1.5X20-MM)	
M	18	1	**8T-4186**	2	BOLT (M10X1.5X40-MM)	

I-REFER TO HYDRAULIC INFORMATION SYSTEM
M-METRIC PART

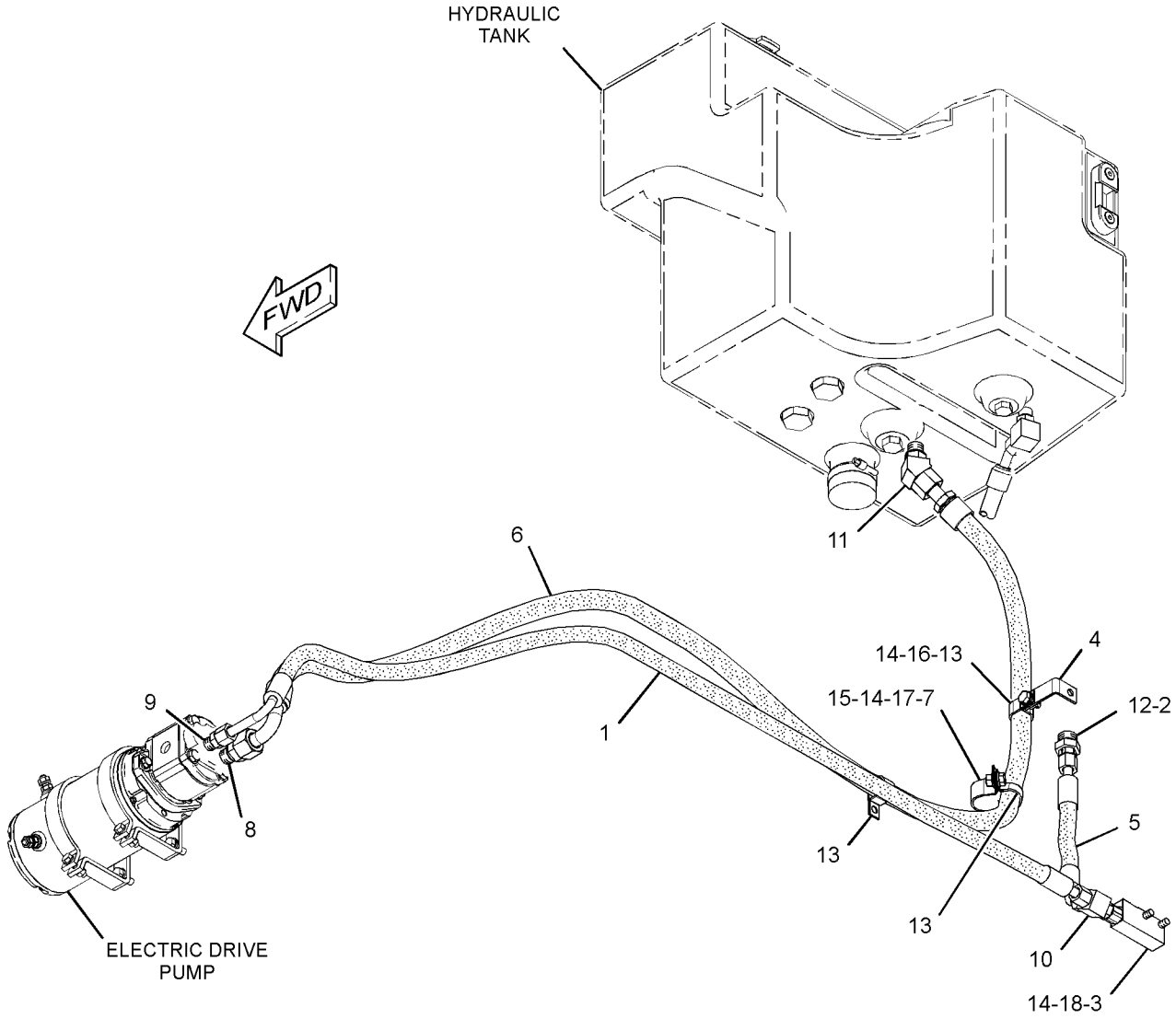

GRAPHIC #1 **<END>** g01343378

HYDRAULIC SYSTEM

231-1512 LINES GP-STEERING

S/N: B9D1-UP

PART OF 234-7721 COMMON AR

SMCS-4304 **i02759306**

NOTE	REF NO	GRAPHIC REF	PART NUMBER	QTY	PART NAME 1 2 3 4 5 6 (PRODUCT LEVEL)	SEE PAGE
	1	1	**245-1377**	1	TUBE AS	
Y	2	1	**254-3415**	1	MANIFOLD GP-CONTROL (STEERING BACKUP)	620
	3	1	**267-0006**	1	PLATE	
	4	1	**285-8264**	1	TUBE AS	
	5	1	**285-8266**	1	TUBE AS	
	6	1	**285-8267**	1	TUBE AS	
	7	1	**288-6176**	1	TUBE AS	
	8	1	**288-6177**	1	TUBE AS	
	9	1	**291-8464**	1	TUBE AS	
	10	1	**291-8465**	1	TUBE AS	
Y	11	1	**308-0934**	1	VALVE GP-STEERING	701
	12	1	*148-8318*	4	CONNECTOR AS	
					(EACH INCLUDES)	
		1	**6V-8634**	1	CONNECTOR	
		1	**3K-0360**	1	SEAL-O-RING	
		1	**6V-8397**	1	SEAL-O-RING	
	13	1	*148-8336*	2	CONNECTOR AS	
					(EACH INCLUDES)	
		1	**6V-8636**	1	CONNECTOR	
		1	**3J-1907**	1	SEAL-O-RING	
		1	**6V-8397**	1	SEAL-O-RING	
	14	1	*148-8342*	1	CONNECTOR AS	
		1	**6V-8632**	1	CONNECTOR	
		1	**3K-0360**	1	SEAL-O-RING	
		1	**7J-9108**	1	SEAL-O-RING	
	15	1	*148-8359*	1	ELBOW AS	
		1	**6V-9877**	1	ELBOW	
		1	**3K-0360**	1	SEAL-O-RING	
		1	**6V-9746**	1	SEAL-O-RING	
	16	1	*148-8378*	2	ELBOW AS (90-DEG)	
					(EACH INCLUDES)	
		1	**6V-8724**	1	ELBOW (90-DEG)	
		1	**3J-1907**	1	SEAL-O-RING	
		1	**6V-8397**	1	SEAL-O-RING	
	17	1	*150-3035*	1	ELBOW AS	
		1	**8T-1718**	1	ELBOW	
		1	**6V-9746**	1	SEAL-O-RING	
M	18	1	**280-8912**	1	BOLT (M10X1.5X75-MM)	
	19	1	**283-8650**	3	WASHER-HARD (10.2X18.5X5.0-MM THK)	
	20	1	**3S-8664**	2	CLIP	
	21	1	**5K-9660**	2	CLIP	
	22	1	**6V-8398**	2	SEAL-O-RING	
	23	1	**6V-9746**	2	SEAL-O-RING	
	24	1	**8T-4121**	6	WASHER-HARD (11X21X2.5-MM THK)	
M	25	1	**8T-4137**	2	BOLT (M10X1.5X20-MM)	
M	26	1	**8T-4172**	1	BOLT (M10X1.5X80-MM)	
M	27	1	**8T-4195**	1	BOLT (M10X1.5X30-MM)	
M	28	1	**8T-4908**	3	BOLT (M8X1.25X25-MM)	
M	29	1	**8T-6466**	1	BOLT (M10X1.5X60-MM)	

M-METRIC PART
Y-SEPARATE ILLUSTRATION

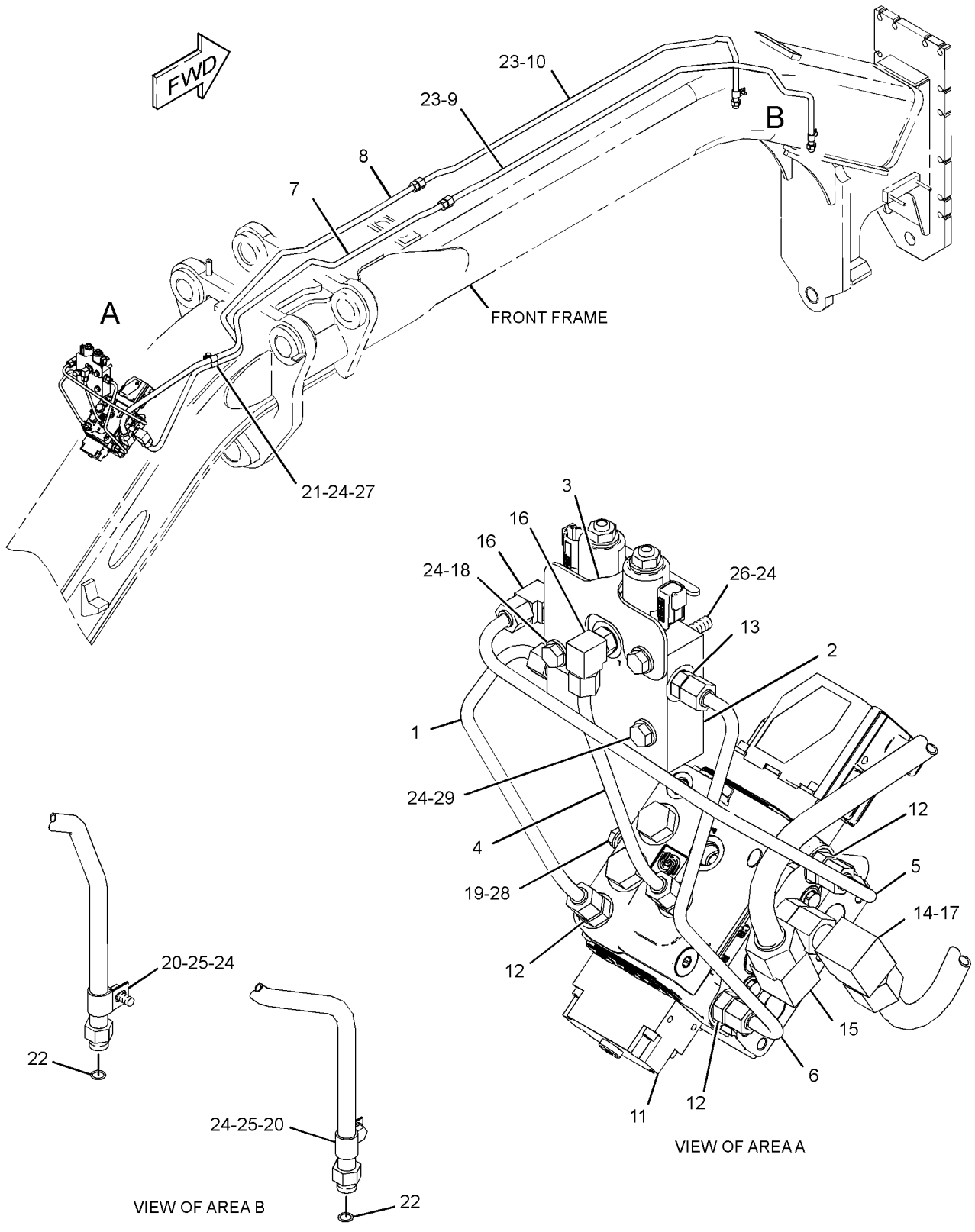

GRAPHIC #1 **<END>** g01365770

HYDRAULIC SYSTEM

264-2994 LINES GP-STEERING—ALL WHEEL DRIVE

S/N: B9D1-UP

PART OF 261-0153 AXLE AR-FRONT

SMCS-4304 **i02786118**

NOTE	REF NO	GRAPHIC REF	PART NUMBER	QTY	PART NAME 1 2 3 4 5 6 (PRODUCT LEVEL)	SEE PAGE
	1	1	**9M-0766**	1	BRACKET	
I	2	1	**238-6666**	1	HOSE AS	
I	3	1	**238-6667**	1	HOSE AS	
I	4	1	**285-3826**	2	HOSE AS	
	5	1	**288-6370**	1	TUBE AS	
	6	1	**288-6371**	1	TUBE AS	
I	7	1	**300-6576**	2	HOSE AS	
	8	1	*148-8318*	2	CONNECTOR AS	
					(EACH INCLUDES)	
		1	**6V-8634**	1	CONNECTOR	
		1	**3K-0360**	1	SEAL-O-RING	
		1	**6V-8397**	1	SEAL-O-RING	
	9	1	*148-8340*	5	CONNECTOR AS	
					(EACH INCLUDES)	
		1	**6V-8639**	1	CONNECTOR	
		1	**3K-0360**	1	SEAL-O-RING	
		1	**6V-8398**	1	SEAL-O-RING	
	10	1	*148-8374*	1	ELBOW AS	
		1	**6V-8723**	1	ELBOW	
		1	**3K-0360**	1	SEAL-O-RING	
		1	**6V-8397**	1	SEAL-O-RING	
	11	1	*148-8444*	2	TEE AS-SWIVEL	
					(EACH INCLUDES)	
		1	**6V-9837**	1	TEE-SWIVEL	
		1	**6V-8398**	2	SEAL-O-RING	
	12	1	**231-0336**	1	STUD-TAPERLOCK (M10X1.75X70-MM)	
	13	1	**1S-0994**	3	CLIP	
	14	1	**4V-4125**	2	CLIP	
	15	1	**5G-3676**	2	GROMMET	
	16	1	**5P-7464**	4	CLIP (SLOT)	
	17	1	**5P-7465**	4	CLIP (TAB)	
	18	1	**6D-4246**	2	CLIP	
	19	1	**6V-1249**	4	GROMMET	
	20	1	**6V-8398**	2	SEAL-O-RING	
	21	1	**8T-1889**	2	CLIP (SLOT)	
	22	1	**8T-1890**	2	CLIP (TAB)	
	23	1	**8T-4121**	15	WASHER-HARD (11X21X2.5-MM THK)	
M	24	1	**8T-4133**	4	NUT (M10X1.5-THD)	
M	25	1	**8T-4136**	7	BOLT (M10X1.5X25-MM)	
M	26	1	**8T-4137**	4	BOLT (M10X1.5X20-MM)	

I-REFER TO HYDRAULIC INFORMATION SYSTEM
M-METRIC PART

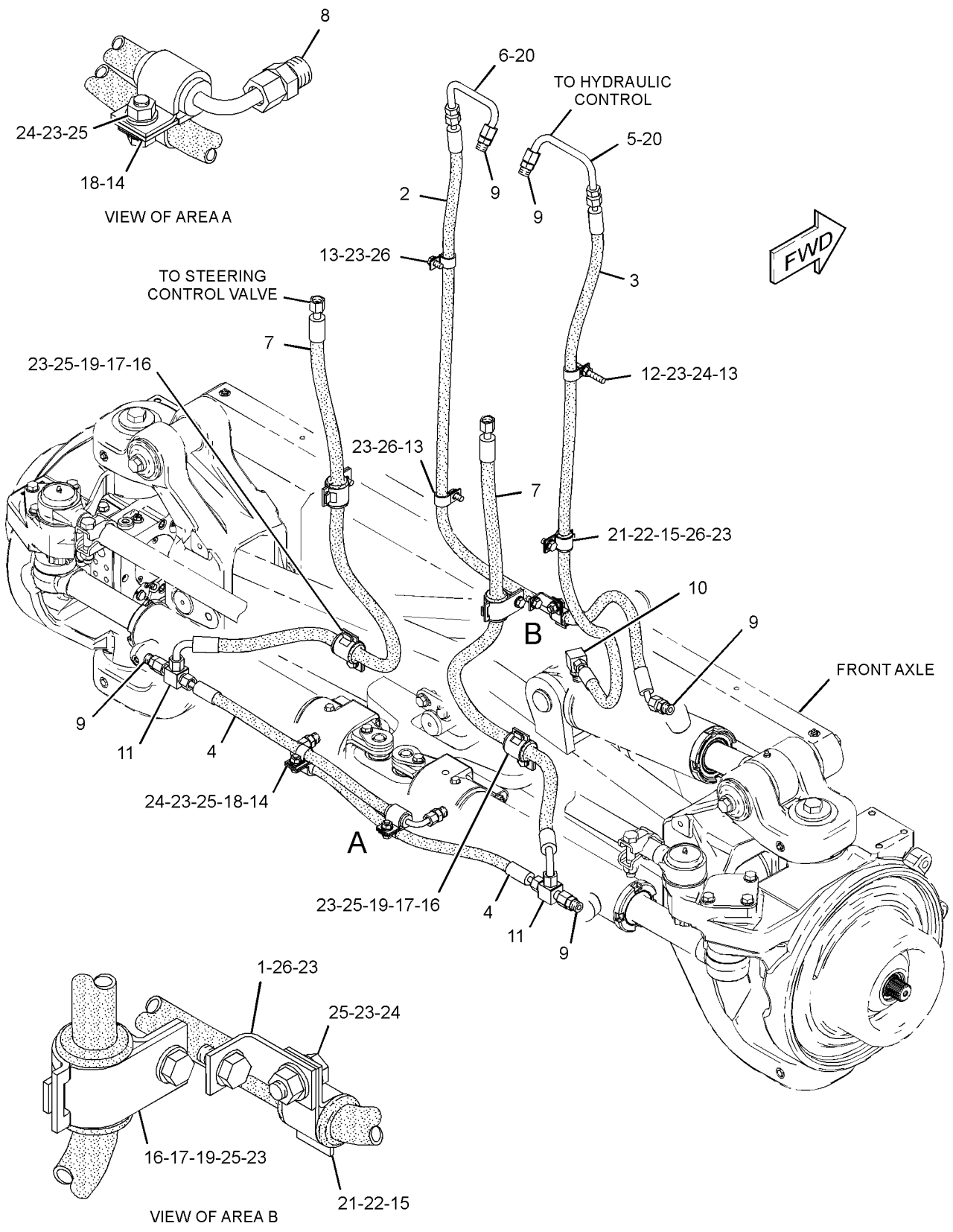

GRAPHIC #1 **<END>** g01366799

HYDRAULIC SYSTEM

246-4477 LOCK GP-CENTERSHIFT

S/N: B9D1-UP

PART OF 234-7721 COMMON AR

SMCS-5221 **i02773472**

NOTE	REF NO	GRAPHIC REF	PART NUMBER	QTY	PART NAME 1 2 3 4 5 6 (PRODUCT LEVEL)	SEE PAGE
	1	1	**2H-3931**	1	SEAL-O-RING	
	2	1	**4T-8054**	1	SEAL AS	
	3	1	**8X-3749**	1	PISTON	
	4	1	**9D-6584**	1	SEAL-LIP TYPE	
	5	1	**115-0540**	1	CYLINDER	
	6	1	**115-0541**	1	PIN	
	7	1	**142-5787**	1	CAP	
Y	8	1	**152-8346**	1	VALVE GP-SOLENOID (CENTERSHIFT)	697
	9	1	**167-2307**	1	SEAL-U-CUP	
M	10	1	**8T-4193**	2	BOLT (M16X2X50-MM)	
	11	1	**7X-0346**	1	BOLT (5/8-11X2-IN)	
	12	1	**8T-4122**	1	WASHER-HARD (17X32X3.5-MM THK)	
	13	1	**8T-4223**	2	WASHER-HARD (13.5X25.5X3-MM THK)	
	14	1	**8T-8917**	2	BOLT (1/2-13X1.25-IN)	
	15	1	**9X-8257**	2	WASHER (17.5X30X3.5-MM THK)	

M-METRIC PART
Y-SEPARATE ILLUSTRATION

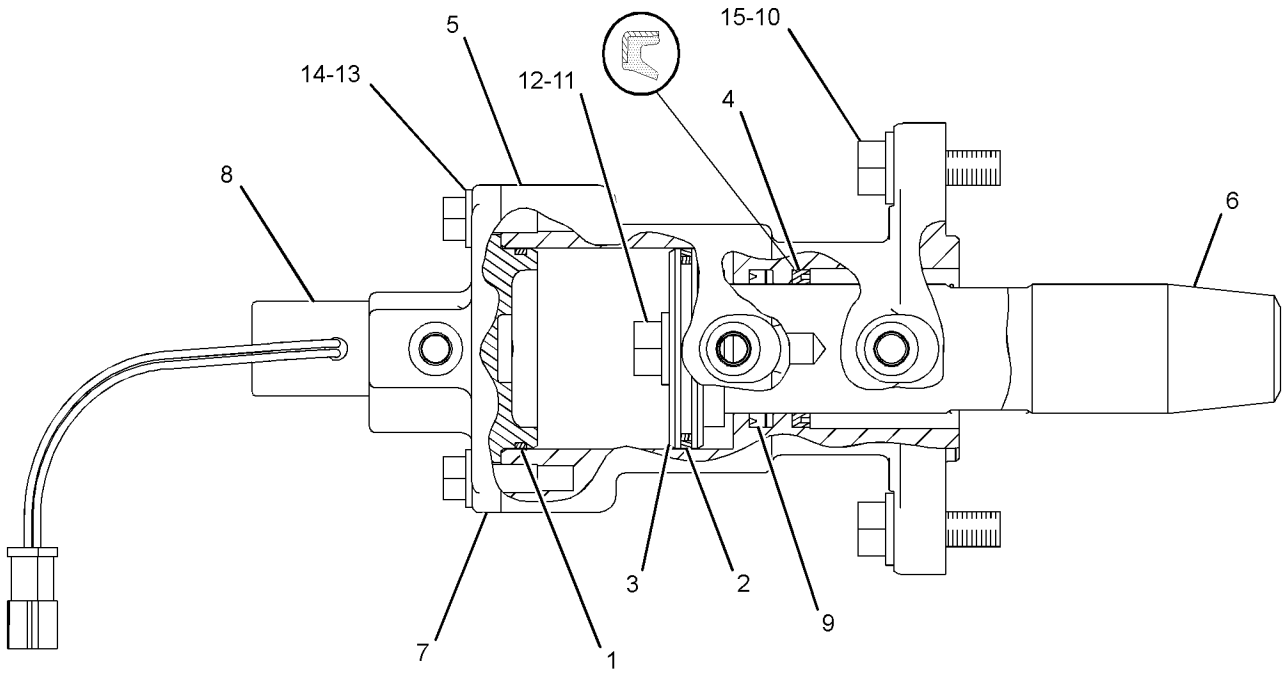

GRAPHIC #1 **<END>** g01390784

251-8256 MANIFOLD GP-CONTROL–BRAKE, HYDRAULIC FAN

S/N: B9D1-UP

PART OF 266-3724 LINES GP-HYDRAULIC FAN

SMCS-5051, 5069, 5264, 5467, 5479 **i02780504**

NOTE	REF NO	GRAPHIC REF	PART NUMBER	QTY	PART NAME 1 2 3 4 5 6 (PRODUCT LEVEL)	SEE PAGE
H	1	1	**282-5396**	1	KIT-VALVE (BRAKE ACCUMULATOR)	
					(INCLUDES SEAL-O-RINGS & BACK-UP RINGS)	
Y	2	1	**251-8330**	1	VALVE GP-RELIEF (BRAKE ACCUMULATOR)	695
S	3	1	**239-0618**	1	VALVE GP-SHUTTLE (HYDRAULIC FAN)	
		1	**3H-0442**	1	SEAL-O-RING	
Y	4	1	**277-2132**	1	VALVE GP-DIVERTER	689
	5	1	**9S-8001**	3	PLUG	
	6	1	**4J-7533**	3	SEAL-O-RING	
	7	1	**9S-8004**	1	PLUG-O-RING	
	8	1	**3J-1907**	1	SEAL-O-RING	
Y	9	1	**257-8414**	1	VALVE GP-SHUTTLE (BRAKE ACCUMULATOR)	696
Y	10	1	**237-0957**	1	SENSOR GP-PRESSURE (BRAKE ACCUMULATOR)	236
Y	11	1	**158-9956**	1	VALVE GP-CHECK (BRAKE, HYDRAULIC FAN)	662
Y	12	1	**189-8627**	1	VALVE GP-SOLENOID (HYDRAULIC FAN)	698
	13	1	**6E-5066**	1	SCREEN (CONTROL MANIFOLD)	
	14	1	**280-0947**	1	PLUG-ORIFICE (HYDRAULIC FAN)	
	15	1	**266-1602**	1	PLUG-ORIFICE	
					AVAILABLE REPAIR KIT(S):	
			200-6282	1	KIT-SEAL (DIVERTER VALVE)	
					(INCLUDES SEAL-O-RINGS & BACK-UP RINGS)	
S			**239-5195**	1	KIT-SEAL (SHUTTLE VALVE)	
					(INCLUDES SEAL-O-RING & BACK-UP RING)	

H-KIT MARKED H SERVICES PART(S) MARKED H
S-KIT MARKED S SERVICES PART(S) MARKED S
Y-SEPARATE ILLUSTRATION

251-8256 MANIFOLD GP-CONTROL *(contd.)* i02780504

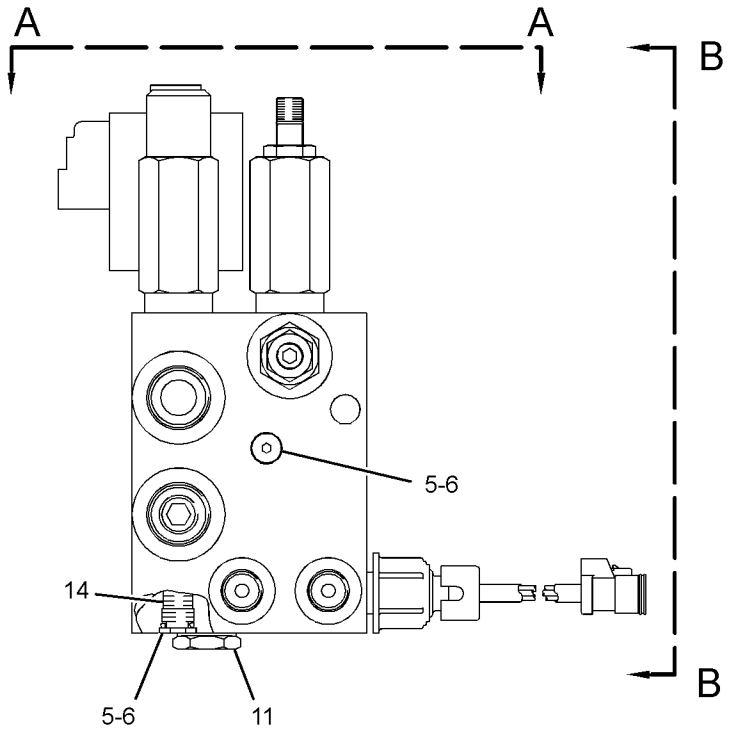

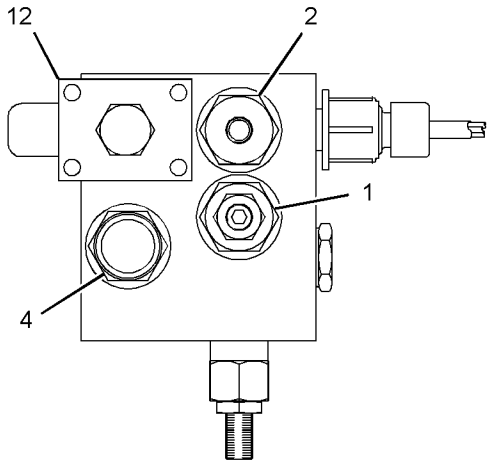

VIEW A-A

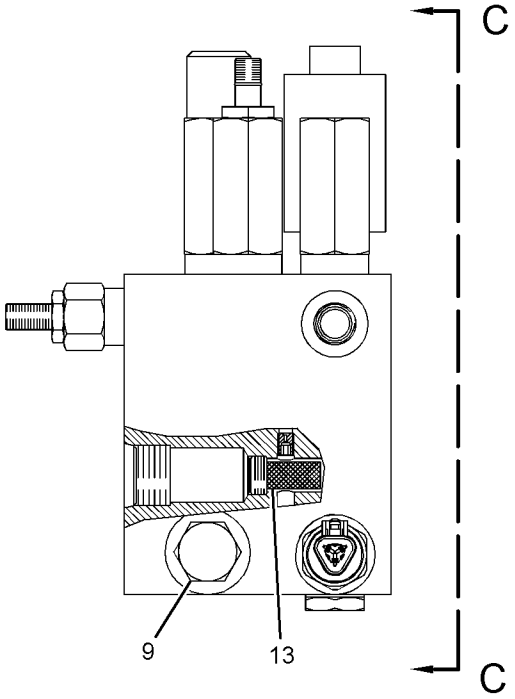

VIEW B-B

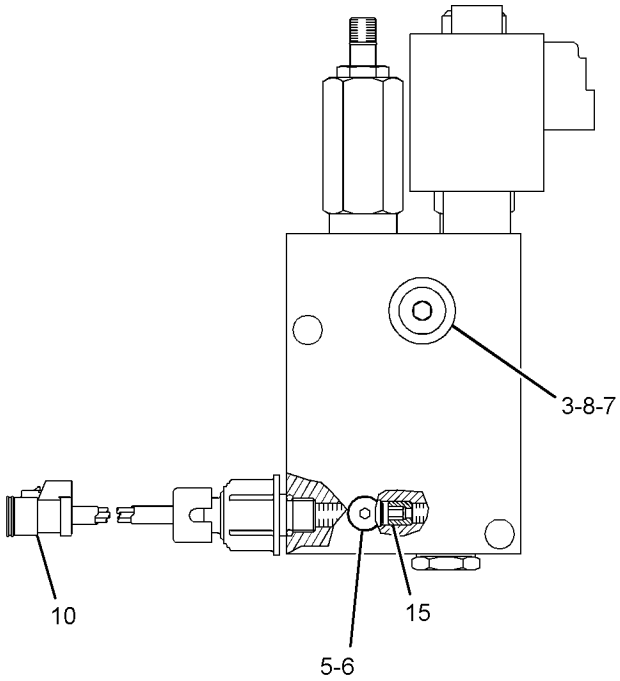

VIEW C-C

GRAPHIC #1 **<END>** g01290597

253-1320 MANIFOLD GP-CONTROL—BLADE CUSHION

S/N: B9D1-UP

PART OF 231-1532 LINES GP-HYDRAULIC

SMCS-5051, 5069, 5264, 5467, 5479 **i02502930**

NOTE	REF NO	GRAPHIC REF	PART NUMBER	QTY	PART NAME 1 2 3 4 5 6 (PRODUCT LEVEL)	SEE PAGE
	1	1	**253-1319**	1	MANIFOLD	
	2	1	**244-8686**	1	VALVE GP-SOLENOID (BLADE CUSHION)	
		1	**249-0981**	1	COIL AS	

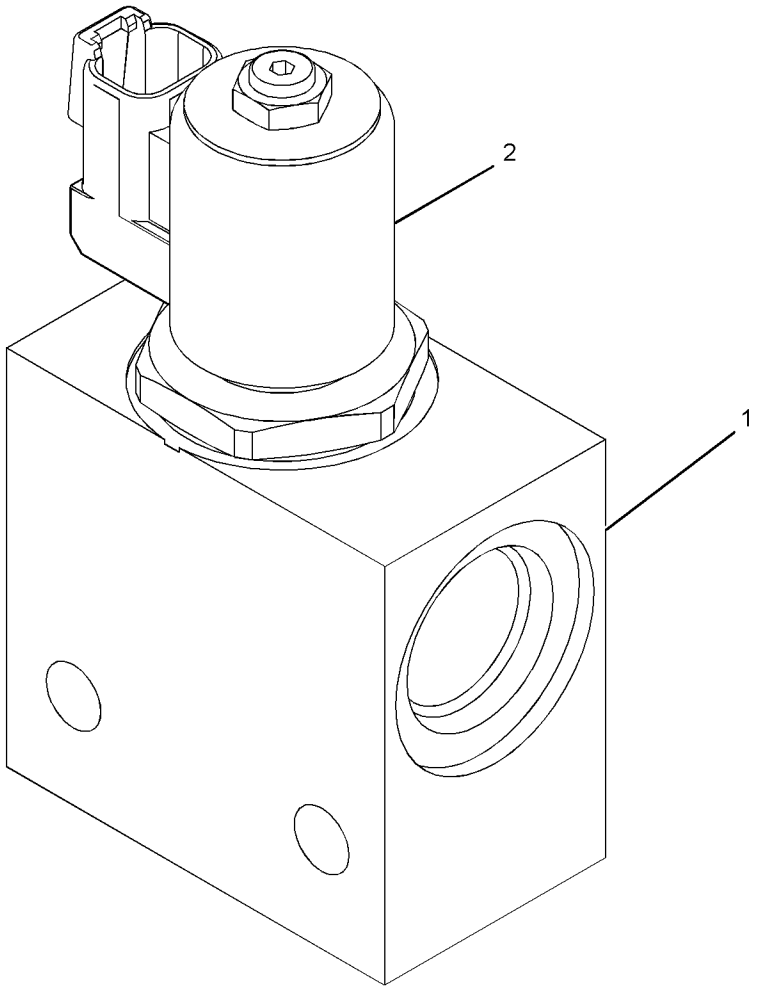

GRAPHIC #1 **<END>** g01227961

HYDRAULIC SYSTEM

254-3415 MANIFOLD GP-CONTROL–STEERING BACKUP

S/N: B9D1-UP

PART OF 231-1512 LINES GP-STEERING

SMCS-5051, 5069, 5264, 5467, 5479 **i02761459**

NOTE	REF NO	GRAPHIC REF	PART NUMBER	QTY	PART NAME 1 2 3 4 5 6 (PRODUCT LEVEL)	SEE PAGE
	2	1	**6E-5066**	1	SCREEN (CONTROL MANIFOLD)	
	3	1	**254-3413**	1	MANIFOLD AS	
		1	**124-1555**	1	PLUG	
	4	1	**310-7060**	2	VALVE GP-SOLENOID (STEERING)	
		1	**164-2108**	1	WASHER (13.03X25.4X2.38-MM THK)	
		1	**218-2373**	1	NUT (1/2-28-THD)	
		1	**226-9629**	1	COIL AS-SOLENOID (12-VOLT)	

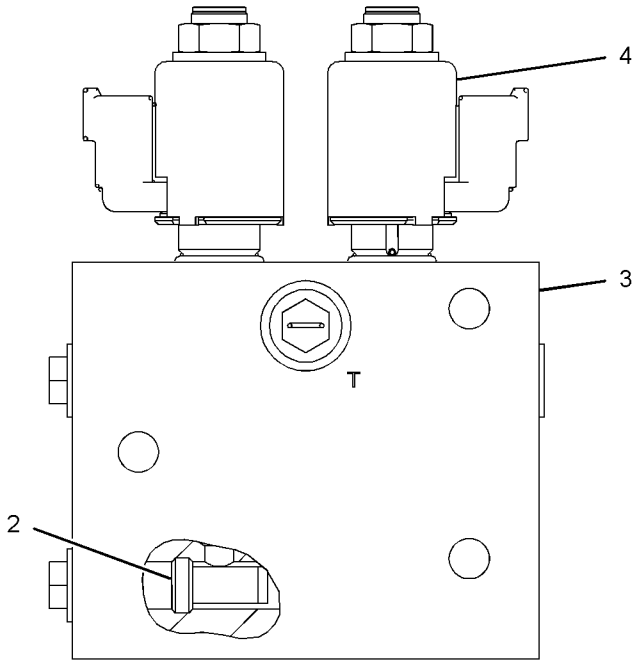

FRONT VIEW

GRAPHIC #1 **<END>** g01107180

263-1790 MANIFOLD GP-CONTROL—IMPLEMENT, STEERING—SECONDARY STEERING

S/N: B9D1-UP

PART OF 237-6423 LINES GP-PUMP

SMCS-5051, 5069, 5264, 5467, 5479 **i02773340**

NOTE	REF NO	GRAPHIC REF	PART NUMBER	QTY	PART NAME 1 2 3 4 5 6 (PRODUCT LEVEL)	SEE PAGE
	1	1	**9S-8003**	1	PLUG	
Y	2	1	**133-5330**	1	VALVE GP-RELIEF (MAIN)	694
Y	3	1	**252-8038**	1	VALVE GP-PRESSURE REDUCING (PRIMARY STEERING)	690
	4	1	**252-0741**	1	VALVE GP-SOLENOID (PARKING BRAKE CONTROL)	
		1	**156-5970**	1	NUT (1/2-20-2B-THD)	
		1	**252-0745**	1	COIL AS	
Y	5	1	**237-0957**	1	SENSOR GP-PRESSURE (SECONDARY STEERING)	236
	6	1	**6V-0852**	2	CAP-DUST	
	7	1	**6V-3965**	2	FITTING-COUPLER	
	8	1	**3J-1907**	4	SEAL-O-RING	
	9	1	**6V-0484**	2	ADAPTER-O-RING	
	10	1	**8C-3446**	1	VALVE-FLUID SAMPLING	
	11	1	**126-8440**	2	SEAL-O-RING	
	12	1	**151-5145**	1	ELBOW	
	13	1	**3J-7354**	2	SEAL-O-RING	
	14	1	**8C-3451**	1	CAP-DUST	

Y-SEPARATE ILLUSTRATION

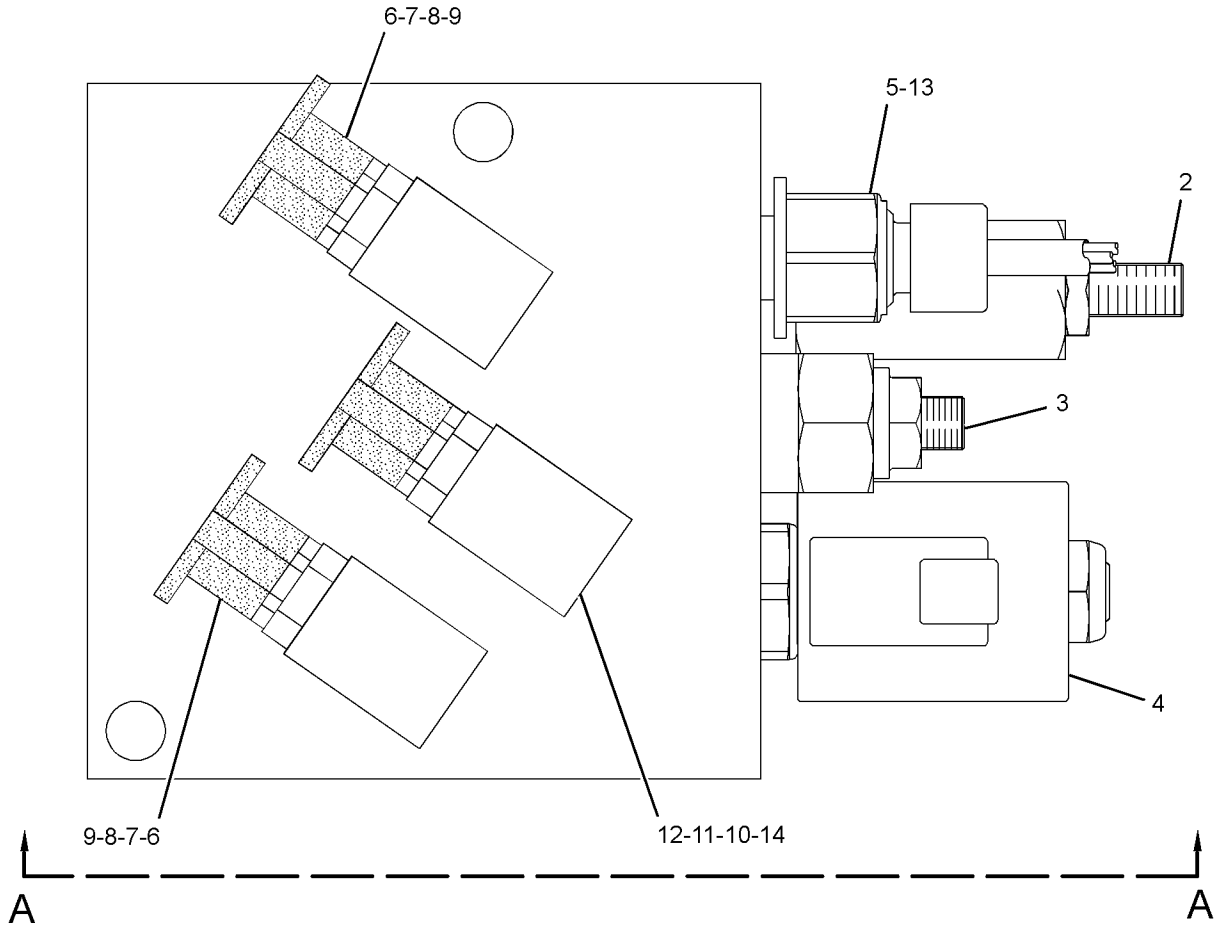

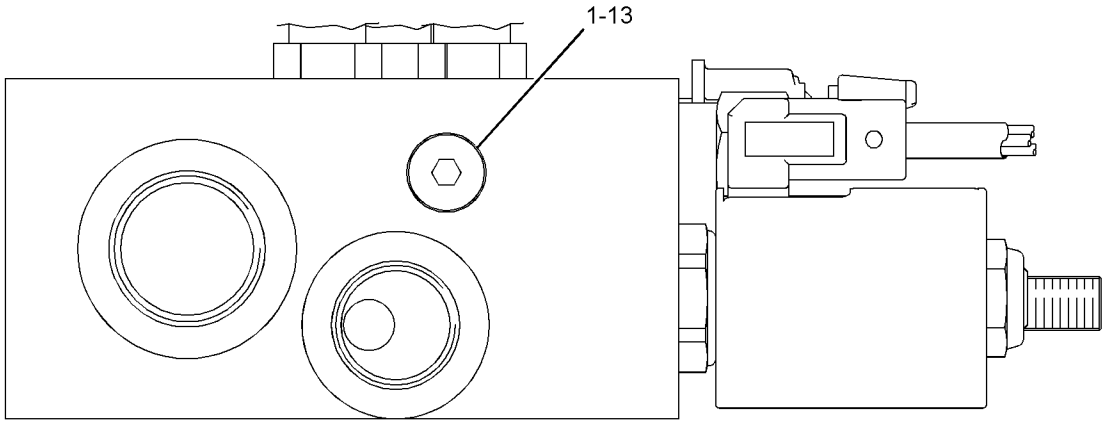

VIEW A-A

GRAPHIC #1 **<END>** g01259949

294-1109 MANIFOLD GP-CONTROL—ALL WHEEL DRIVE

S/N: B9D1-UP

PART OF 231-8164 LINES GP-ALL WHEEL DRIVE

SMCS-5051, 5069, 5264, 5467, 5479 **i02785663**

NOTE	REF NO	GRAPHIC REF	PART NUMBER	QTY	PART NAME 1 2 3 4 5 6 (PRODUCT LEVEL)	SEE PAGE
	1	1	**243-5015**	1	VALVE GP-SOLENOID (FORWARD, RH)	
	1A	1	**243-5015**	1	VALVE GP-SOLENOID (REVERSE, RH)	
	1B	1	**243-5015**	1	VALVE GP-SOLENOID (FORWARD, LH)	
	1C	1	**243-5015**	1	VALVE GP-SOLENOID (REVERSE, LH)	
	2	1	**251-7509**	2	VALVE GP-SHUTTLE (AWD, PISTON MOTOR)	
Y	3	1	**214-6863**	1	SENSOR GP-PRESSURE (AWD SENSOR CONTROL, RH)	233
Y	3A	1	**214-6863**	1	SENSOR GP-PRESSURE (AWD SENSOR CONTROL, LH)	233
Y	4	1	**253-0937**	1	VALVE GP-SOLENOID (ALL WHEEL DRIVE, RH)	699
Y	4A	1	**253-0937**	1	VALVE GP-SOLENOID (ALL WHEEL DRIVE, LH)	699
	5	1	**6V-3965**	4	FITTING-COUPLER	
	6	1	**6V-0852**	4	CAP-DUST	
	7	1	**9S-8001**	22	PLUG	
	8	1	**4J-7533**	22	SEAL-O-RING	
	9	1	**6E-5066**	1	SCREEN (CONTROL MANIFOLD)	

Y-SEPARATE ILLUSTRATION

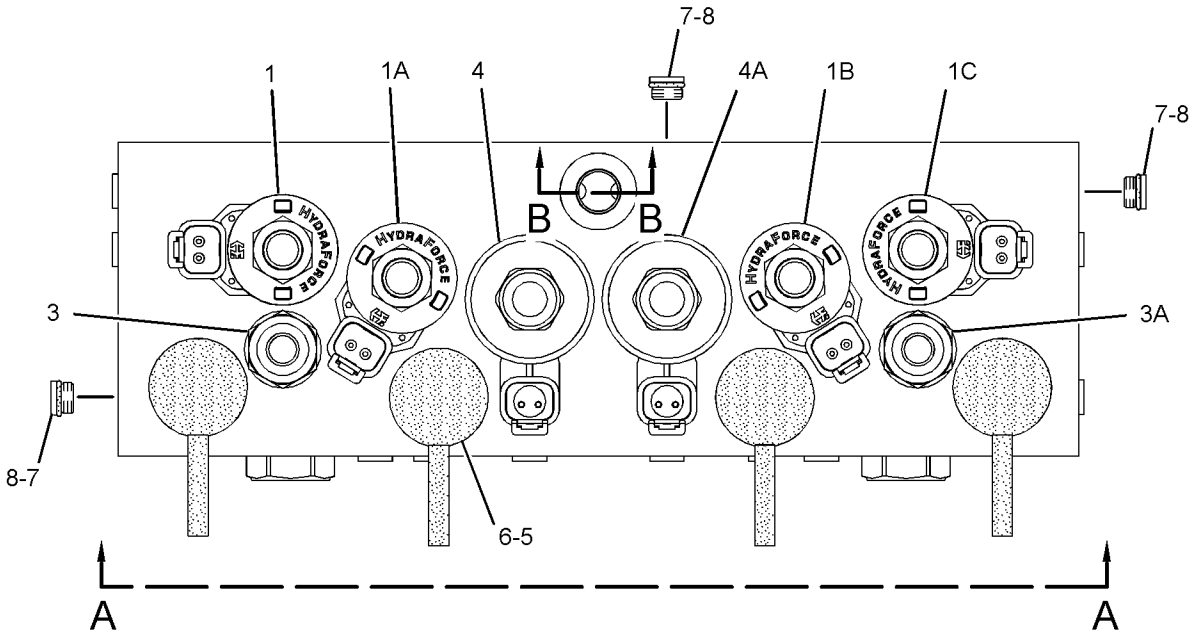

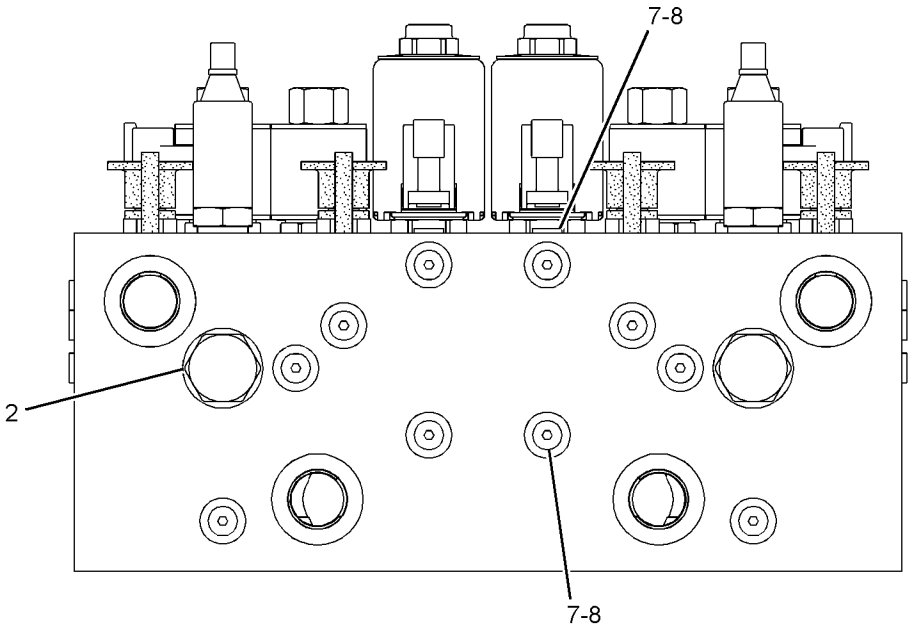

VIEW A-A

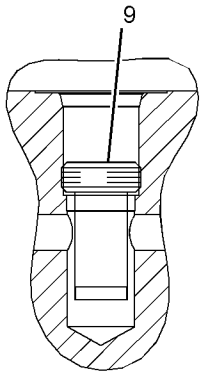

SECTION B-B

GRAPHIC #1 **<END>** g01366826

292-2033 MANIFOLD GP-VALVE–INLET

S/N: B9D1-UP

PART OF 248-6168 VALVE GP-BANK 5, 249-7294, 249-7295 VALVE GP-BANK 6, 249-5328, 249-7296 VALVE GP-BANK 7, 249-5329, 249-7297 VALVE GP-BANK 8

SMCS-5264 **i02779590**

NOTE	REF NO	GRAPHIC REF	PART NUMBER	QTY	PART NAME 1 2 3 4 5 6 (PRODUCT LEVEL)	SEE PAGE
	1	1	**259-0309**	1	MANIFOLD-INLET	
	2	1	**301-4568**	1	ORIFICE	
	3	1	*148-8407*	2	PLUG AS	
					(EACH INCLUDES)	
		1	**9S-4191**	1	PLUG-O-RING	
		1	**3J-1907**	1	SEAL-O-RING	
	4	1	*148-8411*	4	PLUG AS	
					(EACH INCLUDES)	
		1	**9S-4185**	1	PLUG-O-RING	
		1	**3K-0360**	1	SEAL-O-RING	
	5	1	*173-3993*	5	PLUG AS	
					(EACH INCLUDES)	
		1	**9S-8001**	1	PLUG	
		1	**4J-7533**	1	SEAL-O-RING	

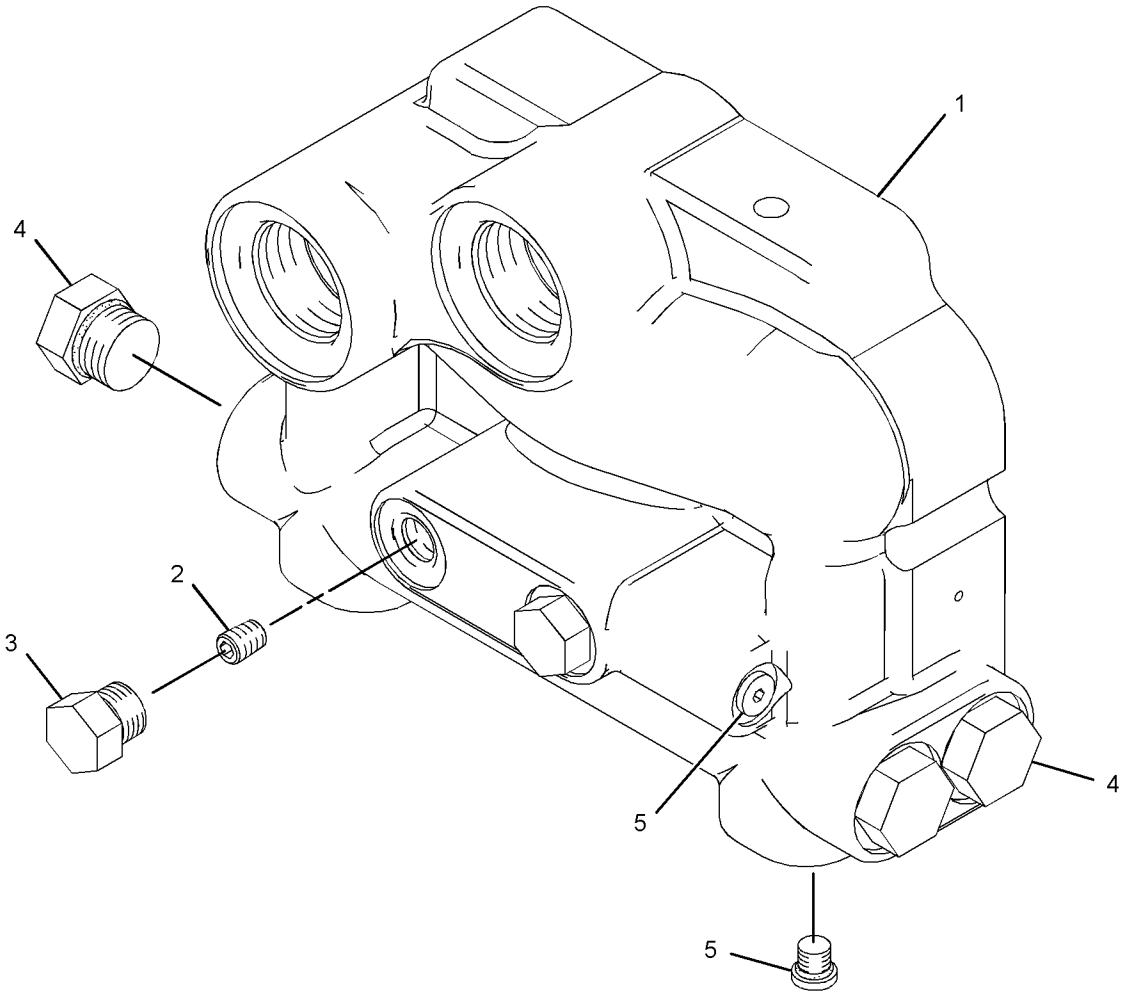

GRAPHIC #1 **<END>** g01390511

HYDRAULIC SYSTEM

292-2034 MANIFOLD GP-VALVE–INLET

S/N: B9D1-UP

PART OF 249-7298 VALVE GP-BANK 3, 248-6169 VALVE GP-BANK 4, 249-7299 VALVE GP-BANK 5, 249-5330 VALVE GP-BANK 6

SMCS-5264 **i02781282**

NOTE	REF NO	GRAPHIC REF	PART NUMBER	QTY	PART NAME 1 2 3 4 5 6 (PRODUCT LEVEL)	SEE PAGE
	2	1	**096-3831**	1	ORIFICE	
H	3	1	**243-5210**	1	VALVE GP-RELIEF (MAIN)	
J		1	**161-6161**	2	RING-BACKUP	
J		1	**161-6149**	1	SEAL-O-RING	
J		1	**2M-9780**	1	SEAL-O-RING	
	4	1	**259-0310**	1	MANIFOLD-INLET	
	6	1	*148-8407*	3	PLUG AS	
					(EACH INCLUDES)	
		1	**9S-4191**	1	PLUG-O-RING	
		1	**3J-1907**	1	SEAL-O-RING	
	7	1	*148-8411*	4	PLUG AS	
					(EACH INCLUDES)	
		1	**3K-0360**	1	SEAL-O-RING	
		1	**9S-4185**	1	PLUG-O-RING	
	8	1	*173-3993*	4	PLUG AS	
					(EACH INCLUDES)	
		1	**9S-8001**	1	PLUG	
		1	**4J-7533**	1	SEAL-O-RING	
	9	1	*183-7263*	1	PLUG AS	
		1	**9S-8002**	1	PLUG-O-RING	
		1	**3J-7354**	1	SEAL-O-RING	
					AVAILABLE REPAIR KIT(S):	
HJ			**133-5545**	1	KIT-SEAL (RELIEF VALVE)	

H-KIT MARKED H SERVICES PART(S) MARKED H
J-KIT MARKED J INCLUDES PART(S) MARKED J

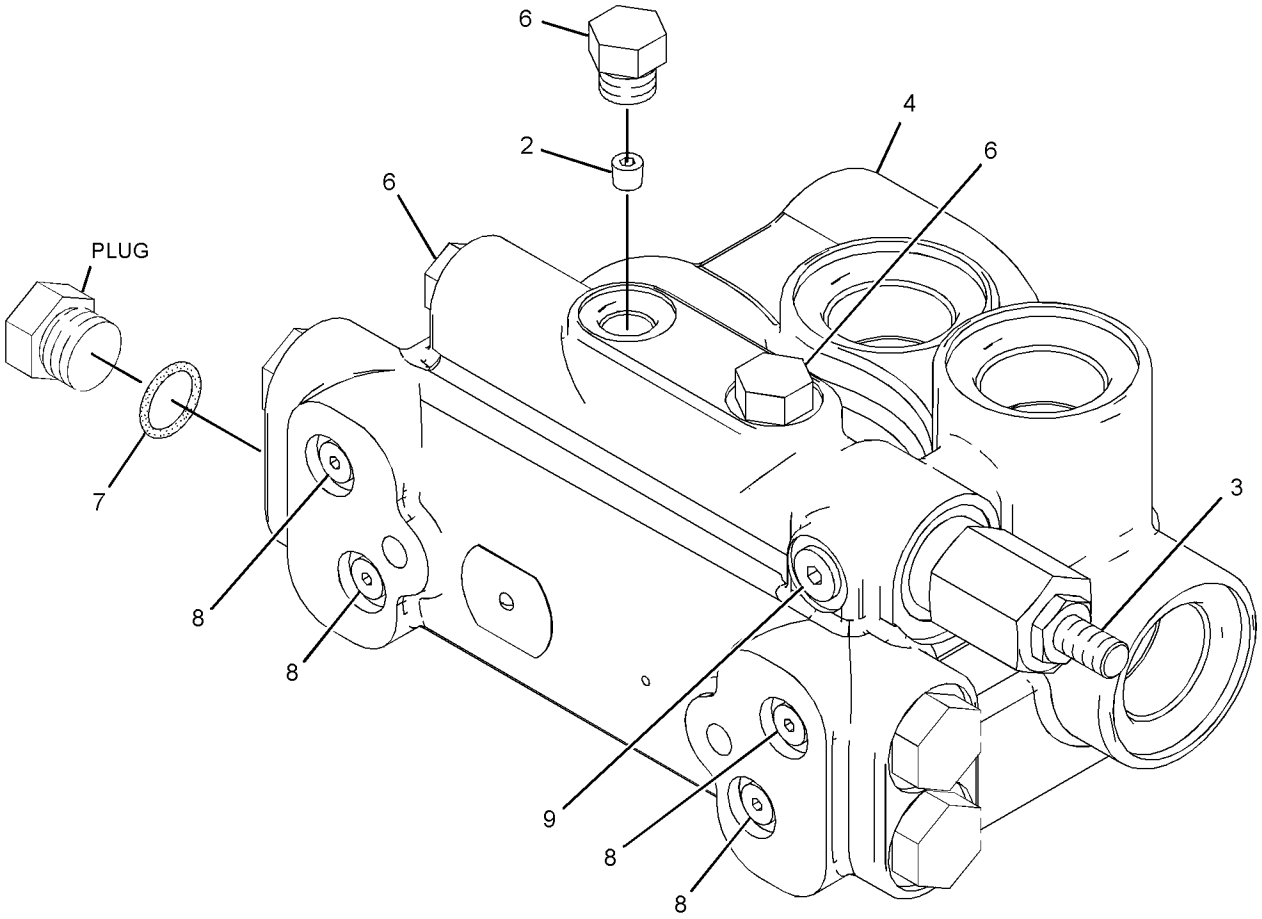

GRAPHIC #1 **<END>** g01313813

HYDRAULIC SYSTEM

105-3196 MOTOR GP-GEROTOR

S/N: B9D1-UP

PART OF 253-4677 DRIVE GP-CIRCLE

SMCS-5082 **i02205130**

NOTE	REF NO	GRAPHIC REF	PART NUMBER	QTY	PART NAME 1 2 3 4 5 6 (PRODUCT LEVEL)	SEE PAGE
	1	1	**9T-8051**	7	BOLT (3/8-24X4.12-IN)	
	2	1	**9T-8070**	1	HOUSING AS	
	3	1	**6Y-2934**	1	BEARING-ROLLER	
	4	1	**6Y-2933**	2	RING-THRUST	
	5	1	**6Y-2932**	1	BEARING-THRUST	
	6	1	**8T-1698**	1	BEARING AS-NEEDLE	
	7	1	**9T-9071**	1	SHIM	
	8	1	**9T-8058**	1	BACKUP	
	9	1	**9T-8059**	1	SEAL	
	10	1	**9T-8056**	1	SHAFT	
	11	1	**6Y-2935**	1	BEARING	
	12	1	**9T-8053**	5	SEAL	
	13	1	**9T-8054**	1	LINK	
	14	1	**9T-8061**	1	PLATE	
	15	1	**9T-8063**	1	ROTOR SET	
	16	1	**9T-8065**	1	MANIFOLD	
	17	1	**9J-4963**	1	RING	
	18	1	**9T-8069**	1	PLATE AS	
	19	1	**9T-8067**	1	COVER	
					AVAILABLE REPAIR KIT(S):	
			9T-9072	1	KIT-SEAL (MOTOR) (CIRCLE DRIVE)	
					(INCLUDES RING, SHIM, SEALS & GREASE PACK)	

105-3196 **MOTOR GP-GEROTOR** *(contd.)* **i02205130**

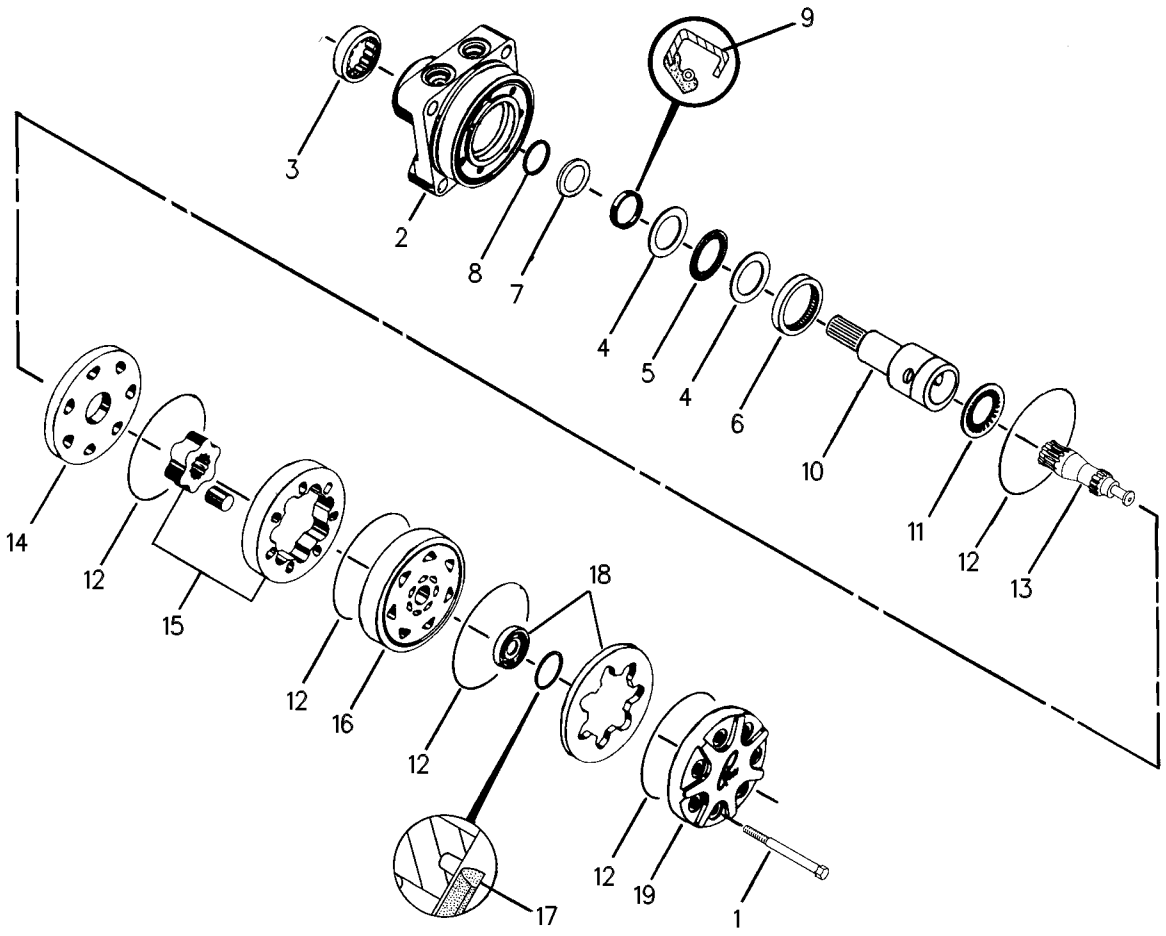

GRAPHIC #1 **<END>** g00108578

250-1170 PUMP & MTG GP-ELECTRIC DRIVE–
SECONDARY STEERING
S/N: B9D1-UP

PART OF 234-7721 COMMON AR, 276-1425 STEERING AR-SECONDARY

SMCS-1325, 4324 **i02774585**

NOTE	REF NO	GRAPHIC REF	PART NUMBER	QTY	PART NAME 1 2 3 4 5 6 (PRODUCT LEVEL)	SEE PAGE
Y	1	1	**273-8714**	1	PUMP GP-ELECTRIC DRIVE (SECONDARY STEERING)	633
	2	1	**279-8929**	2	CLAMP	
	3	1	**283-9796**	2	CLAMP	
M	4	1	**5C-7261**	2	NUT (M8X1.25-THD)	
M	5	1	**7X-2537**	2	BOLT (M8X1.25X35-MM)	
	6	1	**8T-4121**	4	WASHER-HARD (11X21X2.5-MM THK)	
M	7	1	**8T-4136**	2	BOLT (M10X1.5X25-MM)	
M	8	1	**8T-4195**	2	BOLT (M10X1.5X30-MM)	
	9	1	**8T-4224**	4	WASHER-HARD (8.8X16X2-MM THK)	

M-METRIC PART
Y-SEPARATE ILLUSTRATION

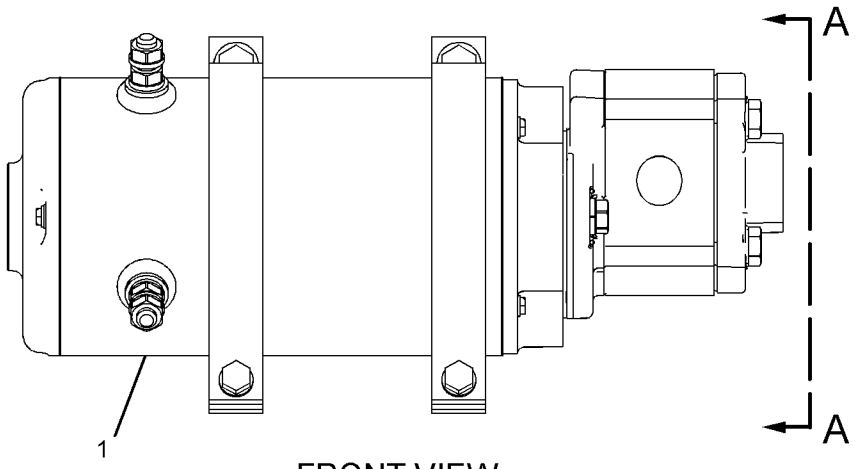

FRONT VIEW

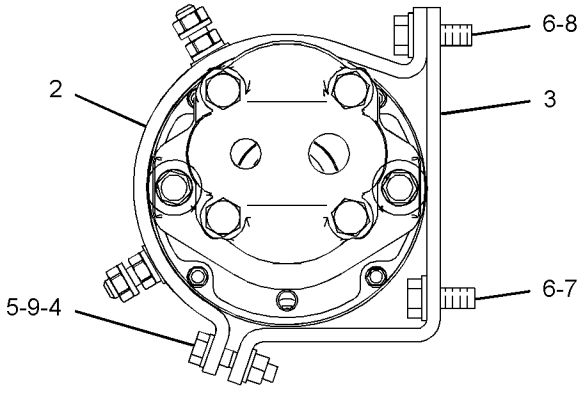

VIEW A-A

GRAPHIC #1 **<END>** g01285258

231-1535 PUMP & MTG GP-PISTON–IMPLEMENT, STEERING–IMPLEMENT

S/N: B9D1-UP

PART OF 234-7721 COMMON AR

SMCS-5070 **i02796762**

NOTE	REF NO	GRAPHIC REF	PART NUMBER	QTY	PART NAME 1 2 3 4 5 6 (PRODUCT LEVEL)	SEE PAGE
Y	1	1	**236-7296**	1	PUMP GP-PISTON	634
M	2	1	**8T-4183**	4	BOLT (M12X1.75X40-MM)	
	3	1	**8T-4223**	4	WASHER-HARD (13.5X25.5X3-MM THK)	
	4	1	**9X-7371**	1	SEAL-O-RING	

M-METRIC PART
Y-SEPARATE ILLUSTRATION

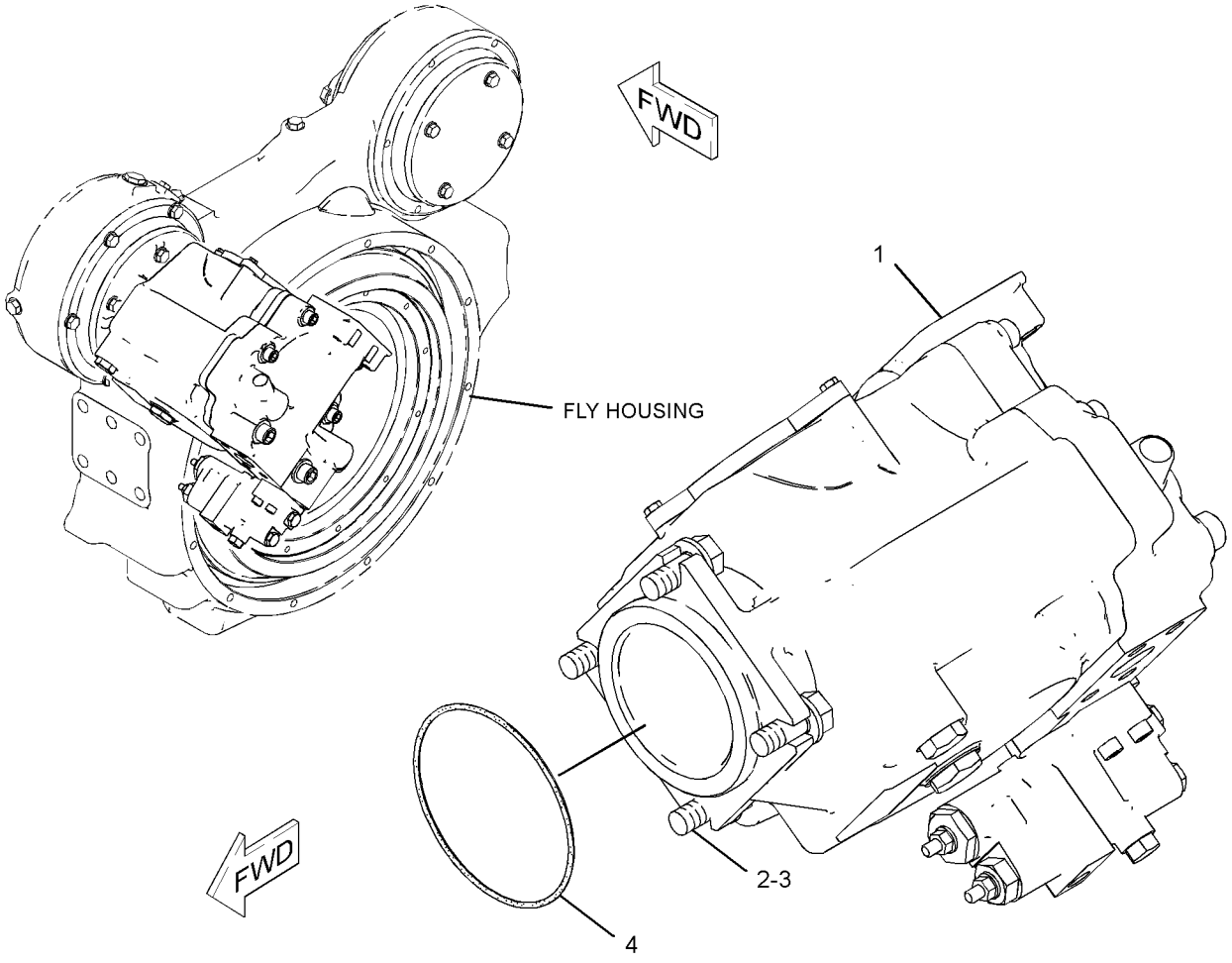

GRAPHIC #1 **<END>** g01297749

235-8552 PUMP & MTG GP-PISTON–BRAKE, HYDRAULIC FAN

S/N: B9D1-UP

PART OF 234-7721 COMMON AR

SMCS-5070 **i02773228**

NOTE	REF NO	GRAPHIC REF	PART NUMBER	QTY	PART NAME 1 2 3 4 5 6 (PRODUCT LEVEL)	SEE PAGE
Y	1	1	**250-8337**	1	PUMP GP-PISTON (BRAKE, HYDRAULIC FAN)	636
	2	1	**1H-6227**	1	SEAL-O-RING	
	3	1	**8T-4223**	2	WASHER-HARD (13.5X25.5X3-MM THK)	
M	4	1	**8T-4956**	2	BOLT (M12X1.75X35-MM)	

M-METRIC PART
Y-SEPARATE ILLUSTRATION

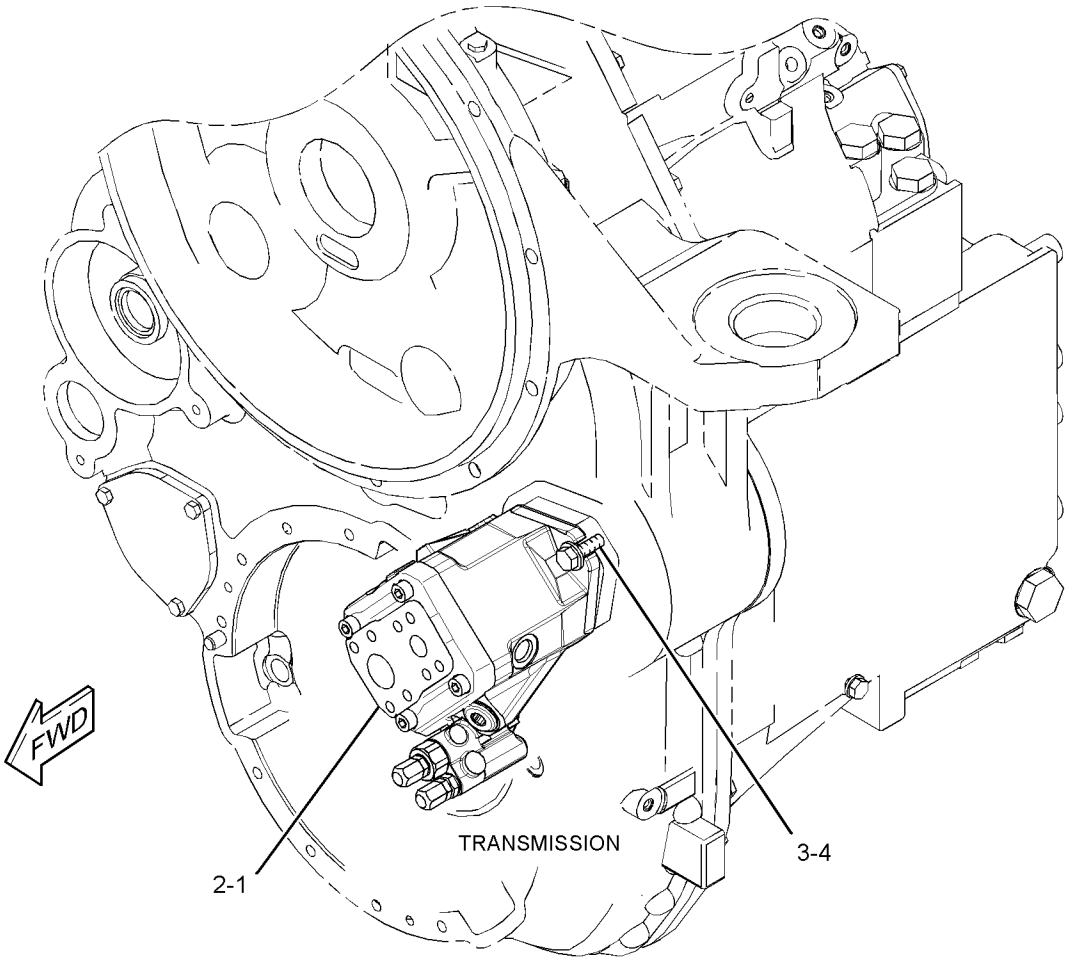

GRAPHIC #1 **<END>** g01335244

273-8714 PUMP GP-ELECTRIC DRIVE–SECONDARY STEERING

S/N: B9D1-UP

PART OF 250-1170 PUMP & MTG GP-ELECTRIC DRIVE

SMCS-4324, 5057, 5713 **i02774586**

NOTE	REF NO	GRAPHIC REF	PART NUMBER	QTY	PART NAME 1 2 3 4 5 6 (PRODUCT LEVEL)	SEE PAGE
	1	1	**269-1009**	1	MOTOR-ELECTRIC	
	2	1	**117-5268**	1	GASKET	
	3	1	**123-8914**	1	PUMP	
					AVAILABLE REPAIR KIT(S):	
			269-1014	1	KIT-SEAL (SECONDARY STEERING PUMP)	
					(INCLUDES RETAINING RING, SHAFT SEAL, BACK-UP RINGS, E-SEALS, O-RINGS)	

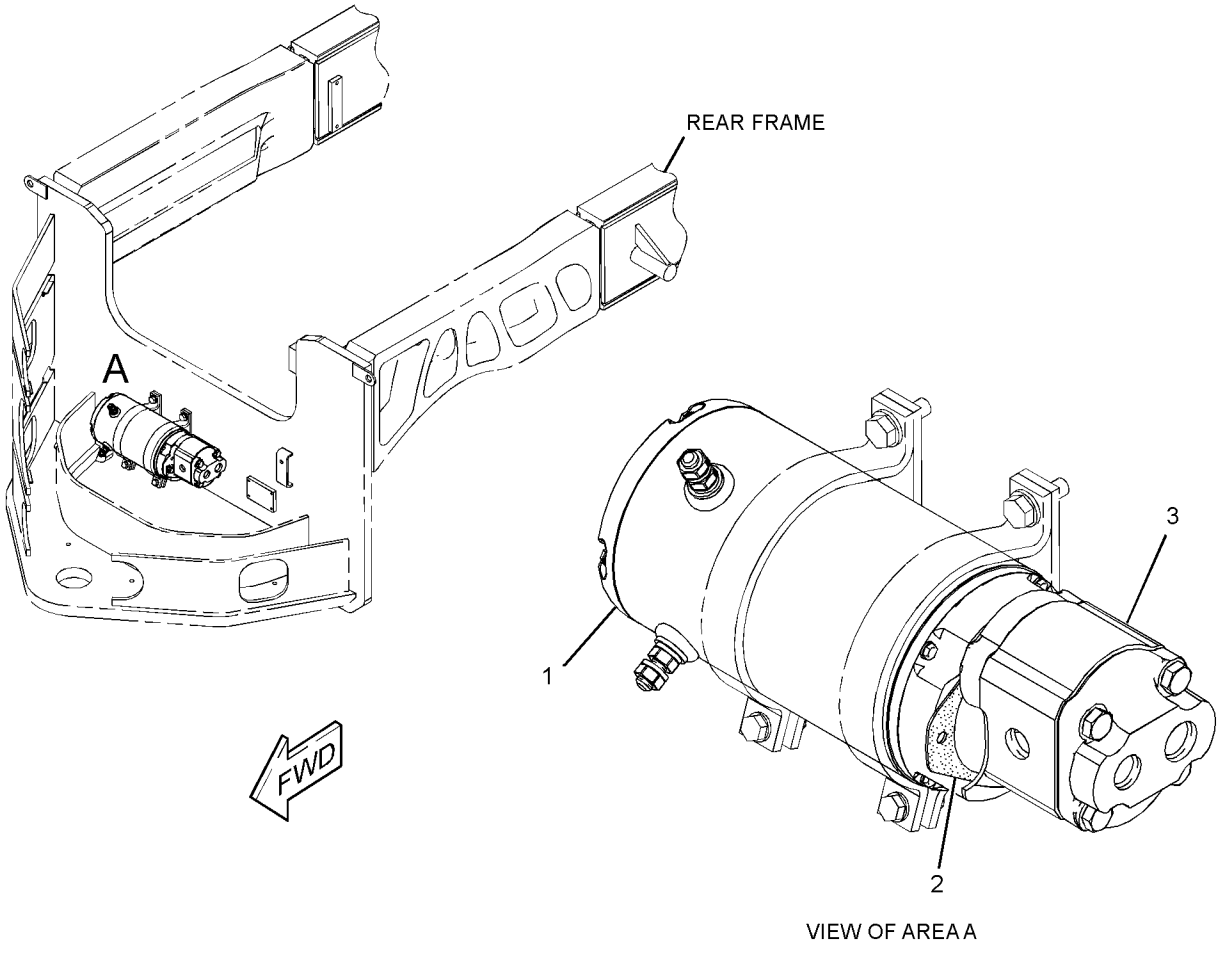

GRAPHIC #1 **<END>** g01303336

HYDRAULIC SYSTEM

236-7296 PUMP GP-PISTON–IMPLEMENT, STEERING

S/N: B9D1-UP

PART OF 231-1535 PUMP & MTG GP-PISTON

SMCS-5070 **i02796764**

NOTE	REF NO	GRAPHIC REF	PART NUMBER	QTY	PART NAME 1 2 3 4 5 6 (PRODUCT LEVEL)	SEE PAGE
	1	1	**6E-4224**	1	PLUG-SWASHPLATE	
	2	1	**033-6036**	1	SEAL-O-RING	
	3	1	**100-3402**	1	BEARING-SWASH	
	4	1	**100-3405**	1	BEARING-SWASH	
M	5	1	**6V-8837**	3	BOLT (M6X1X16-MM)	
	6	1	**4F-4097**	1	SEAL-O-RING	
M	7	1	**3E-4302**	2	SCREW-FLAT HEAD (M4X0.7X10-MM)	
	8	1	**100-3404**	1	COVER-TRUNNION	
	9	1	**9T-1636**	1	SEAT	
	10	1	**9T-1710**	1	POPPET	
	11	1	**9T-1699**	1	SPRING	
M	12	1	**6V-7673**	3	BOLT (M12X1.75X50-MM)	
B	13	1	**6E-1436**	1	SHIM PACK (INCLUDES 17-SHIMS)	
	14	1	**6Y-4280**	1	CONE-BEARING	
	15	1	**7T-9755**	1	CUP-BEARING	
	16	1	**9T-9460**	1	PLATE-VALVE	
	17	1	**3E-7417**	3	PLUG	
	18	1	**8T-7876**	3	SEAL-O-RING	
	19	1	**7L-9061**	2	SEAL-O-RING	
	20	1	**100-3413**	1	GASKET	
Y	21	1	**100-3412**	1	ROTATING GP-PUMP	638
	22	1	**100-3409**	1	SPRING-BIAS	
	23	1	**100-3408**	1	KIT-BIAS PISTON	
					(INCLUDES SPRING, ROD, PISTON, & SEAL)	
	24	1	**002-1212**	1	CUP-BEARING	
	25	1	**2F-8509**	1	CONE-BEARING	
	26	1	**102-2066**	1	SHAFT-PUMP	
	27	1	**8T-5039**	3	SEAL-O-RING	
	28	1	**006-8663**	2	RING	
	29	1	**8T-4750**	2	SEAL-LIP TYPE	
Y	30	1	**169-3290**	1	SWASHPLATE GP	641
	31	1	**100-3415**	1	KIT-CONTROL PISTON	
					(INCLUDES ROD, PISTON, & SEAL)	
	32	1	**9T-1652**	1	PIN	
M	33	1	**8T-0372**	1	BOLT (M12X1.75X90-MM)	
M	34	1	**8T-7811**	1	BOLT-SOCKET HEAD (M12X1.75X50-MM)	
M	35	1	**6V-8336**	1	BOLT (M12X1.75X70-MM)	
M	36	1	**6V-8337**	4	BOLT-SOCKET HEAD (M8X1.25X35-MM)	
Y	37	1	**271-6847**	1	VALVE GP-PUMP CONTROL (PRESSURE, FLOW COMPENSATOR) (IMPLEMENT)	693
	38	1	**9S-4190**	1	PLUG-O-RING	
	39	1	**033-6027**	1	SEAL-O-RING	
	40	1	**095-0888**	2	PIN-SPRING	

B-USE AS REQUIRED
M-METRIC PART
Y-SEPARATE ILLUSTRATION

236-7296 PUMP GP-PISTON *(contd.)* **i02796764**

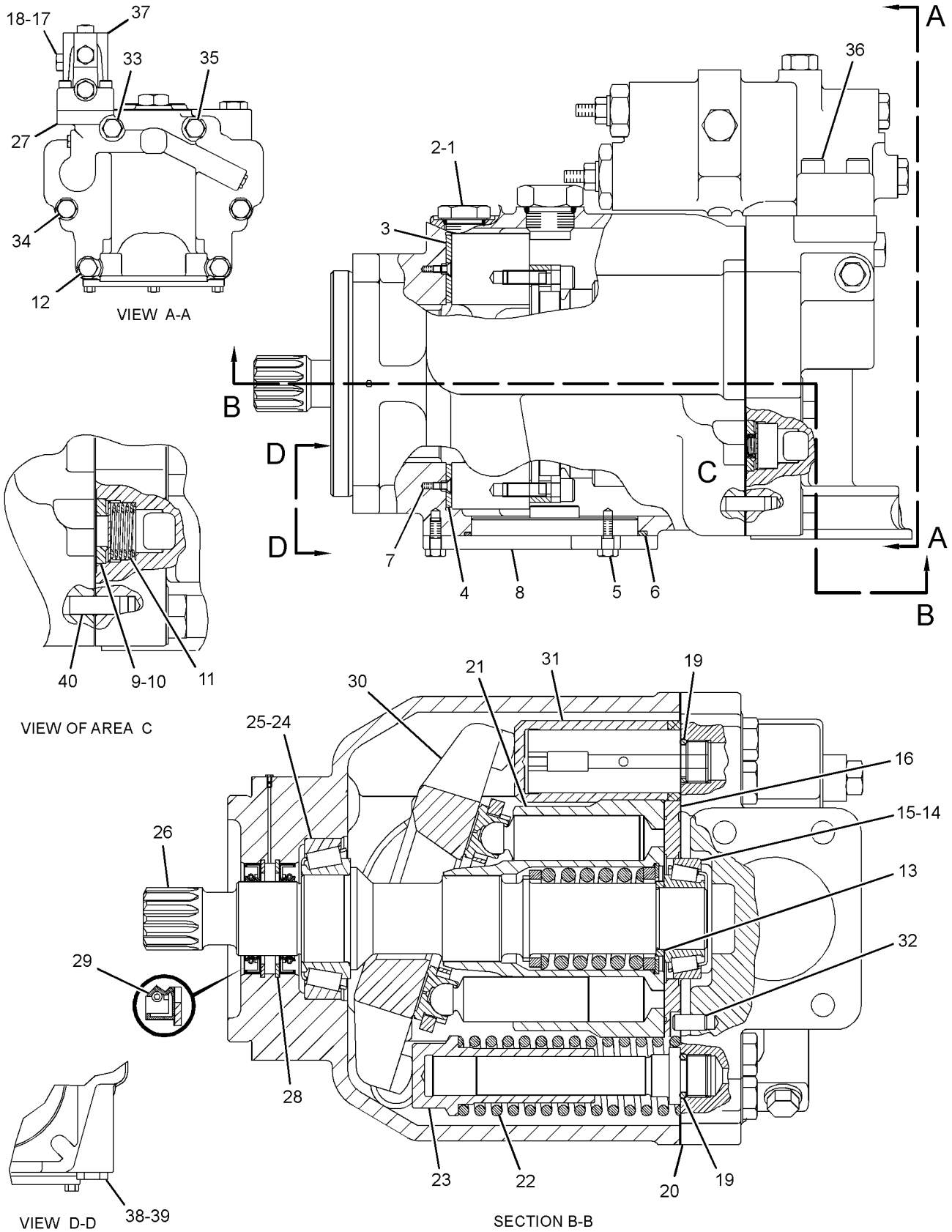

GRAPHIC #1 **<END>** g01338789

HYDRAULIC SYSTEM

250-8337 PUMP GP-PISTON–BRAKE, HYDRAULIC FAN

S/N: B9D1-UP

PART OF 235-8552 PUMP & MTG GP-PISTON

SMCS-5070 **i02773237**

NOTE	REF NO	GRAPHIC REF	PART NUMBER	QTY	PART NAME 1 2 3 4 5 6 (PRODUCT LEVEL)	SEE PAGE
Y	1	1	**259-5504**	1	ROTATING GP-PUMP (BRAKE, HYDRAULIC FAN)	639
	2	1	**168-7861**	1	PISTON-ACTUATOR	
	3	1	**259-5507**	1	ROD-PISTON	
	4	1	**271-6418**	1	SWASHPLATE	
	5	1	**271-6919**	1	SHAFT-DRIVE	
	6	1	**198-5351**	1	PLUG	
	7	1	**194-9472**	1	SPRING	
	8	1	**191-7582**	1	SHIM (2.5-MM THK)	
	9	1	**194-9473**	2	RING	
	10	1	**271-6432**	1	BEARING AS-TAPERED ROLLER	
	11	1	**191-7583**	1	BEARING AS-ROLLER	
	12	1	**194-9474**	2	BEARING-CRADLE	
	13	1	**155-9127**	1	SEAL	
	14	1	**133-6578**	1	SEAL-O-RING	
	15	1	**8T-7525**	1	SEAL-O-RING	
	16	1	**168-3504**	1	SEAL	
M	18	1	**8T-9515**	4	BOLT-SOCKET HEAD (M10X1.5X40-MM)	
	19	1	**9S-8005**	1	PLUG-O-RING	
	20	1	**120-4394**	1	PLUG-BREAK OFF	
	21	1	**099-3047**	1	DOWEL	
	22	1	**3K-0360**	1	SEAL-O-RING	
Y	23	1	**168-2210**	1	VALVE GP-PUMP CONTROL (PRESSURE, FLOW COMPENSATOR) (BRAKE, HYDRAULIC FAN)	691
	24	1	**3J-7354**	1	SEAL-O-RING	
	25	1	**9S-8002**	1	PLUG-O-RING	

M-METRIC PART
Y-SEPARATE ILLUSTRATION

250-8337 PUMP GP-PISTON *(contd.)* **i02773237**

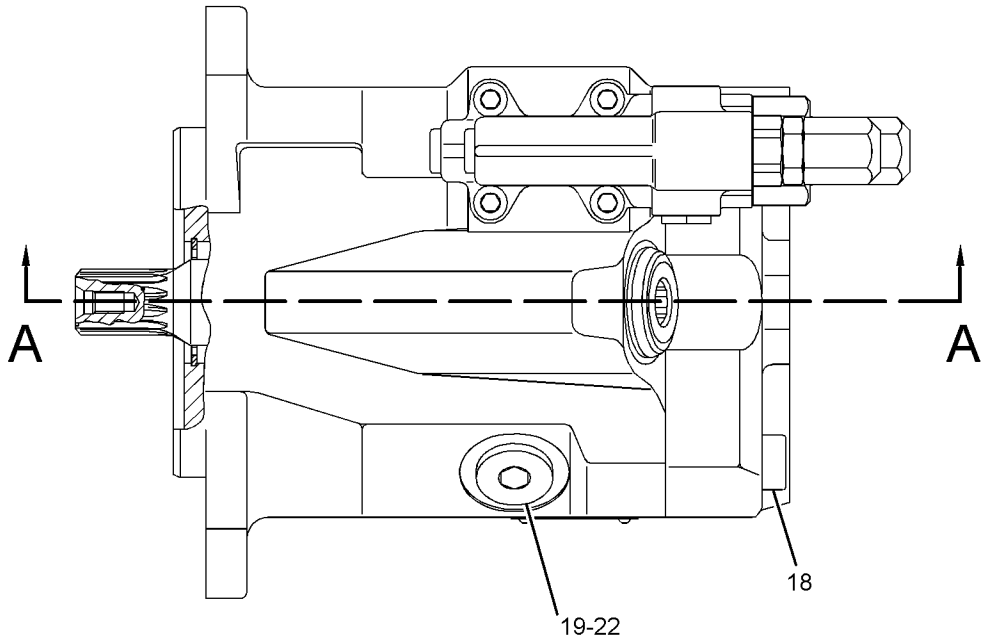

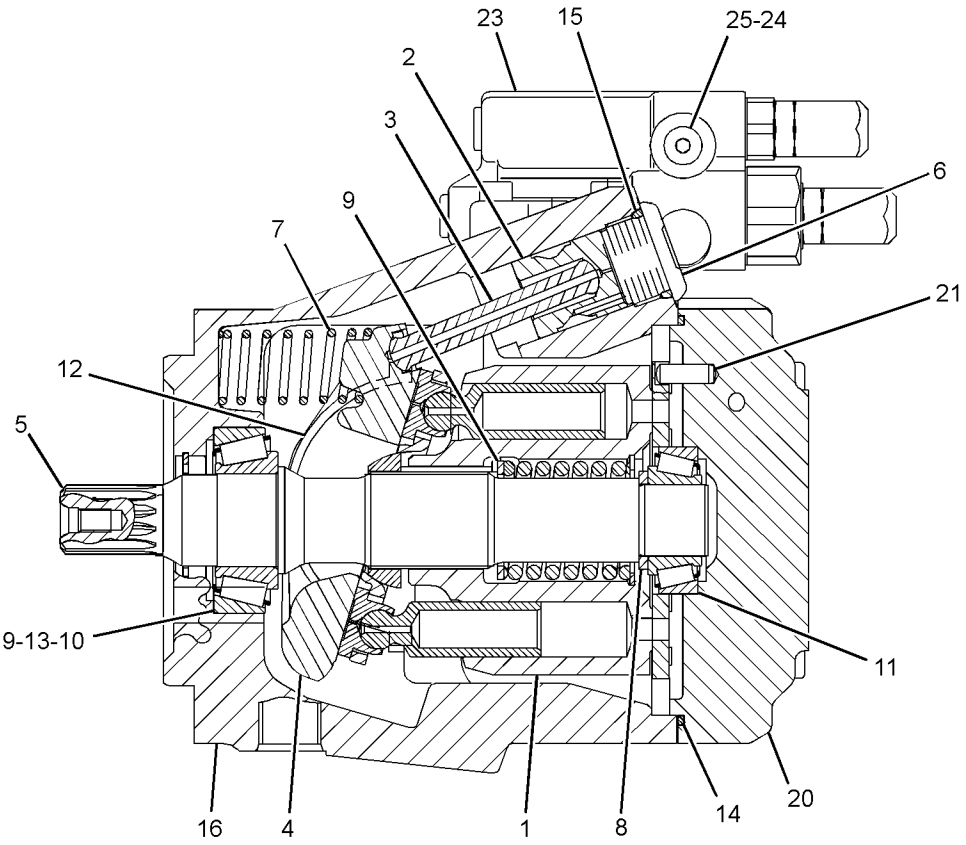

VIEW OF AREA A-A

GRAPHIC #1 **<END>** g01309678

HYDRAULIC SYSTEM

100-3412 ROTATING GP-PUMP–IMPLEMENT

S/N: B9D1-UP

PART OF 236-7296 PUMP GP-PISTON

SMCS-5070 **i00130809**

NOTE	REF NO	GRAPHIC REF	PART NUMBER	QTY	PART NAME 1 2 3 4 5 6 (PRODUCT LEVEL)	SEE PAGE
	1	1	**9T-7774**	1	BARREL	
	2	1	**3J-8500**	1	RING-RETAINING	
	3	1	**9T-7769**	1	GUIDE-OUTER	
M	4	1	**6V-5192**	4	BOLT-SOCKET HEAD (M8X1.25X30-MM)	
	5	1	**100-3410**	2	PLATE	
	6	1	**100-3411**	2	PLATE-SPACER	
	7	1	**9T-7765**	9	PISTON	
	8	1	**9T-7767**	1	PLATE-RETRACTION	
	9	1	**9T-7773**	1	GUIDE-INNER	
	10	1	**9T-7771**	1	SPRING	

M-METRIC PART

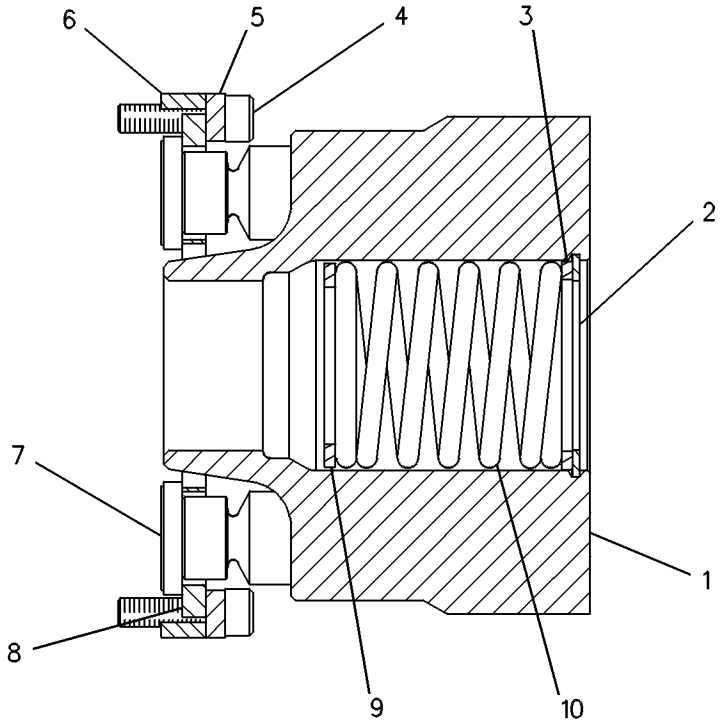

GRAPHIC #1 **<END>** g00084780

259-5504 ROTATING GP-PUMP

S/N: B9D1-UP

PART OF 250-8337 PUMP GP-PISTON

SMCS-5070 **i02305775**

NOTE	REF NO	GRAPHIC REF	PART NUMBER	QTY	PART NAME 1 2 3 4 5 6 (PRODUCT LEVEL)	SEE PAGE
	1	1	**259-5501**	9	PISTON AS	
	2	1	**259-5502**	1	BARREL	
	3	1	**259-5503**	1	PLATE	
	4	1	**155-9116**	1	GUIDE-BALL	
	5	1	**155-9117**	1	SPRING	
	6	1	**194-9479**	3	PIN	
	7	1	**194-9480**	1	RING-RETAINING	
	8	1	**194-9481**	1	DISC-THRUST	
	9	1	**194-9478**	1	PLATE-PORT	

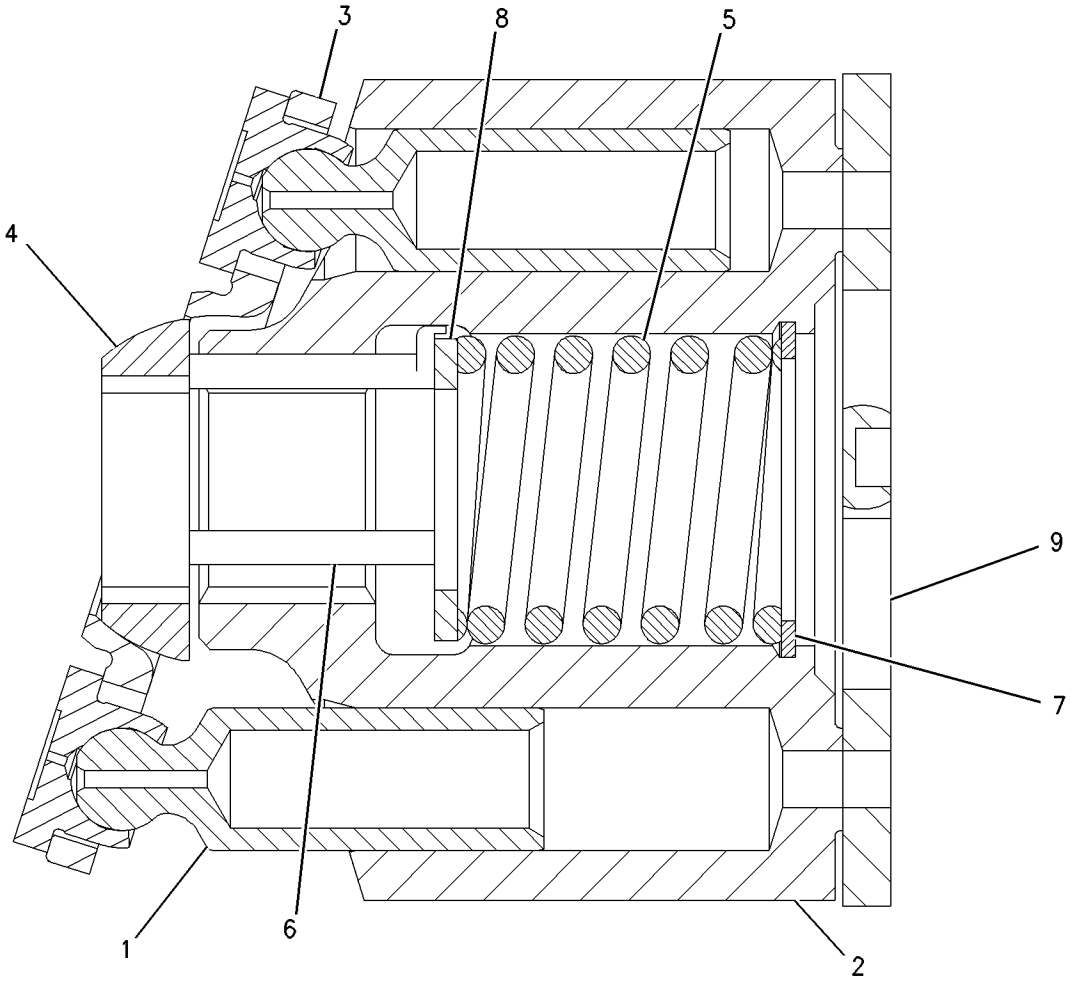

GRAPHIC #1 **<END>** g00768329

HYDRAULIC SYSTEM

276-1425 STEERING AR-SECONDARY

S/N: B9D1-UP

SMCS-4300 **i02785199**

NOTE	PART NUMBER	QTY	PART NAME 1 2 3 4 5 6 (PRODUCT LEVEL)	SEE PAGE
Y	*237-6423*	1	LINES GP-PUMP (SECONDARY STEERING)	595
Y	*231-1531*	1	LINES GP-SECONDARY STEERING	610
Y	*246-6712*	1	OIL CHANGE GP-HIGH SPEED	66
Y	*250-1170*	1	PUMP & MTG GP-ELECTRIC DRIVE (SECONDARY STEERING)	630
Y	*269-4150*	1	WIRING GP-SECONDARY STEERING	308

Y-SEPARATE ILLUSTRATION

<END>

169-3290 SWASHPLATE GP

S/N: B9D1-UP

PART OF 236-7296 PUMP GP-PISTON

SMCS-5070 **i01771931**

NOTE	REF NO	GRAPHIC REF	PART NUMBER	QTY	PART NAME 1 2 3 4 5 6 (PRODUCT LEVEL)	SEE PAGE
	1	1	**1H-3937**	2	PIN	
	2	1	**167-1801**	2	STOP-SWASHPLATE	

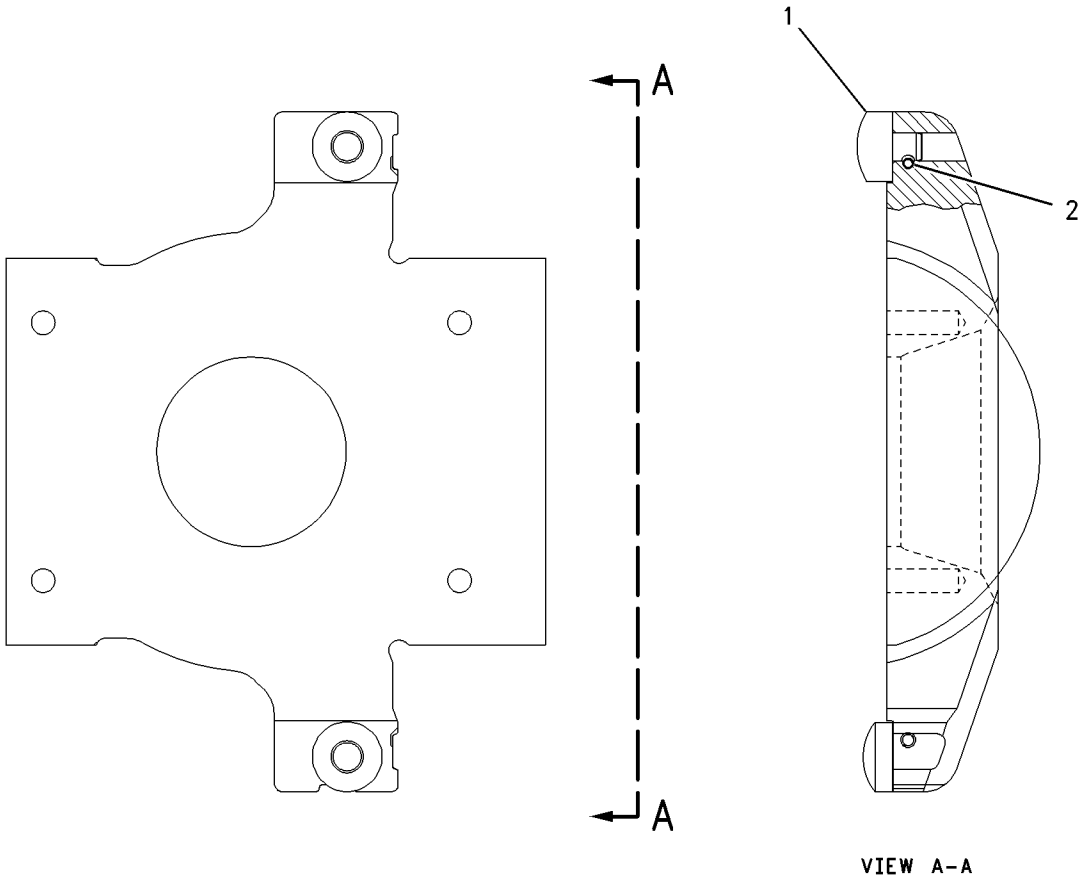

VIEW A-A

GRAPHIC #1 **<END>** g00938671

HYDRAULIC SYSTEM

260-6502 SWIVEL GP

S/N: B9D1-UP

PART OF 231-1516, 231-1532 LINES GP-HYDRAULIC

SMCS-5060 **i02322216**

NOTE	REF NO	GRAPHIC REF	PART NUMBER	QTY	PART NAME 1 2 3 4 5 6 (PRODUCT LEVEL)	SEE PAGE
B	1	1	**5J-1246**	6	SHIM (0.13-MM THK)	
	2	1	**8J-2331**	7	SEAL	
	3	1	**173-1008**	1	ROTOR	
	4	1	**173-1009**	1	RETAINER	
	5	1	**223-0580**	1	COVER	
	7	1	**260-6501**	1	BODY	
	8	1	**173-1007**	2	SEAL	
	9	1	**1P-3700**	4	SEAL-RECTANGULAR	
	10	1	**2H-3928**	7	SEAL-O-RING	
	11	1	**4J-9964**	2	SEAL	
	12	1	**5P-2566**	6	BOLT (1/2-13X1.5-IN)	
	13	1	**8T-4223**	4	WASHER-HARD (13.5X25.5X3-MM THK)	

B-USE AS REQUIRED

260-6502 SWIVEL GP *(contd.)* **i02322216**

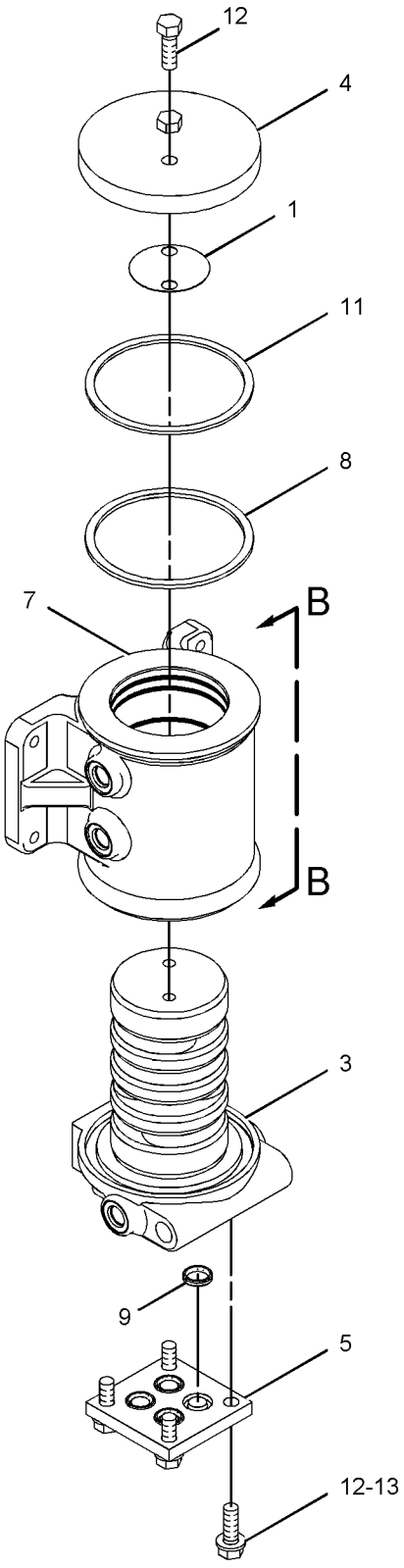

VIEW OF AREA A

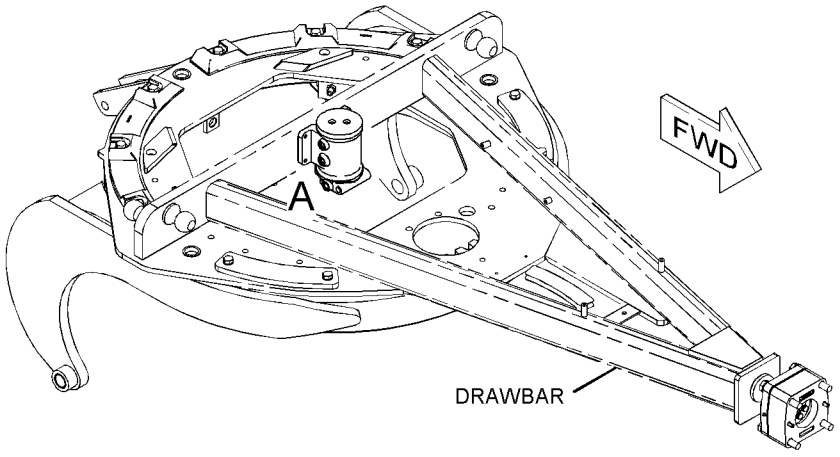

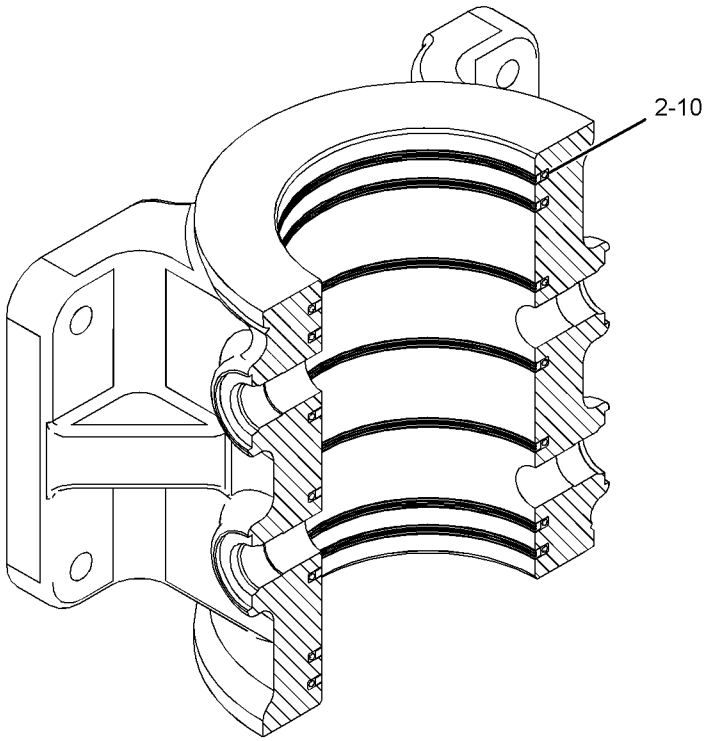

SECTION B-B

GRAPHIC #1 **<END>** g01142114

HYDRAULIC SYSTEM

233-4259 TANK & MTG GP-HYDRAULIC

S/N: B9D1-UP

PART OF 231-5061 SERVICE CENTER AR

SMCS-4332, 5056, 5068 **i02772119**

NOTE	REF NO	GRAPHIC REF	PART NUMBER	QTY	PART NAME 1 2 3 4 5 6 (PRODUCT LEVEL)	SEE PAGE
	1	1	**1P-4278**	3	CLAMP-HOSE	
	2	1	**9R-9925**	1	FILTER-BREATHER (HYDRAULIC TANK)	
Y	3	1	*241-3867*	1	TANK GP-HYDRAULIC	646
	4	1	**250-2784**	1	STRAP AS	
	5	1	**4H-2558**	1	GROMMET	
	6	1	**6D-3479**	3	CLIP	
	7	1	**6K-8178**	1	CLIP	
M	8	1	**8T-0389**	1	LOCKNUT (M10X1.15-THD)	
	9	1	**8T-4121**	6	WASHER-HARD (11X21X2.5-MM THK)	
M	10	1	**8T-4136**	1	BOLT (M10X1.5X25-MM)	
M	11	1	**8T-4137**	4	BOLT (M10X1.5X20-MM)	
E	12	1	**5P-1442**		HOSE (98.2-CM)	
E	12A	1	**5P-1442**		HOSE (9.5-CM)	

E-ORDER BY THE CENTIMETER
M-METRIC PART
Y-SEPARATE ILLUSTRATION

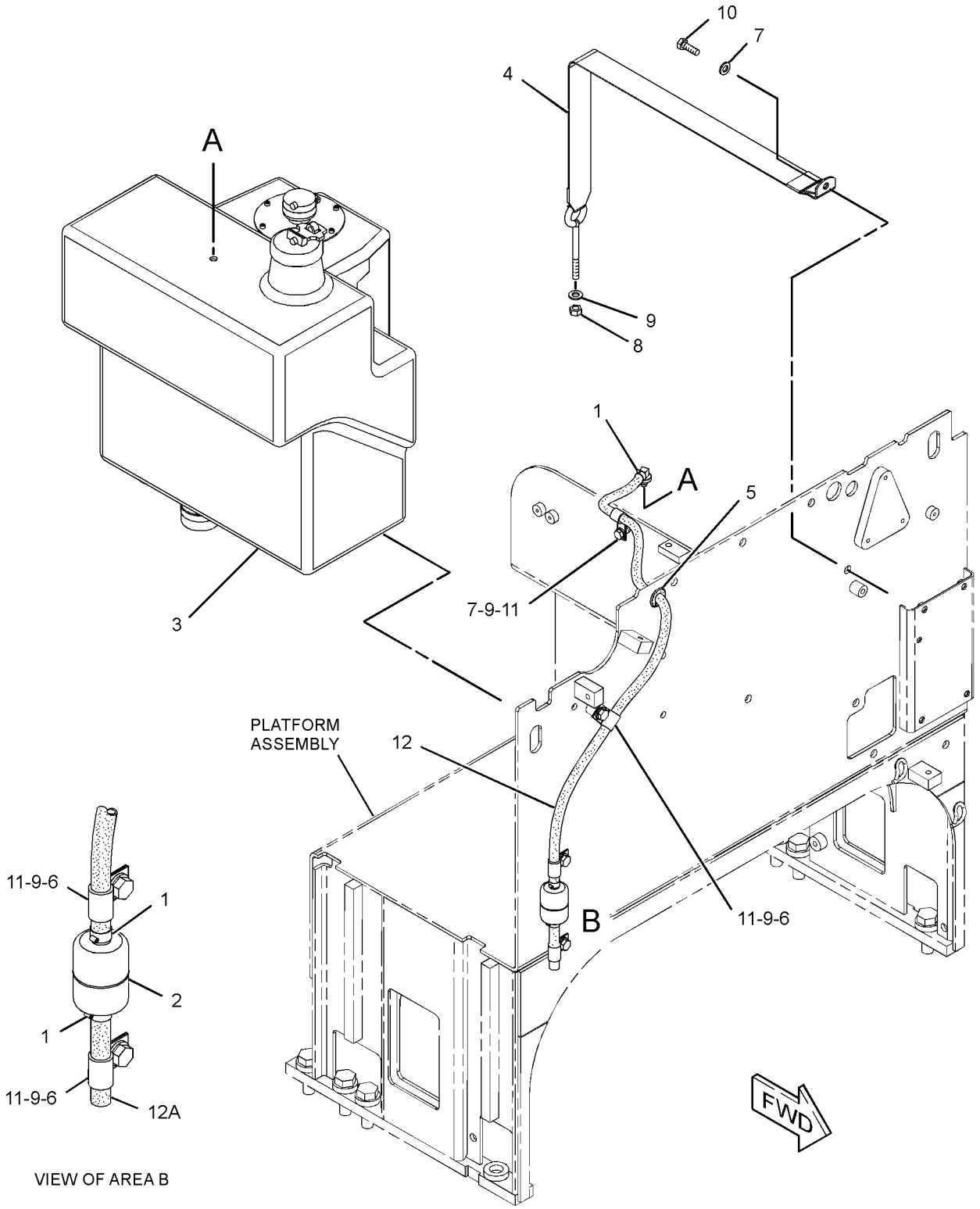

GRAPHIC #1

<END>

g01311704

HYDRAULIC SYSTEM

241-3867 TANK GP-HYDRAULIC

S/N: B9D1-UP
90-LITER (23.8-US GAL)
PART OF 233-4259 TANK & MTG GP-HYDRAULIC

SMCS-4332, 5056, 5068 **i02772120**

NOTE	REF NO	GRAPHIC REF	PART NUMBER	QTY	PART NAME 1 2 3 4 5 6 (PRODUCT LEVEL)	SEE PAGE
	1	1	**6W-5698**	1	GROMMET	
	2	1	**142-8928**	1	ELBOW	
	3	1	**142-8937**	1	CAP AS-FILLER (HYDRAULIC TANK)	
	4	1	**241-3868**	1	TANK AS-HYDRAULIC	
	5	1	**250-3443**	1	TUBE AS	
	6	1	**265-5644**	1	GAUGE GP-SIGHT (HYDRAULIC TANK OIL)	
M	7	1	**099-2374**	6	BOLT-SOCKET HEAD (M5X0.8X12-MM)	
	8	1	**132-3056**	1	SEAL-O-RING	

M-METRIC PART

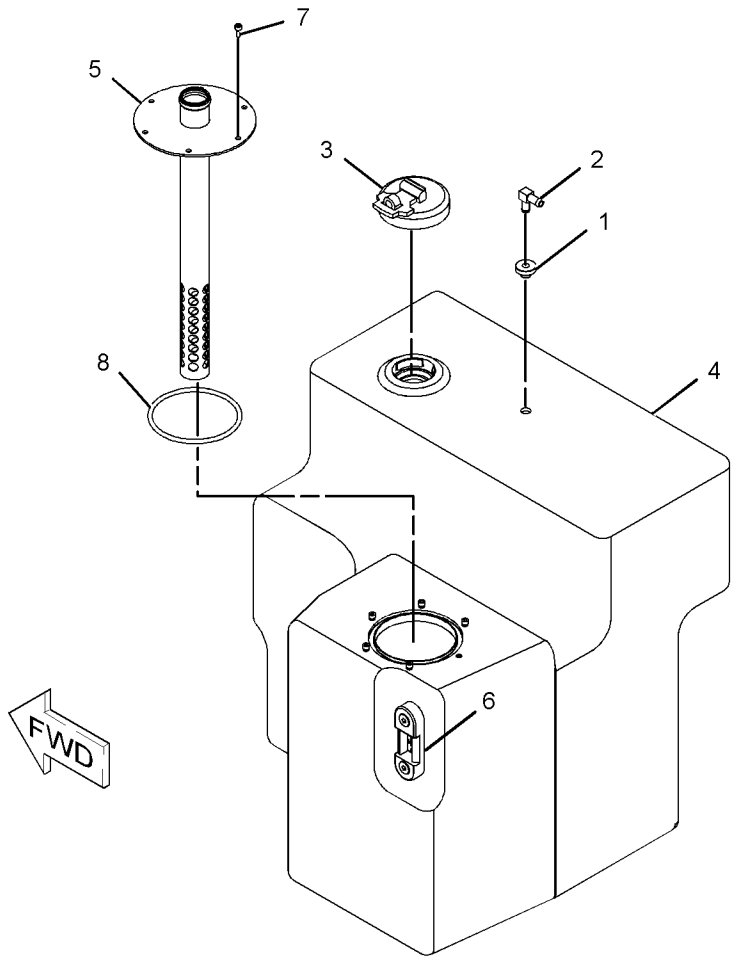

GRAPHIC #1 **<END>** g01334631

249-7298 VALVE GP-BANK 3–FRONT FRAME, REAR

S/N: B9D1-UP

PART OF 242-5056, 242-5058, 242-5059, 242-5061, 242-6108, 242-6110 CONTROL

AR-HYDRAULIC

SMCS-5051 **i02797030**

NOTE	REF NO	GRAPHIC REF	PART NUMBER	QTY	PART NAME 1 2 3 4 5 6 (PRODUCT LEVEL)	SEE PAGE
	1	1	**243-3662**	4	SEAL-INTEGRAL	
Y	3	1	**245-9532**	1	VALVE GP-CONTROL (ARTICULATION)	663
Y	4	1	**245-9533**	1	VALVE GP-CONTROL (BLADE LIFT) (LEFT)	665
Y	4A	1	**245-9533**	1	VALVE GP-CONTROL (BLADE LIFT) (RIGHT)	665
	5	1	**249-5636**	4	ROD	
	7	1	**273-1871**	1	COVER	
Y	8	1	**292-2034**	1	MANIFOLD GP-VALVE (INLET)	626
	9	1	**292-9221**	1	PLUG AS	
		1	**292-9220**	1	PLUG	
		1	**294-8055**	1	SEAL-O-RING	
	10	1	*148-8411*	6	PLUG AS	
					(EACH INCLUDES)	
		1	**9S-4185**	1	PLUG-O-RING	
		1	**3K-0360**	1	SEAL-O-RING	
	11	1	**8T-4121**	4	WASHER-HARD (11X21X2.5-MM THK)	
M	12	1	**8T-4133**	4	NUT (M10X1.5-THD)	

M-METRIC PART
Y-SEPARATE ILLUSTRATION

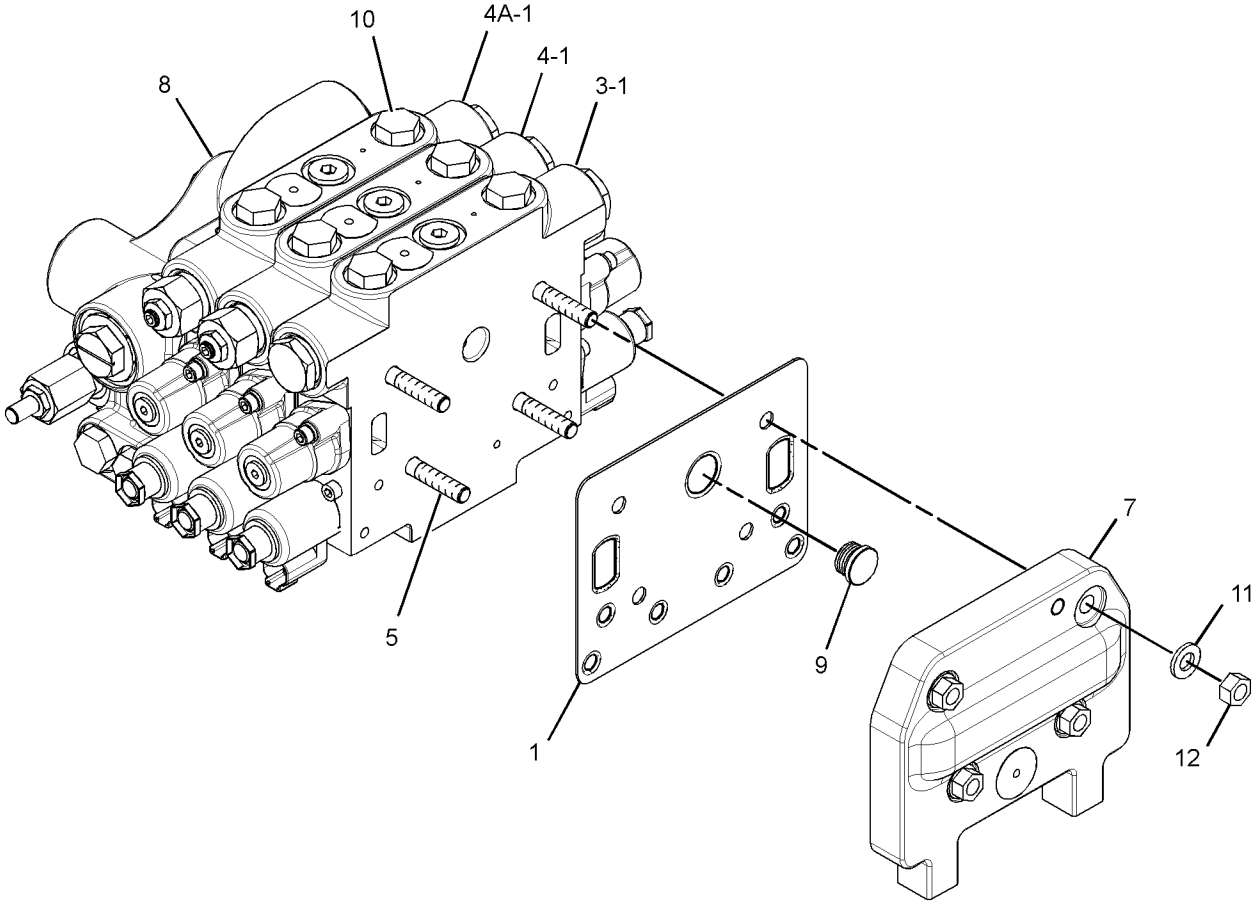

GRAPHIC #1 **<END>** g01366453

248-6169 VALVE GP-BANK 4—FRONT FRAME, REAR

S/N: B9D1-UP

PART OF 242-5057, 242-5060, 242-5062, 309-7551 CONTROL AR-HYDRAULIC

SMCS-5051 **i02797063**

NOTE	REF NO	GRAPHIC REF	PART NUMBER	QTY	PART NAME 1 2 3 4 5 6 (PRODUCT LEVEL)	SEE PAGE
	2	1	**243-3662**	5	SEAL-INTEGRAL	
Y	3	1	**245-9532**	1	VALVE GP-CONTROL (ARTICULATION)	663
Y	4	1	**245-9533**	1	VALVE GP-CONTROL (BLADE LIFT) (LEFT)	665
Y	4A	1	**245-9533**	1	VALVE GP-CONTROL (BLADE LIFT) (RIGHT)	665
Y	5	1	**245-9541**	1	VALVE GP-CONTROL (RIPPER)	677
	7	1	**248-6175**	4	ROD	
	8	1	**273-1871**	1	COVER	
Y	9	1	**292-2034**	1	MANIFOLD GP-VALVE (INLET)	626
	10	1	*292-9221*	1	PLUG AS	
		1	**292-9220**	1	PLUG	
		1	**294-8055**	1	SEAL-O-RING	
	11	1	*148-8411*	8	PLUG AS	
					(EACH INCLUDES)	
		1	**9S-4185**	1	PLUG-O-RING	
		1	**3K-0360**	1	SEAL-O-RING	
	12	1	**8T-4121**	4	WASHER-HARD (11X21X2.5-MM THK)	
M	13	1	**8T-4133**	4	NUT (M10X1.5-THD)	

M-METRIC PART
Y-SEPARATE ILLUSTRATION

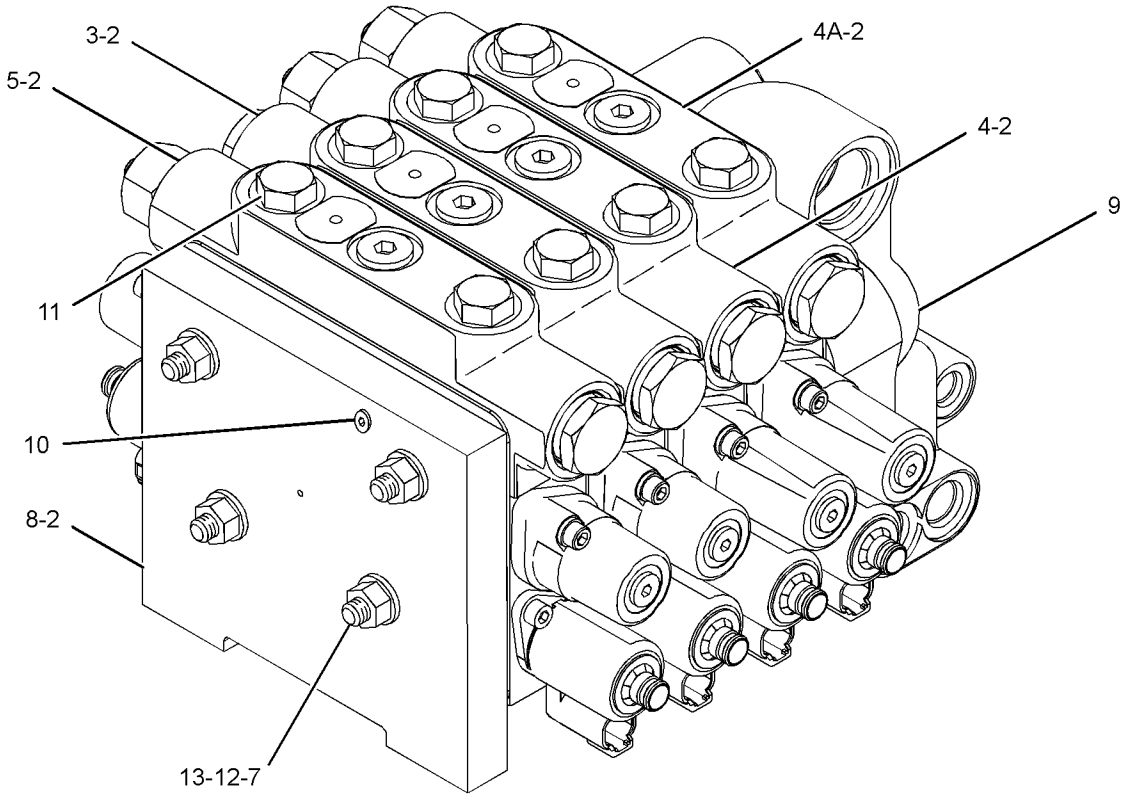

GRAPHIC #1 **<END>** g01341168

248-6168 VALVE GP-BANK 5–FRONT FRAME

S/N: B9D1-UP

PART OF 242-5056, 242-5057, 242-6109 CONTROL AR-HYDRAULIC

SMCS-5051 **i02797069**

NOTE	REF NO	GRAPHIC REF	PART NUMBER	QTY	PART NAME 1 2 3 4 5 6 (PRODUCT LEVEL)	SEE PAGE
	2	1	**243-3662**	6	SEAL-INTEGRAL	
Y	3	1	**245-9534**	1	VALVE GP-CONTROL (BLADE TIP)	667
Y	4	1	**245-9535**	1	VALVE GP-CONTROL (BLADE CENTERSHIFT)	669
Y	5	1	**245-9536**	1	VALVE GP-CONTROL (BLADE SIDESHIFT)	671
Y	6	1	**245-9537**	1	VALVE GP-CONTROL (CIRCLE DRIVE)	673
Y	7	1	**245-9539**	1	VALVE GP-CONTROL (WHEEL LEAN)	675
	9	1	**248-6174**	4	ROD	
	10	1	**273-1871**	1	COVER	
Y	11	1	**292-2033**	1	MANIFOLD GP-VALVE (INLET)	625
	12	1	*292-9221*	1	PLUG AS	
		1	**292-9220**	1	PLUG	
		1	**294-8055**	1	SEAL-O-RING	
	13	1	*148-8411*	10	PLUG AS	
					(EACH INCLUDES)	
		1	**9S-4185**	1	PLUG-O-RING	
		1	**3K-0360**	1	SEAL-O-RING	
	14	1	**8T-4121**	4	WASHER-HARD (11X21X2.5-MM THK)	
M	15	1	**8T-4133**	4	NUT (M10X1.5-THD)	

M-METRIC PART
Y-SEPARATE ILLUSTRATION

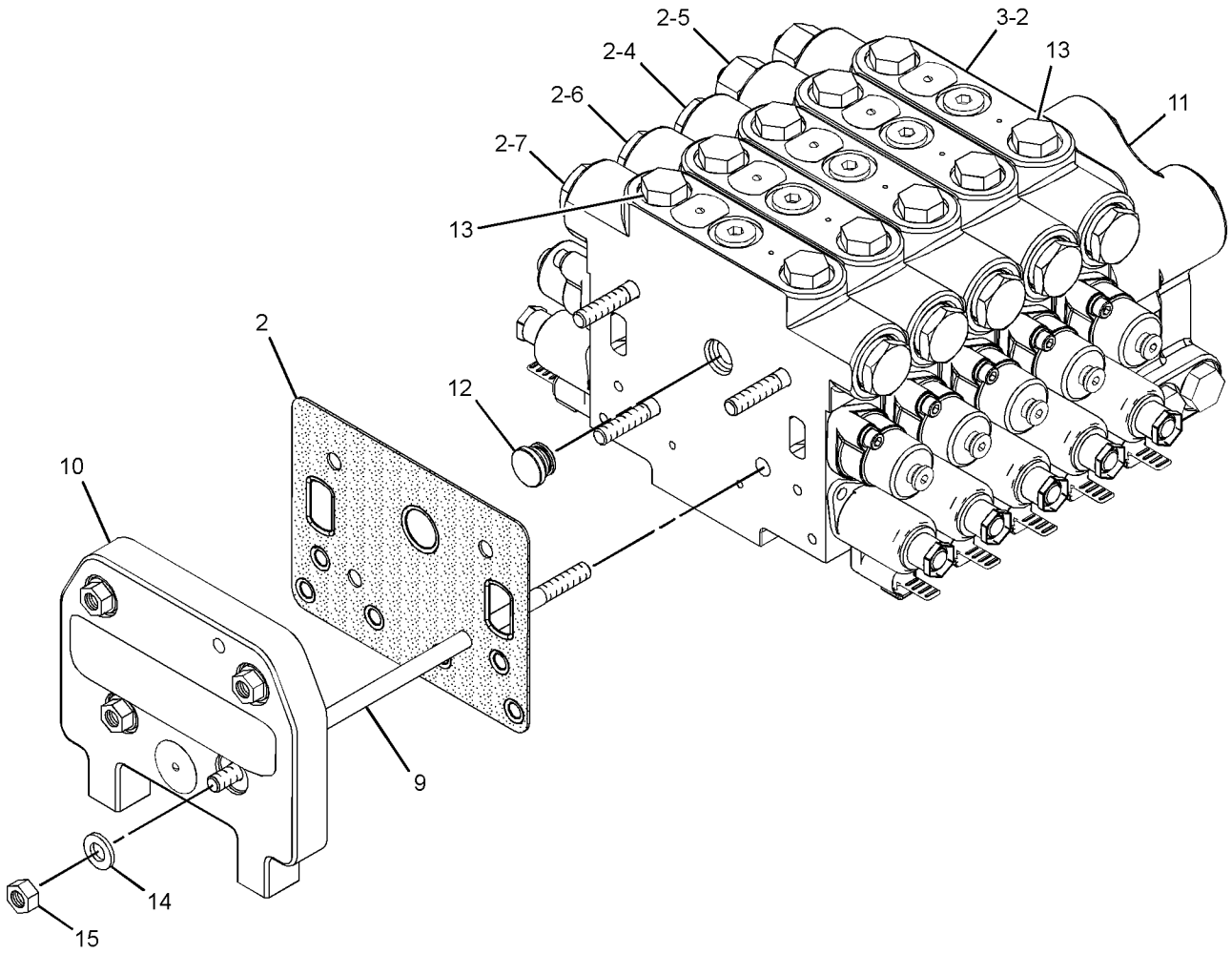

GRAPHIC #1 **<END>** g01339628

HYDRAULIC SYSTEM

249-7299 VALVE GP-BANK 5—FRONT FRAME, REAR

S/N: B9D1-UP

PART OF 242-5063, 242-5064, 242-6111, 242-6146 CONTROL AR-HYDRAULIC

SMCS-5051 **i02797072**

NOTE	REF NO	GRAPHIC REF	PART NUMBER	QTY	PART NAME 1 2 3 4 5 6 (PRODUCT LEVEL)	SEE PAGE
	2	1	**243-3662**	6	SEAL-INTEGRAL	
Y	3	1	**245-9532**	1	VALVE GP-CONTROL (ARTICULATION)	663
Y	4	1	**245-9533**	1	VALVE GP-CONTROL (BLADE LIFT) (LEFT)	665
Y	4A	1	**245-9533**	1	VALVE GP-CONTROL (BLADE LIFT) (RIGHT)	665
Y	5	1	**245-9542**	1	VALVE GP-CONTROL (WING TILT)	679
Y	6	1	**245-9543**	1	VALVE GP-CONTROL (WING LIFT)	681
	7	1	**248-6174**	4	ROD	
	9	1	**273-1871**	1	COVER	
Y	10	1	**292-2034**	1	MANIFOLD GP-VALVE (INLET)	626
	11	1	*292-9221*	1	PLUG AS	
		1	**292-9220**	1	PLUG	
		1	**294-8055**	1	SEAL-O-RING	
	12	1	*148-8411*	10	PLUG AS	
					(EACH INCLUDES)	
		1	**9S-4185**	1	PLUG-O-RING	
		1	**3K-0360**	1	SEAL-O-RING	
	13	1	**8T-4121**	4	WASHER-HARD (11X21X2.5-MM THK)	
M	14	1	**8T-4133**	4	NUT (M10X1.5-THD)	

M-METRIC PART
Y-SEPARATE ILLUSTRATION

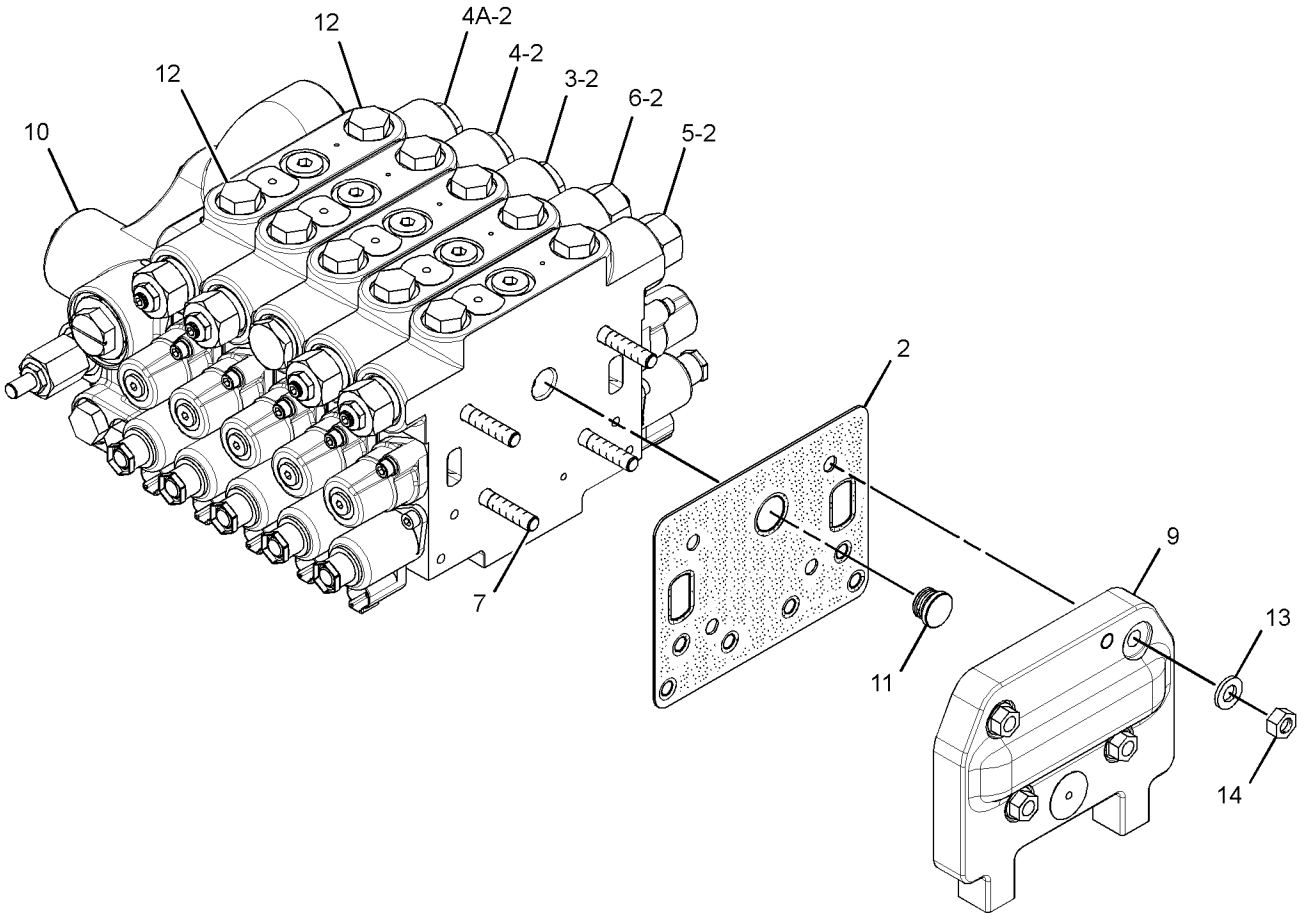

GRAPHIC #1 **<END>** g01342794

249-5330 VALVE GP-BANK 6–FRONT FRAME, REAR

S/N: B9D1-UP

PART OF 242-5066, 242-6107, 242-6109, 242-6112 CONTROL AR-HYDRAULIC

SMCS-5051 **i02797082**

NOTE	REF NO	GRAPHIC REF	PART NUMBER	QTY	PART NAME 1 2 3 4 5 6 (PRODUCT LEVEL)	SEE PAGE
	2	1	**243-3662**	7	SEAL-INTEGRAL	
Y	3	1	**245-9532**	1	VALVE GP-CONTROL (ARTICULATION)	663
Y	4	1	**245-9533**	1	VALVE GP-CONTROL (BLADE LIFT) (RIGHT)	665
Y	4A	1	**245-9533**	1	VALVE GP-CONTROL (BLADE LIFT) (LEFT)	665
Y	5	1	**245-9541**	1	VALVE GP-CONTROL (RIPPER)	677
Y	6	1	**245-9542**	1	VALVE GP-CONTROL (WING TILT)	679
Y	7	1	**245-9543**	1	VALVE GP-CONTROL (WING LIFT)	681
	9	1	**249-5334**	4	ROD	
	10	1	**273-1871**	1	COVER	
Y	11	1	**292-2034**	1	MANIFOLD GP-VALVE (INLET)	626
	12	1	*292-9221*	1	PLUG AS	
		1	**292-9220**	1	PLUG	
		1	**294-8055**	1	SEAL-O-RING	
	13	1	*148-8411*	12	PLUG AS	
					(EACH INCLUDES)	
		1	**9S-4185**	1	PLUG-O-RING	
		1	**3K-0360**	1	SEAL-O-RING	
	14	1	**8T-4121**	4	WASHER-HARD (11X21X2.5-MM THK)	
M	15	1	**8T-4133**	4	NUT (M10X1.5-THD)	

M-METRIC PART
Y-SEPARATE ILLUSTRATION

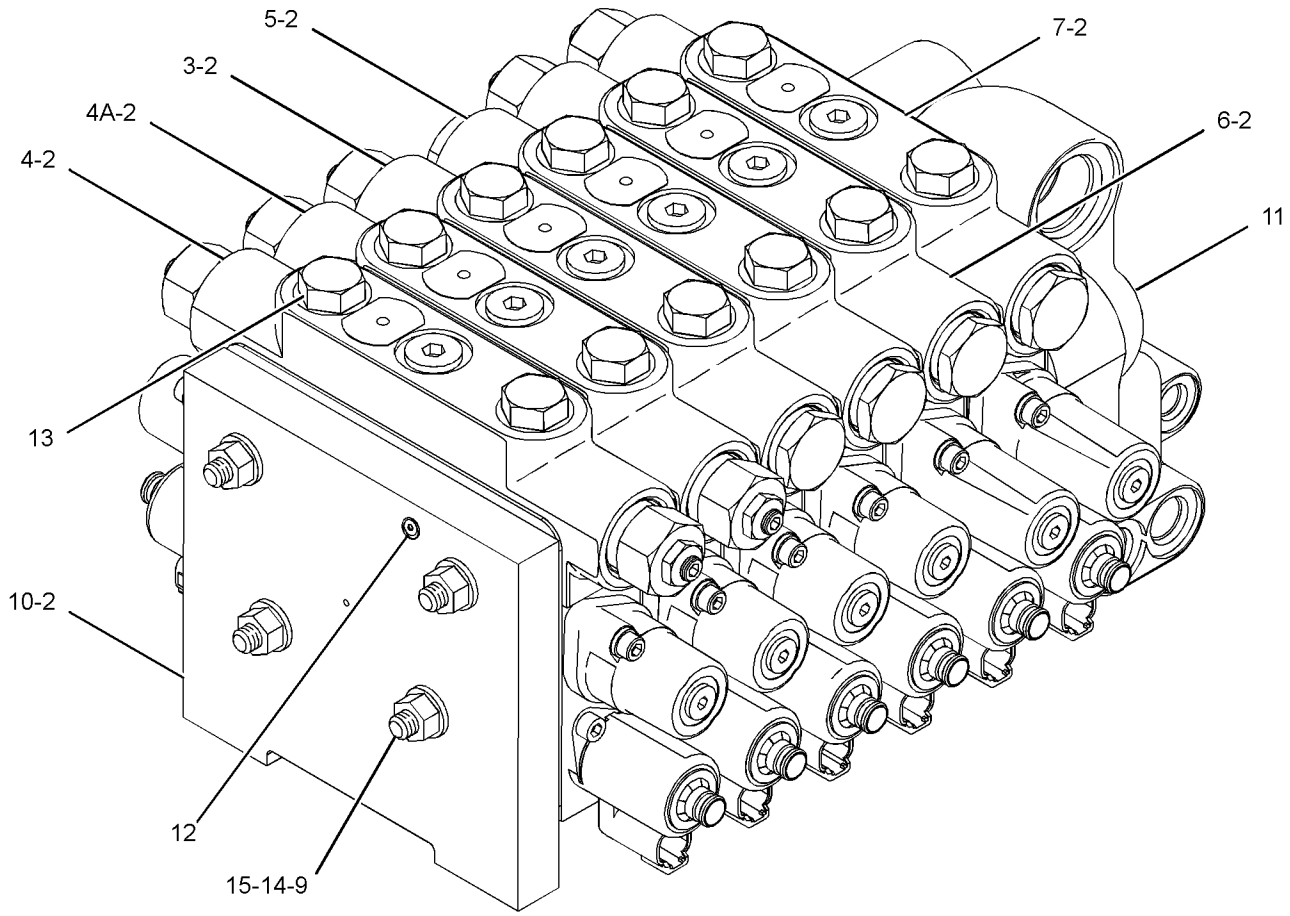

GRAPHIC #1 **<END>** g01341133

249-7294 VALVE GP-BANK 6–FRONT FRAME

S/N: B9D1-UP

PART OF 242-5058, 242-5060, 242-5063, 242-5066 CONTROL AR-HYDRAULIC

SMCS-5051 **i02797081**

NOTE	REF NO	GRAPHIC REF	PART NUMBER	QTY	PART NAME 1 2 3 4 5 6 (PRODUCT LEVEL)	SEE PAGE
	1	1	**243-3662**	7	SEAL-INTEGRAL	
Y	3	1	**245-9534**	1	VALVE GP-CONTROL (BLADE TIP)	667
Y	4	1	**245-9535**	1	VALVE GP-CONTROL (BLADE CENTERSHIFT)	669
Y	5	1	**245-9536**	1	VALVE GP-CONTROL (BLADE SIDESHIFT)	671
Y	6	1	**245-9537**	1	VALVE GP-CONTROL (CIRCLE DRIVE)	673
Y	7	1	**245-9539**	1	VALVE GP-CONTROL (WHEEL LEAN)	675
Y	8	1	**245-9544**	1	VALVE GP-CONTROL (BULLDOZER LIFT, PLOW)	683
	9	1	**249-5334**	4	ROD	
	11	1	**273-1871**	1	COVER	
Y	12	1	**292-2033**	1	MANIFOLD GP-VALVE (INLET)	625
	13	1	*292-9221*	1	PLUG AS	
		1	**292-9220**	1	PLUG	
		1	**294-8055**	1	SEAL-O-RING	
	14	1	*148-8411*	12	PLUG AS	
					(EACH INCLUDES)	
		1	**3K-0360**	1	SEAL-O-RING	
		1	**9S-4185**	1	PLUG-O-RING	
	15	1	**8T-4121**	4	WASHER-HARD (11X21X2.5-MM THK)	
M	16	1	**8T-4133**	4	NUT (M10X1.5-THD)	

M-METRIC PART
Y-SEPARATE ILLUSTRATION

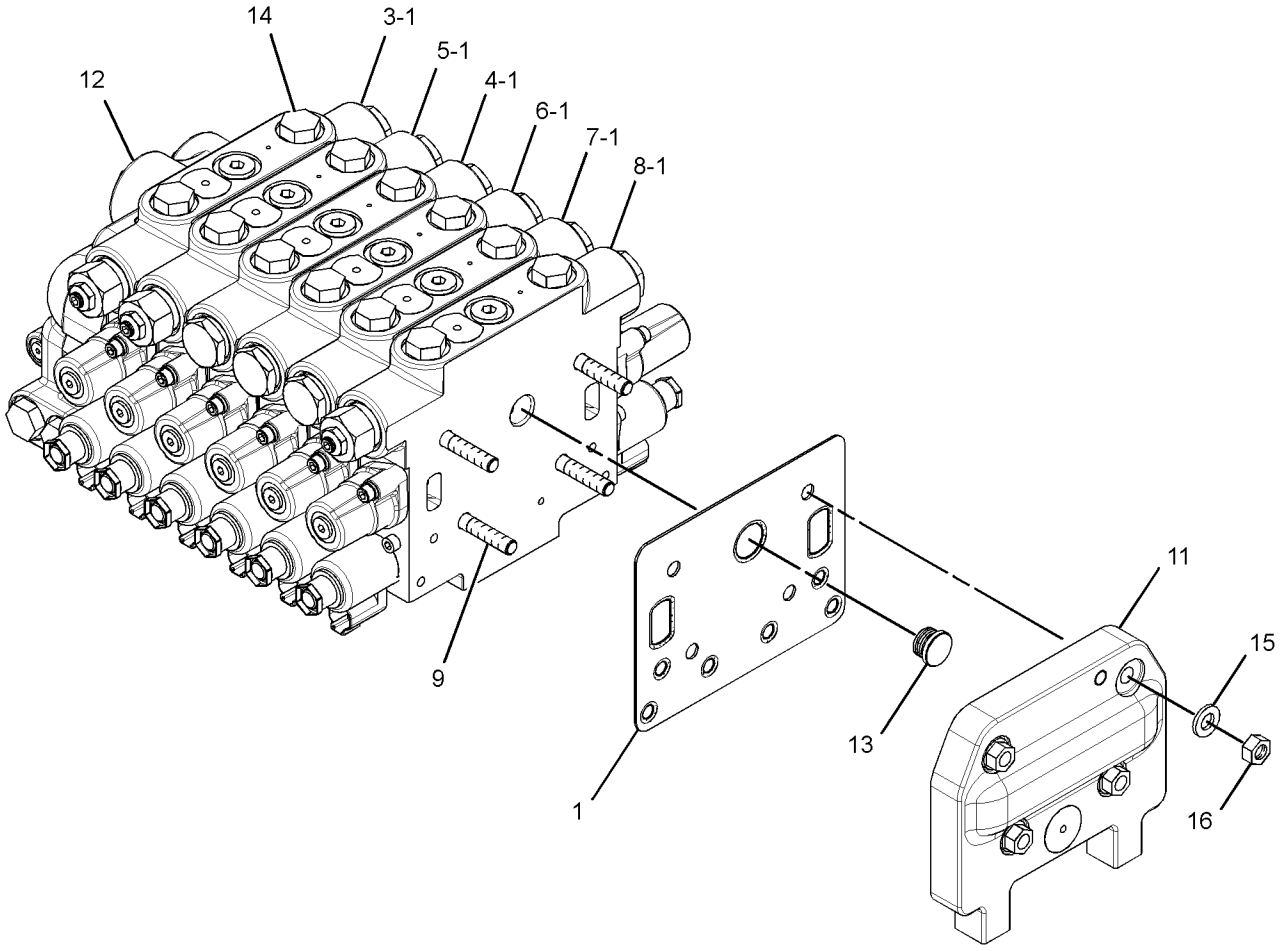

GRAPHIC #1 **<END>** g01370392

249-7295 VALVE GP-BANK 6–FRONT FRAME

S/N: B9D1-UP

PART OF 242-5059 CONTROL AR-HYDRAULIC

SMCS-5051 **i02797125**

NOTE	REF NO	GRAPHIC REF	PART NUMBER	QTY	PART NAME 1 2 3 4 5 6 (PRODUCT LEVEL)	SEE PAGE
	1	1	**243-3662**	7	SEAL-INTEGRAL	
Y	3	1	**245-9534**	1	VALVE GP-CONTROL (BLADE TIP)	667
Y	4	1	**245-9535**	1	VALVE GP-CONTROL (BLADE CENTERSHIFT)	669
Y	5	1	**245-9536**	1	VALVE GP-CONTROL (BLADE SIDESHIFT)	671
Y	6	1	**245-9537**	1	VALVE GP-CONTROL (CIRCLE DRIVE)	673
Y	7	1	**245-9539**	1	VALVE GP-CONTROL (WHEEL LEAN)	675
	8	1	**249-5334**	4	ROD	
Y	10	1	**249-7307**	1	VALVE GP-CONTROL (SCARIFIER)	687
	11	1	**273-1871**	1	COVER	
Y	12	1	**292-2033**	1	MANIFOLD GP-VALVE (INLET)	625
	13	1	*292-9221*	1	PLUG AS	
		1	**292-9220**	1	PLUG	
		1	**294-8055**	1	SEAL-O-RING	
	14	1	*148-8411*	12	PLUG AS	
					(EACH INCLUDES)	
		1	**9S-4185**	1	PLUG-O-RING	
		1	**3K-0360**	1	SEAL-O-RING	
	15	1	**8T-4121**	4	WASHER-HARD (11X21X2.5-MM THK)	
M	16	1	**8T-4133**	4	NUT (M10X1.5-THD)	

M-METRIC PART
Y-SEPARATE ILLUSTRATION

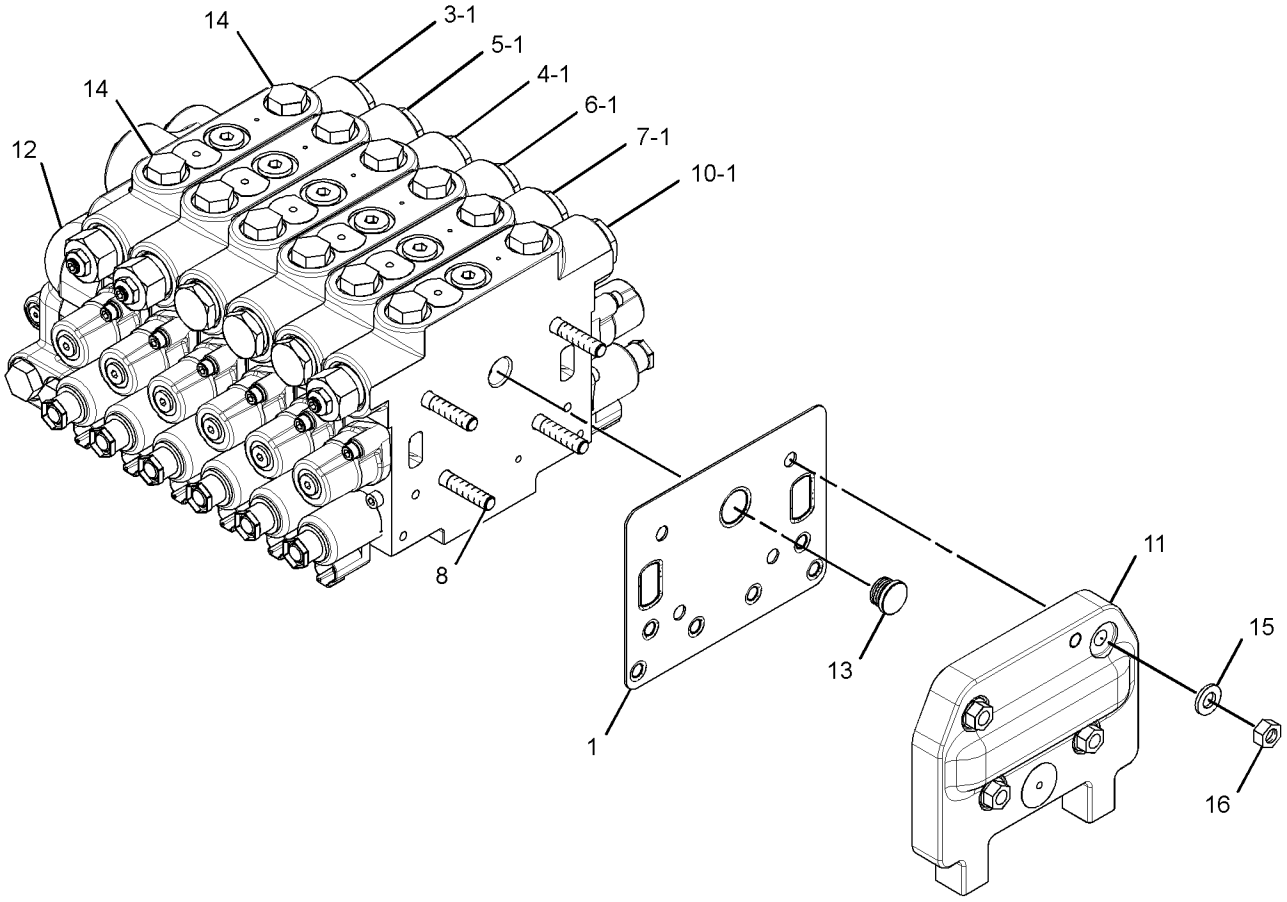

GRAPHIC #1 **<END>** g01370402

249-5328 VALVE GP-BANK 7–FRONT FRAME

S/N: B9D1-UP

PART OF 242-5062, 242-5064, 242-6108, 242-6112 CONTROL AR-HYDRAULIC

SMCS-5051 **i02797126**

NOTE	REF NO	GRAPHIC REF	PART NUMBER	QTY	PART NAME 1 2 3 4 5 6 (PRODUCT LEVEL)	SEE PAGE
	1	1	**243-3662**	8	SEAL-INTEGRAL	
Y	3	1	**245-9534**	1	VALVE GP-CONTROL (BLADE TIP)	667
Y	4	1	**245-9535**	1	VALVE GP-CONTROL (BLADE CENTERSHIFT)	669
Y	5	1	**245-9536**	1	VALVE GP-CONTROL (BLADE SIDESHIFT)	671
Y	6	1	**245-9537**	1	VALVE GP-CONTROL (CIRCLE DRIVE)	673
Y	7	1	**245-9539**	1	VALVE GP-CONTROL (WHEEL LEAN)	675
Y	8	1	**245-9544**	1	VALVE GP-CONTROL (BULLDOZER LIFT, PLOW)	683
Y	9	1	**245-9545**	1	VALVE GP-CONTROL (PLOW ANGLE)	685
	10	1	**246-3193**	4	ROD	
	12	1	**273-1871**	1	COVER	
Y	13	1	**292-2033**	1	MANIFOLD GP-VALVE (INLET)	625
	14	1	**292-9221**	1	PLUG AS	
		1	**292-9220**	1	PLUG	
		1	**294-8055**	1	SEAL-O-RING	
	15	1	*148-8411*	14	PLUG AS	
					(EACH INCLUDES)	
		1	**9S-4185**	1	PLUG-O-RING	
		1	**3K-0360**	1	SEAL-O-RING	
	16	1	**8T-4121**	4	WASHER-HARD (11X21X2.5-MM THK)	
M	17	1	**8T-4133**	4	NUT (M10X1.5-THD)	

M-METRIC PART
Y-SEPARATE ILLUSTRATION

249-5328 VALVE GP-BANK 7 *(contd.)* **i02797126**

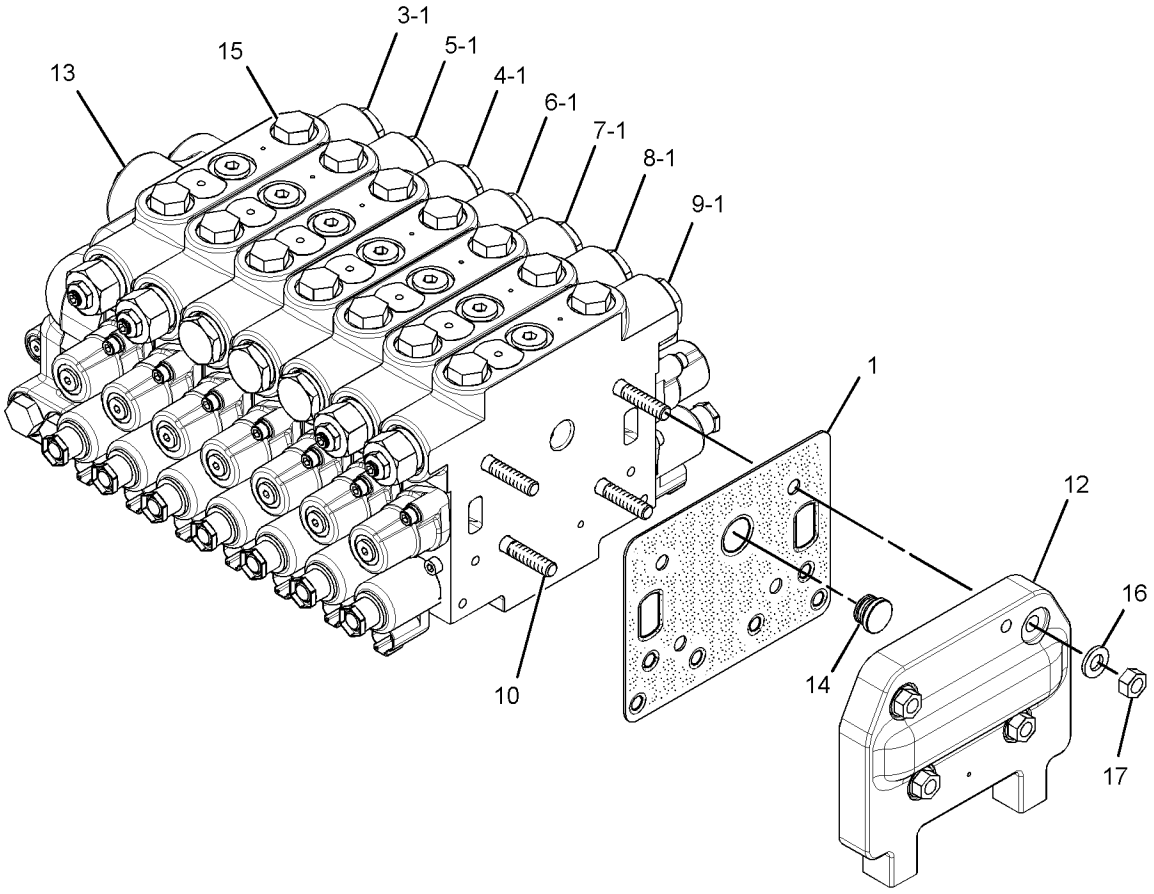

GRAPHIC #1 **<END>** g01371375

249-7296 VALVE GP-BANK 7–FRONT FRAME

S/N: B9D1-UP

PART OF 242-5061, 242-6111, 309-7551 CONTROL AR-HYDRAULIC

SMCS-5051 **i02797135**

NOTE	REF NO	GRAPHIC REF	PART NUMBER	QTY	PART NAME 1 2 3 4 5 6 (PRODUCT LEVEL)	SEE PAGE
	1	1	**243-3662**	8	SEAL-INTEGRAL	
Y	3	1	**245-9534**	1	VALVE GP-CONTROL (BLADE TIP)	667
Y	4	1	**245-9535**	1	VALVE GP-CONTROL (BLADE CENTERSHIFT)	669
Y	5	1	**245-9536**	1	VALVE GP-CONTROL (BLADE SIDESHIFT)	671
Y	6	1	**245-9537**	1	VALVE GP-CONTROL (CIRCLE DRIVE)	673
Y	7	1	**245-9539**	1	VALVE GP-CONTROL (WHEEL LEAN)	675
Y	8	1	**245-9544**	1	VALVE GP-CONTROL (BULLDOZER LIFT, PLOW)	683
	9	1	**246-3193**	4	ROD	
Y	11	1	**249-7307**	1	VALVE GP-CONTROL (SCARIFIER)	687
	12	1	**273-1871**	1	COVER	
Y	13	1	**292-2033**	1	MANIFOLD GP-VALVE (INLET)	625
	14	1	*292-9221*	1	PLUG AS	
		1	**292-9220**	1	PLUG	
		1	**294-8055**	1	SEAL-O-RING	
	15	1	*148-8411*	14	PLUG AS	
					(EACH INCLUDES)	
		1	**3K-0360**	1	SEAL-O-RING	
		1	**9S-4185**	1	PLUG-O-RING	
	16	1	**8T-4121**	4	WASHER-HARD (11X21X2.5-MM THK)	
M	17	1	**8T-4133**	4	NUT (M10X1.5-THD)	

M-METRIC PART
Y-SEPARATE ILLUSTRATION

249-7296 VALVE GP-BANK 7 *(contd.)* **i02797135**

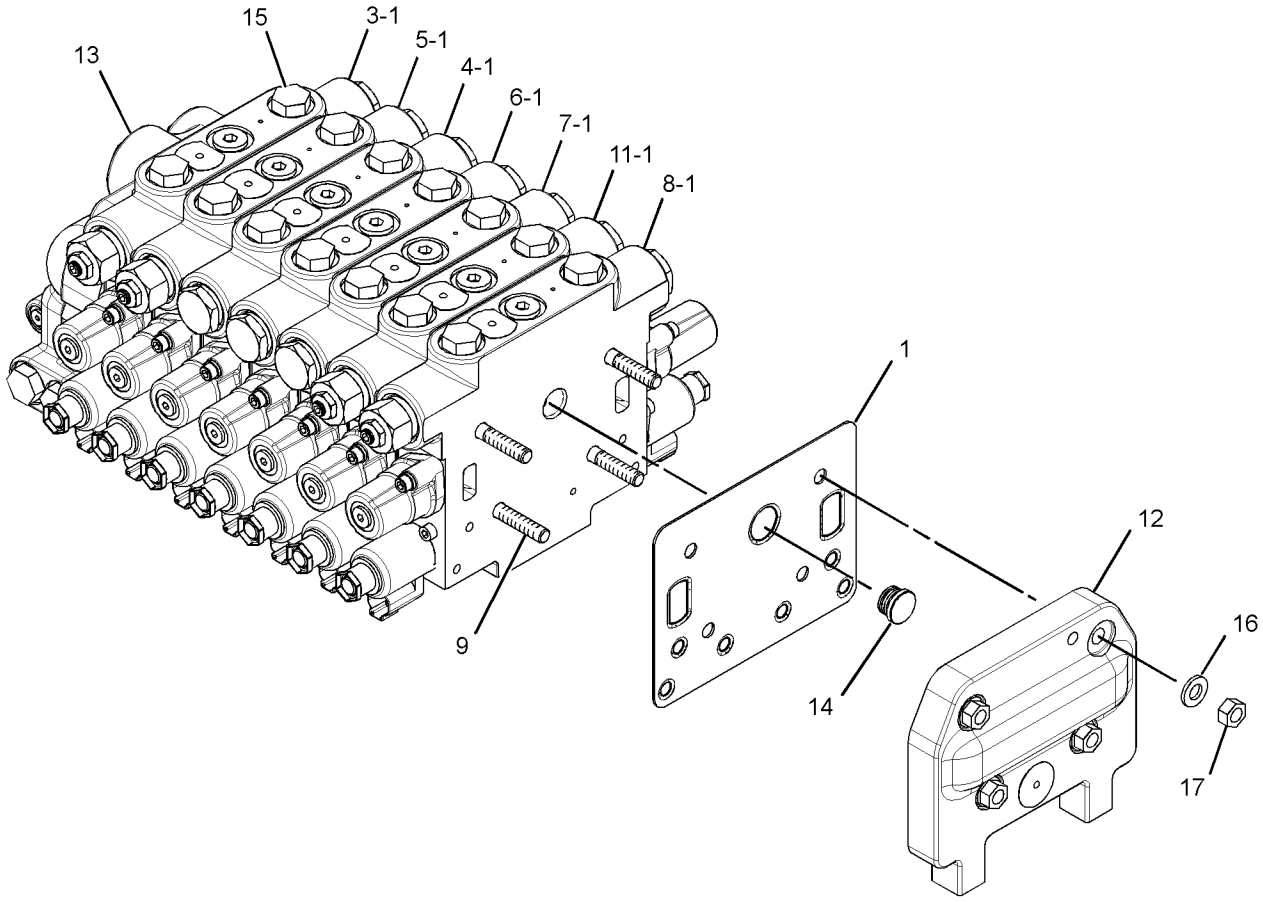

GRAPHIC #1 **<END>** g01370435

249-5329 VALVE GP-BANK 8–FRONT FRAME

S/N: B9D1-UP

PART OF 242-6107 CONTROL AR-HYDRAULIC

SMCS-5051 **i02797137**

NOTE	REF NO	GRAPHIC REF	PART NUMBER	QTY	PART NAME 1 2 3 4 5 6 (PRODUCT LEVEL)	SEE PAGE
	2	1	**243-3662**	9	SEAL-INTEGRAL	
Y	3	1	**245-9534**	1	VALVE GP-CONTROL (BLADE TIP)	667
Y	4	1	**245-9535**	1	VALVE GP-CONTROL (BLADE CENTERSHIFT)	669
Y	5	1	**245-9536**	1	VALVE GP-CONTROL (BLADE SIDESHIFT)	671
Y	6	1	**245-9537**	1	VALVE GP-CONTROL (CIRCLE DRIVE)	673
Y	7	1	**245-9539**	1	VALVE GP-CONTROL (WHEEL LEAN)	675
Y	8	1	**245-9544**	1	VALVE GP-CONTROL (BULLDOZER LIFT, PLOW)	683
Y	9	1	**245-9545**	2	VALVE GP-CONTROL (PLOW ANGLE)	685
	11	1	**249-5637**	4	ROD	
	12	1	**273-1871**	1	COVER	
Y	13	1	**292-2033**	1	MANIFOLD GP-VALVE (INLET)	625
	14	1	*292-9221*	1	PLUG AS	
		1	**292-9220**	1	PLUG	
		1	**294-8055**	1	SEAL-O-RING	
	15	1	*148-8411*	16	PLUG AS	
					(EACH INCLUDES)	
		1	**9S-4185**	1	PLUG-O-RING	
		1	**3K-0360**	1	SEAL-O-RING	
	16	1	**8T-4121**	4	WASHER-HARD (11X21X2.5-MM THK)	
M	17	1	**8T-4133**	4	NUT (M10X1.5-THD)	

M-METRIC PART
Y-SEPARATE ILLUSTRATION

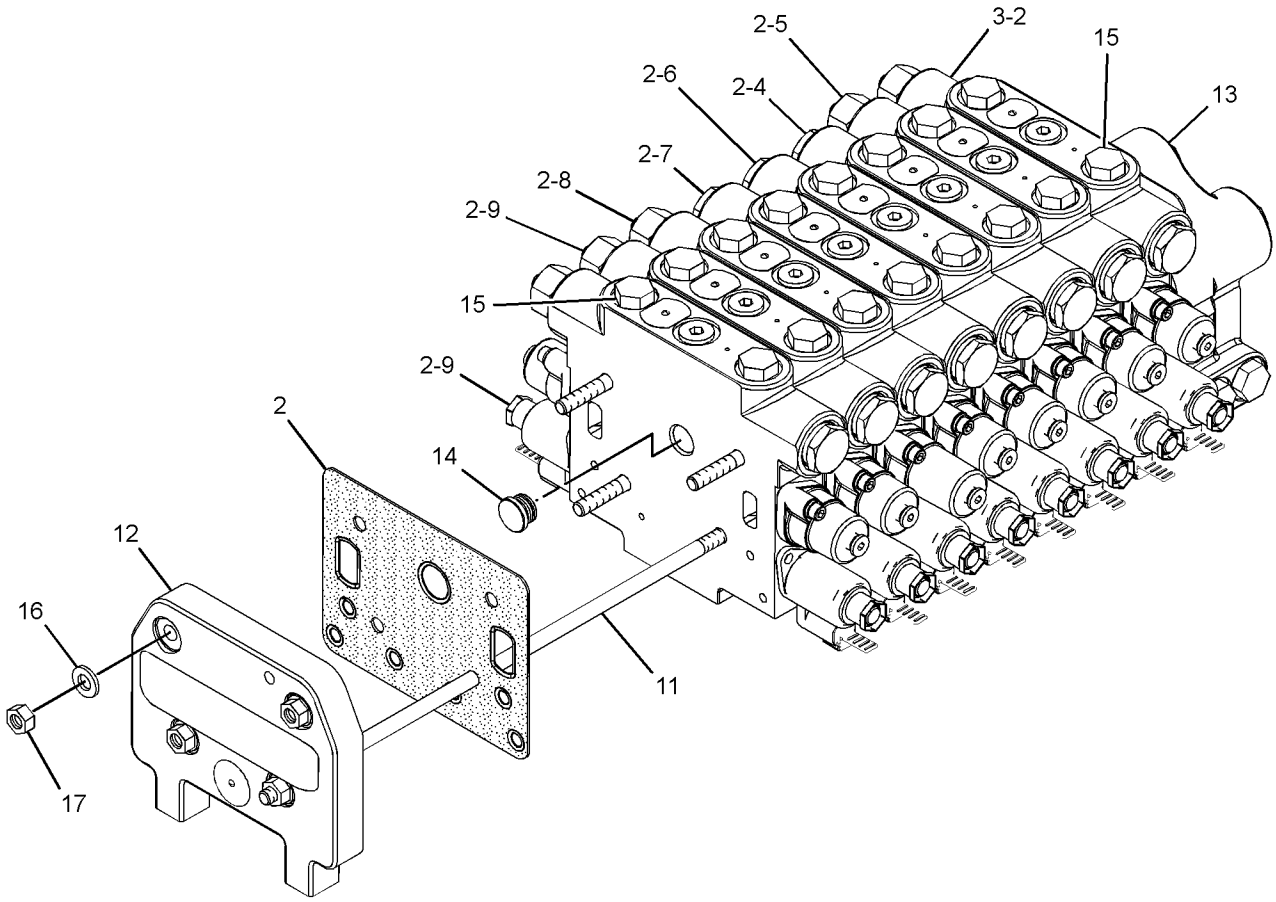

GRAPHIC #1 **<END>** g01341333

HYDRAULIC SYSTEM

249-7297 VALVE GP-BANK 8–FRONT FRAME

S/N: B9D1-UP

PART OF 242-6110, 242-6146 CONTROL AR-HYDRAULIC

SMCS-5051 **i02797136**

NOTE	REF NO	GRAPHIC REF	PART NUMBER	QTY	PART NAME 1 2 3 4 5 6 (PRODUCT LEVEL)	SEE PAGE
	1	1	**243-3662**	9	SEAL-INTEGRAL	
Y	3	1	**245-9534**	1	VALVE GP-CONTROL (BLADE TIP)	667
Y	4	1	**245-9535**	1	VALVE GP-CONTROL (BLADE CENTERSHIFT)	669
Y	5	1	**245-9536**	1	VALVE GP-CONTROL (BLADE SIDESHIFT)	671
Y	6	1	**245-9537**	1	VALVE GP-CONTROL (CIRCLE DRIVE)	673
Y	7	1	**245-9539**	1	VALVE GP-CONTROL (WHEEL LEAN)	675
Y	8	1	**245-9544**	1	VALVE GP-CONTROL (BULLDOZER LIFT, PLOW)	683
Y	9	1	**245-9545**	1	VALVE GP-CONTROL (PLOW ANGLE)	685
	10	1	**249-5637**	4	ROD	
Y	12	1	**249-7307**	1	VALVE GP-CONTROL (SCARIFIER)	687
	13	1	**273-1871**	1	COVER	
Y	14	1	**292-2033**	1	MANIFOLD GP-VALVE (INLET)	625
	15	1	*292-9221*	1	PLUG AS	
		1	**292-9220**	1	PLUG	
		1	**294-8055**	1	SEAL-O-RING	
	16	1	*148-8411*	16	PLUG AS	
					(EACH INCLUDES)	
		1	**3K-0360**	1	SEAL-O-RING	
		1	**9S-4185**	1	PLUG-O-RING	
	17	1	**8T-4121**	4	WASHER-HARD (11X21X2.5-MM THK)	
M	18	1	**8T-4133**	4	NUT (M10X1.5-THD)	

M-METRIC PART
Y-SEPARATE ILLUSTRATION

249-7297 VALVE GP-BANK 8 *(contd.)* **i02797136**

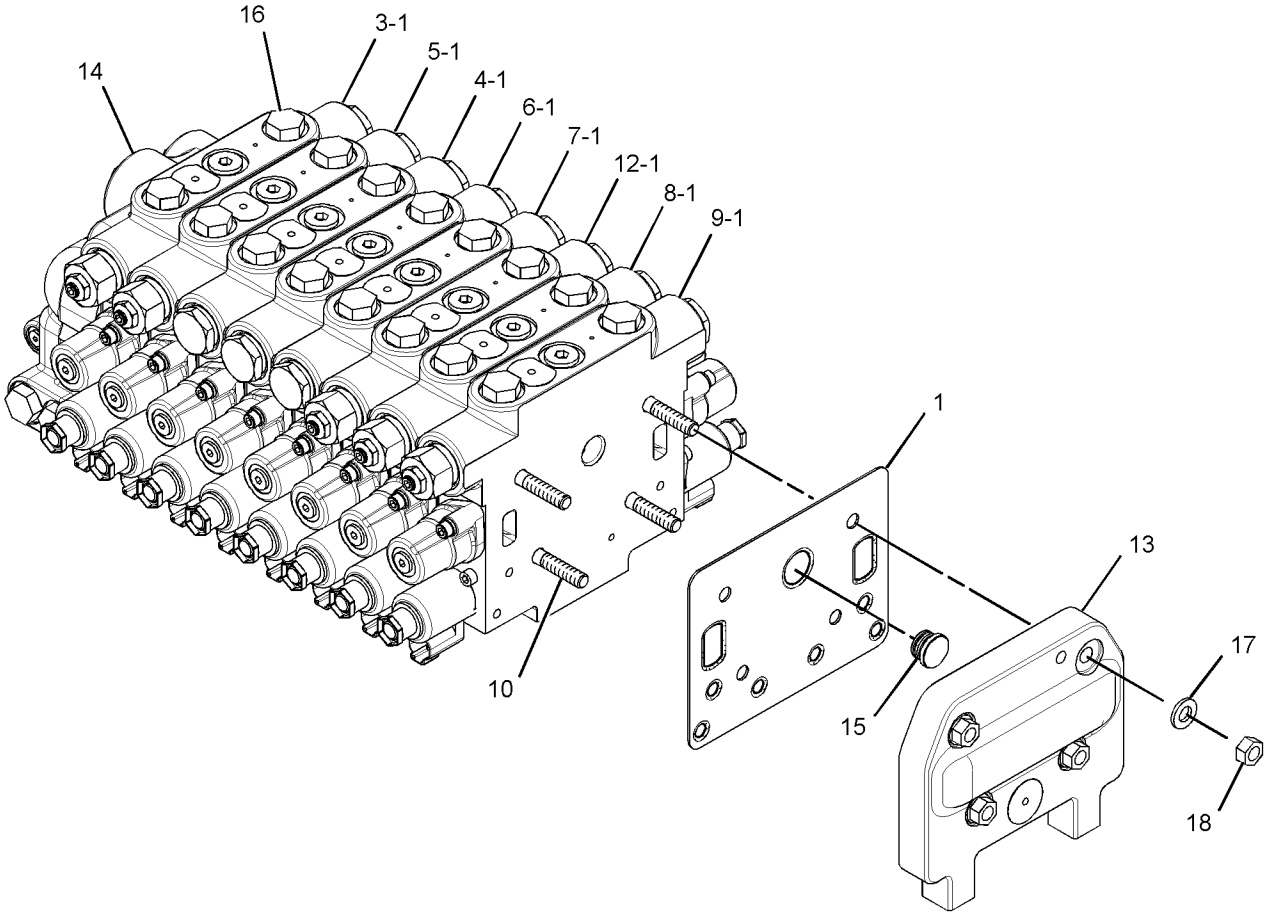

GRAPHIC #1 **<END>** g01370446

HYDRAULIC SYSTEM

158-9956 VALVE GP-CHECK

S/N: B9D1-UP

PART OF 251-8256 MANIFOLD GP-CONTROL

SMCS-5067 **i02106248**

NOTE	REF NO	GRAPHIC REF	PART NUMBER	QTY	PART NAME 1 2 3 4 5 6 (PRODUCT LEVEL)	SEE PAGE
	1	1	**3K-0360**	1	SEAL-O-RING	
	2	1	**161-6154**	1	SEAL-O-RING	
	3	1	**6E-0381**	1	RING-BACKUP	

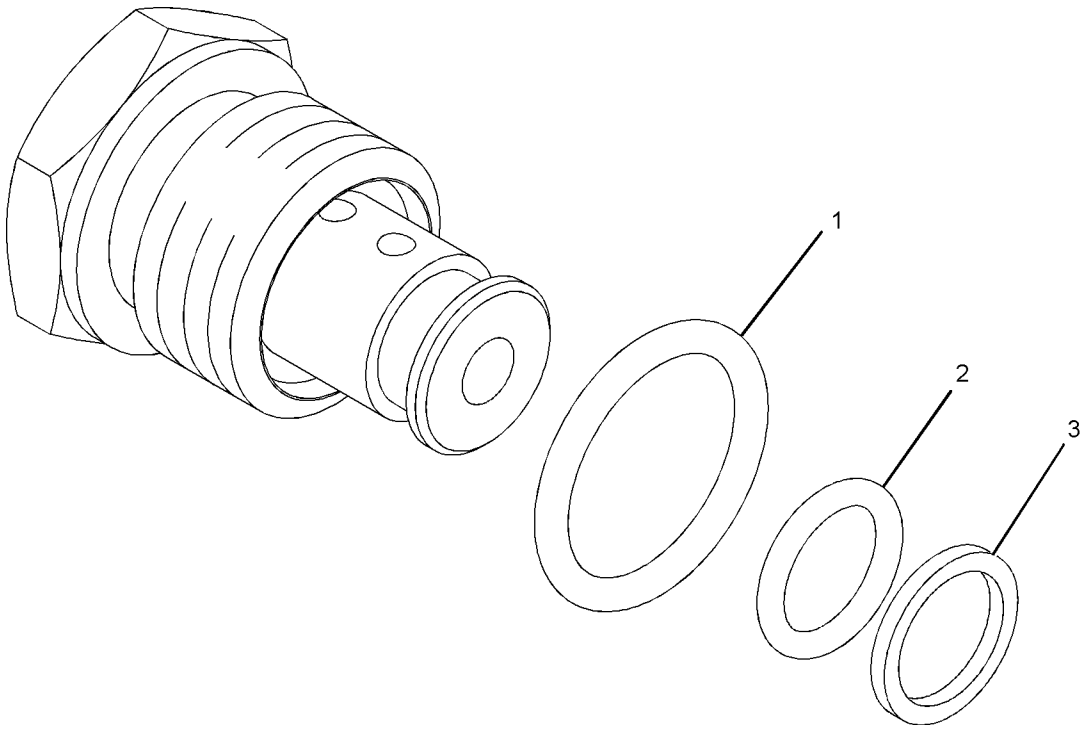

GRAPHIC #1 **<END>** g01016882

HYDRAULIC SYSTEM

245-9532 VALVE GP-CONTROL—ARTICULATION

S/N: B9D1-UP

PART OF 249-7298 VALVE GP-BANK 3, 248-6169 VALVE GP-BANK 4, 249-7299 VALVE GP-BANK 5, 249-5330 VALVE GP-BANK 6

SMCS-5051 **i02780671**

NOTE	REF NO	GRAPHIC REF	PART NUMBER	QTY	PART NAME 1 2 3 4 5 6 (PRODUCT LEVEL)	SEE PAGE
	2	1	**6E-3007**	1	SPRING	
	3	1	**9W-7783**	6	PLUG	
	4	1	**106-3659**	1	PISTON	
M	5	1	**136-4192**	4	BOLT (M6X1X35-MM)	
	6	1	**212-4961**	1	SPRING	
	7	1	**242-9264**	1	PLUG-ORIFICE	
	8	1	**243-2965**	1	SPOOL	
	9	1	**244-2579**	1	PLUG	
	10	1	**245-9923**	2	VALVE GP-CHECK (ARTICULATION)	
					(EACH INCLUDES)	
J		1	**3K-0360**	1	SEAL-O-RING	
J		1	**6V-5326**	1	SEAL-O-RING	
J		1	**6V-6580**	1	SEAL-O-RING	
	12	1	**251-1668**	2	COVER-SPRING	
	13	1	**254-3950**	1	STEM	
Y	15	1	**278-1799**	2	VALVE GP-SOLENOID (ARTICULATION)	700
	16	1	**284-3555**	2	SPRING	
	17	1	**284-4601**	2	RETAINER	
	18	1	**284-4602**	2	RETAINER	
	19	1	*148-8395*	1	PLUG AS	
		1	**9S-8005**	1	PLUG-O-RING	
		1	**3K-0360**	1	SEAL-O-RING	
	20	1	*183-7263*	3	PLUG AS	
					(EACH INCLUDES)	
		1	**9S-8002**	1	PLUG-O-RING	
		1	**3J-7354**	1	SEAL-O-RING	
	21	1	**3K-0360**	1	SEAL-O-RING	
	22	1	**3S-9233**	2	SEAL-O-RING	
	23	1	**4J-7533**	1	SEAL-O-RING	
	24	1	**5B-9318**	1	BALL	
M	25	1	**8T-0267**	2	BOLT-SOCKET HEAD (M6X1X12-MM)	
	26	1	**9X-8256**	4	WASHER (6.6X12X2-MM THK)	
					PARTS SHOWN IN GRAPHIC(S) WITHOUT A REFERENCE NUMBER ARE NOT SERVICED SEPARATELY	
					AVAILABLE REPAIR KIT(S):	
J			**248-6887**	1	KIT-SEAL (CHECK VALVE) (ARTICULATION)	
					(INCLUDES SEAL-O-RINGS & BACKUP RING)	

J-KIT MARKED J SERVICES PART(S) MARKED J
M-METRIC PART
Y-SEPARATE ILLUSTRATION

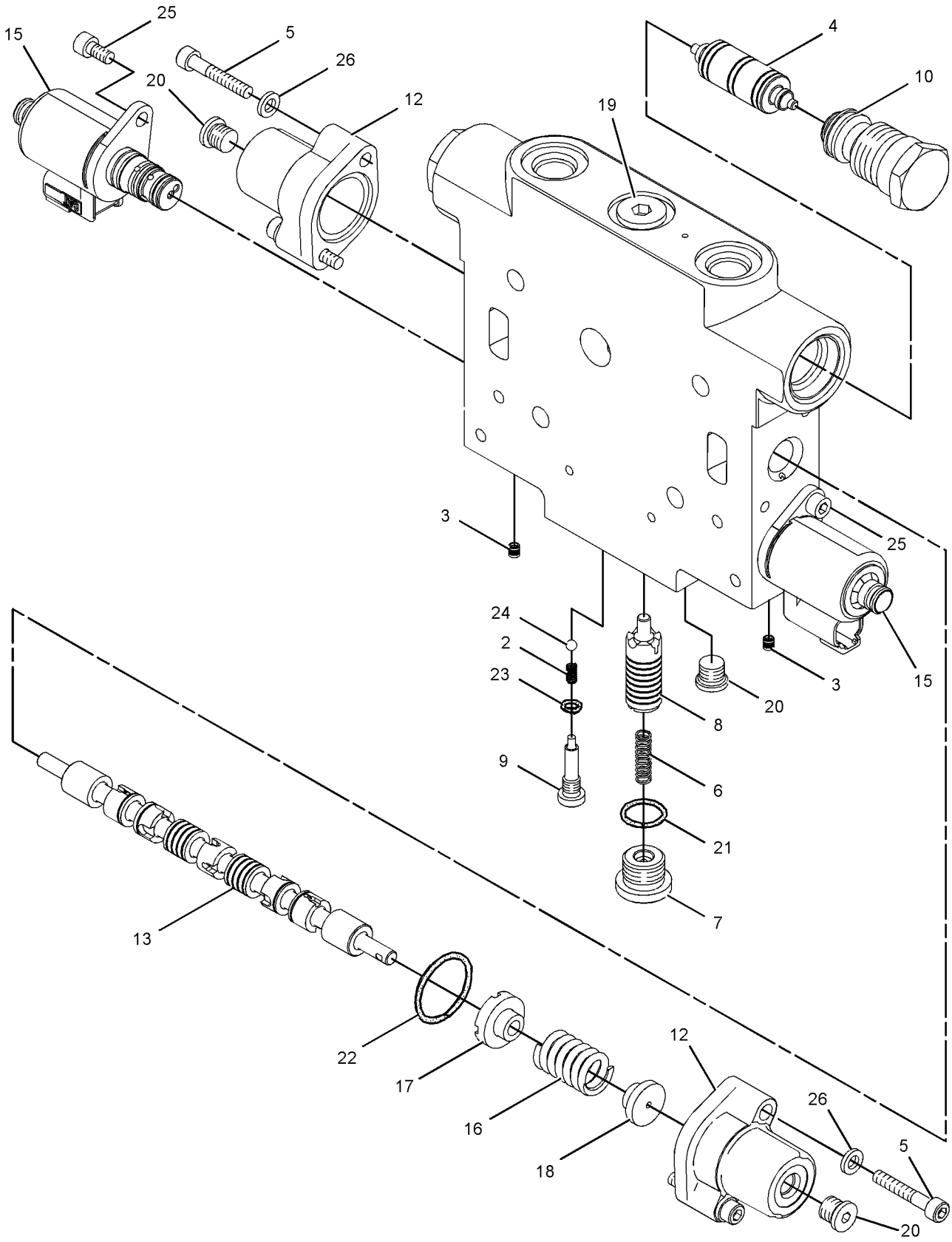

GRAPHIC #1 **<END>** g01361058

245-9533 VALVE GP-CONTROL—BLADE LIFT

S/N: B9D1-UP

PART OF 249-7298 VALVE GP-BANK 3, 248-6169 VALVE GP-BANK 4, 249-7299 VALVE GP-BANK 5, 249-5330 VALVE GP-BANK 6

SMCS-5051 **i02779408**

NOTE	REF NO	GRAPHIC REF	PART NUMBER	QTY	PART NAME 1 2 3 4 5 6 (PRODUCT LEVEL)	SEE PAGE
	2	1	**6E-3007**	1	SPRING	
	3	1	**9W-7783**	6	PLUG	
	4	1	**106-3660**	2	PISTON	
M	5	1	**136-4192**	4	BOLT (M6X1X35-MM)	
	6	1	**212-4961**	1	SPRING	
	7	1	**242-9264**	1	PLUG-ORIFICE	
	8	1	**243-2965**	1	SPOOL	
	9	1	**244-2579**	1	PLUG	
J	10	1	**245-9923**	1	VALVE GP-CHECK	
J	11	1	**246-1566**	1	VALVE GP-CHECK & RELIEF (LINE, LIFT)	
					(EACH VALVE GP INCLUDES)	
		1	**3K-0360**	1	SEAL-O-RING	
		1	**6V-5326**	1	SEAL-O-RING	
		1	**6V-6580**	1	SEAL-O-RING	
	13	1	**251-1668**	1	COVER-SPRING	
	14	1	**251-1669**	1	COVER-SPRING	
Y	16	1	**278-1799**	2	VALVE GP-SOLENOID (PILOT PROPORTIONING)	700
	17	1	**284-3555**	1	SPRING	
	18	1	**284-3556**	1	SPRING	
	19	1	**284-4601**	2	RETAINER	
	20	1	**284-4602**	2	RETAINER	
	21	1	**300-7325**	1	STEM	
	22	1	*148-8395*	1	PLUG AS	
		1	**9S-8005**	1	PLUG-O-RING	
		1	**3K-0360**	1	SEAL-O-RING	
	23	1	*183-7263*	3	PLUG AS	
					(EACH INCLUDES)	
		1	**9S-8002**	1	PLUG-O-RING	
		1	**3J-7354**	1	SEAL-O-RING	
	24	1	**3K-0360**	1	SEAL-O-RING	
	25	1	**3S-9233**	2	SEAL-O-RING	
	26	1	**4J-7533**	1	SEAL-O-RING	
	27	1	**5B-9318**	1	BALL	
M	28	1	**8T-0267**	2	BOLT-SOCKET HEAD (M6X1X12-MM)	
	29	1	**9X-8256**	4	WASHER (6.6X12X2-MM THK)	
					PARTS SHOWN IN GRAPHIC(S) WITHOUT A REFERENCE NUMBER ARE NOT SERVICED SEPARATELY	
					AVAILABLE REPAIR KIT(S):	
J			**248-6887**	1	KIT-SEAL (CHECK VALVE)	
					(KIT INCLUDES SEAL-O-RINGS & RING-BACKUP)(1 SEAL KIT SERVICES 1 CHECK VALVE)	

J-KIT MARKED J SERVICES PART(S) MARKED J
M-METRIC PART
Y-SEPARATE ILLUSTRATION

245-9533 VALVE GP-CONTROL *(contd.)* i02779408

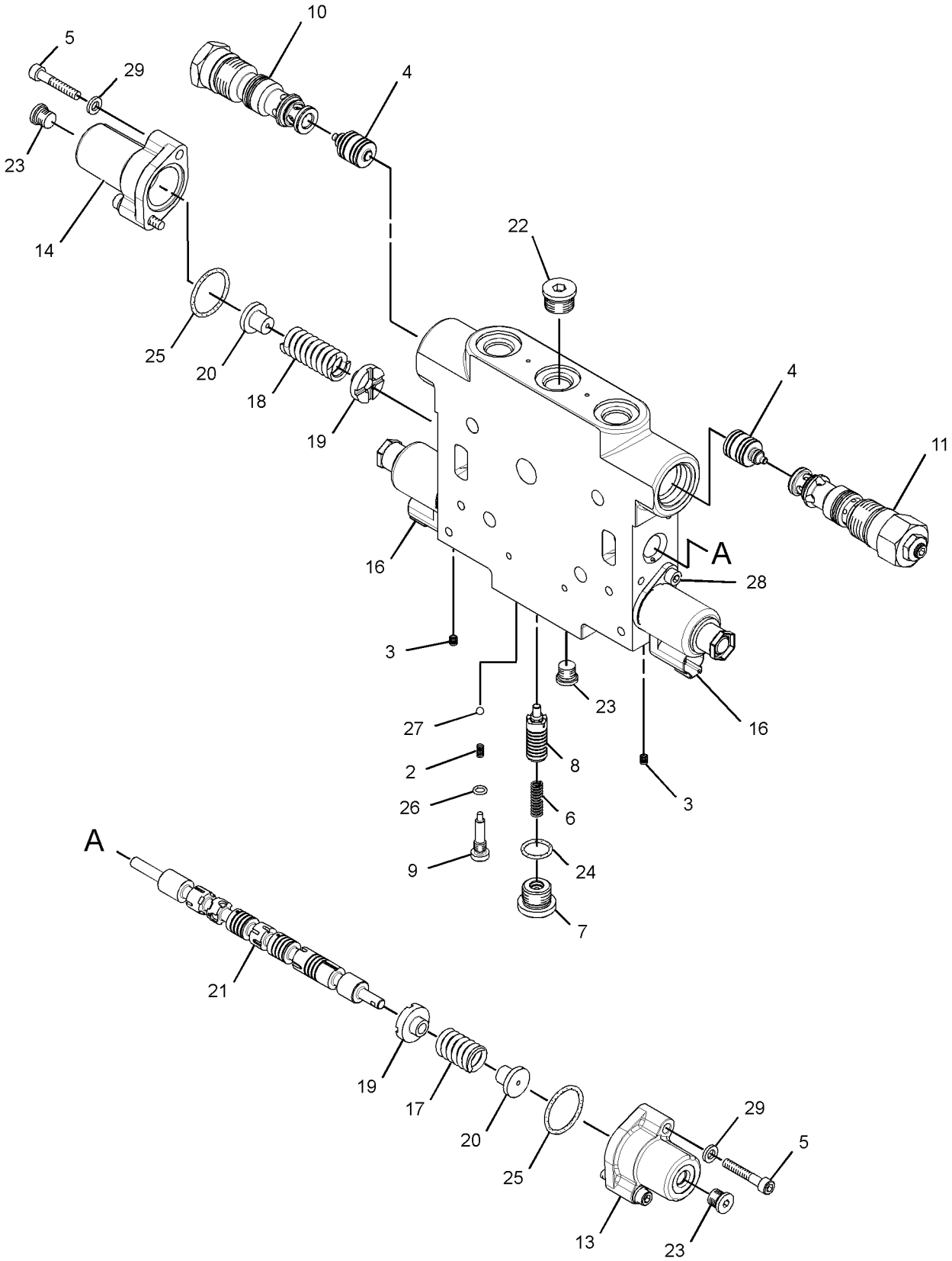

GRAPHIC #1 **<END>** g01345765

245-9534 VALVE GP-CONTROL—BLADE TIP

S/N: B9D1-UP

PART OF 248-6168 VALVE GP-BANK 5, 249-7294, 249-7295 VALVE GP-BANK 6, 249-5328, 249-7296 VALVE GP-BANK 7, 249-5329, 249-7297 VALVE GP-BANK 8

SMCS-5051 **i02779364**

NOTE	REF NO	GRAPHIC REF	PART NUMBER	QTY	PART NAME 1 2 3 4 5 6 (PRODUCT LEVEL)	SEE PAGE
	2	1	**6E-3007**	1	SPRING	
	3	1	**9W-7783**	6	PLUG	
	4	1	**106-3659**	1	PISTON	
	5	1	**212-4961**	1	SPRING	
	6	1	**242-9264**	1	PLUG-ORIFICE	
	7	1	**243-2965**	1	SPOOL	
	8	1	**244-2579**	1	PLUG	
	9	1	**245-9045**	1	STEM	
J	10	1	**245-9923**	1	VALVE GP-CHECK	
J	11	1	**246-1567**	1	VALVE GP-CHECK & RELIEF (LINE, BLADE TIP)	
					(EACH VALVE GP INCLUDES)	
		1	**3K-0360**	1	SEAL-O-RING	
		1	**6V-5326**	1	SEAL-O-RING	
		1	**6V-6580**	1	SEAL-O-RING	
	13	1	**251-1668**	2	COVER-SPRING	
Y	15	1	**278-1799**	2	VALVE GP-SOLENOID (BLADE TIP)	700
	16	1	**284-3555**	2	SPRING	
	17	1	**284-4601**	2	RETAINER	
	18	1	**284-4602**	2	RETAINER	
M	19	1	**136-4192**	4	BOLT (M6X1X35-MM)	
	20	1	*148-8395*	1	PLUG AS	
		1	**9S-8005**	1	PLUG-O-RING	
		1	**3K-0360**	1	SEAL-O-RING	
	21	1	*183-7263*	3	PLUG AS	
					(EACH INCLUDES)	
		1	**9S-8002**	1	PLUG-O-RING	
		1	**3J-7354**	1	SEAL-O-RING	
	22	1	**3K-0360**	1	SEAL-O-RING	
	23	1	**3S-9233**	2	SEAL-O-RING	
	24	1	**4J-7533**	1	SEAL-O-RING	
	25	1	**5B-9318**	1	BALL	
M	26	1	**8T-0267**	2	BOLT-SOCKET HEAD (M6X1X12-MM)	
	27	1	**9X-8256**	4	WASHER (6.6X12X2-MM THK)	
					PARTS SHOWN IN GRAPHIC(S) WITHOUT A REFERENCE NUMBER ARE NOT SERVICED SEPARATELY	
					AVAILABLE REPAIR KIT(S):	
J			**248-6887**	2	KIT-SEAL (CHECK VALVE) (BLADE TIP)	
					(INCLUDES SEAL-O-RINGS, BACKUP RING)	

J-KIT MARKED J SERVICES PART(S) MARKED J
M-METRIC PART
Y-SEPARATE ILLUSTRATION

245-9534 VALVE GP-CONTROL *(contd.)* i02779364

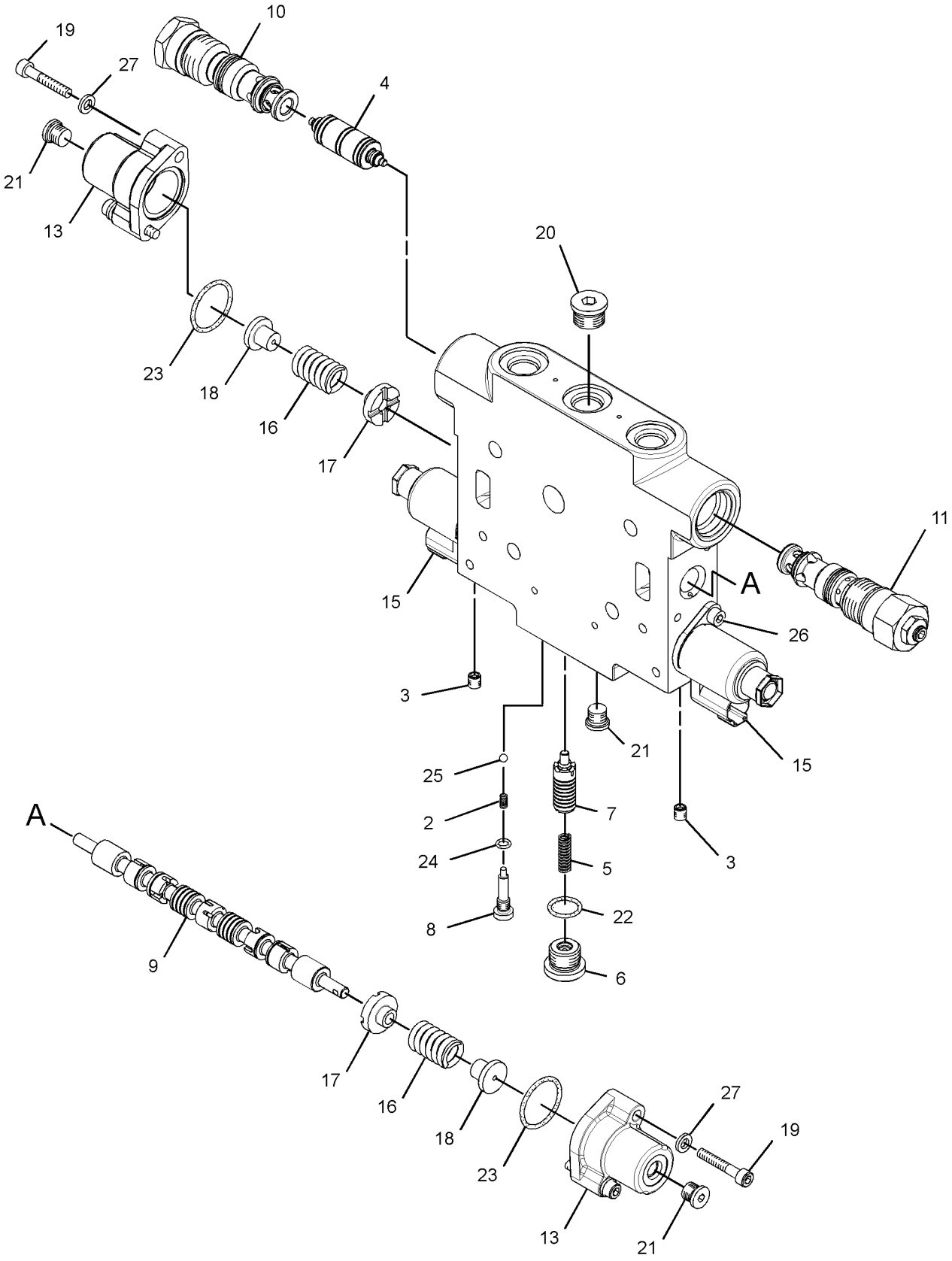

GRAPHIC #1 **<END>** g01390515

245-9535 VALVE GP-CONTROL–BLADE CENTERSHIFT

S/N: B9D1-UP

PART OF 248-6168 VALVE GP-BANK 5, 249-7294, 249-7295 VALVE GP-BANK 6, 249-5328, 249-7296 VALVE GP-BANK 7, 249-5329, 249-7297 VALVE GP-BANK 8

SMCS-5051 **i02779363**

NOTE	REF NO	GRAPHIC REF	PART NUMBER	QTY	PART NAME 1 2 3 4 5 6 (PRODUCT LEVEL)	SEE PAGE
	2	1	**6E-3007**	1	SPRING	
	3	1	**9W-7783**	6	PLUG	
	4	1	**106-3659**	1	PISTON	
	5	1	**212-4961**	1	SPRING	
	6	1	**242-9264**	1	PLUG-ORIFICE	
	7	1	**243-2965**	1	SPOOL	
	8	1	**244-2579**	1	PLUG	
	9	1	**245-9046**	1	STEM	
J	10	1	**245-9923**	2	VALVE GP-CHECK (BLADE CENTERSHIFT)	
					(EACH INCLUDES)	
		1	**3K-0360**	1	SEAL-O-RING	
		1	**6V-5326**	1	SEAL-O-RING	
		1	**6V-6580**	1	SEAL-O-RING	
	11	1	**284-4601**	2	RETAINER	
	12	1	**284-4602**	2	RETAINER	
Y	14	1	**278-1799**	2	VALVE GP-SOLENOID (BLADE CENTERSHIFT)	700
	15	1	**251-1668**	2	COVER-SPRING	
	16	1	**284-3555**	2	SPRING	
M	18	1	**136-4192**	4	BOLT (M6X1X35-MM)	
	19	1	*148-8395*	1	PLUG AS	
		1	**9S-8005**	1	PLUG-O-RING	
		1	**3K-0360**	1	SEAL-O-RING	
	20	1	*183-7263*	3	PLUG AS	
					(EACH INCLUDES)	
		1	**9S-8002**	1	PLUG-O-RING	
		1	**3J-7354**	1	SEAL-O-RING	
	21	1	**3K-0360**	1	SEAL-O-RING	
	22	1	**3S-9233**	2	SEAL-O-RING	
	23	1	**4J-7533**	1	SEAL-O-RING	
	24	1	**5B-9318**	1	BALL	
M	25	1	**8T-0267**	2	BOLT-SOCKET HEAD (M6X1X12-MM)	
	26	1	**9X-8256**	4	WASHER (6.6X12X2-MM THK)	
					PARTS SHOWN IN GRAPHIC(S) WITHOUT A REFERENCE NUMBER ARE NOT SERVICED SEPARATELY	
					AVAILABLE REPAIR KIT(S):	
J			**248-6887**	1	KIT-SEAL (CHECK VALVE)	
					(KIT INCLUDES SEAL-O-RINGS & BACK-UP RING)	

J-KIT MARKED J SERVICES PART(S) MARKED J
M-METRIC PART
Y-SEPARATE ILLUSTRATION

245-9535 VALVE GP-CONTROL *(contd.)* i02779363

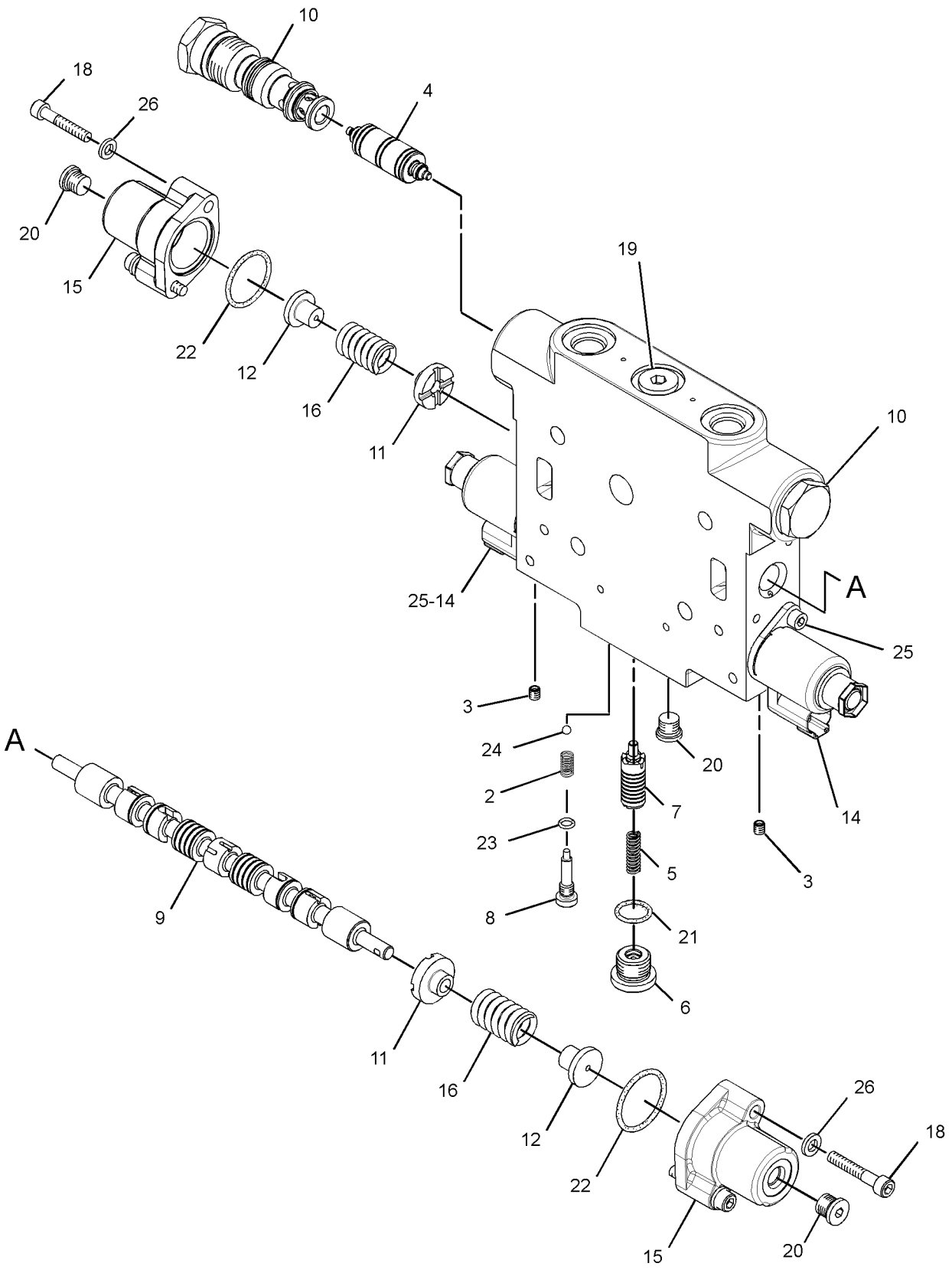

GRAPHIC #1 **<END>** g01371498

245-9536 VALVE GP-CONTROL–BLADE SIDESHIFT

S/N: B9D1-UP

PART OF 248-6168 VALVE GP-BANK 5, 249-7294, 249-7295 VALVE GP-BANK 6, 249-5328, 249-7296 VALVE GP-BANK 7, 249-5329, 249-7297 VALVE GP-BANK 8

SMCS-5051 **i02779359**

NOTE	REF NO	GRAPHIC REF	PART NUMBER	QTY	PART NAME 1 2 3 4 5 6 (PRODUCT LEVEL)	SEE PAGE
	1	1	**6E-3007**	1	SPRING	
	3	1	**9W-7783**	6	PLUG	
	4	1	**106-3659**	1	PISTON	
	5	1	**212-4961**	1	SPRING	
	6	1	**242-9264**	1	PLUG-ORIFICE	
	7	1	**243-2965**	1	SPOOL	
	8	1	**244-2579**	1	PLUG	
	9	1	**245-9047**	1	STEM	
H	10	1	**245-9923**	1	VALVE GP-CHECK (BLADE SIDESHIFT)	
H	11	1	**246-1567**	1	VALVE GP-CHECK & RELIEF (LINE, BLADE SIDESHIFT)	
					(EACH VALVE GP INCLUDES)	
J		1	**6V-6580**	1	SEAL-O-RING	
J		1	**3K-0360**	1	SEAL-O-RING	
J		1	**6V-5326**	1	SEAL-O-RING	
	12	1	**284-4601**	2	RETAINER	
	13	1	**284-4602**	2	RETAINER	
Y	15	1	**278-1799**	2	VALVE GP-SOLENOID (BLADE SIDESHIFT)	700
	16	1	**251-1668**	2	COVER-SPRING	
	17	1	**284-3555**	2	SPRING	
M	19	1	**136-4192**	4	BOLT (M6X1X35-MM)	
	20	1	*148-8395*	1	PLUG AS	
		1	**9S-8005**	1	PLUG-O-RING	
		1	**3K-0360**	1	SEAL-O-RING	
	21	1	*183-7263*	3	PLUG AS	
					(EACH INCLUDES)	
		1	**9S-8002**	1	PLUG-O-RING	
		1	**3J-7354**	1	SEAL-O-RING	
	22	1	**3K-0360**	1	SEAL-O-RING	
	23	1	**3S-9233**	2	SEAL-O-RING	
	24	1	**4J-7533**	1	SEAL-O-RING	
	25	1	**5B-9318**	1	BALL	
M	26	1	**8T-0267**	2	BOLT-SOCKET HEAD (M6X1X12-MM)	
	27	1	**9X-8256**	4	WASHER (6.6X12X2-MM THK)	
					AVAILABLE REPAIR KIT(S):	
HJ			**248-6887**	1	KIT-SEAL (CHECK VALVE)	
					(INCLUDES SEALS & BACKUP RING)(1 SEAL KIT SERVICES 1 CHECK VALVE)	

H-KIT MARKED H SERVICES PART(S) MARKED H
J-KIT MARKED J INCLUDES PART(S) MARKED J
M-METRIC PART
Y-SEPARATE ILLUSTRATION

245-9536 VALVE GP-CONTROL *(contd.)* **i02779359**

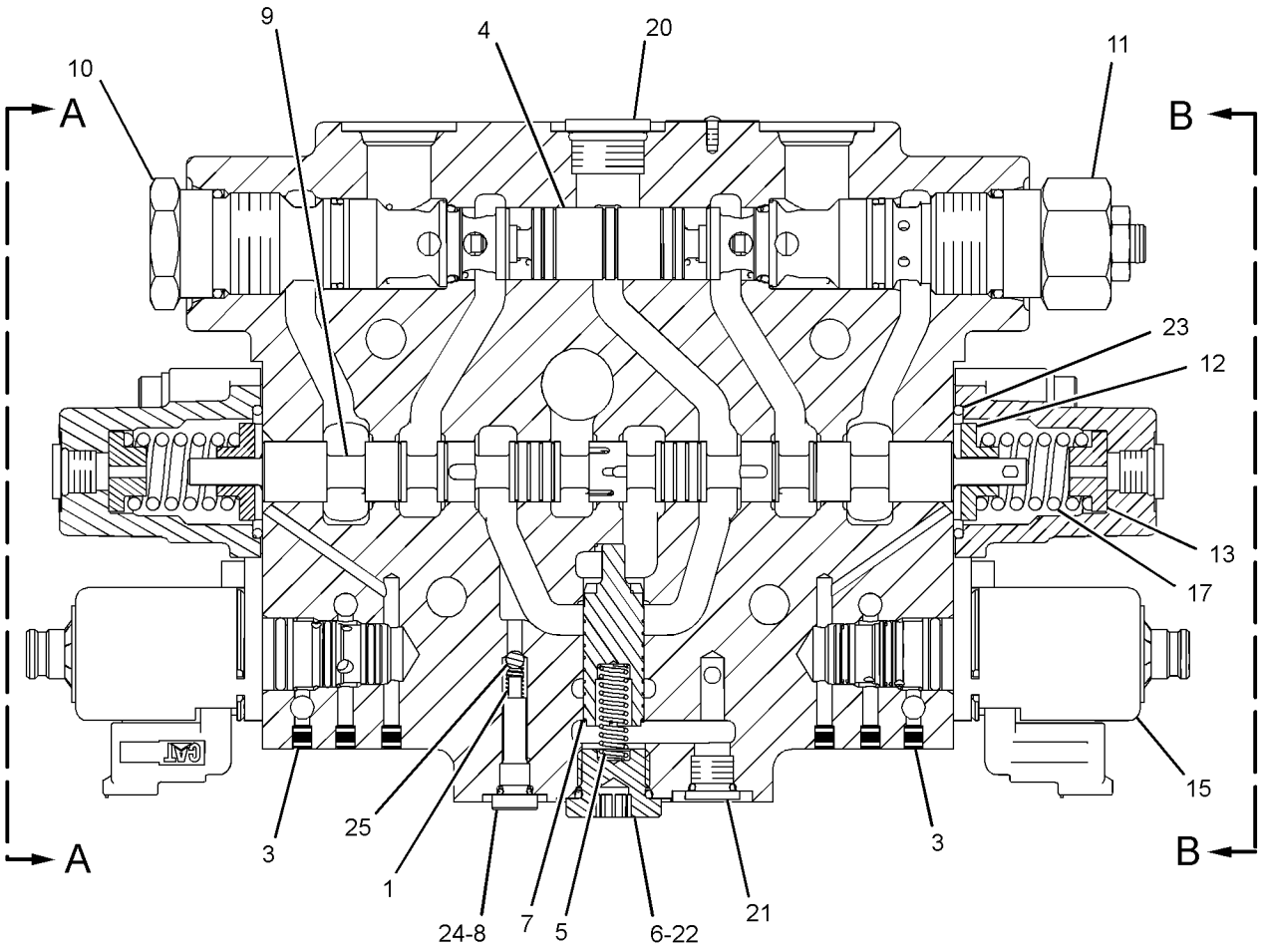

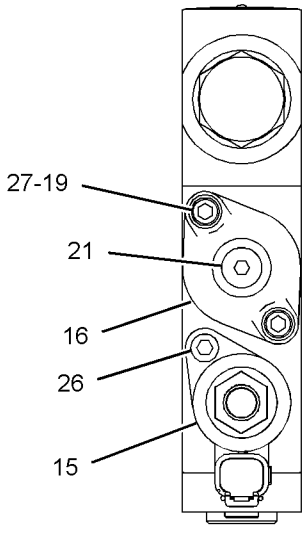

VIEW A-A

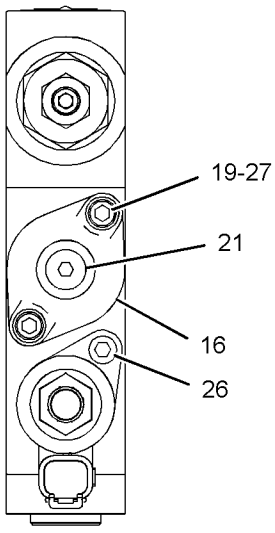

VIEW B-B

GRAPHIC #1 **<END>** g01394598

HYDRAULIC SYSTEM

245-9537 VALVE GP-CONTROL—CIRCLE DRIVE

S/N: B9D1-UP

PART OF 248-6168 VALVE GP-BANK 5, 249-7294, 249-7295 VALVE GP-BANK 6, 249-5328, 249-7296 VALVE GP-BANK 7, 249-5329, 249-7297 VALVE GP-BANK 8

SMCS-5051 **i02779407**

NOTE	REF NO	GRAPHIC REF	PART NUMBER	QTY	PART NAME 1 2 3 4 5 6 (PRODUCT LEVEL)	SEE PAGE
	2	1	**6E-3007**	1	SPRING	
	3	1	**9W-7783**	6	PLUG	
	4	1	**106-3659**	1	PISTON	
	5	1	**212-4961**	1	SPRING	
	6	1	**242-9264**	1	PLUG-ORIFICE	
	7	1	**243-2965**	1	SPOOL	
	8	1	**244-2579**	1	PLUG	
	9	1	**245-9048**	1	STEM	
J	10	1	**245-9923**	2	VALVE GP-CHECK (CIRCLE DRIVE)	
					(EACH INCLUDES)	
		1	**3K-0360**	1	SEAL-O-RING	
		1	**6V-5326**	1	SEAL-O-RING	
		1	**6V-6580**	1	SEAL-O-RING	
	11	1	**284-4601**	2	RETAINER	
	12	1	**284-4602**	2	RETAINER	
Y	14	1	**278-1799**	2	VALVE GP-SOLENOID (CIRCLE DRIVE)	700
	15	1	**251-1668**	2	COVER-SPRING	
	16	1	**284-3555**	2	SPRING	
M	18	1	**136-4192**	4	BOLT (M6X1X35-MM)	
	19	1	*148-8395*	1	PLUG AS	
		1	**9S-8005**	1	PLUG-O-RING	
		1	**3K-0360**	1	SEAL-O-RING	
	20	1	*183-7263*	3	PLUG AS	
					(EACH INCLUDES)	
		1	**9S-8002**	1	PLUG-O-RING	
		1	**3J-7354**	1	SEAL-O-RING	
	21	1	**3K-0360**	1	SEAL-O-RING	
	22	1	**3S-9233**	2	SEAL-O-RING	
	23	1	**4J-7533**	1	SEAL-O-RING	
	24	1	**5B-9318**	1	BALL	
M	25	1	**8T-0267**	2	BOLT-SOCKET HEAD (M6X1X12-MM)	
	26	1	**9X-8256**	4	WASHER (6.6X12X2-MM THK)	
	27	1	**6L-9716**	1	PLUG-PIPE	
					PARTS SHOWN IN GRAPHIC(S) WITHOUT A REFERENCE NUMBER ARE NOT SERVICED SEPARATELY	
					AVAILABLE REPAIR KIT(S):	
J			**248-6887**	1	KIT-SEAL (CHECK VALVE)	
					(EACH INCLUDES RING-BACKUP & SEAL-O-RINGS)	

J-KIT MARKED J SERVICES PART(S) MARKED J
M-METRIC PART
Y-SEPARATE ILLUSTRATION

245-9537 VALVE GP-CONTROL *(contd.)* **i02779407**

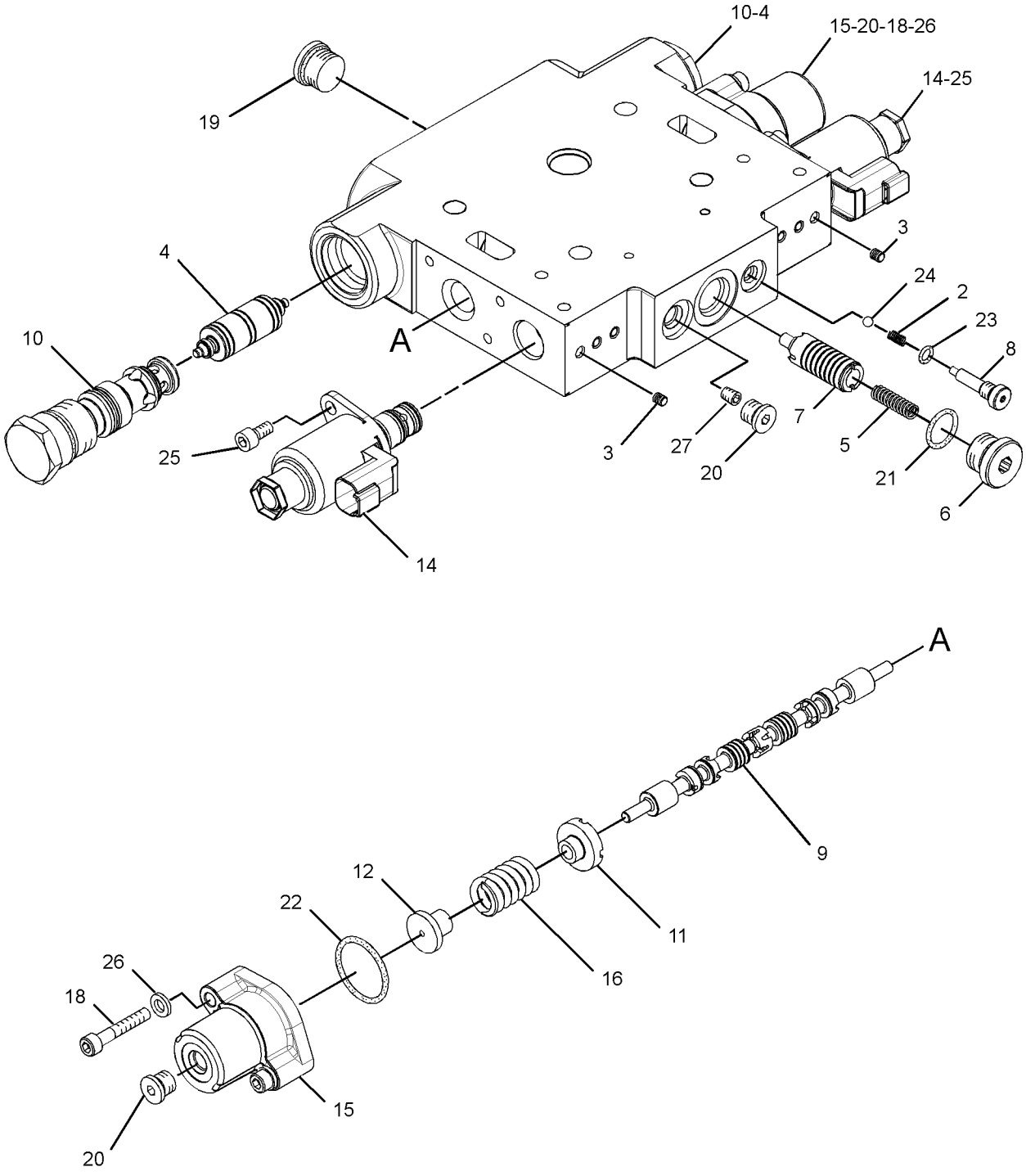

GRAPHIC #1 **<END>** g01371479

HYDRAULIC SYSTEM

245-9539 VALVE GP-CONTROL—WHEEL LEAN

S/N: B9D1-UP

PART OF 248-6168 VALVE GP-BANK 5, 249-7294, 249-7295 VALVE GP-BANK 6, 249-5328, 249-7296 VALVE GP-BANK 7, 249-5329, 249-7297 VALVE GP-BANK 8

SMCS-5051 **i02779542**

NOTE	REF NO	GRAPHIC REF	PART NUMBER	QTY	PART NAME 1 2 3 4 5 6 (PRODUCT LEVEL)	SEE PAGE
	2	1	**6E-3007**	1	SPRING	
	3	1	**9W-7783**	6	PLUG	
	4	1	**106-3659**	1	PISTON	
	5	1	**212-4961**	1	SPRING	
	6	1	**242-9264**	1	PLUG-ORIFICE	
	7	1	**243-2965**	1	SPOOL	
	8	1	**244-2579**	1	PLUG	
	9	1	**245-9049**	1	STEM	
J	10	1	**245-9923**	2	VALVE GP-CHECK (WHEEL LEAN)	
					(EACH INCLUDES)	
		1	**3K-0360**	1	SEAL-O-RING	
		1	**6V-5326**	1	SEAL-O-RING	
		1	**6V-6580**	1	SEAL-O-RING	
	11	1	**284-4601**	2	RETAINER	
	12	1	**284-4602**	2	RETAINER	
Y	14	1	**278-1799**	2	VALVE GP-SOLENOID (WHEEL LEAN)	700
	15	1	**251-1668**	2	COVER-SPRING	
	16	1	**284-3555**	2	SPRING	
M	18	1	**136-4192**	4	BOLT (M6X1X35-MM)	
	19	1	*148-8395*	1	PLUG AS	
		1	**9S-8005**	1	PLUG-O-RING	
		1	**3K-0360**	1	SEAL-O-RING	
	20	1	*183-7263*	3	PLUG AS	
					(EACH INCLUDES)	
		1	**9S-8002**	1	PLUG-O-RING	
		1	**3J-7354**	1	SEAL-O-RING	
	21	1	**3K-0360**	1	SEAL-O-RING	
	22	1	**3S-9233**	2	SEAL-O-RING	
	23	1	**4J-7533**	1	SEAL-O-RING	
	24	1	**5B-9318**	1	BALL	
M	25	1	**8T-0267**	2	BOLT-SOCKET HEAD (M6X1X12-MM)	
	26	1	**9X-8256**	4	WASHER (6.6X12X2-MM THK)	
					PARTS SHOWN IN GRAPHIC(S) WITHOUT A REFERENCE NUMBER ARE NOT SERVICED SEPARATELY	
					AVAILABLE REPAIR KIT(S):	
J			**248-6887**	1	KIT-SEAL (CHECK VALVE)	
					(KIT INCLUDES SEAL-O-RINGS & BACK-UP RING)	

J-KIT MARKED J SERVICES PART(S) MARKED J
M-METRIC PART
Y-SEPARATE ILLUSTRATION

245-9539 VALVE GP-CONTROL *(contd.)* i02779542

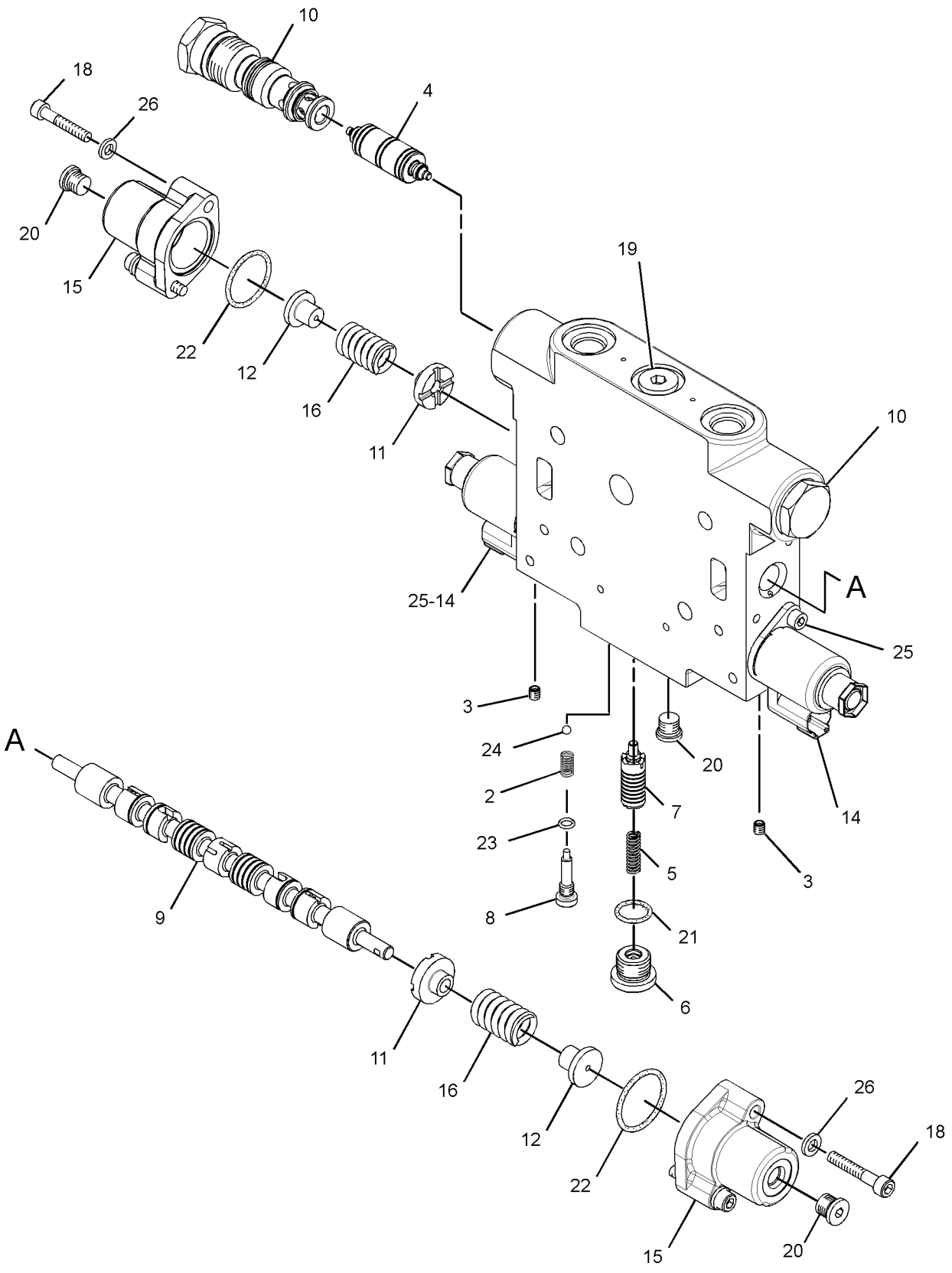

GRAPHIC #1 **<END>** g01390510

HYDRAULIC SYSTEM

245-9541 VALVE GP-CONTROL—RIPPER

S/N: B9D1-UP

PART OF 248-6169 VALVE GP-BANK 4, 249-5330 VALVE GP-BANK 6

SMCS-5051 **i02779395**

NOTE	REF NO	GRAPHIC REF	PART NUMBER	QTY	PART NAME 1 2 3 4 5 6 (PRODUCT LEVEL)	SEE PAGE
	1	1	**6E-3007**	1	SPRING	
	3	1	**9W-7783**	6	PLUG	
	4	1	**106-3659**	1	PISTON	
	5	1	**212-4961**	1	SPRING	
	6	1	**242-9264**	1	PLUG-ORIFICE	
	7	1	**243-2965**	1	SPOOL	
	8	1	**244-2579**	1	PLUG	
	9	1	**245-9923**	1	VALVE GP-CHECK	
	10	1	**246-1567**	1	VALVE GP-CHECK & RELIEF (LINE, RIPPER)	
					(EACH VALVE GP INCLUDES)	
J		1	**3K-0360**	1	SEAL-O-RING	
J		1	**6V-5326**	1	SEAL-O-RING	
J		1	**6V-6580**	1	SEAL-O-RING	
	11	1	**284-4601**	2	RETAINER	
	12	1	**284-4602**	2	RETAINER	
Y	13	1	**278-1799**	2	VALVE GP-SOLENOID (RIPPER)	700
	14	1	**251-1668**	2	COVER-SPRING	
	15	1	**254-3950**	1	STEM	
	16	1	**284-3555**	2	SPRING	
M	19	1	**136-4192**	4	BOLT (M6X1X35-MM)	
	20	1	*148-8395*	1	PLUG AS	
		1	**9S-8005**	1	PLUG-O-RING	
		1	**3K-0360**	1	SEAL-O-RING	
	21	1	*183-7263*	3	PLUG AS	
					(EACH INCLUDES)	
		1	**9S-8002**	1	PLUG-O-RING	
		1	**3J-7354**	1	SEAL-O-RING	
	22	1	**3K-0360**	1	SEAL-O-RING	
	23	1	**3S-9233**	2	SEAL-O-RING	
	24	1	**4J-7533**	1	SEAL-O-RING	
	25	1	**5B-9318**	1	BALL	
M	26	1	**8T-0267**	2	BOLT-SOCKET HEAD (M6X1X12-MM)	
	27	1	**9X-8256**	4	WASHER (6.6X12X2-MM THK)	
					PARTS SHOWN IN GRAPHIC(S) WITHOUT A REFERENCE NUMBER ARE NOT SERVICED SEPARATELY	
					AVAILABLE REPAIR KIT(S):	
J			**248-6887**	1	KIT-SEAL (CHECK VALVE)	
					(INCLUDES SEAL-O-RINGS & BACKUP RING)	

J-KIT MARKED J SERVICES PART(S) MARKED J
M-METRIC PART
Y-SEPARATE ILLUSTRATION

245-9541 VALVE GP-CONTROL *(contd.)* i02779395

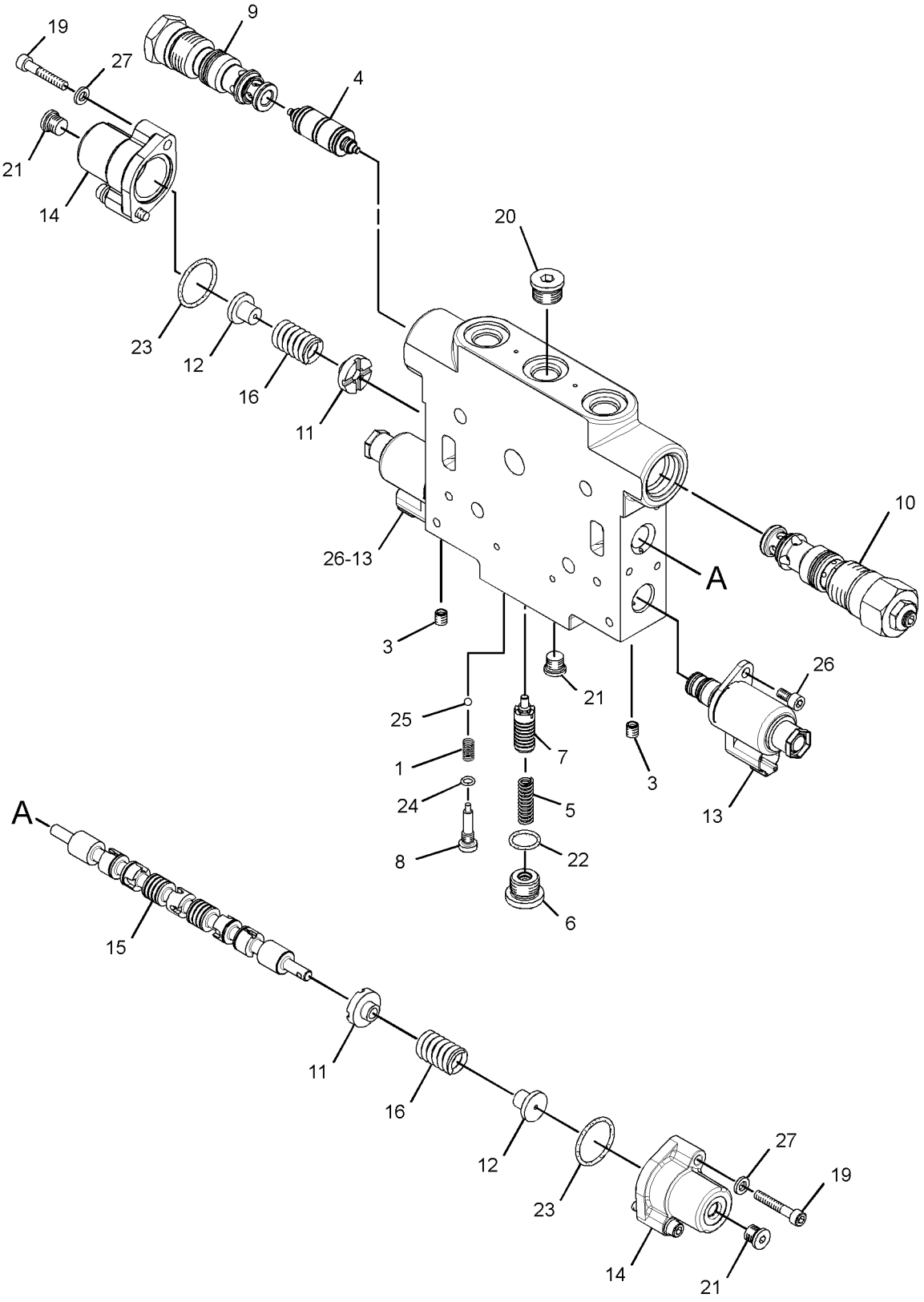

GRAPHIC #1 **<END>** g01393993

245-9542 VALVE GP-CONTROL—WING TILT

S/N: B9D1-UP

PART OF 249-7299 VALVE GP-BANK 5, 249-5330 VALVE GP-BANK 6

SMCS-5051 **i02780676**

NOTE	REF NO	GRAPHIC REF	PART NUMBER	QTY	PART NAME 1 2 3 4 5 6 (PRODUCT LEVEL)	SEE PAGE
	1	1	**6E-3007**	1	SPRING	
	3	1	**9W-7783**	6	PLUG	
	4	1	**106-3659**	1	PISTON	
	5	1	**212-4961**	1	SPRING	
	6	1	**242-9264**	1	PLUG-ORIFICE	
	7	1	**243-2965**	1	SPOOL	
	8	1	**244-2579**	1	PLUG	
H	9	1	**246-1567**	2	VALVE GP-CHECK & RELIEF (LINE, TILT)	
					(EACH INCLUDES)	
J		1	**3K-0360**	1	SEAL-O-RING	
J		1	**6V-5326**	1	SEAL-O-RING	
J		1	**6V-6580**	1	SEAL-O-RING	
	10	1	**284-4601**	2	RETAINER	
	11	1	**284-4602**	2	RETAINER	
Y	13	1	**278-1799**	2	VALVE GP-SOLENOID (WING TILT)	700
	14	1	**251-1668**	2	COVER-SPRING	
	15	1	**254-3951**	1	STEM	
	16	1	**284-3555**	2	SPRING	
M	18	1	**136-4192**	4	BOLT (M6X1X35-MM)	
	19	1	*148-8395*	1	PLUG AS	
		1	**3K-0360**	1	SEAL-O-RING	
		1	**9S-8005**	1	PLUG-O-RING	
	20	1	*183-7263*	3	PLUG AS	
					(EACH INCLUDES)	
		1	**3J-7354**	1	SEAL-O-RING	
		1	**9S-8002**	1	PLUG-O-RING	
	21	1	**3K-0360**	1	SEAL-O-RING	
	22	1	**3S-9233**	2	SEAL-O-RING	
	23	1	**4J-7533**	1	SEAL-O-RING	
	24	1	**5B-9318**	1	BALL	
M	25	1	**8T-0267**	2	BOLT-SOCKET HEAD (M6X1X12-MM)	
	26	1	**9X-8256**	4	WASHER (6.6X12X2-MM THK)	
					PARTS SHOWN IN GRAPHIC(S) WITHOUT A REFERENCE NUMBER ARE NOT SERVICED SEPARATELY	
					AVAILABLE REPAIR KIT(S):	
HJ			**248-6887**	2	KIT-SEAL (CHECK VALVE)	
					(EACH INCLUDES SEAL-O-RINGS AND BACKUP RING)	

H-KIT(S) MARKED H SERVICES PART(S) MARKED H
J-KIT MARKED J INCLUDES PART(S) MARKED J
M-METRIC PART
Y-SEPARATE ILLUSTRATION

245-9542 VALVE GP-CONTROL *(contd.)* i02780676

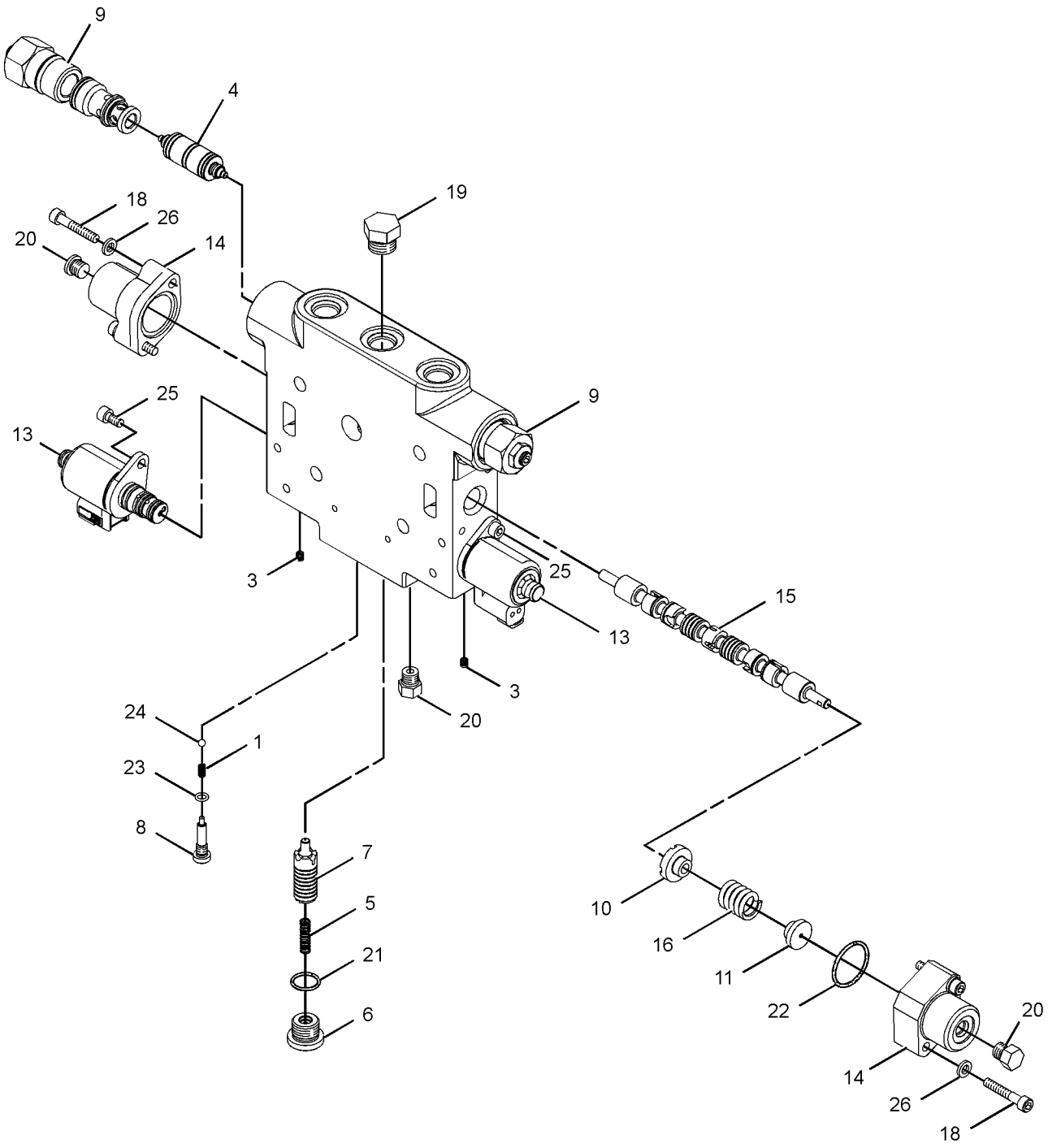

GRAPHIC #1 **<END>** g01341602

245-9543 VALVE GP-CONTROL—WING LIFT

S/N: B9D1-UP

PART OF 249-7299 VALVE GP-BANK 5, 249-5330 VALVE GP-BANK 6

SMCS-5051 **i02780733**

NOTE	REF NO	GRAPHIC REF	PART NUMBER	QTY	PART NAME 1 2 3 4 5 6 (PRODUCT LEVEL)	SEE PAGE
	1	1	**6E-3007**	1	SPRING	
	3	1	**9W-7783**	6	PLUG	
	4	1	**106-3659**	1	PISTON	
Y	5	1	**278-1799**	2	VALVE GP-SOLENOID (WING LIFT)	700
	6	1	**212-4961**	1	SPRING	
	7	1	**242-9264**	1	PLUG-ORIFICE	
	8	1	**243-2965**	1	SPOOL	
	10	1	**244-2579**	1	PLUG	
	11	1	**245-9055**	1	STEM	
	12	1	**246-1567**	2	VALVE GP-CHECK & RELIEF (LINE, WING LIFT)	
					(EACH INCLUDES)	
J		1	**3K-0360**	1	SEAL-O-RING	
J		1	**6V-5326**	1	SEAL-O-RING	
J		1	**6V-6580**	1	SEAL-O-RING	
	13	1	**284-3555**	2	SPRING	
	14	1	**251-1668**	2	COVER-SPRING	
	15	1	**284-4601**	2	RETAINER	
	16	1	**284-4602**	2	RETAINER	
M	18	1	**136-4192**	4	BOLT (M6X1X35-MM)	
	19	1	*148-8395*	1	PLUG AS	
		1	**9S-8005**	1	PLUG-O-RING	
		1	**3K-0360**	1	SEAL-O-RING	
	20	1	*183-7263*	3	PLUG AS	
					(EACH INCLUDES)	
		1	**9S-8002**	1	PLUG-O-RING	
		1	**3J-7354**	1	SEAL-O-RING	
	21	1	**3K-0360**	1	SEAL-O-RING	
	22	1	**3S-9233**	2	SEAL-O-RING	
	23	1	**4J-7533**	1	SEAL-O-RING	
	24	1	**5B-9318**	1	BALL	
	25	1	**9X-8256**	4	WASHER (6.6X12X2-MM THK)	
M	26	1	**8T-0267**	2	BOLT-SOCKET HEAD (M6X1X12-MM)	
					PARTS SHOWN IN GRAPHIC(S) WITHOUT A REFERENCE NUMBER ARE NOT SERVICED SEPARATELY	
					AVAILABLE REPAIR KIT(S):	
J			**248-6887**	1	KIT-SEAL (CHECK VALVE) (WING LIFT)	
					(KIT INCLUDES O-RINGS & BACKUP RING)	

J-KIT MARKED J SERVICES PARTS MARKED J
M-METRIC PART
Y-SEPARATE ILLUSTRATION

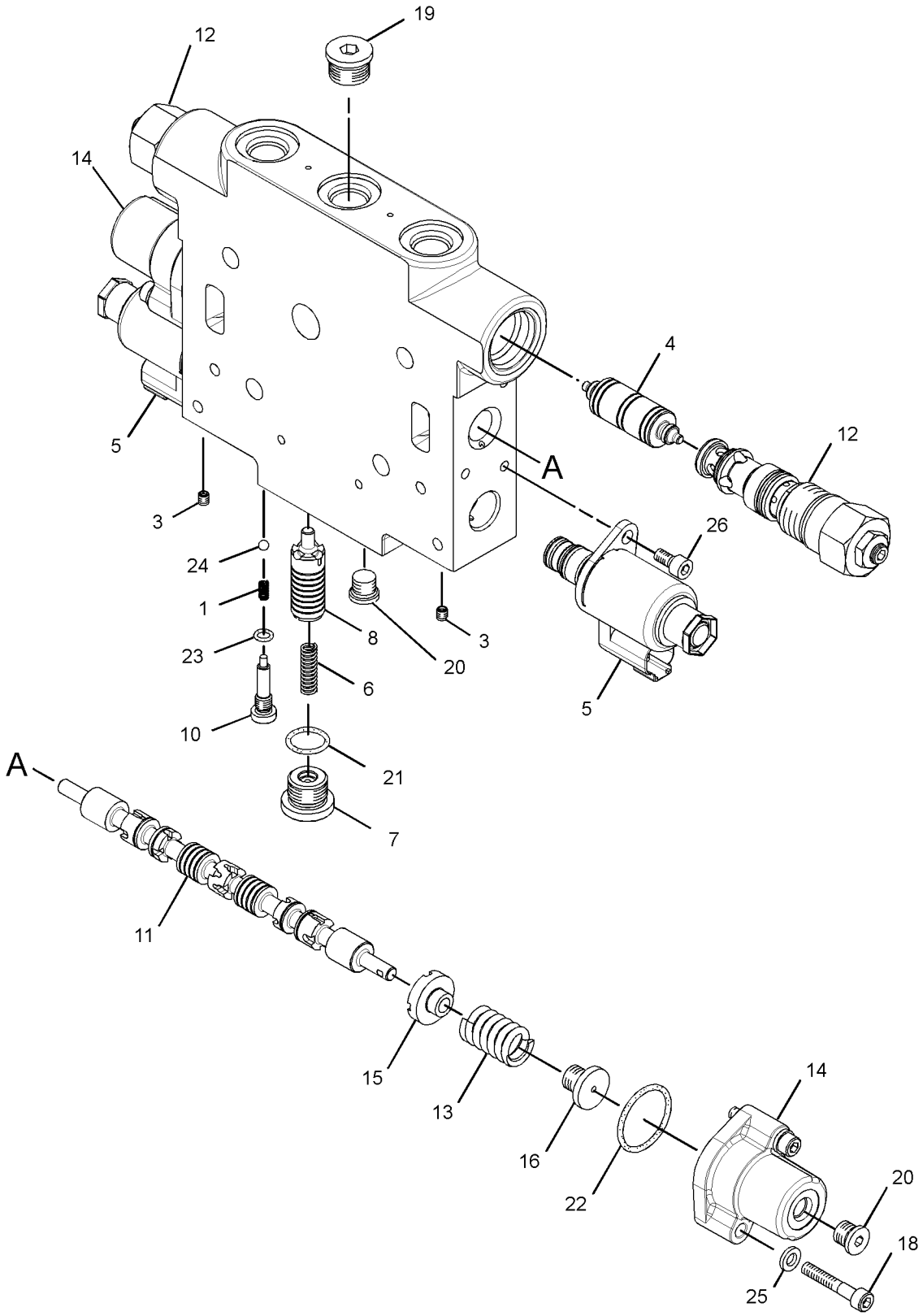

GRAPHIC #1 **<END>** g01370071

HYDRAULIC SYSTEM

245-9544 VALVE GP-CONTROL—BULLDOZER LIFT, PLOW

S/N: B9D1-UP

PART OF 249-7294 VALVE GP-BANK 6, 249-5328, 249-7296 VALVE GP-BANK 7, 249-5329, 249-7297 VALVE GP-BANK 8

SMCS-5051 **i02780265**

NOTE	REF NO	GRAPHIC REF	PART NUMBER	QTY	PART NAME 1 2 3 4 5 6 (PRODUCT LEVEL)	SEE PAGE
	1	1	**6E-3007**	1	SPRING	
	3	1	**9W-7783**	6	PLUG	
	4	1	**106-3660**	2	PISTON	
	5	1	**212-4961**	1	SPRING	
	6	1	**242-9264**	1	PLUG-ORIFICE	
	7	1	**243-2965**	1	SPOOL	
	8	1	**244-2579**	1	PLUG	
	9	1	**245-9054**	1	STEM	
H	10	1	**245-9923**	1	VALVE GP-CHECK (PLOW, BULLDOZER LIFT)	
J		1	**3K-0360**	1	SEAL-O-RING	
J		1	**6V-5326**	1	SEAL-O-RING	
J		1	**6V-6580**	1	SEAL-O-RING	
H	11	1	**246-1566**	1	VALVE GP-CHECK & RELIEF (LINE, PLOW, BULLDOZER LIFT)	
J		1	**3K-0360**	1	SEAL-O-RING	
J		1	**6V-5326**	1	SEAL-O-RING	
J		1	**6V-6580**	1	SEAL-O-RING	
	13	1	**251-1668**	1	COVER-SPRING	
	14	1	**251-1669**	1	COVER-SPRING	
Y	16	1	**278-1799**	2	VALVE GP-SOLENOID (PLOW, BULLDOZER LIFT)	700
	17	1	**284-3555**	1	SPRING	
	18	1	**284-3556**	1	SPRING	
	19	1	**284-4601**	2	RETAINER	
	20	1	**284-4602**	2	RETAINER	
M	21	1	**136-4192**	4	BOLT (M6X1X35-MM)	
	22	1	*148-8395*	1	PLUG AS	
		1	**9S-8005**	1	PLUG-O-RING	
		1	**3K-0360**	1	SEAL-O-RING	
	23	1	*183-7263*	3	PLUG AS	
					(EACH INCLUDES)	
		1	**9S-8002**	1	PLUG-O-RING	
		1	**3J-7354**	1	SEAL-O-RING	
	24	1	**3K-0360**	1	SEAL-O-RING	
	25	1	**3S-9233**	2	SEAL-O-RING	
	26	1	**4J-7533**	1	SEAL-O-RING	
	27	1	**5B-9318**	1	BALL	
M	28	1	**8T-0267**	2	BOLT-SOCKET HEAD (M6X1X12-MM)	
	29	1	**9X-8256**	4	WASHER (6.6X12X2-MM THK)	
					PARTS SHOWN IN GRAPHIC(S) WITHOUT A REFERENCE NUMBER ARE NOT SERVICED SEPARATELY	
					AVAILABLE REPAIR KIT(S):	
HJ			**248-6887**	1	KIT-SEAL (CHECK VALVE) (PLOW, BULLDOZER LIFT)	
					(KIT INCLUDES SEAL-O-RINGS & BACKUP RING)	

H-KIT MARKED H SERVICES PART(S) MARKED H (WILL REPAIR 1 CHECK VALVE)
J-KIT MARKED J INCLUDES PART(S) MARKED J
M-METRIC PART
Y-SEPARATE ILLUSTRATION

245-9544 VALVE GP-CONTROL *(contd.)* i02780265

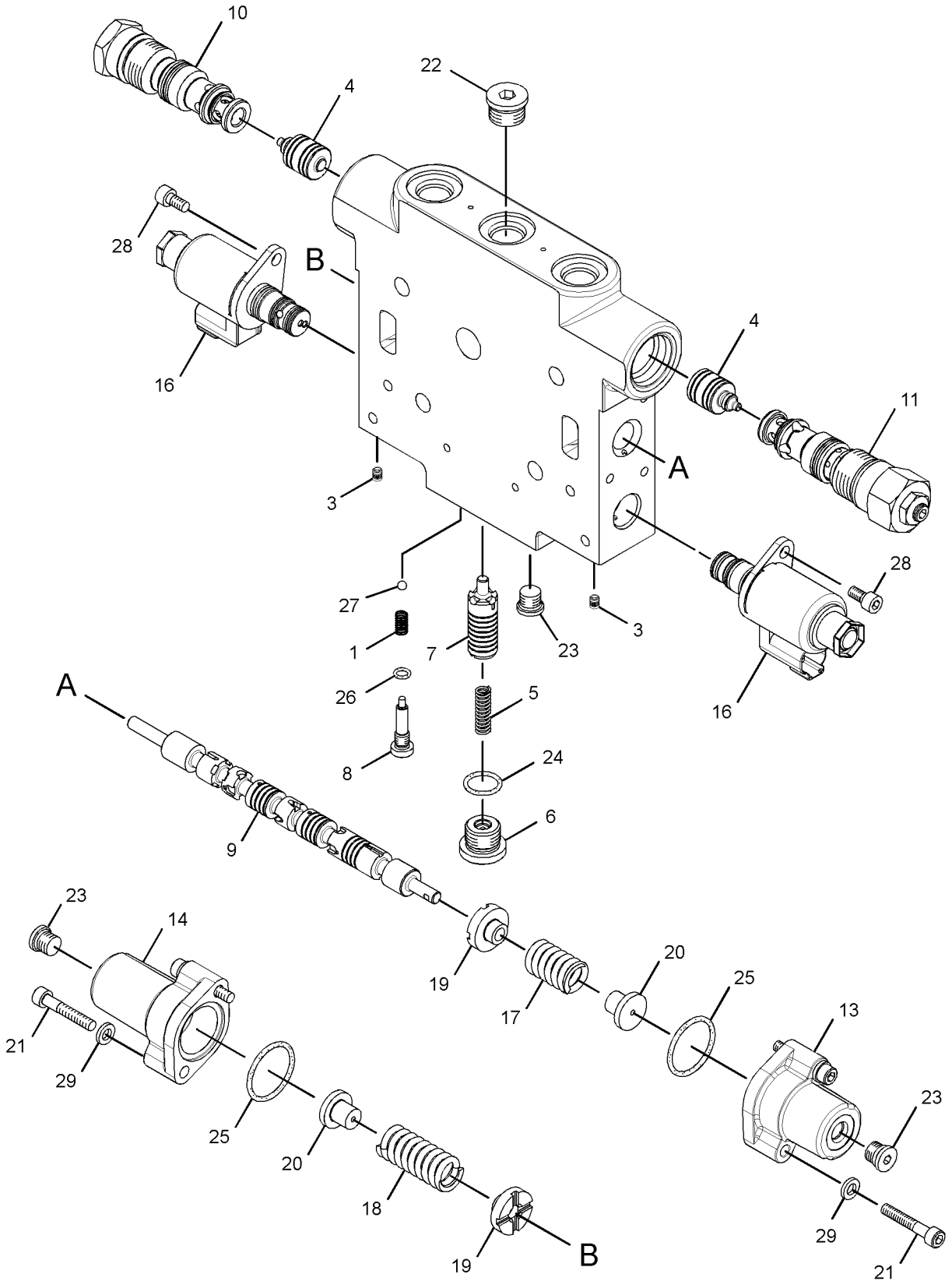

GRAPHIC #1 **<END>** g01371873

HYDRAULIC SYSTEM

245-9545 VALVE GP-CONTROL—PLOW ANGLE

S/N: B9D1-UP

PART OF 249-5328 VALVE GP-BANK 7, 249-5329, 249-7297 VALVE GP-BANK 8

SMCS-5051 **i02781166**

NOTE	REF NO	GRAPHIC REF	PART NUMBER	QTY	PART NAME 1 2 3 4 5 6 (PRODUCT LEVEL)	SEE PAGE
	1	1	**6E-3007**	1	SPRING	
	3	1	**9W-7783**	6	PLUG	
	4	1	**106-3659**	1	PISTON	
	5	1	**212-4961**	1	SPRING	
	6	1	**242-9264**	1	PLUG-ORIFICE	
	7	1	**243-2965**	1	SPOOL	
	8	1	**244-2579**	1	PLUG	
	9	1	**245-9055**	1	STEM	
	10	1	**245-9923**	1	VALVE GP-CHECK (PLOW ANGLE)	
J		1	**3K-0360**	1	SEAL-O-RING	
J		1	**6V-5326**	1	SEAL-O-RING	
J		1	**6V-6580**	1	SEAL-O-RING	
	11	1	**246-1567**	1	VALVE GP-CHECK & RELIEF (LINE, PLOW ANGLE)	
J		1	**3K-0360**	1	SEAL-O-RING	
J		1	**6V-5326**	1	SEAL-O-RING	
J		1	**6V-6580**	1	SEAL-O-RING	
	13	1	**251-1668**	2	COVER-SPRING	
Y	15	1	**278-1799**	2	VALVE GP-SOLENOID (PLOW ANGLE)	700
	16	1	**284-3555**	2	SPRING	
	17	1	**284-4601**	2	RETAINER	
	18	1	**284-4602**	2	RETAINER	
M	19	1	**136-4192**	4	BOLT (M6X1X35-MM)	
	20	1	*148-8395*	1	PLUG AS	
		1	**3K-0360**	1	SEAL-O-RING	
		1	**9S-8005**	1	PLUG-O-RING	
	21	1	*183-7263*	3	PLUG AS	
					(EACH INCLUDES)	
		1	**3J-7354**	1	SEAL-O-RING	
		1	**9S-8002**	1	PLUG-O-RING	
	22	1	**3K-0360**	1	SEAL-O-RING	
	23	1	**3S-9233**	2	SEAL-O-RING	
	24	1	**4J-7533**	1	SEAL-O-RING	
	25	1	**5B-9318**	1	BALL	
M	26	1	**8T-0267**	2	BOLT-SOCKET HEAD (M6X1X12-MM)	
	27	1	**9X-8256**	4	WASHER (6.6X12X2-MM THK)	
					PARTS SHOWN IN GRAPHIC(S) WITHOUT A REFERENCE NUMBER ARE NOT SERVICED SEPARATELY	
					AVAILABLE REPAIR KIT(S):	
J			**248-6887**	1	KIT-SEAL (CHECK VALVE) (PLOW ANGLE)	
					(KIT INCLUDES SEAL-O-RINGS & BACKUP RING)	

J-KIT MARKED J SERVICES PARTS MARKED J
M-METRIC PART
Y-SEPARATE ILLUSTRATION

245-9545 VALVE GP-CONTROL *(contd.)* **i02781166**

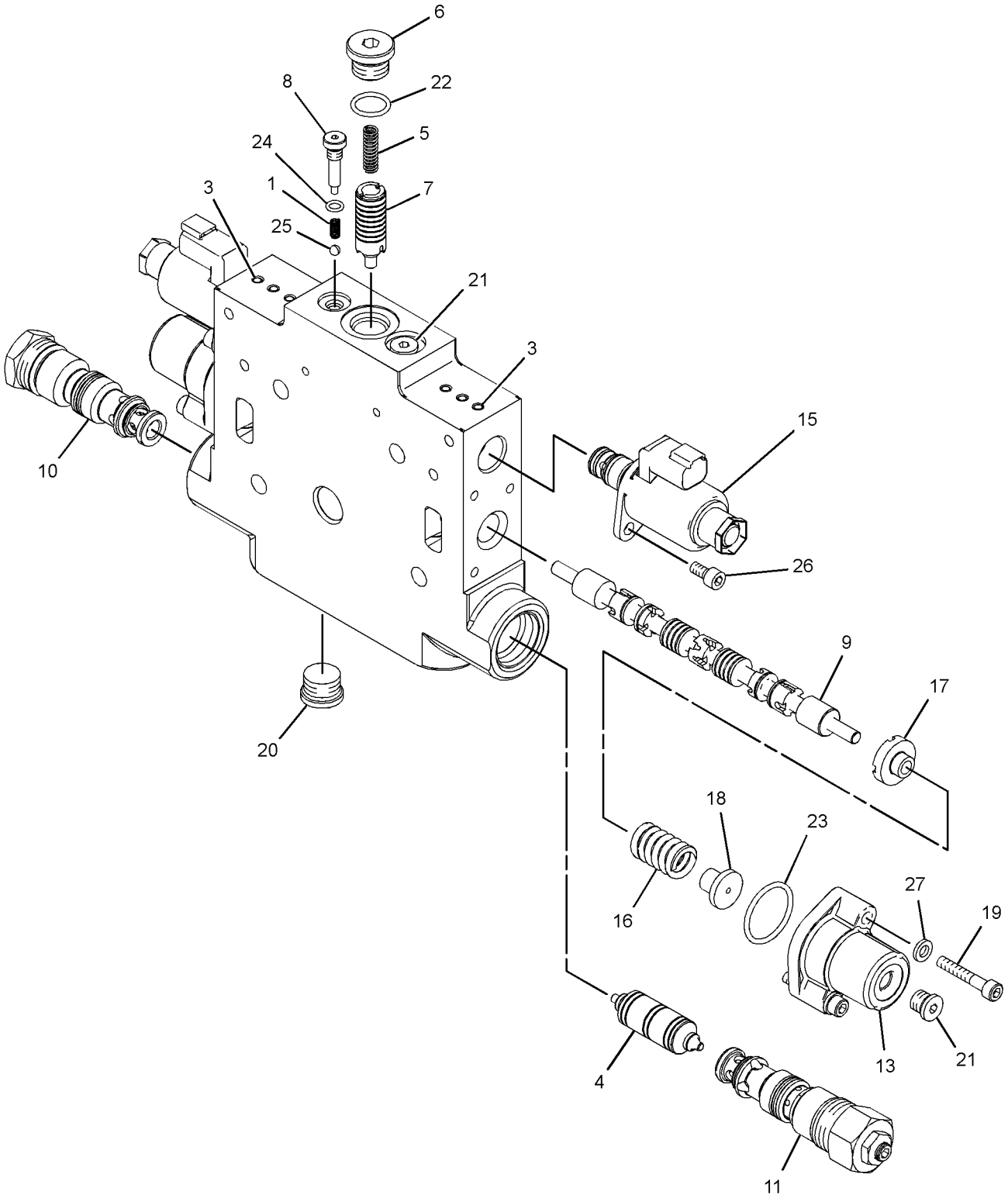

GRAPHIC #1 **<END>** g01371874

HYDRAULIC SYSTEM

249-7307 VALVE GP-CONTROL—SCARIFIER

S/N: B9D1-UP

PART OF 249-7295 VALVE GP-BANK 6, 249-7296 VALVE GP-BANK 7, 249-7297 VALVE GP-BANK 8

SMCS-5051 **i02782457**

NOTE	REF NO	GRAPHIC REF	PART NUMBER	QTY	PART NAME 1 2 3 4 5 6 (PRODUCT LEVEL)	SEE PAGE
	2	1	**6E-3007**	1	SPRING	
	3	1	**9W-7783**	6	PLUG	
	4	1	**106-3659**	1	PISTON	
	5	1	**212-4961**	1	SPRING	
	6	1	**242-9264**	1	PLUG-ORIFICE	
	7	1	**243-2965**	1	SPOOL	
	8	1	**244-2579**	1	PLUG	
	9	1	**245-9041**	1	STEM	
J	10	1	**245-9923**	1	VALVE GP-CHECK (SCARIFIER)	
		1	**3K-0360**	1	SEAL-O-RING	
		1	**6V-5326**	1	SEAL-O-RING	
		1	**6V-6580**	1	SEAL-O-RING	
	11	1	**284-4601**	2	RETAINER	
	12	1	**284-4602**	2	RETAINER	
J	14	1	**249-7309**	1	VALVE GP-CHECK & RELIEF (LINE, SCARIFIER)	
		1	**3K-0360**	1	SEAL-O-RING	
		1	**6V-5326**	1	SEAL-O-RING	
		1	**6V-6580**	1	SEAL-O-RING	
Y	15	1	**278-1799**	2	VALVE GP-SOLENOID (SCARIFIER)	700
	16	1	**251-1668**	2	COVER-SPRING	
	17	1	**284-3555**	2	SPRING	
M	19	1	**136-4192**	4	BOLT (M6X1X35-MM)	
	20	1	*148-8395*	1	PLUG AS	
		1	**9S-8005**	1	PLUG-O-RING	
		1	**3K-0360**	1	SEAL-O-RING	
	21	1	*183-7263*	3	PLUG AS	
					(EACH INCLUDES)	
		1	**9S-8002**	1	PLUG-O-RING	
		1	**3J-7354**	1	SEAL-O-RING	
	22	1	**3K-0360**	1	SEAL-O-RING	
	23	1	**3S-9233**	2	SEAL-O-RING	
	24	1	**4J-7533**	1	SEAL-O-RING	
	25	1	**5B-9318**	1	BALL	
M	26	1	**8T-0267**	2	BOLT-SOCKET HEAD (M6X1X12-MM)	
	27	1	**9X-8256**	4	WASHER (6.6X12X2-MM THK)	
					PARTS SHOWN IN GRAPHIC(S) WITHOUT A REFERENCE NUMBER ARE NOT SERVICED SEPARATELY	
					AVAILABLE REPAIR KIT(S):	
J			**248-6887**	1	KIT-SEAL (CHECK VALVE)	
					(INCLUDES SEALS & RINGS)	

J-KIT MARKED J SERVICES PART(S) MARKED J
M-METRIC PART
Y-SEPARATE ILLUSTRATION

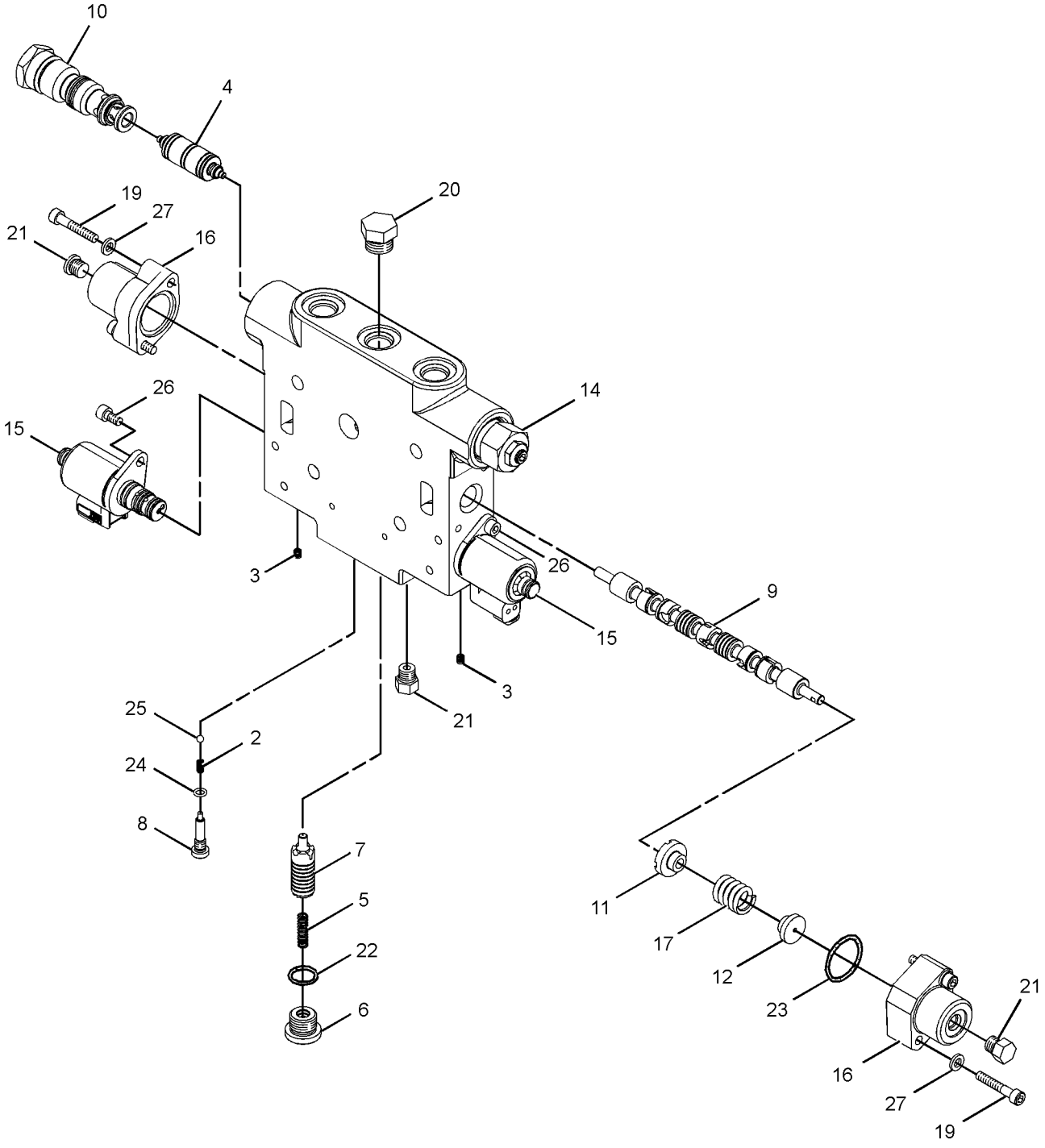

GRAPHIC #1 **<END>** g01371950

277-2132 VALVE GP-DIVERTER–FAN DRIVE

S/N: B9D1-UP

PART OF 251-8256 MANIFOLD GP-CONTROL

SMCS-5066 **i02780838**

NOTE	REF NO	GRAPHIC REF	PART NUMBER	QTY	PART NAME 1 2 3 4 5 6 (PRODUCT LEVEL)	SEE PAGE
J	1	1	**2M-9780**	1	SEAL-O-RING	
J	2	1	**6V-5142**	1	SEAL-O-RING	
J	3	1	**169-1617**	2	RING-BACKUP	
J	4	1	**095-1751**	1	SEAL-O-RING	
J	5	1	**169-1616**	2	RING-BACKUP	
					AVAILABLE REPAIR KIT(S):	
J			**200-6282**	1	KIT-SEAL (DIVERTER VALVE) (HYDRAULIC FAN FLUID FLOW)	
					(INCLUDES SEALS & RINGS)	

J-KIT MARKED J INCLUDES PART(S) MARKED J

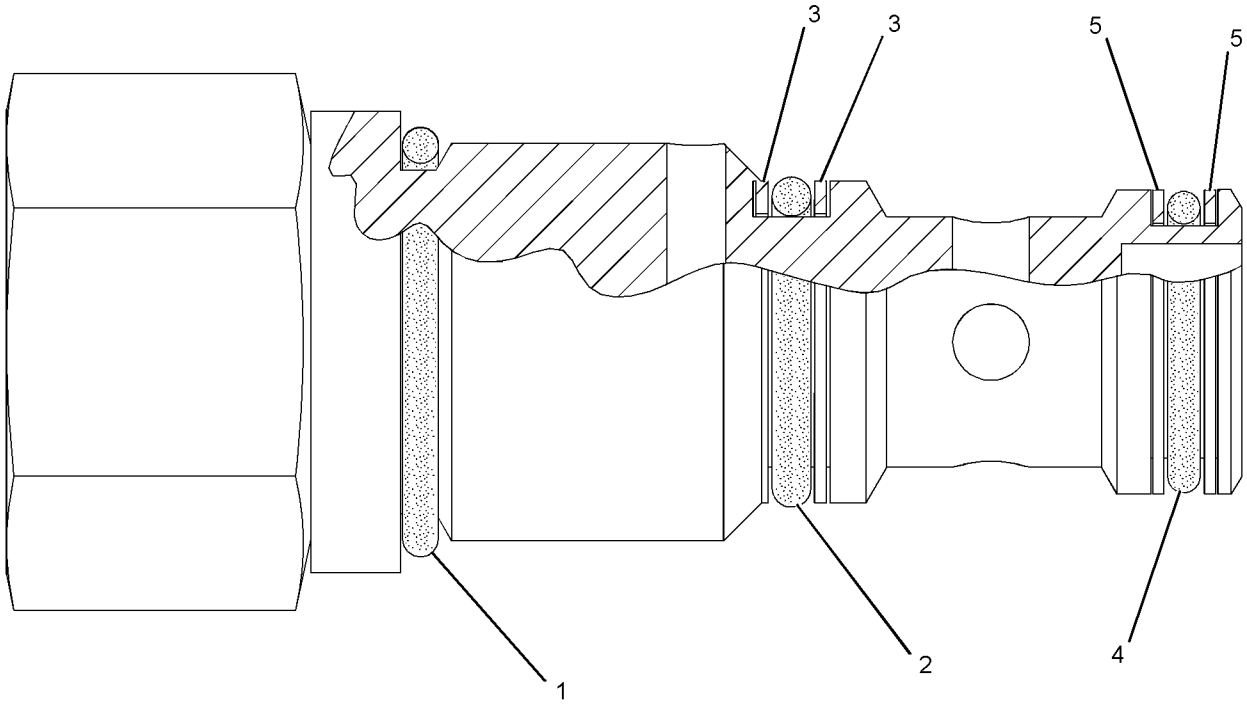

GRAPHIC #1 **<END>** g01109584

252-8038 VALVE GP-PRESSURE REDUCING–PRIMARY STEERING

S/N: B9D1-UP

PART OF 263-1790 MANIFOLD GP-CONTROL

SMCS-5117 **i02773284**

NOTE	REF NO	GRAPHIC REF	PART NUMBER	QTY	PART NAME 1 2 3 4 5 6 (PRODUCT LEVEL)	SEE PAGE
	1	1	**2M-9780**	1	SEAL-O-RING	
	2	1	**6V-3505**	1	RING-BACKUP	
	3	1	**8C-3132**	1	SEAL-O-RING	
	4	1	**6E-0410**	1	SEAL-O-RING	
	5	1	**5P-2199**	1	RING-BACKUP	

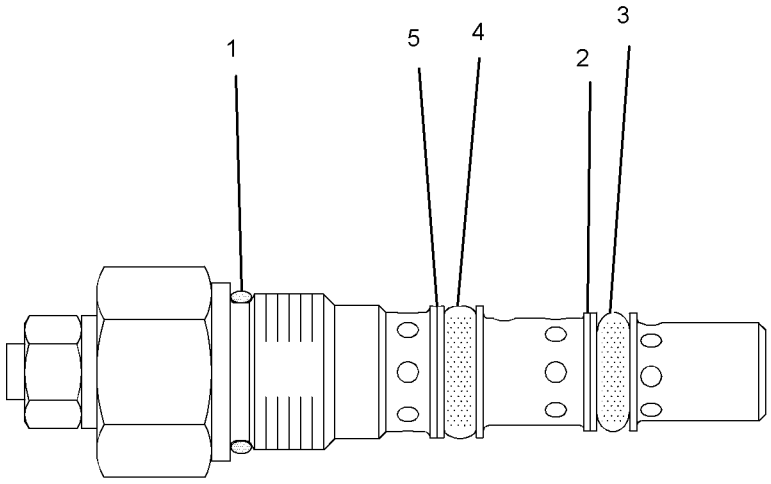

GRAPHIC #1 **<END>** g01089904

168-2210 VALVE GP-PUMP CONTROL—HYDRAULIC PUMP

S/N: B9D1-UP

PART OF 250-8337 PUMP GP-PISTON

SMCS-5455 **i01828585**

NOTE	REF NO	GRAPHIC REF	PART NUMBER	QTY	PART NAME 1 2 3 4 5 6 (PRODUCT LEVEL)	SEE PAGE
	1	1	**6E-6527**	2	PLUG	
	2	1	**6E-6528**	6	SEAL	
	3	1	**9S-8002**	1	PLUG-O-RING	
	4	1	**9X-7680**	3	SEAL-O-RING	
	5	1	**5P-9262**	1	SEAL-O-RING	
	6	1	**105-2145**	1	VALVE-ORIFICE	
	7	1	**6E-3268**	1	RETAINER-SPRING	
	8	1	**6E-3269**	1	RETAINER-SPRING	
M	9	1	**8T-8442**	4	BOLT-SOCKET HEAD (M6X1X30-MM)	
	10	1	**6E-3273**	1	SEAT	
	11	1	**6V-8352**	1	SEAL-O-RING	
	12	1	**6E-6536**	1	PLUG	
M	13	1	**6E-6537**	2	SCREW-ADJUSTMENT (M8X1X28-MM)	
M	14	1	**6E-6538**	2	NUT-ADJUSTMENT (M8X1-THD)	
M	15	1	**6E-6539**	2	NUT-CAP (M8X1-THD)	
	16	1	**6E-6540**	1	PLUG	
	17	1	**033-6043**	1	SEAL-O-RING	
	18	1	**6E-3272**	1	SEAT	
	19	1	**6E-3274**	1	SPRING	
	20	1	**6E-3275**	1	SPRING	
	21	1	**3J-7354**	1	SEAL-O-RING	
	22	1	**201-0780**	1	ORIFICE	
	23	1	**193-1036**	1	SPRING	
	24	1	**6E-3276**	1	SPRING	
Z	25	1		1	STEM	
Z	26	1		1	STEM	
Z	27	1		1	BODY	

M-METRIC PART
Z-NOT SERVICED SEPARATELY

168-2210 **VALVE GP-PUMP CONTROL** *(contd.)* **i01828585**

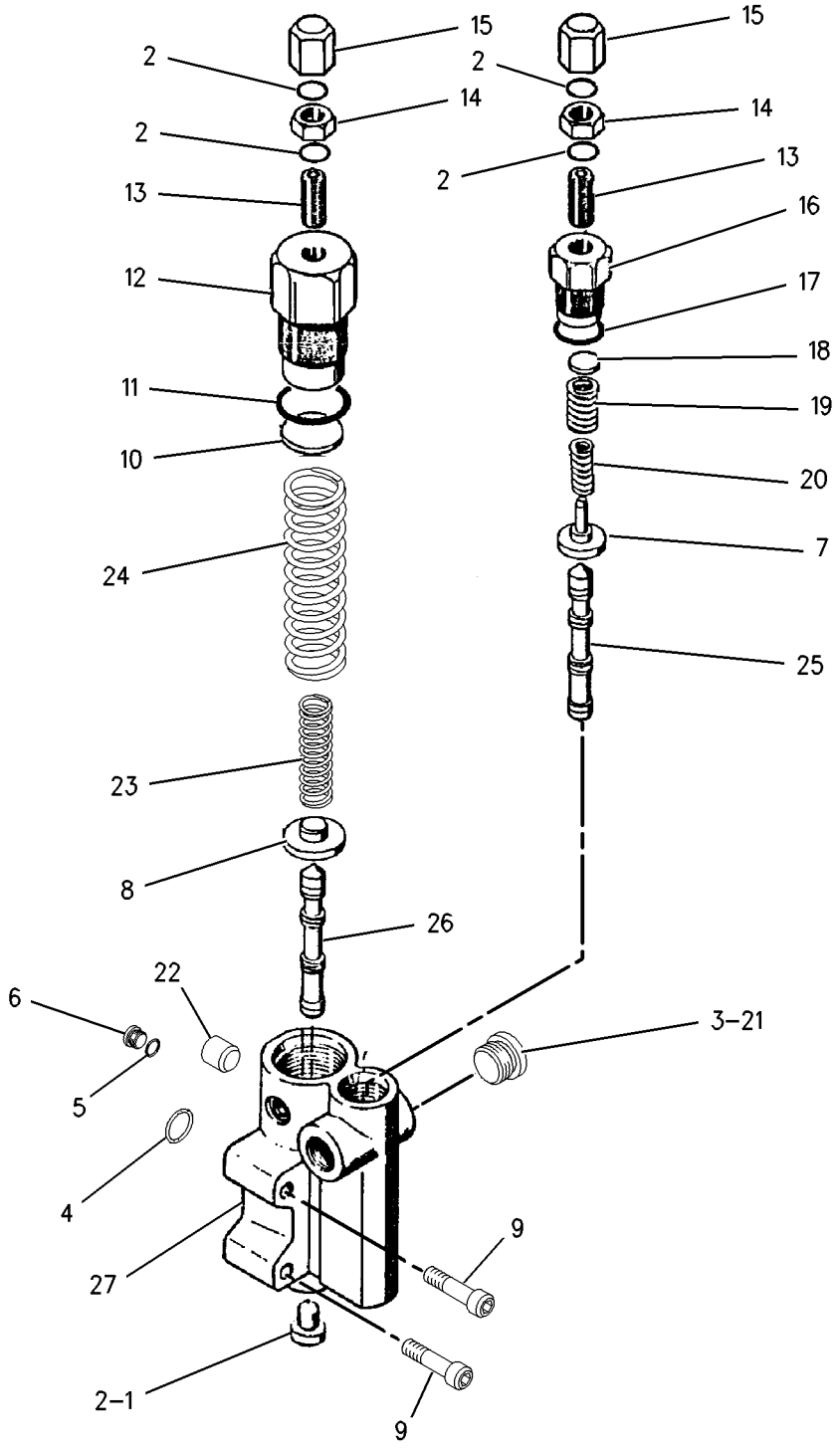

GRAPHIC #1 **<END>** g00918518

271-6847 VALVE GP-PUMP CONTROL–
PRESSURE, FLOW COMPENSATOR
S/N: B9D1-UP
PART OF 236-7296 PUMP GP-PISTON

SMCS-5455 **i02771701**

NOTE	REF NO	GRAPHIC REF	PART NUMBER	QTY	PART NAME 1 2 3 4 5 6 (PRODUCT LEVEL)	SEE PAGE
	1	1	**6E-4229**	1	BODY-COMPENSATOR	
	2	1	**9S-4191**	1	PLUG-O-RING	
	3	1	**3J-1907**	3	SEAL-O-RING	
	4	1	**6E-4241**	1	SPOOL-MARGIN	
	5	1	**9T-2186**	2	PLUG	
	6	1	**6E-4239**	1	SPOOL-CUTOFF	
	7	1	**6E-4230**	2	GUIDE-SPRING	
	8	1	**6E-4228**	1	SPRING (CUTOFF)	
	9	1	**6E-6140**	1	PLUG-COMPENSATOR	
	10	1	**033-6036**	1	SEAL-O-RING	
	11	1	**6E-6141**	2	LOCKNUT-SEALING (M8X1.25-THD)	
M	12	1	**9X-8914**	2	SETSCREW-SOCKET (M8X1.25X45-MM)	
	13	1	**6E-6142**	1	PLUG-MARGIN	
	14	1	**033-6027**	1	SEAL-O-RING	
	15	1	**6E-4246**	1	SPRING-MARGIN	
	16	1	**6E-4318**	1	PIN-SPRING STOP	
	17	1	**6E-4242**	2	GUIDE-SPRING	

M-METRIC PART

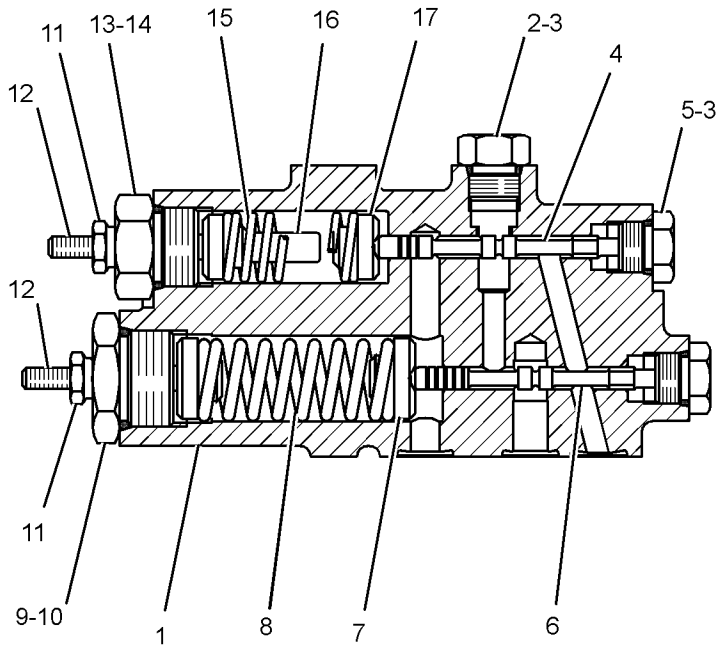

GRAPHIC #1 **<END>** g01287415

HYDRAULIC SYSTEM

133-5330 VALVE GP-RELIEF

S/N: B9D1-UP

PART OF 263-1790 MANIFOLD GP-CONTROL

SMCS-4322, 5069, 5072, 5117 **i02773417**

NOTE	REF NO	GRAPHIC REF	PART NUMBER	QTY	PART NAME 1 2 3 4 5 6 (PRODUCT LEVEL)	SEE PAGE
J	1	1	**161-6149**	1	SEAL-O-RING	
J	2	1	**161-6161**	2	RING-BACKUP	
J	3	1	**2M-9780**	1	SEAL-O-RING	
					AVAILABLE REPAIR KIT(S):	
J			**133-5545**	1	KIT-SEAL (RELIEF VALVE)	
					(INCLUDES SEAL RINGS & BACK-UP RING)	

J-KIT MARKED J INCLUDES PART(S) MARKED J

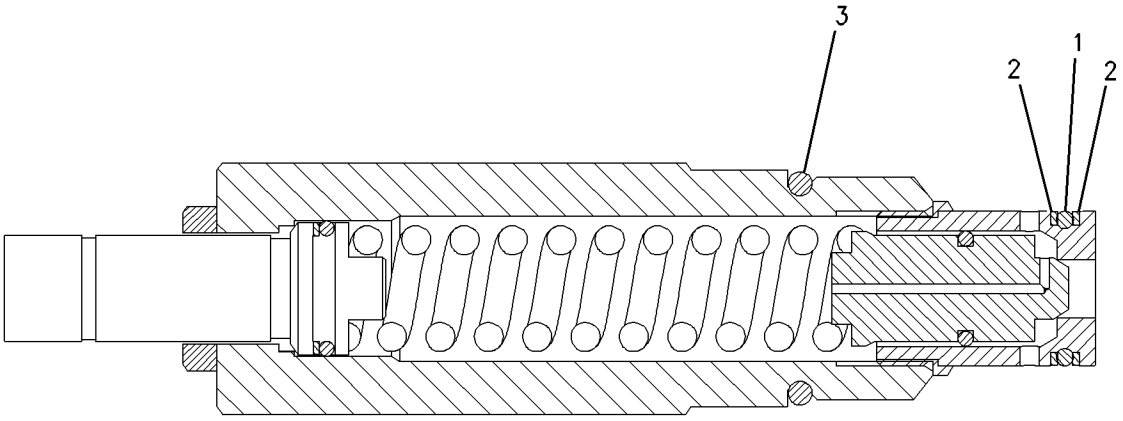

GRAPHIC #1 **<END>** g00705020

251-8330 VALVE GP-RELIEF–BRAKE ACCUMULATOR

S/N: B9D1-UP

PART OF 251-8256 MANIFOLD GP-CONTROL

SMCS-4322, 5069, 5072, 5117 **i02780835**

NOTE	REF NO	GRAPHIC REF	PART NUMBER	QTY	PART NAME 1 2 3 4 5 6 (PRODUCT LEVEL)	SEE PAGE
J	1	1	**2M-9780**	1	SEAL-O-RING	
J	2	1	**161-6149**	1	SEAL-O-RING	
J	3	1	**161-6161**	2	RING-BACKUP	
					AVAILABLE REPAIR KIT(S):	
			133-5545	1	KIT-SEAL (RELIEF VALVE)	
					KIT INCLUDES SEAL-O-RINGS & BACK-UP RINGS	
J-KIT MARKED J INCLUDES PART(S) MARKED J						

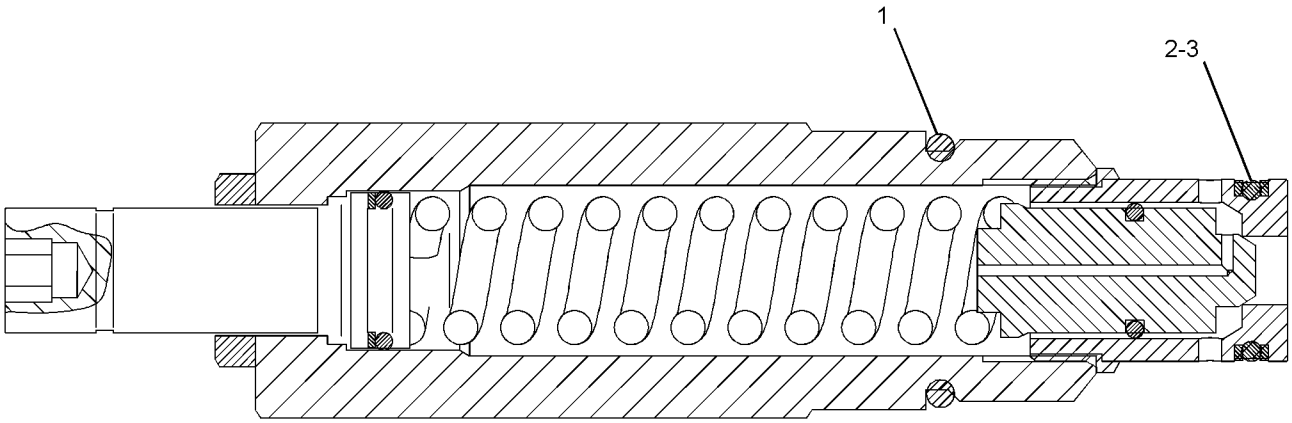

GRAPHIC #1 **<END>** g01113664

HYDRAULIC SYSTEM

257-8414 VALVE GP-SHUTTLE

S/N: B9D1-UP

PART OF 251-8256 MANIFOLD GP-CONTROL

SMCS-5079 **i02708474**

NOTE	REF NO	GRAPHIC REF	PART NUMBER	QTY	PART NAME 1 2 3 4 5 6 (PRODUCT LEVEL)	SEE PAGE
	1	1	**3K-0360**	1	SEAL-O-RING	
	2	1	**161-6149**	1	SEAL-O-RING	
	3	1	**095-1750**	1	SEAL-O-RING	
	4	1	**161-6161**	1	RING-BACKUP	
	5	1	**187-0541**	1	RING-BACKUP	

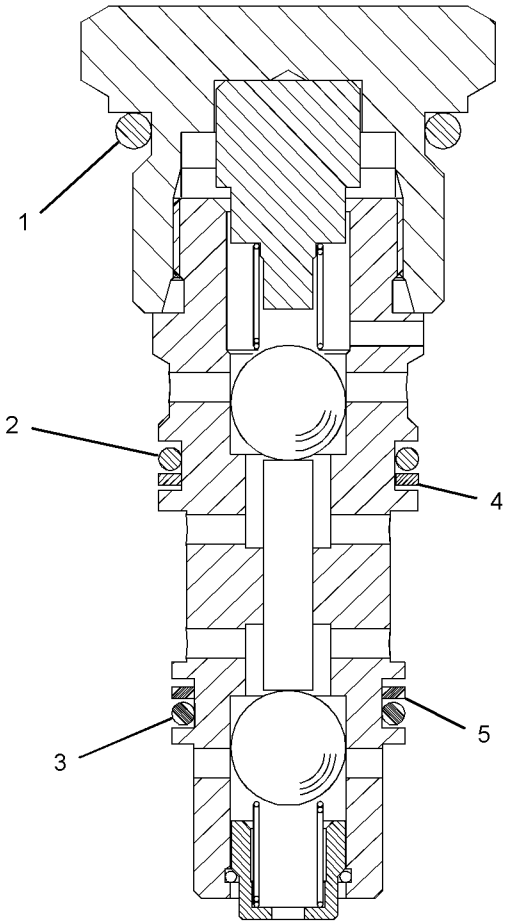

GRAPHIC #1 **<END>** g01104191

HYDRAULIC SYSTEM

152-8346 VALVE GP-SOLENOID

S/N: B9D1-UP

PART OF 246-4477 LOCK GP-CENTERSHIFT

SMCS-5479 **i01861563**

NOTE	REF NO	GRAPHIC REF	PART NUMBER	QTY	PART NAME 1 2 3 4 5 6 (PRODUCT LEVEL)	SEE PAGE
	1	1	**141-6787**	1	COIL AS	
	2	1	**102-8802**	1	KIT-RECEPTACLE (2-PIN)	
					(INCLUDES RECEPTACLE AS AND WEDGE)	
	3	1	**3E-3365**	1	WEDGE-RECEPTACLE LOCK (2-PIN)	
	4	1	**8T-8729**	2	PIN-CONNECTOR	
	5	1	**1S-9593**	2	STRAP-CABLE	
	6	1	**152-8352**	1	SPOOL AS-VALVE	
	7	1	**111-0343**	1	LOCKNUT (5/16-18-THD)	
	8	1	**8C-9987**	1	WASHER (8.3X28X2.5-MM THK)	
					AVAILABLE REPAIR KIT(S):	
			109-3036	1	KIT-SEAL	
					(INCLUDES SEALS & RINGS)	

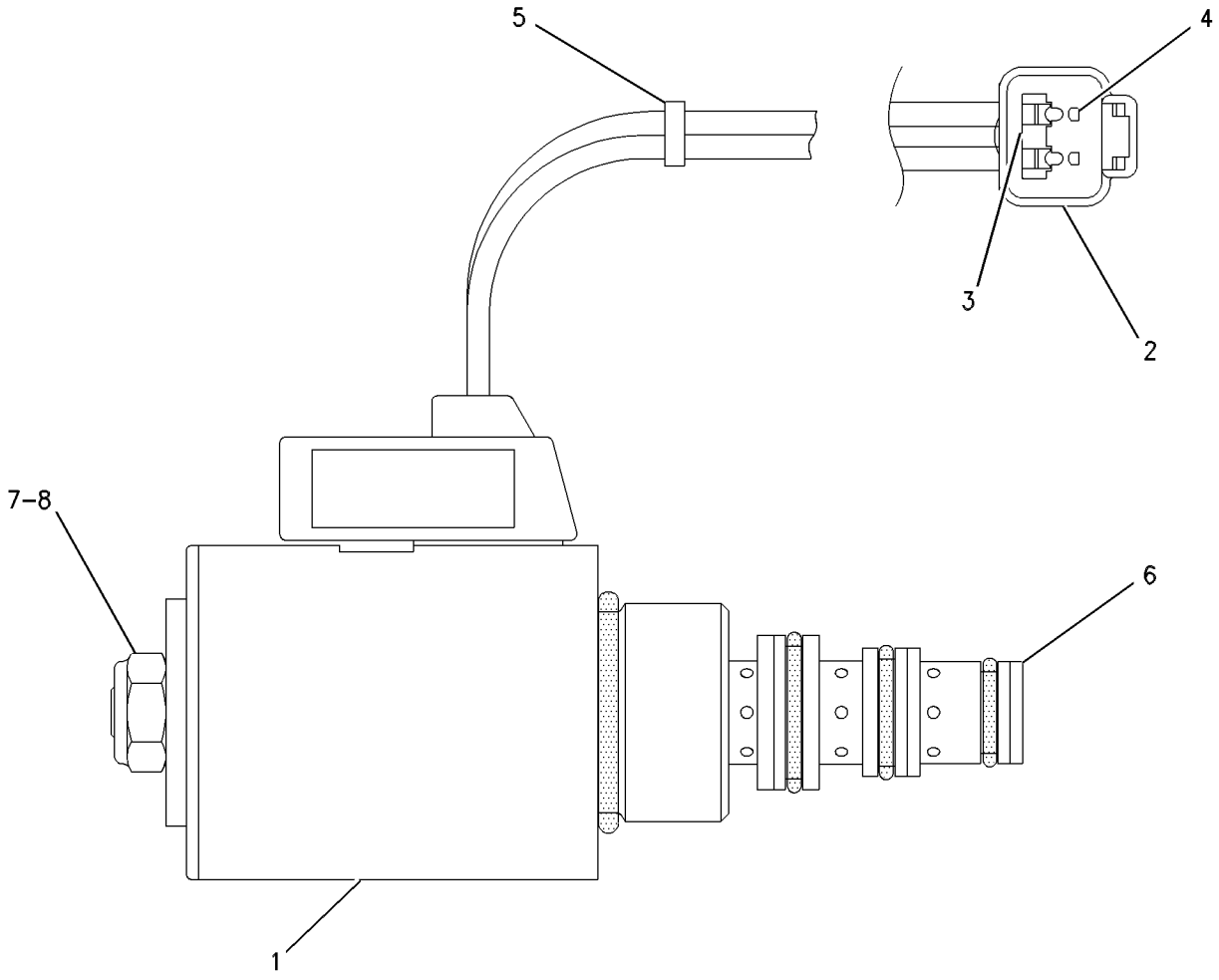

GRAPHIC #1 **<END>** g00482067

HYDRAULIC SYSTEM

189-8627 VALVE GP-SOLENOID

S/N: B9D1-UP

PART OF 251-8256 MANIFOLD GP-CONTROL

SMCS-5479 **i02780828**

NOTE	REF NO	GRAPHIC REF	PART NUMBER	QTY	PART NAME 1 2 3 4 5 6 (PRODUCT LEVEL)	SEE PAGE
	1	1	**146-3728**	1	WASHER-SPRING	
	2	1	**187-8191**	1	COIL AS	
					PARTS SHOWN IN GRAPHIC(S) WITHOUT A REFERENCE NUMBER ARE NOT SERVICED SEPARATELY	

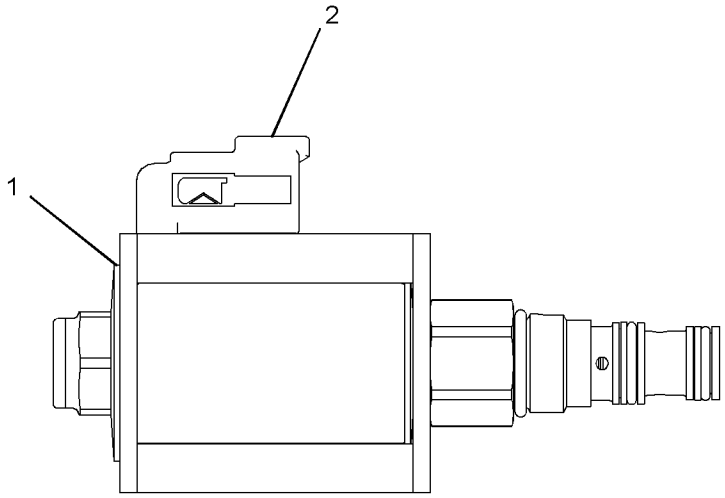

GRAPHIC #1 **<END>** g01390755

HYDRAULIC SYSTEM

253-0937 VALVE GP-SOLENOID

S/N: B9D1-UP

PART OF 294-1109 MANIFOLD GP-CONTROL

SMCS-5479 **i02604806**

NOTE	REF NO	GRAPHIC REF	PART NUMBER	QTY	PART NAME 1 2 3 4 5 6 (PRODUCT LEVEL)	SEE PAGE
Z	1	1		1	WASHER-SPRING	
Z	2	1		1	CARTRIDGE AS	
Z	3	1		1	COIL AS	
Z	4	1		1	CARTRIDGE AS-VALVE	
	5	1	**033-6043**	1	SEAL-O-RING	
	6	1	**6V-4589**	1	SEAL-O-RING	
	7	1	**8L-2746**	1	SEAL-O-RING	

Z-NOT SERVICED SEPARATELY

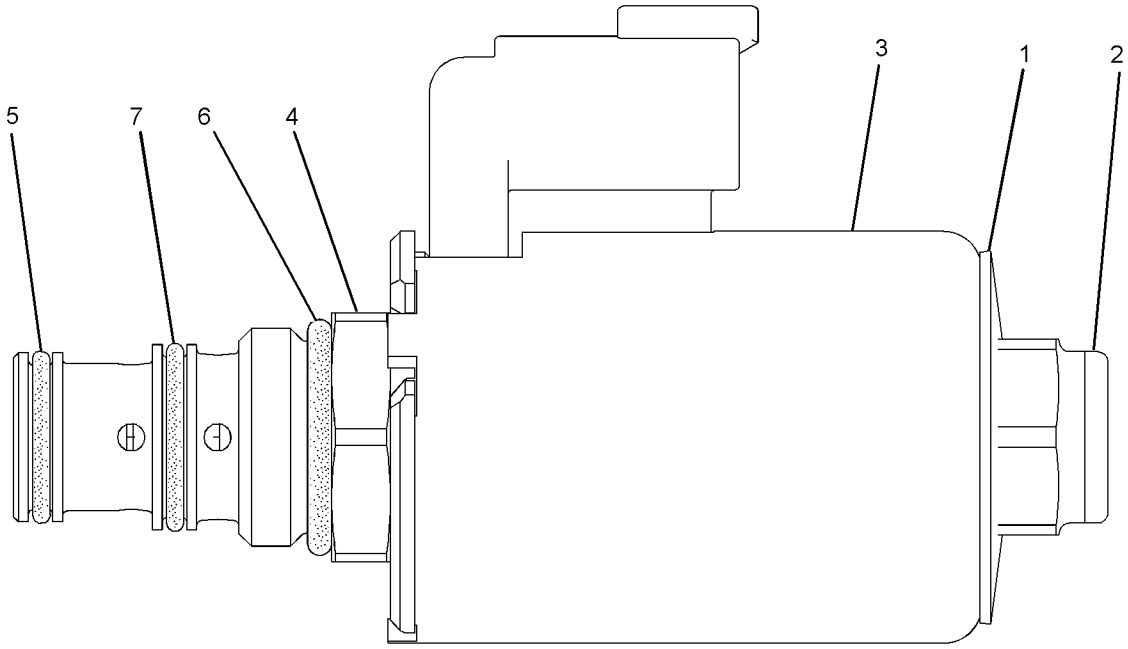

GRAPHIC #1 **<END>** g01069628

HYDRAULIC SYSTEM

278-1799 VALVE GP-SOLENOID

S/N: B9D1-UP

PART OF 245-9532, 245-9533, 245-9534, 245-9535, 245-9536, 245-9537, 245-9539, 245-9541, 245-9542, 245-9543, 245-9544, 245-9545, 249-7307 VALVE GP-CONTROL

SMCS-5479 **i02779495**

NOTE	REF NO	GRAPHIC REF	PART NUMBER	QTY	PART NAME 1 2 3 4 5 6 (PRODUCT LEVEL)	SEE PAGE
	1	1	**8C-6711**	1	NUT-RETAINER (1/2-20-THD)	
	2	1	**226-9622**	1	COIL AS (24-VOLT)	
	3	1	**4K-2039**	1	SEAL-O-RING	
	4	1	**5L-4758**	1	SEAL-O-RING	
	5	1	**6F-4855**	1	SEAL-O-RING	

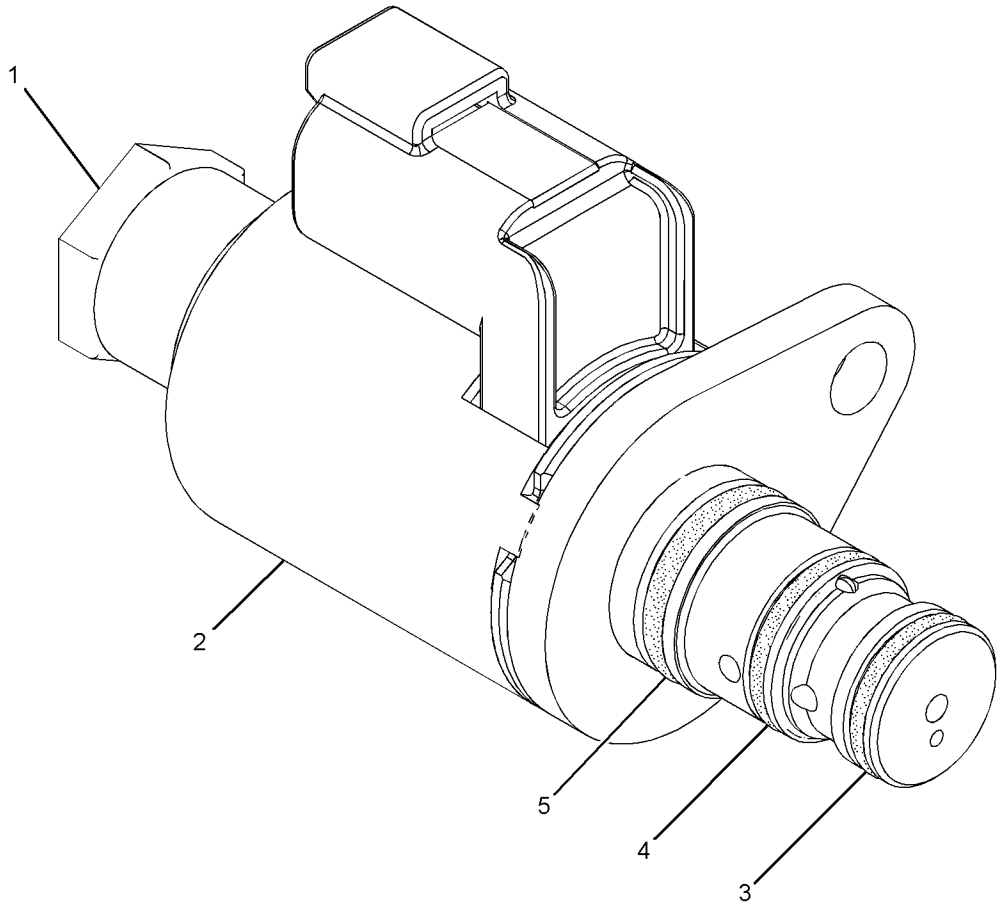

GRAPHIC #1 **<END>** g01281815

HYDRAULIC SYSTEM

308-0934 VALVE GP-STEERING

S/N: B9D1-UP

PART OF 231-1512 LINES GP-STEERING

SMCS-4307, 4322, 4343, 5067, 5453 **i02759323**

NOTE	REF NO	GRAPHIC REF	PART NUMBER	QTY	PART NAME 1 2 3 4 5 6 (PRODUCT LEVEL)	SEE PAGE
	1	1	**192-7507**	1	SEAL-O-RING	
	2	1	**9T-4057**	5	SEAL-O-RING	
	3	1	**8T-7877**	8	SEAL-O-RING	
	4	1	**192-7510**	3	SEAL-O-RING	
	5	1	**5L-4758**	1	SEAL-O-RING	
	6	1	**192-7508**	2	SEAL-O-RING	
	7	1	**301-5165**	1	KIT-SEAL (BANK VALVE)	
					(INCLUDES O-RINGS)	
	8	1	**301-5166**	1	KIT-SEAL (BANK VALVE)	
					(INCLUDES O-RINGS)	
	9	1	**301-5167**	1	KIT-SEAL (BANK VALVE)	
					(INCLUDES FILTER & O-RINGS)	
	10	1	**308-0938**	1	VALVE GP-ACTUATOR (STEERING SIGNAL)	
M		1	**1R-5396**	4	BOLT (M6X1X35-MM)	
	11	1	**301-4483**	2	VALVE GP-RELIEF (STEERING PRESSURE)	
					PARTS SHOWN IN GRAPHIC(S) WITHOUT A REFERENCE NUMBER ARE NOT SERVICED SEPARATELY	

M-METRIC PART

308-0934 VALVE GP-STEERING *(contd.)* **i02759323**

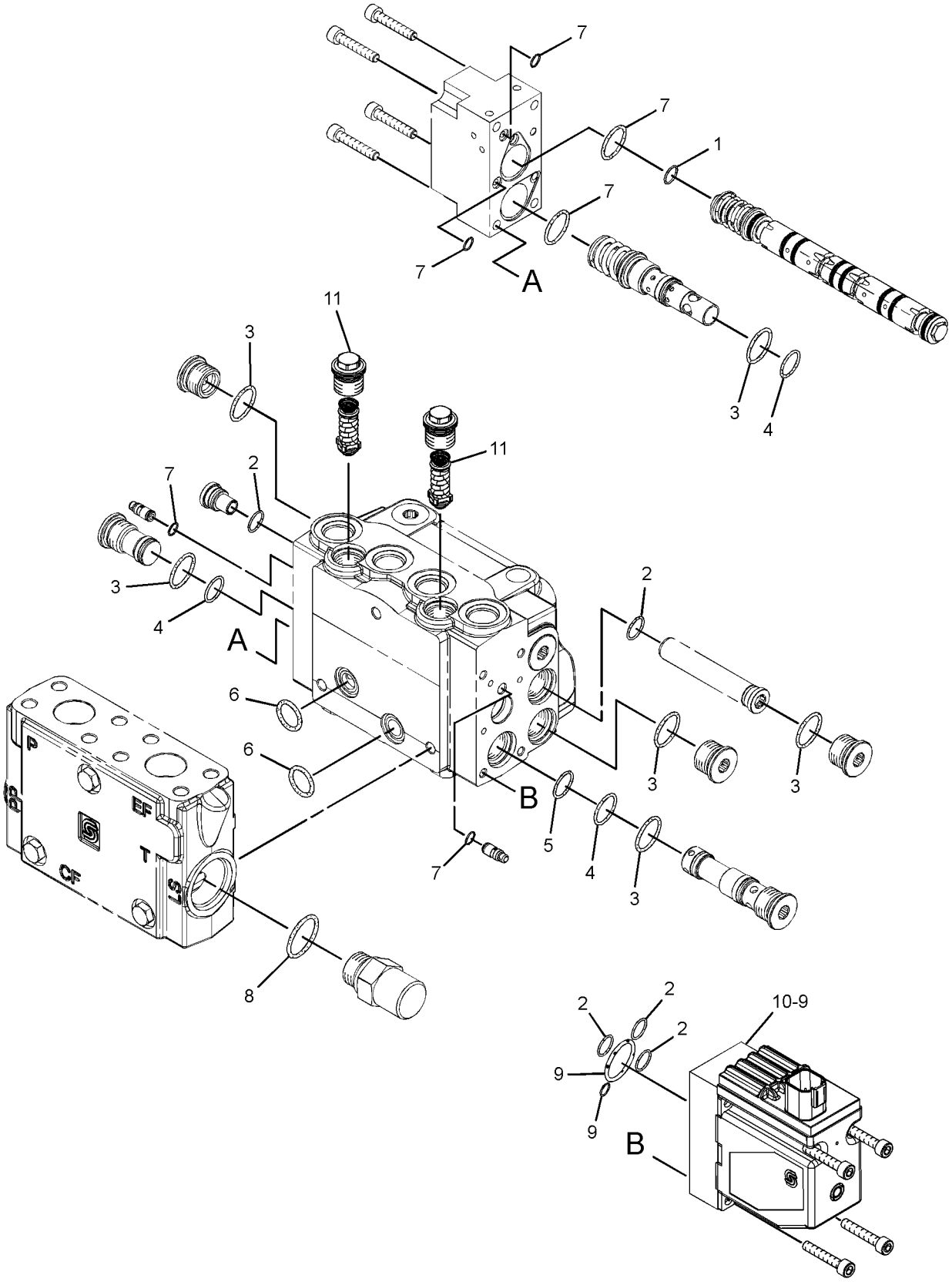

GRAPHIC #1 **<END>** g01336336

IMPLEMENTS

243-6660 CIRCLE GP

S/N: B9D1-UP

PART OF 234-7721 COMMON AR

SMCS-6152, 6154, 6155 **i02773470**

NOTE	REF NO	GRAPHIC REF	PART NUMBER	QTY	PART NAME 1 2 3 4 5 6 (PRODUCT LEVEL)	SEE PAGE
B	1	1	**190-0627**	6	SHIM (2-MM THK)	
	2	1	**243-6650**	1	CIRCLE AS	
	3	1	**243-6652**	4	COVER	
	4	1	**276-1317**	2	STRIP-WEAR	
	5	1	**276-1318**	2	STRIP-WEAR	
	6	1	**276-1319**	2	STRIP-WEAR	
	7	1	**252-7086**	1	MOUNTING GP-BLADE	
	8	1	**253-4645**	2	SHAFT	
	10	1	**265-6722**	4	COVER	
M	11	1	**095-1235**	4	NUT-CASTLE	
	12	1	**3B-4643**	4	PIN-COTTER	
	13	1	**285-6124**	16	WASHER-HARD (16X35X5-MM THK)	
	14	1	**285-6125**	16	BOLT (M14X2-MM-THD)	
M	15	1	**6V-7688**	6	LOCKNUT (M20X2.5-THD)	
	16	1	**7X-7740**	4	WASHER (45X78X8-MM THK)	
M	17	1	**129-2220**	6	SETSCREW-SOCKET (M20X2.5X80-MM)	
	18	1	**194-4175**	8	BEARING-SLEEVE	

B-USE AS REQUIRED
M-METRIC PART

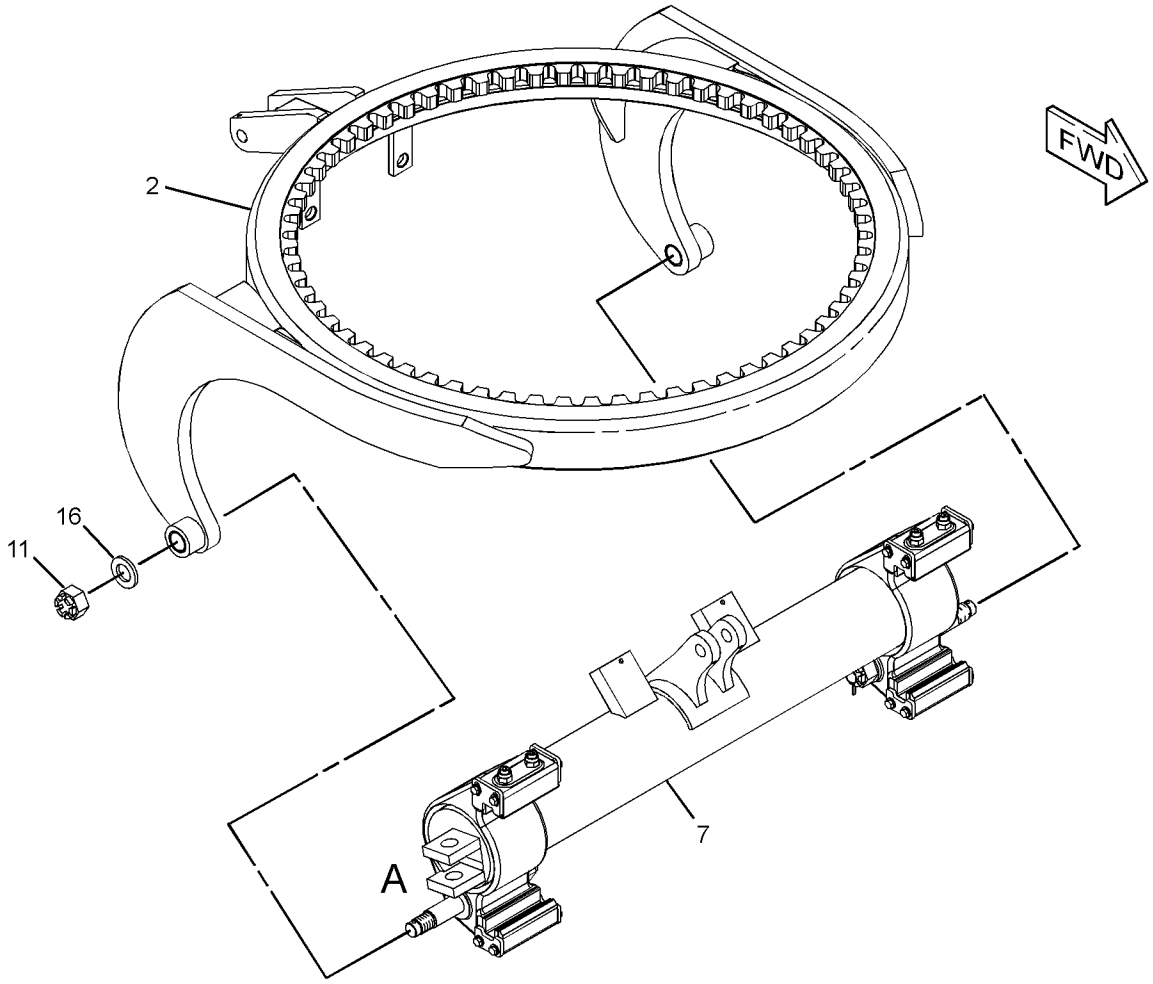

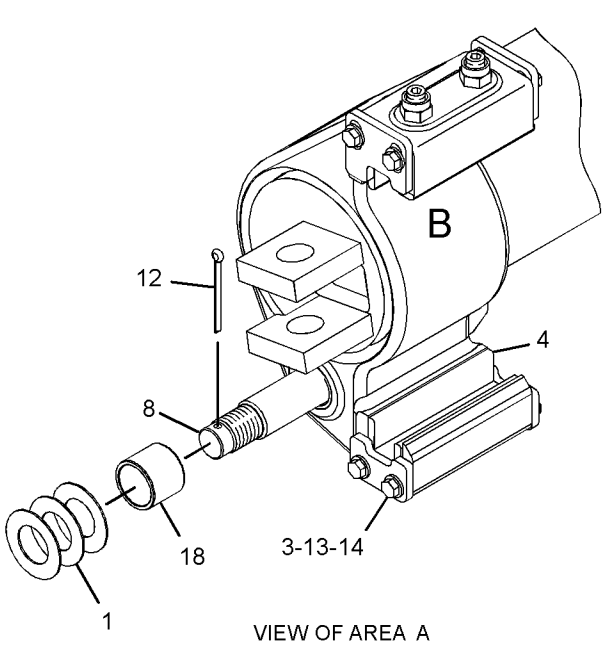

VIEW OF AREA A

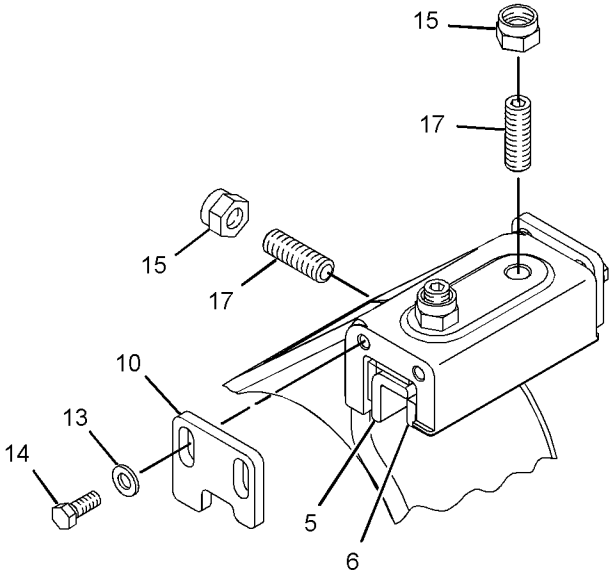

VIEW OF AREA B

GRAPHIC #1 **<END>** g01393001

253-4630 DRAWBAR GP

S/N: B9D1-UP

PART OF 234-7721 COMMON AR

SMCS-6153 **i02774600**

NOTE	REF NO	GRAPHIC REF	PART NUMBER	QTY	PART NAME 1 2 3 4 5 6 (PRODUCT LEVEL)	SEE PAGE
	1	1	**1D-5119**	12	NUT (3/4-10-THD)	
	2	1	**3B-8489**	1	FITTING-GREASE	
	3	1	**6G-5442**	1	BALL	
	4	1	**6K-6444**	2	SPACER (0.906X1.625X1.31-IN THK)	
	5	1	**7J-8782**	3	PLUG	
	6	1	**128-9656**	6	STRIP-WEAR	
M	7	1	**201-8034**	18	BOLT (M20X2.5X120-MM)	
	8	1	**213-8179**	6	SHOE-CIRCLE GUIDE	
	9	1	**253-4651**	1	DRAWBAR & YOKE AS	
		1	**178-3086**	3	STUD-BALL	
	10	1	**302-6338**	6	STRIP-WEAR	
B	11	1	**302-6337**	6	SHIM (10-MM THK)	
B	12	1	**302-6335**	36	SHIM (0.25-MM THK)	
B	13	1	**302-6336**	102	SHIM (0.5-MM THK)	
	14	1	**261-4672**	1	CAP (DRAWBAR)	
	15	1	**261-4673**	1	ADAPTER	
B	16	1	**261-4674**	4	SHIM (0.8-MM THK)	
B	17	1	**261-4675**	6	SHIM (0.25-MM THK)	
B	18	1	**261-4676**	1	SHIM (0.12-MM THK)	
	19	1	**302-6340**	4	COVER	
	20	1	**302-6341**	1	COVER	
	21	1	**302-6339**	1	COVER	
	22	1	**283-1578**	20	WASHER-HARD (22X45X10-MM THK)	
M	23	1	**288-3678**	14	BOLT (M20X2.5X45-MM)	
	24	1	**110-2456**	2	PIN-SPRING	
M	25	1	**147-5112**	4	BOLT (M24X3X150-MM)	
M	26	1	**213-5007**	2	BOLT (M20X2.5X88-MM)	
	27	1	**267-3506**	4	WASHER-HARD (26X44X4-MM THK)	
	28	1	**267-3508**	18	WASHER-HARD (35X22X3.5-MM THK)	
M	29	1	**286-0742**	4	NUT (M20X2.5-THD)	
	30	1	**287-5701**	2	BOLT (HEX HEAD) (M20X2.5X50-MM)	
	31	1	**289-0580**	12	SETSCREW (3/4-10X2.5-IN)	
	32	1	**5P-8291**	5	BOLT (3/4-16X2-IN)	
M	33	1	**6V-8653**	2	BOLT-SOCKET HEAD (M6X1X40-MM)	

B-USE AS REQUIRED
M-METRIC PART

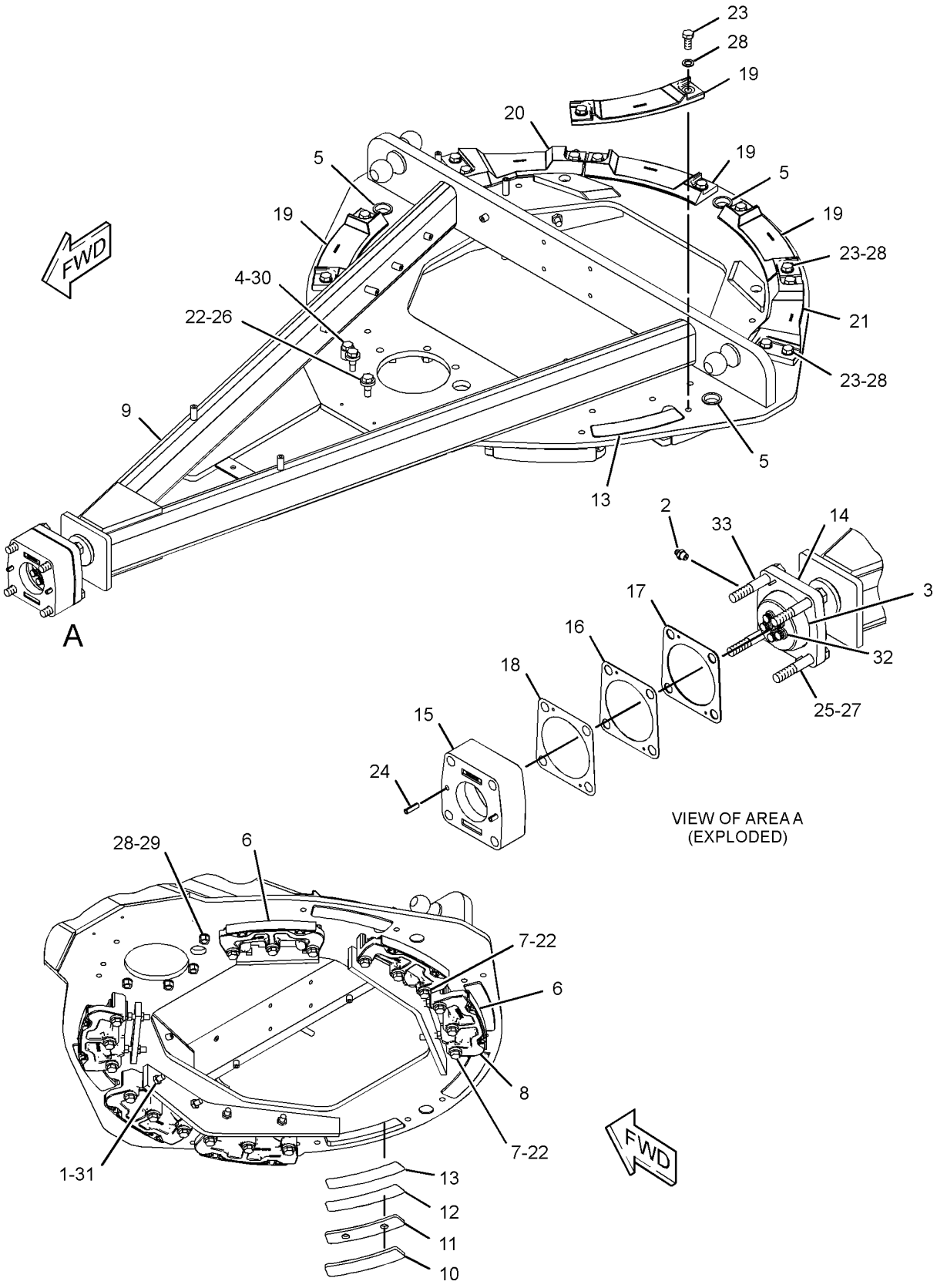

GRAPHIC #1

<END>

g01338957

250-3071 PLATE GP-PUSH

S/N: B9D1-UP

SMCS-6077 **i02783246**

NOTE	REF NO	GRAPHIC REF	PART NUMBER	QTY	PART NAME 1 2 3 4 5 6 (PRODUCT LEVEL)	SEE PAGE
M	1	1	**166-1880**	8	BOLT (M20X2.5X75-MM)	
	2	1	**259-4476**	1	PLATE AS-PUSH	
	2A	1	**5J-7333**	2	HOOK	
	3	1	**283-1578**	8	WASHER-HARD (22X45X10-MM THK)	

M-METRIC PART

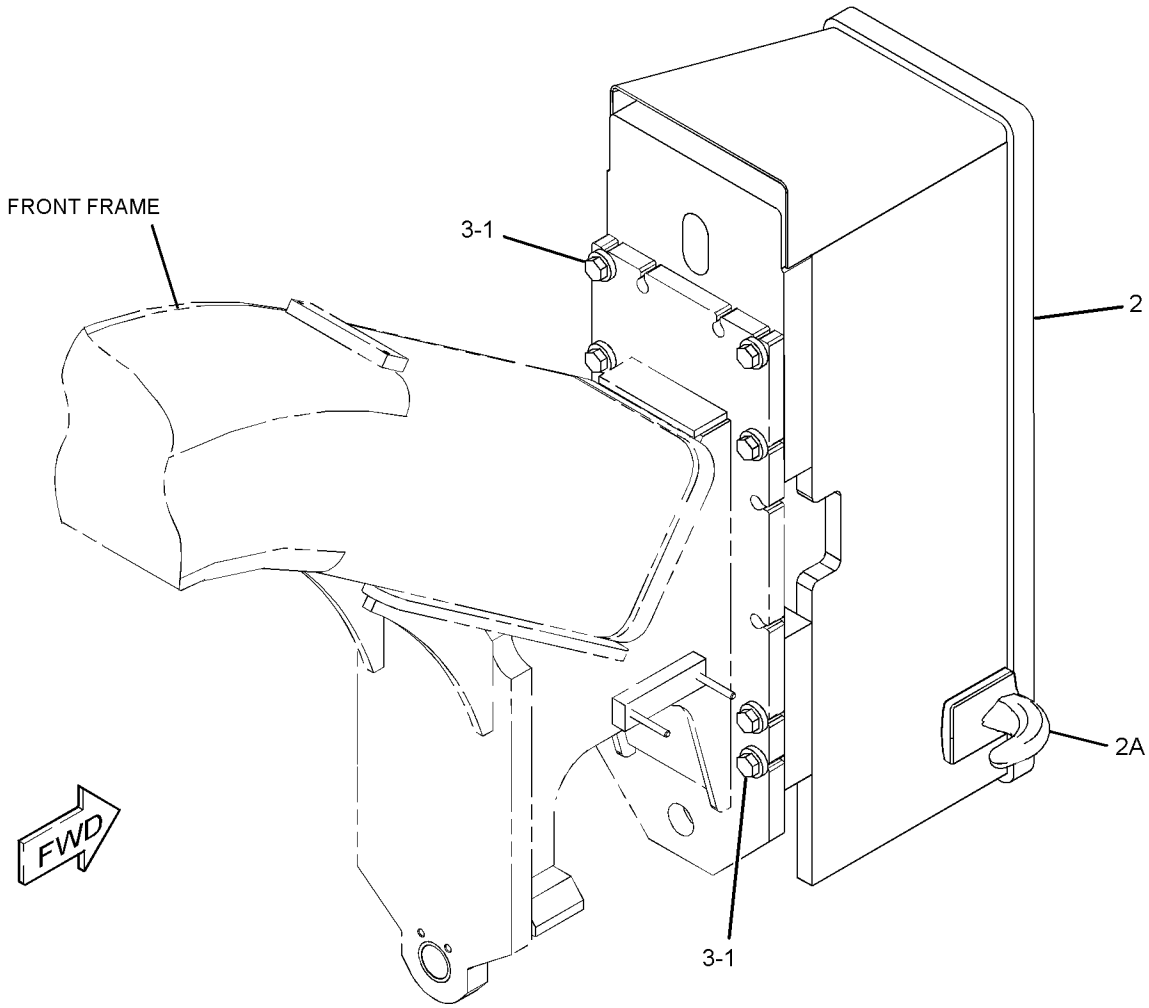

GRAPHIC #1 **<END>** g01339420

WORK TOOLS

233-7149 BIT GP

S/N: B9D1-UP

SMCS-6804 **i02778921**

NOTE	PART NUMBER	QTY	PART NAME 1 2 3 4 5 6 (PRODUCT LEVEL)	SEE PAGE
	232-2142	2	BIT	
	8E-5529	2	BIT-END	
	1J-6762	12	BOLT-PLOW (3/4-10X3-IN)	
	2J-3506	12	NUT-FULL (3/4-10-THD)	

<END>

233-7161 BIT GP

S/N: B9D1-UP

SMCS-6804 **i02778938**

NOTE	PART NUMBER	QTY	PART NAME 1 2 3 4 5 6 (PRODUCT LEVEL)	SEE PAGE
	159-0318	4	ADAPTER (3-FT)	
	6Y-4339	60	BIT AS (30-MM WIDE)	
			(EACH INCLUDES)	
	068-4860	1	RING-RETAINING	
	5J-4771	28	BOLT-PLOW (3/4-10X2.75-IN)	
	2J-3506	28	NUT-FULL (3/4-10-THD)	

<END>

233-7162 BIT GP

S/N: B9D1-UP

SMCS-6804 **i02778942**

NOTE	PART NUMBER	QTY	PART NAME 1 2 3 4 5 6 (PRODUCT LEVEL)	SEE PAGE
	159-0313	4	ADAPTER	
	105-5180	48	BIT AS (23-MM WIDE)	
			(EACH INCLUDES)	
	068-4860	1	RING-RETAINING	
	5J-4771	28	BOLT-PLOW (3/4-10X2.75-IN)	
	2J-3506	28	NUT-FULL (3/4-10-THD)	

<END>

233-7163 BIT GP

S/N: B9D1-UP

SMCS-6804 **i02778948**

NOTE	PART NUMBER	QTY	PART NAME 1 2 3 4 5 6 (PRODUCT LEVEL)	SEE PAGE
	159-0317	2	ADAPTER (4-FT)	
	159-0318	2	ADAPTER (3-FT)	
	6Y-4339	70	BIT AS (30-MM WIDE)	
			(EACH INCLUDES)	
	068-4860	1	RING-RETAINING	
	5J-4771	32	BOLT-PLOW (3/4-10X2.75-IN)	
	2J-3506	32	NUT-FULL (3/4-10-THD)	

<END>

WORK TOOLS

233-7164 BIT GP

S/N: B9D1-UP

SMCS-6804 **i02778843**

NOTE	PART NUMBER	QTY	PART NAME 1 2 3 4 5 6 (PRODUCT LEVEL)	SEE PAGE
	159-0313	2	ADAPTER	
	159-0314	2	ADAPTER	
	105-5180	56	BIT AS (23-MM WIDE)	
			(EACH INCLUDES)	
	068-4860	1	RING-RETAINING	
	5J-4771	32	BOLT-PLOW (3/4-10X2.75-IN)	
	2J-3506	32	NUT-FULL (3/4-10-THD)	

<END>

268-8690 BIT GP

S/N: B9D1-UP

SMCS-6804 **i02787302**

NOTE	PART NUMBER	QTY	PART NAME 1 2 3 4 5 6 (PRODUCT LEVEL)	SEE PAGE
	159-0318	4	ADAPTER (3-FT)	
	105-5180	60	BIT AS (23-MM WIDE)	
			(EACH INCLUDES)	
	068-4860	1	RING-RETAINING	
	5J-4771	28	BOLT-PLOW (3/4-10X2.75-IN)	
	2J-3506	28	NUT-FULL (3/4-10-THD)	

<END>

268-8691 BIT GP

S/N: B9D1-UP

SMCS-6804 **i02787301**

NOTE	PART NUMBER	QTY	PART NAME 1 2 3 4 5 6 (PRODUCT LEVEL)	SEE PAGE
	159-0318	4	ADAPTER (3-FT)	
	105-5183	60	BIT AS (15.5-MM)	
			(EACH INCLUDES)	
	068-4860	1	RING-RETAINING	
	5J-4771	28	BOLT-PLOW (3/4-10X2.75-IN)	
	2J-3506	28	NUT-FULL (3/4-10-THD)	

<END>

268-8692 BIT GP

S/N: B9D1-UP

SMCS-6804 **i02787300**

NOTE	PART NUMBER	QTY	PART NAME 1 2 3 4 5 6 (PRODUCT LEVEL)	SEE PAGE
	159-0313	4	ADAPTER	
	6Y-4339	48	BIT AS (30-MM WIDE)	
			(EACH INCLUDES)	
	068-4860	1	RING-RETAINING	
	5J-4771	28	BOLT-PLOW (3/4-10X2.75-IN)	
	2J-3506	28	NUT-FULL (3/4-10-THD)	

<END>

WORK TOOLS

268-8693 BIT GP

S/N: B9D1-UP

SMCS-6804 **i02787297**

NOTE	PART NUMBER	QTY	PART NAME 1 2 3 4 5 6 (PRODUCT LEVEL)	SEE PAGE
	159-0313	4	ADAPTER	
	105-5183	48	BIT AS (15.5-MM)	
			(EACH INCLUDES)	
	068-4860	1	RING-RETAINING	
	5J-4771	28	BOLT-PLOW (3/4-10X2.75-IN)	
	2J-3506	28	NUT-FULL (3/4-10-THD)	

<END>

268-8694 BIT GP

S/N: B9D1-UP

SMCS-6804 **i02787294**

NOTE	PART NUMBER	QTY	PART NAME 1 2 3 4 5 6 (PRODUCT LEVEL)	SEE PAGE
	159-0317	2	ADAPTER (4-FT)	
	159-0318	2	ADAPTER (3-FT)	
	105-5180	70	BIT AS (23-MM WIDE)	
			(EACH INCLUDES)	
	068-4860	1	RING-RETAINING	
	5J-4771	32	BOLT-PLOW (3/4-10X2.75-IN)	
	2J-3506	32	NUT-FULL (3/4-10-THD)	

<END>

268-8695 BIT GP

S/N: B9D1-UP

SMCS-6804 **i02787291**

NOTE	PART NUMBER	QTY	PART NAME 1 2 3 4 5 6 (PRODUCT LEVEL)	SEE PAGE
	159-0317	2	ADAPTER (4-FT)	
	159-0318	2	ADAPTER (3-FT)	
	105-5183	70	BIT AS (15.5-MM)	
			(EACH INCLUDES)	
	068-4860	1	RING-RETAINING	
	5J-4771	32	BOLT-PLOW (3/4-10X2.75-IN)	
	2J-3506	32	NUT-FULL (3/4-10-THD)	

<END>

WORK TOOLS

268-8696 BIT GP

S/N: B9D1-UP

SMCS-6804 **i02787287**

NOTE	PART NUMBER	QTY	PART NAME 1 2 3 4 5 6 (PRODUCT LEVEL)	SEE PAGE
	159-0313	2	ADAPTER (3-FT)	
	159-0314	2	ADAPTER (4-FT)	
	6Y-4339	56	BIT AS (30-MM WIDE)	
			(EACH INCLUDES)	
	068-4860	1	RING-RETAINING	
	5J-4771	32	BOLT-PLOW (3/4-10X2.75-IN)	
	2J-3506	32	NUT-FULL (3/4-10-THD)	

<END>

268-8697 BIT GP

S/N: B9D1-UP

SMCS-6804 **i02787278**

NOTE	PART NUMBER	QTY	PART NAME 1 2 3 4 5 6 (PRODUCT LEVEL)	SEE PAGE
	159-0313	2	ADAPTER (3-FT)	
	159-0314	2	ADAPTER (4-FT)	
	105-5183	56	BIT AS (15.5-MM)	
			(EACH INCLUDES)	
	068-4860	1	RING-RETAINING	
	5J-4771	32	BOLT-PLOW (3/4-10X2.75-IN)	
	2J-3506	32	NUT-FULL (3/4-10-THD)	

<END>

233-7148 BIT GP-END

S/N: B9D1-UP

CANNOT BE USED WITH 233-7149—PAGE 708, 233-7160—PAGE 711

SMCS-6804 **i02778901**

NOTE	PART NUMBER	QTY	PART NAME 1 2 3 4 5 6 (PRODUCT LEVEL)	SEE PAGE
	8E-5529	2	BIT-END	
	5J-4773	10	BOLT-PLOW (3/4-10X2.5-IN)	
	2J-3506	10	NUT-FULL (3/4-10-THD)	

<END>

233-7160 BIT GP-END

S/N: B9D1-UP

SMCS-6804 **i02778931**

NOTE	PART NUMBER	QTY	PART NAME 1 2 3 4 5 6 (PRODUCT LEVEL)	SEE PAGE
	6Y-2805	2	BIT-END	
	8E-5529	2	BIT-END	
	1J-6762	4	BOLT-PLOW (3/4-10X3-IN)	
	5F-8933	8	BOLT-PLOW (3/4-10X3.75-IN)	
	2J-3506	12	NUT-FULL (3/4-10-THD)	

<END>

WORK TOOLS

243-6702 BLADE GP

S/N: B9D1-UP

12-FT

SMCS-6151 **i02782252**

NOTE	REF NO	GRAPHIC REF	PART NUMBER	QTY	PART NAME 1 2 3 4 5 6 (PRODUCT LEVEL)	SEE PAGE
	1	1	**260-7792**	1	MOLDBOARD AS	

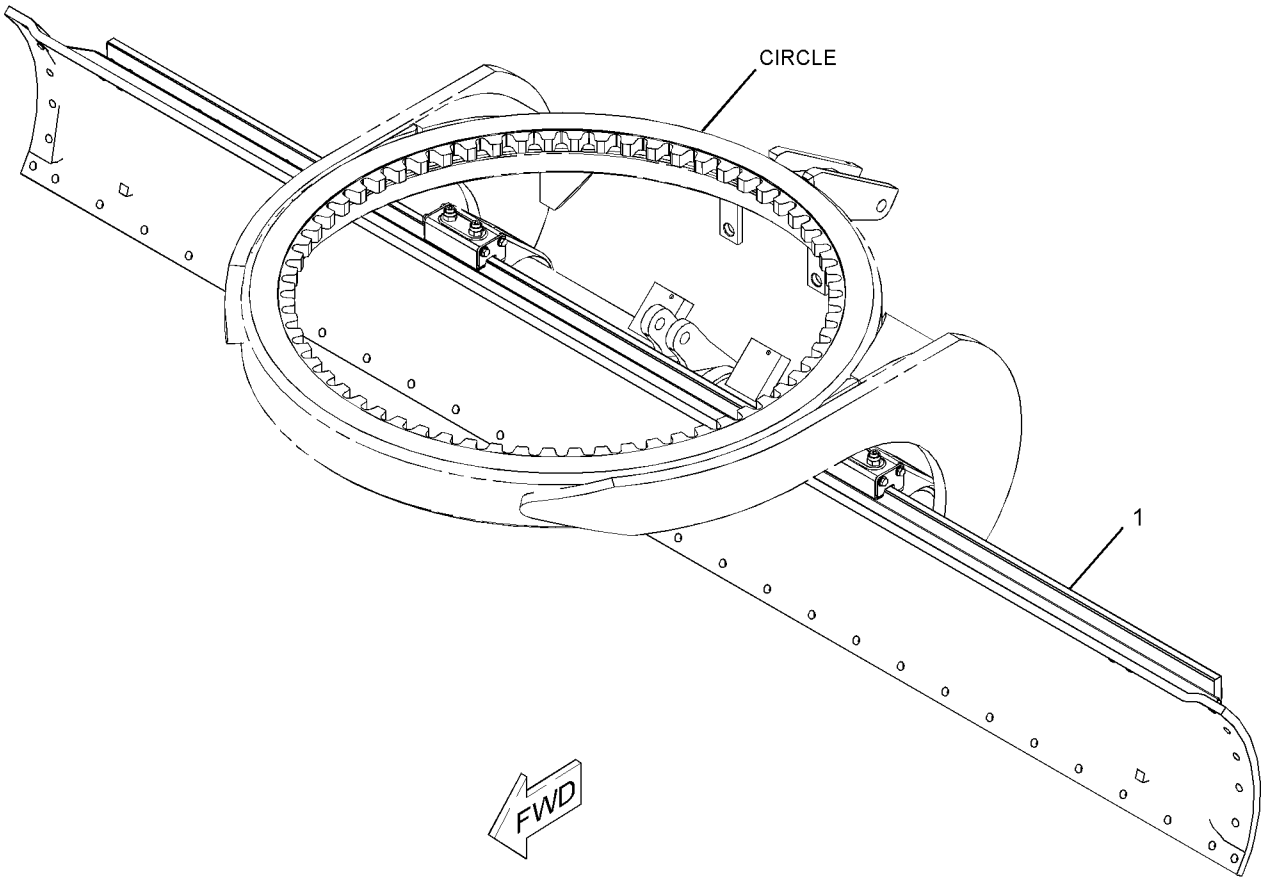

GRAPHIC #1 **<END>** g01129892

WORK TOOLS

243-6703 BLADE GP

S/N: B9D1-UP
14-FT X 24-IN

SMCS-6151 **i02782361**

NOTE	REF NO	GRAPHIC REF	PART NUMBER	QTY	PART NAME 1 2 3 4 5 6 (PRODUCT LEVEL)	SEE PAGE
	1	1	**260-7793**	1	MOLDBOARD AS	

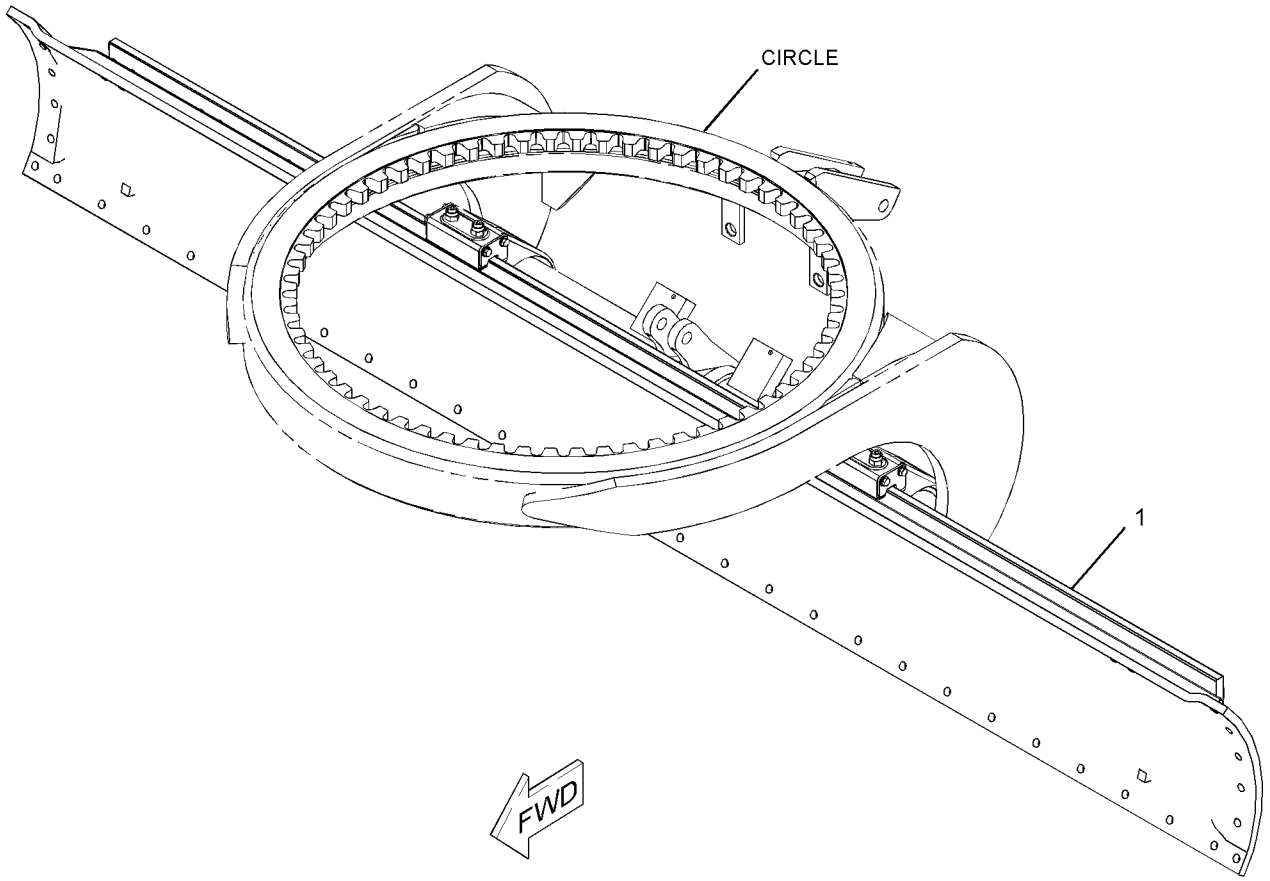

GRAPHIC #1 **<END>** g01129892

WORK TOOLS

243-6704 BLADE GP

S/N: B9D1-UP
14-FT X 27-IN

SMCS-6151 **i02782467**

NOTE	REF NO	GRAPHIC REF	PART NUMBER	QTY	PART NAME 1 2 3 4 5 6 (PRODUCT LEVEL)	SEE PAGE
	1	1	**260-7794**	1	MOLDBOARD AS	

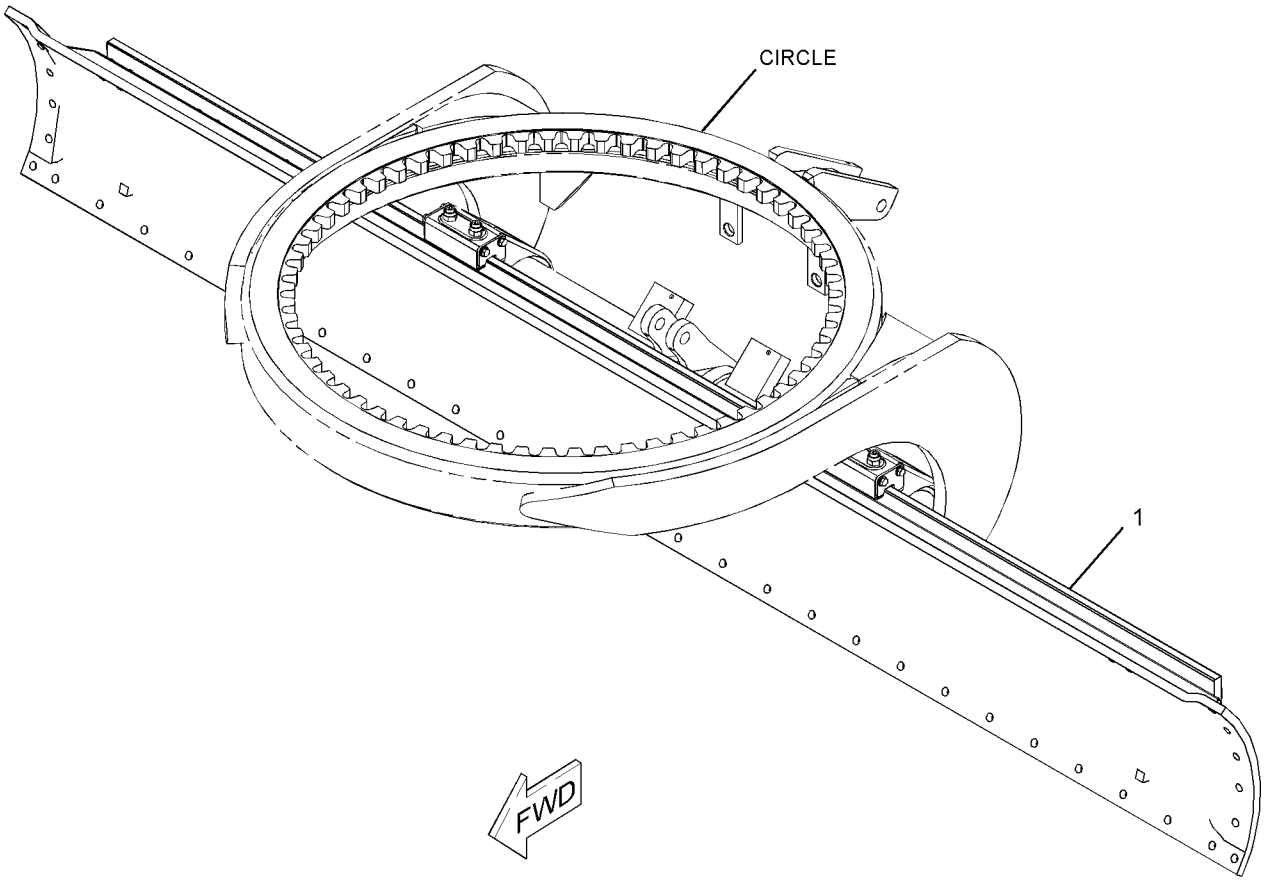

GRAPHIC #1 **<END>** g01129893

152-1353 BLADE GP-BULLDOZER—STRAIGHT BLADE

S/N: B9D1-UP

SMCS-6060 **i02774961**

NOTE	REF NO	GRAPHIC REF	PART NUMBER	QTY	PART NAME 1 2 3 4 5 6 (PRODUCT LEVEL)	SEE PAGE
	1	1	**1D-4610**	4	BOLT (3/4-10X3.25-IN)	
	2	1	**4T-3028**	3	EDGE-CUTTING	
	3	1	**4T-3051**	1	BIT-END	
	4	1	**4T-3052**	1	BIT-END	
	5	1	**137-4234**	1	PLATE-IDENTIFICATION (WORK TOOL)	
	6	1	**171-4808**	2	BASE AS	
	7	1	**173-1172**	2	SHOE AS	
	8	1	**179-1633**	4	PIN	
Y	9	1	*258-4500*	1	BLADE GP-BULLDOZER (STRAIGHT BLADE)	716
	10	1	**2J-3506**	4	NUT-FULL (3/4-10-THD)	
	11	1	**3B-5301**	4	PIN-COTTER	
	12	1	**3F-5108**	24	BOLT-PLOW (5/8-11X2.25-IN)	
	13	1	**4K-0367**	24	NUT-FULL (5/8-11-THD)	
	14	1	**5P-8248**	4	WASHER-HARD (20X36.5X3.5-MM THK)	

Y-SEPARATE ILLUSTRATION

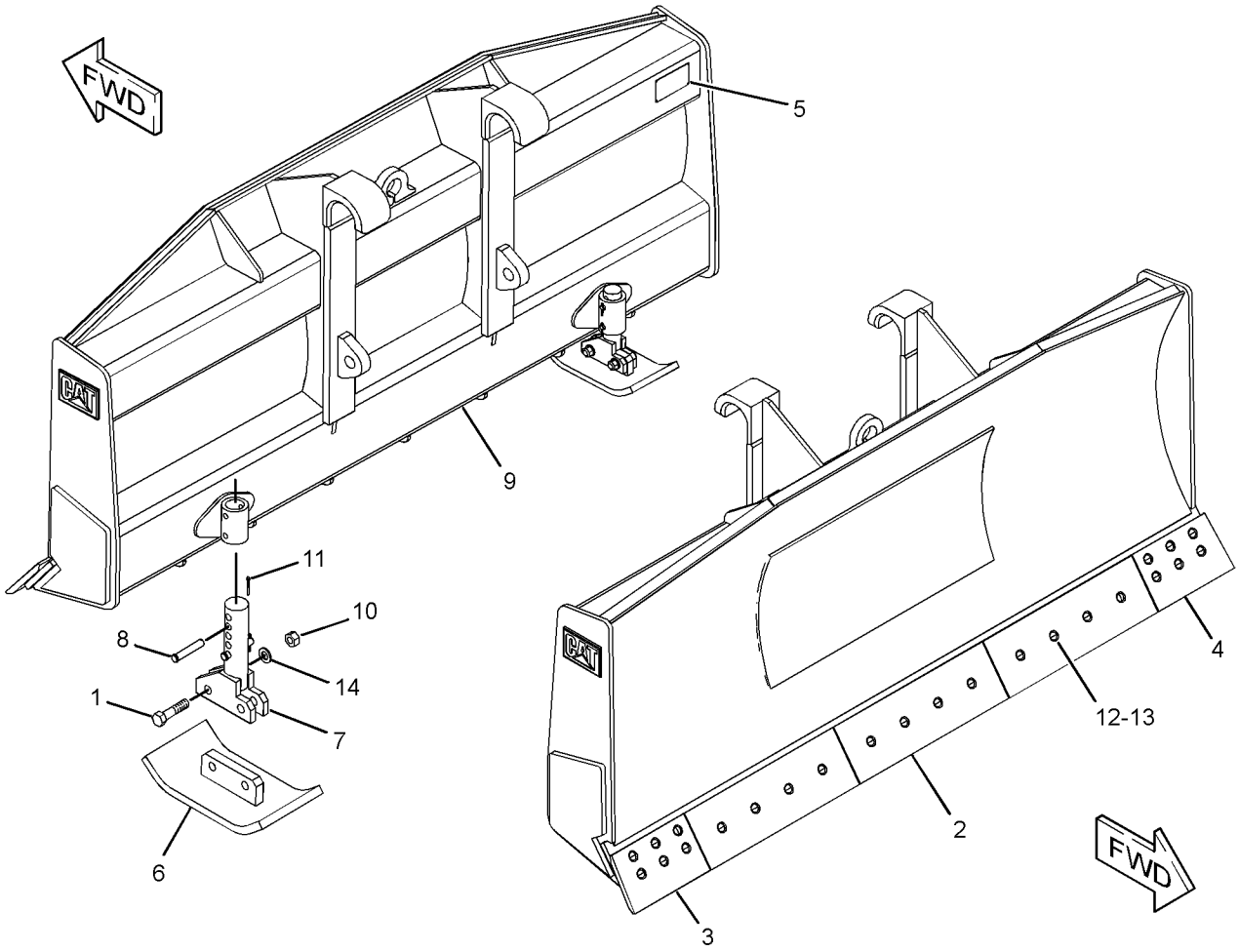

GRAPHIC #1 **<END>** g01161619

WORK TOOLS

258-4500 BLADE GP-BULLDOZER

S/N: B9D1-UP

PART OF 152-1353 BLADE GP-BULLDOZER

SMCS-6060 **i02774943**

NOTE	REF NO	GRAPHIC REF	PART NUMBER	QTY	PART NAME 1 2 3 4 5 6 (PRODUCT LEVEL)	SEE PAGE
	1	1	**173-1173**	2	TUBE	
	2	1	**173-1180**	1	PLATE	
	3	1	**173-1181**	1	PLATE	
	4	1	**173-1186**	2	PLATE-SIDE WEAR	
	5	1	**2C-9259**	2	PLATE-IDENTIFICATION (CAT)	

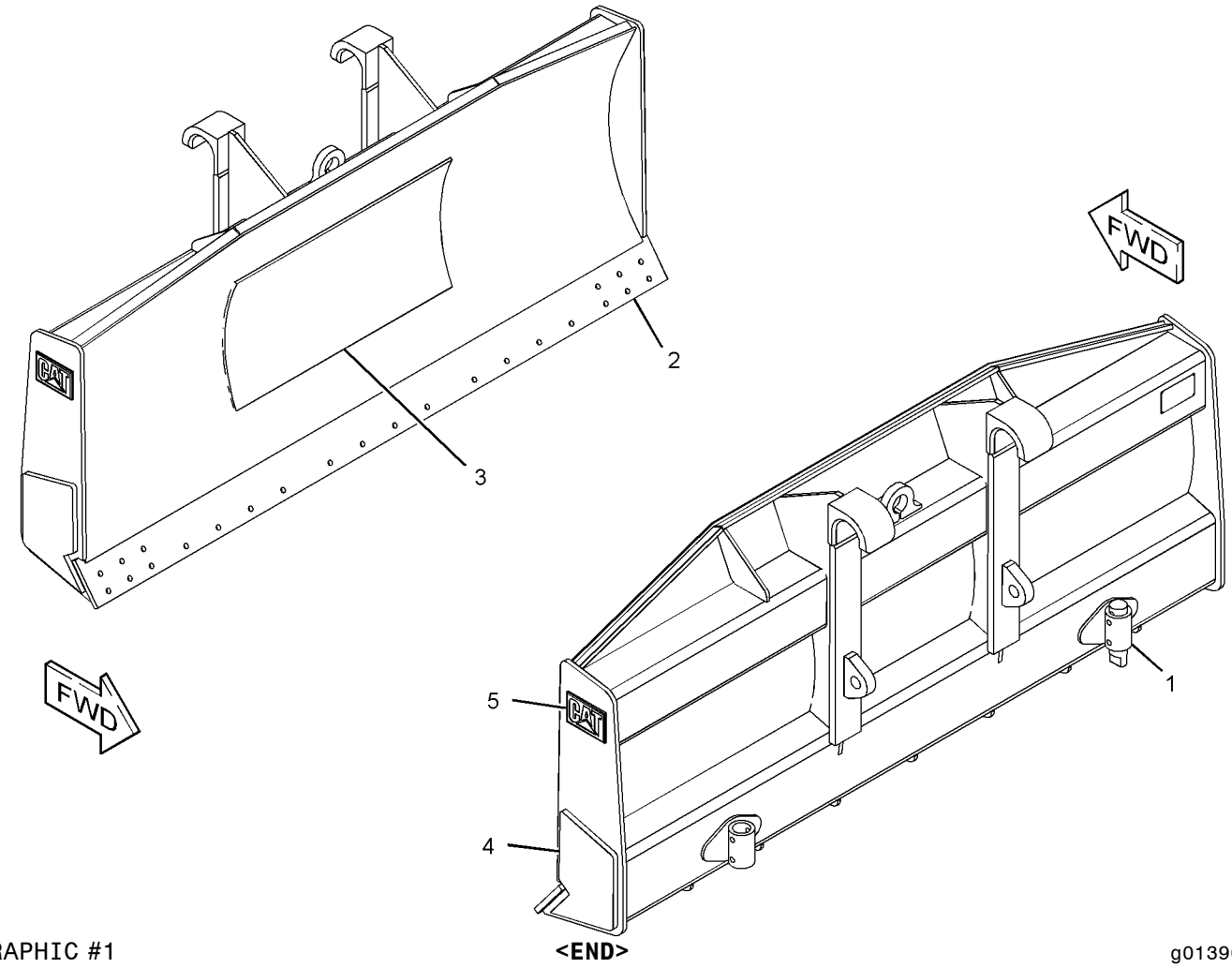

GRAPHIC #1

<END>

g01390221

293-5559 BRACE GP—WORK TOOL LIFT

S/N: B9D1-UP

PART OF 293-5556 LIFT GP-WORK TOOL

SMCS-0635 **i02788423**

NOTE	REF NO	GRAPHIC REF	PART NUMBER	QTY	PART NAME 1 2 3 4 5 6 (PRODUCT LEVEL)	SEE PAGE
	1	1	**269-8775**	2	BRACE AS	
					(EACH INCLUDES)	
M		1	**8T-6462**	1	BOSS-WELD (M10X1.5X25-MM OAL)	
M	2	1	**112-3927**	6	BOLT (M20X2.5X90-MM)	
	3	1	**267-3508**	28	WASHER-HARD (35X22X3.5-MM THK)	
	4	1	**286-0466**	8	BOLT (M20X2.5X100-MM)	
M	5	1	**286-0742**	14	NUT (M20X2.5-THD)	
M	6	1	**6V-7676**	4	NUT (M24X3-THD)	
M	7	1	**7X-2489**	4	BOLT (M24X3X100-MM)	
	8	1	**8T-4167**	4	WASHER-HARD (26X44X4-MM THK)	

M-METRIC PART

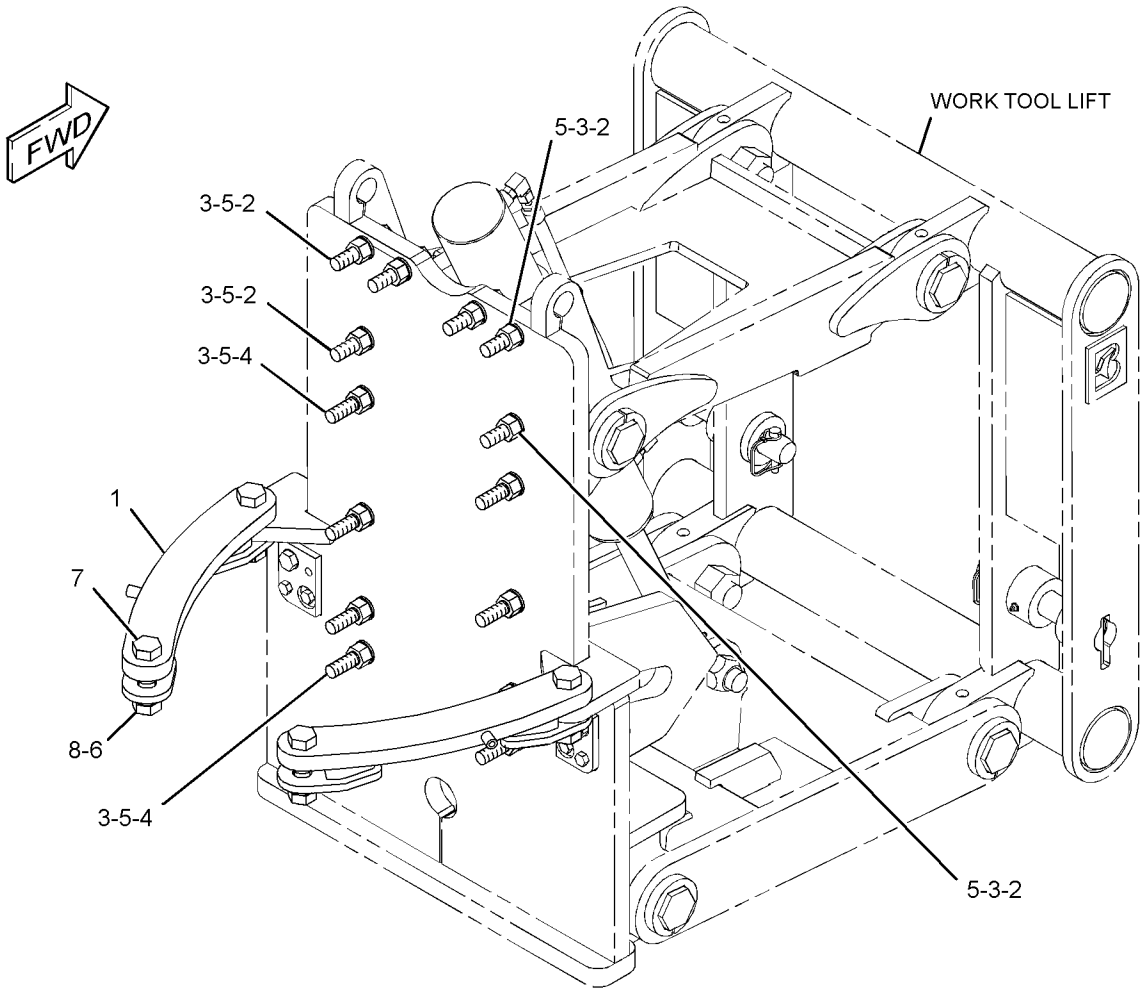

GRAPHIC #1 **<END>** g01325650

WORK TOOLS

116-0379 BRACKET GP-SCARIFIER

S/N: B9D1-UP

PART OF 108-1104, 113-0704 SCARIFIER AR

SMCS-6162 **i01066613**

NOTE	REF NO	GRAPHIC REF	PART NUMBER	QTY	PART NAME 1 2 3 4 5 6 (PRODUCT LEVEL)	SEE PAGE
	1	1	**8W-0684**	1	BRACKET AS	
	2	1	**8W-0681**	1	PLATE	

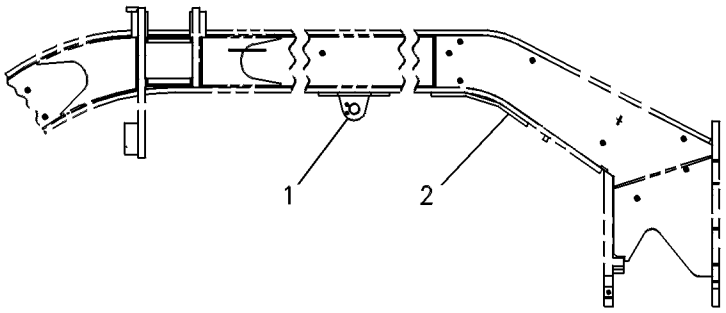

GRAPHIC #1 **<END>** g00108689

WORK TOOLS

256-0783 BRACKET GP-SCARIFIER

S/N: B9D1-UP

SMCS-6162 **i02785214**

NOTE	REF NO	GRAPHIC REF	PART NUMBER	QTY	PART NAME 1 2 3 4 5 6 (PRODUCT LEVEL)	SEE PAGE
	1	1	**261-4175**	1	BRACKET AS	
	2	1	**305-5337**	1	BRACKET AS	

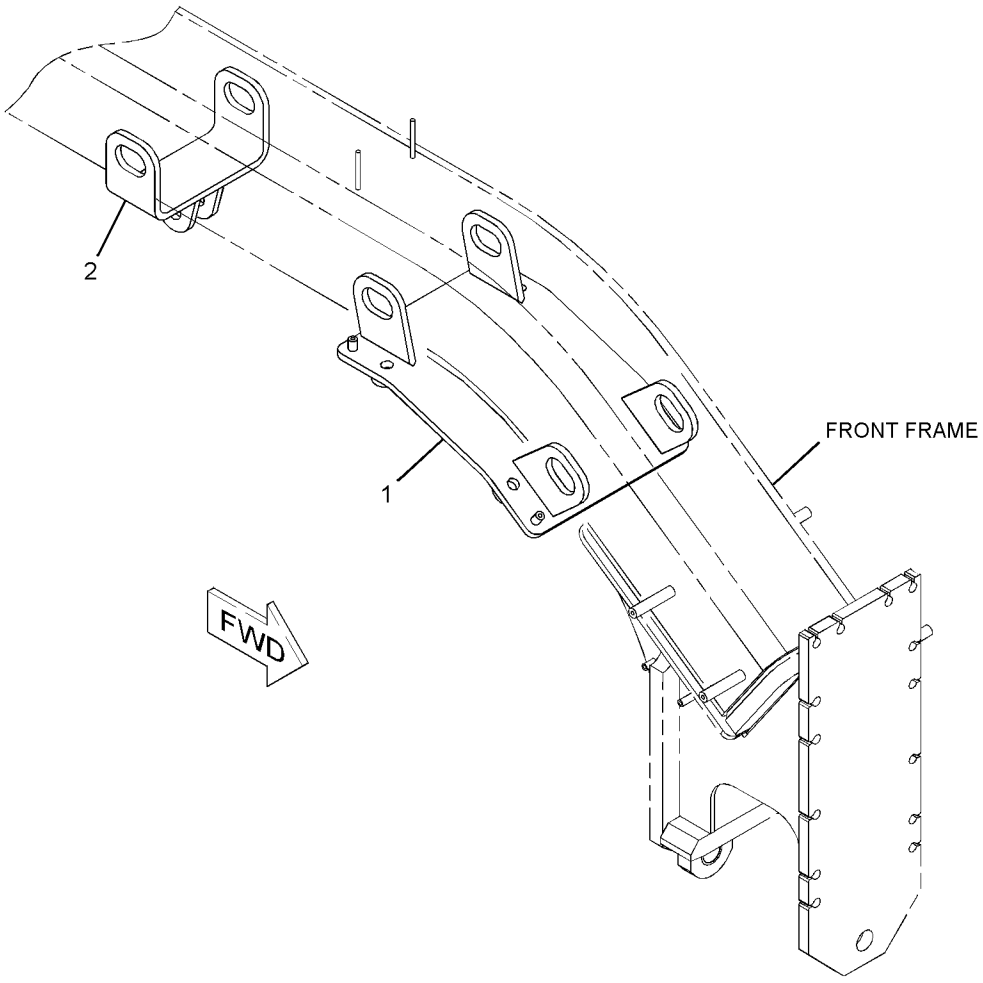

GRAPHIC #1 **<END>** g01372625

217-3501 CYLINDER GP-HYDRAULIC—WORK TOOL LIFT

S/N: B9D1-UP

PART OF 293-5556 LIFT GP-WORK TOOL

SMCS-7562 **i02788553**

NOTE	REF NO	GRAPHIC REF	PART NUMBER	QTY	PART NAME 1 2 3 4 5 6 (PRODUCT LEVEL)	SEE PAGE
	1	1	**2K-7468**	1	LOCKNUT (1-1/4-12-THD)	
	2	1	**4T-6907**	1	RING-WEAR	
	3	1	**4T-8054**	1	SEAL AS	
	4	1	**7J-9885**	1	RING-WEAR	
	5	1	**167-2190**	1	SEAL AS-BUFFER	
	6	1	**219-7242**	1	TUBE AS	
	7	1	**219-7243**	1	ROD AS	
	8	1	**219-7244**	1	PISTON	
	9	1	**219-7245**	1	HEAD	
	10	1	**231-3539**	1	SEAL-WIPER	
	11	1	**167-2300**	1	SEAL-U-CUP	
	12	1	**2H-3931**	2	SEAL-O-RING	
	13	1	**4J-9224**	1	RING-BACKUP	

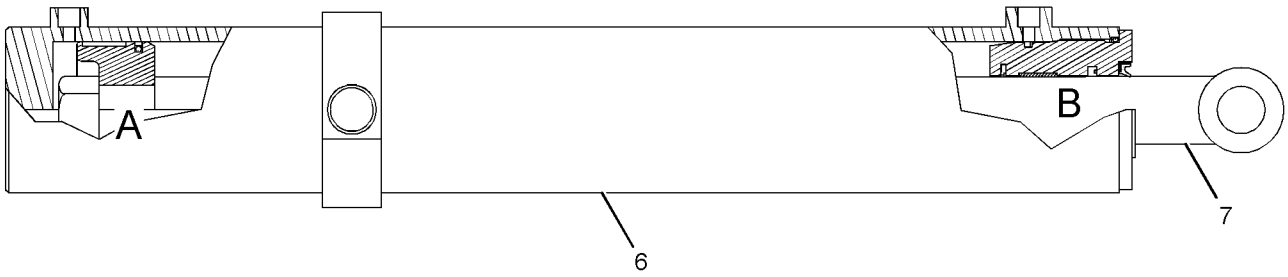

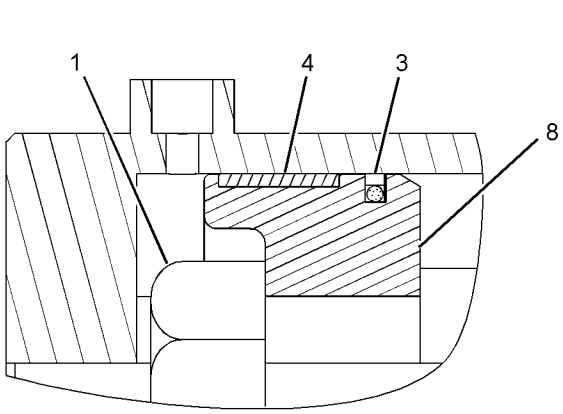

VIEW OF AREA A

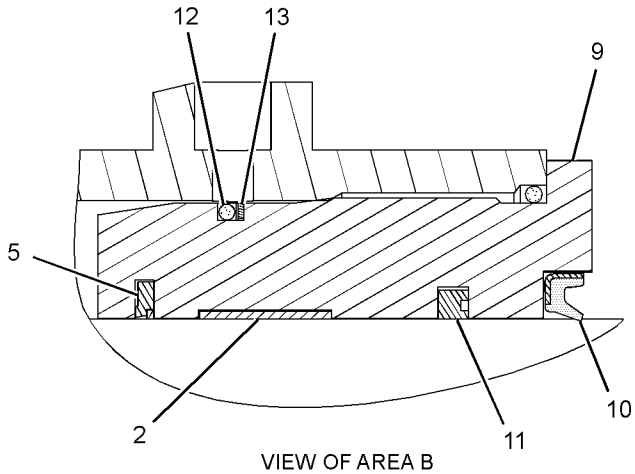

VIEW OF AREA B

GRAPHIC #1 **<END>** g01159664

WORK TOOLS

233-7139 EDGE GP-CUTTING

S/N: B9D1-UP

SMCS-6801 **i02778777**

NOTE	PART NUMBER	QTY	PART NAME 1 2 3 4 5 6 (PRODUCT LEVEL)	SEE PAGE
	5J-4773	26	BOLT-PLOW (3/4-10X2.5-IN)	
	9J-3657	2	EDGE-CUTTING (6-FT EACH)	
	2J-3506	26	NUT-FULL (3/4-10-THD)	

<END>

233-7140 EDGE GP-CUTTING

S/N: B9D1-UP

SMCS-6801 **i02778785**

NOTE	PART NUMBER	QTY	PART NAME 1 2 3 4 5 6 (PRODUCT LEVEL)	SEE PAGE
	5J-4773	26	BOLT-PLOW (3/4-10X2.5-IN)	
	7D-1576	2	EDGE-CUTTING (6-FT EACH)	
	2J-3506	26	NUT-FULL (3/4-10-THD)	

<END>

233-7141 EDGE GP-CUTTING

S/N: B9D1-UP

SMCS-6801 **i02778807**

NOTE	PART NUMBER	QTY	PART NAME 1 2 3 4 5 6 (PRODUCT LEVEL)	SEE PAGE
	5J-4773	26	BOLT-PLOW (3/4-10X2.5-IN)	
	9J-7701	2	EDGE-CUTTING (6-FT EACH)	
	2J-3506	26	NUT-FULL (3/4-10-THD)	

<END>

WORK TOOLS

233-7142 EDGE GP-CUTTING

S/N: B9D1-UP

SMCS-6801 **i02778756**

NOTE	REF NO	GRAPHIC REF	PART NUMBER	QTY	PART NAME 1 2 3 4 5 6 (PRODUCT LEVEL)	SEE PAGE
	1	1	**9J-3658**	2	EDGE-CUTTING (7-FT EACH)	
	2	1	**2J-3506**	30	NUT-FULL (3/4-10-THD)	
	3	1	**5J-4773**	30	BOLT-PLOW (3/4-10X2.5-IN)	

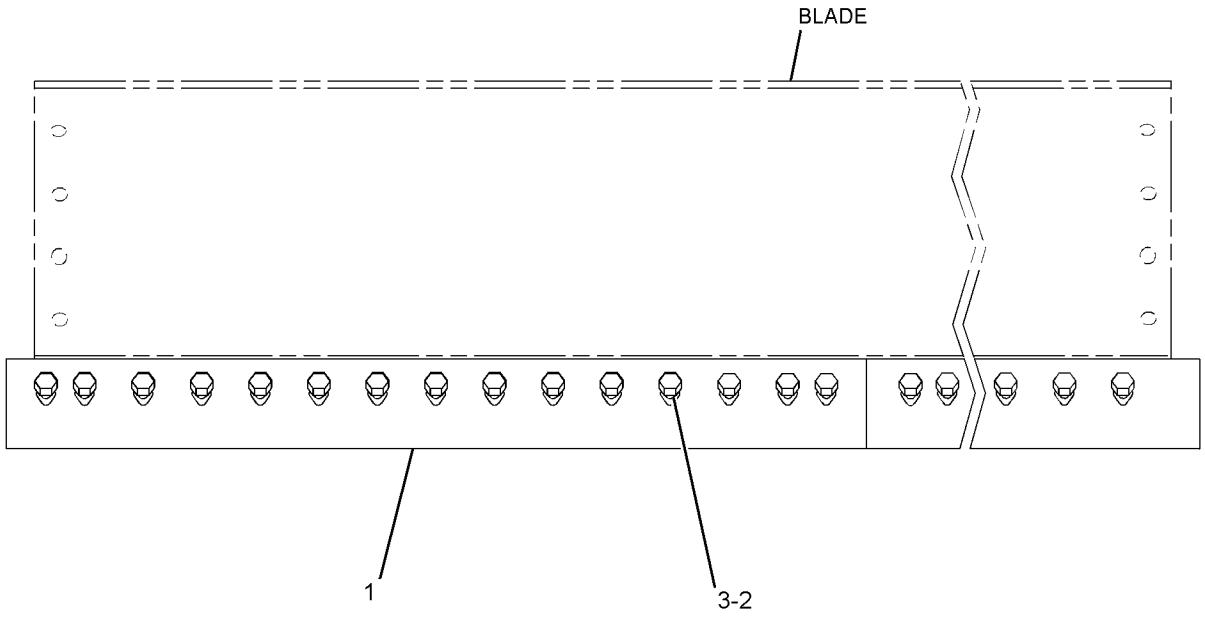

GRAPHIC #1 **<END>** g01161796

WORK TOOLS

233-7143 EDGE GP-CUTTING

S/N: B9D1-UP

SMCS-6801 **i02778871**

NOTE	PART NUMBER	QTY	PART NAME 1 2 3 4 5 6 (PRODUCT LEVEL)	SEE PAGE
	5J-4773	30	BOLT-PLOW (3/4-10X2.5-IN)	
	7D-1577	2	EDGE-CUTTING (7-FT EACH)	
	2J-3506	30	NUT-FULL (3/4-10-THD)	

<END>

233-7144 EDGE GP-CUTTING

S/N: B9D1-UP

SMCS-6801 **i02778881**

NOTE	PART NUMBER	QTY	PART NAME 1 2 3 4 5 6 (PRODUCT LEVEL)	SEE PAGE
	5J-4773	30	BOLT-PLOW (3/4-10X2.5-IN)	
	7D-1158	2	EDGE-CUTTING (7-FT EACH)	
	2J-3506	30	NUT-FULL (3/4-10-THD)	

<END>

WORK TOOLS

110-5326 EXTENSION GP-BLADE–RH–2 FT

S/N: B9D1-UP

SMCS-6173 **i01230874**

NOTE	REF NO	GRAPHIC REF	PART NUMBER	QTY	PART NAME 1 2 3 4 5 6 (PRODUCT LEVEL)	SEE PAGE
	1	1	**5J-4773**	6	BOLT-PLOW (3/4-10X2.5-IN)	
	2	1	**2J-3506**	16	NUT-FULL (3/4-10-THD)	
	3	1	**176-5639**	1	PLATE AS	
	4	1	**5F-8933**	10	BOLT-PLOW (3/4-10X3.75-IN)	
	5	1	**110-5336**	1	ANGLE AS	
	6	1	**110-5334**	3	SPACER (3-MM THK)	
	7	1	**3G-2165**	1	EDGE-CUTTING	
	8	1	**133-7523**	1	EXTENSION-RH	
	9	1	**9X-8885**	2	BOLT (3/4-10X2.25-IN)	
	10	1	**2S-0115**	2	WASHER-HARD (20X36.5X5-MM THK)	
B	11	1	**176-5642**	1	SPACER (2-MM THK)	
B	12	1	**176-5643**	2	SPACER (1-MM THK)	

B-USE AS REQUIRED

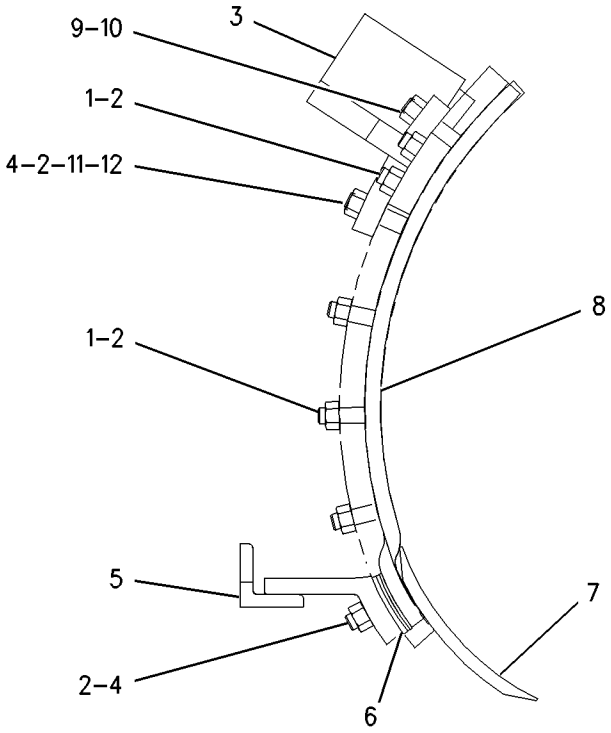

GRAPHIC #1 **<END>** g00638547

110-5327 EXTENSION GP-BLADE–LH–2 FT

S/N: B9D1-UP

SMCS-6173 **i01230922**

NOTE	REF NO	GRAPHIC REF	PART NUMBER	QTY	PART NAME 1 2 3 4 5 6 (PRODUCT LEVEL)	SEE PAGE
	1	1	**133-7524**	1	EXTENSION-LH	
	2	1	**3G-2165**	1	EDGE-CUTTING	
	3	1	**176-5638**	1	PLATE AS	
	4	1	**110-5334**	3	SPACER (3-MM THK)	
	5	1	**110-5335**	1	ANGLE AS	
	6	1	**5F-8933**	10	BOLT-PLOW (3/4-10X3.75-IN)	
	7	1	**2J-3506**	16	NUT-FULL (3/4-10-THD)	
	8	1	**5J-4773**	6	BOLT-PLOW (3/4-10X2.5-IN)	
	9	1	**9X-8885**	2	BOLT (3/4-10X2.25-IN)	
	10	1	**2S-0115**	2	WASHER-HARD (20X36.5X5-MM THK)	
B	11	1	**176-5642**	1	SPACER (2-MM THK)	
B	12	1	**176-5643**	2	SPACER (1-MM THK)	

B-USE AS REQUIRED

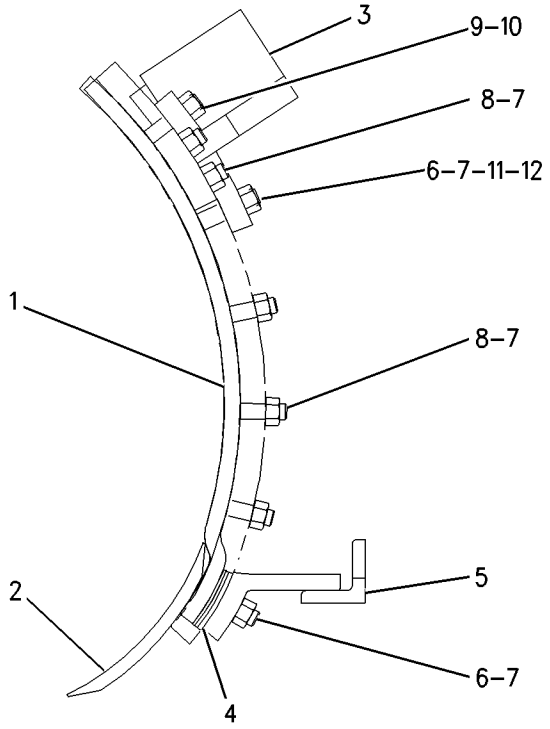

GRAPHIC #1 **<END>** g00638560

WORK TOOLS

243-6685 EXTENSION GP-BLADE—RH

S/N: B9D1-UP

2-FT

SMCS-6173 **i02782233**

NOTE	REF NO	GRAPHIC REF	PART NUMBER	QTY	PART NAME 1 2 3 4 5 6 (PRODUCT LEVEL)	SEE PAGE
	1	1	**110-5334**	2	SPACER (3-MM THK)	
	2	1	**110-5336**	1	ANGLE AS	
B	3	1	**176-5642**	1	SPACER (2-MM THK)	
B	4	1	**176-5643**	2	SPACER (1-MM THK)	
	5	1	**232-2146**	1	EDGE-CUTTING	
	6	1	**243-6683**	1	EXTENSION	
	7	1	**243-6684**	1	PLATE AS	
	8	1	**2J-3506**	15	NUT-FULL (3/4-10-THD)	
	9	1	**2S-0115**	2	WASHER-HARD (20X36.5X5-MM THK)	
	10	1	**5F-8933**	10	BOLT-PLOW (3/4-10X3.75-IN)	
	11	1	**5J-4773**	5	BOLT-PLOW (3/4-10X2.5-IN)	
	12	1	**9X-8885**	2	BOLT (3/4-10X2.25-IN)	

B-USE AS REQUIRED

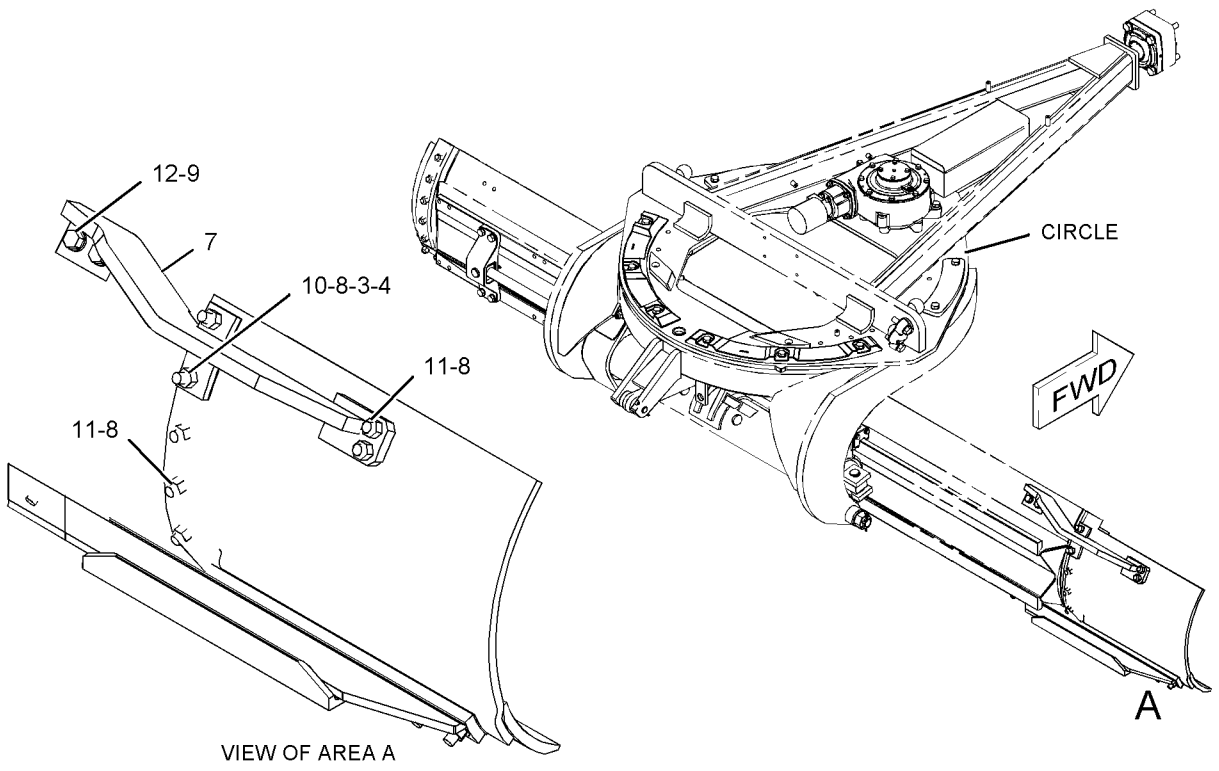

VIEW OF AREA A

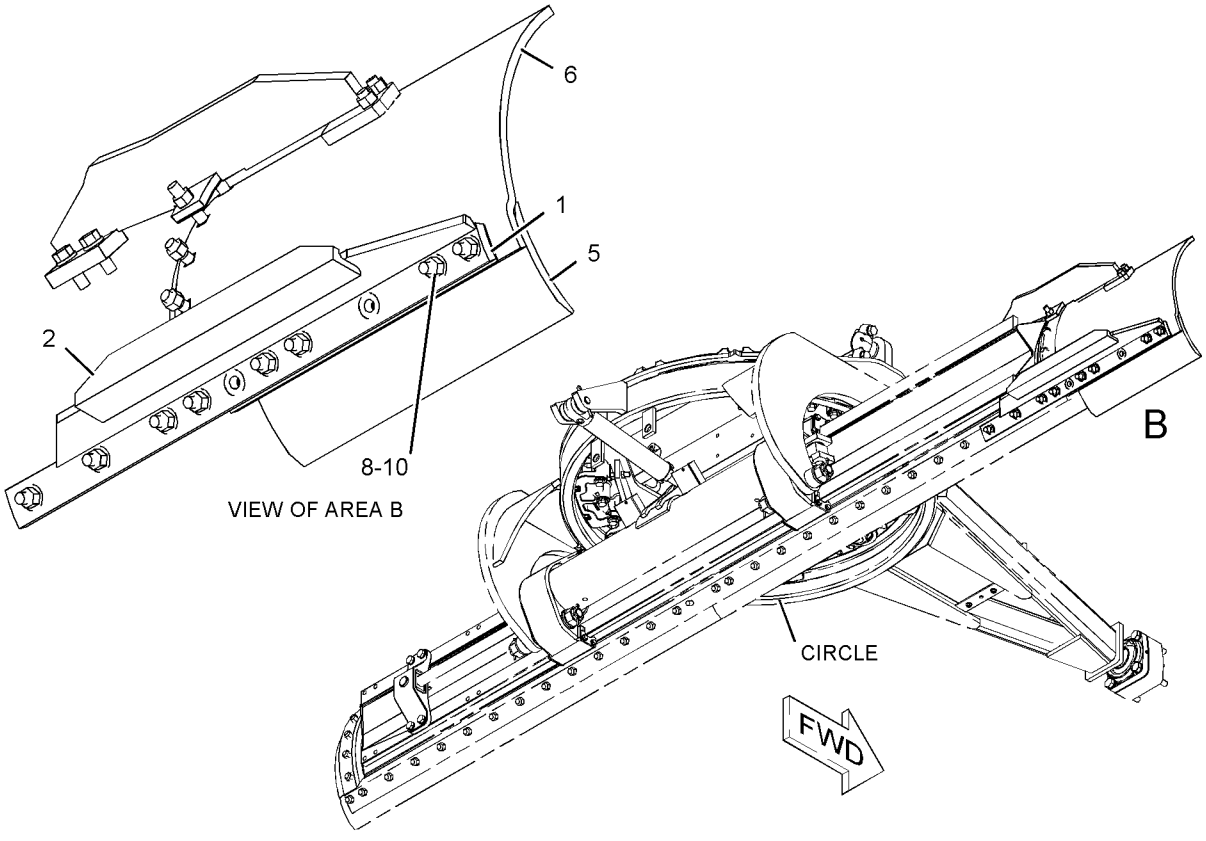

VIEW OF AREA B

GRAPHIC #1 **<END>** g01129959

WORK TOOLS

250-0615 EXTENSION GP-BLADE—LH

S/N: B9D1-UP

2-FT

SMCS-6173 **i02783245**

NOTE	REF NO	GRAPHIC REF	PART NUMBER	QTY	PART NAME 1 2 3 4 5 6 (PRODUCT LEVEL)	SEE PAGE
	1	1	**110-5334**	2	SPACER (3-MM THK)	
	2	1	**110-5335**	1	ANGLE AS	
B	3	1	**176-5642**	1	SPACER (2-MM THK)	
B	4	1	**176-5643**	2	SPACER (1-MM THK)	
	5	1	**232-2146**	1	EDGE-CUTTING	
	6	1	**250-0613**	1	EXTENSION	
	7	1	**250-0614**	1	PLATE AS	
	8	1	**2J-3506**	15	NUT-FULL (3/4-10-THD)	
	9	1	**2S-0115**	2	WASHER-HARD (20X36.5X5-MM THK)	
	10	1	**5F-8933**	10	BOLT-PLOW (3/4-10X3.75-IN)	
	11	1	**5J-4773**	5	BOLT-PLOW (3/4-10X2.5-IN)	
	12	1	**9X-8885**	2	BOLT (3/4-10X2.25-IN)	

B-USE AS REQUIRED

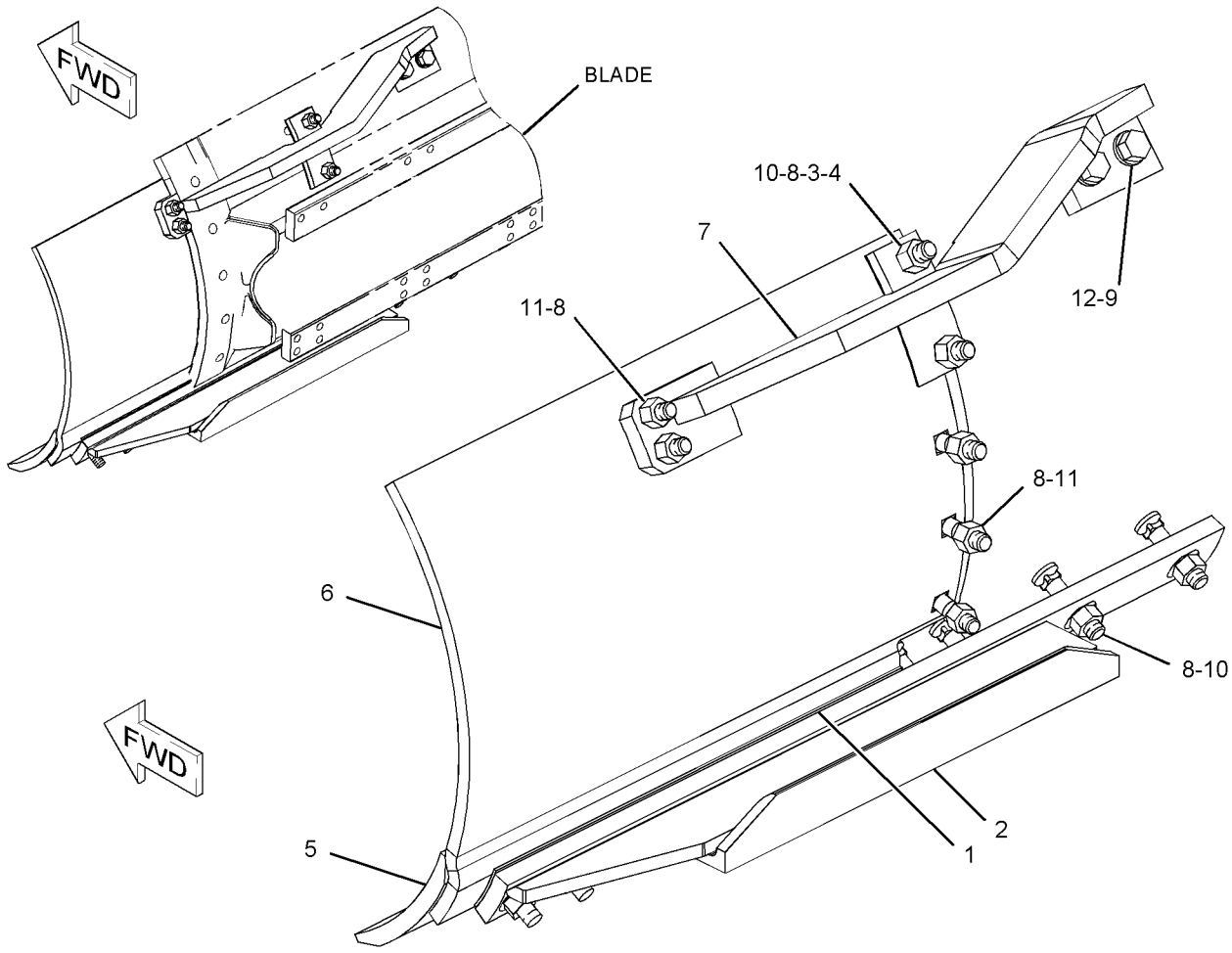

GRAPHIC #1 **<END>** g01134922

WORK TOOLS

261-8536 LIFT GP-BLADE

S/N: B9D1-UP

PART OF 234-7721 COMMON AR

SMCS-6151 **i02780365**

NOTE	REF NO	GRAPHIC REF	PART NUMBER	QTY	PART NAME 1 2 3 4 5 6 (PRODUCT LEVEL)	SEE PAGE
	1	1	**7D-8875**	4	WASHER-THRUST	
	2	1	**7D-8878**	4	WASHER-THRUST	
B	3	1	**7D-8879**	8	SHIM (0.127-MM THK)	
B	4	1	**7D-8881**	6	SHIM (0.254-MM THK)	
B	5	1	**7D-8882**	2	SHIM (0.508-MM THK)	
B	6	2	**8D-4336**	2	WASHER-THRUST (3.02X5.75X0.08-MM THK)	
	7	2	**8X-5106**	1	STUD-BALL	
	8	1	**8X-5107**	1	PIN	
	9	1	**8X-5109**	1	BAR AS	
		1	**8X-5108**	2	BEARING-SLEEVE	
		1	**124-5836**	5	BUSHING	
B	10	2	**123-8187**	2	WASHER-THRUST (76.6X146X1-MM THK)	
M	11	2	**201-8034**	6	BOLT (M20X2.5X120-MM)	
	12	1	**259-2627**	4	BOLT	
	13	2	**259-4483**	2	PIN	
	14	2	**259-4492**	2	LOCK	
	15	1	**261-8537**	1	ARM AS (LH)	
		1	**7D-8889**	1	BEARING (76.35-MM ID)	
		1	**8D-8168**	1	BEARING (63.65-MM ID)	
	16	1	**261-8538**	1	ARM AS (RH)	
		1	**7D-8889**	1	BEARING (76.35-MM ID)	
		1	**8D-8168**	1	BEARING (63.65-MM ID)	
	17	1	**261-8541**	2	YOKE AS	
					(EACH INCLUDES)	
		1	**2G-8233**	1	RING	
	18	1	**261-8543**	2	RETAINER	
	19	2	**261-8545**	1	PLATE	
	20	2	**261-8547**	2	LOCK	
M	21	2	**288-0735**	1	BOLT (M12X1.75X60-MM)	
M	22	1,2	**112-3926**	4	BOLT (M20X2.5X110-MM)	
	23	1,2	**267-3508**	16	WASHER-HARD (35X22X3.5-MM THK)	
	24	1,2	**279-6632**	5	WASHER (13.5X25.5X3-MM THK)	
M	25	2	**286-0742**	6	NUT (M20X2.5-THD)	
	26	1,2	**3P-1461**	4	SEAL-LIP TYPE	
	27	1	**5F-0149**	2	SEAL-O-RING	
	28	1	**7D-8876**	2	WASHER-THRUST	
	29	1	**7D-8877**	2	WASHER-THRUST	
	30	1	**7D-8883**	2	SEAL	
	31	1	**7D-8884**	2	SEAL	
	32	1	**7H-2444**	2	SEAL	

B-USE AS REQUIRED
M-METRIC PART

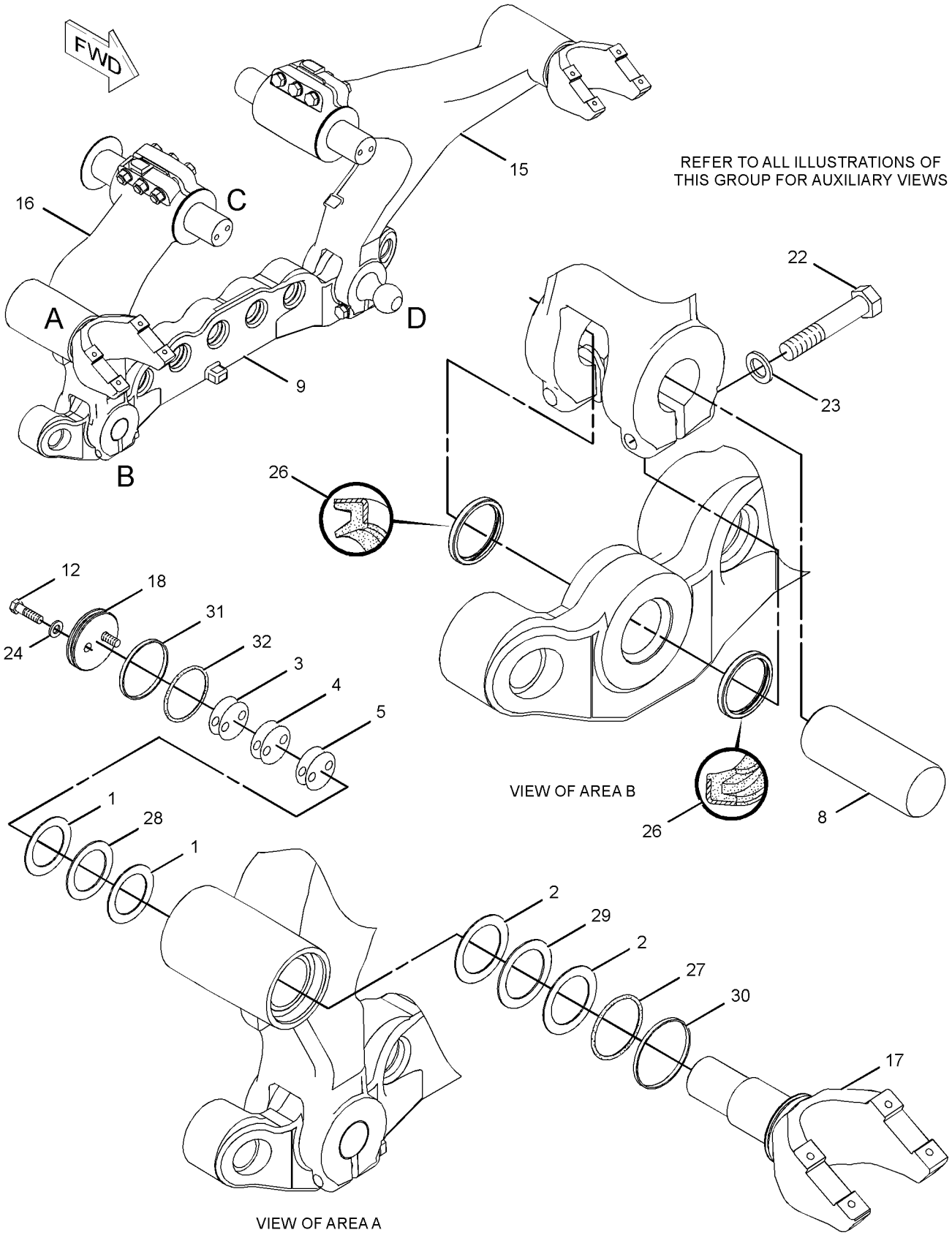

GRAPHIC #1

g01342938

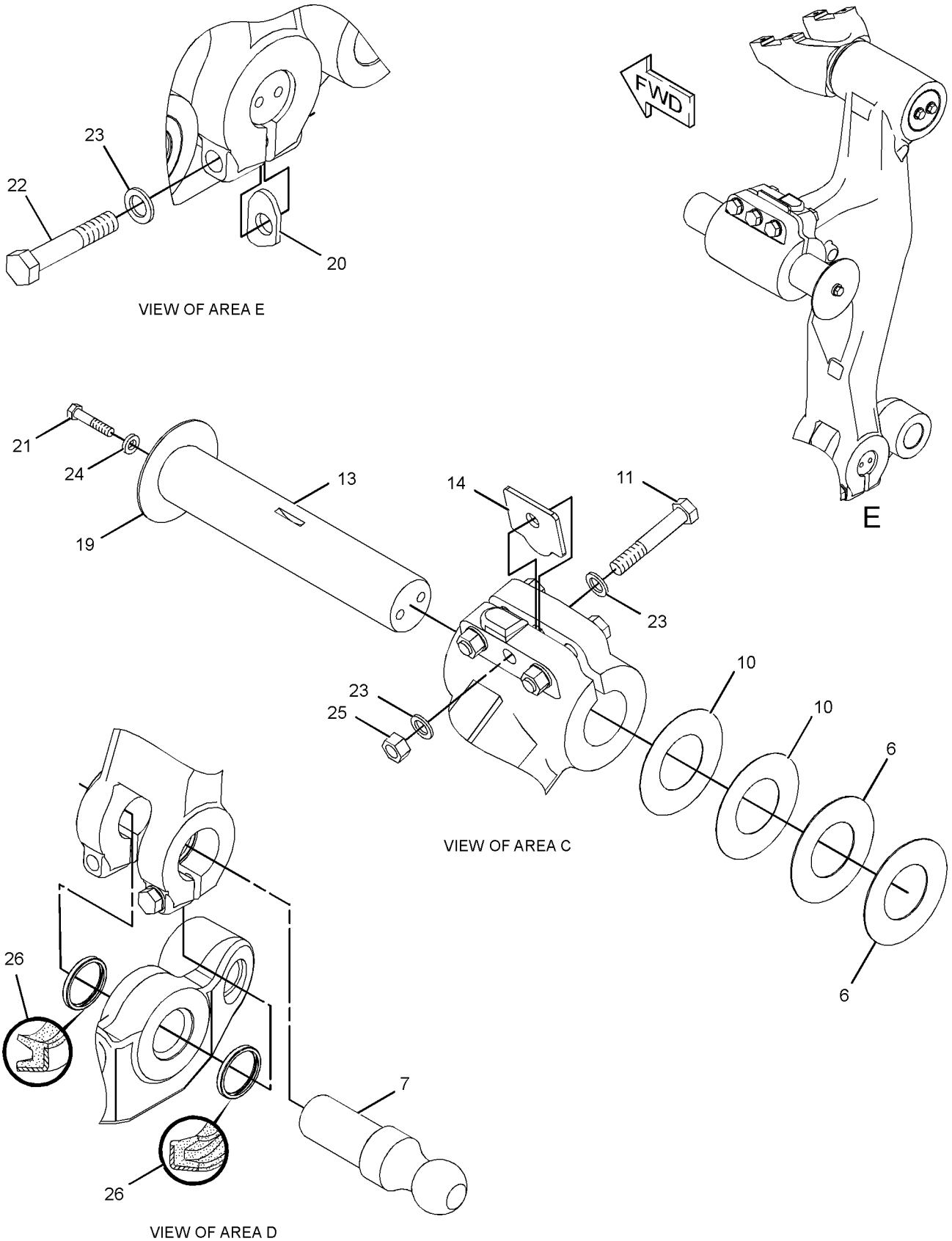

GRAPHIC #2 **<END>** g01342940

WORK TOOLS

293-5556 LIFT GP-WORK TOOL

S/N: B9D1-UP

PART OF 312-2204 LIFT GP-WORK TOOL

FOR USE WITH PLOW/BULLDOZER-LIFT VALVE AND LINES GP TO FRONT OF MOTORGRADER

SMCS-6050, 6159, 6701 **i02788557**

NOTE	REF NO	GRAPHIC REF	PART NUMBER	QTY	PART NAME 1 2 3 4 5 6 (PRODUCT LEVEL)	SEE PAGE
	1	1	**1F-6762**	4	BOLT (1-1/2-12X4.5-IN)	
	2	1	**2K-7468**	1	LOCKNUT (1-1/4-12-THD)	
	3	1	**3B-8489**	11	FITTING-GREASE	
	4	1	**4H-6511**	1	BOLT (1-1/4-12X6.5-IN)	
	5	1	**5F-9891**	4	BOLT (1-1/2-12X6-IN)	
	6	1	**9X-2521**	8	NUT-FULL	
	7	1	**137-4234**	1	PLATE-IDENTIFICATION (WORK TOOL)	
	8	1	**170-4910**	1	FRAME AS-COUPLER	
	9	1	**172-8121**	2	SPACER (34.925X60.325X14.2-MM THK)	
	10	1	**172-8122**	2	PIN AS	
	11	1	**172-8125**	3	PIN (SNAP)	
	12	1	**172-8126**	1	FILM-WARNING (CRUSH HAZARD)	
	13	1	**172-8127**	1	PIN AS (LOCKING)	
I	14	1	**172-8287**	1	HOSE AS	
I	15	1	**172-8288**	1	HOSE AS	
	16	1	**194-3655**	2	BEARING GP	
	17	1	**195-3330**	1	PLATE AS-MOUNTING	
Y	18	1	**217-3501**	1	CYLINDER GP-HYDRAULIC (WORK TOOL)	720
	19	1	**284-7971**	1	ARM AS (LOWER)	
	20	1	**284-7972**	1	ARM AS (UPPER)	
	22	1	**2M-9780**	4	SEAL-O-RING	
	23	1	**3J-1907**	4	SEAL-O-RING	
	24	1	**5P-8245**	4	WASHER-HARD (13.5X25.5X3-MM THK)	
	25	1	**6V-8397**	4	SEAL-O-RING	
	26	1	**6V-8636**	1	CONNECTOR	
	27	1	**6V-8724**	3	ELBOW (90-DEG)	
	28	1	**9X-8875**	4	BOLT (1/2-13X3.5-IN)	
FY			*293-5559*	1	BRACE GP (WORK TOOL LIFT)	717

F-NOT SHOWN
I-REFER TO HYDRAULIC INFORMATION SYSTEM
Y-SEPARATE ILLUSTRATION

293-5556 **LIFT GP-WORK TOOL** *(contd.)* **i02788557**

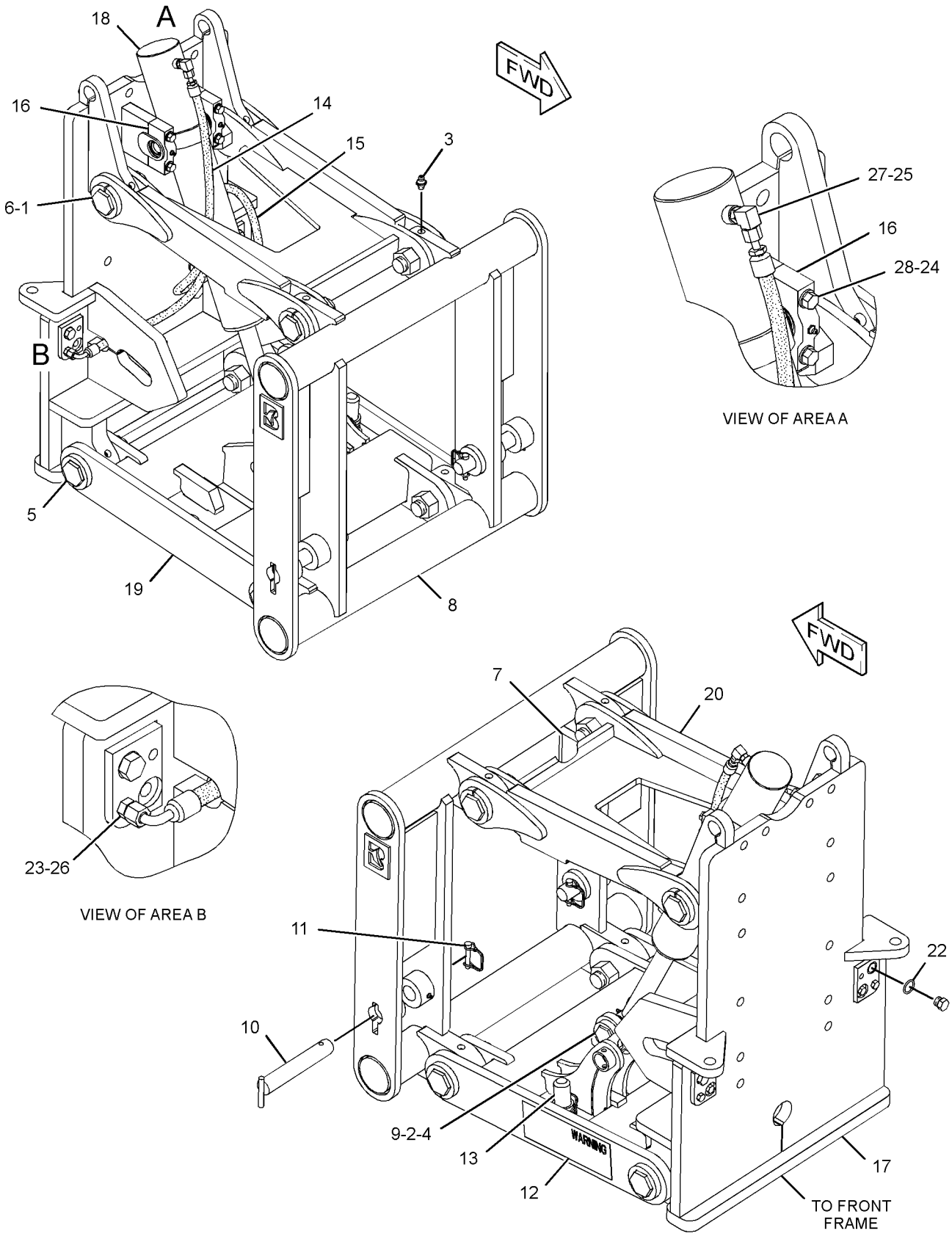

GRAPHIC #1 **<END>** g01325600

WORK TOOLS

312-2204 LIFT GP-WORK TOOL

S/N: B9D1-UP

SMCS-6050, 6159, 6701 **i02788354**

NOTE	PART NUMBER	QTY	PART NAME 1 2 3 4 5 6 (PRODUCT LEVEL)	SEE PAGE
Y	*293-5556*	1	LIFT GP-WORK TOOL	732

Y-SEPARATE ILLUSTRATION

<END>

248-1323 MOUNTING GP-RIPPER

S/N: B9D1-UP

PART OF 248-1322 RIPPER AR

SMCS-6165, 6324 **i02783083**

NOTE	REF NO	GRAPHIC REF	PART NUMBER	QTY	PART NAME 1 2 3 4 5 6 (PRODUCT LEVEL)	SEE PAGE
	1	1	**3W-7254**	2	SPACER (47X80X20-MM THK)	
	2	1	**3W-7256**	2	SPACER (47X80X16-MM THK)	
	3	1	**6P-5647**	2	BOSS	
	4	1	**104-4523**	2	CAM AS	
	5	1	**248-1326**	1	PLATE AS	
		1	**104-4522**	2	PLATE	
	6	1	**291-6300**	2	LINK AS	
					(EACH INCLUDES)	
		1	**3V-2024**	1	BOSS	
	7	1	**293-2476**	2	PIN	
M	8	1	**106-4175**	8	BOLT (M20X2.5X60-MM)	
M	9	1	**129-3180**	2	LOCKNUT (M12X1.75-THD)	
	10	1	**267-3506**	6	WASHER-HARD (26X44X4-MM THK)	
	11	1	**267-3508**	8	WASHER-HARD (35X22X3.5-MM THK)	
M	12	1	**7X-2543**	2	BOLT (M10X1.5X120-MM)	
M	13	1	**7X-2544**	2	BOLT (M10X1.5X104-MM)	
M	14	1	**8T-0389**	4	LOCKNUT (M10X1.15-THD)	
M	15	1	**8T-5041**	2	BOLT (M12X1.75X120-MM)	
	16	1	**9W-7469**	2	PIN	
	17	1	**9W-7470**	2	PIN	
M	18	1	**9X-2615**	6	BOLT (M24X3X60-MM)	

M-METRIC PART

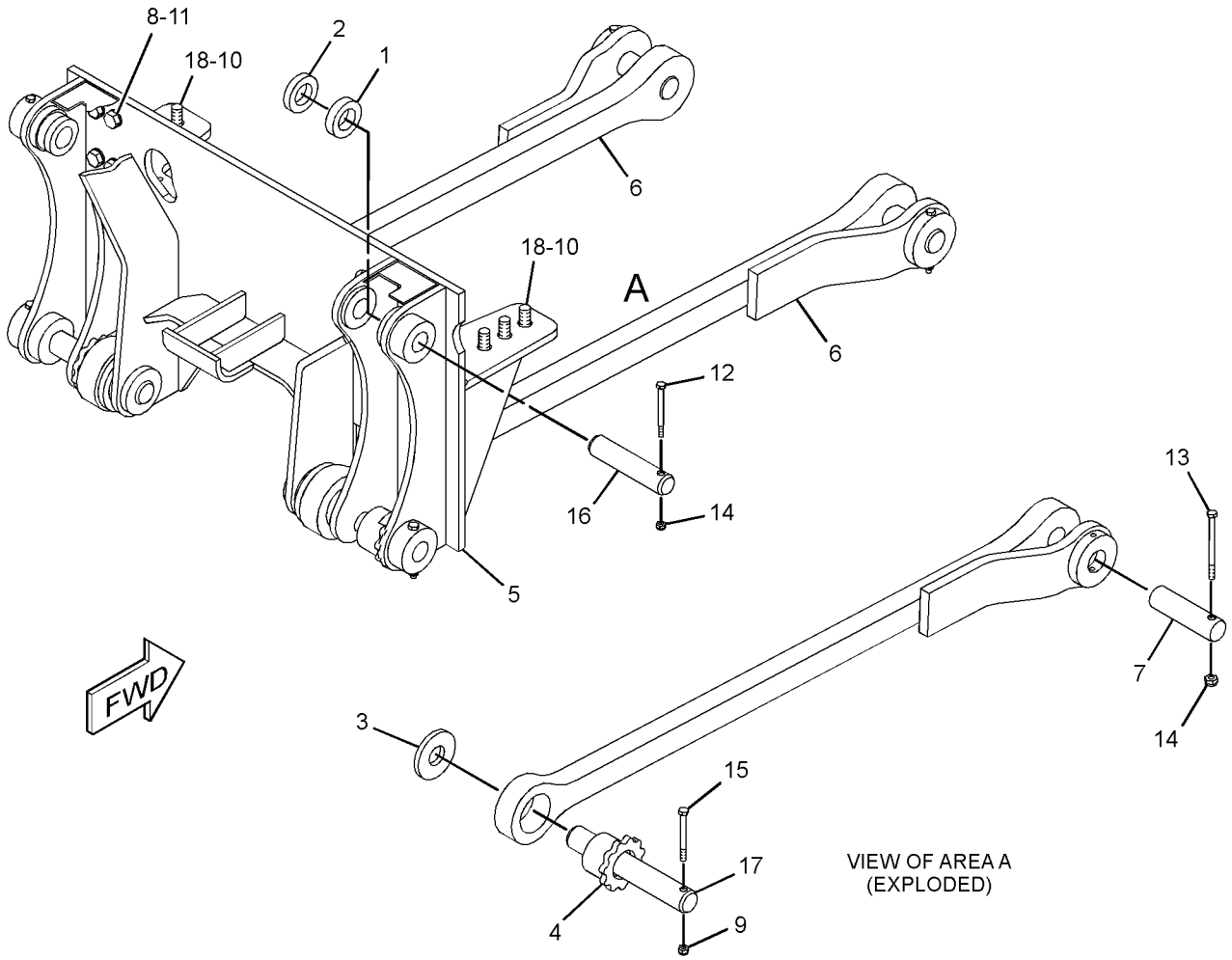

GRAPHIC #1 **<END>** g01339049

WORK TOOLS

249-7587 MOUNTING GP-SNOW WING

S/N: B9D1-UP

SMCS-6158 **i02783125**

NOTE	REF NO	GRAPHIC REF	PART NUMBER	QTY	PART NAME 1 2 3 4 5 6 (PRODUCT LEVEL)	SEE PAGE
	1	1	**255-2410**	1	PLATE	
	2	1	**260-6731**	1	PLATE AS	
	3	1	**284-8931**	1	PLATE-MOUNTING	
	4	1	**284-8932**	2	PLATE	
	5	1	**287-1640**	1	PLATE (RH)	
	6	1	**287-1641**	1	PLATE (LH)	

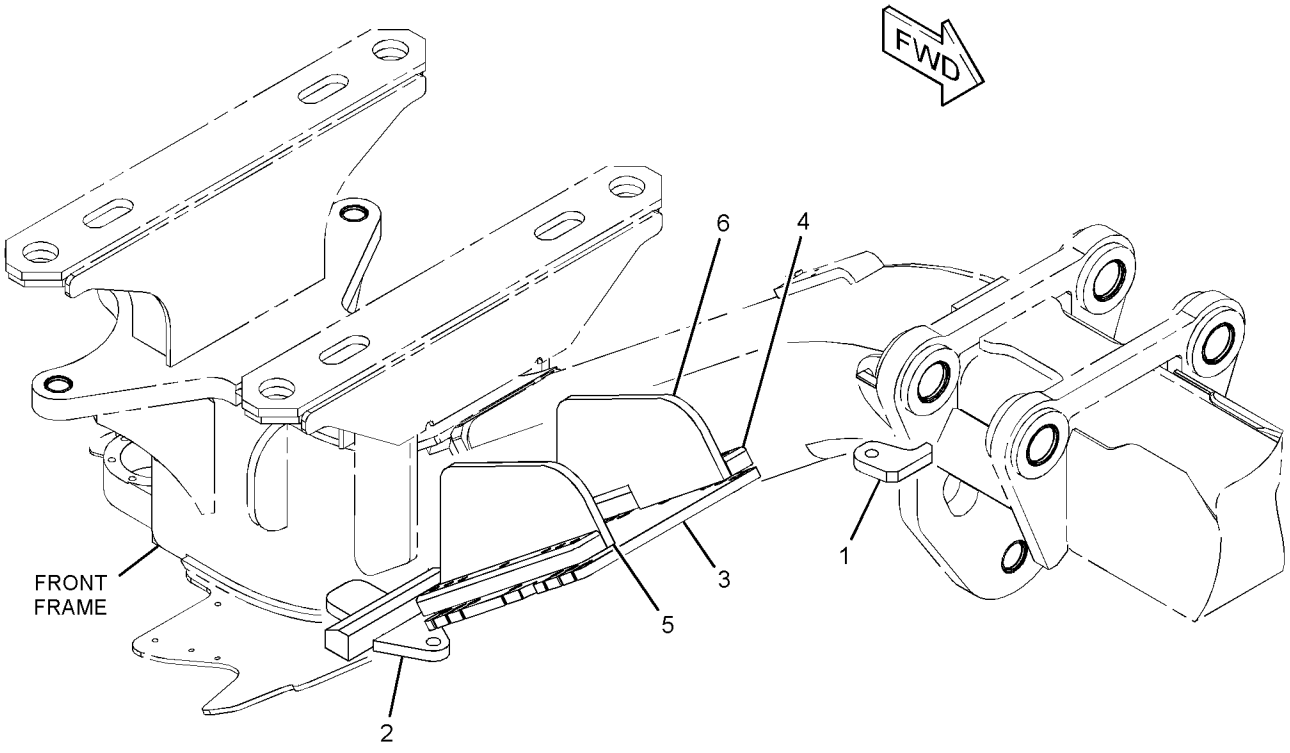

GRAPHIC #1 **<END>** g01339415

WORK TOOLS

257-5176 MOUNTING GP-SNOW WING

S/N: B9D1-UP

SMCS-6158 **i02785213**

NOTE	REF NO	GRAPHIC REF	PART NUMBER	QTY	PART NAME 1 2 3 4 5 6 (PRODUCT LEVEL)	SEE PAGE
	1	1	**257-5177**	2	PLATE	

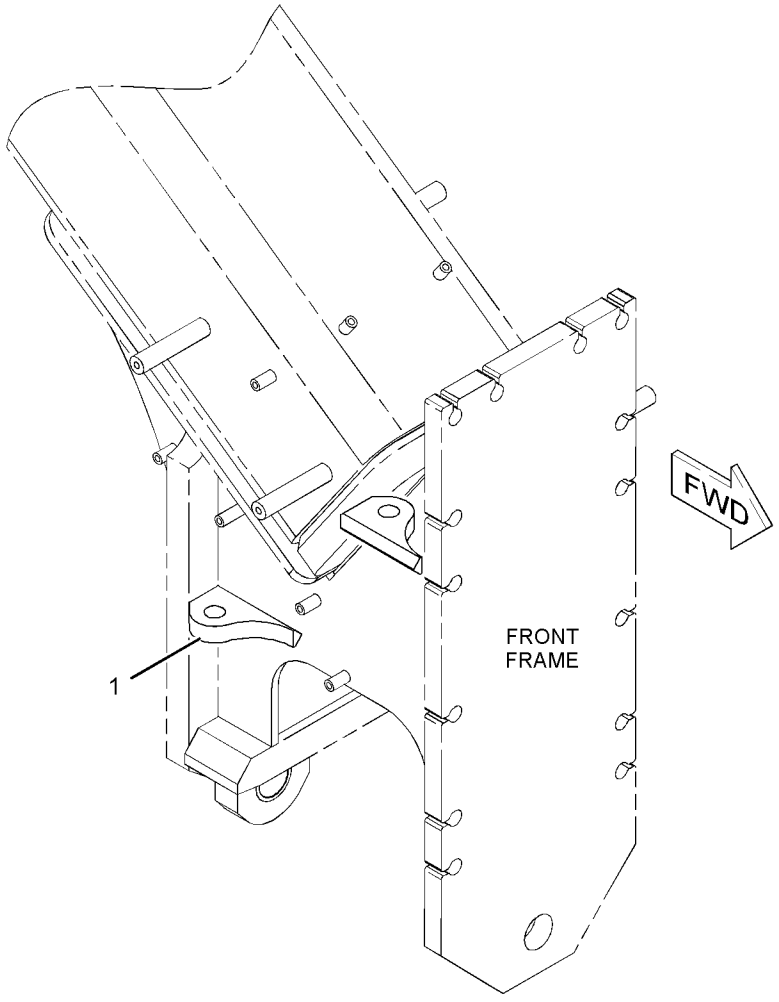

GRAPHIC #1 **<END>** g01135848

WORK TOOLS

248-1322 RIPPER AR

S/N: B9D1-UP

SMCS-6325 **i02783084**

NOTE	REF NO	GRAPHIC REF	PART NUMBER	QTY	PART NAME 1 2 3 4 5 6 (PRODUCT LEVEL)	SEE PAGE
Y	2	1	**113-7754**	1	CYLINDER GP-RIPPER	548
Y	3	1	*248-1323*	1	MOUNTING GP-RIPPER	735
Y	4	1	*250-6181*	1	LINES GP-RIPPER	609
Y	5	1	*290-3518*	1	RIPPER GP	740

Y-SEPARATE ILLUSTRATION

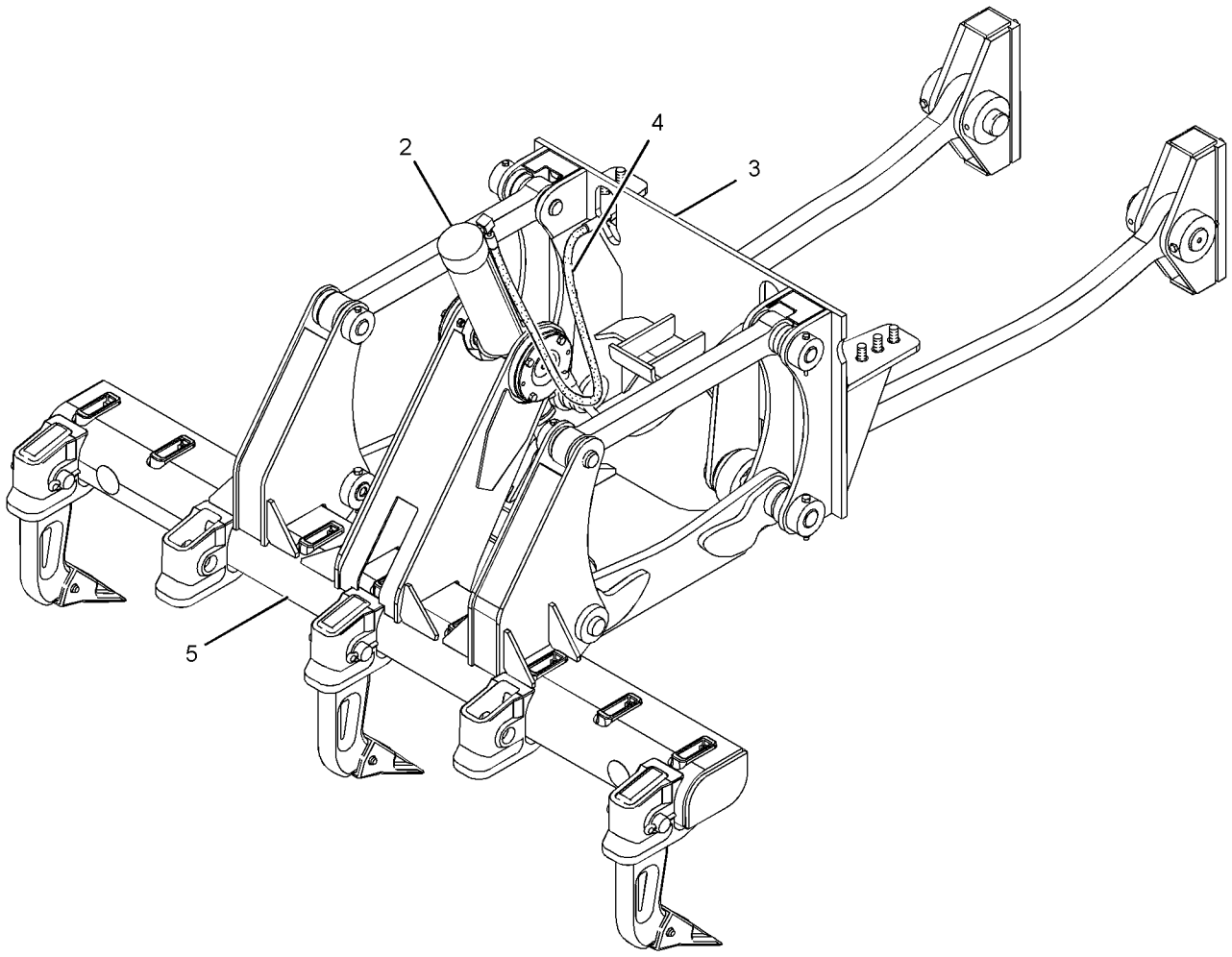

GRAPHIC #1 **<END>** g01341927

WORK TOOLS

290-3518 RIPPER GP

S/N: B9D1-UP

PART OF 248-1322 RIPPER AR

SMCS-6325 **i02783081**

NOTE	REF NO	GRAPHIC REF	PART NUMBER	QTY	PART NAME 1 2 3 4 5 6 (PRODUCT LEVEL)	SEE PAGE
	1	1	**2K-0120**	1	PIN	
	2	1	**2K-0703**	1	BAR	
	3	1	**3B-8489**	3	FITTING-GREASE (HYDRAULIC)	
	4	1	**4K-3004**	2	BEARING-TRUNNION SUPPLEMENTARY	
	5	1	**4K-3150**	2	PIN	
Y	6	1	*8J-1434*	3	TOOTH GP-RIPPER	753
	7	1	**9J-0096**	2	LINK AS-UPPER	
					(EACH INCLUDES)	
		1	**3G-2581**	2	BEARING	
	8	1	**9W-3155**	1	CARRIAGE AS	
		1	**4K-6302**	5	HOLDER-BIT	
		1	**112-3690**	5	HOLDER-BIT	
	9	1	**190-5386**	2	FILM-IDENTIFICATION (ROUND RED REFLECTIVE)	
	10	1	**290-3519**	1	LINK AS-LOWER	
		1	**3G-2579**	4	BEARING	
		1	**5G-8760**	4	BOSS	
	11	1	**2D-0626**	8	SEAL	
M	12	1	**6V-1819**	2	BOLT (M10X1.5X100-MM)	
M	13	1	**6V-7687**	10	LOCKNUT (M12X1.75-THD)	
M	14	1	**6V-7744**	2	LOCKNUT (M10X1.15-THD)	
M	15	1	**6V-8004**	2	BOLT (M12X1.75X120-MM)	
	16	1	**7K-9203**	8	SEAL-LIP TYPE	
	17	1	**8J-7008**	2	PIN	
M	18	1	**8T-4192**	2	BOLT (M12X1.75X25-MM)	
M	19	1	**8T-4910**	8	BOLT (M12X1.75X60-MM)	

M-METRIC PART
Y-SEPARATE ILLUSTRATION

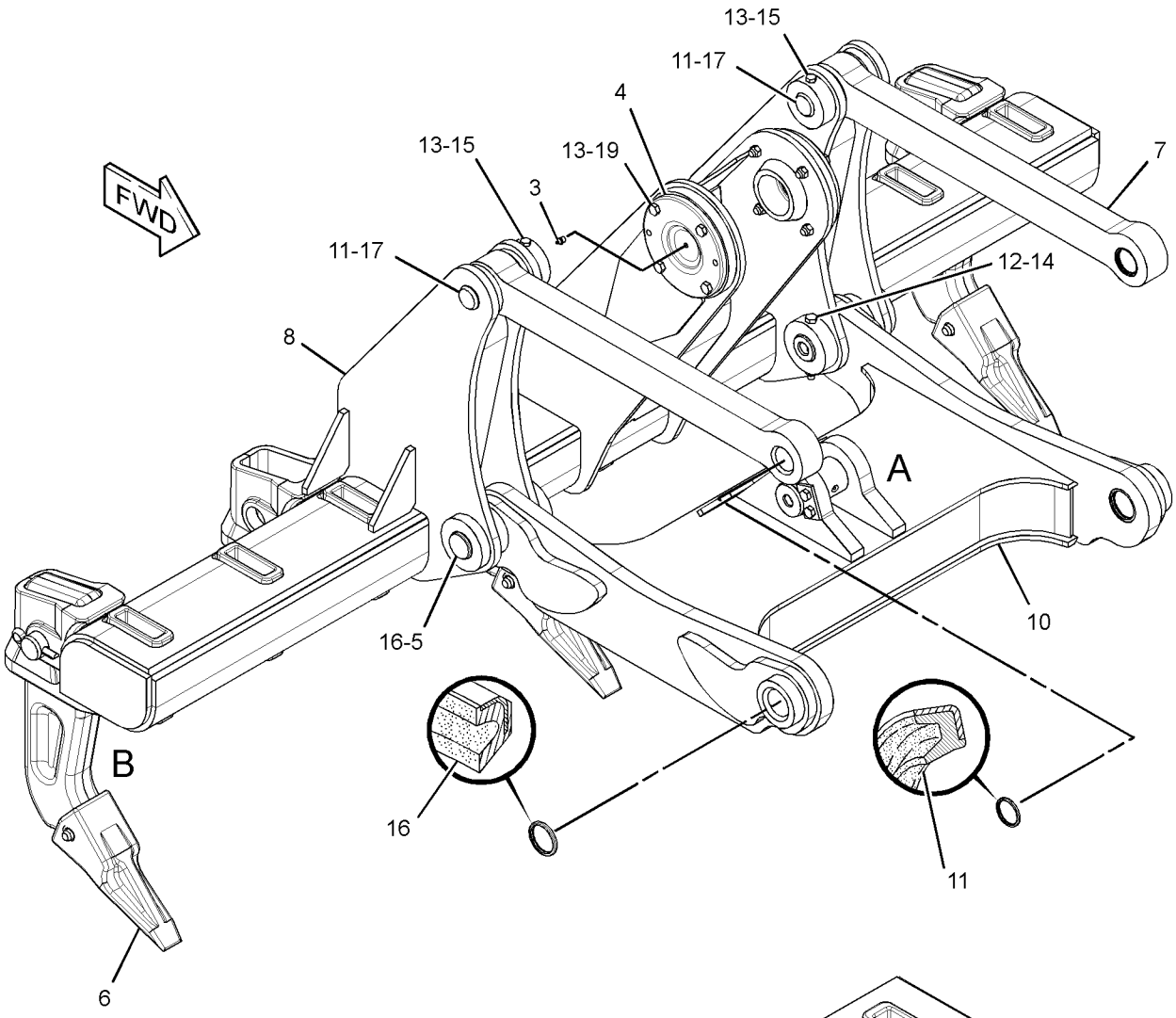

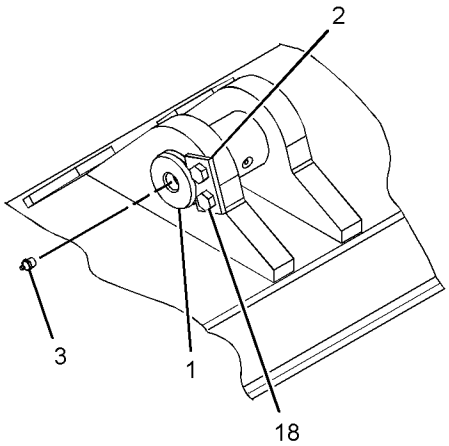

VIEW OF AREA A

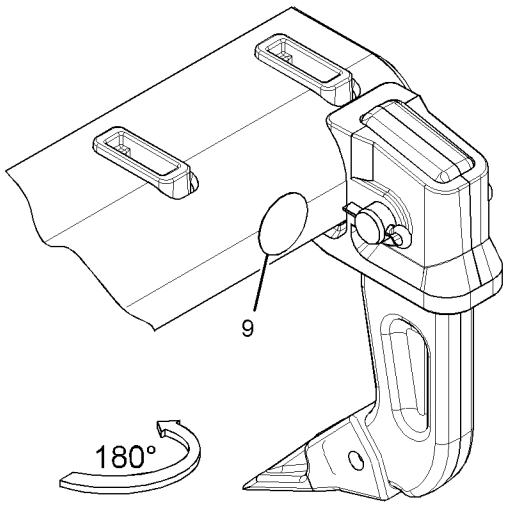

VIEW OF AREA B

GRAPHIC #1 **<END>** g01346680

WORK TOOLS

108-1104 SCARIFIER AR—VEE TYPE

S/N: B9D1-UP

SMCS-6162, 6325, 6811 **i02592949**

NOTE	PART NUMBER	QTY	PART NAME 1 2 3 4 5 6 (PRODUCT LEVEL)	SEE PAGE
Y	*116-0379*	1	BRACKET GP-SCARIFIER	718
Y	*8W-2913*	1	CYLINDER & MTG GP-SCARIFIER	539
Y	*8X-6070*	1	LINES GP-HYDRAULIC (SCARIFIER)	569
Y	*8X-6080*	1	SCARIFIER GP (VEE TYPE)	743

Y-SEPARATE ILLUSTRATION

<END>

113-0704 SCARIFIER AR—STRAIGHT

S/N: B9D1-UP

SMCS-6162, 6325, 6811 **i02796903**

NOTE	PART NUMBER	QTY	PART NAME 1 2 3 4 5 6 (PRODUCT LEVEL)	SEE PAGE
Y	*116-0379*	1	BRACKET GP-SCARIFIER	718
Y	*8W-2913*	1	CYLINDER & MTG GP-SCARIFIER	539
Y	*8X-6070*	1	LINES GP-HYDRAULIC (SCARIFIER)	569
Y	*111-3883*	1	SCARIFIER GP (STRAIGHT TYPE)	747

Y-SEPARATE ILLUSTRATION

<END>

WORK TOOLS

8X-6080 SCARIFIER GP—VEE TYPE

S/N: B9D1-UP

PART OF 108-1104 SCARIFIER AR

SMCS-6162, 6325, 6811 **i02568052**

NOTE	REF NO	GRAPHIC REF	PART NUMBER	QTY	PART NAME 1 2 3 4 5 6 (PRODUCT LEVEL)	SEE PAGE
	1	1	**2H-3746**	4	BOLT (1-14X5-IN)	
	2	1	**5P-8250**	8	WASHER (28X49X5-MM THK)	
	3	1	**2K-7471**	4	LOCKNUT (1-14-THD)	
	4	2	**1A-8063**	8	BOLT (3/4-10X2.5-IN)	
	5	2	**5P-8248**	8	WASHER-HARD (20X36.5X3.5-MM THK)	
	6	2	**6F-6992**	4	CAP-BALL SOCKET	
B	7	2	**7F-1327**	32	SHIM (0.03-IN THK)	
	8	2	**3B-8489**	4	FITTING-GREASE (SCARIFIER LIFT LINK SOCKET)	
	9	2	**195-7218**	11	SHANK	
	10	2	**6Y-5230**	11	TOOTH-SCARIFIER	
	11	1	**1D-4612**	4	BOLT (3/4-10X4-IN)	
	12	1	**8X-3663**	8	WASHER (20X45X12-MM THK)	
	13	1	**2J-3506**	4	NUT-FULL (3/4-10-THD)	
	14	1	**8X-6075**	1	BOLSTER AS	
	15	1	**9D-5516**	2	LINK AS-LIFT	
					(EACH INCLUDES)	
		1	**7D-2135**	1	SOCKET-BALL	
	16	1	**7D-2196**	2	SLEEVE AS-LINK	
					(EACH INCLUDES)	
		1	**7D-2136**	1	SOCKET-BALL	
	17	1	**5D-8161**	2	PIN	
	18	1	**5D-8159**	2	PIN AS	
	19	1	**118-7880**	1	DRAWBAR AS	
	19A	1	**8W-5597**	1	STUD-BALL	
	19B	1	**2G-7728**	2	COLLAR	
	20	1	**118-7881**	1	DRAWBAR AS	
	20A	1	**8W-5597**	1	STUD-BALL	
	20B	1	**2G-7728**	2	COLLAR	
	21	1	**2G-7309**	1	SHAFT	
	22	1	**9X-8875**	2	BOLT (1/2-13X3.5-IN)	
	23	2	**5P-8245**	2	WASHER-HARD (13.5X25.5X3-MM THK)	
	24	2	**1F-7958**	2	NUT-FULL (1/2-13-THD)	
	25	1	**5B-0577**	2	COLLAR	
	26	1	**8H-4040**	4	BOLT (1-1/8-12X4.5-IN)	
	27	1	**3S-1349**	4	WASHER-HARD (31X52.5X6-MM THK)	
	28	1	**3D-4904**	4	LOCKNUT (1-1/8-12-THD)	
	29	1	**1A-0224**	2	BOLT (7/8-14X3.5-IN)	
	30	1	**1B-4208**	2	NUT-FULL (7/8-14-THD)	
	31	2	**8D-1268**	2	ARM AS-LIFT	
					(EACH INCLUDES)	
		2	**7D-8245**	1	STUD-BALL	
	32	2	**7X-0390**	4	BOLT (7/8-9X5-IN)	
	33	2	**8C-6913**	4	WASHER-HARD (24X41.5X4-MM THK)	
	34	2	**6K-0545**	4	LOCKNUT (7/8X19-THD)	
	35	2	**4D-6086**	2	KEY	
	36	1	**107-8375**	1	SHAFT AS	
	37	1	**8W-0663**	2	BRACKET AS	
					(EACH INCLUDES)	
		1	**3B-8489**	1	FITTING-GREASE (SCARIFIER)	
		1	**107-8374**	2	BEARING	
	38	1	**6B-3260**	1	TOOL	
	39	1	**2G-4332**	1	BLOCK AS-SCARIFIER	
		1	**7D-8825**	11	SPACER	
		1	**7D-8826**	11	SPACER	
	40	1	**5K-1458**	11	GROMMET	
	41	1	**5K-1459**	11	LOCK PIN	

8X-6080 **SCARIFIER GP** *(contd.)* **i02568052**

NOTE	REF NO	GRAPHIC REF	PART NUMBER	QTY	PART NAME 1 2 3 4 5 6 (PRODUCT LEVEL)	SEE PAGE
B	42	1	**198-9812**	2	SPACER (83X145X2-MM THK)	
B	43	1	**198-9811**	2	SPACER (83X145X3-MM THK)	

B-USE AS REQUIRED

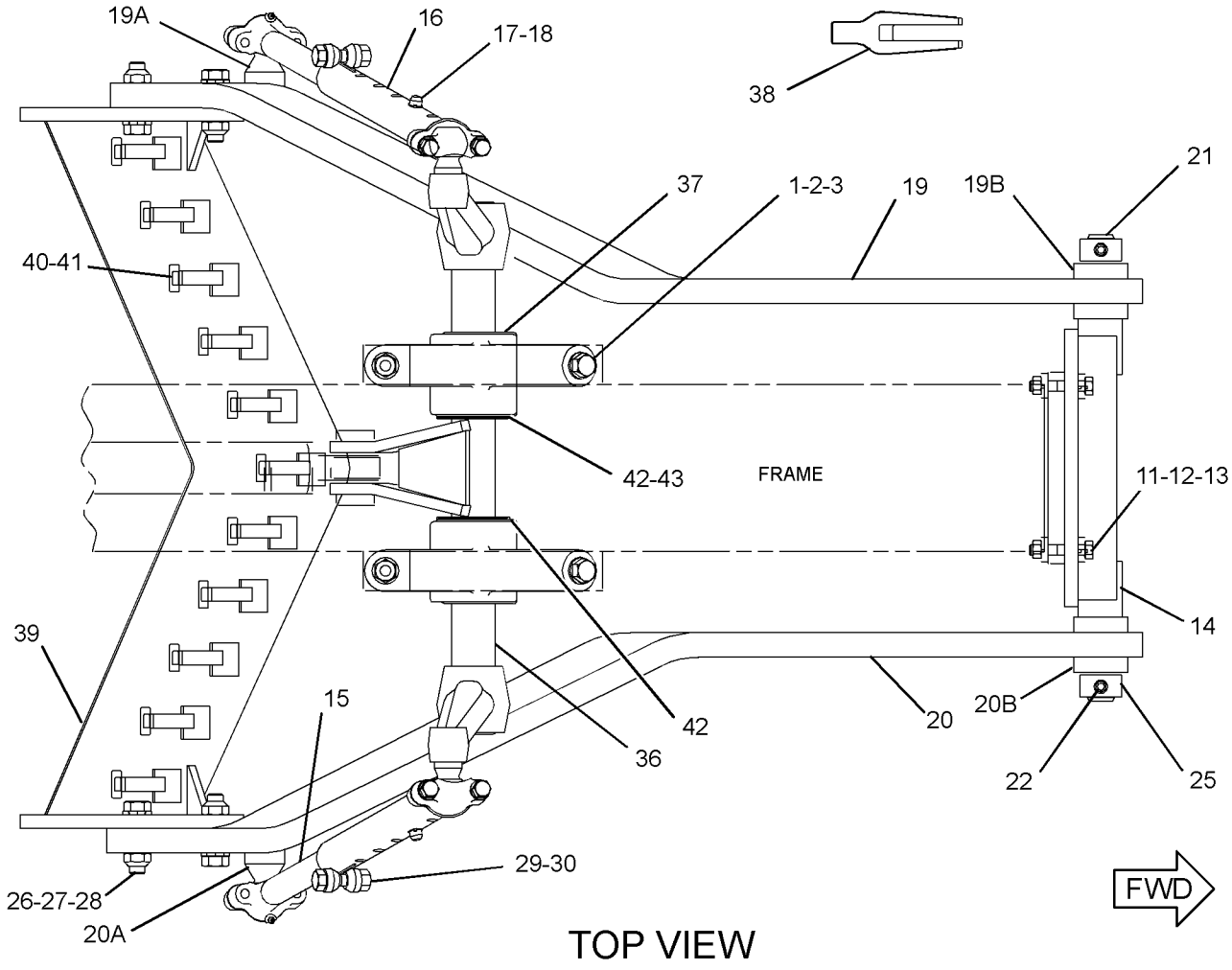

TOP VIEW

GRAPHIC #1 g01291378

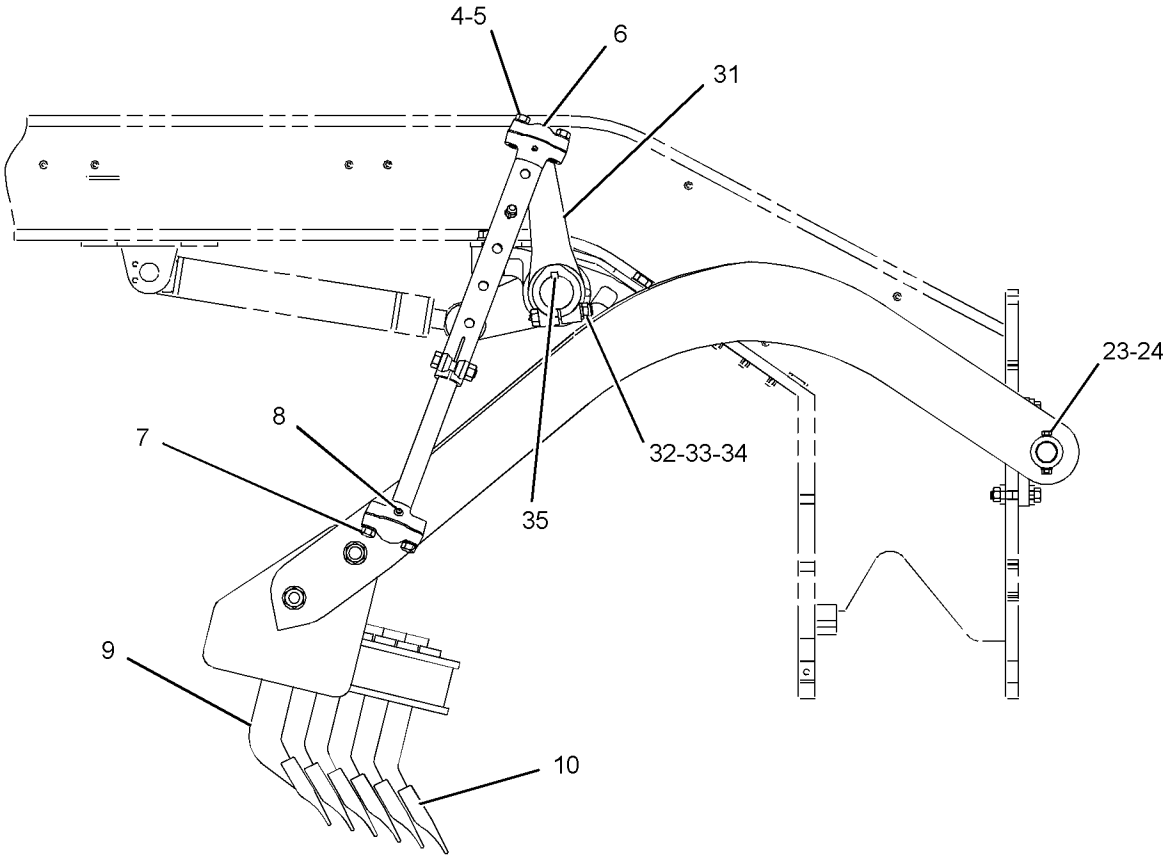

RIGHT SIDE VIEW

GRAPHIC #2 **<END>** g01291379

WORK TOOLS

111-3883 SCARIFIER GP—STRAIGHT TYPE

S/N: B9D1-UP

PART OF 113-0704 SCARIFIER AR

SMCS-6162, 6325, 6811 **i02614301**

NOTE	REF NO	GRAPHIC REF	PART NUMBER	QTY	PART NAME 1 2 3 4 5 6 (PRODUCT LEVEL)	SEE PAGE
	1	1	**9D-5516**	2	LINK AS-LIFT	
					(EACH INCLUDES)	
		1	**7D-2135**	1	SOCKET-BALL	
	2	1	**7D-2196**	2	SLEEVE AS-LINK	
					(EACH INCLUDES)	
		1	**7D-2136**	1	SOCKET-BALL	
	3	1	**5D-8161**	2	PIN	
		1	**5D-8159**	2	PIN AS	
	4	1	**107-8375**	1	SHAFT AS	
	5	1	**118-7880**	1	DRAWBAR AS	
	6	1	**8W-5597**	1	STUD-BALL	
	7	1	**2G-7728**	2	COLLAR	
	8	1	**2G-7309**	1	SHAFT	
	9	1	**8X-6075**	1	BOLSTER AS	
	10	1	**1D-4612**	4	BOLT (3/4-10X4-IN)	
		1	**2J-3506**	4	NUT-FULL (3/4-10-THD)	
		1	**8X-3663**	8	WASHER (20X45X12-MM THK)	
	11	1	**5B-0577**	2	COLLAR	
	12	1	**9X-8875**	2	BOLT (1/2-13X3.5-IN)	
		1	**1F-7958**	2	NUT-FULL (1/2-13-THD)	
		1	**5P-8245**	2	WASHER-HARD (13.5X25.5X3-MM THK)	
	13	1	**5K-1458**	11	GROMMET	
	14	1	**8W-0663**	2	BRACKET AS	
					(EACH INCLUDES)	
		1	**3B-8489**	1	FITTING-GREASE (TRUNNION)	
		1	**107-8374**	2	BEARING	
	15	1	**118-7881**	1	DRAWBAR AS	
	16	1	**8W-5597**	1	STUD-BALL	
	17	1	**2G-7728**	2	COLLAR	
	18	1	**1A-0224**	2	BOLT (7/8-14X3.5-IN)	
		1	**1B-4208**	2	NUT-FULL (7/8-14-THD)	
	19	1	**8H-4040**	4	BOLT (1-1/8-12X4.5-IN)	
		1	**3D-4904**	4	LOCKNUT (1-1/8-12-THD) (1-1/8-12 THD)	
		1	**3S-1349**	4	WASHER-HARD (31X52.5X6-MM THK)	
	20	1	**5K-1459**	11	LOCK PIN	
	21	1	**2G-7149**	1	BLOCK AS	
	22	1	**6B-3260**	1	TOOL	
	23	1	**2H-3746**	4	BOLT (1-14X5-IN)	
		1	**2K-7471**	4	LOCKNUT (1-14-THD)	
		1	**5P-8250**	8	WASHER (28X49X5-MM THK)	
	24	2	**3B-8489**	4	FITTING-GREASE (SCARIFIER LIFT LINK SOCKET)	
	25	2	**4D-6086**	2	KEY	
	26	2	**6F-6992**	4	CAP-BALL SOCKET	
B		2	**7F-1327**	32	SHIM (0.03-IN THK)	
	27	2	**6Y-5230**	11	TOOTH-SCARIFIER	
	28	2	**6K-0545**	4	LOCKNUT (7/8X19-THD)	
	29	2	**7X-0390**	4	BOLT (7/8-9X5-IN)	
		2	**8C-6913**	4	WASHER-HARD (24X41.5X4-MM THK)	
	30	2	**195-7219**	17	SHANK	
	31	2	**1A-8063**	8	BOLT (3/4-10X2.5-IN)	
	32	2	**5P-8248**	8	WASHER-HARD (20X36.5X3.5-MM THK)	
	33	2	**8D-1268**	2	ARM AS-LIFT	
					(EACH INCLUDES)	
		2	**7D-8245**	1	STUD-BALL	
B	34	1	**198-9811**	2	SPACER (83X145X3-MM THK)	
B	35	1	**198-9812**	2	SPACER (83X145X2-MM THK)	

111-3883 **SCARIFIER GP** *(contd.)* **i02614301**

B-USE AS REQUIRED

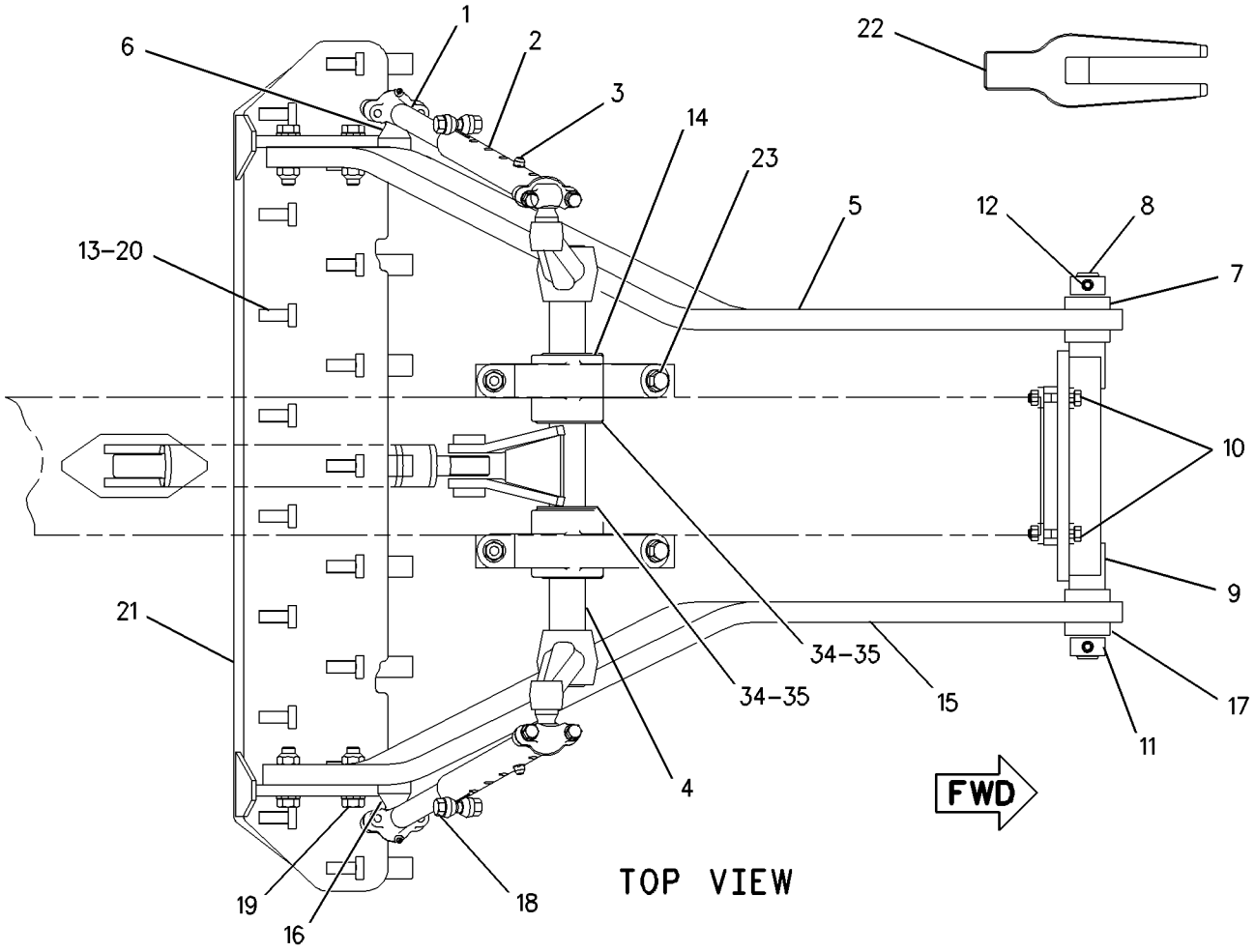

GRAPHIC #1 g00772503

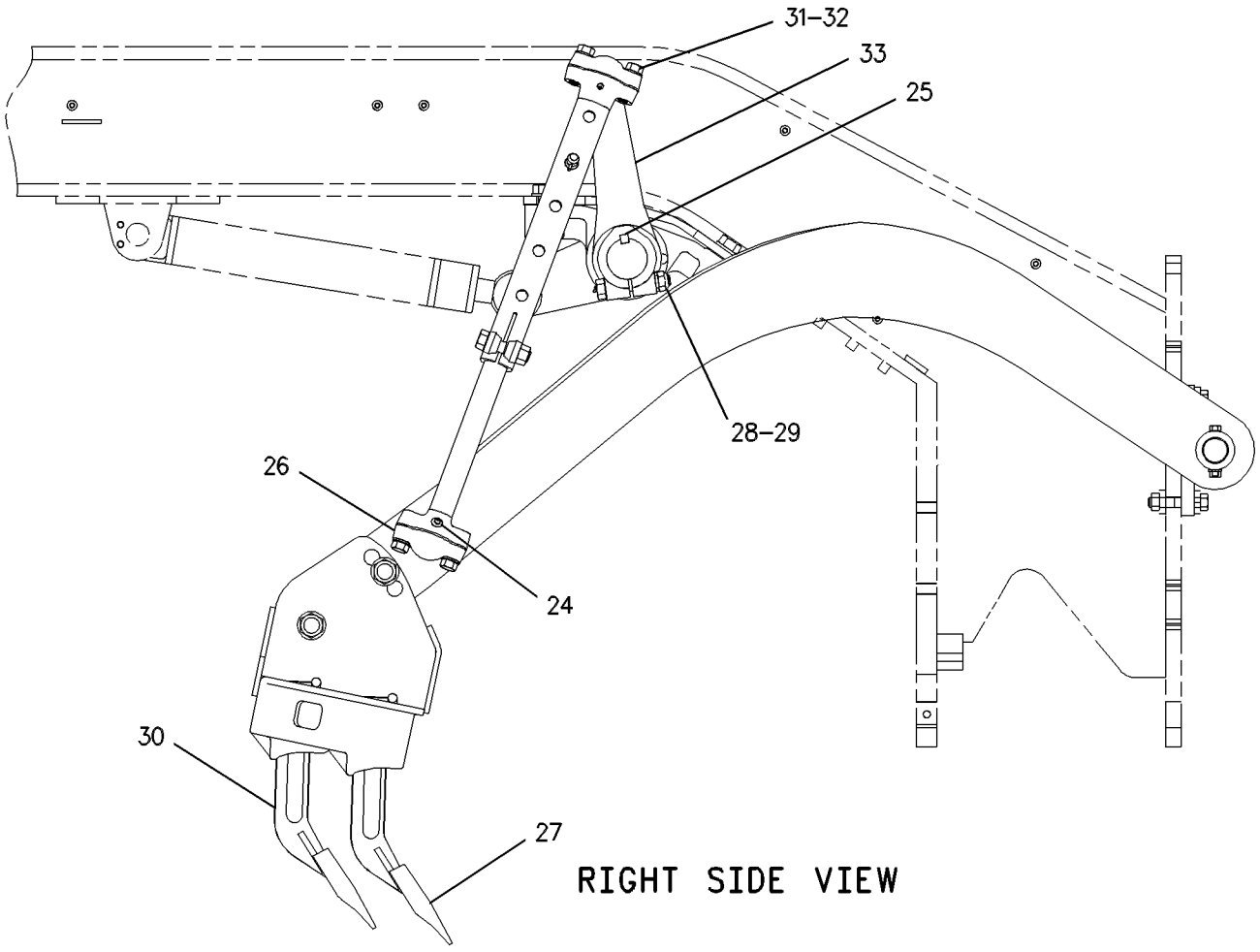

GRAPHIC #2 **<END>** g00304036

WORK TOOLS

212-6231 SCARIFIER GP—11-TEETH

S/N: B9D1-UP

PART OF 312-2203 SCARIFIER GP

CANNOT BE USED WITH 212-6232—PAGE 751

SMCS-6162, 6325, 6811 **i02775134**

NOTE	REF NO	GRAPHIC REF	PART NUMBER	QTY	PART NAME 1 2 3 4 5 6 (PRODUCT LEVEL)	SEE PAGE
	1	1	**5K-1458**	11	GROMMET	
	2	1	**5K-1459**	11	LOCK PIN	
	3	1	**6Y-5230**	11	TOOTH-SCARIFIER	
	4	1	**137-4234**	1	PLATE-IDENTIFICATION (WORK TOOL)	
	5	1	**195-7218**	11	SHANK	
	6	1	**212-6279**	1	SCARIFIER AS	

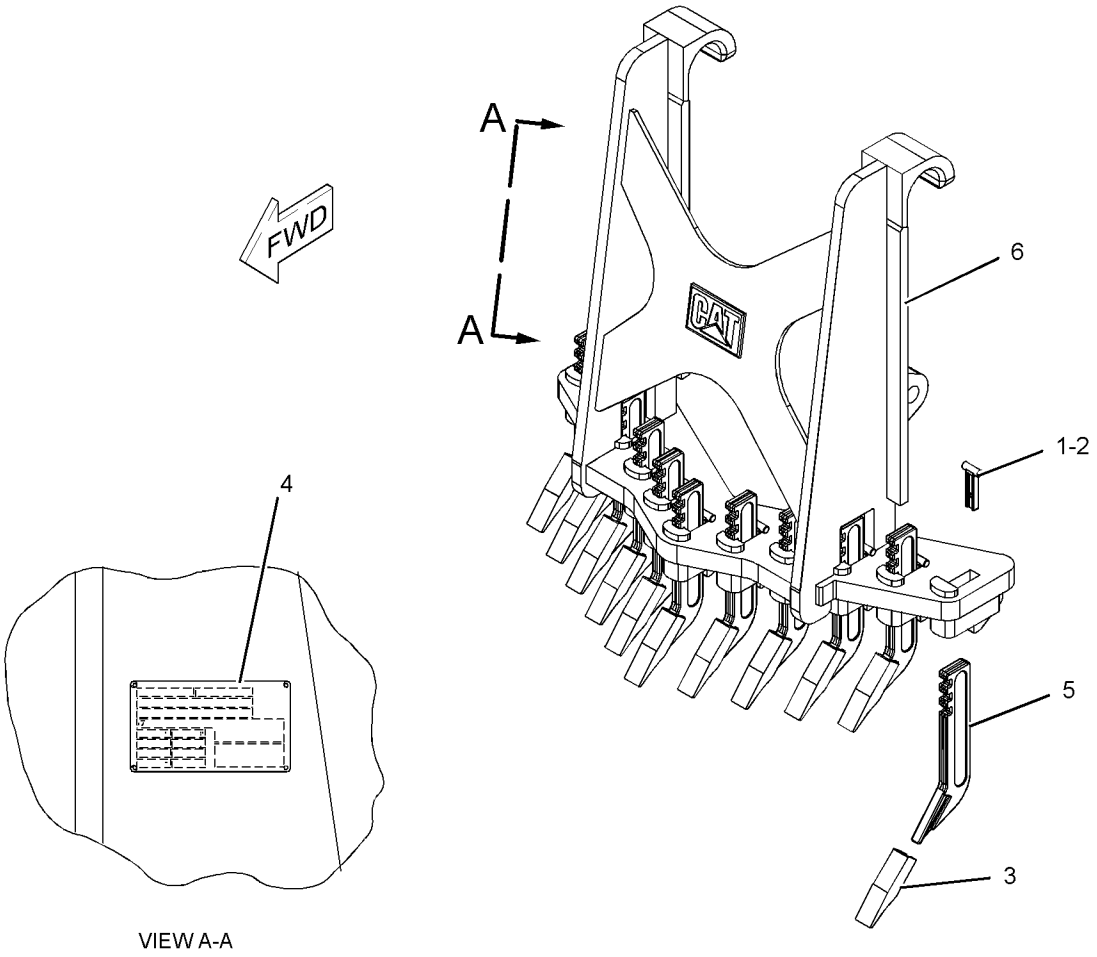

VIEW A-A

GRAPHIC #1 **<END>** g01288373

212-6232 SCARIFIER GP—5-TEETH

S/N: B9D1-UP

PART OF 312-2202 SCARIFIER GP

CANNOT BE USED WITH 212-6231—PAGE 750

SMCS-6162, 6325, 6811 **i02774974**

NOTE	REF NO	GRAPHIC REF	PART NUMBER	QTY	PART NAME 1 2 3 4 5 6 (PRODUCT LEVEL)	SEE PAGE
	1	1	**5K-1459**	5	LOCK PIN	
	2	1	**6Y-5230**	5	TOOTH-SCARIFIER	
	3	1	**137-4234**	1	PLATE-IDENTIFICATION (WORK TOOL)	
	4	1	**195-7218**	5	SHANK	
	5	1	**212-6279**	1	SCARIFIER AS	

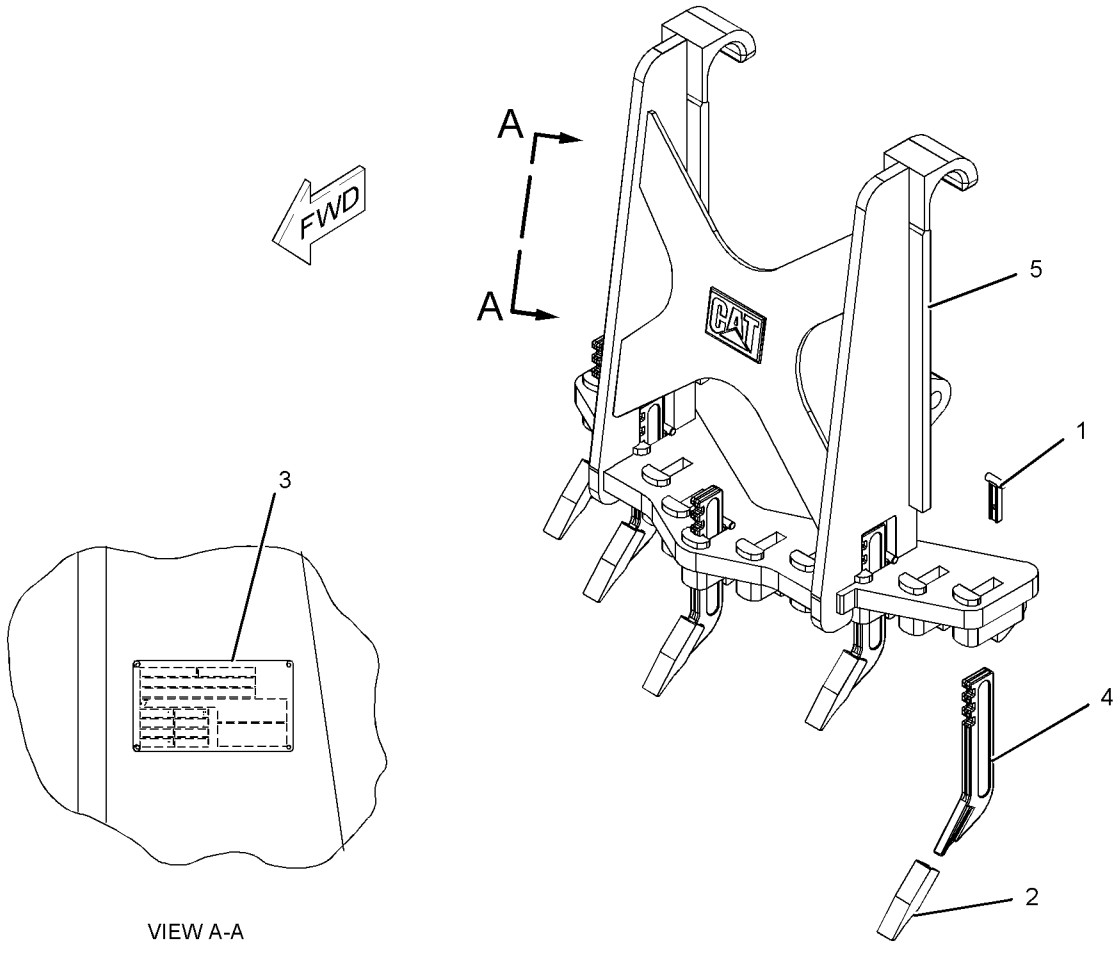

VIEW A-A

GRAPHIC #1 **<END>** g01144649

WORK TOOLS

312-2202 SCARIFIER GP

S/N: B9D1-UP

SMCS-6162, 6325, 6811 **i02788319**

NOTE	PART NUMBER	QTY	PART NAME 1 2 3 4 5 6 (PRODUCT LEVEL)	SEE PAGE
Y	*212-6232*	1	SCARIFIER GP (5-TEETH)	751
Y-SEPARATE ILLUSTRATION				

<END>

312-2203 SCARIFIER GP

S/N: B9D1-UP

SMCS-6162, 6325, 6811 **i02788332**

NOTE	PART NUMBER	QTY	PART NAME 1 2 3 4 5 6 (PRODUCT LEVEL)	SEE PAGE
Y	*212-6231*	1	SCARIFIER GP (11-TEETH)	750
Y-SEPARATE ILLUSTRATION				

<END>

WORK TOOLS

8J-1434 TOOTH GP-RIPPER

S/N: B9D1-UP

PART OF 290-3518 RIPPER GP

SMCS-6808 **i02761493**

NOTE	REF NO	GRAPHIC REF	PART NUMBER	QTY	PART NAME 1 2 3 4 5 6 (PRODUCT LEVEL)	SEE PAGE
	1	1	**3B-5325**	2	PIN-COTTER	
	2	1	**2K-6413**	1	PIN	
	3	1	**9J-6586**	1	SHANK	
	4	1	**136-8308**	1	PIN	
	5	1	**6Y-0309**	1	TIP-RIPPER (PENETRATION)	
	6	1	**114-0359**	1	RETAINER AS (G.E.T.)	

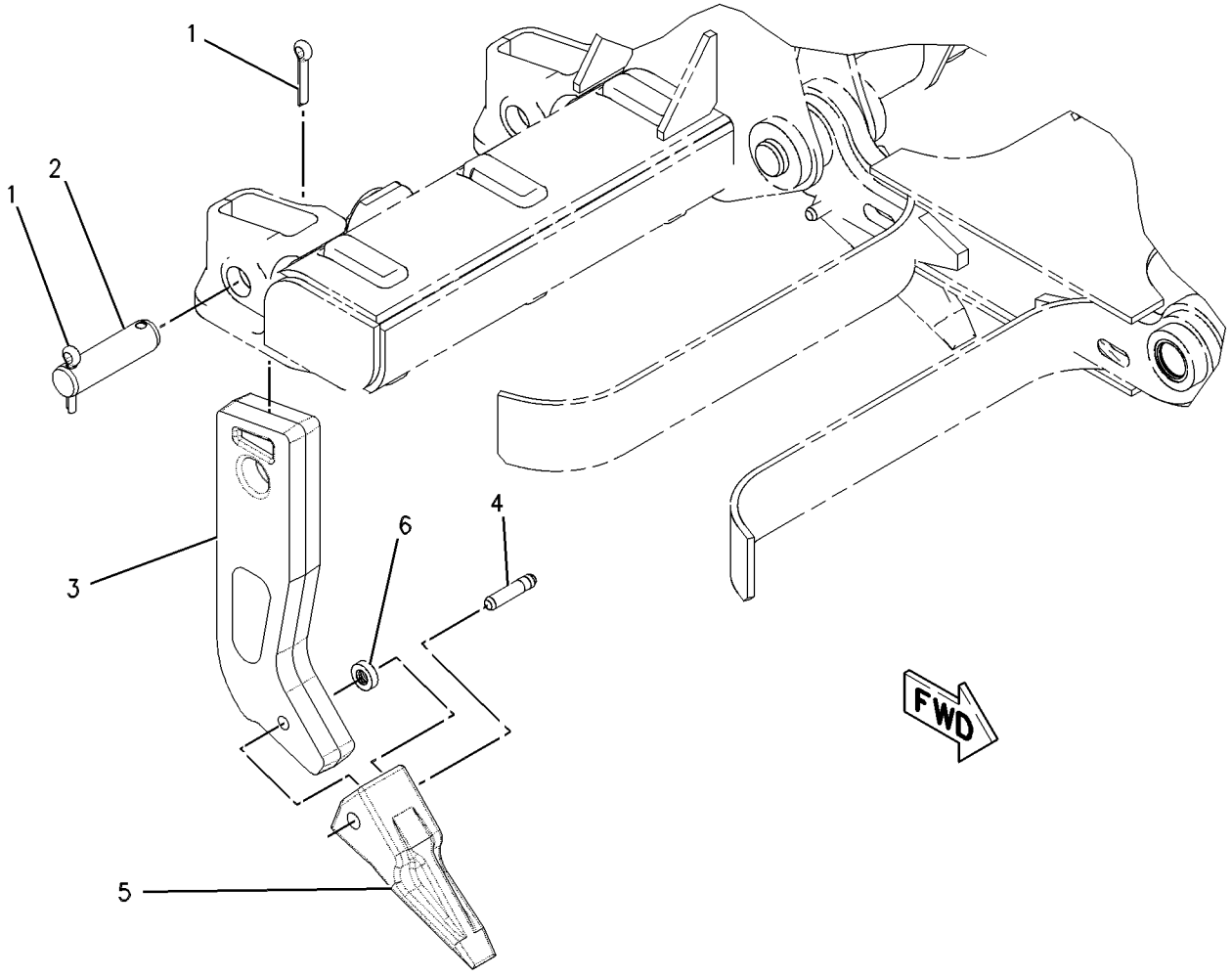

GRAPHIC #1 **<END>** g00632727

WORK TOOLS

8J-5313 TOOTH GP-RIPPER

S/N: B9D1-UP

SMCS-6808 **i00834867**

NOTE	REF NO	GRAPHIC REF	PART NUMBER	QTY	PART NAME 1 2 3 4 5 6 (PRODUCT LEVEL)	SEE PAGE
	1	1	**6B-5464**	1	PIN	
	2	1	**8J-5299**	1	SHANK-RIPPER	
C	3	1	**8E-6208**	1	PIN-G.E.T.	
C		1	**8E-6209**	1	RETAINER AS-G.E.T.	
C	4	1	**1U-3202**	1	TIP-LONG	
	5	1	**3B-4632**	2	COTTER	

C-CHANGE FROM PREVIOUS TYPE

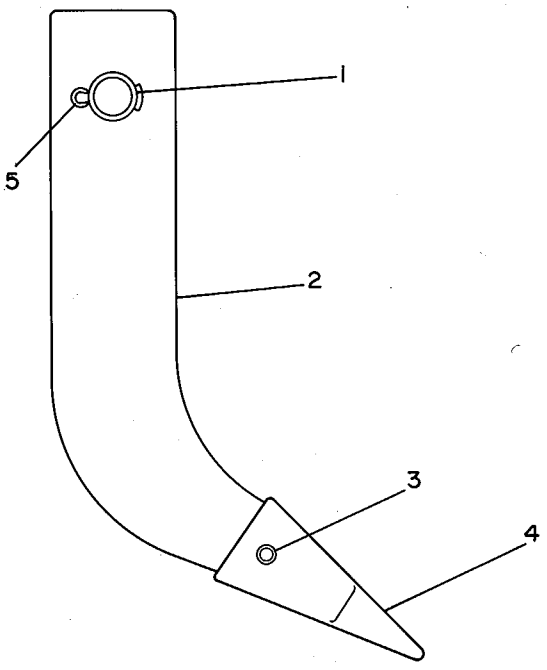

GRAPHIC #1 **<END>** g00108181

WORK TOOLS

4K-3330 TOOTH GP-SCARIFIER

S/N: B9D1-UP
9 TEETH

SMCS-6807 **i01723061**

NOTE	REF NO	GRAPHIC REF	PART NUMBER	QTY	PART NAME 1 2 3 4 5 6 (PRODUCT LEVEL)	SEE PAGE
	1	1	**5K-1459**	9	LOCK PIN	
	2	1	**5K-1458**	9	GROMMET	
	3	1	**195-7218**	9	SHANK	
	4	1	**6Y-5230**	9	TOOTH-SCARIFIER	
F			**6B-3260**	1	TOOL	

F-NOT SHOWN

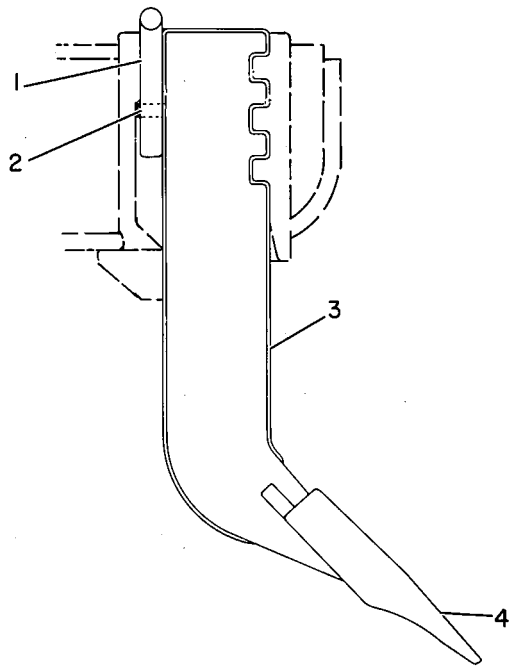

GRAPHIC #1 **<END>** g00108148

OPERATOR STATION

173-1028 ADJUSTER GP-SEAT

S/N: B9D1-UP

PART OF 244-5002 SEAT GP

SMCS-7321 **i01582195**

NOTE	REF NO	GRAPHIC REF	PART NUMBER	QTY	PART NAME 1 2 3 4 5 6 (PRODUCT LEVEL)	SEE PAGE
	1	1	**4V-8256**	4	SPRING	
	2	1	**117-4492**	1	ROD	
	3	1	**136-1544**	1	LATCH AS-LH	
	4	1	**156-5545**	1	LATCH AS-RH	
	5	1	**164-4531**	1	ROD	
	6	1	**170-1112**	1	PLATE AS	
	7	1	**170-1114**	1	HANDLE (SLIDE ADJUSTMENT)	
	8	1	**170-1115**	1	HANDLE (TILT ADJUSTMENT)	
	9	1	**132-0338**	2	WASHER-PLASTIC (13X31.7X.8-MM THK)	
	10	1	**2K-4973**	2	LOCKNUT (3/8-16-THD)	
	11	1	**7X-0608**	2	WASHER-HARD (10.2X16X2-MM THK)	

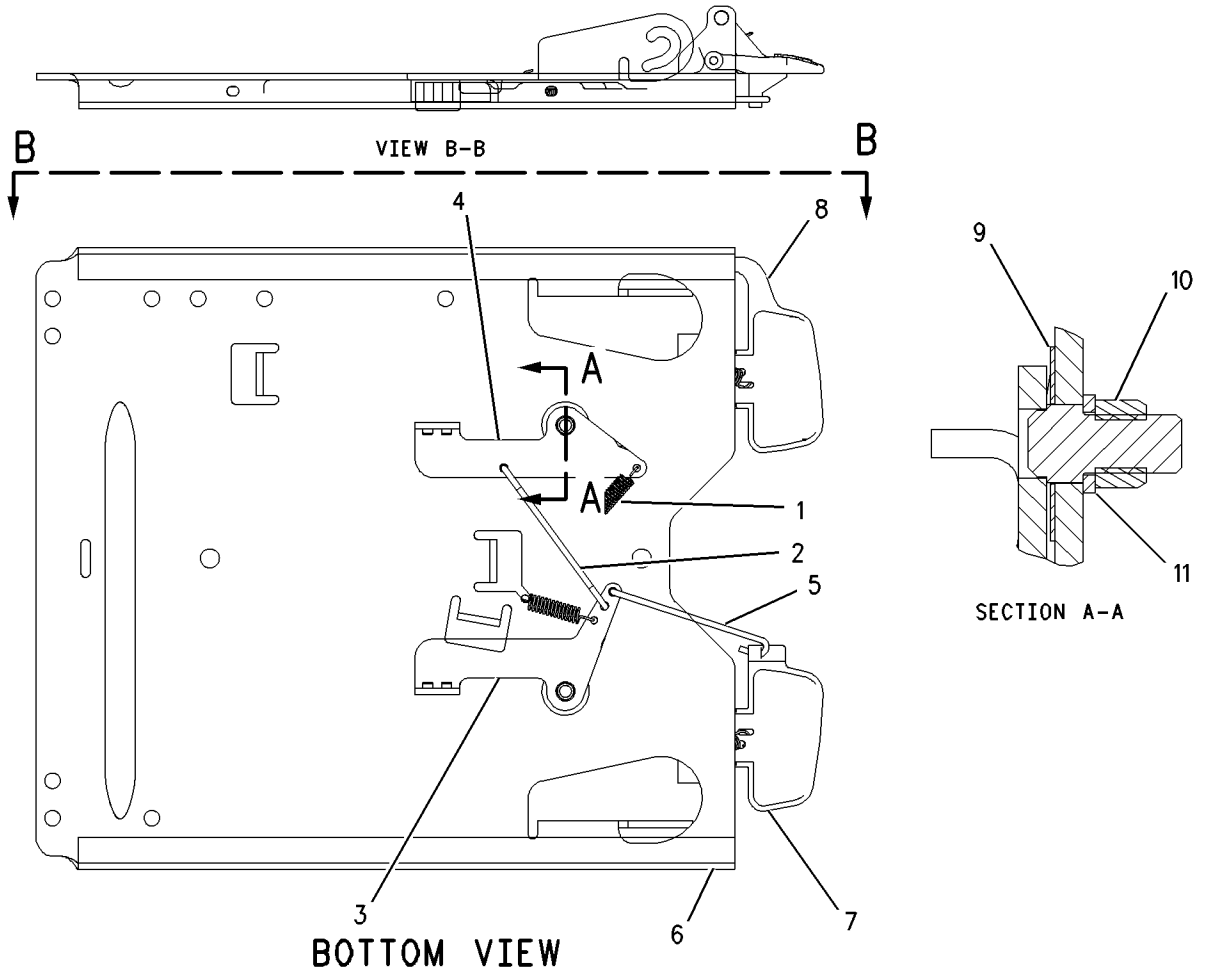

GRAPHIC #1 **<END>** g00816460

OPERATOR STATION

214-0783 AIR COMPRESSOR GP-SEAT–HEAVY-DUTY

S/N: B9D1-UP

OPTIONAL FIELD REPLACEMENT FOR 2373970 STANDARD DUTY COMPRESSOR

PART OF 256-8768 SUSPENSION GP-SEAT

SMCS-731S, 7324 **i02801038**

NOTE	REF NO	GRAPHIC REF	PART NUMBER	QTY	PART NAME 1 2 3 4 5 6 (PRODUCT LEVEL)	SEE PAGE
	1	1	**5P-4423**	1	ELBOW	
	2	1	**5P-4432**	1	ELBOW-AIR BRAKE	
	3	1	**175-5058**	1	MOUNT	
	4	1	**186-5107**	3	SCREW (NO 8X1.25-IN)	
	5	1	**214-0784**	1	COMPRESSOR AS	

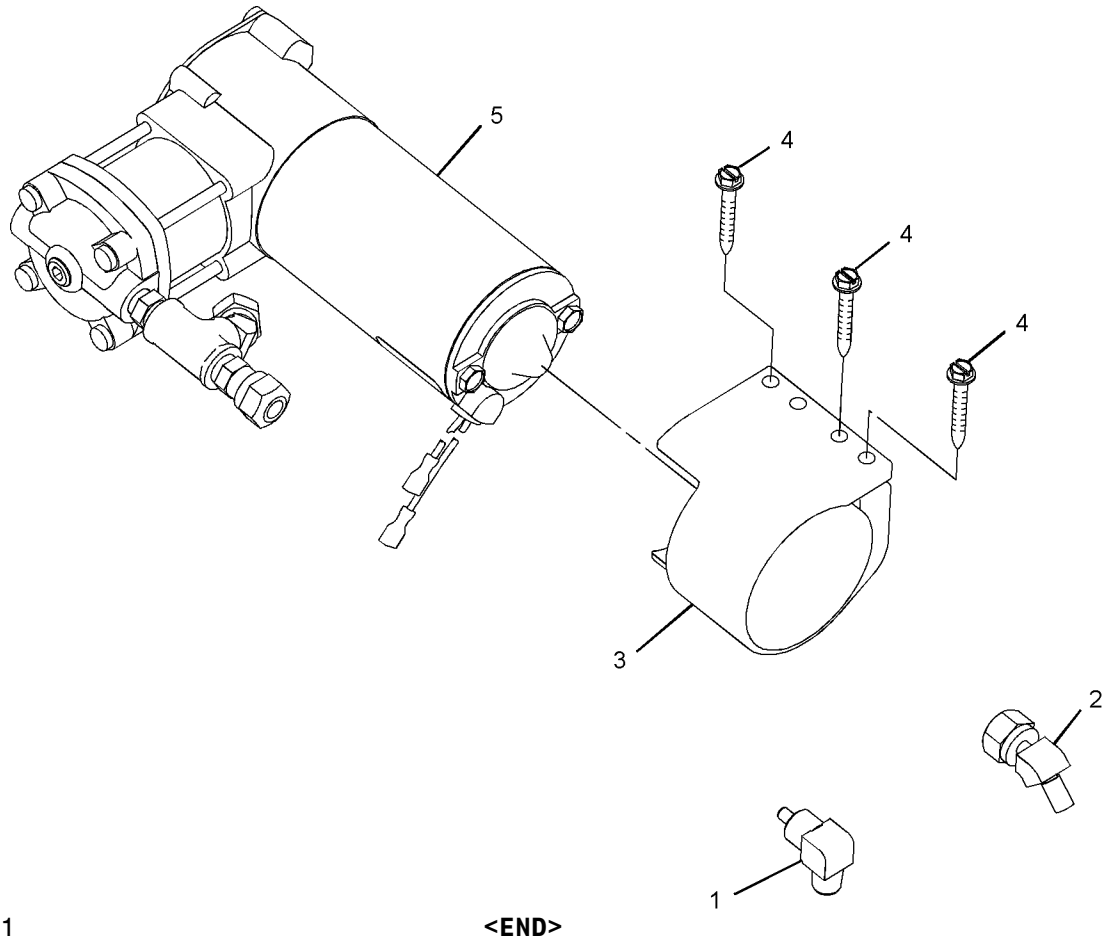

GRAPHIC #1 **<END>** g01040572

OPERATOR STATION

237-3970 AIR COMPRESSOR GP-SEAT

S/N: B9D1-UP

FOR OPTIONAL FIELD REPLACEMENT ORDER 214-0783 COMPRESSOR,211-5358 CONDUIT(100-CM) & 5P-6010 TUBE(1-M), PROVIDES HEAVY DUTY SEAT COMPRESSOR PART OF 256-8768 SUSPENSION GP-SEAT

SMCS-731S, 7324 **i02784170**

NOTE	REF NO	GRAPHIC REF	PART NUMBER	QTY	PART NAME 1 2 3 4 5 6 (PRODUCT LEVEL)	SEE PAGE
					(NO SERVICED PARTS)	

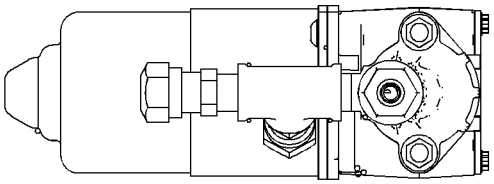

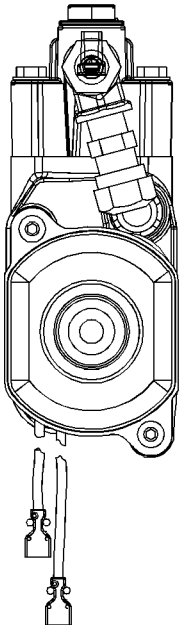

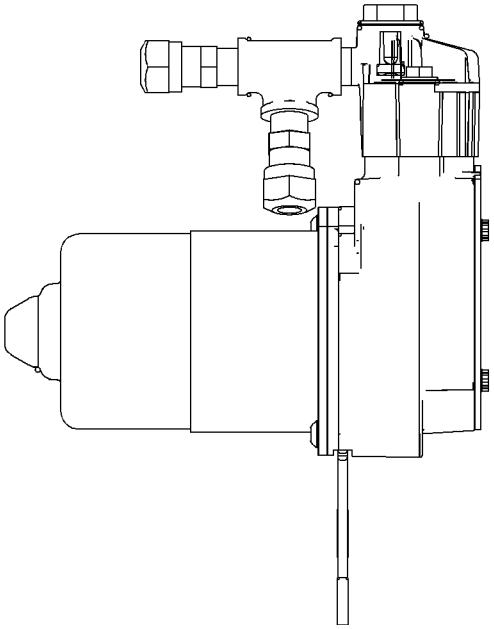

GRAPHIC #1

<END>

g01040576

OPERATOR STATION

244-2722 AIR CONDITIONER & MOUNTING GP

S/N: B9D1-UP

PART OF 233-3149 AIR CONDITIONER GP

SMCS-7320 **i02786358**

NOTE	REF NO	GRAPHIC REF	PART NUMBER	QTY	PART NAME 1 2 3 4 5 6 (PRODUCT LEVEL)	SEE PAGE
	1	1	**249-0410**	2	GASKET	
	2	1	**249-0411**	1	GASKET	
	3	1	**249-0937**	1	DUCT	
	4	1	**265-7454**	1	GASKET	
	5	1	**266-3753**	2	SPACER (11X25X42.8-MM)	
Y	6	1	**285-8055**	1	AIR CONDITIONER GP	763
	7	1	**118-5619**	2	SCREW-FLAT HEAD (NO 6X20X1-IN)	
	8	1	**6V-6689**	2	SCREW-SELF-TAPPING (10-16X.625-IN)	
	9	1	**8T-4121**	4	WASHER-HARD (11X21X2.5-MM THK)	
M	10	1	**8T-4172**	2	BOLT (M10X1.5X80-MM)	
M	11	1	**8T-4196**	2	BOLT (M10X1.5X35-MM)	
D	12	1	**5P-5637**		SEAL (0.5-M)	
D	13	1	**5P-5927**		SEAL (0.4-M)	
D	13A	1	**5P-5927**		SEAL (0.3-M EACH)	
D	13B	1	**5P-5927**		SEAL (0.5-M EACH)	

D-ORDER BY THE METER
M-METRIC PART
Y-SEPARATE ILLUSTRATION

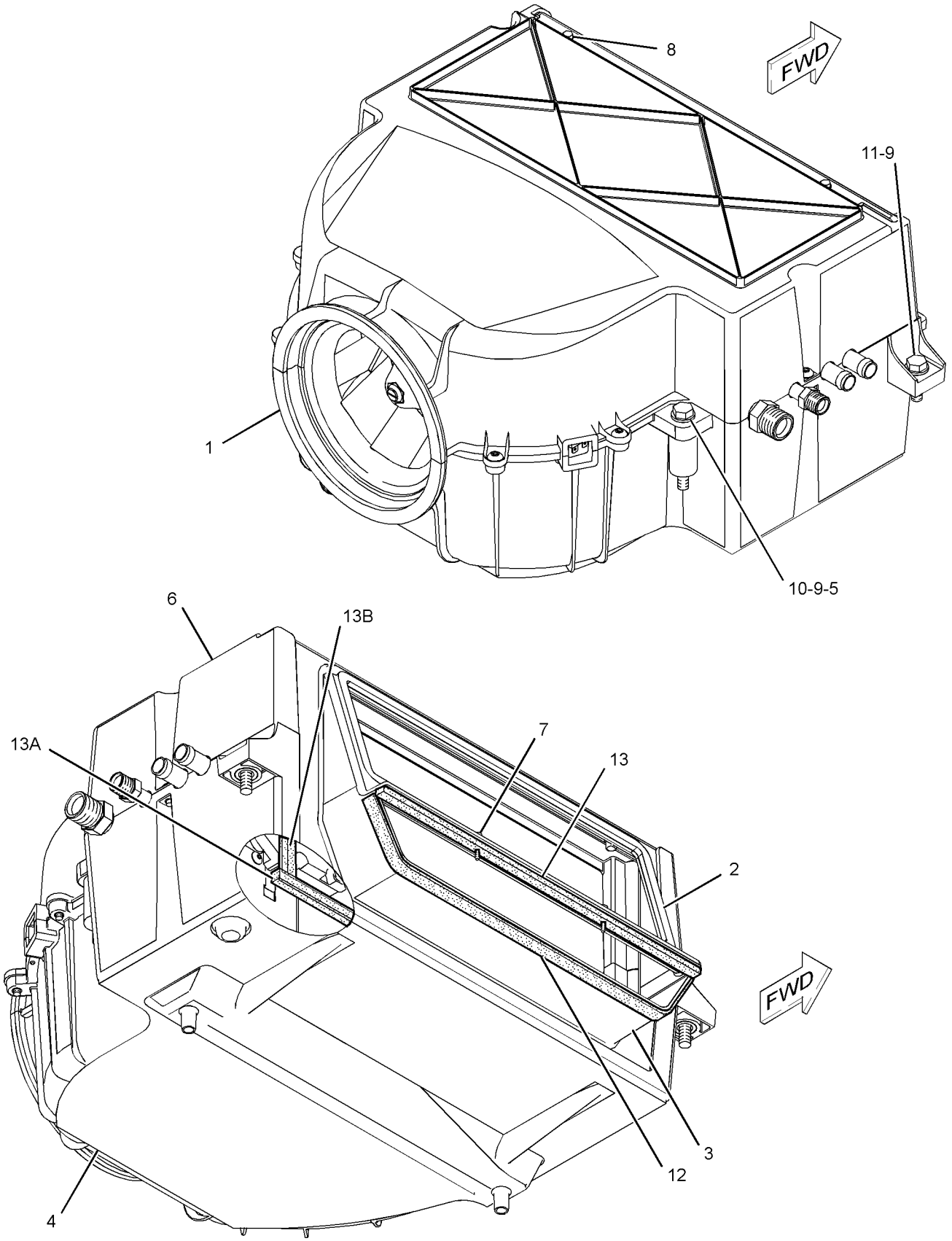

GRAPHIC #1 **<END>** g01284655

OPERATOR STATION

261-0775 AIR CONDITIONER AR

S/N: B9D1-UP

PART OF 261-0187 SNOW AR-MOTOR GRADER

SMCS-7320 **i02786179**

NOTE	PART NUMBER	QTY	PART NAME 1 2 3 4 5 6 (PRODUCT LEVEL)	SEE PAGE
Y	*233-3149*	1	AIR CONDITIONER GP	762
Y	*246-6714*	1	COMPRESSOR GP-REFRIGERANT	773
Y	*232-4738*	1	CONDENSER & MTG GP-REFRIGERANT	774
Y	*255-1249*	1	LINES GP-AIR CONDITIONER	814
Y	*255-1248*	1	LINES GP-HEATER	817
	110-6393	1	PLATE-INSTRUCTION (AIR CONDITIONER)	

Y-SEPARATE ILLUSTRATION

<END>

OPERATOR STATION

233-3149 AIR CONDITIONER GP

S/N: B9D1-UP

PART OF 261-0775 AIR CONDITIONER AR

SMCS-7320 **i02786272**

NOTE	REF NO	GRAPHIC REF	PART NUMBER	QTY	PART NAME 1 2 3 4 5 6 (PRODUCT LEVEL)	SEE PAGE
Y	1	1	*233-3291*	1	CONTROL GP-AIR & TEMPERATURE	778
Y	2	1	*244-2701*	1	DUCT & FILTER GP-CAB AIR	797
Y	3	1	*244-2702*	1	LINES GP-AIR CONDITIONER	812
Y	4	1	*244-2722*	1	AIR CONDITIONER & MOUNTING GP	759
Y	5	1	*250-2933*	1	LINES GP-HEATER	816

Y-SEPARATE ILLUSTRATION

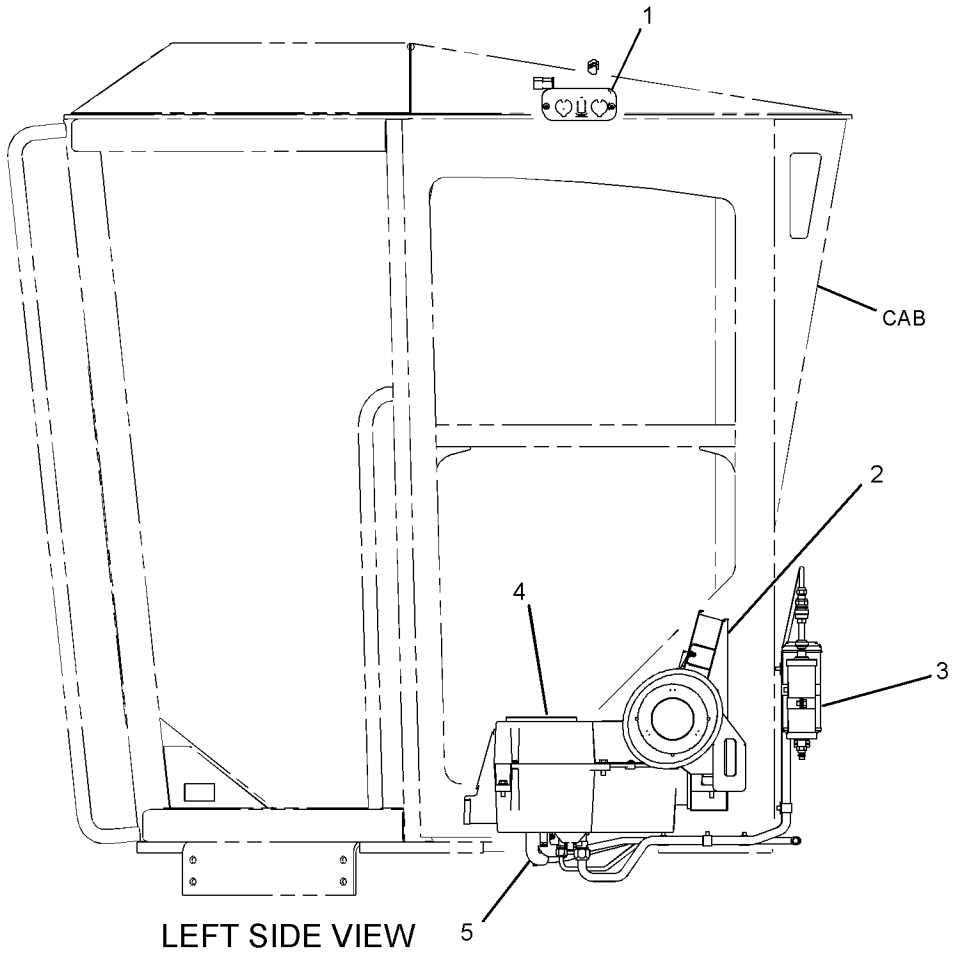

LEFT SIDE VIEW

GRAPHIC #1 **<END>** g01286548

OPERATOR STATION

285-8055 AIR CONDITIONER GP

S/N: B9D1-UP

PART OF 244-2722 AIR CONDITIONER & MOUNTING GP

SMCS-7320 **i02786355**

NOTE	REF NO	GRAPHIC REF	PART NUMBER	QTY	PART NAME 1 2 3 4 5 6 (PRODUCT LEVEL)	SEE PAGE
	1	1	**3E-5464**	1	SWITCH AS-TEMPERATURE (AIR CONDITIONER, HEATER)	
	2	1	**3S-2093**	2	STRAP-CABLE	
	3	1	**6T-6708**	2	WASHER (7X28.6X4.1-MM THK)	
	4	1	**125-9740**	1	RESISTOR	
	5	1	**133-9012**	1	FUSE (15-AMPERE)	
	6	1	**249-0934**	1	CASE AS	
	7	1	**249-0938**	1	CASE	
	8	1	**263-6443**	1	FAN AS-BLOWER (24-VOLT; A/C, HEATER) (9-BLADE)	
		1	**1F-7958**	1	NUT-FULL (1/2-13-THD)	
	9	1	**263-9466**	1	PLATE	
	10	1	**263-9479**	1	PLATE	
	11	1	**265-7434**	1	SEAL	
	12	1	**265-7435**	1	GASKET	
	13	1	**273-0342**	1	PLATE-IDENTIFICATION (SERIAL NUMBER)	
	14	1	**276-9015**	1	HARNESS AS-MOTOR	
		1	**102-8806**	1	KIT-RECEPTACLE (8-PIN)	
		1	**177-9645**	1	KIT-RECEPTACLE (2-PIN)	
					(EACH INCLUDES RECEPTACLE AS & WEDGE)	
Y	15	1	*278-1440*	1	COIL GP-VALVE (AIR CONDITIONER, HEATER)	769
	16	1	**278-3354**	1	FILM-INSTRUCTION (HVAC WATER, DRAINING, FILLING)	
	17	1	**279-1124**	1	GROMMET	
	18	1	**286-3092**	1	PLATE	
M	19	1	**129-3178**	1	LOCKNUT (M6X1-THD)	
	20	1	**132-5793**	1	SCREW-WASHER HD (4-40X0.25-IN)	
M	21	1	**141-9784**	1	BOLT (M6X1X190-MM)	
	22	1	**2S-3745**	4	SCREW-TAPPING (10-16X0.5-IN)	
	23	1	**6V-1668**	2	WASHER (6.5X29.1X3-MM THK)	
	24	1	**6V-6717**	2	SCREW-WASHER HEAD (8-32X9.52-MM)	
	25	1	**8T-4205**	2	WASHER-HARD (7.2X14.5X2-MM THK)	
	26	1	**9X-2038**	4	WASHER (7X19X2-MM THK)	
M	27	1	**9X-2044**	10	SCREW-TRUSS HEAD (M6X1X16-MM)	

M-METRIC PART
Y-SEPARATE ILLUSTRATION

285-8055 AIR CONDITIONER GP *(contd.)* i02786355

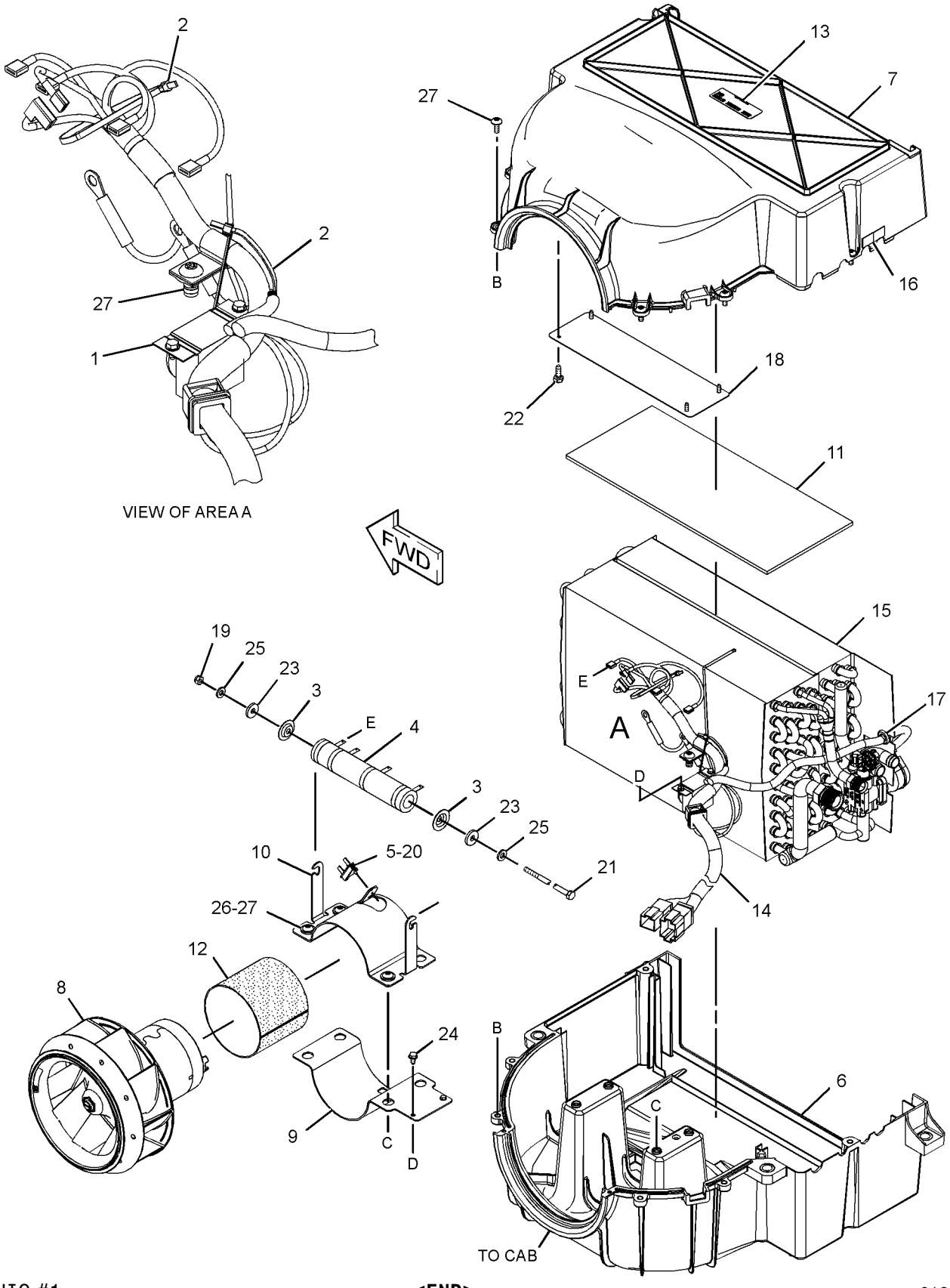

GRAPHIC #1 **<END>** g01288051

OPERATOR STATION

292-0609 ARMREST GP–RH

S/N: B9D1-UP

PART OF 233-3146 CONTROL & MTG GP-JOYSTICK

SMCS-7307 **i02785961**

NOTE	REF NO	GRAPHIC REF	PART NUMBER	QTY	PART NAME 1 2 3 4 5 6 (PRODUCT LEVEL)	SEE PAGE
	1	1	**233-3278**	1	BRACKET AS (RH)	
	2	1	**253-8868**	1	PIN-SPRING	
	3	1	**283-7980**	1	CUSHION AS	
M	4	1	**3E-8020**	4	SCREW-TRUSS HEAD (M6X1X25-MM)	
	5	1	**122-7666**	1	SPRING	
	6	1	**127-4838**	1	SETSCREW-SOCKET (NO 8X1.26-IN)	
	7	1	**292-0611**	2	BUSHING	
	8	1	**292-0612**	1	BUSHING	
	9	1	**292-0614**	1	ROD	
	10	1	**292-0618**	1	KNOB	

M-METRIC PART

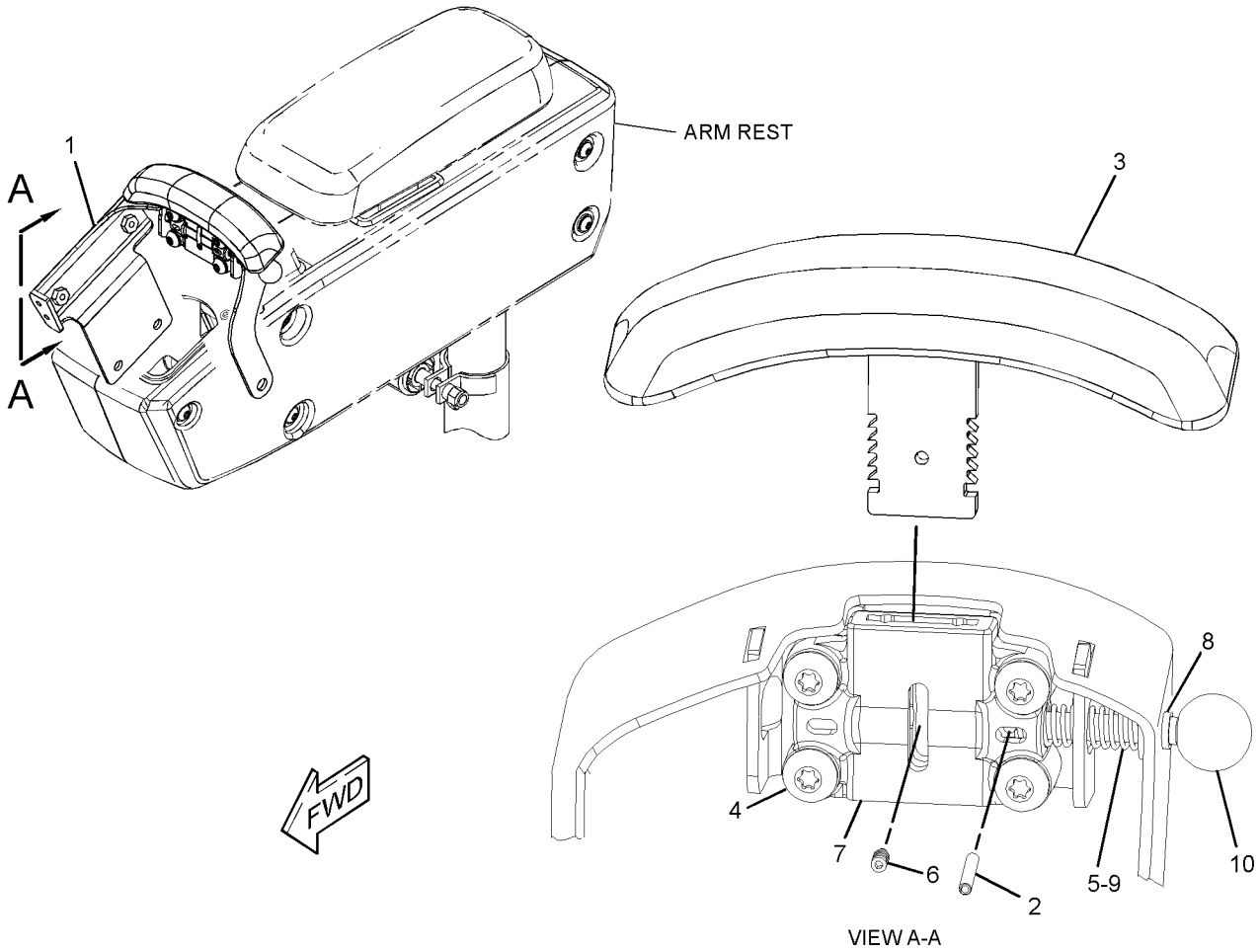

VIEW A-A

GRAPHIC #1 **<END>** g01391688

OPERATOR STATION

292-0617 ARMREST GP–LH

S/N: B9D1-UP

PART OF 233-3146 CONTROL & MTG GP-JOYSTICK

SMCS-7307 **i02775720**

NOTE	REF NO	GRAPHIC REF	PART NUMBER	QTY	PART NAME 1 2 3 4 5 6 (PRODUCT LEVEL)	SEE PAGE
	1	1	**233-3277**	1	BRACKET AS	
	2	1	**253-8868**	1	PIN-SPRING	
	3	1	**283-7980**	1	CUSHION AS	
M	4	1	**3E-8020**	4	SCREW-TRUSS HEAD (M6X1X25-MM)	
	5	1	**127-4838**	1	SETSCREW-SOCKET (NO 8X1.26-IN)	
	6	1	**122-7666**	1	SPRING	
	7	1	**292-0611**	2	BUSHING	
	8	1	**292-0612**	1	BUSHING	
	9	1	**292-0614**	1	ROD	
	10	1	**292-0618**	1	KNOB	

M-METRIC PART

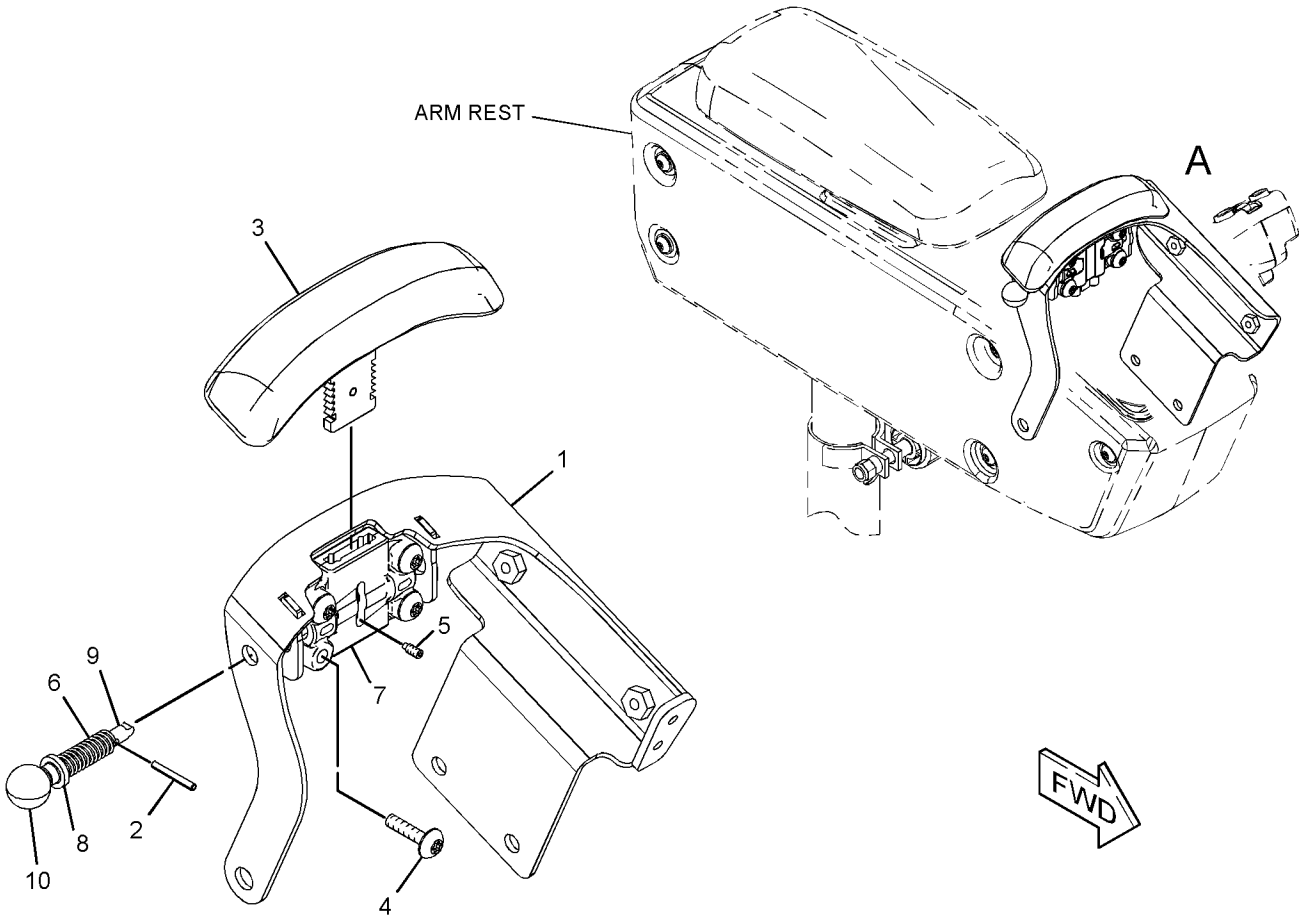

VIEW OF AREA A

GRAPHIC #1 **<END>** g01391674

OPERATOR STATION

265-8937 BRACKET GP-MOUNTING—FUSE PANEL

S/N: B9D1-UP

PART OF 291-2910 WIRING GP-CAB

SMCS-7301 **i02779154**

NOTE	REF NO	GRAPHIC REF	PART NUMBER	QTY	PART NAME 1 2 3 4 5 6 (PRODUCT LEVEL)	SEE PAGE
	1	1	**114-6658**	4	WASHER (6.5X17X1-MM THK)	
	2	1	**265-8932**	1	PLATE AS	
	3	1	**265-8933**	1	PLATE AS	
	4	1	**265-8934**	1	PLATE	
	5	1	**265-8936**	1	FILM-FUSE PANEL (FUSE IDENTIFICATION)	
M	6	1	**5C-9553**	4	BOLT (M6X1X16-MM)	
M	7	1	**9X-2044**	4	SCREW-TRUSS HEAD (M6X1X16-MM)	
	8	1	**9X-8256**	4	WASHER (6.6X12X2-MM THK)	

M-METRIC PART

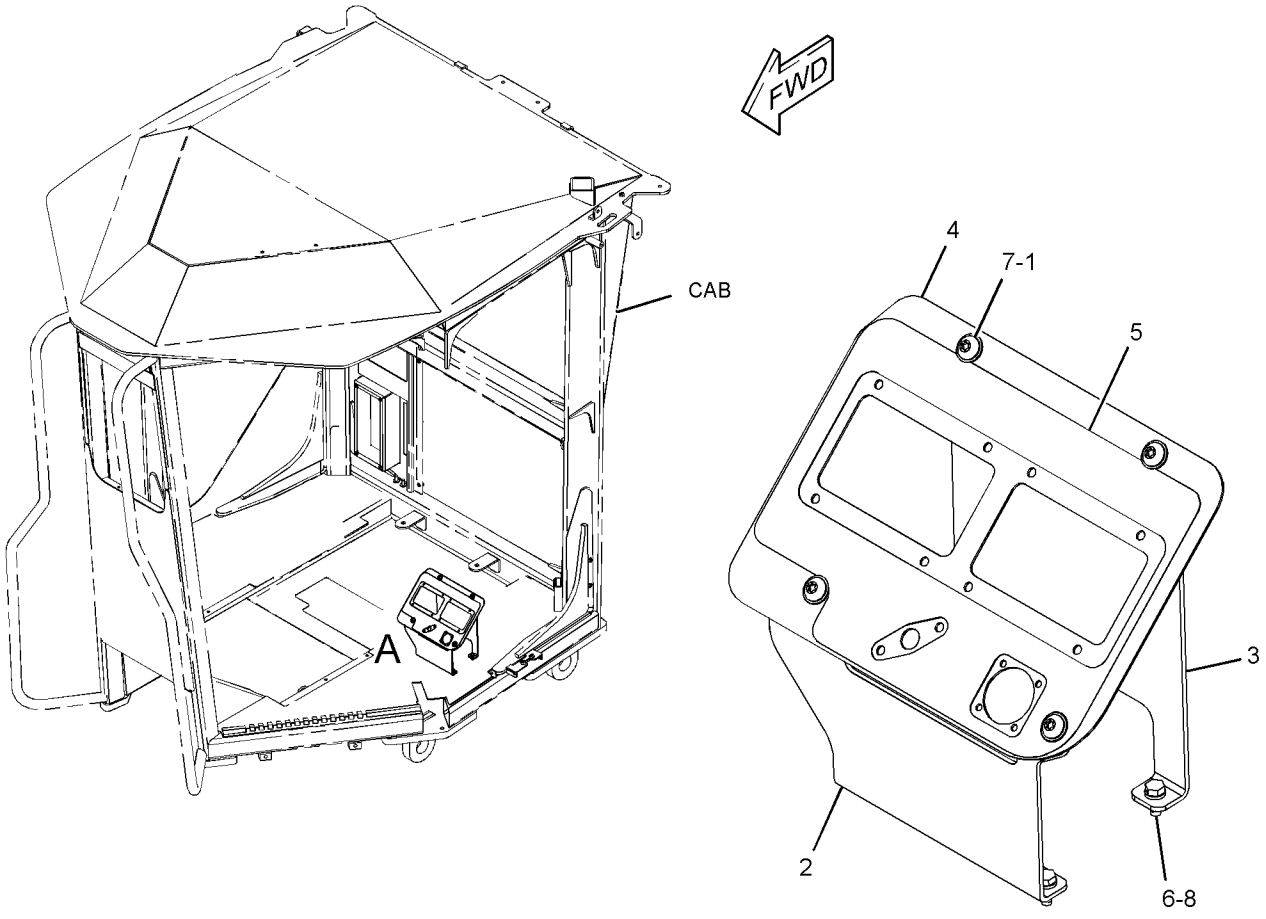

VIEW OF AREA A

GRAPHIC #1 **<END>** g01289329

OPERATOR STATION

254-5399 CAB AR

S/N: B9D1-UP

PART OF 234-7721 COMMON AR

SMCS-7301 **i02775392**

NOTE	PART NUMBER	QTY	PART NAME 1 2 3 4 5 6 (PRODUCT LEVEL)	SEE PAGE
Y	*233-3145*	1	CONTROL & MTG GP-IMPLEMENT	151
Y	*233-3146*	1	CONTROL & MTG GP-JOYSTICK	775
Y	*233-3135*	1	CONVERTER GP-ELECTRICAL	163
Y	*263-2590*	1	COVER GP-CAB	786
Y	*294-0984*	1	PANEL GP-INSTRUMENT (FRONT CONSOLE)	846
Y	*294-1033*	1	DOOR GP-CAB (LH)	794
Y	*250-9257*	1	ELECTRONICS GP-IMPLEMENT	165
Y	*250-9258*	1	ELECTRONICS GP-IMPLEMENT (IMPLEMENT 2)	165
Y	*294-0987*	1	LINER GP-CAB	810
Y	*233-3208*	1	MIRROR GP-REAR VIEW (INTERIOR)	821
Y	*254-5395*	1	MOUNTING GP-CAB	828
Y	*293-4200*	1	PANEL GP-CAB	838
Y	*233-3133*	1	ROOF GP-CAB	851
Y	*294-1011*	1	WINDOW GP-CAB	874
Y	*233-3138*	1	WIPER & WASHER GP-WINDOW (FRONT)	877
Y	*291-2910*	1	WIRING GP-CAB	265
Y	*233-3288*	1	WIRING GP-GRADE CONTROL (CAB)	280
Y	*291-2909*	1	WIRING GP-LIGHTING (FLOODLIGHTS, WARNING BEACON)	288
Y	*292-1874*	1	WIRING GP-LIGHTING (WORK LIGHTS)	289
	294-0985	1	CAB AS-ROPS	
	267-3179	1	FILM-INFORMATION (ROPS, FOPS, READ OMM) ON THE ROPS	

Y-SEPARATE ILLUSTRATION

<END>

OPERATOR STATION

278-1440 COIL GP-VALVE

S/N: B9D1-UP

PART OF 285-8055 AIR CONDITIONER GP

SMCS-7309 **i02786356**

NOTE	REF NO	GRAPHIC REF	PART NUMBER	QTY	PART NAME 1 2 3 4 5 6 (PRODUCT LEVEL)	SEE PAGE
	1	1	**131-3093**	1	BUSHING	
	2	1	**238-8839**	1	CORE AS-HEATER	
	3	1	**238-8840**	1	COIL AS-EVAPORATOR	
	4	1	**238-8841**	1	VALVE AS-CONTROL	
	5	1	**245-1596**	1	ACTUATOR	
	6	1	**248-2924**	2	SPACER (4.3X9.5X19.1-MM THK)	
	7	1	**248-6772**	11	SCREW-MACHINE (8-16X7.75-IN)	
	8	1	**262-4930**	1	TUBE	
	9	1	**281-2588**	4	SCREW	
M	10	1	**124-0608**	2	BOLT (M4X0.7X35-MM)	
	11	1	**4M-6582**	2	SEAL-O-RING	

M-METRIC PART

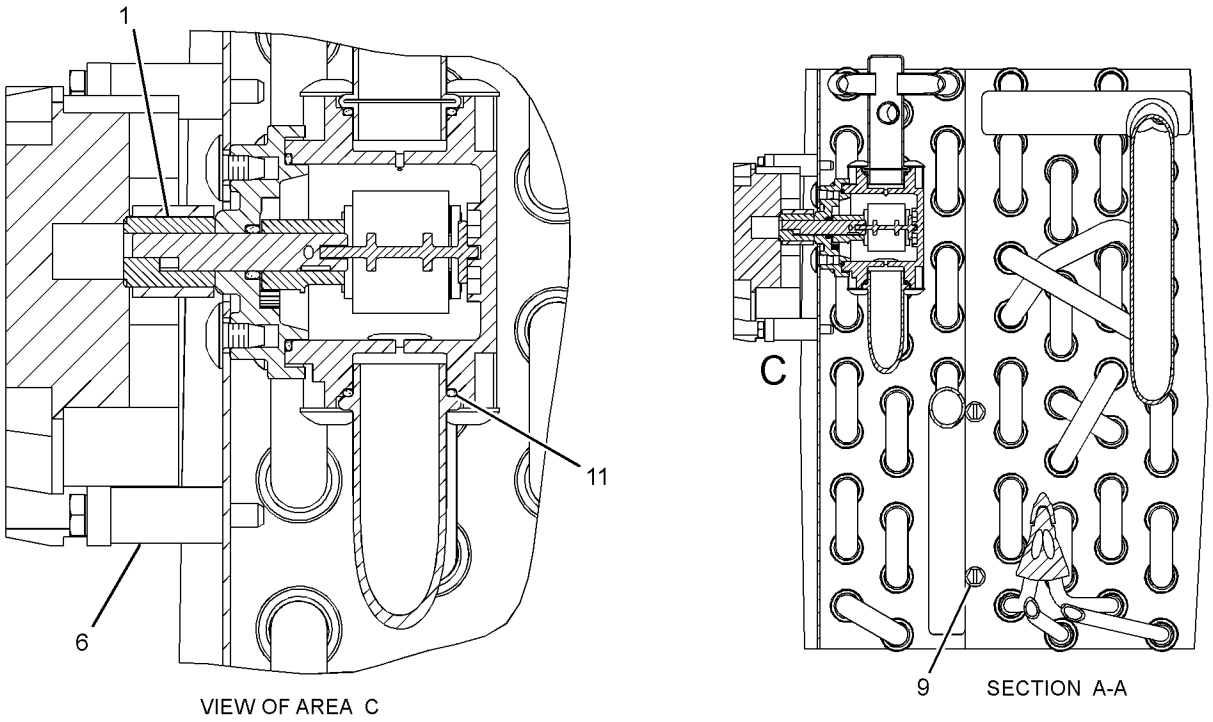

GRAPHIC #1 **<END>** g01240707

278-1442 COIL GP-VALVE—AIR CONDITIONER, HEATER

S/N: B9D1-UP

PART OF 244-2699 HEATER GP-CAB

SMCS-7309 **i02786766**

NOTE	REF NO	GRAPHIC REF	PART NUMBER	QTY	PART NAME 1 2 3 4 5 6 (PRODUCT LEVEL)	SEE PAGE
	1	1	**131-3093**	1	BUSHING	
	2	1	**238-8839**	1	CORE AS-HEATER	
	3	1	**238-8841**	1	VALVE AS-CONTROL (AIR CONDITIONER)	
	4	1	**245-1596**	1	ACTUATOR	
	5	1	**248-2924**	2	SPACER (4.3X9.5X19.1-MM THK)	
	6	1	**248-6772**	11	SCREW-MACHINE (8-16X7.75-IN)	
	7	1	**262-4930**	1	TUBE	
	8	1	**273-0337**	2	PLATE	
	9	1	**281-2588**	4	SCREW	
M	10	1	**124-0608**	2	BOLT (M4X0.7X35-MM)	
	11	1	**4M-6582**	2	SEAL-O-RING	

M-METRIC PART

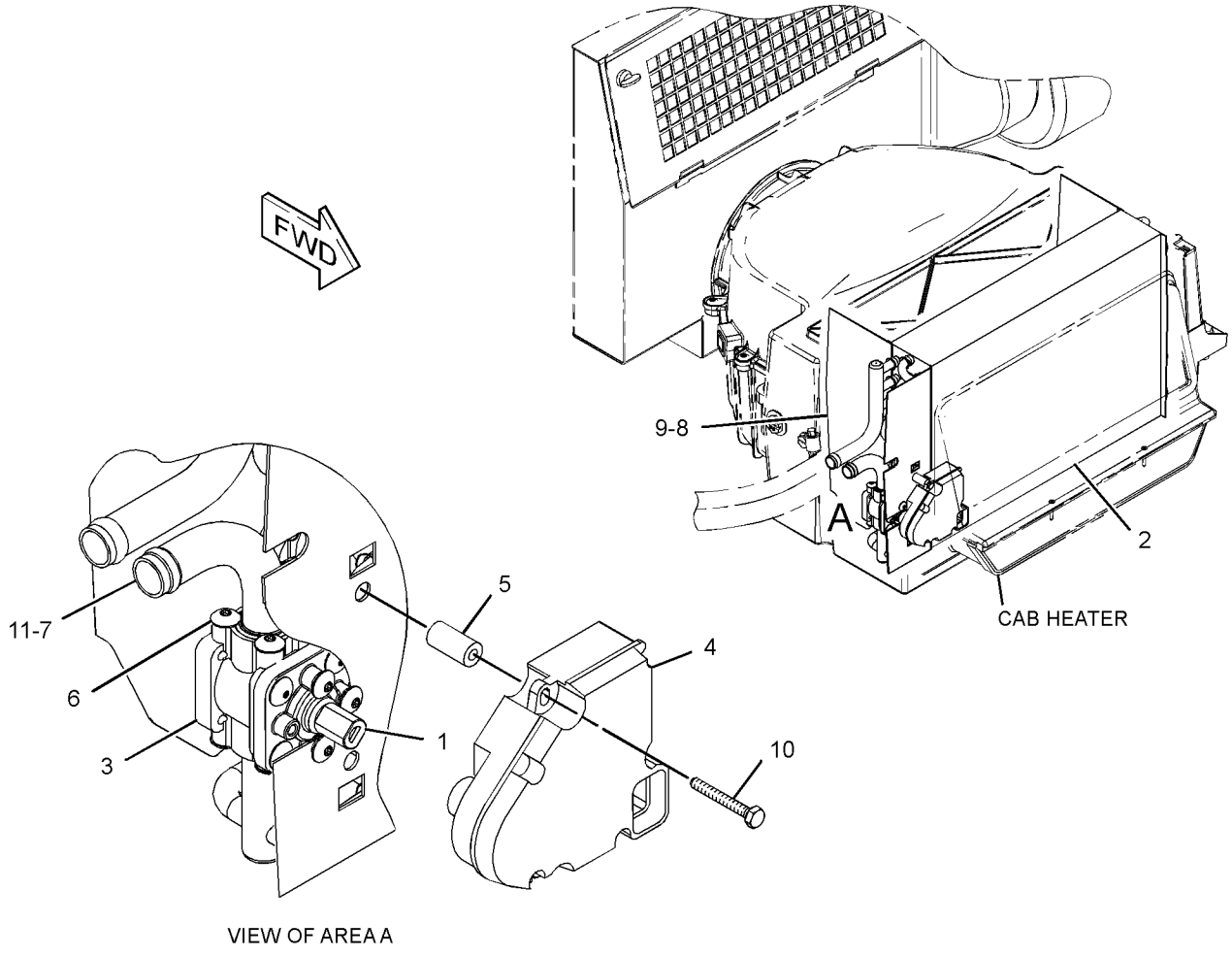

GRAPHIC #1 **<END>** g01252133

OPERATOR STATION

163-0872 COMPRESSOR GP-REFRIGERANT

S/N: B9D1-UP

PART OF 246-6714 COMPRESSOR GP-REFRIGERANT

SMCS-1802 **i02421639**

NOTE	REF NO	GRAPHIC REF	PART NUMBER	QTY	PART NAME 1 2 3 4 5 6 (PRODUCT LEVEL)	SEE PAGE
	1	1	**102-8802**	1	KIT-RECEPTACLE (2-PIN)	
					(INCLUDES RECEPTACLE AS AND WEDGE)	
	2	1	**114-3469**	1	VALVE GP-RELIEF (REFRIGERANT COMPRESSOR)	
		1	**9X-7378**	1	SEAL-O-RING	
	3	1	**7T-4532**	1	PLUG AS	
	4	1	**9X-7385**	2	SEAL-O-RING	
B	5	1	**4C-2959**		OIL-AIR CONDITIONER	

B-USE AS REQUIRED

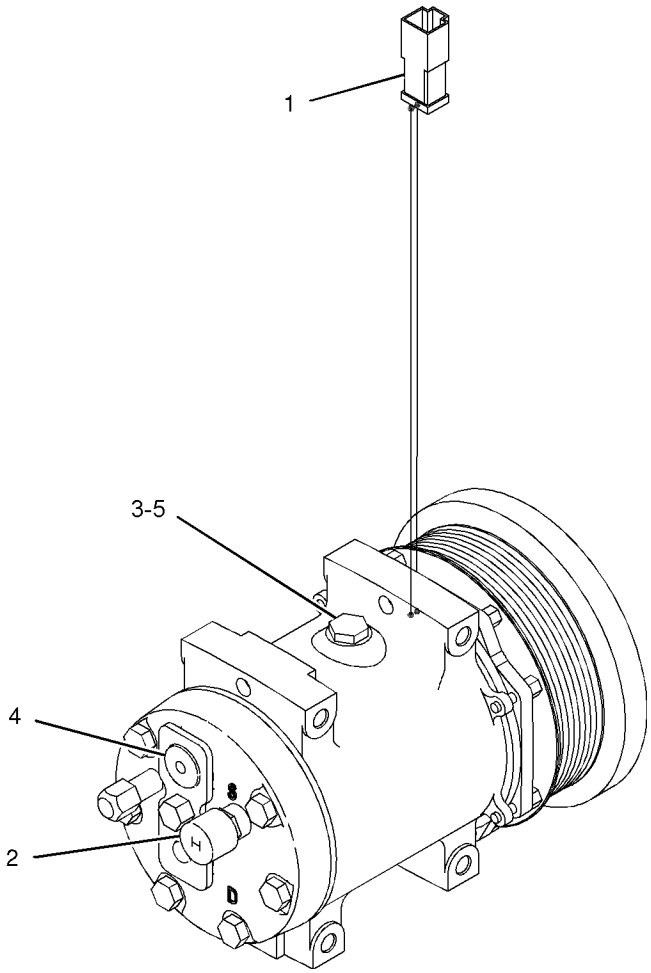

GRAPHIC #1

<END>

g01054441

OPERATOR STATION

246-6714 COMPRESSOR GP-REFRIGERANT

S/N: B9D1-UP

PART OF 261-0775 AIR CONDITIONER AR

SMCS-1802 **i02786445**

NOTE	REF NO	GRAPHIC REF	PART NUMBER	QTY	PART NAME 1 2 3 4 5 6 (PRODUCT LEVEL)	SEE PAGE
	1	1	**7W-3872**	2	SLEEVE	
Y	2	1	**163-0872**	1	COMPRESSOR GP-REFRIGERANT	772
	3	1	**266-6026**	1	SUPPORT	
	4	1	**198-4776**	3	WASHER-HARD (8.8X20X8-MM THK)	
M	5	1	**7X-2537**	4	BOLT (M8X1.25X35-MM)	
M	6	1	**7X-2538**	4	BOLT (M8X1.25X100-MM)	
	7	1	**8T-4224**	5	WASHER-HARD (8.8X16X2-MM THK)	

M-METRIC PART
Y-SEPARATE ILLUSTRATION

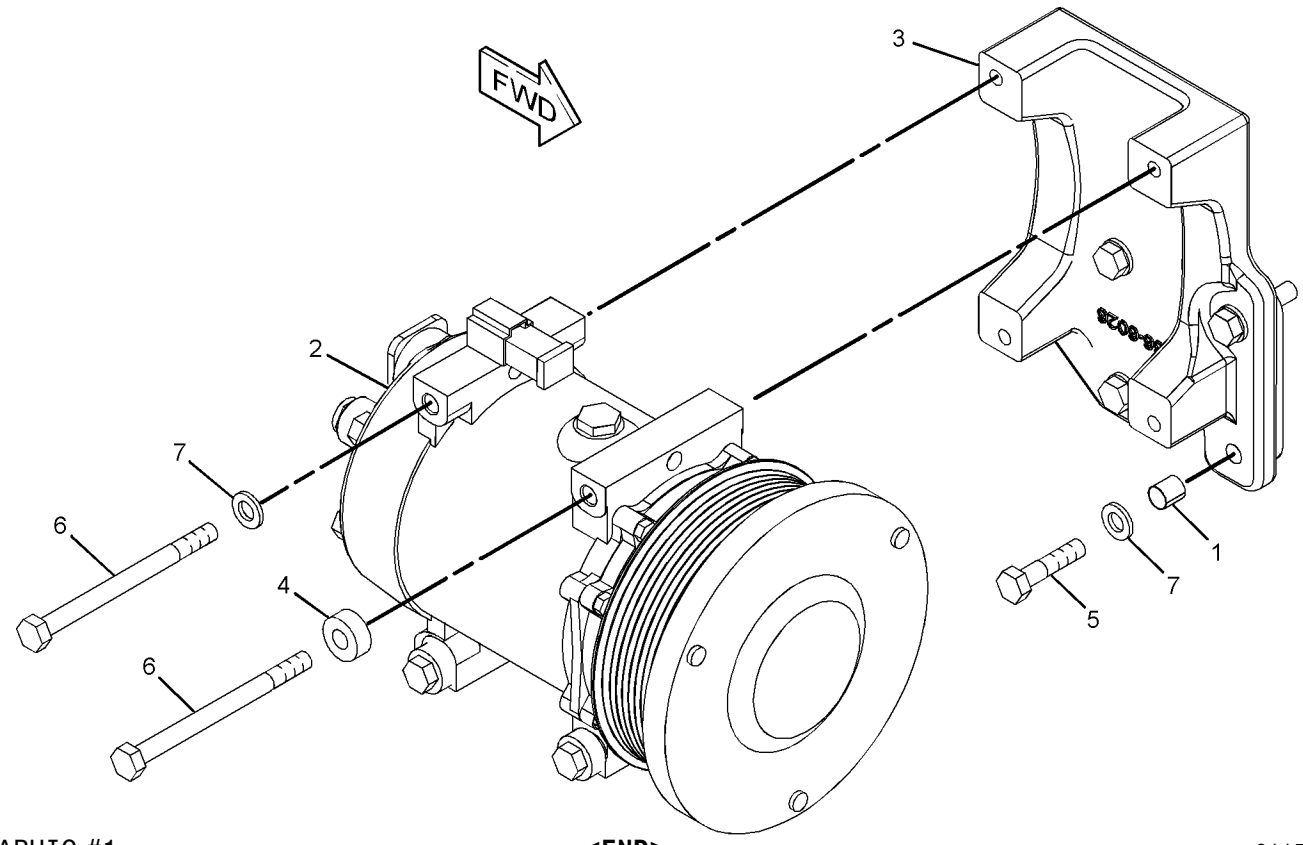

GRAPHIC #1 **<END>** g01152332

OPERATOR STATION

232-4738 CONDENSER & MTG GP-REFRIGERANT

S/N: B9D1-UP

PART OF 261-0775 AIR CONDITIONER AR

SMCS-1805 **i02786232**

NOTE	REF NO	GRAPHIC REF	PART NUMBER	QTY	PART NAME 1 2 3 4 5 6 (PRODUCT LEVEL)	SEE PAGE
	1	1	**251-0982**	1	CORE AS-CONDENSER (REFRIGERANT)	
	2	1	**8T-4121**	4	WASHER-HARD (11X21X2.5-MM THK)	
M	3	1	**8T-4136**	4	BOLT (M10X1.5X25-MM)	

M-METRIC PART

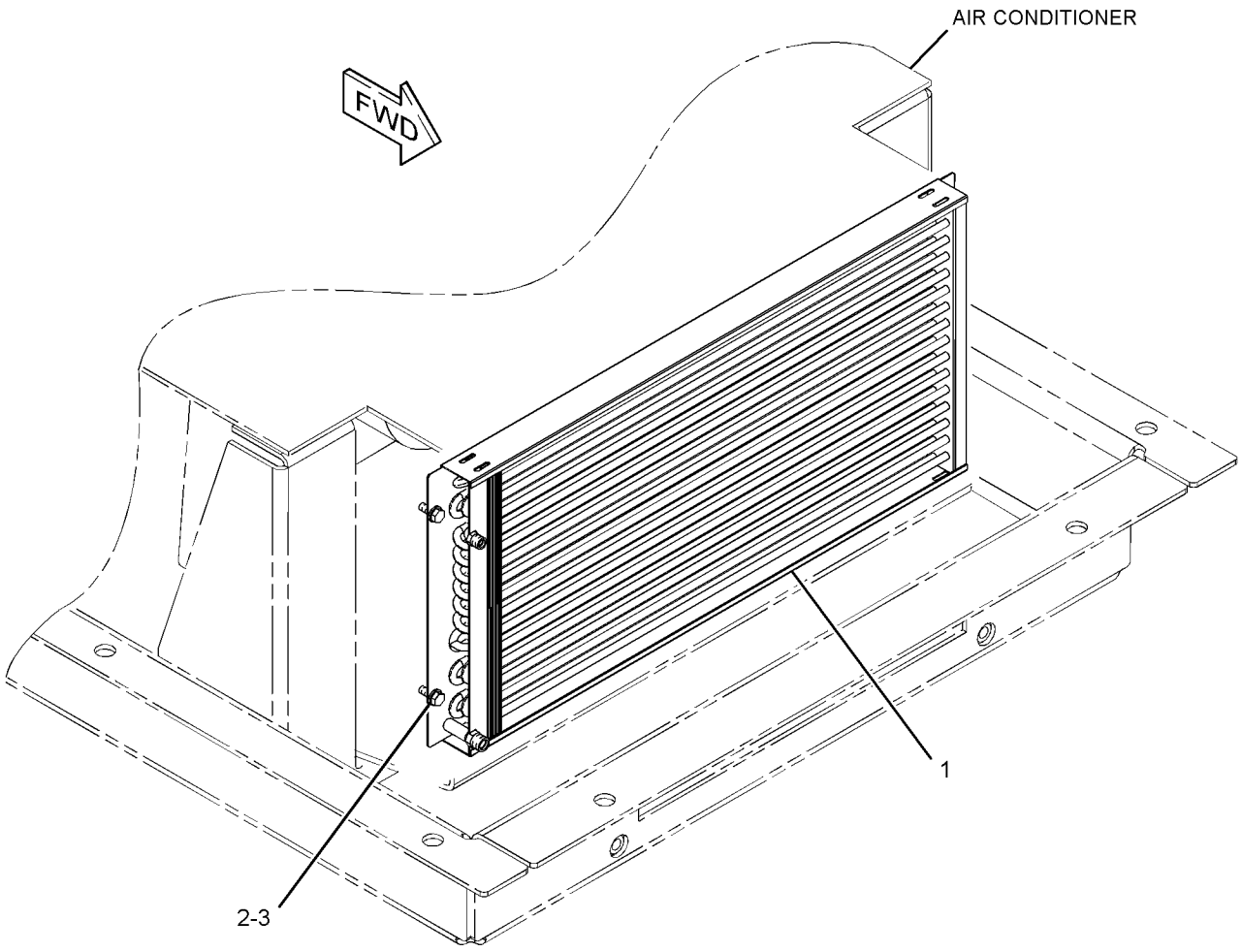

GRAPHIC #1 **<END>** g01369682

OPERATOR STATION

233-3146 CONTROL & MTG GP-JOYSTICK

S/N: B9D1-UP

PART OF 254-5399 CAB AR

SMCS-5063, 5705 **i02775591**

NOTE	REF NO	GRAPHIC REF	PART NUMBER	QTY	PART NAME 1 2 3 4 5 6 (PRODUCT LEVEL)	SEE PAGE
	1	2	**102-8802**	1	KIT-RECEPTACLE (2-PIN)	
					(INCLUDES RECEPTACLE AS & WEDGE)	
	2	2	**140-5945**	1	FILM-IDENTIFICATION (HORN)	
	3	2	**170-1821**	1	SWITCH AS-PUSH BUTTON (HORN)	
		2	**6F-0253**	1	LOCKWASHER	
		2	**186-3735**	2	PIN-CONNECTOR (16-GA TO 18-GA)	
		2	**172-3511**	1	NUT (5/8-24-THD)	
Y	4	2	**233-3118**	1	CONTROL GP-JOYSTICK (RH)	783
Y	5	1	*233-3224*	1	SUPPORT GP-CONTROL (JOYSTICK, LH)	859
Y	6	1	*233-3225*	1	SUPPORT GP-CONTROL (JOYSTICK, RH)	861
	7	2	**249-5482**	1	SWITCH AS-ROCKER (TURN SIGNAL)	
	8	1,2	**251-2247**	2	GROMMET	
	9	2	**251-2272**	1	COVER (LH)	
	10	2	**251-2273**	1	COVER (RH)	
	11	2	**251-2274**	1	COVER (LH)	
	12	2	**251-2275**	1	COVER (RH)	
Y	13	2	**300-6464**	1	CONTROL GP-JOYSTICK (LH)	784
	14	1	**280-7477**	1	FILM-INSTRUCTION (OPERATOR CONSOLE, LH)	
	15	1	**280-7478**	1	FILM-INSTRUCTION (OPERATOR CONSOLE, RH)	
Y	16	2	*292-0609*	1	ARMREST GP (RH)	765
Y	17	2	*292-0617*	1	ARMREST GP (LH)	766
	18	2	**297-4147**	1	COVER (LH)	
	19	2	**297-4148**	1	COVER (RH)	
	20	1	**6V-5839**	8	WASHER (11X21X2.5-MM THK)	
M	21	2	**8T-0269**	8	BOLT-SOCKET HEAD (M6X1X20-MM)	
	22	2	**8T-2228**	20	WASHER-HARD (6.5X17X2-MM THK)	
M	23	1	**8T-4196**	8	BOLT (M10X1.5X35-MM)	
M	24	2	**8T-4200**	6	BOLT (M8X1.25X16-MM)	
	25	2	**8T-4224**	6	WASHER-HARD (8.8X16X2-MM THK)	
M	26	2	**9X-2044**	24	SCREW-TRUSS HEAD (M6X1X16-MM)	
E	27	2	**116-8376**		SEAL (17-CM EACH)	
E	27A	2	**116-8376**		SEAL (5.5-CM EACH)	

E-ORDER BY THE CENTIMETER
M-METRIC PART
Y-SEPARATE ILLUSTRATION

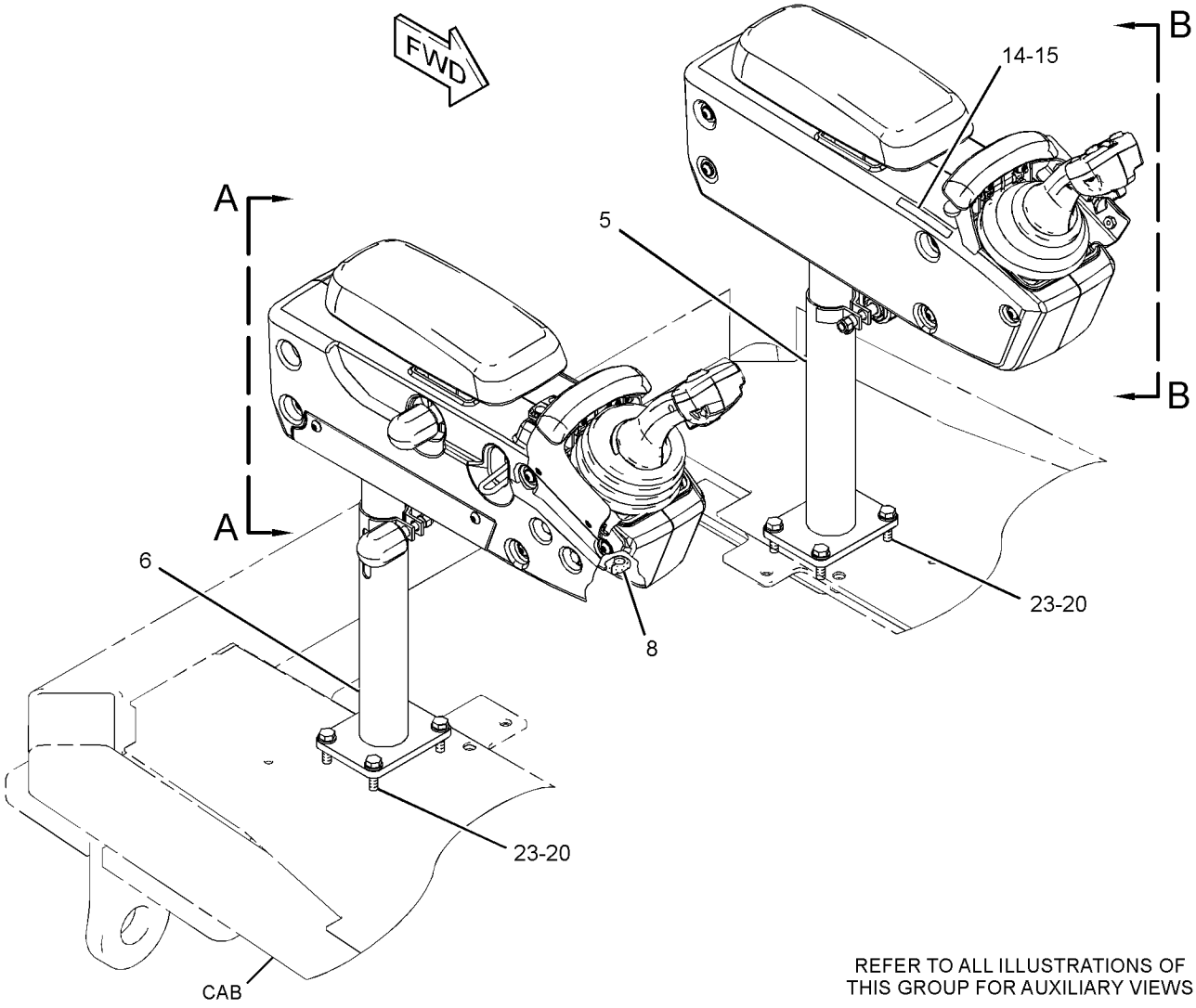

REFER TO ALL ILLUSTRATIONS OF
THIS GROUP FOR AUXILIARY VIEWS

GRAPHIC #1

g01305106

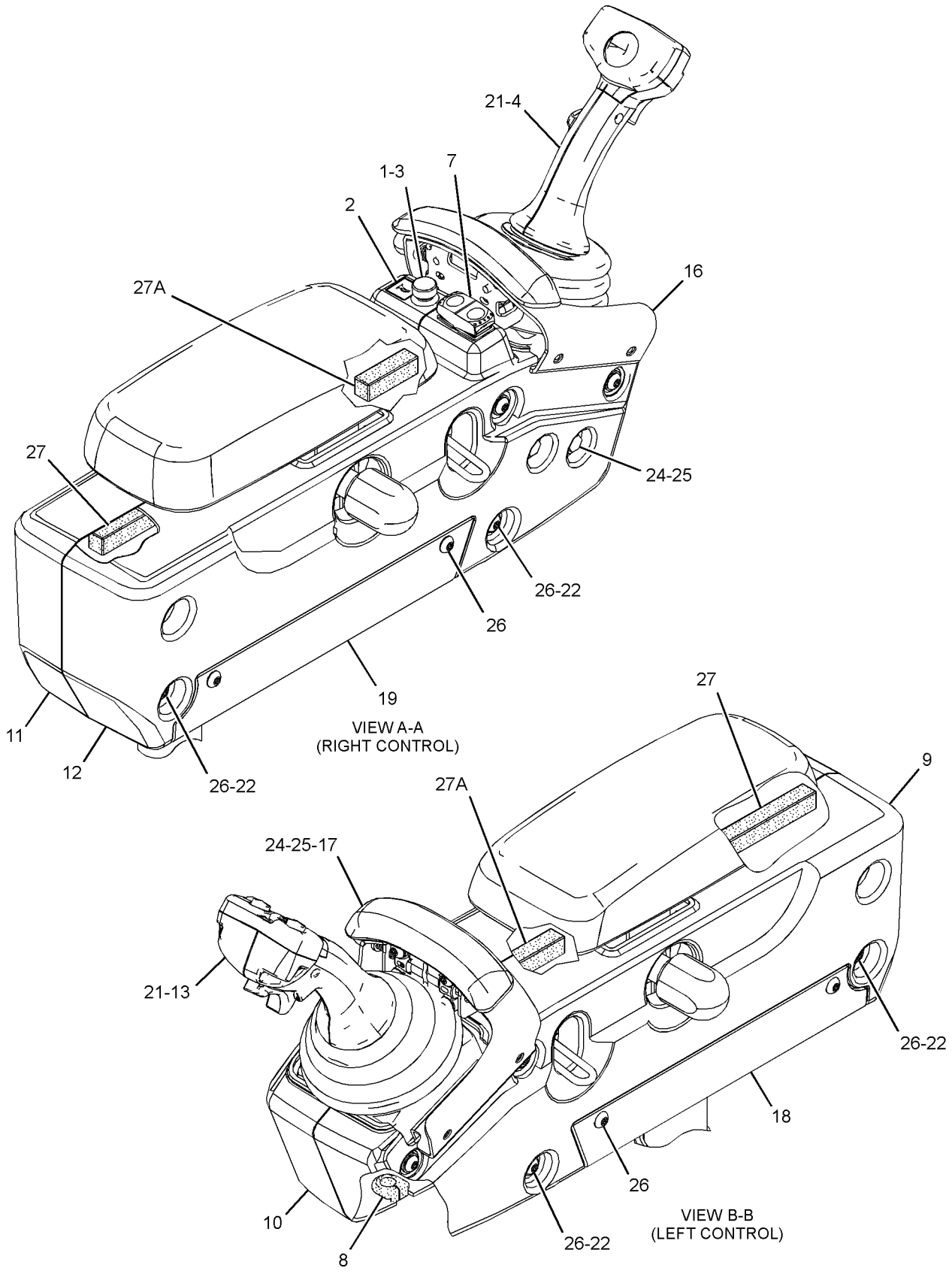

GRAPHIC #2 **<END>** g01305107

OPERATOR STATION

233-3291 CONTROL GP-AIR & TEMPERATURE

S/N: B9D1-UP

PART OF 233-3149 AIR CONDITIONER GP

SMCS-7451 **i02786271**

NOTE	REF NO	GRAPHIC REF	PART NUMBER	QTY	PART NAME 1 2 3 4 5 6 (PRODUCT LEVEL)	SEE PAGE
	1	1	**248-4220**	1	PANEL AS	
	1A	1	**271-7312**	1	KNOB (TEMPERATURE CONTROL)	
	1B	1	**285-7415**	1	KNOB (BLOWER FAN SPEED)	
	2	1	**251-1196**	1	SWITCH AS-ROCKER (AIR CONDITIONER ON, OFF)	
M	3	1	**9X-2045**	2	SCREW-TRUSS HEAD (M6X1X20-MM)	

M-METRIC PART

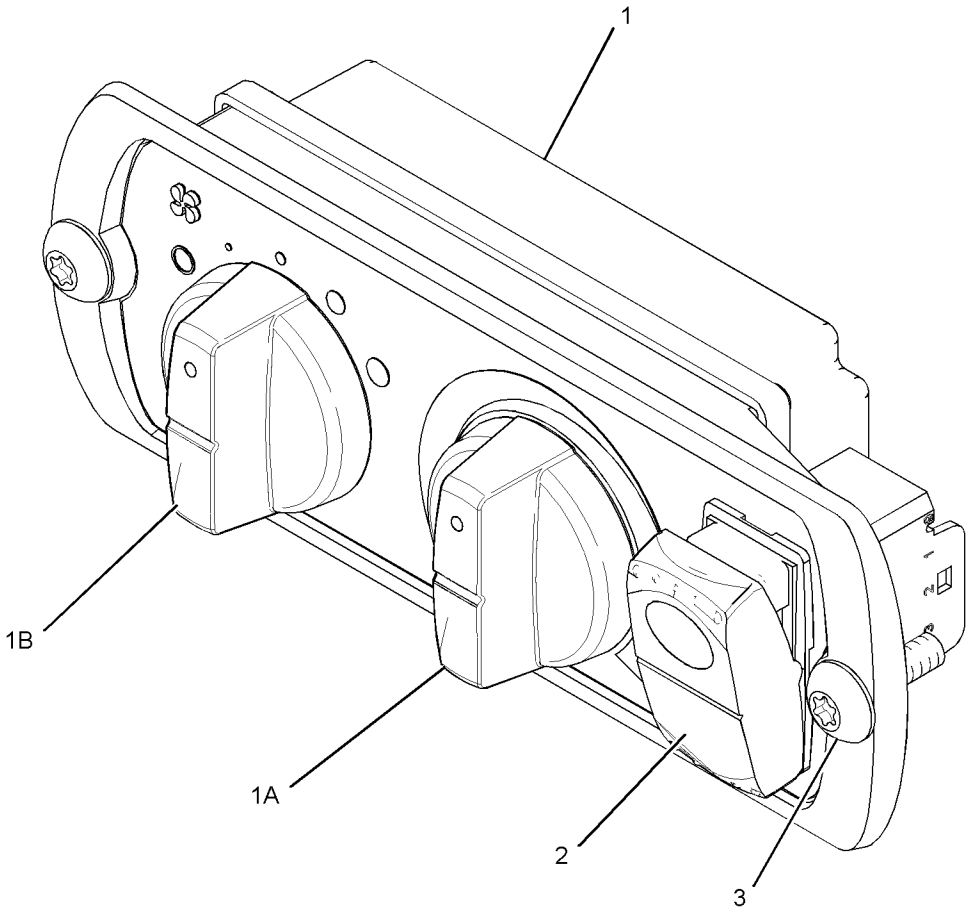

GRAPHIC #1 **<END>** g01323364

OPERATOR STATION

283-7678 CONTROL GP-AIR & TEMPERATURE–HEATER

S/N: B9D1-UP

PART OF 233-3130 HEATER GP-CAB

SMCS-7451 **i02786764**

NOTE	REF NO	GRAPHIC REF	PART NUMBER	QTY	PART NAME 1 2 3 4 5 6 (PRODUCT LEVEL)	SEE PAGE
	1	1	**228-6089**	1	PLUG (ROCKER SWITCH) (ROCKER SWITCH)	
	2	1	**248-4220**	1	PANEL AS	
	2A	1	**271-7312**	1	KNOB (TEMPERATURE CONTROL)	
	2B	1	**285-7415**	1	KNOB (BLOWER FAN SPEED)	
M	3	1	**9X-2045**	2	SCREW-TRUSS HEAD (M6X1X20-MM)	

M-METRIC PART

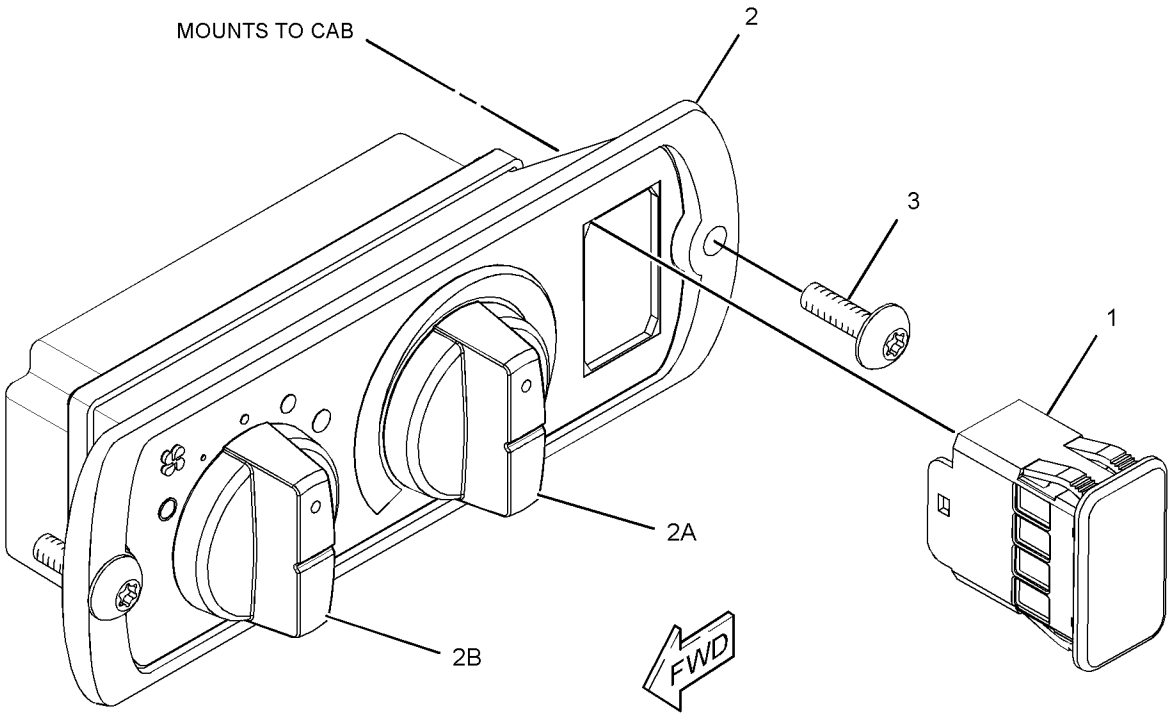

GRAPHIC #1 **<END>** g01309619

233-3147 CONTROL GP-ELECTROHYDRAULIC–
WITH AUXILIARY LEVER
S/N: B9D1-UP

PART OF 242-5063, 242-5064, 242-5066, 242-6107, 242-6109, 242-6110, 242-6111, 242-6112, 242-6146 CONTROL AR-HYDRAULIC

SMCS-5702, 5705 **i02780746**

NOTE	PART NUMBER	QTY	PART NAME 1 2 3 4 5 6 (PRODUCT LEVEL)	SEE PAGE
Y	**272-8442**	1	CONTROL GP-ELECTROHYDRAULIC (WITH AUXILIARY LEVER)	782
M	**5C-9553**	1	BOLT (M6X1X16-MM)	
	7X-0018	2	BOLT (1/4-20X3.25-IN)	
	9X-8256	1	WASHER (6.6X12X2-MM THK)	
	5P-4116	2	WASHER-HARD (8.8X20.5X2-MM THK)	

M-METRIC PART
Y-SEPARATE ILLUSTRATION

<END>

238-8756 CONTROL GP-ELECTROHYDRAULIC–
WITHOUT AUXILIARY LEVER
S/N: B9D1-UP

PART OF 242-5062, 242-6108 CONTROL AR-HYDRAULIC

SMCS-5702, 5705 **i02781141**

NOTE	PART NUMBER	QTY	PART NAME 1 2 3 4 5 6 (PRODUCT LEVEL)	SEE PAGE
Y	**272-8441**	1	CONTROL GP-ELECTROHYDRAULIC (WITHOUT AUXILIARY LEVER)	781
M	**5C-9553**	1	BOLT (M6X1X16-MM)	
M	**7X-0818**	2	BOLT (M8X1.25X45-MM)	
	9X-8256	1	WASHER (6.6X12X2-MM THK)	
	5P-4116	2	WASHER-HARD (8.8X20.5X2-MM THK)	

M-METRIC PART
Y-SEPARATE ILLUSTRATION

<END>

OPERATOR STATION

272-8441 CONTROL GP-ELECTROHYDRAULIC–

WITHOUT AUXILIARY LEVER

S/N: B9D1-UP

PART OF 238-8756 CONTROL GP-ELECTROHYDRAULIC

SMCS-5702, 5705 **i02781136**

NOTE	REF NO	GRAPHIC REF	PART NUMBER	QTY	PART NAME 1 2 3 4 5 6 (PRODUCT LEVEL)	SEE PAGE
	1	1	**295-8260**	1	COVER	
	2	1	**292-8706**	1	CONTROL GP-ELECTROHYDRAULIC	
	2A	1	**8T-8737**	1	PLUG-SEAL	
	2B	1	**9X-3401**	11	PIN-CONNECTOR (16-GA TO 18-GA)	
	2C	1	**190-7613**	1	RECEPTACLE AS-CONNECTOR (12-PIN)	
	2D	1	**281-4655**	1	FILM-INSTRUCTION (AUXILIARY)	
	3	1	**292-8703**	1	PALMREST	
	4	1	**292-8054**	1	BRACKET	

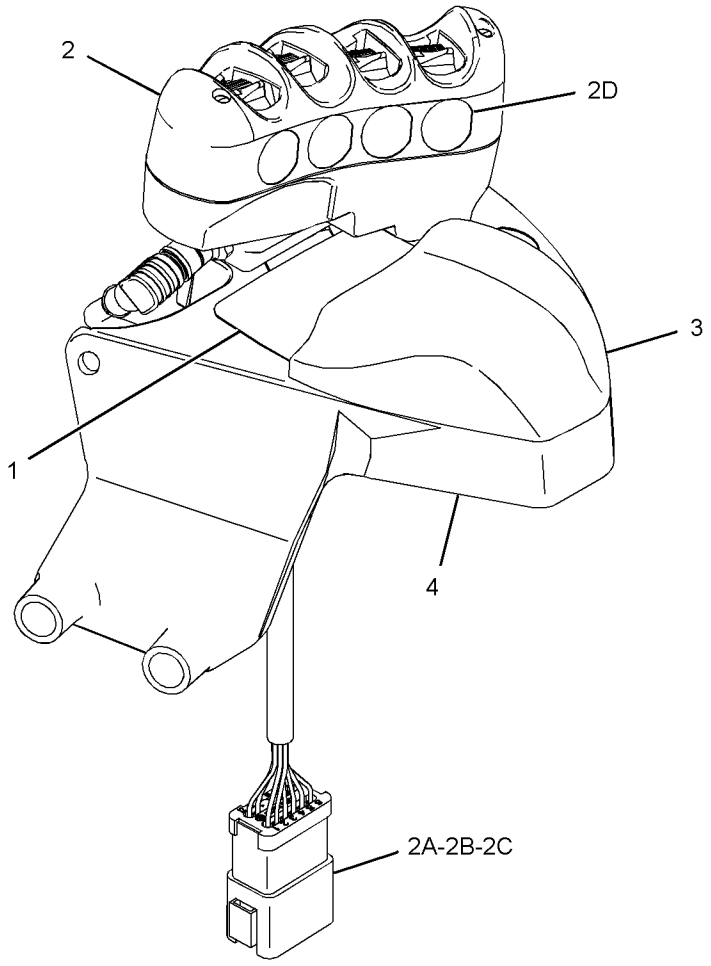

GRAPHIC #1 **<END>** g01349062

OPERATOR STATION

272-8442 CONTROL GP-ELECTROHYDRAULIC–

WITH AUXILIARY LEVER

S/N: B9D1-UP

PART OF 233-3147 CONTROL GP-ELECTROHYDRAULIC

SMCS-5702, 5705 **i02780755**

NOTE	REF NO	GRAPHIC REF	PART NUMBER	QTY	PART NAME 1 2 3 4 5 6 (PRODUCT LEVEL)	SEE PAGE
	1	1	**247-0737**	1	CONTROL GP-JOYSTICK (ELECTRONIC CONTROL)	
	1A	1	**292-8705**	1	BOOT	
	2	1	**292-8706**	1	CONTROL GP-ELECTROHYDRAULIC	
	2A	1	**8T-8737**	1	PLUG-SEAL	
	2B	1	**9X-3401**	11	PIN-CONNECTOR (16-GA TO 18-GA)	
	2C	1	**190-7613**	1	RECEPTACLE AS-CONNECTOR (12-PIN)	
	2D	1	**281-4655**	1	FILM-INSTRUCTION (AUXILIARY)	
	3	1	**292-8703**	1	PALMREST	
	4	1	**292-8054**	1	BRACKET	
	5	1	**102-8801**	1	KIT-RECEPTACLE (12-PIN)	
					(INCLUDES RECEPTACLE AS & WEDGE)	

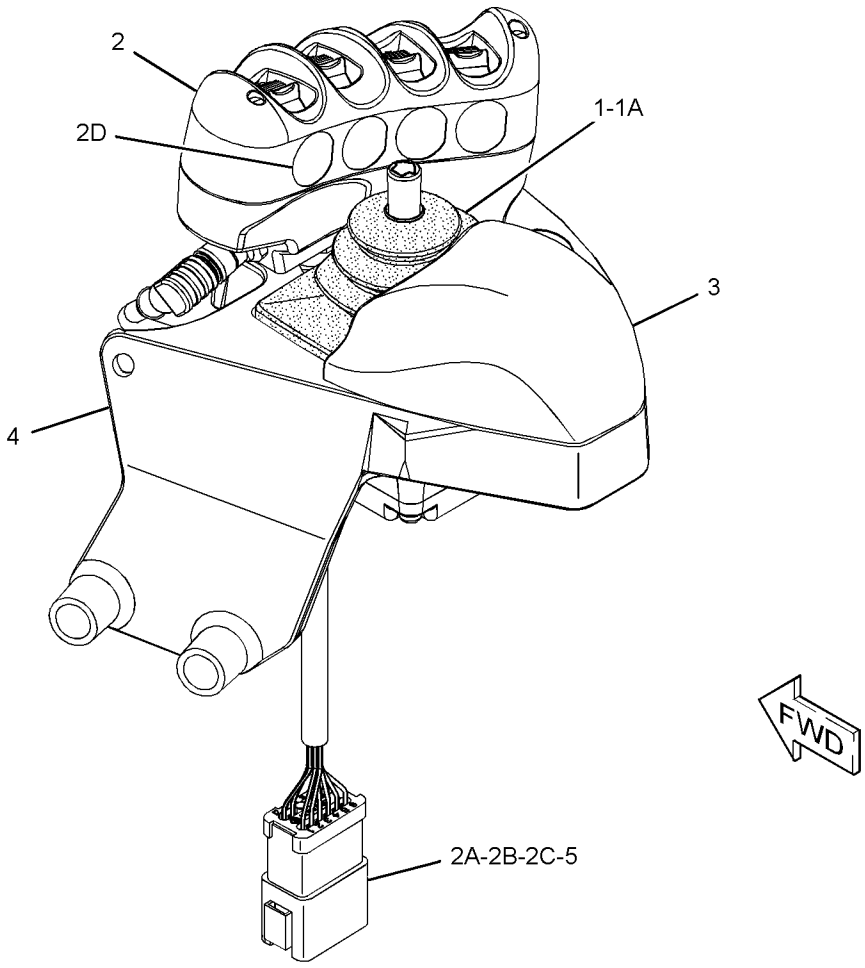

GRAPHIC #1 **<END>** g01373975

OPERATOR STATION

233-3118 CONTROL GP-JOYSTICK–RH

S/N: B9D1-UP

PART OF 233-3146 CONTROL & MTG GP-JOYSTICK

SMCS-3168, 4343, 5063, 5705 **i02775588**

NOTE	REF NO	GRAPHIC REF	PART NUMBER	QTY	PART NAME 1 2 3 4 5 6 (PRODUCT LEVEL)	SEE PAGE
	1	1	**174-3091**	1	KIT-RECEPTACLE (12-PIN)	
					(INCLUDES RECEPTACLE AS & WEDGE)	
	2	1	**247-0733**	1	BOOT	
	3	1	**9X-3401**	15	PIN-CONNECTOR (16-GA TO 18-GA)	
	4	1	**8T-8737**	9	PLUG-SEAL	
	5	1	**271-2811**	1	KIT-RECEPTACLE (12-PIN)	
					(INCLUDES RECEPTACLE AS & WEDGE)	

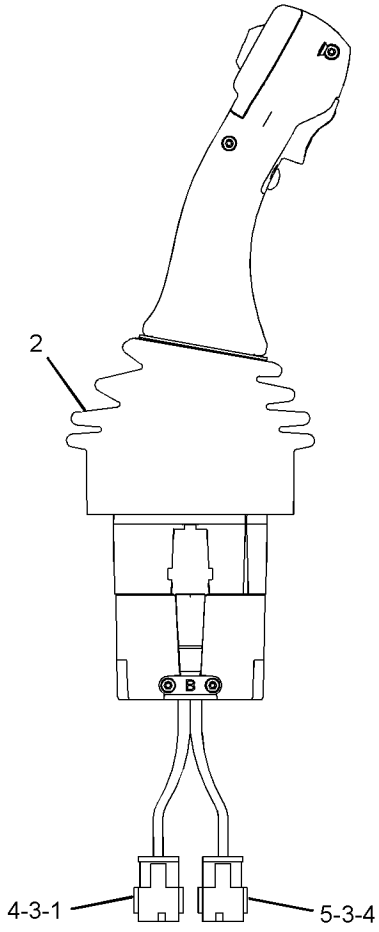

RIGHT SIDE VIEW

GRAPHIC #1

<END>

g01338993

OPERATOR STATION

300-6464 CONTROL GP-JOYSTICK–LH

S/N: B9D1-UP

PART OF 233-3146 CONTROL & MTG GP-JOYSTICK

SMCS-3168, 4343, 5063, 5705 **i02775598**

NOTE	REF NO	GRAPHIC REF	PART NUMBER	QTY	PART NAME 1 2 3 4 5 6 (PRODUCT LEVEL)	SEE PAGE
	1	1	**174-3091**	1	KIT-RECEPTACLE (12-PIN)	
					(INCLUDES RECEPTACLE AS & WEDGE)	
	2	1	**247-0733**	1	BOOT	
	3	1	**9X-3401**	23	PIN-CONNECTOR (16-GA TO 18-GA)	
					–OR–	
		1	**126-1767**	23	PIN-CONNECTOR (14-GA)	
	4	1	**8T-8737**	5	PLUG-SEAL	
	5	1	**271-2811**	1	KIT-RECEPTACLE (12-PIN)	
	6	1	**151-9274**	1	KIT-RECEPTACLE (4-PIN)	
					(EACH INCLUDES RECEPTACLE AS & WEDGE)	

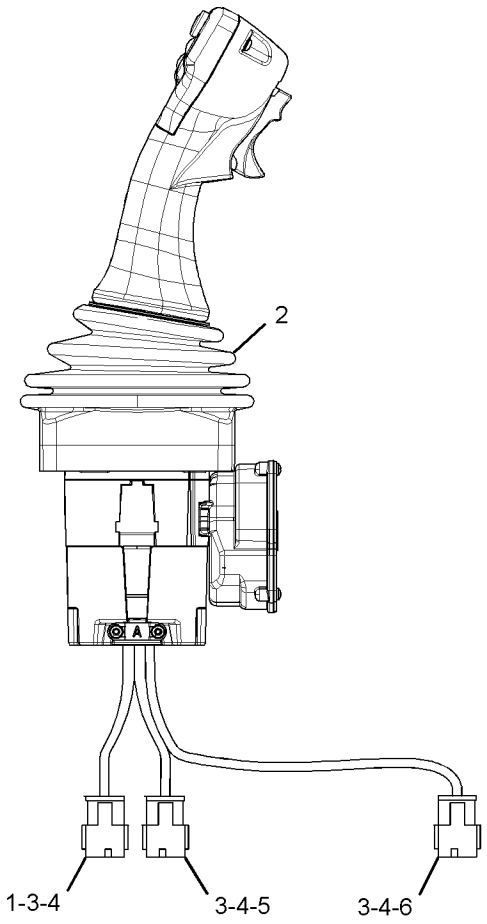

RIGHT SIDE VIEW

GRAPHIC #1

<END>

g01338504

OPERATOR STATION

239-5025 CONTROL GP-UNPRGMED MONITOR–MESSENGER

S/N: B9D1-UP

PART OF 275-9650 ELECTRONICS GP-MONITOR

SMCS-7610 **i02779168**

NOTE	REF NO	GRAPHIC REF	PART NUMBER	QTY	PART NAME 1 2 3 4 5 6 (PRODUCT LEVEL)	SEE PAGE
	1	1	*239-5024*	1	CONTROL GP-MONITOR (MESSENGER)	
	1A	1	**124-0312**	1	SCREW-PAN HEAD (8-16X0.32-IN)	
	2	1	**242-2461**	1	BEZEL	
					PARTS SHOWN IN GRAPHIC(S) WITHOUT A REFERENCE NUMBER ARE NOT SERVICED SEPARATELY	

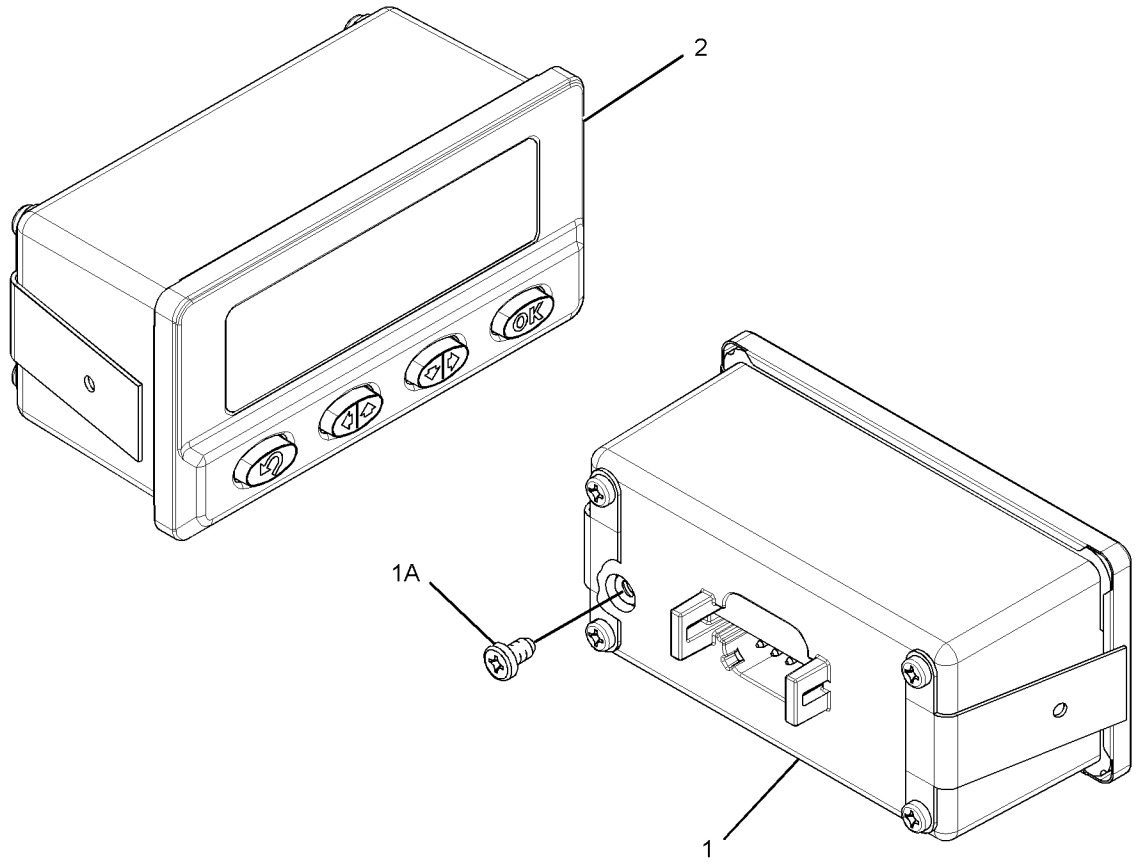

GRAPHIC #1 **<END>** g01393265

OPERATOR STATION

263-2590 COVER GP-CAB–BULKHEAD

S/N: B9D1-UP

PART OF 254-5399 CAB AR

SMCS-7301 **i02779046**

NOTE	REF NO	GRAPHIC REF	PART NUMBER	QTY	PART NAME 1 2 3 4 5 6 (PRODUCT LEVEL)	SEE PAGE
	1	1	**263-2589**	1	COVER	
	2	1	**5P-4116**	3	WASHER-HARD (8.8X20.5X2-MM THK)	
M	3	1	**8T-4189**	3	BOLT (M8X1.25X20-MM)	
D	4	1	**6V-5746**		TRIM (0.7-M)	

D-ORDER BY THE METER
M-METRIC PART

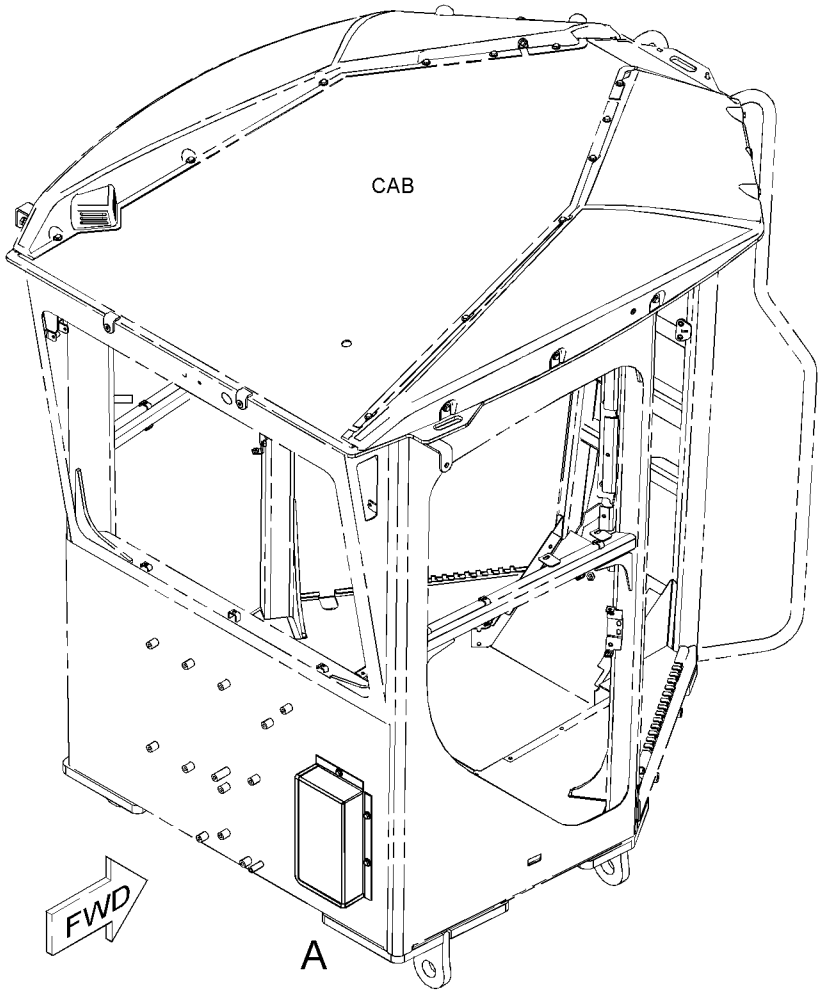

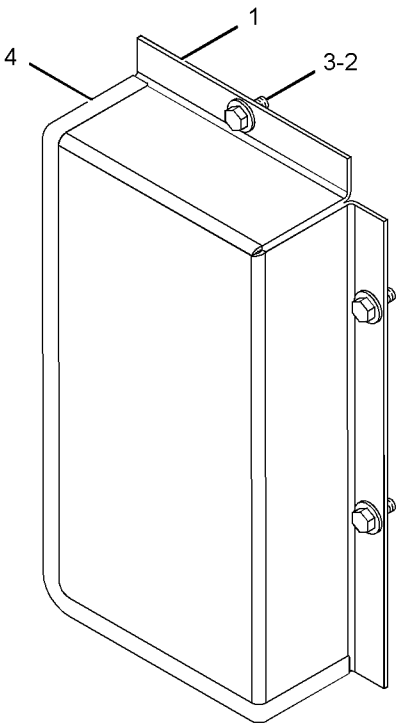

VIEW OF AREA A

GRAPHIC #1 **<END>** g01144301

OPERATOR STATION

252-1805 CUSHION GP-ARM

S/N: B9D1-UP

PART OF 233-3224, 233-3225 SUPPORT GP-CONTROL

SMCS-7307 **i02775610**

NOTE	REF NO	GRAPHIC REF	PART NUMBER	QTY	PART NAME 1 2 3 4 5 6 (PRODUCT LEVEL)	SEE PAGE
	1	1	**233-3245**	1	PLATE	
	2	1	**233-3272**	1	CUSHION AS	
M	3	1	**5C-9553**	2	BOLT (M6X1X16-MM)	
	4	1	**9X-8256**	2	WASHER (6.6X12X2-MM THK)	

M-METRIC PART

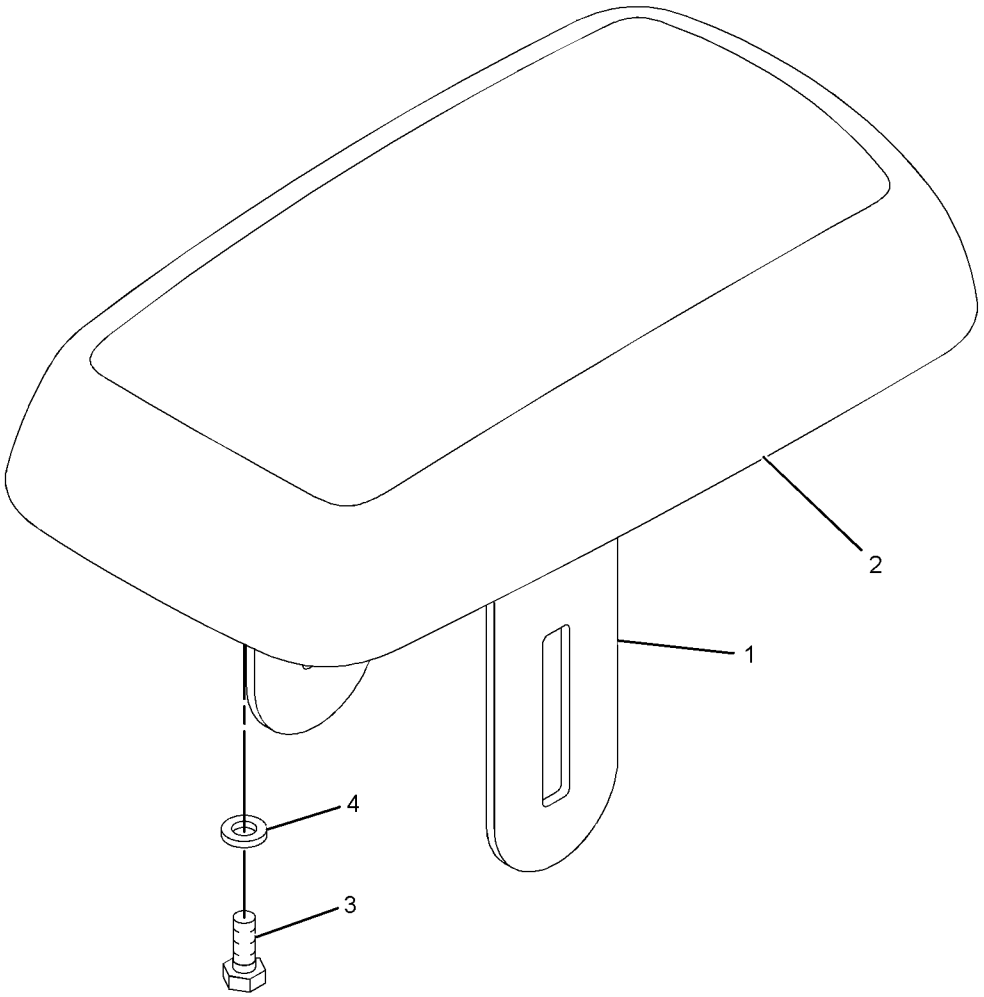

GRAPHIC #1 **<END>** g01109286

OPERATOR STATION

292-7975 DISPLAY AR-MONITOR—CD700

S/N: B9D1-UP

FOR USE WITH M SERIES MOTOR GRADER

SMCS-7490 **i02788454**

NOTE	PART NUMBER	QTY	PART NAME 1 2 3 4 5 6 (PRODUCT LEVEL)	SEE PAGE
Y	*286-0134*	1	DISPLAY GP-MONITOR (CD700)	790
Y	**286-9124**	3	MONITOR AS (LIGHT BAR)	824
Y	*253-1964*	1	WIRING GP-MONITOR (CD700 DISPLAY)	291

Y-SEPARATE ILLUSTRATION

<END>

292-7980 DISPLAY AR-MONITOR—CD610

S/N: B9D1-UP

FOR USE WITH M SERIES MOTOR GRADER

SMCS-7490 **i02788451**

NOTE	PART NUMBER	QTY	PART NAME 1 2 3 4 5 6 (PRODUCT LEVEL)	SEE PAGE
Y	**292-0309**	1	DISPLAY GP-MONITOR (CD610)	790
Y	**253-1967**	1	WIRING GP-MONITOR (CD610 DISPLAY)	294

Y-SEPARATE ILLUSTRATION

<END>

OPERATOR STATION

278-0668 DISPLAY GP-MONITOR—WORK AREA VISUAL SYSTEM

S/N: B9D1-UP

PART OF 278-1842 INSTALLATION GP-CAMERA

SMCS-7490 **i02787748**

NOTE	REF NO	GRAPHIC REF	PART NUMBER	QTY	PART NAME 1 2 3 4 5 6 (PRODUCT LEVEL)	SEE PAGE
	1	1	**3S-2093**	10	STRAP-CABLE	
	2	1	**251-4243**	1	CONNECTOR GP-ELECTRONIC	
	3	1	**263-5033**	1	PLATE	
	4	1	**251-8248**	1	CABLE AS-COMMUNICATION (5-M)	
	5	1	**261-3224**	1	MODULE GP-DISPLAY (WORK AREA VISUAL SYSTEM)	
		1	**280-2691**	1	CABLE AS (0.5-M)	
		1	**8T-8737**	1	PLUG-SEAL	
		1	**102-8805**	1	KIT-RECEPTACLE (6-PIN)	
					(INCLUDES RECEPTACLE AS, & WEDGE)	
		1	**186-3735**	5	PIN-CONNECTOR (16-GA TO 18-GA)	
	6	1	**4B-4274**	4	WASHER (5.5X13X1.2-MM THK)	
M	7	1	**8T-2226**	4	SCREW-MACHINE (M5X0.8X10-MM)	

M-METRIC PART

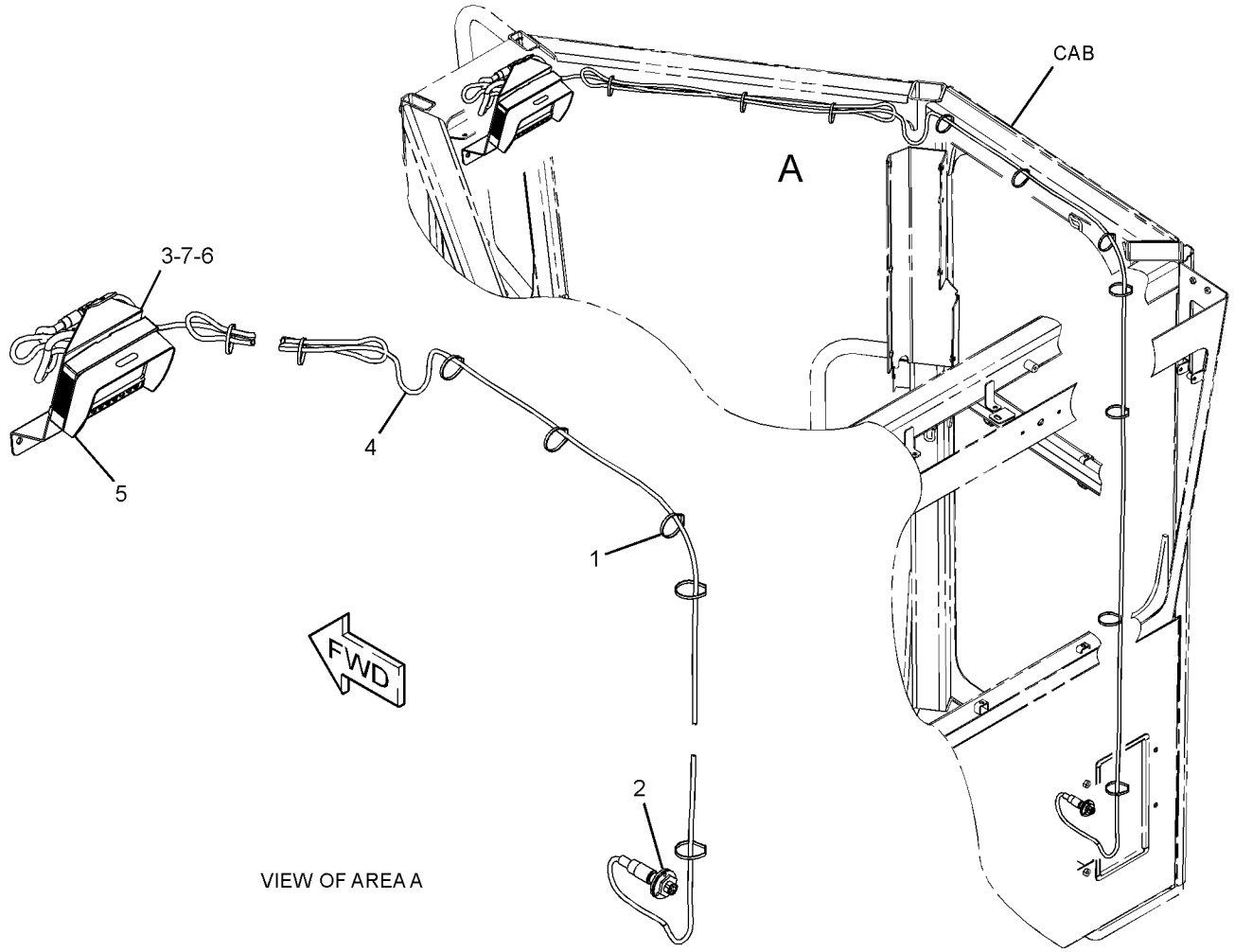

GRAPHIC #1 **<END>** g01302342

OPERATOR STATION

286-0134 DISPLAY GP-MONITOR—CD700

S/N: B9D1-UP

PART OF 292-7975 DISPLAY AR-MONITOR

SMCS-7490 **i02768374**

NOTE	PART NUMBER	QTY	PART NAME 1 2 3 4 5 6 (PRODUCT LEVEL)	SEE PAGE
	194-8031	1	ADAPTER (COMPACT)	
M	**8T-4171**	4	BOLT (M6X1X12-MM)	
	292-0311	1	CASE-CARRYING	
	291-3845	1	COMPACT DISC	
	283-4426	1	CARD AS-MEMORY (FLASH)	
	244-1716	1	DISPLAY GP-MONITOR (CD700)	
M	**8T-0285**	6	SCREW-MACHINE (M4X0.7X12-MM)	
	9X-8256	4	WASHER (6.6X12X2-MM THK)	
	096-6166	6	WASHER-HARD (4.5X9X1-MM THK)	

M-METRIC PART

<END>

292-0309 DISPLAY GP-MONITOR—CD610

S/N: B9D1-UP

PART OF 292-7980 DISPLAY AR-MONITOR

SMCS-7490 **i02649296**

NOTE	PART NUMBER	QTY	PART NAME 1 2 3 4 5 6 (PRODUCT LEVEL)	SEE PAGE
M	**7X-2619**	6	BOLT (M6X1X10-MM)	
	292-0311	1	CASE-CARRYING	
	283-9530	1	DISPLAY GP-MONITOR (CD610)	
	290-6112	1	SOFTWARE GP-MONITOR	
	8T-4205	6	WASHER-HARD (7.2X14.5X2-MM THK)	

M-METRIC PART

<END>

OPERATOR STATION

233-3287 DOOR GP-CAB–ALTERNATE EXIT

S/N: B9D1-UP

SMCS-7308 **i02775634**

NOTE	REF NO	GRAPHIC REF	PART NUMBER	QTY	PART NAME 1 2 3 4 5 6 (PRODUCT LEVEL)	SEE PAGE
	1	2	**3S-2093**	5	STRAP-CABLE	
	2	1	**3V-4694**	3	PLUG-BUTTON	
	3	1	**8Y-6379**	1	KIT-HAMMER (CAB WINDOW)	
					(KIT INCLUDES BRACKET & HAMMER)	
	4	1,2	**114-6658**	7	WASHER (6.5X17X1-MM THK)	
	5	1	**214-9186**	2	BUTTON	
	6	1	**247-3969**	1	DOOR AS	
	7	2	**249-2428**	1	PLATE	
Y	8	1	*249-4096*	1	WIPER GP-WINDOW	882
	9	2	**251-2247**	1	GROMMET	
	10	1	**263-2574**	2	CLIP	
	11	2	**268-3527**	1	COVER	
	12	1	**268-3532**	2	HINGE AS (RH)	
B	13	1	**268-3535**	1	GLASS (DOOR, RH)	
B	14	1	**276-2331**	1	FILM-INSTRUCTION (EXIT)	
B	15	1	**278-0674**	1	PLATE	
B	16	2	**279-0465**	1	PLATE AS	
	17	2	**279-1118**	1	HARNESS AS-CAB (WIPER, RH DOOR)	
		2	**102-8805**	1	KIT-RECEPTACLE (6-PIN)	
					(INCLUDES RECEPTACLE AS & WEDGE)	
		2	**155-2274**	1	KIT-CONNECTING PLUG (6-PIN)	
					(INCLUDES PLUG AS, WEDGE, & INTERFACE SEAL)	
	18	2	**293-9874**	1	BRACKET	
	19	2	**161-6987**	2	WASHER-HARD (5.2X16X1.5-MM THK)	
	20	2	**3V-3263**	1	CONNECTOR (HOSE)	
	21	1	**4H-3001**	1	PLUG-BUTTON	
	22	2	**4P-7581**	1	CLIP	
M	23	2	**6V-7743**	1	LOCKNUT (M6X1-THD)	
M	24	1	**8C-8451**	1	BOLT (M6X1X40-MM)	
	25	2	**8J-1256**	1	CLIP	
	26	1	**8T-4121**	6	WASHER-HARD (11X21X2.5-MM THK)	
M	27	2	**8T-4137**	2	BOLT (M10X1.5X20-MM)	
M	28	2	**8T-4138**	2	BOLT (M6X1X20-MM)	
M	29	1	**8T-4195**	6	BOLT (M10X1.5X30-MM)	
	30	2	**9X-2027**	2	WASHER (11X18X2-MM THK)	
M	31	2	**9X-2043**	1	SCREW-TRUSS HEAD (M6X1X14-MM)	
M	32	1,2	**9X-2044**	8	SCREW-TRUSS HEAD (M6X1X16-MM)	
	33	1,2	**9X-8256**	2	WASHER (6.6X12X2-MM THK)	
	34	1	**268-3644**	1	SEAL (EDGE)	
E	35	2	**178-8894**		SEAL (500-CM)	
E	36	2	**144-0195**		HOSE (123-CM)	
E	37	2	**282-0808**		SLEEVE (123-CM)	

B-USE AS REQUIRED
E-ORDER BY THE CENTIMETER
M-METRIC PART
Y-SEPARATE ILLUSTRATION

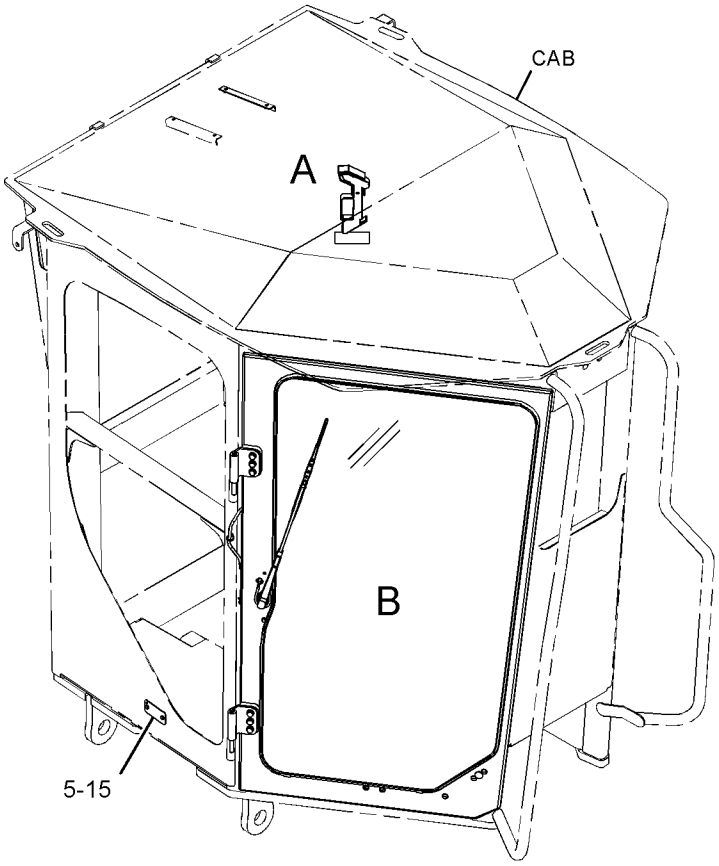

REFER TO ALL ILLUSTRATIONS OF
THIS GROUP FOR AUXILIARY VIEWS



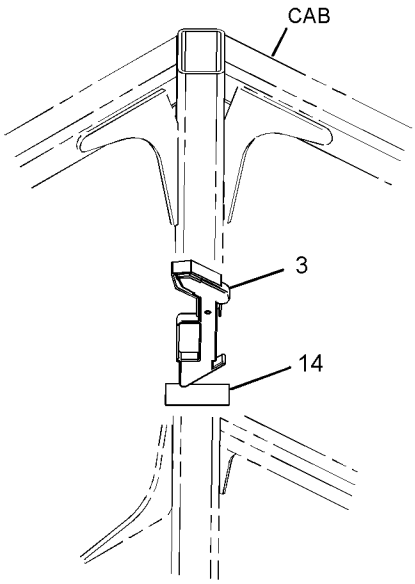

VIEW OF AREA A

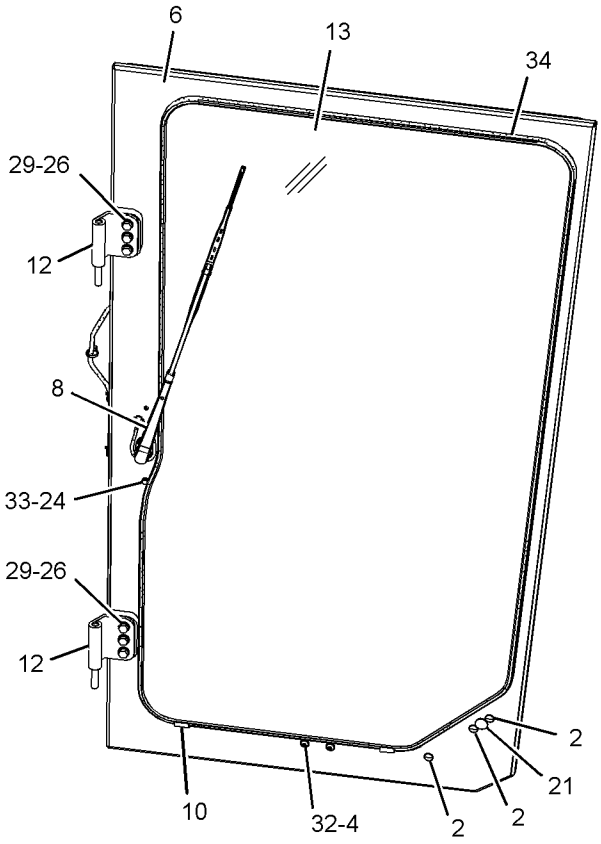

VIEW OF AREA B

GRAPHIC #1

g01324345

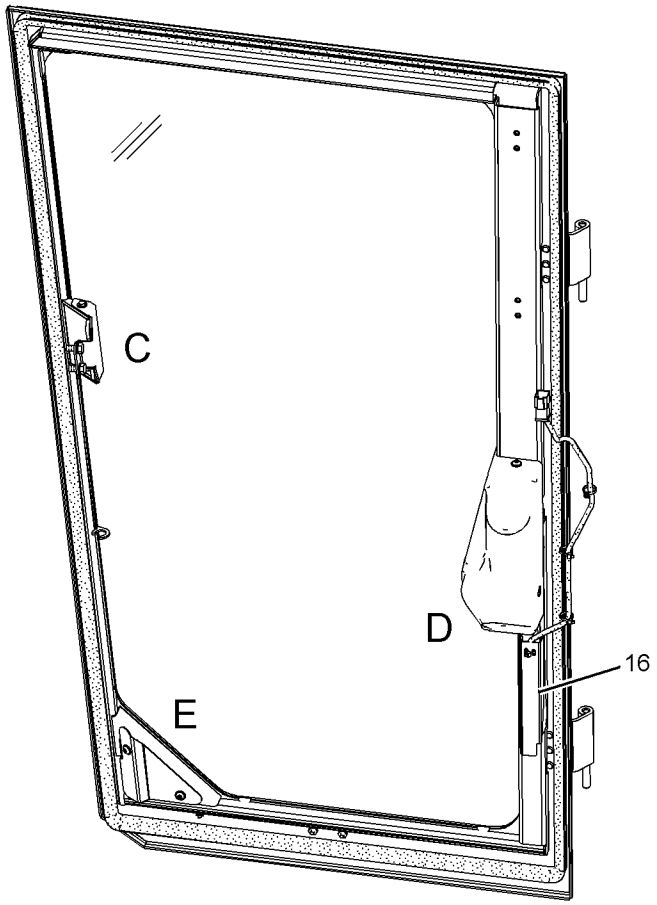

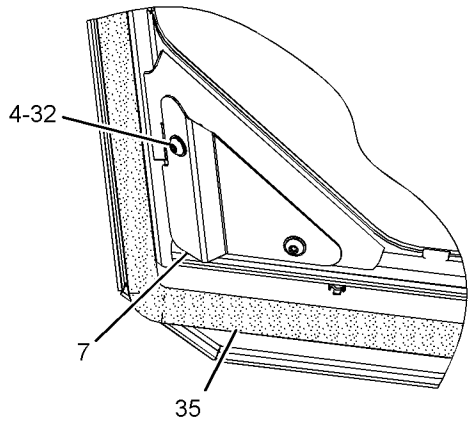

VIEW OF AREA E



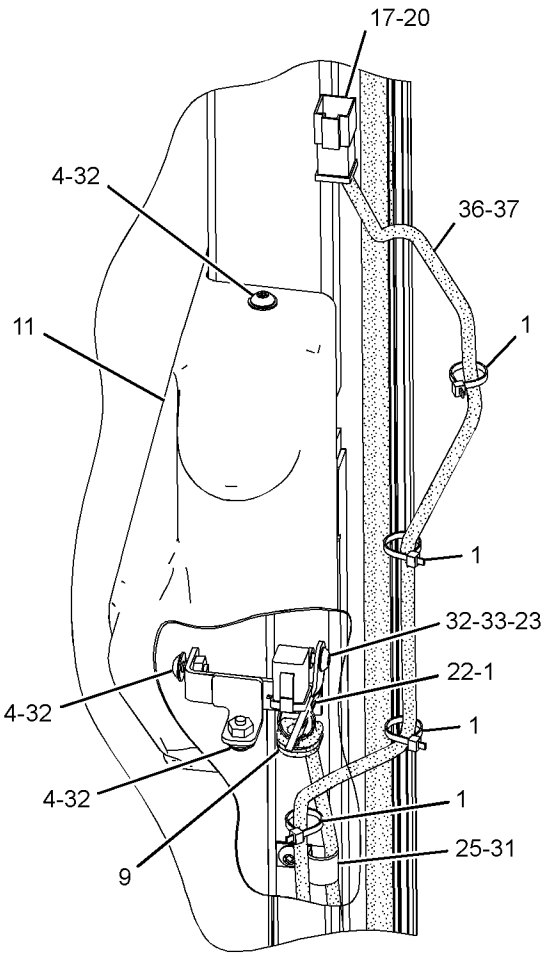

VIEW OF AREA D

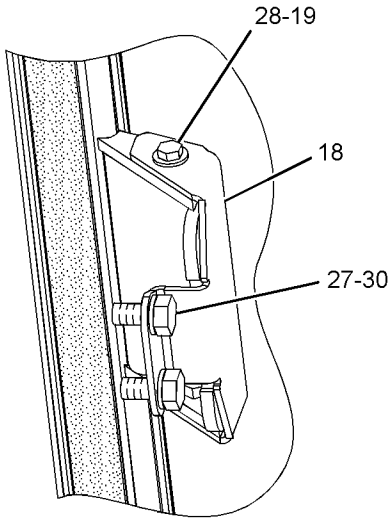

VIEW OF AREA C

GRAPHIC #2 **<END>** g01324346

OPERATOR STATION

294-1033 DOOR GP-CAB—LH

S/N: B9D1-UP

PART OF 254-5399 CAB AR

SMCS-7308 **i02779648**

NOTE	REF NO	GRAPHIC REF	PART NUMBER	QTY	PART NAME 1 2 3 4 5 6 (PRODUCT LEVEL)	SEE PAGE
	1	1	**6V-7636**	2	PIN AS-SPRING	
	2	1	**139-6039**	5	NUT (U-TYPE RETAINER)	
M	3	1	**184-0983**	1	NUT-HEX FLANGE (M12X1.75-THD)	
J	4	1	**252-1862**	1	HANDLE AS	
	5	1	**252-1863**	1	GASKET	
	6	1	**261-1731**	1	BOOT	
	7	1	**261-5524**	1	COVER AS	
	8	1	**269-2890**	1	CLEVIS	
	9	1	**269-2892**	1	PIN	
	10	1	**269-2893**	1	CLIP	
	11	1	**272-1623**	1	BELLCRANK AS	
	12	1	**285-3692**	1	SPACER	
	13	1	**294-1031**	1	DOOR AS-CAB (LH)	
		1	**7T-1099**	5	LINK	
		1	**300-6784**	2	PIN	
Y	14	1	*295-1114*	1	WIPER GP-WINDOW (LH) (DOOR)	883
	15	1	**295-1200**	2	HINGE (LH)	
	16	1	**295-5648**	1	PLATE	
	17	1	**295-5665**	1	BRACKET AS	
	18	1	**295-6393**	1	COVER (LH)	
	19	1	**295-6396**	1	LATCH AS (LH)	
	20	1	**295-6400**	1	LINKAGE AS (LH)	
	21	1	**295-6406**	1	LATCH AS (LH)	
	22	1	**295-6652**	1	GLASS (DOOR, LH)	
	23	1	**296-2991**	1	BRACKET	
	24	1	**296-4040**	1	BRACKET AS	
	25	1	**296-4109**	1	COVER	
	26	1	**296-4924**	1	HARNESS AS-WINDOW WIPER	
		1	**102-8805**	1	KIT-RECEPTACLE (6-PIN)	
					(INCLUDES RECEPTACLE AS & WEDGE)	
		1	**155-2274**	1	KIT-CONNECTING PLUG (6-PIN)	
					(INCLUDES PLUG AS, WEDGE, & INTERFACE SEAL)	
		1	**297-4169**	2	GROMMET	
E		1	**144-0195**		HOSE (95-CM)	
	27	1	**297-4169**	1	GROMMET	
	28	1	**299-1021**	1	LEVER AS	
		1	**8T-7971**	2	WASHER-HARD (13.5X25.5X5-MM THK)	
M		1	**9X-2044**	2	SCREW-TRUSS HEAD (M6X1X16-MM)	
		1	**114-6658**	2	WASHER (6.5X17X1-MM THK)	
		1	**115-9345**	1	KNOB-CONTROL (DOOR RELEASE)	
	29	1	**299-1660**	1	CABLE AS	
		1	**7S-9930**	2	RING-RETAINING	
		1	**159-0052**	2	PIN-CLEVIS	
	30	1	**114-6658**	4	WASHER (6.5X17X1-MM THK)	
	31	1	**109-5008**	1	BUMPER-CONICAL	
M	32	1	**3E-8020**	4	SCREW-TRUSS HEAD (M6X1X25-MM)	
M	33	1	**5C-7261**	1	NUT (M8X1.25-THD)	
M	34	1	**6V-7732**	4	BOLT (M10X1.5X25-MM)	
	35	1	**8T-4121**	4	WASHER-HARD (11X21X2.5-MM THK)	
M	36	1	**8T-7547**	2	BOLT (M8X1.25X30-MM)	
M	37	1	**9X-2043**	11	SCREW-TRUSS HEAD (M6X1X14-MM)	
M	38	1	**9X-2044**	6	SCREW-TRUSS HEAD (M6X1X16-MM)	
E	39	1	**240-2183**		SEAL (510-CM)	

E-ORDER BY THE CENTIMETER
J-REQUIRES CORPRATE KEY
M-METRIC PART
Y-SEPARATE ILLUSTRATION

294 - 1033 **DOOR GP - CAB** *(contd.)* **i02779648**

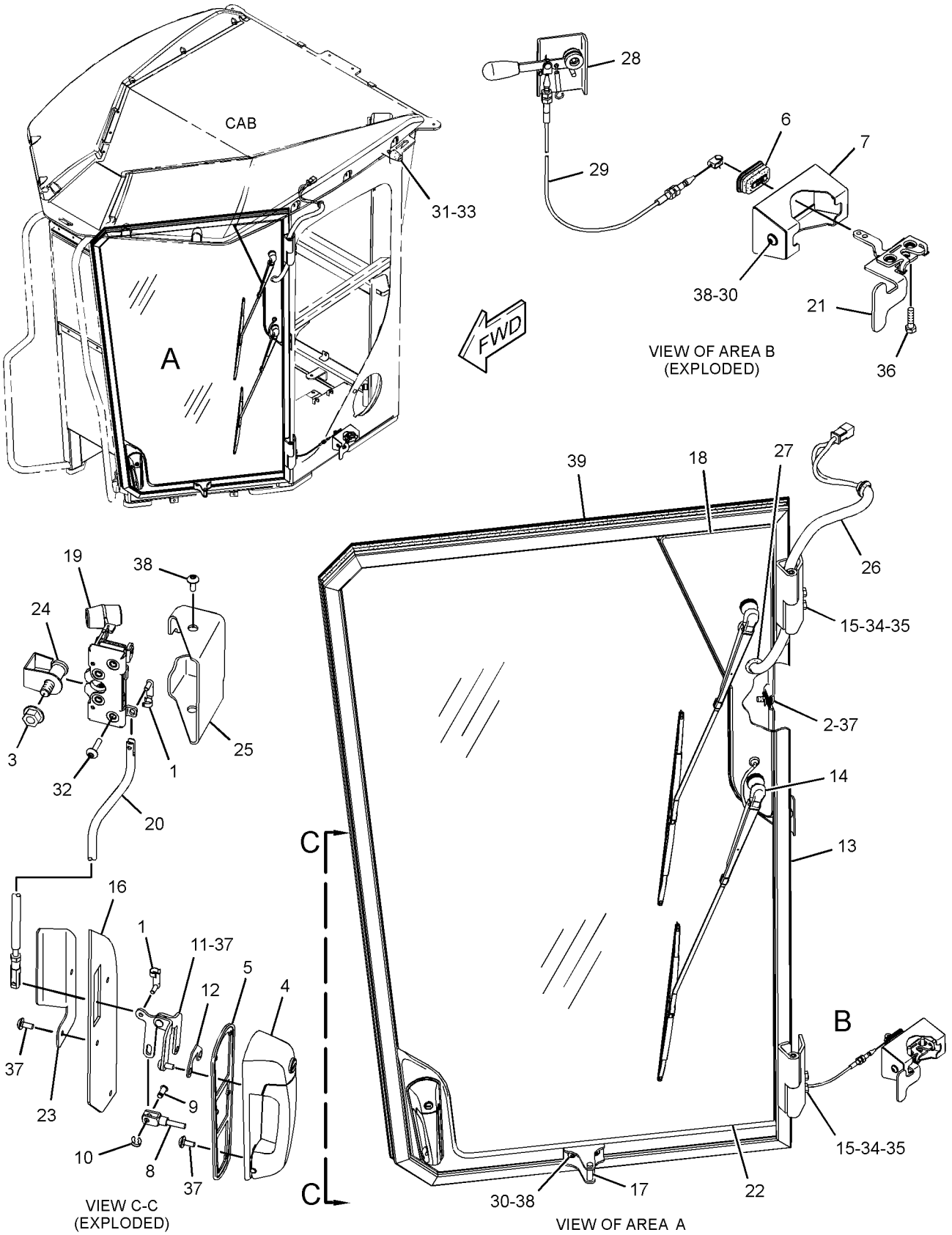

GRAPHIC #1 **<END>** g01370585

OPERATOR STATION

244-2701 DUCT & FILTER GP-CAB AIR

S/N: B9D1-UP

PART OF 233-3149 AIR CONDITIONER GP, 233-3130 HEATER GP-CAB

SMCS-7337, 7342, 734D **i02786270**

NOTE	REF NO	GRAPHIC REF	PART NUMBER	QTY	PART NAME 1 2 3 4 5 6 (PRODUCT LEVEL)	SEE PAGE
	1	1	**2R-2376**	2	WASHER (7X16X0.8-MM THK)	
	2	1	**149-1912**	1	FILTER AS-AIR (CAB HEATER, AIR CONDITIONER)	
					—OR—	
		1	**220-8800**	1	FILTER AS-AIR (CAB) (ACTIVATED CHARCOAL)	
	3	1	**211-2660**	1	FILTER AS-AIR (CAB HEATER, AIR CONDITIONER)	
	4	1	**297-4139**	1	DUCT	
	5	1	**297-4140**	1	DUCT	
	6	1	**274-2384**	1	DUCT AS	
	7	1	**274-2385**	1	COVER	
	8	1	**274-2392**	2	THUMBSCREW	
	9	1	**5P-4115**	1	WASHER-HARD (7.2X19X2-MM THK)	
M	10	1	**6V-6317**	2	BOLT (M10X1.5X20-MM)	
M	11	1	**8T-0640**	1	BOLT (M6X1X30-MM)	
	12	1	**8T-4121**	2	WASHER-HARD (11X21X2.5-MM THK)	

M-METRIC PART

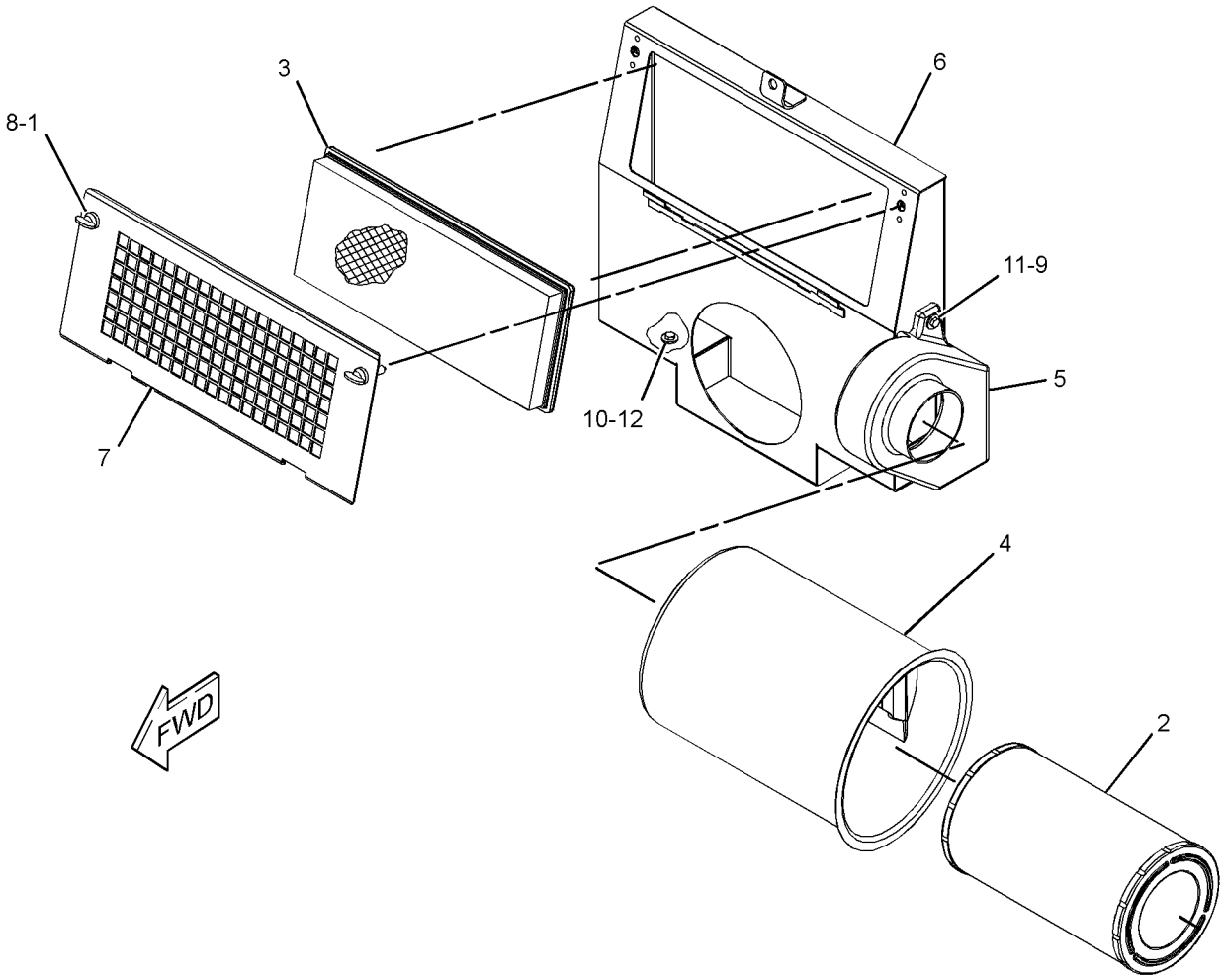

GRAPHIC #1 **<END>** g01332128

OPERATOR STATION

170-5334 FAN GP-CIRCULATING—FRONT

S/N: B9D1-UP
24 VOLT
PART OF 233-3137 FAN GP-CIRCULATING

SMCS-7316 **i02796711**

NOTE	REF NO	GRAPHIC REF	PART NUMBER	QTY	PART NAME 1 2 3 4 5 6 (PRODUCT LEVEL)	SEE PAGE
	1	1	**3D-8747**	1	BRACKET	
	2	1	**3D-8748**	1	FAN AS (4-BLADE)	
	3	1	**3D-8749**	1	GUARD	
	4	1	**3T-6774**	1	GROMMET	
	5	1	**9X-9689**	1	BASE-FAN	
	6	1	**135-1979**	1	BRACKET	
Y	7	1	**170-5335**	1	MOTOR GP-ELECTRIC	206
	8	1	**031-4155**	1	LOCKNUT (5/16-18-THD)	
	9	1	**1B-2713**	1	BOLT (1/4-20X1.75-IN)	
	10	1	**1M-1230**	2	NUT & LOCK AS (10-32-THD)	
	11	1	**2D-6235**	1	LOCKNUT (1/4-20-THD)	
	12	1	**3D-8752**	1	LOCKNUT (5/16-24-THD)	
	13	1	**4M-0061**	1	BOLT (5/16-18X0.75-IN)	
	14	1	**5P-0537**	4	WASHER-HARD (7.2X14.5X2-MM THK)	
	15	1	**6G-5987**	1	BRACKET	
	16	1	**7L-8316**	1	SETSCREW-SOCKET (10-32X2.54-IN)	
	17	1	**7T-0582**	1	BOLT	
	18	1	**9M-1974**	3	WASHER-HARD (8.8X16X2-MM THK)	
	19	1	**9T-5241**	2	WASHER (9.53X18X1-MM THK)	

Y-SEPARATE ILLUSTRATION

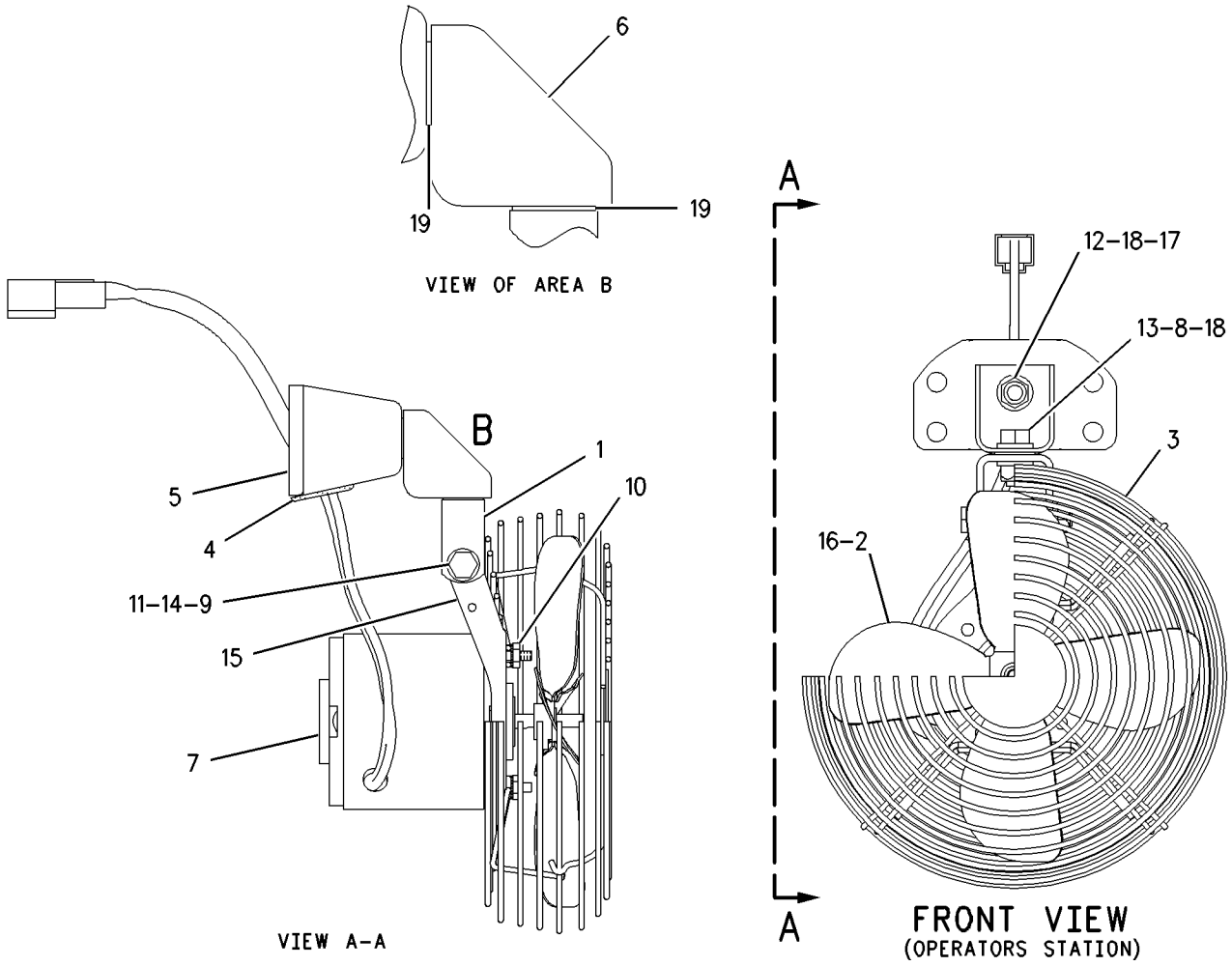

GRAPHIC #1 **<END>** g00761361

OPERATOR STATION

233-3137 FAN GP-CIRCULATING

S/N: B9D1-UP

PART OF 261-0187 SNOW AR-MOTOR GRADER

SMCS-7316 **i02772939**

NOTE	REF NO	GRAPHIC REF	PART NUMBER	QTY	PART NAME 1 2 3 4 5 6 (PRODUCT LEVEL)	SEE PAGE
	1	1	**7T-4003**	1	RESISTOR	
Y	2	1	**170-5334**	1	FAN GP-CIRCULATING	798
	3	1	**236-4611**	1	SWITCH AS-ROCKER (FAN BLOWER SPEED)	
M	4	1	**9X-1046**	2	SCREW (M4X0.7X18-MM)	
M	5	1	**9X-2046**	4	SCREW-TRUSS HEAD (M6X1X35-MM)	

M-METRIC PART
Y-SEPARATE ILLUSTRATION

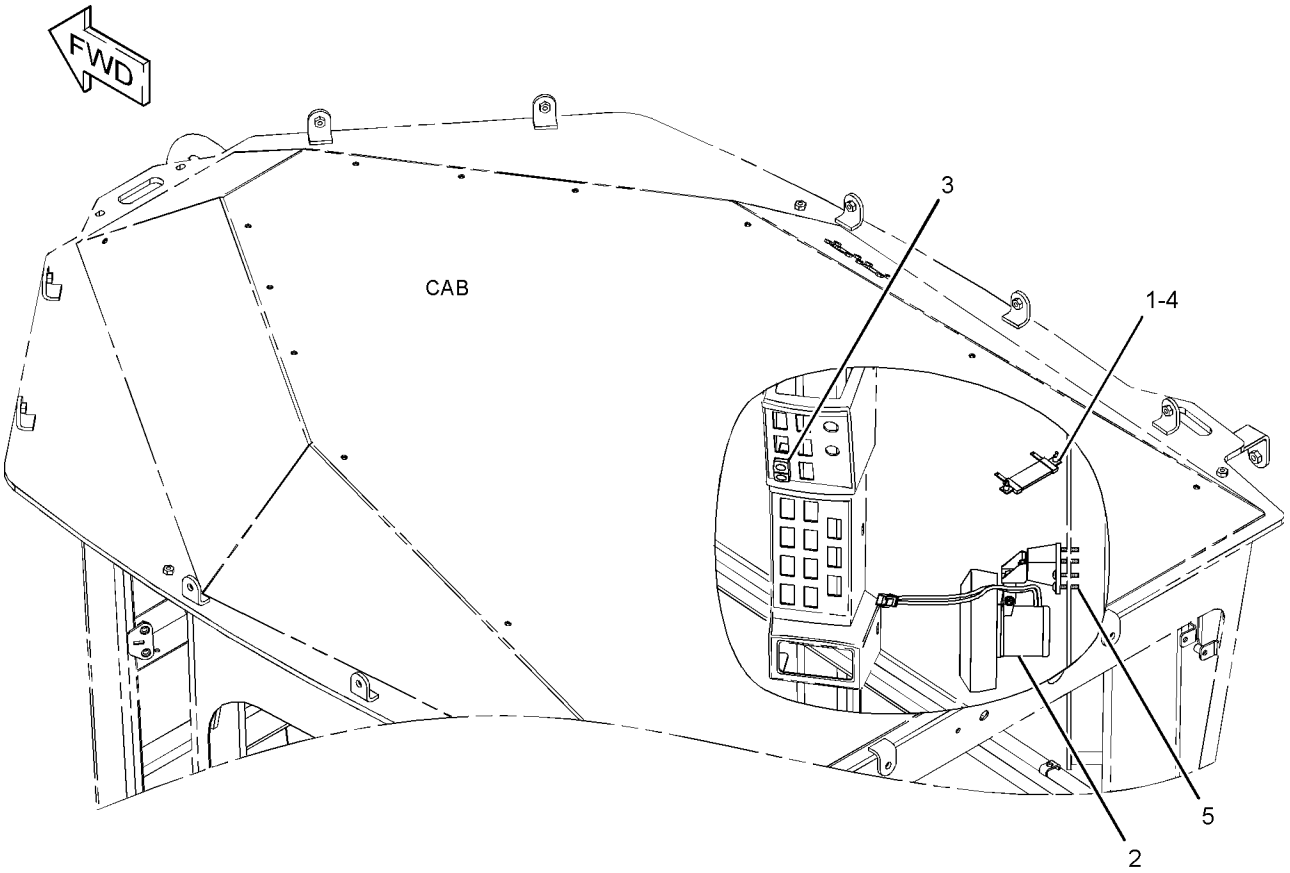

GRAPHIC #1 **<END>** g01152468

OPERATOR STATION

271-7302 HEATER & MTG GP-CAB

S/N: B9D1-UP

PART OF 233-3130 HEATER GP-CAB

SMCS-7304 **i02786774**

NOTE	REF NO	GRAPHIC REF	PART NUMBER	QTY	PART NAME 1 2 3 4 5 6 (PRODUCT LEVEL)	SEE PAGE
Y	1	1	**244-2699**	1	HEATER GP-CAB	804
	2	1	**249-0410**	2	GASKET	
	3	1	**249-0411**	1	GASKET	
	4	1	**249-0937**	1	DUCT	
	5	1	**265-7454**	1	GASKET	
	6	1	**266-3753**	2	SPACER (11X25X42.8-MM)	
	7	1	**118-5619**	2	SCREW-FLAT HEAD (NO 6X20X1-IN)	
	8	1	**6V-6689**	2	SCREW-SELF-TAPPING (10-16X.625-IN)	
	9	1	**8T-4121**	4	WASHER-HARD (11X21X2.5-MM THK)	
M	10	1	**8T-4172**	2	BOLT (M10X1.5X80-MM)	
M	11	1	**8T-4196**	2	BOLT (M10X1.5X35-MM)	
D	12	1	**5P-5637**		SEAL (0.5-M)	
D	13	1	**5P-5927**		SEAL (0.4-M)	
D	13A	1	**5P-5927**		SEAL (0.3-M EACH)	
D	13B	1	**5P-5927**		SEAL (0.5-M EACH)	

D-ORDER BY THE METER
M-METRIC PART
Y-SEPARATE ILLUSTRATION

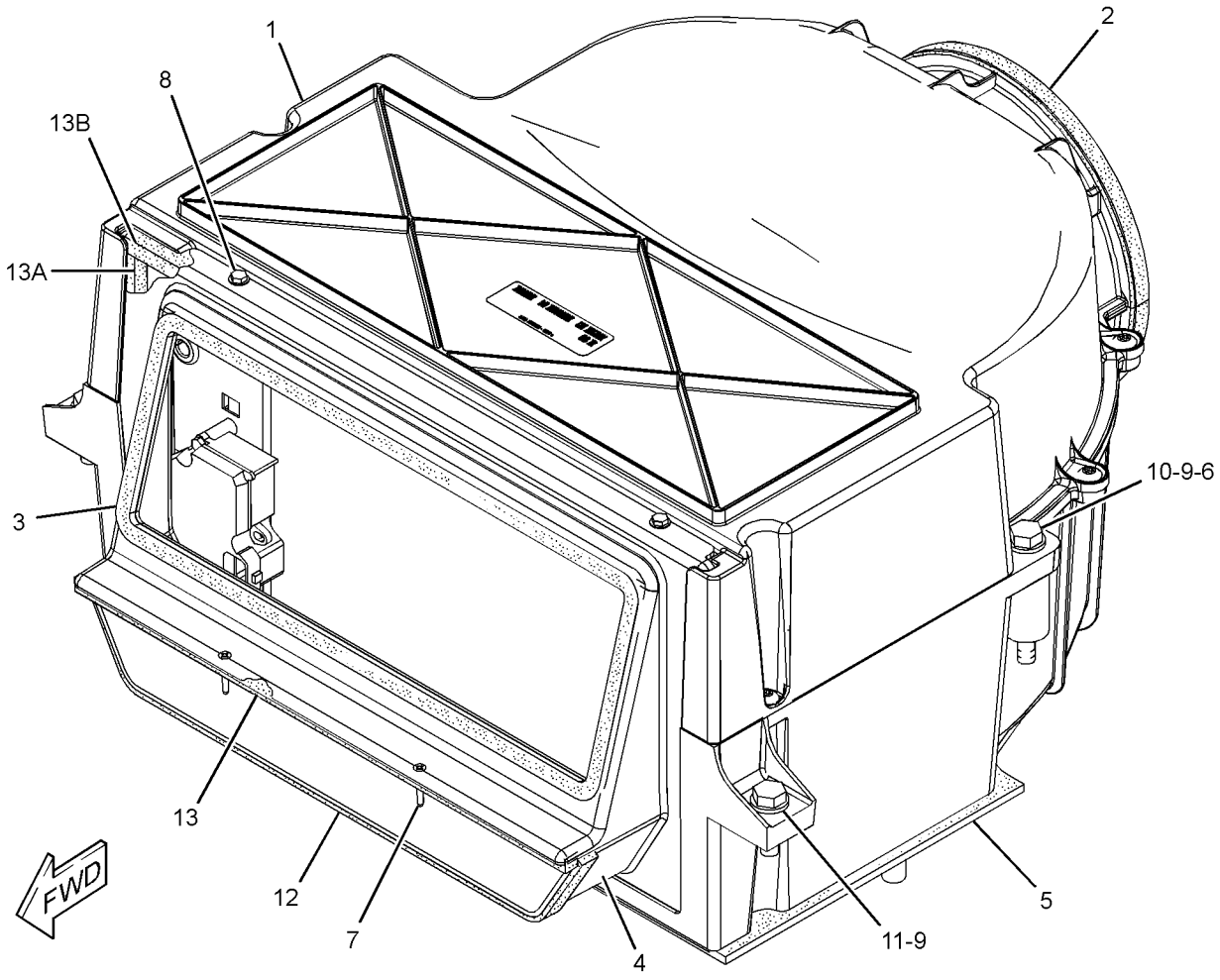

GRAPHIC #1 **<END>** g01393236

OPERATOR STATION

261-0839 HEATER AR-CAB

S/N: B9D1-UP

SMCS-7304 **i02786778**

NOTE	PART NUMBER	QTY	PART NAME 1 2 3 4 5 6 (PRODUCT LEVEL)	SEE PAGE
Y	*233-3130*	1	HEATER GP-CAB	803
Y	*255-1248*	1	LINES GP-HEATER	817

Y-SEPARATE ILLUSTRATION

<END>

OPERATOR STATION

233-3130 HEATER GP-CAB

S/N: B9D1-UP

PART OF 261-0839 HEATER AR-CAB

SMCS-7304 **i02786782**

NOTE	REF NO	GRAPHIC REF	PART NUMBER	QTY	PART NAME 1 2 3 4 5 6 (PRODUCT LEVEL)	SEE PAGE
Y	1	1	*244-2701*	1	DUCT & FILTER GP-CAB AIR	797
Y	2	1	*271-7302*	1	HEATER & MTG GP-CAB	801
Y	3	1	*273-1878*	1	LINES GP-HEATER	819
Y	4	1	*283-7678*	1	CONTROL GP-AIR & TEMPERATURE (HEATER)	779

Y-SEPARATE ILLUSTRATION

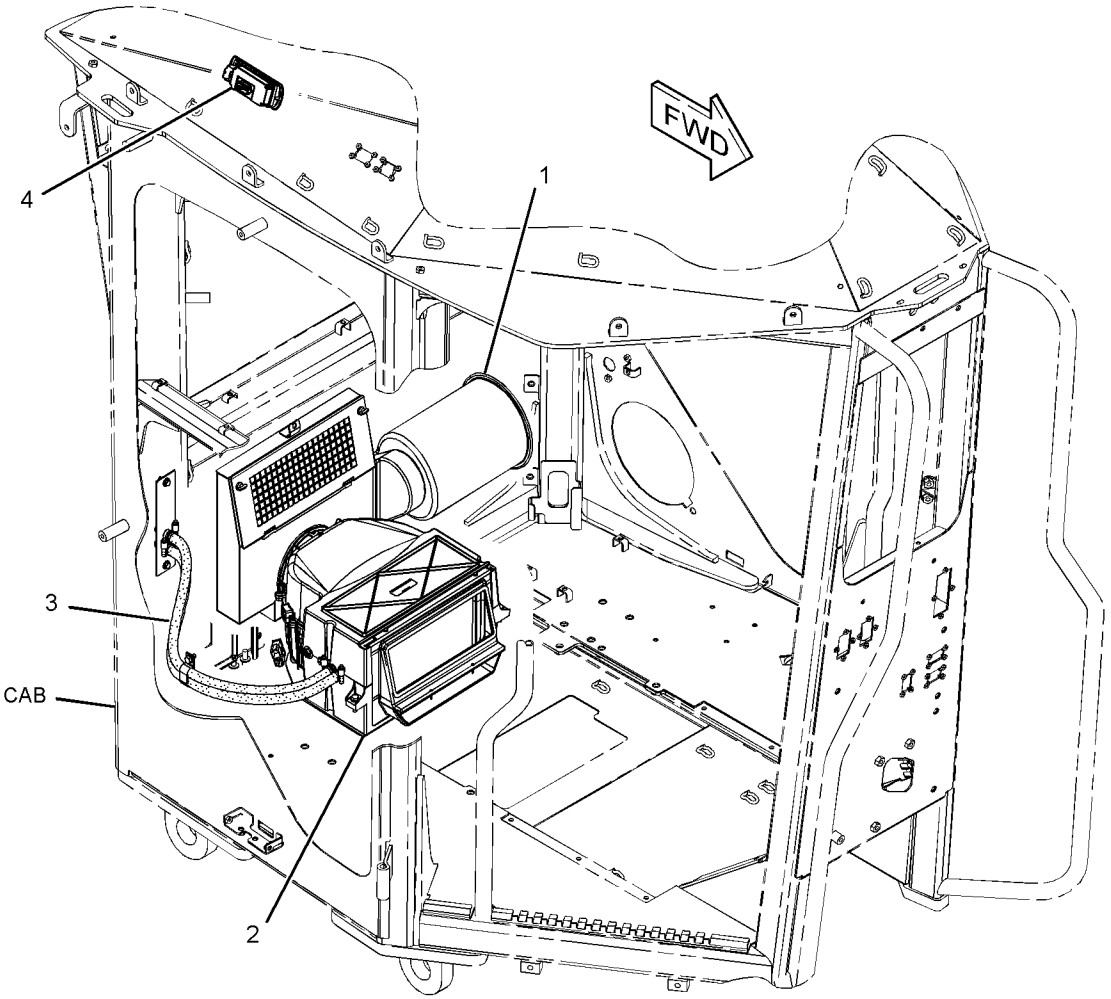

GRAPHIC #1 **<END>** g01286696

OPERATOR STATION

244-2699 HEATER GP-CAB

S/N: B9D1-UP

PART OF 271-7302 HEATER & MTG GP-CAB

SMCS-7304 **i02786779**

NOTE	REF NO	GRAPHIC REF	PART NUMBER	QTY	PART NAME 1 2 3 4 5 6 (PRODUCT LEVEL)	SEE PAGE
	1	1	**3S-2093**	2	STRAP-CABLE	
	2	1	**6T-6708**	2	WASHER (7X28.6X4.1-MM THK)	
	3	2	**125-9740**	1	RESISTOR	
	4	2	**133-9012**	1	FUSE (15-AMPERE)	
	5	1	**249-0934**	1	CASE AS	
	6	1	**249-0938**	1	CASE	
	7	2	**263-6443**	1	FAN AS-BLOWER (24-VOLT; A/C, HEATER)	
		2	**1F-7958**	1	NUT-FULL (1/2-13-THD)	
	8	2	**263-9466**	1	PLATE	
	9	2	**263-9479**	1	PLATE	
	10	2	**265-7435**	1	GASKET	
	11	2	**273-0336**	1	SEAL	
	12	1	**273-0338**	1	PLUG	
	13	1	**273-0339**	1	PLUG	
	14	2	**273-0340**	2	CAP	
	16	1	**276-9015**	1	HARNESS AS-MOTOR (THERMOSTAT)	
		1	**102-8806**	1	KIT-RECEPTACLE (8-PIN)	
		1	**177-9645**	1	KIT-RECEPTACLE (2-PIN)	
					(EACH INCLUDES RECEPTACLE AS & WEDGE)	
Y	17	1	*278-1442*	1	COIL GP-VALVE (AIR CONDITIONER, HEATER)	771
	18	1	**278-3354**	1	FILM-INSTRUCTION (HVAC WATER, DRAINING, FILLING)	
	19	1	**279-1124**	1	GROMMET	
	20	2	**286-3092**	1	PLATE	
M	21	1	**129-3178**	1	LOCKNUT (M6X1-THD)	
	22	2	**132-5793**	1	SCREW-WASHER HD (4-40X0.25-IN)	
M	23	1	**141-9784**	1	BOLT (M6X1X190-MM)	
	24	2	**2S-3745**	4	SCREW-TAPPING (10-16X0.5-IN)	
	25	1	**6V-1668**	2	WASHER (6.5X29.1X3-MM THK)	
	26	1	**8T-4205**	2	WASHER-HARD (7.2X14.5X2-MM THK)	
	27	1	**9X-2038**	4	WASHER (7X19X2-MM THK)	
M	28	1	**9X-2044**	10	SCREW-TRUSS HEAD (M6X1X16-MM)	

M-METRIC PART
Y-SEPARATE ILLUSTRATION

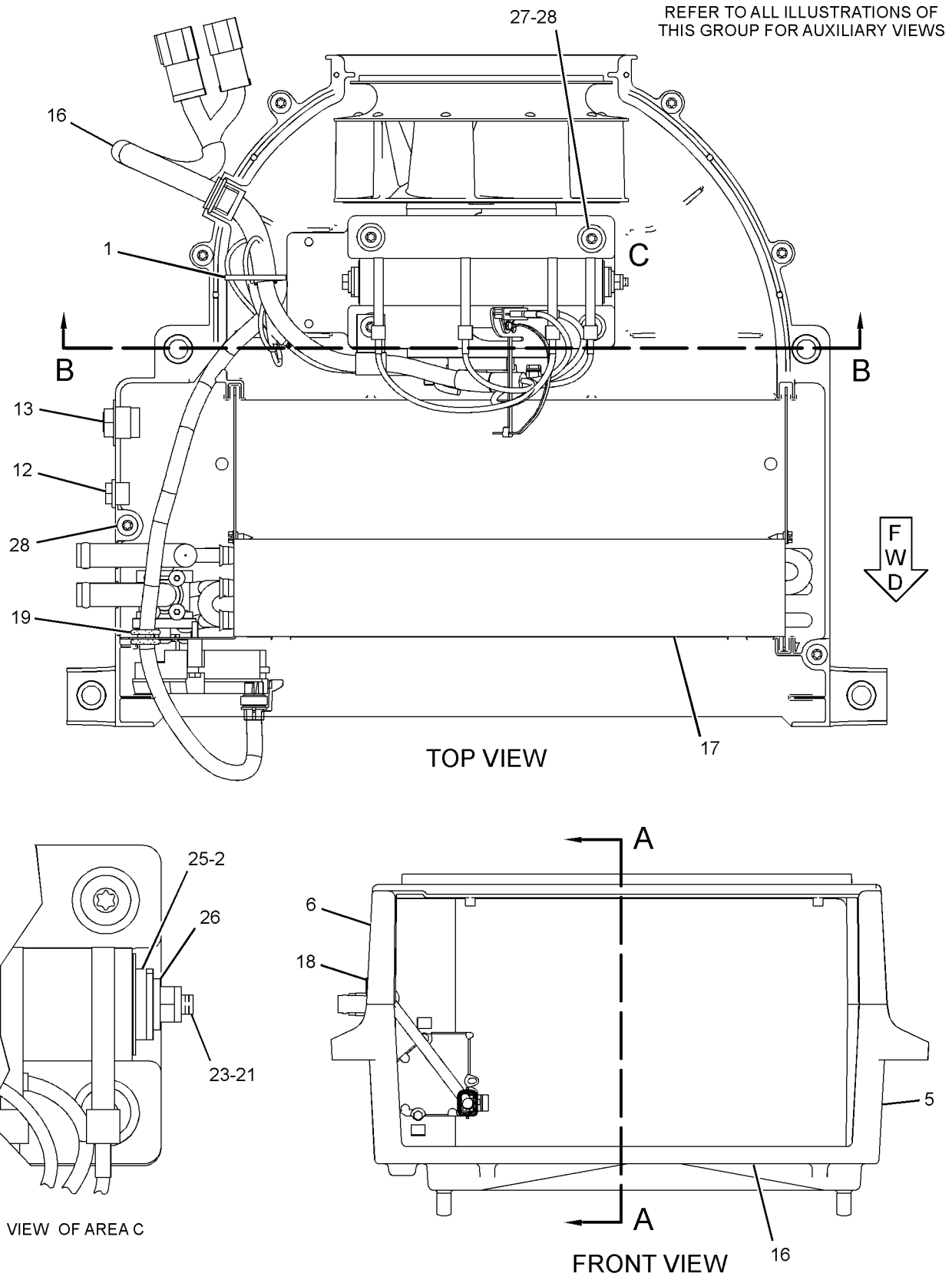

GRAPHIC #1

g01289183

244-2699 HEATER GP-CAB *(contd.)* **i02786779**

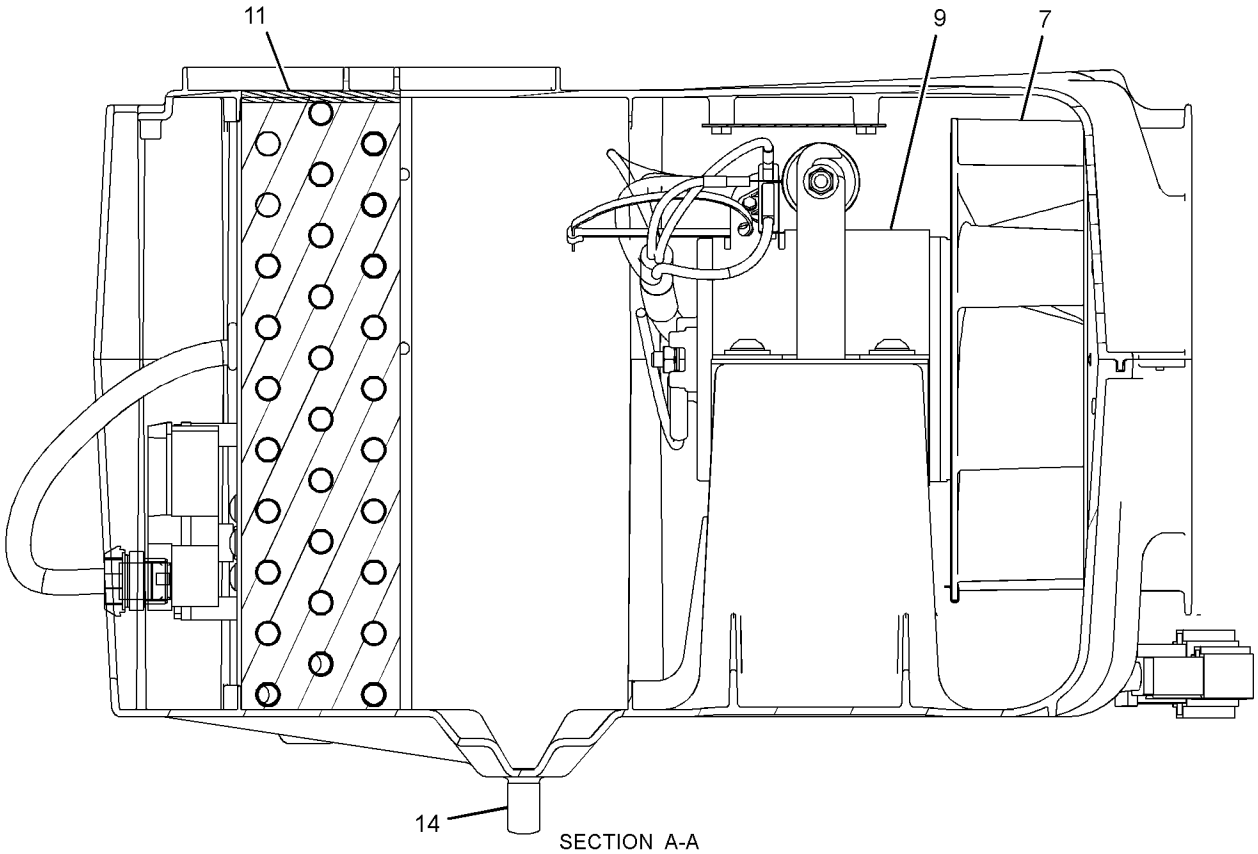

SECTION A-A

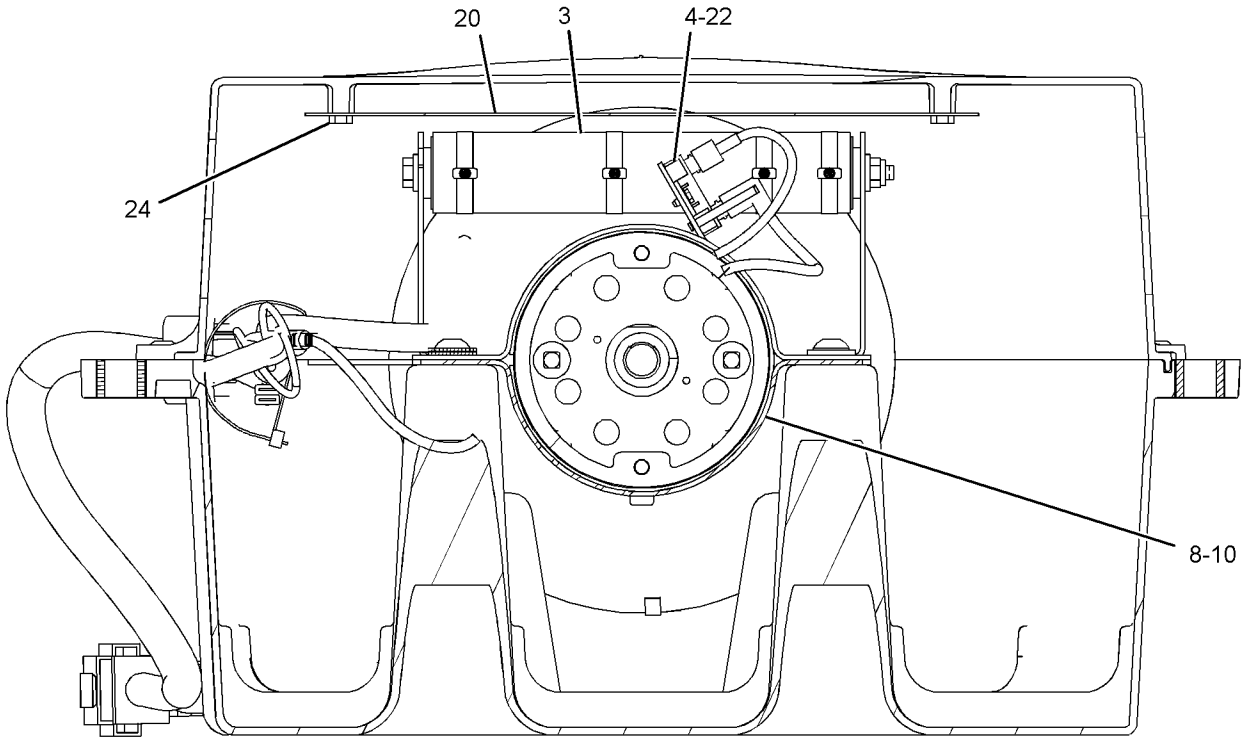

SECTION B-B

GRAPHIC #2 **<END>** g01289184

OPERATOR STATION

174-2231 HOUSING GP-SEAT SUSPENSION

S/N: B9D1-UP

PART OF 160-7165 SUSPENSION GP-SEAT

SMCS-7321, 7324 **i01883773**

NOTE	REF NO	GRAPHIC REF	PART NUMBER	QTY	PART NAME 1 2 3 4 5 6 (PRODUCT LEVEL)	SEE PAGE
	1	1	**1Y-7927**	1	PIN	
	2	1	**2D-6235**	2	LOCKNUT (1/4-20-THD)	
	3	1	**2M-7819**	4	RING-RETAINING	
	4	1	**3D-2975**	2	RING-RETAINING	
	5	1	**4B-5059**	6	WASHER (15X29.5X2.5-MM THK)	
	6	1	**4N-2927**	2	RACE-THRUST BEARING	
	7	1	**5D-4822**	2	RING-RETAINING	
	8	1	**5P-8445**	4	RING-RETAINING	
	9	1	**5V-0770**	2	BOLT-CARRIAGE (1/4-20X0.74-IN)	
	10	1	**7M-7219**	1	BEARING-THRUST	
	11	1	**7V-5191**	2	SPACER (28X10X7.1-MM THK)	
	12	1	**8L-8413**	2	STRAP-CABLE	
	13	1	**8S-7803**	4	RING-RETAINING	
	14	1	**8Y-6041**	1	ARM AS	
	15	1	**8Y-6045**	1	CAM	
	16	1	**8Y-6046**	1	PIN	
	17	1	**8Y-6047**	2	PIN	
	18	1	**8Y-6060**	2	ROLLER	
	19	1	**8Y-6062**	1	LINK-ACTUATOR	
	20	1	**8Y-6063**	1	LINK-ACTUATOR	
	21	1	**8Y-6064**	2	ROLLER-SLIDER	
	22	1	**8Y-6066**	1	SPRING	
	23	1	**8Y-6067**	1	SPACER (10.54-MM THK)	
	24	1	**8Y-6068**	1	NUT (3/8X16-THD)	
	25	1	**8Y-6069**	1	ADJUSTER AS	
	26	1	**9X-8918**	3	SCREW-FLAT HEAD (8-32X0.5-IN)	
	27	1	**095-0878**	1	PIN-SPRING	
	28	1	**131-4242**	1	BOLT (3/8-16X5.18-IN)	
	29	1	**131-5167**	1	KNOB AS-ADJUSTMENT (SEAT SUSPENSION)	
	30	1	**161-5967**	1	SHAFT	
	31	1	**174-2237**	1	HOUSING AS-UPPER	
JZ	32	1		1	KNOB-HEIGHT (SEAT SUSPENSION)	
JZ	33	1		1	KNOB-HEIGHT (SEAT SUSPENSION)	
LZ	34	1		2	SPRING	
LZ	35	1		2	BUSHING	
VZ	36	1		2	SPRING	
VZ	37	1		2	SPACER	
VZ	38	1		2	BUSHING-GUIDE	
VZ	39	1		2	ROD	
PZ	40	1		1	TAPE-INDICATOR	
PZ	41	1		1	GUIDE	
SZ	42	1		1	PIN	
SZ	43	1		1	FOLLOWER-CAM	
TZ	44	1		1	PIN	
TZ	45	1		1	FOLLOWER-CAM	
UZ	46	1		2	ROLLER AS	
UZ	47	1		1	ROLLER AS	
QZ	48	1		3	BUMPER	
					AVAILABLE REPAIR KIT(S):	
J			**8Y-5945**	1	KIT-SUSPENSION KNOB (HEIGHT ADJUSTMENT) (SUSPENSION SEAT)	
L			**8Y-6859**	1	KIT-SPRING (SUSPENSION SEAT)	
V			**8Y-6860**	1	KIT-SPRING (HEIGHT ADJUSTMENT) (SUSPENSION SEAT)	
P			**100-3224**	1	KIT-INDICATOR (WEIGHT ADJUSTMENT) (SUSPENSION SEAT)	

174-2231 **HOUSING GP-SEAT SUSPENSION** *(contd.)* **i01883773**

NOTE	REF NO	GRAPHIC REF	PART NUMBER	QTY	PART NAME 1 2 3 4 5 6 (PRODUCT LEVEL)	SEE PAGE
Q			**100-5179**	1	KIT-BUMPER (WEIGHT ADJUSTMENT) (SUSPENSION SEAT)	
S			**108-4086**	1	KIT-FOLLOWER (SUSPENSION SEAT)	
T			**108-4087**	1	KIT-FOLLOWER (SUSPENSION SEAT)	
U			**108-4103**	1	KIT-BEARING (SUSPENSION SEAT)	

J-KIT MARKED J INCLUDES PARTS MARKED J
L-KIT MARKED L INCLUDES PARTS MARKED L AND RETAINING RING
P-KIT MARKED P INCLUDES PARTS MARKED P AND CABLE STRAP
Q-KIT MARKED Q INCLUDES PARTS MARKED Q
S-KIT MARKED S INCLUDES PARTS MARKED S
T-KIT MARKED T INCLUDES PARTS MARKED T
U-KIT MARKED U INCLUDES PARTS MARKED U
V-KIT MARKED V INCLUDES PARTS MARKED V
Z-NOT SERVICED SEPARATELY

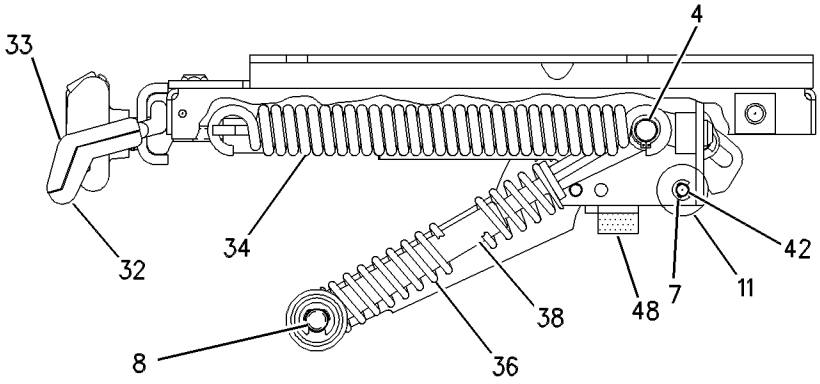

SECTION B-B

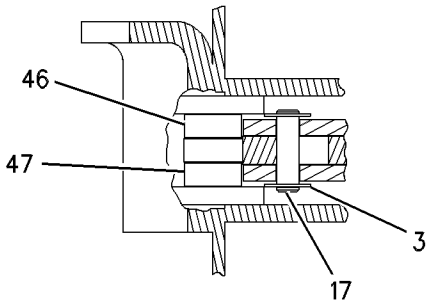

SECTION C-C

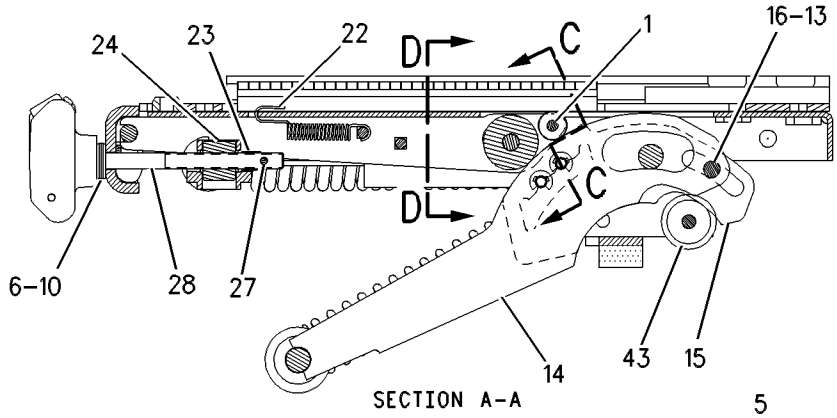

SECTION A-A

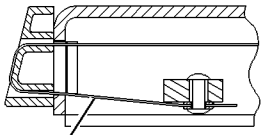

SECTION E-E

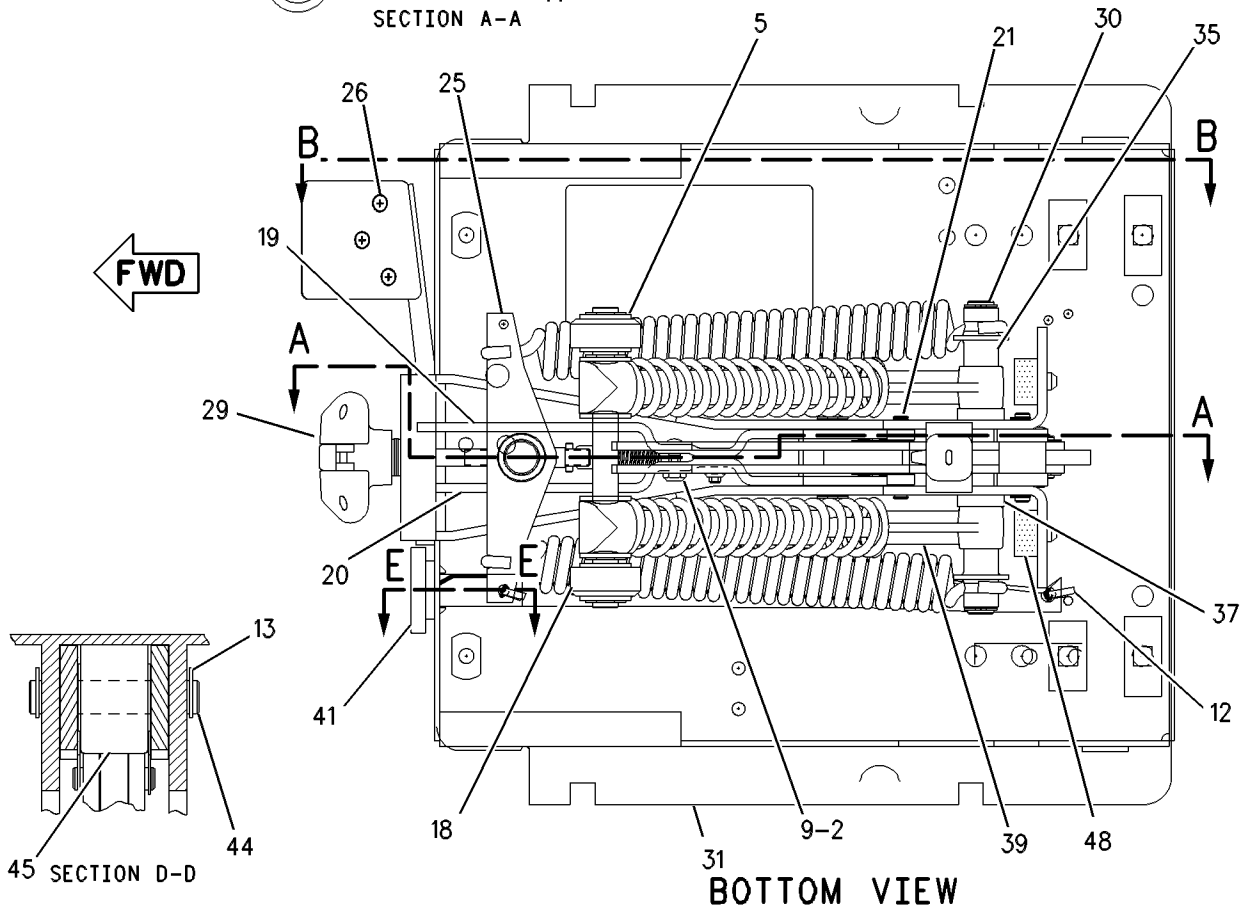

BOTTOM VIEW

SECTION D-D

GRAPHIC #1 **<END>** g00608620

OPERATOR STATION

294-0987 LINER GP-CAB

S/N: B9D1-UP

PART OF 254-5399 CAB AR

SMCS-7329 **i02779227**

NOTE	REF NO	GRAPHIC REF	PART NUMBER	QTY	PART NAME 1 2 3 4 5 6 (PRODUCT LEVEL)	SEE PAGE
Y	1	1	**3E-6389**	1	LAMP GP-DOME (24-VOLT)	178
	2	1	**5T-1625**	1	PLATE AS	
	3	1	**9F-8125**	3	LOCKWASHER	
	4	1	**101-0003**	2	FASTENER	
	5	1	**114-6658**	15	WASHER (6.5X17X1-MM THK)	
	6	1	**139-6039**	24	NUT (U-TYPE RETAINER)	
	7	1	**250-8335**	2	LAMP AS (24-VOLT)	
					(EACH INCLUDES)	
		1	**102-8802**	1	KIT-RECEPTACLE (2-PIN)	
					(INCLUDES RECEPTACLE AS & WEDGE)	
		1	**186-3735**	2	PIN-CONNECTOR (16-GA TO 18-GA)	
	8	1	**263-2573**	1	FILM-INSTRUCTION (WIPER)	
	9	1	**263-2588**	1	COVER	
	10	1	**272-8327**	1	PLATE	
	11	1	**274-2399**	1	COVER	
	12	1	**276-9622**	1	PLATE	
	13	1	**294-0986**	1	HEADLINER AS	
	14	1	**294-0988**	1	COVER	
	15	1	**294-0992**	1	PLATE	
	16	1	**294-0993**	1	PLATE	
	17	1	**033-4814**	3	SCREW (10-32X1-IN)	
	18	1	**096-6166**	6	WASHER-HARD (4.5X9X1-MM THK)	
	19	1	**101-2867**	9	WASHER-HARD (7.2X25X2-MM THK)	
	20	1	**9K-5635**	10	SCREW-TAPPING (8-18X1-IN)	
M	21	1	**9X-2044**	13	SCREW-TRUSS HEAD (M6X1X16-MM)	
M	22	1	**9X-2045**	11	SCREW-TRUSS HEAD (M6X1X20-MM)	

M-METRIC PART
Y-SEPARATE ILLUSTRATION

294-0987 **LINER GP-CAB** *(contd.)* **i02779227**

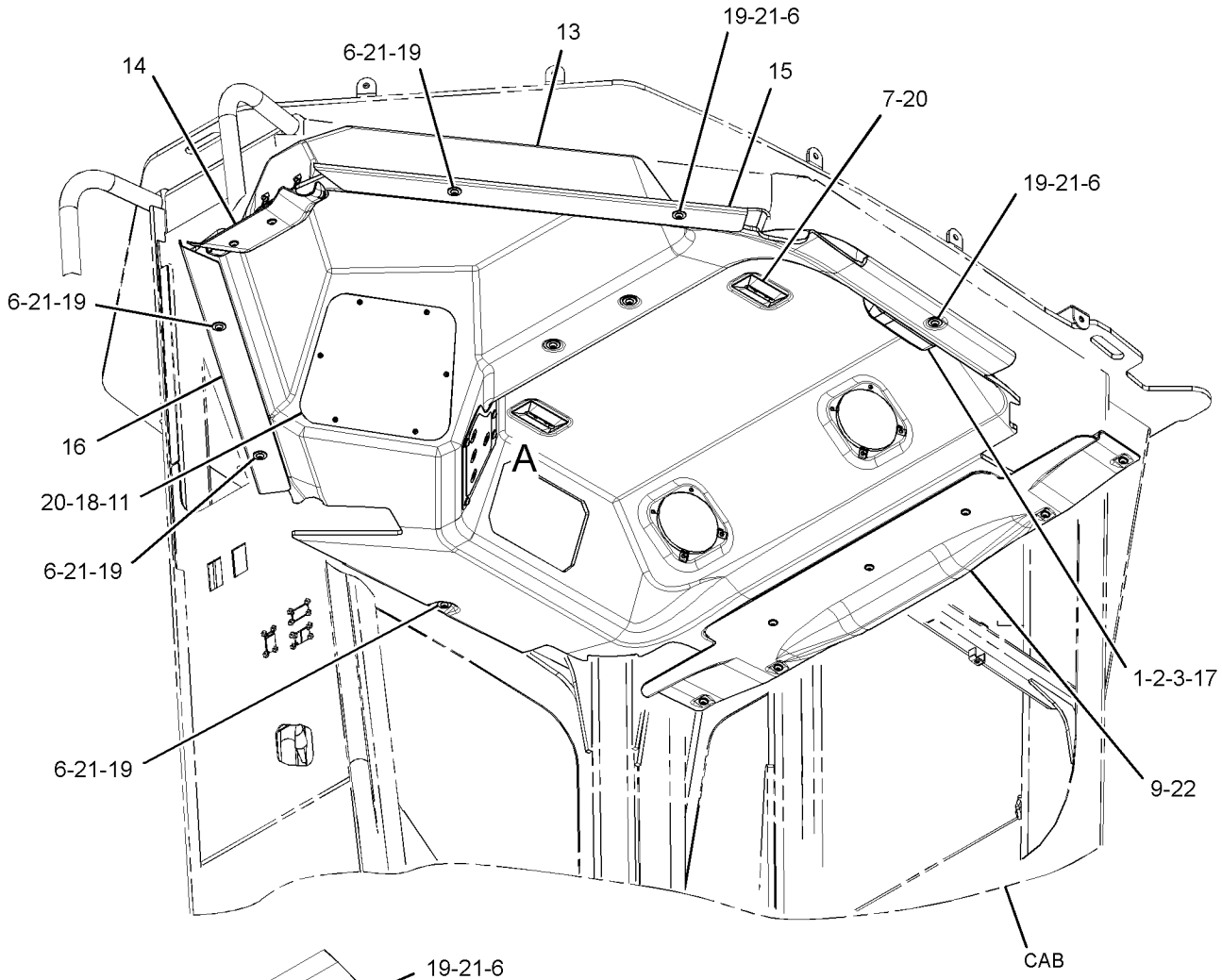

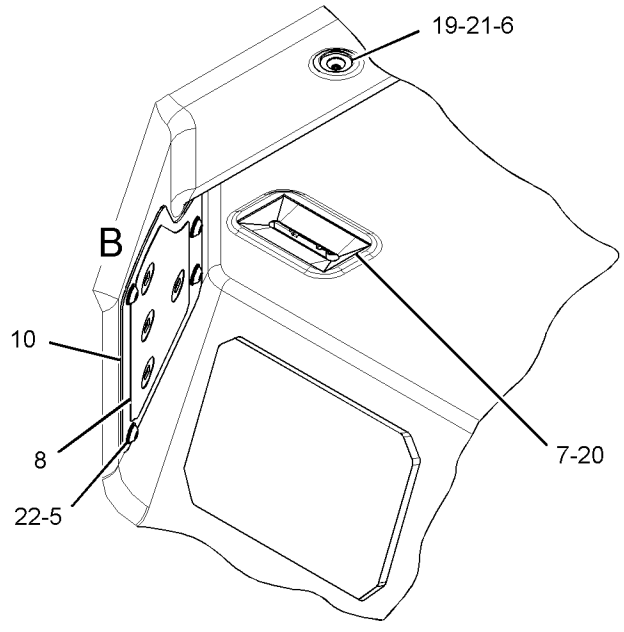

VIEW OF AREA A

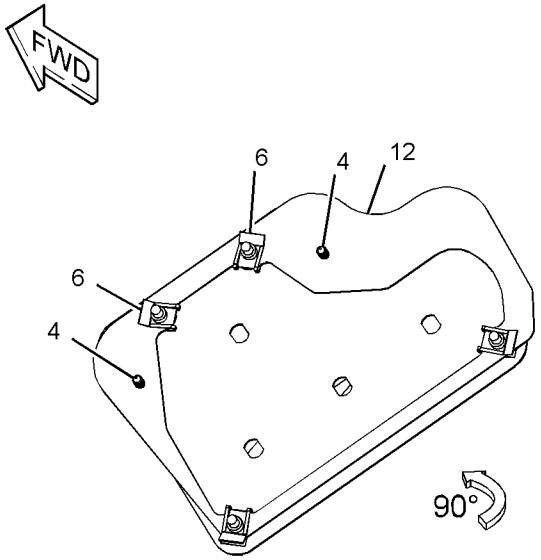

VIEW OF AREA B

GRAPHIC #1 **<END>** g01331993

OPERATOR STATION

244-2702 LINES GP-AIR CONDITIONER

S/N: B9D1-UP

PART OF 233-3149 AIR CONDITIONER GP

SMCS-1808, 7320 **i02786269**

NOTE	REF NO	GRAPHIC REF	PART NUMBER	QTY	PART NAME 1 2 3 4 5 6 (PRODUCT LEVEL)	SEE PAGE
	1	1	**186-6189**	1	ACCUMULATOR-REFRIGERANT	
	2	1	**250-3528**	1	TUBE AS	
	3	1	**250-3529**	1	TUBE AS	
	4	1	**257-3226**	1	RECEIVER DRYER AS (REFRIGERANT)	
		1	**189-1707**	1	ORIFICE AS-AIR CONDITIONER	
I	5	1	**260-5807**	1	HOSE AS	
I	6	1	**260-5808**	1	HOSE AS	
	7	1	**128-5924**	1	CLAMP	
	8	1	**5P-9297**	1	CLIP	
	9	1	**8R-3393**	1	STRAP	
	10	1	**8S-6109**	1	CLIP (SLOT)	
	11	1	**8S-6110**	1	CLIP (TAB)	
	12	1	**8T-4121**	5	WASHER-HARD (11X21X2.5-MM THK)	
M	13	1	**8T-4136**	2	BOLT (M10X1.5X25-MM)	
M	14	1	**8T-4137**	1	BOLT (M10X1.5X20-MM)	
M	15	1	**8T-4191**	2	BOLT (M10X1.5X16-MM)	
	16	1	**9M-8406**	1	CLIP	
	17	1	**9X-7381**	2	SEAL-O-RING	
	18	1	**9X-7382**	2	SEAL-O-RING	
	19	1	**9X-7383**	2	SEAL-O-RING	
	20	1	**9X-8250**	1	CLIP	

I-REFER TO HYDRAULIC INFORMATION SYSTEM
M-METRIC PART

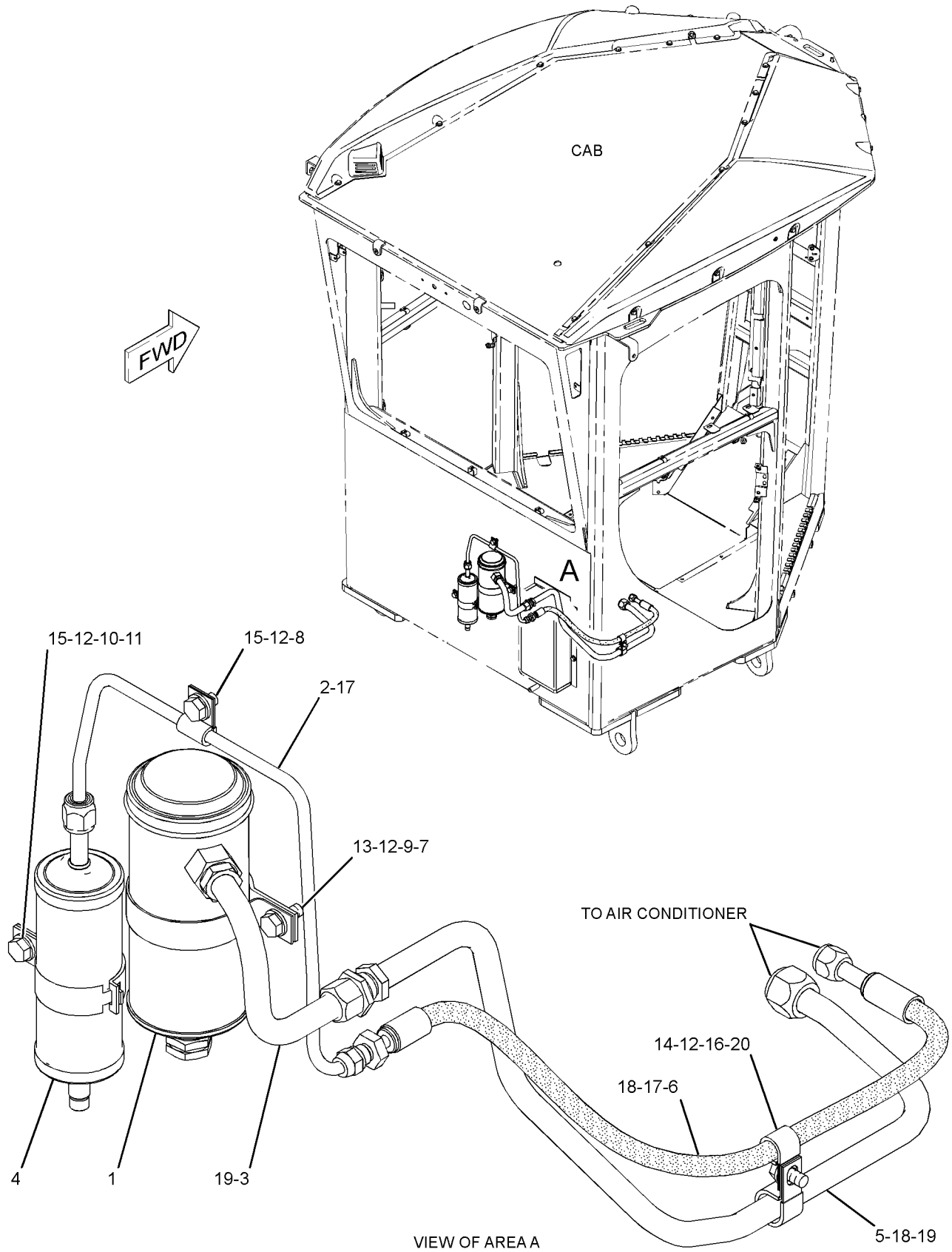

GRAPHIC #1

<END>

g01281876

OPERATOR STATION

255-1249 LINES GP-AIR CONDITIONER

S/N: B9D1-UP

PART OF 261-0775 AIR CONDITIONER AR

SMCS-1808, 7320 **i02786442**

NOTE	REF NO	GRAPHIC REF	PART NUMBER	QTY	PART NAME 1 2 3 4 5 6 (PRODUCT LEVEL)	SEE PAGE
	1	1	**1P-6356**	1	PLATE	
	2	1	**5D-1026**	5	CLAMP-HOSE	
I	3	1	**114-0876**	1	HOSE AS	
	4	1	**114-5333**	1	SWITCH AS-PRESSURE (COMPRESSOR, HIGH SIDE)	
		1	**102-8802**	1	KIT-RECEPTACLE (2-PIN)	
					(INCLUDES RECEPTACLE AS & WEDGE)	
		1	**186-3735**	2	PIN-CONNECTOR (16-GA TO 18-GA)	
E		1	**9X-1386**		SLEEVE (25-CM)	
	5	1	**149-6371**	1	SWITCH AS-PRESSURE (COMPRESSOR, LOW SIDE)	
		1	**102-8802**	1	KIT-RECEPTACLE (2-PIN)	
					(INCLUDES RECEPTACLE AS & WEDGE)	
		1	**186-3735**	2	PIN-CONNECTOR (16-GA TO 18-GA)	
	6	1	**189-3158**	1	SUPPRESSOR-ARC	
	7	1	**287-7250**	1	TEE	
	8	1	**290-2704**	1	TUBE AS	
	9	1	**290-2705**	1	TUBE AS	
I	10	1	**293-9352**	1	HOSE AS	
I	11	1	**296-7831**	1	HOSE AS	
	12	1	**3J-1907**	1	SEAL-O-RING	
	13	1	**5K-5338**	1	CLIP	
	14	1	**5P-1075**	1	WASHER-HARD (10.2X22.5X3-MM THK)	
	15	1	**5P-9299**	1	CLIP	
	16	1	**6K-8178**	1	CLIP	
	17	1	**6V-8397**	1	SEAL-O-RING	
	18	1	**8T-4121**	2	WASHER-HARD (11X21X2.5-MM THK)	
M	19	1	**8T-4136**	1	BOLT (M10X1.5X25-MM)	
M	20	1	**8T-4137**	1	BOLT (M10X1.5X20-MM)	
	21	1	**8T-9377**	1	BOLT (3/8-16X2.25-IN)	
	22	1	**9X-7380**	2	SEAL-O-RING	
	23	1	**9X-7381**	2	SEAL-O-RING	
	24	1	**9X-7382**	1	SEAL-O-RING	
	25	1	**9X-7383**	1	SEAL-O-RING	
	26	1	**9X-7385**	2	SEAL-O-RING	
E	27	1	**5P-0767**		HOSE (23-CM)	
E	27A	1	**5P-0767**		HOSE (25-CM)	
E	27B	1	**5P-0767**		HOSE (97-CM)	

E-ORDER BY THE CENTIMETER
I-REFER TO HYDRAULIC INFORMATION SYSTEM
M-METRIC PART

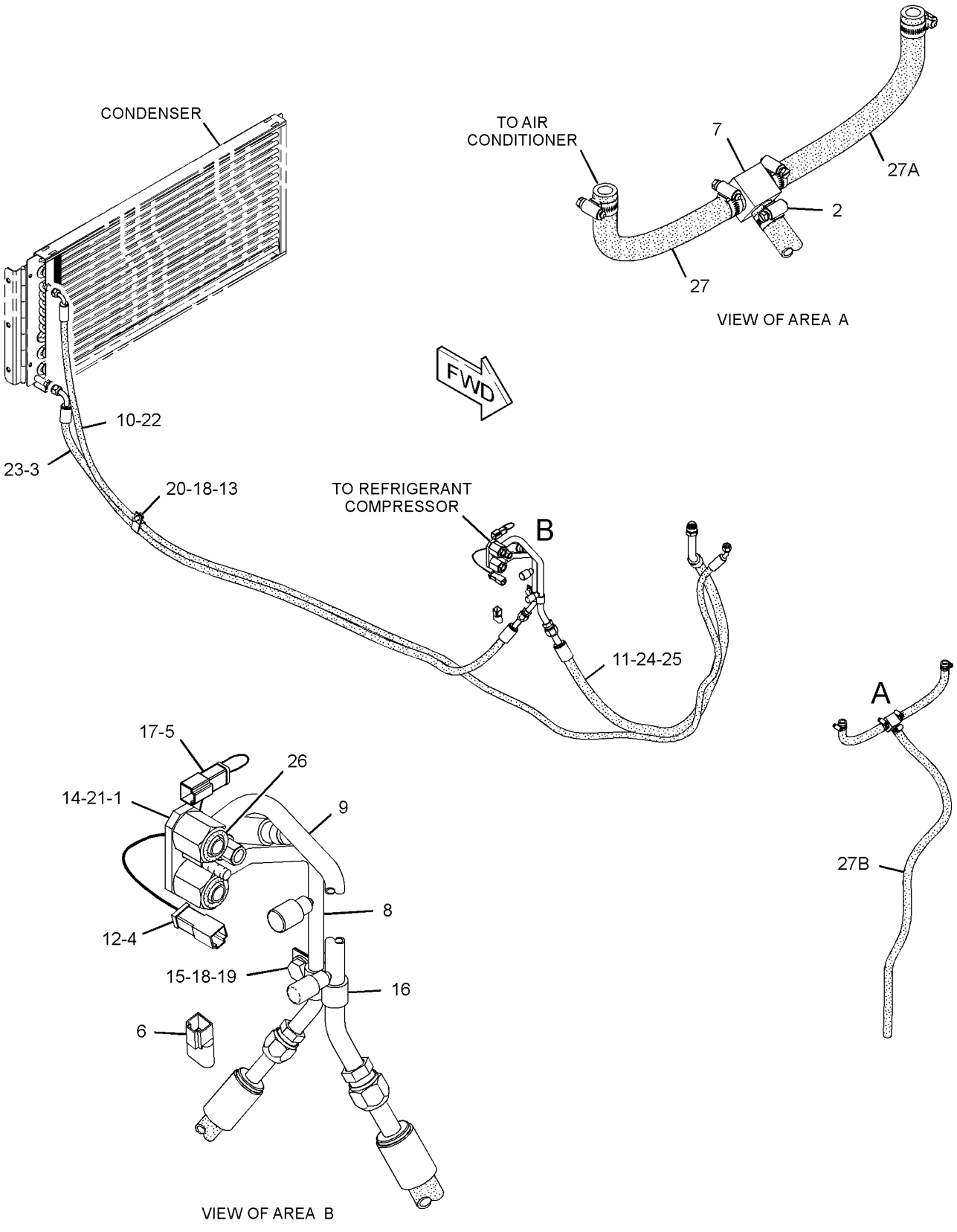

GRAPHIC #1 **<END>** g01365362

OPERATOR STATION

250-2933 LINES GP-HEATER

S/N: B9D1-UP

PART OF 233-3149 AIR CONDITIONER GP

SMCS-1812, 7304 **i02786450**

NOTE	REF NO	GRAPHIC REF	PART NUMBER	QTY	PART NAME 1 2 3 4 5 6 (PRODUCT LEVEL)	SEE PAGE
	1	1	**9X-2488**	4	CLAMP-HOSE	
	2	1	**260-5806**	1	PLATE AS	
	3	1	**278-3354**	1	FILM-INSTRUCTION (HVAC WATER, DRAINING, FILLING)	
	4	1	**5P-4116**	2	WASHER-HARD (8.8X20.5X2-MM THK)	
	5	1	**6D-1641**	1	CLIP	
	6	1	**8T-4121**	1	WASHER-HARD (11X21X2.5-MM THK)	
M	7	1	**8T-4137**	1	BOLT (M10X1.5X20-MM)	
M	8	1	**8T-4908**	2	BOLT (M8X1.25X25-MM)	
E	9	1	**136-1953**		HOSE (85-CM)	
E	9A	1	**136-1953**		HOSE (87-CM)	
D	10	1	**5P-5637**		SEAL (0.7-M)	

D-ORDER BY THE METER
E-ORDER BY THE CENTIMETER
M-METRIC PART

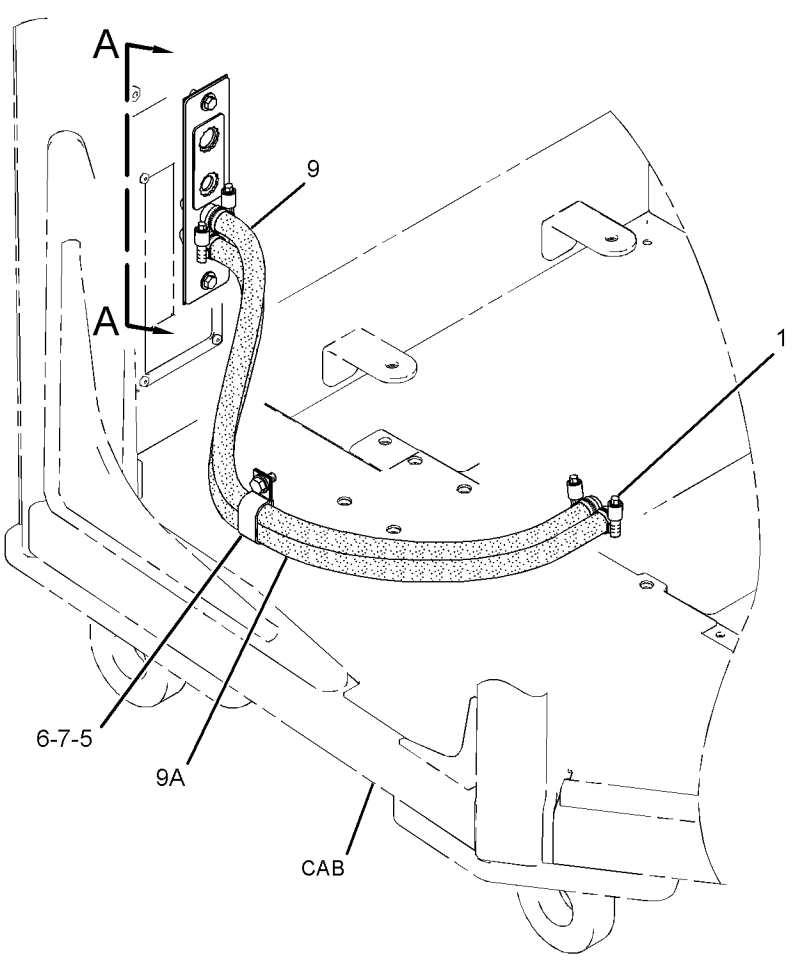

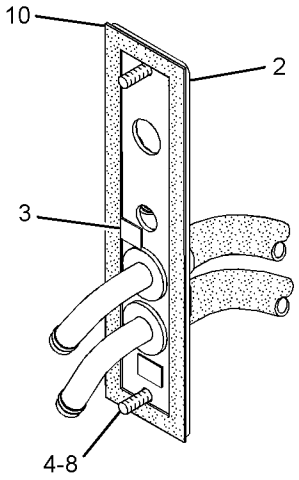

VIEW A-A



GRAPHIC #1 **<END>** g01280970

OPERATOR STATION

255-1248 LINES GP-HEATER

S/N: B9D1-UP

PART OF 261-0775 AIR CONDITIONER AR, 261-0839 HEATER AR-CAB

SMCS-1812, 7304 **i02786449**

NOTE	REF NO	GRAPHIC REF	PART NUMBER	QTY	PART NAME 1 2 3 4 5 6 (PRODUCT LEVEL)	SEE PAGE
	1	1	**5D-1026**	4	CLAMP-HOSE	
	2	1	**132-9496**	1	VALVE-BALL	
	3	1	**194-4864**	1	ELBOW	
	4	1	**290-3385**	1	PLATE AS	
	5	1	**304-0760**	1	TUBE AS	
	6	1	**304-0761**	1	TUBE AS	
	7	1	*148-8342*	1	CONNECTOR AS	
		1	**6V-8632**	1	CONNECTOR	
		1	**3K-0360**	1	SEAL-O-RING	
		1	**7J-9108**	1	SEAL-O-RING	
	8	1	**150-7158**	2	CONNECTOR	
	9	1	**2M-9780**	1	SEAL-O-RING	
	10	1	**6K-8178**	1	CLIP	
	11	1	**7J-9108**	2	SEAL-O-RING	
	12	1	**7X-0510**	1	WASHER-HARD (15.5X29X3-MM THK)	
M	13	1	**8C-3425**	1	BOLT (M14X2X35-MM)	
	14	1	**8T-4121**	1	WASHER-HARD (11X21X2.5-MM THK)	
M	15	1	**8T-4137**	1	BOLT (M10X1.5X20-MM)	
	16	1	**9X-8250**	2	CLIP	
E	17	1	**5P-0767**		HOSE (125-CM)	
E	17A	1	**5P-0767**		HOSE (163-CM)	

E-ORDER BY THE CENTIMETER
M-METRIC PART

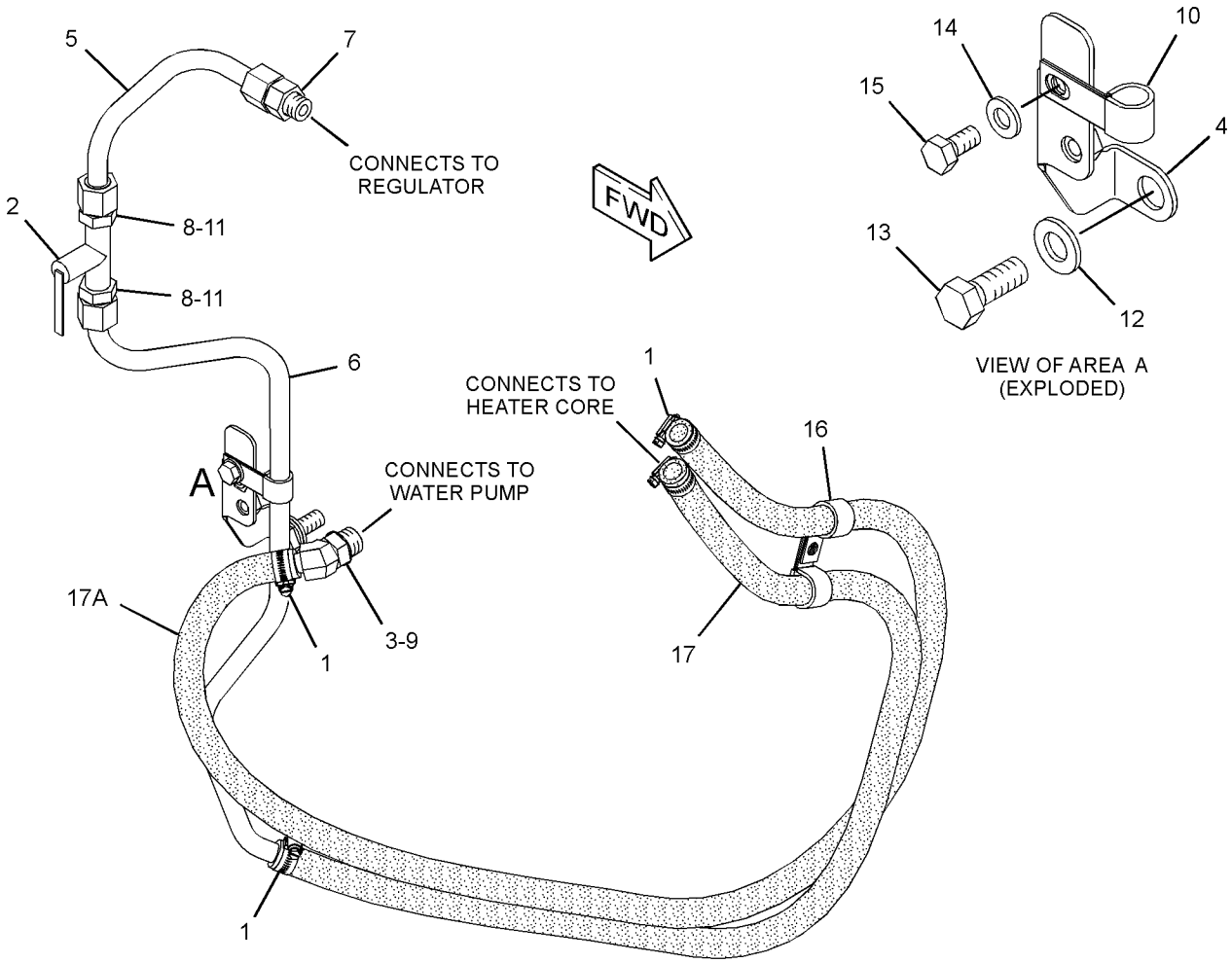

GRAPHIC #1 **<END>** g01373795

OPERATOR STATION

273-1878 LINES GP-HEATER

S/N: B9D1-UP

PART OF 233-3130 HEATER GP-CAB

SMCS-1812, 7304 **i02786767**

NOTE	REF NO	GRAPHIC REF	PART NUMBER	QTY	PART NAME 1 2 3 4 5 6 (PRODUCT LEVEL)	SEE PAGE
	1	1	**9X-2488**	4	CLAMP-HOSE	
	2	1	**273-0343**	1	PLATE AS	
	3	1	**278-3354**	1	FILM-INSTRUCTION (HVAC WATER, DRAINING, FILLING)	
	4	1	**5P-4116**	2	WASHER-HARD (8.8X20.5X2-MM THK)	
	5	1	**6D-1641**	1	CLIP	
	6	1	**8T-4121**	1	WASHER-HARD (11X21X2.5-MM THK)	
M	7	1	**8T-4137**	1	BOLT (M10X1.5X20-MM)	
M	8	1	**8T-4908**	2	BOLT (M8X1.25X25-MM)	
E	9	1	**136-1953**		HOSE (172-CM)	
D	10	1	**5P-5637**		SEAL (0.7-M)	

D-ORDER BY THE METER
E-ORDER BY THE CENTIMETER
M-METRIC PART

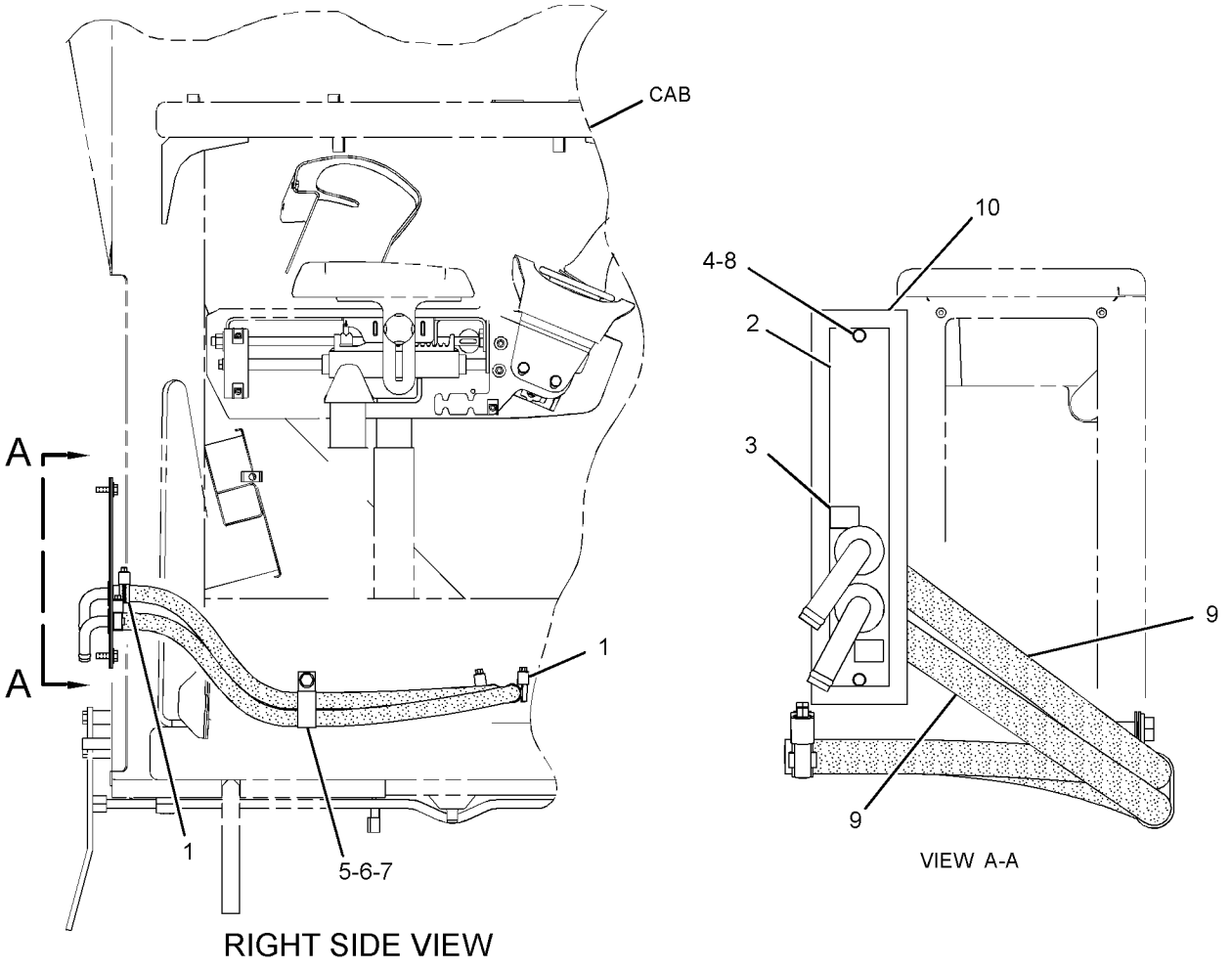

GRAPHIC #1 **<END>** g01259573

OPERATOR STATION

105-9659 MIRROR GP-REAR VIEW

S/N: B9D1-UP

PART OF 233-3208 MIRROR GP-REAR VIEW

SMCS-7319 **i00599732**

NOTE	REF NO	GRAPHIC REF	PART NUMBER	QTY	PART NAME 1 2 3 4 5 6 (PRODUCT LEVEL)	SEE PAGE
	1	1	**9P-9388**	1	KNOB	
	2	1	**5P-6874**	1	MIRROR	
	3	1	**5K-9179**	1	BOLT-ROUND HEAD (3/8-16X11-IN)	
	4	1	**6Y-5113**	1	BRACKET	
	5	1	**8T-4121**	2	WASHER-HARD (11X21X2.5-MM THK)	
M	6	1	**8T-4195**	2	BOLT (M10X1.5X30-MM)	

M-METRIC PART

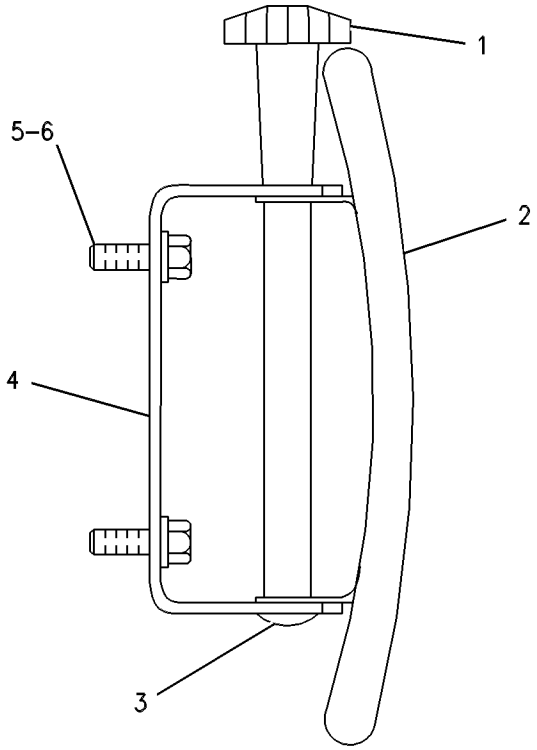

GRAPHIC #1 **<END>** g00254288

OPERATOR STATION

233-3208 MIRROR GP-REAR VIEW—INTERIOR

S/N: B9D1-UP

PART OF 254-5399 CAB AR

SMCS-7319 **i02775815**

NOTE	PART NUMBER	QTY	PART NAME 1 2 3 4 5 6 (PRODUCT LEVEL)	SEE PAGE
Y	*105-9659*	1	MIRROR GP-REAR VIEW	820

Y-SEPARATE ILLUSTRATION

<END>

OPERATOR STATION

233-3295 MIRROR GP-REAR VIEW—EXTERIOR

S/N: B9D1-UP

CANNOT BE USED WITH 233-3296—PAGE 823

SMCS-7319 **i02775844**

NOTE	REF NO	GRAPHIC REF	PART NUMBER	QTY	PART NAME 1 2 3 4 5 6 (PRODUCT LEVEL)	SEE PAGE
	1	1	**123-4586**	4	BLOCK	
	2	1	**291-9154**	4	BLOCK	
	3	1	**259-4758**	2	MIRROR AS	
	4	1	**265-8941**	2	TUBE AS	
	5	1	**8T-4121**	8	WASHER-HARD (11X21X2.5-MM THK)	
M	6	1	**8T-4185**	8	BOLT (M10X1.5X50-MM)	

M-METRIC PART

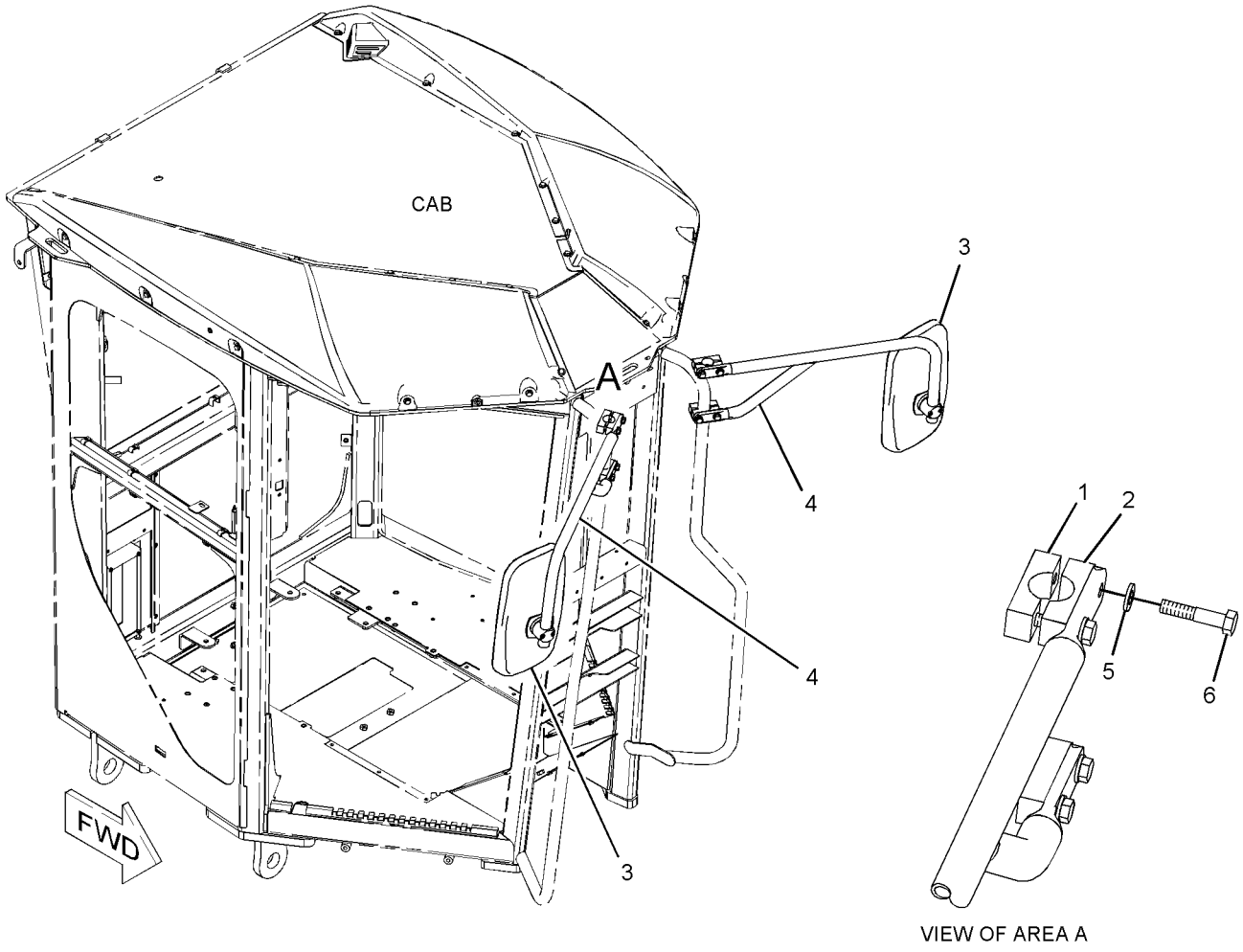

VIEW OF AREA A

GRAPHIC #1 **<END>** g01142028

233-3296 MIRROR GP-REAR VIEW—HEATED

S/N: B9D1-UP

PART OF 261-0187 SNOW AR-MOTOR GRADER

CANNOT BE USED WITH 233-3295—PAGE 822

SMCS-7319 **i02776062**

NOTE	REF NO	GRAPHIC REF	PART NUMBER	QTY	PART NAME 1 2 3 4 5 6 (PRODUCT LEVEL)	SEE PAGE
	1	1	**123-4586**	4	BLOCK	
	2	1	**145-7214**	4	BLOCK	
	3	1	**236-4630**	1	SWITCH AS-ROCKER (HEATED MIRRORS)	
	4	1	**259-4759**	2	MIRROR AS	
					(EACH INCLUDES)	
		1	**102-8802**	1	KIT-RECEPTACLE (2-PIN)	
					(INCLUDES RECEPTACLE AS & WEDGE)	
		1	**186-3735**	2	PIN-CONNECTOR (16-GA TO 18-GA)	
	5	1	**265-8941**	2	TUBE AS	
	6	1	**297-0760**	1	RELAY AS (24-VDC, 20-AMPERE) (HEATED MIRROR TIMER)	
M	7	1	**5C-9553**	1	BOLT (M6X1X16-MM)	
	8	1	**8T-4121**	8	WASHER-HARD (11X21X2.5-MM THK)	
M	9	1	**8T-4185**	8	BOLT (M10X1.5X50-MM)	
	10	1	**9X-8256**	1	WASHER (6.6X12X2-MM THK)	

M-METRIC PART

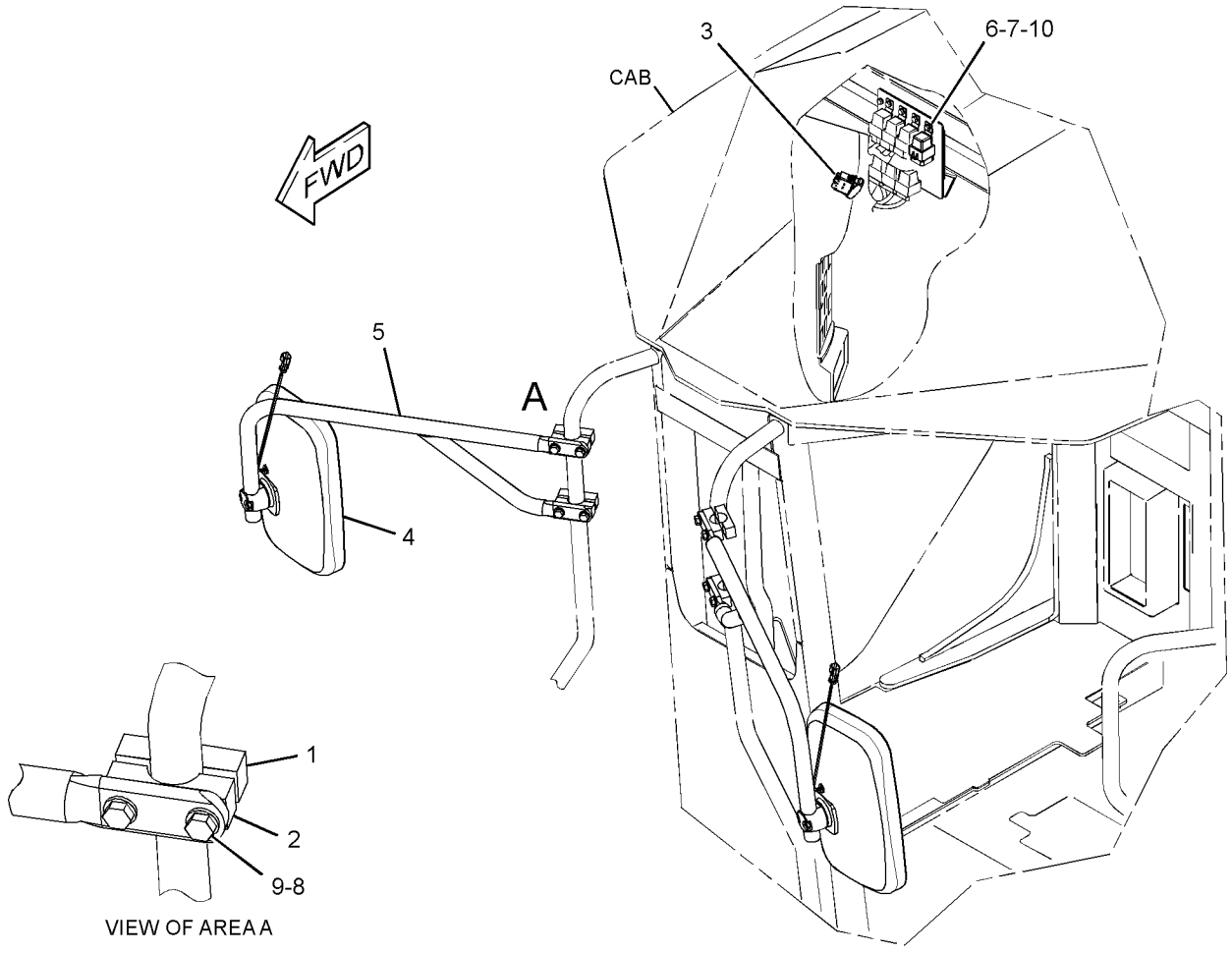

GRAPHIC #1 **<END>** g01364199

OPERATOR STATION

286-9124 MONITOR AS—LIGHT BAR

S/N: B9D1-UP

PART OF 292-7975 DISPLAY AR-MONITOR

SMCS-7431 **i02618799**

NOTE	REF NO	GRAPHIC REF	PART NUMBER	QTY	PART NAME 1 2 3 4 5 6 (PRODUCT LEVEL)	SEE PAGE
	1	1	**230-5009**	1	RECEPTACLE AS-CONNECTOR (4-PIN)	
	2	1	**9X-3402**	3	SOCKET-CONNECTOR (16-GA TO 18-GA)	
	3	1	**8T-8737**	1	PLUG-SEAL	

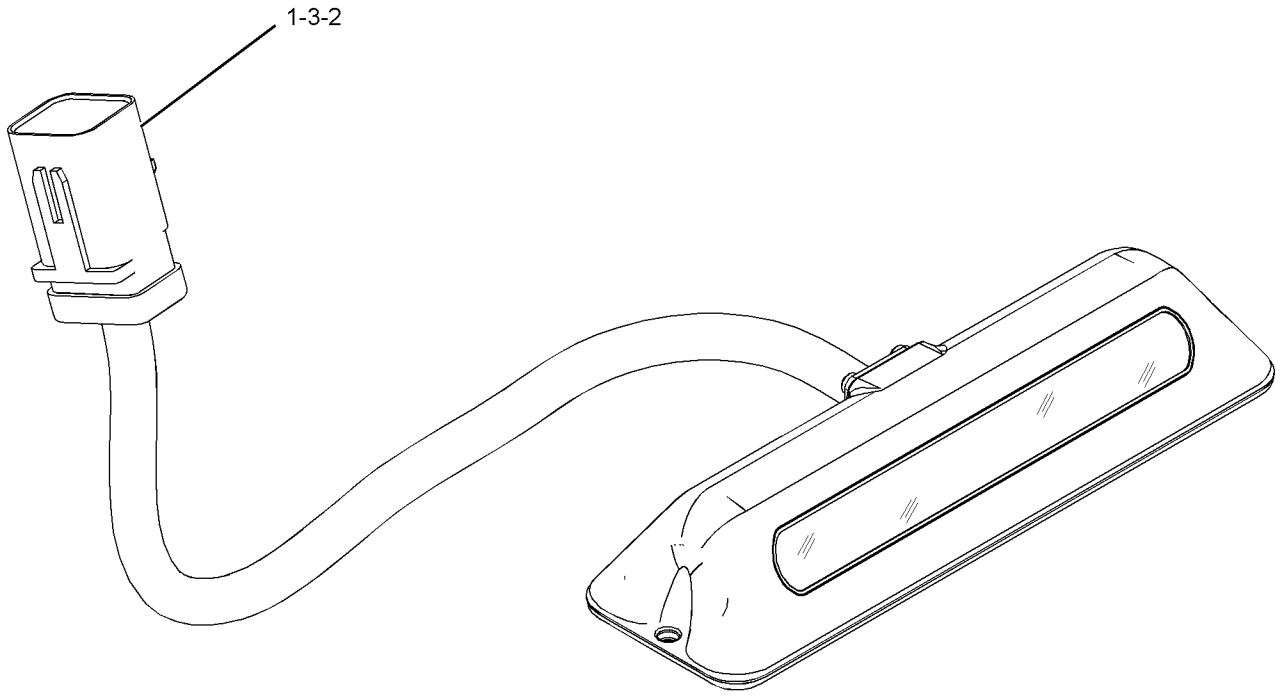

GRAPHIC #1 **<END>** g01313338

OPERATOR STATION

250-5529 MOTOR GP-WINDOW WIPER

S/N: B9D1-UP

24-VOLT

PART OF 233-3139 WIPER GP-WINDOW

SMCS-7305 **i02772913**

NOTE	REF NO	GRAPHIC REF	PART NUMBER	QTY	PART NAME 1 2 3 4 5 6 (PRODUCT LEVEL)	SEE PAGE
	1	1	**102-8805**	1	KIT-RECEPTACLE (6-PIN)	
					(INCLUDES RECEPTACLE AS & WEDGE)	
	2	1	**3F-9556**	1	LOCKWASHER	
M	3	1	**5C-7261**	1	NUT (M8X1.25-THD)	
	4	1	**186-3735**	5	PIN-CONNECTOR (16-GA TO 18-GA)	
	5	1	**8T-8737**	1	PLUG-SEAL	

M-METRIC PART

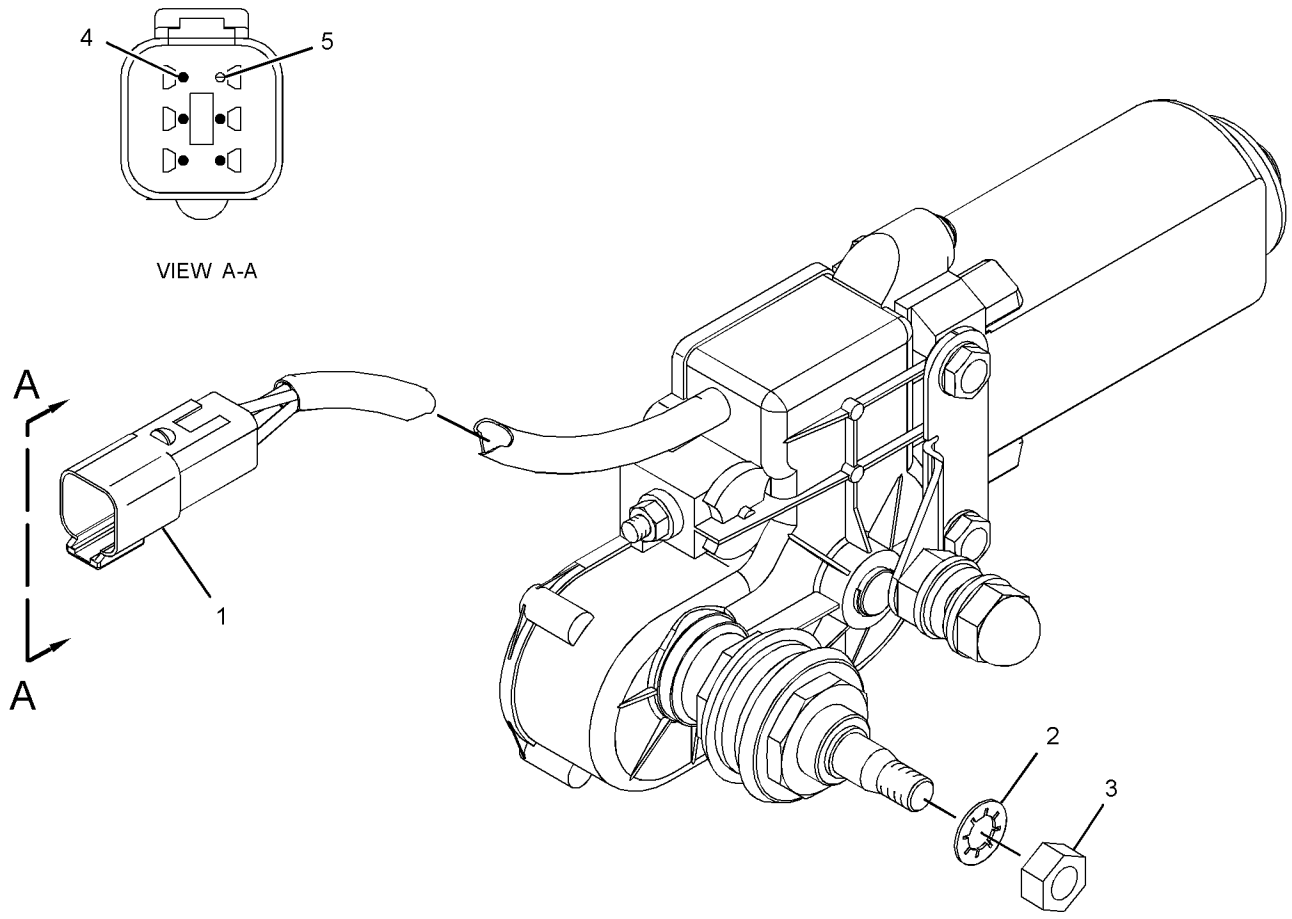

GRAPHIC #1 **<END>** g01230214

OPERATOR STATION

295-1120 MOTOR GP-WINDOW WIPER—FRONT

S/N: B9D1-UP
24-VOLT
PART OF 233-3138 WIPER & WASHER GP-WINDOW

SMCS-7305 **i02775496**

NOTE	REF NO	GRAPHIC REF	PART NUMBER	QTY	PART NAME 1 2 3 4 5 6 (PRODUCT LEVEL)	SEE PAGE
	1	1	**135-0611**	1	MOTOR GP-WINDOW WIPER (24-VOLT, 2-SPEED) (FRONT)	
	2	1	**206-5823**	2	CAP (WIPER) (MOTOR)	
	3	1	**3F-9556**	2	LOCKWASHER	
M	4	1	**5C-7261**	2	NUT (M8X1.25-THD)	

M-METRIC PART

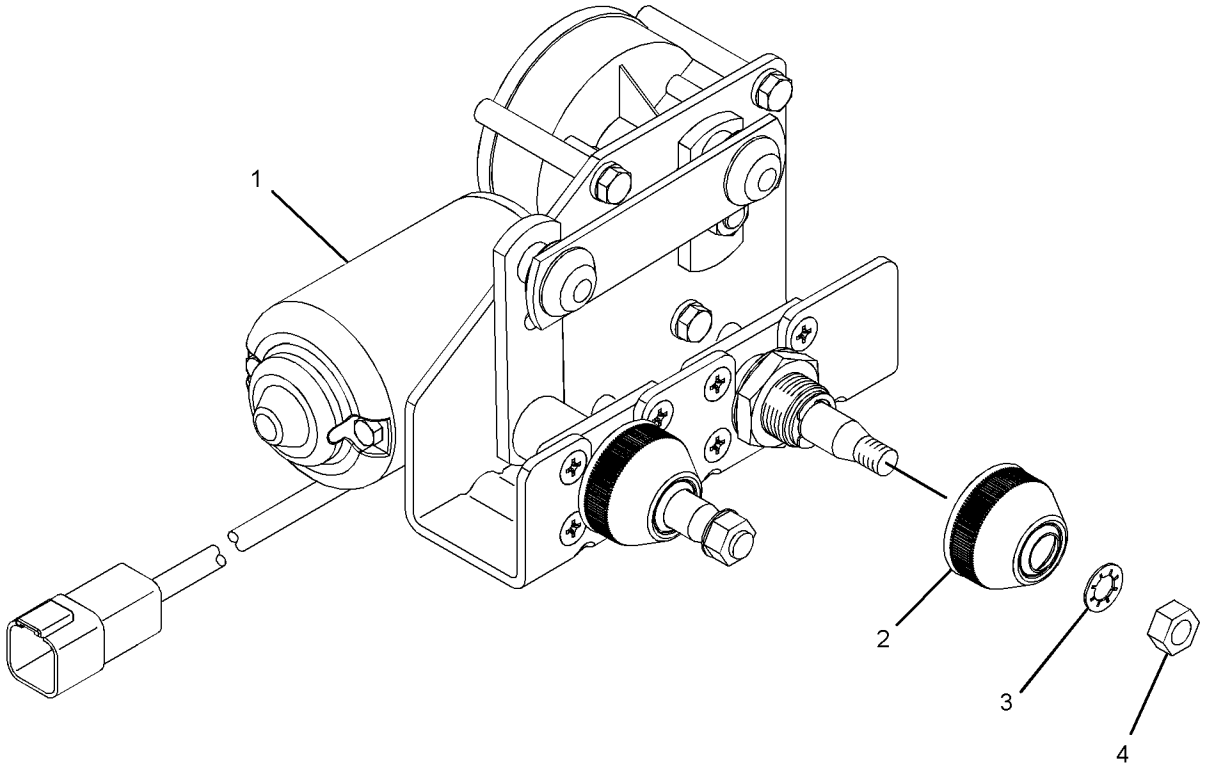

GRAPHIC #1 **<END>** g01315464

OPERATOR STATION

233-3122 MOUNTING GP-ANTENNA

S/N: B9D1-UP

SMCS-7338 **i02773260**

NOTE	REF NO	GRAPHIC REF	PART NUMBER	QTY	PART NAME 1 2 3 4 5 6 (PRODUCT LEVEL)	SEE PAGE
	1	1	**6T-7695**	2	SPEAKER AS-RADIO	
	2	1	**7K-1181**	1	STRAP-CABLE	
	3	1	**8E-1118**	1	ANTENNA AS	
	4	1	**101-3055**	2	COVER-SPEAKER	
	5	1	**109-8981**	1	CABLE AS-COAXIAL	
	6	1	**9K-5635**	8	SCREW-TAPPING (8-18X1-IN)	

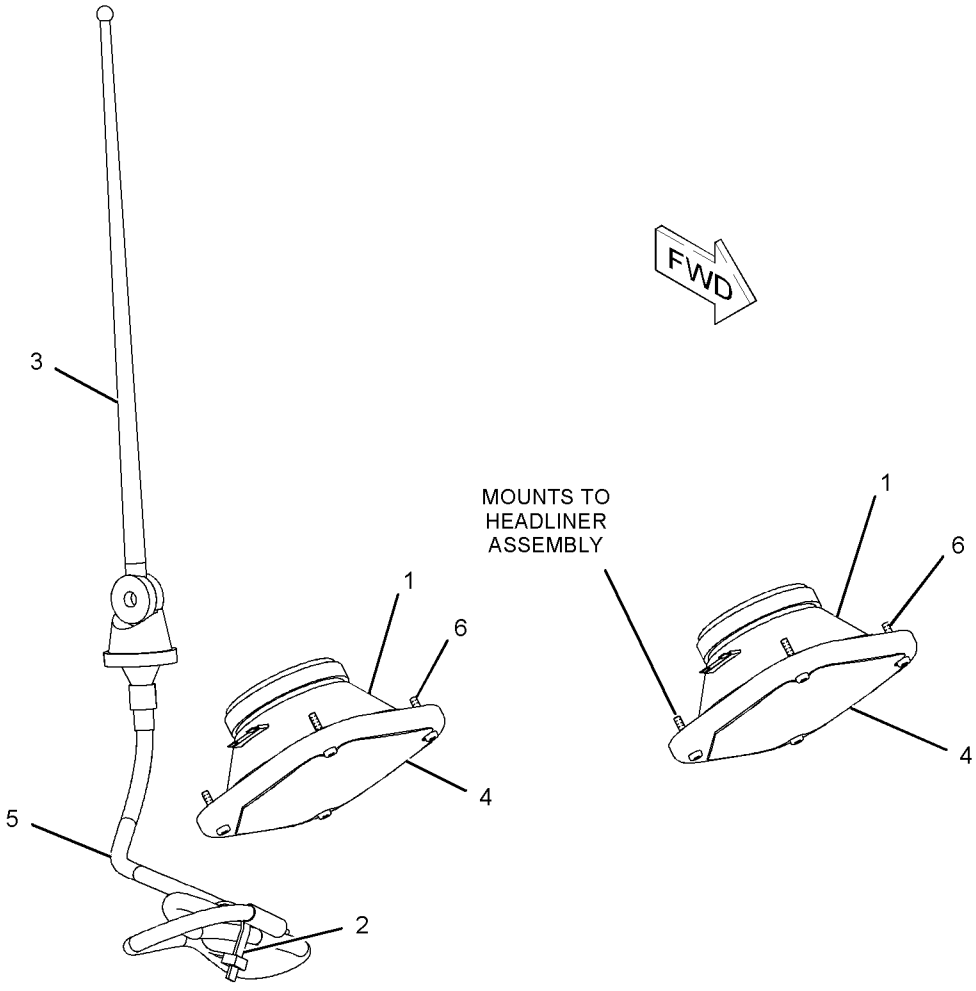

GRAPHIC #1 **<END>** g01114364

OPERATOR STATION

254-5395 MOUNTING GP-CAB

S/N: B9D1-UP

PART OF 254-5399 CAB AR

SMCS-7301 **i02775863**

NOTE	REF NO	GRAPHIC REF	PART NUMBER	QTY	PART NAME 1 2 3 4 5 6 (PRODUCT LEVEL)	SEE PAGE
	1	1	**3E-4898**	4	SLEEVE	
	2	1	**7Y-2174**	8	WASHER (24.5X130X12-MM THK)	
	3	1	**117-8131**	8	MOUNT AS	
M	4	1	**7X-2465**	4	BOLT (M24X3X180-MM)	

M-METRIC PART

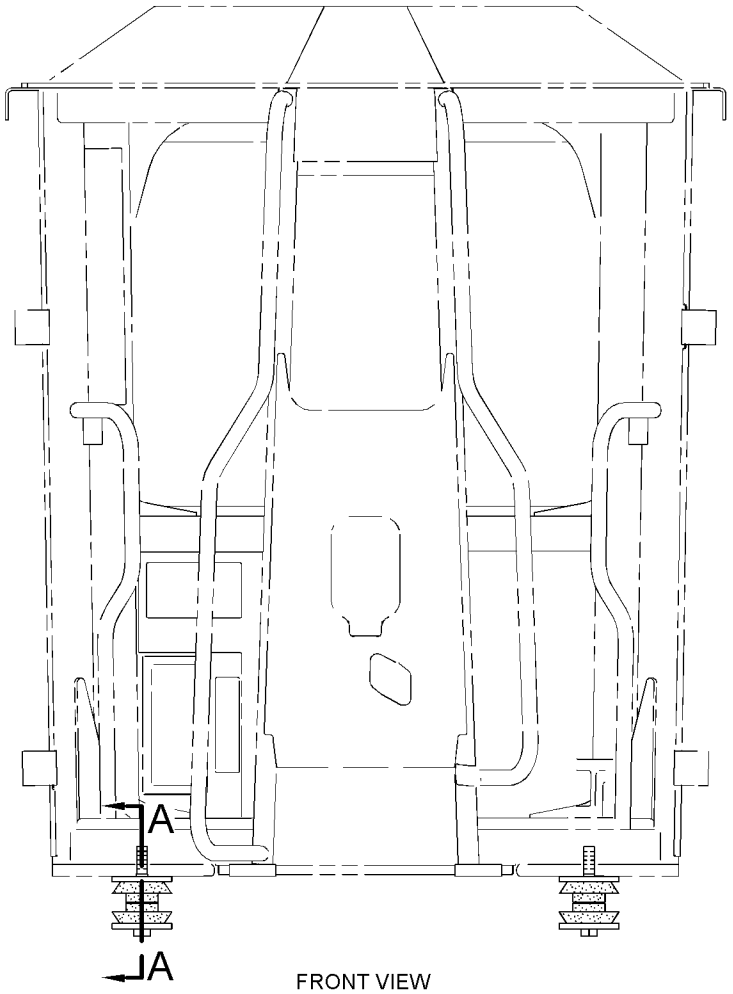

FRONT VIEW

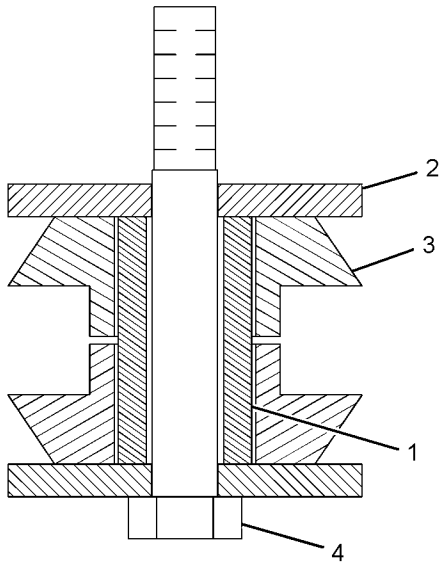

SECTION A-A

GRAPHIC #1 **<END>** g01328614

OPERATOR STATION

281-0429 MOUNTING GP-CONTROL VALVE—WITH ENCLOSURE

S/N: B9D1-UP

PART OF 277-5405, 277-5406, 277-5408 CONTROL GP-IMPLEMENT

SMCS-5063 **i02787698**

NOTE	REF NO	GRAPHIC REF	PART NUMBER	QTY	PART NAME 1 2 3 4 5 6 (PRODUCT LEVEL)	SEE PAGE
	1	1	**251-2247**	1	GROMMET	
	2	1	**281-0387**	1	PLATE	
	3	1	**281-0390**	1	GRIP	
	4	1	**281-0395**	1	ENCLOSURE AS	
M	5	1	**127-2170**	2	SCREW-TRUSS HEAD (M8X1.25X20-MM)	
	6	1	**225-3109**	5	SCREW-TRUSS HEAD (M4X0.7X14-MM)	
E	7	1	**282-0808**		SLEEVE (31-CM)	

E-ORDER BY THE CENTIMETER
M-METRIC PART

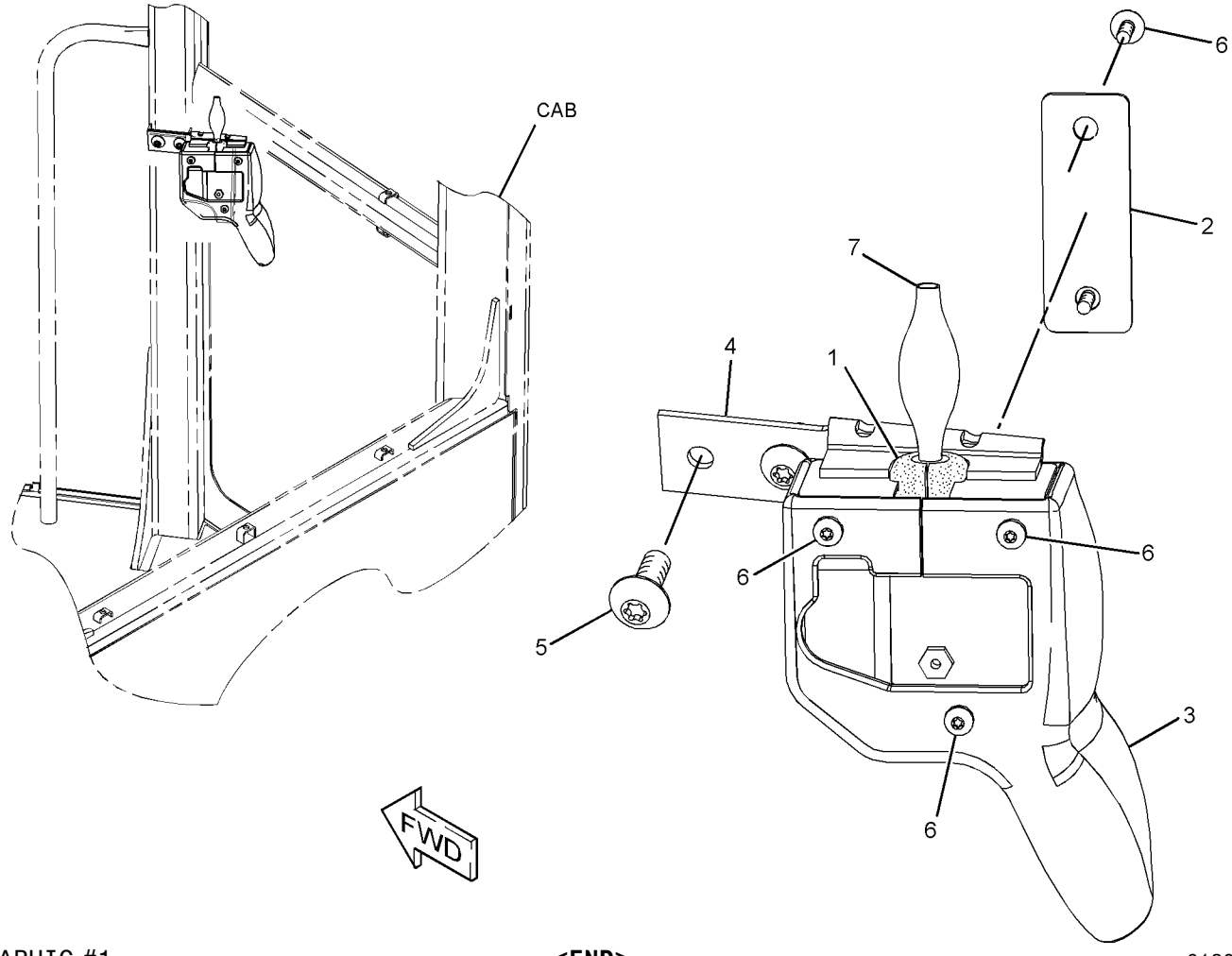

GRAPHIC #1 **<END>** g01301526

OPERATOR STATION

299-0881 MOUNTING GP-CONTROL VALVE—WITH ENCLOSURE

S/N: B9D1-UP

PART OF 299-0874, 299-0875, 299-0876 CONTROL GP-IMPLEMENT

SMCS-5063 **i02779280**

NOTE	REF NO	GRAPHIC REF	PART NUMBER	QTY	PART NAME 1 2 3 4 5 6 (PRODUCT LEVEL)	SEE PAGE
	1	1	**251-2247**	1	GROMMET	
	2	1	**281-0387**	1	PLATE	
	3	1	**281-0390**	1	GRIP	
	4	1	**299-1030**	1	ENCLOSURE AS	
	5	1	**225-3109**	5	SCREW-TRUSS HEAD (M4X0.7X14-MM)	
M	6	1	**9X-2043**	2	SCREW-TRUSS HEAD (M6X1X14-MM)	
E	7	1	**282-0808**		SLEEVE (31-CM)	

E-ORDER BY THE CENTIMETER
M-METRIC PART

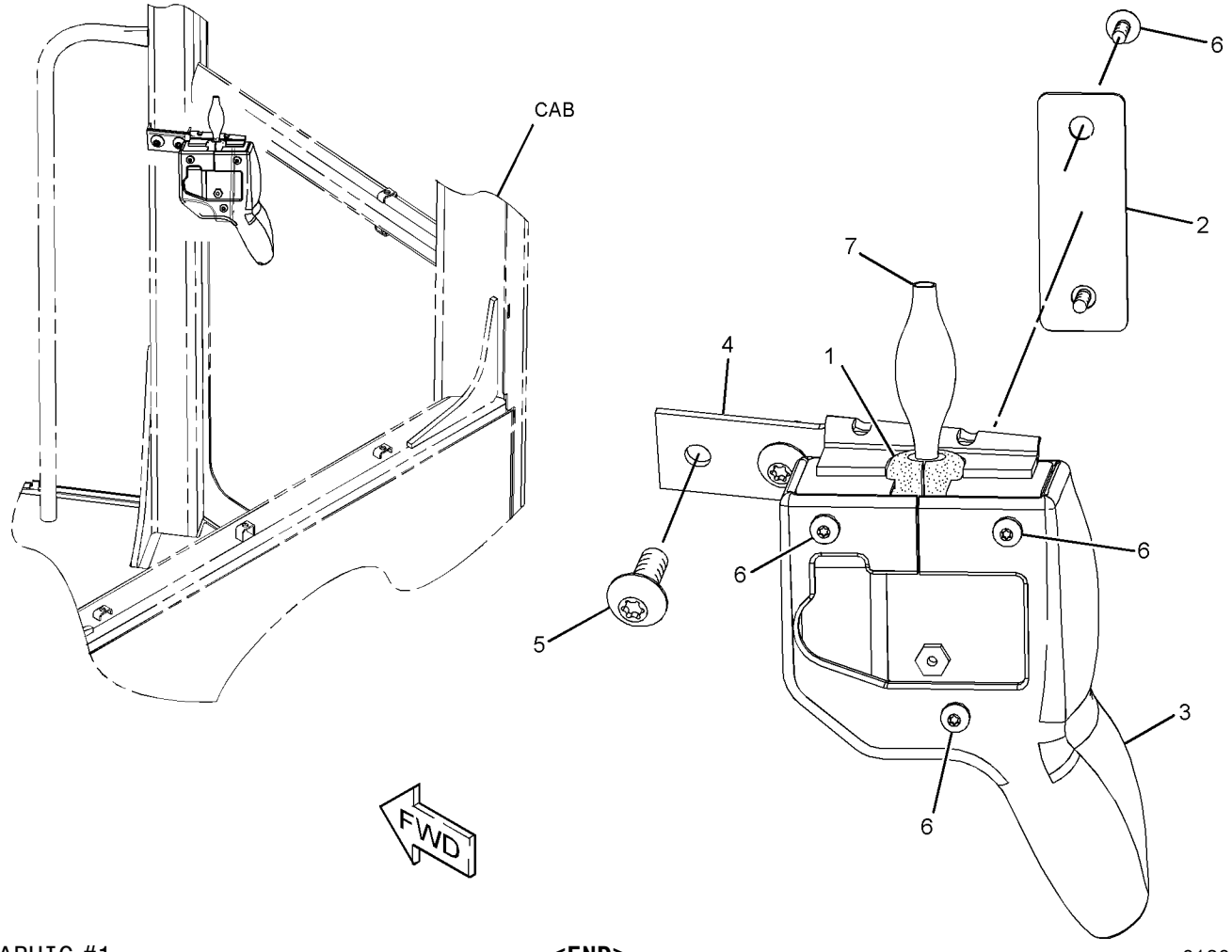

GRAPHIC #1 **<END>** g01301526

OPERATOR STATION

243-6737 PAN AS-SEAT

S/N: B9D1-UP

PART OF 244-5002 SEAT GP

SMCS-7312 **i02791334**

NOTE	REF NO	GRAPHIC REF	PART NUMBER	QTY	PART NAME 1 2 3 4 5 6 (PRODUCT LEVEL)	SEE PAGE
	1	1	**3S-2093**	2	STRAP-CABLE	
	2	1	**8T-9082**	5	RIVET-POP	
	3	1	**216-0814**	1	SWITCH AS-LIMIT (SEAT ADJUSTMENT)	
	4	1	**266-9281**	2	CLIP	
	5	1	**285-2372**	1	HARNESS AS-SWITCH (HEATED SEAT)	
		1	**102-8803**	1	KIT-RECEPTACLE (3-PIN)	
					(INCLUDES RECEPTACLE AS & WEDGE)	

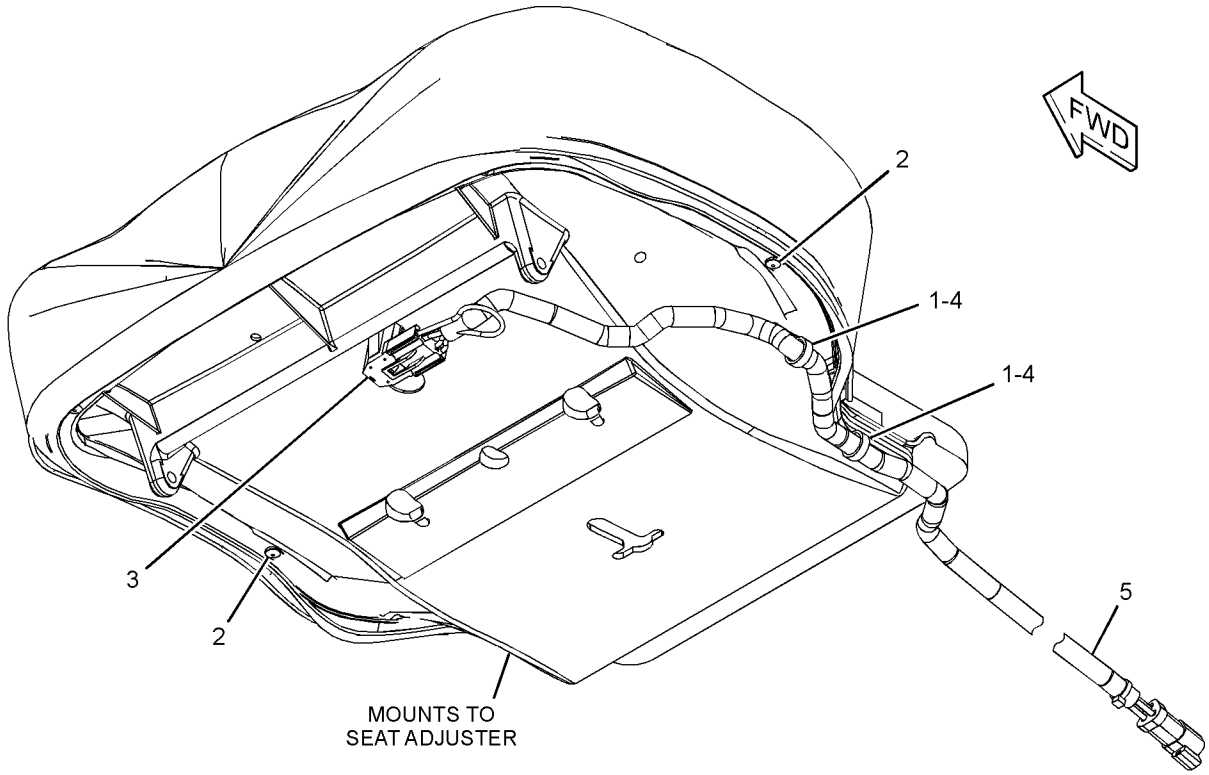

GRAPHIC #1 **<END>** g01338841

OPERATOR STATION

292-6402 PAN GP-BACKREST

S/N: B9D1-UP

PART OF 292-9237 PAN GP-BACKREST

SMCS-7312 **i02679414**

NOTE	REF NO	GRAPHIC REF	PART NUMBER	QTY	PART NAME 1 2 3 4 5 6 (PRODUCT LEVEL)	SEE PAGE
	1	1	**4K-9429**	8	RIVET-POP	
	2	1	**5P-7957**	1	LANYARD	
	3	1	**136-1543**	1	PLATE AS-LUMBAR	
	4	1	**173-2052**	1	RETAINER	
	5	1	**178-7907**	1	HOLDER	
	6	1	**261-5694**	1	PAN AS-BACKREST	

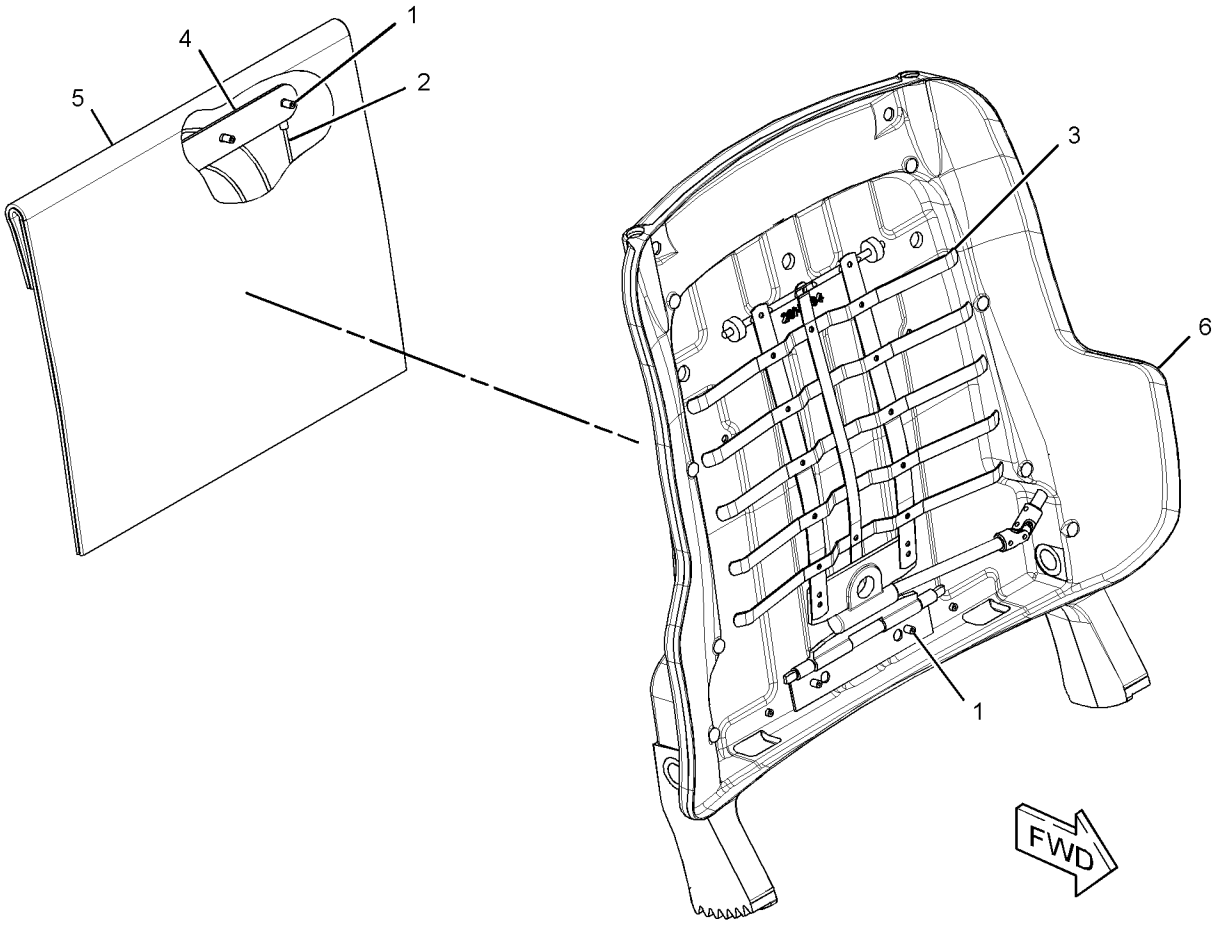

GRAPHIC #1 **<END>** g01304232

OPERATOR STATION

292-9237 PAN GP-BACKREST

S/N: B9D1-UP

PART OF 244-5002 SEAT GP

SMCS-7312 **i02679251**

NOTE	REF NO	GRAPHIC REF	PART NUMBER	QTY	PART NAME 1 2 3 4 5 6 (PRODUCT LEVEL)	SEE PAGE
	1	1	**164-4883**	1	KNOB-LUMBAR	
	2	1	**250-4628**	3	PLUG	
	3	1	**292-6097**	1	CUSHION AS-BACK	
Y	4	1	**292-6402**	1	PAN GP-BACKREST	832
	5	1	**5P-0537**	2	WASHER-HARD (7.2X14.5X2-MM THK)	
	6	1	**6V-8969**	2	SCREW-BUTTON HEAD (1/4-20X0.5-IN)	
	7	1	**8T-7566**	1	PIN-SPRING	

Y-SEPARATE ILLUSTRATION

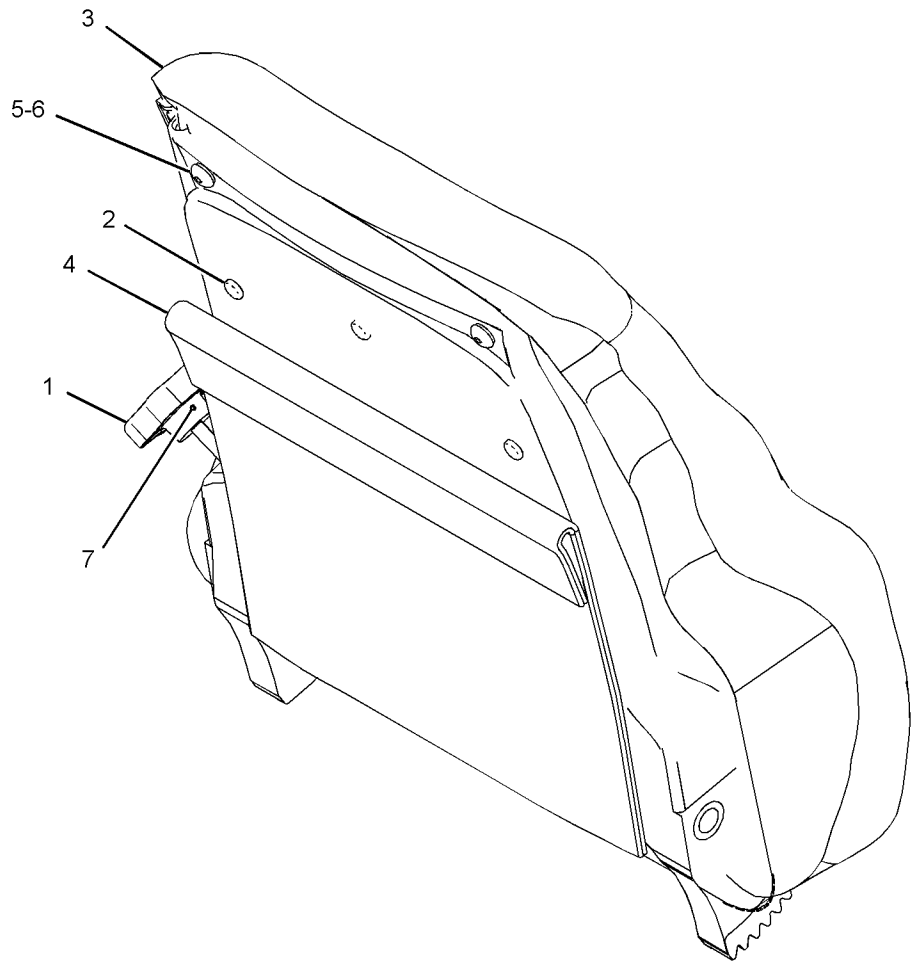

GRAPHIC #1 **<END>** g01336870

OPERATOR STATION

233-3128 PANEL GP-CAB

S/N: B9D1-UP

SMCS-7301 **i02773005**

NOTE	REF NO	GRAPHIC REF	PART NUMBER	QTY	PART NAME 1 2 3 4 5 6 (PRODUCT LEVEL)	SEE PAGE
	1	1	**6V-8928**	1	HOOK-COAT	
	2	1,2	**114-6658**	35	WASHER (6.5X17X1-MM THK)	
	3	1	**122-7045**	3	COVER	
	4	1,2	**139-6039**	18	NUT (U-TYPE RETAINER)	
	5	1	**190-8505**	1	ASHTRAY	
	6	2	**233-3283**	1	PANEL-COVER (LH)	
	7	1,2	**251-2247**	2	GROMMET	
	8	1	**251-2249**	1	PLENUM AS	
	9	2	**254-5373**	1	COVER AS	
		2	**214-9186**	6	BUTTON	
	10	2	**265-8935**	1	COVER	
	11	2	**265-8947**	1	PANEL AS (RH)	
	12	2	**265-8948**	1	PANEL AS (LH)	
	13	1	**267-3171**	1	COVER	
	14	2	**267-3172**	1	PLATE	
	15	1	**272-8330**	1	COVER	
	16	2	**274-2386**	1	PLATE	
	17	1	**274-2401**	1	PANEL-COVER (RH)	
	18	2	**274-2402**	1	PANEL-COVER (LH)	
	19	1	**274-2403**	1	PANEL-COVER (RH)	
	20	1	**274-2404**	2	COVER	
	21	2	**274-2405**	1	COVER AS	
		2	**214-9186**	5	BUTTON	
	22	1	**283-7978**	1	COVER AS	
M		1	**6V-9632**	1	NUT-WELD (M6X1-THD)	
	23	1	**289-6321**	1	FLOOR MAT	
	24	1	**297-3122**	1	BRACKET AS	
M		1	**6V-9632**	2	NUT-WELD (M6X1-THD)	
	25	2	**297-4133**	1	COVER AS	
M		2	**6V-9632**	2	NUT-WELD (M6X1-THD)	
M		2	**8T-3490**	2	NUT-WELD (M10X1.5-THD)	
	26	1	**297-4144**	1	COVER AS (RH)	
M		1	**6V-9632**	5	NUT-WELD (M6X1-THD)	
	27	1	**297-4150**	1	SUPPORT AS	
M		1	**8T-3490**	4	NUT-WELD (M10X1.5-THD)	
	28	1	**297-4152**	1	COVER AS	
M		1	**6V-9632**	4	NUT-WELD (M6X1-THD)	
	29	1	**297-4154**	1	COVER	
	30	1	**297-4160**	1	COVER AS-PANEL (SWITCH)	
		1	**297-4161**	1	FILM-IDENTIFICATION (LOWER)	
		1	**297-4162**	1	FILM-IDENTIFICATION (UPPER)	
	31	1	**297-4165**	4	COVER-LOUVER	
	32	1	**096-6166**	8	WASHER-HARD (4.5X9X1-MM THK)	
	33	1	**118-5619**	6	SCREW-FLAT HEAD (NO 6X20X1-IN)	
	34	2	**5P-4115**	8	WASHER-HARD (7.2X19X2-MM THK)	
	35	2	**5P-4116**	2	WASHER-HARD (8.8X20.5X2-MM THK)	
M	36	2	**6V-6317**	2	BOLT (M10X1.5X20-MM)	
M	37	1	**7Y-9099**	2	SCREW-TRUSS HEAD (M8X1.25X25-MM)	
	38	1,2	**8T-4121**	12	WASHER-HARD (11X21X2.5-MM THK)	
M	39	1	**8T-4191**	4	BOLT (M10X1.5X16-MM)	
M	40	1	**8T-4195**	6	BOLT (M10X1.5X30-MM)	
M	41	2	**8T-4908**	2	BOLT (M8X1.25X25-MM)	
	42	1	**9K-5635**	16	SCREW-TAPPING (8-18X1-IN)	
	43	1	**9N-0869**	2	WASHER-HARD (8.8X25.5X2-MM THK)	
M	44	1	**9X-2043**	7	SCREW-TRUSS HEAD (M6X1X14-MM)	
M	45	1,2	**9X-2044**	28	SCREW-TRUSS HEAD (M6X1X16-MM)	
M	46	1,2	**9X-2045**	13	SCREW-TRUSS HEAD (M6X1X20-MM)	

233-3128 **PANEL GP-CAB** *(contd.)* **i02773005**

NOTE	REF NO	GRAPHIC REF	PART NUMBER	QTY	PART NAME 1 2 3 4 5 6 (PRODUCT LEVEL)	SEE PAGE
D	47	1	**6V-5746**		TRIM (0.2-M)	

D-ORDER BY THE METER
M-METRIC PART

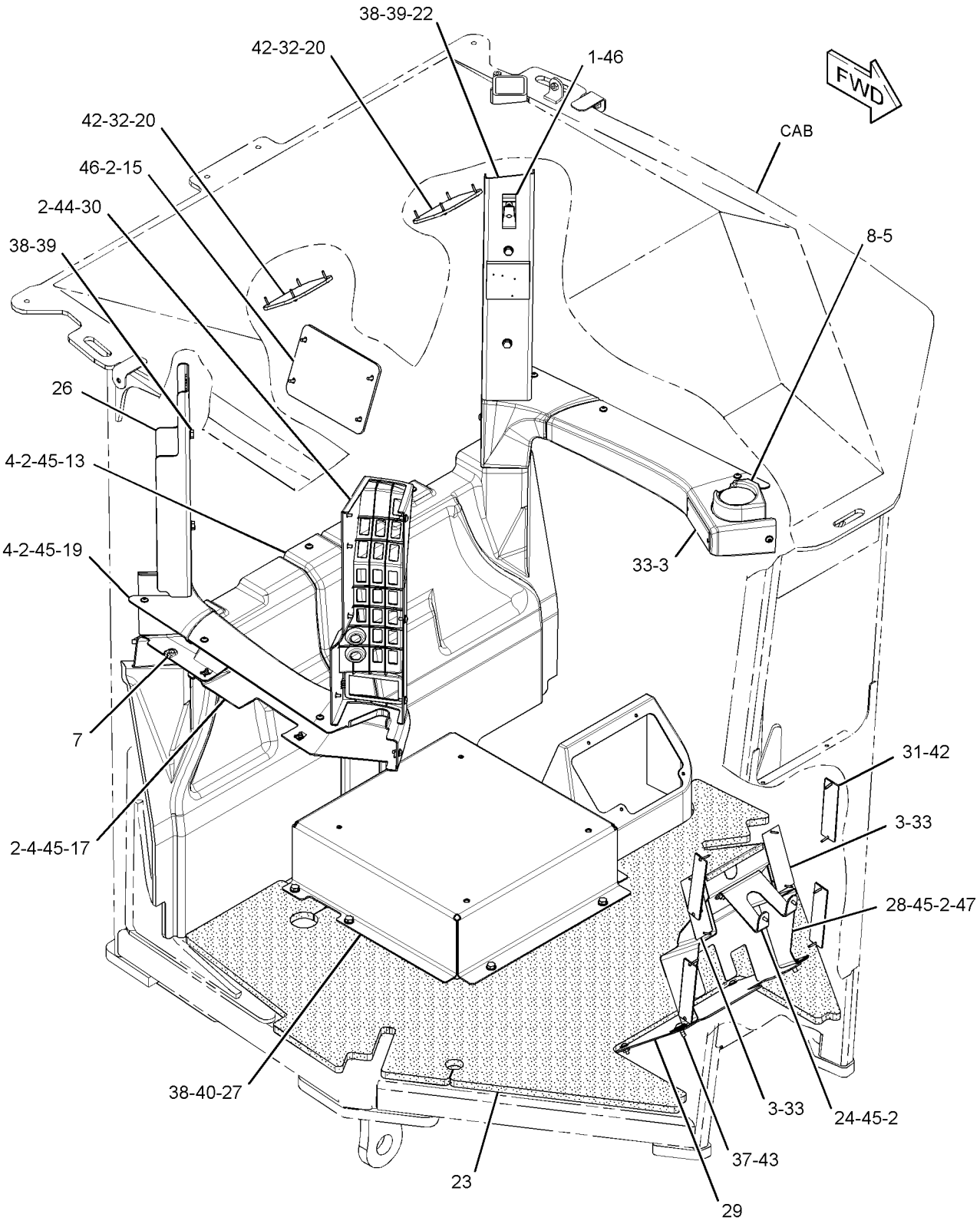

GRAPHIC #1 g01350420

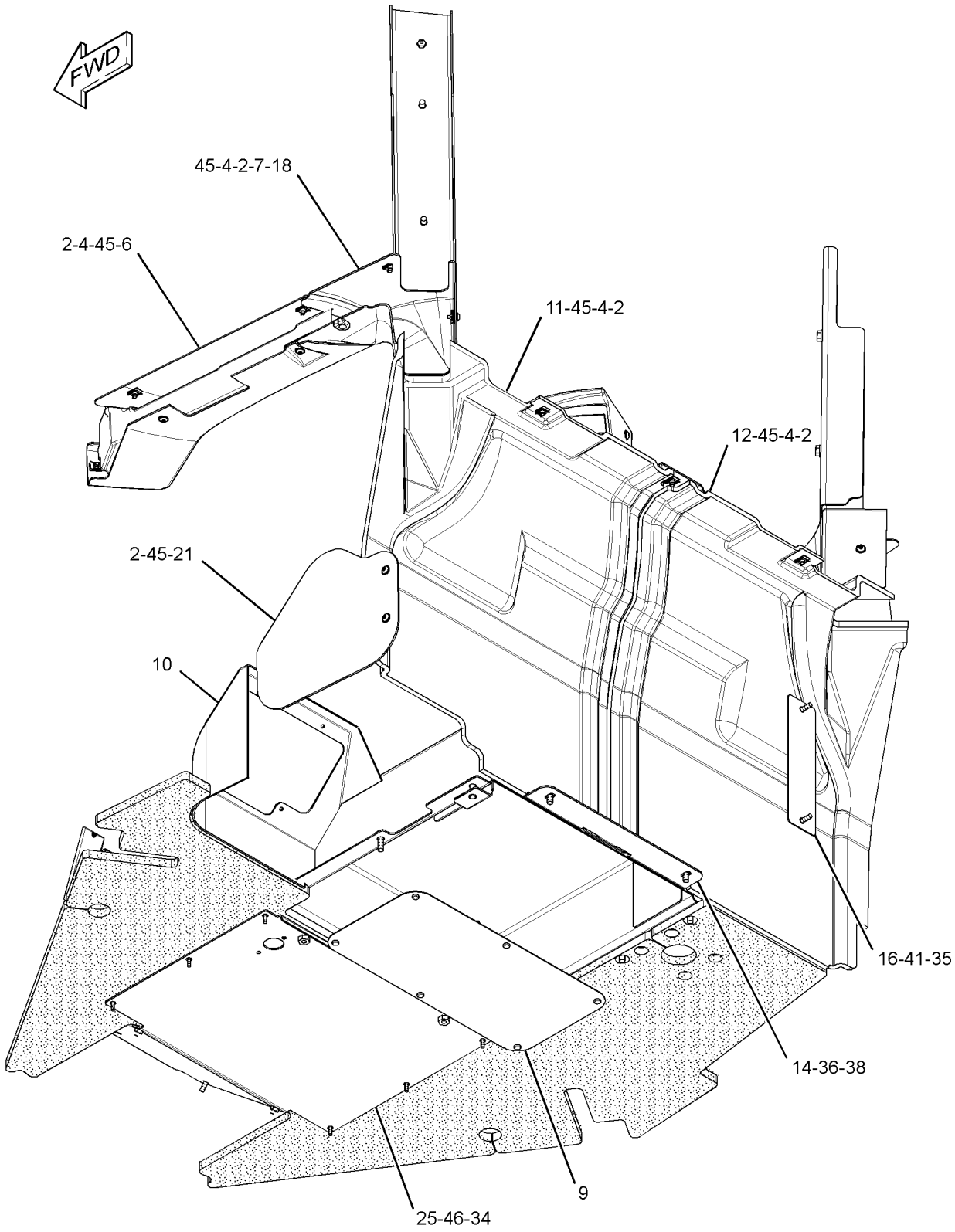

GRAPHIC #2 **<END>** g01367928

OPERATOR STATION

293-4200 PANEL GP-CAB

S/N: B9D1-UP

PART OF 254-5399 CAB AR

SMCS-7301 **i02779222**

NOTE	REF NO	GRAPHIC REF	PART NUMBER	QTY	PART NAME 1 2 3 4 5 6 (PRODUCT LEVEL)	SEE PAGE
	1	1	**2V-2015**	1	NUT-SPEED	
	2	1	**6V-8928**	1	HOOK-COAT	
	3	1	**9U-8263**	1	COVER	
	4	1,2	**114-6658**	29	WASHER (6.5X17X1-MM THK)	
	5	1	**139-6039**	8	NUT (U-TYPE RETAINER)	
	6	1,2	**171-4047**	8	LOUVER AS-VENT	
	7	1,2	**223-0455**	10	LOUVER AS	
	8	1	**249-4097**	1	PLATE AS	
	9	2	**263-2576**	1	PLATE AS	
	10	1	**265-8935**	1	COVER	
	11	1	**265-8949**	1	PANEL AS (LH)	
	12	1	**265-8950**	1	PANEL AS (RH)	
	13	1	**274-2392**	1	THUMBSCREW	
	14	1	**274-2404**	2	COVER	
	15	1	**283-7978**	1	COVER AS	
	16	1	**289-6323**	1	FLOOR MAT	
	17	1	**294-1002**	1	PLENUM (LOWER, RH)	
	18	1	**294-1003**	1	PLENUM (UPPER, RH)	
	19	1	**294-1004**	1	PLENUM (LOWER, LH)	
	20	1	**294-1005**	1	PLENUM (UPPER, LH)	
	21	2	**297-3122**	1	BRACKET AS	
	22	1	**297-4131**	1	SUPPORT AS	
M		1	**6V-9632**	3	NUT-WELD (M6X1-THD)	
M		1	**8T-3490**	4	NUT-WELD (M10X1.5-THD)	
	23	2	**297-4133**	1	COVER AS	
M		2	**6V-9632**	2	NUT-WELD (M6X1-THD)	
M		2	**8T-3490**	2	NUT-WELD (M10X1.5-THD)	
	24	1	**297-4144**	1	COVER AS (RH)	
M		1	**6V-9632**	1	NUT-WELD (M6X1-THD)	
	25	1	**297-4145**	1	COVER AS	
	26	2	**297-4149**	1	PLATE	
	27	1	**297-4153**	1	COVER	
	28	1	**297-4155**	2	PLENUM	
	29	1	**297-4160**	1	COVER AS-PANEL (SWITCH)	
	30	2	**297-4168**	1	PLATE AS	
M		2	**8T-3612**	2	NUT-WELD (M8X1.25-THD)	
	31	1	**297-4170**	1	INSULATION	
	32	2	**300-0473**	1	COVER AS	
M		2	**6V-9632**	4	NUT-WELD (M6X1-THD)	
	33	1	**303-9456**	1	CUP HOLDER	
	34	1	**096-6166**	8	WASHER-HARD (4.5X9X1-MM THK)	
M	35	1	**111-4627**	6	SCREW-MACHINE (M6X1X30-MM)	
	36	1,2	**118-5619**	36	SCREW-FLAT HEAD (NO 6X20X1-IN)	
M	37	1	**3E-8020**	1	SCREW-TRUSS HEAD (M6X1X25-MM)	
	38	2	**5P-4115**	10	WASHER-HARD (7.2X19X2-MM THK)	
	39	1	**6V-5839**	4	WASHER (11X21X2.5-MM THK)	
M	40	1	**6V-8212**	4	BOLT (M10X1.5X16-MM)	
M	41	1	**6V-9672**	6	SCREW-MACHINE (M4X0.7X16-MM)	
	42	1	**7G-4824**	1	STRAP	
M	43	2	**7Y-9099**	2	SCREW-TRUSS HEAD (M8X1.25X25-MM)	
	44	1	**8E-7791**	1	STRAP	
	45	1	**8T-0328**	6	WASHER-HARD (5.5X10X1-MM THK)	
	46	1	**8T-4121**	6	WASHER-HARD (11X21X2.5-MM THK)	
M	47	1	**8T-4195**	6	BOLT (M10X1.5X30-MM)	
	48	1	**9K-5635**	8	SCREW-TAPPING (8-18X1-IN)	
	49	2	**9N-0869**	2	WASHER-HARD (8.8X25.5X2-MM THK)	

293-4200 **PANEL GP-CAB** *(contd.)* **i02779222**

NOTE	REF NO	GRAPHIC REF	PART NUMBER	QTY	PART NAME 1 2 3 4 5 6 (PRODUCT LEVEL)	SEE PAGE
M	50	1	**9X-2043**	7	SCREW-TRUSS HEAD (M6X1X14-MM)	
M	51	1,2	**9X-2044**	17	SCREW-TRUSS HEAD (M6X1X16-MM)	
M	52	1,2	**9X-2045**	15	SCREW-TRUSS HEAD (M6X1X20-MM)	
D	53	1	**8T-5372**		SEAL (0.9-M)	

D-ORDER BY THE METER
M-METRIC PART

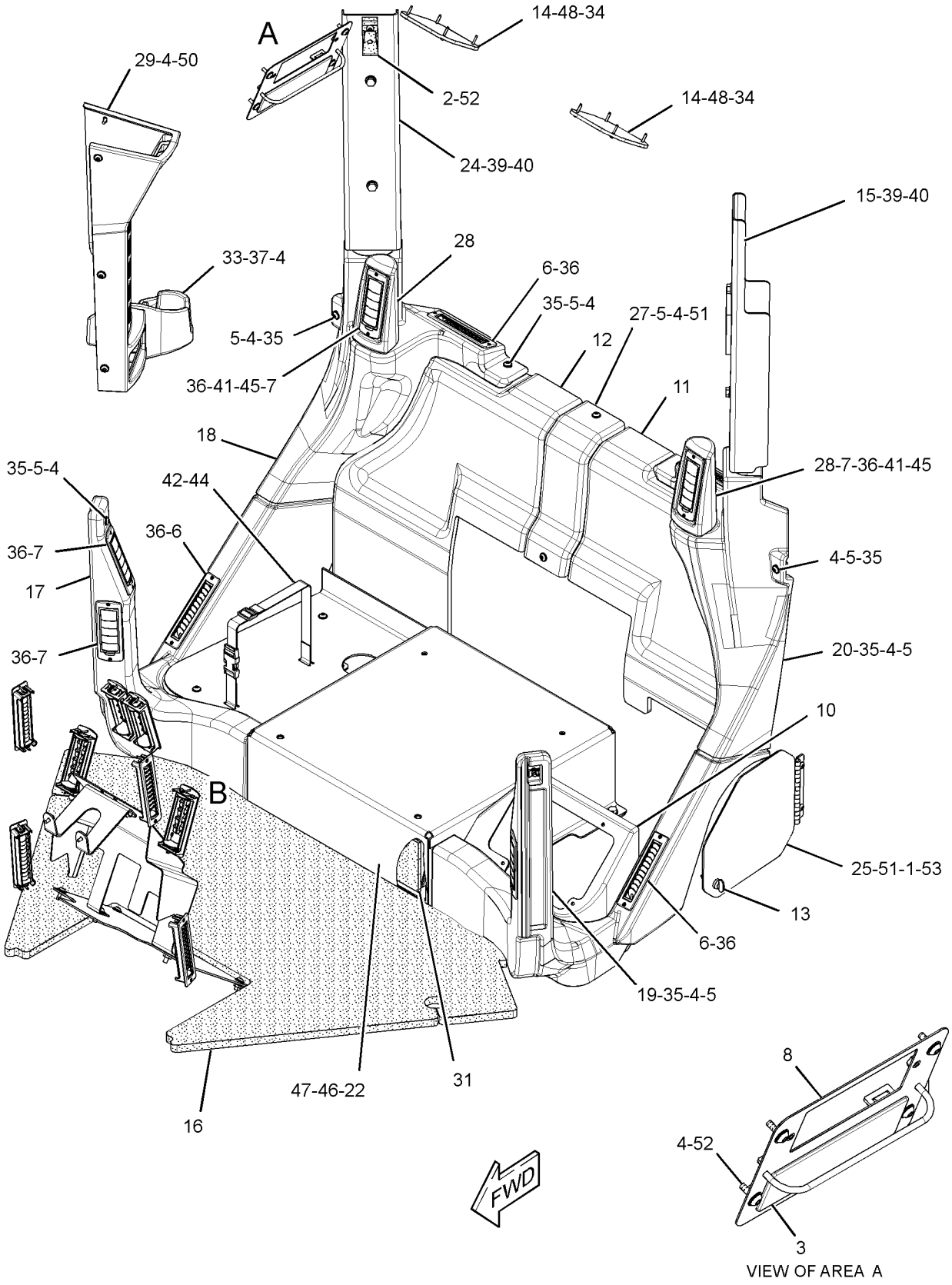

GRAPHIC #1

g01392335

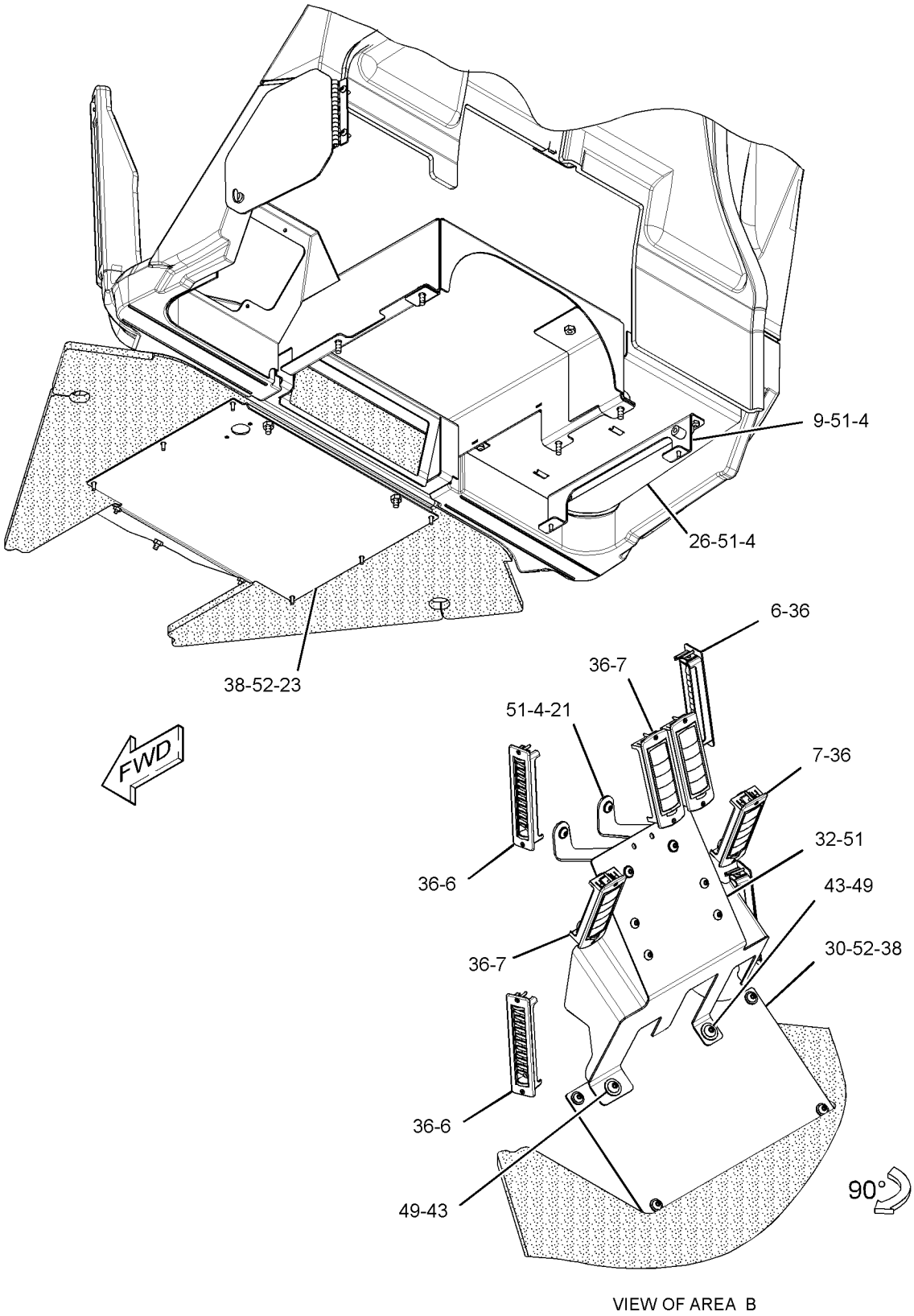

VIEW OF AREA B

GRAPHIC #2 **<END>** g01392338

OPERATOR STATION

249-4103 PANEL GP-CONTROL—LH

S/N: B9D1-UP

PART OF 302-9097 GRADE CONTROL GP

SMCS-7332, 7451 **i02787078**

NOTE	REF NO	GRAPHIC REF	PART NUMBER	QTY	PART NAME 1 2 3 4 5 6 (PRODUCT LEVEL)	SEE PAGE
	1	1	**7K-1181**	1	STRAP-CABLE	
	3	1	**249-5483**	1	SWITCH AS-ROCKER (24-VOLT) (INCREMENT, DECREMENT, RH)	
	3A	1	**249-5483**	1	SWITCH AS-ROCKER (24-VOLT) (INCREMENT, DECREMENT, LH)	
	4	1	**302-9089**	1	BRACKET AS	
		1	**7T-1099**	1	LINK	
M		1	**159-9539**	2	NUT-WELD (M6X1-THD)	
	5	1	**253-1956**	1	HARNESS AS-PANEL	
	6	1	**302-9090**	1	COVER	
	7	1	**307-0016**	1	FILM-IDENTIFICATION (PANEL SWITCHES) (BLADE CONTROL)	
	8	1	**253-1789**	1	SWITCH AS-PUSH BUTTON (BLADE LIFT, LOWER)	
		1	**6F-0253**	1	LOCKWASHER	
		1	**102-8803**	1	KIT-RECEPTACLE (3-PIN)	
					(INCLUDES RECEPTACLE AS & WEDGE)	
		1	**172-3511**	1	NUT (5/8-24-THD)	
		1	**186-3735**	1	PIN-CONNECTOR (16-GA TO 18-GA)	
M	9	1	**5C-9553**	2	BOLT (M6X1X16-MM)	
M	10	1	**9X-2044**	2	SCREW-TRUSS HEAD (M6X1X16-MM)	
	11	1	**9X-8256**	4	WASHER (6.6X12X2-MM THK)	
	12	1	**253-1957**	1	HARNESS AS-PANEL	
	13	1	**296-1065**	1	HARNESS AS-SWITCH	

M-METRIC PART

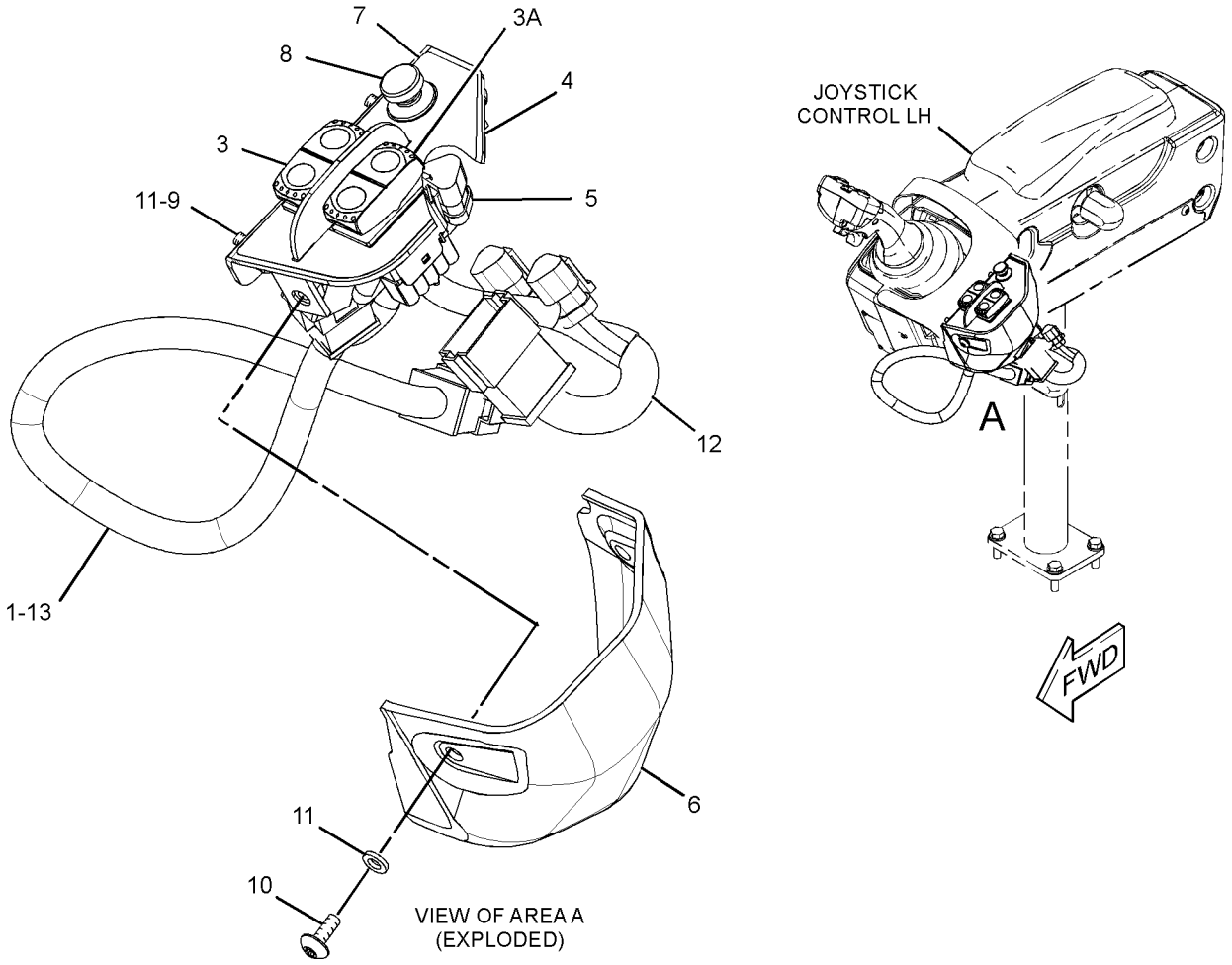

GRAPHIC #1 **<END>** g01375489

OPERATOR STATION

249-4104 PANEL GP-CONTROL–RH

S/N: B9D1-UP

PART OF 302-9097 GRADE CONTROL GP

SMCS-7332, 7451 **i02796284**

NOTE	REF NO	GRAPHIC REF	PART NUMBER	QTY	PART NAME 1 2 3 4 5 6 (PRODUCT LEVEL)	SEE PAGE
	1	1	**7K-1181**	1	STRAP-CABLE	
	2	1	**139-6039**	2	NUT (U-TYPE RETAINER)	
	3	1	**249-5483**	1	SWITCH AS-ROCKER (24-VOLT) (OFFSET, RH)	
	4	1	**251-2255**	1	BRACKET AS (RH)	
	5	1	**253-1957**	1	HARNESS AS-PANEL	
		1	**102-8801**	1	KIT-RECEPTACLE (12-PIN)	
					(INCLUDES RECEPTACLE AS & WEDGE)	
		1	**155-2260**	1	KIT-CONNECTING PLUG (3-PIN)	
					(INCLUDES PLUG AS, WEDGE & INTERFACE SEAL)	
	6	1	**253-1965**	1	COVER	
	7	1	**256-2740**	1	FILM-INSTRUCTION (SWITCH PANEL) (BLADE CONTROL)	
	8	1	**253-1789**	1	SWITCH AS-PUSH BUTTON (BLADE LIFT, LOWER)	
	8A	1	**253-1789**	1	SWITCH AS-PUSH BUTTON (SIDESHIFT)	
					(EACH SWITCH AS INCLUDES)	
		1	**3E-3371**	1	WEDGE-RECEPTACLE LOCK (3-PIN)	
		1	**6F-0253**	1	LOCKWASHER	
		1	**102-8803**	1	KIT-RECEPTACLE (3-PIN)	
					(INCLUDES RECEPTACLE AS & WEDGE)	
		1	**172-3511**	1	NUT (5/8-24-THD)	
		1	**186-3735**	1	PIN-CONNECTOR (16-GA TO 18-GA)	
M	9	1	**5C-9553**	2	BOLT (M6X1X16-MM)	
M	10	1	**9X-2043**	2	SCREW-TRUSS HEAD (M6X1X14-MM)	
	11	1	**9X-8256**	4	WASHER (6.6X12X2-MM THK)	

M-METRIC PART

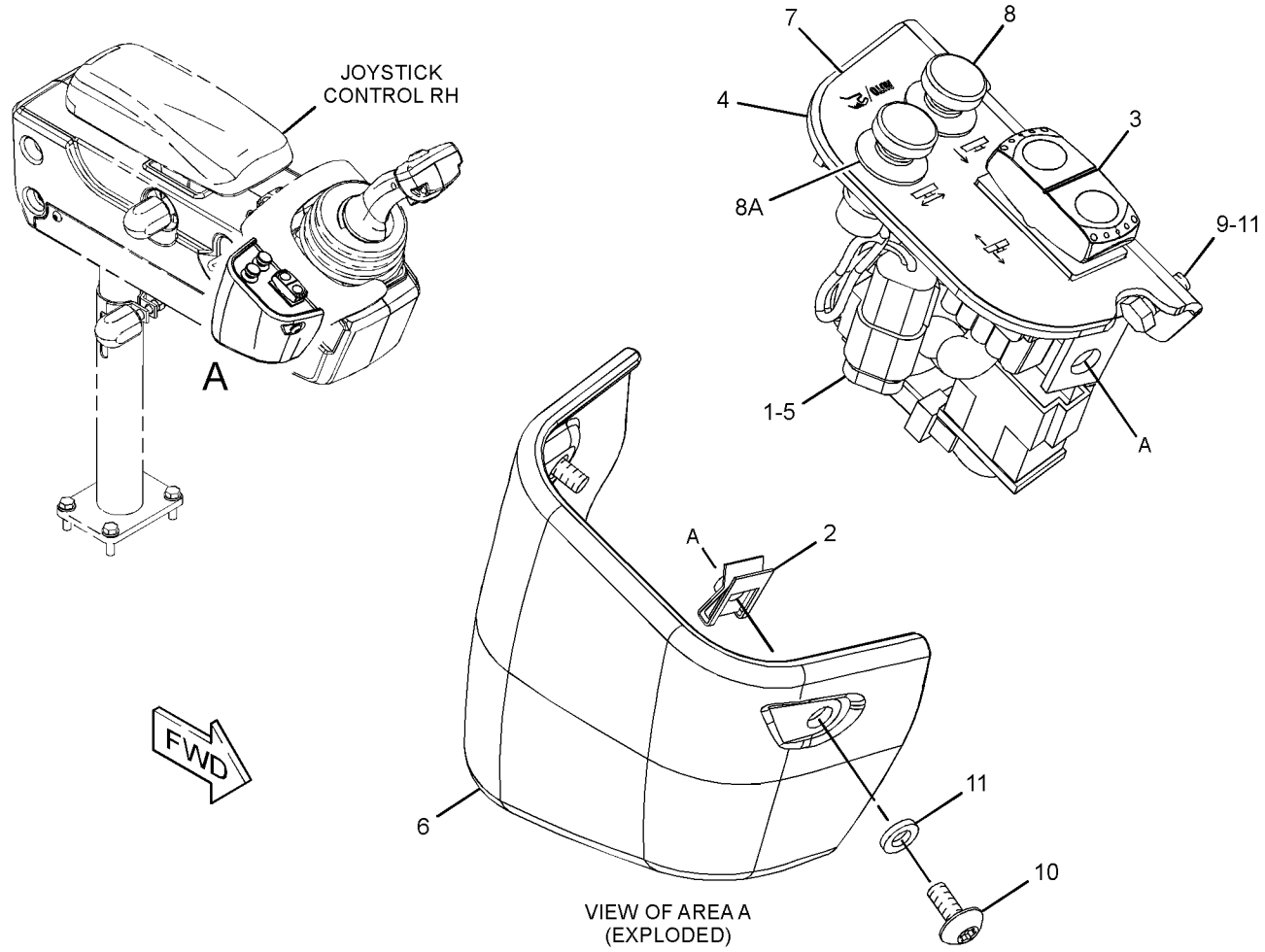

GRAPHIC #1 **<END>** g01396508

OPERATOR STATION

294-0984 PANEL GP-INSTRUMENT—FRONT CONSOLE

S/N: B9D1-UP

PART OF 254-5399 CAB AR

SMCS-7450, 7451 **i02779225**

NOTE	REF NO	GRAPHIC REF	PART NUMBER	QTY	PART NAME 1 2 3 4 5 6 (PRODUCT LEVEL)	SEE PAGE
	1	1	**114-6658**	8	WASHER (6.5X17X1-MM THK)	
	2	1	**171-4047**	5	LOUVER AS-VENT	
	3	1	**223-0455**	4	LOUVER AS	
	4	1	**289-6323**	1	FLOOR MAT (CAB)	
	5	1	**294-0997**	1	PANEL-DASH	
	6	1	**294-0998**	1	PLENUM AS	
	7	1	**294-0999**	1	PLENUM	
	8	1	**294-1016**	1	FILM-INFORMATION (CONSOLE, LH)	
	9	1	**294-1019**	1	FILM-INFORMATION (CONSOLE, RH)	
	10	1	**297-4168**	1	PLATE AS	
M		1	**8T-3612**	2	NUT-WELD (M8X1.25-THD)	
	11	1	**300-0473**	1	COVER AS	
M		1	**6V-9632**	4	NUT-WELD (M6X1-THD)	
	12	1	**312-4153**	1	BRACKET AS	
M		1	**6V-9632**	2	NUT-WELD (M6X1-THD)	
	13	1	**104-2091**	18	SCREW-FLAT HEAD (NO 6X0.5-IN)	
	14	1	**5P-4115**	6	WASHER-HARD (7.2X19X2-MM THK)	
M	15	1	**7Y-9099**	2	SCREW-TRUSS HEAD (M8X1.25X25-MM)	
	16	1	**9N-0869**	2	WASHER-HARD (8.8X25.5X2-MM THK)	
M	17	1	**9X-2043**	4	SCREW-TRUSS HEAD (M6X1X14-MM)	
M	18	1	**9X-2044**	4	SCREW-TRUSS HEAD (M6X1X16-MM)	
M	19	1	**9X-2045**	6	SCREW-TRUSS HEAD (M6X1X20-MM)	
M	20	1	**9X-2046**	4	SCREW-TRUSS HEAD (M6X1X35-MM)	
E	21	1	**7X-2634**		SEAL (52-CM)	

E-ORDER BY THE CENTIMETER
M-METRIC PART

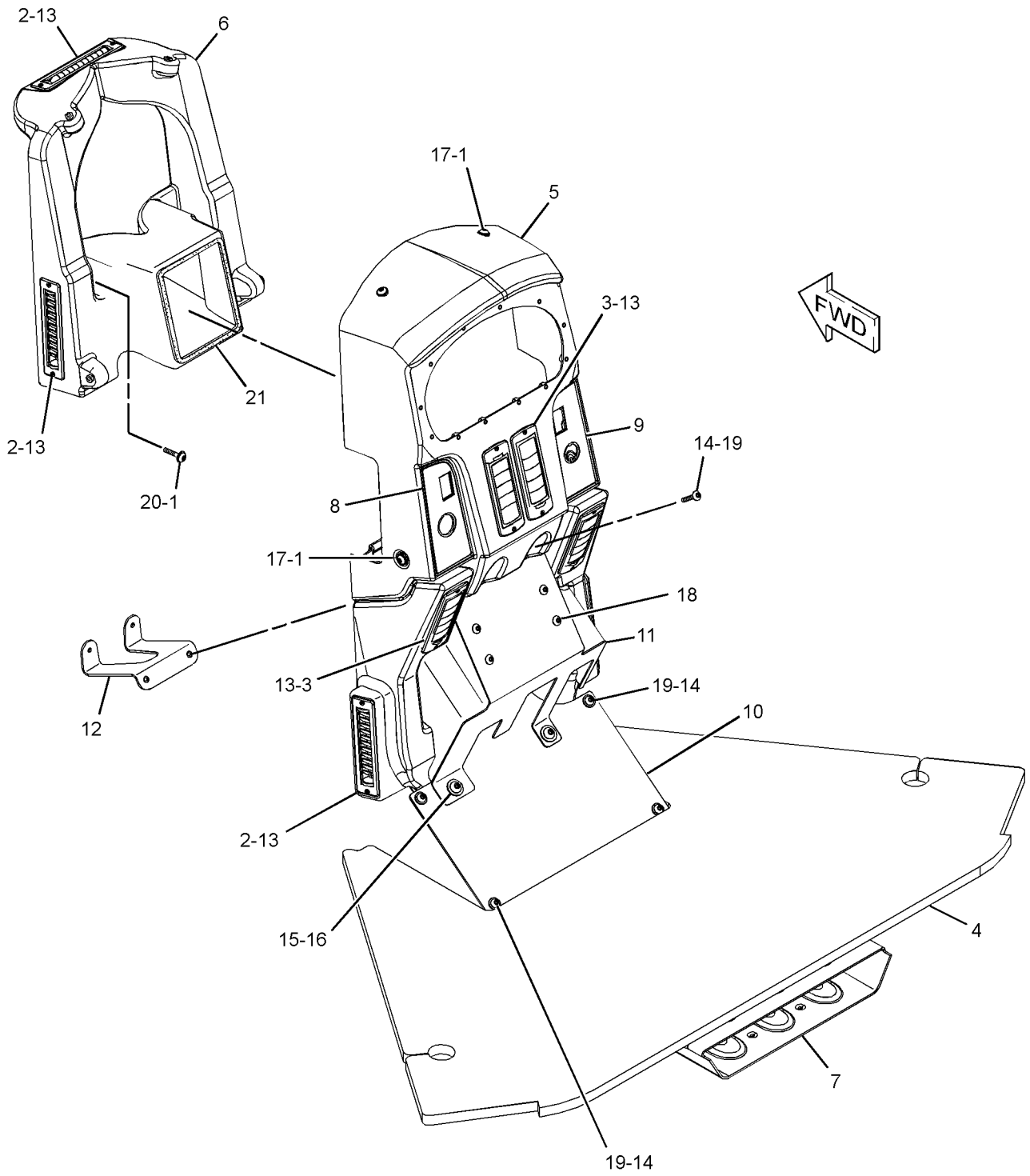

GRAPHIC #1 **<END>** g01385692

OPERATOR STATION

265-8943 PEDAL GP-BRAKE, TMSN & GOV

S/N: B9D1-UP

PART OF 249-4080 CONTROL GP-SERVICE BRAKE

SMCS-1265, 3191, 4269 **i02787984**

NOTE	REF NO	GRAPHIC REF	PART NUMBER	QTY	PART NAME 1 2 3 4 5 6 (PRODUCT LEVEL)	SEE PAGE
Y	1	1	**160-2443**	1	SENSOR GP-POSITION (ROTARY) (THROTTLE POSITION SENSOR)	225
Y	1A	1	**160-2443**	1	SENSOR GP-POSITION (ROTARY) (TMSN MODULATOR CONTROL)	225
Y	2	1	**171-3759**	1	SWITCH GP-LIMIT (BRAKE PEDAL)	253
Y	2A	1	**171-3759**	1	SWITCH GP-LIMIT (TMSN MODULATOR CONTROL)	253
	3	1	**189-0135**	1	SWITCH AS-LIMIT (BRAKE LIGHT)	
		1	**186-3735**	3	PIN-CONNECTOR (16-GA TO 18-GA)	
		1	**102-8803**	1	KIT-RECEPTACLE (3-PIN)	
					(INCLUDES RECEPTACLE AS & WEDGE)	

Y-SEPARATE ILLUSTRATION

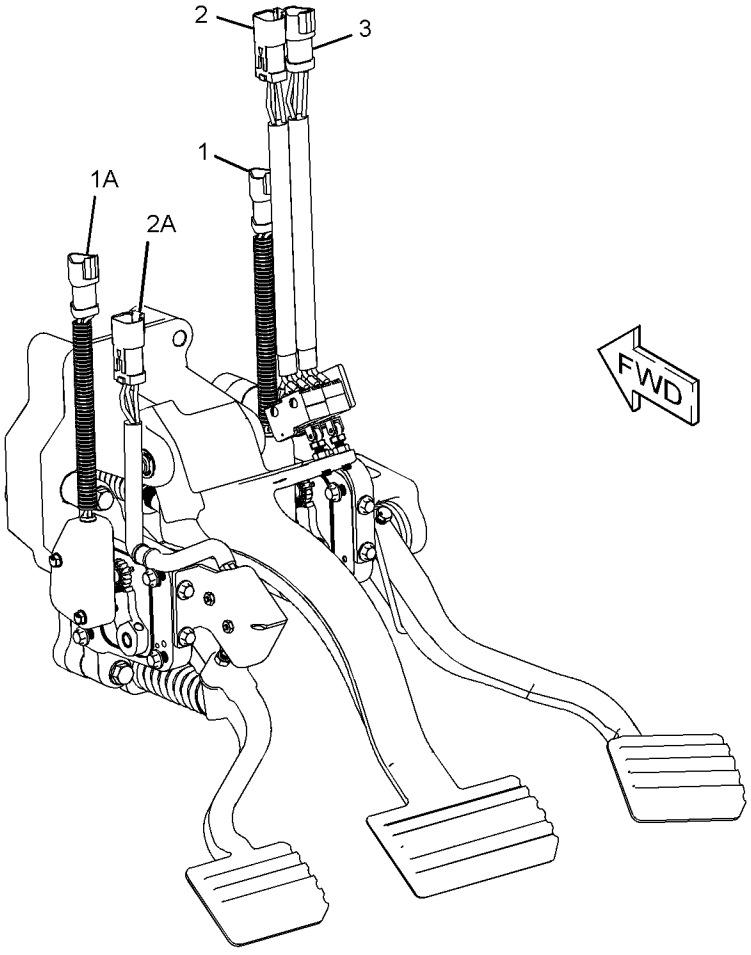

GRAPHIC #1 **<END>** g01338460

OPERATOR STATION

269-3284 PRESSURIZER GP-CAB

S/N: B9D1-UP

SMCS-7311, 7342 **i02787514**

NOTE	REF NO	GRAPHIC REF	PART NUMBER	QTY	PART NAME 1 2 3 4 5 6 (PRODUCT LEVEL)	SEE PAGE
	1	1	**6L-4725**	1	CLAMP-HOSE	
	2	1	**6V-0447**	1	CLAMP-HOSE	
	3	1	**110-7524**	4	BUTTON	
	4	1	**235-0320**	1	CAP AS-AIR CLEANER (PRECLEANER)	
		1	**3E-7404**	1	CLAMP-HOSE	
	5	1	**269-3998**	2	BRACKET AS	
					(EACH INCLUDES)	
M		1	**6V-9632**	2	NUT-WELD (M6X1-THD)	
	6	1	**269-3999**	1	PLATE	
	7	1	**269-4001**	1	HOSE	
	8	1	**289-6215**	1	PRECLEANER GP-CAB AIR	
		1	**197-1932**	1	MOTOR AS-BLOWER (24-VOLT, CAB AIR)	
		1	**102-8802**	1	KIT-RECEPTACLE (2-PIN)	
					(INCLUDES RECEPTACLE AS & WEDGE)	
		1	**9W-0852**	2	PIN-CONNECTOR (14-GA)	
M	9	1	**5C-9553**	8	BOLT (M6X1X16-MM)	
	10	1	**8T-4205**	8	WASHER-HARD (7.2X14.5X2-MM THK)	

M-METRIC PART

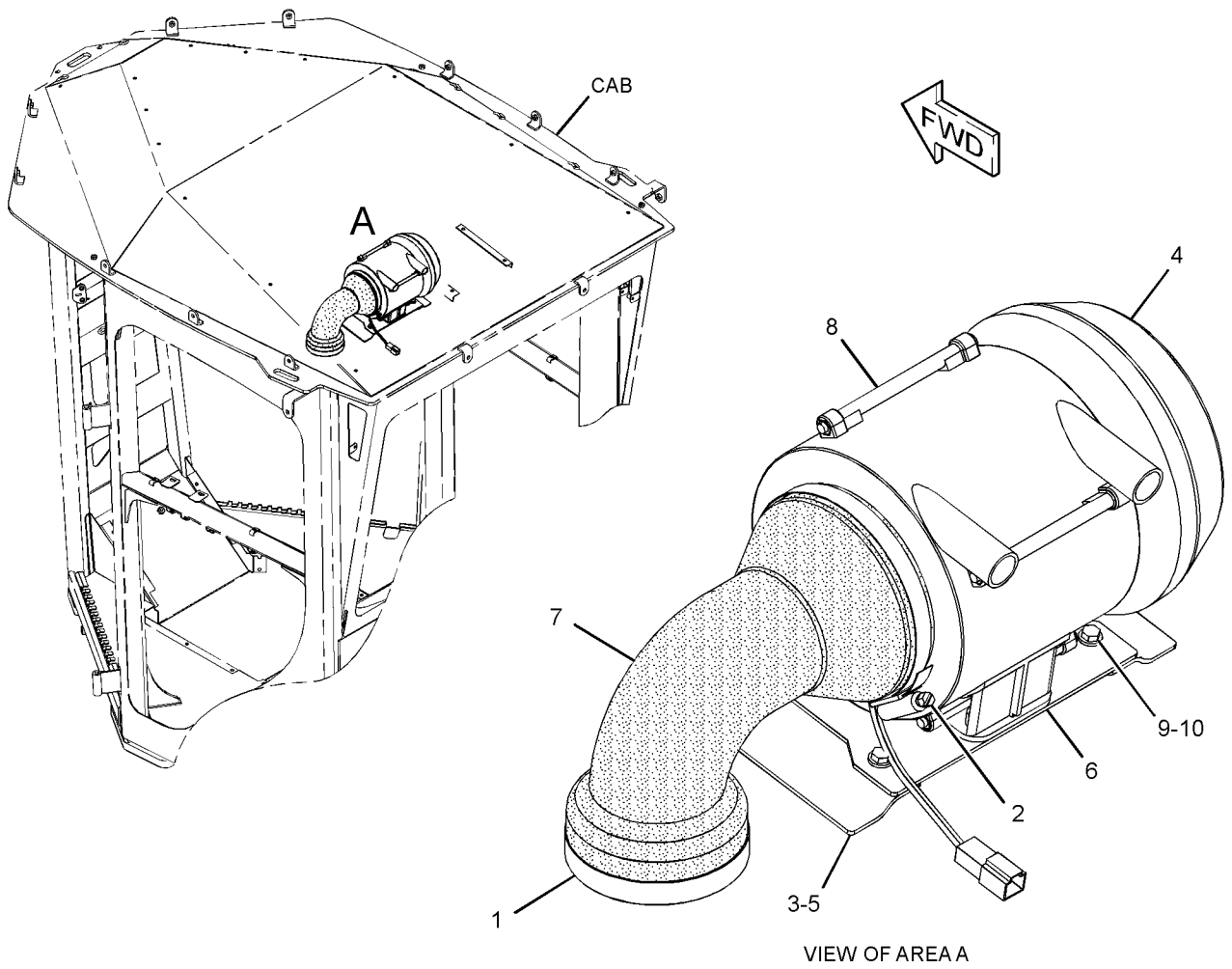

VIEW OF AREA A

GRAPHIC #1 **<END>** g01290509

OPERATOR STATION

210-2270 RECLINER GP-SEAT

S/N: B9D1-UP

PART OF 244-5002 SEAT GP

SMCS-7312 **i02733467**

NOTE	REF NO	GRAPHIC REF	PART NUMBER	QTY	PART NAME 1 2 3 4 5 6 (PRODUCT LEVEL)	SEE PAGE
	1	1	**177-1862**	1	BRACKET (SEAT BELT)	
	2	1	**210-2262**	1	BRACKET AS	
	3	1	**210-2263**	1	BRACKET AS	
	4	1	**210-2266**	1	GEAR-LOCK (14-TEETH)	
	5	1	**293-2911**	1	SHAFT AS	
		1	**2L-5893**	2	PIN-SPRING	
		1	**170-8590**	1	SPRING	
	6	1	**217-7933**	1	LATCH	
	7	1	**236-5197**	1	SPRING	
	8	1	**031-0214**	1	BOLT-LOCKING (1/4-20X0.5-IN)	
	9	1	**101-2867**	1	WASHER-HARD (7.2X25X2-MM THK)	
	10	1	**4M-6425**	1	BOLT (5/16-18X1-IN)	
	11	1	**5M-2894**	1	WASHER-HARD (10.2X18.5X2.5-MM THK)	
	12	1	**5S-7383**	1	BOLT (3/8-16X1.75-IN)	
	13	1	**8T-4224**	1	WASHER-HARD (8.8X16X2-MM THK)	

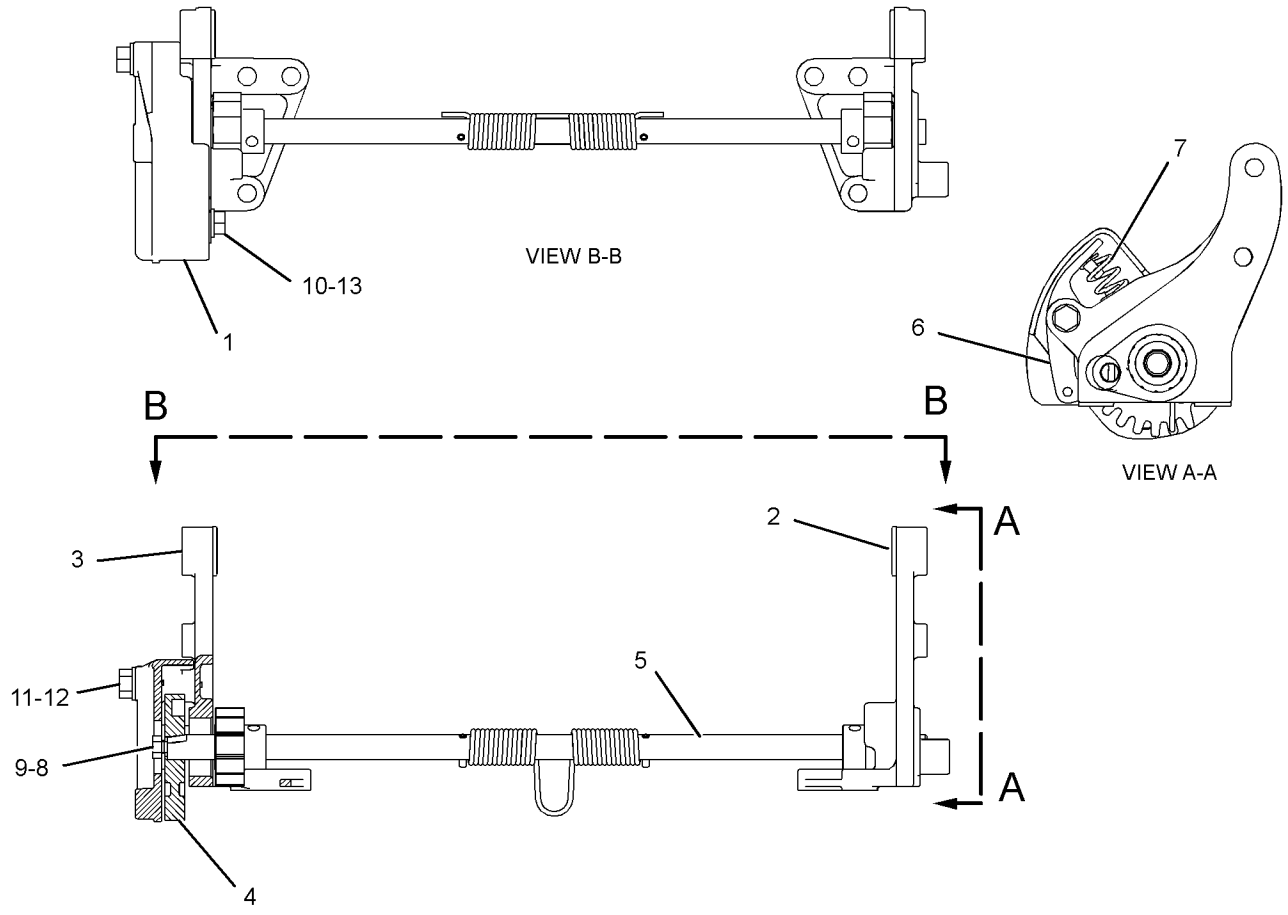

GRAPHIC #1 **<END>** g01296294

OPERATOR STATION

233-3133 ROOF GP-CAB

S/N: B9D1-UP

PART OF 254-5399 CAB AR

SMCS-7301 **i02775399**

NOTE	REF NO	GRAPHIC REF	PART NUMBER	QTY	PART NAME 1 2 3 4 5 6 (PRODUCT LEVEL)	SEE PAGE
	1	1	**6V-3928**	2	PLUG-BUTTON	
	2	1	**8T-5401**	1	PLUG-BUTTON	
	3	1	**233-3209**	1	PANEL (LH)	
	4	1	**249-4073**	1	PANEL (RH)	
	5	1	**251-2247**	3	GROMMET	
	6	1	**285-6648**	18	INSERT	
	7	1	**5P-4115**	18	WASHER-HARD (7.2X19X2-MM THK)	
	8	1	**5P-4116**	10	WASHER-HARD (8.8X20.5X2-MM THK)	
M	9	1	**8T-4138**	18	BOLT (M6X1X20-MM)	
M	10	1	**8T-4189**	10	BOLT (M8X1.25X20-MM)	

M-METRIC PART

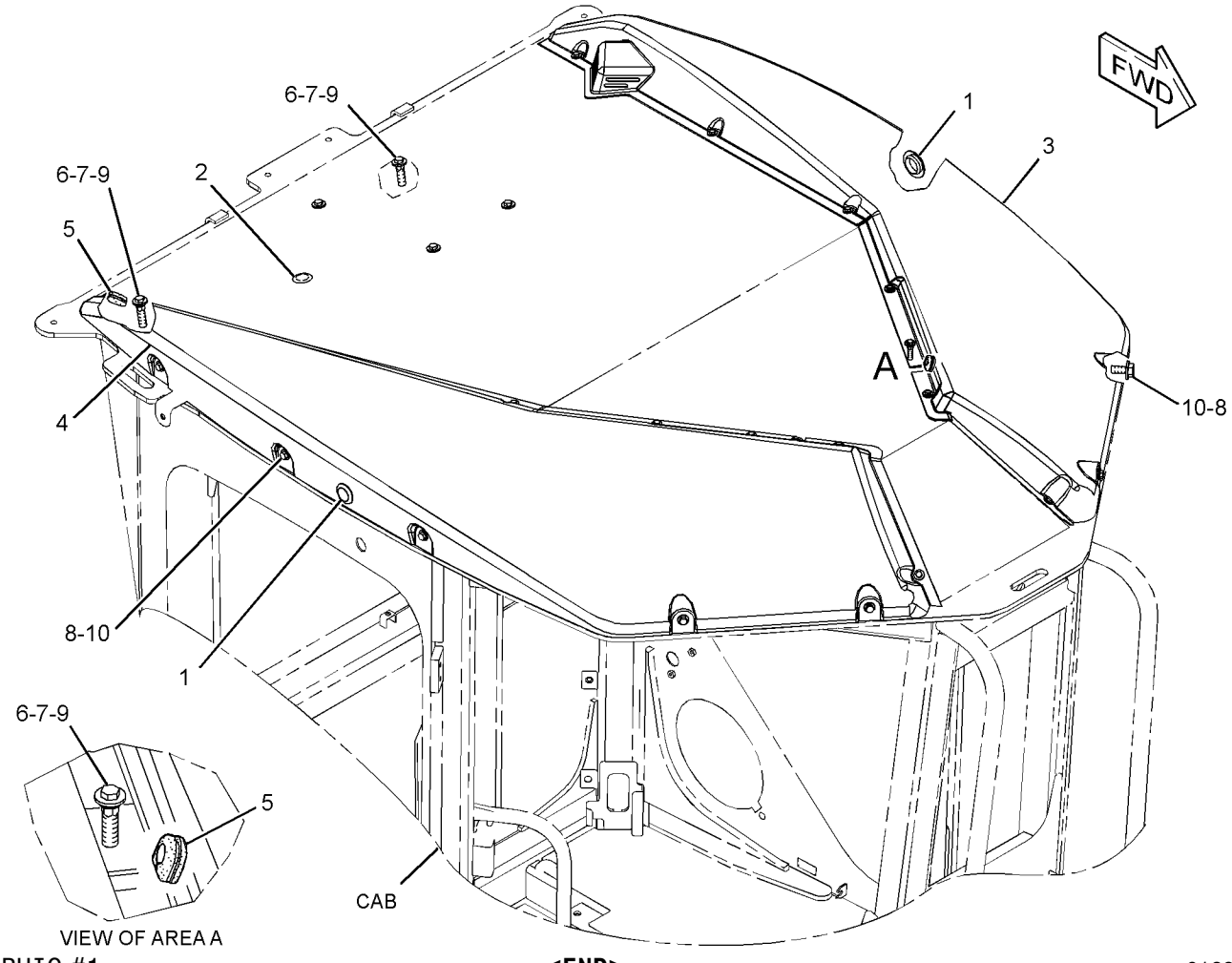

GRAPHIC #1 **<END>** g01290059

OPERATOR STATION

254-1550 SCREEN GP-SUN

S/N: B9D1-UP

SMCS-7165 **i02785191**

NOTE	REF NO	GRAPHIC REF	PART NUMBER	QTY	PART NAME 1 2 3 4 5 6 (PRODUCT LEVEL)	SEE PAGE
					(NO SERVICED PARTS)	

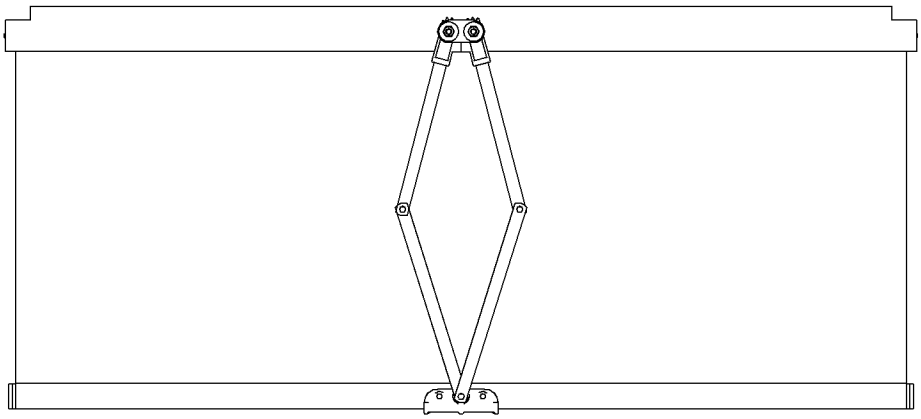

GRAPHIC #1 **<END>** g01321117

OPERATOR STATION

233-3116 SEAT & MOUNTING GP

S/N: B9D1-UP

CANNOT BE USED WITH 233-3150—PAGE 853

SMCS-7312 **i02773238**

NOTE	PART NUMBER	QTY	PART NAME 1 2 3 4 5 6 (PRODUCT LEVEL)	SEE PAGE
Y	*243-6740*	1	SEAT GP-SUSPENSION	858
M	**8T-4136**	4	BOLT (M10X1.5X25-MM)	
	8T-4121	4	WASHER-HARD (11X21X2.5-MM THK)	

M-METRIC PART
Y-SEPARATE ILLUSTRATION

<END>

233-3150 SEAT & MOUNTING GP—AIR

S/N: B9D1-UP

CANNOT BE USED WITH 233-3116—PAGE 853

SMCS-7312 **i02775437**

NOTE	PART NUMBER	QTY	PART NAME 1 2 3 4 5 6 (PRODUCT LEVEL)	SEE PAGE
Y	**238-6683**	1	SEAT GP-SUSPENSION (AIR)	857
M	**8T-4136**	4	BOLT (M10X1.5X25-MM)	
	8T-4121	4	WASHER-HARD (11X21X2.5-MM THK)	

M-METRIC PART
Y-SEPARATE ILLUSTRATION

<END>

244-5001 SEAT GP–CLOTH

S/N: B9D1-UP

PART OF 238-6683, 243-6740 SEAT GP-SUSPENSION

SMCS-7312 **i02773241**

NOTE	REF NO	GRAPHIC REF	PART NUMBER	QTY	PART NAME 1 2 3 4 5 6 (PRODUCT LEVEL)	SEE PAGE
	1	1	**177-4937**	1	SPACER (11.7X19.8X20.3-MM THK)	
	2	1	**222-0345**	1	SEAT BELT GP (RETRACTABLE)	
	2A	1	**0T-0244**	1	BOLT (7/16-20X1.25-IN)	
	2B	1	**205-6388**	1	BOLT (7/16-20X1.75-IN)	
	3	1	**229-1494**	1	EXTENSION GP-BACKREST (CLOTH)	
Y	4	1	**244-5002**	1	SEAT GP (CLOTH)	855

Y-SEPARATE ILLUSTRATION

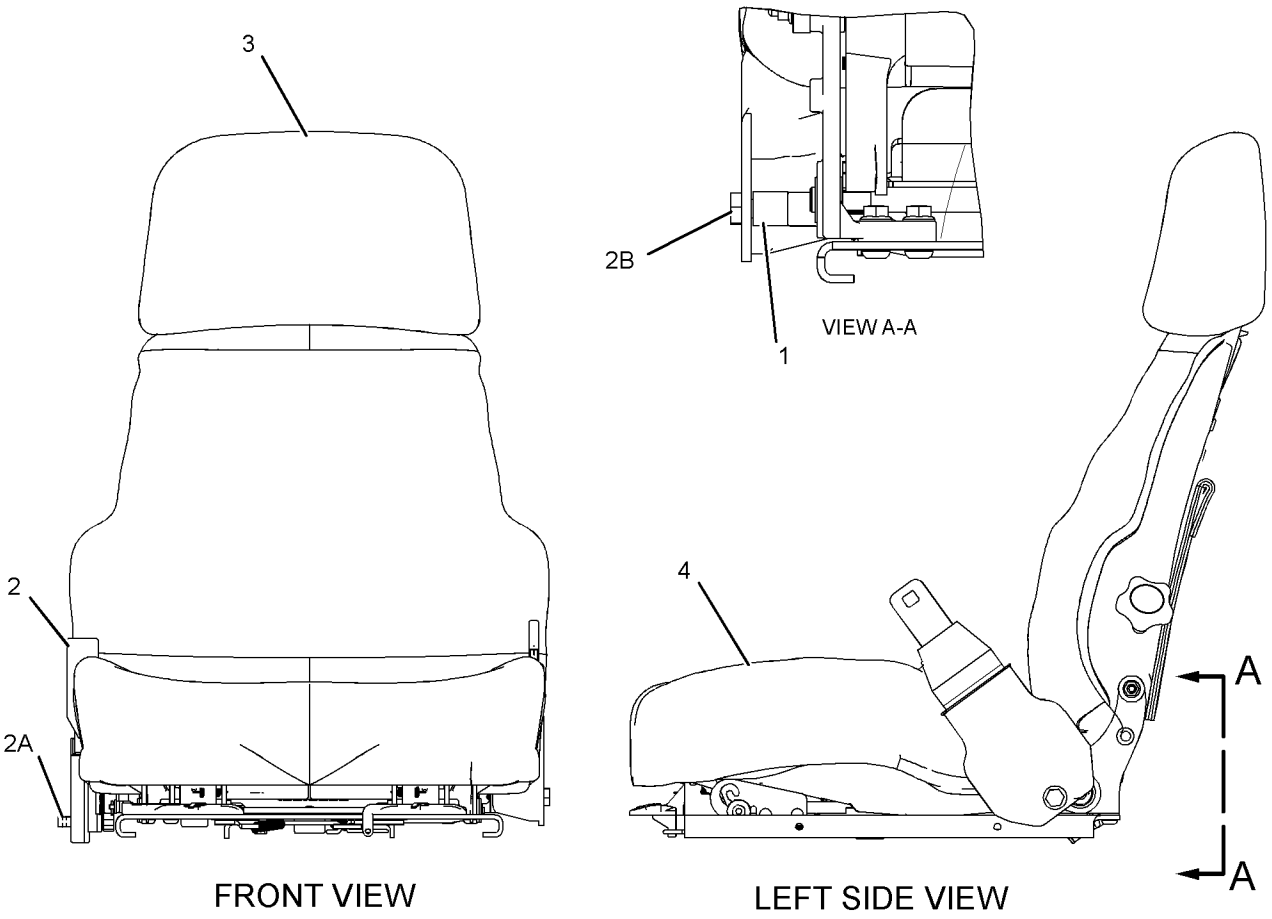

GRAPHIC #1 **<END>** g01393999

OPERATOR STATION

244-5002 SEAT GP—CLOTH

S/N: B9D1-UP

PART OF 244-5001 SEAT GP

SMCS-7312 **i02788543**

NOTE	REF NO	GRAPHIC REF	PART NUMBER	QTY	PART NAME 1 2 3 4 5 6 (PRODUCT LEVEL)	SEE PAGE
	1	1	**294-5042**	2	SPACER (11.1X19.5X9.67-MM THK)	
	2	1	**143-1288**	8	LOCKNUT-FLANGE (3/8-16-THD)	
	3	1	**171-6682**	1	BAR	
	4	1	**172-2416**	2	PIN	
Y	5	1	*173-1028*	1	ADJUSTER GP-SEAT	756
	6	1	**177-1863**	2	BOLT-PIVOT (3/8-16X2.89-IN)	
Y	7	1	*292-9237*	1	PAN GP-BACKREST	833
	8	1	**184-2298**	1	ROD	
	9	1	**184-2299**	4	WASHER (7X25.4X2.54-MM THK)	
Y	10	1	*210-2270*	1	RECLINER GP-SEAT	850
Y	11	1	**243-6737**	1	PAN AS-SEAT	831
	12	1	**095-0843**	2	PIN-COTTER	
	13	1	**171-1230**	6	SCREW-BUTTON HEAD (3/8-16X1-IN)	
	14	1	**5V-1496**	2	RETAINER	
	15	1	**6V-7646**	2	WASHER-HARD (7.2X25X2-MM THK)	
	16	1	**8T-0328**	1	WASHER-HARD (5.5X10X1-MM THK)	
	17	1	**8T-4205**	1	WASHER-HARD (7.2X14.5X2-MM THK)	

Y-SEPARATE ILLUSTRATION

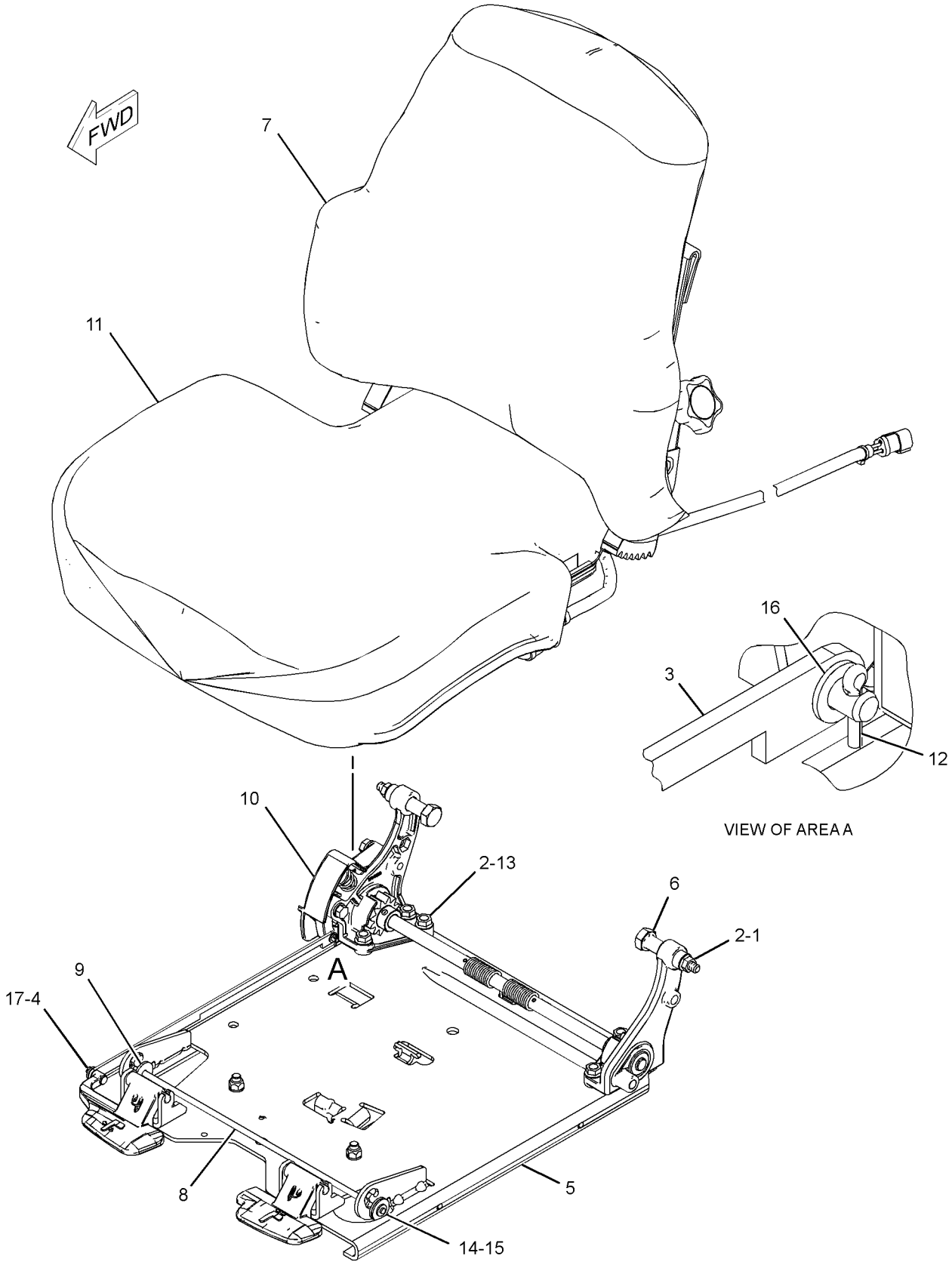

GRAPHIC #1 **<END>** g01336772

OPERATOR STATION

238-6683 SEAT GP-SUSPENSION—AIR

S/N: B9D1-UP

PART OF 233-3150 SEAT & MOUNTING GP

SMCS-7312 **i02775476**

NOTE	REF NO	GRAPHIC REF	PART NUMBER	QTY	PART NAME 1 2 3 4 5 6 (PRODUCT LEVEL)	SEE PAGE
JZ	1	1		4	BLOCK-SLIDER	
J	2	1	**173-5787**	4	SETSCREW (1/4-20-THD)	
Y	3	1	**256-8768**	1	SUSPENSION GP-SEAT (AIR)	865
J	4	1	**203-7703**	2	WASHER-HARD (10.2X22.22X2.38-MM THK)	
Y	5	1	*244-5001*	1	SEAT GP (CLOTH)	854
J	6	1	**4F-4879**	1	BOLT (3/8-16X0.5-IN)	
					AVAILABLE REPAIR KIT(S):	
J			**173-7035**	1	KIT-SLIDER BLOCK (SUSPENSION SEAT)	
					(INCLUDES WASHERS, BOLT, BLOCK SLIDERS & SETSCREWS)	

J-KIT MARKED J SERVICES PARTS MARKED J
Y-SEPARATE ILLUSTRATION
Z-NOT SERVICED SEPARATELY

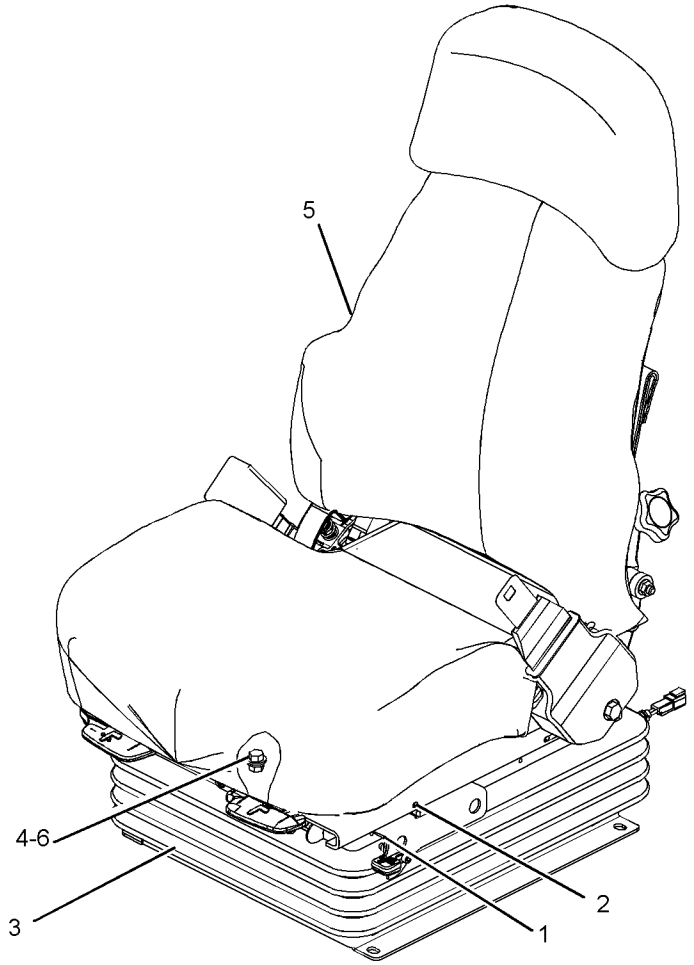

GRAPHIC #1 **<END>** g01110094

OPERATOR STATION

243-6740 SEAT GP-SUSPENSION

S/N: B9D1-UP

PART OF 233-3116 SEAT & MOUNTING GP

SMCS-7312 **i02773252**

NOTE	REF NO	GRAPHIC REF	PART NUMBER	QTY	PART NAME 1 2 3 4 5 6 (PRODUCT LEVEL)	SEE PAGE
Y	1	1	**160-7165**	1	SUSPENSION GP-SEAT	863
JZ				4	BLOCK-SLIDER	
J	3	1	**173-5787**	4	SETSCREW (1/4-20-THD)	
J	4	1	**203-7703**	2	WASHER-HARD (10.2X22.22X2.38-MM THK)	
Y	5	1	**244-5001**	1	SEAT GP (CLOTH)	854
J	6	1	**4F-4879**	1	BOLT (3/8-16X0.5-IN)	
					AVAILABLE REPAIR KIT(S):	
J			**173-7035**	1	KIT-SLIDER BLOCK (SUSPENSION SEAT) (SEAT)	
					(INCLUDES WASHER, SCREW, BOLT & BLOCK-SLIDER)	

J-KIT MARKED J SERVICES PARTS MARKED J
Y-SEPARATE ILLUSTRATION
Z-NOT SERVICED SEPARATELY

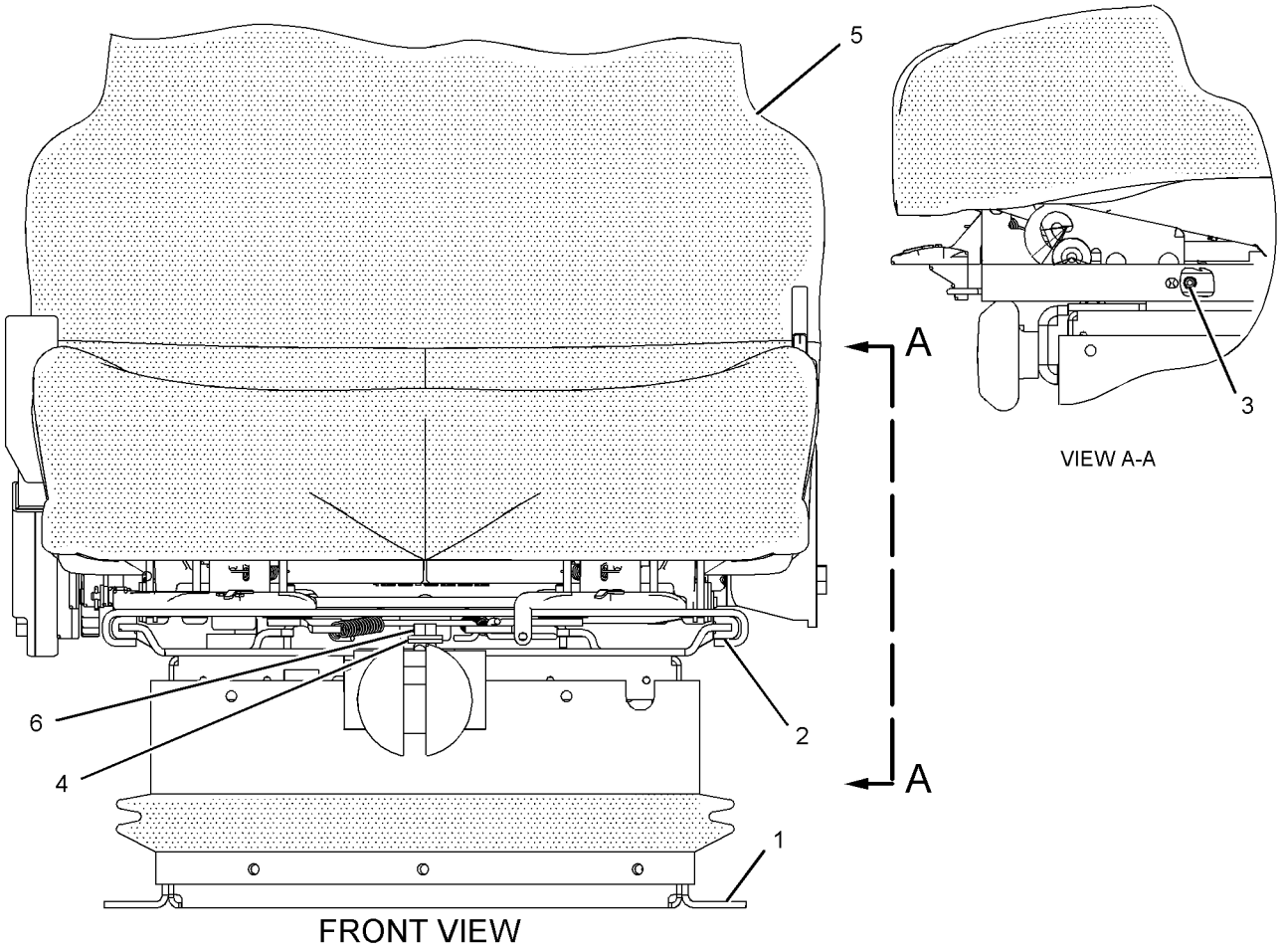

GRAPHIC #1 **<END>** g01109160

OPERATOR STATION

233-3224 SUPPORT GP-CONTROL—JOYSTICK, LH

S/N: B9D1-UP

PART OF 233-3146 CONTROL & MTG GP-JOYSTICK

SMCS-4343, 6150 **i02775609**

NOTE	REF NO	GRAPHIC REF	PART NUMBER	QTY	PART NAME 1 2 3 4 5 6 (PRODUCT LEVEL)	SEE PAGE
	1	1	**8X-1386**	1	SPACER (12.2X23X22-MM THK)	
	2	1	**139-6039**	10	NUT (U-TYPE RETAINER)	
	3	1	**233-3227**	1	SUPPORT AS (LH)	
	4	1	**233-3248**	2	BUSHING	
	5	1	**233-3252**	1	SHAFT AS	
	6	1	**235-6178**	1	SUPPORT AS (LH)	
Y	7	1	**252-1805**	1	CUSHION GP-ARM	787
	8	1	**252-1807**	1	SUPPORT AS (LH)	
		1	**3G-0622**	2	RING-RETAINING	
M		1	**9X-2044**	2	SCREW-TRUSS HEAD (M6X1X16-MM)	
		1	**7X-0605**	2	WASHER-HARD (13X28X1.6-MM THK)	
		1	**114-6658**	2	WASHER (6.5X17X1-MM THK)	
		1	**294-1001**	1	PLATE AS	
M		1	**6V-9632**	2	NUT-WELD (M6X1-THD)	
	9	1	**253-3482**	1	KNOB AS	
	10	1	**253-3483**	1	PLATE AS	
	11	1	**253-3484**	2	WASHER (13X46X3.5-MM THK)	
	12	1	**272-8329**	1	BRACKET	
	13	1	**308-4358**	1	PLATE AS	
		1	**130-5300**	4	CLIP	
M	14	1	**5C-9553**	2	BOLT (M6X1X16-MM)	
	15	1	**7J-5925**	1	PIN-COTTER	
	16	1	**7X-0578**	2	WASHER-HARD (10.2X32X2.5-MM THK)	
	17	1	**8T-4224**	7	WASHER-HARD (8.8X16X2-MM THK)	
M	18	1	**8T-4908**	7	BOLT (M8X1.25X25-MM)	
M	19	1	**9X-2043**	2	SCREW-TRUSS HEAD (M6X1X14-MM)	
	20	1	**9X-8256**	2	WASHER (6.6X12X2-MM THK)	

M-METRIC PART
Y-SEPARATE ILLUSTRATION

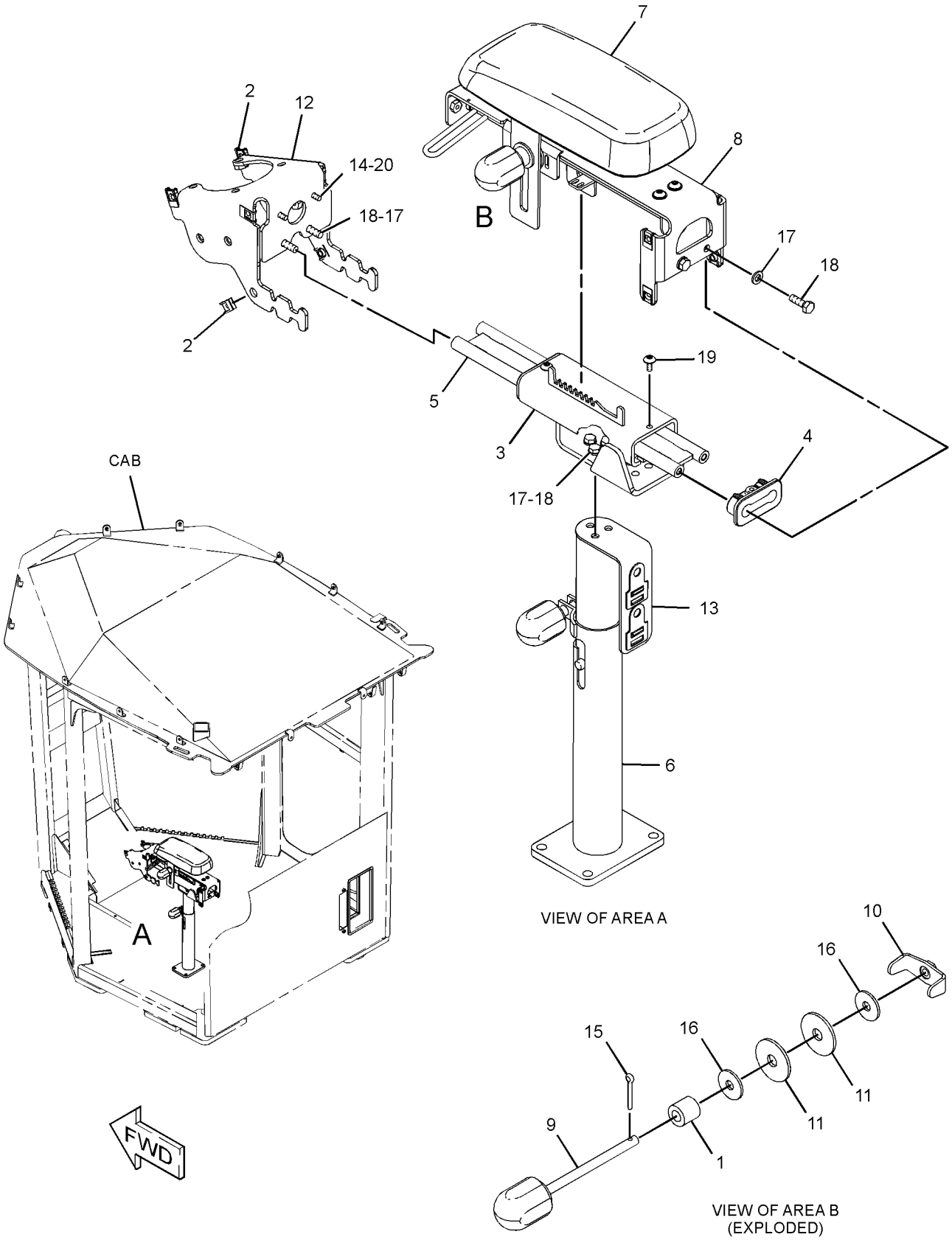

GRAPHIC #1 **<END>** g01387155

OPERATOR STATION

233-3225 SUPPORT GP-CONTROL—JOYSTICK, RH

S/N: B9D1-UP

PART OF 233-3146 CONTROL & MTG GP-JOYSTICK

SMCS-4343, 6150 **i02775662**

NOTE	REF NO	GRAPHIC REF	PART NUMBER	QTY	PART NAME 1 2 3 4 5 6 (PRODUCT LEVEL)	SEE PAGE
	1	1	**8X-1386**	1	SPACER (12.2X23X22-MM THK)	
	2	1	**139-6039**	10	NUT (U-TYPE RETAINER) (M6-THD)	
	3	1	**233-3226**	1	SUPPORT AS (RH)	
	4	1	**233-3248**	2	BUSHING	
	5	1	**233-3252**	1	SHAFT AS	
	6	1	**233-3270**	1	SUPPORT AS (RH)	
	7	1	**233-3275**	1	BRACKET	
Y	8	1	**252-1805**	1	CUSHION GP-ARM	787
	9	1	**252-1808**	1	SUPPORT AS (RH)	
	9A	1	**3G-0622**	2	RING-RETAINING	
	9B	1	**7X-0605**	2	WASHER-HARD (13X28X1.6-MM THK)	
M	9C	1	**9X-2044**	2	SCREW-TRUSS HEAD (M6X1X16-MM)	
	9D	1	**114-6658**	2	WASHER (6.5X17X1-MM THK)	
	9E	1	**294-1001**	1	PLATE AS	
M		1	**6V-9632**	2	NUT-WELD (M6X1-THD)	
	10	1	**253-3482**	1	KNOB AS (ARMREST ADJUSTMENT)	
		1	**164-1214**	1	KNOB	
	11	1	**253-3483**	1	PLATE AS	
	12	1	**253-3484**	2	WASHER (13X46X3.5-MM THK)	
M	13	1	**5C-9553**	2	BOLT (M6X1X16-MM)	
	14	1	**7J-5925**	1	PIN-COTTER	
	15	1	**7X-0578**	2	WASHER-HARD (10.2X32X2.5-MM THK)	
	16	1	**8T-4224**	7	WASHER-HARD (8.8X16X2-MM THK)	
M	17	1	**8T-4908**	7	BOLT (M8X1.25X25-MM)	
M	18	1	**9X-2043**	2	SCREW-TRUSS HEAD (M6X1X14-MM)	
	19	1	**9X-8256**	2	WASHER (6.6X12X2-MM THK)	
	20	1	**308-4358**	1	PLATE AS	
		1	**130-5300**	4	CLIP	

M-METRIC PART
Y-SEPARATE ILLUSTRATION

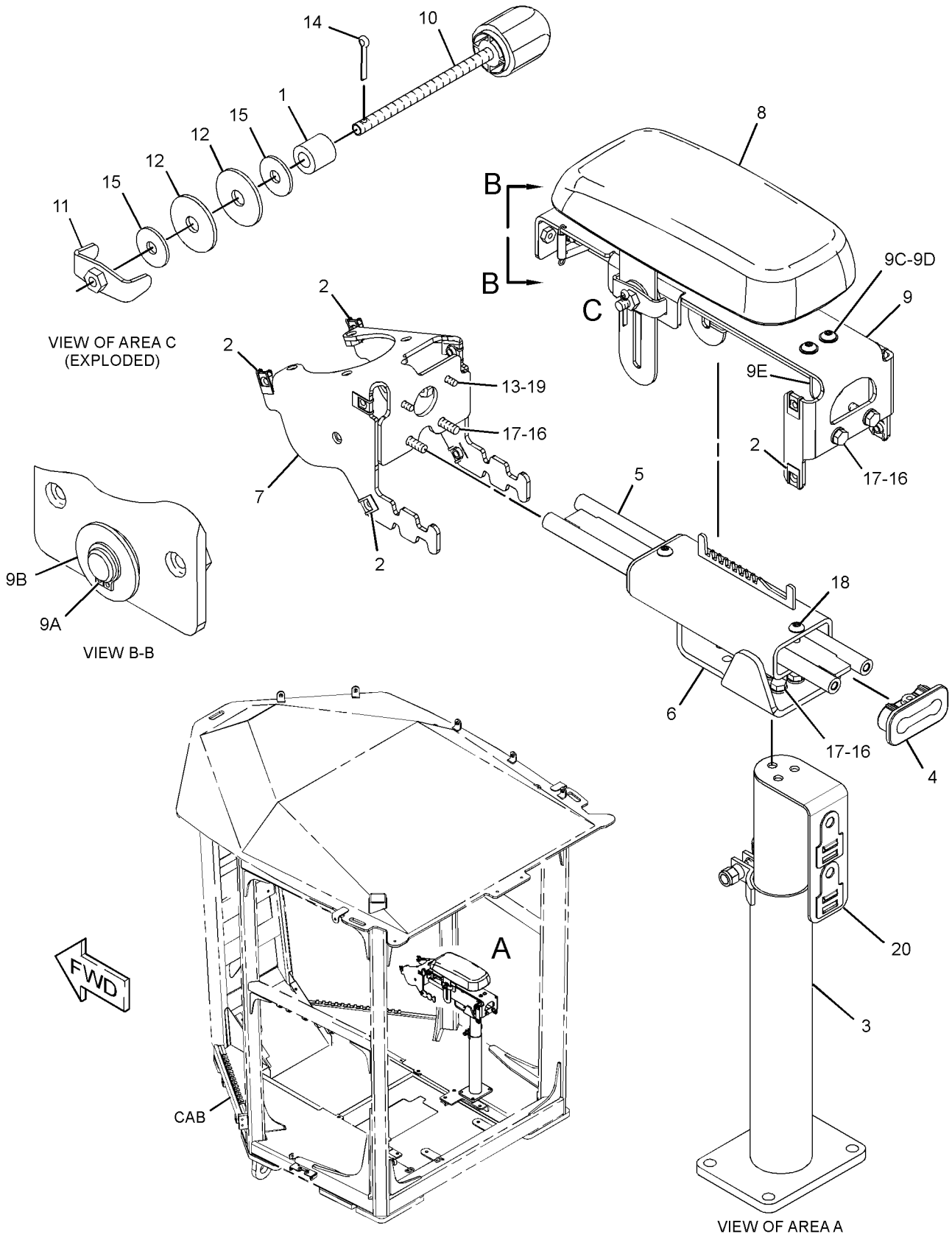

GRAPHIC #1

<END>

g01382473

OPERATOR STATION

160-7165 SUSPENSION GP-SEAT

S/N: B9D1-UP

PART OF 243-6740 SEAT GP-SUSPENSION

SMCS-7324 **i02238203**

NOTE	REF NO	GRAPHIC REF	PART NUMBER	QTY	PART NAME 1 2 3 4 5 6 (PRODUCT LEVEL)	SEE PAGE
	1	1	**2K-4973**	2	LOCKNUT (3/8-16-THD)	
	2	1	**4V-7884**	2	BEARING	
	3	1	**4V-8577**	4	BEARING	
	4	1	**5V-1497**	1	RETAINER	
	5	1	**8Y-5965**	1	ABSORBER AS-SHOCK	
	6	1	**8Y-6012**	1	ARM AS-SUSPENSION	
	7	1	**8Y-6014**	1	HOUSING AS-LOWER	
	8	1	**8Y-6024**	2	SHAFT AS	
J	9	1	**101-0003**	20	FASTENER	
J	10	1	**166-6781**	6	FASTENER	
J	11	1	**163-1146**	3	FASTENER	
	12	1	**145-0326**	1	FILM-INSTRUCTION (SEAT ADJUSTMENT)	
	13	1	**169-7380**	1	BOLT-SOCKET HEAD (3/8-16X0.375-IN)	
Y	14	1	**174-2231**	1	HOUSING GP-SEAT SUSPENSION	807
J	15	1	**197-7689**	3	FASTENER	
					AVAILABLE REPAIR KIT(S):	
J				1	KIT-SUSPENSION BOOT (SEAT)	
					(INCLUDES BOOT, RETAINER & FASTENERS)	
				1	KIT-BELT TETHER (SUSPENSION SEAT)	
					(INCLUDES BELTS)	
				1	KIT-SUSPENSION ROLLER (SUSPENSION SEAT)	
					(INCLUDES ROLLERS)	

J-KIT MARKED J INCLUDES PARTS MARKED J
Y-SEPARATE ILLUSTRATION

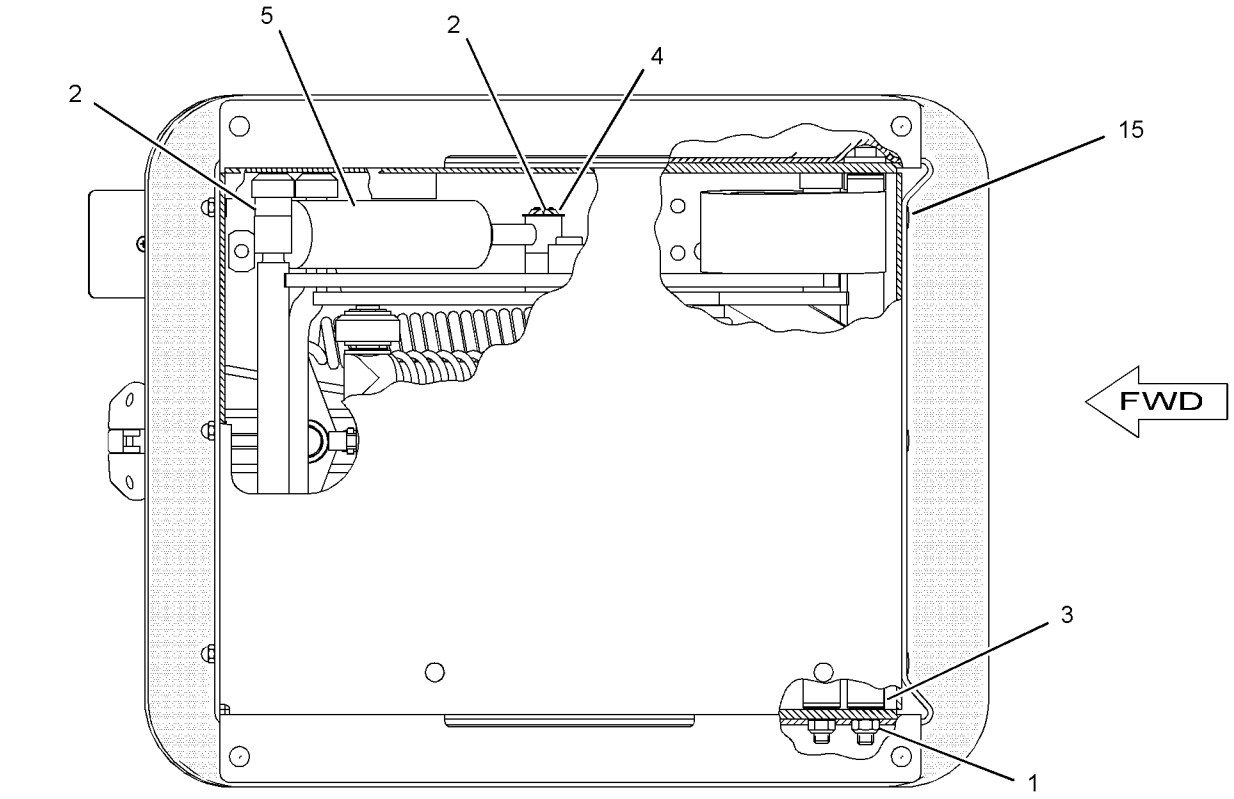

BOTTOM VIEW

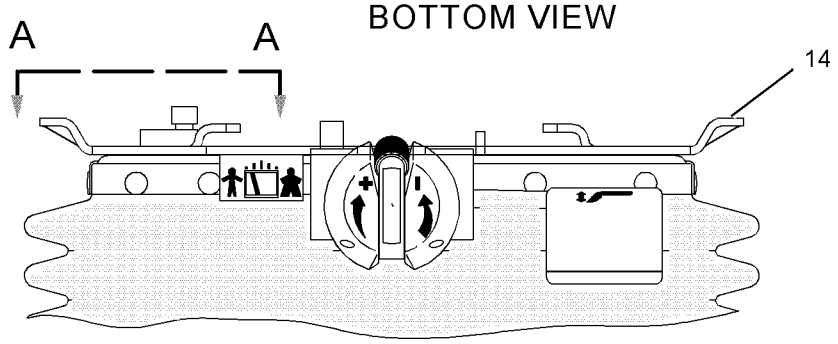

FRONT VIEW

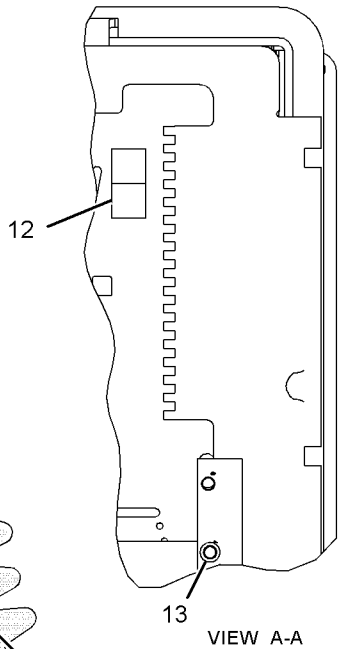

VIEW A-A

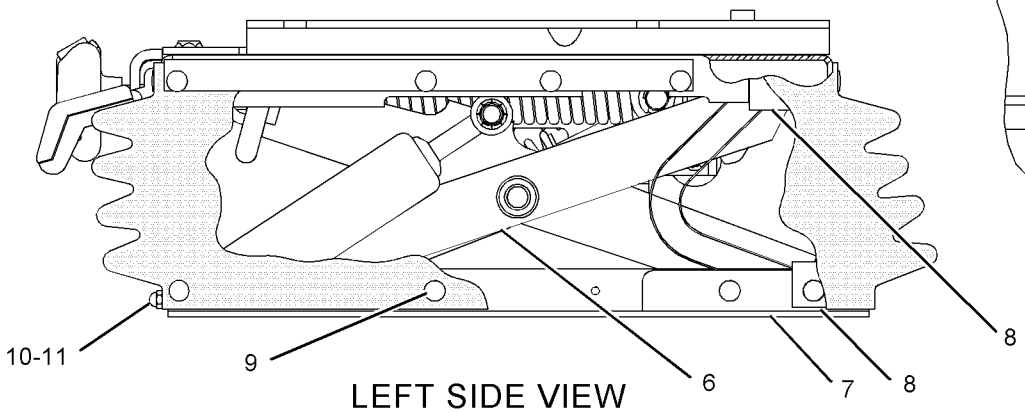

LEFT SIDE VIEW

GRAPHIC #1 **<END>** g01129757

OPERATOR STATION

256-8768 SUSPENSION GP-SEAT—AIR

S/N: B9D1-UP

PART OF 238-6683 SEAT GP-SUSPENSION

SMCS-7324 **i02784167**

NOTE	REF NO	GRAPHIC REF	PART NUMBER	QTY	PART NAME 1 2 3 4 5 6 (PRODUCT LEVEL)	SEE PAGE
	1	1	**3P-9900**	5	WASHER (10.5X30X3-MM THK)	
	2	1	**4B-4278**	2	WASHER (10.2X20.5X1.6-MM THK)	
	3	1	**4V-8577**	12	BEARING	
	4	1	**8L-8413**	1	STRAP-CABLE	
	5	1	**101-0003**	26	FASTENER	
	6	1	**145-0326**	1	FILM-INSTRUCTION (SEAT ADJUSTMENT)	
	7	1	**164-1234**	1	PLATE	
	8	1	**169-7380**	1	BOLT-SOCKET HEAD (3/8-16X0.375-IN)	
	9	1	**186-5107**	2	SCREW (NO 8X1.25-IN)	
	10	1	**192-7752**	4	SHAFT AS	
	11	1	**192-7755**	1	HOUSING AS	
	12	1	**192-7760**	1	SHAFT	
	13	1	**192-7767**	1	SCISSORS AS	
	14	1	**192-7783**	1	TOGGLE AS	
	15	1	**192-7787**	1	TOGGLE AS	
	16	1	**192-7790**	1	HOUSING AS	
	17	1	**192-7795**	1	BOOT	
	18	1	**192-7805**	1	HARNESS AS-VALVE (SEAT AIR COMPRESSOR)	
		1	**102-8802**	1	KIT-RECEPTACLE (2-PIN)	
		1	**102-8802**	1	KIT-RECEPTACLE (2-PIN)	
					(EACH KIT INCLUDES RECEPTACLE AS AND WEDGE)	
	19	1	**192-7810**	1	SPRING AS-AIR	
		1	**5P-4423**	1	ELBOW	
	20	1	**192-7812**	1	BOLT-SHOULDER (3/8-16X2-IN)	
	21	1	**192-7820**	3	BUMPER	
	22	1	**192-7822**	1	SHAFT	
	23	1	**237-3943**	1	BRACKET	
Y	24	1	**237-3970**	1	AIR COMPRESSOR GP-SEAT	758
	25	1	**1H-8296**	1	SCREW-MACHINE (3/8-16X0.52-IN)	
	26	1	**2K-4973**	8	LOCKNUT (3/8-16-THD)	
	27	1	**3J-4818**	1	LOCKWASHER	
M	28	1	**5C-2890**	3	NUT (M6X1-THD)	
D	29	1	**5P-6010**		TUBE (0.257-M)	
D	29A	1	**5P-6010**		TUBE (0.356-M)	
	30	1	**8T-9371**	1	BOLT (3/8-16X0.5-IN)	
E	31	1	**211-5358**		CONDUIT-FLEXIBLE (26.7-CM)	
E	31A	1	**211-5358**		CONDUIT-FLEXIBLE (35.6-CM)	
					AVAILABLE REPAIR KIT(S):	
			192-7799	1	KIT-AIR VALVE (SEAT)	
					(INCLUDES KNOB ASSEMBLY)	
			212-7779	1	KIT-SHOCK ABSORBER (SUSPENSION SEAT)	
					(INCLUDES, LOCKNUTS, BALL, LOCKWASHER, STRAP, SPRING, CLAMP, ADJUSTERS, BOLTS, BEARINGS, WASHERS, SHOCK ABSORBER,	
					BRACKETS, KIT, CABLE ASSEMBLY, AND KNOB)	
			213-5170	1	KIT-INDICATOR (SEAT ADJUSTMENT)	
					(INCLUDES BOLTS, NUTS, ROD, ARM, AND HOUSING)	
			211-9294	1	KIT-TETHER (SEAT)	
					(INCLUDES TETHER)	

D-ORDER BY THE METER
E-ORDER BY THE CENTIMETER
M-METRIC PART
Y-SEPARATE ILLUSTRATION

256-8768 SUSPENSION GP-SEAT *(contd.)* i02784167

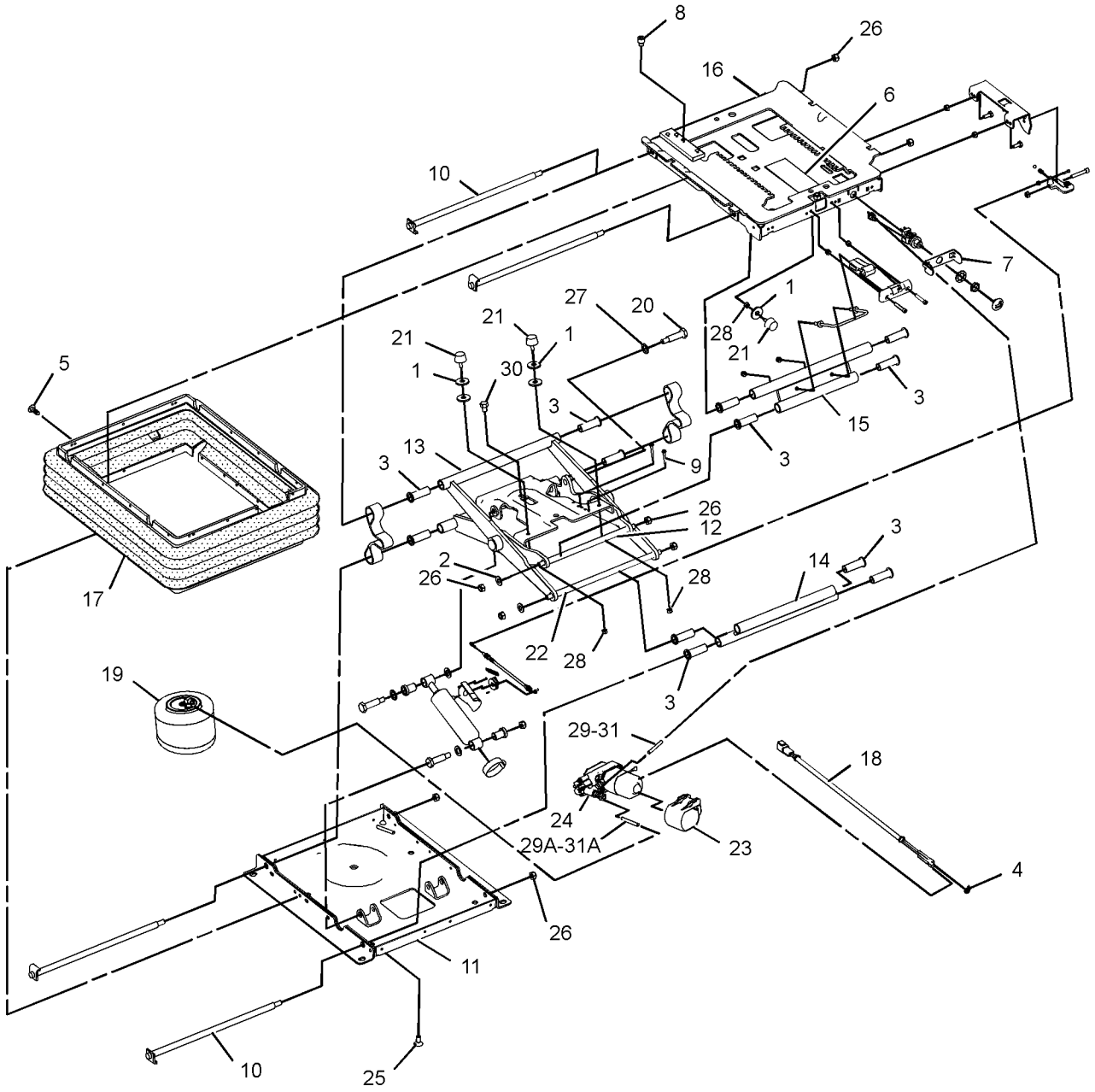

GRAPHIC #1 **<END>** g01198499

OPERATOR STATION

248-3164 TANK GP-WINDOW WASHER

S/N: B9D1-UP

PART OF 233-3138 WIPER & WASHER GP-WINDOW

SMCS-7306 **i02775498**

NOTE	REF NO	GRAPHIC REF	PART NUMBER	QTY	PART NAME 1 2 3 4 5 6 (PRODUCT LEVEL)	SEE PAGE
	1	1	**6W-5698**	1	GROMMET	
	2	1	**7T-8890**	3	PUMP AS-WASHER	
	3	1	**8T-5914**	3	GROMMET	
	5	1	**254-0079**	1	TANK-WASHER	
	6	1	**261-3345**	1	CONNECTOR	
	7	1	**267-8715**	3	PLUG	
E	8	1	**144-0195**		HOSE (10-CM EACH)	

E-ORDER BY THE CENTIMETER

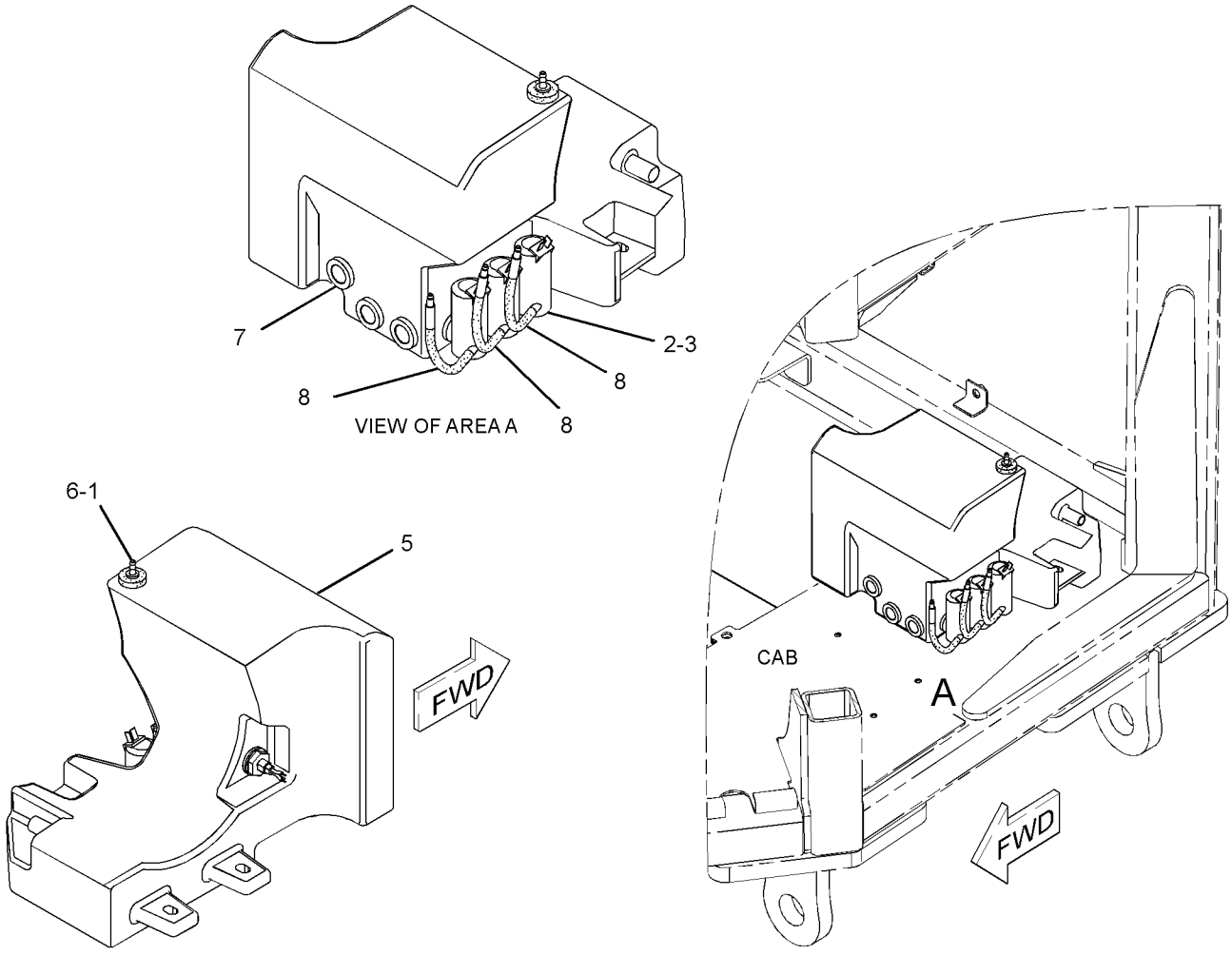

GRAPHIC #1 **<END>** g01381047

OPERATOR STATION

233-3113 WINDOW GP-CAB—REAR, LH, RH

S/N: B9D1-UP

SMCS-7310 **i02773203**

NOTE	REF NO	GRAPHIC REF	PART NUMBER	QTY	PART NAME 1 2 3 4 5 6 (PRODUCT LEVEL)	SEE PAGE
	1	1	**233-3235**	1	GLASS-REAR	
	2	1	**233-3236**	1	GLASS (LH)	
	3	1	**233-3238**	1	GLASS (RH)	
	4	1	**263-2574**	6	CLIP	
E	5	1	**3E-3000**		SEAL (387-CM)	
E	5A	1	**3E-3000**		SEAL (398-CM EACH)	

E-ORDER BY THE CENTIMETER

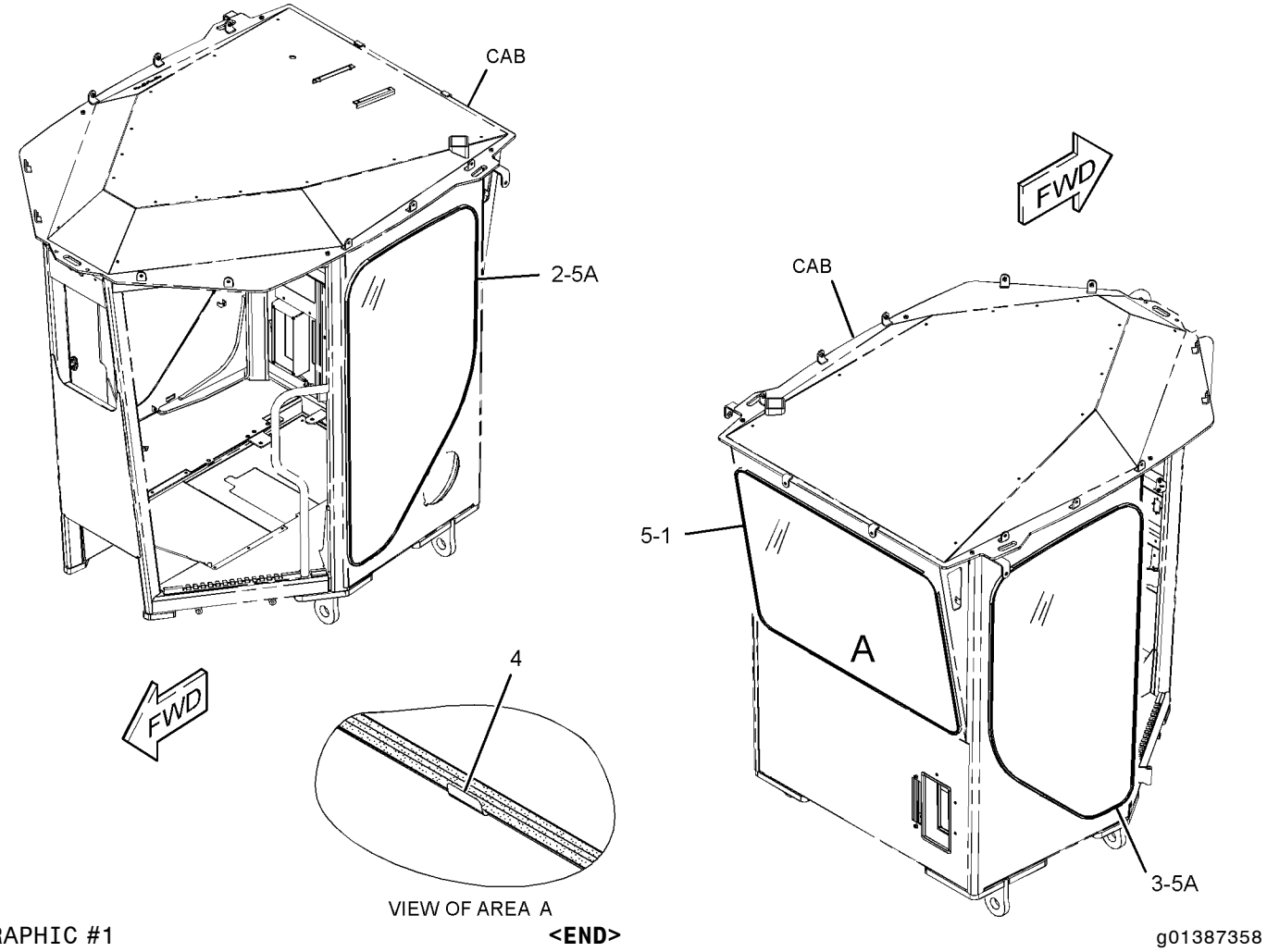

GRAPHIC #1 **<END>** g01387358

OPERATOR STATION

233-3140 WINDOW GP-CAB—FRONT

S/N: B9D1-UP

CANNOT BE USED WITH 233-3286—PAGE 870

SMCS-7310 **i02772817**

NOTE	REF NO	GRAPHIC REF	PART NUMBER	QTY	PART NAME 1 2 3 4 5 6 (PRODUCT LEVEL)	SEE PAGE
	1	1	**114-6658**	6	WASHER (6.5X17X1-MM THK)	
	2	1	**238-8760**	1	GLASS-FRONT	
	3	1	**249-4081**	2	BRACKET	
M	4	1	**9X-2045**	6	SCREW-TRUSS HEAD (M6X1X20-MM)	
E	5	1	**148-5353**		SEAL (187-CM)	

E-ORDER BY THE CENTIMETER
M-METRIC PART

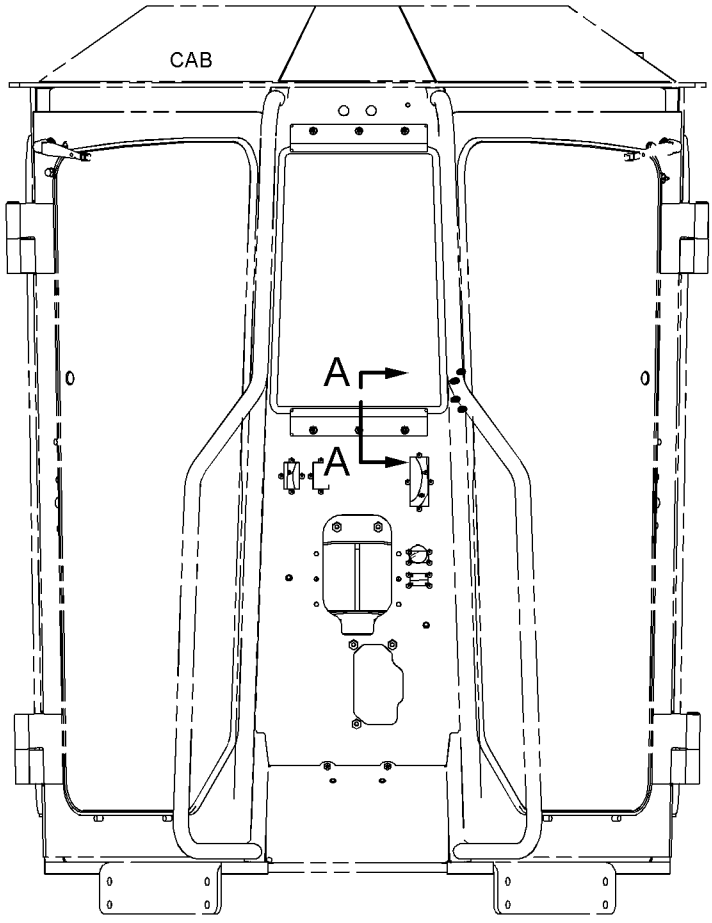

FRONT VIEW

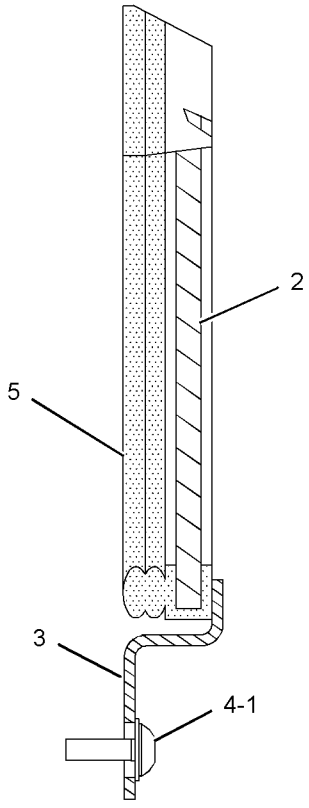

SECTION A-A

GRAPHIC #1 **<END>** g01110119

OPERATOR STATION

233-3286 WINDOW GP-CAB—VENT, FRONT

S/N: B9D1-UP

CANNOT BE USED WITH 233-3140—PAGE 869

SMCS-7310 **i02775823**

NOTE	REF NO	GRAPHIC REF	PART NUMBER	QTY	PART NAME 1 2 3 4 5 6 (PRODUCT LEVEL)	SEE PAGE
M	1	1	**9X-2045**	3	SCREW-TRUSS HEAD (M6X1X20-MM)	
	2	1	**114-6658**	5	WASHER (6.5X17X1-MM THK)	
	3	1	**251-2364**	1	BRACKET AS	
	4	1	**251-2365**	1	HINGE AS	
	5	1	**251-2422**	1	BRACKET	
	6	1	**251-4207**	1	LATCH AS-WINDOW	
	7	1	**254-5094**	1	GLASS (VENT WINDOW)	
	8	1	**225-3109**	2	SCREW-TRUSS HEAD (M4X0.7X14-MM)	
M	10	1	**5C-8312**	2	NUT (M4X0.7-THD)	
M	11	1	**7Y-7390**	3	SCREW-BUTTON HEAD (M6X6X1-MM)	
E	12	1	**148-5353**		SEAL (172-CM)	

E-ORDER BY THE CENTIMETER
M-METRIC PART

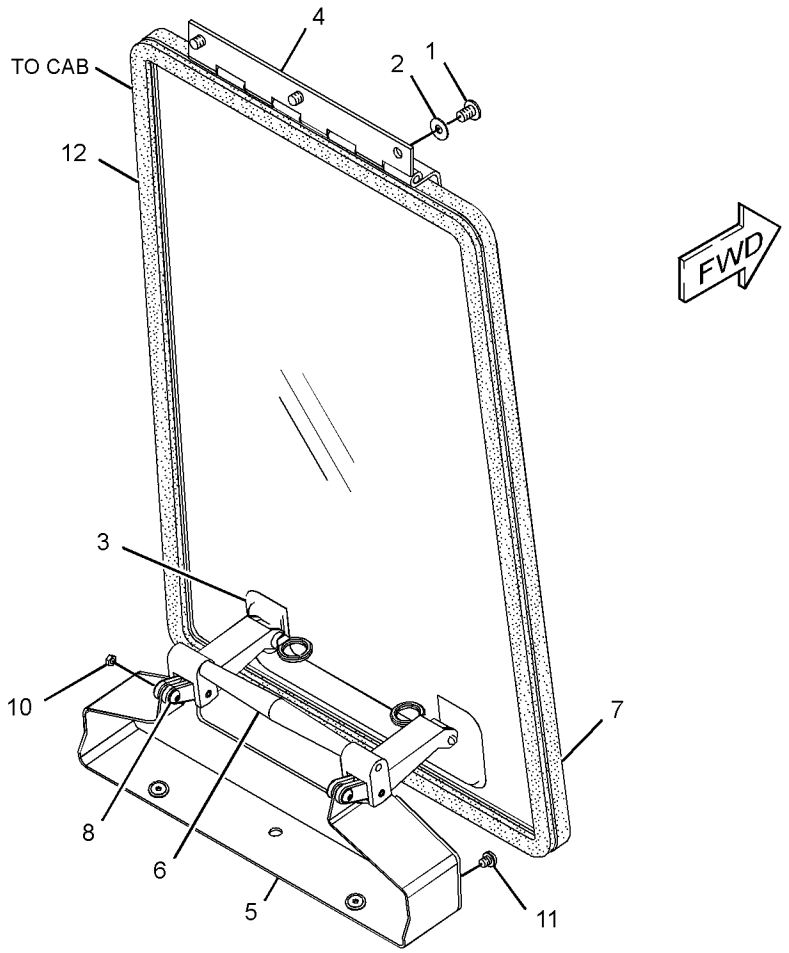

GRAPHIC #1 **<END>** g01283524

OPERATOR STATION

260-6724 WINDOW GP-CAB

S/N: B9D1-UP

SMCS-7310 **i02785219**

NOTE	REF NO	GRAPHIC REF	PART NUMBER	QTY	PART NAME 1 2 3 4 5 6 (PRODUCT LEVEL)	SEE PAGE
Y	1	1	*233-3188*	1	WIPER GP-WINDOW (SIDE, RH, LH)	880
	2	1	**233-3235**	1	GLASS-REAR	
	3	1	**235-6175**	1	HARNESS AS-WINDOW WIPER	
		1	**102-8804**	1	KIT-RECEPTACLE (4-PIN)	
					(INCLUDES RECEPTACLE AS & WEDGE)	
		1	**155-2260**	2	KIT-CONNECTING PLUG (3-PIN)	
					(EACH PLUG KIT INCLUDES PLUG AS, WEDGE, & INTERFACE SEAL)	
	4	1	**260-6725**	1	GLASS (CAB, LH)	
	5	1	**260-6726**	1	GLASS (CAB, RH)	
	6	1	**263-2574**	6	CLIP	
E	7	1	**3E-3000**		SEAL (387-CM)	
E	7A	1	**3E-3000**		SEAL (398-CM EACH)	

E-ORDER BY THE CENTIMETER
Y-SEPARATE ILLUSTRATION

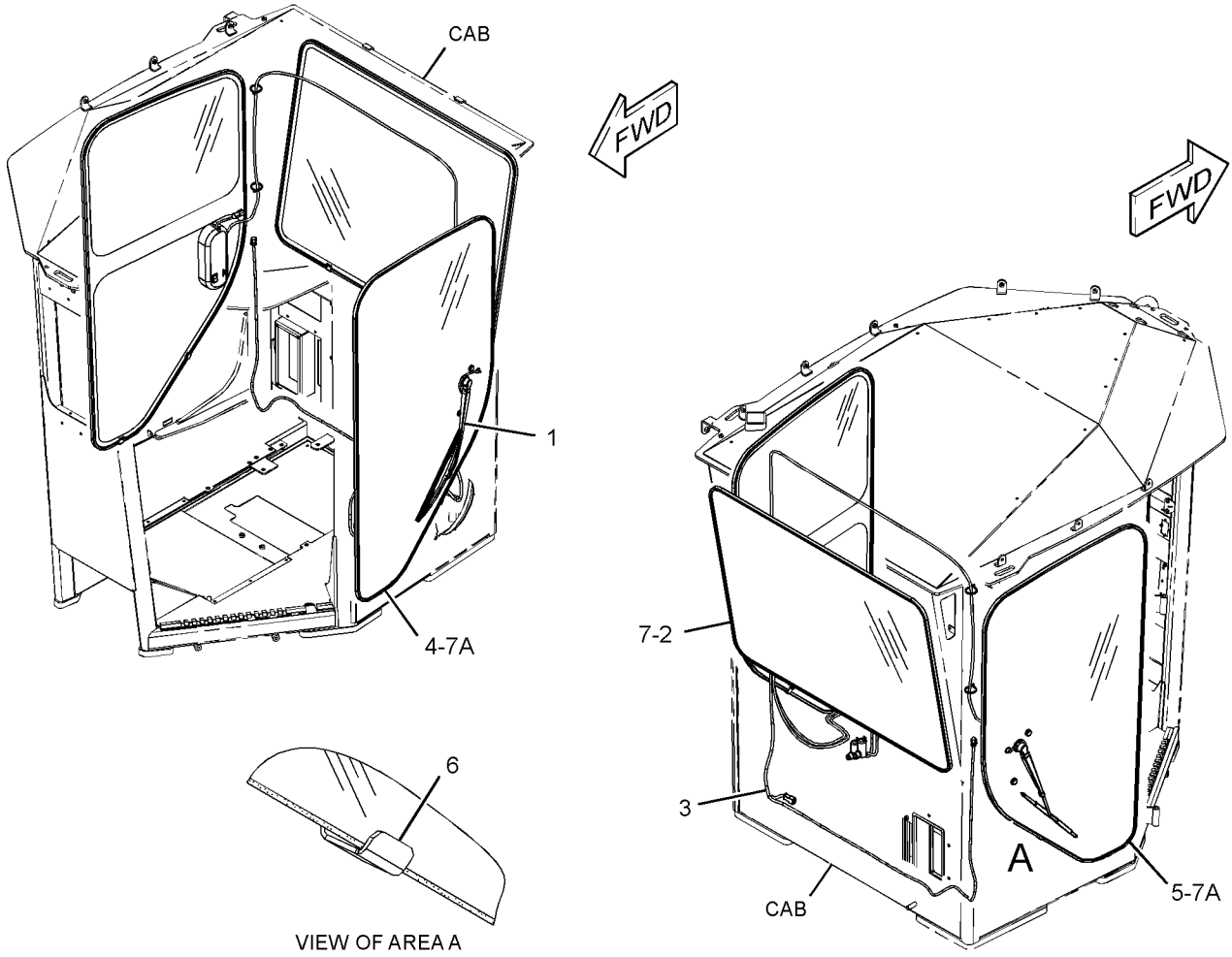

GRAPHIC #1 **<END>** g01391825

OPERATOR STATION

265-8946 WINDOW GP-CAB–VENT

S/N: B9D1-UP

SMCS-7310 **i02787186**

NOTE	REF NO	GRAPHIC REF	PART NUMBER	QTY	PART NAME 1 2 3 4 5 6 (PRODUCT LEVEL)	SEE PAGE
	1	1	**114-6658**	4	WASHER (6.5X17X1-MM THK)	
	2	1	**254-5362**	1	VENT AS (RH)	
	3	1	**254-5363**	2	PIN	
	4	1	**254-5365**	1	VENT AS (LH)	
	5	1	**254-5368**	2	BUSHING	
	6	1	**274-2387**	6	WASHER (10.4X20.6X1.6-MM THK)	
	7	1	**254-5372**	2	BRACKET	
	8	1	**6V-9500**	2	RING-RETAINING	
M	9	1	**9X-2045**	4	SCREW-TRUSS HEAD (M6X1X20-MM)	
M	10	1	**9X-2480**	2	BOLT (M6X1X45-MM)	
	11	1	**9X-8256**	2	WASHER (6.6X12X2-MM THK)	
E	12	1	**148-5353**		SEAL (66-CM EACH)	

E-ORDER BY THE CENTIMETER
M-METRIC PART

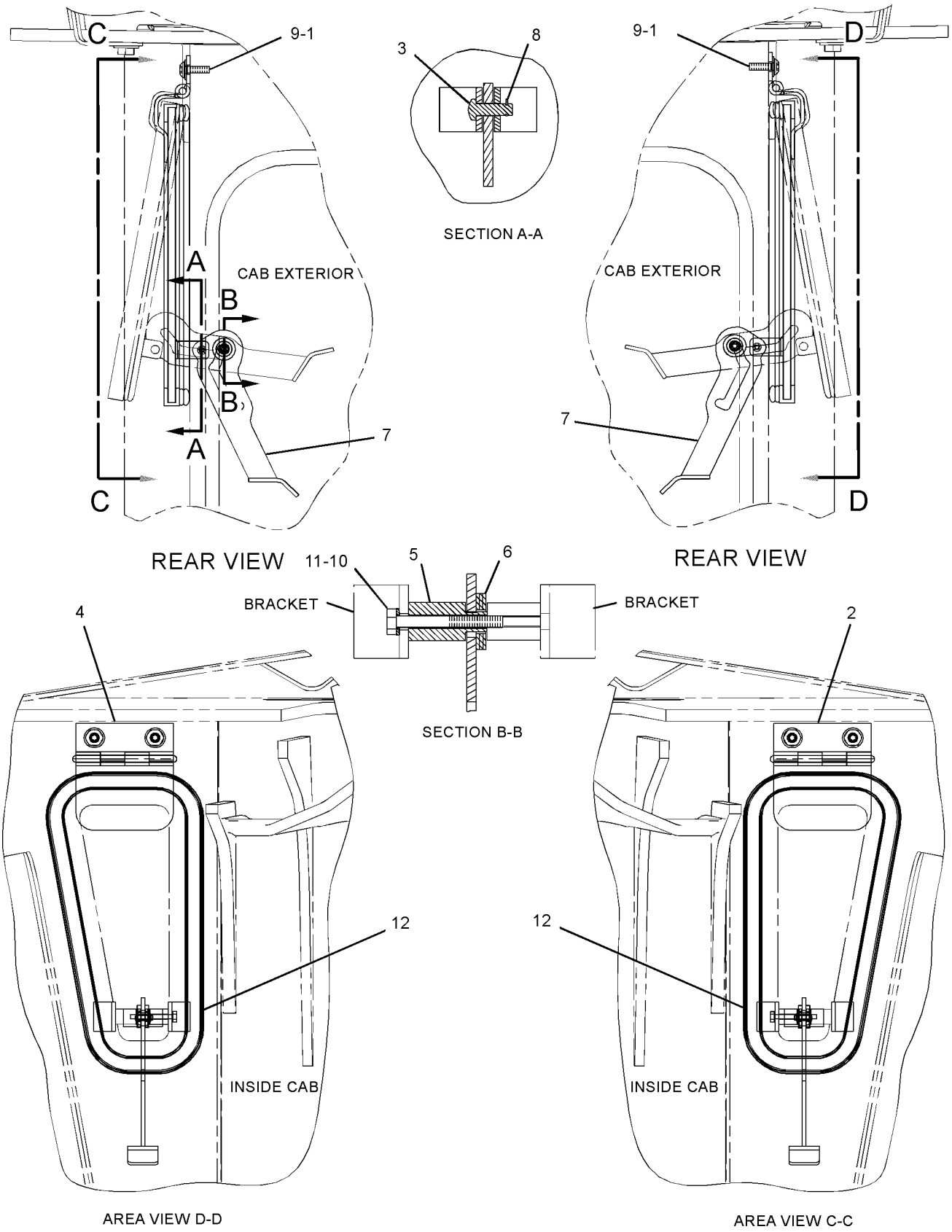

GRAPHIC #1 **<END>** g01392708

OPERATOR STATION

294-1011 WINDOW GP-CAB—FRONT

S/N: B9D1-UP

PART OF 254-5399 CAB AR

SMCS-7310 **i02779649**

NOTE	REF NO	GRAPHIC REF	PART NUMBER	QTY	PART NAME 1 2 3 4 5 6 (PRODUCT LEVEL)	SEE PAGE
	1	1	**114-6658**	6	WASHER (6.5X17X1-MM THK)	
	2	1	**294-1017**	1	GLASS	
	3	1	**294-1018**	2	BRACKET	
M	4	1	**9X-2045**	6	SCREW-TRUSS HEAD (M6X1X20-MM)	
E	5	1	**294-1015**		SEAL (30-CM EACH)	
E	6	1	**294-1014**		SEAL-GLASS (171-CM)	

E-ORDER BY THE CENTIMETER
M-METRIC PART

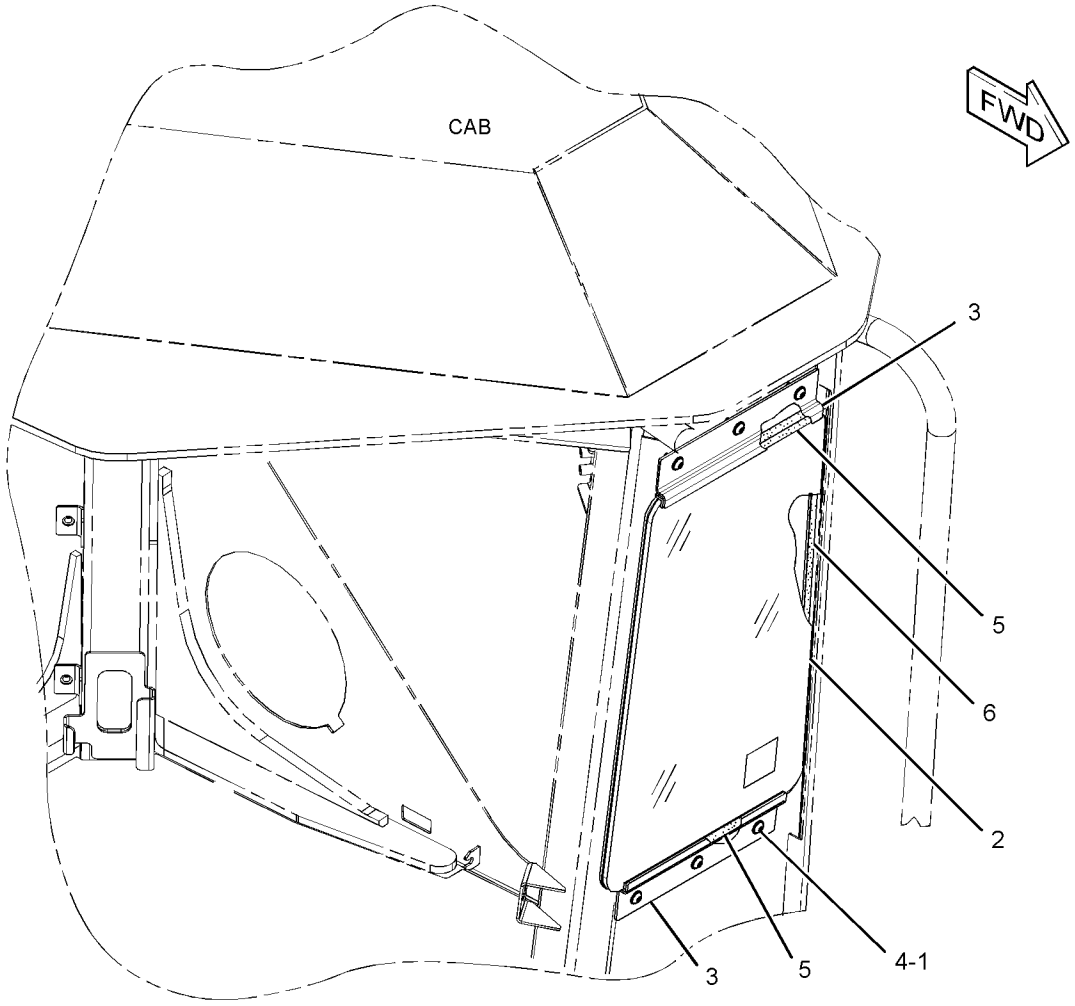

GRAPHIC #1 **<END>** g01331051

OPERATOR STATION

300-1870 WINDOW GP-CAB—SIDE, REAR, RH, LH

S/N: B9D1-UP

SMCS-7310 **i02788482**

NOTE	REF NO	GRAPHIC REF	PART NUMBER	QTY	PART NAME 1 2 3 4 5 6 (PRODUCT LEVEL)	SEE PAGE
	1	1	**233-3235**	1	GLASS-REAR	
	2	1	**263-2574**	6	CLIP	
	3	1	**300-1871**	1	GLASS (RH)	
	4	1	**300-1872**	1	GLASS (LH)	
E	5	1	**3E-3000**		SEAL (392-CM EACH)	
E	5A	1	**3E-3000**		SEAL (387-CM)	

E-ORDER BY THE CENTIMETER

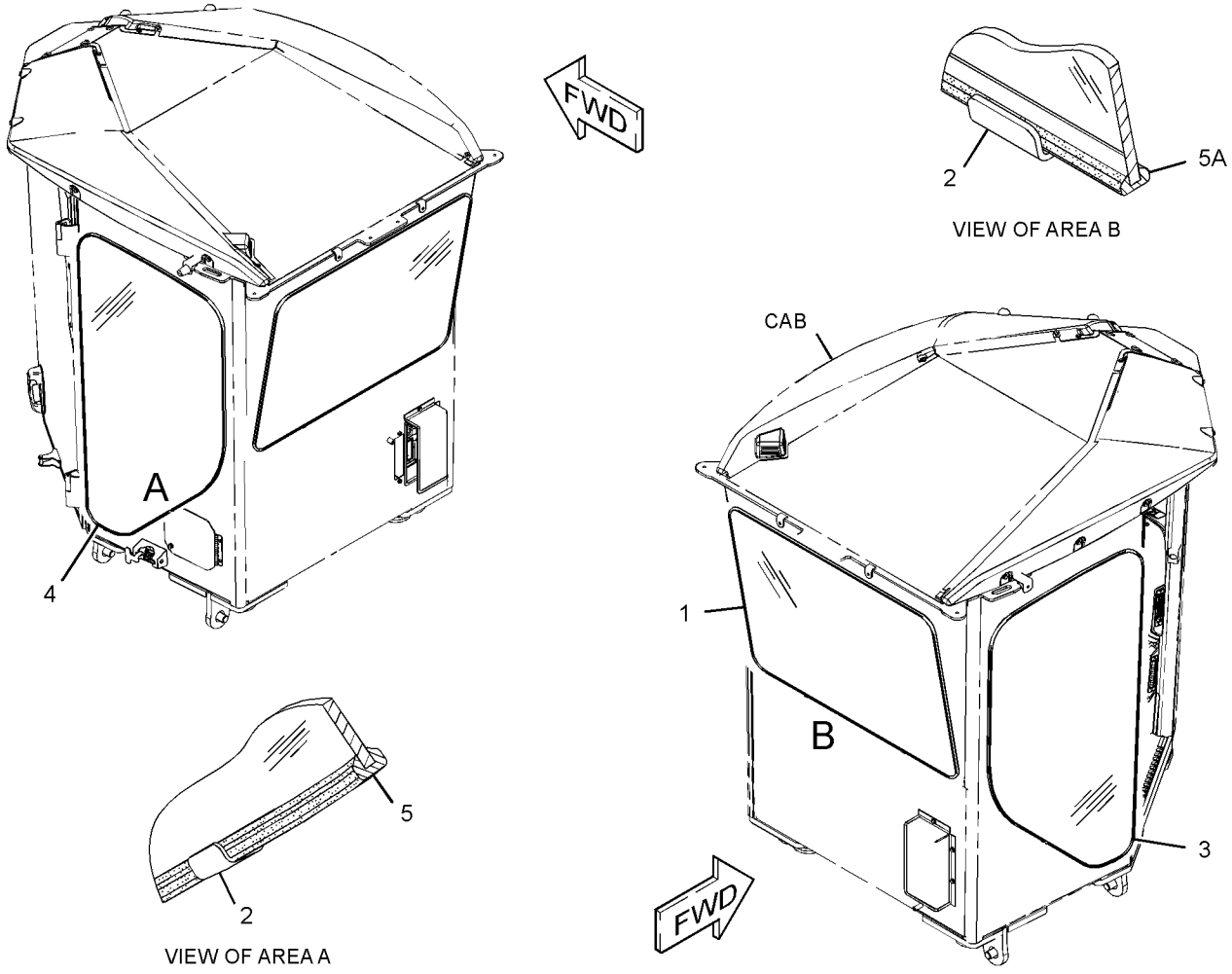

GRAPHIC #1

<END>

g01393447

OPERATOR STATION

300-1873 WINDOW GP-CAB—REAR, LH, RH, SIDE WIPERS

S/N: B9D1-UP

PART OF 261-0187 SNOW AR-MOTOR GRADER

SMCS-7310 **i02786440**

NOTE	REF NO	GRAPHIC REF	PART NUMBER	QTY	PART NAME 1 2 3 4 5 6 (PRODUCT LEVEL)	SEE PAGE
Y	1	1	*233-3188*	1	WIPER GP-WINDOW (SIDE, RH, LH)	880
	2	1	**233-3235**	1	GLASS-REAR	
	3	1	**235-6175**	1	HARNESS AS-WINDOW WIPER	
		1	**155-2260**	2	KIT-CONNECTING PLUG (3-PIN)	
					(EACH INCLUDES PLUG AS, WEDGE, & INTERFACE SEAL)	
		1	**102-8804**	1	KIT-RECEPTACLE (4-PIN)	
					(INCLUDES RECEPTACLE AS & WEDGE)	
	4	1	**300-1874**	1	GLASS (RH)	
	5	1	**300-1875**	1	GLASS (LH)	
E	6	1	**3E-3000**		SEAL (387-CM)	
E	6A	1	**3E-3000**		SEAL (398-CM EACH)	

E-ORDER BY THE CENTIMETER
Y-SEPARATE ILLUSTRATION

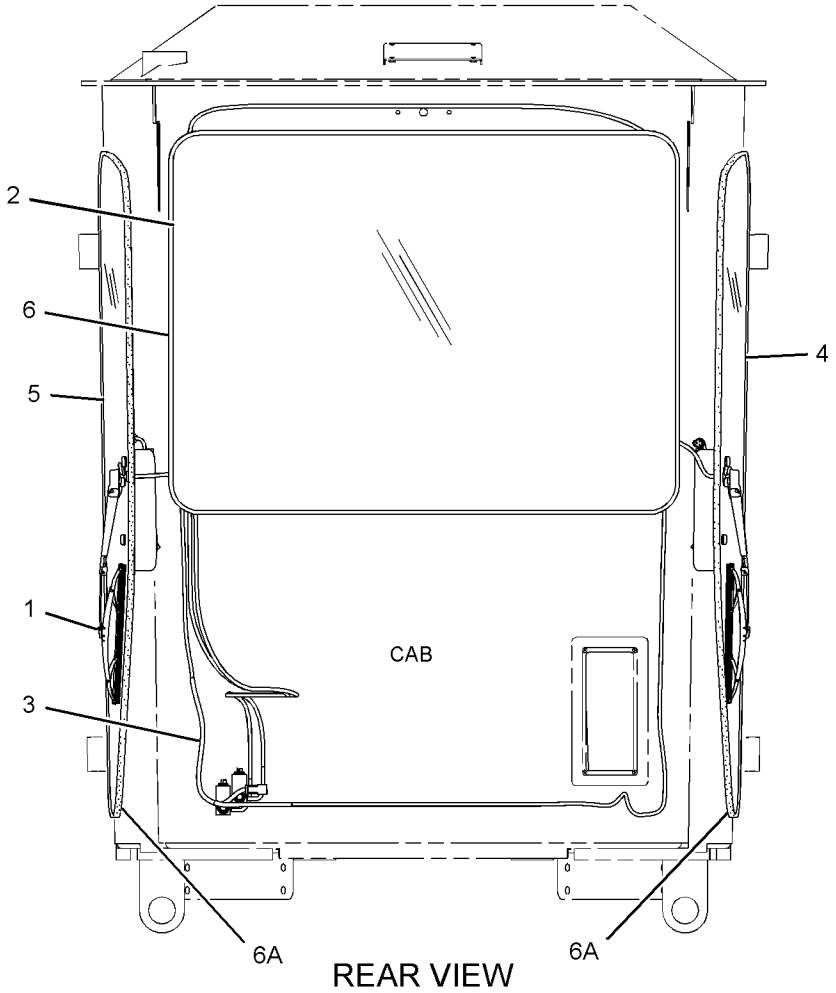

REAR VIEW

GRAPHIC #1 **<END>** g01392921

OPERATOR STATION

233-3138 WIPER & WASHER GP-WINDOW—FRONT

S/N: B9D1-UP

PART OF 254-5399 CAB AR

SMCS-7305, 7306 **i02775499**

NOTE	REF NO	GRAPHIC REF	PART NUMBER	QTY	PART NAME 1 2 3 4 5 6 (PRODUCT LEVEL)	SEE PAGE
B	1	1	**3S-2093**	15	STRAP-CABLE	
	2	1	**3V-3263**	2	CONNECTOR (HOSE)	
	3	1	**5D-1026**	2	CLAMP-HOSE	
	4	1	**6V-5853**	1	BLADE AS-WIPER (450-MM) (FRONT)	
	5	1	**8T-5400**	1	CONNECTOR AS	
	6	1	**8V-7162**	1	CABLE	
	7	1	**114-6658**	3	WASHER (6.5X17X1-MM THK)	
	8	1	**180-0149**	3	TUBE	
	9	1	**204-2581**	3	VALVE AS-CHECK	
	10	1	**248-2621**	1	ARM GP-WINDOW WIPER (FRONT)	
		1	**136-3188**	3	CLIP	
		1	**136-3191**	1	NOZZLE AS-WASHER	
E		1	**194-5171**		HOSE (55-CM)	
Y	11	1	**248-3164**	1	TANK GP-WINDOW WASHER	867
	12	1	**253-4115**	1	SPOUT	
	13	1	**276-3884**	1	CAP-VENTED (WASHER TANK)	
Y	14	1	**295-1120**	1	MOTOR GP-WINDOW WIPER (FRONT)	826
	15	1	**101-2867**	3	WASHER-HARD (7.2X25X2-MM THK)	
M	16	1	**9X-2044**	3	SCREW-TRUSS HEAD (M6X1X16-MM)	
M	17	1	**9X-2046**	3	SCREW-TRUSS HEAD (M6X1X35-MM)	
E	18	1	**153-2817**		HOSE (37-CM)	
E	19	1	**144-0195**		HOSE (238-CM)	
E	19A	1	**144-0195**		HOSE (370-CM)	
E	19B	1	**144-0195**		HOSE (94-CM)	
E	19C	1	**144-0195**		HOSE (349-CM)	

B-USE AS REQUIRED
E-ORDER BY THE CENTIMETER
M-METRIC PART
Y-SEPARATE ILLUSTRATION

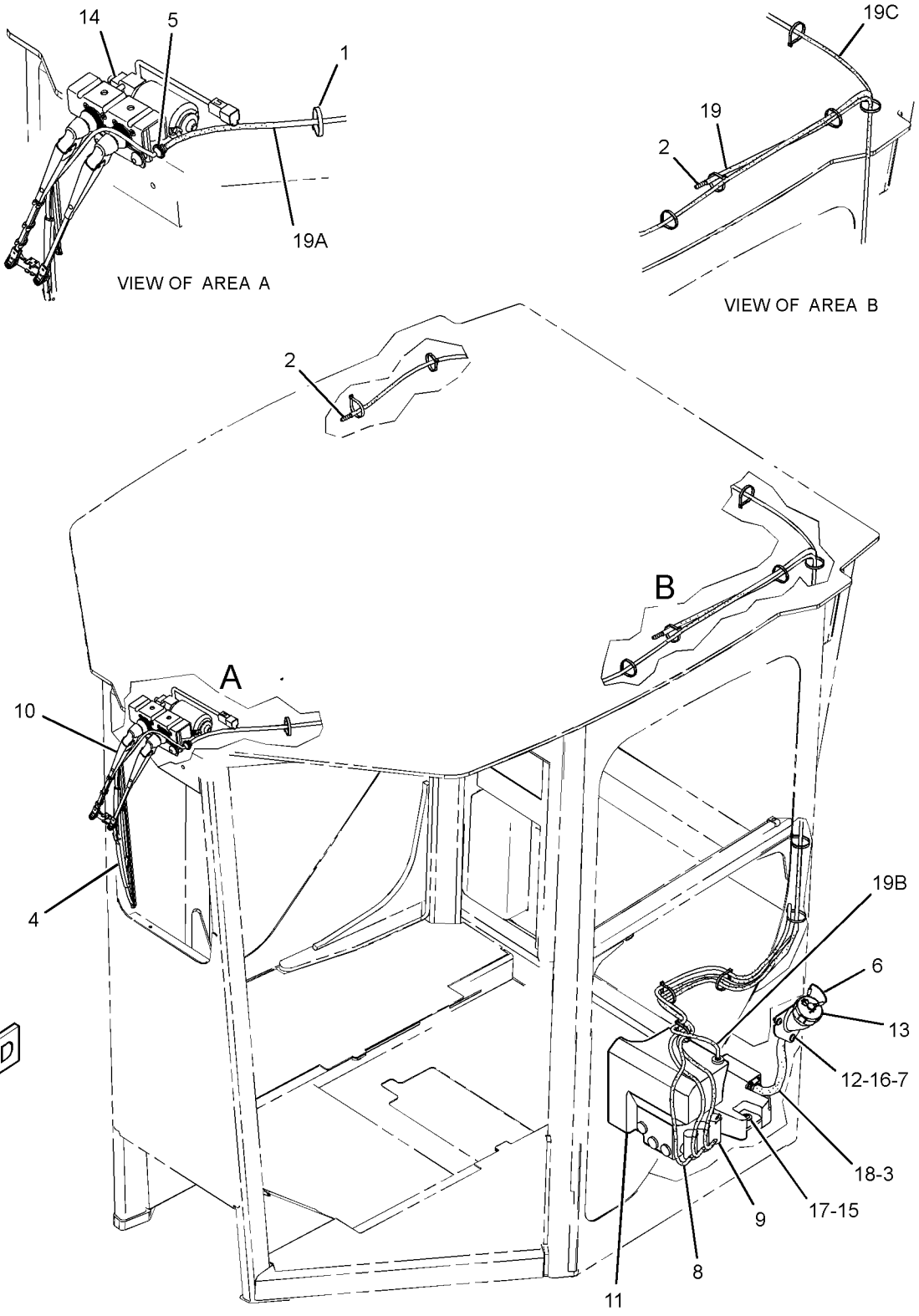

GRAPHIC #1 **<END>** g01316079

OPERATOR STATION

233-3139 WIPER GP-WINDOW

S/N: B9D1-UP

PART OF 261-0187 SNOW AR-MOTOR GRADER

SMCS-7305 **i02772926**

NOTE	REF NO	GRAPHIC REF	PART NUMBER	QTY	PART NAME 1 2 3 4 5 6 (PRODUCT LEVEL)	SEE PAGE
	1	1	**8T-5400**	1	CONNECTOR AS	
	2	1	**112-5869**	1	ARM AS-WIPER	
	3	1	**146-6433**	1	BLADE AS-WIPER (500-MM) (REAR)	
	4	1	**204-2581**	1	VALVE AS-CHECK (WINDOW WASHER)	
Y	5	1	**250-5529**	1	MOTOR GP-WINDOW WIPER (REAR)	825
E	6	1	**144-0195**		HOSE (297-CM)	
	7	1	**8T-5914**	1	GROMMET	
	8	1	**7T-8890**	1	PUMP AS-WASHER	
Y	9	1	**3E-0155**	1	SWITCH GP-WIPER (24-VOLT, INTERMITTENT)	261

E-ORDER BY THE CENTIMETER
Y-SEPARATE ILLUSTRATION

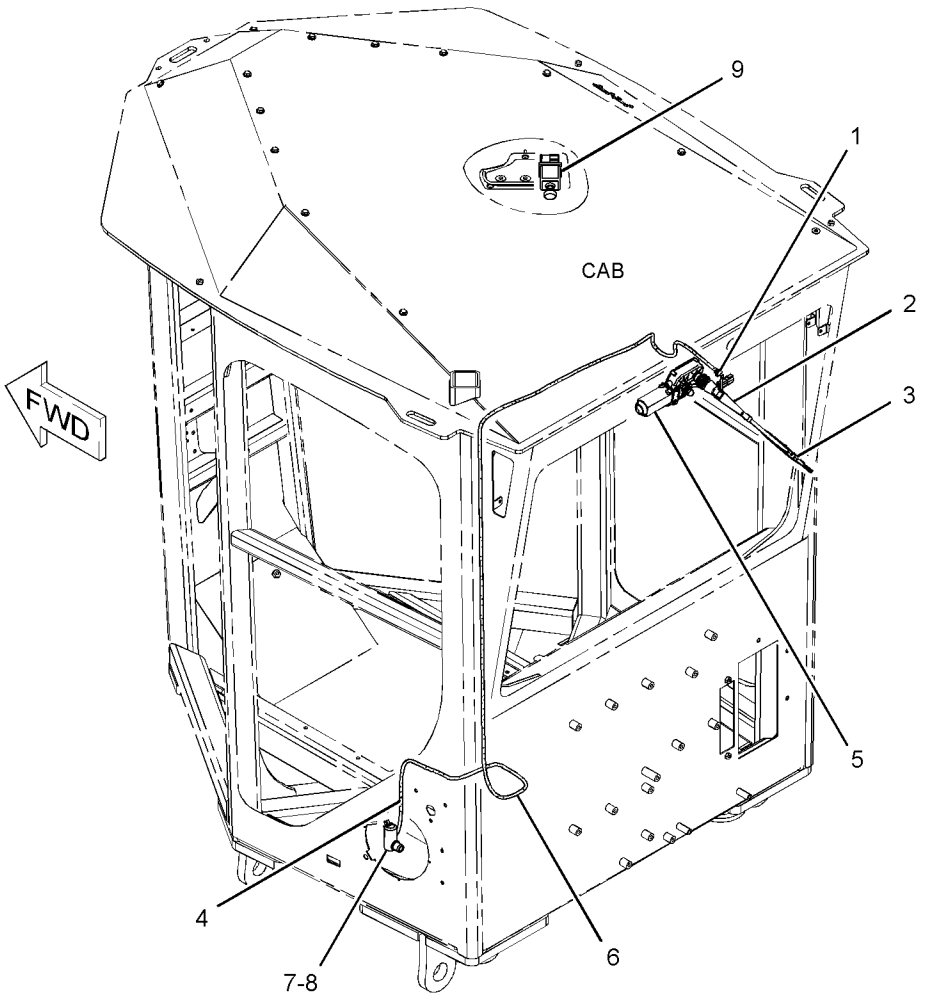

GRAPHIC #1 **<END>** g01141070

OPERATOR STATION

233-3188 WIPER GP-WINDOW—SIDE, RH, LH

S/N: B9D1-UP

PART OF 260-6724, 300-1873 WINDOW GP-CAB

SMCS-7305 **i02775808**

NOTE	REF NO	GRAPHIC REF	PART NUMBER	QTY	PART NAME 1 2 3 4 5 6 (PRODUCT LEVEL)	SEE PAGE
	1	1	**3S-2093**	2	STRAP-CABLE	
	2	1	**6V-5851**	2	BLADE AS-WIPER (400-MM) (FRONT)	
	3	1	**7T-8890**	2	PUMP AS-WASHER	
	4	1	**8T-5400**	2	CONNECTOR AS	
	5	1	**8T-5914**	2	GROMMET	
	6	1	**204-2581**	2	VALVE AS-CHECK	
	7	1	**248-2628**	1	MOTOR GP-WINDOW WIPER (24-VOLT) (RH)	
		1	**3F-9556**	1	LOCKWASHER	
M		1	**5C-7261**	1	NUT (M8X1.25-THD)	
		1	**102-8803**	1	KIT-RECEPTACLE (3-PIN)	
					(INCLUDES RECEPTACLE AS & WEDGE)	
		1	**186-3735**	3	PIN-CONNECTOR (16-GA TO 18-GA)	
		1	**208-8759**	1	PLATE	
	8	1	**260-2577**	1	MOTOR GP-WINDOW WIPER (24-VOLT) (LH)	
		1	**3F-9556**	1	LOCKWASHER	
M		1	**5C-7261**	1	NUT (M8X1.25-THD)	
		1	**102-8803**	1	KIT-RECEPTACLE (3-PIN)	
					(INCLUDES RECEPTACLE AS & WEDGE)	
		1	**186-3735**	1	PIN-CONNECTOR (16-GA TO 18-GA)	
		1	**260-6438**	1	PLATE	
	9	1	**260-2579**	1	ARM AS-WIPER (LH)	
		1	**136-3192**	1	NOZZLE AS-WASHER	
E		1	**194-5171**		HOSE (33-CM)	
	10	1	**270-4884**	1	ARM AS-WIPER (RH)	
		1	**136-3193**	1	NOZZLE AS-WASHER	
E		1	**194-5171**		HOSE (33-CM)	
	11	1	**295-4243**	2	WASHER-RUBBER	
E	12	1	**144-0195**		HOSE (390-CM)	
E	12A	1	**144-0195**		HOSE (130-CM)	
E	12B	1	**144-0195**		HOSE (10-CM EACH)	

E-ORDER BY THE CENTIMETER
M-METRIC PART

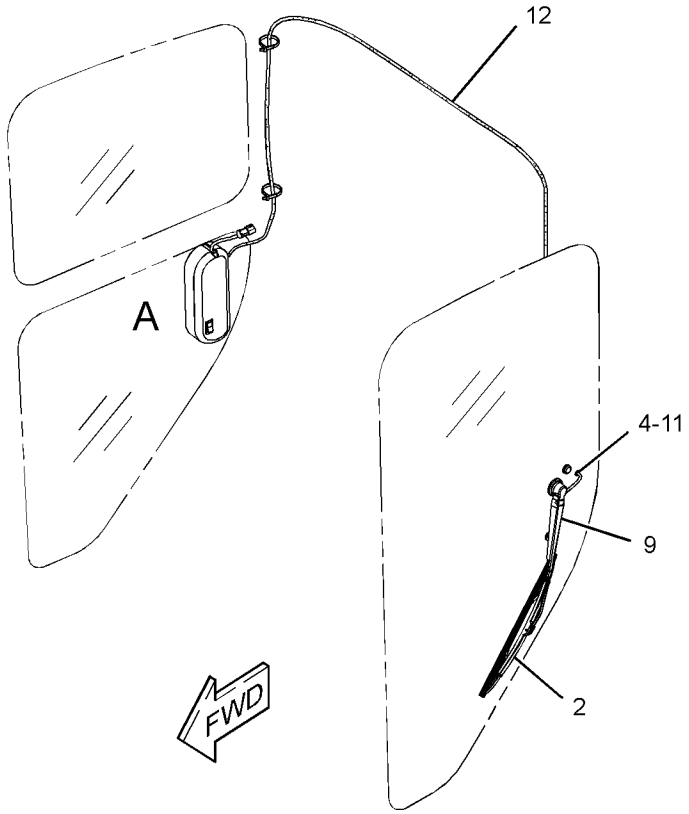

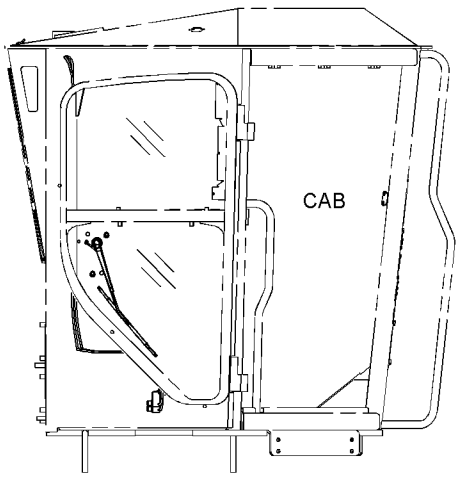

RIGHT SIDE VIEW

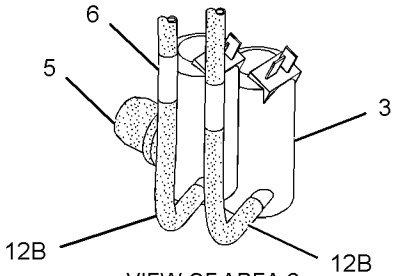

VIEW OF AREA C

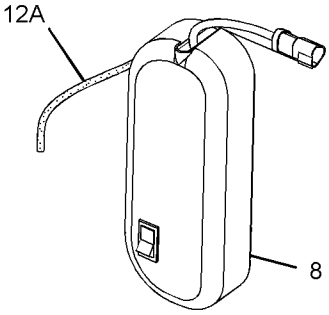

VIEW OF AREA B

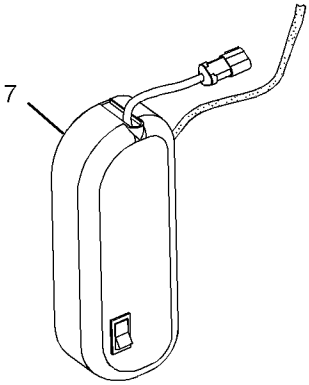

VIEW OF AREA A

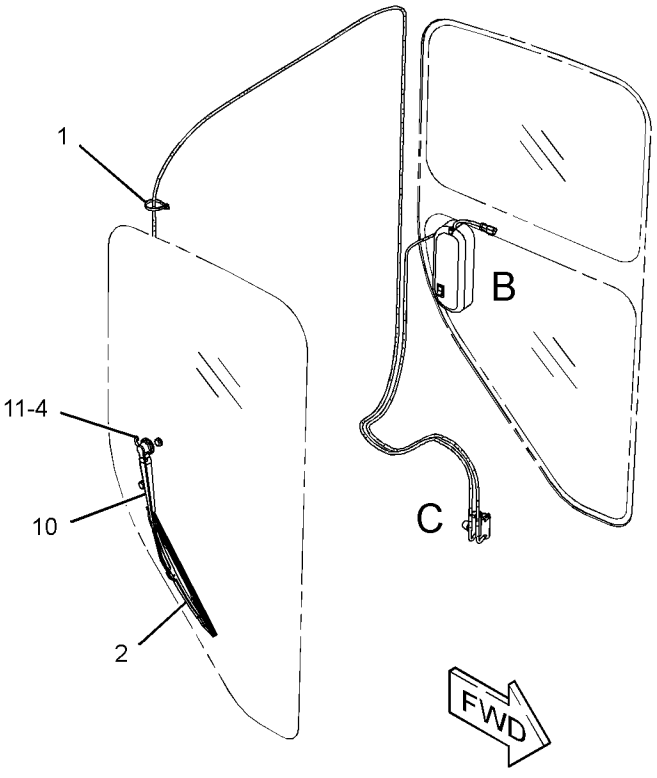

GRAPHIC #1 **<END>** g01335565

OPERATOR STATION

249-4096 WIPER GP-WINDOW—DOOR, RH

S/N: B9D1-UP

PART OF 233-3287 DOOR GP-CAB

SMCS-7305 **i02775663**

NOTE	REF NO	GRAPHIC REF	PART NUMBER	QTY	PART NAME 1 2 3 4 5 6 (PRODUCT LEVEL)	SEE PAGE
	1	1	**146-6433**	1	BLADE AS-WIPER (500-MM) (DOOR, RH)	
	2	1	**266-8921**	1	MOTOR GP-WINDOW WIPER (RH)	
		1	**3F-9556**	1	LOCKWASHER	
M		1	**5C-7261**	1	NUT (M8X1.25-THD)	
		1	**135-0611**	1	MOTOR GP-WINDOW WIPER (24-VOLT, 2-SPEED)	
		1	**206-5823**	1	CAP (WIPER)	
	3	1	**283-3450**	1	ARM GP-WINDOW WIPER (DOOR, RH)	
		1	**136-3194**	1	NOZZLE AS-WASHER	
E		1	**194-5171**	1	HOSE (33-CM)	
	4	1	**283-3451**	1	CONNECTOR AS	
M	5	1	**7X-2533**	1	BOLT (M6X1X35-MM)	
	6	1	**9X-8256**	1	WASHER (6.6X12X2-MM THK)	

E-ORDER BY THE CENTIMETER
M-METRIC PART

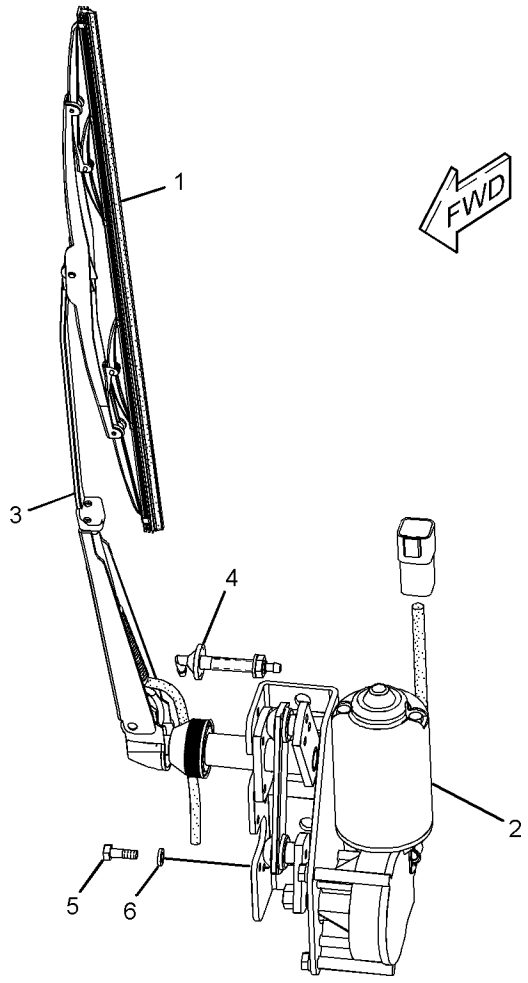

GRAPHIC #1 **<END>** g01276300

295-1114 WIPER GP-WINDOW—DOOR, LH

S/N: B9D1-UP

PART OF 294-1033 DOOR GP-CAB

SMCS-7305 **i02779872**

NOTE	REF NO	GRAPHIC REF	PART NUMBER	QTY	PART NAME 1 2 3 4 5 6 (PRODUCT LEVEL)	SEE PAGE
	1	1	**3S-2093**	1	STRAP-CABLE	
	2	1	**5C-8811**	1	BLADE AS-WIPER (500-MM) (UPPER DOOR WINDOW, LH)	
	3	1	**6V-5851**	1	BLADE AS-WIPER (400-MM) (LOWER DOOR WINDOW, LH)	
	4	1	**8T-5400**	2	CONNECTOR AS	
	5	1	**222-5376**	1	MOTOR GP-WINDOW WIPER (24-VOLT, 2-SPEED)	
		1	**102-8805**	1	KIT-RECEPTACLE (6-PIN)	
					(INCLUDES RECEPTACLE AS & WEDGE)	
		1	**186-3735**	5	PIN-CONNECTOR (16-GA TO 18-GA)	
		1	**8T-8737**	1	PLUG-SEAL	
	6	1	**295-1116**	1	LINKAGE GP-WIPER	
		1	**3F-9556**	2	LOCKWASHER	
M		1	**5C-7261**	2	NUT (M8X1.25-THD)	
		1	**206-5823**	2	CAP (WIPER)	
	7	1	**295-1119**	1	ARM GP-WINDOW WIPER (LOWER DOOR WINDOW, LH)	
		1	**136-3194**	1	NOZZLE AS-WASHER	
E		1	**194-5171**		HOSE (29-CM)	
	8	1	**306-9501**	2	SPACER (20.5X39X19-MM THK)	
	9	1	**295-1118**	1	ARM GP-WINDOW WIPER (UPPER DOOR WINDOW, LH)	
		1	**136-3194**	1	NOZZLE AS-WASHER	
E		1	**194-5171**		HOSE (24-CM)	
	10	1	**3F-9556**	1	LOCKWASHER	
M	11	1	**5C-7261**	1	NUT (M8X1.25-THD)	
	12	1	**6K-9632**	1	TEE	
	13	1	**8T-0087**	3	LOCKWASHER	
M	14	1	**8T-4970**	3	BOLT (M6X1X14-MM)	
E	15	1	**144-0195**		HOSE (44-CM)	

E-ORDER BY THE CENTIMETER
M-METRIC PART

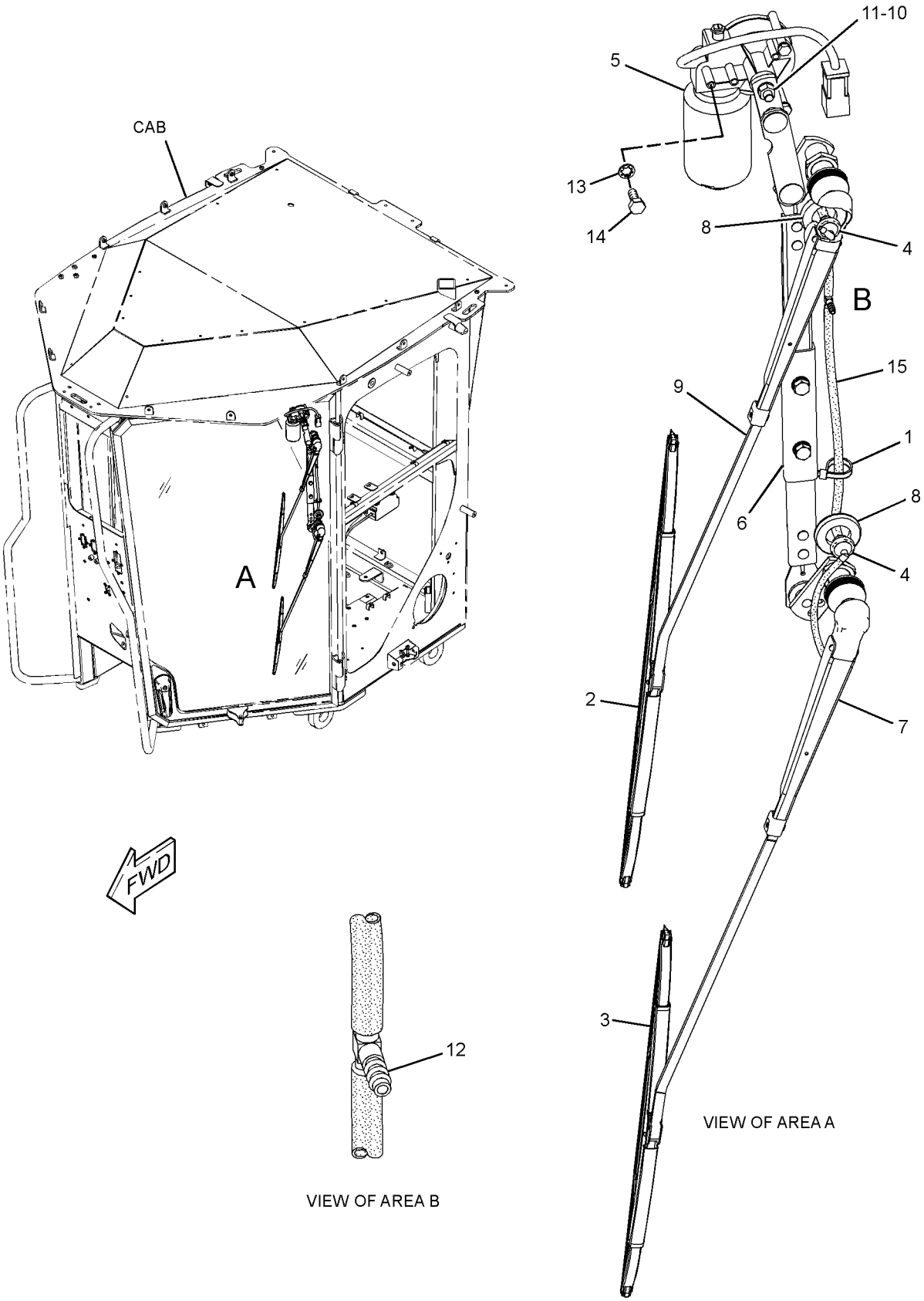

GRAPHIC #1 **<END>** g01364350

SERVICE EQUIPMENT AND SUPPLIES

247-8622 BOX GP-TOOL

S/N: B9D1-UP

PART OF 234-7721 COMMON AR

SMCS-7259 **i02774571**

NOTE	REF NO	GRAPHIC REF	PART NUMBER	QTY	PART NAME 1 2 3 4 5 6 (PRODUCT LEVEL)	SEE PAGE
	1	1	**246-2641**	1	PADLOCK GP	
		1	**5P-8500**	1	KEY	
	2	1	**8W-0791**	1	BOX AS-TOOL	
	3	1	**132-7551**	2	SPACER (11X19X6-MM THK)	
	4	1	**7X-7729**	4	WASHER (11X25X3-MM THK)	
M	5	1	**8T-4133**	2	NUT (M10X1.5-THD)	
M	6	1	**8T-4136**	4	BOLT (M10X1.5X25-MM)	

M-METRIC PART

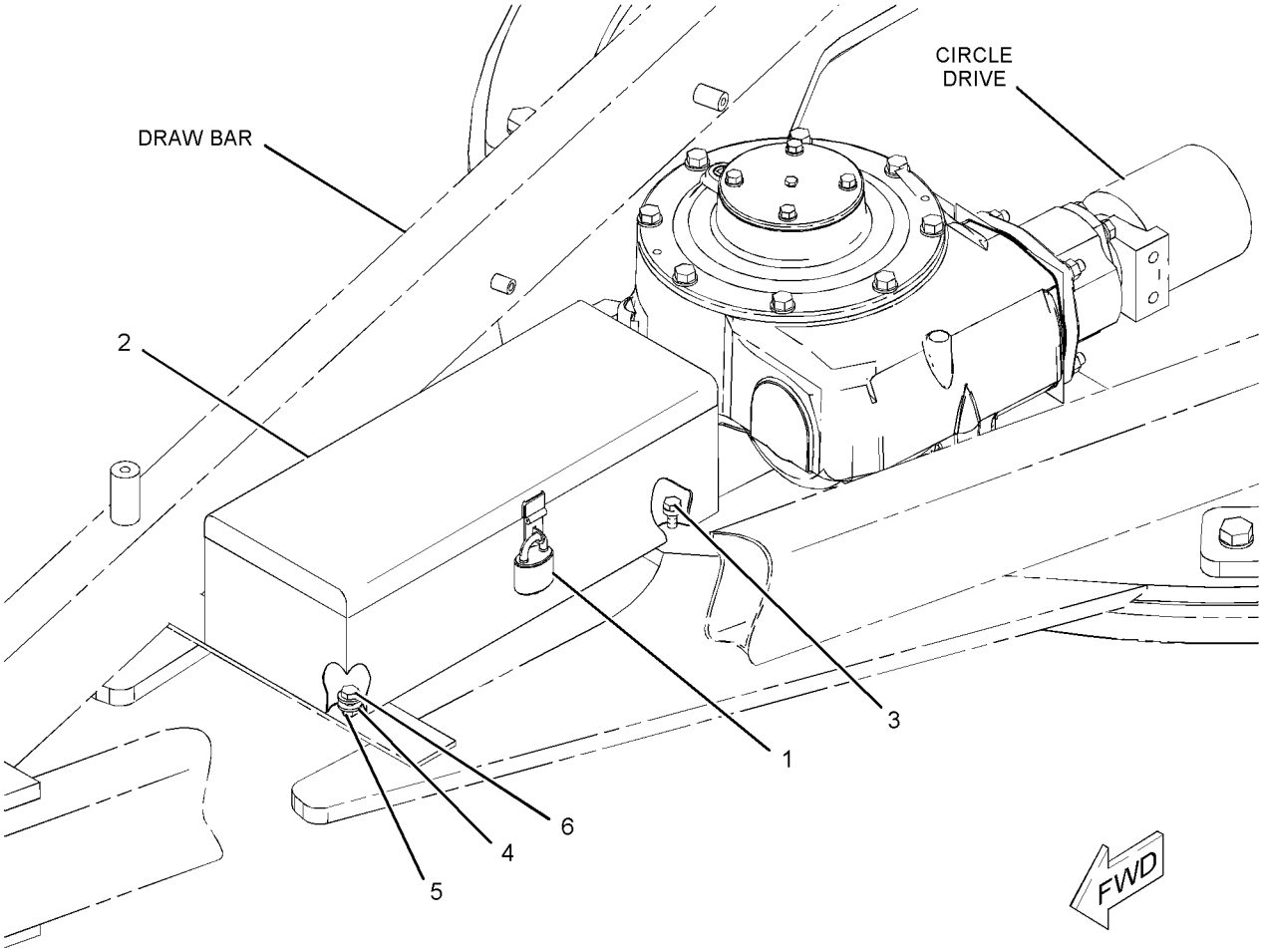

GRAPHIC #1 **<END>** g01108409

SERVICE EQUIPMENT AND SUPPLIES

246-6703 FILM GP—VARIABLE HORSEPOWER

S/N: B9D1-UP

SMCS-0375, 7000, 7405, 7557 **i02782548**

NOTE	PART NUMBER	QTY	PART NAME 1 2 3 4 5 6 (PRODUCT LEVEL)	SEE PAGE
Y	**115-5852**	1	PLATE & FILM GP (ENGINE)	890
			(ON LEFT REAR VERTICAL SURFACE OF HEAD)	
	280-1033	2	FILM-IDENTIFICATION (VARIABLE HORSEPOWER)	
			(ON ENCLOSURE GROUP, BOTH SIDES)	

Y-SEPARATE ILLUSTRATION

<END>

246-6711 FILM GP—VARIABLE HORSEPOWER PLUS

S/N: B9D1-UP

SMCS-0375, 7000, 7405, 7557 **i02782635**

NOTE	PART NUMBER	QTY	PART NAME 1 2 3 4 5 6 (PRODUCT LEVEL)	SEE PAGE
Y	**115-5852**	1	PLATE & FILM GP (ENGINE)	890
			(ABOVE STARTER ON THE FRONT SURFACE OF FLYWHEEL HOUSING CASTING)	
	280-1034	2	FILM-IDENTIFICATION (VARIABLE HORSEPOWER PLUS)	
			(ON RH & LH SIDE DOORS OF ENCLOSURE GP)	
J	**249-6751**	1	CONFIGURATION-PREMIUM	

J-DLR INSTALL CONFIG:SEE IRM: EES03-01
Y-SEPARATE ILLUSTRATION

<END>

262-4795 FILM GP—VARIABLE HORSEPOWER PLUS

S/N: B9D1-UP

SMCS-0375, 7000, 7405, 7557 **i02786800**

NOTE	PART NUMBER	QTY	PART NAME 1 2 3 4 5 6 (PRODUCT LEVEL)	SEE PAGE
Y	**115-5852**	1	PLATE & FILM GP (ENGINE)	890
			(ABOVE STARTER ONTO THE FRONT SURFACE OF FLYWHEEL HOUSING)	
J	*249-6751*	1	CONFIGURATION-PREMIUM	
	280-1034	2	FILM-IDENTIFICATION (VARIABLE HORSEPOWER PLUS)	
			(ON RH & LH SIDE OF ENGINE ENCLOSURE)	

J-DLR INSTALL CONFIG: SEE IRM: EE03-01
Y-SEPARATE ILLUSTRATION

<END>

268-4726 FILM GP

S/N: B9D1-UP

PART OF 278-1488, 298-5635 PLATE & FILM GP

SMCS-0375, 7000, 7405, 7557 **i02788541**

NOTE	REF NO	GRAPHIC REF	PART NUMBER	QTY	PART NAME 1 2 3 4 5 6 (PRODUCT LEVEL)	SEE PAGE
	1	1	**253-0861**	2	FILM-INFORMATION (CAT POWER, ACERT TECHNOLOGY)	
	2	1	**280-1030**	1	FILM-STRIPE (CAT, HOOD, LH)	
	3	1	**280-1031**	1	FILM-STRIPE (CAT, HOOD, RH)	
	4	1	**280-1033**	2	FILM-IDENTIFICATION (VARIABLE HORSEPOWER)	
	5	1	**280-1480**	1	FILM-IDENTIFICATION (CATERPILLAR)	
	6	1	**281-2715**	1	FILM-STRIPE (FRONT COVER, RH)	
	7	1	**281-2716**	1	FILM-STRIPE (FRONT COVER, LH)	
	8	1	**281-2721**	2	FILM-STRIPE (140M)	

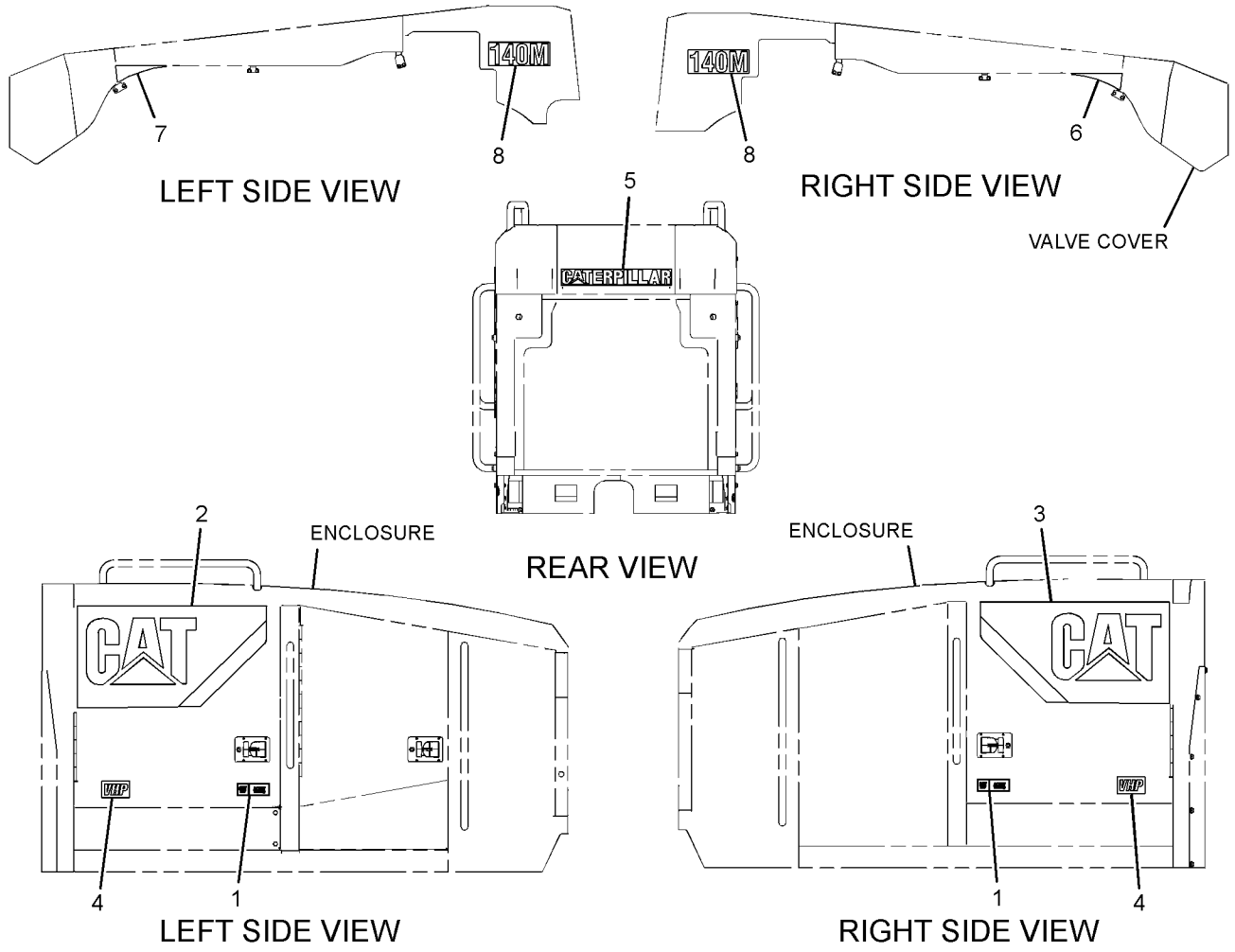

GRAPHIC #1 **<END>** g01362012

SERVICE EQUIPMENT AND SUPPLIES

267-3184 FILM GP-INTERNATIONAL

S/N: B9D1-UP

PART OF 302-5133, 302-8670, 302-8671, 302-8672, 302-8673, 302-8674, 302-8675, 302-8676, 302-8677, 302-8678, 302-8679, 302-8680, 302-8681, 302-8682, 302-8683, 302-8684, 302-8685, 302-8686, 302-8687 PLATE & FILM GP

SMCS-7557 **i02788521**

NOTE	REF NO	GRAPHIC REF	PART NUMBER	QTY	PART NAME 1 2 3 4 5 6 (PRODUCT LEVEL)	SEE PAGE
	1	1	**219-0302**	1	FILM-WARNING (NO WELD, NO DRILL, READ OMM)	
	2	1	**224-0554**	1	FILM-WARNING (UNIVERSAL, READ OMM)	
	3	1	**227-7391**	1	FILM-WARNING (SEAT BELT)	
	4	1	**249-6688**	1	FILM-WARNING (CRUSH HAZARD, READ MANUAL)	

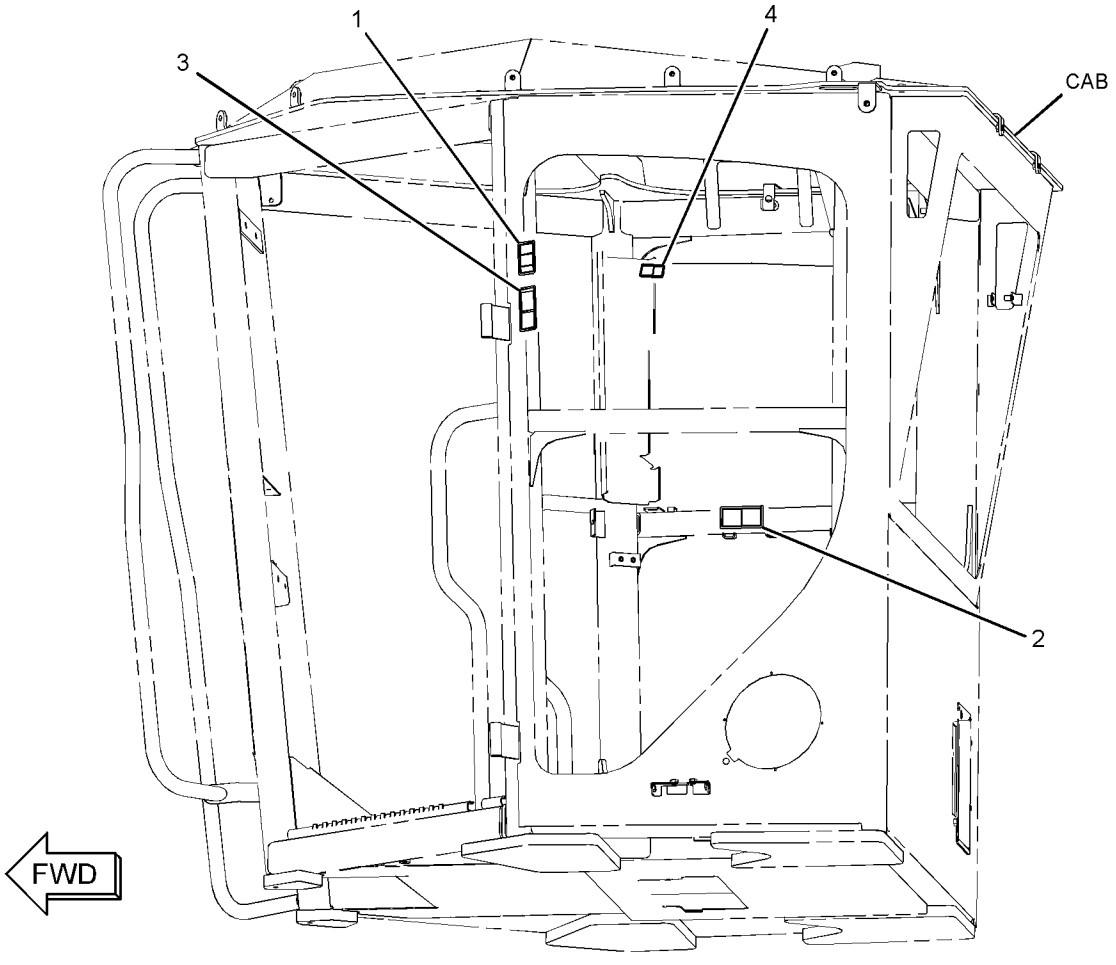

GRAPHIC #1 **<END>** g01337544

SERVICE EQUIPMENT AND SUPPLIES

267-3183 FILM GP-U.S.

S/N: B9D1-UP

PART OF 302-8669 PLATE & FILM GP

SMCS-7557 **i02790206**

NOTE	REF NO	GRAPHIC REF	PART NUMBER	QTY	PART NAME 1 2 3 4 5 6 (PRODUCT LEVEL)	SEE PAGE
	1	1	**219-0302**	1	FILM-WARNING (NO WELD, NO DRILL, READ OMM)	
	2	1	**225-3305**	1	FILM-WARNING (UNIVERSAL, READ OMM)	
	3	1	**227-7390**	1	FILM-WARNING (SEAT BELT)	
	4	1	**249-6687**	1	FILM-WARNING (CRUSH HAZARD)	

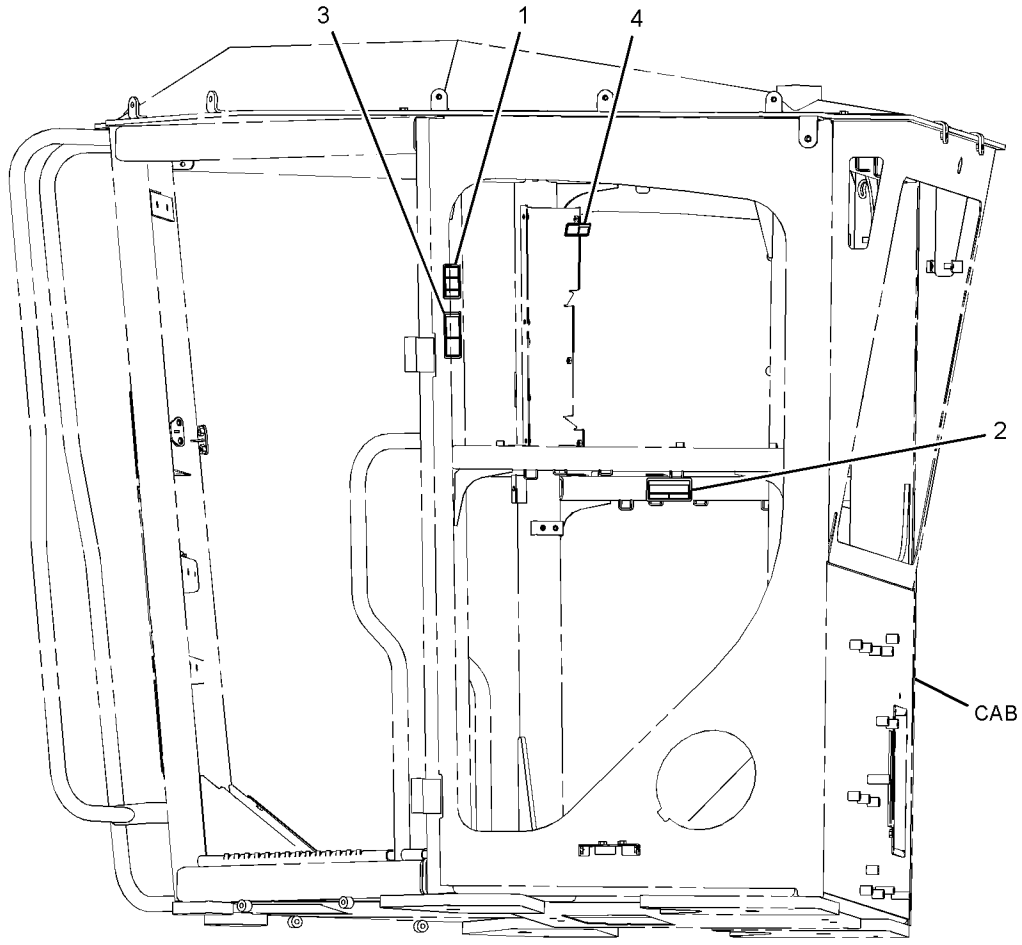

LEFT SIDE VIEW

GRAPHIC #1 **<END>** g01238192

SERVICE EQUIPMENT AND SUPPLIES

115-5852 PLATE & FILM GP

S/N: B9D1-UP

PART OF 246-6703, 246-6711, 262-4795 FILM GP

SMCS-7405, 7557, 7620 **i01999862**

NOTE	PART NUMBER	QTY	PART NAME 1 2 3 4 5 6 (PRODUCT LEVEL)	SEE PAGE
	122-9760	1	FILM-INFORMATION (SILVER ULTRAPLATE) (ENGINE)	
			(INSTALL VERTICALLY ON RH REAR VALVE COVER IN FRONT OF RECESS OR BOSS, READABLE FROM REAR OF ENGINE)	
	122-9761	1	FILM-INFORMATION (LAMINATE) (ENGINE)	
			(APPLY LAMINANT OVER SILVER FILM)	

<END>

SERVICE EQUIPMENT AND SUPPLIES

278-1488 PLATE & FILM GP

S/N: B9D1-UP

PART OF 302-8669 PLATE & FILM GP

SMCS-7405, 7557, 7620 **i02790207**

NOTE	REF NO	GRAPHIC REF	PART NUMBER	QTY	PART NAME 1 2 3 4 5 6 (PRODUCT LEVEL)	SEE PAGE
	1	1	**3E-1552**	1	FILM-INSTRUCTION (TRANSMISSION FILTER)	
	2	3	**5P-1174**	1	FILM-IDENTIFICATION (TRANSMISSION OIL FILL CAP)	
	3	3	**5P-1175**	1	FILM-IDENTIFICATION (ENGINE OIL FILL)	
	4	1	**9X-8355**	1	FILM-INDENTIFICATION (BLADE CENTERSHIFT)	
	5	1	**109-0361**	1	FILM-INSTRUCTION (ENGINE SHUTDOWN)	
	6	1	**129-7680**	1	FILM-INSTRUCTION (HYDRAULIC TANK OIL DRAIN)	
	7	1	**134-7258**	1	FILM-INFORMATION (EXTENDED LIFE COOLANT-READ OMM)	
	8	1	**146-6747**	1	FILM-INFORMATION (24-VOLT)	
	9	1	**158-7864**	1	FILM-INSTRUCTION (HYDRAULIC OIL)	
	10	2	**190-5386**	2	FILM-IDENTIFICATION (ROUND RED REFLECTIVE)	
	11	1	**225-4150**	1	PLATE-SERVICE INFORMATION (MACHINE)	
	12	2,3	**226-1242**	2	FILM-WARNING (CRUSH HAZARD, STAY BACK)	
	13	2	**226-1275**	1	FILM-WARNING (CRUSH HAZARD, READ MANUAL)	
	14	1	**239-4990**	2	FILM-WARNING (HIGH PRESSURE CYLINDER)	
	15	1	**239-6989**	1	PLATE-SERIAL NUMBER (MACHINE)	
	16	1	**243-5289**	2	FILM-IDENTIFICATION (LIFT POINT)	
	17	1	**248-5245**	2	FILM-INSTRUCTION (LIFT EYE, TIE-DOWN LOCATION)	
	18	1	**249-8575**	1	FILM-WARNING (NO DRILL, WELD, READ OMM)	
	19	3	**252-2157**	2	FILM-INFORMATION (TIE-DOWN)	
	20	1	**263-6901**	1	FILM-WARNING (HOT FLUID)	
Y	21	1	*268-4726*	1	FILM GP (140M)	887
	22	2	**275-3292**	1	FILM-IDENTIFICATION (GREASE POINT)	
	23	1	**286-1089**	1	FILM-IDENTIFICATION (FLUID LEVEL)	
	24	2	**293-3822**	1	FILM-IDENTIFICATION (ARTICULATION LOCK)	
E	25	3	**117-9978**		FILM-STRIPE (RED) (11-CM EACH)	
AF			**4W-1413**	1	PLATE-SERIAL NUMBER (ENGINE)	
					(ON LH SIDE OF CYLINDER BLOCK TOWARD TOP & NEAR FLAT AREA)	

A-NOT PART OF THIS GROUP
E-ORDER BY THE CENTIMETER
F-NOT SHOWN
Y-SEPARATE ILLUSTRATION

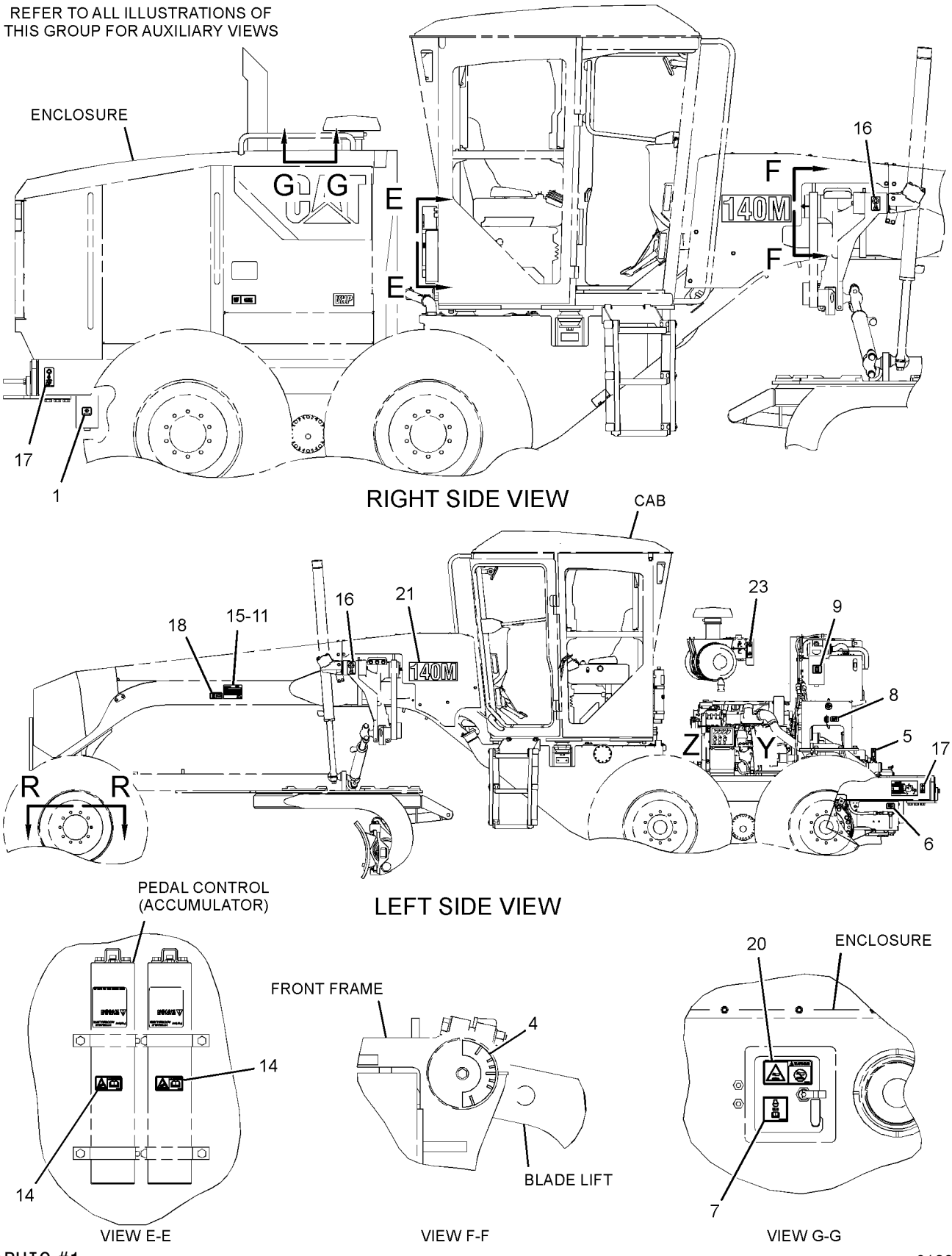

GRAPHIC #1

g01394282

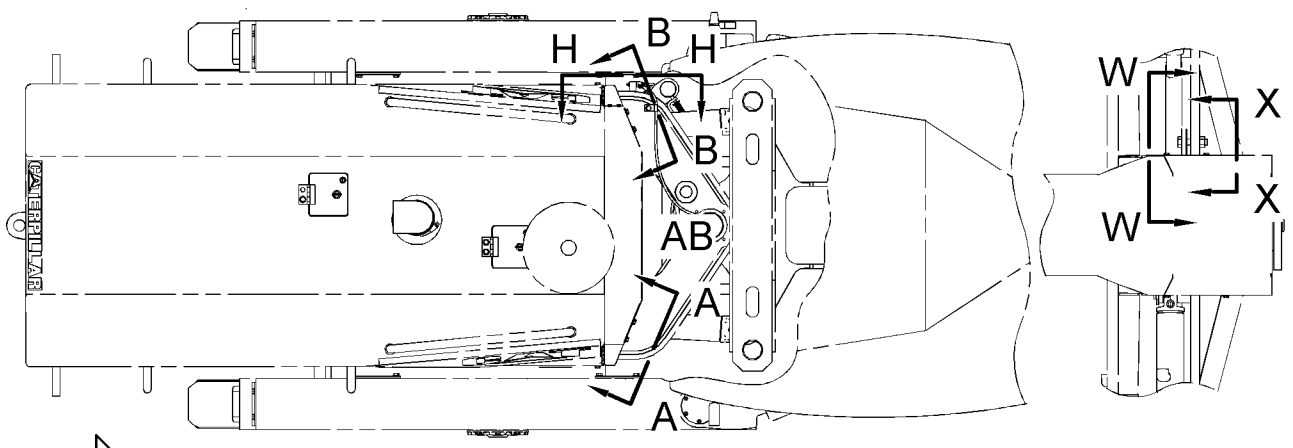

FWD

TOP VIEW

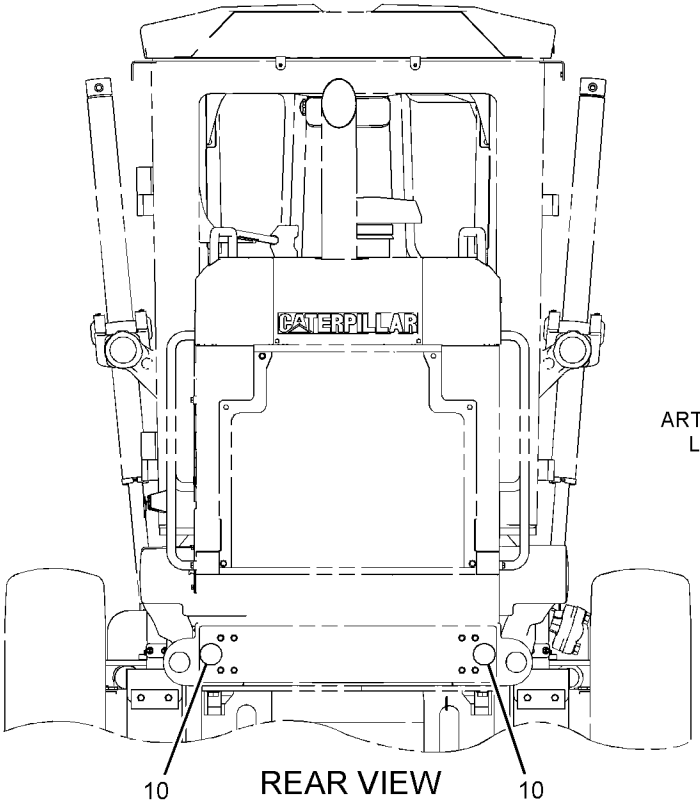

REAR VIEW

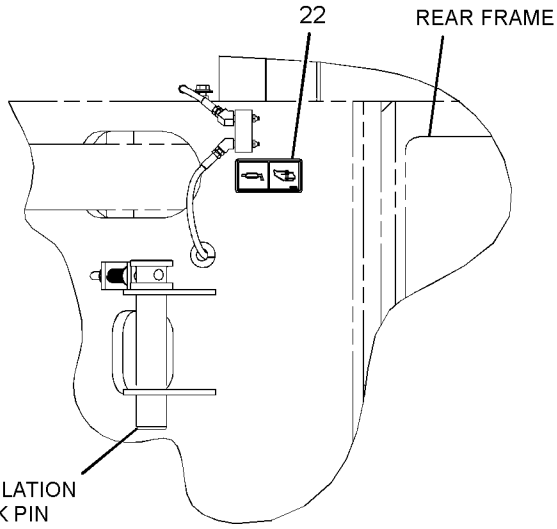

VIEW H-H

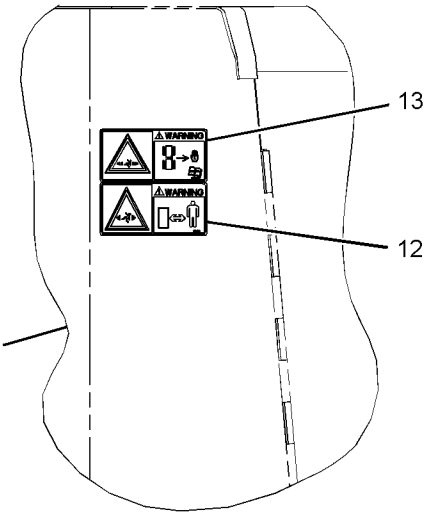

VIEW B-B

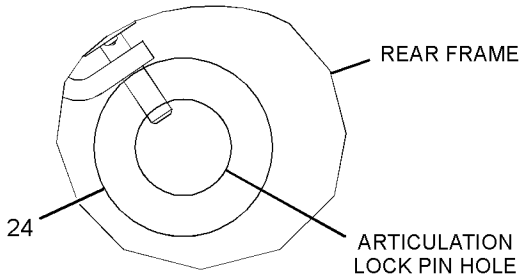

VIEW OF AREA AB

REFER TO ALL ILLUSTRATIONS OF THIS GROUP FOR AUXILIARY VIEWS

GRAPHIC #2

g01362779

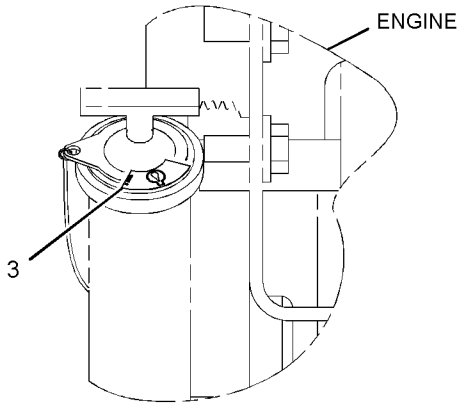

VIEW OF AREA Z

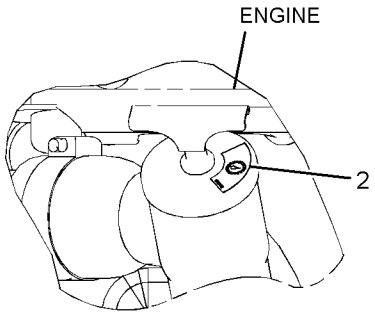

VIEW OF AREA Y

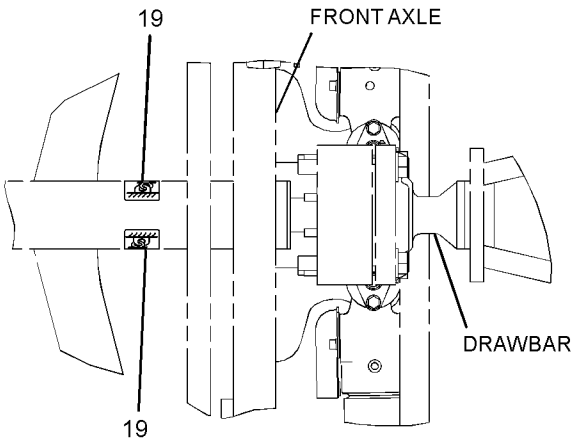

VIEW R-R

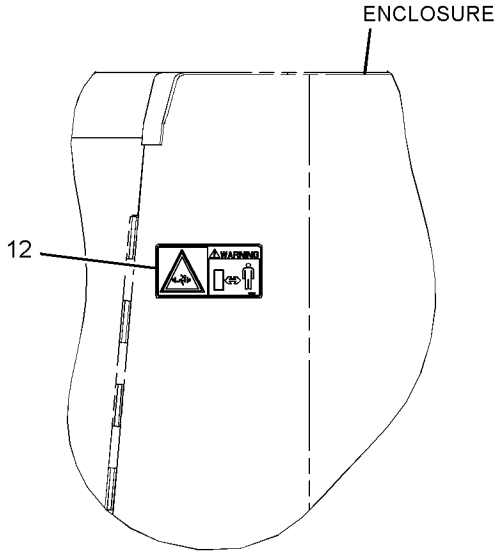

VIEW A-A

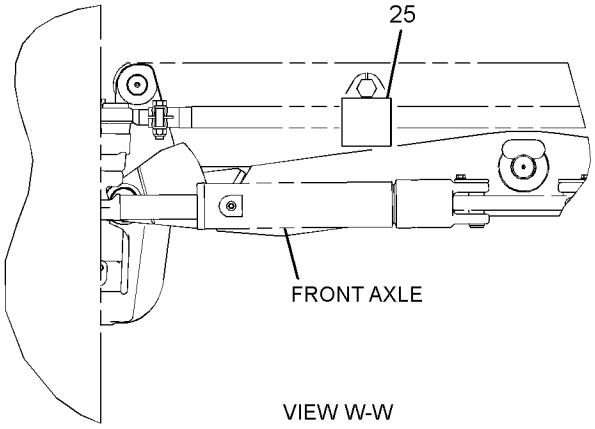

VIEW W-W

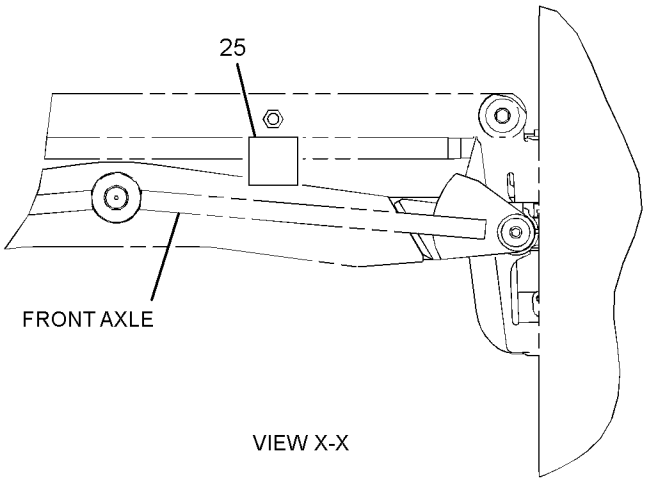

VIEW X-X

GRAPHIC #3 **<END>** g01362777

SERVICE EQUIPMENT AND SUPPLIES

298-5635 PLATE & FILM GP

S/N: B9D1-UP

PART OF 302-5133, 302-8670, 302-8671, 302-8672, 302-8673, 302-8674, 302-8675, 302-8676, 302-8677, 302-8678, 302-8679, 302-8680, 302-8681, 302-8682, 302-8683, 302-8684, 302-8685, 302-8686, 302-8687 PLATE & FILM GP

SMCS-7405, 7557, 7620 **i02788539**

NOTE	REF NO	GRAPHIC REF	PART NUMBER	QTY	PART NAME 1 2 3 4 5 6 (PRODUCT LEVEL)	SEE PAGE
	1	1	**3E-1552**	1	FILM-INSTRUCTION (TRANSMISSION FILTER)	
	2	3	**5P-1174**	1	FILM-IDENTIFICATION (TRANSMISSION OIL FILL CAP)	
	3	3	**5P-1175**	1	FILM-IDENTIFICATION (ENGINE OIL FILL)	
	4	1	**9X-8355**	1	FILM-INDENTIFICATION (BLADE CENTERSHIFT)	
	5	1	**109-0361**	1	FILM-INSTRUCTION (ENGINE SHUTDOWN)	
	6	1	**129-7680**	1	FILM-INSTRUCTION (HYDRAULIC TANK OIL DRAIN)	
	7	1	**134-7258**	1	FILM-INFORMATION (EXTENDED LIFE COOLANT-READ OMM)	
	8	1	**146-6747**	1	FILM-INFORMATION (24-VOLT)	
	9	1	**158-7864**	1	FILM-INSTRUCTION (HYDRAULIC OIL)	
	10	2	**190-5386**	2	FILM-IDENTIFICATION (ROUND RED REFLECTIVE)	
	11	1	**225-4150**	1	PLATE-SERVICE INFORMATION (MACHINE)	
	12	2,3	**226-1240**	2	FILM-WARNING (CRUSH HAZARD, STAY BACK)	
	13	2	**226-1274**	1	FILM-WARNING (CRUSH HAZARD, READ OMM)	
	14	1	**239-4991**	2	FILM-WARNING (HIGH PRESSURE CYLINDER)	
	15	1	**239-6989**	1	PLATE-SERIAL NUMBER (MACHINE)	
	16	1	**243-5289**	2	FILM-IDENTIFICATION (LIFT POINT)	
	17	1	**248-5245**	2	FILM-INSTRUCTION (LIFT EYE, TIE-DOWN LOCATION)	
	18	1	**249-8575**	1	FILM-WARNING (NO DRILL, WELD, READ OMM)	
	19	3	**252-2157**	2	FILM-INFORMATION (TIE-DOWN)	
	20	1	**263-6902**	1	FILM-WARNING (HOT FLUID)	
Y	21	1	*268-4726*	1	FILM GP (140M)	887
	22	2	**275-3292**	1	FILM-IDENTIFICATION (GREASE POINT)	
	23	1	**286-1089**	1	FILM-IDENTIFICATION (FLUID LEVEL)	
	24	2	**293-3822**	1	FILM-IDENTIFICATION (ARTICULATION LOCK)	
E	25	3	**117-9978**		FILM-STRIPE (RED) (11-CM EACH)	
AF			**4W-1413**	1	PLATE-SERIAL NUMBER (ENGINE)	
					(ON LH SIDE OF CYLINDER BLOCK TOWARD THE TOP & REAR FLAT AREA THAT WOULD BE ABOVE AND BEHIND THE ECM WHEN MOUNTED)	

A-NOT PART OF THIS GROUP
E-ORDER BY THE CENTIMETER
F-NOT SHOWN
Y-SEPARATE ILLUSTRATION

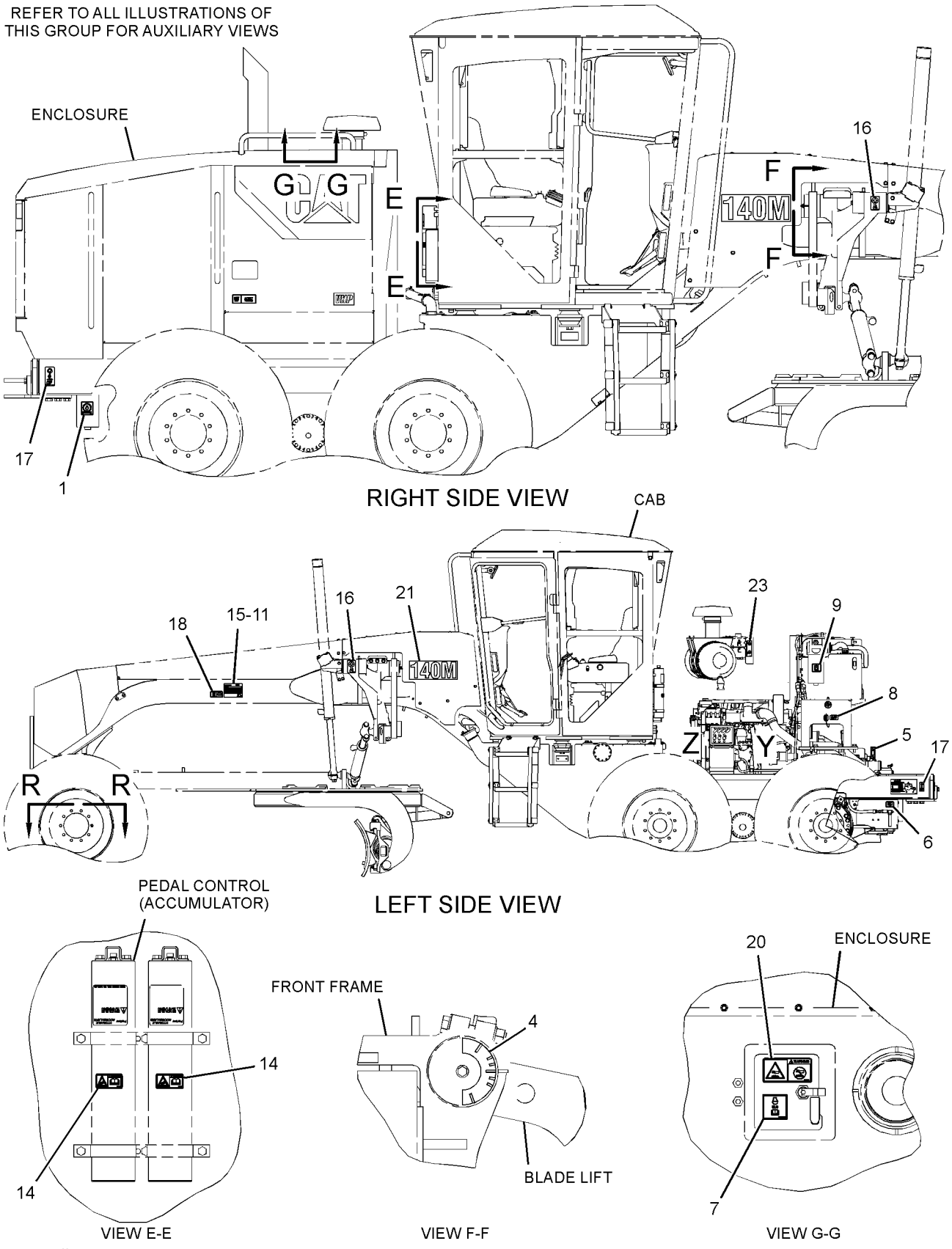

GRAPHIC #1

g01362781

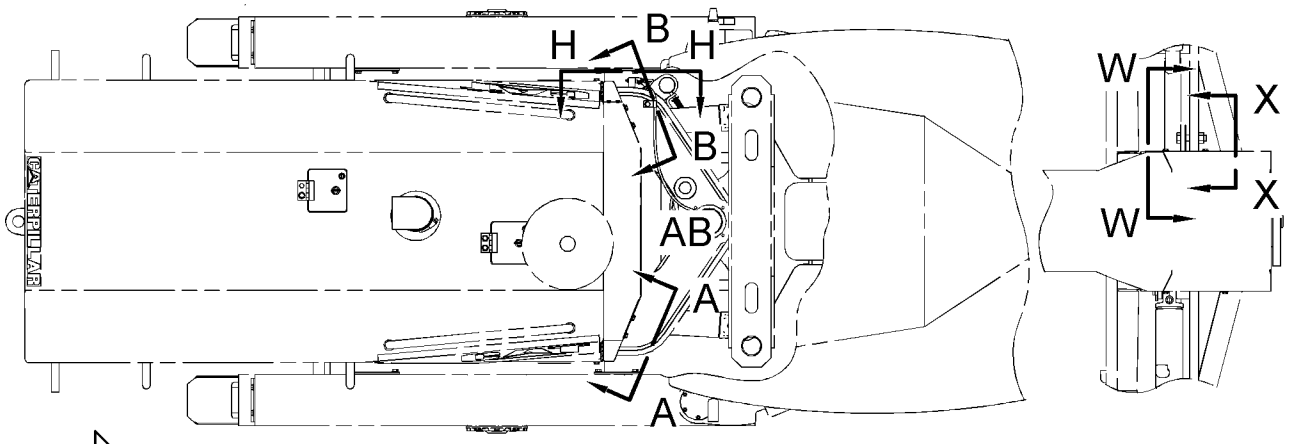

FWD

TOP VIEW

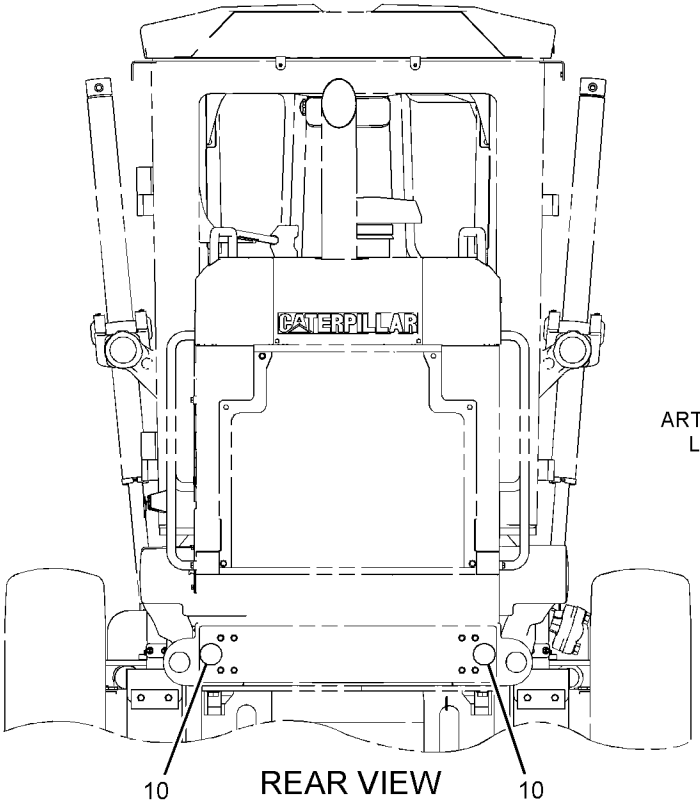

REAR VIEW

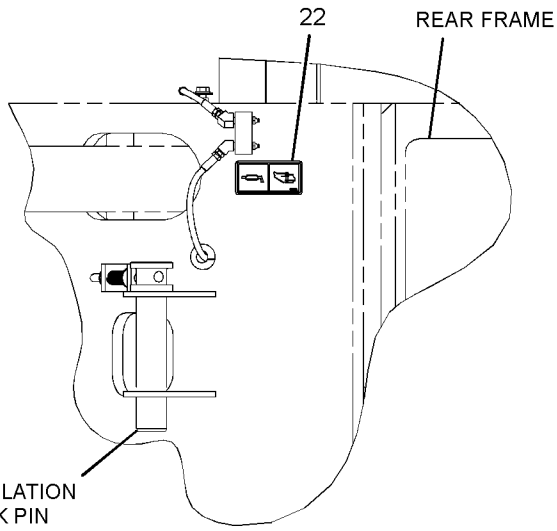

VIEW H-H

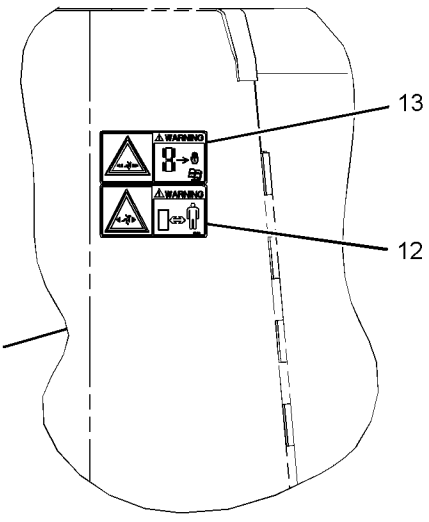

VIEW B-B

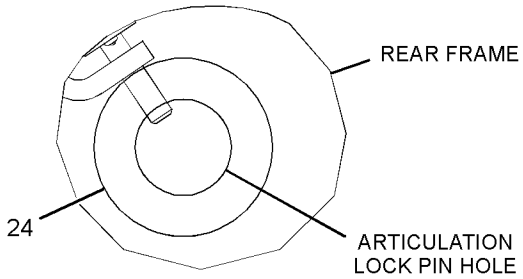

VIEW OF AREA AB

REFER TO ALL ILLUSTRATIONS OF THIS GROUP FOR AUXILIARY VIEWS

GRAPHIC #2

g01362783

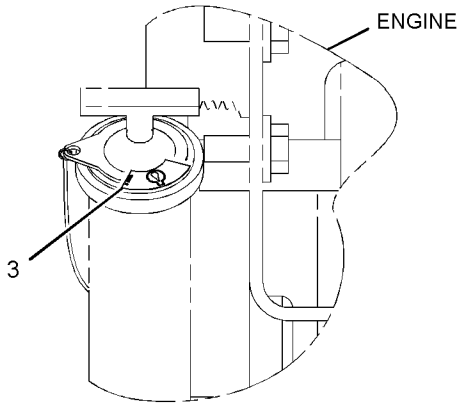

VIEW OF AREA Z

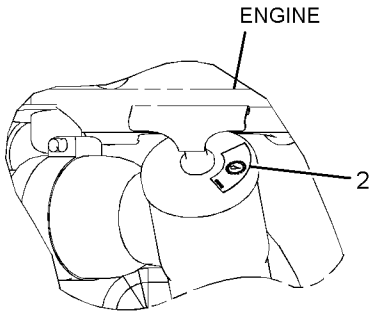

VIEW OF AREA Y

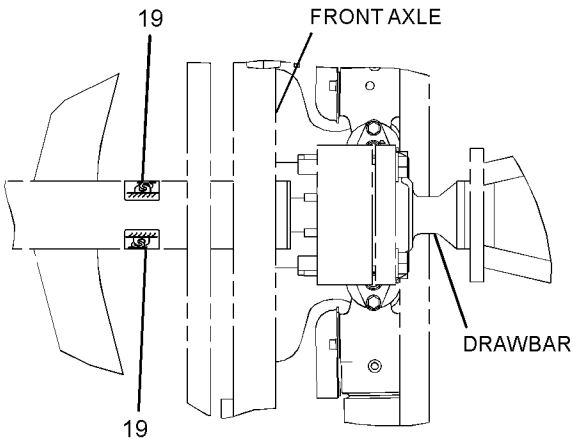

VIEW R-R

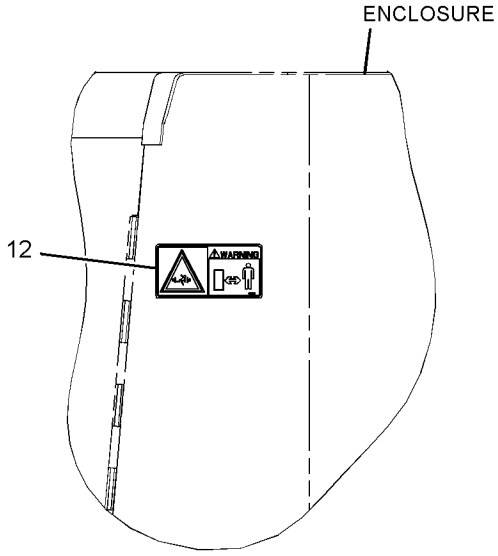

VIEW A-A

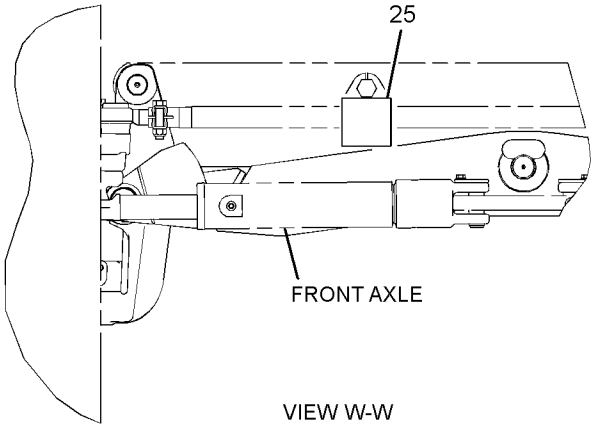

VIEW W-W

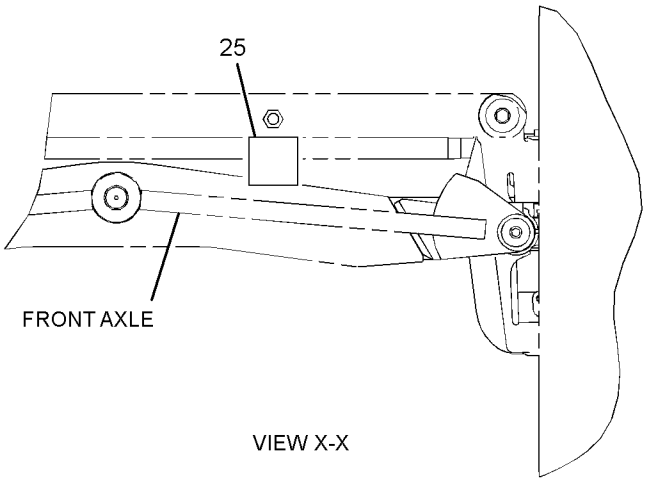

VIEW X-X

GRAPHIC #3 **<END>** g01362784

302-5133 PLATE & FILM GP—BRITISH, WITH MONITOR SOFTWARE

S/N: B9D1-UP

SMCS-7405, 7557, 7620 **i02788484**

NOTE	PART NUMBER	QTY	PART NAME 1 2 3 4 5 6 (PRODUCT LEVEL)	SEE PAGE
Y	*250-9254*	1	ELECTRONICS GP-MONITOR	166
Y	*267-3184*	1	FILM GP-INTERNATIONAL	888
Y	*298-5635*	1	PLATE & FILM GP	895
Y-SEPARATE ILLUSTRATION				

<END>

302-8669 PLATE & FILM GP—ENGLISH, WITH MONITOR SOFTWARE

S/N: B9D1-UP

SMCS-7405, 7557, 7620 **i02788561**

NOTE	PART NUMBER	QTY	PART NAME 1 2 3 4 5 6 (PRODUCT LEVEL)	SEE PAGE
Y	*250-9254*	1	ELECTRONICS GP-MONITOR	166
Y	*267-3183*	1	FILM GP-U.S.	889
Y	*278-1488*	1	PLATE & FILM GP	891
Y-SEPARATE ILLUSTRATION				

<END>

302-8670 PLATE & FILM GP—PORTUGUESE, WITH MONITOR SOFTWARE

S/N: B9D1-UP

SMCS-7405, 7557, 7620 **i02788676**

NOTE	PART NUMBER	QTY	PART NAME 1 2 3 4 5 6 (PRODUCT LEVEL)	SEE PAGE
Y	*250-9254*	1	ELECTRONICS GP-MONITOR	166
Y	*267-3184*	1	FILM GP-INTERNATIONAL	888
Y	*298-5635*	1	PLATE & FILM GP	895
Y-SEPARATE ILLUSTRATION				

<END>

302-8671 PLATE & FILM GP—SPANISH, WITH MONITOR SOFTWARE

S/N: B9D1-UP

SMCS-7405, 7557, 7620 **i02788675**

NOTE	PART NUMBER	QTY	PART NAME 1 2 3 4 5 6 (PRODUCT LEVEL)	SEE PAGE
Y	*250-9254*	1	ELECTRONICS GP-MONITOR	166
Y	*267-3184*	1	FILM GP-INTERNATIONAL	888
Y	*298-5635*	1	PLATE & FILM GP	895
Y-SEPARATE ILLUSTRATION				

<END>

302-8672 PLATE & FILM GP—FRENCH, WITH MONITOR SOFTWARE

S/N: B9D1-UP

SMCS-7405, 7557, 7620 **i02788674**

NOTE	PART NUMBER	QTY	PART NAME 1 2 3 4 5 6 (PRODUCT LEVEL)	SEE PAGE
Y	*250-9254*	1	ELECTRONICS GP-MONITOR	166
Y	*267-3184*	1	FILM GP-INTERNATIONAL	888
Y	*298-5635*	1	PLATE & FILM GP	895

Y-SEPARATE ILLUSTRATION

<END>

302-8673 PLATE & FILM GP—GERMAN, WITH MONITOR SOFTWARE

S/N: B9D1-UP

SMCS-7405, 7557, 7620 **i02788673**

NOTE	PART NUMBER	QTY	PART NAME 1 2 3 4 5 6 (PRODUCT LEVEL)	SEE PAGE
Y	*250-9254*	1	ELECTRONICS GP-MONITOR	166
Y	*267-3184*	1	FILM GP-INTERNATIONAL	888
Y	*298-5635*	1	PLATE & FILM GP	895

Y-SEPARATE ILLUSTRATION

<END>

302-8674 PLATE & FILM GP—DUTCH, WITH MONITOR SOFTWARE

S/N: B9D1-UP

SMCS-7405, 7557, 7620 **i02788672**

NOTE	PART NUMBER	QTY	PART NAME 1 2 3 4 5 6 (PRODUCT LEVEL)	SEE PAGE
Y	*250-9254*	1	ELECTRONICS GP-MONITOR	166
Y	*267-3184*	1	FILM GP-INTERNATIONAL	888
Y	*298-5635*	1	PLATE & FILM GP	895

Y-SEPARATE ILLUSTRATION

<END>

302-8675 PLATE & FILM GP—DANISH, WITH MONITOR SOFTWARE

S/N: B9D1-UP

SMCS-7405, 7557, 7620 **i02788670**

NOTE	PART NUMBER	QTY	PART NAME 1 2 3 4 5 6 (PRODUCT LEVEL)	SEE PAGE
Y	*302-0359*	1	ELECTRONICS GP-MONITOR	166
Y	*267-3184*	1	FILM GP-INTERNATIONAL	888
Y	*298-5635*	1	PLATE & FILM GP	895

Y-SEPARATE ILLUSTRATION

<END>

302-8676 PLATE & FILM GP—FINNISH, WITH MONITOR SOFTWARE

S/N: B9D1-UP

SMCS-7405, 7557, 7620 **i02788667**

NOTE	PART NUMBER	QTY	PART NAME 1 2 3 4 5 6 (PRODUCT LEVEL)	SEE PAGE
Y	*302-0359*	1	ELECTRONICS GP-MONITOR	166
Y	*267-3184*	1	FILM GP-INTERNATIONAL	888
Y	*298-5635*	1	PLATE & FILM GP	895

Y-SEPARATE ILLUSTRATION

<END>

302-8677 PLATE & FILM GP—SWEDISH, WITH MONITOR SOFTWARE

S/N: B9D1-UP

SMCS-7405, 7557, 7620 **i02788661**

NOTE	PART NUMBER	QTY	PART NAME 1 2 3 4 5 6 (PRODUCT LEVEL)	SEE PAGE
Y	*302-0359*	1	ELECTRONICS GP-MONITOR	166
Y	*267-3184*	1	FILM GP-INTERNATIONAL	888
Y	*298-5635*	1	PLATE & FILM GP	895

Y-SEPARATE ILLUSTRATION

<END>

302-8678 PLATE & FILM GP—NORWEGIAN, WITH MONITOR SOFTWARE

S/N: B9D1-UP

SMCS-7405, 7557, 7620 **i02788658**

NOTE	PART NUMBER	QTY	PART NAME 1 2 3 4 5 6 (PRODUCT LEVEL)	SEE PAGE
Y	*302-0359*	1	ELECTRONICS GP-MONITOR	166
Y	*267-3184*	1	FILM GP-INTERNATIONAL	888
Y	*298-5635*	1	PLATE & FILM GP	895

Y-SEPARATE ILLUSTRATION

<END>

302-8679 PLATE & FILM GP—ITALIAN, WITH MONITOR SOFTWARE

S/N: B9D1-UP

SMCS-7405, 7557, 7620 **i02788655**

NOTE	PART NUMBER	QTY	PART NAME 1 2 3 4 5 6 (PRODUCT LEVEL)	SEE PAGE
Y	*302-0360*	1	ELECTRONICS GP-MONITOR	167
Y	*267-3184*	1	FILM GP-INTERNATIONAL	888
Y	*298-5635*	1	PLATE & FILM GP	895

Y-SEPARATE ILLUSTRATION

<END>

302-8680 PLATE & FILM GP—GREEK, WITH MONITOR SOFTWARE

S/N: B9D1-UP

SMCS-7405, 7557, 7620 **i02788649**

NOTE	PART NUMBER	QTY	PART NAME 1 2 3 4 5 6 (PRODUCT LEVEL)	SEE PAGE
Y	*302-0360*	1	ELECTRONICS GP-MONITOR	167
Y	*267-3184*	1	FILM GP-INTERNATIONAL	888
Y	*298-5635*	1	PLATE & FILM GP	895

Y-SEPARATE ILLUSTRATION

<END>

302-8681 PLATE & FILM GP—HEBREW, WITH MONITOR SOFTWARE

S/N: B9D1-UP

SMCS-7405, 7557, 7620 **i02788646**

NOTE	PART NUMBER	QTY	PART NAME 1 2 3 4 5 6 (PRODUCT LEVEL)	SEE PAGE
Y	*302-0360*	1	ELECTRONICS GP-MONITOR	167
Y	*267-3184*	1	FILM GP-INTERNATIONAL	888
Y	*298-5635*	1	PLATE & FILM GP	895

Y-SEPARATE ILLUSTRATION

<END>

302-8682 PLATE & FILM GP—TURKISH, WITH MONITOR SOFTWARE

S/N: B9D1-UP

SMCS-7405, 7557, 7620 **i02788642**

NOTE	PART NUMBER	QTY	PART NAME 1 2 3 4 5 6 (PRODUCT LEVEL)	SEE PAGE
Y	*302-0360*	1	ELECTRONICS GP-MONITOR	167
Y	*267-3184*	1	FILM GP-INTERNATIONAL	888
Y	*298-5635*	1	PLATE & FILM GP	895

Y-SEPARATE ILLUSTRATION

<END>

302-8683 PLATE & FILM GP—RUSSIAN, WITH MONITOR SOFTWARE

S/N: B9D1-UP

SMCS-7405, 7557, 7620 **i02788491**

NOTE	PART NUMBER	QTY	PART NAME 1 2 3 4 5 6 (PRODUCT LEVEL)	SEE PAGE
Y	*302-0361*	1	ELECTRONICS GP-MONITOR	167
Y	*267-3184*	1	FILM GP-INTERNATIONAL	888
Y	*298-5635*	1	PLATE & FILM GP	895

Y-SEPARATE ILLUSTRATION

<END>

302-8684 PLATE & FILM GP—ARABIC, WITH MONITOR SOFTWARE

S/N: B9D1-UP

SMCS-7405, 7557, 7620 **i02788562**

NOTE	PART NUMBER	QTY	PART NAME 1 2 3 4 5 6 (PRODUCT LEVEL)	SEE PAGE
Y	*302-0361*	1	ELECTRONICS GP-MONITOR	167
Y	*267-3184*	1	FILM GP-INTERNATIONAL	888
Y	*298-5635*	1	PLATE & FILM GP	895

Y-SEPARATE ILLUSTRATION

<END>

302-8685 PLATE & FILM GP—CHINESE, WITH MONITOR SOFTWARE

S/N: B9D1-UP

SMCS-7405, 7557, 7620 **i02788584**

NOTE	PART NUMBER	QTY	PART NAME 1 2 3 4 5 6 (PRODUCT LEVEL)	SEE PAGE
Y	*302-0361*	1	ELECTRONICS GP-MONITOR	167
Y	*267-3184*	1	FILM GP-INTERNATIONAL	888
Y	*298-5635*	1	PLATE & FILM GP	895

Y-SEPARATE ILLUSTRATION

<END>

302-8686 PLATE & FILM GP—ROMANIAN, WITH MONITOR SOFTWARE

S/N: B9D1-UP

SMCS-7405, 7557, 7620 **i02788588**

NOTE	PART NUMBER	QTY	PART NAME 1 2 3 4 5 6 (PRODUCT LEVEL)	SEE PAGE
Y	*302-0362*	1	ELECTRONICS GP-MONITOR	167
Y	*267-3184*	1	FILM GP-INTERNATIONAL	888
Y	*298-5635*	1	PLATE & FILM GP	895

Y-SEPARATE ILLUSTRATION

<END>

302-8687 PLATE & FILM GP—SLOVENIAN, WITH MONITOR SOFTWARE

S/N: B9D1-UP

SMCS-7405, 7557, 7620 **i02788595**

NOTE	PART NUMBER	QTY	PART NAME 1 2 3 4 5 6 (PRODUCT LEVEL)	SEE PAGE
Y	*302-0362*	1	ELECTRONICS GP-MONITOR	167
Y	*267-3184*	1	FILM GP-INTERNATIONAL	888
Y	*298-5635*	1	PLATE & FILM GP	895

Y-SEPARATE ILLUSTRATION

<END>

SERVICE EQUIPMENT AND SUPPLIES

236-8922 TANK GP-AIR

S/N: B9D1-UP

PART OF 261-0610 AIR COMPRESSOR AR

SMCS-5505 **i02786536**

NOTE	REF NO	GRAPHIC REF	PART NUMBER	QTY	PART NAME 1 2 3 4 5 6 (PRODUCT LEVEL)	SEE PAGE
	1	1	**1P-4278**	1	CLAMP-HOSE	
	2	1	**1P-9328**	1	FITTING	
	3	1	**2G-1034**	1	VALVE-AIR RELIEF	
	4	1	**5F-5434**	1	VALVE AS-VENT	
	5	1	**172-9284**	1	VALVE-BALL	
J	6	1	**205-7187**	1	GOVERNOR AS (AIR COMPRESSOR)	
		1	**2S-2923**	1	COVER	
I	7	1	**177-0279**	1	HOSE AS	
	9	1	**246-6651**	1	TANK-AIR	
	13	1	**4H-2558**	1	GROMMET	
	14	1	**4S-7606**	1	ELBOW	
	15	1	**6K-8178**	2	CLIP	
	16	1	**6V-7535**	1	ELBOW-PIPE	
	17	1	**7J-8611**	1	ELBOW-PIPE	
	18	1	**8T-6757**	4	PLUG-PIPE	
	20	1	**9X-8256**	2	WASHER (6.6X12X2-MM THK)	
E	21	1	**5P-1465**		HOSE (102-CM)	
	22	1	**174-5907**	1	CLIP	
	23	1	*164-5567*	1	FITTING AS (QUICK DISCONNECT, MALE)	
		1	**6V-3965**	1	FITTING-COUPLER	
		1	**3J-1907**	1	SEAL-O-RING	
M	24	1	**8T-4189**	4	BOLT (M8X1.25X20-MM)	
M	25	1	**8T-4137**	1	BOLT (M10X1.5X20-MM)	
	26	1	**8T-4121**	1	WASHER-HARD (11X21X2.5-MM THK)	
M	27	1	**8T-3844**	2	BOLT (M6X1X70-MM)	
	28	1	**8C-6867**	1	CONNECTOR	
	29	1	**6V-0852**	1	CAP-DUST	
I	30	1	**6D-9855**	1	HOSE AS	
	31	1	**5P-4116**	4	WASHER-HARD (8.8X20.5X2-MM THK)	
I	32	1	**310-4235**	1	HOSE AS	
	33	1	*169-5863*	1	ADAPTER GP	
		1	**7X-7945**	1	ADAPTER (9/16-18-THD)	
		1	**4J-5477**	1	SEAL-O-RING	
	34	1	*165-4931*	1	ELBOW AS	
		1	**6V-8077**	1	ELBOW	
		1	**3J-1907**	1	SEAL-O-RING	
	35	1	**4J-5477**	1	SEAL-O-RING	
	36	1	**2P-1279**	1	LOCKNUT (9/16-18-THD)	
					AVAILABLE REPAIR KIT(S):	
J			**9M-0402**	1	KIT-GOVERNOR OVERHAUL (AIR COMPRESSOR)	
					(INCLUDES GROMMETS, FILTERS, SPRING, VALVE, COVER, RING, & GASKET)	

E-ORDER BY THE CENTIMETER
I-REFER TO HYDRAULIC INFORMATION SYSTEM
J-KIT MARKED J SERVICES PART(S) MARKED J
M-METRIC PART

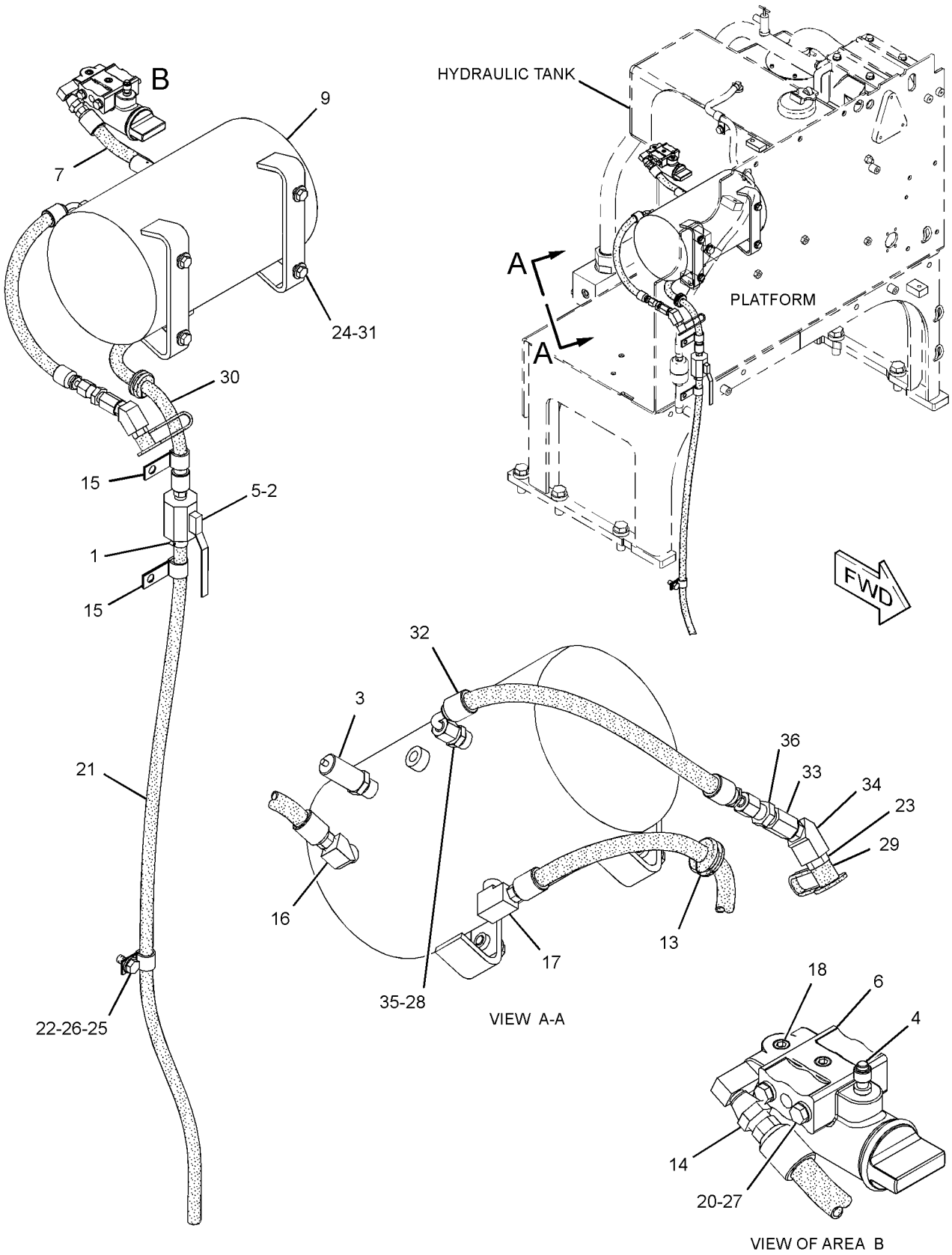

GRAPHIC #1 **<END>** g01392952

MEMORANDA

PART NUMBER INDEX

Part	Page
0	
0S-1585	557
0S-1621	539
0T-0244	854
1	
1A-0224	743
	747
1A-1415	557
1A-8063	743
	747
1B-2578	255
1B-2713	798
1B-4038	557
1B-4046	557
1B-4208	743
	747
1B-5170	328
1B-5174	557
1B-8705	12
	18
1D-0906	483
1D-4610	715
1D-4612	743
	747
1D-5119	705
1F-0748	579
1F-0750	116
1F-6762	732
1F-7567	61
	64
1F-7958	557
	743
	747
	763
	804
1G-8878	362
	562
1H-3244	130
	266
1H-3338	254
1H-3937	641
1H-4393	266
1H-6227	632
1H-7339	551
	553
	557
1H-8296	865
1J-2860	349
1J-4757	349
1J-6762	708
	711
1J-9671	34
	36
	79
	499
	500
1M-1230	798
1M-4095	392
1M-6119	141
	143
	146
1M-6120	141
	143
	146
1M-6718	248
1N-5999	26
1P-0604	338
1P-3700	642
1P-3702	366
1P-3703	366
1P-4278	644
	904
1P-4577	372
1P-4578	372
	375
	590
1P-4582	121
1P-6356	814
1P-7009	599
1P-9328	904
1R-0762	106
1R-0770	108
1R-1807	58
1R-1809	355
	372
	563
1R-5396	701
1S-0994	82
	113
	300
	366
	565
	567
	572
	580
	589
	599
	605
	607
	614
1S-2563	61
1S-3618	609
1S-6420	366
1S-7251	141
	143
	146
	246
	296
1S-7252	141
	143
	146
	246
	296
	308
1S-9110	326
1S-9593	697
1S-9799	372
1T-0043	327
1T-0205	327
1U-3202	754
1U-8846	13
	34
	36
	38
	88
	90
	328
	502
1V-6688	304
	306
1V-7801	104
1V-8284	458
	480
1W-2431	96
1W-2715	25
1W-4738	32
	33
1W-4741	32
	33
1W-4746	32
	33
1W-8407	20
1Y-7927	807
2	
2A-1162	34
	36
2A-3034	91
2A-4429	25
2B-0941	569
2B-7410	557
2B-9174	356
	358
2B-9373	386
2C-9259	716
2D-0094	347
2D-0626	740
2D-2507	444
	445
	446
2D-2508	444
	445
	446
2D-2509	444
	445
	446
2D-2511	444
2D-2565	444
	445
2D-2654	440
	442
2D-6235	798
	807
2D-6642	39
2D-8009	386
2D-8154	557
2D-8652	322
	453
	545
2D-8910	515
2D-9454	349
2D-9455	349
2F-7888	300
2F-8057	482
	542
2F-8509	634
2G-0478	557
2G-0617	209
	211
2G-0988	209
	211
2G-1034	904
2G-3865	450
2G-4332	743
2G-5493	571
	579
2G-5667	319
2G-5673	485
2G-6595	445
	446
2G-6695	557
2G-7149	747
2G-7309	743
	747
2G-7728	743
	747
2G-8233	729
2G-8615	319
	449
2G-8624	449
2G-8626	319
	449
2G-8631	319
	453
	555
2G-8741	319
	449
2G-8777	319
	449
2G-8793	322
2H-3746	743
	747
2H-3920	248
	261
2H-3922	251
2H-3928	642
2H-3931	616
	720
2H-6489	327
2H-6490	392
2H-9247	557
2J-3506	282
	708
	709
	710
	711
	715
	721
	722
	723
	724
	725
	726
	728
	743
	747
2J-8163	449
2K-0120	740
2K-0420	534
2K-0703	740
2K-1738	332
2K-4821	130
2K-4973	756
	863

► **PRIMARY REFERENCE**

PART NUMBER INDEX

Part	Page
	865
2K-5232	275
2K-5340	323
2K-6413	753
2K-6830	548
2K-7468	720
	732
2K-7471	743
	747
2K-8467	300
2L-5893	850
2M-4453	79
2M-6471	22
2M-7819	807
2M-9780	22
	26
	58
	79
	90
	113
	328
	362
	364
	365
	366
	393
	572
	580
	590
	597
	598
	599
	610
	626
	689
	690
	694
	695
	732
	817
2N-9421	300
2P-1279	904
2P-1692	342
2P-2537	58
2P-2975	141
	146
2P-4358	8
2P-8421	327
2R-2376	797
2R-6806	106
	111
2S-0115	724
	725
	726
	728
2S-2053	60
2S-2923	904
2S-3029	327
2S-3745	763
	804
2S-4078	325
	328
	372
	523
	597
2S-4663	399
2S-5835	399
2T-1925	123
2V-1771	296
2V-2015	838
2V-2043	66
2V-3216	300
2V-4332	477
2W-0027	47
2W-6544	13
2W-7213	22
2W-7381	28
2W-8147	18
2Y-5829	54
	64
2Y-5882	481

3

3B-4508	214
3B-4512	213
	214
3B-4610	291
3B-4615	459
	472
3B-4618	449
	542
3B-4628	572
	580
3B-4629	319
3B-4632	754
3B-4643	703
3B-4647	540
3B-5301	304
	715
3B-5316	534
3B-5325	753
3B-7733	481
3B-7896	481
3B-8485	319
	536
	538
3B-8486	449
3B-8489	319
	449
	481
	541
	542
	543
	705
	732
	740
	743
	747
3B-8686	319
3B-8921	336
	338
3D-2239	444
3D-2824	9
	46
	48
	63
	66
	71
	79
	82
	94
	250
	325
	327
	347
	362
	364
	365
	366
	372
	515
	532
	560
	579
	580
	590
	593
	597
	610
3D-2975	807
3D-2981	393
3D-4904	541
	743
	747
3D-5279	515
3D-8317	399
3D-8747	798
3D-8748	798
3D-8749	798
3D-8752	798
3E-0155	▶261
	265
	879
3E-1552	891
	895
3E-3000	868
	871
	875
	876
3E-3365	192
	250
	697
3E-3368	228
	229
3E-3371	225
	226
	227
	299
	342
	844
3E-3377	253
	275
	379
	551
	553
3E-3383	248
3E-3389	261
3E-3636	275
3E-4302	634
3E-4315	395
3E-4321	366
	580
	586
	588
3E-4352	60
	223
3E-4353	326
3E-4369	104
3E-4887	42
3E-4888	42
3E-4898	828
3E-5169	300
3E-5239	265
	300
3E-5464	763
3E-5519	266
3E-6328	▶129
	265
3E-6389	▶178
	810
3E-6697	494
3E-6762	379
3E-7401	76
	595
3E-7404	849
3E-7417	634
3E-7445	372
3E-7775	244
3E-8017	84
	100
3E-8020	765
	766
	794
	838
3E-9375	227
3E-9412	53
	117
3E-9854	189
3F-5108	715
3F-5792	34
	36
3F-9556	130
	256
	825
	826
	880
	882
	883
3G-0622	859
	861
3G-2165	724
	725
3G-2579	740
3G-2581	740
3G-8054	520
3G-8057	520
3H-0442	617
3H-5552	22
3H-7654	53
3J-1907	9
	26
	34
	36
	65
	89
	106
	111
	113

▶ **PRIMARY REFERENCE**

PART NUMBER INDEX

Part	Page	Part	Page	Part	Page	Part	Page
	123		683		662		763
	275		685		663		789
	327		687		665		791
	340		691		667		804
	342	3J-8500	541		669		831
	347		542		671		877
	355		638		673		880
	362	3K-0360	8		675		883
	364		9		677	3S-6049	143
	366		34		679		146
	371		36		681	3S-6050	143
	372		49		683		146
	385		58		685	3S-6931	323
	397		71		687	3S-7023	546
	399		74		696		547
	519		76		817		548
	560		79	3K-0715	328	3S-7608	577
	562		82	3K-8460	34	3S-8664	296
	563		90		36		590
	565		310		223		612
	577		340	3K-9520	209	3S-8665	366
	586		342		211	3S-9233	323
	588		393	3P-0337	338		663
	590		399	3P-0764	243		665
	597		449	3P-1156	62		667
	598		502		69		669
	599		513	3P-1461	536		671
	612		517		729		673
	617		532	3P-1932	58		675
	621		537	3P-9900	865		677
	625		567	3R-8797	244		679
	626		569	3R-9965	280		681
	693		571	3S-0004	386		683
	732		572	3S-1349	743		685
	814		577		747		687
	904		579	3S-2093	106	3S-9557	266
3J-3679	79		580		111	3T-0849	248
3J-4818	865		586		113	3T-2662	216
3J-5390	80		588		141		217
3J-7354	9		589		143	3T-3422	244
	34		593		146	3T-3434	244
	36		595		158	3T-4377	392
	58		597		171	3T-6774	798
	74		598		175	3T-6848	609
	223		599		193	3T-8724	▶169
	323		605		198	3T-9549	325
	355		607		199	3V-2024	735
	364		609		216	3V-2431	115
	365		610		263		551
	563		612		265		553
	590		614		266	3V-3263	791
	597		625		271		877
	621		626		273	3V-4694	791
	626		636		275	3W-7254	735
	636		647		279	3W-7256	735
	663		648		280		
	665		649		282		
	667		650		288	**4**	
	669		651		289		
	671		652		299	4B-3365	323
	673		653		304	4B-4274	217
	675		654		306		300
	677		656		308		789
	679		658		315	4B-4278	865
	681		660		342	4B-4863	101

▶ **PRIMARY REFERENCE**

PART NUMBER INDEX

Part	Page	Part	Page	Part	Page	Part	Page
	103	4I-8897	63	4K-8864	264	4T-3051	715
	124	4J-0519	599		275	4T-3052	715
	126	4J-0520	372		279	4T-5613	546
4B-5059	807		375		296		547
4B-7270	504		599		310		548
	506	4J-0522	372	4K-9429	832		551
4B-8394	356		375	4L-3641	64		553
	358		590		586		555
4B-9880	399	4J-0524	79		588	4T-6779	544
4C-2959	772		372	4L-6499	255	4T-6780	545
4C-9612	46		560	4L-7125	291	4T-6907	549
4D-1326	255	4J-0527	121		294		550
4D-1432	275	4J-1888	537	4M-0061	798		720
	296	4J-5267	590	4M-0189	34	4T-8054	616
4D-2560	515	4J-5309	360		36		720
4D-2886	609		361		347	4V-0015	477
4D-3704	356	4J-5351	323	4M-1831	244	4V-4125	567
	358	4J-5468	569	4M-2381	399		614
4D-6086	743	4J-5477	9	4M-5905	399	4V-7884	863
	747		323	4M-6107	332	4V-8256	756
4D-6695	356		340		334	4V-8577	863
	358		364	4M-6108	327		865
4D-7388	76		365	4M-6425	214	4V-9804	493
	515		904		850	4W-0253	78
4D-7733	515	4J-7533	617	4M-6582	769	4W-1413	891
4D-7735	9		623		771		895
	113		625	4N-1230	32	4W-2026	14
	264		626		33	4W-2232	62
	520		663	4N-2927	807	4W-7592	78
	565		665	4N-5091	579	4Y-9652	13
4D-7794	264		667	4P-4369	60		
	273		669	4P-5918	13		
	275		671		273	**5**	
	279		673	4P-7428	275		
	300		675	4P-7429	282	5B-0577	743
	310		677		342		747
4D-8123	481		679	4P-7581	106	5B-1866	54
4D-9517	300		681		198	5B-9318	663
	607		683		199		665
4E-3273	391		685		275		667
4E-5985	391		687		282		669
4F-2294	257	4J-8996	328		300		671
4F-4097	634		502		310		673
4F-4879	857	4J-9224	555		342		675
	858		720		354		677
4F-5695	24	4J-9225	545		791		679
4F-6024	32	4J-9964	642	4P-7582	300		681
	33	4K-0367	715		342		683
4F-7952	385	4K-1388	323	4P-8134	116		685
4F-8824	541		598		300		687
	542	4K-2039	700	4S-1962	300	5C-2890	197
4F-9029	65	4K-3004	740		366		217
4F-9653	115	4K-3150	740		375		254
	557	4K-3330	►755		580		270
4H-2558	515	4K-4879	446		590		304
	644	4K-4881	439		599		306
	904		441	4S-4455	366		865
4H-3001	791		443		590	5C-7261	13
4H-6511	732	4K-6302	740	4S-5565	551		15
4H-6520	377	4K-6781	477		553		111
4H-6996	557	4K-7463	477	4S-5879	504		113
4H-7869	246	4K-7464	477		506		273
4I-0755	504	4K-8302	296	4S-7606	515		291
	506	4K-8603	327		904		300
4I-7889	607	4K-8734	477	4T-3028	715		345

► **PRIMARY REFERENCE**

PART NUMBER INDEX

Part	Page	Part	Page	Part	Page	Part	Page
	459		336	5L-4758	700		138
	464		338		701		141
	630	5H-9695	174	5L-4759	323		143
	794	5I-4370	113	5M-2894	346		146
	825	5J-1246	642		850		158
	826	5J-4561	551	5M-3062	499		193
	880		553		500		208
	882	5J-4771	708	5M-3320	386		247
	883		709	5M-6214	319		263
5C-7423	332		710	5M-7937	327		271
	334		711		502		291
5C-8312	870	5J-4773	711	5N-2840	590		300
5C-8811	883		721	5P-0537	196		345
5C-9553	266		722		300		459
	300		723		798		469
	767		724		833		480
	780		725	5P-0599	571		497
	787		726		579		780
	823		728	5P-0747	246		786
	842	5J-5402	548		308		816
	844	5J-7010	545	5P-0765	373		819
	849	5J-7011	555	5P-0767	814		834
	859	5J-7013	555		817		851
	861	5J-7333	707	5P-1075	814		904
5C-9583	193	5K-0983	477	5P-1076	71	5P-4295	101
5D-0269	481	5K-0987	477		104	5P-4423	757
5D-1026	82	5K-0988	477		238		865
	595	5K-0989	477		282	5P-4432	757
	814	5K-1458	743		304	5P-4483	327
	817		747		493	5P-4484	328
	877		750		534	5P-4536	99
5D-3887	472		755	5P-1174	891	5P-4868	595
5D-4822	807	5K-1459	743		895	5P-4961	76
5D-8159	743		747	5P-1175	891	5P-5297	502
	747		750		895	5P-5630	243
5D-8161	743		751	5P-1230	82	5P-5637	759
	747		755	5P-1251	82		801
5D-9629	304	5K-3294	82	5P-1259	76		816
5F-0149	729		209	5P-1262	76		819
5F-0304	34		211	5P-1268	520	5P-5677	253
	36		520	5P-1442	644	5P-5927	759
5F-3092	328	5K-5129	449	5P-1465	904		801
5F-5434	904		504	5P-2199	690	5P-6010	865
5F-8000	390		506	5P-2230	96	5P-6419	291
5F-8933	282		557	5P-2369	96	5P-6629	481
	711	5K-5288	449		366	5P-6874	820
	724		504		590	5P-7197	319
	725		506	5P-2566	642	5P-7462	520
	726		557	5P-2618	101		572
	728	5K-5338	366	5P-3413	327		580
5F-9144	351		520	5P-3863	328	5P-7463	520
5F-9657	169		814		390		572
	170	5K-8454	557	5P-3924	327		581
5F-9891	732	5K-9090	362	5P-4115	304	5P-7464	567
5G-3676	567		364		306		614
	614		365		797	5P-7465	567
5G-8760	740		366		834		614
5H-0793	327		372		838	5P-7468	76
5H-3701	504		375		846		599
	506		532		851	5P-7469	76
5H-4909	557		593	5P-4116	76		599
5H-7826	481		597		113	5P-7470	104
5H-8848	599		598		132	5P-7471	104
5H-8985	332	5K-9179	820		134	5P-7657	291
	334	5K-9660	612		136		294

► **PRIMARY REFERENCE**

PART NUMBER INDEX

Part	Page
5P-7703	104
5P-7814	223
5P-7854	366
5P-7957	832
5P-7958	2
	265
5P-7970	61
	116
5P-8066	64
5P-8196	58
5P-8245	14
	30
	34
	36
	52
	71
	347
	356
	358
	477
	539
	543
	557
	732
	743
	747
5P-8246	34
	36
5P-8247	21
	130
5P-8248	715
	743
	747
5P-8250	743
	747
5P-8291	705
5P-8309	80
5P-8347	74
	186
	342
5P-8439	459
5P-8441	304
	306
5P-8444	599
5P-8445	807
5P-8500	2
	885
5P-8525	270
5P-8843	322
	453
5P-8874	106
5P-8890	319
	449
5P-9085	202
	481
5P-9135	209
	211
	279
5P-9262	691
5P-9297	275
	300
	366
	812
5P-9299	113
	366
	508
	511
	605
	607
	814
5P-9436	94
5P-9617	74
5P-9810	579
5S-7349	130
	244
	291
5S-7379	557
5S-7382	372
5S-7383	850
5S-7385	238
	463
5T-0906	449
5T-1625	810
5T-8417	540
5T-9686	571
	579
5T-9722	588
5V-0770	807
5V-1496	855
5V-1497	863
5W-1437	214
5W-7479	379

6

Part	Page
6A-5591	34
	36
6B-3223	504
	506
6B-3260	743
	747
	755
6B-5464	754
6B-6684	71
6B-8193	291
6C-3246	416
	425
	431
6C-3248	433
6C-7366	425
	431
6D-1004	8
6D-1641	599
	816
	819
6D-3033	282
6D-3479	300
	310
	340
	599
	644
6D-4244	282
	300
	572
	577
	581
6D-4246	520
	567
	572
	581
	614
6D-4247	569
	572
	581
	607
6D-4492	515
6D-5257	280
6D-9855	904
6E-0123	544
6E-0381	662
6E-0410	690
6E-0775	548
6E-1131	546
	547
6E-1436	634
6E-3007	663
	665
	667
	669
	671
	673
	675
	677
	679
	681
	683
	685
	687
6E-3268	691
6E-3269	691
6E-3272	691
6E-3273	691
6E-3274	691
6E-3275	691
6E-3276	691
6E-4224	634
6E-4228	693
6E-4229	693
6E-4230	693
6E-4239	693
6E-4241	693
6E-4242	693
6E-4246	693
6E-4318	693
6E-4940	545
6E-4974	555
6E-5047	393
6E-5066	617
	620
	623
6E-6140	693
6E-6141	693
6E-6142	693
6E-6527	691
6E-6528	691
6E-6536	691
6E-6537	691
6E-6538	691
6E-6539	691
6E-6540	691
6F-0253	775
	842
	844
6F-0612	299
6F-3930	444
	445
	446
6F-4855	700
6F-6992	743
	747
6F-7045	251
6F-7062	48
6F-8499	472
6G-1527	439
6G-3206	356
	358
6G-5442	705
6G-5532	557
6G-5533	557
6G-5534	557
6G-5537	557
6G-5538	557
6G-5539	557
6G-5542	557
6G-5543	557
6G-5544	557
6G-5547	557
6G-5548	557
6G-5987	798
6G-6122	557
6G-7187	104
	485
	539
	543
6H-0211	540
6H-1717	557
6I-1418	151
	158
	271
6I-8642	327
6I-8911	332
6I-8912	332
	334
	336
	338
6I-9248	323
6I-9249	323
6I-9502	332
	334
	336
	338
6J-0789	544
6J-0790	544
6J-0793	544
6J-1381	544
6J-1972	546
	547
	549
	550
	551
	553
6J-2797	548
6J-5731	546
	547
	549
	550
	551
	553
6J-5733	546

PART NUMBER INDEX

Part	Page	Part	Page	Part	Page	Part	Page
	547	6V-1722	610	6V-5048	26		328
	549	6V-1819	332		223		343
	550		334		231		353
6K-0545	743		336		232		775
	747		338		237		838
6K-3273	490		740	6V-5049	79	6V-5842	323
6K-4076	471	6V-1820	8		106		385
6K-6307	560		32		122	6V-5843	31
6K-6444	705		33		223	6V-5844	34
6K-8178	644		328		230		36
	814	6V-1889	610	6V-5142	689		319
	817	6V-1970	2	6V-5192	34		449
	904	6V-2317	13		36	6V-5851	880
6K-9632	883		15		286		883
6L-4725	849		58		638	6V-5853	877
6L-9716	673		61	6V-5215	342	6V-6317	33
6N-1604	169		180	6V-5217	38		328
	170		286		61		343
6N-3826	244	6V-2449	356	6V-5218	64		797
6N-6984	595		358		399		834
6N-7523	273	6V-2686	243	6V-5219	65	6V-6580	663
6P-5647	735	6V-2722	141		390		665
6R-2051	364		143	6V-5221	8		667
6R-2052	367		146		90		669
6R-7605	595		296	6V-5222	342		671
6T-3631	299	6V-3250	74	6V-5223	74		673
6T-3632	299	6V-3265	111	6V-5258	593		675
6T-3633	299		300	6V-5326	663		677
6T-3644	266		310		665		679
6T-6708	763	6V-3505	690		667		681
	804	6V-3538	20		669		683
6T-7695	827	6V-3668	543		671		685
6V-0400	366	6V-3823	347		673		687
6V-0447	849		477		675	6V-6609	74
6V-0484	355	6V-3918	38		677		242
	598		78		679	6V-6689	759
	621	6V-3928	851		681		801
6V-0683	520	6V-3940	12		683	6V-6717	763
	572		47		685	6V-7238	595
	581		62		687	6V-7535	904
6V-0852	327		74	6V-5684	477	6V-7555	282
	340		223	6V-5686	323	6V-7636	794
	342		328	6V-5696	14	6V-7646	855
	355		399		52	6V-7673	32
	362	6V-3965	327		53		33
	385		340		449		634
	399		355	6V-5698	13	6V-7676	717
	560		366	6V-5746	459	6V-7687	304
	590		385		786		493
	595		397		835		740
	621		399	6V-5759	502	6V-7688	703
	623		560	6V-5815	68	6V-7732	326
	904		590	6V-5839	8		794
6V-0894	300		598		11	6V-7742	323
6V-0974	520		621		15	6V-7743	791
6V-1228	282		623		27	6V-7744	217
	586		904		32		740
6V-1249	567	6V-4248	62		33	6V-7981	117
	614		64		34	6V-8004	740
6V-1581	76	6V-4249	28		36	6V-8077	342
6V-1582	76	6V-4292	82		62		399
6V-1614	253	6V-4589	243		64		904
6V-1668	763		258		68	6V-8133	449
	804		699		117	6V-8149	14
6V-1720	327	6V-4604	71		323		347

► **PRIMARY REFERENCE**

PART NUMBER INDEX

Part	Page
6V-8185	266
6V-8186	256
6V-8187	216
6V-8188	132
	134
	136
	138
	214
	238
	244
6V-8189	130
6V-8197	477
6V-8202	141
	143
	146
6V-8212	96
	328
	838
6V-8213	379
6V-8225	196
6V-8237	549
6V-8336	634
6V-8337	634
6V-8352	691
6V-8369	248
	261
6V-8376	217
	266
6V-8378	216
	244
	255
	256
6V-8397	76
	113
	123
	323
	340
	362
	364
	365
	366
	371
	372
	519
	537
	565
	567
	569
	571
	572
	579
	580
	589
	590
	595
	597
	598
	599
	605
	607
	609
	612
	614
	732
	814
6V-8398	9
	113
	362
	364
	365
	366
	513
	517
	519
	567
	571
	572
	577
	580
	581
	586
	588
	597
	598
	605
	607
	610
	612
	614
6V-8400	363
	365
	366
	372
	375
	597
	598
6V-8523	76
6V-8624	365
	572
	580
6V-8625	9
	513
	517
	572
	580
6V-8626	598
6V-8627	9
	340
6V-8628	9
	323
	365
6V-8629	365
6V-8632	597
	612
	817
6V-8633	364
	580
6V-8634	567
	569
	589
	612
	614
6V-8635	364
	372
	375
	532
	593
	597
6V-8636	115
	364
	371
	372
	519
	565
	590
	597
	612
	732
6V-8637	364
	593
6V-8639	9
	513
	517
	567
	571
	577
	580
	586
	588
	597
	605
	607
	610
	614
6V-8640	364
	590
	610
6V-8641	340
6V-8642	590
	597
6V-8647	364
6V-8653	705
6V-8713	590
	597
6V-8714	364
6V-8716	71
6V-8721	113
	572
	580
6V-8722	598
6V-8723	340
	537
	567
	569
	572
	580
	589
	609
	614
6V-8724	113
	340
	371
	372
	565
	598
	612
	732
6V-8730	366
6V-8734	366
6V-8782	513
	517
	598
	610
6V-8785	593
6V-8837	634
6V-8928	834
	838
6V-8947	366
6V-8948	598
6V-8969	833
6V-8987	519
6V-8998	372
6V-9001	364
	519
	597
6V-9002	571
	580
6V-9004	9
	71
6V-9005	365
	597
6V-9007	63
	66
	593
	597
6V-9008	365
	375
	532
	597
6V-9023	286
6V-9027	74
	345
6V-9028	343
6V-9168	76
	323
	520
	572
	581
	599
	605
	607
6V-9172	373
6V-9182	66
	71
6V-9189	179
	180
	185
	186
	189
	467
6V-9200	590
	597
6V-9500	872
6V-9632	158
	216
	270
	291
	834
	838
	846
	849
	859
	861
6V-9672	838
6V-9746	9
	63
	66
	71
	362
	364

► **PRIMARY REFERENCE**

PART NUMBER INDEX

Part	Page	Part	Page	Part	Page	Part	Page
	365	6Y-1891	334		747	7J-3554	347
	366		336	7D-5252	444	7J-5925	859
	590	6Y-1895	334		445		861
	593		336		446	7J-6356	104
	597	6Y-2307	334	7D-7233	82	7J-8611	353
	598	6Y-2312	336		300		904
	610		338		340	7J-8782	705
	612	6Y-2419	336		520	7J-9108	362
6V-9829	605	6Y-2425	336		590		590
	607		338		599		595
6V-9836	365	6Y-2428	338	7D-7496	473		597
6V-9837	513	6Y-2429	338	7D-8245	743		598
	517	6Y-2736	379		747		612
	567	6Y-2737	379	7D-8437	504		817
	580	6Y-2805	711		506	7J-9885	555
	614	6Y-2932	628	7D-8439	356		720
6V-9838	598	6Y-2933	628		358	7K-1181	124
6V-9839	598	6Y-2934	628		504		126
6V-9840	365	6Y-2935	628		506		217
6V-9843	365	6Y-3083	327	7D-8441	356		264
6V-9845	598	6Y-3860	390		358		266
6V-9850	76	6Y-3861	390		504		270
	365	6Y-4280	634		506		275
	371	6Y-4339	708	7D-8636	449		279
	565		709	7D-8637	449		282
6V-9851	519		711	7D-8643	449		291
	597	6Y-5010	386	7D-8825	743		296
6V-9852	590	6Y-5113	820	7D-8826	743		300
	598	6Y-5230	743	7D-8875	729		310
6V-9853	365		747	7D-8876	729		313
	598		750	7D-8877	729		314
6V-9854	372		751	7D-8878	729		520
	597		755	7D-8879	729		827
6V-9855	598	6Y-7953	557	7D-8881	729		842
6V-9873	519	6Y-7981	338	7D-8882	729		844
	577	6Y-9960	42	7D-8883	729	7K-4129	101
	586			7D-8884	729		111
	588			7D-8889	729	7K-9202	319
6V-9875	372	**7**		7D-8983	557		449
6V-9876	537			7D-8984	557		453
	572	7C-1493	58	7E-0759	74		471
	580	7C-4355	300	7E-1313	44		472
6V-9877	612	7C-6921	571	7E-2968	21		539
6W-4126	395		579	7E-3443	132		543
6W-5698	646		607		134	7K-9203	740
	867	7C-6976	47	7E-4761	76	7L-2894	244
6Y-0309	753	7C-6977	47	7E-6794	39	7L-8316	798
6Y-0976	334	7C-7431	84	7E-7589	51	7L-9061	258
6Y-0983	336		100	7E-7590	4		634
6Y-1001	336	7C-7980	18		5	7M-1297	325
6Y-1114	334	7C-9279	4		▶51		523
	336		5	7E-7779	25	7M-7219	807
	338		▶62	7E-8570	345	7M-8485	66
6Y-1115	332	7C-9280	62	7F-1327	743		71
	334	7D-1158	723		747		123
	336	7D-1576	721	7G-4822	332		323
	338	7D-1577	723		334		327
6Y-1116	332	7D-1649	52		336		328
6Y-1119	332	7D-1677	349		338		347
	334	7D-1728	275	7G-4824	838		363
6Y-1887	334	7D-2135	743	7G-4998	325		364
	336		747		523		365
	338	7D-2136	743	7H-2444	729		372
6Y-1888	334		747	7I-5412	609		375
6Y-1890	338	7D-2196	743	7J-0204	26		523

▶ **PRIMARY REFERENCE**

PART NUMBER INDEX

Part	Page
	532
	593
	597
	598
7M-9918	99
7N-0718	141
	143
	146
	▶251
7N-2059	243
7N-3718	264
7N-5274	143
	146
7N-5683	20
7N-9801	262
7N-9943	178
7S-4001	349
7S-8561	360
	361
7S-9930	794
7T-0020	178
7T-0582	798
7T-1099	291
	458
	486
	794
	842
7T-3267	244
7T-3268	244
7T-3276	244
7T-3277	244
7T-3278	244
7T-3279	244
7T-3451	244
7T-3454	244
7T-3974	244
7T-4003	800
7T-4532	772
7T-4897	332
	334
	336
	338
7T-6496	327
7T-6799	265
7T-8890	867
	879
	880
7T-9302	261
7T-9755	634
7U-4891	265
7U-4892	266
7V-5191	807
7W-3872	13
	132
	134
	773
7W-5340	62
7W-7381	355
7W-9737	67
7W-9738	67
7W-9740	67
7W-9930	67
7X-0018	780
7X-0289	569
7X-0334	581
7X-0343	205
	213
7X-0346	616
7X-0366	205
	213
7X-0390	743
	747
7X-0481	132
	134
	136
	138
7X-0510	817
7X-0562	244
7X-0578	859
	861
7X-0605	296
	300
	502
	859
	861
7X-0608	756
7X-0620	255
7X-0622	352
	465
7X-0632	9
7X-0818	780
7X-0820	572
	580
7X-0851	449
7X-0873	590
7X-1387	458
7X-2393	304
7X-2465	828
7X-2489	717
7X-2533	882
7X-2536	82
7X-2537	132
	134
	291
	630
	773
7X-2538	773
7X-2539	120
7X-2543	519
	560
	577
	590
	735
7X-2544	599
	735
7X-2546	80
7X-2548	296
7X-2549	104
	502
7X-2554	360
	361
	469
7X-2555	459
7X-2557	104
7X-2561	319
	449
7X-2562	383
7X-2563	489
7X-2565	42
7X-2576	70
7X-2585	42
7X-2619	790
7X-2634	846
7X-3373	244
7X-6222	266
	299
7X-6315	160
	164
7X-7700	124
	126
7X-7729	71
	73
	76
	80
	85
	104
	113
	143
	146
	304
	345
	366
	449
	455
	459
	469
	473
	480
	490
	494
	497
	520
	572
	581
	590
	593
	609
	885
7X-7740	703
7X-7945	904
7X-7958	63
7X-8549	562
7Y-2174	828
7Y-7390	870
7Y-9099	834
	838
	846
8	
8B-1615	353
8C-0537	34
	36
8C-0563	24
8C-0620	104
8C-0622	349
8C-2926	386
8C-3093	378
8C-3131	378
8C-3132	690
8C-3205	591
8C-3206	373
	375
	599
8C-3210	328
8C-3425	817
8C-3428	343
8C-3445	58
8C-3446	58
	355
	621
8C-3447	355
8C-3451	562
	621
8C-3655	244
8C-3681	82
8C-5053	123
8C-5607	171
	175
	291
8C-5608	171
	175
	291
8C-5748	189
	343
8C-5918	141
	143
	146
8C-6354	265
	266
8C-6711	700
8C-6857	282
8C-6867	904
8C-6913	743
	747
8C-6959	113
8C-8451	791
8C-8498	366
8C-8580	217
8C-8585	455
	475
8C-8729	360
	361
8C-8989	365
	519
	572
	580
8C-9987	697
8D-1268	743
	747
8D-3902	356
	358
8D-4336	729
8D-5641	304
8D-7086	471
	472
	539
8D-7225	539
8D-7423	557
8D-7424	557
8D-7425	557
8D-7426	557
8D-7996	536
8D-8168	729
8D-9092	572
	581
8D-9159	471
8D-9671	296
8E-1118	827

▶ **PRIMARY REFERENCE**

PART NUMBER INDEX

Part	Page
8E-1143	399
8E-1263	332
	334
8E-1911	338
8E-3366	1
	▶346
8E-4563	571
8E-5529	708
	711
8E-5734	334
	336
	338
8E-5736	338
8E-5742	332
	334
	336
	338
8E-6208	754
8E-6209	754
8E-7791	838
8E-8319	332
	334
	336
	338
8F-1434	216
	244
	255
	256
8F-1974	275
8F-3469	332
	334
	336
	338
8F-4102	537
8F-6302	300
8F-9538	504
	506
8H-1141	244
8H-2046	57
8H-3481	192
8H-4040	743
	747
8H-5244	54
8H-5303	251
8H-5306	251
8J-0112	545
8J-1256	791
8J-1434	740
	▶753
8J-2331	642
8J-5299	754
8J-5313	▶754
8J-6371	544
8J-6384	547
8J-7008	740
8J-9910	548
8J-9911	548
8K-0530	473
8L-2746	699
8L-2786	58
	240
	241
8L-5189	323
8L-8413	807
	865
8M-2770	301
	572
	581
	607
8M-2772	276
8M-2773	76
	111
	113
	264
	283
	301
	366
	371
8M-3368	515
8M-4069	599
8M-4295	338
8M-4992	328
8M-5253	399
8M-5860	24
8M-6521	327
8M-6678	362
8M-8489	386
8M-9315	34
	36
8N-0869	141
	143
	146
	296
	308
8N-1517	216
	266
8N-1518	299
8N-1521	266
	299
8N-1523	216
	267
8N-1725	143
	146
8R-1803	222
8R-3393	508
	511
	812
8R-7887	571
	581
8R-8088	132
	134
	136
	138
	342
8S-0768	342
8S-0948	296
8S-2634	141
	143
	146
8S-3020	308
8S-4950	106
8S-6109	812
8S-6110	812
8S-7048	299
8S-7803	807
8S-9129	390
8S-9130	390
8T-0075	364
8T-0076	569
	571
	579
8T-0087	883
8T-0088	323
8T-0100	15
	29
	53
	343
8T-0106	52
8T-0267	663
	665
	667
	669
	671
	673
	675
	677
	679
	681
	683
	685
	687
8T-0269	775
8T-0276	58
8T-0281	482
	483
8T-0282	349
8T-0285	265
	790
8T-0293	48
	347
8T-0309	101
8T-0315	560
8T-0328	162
	163
	216
	217
	244
	248
	265
	267
	838
	855
8T-0336	557
8T-0355	386
	390
8T-0372	356
	358
	634
8T-0375	319
	477
8T-0389	104
	143
	146
	183
	184
	190
	191
	366
	520
	572
	581
	644
	735
8T-0640	797
8T-0643	11
	15
	34
	36
8T-0644	79
	385
8T-0646	477
8T-0667	550
8T-1117	82
8T-1158	343
	396
8T-1159	115
	504
	506
8T-1447	360
	361
8T-1576	362
8T-1698	628
8T-1718	365
	612
8T-1887	520
8T-1888	520
8T-1889	567
	614
8T-1890	567
	614
8T-2223	599
8T-2226	789
8T-2228	775
8T-2353	223
8T-2396	8
8T-2947	171
8T-3282	27
	545
8T-3311	340
8T-3490	73
	76
	91
	113
	116
	207
	216
	282
	291
	294
	300
	327
	362
	363
	372
	457
	458
	459
	469
	486
	490
	497
	579
	596
	834
	838
8T-3597	104
8T-3611	597
8T-3612	458
	469
	497
	838

▶ **PRIMARY REFERENCE**

PART NUMBER INDEX

Part	Page	Part	Page	Part	Page	Part	Page
	846		467		838		73
8T-3666	28		473		853		76
8T-3727	356		475		904		82
	358		481	8T-4122	205		104
8T-3844	904		486		213		113
8T-4121	9		494		616		141
	40		508	8T-4123	42		143
	41		511		91		146
	44		515		283		198
	63		520		366		199
	66		524		383		200
	71		525	8T-4133	76		202
	76		526		80		203
	82		527		82		217
	91		528		113		296
	96		529		132		301
	100		530		134		304
	104		531		202		310
	113		532		203		340
	132		537		209		345
	134		541		211		366
	136		542		267		371
	138		560		276		373
	141		565		283		455
	143		567		301		459
	146		572		310		473
	151		577		340		486
	158		581		366		490
	181		589		371		494
	182		591		373		497
	183		593		459		520
	184		599		465		524
	185		605		467		525
	186		607		490		526
	187		610		494		527
	188		612		515		528
	198		614		520		529
	199		630		537		530
	200		644		560		531
	201		647		567		565
	202		648		572		567
	203		649		577		572
	207		650		581		577
	209		651		589		581
	211		652		591		589
	217		653		599		591
	267		654		609		593
	276		656		610		599
	279		658		614		605
	283		660		647		607
	294		759		648		610
	296		774		649		614
	301		791		650		630
	306		794		651		644
	308		797		652		774
	310		801		653		812
	328		812		654		814
	340		814		656		853
	354		816		658		885
	366		817		660	8T-4137	66
	371		819		885		71
	373		820	8T-4136	9		76
	375		822		40		82
	457		823		63		113
	465		834		71		141

PART NUMBER INDEX

Part	Page	Part	Page	Part	Page	Part	Page
	143	8T-4149	598		572		532
	146	8T-4167	717		581		560
	151	8T-4171	267		599		572
	181		294		607		581
	182		308		610		591
	201		790	8T-4189	76		593
	207	8T-4172	71		101		599
	217		306		103		609
	267		367		104		612
	276		612		141		630
	279		759		185		791
	283		801		220		820
	296	8T-4175	473		263		834
	301	8T-4176	304		267		838
	308	8T-4178	367		301	8T-4196	44
	310		593		328		76
	328		599		459		85
	347	8T-4179	104		469		96
	366		141		497		104
	375		143		572		113
	449		146		581		296
	455		217		786		328
	459		296		851		353
	480	8T-4182	80		904		373
	481		91	8T-4191	158		375
	494		296		296		459
	508		301		812		490
	511		367		834		497
	515		469	8T-4192	104		520
	520		572		301		532
	532		581		393		572
	541	8T-4183	42		740		581
	542		96	8T-4193	377		591
	567		467		384		599
	572		560		616		759
	581		631	8T-4194	42		775
	591	8T-4184	354		282		801
	599		367		296	8T-4198	537
	605		459	8T-4195	41		572
	607		465		44		581
	610	8T-4185	85		71	8T-4200	243
	612		132		76		775
	614		134		85	8T-4205	130
	644		143		96		197
	791		146		113		216
	812		207		132		217
	814		283		134		244
	816		459		202		266
	817		473		203		291
	819		508		209		294
	904		822		211		301
8T-4138	171		823		276		763
	217	8T-4186	41		296		790
	270		80		301		804
	301		82		354		849
	791		132		367		855
	851		134		455	8T-4223	9
8T-4139	71		136		457		104
	104		138		459		121
	352		207		490		132
	465		276		494		134
	473		308		497		136
	485		490		508		138
	494		511		511		141
8T-4140	459		520		520		143

► **PRIMARY REFERENCE**

PART NUMBER INDEX

Part	Page	Part	Page	Part	Page	Part	Page
	146	8T-4750	634		880		153
	209	8T-4778	482		883		154
	211		483	8T-5401	851		155
	213	8T-4779	373	8T-5410	248		156
	217		469	8T-5412	209		157
	283		599		211		190
	296	8T-4780	91	8T-5429	79		191
	304		367		365		248
	354	8T-4835	132	8T-5890	605		261
	367		134		607		347
	373		136	8T-5907	365		551
	393		138	8T-5914	867		553
	473	8T-4896	106		879		781
	485		373		880		782
	493		557	8T-6381	42		783
	494		569	8T-6462	717		784
	560	8T-4908	101	8T-6466	132		789
	572		193		134		824
	581		247		508		825
	599		291		607		883
	616		328		612	8T-8874	217
	631		459	8T-6684	365	8T-8917	238
	632		469		593		463
	642		480	8T-6699	248		616
8T-4224	15		497	8T-6703	560	8T-8919	121
	16		612		591	8T-8986	598
	61		816	8T-6757	904	8T-9082	831
	82		819	8T-6868	9	8T-9371	865
	86		834	8T-6869	120	8T-9377	814
	103		859		179	8T-9383	214
	104		861	8T-6870	345	8T-9388	222
	130	8T-4910	740		467	8T-9389	238
	132	8T-4956	71	8T-6876	519	8T-9394	291
	134		104	8T-6912	80	8T-9403	367
	141		373		151	8T-9405	141
	180		459		158		143
	189		493		208		146
	220		534		271		267
	243		599	8T-7525	636		271
	247		632	8T-7547	345		280
	267	8T-4970	270		794	8T-9515	379
	273		883	8T-7566	248		636
	291	8T-4983	372		833	8T-9525	398
	301	8T-4994	205	8T-7811	634	8T-9655	120
	343		213	8T-7852	291		150
	459		572	8T-7876	634		151
	464		581	8T-7877	701		158
	465	8T-5002	351	8T-7926	560		271
	467	8T-5005	276	8T-7934	367		343
	572		296	8T-7950	27	8T-9756	141
	581		340	8T-7968	362		143
	630		373	8T-7970	362		146
	773		511		532	8T-9884	244
	775		573	8T-7971	42	8U-0599	398
	850		581		794	8U-2564	378
	859		593	8T-8441	323	8U-3875	398
	861	8T-5035	354	8T-8442	53	8U-9480	378
8T-4226	80	8T-5039	634		691	8V-7162	877
	85	8T-5041	735	8T-8443	379	8V-9708	296
8T-4244	213	8T-5070	551	8T-8566	244	8W-0663	743
	283		553	8T-8569	244		747
8T-4648	213	8T-5372	839	8T-8729	225	8W-0681	718
	367	8T-5389	610		261	8W-0684	718
	572	8T-5400	877		697	8W-0791	885
	581		879	8T-8737	152	8W-2842	536

PART NUMBER INDEX

Part	Page
8W-2913	▶539
	742
8W-3991	571
	579
8W-5597	743
	747
8W-6466	453
8W-6469	453
8W-6626	473
8W-7957	421
8W-8528	296
8W-9566	440
	442
8W-9582	439
8W-9594	441
	443
8X-1386	859
	861
8X-3663	743
	747
8X-3749	616
8X-5106	729
8X-5107	729
8X-5108	729
8X-5109	729
8X-5489	560
8X-6070	▶569
	742
8X-6075	743
	747
8X-6080	742
	▶743
8X-8377	326
8Y-3925	473
8Y-4489	104
	486
8Y-5945	807
8Y-5965	863
8Y-6012	863
8Y-6014	863
8Y-6024	863
8Y-6041	807
8Y-6045	807
8Y-6046	807
8Y-6047	807
8Y-6060	807
8Y-6062	807
8Y-6063	807
8Y-6064	807
8Y-6066	807
8Y-6067	807
8Y-6068	807
8Y-6069	807
8Y-6379	791
8Y-6859	807
8Y-6860	807
8Y-8694	610
8Y-9603	246
9	
9B-0453	214
9B-7233	217
	266
9B-7237	106
9C-1078	66
9C-5344	207
9D-0630	101
9D-1142	557
9D-1491	557
9D-1829	591
9D-3075	356
	358
	504
	506
9D-3311	471
9D-3523	485
9D-5516	743
	747
9D-6196	76
9D-6197	76
9D-6584	471
	616
9D-6589	471
9D-7047	356
	358
	504
	506
9F-2247	356
	358
9F-5644	251
9F-8125	810
9G-0002	141
	143
	146
9G-0005	141
	143
	146
9G-2758	141
	143
	146
9G-3695	253
9G-5127	353
	393
9G-7101	282
9G-8909	141
	143
	146
	296
	308
9G-9155	458
9H-0846	347
9J-0096	740
9J-3657	721
9J-3658	722
9J-3866	372
9J-4963	628
9J-6586	753
9J-7701	721
9K-5635	810
	827
	834
	838
9K-7951	444
	445
	446
9L-1775	282
9L-3334	299
9L-6770	130
9M-0402	904
9M-0766	614
9M-1974	8
	13
	38
	53
	58
	62
	64
	74
	78
	90
	101
	111
	116
	150
	286
	328
	343
	399
	798
9M-2042	327
9M-2092	319
	449
9M-2110	399
9M-2904	60
9M-4594	571
	579
9M-4972	301
9M-7958	123
	124
	126
9M-8406	276
	283
	308
	310
	313
	314
	812
9N-0869	29
	57
	120
	150
	151
	343
	834
	838
	846
9N-1995	476
9N-4155	386
9P-9388	820
9R-1183	571
	579
9R-1499	488
9R-2404	487
	488
9R-2613	486
9R-2672	216
	486
	519
9R-2821	113
	146
	216
	486
9R-5008	91
9R-6307	204
9R-6414	143
	147
9R-8870	571
	579
9R-9925	644
9R-9926	577
9S-1316	304
9S-1350	599
9S-1362	213
9S-4167	106
9S-4181	123
	532
9S-4182	34
	36
	74
	345
	563
9S-4183	71
	347
	560
9S-4185	58
	74
	532
	593
	625
	626
	647
	648
	649
	650
	651
	652
	653
	654
	656
	658
	660
9S-4190	393
	634
9S-4191	34
	36
	65
	89
	106
	123
	223
	347
	519
	563
	625
	626
	693
9S-8001	617
	623
	625
	626
9S-8002	26
	223
	626
	636
	663
	665
	667

▶ **PRIMARY REFERENCE**

PART NUMBER INDEX

Part	Page
	669
	671
	673
	675
	677
	679
	681
	683
	685
	687
	691
9S-8003	79
	621
9S-8004	26
	111
	117
	355
	399
	617
9S-8005	8
	34
	36
	49
	74
	79
	90
	449
	502
	636
	663
	665
	667
	669
	671
	673
	675
	677
	679
	681
	683
	685
	687
9S-8006	22
	26
	79
	90
	328
9S-8008	46
	48
	325
	327
9S-8010	328
	523
9S-9334	24
	26
	327
	347
	523
9T-1013	610
9T-1636	634
9T-1652	634
9T-1699	634
9T-1710	634
9T-2186	693
9T-2457	545
9T-3133	548
9T-4057	701
9T-4211	549
	550
9T-4893	388
9T-4901	378
9T-5241	798
9T-7765	638
9T-7767	638
9T-7769	638
9T-7771	638
9T-7773	638
9T-7774	638
9T-8051	628
9T-8053	628
9T-8054	628
9T-8056	628
9T-8058	628
9T-8059	628
9T-8061	628
9T-8063	628
9T-8065	628
9T-8067	628
9T-8069	628
9T-8070	628
9T-8071	610
9T-8958	548
9T-9040	555
9T-9071	628
9T-9072	628
9T-9460	634
9U-8263	838
9U-8669	399
9U-8815	332
	334
9U-9995	332
9W-0335	267
9W-0852	206
	248
	261
	849
9W-1441	265
9W-1442	265
9W-1454	327
9W-2029	332
	334
9W-3155	740
9W-4050	266
9W-4363	586
	588
9W-5134	▶390
	394
9W-6068	502
9W-6465	327
9W-6467	338
9W-6582	42
9W-6584	42
9W-7038	327
9W-7469	735
9W-7470	735
9W-7783	663
	665
	667
	669
	671
	673
	675
	677
	679
	681
	683
	685
	687
9W-8095	42
9W-9371	332
	334
9W-9905	332
	334
	336
	338
9W-9920	42
9X-0145	266
9X-0196	266
9X-0261	106
9X-0262	223
9X-0352	216
9X-1046	267
	800
9X-1054	266
	280
	299
	300
9X-1386	253
	551
	553
	814
9X-1813	228
	229
	234
	236
	250
	254
	258
	263
	342
	379
9X-2023	560
9X-2026	267
	270
9X-2027	791
9X-2032	291
9X-2038	763
	804
9X-2043	208
	791
	794
	830
	834
	839
	844
	846
	859
	861
9X-2044	287
	763
	767
	775
	791
	794
	804
	810
	834
	839
	842
	846
	859
	861
	877
9X-2045	158
	291
	778
	779
	810
	834
	839
	846
	869
	870
	872
	874
9X-2046	800
	846
	877
9X-2085	113
	586
	588
9X-2099	15
9X-2125	449
9X-2133	82
9X-2134	599
9X-2205	124
	126
9X-2305	67
9X-2480	872
9X-2488	816
	819
9X-2521	732
9X-2615	318
	382
	479
	735
9X-3294	3
	▶170
9X-3401	152
	153
	154
	155
	156
	157
	227
	253
	379
	551
	553
	781
	782
	783
	784
9X-3402	824
9X-3463	180
	183
	184
	189
9X-3465	190
	191

▶ PRIMARY REFERENCE

PART NUMBER INDEX

Part	Page
9X-3982	76
9X-4244	180
	183
	184
	185
	187
	188
9X-4385	282
9X-4391	275
	299
9X-4493	197
9X-4494	192
9X-4609	343
9X-4824	244
9X-6016	217
9X-6165	171
	175
	291
9X-6578	362
9X-6772	171
	266
	294
	299
9X-7143	158
9X-7144	310
9X-7145	280
9X-7146	282
9X-7345	181
	182
9X-7371	384
	631
9X-7378	772
9X-7380	814
9X-7381	812
	814
9X-7382	812
	814
9X-7383	812
	814
9X-7385	772
	814
9X-7408	379
9X-7680	691
9X-7712	24
	26
9X-7849	196
9X-8139	196
9X-8250	276
	310
	367
	573
	577
	599
	812
	817
9X-8256	171
	217
	248
	267
	270
	301
	304
	306
	308
	328
	663
	665
	667
	669
	671
	673
	675
	677
	679
	681
	683
	685
	687
	767
	780
	787
	790
	791
	823
	842
	844
	859
	861
	872
	882
	904
9X-8257	373
	377
	384
	469
	473
	599
	616
9X-8258	42
9X-8267	8
9X-8268	34
	36
	323
	349
	351
	477
9X-8355	891
	895
9X-8399	544
	555
9X-8403	223
9X-8600	124
	126
9X-8875	732
	743
	747
9X-8885	724
	725
	726
	728
9X-8914	693
9X-8916	21
9X-8918	807
9X-9120	308
9X-9365	181
9X-9689	798
9X-9825	296

0

Part	Page
002-1212	634
002-3448	15
006-8663	634
012-0380	254
014-0816	261
030-0060	449
030-0061	449
030-1712	286
030-7962	113
030-8194	119
031-0214	850
031-4155	798
032-9828	287
033-4814	810
033-6027	56
	634
	693
033-6036	634
	693
033-6043	691
	699
033-6783	372
033-8248	82
	264
	275
	279
	282
	300
034-5677	378
036-7232	299
036-9823	244
053-0558	610
054-3788	472
061-9455	15
064-3843	502
067-2551	113
068-4860	708
	709
	710
	711
070-0107	98
087-5841	458
091-0081	275
	571
	579
	586
	588
091-4537	248
092-5524	282
092-7385	364
095-0817	294
095-0843	855
095-0878	807
095-0879	551
095-0888	634
095-0939	378
095-1235	703
095-1750	696
095-1751	689
096-0001	398
096-3831	626
096-4883	207
	275
096-5866	465
096-6166	141
	143
	146
	266
	271
	280
	291
	790
	810
	834
	838
097-4896	296
099-2374	646
099-3047	636
099-3649	16
	86
	469

1

Part	Page
100-3224	807
100-3253	190
	191
100-3254	190
	191
100-3255	190
	191
100-3320	273
100-3402	634
100-3404	634
100-3405	634
100-3408	634
100-3409	634
100-3410	638
100-3411	638
100-3412	634
	▶638
100-3413	634
100-3415	634
100-4336	364
	571
	579
100-5179	808
101-0003	810
	863
	865
101-2867	810
	850
	877
101-3055	827
101-3128	150
101-3934	34
	36
102-2066	634
102-2244	551
	553
102-2828	362
102-5881	334
	336
	338
102-8801	171

▶ **PRIMARY REFERENCE**

PART NUMBER INDEX

Part	Page
	264
	265
	273
	280
	288
	291
	294
	299
	342
	782
	844
102-8802	129
	158
	175
	192
	193
	195
	196
	197
	206
	209
	211
	216
	250
	254
	256
	260
	262
	263
	264
	265
	266
	273
	275
	279
	288
	299
	300
	304
	306
	697
	772
	775
	810
	814
	823
	849
	865
102-8803	175
	178
	194
	225
	226
	227
	265
	273
	275
	299
	300
	304
	306
	310
	342
	831
	842
	844
	848
	880
102-8804	253
	265
	271
	275
	280
	282
	291
	310
	315
	379
	551
	553
	871
	876
102-8805	175
	190
	191
	209
	211
	248
	264
	265
	279
	299
	300
	310
	342
	789
	791
	794
	825
	883
102-8806	261
	264
	265
	280
	763
	804
103-0213	266
103-2006	124
	126
103-2543	494
103-4660	596
103-6169	356
	358
	504
	506
104-2091	846
104-3601	192
104-4522	735
104-4523	735
105-1797	273
105-1866	590
105-2145	691
105-3196	557
	▶628
105-3249	401
	408
	431
105-5180	708
	709
	710
105-5183	709
	710
	711
105-6148	378
105-7167	605
	607
105-9659	▶820
	821
106-1567	418
	419
	428
106-3659	663
	667
	669
	671
	673
	675
	677
	679
	681
	685
	687
106-3660	665
	683
106-4175	479
	540
	735
106-4835	425
	426
	431
106-9586	378
107-6279	388
107-7694	12
107-7708	18
107-8374	743
	747
107-8375	743
	747
108-1104	▶742
108-3612	15
108-4086	808
108-4087	808
108-4103	808
108-5751	332
109-0361	891
	895
109-3036	697
109-3207	109
	110
109-5008	794
109-5825	362
	366
109-8981	827
110-0361	4
	▶11
110-2456	705
110-4213	444
110-4214	444
110-5266	565
110-5326	▶724
110-5327	▶725
110-5334	724
	725
	726
	728
110-5335	725
	728
110-5336	724
	726
110-6109	158
110-6393	761
110-7149	504
	506
110-7524	849
110-7618	13
110-7887	265
110-8826	66
110-8827	66
111-0343	697
111-2416	273
111-3883	742
	▶747
111-4627	838
111-9110	499
	500
111-9251	605
	607
112-0858	248
112-1574	385
	386
112-3199	569
112-3200	569
	579
112-3690	740
112-3926	729
112-3927	717
112-3931	484
112-5869	879
112-8372	266
112-9442	565
112-9736	71
	494
	532
112-9813	417
	418
	427
113-0693	222
113-0704	▶742
113-6069	31
113-7754	▶548
	739
113-7755	548
113-7756	548
113-8373	216
113-9234	362
114-0359	753
114-0876	814
114-2687	64
114-3469	772
114-5333	814
114-6099	536
	538
114-6658	158
	208
	287
	291
	767
	791
	794
	810

▶ PRIMARY REFERENCE

PART NUMBER INDEX

Part	Page	Part	Page	Part	Page	Part	Page
	834	121-9917	378		765		336
	838	121-9941	378		766		338
	846	121-9942	378	127-9323	519	131-4242	807
	859	121-9946	379		610	131-4428	322
	861	122-6871	599	127-9831	379		453
	869	122-6908	560	128-5450	422	131-5167	807
	870		591	128-5451	423	131-6143	91
	872	122-7045	834	128-5924	508	131-7191	537
	874	122-7666	765		511		▶545
	877		766		812	131-7194	545
115-0540	616	122-9760	890	128-6157	265	131-7195	545
115-0541	616	122-9761	890	128-6841	364	132-0111	175
115-4072	31	123-3178	418	128-9656	705	132-0338	756
115-4219	31		428	129-1170	78	132-3056	646
115-4223	74	123-4586	822	129-2220	703	132-4928	547
115-4550	399		823	129-2861	345	132-5789	266
115-5852	886	123-8187	729	129-3178	763		275
	▶890	123-8914	633		804		300
115-8634	366	124-0312	785	129-3180	735		310
115-9345	794	124-0608	769	129-3181	502		342
116-0118	304		771	129-5096	132	132-5793	763
	306	124-1555	502		134		804
116-0379	▶718		620		136	132-7551	201
	742	124-5836	729		138		885
116-3195	378	124-7790	50	129-5454	419	132-8487	282
116-4627	386	124-7791	50		428	132-9496	817
116-8376	775	124-7792	50	129-7679	63	132-9625	332
117-1385	342		132	129-7680	891	132-9628	334
117-2311	163		134		895	132-9630	336
117-2927	347		136	130-0229	355	132-9633	336
117-3437	78		138		372	132-9637	338
117-3643	6	125-0327	565		563	133-2198	325
	▶69	125-1302	216	130-3515	190	133-3260	577
117-4492	756		▶254		191	133-4995	27
117-5268	633	125-7874	253	130-5300	182	133-5330	621
117-7798	510	125-9740	763		199		▶694
117-7799	510		804		203	133-5545	626
117-8131	828	126-1757	15		209		694
117-8929	291	126-1767	227		211		695
117-9409	304		784		216	133-6379	53
117-9978	891	126-1773	347		266	133-6578	636
	895	126-1774	158		275	133-7523	724
118-0911	58		171		280	133-7524	725
118-1727	4		266		282	133-9012	763
	5		271		291		804
	▶14		294		294	134-0404	362
118-5068	379		299		300	134-0744	579
118-5619	759	126-5011	273		310	134-2540	266
	801	126-5466	74		342		280
	834	126-6872	596		354		282
	838	126-7574	160		458		300
118-7880	743		164		859	134-3344	141
	747	126-8237	132		861		143
118-7881	743		134	130-5301	209		146
	747	126-8240	41		211		275
119-2942	64		132		300	134-3355	300
119-3025	78		134	130-9811	241	134-3987	300
120-4394	636	126-8440	621		242	134-4126	160
120-8234	590	127-1647	366	130-9984	372		164
120-9027	179	127-2170	155	131-2182	41	134-4483	25
	186		156		132	134-4772	590
121-3307	80		157		134	134-7258	891
	85		829	131-3093	769		895
121-9245	555	127-3008	248		771	135-0426	▶194
121-9915	378	127-4838	248	131-3919	334		304

▶ **PRIMARY REFERENCE**

PART NUMBER INDEX

Part	Page
	306
135-0611	826
	882
135-1979	798
135-2142	11
135-2543	273
	286
135-3241	364
135-5975	273
135-9819	9
	14
136-0822	15
136-1543	832
136-1544	756
136-1953	816
	819
136-3188	877
136-3191	877
136-3192	880
136-3193	880
136-3194	882
	883
136-3377	379
136-4183	31
136-4192	663
	665
	667
	669
	671
	673
	675
	677
	679
	681
	683
	685
	687
136-7227	119
136-8308	753
137-1602	99
137-4234	715
	732
	750
	751
137-6645	71
	310
	342
137-6715	25
137-6717	54
137-6718	25
137-9410	209
	211
138-3252	27
138-7198	54
138-8402	54
138-8403	54
138-9403	610
138-9868	54
139-2116	299
139-4081	▶39
	53
139-4084	39
139-4613	296
139-6039	794
	810
	834
	838
	844
	859
	861
139-9476	39
140-0860	296
140-3607	420
140-5945	775
140-6188	25
140-7480	291
140-9670	25
141-0360	416
	420
141-1480	96
141-6141	482
141-6787	697
141-6968	564
141-9784	763
	804
142-0038	362
142-2527	248
142-5787	616
142-6173	417
	427
142-6174	427
142-6175	417
	427
142-6176	429
142-6177	429
142-6179	429
142-6183	422
	430
142-6184	423
	430
142-6186	424
	430
142-6187	424
	430
142-6230	433
	▶439
142-7289	27
142-8928	646
142-8937	646
143-1288	855
143-4654	57
143-7356	477
143-9392	150
144-0195	791
	794
	867
	877
	879
	880
	883
144-1636	258
144-4613	567
144-5629	363
144-8344	82
	296
	300
	308
145-0162	18
145-0164	18
145-0168	18
145-0170	18
145-0326	863
	865
145-1144	397
145-2901	50
	132
	134
	136
	138
145-3757	372
145-4496	371
145-5181	467
145-7214	823
145-7376	54
145-7385	54
145-7390	25
145-8039	327
146-1842	319
	449
146-1843	449
146-3728	698
146-6433	879
	882
146-6747	891
	895
146-7453	63
	124
	126
147-0385	82
147-1444	294
147-1445	158
	266
	271
	299
147-1446	158
	266
	271
	299
147-3069	593
147-5088	78
147-5112	705
147-8211	25
147-8214	25
147-8218	24
147-8220	25
148-1925	342
148-2593	546
	547
148-2903	109
	110
148-5353	869
	870
	872
148-7841	351
148-8307	106
148-8309	327
148-8315	590
	597
148-8316	364
148-8317	364
148-8318	567
	569
	589
	612
	614
148-8322	364
	590
	610
148-8323	372
148-8325	340
148-8327	364
	593
148-8328	364
	580
148-8334	597
148-8335	364
	372
	375
	532
	593
	597
148-8336	364
	371
	372
	519
	565
	590
	597
	612
148-8338	364
148-8339	71
148-8340	9
	513
	517
	567
	571
	577
	580
	586
	588
	597
	605
	607
	610
	614
148-8341	590
	597
148-8342	597
	612
	817
148-8347	63
	66
	593
	597
148-8352	372
	597
148-8353	364
	519
	597
148-8354	571
	580
148-8355	364
	597
148-8357	365
	375
	532
	597
148-8358	365
	572
	580

▶ PRIMARY REFERENCE

PART NUMBER INDEX

Part	Page	Part	Page	Part	Page	Part	Page
148-8359	612		673	149-8142	76		306
148-8360	66		675	150-1280	550		310
	71		677	150-1293	379		347
148-8361	590		679	150-3026	82	155-2256	264
	597		681	150-3035	365		266
148-8362	365		683		612		280
	593		685	150-3065	598	155-2257	266
148-8363	537		687	150-3074	565	155-2258	347
	572	148-8405	34	150-4031	598	155-2260	158
	580		36	150-4036	58		228
148-8364	9	148-8406	327	150-4043	519		229
	513		347		577		233
	517	148-8407	34		586		234
	572		36		588		236
	580		347	150-4048	598		266
148-8365	519		519	150-4049	598		273
148-8366	519		625	150-7158	817		299
148-8367	76		626	150-7955	432		304
	365	148-8408	71	151-1398	266		306
	371		347	151-5145	621		313
	565		560	151-7038	551		315
148-8368	9	148-8409	327		553		342
	340	148-8411	532	151-8754	185		844
148-8369	9		593		186		871
	323		625	151-9274	784		876
	365		626	152-1353	▶715	155-2263	347
148-8370	519		647	152-3952	78	155-2265	175
	597		648	152-8346	616		264
148-8372	113		649		▶697		266
	572		650	152-8352	697		273
	580		651	153-2817	877		279
148-8374	340		652	153-5700	146		280
	537		653	153-5710	143		288
	567		654	153-6237	9	155-2270	158
	569		656		71		175
	572		658	153-6241	365		193
	580		660		519		216
	589	148-8423	340		572		257
	609	148-8428	513		580		264
	614		517	153-6244	610		266
148-8378	113		598	153-6246	572		273
	340		610		580		275
	371	148-8429	365	153-6262	366		279
	372	148-8430	590	153-8085	586		288
	565	148-8431	593	153-8467	54		294
	597	148-8433	365	153-8470	54		299
	612	148-8434	365	154-0051	426		300
148-8381	365	148-8444	513		433		304
148-8387	598		517	154-9023	74		306
148-8388	365		567	154-9025	76		310
148-8390	598		580	155-1142	449		342
148-8392	365		614	155-2026	372	155-2271	158
	598	148-8446	598	155-2255	158		266
148-8393	590	148-8449	598		171		275
	598	148-8453	365		266		280
148-8395	34	149-1912	797		273		282
	36	149-5240	109		275		310
	79		110		280		313
	449	149-5262	265		288	155-2272	271
	502	149-6371	814		289	155-2274	158
	663	149-7738	275		291		209
	665		310		294		211
	667		365		299		264
	669		515		300		266
	671		590		304		275

▶ **PRIMARY REFERENCE**

PART NUMBER INDEX

Part	Page
	279
	289
	299
	310
	347
	791
	794
155-2276	234
155-3624	34
	36
155-5114	342
155-6258	366
155-7321	610
155-9116	639
155-9117	639
155-9127	636
156-0214	362
156-4283	560
156-4974	493
156-5025	166
156-5545	756
156-5970	621
156-6175	304
	306
156-6198	166
	167
157-0670	74
	76
157-2348	598
158-0851	598
158-2336	499
	500
	501
158-6072	99
158-7864	891
	895
158-9956	617
	▶662
159-0052	794
159-0286	15
159-0303	4
	5
	▶48
159-0308	332
	334
159-0313	708
	709
	710
	711
159-0314	709
	711
159-0317	708
	710
159-0318	708
	709
	710
159-0927	332
	334
159-3046	349
159-8048	296
159-8049	141
	143
	146
	296
159-9539	842
160-0011	557
160-0564	296
160-1744	371
	595
160-2169	270
160-2246	124
	126
160-2247	571
	579
160-2251	363
160-2443	▶225
	848
160-5131	74
160-7165	858
	▶863
160-7689	299
160-7690	171
160-8184	32
	33
160-8492	327
	465
160-8509	356
	358
161-1703	230
161-1704	232
161-1705	231
161-5967	807
161-6149	626
	694
	695
	696
161-6154	662
161-6161	626
	694
	695
	696
161-6713	332
	334
161-6963	99
161-6987	791
162-0177	399
162-2165	101
	103
	124
	126
162-3148	60
162-7449	579
162-8068	4
	5
	▶49
163-0872	▶772
	773
163-1146	863
163-2478	25
163-4195	571
	579
163-5382	275
164-0210	57
164-1214	861
164-1234	865
164-1404	275
164-2108	397
	620
164-4058	598
164-4180	532
164-4531	756
164-4883	833
164-5557	113
164-5567	327
	340
	366
	399
	560
	590
	598
	904
164-5570	366
164-5605	569
	571
	579
164-5615	598
164-5619	79
	328
164-5624	113
	586
	588
164-6872	366
164-6873	362
164-7556	180
	183
	184
164-7577	▶250
	325
165-2510	539
	▶549
165-3928	346
165-4446	6
	▶38
165-4854	372
165-4931	399
	904
166-0690	300
166-1776	15
166-1781	15
166-1880	707
166-2905	46
166-5229	266
	271
166-6781	863
166-9130	519
167-1795	79
167-1801	641
167-2186	545
167-2190	549
	550
	720
167-2192	544
167-2195	546
	547
	548
	551
	553
	555
	616
	28
	291
	294
	294
	294
	291
	397
	636
	▶691
	636
	636
	549
	549
	689
	689
	163
	▶41
	136
	138
	634
	▶641
	223
	904
	863
	865
	435
	522
	756
	756
	775
	534
	296
	732
	▶798
	800
	▶206
	798
	850
	855
	398
	216
	216
	388
	▶253
	848
	838
	846
	715
	379
	579
	855
	332
167-2294	545
167-2300	549
167-2302	544
167-2304	546
	547
	548
	551
	553
	555
167-2307	616
167-8121	28
167-8610	291
167-8712	294
167-8713	294
167-8714	294
167-8987	291
167-9524	397
168-2210	636
	▶691
168-3504	636
168-7861	636
168-9108	549
168-9110	549
169-1616	689
169-1617	689
169-2876	163
169-3130	▶41
	136
	138
169-3290	634
	▶641
169-5861	223
169-5863	904
169-7380	863
	865
170-0432	435
170-0493	522
170-1112	756
170-1114	756
170-1115	756
170-1821	775
170-3093	534
170-3794	296
170-4910	732
170-5334	▶798
	800
170-5335	▶206
	798
170-8590	850
171-1230	855
171-2039	398
171-2210	216
171-2215	216
171-3010	388
171-3759	▶253
	848
171-4047	838
	846
171-4808	715
171-5349	379
171-6466	579
171-6682	855
171-7091	332
171-7095	334
171-9375	502

▶ **PRIMARY REFERENCE**

PART NUMBER INDEX

Part	Page	Part	Page	Part	Page	Part	Page
172-2416	855		163		229		153
172-3511	775	174-9570	▶108		233		154
	842		128	180-9852	433		156
	844	174-9692	282		434		157
172-4013	296	175-2447	379	180-9853	426		178
172-4863	216	175-3223	▶50		432		190
172-6298	95		132	180-9900	265		191
172-7966	399		134	183-3399	64		192
172-7968	399	175-3225	132		115		193
172-8121	732		134	183-3406	106		194
172-8122	732	175-3676	46		223		195
172-8125	732	175-3721	34	183-4000	490		196
172-8126	732		36	183-4365	54		197
172-8127	732		347	183-6854	95		226
172-8287	732	175-4291	180	183-6856	95		250
172-8288	732	175-4292	180	183-7262	328		254
172-9284	904	175-5058	757	183-7263	223		256
172-9367	28	175-7453	345		626		262
173-1007	642	175-7895	545		663		263
173-1008	642	175-7896	546		665		265
173-1009	642		547		667		275
173-1028	▶756		549		669		299
	855		550		671		342
173-1172	715	175-7897	544		673		775
173-1173	716	175-7898	555		675		789
173-1180	716	175-7900	548		677		810
173-1181	716	176-5638	725		679		814
173-1186	716	176-5639	724		681		823
173-2052	832	176-5642	724		683		825
173-2090	366		725		685		842
173-3993	625		726		687		844
	626		728	183-7264	562		848
173-5549	54	176-5643	724	184-0983	794		880
173-5787	857		725	184-1681	419		883
	858		726		420	186-3736	257
173-7035	857		728		428	186-5107	757
	858	177-0279	904	184-2298	855		865
173-7546	362	177-0581	91	184-2299	855	186-6189	812
173-7830	421	177-1061	362	184-2420	76	187-0541	696
173-9683	544	177-1862	850		595	187-3369	502
	546	177-1863	855	184-2509	76	187-8191	698
	547	177-4937	854	184-3579	162	187-8194	32
	548	177-9645	763	184-5394	113		33
	555		804		595	188-0633	502
173-9685	545	177-9648	266	184-9843	549	188-2008	362
173-9779	549	177-9656	266		550		532
174-0503	280	177-9953	▶130	185-2638	130	188-2162	327
	282		132	185-2639	130	188-2199	551
	299		136	185-2643	130		553
174-2231	▶807	178-0572	362	185-2644	130	188-3959	143
	863	178-2176	520	185-2645	130		146
174-2237	807	178-3086	705	185-2647	130	188-6121	▶119
174-3091	783	178-7838	388	185-2648	130		120
	784	178-7907	832	185-2650	130	188-8726	362
174-4181	80	178-8894	791	185-2651	130	188-9644	282
174-5415	98	179-0006	▶255	185-2653	130	189-0135	848
174-5907	141		308	185-2654	130	189-1707	812
	143	179-1633	715	185-2655	130	189-3158	216
	146	179-7383	8	185-2658	130		266
	279	179-9392	265	185-6335	248		299
	904	180-0149	877	185-6596	545		814
174-6899	432	180-3998	95	185-7025	549	189-8627	617
174-7449	399		577	186-2506	590		▶698
174-7875	275		580	186-2793	577	189-8772	95
174-8131	162	180-9340	228	186-3735	129	189-8777	67

▶ **PRIMARY REFERENCE**

PART NUMBER INDEX

Part	Page
189-8780	4
	5
	▶88
190-0627	703
190-1105	113
	▶120
190-3849	308
190-3850	522
190-4164	532
190-4885	593
190-5386	740
	891
	895
190-7613	266
	271
	781
	782
190-7614	280
	291
190-8505	834
190-8970	128
190-8977	119
	▶128
190-9752	378
191-0461	6
	▶115
191-0522	56
191-0523	▶56
	115
191-1782	120
191-1783	120
191-7582	636
191-7583	636
191-8303	342
191-8304	342
191-9784	▶562
	595
192-4594	90
192-7120	379
192-7507	701
192-7508	701
192-7510	701
192-7515	378
192-7752	865
192-7755	865
192-7760	865
192-7767	865
192-7783	865
192-7787	865
192-7790	865
192-7795	865
192-7799	865
192-7805	865
192-7810	865
192-7812	865
192-7820	865
192-7822	865
193-1036	691
193-2200	502
193-8570	244
193-9230	595
194-2150	571
	579
194-3655	732
194-4175	703
194-4254	265
194-4864	817
194-5131	61
194-5171	877
	880
	882
	883
194-5226	234
194-5227	234
194-6523	124
	126
194-6722	▶228
	299
194-6725	▶229
	237
194-8031	790
194-8742	323
194-9472	636
194-9473	636
194-9474	636
194-9478	639
194-9479	639
194-9480	639
194-9481	639
195-0321	47
195-2274	469
195-3330	732
195-7218	743
	750
	751
	755
195-7219	747
195-7988	265
196-1803	362
196-1912	4
	5
	▶40
196-1914	40
196-7308	379
196-9519	18
197-1932	849
197-4977	327
197-7689	863
197-8393	223
	▶230
197-8394	223
	▶231
197-8419	64
197-8940	362
197-9353	47
197-9371	47
197-9372	47
197-9386	47
198-0143	598
198-2713	273
198-4768	319
	356
	358
	449
	504
	506
198-4769	323
198-4776	773
198-4777	85
	96
	113
	459
198-4778	80
	96
	459
198-4780	459
198-4781	42
	489
198-4782	70
198-5351	636
198-5389	175
198-9811	744
	747
198-9812	744
	747
199-3368	▶195
	304
199-4318	476
199-7819	483
199-7891	130
199-8161	571
199-8436	130
199-9907	124
	126
199-9985	103
	2
200-4495	31
200-4497	▶67
	68
200-6282	617
	689
200-8788	266
201-0780	691
201-7713	349
201-8034	705
	729
201-8476	351
201-8477	351
201-8478	323
201-8480	351
201-8481	349
201-9109	480
201-9774	58
202-6473	356
	358
202-6611	180
	184
202-6614	183
203-1074	388
203-1558	499
	500
	501
203-3768	95
203-3940	239
203-6066	480
203-7703	857
	858
203-9807	124
	126
204-0813	291
204-2581	877
	879
	880
205-0826	175
205-1280	115
205-1320	31
205-1321	6
	▶31
205-2357	362
205-3096	366
205-5596	565
205-6388	854
205-7047	291
205-7187	904
205-8257	175
206-1345	273
206-4228	4
	5
	▶74
206-4669	63
206-5162	175
206-5208	175
206-5823	826
	882
	883
207-1556	▶244
	246
208-0800	124
	126
208-6054	76
208-8375	166
	167
208-8759	880
208-9277	256
209-0229	323
209-0230	323
209-0381	163
209-4527	323
209-4578	91
209-5582	256
209-6638	179
209-9234	119
210-1747	223
	▶232
210-2262	850
210-2263	850
210-2266	850
210-2270	▶850
	855
210-3321	13
210-4458	372
210-5590	6
	▶18
210-7722	95
210-8422	▶179
	201
211-2660	797
211-4038	598
211-5358	865
211-7730	119
211-9294	865
212-0907	551
	553
212-2270	6
	▶68
212-3652	6
	▶47

▶ PRIMARY REFERENCE

PART NUMBER INDEX

Part	Page	Part	Page	Part	Page	Part	Page
212-3706	115	217-5213	24	222-7843	349	227-5904	117
212-3924	▶192	217-6885	104	222-7890	265	227-5942	74
	287	217-7933	850	222-9151	291	227-6715	132
212-4174	63	217-9060	74	222-9238	378		134
212-4288	12	217-9174	593	222-9289	388	227-7390	508
212-4289	6	218-0054	577	222-9299	388		889
	▶12	218-0404	175	222-9320	398	227-7391	511
212-4621	101	218-2373	620	222-9321	398		888
212-4669	101	218-3339	338	222-9322	398	228-3323	282
212-4670	101	219-0302	508	222-9324	398	228-3621	28
212-4893	18		511	223-0455	838	228-4710	362
212-4961	663		888		846	228-6051	190
	665		889	223-0580	642		191
	667	219-0314	86	223-2321	379	228-6053	190
	669	219-2392	▶226	223-3353	551		191
	671		248		553	228-6054	190
	673	219-3016	398	223-4296	171		191
	675	219-3309	53	223-6472	362	228-6056	190
	677	219-5844	▶24	223-7577	▶256		191
	679		25		286	228-6089	265
	681	219-5846	▶25	224-0003	▶8		779
	683		26		9	228-8510	60
	685	219-5847	▶26	224-0554	511	229-1494	854
	687		27		888	229-1537	342
212-6231	▶750	219-5849	6	224-2821	193	229-2580	265
	752		▶27	224-3217	388	229-5153	18
212-6232	▶751	219-6036	480	224-3223	388	229-5154	18
	752	219-6314	175	224-3247	12	229-5155	18
212-6279	750	219-6486	▶180	224-4536	▶234	229-5156	18
	751		204		235	229-8841	4
212-6933	76	219-7242	720	224-4829	388		5
212-7779	865	219-7243	720	224-6638	47		▶13
213-0064	106	219-7244	720	224-8181	379	229-8844	29
213-3193	47	219-7245	720	224-8184	379	229-8851	286
213-3733	193	219-7265	▶522	224-8185	379	229-9382	546
213-5007	705		579	224-8186	379		547
213-5170	865	220-0771	246	225-0312	489		548
213-8179	705	220-1194	4	225-0313	489		551
213-9100	263		5	225-0947	100		553
214-0783	▶757		▶60	225-3109	158		555
214-0784	757	220-4125	93		291	229-9969	179
214-2470	316		94		829	229-9974	179
214-6480	551	220-4335	504		830		185
	553		506		870		186
214-6863	▶233	220-4336	504	225-3305	508		187
	623		506		889		188
214-7567	235	220-8678	108	225-4150	891	230-3671	93
214-7568	64	220-8800	797		895		94
	115	221-0318	103	226-0295	480	230-4011	258
	117	221-3494	64	226-0733	434		266
214-9186	791		115	226-1240	895		342
	834	221-4482	6	226-1242	891	230-4012	153
215-1942	551		▶20	226-1274	895		154
	553	221-8040	351	226-1275	891		156
215-2315	273	222-0345	854	226-2333	205		157
215-2693	340	222-1185	54	226-8202	545		266
216-0814	831	222-1186	54	226-8696	65	230-5008	291
216-2211	93	222-2367	522	226-9169	220	230-5009	824
	94	222-5376	883	226-9622	700	230-5010	266
	104	222-5893	13	226-9629	620	230-5011	266
216-5586	22	222-5915	74	227-1143	544	230-6368	141
217-3311	551	222-5917	273	227-1200	24	230-9174	216
	553	222-5946	4	227-3101	458	231-0049	213
217-3501	▶720		5	227-3103	458	231-0303	6
	732		▶57	227-5480	18	231-0336	366

▶ **PRIMARY REFERENCE**

PART NUMBER INDEX

Part	Page	Part	Page	Part	Page	Part	Page
	567		728	233-3245	787	233-8134	327
	614	232-2678	1	233-3248	859	234-0819	386
231-0878	▶4		▶477		861	234-0821	386
	318	232-3717	6	233-3252	859	234-0823	386
231-0879	4		▶53		861	234-0826	386
	5	232-4738	761	233-3270	861	234-4325	181
	▶6		▶774	233-3272	787		▶183
231-1511	1	233-0891	150	233-3275	861		198
	▶340	233-3113	▶868	233-3277	766		200
231-1512	1	233-3116	▶853	233-3278	765		202
	▶612	233-3118	775	233-3283	834	234-4326	174
231-1515	1		▶783	233-3286	▶870		▶184
	▶565	233-3122	▶827	233-3287	▶791		204
231-1516	▶571	233-3124	▶259	233-3288	▶280	234-5013	106
231-1518	▶605	233-3126	▶174		768		▶240
231-1520	524	233-3127	3	233-3291	762	234-7721	▶1
	525		▶177		▶778	234-7730	183
	526	233-3128	▶834	233-3295	▶822		184
	527	233-3130	802	233-3296	3	234-7731	183
	528		▶803		▶823		184
	529	233-3133	768	233-3366	1	234-9970	205
	530		▶851		▶486		▶214
	531	233-3134	▶162	233-3387	▶98	235-0320	849
	▶577	233-3135	▶163	233-4259	489	235-2412	▶332
231-1531	1		768		▶644		394
	▶610	233-3137	3	233-4600	2	235-2413	▶334
	640		▶800		▶275		394
231-1532	▶579	233-3138	768	233-4603	▶141	235-2414	▶336
231-1535	1		▶877	233-4610	▶209		394
	▶631	233-3139	3	233-4611	3	235-2448	9
231-1536	▶586		▶879		▶143	235-3530	342
231-1593	▶588	233-3140	▶869	233-4613	2		▶399
231-2114	1	233-3142	▶508		▶264	235-3937	▶196
	▶86	233-3145	▶151	233-4615	▶198	235-5201	395
231-2156	1		768	233-4616	▶199	235-5527	54
	▶42	233-3146	768	233-4618	▶200	235-5528	53
231-2311	70		▶775	233-4619	▶201		▶54
	▶85	233-3147	526	233-4620	▶181	235-6175	315
231-2313	1		527	233-4621	▶182		871
	▶71		528	233-4623	▶304		876
231-2315	70		529	233-4624	▶211	235-6177	158
	▶80		530	233-4631	2	235-6178	859
231-2316	70		▶780		▶193	235-6183	271
	▶494	233-3149	761	233-4637	▶279	235-6188	▶171
231-3047	111		▶762	233-4871	480	235-6194	▶310
231-3539	549	233-3150	▶853	233-6370	1		318
	550	233-3188	871		▶391	235-6195	177
	720		876	233-7139	▶721	235-8552	1
231-3627	378		▶880	233-7140	▶721		▶632
	398	233-3189	▶315	233-7141	▶721	235-9651	118
231-5052	▶465	233-3208	768	233-7142	▶722	235-9778	299
231-5055	2		▶821	233-7143	▶723	236-1924	▶146
	▶496	233-3209	851	233-7144	▶723	236-1928	306
231-5061	1	233-3224	775	233-7148	▶711	236-2216	38
	▶489		▶859	233-7149	▶708	236-2335	209
231-8159	318	233-3225	775	233-7160	▶711		211
	▶384		▶861	233-7161	▶708	236-2340	141
231-8164	318	233-3226	861	233-7162	▶708		143
	▶362	233-3227	859	233-7163	▶708		146
232-0343	111	233-3235	868	233-7164	▶709	236-2341	143
	▶122		871	233-7654	58		146
232-1754	53		875	233-7721	1	236-2356	282
232-1767	121		876		▶534	236-4413	▶78
232-2142	708	233-3236	868	233-7723	1		79
232-2146	726	233-3238	868		▶537	236-4420	78

▶ PRIMARY REFERENCE

PART NUMBER INDEX

Part	Page	Part	Page	Part	Page	Part	Page
236-4421	78	238-8818	151		▶257	243-3662	647
236-4545	243	238-8824	▶260	241-8528	318		648
236-4611	800		316		▶532		649
236-4615	265	238-8825	3	241-8534	71		650
236-4616	265		▶247	241-9585	▶103		651
236-4630	823	238-8827	▶175		124		652
236-5197	850	238-8828	▶271	242-0407	560		653
236-6220	223		525	242-2461	166		654
	▶235		526		167		656
236-6221	223		527		785		658
	▶239		528	242-3282	158		660
236-7296	631		529		175	243-5015	623
	▶634		530	242-3360	99	243-5063	85
236-8826	282	238-8839	769	242-3864	58	243-5210	626
236-8921	1		771	242-5056	▶524	243-5289	891
	▶481	238-8840	769	242-5057	▶524		895
236-8922	7	238-8841	769	242-5058	▶524	243-5362	282
	▶904		771	242-5059	▶525	243-6650	703
237-0957	▶236	238-9561	3	242-5060	▶525	243-6652	703
	617		▶243	242-5061	▶525	243-6660	1
	621	239-0618	617	242-5062	▶526		▶703
237-3943	865	239-1134	243	242-5063	▶526	243-6683	726
237-3970	▶758		▶262	242-5064	▶527	243-6684	726
	865	239-2396	106	242-5066	▶527	243-6685	▶726
237-4132	214		▶237	242-6107	▶528	243-6702	▶712
237-4133	214	239-3105	351	242-6108	▶528	243-6703	▶713
237-4134	214	239-4990	891	242-6109	▶528	243-6704	▶714
237-4135	214	239-4991	895	242-6110	▶529	243-6737	▶831
237-5176	74	239-5024	785	242-6111	▶529		855
237-6423	1	239-5025	166	242-6112	▶530	243-6740	853
	▶595		▶785	242-6146	▶530		▶858
	640	239-5195	617	242-9264	663	244-1018	580
237-7252	214	239-6379	306		665	244-1716	790
237-7552	213	239-6383	168		667	244-2240	379
237-8063	4		▶282		669	244-2246	379
	5	239-6989	891		671	244-2248	379
	▶65		895		673	244-2317	379
237-9736	177	239-7352	266		675	244-2331	379
238-0112	342	239-7353	266		677	244-2579	663
238-0251	475	239-9271	205		679		665
238-1029	▶325	239-9954	140		681		667
	355		▶160		683		669
238-1916	1	240-2183	794		685		671
	▶455	240-2767	69		687		673
238-2706	47	240-7193	275	242-9514	551		675
238-2720	47		299		553		677
238-5592	605	241-0037	500	242-9515	551		679
	607		501		553		681
238-6666	614		522	243-1352	198		683
238-6667	614	241-0542	116		199		685
238-6683	853	241-2443	590	243-2289	80		687
	▶857	241-2451	590	243-2965	663	244-2699	801
238-8756	526	241-3352	355		665		▶804
	528		563		667	244-2701	762
	▶780	241-3722	502		669		▶797
238-8758	1	241-3867	644		671		803
	▶493		▶646		673	244-2702	762
238-8760	869	241-3868	646		675		▶812
238-8763	3	241-4194	243		677	244-2710	248
	▶252	241-4602	571		679	244-2711	248
238-8808	▶158	241-5645	15		681	244-2712	248
	318	241-6185	94		683	244-2713	247
238-8809	158	241-6205	399		685	244-2714	247
	▶248	241-6218	399		687	244-2722	▶759
238-8813	175	241-8368	216	243-3250	282		762

▶ **PRIMARY REFERENCE**

PART NUMBER INDEX

Part	Page
244-2729	493
244-3114	342
	▶397
244-3168	150
244-4486	16
244-4500	29
244-4924	455
244-5001	▶854
	857
	858
244-5002	854
	▶855
244-5682	323
244-8686	619
245-1181	342
	396
245-1375	571
	579
245-1377	612
245-1596	769
	771
245-1739	32
	33
245-1811	396
245-1912	396
245-2797	480
245-2798	480
245-2806	458
245-2807	458
245-2810	304
245-2811	304
245-2812	304
245-2813	304
245-2814	304
245-2815	496
245-2827	458
245-3555	396
245-4630	239
245-4747	205
245-6375	87
245-6376	87
245-6795	89
245-6796	16
245-7339	51
245-7601	595
245-7603	560
245-8334	291
245-8842	141
	143
	146
245-8964	560
245-9041	687
245-9045	667
245-9046	669
245-9047	671
245-9048	673
245-9049	675
245-9054	683
245-9055	681
	685
245-9532	647
	648
	650
	651
	▶663
245-9533	647
	648
	650
	651
	▶665
245-9534	649
	652
	653
	654
	656
	658
	660
	▶667
245-9535	649
	652
	653
	654
	656
	658
	660
	▶669
245-9536	649
	652
	653
	654
	656
	658
	660
	▶673
245-9539	649
	652
	653
	654
	656
	658
	660
	▶675
245-9541	648
	651
	▶677
245-9542	650
	651
	▶679
245-9543	650
	651
	▶681
245-9544	652
	654
	656
	658
	660
	▶683
245-9545	654
	658
	660
	▶685
245-9923	663
	665
	667
	669
	671
	673
	675
	677
	683
	685
	687
246-1566	665
	683
246-1567	667
	671
	677
	679
	681
	685
246-1670	143
	146
246-1672	211
246-1674	201
246-1685	193
246-2641	885
246-3193	654
	656
246-3298	519
246-3303	513
	517
246-3304	513
	517
246-3305	513
	517
246-3306	513
	517
246-3307	513
	517
246-3314	519
246-3343	362
246-3344	362
246-3345	362
246-3346	362
246-3349	571
	579
246-3350	595
246-3352	595
246-3353	362
246-3356	595
246-3358	595
246-3359	595
246-3361	595
246-3372	595
246-3375	362
246-3377	362
246-3483	467
246-3486	465
	467
246-3511	465
246-4311	265
246-4389	605
	607
246-4424	362
246-4441	362
246-4477	1
	▶616
246-4490	384
	▶388
246-4611	86
246-4615	87
246-6115	1
	▶540
246-6311	571
	579
246-6324	579
246-6328	595
246-6332	595
246-6333	595
246-6334	595
246-6335	595
246-6341	571
	579
246-6342	571
	579
246-6350	1
	▶471
246-6465	391
	▶395
246-6651	904
246-6654	372
246-6657	579
246-6701	▶132
246-6703	▶886
246-6704	1
	▶91
246-6705	▶63
246-6706	1
	▶113
246-6707	1
	▶76
246-6709	1
	▶96
246-6711	▶886
246-6712	▶66
	640
246-6714	761
	▶773
246-6715	▶134
246-6719	7
	▶9
246-8627	169
246-8628	170
246-8630	169
246-8631	170
246-8746	392
246-8752	392
246-8777	502
246-8779	502
246-8780	502
246-8784	502
246-8786	502
246-8787	502
246-9345	4
	5
	▶150
247-0096	534
	▶544
247-0270	4
	5
	▶52
247-0271	52

▶ PRIMARY REFERENCE

PART NUMBER INDEX

Part	Page	Part	Page	Part	Page	Part	Page
247-0733	783	248-2924	769	249-2307	560	249-5637	658
	784		771		▶563		660
247-0737	782	248-3164	▶867	249-2308	▶523	249-5643	540
247-0740	152		877		563	249-6687	508
	154	248-3303	469	249-2428	791		889
	155	248-3304	469	249-3505	541	249-6688	511
	157	248-4037	362		542		888
247-3969	791	248-4220	778	249-3860	▶499	249-6692	▶476
247-4025	1		779		513	249-6718	336
	▶353	248-4765	▶123	249-3862	▶500	249-6751	886
247-4243	595		124		517	249-7294	524
247-4244	595		126	249-3863	▶501		525
247-4245	595	248-5081	265	249-4073	851		526
247-4247	519	248-5245	891	249-4080	508		527
247-4250	595		895		▶510		▶652
247-4993	342	248-5358	291		511	249-7295	525
247-5838	494	248-5523	342	249-4081	869		▶653
247-6430	▶306	248-5627	540	249-4088	513	249-7296	525
247-6440	141	248-6168	524		517		529
247-6441	141		528	249-4091	508		531
247-8303	▶338		▶649		511		▶656
	394	248-6169	524	249-4096	791	249-7297	529
247-8602	91		525		▶882		530
247-8622	1		526	249-4097	838		▶660
	▶885		531	249-4099	248	249-7298	524
247-8629	332		▶648	249-4103	168		525
	334	248-6174	649		▶842		528
247-9711	332		650	249-4104	168		529
	334	248-6175	648		▶844		▶647
247-9729	86	248-6201	393	249-4116	540	249-7299	526
	▶87	248-6225	449		▶550		527
247-9730	87	248-6364	91	249-4117	550		529
247-9764	494	248-6772	769	249-4120	550		530
247-9765	494		771	249-5193	551		▶650
247-9766	494	248-6883	469	249-5299	543	249-7307	653
247-9769	494	248-6884	469		▶555		656
247-9930	338	248-6887	663	249-5300	544		660
248-0322	455		665	249-5303	544		▶687
248-0409	71		667	249-5304	544	249-7309	687
248-0442	▶564		669	249-5328	526	249-7386	80
248-0443	▶564		671		527	249-7587	▶737
248-0671	71		673		528	249-7742	126
	▶73		675		530	249-7841	▶401
248-0676	85		677		▶654	249-7842	▶401
248-0677	80		679	249-5329	528	249-8540	63
248-0679	494		681		▶658	249-8575	891
248-0716	4		683	249-5330	527		895
	5		685		528	250-0613	728
	▶246		687		530	250-0614	728
248-0833	323	248-6925	3		▶651	250-0615	▶728
248-1322	▶739		▶316	249-5334	651	250-0683	494
248-1323	▶735	248-8805	551		652	250-0684	494
	739	249-0313	134		653	250-0841	▶99
248-1326	735		138	249-5478	260		100
248-1385	71	249-0410	759	249-5479	259	250-1170	1
248-1484	238		801	249-5480	174		▶630
248-1496	213	249-0411	759		288		640
248-1502	205		801	249-5482	775	250-1419	595
248-1503	205	249-0934	763	249-5483	842	250-1420	595
	213		804		844	250-2002	318
248-2284	294	249-0937	759	249-5486	265	250-2138	396
248-2378	393		801	249-5487	265	250-2139	340
248-2621	877	249-0938	763	249-5488	252		▶396
248-2628	880		804	249-5493	265	250-2177	243
248-2886	334	249-0981	619	249-5636	647	250-2299	158

▶ **PRIMARY REFERENCE**

PART NUMBER INDEX

Part	Page	Part	Page	Part	Page	Part	Page
	260		▶121	251-2247	171		418
250-2784	644	250-9254	▶166		775		419
250-2933	762		899		791		420
	▶816		900		829		421
250-2984	86	250-9257	▶165		830		432
250-3071	▶707		768		834		437
250-3443	646	250-9258	▶165		851		▶445
250-3507	489		768	251-2249	834	252-0111	429
	▶560	250-9259	▶165	251-2253	175		430
250-3528	812		525	251-2255	844		431
250-3529	812		526	251-2272	775		433
250-3818	▶2		527	251-2273	775		435
250-3865	121		528	251-2274	775		437
250-4091	393		529	251-2275	775		▶445
250-4226	▶607		530	251-2290	493	252-0112	408
250-4330	209	250-9260	▶168	251-2305	32		422
250-4357	476		318		33		423
250-4358	476	250-9304	103	251-2364	870		424
250-4359	476	250-9305	123	251-2365	870		425
250-4360	476	250-9691	401	251-2422	870		426
250-4628	833	250-9709	▶416	251-2449	469		432
250-5529	▶825	250-9779	401	251-3227	82		436
	879		▶416	251-3265	299		437
250-5701	590	250-9786	▶440	251-4160	270		▶446
250-5719	571		445	251-4162	270	252-0113	401
	579	250-9788	434	251-4207	870		416
250-5744	279		435	251-4243	789		422
250-6181	▶609		▶441	251-4378	469		423
	739		446	251-4383	469		424
250-8292	▶354	250-9819	266	251-4385	469		425
	394	250-9830	266	251-4386	469		426
250-8305	30	250-9831	71	251-5743	98		436
250-8306	4	251-0077	294	251-6673	327		437
	5	251-0982	774	251-6674	327		▶446
	▶116	251-1133	282	251-7509	623	252-0114	▶436
250-8307	116	251-1135	4	251-8248	270	252-0115	▶436
250-8308	4		▶34		789	252-0116	▶437
	▶32	251-1139	34	251-8256	590	252-0117	▶437
250-8309	4	251-1140	469		▶617	252-0118	▶437
	5	251-1141	469	251-8330	617	252-0119	▶437
	▶28	251-1142	469		▶695	252-0666	401
250-8312	4	251-1151	469	251-9571	294		▶417
	5	251-1153	469	252-0098	444	252-0667	▶401
	▶30	251-1154	469	252-0100	445	252-0674	401
250-8313	4	251-1196	778	252-0102	▶442		402
	5	251-1197	265		444		▶417
	▶106	251-1217	101	252-0104	434	252-0675	▶401
250-8314	4	251-1550	555		435	252-0676	402
	5	251-1668	663		▶443		▶417
	▶111		665		446	252-0677	▶402
250-8315	4		667	252-0106	427	252-0678	402
	5		669		428		▶417
	▶64		671		436	252-0679	▶402
250-8316	64		673		▶444	252-0680	402
250-8317	64		675	252-0108	417		▶418
250-8318	4		677		418	252-0681	▶402
	5		679		419	252-0682	402
	▶84		681		420		▶418
250-8320	4		683		421	252-0683	▶402
	5		685		432	252-0684	402
	▶46		687		436		▶418
250-8335	810	251-1669	665		437	252-0685	▶402
250-8337	632		683		▶444	252-0686	403
	▶636	251-2243	508	252-0110	416		▶418
250-9200	101		▶513		417	252-0687	▶403

▶ PRIMARY REFERENCE

PART NUMBER INDEX

Part	Page
252-0688	403
	▶419
252-0690	▶403
252-0692	403
	▶419
252-0693	▶403
252-0694	403
	▶419
252-0695	▶403
252-0696	403
	404
	▶419
252-0697	▶403
252-0698	404
	▶420
252-0699	▶404
252-0700	404
	▶420
252-0701	▶404
252-0707	404
	▶420
252-0708	▶404
252-0709	404
	▶420
252-0710	▶404
252-0713	404
	405
	▶421
252-0714	▶404
252-0715	405
	▶421
252-0716	▶405
252-0719	405
	▶421
252-0720	▶405
252-0721	405
	▶421
252-0722	▶405
252-0726	▶422
252-0728	▶422
252-0730	405
	▶422
252-0731	▶405
252-0732	▶422
252-0734	405
	406
	▶423
252-0735	▶405
252-0741	621
252-0745	621
252-0746	406
	▶423
252-0747	▶406
252-0748	406
	▶423
252-0750	406
	▶423
252-0751	▶406
252-0752	406
	▶424
252-0753	▶406
252-0754	406
	▶424
252-0755	▶406
252-0757	406
	407
	▶424
252-0758	▶406
252-0760	407
	▶424
252-0761	▶407
252-0762	407
	▶425
252-0763	▶407
252-0764	407
	▶425
252-0765	▶407
252-0766	401
	407
	▶425
252-0767	▶407
252-0770	407
	408
	▶425
252-0771	▶407
252-0772	408
	▶426
252-0773	▶408
252-0774	401
	▶408
252-0775	▶408
252-0776	408
	▶426
252-0777	▶408
252-0778	408
	▶426
252-0779	▶408
252-0791	409
	▶426
252-0792	▶409
252-0828	471
252-0977	471
252-0990	477
252-1272	71
252-1462	93
	94
252-1805	▶787
	859
	861
252-1807	859
252-1808	861
252-1810	2
	▶511
252-1811	511
	▶517
252-1824	477
252-1862	794
252-1863	794
252-1867	595
252-2157	891
	895
252-2177	42
252-5190	291
252-5224	265
252-6307	493
252-7086	703
252-7947	▶427
252-8000	173
	▶270
252-8038	621
	▶690
252-8744	205
	213
252-9513	71
252-9628	222
253-0472	113
253-0861	887
253-0937	623
	▶699
253-1167	532
253-1319	619
253-1320	579
	▶619
253-1789	842
	844
253-1956	842
253-1957	842
	844
253-1963	291
253-1964	▶291
	788
253-1965	844
253-1967	▶294
	788
253-2111	216
	217
253-2723	▶136
253-2724	3
	▶138
253-3476	508
	511
253-3482	859
	861
253-3483	859
	861
253-3484	859
	861
253-3489	265
253-3491	265
253-4115	877
253-4630	1
	▶705
253-4645	703
253-4651	705
253-4677	1
	▶557
253-4678	557
253-5303	327
253-5306	342
253-5322	327
253-5323	342
253-5326	327
253-5327	355
253-5366	579
253-7461	291
253-7536	91
253-8329	222
253-8405	1
	▶394
253-8424	394
	▶502
253-8425	▶342
	394
253-8426	▶327
	394
253-8867	502
253-8868	765
	766
253-8967	214
253-8969	214
253-8981	214
254-0079	867
254-0095	6
	▶117
254-1550	▶852
254-3286	353
254-3413	620
254-3415	612
	▶620
254-3813	6
	▶100
254-3950	663
	677
254-3951	679
254-4486	595
254-5094	870
254-5362	872
254-5363	872
254-5365	872
254-5368	872
254-5372	872
254-5373	834
254-5389	493
254-5395	768
	▶828
254-5399	1
	▶768
254-6802	91
254-6997	1
	▶82
254-7888	409
	▶427
254-7889	409
	▶427
254-7890	409
	▶427
254-7891	409
	▶428
254-7892	410
	▶428
254-7893	410
	▶428
254-7894	410
	▶428
254-7902	▶409
254-7903	▶409
254-7904	▶409
254-7905	▶409
254-7906	▶410
254-7907	▶410
254-7908	▶410
254-7941	410
	▶429
254-7942	410
	▶429
254-7944	411
	▶429
254-7945	411
	▶429
254-7948	411

▶ **PRIMARY REFERENCE**

PART NUMBER INDEX

Part	Page	Part	Page	Part	Page	Part	Page
	▶430		▶865		209		306
254-7949	411	256-9651	30		211	261-1731	794
	▶430	257-1702	504	260-2577	880	261-3223	270
254-7951	411		506	260-2579	880	261-3224	789
	▶430	257-2758	541	260-3226	455	261-3345	867
254-7952	412		542	260-3404	308	261-3613	182
	▶430	257-3226	812	260-4802	319	261-4175	719
254-7953	412	257-5176	▶738		▶377	261-4377	66
	▶431	257-5177	738	260-4803	319	261-4672	705
254-7954	412	257-5703	84		▶352	261-4673	705
	▶431	257-7066	595	260-5806	816	261-4674	705
254-7955	412	257-7224	1	260-5807	812	261-4675	705
	▶431		▶263	260-5808	812	261-4676	705
254-7956	412	257-8299	90	260-6117	541	261-5524	794
	▶431	257-8414	617	260-6438	880	261-5694	832
254-7957	▶410		▶696	260-6501	642	261-7575	96
254-7958	▶410	257-8467	4	260-6502	572	261-8536	1
254-7960	▶411		5		580		▶729
254-7961	▶411		▶95		▶642	261-8537	729
254-7964	▶411	257-8897	560	260-6724	▶871	261-8538	729
254-7965	▶411	257-9182	362	260-6725	871	261-8541	729
254-7967	▶411	257-9799	319	260-6726	871	261-8543	729
254-7968	▶412		449	260-6731	737	261-8545	729
254-7969	▶412	258-1536	238	260-6878	494	261-8547	729
254-7970	▶412		▶463	260-7451	▶447	261-8553	557
254-7971	▶412	258-4500	715		448	261-9287	99
254-7972	▶412		▶716	260-7453	447	261-9391	171
254-9136	205	258-8675	124		▶449	262-0412	▶467
255-0683	595		126	260-7455	449	262-0413	2
255-0686	595	258-8676	124		▶453		▶469
255-0939	222		126	260-7456	453	262-0568	87
255-1243	1	258-8699	104	260-7486	449	262-1408	158
	▶372	258-8723	4	260-7596	338		161
255-1244	1		5	260-7792	712		271
	▶371		▶29	260-7793	713		342
255-1248	761	258-8949	299	260-7794	714	262-1900	536
	802	258-9864	551	260-8602	449		▶547
	▶817	258-9981	541	260-8696	▶317	262-1907	538
255-1249	761		542		318		▶546
	▶814	259-0134	193	260-8698	317	262-1919	547
255-1250	7	259-0309	625		▶319	262-1920	546
	▶515	259-0310	626	260-8699	319	262-1926	546
255-1283	7	259-2569	473		▶322	262-2043	▶164
	▶93	259-2620	353	260-8700	322		171
255-1284	▶94	259-2627	729	260-8703	319	262-2827	217
255-1566	▶382	259-4476	707	260-8704	319	262-3963	465
	448	259-4483	729	260-8709	319		467
255-2410	737	259-4492	729		▶541	262-3969	467
255-2755	580	259-4758	822	260-8713	319	262-3970	467
255-3482	282	259-4759	823		449	262-3971	467
255-3631	595	259-5501	639		▶543	262-3972	467
255-5284	150	259-5502	639	260-8719	319	262-4795	▶886
255-8575	356	259-5503	639	260-8721	319	262-4930	769
	358	259-5504	636	260-8722	352		771
255-8715	542		▶639	260-9143	362	262-4961	265
	▶551	259-5507	636	260-9189	366	262-4972	2
256-0193	46	259-6836	504	261-0153	▶318		▶287
256-0783	▶719		506	261-0182	▶2	262-5610	504
256-2740	844	259-7138	323	261-0187	▶3		506
256-5308	80	259-7140	565	261-0610	▶7	262-5766	541
256-6019	429	259-9283	477	261-0775	3		▶553
256-6070	30	259-9287	▶190		▶761	262-5768	553
256-6453	240		209	261-0839	▶802	262-5769	553
256-6944	238		211	261-1502	▶197	262-5906	553
256-8768	857	259-9288	▶191		304	262-6658	362

▶ PRIMARY REFERENCE

PART NUMBER INDEX

Part	Page	Part	Page	Part	Page	Part	Page
262-6672	▶385		394	265-8935	834		899
	394	263-7814	465		838		900
262-6674	▶375	263-7815	465	265-8936	767		901
	394	263-8948	171	265-8937	265		902
262-7687	76	263-9088	171		▶767		903
262-7688	76		▶221	265-8941	822	267-3506	479
262-7689	76	263-9466	763		823		536
262-7692	76		804	265-8943	510		538
262-7721	345	263-9479	763		▶848		705
262-7857	345		804	265-8946	▶872		735
262-8057	91	264-0194	356	265-8947	834	267-3507	318
262-8058	91		358	265-8948	834		382
262-8360	1	264-0196	356	265-8949	838		484
	▶383		358	265-8950	838	267-3508	479
262-8361	595	264-0575	349	265-9125	326		540
262-8364	595	264-0638	595	265-9383	353		705
262-8365	595	264-1180	485	265-9385	76		717
262-8366	595	264-1434	4	265-9642	164		729
262-8370	595		5	265-9643	164		735
262-8371	595		▶79	266-0199	356	267-4743	69
262-8372	595	264-2392	▶479		358	267-5503	458
263-1786	132	264-2393	479	266-1467	▶227	267-6599	4
	134	264-2993	448		299		5
	136		▶567	266-1595	532		▶58
	138	264-2994	318		593	267-8628	356
263-1790	595		▶614	266-1602	617		358
	▶621	264-3152	96	266-2423	1	267-8715	867
263-2571	287	264-4297	71		▶475	267-9386	91
263-2573	810		310	266-3724	1	268-1515	363
263-2574	791	264-5346	197		▶590	268-1516	363
	868	264-5732	273	266-3753	759	268-1543	123
	871	264-6870	132		801	268-1647	595
	875		134	266-6025	136	268-1839	6
263-2576	838	264-7021	132		138		▶118
263-2588	810		134	266-6026	773	268-3527	791
263-2589	786		136	266-6149	536	268-3532	791
263-2590	768		138		538	268-3535	791
	▶786	264-7522	2	266-7315	319	268-3644	791
263-2787	1		▶299		449	268-4726	▶887
	▶536	264-8214	446	266-7531	132		891
263-2788	1	264-8233	446		134		895
	▶538	264-9726	543	266-7532	104	268-5817	132
263-3350	93	265-2122	571	266-7589	82		134
	94		579	266-7599	398		136
263-3351	93	265-2123	571	266-7650	76		138
	94		579	266-7651	76	268-6570	1
263-3774	▶21	265-4043	9	266-7711	71		▶70
	22	265-4049	9	266-7712	71	268-8080	270
263-5033	789	265-5098	567	266-7713	71	268-8082	270
263-5526	465	265-5100	567	266-8568	71	268-8690	▶709
263-5527	465	265-5644	646	266-8804	595	268-8691	▶709
263-5528	465	265-6631	141	266-8921	882	268-8692	▶709
263-5529	465		143	266-9281	831	268-8693	▶710
263-6443	763		146	266-9731	449	268-8694	▶710
	804	265-6722	703	266-9732	449	268-8695	▶710
263-6891	143	265-7346	362	266-9737	565	268-8696	▶711
	146	265-7347	363	267-0006	612	268-8697	▶711
263-6901	891	265-7434	763	267-2099	141	269-1009	633
263-6902	895	265-7435	763	267-2776	532	269-1014	633
263-7415	▶168		804	267-3171	834	269-1021	124
263-7428	386	265-7454	759	267-3172	834		126
263-7429	328		801	267-3179	768	269-2890	794
263-7431	385	265-8932	767	267-3183	▶889	269-2892	794
	▶386	265-8933	767		899	269-2893	794
263-7434	▶347	265-8934	767	267-3184	▶888	269-3284	▶849

▶ **PRIMARY REFERENCE**

PART NUMBER INDEX

Part	Page	Part	Page	Part	Page	Part	Page
269-3998	849	271-6891	378		191	275-1307	4
269-3999	849	271-6892	378	273-0336	804		5
269-4001	849	271-6893	378	273-0337	771		▶90
269-4150	2	271-6894	378	273-0338	804	275-3292	891
	▶308	271-6895	378	273-0339	804		895
	640	271-6896	378	273-0340	804	275-3393	80
269-4152	2	271-6897	378	273-0342	763	275-3634	243
	▶296	271-6898	378	273-0343	819	275-5387	494
269-4156	299	271-6899	378	273-1719	291	275-5739	532
269-4157	296	271-6919	636	273-1871	647	275-8532	282
269-4800	▶185	271-6928	378		648	275-8533	282
	205	271-6929	378		649	275-8967	271
269-6275	9	271-6954	378		650	275-8969	151
269-6650	76	271-6959	379		651		▶161
269-6974	372	271-6961	379		652	275-8970	151
	375	271-6963	379		653		▶161
269-8775	717	271-6964	379		654	275-8971	342
270-2675	515	271-6965	379		656	275-9650	▶166
270-3651	104	271-6966	379		658		265
270-4884	880	271-6970	379		660	275-9651	▶140
270-5320	108	271-6972	379	273-1878	803		171
270-6986	1	271-6974	379		▶819	276-0764	222
	▶104	271-6977	379	273-4919	113	276-1317	703
270-6987	▶124	271-7302	▶801	273-5454	388	276-1318	703
270-6988	▶126		803	273-5470	388	276-1319	703
270-6989	▶490	271-7312	778	273-5492	388	276-1425	▶640
270-7103	595		779	273-5499	388	276-1816	551
270-7566	165	271-7495	571	273-5500	388		553
270-7567	165		579	273-5510	388	276-2171	340
270-8407	490	271-8510	595		▶398	276-2331	791
270-9583	104	271-8523	349	273-5511	398	276-2954	319
271-2417	16	271-8528	349	273-5924	291		▶483
271-2811	783	271-8529	349	273-8714	630	276-3196	455
	784	271-8594	323		▶633	276-3276	101
271-3567	467		▶349	274-2384	797		103
271-3959	66	271-8680	349	274-2385	797	276-3620	477
271-5397	1	272-0388	16	274-2386	834	276-3622	477
	▶519	272-1045	▶345	274-2387	872	276-3674	61
271-6369	595		383	274-2392	797	276-3681	4
271-6370	595	272-1540	2		838		5
271-6373	205		▶497	274-2399	810		▶61
271-6418	636	272-1541	497	274-2401	834	276-3884	877
271-6432	636	272-1623	794	274-2402	834	276-4107	4
271-6847	634	272-1956	95	274-2403	834		5
	▶693	272-5444	326	274-2404	834		▶273
271-6862	378	272-5446	326		838	276-8172	378
271-6864	378	272-5449	326	274-2405	834	276-8229	483
271-6866	378	272-7116	349	274-6808	542	276-8488	158
271-6869	378	272-7239	141	274-6809	483	276-8489	248
271-6871	378		143	274-6810	483	276-8722	482
271-6872	378		146	274-6811	483	276-8723	482
271-6873	378	272-8009	▶326	274-6816	449	276-8724	482
271-6874	378		356		▶482	276-9015	763
271-6876	378		358	274-7395	223		804
271-6877	378	272-8325	171		▶241	276-9622	810
271-6878	378	272-8326	171	274-7396	223	276-9873	113
271-6879	378	272-8327	810		▶242	277-0648	482
271-6881	378	272-8329	859	275-0595	4	277-2132	617
271-6882	378	272-8330	834		5		▶689
271-6883	378	272-8441	780		▶15	277-2473	363
271-6884	378		▶781	275-0596	4	277-3082	186
271-6885	378	272-8442	780		5	277-4421	13
271-6886	378		▶782		▶286	277-4453	323
271-6889	378	272-9800	196	275-1253	106	277-4837	82
271-6890	378	272-9850	190		▶258	277-4844	101

▶ PRIMARY REFERENCE

PART NUMBER INDEX

Part	Page	Part	Page	Part	Page	Part	Page
	103		154		▶829	283-9433	458
277-4845	101		156	281-0431	152	283-9484	458
	103		157		153	283-9503	124
277-5405	▶152		265		154		126
277-5406	▶153	279-5643	36		155	283-9530	790
277-5408	▶154	279-5644	5		156	283-9796	630
277-5431	113		▶36		157	284-0009	590
277-7751	388	279-5645	5	281-2588	769	284-0424	458
277-8283	33		▶33		771	284-0438	458
278-0668	173	279-5648	36	281-2715	887	284-0525	458
	▶789	279-5746	449	281-2716	887	284-0565	458
278-0674	791		▶542	281-2721	887	284-2425	327
278-1440	763	279-6612	596	281-3136	152	284-2430	327
	▶769	279-6631	536		154	284-2721	44
278-1442	▶771	279-6632	536		155	284-3555	663
	804		729	281-3137	153		665
278-1488	▶891	279-6798	299		154		667
	899	279-8929	630		156		669
278-1799	663	279-9022	596		157		671
	665	279-9023	596	281-3431	104		673
	667	279-9658	299	281-3432	104		675
	669	279-9675	153	281-3433	104		677
	671		154	281-4271	596		679
	673		156	281-4619	111		681
	675		157	281-4655	781		683
	677	280-0134	378		782		685
	679	280-0947	617	281-5825	216		687
	681	280-1030	887	281-6780	▶101	284-3556	665
	683	280-1031	887		126		683
	685	280-1032	318	281-8268	567	284-3790	378
	687	280-1033	886	281-9356	508	284-3965	378
	▶700		887		511	284-4601	663
278-1842	▶173	280-1034	886	282-0808	791		665
278-3319	504	280-1480	887		829		667
	506	280-1766	372		830		669
278-3320	356	280-2064	596	282-2953	596		671
	358	280-2691	789	282-3650	363		673
278-3354	763	280-2748	47	282-4350	356		675
	804	280-4432	323		358		677
	816	280-4437	323	282-5396	617		679
	819	280-4438	323	282-9913	596		681
278-3419	▶448	280-7327	445	283-1099	346		683
278-6045	388	280-7329	445	283-1107	244		685
278-9732	▶5	280-7477	775	283-1224	256		687
	448	280-7478	775	283-1578	705	284-4602	663
279-0465	791	280-7911	519		707		665
279-1118	791	280-7912	519	283-3450	882		667
279-1124	763	280-7913	519	283-3451	882		669
	804	280-8912	612	283-4426	790		671
279-2568	356	280-8969	▶216	283-5830	275		673
	358		296	283-7678	▶779		675
279-3221	265	280-8973	216		803		677
279-3222	265	280-8974	216	283-7728	388		679
279-4346	323	280-8976	216	283-7960	168		681
279-4353	449	280-9455	216		▶220		683
279-4354	449	281-0228	202	283-7978	834		685
279-4355	449		203		838		687
279-4356	449	281-0387	829	283-7980	765	284-5013	1
279-4357	449		830		766		▶323
279-4724	200	281-0390	829	283-8145	182	284-5016	356
279-5267	536		830		▶186	284-5018	358
	538	281-0395	829		199	284-5019	1
279-5268	536	281-0429	152		203		▶438
	538		153	283-8650	612	284-5020	438
279-5308	153		154	283-9428	458		▶504

▶ **PRIMARY REFERENCE**

PART NUMBER INDEX

Part	Page
284-5021	438
	▶506
284-5022	504
	506
284-5023	504
	506
284-5025	1
	▶484
284-7630	363
284-7971	732
284-7972	732
284-7994	458
284-8379	209
	211
284-8450	469
284-8931	737
284-8932	737
284-8959	504
	506
284-8960	504
	506
284-9552	504
	506
284-9553	504
	506
284-9554	504
	506
284-9555	504
	506
284-9556	504
	506
284-9557	504
	506
285-0592	1
	▶393
285-0593	393
285-0594	393
285-0610	504
	506
285-0612	541
	542
285-2372	831
285-3667	486
285-3668	486
285-3692	794
285-3806	101
285-3826	614
285-6124	703
285-6125	703
285-6648	851
285-7415	778
	779
285-8055	759
	▶763
285-8264	612
285-8266	612
285-8267	612
285-8739	▶473
285-8940	458
285-9034	458
285-9036	458
285-9066	132
	134
	136
	138
286-0132	▶238
286-0133	▶238
286-0134	788
	▶790
286-0274	154
	157
286-0276	153
	156
286-0277	152
	155
286-0323	265
286-0466	717
286-0742	705
	717
	729
286-1089	891
	895
286-1278	490
286-2439	308
286-3077	▶187
	205
286-3092	763
	804
286-3197	375
286-4497	363
286-4498	363
286-4500	363
286-5299	519
286-5626	458
286-5672	508
	511
286-7909	▶202
286-7910	▶203
286-8172	342
286-8181	571
	579
286-8183	571
286-8184	571
	579
286-8185	571
286-8187	571
286-8292	458
286-9124	788
	▶824
286-9155	504
	506
286-9714	490
286-9715	490
286-9718	304
	306
286-9725	490
287-1512	354
	▶355
287-1640	737
287-1641	737
287-1686	216
287-1687	216
287-1688	216
287-1893	377
	▶378
287-2512	571
	580
287-2643	363
287-3252	265
287-3754	101
287-5701	705
287-6436	296
287-6642	275
287-6688	207
287-7250	814
287-7978	363
287-7980	363
287-8222	351
287-8223	349
	▶351
287-8358	32
287-8826	363
287-8828	296
287-8829	363
287-8830	363
287-8831	363
287-8832	363
288-0693	207
288-0735	729
288-0743	363
288-1401	265
288-1402	265
288-3678	705
288-3687	216
288-3901	310
288-3902	310
288-5507	299
	342
288-5508	282
288-5509	282
288-5515	207
288-5516	207
288-6176	612
288-6177	612
288-6370	567
	614
288-6371	567
	614
288-6508	323
	▶356
288-6509	323
	▶358
288-7312	124
	126
288-8988	1
	▶458
288-8990	458
288-9007	458
288-9013	458
288-9014	458
288-9017	458
288-9022	458
288-9251	323
288-9469	519
288-9473	519
288-9588	458
	▶480
288-9589	480
289-0213	113
289-0580	705
289-1416	472
289-1417	1
	▶472
289-2047	354
289-2081	448
	▶593
289-2143	323
289-2144	326
289-2527	216
289-2528	216
289-3820	▶188
	205
289-4086	496
289-4087	496
289-4088	496
289-4089	496
289-5189	363
289-5190	363
289-5191	363
289-5192	363
289-5193	363
289-5194	363
289-5195	363
289-5196	363
289-5197	363
289-5198	363
289-6215	849
289-6321	834
289-6323	838
	846
289-8436	310
289-8439	310
289-8449	222
289-8674	458
289-9519	300
289-9520	299
289-9726	443
290-1505	442
290-1508	440
290-1511	441
290-2014	247
290-2015	208
290-2016	174
	▶208
290-2018	208
290-2160	455
290-2219	455
290-2294	515
290-2704	814
290-2705	814
290-3263	327
290-3385	817
290-3421	340
290-3422	340
290-3518	739
	▶740
290-3519	740
290-3527	1
	▶457
290-3921	317
	447
	▶485
290-5749	▶189
	204
290-6101	349
290-6112	790
290-7296	349
290-8159	185
	186
	187

▶ PRIMARY REFERENCE

PART NUMBER INDEX

Part	Page	Part	Page	Part	Page	Part	Page
	188	292-0281	▶205		833		579
290-8160	185		221	292-7971	▶221	293-4712	571
	186	292-0285	221	292-7975	▶788		579
	187		▶222	292-7980	▶788	293-4906	596
	188	292-0292	221	292-8054	781	293-4908	596
290-8996	186		▶222		782	293-4909	596
290-9989	349	292-0301	▶221	292-8703	781	293-4910	596
291-0339	537	292-0302	205		782	293-4911	596
291-0911	458		▶213	292-8705	782	293-4912	596
291-0927	458	292-0309	788	292-8706	781	293-4913	596
291-1339	496		▶790		782	293-4914	596
291-1340	496	292-0310	▶221	292-9220	647	293-4915	596
291-1348	71	292-0311	790		648	293-4916	596
	593	292-0609	▶765		649	293-4941	598
291-1881	296		775		650	293-4942	599
291-1884	296	292-0611	765		651	293-5368	351
291-1889	296		766		652	293-5536	586
291-1891	296	292-0612	765		653	293-5556	▶732
291-1913	222		766		654		734
291-1965	372	292-0614	765		656	293-5559	▶717
	375		766		658		732
291-2161	300	292-0617	▶766		660	293-5704	586
291-2162	300		775	292-9221	647	293-7546	537
291-2634	61	292-0618	765		648	293-7547	537
291-2907	265		766		649	293-8335	484
291-2908	288	292-0620	96		650	293-9352	814
291-2909	▶288	292-0666	475		651	293-9387	363
	768	292-0907	▶205		652	293-9619	42
291-2910	▶265		221		653	293-9647	363
	768	292-0908	▶213		654	293-9648	363
291-2939	185		221		656	293-9649	363
	187	292-0970	300		658	293-9650	363
	188	292-1268	222		660	293-9874	791
291-2941	187	292-1868	289	292-9237	▶833	293-9963	363
291-2943	185	292-1874	▶289		855	294-0115	593
	188		768	292-9390	304	294-0984	768
291-3817	308	292-1923	596	292-9391	304		▶846
291-3845	790	292-2033	▶625	293-0730	109	294-0985	768
291-3919	596		649		110	294-0986	810
291-3920	596		652	293-2476	735	294-0987	768
291-3921	596		653	293-2911	850		▶810
291-3922	596		654	293-3822	891	294-0988	810
291-3923	596		656		895	294-0992	810
291-3924	596		658	293-3908	132	294-0993	810
291-3925	596		660		134	294-0997	846
291-3926	596	292-2034	▶626	293-3909	136	294-0998	846
291-4038	▶204		647		138	294-0999	846
291-4039	▶205		648	293-4066	▶109	294-1001	859
291-4826	275		650	293-4200	768		861
291-4827	275		651		▶838	294-1002	838
291-4845	282	292-2492	596	293-4243	610	294-1003	838
291-4848	310	292-2493	596	293-4386	386	294-1004	838
291-6300	735	292-3091	458	293-4622	4	294-1005	838
291-6848	473	292-3092	458		5	294-1011	768
291-6849	473	292-3482	352		▶44		▶874
291-6850	473		▶360	293-4664	596	294-1014	874
291-6851	473	292-3483	352	293-4667	596	294-1015	874
291-6852	473		▶361	293-4668	596	294-1016	846
291-6853	473	292-3757	475	293-4706	596	294-1017	874
291-6874	356	292-4304	141	293-4707	605	294-1018	874
	358	292-4305	143		607	294-1019	846
291-8464	612		146	293-4708	605	294-1031	794
291-8465	612	292-4417	76		607	294-1033	768
291-8521	378	292-6097	833	293-4709	607		▶794
291-9154	822	292-6402	▶832	293-4711	571	294-1109	366

▶ **PRIMARY REFERENCE**

PART NUMBER INDEX

Part	Page	Part	Page	Part	Page	Part	Page
	▶623		361		579		846
294-2382	459	295-2579	360	296-4309	571	297-4169	794
294-4636	596		361		579	297-4170	838
294-4637	596	295-2580	360	296-4355	497	297-5355	4
294-4638	596		361	296-4400	363		5
294-4695	596	295-2581	360	296-4922	294		▶223
294-4696	596		361	296-4924	794	297-5874	490
294-4827	596	295-2582	360	296-4925	280	297-5875	490
294-5042	855		361	296-5121	571	297-5876	490
294-5568	455	295-2585	360	296-5122	571	297-5877	490
294-7675	88		361	296-5905	313	297-5878	490
	▶89	295-2619	473	296-5906	313	297-5879	490
294-7809	596	295-3839	459	296-5907	314	297-5880	490
294-7811	596	295-4243	880	296-5908	314	297-6867	4
294-7814	596	295-4661	489	296-5909	▶313		5
294-8055	647	295-5648	794		318		▶464
	648	295-5665	794	296-5910	▶314	297-7129	455
	649	295-6393	794		448	297-7130	455
	650	295-6396	794	296-6012	596	297-7131	455
	651	295-6400	794	296-6859	596	297-8035	490
	652	295-6406	794	296-7739	496	297-8049	275
	653	295-6652	794	296-7759	179		313
	654	295-7612	76	296-7831	814		314
	656	295-7914	596	296-9931	217	297-8332	372
	658	295-7915	596	297-0760	823	297-8333	372
	660	295-8062	327	297-1225	519	297-8334	372
294-8620	122	295-8260	781	297-2537	449	297-8335	372
294-9580	541	295-8369	291	297-2628	542	297-8336	372
294-9701	560	295-8370	291	297-2653	363	297-8530	363
294-9702	560	295-8381	291	297-2654	363	297-8776	1
294-9879	363	295-8385	497	297-2655	363		▶331
294-9880	363	295-8386	497	297-2656	363	297-8777	331
295-0775	319	295-8387	497	297-2813	571	297-8778	331
295-0782	319	295-8388	497		579	297-9843	590
295-1114	794	295-8389	497	297-2814	571	298-2011	363
	▶883	295-8390	497		579	298-3643	168
295-1116	883	295-8391	497	297-2823	502		▶207
295-1118	883	295-8392	497	297-2825	502	298-3644	207
295-1119	883	295-8393	497	297-3122	834	298-3645	275
295-1120	▶826	295-8397	497		838	298-3646	275
	877	295-8427	497	297-4074	363	298-5635	▶895
295-1200	794	295-8428	497	297-4131	838		899
295-1411	▶110	295-8963	294	297-4133	834		900
	118	295-9949	473		838		901
295-1488	596	295-9950	473	297-4139	797		902
295-1544	455	296-0012	2	297-4140	797		903
295-1545	455		▶487	297-4144	834	299-0874	▶155
295-1550	455	296-0727	473		838		524
295-1578	459	296-1065	842	297-4145	838		525
295-1902	481	296-1067	291	297-4147	775		526
295-1965	593	296-1302	124	297-4148	775		527
295-1967	593		126	297-4149	838		528
295-1969	593	296-2710	497	297-4150	834		529
295-2349	71	296-2876	571	297-4152	834		530
295-2570	360		579	297-4153	838	299-0875	▶156
295-2571	361	296-2977	113	297-4154	834		524
295-2572	360	296-2989	457	297-4155	838	299-0876	▶157
	361	296-2990	457	297-4156	158		525
295-2573	360	296-2991	794	297-4159	158		531
	361	296-3491	71	297-4160	834	299-0877	155
295-2574	360	296-4040	794		838		156
	361	296-4109	794	297-4161	834		157
295-2576	360	296-4119	497	297-4162	834	299-0881	155
	361	296-4120	497	297-4165	834		156
295-2578	360	296-4308	571	297-4168	838		157

▶ PRIMARY REFERENCE

PART NUMBER INDEX

Part	Page
	▶830
299-1021	794
299-1030	830
299-1056	275
299-1057	264
299-1660	794
299-4005	168
299-4006	168
299-4608	363
299-4612	363
299-4615	363
299-4622	363
299-4646	363
299-4649	364
299-4650	364
299-4653	364
299-4654	364
299-4657	364
299-4762	104
299-5783	596
299-5784	596
299-5785	599
299-5786	596
299-5787	596
299-6181	364
299-7620	607
299-7985	96
299-8231	96
299-8904	327
299-8905	327
299-9001	310
299-9002	282
3	
300-0473	838
	846
300-1276	310
300-1870	▶875
300-1871	875
300-1872	875
300-1873	3
	▶876
300-1874	876
300-1875	876
300-6464	775
	▶784
300-6576	567
	614
300-6784	794
300-7325	665
300-7909	291
300-9517	222
301-0960	519
301-2940	168
301-2941	168
301-2943	165
301-2944	165
301-4129	510
301-4136	222
301-4371	388
301-4483	701
301-4568	625
301-5165	701
301-5166	701
301-5167	701
301-7318	596
302-0359	▶166
	900
	901
302-0360	▶167
	901
	902
302-0361	▶167
	902
	903
302-0362	▶167
	903
302-5133	▶899
302-6335	705
302-6336	705
302-6337	705
302-6338	705
302-6339	705
302-6340	705
302-6341	705
302-8669	▶899
302-8670	▶899
302-8671	▶899
302-8672	▶900
302-8673	▶900
302-8674	▶900
302-8675	▶900
302-8676	▶901
302-8677	▶901
302-8678	▶901
302-8679	▶901
302-8680	▶902
302-8681	▶902
302-8682	▶902
302-8683	▶902
302-8684	▶903
302-8685	▶903
302-8686	▶903
302-8687	▶903
302-9089	842
302-9090	842
302-9097	▶168
303-2253	104
303-9456	838
304-0607	117
304-0760	817
304-0761	817
304-7620	458
304-9224	392
305-2148	▶392
	394
305-3351	351
305-3352	351
305-3384	534
305-5337	719
305-6155	413
	▶432
305-6159	▶413
305-6160	▶413
305-6161	413
	▶432
305-6227	413
	▶432
305-6230	413
	▶432
305-6233	▶413
305-6236	▶413
305-7976	360
	361
305-7994	282
305-8141	20
	▶22
306-4148	327
306-5622	351
306-5628	351
306-5629	351
306-5635	351
306-6511	2
	▶488
306-9501	883
306-9997	216
306-9998	216
307-0016	842
307-1735	4
	5
	▶16
307-1738	16
307-4801	364
307-6384	532
308-0398	372
308-0934	612
	▶701
308-0938	701
308-2129	189
308-3510	481
308-4358	859
	861
308-6308	593
308-6409	96
308-7777	459
308-8636	435
	436
308-9532	596
308-9534	364
308-9535	364
308-9536	364
309-1833	73
309-1834	73
309-1835	73
309-1836	73
309-1905	364
	596
309-1906	571
	579
309-4629	364
309-5244	596
309-6887	519
309-6989	▶589
309-7551	▶531
310-0815	166
310-0816	166
310-0817	166
310-0818	166
310-0819	167
310-0820	167
310-0821	167
310-0822	167
310-0823	167
310-0824	167
310-1627	589
310-1629	589
310-1758	590
310-3221	▶168
	394
310-4142	165
310-4143	165
310-4213	113
310-4235	904
310-4759	551
310-6175	519
310-6176	519
310-6177	519
310-6178	519
310-6179	519
310-7060	620
310-7301	413
	▶433
310-7305	414
	▶433
310-7306	414
	▶433
310-7307	414
	▶433
310-7308	414
	▶434
310-7309	414
	▶434
310-7310	415
	▶434
310-7311	415
	▶434
310-7312	415
	▶435
310-7313	415
	▶435
310-7314	415
	▶435
310-7320	▶413
310-7323	▶414
310-7324	▶414
310-7325	▶414
310-7326	▶414
310-7327	▶414
310-7328	▶415
310-7329	▶415
310-7330	▶415
310-7331	▶415
310-7332	▶415
311-1502	323
311-6078	416
	▶435
311-6079	416
	▶436
311-6080	416
	▶436
311-6086	▶416
311-6087	▶416
311-6088	▶416
311-8377	221
312-2202	▶752
312-2203	▶752
312-2204	▶734
312-2361	372

▶ **PRIMARY REFERENCE**

PART NUMBER INDEX

Part	Page	Part	Page	Part	Page	Part	Page
312-2688	106						
312-4153	846						
312-8373	579						
312-8381	579						
312-8382	579						
312-8383	579						
312-8384	579						



© 2007 Caterpillar
All Rights Reserved

Printed in U.S.A.