CATERPILLAR®

SEBP4304
May 2005

RUTHZIL TRATOR COMERCIAL DE PEÇAS LTDA 11 97083-6812 ROLANDO

Parts Manual

SIS

See "General Information" for New Parts Manual Features.

140X Motor Grader

B9M1-Up (Machine)
KHX1-Up (Engine)
DGX1-Up (Transmission)

PROOF

Powered By C7 Engine
This Parts Manual is also Available in .PDF Format on Compact Disc (CD-ROM - Caterpillar Form No. SERP4304

PROOF

Product and Dealer Information

Note: For product identification plate locations, see the section “Product Identification Information” in the Operation and Maintenance Manual.

Delivery Date: _____

Product Information

Model: _____

Product Identification Number: _____

Engine Serial Number: _____

Transmission Serial Number: _____

Generator Serial Number: _____

Attachment Serial Numbers: _____

Attachment Information: _____

Customer Equipment Number: _____

Dealer Equipment Number: _____

Dealer Information

Name: _____ Branch: _____

Address: _____

_____

_____

	Dealer Contact	Phone Number	Hours
Sales:	_____	_____	_____
Parts:	_____	_____	_____
Service:	_____	_____	_____

PROOF

Informations produit et concessionnaire

Nota: Voir l'emplacement de la plaque signalétique du produit au chapitre "Informations produit" du guide d'utilisation et d'entretien.

Date de livraison: _____

Informations produit

Modèle: _____

Numéro d'identification produit: _____

Numéro de série du moteur: _____

Numéro de série de la boîte de vitesses: _____

Numéro de série de l'alternateur: _____

Numéros de série d'équipement: _____

Informations sur l'équipement: _____

Numéro matériel client: _____

Numéro matériel concessionnaire: _____

Informations concessionnaire

Nom: _____ Agence: _____

Adresse: _____

_____

_____

	Contact concessionnaire	Numéro de téléphone	Heures
Ventes:			
Pièces:			
Service:			

PROOF

Información del Producto/Distribuidor

Nota: Para saber la ubicación de las placas de identificación del producto, ver la sección “Información sobre identificación del producto” en el Manual de Operación y Mantenimiento.

Fecha de entrega: _____

Información del producto

Modelo: _____

Número de identificación del producto: _____

Número de serie del motor: _____

Número de serie de la transmisión: _____

Número de serie del generador: _____

Números de serie de los accesorios: _____

Información sobre los accesorios: _____

Número del equipo del cliente: _____

Número del equipo del distribuidor: _____

Información del distribuidor

Nombre: _____ Sucursal: _____

Dirección: _____

_____

_____

Comunicación con el distribuidor	Número de teléfono	Horas
Ventas: _____	_____	_____
Piezas: _____	_____	_____
Servicio: _____	_____	_____

PROOF

Informações Sobre Produto e Revendedor

Nota: Para localizações da placa de identificação do produto, consulte a seção, “Informações Sobre Identificação do Produto” no Manual de Operação e Manutenção.

Data de Entrega: _____

Informações Sobre o Produto

Modelo: _____

Número de Identificação do Produto: _____

Número de Série do Motor: _____

Número de Série da Transmissão: _____

Número de Série do Gerador: _____

Números de Série de Acessórios: _____

Informações Sobre Acessórios: _____

Número do Equipamento do Cliente: _____

Número do Equipamento do Revendedor: _____

Informações Sobre o Revendedor

Nome: _____ Filial: _____

Endereço: _____

_____

_____

	Contato do Revendedor	Telefone	Horas
Vendas:	_____	_____	_____
Peças:	_____	_____	_____
Serviço:	_____	_____	_____

PROOF

Produkt- und Händlerinformation

Anmerkung: Für die Lage der Produkt-Identnummer und Seriennummern siehe Abschnitt “Produkt-Identinformation” im Betriebs- und Wartungshandbuch.

Lieferdatum: _____

Produkt-Identinformation

Modell: _____

Produkt-Identnummer: _____

Seriennummer des Motors: _____

Seriennummer des Getriebes: _____

Seriennummer des Generators: _____

Seriennummern der Arbeitsgeräte: _____

Arbeitsgeräteinformation: _____

Kundennummer: _____

Händlernummer: _____

Händlerinformation

Name: _____ Niederlassung: _____

Adresse: _____

_____

_____

	Kontaktperson beim Händler	Telefon	Dienststunden
Verkauf:			
Ersatzteile:			
Service:			

PROOF

MEMORANDA

PROOF

TABLE OF CONTENTS

Name	Page
GENERAL INFORMATION	A24
REPAIR ALTERNATIVES	A43
SUPPLEMENTAL COOLANT ADDITIVES	A48
MAINTENANCE PARTS	A53
INDEX	A75
MACHINE ARRANGEMENT	1
COMMON AR-MOTOR GRADER	1
OPTION AR-EU	2
ROADING AR	2
SNOW AR-MOTOR GRADER	2
ENGINE ARRANGEMENT	3
ENGINE AR-COMPLETE	3
BASIC ENGINE	4
AIR COMPRESSOR AR	4
AIR COMPRESSOR GP	5
BELT TIGHTENER GP	8
COVER GP-CYLINDER BLOCK	9
COVER GP-FRONT HOUSING	10
COVER GP-VALVE MECHANISM	12
DAMPER & PULLEY GP	14
FLYWHEEL GP	15
GEAR GP-REAR	16
HOUSING GP-FLYWHEEL	17
LIFTING GP-ENGINE	19
MOUNTING GP-ALTERNATOR	20
MOUNTING GP-ENGINE & TMSN	21
MOUNTING GP-FAN DRIVE	23
PAN GP-OIL	25
PLUG GP-CYLINDER BLOCK	26
PLUG GP-ENGINE	27
PULLEY GP-IDLER	28
SEAL GP-CRANKSHAFT	29
SUPPORT GP-ENGINE	30
LUBRICATION SYSTEM	31
BASE GP-OIL FILTER	31
BREATHER GP	33
FILTER GP-ENGINE OIL	34
FUMES DISPOSAL GP	36
GAUGE GP-OIL LEVEL (DIPSTICK)	37
LINES GP-ENGINE OIL	38
LINES GP-ENGINE OIL DRAIN	39
LINES GP-TURBOCHARGER OIL	42
MANIFOLD GP-ENGINE OIL	43
OIL CHANGE AR-HIGH SPEED	44
OIL CHANGE GP-HIGH SPEED	45
COOLING SYSTEM	46
COOLING AR	46
FAN & MOTOR GP	47
FAN AR-REVERSIBLE	49
LINES GP-WATER	50
PUMP GP-WATER	54
RADIATOR GP	56
TANK GP-COOLANT	58
AIR INLET AND EXHAUST SYSTEM	61
ADAPTER GP-TURBOCHARGER	61
AFTERCOOLER GP-AIR	62
AIR CLEANER GP	63
COVER GP-AIR INLET	65
ELBOW GP-AIR INLET	67
LINES GP-AIR	68
MANIFOLD GP-EXHAUST	72
MUFFLER & MOUNTING GP	73
PRECLEANER GP	75
FUEL SYSTEM	76
ADAPTER GP-FAST FILL FUEL	76
FASTENER GP-FUEL TANK	79
FILTER GP-FUEL	81
FILTER GP-WATER SEP & FUEL	83
LINES GP-FUEL	84
LINES GP-FUEL FILTER	86
MOUNTING GP-FUEL FILTER	88
PUMP GP-FUEL PRM & PRIM FILTER	89
PUMP GP-FUEL TRANSFER	90
PUMP GP-FUEL TRANSFER & FILTER	91
REGULATOR GP-FUEL PRESSURE	92
TANK GP-FUEL	93
VALVE GP-CHECK	97
ELECTRICAL AND STARTING SYSTEM	99
ALARM GP	99
ALTERNATOR GP-CHARGING	100
BATTERY GP	112
BLOCK GP-JUNCTION	124
CONTROL & MTG GP-ENGINE ELEK	128
CONTROL & MTG GP-IMPLEMENT	129
CONTROL GP-IMPLEMENT	130
CONTROL GP-POWER TRAIN	131
CONTROL GP-UNPROGRAMMED	133
CONVERTER GP-ELECTRICAL	137
ELECTRONICS GP-IMPLEMENT	138
ELECTRONICS GP-MONITOR	139
ELECTRONICS GP-POWER TRAIN	139
HEATER GP-JACKET WATER	140
INSTALLATION AR-COMMUNICATION	142
INSTALLATION AR-GRADE CONTROL	144

PROOF

TABLE OF CONTENTS

Name	Page
INSTALLATION GP-GRADE CONTROL	144
INSTALLATION GP-LIGHTING	145
INSTALLATION GP-SECURITY	146
LAMP GP-DOME	149
LAMP GP-FLOOD	150
LAMP GP-HEAD & SIGNAL	155
LAMP GP-MARKER	161
LAMP GP-SIGNAL	162
LAMP GP-WARNING BEACON	163
LIGHTING GP-BACKUP	166
LIGHTING GP-FLOOD	167
LIGHTING GP-ROADING	173
MOTOR GP-ELECTRIC	174
PLUG GP-CONNECTOR	175
SENSOR GP-ENGINE	176
SENSOR GP-POSITION	178
SENSOR GP-PRESSURE	180
SENSOR GP-SPEED	189
SENSOR GP-TEMPERATURE	190
SERVICE GP-MACHINE	194
STARTING AID GP	195
STARTING AID GP-ETHER	196
STARTING MOTOR GP-ELECTRIC	197
SWITCH GP-ALL WHEEL DRIVE	203
SWITCH GP-BYPASS	205
SWITCH GP-DISCONNECT	206
SWITCH GP-LIGHT	207
SWITCH GP-MAGNETIC	208
SWITCH GP-PRESSURE	211
SWITCH GP-ROADING	212
SWITCH GP-ROCKER	213
SWITCH GP-WIPER	214
VALVE GP-ETHER STARTING	215
WARNING GP-BACKUP	216
WIRING GP-CAB	217
WIRING GP-CAMERA	223
WIRING GP-ENGINE	225
WIRING GP-FRONT	227
WIRING GP-GRADE CONTROL	233
WIRING GP-LIGHTING	237
WIRING GP-POWER RECEPTACLE	244
WIRING GP-REAR	246
WIRING GP-REAR LIGHTING	250
WIRING GP-SECONDARY STEERING	252
WIRING GP-SENSOR	254
POWER TRAIN	257
AUTOSHIFT AR	257
AXLE AR-FRONT	257
AXLE GP-FRONT	260
AXLE GP-REAR	266
CASE & PARTS GP-PLANETARY	268
CHAIN GP-DRIVE	275
CLUTCH GP-TRANSMISSION	276
CONTROL GP-DIFFERENTIAL LOCK	284
CONTROL GP-TRANSMISSION HYD	286
COOLER GP-TRANSMISSION OIL	288
COUPLING GP-TORSIONAL	290
COVER GP-SHIPPING	291
DIFFERENTIAL & BEVEL GEAR GP	293
DIFFERENTIAL GP	295
DRAIN GP-ECOLOGY	297
DRIVE GP-WHEEL	298
FILLER GP-POWER TRAIN OIL	299
FILTER & MTG GP-OIL	300
FILTER GP-OIL	303
FINAL DRIVE GP	306
LINES GP-ALL WHEEL DRIVE	310
LINES GP-POWER TAKE-OFF	321
LINES GP-TRANSMISSION OIL	322
MOTOR GP-PISTON	328
MOUNTING GP-WHEEL	329
PUMP & MTG GP-ALL WHEEL DRIVE	330
PUMP & MTG GP-GEAR	331
PUMP GP-GEAR	332
SCREEN GP-MAGNETIC	334
SHAFT GP-DRIVE	335
SHAFT GP-INPUT	336
TANDEM & COVER GP	337
TRANSMISSION AR	339
UNIVERSAL JOINT GP	341
VALVE & MTG GP-SOLENOID	342
VALVE GP-MODULATING	343
VALVE GP-RELIEF	344
WHEEL & TIRE AR	346
WHEEL & TIRE GP	366
WHEEL AR	393
WHEEL GP	394
FRAME AND BODY	399
CASE & FRAME GP	399
COVER GP-ACCESS	401
COVER GP-CONTROL VALVE	404
ENCLOSURE GP-ENGINE	406
FENDER & SUPPORT GP	410
FRAME GP-FRONT	418
GUARD GP-BOTTOM	419
GUARD GP-BRAKE LINES	420
GUARD GP-FUEL TANK	421
HITCH GP-ARTICULATING	422
HITCH GP-TOWING	424
LINES GP-GREASE	425
LINK GP-STEERING	426
MOUNTING GP-AXLE	428
MOUNTING GP-VALVE	429
STEP GP	431
SUPPORT AR-REAR CHASSIS	432
SUPPORT GP-RADIATOR	433

PROOF

TABLE OF CONTENTS

Name	Page
BRAKING SYSTEM	435
ACCUMULATOR GP-BRAKE	435
BRAKE GP-PARKING	437
BRAKE GP-SERVICE	439
CONTROL GP-SERVICE BRAKE	443
LINES GP-AIR TANK	452
LINES GP-SERVICE BRAKE	454
TANK GP-AIR	458
HYDRAULIC SYSTEM	460
CONTROL AR-HYDRAULIC	460
CONTROL GP-ELECTROHYDRAULIC	468
CONTROL GP-STEERING	469
COOLER GP-HYDRAULIC OIL	471
CYLINDER & MTG GP-ARTICULATION	473
CYLINDER & MTG GP-BLADE LIFT	474
CYLINDER & MTG GP-BLADE TIP	475
CYLINDER & MTG GP-CENTERSHIFT	477
CYLINDER & MTG GP-SCARIFIER	478
CYLINDER & MTG GP-SIDESHIFT	479
CYLINDER & MTG GP-STEERING	480
CYLINDER & MTG GP-WHEEL LEAN	482
CYLINDER GP-ARTICULATION	483
CYLINDER GP-BLADE TIP	485
CYLINDER GP-CENTERSHIFT	486
CYLINDER GP-HYDRAULIC	487
CYLINDER GP-LIFT	488
CYLINDER GP-RIPPER	489
CYLINDER GP-SCARIFIER	491
CYLINDER GP-SIDESHIFT	492
CYLINDER GP-STEERING	493
CYLINDER GP-WHEEL LEAN	497
DRIVE GP-CIRCLE	499
FILTER GP-OIL	502
HYDRAULIC AR	503
LINES GP-CENTERSHIFT LOCK	504
LINES GP-HYDRAULIC	508
LINES GP-HYDRAULIC FAN	526
LINES GP-PUMP	530
LINES GP-RIPPER	552
LINES GP-SECONDARY STEERING	555
LINES GP-STEERING	559
LOCK GP-CENTERSHIFT	565
MANIFOLD GP-CONTROL	566
MOTOR GP-GEROTOR	572
PUMP & MTG GP-ELECTRIC DRIVE	574
PUMP & MTG GP-HYDRAULIC FAN	577
PUMP & MTG GP-PISTON	578
STEERING AR-SECONDARY	579
SWIVEL GP	580
TANK & MTG GP-HYDRAULIC	582
TANK GP-HYDRAULIC	584
VALVE GP-BANK 3	585
VALVE GP-BANK 4	587
VALVE GP-BANK 5	589
VALVE GP-BANK 6	593
VALVE GP-BANK 7	599
VALVE GP-BANK 8	603
VALVE GP-CHECK	607
VALVE GP-CONTROL	608
VALVE GP-DIVERTER	634
VALVE GP-RELIEF	635
VALVE GP-SHUTTLE	636
VALVE GP-SOLENOID	637
IMPLEMENTS	640
CIRCLE GP	640
DRAWBAR GP	642
MOUNTING GP-GRADE CONTROL	645
PLATE GP-PUSH	646
WORK TOOLS	647
BIT GP	647
BIT GP-END	651
BLADE GP	652
BLADE GP-BULLDOZER	655
BRACKET GP-SCARIFIER	670
EDGE GP-CUTTING	671
EXTENSION GP-BLADE	674
LIFT GP-BLADE	679
MOUNTING GP-BLADE	682
MOUNTING GP-GRADE CONTROL	683
MOUNTING GP-RIPPER	684
MOUNTING GP-SNOW WING	686
RIPPER AR	688
RIPPER GP	689
SCARIFIER AR	691
SCARIFIER GP	692
TOOTH GP-RIPPER	700
OPERATOR STATION	701
ADJUSTER GP-SEAT	701
AIR COMPRESSOR GP-SEAT	702
AIR CONDITIONER & MOUNTING GP	703
AIR CONDITIONER AR	705
AIR CONDITIONER GP	706
CAB AR	710
COMPRESSOR GP-REFRIGERANT	711
CONDENSER & MTG GP-REFRIGERANT	713
CONTROL & MTG GP-JOYSTICK	714
CONTROL GP-AIR & TEMPERATURE	717
CONTROL GP-UNPRGMED MONITOR	718
COVER GP-CAB	719
COVER GP-STEERING COLUMN	720
CUSHION GP-ARM	721
DOOR GP-CAB	723
DUCT & FILTER GP-AIR	731

PROOF

TABLE OF CONTENTS

Name	Page	Name	Page
FAN GP-CIRCULATING	732		
FAN GP-DEFROSTER	734		
HOUSING GP-SEAT SUSPENSION	735		
INSTALLATION GP-RADIO	738		
INSULATION GP-WEATHER	739		
LINER GP-CAB	740		
LINES GP-AIR CONDITIONER	741		
LINES GP-HEATER	745		
MIRROR GP-REAR VIEW	747		
MOTOR GP-WINDOW WIPER	751		
PAN GP-BACKREST	752		
PANEL GP-CAB	754		
RADIO GP	757		
RECLINER GP-SEAT	758		
ROOF GP-CAB	759		
SEAT & MOUNTING GP	759		
SEAT GP	761		
SEAT GP-SUSPENSION	767		
SUPPORT GP-CONTROL	770		
SUPPRESSION GP-SOUND	774		
SUSPENSION GP-SEAT	775		
TANK GP-WINDOW WASHER	781		
TRIM GP-CAB	782		
WINDOW GP-CAB	783		
WIPER & WASHER GP-WINDOW	787		
WIPER GP-WINDOW	789		
SERVICE EQUIPMENT AND SUPPLIES	796		
BOX GP-TOOL	796		
FILM GP	797		
PLATE & FILM GP	798		
PART NUMBER INDEX	B1		

PROOF

TABLE DES MATIÈRES

Désignation	Page
GÉNÉRALITÉS	A27
OPTIONS DE RÉPARATION	A44
ADDITIFS POUR LIQUIDE DE REFROIDISSEMENT	A49
PIÈCES DE RECHANGE	A57
INDEX	A86
VERSION DE MACHINE	1
NIVELEUSE - VERSION DE BASE	1
VERSION EN OPTION - EU	2
ÉQUIPEMENT POUR DÉPLACEMENT ROUTIER (VERSION)	2
VERSION NEIGE - NIVELEUSE	2
MOTEUR COMPLET	3
VERSION DE MOTEUR COMPLET	3
MOTEUR STANDARD	4
*AIR COMPRESSOR AR	4
COMPRESSEUR D'AIR (ASS)	5
TENDEUR DE COURROIE (ASS)	8
BLOC-CYLINDRES - COUVERCLE (ASS)	9
COUVERCLE DE CARTER AV (ASS)	10
CACHE-SOUPAPES (ASS)	12
AMORTISSEUR DE VIBRATIONS ET POULIE (ASS)	14
VOLANT MOTEUR (ASS)	15
PIGNON AR (ASS)	16
CARTER DE VOLANT (ASS)	17
OEILLETONS DE LEVAGE MOTEUR (ASS)	19
MONTAGE D'ALTERNATEUR (ASS)	20
MONTAGE DE MOTEUR ET BOÎTE (ASS)	21
MONTAGE D'ENTRAÎNEMENT DE VENTILATEUR (ASS)	23
HUILE MOTEUR - CARTER (ASS)	25
BOUCHON DE BLOC-CYLINDRES (ASS)	26
BOUCHON DE MOTEUR (ASS)	27
POULIE-ROUE AVANT (ASS)	28
JOINT DE VILEBREQUIN (ASS)	29
SUPPORT DE MOTEUR (ASS)	30
CIRCUIT DE GRAISSAGE	31
SUPPORT DE FILTRE À HUILE (ASS)	31
RENIFLARD (ASS)	33
FILTRE À HUILE MOTEUR (ASS)	34
DISPOSITIF D'EVACUATION DES VAPEURS DE CARTER	36
JAUGE D'HUILE MOTEUR (BAIONNETTE) (ASS)	37
CANALISATIONS D'HUILE MOTEUR (ASS)	38
*LINES GP-ENGINE OIL DRAIN	39
CANALISATIONS-VIDANGE D'HUILE DE MOTEUR (ASS)	40
CANALISATIONS D'HUILE DE TURBOCOMPRESSEUR (ASS)	42
COLLECTEUR (ASS)-HUILE MOTEUR	43
VIDANGE D'HUILE (VERSION) - HAUTE VITESSE	44
DISPOSITIF DE VIDANGE RAPIDE D'HUILE (ASS)	45
CIRCUIT DE REFROIDISSEMENT	46
REFROIDISSEMENT (VERSION)	46
MOTEUR ET VENTILATEUR (ASS)	47
VENTILATEUR À PALES RÉVERSIBLES (VERSION)	49
CANALISATIONS D'EAU (ASS)	50
POMPE A EAU (ASS)	54
RADIATEUR (ASS)	56
RÉSERVOIR DU LIQUIDE DE REFROIDISSEMENT (ASS)	58
CIRCUIT D'ADMISSION D'AIR ET D'ÉCHAPPEMENT	61
ADAPTATEUR DE TURBOCOMPRESSEUR (ASS)	61
REFROIDISSEUR D'ADMISSION D'AIR (ASS)	62
FILTRE A AIR (ASS)	63
COUVERCLE DE COLLECTEUR D'ADMISSION (ASS)	65
COUDE D'ADMISSION D'AIR (ASS)	67
CANALISATIONS D'AIR (ASS)	68
COLLECTEUR D'ÉCHAPPEMENT (ASS)	72
SILENCIEUX ET MONTAGE (ASS)	73
PREFILTRE (ASS)	75
CIRCUIT DE CARBURANT	76
ADAPTATEUR DE REMPLIS. RAPIDE DE CARBURANT (ASS)	76
RÉSERVOIR DE CARBURANT - BOULONNERIE (ASS)	79
FILTRE A CARBURANT (ASS)	81
FILTRE DE SÉPARATEUR D'EAU ET DE CARBURANT (ASS)	83

* TRADUCTION NON DISPONIBLE AU MOMENT DE LA PUBLICATION

TABLE DES MATIÈRES

Désignation	Page
CANALISATIONS DE CARBURANT (ASS)	84
CANALISATIONS DU FILTRE A CARBURANT (ASS)	86
MONTAGE DE FILTRE À CARBURANT (ASS)	88
POMPE D'AMORÇAGE DE CARBURANT ET FILTRE PRINCIPAL	89
POMPE D'ALIMENTATION EN CARBURANT (ASS)	90
POMPE D'ALIMENTATION DE CARBURANT ET FILTRE (ASS)	91
REGULATEUR DE PRESSION DE CARBURANT (ASS)	92
RÉSERVOIR DE CARBURANT (ASS)	93
CLAPET DE RETENUE (ENS)	97
CIRCUIT ÉLECTRIQUE ET DE DÉMARRAGE	99
AVERTISSEUR (ASS)	99
ALTERNATEUR DE CHARGE (ASS)	100
BATTERIE (ASS)	112
BLOC DE BRANCHEMENT (ASS)	124
COMMANDE ET MONTAGE - MOTEUR	128
COMMANDE D'ÉQUIPEMENT	129
COMMANDE D'EQUIPEMENT (ASS)	130
COMMANDE DE TRANSMISSION (ASS)	131
COMMANDE NON PROGRAMMEE (ASS)	133
TRANSFORMATION ELECTRIQUE (ASS)	137
COMMANDE ÉLECTRONIQUE D'ÉQUIPEMENT (ASS)	138
ÉLECTRONIQUE-MONITEUR (ASS)	139
ÉLECTRONIQUE DE TRANSMISSION (ASS)	139
EAU DES CHEMISES - RECHAUFFEUR (ASS)	140
VERSION DE MONTAGE-COMMUNICATION	142
VERSION DE MONTAGE DE COMMANDE DE PROFIL LONGITUDINAL	144
MONTAGE DE COMMANDE DE PROFIL LONGITUDINAL (ASS)	144
MONTAGE D'ECLAIRAGE	145
MONTAGE-SÉCURITÉ (ASS)	146
PLAFONNIER (ASS)	149
LAMPE - PHARE (ASS)	150
LAMPE - PHARE ET CLIGNOTANT	155
REPÈRE DE LAMPE (ASS)	161
LAMPE - CLIGNOTANT DE DIRECTION (ASS)	162
LAMPE - GYROPHARE (ASS)	163
ECLAIRAGE AR (ASS)	166
ÉCLAIRAGE - PROJECTEURS (ASS)	167
ÉCLAIRAGE - FEUX DE ROUTE (ASS)	173
MOTEUR ELECTRIQUE (ASS)	174
PRISE (ASS)	175
CAPTEUR - MOTEUR (ASS)	176
SONDE - CIRCUIT DE CARBURANT	178
CAPTEUR DE PRESSION (ASS)	180
CAPTEUR DE VITESSE (ASS)	189
CAPTEUR DE TEMPERATURE (ASS)	190
ENTRETIEN DE LA MACHINE (ASS)	194
AUXILIAIRE DE DÉMARRAGE (ASS)	195
AUXILIAIRE DE DÉMARRAGE À L'ÉTHER	196
DÉMARREUR ÉLECTRIQUE (ASS)	197
CONTACTEUR DE TRACTION INTÉGRALE (ASS)	203
INTERRUPTEUR - DÉRIVATION (ASS)	205
ROBINET DE BATTERIE (ASS)	206
INTERRUPTEUR D'ÉCLAIRAGE (ASS)	207
CONTACTEUR MAGNETIQUE (ASS)	208
MANOCONTACT	211
INTERRUPTEUR - DÉPLACEMENT ROUTIER (ASS)	212
INTERRUPTEUR À BASCULE (ASS)	213
INTERRUPTEUR D'ESSUIE-GLACE (ASS)	214
SOUPAPE DE DÉMARRAGE À L'ÉTHER (ASS)	215
AVERTISSEUR DE RECUL (ASS)	216
CABLAGE DE CABINE (ASS)	217
CÂBLAGE DE CAMÉRA (ASS)	223
CABLAGE DE MOTEUR (ASS)	225
CABLAGE AV (ASS)	227
AVERTISSEMENT DE PROFIL LONGITUDINAL (ASS)	233
CABLAGE D'ÉCLAIRAGE (ASS)	237
CABLAGE DE PRISE DE FORCE	244
CABLAGE AR (ASS)	246
CABLAGE D'ECLAIRAGE ARRIERE (ASS)	250
CABLAGE DE DIRECTION AUXILIAIRE (ASS)	252
CABLAGE - CAPTEUR (ASS)	254
TRANSMISSION	257
CHANGEMENT DE VITESSES AUTOMATIQUE (VERSION)	257
ESSIEU AV (VERSION)	257

* TRADUCTION NON DISPONIBLE AU MOMENT DE LA PUBLICATION

TABLE DES MATIÈRES

Désignation	Page
ESSIEU AV (ASS)	260
ESSIEU AR (ASS)	266
TRAINS PLANÉTAIRES - CARTER ET PIÈCES	268
ENTRAÎNEMENT DE CHAÎNE (ASS)	275
EMBRAYAGE DE BOÎTE DE VITESSES (ASS)	276
COMMANDE DE DIFFÉRENTIEL - VERROUILLAGE (ASS)	284
COMMANDE HYDRAULIQUE DE BOÎTE (ASS)	286
REFROIDISSEUR D'HUILE DE BOÎTE (ASS)	288
ACCOUPLEMENT DE TORSION (ASS)	290
COUVERCLES D'EXPEDITION (ASS)	291
COURONNE ET DIFFERENTIEL (ASS)	293
DIFFERENTIEL (ASS)	295
VIDANGE-ÉCOLOGIE (ASS)	297
ENTRAÎNEMENT DE ROUE (ASS)	298
GOULOTTE DE REMPLISSAGE D'HUILE DE TRANSMISSION	299
FILTRE À HUILE ET MONTAGE (ASS)	300
FILTRE A HUILE (ASS)	303
RÉDUCTEURS (ASS)	306
CANALISATIONS DE TRACTION INTÉGRALE (ASS)	310
CANALISATIONS DE PRISE DE FORCE (ASS)	321
CANALISATIONS D'HUILE DE BOÎTE (ASS)	322
GROUPE DE MOTEUR A PISTONS	328
ROUE - GROUPE DE MONTAGE	329
POMPE ET MONTAGE DE TRACTION INTÉGRALE (ASS)	330
POMPE ET MONTAGE - PIGNON	331
POMPE A ENGRENAGES (ASS)	332
ÉCRAN MAGNÉTIQUE (ASS)	334
ARBRE D'ENTRAÎNEMENT (ASS)	335
ARBRE D'ENTRÉE (ASS)	336
TANDEM ET CARTER (ASS)	337
BOÎTE DE VITESSES (VERSION)	339
JOINT UNIVERSEL (ASS)	341
SOUPAPE ET MONTAGE - SOLÉNOÏDE	342
SOUPAPE DE MODULATION (ASS)	343
CLAPET DE DECHARGE (ASS)	344
ROUE ET PNEU (VERSION)	346
ROUE ET PNEU (ASS)	366
ROUE (VERSION)	393
JANTE (ASS)	394
CHÂSSIS ET BENNE	399
CHÂSSIS ET CARTER (ASS)	399
COUVERCLE DE VISITE (ASS)	401
COUVERCLE DE DISTRIBUTEUR (ASS)	404
CARENAGE DE MOTEUR (ASS)	406
GARDE-BOUE ET SUPPORT (ASS)	410
CHÂSSIS AV (ASS)	418
BLINDAGE INFÉRIEUR (ASS)	419
BLINDAGE DES CANALISATIONS DES FREINS	420
PROTECTION DU RÉSERVOIR DE CARBURANT (ASS)	421
ATTELAGE D'ARTICULATION (ASS)	422
ATTELAGE-REMORQUAGE (ASS)	424
CANALISATIONS DE GRAISSAGE (ASS)	425
ARTICULATION DE DIRECTION (ASS)	426
MONTAGE D'ESSIEU (ASS)	428
MONTAGE DE SOUPAPE (ASS)	429
MARCHEPIED (ASS)	431
VERSION DE SUPPORT DE CHÂSSIS ARRIÈRE	432
SUPPORT DE RADIATEUR (ASS)	433
CIRCUIT DE FREINAGE	435
ACCUMULATEUR - FREIN	435
FREIN DE STATIONNEMENT (ASS)	437
FREIN DE MANOEUVRE (ASS)	439
FREIN DE MANOEUVRE - COMMANDE (ASS)	443
CANALISATIONS DU RÉSERVOIR D'AIR (ASS)	452
CANALISATIONS DU FREIN DE MANOEUVRE (ASS)	454
RÉSERVOIR PNEUMATIQUE (ASS)	458
CIRCUIT HYDRAULIQUE	460
COMMANDE HYDRAULIQUE (VERSION)	460
COMMANDE ÉLECTROHYDRAULIQUE (ASS)	468
COMMANDE DE DIRECTION (ASS)	469
REFROIDISSEUR D'HUILE HYDRAULIQUE (ASS)	471
VÉRIN D'ARTICULATION ET MONTAGE (ASS)	473
VÉRIN DE RELEVAGE DE LAME ET MONTAGE (ASS)	474
VÉRIN D'INCLINAISON DE LAME ET MONTAGE (ASS)	475
VÉRIN DE DÉPORT DE CERCLE ET MONTAGE (ASS)	477

* TRADUCTION NON DISPONIBLE AU MOMENT DE LA PUBLICATION

TABLE DES MATIÈRES

Désignation	Page
VÉRIN DE SCARIFICATEUR ET MONTAGE (ASS)	478
VÉRIN DE DÉPORT DE LAME (ASS)	479
VERIN DE DIRECTION ET MONTAGE (ASS)	480
VÉRIN D'INCLINAISON DE ROUE ET MONTAGE (ASS)	482
VÉRIN D'ARTICULATION (ASS)	483
VÉRIN D'INCIDENCE DE LAME (ASS)	485
VÉRIN DE DÉPORT DE CERCLE (ASS)	486
VÉRIN HYDRAULIQUE (ASS)	487
VÉRIN DE LEVAGE (ASS)	488
VERIN DE RIPPER (ASS)	489
VÉRIN DE SCARIFICATEUR (ASS)	491
VÉRIN DE DÉPORT DE LAME (ASS)	492
VERIN DE DIRECTION (ASS)	493
VÉRIN D'INCLINAISON DE ROUE (ASS)	497
ENTRAÎNEMENT DE CERCLE (ASS)	499
FILTRE A HUILE (ASS)	502
VERSION HYDRAULIQUE	503
CANALISATIONS DE VERROUILLAGE DE DÉPORT DE CERCLE (ASS)	504
CANALISATIONS HYDRAULIQUES (ASS)	508
*LINES GP-HYDRAULIC	524
CANALISATIONS HYDRAULIQUES (ASS)	525
CANALISATIONS HYDRAULIQUES DE VENTILATEUR (ASS)	526
CANALISATIONS DE POMPE (ASS)	530
CANALISATIONS DU RIPPER (ASS)	552
CANALISATION DE DIRECTION AUXILIAIRE	555
*LINES GP-STEERING	559
CANALISATIONS DE DIRECTION (ASS)	561
VERROUILLAGE DE DÉPORT DE CERCLE (ASS)	565
*MANIFOLD GP-CONTROL	566
COLLECTEUR - COMMANDE (ASS)	567
MOTEUR HYDRAULIQUE (ASS)	572
POMPE ET MONTAGE - ENTRAÎNEMENT ÉLECTRIQUE (ASS)	574
POMPE ET MONTAGE-VENTILATEUR HYDRAULIQUE	577
POMPE ET MONTAGE - PISTON (ASS)	578
DIRECTION AUXILIAIRE (VERSION)	579
GROUPE D'ORIENTATION	580
RÉSERVOIR HYDRAULIQUE ET MONTAGE (ASS)	582
RÉSERVOIR HYDRAULIQUE (ASS)	584
DISTRIBUTEUR TRIPLE ÉLÉMENT (ASS)	585
DISTRIBUTEUR 4 ÉLÉMENTS (ASS)	587
DISTRIBUTEUR 5 ÉLÉMENTS (ASS)	589
DISTRIBUTEUR 6 ÉLÉMENTS (ASS)	593
DISTRIBUTEUR 7 ÉLÉMENTS (ASS)	599
DISTRIBUTEUR 8 ÉLÉMENTS (ASS)	603
CLAPET DE RETENUE (ENS)	607
DISTRIBUTEUR (ASS)	608
SOUPAPE DE DERIVATION (ASS)	634
CLAPET DE DECHARGE (ASS)	635
VANNE PILOTE (ASS)	636
SOUPAPE - SOLÉNOÏDE (ASS)	637
ÉQUIPEMENTS	640
CERCLE (ASS)	640
BARRE D'ATTELAGE (ASS)	642
*MOUNTING GP-GRADE CONTROL	645
PLAQUE DE POUSSÉE (ASS)	646
OUTILS DE TRAVAIL	647
EMBOUT (ASS)	647
EMBOUT D'EXTRÉMITÉ (ASS)	651
LAME (ASS)	652
LAME - BULLDOZER (ASS)	655
SUPPORT DE SCARIFICATEUR (ASS)	670
LAME DE COUPE (ASS)	671
RALLONGE DE LAME (ASS)	674
LEVAGE - LAME (ASS)	679
MONTAGE DE LAME	682
*MOUNTING GP-GRADE CONTROL	683
MONTAGE DE RIPPER (ASS)	684
MONTAGE D'AILERON CHASSE-NEIGE (ASS)	686
RIPPER (VERSION)	688
RIPPER (ASS)	689
SCARIFICATEUR (VERSION)	691
SCARIFICATEUR (ASS)	692
*TOOTH GP-RIPPER	700
POSTE DE CONDUITE	701
REGLAGE DE SIEGE (ASS)	701
SIÈGE - COMPRESSEUR D'AIR (ASS)	702
CLIMATISEUR ET MONTAGE (ASS)	703
CLIMATISEUR (VERSION)	705
CLIMATISEUR (ASS)	706
CABINE (VERSION)	710
COMPRESSEUR DE REFRIGERANT (ASS)	711
CONDENSATEUR ET MONTAGE (RÉFRIGÉRANT)	713

* TRADUCTION NON DISPONIBLE AU MOMENT DE LA PUBLICATION

PROOF

TABLE DES MATIÈRES

Désignation	Page	Désignation	Page
COMMANDE ET MONTAGE - LEVIER (ASS)	714		
COMMANDE - AIR ET TEMPERATURE (ASS)	717		
COMMANDE DE MONITEUR NON PROGRAMMÉE (ASS)	718		
COUVERCLE - CABINE (ASS)	719		
COUVERCLE DE COLONNE DE DIRECTION (ASS)	720		
ACCOUDOIR (ASS)	721		
PORTIÈRE DE CABINE (ASS)	723		
CONDUIT ET FILTRE À AIR (ASS)	731		
VENTILATEUR DE CABINE (ASS)	732		
VENTILATEUR DÉGIVREUR (ASS)	734		
SUSPENSION DE SIEGE - CARTER (ASS)	735		
MONTAGE DE RADIO (ASS)	738		
ISOLATION DE CABINE (ASS)	739		
CABINE - REVÊTEMENT (ASS)	740		
CANALISATIONS DE CLIMATISEUR (ASS)	741		
CANALISATIONS DE CHAUFFAGE (ASS)	745		
RÉTROVISEUR (ASS)	747		
MOTEUR D'ESSUIE-GLACE (ASS)	751		
COUVERCLE INFÉRIEUR-DOSSIER (ASS)	752		
TABLEAU DE BORD (ASS)	754		
RADIO (ASS)	757		
SIÈGE INCLINABLE (ASS)	758		
TOIT - CABINE (ASS)	759		
SIÈGE ET MONTAGE (ASS)	759		
SIÈGE (ASS)	761		
SIÈGE AVEC SUSPENSION (ASS)	767		
SUPPORT - COMMANDE (ASS)	770		
INSONORISATION (ASS)	774		
SIÈGE AVEC SUSPENSION (ASS)	775		
RÉSERVOIR - LAVE-GLACE (ASS)	781		
GARNITURE POUR CABINE (ASS)	782		
VITRE DE CABINE (ASS)	783		
ESSUIE-GLACE ET LAVE-GLACE	787		
ESSUIE-GLACE (ASS)	789		
MATÉRIEL ET FOURNITURES D'ENTRETIEN	796		
COFFRE A OUTILS (ASS)	796		
PLAQUE SIGNALÉTIQUE (ASS)	797		
PLAQUES SIGNALETIQUES ET AUTOCOLLANTS (ASS)	798		
INDEX DE NUMÉROS DE PIÈCES	B1		

* TRADUCTION NON DISPONIBLE AU MOMENT DE LA PUBLICATION

PROOF

CONTENIDO

Nombre	Página
INFORMACIÓN GENERAL	A31
ALTERNATIVAS DE REPARACIÓN	A45
ADITIVOS DE REFRIGERANTE SUPLEMENTARIOS	A50
PIEZAS DE MANTENIMIENTO	A61
INDICE	A100
CONFIGURACIÓN DE MÁQUINA	1
CONFIGURACIÓN BÁSICA DE LA MOTONIVELADORA	1
CONFIGURACIÓN PARA LA UNIÓN EUROPEA	2
CONFIGURACIÓN PARA CARRETERA	2
MOTONIVELADORA PARA LA NIEVE (CONFIG)	2
CONFIGURACIÓN DE MOTOR	3
MOTOR COMPLETO (CONFIG)	3
MOTOR BÁSICO	4
*AIR COMPRESSOR AR	4
COMPRESOR DE AIRE (GR)	5
AJUSTADOR DE CORREA (GR)	8
TAPA DEL BLOQUE MOTOR (GR)	9
TAPA DE LA CAJA DELANTERA (GR)	10
TAPA DEL MECANISMO DE VÁLVULAS (GR)	12
AMORTIGUADOR Y POLEA (GR)	14
VOLANTE (GR)	15
ENGRANAJE TRASERO (GR)	16
VOLANTE - CAJA DE (GR)	17
CÁNCAMOS DE LEVANTAMIENTO DEL MOTOR (GR)	19
MONTAJE DEL ALTERNADOR (GR)	20
MONTAJE DEL MOTOR Y LA TRANSMISIÓN (GR)	21
MONTAJE DEL MANDO DE VENTILADOR (GR)	23
CÁRTER - COLECTOR DEL (GR)	25
TAPÓN DEL BLOQUE MOTOR (GR)	26
TAPÓN DEL MOTOR (GR)	27
POLEA DE RUEDA GUIA (GR)	28
SELLO DE CIGÜEÑAL (GR)	29
MOTOR - SOPORTE DEL (GR)	30
SISTEMA DE LUBRICACIÓN	31
FILTRO DE ACEITE - BASE DEL (GR)	31
RESPIRADERO (GR)	33
FILTRO DE ACEITE DEL MOTOR (GR)	34
ESCAPE DE GASES (GR)	36
INDICADOR DEL NIVEL DE ACEITE (VARILLA) (GR)	37
TUBERÍAS DE ACEITE DEL MOTOR (GR)	38
*LINES GP-ENGINE OIL DRAIN	39
TUBERIAS DE DRENAJE DE ACEITE DE MOTOR (GR)	40
TURBOCOMPRESOR - TUBERÍAS DE ACEITE DEL (GR)	42
MULTIPLE DE ACEITE DE MOTOR (GR)	43
CAMBIO RÁPIDO DE ACEITE (CONFIG)	44
CAMBIO RÁPIDO DE ACEITE (GR)	45
SISTEMA DE ENFRIAMIENTO	46
CONFIGURACIÓN DE ENFRIAMIENTO	46
MOTOR Y VENTILADOR (GR)	47
VENTILADOR REVERSIBLE (CONFIG)	49
TUBERÍAS DEL AGUA (GR)	50
BOMBA DE AGUA (GR)	54
RADIADOR (GR)	56
TANQUE DE REFRIGERANTE (GR)	58
SISTEMA DE ADMISIÓN Y ESCAPE DE AIRE	61
ADAPTADOR DEL TURBOCOMPRESOR (GR)	61
POSENFRIADOR DE AIRE (GR)	62
FILTRO DE AIRE (GR)	63
TAPA DE ADMISIÓN DE AIRE (GR)	65
CODO DE ADMISIÓN DE AIRE (GR)	67
AIRE - TUBERÍAS DE (GR)	68
MÚLTIPLE DE ESCAPE (GR)	72
SILENCIADOR Y MONTAJE GR	73
ANTEFILTRO (GR)	75
SISTEMA DE COMBUSTIBLE	76
ADAPTADOR DE LLENADO RÁPIDO DE COMBUSTIBLE (GR)	76
TORNILLERÍA DEL TANQUE DE COMBUSTIBLE	79
FILTRO DE COMBUSTIBLE (GR)	81
FILTRO DE COMBUSTIBLE Y SEPARADOR DE AGUA (GR)	83
TUBERÍAS DE COMBUSTIBLE (GR)	84
TUBERÍAS DEL FILTRO DE COMBUSTIBLE	86

* NO HAY TRADUCCION DISPONIBLE EN EL MOMENTO DE LA IMPRESION

PROOF

CONTENIDO

Nombre	Página
MONTAJE DE FILTRO DE COMBUSTIBLE (GR)	88
BOMBA DE CEBADO Y FILTRO PRIMARIO DE COMBUSTIBLE (GR)	89
BOMBA DE TRANSFERENCIA DE COMBUSTIBLE (GR)	90
BOMBA DE TRANSFERENCIA DE COMBUSTIBLE Y FILTRO (GR)	91
REGULADOR DE LA PRESION DE COMBUSTIBLE (GR)	92
COMBUSTIBLE - TANQUE DE (GR)	93
VÁLVULA DE RETENCIÓN (GR)	97
SISTEMA ELÉCTRICO Y DE ARRANQUE	99
ALARMA (GR)	99
CARGA - ALTERNADOR DE (GR)	100
BATERÍA (GR)	112
BLOQUE DE EMPALME (GR)	124
CONTROL ELECTRÓNICO DEL MOTOR Y MONTAJE	128
CONTROL DE IMPLEMENTOS Y MONTAJE (GR)	129
CONTROL DE IMPLEMENTOS (GR)	130
CONTROL DE TREN DE FUERZA (GR)	131
CONTROL NO PROGRAMADO (GR)	133
CONVERTIDOR ELÉCTRICO (GR)	137
IMPLEMENTOS (GR ELECTRÓNICO)	138
ELECTRONICA DE MONITOR (GR)	139
TREN DE FUERZA-GRUPO ELECTRÓNICO	139
AGUA DE LAS CAMISAS - CALENTADOR DEL (GR)	140
INSTALACION DE COMUNICATION (CONFIG)	142
INSTALALCIÓN (CONFIG) -CONTROL DE GRADO	144
GRUPO DE INSTALACION, CONTROL DE GRADO	144
*INSTALLATION GP-LIGHTING	145
INSTALACION DE SEGURIDAD (GR)	146
LÁMPARA DEL TECHO (GR)	149
REFLECTOR (GR)	150
LÁMPARA DE LUZ DELANTERA Y DE SEÑAL (GR)	155
LAMPARA MARCADORA (GR)	161
LUZ DE SEÑAL DE GIRO (GR)	162
LÁMPARA DE BALIZA DE ADVERTENCIA (GR)	163
LUCES DE RETROCESO (GR)	166
LUCES DE REFLECTOR (GR)	167
LUCES DE DESPLAZAMIENTO (GR)	173
MOTOR ELÉCTRICO (GR)	174
*PLUG GP-CONNECTOR	175
SENSOR DEL MOTOR (GR)	176
DETECTOR DE POSICIÓN (SISTEMA DE COMBUST.) (GR)	178
SENSOR DE PRESIÓN (GR)	180
SENSOR DE VELOCIDAD (GR)	189
SENSOR DE TEMPERATURA (GR)	190
SERVICIO DE MAQUINA (GR)	194
AUXILIAR DE ARRANQUE (GR)	195
AUXILIAR DE ARRANQUE CON ÉTER (GR)	196
MOTOR DE ARRANQUE ELÉCTRICO (GR)	197
GRUPO DE INTERRUPTOR-TRACCIÓN EN TODAS LAS RUEDAS	203
INTERRUPTOR DE DERIVACIÓN	205
DISYUNTOR (GR)	206
INTERRUPTOR DE LUZ (GR)	207
INTERRUPTOR MAGNÉTICO (GR)	208
INTERRUPTOR DE PRESIÓN (GR)	211
INTERRUPTOR DE DESPLAZAMIENTO POR CARRETERA (GR)	212
INTERRUPTOR DE VOLQUETE (GR)	213
INTERRUPTOR DEL LIMPIADOR (GR)	214
GRUPO DE VÁLVULA-ARRANQUE CON ÉTER	215
RETROCESO - ALARMA DE (GR)	216
CABLES DE LA CABINA (GR)	217
*WIRING GP-CAMERA	223
CABLES DEL MOTOR (GR)	225
CABLES DELANTEROS (GR)	227
CABLE GR-GRADO DE CONTROL	233
CABLES DE LAS LUCES (GR)	237
CABLES DEL RECEPTÁCULO DE FUERZA (GR)	244
CABLES POSTERIORES (GR)	246
ALAMBRADO DE LUCES TRASERAS (GR)	250
CABLES DE LA DIRECCIÓN SECUNDARIA	252
CABLES DE SENSOR (GR)	254
TREN DE FUERZA	257
CAMBIO AUTOMÁTICO DE VELOCIDADES (CONFIG)	257
EJE DE DIRECCION (CONFIG)	257
EJE DELANTERO (GR)	260
EJE TRASERO (GR)	266
CAJA Y PIEZAS DE LOS PLANETARIOS	268
CADENA DE IMPULSIÓN (GR)	275

* NO HAY TRADUCCION DISPONIBLE EN EL MOMENTO DE LA IMPRESION

CONTENIDO

Nombre	Página
EMBRAGUE DE LA TRANSMISIÓN (GR)	276
CONTROL DE TRABA DEL DIFERENCIAL (GR)	284
CONTROL HIDRÁULICO DE LA TRANSMISIÓN (GR)	286
ENFRIADOR DE ACEITE DE LA TRANSMISIÓN (GR)	288
ACOPLAMIENTO TORSIONAL (GR)	290
TAPAS PROTECTORAS DE EMBARQUE (GR)	291
DIFERENCIAL Y CORONA (GR)	293
DIFERENCIAL (GR)	295
DRENAJE DE SEGURIDAD ECOLÓGICA (GR)	297
MANDO DE LA RUEDA	298
TUBO DE LLENADO DE ACEITE DE LA TRANSMISIÓN (GR)	299
FILTRO DE ACEITE Y MONTAJE (GR)	300
FILTRO DE ACEITE (GR)	303
MANDO FINAL (GR)	306
GRUPO DE TUBERIAS, MANDO EN TODAS LAS RUEDAS	310
TUBERÍAS DE LA TOMA DE FUERZA (GR)	321
TUBERÍAS DE ACEITE DE LA TRANSMISIÓN (GR)	322
PISTONES DEL MOTOR (GR)	328
MONTAJE DE RUEDA (GR)	329
GRUPO DE BOMBA Y MONTAJE, MANDO DE TODAS LAS RUEDAS	330
BOMBA DE ENGRANJE Y MONTAJE (GR)	331
BOMBA DE ENGRANAJES (GR)	332
REJILLA MAGNÉTICA (GR)	334
EJE DE MANDO (GR)	335
EJE DE ENTRADA (GR)	336
TÁNDEM Y CUBIERTA (GR)	337
TRANSMISION (CONFIG)	339
JUNTA UNIVERSAL (GR)	341
VALVULA DE SOLENOIDE Y MONTAJE (GR	342
VÁLVULA DE MODULACIÓN (GR)	343
VÁLVULA DE ALIVIO (GR)	344
RUEDA Y LLANTA (CONFIG)	346
RUEDA Y NEUMÁTICO (GR)	366
RUEDA (CONFIG)	393
RUEDA (GR)	394
BASTIDOR Y CAJA	399
CAJA Y BASTIDOR (GR)	399
GRUPO DE TAPA, ACCESO	401
TAPA DE VÁLVULA DE CONTROL (GR)	404
COMPARTIMIENTO DEL MOTOR (GR)	406
GUARDABARROS Y SOPORTE (GR)	410
BASTIDOR DELANTERO (GR)	418
PROTECTOR INFERIOR (GR)	419
PROTECTOR DE LAS TUBERÍAS DE LOS FRENOS (GR)	420
PROTECTOR DEL TANQUE DE COMBUSTIBLE (GR)	421
ENGANCHE ARTICULADO (GR)	422
ENGANCHE DE REMOLQUE (GR)	424
TUBERÍAS DE ENGRASE (GR)	425
TIRANTE DE DIRECCIÓN (GR)	426
EJE - GRUPO DE MONTAJE	428
VÁLVULA - MONTAJE DE LA (GR)	429
ESTRIBO DEL OPERADOR (GR)	431
CONFIGURACIÓN DE SOPORTE DE CHASIS TRASERO	432
SOPORTE DEL RADIADOR (GR)	433
SISTEMA DE FRENOS	435
ACUMULADOR DEL FRENO (GR)	435
FRENO DE ESTACIONAMIENTO (GR)	437
FRENO DE SERVICIO (GR)	439
FRENO DE SERVICIO - CONTROL (GR)	443
TUBERÍAS DEL TANQUE DE AIRE (GR)	452
TUBERÍAS DEL FRENO DE SERVICIO (GR)	454
TANQUE DE AIRE (GR)	458
SISTEMA HIDRÁULICO	460
CONTROL HIDRÁULICO (CONFIG)	460
CONTROL ELECTROHIDRAULICO (GR)	468
CONTROL DE DIRECCIÓN (GR)	469
ENFRIADOR DEL ACEITE HIDRAULICO (GR)	471
CILINDRO DE ARTICULACIÓN Y MONTAJE (GR)	473
CILINDRO DE LEVANTAMIENTO DE HOJA Y MONTAJE (GR)	474
CILINDRO DE LA PUNTA DE LA HOJA Y MONTAJE (GR)	475
CILINDRO DE DESPLAZAMIENTO DEL CÍRCULO Y MONTAJE (GR)	477
CILINDRO DE ESCARIFICADOR Y MONTAJE (GR)	478
CILINDRO DE DESPLAZAMIENTO LATERAL Y MONTAJE (GR)	479

* NO HAY TRADUCCION DISPONIBLE EN EL MOMENTO DE LA IMPRESION

CONTENIDO

Nombre	Página
CILINDRO DE DIRECCIÓN Y MONTAJE (GR)	480
CILINDRO DE INCLINACIÓN DE RUEDA Y MONTAJE (GR)	482
ARTICULACIÓN DE CILINDRO (GR)	483
CILINDRO DE INCLINACIÓN DE LA HOJA (GR)	485
CILINDRO DE DESPLAZAMIENTO DEL CÍRCULO (GR)	486
CILINDRO HIDRÁULICO (GRUPO)	487
CILINDRO DE LEVANTAMIENTO (GR)	488
CILINDRO DE DESGARRADOR (GR)	489
CILINDRO DE ESCARIFICADOR (GR)	491
CILINDRO DE DESPLAZAMIENTO LATERAL (GR)	492
CILINDRO DE DIRECCIÓN (GR)	493
CILINDRO DE INCLINACIÓN DE LAS RUEDAS (GR)	497
MANDO DEL CIRCULO (GR)	499
FILTRO DE ACEITE (GR)	502
HIDRÁULICA (CONFIG)	503
CABLES DE LA TRABA DEL DESPLAZADOR DEL CÍRCULO (GR)	504
TUBERÍAS HIDRÁULICAS (GR)	508
*LINES GP-HYDRAULIC	524
TUBERÍAS HIDRÁULICAS (GR)	525
TUBERÍAS HIDRÁULICAS DEL VENTILADOR (GR)	526
BOMBA - TUBERÍAS DE (GR)	530
TUBERÍAS DEL DESGARRADOR (GR)	552
TUBERÍAS DE LA DIRECCIÓN SECUNDARIA (GR)	555
*LINES GP-STEERING	559
TUBERÍAS DE DIRECCIÓN (GR)	561
TRABA DE DESPLAZAMIENTO DEL CIRCULO (GR)	565
*MANIFOLD GP-CONTROL	566
CONTROL DEL MULTIPLE (GR)	567
MOTOR HIDRÁULICO DE ENGRANAJES (GR)	572
BOMBA DEL MANDO ELÉCTRICO Y MONTAJE (GR)	574
BOMBA Y MONTAJE DE VENTILADOR HIDRAULICO (GR)	577
BOMBA Y MONTAJE DEL PISTÓN (GR)	578
DIRECCIÓN SECUNDARIA (CONFIG)	579
UNIÓN GIRATORIA (GR)	580
TANQUE HIDRÁULICO Y MONTAJE (GR)	582
TANQUE HIDRÁULICO (GR)	584
GRUPO DE 3 VÁLVULAS HIDRÁULICAS	585
GRUPO DE 4 VÁLVULAS HIDRÁULICAS	587
BANCADA 5 (GR)	589
VÁLVULAS HIDRÁULICAS - GRUPO DE 6	593
VÁLVULAS HIDRÁULICAS - GRUPO DE 7	599
*VALVE GP-BANK 8	603
VÁLVULA DE RETENCIÓN (GR)	607
VÁLVULA DE CONTROL (GR)	608
VÁLVULA DE DERIVACIÓN (GR)	634
VÁLVULA DE ALIVIO (GR)	635
VÁLVULA DE LANZADERA (GR)	636
VÁLVULA DE SOLENOIDE (GR)	637
IMPLEMENTOS	640
CÍRCULO (GR)	640
BARRA DE TIRO (GR)	642
*MOUNTING GP-GRADE CONTROL	645
PLANCHA DE EMPUJE (GR)	646
HERRAMIENTAS	647
CANTONERA (GR)	647
CANTONERA DE EXTREMO (GR)	651
HOJA (GR)	652
HOJA TOPADORA (GR)	655
SOPORTE DEL ESCARIFICADOR (GR)	670
CUCHILLA (GR)	671
EXTENSIÓN DE LA HOJA (GR)	674
LEVANTAMIENTO - HOJA DE (GR)	679
MONTAJE DE LA HOJA (GR)	682
*MOUNTING GP-GRADE CONTROL	683
MONTAJE DEL DESGARRADOR (GR)	684
GRUPO DE MONTAJE DE ALA PARA NIEVE	686
DESGARRADOR (CONFIG)	688
DESGARRADOR (GR)	689
ESCARIFICADOR (CONFIG)	691
GRUPO ESCARIFICADOR	692
*TOOTH GP-RIPPER	700
PUESTO DEL OPERADOR	701
AJUSTADOR DEL ASIENTO (GR)	701
COMPRESOR DE AIRE DEL ASIENTO (GR)	702
ACONDICIONADOR DE AIRE Y MONTAJE (GR)	703
ACONDICIONADOR DE AIRE (CONFIG)	705
ACONDICIONADOR DE AIRE (GR)	706

* NO HAY TRADUCCION DISPONIBLE EN EL MOMENTO DE LA IMPRESION

CONTENIDO

Nombre	Página
CABINA (CONFIG)	710
COMPRESOR DE REFRIGERANTE (GR)	711
CONDENSADOR DEL REFRIGERANTE Y MONTAJE (GR)	713
PALANCA UNIVERSAL-CONTROL Y MONTAJE (GR)	714
CONTROL DE AIRE Y TEMPERATURA (GR)	717
*CONTROL GP-UNPRGMED MONITOR	718
TAPA DE LA CABINA (GR)	719
TAPA DE LA COLUMNA DE DIRECCION (GR)	720
BRAZO ACOJINADO (GR)	721
PUERTA DE CABINA	723
CONDUCTO Y FILTRO DE AIRE (GR)	731
VENTILADOR DE CIRCULACION	732
VENTILADOR DESCONGELADOR (GR)	734
CAJA DE LA SUSPENSIÓN DEL ASIENTO (GR)	735
INSTALACIÓN DE RADIO (GR)	738
GRUPO DE AISLAMIENTO DE LA CABINA	739
REVESTIMIENTO DE LA CABINA (GR)	740
TUBERÍAS DE ACONDICIONADOR DE AIRE (GR)	741
TUBERÍAS DE LA CALEFACCIÓN (GR)	745
RETROVISOR (GR)	747
MOTOR-LIMPIAPARABRISAS (GR)	751
GRUPO DE SOPORTE DEL RESPALDO	752
PANEL DE LA CABINA (GR)	754
RADIO (GR)	757
RECLINACION DE ASIENTO (GR)	758
TECHO DE LA CABINA (GR)	759
ASIENTO Y MONTAJE (GR)	759
ASIENTO (GR)	761
SUSPENSIÓN - ASIENTO CON (GR)	767
SOPORTE DE CONTROL (GR)	770
INSONORIZADOR (GR)	774
ASIENTO CON SUSPENSIÓN (GR)	775
TANQUE DEL LAVAPARABRISAS (GR)	781
GUARNICIONES DE LA CABINA (GR)	782
VENTANA DE LA CABINA (GR)	783
LIMPIA Y LAVAPARABRISAS (GR)	787
LIMPIAPARABRISAS DE LA VENTANA (GR)	789
EQUIPO Y SUMINISTRO DE SERVICIOS	796
CAJA DE HERRAMIENTAS (GR)	796
ETIQUETA DE ADVERTENCIA (GR)	797
CALCOMANÍAS Y PLACAS DE IDENTIFICACIÓN (GR)	798
INDICE DE NUMEROS DE PIEZA	B1

* NO HAY TRADUCCION DISPONIBLE EN EL MOMENTO DE LA IMPRESION

PROOF

ÍNDICE

Designação	Página
INFORMAÇÃO GERAL	A35
ALTERNATIVAS DE REPARO	A46
ADITIVOS SUPLEMENTARES DO LÍQUIDO ARREFECEDOR	A51
PEÇAS DE MANUTENÇÃO	A66
ÍNDICE	A114
MÁQUINA - ARRANJO	1
ARRANJO BÁSICO - MOTONIVELADORA	1
OPÇÃO - UNIÃO EUROPÉIA - EU	2
ARRANJO RODOVIÁRIO	2
AR. PARA NEVE - MOTONIVELADORA	2
MOTOR - ARRANJO	3
MOTOR COMPLETO	3
MOTOR BÁSICO	4
COMPRESSOR DE AR	4
AJUSTADOR DE CORREIAS	8
TAMPA - BLOCO DO MOTOR	9
TAMPA - CAIXA DIANTEIRA	10
TAMPA - MECANISMO DAS VÁLVULAS	12
AMORTECEDOR DE VIBRAÇÕES E POLIA	14
VOLANTE DO MOTOR	15
ENGRENAGENS DE COMANDO TRASEIRO	16
CAIXA DO VOLANTE DO MOTOR	17
LEVANTAMENTO DO MOTOR	19
MONTAGEM - ALTERNADOR	20
MONTAGEM - MOTOR E TRANSMISSÃO	21
MONTAGEM - COMANDO DO VENTILADOR	23
CÁRTER DO ÓLEO DO MOTOR	25
BUJÃO DO BLOCO DO CILINDRO	26
BUJÃO DO MOTOR	27
POLIA DA RODA-GUIA	28
RETENTOR DO VIRABREQUIM	29
SUPORTE DO MOTOR	30
SISTEMA DE LUBRIFICAÇÃO	31
BASE DO FILTRO DE ÓLEO	31
RESPIRO	33
FILTRO - ÓLEO DO MOTOR	34
ELIMINAÇÃO DE VAPORES DO CÁRTER	36
INDICADOR - NÍVEL DO ÓLEO (VARETA)	37
TUBOS - ÓLEO DO MOTOR	38
*LINES GP-ENGINE OIL DRAIN	39
TUBULAÇÕES - DRENAGEM DE ÓLEO DO MOTOR	40
TUBOS - ÓLEO DO TURBOALIMENTADOR	42
COLETOR - ÓLEO DO MOTOR	43
ÓLEO - ARRANJO PARA TROCA RÁPIDA	44
SISTEMA DE ARREFECIMENTO	46
ARREFECIMENTO	46
MOTOR E VENTILADOR	47
VENTILADOR REVERSÍVEL	49
TUBOS - ÁGUA	50
BOMBA DE ÁGUA	54
RADIADOR	56
TANQUE - LÍQUIDO ARREFECEDOR	58
SISTEMA DE ADMISSÃO DE AR E DE ESCAPE	61
ADAPTADOR DO TURBOALIMENTADOR	61
PÓS-ARREFECEDOR DA ADMISSÃO DE AR	62
PURIFICADOR DE AR	63
TAMPA - ADMISSÃO DE AR	65
COTOVELO DE ADMISSÃO DE AR	67
TUBOS - AR	68
COLETOR DE ESCAPE	72
AMORTECEDOR E MONTAGEM	73
PRÉ-PURIFICADOR	75
SISTEMA DE COMBUSTÍVEL	76
ADAPTADOR - ABASTECIMENTO RÁPIDO DE COMBUSTÍVEL	76
FIXADORES - TANQUE DE COMBUSTÍVEL	79
FILTRO - COMBUSTÍVEL	81
FILTRO DE COMBUSTÍVEL E SEPARADOR DE ÁGUA	83
TUBOS - COMBUSTÍVEL	84
TUBOS - FILTRO DO COMBUSTÍVEL	86
MONTAGEM DO FILTRO DE COMBUSTÍVEL	88
BOMBA DE ESCORVA DO COMBUSTÍVEL E DO FILTRO PRIMÁRIO	89
BOMBA DE TRANSFERÊNCIA DO COMBUSTÍVEL	90

* TRADUÇÃO NÃO DISPONÍVEL NO MOMENTO DA IMPRESSÃO

ÍNDICE

Designação	Página
BOMBA - FILTRO E TRANSFERÊNCIA DE COMBUSTÍVEL	91
REGULADOR DE PRESSÃO DO COMBUSTÍVEL	92
TANQUE DE COMBUSTÍVEL	93
VÁLVULA DE RETENÇÃO	97
SISTEMA ELÉTRICO E DE PARTIDA	99
ALARME	99
ALTERNADOR DE CORRENTE	100
BATERIA	112
BLOCO DE JUNÇÃO	124
CONTROLE ELETRÔNICO E MONTAGEM - MOTOR	128
CONTROLE DO ACESSÓRIO E MONTAGEM	129
CONTROLE - ACESSÓRIO	130
CONTROLE DO TREM DE FORÇA	131
CONTROLE - NÃO PROGRAMADO	133
CONVERSOR ELÉTRICO	137
SIST. ELETRÔNICO - ACESSÓRIO	138
SISTEMA ELETRÔNICO - MONITOR	139
SISTEMA ELETRÔNICO - TREM DE FORÇA	139
AQUECEDOR DA ÁGUA DO MOTOR	140
INSTALAÇÃO-COMUNICAÇÃO	142
INSTALACAO - CONTROLE DA GRELHA	144
INSTALAÇÃO-CONTROLE DA INCLINAÇÃO	144
INSTALAÇÃO DO SISTEMA DE ILUMINAÇÃO	145
INSTALAÇÃO-SEGURANÇA	146
LÂMPADA - TETO	149
LÂMPADA - FAROL	150
LÂMPADA DIANTEIRA E DE SINAL	155
LÀMPADA - MARCADORA	161
LÂMPADA - SINALIZAÇÃO	162
LUZ GIRATÓRIA DE ALARME	163
ILUMINAÇÃO - MARCHA A RÉ	166
SISTEMA DE ILUMINAÇÃO - FARÓIS	167
ILUMINAÇÃO - RODOVIÁRIA	173
MOTOR ELÉTRICO	174
BUJÃO - CONECTOR	175
SENSOR DO MOTOR	176
EMISSOR - POSIÇÃO	178
SENSOR - PRESSÃO	180
SENSOR DE VELOCIDADE	189
SENSOR - TEMPERATURA	190
GR. DE SERVIÇO - MÁQUINA	194
AUXILIAR DE PARTIDA	195
AUXILIAR DE PARTIDA A ÉTER	196
MOTOR ELÉTRICO DE PARTIDA	197
INTERRUPTOR-TRAÇÃO EM TODAS AS RODAS	203
INTERRUPTOR DE DERIVAÇÃO	205
CHAVE GERAL	206
INTERRUPTOR - LUZES	207
INTERRUPTOR - MAGNÉTICO	208
INTERRUPTOR - PRESSÃO	211
INTERRUPTOR - RODOVIÁRIO	212
INTERRUPTOR - BALANCIM	213
INTERRUPTOR - LIMPADOR DO PÁRA-BRISA	214
VALVULA - PARTIDA A ETER	215
ALARME DE MARCHA À RÉ	216
CABOS/FIOS ELÉTRICOS - CABINE	217
FIAÇÃO-CÂMERA	223
CABOS/FIOS ELÉTRICOS - MOTOR	225
CABOS/FIOS ELÉTRICOS - DIANTEIROS	227
FIACAO - CONTROLE DO NIVEL	233
CABOS/FIOS ELÉTRICOS DE ILUMINAÇÃO	237
CABOS/FIOS ELÉTRICOS - TOMADA DE FORÇA	244
CABOS/FIOS ELÉTRICOS - TRASEIROS	246
CABOS E FIOS ELÉTRICOS-LUZES TRASEIRAS	250
CABOS/FIOS ELÉTRICOS - DIREÇÃO SECUNDÁRIA	252
CABOS/FIOS ELÉTRICOS - SENSOR	254
TREM DE FORÇA	257
CONTROLE ELÉTRICO DAS MARCHAS	257
EIXO DIANTEIRO	257
SEMI-EIXO TRASEIRO	266
CARCAÇA DAS ENGRENAGENS PLANETÁRIAS E COMPONENTES	268
CORRENTE - COMANDO	275
EMBREAGEM DA TRANSMISSÃO	276
CONTROLE DA TRAVA DO DIFERENCIAL	284
CONTROLE HIDRÁULICO DA TRANSMISSÃO	286
ARREFECEDOR DE ÓLEO DA TRANSMISSÃO	288
ACOPLAMENTO TORSIONAL	290
TAMPA - EMBARQUE	291
DIFERENCIAL E COROA	293
DIFERENCIAL	295
DRENO - ECOLOGIA	297
RODA PROPULSORA	298

* TRADUÇÃO NÃO DISPONÍVEL NO MOMENTO DA IMPRESSÃO

ÍNDICE

Designação	Página
BOCAL DE ENCHIMENTO DE ÓLEO DO TREM DE FORÇA	299
FILTRO DO ÓLEO E MONTAGEM	300
FILTRO - ÓLEO	303
COMANDO FINAL	306
TUBULAÇÒES - TRAÇÃO EM TODAS AS RODAS	310
TUBOS - TOMADA DE FORÇA	321
TUBOS - ÓLEO DA TRANSMISSÃO	322
MOTOR - PISTÃO	328
MONTAGEM - RODA	329
BOMBA E MONTAGEM - TRAÇÃO EM TODAS AS RODAS	330
BOMBA DAS ENGRENAGENS E MONTAGEM	331
BOMBA DE ENGRENAGENS	332
FILTRO - MAGNÉTICO	334
EIXO DE TRANSMISSÃO	335
EIXO DE ENTRADA	336
TANDEM E TAMPA	337
TRANSMISSÃO	339
JUNTA UNIVERSAL	341
VALVULA DO SOLENOIDE E MONTAGEM	342
VÁLVULA DE MODULAÇÃO	343
VÁLVULA DE ALÍVIO	344
RODA E PNEU	346
RODA	393
CHASSI E CARROCERIA	399
CAIXA E CHASSI	399
TAMPA - ACESSO	401
TAMPA - VÁLVULA DE CONTROLE	404
COBERTURA DO MOTOR	406
PÁRA-LAMA E SUPORTE	410
CHASSI DIANTEIRO	418
PROTETOR INFERIOR	419
PROTETOR - TUBOS DO FREIO	420
PROTETOR - TANQUE DE COMBUSTÍVEL	421
ENGATE - ARTICULAÇÃO	422
ENGATE DO REBOQUE	424
TUBOS - GRAXA	425
ELO - DIREÇÃO	426
MONTAGEM DO EIXO	428
MONTAGEM - VÁLVULA	429
DEGRAU	431
SUPORTE - CHASSI TRASEIRO	432
SUPORTE DO RADIADOR	433
SISTEMA DE FREIO	435
ACUMULADOR - FREIO	435
FREIO DE ESTACIONAMENTO	437
FREIO DE SERVIÇO	439
CONTROLE DO FREIO DE SERVIÇO	443
TUBOS - TANQUE DE AR	452
TUBOS - FREIO DE SERVIÇO	454
TANQUE DE AR	458
SISTEMA HIDRÁULICO	460
CONTROLE HIDRÁULICO	460
CONTROLE-ELETROIDRÁULICO	468
CONTROLE DE DIREÇÃO	469
ARREFECEDOR DO ÓLEO HIDRÁULICO	471
CILINDRO E MONTAGEM - ARTICULAÇÃO	473
CILINDRO E MONTAGEM - LEVANTAMENTO DA LÂMINA	474
CILINDRO E MONTAGEM - TOMBAMENTO DA LÂMINA	475
CILINDRO E MONTAGEM - DESLOCAMENTO DO CÍRCULO	477
CILINDRO E MONTAGEM - ESCARIFICADOR	478
CILINDRO E MONTAGEM - DESLOCAMENTO DA LÂMINA	479
CILINDRO DE DIREÇÃO E MONTAGEM	480
CILINDRO E MONTAGEM - INCLINAÇÃO DAS RODAS	482
CILINDRO DE ARTICULAÇÃO	483
CILINDRO DE TOMBAMENTO DA LÂMINA	485
CILINDRO DE DESLOCAMENTO LATERAL	486
CILINDRO HIDRÁULICO	487
CILINDRO DE LEVANTAMENTO	488
CILINDRO DO RÍPER	489
CILINDRO DO ESCARIFICADOR	491
CILINDRO DE DESLIZAMENTO LONGITUDINAL	492
CILINDRO DA DIREÇÃO	493
CILINDRO DE INCLINAÇÃO LATERAL DAS RODAS	497
MOTOR DE REVERSÃO DO CÍRCULO	499
FILTRO - ÓLEO	502
COMANDO HIDRÁULICO	503
TUBOS - PINO MESTRE DE DESLOCAMENTO LATERAL	504
TUBOS - ÓLEO HIDRÁULICO	508
*LINES GP-HYDRAULIC	524
TUBOS - ÓLEO HIDRÁULICO	525
TUBOS - VENTILADOR HIDRÁULICOS	526
TUBOS - BOMBA	530

* TRADUÇÃO NÃO DISPONÍVEL NO MOMENTO DA IMPRESSÃO

ÍNDICE

Designação	Página
TUBOS - RIPER	552
TUBOS - DIREÇÃO SECUNDÁRIA	555
*LINES GP-STEERING	559
TUBOS - DIREÇÃO	561
TRAVA - DESLOCAMENTO LATERAL	565
*MANIFOLD GP-CONTROL	566
COLETOR - CONTROLE	567
MOTOR HIDRÁULICO DO GEROTOR	572
BOMBA DO COMANDO ELÉTRICO E MONTAGEM	574
BOMBA DO VENTILADOR HIDRÁULICO E MONTAGEM	577
BOMBA E MONTAGEM - PISTÃO	578
DIREÇÃO SECUNDÁRIA	579
ARTICULAÇÃO GIRATÓRIA	580
TANQUE DE ÓLEO HIDRÁULICO E MONTAGEM	582
TANQUE HIDRÁULICO	584
GRUPO DE VÁLVULAS DE CONTROLE - TRIPLO	585
GRUPO DE VÁLVULAS DE CONTROLE - QUÁDRUPLO	587
GRUPO DE VÁLVULAS DE CONTROLE - CINCO	589
GRUPO DE VÁLVULAS DE CONTROLE - SEIS	593
GRUPO DE VÁLVULAS DE CONTROLE - SETE	599
GRUPO DE VÁLVULAS DE CONTROLE - OITO	603
VÁLVULA DE RETENÇÃO	607
VÁLVULA DE CONTROLE	608
VÁLVULA DESVIADORA	634
VÁLVULA DE ALÍVIO	635
VÁLVULA DE SEPARAÇÃO	636
VÁLVULA SOLENÓIDE	637
ACESSÓRIOS	640
CÍRCULO	640
BARRA DE TRAÇÃO	642
*MOUNTING GP-GRADE CONTROL	645
CHAPA DE EMPUXO	646
FERRAMENTAS DE TRABALHO	647
CANTO DE LÂMINA	647
LÂMINA	652
LÂMINA BULDOZER	655
SUPORTE DO ESCARIFICADOR	670
BORDA CORTANTE	671
EXTENSÃO DA LÂMINA	674
LEVANTAMENTO DA LÂMINA	679
MONTAGEM DA LÂMINA	682
*MOUNTING GP-GRADE CONTROL	683
MONTAGEM - RIPER	684
MONTAGEM - REMOVEDOR DE NEVE	686
RIPER	688
ESCARIFICADOR	691
*TOOTH GP-RIPPER	700
ESTAÇÃO DO OPERADOR	701
AJUSTADOR DO ASSENTO	701
COMPRESSOR DE AR - ASSENTO	702
CONDICIONADOR DE AR E MONTAGEM	703
CONDICIONADOR DE AR	705
CABINE	710
COMPRESSOR DE REFRIGERANTE	711
CONDENSADOR DO REFRIGERANTE E MONTAGEM	713
ALAVANCA DE CONTROLE E MONTAGEM	714
CONTROLE DO AR E TEMPERATURA	717
CONTROLE-MONITOR NÃO PROGRAMADO	718
TAMPA - CABINE	719
TAMPA - COLUNA DA DIREÇÃO	720
BRAÇO DO ASSENTO	721
PORTA DA CABINE	723
DUCTO E FILTRO	731
VENTILADOR DE CIRCULAÇÃO DE AR DA CABINE	732
DESCONGELADOR	734
CAIXA - SUSPENSÃO DO ASSENTO	735
INSTALAÇÃO DO RÁDIO	738
ISOLADOR - TEMPO	739
REVESTIMENTO DA CABINE	740
TUBOS - AR CONDICIONADO	741
TUBOS - AQUECEDOR	745
ESPELHO RETROVISOR	747
MOTOR - LIMPADOR DO VIDRO	751
FUNDO - ENCOSTO	752
PAINEL - CABINE	754
RÁDIO	757
RECLINAÇÃO - ASSENTO	758
TETO - CABINE	759
ASSENTO E MONTAGEM	759
ASSENTO	761
ASSENTO COM SUSPENSÃO	767
SUPORTE - CONTROLE	770
REDUÇÃO DE RUÍDO	774
SUSPENSÃO - ASSENTO	775
TANQUE - LAVADOR DE JANELA	781
LISTRA DA CABINE	782
JANELA DA CABINE	783
LIMPADOR E LAVADOR - JANELA	787

* TRADUÇÃO NÃO DISPONÍVEL NO MOMENTO DA IMPRESSÃO

PROOF

ÍNDICE

Designação	Página	Designação	Página
LIMPADOR DO VIDRO	789		
EQUIPAMENTOS DE SERVIÇO E SUPRIMENTOS	796		
CAIXA DE FERRAMENTAS	796		
DECALQUE	797		
PLACA E DECALQUE	798		
ÍNDICE DE NÚMERO DE PEÇA	B1		

PROOF

* TRADUÇÃO NÃO DISPONÍVEL NO MOMENTO DA IMPRESSÃO

INHALTSVERZEICHNIS

Bezeichnung	Seite
ALLGEMEINE HINWEISE	A39
REPARATURALTERNATIVEN	A47
KÜHLMITTELZUSATZ	A52
WARTUNGSTEILE	A71
STICHWORTVERZEICHNIS	A127
MASCHINE	1
BASISAUSFÜHRUNG	1
SONDERAUSRÜSTUNG (EUROPÄISCHE GEMEINSCHAFT)	2
AUSRÜSTUNG FÜR STRASSEN-FAHRT	2
SCHNEERÄUMVORRICHTUNG	2
MOTOR	3
MOTOR, KOMPLETT	3
MOTOR - GRUNDAUSFÜHRUNG	4
DRUCKLUFTKOMPRESSOR	4
LUFTKOMPRESSOR	5
RIEMENSPANNER	8
MOTORBLOCKDECKEL	9
STIRNRADGEHÄUSEDECKEL	10
VENTILDECKEL	12
DÄMPFER UND RIEMENSCHEIBE	14
SCHWUNGRAD	15
ZAHNRADVORGELEGE	16
SCHWUNGRADGEHÄUSE	17
MOTORHUBÖSE	19
DREHSTROMGENERATOR - BEFESTIGUNG	20
MOTOR- UND GETRIEBEAUFLAGER	21
LÜFTERANTRIEBSAUFHÄNGUNG	23
ÖLWANNE	25
ZYLINDERBLOCKSCHRAUBE	26
MOTORSTOPFEN	27
RIEMENSPANNER	28
KURBELWELLENDICHTUNG	29
MOTORAUFHÄNGUNG	30
SCHMIERSYSTEM	31
ÖLFILTERSOCKEL	31
ENTLÜFTER	33
ÖLFILTER	34
ENTDUNSTER	36
ÖLMESSSTAB	37
MOTORÖLLEITUNGEN	38
*LINES GP-ENGINE OIL DRAIN	39
MOTORÖLABLASSLEITUNGEN	40
TURBOLADERÖLLEITUNGEN	42
MOTORÖLKRÜMMER	43
ÖLSCHNELLWECHSELANSCHLUSS	44
KÜHLSYSTEM	46
KÜHLSYSTEM	46
MOTOR UND LÜFTER	47
UMKEHRLÜFTER	49
KÜHLWASSERLEITUNGEN	50
KÜHLWASSERPUMPE	54
KÜHLER	56
KÜHLMITTELBEHÄLTER	58
LUFTANSAUG- UND ABGASSYSTEM	61
TURBOLADERADAPTER	61
LADELUFTKÜHLER	62
LUFTREINIGER	63
LUFTEINLASSDECKEL	65
LUFTEINLASSBOGEN	67
DRUCKLUFTLEITUNGEN	68
AUSPUFFKRÜMMER	72
SCHALLDÄMPFER U. BEFESTIGUNG	73
VORREINIGER	75
KRAFTSTOFFSYSTEM	76
SCHNELLBETANKUNGSAN-SCHLUSS	76
KRAFTSTOFFTANK-HALTETEILE	79
KRAFTSTOFFILTER	81
WASSERABSCHEIDER- U. KRAFTSTOFFIL-TER	83
KRAFTSTOFFLEITUNGEN	84
KRAFTSTOFFILTERLEITUNGEN	86
KRAFTSTOFFILTERBEFESTIGUNG	88
KRAFTSTOFFENTLÜFTUNGSPUMPE UND -HAUPTFILTER	89
KRAFTSTOFFÖRDERPUMPE	90
KRAFTSTOFFÖRDERPUMPE U. FILTER	91
KRAFTSTOFFDRUCKREGLER	92
KRAFTSTOFFTANK	93
SPERRVENTIL	97
ELEKTRISCHE ANLAGE UND STARTSYSTEM	99
WARNVORRICHTUNG	99
DREHSTROMGENERATOR	100
BATTERIE	112
KLEMMLEISTE	124
STEUERUNGSEINHEIT, ELEKTRON. FÜR MOTOR UND BEFEST.	128
ARBEITSGERÄTEHEBEL UND BEFESTIGUNGSTEILE	129

* ÜBERSETZUNG ZUM ZEITPUNKT DER DRUCKLEGUNG NICHT VORHANDEN

INHALTSVERZEICHNIS

Bezeichnung	Seite
ARBEITSGERÄTESTEUERUNG	130
KRAFTÜBERTRAGUNGSSTEUERUNG	131
STEUERUNG - NICHT PROGRAMMIERT	133
ELEKTR. UMFORMER	137
ARBEITSGERÄTEELEKTRONIK	138
ELEKTRONIK - MONITOR	139
KRAFTÜBERTRAGUNGSELEKTRONIK	139
UMLAUFKÜHLWASSERHEIZUNG	140
ÜBERTRAGUNGSEINBAUSATZ	142
NEIGUNGSSTEUREINBAUSATZ	144
EINBAUSATZ - PLANIERSTEUERUNG	144
*INSTALLATION GP-LIGHTING	145
SICHERHEITSEINBAUSATZ	146
FAHRERHAUSBELEUCHTUNG	149
ARBEITSLEUCHTEN	150
SCHEINWERFER U. RICHTUNGSLEUCHTE	155
MARKIERUNGSLEUCHTE	161
BLINKLEUCHTE	162
RUNDUM-KENNLEUCHTE	163
SCHEINWERFER, HINTEN	166
ARBEITSLEUCHTEN	167
BELEUCHTUNGSANLAGE (STRASSENAUSRÜSTUNG)	173
MOTOR, ELEKTR.	174
VERBINDUNGSSTECKER	175
MOTORSENSOR	176
STELLUNGSSENSOR	178
DRUCKSENSOR	180
DREHZAHLSENSOR	189
TEMPERATURSENSOR	190
SERVICE MASCHINE	194
STARTHILFE	195
ÄTHERSTARTHILFE	196
STARTERMOTOR	197
SCHALTER - ALLRADANTRIEB	203
UMGEHUNGSSCHALTER	205
TRENNSCHALTER	206
LICHTSCHALTER	207
MAGNETSCHALTER	208
DRUCKSCHALTER	211
STRASSENFAHRTSCHALTER	212
KIPPSCHALTER	213
SCHEIBENWISCHERSCHALTER	214
ÄTHERSTARTVENTIL	215
RÜCKFAHRWARNHORN	216
FAHRERHAUSVERDRAHTUNG	217
KAMERA, VERDRAHTUNG	223
MOTORVERDRAHTUNG	225
VERDRAHTUNG, VORNE	227
NIEGUNGSSTEUER VERDRAHTUNG	233
BELEUCHTUNGSVERDRAHTUNG	237
STECKDOSENVERDRAHTUNG	244
VERDRAHTUNG, HINTEN	246
HECKBELEUCHTUNGSVERDRAHTUNG	250
NOTLENKUNGSVERDRAHTUNG	252
SENSORVERDRAHTUNG	254
KRAFTÜBERTRAGUNG	257
SCHALTAUTOMATIK	257
VORDERACHSE	257
HINTERACHSE	266
PLANETENANTRIEBSGEHÄUSE U. TEILE	268
ANTRIEBSKETTE	275
GETRIEBEKUPPLUNG	276
DIFFERENTIALSPERRENGESTÄNGE	284
GETRIEBEHYDRAULIK	286
GETRIEBEÖLKÜHLER	288
TORSIONSKUPPLUNG	290
VERSANDDECKEL	291
DIFFERENTIAL UND TELLERRAD	293
DIFFERENTIAL	295
ABLASS (UMWELTFREUNDLICH)	297
RADANTRIEB	298
GETRIEBEÖLFÜLLSTUTZEN	299
ÖLFILTER U. BEFESTIGUNGSTEILE	300
ÖLFILTER	303
SEITENANTRIEB	306
ALLRADANTRIEBSLEITUNGEN	310
ZAPFWELLENLEITUNGEN	321
GETRIEBEÖLLEITUNGEN	322
KOLBENMOTOR	328
RADAUFHAENGUNG	329
PUMPE U. BEFESTIGUNG - ALLRADANTRIEB	330
ZAHNRADPUMPE U. BEFESTIGUNGSTEILE	331
ZAHNRADPUMPE	332
MAGNETSIEB	334
ANTRIEBSWELLE	335
TANDEMGEHÄUSE UND DECKEL	337
GETRIEBE	339
KREUZGELENK	341
SOLENOIDVENTIL U. BEFESTIGUNGSTEILE	342
MODULATORVENTIL	343
ÜBERDRUCKVENTIL	344
RAD UND REIFEN	346
RADSATZ	393

* ÜBERSETZUNG ZUM ZEITPUNKT DER DRUCKLEGUNG NICHT VORHANDEN

INHALTSVERZEICHNIS

Bezeichnung	Seite
RAHMEN UND AUFBAU	399
RAHMEN UND GEHÄUSE	399
ZUGANGSKLAPPE	401
STEUERVENTILDECKEL	404
MOTORVERKLEIDUNG	406
SCHUTZBLECHE UND AUFHÄNGUNG	410
VORDERRAHMEN	418
PANZERWANNE	419
BREMSLEITUNGSVERKLEIDUNG	420
KRAFTSTOFFTANKVERKLEIDUNG	421
KNICKGELENK-ANHÄNGUNG	422
ANHÄNGEVORRICHTUNG	424
SCHMIERLEITUNGEN	425
LENKGESTÄNGE	426
ACHSENANBAUSATZ	428
VENTILAUFHÄNGUNG	429
STEIGLEITER	431
AUFHÄNGUNG - HINTERES FAHRWERK	432
KÜHLERAUFHÄNGUNG	433
BREMSSYSTEM	435
BREMSDRUCKSPEICHER	435
FESTSTELLBREMSE	437
BETRIEBSBREMSE	439
BREMSGESTÄNGE	443
DRUCKLUFTTANKLEITUNGEN	452
BETRIEBSBREMSLEITUNGEN	454
DRUCKLUFTBEHÄLTER	458
HYDRAULIKSYSTEM	460
HYDRAULIKSTEUERUNG	460
ELEKTROHYDRAULISCHE STEUERUNG	468
LENKBETÄTIGUNG	469
HYDRAULIKÖLKÜHLER	471
GELENKZYLINDER UND BEFESTIGUNGSTEILE	473
SCHARHUBZYLINDER UND BEFESTIGUNGSTEILE	474
SCHARKIPPZYLINDER UND BEFESTIGUNGSTEILE	475
SEITENSCHUBZYLINDER UND BEFESTIGUNGSTEILE	477
AUFREISSERZYLINDER UND BEFESTIGUNGSTEILE	478
SEITENSCHIEBERZYLINDER UND BEFESTIGUNGSTEILE	479
LENKZYLINDER UND AUFHÄNGUNG	480
RADSTURZZYLINDER UND BEFESTIGUNGSTEILE	482
KNICKLENKZYLINDER	483
SCHARNEIGEZYLINDER	485
SEITENSCHUBZYLINDER	486
HYDRAULIKZYLINDER	487
HUBZYLINDER	488
AUFREISSERZYLINDER	489
FRONTAUFREISSERZYLINDER	491
SEITENSCHUBZYLINDER	492
LENKZYLINDER	493
RADSTURZZYLINDER	497
SCHARDREHWERK	499
ÖLFILTER	502
HYDRAULIKSYSTEM	503
SCHARDREHWERKSPERRENLEITUNGEN	504
HYDRAULIKLEITUNGEN	508
*LINES GP-HYDRAULIC	524
HYDRAULIKLEITUNGEN	525
HYDRAULIKLÜFTERLEITUNGEN	526
HYDRAULIKPUMPE UND LEITUNGEN	530
AUFREISSERLEITUNGEN	552
NOTLENKUNGSLEITUNGEN	555
*LINES GP-STEERING	559
LENKÖLLEITUNGEN	561
SEITENSCHUBSPERRE	565
*MANIFOLD GP-CONTROL	566
STEUERKRÜMMER	567
ZAHNRADANTRIEB	572
ANTRIEBSPUMPE, ELEKTR. U. BEFESTIGUNGSTEILE	574
HYDRAULIKLÜFTERPUMPE U. BEFESTIGUNG	577
KOLBENPUMPE UND BEFESTIGUNG	578
NOTLENKUNG	579
SCHWENKBLOCK	580
HYDRAULIKTANK UND BEFESTIGUNGSTEILE	582
HYDRAULIKTANK	584
VENTILSATZ (3-VENTIL)	585
VENTILSATZ (4-VENTIL)	587
VENTILSATZ (5-VENTIL)	589
VENTILSATZ (6-VENTIL)	593
VENTILSATZ (7-VENTIL)	599
VENTILSATZ (8-VENTIL)	603
SPERRVENTIL	607
STEUERVENTIL	608
UMLEITVENTIL	634
ÜBERDRUCKVENTIL	635
PENDELVENTIL	636
MAGNETVENTIL	637
ARBEITSGERÄTE	640
SCHARDREHWERK	640

* ÜBERSETZUNG ZUM ZEITPUNKT DER DRUCKLEGUNG NICHT VORHANDEN

INHALTSVERZEICHNIS

Bezeichnung	Seite
ZUGHAKEN	642
*MOUNTING GP-GRADE CONTROL	645
SCHUBPLATTE	646
ARBEITSGERÄTE	647
ECKMESSER	647
ENDMESSER	651
SCHAR	652
PLANIERSCHILD	655
AUFREISSERTRÄGER	670
SCHNEIDMESSER	671
SCHARVERLÄNGERUNG	674
SCHILDHUB	679
SCHARBEFESTIGUNGSTEILE	682
*MOUNTING GP-GRADE CONTROL	683
AUFREISSERBEFESTIGUNG	684
SCHNEEFLÜGEL-BEFESTIGUNG	686
AUFREISSER	688
FRONTAUFREISSER	691
*TOOTH GP-RIPPER	700
FAHRERHAUS	701
FAHRERSITZVERSTELLER	701
LUFTKOMPRESSORSITZ	702
KLIMAANLAGE UND AUFHÄNGUNG	703
KLIMAANLAGE	705
FAHRERHAUS	710
KÄLTEMITTELKOMPRESSOR	711
KÄLTEMITTELKONDENSATOR U. BEFESTIGUNGSTEILE	713
JOYSTICKSTEUERUNG U. BEFESTIGUNG	714
LUFTTEMPERATURKONTROLLE	717
*CONTROL GP-UNPRGMED MONITOR	718
FAHRERHAUSABDECKUNG	719
LENKSÄULENABDECKUNG	720
ARMSTÜTZE	721
FAHRERHAUSTÜR	723
LUFTKANAL U. FILTER	731
UMLAUFLÜFTER	732
ENTFROSTERGEBLÄSE	734
FAHRERSITZFEDERUNGSGEHÄUSE	735
RADIOEINBAUSATZ	738
WÄRMEISOLIERUNG	739
FAHRERHAUSAUSKLEIDUNG	740
KLIMAANLAGENLEITUNGEN	741
HEIZUNGSLEITUNGEN	745
RÜCKSPIEGEL	747
SCHEIBENWISCHERMOTOR	751
SCHALE - RÜCKENLEHNE	752
VERKLEIDUNG - FAHRERHAUS	754
RADIO	757
VERSTELLBARER SITZ	758
FAHRERHAUSDACH	759
FAHRERSITZ UND UNTERBAU	759
FAHRERSITZ	761
SCHWINGSITZ	767
STÜTZGRUPPE - STEUERUNG	770
SCHALLDÄMPFUNG	774
FAHRERSITZFEDERUNG	775
SCHEIBENWASCHMITTELBEHÄLTER	781
FAHRERHAUS - HALTETEILE	782
FAHRERHAUSFENSTER	783
SCHEIBENWISCHER UND -WASCHANLAGE	787
SCHEIBENWISCHER	789
WARTUNGSAUSRÜSTUNG	796
WERKZEUGKASTEN	796
AUFKLEBER	797
SCHILD UND AUFKLEBER	798
ERSATZTEILNUMMERNINDEX	B1

* ÜBERSETZUNG ZUM ZEITPUNKT DER DRUCKLEGUNG NICHT VORHANDEN

PROOF

GENERAL INFORMATION

1. MACHINE IDENTIFICATION

Caterpillar machines are identified by Product Identification Numbers (PIN). Some components included in a machine may be identified by Serial Numbers (S/N). Typical components that will be serialized include engines, transmissions, bulldozers, and rippers. The machine and engine are further identified by arrangement numbers and in some cases modification numbers. These numbers are shown on the product identification plate(s) and on the master plate in the operator's compartment.

Caterpillar dealers need all of these numbers to determine accurate parts identification.

SIS *New Feature*

Effective First Quarter 2001 the Caterpillar Product Identification Number (PIN) changed from 8 to 17 characters. In an effort to provide uniform equipment identification, Caterpillar and other construction equipment manufacturers are moving to comply with the latest version of the product identification numbering standard. Non-road machine PINs are defined by ISO 10261. The new PIN format will apply to all Caterpillar machines and generator sets. The PIN plates and frame marking will display the 17 character PIN. The new format will look like the following:

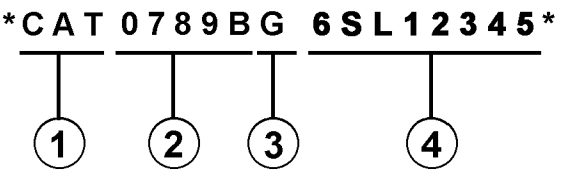

Where:

1. Caterpillar's World Manufacturing Code (characters 1-3)

2. Machine Descriptor (characters 4-8)

3. Check Character (character 9)

4. Machine Indicator Section (MIS) or Product Sequence Number (characters 10-17). These were previously referred to as the Serial Number.

Machines and generator sets produced before First Quarter 2001 will maintain their 8 character PIN format.

Components such as engines, transmissions, axles, etc. and work tools will continue to use an 8 character Serial Number (S/N).

2. ORDERING PARTS

⚠ WARNING

When replacement parts are required for this product Caterpillar recommends using Caterpillar replacement parts or parts with equivalent specifications including, but not limited to, physical dimensions, type, strength and material.

Failure to heed this warning can lead to premature failures, product damage, personal injury or death.

Quality Caterpillar replacement parts are available from Caterpillar dealers throughout the world. Their parts inventories are up to date and include all parts normally required to protect your investment in Caterpillar machines. Dealers may offer repair kits or remanufactured parts to allow selection of the most effective repair alternative for a particular situation. When ordering parts, your order should specify the quantity, part number, part name, and the serial number/product identification number of the machine for which the parts are needed.

3. PARTS MANUAL ORGANIZATION

Product information in this manual is presented as "information elements" that represent all of the components for the specific model. Engine Arrangement and Seat Group are examples of information elements. The information elements are organized alphabetically by part name and secondarily by part number within each major section of the manual.

4. TABLE OF CONTENTS

A table of contents (TOC) is found at the beginning of the manual. The TOC lists each section of the manual with a complete list of all information elements organized as they appear in the manual. Page numbers are provided for quick reference to detailed parts identification illustrations and serviceable consist lists.

5. MAINTENANCE PARTS INDEX

The Maintenance Parts Index, located near the beginning of the manual, references most frequently used maintenance part numbers, providing description, quantity, usage and page number. This information is organized alphabetically by part description.

6. INDEX

The index located near the front of the manual is an alphabetical listing of all information elements included in the manual. Page numbers are provided for quick reference to detailed parts identification illustrations and serviceable consist lists.

7. PART NUMBER INDEX

A numerical index listing all part numbers and the corresponding page number(s) appears at the back of the manual.

8. CAPTIONS

Captions located at the beginning of each information element identify the part number and part name along with additional descriptive information. PIN and S/N information found in each caption should be used to select correct information for a specific machine. Field replacement options, identification of optional attachment components, and where used ("part of") information is also provided.

The first line of a caption is shown in larger type font to indicate the beginning of an information element. Captions for additional pages that may be required to illustrate an information element will be shown in standard type font and will include the term *(contd.)* .

9. NON-SERVICED PARTS

In some instances it is necessary to display non-serviced parts that are a link to a lower level serviceable consist lists. These non-serviced part numbers are shown in *italic* type indicating that they are not available.

10. PARTS LIST REFERENCE NUMBERS

Numbers shown in the Ref No column correspond to numbers used in the associated graphic(s). An alphabetic suffix may be added to a reference number to identify lower level consist items. Numbers shown in the Graphic Ref column refer to the graphic number identifier displayed in the lower left corner of each illustration. The Graphic Ref number may be used in combination with the item Ref No to determine the correct part number. There may be intentional omission of a Ref No in a consist list as information is updated to reflect the latest serviceable part numbers.

11. INDENTED PART NAMES

When a part name is indented in a parts list, it is part of (included in) the group or assembly under which it is indented.

12. ILLUSTRATION REFERENCE LETTERS

When necessary, illustrations contain reference letters (A, B, C etc.) that are intended to track lines and harnesses from one point to another. They are also used to show where to reconnect illustrations that have been separated.

13. ABBREVIATIONS AND SYMBOLS

O.D. – Outside Diameter
I.D. – Inside Diameter
A – Not Part Of This Group
B – Use As Required
C – Change From Previous Type
D – Order By The Meter
E – Order By The Centimeter
F – Not Shown
G – Order By The Inch
I – Refer To Hydraulic Information System
M – Metric Part
R – Remfg Part May Be Available
Y – Separate Illustration
Z – Not Serviced Separately

SIS *New Feature*

14.<END>

This symbol indicates the end of an information element.

NOTE:

Continuing improvement and advancement of product design may cause changes to your machine which may not be included in this publication. Whenever a question arises regarding your caterpillar product or this publication, please consult your caterpillar dealer for the latest available information.

PROOF

GENERAL INFORMATION

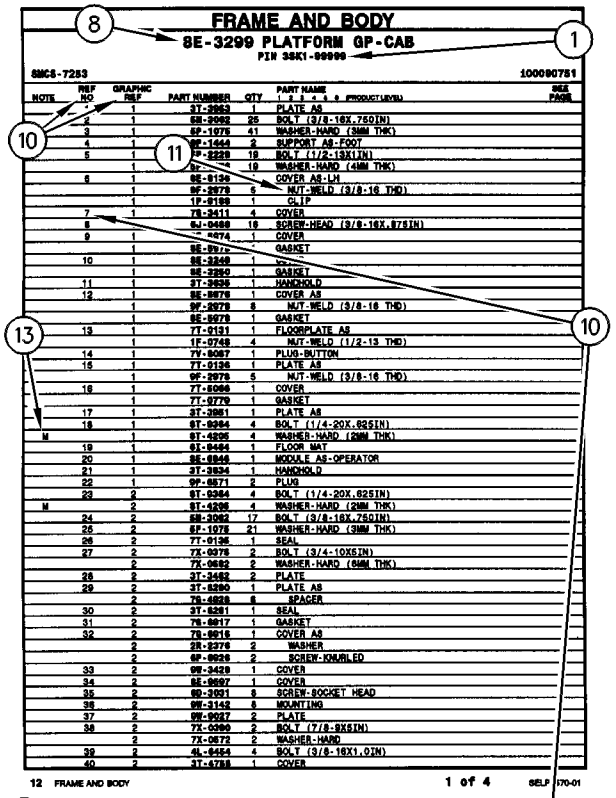

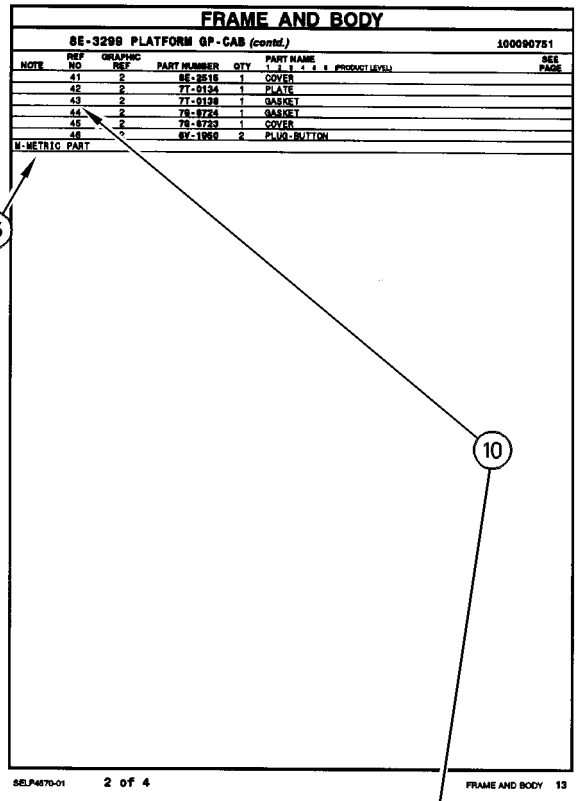

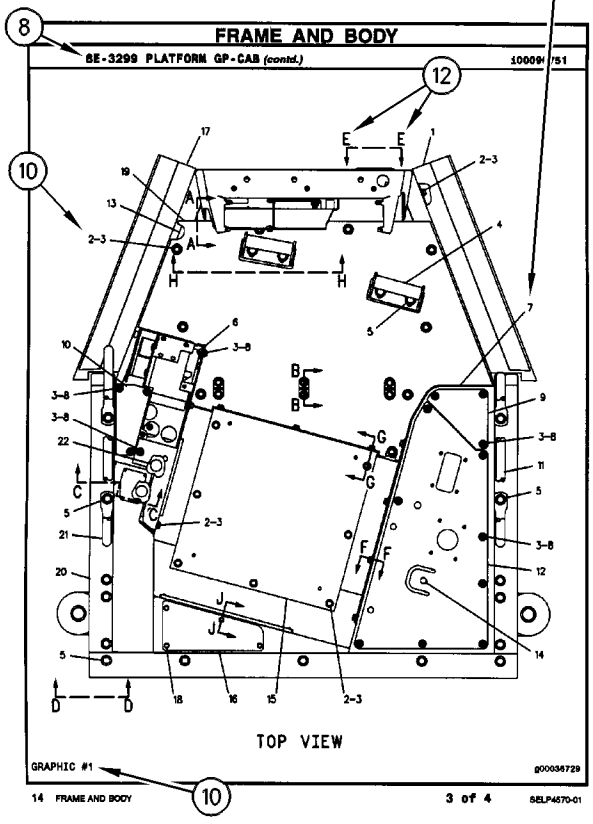

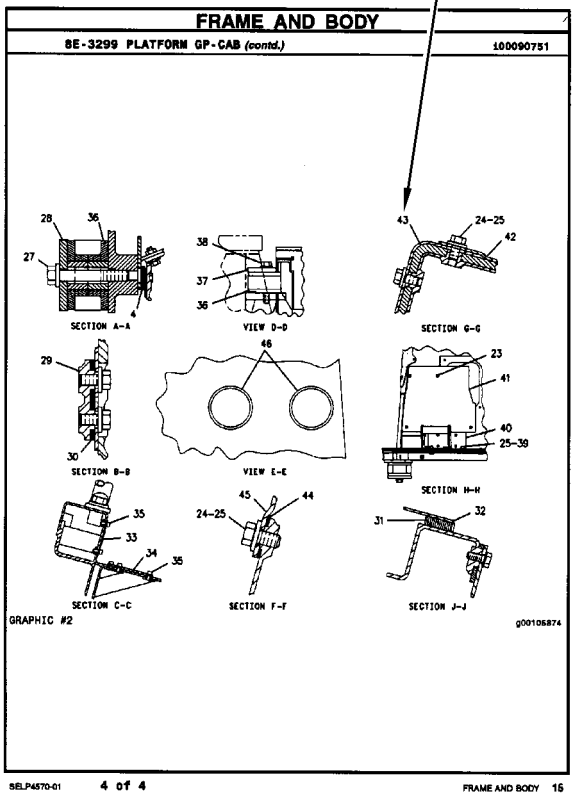

1. IDENTIFICATION DE LA MACHINE

Toutes les machines Caterpillar portent un numéro d'identification (PIN). Certains composants des machines peuvent porter des numéros de série (S/N). En général, parmi les composants qui portent des numéros de série il y a les moteurs, les transmissions, les bulldozers et les rippers. En plus, la machine et le moteur peuvent recevoir des numéros de version, et dans certains cas, de modification. Ces numéros figurent sur les plaques de numéro de série et sur la plaque signalétique principale qui se trouve dans le poste de conduite.

Les concessionnaires Caterpillar doivent connaître tous ces numéros pour identifier correctement les pièces.

SIS *Nouvelle Caractéristique*

À partir du premier trimestre 2001, le numéro d'identification produit (PIN) Caterpillar passe de 8 à 17 caractères. Afin de permettre une identification uniforme des matériels, Caterpillar et d'autres constructeurs de machines de travaux publics s'efforcent de se conformer à la norme la plus récente portant sur les numéros d'identification des produits. Les numéros d'identification (PIN) de machines de chantier sont définis par la norme ISO 10261. Le nouveau format du numéro d'identification est valable pour toutes les machines et tous les groupes électrogènes Caterpillar. Le numéro d'identification produit (PIN) figurant sur la plaque et sur le châssis se composera de 17 caractères. Le nouveau format ressemblera à ceci:

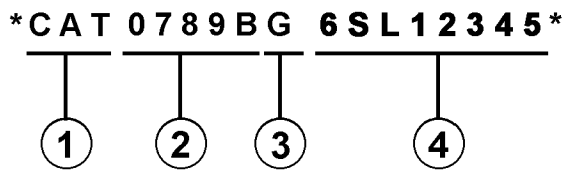

Il se décomposera de la façon suivante:

1. Code international de fabrication de Caterpillar (caractères 1 à 3)

2. Descriptif de la machine (caractères 4 à 8)

3. Contrôle (caractère 9)

4. Indicateur machine (MIS) ou numéro de séquence produit (caractères 10 à 17). Ceux-ci étaient auparavant désignés sous le terme de numéro de série.

Les machines et les groupes électrogènes construits avant le premier trimestre 2001 garderont le format à 8 caractères du numéro d'identification produit (PIN).

Les organes tels que les moteurs, les boîtes de vitesses, les essieux, etc., continueront d'être désignés par un numéro de série (S/N) à 8 caractères.

2. COMMANDE DE PIÈCES

⚠ DANGER

Lorsqu'il faut remplacer des pièces de rechange pour ce produit Caterpillar recommande d'utiliser les pièces de rechange Caterpillar ou les pièces qui ont des spécifications équivalentes dont les dimensions physiques, le type, la force et le matériau. Ces équivalences ne se limitent pas à l'énoncé précédent.

L'inobservation de cette mise en garde peut entraîner des défaillances prématurées, des dommages au produit, des blessures ou même la mort.

Les concessionnaires Caterpillar fournissent dans le monde entier des pièces de rechange de qualité Caterpillar. Leurs stocks de pièces sont constamment réapprovisionnés et comptent toutes les pièces nécessaires pour assurer la bonne marche de vos machines Caterpillar. Certains concessionnaires proposent également des kits de réparation ou des pièces rénovées, ce qui permet de choisir la solution la plus économique dans une situation donnée. Lors des commandes de pièces, mentionner la quantité, le numéro et la désignation des pièces ainsi que le numéro de série ou le numéro d'identification (PIN) de la machine pour laquelle ces pièces sont requises.

3. ORGANISATION DU CATALOGUE DE PIÈCES

Les renseignements sur les produits sont présentés sous forme de "Information element" (élément d'information) représentant tous les composants d'un modèle donné. "Engine Arrangement" (version de moteur) et "Seat Group" (assemblage de siège)" sont des exemples d'éléments d'information. Les éléments d'information sont classés par ordre alphabétique par la désignation standard des pièces et par numéros de pièces dans chaque partie importante du manuel.

4. TABLE DES MATIÈRES

SIS *Nouvelle Caractéristique*

La table des matières se trouve au début du manuel. La table des matières fournit la liste de tous les chapitres du manuel avec une liste complète de tous les éléments d'information classés par ordre d'apparition dans le manuel. Les numéros de page sont fournis afin que l'utilisateur puisse trouver rapidement les illustrations détaillées concernant l'identification des pièces et les listes des pièces d'entretien.

5. INDEX DES PIÈCES D'ENTRETIEN

La rubrique "Index des pièces d'entretien" qui se trouve au début du manuel renvoie aux pièces d'entretien les plus fréquemment utilisées en précisant la désignation, la quantité, là où la pièce est utilisée et le numéro de page. Ces pièces sont classés par ordre alphabétique.

6. INDEX

L'index qui se trouve vers le début du manuel est une liste alphabétique de tous les éléments d'information du manuel. Les numéros de page sont fournis afin que l'utilisateur puisse trouver rapidement les illustrations détaillées concernant l'identification des pièces et les listes des pièces d'entretien.

7. INDEX DES NUMÉROS DE PIÈCES

Une liste numérique de tous les numéros de pièces et des pages correspondantes se trouve à la fin du manuel.

8. LÉGENDES

Les légendes qui se trouvent en haut de chaque page de chaque élément d'information fournissent le numéro de pièce, la désignation ainsi que des renseignements supplémentaires sur les pièces. Les renseignements concernant les numéros de série (S/N) qui se trouvent dans chaque légende doivent être utilisés pour sélectionner les informations correctes pour un moteur donné. Les informations concernant les options de remplacement sur le chantier, l'identification des composants des équipements offerts en option et les lieux d'application sont aussi fournies.

SIS *Nouvelle Caractéristique*

Les lettres de la première ligne d'une légende sont présentées en police plus grande afin d'indiquer le début d'une unité d'information. Les légendes qui pourraient être requises pour des pages supplémentaires afin d'illustrer une unité d'information seront présentées en police standard et comprendront le terme (à suivre).

9. PIÈCES NON FOURNIES

SIS *Nouvelle Caractéristique*

Dans certains cas, il est nécessaire d'indiquer les pièces non fournies qui sont en aval de la liste des pièces d'entretien. Les numéros des pièces non fournies dans la liste des pièces et les légendes seront en italique pour signaler qu'ils ne sont pas disponibles.

10. NUMÉROS DE RÉFÉRENCE DE LA LISTE DES PIÈCES

SIS *Nouvelle Caractéristique*

Les numéros indiqués dans la colonne des numéros de références correspondent aux numéros utilisés dans les illustrations auxquelles ils sont associés. Un suffixe alphabétique peut être ajouté à un numéro de référence pour identifier la liste des articles en aval. Les numéros indiqués dans la colonne de référence de l'illustration renvoient à l'identification du numéro affiché dans le coin inférieur gauche de chaque illustration. Le numéro de référence de l'illustration pourrait être utilisé avec le numéro de référence de l'article pour déterminer le numéro de pièce correct. Il peut y avoir une omission intentionnelle d'un numéro de référence dans une liste de pièces suite à la mise à jour des informations en vue de refléter les numéros de pièces les plus récentes.

11. DÉSIGNATIONS DE PIÈCES EN RETRAIT

Lorsqu'une désignation de pièce est en retrait, cela veut dire que l'article en regard fait partie de l'ensemble sous lequel il figure.

12. LETTRES DE RÉFÉRENCE DES ILLUSTRATIONS

Quand cela est nécessaire, les illustrations comportent des lettres de référence (A, B, C, etc.) pour montrer le trajet des canalisations et faisceaux de câbles d'un point à l'autre. Elles sont utilisées également pour indiquer où relier les illustrations séparées auparavant.

13. ABRÉVIATIONS ET SYMBOLES

O.D. – Diamètre extérieur
I.D. – Diamètre intérieur
A – Ne fait pas partie de ce groupe
B – Utiliser selon besoin
C – Modification
D – Commander par mètre
E – Commander par centimètre
F – Non représenté
G – Commander par pouce
I – Voir "Hydraulic Information System"
M – Pièce métrique
R – Pièce rénovée éventuellement disponible
Y – Illustration séparée
Z – Non fourni séparément

NOTA:

En raison du progrès technique et des améliorations continuelles apportées au matériel, votre machine comporte peut-être des modifications qui n'apparaissent pas dans la présente publication. En cas de doute sur un détail de votre machine Caterpillar ou sur le texte de la présente publication, adressez-vous à votre concessionnaire Caterpillar.

PROOF

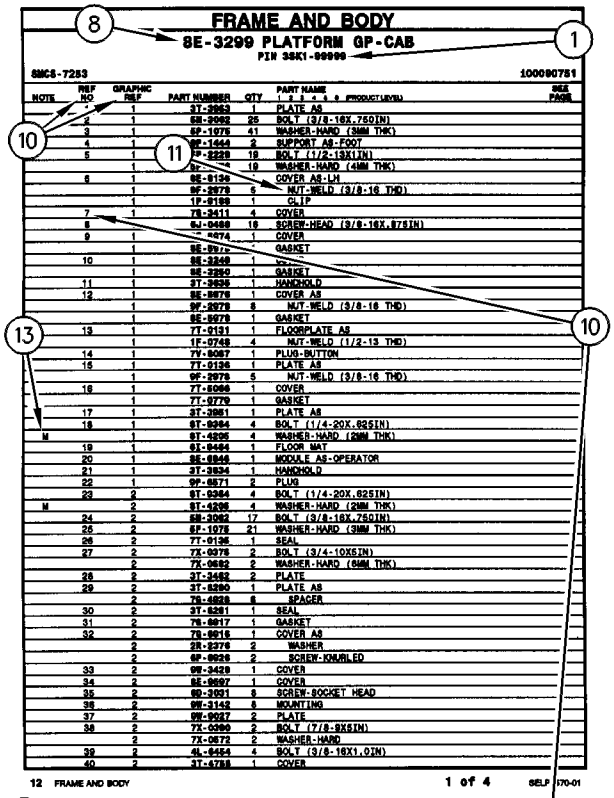
FRAME AND BODY
8E-3299 PLATFORM GP-CAB
PIN 3SK1-99999
SMCS-7283
100090751
12 FRAME AND BODY
1 of 4
SELP4570-01

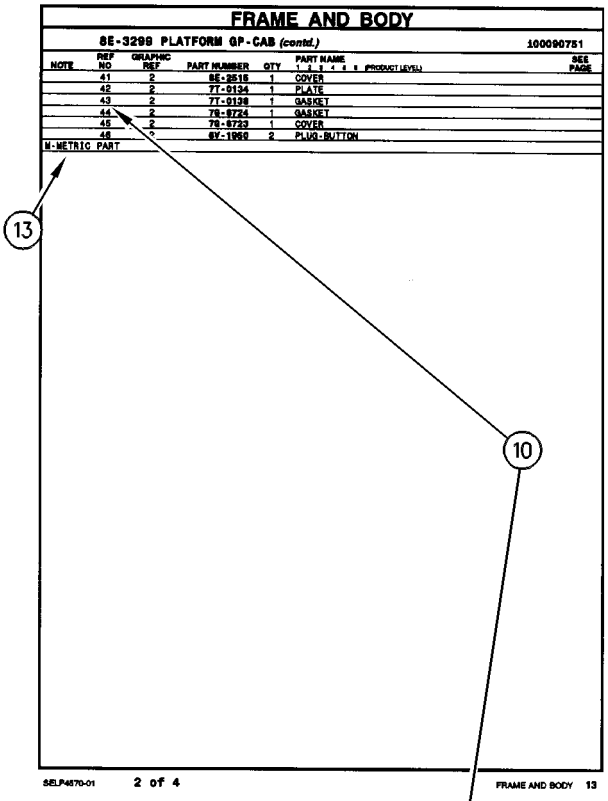
FRAME AND BODY
8E-3299 PLATFORM GP-CAB (contd.)
100090751
M-METRIC PART
SELP4570-01
2 of 4
FRAME AND BODY 13

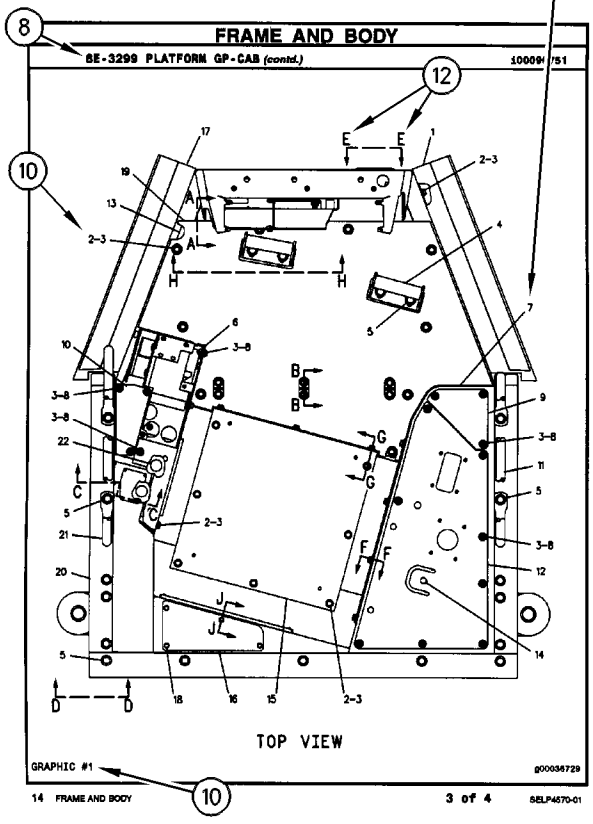
FRAME AND BODY
8E-3299 PLATFORM GP-CAB (contd.)
TOP VIEW
GRAPHIC #1
g00036729
14 FRAME AND BODY
3 of 4
SELP4570-01

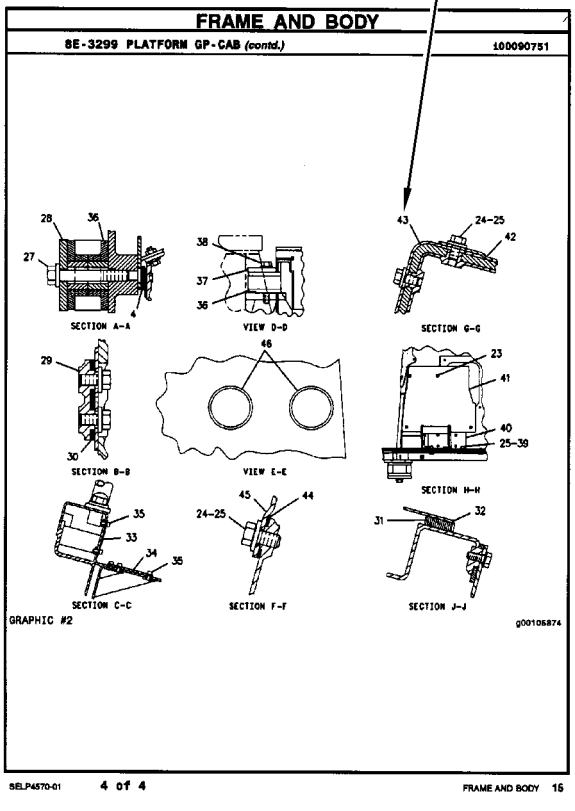
FRAME AND BODY
8E-3299 PLATFORM GP-CAB (contd.)
100090751
SECTION A-A
VIEW D-D
SECTION G-G
SECTION B-B
VIEW E-E
SECTION H-H
SECTION C-C
SECTION F-F
SECTION J-J
GRAPHIC #2
g00105874
SELP4570-01
4 of 4
FRAME AND BODY 15

INFORMACIÓN GENERAL

1. MÁQUINAS

Las máquinas Caterpillar se identifican con Números de Identificación del Producto (PIN). Algunos componentes incluídos en la máquina pueden estar identificados con Números de Serie (N/S). Los componentes que tienen típicamente esta identificación incluyen motores, transmisiones, hojas topadoras y desgarradores. La máquina y el motor se identifican además con Números de Configuración y en algunos casos, Números de Modificación. Estos números están en las placas de identificación del producto o en la placa principal en la cabina del operador.

Los distribuidores Caterpillar necesitan estos números para identificar con exactitud los números de piezas de repuesto.

SIS *Nueva Característica*

A partir del primer trimestre del 2001, el Número de Identificación de Producto (PIN) de Caterpillar cambió de 8 a 17 caracteres. Para hacer más uniforme el método de identificación de equipos, Caterpillar y otros fabricantes de equipo de construcción han tomado medidas para cumplir con la versión más reciente de la norma de numeración de identificación de productos. Los Números de Identificación de Producto para máquinas que no se operan en carreteras son definidos por la norma ISO 10261. El nuevo formato PIN corresponderá a todas las máquinas y grupos electrógenos Caterpillar. Las placas y los caracteres PIN estampados en el bastidor mostrarán el PIN de 17 caracteres. El nuevo formato tendrá la apariencia siguiente:

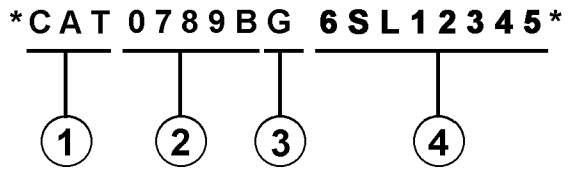

Significado de los caracteres:

1. Código de Fabricación Mundial de Caterpillar (caracteres 1-3)

2. Sección Descriptor de la Máquina (caracteres 4-8)

3. Carácter de Verificación (carácter 9)

4. Sección Indicador de la Máquina (MIS) o Número de Secuencia de Producto (caracteres 10-17). Anteriormente, estos caracteres constituían el Número de Serie.

Las máquinas y grupos electrógenos producidos antes del primer semestre del 2001 mantendrán su formato PIN de 8 caracteres.

Los componentes como motores, transmisiones, ejes, herramientas de trabajo, etc., continuarán usando un Número de Serie (S/N) de 8 caracteres.

2. COMO PEDIR REPUESTOS

⚠ ADVERTENCIA

Cuando se necesiten piezas de repuesto para este producto, Caterpillar recomienda usar piezas de repuesto Caterpillar o piezas que tengan especificaciones equivalentes incluyendo, pero sin estar limitadas a, dimensiones físicas, tipo, fortaleza y material.

El no hacer caso de esta advertencia puede llevar a fallas prematuras, daños al producto y lesiones graves o mortales.

Las piezas de repuesto Caterpillar de calidad están a la disposición de los distribuidores Caterpillar en todo el mundo. Sus existencias actualizadas incluyen todas las piezas normalmente requeridas para proteger su inversión en máquinas Caterpillar. Los distribuidores pueden tener juegos de reparación o piezas remanufacturadas para permitir la selección de la mejor alternativa de reparación en un caso en particular. Al pedir piezas de repuesto, especifique en su pedido la cantidad, el número de pieza, el nombre de la pieza y el número de serie/número de identificación del producto, de la máquina para la cual se necesitan estas piezas.

3. ORGANIZACION DEL MANUAL DE PIEZAS

La información sobre el producto, se presenta en este manual, como "elementos de información" que representan todos los componentes de un modelo específico. Las configuraciones de motores y los grupos de asientos son ejemplos de elementos de información. Los elementos de información están organizados primeramente por nombres de piezas en orden alfabético y en segundo lugar, por el número de pieza dentro de cada sección principal del manual.

4. CONTENIDO

La página de Contenido se encuentra al principio del manual. El Contenido indica cada sección del manual con una lista completa de todos los elementos de información organizados en el orden que aparecen en el manual. Los números de página proporcionan una referencia rápida a las ilustraciones detalladas de identificación de piezas y a las listas de componentes de repuesto de dichas piezas.

5. ÍNDICE DE PIEZAS DE MANTENIMIENTO

Al principio de este catálogo se encuentra un índice de los números de piezas utilizadas más frecuentemente para el mantenimiento, que incluye descripción, cantidad necesaria, lugar de utilización y número de página. Esta información está organizada alfabéticamente, por descripción de la pieza.

6. ÍNDICE

El Índice, ubicado cerca del principio del manual, es una lista en orden alfabético de todos los elementos de información incluídos en el manual. Los números de página proporcionan una referencia rápida a las ilustraciones detalladas de identificación de piezas y a las listas de componentes de repuesto de dichas piezas.

7. INDICE NUMÉRICO DE PIEZAS

Un índice numérico de piezas con el correspondiente número de página aparece al final de este catálogo.

8. TÍTULOS

Los títulos ubicados al principio de cada elemento de información identifican el número y el nombre de la pieza junto con información descriptiva. Se debe usar información sobre los Números de Identificación de Pieza (PIN) y los números de serie (S/N) para seleccionar la información que corresponda a una máquina en particular. También se suministra información sobre las opciones de reparación en el campo, la identificación de componentes de accesorios optativos y el lugar de ubicación de la pieza ("es parte de").

La primera línea del título se muestra con un tipo de letra más grande para indicar el comienzo de un elemento de información. Si se requieren páginas adicionales para ilustrar un elemento de información, los títulos se muestran con un tipo de letra normal y la continuación se indica entre paréntesis.

9. PIEZAS QUE NO SE SUMINISTRAN COMO REPUESTO

En algunos casos es necesario indicar piezas que no se suministran como repuesto pero que pueden estar conectadas a listas de componentes de otras piezas de repuesto. En tal caso, dichas piezas se muestran en cursiva para indicar que no son piezas disponibles.

10. NÚMEROS DE REFERENCIA

Los números en la columna de No. de Referencia corresponden a los números indicados en la ilustración que pertenece a ese número de pieza. Los números que tienen un sufijo alfabético identifican artículos de las listas de componentes de piezas. Los números en la columna de Referencia de la ilustración se identifican en la esquina inferior izquierda de cada ilustración. Para determinar el número de pieza correcto se puede utilizar tanto el No. de Referencia de la ilustración como el No. de Referencia del artículo. A medida que se actualiza la información para indicar los más recientes números de piezas de repuesto, puede omitirse intencionalmente un No. de Referencia en una lista de componentes de piezas.

11. NOMBRES DE PIEZA SANGRADOS

Cuando el nombre de una pieza está sangrado en una lista, significa que esta pieza forma parte del grupo o conjunto del renglón inmediatamente superior.

12. LETRAS DE REFERENCIA DE ILUSTRACIONES

Las ilustraciones contienen algunas veces letras de referencia (A, B, C etc.) cuyo propósito es seguir el trayecto de líneas y mazos de cables de un punto a otro. También se utilizan para mostrar dónde volver a unir ilustraciones que se habían separado.

13. ABREVIATURAS Y SIMBOLOS

O.D. – Diámetro exterior
I.D. – Diámetro interior
A – No es pieza de este grupo
B – Utilizado según la demanda
C – Indica cambio
D – Se pide por metro
E – Se pide por centímetro
F – No se muestra
G – Se pide por pulgada
I – Consulte el sistema de información hidráulica
M – Pieza métrica
R – Puede estar disponible como pieza remanufacturada
Y – Ilustración separada
Z – No se suministra por separado

SIS *Nueva Característica*

14.<END>

Este símbolo indica el final de un elemento de información.

NOTA:

Las contínuas mejoras y adelantos en diseño podrían originar cambios a su máquina que no se incluyen en esta publicación. Cuando tenga alguna pregunta acerca de su producto Caterpillar o de esta publicación, consulte al distribuidor Caterpillar para obtener la información más reciente.

PROOF

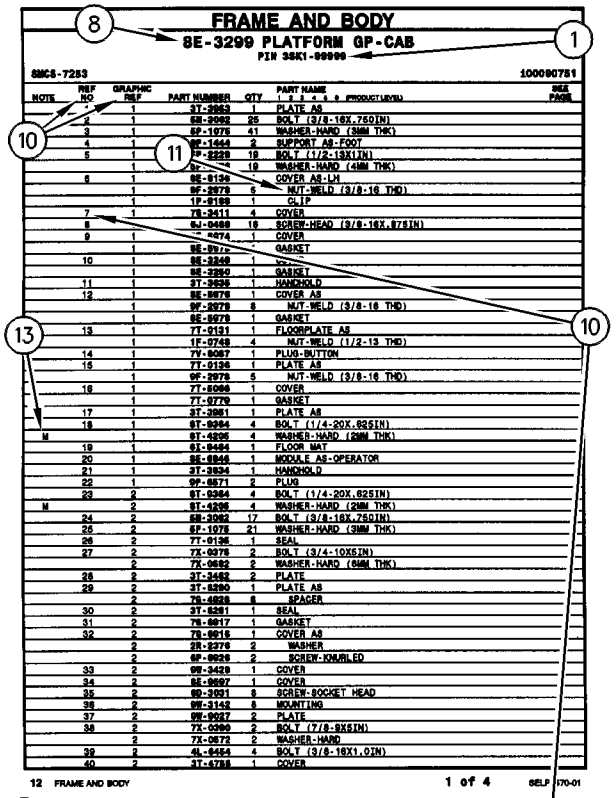

FRAME AND BODY

8E-3299 PLATFORM GP-CAB

PIN 3SK1-99999

SMCS-7283 100090751

NOTE	REF NO	GRAPHIC REF	PART NUMBER	QTY	PART NAME 1 2 3 4 5 6 (PRODUCT LEVEL)	SEE PAGE
	*	1	3T-3963	1	PLATE AS	
	2	1	5M-2062	25	BOLT (3/8-16X.750IN)	
	3	1	6P-1075	41	WASHER-HARD (3MM THK)	
	4	1	9E-1443	2	SUPPORT AS-FOOT	
	5	1	9P-2229	19	BOLT (1/2-13X1IN)	
		1	9P-[illegible]	19	WASHER-HARD (4MM THK)	
	6	1	9E-9136	*	COVER AS-LH	
		1	9F-2979	6	NUT-WELD (3/8-16 THD)	
		1	1P-0189	1	CLIP	
	7	1	7S-2411	4	COVER	
	8	1	6J-0468	18	SCREW-HEAD (3/8-16X.87SIN)	
	9	1	[illegible]-0274	1	COVER	
		1	9E-9976	*	GASKET	
	10	1	9E-3248	1	[illegible]	
		1	9E-2250	1	GASKET	
	11	1	3T-3636	1	HANDHOLD	
	12	1	9E-9978	1	COVER AS	
		1	9F-2979	8	NUT-WELD (3/8-16 THD)	
		1	9E-9979	1	GASKET	
	13	1	7T-9131	1	FLOORPLATE AS	
		1	1F-0748	4	NUT-WELD (1/2-13 THD)	
	14	1	7V-8067	1	PLUG-BUTTON	
	15	1	7T-9136	1	PLATE AS	
		1	9F-2979	5	NUT-WELD (3/8-16 THD)	
	16	1	7T-8066	1	COVER	
		1	7T-9779	1	GASKET	
	17	1	3T-3951	1	PLATE AS	
	18	1	9T-0264	4	BOLT (1/4-20X.62SIN)	
M		1	9T-4295	4	WASHER-HARD (2MM THK)	
	19	1	9I-9464	1	FLOOR MAT	
	20	1	9E-6946	1	MODULE AS-OPERATOR	
	21	1	3T-3934	1	HANDHOLD	
	22	1	9P-0671	2	PLUG	
	23	2	9T-0264	4	BOLT (1/4-20X.62SIN)	
M		2	9T-4295	4	WASHER-HARD (2MM THK)	
	24	2	5M-2062	17	BOLT (3/8-16X.75QIN)	
	25	2	6P-1075	21	WASHER-HARD (3MM THK)	
	26	2	7T-9136	1	SEAL	
	27	2	7X-0075	2	BOLT (3/4-10X5IN)	
		2	7X-0682	2	WASHER-HARD (6MM THK)	
	28	2	3T-3482	2	PLATE	
	29	2	3T-5290	1	PLATE AS	
		2	7S-4828	6	SPACER	
	30	2	3T-5291	1	SEAL	
	31	2	7S-8817	1	GASKET	
	32	2	7S-8816	1	COVER AS	
		2	5R-2276	2	WASHER	
		2	9F-9026	2	SCREW-KNURLED	
	33	2	9W-3429	1	COVER	
	34	2	8E-9697	1	COVER	
	35	2	9D-3031	8	SCREW-SOCKET HEAD	
	36	2	9W-3143	8	MOUNTING	
	37	2	9W-9027	2	PLATE	
	38	2	7X-0360	2	BOLT (7/8-9X5IN)	
		2	7X-0672	2	WASHER-HARD	
	39	2	4L-6454	4	BOLT (3/8-16X1.0IN)	
	40	2	3T-4788	1	COVER	

12 FRAME AND BODY 1 of 4 SELP4570-01

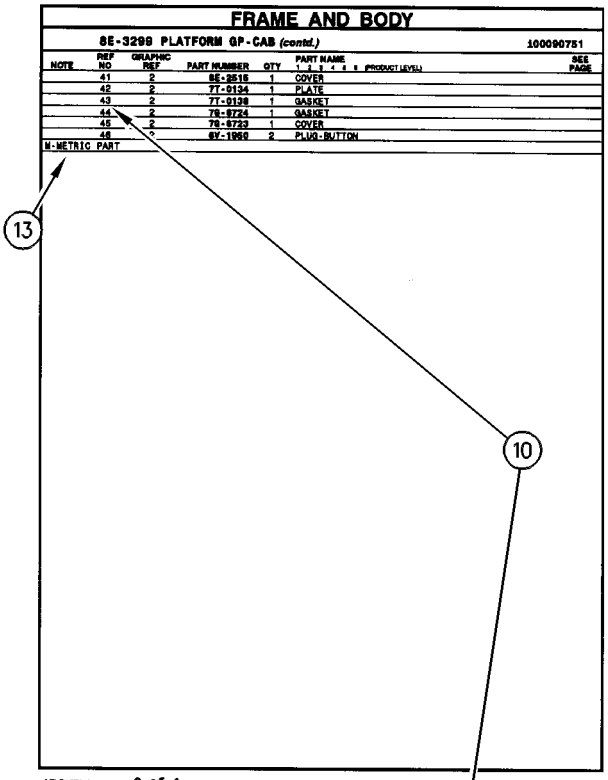

FRAME AND BODY

8E-3299 PLATFORM GP-CAB (contd.) 100090751

NOTE	REF NO	GRAPHIC REF	PART NUMBER	QTY	PART NAME 1 2 3 4 5 6 (PRODUCT LEVEL)	SEE PAGE
	41	2	8E-2515	1	COVER	
	42	2	7T-9134	1	PLATE	
	43	2	7T-9138	1	GASKET	
	44	2	7S-8724	1	GASKET	
	45	2	7S-8723	1	COVER	
	46	*	8Y-1950	2	PLUG-BUTTON	

M-METRIC PART

SELP4570-01 2 of 4 FRAME AND BODY 13

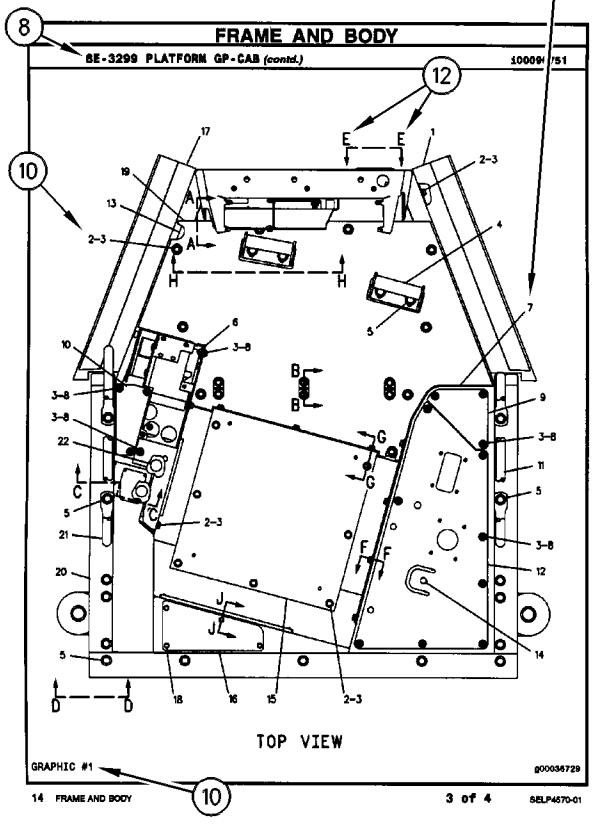

FRAME AND BODY

8E-3299 PLATFORM GP-CAB (contd.) 100090751

TOP VIEW

GRAPHIC #1 g00036729

14 FRAME AND BODY 3 of 4 SELP4570-01

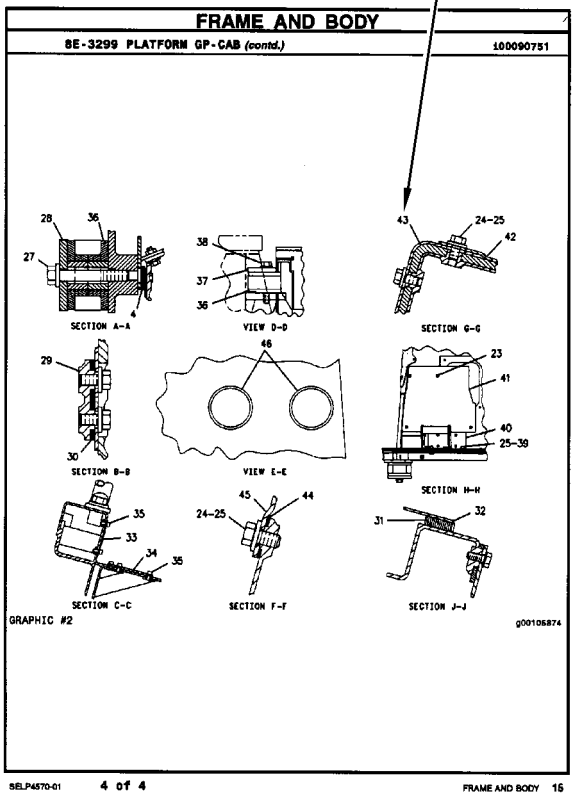

FRAME AND BODY

8E-3299 PLATFORM GP-CAB (contd.) 100090751

SECTION A-A VIEW D-D SECTION G-G

SECTION B-B VIEW E-E SECTION H-H

SECTION C-C SECTION F-F SECTION J-J

GRAPHIC #2 g00105874

SELP4570-01 4 of 4 FRAME AND BODY 15

1. IDENTIFICAÇÃO DA MÁQUINA

As máquinas Caterpillar são identificadas pelos Números de Informação do Produto (PIN). Alguns componentes incluídos numa máquina podem ser identificados por Números de Série (S/N). Componentes típicos que serão enumerados com números de série incluem motores, transmissões, lâminas e ríperes. Além do número de série, a máquina e o motor são ainda identificados por números de arranjo e, em alguns casos, números de modificações. Tais números encontram-se na(s) placa(s) de identificação do produto e na placa mestre no compartimento do operador.

SIS *Novidades*

A partir do primeiro trimestre de 2001 o Número de Identificação de Produto da Caterpillar (PIN) precisa ser mudado de 8 para 17 caracteres. Esforçando-se para fornecer uma identificação uniforme de equipamentos, a Caterpillar e outros fabricantes de equipamento de construção estão mudando para atender a versão mais atualizada do padrão de identificação de produtos. Os números de PIN para produtos de aplicações não rodoviárias são definidos pela ISO 10261. O novo formato de número PIN será adotado em todas as máquinas e grupos geradores Caterpillar. As placas e as marcações do chassi mostrarão os 17 dígitos de PIN. O novo formato terá a seguinte disposição:

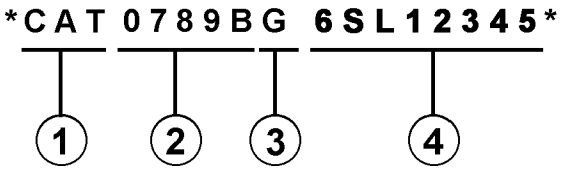

Onde:

1. Código de Fabricação Mundial da Caterpillar (dígitos 1-3)

2. Descrição da Máquina (dígitos 4-8)

3. Dígito de Verificação (dígito 9)

4. Seção de Indicador da Máquina (MIS) ou Número de Seqüência de Produto (dígitos 10-17). Estes eram anteriormente chamados de Número de Série.

Máquinas e grupos geradores produzidos antes do primeiro trimestre de 2001 manterão o formato de 8 caracteres de PIN.

Componentes como motores, transmissões, eixos, ferramentas de trabalho, etc. continuarão a usar Número de Série (S/N) com oito caracteres.

2. COMO OBTER PEÇAS

⚠ CUIDADO

Quando peças de substituição são exigidas para este produto, a Caterpillar recomenda a utilização de peças de substituição Caterpillar ou peças com as especificações equivalentes incluindo, mas não limitadas, à dimensões físicas, tipos, resistência e materiais.

A inobservância desta advertência poderá resultar em falhas prematuras, danos ao produto, ferimentos ou morte.

As Peças de Reposição de Qualidade Caterpillar encontram-se disponíveis nos revendedores Caterpillar no mundo inteiro. Seus estoques de peças são atualizados e incluem todas as peças normalmente necessárias para proteger seu investimento em máquinas Caterpillar. Alguns revendedores podem oferecer jogos de reparo ou peças de troca/remanufaturadas disponíveis como uma opção da alternativa de reparo mais eficaz para uma situação específica. Ao encomendar peças, seu pedido deve especificar a quantidade, o número e o nome da peça e o número de série/número de identificação do produto referentes à máquina para a qual as peças se destinam.

3. ORGANIZAÇÃO DO MANUAL DE PEÇAS

A informação do produto neste manual é apresentada em forma de "elementos de informação" que representam todos os componentes para o modelo específico. Arranjo de Motor e Grupo de Assento são exemplos de elementos de informação. Os elementos de informação são organizados em ordem alfabética por nome de peça ou secundariamente, por número de peça incluído em cada seção principal do manual.

4. LISTA DE CONTEÚDOS

A Lista de Conteúdos (TOC) se encontra no princípio do manual. A Lista de Conteúdos (TOC) relaciona em cada seção do manual uma lista completa com todos os elementos de informação organizados conforme aparecem no manual. Números de página são fornecidos para que se tenha referência rápida de ilustrações de peças detalhadas e listas de conteúdos que podem receber serviço de manutenção.

5. ÍNDICE DE PEÇAS DE MANUTENÇÃO

O Índice de Peças de Manutenção, localizado perto do princípio do manual, faz referência aos números de peça de manutenção usados com maior frequência, fornecendo uma descrição, a quantidade, o uso e o número de página. Esta informação é organizada com a descrição da peça em ordem alfabética.

6. ÍNDICE

O Índice localizado perto do princípio do manual, consiste de uma lista em ordem alfabética de todos os elementos de informação incluídos no manual. Números de página são fornecidos para que se tenha referência rápida de ilustrações de peças detalhadas e listas de conteúdos que podem receber serviço de manutenção.

7. ÍNDICE DE NÚMERO DE PEÇA

Um índice numérico relacionando todos os números de peça e a(s) página(s) correspondentes, aparece no final do manual.

8. LEGENDAS

As legendas localizadas no início de cada elemento de informação identificam o número e o nome de peça, juntamente com informação descritiva adicional. Informações sobre o Número de Informação do Produto (PIN) e o Número de Série (S/N) encontradas em cada legenda devem ser usadas para selecionar a informação correta sobre uma máquina específica. Opções de substituição no campo, identificação de componentes de acessórios opcionais e informações sobre onde são utilizados ("parte de") são também fornecidas.

A primeira linha de uma legenda é indicada em tipo maior para indicar o princípio de um elemento de informação. Legendas para páginas adicionais que podem ser necessárias para ilustrar um elemento de informação serão apresentadas em tipo padrão e incluirão o termo *(continua)* .

9. NÃO DISPONÍVEL SEPARADAMENTE

Em alguns casos, é necessário mostrar peças não disponíveis separadamente que têm uma ligação com listas de conteúdos de nível inferior que podem receber serviço de manutenção. Os números de peça destes componentes não disponíveis aparecerão em *itálico* , a fim de indicar que não estão disponíveis.

10. NÙMEROS DE REFERÊNCIA À LISTA DE PEÇAS

Os números indicados na coluna Ref No (No. de Referência) correspondem-se aos números usados no(s) gráfico(s) correspondente(s). Um sufixo com letras pode ser acrescentado a um número de referência para identificar itens de conteúdo de nível inferior. Os números indicados na coluna Graphic Ref (Referência de Gráfico) referem-se ao identificador de número de gráfico presente no canto esquerdo inferior de cada ilustração. O número de Referência de Gráfico pode ser usado em combinação com o item Ref No para determinar-se o número de peça correto. Poderá haver omissão intencional de um número de referência (Ref No) de uma lista de conteúdos uma vez que as informações são atualizadas para refletir os números de peça mais recentes que podem receber serviço de manutenção.

11. NOMES DE PEÇAS DESALINHADOS

Quando um nome de peça encontra-se desalinhado numa lista de peças, significa que tal item faz parte do (está incluído no) grupo ou conjunto sob o qual está relacionado.

12. LETRAS DE REFERÊNCIA NAS ILUSTRAÇÕES

Quando necessário, as ilustrações contêm letras de referência (A, B, C, etc.) que são utilizadas para seguir tubulações e cabos elétricos de um ponto a outro. Também foram utilizadas para indicar onde se pode reconectar as ilustrações que foram separadas.

13. ABREVIAÇÕES E SÍMBOLOS

O.D. – "Outside Diameter" (Diâmetro Externo)
I.D. – "Inside Diameter" (Diâmetro Interno)
A – Não faz parte deste grupo
B – Use conforme necessário
C – Indica modificação
D – Vendido por metro
E – Vendido por centímetro
F – Não ilustrado
G – Vendido por polegada
I – Consultar o Sistema de Informações Hidráulicas
M – Peça métrica
R – Peça remanufaturada pode estar disponível; consulte o seu revendedor Cat
Y – Ilustração separada
Z – Não disponível separadamente

SIS *Novidades*

14. <END>

Este símbolo indica o final de um elemento de informação.

NOTA:

Os contínuos aperfeiçoamentos e avanços no projeto do produto podem ocasionar modificações em sua máquina que talvez ainda não estejam incluídas nesta publicação. Sempre que surgirem dúvidas quanto a um produto Caterpillar ou quanto à presente publicação, consulte o seu revendedor Caterpillar para obter as informações mais recentes disponíveis.

PROOF

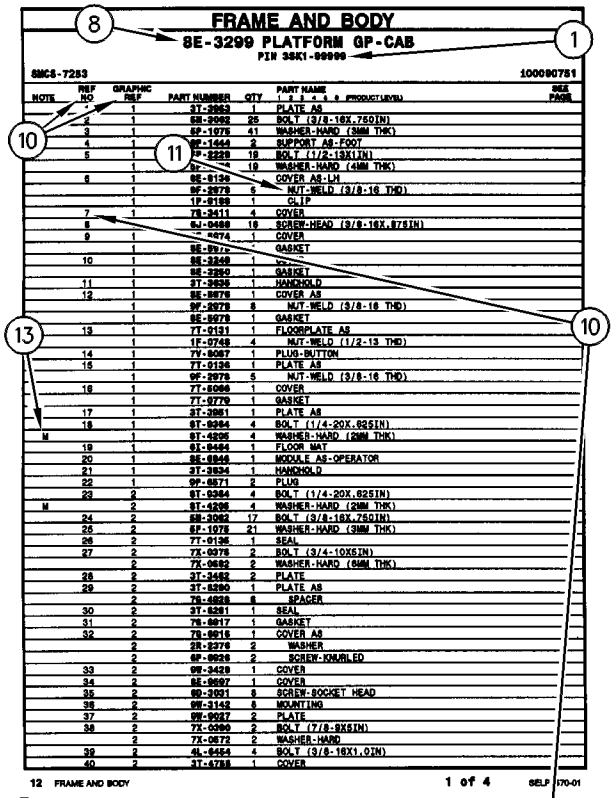

FRAME AND BODY

8E-3299 PLATFORM GP-CAB

PIN 3SK1-99999

SMCS-7283 100090751

NOTE	REF NO	GRAPHIC REF	PART NUMBER	QTY	PART NAME 1 2 3 4 5 6 (PRODUCT LEVEL)	SEE PAGE
	*	1	3T-3963	1	PLATE AS	
	2	1	5B-3062	25	BOLT (3/8-16X.750IN)	
	3	1	6P-1075	41	WASHER-HARD (3MM THK)	
	4	1	9E-1443	2	SUPPORT AS-FOOT	
	5	1	9P-2229	19	BOLT (1/2-13X1IN)	
		1	6P-[illegible]	19	WASHER-HARD (4MM THK)	
	6	1	9E-9136	*	COVER AS-LH	
		1	9F-2979	6	NUT-WELD (3/8-16 THD)	
		1	1P-0189	1	CLIP	
	7	1	7B-3411	4	COVER	
	8	1	6J-0468	18	SCREW-HEAD (3/8-16X.87SIN)	
	9	1	[illegible]-0274	1	COVER	
		1	9E-9[illegible]	*	GASKET	
	10	1	9E-3248	1	[illegible]	
		1	9E-3250	1	GASKET	
	11	1	3T-3636	1	HANDHOLD	
	12	1	9E-9076	1	COVER AS	
		1	9F-2979	8	NUT-WELD (3/8-16 THD)	
		1	9E-9078	1	GASKET	
	13	1	7T-9131	1	FLOORPLATE AS	
		1	1F-0748	4	NUT-WELD (1/2-13 THD)	
	14	1	7V-8067	1	PLUG-BUTTON	
	15	1	7T-0136	1	PLATE AS	
		1	9F-2979	5	NUT-WELD (3/8-16 THD)	
	16	1	7T-5066	1	COVER	
		1	7T-9779	1	GASKET	
	17	1	3T-3951	1	PLATE AS	
	18	1	9T-0264	4	BOLT (1/4-20X.62SIN)	
M		1	9T-4296	4	WASHER-HARD (2MM THK)	
	19	1	9I-9464	1	FLOOR MAT	
	20	1	9E-6946	1	MODULE AS-OPERATOR	
	21	1	3T-3934	1	HANDHOLD	
	22	1	9P-0671	2	PLUG	
	23	2	9T-0264	4	BOLT (1/4-20X.62SIN)	
M		2	9T-4296	4	WASHER-HARD (2MM THK)	
	24	2	5B-3062	17	BOLT (3/8-16X.75QIN)	
	25	2	6P-1075	21	WASHER-HARD (3MM THK)	
	26	2	7T-0136	1	SEAL	
	27	2	7X-0078	2	BOLT (3/4-10X5IN)	
		2	7X-0682	2	WASHER-HARD (6MM THK)	
	28	2	3T-3482	2	PLATE	
	29	2	3T-5290	1	PLATE AS	
		2	7B-4828	6	SPACER	
	30	2	3T-5291	1	SEAL	
	31	2	7B-8817	1	GASKET	
	32	2	7B-8816	1	COVER AS	
		2	5R-2276	2	WASHER	
		2	9F-9026	2	SCREW-KNURLED	
	33	2	9M-3429	1	COVER	
	34	2	8E-9697	1	COVER	
	35	2	9D-3031	8	SCREW-SOCKET HEAD	
	36	2	9M-3143	8	MOUNTING	
	37	2	9M-9037	2	PLATE	
	38	2	7X-0360	2	BOLT (7/8-9X5IN)	
		2	7X-0672	2	WASHER-HARD	
	39	2	4L-6454	4	BOLT (3/8-16X1.0IN)	
	40	2	3T-4788	1	COVER	

12 FRAME AND BODY 1 of 4 SELP[illegible]70-01

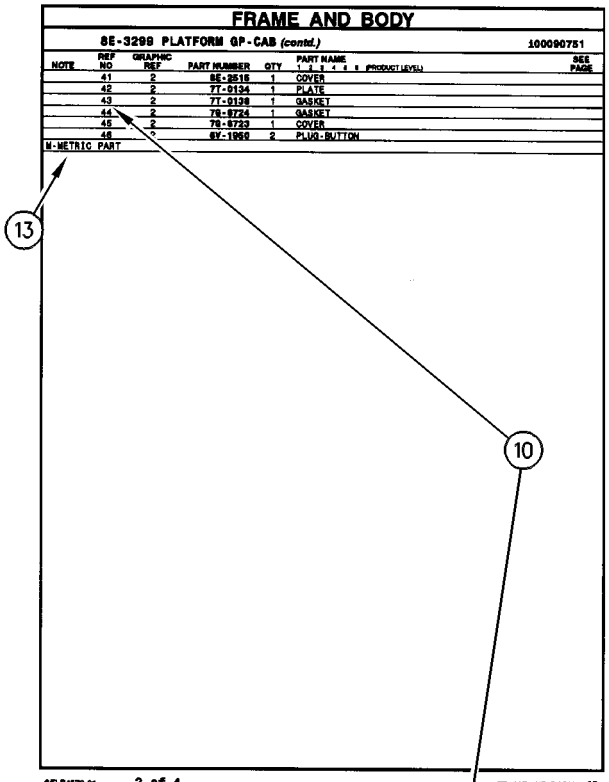

FRAME AND BODY

8E-3299 PLATFORM GP-CAB (contd.) 100090751

NOTE	REF NO	GRAPHIC REF	PART NUMBER	QTY	PART NAME 1 2 3 4 5 6 (PRODUCT LEVEL)	SEE PAGE
	41	2	8E-2515	1	COVER	
	42	2	7T-9134	1	PLATE	
	43	2	7T-9138	1	GASKET	
	44	2	7B-8724	1	GASKET	
	45	2	7B-8723	1	COVER	
	46	*	8Y-1950	2	PLUG-BUTTON	

M-METRIC PART

SELP4570-01 2 of 4 FRAME AND BODY 13

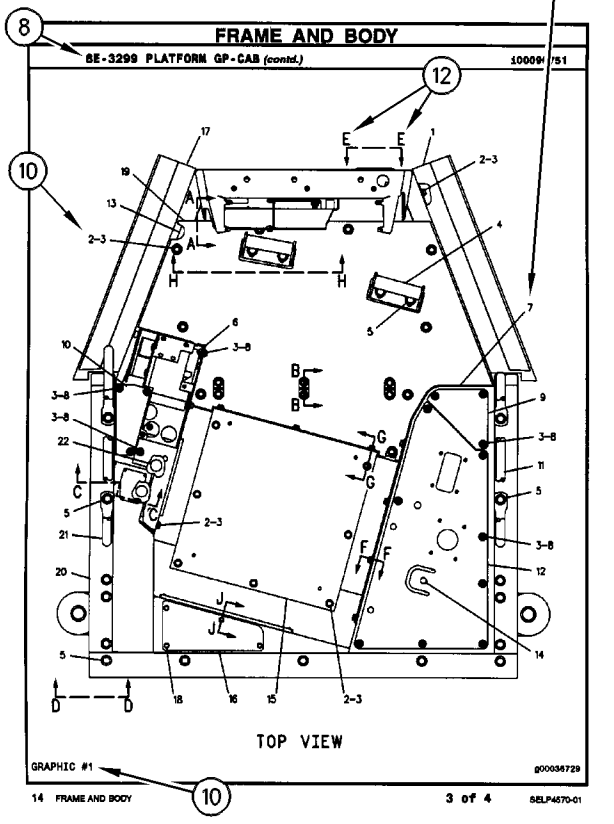

FRAME AND BODY

8E-3299 PLATFORM GP-CAB (contd.) 100090751

TOP VIEW

GRAPHIC #1 g00036729

14 FRAME AND BODY 3 of 4 SELP4570-01

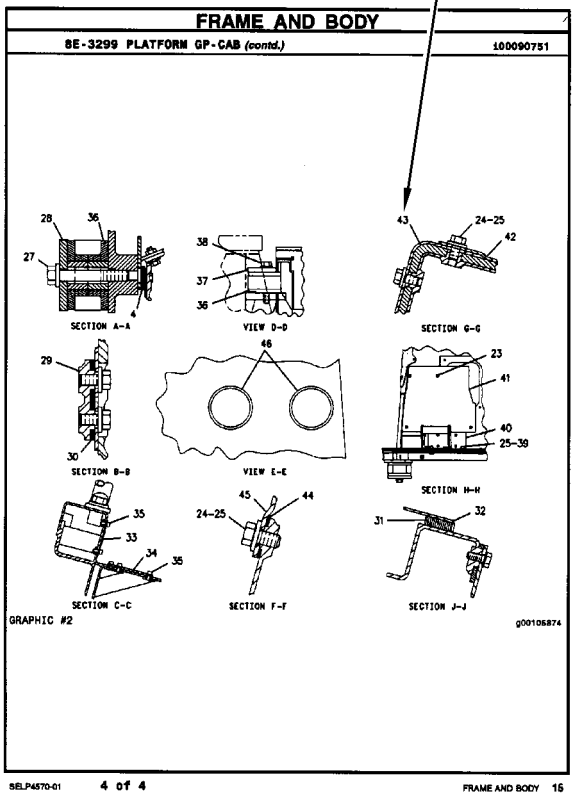

FRAME AND BODY

8E-3299 PLATFORM GP-CAB (contd.) 100090751

SECTION A-A VIEW D-D SECTION G-G

SECTION B-B VIEW E-E SECTION H-H

SECTION C-C SECTION F-F SECTION J-J

GRAPHIC #2 g00105874

SELP4570-01 4 of 4 FRAME AND BODY 15

ALLGEMEINE HINWEISE

1. MASCHINENKENNZEICHNUNG

Caterpillar-Maschinen sind mit PRODUCT IDENTIFICATION NUMBERS (PIN) (Produkt-Identnummern) gekennzeichnet. Einige Baugruppen, z.B. Motoren, Getriebe, Planierschilde und Aufreißer, sind mit SERIAL NUMBERS (S/N) (Seriennummern) gekennzeichnet. An der Maschine und am Motor befinden sich außerdem ARRANGEMENT NUMBERS (Ausrüstungsnummern) sowie in einigen Fällen MODIFICATION NUMBERS (Änderungsnummern). Sie befinden sich auf den PIN-Schildern und auf dem Typenschild im Fahrerhaus.

Bei Ersatzteilbestellungen müssen dem Händler alle diese Nummern zur Verfügung gestellt werden.

SIS *Neu im Parts Manual*

Vom ersten Quartal 2001 ab wurde die Caterpillar Produkt-Identnummer (PIN) von 8 auf 17 Zeichen geändert. Um zur Standardisierung der Produkt-Identnummer beizutragen, sind Caterpillar und andere Baumaschinenhersteller bestrebt, die aktuellste Norm zur Produkt-Identnummerierung einzuführen. Produkt-Identnummern für Baumaschinen sind durch ISO 10261 definiert. Das neue Format der Produkt-Identnummern gilt für alle Caterpillar-Maschinen und -Stromaggregate. Die Produkt-Identschilder und -Identrahmenmarkierung enthalten die aus 17 Zeichen bestehende Identnummer. Das neue Format hat folgende Abschnitte:

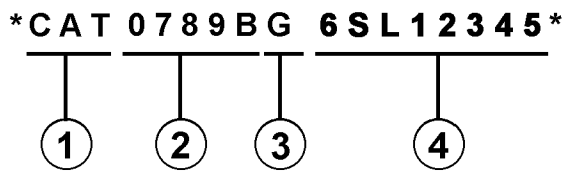

Abschnitte:

1. Caterpillars weltweiter Herstellungscode (Zeichen 1-3)

2. Modell (Zeichen 4-8)

3. Kontrollzeichen (Zeichen 9)

4. Maschinenspezifische Kennung (MIS) oder Produktsequenznummer (Zeichen 10-17). Diese wurde früher als Seriennummer bezeichnet.

Für vor dem ersten Quartal 2001 hergestellte Maschinen und Stromaggregate wird das aus 8 Zeichen bestehende PIN-Format beibehalten.

Bauteile wie z.B. Motoren, Getriebe, Achsen sowie Arbeitsgeräte werden weiterhin eine aus 8 Zeichen bestehende Seriennummer (S/N) aufweisen.

2. BESTELLEN VON ERSATZTEILEN

⚠ WARNUNG

Wenn für diese Maschine Ersatzteile benötigt werden, empfiehlt Caterpillar, ausschließlich Caterpillar-Ersatzteile oder solche zu verwenden, die die gleichen technischen Merkmale hinsichtlich Typ, Festigkeit, Werkzeugeigenschaften und die gleichen Maße aufweisen.

Bei Nichtbeachtung dieser Warnung besteht Verletzungs- oder sogar Lebensgefahr! Ferner kann Nichtbeachtung vorzeitige Ausfälle der Teile und Beschädigung der Maschine zur Folge haben.

Original Caterpillar-Ersatzteile können weltweit bei jedem Caterpillar-Händlern bestellt werden. Die umfangreichen Händlerlager enthalten normalerweise alle Teile, die Sie für Ihre Caterpillar-Maschine benötigen. Einige Händler bieten Reparatursätze, Austausch- oder werküberholte Teile an, so daß Sie eine Auswahl unter verschiedenen Reparaturmöglichkeiten treffen können. Ihre Bestellung muß folgende Angaben enthalten: Anzahl der benötigten Teile, Bestellnummer, Bezeichnung des Teils, Serien-Nr./Produkt-Ident-Nr., Ausrüstungs-Nr. und Änderungs-Nr. der Maschine, für die diese Teile benötigt werden.

3. AUFBAU DES PARTS MANUAL

Die Produktinformationen für alle Komponenten eines bestimmten Modells sind in INFORMATION ELEMENTS (Informationseinheiten) gegliedert. ENGINE ARRANGEMENT (Motorausführung) und SEAT GROUP (Fahrersitz) sind Beispiele für solche Informationseinheiten. Sie sind innerhalb jeder Gruppe alphabetisch, entsprechend der Ersatzteilbezeichnung, und zusätzlich numerisch, entsprechend der Ersatzteilnummer, geordnet.

4. INHALTSVERZEICHNIS

Das Inhaltsverzeichnis befindet sich am Anfang des Buches. Im Inhaltsverzeichnis werden die einzelnen Abschnitte des Buches aufgeführt. Die Abschnitte enthalten eine vollständige Aufstellung aller Informationseinheiten. Diese sind entsprechend ihrem Erscheinen im Buch geordnet. Das Inhaltsverzeichnis enthält Seitenangaben für Schnellverweise auf detaillierte Abbildungen und Teillisten.

ALLGEMEINE HINWEISE

5. INDEX FÜR WARTUNGSTEILE

Der Index für Wartungsteile vorn im Buch enthält die Bestellnummern, Seitenangaben, Mengenangaben und Informationen über den Einsatzbereich für die am häufigsten benötigten Ersatzteile. Die Angaben sind alphabetisch entsprechend der Teilebezeichnung geordnet.

6. INDEX

Der Index vorn im Buch enthält eine alphabetische Liste aller Informationseinheiten. Er enthält Seitenangaben für Schnellverweise auf detaillierte Abbildungen und Teillisten.

7. INDEX FÜR BESTELLNUMMERN

Hinten im Buch befindet sich ein numerischer Index, mit allen Bestellnummern und dem Hinweis auf die Seite, auf der sich die betreffende Abbildung befindet.

8. ÜBERSCHRIFTEN

Die Überschriften, die sich am Anfang jeder der Informationseinheiten befinden, enthalten Bestellnummern, Ersatzteilbezeichnungen und zusätzliche beschreibende Informationen. Produkt-Ident- und Seriennummern in den Überschriften sollten zur Auswahl der richtigen Informationen für die betreffende Maschine verwendet werden. Die Überschriften enthalten außerdem Informationen über möglichen Außendienstersatz, mögliche Baugerätekomponenten und die Baugruppe, zu der das Teil gehört.

Die erste Zeile einer Überschrift erscheint in einer größeren Schriftart, um den Anfang einer Informationseinheit zu kennzeichnen. Überschriften für zusätzliche Seiten, die zur Erläuterung einer Informationseinheit notwendig sind, erscheinen in normaler Schriftart und enthalten den Begriff "(contd.)".

9. NICHT EINZELN LIEFERBARE TEILE

In einigen Fällen ist es notwendig nicht lieferbare Teile, die selbst mit einer eigenen Teilliste im Buch vertreten sind, aufzuführen. Die Bestellnummern dieser nicht einzeln lieferbaren Teile erscheinen kursiv, wodurch angezeigt wird, daß sie nur in Verbindung mit anderen Teilen lieferbar sind.

10. REFERENZNUMMER FÜR ERSATZTEILE

Die Zahlen, die in der Spalte "Ref No" aufgeführt sind, stimmen mit den Zahlen in den beigefügten Abbildungen überein. Ein Buchstaben-Suffix kann zu einer Referenznummer hinzugefügt werden, um zu kennzeichnen, daß das Teil mit einer eigenen Teilliste im Buch aufgeführt ist. Die in der Spalte "Graphic Ref" angeführten Zahlen verweisen auf die Identifikationsnummer der Abbildung, die sich in der linken unteren Ecke der Abbildung befindet. Diese Nummer kann zusammen mit der Referenznummer des Teils angegeben werden, um die richtige Ersatzteilnummer zu ermitteln. Referenznummern können absichtlich weggelassen werden, da die Nummern der lieferbaren Ersatzteile ständig aktualisiert werden.

11. EINGERÜCKTE BEZEICHNUNGEN

Wenn eine Bezeichnung eingerückt ist, wird dadurch angezeigt, daß das Teil zu einer Baugruppe gehört, unter deren Bezeichnung es eingerückt ist.

12. REFERENZBUCHSTABEN

Falls erforderlich sind in den Abbildungen Referenzbuchstaben enthalten (z.B. A, B, C, usw.), die Leitungen und Kabelbäume von einem Punkt zum anderen verfolgen. Außerdem geben sie die Stelle an, an der getrennte Abbildungen fortgesetzt werden.

13. ABKÜRZUNGEN UND SYMBOLE

O.D. – Außendurchmesser
I.D. – Innendurchmesser
A – kein Teil dieser Gruppe
B – nach Bedarf verwenden
C – Hinweis auf eine Änderung
D – in Meter-Länge bestellen
E – in Zentimeter-Länge bestellen
F – nicht gezeigt
G – in Zoll-Länge bestellen
I – siehe Hydraulikinformationssystem
M – metrisches Teil
R – werküberholtes Teil unter Umständen lieferbar
Y – separate Abbildung
Z – nicht einzeln lieferbar

SIS *Neu im Parts Manual*

14. <END>

Dieses Symbol zeigt das Ende eines Informationselements an.

PROOF

ANMERKUNG:

Ständig vorgenommene Verbesserungen und Weiterentwicklungen an Ihrer Maschine können Änderungen verursachen, die in der vorliegenden Ausgabe noch nicht berücksichtigt sind. Fragen zu Ihrer Caterpillar-Maschine oder diesem Ersatzteilbuch beantwortet Ihr Caterpillar-Händler.

PROOF

ALLGEMEINE HINWEISE

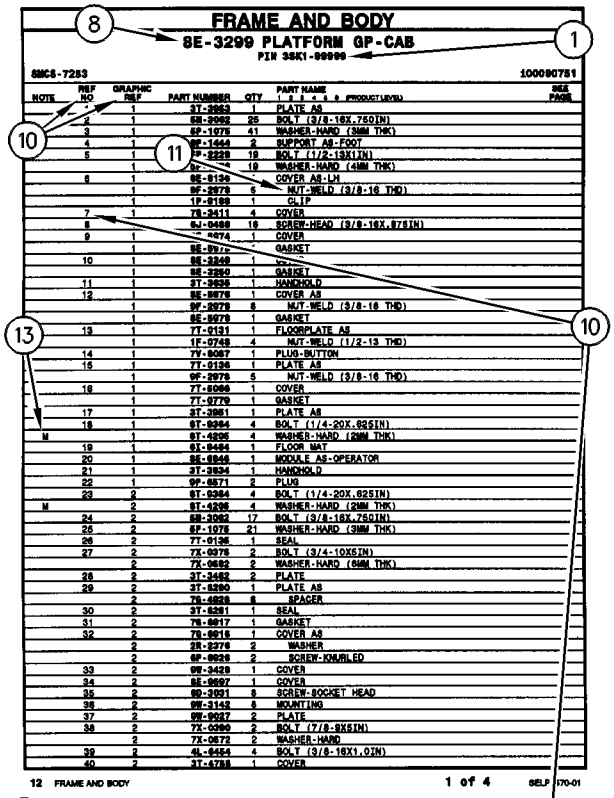

NOTE	REF NO	GRAPHIC REF	PART NUMBER	QTY	PART NAME 1 2 3 4 5 6 (PRODUCT LEVEL)	SEE PAGE
	*	1	3T-3963	1	PLATE AS	
	2	1	5M-3062	25	BOLT (3/8-16X.750IN)	
	3	1	6P-1075	41	WASHER-HARD (3MM THK)	
	4	1	9E-1444	2	SUPPORT AS-FOOT	
	5	1	9P-2229	19	BOLT (1/2-13X1IN)	
		1	9P-[illegible]	19	WASHER-HARD (4MM THK)	
	6	1	9E-9136	*	COVER AS-LH	
		1	9F-2979	6	NUT-WELD (3/8-16 THD)	
		1	1F-0189	1	CLIP	
	7	1	7S-2411	4	COVER	
	8	1	6J-0468	18	SCREW-HEAD (3/8-16X.87SIN)	
	9	1	[illegible]074	1	COVER	
		1	9E-9[illegible]	*	GASKET	
	10	1	9E-3248	1	[illegible]	
		1	9E-2250	1	GASKET	
	11	1	3T-3636	1	HANDHOLD	
	12	1	9E-9076	1	COVER AS	
		1	9F-2979	8	NUT-WELD (3/8-16 THD)	
		1	9E-9078	1	GASKET	
	13	1	7T-9131	1	FLOORPLATE AS	
		1	1F-0748	4	NUT-WELD (1/2-13 THD)	
	14	1	7V-8067	1	PLUG-BUTTON	
	15	1	7T-9136	1	PLATE AS	
		1	9F-2979	5	NUT-WELD (3/8-16 THD)	
	16	1	7T-5066	1	COVER	
		1	7T-9779	1	GASKET	
	17	1	3T-3951	1	PLATE AS	
	18	1	9T-0264	4	BOLT (1/4-20X.62SIN)	
M		1	9T-4295	4	WASHER-HARD (2MM THK)	
	19	1	9I-9464	1	FLOOR MAT	
	20	1	9E-6946	1	MODULE AS-OPERATOR	
	21	1	3T-3934	1	HANDHOLD	
	22	1	9P-0671	2	PLUG	
	23	2	9T-0264	4	BOLT (1/4-20X.62SIN)	
M		2	9T-4295	4	WASHER-HARD (2MM THK)	
	24	2	5M-3062	17	BOLT (3/8-16X.75QIN)	
	25	2	6P-1075	21	WASHER-HARD (3MM THK)	
	26	2	7T-9136	1	SEAL	
	27	2	7X-0078	2	BOLT (3/4-10X5IN)	
		2	7X-0682	2	WASHER-HARD (6MM THK)	
	28	2	3T-3482	2	PLATE	
	29	2	3T-5290	1	PLATE AS	
		2	7S-4828	6	SPACER	
	30	2	3T-5291	1	SEAL	
	31	2	7S-8817	1	GASKET	
	32	2	7S-8816	1	COVER AS	
		2	5R-2276	2	WASHER	
		2	9F-9026	2	SCREW-KNURLED	
	33	2	9W-3429	1	COVER	
	34	2	8E-9697	1	COVER	
	35	2	9D-3031	8	SCREW-SOCKET HEAD	
	36	2	9W-3143	8	MOUNTING	
	37	2	9W-9027	2	PLATE	
	38	2	7X-0360	2	BOLT (7/8-9X5IN)	
		2	7X-0672	2	WASHER-HARD	
	39	2	4L-6454	4	BOLT (3/8-16X1.0IN)	
	40	2	3T-4788	1	COVER	

12 FRAME AND BODY 1 of 4 SELP4570-01

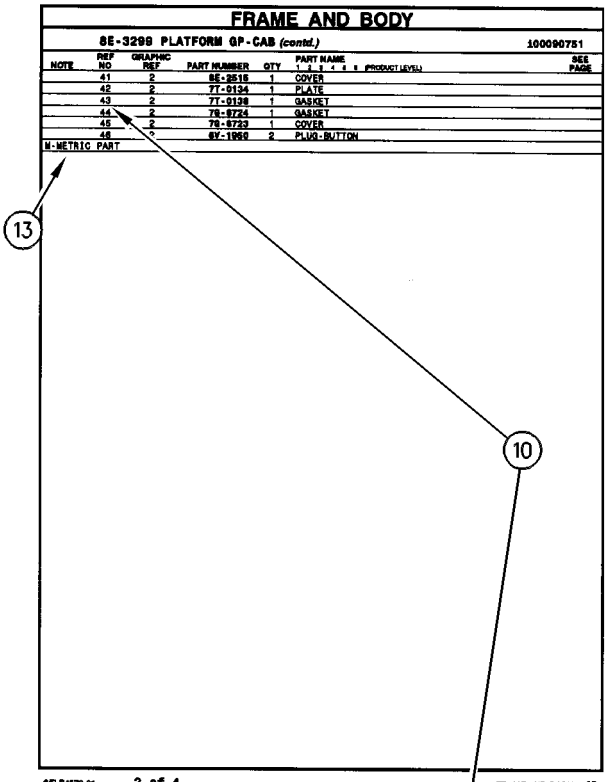

NOTE	REF NO	GRAPHIC REF	PART NUMBER	QTY	PART NAME 1 2 3 4 5 6 (PRODUCT LEVEL)	SEE PAGE
	41	2	8E-2516	1	COVER	
	42	2	7T-9134	1	PLATE	
	43	2	7T-9138	1	GASKET	
	44	2	7S-8724	1	GASKET	
	45	2	7S-8723	1	COVER	
	46	*	8Y-1950	2	PLUG-BUTTON	

M-METRIC PART

SELP4570-01 2 of 4 FRAME AND BODY 13

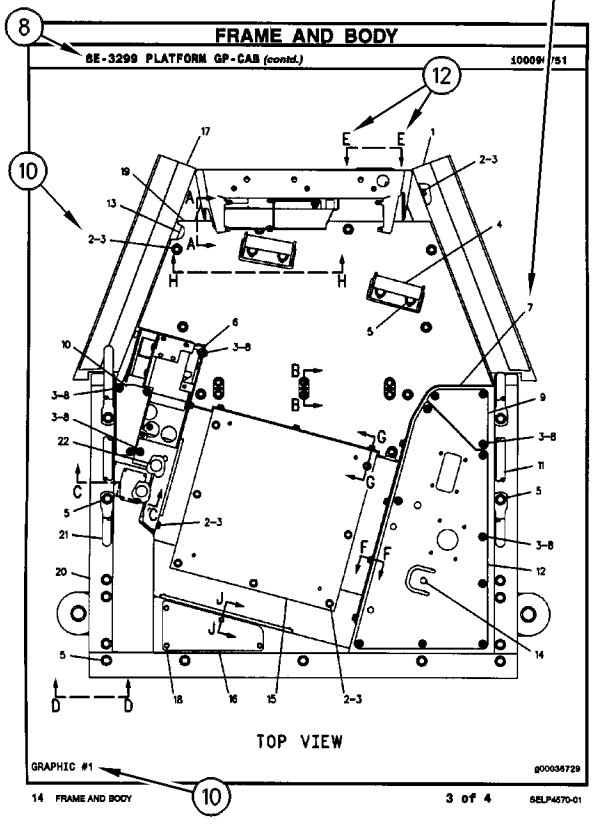

14 FRAME AND BODY 3 of 4 SELP4570-01

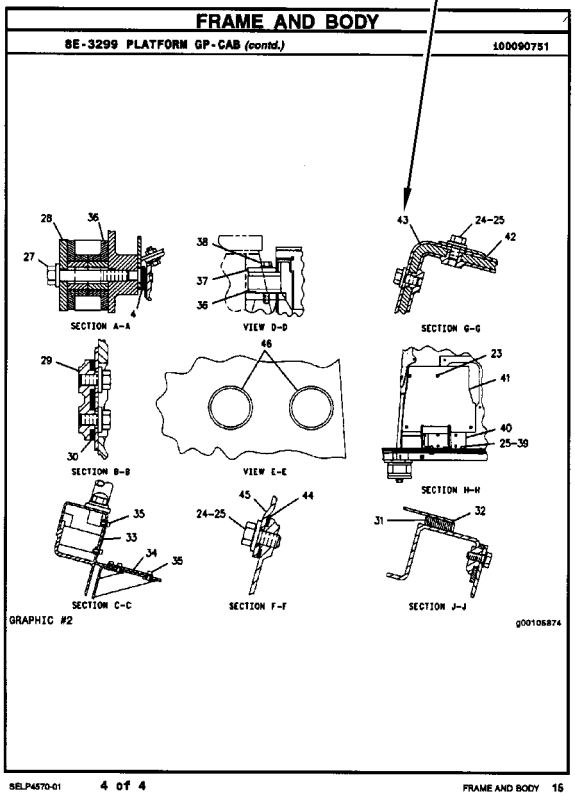

SELP4570-01 4 of 4 FRAME AND BODY 15

REMANUFACTURED COMPONENTS

As an option when making repairs consider Caterpillar Remanufactured Components. Components that are available through the Caterpillar Remanufactured Program are identified three ways in the parts book:

- with the letter R in the note field of the parts list
- with an R* at the beginning of the first line of the caption
- with an *R at the end of the first line of the caption

Typical components included in the Remanufacturing Program include:

ALTERNATORS
CONNECTING RODS
CRANKSHAFTS - UNDERSIZE
CRANKSHAFTS - UPGRADE TO NEW
CYLINDER HEADS
ELECTRONIC CONTROL MODULES (ECM)
ELECTRONIC SENSORS
FUEL INJECTORS
FUEL NOZZLES
FUEL PUMPS
GOVERNORS
OIL PUMPS
PISTONS
SHORT BLOCKS
STARTERS
TURBOCHARGERS - COMPLETE
TURBOCHARGER CARTRIDGES
WATER PUMPS

Caterpillar Remanufactured engines for many engine arrangements are also available.

PROOF

OPTIONS DE RÉPARATION

COMPOSANTS RÉNOVÉS

Comme option de réparation, considérer les composants rénovés Caterpillar. Les composants disponibles dans le cadre du programme Caterpillar de composants rénovés sont identifiés de trois façons dans le catalogue de pièces:

- avec la lettre "R" dans l'espace note de la liste des pièces
- avec R* au début de la première ligne des légendes
- avec *R à la fin de la première ligne des légendes

Les composants suivants figurent parmi les composants typiques du programme de rénovation:

ALTERNATEURS
BIELLES
VILEBREQUINS - SOUS-DIMENSIONNÉS
VILEBREQUINS - REMIS À NEUF
CULASSES
MODULES DE COMMANDE ÉLECTRONIQUE (ECM)
CAPTEURS ÉLECTRONIQUES
INJECTEURS
TÊTES D'INJECTEURS
POMPES À CARBURANT
RÉGULATEURS
POMPES À HUILE
PISTONS
BLOCS EMBIELLÉS
DÉMARREURS
TURBOCOMPRESSEURS - COMPLETS
CARTOUCHES DE TURBOCOMPRESSEUR
POMPES À EAU

Des moteurs rénovés sont aussi disponibles pour plusieurs versions de moteur.

PROOF

ALTERNATIVAS DE REPARACIÓN

COMPONENTES REMANUFACTURADOS

Al hacer reparaciones, tenga en cuenta la opción de Componentes Remanufacturados Caterpillar. Los componentes que están disponibles por medio del programa de Productos Remanufacturados Caterpillar se identifican de tres maneras en el manual de piezas:

- con la letra R en el espacio de Nota de la lista de piezas
- con una R* al comienzo de la primera línea de la leyenda
- con una *R al final de la primera línea de la leyenda

Los componentes que se incluyen típicamente en el Programa de Productos Remanufacturados son:

ALTERNADORES
BIELAS
CIGÜEÑALES - BAJOMEDIDA
CIGÜEÑALES - REMANUFACTURADOS A NUEVO
CULATAS
MÓDULOS DE CONTROL ELECTRÓNICO (ECM)
SENSORES ELECTRONICOS
INYECTORES
BOQUILLAS
BOMBAS DE COMBUSTIBLE
REGULADORES
BOMBAS DE ACEITE
PISTONES
MONOBLOQUES
MOTORES DE ARRANQUE
TURBOCOMPRESORES - COMPLETOS
NÚCLEOS DE TURBOCOMPRESOR
BOMBAS DE AGUA

También hay disponibles motores Remanufacturados Caterpillar para muchas de las configuraciones de motores.

PROOF

ALTERNATIVAS DE REPARO

COMPONENTES REMANUFATURADOS

Considere o uso de Componentes Remanufaturados Caterpillar ao efetuar reparos. Os componentes disponíveis através do Programa de Remanufatura Caterpillar são identificados de três formas no manual de peças:

- com um R na área da nota da lista de peças
- com um R* no princípio da primeira linha da legenda
- com um *R no final da primeira linha da legenda

Os componentes típicos que constam no Programa de Remanufatura incluem:

ALTERNADORES
BIELAS
VIRABREQUINS - SUBMEDIDAS
VIRABREQUINS - ATUALIZAÇÃO
CABEÇOTES
MÓDULOS DE CONTROLE ELETRÔNICO (ECM)
SENSORES ELETRÔNICOS
INJETORES DE COMBUSTÍVEL
BICOS DE ABASTECIMENTO DE COMBUSTÍVEL
BOMBAS DE COMBUSTÍVEL
GOVERNADORES
BOMBAS DE ÓLEO
PISTÕES
BLOCOS BÁSICOS DO MOTOR
MOTORES DE PARTIDA
TURBOALIMENTADORES - COMPLETOS
CARTUCHOS DE TURBOALIMENTADORES
BOMBAS D'ÁGUA

Motores Remanufaturados Caterpillar também encontram-se disponíveis para diversos arranjos de motor.

PROOF

WERKÜBERHOLTE AT-PRODUKTE

Bei Reparaturen sollten werküberholte AT-Produkte von Caterpillar in Betracht gezogen werden. Die durch das AT-Programm von Caterpillar erhältlichen Teile sind im Parts Book auf drei verschiedene Arten gekennzeichnet:

- mit dem Buchstaben R in der Spalte NOTE der Ersatzteilliste
- mit einem R* am Anfang der ersten Zeile der Überschrift
- mit einem *R am Ende der ersten Zeile der Überschrift

Das AT-Programm umfaßt u.a. folgende Produkte:

DREHSTROMGENERATOREN
PLEUELSTANGEN
KURBELWELLEN - MIT UNTERMASS
KURBELWELLEN - MIT ORIGINALMASS
ZYLINDERKÖPFE
ELEKTRONISCHE STEUEREINHEITEN (EMC)
ELEKTRONISCHE SENSOREN
PUMPENDÜSEN
EINSPRITZDÜSEN
KRAFTSTOFFPUMPEN
DREHZAHLREGLER
ÖLPUMPEN
KOLBEN
TEILMOTOREN
ANLASSER
TURBOLADER - KOMPLETT
TURBOLADERLAUFZEUGE
KÜHLWASSERPUMPEN

Viele Motoren können durch werküberholte AT-Motoren von Caterpillar ersetzt werden.

PROOF

SUPPLEMENTAL COOLANT ADDITIVES

CUSTOMER BENEFITS:

Protects against cavitation, foam, erosion, corrosion, and scale buildup in cooling systems.

- Provides measured coolant conditioner.

DESCRIPTION:

Additives deplete from the coolant with normal operation. For this reason, Supplemental Coolant Additives (SCA) must be added to all heavy duty coolants at regular intervals. In addition, when not using a fully formulated, pre-charged antifreeze, like Caterpillar's DEAC, an initial charge of SCA must be added to the cooling system. The amount of SCA added to the system is dependent on the capacity of the system.

The SCA for initial fill is provided as a liquid. SCA's for maintenance intervals are available in liquid form and as a spin-on element. (No Spin-on available for 3600 Family of Engines)

NOTE:

The amount of SCA added at initial fill is not the same as the amount added at maintenance intervals.

The coolant additive elements can be used with any ethylene or propylene glycol type antifreeze which meets ASTM D4985 or ASTM D5345 Specifications.

NOTE:

For use with standard heavy duty coolant only, not for use with Extended Life Coolant.

PARTS NEEDED:

Cooling System Capacity		Liquid SCA at Initial Fill	Liquid SCA at Maintenance*	Spin-on SCA Maintenance Element*
Liters	Gallons			
22-30	(6-8)	3P-2044 (1)	6V-3542 (1)	111-2370 (1)
30-38	(8-10)	3P-2044 (1) 6V-3542 (1)	111-2372 (1)	111-2369 (1)
38-49	(10-13)	3P-2044 (1) 8T-1589 (1)	111-2372 (1)	111-2369 (1)
49-64	(13-17)	3P-2044 (2)	8T-1589 (1)	9N-3368 (1)
64-83	(17-22)	3P-2044 (2) 8T-1589 (1)	111-2372 (1) 6V-3542 (1)	111-2371 (1)
83-114	(22-30)	3P-2044 (3) 8T-1589 (1)	3P-2044 (1)	9N-3718 (1)
114-163	(30-43)	3P-2044 (5)	3P-2044 (1) 6V-3542 (1)	111-2371 (2)
163-242	(43-64)	3P-2044 (8)	3P-2044 (2)	9N-3718 (2)

** Normal maintenance period is 250 hrs. See your Operation and Maintenance Manual for complete coolant maintenance instructions.*

( ) Indicates quantity required.

PROOF

ADDITIFS POUR LIQUIDE DE REFROIDISSEMENT

AVANTAGES POUR LE CLIENT

L'additif protège contre la cavitation, la mousse, l'érosion, la corrosion et l'accumulation de dépôts dans le circuit de refroidissement.

- L'additif complémentaire fournit une quantité mesurée d'additif.

DESCRIPTION:

Les additifs s'épuisent pendant l'utilisation du moteur. C'est pourquoi l'on doit ajouter de l'additif au liquide de refroidissement/antigel pour moteurs diesel à intervalles réguliers. En plus, si l'on n'utilise pas de l'antigel entièrement formulé et pré-chargé comme le liquide de refroidissement/antigel Caterpillar pour moteurs diesel, une quantité initiale d'additif doit être ajoutée au circuit de refroidissement. La quantité d'additif à ajouter au circuit dépend de la contenance du circuit.

L'additif pour le remplissage initial est fourni sous forme liquide. L'additif pour l'entretien ultérieur est disponible sous forme liquide et sous forme d'élément à visser. (Il n'y a pas d'élément à visser pour les moteurs de la famille 3600).

NOTA:

La quantité d'additif à ajouter au remplissage initial diffère de la quantité à ajouter aux intervalles d'entretien.

Les éléments d'additif peuvent être utilisés avec tout antigel de type éthylène ou propylène-glycol conforme à la norme ASTM D4985 ou ASTM D5345.

NOTA:

A utiliser uniquement avec du liquide de refroidissement pour moteurs diesel et non avec le liquide de refroidissement longue durée.

PIÈCES NÉCESSAIRES:

Contenance du circuit de refroidissement		Additif liquide au remplissage initial	Additif liquide aux intervalles d'entretien*	Elément d'additif à visser aux intervalles d'entretien*
Litres	Gallons U.S.			
22-30	(6-8)	3P-2044 (1)	6V-3542 (1)	111-2370 (1)
30-38	(8-10)	3P-2044 (1) 6V-3542 (1)	111-2372 (1)	111-2369 (1)
38-49	(10-13)	3P-2044 (1) 8T-1589 (1)	111-2372 (1)	111-2369 (1)
49-64	(13-17)	3P-2044 (2)	8T-1589 (1)	9N-3368 (1)
64-83	(17-22)	3P-2044 (2) 8T-1589 (1)	111-2372 (1) 6V-3542 (1)	111-2371 (1)
83-114	(22-30)	3P-2044 (3) 8T-1589 (1)	3P-2044 (1)	9N-3718 (1)
114-163	(30-43)	3P-2044 (5)	3P-2044 (1) 6V-3542 (1)	111-2371 (2)
163-242	(43-64)	3P-2044 (8)	3P-2044 (2)	9N-3718 (2)

** L'intervalle d'entretien normal est de 250 heures-service. Voir le Guide d'utilisation et d'entretien pour de plus amples renseignements concernant l'entretien du circuit de refroidissement.*

( ) Indique la quantité exigée.

PROOF

ADITIVOS DE REFRIGERANTE SUPLEMENTARIOS

VENTAJAS PARA EL USUARIO:

Protegen contra la cavitación, la formación de espuma, la corrosión y la acumulación de escamas en los sistemas de enfriamiento.

- Suministra un acondicionador dosificado de refrigerante.

DESCRIPCIÓN:

Los aditivos en el refrigerante se agotan con la operación normal. Por esta razón, se debe agregar Aditivo de refrigerante suplementario (SCA) a todos los refrigerantes para servicio pesado, a intervalos regulares. Además, cuando no se usa un anticongelante de precarga completo, tal como el DEAC de Caterpillar, es necesario agregar una cantidad de aditivo de refrigerante suplementario inicial al sistema de enfriamiento. La cantidad de aditivo que se debe agregar depende de la capacidad del sistema.

El SCA de llenado inicial es líquido. El que se usa para el mantenimiento está disponible tanto en líquido como en un elemento enroscable. (No hay elemento enroscable disponible para la Familia de Motores 3600).

NOTA:

La cantidad de aditivo de llenado inicial no es la misma que se agrega en los intervalos de mantenimiento.

Los elementos de aditivo de refrigerante se pueden usar con cualquier anticongelante de tipo glicol etilénico o propílico que esté de acuerdo con las especificaciones de las normas ASTM D4985 o ASTM D5345.

NOTA:

Se debe utilizar únicamente con refrigerante estándar para servicio pesado; no se debe usar con Refrigerante de Larga Duración.

PIEZAS NECESARIAS:

Capacidad del Sistema de Enfriamiento		SCA líquido de llenado inicial	SCA líquido de mantenimiento*	Elemento de mantenimiento enroscable*
litros	gal EE.UU.			
22-30	6-8	3P-2044 (1)	6V-3542 (1)	111-2370 (1)
30-38	8-10	3P-2044 (1) 6V-3542 (1)	111-2372 (1)	111-2369 (1)
38-49	10-13	3P-2044 (1) 8T-1589 (1)	111-2372 (1)	111-2369 (1)
49-64	13-17	3P-2044 (2)	8T-1589 (1)	9N-3368 (1)
64-83	17-22	3P-2044 (2) 8T-1589 (1)	111-2372 (1) 6V-3542 (1)	111-2371 (1)
83-114	22-30	3P-2044 (3) 8T-1589 (1)	3P-2044 (1)	9N-3718 (1)
114-163	30-43	3P-2044 (5)	3P-2044 (1) 6V-3542 (1)	111-2371 (2)
163-242	43-64	3P-2044 (8)	3P-2044 (2)	9N-3718 (2)

** El período normal de mantenimiento es de 250 horas. Para ver las instrucciones completas sobre el mantenimiento del refrigerante, consulte el Manual de Operación y Mantenimiento.*

( ) Indica la cantidad necesaria.

PROOF

ADITIVOS SUPLEMENTARES DO LÍQUIDO ARREFECEDOR

BENEFÍCIOS PARA O CLIENTE:

Protege contra cavitação, espuma, erosão, corrosão e acúmulo de crostas nos sistemas de arrefecimento.

- Fornece uma quantidade pré-determinada de condicionador de arrefecimento.

DESCRIÇÃO:

Com a operação normal, os aditivos se esgotam do líquido arrefecedor. Por isso, Aditivos Suplementares do Líquido Arrefecedor (SCA) devem ser acrescentados a todos os líquidos arrefecedores para serviço pesado em intervalos regulares. Além disso, quando um anticongelante pré-carregado, totalmente formulado não for usado, como o DEAC Caterpillar, uma carga inicial de SCA deve ser acrescentada ao sistema de arrefecimento. A quantidade de SCA acrescentada ao sistema depende da capacidade do sistema.

O SCA para abastecimento inicial é fornecido em forma de líquido. Os aditivos suplementares (SCA) para intervalos de manutenção estão à disposição em forma líquida e como um elemento com roscas. (Exceto os Motores da Família 3600)

NOTA:

A quantidade de SCA adicionada no abastecimento inicial não é a mesma que a acrescentada nos intervalos de manutenção.

Os elementos do aditivo do líquido arrefecedor podem ser usados com qualquer tipo de anticongelante etileno ou propileno que satisfaz as Especificações ASTM D4985 ou ASTM D5345.

NOTA:

Para uso apenas com líquido arrefecedor para serviço pesado padrão, não deve ser usado com Líquido Arrefecedor de Vida Longa.

PEÇAS NECESSÁRIAS:

Capacidade do Sistema de Arrefecimento		Líquido SCA Durante Abastecimento Inicial	Líquido SCA Durante Manutenção*	Elemento de Manutenção de SCA com Roscas*
Litros	Galões			
22-30	6-8	3P-2044 (1)	6V-3542 (1)	111-2370 (1)
30-38	8-10	3P-2044 (1) 6V-3542 (1)	111-2372 (1)	111-2369 (1)
38-49	10-13	3P-2044 (1) 8T-1589 (1)	111-2372 (1)	111-2369 (1)
49-64	13-17	3P-2044 (2)	8T-1589 (1)	9N-3368 (1)
64-83	17-22	3P-2044 (2) 8T-1589 (1)	111-2372 (1) 6V-3542 (1)	111-2371 (1)
83-114	22-30	3P-2044 (3) 8T-1589 (1)	3P-2044 (1)	9N-3718 (1)
114-163	30-43	3P-2044 (5)	3P-2044 (1) 6V-3542 (1)	111-2371 (2)
163-242	43-64	3P-2044 (8)	3P-2044 (2)	9N-3718 (2)

** O período normal de manutenção é de 250 horas. Consulte o Manual de Operação e Manutenção para obter instruções completas quanto à manutenção do líquido arrefecedor.*

( ) Indica a quantidade exigida.

PROOF

KÜHLMITTELZUSATZ

VORTEILE FÜR DEN KUNDEN:

Schutz gegen Kavitation, Schaumbildung, Erosion, Korrosion und Kesselsteinbildung in Kühlsystemen.

- Richtig dosierter Kühlmittelzusatz

BESCHREIBUNG:

Additive erschöpfen sich während des Motorbetriebs. Deshalb muß allen HD-Kühlmitteln regelmäßig Kühlmittelzusatz beigefügt werden. Wenn bei Erstfüllung kein vollwertiges Fertigkühlmittel, wie das Frostschutz- und Kühlmittel für Dieselmotoren von Caterpiller (DEAC), verwendet wird, muß bei Erstfüllung Kühlmittelzusatz beigefügt werden. Wieviel Kühlmittelzusatz beigefügt werden muß, hängt vom Inhalt des Kühlsystems ab.

Für Erstfüllung ist Kühlmittelzusatz nur in flüssiger Form erhältlich. Für Wartungsintervalle ist Kühlmittelzusatz in flüssiger Form und als Zusatzelement erhältlich. (Für die Motorbaureihe 3600 sind keine Zusatzelemente erhältlich.)

ANMERKUNG:

Die Kühlmittelmenge bei Erstfüllung ist nicht die gleiche Menge, die bei Wartungsintervallen beigefügt werden muß.

Die Kühlmittelzusatzelemente können mit allen Frostschutzmitteln auf Ethylen- oder Propylenglykolbasis verwendet werden, die den Standards nach ASTM D4985 oder ASTM D5345 entsprechen.

ANMERKUNG:

Den Kühlmittelzusatz nicht mit Langzeitkühlmittel (ELC) von Caterpillar verwenden. Der Kühlmittelzusatz ist nur für HD-Kühlmittel bestimmt.

TEILEBEZEICHNUNG:

Kühlsysteminhalt		Kühlmittelzusatz bei Erstfüllung	Flüssiger Kühlmittelzusatz bei Wartung*	Kühlmittelzusatzelement bei Wartung*
Liter	US-Gall.			
22-30	(6-8)	3P-2044 (1)	6V-3542 (1)	111-2370 (1)
30-38	(8-10)	3P-2044 (1) 6V-3542 (1)	111-2372 (1)	111-2369 (1)
38-49	(10-13)	3P-2044 (1) 8T-1589 (1)	111-2372 (1)	111-2369 (1)
49-64	(13-17)	3P-2044 (2)	8T-1589 (1)	9N-3368 (1)
64-83	(17-22)	3P-2044 (2) 8T-1589 (1)	111-2372 (1) 6V-3542 (1)	111-2371 (1)
83-114	(22-30)	3P-2044 (3) 8T-1589 (1)	3P-2044 (1)	9N-3718 (1)
114-163	(30-43)	3P-2044 (5)	3P-2044 (1) 6V-3542 (1)	111-2371 (2)
163-242	(43-64)	3P-2044 (8)	3P-2044 (2)	9N-3718 (2)

** Der normale Wartungsintervall beträgt 250 Betriebsstunden. Für vollständige Anweisungen zur Wartung des Kühlsystems, siehe Betriebs- und Wartungshandbuch.*

( ) Erforderliche Anzahl

PROOF

MAINTENANCE PARTS

DESCRIPTION	PART NUMBER	QTY	WHERE USED	PAGE
AIR INLET AND EXHAUST SYSTEM				
FILTER ELEMENT AS-AIR (PRIMARY)	245-6375	1	AIR CLEANER GP	64
FILTER ELEMENT AS-AIR (SECONDARY)	245-6376	1	AIR CLEANER GP	64
BASIC ENGINE				
CAP AS-FILLER (ENGINE OIL)	241-5645	1	COVER GP-FRONT HOUSING	11
COOLING SYSTEM				
CAP AS-RADIATOR (6 TO 8-PSI) (PRESSURE RELIEF)	126-5027	1	TANK GP-COOLANT	58
FILTER (WATER) (PUMP)	119-3025	1	PUMP GP-WATER	54
GASKET (TEMPERATURE REGULATOR HOUSING)	222-5915	1	LINES GP-WATER	50
REGULATOR-WATER TEMPERATURE (97-DEG C) (COOLANT)	115-4223	2	LINES GP-WATER	50
ELECTRICAL AND STARTING SYSTEM				
BATTERY GP (12-VOLT, MAINTENANCE FREE)	153-5700	2	BATTERY GP	120
BATTERY (12-VOLT, MAINTENANCE FREE)	153-5710	2	BATTERY GP	116
	230-6368	2	BATTERY GP	112
BELT-SERPENTINE	263-8527	1	ALTERNATOR GP-CHARGING	104
	263-8528	1	ALTERNATOR GP-CHARGING	108
		1	ALTERNATOR GP-CHARGING	110
BELT-SERPENTINE (ALTERNATOR)	263-8527	1	ALTERNATOR GP-CHARGING	106
CIRCUIT BREAKER AS (105-AMPERE) (ALTERNATOR)	171-2212	1	BLOCK GP-JUNCTION	124
CIRCUIT BREAKER AS (105-AMPERE) (ALTERNATOR NO. 2)	171-2212	1	BLOCK GP-JUNCTION	124
CIRCUIT BREAKER AS (15-AMPERE) (KEY SWITCH)	6T-3643	1	BLOCK GP-JUNCTION	125
CIRCUIT BREAKER AS (15-AMPERE) (RUNNING LIGHTS)	3T-2662	2	BLOCK GP-JUNCTION	124
CIRCUIT BREAKER AS (15-AMPERE) (TRANSMISSION CONTROL)	6T-3643	1	BLOCK GP-JUNCTION	125
CIRCUIT BREAKER AS (80-AMPERE) (LOAD)	171-2210	1	BLOCK GP-JUNCTION	124
CIRCUIT BREAKER AS (80-AMPERE) (MAIN)	171-2210	1	BLOCK GP-JUNCTION	124
CIRCUIT BREAKER GP (20-AMPERE) (ENGINE CONTROL)	6T-3644	1	BLOCK GP-JUNCTION	125
ELEMENT AS-JACKET WATER HEATER (120-VOLT, 1000-WATT)	246-8628	1	HEATER GP-JACKET WATER	141
ELEMENT AS-JACKET WATER HEATER (240-VOLT, 1000-WATT)	246-8627	1	HEATER GP-JACKET WATER	140
FUSE (10-AMPERE)	9W-1442	21	WIRING GP-CAB	217
FUSE (15-AMPERE)	9W-1441	17	WIRING GP-CAB	217
FUSE (30-AMPERE)	8T-9636	2	WIRING GP-CAB	217
KEY AS-ELECTRONIC (SECURITY)	206-5162	2	INSTALLATION GP-SECURITY	147
		2	SERVICE GP-MACHINE	194
	206-5165	2	SERVICE GP-MACHINE	194

PROOF

DESCRIPTION	PART NUMBER	QTY	WHERE USED	PAGE
KEY (BATTERY DISCONNECT)(STARTER)	8H-5306	1	SWITCH GP-DISCONNECT	206
LAMP AS (RED, GREEN, LED, 12-VOLT)	165-5655	1	INSTALLATION GP-SECURITY	146
LAMP AS (24-VOLT)	170-3462	1	WIRING GP-ENGINE	225
LAMP GP-HEAD & SIGNAL (24-VOLT, LH)	238-2798	1	LAMP GP-HEAD & SIGNAL	157
LAMP GP-HEAD & SIGNAL (24-VOLT, RH)	238-2797	1	LAMP GP-HEAD & SIGNAL	157
LAMP-HALOGEN (24-VOLT, 65-WATT)	9X-3463	1	LAMP GP-FLOOD	152
		1	LAMP GP-FLOOD	153
LAMP-HALOGEN (24-VOLT, 65-WATT) (BLADE)	9X-3463	1	LAMP GP-FLOOD	154
LAMP-LED (24-VOLT, GREEN)	250-2299	1	SWITCH GP-ALL WHEEL DRIVE	203
		1	WIRING GP-CAB	217
LAMP-LED (24-VOLT, RED)	242-3282	1	INSTALLATION GP-SECURITY	147
		1	SWITCH GP-ALL WHEEL DRIVE	203
LAMP (12-VOLT, 24-VOLT, 35-WATT)	209-6638	1	LAMP GP-FLOOD	150
		1	LAMP GP-FLOOD	151
LAMP (24-VOLT)	5C-9583	1	LIGHTING GP-ROADING	173
	7N-9943	1	LAMP GP-DOME	149
LAMP (24-VOLT) (CAB POSITION)	9X-4494	1	LAMP GP-MARKER	161
LAMP (24-VOLT, 21-WATT) (AMBER)	242-0588	1	LAMP GP-HEAD & SIGNAL	159
		1	LAMP GP-HEAD & SIGNAL	160
LAMP (24-VOLT, 21-WATT) (ENGINE COMPARTMENT)	9X-4493	1	LIGHTING GP-BACKUP	166
LAMP (24-VOLT, 5-WATT) (CLEAR)	130-3515	1	LAMP GP-HEAD & SIGNAL	159
		1	LAMP GP-HEAD & SIGNAL	160
LAMP (24-VOLT, 70-WATT)	9X-7849	1	LAMP GP-WARNING BEACON	165
LAMP (24-VOLT, 75/70-WATT) (CLEAR)	9X-3465	1	LAMP GP-HEAD & SIGNAL	160
		1	LAMP GP-HEAD & SIGNAL	159
LENS (WARNING BEACON) (AMBER)	198-0316	1	LAMP GP-WARNING BEACON	163
FUEL SYSTEM				
CAP AS-FILLER (FUEL TANK)	7X-7700	1	TANK GP-FUEL	93
		1	TANK GP-FUEL	95
FILTER AS-FUEL	1R-0762	1	FILTER GP-FUEL	81
FILTER AS-WATER SEP & FUEL (PRIMARY)	1R-0770	1	FILTER GP-WATER SEP & FUEL	83
STRAINER-FUEL	199-9907	1	TANK GP-FUEL	93
		1	TANK GP-FUEL	95

PROOF

MAINTENANCE PARTS

DESCRIPTION	PART NUMBER	QTY	WHERE USED	PAGE
HYDRAULIC SYSTEM				
CAP AS-FILLER (HYDRAULIC TANK)	142-8937	1	TANK GP-HYDRAULIC	584
FILTER-BREATHER (HYDRAULIC TANK)	9R-9925	1	TANK & MTG GP-HYDRAULIC	582
FILTER ELEMENT-HYDRAULIC OIL (PRIMARY)	1G-8878	1	FILTER GP-OIL	502
LAMP-LED (24-VOLT, AMBER)	250-2298	1	CONTROL GP-STEERING	469
LAMP-LED (24-VOLT, GREEN)	250-2299	1	CONTROL GP-STEERING	469
PLUG-PIPE (OIL DRAIN)	2B-7410	1	DRIVE GP-CIRCLE	499
SCREEN (BRAKE, HYDRAULIC FAN)	6E-5066	1	MANIFOLD GP-CONTROL	567
SCREEN (STEERING)	6E-5066	1	MANIFOLD GP-CONTROL	571
SEAL-INTEGRAL	243-3662	4	VALVE GP-BANK 3	585
		5	VALVE GP-BANK 4	587
		6	VALVE GP-BANK 5	589
		6	VALVE GP-BANK 5	591
		7	VALVE GP-BANK 6	593
		7	VALVE GP-BANK 6	595
		7	VALVE GP-BANK 6	597
		8	VALVE GP-BANK 7	599
		8	VALVE GP-BANK 7	601
		9	VALVE GP-BANK 8	603
		9	VALVE GP-BANK 8	605
LUBRICATION SYSTEM				
BREATHER AS (CRANKCASE)	164-0210	1	BREATHER GP	33
FILTER AS-ENGINE OIL	1R-1807	1	FILTER GP-ENGINE OIL	34
HOSE-DISPOSAL (FUMES)	228-8510	1	FUMES DISPOSAL GP	36
OPERATOR STATION				
ACCUMULATOR GP-REFRIGERANT	186-6189	1	LINES GP-AIR CONDITIONER	741
BLADE AS-WIPER (DOOR, LH)	146-6433	1	WIPER GP-WINDOW	793
BLADE AS-WIPER (DOOR, RH)	146-6433	1	WIPER GP-WINDOW	795
BLADE AS-WIPER (FRONT)	6V-5853	1	WIPER & WASHER GP-WINDOW	787
BLADE AS-WIPER (LEFT)	6V-5851	1	WIPER GP-WINDOW	790
BLADE AS-WIPER (REAR WIPER)	146-6433	1	WIPER GP-WINDOW	789
BLADE AS-WIPER (RH DOOR)	6V-5851	1	WIPER GP-WINDOW	791
		1	WIPER GP-WINDOW	792
FILTER-AIR (CAB HEATER, AIR CONDITIONER)	119-3355	1	DUCT & FILTER GP-AIR	731
FILTER AS-AIR (CAB HEATER, AIR CONDITIONER)	149-1912	1	DUCT & FILTER GP-AIR	731
FUSE (15-AMPERE)	133-9012	1	AIR CONDITIONER GP	707
LAMP AS (24-VOLT)	250-8335	2	LINER GP-CAB	740
SEAT BELT GP	222-0345	1	SEAT GP	761
		1	SEAT GP	764

PROOF

MAINTENANCE PARTS

DESCRIPTION	PART NUMBER	QTY	WHERE USED	PAGE
POWER TRAIN				
BREATHER AS (POWER TRAIN OIL TANK)	9G-5127	1	FILLER GP-POWER TRAIN OIL	299
BREATHER AS (TANDEM)	4H-6112	1	TANDEM & COVER GP	337
FILTER ELEMENT AS-OIL (HIGH EFFICIENCY) (HYDRAULIC TANK)	1R-1809	1	FILTER GP-OIL	305
FILTER ELEMENT AS-OIL (HIGH EFFICIENCY) (TRANSMISSION)	1R-1809	1	FILTER GP-OIL	303
FILTER ELEMENT-HYDRAULIC OIL (ALL WHEEL DRIVE)	1G-8878	1	LINES GP-ALL WHEEL DRIVE	310
FILTER-MAGNETIC (TRANSMISSION)	8S-9129	1	SCREEN GP-MAGNETIC	334
FILTER (TRANSMISSION)	251-6673	1	CASE & PARTS GP-PLANETARY	268
PLUG (DRAIN)	175-4966	1	DRAIN GP-ECOLOGY	297
SCREEN (SCAVENGE)	251-6674	1	CASE & PARTS GP-PLANETARY	268
SCREEN-SUCTION (TRANSMISSION)	8S-9130	1	SCREEN GP-MAGNETIC	334
SERVICE EQUIPMENT AND SUPPLIES				
PADLOCK GP (TOOL BOX)	246-2641	1	BOX GP-TOOL	796

PROOF

PIÈCES DE RECHANGE

DESCRIPTION	NUMÉRO DE PIECÈS	QTÉ	DOMAINE D'APPLICATION	PAGE
CIRCUIT D'ADMISSION D'AIR ET D'ÉCHAPPEMENT				
ÉLÉMENT DE FILTRE À AIR (ENS) (PRINCIPAL)	245-6375	1	FILTRE A AIR (ASS)	64
ÉLÉMENT DE FILTRE À AIR (ENS) (SECONDAIRE)	245-6376	1	FILTRE A AIR (ASS)	64
CIRCUIT DE CARBURANT				
BOUCHON DE GOULOTTE DE REMPLISSAGE (ENS) (RÉSERVOIR DE CARBURANT)	7X-7700	1	RÉSERVOIR DE CARBURANT (ASS)	93
		1	RÉSERVOIR DE CARBURANT (ASS)	95
FILTRE - SÉPARATEUR D'EAU ET DE CARBURANT (ENS) (PRINCIPAL)	1R-0770	1	FILTRE DE SÉPARATEUR D'EAU ET DE CARBURANT (ASS)	83
FILTRE À CARBURANT	199-9907	1	RÉSERVOIR DE CARBURANT (ASS)	93
		1	RÉSERVOIR DE CARBURANT (ASS)	95
FILTRE A CARBURANT (ENS)	1R-0762	1	FILTRE A CARBURANT (ASS)	81
CIRCUIT DE GRAISSAGE				
FILTRE A HUILE MOTEUR (ENS)	1R-1807	1	FILTRE À HUILE MOTEUR (ASS)	34
RENIFLARD (ENS) (CARTER)	164-0210	1	RENIFLARD (ASS)	33
TUYAU D'ÉCHAPPEMENT (VAPEURS)	228-8510	1	DISPOSITIF D'EVACUATION DES VAPEURS DE CARTER	36
CIRCUIT DE REFROIDISSEMENT				
BOUCHON DE RADIATEUR (ENS) (*6 TO 8-PSI) (DÉCHARGE DE PRESSION)	126-5027	1	RÉSERVOIR DU LIQUIDE DE REFROIDISSEMENT (ASS)	58
FILTRE (EAU) (POMPE)	119-3025	1	POMPE A EAU (ASS)	54
JOINT PLAT (BOÎTIER DE RÉGULATEUR DE TEMPÉRATURE)	222-5915	1	CANALISATIONS D'EAU (ASS)	50
THERMOSTAT-TEMPÉRATURE D'EAU (97-DEG C) (LIQUIDE DE REFROIDISSEMENT)	115-4223	2	CANALISATIONS D'EAU (ASS)	50
CIRCUIT ÉLECTRIQUE ET DE DÉMARRAGE				
AMPOULE (12V, 24V, 35W)	209-6638	1	LAMPE - PHARE (ASS)	150
		1	LAMPE - PHARE (ASS)	151
AMPOULE (24 VOLTS)	7N-9943	1	PLAFONNIER (ASS)	149
	5C-9583	1	ÉCLAIRAGE - FEUX DE ROUTE (ASS)	173
AMPOULE (24 VOLTS) (POSITION DE CABINE)	9X-4494	1	REPÈRE DE LAMPE (ASS)	161
AMPOULE (24V, 21W) (AMBRE)	242-0588	1	LAMPE - PHARE ET CLIGNOTANT	159
		1	LAMPE - PHARE ET CLIGNOTANT	160
AMPOULE (24V, 21W) (COMPARTIMENT MOTEUR)	9X-4493	1	ECLAIRAGE AR (ASS)	166
AMPOULE (24V, 5W) (EFFACEMENT)	130-3515	1	LAMPE - PHARE ET CLIGNOTANT	159
		1	LAMPE - PHARE ET CLIGNOTANT	160
AMPOULE (24V, 70W)	9X-7849	1	LAMPE - GYROPHARE (ASS)	165
AMPOULE (24V, 75/70W) (EFFACEMENT)	9X-3465	1	LAMPE - PHARE ET CLIGNOTANT	159
		1	LAMPE - PHARE ET CLIGNOTANT	160
BATTERIE (ASS) (12V, SANS ENTRETIEN)	153-5700	2	BATTERIE (ASS)	120

* TRADUCTION NON DISPONIBLE AU MOMENT DE LA PUBLICATION

PROOF

PIÈCES DE RECHANGE

DESCRIPTION	NUMÉRO DE PIECÈS	QTÉ	DOMAINE D'APPLICATION	PAGE
BATTERIE (12V, SANS ENTRETIEN)	153-5710	2	BATTERIE (ASS)	116
	230-6368	2	BATTERIE (ASS)	112
CLÉ (DÉBRANCHEMENT DE BATTERIE)(DÉMARREUR)	8H-5306	1	ROBINET DE BATTERIE (ASS)	206
CLÉ ÉLECTRONIQUE (ENS) (SÉCURITÉ)	206-5162	2	MONTAGE-SÉCURITÉ (ASS)	147
		2	ENTRETIEN DE LA MACHINE (ASS)	194
	206-5165	2	ENTRETIEN DE LA MACHINE (ASS)	194
COURROIE MULTIPLE	263-8527	1	ALTERNATEUR DE CHARGE (ASS)	104
	263-8528	1	ALTERNATEUR DE CHARGE (ASS)	108
		1	ALTERNATEUR DE CHARGE (ASS)	110
COURROIE MULTIPLE (ALTERNATEUR)	263-8527	1	ALTERNATEUR DE CHARGE (ASS)	106
DIODE (24-VOLTS, ROUGE)	242-3282	1	CONTACTEUR DE TRACTION INTÉGRALE (ASS)	203
		1	MONTAGE-SÉCURITÉ (ASS)	147
DIODE (24-VOLTS, VERT)	250-2299	1	CABLAGE DE CABINE (ASS)	217
		1	CONTACTEUR DE TRACTION INTÉGRALE (ASS)	203
DISJONCTEUR (ASS) (20A) (COMMANDE DU MOTEUR)	6T-3644	1	BLOC DE BRANCHEMENT (ASS)	125
DISJONCTEUR (ENS) (105A) (ALTERNATEUR)	171-2212	1	BLOC DE BRANCHEMENT (ASS)	124
DISJONCTEUR (ENS) (105A) (ALTERNATEUR NO 2)	171-2212	1	BLOC DE BRANCHEMENT (ASS)	124
DISJONCTEUR (ENS) (15A) (COMMANDE DE BOÎTE DE VITESSES)	6T-3643	1	BLOC DE BRANCHEMENT (ASS)	125
DISJONCTEUR (ENS) (15A) (FEUX DE ROUTE)	3T-2662	2	BLOC DE BRANCHEMENT (ASS)	124
DISJONCTEUR (ENS) (15A) (INTERRUPTEUR À CLÉ)	6T-3643	1	BLOC DE BRANCHEMENT (ASS)	125
DISJONCTEUR (ENS) (80A) (CHARGE)	171-2210	1	BLOC DE BRANCHEMENT (ASS)	124
DISJONCTEUR (ENS) (80A) (PRINCIPAL)	171-2210	1	BLOC DE BRANCHEMENT (ASS)	124
ÉLÉMENT DU RÉCHAUFFEUR D'EAU DES CHEMISES (ENS) (120-VOLT, 1000-WATT)	246-8628	1	EAU DES CHEMISES - RECHAUFFEUR (ASS)	141
ÉLÉMENT DU RÉCHAUFFEUR D'EAU DES CHEMISES (ENS) (240V, 1000W)	246-8627	1	EAU DES CHEMISES - RECHAUFFEUR (ASS)	140
FUSIBLE (10A)	9W-1442	21	CABLAGE DE CABINE (ASS)	217
FUSIBLE (15A)	9W-1441	17	CABLAGE DE CABINE (ASS)	217
FUSIBLE (30A)	8T-9636	2	CABLAGE DE CABINE (ASS)	217
LAMPE - PHARE ET CLIGNOTANT (24V, DROITE)	238-2797	1	LAMPE - PHARE ET CLIGNOTANT	157
LAMPE - PHARE ET CLIGNOTANT (24V, GAUCHE)	238-2798	1	LAMPE - PHARE ET CLIGNOTANT	157
LAMPE (ENS) (ROUGE, VERT, TÉMOIN LUMINEUX, 12V)	165-5655	1	MONTAGE-SÉCURITÉ (ASS)	146
LAMPE (ENS) (24 VOLTS)	170-3462	1	CABLAGE DE MOTEUR (ASS)	225
LAMPE HALOGÈNE (24V, 65W)	9X-3463	1	LAMPE - PHARE (ASS)	152
		1	LAMPE - PHARE (ASS)	153
LAMPE HALOGÈNE (24V, 65W) (LAME)	9X-3463	1	LAMPE - PHARE (ASS)	154
LENTILLE (GYROPHARE) (AMBRE)	198-0316	1	LAMPE - GYROPHARE (ASS)	163

* TRADUCTION NON DISPONIBLE AU MOMENT DE LA PUBLICATION

PROOF

PIÈCES DE RECHANGE

DESCRIPTION	NUMÉRO DE PIECÈS	QTÉ	DOMAINE D'APPLICATION	PAGE
CIRCUIT HYDRAULIQUE				
BOUCHON DE GOULOTTE DE REMPLISSAGE (ENS) (RÉSERVOIR HYDRAULIQUE)	142-8937	1	RÉSERVOIR HYDRAULIQUE (ASS)	584
BOUCHON FILETÉ (VIDANGE D'HUILE)	2B-7410	1	ENTRAÎNEMENT DE CERCLE (ASS)	499
DIODE (24-VOLTS, JAUNE)	250-2298	1	COMMANDE DE DIRECTION (ASS)	469
DIODE (24-VOLTS, VERT)	250-2299	1	COMMANDE DE DIRECTION (ASS)	469
ÉCRAN (DIRECTION)	6E-5066	1	COLLECTEUR - COMMANDE (ASS)	571
ÉCRAN (FREIN, VENTILATEUR HYDRAULIQUE)	6E-5066	1	COLLECTEUR - COMMANDE (ASS)	567
ÉLÉMENT DE FILTRE À HUILE HYDRAULIQUE (PRINCIPAL)	1G-8878	1	FILTRE A HUILE (ASS)	502
FILTRE - RENIFLARD (RÉSERVOIR HYDRAULIQUE)	9R-9925	1	RÉSERVOIR HYDRAULIQUE ET MONTAGE (ASS)	582
JOINT INTÉGRÉ	243-3662	4	DISTRIBUTEUR TRIPLE ÉLÉMENT (ASS)	585
		5	DISTRIBUTEUR 4 ÉLÉMENTS (ASS)	587
		6	DISTRIBUTEUR 5 ÉLÉMENTS (ASS)	589
		6	DISTRIBUTEUR 5 ÉLÉMENTS (ASS)	591
		7	DISTRIBUTEUR 6 ÉLÉMENTS (ASS)	593
		7	DISTRIBUTEUR 6 ÉLÉMENTS (ASS)	595
		7	DISTRIBUTEUR 6 ÉLÉMENTS (ASS)	597
		8	DISTRIBUTEUR 7 ÉLÉMENTS (ASS)	599
		8	DISTRIBUTEUR 7 ÉLÉMENTS (ASS)	601
		9	DISTRIBUTEUR 8 ÉLÉMENTS (ASS)	603
		9	DISTRIBUTEUR 8 ÉLÉMENTS (ASS)	605
MATÉRIEL ET FOURNITURES D'ENTRETIEN				
CADENAS (ASS) (BOÎTE À OUTILS)	246-2641	1	COFFRE A OUTILS (ASS)	796
MOTEUR STANDARD				
BOUCHON DE GOULOTTE DE REMPLISSAGE (ENS) (HUILE MOTEUR)	241-5645	1	COUVERCLE DE CARTER AV (ASS)	11

PROOF

* TRADUCTION NON DISPONIBLE AU MOMENT DE LA PUBLICATION

PIÈCES DE RECHANGE

DESCRIPTION	NUMÉRO DE PIECÈS	QTÉ	DOMAINE D'APPLICATION	PAGE
POSTE DE CONDUITE				
ACCUMULATEUR - CLIMATISEUR (ASS)	186-6189	1	CANALISATIONS DE CLIMATISEUR (ASS)	741
BALAI D'ESSUIE-GLACE (ENS) (AVANT)	6V-5853	1	ESSUIE-GLACE ET LAVE-GLACE	787
BALAI D'ESSUIE-GLACE (ENS) (ESSUIE-GLACE ARRIÈRE)	146-6433	1	ESSUIE-GLACE (ASS)	789
BALAI D'ESSUIE-GLACE (ENS) (GAUCHE)	6V-5851	1	ESSUIE-GLACE (ASS)	790
BALAI D'ESSUIE-GLACE (ENS) (PORTE, DROITE)	146-6433	1	ESSUIE-GLACE (ASS)	795
BALAI D'ESSUIE-GLACE (ENS) (PORTE, GAUCHE)	146-6433	1	ESSUIE-GLACE (ASS)	793
BALAI D'ESSUIE-GLACE (ENS) (PORTIERE DROITE)	6V-5851	1	ESSUIE-GLACE (ASS)	791
		1	ESSUIE-GLACE (ASS)	792
CEINTURE DE SECURITE (ASS)	222-0345	1	SIÈGE (ASS)	761
		1	SIÈGE (ASS)	764
FILTRE À AIR (*CAB HEATER, AIR CONDITIONER)	119-3355	1	CONDUIT ET FILTRE À AIR (ASS)	731
FILTRE A HUILE (ENS) (*CAB HEATER, AIR CONDITIONER)	149-1912	1	CONDUIT ET FILTRE À AIR (ASS)	731
FUSIBLE (15A)	133-9012	1	CLIMATISEUR (ASS)	707
LAMPE (ENS) (24 VOLTS)	250-8335	2	CABINE - REVÊTEMENT (ASS)	740
TRANSMISSION				
BOUCHON FILETÉ (VIDANGE)	175-4966	1	VIDANGE-ÉCOLOGIE (ASS)	297
ÉCRAN (GAVAGE)	251-6674	1	TRAINS PLANÉTAIRES - CARTER ET PIÈCES	268
ÉCRAN MAGNÉTIQUE (BOîTE DE VITESSES)	8S-9129	1	ÉCRAN MAGNÉTIQUE (ASS)	334
ÉLÉMENT DE FILTRE À HUILE (ENS) (GRANDE EFFICACITÉ) (BOîTE DE VITESSES)	1R-1809	1	FILTRE A HUILE (ASS)	303
ÉLÉMENT DE FILTRE À HUILE (ENS) (GRANDE EFFICACITÉ) (RÉSERVOIR HYDRAULIQUE)	1R-1809	1	FILTRE A HUILE (ASS)	305
ÉLÉMENT DE FILTRE À HUILE HYDRAULIQUE (TRACTION INTÉGRALE)	1G-8878	1	CANALISATIONS DE TRACTION INTÉGRALE (ASS)	310
FILTRE (BOîTE DE VITESSES)	251-6673	1	TRAINS PLANÉTAIRES - CARTER ET PIÈCES	268
RENIFLARD (ENS) (RÉSERVOIR D'HUILE DE TRANSMISSION)	9G-5127	1	GOULOTTE DE REMPLISSAGE D'HUILE DE TRANSMISSION	299
RENIFLARD (ENS) (TANDEM)	4H-6112	1	TANDEM ET CARTER (ASS)	337
TAMIS D'ASPIRATION (BOîTE DE VITESSES)	8S-9130	1	ÉCRAN MAGNÉTIQUE (ASS)	334

* TRADUCTION NON DISPONIBLE AU MOMENT DE LA PUBLICATION

PROOF

PIEZAS DE MANTENIMIENTO

DESCRIPCION	NUMERO DE PIEZA	CANT	SE UTILIZA EN	PAGINA
EQUIPO Y SUMINISTRO DE SERVICIOS				
CANDADO (GR) (CAJA DE HERRAMIENTAS)	246-2641	1	CAJA DE HERRAMIENTAS (GR)	796
MOTOR BÁSICO				
TAPA DE LLENADO (CONJ) (ACEITE DEL MOTOR)	241-5645	1	TAPA DE LA CAJA DELANTERA (GR)	11
PUESTO DEL OPERADOR				
ACUMULADOR DEL ACONDICIONADOR DE AIRE (GR)	186-6189	1	TUBERÍAS DE ACONDICIONADOR DE AIRE (GR)	741
CINTURÓN DE SEGURIDAD (GR)	222-0345	1	ASIENTO (GR)	761
		1	ASIENTO (GR)	764
FILTRO DE AIRE (*CAB HEATER, AIR CONDITIONER)	119-3355	1	CONDUCTO Y FILTRO DE AIRE (GR)	731
FILTRO DE AIRE (CONJ) (*CAB HEATER, AIR CONDITIONER)	149-1912	1	CONDUCTO Y FILTRO DE AIRE (GR)	731
FUSIBLE (15 AMPERIOS)	133-9012	1	ACONDICIONADOR DE AIRE (GR)	707
HOJA DE LIMPIAPARABRISAS (CONJ) (DELANTERO)	6V-5853	1	LIMPIA Y LAVAPARABRISAS (GR)	787
HOJA DE LIMPIAPARABRISAS (CONJ) (IZQUIERDA)	6V-5851	1	LIMPIAPARABRISAS DE LA VENTANA (GR)	790
HOJA DE LIMPIAPARABRISAS (CONJ) (LIMPIAPARABRISAS TRASERO)	146-6433	1	LIMPIAPARABRISAS DE LA VENTANA (GR)	789
HOJA DE LIMPIAPARABRISAS (CONJ) (PUERTA DE LADO DERECHO)	6V-5851	1	LIMPIAPARABRISAS DE LA VENTANA (GR)	791
		1	LIMPIAPARABRISAS DE LA VENTANA (GR)	792
HOJA DE LIMPIAPARABRISAS (CONJ) (PUERTA, DERECHA)	146-6433	1	LIMPIAPARABRISAS DE LA VENTANA (GR)	795
HOJA DE LIMPIAPARABRISAS (CONJ) (PUERTA, IZQUIERDA)	146-6433	1	LIMPIAPARABRISAS DE LA VENTANA (GR)	793
LÁMPARA (CONJ) (24 VOLTIOS)	250-8335	2	REVESTIMIENTO DE LA CABINA (GR)	740
SISTEMA DE ADMISIÓN Y ESCAPE DE AIRE				
ELEMENTO DEL FILTRO DE AIRE (CONJ) (PRIMARIO)	245-6375	1	FILTRO DE AIRE (GR)	64
ELEMENTO DEL FILTRO DE AIRE (CONJ) (SECUNDARIO)	245-6376	1	FILTRO DE AIRE (GR)	64
SISTEMA DE COMBUSTIBLE				
COLADOR DE COMBUSTIBLE	199-9907	1	COMBUSTIBLE - TANQUE DE (GR)	93
		1	COMBUSTIBLE - TANQUE DE (GR)	95
FILTRO DE COMBUSTIBLE (CONJ)	1R-0762	1	FILTRO DE COMBUSTIBLE (GR)	81
FILTRO DE COMBUSTIBLE Y SEPARADOR DE AGUA (CONJ) (PRIMARIO)	1R-0770	1	FILTRO DE COMBUSTIBLE Y SEPARADOR DE AGUA (GR)	83
TAPA DE LLENADO (CONJ) (TANQUE DE COMBUSTIBLE)	7X-7700	1	COMBUSTIBLE - TANQUE DE (GR)	93
		1	COMBUSTIBLE - TANQUE DE (GR)	95

* NO HAY TRADUCCION DISPONIBLE EN EL MOMENTO DE LA IMPRESION

PROOF

PIEZAS DE MANTENIMIENTO

DESCRIPCION	NUMERO DE PIEZA	CANT	SE UTILIZA EN	PAGINA
SISTEMA DE ENFRIAMIENTO				
EMPAQUETADURA (CAJA DEL REGULADOR DE TEMPERATURA)	222-5915	1	TUBERÍAS DEL AGUA (GR)	50
FILTRO (AGUA) (BOMBA)	119-3025	1	BOMBA DE AGUA (GR)	54
REGULADOR DE TEMPERATURA DEL AGUA (97 GRADOS C) (REFRIGERANTE)	115-4223	2	TUBERÍAS DEL AGUA (GR)	50
TAPA DE RADIADOR (CONJ) (*6 TO 8-PSI) (ALIVIO DE PRESIÓN)	126-5027	1	TANQUE DE REFRIGERANTE (GR)	58
SISTEMA DE LUBRICACIÓN				
FILTRO DE ACEITE DEL MOTOR (CONJ)	1R-1807	1	FILTRO DE ACEITE DEL MOTOR (GR)	34
RESPIRADERO (CONJ) (CÁRTER DEL MOTOR)	164-0210	1	RESPIRADERO (GR)	33
TUBO DE ESCAPE (VAPORES)	228-8510	1	ESCAPE DE GASES (GR)	36
SISTEMA ELÉCTRICO Y DE ARRANQUE				
BATERÍA (GR) (12-VOLTIOS, LIBRE DE MANTENIMIENTO)	153-5700	2	BATERÍA (GR)	120
BATERÍA (12-VOLTIOS, LIBRE DE MANTENIMIENTO)	153-5710	2	BATERÍA (GR)	116
	230-6368	2	BATERÍA (GR)	112
CONJUNTO DE LLAVE, ELECTRONICA (SEGURIDAD)	206-5162	2	INSTALACION DE SEGURIDAD (GR)	147
		2	SERVICIO DE MAQUINA (GR)	194
	206-5165	2	SERVICIO DE MAQUINA (GR)	194
CORREA-SERPENTIN	263-8527	1	CARGA - ALTERNADOR DE (GR)	104
	263-8528	1	CARGA - ALTERNADOR DE (GR)	108
		1	CARGA - ALTERNADOR DE (GR)	110
CORREA-SERPENTIN (ALTERNADOR)	263-8527	1	CARGA - ALTERNADOR DE (GR)	106
CRISTAL (BALIZA DE ADVERTENCIA) (AMBAR)	198-0316	1	LÁMPARA DE BALIZA DE ADVERTENCIA (GR)	163
DISYUNTOR (CONJ) (105 AMPERIOS) (ALTERNADOR)	171-2212	1	BLOQUE DE EMPALME (GR)	124
DISYUNTOR (CONJ) (105 AMPERIOS) (*ALTERNATOR NO. 2)	171-2212	1	BLOQUE DE EMPALME (GR)	124
DISYUNTOR (CONJ) (15 AMPERIOS) (CONTROL DE LA TRANSMISIÓN)	6T-3643	1	BLOQUE DE EMPALME (GR)	125
DISYUNTOR (CONJ) (15 AMPERIOS) (INTERRUPTOR DE LLAVE)	6T-3643	1	BLOQUE DE EMPALME (GR)	125
DISYUNTOR (CONJ) (15 AMPERIOS) (LUCES DE TRABAJO)	3T-2662	2	BLOQUE DE EMPALME (GR)	124
DISYUNTOR (CONJ) (80 AMPERIOS) (CARGA)	171-2210	1	BLOQUE DE EMPALME (GR)	124
DISYUNTOR (CONJ) (80 AMPERIOS) (PRINCIPAL)	171-2210	1	BLOQUE DE EMPALME (GR)	124
DISYUNTOR DE CIRCUITO (GR) (20-AMPERIOS) (CONTROL DEL MOTOR)	6T-3644	1	BLOQUE DE EMPALME (GR)	125
ELEMENTO DEL CALENTADOR DEL AGUA DE LAS CAMISAS (120 VOLTIOS, 1000 VATIOS)	246-8628	1	AGUA DE LAS CAMISAS - CALENTADOR DEL (GR)	141

* NO HAY TRADUCCION DISPONIBLE EN EL MOMENTO DE LA IMPRESION

PROOF

PIEZAS DE MANTENIMIENTO

DESCRIPCION	NUMERO DE PIEZA	CANT	SE UTILIZA EN	PAGINA
ELEMENTO DEL CALENTADOR DEL AGUA DE LAS CAMISAS (240 VOLTIOS, 1000 VATIOS)	246-8627	1	AGUA DE LAS CAMISAS - CALENTADOR DEL (GR)	140
FUSIBLE (10-AMPERIOS)	9W-1442	21	CABLES DE LA CABINA (GR)	217
FUSIBLE (15 AMPERIOS)	9W-1441	17	CABLES DE LA CABINA (GR)	217
FUSIBLE (30-AMPERIOS)	8T-9636	2	CABLES DE LA CABINA (GR)	217
LÁMPARA (CONJ) (ROJO, VERDE, DIODO, 12 VOLTIOS)	165-5655	1	INSTALACION DE SEGURIDAD (GR)	146
LÁMPARA (CONJ) (24 VOLTIOS)	170-3462	1	CABLES DEL MOTOR (GR)	225
LÁMPARA DE LUZ DELANTERA Y DE SEÑAL (GR) (24 VOLTIOS, LADO DERECHO)	238-2797	1	LÁMPARA DE LUZ DELANTERA Y DE SEÑAL (GR)	157
LÁMPARA DE LUZ DELANTERA Y DE SEÑAL (GR) (24 VOLTIOS, MANO IZQUIERDA)	238-2798	1	LÁMPARA DE LUZ DELANTERA Y DE SEÑAL (GR)	157
LAMPARA-LED (24-VOLTIOS, ROJO)	242-3282	1	GRUPO DE INTERRUPTOR-TRACCIÓN EN TODAS LAS RUEDAS	203
		1	INSTALACION DE SEGURIDAD (GR)	147
LAMPARA-LED (24 VOLTIOS, VERDE)	250-2299	1	CABLES DE LA CABINA (GR)	217
		1	GRUPO DE INTERRUPTOR-TRACCIÓN EN TODAS LAS RUEDAS	203
LÁMPARA (12 VOLTIOS, 24 VOLTIOS, 35 VATIOS)	209-6638	1	REFLECTOR (GR)	150
		1	REFLECTOR (GR)	151
LÁMPARA (24 VOLTIOS)	5C-9583	1	LUCES DE DESPLAZAMIENTO (GR)	173
	7N-9943	1	LÁMPARA DEL TECHO (GR)	149
LÁMPARA (24 VOLTIOS) (POSICIÓN DE LA CABINA)	9X-4494	1	LAMPARA MARCADORA (GR)	161
LÁMPARA (24-VOLTIOS, 21 VATIOS) (AMBAR)	242-0588	1	LÁMPARA DE LUZ DELANTERA Y DE SEÑAL (GR)	159
		1	LÁMPARA DE LUZ DELANTERA Y DE SEÑAL (GR)	160
LÁMPARA (24-VOLTIOS, 21 VATIOS) (COMPARTIMIENTO DEL MOTOR)	9X-4493	1	LUCES DE RETROCESO (GR)	166
LÁMPARA (24 VOLTIOS, 5 VATIOS) (SERVICIO)	130-3515	1	LÁMPARA DE LUZ DELANTERA Y DE SEÑAL (GR)	159
		1	LÁMPARA DE LUZ DELANTERA Y DE SEÑAL (GR)	160
LÁMPARA (24-VOLTIOS, 70-VATIOS)	9X-7849	1	LÁMPARA DE BALIZA DE ADVERTENCIA (GR)	165
LÁMPARA (24 VOLTIOS, 75/70 VATIOS) (SERVICIO)	9X-3465	1	LÁMPARA DE LUZ DELANTERA Y DE SEÑAL (GR)	160
		1	LÁMPARA DE LUZ DELANTERA Y DE SEÑAL (GR)	159
LLAVE (DESCONEXIÓN DE BATERÍA)(ARRANQUE)	8H-5306	1	DISYUNTOR (GR)	206
LUCES DE ALÓGENO (24 VOLTIOS, 65 VATIOS)	9X-3463	1	REFLECTOR (GR)	152
		1	REFLECTOR (GR)	153

* NO HAY TRADUCCION DISPONIBLE EN EL MOMENTO DE LA IMPRESION

PROOF

PIEZAS DE MANTENIMIENTO

DESCRIPCION	NUMERO DE PIEZA	CANT	SE UTILIZA EN	PAGINA
LUCES DE ALÓGENO (24 VOLTIOS, 65 VATIOS) (HOJA)	9X-3463	1	REFLECTOR (GR)	154
SISTEMA HIDRÁULICO				
ELEMENTO DE FILTRO DE ACEITE HIDRÁULICO (PRIMARIO)	1G-8878	1	FILTRO DE ACEITE (GR)	502
*FILTER-BREATHER (TANQUE HIDRÁULICO)	9R-9925	1	TANQUE HIDRÁULICO Y MONTAJE (GR)	582
LAMPARA-LED (24 VOLTIOS, AMBAR)	250-2298	1	CONTROL DE DIRECCIÓN (GR)	469
LAMPARA-LED (24 VOLTIOS, VERDE)	250-2299	1	CONTROL DE DIRECCIÓN (GR)	469
REJILLA (*BRAKE, HYDRAULIC FAN)	6E-5066	1	CONTROL DEL MULTIPLE (GR)	567
REJILLA (DIRECCIÓN)	6E-5066	1	CONTROL DEL MULTIPLE (GR)	571
SELLO, INTEGRAL	243-3662	6	BANCADA 5 (GR)	589
		6	BANCADA 5 (GR)	591
		4	GRUPO DE 3 VÁLVULAS HIDRÁULICAS	585
		5	GRUPO DE 4 VÁLVULAS HIDRÁULICAS	587
		9	*VALVE GP-BANK 8	603
		9	*VALVE GP-BANK 8	605
		7	VÁLVULAS HIDRÁULICAS - GRUPO DE 6	593
		7	VÁLVULAS HIDRÁULICAS - GRUPO DE 6	595
		7	VÁLVULAS HIDRÁULICAS - GRUPO DE 6	597
		8	VÁLVULAS HIDRÁULICAS - GRUPO DE 7	599
		8	VÁLVULAS HIDRÁULICAS - GRUPO DE 7	601
TAPA DE LLENADO (CONJ) (TANQUE HIDRAULICO)	142-8937	1	TANQUE HIDRÁULICO (GR)	584
TAPON DE TUBO (DRENAJE DE ACEITE)	2B-7410	1	MANDO DEL CIRCULO (GR)	499

PROOF

* NO HAY TRADUCCION DISPONIBLE EN EL MOMENTO DE LA IMPRESION

PIEZAS DE MANTENIMIENTO

DESCRIPCION	NUMERO DE PIEZA	CANT	SE UTILIZA EN	PAGINA
TREN DE FUERZA				
ELEMENTO DE FILTRO DE ACEITE (CONJ) (ALTA EFICIENCIA) (TANQUE HIDRÁULICO)	1R-1809	1	FILTRO DE ACEITE (GR)	305
ELEMENTO DE FILTRO DE ACEITE (CONJ) (ALTA EFICIENCIA) (TRANSMISION)	1R-1809	1	FILTRO DE ACEITE (GR)	303
ELEMENTO DE FILTRO DE ACEITE HIDRÁULICO (MANDO DE TODAS LAS RUEDAS)	1G-8878	1	GRUPO DE TUBERIAS, MANDO EN TODAS LAS RUEDAS	310
FILTRO MAGNÉTICO (TRANSMISION)	8S-9129	1	REJILLA MAGNÉTICA (GR)	334
FILTRO (TRANSMISION)	251-6673	1	CAJA Y PIEZAS DE LOS PLANETARIOS	268
REJILLA (BARRIDO)	251-6674	1	CAJA Y PIEZAS DE LOS PLANETARIOS	268
REJILLA DE SUCCIÓN (TRANSMISION)	8S-9130	1	REJILLA MAGNÉTICA (GR)	334
RESPIRADERO (CONJ) (*POWER TRAIN OIL TANK)	9G-5127	1	TUBO DE LLENADO DE ACEITE DE LA TRANSMISIÓN (GR)	299
RESPIRADERO (CONJ) (TANDEM)	4H-6112	1	TÁNDEM Y CUBIERTA (GR)	337
TAPÓN (DRENAJE)	175-4966	1	DRENAJE DE SEGURIDAD ECOLÓGICA (GR)	297

PROOF

* NO HAY TRADUCCION DISPONIBLE EN EL MOMENTO DE LA IMPRESION

PEÇAS DE MANUTENÇÃO

DESCRIÇÃO	NÚMERO DE PEÇA	QUANT	UTILIZADA EM	PÁGINA
EQUIPAMENTOS DE SERVIÇO E SUPRIMENTOS				
CADEADO (CAIXA DE FERRAMENTAS)	246-2641	1	CAIXA DE FERRAMENTAS	796
ESTAÇÃO DO OPERADOR				
ACUMULADOR - AR CONDICIONADO	186-6189	1	TUBOS - AR CONDICIONADO	741
CINTO DE SEGURANÇA	222-0345	1	ASSENTO	761
		1	ASSENTO	764
FILTRO - AR (AQUECEDOR, CONDICIONADOR DE AR DA CABINE)	119-3355	1	DUCTO E FILTRO	731
	149-1912	1	DUCTO E FILTRO	731
FUSÍVEL (15 AMPERES)	133-9012	1	CONDICIONADOR DE AR	707
LÂMINA DO LIMPADOR DE PÁRA-BRISA (DIANTEIRO)	6V-5853	1	LIMPADOR E LAVADOR - JANELA	787
LÂMINA DO LIMPADOR DE PÁRA-BRISA (ESQ.)	6V-5851	1	LIMPADOR DO VIDRO	790
LÂMINA DO LIMPADOR DE PÁRA-BRISA (LIMPADOR TRASEIRO)	146-6433	1	LIMPADOR DO VIDRO	789
LÂMINA DO LIMPADOR DE PÁRA-BRISA (PORTA, LADO DIREITO)	146-6433	1	LIMPADOR DO VIDRO	795
LÂMINA DO LIMPADOR DE PÁRA-BRISA (PORTA-LADO DIREITO)	6V-5851	1	LIMPADOR DO VIDRO	791
		1	LIMPADOR DO VIDRO	792
LÂMINA DO LIMPADOR DE PÁRA-BRISA (PORTA, LADO ESQUERDO)	146-6433	1	LIMPADOR DO VIDRO	793
LÂMPADA (24 VOLTS)	250-8335	2	REVESTIMENTO DA CABINE	740
MOTOR BÁSICO				
TAMPA - BOCAL DE ENCHIMENTO (ÓLEO DO MOTOR)	241-5645	1	TAMPA - CAIXA DIANTEIRA	11
SISTEMA DE ADMISSÃO DE AR E DE ESCAPE				
ELEMENTO DO FILTRO DE AR (PRIMÁRIO)	245-6375	1	PURIFICADOR DE AR	64
ELEMENTO DO FILTRO DE AR (SECUNDÁRIO)	245-6376	1	PURIFICADOR DE AR	64
SISTEMA DE ARREFECIMENTO				
FILTRO (ÁGUA) (BOMBA)	119-3025	1	BOMBA DE ÁGUA	54
JUNTA (ALOJAMENTO DO REGULADOR DE TEMPERATURA)	222-5915	1	TUBOS - ÁGUA	50
REGULADOR DE TEMPERATURA DA ÁGUA (97 GRAUS C) (LÍQUIDO ARREFECEDOR)	115-4223	2	TUBOS - ÁGUA	50
TAMPA - RADIADOR (*6 TO 8-PSI) (ALÍVIO DE PRESSÃO)	126-5027	1	TANQUE - LÍQUIDO ARREFECEDOR	58

PROOF

* TRADUÇÃO NÃO DISPONÍVEL NO MOMENTO DA IMPRESSÃO

PEÇAS DE MANUTENÇÃO

DESCRIÇÃO	NÚMERO DE PEÇA	QUANT	UTILIZADA EM	PÁGINA
SISTEMA DE COMBUSTÍVEL				
FILTRO - COMBUSTÍVEL	1R-0762	1	FILTRO - COMBUSTÍVEL	81
	199-9907	1	TANQUE DE COMBUSTÍVEL	93
		1	TANQUE DE COMBUSTÍVEL	95
FILTRO - SEPARADOR DE ÁGUA E COMBUSTÍVEL (PRIMÁRIO)	1R-0770	1	FILTRO DE COMBUSTÍVEL E SEPARADOR DE ÁGUA	83
TAMPA - BOCAL DE ENCHIMENTO (TANQUE DE COMBUSTÍVEL)	7X-7700	1	TANQUE DE COMBUSTÍVEL	93
		1	TANQUE DE COMBUSTÍVEL	95
SISTEMA DE LUBRIFICAÇÃO				
FILTRO - ÓLEO DO MOTOR	1R-1807	1	FILTRO - ÓLEO DO MOTOR	34
MANGUEIRA - DESCARTE (VAPORES)	228-8510	1	ELIMINAÇÃO DE VAPORES DO CÁRTER	36
RESPIRO (CÁRTER DO MOTOR)	164-0210	1	RESPIRO	33
SISTEMA ELÉTRICO E DE PARTIDA				
BATERIA (12 VOLTS, ISENTO DE MANUTENÇÃO)	153-5700	2	BATERIA	120
	153-5710	2	BATERIA	116
	230-6368	2	BATERIA	112
CHAVE - ELETRÔNICO (SEGURANÇA)	206-5162	2	GR. DE SERVIÇO - MÁQUINA	194
		2	INSTALAÇÃO-SEGURANÇA	147
	206-5165	2	GR. DE SERVIÇO - MÁQUINA	194
CHAVE (CHAVE GERAL DA BATERIA)(MOTOR DE PARTIDA)	8H-5306	1	CHAVE GERAL	206
CORREIA- SERPENTINA	263-8527	1	ALTERNADOR DE CORRENTE	104
	263-8528	1	ALTERNADOR DE CORRENTE	108
		1	ALTERNADOR DE CORRENTE	110
CORREIA- SERPENTINA (ALTERNADOR)	263-8527	1	ALTERNADOR DE CORRENTE	106
DISJUNTOR AUTOMÁTICO DE CIRCUITO (105 AMPERES) (ALTERNADOR)	171-2212	1	BLOCO DE JUNÇÃO	124
DISJUNTOR AUTOMÁTICO DE CIRCUITO (105 AMPERES) (ALTERNADOR NO. 2)	171-2212	1	BLOCO DE JUNÇÃO	124
DISJUNTOR AUTOMÁTICO DE CIRCUITO (15 AMPERES) (CHAVE INTERRUPTORA)	6T-3643	1	BLOCO DE JUNÇÃO	125
DISJUNTOR AUTOMÁTICO DE CIRCUITO (15 AMPERES) (ILUMINAÇÃO DE OPERAÇÃO)	3T-2662	2	BLOCO DE JUNÇÃO	124
DISJUNTOR AUTOMÁTICO DE CIRCUITO (15 AMPERES) (TRANSMISSÃO - CONTRÔLE DAS MARCHAS)	6T-3643	1	BLOCO DE JUNÇÃO	125
DISJUNTOR AUTOMÁTICO DE CIRCUITO (80 AMPERES) (CARGA)	171-2210	1	BLOCO DE JUNÇÃO	124
DISJUNTOR AUTOMÁTICO DE CIRCUITO (80 AMPERES) (PRINCIPAL)	171-2210	1	BLOCO DE JUNÇÃO	124

* TRADUÇÃO NÃO DISPONÍVEL NO MOMENTO DA IMPRESSÃO

PROOF

PEÇAS DE MANUTENÇÃO

DESCRIÇÃO	NÚMERO DE PEÇA	QUANT	UTILIZADA EM	PÁGINA
ELEMENTO - AQUECEDOR DE ÁGUA DA CAMISA (120 VOLTS, 1.000 WATTS)	246-8628	1	AQUECEDOR DA ÁGUA DO MOTOR	141
ELEMENTO - AQUECEDOR DE ÁGUA DA CAMISA (240 VOLTS, 1.000 WATTS)	246-8627	1	AQUECEDOR DA ÁGUA DO MOTOR	140
FUSÍVEL (10 AMPERES)	9W-1442	21	CABOS/FIOS ELÉTRICOS - CABINE	217
FUSÍVEL (15 AMPERES)	9W-1441	17	CABOS/FIOS ELÉTRICOS - CABINE	217
FUSÍVEL (30 AMPERES)	8T-9636	2	CABOS/FIOS ELÉTRICOS - CABINE	217
INTERRUPTOR - CIRCUITO (20-AMPERES) (CONTROLE DO MOTOR)	6T-3644	1	BLOCO DE JUNÇÃO	125
LÂMPADA - HALOGÊNEO (24 VOLTS, 65 WATTS)	9X-3463	1	LÂMPADA - FAROL	152
		1	LÂMPADA - FAROL	153
LÂMPADA - HALOGÊNEO (24 VOLTS, 65 WATTS) (LÂMINA)	9X-3463	1	LÂMPADA - FAROL	154
LÂMPADA - LED (24-VOLTS, VERDE)	250-2299	1	CABOS/FIOS ELÉTRICOS - CABINE	217
		1	INTERRUPTOR-TRAÇÃO EM TODAS AS RODAS	203
LÂMPADA - LED (24-VOLTS, VERMELHO)	242-3282	1	INSTALAÇÃO-SEGURANÇA	147
		1	INTERRUPTOR-TRAÇÃO EM TODAS AS RODAS	203
LÂMPADA DIANTEIRA E DE SINAL (24 VOLTS, LADO DIREITO)	238-2797	1	LÂMPADA DIANTEIRA E DE SINAL	157
LÂMPADA DIANTEIRA E DE SINAL (24 VOLTS, LADO ESQUERDO)	238-2798	1	LÂMPADA DIANTEIRA E DE SINAL	157
LÂMPADA (VERMELHA, VERDE, LED, 12 VOLTS)	165-5655	1	INSTALAÇÃO-SEGURANÇA	146
LÂMPADA (12 VOLTS, 24 VOLTS, 35 WATTS)	209-6638	1	LÂMPADA - FAROL	150
		1	LÂMPADA - FAROL	151
LÂMPADA (24 VOLTS)	5C-9583	1	ILUMINAÇÃO - RODOVIÁRIA	173
	7N-9943	1	LÂMPADA - TETO	149
	170-3462	1	CABOS/FIOS ELÉTRICOS - MOTOR	225
LÂMPADA (24 VOLTS) (POSIÇÃO DA CABINE)	9X-4494	1	LÀMPADA - MARCADORA	161
LÂMPADA (24 VOLTS, 21 WATTS) (ÂMBAR)	242-0588	1	LÂMPADA DIANTEIRA E DE SINAL	159
		1	LÂMPADA DIANTEIRA E DE SINAL	160
LÂMPADA (24 VOLTS, 21 WATTS) (COMPARTIMENTO DO MOTOR)	9X-4493	1	ILUMINAÇÃO - MARCHA A RÉ	166
LÂMPADA (24 VOLTS, 5 WATTS) (APAGAR)	130-3515	1	LÂMPADA DIANTEIRA E DE SINAL	159
		1	LÂMPADA DIANTEIRA E DE SINAL	160
LÂMPADA (24 VOLTS, 70 WATTS)	9X-7849	1	LUZ GIRATÓRIA DE ALARME	165
LÂMPADA (24 VOLTS, 75-70 WATTS) (APAGAR)	9X-3465	1	LÂMPADA DIANTEIRA E DE SINAL	159
		1	LÂMPADA DIANTEIRA E DE SINAL	160
LENTE (PISCA-ALERTA) (ÂMBAR)	198-0316	1	LUZ GIRATÓRIA DE ALARME	163

* TRADUÇÃO NÃO DISPONÍVEL NO MOMENTO DA IMPRESSÃO

PROOF

PEÇAS DE MANUTENÇÃO

DESCRIÇÃO	NÚMERO DE PEÇA	QUANT	UTILIZADA EM	PÁGINA
SISTEMA HIDRÁULICO				
BUJÃO - CANO/TUBO (DRENO DO ÓLEO)	2B-7410	1	MOTOR DE REVERSÃO DO CÍRCULO	499
ELEMENTO FILTRANTE - ÓLEO HIDRÁULICO (PRIMÁRIO)	1G-8878	1	FILTRO - ÓLEO	502
FILTRO - RESPIRO (TANQUE HIDRÁULICO)	9R-9925	1	TANQUE DE ÓLEO HIDRÁULICO E MONTAGEM	582
LÂMPADA - LED (24-VOLTS, ÂMBAR)	250-2298	1	CONTROLE DE DIREÇÃO	469
LÂMPADA - LED (24-VOLTS, VERDE)	250-2299	1	CONTROLE DE DIREÇÃO	469
RETENTOR INTEGRAL	243-3662	6	GRUPO DE VÁLVULAS DE CONTROLE - CINCO	589
		6	GRUPO DE VÁLVULAS DE CONTROLE - CINCO	591
		9	GRUPO DE VÁLVULAS DE CONTROLE - OITO	603
		9	GRUPO DE VÁLVULAS DE CONTROLE - OITO	605
		5	GRUPO DE VÁLVULAS DE CONTROLE - QUÁDRUPLO	587
		7	GRUPO DE VÁLVULAS DE CONTROLE - SEIS	593
		7	GRUPO DE VÁLVULAS DE CONTROLE - SEIS	595
		7	GRUPO DE VÁLVULAS DE CONTROLE - SEIS	597
		8	GRUPO DE VÁLVULAS DE CONTROLE - SETE	599
		8	GRUPO DE VÁLVULAS DE CONTROLE - SETE	601
		4	GRUPO DE VÁLVULAS DE CONTROLE - TRIPLO	585
TAMPA - BOCAL DE ENCHIMENTO (TANQUE HIDRÁULICO)	142-8937	1	TANQUE HIDRÁULICO	584
TELA FILTRANTE (DIREÇÃO)	6E-5066	1	COLETOR - CONTROLE	571
TELA FILTRANTE (FREIO, VENTILADOR HIDRÁULICO)	6E-5066	1	COLETOR - CONTROLE	567

PROOF

* TRADUÇÃO NÃO DISPONÍVEL NO MOMENTO DA IMPRESSÃO

PEÇAS DE MANUTENÇÃO

DESCRIÇÃO	NÚMERO DE PEÇA	QUANT	UTILIZADA EM	PÁGINA
TREM DE FORÇA				
ELEMENTO FILTRANTE - ÓLEO (ALTA EFICIÊNCIA) (TANQUE HIDRÁULICO)	1R-1809	1	FILTRO - ÓLEO	305
ELEMENTO FILTRANTE - ÓLEO (ALTA EFICIÊNCIA) (TRANSMISSÃO)	1R-1809	1	FILTRO - ÓLEO	303
ELEMENTO FILTRANTE - ÓLEO HIDRÁULICO (TRAÇÃO EM TODAS AS RODAS)	1G-8878	1	TUBULAÇÒES - TRAÇÃO EM TODAS AS RODAS	310
FILTRO - MAGNÉTICO (TRANSMISSÃO)	8S-9129	1	FILTRO - MAGNÉTICO	334
FILTRO (TRANSMISSÃO)	251-6673	1	CARCAÇA DAS ENGRENAGENS PLANETÁRIAS E COMPONENTES	268
RESPIRO (TANDEM)	4H-6112	1	TANDEM E TAMPA	337
RESPIRO (TANQUE DO ÓLEO DO TREM DE FORÇA)	9G-5127	1	BOCAL DE ENCHIMENTO DE ÓLEO DO TREM DE FORÇA	299
TAMPÃO (DRENO)	175-4966	1	DRENO - ECOLOGIA	297
TELA DE SUCÇÃO (TRANSMISSÃO)	8S-9130	1	FILTRO - MAGNÉTICO	334
TELA FILTRANTE (RETORNO)	251-6674	1	CARCAÇA DAS ENGRENAGENS PLANETÁRIAS E COMPONENTES	268

PROOF

* TRADUÇÃO NÃO DISPONÍVEL NO MOMENTO DA IMPRESSÃO

WARTUNGSTEILE

BESCHREIBUNG	ERSATZTEIL-NUMMER	MENGE	VERWENDET IN	SEITE
ELEKTRISCHE ANLAGE UND STARTSYSTEM				
ABDECKGLAS (RUNDUM-KENNLEUCHTE) (GELB)	198-0316	1	RUNDUM-KENNLEUCHTE	163
BATTERIE (12 V, WARTUNGSFREI)	153-5700	2	BATTERIE	120
	153-5710	2	BATTERIE	116
	230-6368	2	BATTERIE	112
BELEUCHTUNGSANLAGE (ROT, GRÜN, LED, 12 V)	165-5655	1	SICHERHEITSEINBAUSATZ	146
BELEUCHTUNGSANLAGE (24 V)	170-3462	1	MOTORVERDRAHTUNG	225
ELEKTRONISCHER SCHLÜSSEL (SICHERHEIT)	206-5162	2	SERVICE MASCHINE	194
		2	SICHERHEITSEINBAUSATZ	147
	206-5165	2	SERVICE MASCHINE	194
HALOGENSCHINWERFER (24V)(65W)	9X-3463	1	ARBEITSLEUCHTEN	152
		1	ARBEITSLEUCHTEN	153
HALOGENSCHINWERFER (24V)(65W) (SCHILD)	9X-3463	1	ARBEITSLEUCHTEN	154
LEUCHTE, ROT (24 V, GRÜN)	250-2299	1	FAHRERHAUSVERDRAHTUNG	217
		1	SCHALTER - ALLRADANTRIEB	203
LEUCHTE, ROT (24 V, ROT)	242-3282	1	SCHALTER - ALLRADANTRIEB	203
		1	SICHERHEITSEINBAUSATZ	147
LEUCHTE (12 V, 24 V, 35 W)	209-6638	1	ARBEITSLEUCHTEN	150
		1	ARBEITSLEUCHTEN	151
LEUCHTE (24 V)	5C-9583	1	BELEUCHTUNGSANLAGE (STRASSENAUSRÜSTUNG)	173
	7N-9943	1	FAHRERHAUSBELEUCHTUNG	149
LEUCHTE (24 V) (FAHRERHAUSSTELLUNG)	9X-4494	1	MARKIERUNGSLEUCHTE	161
LEUCHTE (24 V, 5 W) (LÖSCHEN)	130-3515	1	SCHEINWERFER U. RICHTUNGSLEUCHTE	159
		1	SCHEINWERFER U. RICHTUNGSLEUCHTE	160
LEUCHTE (24 V, 70 W)	9X-7849	1	RUNDUM-KENNLEUCHTE	165
LEUCHTE (24 V, 75/70 W) (LÖSCHEN)	9X-3465	1	SCHEINWERFER U. RICHTUNGSLEUCHTE	159
		1	SCHEINWERFER U. RICHTUNGSLEUCHTE	160
LEUCHTE (24V, 21W) (GELB)	242-0588	1	SCHEINWERFER U. RICHTUNGSLEUCHTE	159
		1	SCHEINWERFER U. RICHTUNGSLEUCHTE	160
LEUCHTE (24V, 21W) (MOTORRAUM)	9X-4493	1	SCHEINWERFER, HINTEN	166
SCHEINWERFER U. RICHTUNGSLEUCHTE (24 V, LINKS)	238-2798	1	SCHEINWERFER U. RICHTUNGSLEUCHTE	157
SCHEINWERFER U. RICHTUNGSLEUCHTE (24 V, RECHTS)	238-2797	1	SCHEINWERFER U. RICHTUNGSLEUCHTE	157
SCHLÜSSEL (*BATTERY DISCONNECT)(STARTER)	8H-5306	1	TRENNSCHALTER	206
SERPENTINENFÖRMIGER RIEMEN	263-8527	1	DREHSTROMGENERATOR	104
	263-8528	1	DREHSTROMGENERATOR	108
		1	DREHSTROMGENERATOR	110

* ÜBERSETZUNG ZUM ZEITPUNKT DER DRUCKLEGUNG NICHT VORHANDEN

PROOF

WARTUNGSTEILE

BESCHREIBUNG	ERSATZTEIL-NUMMER	MENGE	VERWENDET IN	SEITE
SERPENTINENFÖRMIGER RIEMEN (DREHSTROMGENERATOR)	263-8527	1	DREHSTROMGENERATOR	106
SICHERUNG (10 A)	9W-1442	21	FAHRERHAUSVERDRAHTUNG	217
SICHERUNG (15 A)	9W-1441	17	FAHRERHAUSVERDRAHTUNG	217
SICHERUNG (30 A)	8T-9636	2	FAHRERHAUSVERDRAHTUNG	217
UMLAUFKÜHLWASSERHEIZUNGS-ELEMENT (120 V, 1000 W)	246-8628	1	UMLAUFKÜHLWASSERHEIZUNG	141
UMLAUFKÜHLWASSERHEIZUNGS-ELEMENT (240 V, 1000 W)	246-8627	1	UMLAUFKÜHLWASSERHEIZUNG	140
UNTERBRECHER (105 A) (*ALTERNATOR NO. 2)	171-2212	1	KLEMMLEISTE	124
UNTERBRECHER (105 A) (DREHSTROMGENERATOR)	171-2212	1	KLEMMLEISTE	124
UNTERBRECHER (15 A) (FAHRSCHEINWERFER)	3T-2662	2	KLEMMLEISTE	124
UNTERBRECHER (15 A) (GETRIEBESTEUERUNG)	6T-3643	1	KLEMMLEISTE	125
UNTERBRECHER (15 A) (STARTSCHALTERSCHLÜSSEL)	6T-3643	1	KLEMMLEISTE	125
UNTERBRECHER (20 A) (MOTORSTEUERUNG)	6T-3644	1	KLEMMLEISTE	125
UNTERBRECHER (80 A) (HAUPTUNTERBRECHER)	171-2210	1	KLEMMLEISTE	124
UNTERBRECHER (80 A) (LADEN)	171-2210	1	KLEMMLEISTE	124
FAHRERHAUS				
BELEUCHTUNGSANLAGE (24 V)	250-8335	2	FAHRERHAUSAUSKLEIDUNG	740
KLIMAANLAGENDRUCKSPEICHER	186-6189	1	KLIMAANLAGENLEITUNGEN	741
LUFTFILTER (*CAB HEATER, AIR CONDITIONER)	119-3355	1	LUFTKANAL U. FILTER	731
	149-1912	1	LUFTKANAL U. FILTER	731
SCHEIBENWISCHERBLATT (HINTERER SCHEIBENWISCHER)	146-6433	1	SCHEIBENWISCHER	789
SCHEIBENWISCHERBLATT (LINKS)	6V-5851	1	SCHEIBENWISCHER	790
SCHEIBENWISCHERBLATT (RECHTE TÜRY)	6V-5851	1	SCHEIBENWISCHER	791
		1	SCHEIBENWISCHER	792
SCHEIBENWISCHERBLATT (TÜR, LINKS)	146-6433	1	SCHEIBENWISCHER	793
SCHEIBENWISCHERBLATT (TÜR, RECHTS)	146-6433	1	SCHEIBENWISCHER	795
SCHEIBENWISCHERBLATT (VORNE)	6V-5853	1	SCHEIBENWISCHER UND -WASCHANLAGE	787
SICHERHEITSGURT	222-0345	1	FAHRERSITZ	761
		1	FAHRERSITZ	764
SICHERUNG (15 A)	133-9012	1	KLIMAANLAGE	707

* ÜBERSETZUNG ZUM ZEITPUNKT DER DRUCKLEGUNG NICHT VORHANDEN

PROOF

WARTUNGSTEILE

BESCHREIBUNG	ERSATZTEIL-NUMMER	MENGE	VERWENDET IN	SEITE
HYDRAULIKSYSTEM				
EINFÜLLKAPPE (HYDRAULIKTANK)	142-8937	1	HYDRAULIKTANK	584
ENTLÜFTERFILTER (HYDRAULIKTANK)	9R-9925	1	HYDRAULIKTANK UND BEFESTIGUNGSTEILE	582
HYDRAULIKÖLFILTER (HAUPTELEMENT)	1G-8878	1	ÖLFILTER	502
INTEGRALDICHTUNG	243-3662	4	VENTILSATZ (3-VENTIL)	585
		5	VENTILSATZ (4-VENTIL)	587
		6	VENTILSATZ (5-VENTIL)	589
		6	VENTILSATZ (5-VENTIL)	591
		7	VENTILSATZ (6-VENTIL)	593
		7	VENTILSATZ (6-VENTIL)	595
		7	VENTILSATZ (6-VENTIL)	597
		8	VENTILSATZ (7-VENTIL)	599
		8	VENTILSATZ (7-VENTIL)	601
		9	VENTILSATZ (8-VENTIL)	603
		9	VENTILSATZ (8-VENTIL)	605
LEUCHTE, ROT (24 V, GELB)	250-2298	1	LENKBETÄTIGUNG	469
LEUCHTE, ROT (24 V, GRÜN)	250-2299	1	LENKBETÄTIGUNG	469
ROHRSTOPFEN (ÖLABLASS)	2B-7410	1	SCHARDREHWERK	499
SCREEN (*BRAKE, HYDRAULIC FAN)	6E-5066	1	STEUERKRÜMMER	567
SCREEN (LENKUNG)	6E-5066	1	STEUERKRÜMMER	571
KRAFTSTOFFSYSTEM				
EINFÜLLKAPPE (KRAFTSTOFFTANK)	7X-7700	1	KRAFTSTOFFTANK	93
		1	KRAFTSTOFFTANK	95
KRAFTSTOFFILTER	1R-0762	1	KRAFTSTOFFILTER	81
KRAFTSTOFFSIEB	199-9907	1	KRAFTSTOFFTANK	93
		1	KRAFTSTOFFTANK	95
WASSERABSCHEIDER UND KRAFTSTOFFILTER (HAUPTELEMENT)	1R-0770	1	WASSERABSCHEIDER- U. KRAFTSTOFFILTER	83
KRAFTÜBERTRAGUNG				
ANSAUGSIEB (GETRIEBE)	8S-9130	1	MAGNETSIEB	334
ENTLÜFTER (*POWER TRAIN OIL TANK)	9G-5127	1	GETRIEBEÖLFÜLLSTUTZEN	299
ENTLÜFTER (TANDEM)	4H-6112	1	TANDEMGEHÄUSE UND DECKEL	337
FILTER (GETRIEBE)	251-6673	1	PLANETENANTRIEBSGEHÄUSE U. TEILE	268
HYDRAULIKÖLFILTER (ALLRADANTRIEB)	1G-8878	1	ALLRADANTRIEBSLEITUNGEN	310
MAGNETFILTER (GETRIEBE)	8S-9129	1	MAGNETSIEB	334
ÖLFILTERELEMENT (HOCHLEISTUNG) (GETRIEBE)	1R-1809	1	ÖLFILTER	303
ÖLFILTERELEMENT (HOCHLEISTUNG) (HYDRAULIKTANK)	1R-1809	1	ÖLFILTER	305
SCHRAUBE (ABLASSEN)	175-4966	1	ABLASS (UMWELTFREUNDLICH)	297
SCREEN (SPÜLUNG)	251-6674	1	PLANETENANTRIEBSGEHÄUSE U. TEILE	268

* ÜBERSETZUNG ZUM ZEITPUNKT DER DRUCKLEGUNG NICHT VORHANDEN

PROOF

WARTUNGSTEILE

BESCHREIBUNG	ERSATZTEIL-NUMMER	MENGE	VERWENDET IN	SEITE
KÜHLSYSTEM				
DICHTUNG (TEMPERATURREGELGEHÄUSE)	222-5915	1	KÜHLWASSERLEITUNGEN	50
FILTER (WASSER) (PUMPE)	119-3025	1	KÜHLWASSERPUMPE	54
KÜHLERKAPPE (*6 TO 8-PSI) (DRUCKBEGRENZUNG)	126-5027	1	KÜHLMITTELBEHÄLTER	58
WASSERTEMPERATURREGLER (97 GRAD CELSIUS) (KÜHLMITTEL)	115-4223	2	KÜHLWASSERLEITUNGEN	50
LUFTANSAUG- UND ABGASSYSTEM				
LUFTFILTER (HAUPTELEMENT)	245-6375	1	LUFTREINIGER	64
LUFTFILTER (HILFSELEMENT)	245-6376	1	LUFTREINIGER	64
MOTOR - GRUNDAUSFÜHRUNG				
EINFÜLLKAPPE (MOTORÖL)	241-5645	1	STIRNRADGEHÄUSEDECKEL	11
SCHMIERSYSTEM				
ENTDUNSTERLEITUNG (ENTDUNSTER)	228-8510	1	ENTDUNSTER	36
ENTLÜFTER (KURBELGEHÄUSE)	164-0210	1	ENTLÜFTER	33
ÖLFILTER	1R-1807	1	ÖLFILTER	34
WARTUNGSAUSRÜSTUNG				
VORHÄNGESCHLOSS (WERKZEUGKASTEN)	246-2641	1	WERKZEUGKASTEN	796

PROOF

* ÜBERSETZUNG ZUM ZEITPUNKT DER DRUCKLEGUNG NICHT VORHANDEN

INDEX

Name	Page
A	
ACCUMULATOR GP (BLADE CUSHION)	517
ACCUMULATOR GP-BRAKE	435
	436
ACCUMULATOR GP-REFRIGERANT	741
ADAPTER GP-FAST FILL FUEL	76
	78
ADAPTER GP-TURBOCHARGER	61
ADJUSTER GP-SEAT	701
AFTERCOOLER GP-AIR	62
AIR CLEANER GP	63
	64
AIR COMPRESSOR AR	4
AIR COMPRESSOR GP	5
	6
AIR COMPRESSOR GP-SEAT	702
AIR CONDITIONER & MOUNTING GP	703
AIR CONDITIONER AR	705
AIR CONDITIONER AR–HEATER	705
AIR CONDITIONER GP	706
	707
ALARM AS-BACKUP	216
ALARM GP	99
ALARM GP (24-VOLT)	217
ALTERNATOR GP-CHARGING	100
	102
	104
	106
	108
	110
ARM GP-WIPER (RH DOOR)	792
AUTOSHIFT AR	257
AXLE AR-FRONT	260
AXLE AR-FRONT–ALL WHEEL DRIVE	259
AXLE AR-FRONT–NON ALL WHEEL DRIVE	257
	258
AXLE GP-FRONT–ALL WHEEL DRIVE	264
	265
AXLE GP-FRONT–NON ALL WHEEL DRIVE	260
	262
AXLE GP-REAR	266
B	
BASE GP-OIL FILTER	31
	32
BATTERY GP	112
BATTERY GP–EXTREME DUTY	116
BATTERY GP–HEAVY DUTY	120
BATTERY GP (12-VOLT, MAINTENANCE FREE)	120
BATTERY (12-VOLT, MAINTENANCE FREE)	112
	116
BELT-SERPENTINE	104
	108
	110
BELT-SERPENTINE (ALTERNATOR)	106
BELT TIGHTENER GP	8
BIT GP	647
	648
	649
	650
	651
BIT GP-END	651
BLADE AS-WIPER (DOOR, LH)	793
BLADE AS-WIPER (DOOR, RH)	795
BLADE AS-WIPER (FRONT)	787
BLADE AS-WIPER (LEFT)	790
BLADE AS-WIPER (REAR WIPER)	789
BLADE AS-WIPER (RH DOOR)	791
	792
BLADE GP–12-FT	652
BLADE GP–14 FT X 24 IN	653
BLADE GP–14 FT X 27 IN	654
BLADE GP-BULLDOZER	659
	660
BLADE GP-BULLDOZER–FRONT	655
	664
BLOCK GP-JUNCTION	124
BOX GP-TOOL	796
BRACKET GP-SCARIFIER	670
BRAKE GP-PARKING	437
BRAKE GP-SERVICE	439
	441
BREATHER AS (CRANKCASE)	33
BREATHER AS (POWER TRAIN OIL TANK)	299
BREATHER AS (TANDEM)	337
BREATHER GP	33
C	
CAB AR	710
CAP AS-FILLER (ENGINE OIL)	11
CAP AS-FILLER (FUEL TANK)	93
	95
CAP AS-FILLER (HYDRAULIC TANK)	584
CAP AS-RADIATOR (6 TO 8-PSI) (PRESSURE RELIEF)	58
CASE & FRAME GP	399
CASE & PARTS GP-PLANETARY	268
CHAIN GP-DRIVE–TANDEM	275
CHAIN GP (TANDEM)	275
CIRCLE GP	640
CIRCUIT BREAKER AS (105-AMPERE) (ALTERNATOR)	124
CIRCUIT BREAKER AS (105-AMPERE) (ALTERNATOR NO. 2)	124
CIRCUIT BREAKER AS (15-AMPERE) (KEY SWITCH)	125

PROOF

INDEX

Name	Page
CIRCUIT BREAKER AS (15-AMPERE) (RUNNING LIGHTS)	124
CIRCUIT BREAKER AS (15-AMPERE) (TRANSMISSION CONTROL)	125
CIRCUIT BREAKER AS (80-AMPERE) (LOAD)	124
CIRCUIT BREAKER AS (80-AMPERE) (MAIN)	124
CIRCUIT BREAKER GP (20-AMPERE) (ENGINE CONTROL)	125
CLUTCH GP-TRANSMISSION–FORWARD	276
CLUTCH GP-TRANSMISSION–HIGH, LOW	282
CLUTCH GP-TRANSMISSION–REVERSE, SECOND	278
CLUTCH GP-TRANSMISSION–1ST, 3RD	280
COMMON AR-MOTOR GRADER	1
COMPRESSOR GP-REFRIGERANT	711
	712
CONDENSER & MTG GP-REFRIGERANT	713
CONTROL & MTG GP-ENGINE ELEK	128
CONTROL & MTG GP-IMPLEMENT	129
CONTROL & MTG GP-JOYSTICK	714
CONTROL AR-HYDRAULIC	460
	462
	463
	464
	465
	466
	467
CONTROL AR-HYDRAULIC–FRONT LIFT	460
CONTROL AR-HYDRAULIC–RIPPER, FRONT LIFT	461
CONTROL AR-HYDRAULIC–SCARIFIER	461
CONTROL GP-AIR & TEMPERATURE	717
CONTROL GP-DIFFERENTIAL LOCK	284
CONTROL GP-ELECTROHYDRAULIC	468
CONTROL GP-ELECTROHYDRAULIC (WITHOUT AUXILIARY LEVER)	460
CONTROL GP-ELECTROHYDRAULIC (WITHOUT AUXILIARY LEVER)	461
	462
	465
CONTROL GP-ELECTROHYDRAULIC (WITHOUT AUXILIARY LEVER) (JOYSTICK)	468
CONTROL GP-ELECTRONIC (INSTRUMENT CLUSTER)	217
CONTROL GP-IMPLEMENT	130
CONTROL GP-JOYSTICK (LH)	714
CONTROL GP-JOYSTICK (OPERATOR STATION)	468
CONTROL GP-JOYSTICK (RH)	714
CONTROL GP-MONITOR (MESSENGER)	718
CONTROL GP-POWER TRAIN–ALL WHEEL DRIVE	131
CONTROL GP-SERVICE BRAKE	443
	445
	447
CONTROL GP-STEERING	469
CONTROL GP-TRANSMISSION HYD	286
CONTROL GP-UNPRGMED MONITOR–MESSENGER	718
CONTROL GP-UNPROGRAMMED	133
	134
	136
CONTROL GP-UNPROGRAMMED (ENGINE)	233
CONTROL GP-UNPROGRAMMED (ENGINE)	128
CONTROL GP-UNPROGRAMMED (HYDRAULIC ELECTRONIC)	134
CONTROL GP-UNPROGRAMMED (IMPLEMENT MASTER)	129
CONTROL GP-UNPROGRAMMED (IMPLEMENT SLAVE)	129
CONTROL GP-UNPROGRAMMED (SECURITY)	194
CONTROL GP-UNPROGRAMMED (TRANSMISSION)	286
CONVERTER GP-ELECTRICAL–RADIO	137
COOLANT HEATER LINES	745
	746
COOLER GP-HYDRAULIC OIL	471
COOLER GP-TRANSMISSION OIL	288
	289
COOLING AR	46
CORE AS-CONDENSER (REFRIGERANT)	713
CORE AS-HEATER	707
CORE AS-RADIATOR	56
CORE AS (TRANSMISSION OIL COOLER)	289
COUPLING GP-TORSIONAL–DRIVE	290
COVER GP-ACCESS	401
COVER GP-ACCESS–SCREEN	403
COVER GP-ACCESS–SNOW	402
COVER GP-AIR INLET–STARTING AID HEATER	65
	66
COVER GP-CAB	719
COVER GP-CONTROL VALVE	404
COVER GP-CYLINDER BLOCK	9
COVER GP-FRONT HOUSING	10
	11
COVER GP-SHIPPING	291
COVER GP-STEERING COLUMN	720
COVER GP-VALVE MECHANISM	12
	13
CUSHION GP-ARM–LH	722
CUSHION GP-ARM–RH	721
CYLINDER & MTG GP-ARTICULATION	473
CYLINDER & MTG GP-BLADE LIFT	474
CYLINDER & MTG GP-BLADE TIP	475
CYLINDER & MTG GP-CENTERSHIFT	477
CYLINDER & MTG GP-SCARIFIER	478

INDEX

Name	Page
CYLINDER & MTG GP-SIDESHIFT	479
CYLINDER & MTG GP-STEERING–ALL WHEEL DRIVE	481
CYLINDER & MTG GP-STEERING–NON ALL WHEEL DRIVE	480
CYLINDER & MTG GP-WHEEL LEAN	482
CYLINDER GP-ARTICULATION	483
CYLINDER GP-BLADE TIP	485
CYLINDER GP-CENTERSHIFT	486
CYLINDER GP-HYDRAULIC–BULLDOZER	487
CYLINDER GP-LIFT–BLADE	488
CYLINDER GP-RIPPER	489
CYLINDER GP-SCARIFIER	491
CYLINDER GP-SIDESHIFT	492
CYLINDER GP-STEERING	493
CYLINDER GP-STEERING–ALL WHEEL DRIVE	495
CYLINDER GP-WHEEL LEAN	497

D

DAMPER & PULLEY GP	14
DIFFERENTIAL & BEVEL GEAR GP	293
DIFFERENTIAL GP	295
DOOR GP-CAB–ALTERNATE EXIT	729
DOOR GP-CAB–CAB, LH	723
DOOR GP-CAB–RH	726
DRAIN GP-ECOLOGY	297
DRAWBAR GP	642
DRIVE GP-CIRCLE	499
DRIVE GP-WHEEL	298
DUCT & FILTER GP-AIR	731

E

EDGE GP-CUTTING	671
	672
	673
ELBOW GP-AIR INLET	67
ELECTRONICS GP-IMPLEMENT	138
ELECTRONICS GP-MONITOR	139
ELECTRONICS GP-POWER TRAIN	139
ELEMENT AS-JACKET WATER HEATER (120-VOLT, 1000-WATT)	141
ELEMENT AS-JACKET WATER HEATER (240-VOLT, 1000-WATT)	140
ENCLOSURE GP-ENGINE	406
ENGINE AR-COMPLETE	3
EXTENSION GP-BACKREST (CLOTH)	761
	764
EXTENSION GP-BLADE–LH	675
EXTENSION GP-BLADE–RH	674
	676
EXTENSION GP-BLADE–2-FT, LH	678

F

FAN & MOTOR GP	47
FAN AR-REVERSIBLE	49
FAN GP-CIRCULATING	732
FAN GP-DEFROSTER	734
FASTENER GP-FUEL TANK	79
FENDER & SUPPORT GP–FRONT	410
	414
FENDER & SUPPORT GP–REAR	412
	416
FILLER GP-POWER TRAIN OIL	299
FILM (ALL WHEEL DRIVE)	131
FILM-ENGINE (LOCK, UNLOCK)	40
FILM-ENGINE OIL (FILL, DRAIN)	40
	45
FILM (ENGINE START)	146
FILM (EXCITER COIL)	146
FILM GP	797
FILM (HYDRAULIC ACCUMULATOR)	517
FILM-IDENTIFICATION (BIODEGRADABLE HYDRAULIC OIL)	503
FILM-IDENTIFICATION (HORN)	714
FILM-IDENTIFICATION (RIPPER)	130
FILM-IDENTIFICATION (ROUND RED REFLECTIVE)	689
FILM (IGNITION SWITCH)	146
	147
FILM-INFORMATION (KEY) (SECURITY SYSTEM)	147
FILM-INFORMATION (ROPS, FOPS, READ OMM)	710
FILM-INFORMATION (24-VOLT)	799
FILM-INSTRUCTION (BELT ROUTING)	104
	106
	108
	110
FILM-INSTRUCTION (ENGINE OIL DRAIN)	39
FILM-INSTRUCTION (ENGINE SHUTDOWN)	799
FILM-INSTRUCTION (READ OMM)	146
	147
FILM-INSTRUCTION (SEAT ADJUSTMENT)	775
	777
	779
FILM-INSTRUCTION (WATER IN, WATER OUT)	745
FILM-INSTRUCTION (WIPER)	740
FILM-REFLECTOR (YELLOW)	416
FILM-REFLECTOR (YELLOW) (FENDER)	412
FILM-STEERING (DISABLE)	469
FILM-STEERING (ENABLED)	469
FILM-WARNING (CRUSH HAZARD, STAY BACK)	250
FILM-WARNING (DO NOT LIFT) (BLADE)	664
FILM-WARNING (RECOIL SPRING)	437

PROOF

INDEX

Name	Page
FILTER & MTG GP-OIL	300
FILTER & MTG GP-OIL–TRANSMISSION	302
FILTER-AIR (CAB HEATER, AIR CONDITIONER)	731
FILTER AS-AIR (CAB HEATER, AIR CONDITIONER)	731
FILTER AS-ENGINE OIL	34
FILTER AS-FUEL	81
FILTER AS-WATER SEP & FUEL (PRIMARY)	83
FILTER-BREATHER (HYDRAULIC TANK)	582
FILTER ELEMENT AS-AIR (PRIMARY)	64
FILTER ELEMENT AS-AIR (SECONDARY)	64
FILTER ELEMENT AS-OIL (HIGH EFFICIENCY) (HYDRAULIC TANK)	305
FILTER ELEMENT AS-OIL (HIGH EFFICIENCY) (TRANSMISSION)	303
FILTER ELEMENT-HYDRAULIC OIL (ALL WHEEL DRIVE)	310
FILTER ELEMENT-HYDRAULIC OIL (PRIMARY)	502
FILTER GP-ENGINE OIL	34
FILTER GP-FUEL	81
FILTER GP-OIL	303 305 502
FILTER GP-OIL (ALL WHEEL DRIVE)	310
FILTER GP-WATER SEP & FUEL	83
FILTER-MAGNETIC (TRANSMISSION)	334
FILTER (TRANSMISSION)	268
FILTER (WATER) (PUMP)	54
FINAL DRIVE GP	306 308
FITTING GP-HYDRAULIC	284
FLOOR MAT (CAB)	782
FLYWHEEL GP	15
FRAME GP-FRONT	418
FUMES DISPOSAL GP	36
FUSE (10-AMPERE)	217
FUSE (15-AMPERE)	217 707
FUSE (30-AMPERE)	217

G

Name	Page
GASKET (TEMPERATURE REGULATOR HOUSING)	50
GAUGE AS-OIL LEVEL (DIPSTICK) (POWER TRAIN OIL LEVEL)	299
GAUGE GP-OIL LEVEL (DIPSTICK)–ENGINE	37
GEAR GP (LH) (ALL WHEEL DRIVE)	298
GEAR GP-REAR	16
GEAR GP (RH) (ALL WHEEL DRIVE)	298
GUARD GP-BOTTOM	419
GUARD GP-BRAKE LINES	420
GUARD GP-FAN (RADIATOR COOLING)	47
GUARD GP-FUEL TANK	421

H

Name	Page
HANDLE GP-DOOR	723 726
HARNESS AS-CHASSIS (MACHINE SECURITY SYSTEM)	147
HARNESS AS-CONTROL (ALL WHEEL DRIVE)	131
HARNESS AS-CONTROL (HYDRAULIC ELECTRONIC)	134
HARNESS AS-FRONT CHASSIS	232
HARNESS AS-FRONT LIGHTING	155 157
HARNESS AS-FUEL TANK	227
HARNESS AS-JUNCTION BOX	124
HARNESS AS-LIGHTING	237 239
HARNESS AS-OPERATOR CONTROLS	233
HARNESS AS-POWER (PRODUCT LINK RADIO)	142
HARNESS AS-PUMP (FUEL)	246
HARNESS AS-RADIO	757
HARNESS AS-REAR (AIR CONDITIONER)	246
HARNESS AS-REAR (CHASSIS)	246
HARNESS AS-REAR (HYDRAULIC PUMP)	246
HARNESS AS-REAR LIGHTING	241 250
HARNESS AS-REAR LIGHTING (REGISTRATION PLATE)	173
HARNESS AS-SENSOR	227
HARNESS AS-SENSOR (AWD CONTROL)	254
HARNESS AS-SENSOR (GRADE CONTROL)	234
HARNESS AS-SENSOR (SPEED)	254
HARNESS AS-SENSOR (TRANSMISSION SPEED)	286
HARNESS AS-SOLENOID (ALL WHEEL DRIVE)	254
HARNESS AS-STEERING	252
HARNESS AS-TRANSMISSION	286
HARNESS AS-VALVE (SEAT AIR COMPRESSOR)	777 779
HARNESS AS-WIRING (JUMPER) (FUEL SENSOR)	81
HARNESS AS-WIRING (SECURITY)	146
HARNESS AS-WORK TOOL	234
HEATER GP-JACKET WATER	140 141
HITCH GP-ARTICULATING	422
HITCH GP-TOWING	424
HOSE-DISPOSAL (FUMES)	36
HOUSING GP-FLYWHEEL	17
HOUSING GP-SEAT SUSPENSION	735

PROOF

INDEX

Name	Page
HYDRAULIC AR–ALL WHEEL DRIVE	503
HYDRAULIC AR–NON ALL WHEEL DRIVE	503
I	
INDICATOR (BRAKE WEAR)	439, 441
INDICATOR-LEVEL (TEMPERATURE)	782
INSTALLATION AR-COMMUNICATION	142
INSTALLATION AR-GRADE CONTROL	144
INSTALLATION GP-GRADE CONTROL	144
INSTALLATION GP-LIGHTING	145
INSTALLATION GP-RADIO	738
INSTALLATION GP-SECURITY	146, 147
INSULATION GP-WEATHER	739
K	
KEY AS-ELECTRONIC (SECURITY)	147, 194
KEY (BATTERY DISCONNECT)(STARTER)	206
KIT-AIR VALVE (SEAT)	777, 779
KIT-BEARING (ALTERNATOR)	102
KIT-BEARING (ALTERNATOR)	100
KIT-BEARING (STARTING MOTOR)	197
KIT-BEARING (SUSPENSION SEAT)	736
KIT-BRUSH (STARTING MOTOR)	197, 200
KIT-BUMPER (WEIGHT ADJUSTMENT) (SUSPENSION SEAT)	736
KIT-BUSHING (STARTING MOTOR)	200
KIT-CAP FILTER (FUEL TANK)	93, 95
KIT-FOLLOWER (SUSPENSION SEAT)	736
KIT-GOVERNOR OVERHAUL (AIR COMPRESSOR)	458
KIT-HARDWARE (ALTERNATOR)	100, 102
KIT-HARDWARE (STARTING MOTOR)	197
KIT-INDICATOR (SEAT)	777, 779
KIT-INDICATOR (WEIGHT ADJUSTMENT) (SUSPENSION SEAT)	736
KIT-INSULATOR (STARTING MOTOR)	200
KIT-LEVER (STARTING MOTOR)	200
KIT-REPAIR (FUEL LEVEL SENSOR)	93, 95
KIT-SEAL (BRAKE ACCUMULATOR)	435, 436
KIT-SEAL (CHECK VALVE) (ARTICULATION)	608
KIT-SEAL (CHECK VALVE) (BLADE CENTERSHIFT)	614
KIT-SEAL (CHECK VALVE) (BLADE LIFT)	610
KIT-SEAL (CHECK VALVE) (BLADE SIDESHIFT)	616
KIT-SEAL (CHECK VALVE) (BLADE TIP)	612
KIT-SEAL (CHECK VALVE) (CIRCLE DRIVE)	618
KIT-SEAL (CHECK VALVE) (PLOW ANGLE)	630
KIT-SEAL (CHECK VALVE) (PLOW, BULLDOZER LIFT)	628
KIT-SEAL (CHECK VALVE) (RIPPER)	622
KIT-SEAL (CHECK VALVE) (SCARIFIER)	632
KIT-SEAL (CHECK VALVE) (WHEEL LEAN)	620
KIT-SEAL (CHECK VALVE) (WING LIFT)	626
KIT-SEAL (CHECK VALVE) (WING TILT)	624
KIT-SEAL (DIVERTER VALVE)	567
KIT-SEAL (DIVERTER VALVE) (HYDRAULIC FAN FLUID FLOW)	634
KIT-SEAL (HYDRAULIC ACCUMULATOR)	519
KIT-SEAL (MOTOR)	572
KIT-SEAL (RELIEF VALVE)	587, 591, 635
KIT-SEAL (RELIEF VALVE) (LOAD SENSING SIGNAL)	585, 593
KIT-SEAL (RIPPER CYLINDER)	489
KIT-SEAL (SHUTTLE VALVE)	567
KIT-SEAL (SOLENOID VALVE)	637
KIT-SEAL (STEERING)	639
KIT-SHOCK ABSORBER (SEAT)	777, 779
KIT-SLIDER BLOCK (SEAT)	767, 769
KIT-SLIDER BLOCK (SUSPENSION SEAT)	768
KIT-SPRING (HEIGHT ADJUSTMENT) (SUSPENSION SEAT)	735
KIT-SPRING (SUSPENSION SEAT)	735
KIT-STARTING MOTOR PIN	197
KIT-STARTING MOTOR SEAL	197
KIT-SUSPENSION KNOB (HEIGHT ADJUSTMENT) (SUSPENSION SEAT)	735
KIT-TERMINAL (ALTERNATOR)	100, 102
KIT-TETHER (SEAT)	777, 779
KIT-WASHER (STARTING MOTOR)	197
L	
LAMP AS (RED, GREEN, LED, 12-VOLT)	146
LAMP AS (24-VOLT)	225, 740
LAMP GP-DOME	149
LAMP GP-FLOOD–SUSPENDED MOUNT	150, 153
LAMP GP-FLOOD–VERTICAL MOUNT	151

PROOF

INDEX

Name	Page
	152
LAMP GP-FLOOD–24-VOLT, SUSPENDED MOUNT	154
LAMP GP-HEAD & SIGNAL–HIGH	157
LAMP GP-HEAD & SIGNAL–LH	160
LAMP GP-HEAD & SIGNAL–LOW	155
LAMP GP-HEAD & SIGNAL–RH	159
LAMP GP-HEAD & SIGNAL (24-VOLT, LH)	157
LAMP GP-HEAD & SIGNAL (24-VOLT, RH)	157
LAMP GP-MARKER–CAB POSITION–EU	161
LAMP GP-REGISTRATION PLATE	173
LAMP GP-SIGNAL–STOP, TAIL	162
LAMP GP-SIGNAL (STOP, TAIL, TURN)	250
LAMP GP-WARNING BEACON	163
LAMP GP-WARNING BEACON–AMBER	164
	165
LAMP-HALOGEN (24-VOLT, 65-WATT)	152
	153
LAMP-HALOGEN (24-VOLT, 65-WATT) (BLADE)	154
LAMP-LED (24-VOLT, AMBER)	469
LAMP-LED (24-VOLT, GREEN)	203
	217
LAMP-LED (24-VOLT, GREEN)	469
LAMP-LED (24-VOLT, RED)	203
LAMP-LED (24-VOLT, RED)	147
LAMP (12-VOLT, 24-VOLT, 35-WATT)	150
	151
LAMP (24-VOLT)	149
	173
LAMP (24-VOLT) (CAB POSITION)	161
LAMP (24-VOLT, 21-WATT) (AMBER)	159
	160
LAMP (24-VOLT, 21-WATT) (ENGINE COMPARTMENT)	166
LAMP (24-VOLT, 5-WATT) (CLEAR)	159
	160
LAMP (24-VOLT, 70-WATT)	165
LAMP (24-VOLT, 75/70-WATT) (CLEAR)	160
LAMP (24-VOLT, 75/70-WATT) (CLEAR)	159
LENS (WARNING BEACON) (AMBER)	163
LIFT GP-BLADE	679
LIFTING GP-ENGINE	19
LIGHT-INDICATOR (HIGH SPEED OIL CHANGE)	225
LIGHTER AS (CIGAR, 24-VOLT)	218
LIGHTING GP-BACKUP	166
LIGHTING GP-FLOOD–WORK	167
	168
	169
	170
	171
	172
LIGHTING GP-ROADING	173
LINER GP-CAB	740
LINES GP-AIR	68
	70
	71
LINES GP-AIR CONDITIONER	741
	743
LINES GP-AIR TANK	452
LINES GP-ALL WHEEL DRIVE	310
	319
LINES GP-CENTERSHIFT LOCK	504
	506
LINES GP-ENGINE OIL	38
LINES GP-ENGINE OIL DRAIN	39
	40
LINES GP-FUEL	84
LINES GP-FUEL FILTER	86
LINES GP-GREASE–ARTICULATED HITCH BEARINGS	425
LINES GP-HEATER	745
	746
LINES GP-HYDRAULIC–BLADE LIFT	515
LINES GP-HYDRAULIC–PLOW, BULLDOZER ANGLE	524
	525
LINES GP-HYDRAULIC–SCARIFIER	508
LINES GP-HYDRAULIC–WITH ACCUMULATOR	517
LINES GP-HYDRAULIC–WITHOUT ACCUMULATOR	510
LINES GP-HYDRAULIC FAN	526
LINES GP-POWER TAKE-OFF	321
LINES GP-PUMP	538
LINES GP-PUMP–IMPLEMENT, STEERING	530
LINES GP-PUMP–SECONDARY STEERING	534
	545
LINES GP-RIPPER	554
LINES GP-RIPPER–2 CIRCUITS	552
LINES GP-SECONDARY STEERING	555
	557
LINES GP-SERVICE BRAKE	454
	456
LINES GP-STEERING	559
	561
LINES GP-TRANSMISSION OIL	322
	326
LINES GP-TURBOCHARGER OIL	42
LINES GP-WATER	50
	52
LINK GP-STEERING–ALL WHEEL DRIVE	427
LINK GP-STEERING–NON ALL WHEEL DRIVE	426
LOCK GP-CENTERSHIFT	565

M

MANIFOLD GP-CONTROL	566

PROOF

INDEX

Name	Page
MANIFOLD GP-CONTROL–BLADE CUSHION	570
MANIFOLD GP-CONTROL–BRAKE, HYDRAULIC FAN	567
MANIFOLD GP-CONTROL–STEERING BACKUP	571
MANIFOLD GP-ENGINE OIL	43
MANIFOLD GP-EXHAUST	72
MIRROR GP-REAR VIEW	747
	748
	749
	750
MOTOR GP-ELECTRIC	174
MOTOR GP-GEAR (RADIATOR COOLING)	47
MOTOR GP-GEROTOR–CIRCLE DRIVE	572
MOTOR GP-PISTON	328
MOTOR GP-PISTON (ALL WHEEL DRIVE)	328
MOTOR GP-WINDOW WIPER	751
MOTOR GP-WINDOW WIPER (DOOR, LH)	793
MOTOR GP-WINDOW WIPER (LEFT)	790
MOTOR GP-WINDOW WIPER (REAR)	789
MOTOR GP-WINDOW WIPER (RH)	795
MOTOR GP-WINDOW WIPER (RH DOOR)	791
MOUNTING GP-ALTERNATOR	20
MOUNTING GP-AXLE	428
MOUNTING GP-BLADE	682
MOUNTING GP-ENGINE & TMSN	21
MOUNTING GP-FAN DRIVE	23
MOUNTING GP-FUEL FILTER–FUEL	88
MOUNTING GP-GRADE CONTROL–BLADE	683
MOUNTING GP-GRADE CONTROL–DRAWBAR	645
MOUNTING GP-RIPPER	684
MOUNTING GP-SNOW WING–FRONT LIFT	687
MOUNTING GP-SNOW WING–RIGHT	686
MOUNTING GP-VALVE	429
MOUNTING GP-WHEEL	329
MUFFLER & MOUNTING GP	73

O

Name	Page
OIL CHANGE AR-HIGH SPEED	44
OIL CHANGE GP-HIGH SPEED	45
OPTION AR-EU	2

P

Name	Page
PADLOCK GP (TOOL BOX)	796
PAN GP-BACKREST	753
PAN GP-BACKREST–CLOTH	752
PAN GP-OIL–ENGINE	25
PANEL GP-CAB	756
PANEL GP-CAB–FRONT	754
PLATE & FILM GP	799
PLATE & FILM GP–ENGINE	798
PLATE GP-PUSH	646
PLATE-IDENTIFICATION (CAT)	655
	660
	664
PLATE-IDENTIFICATION (MAXIMUM WEIGHT)	2
PLATE-IDENTIFICATION (WORK TOOL INFORMATION)	659
	698
	699
PLATE-INSTRUCTION (AIR CONDITIONER)	706
PLATE-INSTRUCTION (BATTERY) (DISCONNECT SWITCH)	116
	120
PLATE-INSTRUCTION (BATTERY) (DISCONNECT SWITCH)	112
PLATE-SERIAL NUMBER (TRANSMISSION)	268
PLUG (DRAIN)	297
PLUG GP-CONNECTOR–ENGINE HARNESS, PROTECTIVE COVER	175
PLUG GP-CYLINDER BLOCK	26
PLUG GP-ENGINE	27
PLUG-PIPE (OIL DRAIN)	499
PRECLEANER GP	75
PRECLEANER GP (TURBINE)	75
PULLEY GP-IDLER	28
PUMP & MOTOR GP (HIGH SPEED OIL CHANGE)	574
PUMP & MOTOR GP (QUICK EVAC, SECONDARY STEERING)	576
PUMP & MTG GP-ALL WHEEL DRIVE	330
PUMP & MTG GP-ELECTRIC DRIVE	574
	575
	576
PUMP & MTG GP-GEAR–TRANSMISSION	331
PUMP & MTG GP-HYDRAULIC FAN	577
PUMP & MTG GP-PISTON–IMPLEMENT	578
PUMP GP-FUEL PRM & PRIM FILTER	89
PUMP GP-FUEL TRANSFER	90
PUMP GP-FUEL TRANSFER & FILTER–PRIMARY	91
PUMP GP-GEAR–TRANSMISSION	332
PUMP GP-METERING (STEERING)	469
PUMP GP-PISTON (ALL WHEEL DRIVE)	330
PUMP GP-PISTON (BRAKE, HYDRAULIC FAN)	577
PUMP GP-PISTON (IMPLEMENT)	578
PUMP GP-SECONDARY STEERING	575
PUMP GP-WATER	55
PUMP GP-WATER–COOLANT	54

R

Name	Page
RADIATOR GP	56
RADIO GP	757

PROOF

INDEX

Name	Page
RADIO GP (AM/FM/WB)	757
RADIO GP-COMMUNICATION (PRODUCT LINK 121SR)	142
RECLINER GP-SEAT	758
REGULATOR AS (FUEL PRESSURE)	92
REGULATOR AS-VOLTAGE (24-VOLT) (ALTERNATOR)	100
	102
REGULATOR GP-FUEL PRESSURE	92
REGULATOR-PRESSURE (FUEL TRANSFER PUMP)	90
REGULATOR-WATER TEMPERATURE (97-DEG C) (COOLANT)	50
RELAY AS (12-VOLT) (SECURITY)	146
RELAY AS (24-VOLT)	217
RELAY AS (24-VOLT) (BACKUP ALARM)	247
RELAY AS (24-VOLT) (ENGINE OIL EVAC)	225
RELAY AS (24-VOLT) (FUEL PUMP)	247
RELAY AS (24-VOLT) (ROADING LIGHTS)	212
RELAY AS (24-VOLT) (SECONDARY STEERING)	252
RELAY AS (24-VOLT) (SECURITY)	146
RIPPER AR	688
RIPPER GP–3 TEETH	689
ROADING AR	2
ROOF GP-CAB	759
	760
SEAT BELT GP	761
	764
SEAT GP	761
SEAT GP–CLOTH	762
SEAT GP–CLOTH, HEATED	764
	765
SEAT GP-SUSPENSION	767
	769
SEAT GP-SUSPENSION–CLOTH, HEATED	768
SENSOR GP-ENGINE	176
SENSOR GP-POSITION	179
SENSOR GP-POSITION–ROTARY	178
SENSOR GP-POSITION (STEERING CYLINDER)	493
	495
SENSOR GP-PRESSURE	180
	181
	183
	184
	188
SENSOR GP-PRESSURE–ATMOSPHERIC	182
SENSOR GP-PRESSURE–ENGINE OIL	183
SENSOR GP-PRESSURE–FAN	187
SENSOR GP-PRESSURE–FUEL	188
SENSOR GP-PRESSURE–INJECTION ACTUATION	185
	186
SENSOR GP-SPEED	189
SENSOR GP-SPEED (TRANSMISSION OUTPUT, HIGH)	286
SENSOR GP-SPEED (TRANSMISSION OUTPUT, LOW)	286
SENSOR GP-TEMPERATURE	190
	191
SENSOR GP-TEMPERATURE–AIR INLET MANIFOLD	192
SENSOR GP-TEMPERATURE–COOLANT	193
SENSOR GP-TEMPERATURE (TRANSMISSION OIL)	286
SERVICE GP-IMPLEMENT	138
SERVICE GP-MACHINE–SECURITY	194
SERVICE GP-MONITOR (EMS CONTROL PANEL)	139
SERVICE GP-POWER TRAIN	139
SERVICE GP-POWER TRAIN (ALL WHEEL DRIVE)	139
SHAFT GP-DRIVE	335
SHAFT GP-INPUT	336
SNOW AR-MOTOR GRADER	2
SOCKET GP-TIE ROD (LH)	427
SOCKET GP-TIE ROD (LH) (STEERING)	426
SOCKET GP-TIE ROD (RH)	427
SOCKET GP-TIE ROD (RH) (STEERING)	426
SOFTWARE GP-IMPLEMENT	138

S

SCARIFIER AR–STRAIGHT	691
SCARIFIER AR–VEE TYPE	691
SCARIFIER GP	698
SCARIFIER GP–STRAIGHT	695
SCARIFIER GP–VEE TYPE	692
SCARIFIER GP–11-TEETH	698
SCARIFIER GP–5-TEETH	699
SCARIFIER GP (HYDRAULIC)	699
SCREEN (BRAKE, HYDRAULIC FAN)	567
SCREEN GP-MAGNETIC–TRANSMISSION	334
SCREEN (SCAVENGE)	268
SCREEN (STEERING)	571
SCREEN-SUCTION (TRANSMISSION)	334
SEAL GP-CRANKSHAFT	29
SEAL-INTEGRAL	585
	587
	589
	591
	593
	595
	597
	599
	601
	603
	605
SEAT & MOUNTING GP	759

PROOF

INDEX

Name	Page
SOFTWARE GP-MACHINE	194
SOFTWARE GP-MONITOR (EMS CONTROL PANEL)	139
SOFTWARE GP-POWER TRAIN	139
SOFTWARE GP-POWER TRAIN (ALL WHEEL DRIVE)	139
SOFTWARE GP-POWER TRAIN (AUTOSHIFT)	257
SOLENOID AS (24-VOLT) (STARTING MOTOR)	197
	200
SPIDER & BEARING GP	341
STARTING AID GP	195
STARTING AID GP-ETHER	196
STARTING MOTOR GP-ELECTRIC	197
	199
	200
	202
STEERING AR-SECONDARY	579
STEERING COLUMN GP	469
STEP GP	431
STRAINER-FUEL	93
	95
SUPPORT AR-REAR CHASSIS	432
SUPPORT GP-CONTROL–LH	770
SUPPORT GP-CONTROL–RH	772
SUPPORT GP-ENGINE	30
SUPPORT GP-RADIATOR	433
SUPPRESSION GP-SOUND–ENGINE ENCLOSURE	774
SUSPENSION GP-SEAT	775
SUSPENSION GP-SEAT–AIR	777
	779
SWITCH AS-BALL (CENTERSHIFT INDICATOR)	227
SWITCH AS-LIMIT (STEERING COLUMN POSITION)	469
SWITCH AS-MAGNETIC (24-VOLT) (AIR INLET HEATER)	209
SWITCH AS-PRESSURE (AWD OIL FILTER BYPASS)	310
SWITCH AS-PRESSURE (FILTER BYPASS)	502
SWITCH AS-PUSH BUTTON (HORN)	714
SWITCH AS (RIPPER)	130
SWITCH AS-ROCKER (AIR CONDITIONER ON, OFF)	717
SWITCH AS-ROCKER (BLADE CUSHION)	217
SWITCH AS-ROCKER (FAN BLOWER SPEED)	734
SWITCH AS-ROCKER (FLOODLIGHT)	237
SWITCH AS-ROCKER (HAZARD) (HAZARD)	217
SWITCH AS-ROCKER (HEADLIGHTS, TAIL LIGHTS)	217
SWITCH AS-ROCKER (HEATED MIRRORS)	750
SWITCH AS-ROCKER (IMPLEMENT LOCKOUT)	217
SWITCH AS-ROCKER (PARKING BRAKE)	217
SWITCH AS-ROCKER (QUICK DISCONNECT COUPLING)	217
SWITCH AS-ROCKER (ROADING LIGHTS)	212
SWITCH AS-ROCKER (SECONDARY STEERING)	217
SWITCH AS-ROCKER (SPEED CONTROL REGULATOR)	217
SWITCH AS-ROCKER (THROTTLE LOCK)	217
SWITCH AS-ROCKER (TRANSMISSION SHIFT)	257
SWITCH AS-ROCKER (TURN SIGNAL)	714
SWITCH AS-ROCKER (WARNING BEACON)	213
SWITCH AS-ROCKER (WORK LIGHT)	145
	207
SWITCH AS-ROTARY (24-VOLT) (ALL WHEEL DRIVE CONTROL)	203
SWITCH AS-TEMPERATURE (AIR CONDITIONER)	707
SWITCH AS-TOGGLE (GROUND LEVEL SHUTDOWN)	246
SWITCH AS-WIPER (24-VOLT) (INTERMITTENT)	214
SWITCH GP-ALL WHEEL DRIVE	203
SWITCH GP-BYPASS	205
SWITCH GP-DISCONNECT–BATTERY	206
SWITCH GP-DISCONNECT (BATTERY)	116
SWITCH GP-DISCONNECT (BATTERY)	112
SWITCH GP-LIGHT	207
SWITCH GP-MAGNETIC	208
	209
	210
SWITCH GP-MAGNETIC (24-VOLT) (MAIN RELAY)	124
SWITCH GP-MAGNETIC (24-VOLT) (STARTER RELAY)	124
SWITCH GP-PRESSURE–FUEL	211
SWITCH GP-PRESSURE (HAND METERING UNIT)	561
SWITCH GP-ROADING	212
SWITCH GP-ROCKER	213
SWITCH GP-START (KEY)	217
SWITCH GP-TOGGLE (ENGINE OIL EVAC)	225
SWITCH GP-WIPER	214
SWITCH GP-WIPER (24-VOLT) (FRONT)	217
SWITCH GP-WIPER (24-VOLT) (LEFT)	217
SWITCH GP-WIPER (24-VOLT) (RIGHT)	217
SWITCH-LIQUID LEVEL (WASHER FLUID)	781
SWIVEL GP	580

T

TANDEM & COVER GP	337

INDEX

Name	Page
TANK & MTG GP-HYDRAULIC	582
TANK GP-AIR	458
TANK GP-COOLANT	58
	59
TANK GP-FUEL	93
	95
TANK GP-HYDRAULIC	584
TANK GP-WINDOW WASHER	781
TOOTH GP-RIPPER–3-TEETH	700
TRANSMISSION AR	339
TRIM GP-CAB	782

U

Name	Page
UNIVERSAL JOINT GP	341

V

Name	Page
VALVE & MTG GP-SOLENOID	342
VALVE AS-BYPASS (ENGINE OIL FILTER)	34
VALVE-DRAIN	40
VALVE-DRAIN (ENGINE OIL)	39
VALVE GP-BANK 3–REAR	585
VALVE GP-BANK 4–REAR	587
VALVE GP-BANK 5–FRONT	589
VALVE GP-BANK 5–REAR	591
VALVE GP-BANK 6–FRONT	595
	597
VALVE GP-BANK 6–REAR	593
VALVE GP-BANK 7–FRONT	599
	601
VALVE GP-BANK 8–FRONT	603
	605
VALVE GP-CHECK	607
	630
	632
VALVE GP-CHECK–FUEL	97
	98
VALVE GP-CHECK & RELIEF (BLADE LIFT)	610
VALVE GP-CHECK & RELIEF (BLADE SIDESHIFT)	616
VALVE GP-CHECK & RELIEF (BLADE TIP)	612
VALVE GP-CHECK & RELIEF (PLOW ANGLE)	630
VALVE GP-CHECK & RELIEF (PLOW, BULLDOZER LIFT)	628
VALVE GP-CHECK & RELIEF (RIPPER)	622
VALVE GP-CHECK & RELIEF (WING LIFT)	626
VALVE GP-CHECK & RELIEF (WING TILT)	624
VALVE GP-CHECK (ARTICULATION)	608
VALVE GP-CHECK (BLADE CENTERSHIFT)	614
VALVE GP-CHECK (BLADE LIFT)	610
VALVE GP-CHECK (BLADE SIDESHIFT)	616
VALVE GP-CHECK (BLADE TIP)	612
VALVE GP-CHECK (CIRCLE DRIVE)	618
VALVE GP-CHECK (PLOW, BULLDOZER LIFT)	628
VALVE GP-CHECK (RIPPER)	622
VALVE GP-CHECK (WHEEL LEAN)	620
VALVE GP-CONTROL–ARTICULATION	608
VALVE GP-CONTROL–BLADE CENTERSHIFT	614
VALVE GP-CONTROL–BLADE LIFT	610
VALVE GP-CONTROL–BLADE SIDESHIFT	616
VALVE GP-CONTROL–BLADE TIP	612
VALVE GP-CONTROL–CIRCLE DRIVE	618
VALVE GP-CONTROL–PLOW ANGLE	630
VALVE GP-CONTROL–PLOW, BULLDOZER LIFT	628
VALVE GP-CONTROL–RIPPER	622
VALVE GP-CONTROL–SCARIFIER	632
VALVE GP-CONTROL–WHEEL LEAN	620
VALVE GP-CONTROL–WING LIFT	626
VALVE GP-CONTROL–WING TILT	624
VALVE GP-DIVERTER	634
VALVE GP-DIVERTER (BRAKE ACCUMULATOR)	567
VALVE GP-ETHER STARTING–24-VOLT	215
VALVE GP-MODULATING	343
VALVE GP-RELIEF	344
VALVE GP-RELIEF–BRAKE ACCUMULATOR	635
VALVE GP-RELIEF (BRAKE ACCUMULATOR)	567
VALVE GP-RELIEF (LOAD SENSING SIGNAL)	587
	593
VALVE GP-RELIEF (LOAD SENSING SIGNAL)	585
VALVE GP-RELIEF (PILOT OPERATED)	591
VALVE GP-RELIEF (REFRIGERANT COMPRESSOR)	711
VALVE GP-RELIEF (SECONDARY STEERING)	555
	557
VALVE GP-SHUTTLE–BRAKE ACCUMULATOR	636
VALVE GP-SHUTTLE (HYDRAULIC FAN)	567
VALVE GP-SOLENOID–CENTERSHIFT	637
VALVE GP-SOLENOID–HYDRAULIC FAN	638
VALVE GP-SOLENOID–SECONDARY STEERING	639
VALVE GP-SOLENOID (ARTICULATION)	608
VALVE GP-SOLENOID (BLADE CENTERSHIFT)	614
VALVE GP-SOLENOID (BLADE CUSHION)	570
VALVE GP-SOLENOID (BLADE LIFT)	610
VALVE GP-SOLENOID (BLADE SIDESHIFT)	616
VALVE GP-SOLENOID (BLADE TIP)	612
VALVE GP-SOLENOID (CIRCLE DRIVE)	618

PROOF

INDEX

Name	Page
VALVE GP-SOLENOID (DIFFERENTIAL LOCK)	342
VALVE GP-SOLENOID (PARKING BRAKE)	566
VALVE GP-SOLENOID (PLOW ANGLE)	630
VALVE GP-SOLENOID (PLOW, BULLDOZER LIFT)	628
VALVE GP-SOLENOID (RIPPER)	622
VALVE GP-SOLENOID (SCARIFIER)	632
VALVE GP-SOLENOID (WHEEL LEAN)	620
VALVE GP-SOLENOID (WING LIFT)	626
VALVE GP-SOLENOID (WING TILT)	624
VALVE GP-STEERING	561
VALVE GP-STEERING (MAIN)	559
VALVE GP-TIRE (BASIC)	395
VALVE GP-TIRE (TIRE INFLATION)	395
	396
	397
	398

W

Name	Page
WARNING GP-BACKUP	216
WHEEL & TIRE AR	346
	347
	348
	349
	350
	351
	352
	353
	354
	355
	356
	357
	358
	359
	360
	361
	362
	363
	364
	365
	366
WHEEL & TIRE GP	366
	367
	368
	369
	370
	371
	372
	373
	374
	375
	376
	377
	378
	379
	380
	381
	382
	383
	384
	385
	386
	387
	388
	389
	390
	391
	392
WHEEL AR	393
WHEEL GP	394
	395
	396
	397
	398
WHEEL GP–ALL WHEEL DRIVE	394
WINDOW GP-CAB–FRONT	784
	785
WINDOW GP-CAB–REAR	783
WINDOW GP-CAB–REAR, LH, RH	786
WIPER & WASHER GP-WINDOW	787
WIPER GP-WINDOW	795
WIPER GP-WINDOW–DOOR, LH	793
WIPER GP-WINDOW–REAR	789
WIPER GP-WINDOW–RH, LOWER	792
WIPER GP-WINDOW–SIDE, LH	790
WIPER GP-WINDOW–SIDE, RH	791
WIPER PIVOT GP (RH DOOR)	792
WIRING GP-CAB	217
WIRING GP-CAMERA	223
WIRING GP-ENGINE–OIL EVAC	225
WIRING GP-FRONT	227
	231
WIRING GP-FRONT–LIGHTING	232
WIRING GP-GRADE CONTROL–ACCUGRADE	234
WIRING GP-GRADE CONTROL–CAB	233
WIRING GP-LIGHTING	239
	243
WIRING GP-LIGHTING–ROOF	237
WIRING GP-LIGHTING–TAIL	241
WIRING GP-POWER RECEPTACLE	244
WIRING GP-REAR	246
WIRING GP-REAR LIGHTING	250
WIRING GP-SECONDARY STEERING	252
WIRING GP-SENSOR–ALL WHEEL DRIVE	254

PROOF

INDEX

Désignation	Page

A

ACCOUDOIR (ASS)	721 722
ACCOUPLEMENT DE TORSION (ASS)	290
ACCUMULATEUR - CLIMATISEUR (ASS)	741
ACCUMULATEUR - FREIN	435 436
ACCUMULATEUR (ASS) (AMORTISSEUR DE LAME)	517
ADAPTATEUR DE REMPLIS. RAPIDE DE CARBURANT (ASS)	76 78
ADAPTATEUR DE TURBOCOMPRESSEUR (ASS)	61
*AIR COMPRESSOR AR	4
ALLUME-CIGARE (ENS) (CIGARE, 24V)	218
ALTERNATEUR DE CHARGE (ASS)	102 104 106 108 110
ALTERNATEUR DE CHARGE (ASS)	100
AMORTISSEUR DE VIBRATIONS ET POULIE (ASS)	14
AMPOULE (12V, 24V, 35W)	150 151
AMPOULE (24 VOLTS)	149 173
AMPOULE (24 VOLTS) (POSITION DE CABINE)	161
AMPOULE (24V, 21W) (AMBRE)	159 160
AMPOULE (24V, 21W) (COMPARTIMENT MOTEUR)	166
AMPOULE (24V, 5W) (EFFACEMENT)	159 160
AMPOULE (24V, 70W)	165
AMPOULE (24V, 75/70W) (EFFACEMENT)	159 160
ARBRE D'ENTRAÎNEMENT (ASS)	335
ARBRE D'ENTRÉE (ASS)	336
ARTICULATION DE DIRECTION (ASS)	427
ARTICULATION DE DIRECTION (ASS)	426
ATTELAGE D'ARTICULATION (ASS)	422
ATTELAGE-REMORQUAGE (ASS)	424
AUTOCOLLANT (ACCUMULATEUR HYDRAULIQUE)	517
AUTOCOLLANT (BOBINE D'EXCITATRICE)	146
AUTOCOLLANT (CONTACTEUR D'ALLUMAGE)	146 147
AUTOCOLLANT DE MISE EN GARDE (NE PAS LEVER) (LAME)	664
AUTOCOLLANT DE MISE EN GARDE (RESSORT AMORTISSEUR)	437
AUTOCOLLANT DE MISE EN GARDE (RISQUE D'ÉCRASEMENT, RESTER À L'ÉCART)	250
AUTOCOLLANT (DÉMARRAGE DU MOTEUR)	146
AUTOCOLLANT D'IDENTIFICATION (HUILE HYDRAULIQUE BIODÉGRADABLE)	503
AUTOCOLLANT D'IDENTIFICATION (KLAXON)	714
AUTOCOLLANT D'IDENTIFICATION (RÉFLECTEUR ROND ROUGE)	689
AUTOCOLLANT D'IDENTIFICATION (RIPPER)	130
AUTOCOLLANT-DIRECTION (ACTIVÉ)	469
AUTOCOLLANT (DIRECTION INTÉGRALE)	131
AUTOCOLLANT-DIRECTION (MISE HORS TENSION)	469
AUTOCOLLANT-HUILE MOTEUR (REMPLISSAGE, VIDANGE)	40 45
AUTOCOLLANT-INFORMATION (CLAVETTE) (SYSTÈME DE SÉCURITÉ)	147
AUTOCOLLANT-INFORMATION (*ROPS, FOPS, READ OMM)	710
AUTOCOLLANT-INFORMATION (24 VOLTS)	799
AUTOCOLLANT-MOTEUR (*LOCK, UNLOCK)	40
AUTOCOLLANT-RÉFLECTEUR (JAUNE)	416
AUTOCOLLANT-RÉFLECTEUR (JAUNE) (GARDE-BOUE)	412
AUXILIAIRE DE DÉMARRAGE À L'ÉTHER	196
AUXILIAIRE DE DÉMARRAGE (ASS)	195
AVERTISSEMENT DE PROFIL LONGITUDINAL (ASS)	233 234
AVERTISSEUR (ASS)	99
AVERTISSEUR (ASS) (24 VOLTS)	217
AVERTISSEUR DE RECUL (ASS)	216
AVERTISSEUR DE RECUL (ENS)	216

B

BALAI D'ESSUIE-GLACE (ENS) (AVANT)	787
BALAI D'ESSUIE-GLACE (ENS) (ESSUIE-GLACE ARRIÈRE)	789
BALAI D'ESSUIE-GLACE (ENS) (GAUCHE)	790
BALAI D'ESSUIE-GLACE (ENS) (PORTE, DROITE)	795
BALAI D'ESSUIE-GLACE (ENS) (PORTE, GAUCHE)	793
BALAI D'ESSUIE-GLACE (ENS) (PORTIERE DROITE)	791

* TRADUCTION NON DISPONIBLE AU MOMENT DE LA PUBLICATION

INDEX

Désignation	Page
BALAI D'ESSUIE-GLACE (ENS) (PORTIERE DROITE)	792
BARRE D'ATTELAGE (ASS)	642
BATTERIE (ASS)	112 116 120
BATTERIE (ASS) (12V, SANS ENTRETIEN)	120
BATTERIE (12V, SANS ENTRETIEN)	112 116
BLINDAGE DES CANALISATIONS DES FREINS	420
BLINDAGE INFÉRIEUR (ASS)	419
BLOC-CYLINDRES - COUVERCLE (ASS)	9
BLOC DE BRANCHEMENT (ASS)	124
BOÎTE DE VITESSES (VERSION)	339
BOUCHON DE BLOC-CYLINDRES (ASS)	26
BOUCHON DE GOULOTTE DE REMPLISSAGE (ENS) (HUILE MOTEUR)	11
BOUCHON DE GOULOTTE DE REMPLISSAGE (ENS) (RÉSERVOIR DE CARBURANT)	93 95
BOUCHON DE GOULOTTE DE REMPLISSAGE (ENS) (RÉSERVOIR HYDRAULIQUE)	584
BOUCHON DE MOTEUR (ASS)	27
BOUCHON DE RADIATEUR (ENS) (*6 TO 8-PSI) (DÉCHARGE DE PRESSION)	58
BOUCHON FILETÉ (VIDANGE)	297
BOUCHON FILETÉ (VIDANGE D'HUILE)	499
BRAS D'ESSUIE-GLACE (ASS) (PORTIERE DROITE)	792

C

Désignation	Page
CABINE - REVÊTEMENT (ASS)	740
CABINE (VERSION)	710
CABLAGE - CAPTEUR (ASS)	254
CABLAGE AR (ASS)	246
CABLAGE AV (ASS)	231 232
CABLAGE AV (ASS)	227
CABLAGE DE CABINE (ASS)	217
CÂBLAGE DE CAMÉRA (ASS)	223
CABLAGE DE DIRECTION AUXILIAIRE (ASS)	252
CABLAGE DE MOTEUR (ASS)	225
CABLAGE DE PRISE DE FORCE	244
CABLAGE D'ECLAIRAGE ARRIERE (ASS)	250
CABLAGE D'ÉCLAIRAGE (ASS)	239
CABLAGE D'ÉCLAIRAGE (ASS)	237 243
CABLAGE D'ÉCLAIRAGE (ASS)	241
CACHE-SOUPAPES (ASS)	12 13
CADENAS (ASS) (BOÎTE À OUTILS)	796
CANALISATION DE DIRECTION AUXILIAIRE	555 557
CANALISATIONS D'AIR (ASS)	68 70 71
CANALISATIONS DE CARBURANT (ASS)	84
CANALISATIONS DE CHAUFFAGE (ASS)	745 746
CANALISATIONS DE CLIMATISEUR (ASS)	741 743
CANALISATIONS DE DIRECTION (ASS)	561
CANALISATIONS DE GRAISSAGE (ASS)	425
CANALISATIONS DE POMPE (ASS)	530 534 538 545
CANALISATIONS DE PRISE DE FORCE (ASS)	321
CANALISATIONS DE RÉCHAUFFEUR DE LIQUIDE DE REFROIDISSEMENT	745 746
CANALISATIONS DE TRACTION INTÉGRALE (ASS)	310 319
CANALISATIONS DE VERROUILLAGE DE DÉPORT DE CERCLE (ASS)	504 506
CANALISATIONS D'EAU (ASS)	50 52
CANALISATIONS D'HUILE DE BOÎTE (ASS)	322 326
CANALISATIONS D'HUILE DE TURBOCOMPRESSEUR (ASS)	42
CANALISATIONS D'HUILE MOTEUR (ASS)	38
CANALISATIONS DU FILTRE A CARBURANT (ASS)	86
CANALISATIONS DU FREIN DE MANOEUVRE (ASS)	454 456
CANALISATIONS DU RÉSERVOIR D'AIR (ASS)	452
CANALISATIONS DU RIPPER (ASS)	552 554
CANALISATIONS HYDRAULIQUES (ASS)	508 510 515 517 525
CANALISATIONS HYDRAULIQUES DE VENTILATEUR (ASS)	526
CANALISATIONS-VIDANGE D'HUILE DE MOTEUR (ASS)	40

* TRADUCTION NON DISPONIBLE AU MOMENT DE LA PUBLICATION

PROOF

INDEX

Désignation	Page
CAPTEUR - MOTEUR (ASS)	176
CAPTEUR DE PRESSION (ASS)	180
	181
	182
	183
	184
	185
	186
	187
	188
CAPTEUR DE TEMPERATURE (ASS)	190
	191
	192
	193
CAPTEUR DE TEMPERATURE (ASS) (HUILE DE BOÎTE)	286
CAPTEUR DE VITESSE (ASS)	189
CAPTEUR DE VITESSE (ASS) (*TRANSMISSION OUTPUT, HIGH)	286
CAPTEUR DE VITESSE (ASS) (*TRANSMISSION OUTPUT, LOW)	286
CARENAGE DE MOTEUR (ASS)	406
CARTER DE VOLANT (ASS)	17
CEINTURE DE SECURITE (ASS)	764
CEINTURE DE SECURITE (ASS)	761
CERCLE (ASS)	640
CHAINES (ASS) (TANDEM)	275
CHANGEMENT DE VITESSES AUTOMATIQUE (VERSION)	257
CHÂSSIS AV (ASS)	418
CHÂSSIS ET CARTER (ASS)	399
CLAPET DE DECHARGE (ASS)	344
	635
CLAPET DE DECHARGE (ASS) (ACCUMULATEUR DE FREIN)	567
CLAPET DE DECHARGE (ASS) (COMMANDÉ PAR LE PILOTE)	591
CLAPET DE DECHARGE (ASS) (COMPRESSEUR DE RÉFRIGÉRANT)	711
CLAPET DE DECHARGE (ASS) (DIRECTION AUXILIAIRE)	555
	557
CLAPET DE DECHARGE (ASS) (SIGNAL DE DÉTECTION DE CHARGE)	587
	593
CLAPET DE DECHARGE (ASS) (SIGNAL DE DÉTECTION DE CHARGE)	585
CLAPET DE DECHARGE ET ANTI-RETOUR (ANGLE DE CHARRUE)	630
CLAPET DE DECHARGE ET ANTI-RETOUR (*BLADE SIDESHIFT)	616
CLAPET DE DECHARGE ET ANTI-RETOUR (LEVAGE D'AILERON)	626
CLAPET DE DECHARGE ET ANTI-RETOUR (LEVAGE DE LAME)	610
CLAPET DE DECHARGE ET ANTI-RETOUR (LEVAGE DE LAME DE CHARRUE)	628
CLAPET DE DECHARGE ET ANTI-RETOUR (POINTE DE LAME)	612
CLAPET DE DECHARGE ET ANTI-RETOUR (RIPPER)	622
CLAPET DE DECHARGE ET ANTI-RETOUR (*WING TILT)	624
CLAPET DE RETENUE (ENS)	97
	98
	630
	632
CLAPET DE RETENUE (ENS)	607
CLAPET DE RETENUE (ENS) (ARTICULATION)	608
CLAPET DE RETENUE (ENS) (*BLADE CENTERSHIFT)	614
CLAPET DE RETENUE (ENS) (*BLADE SIDESHIFT)	616
CLAPET DE RETENUE (ENS) (*CIRCLE DRIVE)	618
CLAPET DE RETENUE (ENS) (INCLINAISON DE ROUE)	620
CLAPET DE RETENUE (ENS) (LEVAGE DE LAME)	610
CLAPET DE RETENUE (ENS) (LEVAGE DE LAME DE CHARRUE)	628
CLAPET DE RETENUE (ENS) (POINTE DE LAME)	612
CLAPET DE RETENUE (ENS) (RIPPER)	622
CLÉ (DÉBRANCHEMENT DE BATTERIE)(DÉMARREUR)	206
CLÉ ÉLECTRONIQUE (ENS) (SÉCURITÉ)	147
	194
CLIMATISEUR (ASS)	706
	707
CLIMATISEUR ET MONTAGE (ASS)	703
CLIMATISEUR (VERSION)	705
COFFRE A OUTILS (ASS)	796
COLLECTEUR - COMMANDE (ASS)	567
	571
COLLECTEUR - COMMANDE (ASS)	570
COLLECTEUR (ASS)-HUILE MOTEUR	43
COLLECTEUR D'ÉCHAPPEMENT (ASS)	72
COLONNE DE DIRECTION (ASS)	469
COMMANDE - AIR ET TEMPERATURE (ASS)	717
COMMANDE DE DIFFÉRENTIEL - VERROUILLAGE (ASS)	284
COMMANDE DE DIRECTION (ASS)	469
COMMANDE DE FAISCEAU (ENS) (DIRECTION INTÉGRALE)	131

* TRADUCTION NON DISPONIBLE AU MOMENT DE LA PUBLICATION

PROOF

INDEX

Désignation	Page
COMMANDE DE FAISCEAU (ENS) (HYDRAULIQUE ÉLECTRONIQUE)	134
COMMANDE DE MONITEUR NON PROGRAMMÉE (ASS)	718
COMMANDE DE TRANSMISSION (ASS)	131
COMMANDE D'ÉQUIPEMENT	129
COMMANDE D'EQUIPEMENT (ASS)	130
COMMANDE ÉLECTROHYDRAULIQUE (ASS)	468
COMMANDE ÉLECTROHYDRAULIQUE (ASS) (*WITHOUT AUXILIARY LEVER)	460
	461
	462
	465
COMMANDE ÉLECTROHYDRAULIQUE (ASS) (*WITHOUT AUXILIARY LEVER) (LEVIER)	468
COMMANDE ELECTRONIQUE DE BOITE (ASS) (GROUPE D'INSTRUMENTS)	217
COMMANDE ÉLECTRONIQUE D'ÉQUIPEMENT (ASS)	138
COMMANDE ET MONTAGE - LEVIER (ASS)	714
COMMANDE ET MONTAGE - MOTEUR	128
COMMANDE HYDRAULIQUE DE BOÎTE (ASS)	286
COMMANDE HYDRAULIQUE (VERSION)	460
	461
	462
	463
	464
	465
	466
	467
COMMANDE NON PROGRAMMEE (ASS)	133
	134
	136
COMMANDE NON PROGRAMMEE (ASS) (BOÎTE DE VITESSES)	286
COMMANDE NON PROGRAMMEE (ASS) (ÉQUIPEMENT ASSERVI)	129
COMMANDE NON PROGRAMMEE (ASS) (HYDRAULIQUE ÉLECTRONIQUE)	134
COMMANDE NON PROGRAMMEE (ASS) (MAÎTRE ÉQUIPEMENT)	129
COMMANDE NON PROGRAMMEE (ASS) (MOTEUR)	128
	233
COMMANDE NON PROGRAMMEE (ASS) (SÉCURITÉ)	194
COMPRESSEUR D'AIR (ASS)	5
	6
COMPRESSEUR DE REFRIGERANT (ASS)	711
	712
CONDENSATEUR ET MONTAGE (RÉFRIGÉRANT)	713
CONDUIT ET FILTRE À AIR (ASS)	731
CONTACTEUR DE NIVEAU DE LIQUIDE (LIQUIDE DE LAVE-GLACE)	781
CONTACTEUR DE TRACTION INTÉGRALE (ASS)	203
CONTACTEUR (ENS) (RIPPER)	130
CONTACTEUR MAGNETIQUE (ASS)	208
	209
	210
CONTACTEUR MAGNETIQUE (ASS) (24 VOLTS) (RELAIS DE DÉMARREUR)	124
CONTACTEUR MAGNETIQUE (ASS) (24 VOLTS) (RELAIS PRINCIPAL)	124
CONTACTEUR MAGNETIQUE (ENS) (24 VOLTS) (RÉCHAUFFEUR D'ADMISSION D'AIR)	209
COUDE D'ADMISSION D'AIR (ASS)	67
COURONNE ET DIFFERENTIEL (ASS)	293
COURROIE MULTIPLE	104
	108
	110
COURROIE MULTIPLE (ALTERNATEUR)	106
COUVERCLE - CABINE (ASS)	719
COUVERCLE DE CARTER AV (ASS)	10
	11
COUVERCLE DE COLLECTEUR D'ADMISSION (ASS)	65
	66
COUVERCLE DE COLONNE DE DIRECTION (ASS)	720
COUVERCLE DE DISTRIBUTEUR (ASS)	404
COUVERCLE DE VISITE (ASS)	401
	402
	403
COUVERCLE INFÉRIEUR-DOSSIER (ASS)	752
	753
COUVERCLES D'EXPEDITION (ASS)	291
CROISILLON ET ROULEMENT	341

D

DÉMARREUR ÉLECTRIQUE (ASS)	202
DÉMARREUR ÉLECTRIQUE (ASS)	197
DÉMARREUR ÉLECTRIQUE (ASS)	199
	200
DIFFERENTIEL (ASS)	295
DIODE (24-VOLTS, JAUNE)	469
DIODE (24-VOLTS, ROUGE)	203
DIODE (24-VOLTS, ROUGE)	147
DIODE (24-VOLTS, VERT)	217
DIODE (24-VOLTS, VERT)	203
	469

* TRADUCTION NON DISPONIBLE AU MOMENT DE LA PUBLICATION

PROOF

INDEX

Désignation	Page
DIRECTION AUXILIAIRE (VERSION)	579
DISJONCTEUR (ASS) (20A) (COMMANDE DU MOTEUR)	125
DISJONCTEUR DE SECURITE (ENS) (POSITION DE LA COLONNE DE DIRECTION)	469
DISJONCTEUR (ENS) (105A) (ALTERNATEUR)	124
DISJONCTEUR (ENS) (105A) (ALTERNATEUR NO 2)	124
DISJONCTEUR (ENS) (15A) (COMMANDE DE BOÎTE DE VITESSES)	125
DISJONCTEUR (ENS) (15A) (FEUX DE ROUTE)	124
DISJONCTEUR (ENS) (15A) (INTERRUPTEUR À CLÉ)	125
DISJONCTEUR (ENS) (80A) (CHARGE)	124
DISJONCTEUR (ENS) (80A) (PRINCIPAL)	124
DISPOSITIF DE VIDANGE RAPIDE D'HUILE (ASS)	45
DISPOSITIF D'EVACUATION DES VAPEURS DE CARTER	36
DISTRIBUTEUR (ASS)	608
DISTRIBUTEUR (ASS)	610
	612
	614
	616
	618
	620
	622
	624
	626
	628
	630
	632
DISTRIBUTEUR TRIPLE ÉLÉMENT (ASS)	585
DISTRIBUTEUR 4 ÉLÉMENTS (ASS)	587
DISTRIBUTEUR 5 ÉLÉMENTS (ASS)	589
	591
DISTRIBUTEUR 6 ÉLÉMENTS (ASS)	593
	595
	597
DISTRIBUTEUR 7 ÉLÉMENTS (ASS)	599
	601
DISTRIBUTEUR 8 ÉLÉMENTS (ASS)	603
	605
DOUILLE DE BARRE D'ACCOUPLEMENT (ASS) (DROITE)	427
DOUILLE DE BARRE D'ACCOUPLEMENT (ASS) (DROITE) (DIRECTION)	426
DOUILLE DE BARRE D'ACCOUPLEMENT (ASS) (GAUCHE)	427
DOUILLE DE BARRE D'ACCOUPLEMENT (ASS) (GAUCHE) (DIRECTION)	426

E

Désignation	Page
EAU DES CHEMISES - RECHAUFFEUR (ASS)	141
EAU DES CHEMISES - RECHAUFFEUR (ASS)	140
ÉCLAIRAGE - FEUX DE ROUTE (ASS)	173
ÉCLAIRAGE - PROJECTEURS (ASS)	167
	168
	169
	170
	171
	172
ECLAIRAGE AR (ASS)	166
ÉCRAN (DIRECTION)	571
ÉCRAN (FREIN, VENTILATEUR HYDRAULIQUE)	567
ÉCRAN (GAVAGE)	268
ÉCRAN MAGNÉTIQUE (ASS)	334
ÉCRAN MAGNÉTIQUE (BOÎTE DE VITESSES)	334
ÉLECTRONIQUE DE TRANSMISSION (ASS)	139
ÉLECTRONIQUE-MONITEUR (ASS)	139
ÉLÉMENT DE FILTRE À AIR (ENS) (PRINCIPAL)	64
ÉLÉMENT DE FILTRE À AIR (ENS) (SECONDAIRE)	64
ÉLÉMENT DE FILTRE À HUILE (ENS) (GRANDE EFFICACITÉ) (BOÎTE DE VITESSES)	303
ÉLÉMENT DE FILTRE À HUILE (ENS) (GRANDE EFFICACITÉ) (RÉSERVOIR HYDRAULIQUE)	305
ÉLÉMENT DE FILTRE À HUILE HYDRAULIQUE (PRINCIPAL)	502
ÉLÉMENT DE FILTRE À HUILE HYDRAULIQUE (TRACTION INTÉGRALE)	310
ÉLÉMENT DU RÉCHAUFFEUR D'EAU DES CHEMISES (ENS) (120-VOLT, 1000-WATT)	141
ÉLÉMENT DU RÉCHAUFFEUR D'EAU DES CHEMISES (ENS) (240V, 1000W)	140
EMBOUT (ASS)	647
	648
	649
	650
	651
EMBOUT D'EXTRÉMITÉ (ASS)	651
EMBRAYAGE DE BOÎTE DE VITESSES (ASS)	276
	278
	280
	282
ENTRAÎNEMENT DE CERCLE (ASS)	499
ENTRAÎNEMENT DE CHAÎNE (ASS)	275

* TRADUCTION NON DISPONIBLE AU MOMENT DE LA PUBLICATION

PROOF

INDEX

Désignation	Page
ENTRAÎNEMENT DE ROUE (ASS)	298
ENTRETIEN DE LA MACHINE (ASS)	194
ENTRETIEN DE LA TRANSMISSION (ASS)	139
ENTRETIEN DE LA TRANSMISSION (ASS) (DIRECTION INTÉGRALE)	139
ENTRETIEN D'ÉQUIPEMENT (ASS)	138
ENTRETIEN DU MONITEUR (ASS) (*EMS CONTROL PANEL)	139
ÉQUIPEMENT POUR DÉPLACEMENT ROUTIER (VERSION)	2
ESSIEU AR (ASS)	266
ESSIEU AV (ASS)	260
	262
	264
	265
ESSIEU AV (VERSION)	257
	258
	259
	260
ESSUIE-GLACE (ASS)	789
	790
	791
	792
	793
	795
ESSUIE-GLACE ET LAVE-GLACE	787

F

Désignation	Page
FAISCEAU ARRIÈRE (ENS) (CHASSIS)	246
FAISCEAU ARRIÈRE (ENS) (CLIMATISEUR)	246
FAISCEAU ARRIÈRE (ENS) (POMPE HYDRAULIQUE)	246
FAISCEAU-BOÎTE DE TRANSMISSION	286
FAISCEAU DE BOÎTE DE DÉRIVATION (ENS)	124
FAISCEAU DE CABLES - CAPTEUR (ENS)	227
FAISCEAU DE CABLES - CAPTEUR (ENS) (COMMANDE DE PROFIL LONGITUDINAL)	234
FAISCEAU DE CABLES - CAPTEUR (ENS) (COMMANDE DE TRACTION INTÉGRALE)	254
FAISCEAU DE CABLES - CAPTEUR (ENS) (VITESSE)	254
FAISCEAU DE CABLES - CAPTEUR (ENS) (VITESSE DE BOÎTE)	286
FAISCEAU DE CABLES (ENS) (CAVALIER) (CAPTEUR DE CARBURANT)	81
FAISCEAU DE CABLES (ENS) (SÉCURITÉ)	146
FAISCEAU DE CHÂSSIS AVANT (ENS)	232
FAISCEAU DE CHÂSSIS (ENS) (SYSTÈME DE SÉCURITÉ DE LA MACHINE)	147
FAISCEAU DE COMMANDES (ENS)	233
FAISCEAU DE CONDENSEUR (ENS) (RÉFRIGÉRANT)	713
FAISCEAU DE DIRECTION (ENS)	252
FAISCEAU DE RADIO (ENS)	757
FAISCEAU DE RÉCHAUFFEUR (ENS)	707
FAISCEAU DE RÉSERVOIR DE CARBURANT (ENS)	227
FAISCEAU DE SOLÉNOÏDE (ENS) (TRACTION INTÉGRALE)	254
FAISCEAU DE SOUPAPE (ENS) (COMPRESSEUR PNEUMATIQUE DE SIÈGE)	777
	779
FAISCEAU D'ÉCLAIRAGE ARRIÈRE (ENS)	250
FAISCEAU D'ÉCLAIRAGE ARRIÈRE (ENS)	241
FAISCEAU D'ÉCLAIRAGE ARRIÈRE (ENS) (*REGISTRATION PLATE)	173
FAISCEAU D'ÉCLAIRAGE AVANT (ENS)	155
	157
FAISCEAU D'ÉCLAIRAGE (ENS)	237
FAISCEAU D'ÉCLAIRAGE (ENS)	239
FAISCEAU D'OUTIL DE TRAVAIL (ENS)	234
FAISCEAU (ENS) (REFROIDISSEUR D'HUILE DE BOÎTE)	289
FILTRE - RENIFLARD (RÉSERVOIR HYDRAULIQUE)	582
FILTRE - SÉPARATEUR D'EAU ET DE CARBURANT (ENS) (PRINCIPAL)	83
FILTRE A AIR (ASS)	63
	64
FILTRE À AIR (*CAB HEATER, AIR CONDITIONER)	731
FILTRE À CARBURANT	93
	95
FILTRE A CARBURANT (ASS)	81
FILTRE A CARBURANT (ENS)	81
FILTRE A HUILE (ASS)	303
	305
	502
FILTRE A HUILE (ASS) (TRACTION INTÉGRALE)	310
FILTRE A HUILE (ENS) (*CAB HEATER, AIR CONDITIONER)	731
FILTRE À HUILE ET MONTAGE (ASS)	300
	302
FILTRE À HUILE MOTEUR (ASS)	34
FILTRE A HUILE MOTEUR (ENS)	34
FILTRE (BOÎTE DE VITESSES)	268
FILTRE DE SÉPARATEUR D'EAU ET DE CARBURANT (ASS)	83
FILTRE (EAU) (POMPE)	54
FREIN DE MANOEUVRE - COMMANDE (ASS)	443

* TRADUCTION NON DISPONIBLE AU MOMENT DE LA PUBLICATION

PROOF

INDEX

Désignation	Page
	445
	447
FREIN DE MANOEUVRE (ASS)	439
	441
FREIN DE STATIONNEMENT (ASS)	437
FUSIBLE (10A)	217
FUSIBLE (15A)	217
FUSIBLE (15A)	707
FUSIBLE (30A)	217

G

GARDE-BOUE ET SUPPORT (ASS)	410
	412
GARDE-BOUE ET SUPPORT (ASS)	414
	416
GARNITURE POUR CABINE (ASS)	782
GOULOTTE DE REMPLISSAGE D'HUILE DE TRANSMISSION	299
GRAISSEUR HYDRAULIQUE (ASS)	284
GROUPE DE CONTROLE (*MESSENGER)	718
GROUPE DE MOTEUR A PISTONS	328
GROUPE DE MOTEUR A PISTONS (TRACTION INTÉGRALE)	328
GROUPE D'ORIENTATION	580

H

HUILE MOTEUR - CARTER (ASS)	25

I

INDICATEUR DE NIVEAU (TEMPÉRATURE)	782
INSONORISATION (ASS)	774
INTERRUPTEUR - BOUTON-POUSSOIR (ENS) (KLAXON)	714
INTERRUPTEUR - DÉPLACEMENT ROUTIER (ASS)	212
INTERRUPTEUR - DÉRIVATION (ASS)	205
INTERRUPTEUR À BASCULE (ASS)	213
INTERRUPTEUR À BASCULE (ASS) (*ENGINE OIL EVAC)	225
INTERRUPTEUR À BASCULE (ENS) (ARRÊT DEPUIS LE SOL)	246
INTERRUPTEUR BALANCIER (ENS) (AMORTISSEUR DE LAME)	217
INTERRUPTEUR BALANCIER (ENS) (CHANGEMENT DE VITESSES)	257
INTERRUPTEUR BALANCIER (ENS) (CLIGNOTANT DE DIRECTION)	714
INTERRUPTEUR BALANCIER (ENS) (DIRECTION AUXILIAIRE)	217
INTERRUPTEUR BALANCIER (ENS) (FEUX DE DÉTRESSE) (FEUX DE DÉTRESSE)	217
INTERRUPTEUR BALANCIER (ENS) (FEUX DE MARCHE)	207
INTERRUPTEUR BALANCIER (ENS) (FEUX DE MARCHE)	145
INTERRUPTEUR BALANCIER (ENS) (FEUX DE ROUTE)	212
INTERRUPTEUR BALANCIER (ENS) (FREIN DE STATIONNEMENT)	217
INTERRUPTEUR BALANCIER (ENS) (GYROPHARE)	213
INTERRUPTEUR BALANCIER (ENS) (MARCHE, ARRÊT DE CLIMATISEUR)	717
INTERRUPTEUR BALANCIER (ENS) (PHARES AVANT, FEUX ARRIÈRE)	217
INTERRUPTEUR BALANCIER (ENS) (PROJECTEUR)	237
INTERRUPTEUR BALANCIER (ENS) (RACCORD À DÉBRANCHEMENT RAPIDE)	217
INTERRUPTEUR BALANCIER (ENS) (RÉGULATEUR DE COMMADNE DE VITESSE)	217
INTERRUPTEUR BALANCIER (ENS) (RÉTROVISEURS À CHAUFFAGE INTÉGRÉ)	750
INTERRUPTEUR BALANCIER (ENS) (VERROUILLAGE D'ÉQUIPEMENT)	217
INTERRUPTEUR BALANCIER (ENS) (VERROUILLAGE DU PAPILLON DES GAZ)	217
INTERRUPTEUR BALANCIER (ENS) (VITESSE DU VENTILATEUR SOUFFLANT)	734
INTERRUPTEUR DE DÉMARRAGE (ASS) (CLAVETTE)	217
INTERRUPTEUR D'ÉCLAIRAGE (ASS)	207
INTERRUPTEUR D'ESSUIE-GLACE (ASS)	214
INTERRUPTEUR D'ESSUIE-GLACE (ASS) (24 VOLTS) (AVANT)	217
INTERRUPTEUR D'ESSUIE-GLACE (ASS) (24 VOLTS) (DROIT)	217
INTERRUPTEUR D'ESSUIE-GLACE (ASS) (24 VOLTS) (GAUCHE)	217
INTERRUPTEUR D'ESSUIE-GLACE (24 VOLTS) (INTERMITTENT)	214
INTERRUPTEUR ROTATIF (ENS) (24 VOLTS) (COMMANDE DE TRACTION INTÉGRALE)	203
INTERRUPTEUR SPHÉRIQUE (ENS) (INDICATEUR DE DÉPORT DE CERCLE)	227
ISOLATION DE CABINE (ASS)	739

* TRADUCTION NON DISPONIBLE AU MOMENT DE LA PUBLICATION

INDEX

Désignation	Page
J	
JANTE (ASS)	394 395 396 397 398
JAUGE D'HUILE MOTEUR (BAIONNETTE) (ASS)	37
JAUGE D'HUILE MOTEUR (BAÏONNETTE) (ENS) (NIVEAU D'HUILE DE TRANSMISSION)	299
JOINT DE VILEBREQUIN (ASS)	29
JOINT INTÉGRÉ	585 587 589 591 593 595 597 599 601 603 605
JOINT PLAT (BOÎTIER DE RÉGULATEUR DE TEMPÉRATURE)	50
JOINT UNIVERSEL (ASS)	341
K	
KIT D'AMORTISSEUR (SIÈGE)	777 779
KIT D'ATTACHE (SIÈGE)	777 779
KIT DE BAGUE (DÉMARREUR)	200
KIT DE BALAIS (DÉMARREUR)	197 200
KIT DE BLOC COULISSANT (SIÈGE)	767 769
KIT DE BLOC COULISSANT (SIEGE A SUSPENSION)	768
KIT DE BORNE (ALTERNATEUR)	100 102
KIT DE BOULONNERIE (ALTERNATEUR)	100 102
KIT DE BOULONNERIE (DÉMARREUR)	197
KIT DE BOUTON (REGLAGE DE HAUTEUR) (SIEGE A SUSPENSION)	735
KIT DE BROCHE DE DÉMARREUR	197
KIT DE CHAPEAU DE FILTRE (RÉSERVOIR DE CARBURANT)	93 95
KIT DE COUSSINET (ALTERNATEUR)	100 102
KIT DE COUSSINET (DÉMARREUR)	197
KIT DE COUSSINET (SIEGE A SUSPENSION)	736
KIT DE JOINT DE DÉMARREUR	197
KIT DE JOINTS (ACCUMULATEUR DE FREIN)	435 436
KIT DE JOINTS (ACCUMULATEUR HYDRAULIQUE)	519
KIT DE JOINTS (CLAPET DE DÉCHARGE)	587 591 635
KIT DE JOINTS (CLAPET DE DÉCHARGE) (SIGNAL DE DÉTECTION DE CHARGE)	585 593
KIT DE JOINTS (CLAPET DE RETENUE) (ANGLE DE CHARRUE)	630
KIT DE JOINTS (CLAPET DE RETENUE) (ARTICULATION)	608
KIT DE JOINTS (CLAPET DE RETENUE) (*BLADE CENTERSHIFT)	614
KIT DE JOINTS (CLAPET DE RETENUE) (*BLADE SIDESHIFT)	616
KIT DE JOINTS (CLAPET DE RETENUE) (*CIRCLE DRIVE)	618
KIT DE JOINTS (CLAPET DE RETENUE) (INCLINAISON DE ROUE)	620
KIT DE JOINTS (CLAPET DE RETENUE) (LEVAGE D'AILERON)	626
KIT DE JOINTS (CLAPET DE RETENUE) (LEVAGE DE LAME)	610
KIT DE JOINTS (CLAPET DE RETENUE) (LEVAGE DE LAME DE CHARRUE)	628
KIT DE JOINTS (CLAPET DE RETENUE) (POINTE DE LAME)	612
KIT DE JOINTS (CLAPET DE RETENUE) (RIPPER)	622
KIT DE JOINTS (CLAPET DE RETENUE) (SCARIFICATEUR)	632
KIT DE JOINTS (CLAPET DE RETENUE) (*WING TILT)	624
KIT DE JOINTS (DIRECTION)	639
KIT DE JOINTS (ÉLECTROVANNE)	637
KIT DE JOINTS (MOTEUR)	572
KIT DE JOINTS (SOUPAPE DE DÉRIVATION)	567
KIT DE JOINTS (SOUPAPE DE DÉRIVATION) (DÉBIT DE LIQUIDE DE VENTILATEUR HYDRAULIQUE)	634
KIT DE JOINTS (VANNE-PILOTE)	567
KIT DE JOINTS (VÉRIN DE RIPER)	489
KIT DE LEVIER (DÉMARREUR)	200
KIT DE PARE-CHOCS (RÉGLAGE DU POIDS) (SIEGE A SUSPENSION)	736
KIT DE POUSSOIR (SIEGE A SUSPENSION)	736

* TRADUCTION NON DISPONIBLE AU MOMENT DE LA PUBLICATION

PROOF

INDEX

Désignation	Page
KIT DE RÉPARATION (CAPTEUR DE NIVEAU DE CARBURANT)	93, 95
KIT DE RESSORTS (REGLAGE DE HAUTEUR) (SIEGE A SUSPENSION)	735
KIT DE RESSORTS (SIEGE A SUSPENSION)	735
KIT DE RONDELLE (DÉMARREUR)	197
KIT DE SOUPAPE PNEUMATIQUE (SIÈGE)	777, 779
KIT DE VERIFICATION DU REGULATEUR (COMPRESSEUR D'AIR)	458
KIT D'INDICATEUR (RÉGLAGE DU POIDS) (SIEGE A SUSPENSION)	736
KIT D'INDICATEUR (SIÈGE)	777, 779
KIT D'ISOLANT (DÉMARREUR)	200
LAME - BULLDOZER (ASS)	655
LAME - BULLDOZER (ASS)	659, 660, 664
LAME (ASS)	652, 653, 654
LAME DE COUPE (ASS)	671, 672, 673
LAMPE - CLIGNOTANT DE DIRECTION (ASS)	162
LAMPE - CLIGNOTANT DE DIRECTION (ASS) (STOP, ARRIÈRE, CLIGNOTANT)	250
LAMPE - GYROPHARE (ASS)	163, 164, 165
LAMPE - PHARE (ASS)	150, 151, 152
LAMPE - PHARE (ASS)	153, 154
LAMPE - PHARE ET CLIGNOTANT	155, 157, 159, 160
LAMPE - PHARE ET CLIGNOTANT (24V, DROITE)	157
LAMPE - PHARE ET CLIGNOTANT (24V, GAUCHE)	157
LAMPE (ENS) (ROUGE, VERT, TÉMOIN LUMINEUX, 12V)	146
LAMPE (ENS) (24 VOLTS)	225, 740
LAMPE HALOGÈNE (24V, 65W)	152, 153
LAMPE HALOGÈNE (24V, 65W) (LAME)	154
LAMPE-PLAQUE D'IMMATRICULATION (ASS)	173
LENTILLE (GYROPHARE) (AMBRE)	163
LEVAGE - LAME (ASS)	679
*LIGHT-INDICATOR (VIDANGE D'HUILE RAPIDE)	225
*LINES GP-ENGINE OIL DRAIN	39
*LINES GP-HYDRAULIC	524
*LINES GP-STEERING	559
LOGICIEL - ÉLECTROMODULE (ASS) (*EMS CONTROL PANEL)	139
LOGICIEL - MACHINE (ENS)	194
LOGICIEL - TRANSMISSION (ENS)	139
LOGICIEL - TRANSMISSION (ENS) (AUTOSHIFT)	257
LOGICIEL - TRANSMISSION (ENS) (DIRECTION INTÉGRALE)	139
LOGICIEL-ÉQUIPEMENT (ASS)	138
*MANIFOLD GP-CONTROL	566
MANOCONTACT	211
MANOCONTACT (ENS) (DÉRIVATION DE FILTRE À HUILE POUR TRACTION INTÉGRALE)	310
MANOCONTACT (ENS) (FILTRE DE DÉRIVATION)	502
MANOCONTACT (*HAND METERING UNIT)	561
MARCHEPIED (ASS)	431
MONTAGE D'AILERON CHASSE-NEIGE (ASS)	686, 687
MONTAGE D'ALTERNATEUR (ASS)	20
MONTAGE DE COMMANDE DE PROFIL LONGITUDINAL (ASS)	144
MONTAGE DE FILTRE À CARBURANT (ASS)	88
MONTAGE DE LAME	682
MONTAGE DE MOTEUR ET BOÎTE (ASS)	21
MONTAGE DE RADIO (ASS)	738
MONTAGE DE RIPPER (ASS)	684
MONTAGE DE SOUPAPE (ASS)	429
MONTAGE D'ECLAIRAGE	145
MONTAGE D'ENTRAÎNEMENT DE VENTILATEUR (ASS)	23
MONTAGE D'ESSIEU (ASS)	428
MONTAGE-SÉCURITÉ (ASS)	147
MONTAGE-SÉCURITÉ (ASS)	146
MOTEUR À ENGRENAGES (ASS) (REFROIDISSEMENT DU RADIATEUR)	47

* TRADUCTION NON DISPONIBLE AU MOMENT DE LA PUBLICATION

INDEX

Désignation	Page
MOTEUR D'ESSUIE-GLACE (ASS)	751
MOTEUR D'ESSUIE-GLACE (ASS) (ARRIÈRE)	789
MOTEUR D'ESSUIE-GLACE (ASS) (DROITE)	795
MOTEUR D'ESSUIE-GLACE (ASS) (GAUCHE)	790
MOTEUR D'ESSUIE-GLACE (ASS) (PORTE, GAUCHE)	793
MOTEUR D'ESSUIE-GLACE (ASS) (PORTIERE DROITE)	791
MOTEUR ELECTRIQUE (ASS)	174
MOTEUR ET VENTILATEUR (ASS)	47
MOTEUR HYDRAULIQUE (ASS)	572
*MOUNTING GP-GRADE CONTROL	645 683

N

NIVELEUSE - VERSION DE BASE	1

O

OEILLETONS DE LEVAGE MOTEUR (ASS)	19

P

PALONNIER - GROUPE DE COMMANDE (ASS) (DROITE)	714
PALONNIER - GROUPE DE COMMANDE (ASS) (GAUCHE)	714
PALONNIER - GROUPE DE COMMANDE (ASS) (POSTE DE CONDUITE)	468
PIGNON AR (ASS)	16
PIGNONNERIE (ASS) (DROITE) (TRACTION INTÉGRALE)	298
PIGNONNERIE (ASS) (GAUCHE) (TRACTION INTÉGRALE)	298
PIVOT D'ESSUIE-GLACE (ASS) (PORTIERE DROITE)	792
PLAFONNIER (ASS)	149
PLAQUE DE NUMÉRO DE SÉRIE (BOITE DE VITESSE)	268
PLAQUE DE POUSSÉE (ASS)	646
PLAQUE D'INSTRUCTIONS (BATTERIE) (INTERRUPTEUR DE DÉCONNECTION)	112 116 120
PLAQUE D'INSTRUCTIONS (CLIMATISEUR)	706
PLAQUE (IDENTIFICATION) (CAT)	655 660 664
PLAQUE (IDENTIFICATION) (POIDS MAXIMUM)	2
PLAQUE (IDENTIFICATION) (*WORK TOOL INFORMATION)	659 698 699
PLAQUE SIGNALÉTIQUE (ASS)	797
PLAQUES SIGNALETIQUES ET AUTOCOLLANTS (ASS)	798 799
PNEU - GROUPE DE VALVE (FONDAMENTAL)	395
PNEU - GROUPE DE VALVE (GONFLAGE DES PNEUS)	395 396 397 398
POIGNÉE DE PORTE (ASS)	723 726
POMPE A EAU (ASS)	54 55
POMPE A ENGRENAGES (ASS)	332
POMPE A PISTONS (ASS) (ÉQUIPEMENT)	578
POMPE A PISTONS (ASS) (FREIN, VENTILATEUR HYDRAULIQUE)	577
POMPE A PISTONS (ASS) (TRACTION INTÉGRALE)	330
POMPE D'ALIMENTATION DE CARBURANT ET FILTRE (ASS)	91
POMPE D'ALIMENTATION EN CARBURANT (ASS)	90
POMPE D'AMORÇAGE DE CARBURANT ET FILTRE PRINCIPAL	89
POMPE DE FAISCEAU (ENS) (CARBURANT)	246
POMPE DE LA DIRECTION SECONDAIRE	575
POMPE DE REGULARISATION DE DEBIT (ASS) (DIRECTION)	469
POMPE ET MONTAGE - ENTRAÎNEMENT ÉLECTRIQUE (ASS)	574 575 576
POMPE ET MONTAGE - PIGNON	331
POMPE ET MONTAGE - PISTON (ASS)	578
POMPE ET MONTAGE DE TRACTION INTÉGRALE (ASS)	330
POMPE ET MONTAGE-VENTILATEUR HYDRAULIQUE	577
POMPE ET MOTEUR (ASS) (QUICK EVAC, DIRECTION SECONDAIRE)	576
POMPE ET MOTEUR (ASS) (VIDANGE D'HUILE RAPIDE)	574
PORTIÈRE DE CABINE (ASS)	723 726 729
POULIE-ROUE AVANT (ASS)	28

* TRADUCTION NON DISPONIBLE AU MOMENT DE LA PUBLICATION

PROOF

INDEX

Désignation	Page
PREFILTRE (ASS)	75
PREFILTRE (ASS) (TURBINE)	75
PRISE (ASS)	175
PROTECTION DE VENTILATEUR (ASS) (REFROIDISSEMENT DU RADIATEUR)	47
PROTECTION DU RÉSERVOIR DE CARBURANT (ASS)	421
PUISSANCE DE FAISCEAU (ENS) (RADIO PRODUCT LINK)	142

R

RADIATEUR (ASS)	56
RADIATEUR-CORPS (ENS)	56
RADIO -COMMUNICATION (ASS) (PRODUCT LINK 121SR)	142
RADIO (ASS)	757
RADIO (ASS) (AM/FM/WB)	757
RALLONGE DE LAME (ASS)	674 675 676 678
RALLONGE DU DOSSIER DE SIEGE (TOILE)	761 764
RÉDUCTEURS (ASS)	306 308
REFROIDISSEMENT (VERSION)	46
REFROIDISSEUR D'ADMISSION D'AIR (ASS)	62
REFROIDISSEUR D'HUILE DE BOÎTE (ASS)	288 289
REFROIDISSEUR D'HUILE HYDRAULIQUE (ASS)	471
REGLAGE DE SIEGE (ASS)	701
REGULATEUR DE LA TENSION (ENS) (24 VOLTS) (ALTERNATEUR)	100 102
REGULATEUR DE PRESSION DE CARBURANT (ASS)	92
RÉGULATEUR (ENS) (PRESSION DE CARBURANT)	92
RÉGULATEUR-PRESSION (POMPE D'ALIMENTATION EN CARBURANT)	90
RELAIS (ENS) (12 VOLTS) (SÉCURITÉ)	146
RELAIS (ENS) (24 VOLTS)	217
RELAIS (ENS) (24 VOLTS) (AVERTISSEUR DE RECUL)	247
RELAIS (ENS) (24 VOLTS) (DIRECTION AUXILIAIRE)	252
RELAIS (ENS) (24 VOLTS) (*ENGINE OIL EVAC)	225
RELAIS (ENS) (24 VOLTS) (FEUX DE ROUTE)	212
RELAIS (ENS) (24 VOLTS) (POMPE À CARBURANT)	247
RELAIS (ENS) (24 VOLTS) (SÉCURITÉ)	146
RENIFLARD (ASS)	33
RENIFLARD (ENS) (CARTER)	33
RENIFLARD (ENS) (RÉSERVOIR D'HUILE DE TRANSMISSION)	299
RENIFLARD (ENS) (TANDEM)	337
REPÈRE DE LAMPE (ASS)	161
RÉSERVOIR - LAVE-GLACE (ASS)	781
RÉSERVOIR DE CARBURANT - BOULONNERIE (ASS)	79
RÉSERVOIR DE CARBURANT (ASS)	93 95
RÉSERVOIR DU LIQUIDE DE REFROIDISSEMENT (ASS)	58
RÉSERVOIR DU LIQUIDE DE REFROIDISSEMENT (ASS)	59
RÉSERVOIR HYDRAULIQUE (ASS)	584
RÉSERVOIR HYDRAULIQUE ET MONTAGE (ASS)	582
RÉSERVOIR PNEUMATIQUE (ASS)	458
RÉTROVISEUR (ASS)	747 748 749 750
RIPPER (ASS)	689
RIPPER (VERSION)	688
ROBINET DE BATTERIE (ASS)	206
ROBINET DE BATTERIE (ASS) (BATTERIE)	112 116
ROTATION DE LA ROUE DU VENTILATEUR SOUFFLANT (ARRÊT MOTEUR)	799
ROTATION DE LA ROUE DU VENTILATEUR SOUFFLANT (*BELT ROUTING)	104 106 108 110
ROTATION DE LA ROUE DU VENTILATEUR SOUFFLANT (ENTRÉE D'EAU, SORTIE D'EAU)	745
ROTATION DE LA ROUE DU VENTILATEUR SOUFFLANT (ESSUIE-GLACE)	740
ROTATION DE LA ROUE DU VENTILATEUR SOUFFLANT (LIRE LE GUIDE D'UTILISATION ET D'ENTRETIEN)	146
ROTATION DE LA ROUE DU VENTILATEUR SOUFFLANT (LIRE LE GUIDE D'UTILISATION ET D'ENTRETIEN)	147
ROTATION DE LA ROUE DU VENTILATEUR SOUFFLANT (RÉGLAGE DU SIÈGE)	775 777 779

* TRADUCTION NON DISPONIBLE AU MOMENT DE LA PUBLICATION

INDEX

Désignation	Page
ROTATION DE LA ROUE DU VENTILATEUR SOUFFLANT (ROBINET DE VIDANGE D'HUILE MOTEUR)	39
ROUE - GROUPE DE MONTAGE	329
ROUE ET PNEU (ASS)	366
	367
	368
	369
	370
	371
	372
	373
	374
	375
	376
	377
	378
	379
	380
	381
	382
	383
	384
	385
	386
	387
	388
	389
	390
	391
	392
ROUE ET PNEU (VERSION)	346
	347
	348
	349
	350
	351
	352
	353
	354
	355
	356
	357
	358
	359
	360
	361
	362
	363
	364
	365
	366
ROUE (VERSION)	393

S

Désignation	Page
SCARIFICATEUR (ASS)	692
	695
	698
	699
SCARIFICATEUR (ASS) (HYDRAULIQUE)	699
SCARIFICATEUR (VERSION)	691
SIÈGE - COMPRESSEUR D'AIR (ASS)	702
SIÈGE (ASS)	761
	762
	764
	765
SIÈGE AVEC SUSPENSION (ASS)	767
	775
	777
SIÈGE AVEC SUSPENSION (ASS)	779
SIÈGE AVEC SUSPENSION (ASS)	768
	769
SIÈGE ET MONTAGE (ASS)	759
	760
SIÈGE INCLINABLE (ASS)	758
SILENCIEUX ET MONTAGE (ASS)	73
SOLÉNOÏDE (ENS) (24 VOLTS) (DÉMARREUR)	197
	200
SONDE - CIRCUIT DE CARBURANT	178
	179
SONDE - CIRCUIT DE CARBURANT (VÉRIN DE DIRECTION)	493
	495
SOUPAPE - SOLÉNOÏDE (ASS)	637
	638
	639
SOUPAPE - SOLÉNOÏDE (ASS) (AMORTISSEUR DE LAME)	570
SOUPAPE - SOLÉNOÏDE (ASS) (ANGLE DE CHARRUE)	630
SOUPAPE - SOLÉNOÏDE (ASS) (ARTICULATION)	608
SOUPAPE - SOLÉNOÏDE (ASS) (*BLADE CENTERSHIFT)	614
SOUPAPE - SOLÉNOÏDE (ASS) (*BLADE SIDESHIFT)	616
SOUPAPE - SOLÉNOÏDE (ASS) (*CIRCLE DRIVE)	618
SOUPAPE - SOLÉNOÏDE (ASS) (FREIN DE STATIONNEMENT)	566
SOUPAPE - SOLÉNOÏDE (ASS) (INCLINAISON DE ROUE)	620
SOUPAPE - SOLÉNOÏDE (ASS) (LEVAGE D'AILERON)	626
SOUPAPE - SOLÉNOÏDE (ASS) (LEVAGE DE LAME)	610

* TRADUCTION NON DISPONIBLE AU MOMENT DE LA PUBLICATION

PROOF

INDEX

Désignation	Page
SOUPAPE - SOLÉNOÏDE (ASS) (LEVAGE DE LAME DE CHARRUE)	628
SOUPAPE - SOLÉNOÏDE (ASS) (POINTE DE LAME)	612
SOUPAPE - SOLÉNOÏDE (ASS) (RIPPER)	622
SOUPAPE - SOLÉNOÏDE (ASS) (SCARIFICATEUR)	632
SOUPAPE - SOLÉNOÏDE (ASS) (VERROUILLAGE DE DIFFÉRENTIEL)	342
SOUPAPE - SOLÉNOÏDE (ASS) (*WING TILT)	624
SOUPAPE DE DÉMARRAGE À L'ÉTHER (ASS)	215
SOUPAPE DE DERIVATION (ASS)	634
SOUPAPE DE DERIVATION (ASS) (ACCUMULATEUR DE FREIN)	567
SOUPAPE DE DIRECTION (ASS)	561
SOUPAPE DE DIRECTION (ASS) (PRINCIPAL)	559
SOUPAPE DE MODULATION (ASS)	343
SOUPAPE DE VIDANGE	40
SOUPAPE DE VIDANGE (HUILE MOTEUR)	39
SOUPAPE (ENS)-DÉRIVATION (FILTRE A HUILE MOTEUR)	34
SOUPAPE ET MONTAGE - SOLÉNOÏDE	342
SUPPORT - COMMANDE (ASS)	770 772
SUPPORT DE FILTRE À HUILE (ASS)	31 32
SUPPORT DE MOTEUR (ASS)	30
SUPPORT DE RADIATEUR (ASS)	433
SUPPORT DE SCARIFICATEUR (ASS)	670
SUSPENSION DE SIEGE - CARTER (ASS)	735

T

Désignation	Page
TABLEAU DE BORD (ASS)	754 756
TAMIS D'ASPIRATION (BOÎTE DE VITESSES)	334
TANDEM ET CARTER (ASS)	337
TAPIS DE PLANCHER (CABINE)	782
TÉMOIN (*BRAKE WEAR)	439 441
TENDEUR DE COURROIE (ASS)	8
THERMOCONTACT (ENS) (CLIMATISEUR)	707
THERMOSTAT-TEMPÉRATURE D'EAU (97-DEG C) (LIQUIDE DE REFROIDISSEMENT)	50
TOIT - CABINE (ASS)	759
*TOOTH GP-RIPPER	700
TRAINS PLANÉTAIRES - CARTER ET PIÈCES	268
TRANSFORMATION ELECTRIQUE (ASS)	137
TUYAU D'ÉCHAPPEMENT (VAPEURS)	36

V

Désignation	Page
VANNE PILOTE (ASS)	636
VANNE PILOTE (ASS) (VENTILATEUR HYDRAULIQUE)	567
VENTILATEUR À PALES RÉVERSIBLES (VERSION)	49
VENTILATEUR DE CABINE (ASS)	732
VENTILATEUR DÉGIVREUR (ASS)	734
VÉRIN D'ARTICULATION (ASS)	483
VÉRIN D'ARTICULATION ET MONTAGE (ASS)	473
VÉRIN DE DÉPORT DE CERCLE (ASS)	486
VÉRIN DE DÉPORT DE CERCLE ET MONTAGE (ASS)	477
VÉRIN DE DÉPORT DE LAME (ASS)	479
VÉRIN DE DÉPORT DE LAME (ASS)	492
VERIN DE DIRECTION (ASS)	493 495
VERIN DE DIRECTION ET MONTAGE (ASS)	480 481
VÉRIN DE LEVAGE (ASS)	488
VÉRIN DE RELEVAGE DE LAME ET MONTAGE (ASS)	474
VERIN DE RIPPER (ASS)	489
VÉRIN DE SCARIFICATEUR (ASS)	491
VÉRIN DE SCARIFICATEUR ET MONTAGE (ASS)	478
VÉRIN D'INCIDENCE DE LAME (ASS)	485
VÉRIN D'INCLINAISON DE LAME ET MONTAGE (ASS)	475
VÉRIN D'INCLINAISON DE ROUE (ASS)	497
VÉRIN D'INCLINAISON DE ROUE ET MONTAGE (ASS)	482
VÉRIN HYDRAULIQUE (ASS)	487
VERROUILLAGE DE DÉPORT DE CERCLE (ASS)	565
VERSION DE MONTAGE-COMMUNICATION	142
VERSION DE MONTAGE DE COMMANDE DE PROFIL LONGITUDINAL	144
VERSION DE MOTEUR COMPLET	3
VERSION DE SUPPORT DE CHÂSSIS ARRIÈRE	432
VERSION EN OPTION - EU	2
VERSION HYDRAULIQUE	503
VERSION NEIGE - NIVELEUSE	2
VIDANGE D'HUILE (VERSION) - HAUTE VITESSE	44
VIDANGE-ÉCOLOGIE (ASS)	297
VITRE DE CABINE (ASS)	783 784

* TRADUCTION NON DISPONIBLE AU MOMENT DE LA PUBLICATION

INDEX

Désignation	Page	Désignation	Page
	785		
	786		
VOLANT MOTEUR (ASS)	15		

PROOF

* TRADUCTION NON DISPONIBLE AU MOMENT DE LA PUBLICATION

INDICE

Nombre	Página
A	
ACONDICIONADOR DE AIRE (CONFIG)	705
ACONDICIONADOR DE AIRE (GR)	706
	707
ACONDICIONADOR DE AIRE Y MONTAJE (GR)	703
ACOPLAMIENTO TORSIONAL (GR)	290
ACUMULADOR DEL ACONDICIONADOR DE AIRE (GR)	741
ACUMULADOR DEL FRENO (GR)	435
	436
ACUMULADOR (GR) (AMORTIGUADOR DE LA HOJA)	517
ADAPTADOR DE LLENADO RÁPIDO DE COMBUSTIBLE (GR)	76
	78
ADAPTADOR DEL TURBOCOMPRESOR (GR)	61
AGUA DE LAS CAMISAS - CALENTADOR DEL (GR)	140
	141
*AIR COMPRESSOR AR	4
AIRE - TUBERÍAS DE (GR)	68
	70
	71
AJUSTADOR DE CORREA (GR)	8
AJUSTADOR DEL ASIENTO (GR)	701
ALAMBRADO DE LUCES TRASERAS (GR)	250
ALARMA DE RETROCESO (CONJ)	216
ALARMA (GR)	99
ALARMA (GR) (24 VOLTIOS)	217
ALFOMBRILLA DEL PISO (CABINA)	782
AMORTIGUADOR Y POLEA (GR)	14
ANTEFILTRO (GR)	75
ANTEFILTRO (GR) (TURBINA)	75
*ARM GP-WIPER (PUERTA DE LADO DERECHO)	792
ARRANQUE - INTERRUPTOR DE (GR) (LLAVE)	217
ARTICULACIÓN DE CILINDRO (GR)	483
ASIENTO CON SUSPENSIÓN (GR)	777
ASIENTO CON SUSPENSIÓN (GR)	779
ASIENTO CON SUSPENSIÓN (GR)	775
ASIENTO (GR)	761
	762
	764
	765
ASIENTO Y MONTAJE (GR)	759
	760
AUXILIAR DE ARRANQUE CON ÉTER (GR)	196
AUXILIAR DE ARRANQUE (GR)	195

Nombre	Página
B	
BANCADA 5 (GR)	589
	591
BARRA DE TIRO (GR)	642
BASTIDOR DELANTERO (GR)	418
BATERÍA (GR)	112
	116
	120
BATERÍA (GR) (12-VOLTIOS, LIBRE DE MANTENIMIENTO)	120
BATERÍA (12-VOLTIOS, LIBRE DE MANTENIMIENTO)	112
	116
BLOQUE DE EMPALME (GR)	124
BLOQUE DESLIZANTE-JUEGO (ASIENTO)	767
	769
BLOQUE DESLIZANTE-JUEGO (ASIENTO DE SUSPENSION)	768
BOMBA - TUBERÍAS DE (GR)	530
	534
	538
	545
BOMBA DE AGUA (GR)	54
	55
BOMBA DE CEBADO Y FILTRO PRIMARIO DE COMBUSTIBLE (GR)	89
BOMBA DE DIRECCIÓN SECUNDARIA (GR)	575
BOMBA DE ENGRANAJES (GR)	332
BOMBA DE ENGRANJE Y MONTAJE (GR)	331
BOMBA DE PISTONES (GR) (*BRAKE, HYDRAULIC FAN)	577
BOMBA DE PISTONES (GR) (IMPLEMENTO)	578
BOMBA DE PISTONES (GR) (MANDO DE TODAS LAS RUEDAS)	330
BOMBA DE TRANSFERENCIA DE COMBUSTIBLE (GR)	90
BOMBA DE TRANSFERENCIA DE COMBUSTIBLE Y FILTRO (GR)	91
BOMBA DEL MANDO ELÉCTRICO Y MONTAJE (GR)	574
	575
	576
BOMBA Y MONTAJE DE VENTILADOR HIDRAULICO (GR)	577
BOMBA Y MONTAJE DEL PISTÓN (GR)	578
BOMBA Y MOTOR (GR) (CAMBIO DE ACEITE DE ALTA VELOCIDAD)	574
BOMBA Y MOTOR (GR) (*QUICK EVAC, SECONDARY STEERING)	576
BRAZO ACOJINADO (GR)	721
	722

* NO HAY TRADUCCION DISPONIBLE EN EL MOMENTO DE LA IMPRESION

PROOF

INDICE

Nombre	Página

C

CABINA (CONFIG)	710
CABLE GR-GRADO DE CONTROL	233 234
CABLES CONJ. - TANQUE DE COMBUSTIBLE	227
CABLES DE LA CABINA (GR)	217
CABLES DE LA DIRECCIÓN SECUNDARIA	252
CABLES DE LA TRABA DEL DESPLAZADOR DEL CÍRCULO (GR)	504 506
CABLES DE LAS LUCES (GR)	237 239 241 243
CABLES DE SENSOR (GR)	254
CABLES DEL MOTOR (GR)	225
CABLES DEL RECEPTÁCULO DE FUERZA (GR)	244
CABLES DELANTEROS (GR)	227 231 232
CABLES POSTERIORES (GR)	246
CADENA DE IMPULSIÓN (GR)	275
CADENAS (GR) (TANDEM)	275
CAJA DE HERRAMIENTAS (GR)	796
CAJA DE LA SUSPENSIÓN DEL ASIENTO (GR)	735
CAJA Y BASTIDOR (GR)	399
CAJA Y PIEZAS DE LOS PLANETARIOS	268
CALCOMANIA-ACEITE DE MOTOR (*FILL, DRAIN)	40
CALCOMANIA-ACEITE DE MOTOR (*FILL, DRAIN)	45
CALCOMANÍA (ACUMULADOR HIDRAULICO)	517
CALCOMANÍA (ARRANQUE DEL MOTOR)	146
CALCOMANÍA DE ADVERTENCIA (ASIENTO AJUSTABLE)	775 777 779
CALCOMANÍA DE ADVERTENCIA (*BELT ROUTING)	104 106 108 110
CALCOMANÍA DE ADVERTENCIA (*ENGINE OIL DRAIN)	39
CALCOMANÍA DE ADVERTENCIA (ENTRADA DE AGUA, SALIDA DE AGUA)	745
CALCOMANÍA DE ADVERTENCIA (LEA EL OMM)	146 147
CALCOMANÍA DE ADVERTENCIA (LIMPIADOR)	740
CALCOMANÍA DE ADVERTENCIA (NO LEVANTE) (HOJA)	664
CALCOMANÍA DE ADVERTENCIA (PARADA DE MOTOR)	799
CALCOMANÍA DE ADVERTENCIA (PELIGRO DE APLASTAMIENTO, MANTENGASE DETRAS DE ESTE LUGAR)	250
CALCOMANÍA DE ADVERTENCIA (RESORTE DE AMORTIGUACION)	437
CALCOMANÍA DE IDENTIFICACIÓN (*BIODEGRADABLE HYDRAULIC OIL)	503
CALCOMANÍA DE IDENTIFICACIÓN (BOCINA)	714
CALCOMANÍA DE IDENTIFICACIÓN (DESGARRADOR)	130
CALCOMANÍA DE IDENTIFICACIÓN (RODEADO DE ROJO REFLECTIVO)	689
CALCOMANIA-DIRECCION (*DISABLE)	469
CALCOMANIA-DIRECCION (*ENABLED)	469
CALCOMANÍA (INTERRUPTOR DE ENCENDIDO)	146
CALCOMANÍA (INTERRUPTOR DE ENCENDIDO)	147
CALCOMANÍA (MANDO EN TODAS LAS RUEDAS)	131
CALCOMANIA-MOTOR (*LOCK, UNLOCK)	40
CALCOMANÍA (SERPENTIN EXITADOR)	146
CALCOMANÍAS Y PLACAS DE IDENTIFICACIÓN (GR)	798 799
CAMBIO AUTOMÁTICO DE VELOCIDADES (CONFIG)	257
CAMBIO RÁPIDO DE ACEITE (CONFIG)	44
CAMBIO RÁPIDO DE ACEITE (GR)	45
CÁNCAMOS DE LEVANTAMIENTO DEL MOTOR (GR)	19
CANDADO (GR) (CAJA DE HERRAMIENTAS)	796
CANTONERA DE EXTREMO (GR)	651
CANTONERA (GR)	647 648 649 650 651
CARGA - ALTERNADOR DE (GR)	100 102 104 106 108 110
CÁRTER - COLECTOR DEL (GR)	25

* NO HAY TRADUCCION DISPONIBLE EN EL MOMENTO DE LA IMPRESION

PROOF

INDICE

Nombre	Página
CILINDRO DE ARTICULACIÓN Y MONTAJE (GR)	473
CILINDRO DE DESGARRADOR (GR)	489
CILINDRO DE DESPLAZAMIENTO DEL CÍRCULO (GR)	486
CILINDRO DE DESPLAZAMIENTO DEL CÍRCULO Y MONTAJE (GR)	477
CILINDRO DE DESPLAZAMIENTO LATERAL (GR)	492
CILINDRO DE DESPLAZAMIENTO LATERAL Y MONTAJE (GR)	479
CILINDRO DE DIRECCIÓN (GR)	493 495
CILINDRO DE DIRECCIÓN Y MONTAJE (GR)	480 481
CILINDRO DE ESCARIFICADOR (GR)	491
CILINDRO DE ESCARIFICADOR Y MONTAJE (GR)	478
CILINDRO DE INCLINACIÓN DE LA HOJA (GR)	485
CILINDRO DE INCLINACIÓN DE LAS RUEDAS (GR)	497
CILINDRO DE INCLINACIÓN DE RUEDA Y MONTAJE (GR)	482
CILINDRO DE LA PUNTA DE LA HOJA Y MONTAJE (GR)	475
CILINDRO DE LEVANTAMIENTO DE HOJA Y MONTAJE (GR)	474
CILINDRO DE LEVANTAMIENTO (GR)	488
CILINDRO HIDRÁULICO (GRUPO)	487
CINTURÓN DE SEGURIDAD (GR)	764
CINTURÓN DE SEGURIDAD (GR)	761
CÍRCULO (GR)	640
CODO DE ADMISIÓN DE AIRE (GR)	67
COLADOR DE COMBUSTIBLE	93 95
COLUMNA DE DIRECCIÓN (GR)	469
COMBUSTIBLE - TANQUE DE (GR)	93 95
COMPARTIMIENTO DEL MOTOR (GR)	406
COMPRESOR DE AIRE DEL ASIENTO (GR)	702
COMPRESOR DE AIRE (GR)	5 6
COMPRESOR DE REFRIGERANTE (GR)	712
COMPRESOR DE REFRIGERANTE (GR)	711
CONDENSADOR DEL REFRIGERANTE Y MONTAJE (GR)	713
CONDUCTO Y FILTRO DE AIRE (GR)	731
CONEXION HIDRAULICA (GR)	284
(CONFIG) CABLERIA, CHASIS DELANTERO	232
CONFIGURACIÓN BÁSICA DE LA MOTONIVELADORA	1
CONFIGURACIÓN DE ENFRIAMIENTO	46
CONFIGURACIÓN DE SOPORTE DE CHASIS TRASERO	432
CONFIGURACIÓN PARA CARRETERA	2
CONFIGURACIÓN PARA LA UNIÓN EUROPEA	2
CONJ. NÚCLEO-CALENTADOR	707
CONJUNTO DE CABLERIA, RADIO	757
CONJUNTO DE CABLES-BOMBA (COMBUSTIBLE)	246
CONJUNTO DE CABLES-CAJA DE EMPALME	124
CONJUNTO DE CABLES, VÁLVULA (COMPRESOR DE AIRE DEL ASIENTO)	777 779
CONJUNTO DE LLAVE, ELECTRONICA (SEGURIDAD)	147 194
CONJUNTO DE MAZO DE CABLES DE SOLENOIDE (MANDO DE TODAS LAS RUEDAS)	254
CONJUNTO DE NÚCLEO-CONDENSADOR (REFRIGERANTE)	713
CONJUNTO DE NÚCLEO (REFRIGERANTE DE ACEITE DE TRANSMISIÓN)	289
CONJUNTO MAZO DE CABLES-CONTROLES DEL OPERADOR	233
CONJUNTO, MAZO DE CABLES, LUCES DELANTERAS	155 157
CONTROL DE AIRE Y TEMPERATURA (GR)	717
CONTROL DE DIRECCIÓN (GR)	469
CONTROL DE IMPLEMENTOS (GR)	130
CONTROL DE IMPLEMENTOS Y MONTAJE (GR)	129
CONTROL DE MONITOR (GR) (*MESSENGER)	718
CONTROL DE TRABA DEL DIFERENCIAL (GR)	284
CONTROL DE TREN DE FUERZA (GR)	131
CONTROL DEL MULTIPLE (GR)	567 570 571
CONTROL ELECTROHIDRAULICO (GR)	468
CONTROL ELECTROHIDRAULICO (GR) (*WITHOUT AUXILIARY LEVER)	460 461 462 465
CONTROL ELECTROHIDRAULICO (GR) (*WITHOUT AUXILIARY LEVER) (PALANCA UNIVERSAL)	468
CONTROL ELECTRÓNICO DEL MOTOR Y MONTAJE	128

* NO HAY TRADUCCION DISPONIBLE EN EL MOMENTO DE LA IMPRESION

INDICE

Nombre	Página
CONTROL ELECTRÓNICO (GR) (GRUPO DE INSTRUMENTOS)	217
*CONTROL GP-UNPRGMED MONITOR	718
CONTROL HIDRÁULICO (CONFIG)	460
	461
	462
	463
	464
	465
	466
	467
CONTROL HIDRÁULICO DE LA TRANSMISIÓN (GR)	286
CONTROL NO PROGRAMADO (GR)	133
	134
	136
CONTROL NO PROGRAMADO (GR) (*HYDRAULIC ELECTRONIC)	134
CONTROL NO PROGRAMADO (GR) (*IMPLEMENT MASTER)	129
CONTROL NO PROGRAMADO (GR) (*IMPLEMENT SLAVE)	129
CONTROL NO PROGRAMADO (GR) (MOTOR)	128
	233
CONTROL NO PROGRAMADO (GR) (SEGURIDAD)	194
CONTROL NO PROGRAMADO (GR) (TRANSMISION)	286
CONVERTIDOR ELÉCTRICO (GR)	137
CORREA-SERPENTIN	104
	108
	110
CORREA-SERPENTIN (ALTERNADOR)	106
CRISTAL (BALIZA DE ADVERTENCIA) (AMBAR)	163
CRUCETA Y COJINETE (GR)	341
CUCHILLA (GR)	671
	672
	673

D

DESGARRADOR (CONFIG)	688
DESGARRADOR (GR)	689
DETECTOR DE POSICIÓN (SISTEMA DE COMBUST.) (GR)	178
	179
DETECTOR DE POSICIÓN (SISTEMA DE COMBUST.) (GR) (CILINDRO DE DIRECCION)	493
	495
DIFERENCIAL (GR)	295
DIFERENCIAL Y CORONA (GR)	293
DIRECCIÓN SECUNDARIA (CONFIG)	579
DISYUNTOR (CONJ) (105 AMPERIOS) (ALTERNADOR)	124
DISYUNTOR (CONJ) (105 AMPERIOS) (*ALTERNATOR NO. 2)	124
DISYUNTOR (CONJ) (15 AMPERIOS) (CONTROL DE LA TRANSMISIÓN)	125
DISYUNTOR (CONJ) (15 AMPERIOS) (INTERRUPTOR DE LLAVE)	125
DISYUNTOR (CONJ) (15 AMPERIOS) (LUCES DE TRABAJO)	124
DISYUNTOR (CONJ) (80 AMPERIOS) (CARGA)	124
DISYUNTOR (CONJ) (80 AMPERIOS) (PRINCIPAL)	124
DISYUNTOR DE CIRCUITO (GR) (20-AMPERIOS) (CONTROL DEL MOTOR)	125
DISYUNTOR (GR)	206
DISYUNTOR (GR) (BATERÍA)	112
	116
DOSIFICACIÓN - BOMBA DE (GR) (DIRECCIÓN)	469
DRENAJE DE SEGURIDAD ECOLÓGICA (GR)	297

E

EJE - GRUPO DE MONTAJE	428
EJE DE DIRECCION (CONFIG)	257
	258
	259
	260
EJE DE ENTRADA (GR)	336
EJE DE MANDO (GR)	335
EJE DELANTERO (GR)	260
	262
	264
	265
EJE TRASERO (GR)	266
ELECTRONICA DE MONITOR (GR)	139
ELEMENTO DE FILTRO DE ACEITE (CONJ) (ALTA EFICIENCIA) (TANQUE HIDRÁULICO)	305
ELEMENTO DE FILTRO DE ACEITE (CONJ) (ALTA EFICIENCIA) (TRANSMISION)	303
ELEMENTO DE FILTRO DE ACEITE HIDRÁULICO (MANDO DE TODAS LAS RUEDAS)	310
ELEMENTO DE FILTRO DE ACEITE HIDRÁULICO (PRIMARIO)	502

* NO HAY TRADUCCION DISPONIBLE EN EL MOMENTO DE LA IMPRESION

PROOF

INDICE

Nombre	Página
ELEMENTO DEL CALENTADOR DEL AGUA DE LAS CAMISAS (120 VOLTIOS, 1000 VATIOS)	141
ELEMENTO DEL CALENTADOR DEL AGUA DE LAS CAMISAS (240 VOLTIOS, 1000 VATIOS)	140
ELEMENTO DEL FILTRO DE AIRE (CONJ) (PRIMARIO)	64
ELEMENTO DEL FILTRO DE AIRE (CONJ) (SECUNDARIO)	64
EMBRAGUE DE LA TRANSMISIÓN (GR)	276 278 280 282
EMPAQUETADURA (CAJA DEL REGULADOR DE TEMPERATURA)	50
ENCENDEDOR (CONJ) (ENCENDEDOR, 24 VOLTIOS)	218
ENFRIADOR DE ACEITE DE LA TRANSMISIÓN (GR)	288 289
ENFRIADOR DEL ACEITE HIDRAULICO (GR)	471
ENGANCHE ARTICULADO (GR)	422
ENGANCHE DE REMOLQUE (GR)	424
ENGRANAJE (GR) (IZQUIERDO) (MANDO DE TODAS LAS RUEDAS)	298
ENGRANAJE (GR) (LADO DERECHO) (MANDO DE TODAS LAS RUEDAS)	298
ENGRANAJE TRASERO (GR)	16
ESCAPE DE GASES (GR)	36
ESCARIFICADOR (CONFIG)	691
ESTRIBO DEL OPERADOR (GR)	431
ETIQUETA DE ADVERTENCIA (GR)	797
ETIQUETA REFLECTORA (AMARILLO)	416
ETIQUETA REFLECTORA (AMARILLO) (*FENDER)	412
EXTENSIÓN DE LA HOJA (GR)	674 675 676 678
EXTENSIÓN DEL RESPALDO (GR) (*CLOTH)	761 764

F

Nombre	Página
*FILTER-BREATHER (TANQUE HIDRÁULICO)	582
FILTRO (AGUA) (BOMBA)	54
FILTRO DE ACEITE - BASE DEL (GR)	31 32
FILTRO DE ACEITE DEL MOTOR (CONJ)	34
FILTRO DE ACEITE DEL MOTOR (GR)	34
FILTRO DE ACEITE (GR)	303 305 502
FILTRO DE ACEITE (GR) (MANDO DE TODAS LAS RUEDAS)	310
FILTRO DE ACEITE Y MONTAJE (GR)	300 302
FILTRO DE AIRE (*CAB HEATER, AIR CONDITIONER)	731
FILTRO DE AIRE (CONJ) (*CAB HEATER, AIR CONDITIONER)	731
FILTRO DE AIRE (GR)	63 64
FILTRO DE COMBUSTIBLE (CONJ)	81
FILTRO DE COMBUSTIBLE (GR)	81
FILTRO DE COMBUSTIBLE Y SEPARADOR DE AGUA (CONJ) (PRIMARIO)	83
FILTRO DE COMBUSTIBLE Y SEPARADOR DE AGUA (GR)	83
FILTRO MAGNÉTICO (TRANSMISION)	334
FILTRO (TRANSMISION)	268
FRENO DE ESTACIONAMIENTO (GR)	437
FRENO DE SERVICIO - CONTROL (GR)	443 445 447
FRENO DE SERVICIO (GR)	439 441
FUSIBLE (10-AMPERIOS)	217
FUSIBLE (15 AMPERIOS)	217 707
FUSIBLE (30-AMPERIOS)	217

G

Nombre	Página
GRUPO DE AISLAMIENTO DE LA CABINA	739
GRUPO DE BOMBA Y MONTAJE, MANDO DE TODAS LAS RUEDAS	330
GRUPO DE INSTALACION, CONTROL DE GRADO	144
GRUPO DE INTERRUPTOR-TRACCIÓN EN TODAS LAS RUEDAS	203
GRUPO DE MONTAJE DE ALA PARA NIEVE	686 687
GRUPO DE SOPORTE DEL RESPALDO	752 753
GRUPO DE TAPA, ACCESO	401 402 403
GRUPO DE TUBERIAS, MANDO EN TODAS LAS RUEDAS	310 319
GRUPO DE VÁLVULA-ARRANQUE CON ÉTER	215

* NO HAY TRADUCCION DISPONIBLE EN EL MOMENTO DE LA IMPRESION

PROOF

INDICE

Nombre	Página
GRUPO DE 3 VÁLVULAS HIDRÁULICAS	585
GRUPO DE 4 VÁLVULAS HIDRÁULICAS	587
GRUPO ESCARIFICADOR	692
	695
	698
	699
GRUPO ESCARIFICADOR (HIDRÁULICO)	699
GUARDABARROS Y SOPORTE (GR)	410
	412
	414
	416
GUARNICIONES DE LA CABINA (GR)	782

H

HIDRÁULICA (CONFIG)	503
HOJA DE LIMPIAPARABRISAS (CONJ) (DELANTERO)	787
HOJA DE LIMPIAPARABRISAS (CONJ) (IZQUIERDA)	790
HOJA DE LIMPIAPARABRISAS (CONJ) (LIMPIAPARABRISAS TRASERO)	789
HOJA DE LIMPIAPARABRISAS (CONJ) (PUERTA DE LADO DERECHO)	791
	792
HOJA DE LIMPIAPARABRISAS (CONJ) (PUERTA, DERECHA)	795
HOJA DE LIMPIAPARABRISAS (CONJ) (PUERTA, IZQUIERDA)	793
HOJA (GR)	652
	653
	654
HOJA TOPADORA (GR)	655
	659
	660
	664

I

IMPLEMENTOS (GR ELECTRÓNICO)	138
INDICADOR (*BRAKE WEAR)	439
	441
INDICADOR DE NIVEL (TEMPERATURA)	782
INDICADOR DEL NIVEL DE ACEITE (VARILLA) (GR)	37
INDICADOR DEL NIVEL DEL ACEITE (VARILLA) (CONJ) (NIVEL DE ACEITE DEL TREN DE FUERZA)	299
INSONORIZADOR (GR)	774
INSTALACION DE COMUNICATION (CONFIG)	142
INSTALACIÓN DE RADIO (GR)	738
INSTALACION DE SEGURIDAD (GR)	146
INSTALACION DE SEGURIDAD (GR)	147
INSTALALCIÓN (CONFIG) -CONTROL DE GRADO	144
*INSTALLATION GP-LIGHTING	145
INTERRUPTOR (CONJ) (DESGARRADOR)	130
INTERRUPTOR DE BOLA (CONJ) (INDICADOR DEL DESPLAZADOR DEL CÍRCULO)	227
INTERRUPTOR DE DERIVACIÓN	205
INTERRUPTOR DE DESPLAZAMIENTO POR CARRETERA (GR)	212
INTERRUPTOR DE LÍMITE (CONJ) (*STEERING COLUMN POSITION)	469
INTERRUPTOR DE LUZ (GR)	207
INTERRUPTOR DE PRESIÓN (CONJ) (*AWD OIL FILTER BYPASS)	310
INTERRUPTOR DE PRESIÓN (CONJ) (FILTRO DE DERIVACIÓN)	502
INTERRUPTOR DE PRESIÓN (GR)	211
INTERRUPTOR DE PRESIÓN (GR) (*HAND METERING UNIT)	561
INTERRUPTOR DE TEMPERATURA (CONJ) (AIRE ACONDICIONADO)	707
INTERRUPTOR DE VOLQUETE (CONJ) (ACONDICIONADOR DE AIRE ACTIVO, INACTIVO)	717
INTERRUPTOR DE VOLQUETE (CONJ) (AMORTIGUADOR DE LA HOJA)	217
INTERRUPTOR DE VOLQUETE (CONJ) (APAGADO A NIVEL DEL SUELO)	246
INTERRUPTOR DE VOLQUETE (CONJ) (BALIZA DE ADVERTENCIA)	213
INTERRUPTOR DE VOLQUETE (CONJ) (DIRECCIÓN SECUNDARIA)	217
INTERRUPTOR DE VOLQUETE (CONJ) (FAROS DELANTEROS, LUCES DE COLA)	217
INTERRUPTOR DE VOLQUETE (CONJ) (FRENO DE ESTACIONAMIENTO)	217
INTERRUPTOR DE VOLQUETE (CONJ) (*HAZARD) (RIESGO)	217
INTERRUPTOR DE VOLQUETE (CONJ) (*HEATED MIRRORS)	750
INTERRUPTOR DE VOLQUETE (CONJ) (IMPLEMENTO DE LA TRABA)	217
INTERRUPTOR DE VOLQUETE (CONJ) (LUCES DE DESPLAZAMIENTO)	212
INTERRUPTOR DE VOLQUETE (CONJ) (LUZ DE TRABAJO)	145
	207
INTERRUPTOR DE VOLQUETE (CONJ) (*QUICK DISCONNECT COUPLING)	217
INTERRUPTOR DE VOLQUETE (CONJ) (REFLECTOR)	237

* NO HAY TRADUCCION DISPONIBLE EN EL MOMENTO DE LA IMPRESION

PROOF

INDICE

Nombre	Página
INTERRUPTOR DE VOLQUETE (CONJ) (SEÑAL DE VIRAJE)	714
INTERRUPTOR DE VOLQUETE (CONJ) (*SPEED CONTROL REGULATOR)	217
INTERRUPTOR DE VOLQUETE (CONJ) (TRABA DEL ACELERADOR)	217
INTERRUPTOR DE VOLQUETE (CONJ) (*TRANSMISSION SHIFT)	257
INTERRUPTOR DE VOLQUETE (CONJ) (VELOCIDAD DEL VENTILADOR SOPLADOR)	734
INTERRUPTOR DE VOLQUETE (GR)	213
INTERRUPTOR DE VOLQUETE (GR) (*ENGINE OIL EVAC)	225
INTERRUPTOR DEL LIMPIADOR (GR)	214
INTERRUPTOR DEL LIMPIADOR (GR) (24 VOLTIOS) (DELANTERO)	217
INTERRUPTOR DEL LIMPIADOR (GR) (24 VOLTIOS) (*LEFT)	217
INTERRUPTOR DEL LIMPIADOR (GR) (24 VOLTIOS) (*RIGHT)	217
INTERRUPTOR DEL LIMPIAPARABRISAS (CONJ) (24 VOLTIOS) (INTERMITENTE)	214
INTERRUPTOR MAGNÉTICO (CONJ) (24 VOLTIOS) (AIRE DE ADMISIÓN DE LA CALEFACCIÓN)	209
INTERRUPTOR MAGNÉTICO (GR)	208 209 210
INTERRUPTOR MAGNÉTICO (GR) (24 VOLTIOS) (RELE DE ARRANQUE)	124
INTERRUPTOR MAGNÉTICO (GR) (24 VOLTIOS) (RELE PRINCIPAL)	124
INTERRUPTOR PARA EL NIVEL DE LÍQUIDO (FLUÍDO LAVAPARABRISAS)	781
INTERRUPTOR PULSADOR (CONJ) (BOCINA)	714
INTERRUPTOR ROTATIVO (CONJ) (24 VOLTIOS) (*ALL WHEEL DRIVE CONTROL)	203

J

Nombre	Página
JUEGO (AISLADOR) (MOTOR DE ARRANQUE)	200
JUEGO DE AMORTIGUADOR (ASIENTO)	777 779
JUEGO DE ARANDELA (MOTOR DE ARRANQUE)	197
JUEGO DE ATADURA (ASIENTO)	777 779
JUEGO DE BOTÓN (AJUSTE DE ALTURA) (ASIENTO DE SUSPENSION)	735
JUEGO DE BUJES (MOTOR DE ARRANQUE)	200
JUEGO DE COJINETES (ALTERNADOR)	100 102
JUEGO DE COJINETES (ASIENTO DE SUSPENSION)	736
JUEGO DE COJINETES (MOTOR DE ARRANQUE)	197
JUEGO DE ESCOBILLAS (MOTOR DE ARRANQUE)	197 200
JUEGO DE FILTRO DE TAPA (TANQUE DE COMBUSTIBLE)	93 95
JUEGO DE INDICADOR (AJUSTE DE PESO) (ASIENTO DE SUSPENSION)	736
JUEGO DE INDICADOR (ASIENTO)	777 779
JUEGO DE PALANCA (MOTOR DE ARRANQUE)	200
JUEGO DE PARAGOLPES (AJUSTE DE PESO) (ASIENTO DE SUSPENSION)	736
JUEGO DE PASADOR DEL MOTOR DE ARRANQUE	197
JUEGO DE REACONDICIONAMIENTO DEL REGULADOR (COMPRESOR DE AIRE)	458
JUEGO DE REPARACIÓN (TUBERÍAS DEL FRENO) (*FUEL LEVEL SENSOR)	93 95
JUEGO DE RESORTES (AJUSTE DE ALTURA) (ASIENTO DE SUSPENSION)	735
JUEGO DE RESORTES (ASIENTO DE SUSPENSION)	735
JUEGO DE SEGUIDOR (ASIENTO DE SUSPENSION)	736
JUEGO DE SELLO DEL MOTOR DE ARRANQUE	197
JUEGO DE SELLOS (ACUMULADOR DEL FRENO)	435 436
JUEGO DE SELLOS (ACUMULADOR HIDRÁULICO)	519
JUEGO DE SELLOS (DIRECCIÓN)	639
JUEGO DE SELLOS (MOTOR)	572
JUEGO DE SELLOS (*RIPPER CYLINDER)	489
JUEGO DE SELLOS (VALVULA DE ALIVIO)	587 591 635
JUEGO DE SELLOS (VALVULA DE ALIVIO) (SEÑAL DEL DETECTOR DE CARGA)	585 593
JUEGO DE SELLOS (VÁLVULA DE DERIVADOR)	567

* NO HAY TRADUCCION DISPONIBLE EN EL MOMENTO DE LA IMPRESION

PROOF

INDICE

Nombre	Página
JUEGO DE SELLOS (VÁLVULA DE DERIVADOR) (*HYDRAULIC FAN FLUID FLOW)	634
JUEGO DE SELLOS (VÁLVULA DE LANZADERA)	567
JUEGO DE SELLOS (VÁLVULA DE RETENCIÓN) (ARTICULACIÓN)	608
JUEGO DE SELLOS (VÁLVULA DE RETENCIÓN) (*BLADE CENTERSHIFT)	614
JUEGO DE SELLOS (VÁLVULA DE RETENCIÓN) (*BLADE SIDESHIFT)	616
JUEGO DE SELLOS (VÁLVULA DE RETENCIÓN) (*CIRCLE DRIVE)	618
JUEGO DE SELLOS (VÁLVULA DE RETENCIÓN) (DESGARRADOR)	622
JUEGO DE SELLOS (VÁLVULA DE RETENCIÓN) (ESCARIFICADOR)	632
JUEGO DE SELLOS (VÁLVULA DE RETENCIÓN) (HOJA DE LEVANTAMIENTO)	610
JUEGO DE SELLOS (VÁLVULA DE RETENCIÓN) (INCLINACION DE RUEDA)	620
JUEGO DE SELLOS (VÁLVULA DE RETENCIÓN) (LEVANT. DE ALA)	626
JUEGO DE SELLOS (VÁLVULA DE RETENCIÓN) (*PLOW ANGLE)	630
JUEGO DE SELLOS (VÁLVULA DE RETENCIÓN) (*PLOW, BULLDOZER LIFT)	628
JUEGO DE SELLOS (VÁLVULA DE RETENCIÓN) (PUNTA DE LA HOJA)	612
JUEGO DE SELLOS (VÁLVULA DE RETENCIÓN) (*WING TILT)	624
JUEGO DE SELLOS (VALVULA DE SOLENOIDE)	637
JUEGO DE TERMINAL (ALTERNADOR)	100
JUEGO DE TERMINAL (ALTERNADOR)	100 102
JUEGO DE TORNILLERÍA (ALTERNADOR)	100 102
JUEGO DE TORNILLERÍA (MOTOR DE ARRANQUE)	197
JUEGO DE VALVULA DE AIRE (ASIENTO)	777 779
JUNTA UNIVERSAL (GR)	341

L

Nombre	Página
LÁMPARA (CONJ) (ROJO, VERDE, DIODO, 12 VOLTIOS)	146
LÁMPARA (CONJ) (24 VOLTIOS)	225 740
LÁMPARA DE BALIZA DE ADVERTENCIA (GR)	163
LÁMPARA DE BALIZA DE ADVERTENCIA (GR)	164
	165
LÁMPARA DE LUZ DELANTERA Y DE SEÑAL (GR)	157 159 160
LÁMPARA DE LUZ DELANTERA Y DE SEÑAL (GR)	155
LÁMPARA DE LUZ DELANTERA Y DE SEÑAL (GR) (24 VOLTIOS, LADO DERECHO)	157
LÁMPARA DE LUZ DELANTERA Y DE SEÑAL (GR) (24 VOLTIOS, MANO IZQUIERDA)	157
LAMPARA DE PLACA DE REGISTRO (GR)	173
LÁMPARA DEL TECHO (GR)	149
LAMPARA-LED (24 VOLTIOS, AMBAR)	469
LAMPARA-LED (24-VOLTIOS, ROJO)	203
LAMPARA-LED (24-VOLTIOS, ROJO)	147
LAMPARA-LED (24 VOLTIOS, VERDE)	203
LAMPARA-LED (24 VOLTIOS, VERDE)	217
LAMPARA-LED (24 VOLTIOS, VERDE)	469
LAMPARA MARCADORA (GR)	161
LÁMPARA (12 VOLTIOS, 24 VOLTIOS, 35 VATIOS)	150 151
LÁMPARA (24 VOLTIOS)	149 173
LÁMPARA (24 VOLTIOS) (POSICIÓN DE LA CABINA)	161
LÁMPARA (24-VOLTIOS, 21 VATIOS) (AMBAR)	159 160
LÁMPARA (24-VOLTIOS, 21 VATIOS) (COMPARTIMIENTO DEL MOTOR)	166
LÁMPARA (24 VOLTIOS, 5 VATIOS) (SERVICIO)	159 160
LÁMPARA (24-VOLTIOS, 70-VATIOS)	165
LÁMPARA (24 VOLTIOS, 75/70 VATIOS) (SERVICIO)	159 160
LEVANTAMIENTO - HOJA DE (GR)	679
*LIGHT-INDICATOR (CAMBIO DE ACEITE DE ALTA VELOCIDAD)	225
LIMPIA Y LAVAPARABRISAS (GR)	787
LIMPIAPARABRISAS DE LA VENTANA (GR)	790 791 792 793 795
LIMPIAPARABRISAS DE LA VENTANA (GR)	789
*LINES GP-ENGINE OIL DRAIN	39
*LINES GP-HYDRAULIC	524
*LINES GP-STEERING	559

* NO HAY TRADUCCION DISPONIBLE EN EL MOMENTO DE LA IMPRESION

PROOF

INDICE

Nombre	Página
LLAVE (DESCONEXIÓN DE BATERÍA)(ARRANQUE)	206
LUCES DE ALÓGENO (24 VOLTIOS, 65 VATIOS)	152, 153
LUCES DE ALÓGENO (24 VOLTIOS, 65 VATIOS) (HOJA)	154
LUCES DE DESPLAZAMIENTO (GR)	173
LUCES DE REFLECTOR (GR)	167, 168, 169, 170, 171, 172
LUCES DE RETROCESO (GR)	166
LUZ DE SEÑAL DE GIRO (GR)	162
LUZ DE SEÑAL DE GIRO (GR) (PARADA, COLA, GIRO)	250

M

Nombre	Página
MANDO DE LA RUEDA	298
MANDO DEL CIRCULO (GR)	499
MANDO FINAL (GR)	306, 308
*MANIFOLD GP-CONTROL	566
MANIJA DE LA PUERTA (GR)	723, 726
MAZO DE CABLES (CONJ) (PUENTE) (SENSOR DE COMBUSTIBLE)	81
MAZO DE CABLES (CONJ) (SEGURIDAD)	146
MAZO DE CABLES DE CONTROL (CONJ) (*HYDRAULIC ELECTRONIC)	134
MAZO DE CABLES DE CONTROL (CONJ) (MANDO EN TODAS LAS RUEDAS)	131
MAZO DE CABLES DE DIRECCION (CONJ)	252
MAZO DE CABLES DE LA HERRAMIENTA	234
MAZO DE CABLES DE LA TRANSMISION	286
MAZO DE CABLES DE LUCES TRASERAS (CONJ)	250
MAZO DE CABLES DE LUCES TRASERAS (CONJ)	241
MAZO DE CABLES DE LUCES TRASERAS (CONJ) (*REGISTRATION PLATE)	173
MAZO DE CABLES DE POTENCIA (CONJ) (*PRODUCT LINK RADIO)	142
MAZO DE CABLES DE SENSOR (CONJ)	227
MAZO DE CABLES DE SENSOR (CONJ) (CONTROL DE MANDO DE TODAS RUEDAS)	254
MAZO DE CABLES DE SENSOR (CONJ) (GRADO CONTROL)	234
MAZO DE CABLES DE SENSOR (CONJ) (VELOCIDAD)	254
MAZO DE CABLES DE SENSOR (CONJ) (VELOCIDAD DE TRANSMISION)	286
MAZO DE CABLES DEL CHASIS (CONJ) (SISTEMA DE SEGURIDAD DE LA MÁQUINA)	147
MAZO DE CABLES, LUCES	237, 239
MAZO DE CABLES TRASERO (CONJ) (AIRE ACONDICIONADO)	246
MAZO DE CABLES TRASERO (CONJ) (BOMBA HIDRÁUILICA)	246
MAZO DE CABLES TRASERO (CONJ) (CHASIS)	246
MONTAJE DE FILTRO DE COMBUSTIBLE (GR)	88
MONTAJE DE LA HOJA (GR)	682
MONTAJE DE RUEDA (GR)	329
MONTAJE DEL ALTERNADOR (GR)	20
MONTAJE DEL DESGARRADOR (GR)	684
MONTAJE DEL MANDO DE VENTILADOR (GR)	23
MONTAJE DEL MOTOR Y LA TRANSMISIÓN (GR)	21
MOTONIVELADORA PARA LA NIEVE (CONFIG)	2
MOTOR - SOPORTE DEL (GR)	30
MOTOR COMPLETO (CONFIG)	3
MOTOR DE ARRANQUE ELÉCTRICO (GR)	197, 199, 200, 202
MOTOR DE ENGRANAJES (GR) (*RADIATOR COOLING)	47
MOTOR ELÉCTRICO (GR)	174
MOTOR HIDRÁULICO DE ENGRANAJES (GR)	572
MOTOR-LIMPIAPARABRISAS (GR)	751
MOTOR-LIMPIAPARABRISAS (GR) (IZQUIERDA)	790
MOTOR-LIMPIAPARABRISAS (GR) (LADO DERECHO)	795
MOTOR-LIMPIAPARABRISAS (GR) (PARTE TRASERA)	789
MOTOR-LIMPIAPARABRISAS (GR) (PUERTA DE LADO DERECHO)	791
MOTOR-LIMPIAPARABRISAS (GR) (PUERTA, IZQUIERDA)	793
MOTOR Y VENTILADOR (GR)	47
*MOUNTING GP-GRADE CONTROL	645, 683
MULTIPLE DE ACEITE DE MOTOR (GR)	43

* NO HAY TRADUCCION DISPONIBLE EN EL MOMENTO DE LA IMPRESION

INDICE

Nombre	Página
MÚLTIPLE DE ESCAPE (GR)	72
N	
NUCLEO DE RADIADOR (CONJ)	56
P	
PALANCA UNIVERSAL-CONTROL Y MONTAJE (GR)	714
PALANCA UNIVERSAL DE CONTROL (GR) (ESTACIÓN DEL OPERADOR 3)	468
PALANCA UNIVERSAL DE CONTROL (GR) (LADO DERECHO)	714
PALANCA UNIVERSAL DE CONTROL (GR) (LADO IZQUIERDO)	714
PANEL DE LA CABINA (GR)	754 756
PISTONES DEL MOTOR (GR)	328
PISTONES DEL MOTOR (GR) (MANDO DE TODAS LAS RUEDAS)	328
PIVOTE DEL LIMPIADOR (GR) (PUERTA DE LADO DERECHO)	792
PLACA DE IDENTIFICACION (CAT)	664
PLACA DE IDENTIFICACION (CAT)	655 660
PLACA DE IDENTIFICACION (PESO MAXIMO)	2
PLACA DE IDENTIFICACION (*WORK TOOL INFORMATION)	698 699
PLACA DE IDENTIFICACION (*WORK TOOL INFORMATION)	659
PLACA DE INFORMACION (LLAVE) (SISTEMA DE SEGURIDAD)	147
PLACA DE INFORMACION (ROPS, FOPS, LEA EL OMM)	710
PLACA DE INFORMACION (24 VOLTIOS)	799
PLACA DE INSTRUCCIONES (ACONDICIONADOR DE AIRE)	706
PLACA DE INSTRUCCIONES (BATERÍA) (INTERRUPTOR DE DESCONEXION)	112 116 120
PLACA DEL NÚMERO DE SERIE (TRANSMISION)	268
PLANCHA DE EMPUJE (GR)	646
*PLUG GP-CONNECTOR	175
POLEA DE RUEDA GUIA (GR)	28
POSENFRIADOR DE AIRE (GR)	62
PROTECTOR DE LAS TUBERÍAS DE LOS FRENOS (GR)	420
PROTECTOR DEL TANQUE DE COMBUSTIBLE (GR)	421
PROTECTOR DEL VENTILADOR (GR) (*RADIATOR COOLING)	47
PROTECTOR INFERIOR (GR)	419
PUERTA DE CABINA	723 726 729
R	
RADIADOR (GR)	56
*RADIO GP-COMMUNICATION (*PRODUCT LINK 121SR)	142
RADIO (GR)	757
RADIO (GR) (AM/FM/WB)	757
RECLINACION DE ASIENTO (GR)	758
REFLECTOR (GR)	150 151 152 153 154
REGULADOR (CONJ) (PRESIÓN DE COMBUSTIBLE)	92
REGULADOR DE LA PRESION DE COMBUSTIBLE (GR)	92
REGULADOR DE PRESION (BOMBA DE TRANSFERENCIA DE COMBUSTIBLE)	90
REGULADOR DE TEMPERATURA DEL AGUA (97 GRADOS C) (REFRIGERANTE)	50
REGULADOR DE VOLTAJE (24 VOLTIOS) (ALTERNADOR)	100 102
REJILLA (BARRIDO)	268
REJILLA (*BRAKE, HYDRAULIC FAN)	567
REJILLA DE SUCCIÓN (TRANSMISION)	334
REJILLA (DIRECCIÓN)	571
REJILLA MAGNÉTICA (GR)	334
RELÉ (CONJ) (12 VOLTIOS) (SEGURIDAD)	146
RELÉ (CONJ) (24 VOLTIOS)	217
RELÉ (CONJ) (24 VOLTIOS) (ALARMA DE RETROCESO)	247
RELÉ (CONJ) (24 VOLTIOS) (BOMBA DE COMBUSTIBLE)	247
RELÉ (CONJ) (24 VOLTIOS) (DIRECCIÓN SECUNDARIA)	252
RELÉ (CONJ) (24 VOLTIOS) (*ENGINE OIL EVAC)	225
RELÉ (CONJ) (24 VOLTIOS) (LUCES DE DESPLAZAMIENTO)	212
RELÉ (CONJ) (24 VOLTIOS) (SEGURIDAD)	146
RESPIRADERO (CONJ) (CÁRTER DEL MOTOR)	33

* NO HAY TRADUCCION DISPONIBLE EN EL MOMENTO DE LA IMPRESION

PROOF

INDICE

Nombre	Página
RESPIRADERO (CONJ) (*POWER TRAIN OIL TANK)	299
RESPIRADERO (CONJ) (TANDEM)	337
RESPIRADERO (GR)	33
RETROCESO - ALARMA DE (GR)	216
RETROVISOR (GR)	747
	748
	749
	750
REVESTIMIENTO DE LA CABINA (GR)	740
RUEDA (CONFIG)	393
RUEDA (GR)	394
	395
	396
	397
	398
RUEDA Y LLANTA (CONFIG)	346
	347
	348
	349
	350
	351
	352
	353
	354
	355
	356
	357
	358
	359
	360
	361
	362
	363
	364
	365
	366
RUEDA Y NEUMÁTICO (GR)	366
	367
	368
	369
	370
	371
	372
	373
	374
	375
	376
	377
	378
	379
	380
	381
	382
	383
	384
	385
	386
	387
	388
	389
	390
	391
	392

S

SELLO DE CIGÜEÑAL (GR)	29
SELLO, INTEGRAL	585
	587
	589
	591
	593
	595
	597
	599
	601
	603
	605
SENSOR DE PRESIÓN (GR)	180
	181
	182
	183
	184
	185
	186
	187
	188
SENSOR DE TEMPERATURA (GR)	190
	191
	192
	193
SENSOR DE TEMPERATURA (GR) (ACEITE DE LA TRANSMISIÓN)	286
SENSOR DE VELOCIDAD (GR)	189
SENSOR DE VELOCIDAD (GR) (*TRANSMISSION OUTPUT, HIGH)	286
SENSOR DE VELOCIDAD (GR) (*TRANSMISSION OUTPUT, LOW)	286
SENSOR DEL MOTOR (GR)	176
SERVICIO DE IMPLEMENTO (GR)	138
SERVICIO DE MAQUINA (GR)	194
SERVICIO DE MONITOR (GR) (*EMS CONTROL PANEL)	139
SERVICIO DE TREN DE FUERZA (GR)	139

* NO HAY TRADUCCION DISPONIBLE EN EL MOMENTO DE LA IMPRESION

PROOF

INDICE

Nombre	Página
SERVICIO DE TREN DE FUERZA (GR) (MANDO EN TODAS LAS RUEDAS)	139
SILENCIADOR Y MONTAJE GR	73
*SOCKET GP-TIE ROD (IZQUIERDO)	427
*SOCKET GP-TIE ROD (IZQUIERDO) (DIRECCIÓN)	426
*SOCKET GP-TIE ROD (LADO DERECHO)	427
*SOCKET GP-TIE ROD (LADO DERECHO) (DIRECCIÓN)	426
SOFTWARE DE IMPLEMENTO (GR)	138
SOFTWARE DEL MONITOR (GR) (*EMS CONTROL PANEL)	139
SOFTWARE DEL MONITOR (GR) (*EMS CONTROL PANEL)	139
SOFTWARE DEL TREN DE FUERZA (GR)	139
SOFTWARE DEL TREN DE FUERZA (GR) (AUTODESPLAZAMIENTO)	257
SOFTWARE DEL TREN DE FUERZA (GR) (MANDO EN TODAS LAS RUEDAS)	139
SOFTWARE PARA LA MAQUINA (GR)	194
SOLENOIDE (CONJ) (24 VOLTIOS) (MOTOR DE ARRANQUE)	197 200
SOPORTE DE CONTROL (GR)	770 772
SOPORTE DEL ESCARIFICADOR (GR)	670
SOPORTE DEL RADIADOR (GR)	433
SUSPENSIÓN - ASIENTO CON (GR)	768 769
SUSPENSIÓN - ASIENTO CON (GR)	767

T

TÁNDEM Y CUBIERTA (GR)	337
TANQUE DE AIRE (GR)	458
TANQUE DE REFRIGERANTE (GR)	58 59
TANQUE DEL LAVAPARABRISAS (GR)	781
TANQUE HIDRÁULICO (GR)	584
TANQUE HIDRÁULICO Y MONTAJE (GR)	582
TAPA DE ADMISIÓN DE AIRE (GR)	65 66
TAPA DE LA CABINA (GR)	719
TAPA DE LA CAJA DELANTERA (GR)	10 11
TAPA DE LA COLUMNA DE DIRECCION (GR)	720
TAPA DE LLENADO (CONJ) (ACEITE DEL MOTOR)	11
TAPA DE LLENADO (CONJ) (TANQUE DE COMBUSTIBLE)	93 95
TAPA DE LLENADO (CONJ) (TANQUE HIDRAULICO)	584
TAPA DE RADIADOR (CONJ) (*6 TO 8-PSI) (ALIVIO DE PRESIÓN)	58
TAPA DE VÁLVULA DE CONTROL (GR)	404
TAPA DEL BLOQUE MOTOR (GR)	9
TAPA DEL MECANISMO DE VÁLVULAS (GR)	12 13
TAPAS PROTECTORAS DE EMBARQUE (GR)	291
TAPON DE TUBO (DRENAJE DE ACEITE)	499
TAPÓN DEL BLOQUE MOTOR (GR)	26
TAPÓN DEL MOTOR (GR)	27
TAPÓN (DRENAJE)	297
TECHO DE LA CABINA (GR)	759
TIRANTE DE DIRECCIÓN (GR)	426 427
*TOOTH GP-RIPPER	700
TORNILLERÍA DEL TANQUE DE COMBUSTIBLE	79
TRABA DE DESPLAZAMIENTO DEL CIRCULO (GR)	565
TRANSMISION (CONFIG)	339
TREN DE FUERZA-GRUPO ELECTRÓNICO	139
TUBERÍAS DE ACEITE DE LA TRANSMISIÓN (GR)	322 326
TUBERÍAS DE ACEITE DEL MOTOR (GR)	38
TUBERÍAS DE ACONDICIONADOR DE AIRE (GR)	741 743
TUBERIAS DE CALEFACCION	745 746
TUBERÍAS DE COMBUSTIBLE (GR)	84
TUBERÍAS DE DIRECCIÓN (GR)	561
TUBERIAS DE DRENAJE DE ACEITE DE MOTOR (GR)	40
TUBERÍAS DE ENGRASE (GR)	425
TUBERÍAS DE LA CALEFACCIÓN (GR)	745 746
TUBERÍAS DE LA DIRECCIÓN SECUNDARIA (GR)	555 557
TUBERÍAS DE LA TOMA DE FUERZA (GR)	321
TUBERÍAS DEL AGUA (GR)	50 52
TUBERÍAS DEL DESGARRADOR (GR)	552 554
TUBERÍAS DEL FILTRO DE COMBUSTIBLE	86
TUBERÍAS DEL FRENO DE SERVICIO (GR)	454 456
TUBERÍAS DEL TANQUE DE AIRE (GR)	452

* NO HAY TRADUCCION DISPONIBLE EN EL MOMENTO DE LA IMPRESION

PROOF

INDICE

Nombre	Página
TUBERÍAS HIDRÁULICAS DEL VENTILADOR (GR)	526
TUBERÍAS HIDRÁULICAS (GR)	508, 510, 515, 517, 525
TUBO DE ESCAPE (VAPORES)	36
TUBO DE LLENADO DE ACEITE DE LA TRANSMISIÓN (GR)	299
TURBOCOMPRESOR - TUBERÍAS DE ACEITE DEL (GR)	42
U	
UNIÓN GIRATORIA (GR)	580
V	
*VALVE GP-BANK 8	603, 605
VÁLVULA - MONTAJE DE LA (GR)	429
VÁLVULA DE ALIVIO (GR)	344, 635
VÁLVULA DE ALIVIO (GR) (ACUMULADOR DEL FRENO)	567
VÁLVULA DE ALIVIO (GR) (COMPRESOR DEL REFRIGERANTE)	711
VÁLVULA DE ALIVIO (GR) (DIRECCIÓN SECUNDARIA)	555, 557
VÁLVULA DE ALIVIO (GR) (OPERACIÓN POR PILOTO)	591
VÁLVULA DE ALIVIO (GR) (SEÑAL DEL DETECTOR DE CARGA)	585, 587, 593
VÁLVULA DE CONTROL (GR)	608, 610, 612, 614, 616, 618, 620, 622, 624, 626, 628, 630, 632
VALVULA DE DERIVACION (CONJ) (FILTRO DE ACEITE DEL MOTOR)	34
VÁLVULA DE DERIVACIÓN (GR)	634
VÁLVULA DE DERIVACIÓN (GR) (ACUMULADOR DEL FRENO)	567
VÁLVULA DE DRENAJE	40
VÁLVULA DE DRENAJE (ACEITE DEL MOTOR)	39
VÁLVULA DE LANZADERA (GR)	636
VÁLVULA DE LANZADERA (GR) (VENTILADOR HIDRAULICO)	567
VÁLVULA DE MODULACIÓN (GR)	343
VÁLVULA DE RETENCIÓN (GR)	97, 98, 607, 630, 632
VÁLVULA DE RETENCIÓN (GR) (ARTICULACIÓN)	608
VÁLVULA DE RETENCIÓN (GR) (*BLADE CENTERSHIFT)	614
VÁLVULA DE RETENCIÓN (GR) (*BLADE SIDESHIFT)	616
VÁLVULA DE RETENCIÓN (GR) (*CIRCLE DRIVE)	618
VÁLVULA DE RETENCIÓN (GR) (DESGARRADOR)	622
VÁLVULA DE RETENCIÓN (GR) (HOJA DE LEVANTAMIENTO)	610
VÁLVULA DE RETENCIÓN (GR) (INCLINACION DE RUEDA)	620
VÁLVULA DE RETENCIÓN (GR) (*PLOW, BULLDOZER LIFT)	628
VÁLVULA DE RETENCIÓN (GR) (PUNTA DE LA HOJA)	612
VALVULA DE RETENCIÓN Y ALIVIO (GR) (*BLADE SIDESHIFT)	616
VALVULA DE RETENCIÓN Y ALIVIO (GR) (DESGARRADOR)	622
VALVULA DE RETENCIÓN Y ALIVIO (GR) (HOJA DE LEVANTAMIENTO)	610
VALVULA DE RETENCIÓN Y ALIVIO (GR) (LEVANT. DE ALA)	626
VALVULA DE RETENCIÓN Y ALIVIO (GR) (*PLOW ANGLE)	630
VALVULA DE RETENCIÓN Y ALIVIO (GR) (*PLOW, BULLDOZER LIFT)	628
VALVULA DE RETENCIÓN Y ALIVIO (GR) (PUNTA DE LA HOJA)	612
VALVULA DE RETENCIÓN Y ALIVIO (GR) (*WING TILT)	624
VÁLVULA DE SOLENOIDE (GR)	637, 638, 639
VÁLVULA DE SOLENOIDE (GR) (AMORTIGUADOR DE LA HOJA)	570

* NO HAY TRADUCCION DISPONIBLE EN EL MOMENTO DE LA IMPRESION

PROOF

INDICE

Nombre	Página
VÁLVULA DE SOLENOIDE (GR) (ARTICULACIÓN)	608
VÁLVULA DE SOLENOIDE (GR) (*BLADE CENTERSHIFT)	614
VÁLVULA DE SOLENOIDE (GR) (*BLADE SIDESHIFT)	616
VÁLVULA DE SOLENOIDE (GR) (*CIRCLE DRIVE)	618
VÁLVULA DE SOLENOIDE (GR) (DESGARRADOR)	622
VÁLVULA DE SOLENOIDE (GR) (ESCARIFICADOR)	632
VÁLVULA DE SOLENOIDE (GR) (FRENO DE ESTACIONAMIENTO)	566
VÁLVULA DE SOLENOIDE (GR) (HOJA DE LEVANTAMIENTO)	610
VÁLVULA DE SOLENOIDE (GR) (INCLINACION DE RUEDA)	620
VÁLVULA DE SOLENOIDE (GR) (LEVANT. DE ALA)	626
VÁLVULA DE SOLENOIDE (GR) (*PLOW ANGLE)	630
VÁLVULA DE SOLENOIDE (GR) (*PLOW, BULLDOZER LIFT)	628
VÁLVULA DE SOLENOIDE (GR) (PUNTA DE LA HOJA)	612
VÁLVULA DE SOLENOIDE (GR) (TRABA DE DIFERENCIAL)	342
VÁLVULA DE SOLENOIDE (GR) (*WING TILT)	624
VALVULA DE SOLENOIDE Y MONTAJE (GR	342
VÁLVULA DEL NEUMÁTICO (GR) (BASICO)	395
VÁLVULA DEL NEUMÁTICO (GR) (INFLADO DE NEUMÁTICOS)	395 396 397 398
VÁLVULAS DE LA DIRECCIÓN (GR)	561
VÁLVULAS DE LA DIRECCIÓN (GR) (PRINCIPAL)	559
VÁLVULAS HIDRÁULICAS - GRUPO DE 6	593 595 597
VÁLVULAS HIDRÁULICAS - GRUPO DE 7	599 601
VENTANA DE LA CABINA (GR)	783 784 785 786
VENTILADOR DE CIRCULACION	732
VENTILADOR DESCONGELADOR (GR)	734
VENTILADOR REVERSIBLE (CONFIG)	49
VOLANTE - CAJA DE (GR)	17
VOLANTE (GR)	15

W

*WIRING GP-CAMERA	223

* NO HAY TRADUCCION DISPONIBLE EN EL MOMENTO DE LA IMPRESION

PROOF

ÍNDICE

Designação	Página

A

ACENDEDOR (CIGARROS, 24 VOLTS) 218
ACOPLAMENTO TORSIONAL 290
ACUMULADOR - AR CONDICIONADO 741
ACUMULADOR - FREIO 435
436
ACUMULADOR (AMORTECEDOR DA LÂMINA) 517
ADAPTADOR - ABASTECIMENTO RÁPIDO DE COMBUSTÍVEL 76
78
ADAPTADOR DO TURBOALIMENTADOR 61
ADESIVO-DIREÇÃO (ATIVADO) 469
ADESIVO-DIREÇÃO (DESATIVAR) 469
ADESIVO-MOTOR (TRAVAR, DESTRAVAR) 40
AJUSTADOR DE CORREIAS 8
AJUSTADOR DO ASSENTO 701
ALARME 99
ALARME DE MARCHA À RÉ 216
ALARME (24 VOLTS) 217
ALAVANCA DE CONTROLE E MONTAGEM 714
ALTERNADOR DE CORRENTE 100
102
104
106
108
110
AMORTECEDOR DE VIBRAÇÕES E POLIA 14
AMORTECEDOR E MONTAGEM 73
AQUECEDOR DA ÁGUA DO MOTOR 140
141
AR. PARA NEVE - MOTONIVELADORA 2
ARRANJO BÁSICO - MOTONIVELADORA 1
ARRANJO RODOVIÁRIO 2
ARREFECEDOR DE ÓLEO DA TRANSMISSÃO 288
289
ARREFECEDOR DO ÓLEO HIDRÁULICO 471
ARREFECIMENTO 46
ARTICULAÇÃO GIRATÓRIA 580
ASSENTO 761
762
764
765
ASSENTO COM SUSPENSÃO 767
768
769
ASSENTO E MONTAGEM 759
760
AUXILIAR DE PARTIDA 195
AUXILIAR DE PARTIDA A ÉTER 196

Designação	Página

B

BARRA DE TRAÇÃO 642
BASE DO FILTRO DE ÓLEO 31
32
BATERIA 112
116
120
BATERIA (12 VOLTS, ISENTO DE MANUTENÇÃO) 112
116
BATERIA (12 VOLTS, ISENTO DE MANUTENÇÃO) 120
BLOCO DE JUNÇÃO 124
BOCAL DE ENCHIMENTO DE ÓLEO DO TREM DE FORÇA 299
BOMBA - FILTRO E TRANSFERÊNCIA DE COMBUSTÍVEL 91
BOMBA DA DIREÇÃO SECUNDÁRIA 575
BOMBA DAS ENGRENAGENS E MONTAGEM 331
BOMBA DE ÁGUA 54
55
BOMBA DE ENGRENAGENS 332
BOMBA DE ESCORVA DO COMBUSTÍVEL E DO FILTRO PRIMÁRIO 89
BOMBA DE PISTÃO (FREIO, VENTILADOR HIDRÁULICO) 577
BOMBA DE PISTÃO (IMPLEMENTO) 578
BOMBA DE PISTÃO (TRAÇÃO EM TODAS AS RODAS) 330
BOMBA DE TRANSFERÊNCIA DO COMBUSTÍVEL 90
BOMBA DO COMANDO ELÉTRICO E MONTAGEM 574
575
576
BOMBA DO VENTILADOR HIDRÁULICO E MONTAGEM 577
BOMBA E MONTAGEM - PISTÃO 578
BOMBA E MONTAGEM - TRAÇÃO EM TODAS AS RODAS 330
BOMBA HIDRÁULICA E MOTOR (EVACUAÇÃO RÁPIDA, DIREÇÃO SECUNDÁRIA) 576
BOMBA HIDRÁULICA E MOTOR (MUDANÇA RÁPIDA DE ÓLEO) 574
BOMBA REGULADORA (DIREÇÃO) 469
BORDA CORTANTE 671
672
673
BRAÇO DO ASSENTO 721
722
BRAÇO-LIMPADOR (PORTA-LADO DIREITO) . . . 792
BUJÃO - CANO/TUBO (DRENO DO ÓLEO) 499

* TRADUÇÃO NÃO DISPONÍVEL NO MOMENTO DA IMPRESSÃO

PROOF

ÍNDICE

Designação	Página
BUJÃO - CONECTOR	175
BUJÃO DO BLOCO DO CILINDRO	26
BUJÃO DO MOTOR	27

C

CABINE	710
CABOS E FIOS ELÉTRICOS-LUZES TRASEIRAS	250
CABOS/FIOS ELÉTRICOS - CABINE	217
CABOS/FIOS ELÉTRICOS - DIANTEIROS	227 231 232
CABOS/FIOS ELÉTRICOS - DIREÇÃO SECUNDÁRIA	252
CABOS/FIOS ELÉTRICOS - MOTOR	225
CABOS/FIOS ELÉTRICOS - SENSOR	254
CABOS/FIOS ELÉTRICOS - TOMADA DE FORÇA	244
CABOS/FIOS ELÉTRICOS - TRASEIROS	246
CABOS/FIOS ELÉTRICOS DE ILUMINAÇÃO	237 239 241 243
CADEADO (CAIXA DE FERRAMENTAS)	796
CAIXA - SUSPENSÃO DO ASSENTO	735
CAIXA DE FERRAMENTAS	796
CAIXA DO VOLANTE DO MOTOR	17
CAIXA E CHASSI	399
CANTO DE LÂMINA	647 648 649 650 651
CARCAÇA DAS ENGRENAGENS PLANETÁRIAS E COMPONENTES	268
CÁRTER DO ÓLEO DO MOTOR	25
CHAPA DE EMPUXO	646
CHASSI DIANTEIRO	418
CHAVE - ELETRÔNICO (SEGURANÇA)	147 194
CHAVE (CHAVE GERAL DA BATERIA)(MOTOR DE PARTIDA)	206
CHAVE GERAL	206
CHAVE GERAL (BATERIA)	112 116
CHICOTE - CABOS ELÉTRICOS (CABO AUXILIAR DE PARTIDA) (SENSOR DE COMBUSTÍVEL)	81
CHICOTE - CABOS ELÉTRICOS (SEGURANÇA)	146
CHICOTE - CHASSI (SISTEMA DE SEGURANÇA DA MÁQUINA)	147
CHICOTE - ILUMINAÇÃO	237 239
CHICOTE - SENSOR	227
CHICOTE - SENSOR (CONTROLE DE RAMPA)	234
CHICOTE - SENSOR (CONTROLE DE TRAÇÃO EM TODAS AS RODAS)	254
CHICOTE - SENSOR (VELOCIDADE)	254
CHICOTE - SENSOR (VELOCIDADE DA TRANSMISSÃO)	286
CHICOTE - SOLENÓIDE (TRAÇÃO EM TODAS AS RODAS)	254
CHICOTE - TRANSMISSÃO	286
CHICOTE - TRASEIRO (AR CONDICIONADO)	246
CHICOTE - TRASEIRO (BOMBA HIDRÁULICA)	246
CHICOTE - TRASEIRO (CHASSI)	246
CHICOTE - VÁLVULA (COMPRESSOR DE AR DO ASSENTO)	777 779
CHICOTE-CHASSI DIANTEIRO	232
CHICOTE-DIREÇÃO	252
CILINDRO DA DIREÇÃO	493 495
CILINDRO DE ARTICULAÇÃO	483
CILINDRO DE DESLIZAMENTO LONGITUDINAL	492
CILINDRO DE DESLOCAMENTO LATERAL	486
CILINDRO DE DIREÇÃO E MONTAGEM	480 481
CILINDRO DE INCLINAÇÃO LATERAL DAS RODAS	497
CILINDRO DE LEVANTAMENTO	488
CILINDRO DE TOMBAMENTO DA LÂMINA	485
CILINDRO DO ESCARIFICADOR	491
CILINDRO DO RÍPER	489
CILINDRO E MONTAGEM - ARTICULAÇÃO	473
CILINDRO E MONTAGEM - DESLOCAMENTO DA LÂMINA	479
CILINDRO E MONTAGEM - DESLOCAMENTO DO CÍRCULO	477
CILINDRO E MONTAGEM - ESCARIFICADOR	478
CILINDRO E MONTAGEM - INCLINAÇÃO DAS RODAS	482
CILINDRO E MONTAGEM - LEVANTAMENTO DA LÂMINA	474
CILINDRO E MONTAGEM - TOMBAMENTO DA LÂMINA	475
CILINDRO HIDRÁULICO	487
CINTO DE SEGURANÇA	761 764
CÍRCULO	640

* TRADUÇÃO NÃO DISPONÍVEL NO MOMENTO DA IMPRESSÃO

PROOF

ÍNDICE

Designação	Página
COBERTURA DO MOTOR	406
COLETOR - CONTROLE	567
	570
	571
COLETOR - ÓLEO DO MOTOR	43
COLETOR DE ESCAPE	72
COLMÉIA-AQUECEDOR	707
COLMÉIA (ARREFECEDOR DO ÓLEO DA TRANSMISSÃO)	289
COLMEIA DO CONDENSADOR (REFRIGERANTE)	713
COLMEIA DO RADIADOR	56
COLUNA DA DIREÇÃO	469
COMANDO FINAL	306
	308
COMANDO HIDRÁULICO	503
COMPRESSOR DE AR	4
	5
	6
COMPRESSOR DE AR - ASSENTO	702
COMPRESSOR DE REFRIGERANTE	711
	712
CONDENSADOR DO REFRIGERANTE E MONTAGEM	713
CONDICIONADOR DE AR	705
	706
	707
CONDICIONADOR DE AR E MONTAGEM	703
CONEXÃO - HIDRÁULICA	284
CONTROLE - ACESSÓRIO	130
CONTROLE - ALAVANCA (DIREITO)	714
CONTROLE - ALAVANCA (ESQUERDO)	714
CONTROLE - ALAVANCA (POSTO DO OPERADOR)	468
CONTROLE - NÃO PROGRAMADO	133
	134
	136
CONTROLE - NÃO PROGRAMADO (ESCRAVO DO IMPLEMENTO)	129
CONTROLE - NÃO PROGRAMADO (MESTRE DO IMPLEMENTO)	129
CONTROLE - NÃO PROGRAMADO (MOTOR)	128
	233
CONTROLE - NÃO PROGRAMADO (SEGURANÇA)	194
CONTROLE - NÃO PROGRAMADO (SISTEMA HIDRÁULICO ELETRÔNICO)	134
CONTROLE - NÃO PROGRAMADO (TRANSMISSÃO)	286
CONTROLE DA TRAVA DO DIFERENCIAL	284
CONTROLE DE DIREÇÃO	469
CONTROLE DO ACESSÓRIO E MONTAGEM	129
CONTROLE DO AR E TEMPERATURA	717
CONTROLE DO FREIO DE SERVIÇO	443
	445
	447
CONTROLE DO PAINEL MONITOR (MENSAGEIRO)	718
CONTROLE DO TREM DE FORÇA	131
CONTROLE ELÉTRICO DAS MARCHAS	257
CONTROLE-ELETROIDRÁULICO	468
CONTROLE-ELETROIDRÁULICO (SEM ALAVANCA AUXILIAR)	460
	461
	462
	465
CONTROLE-ELETROIDRÁULICO (SEM ALAVANCA AUXILIAR) (ALAVANCA)	468
CONTROLE ELETRÔNICO E MONTAGEM - MOTOR	128
CONTROLE ELETRÔNICO (GRUPO DE INSTRUMENTOS)	217
CONTROLE HIDRÁULICO	460
	461
	462
	463
	464
	465
	466
	467
CONTROLE HIDRÁULICO DA TRANSMISSÃO	286
CONTROLE-MONITOR NÃO PROGRAMADO	718
CONVERSOR ELÉTRICO	137
CORREIA- SERPENTINA	104
	108
	110
CORREIA- SERPENTINA (ALTERNADOR)	106
CORRENTE - COMANDO	275
CORRENTE (TANDEM)	275
COTOVELO DE ADMISSÃO DE AR	67
CRUZETA E MANCAL	341

D

DECALQUE	797
DECALQUE - ADVERTÊNCIA (MOLA TENSORA)	437
DECALQUE - ADVERTÊNCIA (NÃO LEVANTAR) (LÂMINA)	664
DECALQUE - ADVERTÊNCIA (PERIGO DE ESMAGAMENTO, MANTENHA DISTÂNCIA)	250
DECALQUE - IDENTIFICAÇÃO (BUZINA)	714
DECALQUE - IDENTIFICAÇÃO (ÓLEO HIDRÁULICO BIODEGRADÁVEL)	503

* TRADUÇÃO NÃO DISPONÍVEL NO MOMENTO DA IMPRESSÃO

PROOF

ÍNDICE

Designação	Página
DECALQUE - IDENTIFICAÇÃO (REFLETORA REDONDA VERMELHA)	689
DECALQUE - IDENTIFICAÇÃO (RÍPER)	130
DECALQUE - INFORMAÇÕES (CHAVE) (SISTEMA DE SEGURANÇA)	147
DECALQUE - INFORMAÇÕES (ROPS, FOPS, CONSULTAR OMM)	710
DECALQUE - INFORMAÇÕES (24 VOLTS)	799
DECALQUE - INSTRUÇÃO (AJUSTE DO ASSENTO)	775 777 779
DECALQUE - INSTRUÇÃO (CONSULTAR OMM)	146 147
DECALQUE - INSTRUÇÃO (DRENO DO ÓLEO DO MOTOR)	39
DECALQUE - INSTRUÇÃO (ENCAMINHAMENTO DA CORREIA)	104 106 108 110
DECALQUE - INSTRUÇÃO (ENTRADA E SAIDA DE AGUA)	745
DECALQUE - INSTRUÇÃO (LIMPADOR)	740
DECALQUE - INSTRUÇÃO (PARADA DO MOTOR)	799
DECALQUE - ÓLEO DO MOTOR (ENCHIMENTO, DRENAGEM)	40 45
DECALQUE (ACUMULADOR HIDRÁULICO)	517
DECALQUE (BOBINA DO EXCITADOR)	146
DECALQUE (IGNIÇÃO)	146 147
DECALQUE (PARTIDA DO MOTOR)	146
DECALQUE-REFLETOR (AMARELO)	416
DECALQUE-REFLETOR (AMARELO) (PÁRA-LAMA)	412
DECALQUE (TRAÇÃO EM TODAS AS RODAS)	131
DEGRAU	431
DESCONGELADOR	734
DIFERENCIAL	295
DIFERENCIAL E COROA	293
DIREÇÃO SECUNDÁRIA	579
DISJUNTOR AUTOMÁTICO DE CIRCUITO (105 AMPERES) (ALTERNADOR)	124
DISJUNTOR AUTOMÁTICO DE CIRCUITO (105 AMPERES) (ALTERNADOR NO. 2)	124
DISJUNTOR AUTOMÁTICO DE CIRCUITO (15 AMPERES) (CHAVE INTERRUPTORA)	125
DISJUNTOR AUTOMÁTICO DE CIRCUITO (15 AMPERES) (ILUMINAÇÃO DE OPERAÇÃO)	124
DISJUNTOR AUTOMÁTICO DE CIRCUITO (15 AMPERES) (TRANSMISSÃO - CONTRÔLE DAS MARCHAS)	125
DISJUNTOR AUTOMÁTICO DE CIRCUITO (80 AMPERES) (CARGA)	124
DISJUNTOR AUTOMÁTICO DE CIRCUITO (80 AMPERES) (PRINCIPAL)	124
DRENO - ECOLOGIA	297
DUCTO E FILTRO	731

E

EIXO DE ENTRADA	336
EIXO DE TRANSMISSÃO	335
EIXO DIANTEIRO	257 258 259 260 262 264 265
ELEMENTO - AQUECEDOR DE ÁGUA DA CAMISA (120 VOLTS, 1.000 WATTS)	141
ELEMENTO - AQUECEDOR DE ÁGUA DA CAMISA (240 VOLTS, 1.000 WATTS)	140
ELEMENTO DO FILTRO DE AR (PRIMÁRIO)	64
ELEMENTO DO FILTRO DE AR (SECUNDÁRIO)	64
ELEMENTO FILTRANTE - ÓLEO (ALTA EFICIÊNCIA) (TANQUE HIDRÁULICO)	305
ELEMENTO FILTRANTE - ÓLEO (ALTA EFICIÊNCIA) (TRANSMISSÃO)	303
ELEMENTO FILTRANTE - ÓLEO HIDRÁULICO (PRIMÁRIO)	502
ELEMENTO FILTRANTE - ÓLEO HIDRÁULICO (TRAÇÃO EM TODAS AS RODAS)	310
ELIMINAÇÃO DE VAPORES DO CÁRTER	36
ELO - DIREÇÃO	426 427
EMBREAGEM DA TRANSMISSÃO	276 278 280 282
EMISSOR - POSIÇÃO	178 179
EMISSOR - POSIÇÃO (CILINDRO DA DIREÇÃO)	493 495
ENGATE - ARTICULAÇÃO	422

* TRADUÇÃO NÃO DISPONÍVEL NO MOMENTO DA IMPRESSÃO

ÍNDICE

Designação	Página
ENGATE DO REBOQUE	424
ENGRENAGEM (LADO DIREITO) (TRAÇÃO EM TODAS AS RODAS)	298
ENGRENAGEM (LADO ESQUERDO) (TRAÇÃO EM TODAS AS RODAS)	298
ENGRENAGENS DE COMANDO TRASEIRO	16
ESCARIFICADOR	691 692 695 698 699
ESCARIFICADOR (HIDRÁULICO)	699
ESPELHO RETROVISOR	747 748 749 750
EXTENSÃO - ENCOSTO (TECIDO)	761 764
EXTENSÃO DA LÂMINA	674 675 676 678
FILTRO - ÓLEO	303 305 502
FILTRO - ÓLEO DO MOTOR	34
FILTRO - ÓLEO (TRAÇÃO EM TODAS AS RODAS)	310
FILTRO - RESPIRO (TANQUE HIDRÁULICO)	582
FILTRO - SEPARADOR DE ÁGUA E COMBUSTÍVEL (PRIMÁRIO)	83
FILTRO (ÁGUA) (BOMBA)	54
FILTRO DE COMBUSTÍVEL E SEPARADOR DE ÁGUA	83
FILTRO DO ÓLEO E MONTAGEM	300 302
FILTRO (TRANSMISSÃO)	268
FIXADORES - TANQUE DE COMBUSTÍVEL	79
FREIO DE ESTACIONAMENTO	437
FREIO DE SERVIÇO	439 441
FUNDO - ENCOSTO	752 753
FUSÍVEL (10 AMPERES)	217
FUSÍVEL (15 AMPERES)	217 707
FUSÍVEL (30 AMPERES)	217

F

FIACAO - BOMBA (COMBUSTÍVEL)	246
FIAÇÃO - CAIXA DE JUNÇÃO	124
FIACAO - CONTROLE DO NIVEL	233 234
FIAÇÃO - CONTROLE (SISTEMA HIDRÁULICO ELETRÔNICO)	134
FIAÇÃO - CONTROLE (TRAÇÃO EM TODAS AS RODAS)	131
FIAÇAO - CONTROLES DO OPERADOR	233
FIAÇÃO - FERRAMENTA DE TRABALHO	234
FIAÇÃO - LUZES TRASEIRAS	241 250
FIAÇÃO - LUZES TRASEIRAS (PLACA DE REGISTRO)	173
FIAÇÃO -LUZES DIANTEIRAS	155 157
FIAÇÃO-CÂMERA	223
FIAÇÃO ELÉTRICA (RÁDIO DO PRODUCT LINK)	142
FIAÇÃO-RÁDIO	757
FIAÇÃO-TANQUE DE COMBUSTÍVEL	227
FILTRO - AR (AQUECEDOR, CONDICIONADOR DE AR DA CABINE)	731
FILTRO - COMBUSTÍVEL	81 93 95
FILTRO - MAGNÉTICO	334
FILTRO - MAGNÉTICO (TRANSMISSÃO)	334

G

GR. DE SERVIÇO - ACESSÓRIO	138
GR. DE SERVIÇO - MÁQUINA	194
GR. DE SERVICO - TREM DE FORÇA	139
GR. DE SERVICO - TREM DE FORÇA (TRAÇÃO EM TODAS AS RODAS)	139
GRUPO DE VÁLVULAS DE CONTROLE - CINCO	589 591
GRUPO DE VÁLVULAS DE CONTROLE - OITO	603 605
GRUPO DE VÁLVULAS DE CONTROLE - QUÁDRUPLO	587
GRUPO DE VÁLVULAS DE CONTROLE - SEIS	593 595 597
GRUPO DE VÁLVULAS DE CONTROLE - SETE	599 601
GRUPO DE VÁLVULAS DE CONTROLE - TRIPLO	585

* TRADUÇÃO NÃO DISPONÍVEL NO MOMENTO DA IMPRESSÃO

PROOF

ÍNDICE

Designação	Página
I	
ILUMINAÇÃO - MARCHA A RÉ	166
ILUMINAÇÃO - RODOVIÁRIA	173
INDICADOR - NÍVEL DO ÓLEO (VARETA)	37
INDICADOR - VARETA DO NÍVEL DE ÓLEO (NÍVEL DO ÓLEO DO TREM DE FORÇA)	299
INDICADOR DE NÍVEL (TEMPERATURA)	782
INDICADOR (DESGASTE DO FREIO)	439, 441
INSTALACAO - CONTROLE DA GRELHA	144
INSTALAÇÃO-COMUNICAÇÃO	142
INSTALAÇÃO-CONTROLE DA INCLINAÇÃO	144
INSTALAÇÃO DO RÁDIO	738
INSTALAÇÃO DO SISTEMA DE ILUMINAÇÃO	145
INSTALAÇÃO-SEGURANÇA	146, 147
INTERRUPTOR - BALANCIM	213
INTERRUPTOR - BALANCIM (ACOPLAMENTO DE DESCONEXÃO RÁPIDA)	217
INTERRUPTOR - BALANCIM (AMORTECEDOR DA LÂMINA)	217
INTERRUPTOR - BALANCIM (AQUECIMENTO DOS ESPELHOS)	750
INTERRUPTOR - BALANCIM (CONDICIONADOR DE AR, LIGAR-DESLIGAR)	717
INTERRUPTOR - BALANCIM (DIREÇÃO SECUNDÁRIA)	217
INTERRUPTOR - BALANCIM (EVAC. ÓLEO DO MOTOR)	225
INTERRUPTOR - BALANCIM (FARÓIS DIANTEIROS, LUZES TRASEIRAS)	217
INTERRUPTOR - BALANCIM (FAROL)	237
INTERRUPTOR - BALANCIM (FREIO DE ESTACIONAMENTO)	217
INTERRUPTOR - BALANCIM (ILUMINAÇÃO RODOVIÁRIA)	212
INTERRUPTOR - BALANCIM (LUZ DE OPERAÇÃO)	145, 207
INTERRUPTOR - BALANCIM (PARADA A NÍVEL DO SOLO)	246
INTERRUPTOR - BALANCIM (PERIGO) (PERIGO)	217
INTERRUPTOR - BALANCIM (PISCA-ALERTA)	213
INTERRUPTOR - BALANCIM (REGULADOR DO CONTROLE DA VELOCIDADE)	217
INTERRUPTOR - BALANCIM (SETA DE DIREÇÃO)	714
INTERRUPTOR - BALANCIM (TRAVA DO ACELERADOR)	217
INTERRUPTOR - BALANCIM (TRAVA DO ACESSÓRIO)	217
INTERRUPTOR - BALANCIM (TROCA DE TRANSMISSÃO)	257
INTERRUPTOR - BALANCIM (VELOCIDADE DO VENTILADOR)	734
INTERRUPTOR - BOTÃO (BUZINA)	714
INTERRUPTOR - CIRCUITO (20-AMPERES) (CONTROLE DO MOTOR)	125
INTERRUPTOR - ESFERA (INDICADOR DE DESLOCAMENTO LATERAL)	227
INTERRUPTOR - LIMITADOR (POSIÇÃO DA COLUNA DA DIREÇÃO)	469
INTERRUPTOR - LIMPADOR DO PÁRA-BRISA	214
INTERRUPTOR - LIMPADOR DO PÁRA-BRISA (24 VOLTS) (DIANTEIRO)	217
INTERRUPTOR - LIMPADOR DO PÁRA-BRISA (24 VOLTS) (DIR.)	217
INTERRUPTOR - LIMPADOR DO PÁRA-BRISA (24 VOLTS) (ESQ.)	217
INTERRUPTOR - LIMPADOR (24 VOLTS) (INTERMITENTE)	214
INTERRUPTOR - LUZES	207
INTERRUPTOR - MAGNÉTICO	208, 209, 210
INTERRUPTOR - MAGNÉTICO (24 VOLTS) (AQUECEDOR DE ADMISSÃO DE AR)	209
INTERRUPTOR - MAGNÉTICO (24 VOLTS) (RELÉ DO MOTOR DE PARTIDA)	124
INTERRUPTOR - MAGNÉTICO (24 VOLTS) (RELÉ PRINCIPAL)	124
INTERRUPTOR - NÍVEL DO LÍQUIDO (FLUIDO DO LAVADOR DE PARA-BRISA)	781
INTERRUPTOR - PARTIDA (CHAVE)	217
INTERRUPTOR - PRESSÃO	211
INTERRUPTOR - PRESSÃO (DERIVAÇÃO DO FILTRO)	502
INTERRUPTOR - PRESSÃO (DERIVAÇÃO DO FILTRO DE ÓLEO DA TRAÇÃO EM TODAS AS RODAS)	310
INTERRUPTOR - PRESSÃO (UNIDADE DE MEDIÇÃO MANUAL)	561
INTERRUPTOR - RODOVIÁRIO	212
INTERRUPTOR - ROTATIVO (24 VOLTS) (CONTROLE DA TRAÇÃO EM TODAS AS RODAS)	203
INTERRUPTOR - TEMPERATURA (AR CONDICIONADO)	707
INTERRUPTOR DE DERIVAÇÃO	205
INTERRUPTOR (RIPER)	130
INTERRUPTOR-TRAÇÃO EM TODAS AS RODAS	203
ISOLADOR - TEMPO	739

* TRADUÇÃO NÃO DISPONÍVEL NO MOMENTO DA IMPRESSÃO

ÍNDICE

Designação	Página

J

JANELA DA CABINE 783
784
785
786
JOGO DE ALAVANCA (MOTOR DE PARTIDA) . . . 200
JOGO DE AMORTECEDOR DE CHOQUES (ASSENTO) 777
779
JOGO DE ARRUELA (MOTOR DE PARTIDA) . . . 197
JOGO DE BLOCO DESLIZADOR (ASSENTO) . . . 767
769
JOGO DE BLOCO DESLIZADOR (ASSENTO DA SUSPENSÃO) 768
JOGO DE BOTÃO DE SUSPENSÃO (AJUSTE DE ALTURA) (ASSENTO DA SUSPENSÃO) 735
JOGO DE BUCHA (MOTOR DE PARTIDA) 200
JOGO DE CORDÃO (ASSENTO) 777
779
JOGO DE ESCOVA (MOTOR DE PARTIDA) 197
200
JOGO DE FILTRO DA TAMPA (TANQUE DE COMBUSTÍVEL) 93
95
JOGO DE FIXADORES (ALTERNADOR) 100
102
JOGO DE FIXADORES (MOTOR DE PARTIDA) 197
JOGO DE INDICADOR (AJUSTAGEM DO PESO) (ASSENTO DA SUSPENSÃO) 736
JOGO DE INDICADOR (ASSENTO) 777
779
JOGO DE ISOLADOR (MOTOR DE PARTIDA) . . . 200
JOGO DE MANCAL (ALTERNADOR) 100
102
JOGO DE MANCAL (ASSENTO DA SUSPENSÃO) 736
JOGO DE MANCAL (MOTOR DE PARTIDA) 197
JOGO DE MOLA (AJUSTE DE ALTURA) (ASSENTO DA SUSPENSÃO) 735
JOGO DE MOLA (ASSENTO DA SUSPENSÃO) 735
JOGO DE PÁRA-CHOQUE (AJUSTAGEM DO PESO) (ASSENTO DA SUSPENSÃO) 736
JOGO DE PINO DO MOTOR DE PARTIDA 197
JOGO DE REPARO (SENSOR DE NÍVEL DE COMBUSTÍVEL) 93
95
JOGO DE RETENTOR (ACUMULADOR DO FREIO) 435
436
JOGO DE RETENTOR (ACUMULADOR HIDRÁULICO) 519
JOGO DE RETENTOR (CILINDRO DO RÍPER) 489
JOGO DE RETENTOR (DIREÇÃO) 639
JOGO DE RETENTOR DO MOTOR DE PARTIDA 197
JOGO DE RETENTOR (MOTOR) 572
JOGO DE RETENTOR (VALVULA DE ALIVIO) . . . 587
591
635
JOGO DE RETENTOR (VALVULA DE ALIVIO) (SINAL SENSORIAL DE CARGA) 585
593
JOGO DE RETENTOR (VÁLVULA DE DESVIO) 567
JOGO DE RETENTOR (VÁLVULA DE DESVIO) (FLUXO DO FLUIDO DO VENTILADOR HIDRÁULICO) 634
JOGO DE RETENTOR (VÁLVULA DE RETENÇÃO) (ÂNGULO DO ARADO) 630
JOGO DE RETENTOR (VÁLVULA DE RETENÇÃO) (ARADO, LEVANTAMENTO DA LÂMINA) 628
JOGO DE RETENTOR (VÁLVULA DE RETENÇÃO) (ARTICULAÇÃO) 608
JOGO DE RETENTOR (VÁLVULA DE RETENÇÃO) (COMANDO DO CÍRCULO) 618
JOGO DE RETENTOR (VÁLVULA DE RETENÇÃO) (DESLIZAMNTO LONGITUDINAL DA LÂMINA) 616
JOGO DE RETENTOR (VÁLVULA DE RETENÇÃO) (DESLOCAMENTO LATERAL DA LÂMINA) . . . 614
JOGO DE RETENTOR (VÁLVULA DE RETENÇÃO) (ESCARIFICADOR) 632
JOGO DE RETENTOR (VÁLVULA DE RETENÇÃO) (INCLINAÇÃO DA ASA) 624
JOGO DE RETENTOR (VÁLVULA DE RETENÇÃO) (INCLINAÇÃO DA RODA) 620
JOGO DE RETENTOR (VÁLVULA DE RETENÇÃO) (LEVANTAMENTO DA LÂMINA) 610
JOGO DE RETENTOR (VÁLVULA DE RETENÇÃO) (LEVANTAR ASA) 626

* TRADUÇÃO NÃO DISPONÍVEL NO MOMENTO DA IMPRESSÃO

ÍNDICE

Designação	Página
JOGO DE RETENTOR (VÁLVULA DE RETENÇÃO) (PONTA DA LÂMINA)	612
JOGO DE RETENTOR (VÁLVULA DE RETENÇÃO) (RIPER)	622
JOGO DE RETENTOR (VÁLVULA DE VAIVÉM)	567
JOGO DE RETENTOR (VÁLVULA SOLENÓIDE)	637
JOGO DE REVISÃO - GOVERNADOR (COMPRESSOR DE AR)	458
JOGO DE SEGUIDOR (ASSENTO DA SUSPENSÃO)	736
JOGO DE TERMINAL (ALTERNADOR)	100
	102
JOGO DE VÁLVULA DE AR (ASSENTO)	777
	779
JUNTA (ALOJAMENTO DO REGULADOR DE TEMPERATURA)	50
JUNTA UNIVERSAL	341

L

LÂMINA	652
	653
	654
LÂMINA BULDOZER	655
	659
	660
	664
LÂMINA DO LIMPADOR DE PÁRA-BRISA (DIANTEIRO)	787
LÂMINA DO LIMPADOR DE PÁRA-BRISA (ESQ.)	790
LÂMINA DO LIMPADOR DE PÁRA-BRISA (LIMPADOR TRASEIRO)	789
LÂMINA DO LIMPADOR DE PÁRA-BRISA (PORTA, LADO DIREITO)	795
LÂMINA DO LIMPADOR DE PÁRA-BRISA (PORTA-LADO DIREITO)	791
	792
LÂMINA DO LIMPADOR DE PÁRA-BRISA (PORTA, LADO ESQUERDO)	793
LÂMPADA - FAROL	150
	151
	152
	153
	154
LÂMPADA - HALOGÊNEO (24 VOLTS, 65 WATTS)	152
	153
LÂMPADA - HALOGÊNEO (24 VOLTS, 65 WATTS) (LÂMINA)	154
LÂMPADA - LED (24-VOLTS, ÂMBAR)	469
LÂMPADA - LED (24-VOLTS, VERDE)	203
	217
	469
LÂMPADA - LED (24-VOLTS, VERMELHO)	147
LÂMPADA - LED (24-VOLTS, VERMELHO)	203
LÀMPADA - MARCADORA	161
LÂMPADA - SINALIZAÇÃO	162
LÂMPADA - SINALIZAÇÃO (LUZ DO FREIO, TRASEIRA, SETA DE DIREÇÃO)	250
LÂMPADA - TETO	149
LÂMPADA DIANTEIRA E DE SINAL	155
	157
	159
	160
LÂMPADA DIANTEIRA E DE SINAL (24 VOLTS, LADO DIREITO)	157
LÂMPADA DIANTEIRA E DE SINAL (24 VOLTS, LADO ESQUERDO)	157
LAMPADA-PLACA DE REGISTRO	173
LÂMPADA (VERMELHA, VERDE, LED, 12 VOLTS)	146
LÂMPADA (12 VOLTS, 24 VOLTS, 35 WATTS)	150
	151
LÂMPADA (24 VOLTS)	149
	173
	225
	740
LÂMPADA (24 VOLTS) (POSIÇÃO DA CABINE)	161
LÂMPADA (24 VOLTS, 21 WATTS) (ÂMBAR)	159
	160
LÂMPADA (24 VOLTS, 21 WATTS) (COMPARTIMENTO DO MOTOR)	166
LÂMPADA (24 VOLTS, 5 WATTS) (APAGAR)	159
	160
LÂMPADA (24 VOLTS, 70 WATTS)	165
LÂMPADA (24 VOLTS, 75-70 WATTS) (APAGAR)	159
	160
LENTE (PISCA-ALERTA) (ÂMBAR)	163
LEVANTAMENTO DA LÂMINA	679
LEVANTAMENTO DO MOTOR	19
LIMPADOR DO VIDRO	789
	790
	791
	792
	793
	795
LIMPADOR E LAVADOR - JANELA	787
*LINES GP-ENGINE OIL DRAIN	39
*LINES GP-HYDRAULIC	524
*LINES GP-STEERING	559

* TRADUÇÃO NÃO DISPONÍVEL NO MOMENTO DA IMPRESSÃO

PROOF

ÍNDICE

Designação	Página
LISTRA DA CABINE	782
LUZ GIRATÓRIA DE ALARME	163, 164, 165
LUZ-INDICADORA (MUDANÇA RÁPIDA DE ÓLEO)	225

M

MAÇANETA DA PORTA	723, 726
MANGUEIRA - DESCARTE (VAPORES)	36
*MANIFOLD GP-CONTROL	566
MONITOR DE SERVIÇO (PAINEL DE CONTROLE DO EMS)	139
MONTAGEM - ALTERNADOR	20
MONTAGEM - COMANDO DO VENTILADOR	23
MONTAGEM - MOTOR E TRANSMISSÃO	21
MONTAGEM - REMOVEDOR DE NEVE	686, 687
MONTAGEM - RIPER	684
MONTAGEM - RODA	329
MONTAGEM - VÁLVULA	429
MONTAGEM DA LÂMINA	682
MONTAGEM DO EIXO	428
MONTAGEM DO FILTRO DE COMBUSTÍVEL	88
MOTOR - ENGRENAGENS (ARREFECIMENTO DO RADIADOR)	47
MOTOR - LIMPADOR DO VIDRO	751
MOTOR - LIMPADOR DO VIDRO (DIREITO)	795
MOTOR - LIMPADOR DO VIDRO (ESQ.)	790
MOTOR - LIMPADOR DO VIDRO (PORTA-LADO DIREITO)	791
MOTOR - LIMPADOR DO VIDRO (PORTA, LADO ESQUERDO)	793
MOTOR - LIMPADOR DO VIDRO (TRASEIRO)	789
MOTOR - PISTÃO	328
MOTOR - PISTÃO (TRAÇÃO EM TODAS AS RODAS)	328
MOTOR COMPLETO	3
MOTOR DE REVERSÃO DO CÍRCULO	499
MOTOR E VENTILADOR	47
MOTOR ELÉTRICO	174
MOTOR ELÉTRICO DE PARTIDA	197, 199, 200, 202
MOTOR HIDRÁULICO DO GEROTOR	572
*MOUNTING GP-GRADE CONTROL	645, 683

O

ÓLEO - ARRANJO PARA TROCA RÁPIDA	44, 45
OPÇÃO - UNIÃO EUROPÉIA - EU	2

P

PAINEL - CABINE	754, 756
PÁRA-LAMA E SUPORTE	410, 412, 414, 416
PIVÔ DO LIMPADOR (PORTA-LADO DIREITO)	792
PLACA - NÚMERO DE SÉRIE (TRANSMISSÃO)	268
PLACA DE IDENTIFICAÇÃO (CATERPILLAR)	655, 660
PLACA DE IDENTIFICAÇÃO (CATERPILLAR)	664
PLACA DE IDENTIFICAÇÃO (INFORMAÇÕES SOBRE A FERRAMENTA DE TRABALHO)	659, 698, 699
PLACA DE IDENTIFICAÇÃO (PESO MÁXIMO)	2
PLACA DE INSTRUÇÃO (BATERIA) (CHAVE GERAL)	112, 116, 120
PLACA DE INSTRUÇÃO (CONDICIONADOR DE AR)	706
PLACA E DECALQUE	798, 799
POLIA DA RODA-GUIA	28
PORTA DA CABINE	723, 726, 729
PÓS-ARREFECEDOR DA ADMISSÃO DE AR	62
PRÉ-PURIFICADOR	75
PRÉ-PURIFICADOR (TURBINA)	75
PROTETOR - TANQUE DE COMBUSTÍVEL	421
PROTETOR - TUBOS DO FREIO	420
PROTETOR DO VENTILADOR (ARREFECIMENTO DO RADIADOR)	47
PROTETOR INFERIOR	419
PURIFICADOR DE AR	63, 64

R

RADIADOR	56
RÁDIO	757

* TRADUÇÃO NÃO DISPONÍVEL NO MOMENTO DA IMPRESSÃO

PROOF

ÍNDICE

Designação	Página
RÁDIO - COMUNICAÇÃO (PRODUCT LINK 121SR)	142
RÁDIO (AM/FM/WB)	757
RECLINAÇÃO - ASSENTO	758
REDUÇÃO DE RUÍDO	774
REGULADOR DE PRESSÃO (BOMBA DE TRANSFERÊNCIA DE COMBUSTÍVEL)	90
REGULADOR DE PRESSÃO DO COMBUSTÍVEL	92
REGULADOR DE TEMPERATURA DA ÁGUA (97 GRAUS C) (LÍQUIDO ARREFECEDOR)	50
REGULADOR DE VOLTAGEM (24 VOLTS) (ALTERNADOR)	100
	102
REGULADOR (PRESSÃO DO COMBUSTÍVEL)	92
RELÉ (CONJ) (12-VOLTS) (SEGURANÇA)	146
RELÉ (CONJ) (24 VOLTS)	217
RELÉ (CONJ) (24 VOLTS) (ALARME DE MARCHA-À-RÉ)	247
RELÉ (CONJ) (24 VOLTS) (BOMBA DE COMBUSTÍVEL)	247
RELÉ (CONJ) (24 VOLTS) (DIREÇÃO SECUNDÁRIA)	252
RELÉ (CONJ) (24 VOLTS) (EVAC. ÓLEO DO MOTOR)	225
RELÉ (CONJ) (24 VOLTS) (ILUMINAÇÃO RODOVIÁRIA)	212
RELÉ (CONJ) (24 VOLTS) (SEGURANÇA)	146
RESPIRO	33
RESPIRO (CÁRTER DO MOTOR)	33
RESPIRO (TANDEM)	337
RESPIRO (TANQUE DO ÓLEO DO TREM DE FORÇA)	299
RETENTOR DO VIRABREQUIM	29
RETENTOR INTEGRAL	585
	587
	589
	591
	593
	595
	597
	599
	601
	603
	605
REVESTIMENTO DA CABINE	740
RIPER	688
	689
RODA	393
	394
	395
	396
	397
	398
RODA E PNEU	346
	347
	348
	349
	350
	351
	352
	353
	354
	355
	356
	357
	358
	359
	360
	361
	362
	363
	364
	365
	366
	367
	368
	369
	370
	371
	372
	373
	374
	375
	376
	377
	378
	379
	380
	381
	382
	383
	384
	385
	386
	387
	388
	389
	390
	391
	392
RODA PROPULSORA	298

* TRADUÇÃO NÃO DISPONÍVEL NO MOMENTO DA IMPRESSÃO

PROOF

ÍNDICE

Designação	Página
S	
SEMI-EIXO TRASEIRO	266
SENSOR - PRESSÃO	180
	181
	182
	183
	184
	185
	186
	187
	188
SENSOR - TEMPERATURA	190
	191
	192
	193
SENSOR - TEMPERATURA (ÓLEO DA TRANSMISSÃO)	286
SENSOR DE VELOCIDADE	189
SENSOR DE VELOCIDADE (SAÍDA DA TRANSMISSÃO, ALTA)	286
SENSOR DE VELOCIDADE (SAÍDA DA TRANSMISSÃO, BAIXA)	286
SENSOR DO MOTOR	176
SIST. ELETRÔNICO - ACESSÓRIO	138
SISTEMA DE ILUMINAÇÃO - FARÓIS	167
	168
	169
	170
	171
	172
SISTEMA ELETRÔNICO - MONITOR	139
SISTEMA ELETRÔNICO - TREM DE FORÇA	139
SOFTWARE - ACESSÓRIO	138
SOFTWARE - MÁQUINA	194
SOFTWARE - MONITOR (PAINEL DE CONTROLE DO EMS)	139
SOFTWARE - TREM DE FORÇA	139
SOFTWARE - TREM DE FORÇA (MUDANÇA AUTOMÁTICA)	257
SOFTWARE - TREM DE FORÇA (TRAÇÃO EM TODAS AS RODAS)	139
SOLENÓIDE (24 VOLTS) (MOTOR DE PARTIDA)	197
	200
SOQUETE - BARRA DE DIREÇÃO (LADO DIREITO)	427
SOQUETE - BARRA DE DIREÇÃO (LADO DIREITO) (DIREÇÃO)	426
SOQUETE - BARRA DE DIREÇÃO (LADO ESQUERDO)	427
SOQUETE - BARRA DE DIREÇÃO (LADO ESQUERDO) (DIREÇÃO)	426
SUPORTE - CHASSI TRASEIRO	432
SUPORTE - CONTROLE	770
	772
SUPORTE DO ESCARIFICADOR	670
SUPORTE DO MOTOR	30
SUPORTE DO RADIADOR	433
SUSPENSÃO - ASSENTO	775
	777
	779
T	
TAMPA - ACESSO	401
	402
	403
TAMPA - ADMISSÃO DE AR	65
	66
TAMPA - BLOCO DO MOTOR	9
TAMPA - BOCAL DE ENCHIMENTO (ÓLEO DO MOTOR)	11
TAMPA - BOCAL DE ENCHIMENTO (TANQUE DE COMBUSTÍVEL)	93
	95
TAMPA - BOCAL DE ENCHIMENTO (TANQUE HIDRÁULICO)	584
TAMPA - CABINE	719
TAMPA - CAIXA DIANTEIRA	10
	11
TAMPA - COLUNA DA DIREÇÃO	720
TAMPA - EMBARQUE	291
TAMPA - MECANISMO DAS VÁLVULAS	12
	13
TAMPA - RADIADOR (*6 TO 8-PSI) (ALÍVIO DE PRESSÃO)	58
TAMPA - VÁLVULA DE CONTROLE	404
TAMPÃO (DRENO)	297
TANDEM E TAMPA	337
TANQUE - LAVADOR DE JANELA	781
TANQUE - LÍQUIDO ARREFECEDOR	58
	59
TANQUE DE AR	458
TANQUE DE COMBUSTÍVEL	93
	95
TANQUE DE ÓLEO HIDRÁULICO E MONTAGEM	582
TANQUE HIDRÁULICO	584
TAPETE (CABINE)	782
TELA DE SUCÇÃO (TRANSMISSÃO)	334
TELA FILTRANTE (DIREÇÃO)	571
TELA FILTRANTE (FREIO, VENTILADOR HIDRÁULICO)	567
TELA FILTRANTE (RETORNO)	268
TETO - CABINE	759
*TOOTH GP-RIPPER	700

* TRADUÇÃO NÃO DISPONÍVEL NO MOMENTO DA IMPRESSÃO

PROOF

ÍNDICE

Designação	Página
TRANSMISSÃO	339
TRAVA - DESLOCAMENTO LATERAL	565
TUBOS - ÁGUA	50
	52
TUBOS - AQUECEDOR	745
	746
TUBOS - AR	68
	70
	71
TUBOS - AR CONDICIONADO	741
	743
TUBOS - BOMBA	530
	534
	538
	545
TUBOS - COMBUSTÍVEL	84
TUBOS - DIREÇÃO	561
TUBOS - DIREÇÃO SECUNDÁRIA	555
	557
TUBOS - FILTRO DO COMBUSTÍVEL	86
TUBOS - FREIO DE SERVIÇO	454
	456
TUBOS - GRAXA	425
TUBOS - ÓLEO DA TRANSMISSÃO	322
	326
TUBOS - ÓLEO DO MOTOR	38
TUBOS - ÓLEO DO TURBOALIMENTADOR	42
TUBOS - ÓLEO HIDRÁULICO	508
	510
	515
	517
	525
TUBOS - PINO MESTRE DE DESLOCAMENTO LATERAL	504
	506
TUBOS - RIPER	552
	554
TUBOS - TANQUE DE AR	452
TUBOS - TOMADA DE FORÇA	321
TUBOS - VENTILADOR HIDRÁULICOS	526
TUBOS DO AQUECEDOR	745
	746
TUBULAÇÕES - DRENAGEM DE ÓLEO DO MOTOR	40
TUBULAÇÒES - TRAÇÃO EM TODAS AS RODAS	310
	319

V

VALVULA - PARTIDA A ETER	215
VÁLVULA DA DIREÇÃO	561
VÁLVULA DA DIREÇÃO (PRINCIPAL)	559
VÁLVULA DE ALÍVIO	344
	635
VÁLVULA DE ALÍVIO (ACUMULADOR DO FREIO)	567
VÁLVULA DE ALÍVIO (COMPRESSOR DO REFRIGERANTE)	711
VÁLVULA DE ALÍVIO (DIREÇÃO SECUNDÁRIA)	555
	557
VÁLVULA DE ALÍVIO (OPERAÇÃO POR PILOTO)	591
VÁLVULA DE ALÍVIO (SINAL SENSORIAL DE CARGA)	585
	587
	593
VÁLVULA DE CONTROLE	608
	610
	612
	614
	616
	618
	620
	622
	624
	626
	628
	630
	632
VÁLVULA DE DERIVAÇÃO (FILTRO DE ÓLEO DO MOTOR)	34
VÁLVULA DE DRENAGEM	40
VÁLVULA DE DRENAGEM (ÓLEO DO MOTOR)	39
VÁLVULA DE MODULAÇÃO	343
VÁLVULA DE PNEU (BÁSICO)	395
VÁLVULA DE PNEU (INFLAÇÃO DO PNEU)	395
	396
	397
	398
VÁLVULA DE RETENÇÃO	97
	98
	607
	630
	632
VÁLVULA DE RETENÇÃO (ARADO, LEVANTAMENTO DA LÂMINA)	628
VÁLVULA DE RETENÇÃO (ARTICULAÇÃO)	608
VÁLVULA DE RETENÇÃO (COMANDO DO CÍRCULO)	618
VÁLVULA DE RETENÇÃO (DESLIZAMNTO LONGITUDINAL DA LÂMINA)	616
VÁLVULA DE RETENÇÃO (DESLOCAMENTO LATERAL DA LÂMINA)	614

* TRADUÇÃO NÃO DISPONÍVEL NO MOMENTO DA IMPRESSÃO

PROOF

ÍNDICE

Designação	Página
VÁLVULA DE RETENÇÃO E DE ALÍVIO (ÂNGULO DO ARADO)	630
VÁLVULA DE RETENÇÃO E DE ALÍVIO (ARADO, LEVANTAMENTO DA LÂMINA)	628
VÁLVULA DE RETENÇÃO E DE ALÍVIO (DESLIZAMNTO LONGITUDINAL DA LÂMINA)	616
VÁLVULA DE RETENÇÃO E DE ALÍVIO (INCLINAÇÃO DA ASA)	624
VÁLVULA DE RETENÇÃO E DE ALÍVIO (LEVANTAMENTO DA LÂMINA)	610
VÁLVULA DE RETENÇÃO E DE ALÍVIO (LEVANTAR ASA)	626
VÁLVULA DE RETENÇÃO E DE ALÍVIO (PONTA DA LÂMINA)	612
VÁLVULA DE RETENÇÃO E DE ALÍVIO (RIPER)	622
VÁLVULA DE RETENÇÃO (INCLINAÇÃO DA RODA)	620
VÁLVULA DE RETENÇÃO (LEVANTAMENTO DA LÂMINA)	610
VÁLVULA DE RETENÇÃO (PONTA DA LÂMINA)	612
VÁLVULA DE RETENÇÃO (RIPER)	622
VÁLVULA DE SEPARAÇÃO	636
VÁLVULA DE SEPARAÇÃO (VENTILADOR HIDRÁULICO)	567
VÁLVULA DESVIADORA	634
VÁLVULA DESVIADORA (ACUMULADOR DO FREIO)	567
VALVULA DO SOLENOIDE E MONTAGEM	342
VÁLVULA SOLENÓIDE	637 638 639
VÁLVULA SOLENÓIDE (AMORTECEDOR DA LÂMINA)	570
VÁLVULA SOLENÓIDE (ÂNGULO DO ARADO)	630
VÁLVULA SOLENÓIDE (ARADO, LEVANTAMENTO DA LÂMINA)	628
VÁLVULA SOLENÓIDE (ARTICULAÇÃO)	608
VÁLVULA SOLENÓIDE (COMANDO DO CÍRCULO)	618
VÁLVULA SOLENÓIDE (DESLIZAMNTO LONGITUDINAL DA LÂMINA)	616
VÁLVULA SOLENÓIDE (DESLOCAMENTO LATERAL DA LÂMINA)	614
VÁLVULA SOLENÓIDE (ESCARIFICADOR)	632
VÁLVULA SOLENÓIDE (FREIO DE ESTACIONAMENTO)	566
VÁLVULA SOLENÓIDE (INCLINAÇÃO DA ASA)	624
VÁLVULA SOLENÓIDE (INCLINAÇÃO DA RODA)	620
VÁLVULA SOLENÓIDE (LEVANTAMENTO DA LÂMINA)	610
VÁLVULA SOLENÓIDE (LEVANTAR ASA)	626
VÁLVULA SOLENÓIDE (PONTA DA LÂMINA)	612
VÁLVULA SOLENÓIDE (RIPER)	622
VÁLVULA SOLENÓIDE (TRAVA DO DIFERENCIAL)	342
VENTILADOR DE CIRCULAÇÃO DE AR DA CABINE	732
VENTILADOR REVERSÍVEL	49
VOLANTE DO MOTOR	15

* TRADUÇÃO NÃO DISPONÍVEL NO MOMENTO DA IMPRESSÃO

PROOF

STICHWORTVERZEICHNIS

Bezeichnung	Seite
A	
ABDECKGLAS (RUNDUM-KENNLEUCHTE) (GELB)	163
ABLASS (UMWELTFREUNDLICH)	297
ABLASSVENTIL	40
ABLASSVENTIL (MOTORÖL)	39
ACHSENANBAUSATZ	428
ALLRADANTRIEBSLEITUNGEN	310
	319
ANHÄNGEVORRICHTUNG	424
ANSAUGSIEB (GETRIEBE)	334
ANSCHLUSSKLEMMENSATZ (DREHSTROM-GENERATOR)	100
	102
ANSCHLUSSKLEMMENSATZ (DREHSTROM-GENERATOR)	100
ANTRIEBSKETTE	275
ANTRIEBSPUMPE, ELEKTR. U. BEFESTIGUNGSTEILE	575
	576
ANTRIEBSPUMPE, ELEKTR. U. BEFESTIGUNGSTEILE	574
ANTRIEBSSTRANG-WARTUNGSSATZ	139
ANTRIEBSSTRANG-WARTUNGSSATZ (ALLRADANTRIEB)	139
ANTRIEBSWELLE	335
	336
ANZEIGE (*BRAKE WEAR)	439
	441
ANZEIGEN-EINBAUSATZ (GEWICHTSEINSTELLUNG) (SCHWINGSITZ)	736
ANZEIGEN-EINBAUSATZ (SITZ)	777
	779
ANZUGSLEINE (SITZ)	777
	779
ARBEITSGERÄTE-SOFTWARE	138
ARBEITSGERÄTEELEKTRONIK	138
ARBEITSGERÄTEHEBEL UND BEFESTIGUNGSTEILE	129
ARBEITSGERÄTESTEUERUNG	130
ARBEITSLEUCHTEN	150
	151
	152
	153
	154
	167
	168
	169
	170
	171
	172
*ARM GP-WIPER (RECHTE TÜRY)	792
ARMSTÜTZE	721
	722
ÄTHERSTARTHILFE	196
ÄTHERSTARTVENTIL	215
AUFHÄNGUNG - HINTERES FAHRWERK	432
AUFKLEBER	797
AUFKLEBER - INFORMATION (*ROPS, FOPS, READ OMM)	710
AUFKLEBER - INFORMATION (TASTE) (SICHERHEITSSYSTEM)	147
AUFKLEBER - INFORMATION (24 V)	799
AUFKLEBER - MOTOR (*LOCK, UNLOCK)	40
AUFKLEBER (ALLRADANTRIEB)	131
AUFKLEBER (ERREGERSPULE)	146
AUFKLEBER (HYDR. DRUCKSPEICHER)	517
AUFKLEBER, LENKUNG (*DISABLE)	469
AUFKLEBER, LENKUNG (*ENABLED)	469
AUFKLEBER-MOTORÖL (*FILL, DRAIN)	40
AUFKLEBER-MOTORÖL (*FILL, DRAIN)	45
AUFKLEBER (MOTORSTART)	146
AUFKLEBER (STARTSCHLÜSSELSCHALTER)	146
	147
AUFREISSER	688
	689
AUFREISSERBEFESTIGUNG	684
AUFREISSERLEITUNGEN	552
	554
AUFREISSERTRÄGER	670
AUFREISSERZYLINDER	489
AUFREISSERZYLINDER UND BEFESTIGUNGSTEILE	478
AUSPUFFKRÜMMER	72
AUSRÜSTUNG FÜR STRASSENFAHRT	2
B	
BASISAUSFÜHRUNG	1
BATTERIE	112
	116
	120
BATTERIE (12 V, WARTUNGSFREI)	112
	116
	120
BEDIENUNGSELEMENTE - KABELSTRANG	233
BEFESTIGUNGSTEILE (DREHSTROMGENERATOR)	100
	102
BEFESTIGUNGSTEILE (STARTERMOTOR)	197
BEILAGSCHEIBEN-SATZ (STARTERMOTOR)	197
BELEUCHTUNGSANLAGE (ROT, GRÜN, LED, 12 V)	146

* ÜBERSETZUNG ZUM ZEITPUNKT DER DRUCKLEGUNG NICHT VORHANDEN

PROOF

STICHWORTVERZEICHNIS

Bezeichnung	Seite
BELEUCHTUNGSANLAGE (STRASSENAUSRÜSTUNG)	173
BELEUCHTUNGSANLAGE (24 V)	225, 740
BELEUCHTUNGSKABELSTRANG	237, 239
BELEUCHTUNGSVERDRAHTUNG	237, 239, 241, 243
BETRIEBSBREMSE	439, 441
BETRIEBSBREMSLEITUNGEN	454, 456
BLINKLEUCHTE	162
BLINKLEUCHTE (BREMSLICHT, HECKLEUCHTE, RICHTUNGSBLINKER)	250
BLOCK (GETRIEBESÖLKÜHLER)	289
BREMSDRUCKSPEICHER	435, 436
BREMSGESTÄNGE	443, 445, 447
BREMSLEITUNGSVERKLEIDUNG	420
BUCHSEN-EINBAUSATZ (STARTERMOTOR)	200
BÜRSTEN-EINBAUSATZ (STARTERMOTOR)	197, 200

C

*CONTROL GP-UNPRGMED MONITOR	718

D

DÄMPFER UND RIEMENSCHEIBE	14
DICHTUNG (TEMPERATURREGELGEHÄUSE)	50
DICHTUNGSSATZ (AUSGELEICHSVENTIL)	587, 591
DICHTUNGSSATZ (AUSGELEICHSVENTIL)	635
DICHTUNGSSATZ (AUSGELEICHSVENTIL) (LASTAUSGLEICHSSIGNAL)	585, 593
DICHTUNGSSATZ (BREMSDRUCKSPEICHER)	435, 436
DICHTUNGSSATZ (HYDRAULIKDRUCKSPEICHER)	519
DICHTUNGSSATZ (LENKUNG)	639
DICHTUNGSSATZ (MOTOR)	572
DICHTUNGSSATZ (*RIPPER CYLINDER)	489
DICHTUNGSSATZ (RÜCKSCHLAGVENTIL) (AUFREISSER)	622
DICHTUNGSSATZ (RÜCKSCHLAGVENTIL)	632
DICHTUNGSSATZ (RÜCKSCHLAGVENTIL) (*BLADE CENTERSHIFT)	614
DICHTUNGSSATZ (RÜCKSCHLAGVENTIL) (*BLADE SIDESHIFT)	616
DICHTUNGSSATZ (RÜCKSCHLAGVENTIL) (*BLADE TIP)	612
DICHTUNGSSATZ (RÜCKSCHLAGVENTIL) (*CIRCLE DRIVE)	618
DICHTUNGSSATZ (RÜCKSCHLAGVENTIL) (FLÜGELHUB)	626
DICHTUNGSSATZ (RÜCKSCHLAGVENTIL) (KNICKGELENK)	608
DICHTUNGSSATZ (RÜCKSCHLAGVENTIL) (*PLOW ANGLE)	630
DICHTUNGSSATZ (RÜCKSCHLAGVENTIL) (*PLOW, BULLDOZER LIFT)	628
DICHTUNGSSATZ (RÜCKSCHLAGVENTIL) (RADSTURZ)	620
DICHTUNGSSATZ (RÜCKSCHLAGVENTIL) (SCHARHUB)	610
DICHTUNGSSATZ (RÜCKSCHLAGVENTIL) (*WING TILT)	624
DICHTUNGSSATZ (SOLENOIDVENTIL)	637
DICHTUNGSSATZ (VERTEILERVENTIL)	567
DICHTUNGSSATZ (VERTEILERVENTIL) (HYDRAULIKLÜFTERFLUSS)	634
DICHTUNGSSATZ (WECHSELVENTIL)	567
DIFFERENTIAL	295
DIFFERENTIAL UND TELLERRAD	293
DIFFERENTIALSPERRENGESTÄNGE	284
DREHKNOPFSCHALTER (24 V) (*ALL WHEEL DRIVE CONTROL)	203
DREHSCHALTER (SEITENSCHUBANZEIGE)	227
DREHSTROMGENERATOR	100, 102, 104, 106, 108, 110
DREHSTROMGENERATOR - BEFESTIGUNG	20
DREHZAHLSENSOR	189
DREHZAHLSENSOR (*TRANSMISSION OUTPUT, HIGH)	286
DREHZAHLSENSOR (*TRANSMISSION OUTPUT, LOW)	286
DRUCKKNOPFSCHALTER (HUPE)	714
DRUCKLUFTBEHÄLTER	458
DRUCKLUFTKOMPRESSOR	4
DRUCKLUFTLEITUNGEN	68, 70, 71
DRUCKLUFTTANKLEITUNGEN	452

* ÜBERSETZUNG ZUM ZEITPUNKT DER DRUCKLEGUNG NICHT VORHANDEN

PROOF

STICHWORTVERZEICHNIS

Bezeichnung	Seite
DRUCKLUFTVENTILSATZ (SITZ)	777
	779
DRUCKREGLER (KRAFTSTOFFFÖRDERPUMPE)	90
DRUCKSCHALTER	211
DRUCKSCHALTER (*AWD OIL FILTER BYPASS)	310
DRUCKSCHALTER (*HAND METERING UNIT)	561
DRUCKSCHALTER (NEBENSTROMFILTER)	502
DRUCKSENSOR	180
	181
	182
	183
	184
	185
	186
	187
	188
DRUCKSPEICHER (SCHARDÄMPFUNG)	517
E	
ECKMESSER	647
	648
	649
	650
	651
EINBAUSATZ - PLANIERSTEUERUNG	144
EINFÜLLKAPPE (HYDRAULIKTANK)	584
EINFÜLLKAPPE (KRAFTSTOFFTANK)	93
EINFÜLLKAPPE (KRAFTSTOFFTANK)	95
EINFÜLLKAPPE (MOTORÖL)	11
ELEKTR. UMFORMER	137
ELEKTROHYDRAULISCHE STEUERUNG	468
ELEKTROHYDRAULISCHE STEUERUNG (*WITHOUT AUXILIARY LEVER)	460
	461
	462
	465
ELEKTROHYDRAULISCHE STEUERUNG (*WITHOUT AUXILIARY LEVER) (JOYSTICK)	468
ELEKTRONIK - MONITOR	139
ELEKTRONISCHER SCHLÜSSEL (SICHERHEIT)	147
	194
ENDMESSER	651
ENDSCHALTER (*STEERING COLUMN POSITION)	469
ENTDUNSTER	36
ENTDUNSTERLEITUNG (ENTDUNSTER)	36
ENTFROSTERGEBLÄSE	734
ENTLÜFTER	33
ENTLÜFTER (KURBELGEHÄUSE)	33
ENTLÜFTER (*POWER TRAIN OIL TANK)	299
ENTLÜFTER (TANDEM)	337
ENTLÜFTERFILTER (HYDRAULIKTANK)	582
F	
FAHRERHAUS	710
FAHRERHAUS - HALTETEILE	782
FAHRERHAUSABDECKUNG	719
FAHRERHAUSAUSKLEIDUNG	740
FAHRERHAUSBELEUCHTUNG	149
FAHRERHAUSDACH	759
FAHRERHAUSFENSTER	783
	784
	785
	786
FAHRERHAUSTÜR	723
	726
	729
FAHRERHAUSVERDRAHTUNG	217
FAHRERSITZ	761
	762
	764
	765
FAHRERSITZ UND UNTERBAU	759
	760
FAHRERSITZFEDERUNG	775
	777
	779
FAHRERSITZFEDERUNGSGEHÄUSE	735
FAHRERSITZVERSTELLER	701
FAHRWERK-KABELBAUM (MASCHINENSICHERHEITSSYSTEM)	147
FEDER-EINBAUSATZ (HÖHENEINSTELLUNG) (SCHWINGSITZ)	735
FEDER-EINBAUSATZ (SCHWINGSITZ)	735
FEDERUNGS-EINBAUSATZ (EINSTELLKNOPF) (HÖHENEINSTELLUNG) (SCHWINGSITZ)	735
FESTSTELLBREMSE	437
FILTER (GETRIEBE)	268
FILTER (WASSER) (PUMPE)	54
FLÜSSIGKEITSSTANDSCHALTER (WASCHMITTEL)	781
FRONTAUFREISSER	691
	692
	695
	698
	699
FRONTAUFREISSER (HYDRAULIK)	699
FRONTAUFREISSERZYLINDER	491
FUSSMATTE (FAHRERHAUS)	782

* ÜBERSETZUNG ZUM ZEITPUNKT DER DRUCKLEGUNG NICHT VORHANDEN

PROOF

STICHWORTVERZEICHNIS

Bezeichnung	Seite
G	
*GEAR GP (LINKS) (ALLRADANTRIEB)	298
*GEAR GP (RECHTS) (ALLRADANTRIEB)	298
GELENKZYLINDER UND BEFESTIGUNGSTEILE	473
GETRIEBE	339
GETRIEBE-KABELBAUM	286
GETRIEBEHYDRAULIK	286
GETRIEBEKUPPLUNG	276
	278
	280
	282
GETRIEBEÖLFÜLLSTUTZEN	299
GETRIEBEÖLKÜHLER	288
	289
GETRIEBEÖLLEITUNGEN	322
	326
GLEITSCHIENENBLOCK-EINBAUSATZ (SCHWINGSITZ)	768
GLEITSCHIENENBLOCK-EINBAUSATZ (SITZ)	767
	769
H	
HALOGENSCHINWERFER (24V)(65W)	152
	153
HALOGENSCHINWERFER (24V)(65W) (SCHILD)	154
HANDGRIFF FÜR FAHRERHAUSTÜR	723
	726
HEBEL-EINBAUSATZ (STARTERMOTOR)	200
HECKBELEUCHTUNGSVERDRAHTUNG	250
HEIZUNGSBLOCK	707
HEIZUNGSLEITUNGEN	745
	746
HINTERACHSE	266
HINTERER KABELSTRANG (FAHRGESTELL)	246
HINTERER KABELSTRANG (HYDRAULIKPUMPE)	246
HINTERER KABELSTRANG (KLIMAANLAGE)	246
HUBZYLINDER	488
HYDRAULIKFITTING	284
HYDRAULIKLEITUNGEN	508
	510
	515
	517
	525
HYDRAULIKLÜFTERLEITUNGEN	526
HYDRAULIKLÜFTERPUMPE U. BEFESTIGUNG	577
HYDRAULIKÖLFILTER (ALLRADANTRIEB)	310
HYDRAULIKÖLFILTER (HAUPTELEMENT)	502
HYDRAULIKÖLKÜHLER	471
HYDRAULIKPUMPE UND LEITUNGEN	530
	534
	538
	545
HYDRAULIKSTEUERUNG	460
	461
	462
	463
	464
	465
	466
	467
HYDRAULIKSYSTEM	503
HYDRAULIKTANK	584
HYDRAULIKTANK UND BEFESTIGUNGSTEILE	582
HYDRAULIKZYLINDER	487
I	
IDENTIFIKATIONSSCHILD (CAT)	655
	660
	664
IDENTIFIKATIONSSCHILD (MAX. GEWICHT)	2
IDENTIFIKATIONSSCHILD (*WORK TOOL INFORMATION)	659
	698
	699
IDENTIFIZIERUNGS-AUFKLEBER (AUFREISSER)	130
IDENTIFIZIERUNGS-AUFKLEBER (*BIODEGRADABLE HYDRAULIC OIL)	503
IDENTIFIZIERUNGS-AUFKLEBER (RUND, ROT REFEKTIEREND)	689
IDENTIFIZIERUNGS-AUFKLEBER (WARNHORN)	714
*INDICATOR-LEVEL (TEMPERATUR)	782
*INSTALLATION GP-LIGHTING	145
INSTRUKTIONS-AUFKLEBER (*BELT ROUTING)	106
	108
	110
INSTRUKTIONS-AUFKLEBER (*BELT ROUTING)	104
INSTRUKTIONS-AUFKLEBER (BETRIEBS- U. WARTUNGSHANDBUCH LESEN)	146
INSTRUKTIONS-AUFKLEBER (BETRIEBS- U. WARTUNGSHANDBUCH LESEN)	147

* ÜBERSETZUNG ZUM ZEITPUNKT DER DRUCKLEGUNG NICHT VORHANDEN

PROOF

STICHWORTVERZEICHNIS

Bezeichnung	Seite
INSTRUKTIONS-AUFKLEBER (*ENGINE OIL DRAIN)	39
INSTRUKTIONS-AUFKLEBER (FÜR SITZVERSTELLUNG)	775 777 779
INSTRUKTIONS-AUFKLEBER (MOTORABSTELLUNG)	799
INSTRUKTIONS-AUFKLEBER (SCHEIBENWISCHER)	740
INSTRUKTIONS-AUFKLEBER (WASSEREINGANG, WASSER-AUSGANG)	745
INSTRUKTONSSCHILD (BATTERIE) (HAUPTSCHALTER)	112 116 120
INSTRUKTONSSCHILD (KLIMAANLAGE)	706
INTEGRALDICHTUNG	585 587 589 591 593 595 597 599 601 603 605
ISOLATOR-EINBAUSATZ (STARTERMOTOR)	200

J

JOYSTICK -STEUERUNG (FAHRERSTAND)	468
JOYSTICK -STEUERUNG (LINKS)	714
JOYSTICK -STEUERUNG (RECHTS)	714
JOYSTICKSTEUERUNG U. BEFESTIGUNG	714

K

KABELSTRANG - ARBEITSGERÄT	234
KABELSTRANG - HECKBELEUCHTUNG	241 250
KABELSTRANG - HECKBELEUCHTUNG (*REGISTRATION PLATE)	173
KABELSTRANG - LENKUNG	252
KABELSTRANG - VERTEILERKASTEN	124
KABELSTRANG - VORDERE BELEUCHTUNG	155 157
KABELSTRANG - VORDERES FAHRWERK	232
KABELSTRANG (*PRODUCT LINK RADIO)	142
KÄLTEMITTELKOMPRESSOR	711 712
KÄLTEMITTELKONDENSATOR U. BEFESTIGUNGSTEILE	713
KAMERA, VERDRAHTUNG	223
KAPPENFILTERSATZ (KRAFTSTOFFTANK)	93 95
KETTE (TANDEM)	275
KIPPSCHALTER	213
KIPPSCHALTER (ABSTELLUNG AUF STANDEBENE)	246
KIPPSCHALTER (ARBEITSGERÄTESPERRE)	217
KIPPSCHALTER (ARBEITSLEUCHTE)	145
KIPPSCHALTER (ARBEITSLEUCHTE)	207
KIPPSCHALTER (ARBEITSSCHEINWERFER)	237
KIPPSCHALTER (BEHEIZTE SPIEGEL)	750
KIPPSCHALTER (*ENGINE OIL EVAC)	225
KIPPSCHALTER (FAHRLEUCHTEN)	212
KIPPSCHALTER (FAHRSCHEINWERFER, HECKLEUCHTEN)	217
KIPPSCHALTER (FAHRTRICHTUNGSANZEIGER)	714
KIPPSCHALTER (FESTSTELLBREMSE)	217
KIPPSCHALTER (GASREGELSPERRE)	217
KIPPSCHALTER (GEBLÄSEGESCHWINDIGKEIT)	734
KIPPSCHALTER (GEFAHR) (WARNSCHALTER)	217
KIPPSCHALTER (GETRIEBESCHALTUNG)	257
KIPPSCHALTER (KLIMAANLAGE EIN/AUS)	717
KIPPSCHALTER (NOTLENKUNG)	217
KIPPSCHALTER (*QUICK DISCONNECT COUPLING)	217
KIPPSCHALTER (RUNDUM-KENNLEUCHTE)	213
KIPPSCHALTER (SCHARDÄMPFUNG)	217
KIPPSCHALTER (*SPEED CONTROL REGULATOR)	217
KLEMMLEISTE	124
KLIMAANLAGE	705 706 707
KLIMAANLAGE UND AUFHÄNGUNG	703
KLIMAANLAGENDRUCKSPEICHER	741
KLIMAANLAGENLEITUNGEN	741 743
KNICKGELENK-ANHÄNGUNG	422
KNICKLENKZYLINDER	483
KOLBENMOTOR	328
KOLBENMOTOR (ALLRADANTRIEB)	328
KOLBENPUMPE (ALLRADANTRIEB)	330
KOLBENPUMPE (ARBEITSGERÄT)	578

* ÜBERSETZUNG ZUM ZEITPUNKT DER DRUCKLEGUNG NICHT VORHANDEN

PROOF

STICHWORTVERZEICHNIS

Bezeichnung	Seite
KOLBENPUMPE (*BRAKE, HYDRAULIC FAN)	577
KOLBENPUMPE UND BEFESTIGUNG	578
KONDENSATORBLOCK (KÜHLMITTEL)	713
KRAFTSTOFFDRUCKREGLER	92
KRAFTSTOFFENTLÜFTUNGSPUMPE UND -HAUPTFILTER	89
KRAFTSTOFFILTER	81
KRAFTSTOFFILTERBEFESTIGUNG	88
KRAFTSTOFFILTERLEITUNGEN	86
KRAFTSTOFFLEITUNGEN	84
KRAFTSTOFFÖRDERPUMPE	90
KRAFTSTOFFÖRDERPUMPE U. FILTER	91
KRAFTSTOFFSIEB	93 95
KRAFTSTOFFTANK	93 95
KRAFTSTOFFTANK-HALTETEILE	79
KRAFTSTOFFTANK-KABELSTRANG	227
KRAFTSTOFFTANKVERKLEIDUNG	421
KRAFTÜBERTRAGUNGSELEKTRONIK	139
KRAFTÜBERTRAGUNGSSTEUERUNG	131
KREUZGELENK	341
KREUZGELENK UND LAGER	341
KÜHLER	56
KÜHLERAUFHÄNGUNG	433
KÜHLERBLOCK	56
KÜHLERKAPPE (*6 TO 8-PSI) (DRUCKBEGRENZUNG)	58
KÜHLMITTELBEHÄLTER	58 59
KÜHLSYSTEM	46
KÜHLWASSERLEITUNGEN	50 52
KÜHLWASSERPUMPE	54 55
KURBELWELLENDICHTUNG	29

L

Bezeichnung	Seite
LADELUFTKÜHLER	62
LAGERSATZ (DREHSTROMGENERATOR)	100 102
LAGERSATZ (SCHWINGSITZ)	736
LAGERSATZ (STARTERMOTOR)	197
LENKBETÄTIGUNG	469
LENKGESTÄNGE	426 427
LENKÖLLEITUNGEN	561
LENKSÄULE	469
LENKSÄULENABDECKUNG	720
LENKVENTIL	561
LENKVENTIL (HAUPTUNTERBRECHER)	559
LENKZYLINDER	493 495
LENKZYLINDER UND AUFHÄNGUNG	480 481
LEUCHTE, ROT (24 V, GELB)	469
LEUCHTE, ROT (24 V, GRÜN)	203 217
LEUCHTE, ROT (24 V, GRÜN)	469
LEUCHTE, ROT (24 V, ROT)	147
LEUCHTE, ROT (24 V, ROT)	203
LEUCHTE (12 V, 24 V, 35 W)	150 151
LEUCHTE (24 V)	149 173
LEUCHTE (24 V) (FAHRERHAUSSTELLUNG)	161
LEUCHTE (24 V, 5 W) (LÖSCHEN)	159 160
LEUCHTE (24 V, 70 W)	165
LEUCHTE (24 V, 75/70 W) (LÖSCHEN)	159 160
LEUCHTE (24V, 21W) (GELB)	159 160
LEUCHTE (24V, 21W) (MOTORRAUM)	166
LICHTSCHALTER	207
*LIGHT-INDICATOR (ÖLSCHNELLWECHSEL)	225
*LINES GP-ENGINE OIL DRAIN	39
*LINES GP-HYDRAULIC	524
*LINES GP-STEERING	559
LUFTEINLASSBOGEN	67
LUFTEINLASSDECKEL	65 66
LÜFTERANTRIEBSAUFHÄNGUNG	23
LÜFTERVERKLEIDUNG (*RADIATOR COOLING)	47
LUFTFILTER (*CAB HEATER, AIR CONDITIONER)	731
LUFTFILTER (HAUPTELEMENT)	64
LUFTFILTER (HILFSELEMENT)	64
LUFTKANAL U. FILTER	731
LUFTKOMPRESSOR	5 6
LUFTKOMPRESSORSITZ	702
LUFTREINIGER	63 64
LUFTTEMPERATURKONTROLLE	717

M

Bezeichnung	Seite
MAGNETFILTER (GETRIEBE)	334
MAGNETSCHALTER	208 209 210

* ÜBERSETZUNG ZUM ZEITPUNKT DER DRUCKLEGUNG NICHT VORHANDEN

PROOF

STICHWORTVERZEICHNIS

Bezeichnung	Seite
MAGNETSCHALTER (24 V) (ANSAUGLUFT-VORWÄRMANLAGE)	209
MAGNETSCHALTER (24 V) (HAUPTRELAIS)	124
MAGNETSCHALTER (24 V) (STARTERRE-LAIS)	124
MAGNETSIEB	334
MAGNETSPULE (24 V) (STARTERMOTOR)	197 200
MAGNETVENTIL	637 638 639
MAGNETVENTIL (AUFREISSER)	622
MAGNETVENTIL (AUFREISSER)	632
MAGNETVENTIL (*BLADE CENTERSHIFT)	614
MAGNETVENTIL (*BLADE SIDESHIFT)	616
MAGNETVENTIL (*BLADE TIP)	612
MAGNETVENTIL (*CIRCLE DRIVE)	618
MAGNETVENTIL (DIFFERENTIALSPERRE)	342
MAGNETVENTIL (FESTSTELLBREMSE)	566
MAGNETVENTIL (FLÜGELHUB)	626
MAGNETVENTIL (KNICKGELENK)	608
MAGNETVENTIL (*PLOW ANGLE)	630
MAGNETVENTIL (*PLOW, BULLDOZER LIFT)	628
MAGNETVENTIL (RADSTURZ)	620
MAGNETVENTIL (SCHARDÄMPFUNG)	570
MAGNETVENTIL (SCHARHUB)	610
MAGNETVENTIL (*WING TILT)	624
*MANIFOLD GP-CONTROL	566
MARKIERUNGSLEUCHTE	161
MODULATORVENTIL	343
MONITOR - SERVICE (*EMS CONTROL PANEL)	139
MONITOR - SOFTWARE (*EMS CONTROL PANEL)	139
MONITORSTEUERUNG (*MESSENGER)	718
MOTOR- UND GETRIEBEAUFLAGER	21
MOTOR, ELEKTR.	174
MOTOR, KOMPLETT	3
MOTOR UND LÜFTER	47
MOTORANTRIEB (*RADIATOR COOLING)	47
MOTORAUFHÄNGUNG	30
MOTORBLOCKDECKEL	9
MOTORHUBÖSE	19
MOTORÖLABLASSLEITUNGEN	40
MOTORÖLKRÜMMER	43
MOTORÖLLEITUNGEN	38
MOTORSENSOR	176
MOTORSTOPFEN	27
MOTORVERDRAHTUNG	225
MOTORVERKLEIDUNG	406
*MOUNTING GP-GRADE CONTROL	645 683

N

NEIGUNGSSTEUREINBAUSATZ	144
NIEGUNGSSTEUER VERDRAHTUNG	233 234
NOTLENKUNG	579
NOTLENKUNGSLEITUNGEN	555 557
NOTLENKUNGSPUMPE	575
NOTLENKUNGSVERDRAHTUNG	252

O

ÖLFILTER	34 303 305 502
ÖLFILTER (ALLRADANTRIEB)	310
ÖLFILTER U. BEFESTIGUNGSTEILE	300 302
ÖLFILTERELEMENT (HOCHLEISTUNG) (GETRIEBE)	303
ÖLFILTERELEMENT (HOCHLEISTUNG) (HYDRAULIKTANK)	305
ÖLFILTERSOCKEL	31 32
ÖLMESSSTAB	37
ÖLMESSSTAB (KRAFTÜBERTRAGUNG ÖLSTAND)	299
ÖLSCHNELLWECHSELANSCHLUSS	44 45
ÖLWANNE	25

P

PANZERWANNE	419
PENDELVENTIL	636
PENDELVENTIL (HYDRAULIKLÜFTER)	567
PLANETENANTRIEBSGEHÄUSE U. TEILE	268
PLANIERSCHILD	655 659 660 664
PUMPE U. BEFESTIGUNG - ALLRADAN-TRIEB	330
PUMPE UND MOTOR (ÖLSCHNELLWECH-SEL)	574
PUMPE UND MOTOR (*QUICK EVAC, SECONDARY STEERING)	576
PUMPENKABELSTRANG (KRAFTSTOFF)	246

R

RAD UND REIFEN	346

* ÜBERSETZUNG ZUM ZEITPUNKT DER DRUCKLEGUNG NICHT VORHANDEN

STICHWORTVERZEICHNIS

Bezeichnung	Seite
	347
	348
	349
	350
	351
	352
	353
	354
	355
	356
	357
	358
	359
	360
	361
	362
	363
	364
	365
	366
	367
	368
	369
	370
	371
	372
	373
	374
	375
	376
	377
	378
	379
	380
	381
	382
	383
	384
	385
	386
	387
	388
	389
	390
	391
	392
RADANTRIEB	298
RADAUFHAENGUNG	329
RADIO	757
RADIO - KABELSTRANG	757
RADIO - KOMMUNIKATION (*PRODUCT LINK 121SR)	142
RADIO (AM/FM/WB)	757
RADIOEINBAUSATZ	738
RADSATZ	393
	394
	395
	396
	397
	398
RADSTURZZYLINDER	497
RADSTURZZYLINDER UND BEFESTIGUNGS-TEILE	482
RAHMEN UND GEHÄUSE	399
REFLEKTORAUFKLEBER (GELB)	416
REFLEKTORAUFKLEBER (GELB) (KOTFLÜGEL)	412
REGLER (KRAFTSTOFFDRUCK)	92
REGLEREINBAUSATZ (LUFTKOMPRES-SOR)	458
REIFENVENTIL (GRUNDAUSFÜHRUNG)	395
REIFENVENTIL (REIFENFÜLLUNG)	395
	396
	397
	398
RELAIS (12 V) (SICHERHEIT)	146
RELAIS (24 V)	217
RELAIS (24 V) (*ENGINE OIL EVAC)	225
RELAIS (24 V) (FAHRLEUCHTEN)	212
RELAIS (24 V) (KRAFTSTOFFPUMPE)	247
RELAIS (24 V) (NOTLENKUNG)	252
RELAIS (24 V) (RÜCKFAHRALARM)	247
RELAIS (24 V) (SICHERHEIT)	146
REPARATURSATZ (KRAFTSTOFFSTANDSEN-SOR)	93
	95
RIEMENSPANNER	8
	28
ROHRSTOPFEN (ÖLABLASS)	499
RÜCKFAHRWARNHORN	216
RÜCKLEHNENVERLÄNGERUNG (STOFF)	761
	764
RÜCKSCHLAG- U. DRUCKBEGRENZUNGS-VENTIL (AUFREISSER)	622
RÜCKSCHLAG- U. DRUCKBEGRENZUNGS-VENTIL (*BLADE SIDESHIFT)	616
RÜCKSCHLAG- U. DRUCKBEGRENZUNGS-VENTIL (*BLADE TIP)	612
RÜCKSCHLAG- U. DRUCKBEGRENZUNGS-VENTIL (FLÜGELHUB)	626
RÜCKSCHLAG- U. DRUCKBEGRENZUNGS-VENTIL (*PLOW ANGLE)	630
RÜCKSCHLAG- U. DRUCKBEGRENZUNGS-VENTIL (*PLOW, BULLDOZER LIFT)	628
RÜCKSCHLAG- U. DRUCKBEGRENZUNGS-VENTIL (SCHARHUB)	610

* ÜBERSETZUNG ZUM ZEITPUNKT DER DRUCKLEGUNG NICHT VORHANDEN

PROOF

STICHWORTVERZEICHNIS

Bezeichnung	Seite
RÜCKSCHLAG- U. DRUCKBEGRENZUNGS-VENTIL (*WING TILT)	624
RÜCKSPIEGEL	747, 748, 749, 750
RUNDUM-KENNLEUCHTE	163, 164, 165

S

Bezeichnung	Seite
SCHALE - RÜCKENLEHNE	752, 753
SCHALLDÄMPFER U. BEFESTIGUNG	73
SCHALLDÄMPFUNG	774
SCHALTAUTOMATIK	257
SCHALTER - ALLRADANTRIEB	203
SCHALTER (AUFREISSER)	130
SCHAR	652, 653, 654
SCHARBEFESTIGUNGSTEILE	682
SCHARDREHWERK	499, 640
SCHARDREHWERKSPERRENLEITUNGEN	504, 506
SCHARHUBZYLINDER UND BEFESTIGUNGS-TEILE	474
SCHARKIPPZYLINDER UND BEFESTIGUNGS-TEILE	475
SCHARNEIGEZYLINDER	485
SCHARVERLÄNGERUNG	674, 675, 676, 678
SCHEIBENWASCHMITTELBEHÄLTER	781
SCHEIBENWISCHER	789, 790, 791, 792, 793, 795
SCHEIBENWISCHER UND -WASCHANLAGE	787
SCHEIBENWISCHERBLATT (HINTERER SCHEIBENWISCHER)	789
SCHEIBENWISCHERBLATT (LINKS)	790
SCHEIBENWISCHERBLATT (RECHTE TÜRY)	791, 792
SCHEIBENWISCHERBLATT (TÜR, LINKS)	793
SCHEIBENWISCHERBLATT (TÜR, RECHTS)	795
SCHEIBENWISCHERBLATT (VORNE)	787
SCHEIBENWISCHERMOTOR	751
SCHEIBENWISCHERMOTOR (HINTEN)	789
SCHEIBENWISCHERMOTOR (LINKS)	790
SCHEIBENWISCHERMOTOR (RECHTE TÜRY)	791
SCHEIBENWISCHERMOTOR (RECHTS)	795
SCHEIBENWISCHERMOTOR (TÜR, LINKS)	793
SCHEIBENWISCHERSCHALTER	214
SCHEIBENWISCHERSCHALTER (24 V) (INTERVALLSCHALTUNG)	214
SCHEIBENWISCHERSCHALTER (24 V) (LINKS)	217
SCHEIBENWISCHERSCHALTER (24 V) (RECHTS)	217
SCHEIBENWISCHERSCHALTER (24 V) (VORNE)	217
SCHEINWERFER, HINTEN	166
SCHEINWERFER U. RICHTUNGSLEUCHTE	155, 157, 159, 160
SCHEINWERFER U. RICHTUNGSLEUCHTE (24 V, LINKS)	157
SCHEINWERFER U. RICHTUNGSLEUCHTE (24 V, RECHTS)	157
SCHILD UND AUFKLEBER	798, 799
SCHILDHUB	679
SCHLÜSSEL (*BATTERY DISCONNECT) (STARTER)	206
SCHMIERLEITUNGEN	425
SCHNEEFLÜGEL-BEFESTIGUNG	686, 687
SCHNEERÄUMVORRICHTUNG	2
SCHNEIDMESSER	671, 672, 673
SCHNELLBETANKUNGSANSCHLUSS	76, 78
SCHRAUBE (ABLASSEN)	297
SCHUBPLATTE	646
SCHUTZBLECHE UND AUFHÄNGUNG	410, 412, 414, 416
SCHWENKBLOCK	580
SCHWINGSITZ	767, 768, 769
SCHWUNGRAD	15
SCHWUNGRADGEHÄUSE	17
SCREEN (*BRAKE, HYDRAULIC FAN)	567
SCREEN (LENKUNG)	571

* ÜBERSETZUNG ZUM ZEITPUNKT DER DRUCKLEGUNG NICHT VORHANDEN

PROOF

STICHWORTVERZEICHNIS

Bezeichnung	Seite
SCREEN (SPÜLUNG)	268
SEITENANTRIEB	306
	308
SEITENSCHIEBERZYLINDER UND BEFESTIGUNGSTEILE	479
SEITENSCHUBSPERRE	565
SEITENSCHUBZYLINDER	486
	492
SEITENSCHUBZYLINDER UND BEFESTIGUNGSTEILE	477
SENSOR, KABELSTRANG	227
SENSOR, KABELSTRANG (ALLRADANTRIEBS-STEUERUNG)	254
SENSOR, KABELSTRANG (GETRIEBE-GANG)	286
SENSOR, KABELSTRANG (NEIGUNGSSTEUE-RUNG)	234
SENSOR, KABELSTRANG (*SPEED)	254
SENSORVERDRAHTUNG	254
SERIENNUMMERNSCHILD (GETRIEBE)	268
SERPENTINENFÖRMIGER RIEMEN	104
	108
	110
SERPENTINENFÖRMIGER RIEMEN (DREHSTROMGENERATOR)	106
*SERVICE GP-IMPLEMENT	138
SERVICE MASCHINE	194
SICHERHEITSEINBAUSATZ	146
	147
SICHERHEITSGURT	761
	764
SICHERUNG (10 A)	217
SICHERUNG (15 A)	217
	707
SICHERUNG (30 A)	217
*SOCKET GP-TIE ROD (LINKS)	427
*SOCKET GP-TIE ROD (LINKS) (LENKUNG)	426
*SOCKET GP-TIE ROD (RECHTS)	427
*SOCKET GP-TIE ROD (RECHTS) (LENKUNG)	426
SOFTWARE - KRAFTÜBERTRAGUNG	139
SOFTWARE - KRAFTÜBERTRAGUNG (ALLRADANTRIEB)	139
SOFTWARE - KRAFTÜBERTRAGUNG (AUTOSHIFT)	257
SOFTWARE - MASCHINE	194
SOLENOIDVENTIL U. BEFESTIGUNGSTEI-LE	342
SONDERAUSRÜSTUNG (EUROPÄISCHE GEMEINSCHAFT)	2
SPANNUNGSREGLER (24 V) (DREHSTROMGE-NERATOR)	100
	102
SPERRVENTIL	97
	98
	607
	630
	632
SPERRVENTIL (AUFREISSER)	622
SPERRVENTIL (*BLADE CENTERSHIFT)	614
SPERRVENTIL (*BLADE SIDESHIFT)	616
SPERRVENTIL (*BLADE TIP)	612
SPERRVENTIL (*CIRCLE DRIVE)	618
SPERRVENTIL (KNICKGELENK)	608
SPERRVENTIL (*PLOW, BULLDOZER LIFT)	628
SPERRVENTIL (RADSTURZ)	620
SPERRVENTIL (SCHARHUB)	610
STARTERMOTOR	197
	199
	200
	202
STARTERMOTOR-DICHTUNGSSATZ	197
STARTERMOTOR-STIFTEINBAUSATZ	197
STARTHILFE	195
STARTSCHALTER (TASTE)	217
STECKDOSENVERDRAHTUNG	244
STEIGLEITER	431
STELLUNGSSENSOR	178
	179
STELLUNGSSENSOR (LENKUNGSZYLIN-DER)	493
	495
STEUERKRÜMMER	567
	570
	571
STEUERUNG - NICHT PROGRAMMIERT	133
	134
	136
STEUERUNG - NICHT PROGRAMMIERT (GETRIEBE)	286
STEUERUNG - NICHT PROGRAMMIERT (*HYDRAULIC ELECTRONIC)	134
STEUERUNG - NICHT PROGRAMMIERT (*IMPLEMENT MASTER)	129
STEUERUNG - NICHT PROGRAMMIERT (*IMPLEMENT SLAVE)	129
STEUERUNG - NICHT PROGRAMMIERT (MOTOR)	128
	233
STEUERUNG - NICHT PROGRAMMIERT (SICHERHEIT)	194
STEUERUNG, ELEKTRON. (INSTRUMENTEN-GRUPPE)	217
STEUERUNGS-KABELSTRANG (ALLRADANTRIEB)	131

* ÜBERSETZUNG ZUM ZEITPUNKT DER DRUCKLEGUNG NICHT VORHANDEN

STICHWORTVERZEICHNIS

Bezeichnung	Seite
STEUERUNGS-KABELSTRANG (*HYDRAULIC ELECTRONIC)	134
STEUERUNGSEINHEIT, ELEKTRON. FÜR MOTOR UND BEFEST.	128
STEUERVENTIL	608 610 612 614 616 618 620 622 624 626 628 630 632
STEUERVENTILDECKEL	404
STIRNRADGEHÄUSEDECKEL	10 11
STOSSDÄMPFER-REPARATURSATZ (SITZ)	777 779
STOSSSTANGEN-EINBAUSATZ (GEWICHT-SEINSTELLUNG) (SCHWINGSITZ)	736
STRASSENFAHRTSCHALTER	212
STÜTZGRUPPE - STEUERUNG	770 772
TANDEMGEHÄUSE UND DECKEL	337
TEMPERATURSCHALTER (KLIMAANLAGE)	707
TEMPERATURSENSOR	190 191 192 193
TEMPERATURSENSOR (GETRIEBEÖL)	286
*TOOTH GP-RIPPER	700
TORSIONSKUPPLUNG	290
TRENNSCHALTER	206
TRENNSCHALTER (BATTERIE)	112 116
TURBOLADERADAPTER	61
TURBOLADERÖLLEITUNGEN	42
ÜBERDRUCKVENTIL	344 635
ÜBERDRUCKVENTIL (BREMSDRUCKSPEICHER)	567
ÜBERDRUCKVENTIL (KÄLTEMITTELKOMPRESSOR)	711
ÜBERDRUCKVENTIL (LASTAUSGLEICHSSIGNAL)	585 587 593
ÜBERDRUCKVENTIL (NOTLENKUNG)	555 557
ÜBERDRUCKVENTIL (VORGESTEUERT)	591
ÜBERTRAGUNGSEINBAUSATZ	142
UMGEHUNGSSCHALTER	205
UMGEHUNGSVENTIL (MOTORLUFTFILTER)	34
UMKEHRLÜFTER	49
UMLAUFKÜHLWASSERHEIZUNG	140 141
UMLAUFKÜHLWASSERHEIZUNGS-ELEMENT (120 V, 1000 W)	141
UMLAUFKÜHLWASSERHEIZUNGS-ELEMENT (240 V, 1000 W)	140
UMLAUFLÜFTER	732
UMLEITVENTIL	634
UMLEITVENTIL (BREMSDRUCKSPEICHER)	567
UNTERBRECHER (105 A) (*ALTERNATOR NO. 2)	124
UNTERBRECHER (105 A) (DREHSTROMGENERATOR)	124
UNTERBRECHER (15 A) (FAHRSCHEINWERFER)	124
UNTERBRECHER (15 A) (GETRIEBESTEUERUNG)	125
UNTERBRECHER (15 A) (STARTSCHALTER-SCHLÜSSEL)	125
UNTERBRECHER (20 A) (MOTORSTEUERUNG)	125
UNTERBRECHER (80 A) (HAUPTUNTERBRECHER)	124
UNTERBRECHER (80 A) (LADEN)	124
VEDRAHTUNG - SOLENOID (ALLRADANTRIEB)	254
VENTILAUFHÄNGUNG	429
VENTILDECKEL	12 13
VENTILKABELSTRANG (SITZ LUFTKOMPRESSOR)	777 779
VENTILSATZ (3-VENTIL)	585
VENTILSATZ (4-VENTIL)	587
VENTILSATZ (5-VENTIL)	589 591
VENTILSATZ (6-VENTIL)	593 595 597

* ÜBERSETZUNG ZUM ZEITPUNKT DER DRUCKLEGUNG NICHT VORHANDEN

PROOF

STICHWORTVERZEICHNIS

Bezeichnung	Seite
VENTILSATZ (7-VENTIL)	599, 601
VENTILSATZ (8-VENTIL)	603, 605
VENTILSTÖSSELSATZ (SCHWINGSITZ)	736
VERBINDUNGSSTECKER	175
VERDRAHTUNG, HINTEN	246
VERDRAHTUNG, VORNE	227, 231, 232
VERDRAHTUNGSKABELBAUM (SICHERHEIT)	146
VERDRAHTUNGSKABELBAUM (ÜBERBRÜCKUNG) (KRAFTSTOFFSENSOR)	81
VERKLEIDUNG - FAHRERHAUS	754, 756
VERSANDDECKEL	291
VERSTELLBARER SITZ	758
VORDERACHSE	257, 258, 259, 260, 262, 264, 265
VORDERRAHMEN	418
VORHÄNGESCHLOSS (WERKZEUGKASTEN)	796
VORREINIGER	75
VORREINIGER (TURBINE)	75

W

Bezeichnung	Seite
WÄRMEISOLIERUNG	739
WARNAUFKLEBER (KETTENSPANNFEDER)	437
WARNAUFKLEBER (NICHT HEBEN) (SCHILD)	664
WARNAUFKLEBER (QUETSCHGEFAHR, NICHT BETRETEN)	250
WARNVORRICHTUNG	99
WARNVORRICHTUNG (24 V)	217
WASSERABSCHEIDER- U. KRAFTSTOFFILTER	83
WASSERABSCHEIDER UND KRAFTSTOFFILTER (HAUPTELEMENT)	83
WASSERTEMPERATURREGLER (97 GRAD CELSIUS) (KÜHLMITTEL)	50
WERKZEUGKASTEN	796
WISCHERARM (RECHTE TÜRY)	792

Z

Bezeichnung	Seite
ZAHNRADANTRIEB	572
ZAHNRADPUMPE	332
ZAHNRADPUMPE U. BEFESTIGUNGSTEILE	331
ZAHNRADVORGELEGE	16
ZAPFWELLENLEITUNGEN	321
ZIGARETTENANZÜNDER (ZIGARETENANZÜNDER, 24 V)	218
ZUGANGSKLAPPE	401, 402, 403
ZUGHAKEN	642
ZULASSUNGSSCHILDLEUCHTE	173
ZUMESSPUMPE (LENKUNG)	469
ZYLINDERBLOCKSCHRAUBE	26

* ÜBERSETZUNG ZUM ZEITPUNKT DER DRUCKLEGUNG NICHT VORHANDEN

PROOF

MACHINE ARRANGEMENT

234-7721 COMMON AR-MOTOR GRADER

S/N: B9M1-UP

SMCS-7000 **i02286907**

NOTE	PART NUMBER	QTY	PART NAME 1 2 3 4 5 6 (PRODUCT LEVEL)	SEE PAGE
Y	*231-2114*	1	AIR CLEANER GP	63
Y	*247-8622*	1	BOX GP-TOOL	796
Y	*254-5399*	1	CAB AR	710
Y	*246-6359*	1	CASE & FRAME GP	399
Y	*6G-1755*	1	CHAIN GP-DRIVE	275
Y	*243-6660*	1	CIRCLE GP	640
Y	*231-1511*	1	CONTROL GP-DIFFERENTIAL LOCK	284
Y	*271-5397*	1	CONTROL GP-SERVICE BRAKE	447
Y	*262-8360*	1	COOLER GP-TRANSMISSION OIL	288
Y	*268-6570*	1	COOLING AR	46
Y	*8E-3366*	1	COUPLING GP-TORSIONAL	290
Y	*238-1916*	1	COVER GP-CONTROL VALVE	404
Y	*233-7721*	1	CYLINDER & MTG GP-ARTICULATION	473
Y	*263-2787*	1	CYLINDER & MTG GP-BLADE LIFT	474
Y	*233-7723*	1	CYLINDER & MTG GP-BLADE TIP	475
Y	*263-2788*	1	CYLINDER & MTG GP-CENTERSHIFT	477
Y	*246-6115*	1	CYLINDER & MTG GP-SIDESHIFT	479
Y	*253-4630*	1	DRAWBAR GP	642
Y	*253-4677*	1	DRIVE GP-CIRCLE	499
Y	*250-9257*	1	ELECTRONICS GP-IMPLEMENT (MASTER)	138
Y	*250-9258*	1	ELECTRONICS GP-IMPLEMENT (SLAVE)	138
Y	*250-9254*	1	ELECTRONICS GP-MONITOR	139
Y	*250-9255*	1	ELECTRONICS GP-POWER TRAIN (CHASSIS, TRANSMISSION)	139
Y	*253-3325*	1	ENCLOSURE GP-ENGINE	406
Y	**231-0878**	1	ENGINE AR-COMPLETE	3
Y	*270-6986*	1	FASTENER GP-FUEL TANK	79
Y	*247-4025*	1	FILLER GP-POWER TRAIN OIL	299
Y	*246-6350*	1	FRAME GP-FRONT	418
Y	*266-2423*	1	GUARD GP-BRAKE LINES (TANDEM)	420
Y	*232-2678*	1	HITCH GP-ARTICULATING	422
Y	*261-8536*	1	LIFT GP-BLADE	679
Y	*246-6704*	1	LINES GP-AIR	68
Y	*231-1515*	1	LINES GP-CENTERSHIFT LOCK	504
Y	*246-6706*	1	LINES GP-FUEL FILTER	86
Y	*236-8921*	1	LINES GP-GREASE	425
Y	*255-1244*	1	LINES GP-POWER TAKE-OFF	321
Y	*255-1243*	1	LINES GP-TRANSMISSION OIL	322
Y	*246-6707*	1	LINES GP-WATER	52
Y	*246-4477*	1	LOCK GP-CENTERSHIFT	565
Y	*264-5051*	1	MOUNTING GP-AXLE	428
Y	*231-2156*	1	MOUNTING GP-ENGINE & TMSN	21
Y	*233-3366*	1	MOUNTING GP-VALVE	429
Y	*246-6709*	1	MUFFLER & MOUNTING GP	73
Y	*235-8552*	1	PUMP & MTG GP-HYDRAULIC FAN	577
Y	*231-1535*	1	PUMP & MTG GP-PISTON	578
Y	*233-6370*	1	SHAFT GP-DRIVE	335
Y	*238-8758*	1	STEP GP	431
Y	*231-5061*	1	SUPPORT AR-REAR CHASSIS	432
Y	*246-6357*	1	TANDEM & COVER GP	337
Y	*254-6997*	1	TANK GP-COOLANT	59
Y	**231-3005**	1	TRANSMISSION AR	339
Y	*257-7224*	1	WARNING GP-BACKUP	216
Y	*246-7967*	1	AXLE GP-REAR	266
Y	*246-7976*	1	WHEEL AR	393
Y	*233-4600*	1	WIRING GP-FRONT	227
Y	*269-4152*	1	WIRING GP-POWER RECEPTACLE	244

PROOF

MACHINE ARRANGEMENT

234-7721 **COMMON AR-MOTOR GRADER** ***(contd.)*** **i02286907**

NOTE	PART NUMBER	QTY	PART NAME 1 2 3 4 5 6 (PRODUCT LEVEL)	SEE PAGE
Y	*264-7522*	1	WIRING GP-REAR	246
Y-SEPARATE ILLUSTRATION				

<END>

261-0182 OPTION AR-EU

S/N: B9M1-UP

AN ATTACHMENT

SMCS-7000 **i02290606**

NOTE	PART NUMBER	QTY	PART NAME 1 2 3 4 5 6 (PRODUCT LEVEL)	SEE PAGE
Y	*252-1810*	1	CONTROL GP-SERVICE BRAKE	445
Y	*260-6557*	1	GUARD GP-BOTTOM	419
Y	*231-5055*	1	SUPPRESSION GP-SOUND	774
Y-SEPARATE ILLUSTRATION				

<END>

250-3818 ROADING AR

S/N: B9M1-UP

AN ATTACHMENT

SMCS-7000 **i02296691**

NOTE	PART NUMBER	QTY	PART NAME 1 2 3 4 5 6 (PRODUCT LEVEL)	SEE PAGE
Y	*242-2452*	1	FENDER & SUPPORT GP	412
Y	*233-4631*	1	LIGHTING GP-ROADING	173
Y	*233-3295*	1	MIRROR GP-REAR VIEW	749
Y	*262-4972*	1	WIRING GP-LIGHTING	243
	159-7342	1	PLATE-IDENTIFICATION (MAXIMUM WEIGHT)	
Y-SEPARATE ILLUSTRATION				

<END>

261-0187 SNOW AR-MOTOR GRADER

S/N: B9M1-UP

AN ATTACHMENT

SMCS-7000 **i02290704**

NOTE	PART NUMBER	QTY	PART NAME 1 2 3 4 5 6 (PRODUCT LEVEL)	SEE PAGE
Y	*233-3137*	1	FAN GP-DEFROSTER	734
Y	*233-3296*	1	MIRROR GP-REAR VIEW	750
Y	*238-9561*	1	STARTING AID GP-ETHER	196
Y	*233-3127*	1	SWITCH GP-ROCKER	213
Y	*233-3139*	1	WIPER GP-WINDOW (REAR)	789
Y	*233-3188*	1	WIPER GP-WINDOW (SIDE, LH)	790
Y	*233-3190*	1	WIPER GP-WINDOW (SIDE, RH)	791
Y-SEPARATE ILLUSTRATION				

<END>

PROOF

ENGINE ARRANGEMENT

231-0878 ENGINE AR-COMPLETE

S/N: KHX1-UP

PART OF 234-7721 COMMON AR-MOTOR GRADER

SMCS-1000 **i02291119**

NOTE	PART NUMBER	QTY	PART NAME 1 2 3 4 5 6 (PRODUCT LEVEL)	SEE PAGE
Y	*250-8318*	1	ADAPTER GP-TURBOCHARGER	61
Y	*110-0361*	1	BELT TIGHTENER GP	8
Y	*222-5946*	1	BREATHER GP	33
Y	*246-9345*	1	CONTROL & MTG GP-ENGINE ELEK	128
Y	*189-8780*	1	COVER GP-AIR INLET (STARTING AID HEATER)	66
Y	*222-5947*	1	COVER GP-CYLINDER BLOCK	9
Y	*118-1727*	1	COVER GP-FRONT HOUSING (FRONT HOUSING)	10
Y	*205-3081*	1	COVER GP-FRONT HOUSING	11
Y	*222-5952*	1	COVER GP-VALVE MECHANISM	12
Y	*250-8309*	1	DAMPER & PULLEY GP	14
Y	*241-2794*	1	ELBOW GP-AIR INLET	67
Y	*231-0879*	1	ENGINE AR-CORE	
Y	*212-4287*	1	FASTENER GP-VALVE COVER	
Y	*267-6599*	1	FILTER GP-ENGINE OIL	34
Y	*250-8313*	1	FILTER GP-FUEL	81
Y	*250-8312*	1	FLYWHEEL GP	15
Y	*220-1194*	1	FUMES DISPOSAL GP	36
Y	*194-5123*	1	GAUGE GP-OIL LEVEL (DIPSTICK)	37
Y	*250-8308*	1	GEAR GP-REAR	16
Y	*251-1135*	1	HOUSING GP-FLYWHEEL	17
Y	*196-1912*	1	LIFTING GP-ENGINE	19
Y	*7C-9279*	1	LINES GP-ENGINE OIL	38
Y	*250-8314*	1	LINES GP-FUEL	84
Y	*250-8315*	1	LINES GP-TURBOCHARGER OIL	42
Y	*206-4228*	1	LINES GP-WATER	50
Y	*237-8063*	1	MANIFOLD GP-ENGINE OIL	43
Y	*257-8467*	1	MANIFOLD GP-EXHAUST	72
Y	*152-5013*	1	MOUNTING GP-FAN DRIVE	23
Y	*250-8306*	1	MOUNTING GP-FUEL FILTER	88
Y	*250-8320*	1	PAN GP-OIL	25
Y	*235-8200*	1	PLUG GP-CONNECTOR (ENGINE HARNESS, PROT COVER)	175
Y	*159-0303*	1	PLUG GP-CYLINDER BLOCK	26
Y	*162-8068*	1	PLUG GP-ENGINE	27
Y	*264-1434*	1	PUMP GP-WATER	55
Y	*4W-1016*	1	SEAL GP-CRANKSHAFT	29
Y	*231-1977*	1	SENSOR GP-ENGINE	176
Y	*235-9679*	1	STARTING AID GP (SWITCH, WIRING)	195
Y	*248-0716*	1	STARTING MOTOR GP-ELECTRIC	202
Y	*247-0270*	1	SUPPORT GP-ENGINE	30
Y	*198-2714*	1	WIRING GP-ENGINE	

Y-SEPARATE ILLUSTRATION

PROOF

BASIC ENGINE

261-0610 AIR COMPRESSOR AR

S/N: B9M1-UP

AN ATTACHMENT

SMCS-1803, 1804, 5502 **i02290688**

NOTE	PART NUMBER	QTY	PART NAME 1 2 3 4 5 6 (PRODUCT LEVEL)	SEE PAGE
Y	*246-6719*	1	AIR COMPRESSOR GP	6
Y	*255-1284*	1	LINES GP-AIR	71
Y	*255-1250*	1	LINES GP-AIR TANK	452
Y	*236-8922*	1	TANK GP-AIR	458

Y-SEPARATE ILLUSTRATION

<END>

PROOF

224-0003 AIR COMPRESSOR GP

S/N: B9M1-UP
10.9 CFM AT 1250 RPM
PART OF 246-6719 AIR COMPRESSOR GP
AN ATTACHMENT

SMCS-1803 **i01838962**

NOTE	REF NO	GRAPHIC REF	PART NUMBER	QTY	PART NAME 1 2 3 4 5 6 (PRODUCT LEVEL)	SEE PAGE
	2	1	**2P-4358**	1	FLANGE	
	3	1	**179-7383**	1	SEAL-O-RING	
	4	1	**3K-0360**	1	SEAL-O-RING	
	5	1	**6D-1004**	1	GASKET	
M	6	1	**6V-1820**	2	BOLT (M10X1.5X30-MM)	
M	7	1	**6V-5221**	4	BOLT (M8X1.25X80-MM)	
	8	1	**6V-5839**	2	WASHER (11X21X2.5-MM THK)	
M	9	1	**8T-2396**	2	BOLT (M6X1X60-MM)	
	10	1	**9M-1974**	4	WASHER-HARD (8.8X16X2-MM THK)	
	11	1	**9S-8005**	1	PLUG	
	12	1	**9X-8267**	2	WASHER (6.6X12X2-MM THK)	

M-METRIC PART

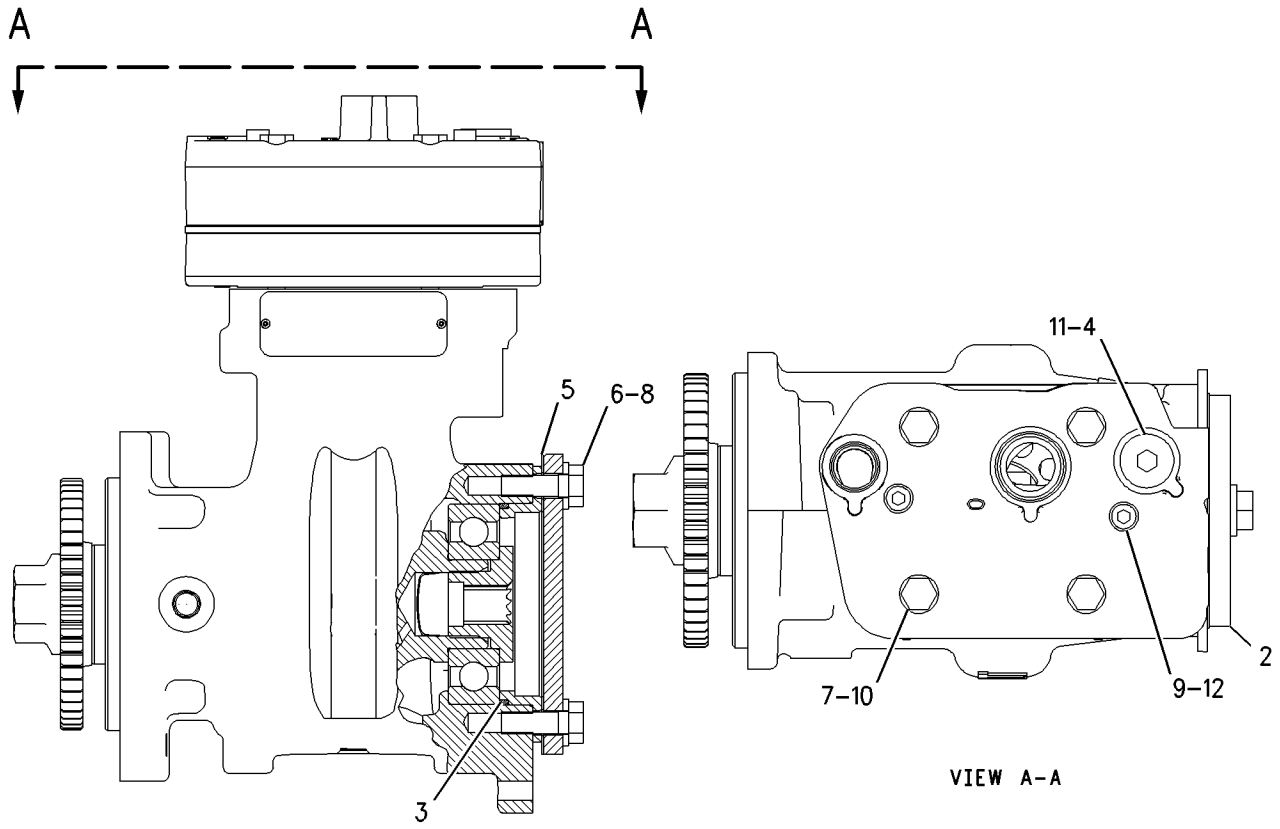

GRAPHIC #1 **<END>** g00939344

BASIC ENGINE

246-6719 AIR COMPRESSOR GP

S/N: B9M1-UP
PART OF 261-0610 AIR COMPRESSOR AR
AN ATTACHMENT

SMCS-1803 **i02299306**

NOTE	REF NO	GRAPHIC REF	PART NUMBER	QTY	PART NAME 1 2 3 4 5 6 (PRODUCT LEVEL)	SEE PAGE
	1	1	**135-9819**	1	SEAL	
Y	2	1	**224-0003**	1	AIR COMPRESSOR GP	5
I	3	1	**265-4043**	1	HOSE AS	
I	4	1	**265-4049**	1	HOSE AS	
I	5	1	**265-4050**	1	HOSE AS	
	6	1	**269-6275**	1	TUBE AS	
	7	1	*148-8340*	2	CONNECTOR AS	
					(EACH INCLUDES)	
		1	**3K-0360**	1	SEAL-O-RING	
		1	**6V-8398**	1	SEAL-O-RING	
		1	**6V-8639**	1	CONNECTOR	
	8	1	**148-8354**	1	ELBOW AS	
		1	**3K-0360**	1	SEAL-O-RING	
		1	**6V-8398**	1	SEAL-O-RING	
		1	**6V-9002**	1	ELBOW	
	9	1	*148-8368*	1	ELBOW AS	
		1	**3J-1907**	1	SEAL-O-RING	
		1	**4J-5477**	1	SEAL-O-RING	
		1	**6V-8627**	1	ELBOW	
	10	1	*148-8369*	1	ELBOW AS	
		1	**3J-7354**	1	SEAL-O-RING	
		1	**4J-5477**	1	SEAL-O-RING	
		1	**6V-8628**	1	ELBOW	
	11	1	*153-6237*	2	ELBOW AS	
					(EACH INCLUDES)	
		1	**3D-2824**	1	SEAL-O-RING	
		1	**6V-9004**	1	ELBOW	
		1	**6V-9746**	1	SEAL-O-RING	
	12	1	**4D-7735**	1	CLIP	
	13	1	**7X-0632**	1	WASHER-HARD (11X36X6-MM THK)	
M	14	1	**8T-4121**	1	WASHER-HARD (11X21X2.5-MM THK)	
M	15	1	**8T-4136**	1	BOLT (M10X1.5X25-MM)	
M	16	1	**8T-4223**	2	WASHER-HARD (13.5X25.5X3-MM THK)	
M	17	1	**8T-6868**	2	BOLT (M12X1.75X80-MM)	

I-REFER TO HYDRAULIC INFORMATION SYSTEM
M-METRIC PART
Y-SEPARATE ILLUSTRATION

PROOF

246-6719 **AIR COMPRESSOR GP** *(contd.)* **i02299306**

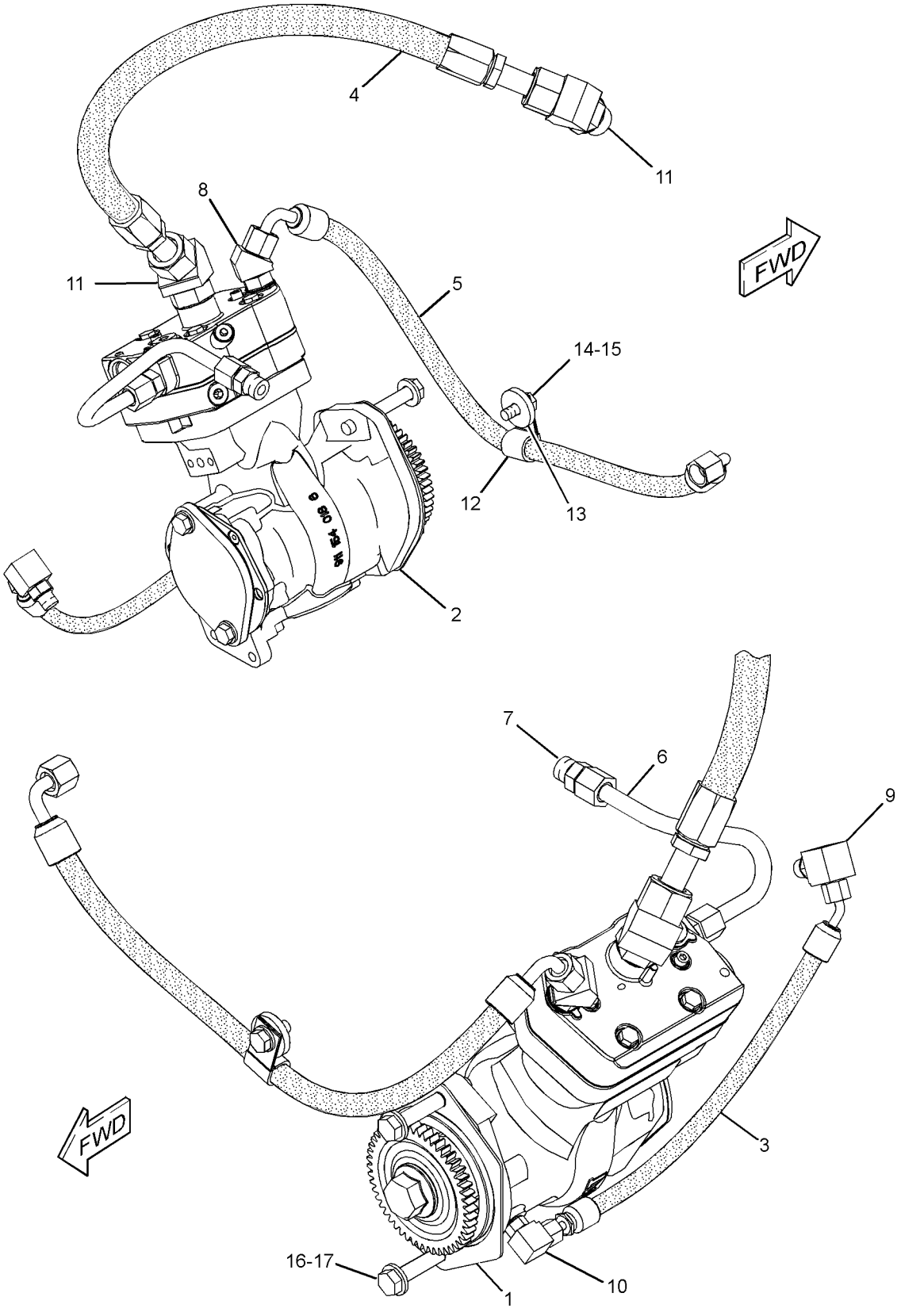

GRAPHIC #1 **<END>** g01154255

BASIC ENGINE

110-0361 BELT TIGHTENER GP

S/N: KHX1-UP
PART OF 231-0878 ENGINE AR-COMPLETE
FOR USE WITH 152-5013—PAGE 23

SMCS-1358 **i00803584**

NOTE	REF NO	GRAPHIC REF	PART NUMBER	QTY	PART NAME 1 2 3 4 5 6 (PRODUCT LEVEL)	SEE PAGE
	1	1	**135-2142**	1	BELT TIGHTENER	
M	2	1	**8T-0643**	1	BOLT (M10X1.50X80MM)	
	3	1	**6V-5839**	1	WASHER (2.5MM THK)	

M-METRIC PART

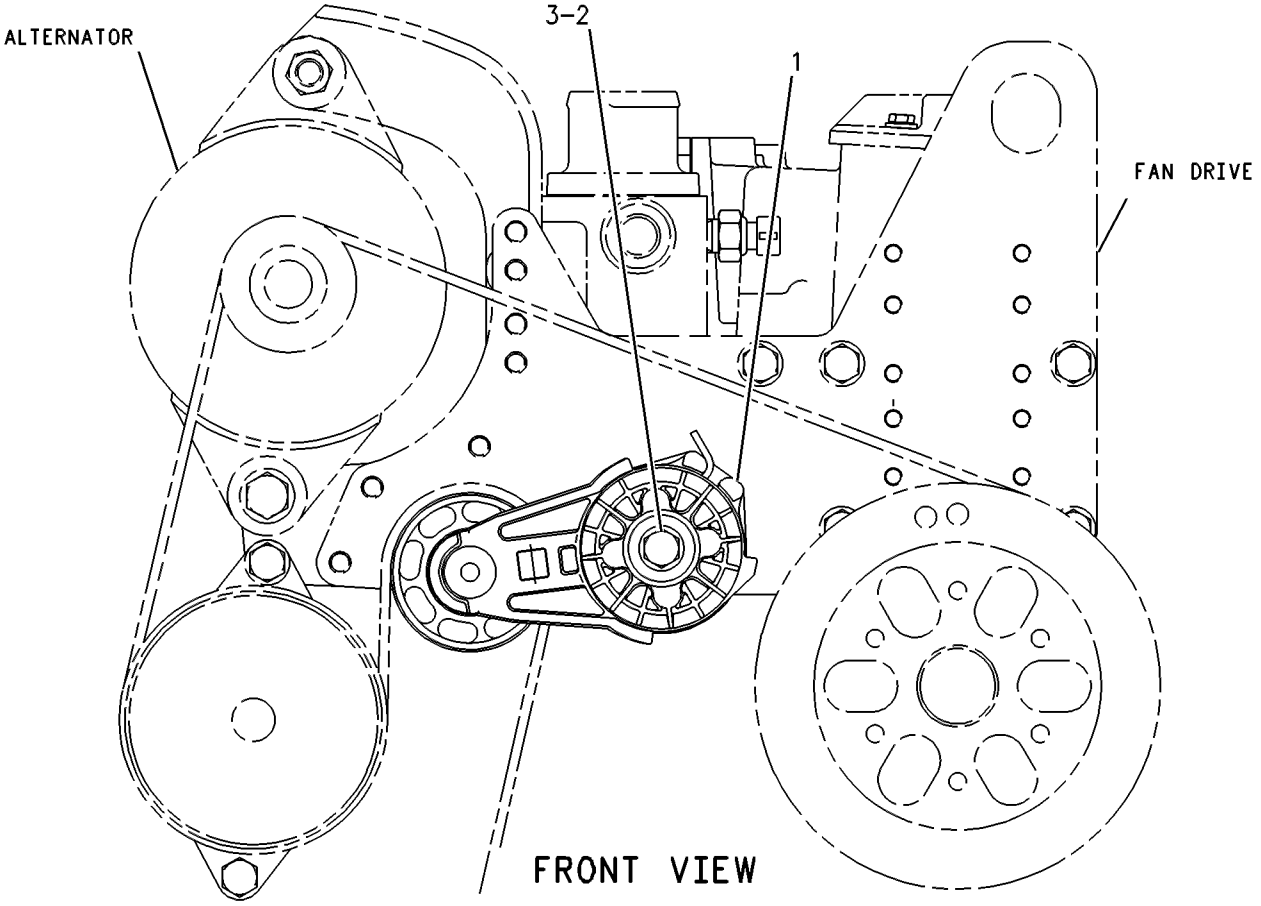

GRAPHIC #1 **<END>** g00260825

222-5947 COVER GP-CYLINDER BLOCK

S/N: KHX1-UP

PROVIDES BLOCK COVER GP WITH REAR STUD AND SIDE COVER BREATHER

PART OF 231-0878 ENGINE AR-COMPLETE

SMCS-1201 **i01885364**

NOTE	REF NO	GRAPHIC REF	PART NUMBER	QTY	PART NAME 1 2 3 4 5 6 (PRODUCT LEVEL)	SEE PAGE
	1	1	**2W-6544**	1	COVER	
	2	1	**4P-5918**	3	CLIP	
	3	1	**4Y-9652**	3	GASKET	
	4	1	**7W-3871**	2	COVER-SIDE	
	5	1	**7W-3872**	6	SLEEVE	
M	6	1	**9X-2099**	1	STUD (M8X1.25-THD)	
	7	1	**110-7618**	3	BOLT AS	
	8	1	**175-1367**	8	SPACER (8.8X16X10-MM THK)	
	9	1	**222-5893**	1	COVER AS	
M		1	**6V-5698**	2	SCREW-BUTTON HEAD (M4X0.7X10-MM)	
	10	1	**210-3321**	1	STUD	
M	11	1	**5C-7261**	1	NUT (M8X1.25-THD)	
M	12	1	**6V-2317**	23	BOLT (M8X1.25X30-MM)	
	13	1	**8T-4224**	1	WASHER-HARD (8.8X16X2-MM THK)	
	14	1	**9M-1974**	14	WASHER-HARD (8.8X16X2-MM THK)	
B	15	1	**1U-8846**		SEALANT-GASKET	

B-USE AS REQUIRED
M-METRIC PART

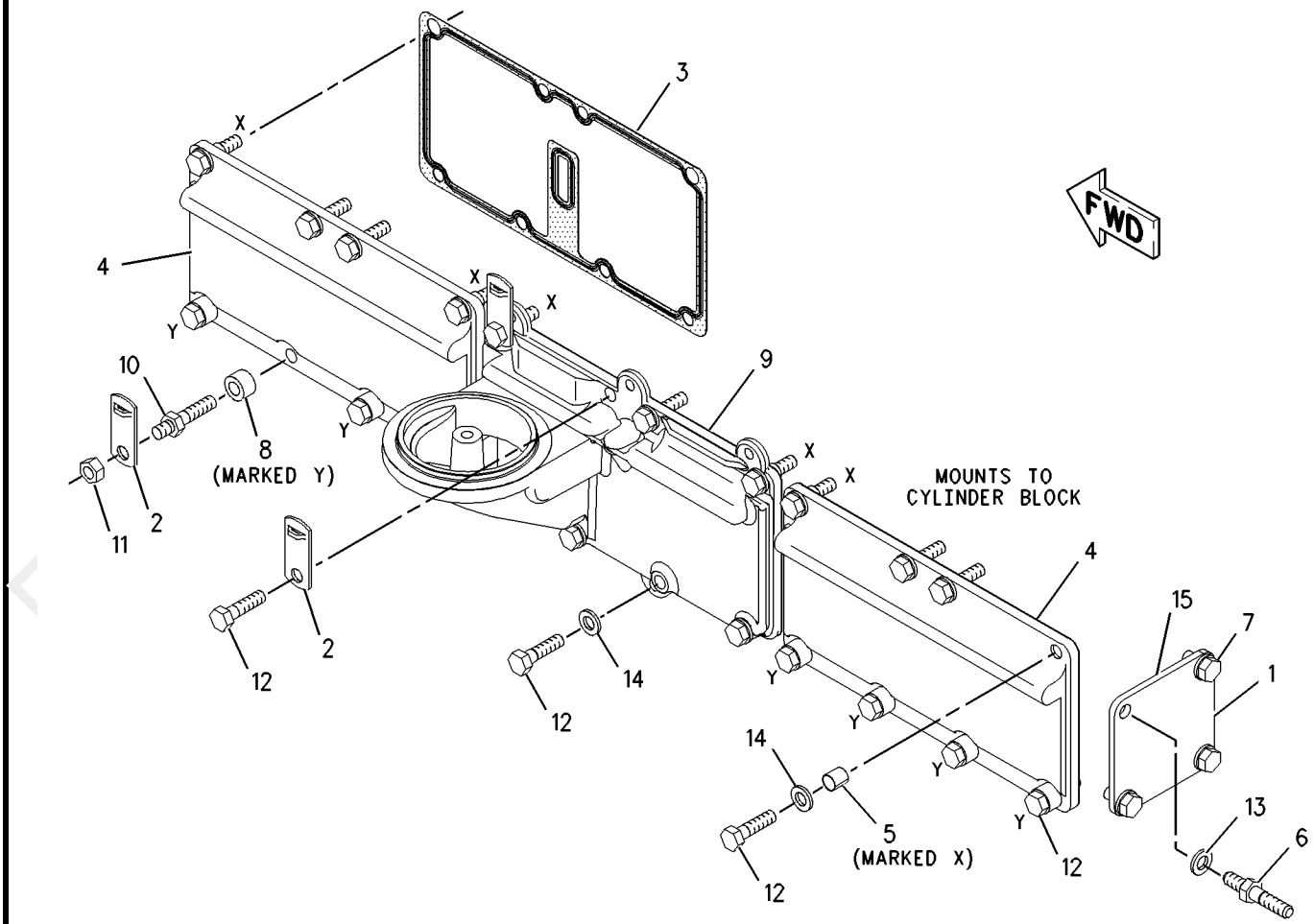

GRAPHIC #1 **<END>** g00947019

118-1727 COVER GP-FRONT HOUSING

S/N: KHX1-UP

REQUIRED ON ENGINES WITHOUT FACTORY INSTALLED AIR COMPRESSOR

PART OF 231-0878 ENGINE AR-COMPLETE

SMCS-1151, 1166 **i01784655**

NOTE	REF NO	GRAPHIC REF	PART NUMBER	QTY	PART NAME 1 2 3 4 5 6 (PRODUCT LEVEL)	SEE PAGE
	1	1	**5P-8245**	4	WASHER-HARD (13.5X25.5X3-MM THK)	
M	2	1	**6V-5696**	2	BOLT (M12X1.75X80-MM)	
	3	1	**4W-2026**	1	COVER	
	4	1	**135-9819**	1	SEAL	
M	5	1	**6V-8149**	2	NUT (M12X1.75-THD)	

M-METRIC PART

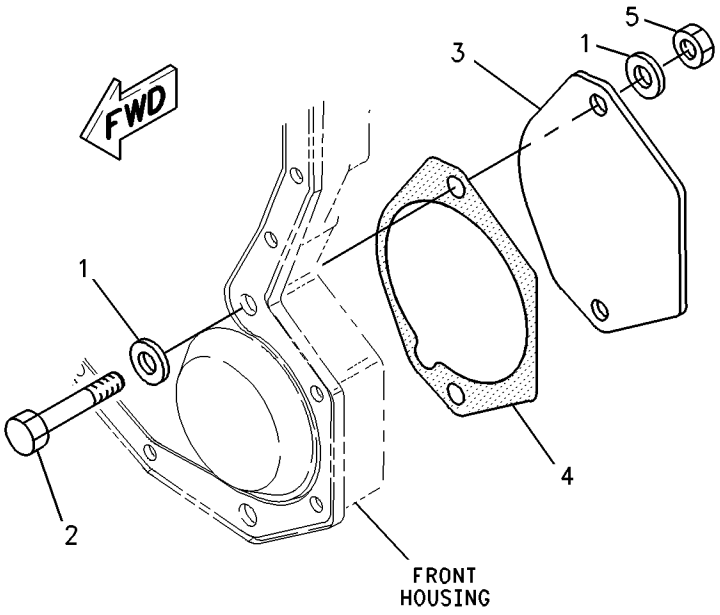

GRAPHIC #1 **<END>** g00897312

BASIC ENGINE

205-3081 COVER GP-FRONT HOUSING

S/N: KHX1-UP

PART OF 231-0878 ENGINE AR-COMPLETE

SMCS-1151, 1166 **i02297281**

NOTE	REF NO	GRAPHIC REF	PART NUMBER	QTY	PART NAME 1 2 3 4 5 6 (PRODUCT LEVEL)	SEE PAGE
M	1	1	**9X-2099**	1	STUD (M8X1.25-THD)	
	2	1	**002-3448**	1	CLIP	
	3	1	**241-5645**	1	CAP AS-FILLER (ENGINE OIL)	
	4	1	**108-3612**	1	SPACER (11.13X19.05X53-MM THK)	
	5	1	**136-0823**	1	COVER AS-FRONT	
		1	**126-1757**	2	WASHER (10.85X19.3X1.27-MM THK)	
		1	**136-0822**	2	STUD	
	6	1	**139-3526**	1	GASKET	
	7	1	**159-0286**	1	TUBE AS-FILLER	
	8	1	**061-9455**	1	SEAL-O-RING (47.22-MM ID)	
M	9	1	**5C-7261**	2	NUT (M8X1.25-THD)	
M	10	1	**6V-2317**	11	BOLT (M8X1.25X30-MM)	
	11	1	**6V-5839**	1	WASHER (11X21X2.5-MM THK)	
M	12	1	**8T-0100**	2	BOLT (M8X1.25X60-MM)	
M	13	1	**8T-0643**	1	BOLT (M10X1.5X80-MM)	
	14	1	**8T-4224**	2	WASHER-HARD (8.8X16X2-MM THK)	

M-METRIC PART

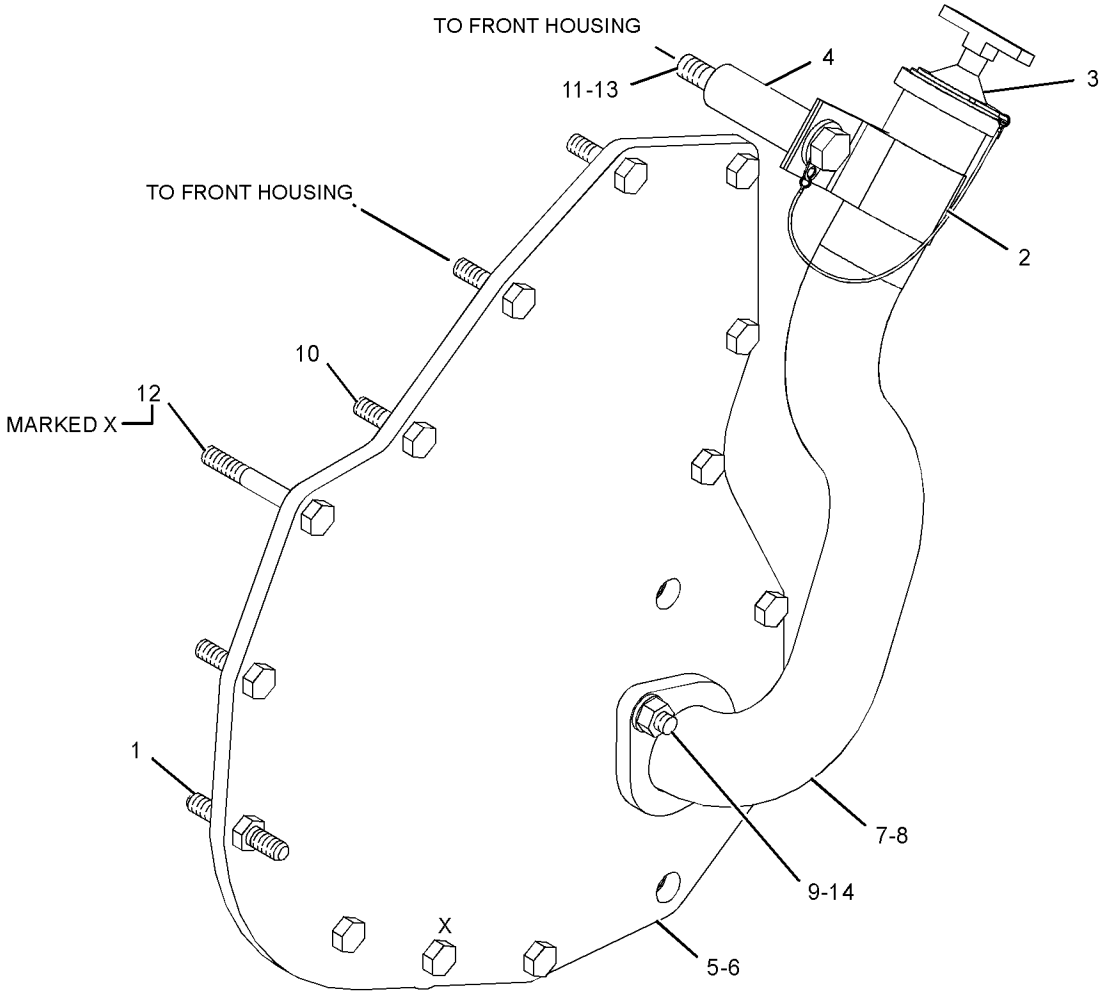

GRAPHIC #1 **<END>** g01156246

222-5952 COVER GP-VALVE MECHANISM

S/N: KHX1-UP

PART OF 231-0878 ENGINE AR-COMPLETE

FOR USE WITH ENGINES THAT USE SIDE COVER BREATHER AND REQUIRE NO TOP OIL FILL

SMCS-1107, 1120 **i02301090**

NOTE	REF NO	GRAPHIC REF	PART NUMBER	QTY	PART NAME 1 2 3 4 5 6 (PRODUCT LEVEL)	SEE PAGE
	1	1	**246-5083**	13	SLEEVE-SPACER	
	2	1	**249-0150**	1	COVER GP-VALVE MECHANISM (BASE)	
J		1	**217-5701**		SEAL (21-DECIMETER)	
CY	3	1	**242-2411**	1	COVER GP-VALVE MECHANISM (TOP)	13
CM	4	1	**6V-5219**	13	BOLT (M8X1.25X40-MM)	
C	5	1	**9M-1974**	13	WASHER-HARD (8.8X16X2-MM THK)	

C-CHANGE FROM PREVIOUS TYPE
J-ORDER BY DECIMETER
M-METRIC PART
Y-SEPARATE ILLUSTRATION

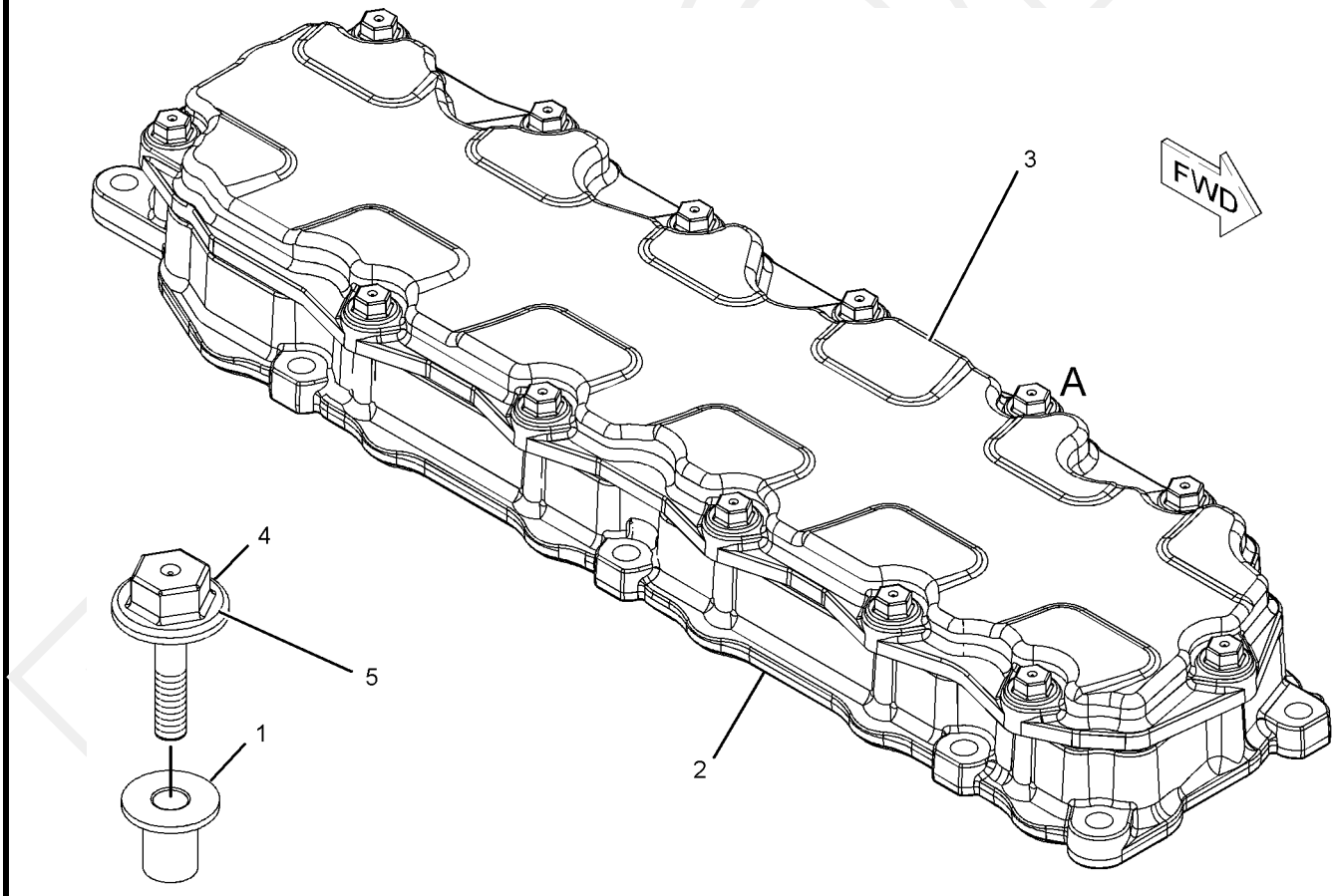

EXPLODED VIEW
OF AREA A

GRAPHIC #1

<END>

g01060391

242-2411 COVER GP-VALVE MECHANISM

S/N: KHX1-UP

PART OF 222-5952 COVER GP-VALVE MECHANISM

SMCS-1107, 1120 **i02168857**

NOTE	REF NO	GRAPHIC REF	PART NUMBER	QTY	PART NAME 1 2 3 4 5 6 (PRODUCT LEVEL)	SEE PAGE
L	1	1	**217-5701**		SEAL (21-DM)	

L-ORDER BY THE DECIMETER

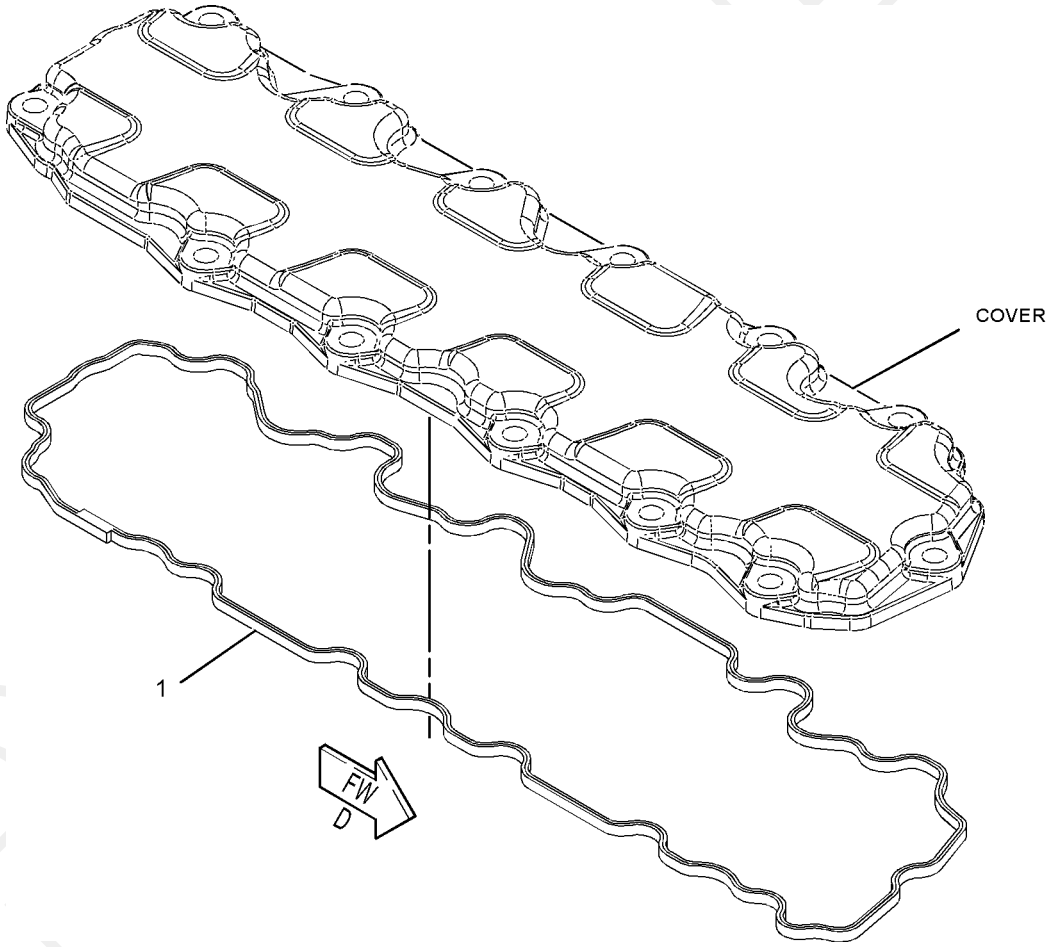

GRAPHIC #1 **<END>** g01098913

BASIC ENGINE

250-8309 DAMPER & PULLEY GP

S/N: KHX1-UP

PART OF 231-0878 ENGINE AR-COMPLETE

SMCS-1205 **i02290229**

NOTE	REF NO	GRAPHIC REF	PART NUMBER	QTY	PART NAME 1 2 3 4 5 6 (PRODUCT LEVEL)	SEE PAGE
	1	1	**2W-7381**	1	WASHER	
	2	1	**167-8121**	1	DAMPER AS	
	3	1	**172-9367**	1	PULLEY-CRANKSHAFT	
	4	1	**228-3621**	1	SPACER	
M	5	1	**6V-4249**	8	BOLT (M10X1.5X50-MM)	
M	6	1	**8T-3666**	4	BOLT (M14X60-MM)	

M-METRIC PART

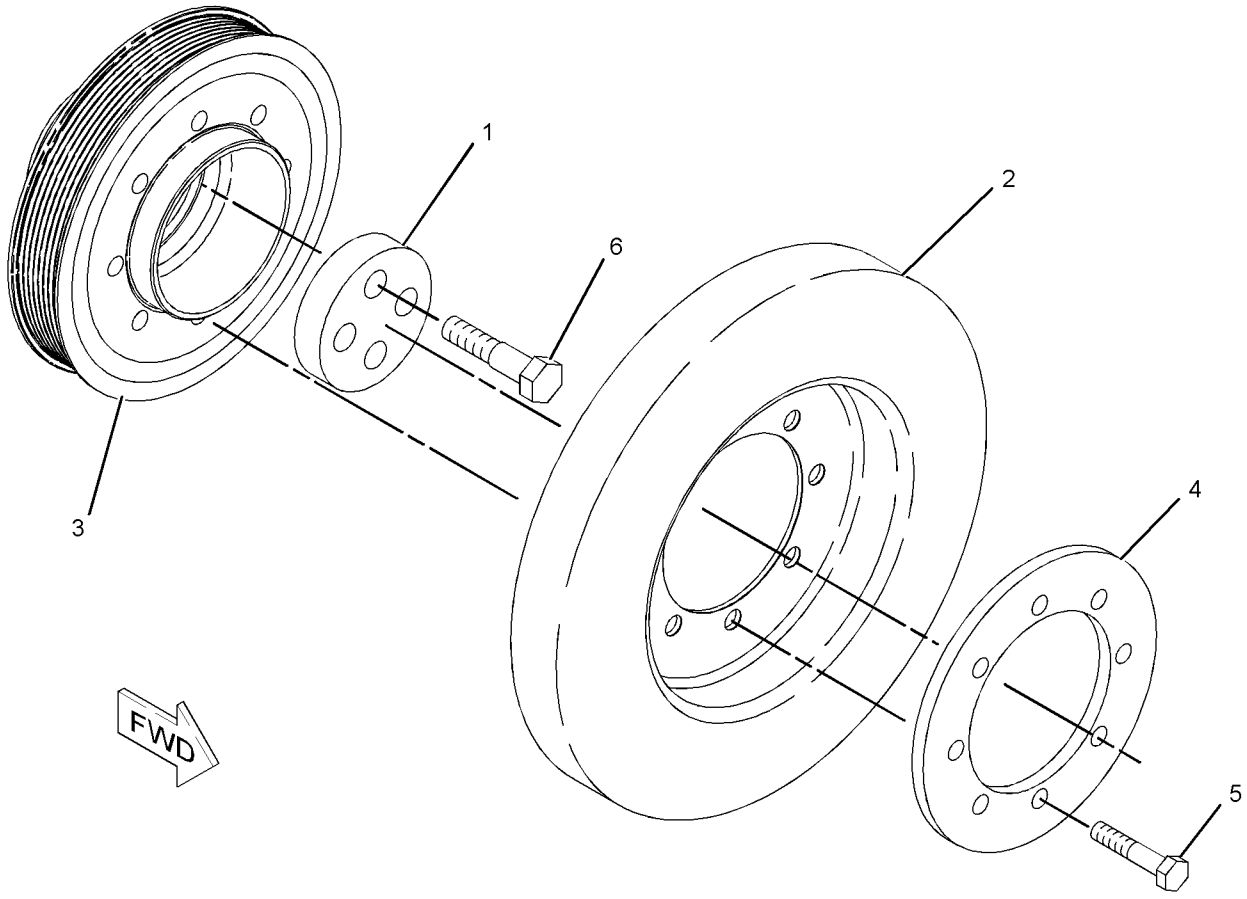

GRAPHIC #1 **<END>** g01148400

250-8312 FLYWHEEL GP

S/N: KHX1-UP

PART OF 231-0878 ENGINE AR-COMPLETE

SMCS-1156, 1158 **i02290270**

NOTE	REF NO	GRAPHIC REF	PART NUMBER	QTY	PART NAME 1 2 3 4 5 6 (PRODUCT LEVEL)	SEE PAGE
	1	1	**250-8305**	1	FLYWHEEL AS	
		1	**256-9651**	1	GEAR-FLYWHEEL (113-TEETH)	
	2	1	**256-6070**	8	BOLT (M12X1.75X150-MM)	
	3	1	**5P-8245**	8	WASHER-HARD (13.5X25.5X3-MM THK)	

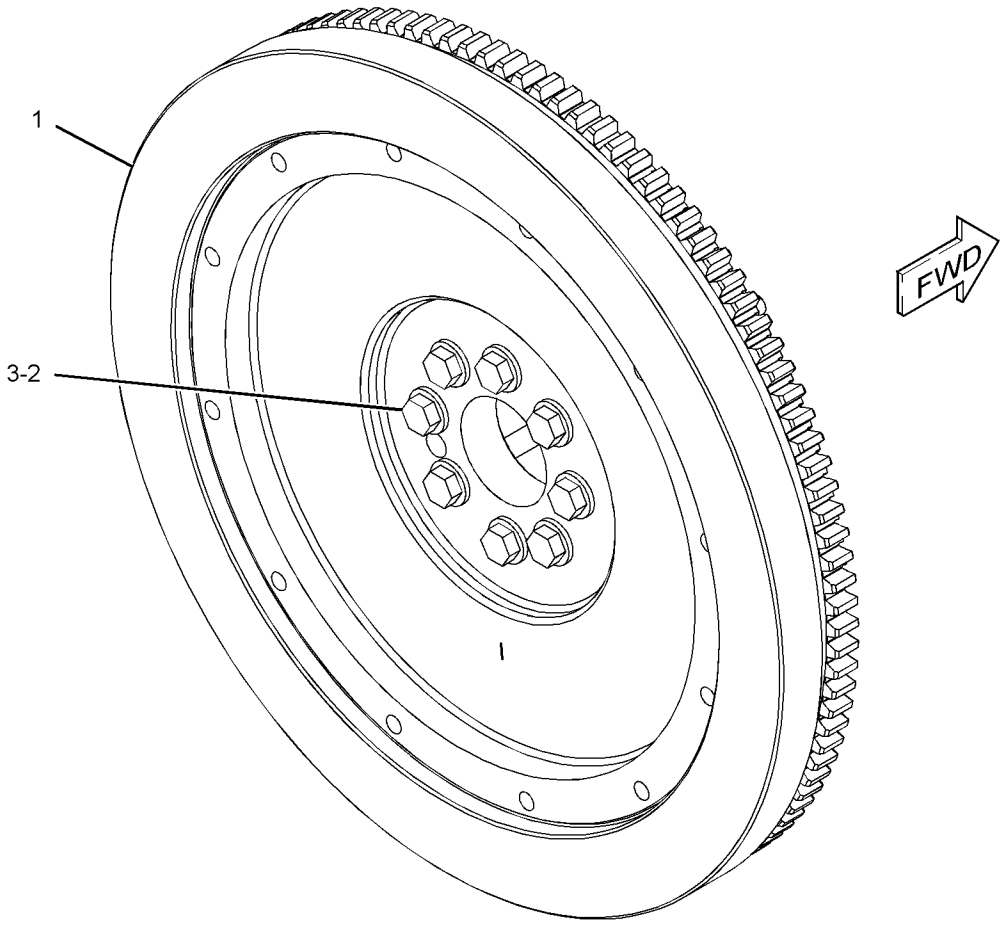

GRAPHIC #1 **<END>** g01152658

BASIC ENGINE

250-8308 GEAR GP-REAR

S/N: KHX1-UP

PART OF 231-0878 ENGINE AR-COMPLETE

SMCS-1206 **i02290234**

NOTE	REF NO	GRAPHIC REF	PART NUMBER	QTY	PART NAME 1 2 3 4 5 6 (PRODUCT LEVEL)	SEE PAGE
	1	1	**1W-4741**	2	GEAR AS-IDLER (70-TEETH)	
					(EACH INCLUDES)	
		1	**1W-4738**	1	BEARING-SLEEVE	
	2	1	**1W-4746**	2	RETAINER-GEAR	
	3	1	**187-8194**	1	GEAR AS-DRIVE (64-TEETH)	
	3A	1	**4F-6024**	1	PIN	
	4	1	**245-1739**	2	ADAPTER AS	
					(EACH INCLUDES)	
		1	**160-8184**	1	BEARING-SLEEVE	
	5	1	**251-2305**	1	GEAR	
	6	1	**251-4812**	1	GEAR AS (64-TEETH)	
	6A	1	**4F-6024**	1	PIN	
	7	1	**4N-1230**	2	SEAL-O-RING	
M	8	1	**6V-1820**	12	BOLT (M10X1.5X30-MM)	
	9	1	**6V-5839**	12	WASHER (11X21X2.5-MM THK)	
M	10	1	**6V-7673**	6	BOLT (M12X1.75X50-MM)	

M-METRIC PART

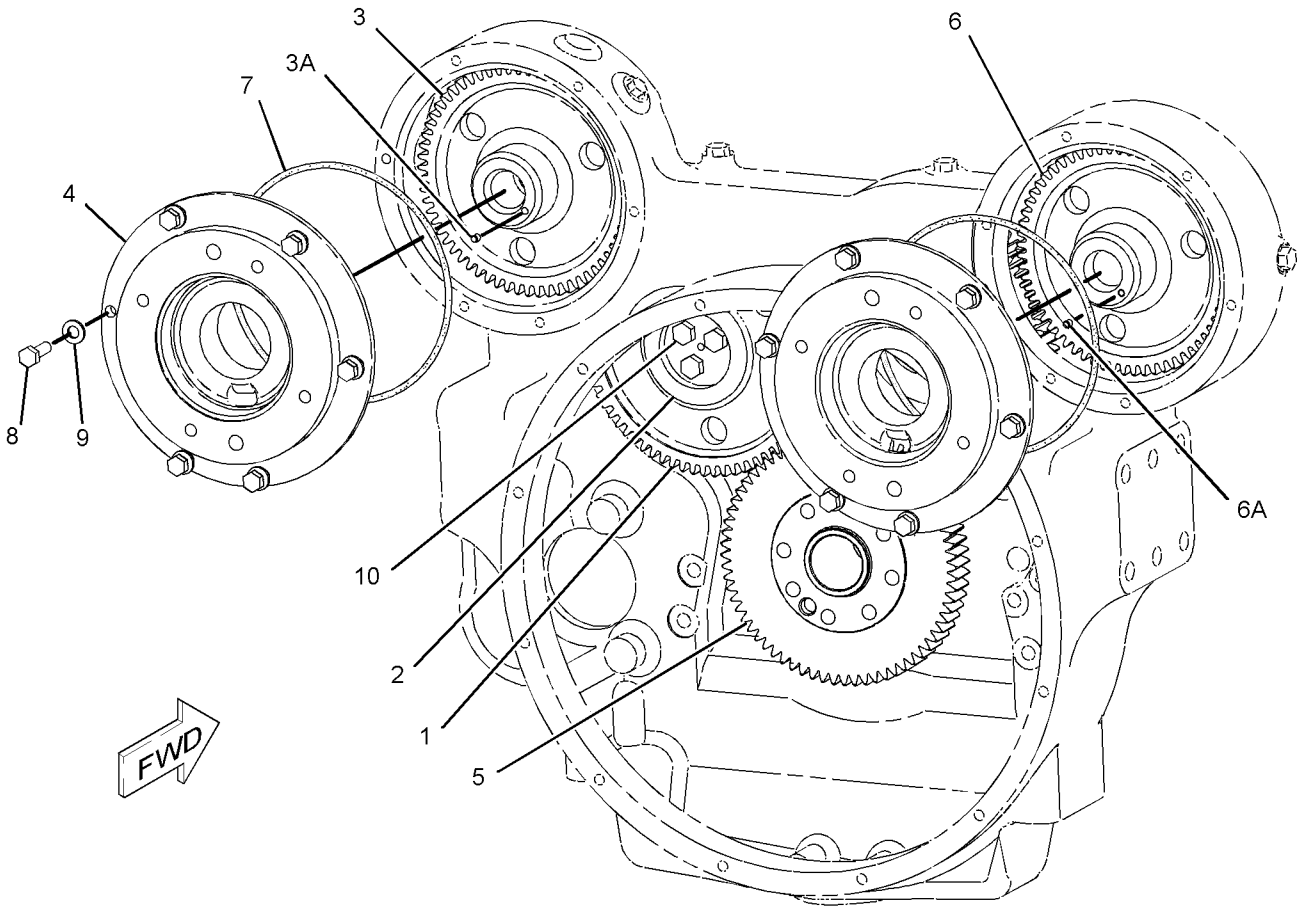

GRAPHIC #1 **<END>** g01148859

251-1135 HOUSING GP-FLYWHEEL

S/N: KHX1-UP

PART OF 231-0878 ENGINE AR-COMPLETE

SMCS-1157 **i02290280**

NOTE	REF NO	GRAPHIC REF	PART NUMBER	QTY	PART NAME 1 2 3 4 5 6 (PRODUCT LEVEL)	SEE PAGE
	1	1	**175-3721**	1	COVER	
	2	1	**195-5837**	1	COVER	
	3	1	**251-1139**	1	HOUSING AS	
		1	**2A-1162**	1	GASKET	
		1	**5F-0304**	1	PLUG	
		1	**8M-9315**	2	BEARING-SLEEVE	
		1	*148-8395*	2	PLUG AS	
					(EACH INCLUDES)	
		1	**3K-0360**	1	SEAL-O-RING	
		1	**9S-8005**	1	PLUG	
		1	*148-8405*	1	PLUG AS	
		1	**1J-9671**	1	SEAL-O-RING	
		1	**3K-8460**	1	PLUG	
		1	*148-8407*	4	PLUG AS	
					(EACH INCLUDES)	
		1	**3J-1907**	1	SEAL-O-RING	
		1	**9S-4191**	1	PLUG	
		1	*155-3624*	1	PLUG AS	
		1	**3J-7354**	1	SEAL-O-RING	
		1	**9S-4182**	1	PLUG	
	4	1	**4M-0189**	1	SEAL-O-RING	
	5	1	**5F-3999**	1	SEAL-O-RING	
	6	1	**5P-8245**	2	WASHER-HARD (13.5X25.5X3-MM THK)	
	7	1	**5P-8246**	10	WASHER-HARD (15.5X29X3-MM THK)	
M	8	1	**6A-5591**	2	BOLT (M12X1.75X25-MM)	
M	9	1	**6V-5192**	1	BOLT-SOCKET HEAD (M8X1.25X30-MM)	
	10	1	**6V-5839**	2	WASHER (11X21X2.5-MM THK)	
M	11	1	**6V-5844**	2	BOLT (M16X2X35-MM)	
M	12	1	**8C-0537**	10	BOLT (M14X2X90-MM)	
M	13	1	**8T-0643**	2	BOLT (M10X1.5X80-MM)	
	14	1	**9X-8268**	2	WASHER (17.5X30X3.5-MM THK)	
B	15	1	**1U-8846**		SEALANT-GASKET	

B-USE AS REQUIRED
M-METRIC PART

PROOF

251-1135 **HOUSING GP-FLYWHEEL** *(contd.)* **i02290280**

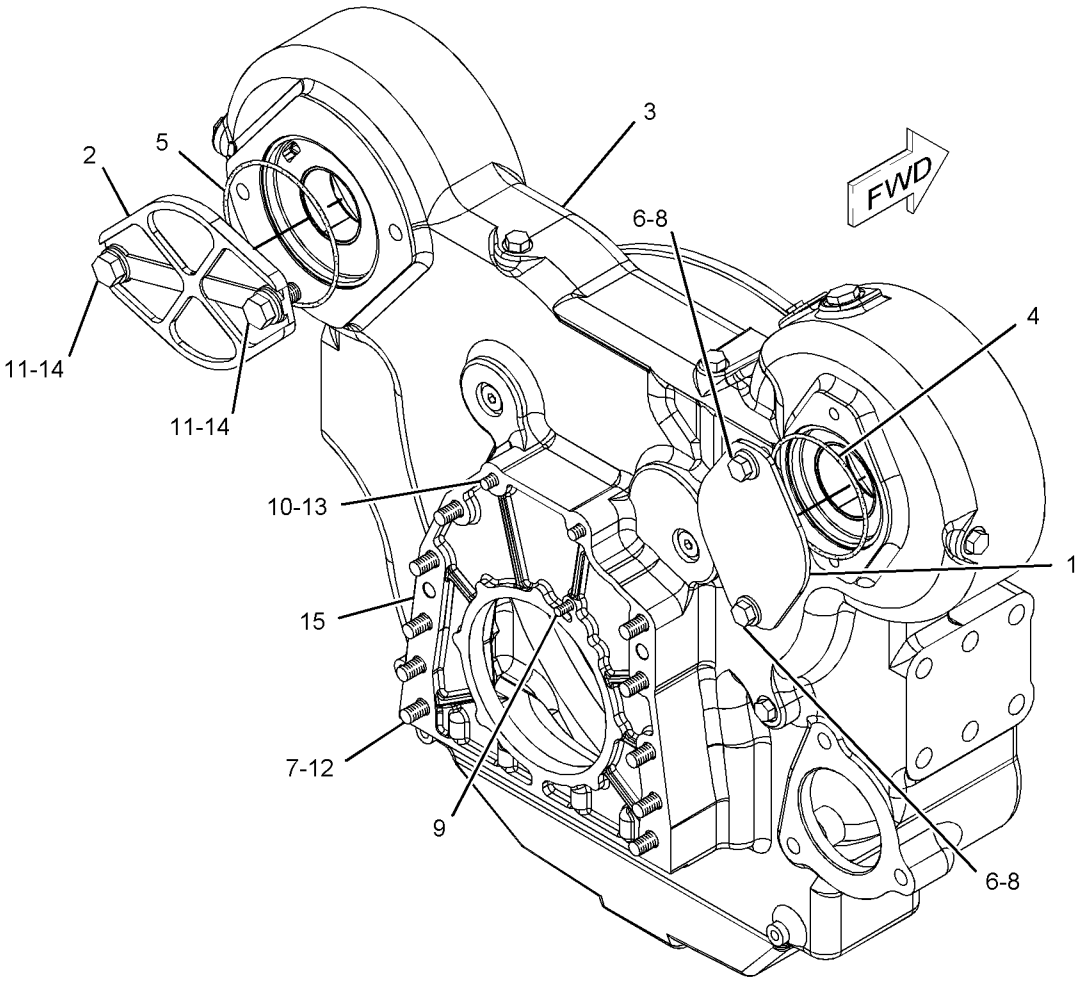

GRAPHIC #1 **<END>** g01149846

196-1912 LIFTING GP-ENGINE

S/N: KHX1-UP
REAR
PART OF 231-0878 ENGINE AR-COMPLETE

SMCS-1122 **i01877691**

NOTE	REF NO	GRAPHIC REF	PART NUMBER	QTY	PART NAME 1 2 3 4 5 6 (PRODUCT LEVEL)	SEE PAGE
M	1	1	**8T-4136**	4	BOLT (M10X1.5X25-MM)	
M	2	1	**8T-4121**	4	WASHER-HARD (11X21X2.5-MM THK)	
	3	1	**196-1914**	1	PLATE	

M-METRIC PART

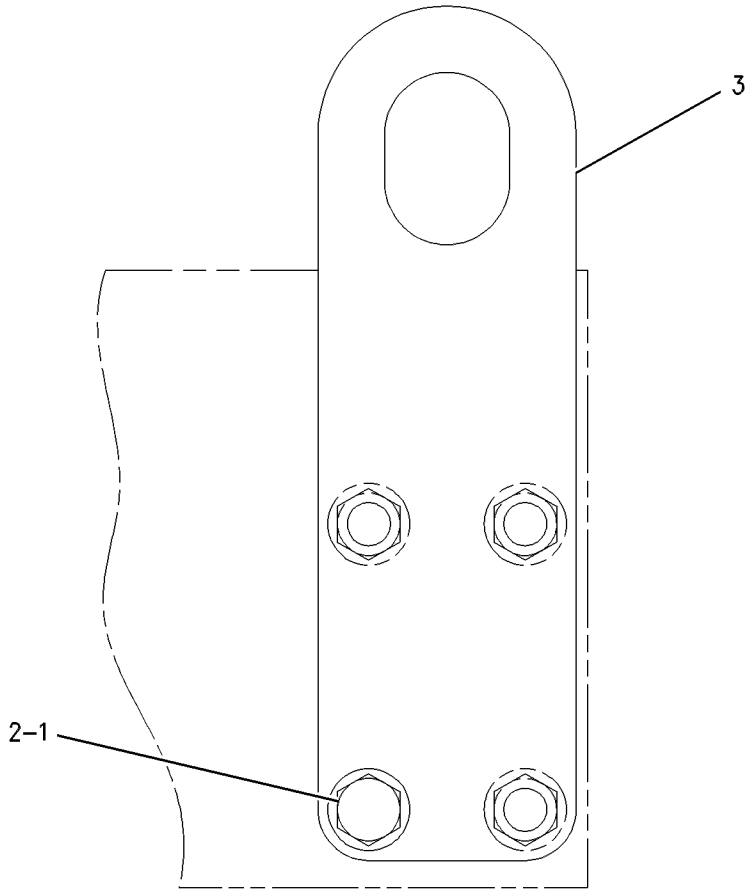

REAR VIEW

GRAPHIC #1 **<END>** g00441547

169-3130 MOUNTING GP-ALTERNATOR

S/N: B9M1-UP
PART OF 253-2723, 253-2724 ALTERNATOR GP-CHARGING
FOR USE WITH 8 GROOVE ALTERNATOR, 110-0361—PAGE 8
AN ATTACHMENT

SMCS-1154, 1405 **i01199695**

NOTE	REF NO	GRAPHIC REF	PART NUMBER	QTY	PART NAME 1 2 3 4 5 6 (PRODUCT LEVEL)	SEE PAGE
	1	1	**131-2182**	1	SUPPORT-ALTERNATOR	
	2	1	**126-8240**	1	SUPPORT-ALTERNATOR	
M	3	1	**8T-4121**	6	WASHER-HARD (11X21X2.5-MM THK)	
M	4	1	**8T-4186**	2	BOLT (M10X1.5X40-MM)	
M	5	1	**8T-4195**	4	BOLT (M10X1.5X30-MM)	

M-METRIC PART

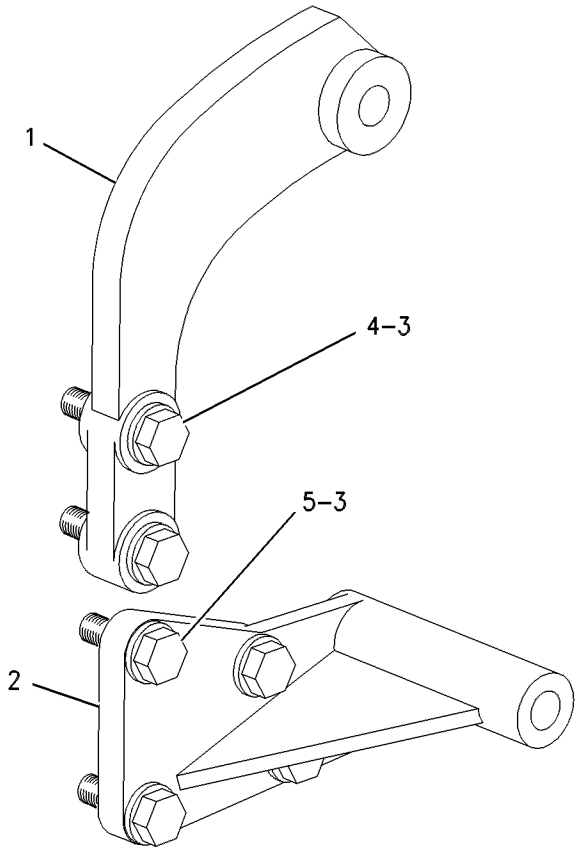

GRAPHIC #1 **<END>** g00642006

231-2156 MOUNTING GP-ENGINE & TMSN

S/N: B9M1-UP

PART OF 234-7721 COMMON AR-MOTOR GRADER

SMCS-1152, 1153, 1154, 3082 **i02235520**

NOTE	REF NO	GRAPHIC REF	PART NUMBER	QTY	PART NAME 1 2 3 4 5 6 (PRODUCT LEVEL)	SEE PAGE
	1	1	**9W-9920**	2	MOUNT AS	
	1A	1	**9W-6582**	2	SLEEVE	
	1B	1	**9W-6584**	2	WASHER (20.5X114X10-MM THK)	
	2	1	**6Y-9960**	2	MOUNT AS	
	2A	1	**3E-4887**	2	SLEEVE	
	2B	1	**3E-4888**	4	WASHER (32X144X12-MM THK)	
	3	1	**253-1687**	1	SUPPORT (RH)	
	4	1	**253-1688**	1	SUPPORT (LH)	
M	5	1	**7X-2565**	8	BOLT (M20X2.5X100-MM)	
M	6	1	**7X-2585**	2	BOLT (M30X3.5X160-MM)	
	7	1	**8T-4123**	10	WASHER-PLATED (22X35X3.5-MM THK)	
M	8	1	**8T-4183**	10	BOLT (M12X1.75X40-MM)	
M	9	1	**8T-4194**	2	BOLT (M12X1.75X50-MM)	
M	10	1	**8T-6381**	2	BOLT (M20X2.5X120-MM)	
	11	1	**8T-7971**	12	WASHER-HARD (13.5X25.5X5-MM THK)	
	12	1	**9X-8258**	2	WASHER (33X56X6-MM THK)	

M-METRIC PART

PROOF

231-2156 **MOUNTING GP-ENGINE & TMSN** *(contd.)* **i02235520**

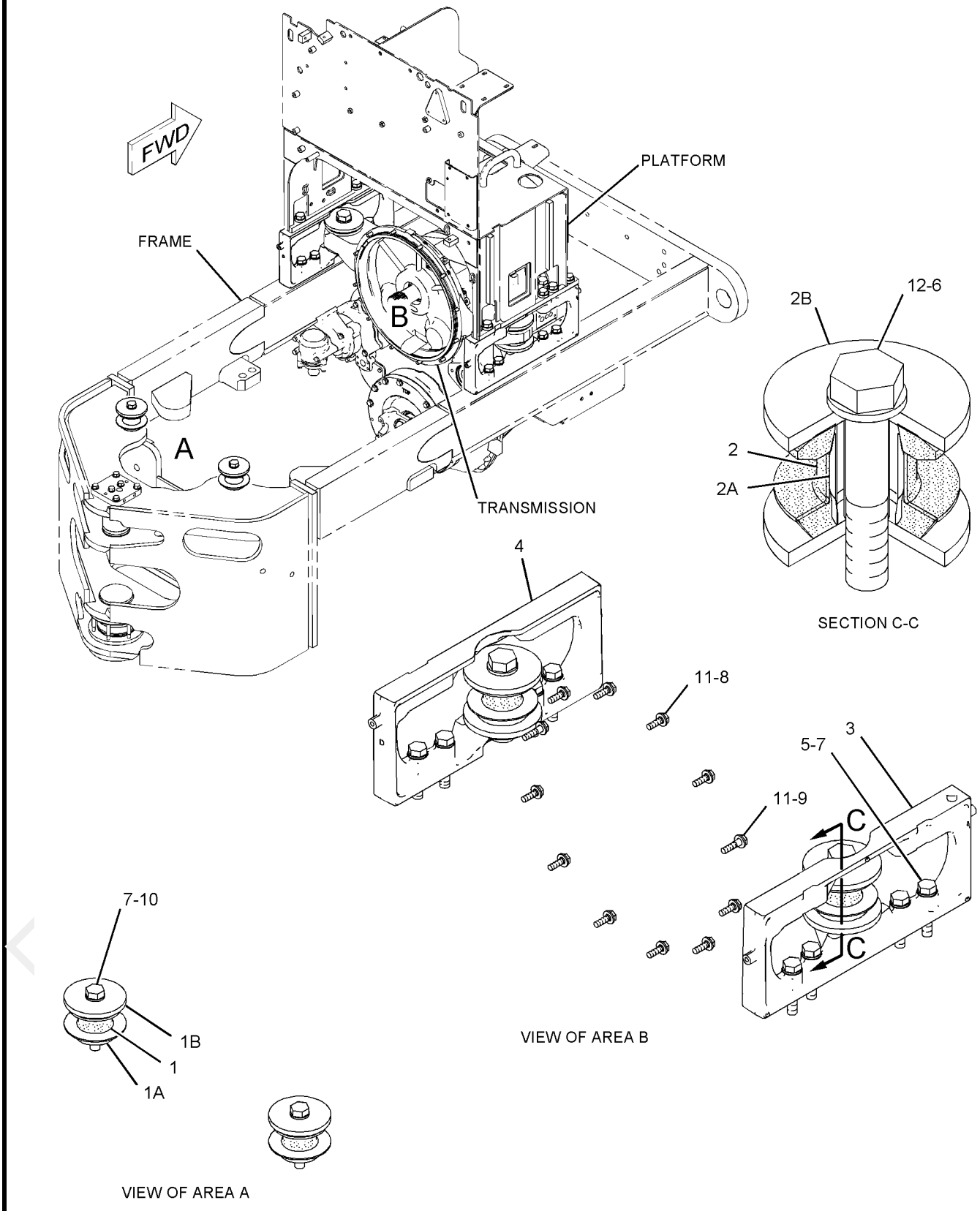

GRAPHIC #1 **<END>** g01133541

152-5013 MOUNTING GP-FAN DRIVE

S/N: KHX1-UP

PART OF 231-0878 ENGINE AR-COMPLETE

FOR USE WITH 110-0361—PAGE 8

SMCS-1359 **i02155232**

NOTE	REF NO	GRAPHIC REF	PART NUMBER	QTY	PART NAME 1 2 3 4 5 6 (PRODUCT LEVEL)	SEE PAGE
	1	1	**7E-1313**	1	BRACKET	
	2	1	**253-9323**	1	SUPPORT AS	
	3	1	**8T-4121**	7	WASHER-HARD (11X21X2.5-MM THK)	
M	4	1	**8T-4195**	2	BOLT (M10X1.5X30-MM)	
M	5	1	**8T-4196**	5	BOLT (M10X1.5X35-MM)	

M-METRIC PART

PROOF

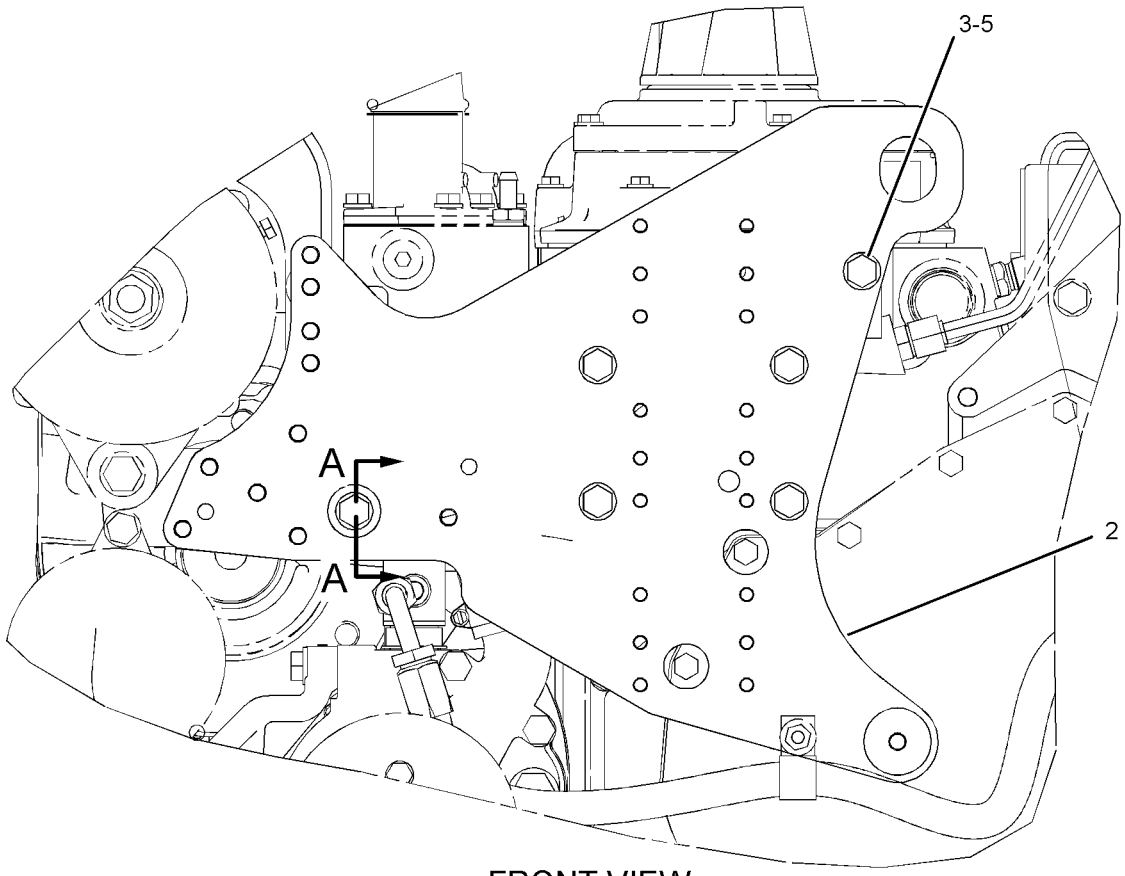

FRONT VIEW

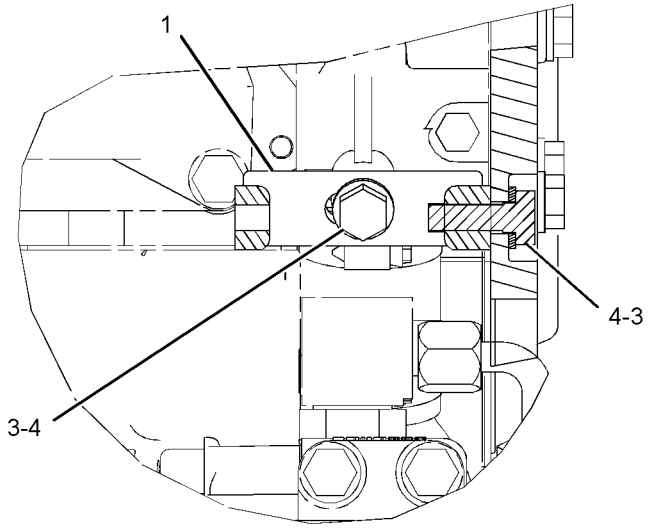

SECTION A-A

GRAPHIC #1

<END>

g01093921

250-8320 PAN GP-OIL—ENGINE

S/N: KHX1-UP

PART OF 231-0878 ENGINE AR-COMPLETE

SMCS-1302 **i02290290**

NOTE	REF NO	GRAPHIC REF	PART NUMBER	QTY	PART NAME 1 2 3 4 5 6 (PRODUCT LEVEL)	SEE PAGE
	1	1	**166-2905**	1	SEAL-INTEGRAL	
	2	1	*256-0193*	1	PAN GP-OIL (ENGINE)	
	2A	1	**3D-2824**	2	SEAL-O-RING	
	2B	1	**9S-8008**	2	PLUG	
M	3	1	**175-3676**	36	BOLT (M8X1.25X19.5-MM)	
B	4	1	**4C-9612**		SEALANT-SILICONE	

B-USE AS REQUIRED
M-METRIC PART

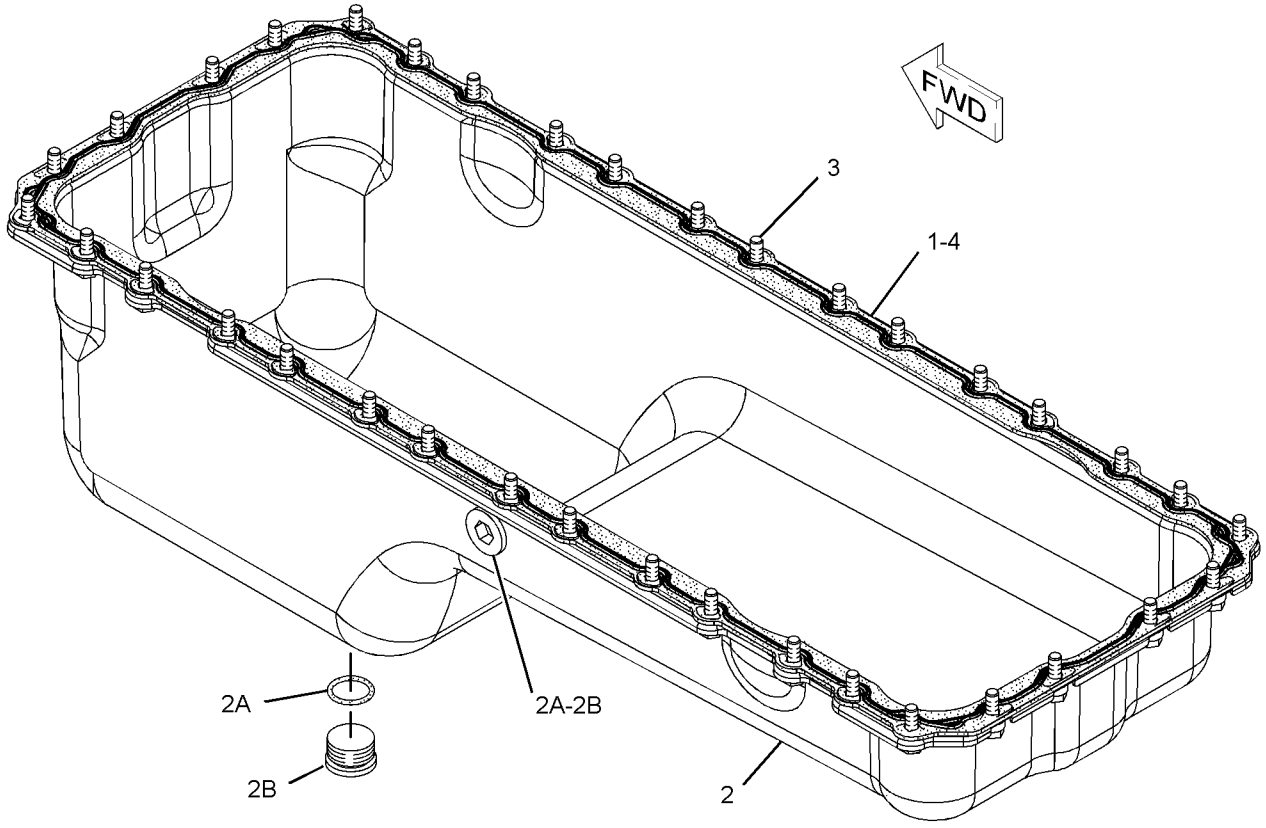

GRAPHIC #1 **<END>** g01148962

159-0303 PLUG GP-CYLINDER BLOCK

S/N: KHX1-UP

REQUIRED WHEN REMOTE MOUNT COOLANT CONDITIONER IS NOT USED

PART OF 231-0878 ENGINE AR-COMPLETE

SMCS-1201 **i01972327**

NOTE	REF NO	GRAPHIC REF	PART NUMBER	QTY	PART NAME 1 2 3 4 5 6 (PRODUCT LEVEL)	SEE PAGE
M	1	1	**8T-0293**	1	BOLT (M12X1.75X20-MM)	
	2	1	**6F-7062**	1	WASHER (12.7X19.05X1.83-MM THK)	
	3	1	**9S-8008**	2	PLUG	
	4	1	**3D-2824**	2	SEAL-O-RING	

M-METRIC PART

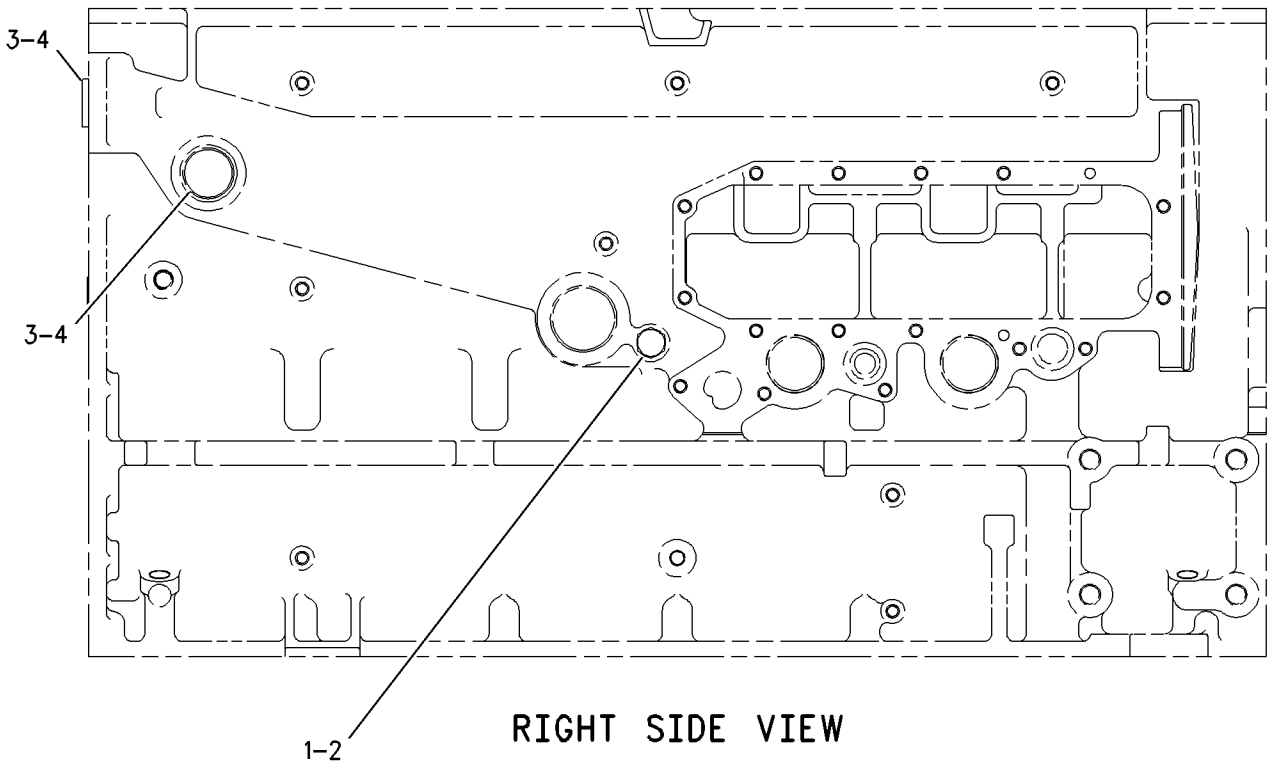

RIGHT SIDE VIEW

GRAPHIC #1 **<END>** g00677138

162-8068 PLUG GP-ENGINE

S/N: KHX1-UP
PART OF 231-0878 ENGINE AR-COMPLETE
FOR USE WITH GM ENGINES ONLY

SMCS-1000, 1201 **i01828029**

NOTE	REF NO	GRAPHIC REF	PART NUMBER	QTY	PART NAME 1 2 3 4 5 6 (PRODUCT LEVEL)	SEE PAGE
	1	1	**9S-8005**	1	PLUG	
	2	1	**3K-0360**	1	SEAL-O-RING	

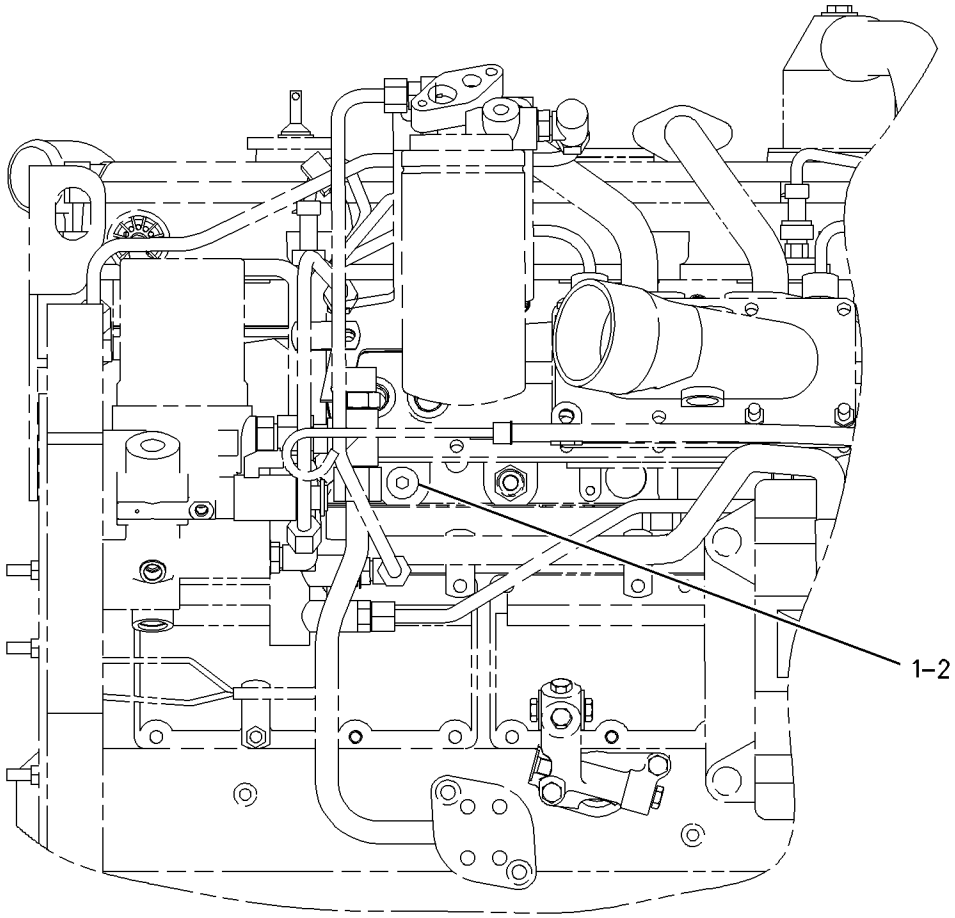

LEFT SIDE VIEW

GRAPHIC #1 **<END>** g00932414

175-3223 PULLEY GP-IDLER

S/N: B9M1-UP
PART OF 246-6701, 246-6715 ALTERNATOR GP-CHARGING
CANNOT BE USED WITH CUSTOMER SUPPLIED REFRIGERANT COMPRESSOR
AN ATTACHMENT

SMCS-1358 **i01571362**

NOTE	REF NO	GRAPHIC REF	PART NUMBER	QTY	PART NAME 1 2 3 4 5 6 (PRODUCT LEVEL)	SEE PAGE
	1	1	**124-7792**	1	PULLEY AS-IDLER	
	2	1	**124-7791**	1	COVER-DUST	
M	3	1	**124-7790**	1	BOLT-SPECIAL (M10X1.5X40-MM)	
	4	1	**145-2901**	1	COVER-DUST (REAR)	

M-METRIC PART

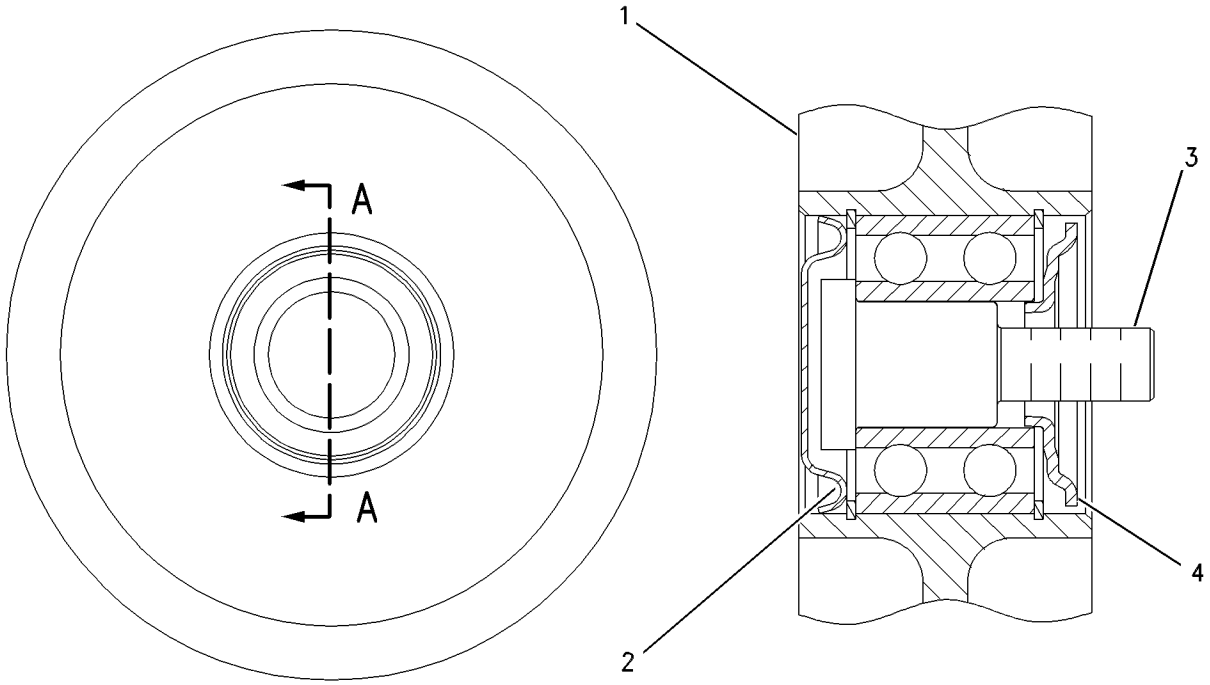

SECTION A-A

GRAPHIC #1 **<END>** g00614102

4W-1016 SEAL GP-CRANKSHAFT

S/N: KHX1-UP

PART OF 231-0878 ENGINE AR-COMPLETE

SMCS-1160, 1161 **i01261285**

NOTE	REF NO	GRAPHIC REF	PART NUMBER	QTY	PART NAME 1 2 3 4 5 6 (PRODUCT LEVEL)	SEE PAGE
	1	1	**7C-3571**	1	SEAL GP-CRANKSHAFT	
	2	1	**7C-4163**	1	SEAL GP-CRANKSHAFT	

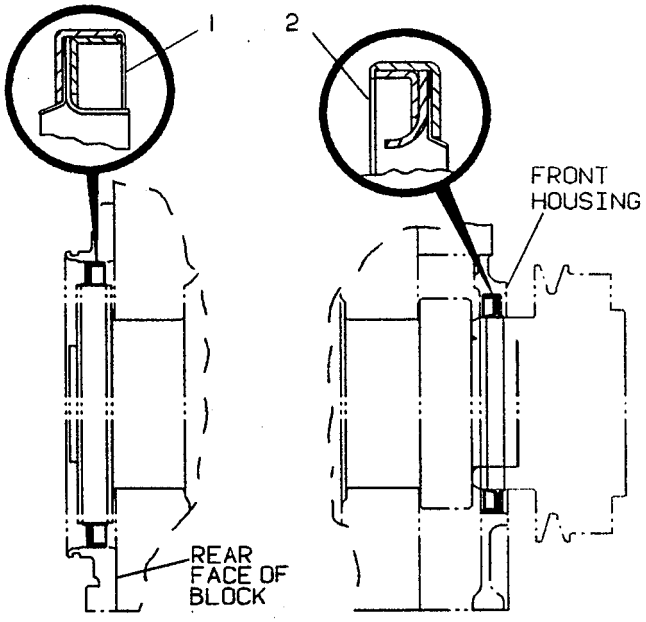

SIDE VIEW

GRAPHIC #1 **<END>** g00125389

BASIC ENGINE

247-0270 SUPPORT GP-ENGINE

S/N: KHX1-UP

PART OF 231-0878 ENGINE AR-COMPLETE

SMCS-1154 **i02243126**

NOTE	REF NO	GRAPHIC REF	PART NUMBER	QTY	PART NAME 1 2 3 4 5 6 (PRODUCT LEVEL)	SEE PAGE
	1	1	**247-0271**	1	SUPPORT-FRONT	
	2	1	**5P-8245**	6	WASHER-HARD (13.5X25.5X3-MM THK)	
M	3	1	**6V-5696**	1	BOLT (M12X1.75X80-MM)	
M	4	1	**8T-0372**	5	BOLT (M12X1.75X90-MM)	

M-METRIC PART

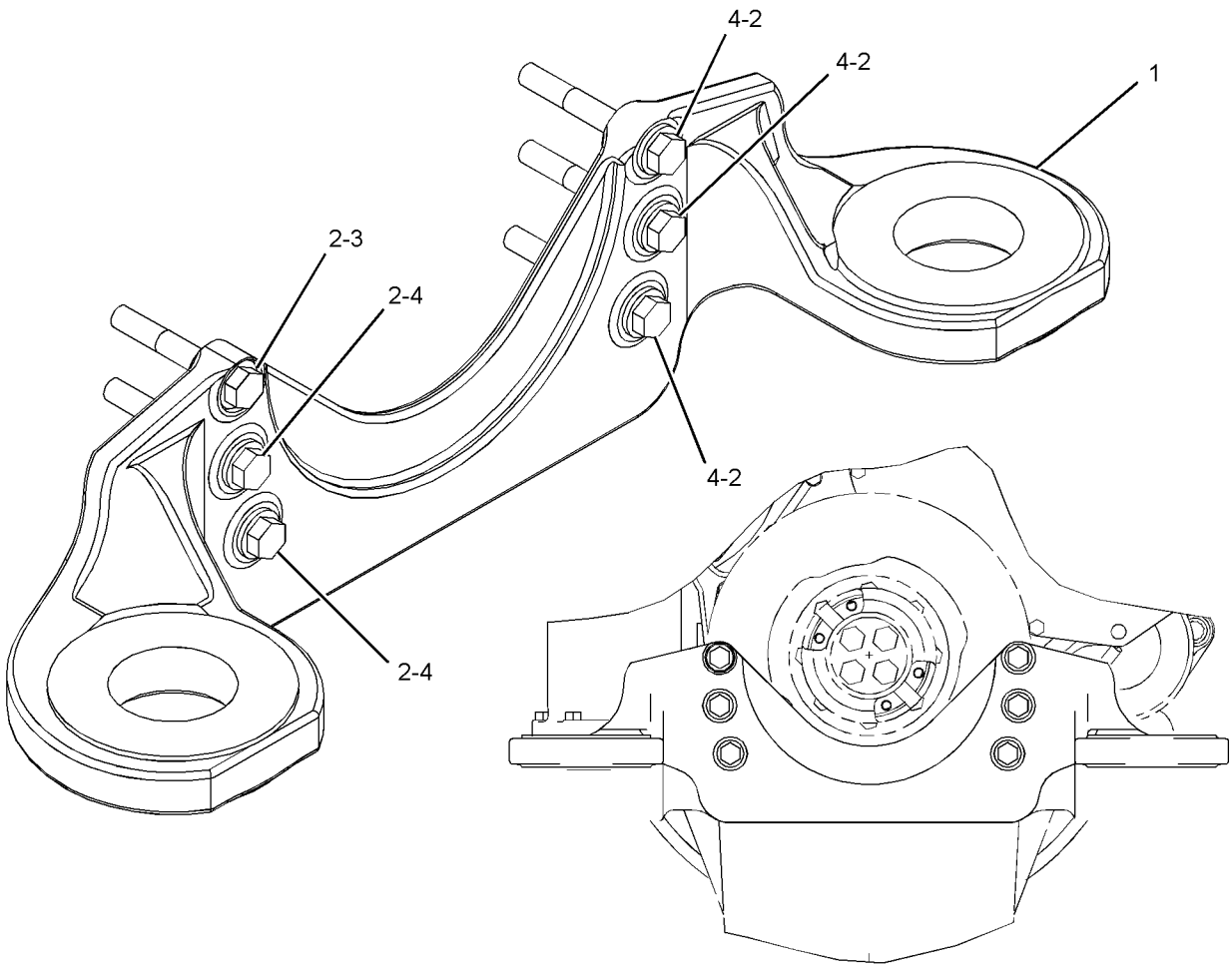

GRAPHIC #1 **<END>** g01131583

241-6093 BASE GP-OIL FILTER

S/N: DGX1-UP

PART OF 241-6094 FILTER GP-OIL

SMCS-1306 **i02333876**

NOTE	REF NO	GRAPHIC REF	PART NUMBER	QTY	PART NAME 1 2 3 4 5 6 (PRODUCT LEVEL)	SEE PAGE
	1	1	**3T-9549**	1	ADAPTER	
	2	1	**7G-4998**	1	SPOOL-BYPASS	
	3	1	**7M-1297**	1	SPRING (OUTER)	
	4	1	**133-2198**	1	SPRING (INNER)	
Y	5	1	**164-7577**	1	SWITCH GP-BYPASS (OIL FILTER BYPASS)	205
Z	6	1		1	BASE-FILTER	
	7	1	**2S-4078**	1	SEAL-O-RING	

Y-SEPARATE ILLUSTRATION
Z-NOT SERVICED SEPARATELY

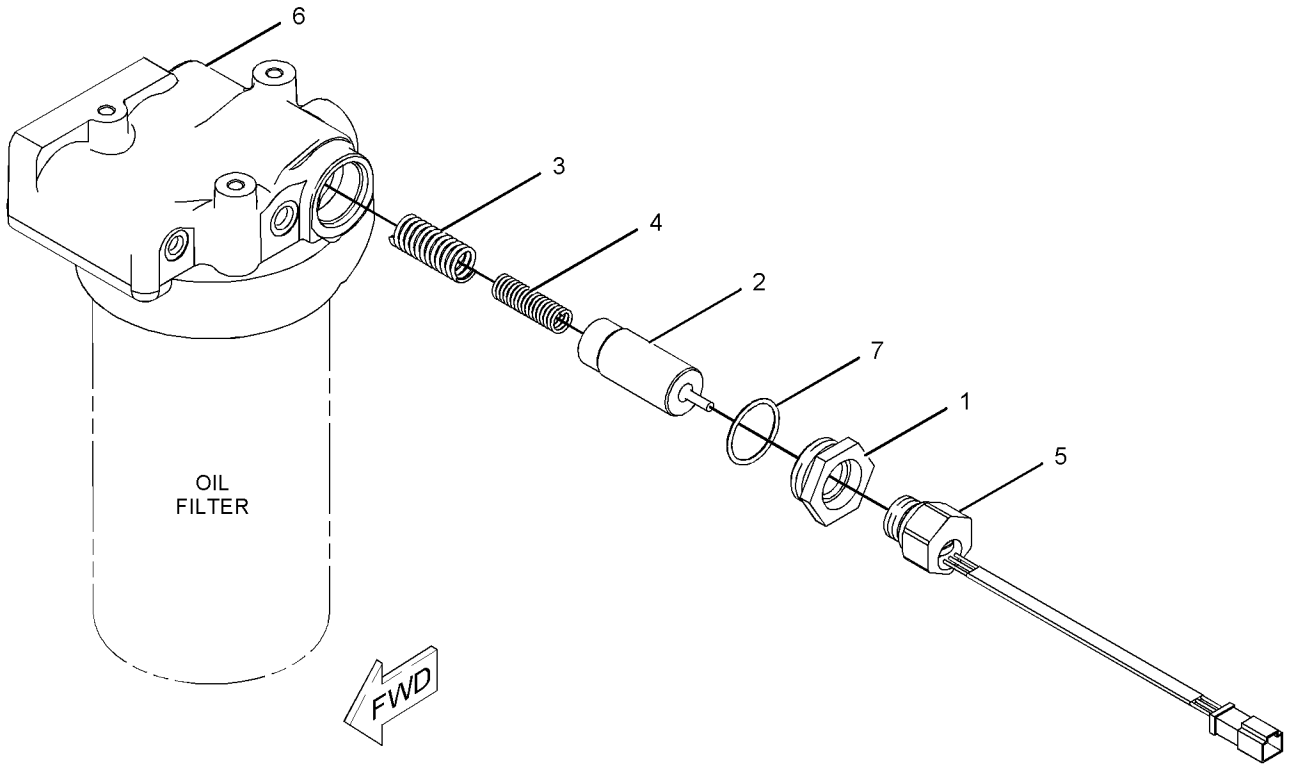

GRAPHIC #1 **<END>** g01135879

LUBRICATION SYSTEM

249-2308 BASE GP-OIL FILTER

S/N: B9M1-UP

PART OF 249-2307 FILTER GP-OIL

SMCS-1306 **i02194760**

NOTE	REF NO	GRAPHIC REF	PART NUMBER	QTY	PART NAME 1 2 3 4 5 6 (PRODUCT LEVEL)	SEE PAGE
	1	1	**7G-4998**	1	SPOOL-BYPASS	
	2	1	**7M-1297**	1	SPRING	
	3	1	**133-2198**	1	SPRING	
	4	1	**244-0355**	1	BASE-FILTER	
	5	1	**2S-4078**	1	SEAL-O-RING	
	6	1	**3J-1907**	1	SEAL-O-RING	
	7	1	**3J-7354**	1	SEAL-O-RING	
	8	1	**7M-8485**	1	SEAL-O-RING	
	9	1	**9S-4182**	1	PLUG	
	10	1	**9S-4191**	1	PLUG	
	11	1	**9S-8010**	1	PLUG	
	12	1	**9S-9334**	1	PLUG	

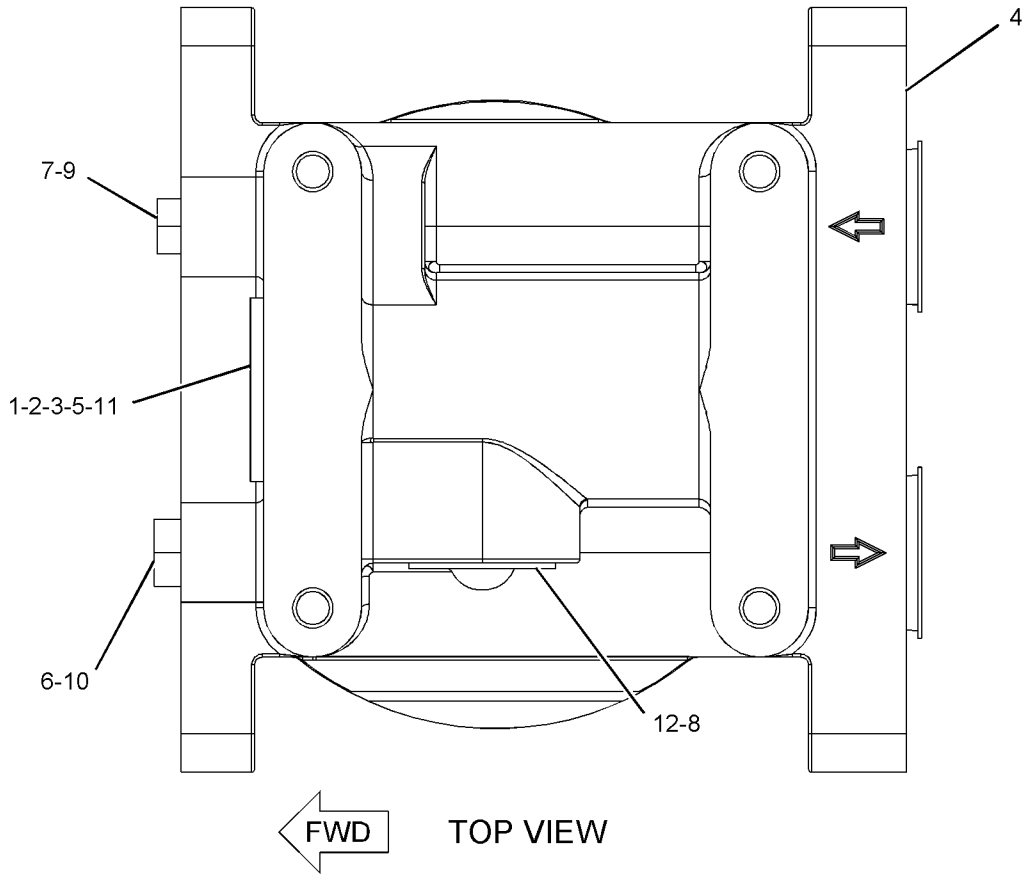

GRAPHIC #1 **<END>** g01110657

LUBRICATION SYSTEM

222-5946 BREATHER GP

S/N: KHX1-UP

PART OF 231-0878 ENGINE AR-COMPLETE

SMCS-1317 **i02249883**

NOTE	REF NO	GRAPHIC REF	PART NUMBER	QTY	PART NAME 1 2 3 4 5 6 (PRODUCT LEVEL)	SEE PAGE
	1	1	**164-0210**	1	BREATHER AS (CRANKCASE)	
M	2	1	**143-4654**	1	BOLT (M8X1.25X105-MM)	
	3	1	**8H-2046**	1	SEAL-O-RING (CRANKCASE BREATHER)	
	4	1	**9N-0869**	1	WASHER-HARD (8.8X25.5X2-MM THK)	

M-METRIC PART

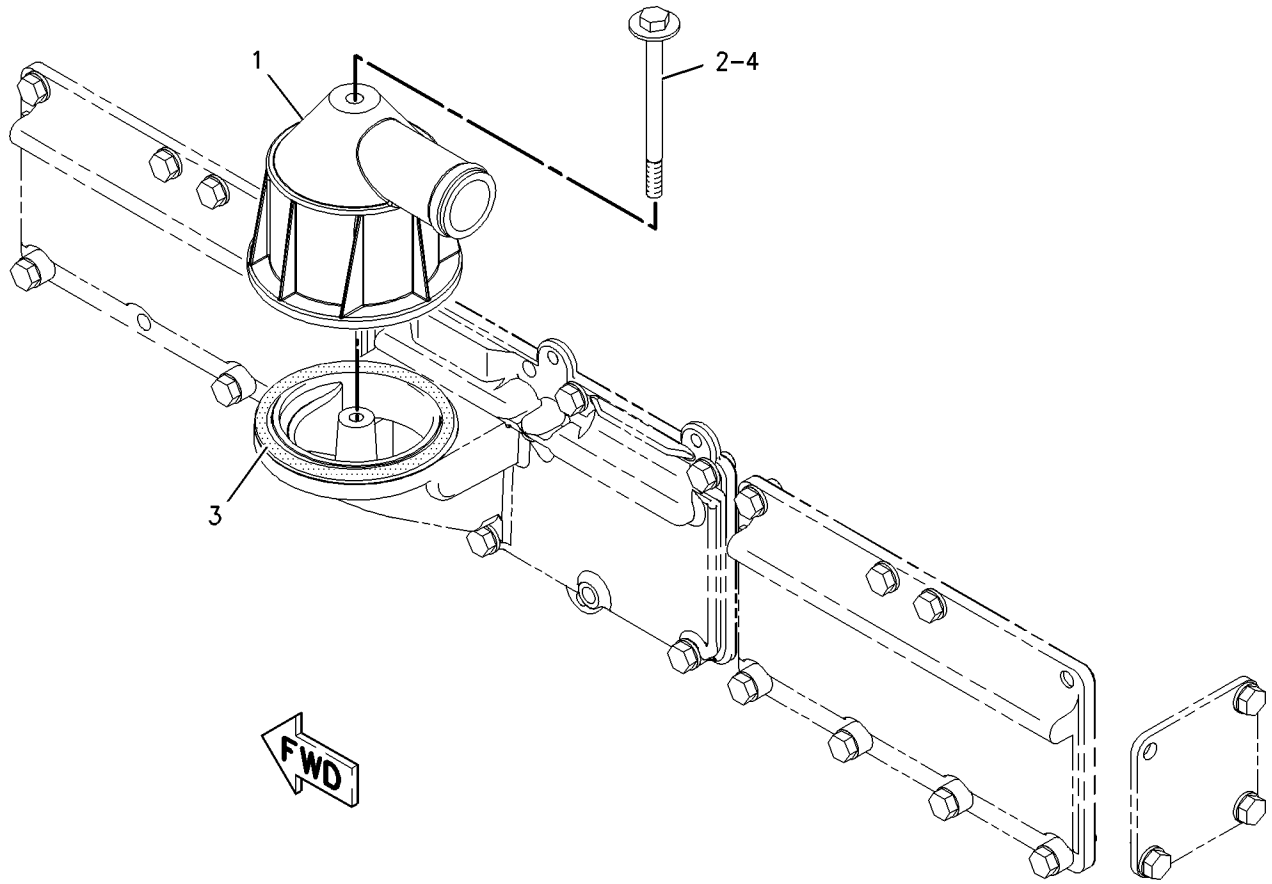

GRAPHIC #1 **<END>** g00947923

LUBRICATION SYSTEM

267-6599 FILTER GP-ENGINE OIL

S/N: KHX1-UP

PART OF 231-0878 ENGINE AR-COMPLETE

SMCS-1308 **i02290351**

NOTE	REF NO	GRAPHIC REF	PART NUMBER	QTY	PART NAME 1 2 3 4 5 6 (PRODUCT LEVEL)	SEE PAGE
	1	1	**7C-1493**	2	VALVE AS-BYPASS (ENGINE OIL FILTER)	
	2	1	**8C-3445**	1	CAP-DUST	
	3	1	*150-4036*	1	TEE AS	
		1	**3K-0360**	1	SEAL-O-RING	
		1	**118-0911**	1	TEE-O-RING PORT	
	4	1	**201-9774**	1	BASE AS-OIL FILTER	
		1	**2P-2537**	1	STUD-HOLLOW	
	5	1	**206-6875**	2	CAP-TUBE	
	6	1	**233-7654**	1	GASKET	
	7	1	**242-3864**	2	SPRING	
	8	1	**1R-1807**	1	FILTER AS-ENGINE OIL	
	9	1	**2M-9780**	2	SEAL-O-RING	
	10	1	**3J-7354**	1	SEAL-O-RING	
	11	1	**3K-0360**	1	SEAL-O-RING	
	12	1	**3P-1932**	1	ADAPTER	
M	13	1	**5P-8196**	2	PLUG	
M	14	1	**6V-2317**	10	BOLT (M8X1.25X30-MM)	
	15	1	**8C-3446**	1	VALVE AS-FLUID SAMPLING	
	16	1	**8L-2786**	1	SEAL-O-RING	
M	17	1	**8T-0276**	3	BOLT (M8X1.25X45-MM)	
	18	1	**9M-1974**	15	WASHER-HARD (8.8X16X2-MM THK)	
	19	1	**9S-4185**	1	PLUG	
M	20	1	**9X-2098**	2	STUD (M8X1.25X67.75-MM OAL)	

M-METRIC PART

PROOF

267-6599 **FILTER GP-ENGINE OIL** *(contd.)* **i02290351**

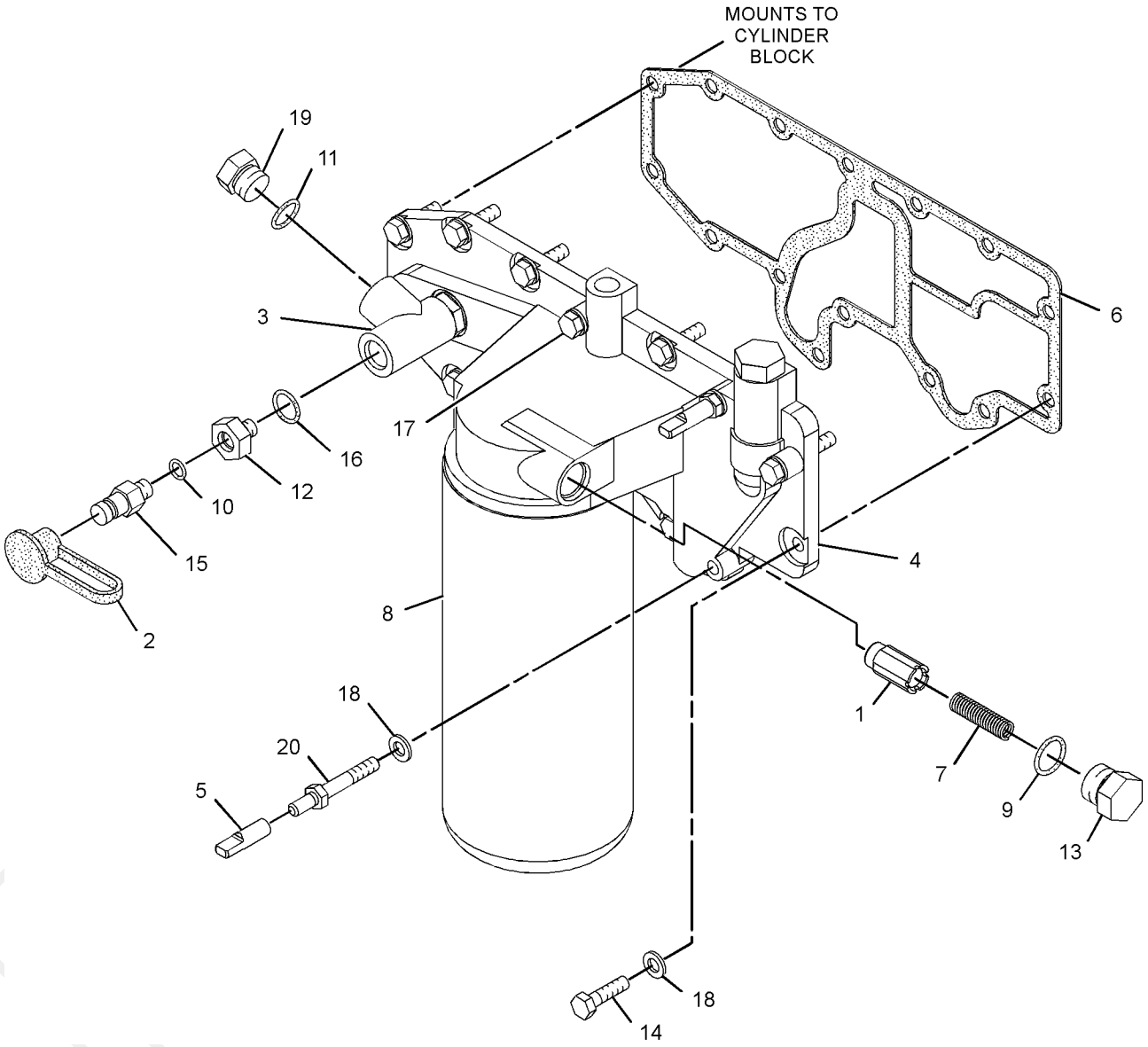

GRAPHIC #1 **<END>** g01150944

220-1194 FUMES DISPOSAL GP

S/N: KHX1-UP

PROVIDES FUMES DISPOSAL GP FOR SIDE MOUNTED BREATHER LOCATION

PART OF 231-0878 ENGINE AR-COMPLETE

FOR USE WITH 222-5946–PAGE 33, 222-5947–PAGE 9

SMCS-1317 **i02156856**

NOTE	REF NO	GRAPHIC REF	PART NUMBER	QTY	PART NAME 1 2 3 4 5 6 (PRODUCT LEVEL)	SEE PAGE
	1	1	**4P-4369**	1	SPACER (12X19X23.5-MM THK)	
	2	1	**9M-2904**	1	CLAMP-HOSE	
	3	1	**228-8510**	1	HOSE-DISPOSAL (FUMES)	
	4	1	**2S-2053**	1	CLIP	
	5	1	**3E-4352**	1	WASHER-HARD (8.8X20.5X2.5-MM THK)	
	6	1	**162-3148**	1	BOLT-SOCKET HEAD	

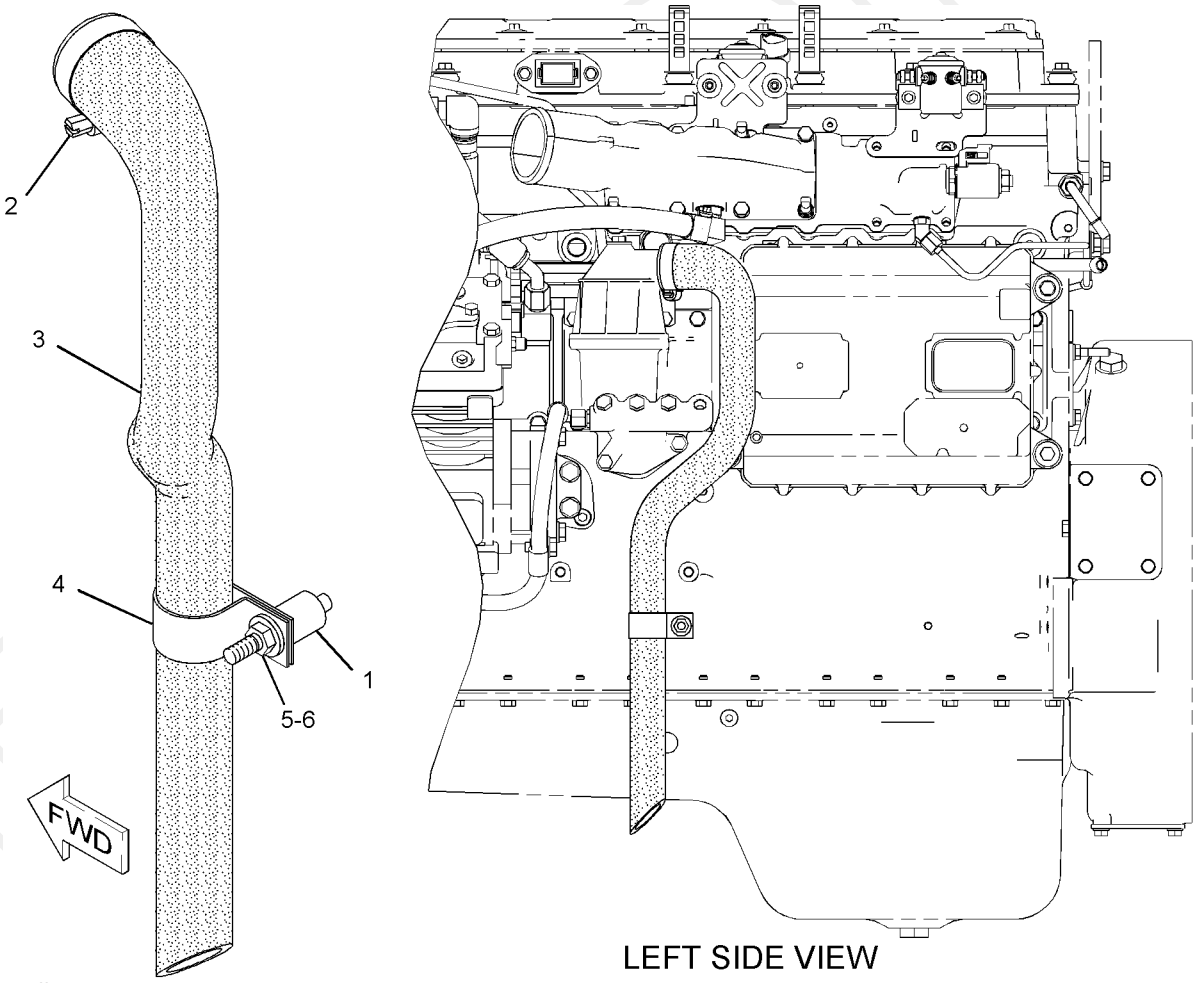

LEFT SIDE VIEW

GRAPHIC #1 **<END>** g01095248

194-5123 GAUGE GP-OIL LEVEL (DIPSTICK)—ENGINE

S/N: KHX1-UP

PART OF 231-0878 ENGINE AR-COMPLETE

SMCS-1326 **i02355582**

NOTE	REF NO	GRAPHIC REF	PART NUMBER	QTY	PART NAME 1 2 3 4 5 6 (PRODUCT LEVEL)	SEE PAGE
	1	1	**1S-2563**	3	PLUG	
	2	1	**139-2380**	1	GAUGE-OIL LEVEL (DIPSTICK) (ENGINE)	
	3	1	**194-5130**	1	TUBE AS	
	4	1	**194-5131**	1	CLIP	
	5	1	**1F-7567**	1	CLIP	
M	6	1	**5P-7970**	1	NUT (M8X1.25-THD)	
M	7	1	**6V-2317**	1	BOLT (M8X1.25X30-MM)	
M	8	1	**6V-5217**	1	BOLT (M8X1.25X20-MM)	
	9	1	**8T-4224**	2	WASHER-HARD (8.8X16X2-MM THK)	

M-METRIC PART

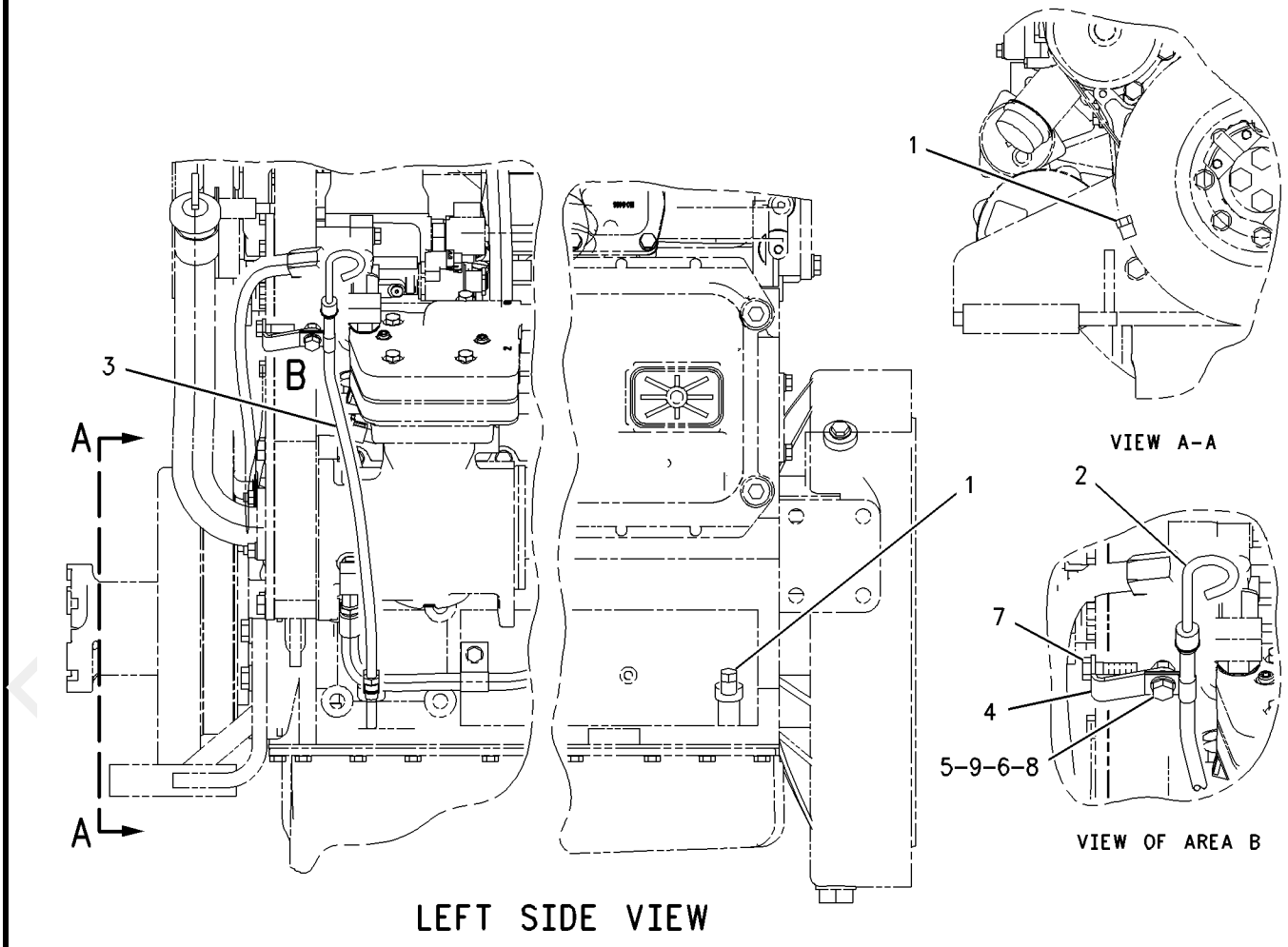

GRAPHIC #1 **<END>** g00874289

LUBRICATION SYSTEM

7C-9279 LINES GP-ENGINE OIL

S/N: KHX1-UP
REAR SUMP
PART OF 231-0878 ENGINE AR-COMPLETE

SMCS-1307 **i00647195**

NOTE	REF NO	GRAPHIC REF	PART NUMBER	QTY	PART NAME 1 2 3 4 5 6 (PRODUCT LEVEL)	SEE PAGE
	1	1	**7C-9280**	1	TUBE AS-SUCTION	
	2	1	**6V-5839**	1	WASHER (2.5MM THK)	
M	3	1	**6V-4248**	1	BOLT (M10X1.50X25MM)	
	4	1	**7W-5340**	1	GASKET	
M	5	1	**6V-3940**	4	BOLT (M8X1.25X25MM)	
	6	1	**9M-1974**	2	WASHER-HARD (2MM THK)	
	7	1	**4W-2232**	1	ELBOW-OUTLET	
	8	1	**3P-1156**	2	SEAL-O-RING	

M-METRIC PART

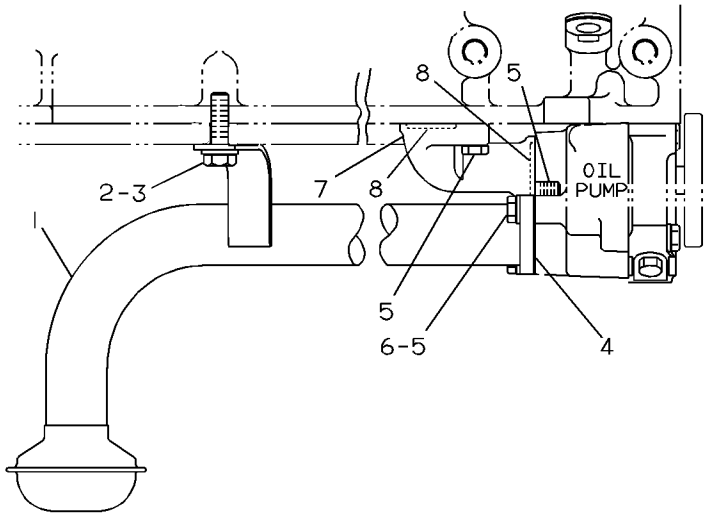

SIDE VIEW

GRAPHIC #1 **<END>** g00210804

PROOF

246-6705 LINES GP-ENGINE OIL DRAIN

S/N: B9M1-UP
AN ATTACHMENT

SMCS-1307 **i02298833**

NOTE	REF NO	GRAPHIC REF	PART NUMBER	QTY	PART NAME 1 2 3 4 5 6 (PRODUCT LEVEL)	SEE PAGE
	1	1	**7X-7958**	1	CLAMP-HOSE	
	2	1	**129-7679**	1	FILM-INSTRUCTION (ENGINE OIL DRAIN)	
I	3	1	**169-2932**	1	HOSE AS	
	4	1	**206-4669**	1	VALVE-DRAIN (ENGINE OIL)	
	5	1	**212-4174**	1	LOCKWASHER	
	6	1	**249-8540**	1	PLATE	
	7	1	*148-8347*	1	ELBOW AS	
		1	**3D-2824**	1	SEAL-O-RING	
		1	**6V-9007**	1	ELBOW	
		1	**6V-9746**	1	SEAL-O-RING	
	8	1	**8T-4121**	2	WASHER-HARD (11X21X2.5-MM THK)	
M	9	1	**8T-4136**	2	BOLT (M10X1.5X25-MM)	
E	10	1	**146-7453**		HOSE (12-CM)	

E-ORDER BY THE CENTIMETER
I-REFER TO HYDRAULIC INFORMATION SYSTEM
M-METRIC PART

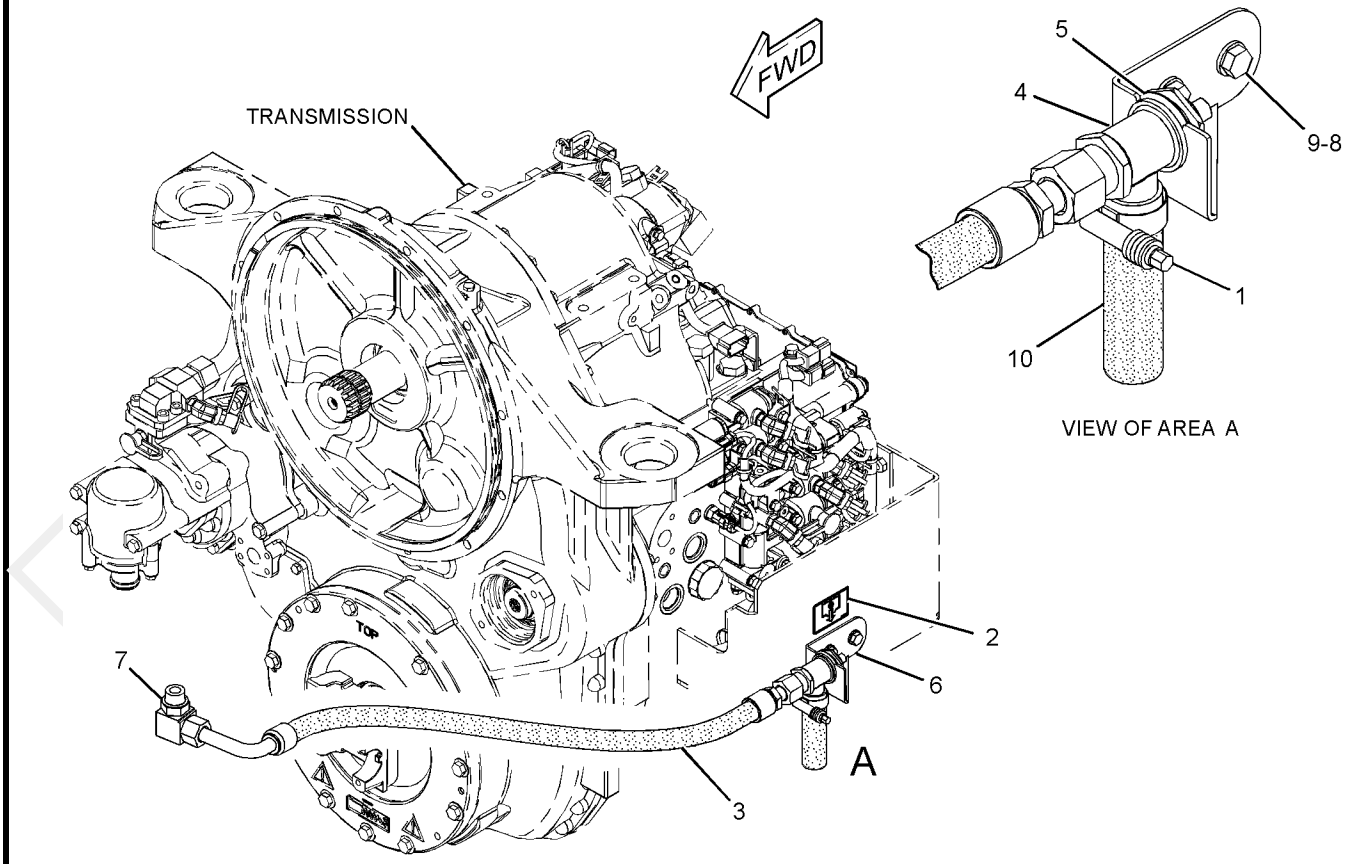

GRAPHIC #1 **<END>** g01153907

LUBRICATION SYSTEM

246-6717 LINES GP-ENGINE OIL DRAIN

S/N: B9M1-UP

PART OF 261-0607 OIL CHANGE AR-HIGH SPEED, 261-0611 STEERING AR-SECONDARY AN ATTACHMENT

SMCS-1307 **i02299292**

NOTE	REF NO	GRAPHIC REF	PART NUMBER	QTY	PART NAME 1 2 3 4 5 6 (PRODUCT LEVEL)	SEE PAGE
	1	1	**7X-7958**	1	CLAMP-HOSE	
	2	1	**123-5150**	1	VALVE-CHECK	
	3	1	**153-2995**	1	FITTING AS (QUICK DISCONNECT, MALE)	
I	4	1	**169-2932**	1	HOSE AS	
	5	1	**193-8335**	1	COUPLING	
I	6	1	**201-8646**	1	HOSE AS	
	7	1	**206-4669**	1	VALVE-DRAIN	
	8	1	**212-4174**	1	LOCKWASHER	
	9	1	**231-3914**	1	ADAPTER	
	10	1	**249-8540**	1	PLATE	
	11	1	**250-4659**	1	BRACKET AS	
	12	1	**261-4377**	1	FILM-ENGINE OIL (FILL, DRAIN)	
	13	1	**261-4378**	1	FILM-ENGINE (LOCK, UNLOCK)	
I	14	1	**267-1851**	1	HOSE AS	
I	15	1	**267-1852**	1	HOSE AS	
	16	1	*148-8315*	1	CONNECTOR AS	
		1	**2M-9780**	1	SEAL-O-RING	
		1	**6V-8642**	1	CONNECTOR	
		1	**7J-9108**	1	SEAL-O-RING	
	17	1	*150-4048*	1	ELBOW AS	
		1	**3K-0360**	1	SEAL-O-RING	
		1	**6V-8722**	1	ELBOW	
		1	**7J-9108**	1	SEAL-O-RING	
	18	1	*153-6244*	1	ELBOW GP	
		1	**2M-9780**	1	SEAL-O-RING	
		1	**6V-9746**	1	SEAL-O-RING	
		1	**8T-5389**	1	ELBOW	
	19	1	*153-6259*	1	TEE GP	
		1	**3D-2824**	1	SEAL-O-RING	
		1	**6V-8777**	1	TEE-FACE SEAL	
		1	**6V-9746**	2	SEAL-O-RING	
	20	1	**2M-9780**	1	SEAL-O-RING	
	21	1	**3K-0360**	1	SEAL-O-RING	
	22	1	**6D-4636**	1	CLIP	
	23	1	**6V-9170**	1	NUT-BULKHEAD (1-14-THD)	
	24	1	**7J-9108**	2	SEAL-O-RING	
M	25	1	**8T-4121**	5	WASHER-HARD (11X21X2.5-MM THK)	
M	26	1	**8T-4136**	5	BOLT (M10X1.5X25-MM)	
E	27	1	**146-7453**		HOSE (13-CM)	

E-ORDER BY THE CENTIMETER
I-REFER TO HYDRAULIC INFORMATION SYSTEM
M-METRIC PART

PROOF

246-6717 **LINES GP-ENGINE OIL DRAIN** *(contd.)* **i02299292**

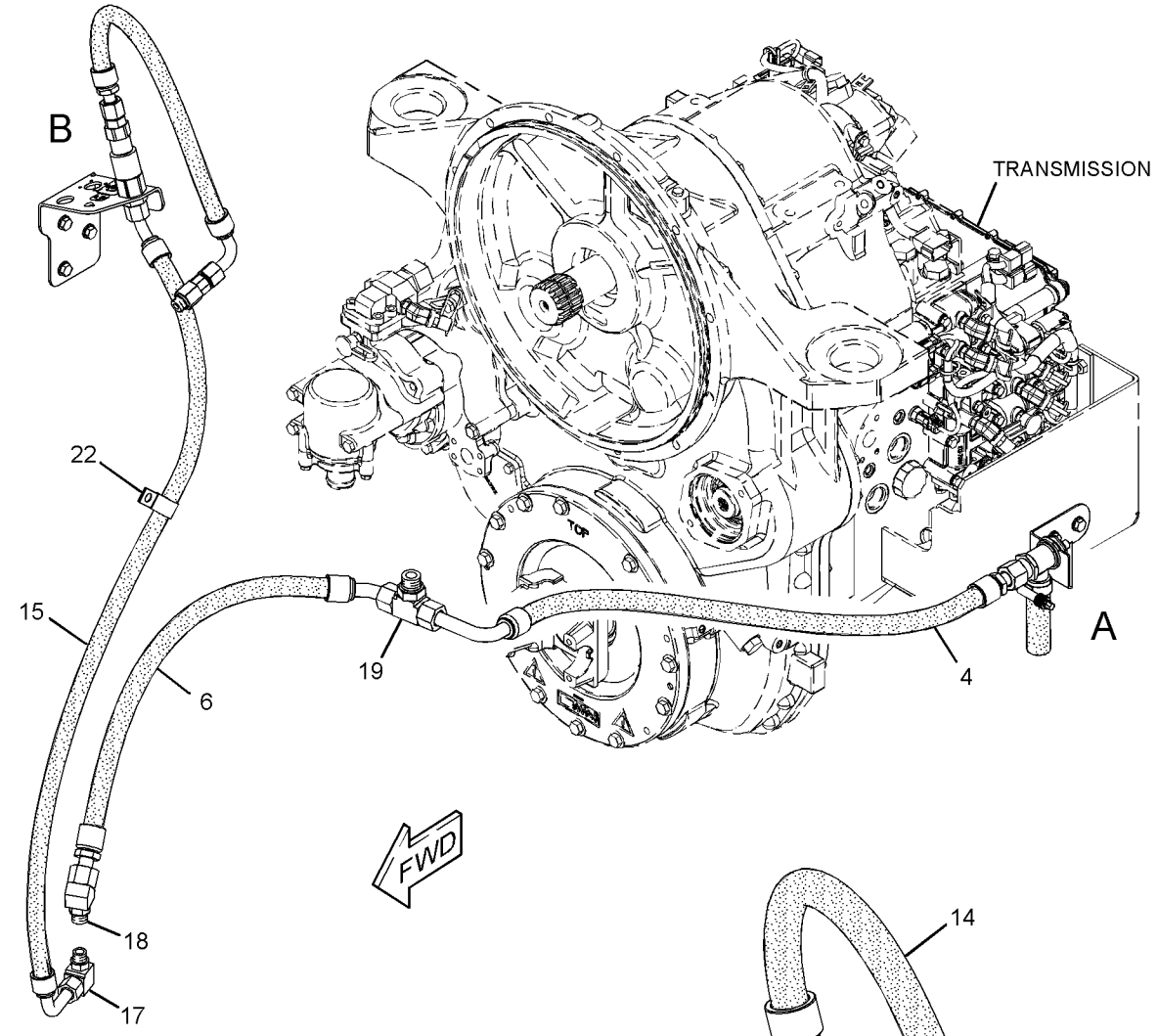

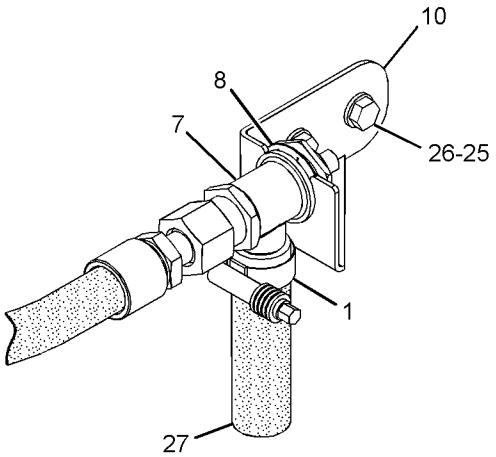

VIEW OF AREA A

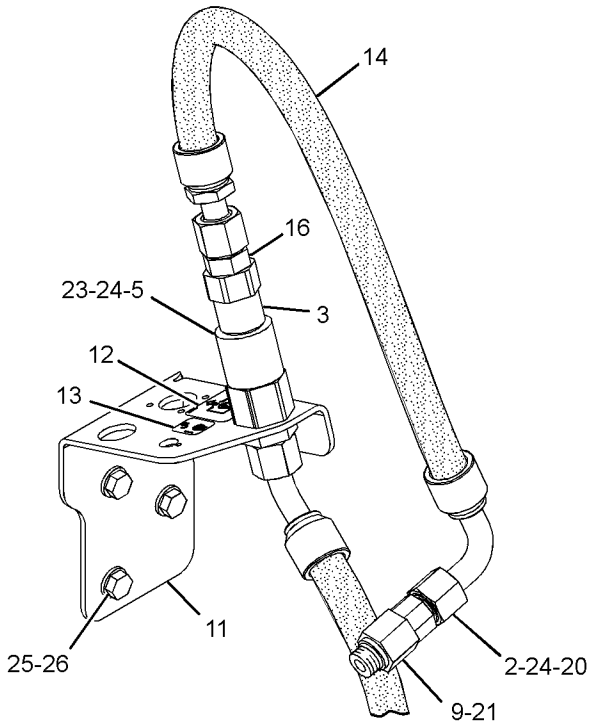

VIEW OF AREA B

GRAPHIC #1 **<END>** g01158087

LUBRICATION SYSTEM

250-8315 LINES GP-TURBOCHARGER OIL

S/N: KHX1-UP

PART OF 231-0878 ENGINE AR-COMPLETE

SMCS-1052, 1307 **i02290631**

NOTE	REF NO	GRAPHIC REF	PART NUMBER	QTY	PART NAME 1 2 3 4 5 6 (PRODUCT LEVEL)	SEE PAGE
	1	1	**119-2942**	1	ADAPTER	
	2	1	*183-3399*	2	CONNECTOR AS	
					(EACH INCLUDES)	
		1	**214-7568**	1	SEAL-O-RING	
		1	**221-3494**	1	SEAL-O-RING	
	3	1	**197-8419**	1	GASKET	
	4	1	**250-8316**	1	TUBE AS	
	5	1	**250-8317**	1	TUBE AS	
	6	1	**114-2687**	1	SEAL-O-RING	
	7	1	**1F-7567**	1	CLIP	
M	8	1	**2Y-5829**	1	NUT (M10X1.5-THD)	
	9	1	**4L-3641**	1	CLIP	
	10	1	**5P-8066**	1	SEAL-O-RING	
M	11	1	**6V-4248**	1	BOLT (M10X1.5X25-MM)	
M	12	1	**6V-5218**	4	BOLT (M8X1.25X35-MM)	
	13	1	**6V-5839**	2	WASHER (11X21X2.5-MM THK)	
	14	1	**9M-1974**	2	WASHER-HARD (8.8X16X2-MM THK)	

M-METRIC PART

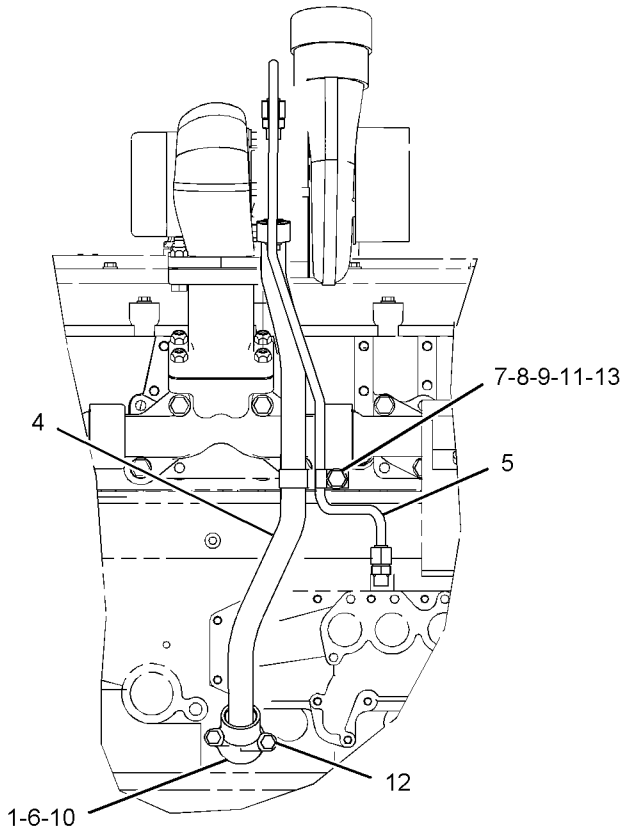

RIGHT SIDE VIEW

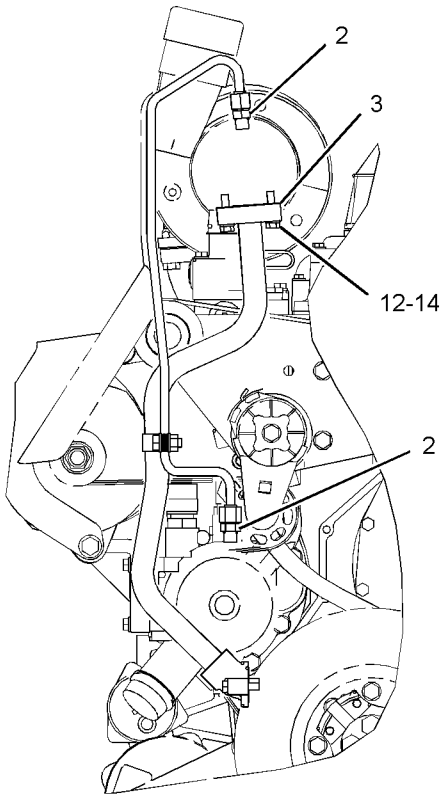

FRONT VIEW

GRAPHIC #1 **<END>** g01148815

237-8063 MANIFOLD GP-ENGINE OIL

S/N: KHX1-UP

PART OF 231-0878 ENGINE AR-COMPLETE

SMCS-1307 **i02164916**

NOTE	REF NO	GRAPHIC REF	PART NUMBER	QTY	PART NAME 1 2 3 4 5 6 (PRODUCT LEVEL)	SEE PAGE
	1	1	**226-8696**	1	MANIFOLD-OIL (ENGINE)	
	2	1	**3J-1907**	4	SEAL-O-RING	
	3	1	**4F-9029**	1	SEAL	
M	4	1	**6V-5219**	2	BOLT (M8X1.25X40-MM)	
	5	1	**9S-4191**	4	PLUG	

M-METRIC PART

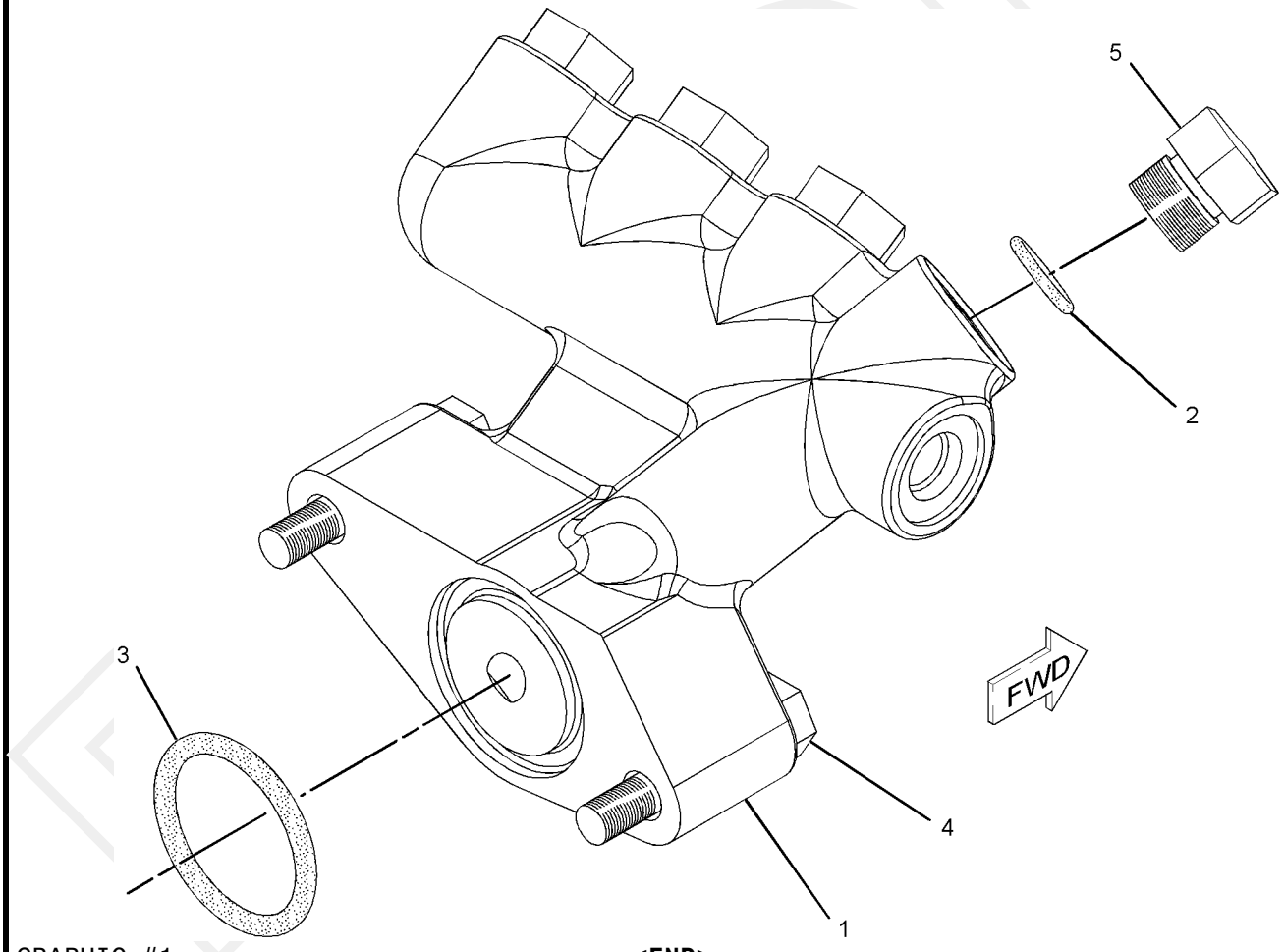

GRAPHIC #1 **<END>** g01099259

LUBRICATION SYSTEM

261-0607 OIL CHANGE AR-HIGH SPEED

S/N: B9M1-UP

AN ATTACHMENT

SMCS-1325 **i02290653**

NOTE	PART NUMBER	QTY	PART NAME 1 2 3 4 5 6 (PRODUCT LEVEL)	SEE PAGE
Y	*246-6717*	1	LINES GP-ENGINE OIL DRAIN	40
Y	*250-1169*	1	PUMP & MTG GP-ELECTRIC DRIVE (HIGH SPEED OIL CHANGE, PRELUBE)	574
Y	*233-4646*	1	WIRING GP-ENGINE (OIL EVAC)	225
Y	*269-4150*	1	WIRING GP-SECONDARY STEERING	252

Y-SEPARATE ILLUSTRATION

<END>

PROOF

246-6712 OIL CHANGE GP-HIGH SPEED

S/N: B9M1-UP
AN ATTACHMENT

SMCS-1325 **i02298840**

NOTE	REF NO	GRAPHIC REF	PART NUMBER	QTY	PART NAME 1 2 3 4 5 6 (PRODUCT LEVEL)	SEE PAGE
	1	1	**2V-2043**	1	LOCKNUT-FLARED (1-5/8-12-THD)	
	2	1	**110-8827**	1	FITTING AS (QUICK DISCONNECT)	
		1	**110-8826**	1	CAP-DUST	
I	3	1	**185-6350**	1	HOSE AS	
	4	1	**261-4377**	1	FILM-ENGINE OIL (FILL, DRAIN)	
	5	1	**271-3959**	1	BRACKET	
	6	1	*148-8347*	1	ELBOW AS	
		1	**3D-2824**	1	SEAL-O-RING	
		1	**6V-9007**	1	ELBOW	
		1	**6V-9746**	1	SEAL-O-RING	
	7	1	*148-8360*	1	ELBOW AS	
		1	**6V-9182**	1	ELBOW	
		1	**6V-9746**	1	SEAL-O-RING	
		1	**7M-8485**	1	SEAL-O-RING	
M	8	1	**8T-4121**	2	WASHER-HARD (11X21X2.5-MM THK)	
M	9	1	**8T-4137**	2	BOLT (M10X1.5X20-MM)	

I-REFER TO HYDRAULIC INFORMATION SYSTEM
M-METRIC PART

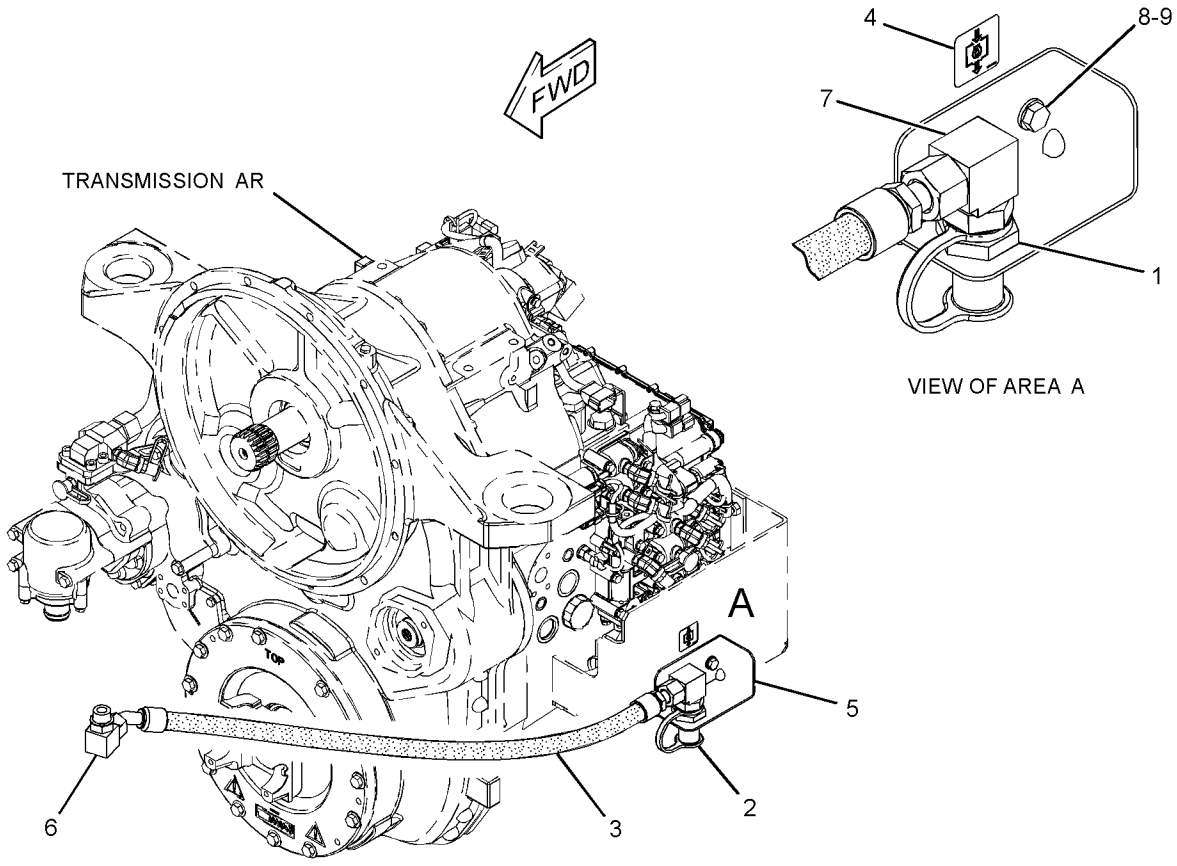

GRAPHIC #1 **<END>** g01153751

COOLING SYSTEM

268-6570 COOLING AR

S/N: B9M1-UP

PART OF 234-7721 COMMON AR-MOTOR GRADER

SMCS-1350 **i02295044**

NOTE	REF NO	GRAPHIC REF	PART NUMBER	QTY	PART NAME 1 2 3 4 5 6 (PRODUCT LEVEL)	SEE PAGE
Y	1	1	*231-2311*	1	AFTERCOOLER GP-AIR	62
Y	2	1	*231-2315*	1	RADIATOR GP	56
Y	3	1	*231-2316*	1	SUPPORT GP-RADIATOR	433
	4	1	**198-4782**	4	WASHER-HARD (26X47X12-MM THK)	
M	5	1	**7X-2576**	4	BOLT (M24X3X70-MM)	

M-METRIC PART
Y-SEPARATE ILLUSTRATION

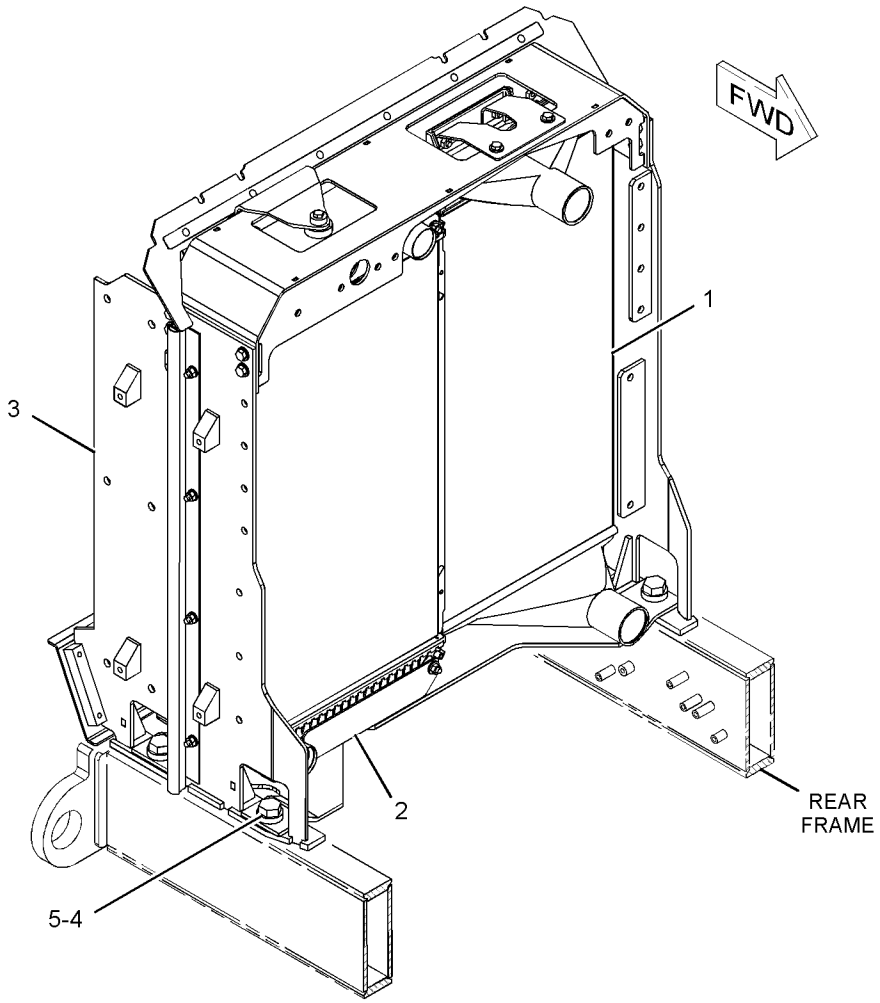

GRAPHIC #1 **<END>** g01150518

231-2313 FAN & MOTOR GP

S/N: B9M1-UP

PART OF 269-1986 FAN AR-REVERSIBLE

AN ATTACHMENT

SMCS-1356, 1386 **i02348689**

NOTE	REF NO	GRAPHIC REF	PART NUMBER	QTY	PART NAME 1 2 3 4 5 6 (PRODUCT LEVEL)	SEE PAGE
	1	1	**241-8534**	1	SPIDER AS (8-BLADE)	
	2	1	**248-0409**	1	ADAPTER-FAN	
	3	1	**248-0671**	1	GUARD GP-FAN (RADIATOR COOLING)	
		1	**248-0674**	1	SHIELD	
		1	**248-0675**	1	SHIELD	
		1	**249-8721**	1	SHIELD AS	
		1	**249-8722**	1	SHIELD AS	
		1	**7X-7729**	24	WASHER (11X25X3-MM THK)	
M		1	**8T-4136**	24	BOLT (M10X1.5X25-MM)	
	4	1	**252-1272**	2	BRACKET AS	
	5	1	**252-9513**	1	SUPPORT AS	
	6	1	**250-9831**	1	MOTOR GP-GEAR (RADIATOR COOLING)	
	7	1	**266-7711**	1	BAFFLE	
	8	1	**266-7712**	1	BAFFLE	
	9	1	**266-7713**	2	STRIP	
	10	1	**5P-1076**	16	WASHER-HARD (13.5X30X4-MM THK)	
	11	1	**5P-8245**	1	WASHER-HARD (13.5X25.5X3-MM THK)	
	12	1	**6B-6684**	1	NUT-FULL (1/2-20-THD)	
	13	1	**6V-4604**	8	RIVET-POP	
	14	1	**7X-7729**	2	WASHER (11X25X3-MM THK)	
M	15	1	**8T-4121**	6	WASHER-HARD (11X21X2.5-MM THK)	
M	16	1	**8T-4137**	6	BOLT (M10X1.5X20-MM)	
M	17	1	**8T-4139**	4	BOLT (M12X1.75X30-MM)	
M	18	1	**8T-4195**	2	BOLT (M10X1.5X30-MM)	
M	19	1	**8T-4956**	12	BOLT (M12X1.75X35-MM)	
BE	20	1	**112-9736**		SEAL (16-CM)	
BE	21	1	**266-8568**		SEAL-BULK (27-CM)	

B-USE AS REQUIRED
E-ORDER BY THE CENTIMETER
M-METRIC PART

PROOF

231-2313 **FAN & MOTOR GP** *(contd.)* **i02348689**

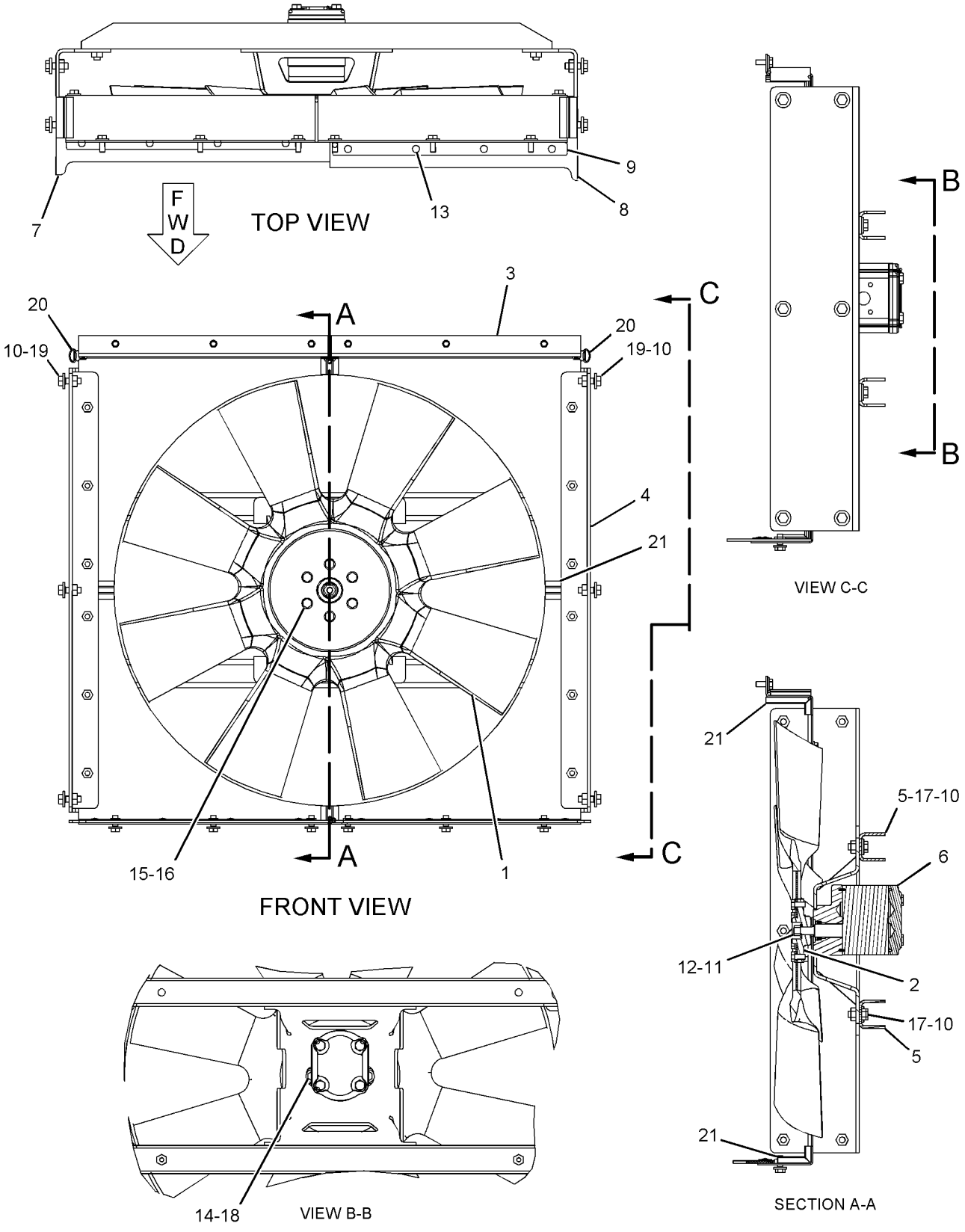

GRAPHIC #1 **<END>** g01127970

COOLING SYSTEM

269-1986 FAN AR-REVERSIBLE

S/N: B9M1-UP

AN ATTACHMENT

SMCS-1356, 1360 **i02290245**

NOTE	PART NUMBER	QTY	PART NAME 1 2 3 4 5 6 (PRODUCT LEVEL)	SEE PAGE
Y	*231-2313*	1	FAN & MOTOR GP	47
Y	*266-3724*	1	LINES GP-HYDRAULIC FAN	526
Y	*235-8552*	1	PUMP & MTG GP-HYDRAULIC FAN	577

Y-SEPARATE ILLUSTRATION

<END>

PROOF

COOLING SYSTEM

206-4228 LINES GP-WATER

S/N: KHX1-UP

PART OF 231-0878 ENGINE AR-COMPLETE

SMCS-1355, 1380, 1393 **i02165077**

NOTE	REF NO	GRAPHIC REF	PART NUMBER	QTY	PART NAME 1 2 3 4 5 6 (PRODUCT LEVEL)	SEE PAGE
	1	1	**7E-0759**	1	HOSE	
	3	1	**115-4223**	2	REGULATOR-WATER TEMPERATURE (97-DEG C) (COOLANT)	
	4	1	**126-5466**	1	GASKET	
	5	1	**157-0670**	1	CAP-DUST	
	6	1	**160-5131**	1	PIPE (OUTLET)	
	7	1	*217-9060*	1	VALVE AS-FLUID SAMPLING (ENGINE COOLANT)	
	7A	1	**3J-7354**	1	SEAL-O-RING	
	7B	1	**154-9023**	1	VALVE-SAMPLING (ENGINE COOLANT)	
	8	1	**222-5915**	1	GASKET (TEMPERATURE REGULATOR HOUSING)	
	9	1	**227-5942**	1	HOUSING-WATER REGULATOR	
	10	1	**237-5176**	2	CLAMP-BAND	
	11	1	**3K-0360**	1	SEAL-O-RING	
M	12	1	**5P-8347**	2	BOLT (M8X1.25X70-MM)	
	13	1	**5P-9617**	1	ADAPTER	
	14	1	**6V-3250**	1	SEAL-O-RING	
M	15	1	**6V-3940**	6	BOLT (M8X1.25X25-MM)	
M	16	1	**6V-5223**	1	BOLT (M8X1.25X100-MM)	
	17	1	**6V-6609**	3	SEAL-O-RING	
	18	1	**6V-9027**	1	SEAL-O-RING	
	19	1	**9M-1974**	6	WASHER-HARD (8.8X16X2-MM THK)	
	20	1	**9S-4182**	1	PLUG	
	21	1	**9S-4185**	3	PLUG	
	22	1	**9S-8005**	1	PLUG	

M-METRIC PART

PROOF

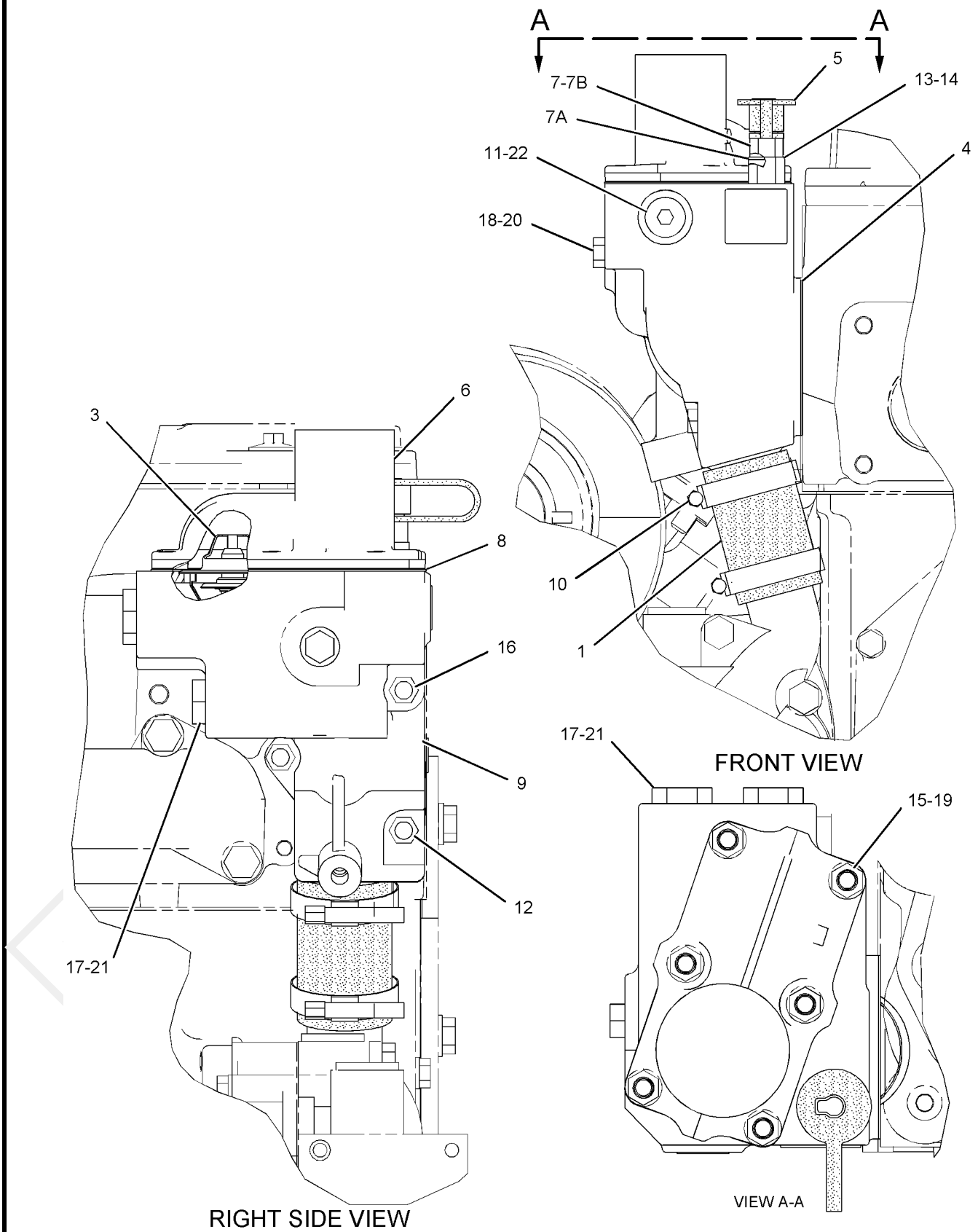

GRAPHIC #1 **<END>** g01099572

COOLING SYSTEM

246-6707 LINES GP-WATER

S/N: B9M1-UP

PART OF 234-7721 COMMON AR-MOTOR GRADER

SMCS-1355, 1380, 1393 **i02296977**

NOTE	REF NO	GRAPHIC REF	PART NUMBER	QTY	PART NAME 1 2 3 4 5 6 (PRODUCT LEVEL)	SEE PAGE
	1	1	**5D-1026**	1	CLAMP-HOSE	
	2	1	**5G-7817**	1	BOSS	
	3	1	**5P-4961**	4	CLAMP-HOSE	
	4	1	**6V-1230**	1	ELBOW	
	5	1	**6V-8367**	1	LOCKWASHER	
E	6	1	**5P-1262**		HOSE (0.6-CM)	
	7	1	*150-3026*	1	ELBOW AS	
		1	**6V-4292**	1	ELBOW	
		1	**3K-0360**	1	SEAL-O-RING	
	8	1	**157-0670**	1	CAP-DUST	
	9	1	*184-2509*	1	VALVE AS (COOLANT)	
		1	**7E-4761**	1	VALVE-SHUTOFF	
		1	**3K-0360**	1	SEAL-O-RING	
	10	1	**262-7687**	1	TUBE AS	
	11	1	**262-7688**	1	TUBE AS	
	12	1	**262-7689**	1	TUBE AS	
	13	1	**262-7692**	1	BRACKET AS	
M		1	**8T-3490**	1	NUT-WELD (M10X1.5-THD)	
	14	1	**265-9385**	1	HOSE	
	15	1	**266-7650**	1	ELBOW	
	16	1	**266-7651**	1	HOSE	
	17	1	**269-6650**	2	COUPLING AS	
	18	1	**272-9877**	1	HOSE	
	19	1	**272-9878**	1	HOSE	
	20	1	**273-2644**	1	BRACKET	
	21	1	**273-2694**	1	HOSE	
	22	1	**148-8433**	1	TEE AS	
		1	**6V-9836**	1	TEE-SWIVEL	
		1	**6V-8397**	2	SEAL-O-RING	
	23	1	**154-9025**	1	VALVE-FLUID SAMPLING	
	24	1	*184-2420*	1	ADAPTER AS	
		1	**3E-7401**	1	ADAPTER	
		1	**6V-8397**	1	SEAL-O-RING	
	25	1	**208-6054**	4	CLAMP	
	26	1	**212-6933**	8	CLAMP	
	27	1	**3K-0360**	1	SEAL-O-RING	
	28	1	**5P-4116**	2	WASHER-HARD (8.8X20.5X2-MM THK)	
	29	1	**6V-1581**	1	CLIP (SLOT)	
	30	1	**6V-1582**	1	CLIP (TAB)	
	31	1	**6V-9168**	1	NUT (11/16-16-THD)	
	32	1	**7X-7729**	3	WASHER (11X25X3-MM THK)	
M	33	1	**8T-4185**	1	BOLT (M10X1.5X50-MM)	
M	34	1	**8T-4189**	2	BOLT (M8X1.25X20-MM)	
M	35	1	**8T-4192**	2	BOLT (M12X1.75X25-MM)	
M	36	1	**8T-4196**	2	BOLT (M10X1.5X35-MM)	
	37	1	**8T-4223**	2	WASHER-HARD (13.5X25.5X3-MM THK)	
	38	1	**9D-6196**	2	CLIP (SLOT)	
	39	1	**9D-6197**	2	CLIP (TAB)	
E	40	1	**5P-1259**		HOSE (26-CM)	

E-ORDER BY THE CENTIMETER
M-METRIC PART

PROOF

246-6707 **LINES GP-WATER** *(contd.)* **i02296977**

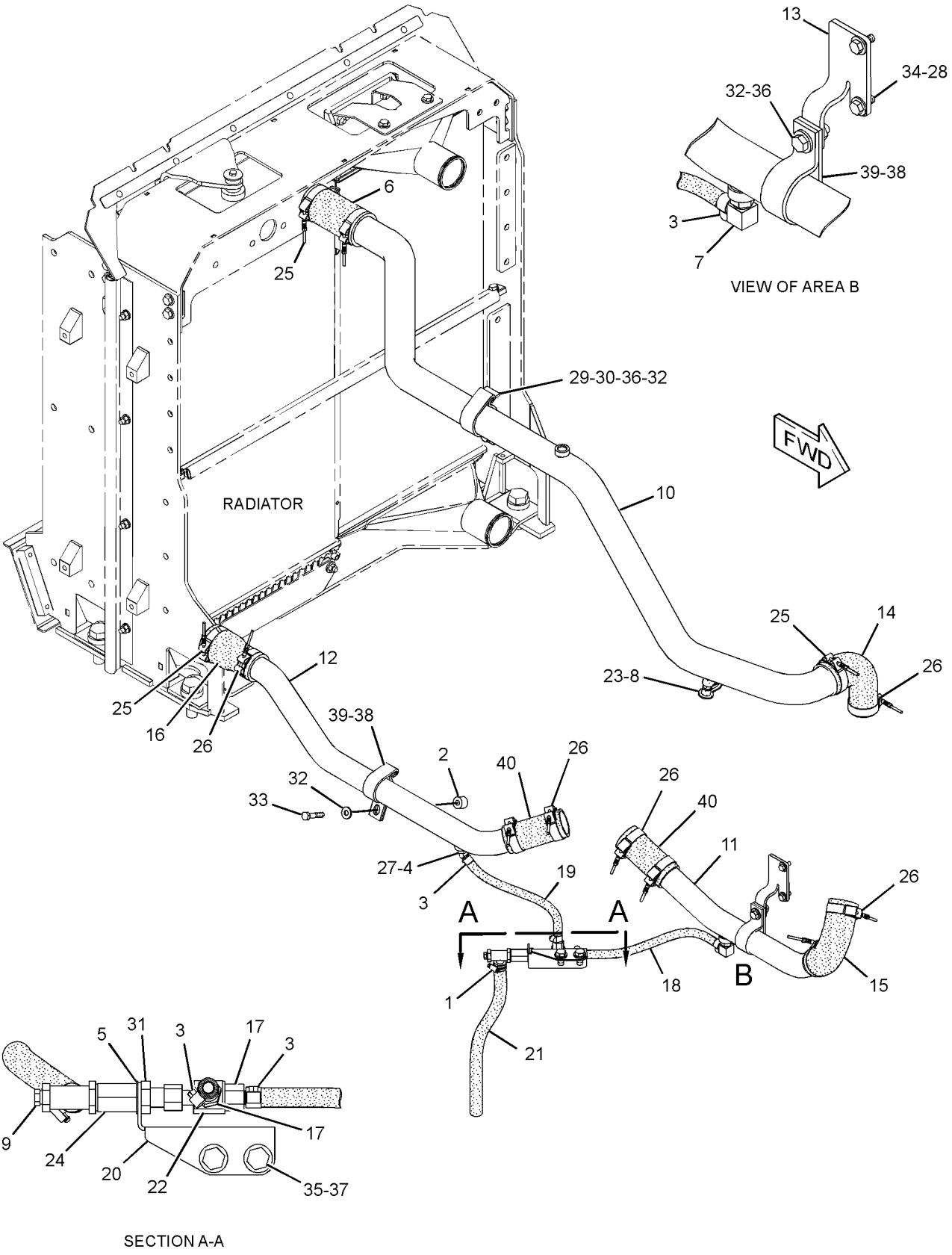

GRAPHIC #1 **<END>** g01159866

COOLING SYSTEM

236-4413 PUMP GP-WATER—COOLANT

S/N: KHX1-UP

PART OF 264-1434 PUMP GP-WATER

SMCS-1361 **i02116273**

NOTE	REF NO	GRAPHIC REF	PART NUMBER	QTY	PART NAME 1 2 3 4 5 6 (PRODUCT LEVEL)	SEE PAGE
	1	1	**4W-0253**	1	COVER	
	2	1	**4W-7592**	1	GASKET	
R	3	1	**236-4420**	1	PUMP AS-WATER	
		1	**117-3437**	1	PULLEY	
		1	**119-3025**	1	FILTER (WATER) (PUMP)	
		1	**129-1170**	1	SHAFT AS	
		1	**147-5088**	1	SEAL AS-WATER PUMP	
		1	**152-3952**	1	IMPELLER-PUMP	
		1	**236-4421**	1	HOUSING-PUMP	
M	4	1	**6V-3918**	4	BOLT (M8X1.25X50-MM)	
	5	1	**9M-1974**	4	WASHER-HARD (8.8X16X2-MM THK)	

M-METRIC PART
R-REMFG PART MAY BE AVAILABLE

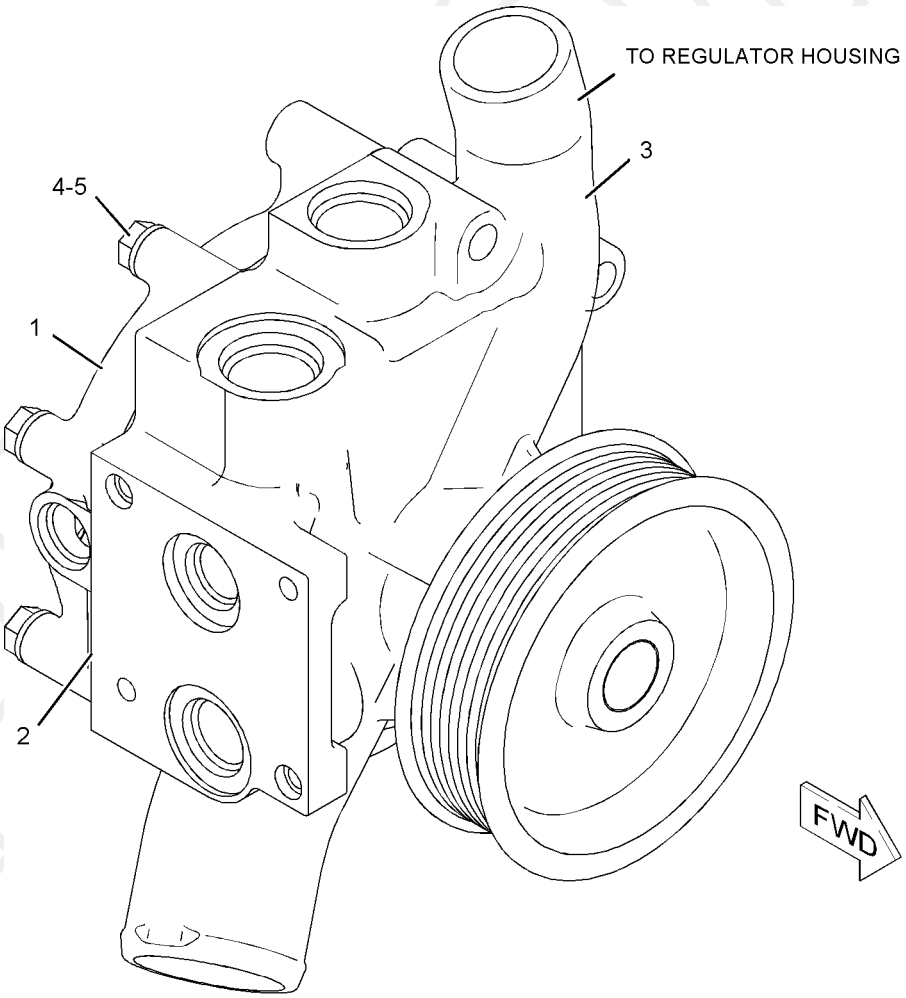

GRAPHIC #1 **<END>** g01040531

264-1434 PUMP GP-WATER

S/N: KHX1-UP

PART OF 231-0878 ENGINE AR-COMPLETE

SMCS-1361 **i02290398**

NOTE	REF NO	GRAPHIC REF	PART NUMBER	QTY	PART NAME 1 2 3 4 5 6 (PRODUCT LEVEL)	SEE PAGE
Y	2	1	**236-4413**	1	PUMP GP-WATER	54
	3	1	*148-8395*	2	PLUG AS	
					(EACH INCLUDES)	
		1	**3K-0360**	1	SEAL-O-RING	
		1	**9S-8005**	1	PLUG	
	4	1	**164-5619**	1	PLUG AS	
		1	**2M-9780**	1	SEAL-O-RING	
		1	**9S-8006**	1	PLUG	
	5	1	**167-1795**	1	ELBOW AS	
	6	1	**2M-4453**	1	SEAL-O-RING	
	7	1	**3D-2824**	1	SEAL-O-RING	
	8	1	*3J-3679*	1	PLUG AS	
		1	**1J-9671**	2	SEAL-O-RING	
		1	**9S-8003**	2	PLUG	
	9	1	**4J-0524**	1	SEAL-O-RING	
	10	1	**6V-5049**	1	SEAL-O-RING	
M	11	1	**8T-0644**	4	BOLT (M10X1.5X90-MM)	
	12	1	**8T-5429**	1	ELBOW	

M-METRIC PART
Y-SEPARATE ILLUSTRATION

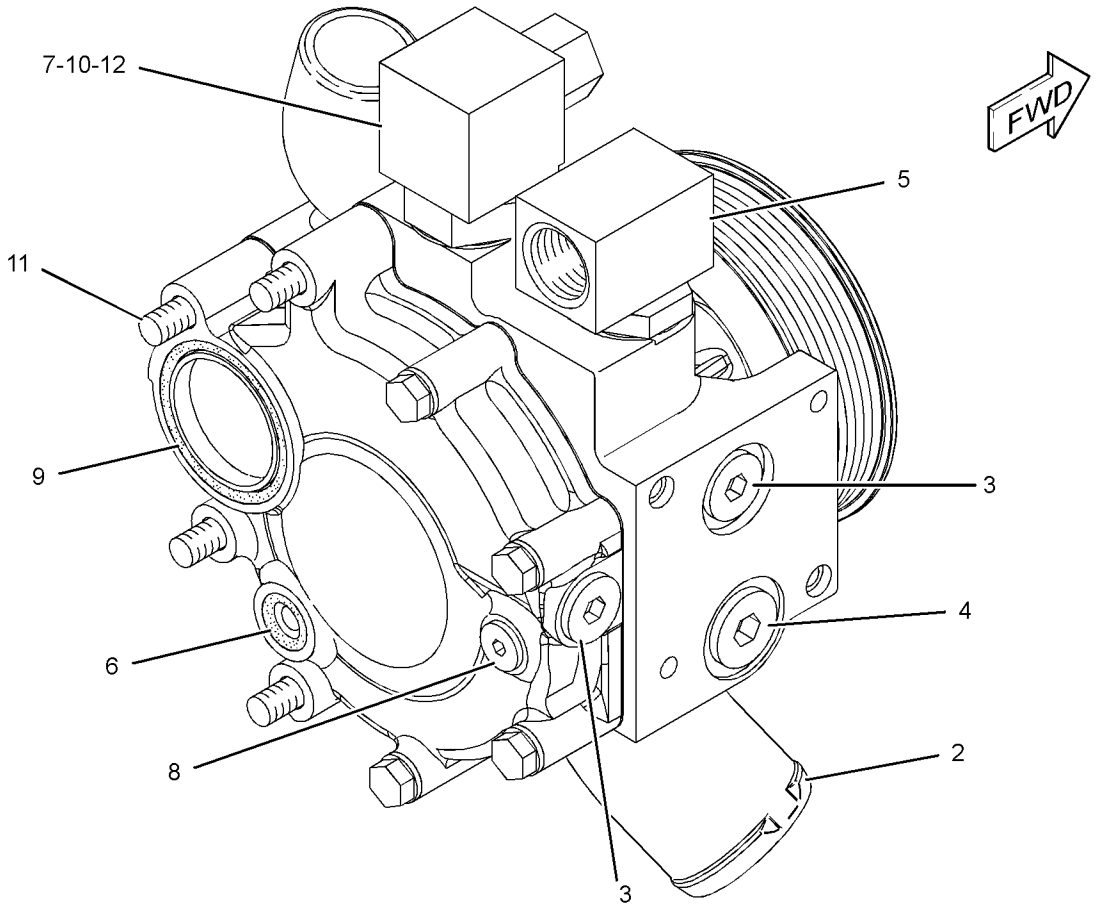

GRAPHIC #1 **<END>** g01151727

COOLING SYSTEM

231-2315 RADIATOR GP

S/N: B9M1-UP

PART OF 268-6570 COOLING AR

SMCS-1353 **i02348705**

NOTE	REF NO	GRAPHIC REF	PART NUMBER	QTY	PART NAME 1 2 3 4 5 6 (PRODUCT LEVEL)	SEE PAGE
	1	1	**243-2289**	3	MOUNT AS	
	2	1	**248-0677**	1	BRACKET AS	
	3	1	**249-7386**	1	BRACKET AS	
	4	1	**249-7815**	1	BRACKET	
	5	1	**256-5308**	1	CORE AS-RADIATOR	
	6	1	**198-4778**	2	WASHER-HARD (13.5X30X12-MM THK)	
	7	1	**3J-5390**	1	PLUG	
M	8	1	**7X-2546**	4	BOLT (M10X1.5X180-MM)	
	9	1	**7X-7729**	10	WASHER (11X25X3-MM THK)	
M	10	1	**8T-4133**	4	NUT (M10X1.5-THD)	
M	11	1	**8T-4186**	2	BOLT (M10X1.5X40-MM)	
M	12	1	**8T-4196**	3	BOLT (M10X1.5X35-MM)	
	13	1	**8T-4226**	3	WASHER-PLATED (10.5X45X3-MM THK)	
D	14	1	**5P-8309**		SEAL (17.5-M)	

D-ORDER BY THE METER
M-METRIC PART

PROOF

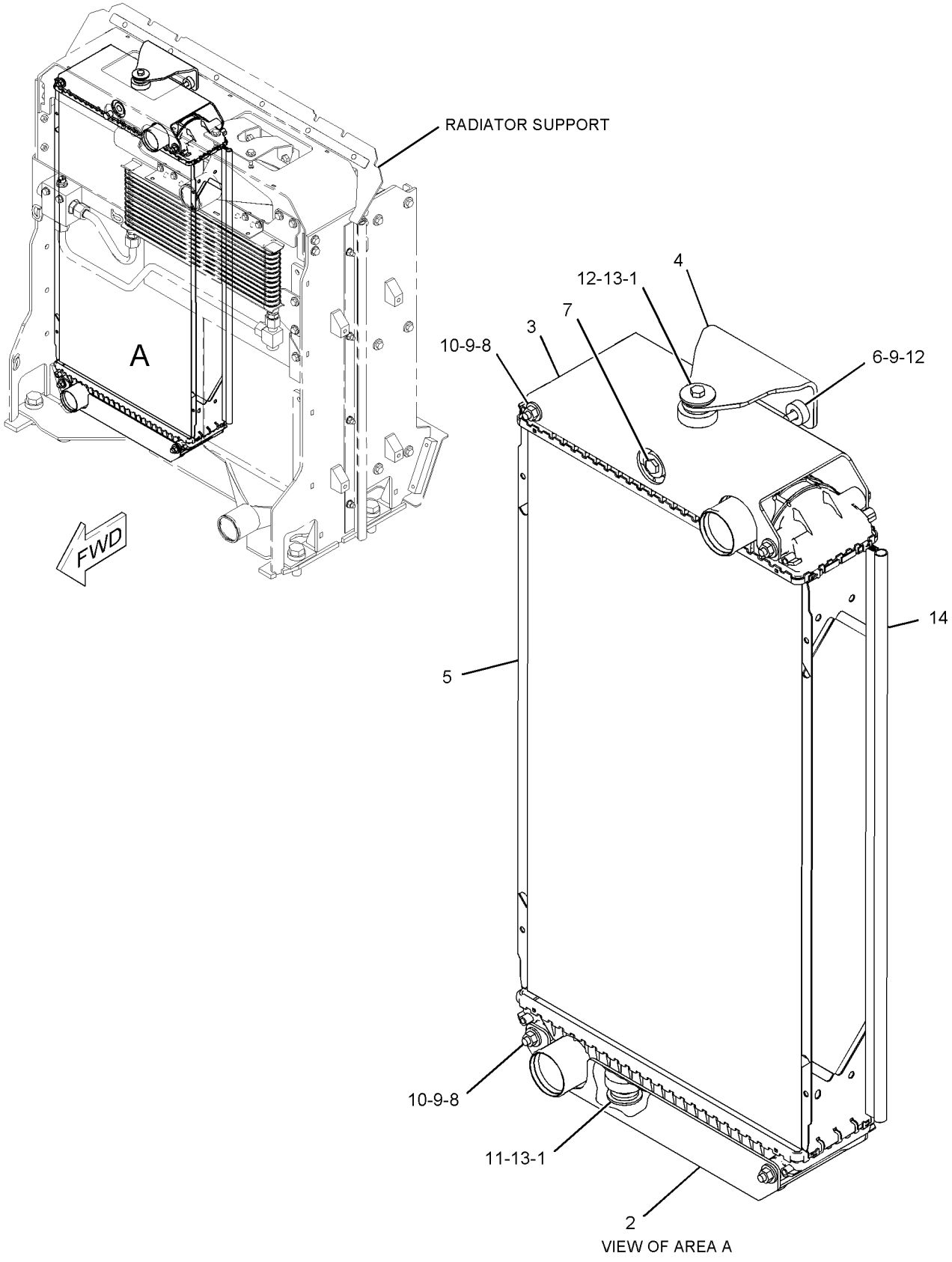

GRAPHIC #1 **<END>** g01108696

COOLING SYSTEM

248-6199 TANK GP-COOLANT

S/N: B9M1-UP

PART OF 254-6997 TANK GP-COOLANT

SMCS-1377 **i02179459**

NOTE	REF NO	GRAPHIC REF	PART NUMBER	QTY	PART NAME 1 2 3 4 5 6 (PRODUCT LEVEL)	SEE PAGE
	1	1	**126-5027**	1	CAP AS-RADIATOR (6 TO 8-PSI) (PRESSURE RELIEF)	
	2	1	**247-6482**	1	TANK AS-COOLANT	

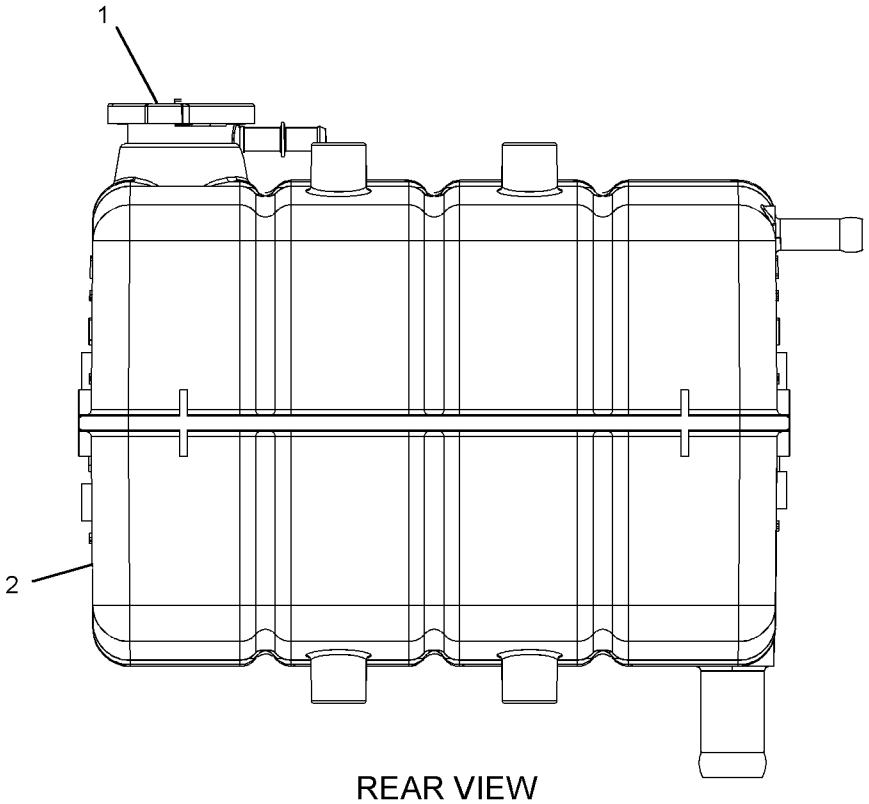

REAR VIEW

GRAPHIC #1 **<END>** g01110610

254-6997 TANK GP-COOLANT

S/N: B9M1-UP

PART OF 234-7721 COMMON AR-MOTOR GRADER

SMCS-1377 **i02297249**

NOTE	REF NO	GRAPHIC REF	PART NUMBER	QTY	PART NAME 1 2 3 4 5 6 (PRODUCT LEVEL)	SEE PAGE
	1	1	**5P-1230**	1	CONNECTOR	
	2	1	*150-3026*	1	ELBOW AS	
		1	**3K-0360**	1	SEAL-O-RING	
		1	**6V-4292**	1	ELBOW	
Y	3	1	**248-6199**	1	TANK GP-COOLANT	58
	4	1	**266-7589**	1	PLATE	
	5	1	**144-8344**	1	SPACER (11X19X20-MM THK)	
	6	1	**1S-0994**	1	CLIP	
	7	1	**3D-2824**	1	SEAL-O-RING	
	8	1	**5D-1026**	2	CLAMP-HOSE	
	9	1	**7D-7233**	1	CLIP	
M	10	1	**7X-2536**	4	BOLT (M8X1.25X14-MM)	
	11	1	**8M-2773**	2	CLIP	
	12	1	**8T-1117**	2	CLAMP-HOSE	
	13	1	**8T-4121**	7	WASHER-HARD (11X21X2.5-MM THK)	
M	14	1	**8T-4133**	1	NUT (M10X1.5-THD)	
M	15	1	**8T-4136**	2	BOLT (M10X1.5X25-MM)	
M	16	1	**8T-4137**	3	BOLT (M10X1.5X20-MM)	
M	17	1	**8T-4186**	1	BOLT (M10X1.5X40-MM)	
	18	1	**8T-4224**	4	WASHER-HARD (8.8X16X2-MM THK)	
E	19	1	**9X-2133**		HOSE (40-CM)	
E	20	1	**5P-1251**		HOSE (73-CM)	
E	21	1	**6V-8523**		HOSE (184-CM)	

E-ORDER BY THE CENTIMETER
M-METRIC PART
Y-SEPARATE ILLUSTRATION

PROOF

254-6997 **TANK GP-COOLANT** *(contd.)* **i02297249**

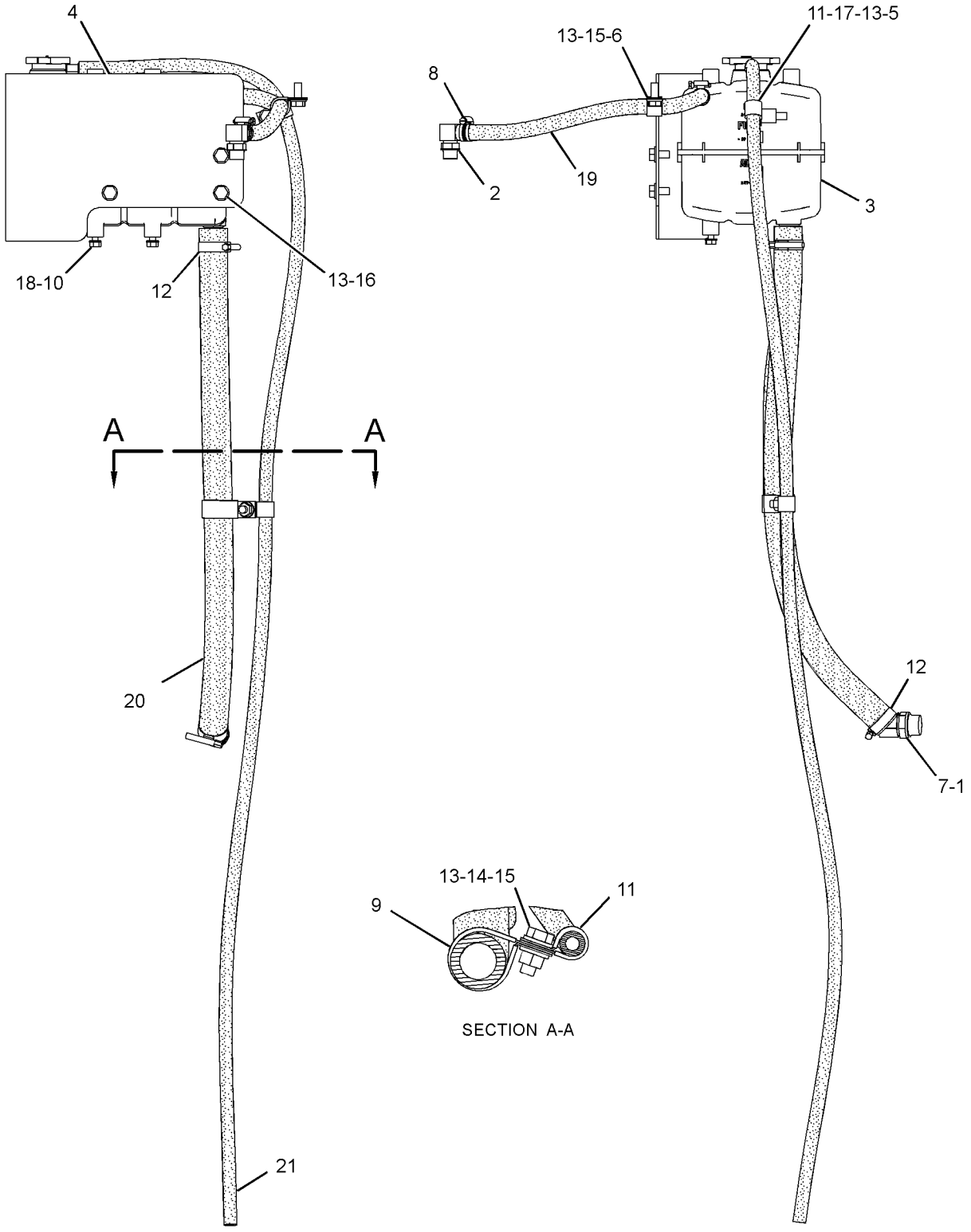

GRAPHIC #1 **<END>** g01156878

AIR INLET AND EXHAUST SYSTEM

250-8318 ADAPTER GP-TURBOCHARGER

S/N: KHX1-UP

PART OF 231-0878 ENGINE AR-COMPLETE

SMCS-1052 **i02290649**

NOTE	REF NO	GRAPHIC REF	PART NUMBER	QTY	PART NAME 1 2 3 4 5 6 (PRODUCT LEVEL)	SEE PAGE
	1	1	**257-5703**	1	ELBOW	
M	2	1	**3E-8017**	4	LOCKNUT (M10X1.5-MM THD)	
	3	1	**7C-7431**	1	GASKET	

M-METRIC PART

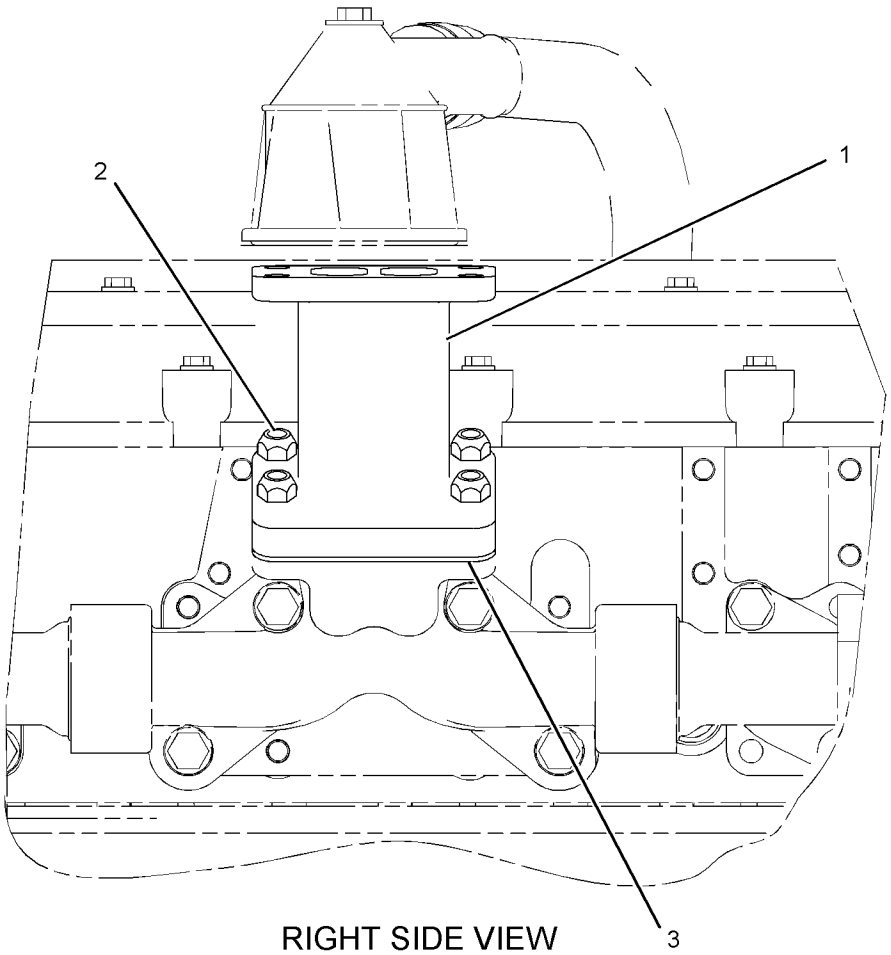

RIGHT SIDE VIEW

GRAPHIC #1 **<END>** g01148265

AIR INLET AND EXHAUST SYSTEM

231-2311 AFTERCOOLER GP-AIR

S/N: B9M1-UP

PART OF 268-6570 COOLING AR

SMCS-1063, 1064, 1079 **i02183831**

NOTE	REF NO	GRAPHIC REF	PART NUMBER	QTY	PART NAME 1 2 3 4 5 6 (PRODUCT LEVEL)	SEE PAGE
	1	1	**121-3307**	2	MOUNT AS-RESILIENT	
	2	1	**243-5063**	1	AFTERCOOLER AS	
	3	1	**248-0676**	1	BRACKET AS	
	4	1	**198-4777**	2	WASHER-HARD (11X25X10-MM THK)	
	5	1	**7X-7729**	4	WASHER (11X25X3-MM THK)	
M	6	1	**8T-4185**	2	BOLT (M10X1.5X50-MM)	
M	7	1	**8T-4195**	2	BOLT (M10X1.5X30-MM)	
M	8	1	**8T-4196**	2	BOLT (M10X1.5X35-MM)	
	9	1	**8T-4226**	2	WASHER-PLATED (10.5X45X3-MM THK)	

M-METRIC PART

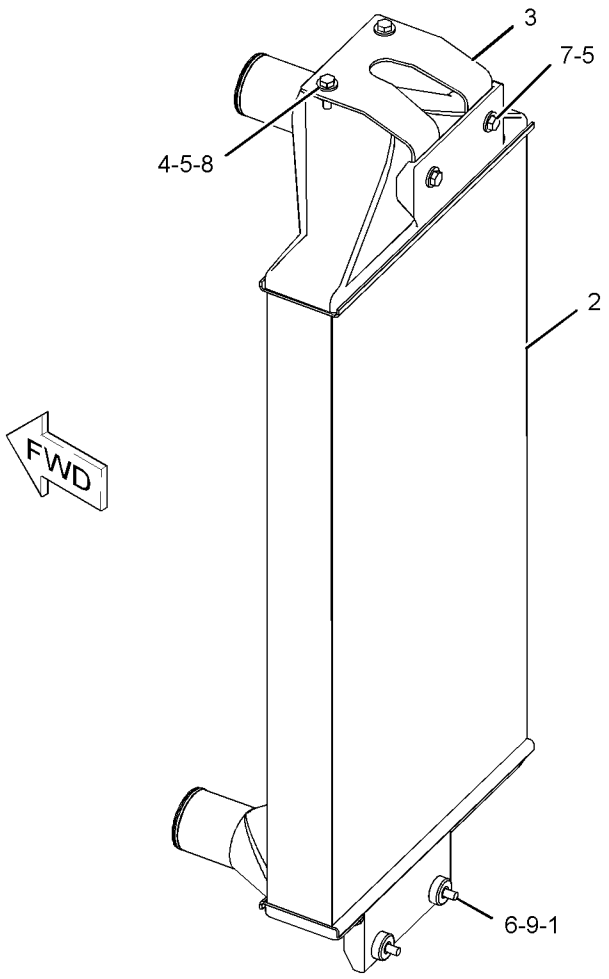

GRAPHIC #1 **<END>** g01109137

AIR INLET AND EXHAUST SYSTEM

231-2114 AIR CLEANER GP

S/N: B9M1-UP

PART OF 234-7721 COMMON AR-MOTOR GRADER

SMCS-1051, 1054 **i02235528**

NOTE	REF NO	GRAPHIC REF	PART NUMBER	QTY	PART NAME 1 2 3 4 5 6 (PRODUCT LEVEL)	SEE PAGE
	1	1	**246-4611**	1	CAP AS-RAIN	
Y	2	1	*247-9729*	1	AIR CLEANER GP	64
	3	1	**250-2984**	1	PIPE-EXTENSION	
M	4	1	**099-3649**	4	BOLT (M8X1.25X40-MM)	
	5	1	**219-0314**	1	CLAMP	
	6	1	**8T-4224**	4	WASHER-HARD (8.8X16X2-MM THK)	

M-METRIC PART
Y-SEPARATE ILLUSTRATION

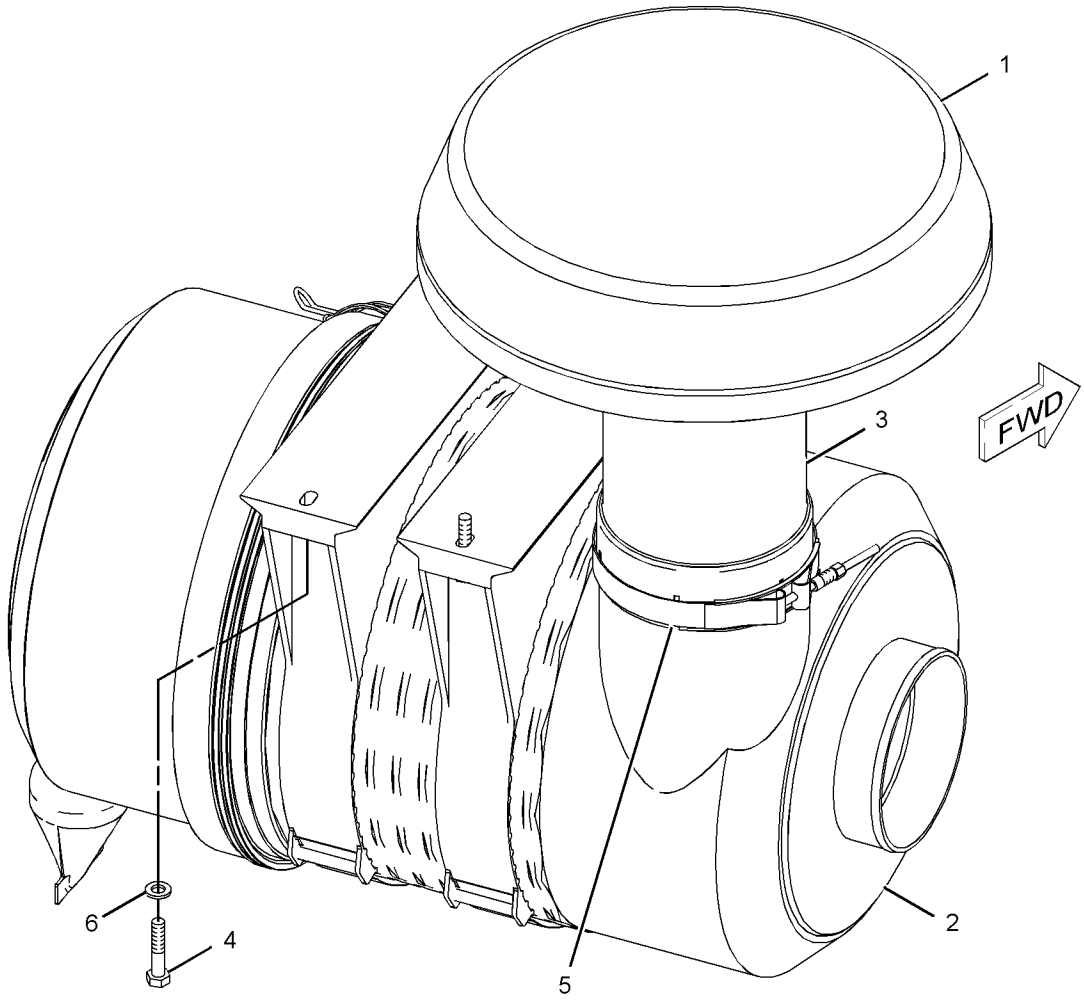

GRAPHIC #1 **<END>** g01131034

AIR INLET AND EXHAUST SYSTEM

247-9729 AIR CLEANER GP

S/N: B9M1-UP

PART OF 231-2114 AIR CLEANER GP

SMCS-1051, 1054 **i02235527**

NOTE	REF NO	GRAPHIC REF	PART NUMBER	QTY	PART NAME 1 2 3 4 5 6 (PRODUCT LEVEL)	SEE PAGE
	1	1	**245-6375**	1	FILTER ELEMENT AS-AIR (PRIMARY)	
	2	1	**245-6376**	1	FILTER ELEMENT AS-AIR (SECONDARY)	
	3	1	**246-4612**	1	VALVE-AIR CLEANER DUST	
	4	1	**246-4615**	2	BRACKET AS	
	5	1	**262-0568**	1	COVER AS	

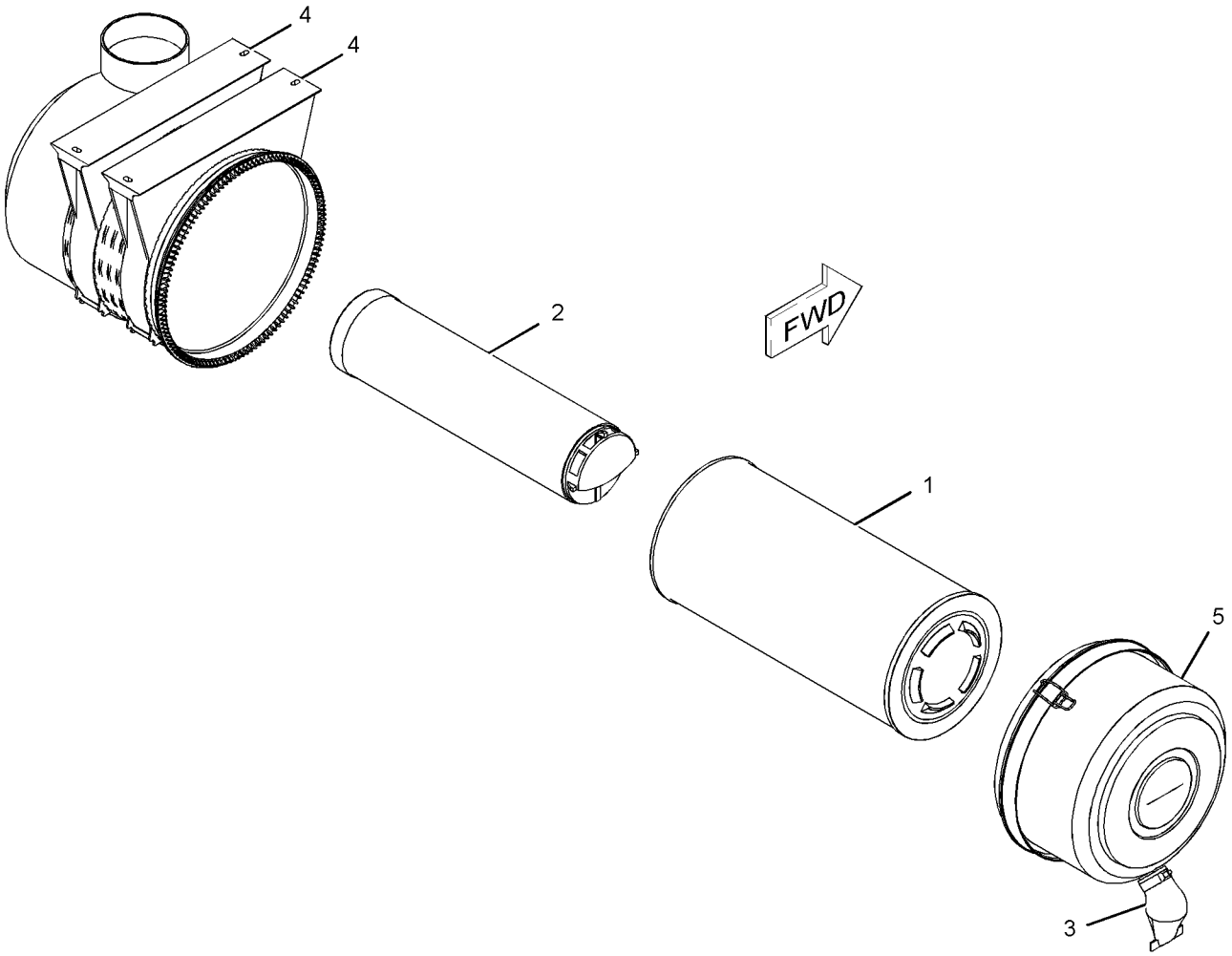

GRAPHIC #1 **<END>** g01132754

189-8779 COVER GP-AIR INLET—STARTING AID HEATER

S/N: KHX1-UP
24 VOLT, NARROW INSTALLATION
PART OF 189-8780 COVER GP-AIR INLET

SMCS-1087 **i02092262**

NOTE	REF NO	GRAPHIC REF	PART NUMBER	QTY	PART NAME 1 2 3 4 5 6 (PRODUCT LEVEL)	SEE PAGE
	1	1	**9S-4191**	2	PLUG	
	2	1	**3J-1907**	2	SEAL-O-RING	
	3	1	**245-6795**	1	INSULATOR	

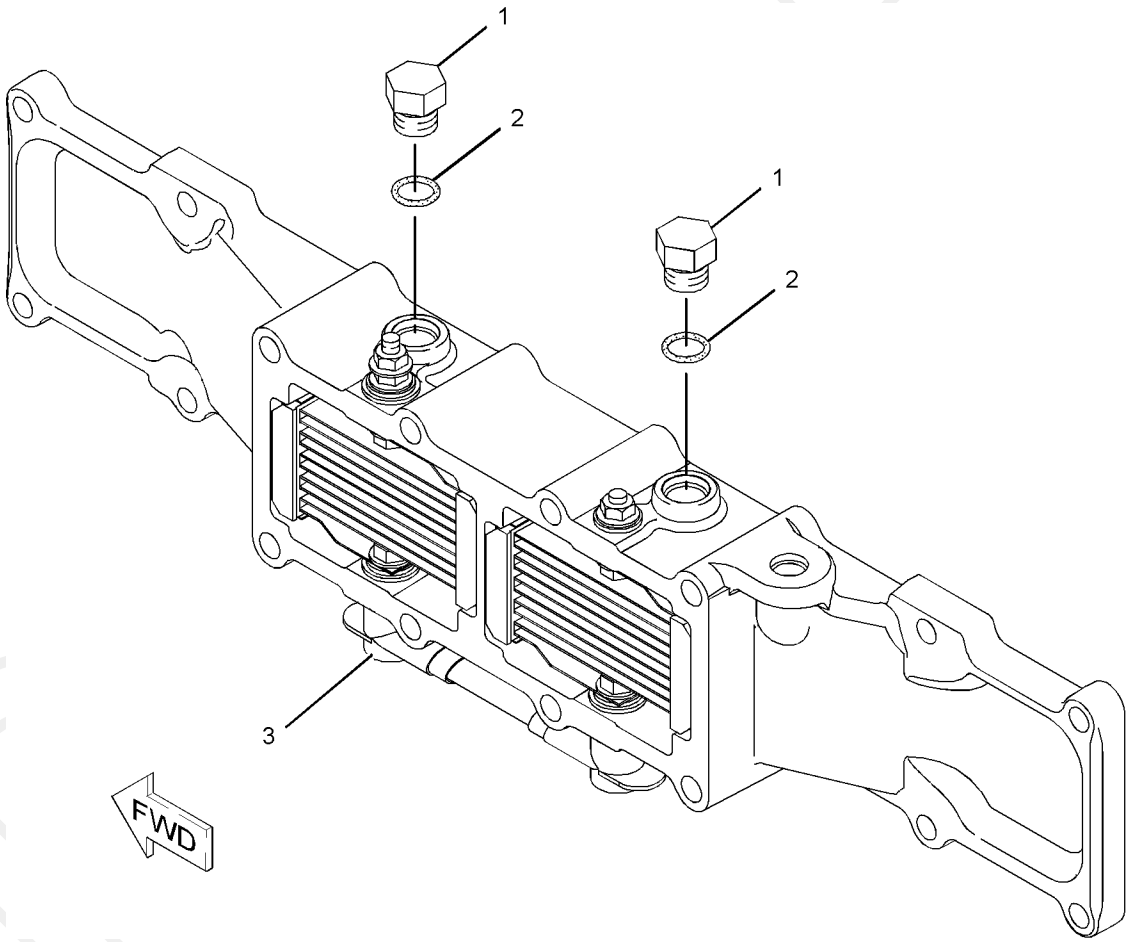

GRAPHIC #1 **<END>** g01071181

AIR INLET AND EXHAUST SYSTEM

189-8780 COVER GP-AIR INLET—STARTING AID HEATER

S/N: KHX1-UP
24 VOLT
PART OF 231-0878 ENGINE AR-COMPLETE

SMCS-1087 **i02228170**

NOTE	REF NO	GRAPHIC REF	PART NUMBER	QTY	PART NAME 1 2 3 4 5 6 (PRODUCT LEVEL)	SEE PAGE
BC	1	1	**1U-8846**		SEALANT-GASKET	
Y	2	1	**189-8779**	1	COVER GP-AIR INLET (STARTING AID HEATER)	65

B-USE AS REQUIRED
C-CHANGE FROM PREVIOUS TYPE
Y-SEPARATE ILLUSTRATION

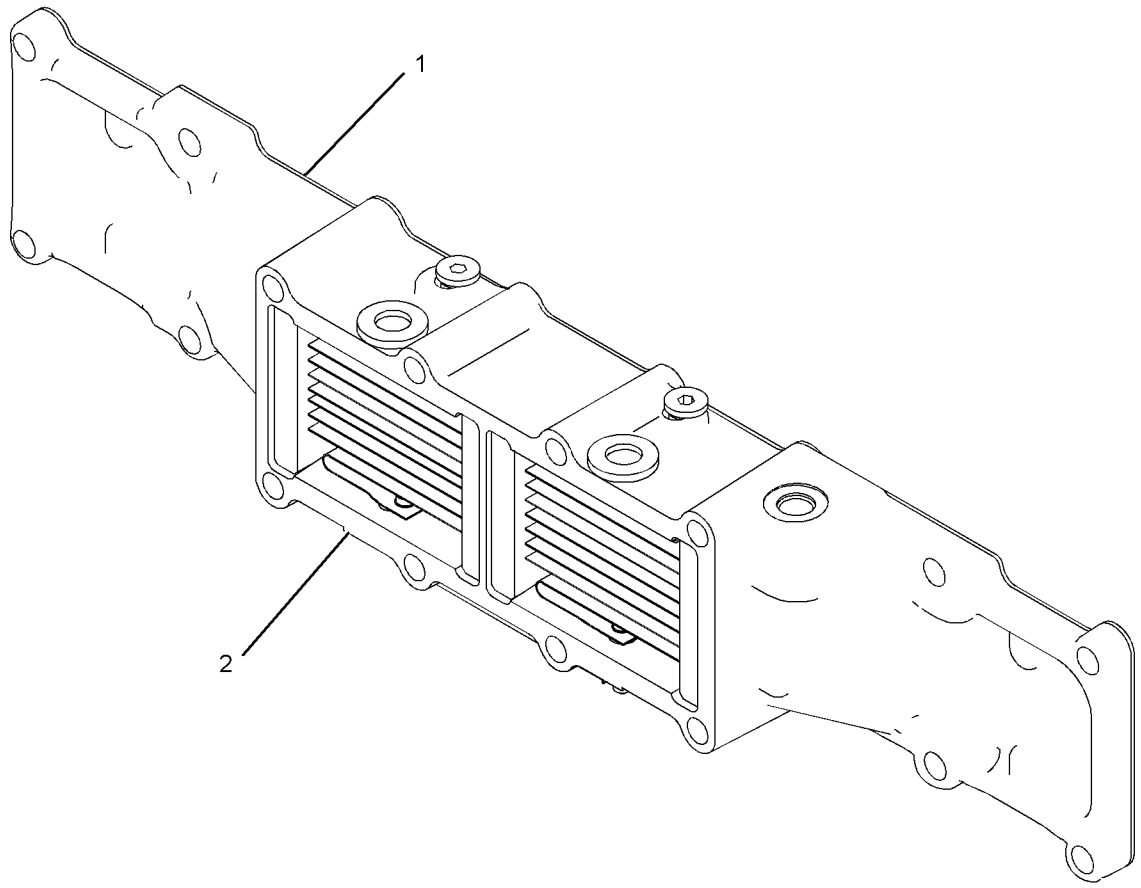

GRAPHIC #1 **<END>** g01125094

AIR INLET AND EXHAUST SYSTEM

241-2794 ELBOW GP-AIR INLET

S/N: KHX1-UP

PART OF 231-0878 ENGINE AR-COMPLETE

SMCS-1087 **i02290462**

NOTE	REF NO	GRAPHIC REF	PART NUMBER	QTY	PART NAME 1 2 3 4 5 6 (PRODUCT LEVEL)	SEE PAGE
M	1	1	**131-0353**	4	STUD	
	2	1	**257-8299**	1	ELBOW-AIR INLET	
	3	1	**3K-0360**	1	SEAL-O-RING	
M	4	1	**8T-0100**	4	BOLT (M8X1.25X60-MM)	
	5	1	**9M-1974**	8	WASHER-HARD (8.8X16X2-MM THK)	
	6	1	**9S-8005**	1	PLUG	
B	7	1	**1U-8846**		SEALANT-GASKET	

B-USE AS REQUIRED
M-METRIC PART

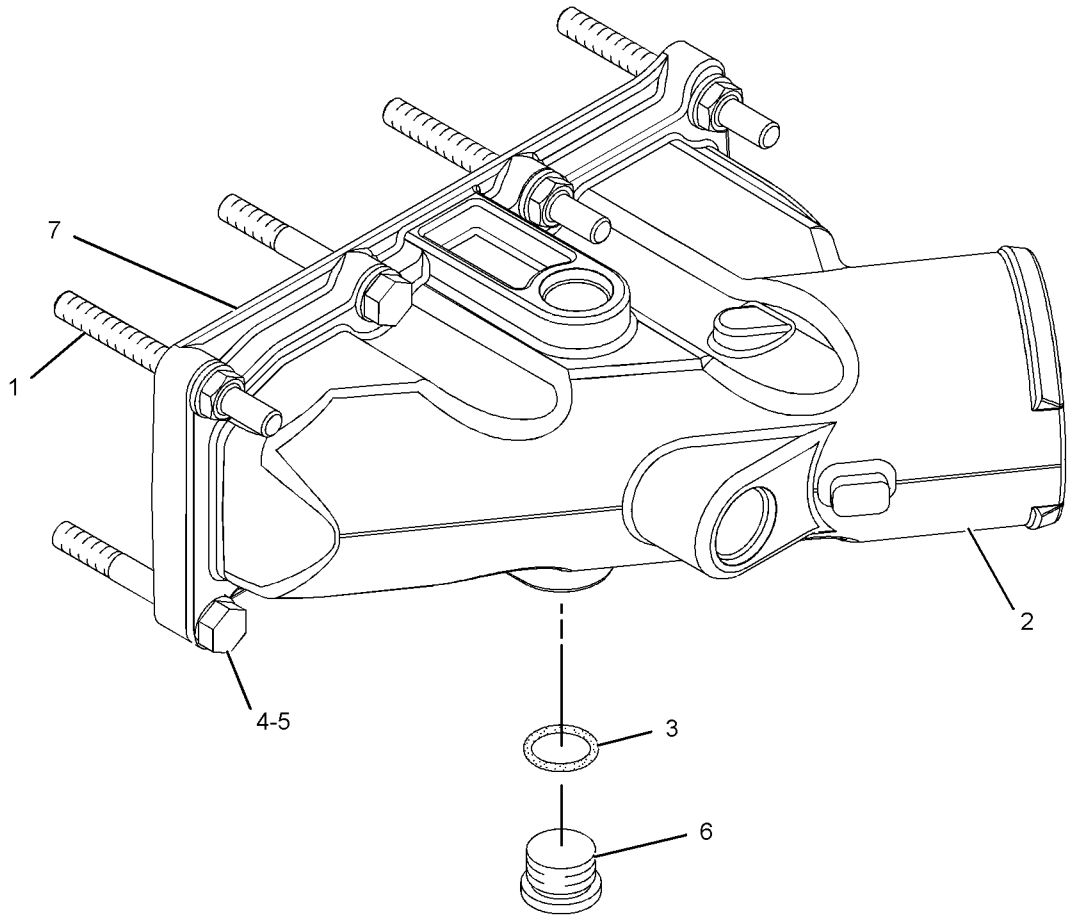

GRAPHIC #1 **<END>** g01147348

AIR INLET AND EXHAUST SYSTEM

246-6704 LINES GP-AIR

S/N: B9M1-UP

PART OF 234-7721 COMMON AR-MOTOR GRADER

SMCS-1071 **i02296819**

NOTE	REF NO	GRAPHIC REF	PART NUMBER	QTY	PART NAME 1 2 3 4 5 6 (PRODUCT LEVEL)	SEE PAGE
	1	1	**9R-5008**	2	SPACER (11X20X6-MM THK)	
	2	1	**131-6143**	4	CLAMP-HOSE	
	3	1	**177-0581**	1	HOSE	
	4	1	**209-4578**	8	CLAMP	
	5	1	**247-8602**	1	HOSE-ELBOW	
	6	1	**248-6364**	1	HOSE-ELBOW	
	7	1	**253-7536**	1	SHIELD-HEAT	
	8	1	**254-6802**	1	HOSE-ELBOW	
	9	1	**262-8057**	1	TUBE	
	10	1	**262-8058**	1	TUBE	
	11	1	**267-9386**	1	BRACKET AS	
M		1	**8T-3490**	1	NUT-WELD (M10X1.5-THD)	
	12	1	**2A-3034**	2	CLAMP-AIR CLEANER	
	13	1	**8T-4121**	2	WASHER-HARD (11X21X2.5-MM THK)	
	14	1	**8T-4123**	2	WASHER-PLATED (22X35X3.5-MM THK)	
M	15	1	**8T-4195**	2	BOLT (M10X1.5X30-MM)	
M	16	1	**8T-4780**	2	BOLT (M20X2.5X30-MM)	

M-METRIC PART

PROOF

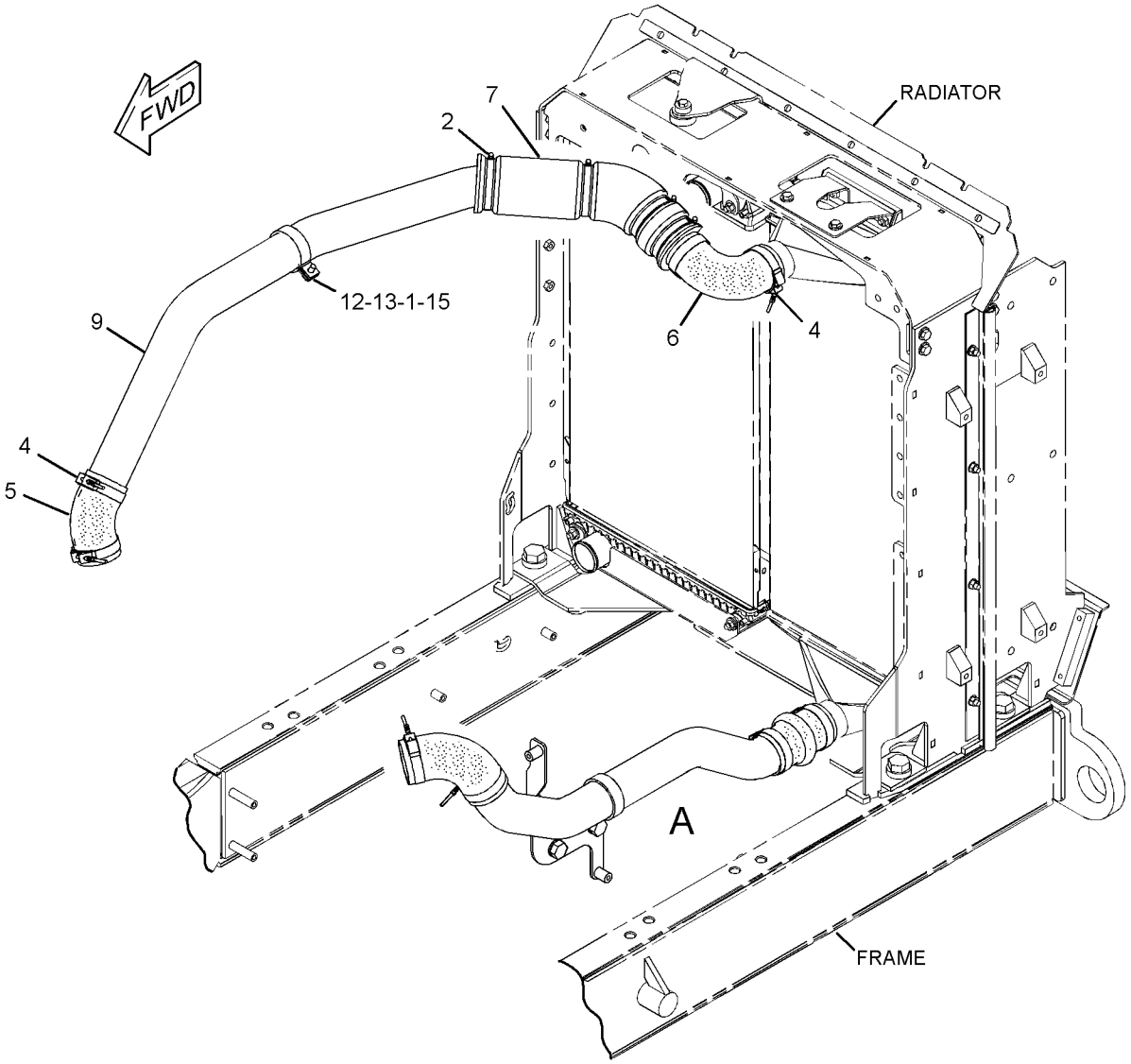

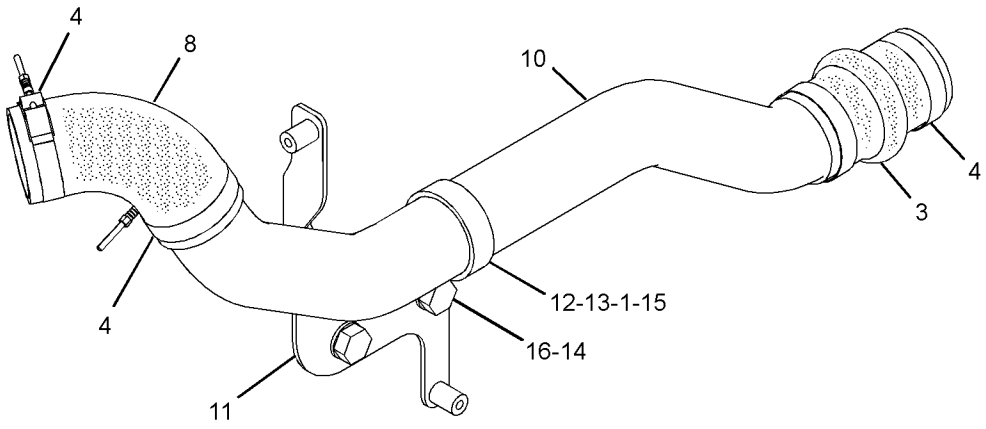

VIEW OF AREA A

GRAPHIC #1 **<END>** g01157852

AIR INLET AND EXHAUST SYSTEM

255-1283 LINES GP-AIR

S/N: B9M1-UP

AN ATTACHMENT

SMCS-1071 **i02290231**

NOTE	REF NO	GRAPHIC REF	PART NUMBER	QTY	PART NAME 1 2 3 4 5 6 (PRODUCT LEVEL)	SEE PAGE
	1	1	**216-2211**	3	CLAMP	
	2	1	**220-4125**	1	CLAMP	
	3	1	**252-1462**	1	TUBE AS	
	4	1	**263-3350**	1	ELBOW	
	5	1	**263-3351**	1	ELBOW	

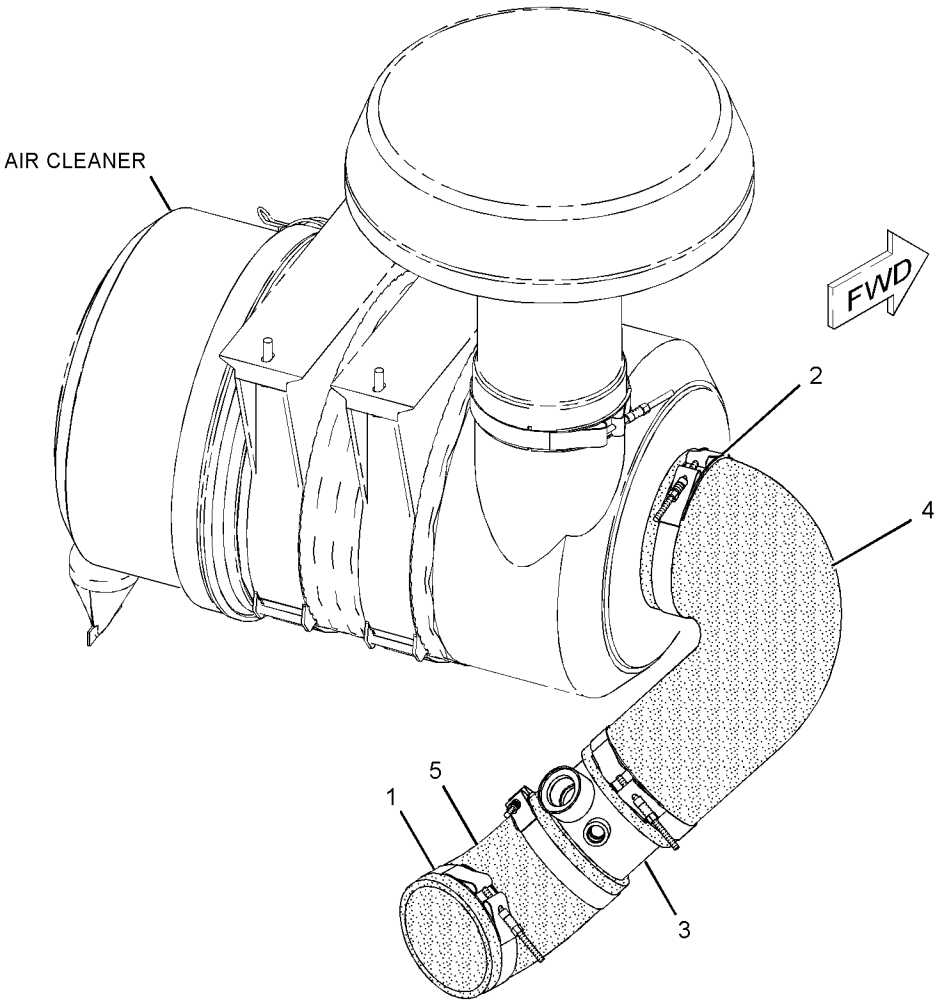

GRAPHIC #1 **<END>** g01147548

AIR INLET AND EXHAUST SYSTEM

255-1284 LINES GP-AIR

S/N: B9M1-UP

PART OF 261-0610 AIR COMPRESSOR AR

AN ATTACHMENT

SMCS-1071 **i02290817**

NOTE	REF NO	GRAPHIC REF	PART NUMBER	QTY	PART NAME 1 2 3 4 5 6 (PRODUCT LEVEL)	SEE PAGE
	1	1	**216-2211**	3	CLAMP	
	2	1	**220-4125**	1	CLAMP	
	3	1	**252-1462**	1	TUBE AS	
	4	1	**263-3350**	1	ELBOW	
	5	1	**263-3351**	1	ELBOW	
	6	1	*241-6185*	1	PLUG AS	
		1	**3D-2824**	2	SEAL-O-RING	
		1	**5P-9436**	2	PLUG-THREADED O-RING	

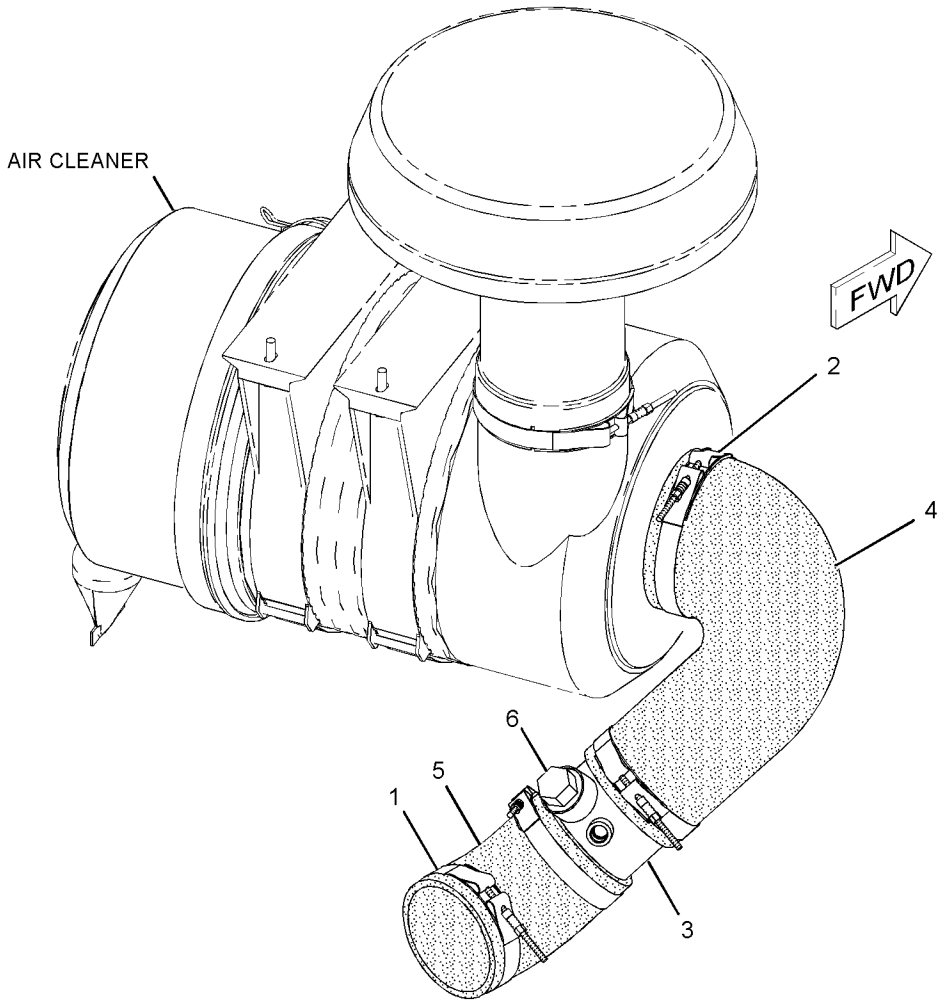

GRAPHIC #1 **<END>** g01148177

AIR INLET AND EXHAUST SYSTEM

257-8467 MANIFOLD GP-EXHAUST

S/N: KHX1-UP

PART OF 231-0878 ENGINE AR-COMPLETE

SMCS-1059 **i02290660**

NOTE	REF NO	GRAPHIC REF	PART NUMBER	QTY	PART NAME 1 2 3 4 5 6 (PRODUCT LEVEL)	SEE PAGE
	1	1	**154-8030**	3	GASKET	
M	2	1	**172-6298**	10	BOLT-FLANGE HEAD (M10)	
	3	1	**183-6854**	1	MANIFOLD-EXHAUST (CENTER)	
	4	1	**183-6856**	2	MANIFOLD-EXHAUST (END)	
	5	1	**189-8772**	10	SPACER (11X16X35-MM THK)	
	6	1	**203-3768**	2	SPACER (11X16X60-MM THK)	
	7	1	**210-7722**	2	BOLT-FLANGE HEAD (M10)	
M	8	1	**180-3998**	4	STUD (M10X1.5X55-MM)	

M-METRIC PART

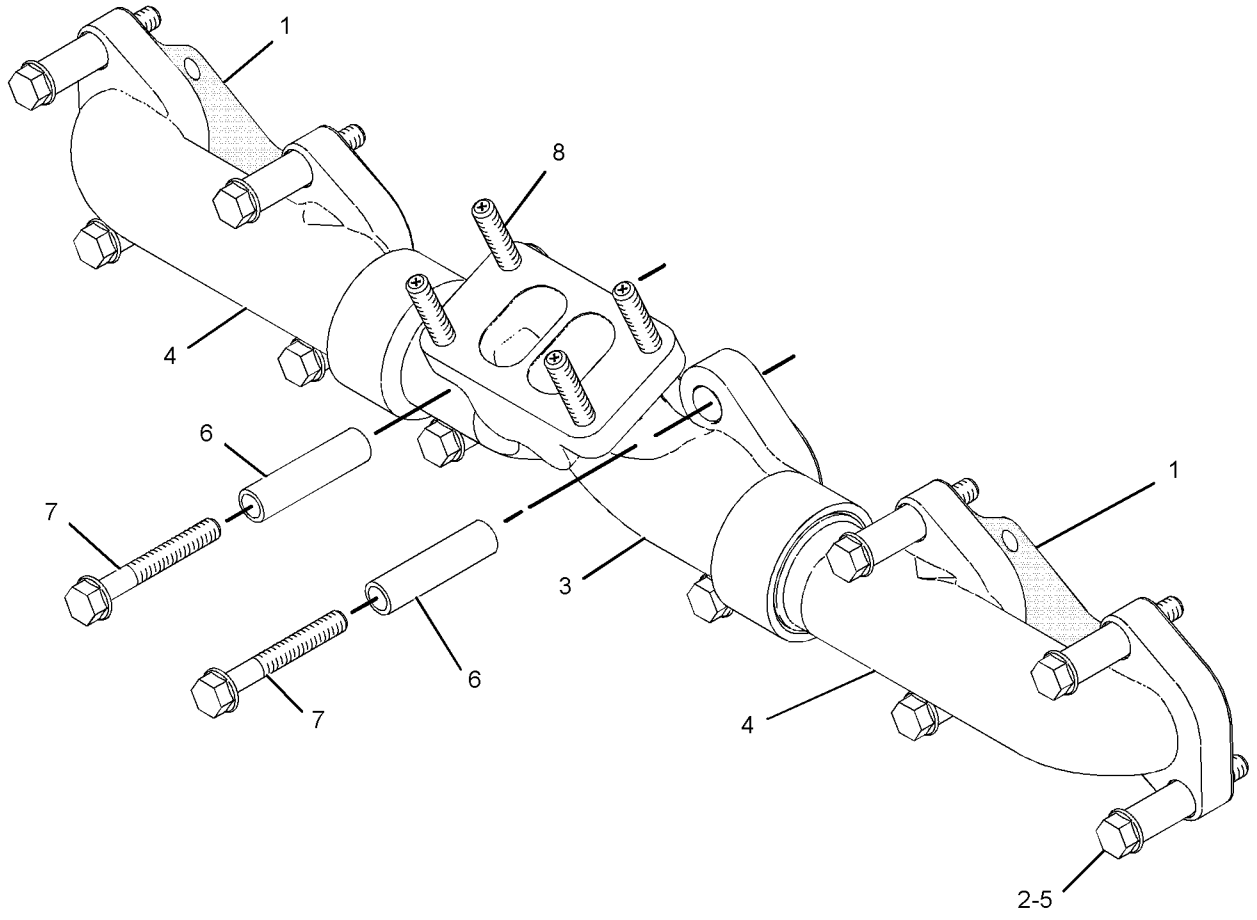

GRAPHIC #1 **<END>** g01149414

AIR INLET AND EXHAUST SYSTEM

246-6709 MUFFLER & MOUNTING GP

S/N: B9M1-UP

PART OF 234-7721 COMMON AR-MOTOR GRADER

SMCS-1062 **i02296988**

NOTE	REF NO	GRAPHIC REF	PART NUMBER	QTY	PART NAME 1 2 3 4 5 6 (PRODUCT LEVEL)	SEE PAGE
	1	1	**1W-2431**	1	CLAMP-BAND	
	2	1	**141-1480**	1	CLAMP AS	
	3	1	**259-5453**	1	MUFFLER AS	
	4	1	**261-7575**	1	BRACKET AS	
	5	1	**264-3152**	1	BRACKET AS	
M		1	**8T-3597**	2	NUT-WELD (M12X1.75-THD)	
	6	1	**264-6798**	1	STACK-EXHAUST	
	7	1	**198-4777**	7	WASHER-HARD (11X25X10-MM THK)	
	8	1	**198-4778**	2	WASHER-HARD (13.5X30X12-MM THK)	
M	9	1	**8T-4183**	2	BOLT (M12X1.75X40-MM)	
M	10	1	**8T-4195**	3	BOLT (M10X1.5X30-MM)	
M	11	1	**8T-4196**	4	BOLT (M10X1.5X35-MM)	

M-METRIC PART

PROOF

246-6709 **MUFFLER & MOUNTING GP** *(contd.)* **i02296988**

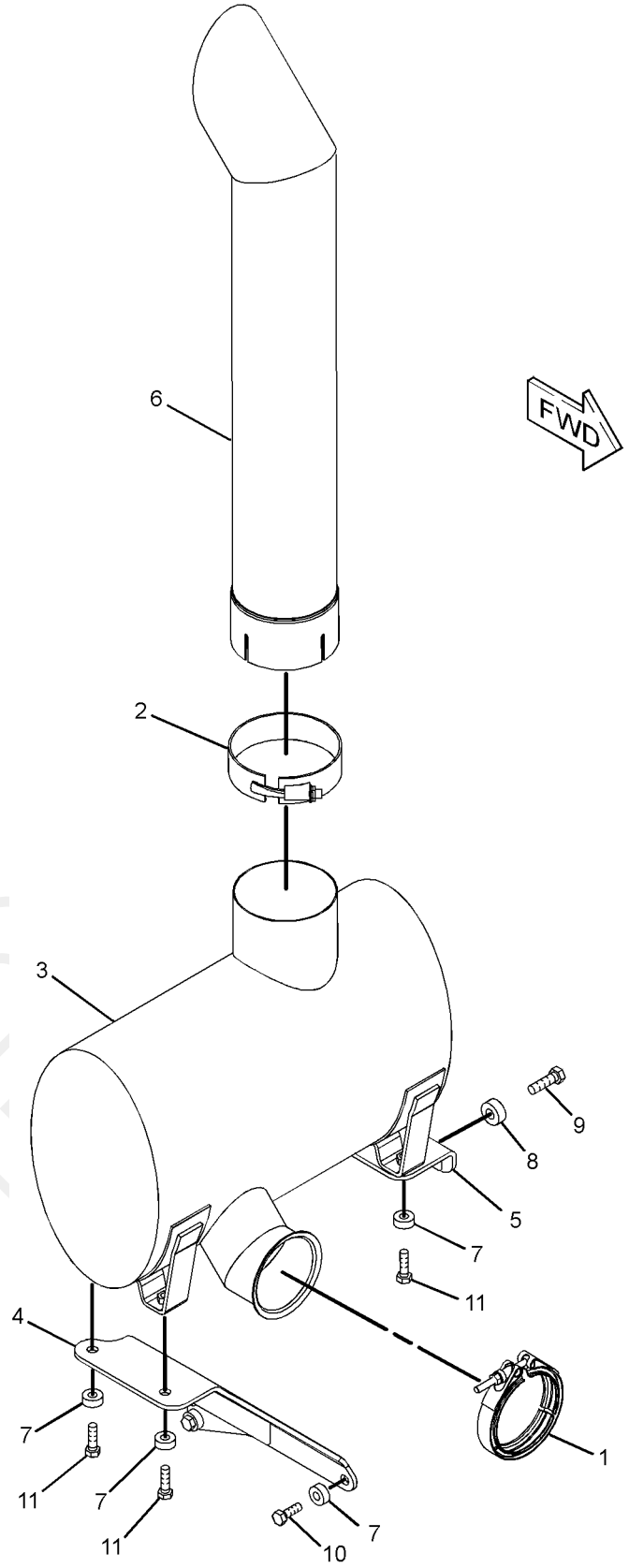

GRAPHIC #1 **<END>** g01152508

AIR INLET AND EXHAUST SYSTEM

233-3387 PRECLEANER GP

S/N: B9M1-UP

AN ATTACHMENT

SMCS-1055 **i02238567**

NOTE	REF NO	GRAPHIC REF	PART NUMBER	QTY	PART NAME 1 2 3 4 5 6 (PRODUCT LEVEL)	SEE PAGE
	1	1	**070-0107**	1	PRECLEANER GP (TURBINE)	
	2	1	**251-5743**	1	DAMPER	

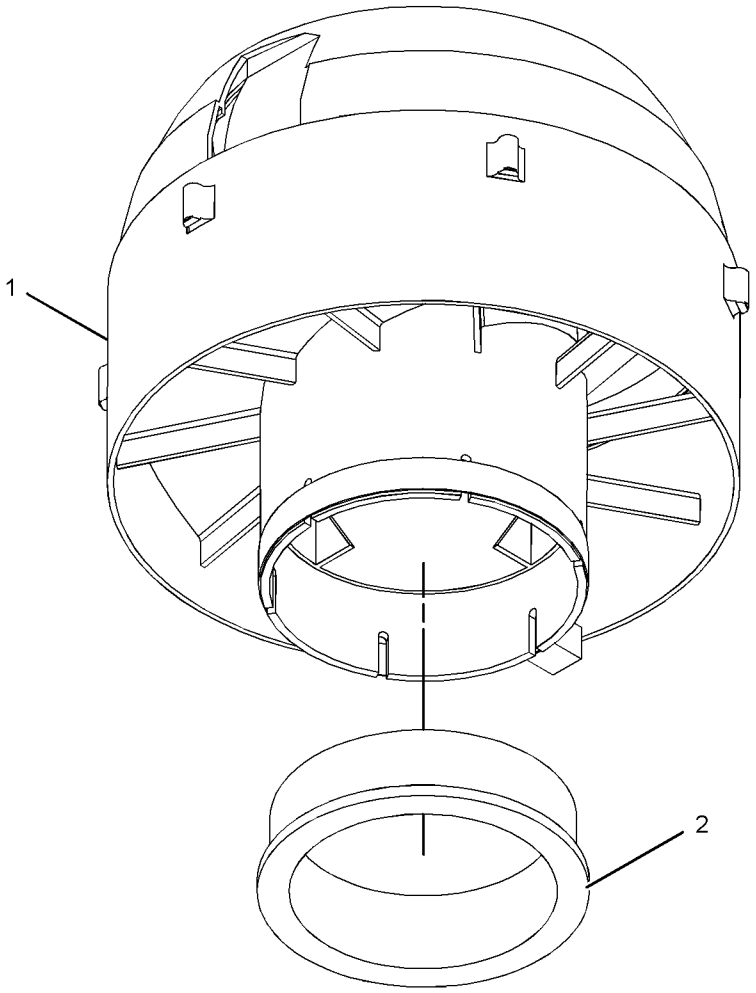

GRAPHIC #1 **<END>** g01132481

241-9584 ADAPTER GP-FAST FILL FUEL

S/N: B9M1-UP
PART OF 270-6988 TANK GP-FUEL
AN ATTACHMENT

SMCS-1710 **i02233919**

NOTE	REF NO	GRAPHIC REF	PART NUMBER	QTY	PART NAME 1 2 3 4 5 6 (PRODUCT LEVEL)	SEE PAGE
	1	1	**203-9808**	1	GASKET	
	2	1	**212-4669**	1	VENT AS	
	3	1	**221-0319**	1	GASKET	
	4	1	*222-9201*	1	FLOAT AS	
		1	**212-4621**	1	MOUNT AS	
		1	**212-4670**	1	FLOAT AS	
		1	**221-0319**	1	GASKET	
	5	1	**250-9200**	1	RECEIVER AS	
		1	**1P-4582**	2	FLANGE-HALF	
		1	**4J-0527**	1	SEAL-O-RING	
		1	**8T-8919**	4	BOLT (1/2-13X1.75-IN)	
		1	**232-1767**	1	RECEIVER AS (FAST FILL FUEL)	
		1	**248-2633**	1	GASKET	
		1	**250-3865**	1	VALVE	
	6	1	**251-1217**	3	HOSE AS	
	7	1	**4B-4863**	6	WASHER (4.7X11X1.2-MM THK)	
	8	1	**5P-2618**	2	CONNECTOR	
	9	1	**7K-4129**	2	UNION-FLARED	
M	10	1	**8T-4189**	6	BOLT (M8X1.25X20-MM)	
M	11	1	**8T-4908**	12	BOLT (M8X1.25X25-MM)	
M	12	1	**8T-9405**	6	BOLT-SOCKET HEAD (M4X0.7X16-MM)	
	13	1	**9M-1974**	18	WASHER-HARD (8.8X16X2-MM THK)	

M-METRIC PART

PROOF

241-9584 **ADAPTER GP-FAST FILL FUEL** *(contd.)* **i02233919**

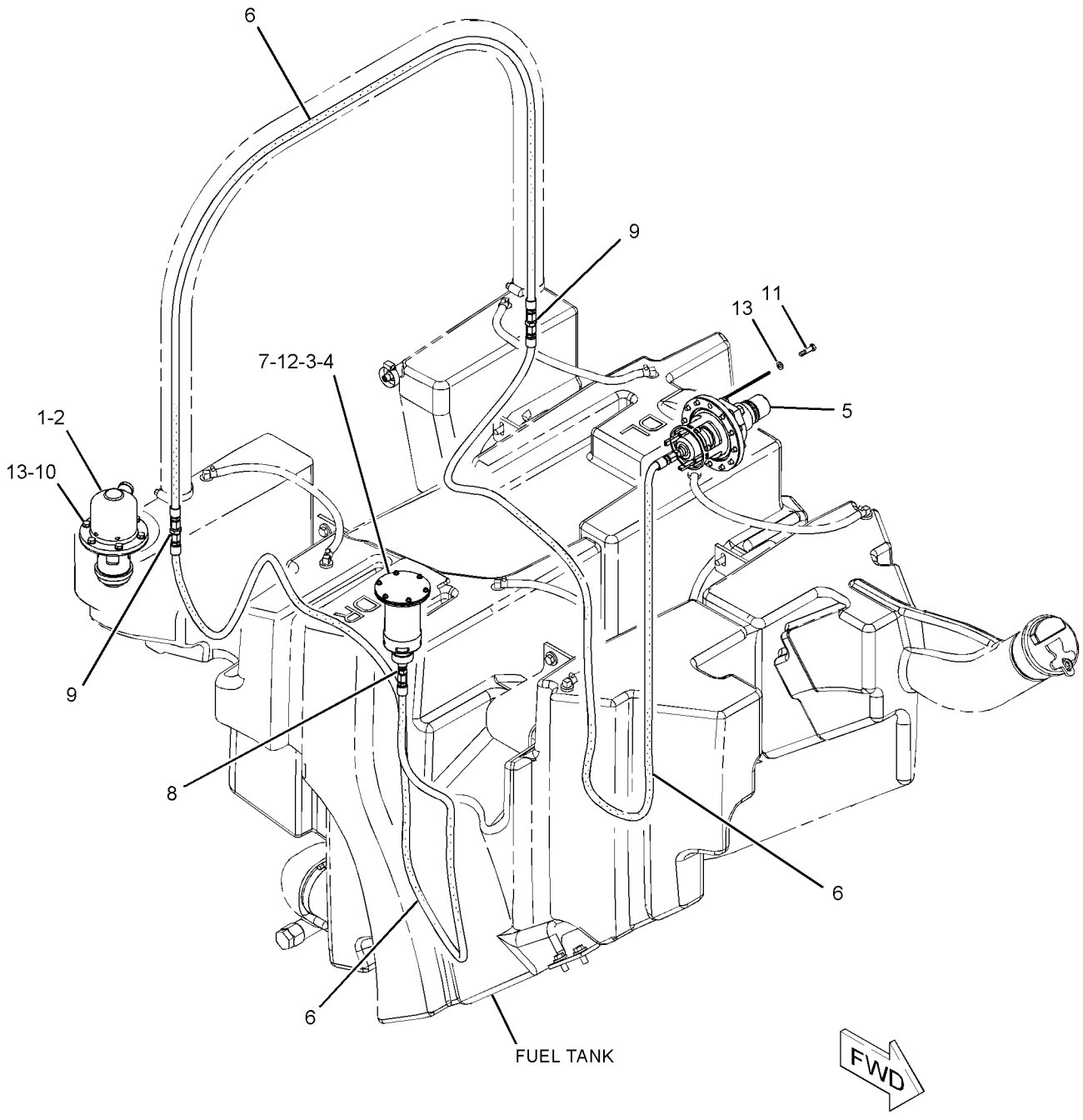

GRAPHIC #1 **<END>** g01127875

241-9585 ADAPTER GP-FAST FILL FUEL

S/N: B9M1-UP
PART OF 270-6987 TANK GP-FUEL
AN ATTACHMENT

SMCS-1710 **i02183621**

NOTE	REF NO	GRAPHIC REF	PART NUMBER	QTY	PART NAME 1 2 3 4 5 6 (PRODUCT LEVEL)	SEE PAGE
	1	1	**199-9985**	1	PLATE	
	2	1	**203-9808**	1	GASKET	
	3	1	**221-0318**	1	PLATE	
	4	1	**221-0319**	1	GASKET	
	5	1	**248-2633**	1	GASKET	
	6	1	**250-9304**	1	PLATE	
	7	1	**151-4977**	6	WASHER (4.445X9.525X1.092-MM THK)	
	8	1	**190-7541**	18	WASHER (8.8X16X2-MM THK)	
M	9	1	**5A-3604**	18	BOLT-SOCKET HEAD (M8X1.25X25-MM)	
M	10	1	**8T-9405**	6	BOLT-SOCKET HEAD (M4X0.7X16-MM)	

M-METRIC PART

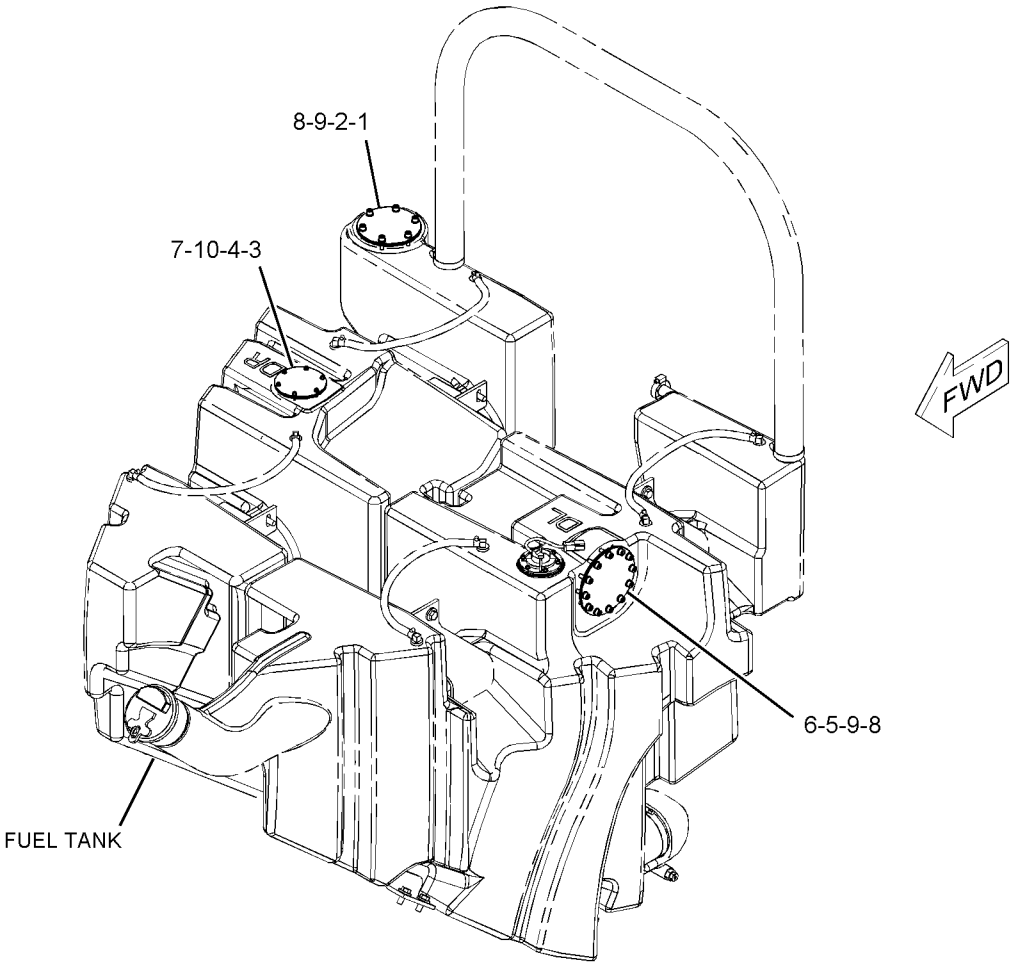

GRAPHIC #1 **<END>** g01121341

270-6986 FASTENER GP-FUEL TANK

S/N: B9M1-UP

PART OF 234-7721 COMMON AR-MOTOR GRADER

SMCS-1273, 7553 **i02296397**

NOTE	REF NO	GRAPHIC REF	PART NUMBER	QTY	PART NAME 1 2 3 4 5 6 (PRODUCT LEVEL)	SEE PAGE
	1	1	**5P-0597**	2	CLAMP-HOSE	
	2	1	**9X-2201**	4	CLAMP-HOSE	
	3	1	**258-8699**	2	HOSE	
	4	1	**266-7532**	1	GUARD	
	5	1	**270-3651**	2	PLATE AS	
	6	1	**270-9583**	6	PLATE	
	7	1	**1V-7801**	2	SPACER (0.546X0.840X2.38-IN THK)	
	8	1	**2B-9304**	2	SPACER	
	9	1	**2S-7010**	1	CLIP	
	10	1	**3E-4369**	2	WASHER (20.6X50.8X5-MM THK)	
	11	1	**5P-1076**	10	WASHER-HARD (13.5X30X4-MM THK)	
M	12	1	**7X-2559**	2	BOLT (M16X2X160-MM)	
M	13	1	**8T-4176**	2	BOLT (M12X1.75X90-MM)	
M	14	1	**8T-4179**	8	BOLT (M12X1.75X20-MM)	
M	15	1	**8T-4192**	12	BOLT (M12X1.75X25-MM)	
	16	1	**8T-4223**	12	WASHER-HARD (13.5X25.5X3-MM THK)	
E	17	1	**5P-1471**		HOSE (231-CM)	

E-ORDER BY THE CENTIMETER
M-METRIC PART

PROOF

270-6986 **FASTENER GP-FUEL TANK** *(contd.)* **i02296397**

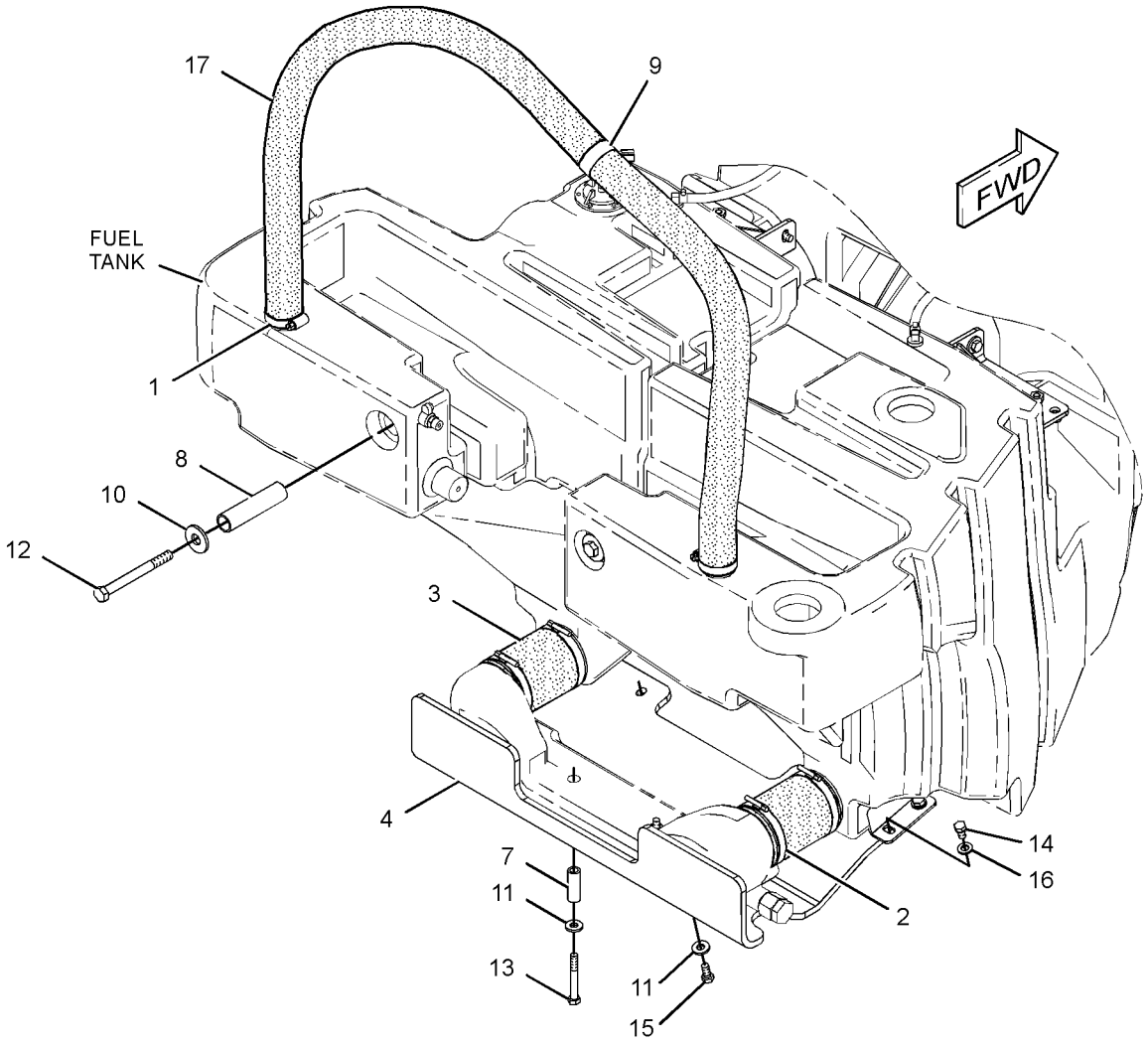

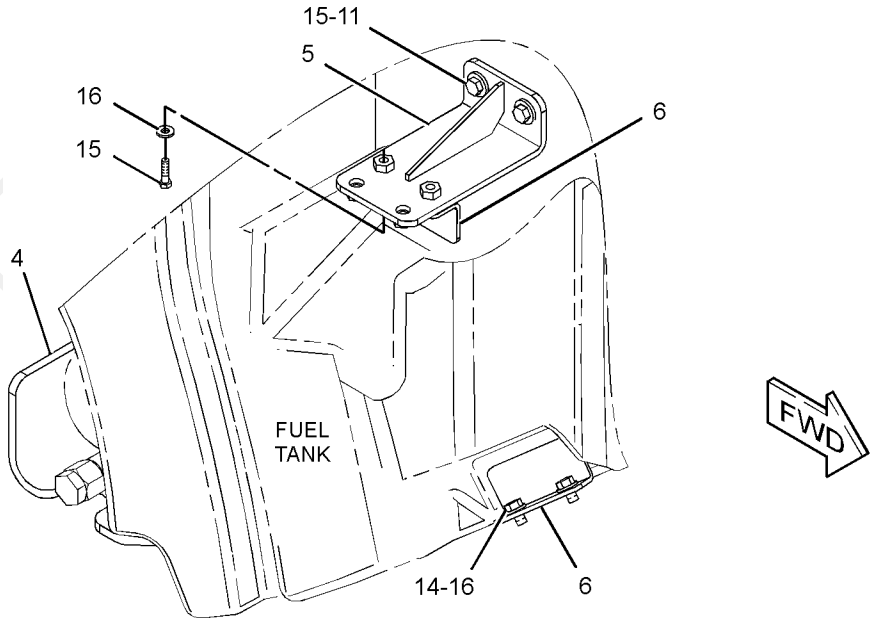

GRAPHIC #1 **<END>** g01153152

250-8313 FILTER GP-FUEL

S/N: KHX1-UP

PART OF 231-0878 ENGINE AR-COMPLETE

SMCS-1261 **i02296011**

NOTE	REF NO	GRAPHIC REF	PART NUMBER	QTY	PART NAME 1 2 3 4 5 6 (PRODUCT LEVEL)	SEE PAGE
	1	1	**1R-0762**	1	FILTER AS-FUEL	
	2	1	**3S-2093**	1	STRAP-CABLE	
	3	1	**8S-4950**	2	CAP	
Y	4	1	*197-8391*	1	SENSOR GP-TEMPERATURE (FUEL)	192
	5	1	**227-3812**	1	HARNESS AS-WIRING (JUMPER) (FUEL SENSOR)	
		1	**102-8803**	1	KIT-RECEPTACLE (3-PIN)	
					(INCLUDES RECEOTACLE AS AND WEDGE)	
		1	**102-8806**	1	KIT-RECEPTACLE (8-PIN)	
					(INCLUDES RECEPTACLE AS AND WEDGE)	
		1	**8T-8737**	1	PLUG-SEAL	
		1	**155-2270**	2	KIT-CONNECTING PLUG (2-PIN)	
					(EACH INCLUDES PLUG AS AND WEDGE)	
Y	6	1	*233-6742*	1	VALVE GP-CHECK (FUEL) (FUEL FILTER BASE)	97
	7	1	**235-3595**	1	ADAPTER	
	8	1	**237-9310**	1	BASE AS	
		1	**9S-4167**	1	STUD-HOLLOW	
Y	9	1	*239-2396*	1	SENSOR GP-PRESSURE (FUEL)	188
Y	10	1	**258-0883**	1	SWITCH GP-PRESSURE (FUEL)	211
	11	1	**030-8188**	2	CONNECTOR	
	12	1	*148-8395*	2	PLUG AS	
					(EACH INCLUDES)	
		1	**3K-0360**	1	SEAL-O-RING	
		1	**9S-8005**	1	PLUG	
	13	1	**164-6867**	2	CONNECTOR AS	
					(EACH INCLUDES)	
		1	**3J-1907**	1	SEAL-O-RING	
	14	1	**3K-0360**	2	SEAL-O-RING	
	15	1	**4L-9337**	2	BOLT (3/8-16X1.5-IN)	
	16	1	**4P-7581**	1	CLIP	
	17	1	**8L-2786**	1	SEAL-O-RING	
	18	1	**8T-4896**	2	WASHER-HARD (10.2X18.5X2.5-MM THK)	

Y-SEPARATE ILLUSTRATION

PROOF

250-8313 **FILTER GP-FUEL** *(contd.)* **i02296011**

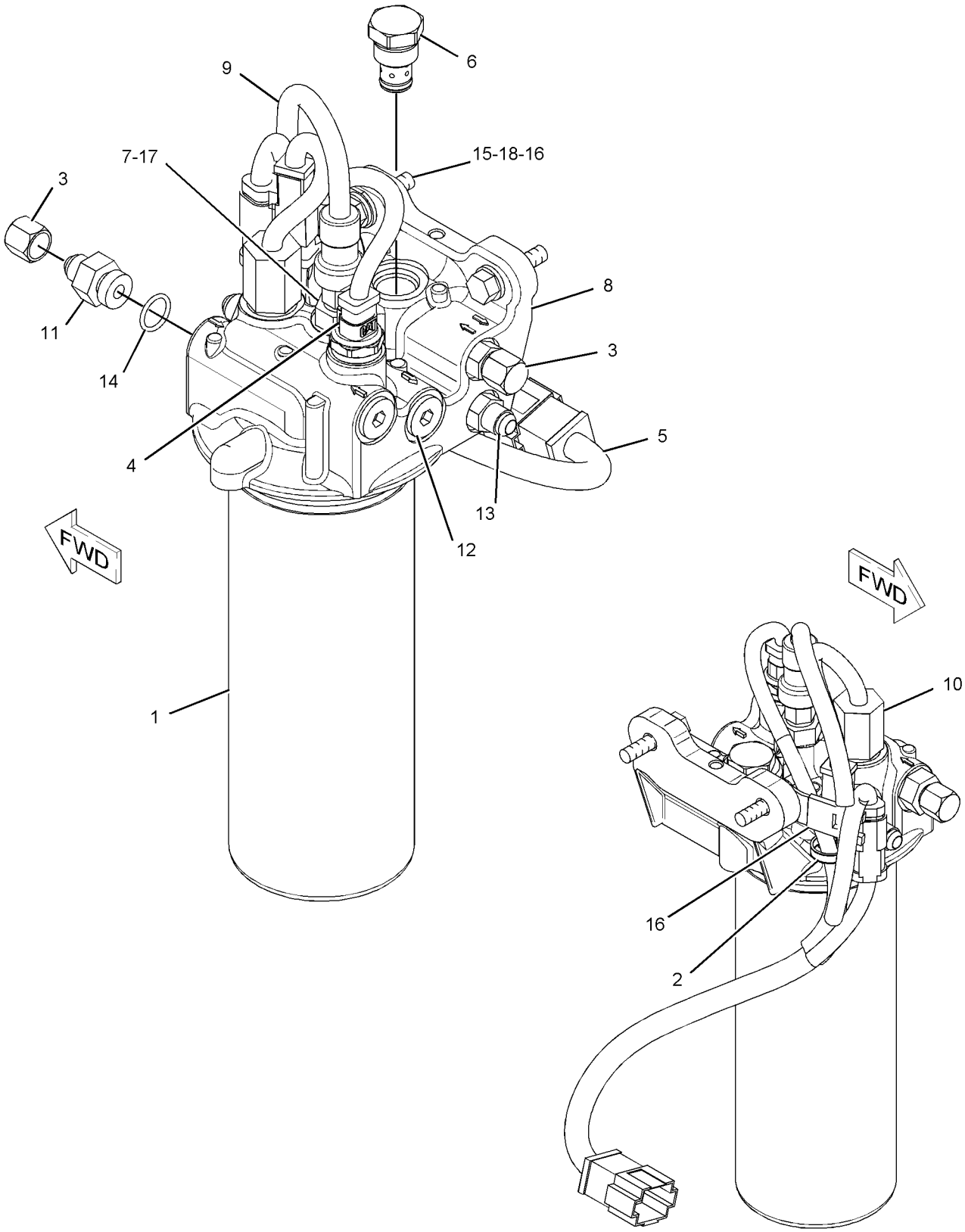

GRAPHIC #1 **<END>** g01150547

174-9570 FILTER GP-WATER SEP & FUEL

S/N: B9M1-UP

PART OF 235-8725 PUMP GP-FUEL TRANSFER & FILTER

SMCS-1261, 1263 **i02352148**

NOTE	REF NO	GRAPHIC REF	PART NUMBER	QTY	PART NAME 1 2 3 4 5 6 (PRODUCT LEVEL)	SEE PAGE
	1	1	**173-7126**	1	BOWL AS (FUEL, WATER SEPARATOR)	
	2	1	**1R-0770**	1	FILTER AS-WATER SEP & FUEL (PRIMARY)	
		1	**220-8678**	1	SEAL	

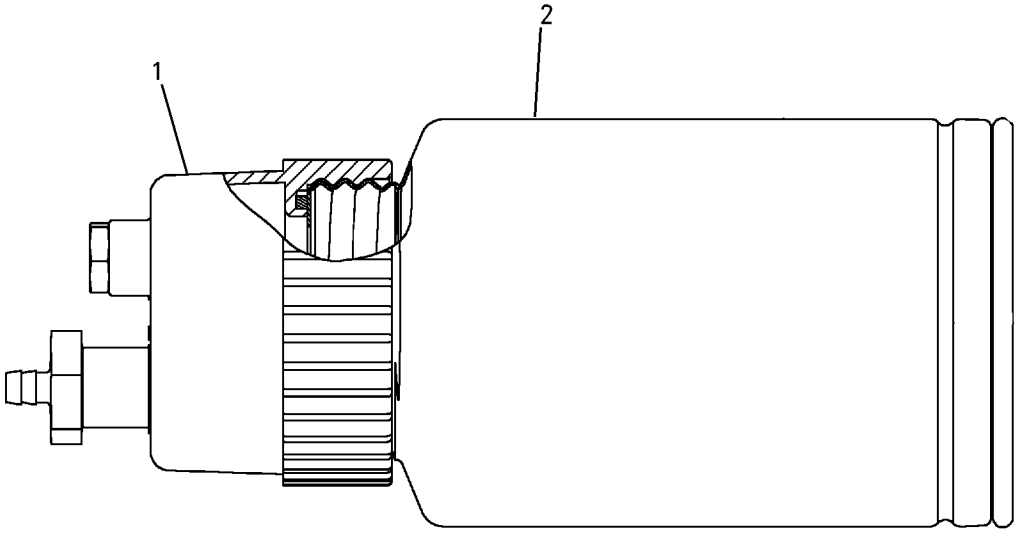

GRAPHIC #1 **<END>** g00787237

250-8314 LINES GP-FUEL

S/N: KHX1-UP

PART OF 231-0878 ENGINE AR-COMPLETE

SMCS-1274 **i02290711**

NOTE	REF NO	GRAPHIC REF	PART NUMBER	QTY	PART NAME 1 2 3 4 5 6 (PRODUCT LEVEL)	SEE PAGE
I	1	1	**224-9814**	1	HOSE AS	
	2	1	**231-3047**	1	TUBE AS	
Y	3	1	*232-0343*	1	REGULATOR GP-FUEL PRESSURE	92
I	4	1	**247-4546**	1	HOSE AS	
	5	1	**149-9129**	1	CLIP	
	6	1	**186-0357**	1	CLIP	
	7	1	**2R-6806**	2	CONNECTOR	
	8	1	**3J-1907**	3	SEAL-O-RING	
M	9	1	**5C-7261**	1	NUT (M8X1.25-THD)	
	10	1	**9M-1974**	1	WASHER-HARD (8.8X16X2-MM THK)	
	11	1	**9S-8004**	1	PLUG	

I-REFER TO HYDRAULIC INFORMATION SYSTEM
M-METRIC PART
Y-SEPARATE ILLUSTRATION

PROOF

250-8314 **LINES GP-FUEL** *(contd.)* **i02290711**

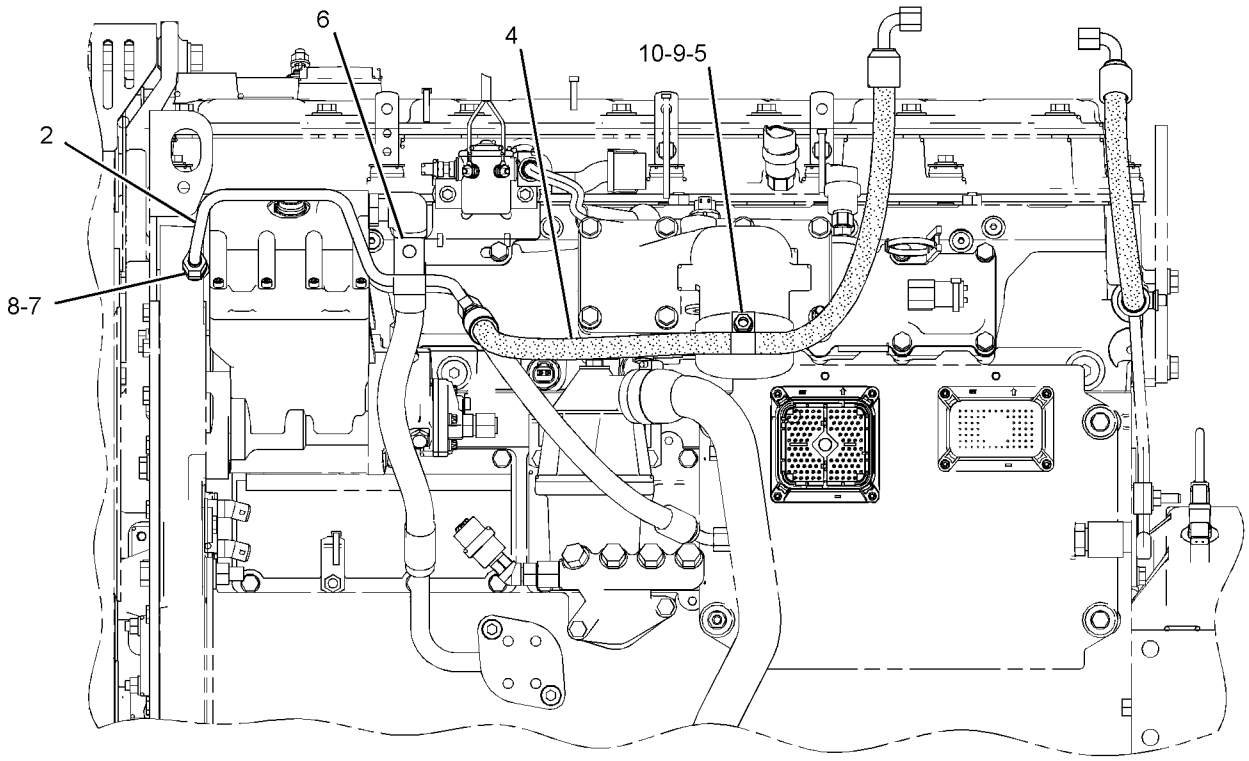

LEFT SIDE VIEW

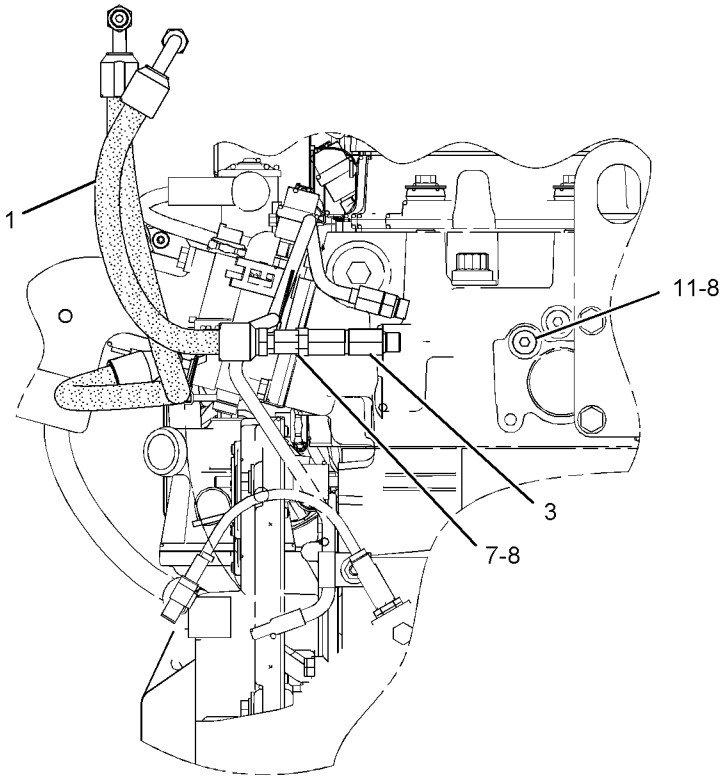

REAR VIEW

GRAPHIC #1 **<END>** g01150648

246-6706 LINES GP-FUEL FILTER

S/N: B9M1-UP

PART OF 234-7721 COMMON AR-MOTOR GRADER

SMCS-1261, 1274 **i02296965**

NOTE	REF NO	GRAPHIC REF	PART NUMBER	QTY	PART NAME 1 2 3 4 5 6 (PRODUCT LEVEL)	SEE PAGE
	1	1	**3E-7445**	1	CLAMP-HOSE	
	2	1	**3S-2093**	1	STRAP-CABLE	
	3	1	**6B-4312**	1	CLIP	
Y	4	1	*190-1105*	1	PUMP GP-FUEL PRM & PRIM FILTER	89
	5	1	**253-7576**	1	BRACKET AS (RH)	
I	6	1	**266-2963**	1	HOSE AS	
	7	1	**266-2964**	1	HOSE AS	
I	8	1	**266-2965**	1	HOSE AS	
	9	1	**266-3706**	1	TUBE AS	
	10	1	*148-8345*	1	CONNECTOR AS	
		1	**6V-8638**	1	CONNECTOR	
		1	**6V-8398**	1	SEAL-O-RING	
		1	**2M-9780**	1	SEAL-O-RING	
	11	1	*148-8372*	1	ELBOW AS	
		1	**6V-8721**	1	ELBOW	
		1	**6V-8398**	1	SEAL-O-RING	
		1	**2M-9780**	1	SEAL-O-RING	
	12	1	**190-4885**	1	SPACER (11X22X50-MM THK)	
	13	1	**1S-0994**	2	CLIP	
M	14	1	**5C-7261**	1	NUT (M8X1.25-THD)	
	15	1	**5P-4116**	2	WASHER-HARD (8.8X20.5X2-MM THK)	
	16	1	**5P-9299**	1	CLIP	
	17	1	**7X-7729**	1	WASHER (11X25X3-MM THK)	
	18	1	**8M-2773**	2	CLIP	
M	19	1	**8T-4121**	1	WASHER-HARD (11X21X2.5-MM THK)	
M	20	1	**8T-4133**	1	NUT (M10X1.5-THD)	
M	21	1	**8T-4196**	1	BOLT (M10X1.5X35-MM)	
M	22	1	**8T-5005**	1	BOLT (M10X1.5X70-MM)	
E	23	1	**8C-6959**		HOSE (150-CM)	

E-ORDER BY THE CENTIMETER
I-REFER TO HYDRAULIC INFORMATION SYSTEM
M-METRIC PART
Y-SEPARATE ILLUSTRATION

PROOF

246-6706 **LINES GP-FUEL FILTER** *(contd.)* **i02296965**

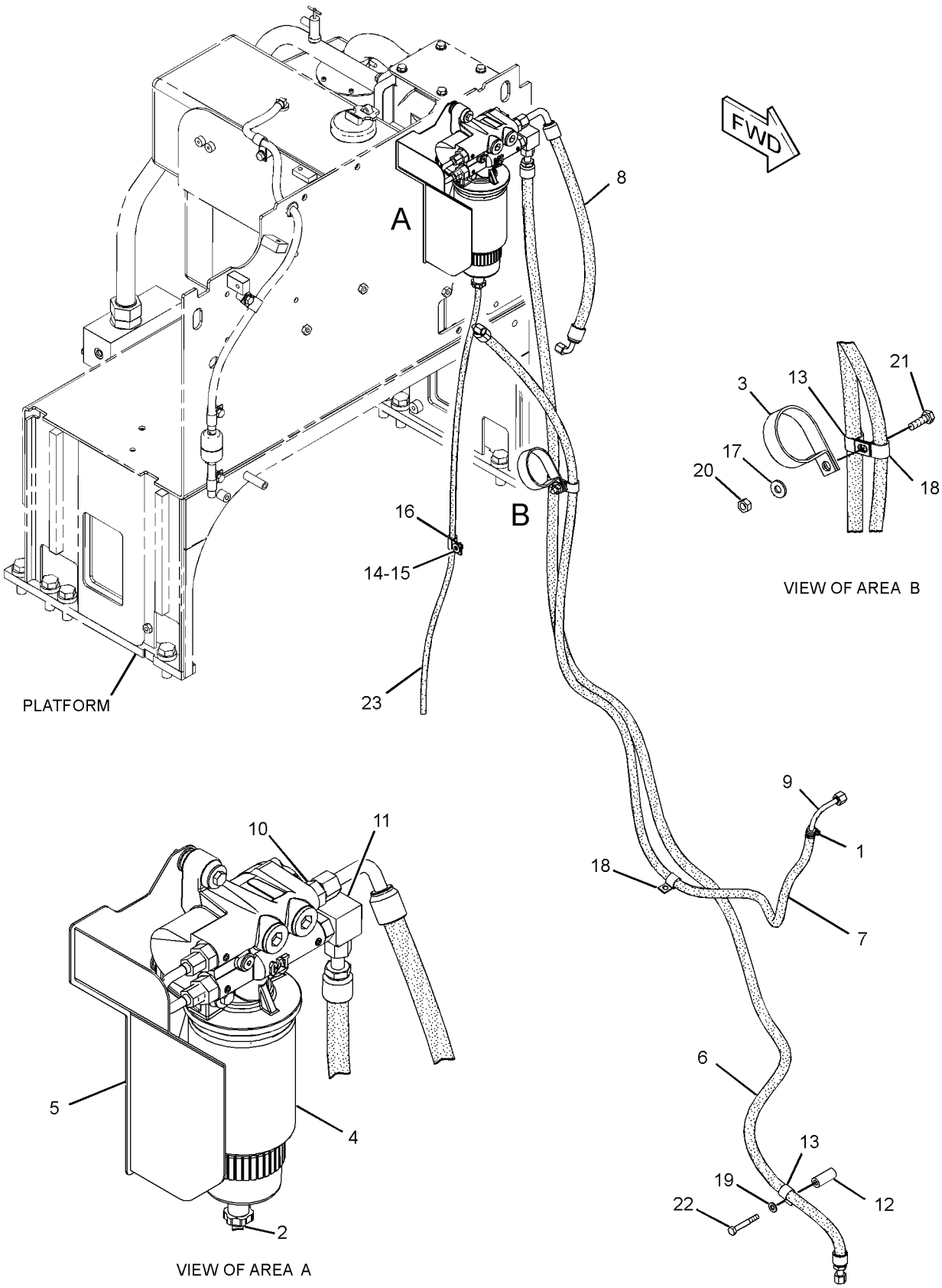

GRAPHIC #1 **<END>** g01155873

250-8306 MOUNTING GP-FUEL FILTER–FUEL

S/N: KHX1-UP

PART OF 231-0878 ENGINE AR-COMPLETE

SMCS-1261, 1262 **i02290670**

NOTE	REF NO	GRAPHIC REF	PART NUMBER	QTY	PART NAME 1 2 3 4 5 6 (PRODUCT LEVEL)	SEE PAGE
	1	1	**250-8307**	1	BRACKET AS	
		1	**1F-0750**	2	NUT-WELD (3/8-16-THD)	
M		1	**8T-3490**	1	NUT-WELD (M10X1.5-THD)	
M	2	1	**6V-5218**	4	BOLT (M8X1.25X35-MM)	
	3	1	**9M-1974**	4	WASHER-HARD (8.8X16X2-MM THK)	

M-METRIC PART

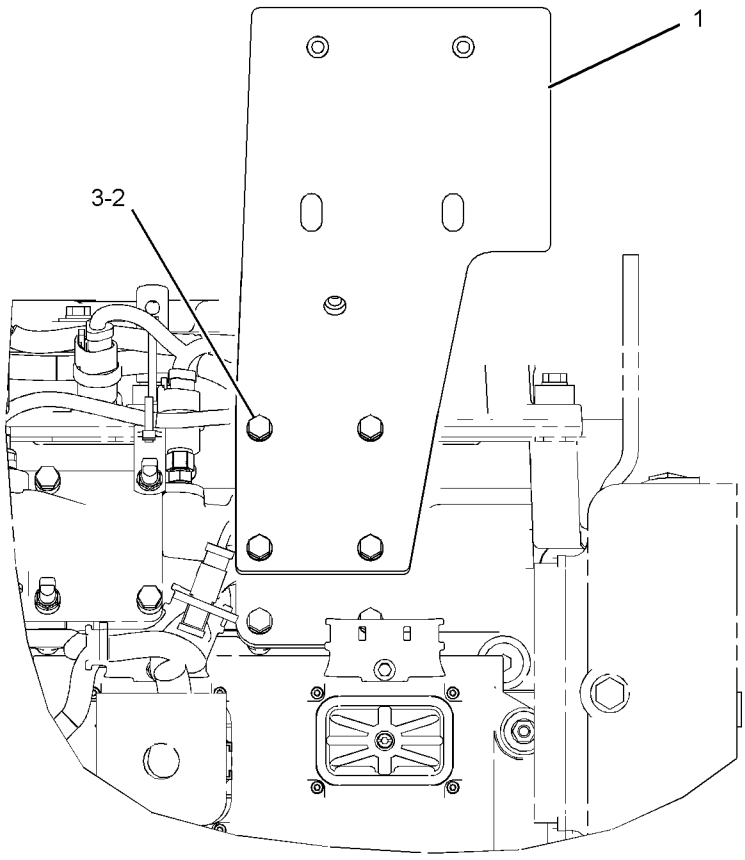

LEFT SIDE VIEW

GRAPHIC #1 **<END>** g01148885

190-1105 PUMP GP-FUEL PRM & PRIM FILTER

S/N: B9M1-UP

PART OF 246-6706 LINES GP-FUEL FILTER

SMCS-1258, 1260, 1261 **i02188669**

NOTE	REF NO	GRAPHIC REF	PART NUMBER	QTY	PART NAME 1 2 3 4 5 6 (PRODUCT LEVEL)	SEE PAGE
	1	1	**8T-9655**	6	MOUNT-ISOLATION	
Y	2	1	**256-6915**	1	PUMP GP-FUEL TRANSFER	90
	3	1	**191-1782**	1	SPACER (8.5X12.7X38.2-MM THK)	
	4	1	**191-1783**	2	SPACER (8.5X12.7X87.3-MM THK)	
M	5	1	**7X-2539**	2	BOLT (M8X1.25X110-MM)	
M	6	1	**8T-6869**	1	BOLT (M8X1.25X60-MM)	
	7	1	**9N-0869**	6	WASHER-HARD (8.8X25.5X2-MM THK)	

M-METRIC PART
Y-SEPARATE ILLUSTRATION

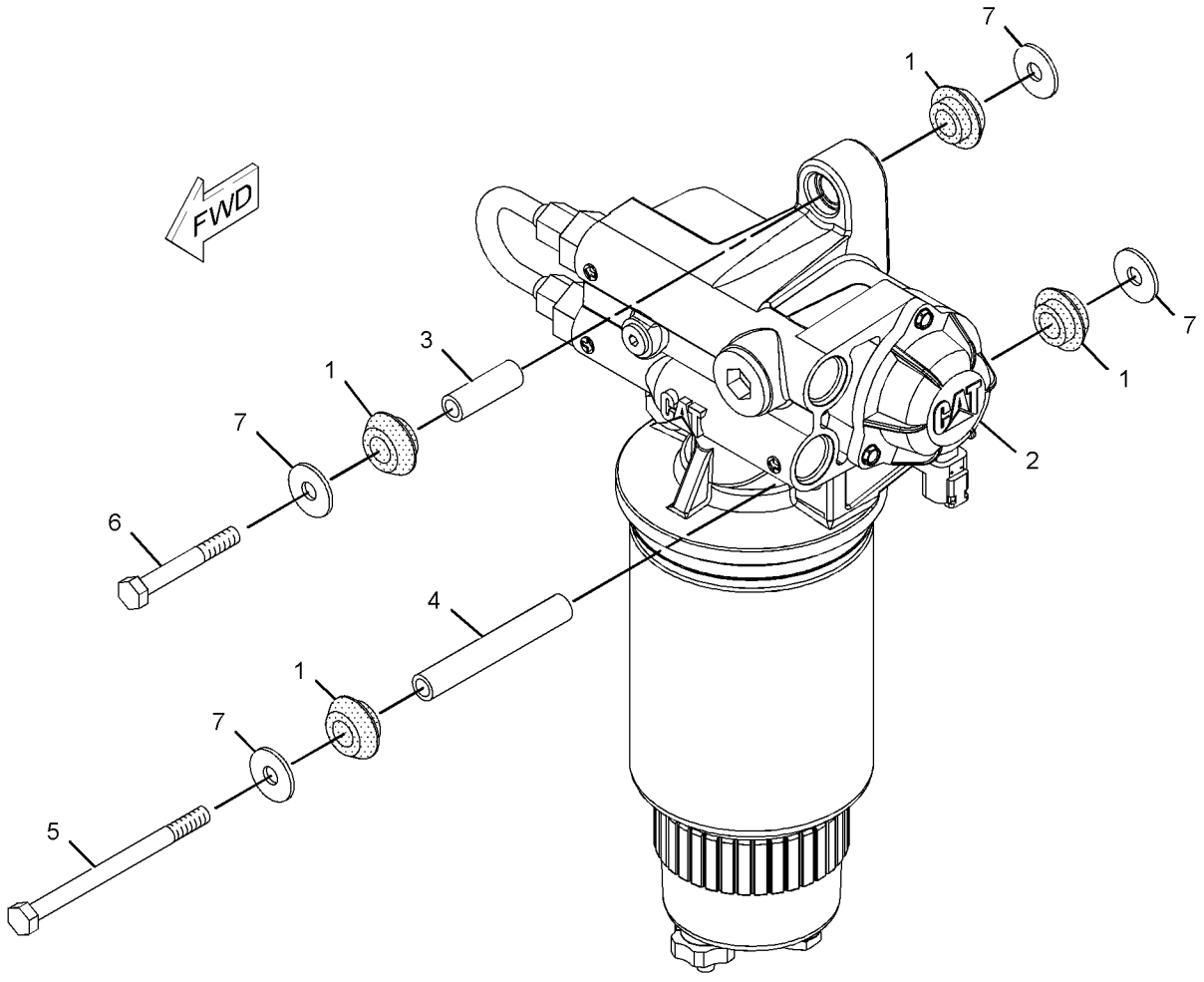

GRAPHIC #1 **<END>** g01107461

FUEL SYSTEM

256-6915 PUMP GP-FUEL TRANSFER

S/N: B9M1-UP

PART OF 190-1105 PUMP GP-FUEL PRM & PRIM FILTER

SMCS-1256 **i02348722**

NOTE	REF NO	GRAPHIC REF	PART NUMBER	QTY	PART NAME 1 2 3 4 5 6 (PRODUCT LEVEL)	SEE PAGE
Y	1	1	**235-8725**	1	PUMP GP-FUEL TRANSFER & FILTER (PRIMARY)	91
	2	1	**209-9234**	1	REGULATOR-PRESSURE (FUEL TRANSFER PUMP)	
	3	1	**211-7730**	1	TUBE AS	
	4	1	**030-8194**	1	CONNECTOR	
	5	1	**136-7227**	2	SEAL-O-RING	

Y-SEPARATE ILLUSTRATION

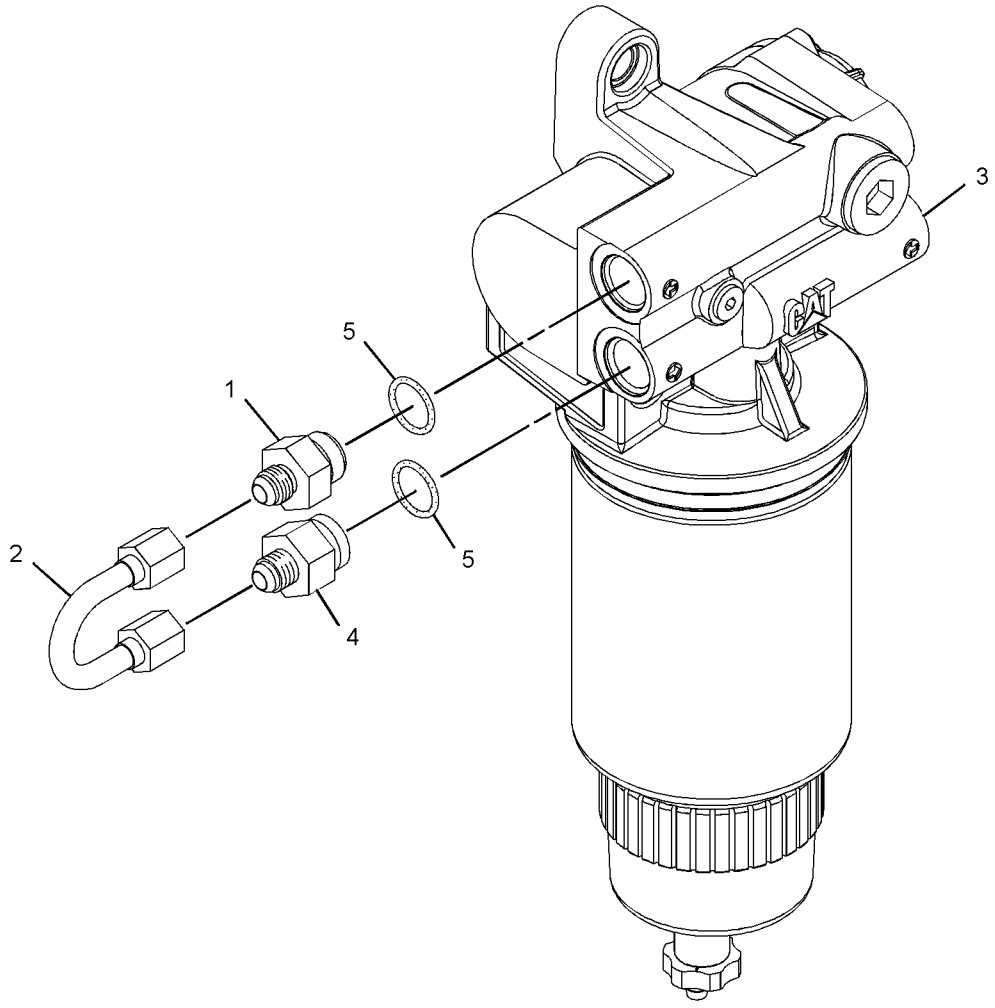

GRAPHIC #1 **<END>** g01107464

235-8725 PUMP GP-FUEL TRANSFER & FILTER–PRIMARY

S/N: B9M1-UP

PART OF 256-6915 PUMP GP-FUEL TRANSFER

SMCS-1256, 1260, 1261 **i02188717**

NOTE	REF NO	GRAPHIC REF	PART NUMBER	QTY	PART NAME 1 2 3 4 5 6 (PRODUCT LEVEL)	SEE PAGE
Y	1	1	*174-9570*	1	FILTER GP-WATER SEP & FUEL (PRIMARY)	83
	2	1	**235-8724**	1	BASE AS-FUEL TRANSFER PUMP	

Y-SEPARATE ILLUSTRATION

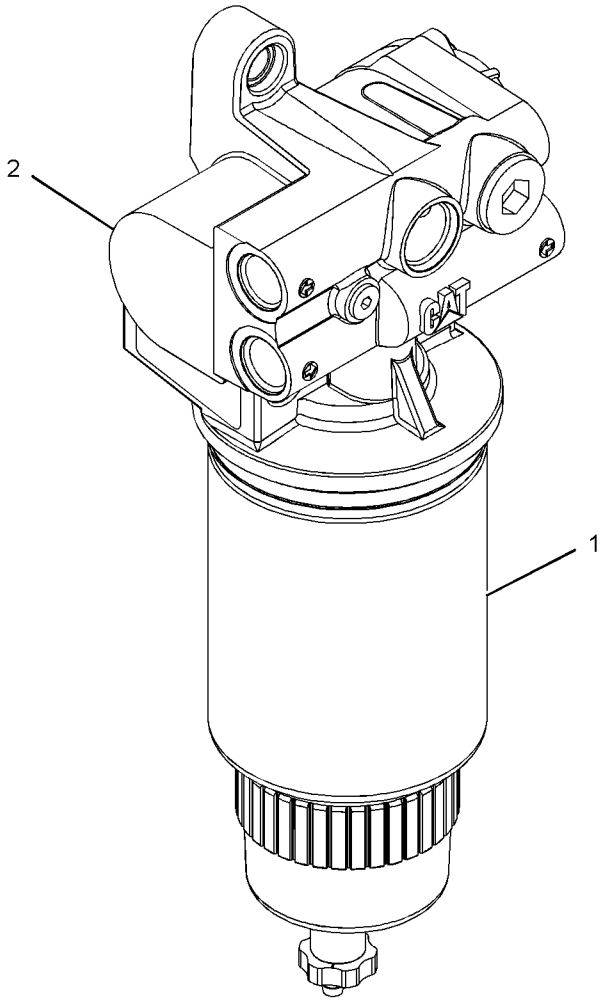

GRAPHIC #1 **<END>** g01107471

232-0343 REGULATOR GP-FUEL PRESSURE

S/N: KHX1-UP

PART OF 250-8314 LINES GP-FUEL

SMCS-1715 **i02288771**

NOTE	REF NO	GRAPHIC REF	PART NUMBER	QTY	PART NAME 1 2 3 4 5 6 (PRODUCT LEVEL)	SEE PAGE
	1	1	**6V-5049**	1	SEAL-O-RING	
	2	1	**229-8870**	1	REGULATOR AS (FUEL PRESSURE)	

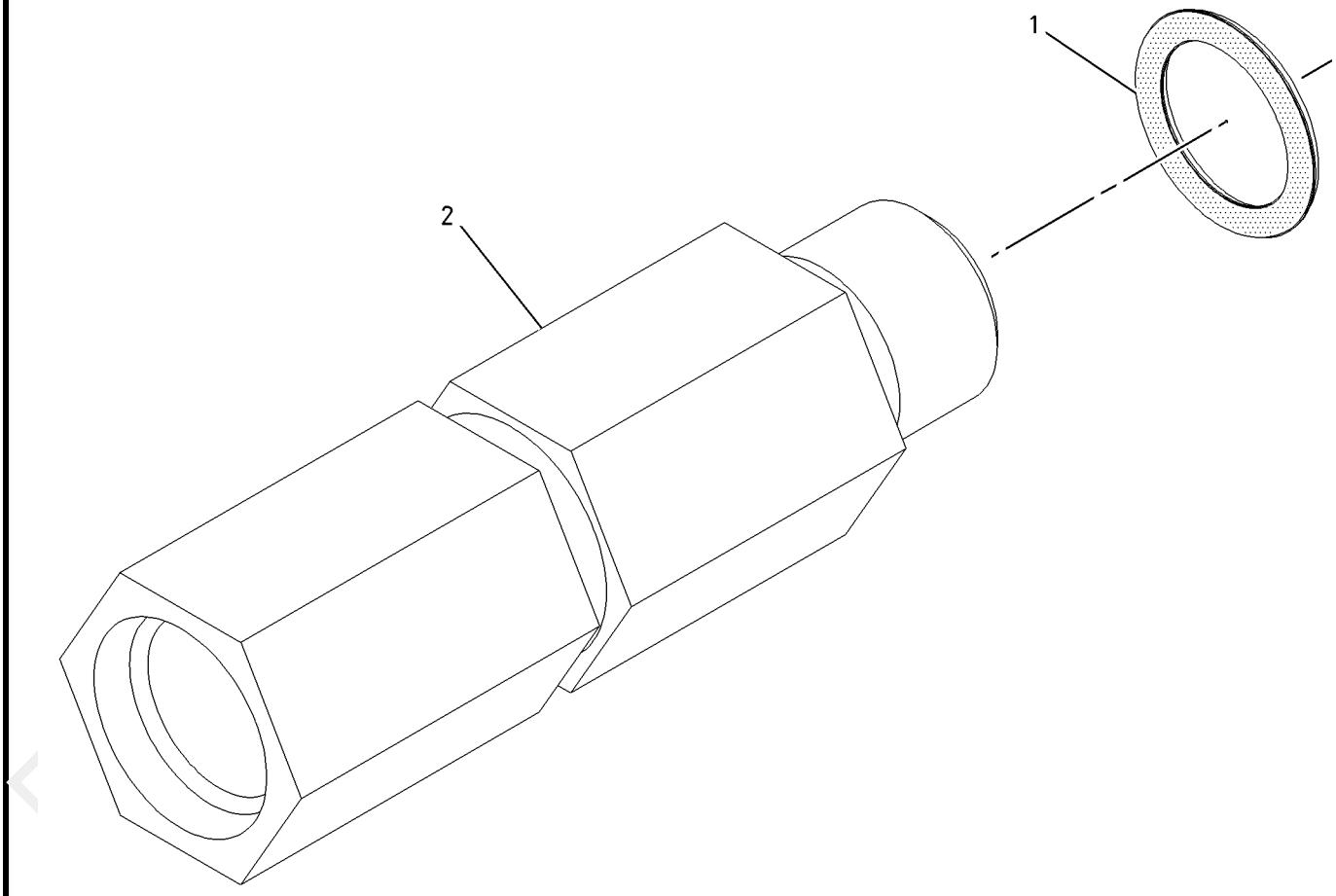

GRAPHIC #1 **<END>** g01004480

FUEL SYSTEM

270-6987 TANK GP-FUEL

S/N: B9M1-UP
AN ATTACHMENT

SMCS-1273 **i02348724**

NOTE	REF NO	GRAPHIC REF	PART NUMBER	QTY	PART NAME 1 2 3 4 5 6 (PRODUCT LEVEL)	SEE PAGE
	1	1	**5P-4961**	4	CLAMP-HOSE	
	2	1	**7X-7700**	1	CAP AS-FILLER (FUEL TANK)	
		1	**9X-2205**	1	KIT-CAP FILTER (FUEL TANK)	
					(INCLUDES FILTER AS, SCREWS, GASKETS & VALVE)	
		1	**9X-8600**	1	SEAL-O-RING	
	3	1	**199-9907**	1	STRAINER-FUEL	
	4	1	**208-0800**	1	GASKET	
Y	5	1	**241-9585**	1	ADAPTER GP-FAST FILL FUEL	78
	6	1	**248-4765**	1	TANK AS-FUEL	
		1	**2T-1925**	1	ELBOW	
		1	**7M-8485**	1	SEAL-O-RING	
		1	**8C-5053**	1	ADAPTER	
		1	**9M-7958**	1	CLAMP-HOSE	
		1	**9S-4181**	1	PLUG	
		1	**216-0906**	1	PLUG AS	
		1	**3J-1907**	1	SEAL-O-RING	
		1	**250-9305**	1	BUSHING	
	7	1	**250-9301**	4	GROMMET	
	8	1	**250-9302**	4	ELBOW	
	9	1	**258-8675**	1	TANK AS-FUEL (LH)	
		1	**8C-6868**	1	CONNECTOR	
		1	**9M-7958**	1	CLAMP-HOSE	
	10	1	**258-8676**	1	TANK AS-FUEL (RH)	
	11	1	**103-2006**	1	SCREW-PAN HEAD (6-19XO.37-IN)	
	12	1	**194-6523**	1	ADAPTER	
	13	1	**269-1021**	1	SENDER AS-FUEL	
		1	**138-0444**	1	KIT-REPAIR (FUEL LEVEL SENSOR)	
					(INCLUDES SENSOR AS & SCREWS)	
	14	1	**4B-4863**	6	WASHER (4.7X11X1.2-MM THK)	
M	15	1	**8T-9405**	6	BOLT-SOCKET HEAD (M4XO.7X16-MM)	
E	16	1	**5P-1442**		HOSE (1OO-CM)	

E-ORDER BY THE CENTIMETER
M-METRIC PART
Y-SEPARATE ILLUSTRATION

PROOF

270-6987 **TANK GP-FUEL** *(contd.)* **i02348724**

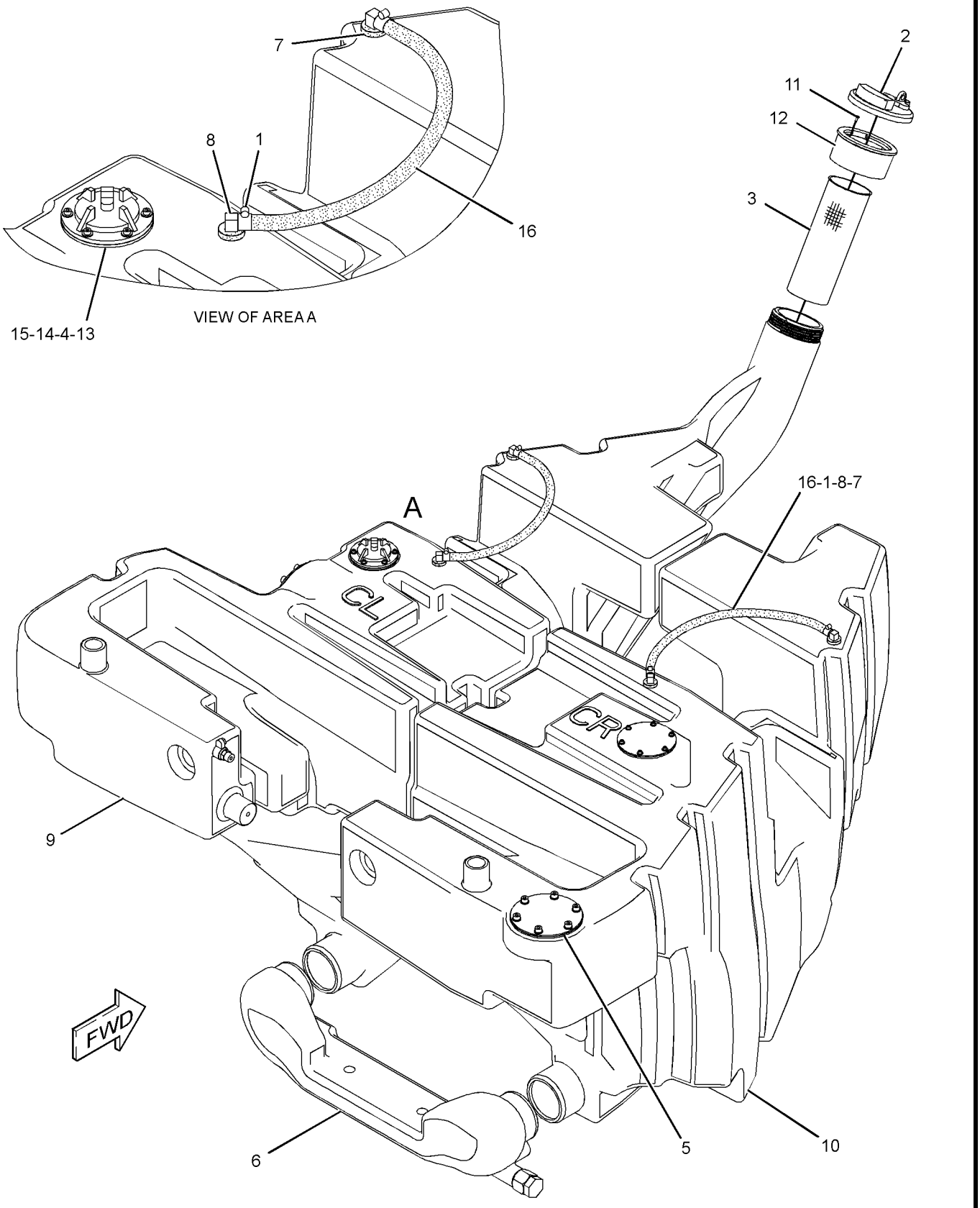

GRAPHIC #1 **<END>** g01162946

FUEL SYSTEM

270-6988 TANK GP-FUEL

S/N: B9M1-UP
AN ATTACHMENT

SMCS-1273 **i02296719**

NOTE	REF NO	GRAPHIC REF	PART NUMBER	QTY	PART NAME 1 2 3 4 5 6 (PRODUCT LEVEL)	SEE PAGE
	1	1	**5P-4961**	4	CLAMP-HOSE	
	2	1	**7X-7700**	1	CAP AS-FILLER (FUEL TANK)	
		1	**9X-2205**	1	KIT-CAP FILTER (FUEL TANK)	
					(KIT INCLUDES FILTER AS, SCREWS, GASKETS & VALVE)	
		1	**9X-8600**	1	SEAL-O-RING	
	3	1	**199-9907**	1	STRAINER-FUEL	
	4	1	**208-0800**	1	GASKET	
Y	5	1	**241-9584**	1	ADAPTER GP-FAST FILL FUEL	76
	6	1	**248-4765**	1	TANK AS-FUEL	
		1	**2T-1925**	1	ELBOW	
		1	**7M-8485**	1	SEAL-O-RING	
		1	**8C-5053**	1	ADAPTER	
		1	**9M-7958**	1	CLAMP-HOSE	
		1	**9S-4181**	1	PLUG	
		1	**216-0906**	1	PLUG AS	
		1	**3J-1907**	1	SEAL-O-RING	
		1	**250-9305**	1	BUSHING	
	7	1	**250-9301**	4	GROMMET	
	8	1	**250-9302**	4	ELBOW	
	9	1	**258-8675**	1	TANK AS-FUEL (LH)	
		1	**8C-6868**	1	CONNECTOR	
		1	**9M-7958**	1	CLAMP-HOSE	
	10	1	**258-8676**	1	TANK AS-FUEL (RH)	
	11	1	**103-2006**	1	SCREW-PAN HEAD (6-19XO.37-IN)	
	12	1	**194-6523**	1	ADAPTER	
	13	1	**269-1021**	1	SENDER AS-FUEL	
		1	**138-0444**	1	KIT-REPAIR (FUEL LEVEL SENSOR)	
					(KIT INCLUDES SENSOR AS & SCREWS)	
	14	1	**4B-4863**	6	WASHER (4.7X11X1.2-MM THK)	
M	15	1	**8T-9405**	6	BOLT-SOCKET HEAD (M4XO.7X16-MM)	
E	16	1	**5P-1442**		HOSE (100-CM)	

E-ORDER BY THE CENTIMETER
M-METRIC PART
Y-SEPARATE ILLUSTRATION

PROOF

270-6988 **TANK GP-FUEL** *(contd.)* **i02296719**

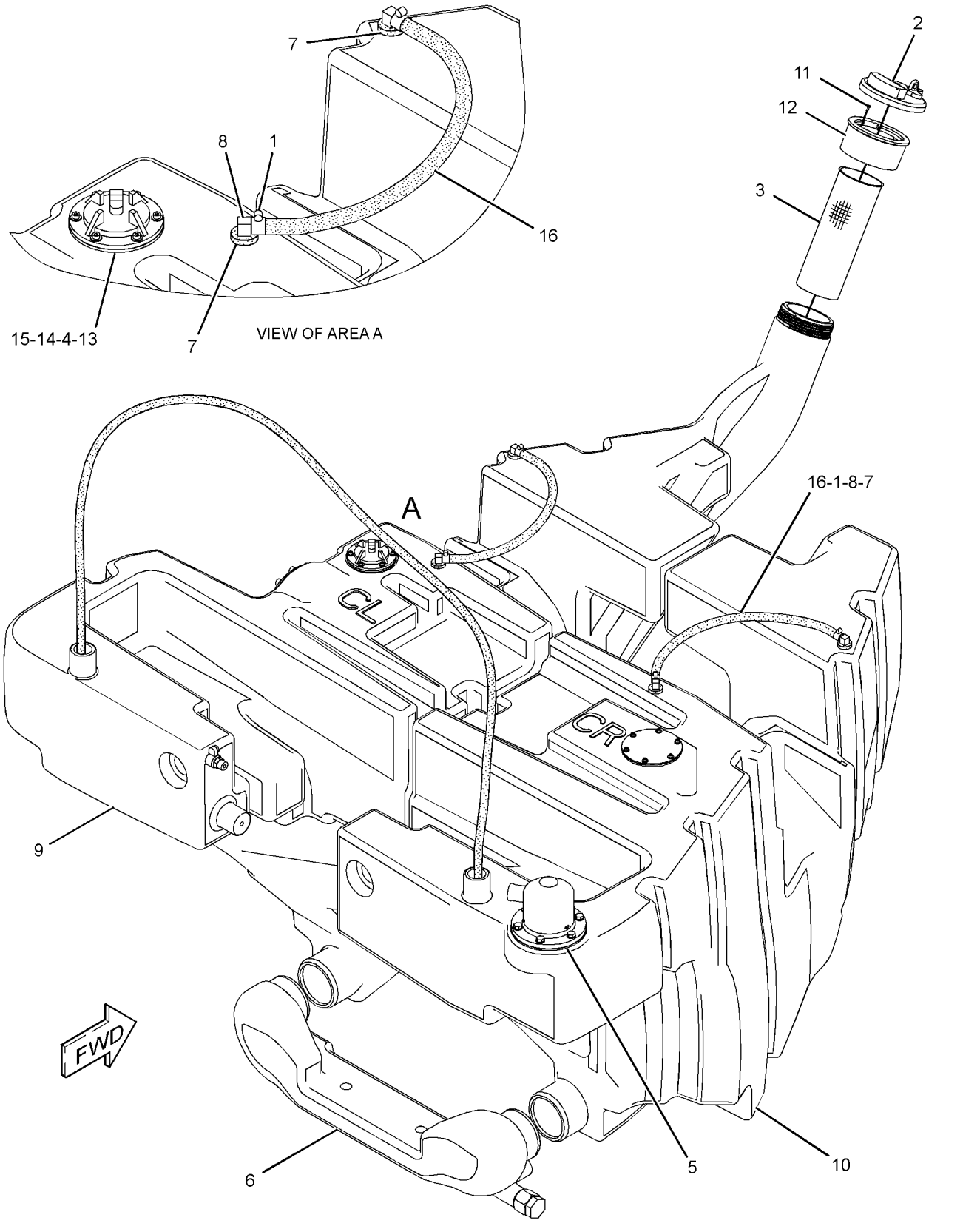

GRAPHIC #1 **<END>** g01163001

233-6742 VALVE GP-CHECK–FUEL

S/N: KHX1-UP

PART OF 250-8313 FILTER GP-FUEL

SMCS-1250, 1274 **i02274525**

NOTE	REF NO	GRAPHIC REF	PART NUMBER	QTY	PART NAME 1 2 3 4 5 6 (PRODUCT LEVEL)	SEE PAGE
Y	1	1	**238-0296**	1	VALVE GP-CHECK (FUEL)	98
	2	1	**6V-4589**	1	SEAL-O-RING	

Y-SEPARATE ILLUSTRATION

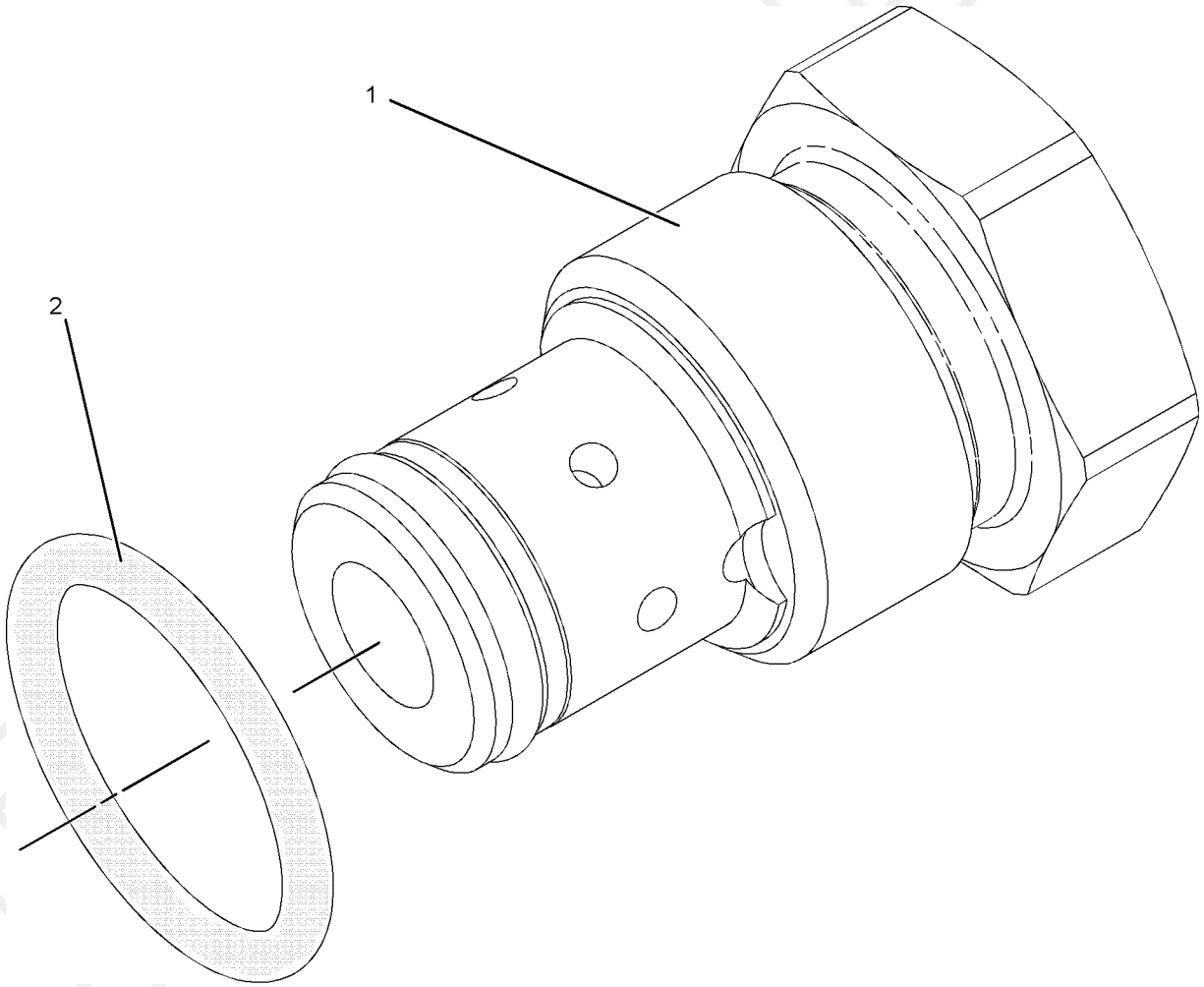

GRAPHIC #1 **<END>** g01031823

238-0296 VALVE GP-CHECK–FUEL

S/N: KHX1-UP

PART OF 233-6742 VALVE GP-CHECK

SMCS-1250, 1274 **i02140024**

NOTE	REF NO	GRAPHIC REF	PART NUMBER	QTY	PART NAME 1 2 3 4 5 6 (PRODUCT LEVEL)	SEE PAGE
	1	1	**6V-6923**	1	RING-BACKUP	
	2	1	**033-6033**	1	SEAL-O-RING	

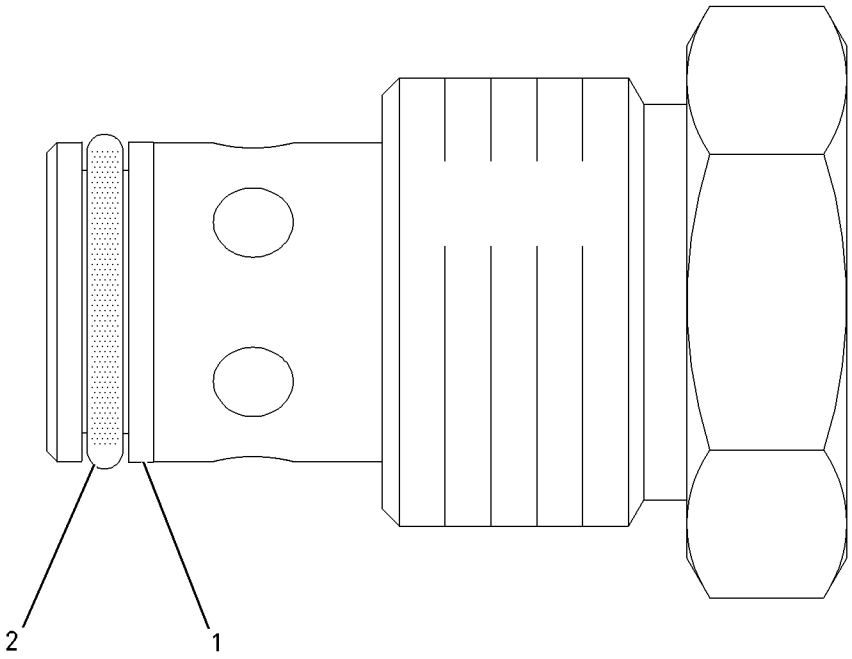

GRAPHIC #1 **<END>** g00864141

3E-6328 ALARM GP

S/N: B9M1-UP
24-VOLT
PART OF 233-3114 WIRING GP-CAB

SMCS-7400, 7402, 7407 **i02160203**

NOTE	REF NO	GRAPHIC REF	PART NUMBER	QTY	PART NAME 1 2 3 4 5 6 (PRODUCT LEVEL)	SEE PAGE
	1	1	**102-8802**	1	KIT-RECEPTACLE (2-PIN)	
					(INCLUDES RECEPTACLE AS & WEDGE)	
	2	1	**186-3735**	2	PIN-CONNECTOR	
	3	1	**3E-3365**	1	WEDGE-RECEPTACLE LOCK (2-PIN)	

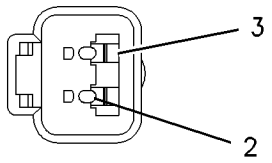

VIEW A–A

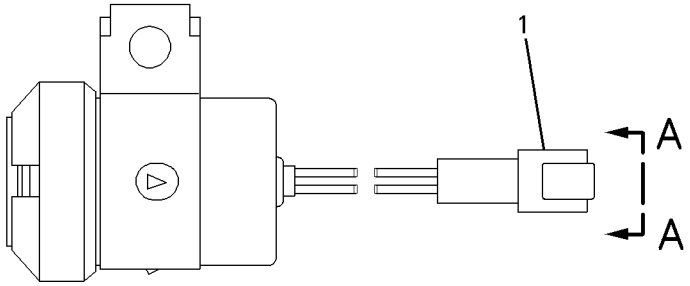

GRAPHIC #1 **<END>** g00826023

ELECTRICAL AND STARTING SYSTEM

177-9953 ALTERNATOR GP-CHARGING*R

S/N: B9M1-UP
24-VOLT, 80-AMPERE
PART OF 246-6701, 253-2723 ALTERNATOR GP-CHARGING
AN ATTACHMENT

SMCS-1405 **i02298927**

NOTE	REF NO	GRAPHIC REF	PART NUMBER	QTY	PART NAME 1 2 3 4 5 6 (PRODUCT LEVEL)	SEE PAGE
	1	1	**185-2653**	1	FRAME	
	2	1	**5S-7349**	1	BOLT (1/4-20X0.5-IN)	
	3	1	**185-2639**	1	FAN AS	
	4	1	**1H-3244**	1	LOCKWASHER	
	5	1	**185-2645**	1	FRAME	
	6	1	**2K-4821**	1	LOCKNUT (5/8-18-THD)	
	7	1	**5P-8247**	1	WASHER-HARD (17X32X3.5-MM THK)	
	8	1	**185-2651**	1	COVER	
	9	1	**8T-4205**	1	WASHER-HARD (7.2X14.5X2-MM THK)	
	10	1	**185-2647**	1	GROMMET	
	11	1	**9L-6770**	1	CAP	
	12	1	**185-2643**	1	STATOR AS	
	13	1	**185-2638**	2	COLLAR	
	14	1	**185-2654**	1	PLATE	
	15	1	**185-2650**	1	ROTOR AS	
	16	1	**185-2644**	1	COIL AS	
	17	1	**185-2648**	1	REGULATOR AS-VOLTAGE (24-VOLT) (ALTERNATOR)	
J	18	1	**6V-8189**	1	NUT (5/16-18-THD)	
J	19	1	**8T-4224**	1	WASHER-HARD (8.8X16X2-MM THK)	
J	20	1	**3F-9556**	1	LOCKWASHER	
					AVAILABLE REPAIR KIT(S):	
J			**199-7891**		KIT-TERMINAL (ALTERNATOR)	
					(INCLUDES INSULATORS, WASHERS, NUT, AND STEP NUT)	
			185-2655		KIT-BEARING (ALTERNATOR)	
					(INCLUDES 3 BEARINGS)	
			199-8436		KIT-TERMINAL (ALTERNATOR)	
					(INCLUDES HOLDER AS, PLATE, INSULATOR, PIN, BOLT, GROMMET, AND NUT)	
			185-2658		KIT-HARDWARE (ALTERNATOR)	
					(INCLUDES BOLTS)	

J-KIT MARKED J SERVICES PARTS MARKED J

PROOF

177-9953 ALTERNATOR GP-CHARGING *(contd.)* **i02298927**

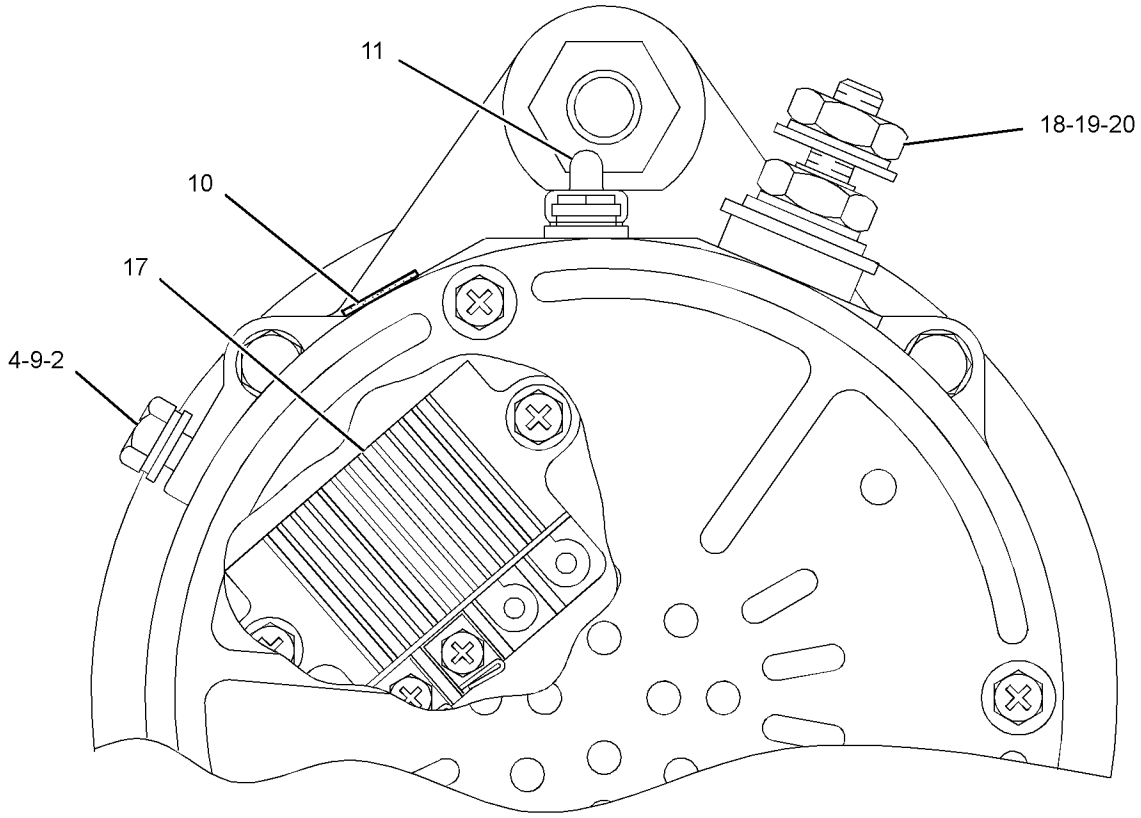

GRAPHIC #1

<END>

g01151601

197-8820 ALTERNATOR GP-CHARGING*R

S/N: B9M1-UP
24-VOLT, 95-AMPERE
PART OF 246-6715, 253-2724 ALTERNATOR GP-CHARGING
AN ATTACHMENT

SMCS-1405 **i02197631**

NOTE	REF NO	GRAPHIC REF	PART NUMBER	QTY	PART NAME 1 2 3 4 5 6 (PRODUCT LEVEL)	SEE PAGE
	1	1	**185-2653**	1	FRAME	
	2	1	**5S-7349**	1	BOLT (1/4-20X0.5-IN)	
	3	1	**185-2639**	1	FAN AS	
	4	1	**1H-3244**	1	LOCKWASHER	
	5	1	**185-2645**	1	FRAME	
	6	1	**2K-4821**	1	LOCKNUT (5/8-18-THD)	
	7	1	**5P-8247**	1	WASHER-HARD (17X32X3.5-MM THK)	
	8	1	**185-2651**	1	COVER	
	9	1	**8T-4205**	1	WASHER-HARD (7.2X14.5X2-MM THK)	
	10	1	**185-2647**	1	GROMMET	
	11	1	**9L-6770**	1	CAP	
	12	1	**205-0626**	1	STATOR AS-ALTERNATOR	
	13	1	**185-2638**	2	COLLAR	
	14	1	**185-2654**	1	PLATE	
	15	1	**185-2650**	1	ROTOR AS	
	16	1	**185-2644**	1	COIL AS	
	17	1	**185-2648**	1	REGULATOR AS-VOLTAGE (24-VOLT) (ALTERNATOR)	
	18	1	**6V-8189**	1	NUT (5/16-18-THD)	
	19	1	**8T-4224**	1	WASHER-HARD (8.8X16X2-MM THK)	
	20	1	**3F-9556**	1	LOCKWASHER	
					AVAILABLE REPAIR KIT(S):	
			185-2655	1	KIT-BEARING (ALTERNATOR)	
					(INCLUDES 2 BEARINGS)	
			199-8436	1	KIT-TERMINAL (ALTERNATOR)	
					(INCLUDES HOLDER AS, PLATE, INSULATOR, PIN, BOLTS, GROMMET, AND NUT)	
			199-7891	1	KIT-TERMINAL (ALTERNATOR)	
					(INCLUDES INSULATORS, WASHERS, AND NUTS)	
			185-2658	1	KIT-HARDWARE (ALTERNATOR)	
					(INCLUDES BOLTS)	

PROOF

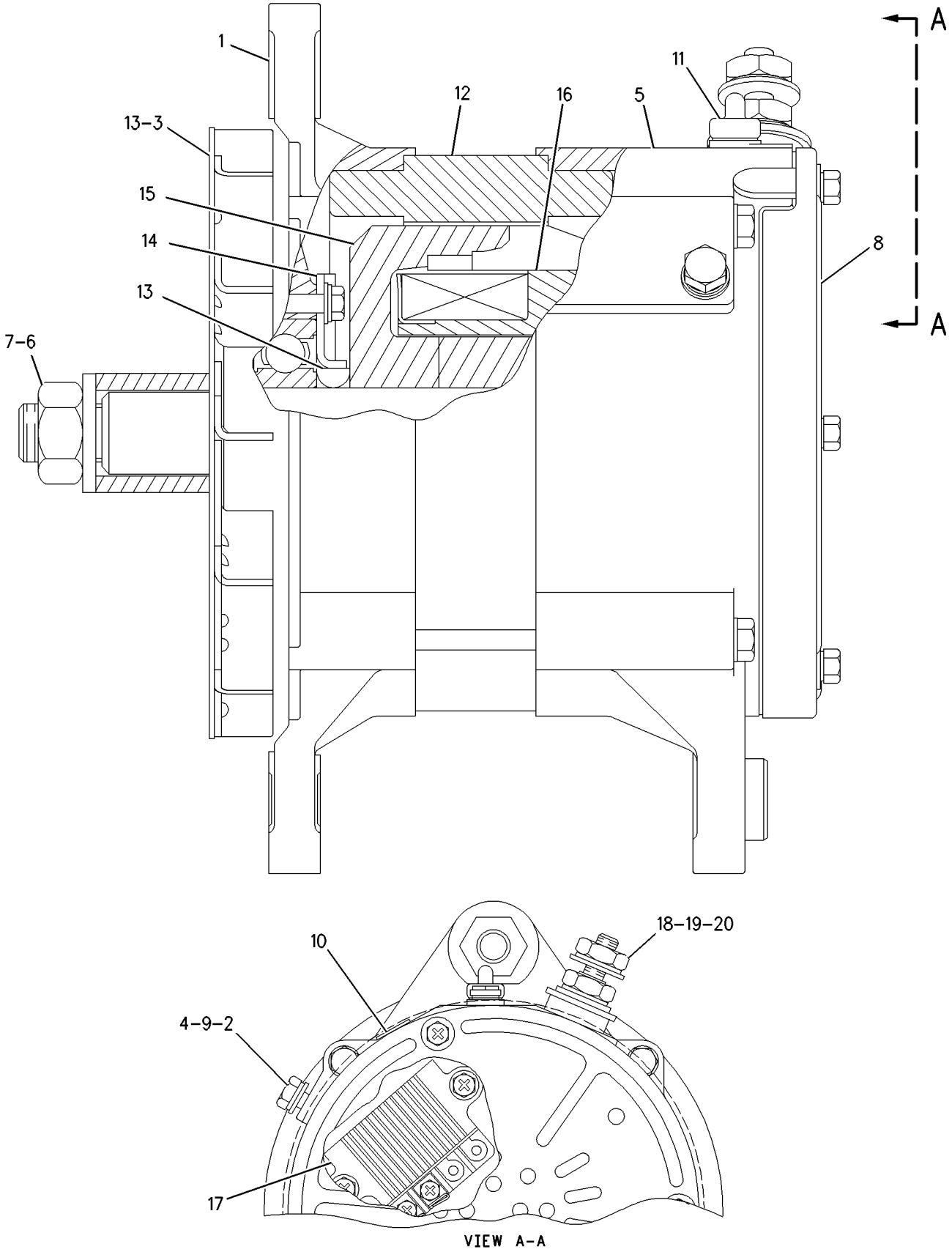

GRAPHIC #1 **<END>** g00873198

ELECTRICAL AND STARTING SYSTEM

246-6701 ALTERNATOR GP-CHARGING

S/N: B9M1-UP
80 AMPERE
AN ATTACHMENT

SMCS-1405 **i02288654**

NOTE	REF NO	GRAPHIC REF	PART NUMBER	QTY	PART NAME 1 2 3 4 5 6 (PRODUCT LEVEL)	SEE PAGE
	1	1	**7E-3443**	1	BUSHING-TERMINAL	
	2	1	**7W-3872**	2	SLEEVE	
	3	1	**123-0790**	1	PULLEY (8-GROOVE)	
	4	1	**124-7792**	1	PULLEY AS-IDLER	
	5	1	**126-8237**	1	SUPPORT-COMPRESSOR	
	6	1	**126-8240**	1	SUPPORT-ALTERNATOR	
	7	1	**131-2182**	1	SUPPORT-ALTERNATOR	
Y	8	1	**175-3223**	1	PULLEY GP-IDLER (8-GROOVE)	28
M		1	**124-7790**	1	BOLT-SPECIAL (M10X1.5X40-MM)	
		1	**124-7791**	1	COVER-DUST	
		1	**124-7792**	1	PULLEY AS-IDLER	
		1	**145-2901**	1	COVER-DUST	
	9	1	**175-3225**	1	BRACKET-PULLEY	
YR	10	1	**177-9953**	1	ALTERNATOR GP-CHARGING (24-VOLT, 80-AMPERE)	100
	11	1	**263-1786**	1	SPACER	
	12	1	**263-8527**	1	BELT-SERPENTINE	
	13	1	**264-6870**	1	BRACKET AS	
M		1	**8T-3490**	3	NUT-WELD (M10X1.5-THD)	
	14	1	**264-7021**	1	GUARD-BELT	
	15	1	**266-7531**	1	PLATE	
	16	1	**268-5817**	1	FILM-INSTRUCTION (BELT ROUTING)	
	17	1	**227-6715**	2	STUD (M10X1.5-THD)	
	18	1	**6V-8188**	1	NUT (1/2-13-THD)	
	19	1	**7X-0338**	1	BOLT (1/2-13X6-IN)	
M	20	1	**7X-2537**	4	BOLT (M8X1.25X35-MM)	
	21	1	**8T-4121**	18	WASHER-HARD (11X21X2.5-MM THK)	
M	22	1	**8T-4133**	4	NUT (M10X1.5-THD)	
M	23	1	**8T-4185**	2	BOLT (M10X1.5X50-MM)	
M	24	1	**8T-4186**	4	BOLT (M10X1.5X40-MM)	
M	25	1	**8T-4195**	2	BOLT (M10X1.5X30-MM)	
	26	1	**8T-4223**	3	WASHER-HARD (13.5X25.5X3-MM THK)	
	27	1	**8T-4224**	4	WASHER-HARD (8.8X16X2-MM THK)	
	28	1	**8T-4835**	1	BOLT (1/2-13X2-IN)	
M	29	1	**8T-5005**	1	BOLT (M10X1.5X70-MM)	
M	30	1	**8T-6466**	1	BOLT (M10X1.5X60-MM)	

M-METRIC PART
R-REMFG PART MAY BE AVAILABLE
Y-SEPARATE ILLUSTRATION

PROOF

246-6701 **ALTERNATOR GP-CHARGING** *(contd.)* **i02288654**

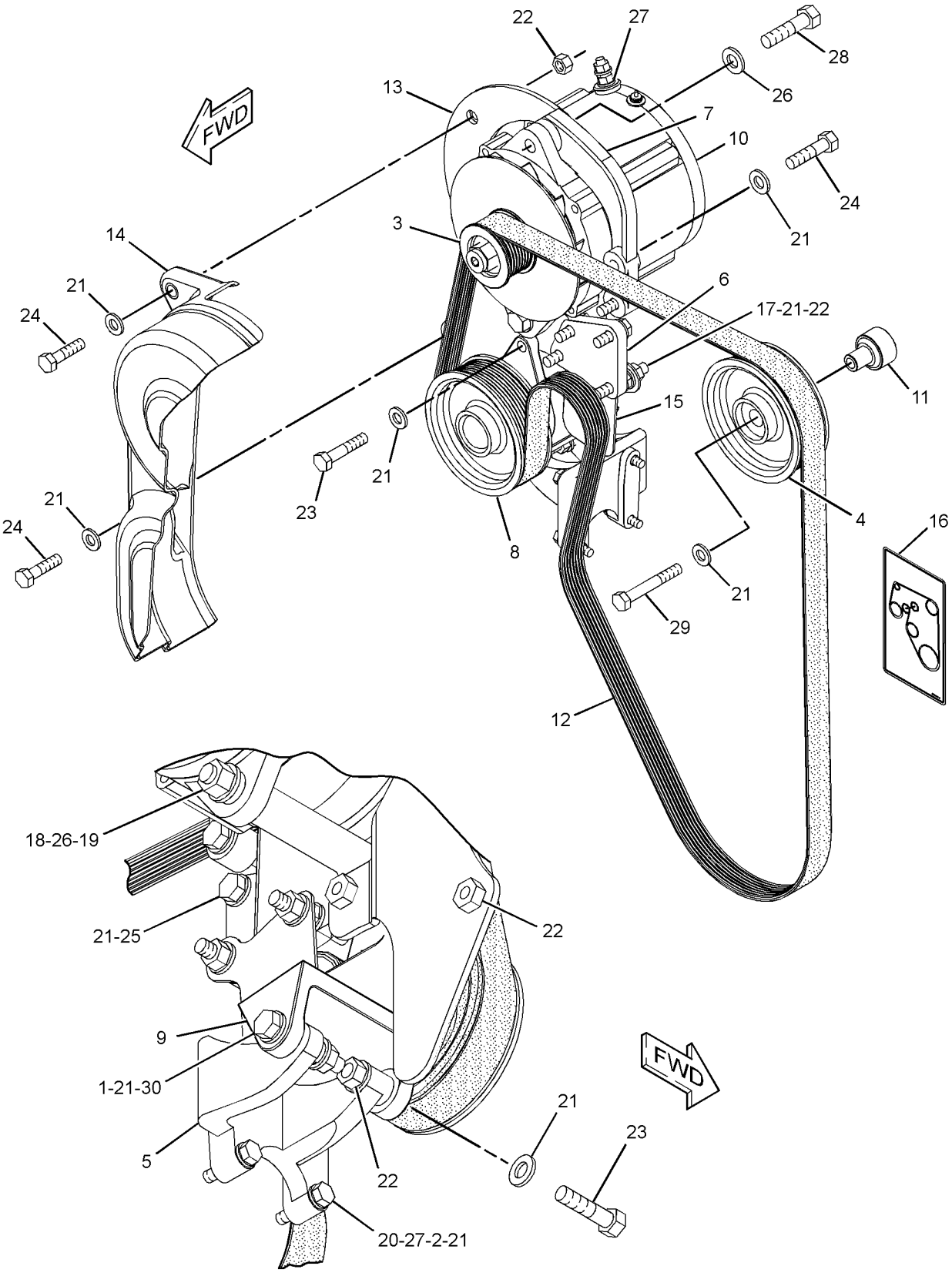

GRAPHIC #1 **<END>** g01157430

ELECTRICAL AND STARTING SYSTEM

246-6715 ALTERNATOR GP-CHARGING

S/N: B9M1-UP
AN ATTACHMENT

SMCS-1405 **i02288712**

NOTE	REF NO	GRAPHIC REF	PART NUMBER	QTY	PART NAME 1 2 3 4 5 6 (PRODUCT LEVEL)	SEE PAGE
	1	1	**7E-3443**	1	BUSHING-TERMINAL	
	2	1	**7W-3872**	2	SLEEVE	
	3	1	**123-0790**	1	PULLEY (8-GROOVE)	
	4	1	**124-7792**	1	PULLEY AS-IDLER	
	5	1	**126-8237**	1	SUPPORT-COMPRESSOR	
	6	1	**126-8240**	1	SUPPORT-ALTERNATOR	
	7	1	**131-2182**	1	SUPPORT-ALTERNATOR	
Y	8	1	**175-3223**	1	PULLEY GP-IDLER (8-GROOVE)	28
M		1	**124-7790**	1	BOLT-SPECIAL (M10X1.5X40-MM)	
		1	**124-7791**	1	COVER-DUST	
		1	**124-7792**	1	PULLEY AS-IDLER	
		1	**145-2901**	1	COVER-DUST	
	9	1	**175-3225**	1	BRACKET-PULLEY	
YR	10	1	**197-8820**	1	ALTERNATOR GP-CHARGING (24-VOLT, 95-AMPERE)	102
	11	1	**263-1786**	1	SPACER	
	12	1	**263-8527**	1	BELT-SERPENTINE (ALTERNATOR)	
	13	1	**264-6870**	1	BRACKET AS	
M		1	**8T-3490**	3	NUT-WELD (M10X1.5-THD)	
	14	1	**264-7021**	1	GUARD-BELT	
		1	**8R-8088**	2	SPACER (11.66X15.88X18-MM THK)	
	15	1	**266-7531**	1	PLATE	
	16	1	**268-5817**	1	FILM-INSTRUCTION (BELT ROUTING)	
	17	1	**227-6715**	2	STUD (M10X1.5-THD)	
	18	1	**6V-8188**	1	NUT (1/2-13-THD)	
	19	1	**7X-0338**	1	BOLT (1/2-13X6-IN)	
M	20	1	**7X-2537**	4	BOLT (M8X1.25X35-MM)	
	21	1	**8T-4121**	18	WASHER-HARD (11X21X2.5-MM THK)	
M	22	1	**8T-4133**	4	NUT (M10X1.5-THD)	
M	23	1	**8T-4185**	2	BOLT (M10X1.5X50-MM)	
M	24	1	**8T-4186**	4	BOLT (M10X1.5X40-MM)	
M	25	1	**8T-4195**	2	BOLT (M10X1.5X30-MM)	
	26	1	**8T-4223**	3	WASHER-HARD (13.5X25.5X3-MM THK)	
	27	1	**8T-4224**	4	WASHER-HARD (8.8X16X2-MM THK)	
	28	1	**8T-4835**	1	BOLT (1/2-13X2-IN)	
M	29	1	**8T-5005**	1	BOLT (M10X1.5X70-MM)	
M	30	1	**8T-6466**	1	BOLT (M10X1.5X60-MM)	

M-METRIC PART
R-REMFG PART MAY BE AVAILABLE
Y-SEPARATE ILLUSTRATION

PROOF

246-6715 **ALTERNATOR GP-CHARGING** *(contd.)* **i02288712**

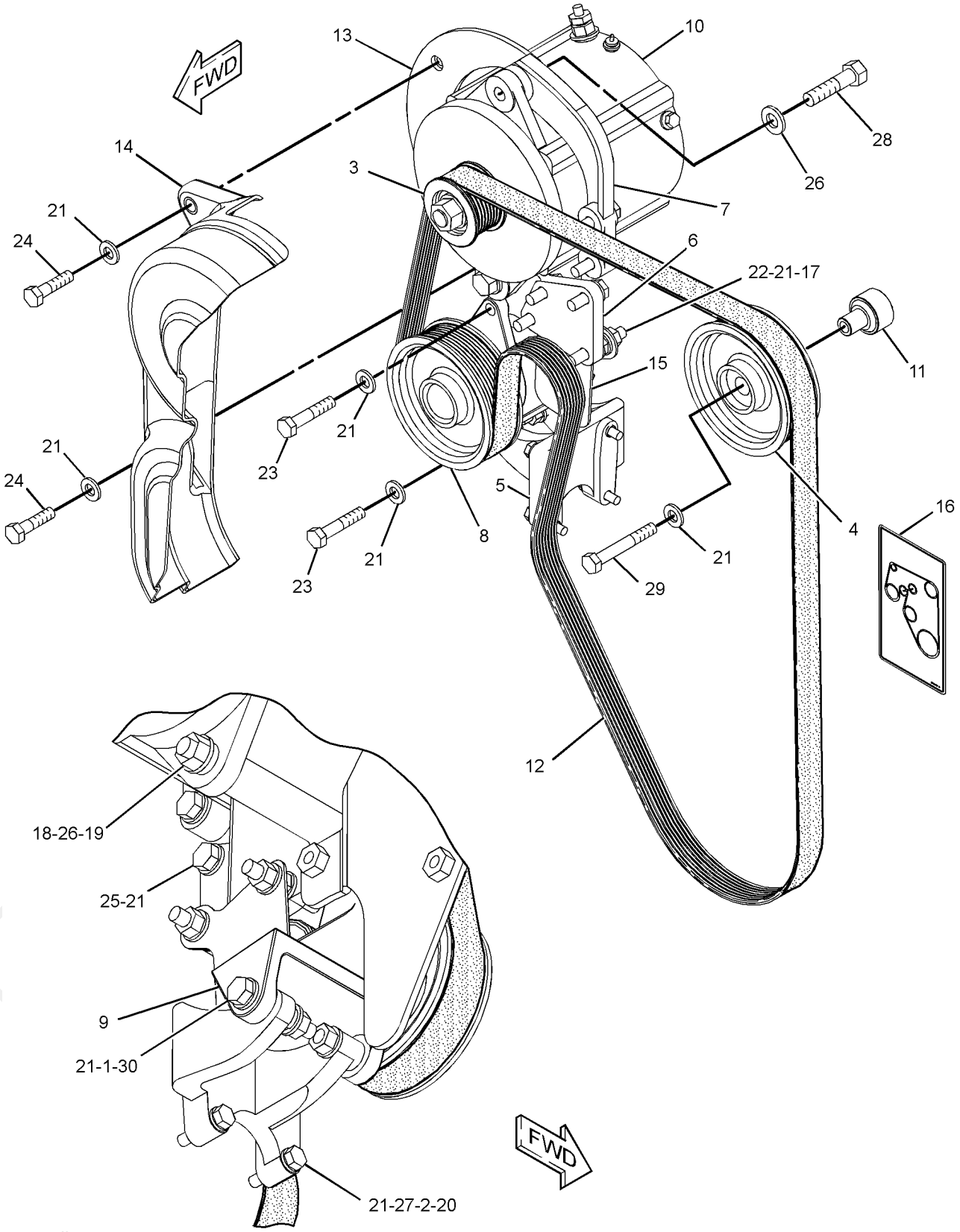

GRAPHIC #1 **<END>** g01152188

ELECTRICAL AND STARTING SYSTEM

253-2723 ALTERNATOR GP-CHARGING

S/N: B9M1-UP
80-AMPERE
FOR USE WITH AIR CONDITIONING
AN ATTACHMENT

SMCS-1405 **i02289411**

NOTE	REF NO	GRAPHIC REF	PART NUMBER	QTY	PART NAME 1 2 3 4 5 6 (PRODUCT LEVEL)	SEE PAGE
	1	1	**123-0790**	1	PULLEY (8-GROOVE)	
	2	1	**124-7792**	1	PULLEY AS-IDLER	
Y	3	1	*169-3130*	1	MOUNTING GP-ALTERNATOR	20
YR	4	1	**177-9953**	1	ALTERNATOR GP-CHARGING (24-VOLT, 80-AMPERE)	100
	5	1	**263-1786**	1	SPACER	
	6	1	**263-8528**	1	BELT-SERPENTINE	
	7	1	**264-7021**	1	GUARD-BELT	
		1	**8R-8088**	2	SPACER (11.66X15.88X18-MM THK)	
	8	1	**266-6025**	1	BRACKET AS	
M		1	**8T-3490**	2	NUT-WELD (M10X1.5-THD)	
	9	1	**268-5817**	1	FILM-INSTRUCTION (BELT ROUTING)	
	10	1	**6V-8188**	1	NUT (1/2-13-THD)	
	11	1	**7X-0338**	1	BOLT (1/2-13X6-IN)	
	12	1	**8T-4121**	3	WASHER-HARD (11X21X2.5-MM THK)	
M	13	1	**8T-4186**	2	BOLT (M10X1.5X40-MM)	
	14	1	**8T-4223**	3	WASHER-HARD (13.5X25.5X3-MM THK)	
	15	1	**8T-4835**	1	BOLT (1/2-13X2-IN)	
M	16	1	**8T-5005**	1	BOLT (M10X1.5X70-MM)	

M-METRIC PART
R-REMFG PART MAY BE AVAILABLE
Y-SEPARATE ILLUSTRATION

PROOF

253-2723 **ALTERNATOR GP-CHARGING** *(contd.)* **i02289411**

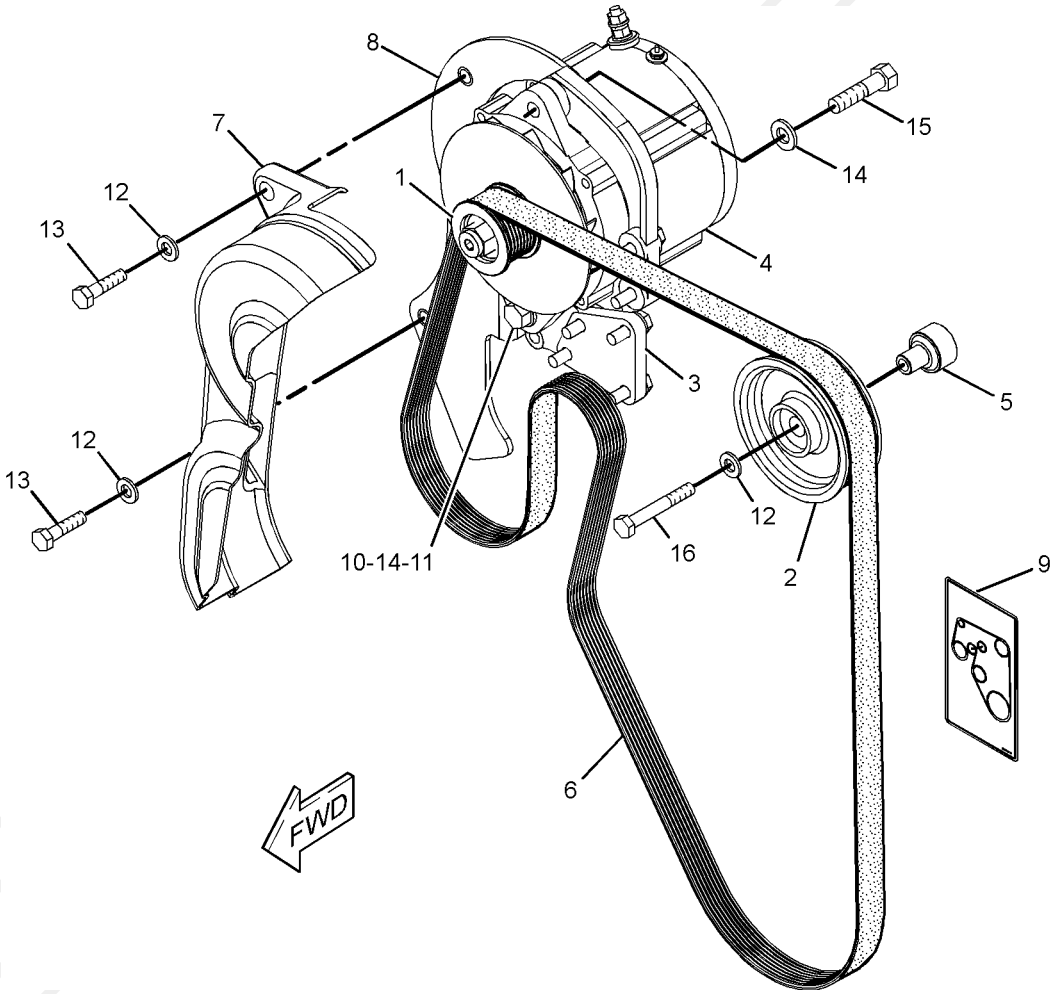

GRAPHIC #1 **<END>** g01151782

ELECTRICAL AND STARTING SYSTEM

253-2724 ALTERNATOR GP-CHARGING

S/N: B9M1-UP
95-AMPERE
FOR USE WITH AIR CONDITIONING
AN ATTACHMENT

SMCS-1405 **i02289475**

NOTE	REF NO	GRAPHIC REF	PART NUMBER	QTY	PART NAME 1 2 3 4 5 6 (PRODUCT LEVEL)	SEE PAGE
	1	1	**123-0790**	1	PULLEY (8-GROOVE)	
	2	1	**124-7792**	1	PULLEY AS-IDLER	
Y	3	1	*169-3130*	1	MOUNTING GP-ALTERNATOR	20
YR	4	1	**197-8820**	1	ALTERNATOR GP-CHARGING (24-VOLT, 95-AMPERE)	102
	5	1	**263-1786**	1	SPACER	
	6	1	**263-8528**	1	BELT-SERPENTINE	
	7	1	**264-7021**	1	GUARD-BELT	
		1	**8R-8088**	2	SPACER (11.66X15.88X18-MM THK)	
	8	1	**266-6025**	1	BRACKET AS	
M		1	**8T-3490**	2	NUT-WELD (M10X1.5-THD)	
	9	1	**268-5817**	1	FILM-INSTRUCTION (BELT ROUTING)	
	10	1	**6V-8188**	1	NUT (1/2-13-THD)	
	11	1	**7X-0338**	1	BOLT (1/2-13X6-IN)	
M	12	1	**8T-4121**	3	WASHER-HARD (11X21X2.5-MM THK)	
M	13	1	**8T-4186**	2	BOLT (M10X1.5X40-MM)	
M	14	1	**8T-4223**	3	WASHER-HARD (13.5X25.5X3-MM THK)	
	15	1	**8T-4835**	1	BOLT (1/2-13X2-IN)	
M	16	1	**8T-5005**	1	BOLT (M10X1.5X70-MM)	

M-METRIC PART
R-REMFG PART MAY BE AVAILABLE
Y-SEPARATE ILLUSTRATION

PROOF

253-2724 **ALTERNATOR GP-CHARGING** *(contd.)* **i02289475**

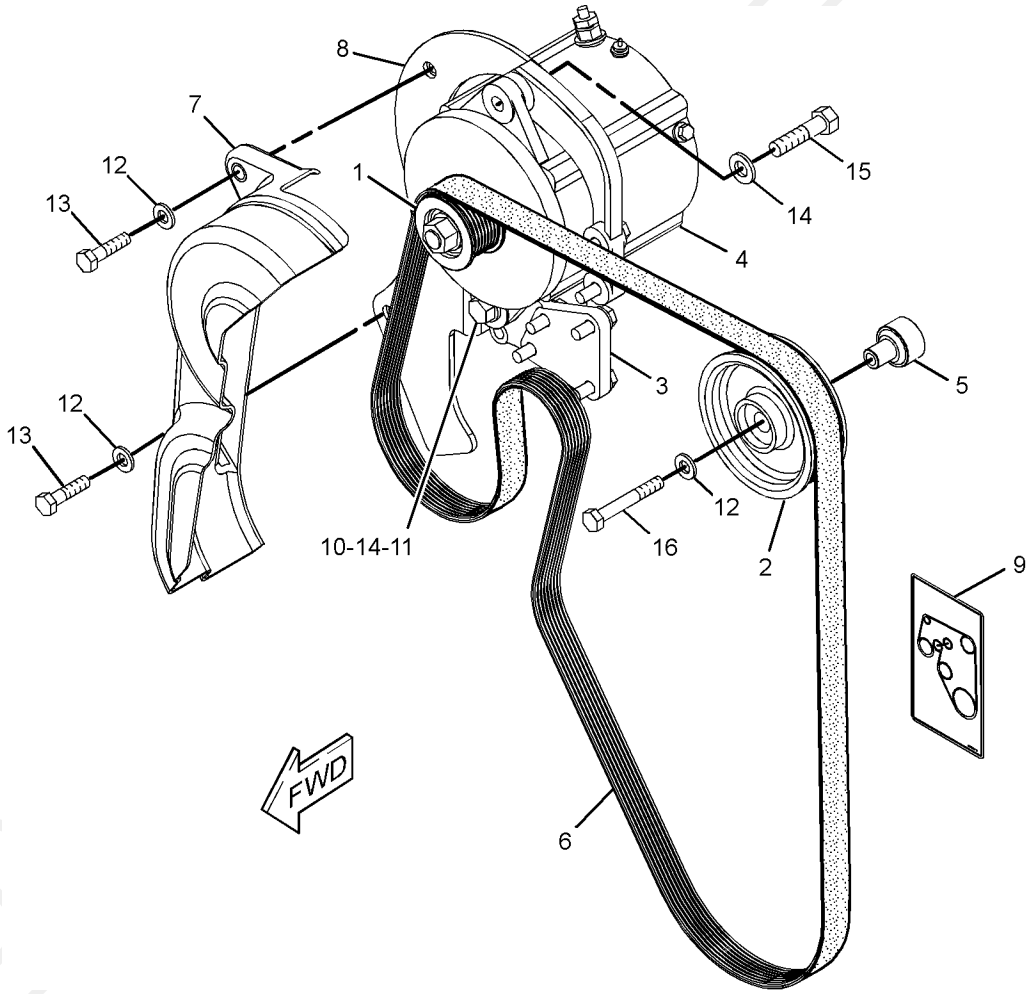

GRAPHIC #1 **<END>** g01151864

ELECTRICAL AND STARTING SYSTEM

233-4603 BATTERY GP

S/N: B9M1-UP

AN ATTACHMENT

SMCS-1401 **i02295902**

NOTE	REF NO	GRAPHIC REF	PART NUMBER	QTY	PART NAME 1 2 3 4 5 6 (PRODUCT LEVEL)	SEE PAGE
	1	2	**3E-8320**	1	PLATE-INSTRUCTION (BATTERY) (DISCONNECT SWITCH)	
Y	2	2	**7N-0718**	1	SWITCH GP-DISCONNECT (BATTERY)	206
	3	2	**187-8674**	1	BLOCK AS-JUNCTION	
	4	1	**230-6368**	2	BATTERY (12-VOLT, MAINTENANCE FREE)	
	5	1	**236-2340**	1	CABLE AS	
		1	**8C-5918**	1	TERMINAL AS (NEGATIVE)	
		1	**1M-6119**	1	BOLT (5/16-18X1.375-IN)	
		1	**1M-6120**	1	NUT (5/16-18-THD)	
		1	**8T-9756**	1	TERMINAL AS (POSITIVE)	
		1	**1M-6119**	1	BOLT (5/16-18X1.375-IN)	
		1	**1M-6120**	1	NUT (5/16-18-THD) (X)	
E		1	**159-8049**		CABLE (OO-GA, RED) (17-CM)	
		1	**9G-0002**	1	COVER-TERMINAL (RED)	
		1	**9G-0005**	1	COVER-TERMINAL (BLACK)	
	6	1	**247-6440**	2	HOLD-DOWN AS	
	7	1	**247-6441**	1	HOLD-DOWN AS	
	8	2	**265-6631**	1	RECEPTACLE AS	
BD		2	**6V-2722**		TUBE-HEAT SHRINK	
		2	**1S-7251**	1	TERMINAL-RING (FOR 1/2-IN BOLT)	
		2	**1S-7252**	1	TERMINAL-RING (FOR 3/8-IN BOLT)	
E		2	**159-8049**		CABLE (OO-GA, RED) (44-CM)	
E		2	**159-8050**		CABLE (OO-GA, BLACK) (9-CM)	
	9	1	**267-2099**	1	CABLE AS	
		1	**1S-7251**	1	TERMINAL-RING (FOR 1/2-IN BOLT)	
		1	**8N-0869**	1	COVER-TERMINAL (RED)	
		1	**9G-0002**	1	COVER-TERMINAL (RED)	
E		1	**159-8049**		CABLE (OO-GA, RED) (75-CM)	
		1	**8T-9756**		TERMINAL AS (POSITIVE)	
		1	**1M-6119**	1	BOLT (5/16-18X1.375-IN)	
		1	**1M-6120**	1	NUT (5/16-18-THD)	
	10	2	**269-4155**	1	PLATE	
	11	2	**096-6166**	4	WASHER-HARD (4.5X9X1-MM THK)	
	12	2	**142-4443**	1	CLIP	
	13	1,2	**174-5907**	8	CLIP	
	14	1	**263-0008**	1	CABLE AS	
		1	**1S-7252**	1	TERMINAL-RING (FOR 3/8-IN BOLT)	
		1	**9G-0005**	1	COVER-TERMINAL (BLACK)	
		1	**9G-8909**	1	COVER-TERMINAL (BLACK)	
E		1	**159-8050**		CABLE (OO-GA, BLACK) (88-CM)	
		1	**8C-5918**	1	TERMINAL AS (NEGATIVE)	
		1	**1M-6119**	1	BOLT (5/16-18X1.375-IN)	
		1	**1M-6120**	1	NUT (5/16-18-THD)	
	15	2	**5P-4116**	4	WASHER-HARD (8.8X20.5X2-MM THK)	
M	16	2	**6V-8202**	4	BOLT-SOCKET HEAD (M8X1.25X16-MM)	
	17	2	**8S-2634**	1	COVER AS	
		2	**2P-2975**	2	SEAL-O-RING	
M	18	1,2	**8T-4121**	6	WASHER-HARD (11X21X2.5-MM THK)	
M	19	1,2	**8T-4137**	3	BOLT (M10X1.5X20-MM)	
M	20	1	**8T-4189**	3	BOLT (M8X1.25X20-MM)	
M	21	1	**8T-4195**	3	BOLT (M10X1.5X30-MM)	
M	22	2	**8T-4223**	1	WASHER-HARD (13.5X25.5X3-MM THK)	
	23	1	**8T-4224**	3	WASHER-HARD (8.8X16X2-MM THK)	
M	24	2	**8T-9405**	4	BOLT-SOCKET HEAD (M4X0.7X16-MM)	
	25	2	**9X-0941**	1	LOCKNUT (1/2-13-THD)	

233-4603 **BATTERY GP** ***(contd.)*** **i02295902**

B-USE AS REQUIRED
D-ORDER BY THE METER
E-ORDER BY THE CENTIMETER
M-METRIC PART
Y-SEPARATE ILLUSTRATION

PROOF

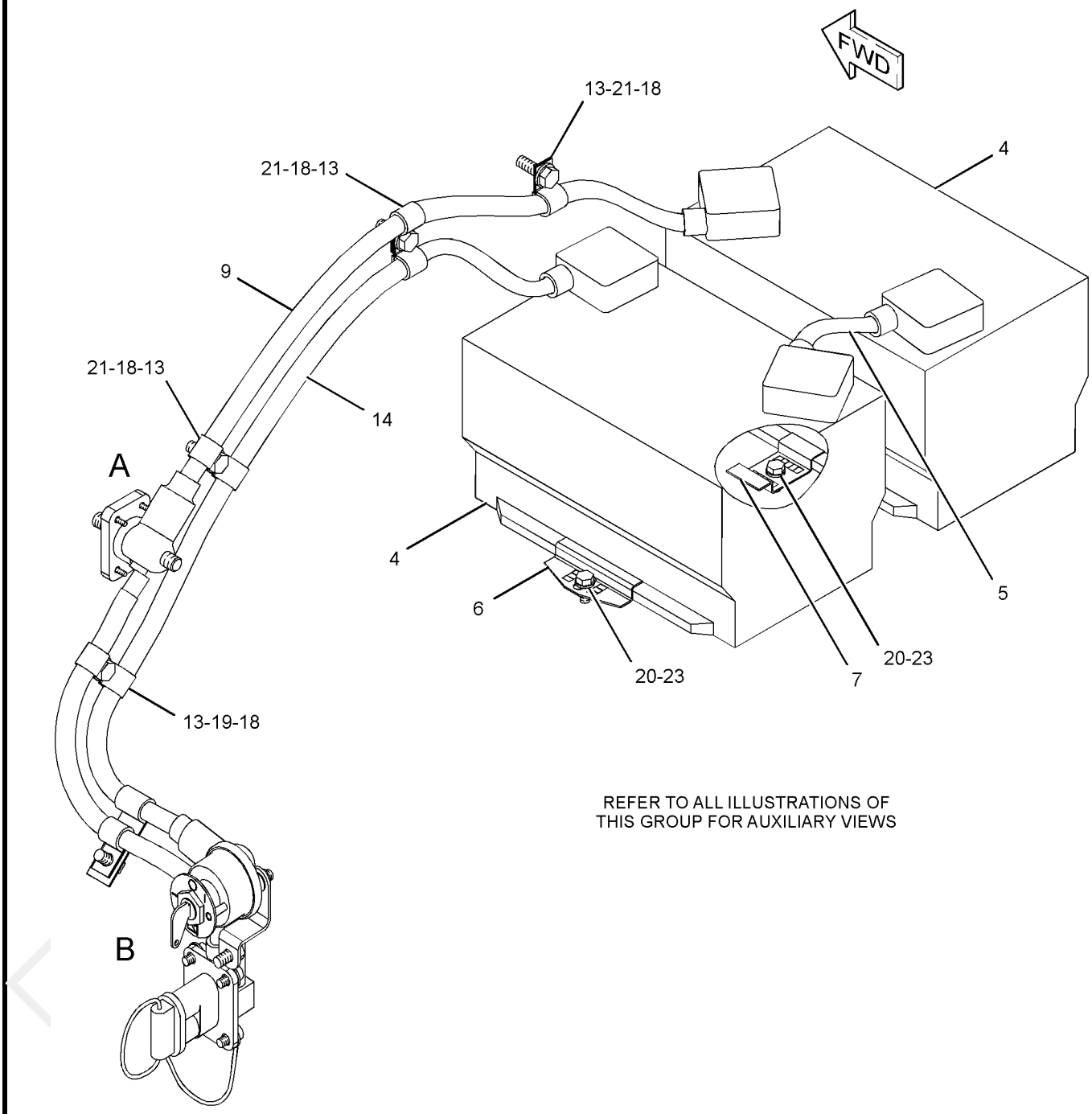

REFER TO ALL ILLUSTRATIONS OF
THIS GROUP FOR AUXILIARY VIEWS

GRAPHIC #1 g01159625

233-4603 **BATTERY GP** *(contd.)* **i02295902**

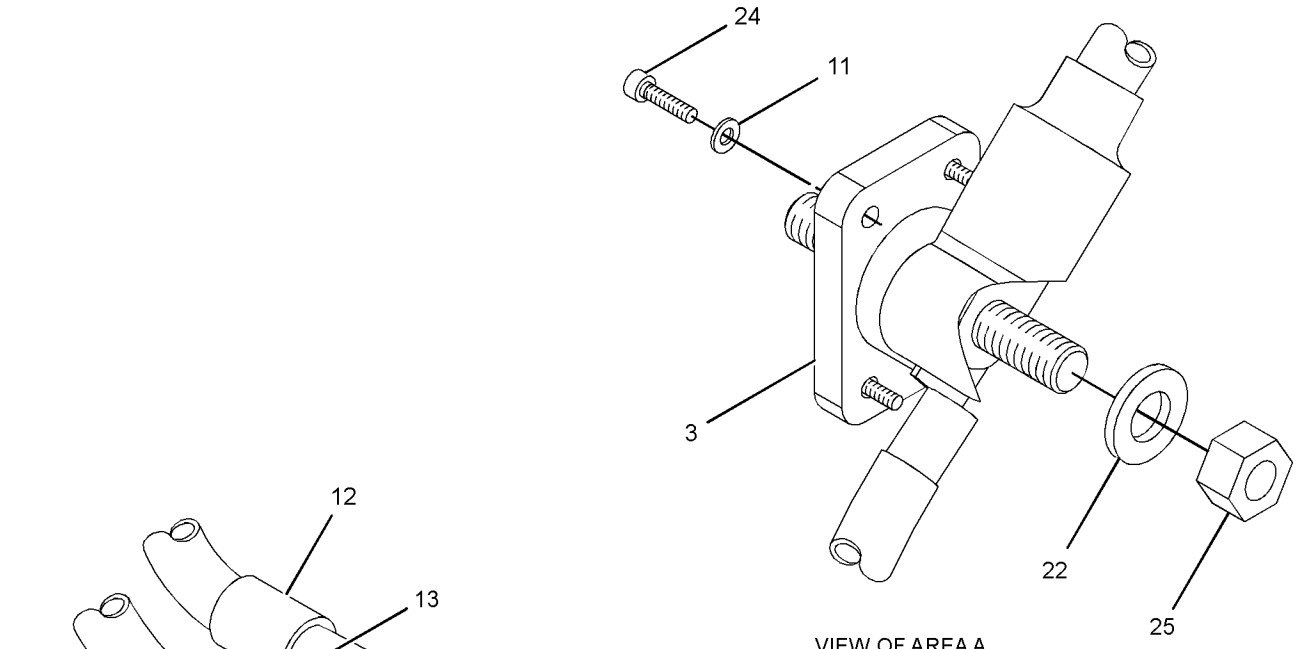

VIEW OF AREA A

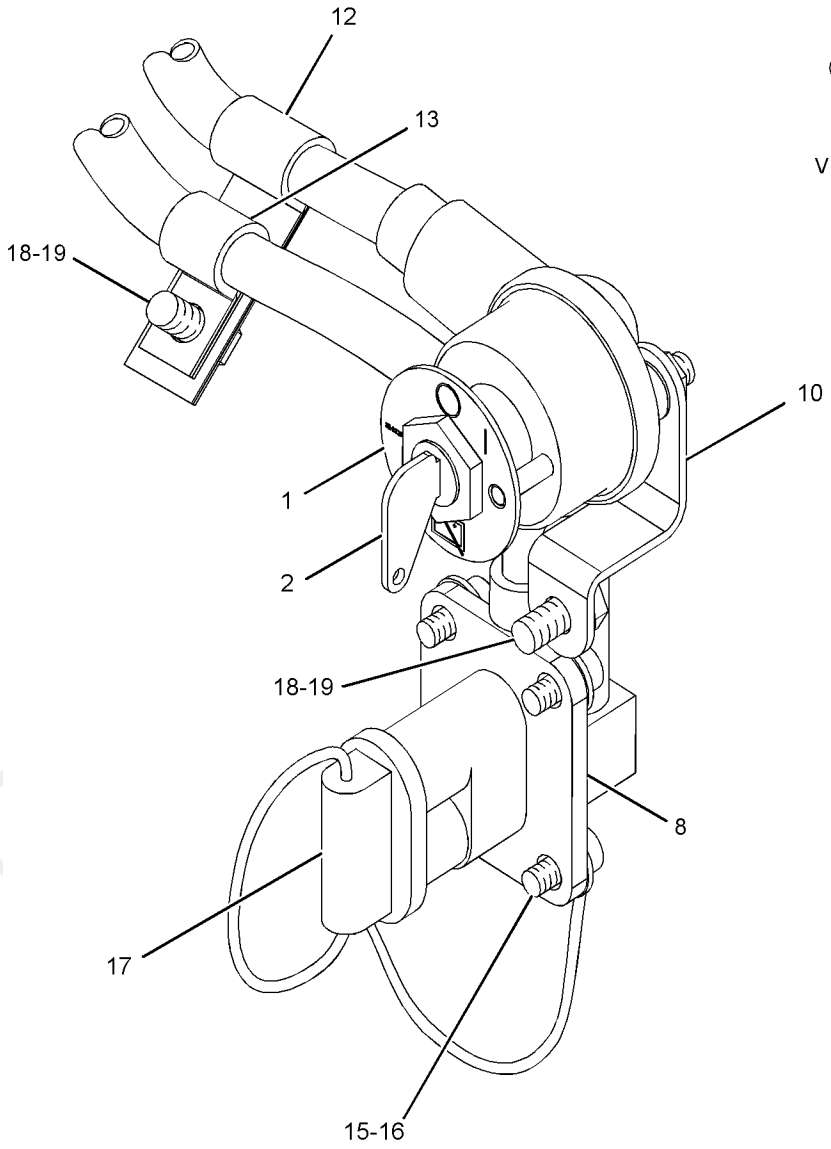

VIEW OF AREA B

GRAPHIC #2 **<END>** g01159626

233-4611 BATTERY GP–EXTREME DUTY

S/N: B9M1-UP

AN ATTACHMENT

SMCS-1401 **i02348727**

NOTE	REF NO	GRAPHIC REF	PART NUMBER	QTY	PART NAME 1 2 3 4 5 6 (PRODUCT LEVEL)	SEE PAGE
	1	2	**3E-8320**	1	PLATE-INSTRUCTION (BATTERY) (DISCONNECT SWITCH)	
Y	2	2	**7N-0718**	1	SWITCH GP-DISCONNECT (BATTERY)	206
	3	1	**153-5710**	2	BATTERY (12-VOLT, MAINTENANCE FREE)	
	4	2	**187-8674**	1	BLOCK AS-JUNCTION	
	5	1	**188-3959**	1	BRACKET	
	6	1	**236-2340**	1	CABLE AS	
		1	**8C-5918**	1	TERMINAL AS (NEGATIVE)	
E		1	**159-8049**		CABLE (OO-GA, RED) (17-CM)	
		1	**9G-0002**	1	COVER-TERMINAL (RED)	
		1	**9G-0005**	1	COVER-TERMINAL (BLACK)	
	7	1	**236-2341**	1	CABLE AS	
		1	**1S-7251**	1	TERMINAL-RING (FOR 1/2-IN BOLT)	
		1	**8N-0869**	1	COVER-TERMINAL (RED)	
		1	**8N-1725**	1	COVER-TERMINAL (RED)	
E		1	**159-8049**		CABLE (OO-GA, RED) (85-CM)	
		1	**1M-6119**	1	BOLT (5/16-18X1.375-IN)	
		1	**1M-6120**	1	NUT (5/16-18-THD)	
		1	**3S-6049**	1	TERMINAL AS-BATTERY (POSITIVE)	
		1	**1M-6119**	1	BOLT (5/16-18X1.375-IN)	
		1	**1M-6120**	1	NUT (5/16-18-THD)	
	8	1	**236-2342**	1	CABLE AS	
		1	**1S-7252**	1	TERMINAL-RING (FOR 3/8-IN BOLT)	
		1	**3S-6050**	1	TERMINAL AS-BATTERY (NEGATIVE)	
		1	**1M-6119**	1	BOLT (5/16-18X1.375-IN)	
		1	**1M-6120**	1	NUT (5/16-18-THD)	
		1	**7N-5274**	1	COVER-TERMINAL (BLACK)	
		1	**9G-8909**	1	COVER-TERMINAL (BLACK)	
E		1	**159-8050**		CABLE (OO-GA, BLACK) (149-CM)	
	9	1	**246-1670**	1	BAR	
	10	1	**246-1671**	1	HOLD-DOWN AS	
	11	2	**265-6631**	1	RECEPTACLE AS	
		2	**1S-7251**	1	TERMINAL-RING (FOR 1/2-IN BOLT)	
		2	**1S-7252**	1	TERMINAL-RING (FOR 3/8-IN BOLT)	
E		2	**159-8049**		CABLE (OO-GA, RED) (44-CM)	
E		2	**159-8050**		CABLE (OO-GA, BLACK) (9-CM)	
BD		2	**6V-2722**		TUBE-HEAT SHRINK	
	12	2	**269-4155**	1	PLATE	
	13	2	**096-6166**	4	WASHER-HARD (4.5X9X1-MM THK)	
	14	2	**142-4443**	1	CLIP	
	15	1,2	**174-5907**	11	CLIP	
	16	2	**5P-4116**	4	WASHER-HARD (8.8X20.5X2-MM THK)	
M	17	2	**6V-8202**	4	BOLT-SOCKET HEAD (M8X1.25X16-MM)	
	18	2	**8S-2634**	1	COVER AS	
		2	**2P-2975**	2	SEAL-O-RING	
M	19	1	**8T-0389**	2	LOCKNUT (M10X1.5-THD)	
M	20	1,2	**8T-4121**	14	WASHER-HARD (11X21X2.5-MM THK)	
M	21	1,2	**8T-4137**	8	BOLT (M10X1.5X20-MM)	
M	22	1	**8T-4185**	2	BOLT (M10X1.5X50-MM)	
M	23	1	**8T-4195**	2	BOLT (M10X1.5X30-MM)	
M	24	2	**8T-4223**	1	WASHER-HARD (13.5X25.5X3-MM THK)	
M	25	2	**8T-9405**	4	BOLT-SOCKET HEAD (M4X0.7X16-MM)	
	26	1	**9R-6414**	2	ROD	
	27	2	**9X-0941**	1	LOCKNUT (1/2-13-THD)	

233-4611 **BATTERY GP** ***(contd.)*** **i02348727**

B-USE AS REQUIRED
D-ORDER BY THE METER
E-ORDER BY THE CENTIMETER
M-METRIC PART
Y-SEPARATE ILLUSTRATION

PROOF

REFER TO ALL ILLUSTRATIONS OF
THIS GROUP FOR AUXILIARY VIEWS

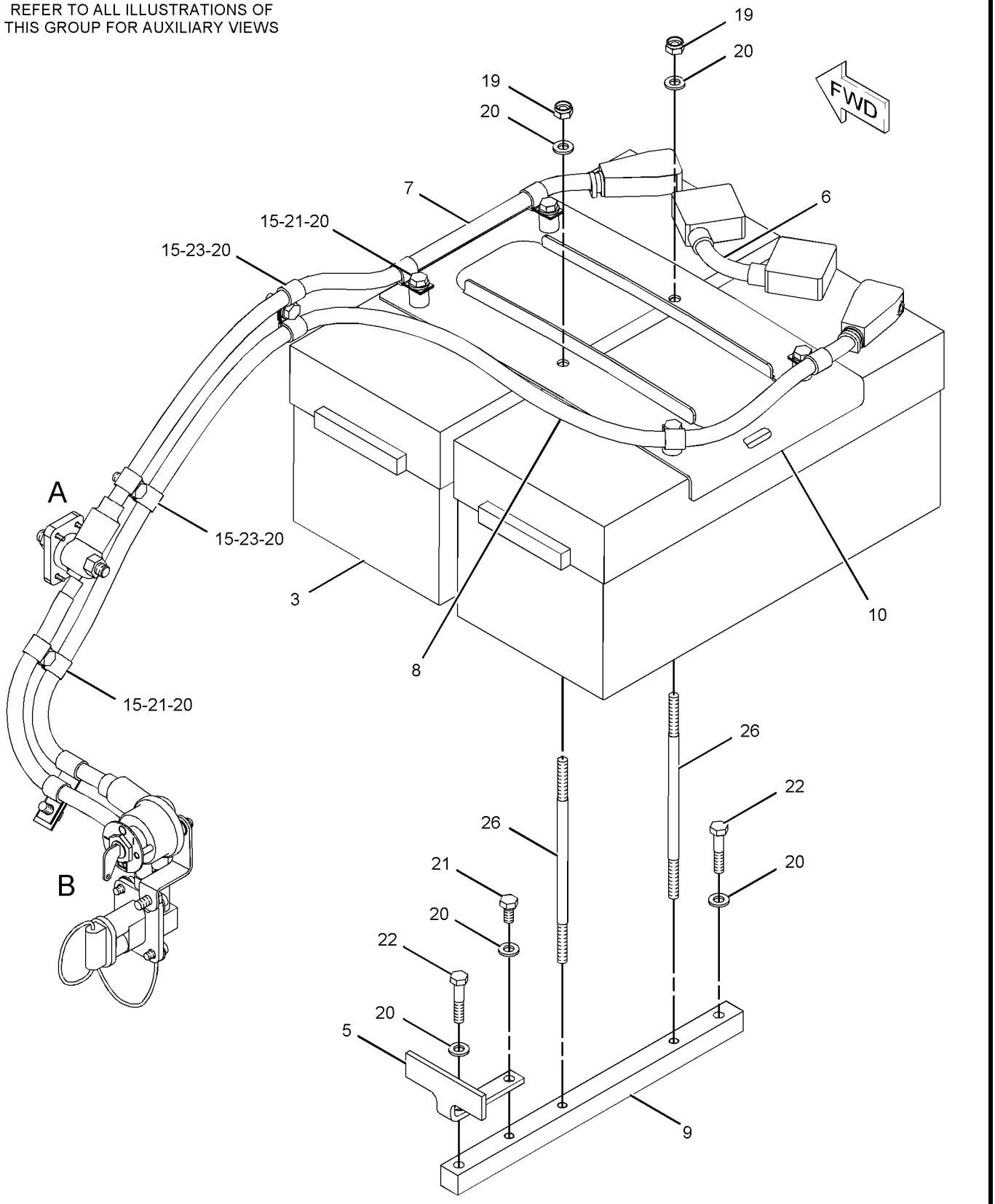

GRAPHIC #1 g01150015

233-4611 **BATTERY GP** *(contd.)* **i02348727**

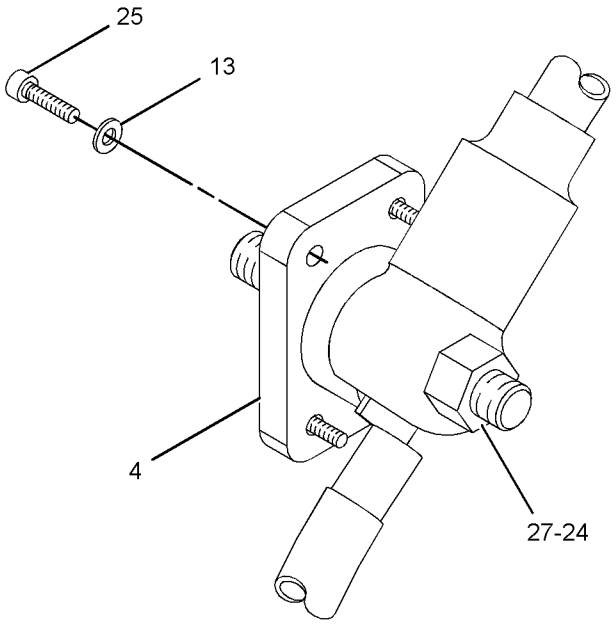

VIEW OF AREA A

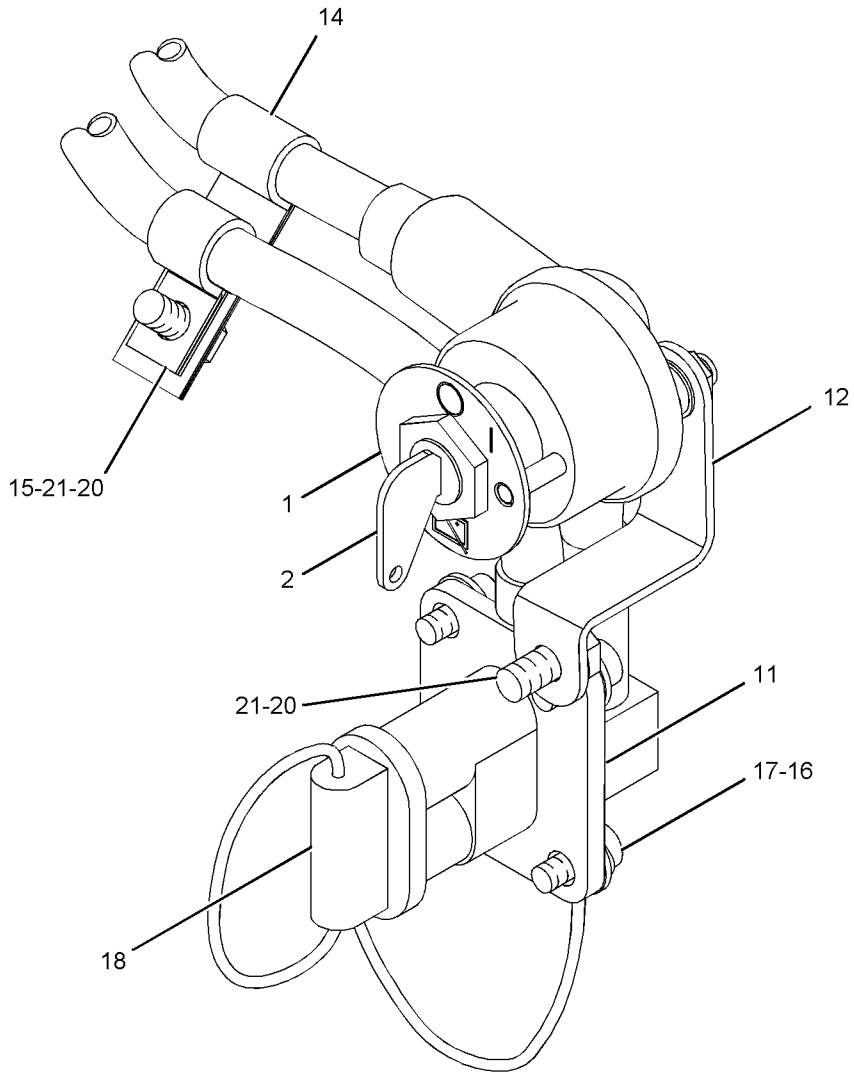

VIEW OF AREA B

GRAPHIC #2 **<END>** g01150016

236-1924 BATTERY GP—HEAVY DUTY

S/N: B9M1-UP

AN ATTACHMENT

SMCS-1401 **i02333881**

NOTE	REF NO	GRAPHIC REF	PART NUMBER	QTY	PART NAME 1 2 3 4 5 6 (PRODUCT LEVEL)	SEE PAGE
	1	2	**3E-8320**	1	PLATE-INSTRUCTION (BATTERY) (DISCONNECT SWITCH)	
Y	2	2	**7N-0718**	1	SWITCH GP-DISCONNECT (BATTERY)	206
	3	1	**153-5700**	2	BATTERY GP (12-VOLT, MAINTENANCE FREE)	
	4	2	**187-8674**	1	BLOCK AS-JUNCTION	
	5	1	**188-3959**	1	BRACKET	
	6	1	**236-2340**	1	CABLE AS	
		1	**8C-5918**	1	TERMINAL AS (NEGATIVE)	
		1	**8T-9756**	1	TERMINAL AS (POSITIVE)	
		1	**9G-0002**	1	COVER-TERMINAL (RED)	
		1	**9G-0005**	1	COVER-TERMINAL (BLACK)	
E		1	**159-8049**		CABLE (OO-GA, RED) (17-CM)	
	7	1	**236-2341**	1	CABLE AS	
		1	**1S-7251**	1	TERMINAL-RING (FOR 1/2-IN BOLT)	
		1	**3S-6049**	1	TERMINAL AS-BATTERY (POSITIVE)	
		1	**1M-6119**	1	BOLT (5/16-18X1.375-IN)	
		1	**1M-6120**	1	NUT (5/16-18-THD)	
		1	**8N-0869**	1	COVER-TERMINAL (RED)	
		1	**8N-1725**	1	COVER-TERMINAL (RED)	
E		1	**159-8049**		CABLE (OO-GA, RED) (85-CM)	
	8	1	**236-2342**	1	CABLE AS	
		1	**1S-7252**	1	TERMINAL-RING (FOR 3/8-IN BOLT)	
		1	**3S-6050**	1	TERMINAL AS-BATTERY (NEGATIVE)	
		1	**1M-6119**	1	BOLT (5/16-18X1.375-IN)	
		1	**1M-6120**	1	NUT (5/16-18-THD)	
		1	**7N-5274**	1	COVER-TERMINAL (BLACK)	
		1	**9G-8909**	1	COVER-TERMINAL (BLACK)	
E		1	**159-8050**		CABLE (OO-GA, BLACK) (149-CM)	
	9	1	**246-1670**	1	BAR	
	10	1	**246-1671**	1	HOLD-DOWN AS	
	11	2	**265-6631**	1	RECEPTACLE AS	
		2	**1S-7251**	1	TERMINAL-RING (FOR 1/2-IN BOLT)	
		2	**1S-7252**	1	TERMINAL-RING (FOR 3/8-IN BOLT)	
BD		2	**6V-2722**		TUBE-HEAT SHRINK	
E		2	**159-8049**		CABLE (OO-GA, RED) (44-CM)	
E		2	**159-8050**		CABLE (OO-GA, BLACK) (9-CM)	
	12	2	**269-4155**	1	PLATE	
	13	2	**096-6166**	4	WASHER-HARD (4.5X9X1-MM THK)	
	14	2	**142-4443**	1	CLIP	
	15	1,2	**174-5907**	11	CLIP	
	16	2	**5P-4116**	4	WASHER-HARD (8.8X20.5X2-MM THK)	
M	17	2	**6V-8202**	4	BOLT-SOCKET HEAD (M8X1.25X16-MM)	
	18	2	**8S-2634**	1	COVER AS	
		2	**2P-2975**	2	SEAL-O-RING	
M	19	1	**8T-0389**	2	LOCKNUT (M10X1.5-THD)	
M	20	1,2	**8T-4121**	14	WASHER-HARD (11X21X2.5-MM THK)	
M	21	1,2	**8T-4137**	8	BOLT (M10X1.5X20-MM)	
M	22	1	**8T-4185**	2	BOLT (M10X1.5X50-MM)	
M	23	1	**8T-4195**	2	BOLT (M10X1.5X30-MM)	
M	24	2	**8T-4223**	1	WASHER-HARD (13.5X25.5X3-MM THK)	
M	25	2	**8T-9405**	4	BOLT-SOCKET HEAD (M4X0.7X16-MM)	
	26	1	**9R-6414**	2	ROD	
	27	2	**9X-0941**	1	LOCKNUT (1/2-13-THD)	

PROOF

236-1924 **BATTERY GP** *(contd.)* **i02333881**

B-USE AS REQUIRED
D-ORDER BY THE METER
E-ORDER BY THE CENTIMETER
M-METRIC PART
Y-SEPARATE ILLUSTRATION

PROOF

REFER TO ALL ILLUSTRATIONS OF
THIS GROUP FOR AUXILIARY VIEWS

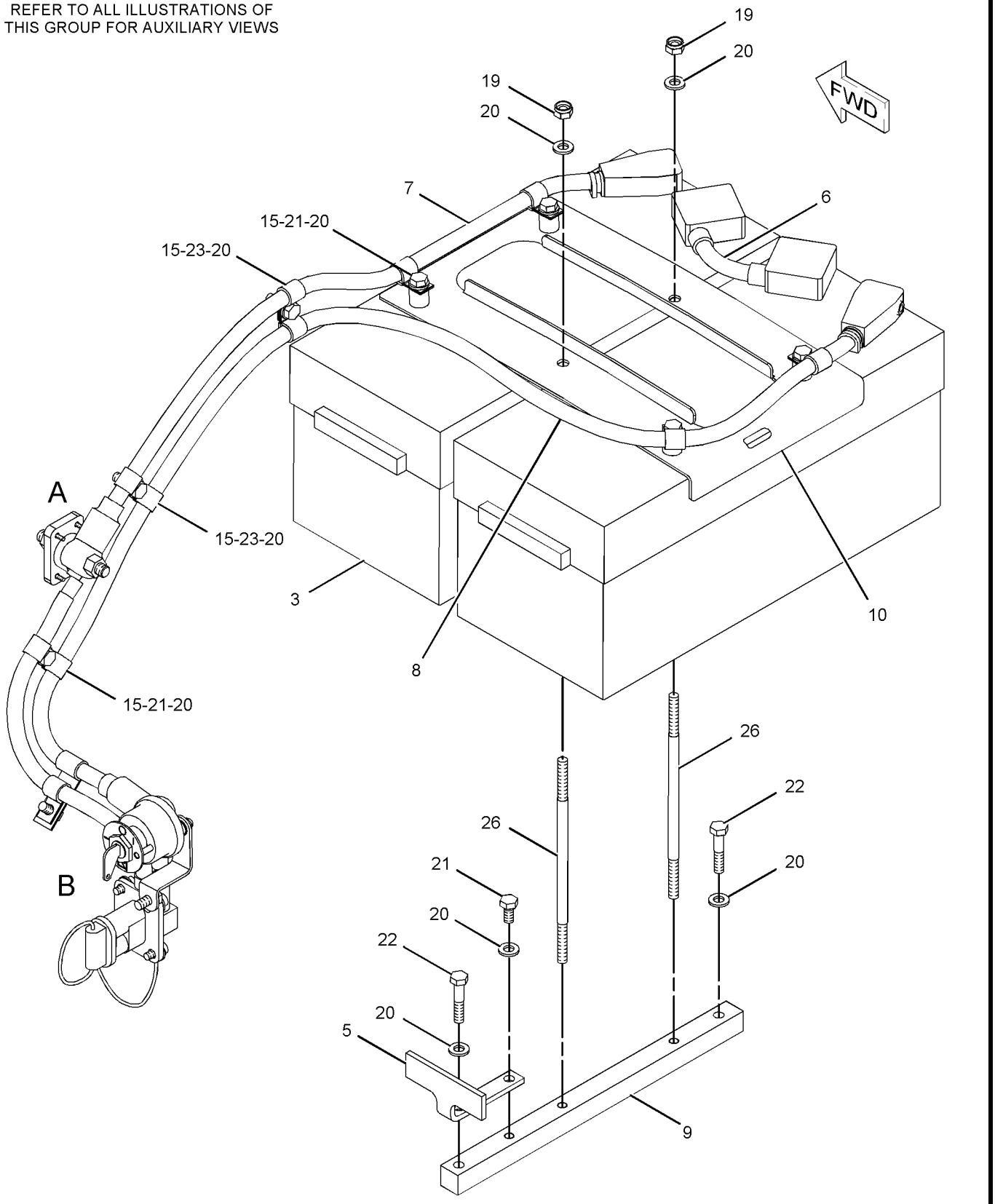

GRAPHIC #1 g01150015

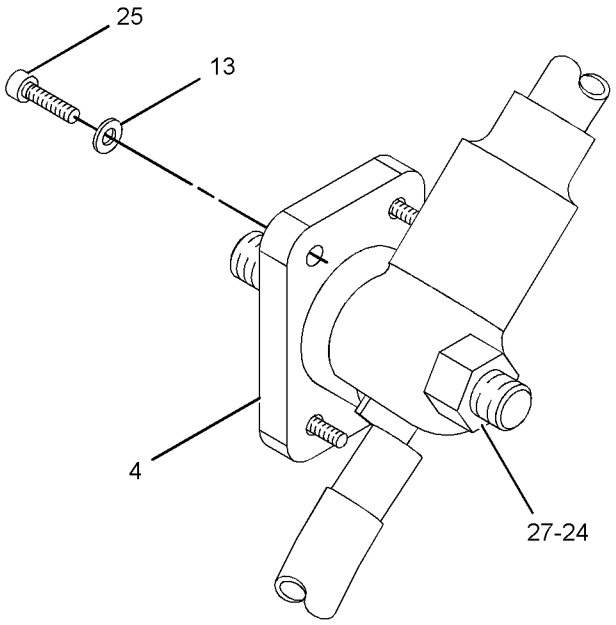

VIEW OF AREA A

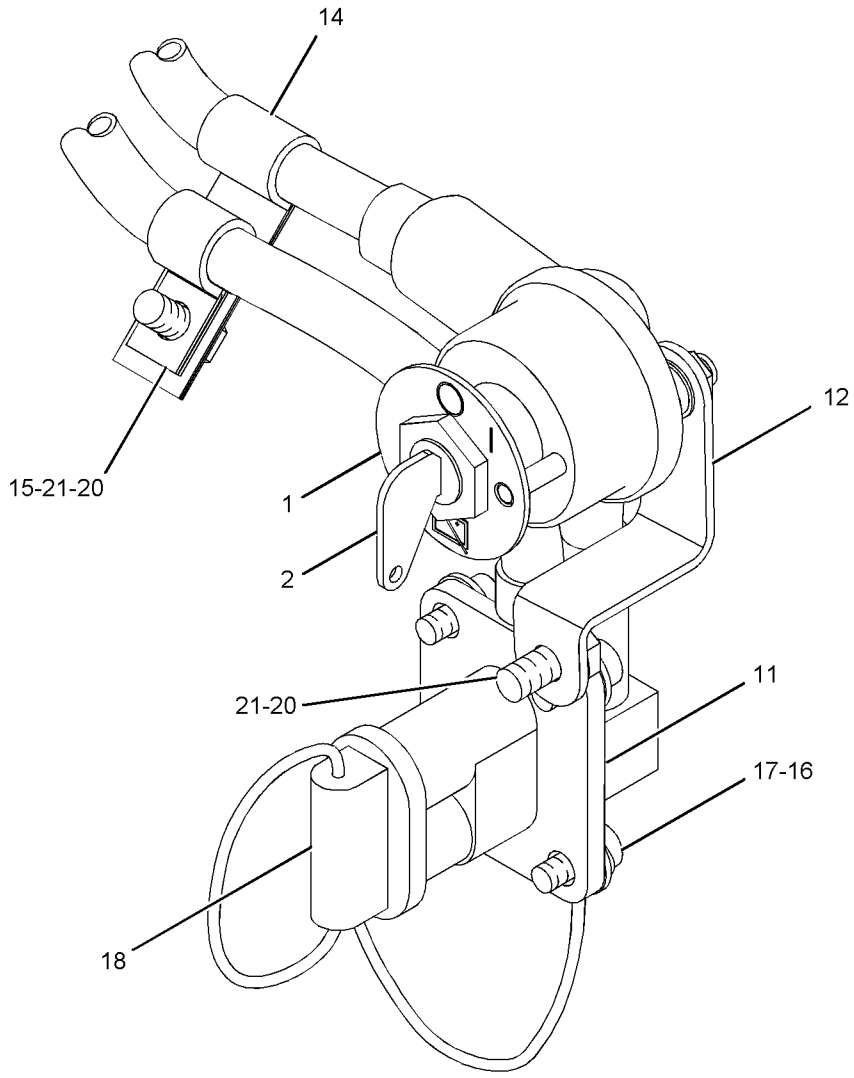

VIEW OF AREA B

GRAPHIC #2 **<END>** g01150016

ELECTRICAL AND STARTING SYSTEM

251-2468 BLOCK GP-JUNCTION

S/N: B9M1-UP

PART OF 269-4152 WIRING GP-POWER RECEPTACLE

SMCS-1408 **i02348728**

NOTE	REF NO	GRAPHIC REF	PART NUMBER	QTY	PART NAME 1 2 3 4 5 6 (PRODUCT LEVEL)	SEE PAGE
	1	1,2	**7K-1181**	6	STRAP-CABLE	
	2	2	**118-3534**	1	SWITCH GP-MAGNETIC (24-VOLT) (STARTER RELAY)	
	3	1	**171-2210**	1	CIRCUIT BREAKER AS (80-AMPERE) (MAIN)	
	3A	1	**171-2210**	1	CIRCUIT BREAKER AS (80-AMPERE) (LOAD)	
					(EACH INCLUDES)	
		1	**6V-8187**	2	NUT (1/4-28-THD)	
		1	**8T-4205**	2	WASHER-HARD (7.2X14.5X2-MM THK)	
		1	**253-2111**	2	LOCKWASHER	
	4	1	**171-2212**	1	CIRCUIT BREAKER AS (105-AMPERE) (ALTERNATOR)	
	4A	1	**171-2212**	1	CIRCUIT BREAKER AS (105-AMPERE) (ALTERNATOR NO. 2)	
					(EACH INCLUDES)	
		1	**6V-8187**	2	NUT (1/4-28-THD)	
		1	**8T-4205**	2	WASHER-HARD (7.2X14.5X2-MM THK)	
		1	**253-2111**	2	LOCKWASHER	
	5	1	**187-8674**	1	BLOCK AS-JUNCTION	
	6	1	**187-8675**	1	GASKET	
	7	2	**233-4645**	1	HARNESS AS-JUNCTION BOX	
		2	**8N-1517**	1	RECEPTACLE AS (25-PIN)	
		2	**102-8802**	1	KIT-RECEPTACLE (2-PIN)	
					(INCLUDES RECEPTACLE AS & WEDGE)	
		2	**155-2270**	1	KIT-CONNECTING PLUG (2-PIN)	
					(INCLUDES PLUG AS & WEDGE)	
Y	8	2	**241-8368**	1	SWITCH GP-MAGNETIC (24-VOLT) (MAIN RELAY)	210
	9	2	**247-6447**	1	PLATE	
	10	1	**251-2469**	1	BOX AS	
	11	1	**253-9557**	2	BLOCK AS	
	12	2	**254-5038**	1	CABLE AS	
E		2	**8C-3056**		CABLE (02-GA, RED) (26-CM)	
		2	**030-1712**	1	TERMINAL-RING (2-GA, 6.35-MM)	
		2	**261-0747**	1	TERMINAL AS	
	13	2	**256-3216**	2	PLATE	
	14	1	**256-3652**	1	COVER	
	15	1	**256-6783**	1	BRACKET AS	
	16	2	**256-6788**	1	CABLE AS	
E		2	**8C-3056**		CABLE (02-GA, RED) (32-CM)	
		2	**030-1712**	1	TERMINAL-RING (2-GA, 6.35-MM)	
		2	**261-0747**	1	TERMINAL AS	
	17	2	**257-7240**	1	WIRE AS	
	18	2	**257-7241**	1	WIRE AS	
	19	2	**257-9458**	1	WIRE AS	
	20	2	**261-3405**	1	CABLE AS	
E		2	**8C-3056**		CABLE (02-GA, RED) (30-CM)	
		2	**180-7110**	1	RING (FOR 3/8-IN BOLT)	
	21	1	**096-6166**	8	WASHER-HARD (4.5X9X1-MM THK)	
	23	2	**189-3158**	1	SUPPRESSOR-ARC	
	24	2	**261-3086**	1	CABLE AS	
E		2	**8C-3056**		CABLE (02-GA, RED) (35-CM)	
		2	**180-7110**	1	RING (FOR 3/8-IN BOLT)	
	25	1	**3K-8106**	10	SCREW-MACHINE (8-32X1-IN)	
	26	2	**3T-2662**	2	CIRCUIT BREAKER AS (15-AMPERE) (RUNNING LIGHTS)	
					(EACH INCLUDES)	
		2	**6V-8376**	2	SCREW-MACHINE (8-32X0.25-IN)	
		2	**9B-7233**	2	LOCKWASHER	
	27	1	**4B-4274**	8	WASHER (5.5X13X1.2-MM THK)	

251-2468 **BLOCK GP-JUNCTION** *(contd.)* **i02348728**

NOTE	REF NO	GRAPHIC REF	PART NUMBER	QTY	PART NAME 1 2 3 4 5 6 (PRODUCT LEVEL)	SEE PAGE
M	28	1	**5C-2890**	4	NUT (M6X1-THD)	
	29	1	**5L-4507**	8	SCREW-MACHINE (10-32X0.875-IN)	
	30	2	**6T-3643**	1	CIRCUIT BREAKER AS (15-AMPERE) (TRANSMISSION CONTROL)	
	30A	2	**6T-3643**	1	CIRCUIT BREAKER AS (15-AMPERE) (KEY SWITCH)	
					(EACH INCLUDES)	
		2	**6V-8376**	2	SCREW-MACHINE (8-32X0.25-IN)	
		2	**9B-7233**	2	LOCKWASHER	
	31	2	**6T-3644**	1	CIRCUIT BREAKER GP (20-AMPERE) (ENGINE CONTROL)	
		2	**6V-8376**	2	SCREW-MACHINE (8-32X0.25-IN)	
		2	**9B-7233**	2	LOCKWASHER	
M	32	1	**8T-3998**	4	BOLT (M4X0.7X12-MM)	
	33	1,2	**8T-4121**	14	WASHER-HARD (11X21X2.5-MM THK)	
M	34	2	**8T-4133**	3	NUT (M10X1.5-THD)	
M	35	1,2	**8T-4137**	9	BOLT (M10X1.5X20-MM)	
M	36	1	**8T-4138**	4	BOLT (M6X1X20-MM)	
M	37	2	**8T-4195**	2	BOLT (M10X1.5X30-MM)	
M	38	2	**8T-4223**	1	WASHER-HARD (13.5X25.5X3-MM THK)	
M	39	1	**8T-9405**	4	BOLT-SOCKET HEAD (M4X0.7X16-MM)	
	40	1	**9B-7233**	10	LOCKWASHER	
	41	2	**9X-0941**	1	LOCKNUT (1/2-13-THD)	
	42	1,2	**9X-8256**	10	WASHER (6.6X12X2-MM THK)	

E-ORDER BY THE CENTIMETER
M-METRIC PART
Y-SEPARATE ILLUSTRATION

PROOF

251-2468 **BLOCK GP-JUNCTION** *(contd.)* **i02348728**

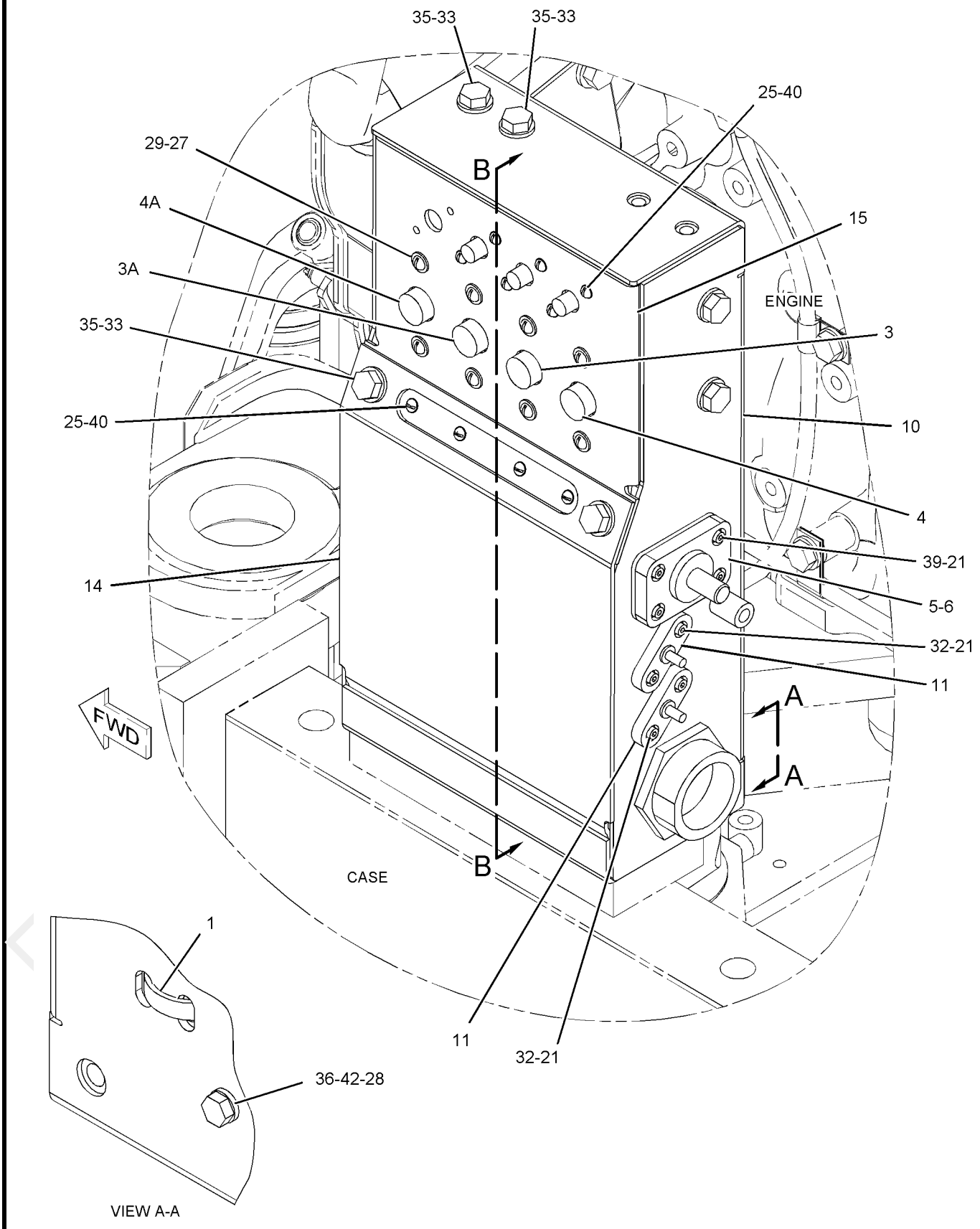

GRAPHIC #1 g01120076

251-2468 **BLOCK GP-JUNCTION** *(contd.)* **i02348728**

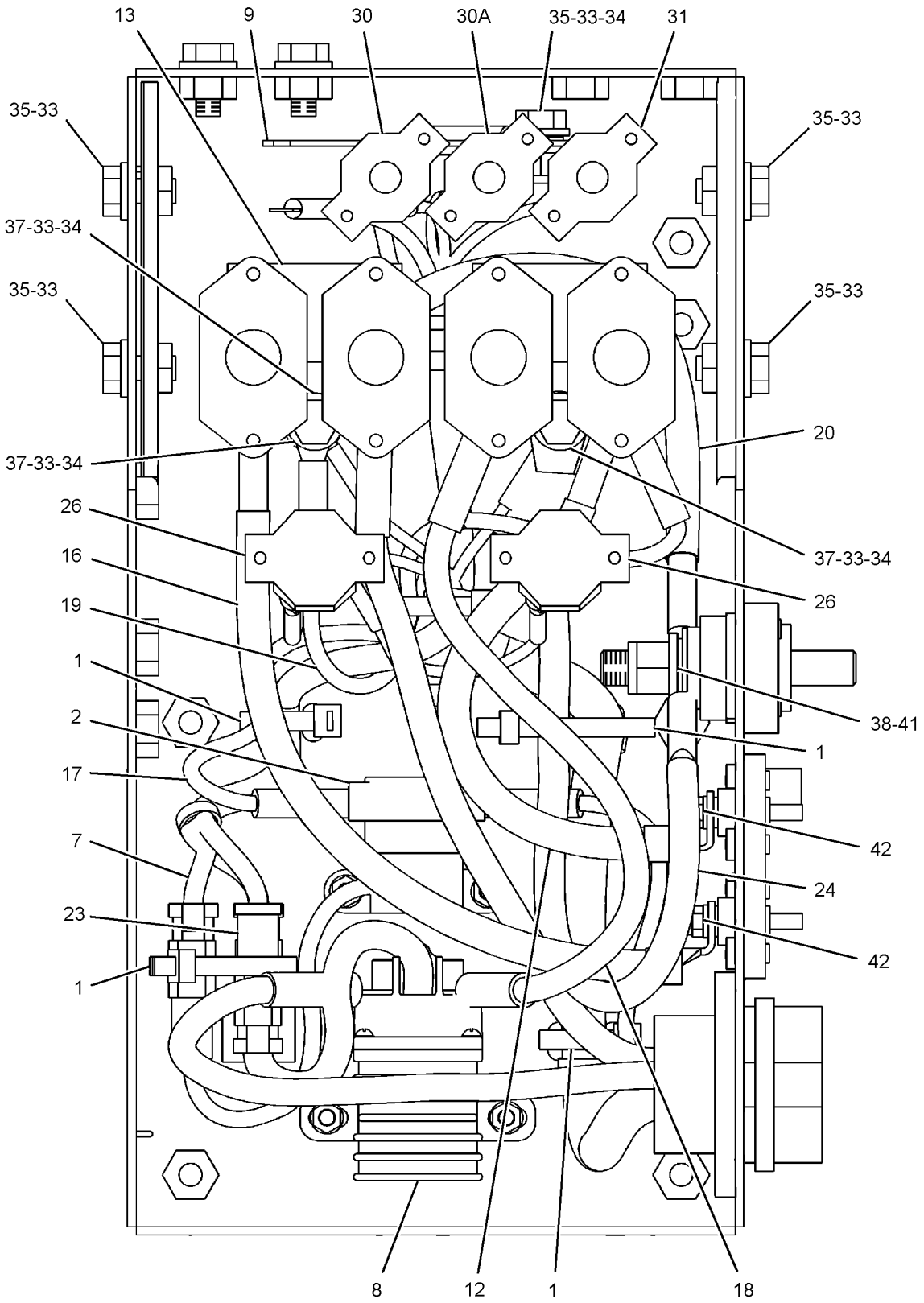

VIEW B-B
(COVERS REMOVED)

GRAPHIC #2 **<END>** g01120077

ELECTRICAL AND STARTING SYSTEM

246-9345 CONTROL & MTG GP-ENGINE ELEK

S/N: KHX1-UP

PART OF 231-0878 ENGINE AR-COMPLETE

SMCS-1901 **i02320633**

NOTE	REF NO	GRAPHIC REF	PART NUMBER	QTY	PART NAME 1 2 3 4 5 6 (PRODUCT LEVEL)	SEE PAGE
	1	1	**8T-9655**	8	MOUNT-ISOLATION	
	2	1	**101-3128**	4	SPACER	
M	3	1	**143-9392**	4	STUD (M8X1.25-THD)	
	4	1	**255-5284**	1	CONTROL GP-UNPROGRAMMED (ENGINE)	
	6	1	**244-3168**	1	BRACKET AS	
	7	1	**233-0891**	1	BRACKET AS	
	8	1	**9M-1974**	4	WASHER-HARD (8.8X16X2-MM THK)	
	9	1	**9N-0869**	4	WASHER-HARD (8.8X25.5X2-MM THK)	

M-METRIC PART

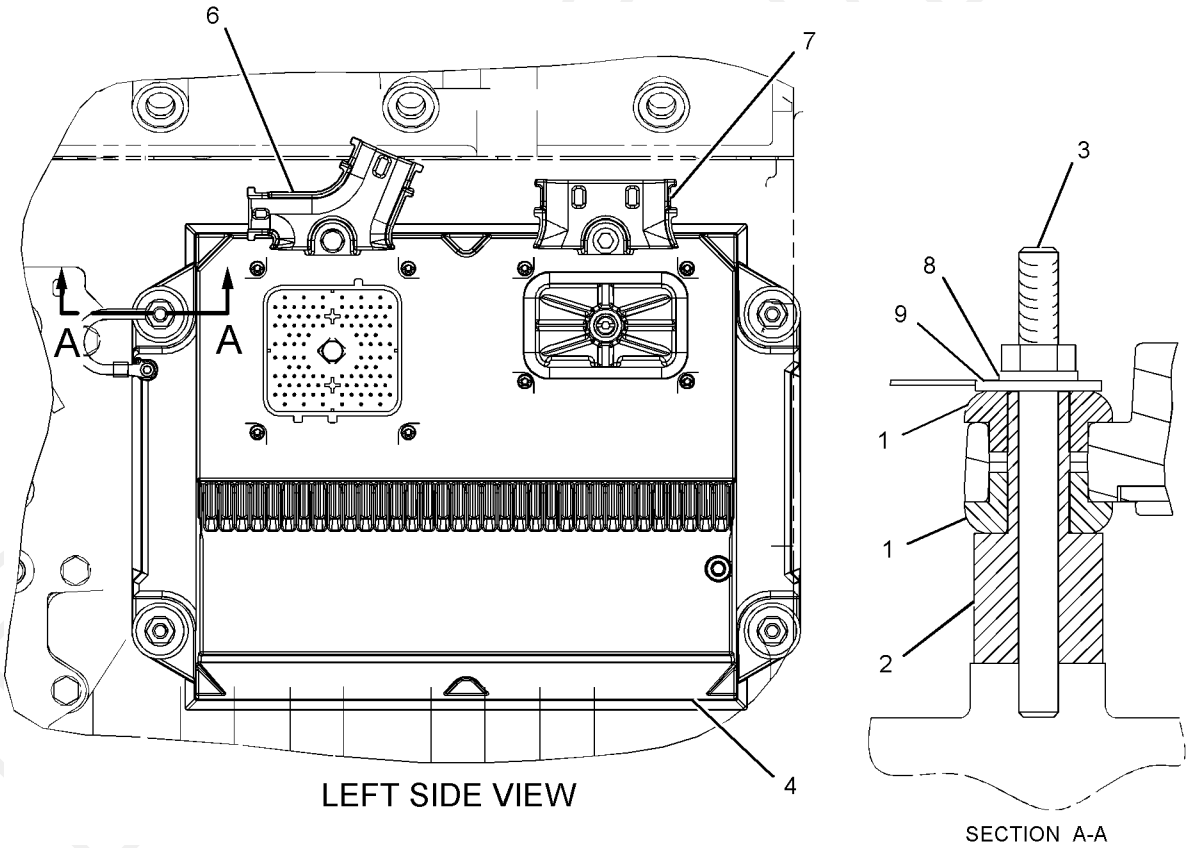

GRAPHIC #1 **<END>** g01093182

233-3145 CONTROL & MTG GP-IMPLEMENT

S/N: B9M1-UP

PART OF 254-5399 CAB AR

SMCS-5063, 5700 **i02276635**

NOTE	REF NO	GRAPHIC REF	PART NUMBER	QTY	PART NAME 1 2 3 4 5 6 (PRODUCT LEVEL)	SEE PAGE
	1	1	**6I-1418**	8	SPACER (8.2X12.7X28.7-MM THK)	
	2	1	**8T-9655**	16	MOUNT-ISOLATION	
	3	1	**238-8818**	1	PLATE AS	
	4	1	**262-1408**	1	CONTROL GP-UNPROGRAMMED (IMPLEMENT SLAVE)	
	4A	1	**262-1408**	1	CONTROL GP-UNPROGRAMMED (IMPLEMENT MASTER)	
M	5	1	**8T-4121**	8	WASHER-HARD (11X21X2.5-MM THK)	
M	6	1	**8T-4137**	8	BOLT (M10X1.5X20-MM)	
M	7	1	**8T-6912**	8	BOLT (M8X1.25X50-MM)	
	8	1	**9N-0869**	8	WASHER-HARD (8.8X25.5X2-MM THK)	

M-METRIC PART

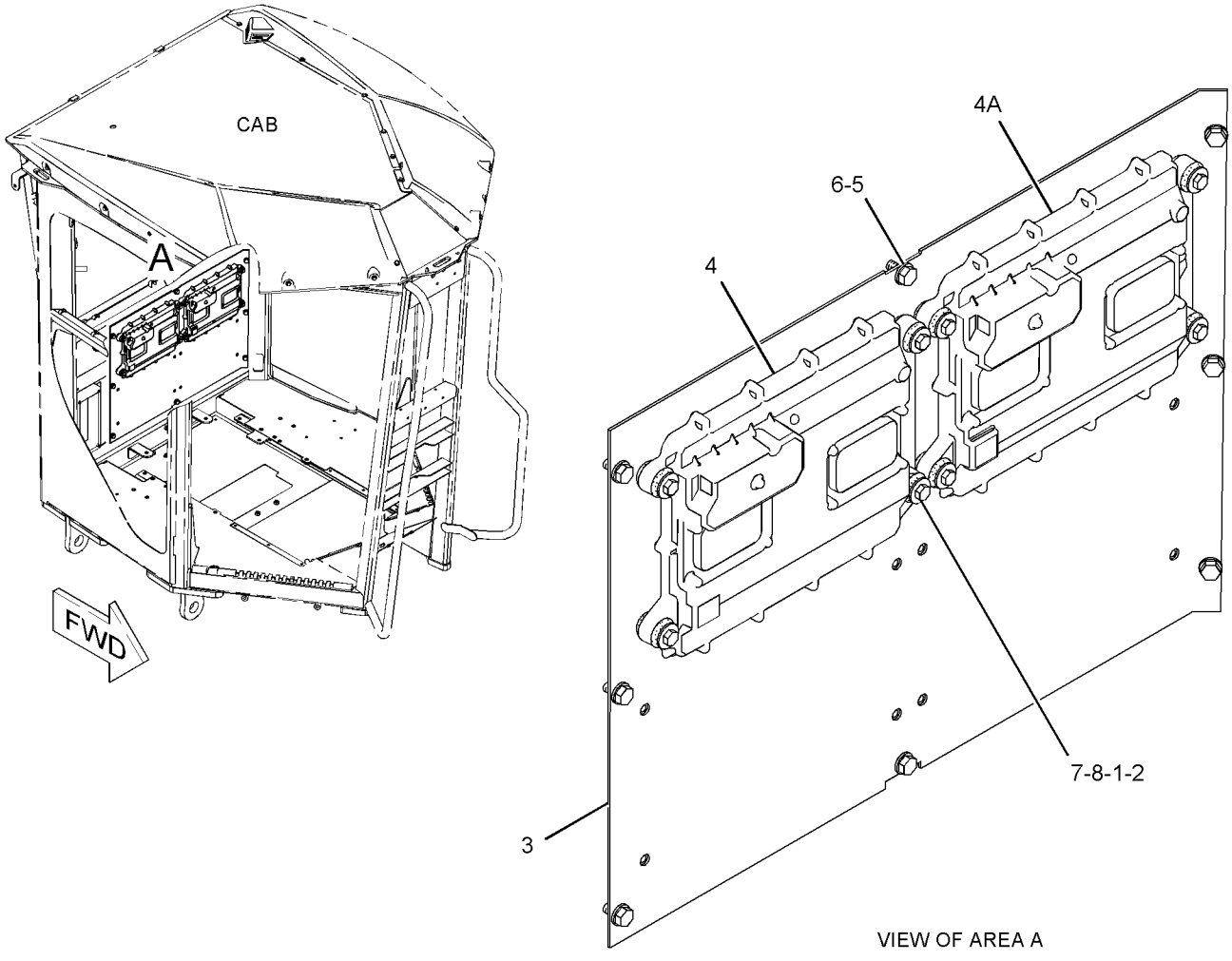

GRAPHIC #1 **<END>** g01144472

233-3144 CONTROL GP-IMPLEMENT

S/N: B9M1-UP

PART OF 242-5057, 242-5059, 242-5060, 242-5061, 242-5062, 242-5066, 242-6107, 242-6109, 242-6110, 242-6111, 242-6112, 242-6146 CONTROL AR-HYDRAULIC AN ATTACHMENT

SMCS-4490, 5700 **i02185562**

NOTE	PART NUMBER	QTY	PART NAME 1 2 3 4 5 6 (PRODUCT LEVEL)	SEE PAGE
	244-2697	1	FILM-IDENTIFICATION (RIPPER)	
	238-8850	1	GRIP-HANDLE	
	102-8804	1	KIT-RECEPTACLE (4-PIN)	
			(INCLUDES RECEPTACLE AS & WEDGE)	
M	**3E-8020**	2	SCREW-TRUSS HEAD (M6X1X25-MM)	
	247-0740	1	SWITCH AS (RIPPER)	
	244-2696	1	TUBE	

M-METRIC PART

<END>

PROOF

238-8808 CONTROL GP-POWER TRAIN–ALL WHEEL DRIVE

S/N: B9M1-UP
PART OF 261-0153 AXLE AR-FRONT
AN ATTACHMENT

SMCS-4808, 7610 **i02348742**

NOTE	REF NO	GRAPHIC REF	PART NUMBER	QTY	PART NAME 1 2 3 4 5 6 (PRODUCT LEVEL)	SEE PAGE
	1	1	**3S-2093**	2	STRAP-CABLE	
	2	1	**6I-1418**	4	SPACER (8.2X12.7X28.7-MM THK)	
	3	1	**8T-9655**	8	MOUNT-ISOLATION	
	4	1	**110-6109**	2	KNOB-CONTROL (AWD MODE)	
	5	1	**114-6658**	3	WASHER (6.5X17X1-MM THK)	
Y	6	1	**230-7490**	1	CONTROL GP-UNPROGRAMMED (AWD MODE)	133
	7	1	**235-6177**	1	HARNESS AS-CONTROL (ALL WHEEL DRIVE)	
		1	**102-8802**	2	KIT-RECEPTACLE (2-PIN)	
					(EACH INCLUDES RECEPTACLE AS & WEDGE)	
		1	**155-2274**	1	KIT-CONNECTING PLUG (6-PIN)	
		1	**155-2270**	2	KIT-CONNECTING PLUG (2-PIN)	
		1	**155-2260**	1	KIT-CONNECTING PLUG (3-PIN)	
		1	**155-2255**	1	KIT-CONNECTING PLUG (12-PIN)	
					(EACH INCLUDES PLUG AS & WEDGE)	
		1	**9X-7143**	1	RECEPTACLE AS (24-PIN)	
		1	**155-2272**	1	PLUG AS-CONNECTOR (4-PIN)	
		1	**147-1445**	1	PLUG AS-CONNECTOR (70-PIN)	
		1	**147-1446**	1	PLUG AS-CONNECTOR (70-PIN)	
	8	1	**238-8799**	1	PANEL-COVER	
Y	9	1	**238-8809**	1	SWITCH GP-ALL WHEEL DRIVE	203
	10	1	**249-4098**	1	FILM (ALL WHEEL DRIVE)	
	11	1	**225-3109**	8	SCREW-TRUSS HEAD	
	12	1	**5P-4116**	4	WASHER-HARD (8.8X20.5X2-MM THK)	
M	13	1	**8T-4121**	1	WASHER-HARD (11X21X2.5-MM THK)	
M	14	1	**8T-4191**	1	BOLT (M10X1.5X16-MM)	
M	15	1	**8T-6912**	4	BOLT (M8X1.25X50-MM)	
M	16	1	**9X-2043**	3	SCREW-TRUSS HEAD (M6X1X14-MM)	

M-METRIC PART
Y-SEPARATE ILLUSTRATION

PROOF

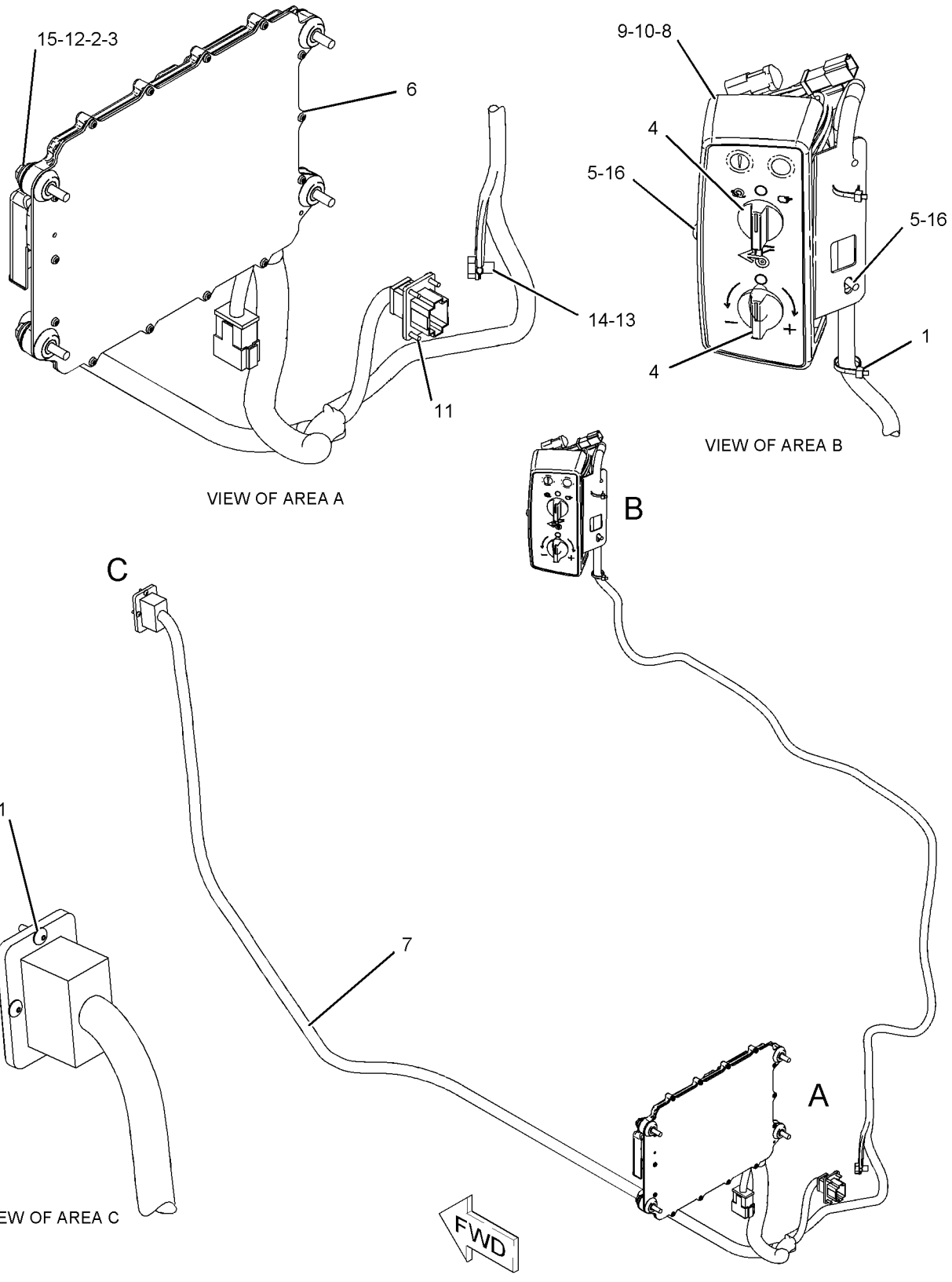

GRAPHIC #1 **<END>** g01111032

ELECTRICAL AND STARTING SYSTEM

230-7490 CONTROL GP-UNPROGRAMMED

S/N: B9M1-UP

PART OF 238-8808 CONTROL GP-POWER TRAIN, 250-9257, 250-9258, 250-9259 ELECTRONICS GP-IMPLEMENT, 250-9255, 250-9260 ELECTRONICS GP-POWER TRAIN ALSO AN ATTACHMENT

SMCS-7610 **i02163081**

NOTE	PART NUMBER	QTY	PART NAME 1 2 3 4 5 6 (PRODUCT LEVEL)	SEE PAGE
			(NO SERVICED PARTS)	

<END>

PROOF

238-8828 CONTROL GP-UNPROGRAMMED

S/N: B9M1-UP

PART OF 242-5061, 242-5062, 242-5063, 242-5064, 242-5066, 242-6107, 242-6108, 242-6109, 242-6110, 242-6111, 242-6112, 242-6146 CONTROL AR-HYDRAULIC AN ATTACHMENT

SMCS-7610 **i02322674**

NOTE	REF NO	GRAPHIC REF	PART NUMBER	QTY	PART NAME 1 2 3 4 5 6 (PRODUCT LEVEL)	SEE PAGE
	1	1	**3S-2093**	3	STRAP-CABLE	
	2	1	**6I-1418**	4	SPACER (8.2X12.7X28.7-MM THK)	
	3	1	**8T-9655**	8	MOUNT-ISOLATION	
	4	1	**235-6183**	1	HARNESS AS-CONTROL (HYDRAULIC ELECTRONIC)	
		1	**3S-2093**	5	STRAP-CABLE	
		1	**126-1774**	2	COVER	
		1	**147-1445**	1	PLUG AS-CONNECTOR (70-PIN)	
		1	**147-1446**	1	PLUG AS-CONNECTOR (70-PIN)	
		1	**155-2272**	1	PLUG AS-CONNECTOR (4-PIN)	
		1	**190-7613**	1	RECEPTACLE AS (12-PIN)	
		1	**102-8804**	1	KIT-RECEPTACLE (4-PIN)	
		1	**166-5229**	1	KIT-RECEPTACLE (12-PIN)	
					(EACH INCLUDES RECEPTACLE AS & WEDGE)	
	5	1	**262-1408**	1	CONTROL GP-UNPROGRAMMED (HYDRAULIC ELECTRONIC)	
	6	1	**096-6166**	4	WASHER-HARD (4.5X9X1-MM THK)	
	7	1	**5P-4116**	4	WASHER-HARD (8.8X20.5X2-MM THK)	
M	8	1	**8T-6912**	4	BOLT (M8X1.25X50-MM)	
M	9	1	**8T-9405**	4	BOLT-SOCKET HEAD (M4X0.7X16-MM)	

M-METRIC PART

PROOF

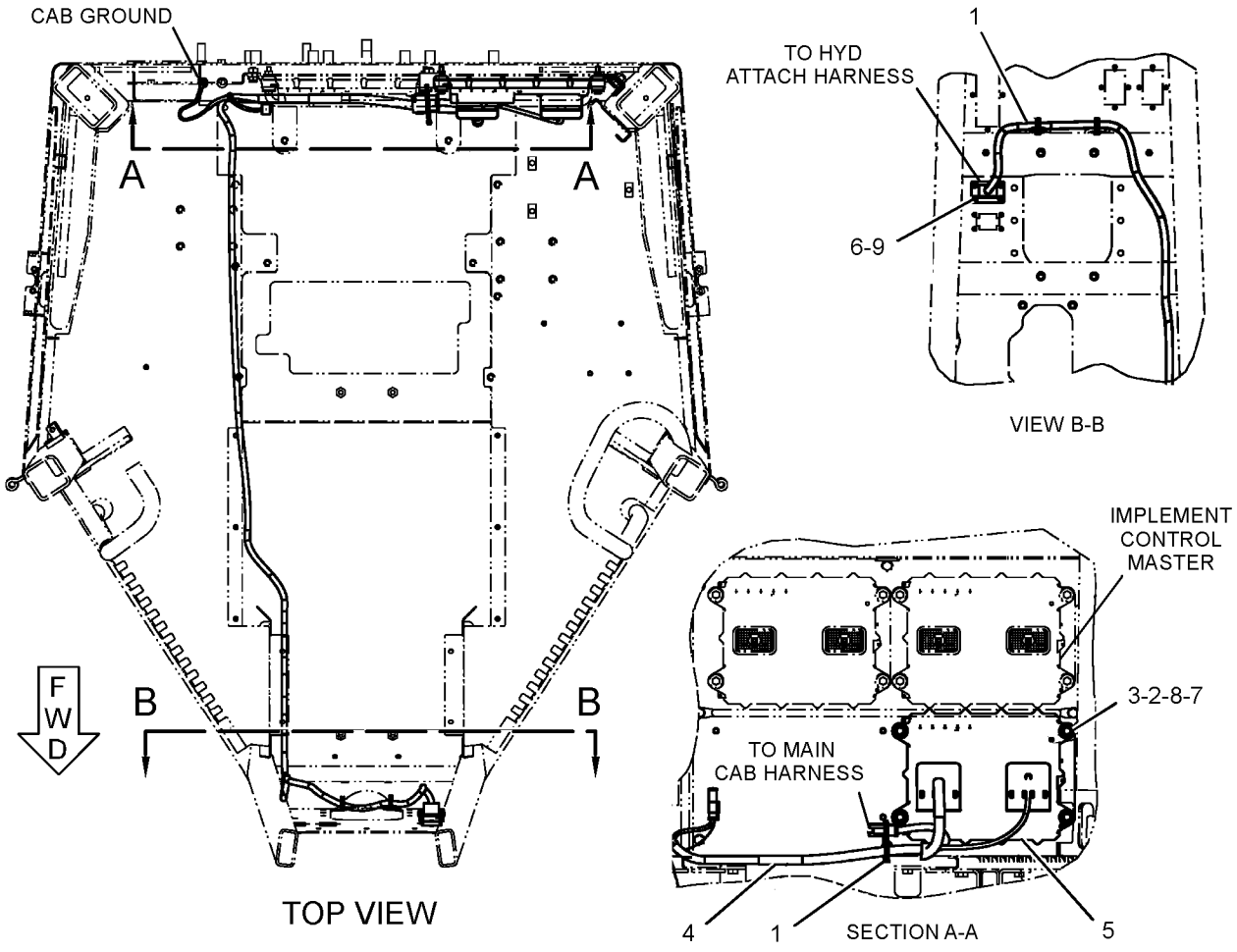

GRAPHIC #1 **<END>** g01163594

239-9954 CONTROL GP-UNPROGRAMMED

S/N: B9M1-UP
PART OF 235-6188 INSTALLATION AR-COMMUNICATION
AN ATTACHMENT

SMCS-7610 **i02293389**

NOTE	REF NO	GRAPHIC REF	PART NUMBER	QTY	PART NAME 1 2 3 4 5 6 (PRODUCT LEVEL)	SEE PAGE
	1	1	**7X-6315**	1	STRAP AS-GROUND	
	2	1	**126-7574**	1	SCREW-PAN HEAD (8-32X9.52-MM)	
	3	1	**134-4126**	1	WASHER (4.52X8.28X0.76-MM THK)	

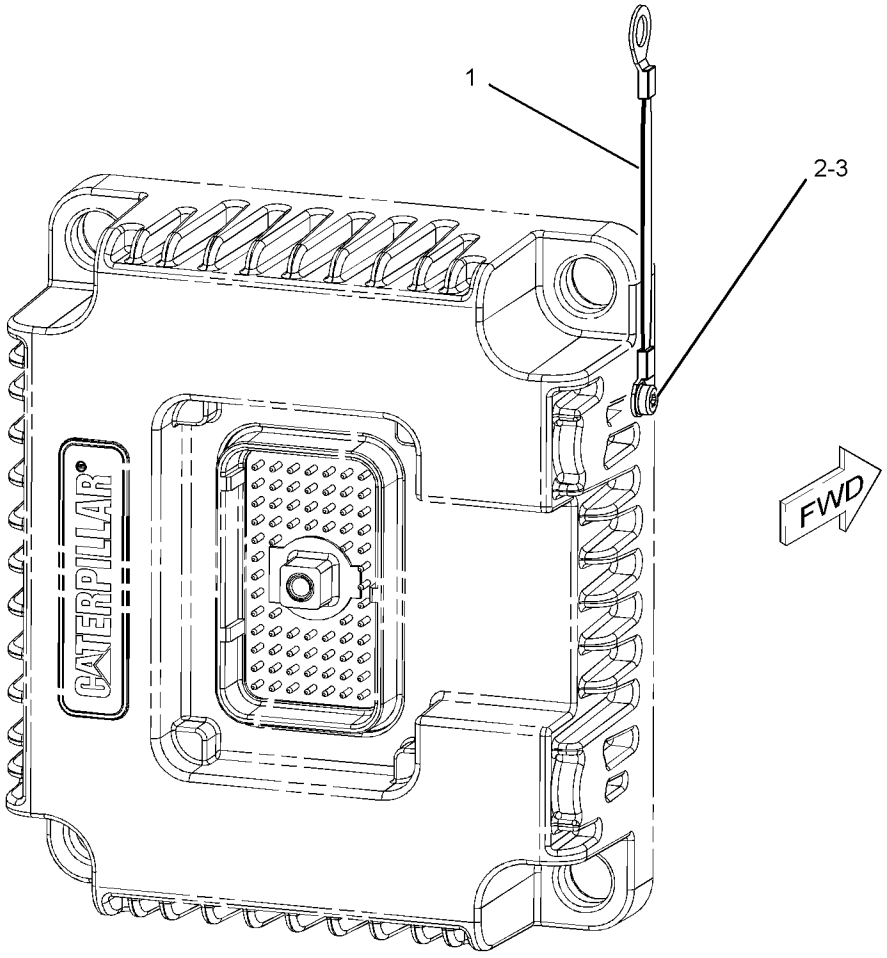

GRAPHIC #1 **<END>** g01145801

233-3134 CONVERTER GP-ELECTRICAL–RADIO

S/N: B9M1-UP

AN ATTACHMENT

SMCS-1421 **i02193584**

NOTE	REF NO	GRAPHIC REF	PART NUMBER	QTY	PART NAME 1 2 3 4 5 6 (PRODUCT LEVEL)	SEE PAGE
	1	1	**184-3579**	1	CONVERTER-POWER (20-AMPERE)	
M	2	1	**174-8131**	4	SCREW-TRUSS HEAD	
	3	1	**8T-0328**	4	WASHER-HARD (5.5X10X1-MM THK)	

M-METRIC PART

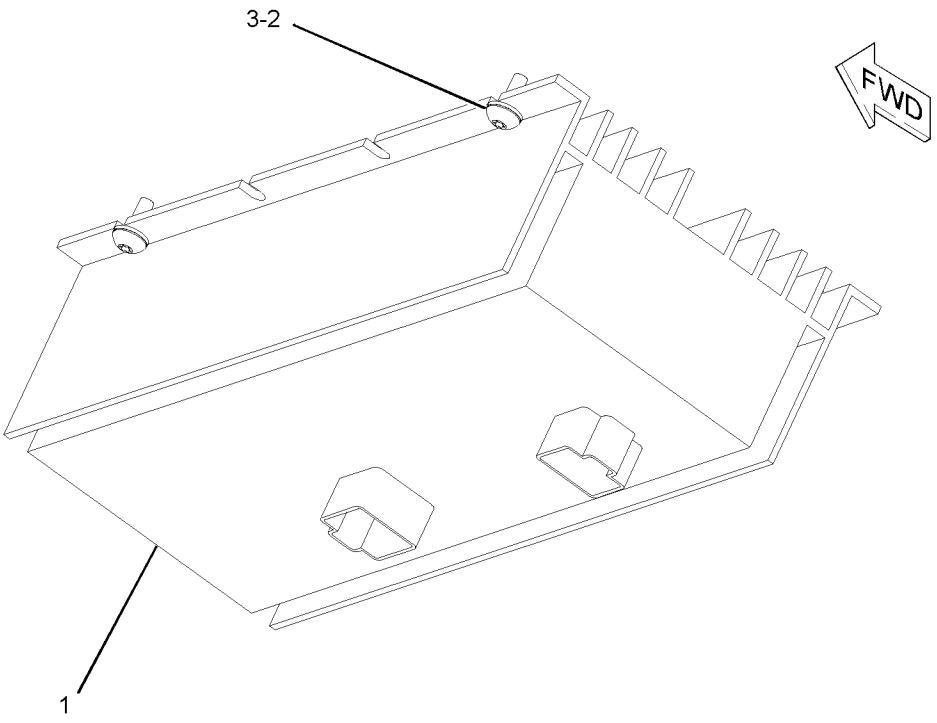

GRAPHIC #1 **<END>** g01110748

250-9257 ELECTRONICS GP-IMPLEMENT

S/N: B9M1-UP

PART OF 234-7721 COMMON AR-MOTOR GRADER

SMCS-5701, 7610, 7620 **i02183463**

NOTE	PART NUMBER	QTY	PART NAME 1 2 3 4 5 6 (PRODUCT LEVEL)	SEE PAGE
	250-9269	1	SOFTWARE GP-IMPLEMENT	
			—OR—	
	250-9270	1	SERVICE GP-IMPLEMENT	
			(OPTIONAL SERVICE REPLACEMENT)	
Y	**230-7490**	1	CONTROL GP-UNPROGRAMMED (IMPLEMENT)	133
	250-9269	1	SOFTWARE GP-IMPLEMENT	

Y-SEPARATE ILLUSTRATION

<END>

250-9258 ELECTRONICS GP-IMPLEMENT

S/N: B9M1-UP

PART OF 234-7721 COMMON AR-MOTOR GRADER

SMCS-5701, 7610, 7620 **i02183465**

NOTE	PART NUMBER	QTY	PART NAME 1 2 3 4 5 6 (PRODUCT LEVEL)	SEE PAGE
	250-9262	1	SOFTWARE GP-IMPLEMENT	
			—OR—	
	250-9263	1	SERVICE GP-IMPLEMENT	
			(OPTIONAL SERVICE REPLACEMENT)	
Y	**230-7490**	1	CONTROL GP-UNPROGRAMMED (IMPLEMENT)	133
	250-9262	1	SOFTWARE GP-IMPLEMENT	

Y-SEPARATE ILLUSTRATION

<END>

250-9259 ELECTRONICS GP-IMPLEMENT

S/N: B9M1-UP

PART OF 242-5061, 242-5062, 242-5063, 242-5064, 242-5066, 242-6107, 242-6108, 242-6109, 242-6110, 242-6111, 242-6112, 242-6146 CONTROL AR-HYDRAULIC AN ATTACHMENT

SMCS-5701, 7610, 7620 **i02333888**

NOTE	PART NUMBER	QTY	PART NAME 1 2 3 4 5 6 (PRODUCT LEVEL)	SEE PAGE
	250-9262	1	SOFTWARE GP-IMPLEMENT	
			—OR—	
	250-9263		SERVICE GP-IMPLEMENT	
			(OPTIONAL SERVICE REPLACEMENT)	
	250-9262	1	SOFTWARE GP-IMPLEMENT	
Y	**230-7490**	1	CONTROL GP-UNPROGRAMMED (IMPLEMENT)	133

Y-SEPARATE ILLUSTRATION

<END>

PROOF

250-9254 ELECTRONICS GP-MONITOR

S/N: B9M1-UP

PART OF 234-7721 COMMON AR-MOTOR GRADER

SMCS-7490, 7610, 7620 **i02179471**

NOTE	PART NUMBER	QTY	PART NAME 1 2 3 4 5 6 (PRODUCT LEVEL)	SEE PAGE
	250-9979	1	SOFTWARE GP-MONITOR (EMS CONTROL PANEL)	
			—OR—	
	250-9980	1	SERVICE GP-MONITOR (EMS CONTROL PANEL)	
			(OPTIONAL SERVICE REPLACEMENT)	
Y	**239-5025**	1	CONTROL GP-UNPRGMED MONITOR (MESSENGER) (EMS CONTROL PANEL)	718
	250-9979	1	SOFTWARE GP-MONITOR (EMS CONTROL PANEL)	

Y-SEPARATE ILLUSTRATION

<END>

250-9255 ELECTRONICS GP-POWER TRAIN

S/N: B9M1-UP

PART OF 234-7721 COMMON AR-MOTOR GRADER

SMCS-4800, 4808, 7610, 7620 **i02183159**

NOTE	PART NUMBER	QTY	PART NAME 1 2 3 4 5 6 (PRODUCT LEVEL)	SEE PAGE
	250-9292	1	SOFTWARE GP-POWER TRAIN	
			—OR—	
	250-9293	1	SERVICE GP-POWER TRAIN	
			(OPTIONAL SERVICE REPLACEMENT)	
Y	**230-7490**	1	CONTROL GP-UNPROGRAMMED (POWER TRAIN)	133
	250-9292	1	SOFTWARE GP-POWER TRAIN	

Y-SEPARATE ILLUSTRATION

<END>

250-9260 ELECTRONICS GP-POWER TRAIN

S/N: B9M1-UP

PART OF 261-0153 AXLE AR-FRONT

AN ATTACHMENT

SMCS-4800, 4808, 7610, 7620 **i02183837**

NOTE	PART NUMBER	QTY	PART NAME 1 2 3 4 5 6 (PRODUCT LEVEL)	SEE PAGE
	250-9266	1	SOFTWARE GP-POWER TRAIN (ALL WHEEL DRIVE)	
			—OR—	
	250-9267	1	SERVICE GP-POWER TRAIN (ALL WHEEL DRIVE)	
			(OPTIONAL SERVICE REPLACEMENT)	
Y	**230-7490**	1	CONTROL GP-UNPROGRAMMED (POWER TRAIN)	133
	250-9266	1	SOFTWARE GP-POWER TRAIN (ALL WHEEL DRIVE)	

Y-SEPARATE ILLUSTRATION

<END>

PROOF

ELECTRICAL AND STARTING SYSTEM

3T-8724 HEATER GP-JACKET WATER

S/N: B9M1-UP
1000 WATT
AN ATTACHMENT

SMCS-1383 **i02238645**

NOTE	REF NO	GRAPHIC REF	PART NUMBER	QTY	PART NAME 1 2 3 4 5 6 (PRODUCT LEVEL)	SEE PAGE
C	1	1	**246-8630**	1	CORD AS-HEATER	
C	2	1	**246-8627**	1	ELEMENT AS-JACKET WATER HEATER (240-VOLT, 1000-WATT)	
	2A	1	**5F-9657**	1	SEAL-O-RING	

C-CHANGE FROM PREVIOUS TYPE

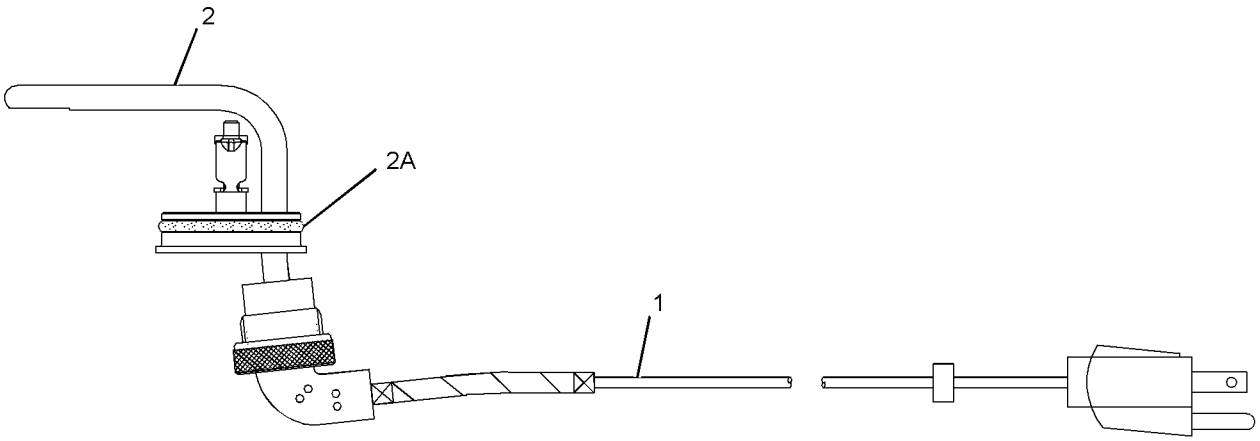

GRAPHIC #1 **<END>** g01135257

9X-3294 HEATER GP-JACKET WATER

S/N: B9M1-UP
1000 WATT
AN ATTACHMENT

SMCS-1383 **i02252596**

NOTE	REF NO	GRAPHIC REF	PART NUMBER	QTY	PART NAME 1 2 3 4 5 6 (PRODUCT LEVEL)	SEE PAGE
	1	1	**246-8631**	1	CORD AS-HEATER	
	2	1	**246-8628**	1	ELEMENT AS-JACKET WATER HEATER (120-VOLT, 1000-WATT)	
	2A	1	**5F-9657**	1	SEAL-O-RING	

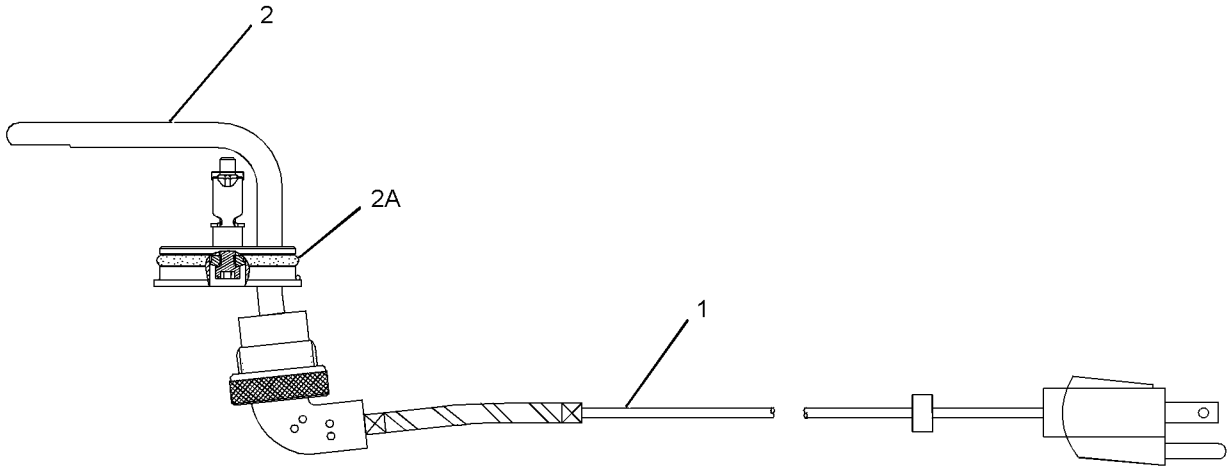

GRAPHIC #1 **<END>** g01135286

235-6188 INSTALLATION AR-COMMUNICATION

S/N: B9M1-UP

AN ATTACHMENT

SMCS-7606 **i02348748**

NOTE	REF NO	GRAPHIC REF	PART NUMBER	QTY	PART NAME 1 2 3 4 5 6 (PRODUCT LEVEL)	SEE PAGE
	1	1	**3S-2093**	3	STRAP-CABLE	
	2	1	**8C-5607**	8	MOUNT-ISOLATION	
	3	1	**8C-5608**	4	SPACER (6.5X9.5X25.4-MM THK)	
	4	1	**207-6136**	1	PLATE	
Y	5	1	**239-9954**	1	CONTROL GP-UNPROGRAMMED (COMMUNICATION)	136
	6	1	**261-9391**	1	HARNESS AS-POWER (PRODUCT LINK RADIO)	
		1	**102-8801**	1	KIT-RECEPTACLE (12-PIN)	
					(INCLUDES RECEPTACLE AS & WEDGE)	
		1	**155-2255**	1	KIT-CONNECTING PLUG (12-PIN)	
					(INCLUDES PLUG AS & WEDGE)	
		1	**160-7690**	1	PLUG AS-CONNECTOR (70-PIN)	
		1	**9X-6772**	2	STRAP-CABLE	
		1	**126-1774**	1	COVER	
	7	1	**262-0982**	1	PLATE AS	
	8	1	**263-8948**	1	ANTENNA AS	
	9	1	**263-9088**	1	RADIO GP-COMMUNICATION (PRODUCT LINK 121SR)	
M	10	1	**8T-2947**	4	BOLT (M6X1X45-MM)	
M	11	1	**8T-4138**	8	BOLT (M6X1X20-MM)	
	12	1	**9X-6165**	4	WASHER (6.5X22X2.5-MM THK)	
	13	1	**9X-8256**	8	WASHER (6.6X12X2-MM THK)	

M-METRIC PART
Y-SEPARATE ILLUSTRATION

PROOF

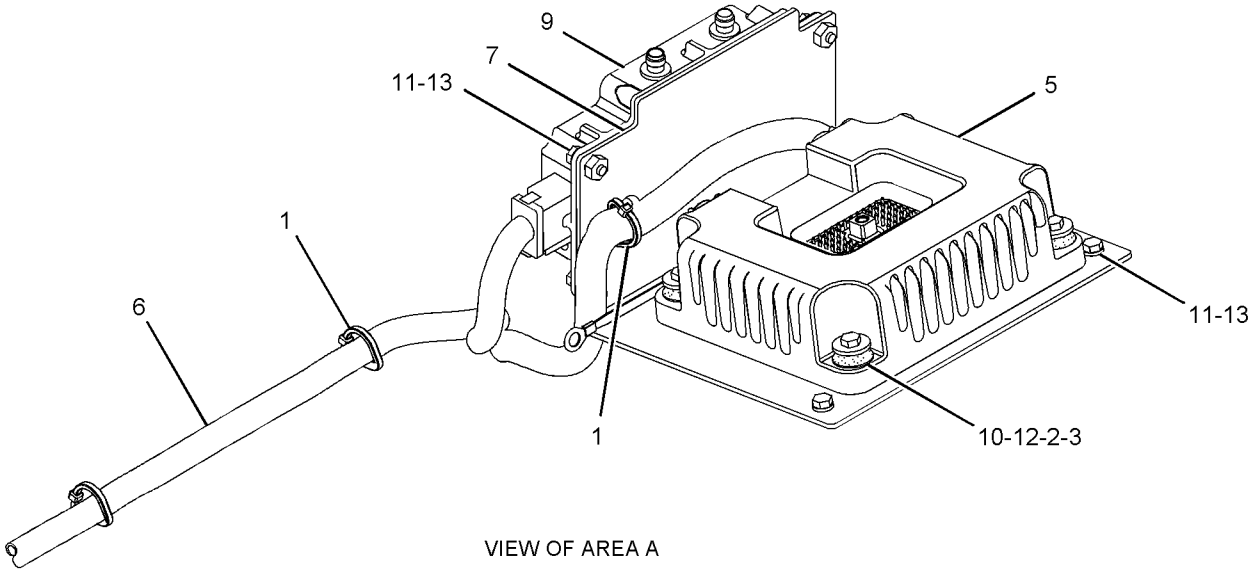

VIEW OF AREA A

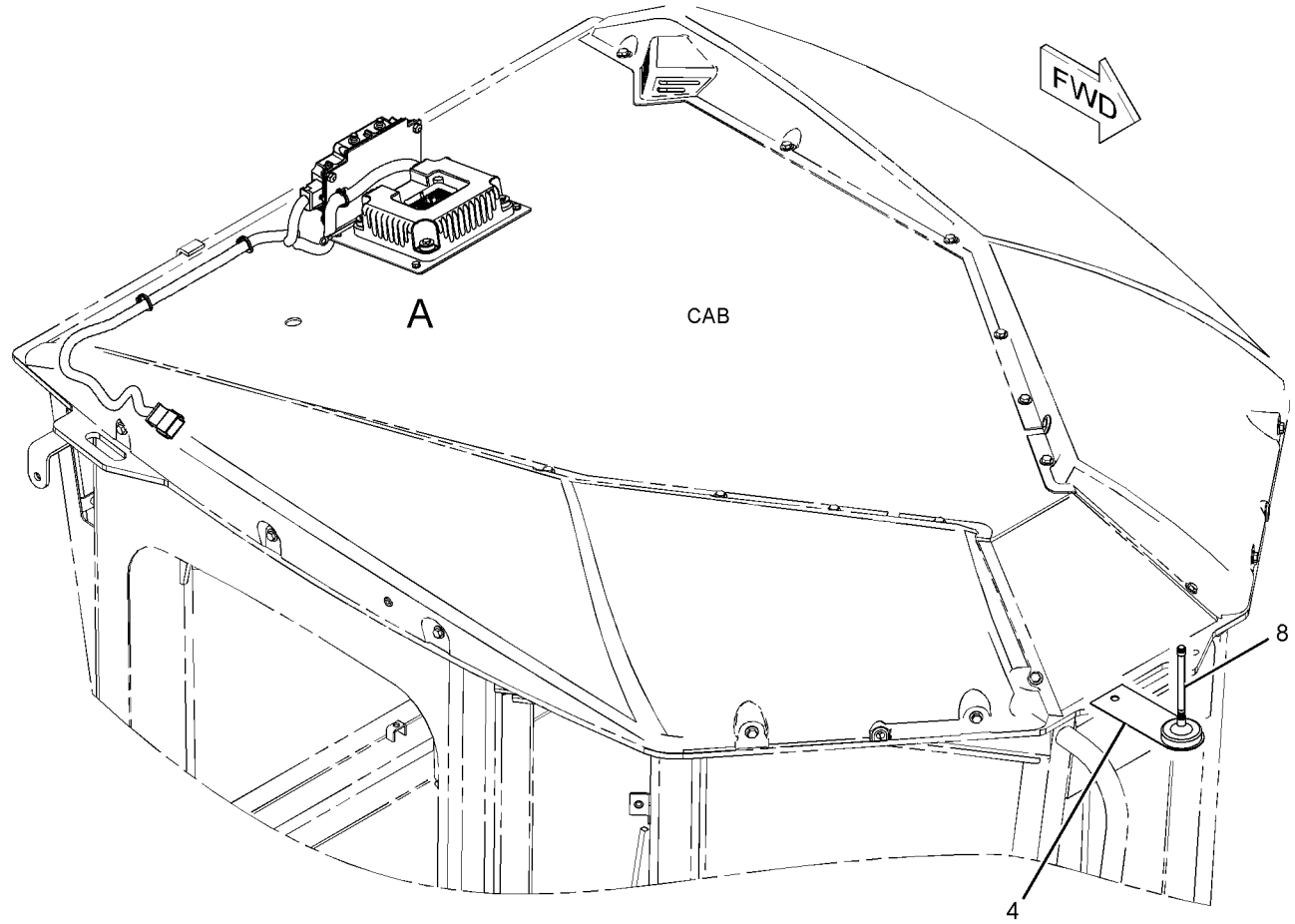

GRAPHIC #1 **<END>** g01142635

251-3230 INSTALLATION AR-GRADE CONTROL

S/N: B9M1-UP
AN ATTACHMENT

SMCS-7220 **i02281694**

NOTE	PART NUMBER	QTY	PART NAME 1 2 3 4 5 6 (PRODUCT LEVEL)	SEE PAGE
Y	*251-4342*	1	MOUNTING GP-GRADE CONTROL (GRADE CONTROL) (DRAWBAR)	645
Y	*251-4188*	1	MOUNTING GP-GRADE CONTROL (BLADE)	683
Y	*233-3288*	1	WIRING GP-GRADE CONTROL (CAB)	233
Y	*239-6383*	1	WIRING GP-GRADE CONTROL (FRONT)	234

Y-SEPARATE ILLUSTRATION

<END>

254-0083 INSTALLATION GP-GRADE CONTROL

S/N: B9M1-UP
AN ATTACHMENT

SMCS-7220 **i02189706**

NOTE	PART NUMBER	QTY	PART NAME 1 2 3 4 5 6 (PRODUCT LEVEL)	SEE PAGE
	244-1900	1	BRACKET	
	253-5331	1	BRACKET	

<END>

254-0084 INSTALLATION GP-GRADE CONTROL

S/N: B9M1-UP
AN ATTACHMENT

SMCS-7220 **i02189728**

NOTE	PART NUMBER	QTY	PART NAME 1 2 3 4 5 6 (PRODUCT LEVEL)	SEE PAGE
	253-5331	2	BRACKET	

<END>

PROOF

233-3126 INSTALLATION GP-LIGHTING

S/N: B9M1-UP

AN ATTACHMENT

SMCS-1429, 7553 **i02238554**

NOTE	REF NO	GRAPHIC REF	PART NUMBER	QTY	PART NAME 1 2 3 4 5 6 (PRODUCT LEVEL)	SEE PAGE
	1	1	**238-8753**	1	BRACKET AS	
M		1	**5W-8591**	1	BOLT (M8X1.25X18-MM)	
		1	**8T-4224**	1	WASHER-HARD (8.8X16X2-MM THK)	
		1	**249-4077**	1	CLIP AS	
		1	**249-4078**	1	CLIP	
	2	1	**249-5480**	1	SWITCH AS-ROCKER (WORK LIGHT)	
Y	3	1	**234-4324**	1	LAMP GP-FLOOD (24-VOLT)	152

M-METRIC PART
Y-SEPARATE ILLUSTRATION

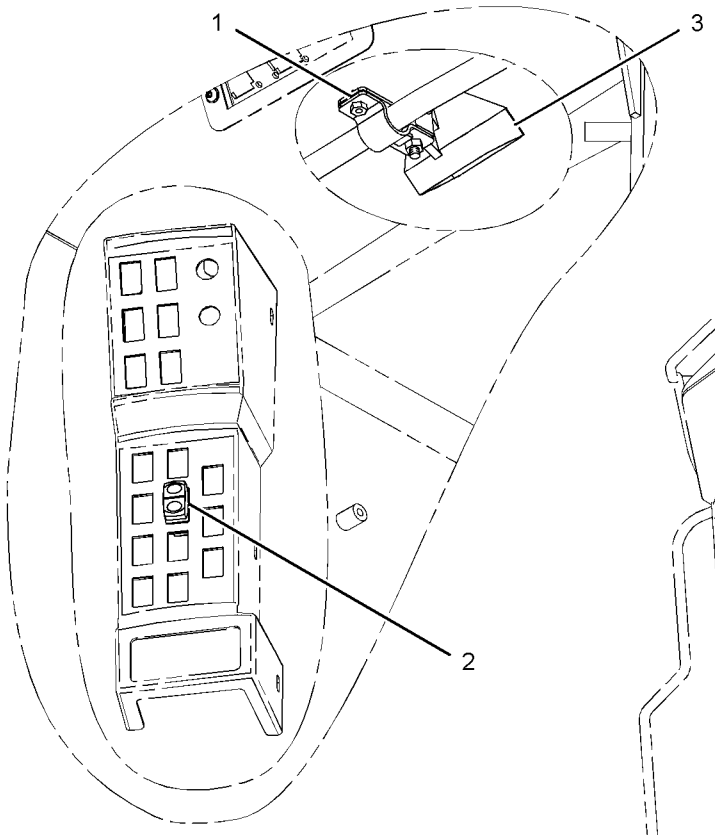

VIEW OF AREA A

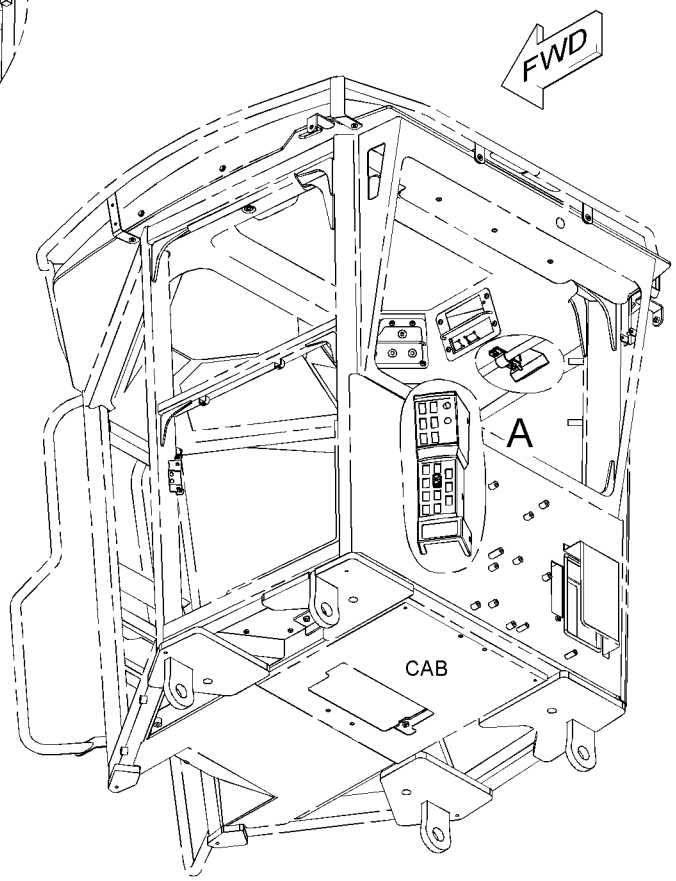

GRAPHIC #1 **<END>** g01144220

237-5920 INSTALLATION GP-SECURITY

S/N: B9M1-UP
UNIVERSAL ATTACHMENT KIT
FIELD INSTALLATION

SMCS-7631 **i02333896**

NOTE	PART NUMBER	QTY	PART NAME 1 2 3 4 5 6 (PRODUCT LEVEL)	SEE PAGE
	205-8257	1	COIL AS (EXCITER)	
	186-3735	2	PIN-CONNECTOR (16-GA TO 18-GA)	
	222-3870	1	COIL AS (FERRITE)	
	102-8802	2	KIT-RECEPTACLE (2-PIN)	
			(INCLUDES RECEPTACLE AS & WEDGE)	
	186-3735	4	PIN-CONNECTOR (16-GA TO 18-GA)	
BE	**9X-1813**		SLEEVE	
Y	**207-5262**	1	SERVICE GP-MACHINE (SECURITY)	194
	198-5389	1	FILM (IGNITION SWITCH)	
	200-5125	1	FILM (IGNITION SWITCH)	
	205-0826	1	FILM-INSTRUCTION (READ OMM)	
	224-3385	1	FILM (ENGINE START)	
	226-5602	1	FILM (EXCITER COIL)	
	225-8513	1	HARNESS AS-WIRING (SECURITY)	
	186-3735	6	PIN-CONNECTOR (16-GA TO 18-GA)	
	155-2260	1	KIT-CONNECTING PLUG (3-PIN)	
	155-2270	3	KIT-CONNECTING PLUG (2-PIN)	
			(EACH INCLUDES PLUG AS & WEDGE)	
	102-8802	1	KIT-RECEPTACLE (2-PIN)	
	102-8803	1	KIT-RECEPTACLE (3-PIN)	
			(EACH INCLUDES RECEPTACLE AS & WEDGE)	
	165-5655	1	LAMP AS (RED, GREEN, LED, 12-VOLT)	
	186-3735	3	PIN-CONNECTOR (16-GA TO 18-GA)	
M	**6V-9189**	3	LOCKNUT (M8X1.25-THD)	
M	**129-3178**	4	LOCKNUT (M6X1-THD)	
	8T-9655	6	MOUNT-ISOLATION	
	149-9818	1	PLATE	
	213-2323	1	PLATE AS	
	230-8173	1	PLATE-COVER	
	3E-5239	2	RELAY AS (24-VOLT) (SECURITY)	
	115-1615	2	RELAY AS (12-VOLT) (SECURITY)	
	200-6260	3	SCREW-BUTTON HEAD	
M	**184-0982**	2	SCREW-PAN HEAD (M6X1X16-MM)	
	141-4976	4	SCREW-WASHER HEAD (NO 4X12.7-MM)	
	6I-1418	3	SPACER (8.2X12.7X28.7-MM THK)	
	115-8109	2	SPLICE-WIRE	
	7K-1181	20	STRAP-CABLE	
	151-6320	2	TOOL-WIRE REMOVAL	
	9N-0869	6	WASHER-HARD (8.8X25.5X2-MM THK)	
			(NO ILLUSTRATION AVAILABLE AT TIME OF PUBLICATION)	

B-USE AS REQUIRED
E-ORDER BY THE CENTIMETER
M-METRIC PART
Y-SEPARATE ILLUSTRATION

<END>

238-8827 INSTALLATION GP-SECURITY

S/N: B9M1-UP

AN ATTACHMENT

SMCS-7631 **i02348750**

NOTE	REF NO	GRAPHIC REF	PART NUMBER	QTY	PART NAME 1 2 3 4 5 6 (PRODUCT LEVEL)	SEE PAGE
	1	1	**3E-3371**	1	WEDGE-RECEPTACLE LOCK (3-PIN)	
	2	1	**3S-2093**	2	STRAP-CABLE	
	3	1	**205-0826**	1	FILM-INSTRUCTION (READ OMM)	
	4	1	**206-5162**	2	KEY AS-ELECTRONIC (SECURITY)	
	5	1	**206-5208**	1	COIL AS (EXCITER)	
		1	**102-8802**	2	KIT-RECEPTACLE (2-PIN)	
		1	**205-8257**	1	COIL AS (EXCITER)	
	6	1	**218-0404**	1	MODULE GP-INTERFACE (KEY) (MACHINE SECURITY SYSTEM)	
	7	1	**219-6314**	2	KEY RING (IDENTIFICATION)	
	8	1	**219-6607**	2	FILM-INFORMATION (KEY) (SECURITY SYSTEM)	
	10	1	**238-8813**	1	HARNESS AS-CHASSIS (MACHINE SECURITY SYSTEM)	
		1	**102-8805**	1	KIT-RECEPTACLE (6-PIN)	
					(INCLUDES RECEPTACLE AS & WEDGE)	
		1	**155-2265**	1	KIT-CONNECTING PLUG (8-PIN)	
		1	**155-2270**	2	KIT-CONNECTING PLUG (2-PIN)	
					(EACH INCLUDES PLUG AS & WEDGE)	
	11	1	**242-3282**	1	LAMP-LED (24-VOLT, RED)	
	12	1	**251-2253**	1	BRACKET AS	
M	13	1	**132-0111**	2	SCREW (M6X1X35-MM)	
	14	1	**102-8802**	1	KIT-RECEPTACLE (2-PIN)	
					(INCLUDES RECEPTACLE AS & WEDGE)	
	15	1	**8C-5607**	4	MOUNT-ISOLATION	
	16	1	**8C-5608**	2	SPACER (6.5X9.5X25.4-MM THK)	
	17	1	**9X-6165**	2	WASHER (6.5X22X2.5-MM THK)	
	18	1	**198-5389**	1	FILM (IGNITION SWITCH)	

M-METRIC PART

PROOF

238-8827 **INSTALLATION GP-SECURITY** *(contd.)* **i02348750**

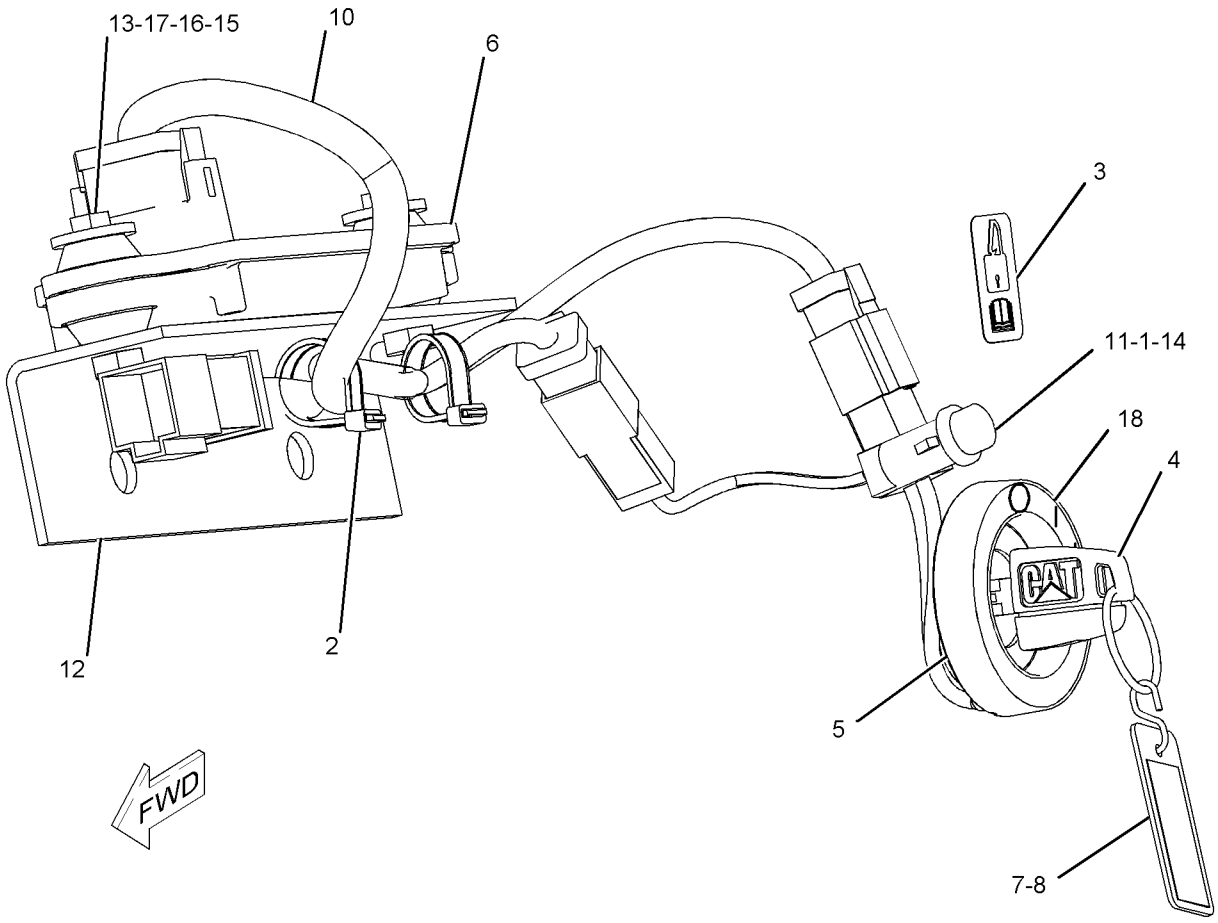

GRAPHIC #1 **<END>** g01141705

3E-6389 LAMP GP-DOME

S/N: B9M1-UP
24-VOLT. WITH SWITCH
PART OF 233-3214 LINER GP-CAB

SMCS-1433 **i02286066**

NOTE	REF NO	GRAPHIC REF	PART NUMBER	QTY	PART NAME 1 2 3 4 5 6 (PRODUCT LEVEL)	SEE PAGE
	1	1	**7N-9943**	1	LAMP (24-VOLT)	
	2	1	**102-8803**	1	KIT-RECEPTACLE (3-PIN)	
					(INCLUDES RECEPTACLE AS & WEDGE)	
	3	1	**3E-3371**	1	WEDGE-RECEPTACLE LOCK (3-PIN)	
	4	1	**8T-8729**	3	PIN-CONNECTOR	
	5	1	**7T-0020**	1	LENS-DOME LAMP	

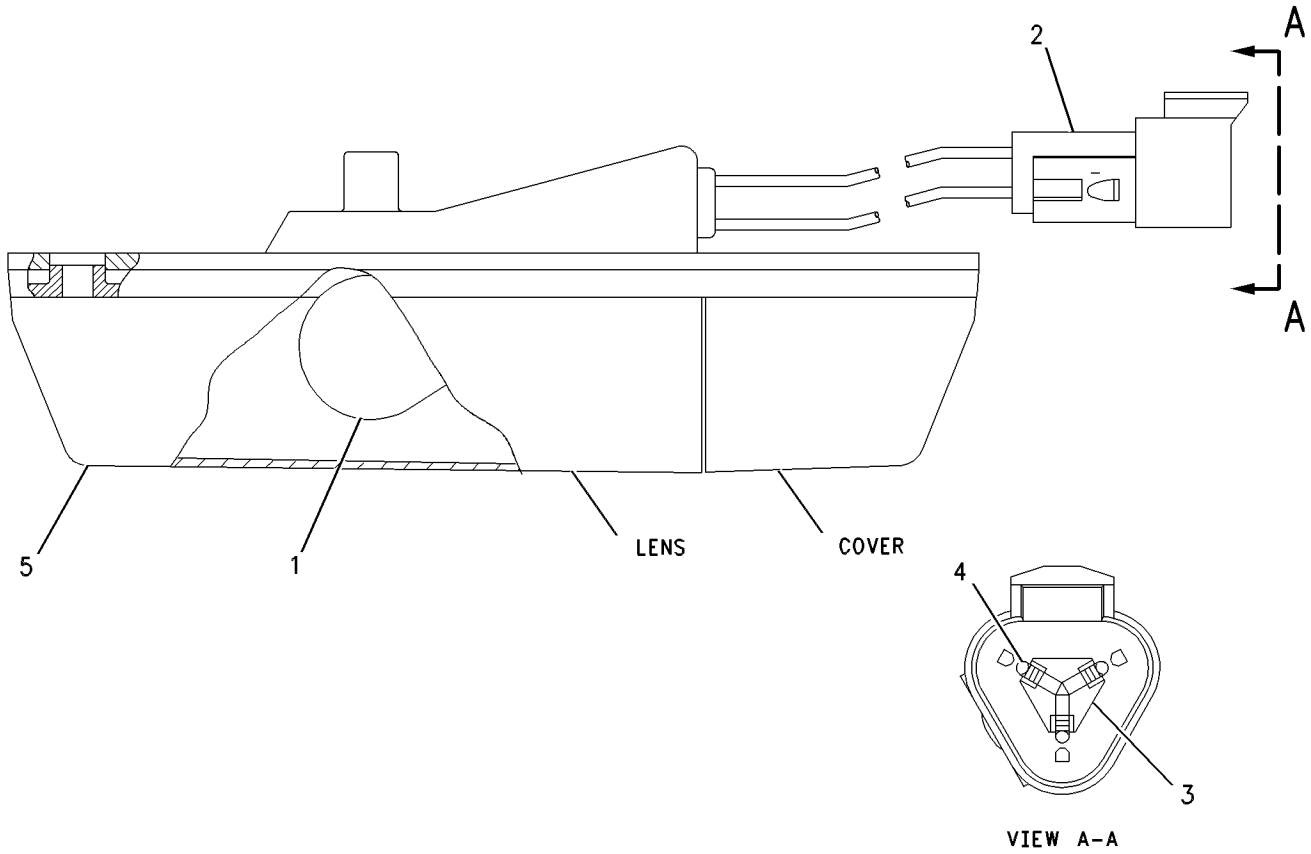

GRAPHIC #1 **<END>** g00647928

210-8422 LAMP GP-FLOOD–SUSPENDED MOUNT

S/N: B9M1-UP
24-VOLT,35-WATT
PART OF 233-4619, 233-4621 LIGHTING GP-FLOOD
AN ATTACHMENT

SMCS-1434 **i02254158**

NOTE	REF NO	GRAPHIC REF	PART NUMBER	QTY	PART NAME 1 2 3 4 5 6 (PRODUCT LEVEL)	SEE PAGE
	1	1	**229-9969**	1	LENS AS (WORK LIGHT)	
	2	1	**209-6638**	1	LAMP (12-VOLT, 24-VOLT, 35-WATT)	
M	3	1	**151-8754**	1	BOLT (M10X1.5X40-MM)	
M	4	1	**8T-4121**	1	WASHER-HARD (11X21X2.5-MM THK)	
M	5	1	**120-9027**	4	SCREW-PAN HEAD (M3X0.5X16-MM)	
M	6	1	**8T-4189**	2	BOLT (M8X1.25X20-MM)	
M	7	1	**6V-9189**	2	LOCKNUT (M8X1.25-THD)	
	8	1	**229-9972**	1	BRACKET AS	
	9	1	**229-9974**	1	BEZEL	

M-METRIC PART

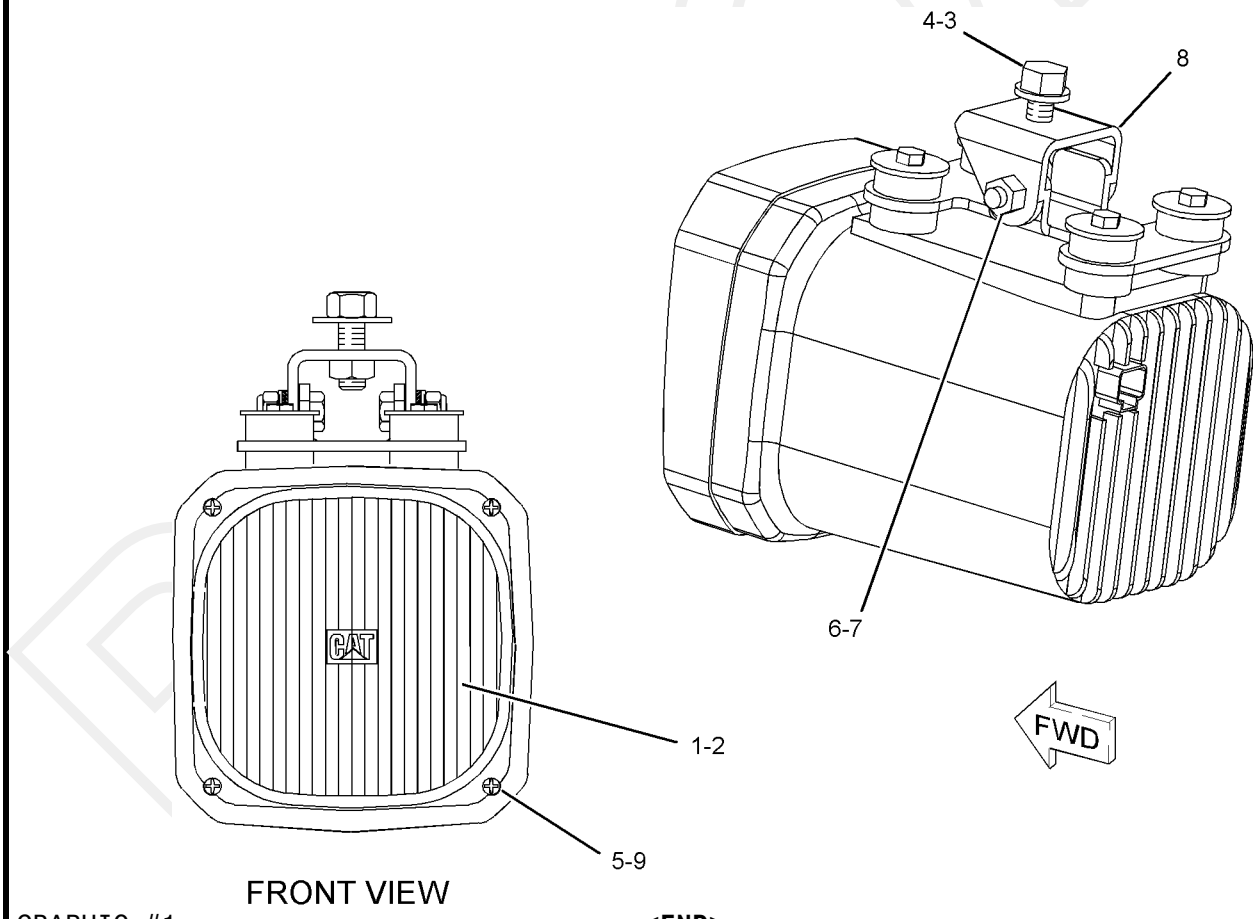

GRAPHIC #1 **<END>** g01069665

210-8423 LAMP GP-FLOOD–VERTICAL MOUNT

S/N: B9M1-UP
24-VOLT, 35-WATT
PART OF 233-4616 LIGHTING GP-FLOOD
AN ATTACHMENT

SMCS-1434 **i02254177**

NOTE	REF NO	GRAPHIC REF	PART NUMBER	QTY	PART NAME 1 2 3 4 5 6 (PRODUCT LEVEL)	SEE PAGE
	1	1	**229-9969**	1	LENS AS (FLOODLIGHT)	
	2	1	**209-6638**	1	LAMP (12-VOLT, 24-VOLT, 35-WATT)	
M	3	1	**151-8754**	1	BOLT (M10X1.5X40-MM)	
	4	1	**8T-4121**	1	WASHER-HARD (11X21X2.5-MM THK)	
M	5	1	**120-9027**	4	SCREW-PAN HEAD (M3X0.5X16-MM)	
M	6	1	**8T-4189**	2	BOLT (M8X1.25X20-MM)	
M	7	1	**6V-9189**	2	LOCKNUT (M8X1.25-THD)	
	8	1	**229-9972**	1	BRACKET AS	
	9	1	**229-9974**	1	BEZEL	

M-METRIC PART

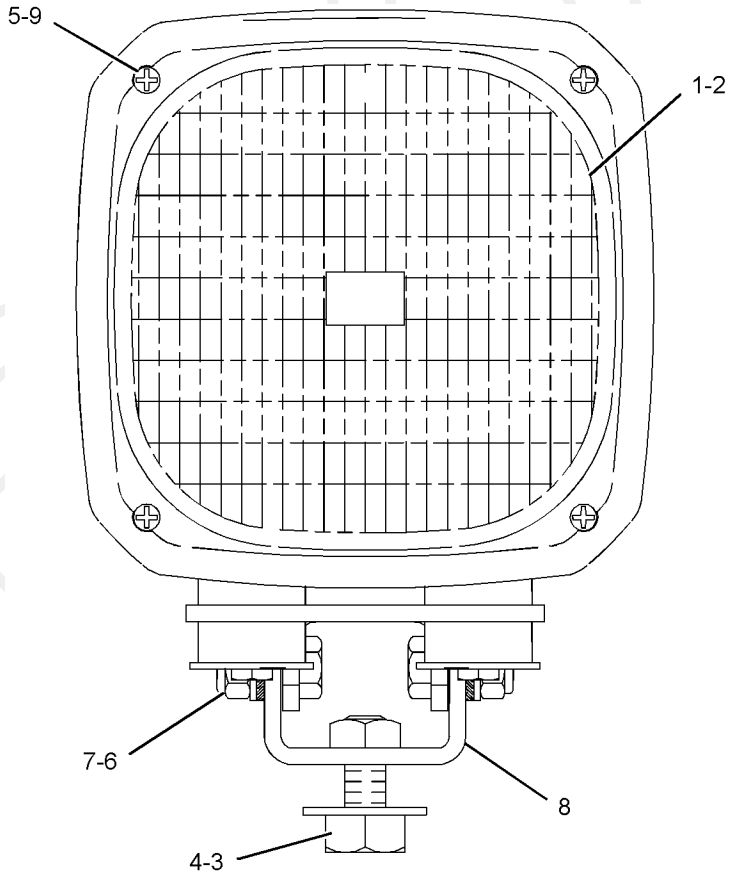

GRAPHIC #1 **<END>** g01022778

234-4324 LAMP GP-FLOOD–VERTICAL MOUNT

S/N: B9M1-UP
24-VOLT
PART OF 233-3126 INSTALLATION GP-LIGHTING
AN ATTACHMENT

SMCS-1434 **i02333910**

NOTE	REF NO	GRAPHIC REF	PART NUMBER	QTY	PART NAME 1 2 3 4 5 6 (PRODUCT LEVEL)	SEE PAGE
	1	1	**9X-3463**	1	LAMP-HALOGEN (24-VOLT, 65-WATT)	
	2	1	**9X-4244**	2	SCREW	
	3	1	**202-6611**	1	LENS AS (FLOODLIGHT)	
	4	1	**234-7730**	1	BODY AS	
	5	1	**164-7556**	1	CLIP	
M	6	1	**8T-4133**	1	NUT (M10X1.5-THD)	
	7	1	**234-7731**	1	BRACKET AS	

M-METRIC PART

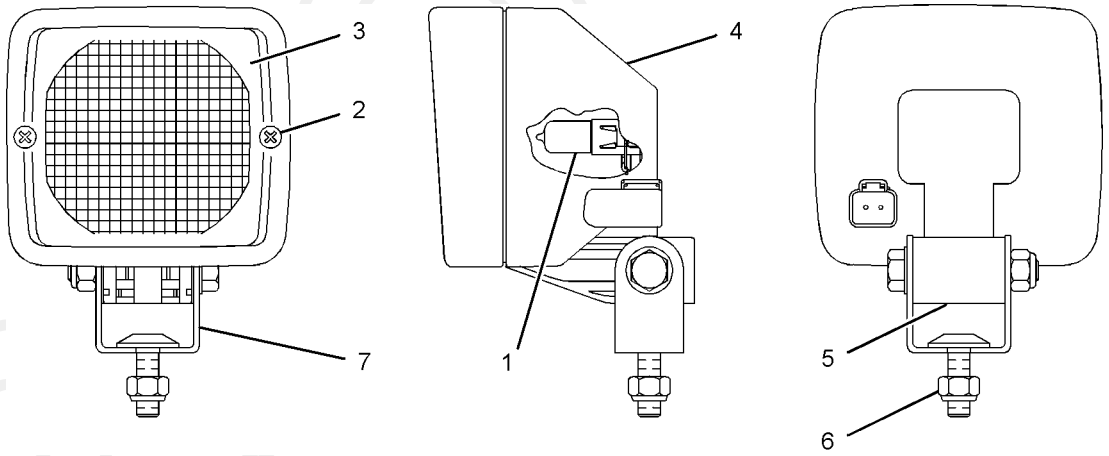

GRAPHIC #1 **<END>** g01091127

PROOF

234-4325 LAMP GP-FLOOD–SUSPENDED MOUNT

S/N: B9M1-UP
24-VOLT
PART OF 233-4615, 233-4618, 233-4620 LIGHTING GP-FLOOD, 233-3125 WIRING GP-LIGHTING
AN ATTACHMENT

SMCS-1434 **i02333913**

NOTE	REF NO	GRAPHIC REF	PART NUMBER	QTY	PART NAME 1 2 3 4 5 6 (PRODUCT LEVEL)	SEE PAGE
	1	1	**9X-3463**	1	LAMP-HALOGEN (24-VOLT, 65-WATT)	
M	2	1	**8T-4133**	1	NUT (M10X1.5-THD)	
	3	1	**9X-4244**	2	SCREW	
	4	1	**202-6614**	1	LENS AS (FLOODLIGHT)	
	5	1	**234-7730**	1	BODY AS	
	6	1	**164-7556**	1	CLIP	
	7	1	**234-7731**	1	BRACKET AS	

M-METRIC PART

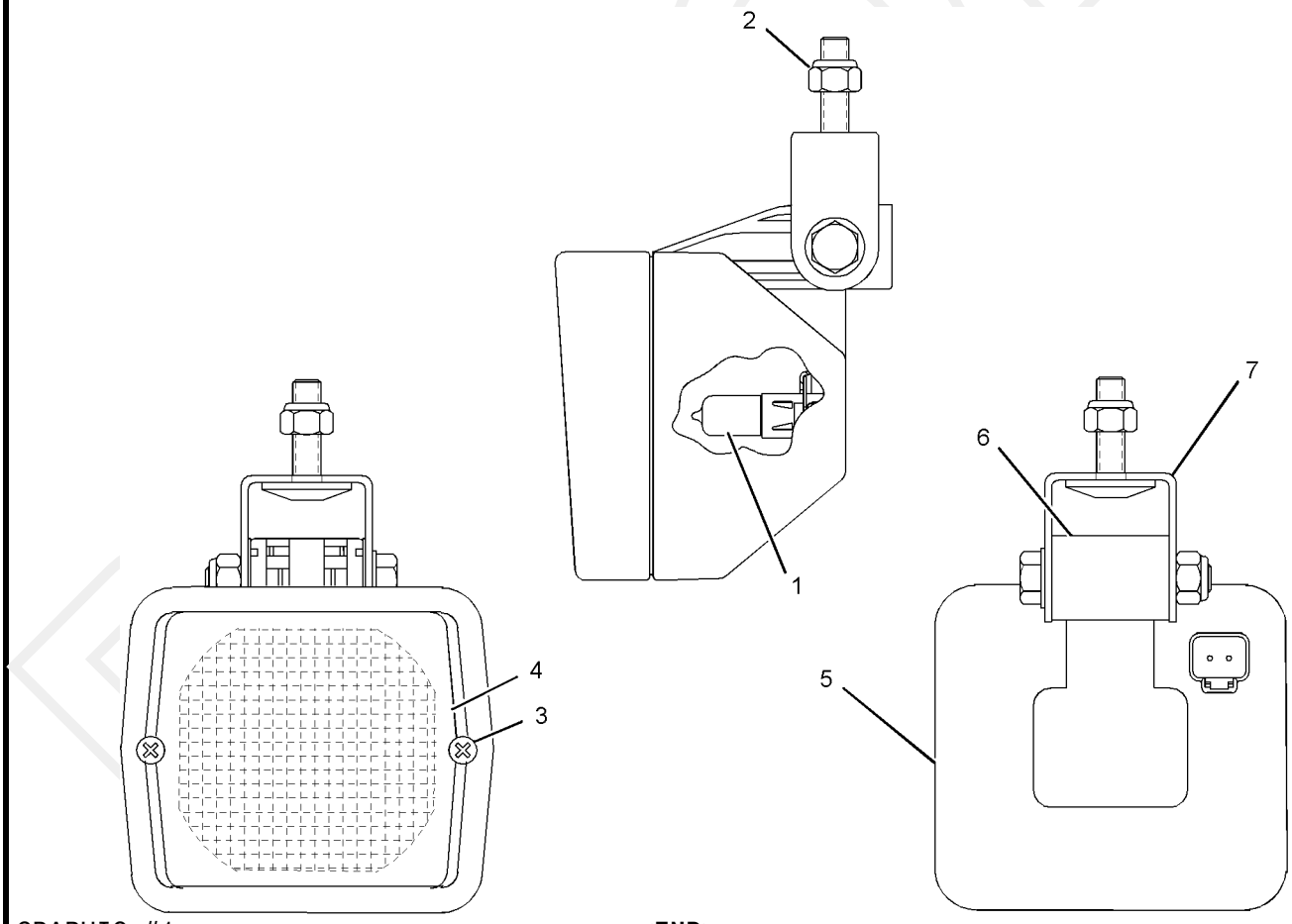

GRAPHIC #1 **<END>** g01026923

234-4326 LAMP GP-FLOOD–24-VOLT, SUSPENDED MOUNT

S/N: B9M1-UP
PART OF 233-3125 WIRING GP-LIGHTING
AN ATTACHMENT

SMCS-1434 **i02254169**

NOTE	REF NO	GRAPHIC REF	PART NUMBER	QTY	PART NAME 1 2 3 4 5 6 (PRODUCT LEVEL)	SEE PAGE
	1	1	**9X-3463**	1	LAMP-HALOGEN (24-VOLT, 65-WATT) (BLADE)	
M	2	1	**8T-4133**	1	NUT (M10X1.5-THD)	
	3	1	**9X-4244**	2	SCREW	
	4	1	**202-6611**	1	LENS AS (FLOODLIGHT)	
	5	1	**234-7730**	1	BODY AS	
	6	1	**164-7556**	1	CLIP	
	7	1	**234-7731**	1	BRACKET AS	

M-METRIC PART

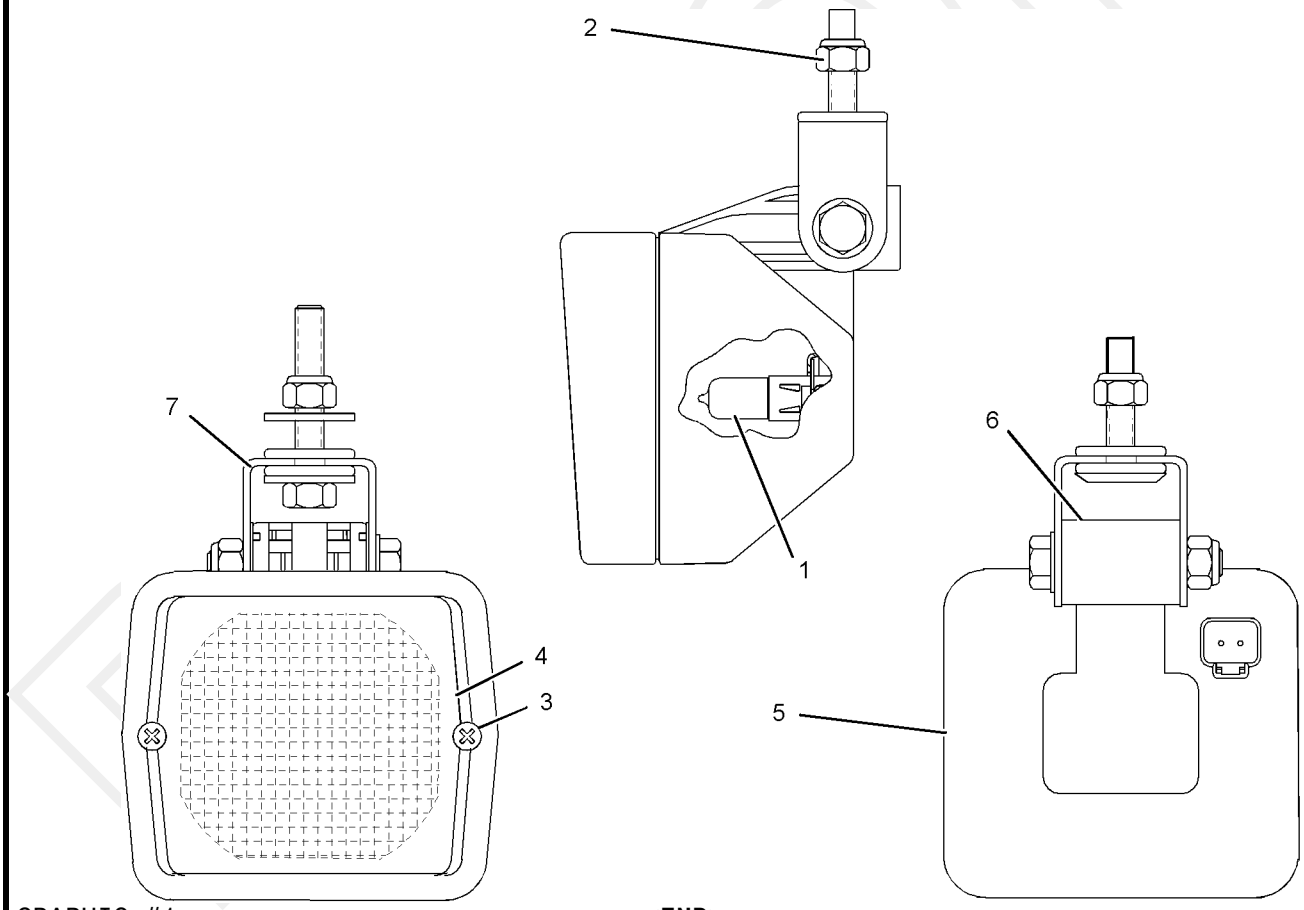

GRAPHIC #1 **<END>** g01044247

233-4610 LAMP GP-HEAD & SIGNAL—LOW

S/N: B9M1-UP
AN ATTACHMENT

SMCS-1429, 1430 **i02238748**

NOTE	REF NO	GRAPHIC REF	PART NUMBER	QTY	PART NAME 1 2 3 4 5 6 (PRODUCT LEVEL)	SEE PAGE
	1	1	**2G-0617**	2	CLAMP	
	2	1	**2G-0988**	2	CAP	
	3	1	**3K-9520**	3	GROMMET	
	4	1	**137-9410**	2	CLAMP	
	5	1	**233-4614**	2	BRACKET	
	6	1	**236-2335**	1	HARNESS AS-FRONT LIGHTING	
		1	**102-8802**	1	KIT-RECEPTACLE (2-PIN)	
		1	**102-8805**	1	KIT-RECEPTACLE (6-PIN)	
					(EACH INCLUDES RECEPTACLE AS & WEDGE)	
		1	**155-2274**	2	KIT-CONNECTING PLUG (6-PIN)	
					(EACH INCLUDES PLUG AS & WEDGE)	
	7	1	**250-4330**	1	TUBE	
	8	1	**130-5300**	2	CLIP	
	9	1	**130-5301**	2	CLIP	
Y	10	1	**238-2797**	1	LAMP GP-HEAD & SIGNAL (24-VOLT, RH)	159
Y	11	1	**238-2798**	1	LAMP GP-HEAD & SIGNAL (24-VOLT, LH)	160
	12	1	**8T-4121**	4	WASHER-HARD (11X21X2.5-MM THK)	
M	13	1	**8T-4133**	2	NUT (M10X1.5-THD)	
M	14	1	**8T-4195**	2	BOLT (M10X1.5X30-MM)	
	15	1	**8T-4223**	4	WASHER-HARD (13.5X25.5X3-MM THK)	
M	16	1	**8T-5412**	4	BOLT (M12X1.75X140-MM)	

M-METRIC PART
Y-SEPARATE ILLUSTRATION

PROOF

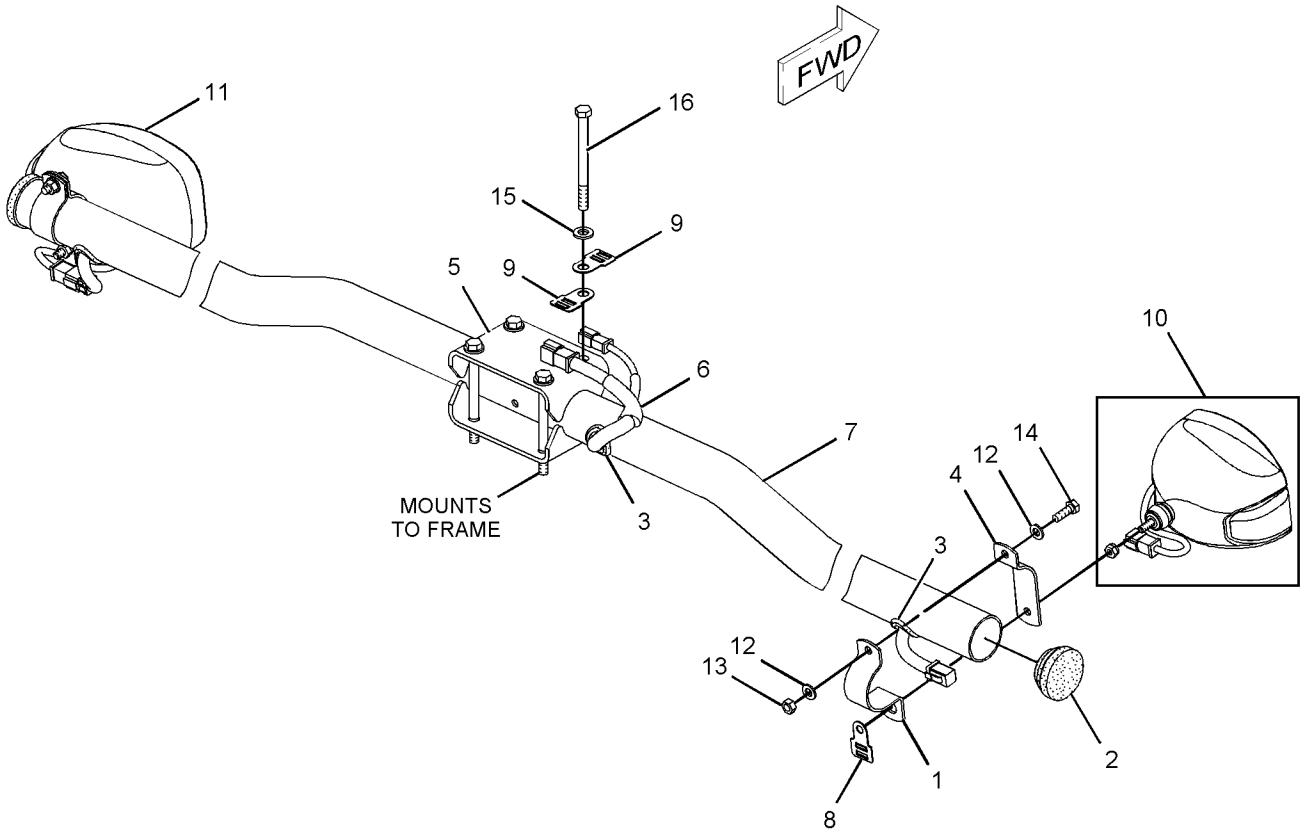

GRAPHIC #1 **<END>** g01132473

233-4624 LAMP GP-HEAD & SIGNAL–HIGH

S/N: B9M1-UP
AN ATTACHMENT

SMCS-1429, 1430 **i02183527**

NOTE	REF NO	GRAPHIC REF	PART NUMBER	QTY	PART NAME 1 2 3 4 5 6 (PRODUCT LEVEL)	SEE PAGE
	1	1	**2G-0617**	2	CLAMP	
	2	1	**2G-0988**	2	CAP	
	3	1	**3K-9520**	3	GROMMET	
	4	1	**137-9410**	2	CLAMP	
	5	1	**236-2335**	1	HARNESS AS-FRONT LIGHTING	
		1	**102-8802**	1	KIT-RECEPTACLE (2-PIN)	
		1	**102-8805**	1	KIT-RECEPTACLE (6-PIN)	
					(EACH INCLUDES RECEPTACLE AS & WEDGE)	
		1	**155-2274**	1	KIT-CONNECTING PLUG (6-PIN)	
					(INCLUDES PLUG AS & WEDGE)	
	6	1	**246-1672**	1	TUBE	
	7	1	**130-5300**	2	CLIP	
	8	1	**130-5301**	2	CLIP	
	9	1	**233-4614**	2	BRACKET	
Y	10	1	**238-2797**	1	LAMP GP-HEAD & SIGNAL (24-VOLT, RH)	159
Y	11	1	**238-2798**	1	LAMP GP-HEAD & SIGNAL (24-VOLT, LH)	160
	12	1	**8T-4121**	4	WASHER-HARD (11X21X2.5-MM THK)	
M	13	1	**8T-4133**	2	NUT (M10X1.5-THD)	
M	14	1	**8T-4195**	2	BOLT (M10X1.5X30-MM)	
	15	1	**8T-4223**	4	WASHER-HARD (13.5X25.5X3-MM THK)	
M	16	1	**8T-5001**	4	BOLT (M12X1.75X130-MM)	

M-METRIC PART
Y-SEPARATE ILLUSTRATION

PROOF

233-4624 **LAMP GP-HEAD & SIGNAL** *(contd.)* **i02183527**

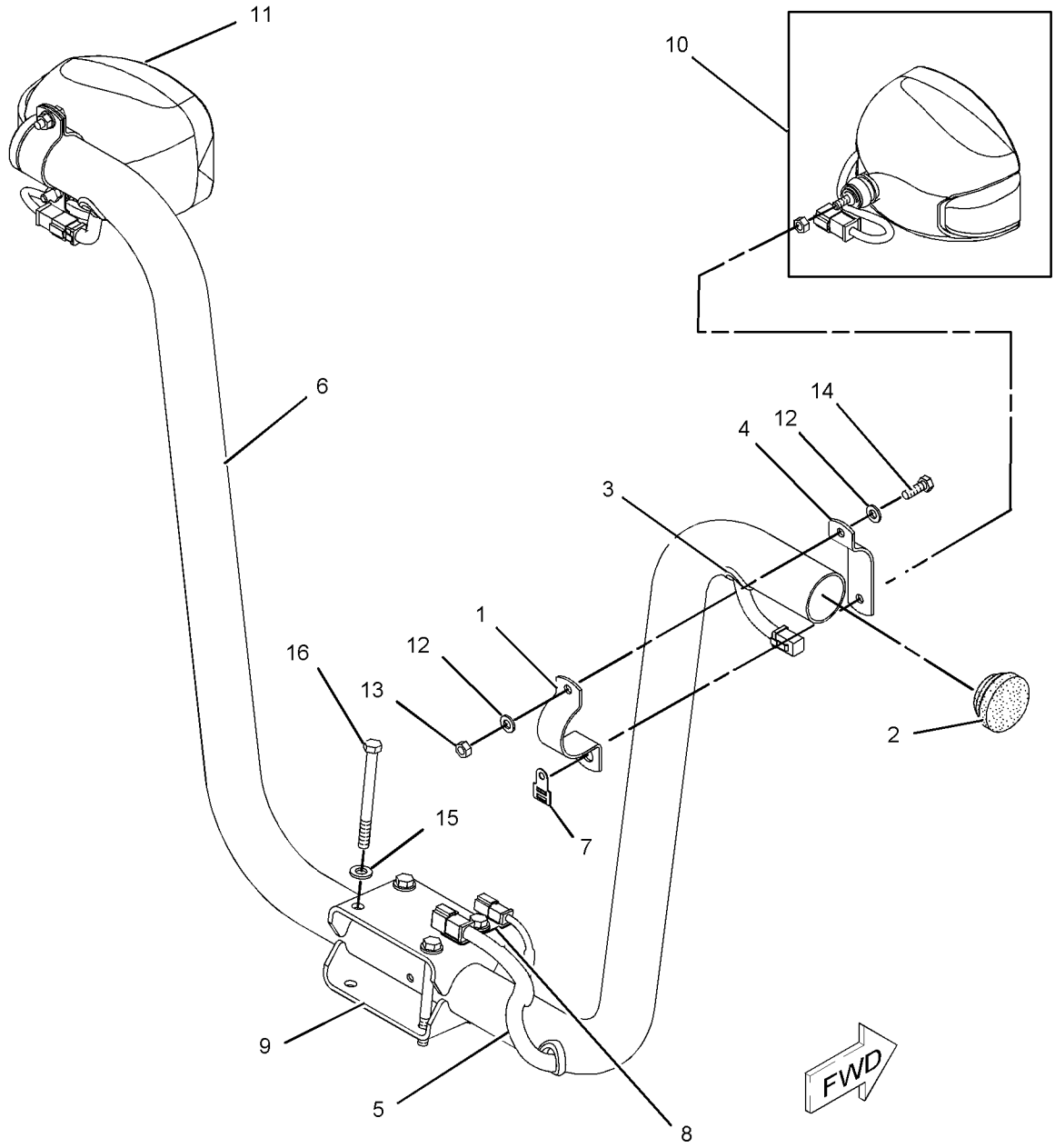

GRAPHIC #1 **<END>** g01109933

238-2797 LAMP GP-HEAD & SIGNAL–RH

S/N: B9M1-UP
24-VOLT
PART OF 233-4610, 233-4624 LAMP GP-HEAD & SIGNAL
AN ATTACHMENT

SMCS-1429, 1430 **i02254218**

NOTE	REF NO	GRAPHIC REF	PART NUMBER	QTY	PART NAME 1 2 3 4 5 6 (PRODUCT LEVEL)	SEE PAGE
	1	1	**228-6053**	1	BODY AS	
	2	1	**228-6054**	1	BEZEL	
	3	1	**228-6051**	1	LENS AS (HEADLIGHT)	
	4	1	**228-6052**	1	LENS AS (TURN SIGNAL)	
	5	1	**228-6056**	6	SCREW	
	6	1	**9X-3465**	1	LAMP (24-VOLT, 75/70-WATT) (CLEAR)	
	7	1	**130-3515**	1	LAMP (24-VOLT, 5-WATT) (CLEAR)	
	8	1	**242-0588**	1	LAMP (24-VOLT, 21-WATT) (AMBER)	
M	9	1	**8T-0389**	1	LOCKNUT (M10X1.5-THD)	
	10	1	**100-3253**	1	SPACER	
	11	1	**100-3254**	1	SPACER	
	12	1	**100-3255**	1	WASHER	
	13	1	**102-8805**	1	KIT-RECEPTACLE (6-PIN)	
					(INCLUDES RECEPTACLE AS & WEDGE)	
	14	1	**186-3735**	5	PIN-CONNECTOR (16-GA TO 18-GA)	
	15	1	**8T-8737**	1	PLUG-SEAL	

M-METRIC PART

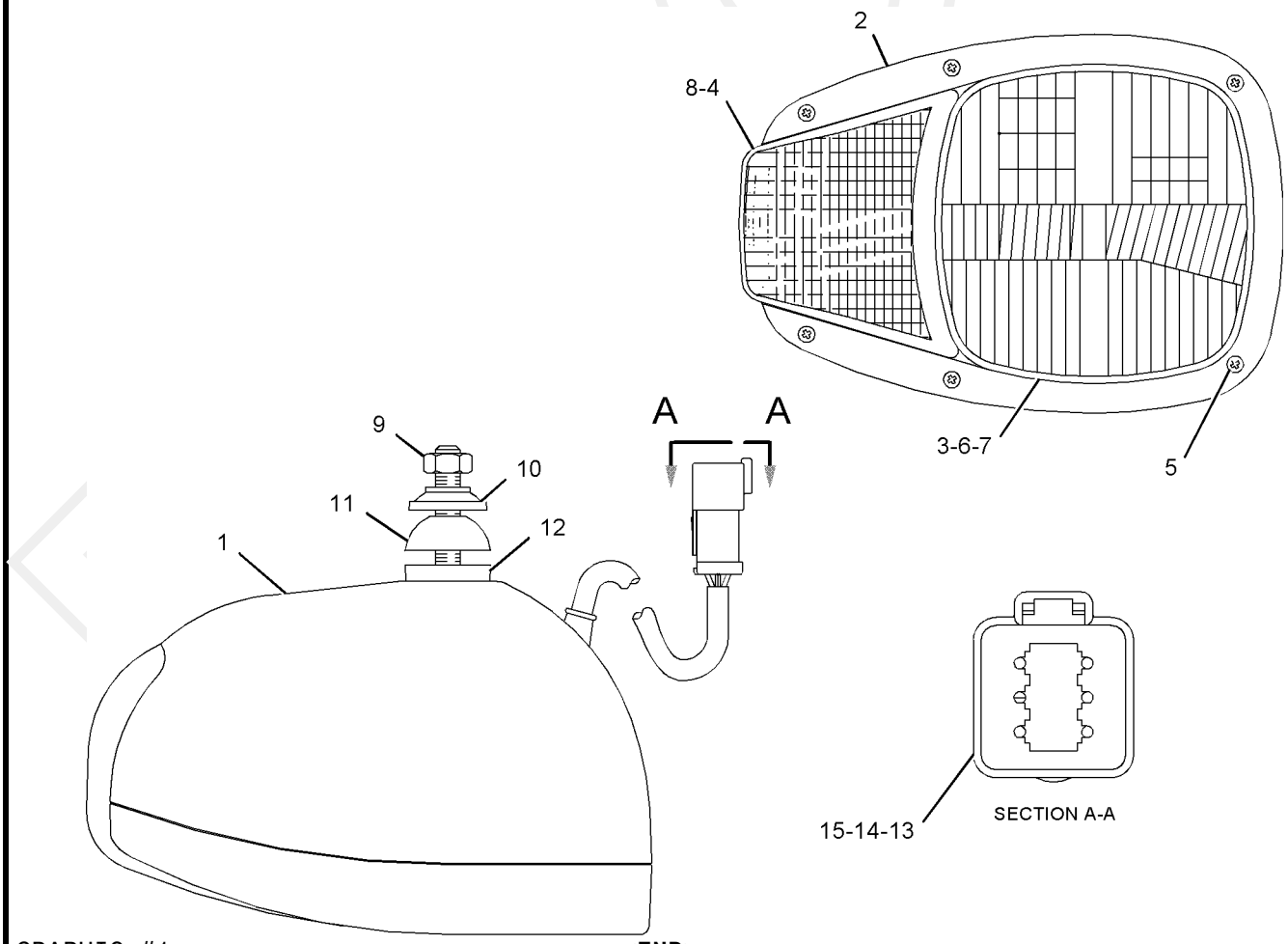

GRAPHIC #1 **<END>** g01106470

238-2798 LAMP GP-HEAD & SIGNAL–LH

S/N: B9M1-UP
24-VOLT
PART OF 233-4610, 233-4624 LAMP GP-HEAD & SIGNAL
AN ATTACHMENT

SMCS-1429, 1430 **i02333915**

NOTE	REF NO	GRAPHIC REF	PART NUMBER	QTY	PART NAME 1 2 3 4 5 6 (PRODUCT LEVEL)	SEE PAGE
	1	1	**228-6053**	1	BODY AS	
	2	1	**228-6054**	1	BEZEL	
	3	1	**228-6051**	1	LENS AS (HEADLIGHT)	
	4	1	**228-6052**	1	LENS AS (TURN SIGNAL)	
	5	1	**228-6056**	6	SCREW (4-32X1.26-IN)	
	6	1	**9X-3465**	1	LAMP (24-VOLT, 75/70-WATT) (CLEAR)	
	7	1	**130-3515**	1	LAMP (24-VOLT, 5-WATT) (CLEAR)	
	8	1	**242-0588**	1	LAMP (24-VOLT, 21-WATT) (AMBER)	
M	9	1	**8T-0389**	1	LOCKNUT (M10X1.5-THD)	
	10	1	**100-3253**	1	SPACER	
	11	1	**100-3254**	1	SPACER	
	12	1	**100-3255**	1	WASHER	
	13	1	**102-8805**	1	KIT-RECEPTACLE (6-PIN)	
					(INCLUDES RECEPTACE AS & WEDGE)	
	14	1	**186-3735**	5	PIN-CONNECTOR (16-GA TO 18-GA)	
	15	1	**8T-8737**	1	PLUG-SEAL	

M-METRIC PART

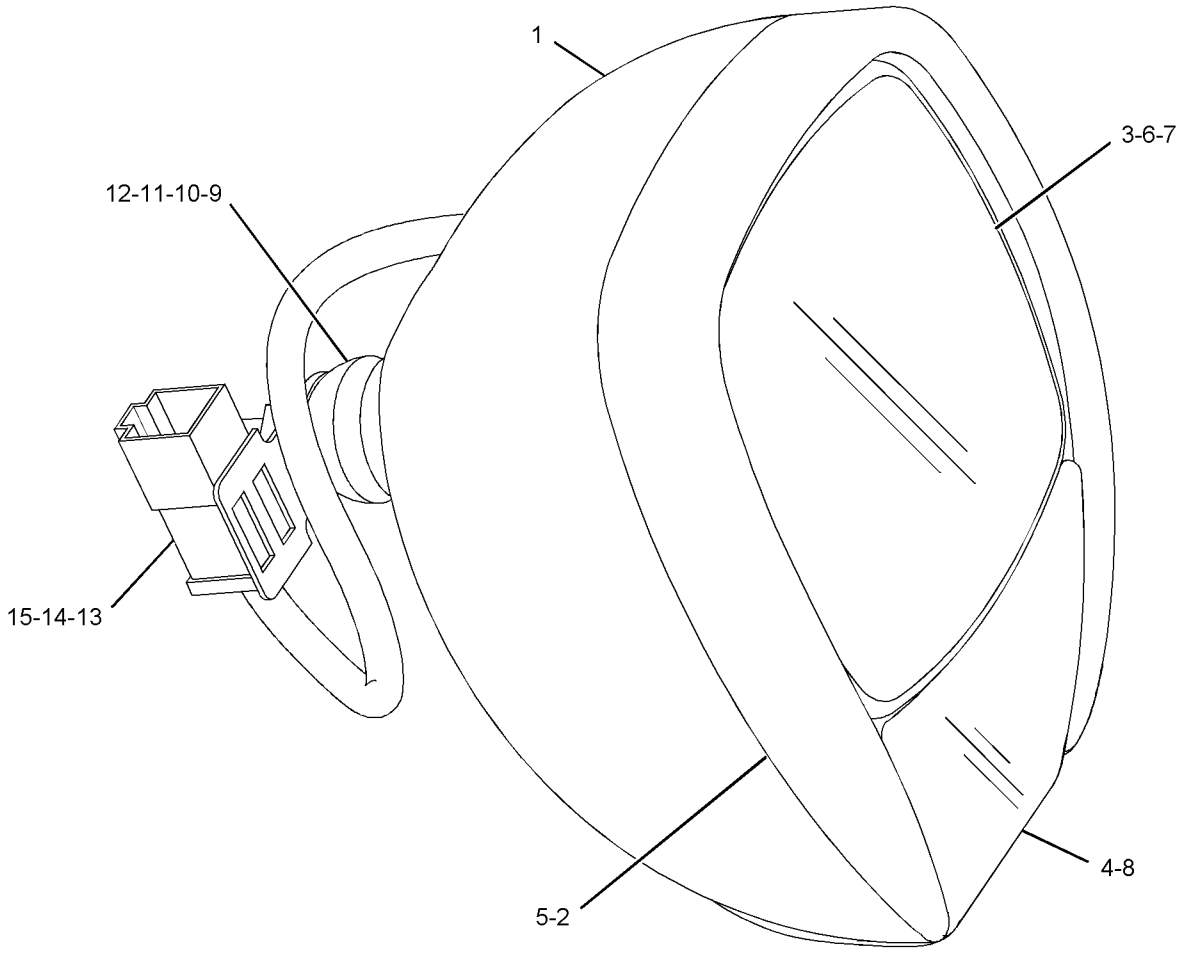

GRAPHIC #1 **<END>** g01110953

212-3924 LAMP GP-MARKER–CAB POSITION–EU

S/N: B9M1-UP
24 VOLT
PART OF 233-3124 SWITCH GP-ROADING, 262-4972 WIRING GP-LIGHTING
AN ATTACHMENT

SMCS-1429 **i01715343**

NOTE	REF NO	GRAPHIC REF	PART NUMBER	QTY	PART NAME 1 2 3 4 5 6 (PRODUCT LEVEL)	SEE PAGE
	1	1	**102-8802**	1	KIT-RECEPTACLE (2-PIN)	
					(INCLUDES RECEPTACLE AS. & WEDGE)	
	2	1	**3E-3365**	1	WEDGE-RECEPTACLE LOCK (2-PIN)	
	3	1	**186-3735**	2	PIN-CONNECTOR (16-GA TO 18-GA)	
	4	1	**9X-4494**	1	LAMP (24-VOLT) (CAB POSITION)	
M	5	1	**104-3601**	2	SCREW-MACHINE (M5X0.8X25-MM)	
	6	1	**8H-3481**	2	LOCKWASHER	

M-METRIC PART

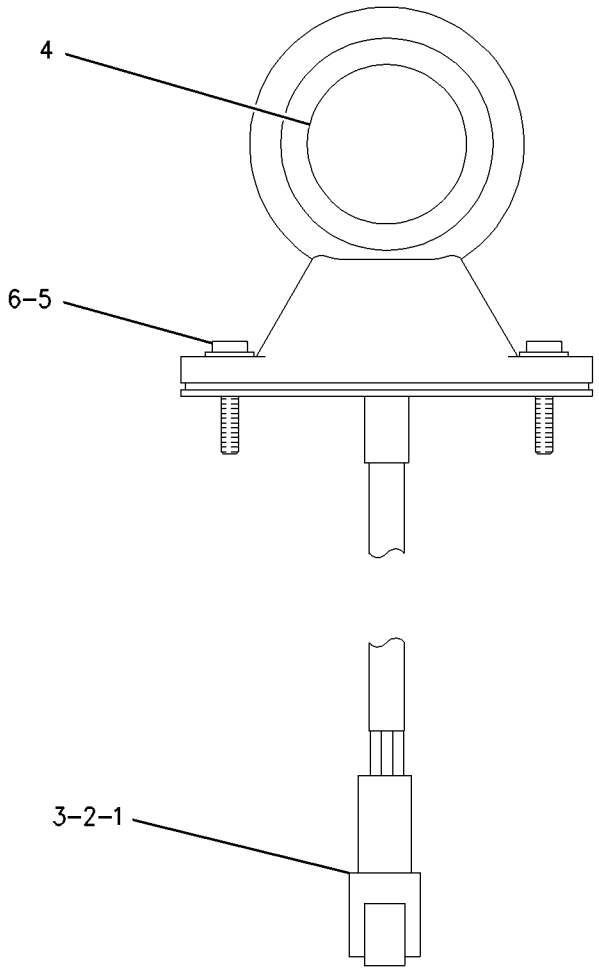

GRAPHIC #1 **<END>** g00882735

135-0426 LAMP GP-SIGNAL–STOP, TAIL

S/N: B9M1-UP
24-VOLT
PART OF 247-6430 WIRING GP-LIGHTING
AN ATTACHMENT

SMCS-1430 **i02266998**

NOTE	REF NO	GRAPHIC REF	PART NUMBER	QTY	PART NAME 1 2 3 4 5 6 (PRODUCT LEVEL)	SEE PAGE
	1	1	**102-8803**	1	KIT-RECEPTACLE (3-PIN)	
					(INCLUDES RECEPTACLE AS & WEDGE)	
	2	1	**3E-3371**	1	WEDGE-RECEPTACLE LOCK (3-PIN)	
	3	1	**186-3735**	3	PIN-CONNECTOR (16-GA TO 18-GA)	

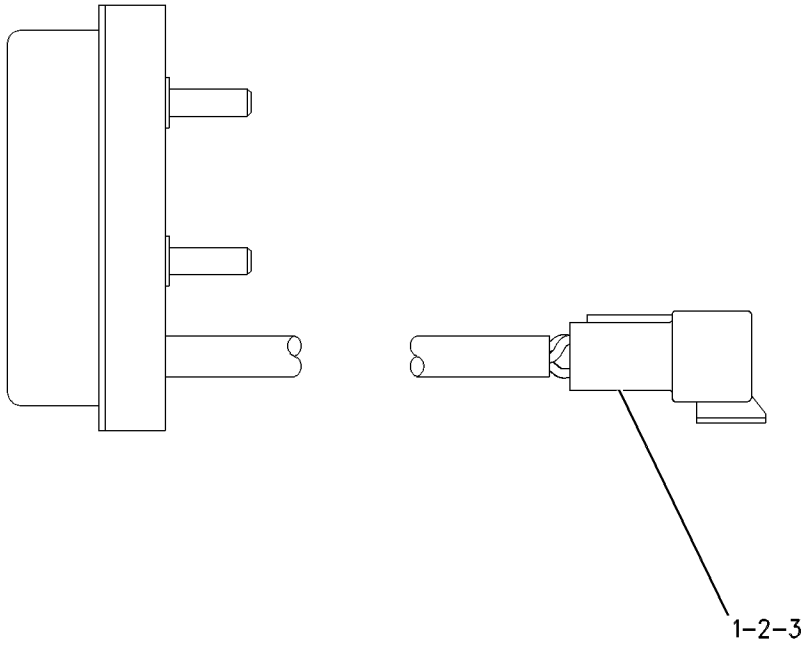

GRAPHIC #1 **<END>** g00305543

110-7563 LAMP GP-WARNING BEACON

S/N: B9M1-UP
AN ATTACHMENT

SMCS-1431 **i02333959**

NOTE	REF NO	GRAPHIC REF	PART NUMBER	QTY	PART NAME 1 2 3 4 5 6 (PRODUCT LEVEL)	SEE PAGE
	1	1	**102-8802**	1	KIT-RECEPTACLE (2-PIN)	
					(INCLUDES RECEPTACLE AS & WEDGE)	
	2	1	**8T-8729**	2	PIN-CONNECTOR	
	3	1	**198-0316**	1	LENS (WARNING BEACON) (AMBER)	
F			**198-0315**	1	TUBE-FLASH (8 PRONG CONNECTION)	
F			**127-8158**	1	TUBE-FLASH (3 PRONG CONNECTION)	
F-NOT SHOWN						

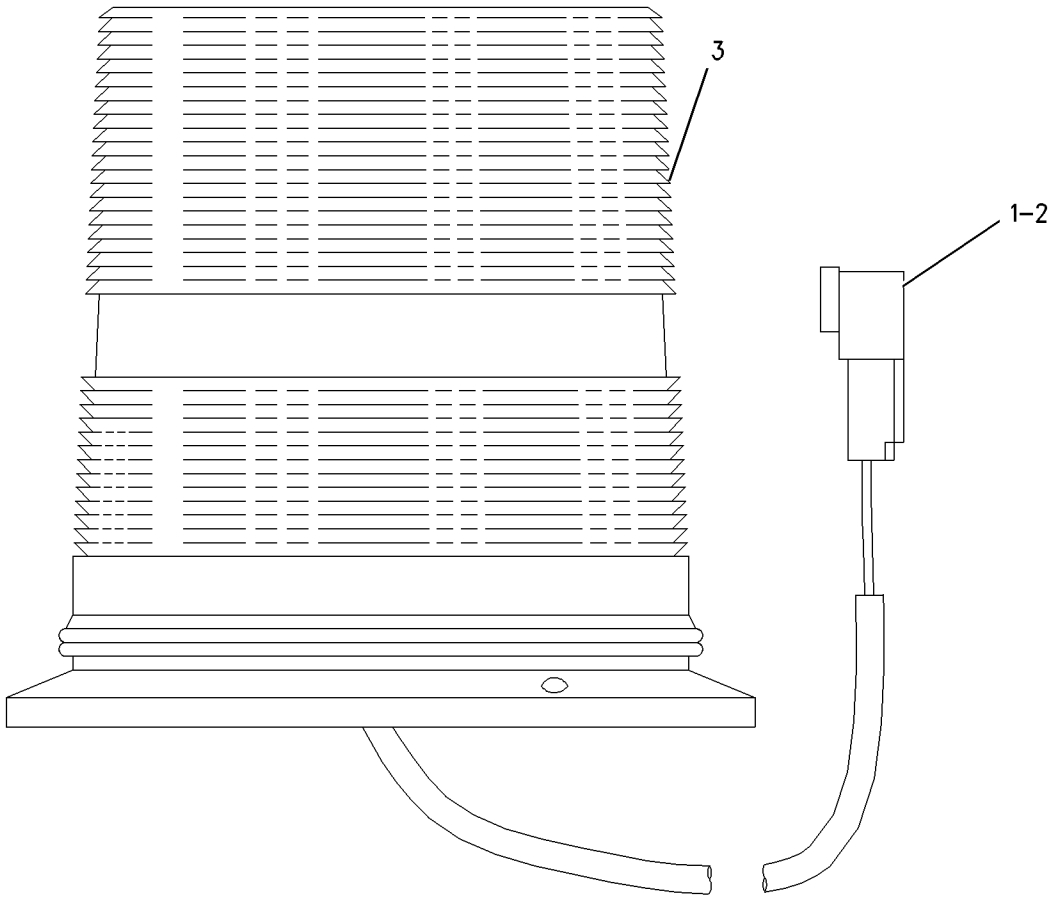

GRAPHIC #1 **<END>** g00748973

140-3668 LAMP GP-WARNING BEACON–AMBER

S/N: B9M1-UP
12-24V
AN ATTACHMENT

SMCS-1431 **i02254155**

NOTE	REF NO	GRAPHIC REF	PART NUMBER	QTY	PART NAME 1 2 3 4 5 6 (PRODUCT LEVEL)	SEE PAGE
	1	1	**9X-8121**	1	LENS (AMBER, WARNING BEACON)	
	2	1	**9R-7942**	1	PLUG AS	

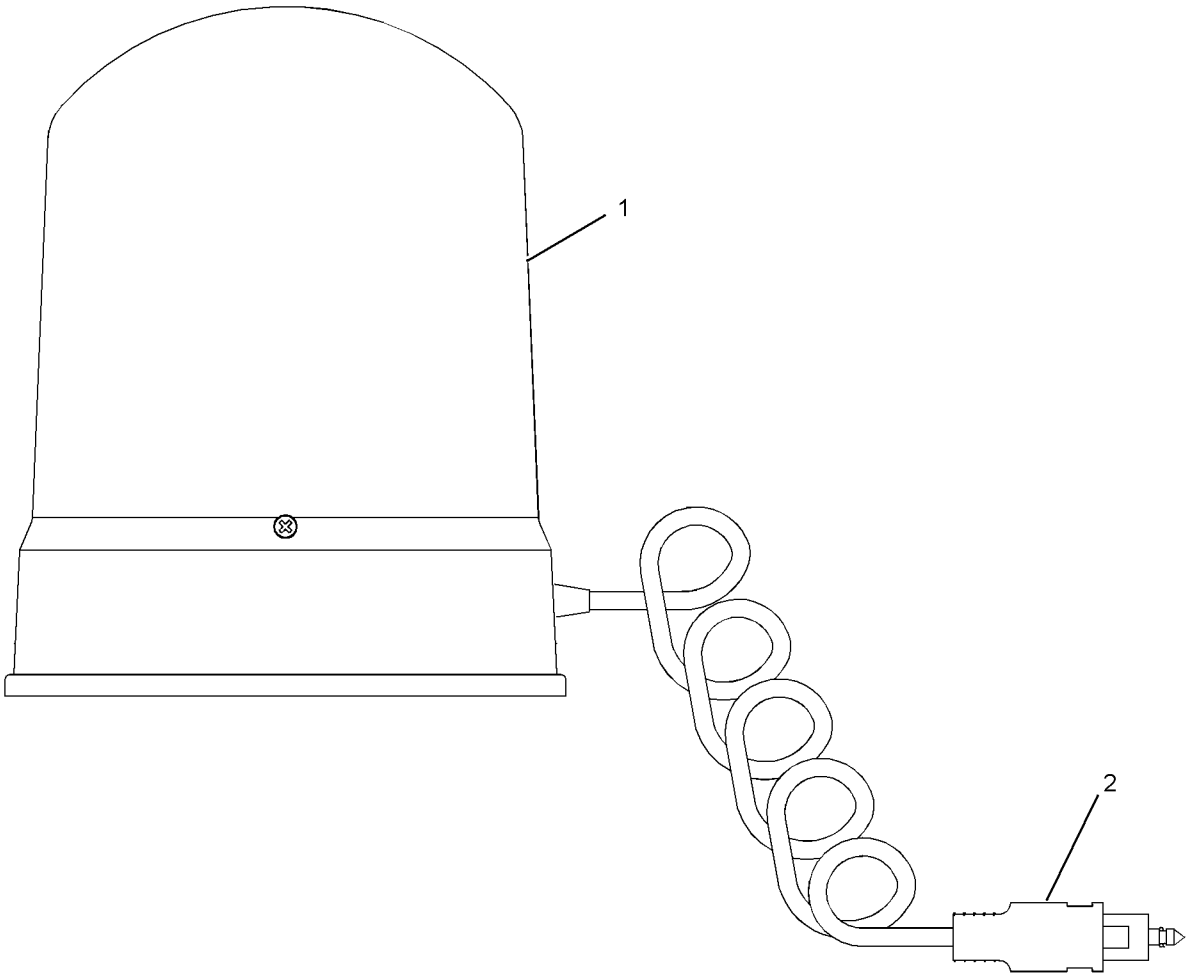

GRAPHIC #1 **<END>** g01110508

235-3937 LAMP GP-WARNING BEACON–AMBER

S/N: B9M1-UP
24-VOLT
AN ATTACHMENT

SMCS-1431 **i02290308**

NOTE	REF NO	GRAPHIC REF	PART NUMBER	QTY	PART NAME 1 2 3 4 5 6 (PRODUCT LEVEL)	SEE PAGE
	1	1	**215-6672**	1	LENS-AMBER (WARNING BEACON)	
	2	1	**9X-7849**	1	LAMP (24-VOLT, 70-WATT)	
	3	1	**215-6673**	1	BELT-WARNING BEACON	
	4	1	**215-6674**	1	CLIP	
M	5	1	**6V-8225**	3	NUT (M6X1-THD)	
	6	1	**5P-0537**	3	WASHER-HARD (7.2X14.5X2-MM THK)	
	7	1	**102-8802**	1	KIT-RECEPTACLE (2-PIN)	
					(KIT INCLUDES RECEPTACLE AS & WEDGE)	
	8	1	**3E-3365**	1	WEDGE-RECEPTACLE LOCK (2-PIN)	
	9	1	**186-3735**	2	PIN-CONNECTOR (16-GA TO 18-GA)	

M-METRIC PART

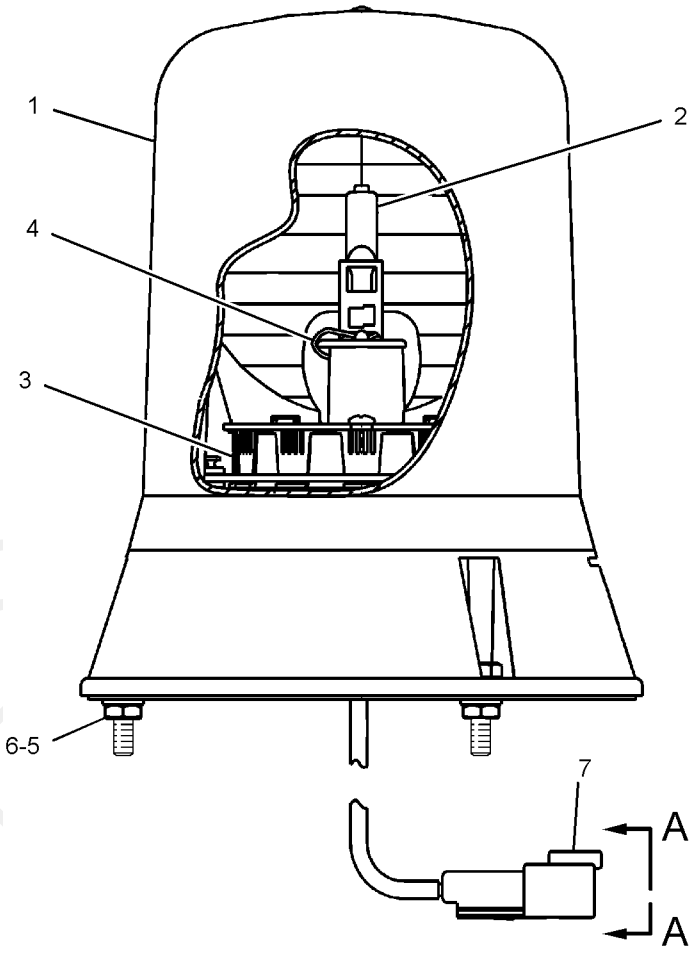

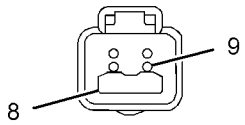

VIEW A-A

GRAPHIC #1 **<END>** g01047107

171-5672 LIGHTING GP-BACKUP

S/N: B9M1-UP
24 VOLT
PART OF 247-6430 WIRING GP-LIGHTING, 233-4623 WIRING GP-REAR LIGHTING
AN ATTACHMENT

SMCS-1408 **i02254157**

NOTE	REF NO	GRAPHIC REF	PART NUMBER	QTY	PART NAME 1 2 3 4 5 6 (PRODUCT LEVEL)	SEE PAGE
	1	1	**9X-3068**	1	LENS-CLEAR (ENGINE COMPARTMENT LAMP)	
	2	1	**9X-4493**	1	LAMP (24-VOLT, 21-WATT) (ENGINE COMPARTMENT)	
	3	1	**186-3735**	2	PIN-CONNECTOR (16-GA TO 18-GA)	
	4	1	**102-8802**	1	KIT-RECEPTACLE (2-PIN)	
					(INCLUDES RECEPTACLE AS & WEDGE)	
	5	1	**3E-3365**	1	WEDGE-RECEPTACLE LOCK (2-PIN)	

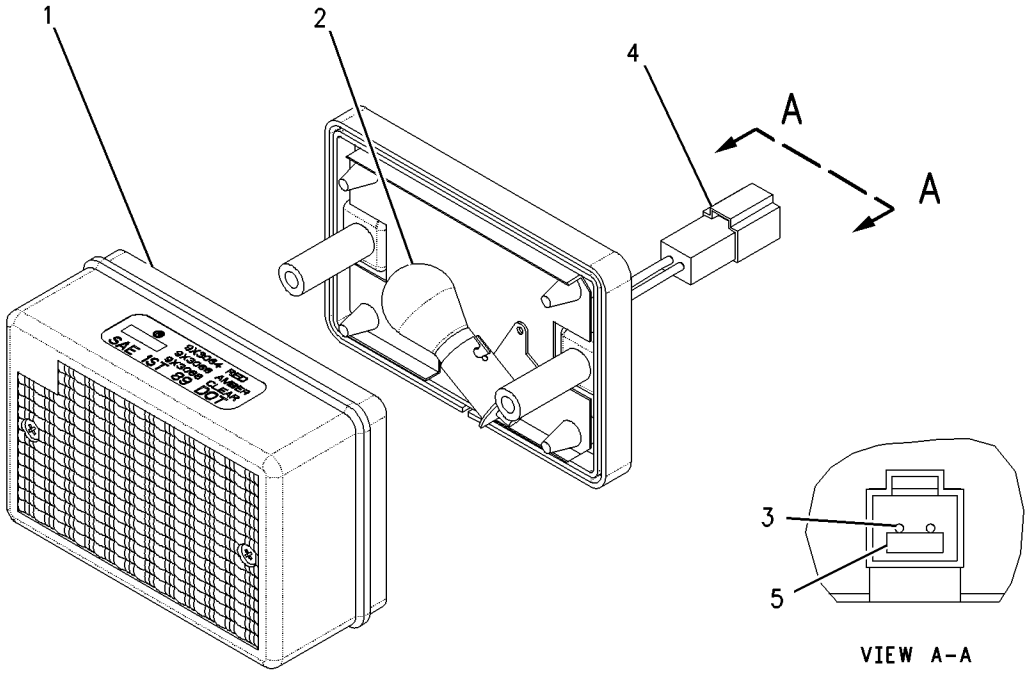

GRAPHIC #1 **<END>** g00664653

233-4615 LIGHTING GP-FLOOD—WORK

S/N: B9M1-UP

AN ATTACHMENT

SMCS-1434 **i02183421**

NOTE	REF NO	GRAPHIC REF	PART NUMBER	QTY	PART NAME 1 2 3 4 5 6 (PRODUCT LEVEL)	SEE PAGE
	1	1	**9X-9365**	2	BRACKET	
Y	2	1	**234-4325**	2	LAMP GP-FLOOD (24-VOLT)	153
	3	1	**8T-4121**	4	WASHER-HARD (11X21X2.5-MM THK)	
M	4	1	**8T-4137**	2	BOLT (M10X1.5X20-MM)	

M-METRIC PART
Y-SEPARATE ILLUSTRATION

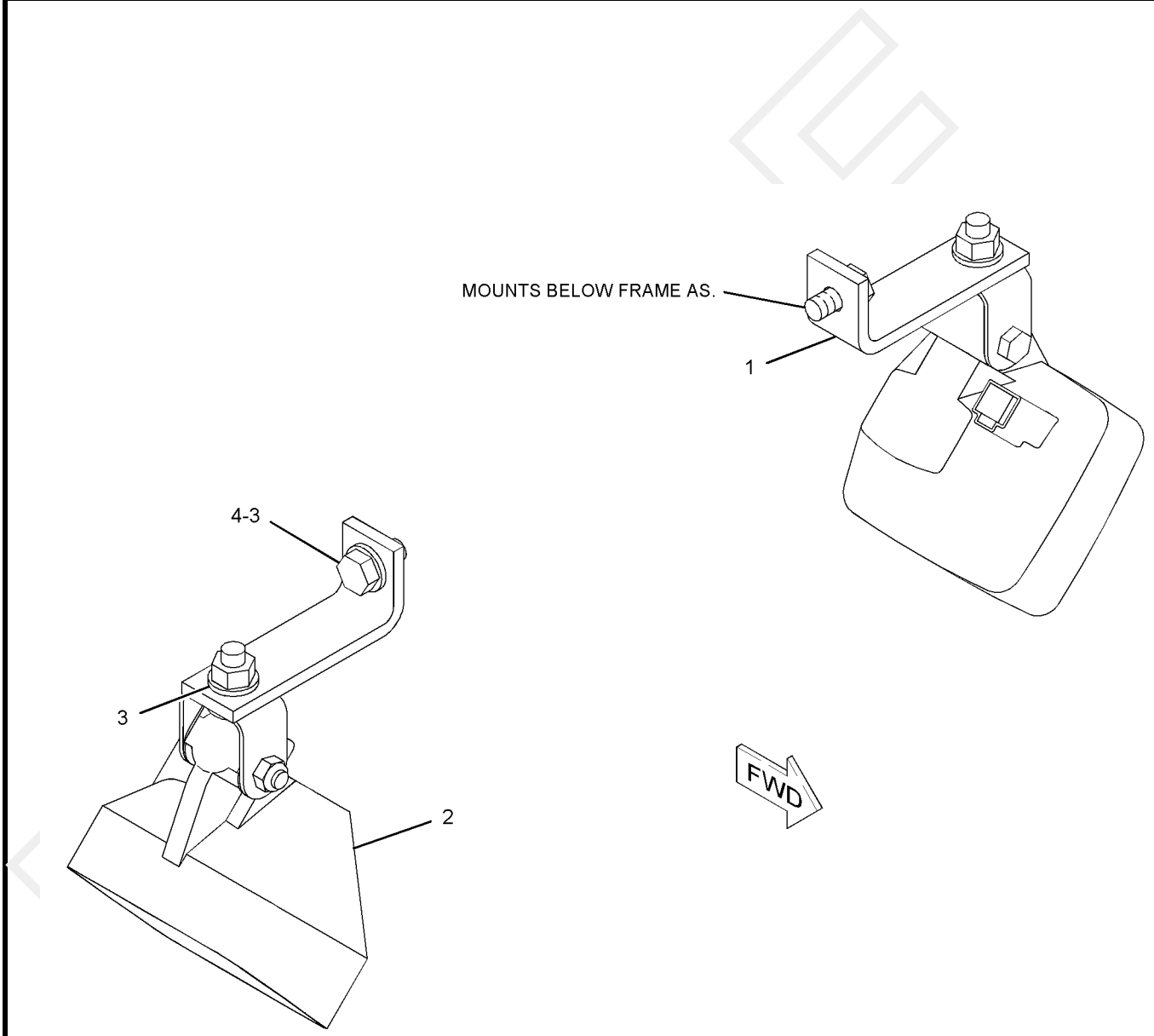

GRAPHIC #1 **<END>** g01105924

233-4616 LIGHTING GP-FLOOD—WORK

S/N: B9M1-UP
HID
AN ATTACHMENT

SMCS-1434 **i02295906**

NOTE	REF NO	GRAPHIC REF	PART NUMBER	QTY	PART NAME 1 2 3 4 5 6 (PRODUCT LEVEL)	SEE PAGE
	1	1	**243-1352**	2	BRACKET AS	
Y	2	1	**210-8423**	2	LAMP GP-FLOOD (24-VOLT, 35-WATT, VERTICAL MT)	151
	3	1	**8T-4121**	4	WASHER-HARD (11X21X2.5-MM THK)	
M	4	1	**8T-4136**	4	BOLT (M10X1.5X25-MM)	

M-METRIC PART
Y-SEPARATE ILLUSTRATION

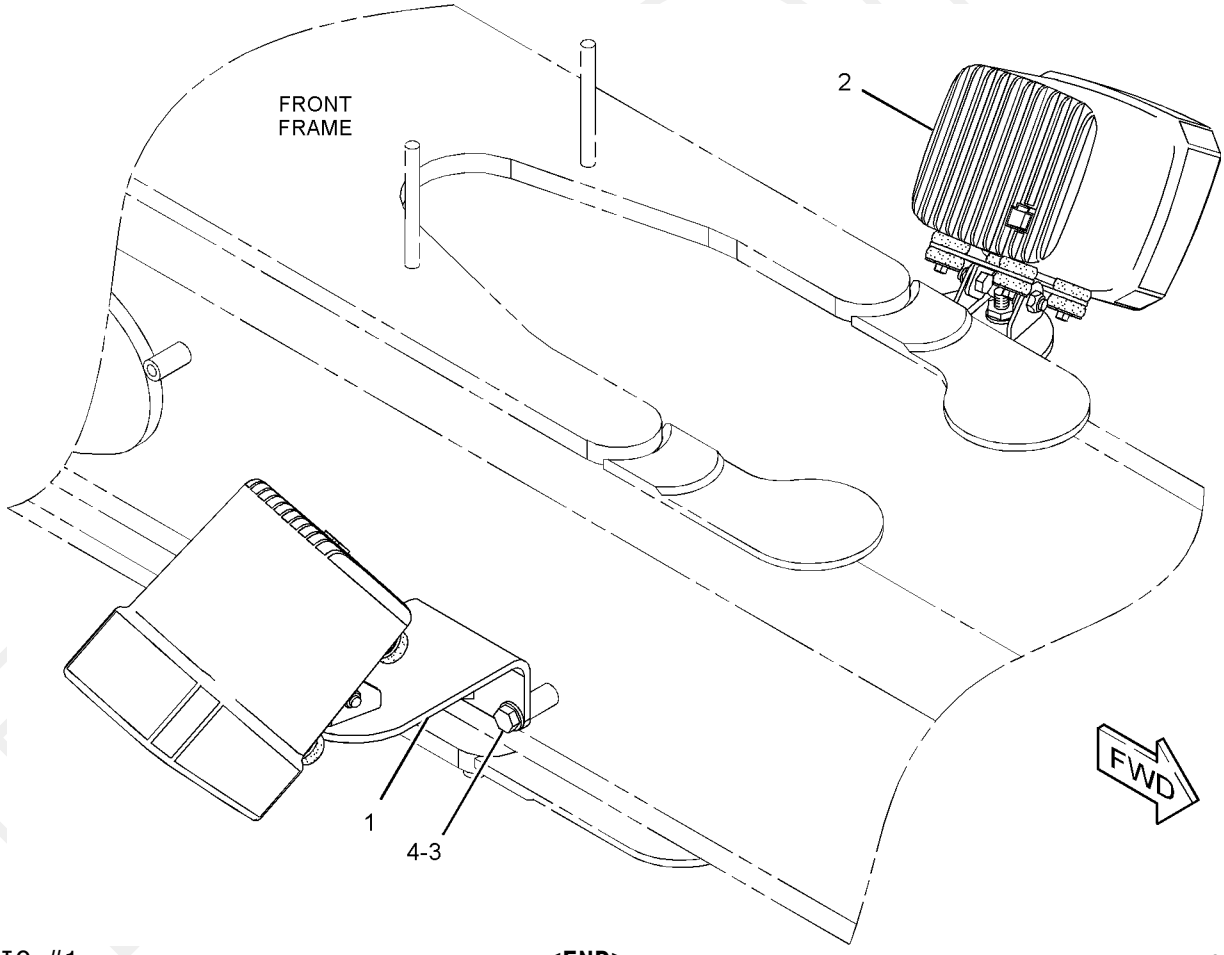

GRAPHIC #1 **<END>** g01150050

233-4618 LIGHTING GP-FLOOD–WORK

S/N: B9M1-UP
HEEL
AN ATTACHMENT

SMCS-1434 **i02183478**

NOTE	REF NO	GRAPHIC REF	PART NUMBER	QTY	PART NAME 1 2 3 4 5 6 (PRODUCT LEVEL)	SEE PAGE
	1	1	**246-1676**	1	BRACKET	
Y	2	1	**234-4325**	2	LAMP GP-FLOOD (24-VOLT, SUSPENDED MOUNT)	153
M	3	1	**8T-4121**	4	WASHER-HARD (11X21X2.5-MM THK)	
M	4	1	**8T-4137**	2	BOLT (M10X1.5X20-MM)	

M-METRIC PART
Y-SEPARATE ILLUSTRATION

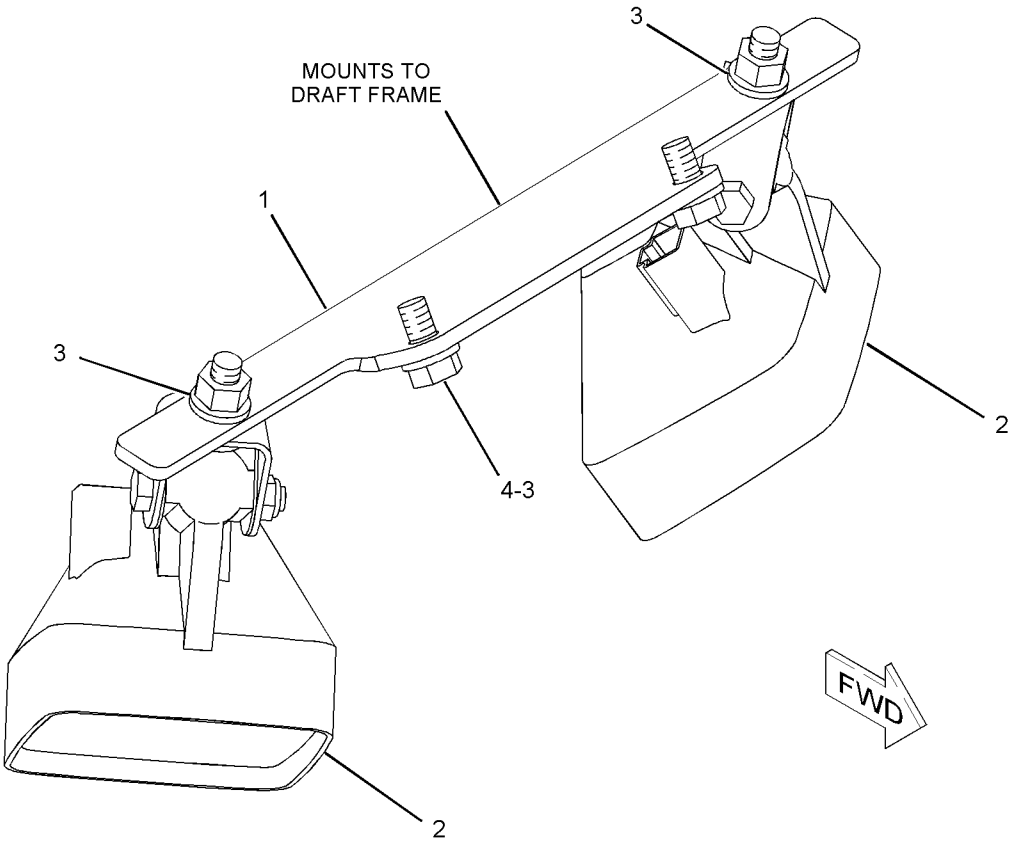

GRAPHIC #1 **<END>** g01115349

233-4619 LIGHTING GP-FLOOD—WORK

S/N: B9M1-UP
HEEL, HID
AN ATTACHMENT

SMCS-1434 **i02183501**

NOTE	REF NO	GRAPHIC REF	PART NUMBER	QTY	PART NAME 1 2 3 4 5 6 (PRODUCT LEVEL)	SEE PAGE
Y	1	1	**210-8422**	2	LAMP GP-FLOOD (24-VOLT, 35-WATT, SUSPENDED MT)	150
	2	1	**246-1674**	1	BRACKET AS	
	3	1	**132-7551**	2	SPACER (11X19X6-MM THK)	
	4	1	**8T-4121**	2	WASHER-HARD (11X21X2.5-MM THK)	
M	5	1	**8T-4137**	2	BOLT (M10X1.5X20-MM)	

M-METRIC PART
Y-SEPARATE ILLUSTRATION

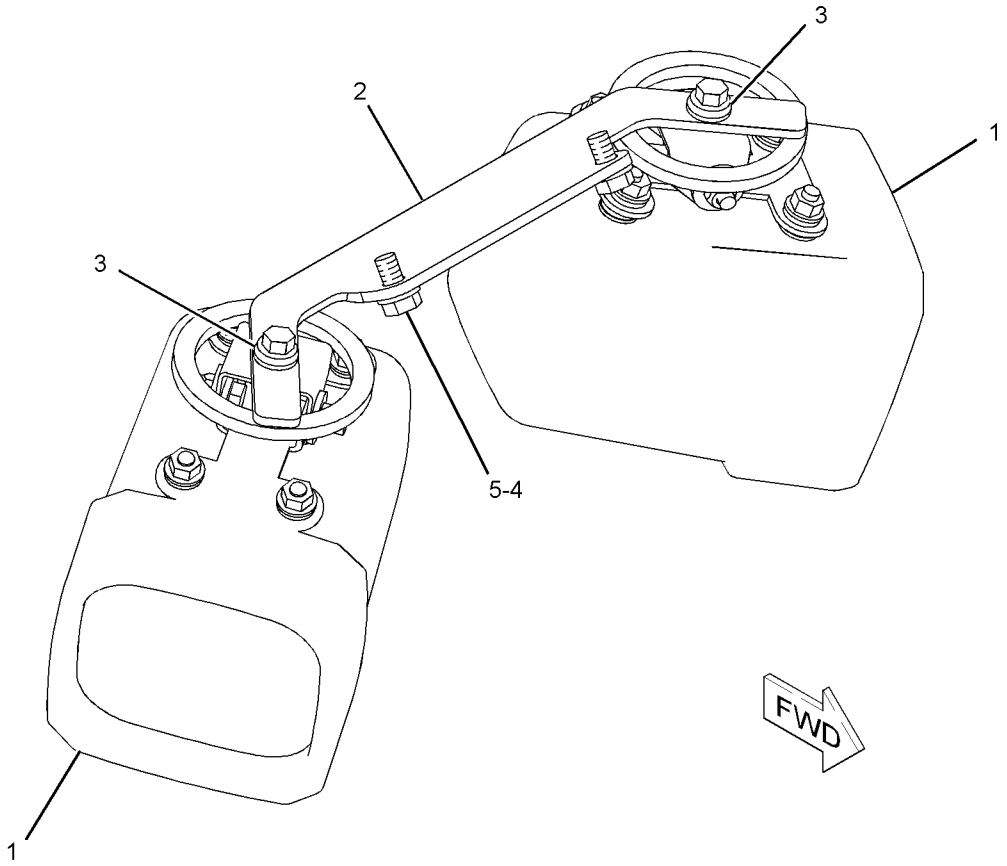

GRAPHIC #1 **<END>** g01115456

233-4620 LIGHTING GP-FLOOD–WORK

S/N: B9M1-UP
RIPPER
AN ATTACHMENT

SMCS-1434 **i02250953**

NOTE	REF NO	GRAPHIC REF	PART NUMBER	QTY	PART NAME 1 2 3 4 5 6 (PRODUCT LEVEL)	SEE PAGE
	1	1	**9X-9365**	2	BRACKET	
Y	2	1	**234-4325**	2	LAMP GP-FLOOD (24-VOLT)	153
	3	1	**8T-4121**	4	WASHER-HARD (11X21X2.5-MM THK)	
M	4	1	**8T-4137**	2	BOLT (M10X1.5X20-MM)	
	5	1	**9X-7345**	2	GROMMET	

M-METRIC PART
Y-SEPARATE ILLUSTRATION

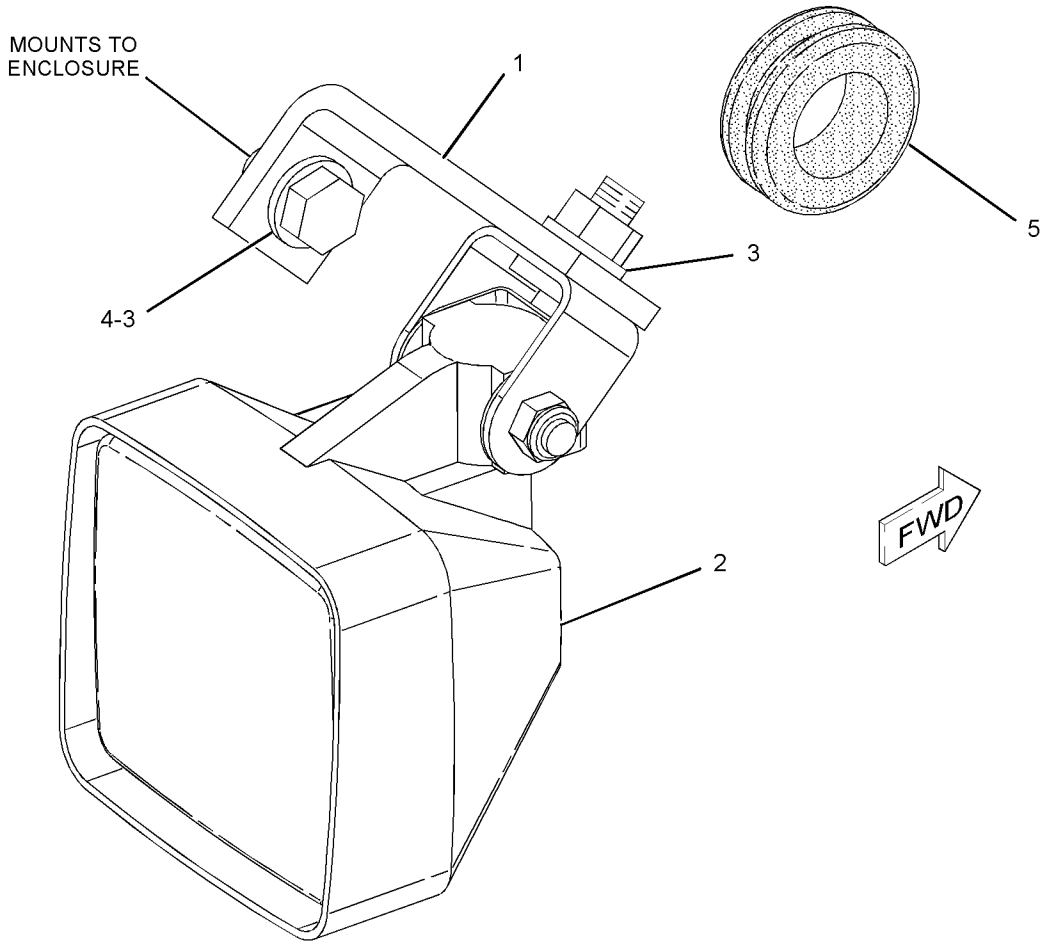

GRAPHIC #1 **<END>** g01133514

233-4621 LIGHTING GP-FLOOD—WORK

S/N: B9M1-UP
RIPPER, HID
AN ATTACHMENT

SMCS-1434 **i02250955**

NOTE	REF NO	GRAPHIC REF	PART NUMBER	QTY	PART NAME 1 2 3 4 5 6 (PRODUCT LEVEL)	SEE PAGE
Y	1	1	**210-8422**	2	LAMP GP-FLOOD (24-VOLT, 35-WATT, SUSPENDED MT)	150
	2	1	**261-3613**	2	BRACKET AS	
	3	1	**132-7551**	2	SPACER (11X19X6-MM THK)	
M	4	1	**8T-4121**	4	WASHER-HARD (11X21X2.5-MM THK)	
M	5	1	**8T-4137**	4	BOLT (M10X1.5X20-MM)	
	6	1	**9X-7345**	2	GROMMET	

M-METRIC PART
Y-SEPARATE ILLUSTRATION

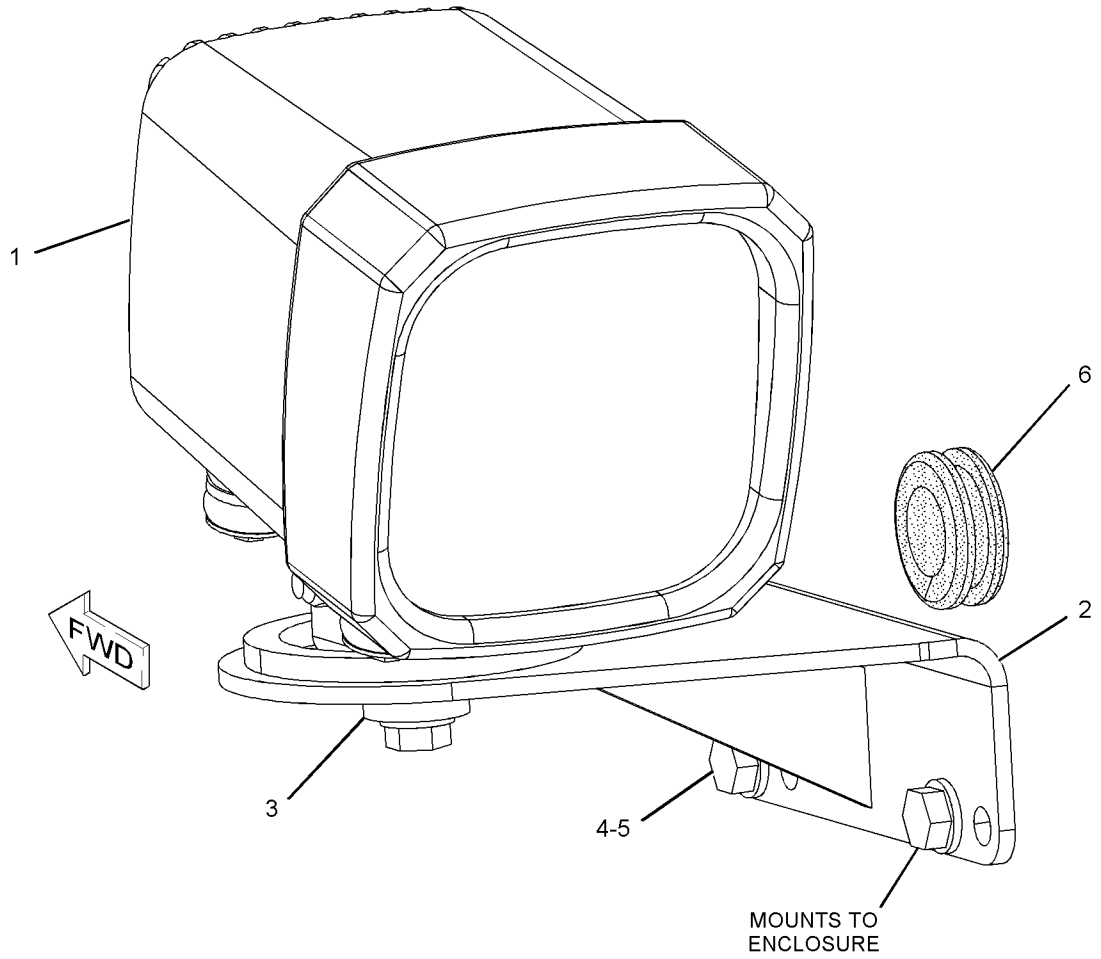

GRAPHIC #1 **<END>** g01133575

233-4631 LIGHTING GP-ROADING

S/N: B9M1-UP
EUROPEAN MARKET
PART OF 250-3818 ROADING AR
AN ATTACHMENT

SMCS-1429 **i02233306**

NOTE	REF NO	GRAPHIC REF	PART NUMBER	QTY	PART NAME 1 2 3 4 5 6 (PRODUCT LEVEL)	SEE PAGE
	1	1	**3S-2093**	6	STRAP-CABLE	
	2	1	**213-3733**	1	PLATE	
	3	1	**224-2821**	4	PLATE AS	
	4	1	**246-1685**	1	HARNESS AS-REAR LIGHTING (REGISTRATION PLATE)	
		1	**102-8802**	1	KIT-RECEPTACLE (2-PIN)	
					(INCLUDES RECEPTACLE AS & WEDGE)	
		1	**155-2270**	1	KIT-CONNECTING PLUG (2-PIN)	
					(INCLUDES PLUG AS & WEDGE)	
	5	1	**259-0134**	1	LAMP GP-REGISTRATION PLATE	
		1	**5C-9583**	1	LAMP (24-VOLT)	
		1	**102-8802**	1	KIT-RECEPTACLE (2-PIN)	
		1	**186-3735**	2	PIN-CONNECTOR (16-GA TO 18-GA)	
	6	1	**5P-4116**	4	WASHER-HARD (8.8X20.5X2-MM THK)	
M	7	1	**8T-4908**	4	BOLT (M8X1.25X25-MM)	

M-METRIC PART

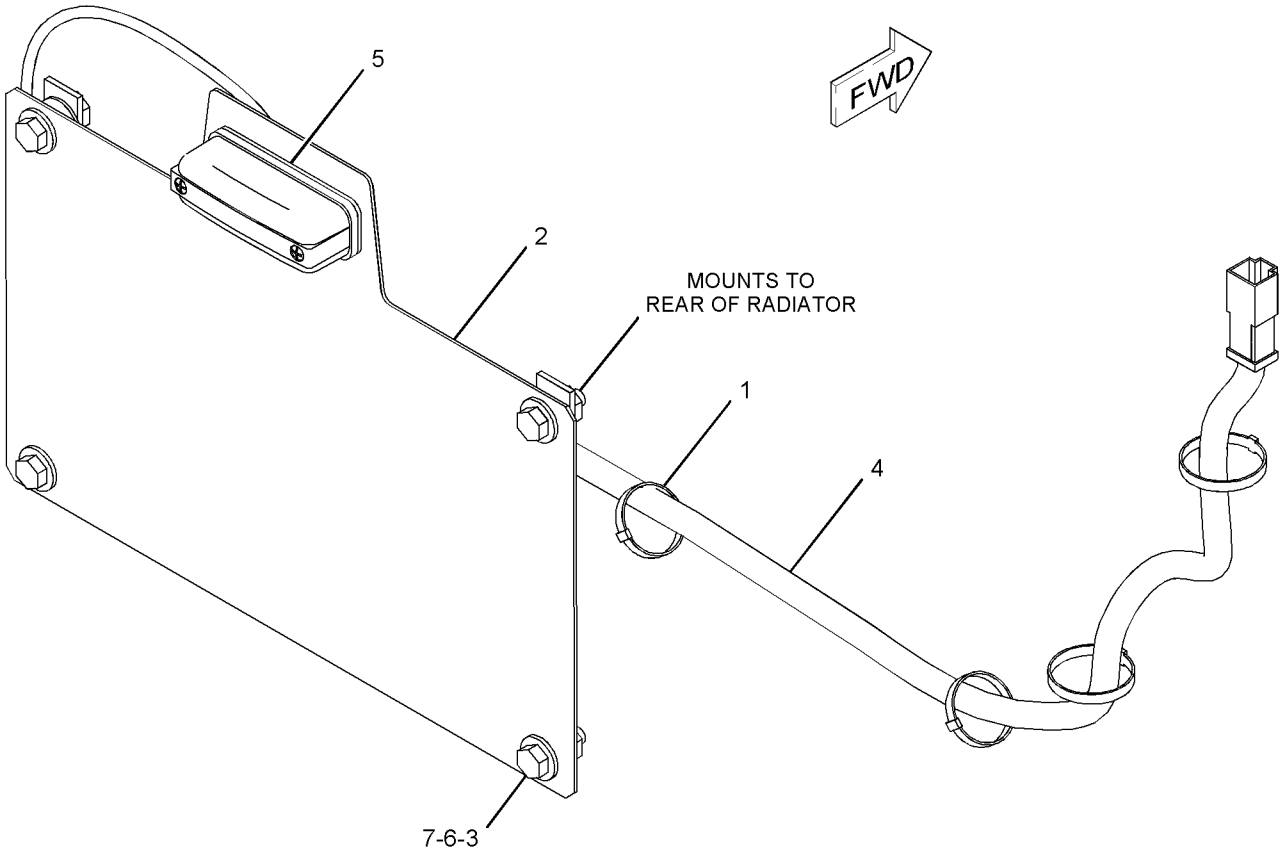

GRAPHIC #1 **<END>** g01110134

170-5335 MOTOR GP-ELECTRIC

S/N: B9M1-UP
27 VOLT
PART OF 170-5334 FAN GP-CIRCULATING
AN ATTACHMENT

SMCS-5927 **i01448257**

NOTE	REF NO	GRAPHIC REF	PART NUMBER	QTY	PART NAME 1 2 3 4 5 6 (PRODUCT LEVEL)	SEE PAGE
	1	1	**102-8802**	1	KIT-RECEPTACLE (2-PIN)	
	2	1	**9W-0852**	2	PIN-CONNECTOR (14-GA)	
	3	1	**3E-3365**	1	WEDGE-RECEPTACLE LOCK (2-PIN)	

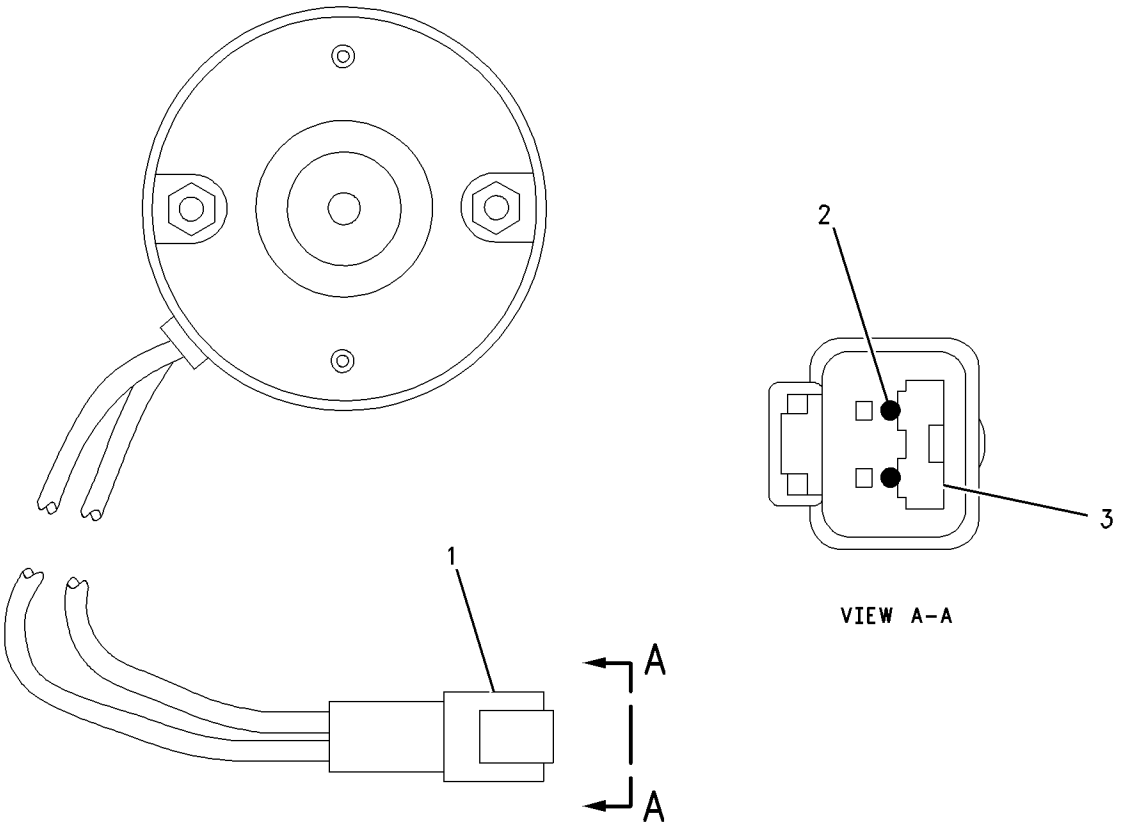

GRAPHIC #1 **<END>** g00769415

235-8200 PLUG GP-CONNECTOR–
ENGINE HARNESS, PROTECTIVE COVER
S/N: KHX1-UP
PART OF 231-0878 ENGINE AR-COMPLETE

SMCS-1403, 1408 **i02185604**

NOTE	REF NO	GRAPHIC REF	PART NUMBER	QTY	PART NAME 1 2 3 4 5 6 (PRODUCT LEVEL)	SEE PAGE
	1	1	**246-9353**	1	PLUG AS	
	1A	1	**8T-8737**	8	PLUG-SEAL	
	1B	1	**102-8806**	1	KIT-RECEPTACLE (8-PIN)	
					(INCLUDES RECEPTACLE AS AND WEDGE)	
	2	1	**3S-2093**	1	STRAP-CABLE	

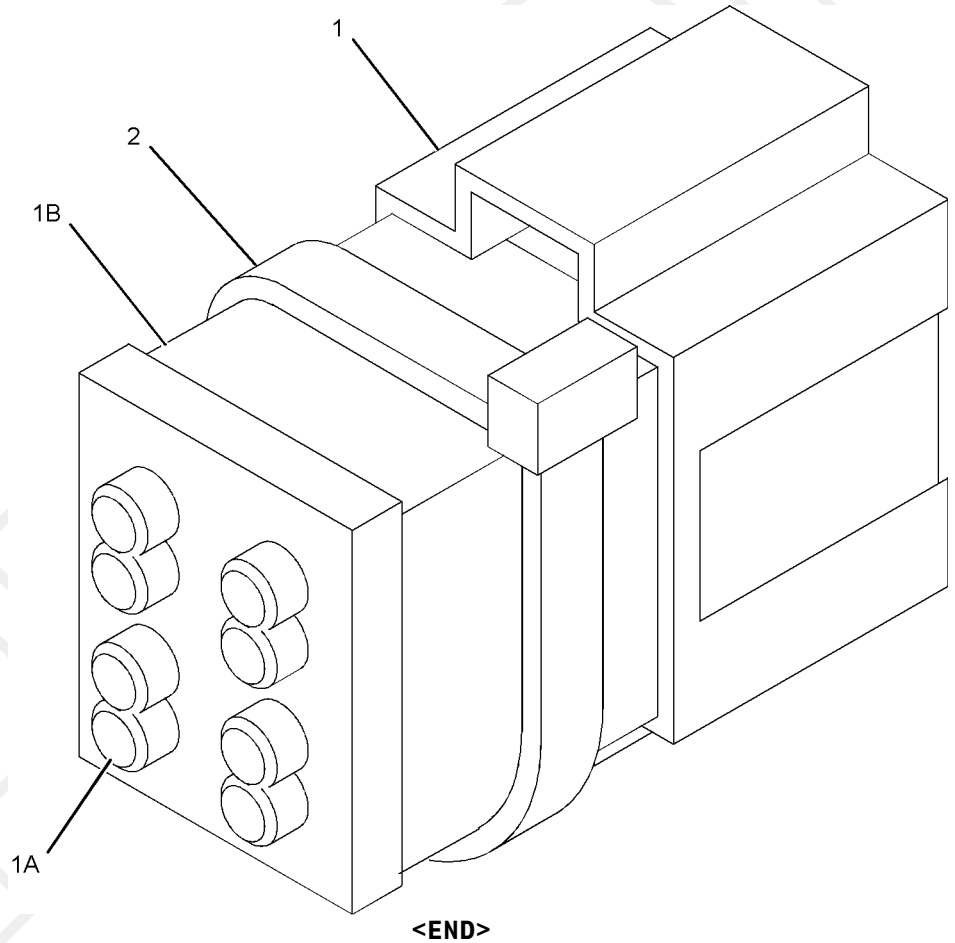

GRAPHIC #1 **<END>** g01105455

ELECTRICAL AND STARTING SYSTEM

231-1977 SENSOR GP-ENGINE

S/N: KHX1-UP

PART OF 231-0878 ENGINE AR-COMPLETE

SMCS-1718, 1906, 1912, 1923, 1924, 1925, 1929 **i02330277**

NOTE	REF NO	GRAPHIC REF	PART NUMBER	QTY	PART NAME 1 2 3 4 5 6 (PRODUCT LEVEL)	SEE PAGE
	1	1	**9X-0262**	1	ADAPTER	
	2	1	**9X-8403**	1	ELBOW	
Y	3	1	*197-8391*	1	SENSOR GP-TEMPERATURE (AIR INLET MANIFOLD)	192
Y	4	1	*197-8392*	1	SENSOR GP-TEMPERATURE (WATER, COOLANT)	193
Y	5	1	*197-8393*	1	SENSOR GP-PRESSURE (ATMOSPHERIC)	182
Y	6	1	*197-8394*	1	SENSOR GP-PRESSURE (ENGINE OIL)	183
Y	7	1	*210-1747*	1	SENSOR GP-PRESSURE (BOOST)	184
Y	8	1	*236-6220*	1	SENSOR GP-PRESSURE (INJECTION ACTUATION)	186
Y	9	1	*236-6221*	1	SENSOR GP-SPEED (ENGINE TIMING)	189
	10	1	*169-5861*	1	PLUG AS	
		1	**3K-8460**	1	PLUG	
		1	**5P-7814**	1	SEAL-O-RING	
	11	1	*183-3406*	1	PLUG AS	
		1	**6V-5049**	1	SEAL-O-RING	
		1	**9S-4191**	1	PLUG	
	12	1	*183-7263*	1	PLUG AS	
		1	**3J-7354**	1	SEAL-O-RING	
		1	**9S-8002**	1	PLUG	
	13	1	**3E-4352**	1	WASHER-HARD (8.8X20.5X2.5-MM THK)	
M	14	1	**6V-3940**	1	BOLT (M8X1.25X25-MM)	
	15	1	**6V-5048**	2	SEAL-O-RING	
	16	1	**6V-5049**	1	SEAL-O-RING	
	17	1	**8T-2353**	1	ADAPTER	

M-METRIC PART
Y-SEPARATE ILLUSTRATION

PROOF

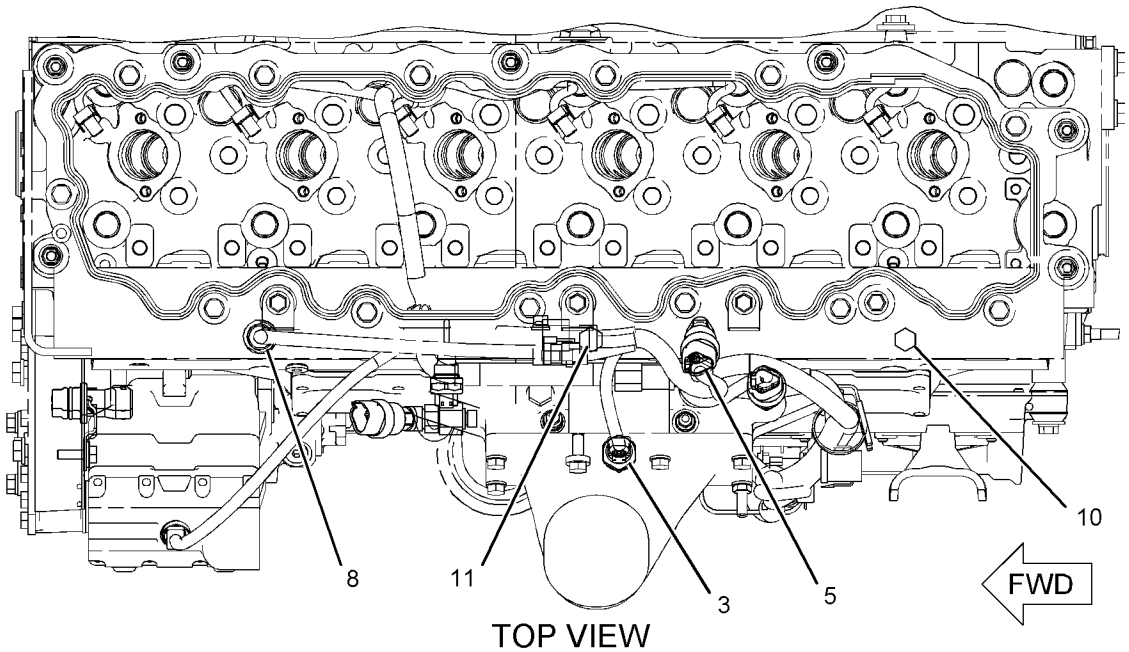

TOP VIEW

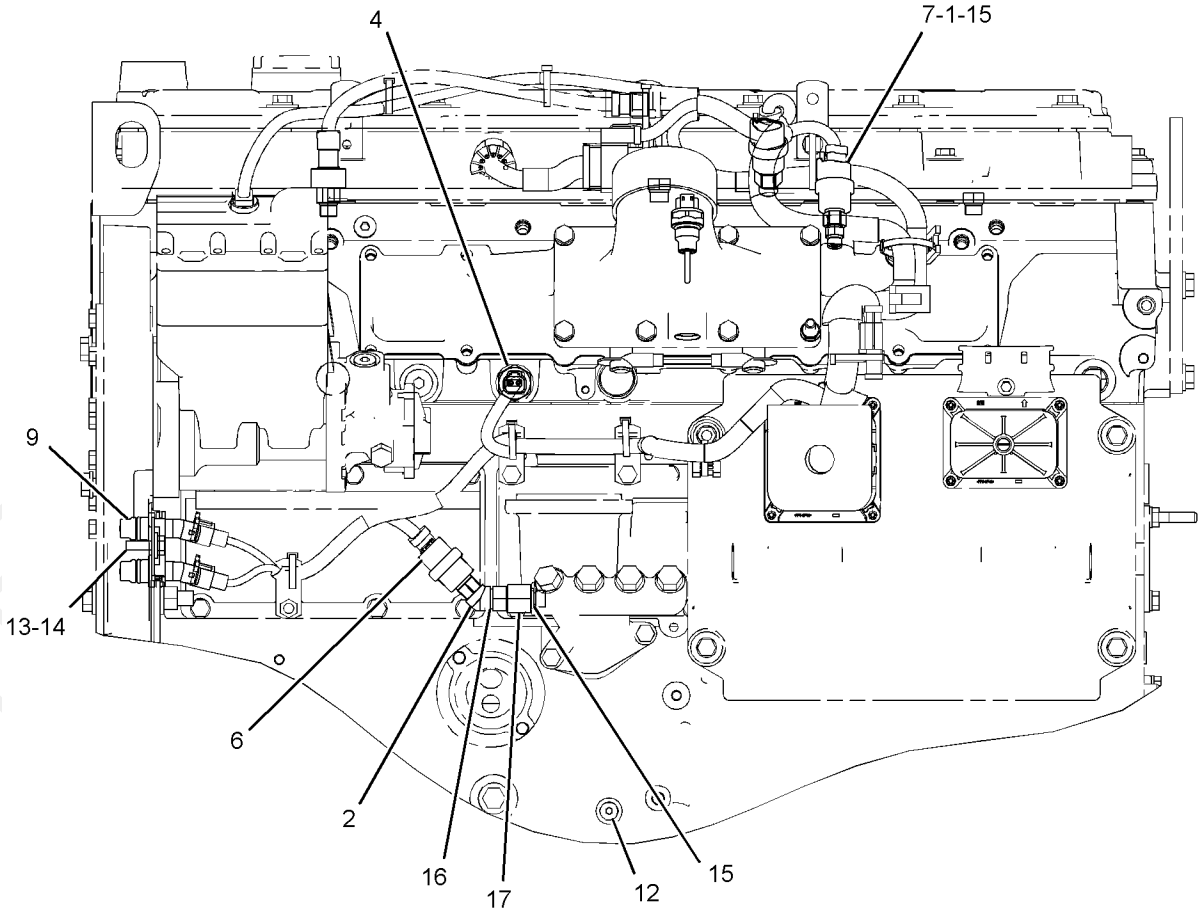

LEFT SIDE VIEW

GRAPHIC #1

<END>

g01098956

160-2443 SENSOR GP-POSITION–ROTARY

S/N: B9M1-UP

PART OF 264-7522 WIRING GP-REAR

SMCS-1408, 1905 **i02249656**

NOTE	REF NO	GRAPHIC REF	PART NUMBER	QTY	PART NAME 1 2 3 4 5 6 (PRODUCT LEVEL)	SEE PAGE
	1	1	**102-8803**	1	KIT-RECEPTACLE (3-PIN)	
					(INCLUDES RECEPTACLE AS & WEDGE)	
	2	1	**8T-8729**	3	PIN-CONNECTOR	
	3	1	**3E-3371**	1	WEDGE-RECEPTACLE LOCK (3-PIN)	

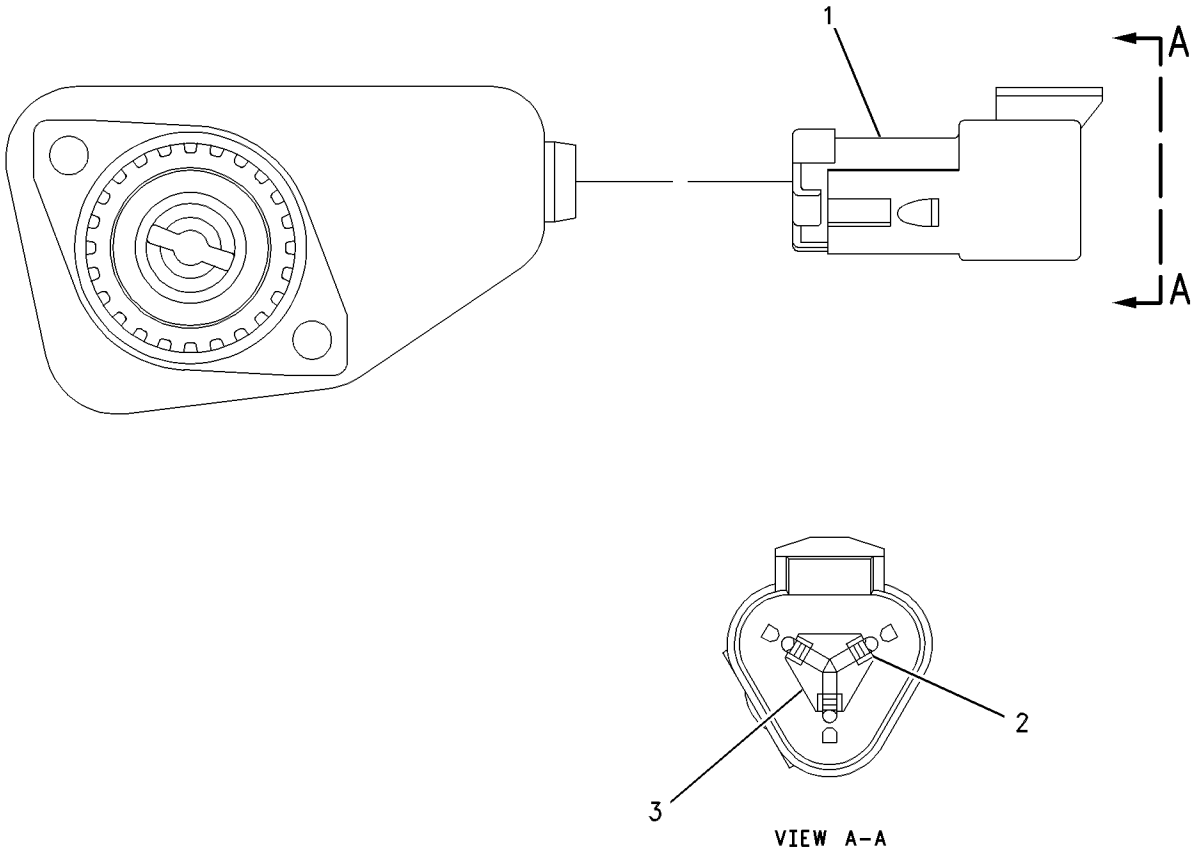

GRAPHIC #1 **<END>** g00637818

219-2392 SENSOR GP-POSITION

S/N: B9M1-UP
AWS
PART OF 238-8809 SWITCH GP-ALL WHEEL DRIVE
AN ATTACHMENT

SMCS-1408, 1905 **i01816866**

NOTE	REF NO	GRAPHIC REF	PART NUMBER	QTY	PART NAME 1 2 3 4 5 6 (PRODUCT LEVEL)	SEE PAGE
	1	1	**102-8803**	1	KIT-RECEPTACLE (3-PIN)	
					(INCLUDES RECEPTACLE AS & WEDGE)	
	2	1	**186-3735**	3	PIN-CONNECTOR (16-GA TO 18-GA)	
	3	1	**3E-3371**	1	WEDGE-RECEPTACLE LOCK (3-PIN)	

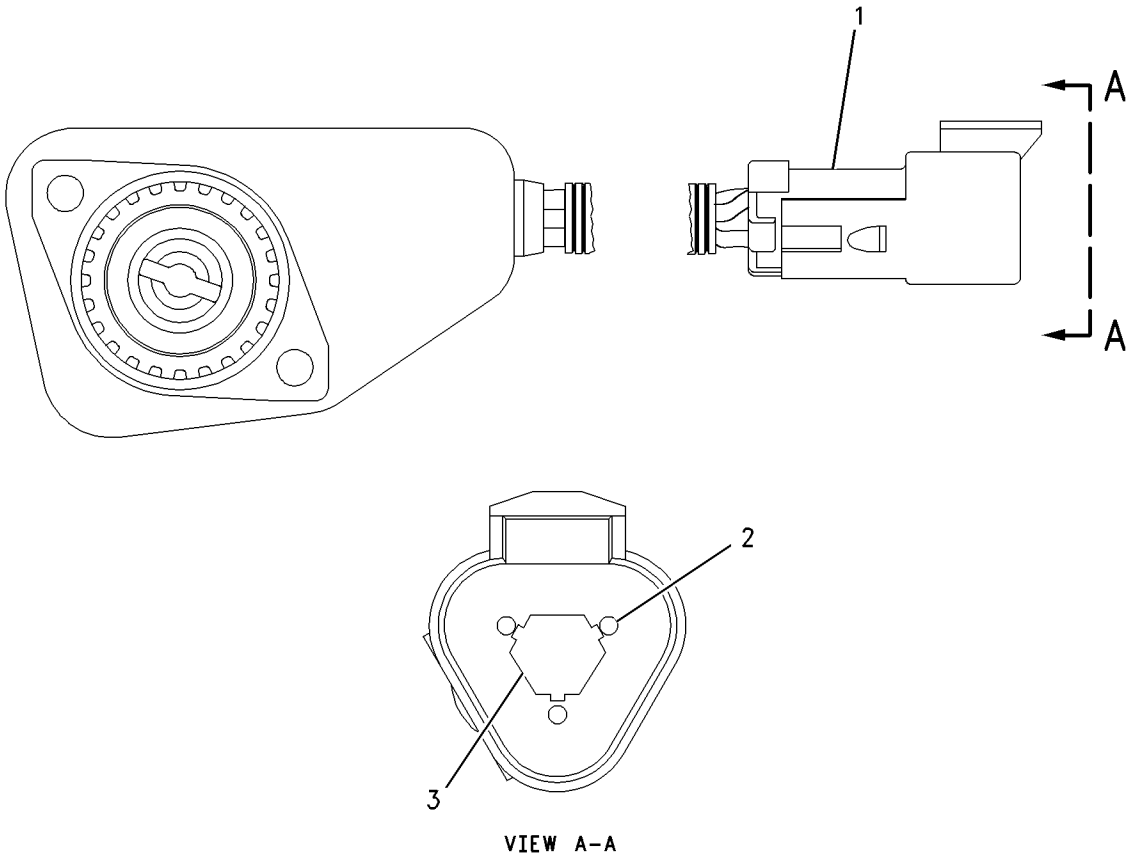

VIEW A-A

GRAPHIC #1 **<END>** g00931978

194-6722 SENSOR GP-PRESSURE

S/N: B9M1-UP

PART OF 264-7522 WIRING GP-REAR

SMCS-4351, 4352 **i02230727**

NOTE	REF NO	GRAPHIC REF	PART NUMBER	QTY	PART NAME 1 2 3 4 5 6 (PRODUCT LEVEL)	SEE PAGE
BE	1	1	**9X-1813**		SLEEVE	
	2	1	**155-2260**	1	KIT-CONNECTING PLUG (3-PIN)	
					(INCLUDES PLUG AS & WEDGE)	
	3	1	**180-9340**	3	SOCKET-CONNECTOR	
	4	1	**3E-3368**	1	WEDGE-PLUG LOCK (3-PIN)	

B-USE AS REQUIRED
E-ORDER BY THE CENTIMETER

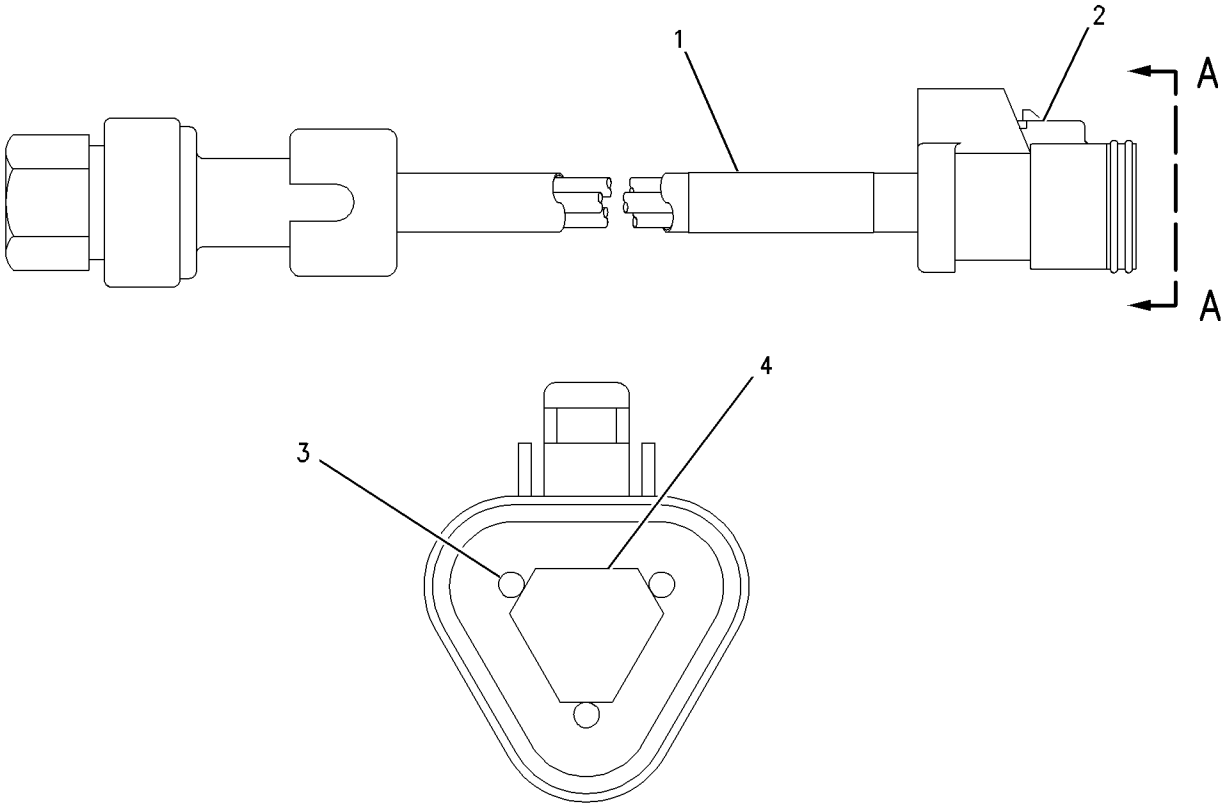

VIEW A-A

GRAPHIC #1 **<END>** g00934579

194-6725 SENSOR GP-PRESSURE

S/N: KHX1-UP

PART OF 239-2396 SENSOR GP-PRESSURE

SMCS-4351, 4352 **i02276739**

NOTE	REF NO	GRAPHIC REF	PART NUMBER	QTY	PART NAME 1 2 3 4 5 6 (PRODUCT LEVEL)	SEE PAGE
E	1	1	**9X-1813**		SLEEVE (34-CM)	
	2	1	**155-2260**	1	KIT-CONNECTING PLUG (3-PIN)	
					(INCLUDES PLUG AS AND WEDGE)	
	3	1	**194-5226**	3	WIRE AS-HARNESS (16-GA TO 18-GA)	
	4	1	**3E-3368**	1	WEDGE-PLUG LOCK (3-PIN)	

E-ORDER BY THE CENTIMETER

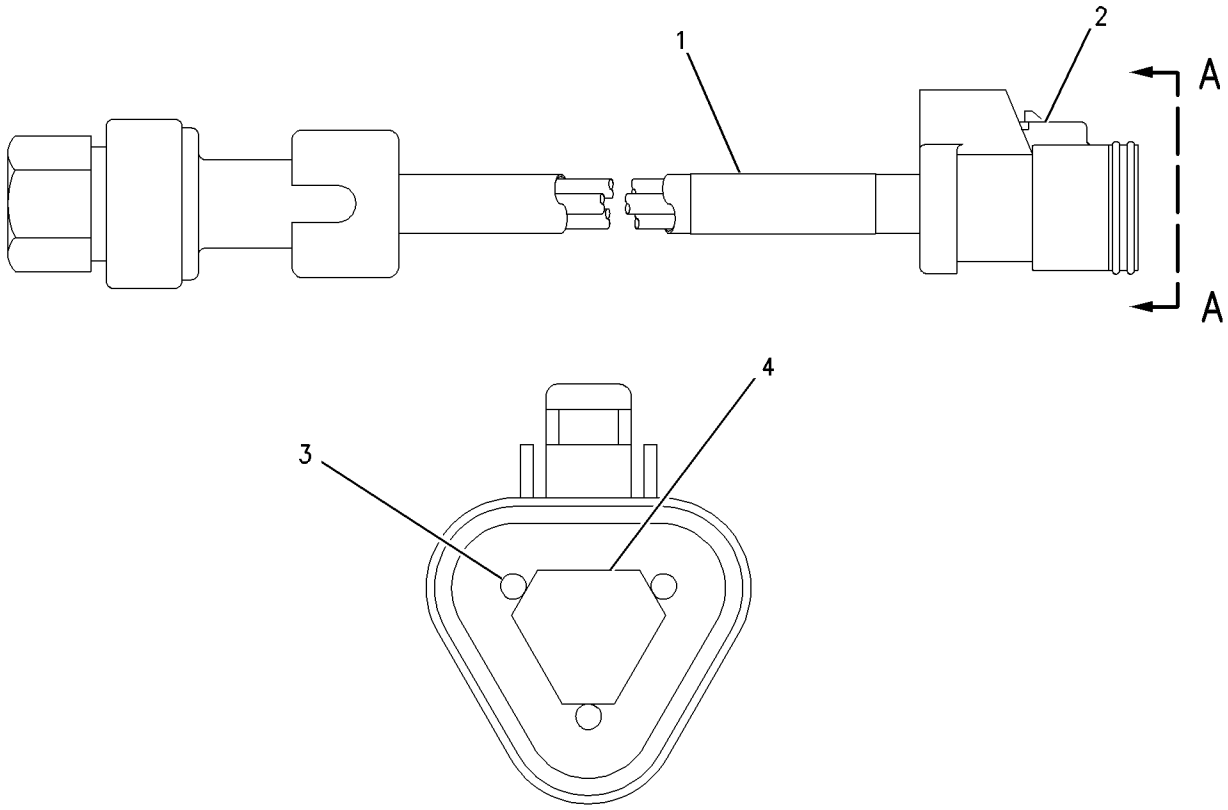

VIEW A-A

GRAPHIC #1 **<END>** g00851220

197-8393 SENSOR GP-PRESSURE–ATMOSPHERIC

S/N: KHX1-UP

PART OF 231-1977 SENSOR GP-ENGINE

SMCS-4351, 4352 **i02353392**

NOTE	REF NO	GRAPHIC REF	PART NUMBER	QTY	PART NAME 1 2 3 4 5 6 (PRODUCT LEVEL)	SEE PAGE
	1	1	**161-1703**	1	SENSOR GP-PRESSURE	
	2	1	**6V-5049**	1	SEAL-O-RING	

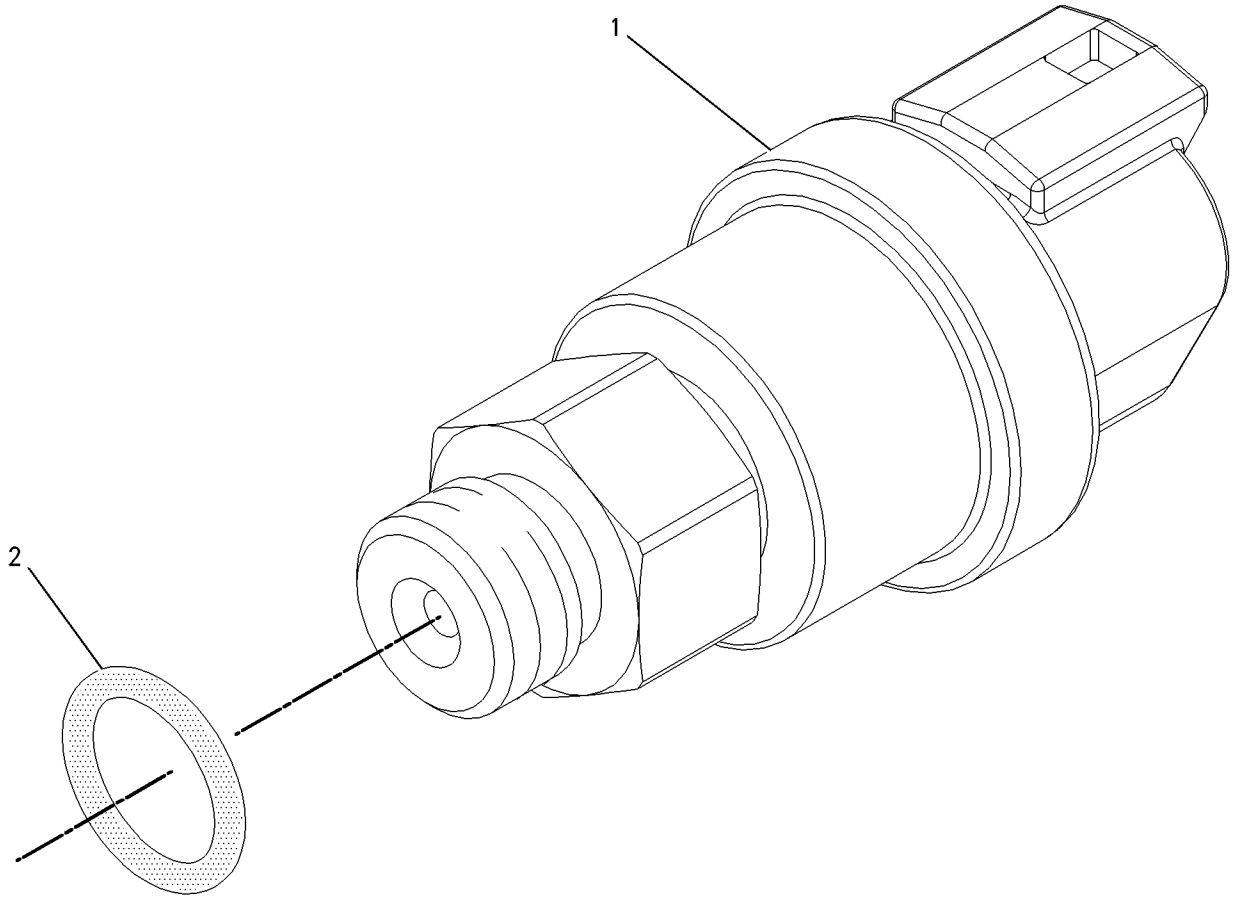

GRAPHIC #1 **<END>** g00855973

197-8394 SENSOR GP-PRESSURE–ENGINE OIL

S/N: KHX1-UP

PART OF 231-1977 SENSOR GP-ENGINE

SMCS-4351, 4352 **i02290153**

NOTE	REF NO	GRAPHIC REF	PART NUMBER	QTY	PART NAME 1 2 3 4 5 6 (PRODUCT LEVEL)	SEE PAGE
	1	1	**161-1705**	1	SENSOR GP-PRESSURE	
	2	1	**6V-5048**	1	SEAL-O-RING	

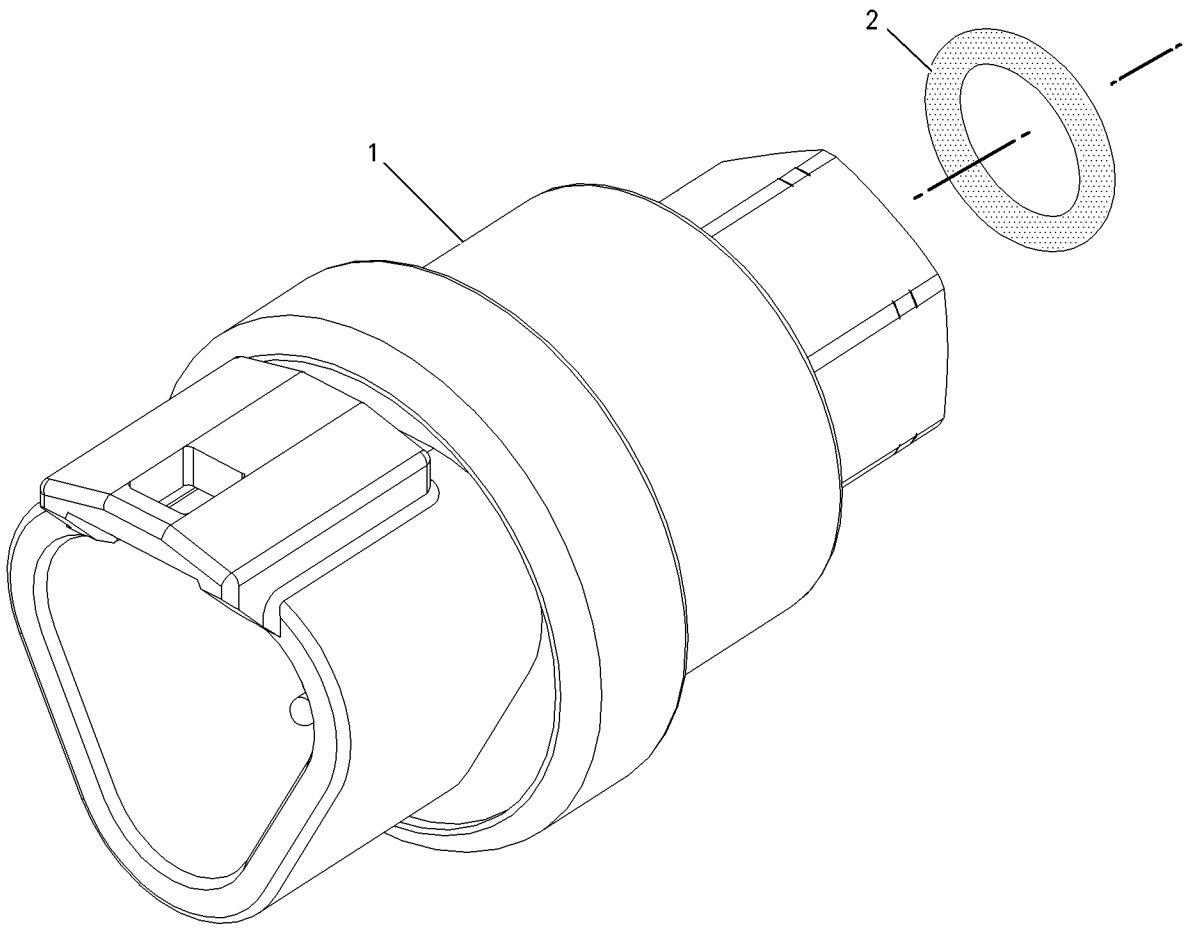

GRAPHIC #1 **<END>** g00856107

210-1747 SENSOR GP-PRESSURE

S/N: KHX1-UP

PART OF 231-1977 SENSOR GP-ENGINE

SMCS-4351, 4352 **i02304547**

NOTE	REF NO	GRAPHIC REF	PART NUMBER	QTY	PART NAME 1 2 3 4 5 6 (PRODUCT LEVEL)	SEE PAGE
	1	1	**161-1704**	1	SENSOR GP-PRESSURE	
	2	1	**6V-5048**	1	SEAL-O-RING	

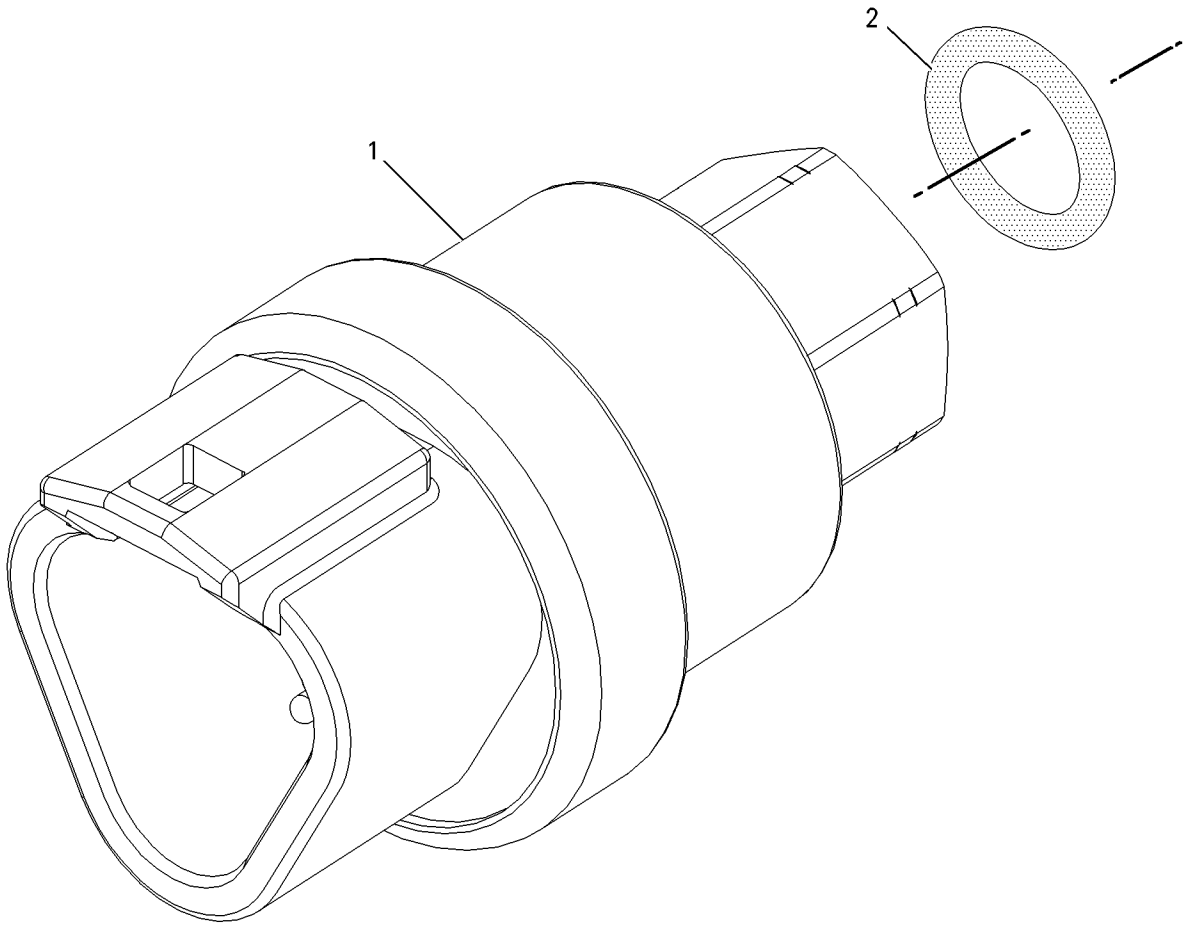

GRAPHIC #1 **<END>** g00856107

224-4536 SENSOR GP-PRESSURE–INJECTION ACTUATION

S/N: KHX1-UP

PART OF 236-6220 SENSOR GP-PRESSURE

SMCS-4351, 4352 **i02294161**

NOTE	REF NO	GRAPHIC REF	PART NUMBER	QTY	PART NAME 1 2 3 4 5 6 (PRODUCT LEVEL)	SEE PAGE
E	1	1	**9X-1813**		SLEEVE (35-CM)	
	2	1	**155-2260**	1	KIT-CONNECTING PLUG (3-PIN)	
					(INCLUDES PLUG AS, WEDGES & INTERFACE SEAL)	
	3	1	**194-5226**	3	WIRE AS-HARNESS (16-GA TO 18-GA)	
					–OR–	
		1	**194-5227**	3	WIRE AS-SENSOR (14-GA WIRE)	
	4	1	**155-2276**	1	WEDGE-PLUG LOCK (3-PIN)	

E-ORDER BY THE CENTIMETER

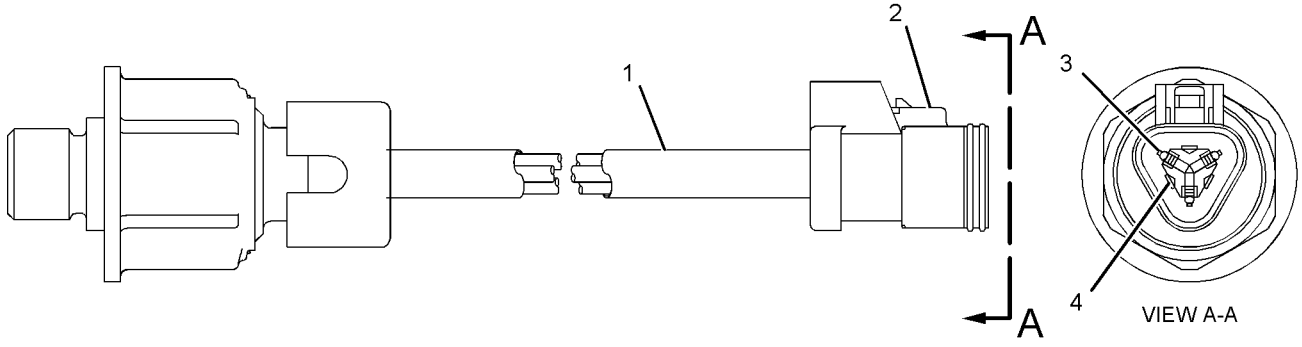

GRAPHIC #1 **<END>** g01040301

PROOF

236-6220 SENSOR GP-PRESSURE–INJECTION ACTUATION

S/N: KHX1-UP

PART OF 231-1977 SENSOR GP-ENGINE

SMCS-4351, 4352 **i02330215**

NOTE	REF NO	GRAPHIC REF	PART NUMBER	QTY	PART NAME 1 2 3 4 5 6 (PRODUCT LEVEL)	SEE PAGE
	1	1	**214-7567**	1	SEAL-O-RING	
Y	2	1	**224-4536**	1	SENSOR GP-PRESSURE (INJECTION ACTUATION)	185

Y-SEPARATE ILLUSTRATION

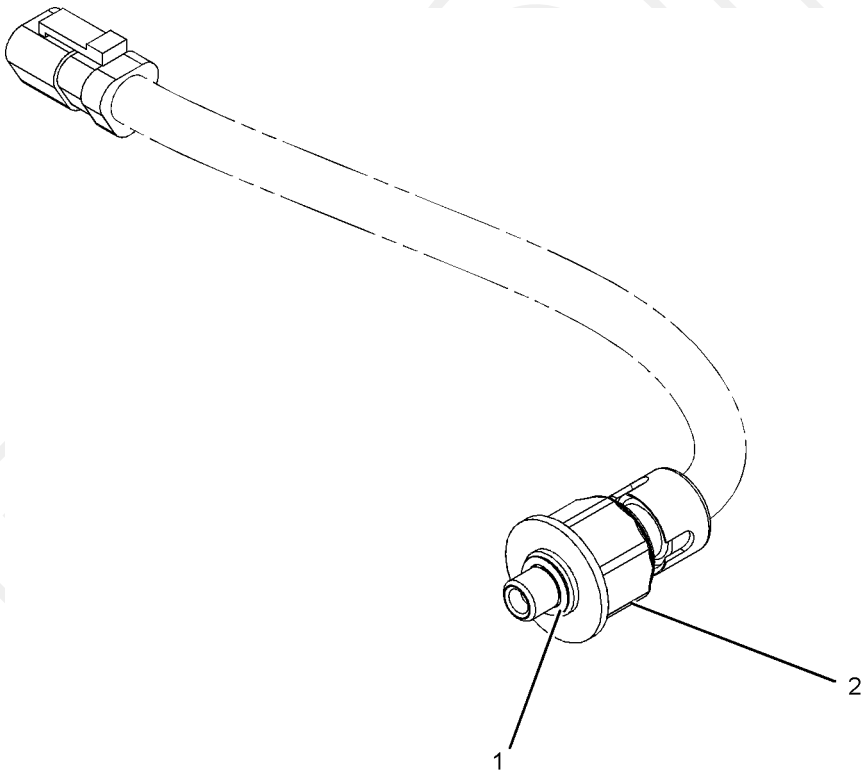

GRAPHIC #1 **<END>** g01054528

237-0957 SENSOR GP-PRESSURE–FAN

S/N: B9M1-UP

PART OF 266-3724 LINES GP-HYDRAULIC FAN, 251-8256 MANIFOLD GP-CONTROL AN ATTACHMENT

SMCS-4351, 4352 **i02254217**

NOTE	REF NO	GRAPHIC REF	PART NUMBER	QTY	PART NAME 1 2 3 4 5 6 (PRODUCT LEVEL)	SEE PAGE
BE	1	1	**9X-1813**		SLEEVE	
	2	1	**155-2260**	1	KIT-CONNECTING PLUG (3-PIN)	
					(INCLUDES PLUG AS & WEDGE)	

B-USE AS REQUIRED
E-ORDER BY THE CENTIMETER

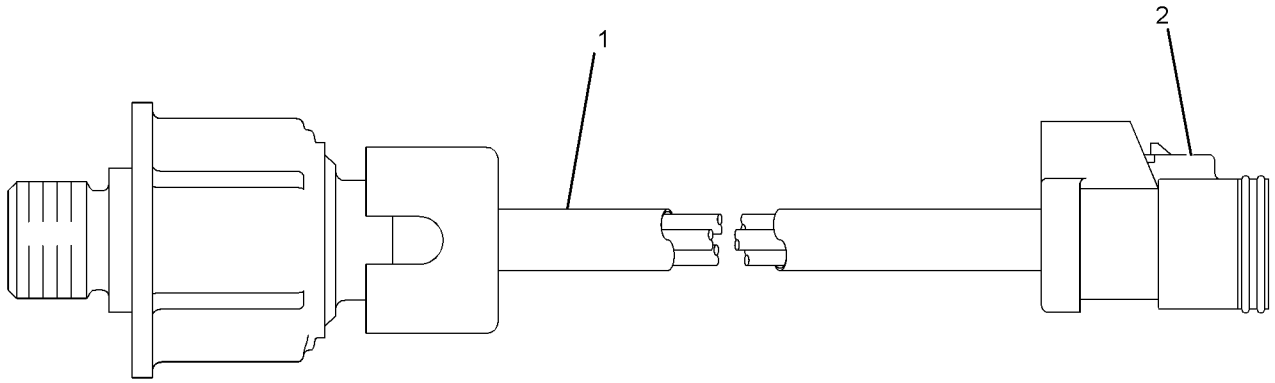

GRAPHIC #1 **<END>** g01131622

239-2396 SENSOR GP-PRESSURE–FUEL

S/N: KHX1-UP

PART OF 250-8313 FILTER GP-FUEL

SMCS-4351, 4352 **i02355593**

NOTE	REF NO	GRAPHIC REF	PART NUMBER	QTY	PART NAME 1 2 3 4 5 6 (PRODUCT LEVEL)	SEE PAGE
Y	1	1	**194-6725**	1	SENSOR GP-PRESSURE	181
	2	1	**6V-5048**	1	SEAL-O-RING	

Y-SEPARATE ILLUSTRATION

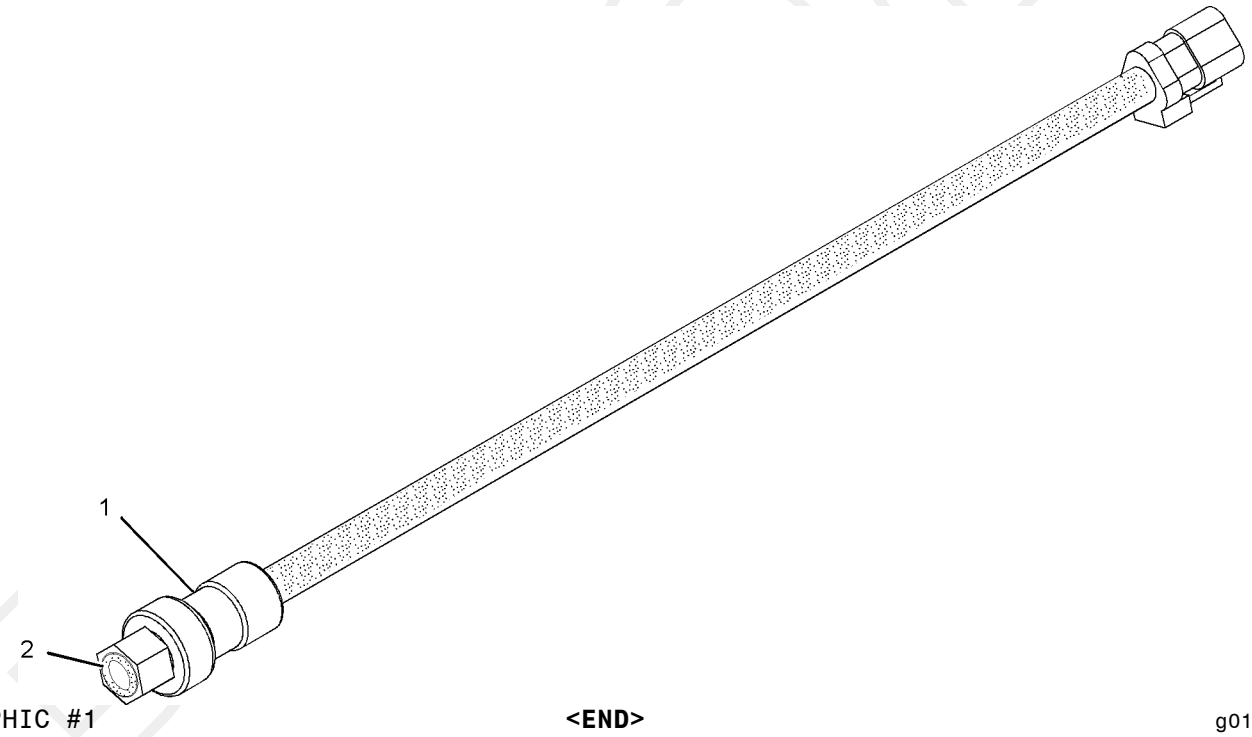

GRAPHIC #1 **<END>** g01019323

236-6221 SENSOR GP-SPEED

S/N: KHX1-UP

PART OF 231-1977 SENSOR GP-ENGINE

SMCS-1907, 3175 **i02304374**

NOTE	REF NO	GRAPHIC REF	PART NUMBER	QTY	PART NAME 1 2 3 4 5 6 (PRODUCT LEVEL)	SEE PAGE
	1	1	**203-3940**	2	SEAL-O-RING	
	2	1	**245-4630**	1	SENSOR GP-SPEED	

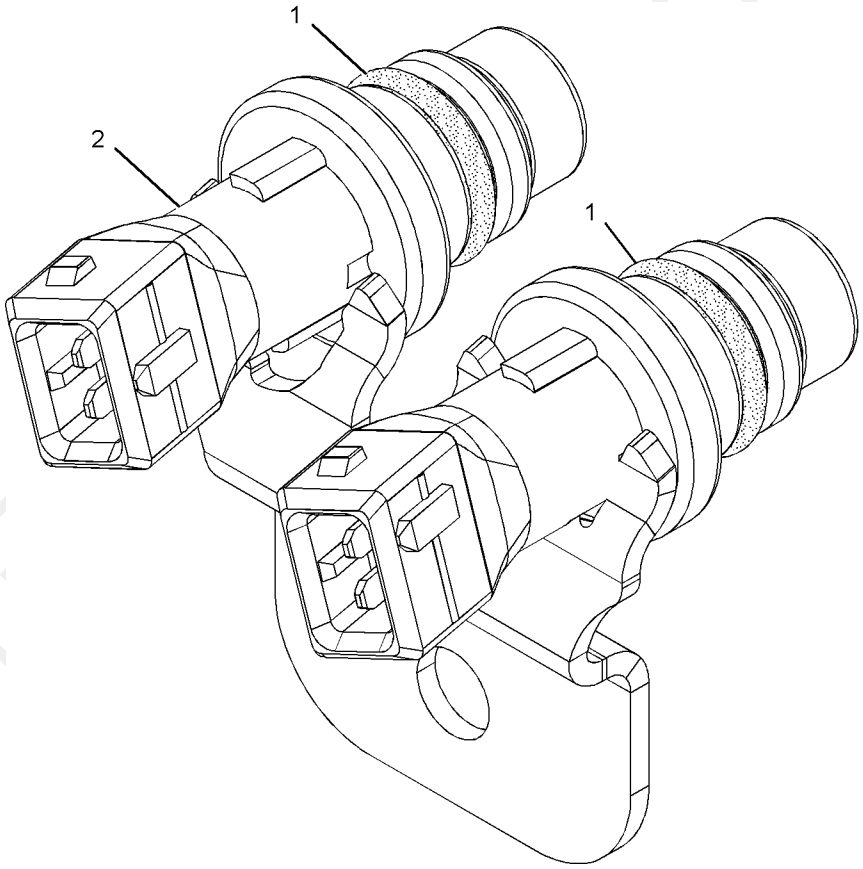

GRAPHIC #1 **<END>** g01013894

130-9811 SENSOR GP-TEMPERATURE

S/N: B9M1-UP
PART OF 241-8528 COOLER GP-HYDRAULIC OIL
AN ATTACHMENT

SMCS-1330 **i02249681**

NOTE	REF NO	GRAPHIC REF	PART NUMBER	QTY	PART NAME 1 2 3 4 5 6 (PRODUCT LEVEL)	SEE PAGE
					(NO SERVICED PARTS)	

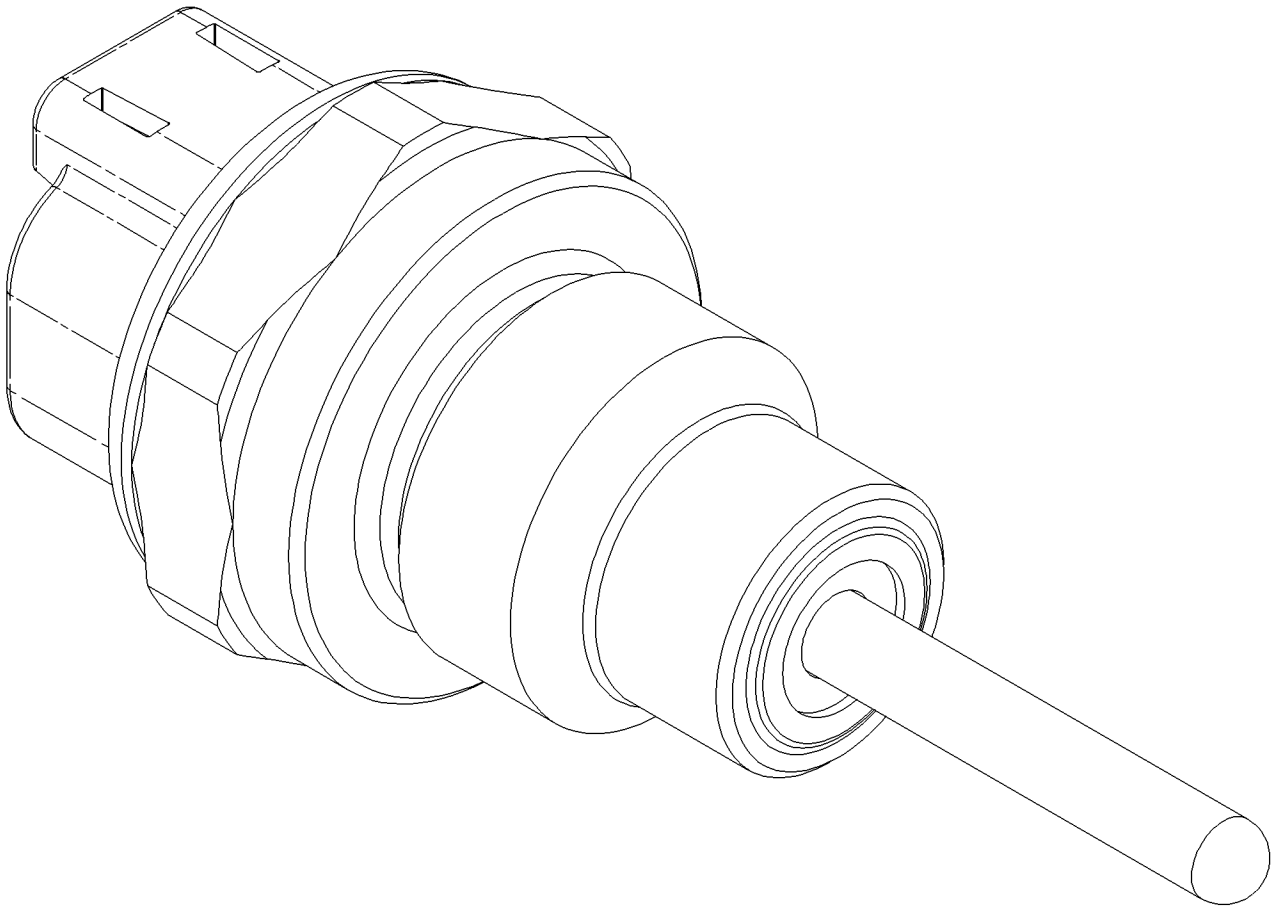

GRAPHIC #1 **<END>** g00945099

145-7028 SENSOR GP-TEMPERATURE

S/N: B9M1-UP
PART OF 235-6194 WIRING GP-SENSOR
AN ATTACHMENT

SMCS-1330 **i02267103**

NOTE	REF NO	GRAPHIC REF	PART NUMBER	QTY	PART NAME 1 2 3 4 5 6 (PRODUCT LEVEL)	SEE PAGE
	1	1	**102-8802**	1	KIT-RECEPTACLE (2-PIN)	
					(INCLUDES RECEPTACLE AS AND WEDGE)	
J	2	1	**153-5043**		SLEEVE (3-DM)	
	3	1	**8T-8729**	2	PIN-CONNECTOR	
	4	1	**3E-3365**	1	WEDGE-RECEPTACLE LOCK (2-PIN)	

J-ORDER BY THE DECIMETER

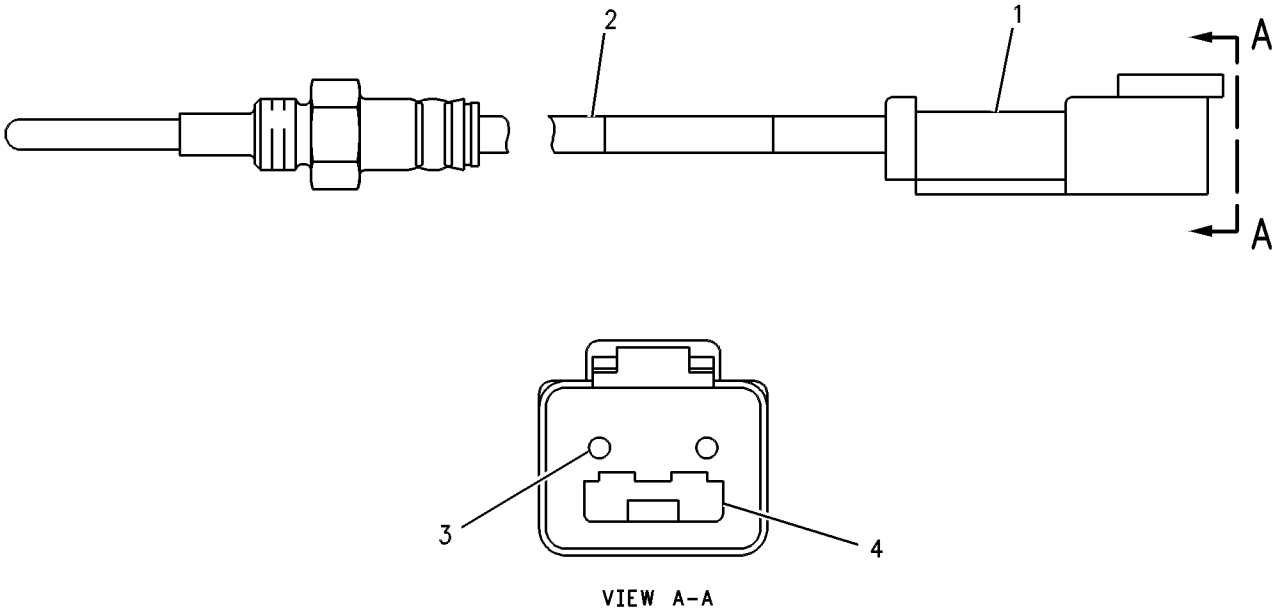

VIEW A-A

GRAPHIC #1 **<END>** g00334570

197-8391 SENSOR GP-TEMPERATURE–AIR INLET MANIFOLD

S/N: KHX1-UP

PART OF 250-8313 FILTER GP-FUEL, 231-1977 SENSOR GP-ENGINE

SMCS-1330 **i02355627**

NOTE	REF NO	GRAPHIC REF	PART NUMBER	QTY	PART NAME 1 2 3 4 5 6 (PRODUCT LEVEL)	SEE PAGE
	1	1	**130-9811**	1	SENSOR GP-TEMPERATURE	
	2	1	**8L-2786**	1	SEAL-O-RING	

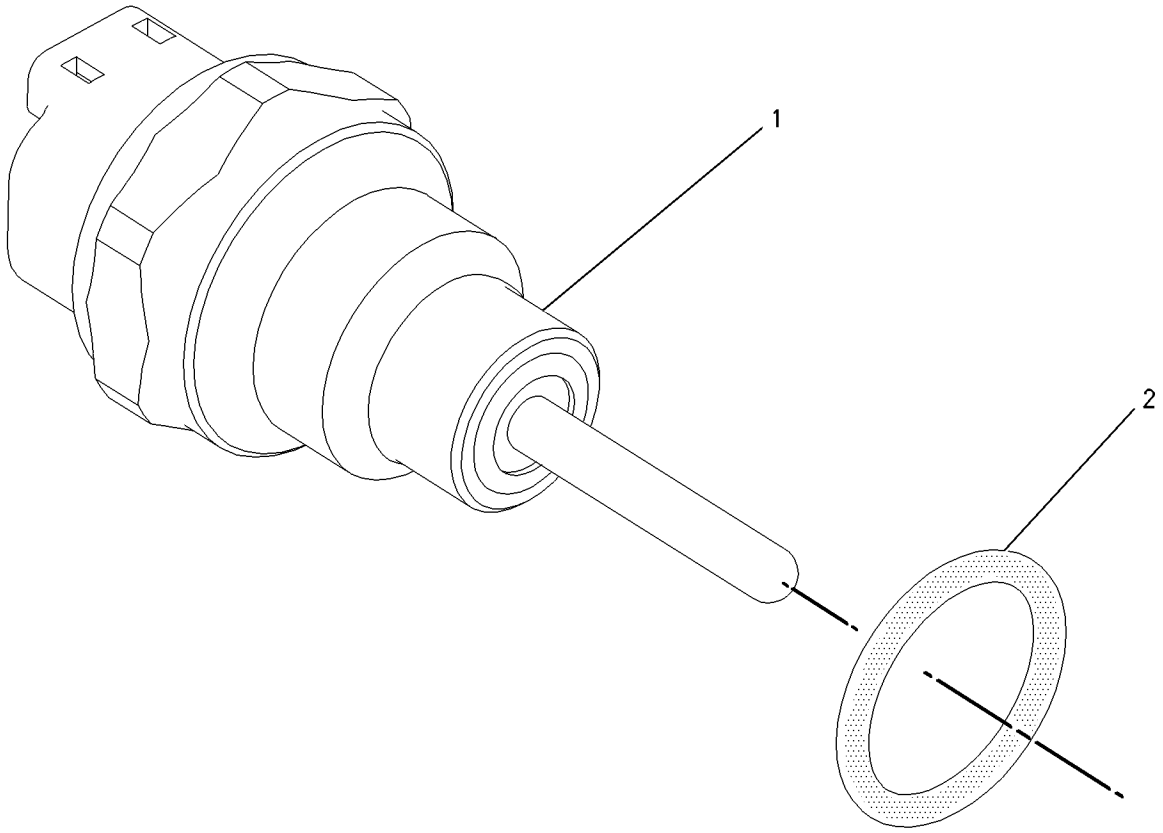

GRAPHIC #1 **<END>** g00856011

197-8392 SENSOR GP-TEMPERATURE–COOLANT

S/N: KHX1-UP

PART OF 231-1977 SENSOR GP-ENGINE

SMCS-1330 **i02355629**

NOTE	REF NO	GRAPHIC REF	PART NUMBER	QTY	PART NAME 1 2 3 4 5 6 (PRODUCT LEVEL)	SEE PAGE
	1	1	**130-9811**	1	SENSOR GP-TEMPERATURE	
	2	1	**6V-6609**	1	SEAL-O-RING	

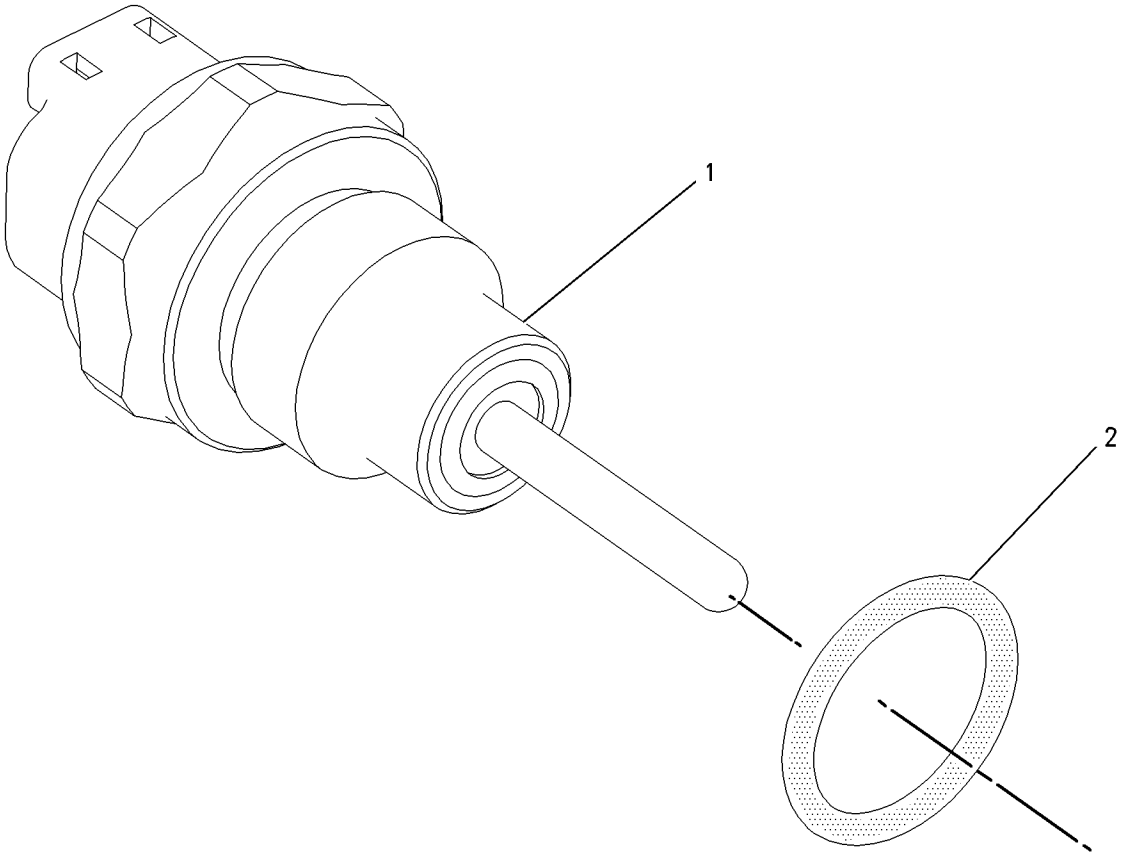

GRAPHIC #1 **<END>** g00856005

207-5262 SERVICE GP-MACHINE–SECURITY

S/N: B9M1-UP

PART OF 237-5920 INSTALLATION GP-SECURITY

SMCS-7610, 7631 **i02348756**

NOTE	REF NO	GRAPHIC REF	PART NUMBER	QTY	PART NAME 1 2 3 4 5 6 (PRODUCT LEVEL)	SEE PAGE
	1	1	*156-6155*	1	CONTROL GP-UNPROGRAMMED (SECURITY)	
	1A	1	**7X-6315**	1	STRAP AS-GROUND	
	1B	1	**184-2472**	1	SCREW-PAN HEAD (NO 8-32X9.52-MM)	
	1C	1	**134-4126**	1	WASHER (4.52X8.28X0.76-MM THK)	
	2	1	**243-6464**	1	SOFTWARE GP-MACHINE	
	3	1	**206-5162**	2	KEY AS-ELECTRONIC (SECURITY)	
					–OR–	
		1	**206-5165**	2	KEY AS-ELECTRONIC (SECURITY)	
	4	1	**219-6314**	2	KEY RING (IDENTIFICATION)	

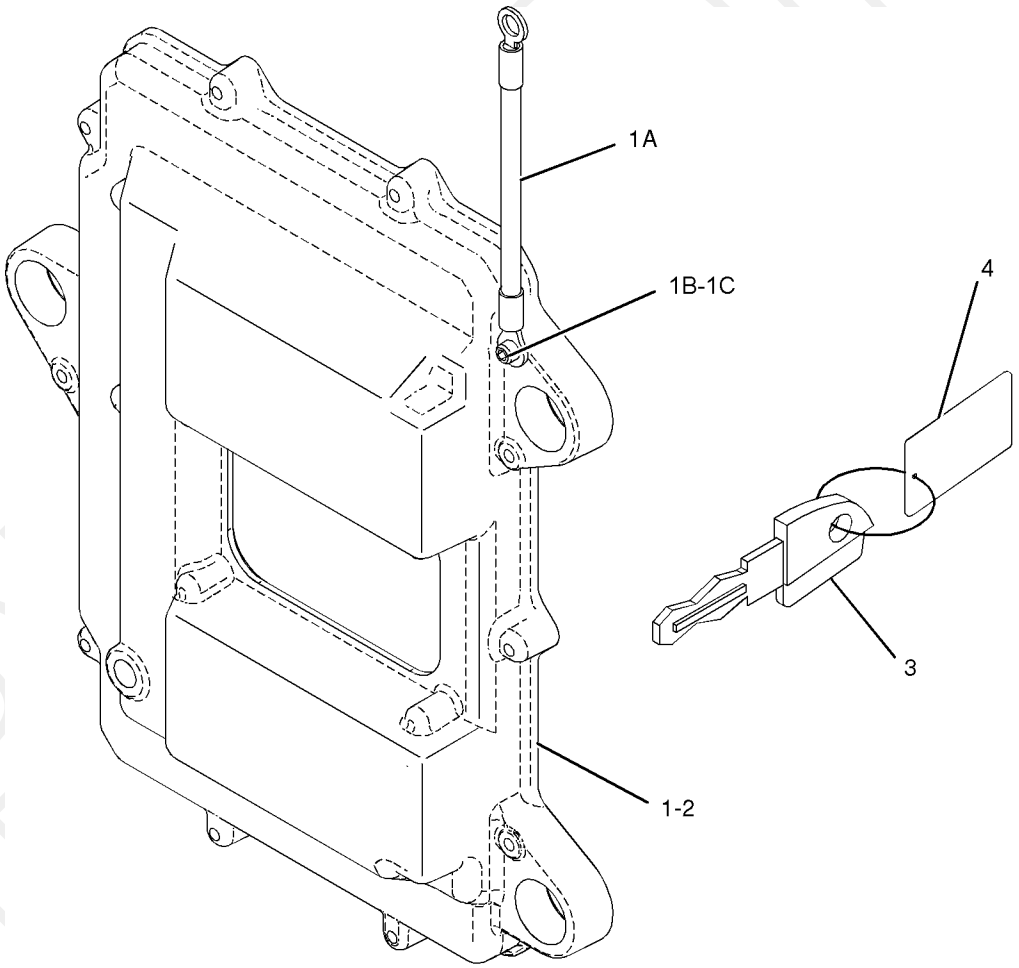

GRAPHIC #1 **<END>** g01026135

235-9679 STARTING AID GP

S/N: KHX1-UP
24-VOLT. FRONT
PART OF 231-0878 ENGINE AR-COMPLETE

SMCS-1090 **i01944894**

NOTE	REF NO	GRAPHIC REF	PART NUMBER	QTY	PART NAME 1 2 3 4 5 6 (PRODUCT LEVEL)	SEE PAGE
	1	1	**3S-2093**	2	STRAP-CABLE	
	2	1	**7S-6369**	1	WASHER (0.344X0.75X0.188-IN THK)	
	3	1	**229-8851**	1	CABLE AS	
	3A	1	**030-1712**	1	TERMINAL-RING (2-AWG, 6.35-MM)	
	3B	1	**135-2543**	1	BOOT	
Y	5	1	**223-7577**	1	SWITCH GP-MAGNETIC (INLET AIR HEATER)	209
	6	1	**4P-8134**	1	CLIP	
M	7	1	**6V-2317**	5	BOLT (M8X1.25X30-MM)	
M	8	1	**6V-5218**	3	BOLT (M8X1.25X35-MM)	
	9	1	**9M-1974**	8	WASHER-HARD (8.8X16X2-MM THK)	

M-METRIC PART
Y-SEPARATE ILLUSTRATION

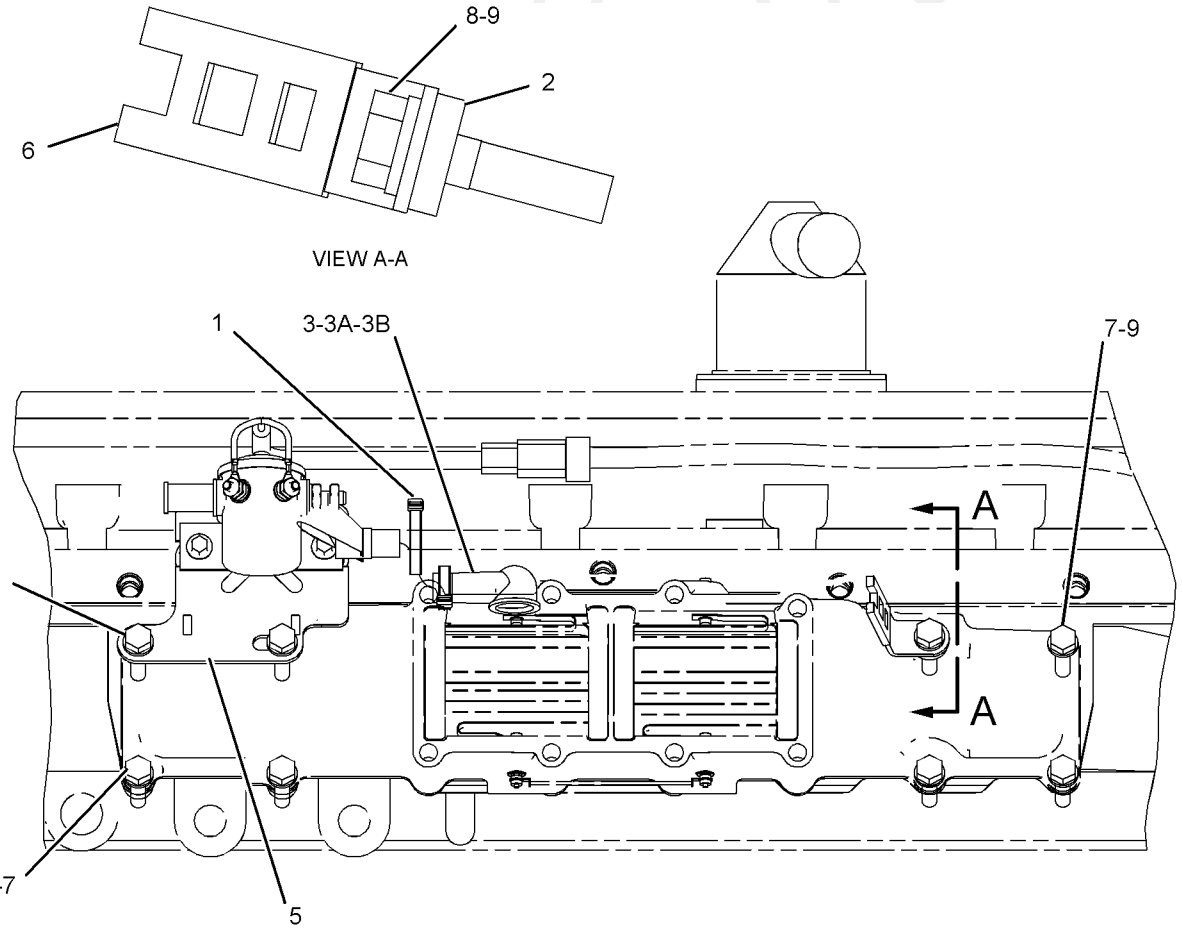

GRAPHIC #1 **<END>** g01028998

ELECTRICAL AND STARTING SYSTEM

238-9561 STARTING AID GP-ETHER

S/N: B9M1-UP
PART OF 261-0187 SNOW AR-MOTOR GRADER
AN ATTACHMENT

SMCS-1456 **i02322680**

NOTE	REF NO	GRAPHIC REF	PART NUMBER	QTY	PART NAME 1 2 3 4 5 6 (PRODUCT LEVEL)	SEE PAGE
	1	1	**3P-0764**	1	PLUG	
	2	1	**7N-2059**	1	CLAMP AS	
Y	4	1	**239-1134**	1	VALVE GP-ETHER STARTING (24-VOLT)	215
	5	1	**241-4194**	1	FITTING	
	6	1	**250-2177**	1	ATOMIZER AS	
	7	1	**5P-2948**	1	CONNECTOR AS	
		1	**4K-9821**	1	SLEEVE	
		1	**4K-9822**	1	NUT (5/16-24-THD)	
	8	1	**6V-2686**	1	CLIP	
M	9	1	**8T-4200**	4	BOLT (M8X1.25X16-MM)	
	10	1	**8T-4224**	4	WASHER-HARD (8.8X16X2-MM THK)	
BD	11	1	**5P-5630**		TUBE	

B-USE AS REQUIRED
D-ORDER BY THE METER
M-METRIC PART
Y-SEPARATE ILLUSTRATION

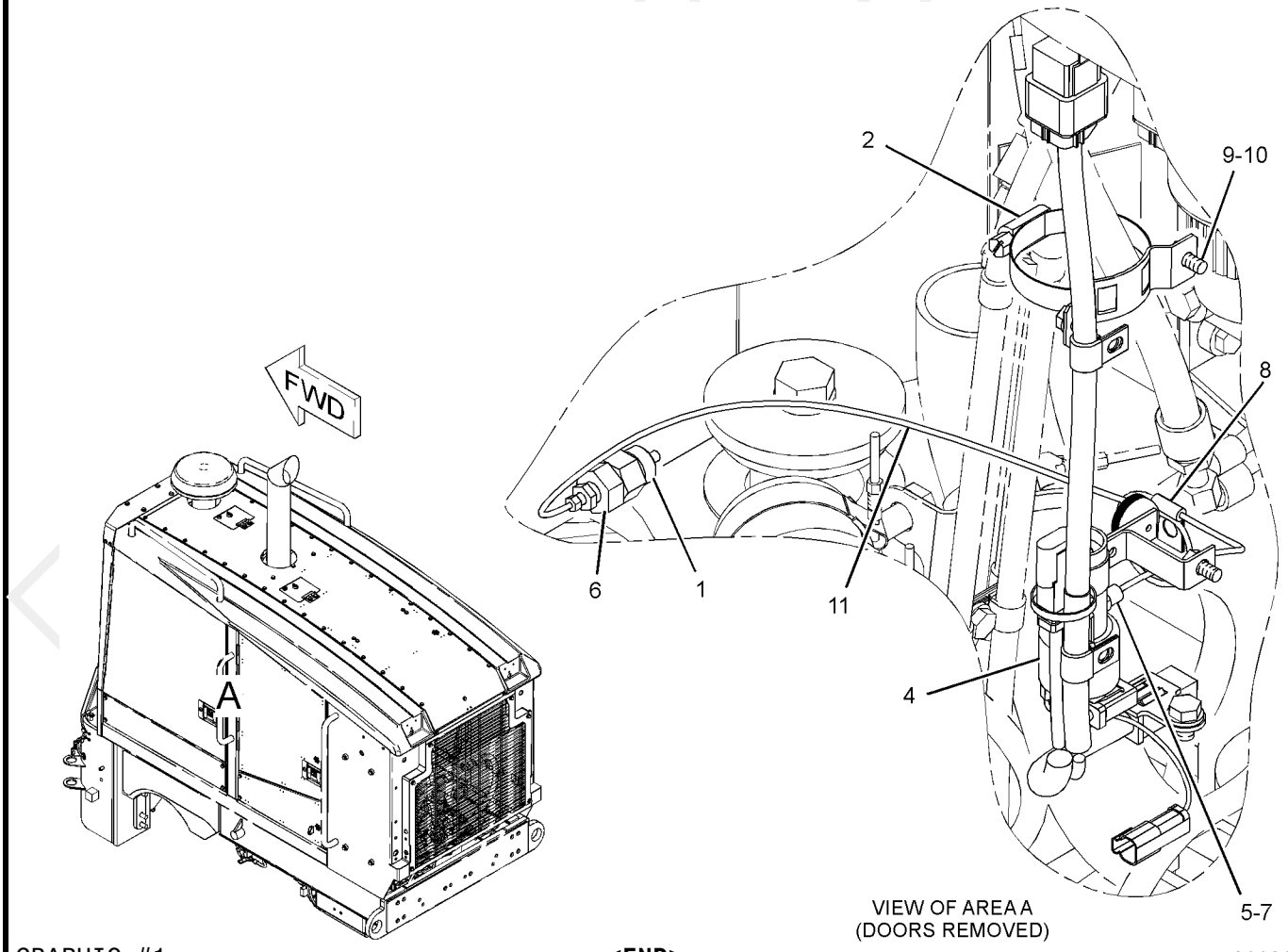

GRAPHIC #1 **<END>** g01161170

6V-5582 STARTING MOTOR GP-ELECTRIC

S/N: KHX1-UP
24-VOLT
PART OF 207-1556 STARTING MOTOR GP-ELECTRIC

SMCS-1453 **i02253251**

NOTE	REF NO	GRAPHIC REF	PART NUMBER	QTY	PART NAME 1 2 3 4 5 6 (PRODUCT LEVEL)	SEE PAGE
	1	1	**6V-8188**	3	NUT (1/2-13-THD)	
	2	1	**7X-0562**	3	WASHER-HARD (13.5X19X0.8-MM THK)	
	3	1	**4B-2049**	1	NUT (10-32-THD)	
	4	1	**8F-1434**	1	LOCKWASHER	
	5	1	**8T-0328**	1	WASHER-HARD (5.5X10X1-MM THK)	
M	6	1	**8T-4133**	1	NUT (M10X1.5-THD)	
	7	1	**8T-4121**	1	WASHER-HARD (11X21X2.5-MM THK)	
	8	1	**3E-0142**	1	HOUSING AS	
	9	1	**3E-0141**	1	STOP-STARTING MOTOR	
	10	1	**4N-7521**	1	RING-LOCK	
	11	1	**3E-0146**	1	DRIVE AS-STARTING MOTOR	
	12	1	**3E-0144**	1	HOUSING AS	
	13	1	**3E-0140**	1	LEVER AS-STARTER	
	14	1	**3E-0138**	1	ARMATURE AS (24-VOLT)	
	15	1	**3E-0137**	1	HOLDER AS-BRUSH (STARTING MOTOR)	
	16	1	**3E-0135**	1	SOLENOID AS (24-VOLT) (STARTING MOTOR)	
	17	1	**3E-0125**	1	COVER AS-STARTING MOTOR	
	18	1	**3E-0139**	1	HOUSING AS	
	19	1	**3E-0136**	1	HOUSING AS	
	20	1	**3E-0132**	1	CONNECTOR	
	21	1	**3E-0133**	1	WIRE AS-STARTING MOTOR	
	22	1	**3E-0134**	1	COVER-PLUNGER	
					AVAILABLE REPAIR KIT(S):	
			3E-0127		KIT-BEARING (STARTING MOTOR)	
					(INCLUDES BEARINGS, SEAL AND BUSHING)	
			3E-0128		KIT-BRUSH (STARTING MOTOR)	
					(INCLUDES O-RINGS, SCREW, SPRING, AND BRUSH)	
			3E-0129		KIT-HARDWARE (STARTING MOTOR)	
					(INCLUDES WASHERS, BOLTS, LOCKWASHERS, NUTS, BUSHINGS, AND PLATE)	
			3E-0145		KIT-STARTING MOTOR PIN	
					(INCLUDES O-RINGS, SHAFT, AND RING)	
			3E-0130		KIT-STARTING MOTOR SEAL	
					(INCLUDES SEAL AND O-RINGS)	
			3E-0131		KIT-WASHER (STARTING MOTOR)	
					(INCLUDES WASHERS)	

M-METRIC PART

PROOF

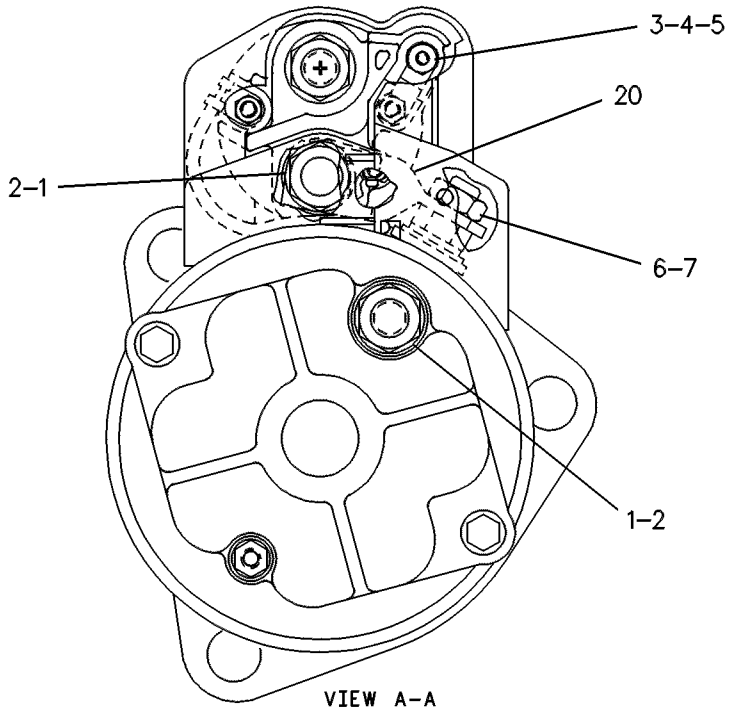

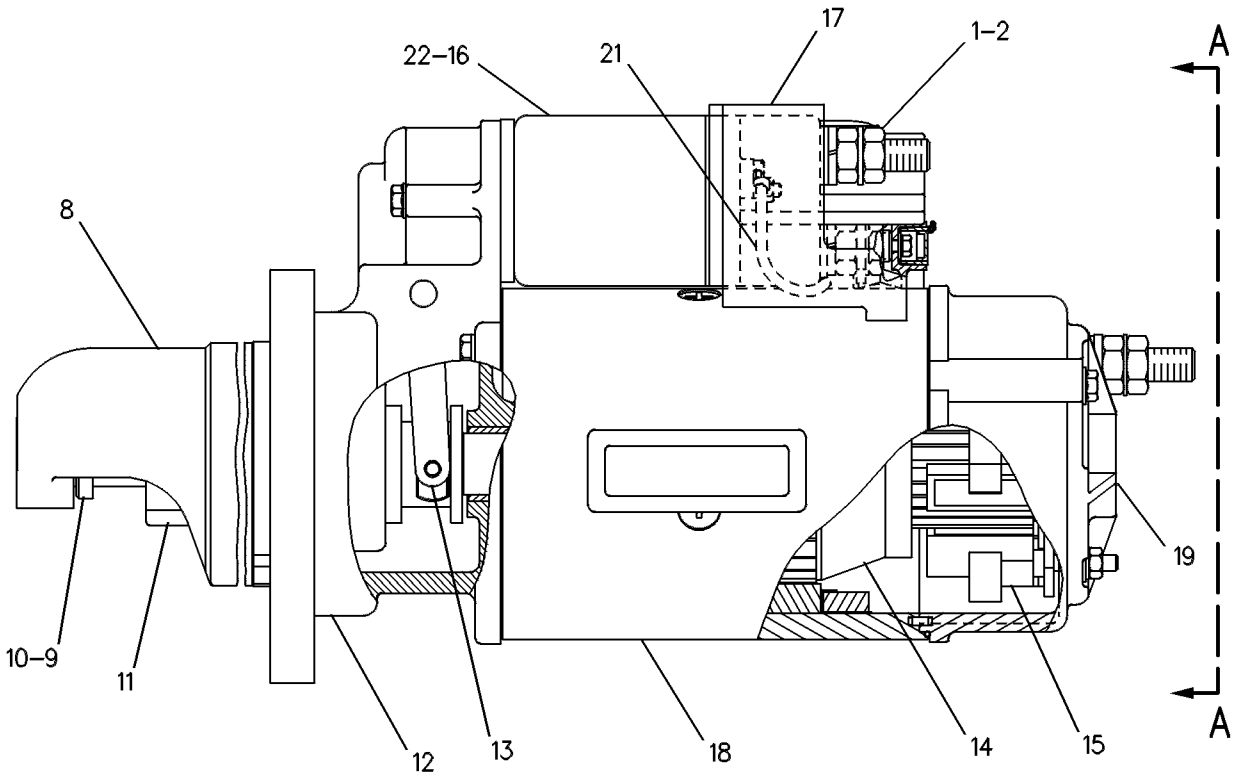

GRAPHIC #1 **<END>** g00084516

207-1556 STARTING MOTOR GP-ELECTRIC*R

S/N: KHX1-UP

24-VOLT. OPTIONAL SERVICE REPLACEMENT STARTER 237-1962 IS AVAILABLE FOR INCREASED CRANKING CAPABILITY ON MODELS E462 AND E555

PART OF 248-0716 STARTING MOTOR GP-ELECTRIC

FIELD REPLACEMENT FOR 207-1557—PAGE 200

SMCS-1453 **i02105118**

NOTE	PART NUMBER	QTY	PART NAME 1 2 3 4 5 6 (PRODUCT LEVEL)	SEE PAGE
Y	*6V-5582*	1	STARTING MOTOR GP-ELECTRIC	197
			—OR—	
Y	*207-1557*	1	STARTING MOTOR GP-ELECTRIC	200

Y-SEPARATE ILLUSTRATION

<END>

PROOF

ELECTRICAL AND STARTING SYSTEM

207-1557 STARTING MOTOR GP-ELECTRIC

S/N: KHX1-UP
24-VOLT
PART OF 207-1556 STARTING MOTOR GP-ELECTRIC
FIELD REPLACEMENT ORDER 207-1556—PAGE 199

SMCS-1453 **i02253252**

NOTE	REF NO	GRAPHIC REF	PART NUMBER	QTY	PART NAME 1 2 3 4 5 6 (PRODUCT LEVEL)	SEE PAGE
	1	1	**3T-3434**	6	PLUG	
	2	1	**7T-3279**	1	HOUSING AS	
	3	1	**8T-8566**	1	TERMINAL AS	
	4	1	**6V-8188**	4	NUT (1/2-13-THD)	
	5	1	**7X-0562**	4	WASHER-HARD (13.5X19X0.8-MM THK)	
	6	1	**3T-3422**	1	WIRE AS	
	7	1	**7T-3278**	1	HOLDER AS-BRUSH	
	8	1	**7T-3277**	1	COIL AS-FIELD	
	9	1	**7T-3454**	1	INSULATOR	
	10	1	**7T-3271**	1	CONNECTOR	
	11	1	**7T-3451**	1	INSULATOR-TERMINAL	
	12	1	**8T-8569**	1	INSULATOR-TERMINAL	
	13	1	**5S-7349**	4	BOLT (1/4-20X0.5-IN)	
	14	1	**8T-4205**	4	WASHER-HARD (7.2X14.5X2-MM THK)	
	15	1	**8H-1141**	4	SHOE-POLE	
	16	1	**3F-0379**	8	SCREW-POLE SHOE (3/8-24-THD)	
	17	1	**7T-3276**	1	ARMATURE AS (24-VOLT)	
	18	1	**3E-7775**	1	HOUSING AS	
	19	1	**4M-1831**	1	PLUG-LEVER HOUSING	
	20	1	**7L-2894**	1	GASKET	
	21	1	**036-9823**	5	BOLT (1/4-28X1-IN)	
	22	1	**6N-3826**	1	DRIVE AS-MOTOR	
	23	1	**7T-3974**	1	HOUSING AS-DRIVE	
	24	1	**7X-3373**	6	BOLT (5/16-18X0.88-IN)	
	25	1	**193-8570**	1	SOLENOID AS (24-VOLT) (STARTING MOTOR)	
	26	1	**6V-8378**	3	NUT (10-32-THD)	
	27	1	**8F-1434**	2	LOCKWASHER	
	28	1	**8T-0328**	3	WASHER-HARD (5.5X10X1-MM THK)	
	29	1	**9X-4824**	1	COVER-STARTING MOTOR	
					AVAILABLE REPAIR KIT(S):	
			7T-3268	1	KIT-LEVER (STARTING MOTOR)	
					(INCLUDES LEVER ASSEMBLIES, SEALS, NUT, GASKET AND RETAINER)	
			7T-3267	1	KIT-BUSHING (STARTING MOTOR)	
					(INCLUDES BUSHINGS, WICKS, CUPS, SEALS, GASKET, SCREW AS, WASHERS, SPACER AND NUT)	
			8C-3655	1	KIT-BRUSH (STARTING MOTOR)	
					(INCLUDES BRUSHES, SPRINGS, SCREWS, SCREW AS AND SEAL)	
			8T-9884	1	KIT-INSULATOR (STARTING MOTOR)	
					(INCLUDES INSULATORS AND BUSHING)	

PROOF

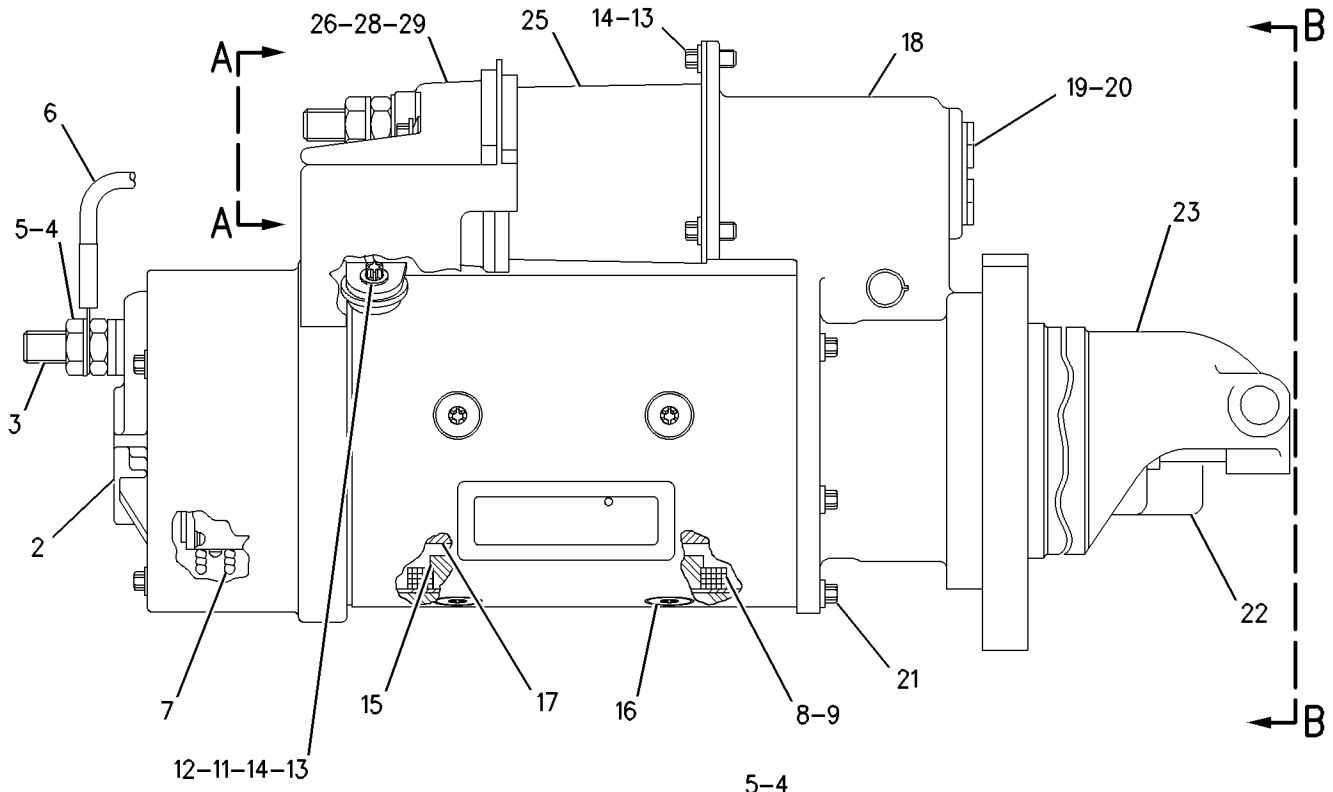

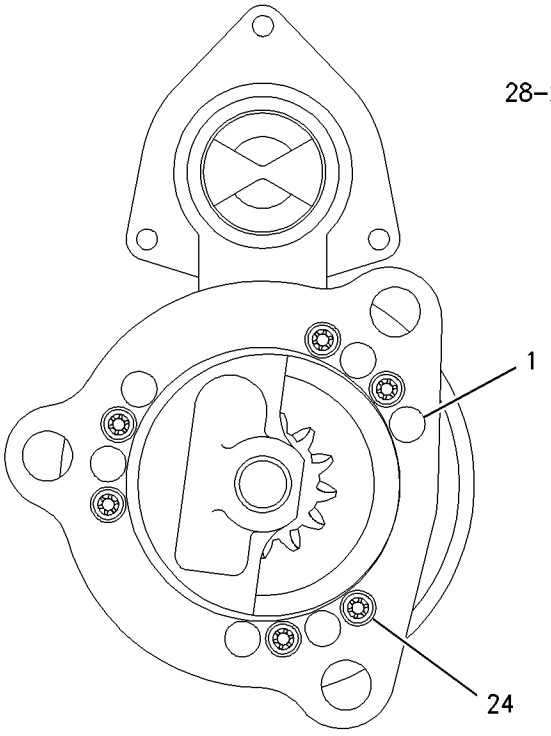

VIEW B-B

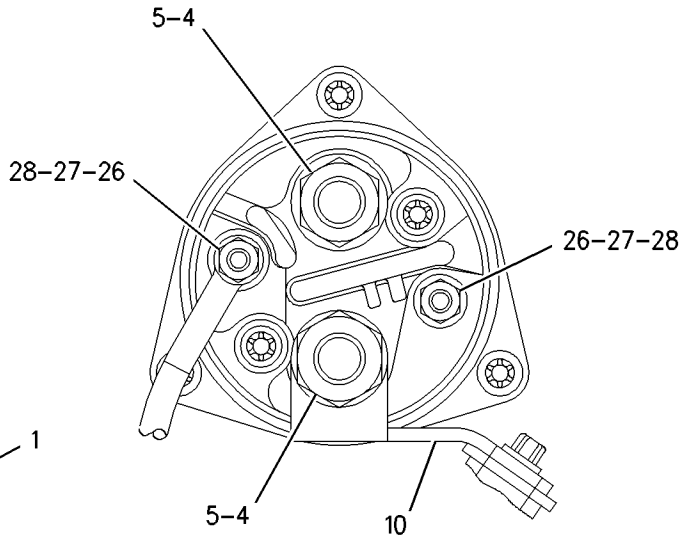

VIEW A-A

GRAPHIC #1 **<END>** g00826583

248-0716 STARTING MOTOR GP-ELECTRIC

S/N: KHX1-UP
24-VOLT
PART OF 231-0878 ENGINE AR-COMPLETE

SMCS-1453 **i02159966**

NOTE	REF NO	GRAPHIC REF	PART NUMBER	QTY	PART NAME 1 2 3 4 5 6 (PRODUCT LEVEL)	SEE PAGE
	1	1	**4H-7869**	1	GASKET	
	2	1	**8Y-9603**	1	CABLE AS-STARTING MOTOR	
		1	**1S-7251**	1	TERMINAL-RING	
		1	**1S-7252**	1	TERMINAL-RING	
E		1	**5P-0747**	28	CABLE (OO-GA, BLACK)	
YR	3	1	**207-1556**	1	STARTING MOTOR GP-ELECTRIC	199
	4	1	**220-0771**	3	BOLT-12 POINT HEAD	

E-ORDER BY THE CENTIMETER
R-REMFG PART MAY BE AVAILABLE
Y-SEPARATE ILLUSTRATION

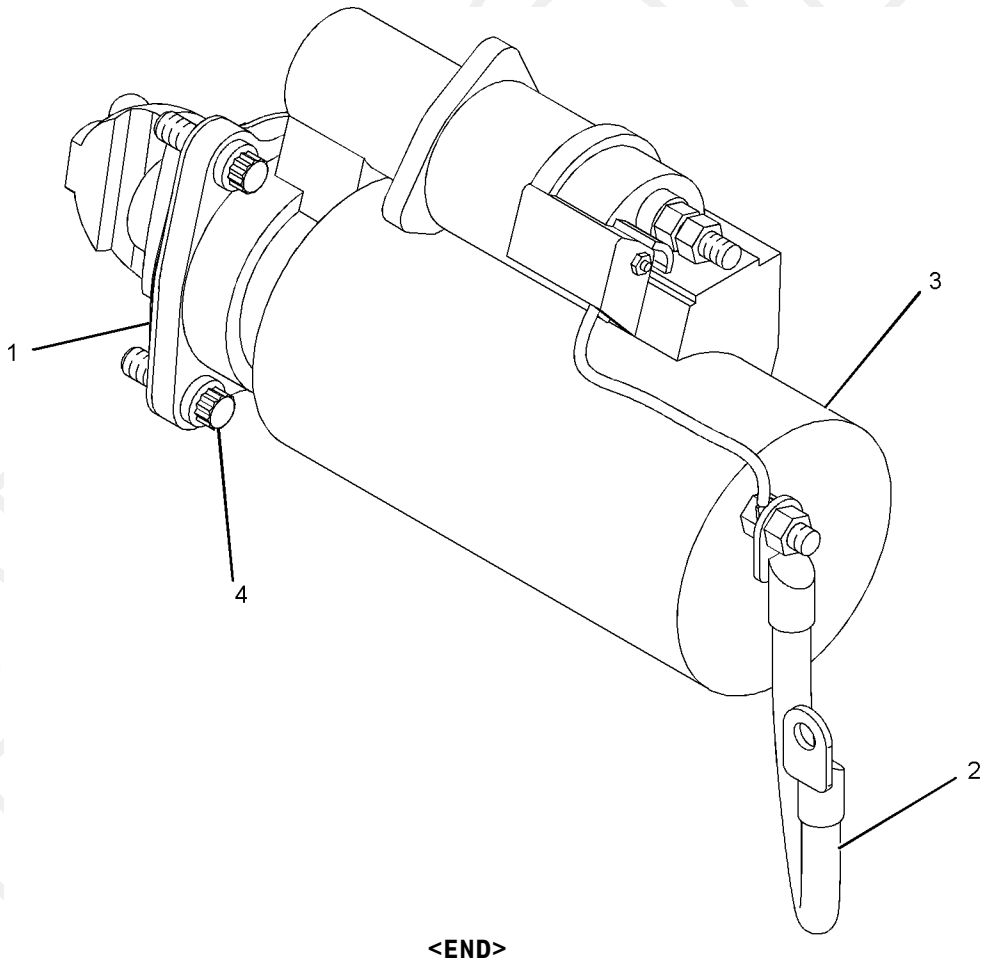

GRAPHIC #1 **<END>** g01097831

238-8809 SWITCH GP-ALL WHEEL DRIVE

S/N: B9M1-UP
PART OF 238-8808 CONTROL GP-POWER TRAIN
AN ATTACHMENT

SMCS-1435 **i02183860**

NOTE	REF NO	GRAPHIC REF	PART NUMBER	QTY	PART NAME 1 2 3 4 5 6 (PRODUCT LEVEL)	SEE PAGE
	1	1	**3E-3365**	2	WEDGE-RECEPTACLE LOCK (2-PIN)	
	2	1	**6V-8369**	1	NUT (7/16-28-THD)	
	3	1	**112-0858**	2	BEARING	
	4	1	**127-3008**	1	SPRING	
	5	1	**142-2527**	2	GASKET	
	6	1	**185-6335**	1	SWITCH AS-ROTARY (24-VOLT) (ALL WHEEL DRIVE CONTROL)	
Y	7	1	**219-2392**	1	SENSOR GP-POSITION (ALL WHEEL DRIVE)	179
	8	1	**238-8844**	1	BRACKET AS	
	9	1	**242-3282**	1	LAMP-LED (24-VOLT, RED)	
	10	1	**244-2710**	1	BLOCK	
	11	1	**244-2711**	1	SHAFT	
	12	1	**244-2712**	1	DETENT	
	13	1	**249-4099**	1	PLATE	
	14	1	**250-2299**	1	LAMP-LED (24-VOLT, GREEN)	
	15	1	**127-4838**	1	SETSCREW-SOCKET (NO 8X1.26-IN)	
	16	1	**1M-6718**	1	BALL	
	17	1	**2H-3920**	1	LOCKWASHER	
	18	1	**102-8802**	2	KIT-RECEPTACLE (2-PIN) (EACH INCLUDE RECEPTACLE AS & WEDGE)	
M	19	1	**3T-0849**	2	BOLT-SOCKET HEAD (M6X1X25-MM)	
	20	1	**8T-0328**	2	WASHER-HARD (5.5X10X1-MM THK)	
	21	1	**8T-5410**	1	SEAL-LIP TYPE	
M	22	1	**8T-6699**	2	BOLT-SOCKET HEAD (M5XO.8X35-MM)	
	23	1	**8T-7566**	2	PIN-SPRING	
	24	1	**9X-8256**	2	WASHER (6.6X12X2-MM THK)	

M-METRIC PART
Y-SEPARATE ILLUSTRATION

PROOF

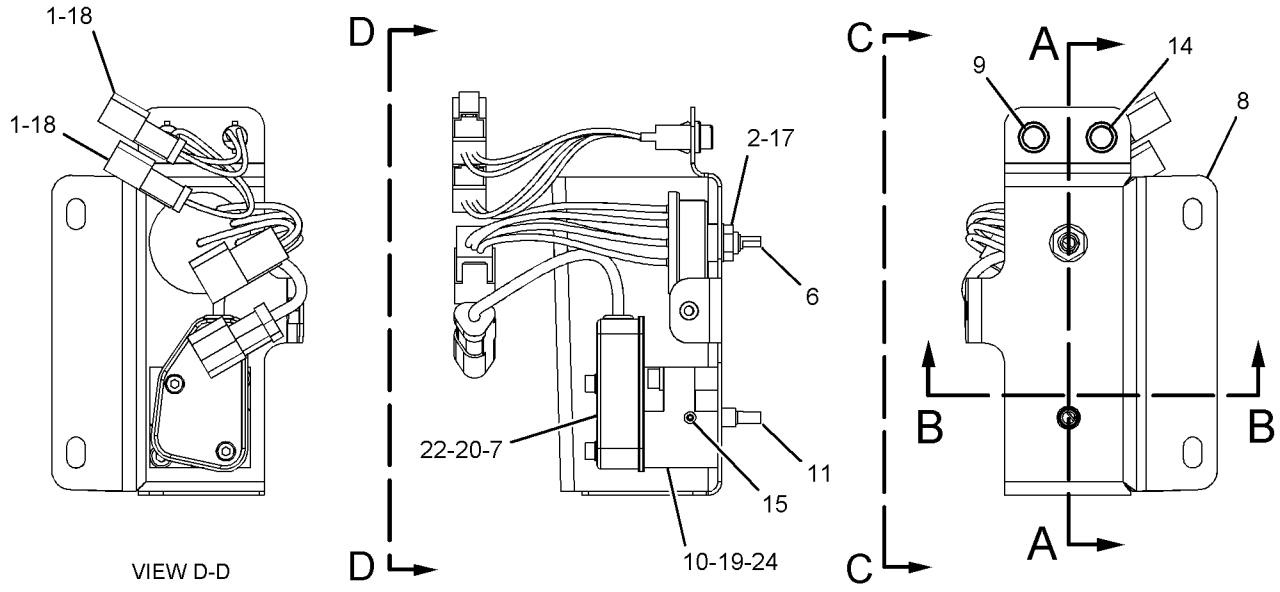

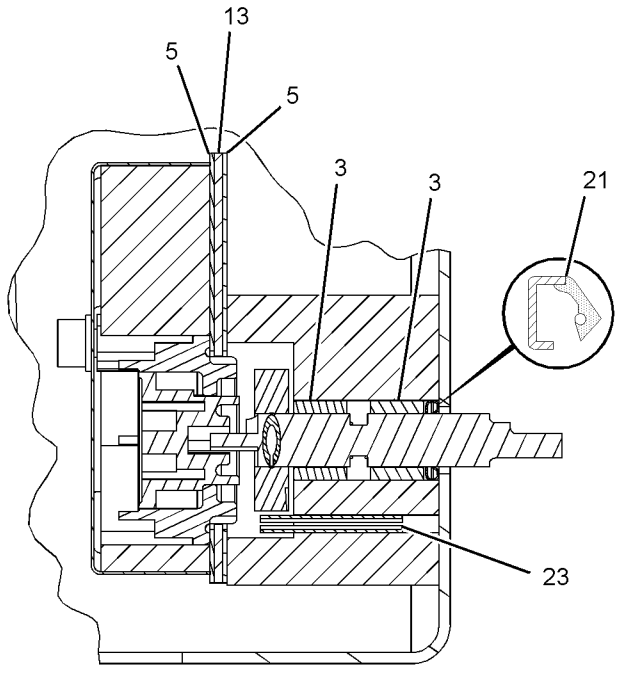

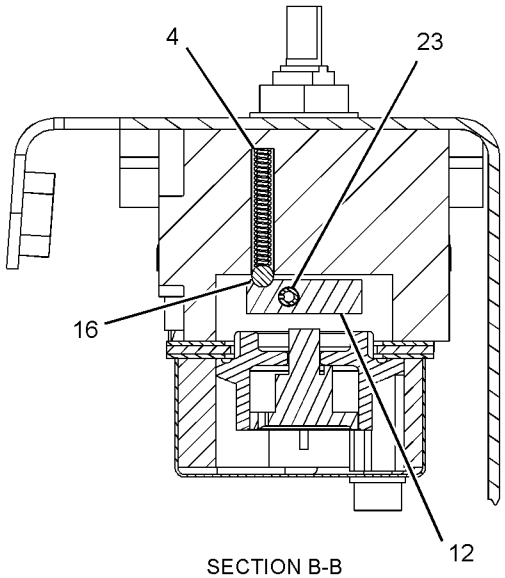

GRAPHIC #1 **<END>** g01114605

164-7577 SWITCH GP-BYPASS

S/N: DGX1-UP

PART OF 241-6093 BASE GP-OIL FILTER

SMCS-1408, 1435 **i02326396**

NOTE	REF NO	GRAPHIC REF	PART NUMBER	QTY	PART NAME 1 2 3 4 5 6 (PRODUCT LEVEL)	SEE PAGE
BE	1	1	**9X-1813**		SLEEVE	
	2	1	**102-8802**	1	KIT-RECEPTACLE (2-PIN)	
					(INCLUDES RECEPTACLE AS & WEDGE)	
	3	1	**186-3735**	2	PIN-CONNECTOR (16-GA TO 18-GA)	
	4	1	**3E-3365**	1	WEDGE-RECEPTACLE LOCK (2-PIN)	
	5	1	**3D-2824**	1	SEAL-O-RING	
Z	6	1		1	SWITCH AS (FILTER BYPASS)	

B-USE AS REQUIRED
E-ORDER BY THE CENTIMETER
Z-NOT SERVICED SEPARATELY

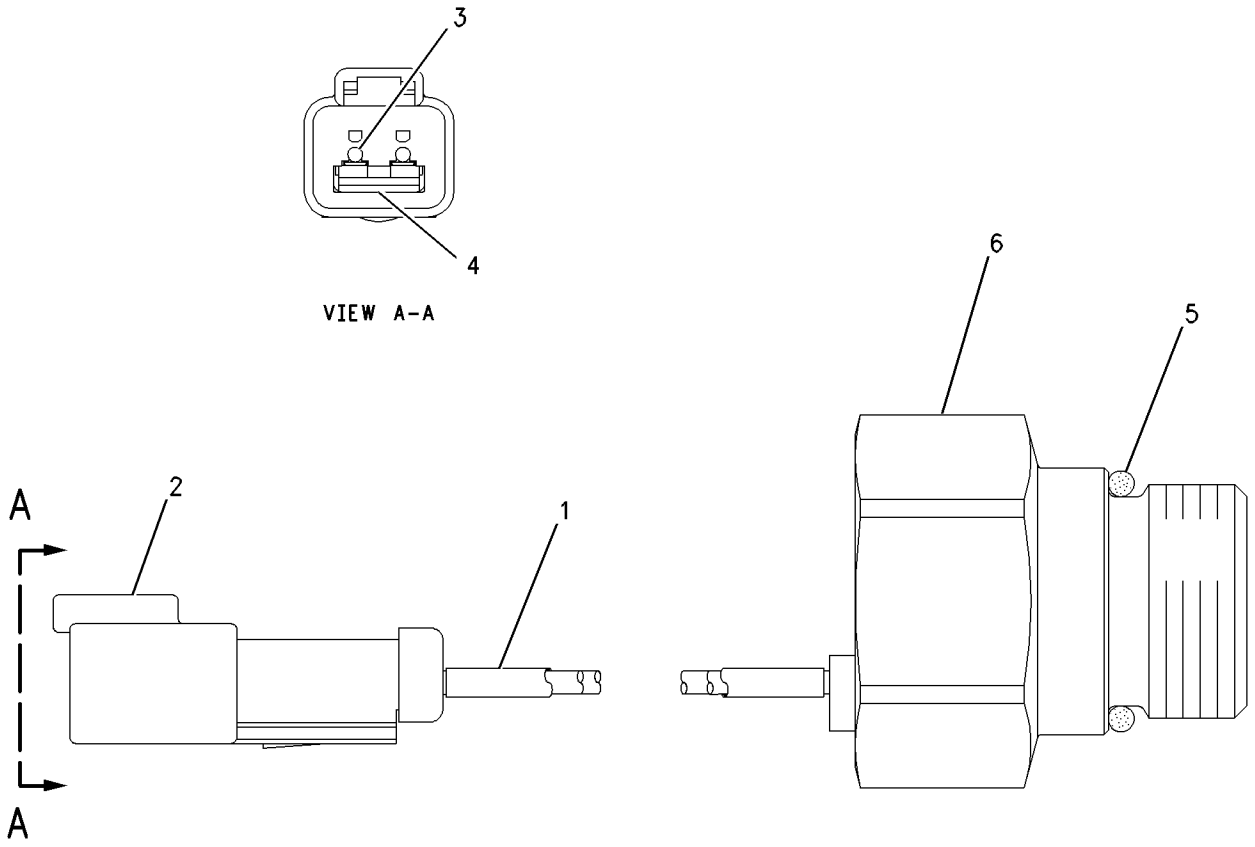

GRAPHIC #1 **<END>** g00750019

7N-0718 SWITCH GP-DISCONNECT–BATTERY

S/N: B9M1-UP

PART OF 233-4603, 233-4611, 236-1924 BATTERY GP

AN ATTACHMENT

SMCS-1411 **i02338397**

NOTE	REF NO	GRAPHIC REF	PART NUMBER	QTY	PART NAME 1 2 3 4 5 6 (PRODUCT LEVEL)	SEE PAGE
	1	1	**8H-5306**	1	KEY (BATTERY DISCONNECT)(STARTER)	
	2	1	**8H-5303**	1	NUT (3/4-16-THD)	
	3	1	**2H-3922**	2	LOCKWASHER	
	4	1	**9F-5644**	2	LOCKWASHER	
	5	1	**6F-7045**	2	NUT-FULL (3/8X24-THD)	

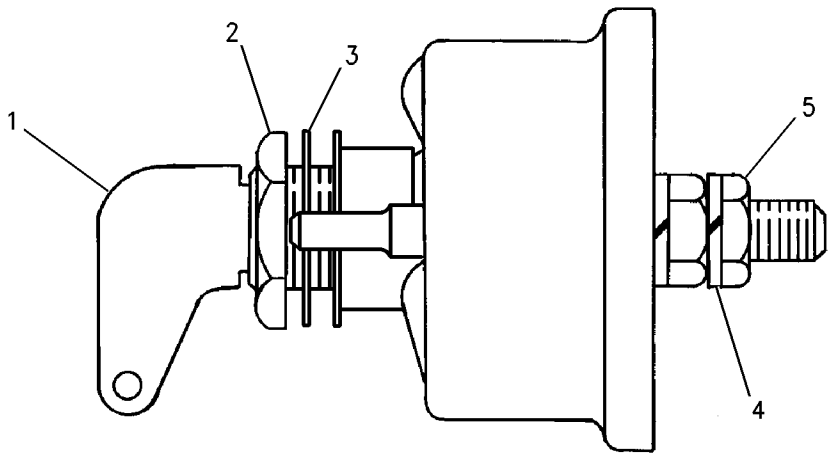

GRAPHIC #1 **<END>** g00715584

ELECTRICAL AND STARTING SYSTEM

238-8763 SWITCH GP-LIGHT

S/N: B9M1-UP

AN ATTACHMENT

SMCS-1429, 1435, 7332 **i02295919**

NOTE	PART NUMBER	QTY	PART NAME 1 2 3 4 5 6 (PRODUCT LEVEL)	SEE PAGE
	249-5480	1	SWITCH AS-ROCKER (WORK LIGHT)	

<END>

PROOF

179-0006 SWITCH GP-MAGNETIC

S/N: B9M1-UP

PART OF 269-4150 WIRING GP-SECONDARY STEERING

AN ATTACHMENT

SMCS-7499 **i02241405**

NOTE	REF NO	GRAPHIC REF	PART NUMBER	QTY	PART NAME 1 2 3 4 5 6 (PRODUCT LEVEL)	SEE PAGE
	1	1	**7X-0620**	2	WASHER-HARD (5.5X13X1.6-MM THK)	
	2	1	**8F-1434**	2	LOCKWASHER	
	3	1	**6V-8378**	2	NUT (10-32-THD)	
	4	1	**4L-6499**	2	WASHER (0.38X0.88X0.02-IN THK)	
	5	1	**4D-1326**	2	LOCKWASHER	
	6	1	**1B-2578**	2	NUT (3/8-16-THD)	

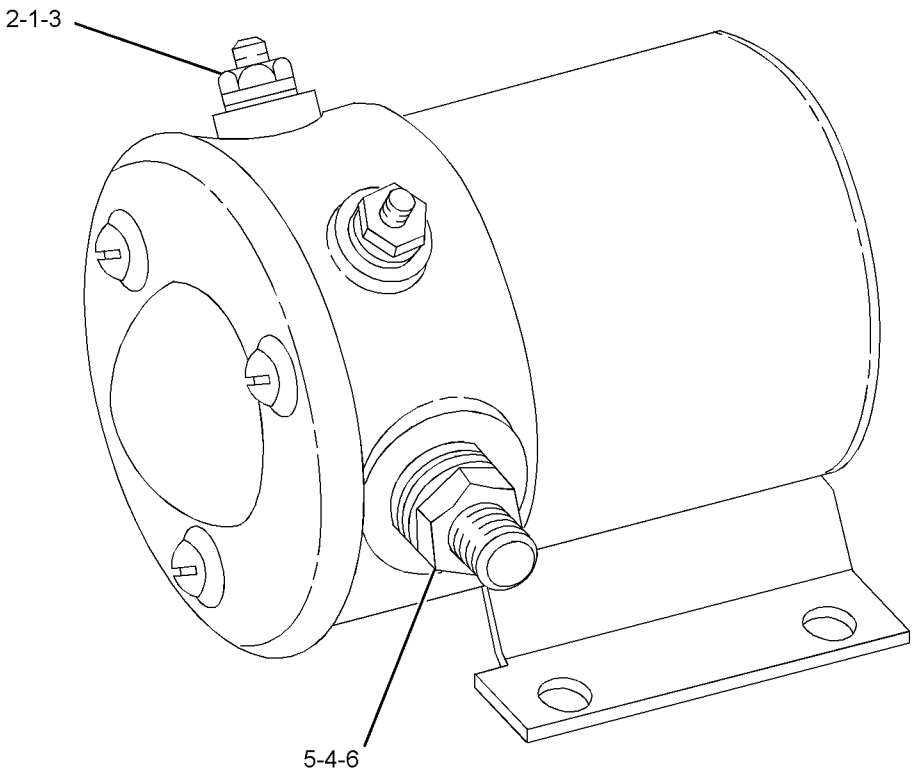

GRAPHIC #1 **<END>** g01132022

223-7577 SWITCH GP-MAGNETIC

S/N: KHX1-UP
24-VOLT
PART OF 235-9679 STARTING AID GP

SMCS-7499 **i02174621**

NOTE	REF NO	GRAPHIC REF	PART NUMBER	QTY	PART NAME 1 2 3 4 5 6 (PRODUCT LEVEL)	SEE PAGE
	1	1	**209-5582**	1	SWITCH AS-MAGNETIC (24-VOLT) (AIR INLET HEATER)	
	1A	1	**102-8802**	1	KIT-RECEPTACLE (2-PIN)	
					(INCLUDES RECEPTACLE AS AND WEDGE)	
	1B	1	**186-3735**	2	PIN-CONNECTOR (16-GA TO 18-GA)	
	1C	1	**3F-9556**	2	LOCKWASHER	
	1D	1	**6V-8186**	2	NUT-FULL (5/16-24-THD)	
	1E	1	**6V-8378**	2	NUT (10-32-THD)	
	1F	1	**8F-1434**	2	LOCKWASHER	

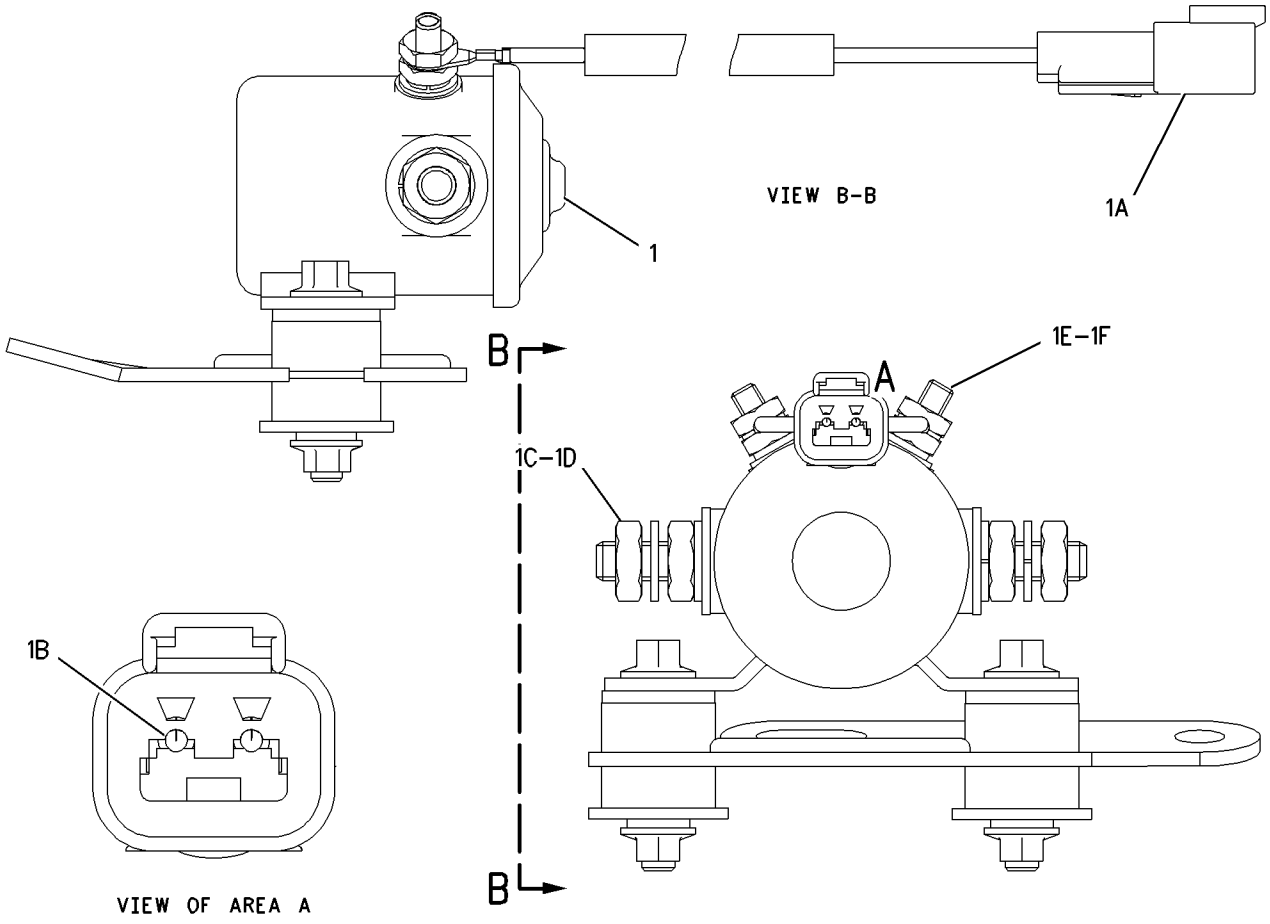

GRAPHIC #1 **<END>** g00976450

241-8368 SWITCH GP-MAGNETIC

S/N: B9M1-UP
24-VOLTS
PART OF 251-2468 BLOCK GP-JUNCTION

SMCS-7499 **i02325242**

NOTE	REF NO	GRAPHIC REF	PART NUMBER	QTY	PART NAME 1 2 3 4 5 6 (PRODUCT LEVEL)	SEE PAGE
	1	1	**155-2270**	1	KIT-CONNECTING PLUG (2-PIN)	
					(INCLUDES PLUG AS, WEDGE & INTERFACE SEAL)	
	2	1	**4F-2294**	2	NUT-JAM (5/16-24-THD)	
	3	1	**186-3736**	2	SOCKET-CONNECTOR (16-GA TO 18-GA)	

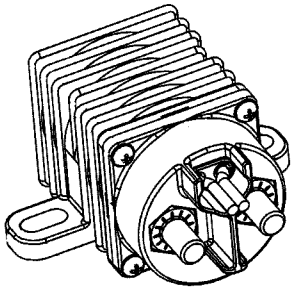

ISOMETRIC VIEW

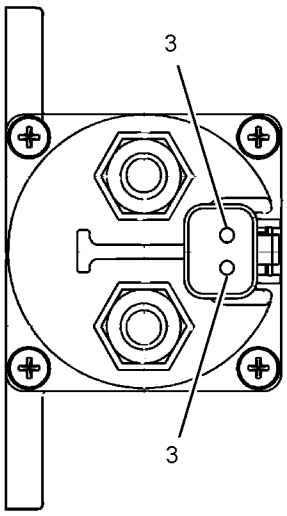

VIEW A-A

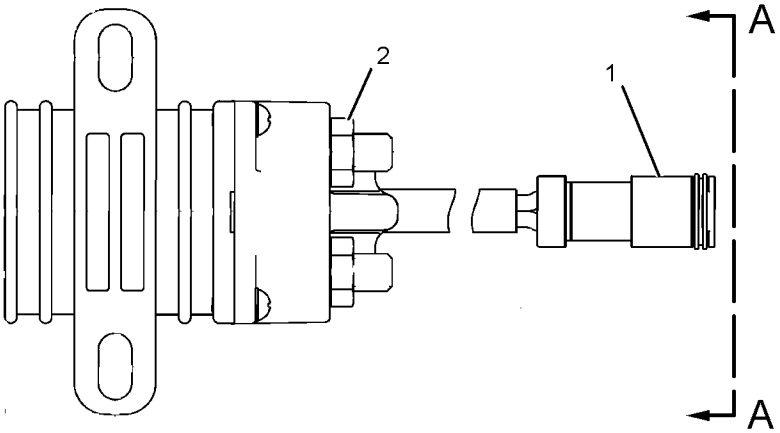

GRAPHIC #1 **<END>** g01077362

258-0883 SWITCH GP-PRESSURE–FUEL

S/N: KHX1-UP

PART OF 250-8313 FILTER GP-FUEL

SMCS-1435, 1718 **i02267120**

NOTE	REF NO	GRAPHIC REF	PART NUMBER	QTY	PART NAME 1 2 3 4 5 6 (PRODUCT LEVEL)	SEE PAGE
	1	1	**102-8802**	1	KIT-RECEPTACLE (2-PIN)	
					(INCLUDES RECEPTACLE AS AND WEDGE)	
	2	1	**3E-3365**	1	WEDGE-RECEPTACLE LOCK (2-PIN)	
	3	1	**186-3735**	2	PIN-CONNECTOR (16-GA TO 18-GA)	
E	4	1	**9X-1813**		SLEEVE (14-CM)	
	5	1	**6V-4589**	1	SEAL-O-RING	
	6	1	**7L-9061**	1	SEAL-O-RING	

E-ORDER BY THE CENTIMETER

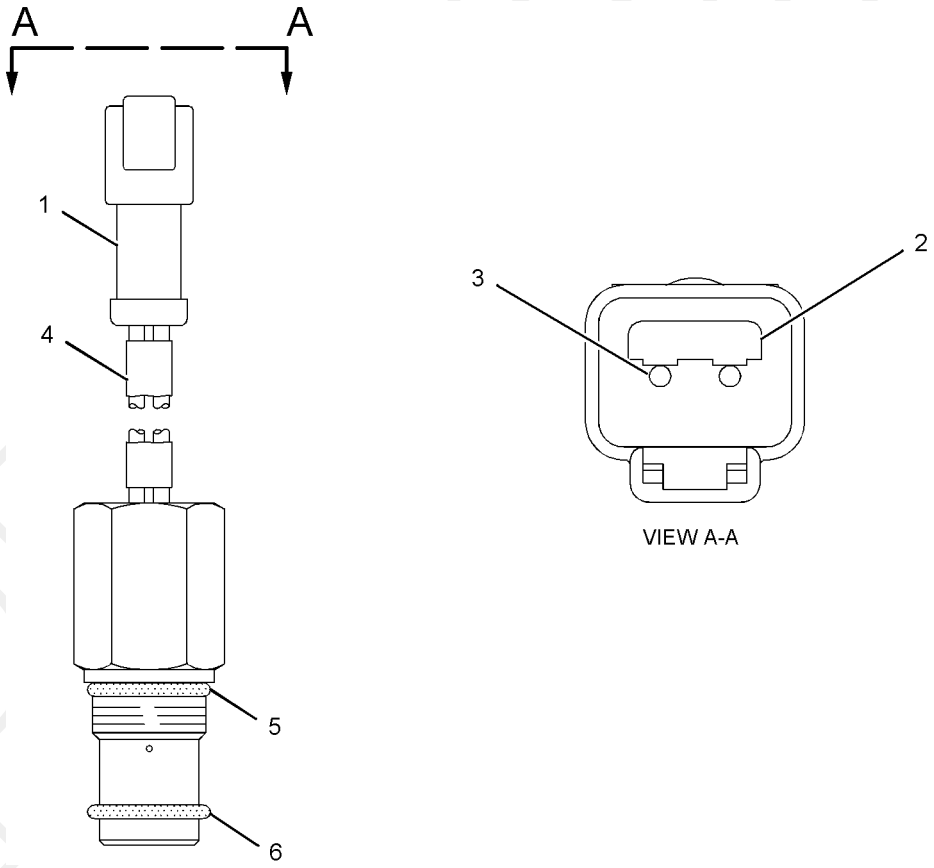

GRAPHIC #1

<END>

g01072091

233-3124 SWITCH GP-ROADING

S/N: B9M1-UP

AN ATTACHMENT

SMCS-7332 **i02203224**

NOTE	PART NUMBER	QTY	PART NAME 1 2 3 4 5 6 (PRODUCT LEVEL)	SEE PAGE
Y	**212-3924**	2	LAMP GP-MARKER	161
	3E-5239	2	RELAY AS (24-VOLT) (ROADING LIGHTS)	
	189-3158	3	SUPPRESSOR-ARC	
	249-5479	1	SWITCH AS-ROCKER (ROADING LIGHTS)	

Y-SEPARATE ILLUSTRATION

<END>

PROOF

233-3127 SWITCH GP-ROCKER

S/N: B9M1-UP
PART OF 261-0187 SNOW AR-MOTOR GRADER
AN ATTACHMENT

SMCS-7332 **i02290610**

NOTE	REF NO	GRAPHIC REF	PART NUMBER	QTY	PART NAME 1 2 3 4 5 6 (PRODUCT LEVEL)	SEE PAGE
	1	1	**235-6195**	1	BRACKET AS	
		1	**7T-1099**	2	LINK	
		1	**130-5300**	1	CLIP	
	2	1	**237-9736**	1	SWITCH AS-ROCKER (WARNING BEACON)	

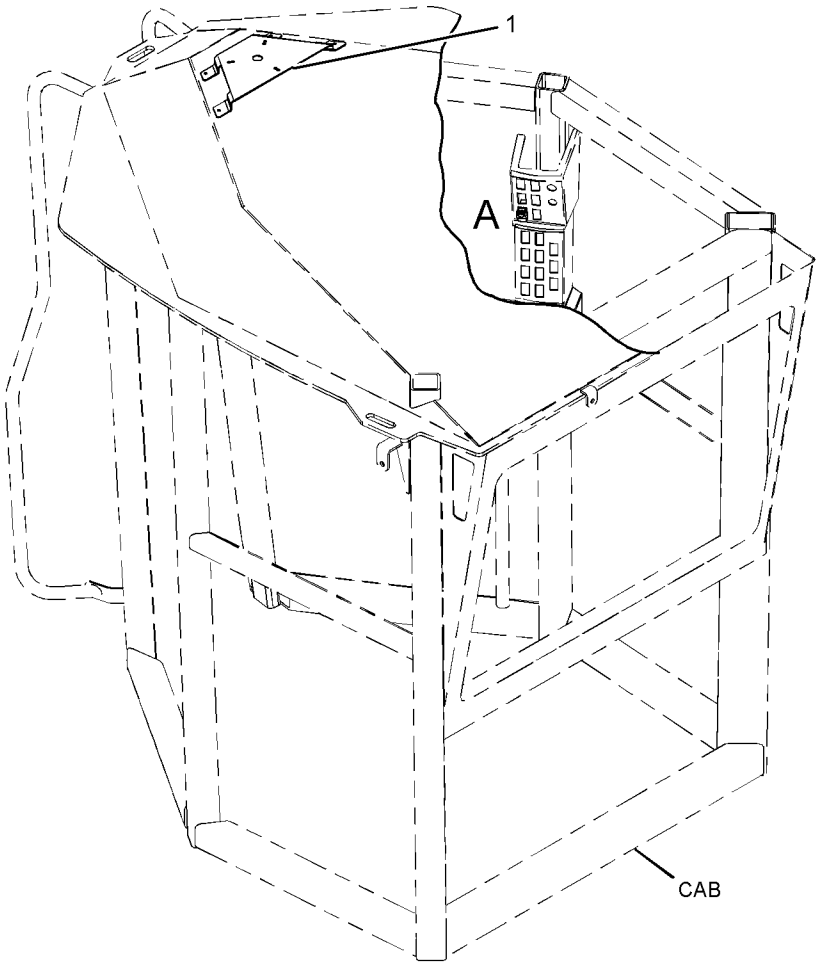

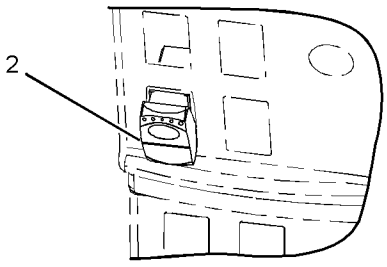

VIEW OF AREA A



GRAPHIC #1 **<END>** g01153634

3E-0155 SWITCH GP-WIPER

S/N: B9M1-UP
24 VOLT
PART OF 233-3139 WIPER GP-WINDOW, 233-3114 WIRING GP-CAB
ALSO AN ATTACHMENT

SMCS-7305, 7332 **i02248459**

NOTE	REF NO	GRAPHIC REF	PART NUMBER	QTY	PART NAME 1 2 3 4 5 6 (PRODUCT LEVEL)	SEE PAGE
	1	1	**110-7886**	1	SWITCH AS-WIPER (24-VOLT) (INTERMITTENT)	
	1A	1	**2H-3920**	1	LOCKWASHER	
	1B	1	**3E-3389**	1	WEDGE-RECEPTACLE LOCK	
	1C	1	**6V-8369**	1	NUT (7/16-28-THD)	
	1D	1	**8T-8737**	1	PLUG-SEAL	
C	1E	1	**9W-0852**	4	PIN-CONNECTOR (14-GA)	
C	1F	1	**102-8806**	1	KIT-RECEPTACLE (8-PIN)	
					(SERVICES RECEPTACLE AS AND WEDGE)	
	1G	1	**186-3735**	3	PIN-CONNECTOR (16-GA TO 18-GA)	
	2	1	**7T-9302**	1	KNOB (WIPER, WASHER)	

C-CHANGE FROM PREVIOUS TYPE

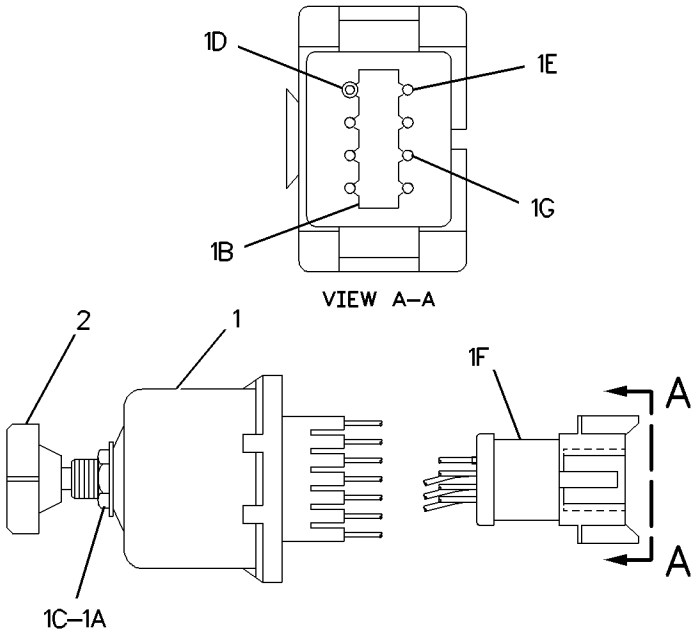

GRAPHIC #1 **<END>** g00899239

PROOF

239-1134 VALVE GP-ETHER STARTING–24-VOLT

S/N: B9M1-UP
PART OF 238-9561 STARTING AID GP-ETHER
AN ATTACHMENT

SMCS-1456 **i02145416**

NOTE	REF NO	GRAPHIC REF	PART NUMBER	QTY	PART NAME 1 2 3 4 5 6 (PRODUCT LEVEL)	SEE PAGE
	1	1	**3E-3365**	1	WEDGE-RECEPTACLE LOCK (2-PIN)	
	2	1	**7N-9801**	1	GASKET	
	3	1	**102-8802**	1	KIT-RECEPTACLE (2-PIN)	
					(KIT INCLUDES RECEPTACLE AS & WEDGE)	
	4	1	**186-3735**	2	PIN-CONNECTOR (16-GA TO 18-GA)	

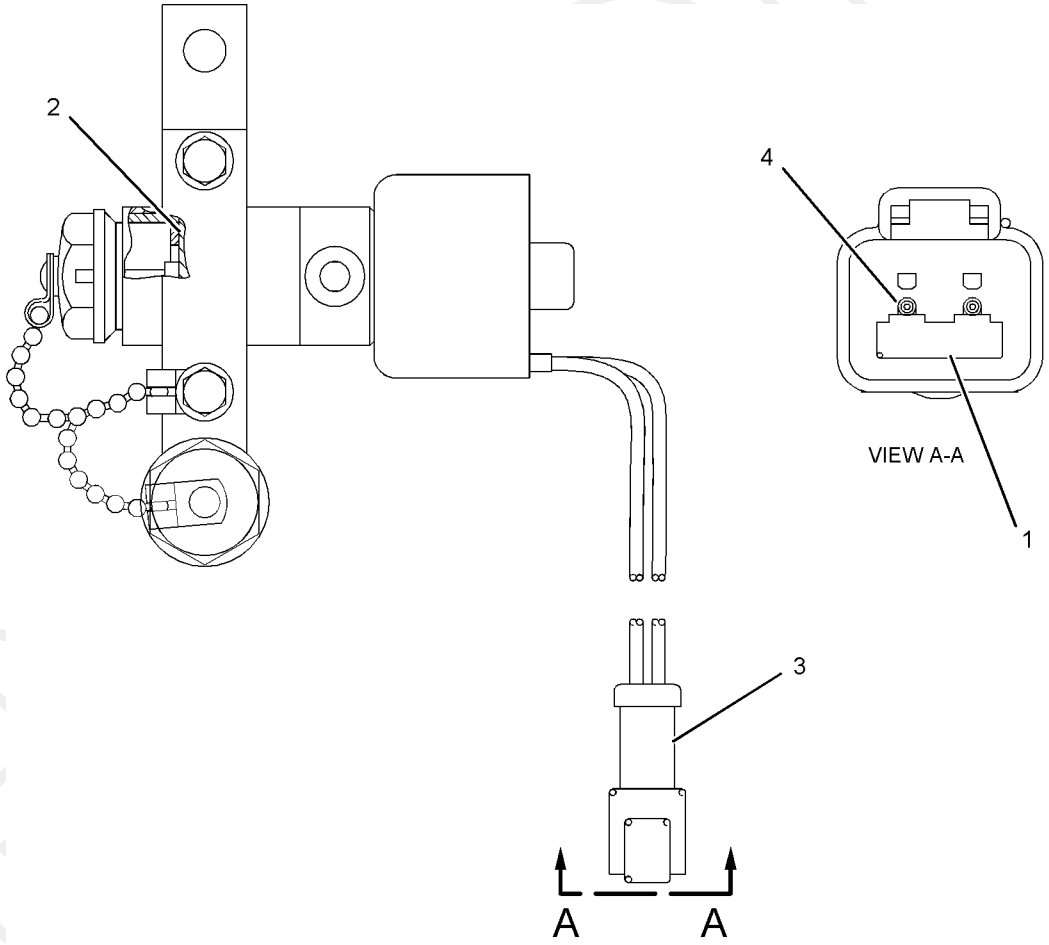

GRAPHIC #1 **<END>** g01053000

257-7224 WARNING GP-BACKUP

S/N: B9M1-UP

PART OF 234-7721 COMMON AR-MOTOR GRADER

SMCS-7406 **i02179481**

NOTE	REF NO	GRAPHIC REF	PART NUMBER	QTY	PART NAME 1 2 3 4 5 6 (PRODUCT LEVEL)	SEE PAGE
	1	1	**3S-2093**	1	STRAP-CABLE	
	2	1	**213-9100**	1	ALARM AS-BACKUP	
BE		1	**9X-1813**		SLEEVE	
		1	**102-8802**	1	KIT-RECEPTACLE (2-PIN)	
					(INCLUDES RECEPTACLE AS & WEDGE)	
	3	1	**5P-4116**	4	WASHER-HARD (8.8X20.5X2-MM THK)	
M	4	1	**8T-4189**	4	BOLT (M8X1.25X20-MM)	

B-USE AS REQUIRED
E-ORDER BY THE CENTIMETER
M-METRIC PART

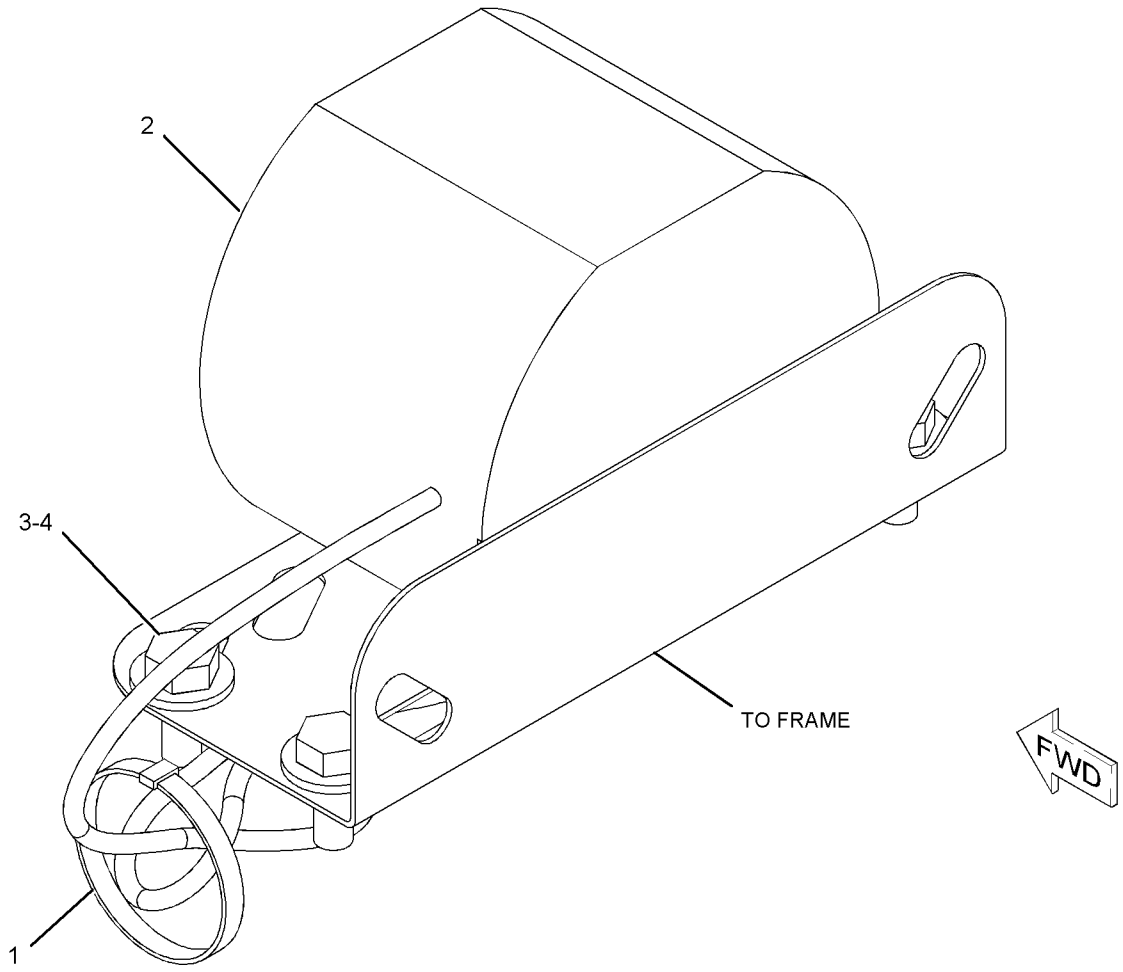

GRAPHIC #1 **<END>** g01109906

ELECTRICAL AND STARTING SYSTEM

233-3114 WIRING GP-CAB

S/N: B9M1-UP

PART OF 254-5399 CAB AR

SMCS-1408, 7301 **i02276627**

NOTE	REF NO	GRAPHIC REF	PART NUMBER	QTY	PART NAME 1 2 3 4 5 6 (PRODUCT LEVEL)	SEE PAGE
Y	1	4	**3E-0155**	1	SWITCH GP-WIPER (24-VOLT) (LEFT)	214
Y	1A	4	**3E-0155**	1	SWITCH GP-WIPER (24-VOLT) (FRONT)	214
Y	1B	4	**3E-0155**	1	SWITCH GP-WIPER (24-VOLT) (RIGHT)	214
	2	2	**3E-5239**	11	RELAY AS (24-VOLT)	
Y	3	2	**3E-6328**	1	ALARM GP (24-VOLT)	99
	4	1,2,4	**3S-2093**	32	STRAP-CABLE	
	5	2	**7U-4891**	8	SCREW (10-32X1-IN)	
	6	2	**8T-9636**	2	FUSE (30-AMPERE)	
	7	2	**9W-1441**	17	FUSE (15-AMPERE)	
	8	2	**9W-1442**	21	FUSE (10-AMPERE)	
	9	2	**110-7887**	1	SWITCH GP-START (KEY)	
		2	**7T-6799**	1	NUT-MOUNTING (1-32-THD)	
		2	**186-3735**	4	PIN-CONNECTOR (16-GA TO 18-GA)	
		2	**102-8804**	1	KIT-RECEPTACLE (4-PIN)	
					(INCLUDES RECEPTACLE AS & WEDGE)	
	10	2	**114-6658**	4	WASHER (6.5X17X1-MM THK)	
	11	2	**128-6157**	1	PLATE	
	12	2	**149-5262**	2	BRACKET AS	
					(EACH INCLUDES)	
M		2	**8T-3490**	1	NUT-WELD (M10X1.5-THD)	
	13	2	**180-9900**	1	CAP AS	
		2	**5P-7958**	1	SLEEVE-CABLE SPLICE (2.38-GA)	
		2	**8C-6354**	1	CAP-RECEPTACLE (DUST)	
		2	**179-9392**	1	LANYARD	
	14	4	**222-7890**	1	SWITCH AS-ROCKER (PARKING BRAKE)	
	15	2,4	**228-6089**	11	PLUG	
	16	4	**229-2580**	1	SWITCH AS-ROCKER (THROTTLE LOCK)	
	17	1	**235-6176**	1	HARNESS AS (MAIN CAB)	
		1	**102-8802**	1	KIT-RECEPTACLE (2-PIN)	
		1	**102-8804**	1	KIT-RECEPTACLE (4-PIN)	
		1	**102-8805**	1	KIT-RECEPTACLE (6-PIN)	
		1	**102-8806**	1	KIT-RECEPTACLE (8-PIN)	
		1	**102-8801**	1	KIT-RECEPTACLE (12-PIN)	
		1	**166-5229**	1	KIT-RECEPTACLE (12-PIN)	
		1	**194-4254**	1	KIT-RECEPTACLE (8-PIN)	
					(EACH INCLUDES RECEPTACLE AS & WEDGE)	
		1	**155-2255**	1	KIT-CONNECTING PLUG (12-PIN)	
		1	**155-2256**	1	KIT-CONNECTING PLUG (12-PIN)	
		1	**155-2257**	1	KIT-CONNECTING PLUG (12-PIN)	
		1	**155-2265**	1	KIT-CONNECTING PLUG (8-PIN)	
		1	**155-2270**	1	KIT-CONNECTING PLUG (2-PIN)	
		1	**155-2274**	1	KIT-CONNECTING PLUG (6-PIN)	
		1	**155-2260**	1	KIT-CONNECTING PLUG (3-PIN)	
		1	**177-9656**	1	KIT-CONNECTING PLUG (4-PIN)	
					(EACH INCLUDES PLUG AS & WEDGE)	
	18	4	**236-4615**	1	SWITCH AS-ROCKER (SECONDARY STEERING)	
	19	4	**236-4616**	1	SWITCH AS-ROCKER (HAZARD) (HAZARD)	
Y	20	4	**239-5025**	1	CONTROL GP-UNPRGMED MONITOR (MESSENGER)	718
	21	4	**248-5081**	1	SWITCH AS-ROCKER (QUICK DISCONNECT COUPLING)	
	22	4	**249-5486**	1	SWITCH AS-ROCKER (HEADLIGHTS, TAIL LIGHTS)	
	23	4	**249-5487**	1	SWITCH AS-ROCKER (BLADE CUSHION)	
	24	4	**249-5493**	1	SWITCH AS-ROCKER (SPEED CONTROL REGULATOR)	
	25	4	**250-2299**	1	LAMP-LED (24-VOLT, GREEN)	
		4	**186-3735**	2	PIN-CONNECTOR (16-GA TO 18-GA)	
	26	2	**250-3010**	1	CONTROL GP-ELECTRONIC (INSTRUMENT CLUSTER)	
	27	4	**251-1197**	1	SWITCH AS-ROCKER (IMPLEMENT LOCKOUT)	

PROOF

233-3114 **WIRING GP-CAB** *(contd.)* **i02276627**

NOTE	REF NO	GRAPHIC REF	PART NUMBER	QTY	PART NAME 1 2 3 4 5 6 (PRODUCT LEVEL)	SEE PAGE
	28	2	**252-5224**	1	FLASHER AS	
	29	2	**253-3491**	1	COVER GP-ACCESS	
	30	4	**260-3037**	1	PLATE AS	
M		4	**6V-9632**	12	NUT-WELD (M6X1-THD)	
	31	4	**262-4961**	1	PLATE	
	32	2,4	**096-6166**	29	WASHER-HARD (4.5X9X1-MM THK)	
	33	2	**132-5789**	4	CLIP	
	34	1,2,4	**134-2540**	5	RECEPTACLE AS (3-PIN)	
M	35	2	**174-8131**	2	SCREW-TRUSS HEAD (M4X0.7X12-MM)	
	36	2	**238-8829**	1	PLATE AS	
M		2	**6V-9632**	5	NUT-WELD (M6X1-THD)	
M		2	**9X-2032**	2	NUT-WELD	
	37	2	**3S-9557**	4	SCREW-PAN HEAD (4-40X0.5-IN)	
M	38	2,4	**5C-9553**	15	BOLT (M6X1X16-MM)	
	39	2	**8T-0328**	2	WASHER-HARD (5.5X10X1-MM THK)	
	40	2,4	**8T-4121**	5	WASHER-HARD (11X21X2.5-MM THK)	
M	41	2,4	**8T-4133**	3	NUT (M10X1.5-THD)	
M	42	2	**8T-4137**	2	BOLT (M10X1.5X20-MM)	
	43	2,4	**8T-4205**	15	WASHER-HARD (7.2X14.5X2-MM THK)	
M	44	2,4	**8T-9405**	28	BOLT-SOCKET HEAD (M4X0.7X16-MM)	
	45	4	**9W-0335**	1	LIGHTER AS (CIGAR, 24-VOLT)	
M	46	2	**9X-1046**	12	SCREW (M4X0.7X18-MM)	
M	47	2	**9X-2044**	4	SCREW-TRUSS HEAD (M6X1X16-MM)	

M-METRIC PART
Y-SEPARATE ILLUSTRATION

PROOF

233-3114 **WIRING GP-CAB** *(contd.)* **i02276627**

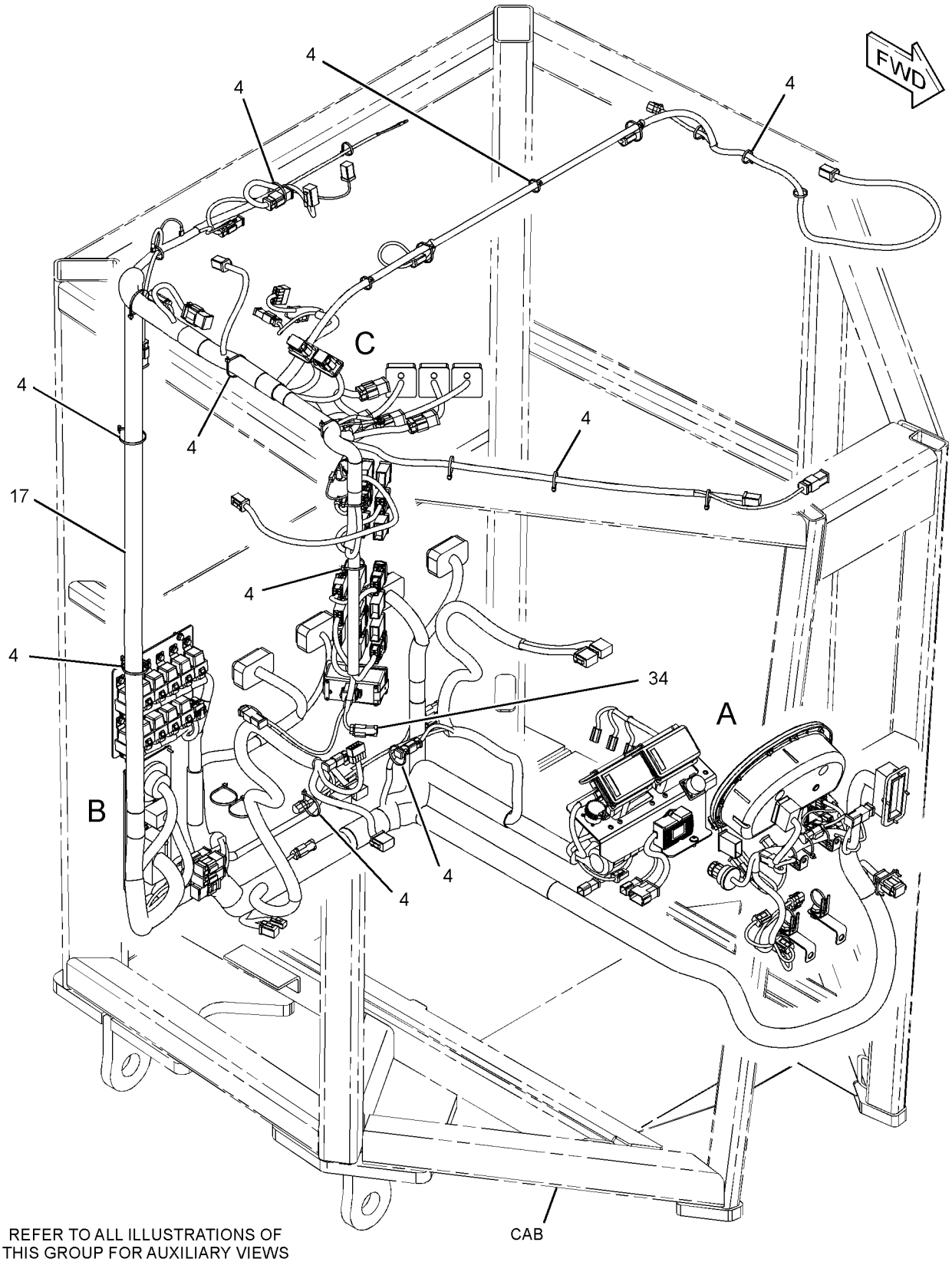

GRAPHIC #1 g01155546

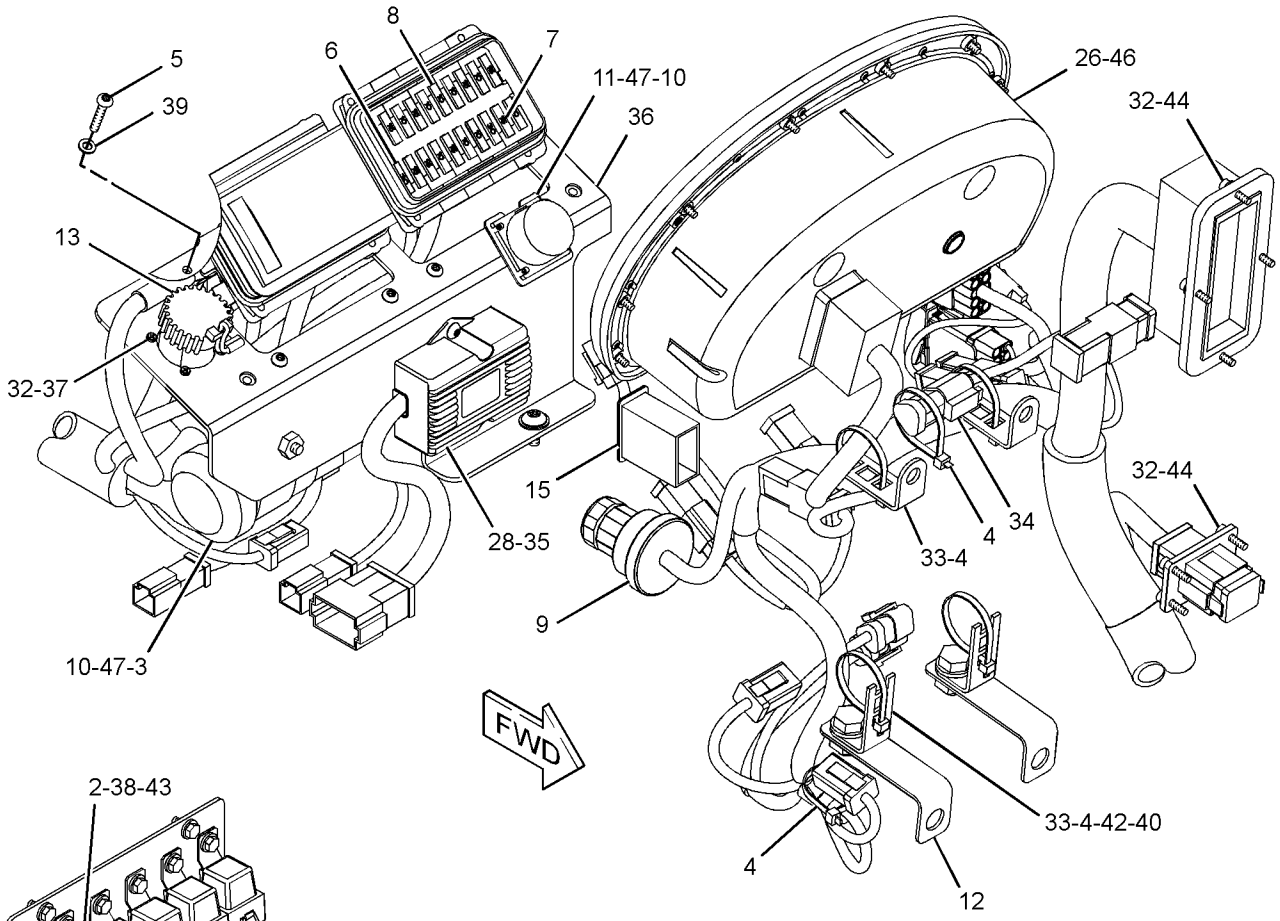

VIEW OF AREA A

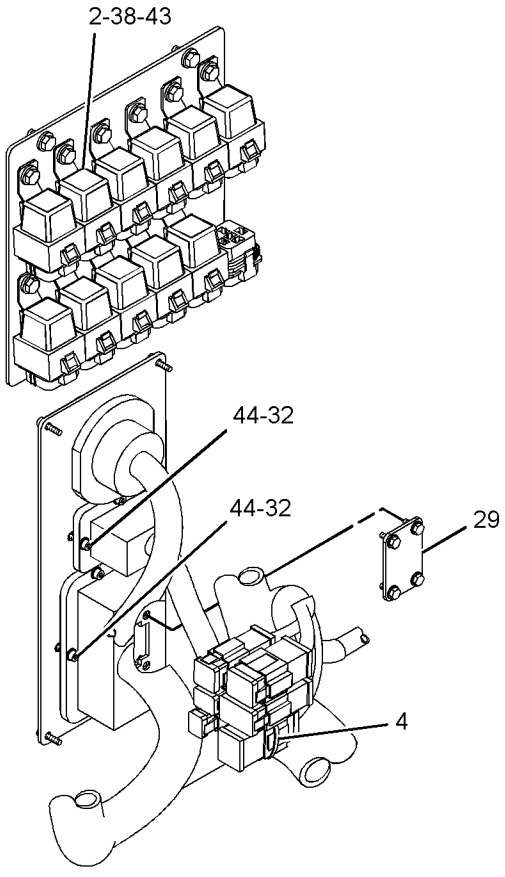

VIEW OF AREA B

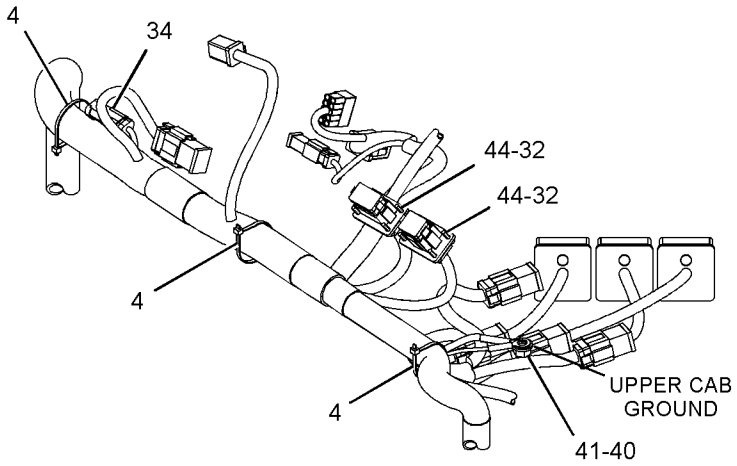

VIEW OF AREA C

GRAPHIC #2 g01155547

233-3114 **WIRING GP-CAB** *(contd.)* **i02276627**

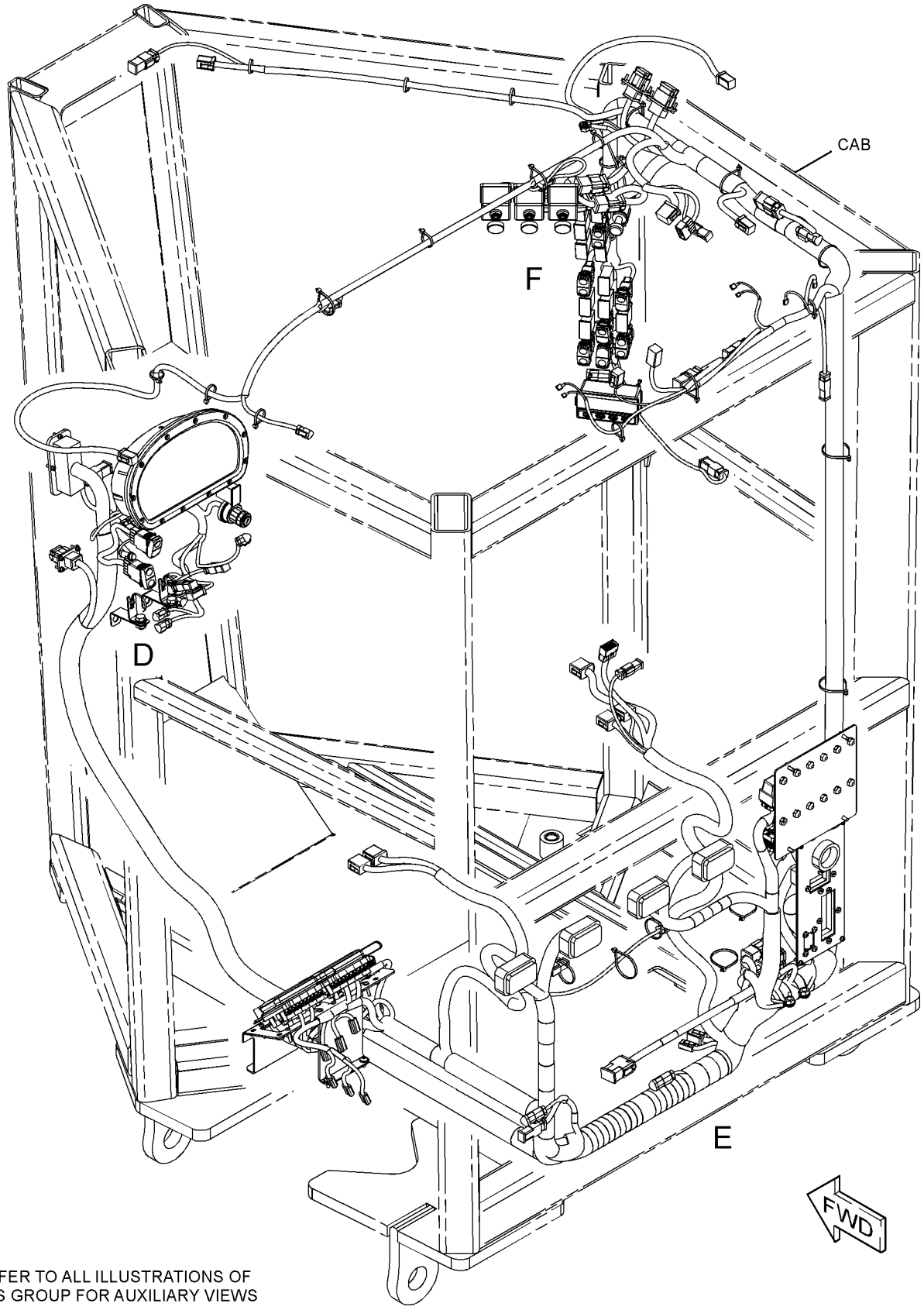

REFER TO ALL ILLUSTRATIONS OF
THIS GROUP FOR AUXILIARY VIEWS

GRAPHIC #3

g01155548

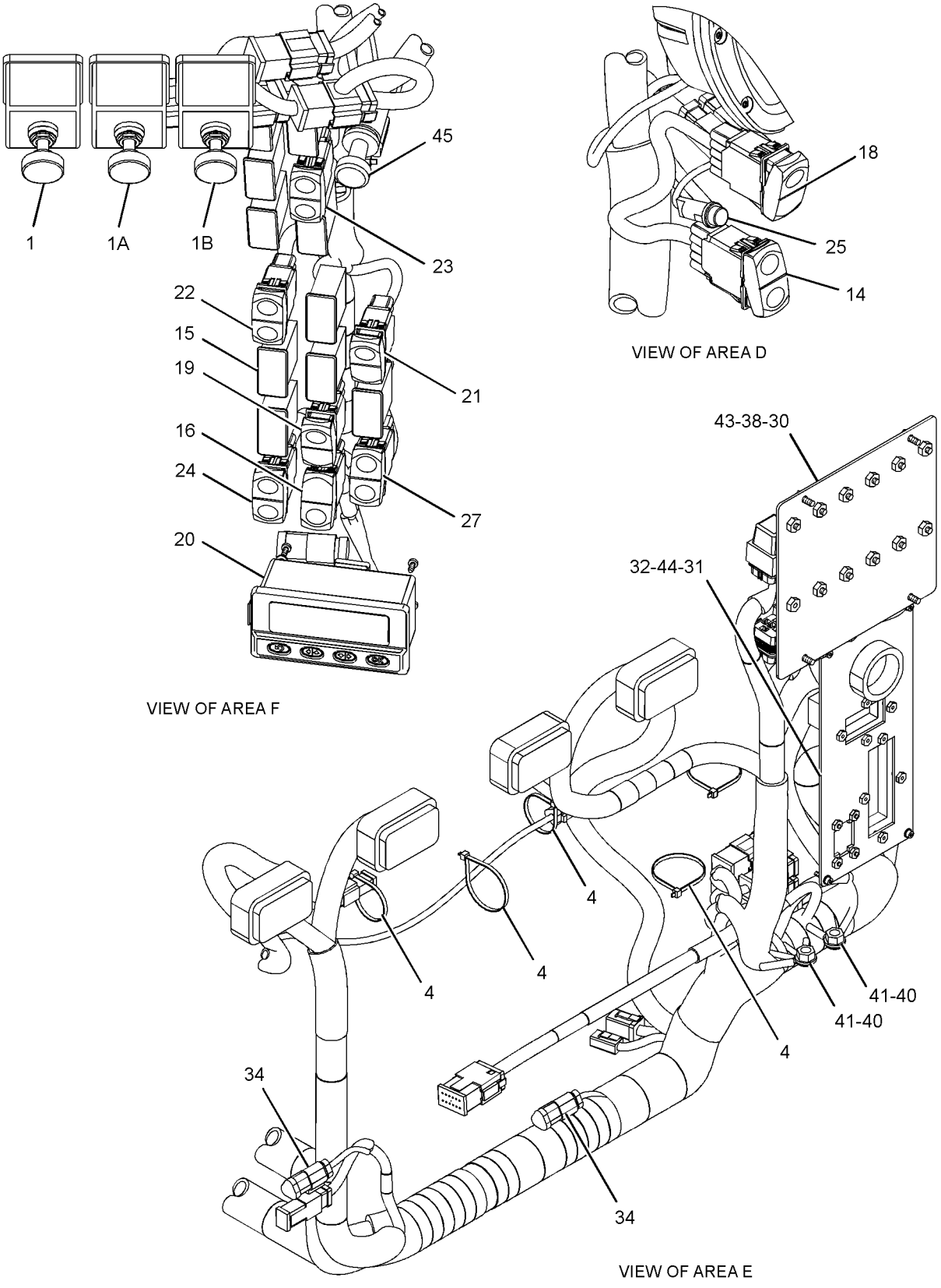

VIEW OF AREA F

VIEW OF AREA D

VIEW OF AREA E

GRAPHIC #4 **<END>** g01155549

252-8000 WIRING GP-CAMERA

S/N: B9M1-UP

AN ATTACHMENT

SMCS-1408, 7348 **i02333961**

NOTE	REF NO	GRAPHIC REF	PART NUMBER	QTY	PART NAME 1 2 3 4 5 6 (PRODUCT LEVEL)	SEE PAGE
	1	1	**7K-1181**	16	STRAP-CABLE	
	2	1	**251-8248**	1	CABLE AS (5-M)	
	3	1	**261-3223**	1	CABLE AS (3-M)	

PROOF

252-8000 **WIRING GP-CAMERA** *(contd.)* **i02333961**

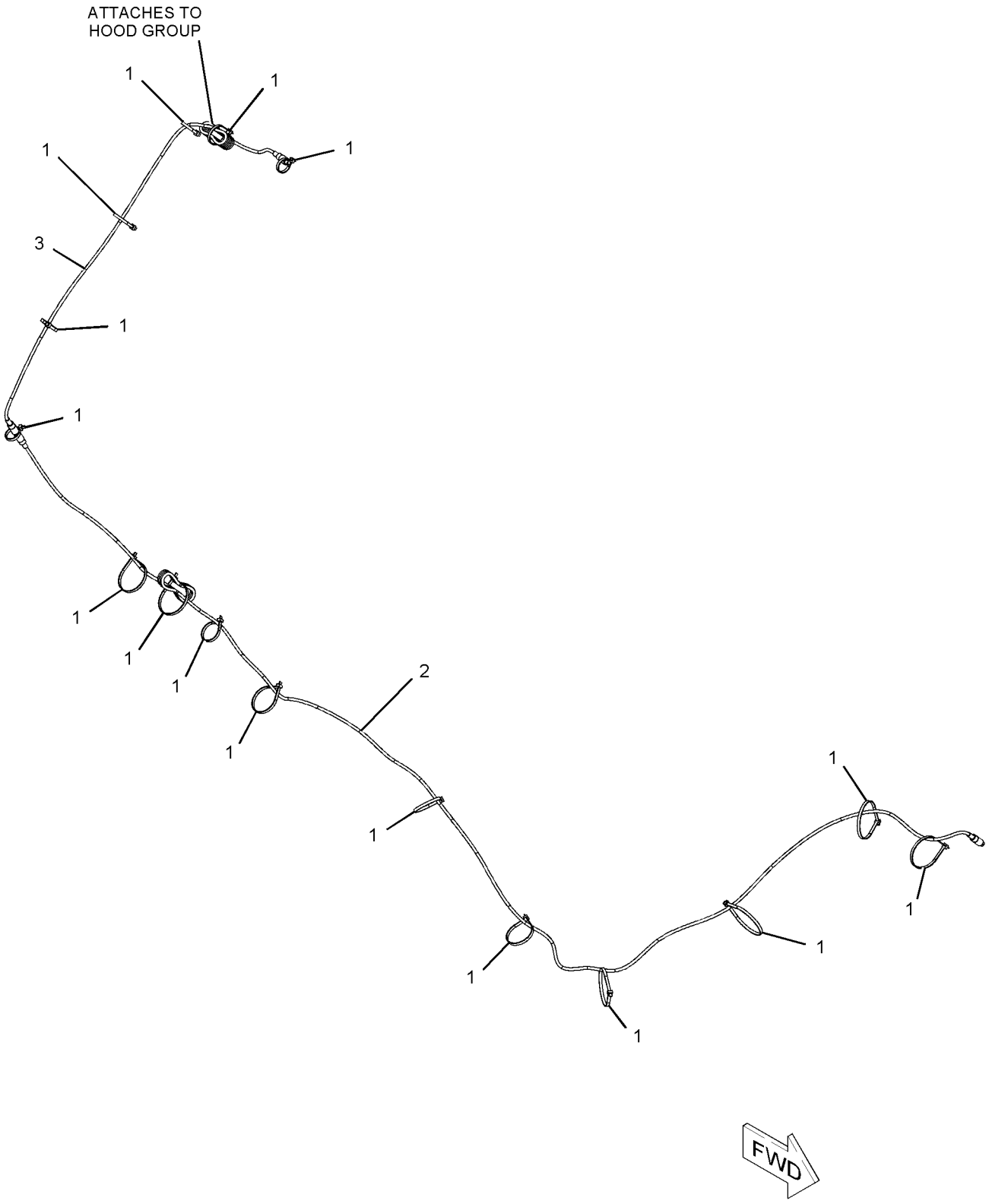

GRAPHIC #1 **<END>** g01114877

233-4646 WIRING GP-ENGINE–OIL EVAC

S/N: B9M1-UP

PART OF 261-0607 OIL CHANGE AR-HIGH SPEED, 261-0611 STEERING AR-SECONDARY AN ATTACHMENT

SMCS-1408 **i02348760**

NOTE	REF NO	GRAPHIC REF	PART NUMBER	QTY	PART NAME 1 2 3 4 5 6 (PRODUCT LEVEL)	SEE PAGE
	1	1	**9L-6331**	1	BRACKET	
	2	1	**170-2512**	1	SWITCH GP-TOGGLE (ENGINE OIL EVAC)	
		1	**6T-3631**	2	NUT-HEX (15/32-32-THD)	
		1	**6T-3632**	1	LOCKWASHER	
		1	**6T-3633**	1	RING-LOCKING	
		1	**186-3735**	1	PIN-CONNECTOR (16-GA TO 18-GA)	
		1	**102-8805**	1	KIT-RECEPTACLE (6-PIN)	
					(INCLUDES RECEPTACLE AS & WEDGE)	
	3	1	**170-3462**	1	LAMP AS (24-VOLT)	
		1	**2Q-7926**	1	LIGHT-INDICATOR (HIGH SPEED OIL CHANGE)	
		1	**186-3735**	1	PIN-CONNECTOR (16-GA TO 18-GA)	
		1	**102-8802**	1	KIT-RECEPTACLE (2-PIN)	
					(INCLUDES RECEPTACLE AS & WEDGE)	
	4	1	**267-2098**	1	HARNESS AS-STEERING	
		1	**9X-1054**	1	PLUG AS-CONNECTOR (4-PIN)	
		1	**140-7684**	1	RECEPTACLE AS	
		1	**102-8801**	1	KIT-RECEPTACLE (12-PIN)	
					(INCLUDES RECEPTACLE AS & WEDGE)	
		1	**155-2260**	1	KIT-CONNECTING PLUG (3-PIN)	
		1	**155-2270**	1	KIT-CONNECTING PLUG (2-PIN)	
		1	**155-2274**	1	KIT-CONNECTING PLUG (6-PIN)	
					(EACH INCLUDES PLUG AS & WEDGE)	
	5	1	**033-8248**	1	CLIP	
	6	1	**096-5962**	8	WASHER-HARD (3.4X7X0.8-MM THK)	
	7	1	**130-5300**	3	CLIP	
	8	1	**2M-6102**	1	PIPE	
M	9	1	**3C-6969**	4	NUT (M3X0.5-THD)	
	10	1	**3E-5169**	1	GUARD-SWITCH	
	11	1	**3E-5239**	1	RELAY AS (24-VOLT) (ENGINE OIL EVAC)	
	12	1	**4K-8864**	2	CLIP	
M	13	1	**6V-9671**	4	SCREW-MACHINE (M3X0.5X12-MM)	
M	14	1	**7X-2619**	1	BOLT (M6X1X20-MM)	
M	15	1	**8T-4121**	5	WASHER-HARD (11X21X2.5-MM THK)	
M	16	1	**8T-4133**	1	NUT (M10X1.5-THD)	
M	17	1	**8T-4136**	2	BOLT (M10X1.5X25-MM)	
M	18	1	**8T-4137**	1	BOLT (M10X1.5X20-MM)	
M	19	1	**8T-4185**	1	BOLT (M10X1.5X50-MM)	
	20	1	**9X-8256**	1	WASHER (6.6X12X2-MM THK)	

M-METRIC PART

PROOF

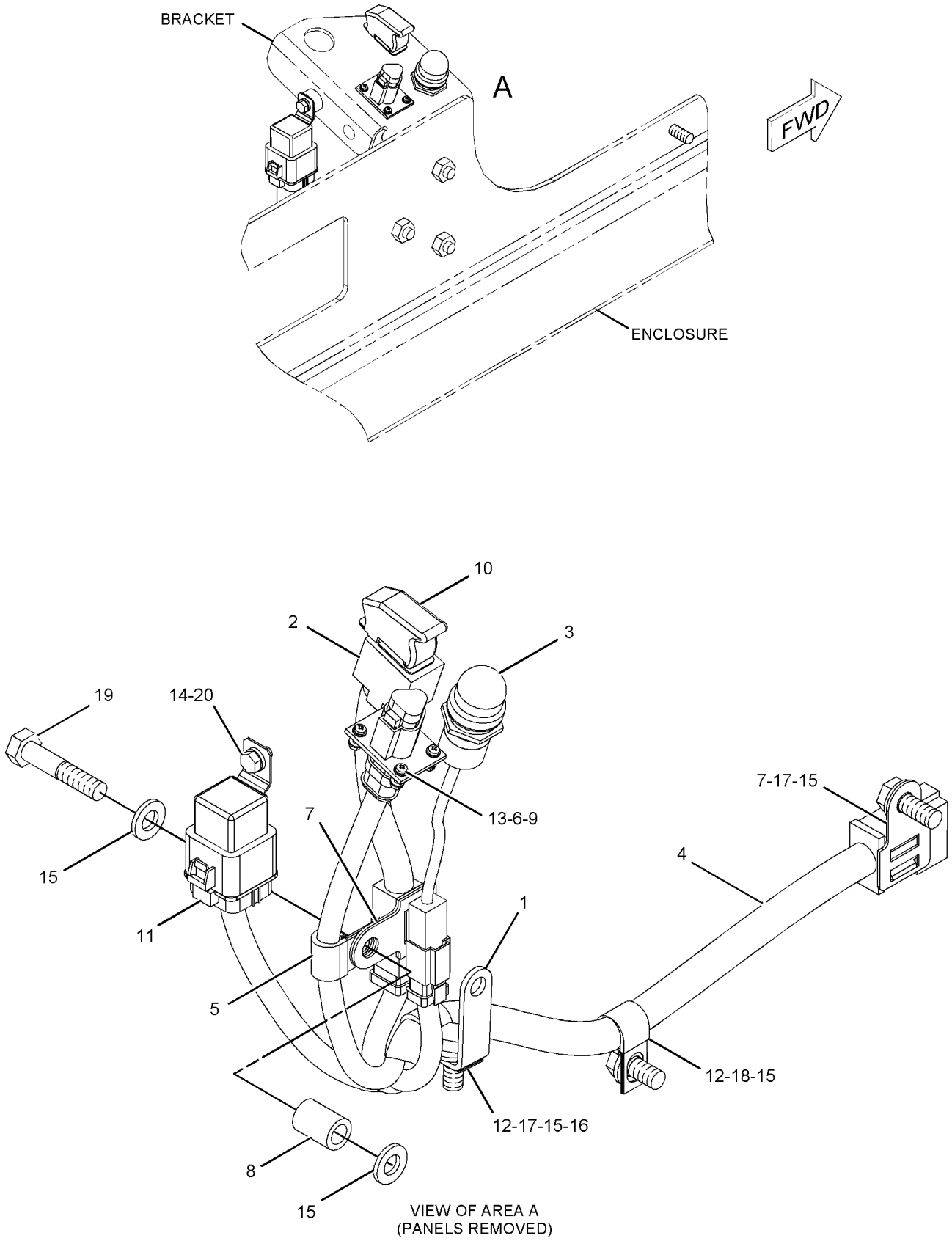

GRAPHIC #1

<END>

g01137895

ELECTRICAL AND STARTING SYSTEM

233-4600 WIRING GP-FRONT

S/N: B9M1-UP

PART OF 234-7721 COMMON AR-MOTOR GRADER

SMCS-1408 **i02348764**

NOTE	REF NO	GRAPHIC REF	PART NUMBER	QTY	PART NAME 1 2 3 4 5 6 (PRODUCT LEVEL)	SEE PAGE
	1	1	**3E-3636**	1	SWITCH AS-BALL (CENTERSHIFT INDICATOR)	
		1	**3E-3377**	1	WEDGE-RECEPTACLE LOCK (4-PIN)	
		1	**186-3735**	1	PIN-CONNECTOR (16-GA TO 18-GA)	
		1	**102-8804**	1	KIT-RECEPTACLE (4-PIN)	
					(INCLUDES RECEPTACLE AS & WEDGE)	
	2	2	**5P-0599**	2	CLAMP	
	3	2	**9R-8870**	2	BLOCK	
	4	1	**134-3355**	1	STRAP AS	
	5	2	**174-7875**	1	HORN AS (24-VOLT, HIGH TONE)	
	6	1	**233-4625**	1	HARNESS AS-FUEL TANK	
		1	**102-8802**	1	KIT-RECEPTACLE (2-PIN)	
					(INCLUDES RECEPTACLE AS & WEDGE)	
		1	**155-2270**	1	KIT-CONNECTING PLUG (2-PIN)	
					(INCLUDES PLUG AS & WEDGE)	
	7	1	**236-4226**	1	HARNESS AS-SENSOR	
		1	**102-8802**	1	KIT-RECEPTACLE (2-PIN)	
		1	**102-8803**	1	KIT-RECEPTACLE (3-PIN)	
					(EACH INCLUDES RECEPTACLE AS & WEDGE)	
		1	**9X-4391**	1	PLUG AS-CONNECTOR (70-PIN)	
		1	**155-2272**	1	PLUG AS-CONNECTOR (4-PIN)	
		1	**155-2270**	1	KIT-CONNECTING PLUG (2-PIN)	
		1	**155-2274**	1	KIT-CONNECTING PLUG (6-PIN)	
		1	**155-2260**	1	KIT-CONNECTING PLUG (3-PIN)	
					(EACH INCLUDES PLUG AS & WEDGE)	
	8	2	**240-7193**	1	RESISTOR AS (500-OHM, 2-WATT)	
		2	**3E-3365**	1	WEDGE-RECEPTACLE LOCK (2-PIN)	
		2	**186-3735**	1	PIN-CONNECTOR (16-GA TO 18-GA)	
		2	**102-8802**	1	KIT-RECEPTACLE (2-PIN)	
					(INCLUDES RECEPTACLE AS & WEDGE)	
	9	2	**261-9601**	1	BRACKET	
	10	2	**261-9602**	1	BRACKET	
	11	1	**261-9603**	1	BRACKET	
	12	1	**263-1823**	1	GUARD	
	13	2	**033-8248**	2	CLIP	
	14	2	**067-2551**	2	CLIP	
	15	1,2	**130-5300**	6	CLIP	
	16	2	**132-5789**	2	CLIP	
	17	1	**174-5907**	1	CLIP	
	18	2	**1S-6420**	2	CLIP	
	19	1	**102-8802**	1	KIT-RECEPTACLE (2-PIN)	
					(INCLUDES RECEPTACLE AS & WEDGE)	
	20	1	**3J-1907**	1	SEAL-O-RING	
	21	1	**4D-7794**	1	CLIP	
	22	1,2	**4P-7581**	2	CLIP	
	23	2	**4P-7582**	1	CLIP	
	24	2	**5G-9603**	1	SPACER (11.03X26.6X50-MM THK)	
	25	2	**5P-1076**	2	WASHER-HARD (13.5X30X4-MM THK)	
	26	1	**5P-7854**	1	CLIP	
	27	1	**5P-9297**	4	CLIP	
	28	1,2	**7K-1181**	25	STRAP-CABLE	
B	29	1	**8F-1974**	10	SHIM (0.13-MM THK)	
	30	1,2	**8T-4121**	21	WASHER-HARD (11X21X2.5-MM THK)	
M	31	1	**8T-4133**	1	NUT (M10X1.5-THD)	
M	32	2	**8T-4136**	2	BOLT (M10X1.5X25-MM)	
M	33	1,2	**8T-4137**	13	BOLT (M10X1.5X20-MM)	
M	34	1	**8T-4178**	1	BOLT (M10X1.5X90-MM)	

233-4600 **WIRING GP-FRONT** *(contd.)* **i02348764**

NOTE	REF NO	GRAPHIC REF	PART NUMBER	QTY	PART NAME 1 2 3 4 5 6 (PRODUCT LEVEL)	SEE PAGE
M	35	2	**8T-4179**	2	BOLT (M12X1.75X20-MM)	
M	36	2	**8T-4191**	1	BOLT (M10X1.5X16-MM)	
M	37	2	**8T-5005**	1	BOLT (M10X1.5X70-MM)	
M	38	1	**8T-6466**	2	BOLT (M10X1.5X60-MM)	
	39	1	**9C-2741**	1	SPACER (13.94X17.14X34-MM THK)	
	40	1	**9P-2495**	1	SPACER (12.52X17.14X67-MM THK)	
	41	1	**9W-1991**	1	SPACER (10.7X17.1X40-MM THK)	

B-USE AS REQUIRED
M-METRIC PART

PROOF

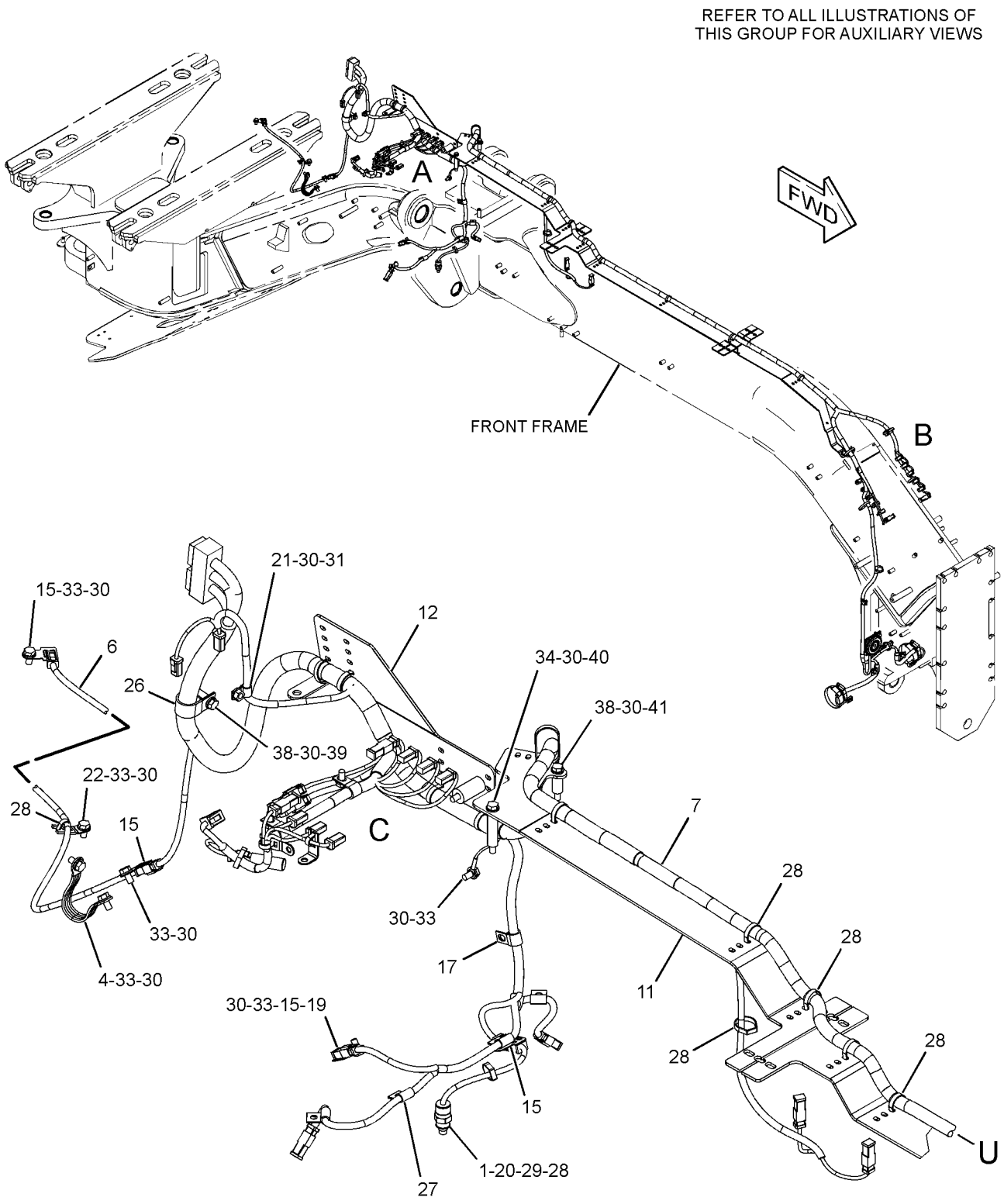

GRAPHIC #1 g01162910

233-4600 **WIRING GP-FRONT** *(contd.)* **i02348764**

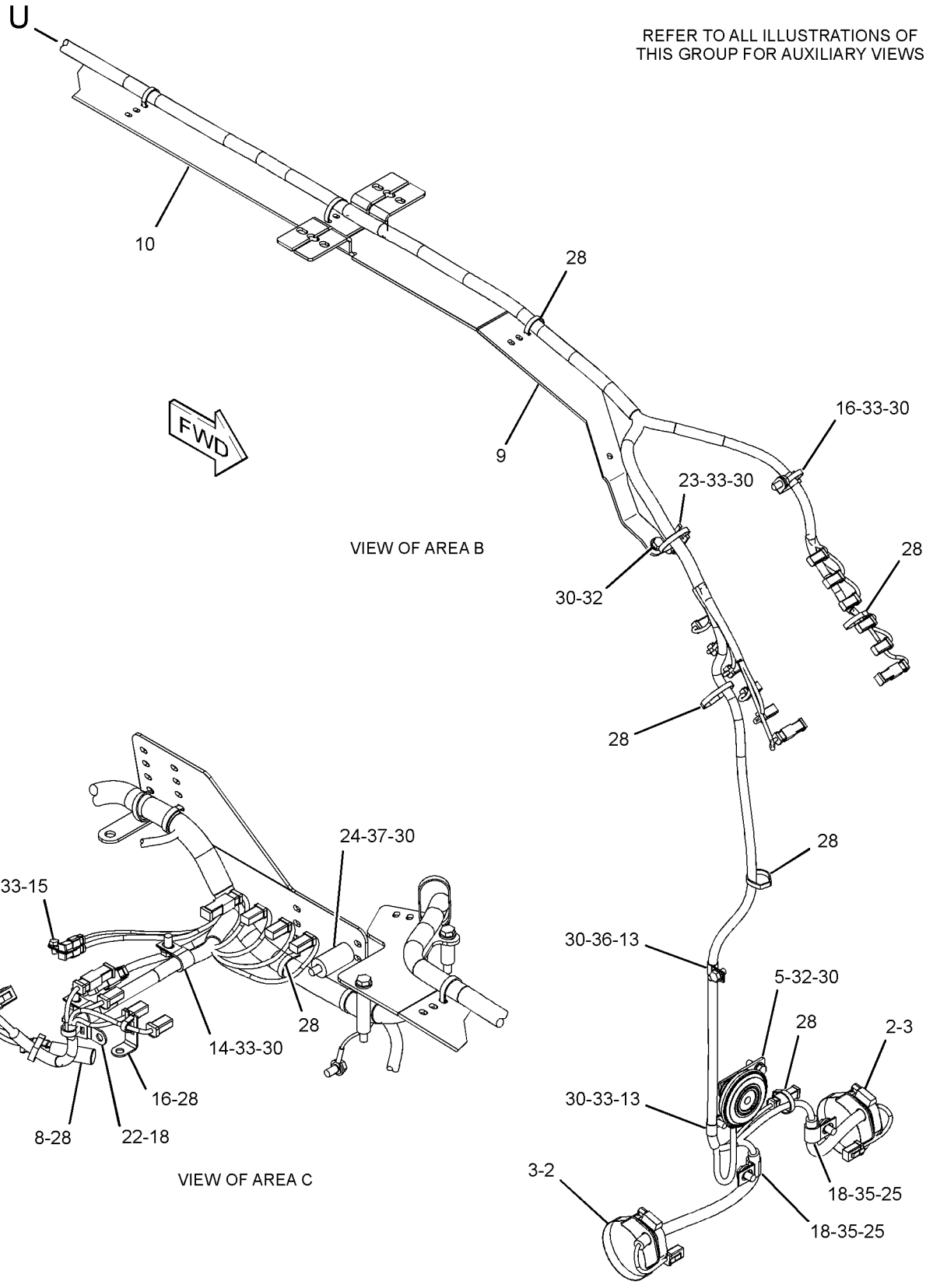

GRAPHIC #2 **<END>** g01162911

233-4613 WIRING GP-FRONT

S/N: B9M1-UP
PART OF 242-5061, 242-5062, 242-5063, 242-5064, 242-5066, 242-6107, 242-6108, 242-6109, 242-6110, 242-6111, 242-6112, 242-6146 CONTROL
AR-HYDRAULIC
AN ATTACHMENT

SMCS-1408 **i02348765**

NOTE	REF NO	GRAPHIC REF	PART NUMBER	QTY	PART NAME 1 2 3 4 5 6 (PRODUCT LEVEL)	SEE PAGE
	1	1	**7K-1181**	16	STRAP-CABLE	
	2	1	**246-1686**	1	HARNESS AS-SOLENOID (FRONT)	
		1	**102-8802**	1	KIT-RECEPTACLE (2-PIN)	
					(INCLUDES RECEPTACLE AS & WEDGE)	
		1	**155-2255**	1	KIT-CONNECTING PLUG (12-PIN)	
		1	**155-2270**	1	KIT-CONNECTING PLUG (2-PIN)	
					(EACH INCLUDES PLUG AS & WEDGE)	
	3	1	**033-8248**	2	CLIP	
	4	1	**4K-8864**	1	CLIP	
	5	1	**8T-4121**	1	WASHER-HARD (11X21X2.5-MM THK)	
M	6	1	**8T-4172**	1	BOLT (M10X1.5X80-MM)	
	7	1	**133-6934**	1	SPACER (11X20X25-MM THK)	

M-METRIC PART

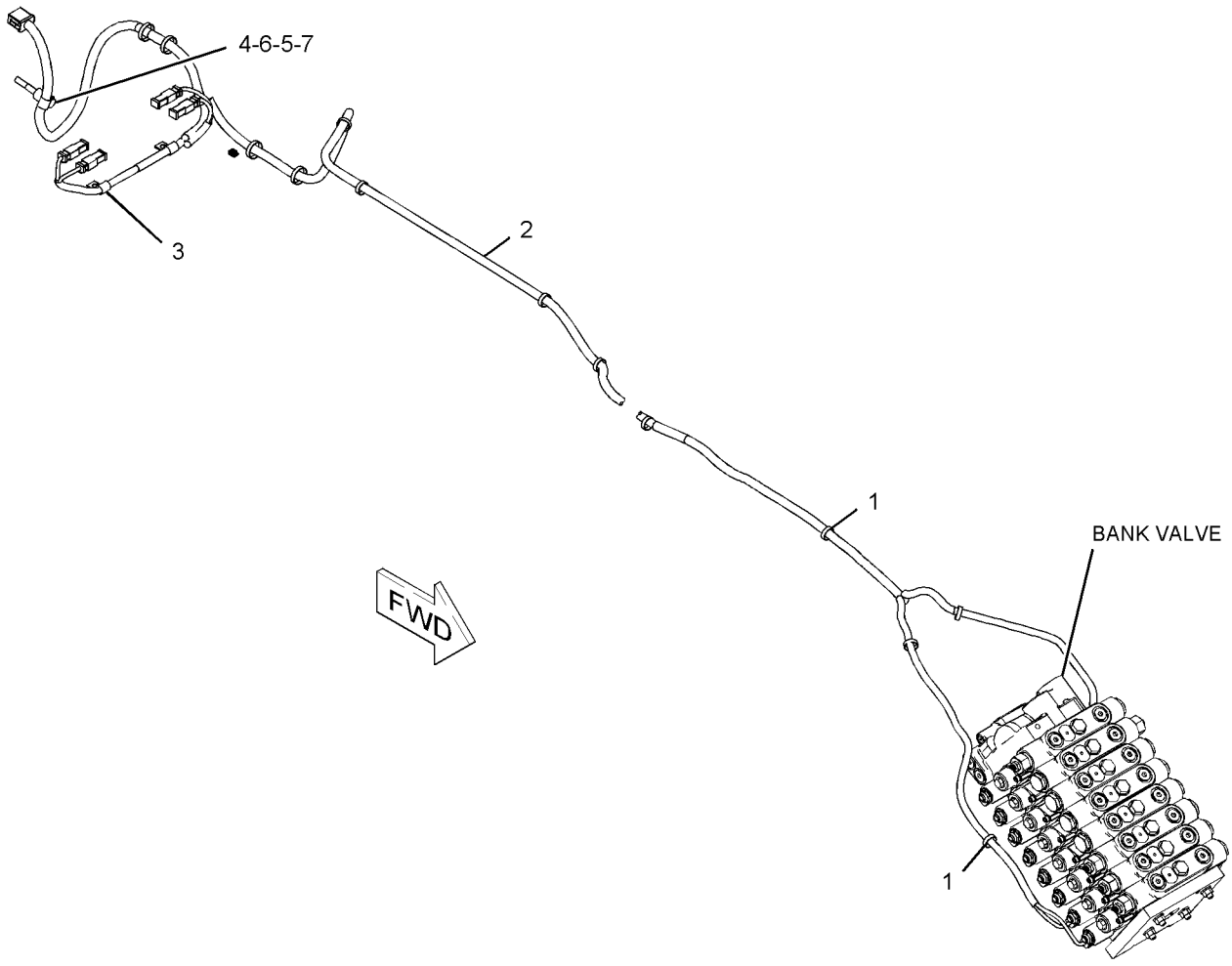

GRAPHIC #1 **<END>** g01132614

233-4637 WIRING GP-FRONT–LIGHTING

S/N: B9M1-UP

AN ATTACHMENT

SMCS-1408 **i02348771**

NOTE	REF NO	GRAPHIC REF	PART NUMBER	QTY	PART NAME 1 2 3 4 5 6 (PRODUCT LEVEL)	SEE PAGE
	1	1	**3S-2093**	2	STRAP-CABLE	
	2	1	**250-5744**	1	HARNESS AS-FRONT CHASSIS	
		1	**102-8802**	1	KIT-RECEPTACLE (2-PIN)	
		1	**102-8805**	1	KIT-RECEPTACLE (6-PIN)	
					(EACH INCLUDES RECEPTACLE AS & WEDGE)	
		1	**155-2265**	1	KIT-CONNECTING PLUG (8-PIN)	
		1	**155-2270**	1	KIT-CONNECTING PLUG (2-PIN)	
		1	**155-2274**	1	KIT-CONNECTING PLUG (6-PIN)	
					(EACH INCLUDES PLUG AS & WEDGE)	
	3	1	**033-8248**	1	CLIP	
	4	1	**174-5907**	2	CLIP	
	5	1	**4D-7794**	2	CLIP	
	6	1	**4K-8864**	1	CLIP	
	7	1	**5P-9135**	1	GROMMET	
	8	1	**7K-1181**	13	STRAP-CABLE	
	9	1	**8T-4121**	4	WASHER-HARD (11X21X2.5-MM THK)	
M	10	1	**8T-4137**	4	BOLT (M10X1.5X20-MM)	

M-METRIC PART

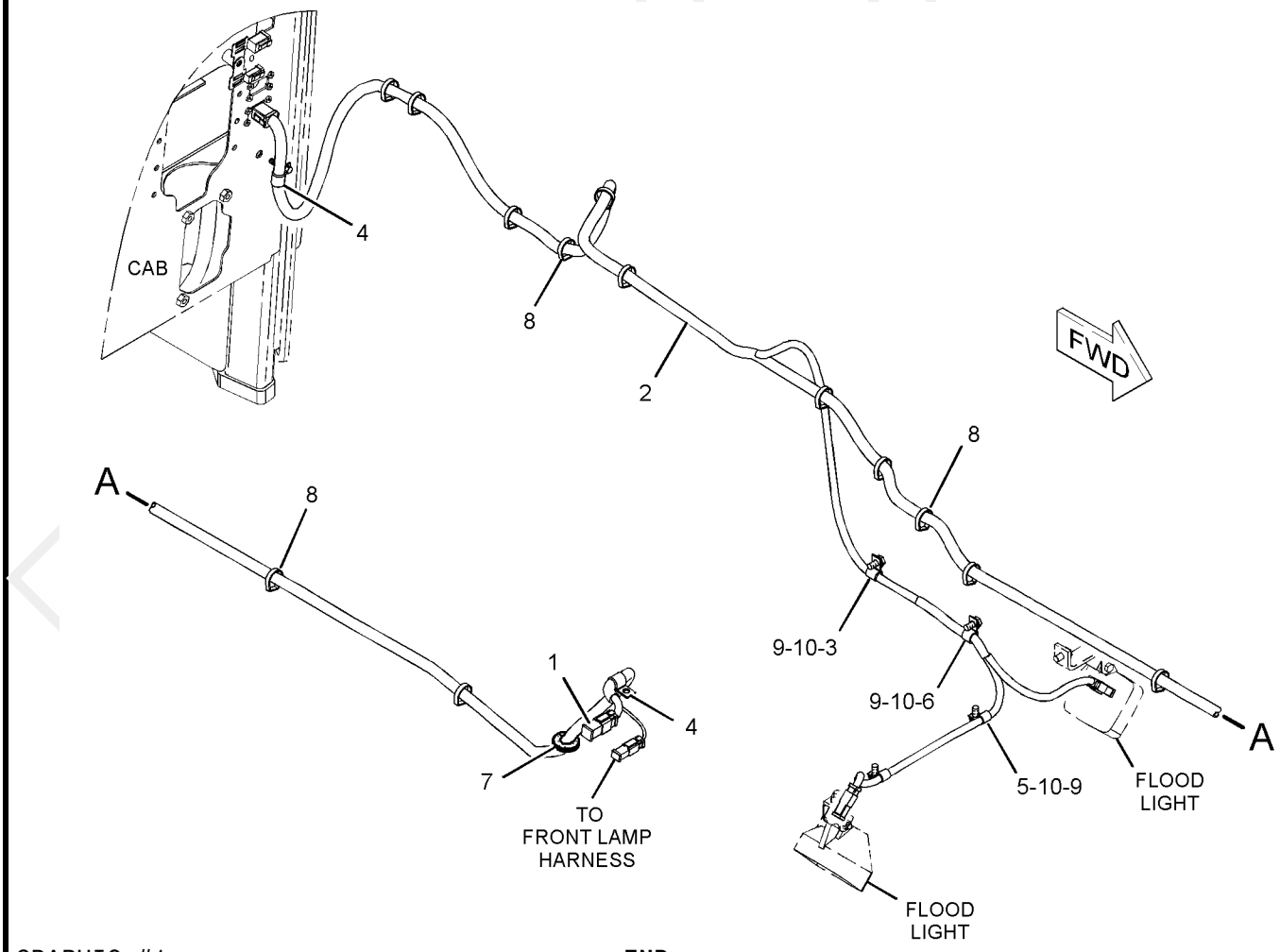

GRAPHIC #1 **<END>** g01143174

233-3288 WIRING GP-GRADE CONTROL–CAB

S/N: B9M1-UP

PART OF 251-3230 INSTALLATION AR-GRADE CONTROL

AN ATTACHMENT

SMCS-1408 **i02185153**

NOTE	PART NUMBER	QTY	PART NAME 1 2 3 4 5 6 (PRODUCT LEVEL)	SEE PAGE
M	**7X-2537**	4	BOLT (M8X1.25X35-MM)	
M	**8T-4189**	4	BOLT (M8X1.25X20-MM)	
M	**122-8164**	2	BOLT (M6X1X28-MM)	
	201-9041	1	CONTROL GP-UNPROGRAMMED (ENGINE)	
	238-8838	1	HARNESS AS-OPERATOR CONTROLS	
	102-8804	1	KIT-RECEPTACLE (4-PIN)	
	102-8806	1	KIT-RECEPTACLE (8-PIN)	
	190-7614	1	KIT-RECEPTACLE (12-PIN)	
			(EACH INCLUDES RECEPTACLE AS & WEDGE)	
	155-2256	1	KIT-CONNECTING PLUG (12-PIN)	
	155-2265	1	KIT-CONNECTING PLUG (8-PIN)	
			(EACH INCLUDES PLUG AS & WEDGE)	
	8T-9655	8	MOUNT-ISOLATION	
	6I-1418	4	SPACER (8.2X12.7X28.7-MM THK)	
	9X-6381	2	WASHER (6.5X12.5X1.6-MM THK)	
	5P-4116	4	WASHER-HARD (8.8X20.5X2-MM THK)	
	8T-4224	4	WASHER-HARD (8.8X16X2-MM THK)	

M-METRIC PART

<END>

PROOF

239-6383 WIRING GP-GRADE CONTROL–ACCUGRADE

S/N: B9M1-UP
PART OF 251-3230 INSTALLATION AR-GRADE CONTROL
AN ATTACHMENT

SMCS-1408 **i02348772**

NOTE	REF NO	GRAPHIC REF	PART NUMBER	QTY	PART NAME 1 2 3 4 5 6 (PRODUCT LEVEL)	SEE PAGE
	2	2	**6V-7555**	2	STRAP-CABLE	
	3	2	**9X-9365**	1	BRACKET	
	4	2	**132-8487**	4	NUT-RING	
	5	1	**169-5414**	1	CLIP	
	6	2	**233-4626**	1	BRACKET AS	
	7	2	**244-5889**	1	BRACKET AS	
	8	1	**250-6901**	1	HARNESS AS-SENSOR (GRADE CONTROL)	
		1	**174-0503**	1	KIT-CONNECTING PLUG (3-PIN)	
					(INCLUDES PLUG AS & WEDGE)	
		1	**134-2540**	4	RECEPTACLE AS (3-PIN)	
		1	**9X-4385**	1	PLUG AS-CONNECTOR	
		1	**9X-7146**	1	PLUG AS-CONNECTOR (24-PIN)	
		1	**155-2272**	1	PLUG AS-CONNECTOR (4-PIN)	
	9	2	**251-1133**	1	TUBE	
	10	2	**261-3753**	1	BRACKET AS	
M		2	**8T-3490**	1	NUT-WELD (M10X1.5-THD)	
	11	2	**033-8248**	2	CLIP	
	13	1	**130-5300**	1	CLIP	
	14	2	**133-6934**	2	SPACER (11X20X25-MM THK)	
	15	1,2	**134-2540**	2	RECEPTACLE AS (3-PIN)	
	16	2	**174-5907**	2	CLIP	
	18	2	**250-0846**	16	SCREW-PAN HEAD	
	19	1	**253-6016**	1	HARNESS AS-WORK TOOL	
		1	**102-8804**	1	KIT-RECEPTACLE (4-PIN)	
					(INCLUDES RECEPTACLE AS & WEDGE)	
		1	**174-0503**	1	KIT-CONNECTING PLUG (3-PIN)	
					(INCLUDES PLUG AS & WEDGE)	
		1	**155-2272**	3	PLUG AS-CONNECTOR (4-PIN)	
	21	2	**3P-2404**	1	CLIP	
	26	1,2	**7K-1181**	26	STRAP-CABLE	
	27	2	**8C-8977**	2	CLIP	
	28	1,2	**8T-4121**	9	WASHER-HARD (11X21X2.5-MM THK)	
M	29	2	**8T-4133**	1	NUT (M10X1.5-THD)	
	30	1	**117-7640**	3	CLAMP	
	31	2	**9X-8257**	8	WASHER (17.5X30X3.5-MM THK)	
M	32	2	**8T-4182**	2	BOLT (M10X1.5X45-MM)	
M	33	1,2	**8T-4137**	7	BOLT (M10X1.5X20-MM)	
M	34	2	**6V-3303**	4	BOLT (M16X2X60-MM)	
	35	2	**5P-7854**	3	CLIP	

M-METRIC PART

PROOF

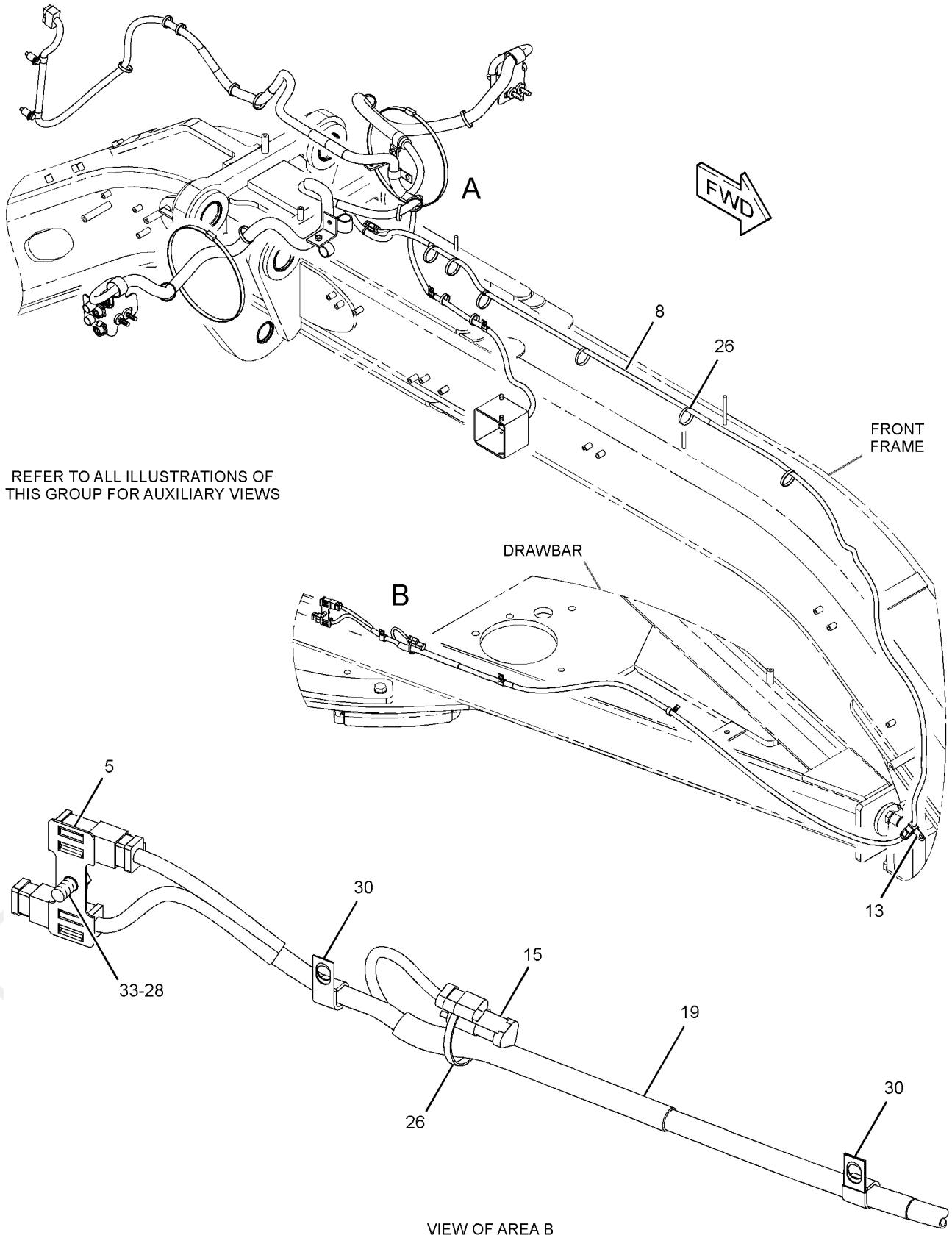

GRAPHIC #1

g01153235

239-6383 **WIRING GP-GRADE CONTROL** *(contd.)* **i02348772**

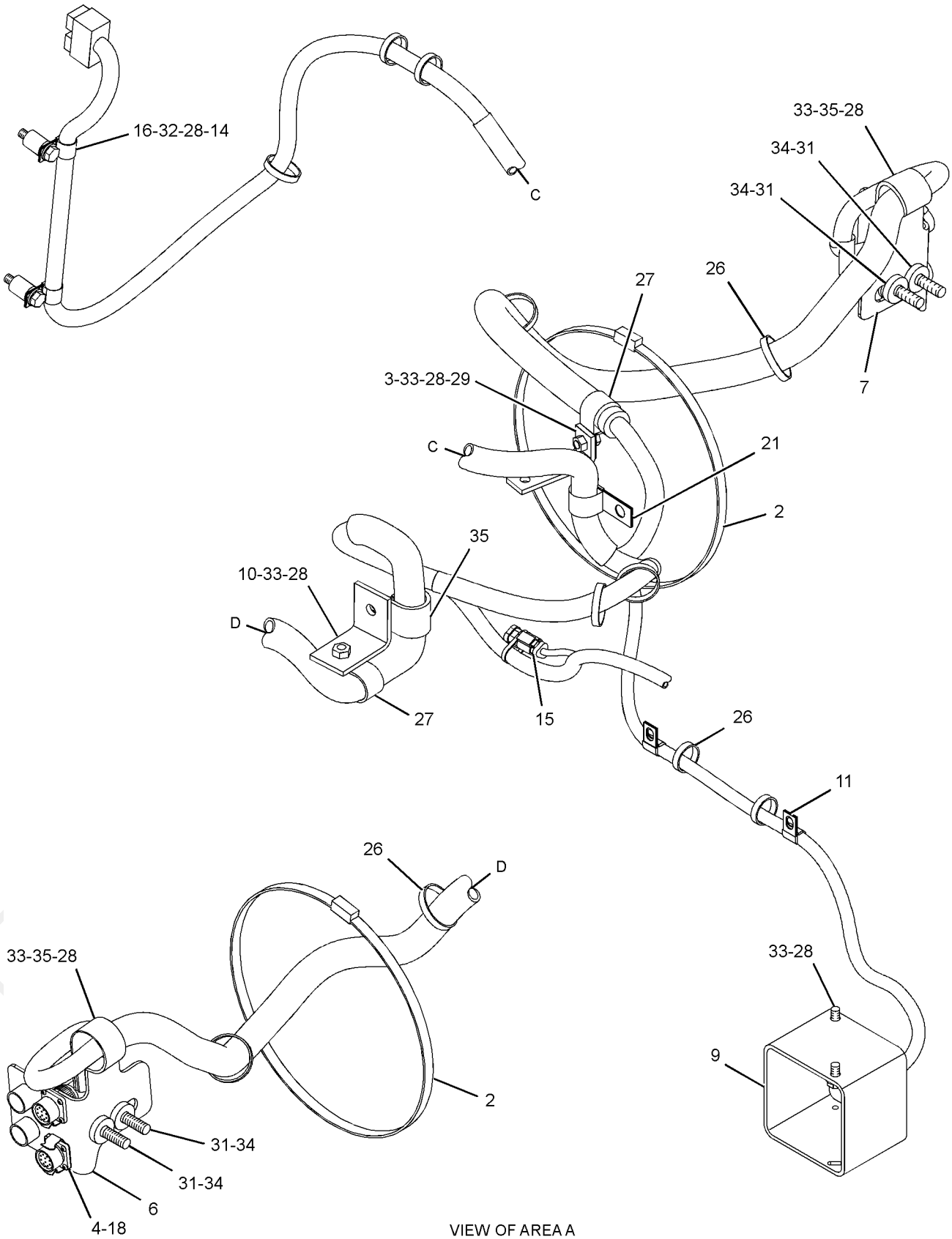

VIEW OF AREA A

GRAPHIC #2 **<END>** g01153236

233-3125 WIRING GP-LIGHTING–ROOF

S/N: B9M1-UP

AN ATTACHMENT

SMCS-1408, 1429 **i02322509**

NOTE	REF NO	GRAPHIC REF	PART NUMBER	QTY	PART NAME 1 2 3 4 5 6 (PRODUCT LEVEL)	SEE PAGE
	1	1	**3S-2093**	22	STRAP-CABLE	
Y	2	1	**234-4325**	2	LAMP GP-FLOOD (24-VOLT, SUSPENDED MOUNT) (FRONT, OUTER)	153
Y	3	1	**234-4326**	2	LAMP GP-FLOOD (24-VOLT, SUSPENDED MOUNT) (FRONT, INNER)	154
	4	1	**235-6180**	1	HARNESS AS-LIGHTING	
		1	**102-8802**	10	KIT-RECEPTACLE (2-PIN)	
		1	**102-8801**	1	KIT-RECEPTACLE (12-PIN)	
					(EACH INCLUDES RECEPTACLE AS & WEDGE)	
		1	**155-2255**	2	KIT-CONNECTING PLUG (12-PIN)	
		1	**155-2265**	1	KIT-CONNECTING PLUG (8-PIN)	
		1	**155-2270**	10	KIT-CONNECTING PLUG (2-PIN)	
					(EACH INCLUDES PLUG AS & WEDGE)	
	5	1	**249-5488**	1	SWITCH AS-ROCKER (FLOODLIGHT)	
	6	1	**7X-0605**	4	WASHER-HARD (13X28X1.6-MM THK)	

Y-SEPARATE ILLUSTRATION

PROOF

233-3125 **WIRING GP-LIGHTING** *(contd.)* **i02322509**

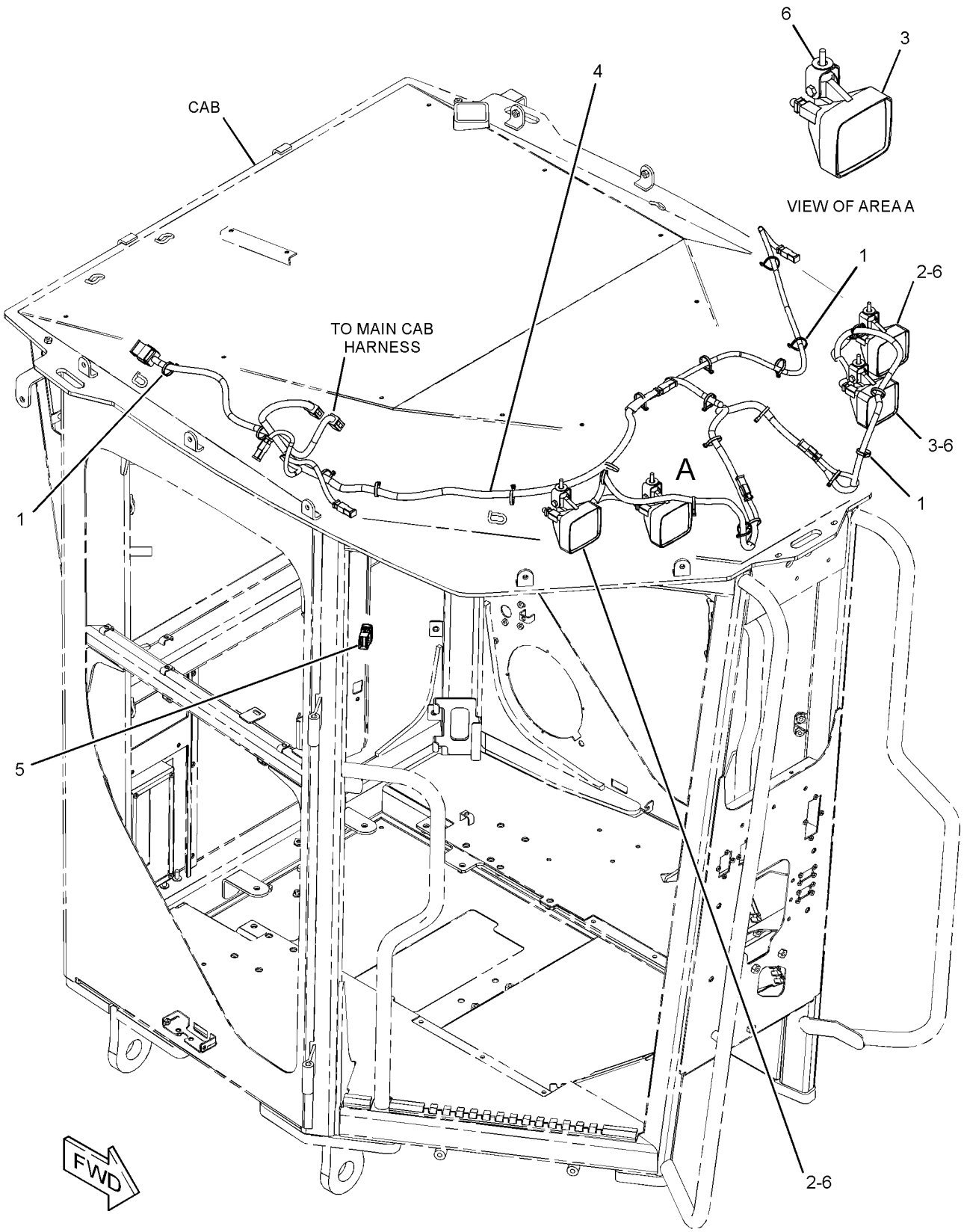

GRAPHIC #1 **<END>** g01161880

235-6196 WIRING GP-LIGHTING

S/N: B9M1-UP

AN ATTACHMENT

SMCS-1408, 1429 **i02322672**

NOTE	REF NO	GRAPHIC REF	PART NUMBER	QTY	PART NAME 1 2 3 4 5 6 (PRODUCT LEVEL)	SEE PAGE
	1	1	**3S-2093**	7	STRAP-CABLE	
	2	1	**238-8749**	1	HARNESS AS-LIGHTING	
		1	**155-2265**	1	KIT-CONNECTING PLUG (8-PIN)	
		1	**155-2274**	1	KIT-CONNECTING PLUG (6-PIN)	
					(EACH INCLUDES PLUG AS & WEDGE)	

PROOF

235-6196 **WIRING GP-LIGHTING** *(contd.)* **i02322672**

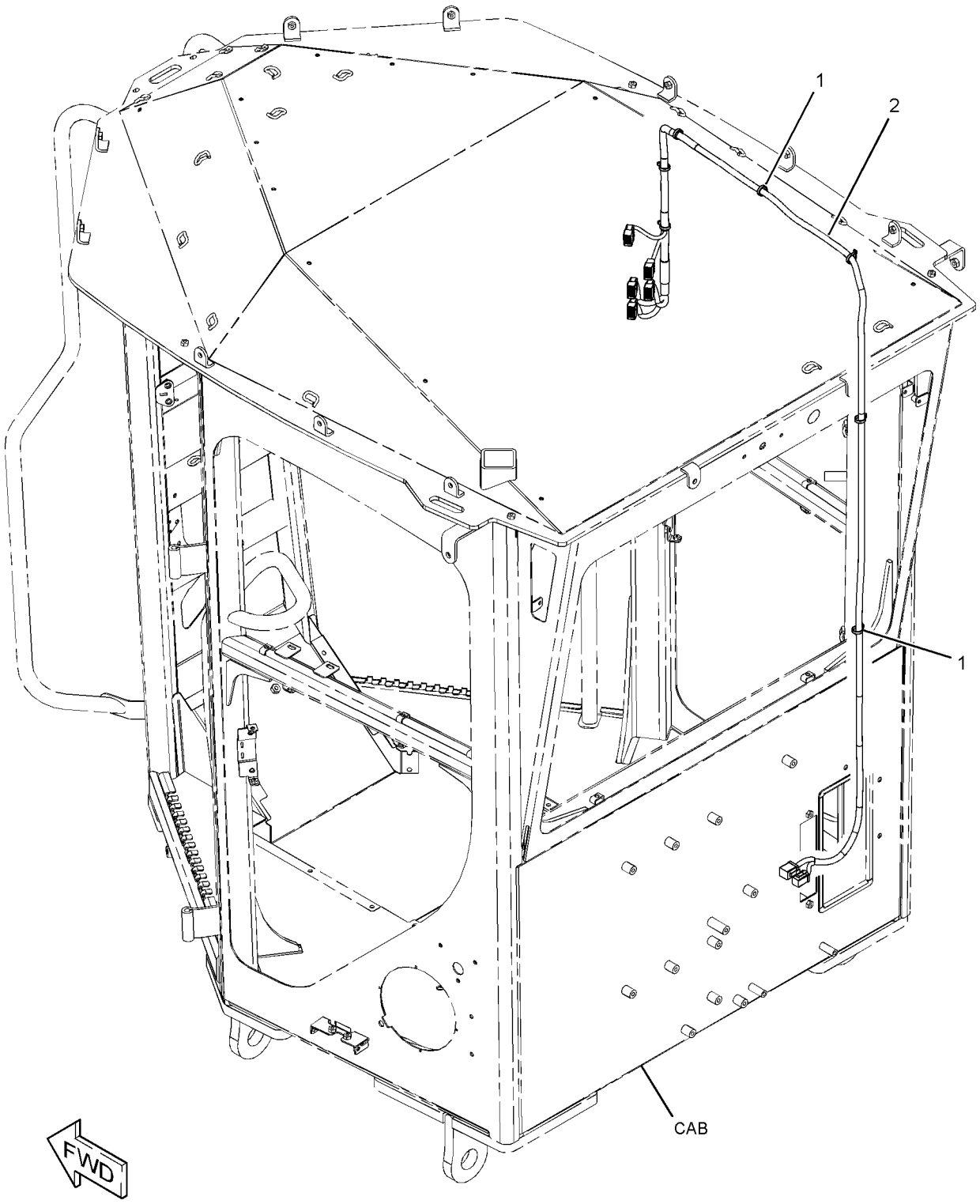

GRAPHIC #1 **<END>** g01161537

ELECTRICAL AND STARTING SYSTEM

247-6430 WIRING GP-LIGHTING–TAIL

S/N: B9M1-UP
AN ATTACHMENT

SMCS-1408, 1429 **i02300215**

NOTE	REF NO	GRAPHIC REF	PART NUMBER	QTY	PART NAME 1 2 3 4 5 6 (PRODUCT LEVEL)	SEE PAGE
	1	1	**3S-2093**	20	STRAP-CABLE	
	2	1	**236-1928**	1	BRACKET AS	
	3	1	**236-2338**	1	HARNESS AS-REAR LIGHTING	
		1	**102-8802**	3	KIT-RECEPTACLE (2-PIN)	
		1	**102-8803**	2	KIT-RECEPTACLE (3-PIN)	
		1	**102-8804**	2	KIT-RECEPTACLE (4-PIN)	
					(EACH INCLUDES RECEPTACLE AS & WEDGE)	
		1	**155-2255**	1	KIT-CONNECTING PLUG (12-PIN)	
		1	**155-2260**	2	KIT-CONNECTING PLUG (3-PIN)	
		1	**155-2270**	5	KIT-CONNECTING PLUG (2-PIN)	
					(EACH INCLUDES PLUG AS & WEDGE)	
		1	**155-2272**	2	PLUG AS-CONNECTOR (4-PIN)	
	4	1	**239-6379**	1	BRACKET AS	
	5	1	**130-5300**	2	CLIP	
Y	6	1	**135-0426**	2	LAMP GP-SIGNAL (24-VOLT, STOP, TAIL)	162
Y	7	1	**171-5672**	2	LIGHTING GP-BACKUP	166
	8	1	**1V-6688**	1	GROMMET	
M	9	1	**5C-2890**	12	NUT (M6X1-THD)	
	10	1	**5P-4115**	4	WASHER-HARD (7.2X19X2-MM THK)	
	11	1	**8M-2773**	2	CLIP	
M	12	1	**8T-4172**	6	BOLT (M10X1.5X80-MM)	
	13	1	**9X-8256**	8	WASHER (6.6X12X2-MM THK)	
	14	1	**8T-4121**	6	WASHER-HARD (11X21X2.5-MM THK)	

M-METRIC PART
Y-SEPARATE ILLUSTRATION

PROOF

247-6430 **WIRING GP-LIGHTING** *(contd.)* **i02300215**

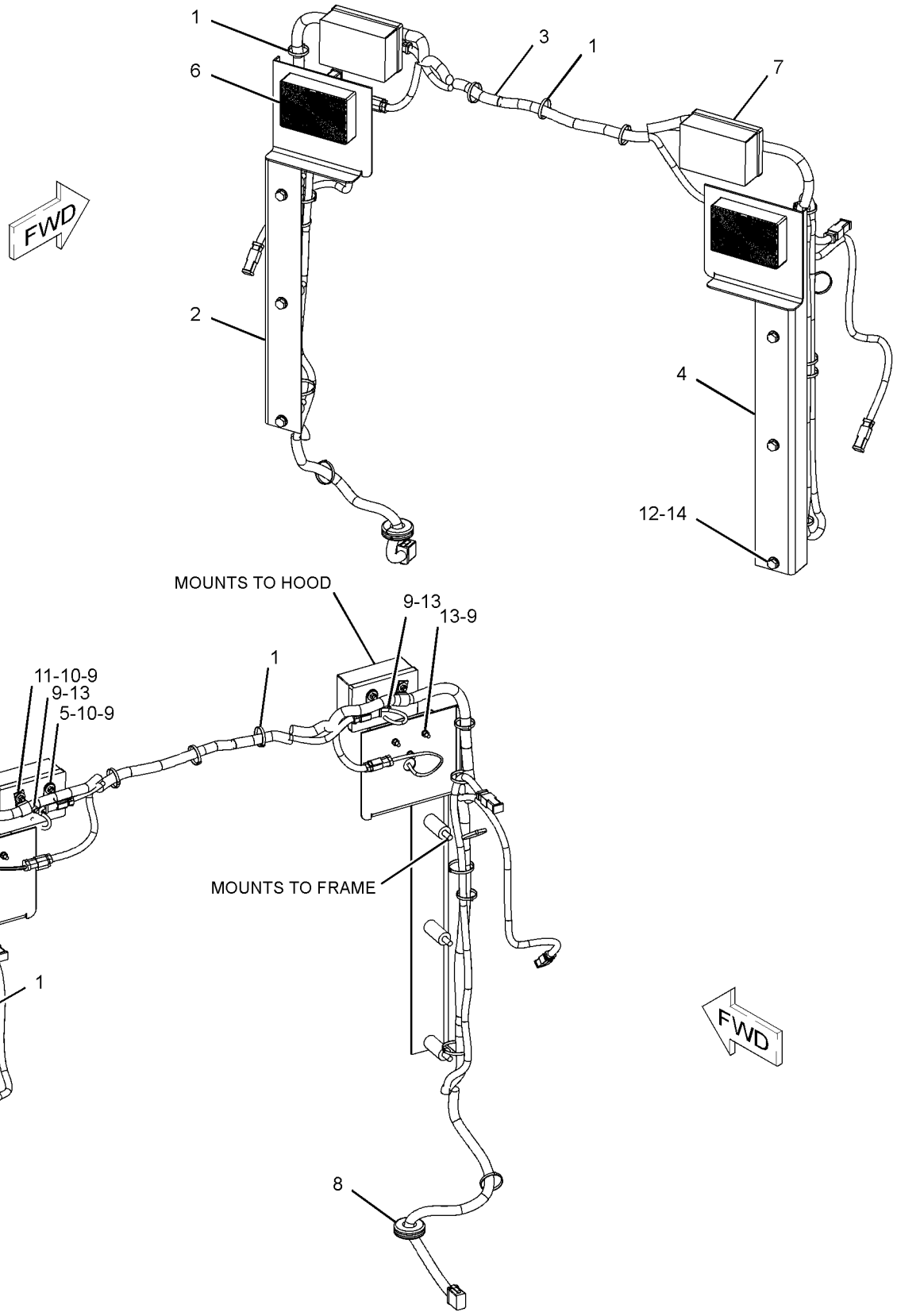

GRAPHIC #1 **<END>** g01151719

262-4972 WIRING GP-LIGHTING

S/N: B9M1-UP
PART OF 250-3818 ROADING AR
AN ATTACHMENT

SMCS-1408, 1429 **i02277754**

NOTE	REF NO	GRAPHIC REF	PART NUMBER	QTY	PART NAME 1 2 3 4 5 6 (PRODUCT LEVEL)	SEE PAGE
	1	1	**114-6658**	4	WASHER (6.5X17X1-MM THK)	
Y	2	1	**212-3924**	2	LAMP GP-MARKER	161
	3	1	**263-2571**	2	PLATE AS	
					(EACH INCLUDES)	
M		1	**8T-8874**	2	NUT-WELD (M5X0.8-THD)	
M	4	1	**9X-2044**	4	SCREW-TRUSS HEAD (M6X1X16-MM)	

M-METRIC PART
Y-SEPARATE ILLUSTRATION

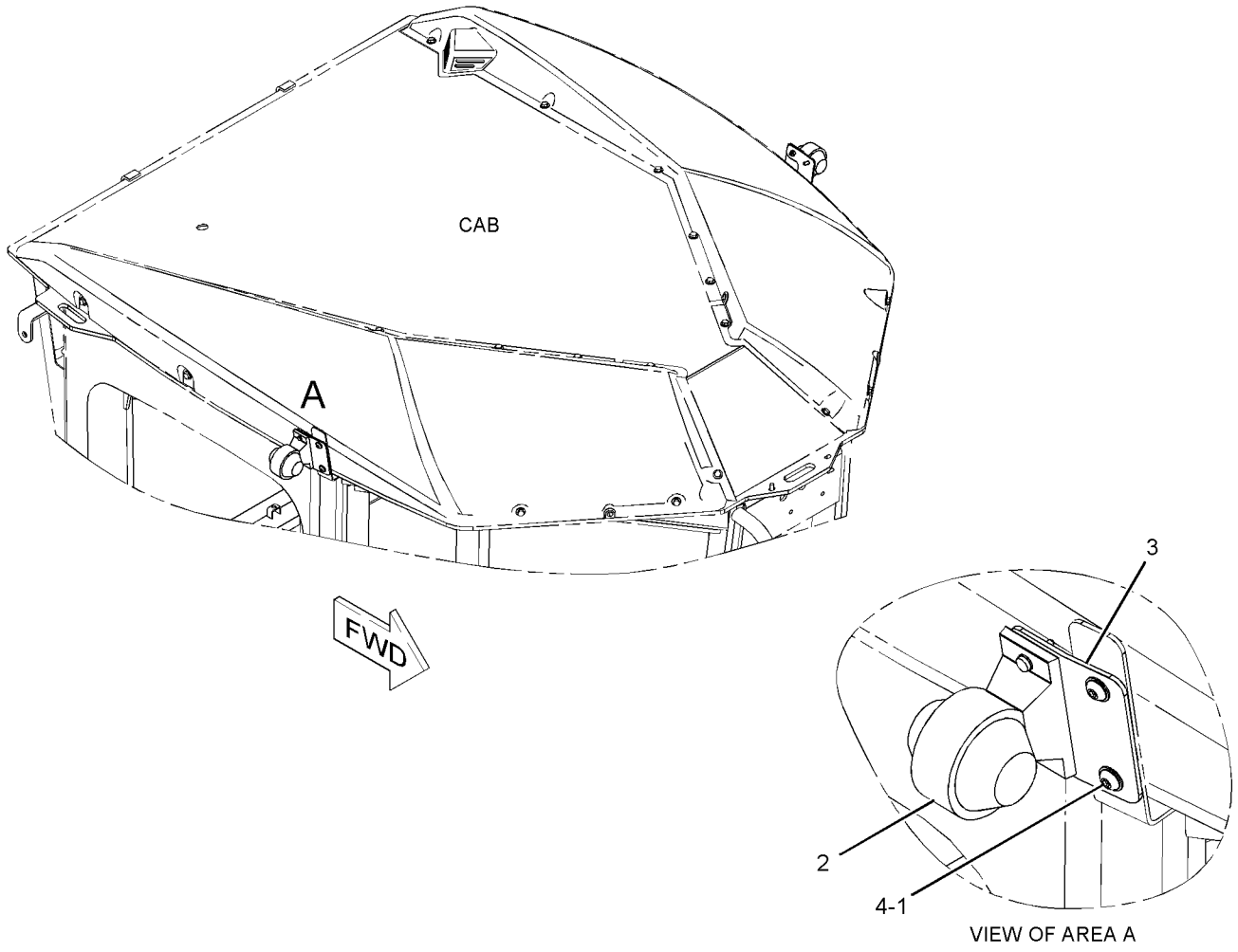

GRAPHIC #1 **<END>** g01142895

ELECTRICAL AND STARTING SYSTEM

269-4152 WIRING GP-POWER RECEPTACLE

S/N: B9M1-UP

PART OF 234-7721 COMMON AR-MOTOR GRADER

SMCS-1408, 1463 **i02300311**

NOTE	REF NO	GRAPHIC REF	PART NUMBER	QTY	PART NAME 1 2 3 4 5 6 (PRODUCT LEVEL)	SEE PAGE
	1	1	**8W-8528**	2	SLEEVE	
	2	1	**097-4896**	2	SPACER (12X20X23-MM THK)	
	3	1	**236-2344**	1	CABLE AS	
		1	**1S-7251**	2	TERMINAL-RING (FOR 1/2-IN BOLT)	
		1	**8N-0869**	1	COVER-TERMINAL (RED)	
E		1	**159-8049**		CABLE (00-GA, RED) (83-CM)	
	4	1	**239-6375**	1	CABLE AS	
		1	**1S-7251**	2	TERMINAL-RING (FOR 1/2-IN BOLT)	
		1	**8N-0869**	2	COVER-TERMINAL (RED)	
E		1	**159-8049**		CABLE (00-GA, RED) (152-CM)	
	5	1	**250-5718**	1	PLATE AS	
M		1	**8T-3490**	3	NUT-WELD (M10X1.5-THD)	
Y	6	1	**251-2468**	1	BLOCK GP-JUNCTION	124
	7	1	**256-6630**	1	PLATE	
	8	1	**267-2100**	1	BRACKET	
	9	1	**269-4153**	1	CABLE AS.	
		1	**8N-0869**	1	COVER-TERMINAL (RED)	
		1	**9X-0195**	1	TERMINAL (FOR 3/8-IN BOLT)	
		1	**9X-9120**	1	BOOT (RED)	
E		1	**159-8047**		CABLE-ELECTRICAL (0-GA, RED) (204-CM)	
		1	**170-3794**	1	RING-TERMINAL	
	10	1	**269-4154**	1	CABLE AS.	
		1	**9G-8909**	2	COVER-TERMINAL (BLACK)	
		1	**030-1707**	1	TERMINAL-RING	
		1	**030-1709**	1	TERMINAL-RING	
E		1	**159-8048**		CABLE-ELECTRICAL (00-GA, BLACK) (127-CM)	
	11	1	**269-4157**	1	CABLE AS.	
		1	**1S-7251**	1	TERMINAL-RING (FOR 1/2-IN BOLT)	
		1	**1S-7252**	1	TERMINAL-RING (FOR 3/8-IN BOLT)	
E		1	**159-8050**		CABLE (00-GA, BLACK) (46-CM)	
	12	1	**140-0860**	1	STRAP AS-GROUND	
	13	1	**142-4443**	1	CLIP	
	14	1	**174-5907**	4	CLIP	
	15	1	**4K-8302**	2	CLIP	
	16	1	**4K-8864**	6	CLIP	
	17	1	**7X-0605**	2	WASHER-HARD (13X28X1.6-MM THK)	
M	18	1	**7X-2548**	1	BOLT (M12X1.75X16-MM)	
	19	1	**7X-7729**	4	WASHER (11X25X3-MM THK)	
	20	1	**8T-4121**	12	WASHER-HARD (11X21X2.5-MM THK)	
M	21	1	**8T-4136**	5	BOLT (M10X1.5X25-MM)	
M	22	1	**8T-4137**	5	BOLT (M10X1.5X20-MM)	
M	23	1	**8T-4179**	2	BOLT (M12X1.75X20-MM)	
M	24	1	**8T-4191**	2	BOLT (M10X1.5X16-MM)	
M	25	1	**8T-4194**	2	BOLT (M12X1.75X50-MM)	
M	26	1	**8T-4195**	2	BOLT (M10X1.5X30-MM)	
	27	1	**8T-4223**	2	WASHER-HARD (13.5X25.5X3-MM THK)	
M	28	1	**8T-4779**	1	BOLT (M16X2X35-MM)	
M	29	1	**8T-4956**	2	BOLT (M12X1.75X35-MM)	
	30	1	**9X-0941**	1	LOCKNUT (1/2-13-THD)	
	31	1	**9X-8257**	1	WASHER (17.5X30X3.5-MM THK)	

E-ORDER BY THE CENTIMETER
M-METRIC PART
Y-SEPARATE ILLUSTRATION

PROOF

269-4152 **WIRING GP-POWER RECEPTACLE** *(contd.)* **i02300311**

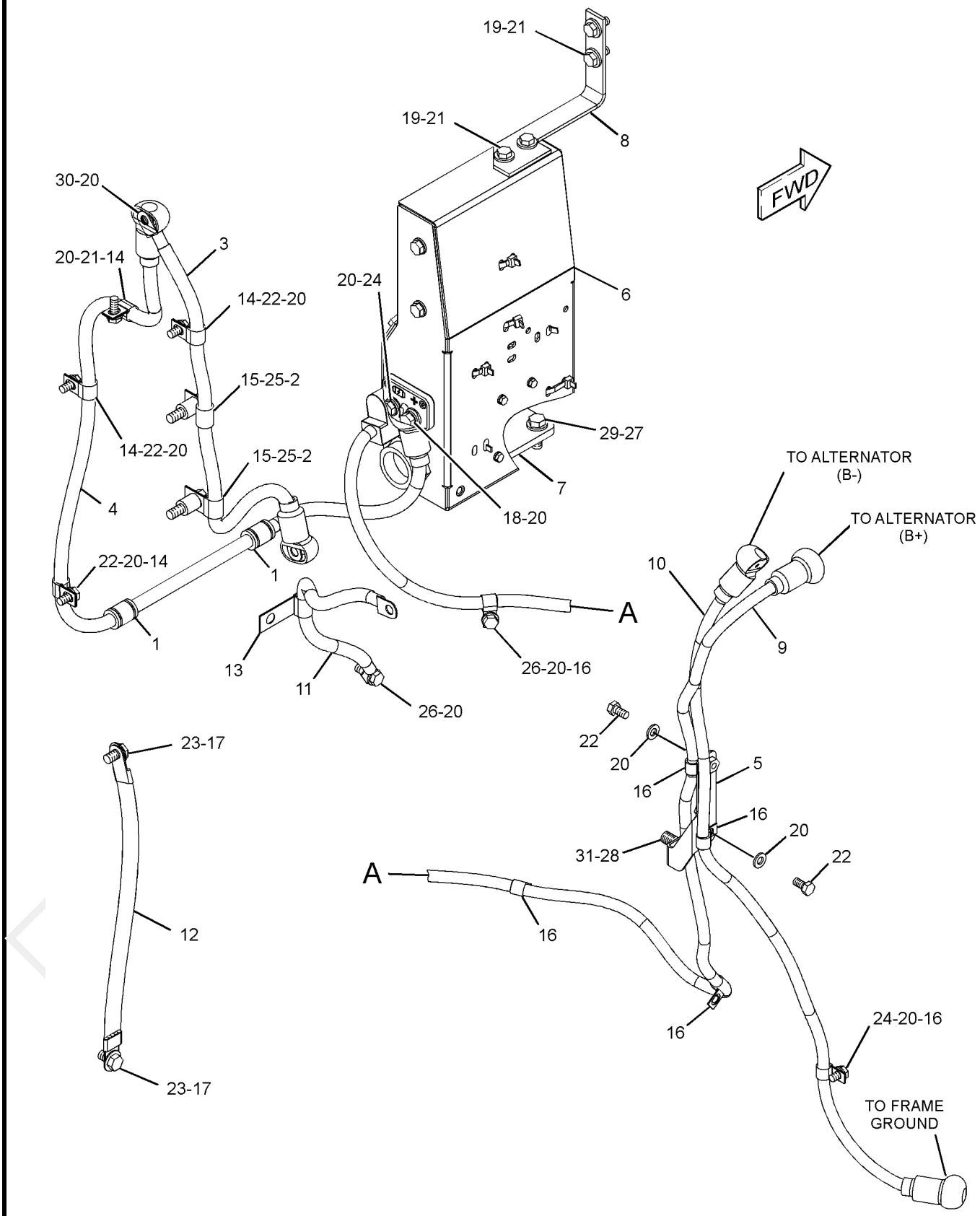

GRAPHIC #1 **<END>** g01159654

ELECTRICAL AND STARTING SYSTEM

264-7522 WIRING GP-REAR

S/N: B9M1-UP

PART OF 234-7721 COMMON AR-MOTOR GRADER

SMCS-1408 **i02297310**

NOTE	REF NO	GRAPHIC REF	PART NUMBER	QTY	PART NAME 1 2 3 4 5 6 (PRODUCT LEVEL)	SEE PAGE
	1	1,2	**3S-2093**	5	STRAP-CABLE	
	2	1	**139-2116**	1	SWITCH AS-TOGGLE (GROUND LEVEL SHUTDOWN)	
		1	**3E-3371**	1	WEDGE-RECEPTACLE LOCK (3-PIN)	
		1	**6T-3631**	2	NUT-HEX (15/32-32-THD)	
		1	**6T-3632**	1	LOCKWASHER	
		1	**6T-3633**	1	RING-LOCKING	
		1	**186-3735**	3	PIN-CONNECTOR (16-GA TO 18-GA)	
		1	**102-8803**	1	KIT-RECEPTACLE (3-PIN)	
					(INCLUDES RECEPTACLE AS & WEDGE)	
Y	3	2	**160-2443**	2	SENSOR GP-POSITION (ROTARY) (ARTICULATION ANGLE)	178
	4	2	**166-0691**	2	BLOCK AS-MOUNTING	
	5	1	**169-5414**	1	CLIP	
	6	1	**189-3158**	1	SUPPRESSOR-ARC	
Y	7	2	**194-6722**	1	SENSOR GP-PRESSURE (HYDRAULIC PUMP)	180
	8	1	**235-9778**	1	HARNESS AS-REAR (HYDRAULIC PUMP)	
		1	**102-8803**	1	KIT-RECEPTACLE (3-PIN)	
		1	**102-8805**	1	KIT-RECEPTACLE (6-PIN)	
					(EACH INCLUDES RECEPTACLE AS & WEDGE)	
		1	**155-2270**	1	KIT-CONNECTING PLUG (2-PIN)	
					(INCLUDES PLUG AS & WEDGE)	
	9	2	**236-1920**	1	HARNESS AS-REAR (AIR CONDITIONER)	
		2	**102-8802**	3	KIT-RECEPTACLE (2-PIN)	
		2	**102-8803**	1	KIT-RECEPTACLE (3-PIN)	
					(EACH INCLUDES RECEPTACLE AS & WEDGE)	
		2	**155-2270**	3	KIT-CONNECTING PLUG (2-PIN)	
					(INCLUDES PLUG AS & WEDGE)	
		2	**155-2273**	1	PLUG AS-CONNECTOR (6-PIN)	
	10	1	**236-4505**	1	HARNESS AS-REAR (CHASSIS)	
		1	**102-8802**	1	KIT-RECEPTACLE (2-PIN)	
		1	**102-8803**	1	KIT-RECEPTACLE (3-PIN)	
		1	**102-8805**	2	KIT-RECEPTACLE (6-PIN)	
		1	**102-8801**	3	KIT-RECEPTACLE (12-PIN)	
					(INCLUDES RECEPTACLE AS & WEDGE)	
		1	**155-2255**	4	KIT-CONNECTING PLUG (12-PIN)	
		1	**155-2260**	3	KIT-CONNECTING PLUG (3-PIN)	
		1	**155-2270**	7	KIT-CONNECTING PLUG (2-PIN)	
		1	**155-2274**	4	KIT-CONNECTING PLUG (6-PIN)	
		1	**174-0503**	1	KIT-CONNECTING PLUG (3-PIN)	
					(EACH INCLUDES PLUG AS & WEDGE)	
		1	**7X-6222**	1	PLUG AS-CONNECTOR (24-PIN)	
		1	**8N-1518**	2	PLUG AS-CONNECTOR (25-PIN)	
		1	**9X-1054**	1	PLUG AS-CONNECTOR (4-PIN)	
		1	**9X-4391**	1	PLUG AS-CONNECTOR (70-PIN)	
		1	**147-1445**	1	PLUG AS-CONNECTOR (70-PIN)	
		1	**147-1446**	1	PLUG AS-CONNECTOR (70-PIN)	
		1	**160-7689**	1	PLUG AS-CONNECTOR (70-PIN)	
		1	**126-1774**	3	COVER	
		1	**8N-1521**	2	BELL AS-END	
		1	**3S-2093**	4	STRAP-CABLE	
		1	**9X-6772**	4	STRAP-CABLE	
	11	1	**254-5036**	1	HARNESS AS-PUMP (FUEL)	
		1	**102-8805**	2	KIT-RECEPTACLE (6-PIN)	
					(INCLUDES RECEPTACLE AS & WEDGE)	
		1	**155-2270**	1	KIT-CONNECTING PLUG (2-PIN)	

PROOF

264-7522 **WIRING GP-REAR** ***(contd.)*** **i02297310**

NOTE	REF NO	GRAPHIC REF	PART NUMBER	QTY	PART NAME 1 2 3 4 5 6 (PRODUCT LEVEL)	SEE PAGE
		1	**155-2274**	1	KIT-CONNECTING PLUG (6-PIN)	
					(EACH INCLUDES PLUG AS & WEDGE)	
		1	**9X-1054**	1	PLUG AS-CONNECTOR (4-PIN)	
	12	1	**257-4967**	1	PLATE AS	
	13	2	**258-8948**	2	LEVER	
	14	2	**258-8949**	4	SPACER (7.5X12X56-MM THK)	
	15	1	**269-4156**	1	BRACKET	
	16	2	**010-2573**	2	SETSCREW-POINT	
	17	1,2	**033-8248**	2	CLIP	
	18	2	**0S-1616**	2	BOLT (1/4-20X1-IN)	
	19	2	**125-4124**	1	CLAMP	
	20	1,2	**130-5300**	9	CLIP	
	21	2	**130-5301**	2	CLIP	
	22	1	**132-5789**	1	CLIP	
	23	2	**134-3355**	1	STRAP AS	
	24	1	**134-3987**	2	CLIP	
	25	2	**251-3265**	2	LINK AS	
					(EACH INCLUDES)	
		2	**6F-0612**	2	NUT-JAM (1/4-28-THD)	
		2	**6L-7751**	1	ROD END	
		2	**8S-7048**	1	ROD END	
		2	**251-1809**	1	ROD	
	26	2	**2F-7888**	4	SCREW-MACHINE (10-32X1.25-IN)	
	27	1	**3E-5169**	1	GUARD-SWITCH	
	28	1	**3E-5239**	1	RELAY AS (24-VOLT) (FUEL PUMP)	
	28A	1	**3E-5239**	1	RELAY AS (24-VOLT) (BACKUP ALARM)	
	29	1	**3S-8665**	1	CLIP	
	30	2	**4B-4274**	4	WASHER (5.5X13X1.2-MM THK)	
	31	1	**4D-7794**	1	CLIP	
	32	1,2	**4P-7581**	3	CLIP	
	33	1	**4S-1962**	1	CLIP	
	34	2	**5P-0537**	4	WASHER-HARD (7.2X14.5X2-MM THK)	
	35	1	**5P-4116**	2	WASHER-HARD (8.8X20.5X2-MM THK)	
	36	1	**5P-9297**	5	CLIP	
	37	1,2	**5P-9299**	4	CLIP	
	38	2	**6D-4246**	1	CLIP	
	39	1,2	**7D-7233**	4	CLIP	
	40	1,2	**7K-1181**	16	STRAP-CABLE	
M	41	1	**7X-2619**	2	BOLT (M6X1X20-MM)	
	42	2	**8F-6302**	4	BOLT (1/4-20X3.75-IN)	
	43	1	**8M-2770**	1	CLIP	
	44	2	**8M-2773**	2	CLIP	
	45	1,2	**8T-4121**	22	WASHER-HARD (11X21X2.5-MM THK)	
M	46	1	**8T-4133**	3	NUT (M10X1.5-THD)	
M	47	1,2	**8T-4136**	2	BOLT (M10X1.5X25-MM)	
M	48	1,2	**8T-4137**	15	BOLT (M10X1.5X20-MM)	
M	49	1	**8T-4189**	2	BOLT (M8X1.25X20-MM)	
M	50	2	**8T-4191**	1	BOLT (M10X1.5X16-MM)	
M	51	2	**8T-4195**	2	BOLT (M10X1.5X30-MM)	
	52	2	**8T-4205**	2	WASHER-HARD (7.2X14.5X2-MM THK)	
	53	1	**8T-4224**	2	WASHER-HARD (8.8X16X2-MM THK)	
	54	2	**9M-4972**	2	CLIP	
	55	2	**9M-8406**	1	CLIP	
	56	1	**9X-8256**	2	WASHER (6.6X12X2-MM THK)	

M-METRIC PART
Y-SEPARATE ILLUSTRATION

PROOF

264-7522 **WIRING GP-REAR** *(contd.)* **i02297310**

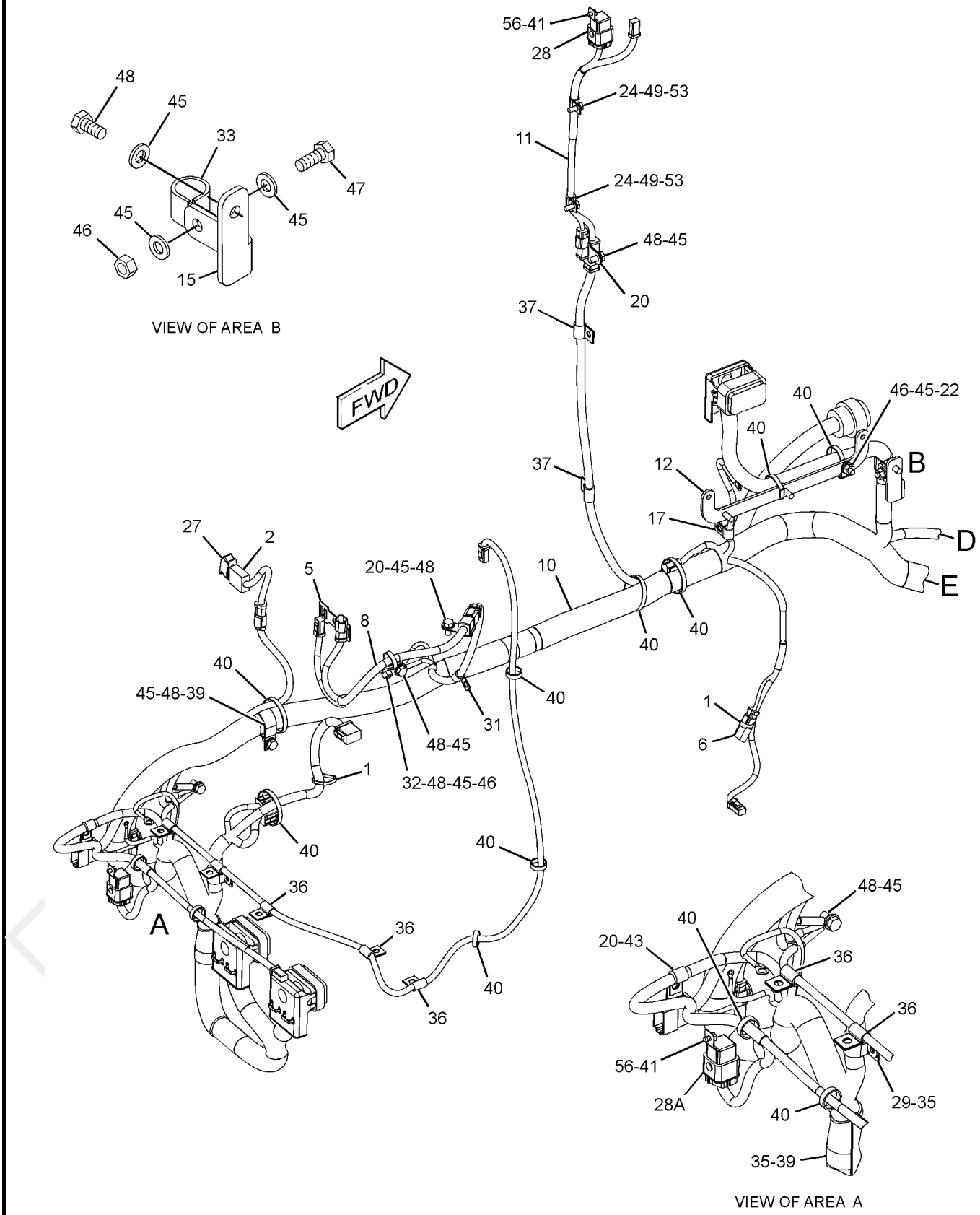

GRAPHIC #1 g01164059

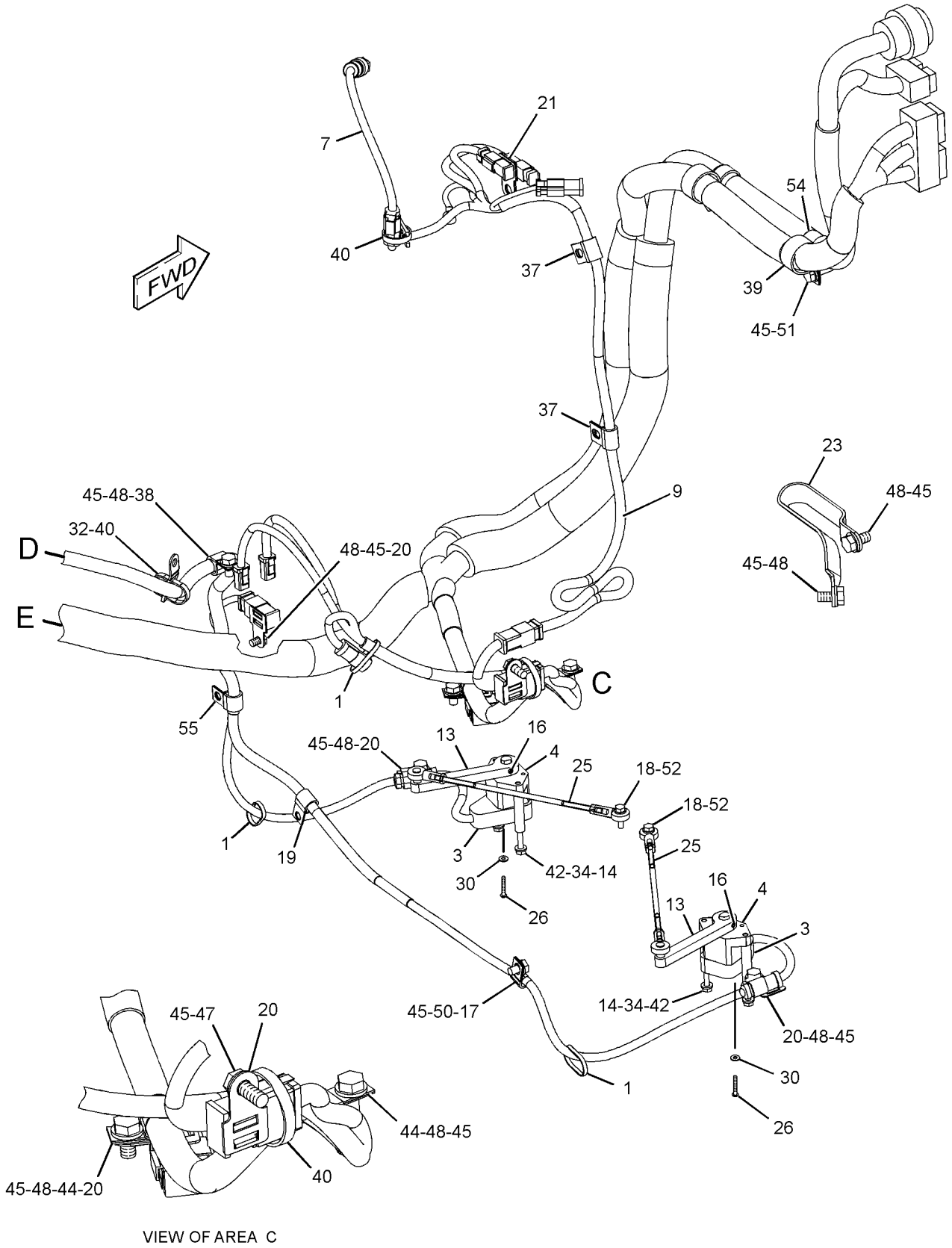

VIEW OF AREA C

GRAPHIC #2 **<END>** g01164060

ELECTRICAL AND STARTING SYSTEM

233-4623 WIRING GP-REAR LIGHTING

S/N: B9M1-UP
AN ATTACHMENT

SMCS-1408, 1429 **i02333962**

NOTE	REF NO	GRAPHIC REF	PART NUMBER	QTY	PART NAME 1 2 3 4 5 6 (PRODUCT LEVEL)	SEE PAGE
	1	1	**3S-2093**	15	STRAP-CABLE	
	2	1	**7X-2393**	4	BUMPER-CONICAL	
	3	1	**9S-1316**	2	SPRING	
	4	1	**236-2338**	1	HARNESS AS-REAR LIGHTING	
		1	**102-8802**	3	KIT-RECEPTACLE (2-PIN)	
		1	**102-8803**	2	KIT-RECEPTACLE (3-PIN)	
		1	**102-8804**	2	KIT-RECEPTACLE (4-PIN)	
		1	**102-8801**	1	KIT-RECEPTACLE (12-PIN)	
					(EACH INCLUDES RECEPTACLE AS & WEDGE)	
		1	**155-2255**	1	KIT-CONNECTING PLUG (12-PIN)	
		1	**155-2260**	2	KIT-CONNECTING PLUG (3-PIN)	
		1	**155-2270**	5	KIT-CONNECTING PLUG (2-PIN)	
		1	**155-2271**	2	KIT-CONNECTING PLUG (4-PIN)	
					(EACH INCLUDES PLUG AS & WEDGE)	
		1	**155-2272**	2	PLUG AS-CONNECTOR (4-PIN)	
	5	1	**245-2810**	1	BRACKET AS (RH)	
M		1	**8T-3612**	2	NUT-WELD (M8X1.25-THD)	
	6	1	**245-2811**	1	BRACKET AS (LH)	
M		1	**8T-3612**	2	NUT-WELD (M8X1.25-THD)	
	7	1	**245-2812**	1	ARM AS (RH)	
		1	**130-5300**	1	CLIP	
	8	1	**245-2813**	1	ARM AS (LH)	
		1	**130-5300**	1	CLIP	
	9	1	**245-2814**	2	ROD	
	10	1	**117-9409**	2	GROMMET	
	11	1	**130-5300**	2	CLIP	
	12	1	**156-0283**	2	WASHER-HARD (8.4X35X2.5-MM THK)	
Y	13	1	**171-5672**	2	LIGHTING GP-BACKUP	166
	14	1	**1V-6688**	1	GROMMET	
	15	1	**232-6136**	2	LAMP GP-SIGNAL (STOP, TAIL, TURN)	
					(EACH INCLUDES)	
		1	**186-3735**	4	PIN-CONNECTOR (16-GA TO 18-GA)	
		1	**3E-3377**	1	WEDGE-RECEPTACLE LOCK (4-PIN)	
		1	**102-8804**	1	KIT-RECEPTACLE (4-PIN)	
					(INCLUDES RECEPTACLE AS & WEDGE)	
	16	1	**3B-5301**	2	PIN-COTTER	
	17	1	**3E-6753**	2	GROMMET	
M	18	1	**5C-2890**	12	NUT (M6X1-THD)	
	19	1	**5P-1076**	4	WASHER-HARD (13.5X30X4-MM THK)	
	20	1	**5P-4115**	4	WASHER-HARD (7.2X19X2-MM THK)	
M	21	1	**6V-7687**	2	LOCKNUT (M12X1.75-THD)	
	22	1	**7X-7729**	4	WASHER (11X25X3-MM THK)	
	23	1	**8M-2773**	2	CLIP	
M	24	1	**8T-4136**	4	BOLT (M10X1.5X25-MM)	
M	25	1	**8T-4176**	2	BOLT (M12X1.75X90-MM)	
	27	1	**8T-4223**	2	WASHER-HARD (13.5X25.5X3-MM THK)	
	28	1	**9V-1312**	4	BEARING	
	29	1	**9X-8256**	8	WASHER (6.6X12X2-MM THK)	
	30	1	**224-8645**	2	FILM-WARNING (CRUSH HAZARD, STAY BACK)	

M-METRIC PART
Y-SEPARATE ILLUSTRATION

PROOF

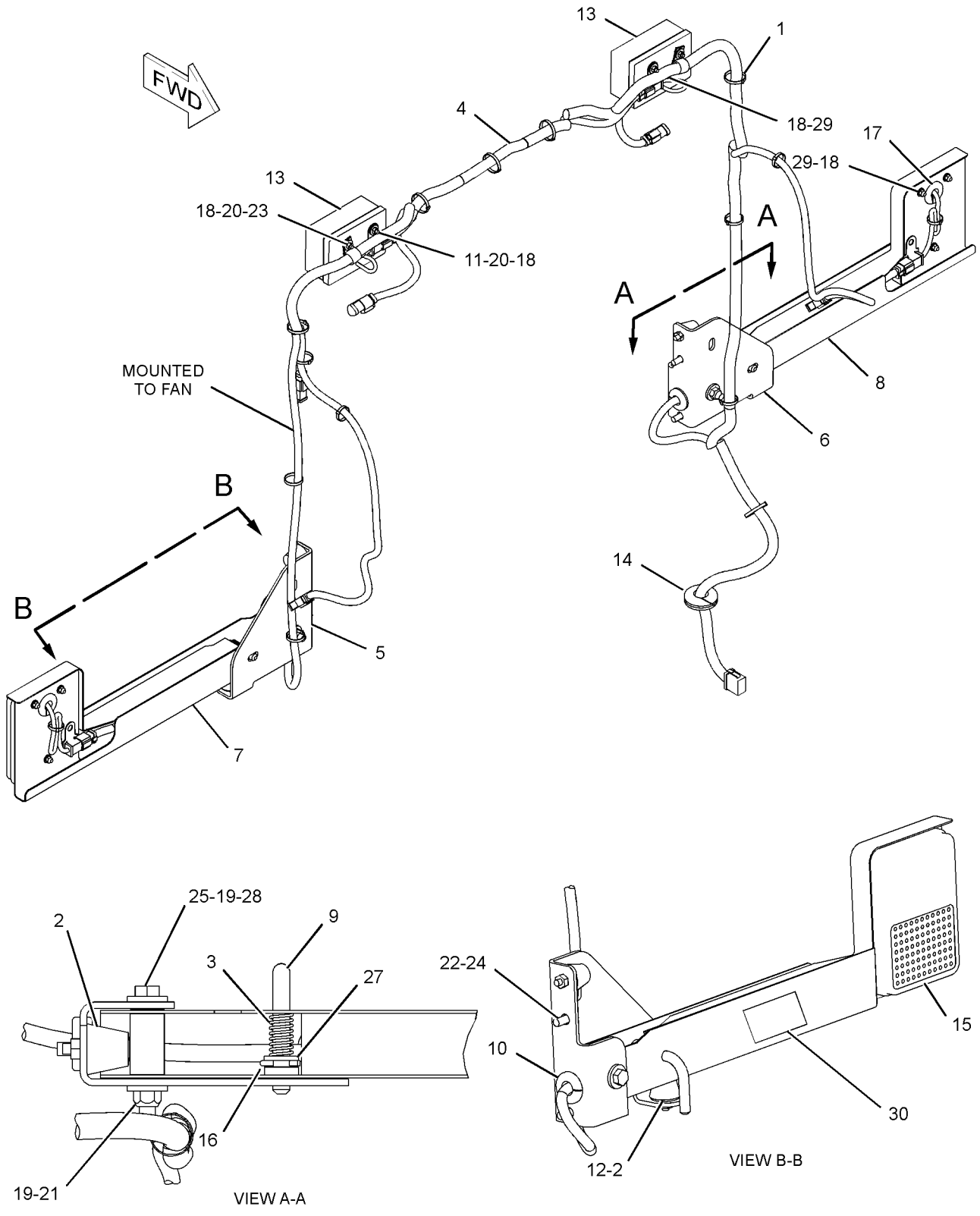

GRAPHIC #1 **<END>** g01155042

269-4150 WIRING GP-SECONDARY STEERING

S/N: B9M1-UP
PART OF 261-0607 OIL CHANGE AR-HIGH SPEED, 261-0611, 261-0774 STEERING AR-SECONDARY AN ATTACHMENT

SMCS-1408, 4334 **i02300388**

NOTE	REF NO	GRAPHIC REF	PART NUMBER	QTY	PART NAME 1 2 3 4 5 6 (PRODUCT LEVEL)	SEE PAGE
	1	1	**7K-1181**	1	STRAP-CABLE	
	2	1	**189-3158**	1	SUPPRESSOR-ARC	
	3	1	**142-4443**	1	CLIP	
	4	1	**174-5907**	1	CLIP	
Y	5	1	**179-0006**	1	SWITCH GP-MAGNETIC	208
	6	1	**236-1929**	1	HARNESS AS-STEERING	
		1	**102-8805**	1	KIT-RECEPTACLE (6-PIN)	
					(INCLUDES RECEPTACLE AS & WEDGE)	
		1	**9X-1054**	1	PLUG AS-CONNECTOR (4-PIN)	
		1	**155-2270**	1	KIT-CONNECTING PLUG (2-PIN)	
					(INCLUDES PLUG AS & WEDGE)	
	7	1	**260-0174**	1	CABLE AS	
		1	**1S-7251**	1	TERMINAL-RING (FOR 1/2-IN BOLT)	
		1	**1S-7252**	1	TERMINAL-RING (FOR 3/8-IN BOLT)	
		1	**8N-0869**	1	COVER-TERMINAL (RED)	
E		1	**159-8049**		CABLE (00-GA, RED) (106-CM)	
	8	1	**260-0175**	1	CABLE AS	
		1	**1S-7252**	2	TERMINAL-RING (FOR 3/8-IN BOLT)	
E		1	**5P-0761**		CABLE (00-GA, RED) (66-CM)	
		1	**8N-0869**	2	COVER-TERMINAL (RED)	
	9	1	**260-3404**	1	CABLE AS	
		1	**1S-7252**	2	TERMINAL-RING (FOR 3/8-IN BOLT)	
E		1	**5P-0747**		CABLE (00-GA, BLACK) (29-CM)	
		1	**9G-8909**	2	COVER-TERMINAL (BLACK)	
	10	1	**3E-5239**	1	RELAY AS (24-VOLT) (SECONDARY STEERING)	
M	11	1	**7X-2619**	5	BOLT (M6X1X20-MM)	
	12	1	**9M-8406**	2	CLIP	
	13	1	**9X-8256**	5	WASHER (6.6X12X2-MM THK)	

E-ORDER BY THE CENTIMETER
M-METRIC PART
Y-SEPARATE ILLUSTRATION

PROOF

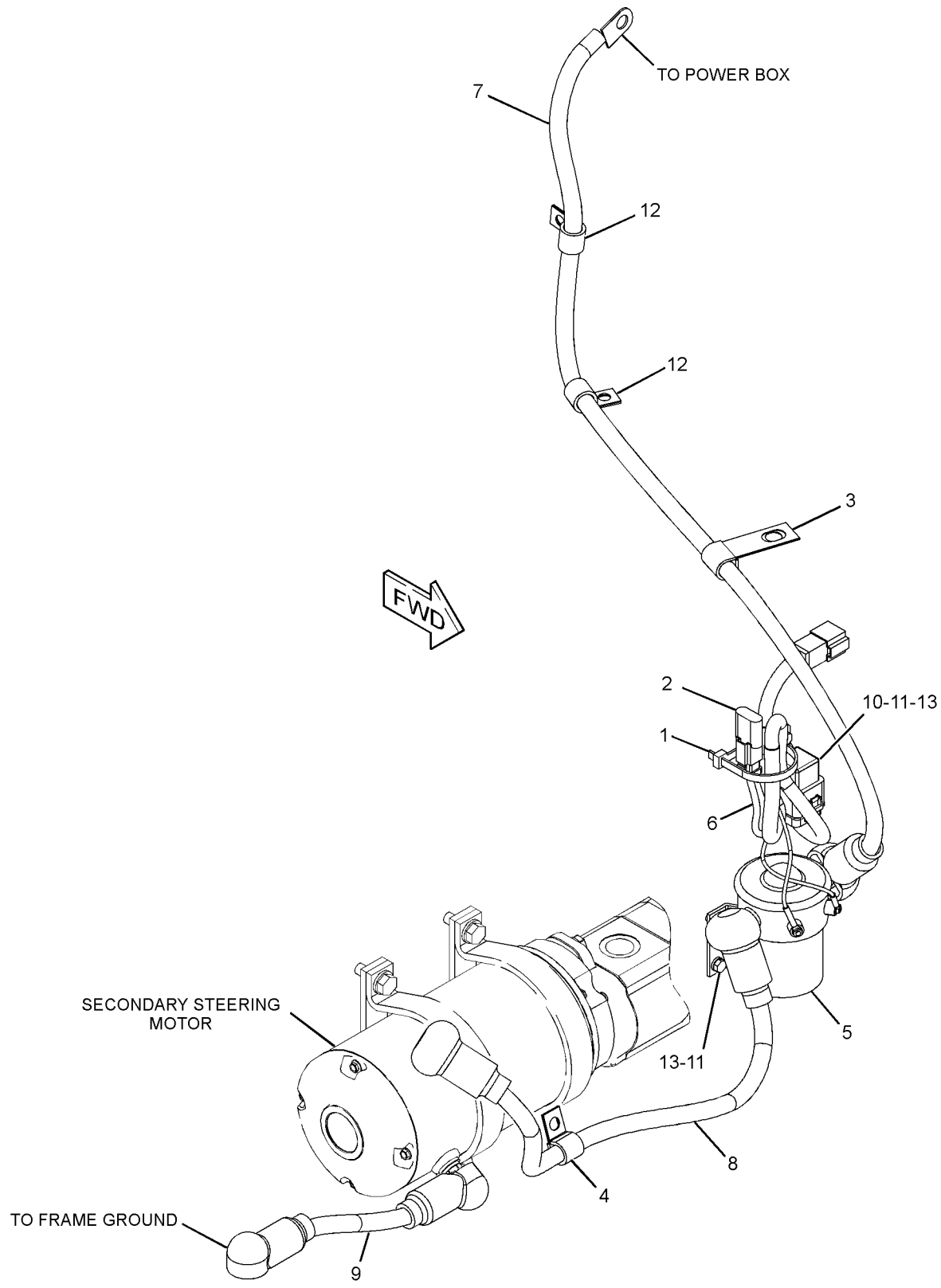

GRAPHIC #1 **<END>** g01159414

235-6194 WIRING GP-SENSOR—ALL WHEEL DRIVE

S/N: B9M1-UP
PART OF 261-0153 AXLE AR-FRONT
AN ATTACHMENT

SMCS-1408 **i02295943**

NOTE	REF NO	GRAPHIC REF	PART NUMBER	QTY	PART NAME 1 2 3 4 5 6 (PRODUCT LEVEL)	SEE PAGE
	1	1	**3S-2093**	1	STRAP-CABLE	
Y	2	2	**145-7028**	1	SENSOR GP-TEMPERATURE (HYDRAULIC OIL)	191
	3	1	**236-1918**	1	HARNESS AS-SENSOR (AWD CONTROL)	
		1	**102-8803**	2	KIT-RECEPTACLE (3-PIN)	
					(EACH INCLUDES RECEPTACLE AS & WEDGE)	
		1	**155-2255**	1	KIT-CONNECTING PLUG (12-PIN)	
		1	**155-2270**	6	KIT-CONNECTING PLUG (2-PIN)	
					(EACH INCLUDES PLUG AS & WEDGE)	
		1	**9X-7144**	1	PLUG AS-CONNECTOR (24-PIN)	
	4	2	**236-1921**	1	HARNESS AS-SOLENOID (ALL WHEEL DRIVE)	
		2	**102-8806**	1	KIT-RECEPTACLE (8-PIN)	
		2	**102-8805**	1	KIT-RECEPTACLE (6-PIN)	
					(EACH INCLUDES RECEPTACLE AS & WEDGE)	
		2	**155-2255**	1	KIT-CONNECTING PLUG (12-PIN)	
		2	**155-2270**	1	KIT-CONNECTING PLUG (2-PIN)	
					(EACH INCLUDES PLUG AS & WEDGE)	
	5	1	**258-7049**	1	HARNESS AS-SENSOR (SPEED)	
		1	**102-8801**	1	KIT-RECEPTACLE (12-PIN)	
					(INCLUDES RECEPTACLE AS & WEDGE)	
		1	**155-2272**	2	PLUG AS-CONNECTOR (4-PIN)	
					(EACH INCLUDES PLUG AS & WEDGE)	
	6	2	**259-4728**	1	HARNESS AS-SOLENOID (ALL WHEEL DRIVE)	
		2	**155-2270**	4	KIT-CONNECTING PLUG (2-PIN)	
		2	**155-2274**	1	KIT-CONNECTING PLUG (6-PIN)	
					(EACH INCLUDES PLUG AS & WEDGE)	
	7	1	**262-1564**	1	BRACKET	
	8	1	**262-4037**	1	BRACKET	
	9	1,2	**130-5300**	5	CLIP	
	10	1	**133-6934**	2	SPACER (11X20X25-MM THK)	
	11	1	**174-5907**	1	CLIP	
	12	2	**4D-7794**	2	CLIP	
	13	1	**4S-1962**	4	CLIP	
	14	2	**6D-3479**	1	CLIP	
	15	2	**6V-3265**	2	CLIP	
	16	2	**7J-0204**	1	SEAL-O-RING	
	17	1	**7K-1181**	20	STRAP-CABLE	
	18	1	**8M-2773**	2	CLIP	
M	19	1,2	**8T-4121**	10	WASHER-HARD (11X21X2.5-MM THK)	
M	20	1	**8T-4133**	3	NUT (M10X1.5-THD)	
M	21	1	**8T-4136**	4	BOLT (M10X1.5X25-MM)	
M	22	1	**8T-4182**	2	BOLT (M10X1.5X45-MM)	
M	23	2	**8T-4186**	1	BOLT (M10X1.5X40-MM)	

M-METRIC PART
Y-SEPARATE ILLUSTRATION

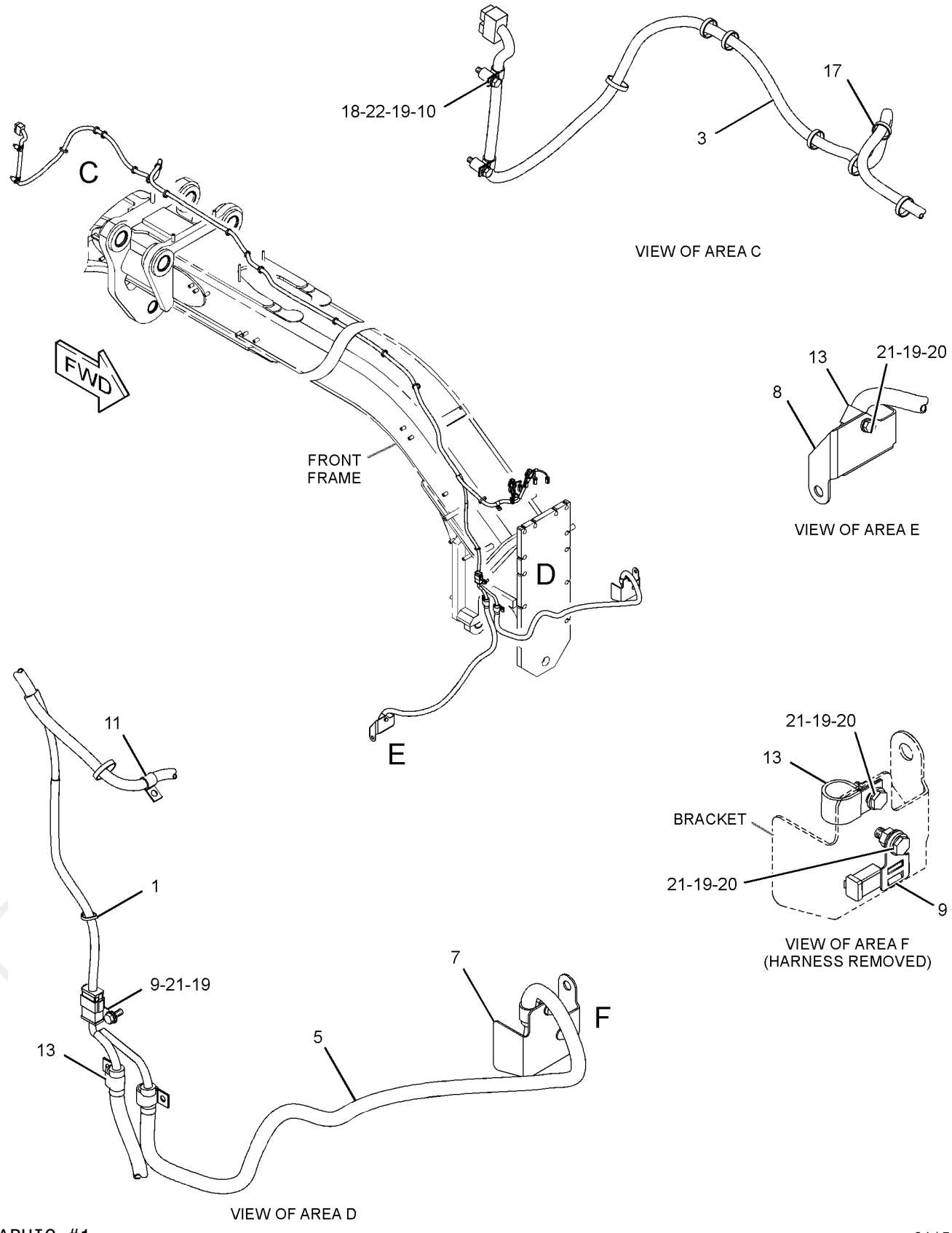

GRAPHIC #1 g01151220

235-6194 **WIRING GP-SENSOR** *(contd.)* **i02295943**

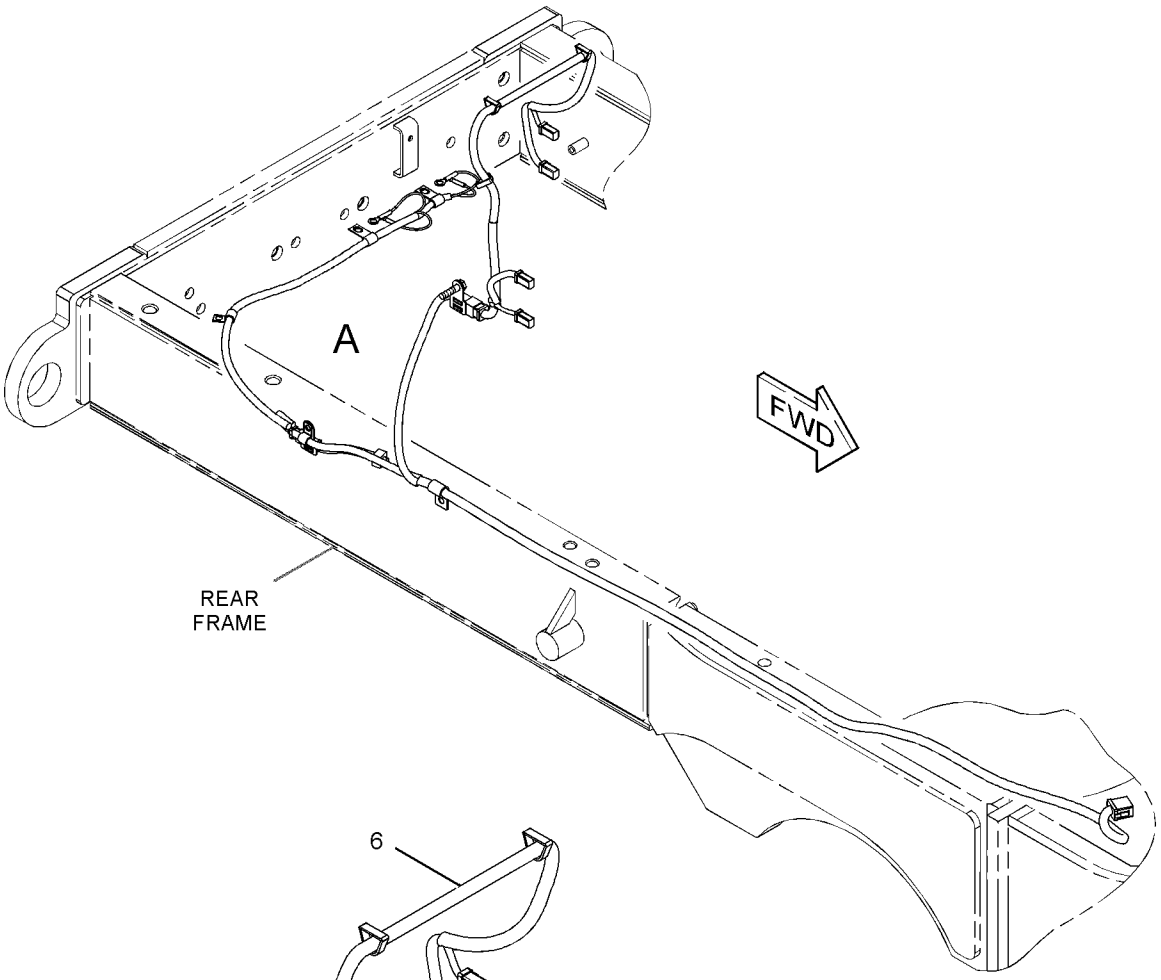

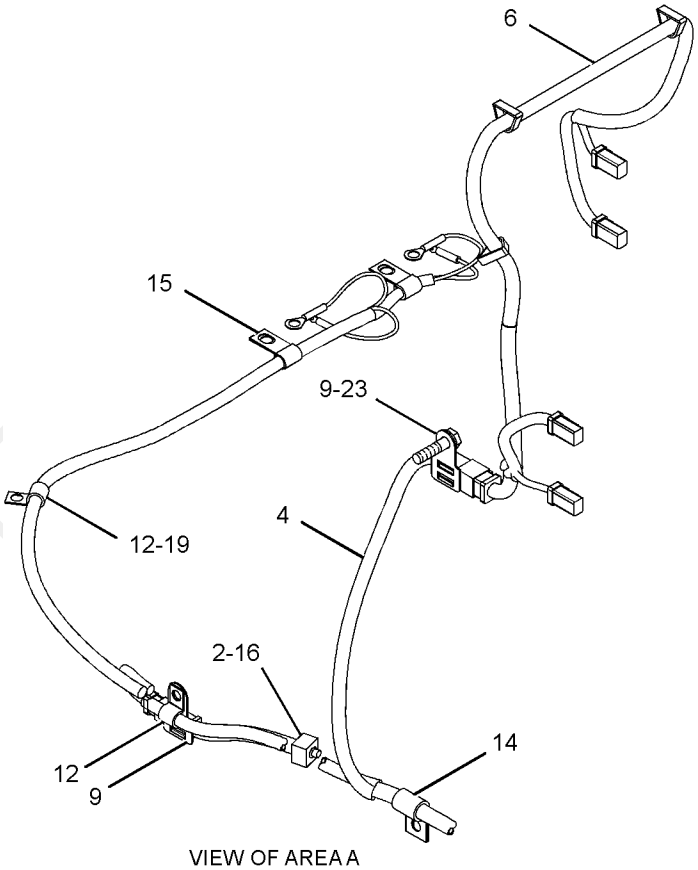

VIEW OF AREA A

GRAPHIC #2 **<END>** g01151223

248-6925 AUTOSHIFT AR

S/N: B9M1-UP
AN ATTACHMENT

SMCS-3168 **i02193538**

NOTE	PART NUMBER	QTY	PART NAME 1 2 3 4 5 6 (PRODUCT LEVEL)	SEE PAGE
	214-2470	1	SOFTWARE GP-POWER TRAIN (AUTOSHIFT)	
	238-8824	1	SWITCH AS-ROCKER (TRANSMISSION SHIFT)	

<END>

247-6481 AXLE AR-FRONT—NON ALL WHEEL DRIVE

S/N: B9M1-UP
AN ATTACHMENT

SMCS-3020, 3278, 4303, 4305, 5225 **i02296295**

NOTE	PART NUMBER	QTY	PART NAME 1 2 3 4 5 6 (PRODUCT LEVEL)	SEE PAGE
Y	*260-7451*	1	AXLE AR-FRONT	258
Y	*255-1566*	1	MOUNTING GP-WHEEL (NON ALL WHEEL DRIVE)	329
Y	*264-2993*	1	LINES GP-CENTERSHIFT LOCK	506
Y	*244-5923*	1	PLATE & FILM GP	

Y-SEPARATE ILLUSTRATION

<END>

PROOF

260-7451 AXLE AR-FRONT—NON ALL WHEEL DRIVE

S/N: B9M1-UP

PART OF 247-6481 AXLE AR-FRONT

AN ATTACHMENT

SMCS-3020, 3278, 4303, 4305, 5225 **i02251268**

NOTE	REF NO	GRAPHIC REF	PART NUMBER	QTY	PART NAME 1 2 3 4 5 6 (PRODUCT LEVEL)	SEE PAGE
Y	1	1	*257-2294*	1	CYLINDER & MTG GP-STEERING (NON ALL WHEEL DRIVE)	480
Y	2	1	*260-7453*	1	AXLE GP-FRONT	260

Y-SEPARATE ILLUSTRATION

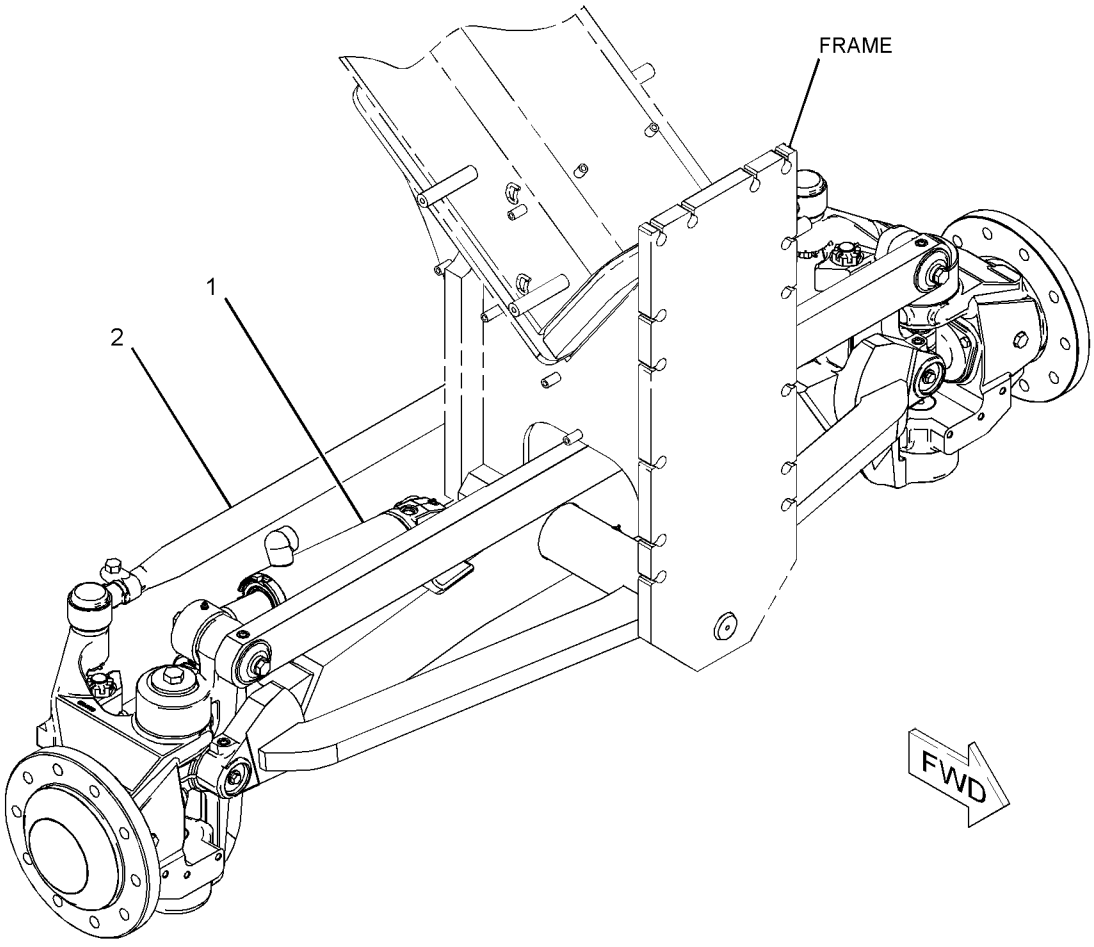

GRAPHIC #1 **<END>** g01134445

260-8696 AXLE AR-FRONT—ALL WHEEL DRIVE

S/N: B9M1-UP

PART OF 261-0153 AXLE AR-FRONT

AN ATTACHMENT

SMCS-3020, 3278, 4303, 4305, 5225 **i02249390**

NOTE	REF NO	GRAPHIC REF	PART NUMBER	QTY	PART NAME 1 2 3 4 5 6 (PRODUCT LEVEL)	SEE PAGE
Y	1	1	*260-8698*	1	AXLE GP-FRONT	264
Y	2	1	*260-8709*	1	CYLINDER & MTG GP-STEERING (ALL WHEEL DRIVE)	481

Y-SEPARATE ILLUSTRATION

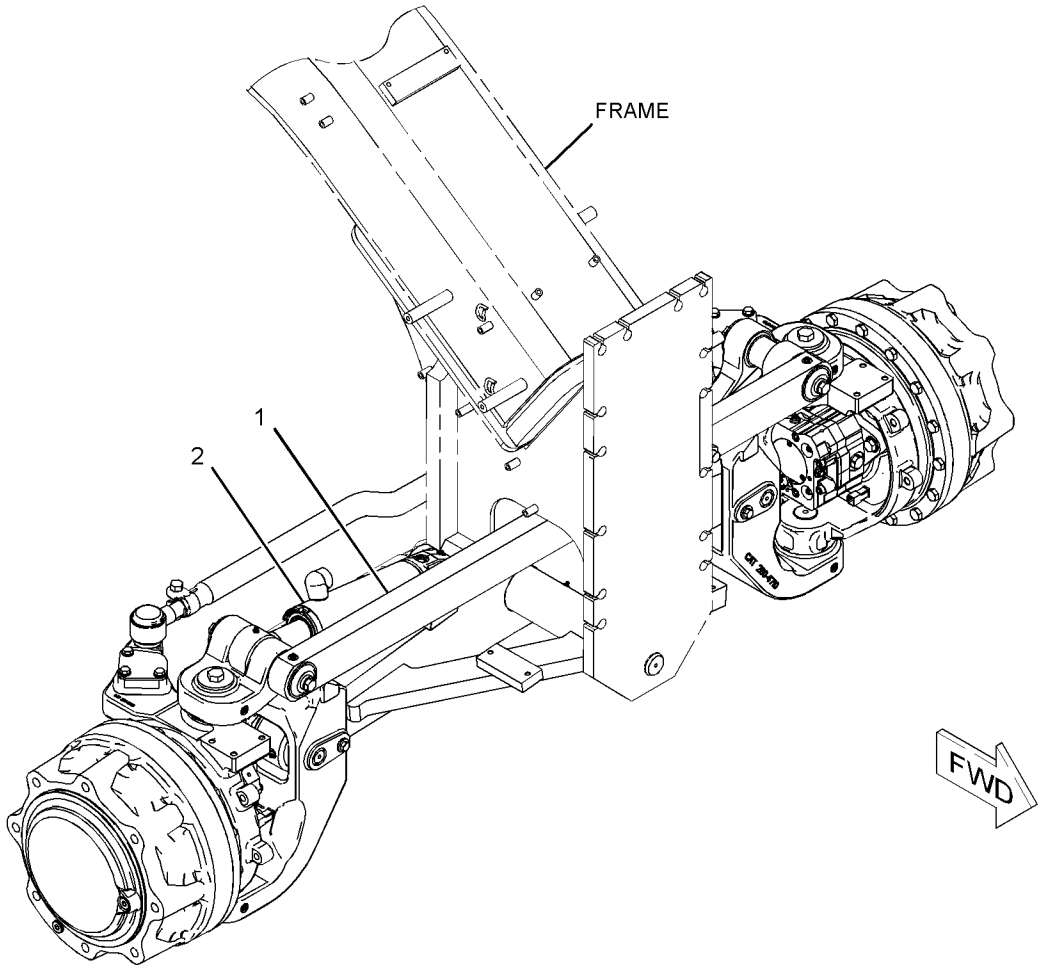

GRAPHIC #1 **<END>** g01134474

POWER TRAIN

261-0153 AXLE AR-FRONT

S/N: B9M1-UP
AN ATTACHMENT

SMCS-3020, 3278, 4303, 4305, 5225 **i02290361**

NOTE	PART NUMBER	QTY	PART NAME 1 2 3 4 5 6 (PRODUCT LEVEL)	SEE PAGE
Y	*260-8696*	1	AXLE AR-FRONT	259
Y	*238-8808*	1	CONTROL GP-POWER TRAIN (ALL WHEEL DRIVE)	131
Y	*241-8528*	1	COOLER GP-HYDRAULIC OIL	471
Y	*250-9260*	1	ELECTRONICS GP-POWER TRAIN	139
Y	*231-8164*	1	LINES GP-ALL WHEEL DRIVE	310
Y	*264-2994*	1	LINES GP-ALL WHEEL DRIVE	319
Y	*247-0093*	1	PLATE & FILM GP	799
Y	*231-8159*	1	PUMP & MTG GP-ALL WHEEL DRIVE	330
Y	*235-6194*	1	WIRING GP-SENSOR (ALL WHEEL DRIVE)	254
	250-2002	1	MOUNTING GP-WHEEL (ALL WHEEL DRIVE)	
M	**8T-0380**	56	BOLT (M24X3X60-MM)	
	198-4771	56	WASHER-HARD (26X47X12-MM THK)	

M-METRIC PART
Y-SEPARATE ILLUSTRATION

<END>

260-7453 AXLE GP-FRONT—NON ALL WHEEL DRIVE

S/N: B9M1-UP
PART OF 260-7451 AXLE AR-FRONT
AN ATTACHMENT

SMCS-3020, 3282, 4303, 4305, 5225 **i02251275**

NOTE	PART NUMBER	QTY	PART NAME 1 2 3 4 5 6 (PRODUCT LEVEL)	SEE PAGE
Y	*260-7455*	1	AXLE GP-FRONT	262
Y	*260-8713*	1	CYLINDER & MTG GP-WHEEL LEAN	482
Y	*260-7487*	1	LINK GP-STEERING	426
	260-7460	1	ARM AS (LH)	
	146-1842	1	BEARING-SLEEVE	
	146-1843	1	BEARING-SLEEVE	
	260-7462	1	PIN	
	260-7461	1	ARM-FRONT AXLE	
	260-7463	1	ARM AS (RH)	
	146-1842	1	BEARING-SLEEVE	
	146-1843	1	BEARING-SLEEVE	
	260-7465	1	PIN	
	260-7464	1	ARM-FRONT AXLE	
	260-7482	1	BAR AS	
	260-7483	1	BAR	
	2G-8624	2	BEARING-SLEEVE	
M	**6V-3668**	2	BOLT (M12X1.75X30-MM)	
M	**6V-5696**	6	BOLT (M12X1.75X80-MM)	
M	**6V-5844**	3	BOLT (M16X2X35-MM)	
M	**7X-2561**	4	BOLT (M20X2.5X35-MM)	
M	**8T-4137**	4	BOLT (M10X1.5X20-MM)	
M	**6V-3669**	2	BOLT (M20X2.5X80-MM)	
M	**9X-2125**	4	BOLT-LOCKING (M10X1.5X25-MM)	
	7D-8636	2	CONE-BEARING	
	030-0061	2	CONE-BEARING	
	5T-0906	2	COVER	
	7D-8637	2	CUP-BEARING	
	030-0060	2	CUP-BEARING	
	3B-8489	11	FITTING-GREASE	
	260-7477	1	HOUSING-SPINDLE	

PROOF

260-7453 **AXLE GP-FRONT** ***(contd.)*** **i02251275**

NOTE	PART NUMBER	QTY	PART NAME 1 2 3 4 5 6 (PRODUCT LEVEL)	SEE PAGE
	260-7481	1	HOUSING-SPINDLE	
	6G-7187	1	LOCK	
	9D-9797	2	LOCK	
M	**6V-7742**	2	NUT-FULL (M20X2.5-THD)	
	257-9799	4	PIN	
	260-7486	2	PIN	
	264-1180	1	PIN	
	3B-4629	2	PIN-COTTER	
	148-8411	2	PLUG AS	
			(EACH INCLUDES)	
	3K-0360	1	SEAL-O-RING	
	9S-4185	1	PLUG	
	2G-5667	3	RETAINER	
	7D-8643	2	RETAINER	
	2G-8741	4	RING-METAL SEAL	
	2G-8777	4	SEAL	
R	**5K-5288**	2	SEAL GP-DUO-CONE	
			(EACH INCLUDES)	
	5K-5129	2	RING-SEALING	
	7K-9202	4	SEAL-LIP TYPE	
	5P-8890	2	SEAL-LIP TYPE	
	2J-8163	2	SEAL-O-RING	
	9M-2092	4	SEAL-O-RING	
B	**2G-3865**	6	SHIM (0.127-MM THK)	
	248-6225	2	SPINDLE	
	2G-5673	2	WASHER (2X4X0.1-IN THK)	
	9D-3523	2	WASHER (2.062X4X0.188-MM THK)	
	260-8602	4	WASHER (11X53.8X3-MM THK)	
	7X-7729	4	WASHER (11X25X3-MM THK)	
	8D-2811	2	WASHER (1.25X1.94X0.032-IN THK)	
	160-2351	2	WASHER-HARD (22X76X6-MM THK)	
	198-4768	3	WASHER-HARD (17.5X32X8-MM THK)	
	5P-8245	2	WASHER-HARD (13.5X25.5X3-MM THK)	
	8T-3282	2	WASHER-HARD (22X35X3.5-MM THK)	
	2G-8615	4	WASHER-THRUST (51X92X2.8-MM THK)	
	2G-8626	2	WASHER-THRUST (2.02X3.63X0.16-MM THK)	

B-USE AS REQUIRED
M-METRIC PART
R-REMFG PART MAY BE AVAILABLE
Y-SEPARATE ILLUSTRATION

<END>

PROOF

260-7455 AXLE GP-FRONT—NON ALL WHEEL DRIVE

S/N: B9M1-UP

PART OF 260-7453 AXLE GP-FRONT

AN ATTACHMENT

SMCS-3020, 3282, 4303, 4305, 5225 **i02251274**

NOTE	REF NO	GRAPHIC REF	PART NUMBER	QTY	PART NAME 1 2 3 4 5 6 (PRODUCT LEVEL)	SEE PAGE
	1	1	**2D-8652**	2	BEARING	
	2	1	**2G-8631**	4	BEARING-SLEEVE	
	3	1	**7K-9202**	4	SEAL-LIP TYPE	
	4	1	**131-4428**	2	BEARING-SLEEVE	
	5	1	**260-7456**	1	AXLE AS	
		1	**8W-6466**	2	END-AXLE	
		1	**8W-6469**	1	BRACKET	
	6	1	**5P-8843**	2	SEAL-LIP TYPE	

PROOF

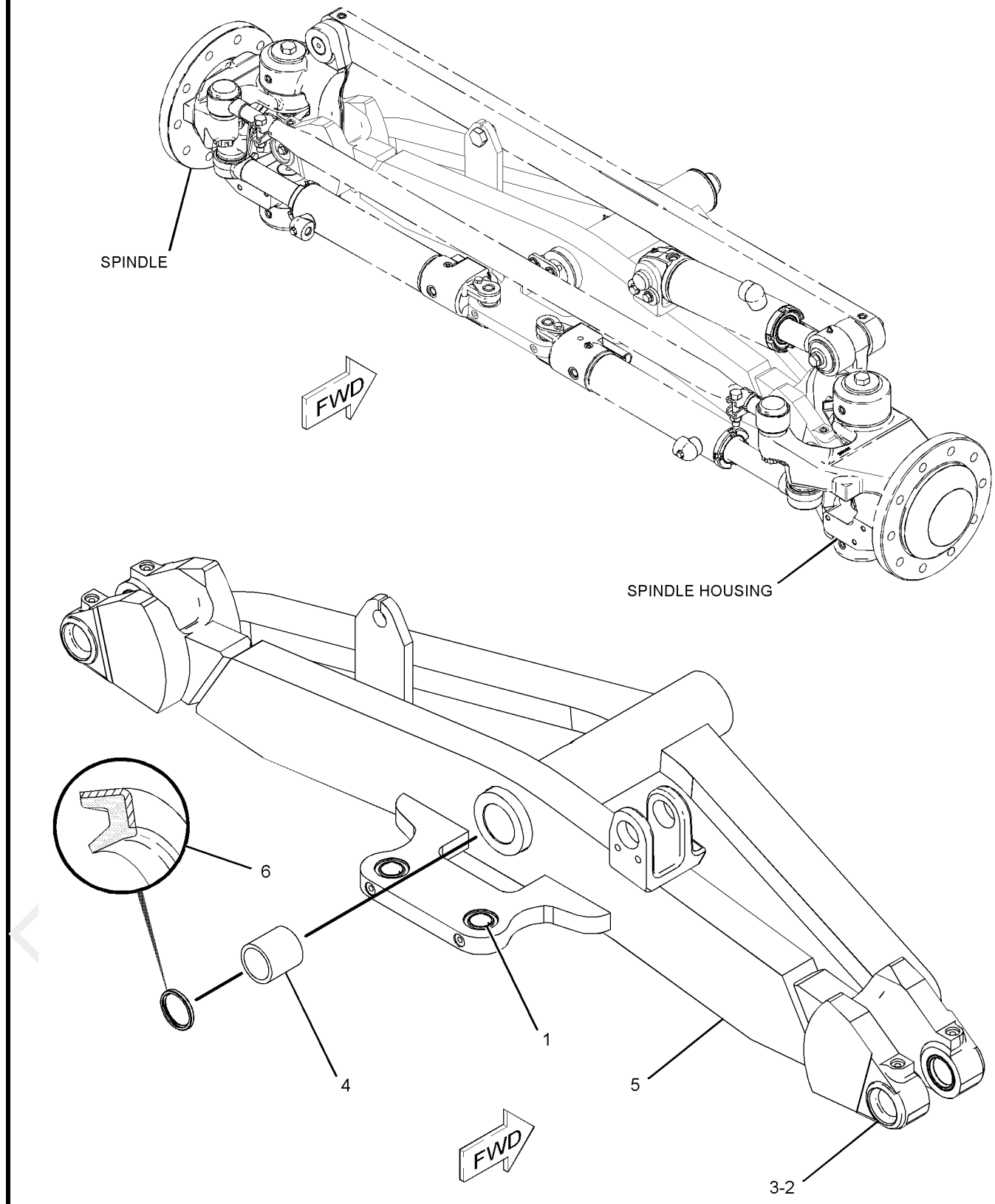

GRAPHIC #1 **<END>** g01134449

POWER TRAIN

260-8698 AXLE GP-FRONT—ALL WHEEL DRIVE

S/N: B9M1-UP

PART OF 260-8696 AXLE AR-FRONT

AN ATTACHMENT

SMCS-3020, 3282, 4303, 4305, 5225 **i02249860**

NOTE	PART NUMBER	QTY	PART NAME 1 2 3 4 5 6 (PRODUCT LEVEL)	SEE PAGE
Y	*260-8699*	1	AXLE GP-FRONT	265
Y	*260-8713*	1	CYLINDER & MTG GP-WHEEL LEAN	482
Y	*260-4803*	1	DRIVE GP-WHEEL	298
Y	*260-8707*	1	LINK GP-STEERING	427
Y	*260-4802*	2	MOTOR GP-PISTON	328
	260-8703	2	ARM AS	
			(EACH INCLUDES)	
	146-1842	2	BEARING-SLEEVE	
	260-4710	1	ARM-FRONT AXLE	
	260-8704	1	BAR AS	
	2G-8631	2	BEARING-SLEEVE	
	7K-9202	4	SEAL-LIP TYPE	
	260-8706	1	BAR	
M	**6V-3668**	2	BOLT (M12X1.75X30-MM)	
M	**6V-5844**	4	BOLT (M16X2X35-MM)	
M	**7X-2561**	4	BOLT (M20X2.5X35-MM)	
M	**8T-4139**	2	BOLT (M12X1.75X30-MM)	
	3B-8485	4	FITTING-GREASE	
	3B-8489	9	FITTING-GREASE	
	6G-7187	1	LOCK	
	257-9799	4	PIN	
	260-8719	2	PIN	
	264-1180	1	PIN	
	260-8715	2	PIN AS	
	5M-6214	4	PLUG-PIPE	
	2G-5667	4	RETAINER	
	2G-8741	4	RING-METAL SEAL	
	2G-8777	4	SEAL	
	5P-8890	2	SEAL-LIP TYPE	
	9M-2092	4	SEAL-O-RING	
	9G-5211	2	SPACER (12.95X19.05X9-MM THK)	
	260-8721	1	SPACER (47.66X63.5X50-MM THK)	
	2G-5673	2	WASHER (2X4X0.1-IN THK)	
	9D-3523	2	WASHER (2.062X4X0.188-MM THK)	
	160-2351	2	WASHER-HARD (22X76X6-MM THK)	
	198-4768	4	WASHER-HARD (17.5X32X8-MM THK)	
	5P-1076	2	WASHER-HARD (13.5X30X4-MM THK)	
	5P-8245	2	WASHER-HARD (13.5X25.5X3-MM THK)	
	2G-8615	4	WASHER-THRUST (51X92X2.8-MM THK)	
	2G-8626	2	WASHER-THRUST (2.02X3.63X0.16-MM THK)	

M-METRIC PART
Y-SEPARATE ILLUSTRATION

<END>

PROOF

260-8699 AXLE GP-FRONT—ALL WHEEL DRIVE

S/N: B9M1-UP

PART OF 260-8698 AXLE GP-FRONT

AN ATTACHMENT

SMCS-3020, 3282, 4303, 4305, 5225 **i02249853**

NOTE	REF NO	GRAPHIC REF	PART NUMBER	QTY	PART NAME 1 2 3 4 5 6 (PRODUCT LEVEL)	SEE PAGE
	1	1	**2D-8652**	2	BEARING	
	2	1	**131-4428**	2	BEARING-SLEEVE	
	3	1	**260-8700**	1	AXLE AS	
	4	1	**2G-8793**	4	BEARING-SLEEVE	
	5	1	**5P-8843**	6	SEAL-LIP TYPE	

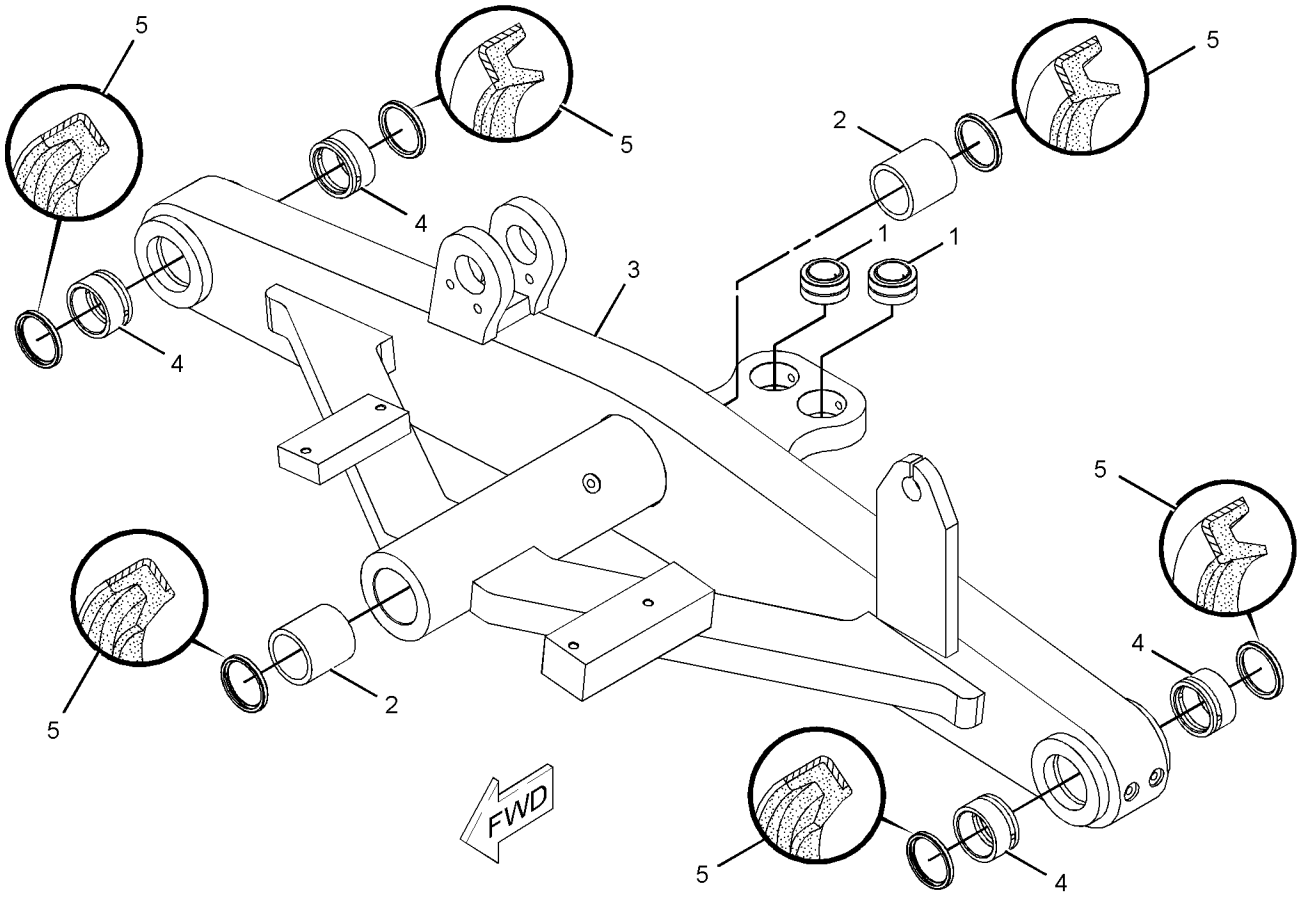

GRAPHIC #1 **<END>** g01135623

246-7967 AXLE GP-REAR

S/N: B9M1-UP

PART OF 234-7721 COMMON AR-MOTOR GRADER

SMCS-3278, 4068 **i02296996**

NOTE	REF NO	GRAPHIC REF	PART NUMBER	QTY	PART NAME 1 2 3 4 5 6 (PRODUCT LEVEL)	SEE PAGE
	1	1	**6I-9248**	1	BEARING-THRUST	
	2	1	**6I-9249**	2	RACE-THRUST BEARING	
Y	3	1	*163-0397*	1	DRAIN GP-ECOLOGY (DIFFERENTIAL CASE)	297
	4	1	**194-8742**	1	SHIM (2.65-MM THK)	
	5	1	**221-2828**	1	PISTON AS	
	6	1	**255-0955**	1	HOUSING	
	7	1	**255-5142**	2	GEAR-SUN (18-TEETH)	
Y	8	1	**258-4459**	1	DIFFERENTIAL & BEVEL GEAR GP	293
Y	9	1	**259-0039**	1	FINAL DRIVE GP (RH)	306
Y	10	1	**259-0040**	1	FINAL DRIVE GP (LH)	308
	11	1	**260-9430**	2	SHAFT-AXLE	
	12	1	**266-4616**	32	STUD	
	13	1	**269-2896**	1	TUBE AS	
	14	1	**123-8829**	1	ELBOW AS	
		1	**4J-5477**	1	SEAL-O-RING	
		1	**8T-7876**	1	SEAL-O-RING	
	15	1	*150-4052*	1	UNION AS	
		1	**6V-8993**	1	UNION	
		1	**4J-5477**	2	SEAL-O-RING	
	16	1	*183-7263*	1	PLUG AS	
		1	**9S-8002**	1	PLUG	
		1	**3J-7354**	1	SEAL-O-RING	
	17	1	**2K-5340**	2	RING-RETAINING	
	18	1	**3S-6931**	2	RING-RETAINING	
M	19	1	**6V-5686**	10	BOLT (M16X2X50-MM)	
M	20	1	**6V-7742**	32	NUT-FULL (M20X2.5-THD)	
	21	1	**8L-5189**	1	SEAL-O-RING	
M	22	1	**8T-0273**	4	BOLT-SOCKET HEAD (M12X1.75X40-MM)	
	23	1	**8T-3282**	32	WASHER-HARD (22X35X3.5-MM THK)	
M	24	1	**8T-8441**	2	BOLT-SOCKET HEAD (M12X1.75X25-MM)	
	25	1	**9X-8268**	10	WASHER (17.5X30X3.5-MM THK)	

M-METRIC PART
Y-SEPARATE ILLUSTRATION

PROOF

246-7967 **AXLE GP-REAR** *(contd.)* **i02296996**

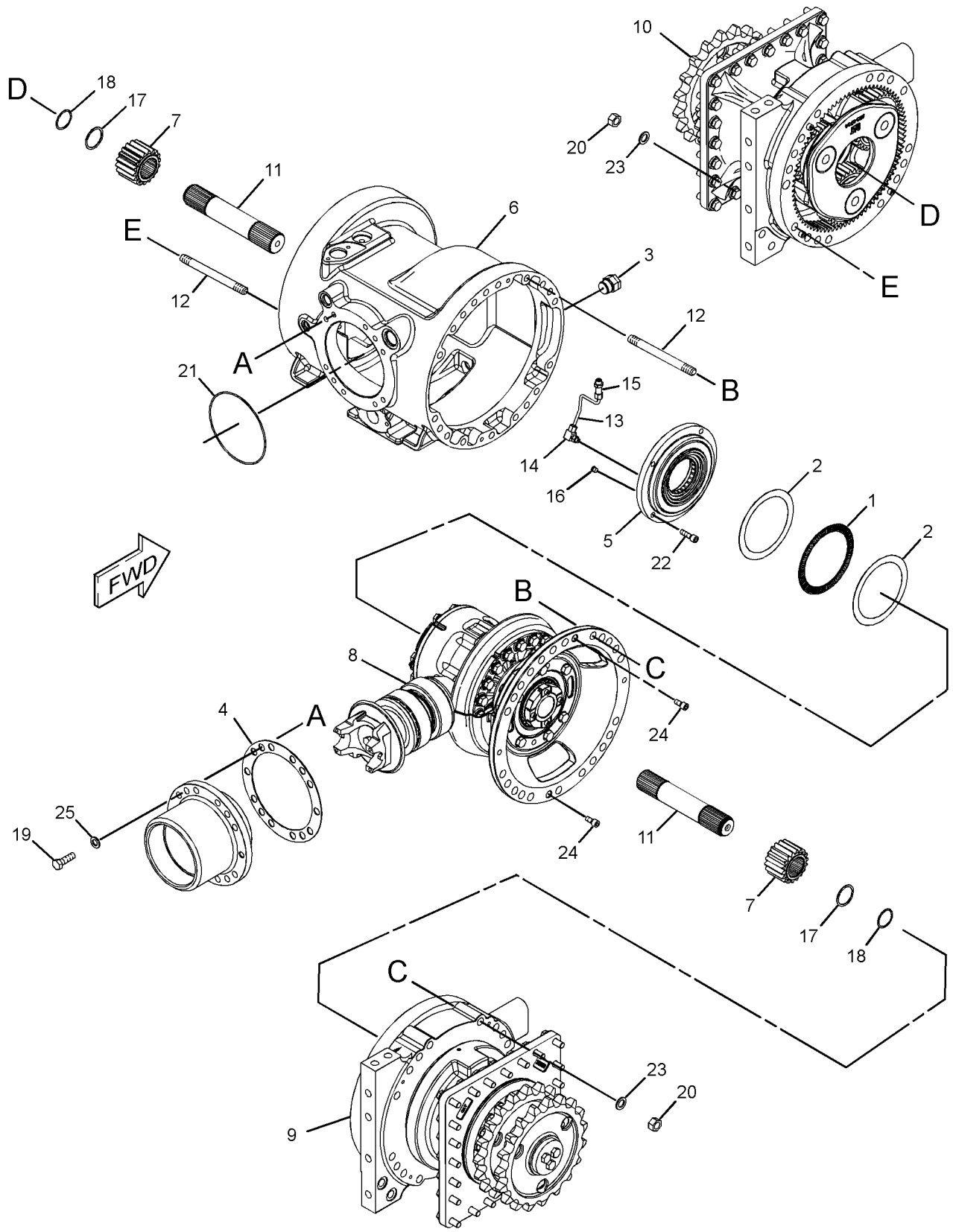

GRAPHIC #1 **<END>** g01156395

POWER TRAIN

262-6673 CASE & PARTS GP-PLANETARY

S/N: DGX1-UP

PART OF 231-3005 TRANSMISSION AR

SMCS-3030, 3064, 3160 **i02235515**

NOTE	REF NO	GRAPHIC REF	PART NUMBER	QTY	PART NAME 1 2 3 4 5 6 (PRODUCT LEVEL)	SEE PAGE
	1	3	**6I-8642**	4	RACE-BEARING OUTER	
	2	3,5	**9M-2042**	1	RACE-BEARING OUTER	
	3	5	**1T-0043**	1	BALL BEARING	
	4	5	**2H-6489**	1	RACE-BEARING OUTER	
	5	5	**2S-3029**	1	BALL BEARING	
	6	5	**4M-6108**	2	RACE-BEARING OUTER	
	7	5	**5P-3924**	2	RACE-BEARING OUTER	
	8	5	**1T-0205**	1	RING-SNAP	
	9	5	**5H-0793**	1	RING-LOCK	
	10	4	**6V-1720**	1	PLATE-SERIAL NUMBER (TRANSMISSION)	
	11	4	**9W-1454**	4	COVER	
	12	5	**9W-6465**	1	RETAINER-BEARING	
	13	5	**9W-7038**	1	RING-SNAP	
	14	4	**133-5631**	1	PLUG	
	16	2	**145-8039**	3	LOCK	
	17	2	**188-2162**	1	COVER	
	18	4	**190-5212**	1	ROTOR	
	19	5	*197-4977*	1	PLUG AS	
		5	**5P-4483**	1	PLUG	
		5	**7M-8485**	1	SEAL-O-RING	
	20	5	**233-8134**	1	GEAR AS (44-TEETH)	
		5	**4K-8603**	1	PLUG-CUP	
	21	5	**248-1367**	1	GEAR AS (38-TEETH)	
		5	**4K-8603**	1	PLUG-CUP	
	22	4	**248-2046**	1	COVER AS	
	23	1	**251-3106**	1	PLATE AS	
M		1	**8T-3490**	2	NUT-WELD (M10X1.5-THD)	
	24	1	**251-3109**	1	PLATE AS	
		1	**4T-3490**	2	GUARD	
	25	2	**251-6673**	1	FILTER (TRANSMISSION)	
	26	2	**251-6674**	1	SCREEN (SCAVENGE)	
	27	1	**260-8740**	1	COVER AS	
		1	**5M-7937**	2	DOWEL	
		1	**7T-6496**	2	PLUG	
	28	1	**260-8741**	1	CASE AS-TRANSMISSION	
		1	**6Y-3083**	7	PLUG	
		1	**7T-6496**	4	PLUG	
		1	**8M-6521**	2	DOWEL	
M	29	4	**099-3649**	4	BOLT (M8X1.25X40-MM)	
	30	1	*148-8407*	1	PLUG AS	
		1	**9S-4191**	1	PLUG	
		1	**3J-1907**	1	SEAL-O-RING	
	31	4	*148-8408*	7	PLUG AS	
					(EACH INCLUDES)	
		4	**9S-4183**	1	PLUG	
		4	**3D-2824**	1	SEAL-O-RING	
	32	1,4	*148-8410*	6	PLUG AS	
					(EACH INCLUDES)	
		1,4	**9S-4190**	1	PLUG	
		1,4	**2M-9780**	1	SEAL-O-RING	
M	33	2	**160-8492**	1	BOLT (M10X1.5X85-MM)	
	34	4	**162-0177**	1	PLUG AS	
		4	**9S-8004**	1	PLUG	
		4	**3J-1907**	1	SEAL-O-RING	
	35	1,2,4	*164-4180*	8	PLUG AS (DRAIN)	
					(EACH INCLUDES)	

PROOF

262-6673 CASE & PARTS GP-PLANETARY *(contd.)* i02235515

NOTE	REF NO	GRAPHIC REF	PART NUMBER	QTY	PART NAME 1 2 3 4 5 6 (PRODUCT LEVEL)	SEE PAGE
		1,2,4	**9S-4181**	1	PLUG	
		1,2,4	**7M-8485**	1	SEAL-O-RING	
	36	1	*164-5616*	1	PLUG AS	
		1	**9S-6130**	1	PLUG	
		1	**2S-4078**	1	SEAL-O-RING	
	37	5	**1B-5170**	1	PLUG-PIPE	
	38	2	**263-7429**	1	TUBE AS	
	39	2	**2J-0157**	2	SEAL-O-RING	
	40	2	**3K-0715**	1	SEAL-O-RING	
	41	4	**5F-1678**	1	SEAL-O-RING	
	42	2	**5F-3092**	1	SEAL-O-RING	
	43	2	**5H-2767**	1	SEAL-O-RING	
	44	4	**5P-3863**	4	SEAL-O-RING	
M	45	2	**6V-1820**	1	BOLT (M10X1.5X30-MM)	
M	46	5	**6V-3940**	4	BOLT (M8X1.25X25-MM)	
M	47	4	**6V-8202**	4	BOLT-SOCKET HEAD (M8X1.25X16-MM)	
M	48	2	**6V-8212**	1	BOLT (M10X1.5X16-MM)	
	49	5	**8M-4992**	1	SEAL-O-RING	
M	50	1,4	**8T-4121**	50	WASHER-HARD (11X21X2.5-MM THK)	
M	51	1	**8T-4136**	5	BOLT (M10X1.5X25-MM)	
M	52	4	**8T-4137**	2	BOLT (M10X1.5X20-MM)	
M	53	4	**8T-4172**	4	BOLT (M10X1.5X80-MM)	
M	54	2,4	**8T-4189**	15	BOLT (M8X1.25X20-MM)	
M	55	4	**8T-4196**	39	BOLT (M10X1.5X35-MM)	
	56	1,4	**8T-6765**	1	PLUG-PIPE	
B	57	1,4	**1U-8846**		SEALANT-GASKET (BLUE)	

B-USE AS REQUIRED
M-METRIC PART

PROOF

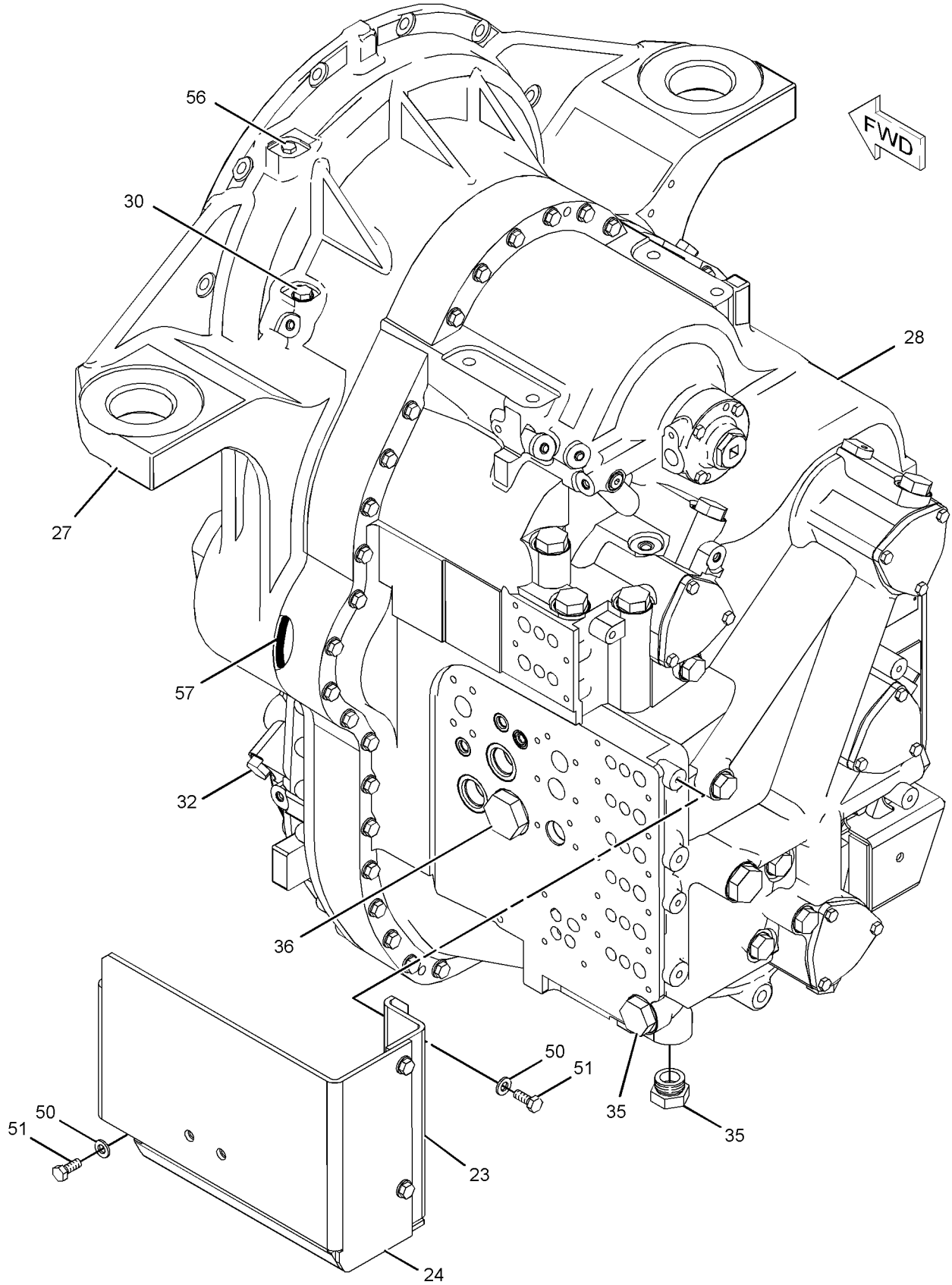

GRAPHIC #1 g01132224

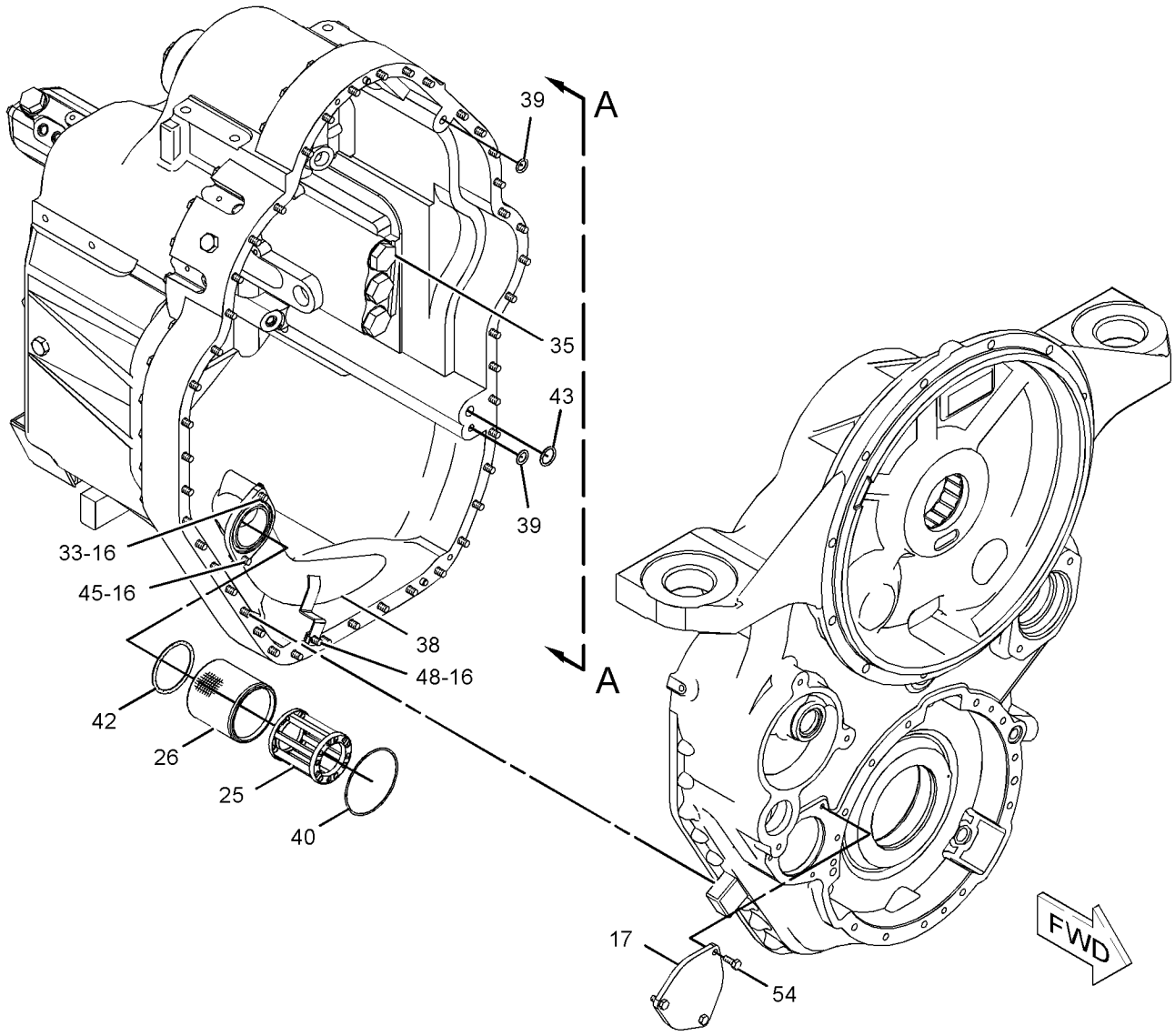

GRAPHIC #2 g01132225

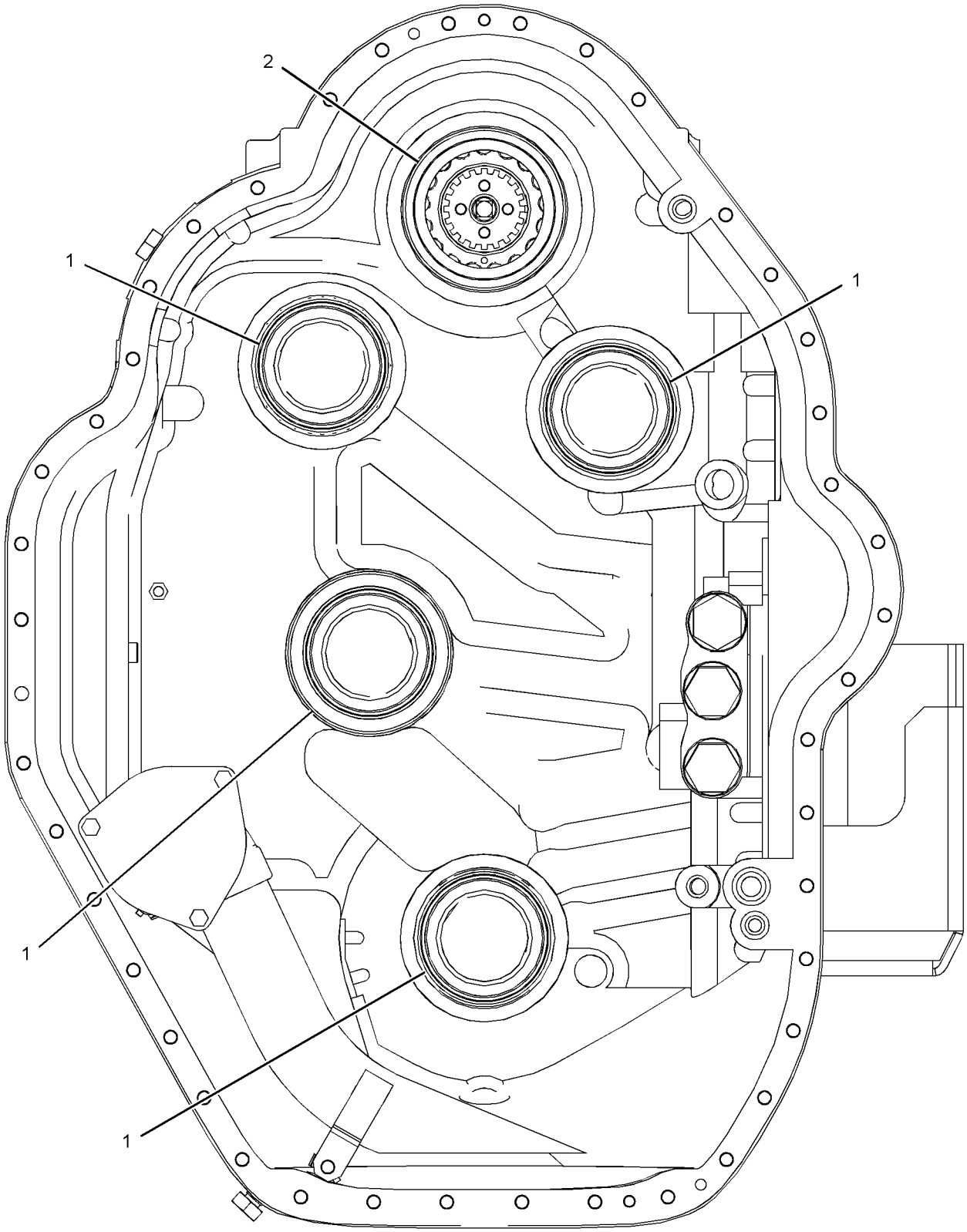

VIEW A-A

GRAPHIC #3 g01132226

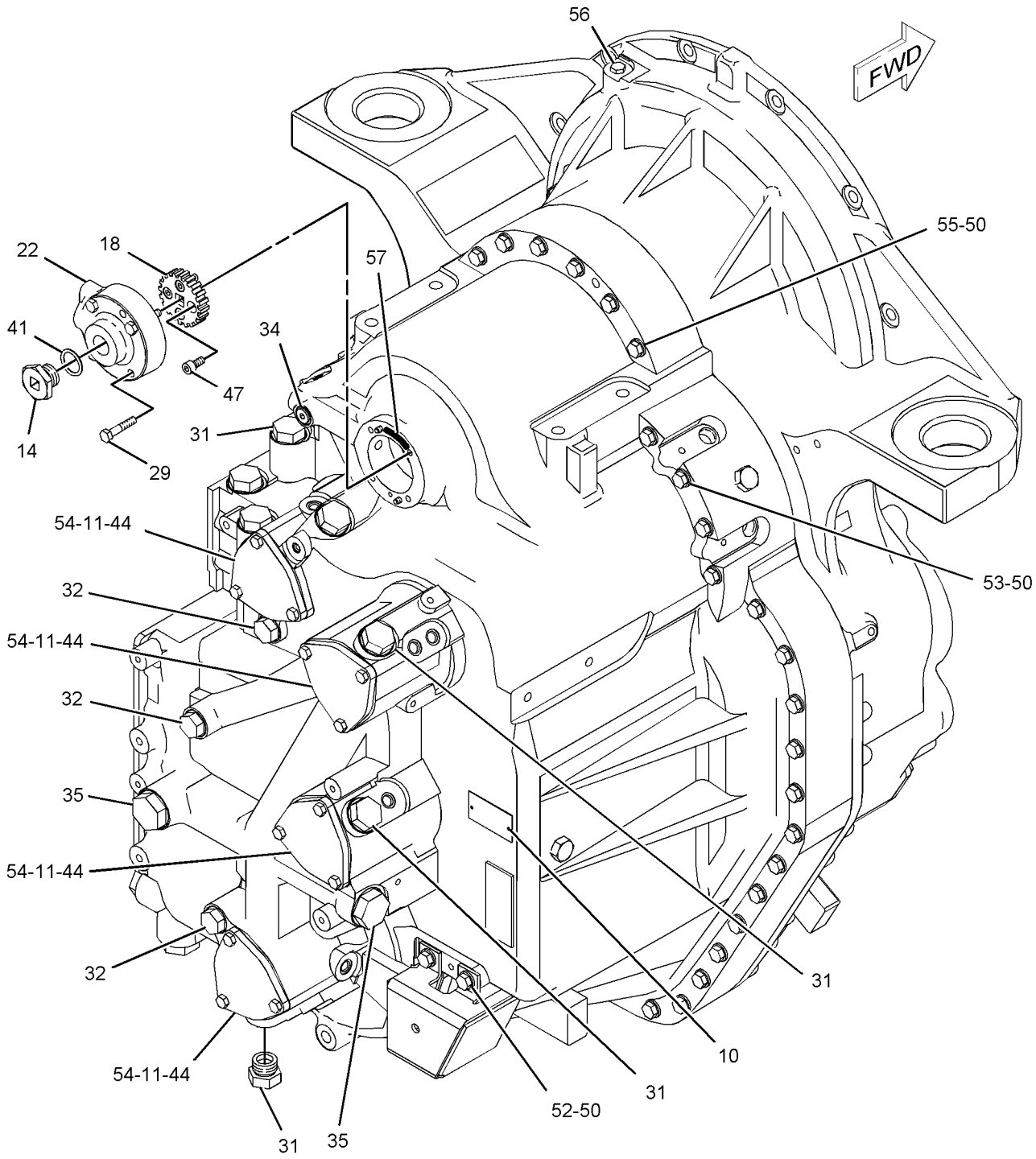

GRAPHIC #4 g01132227

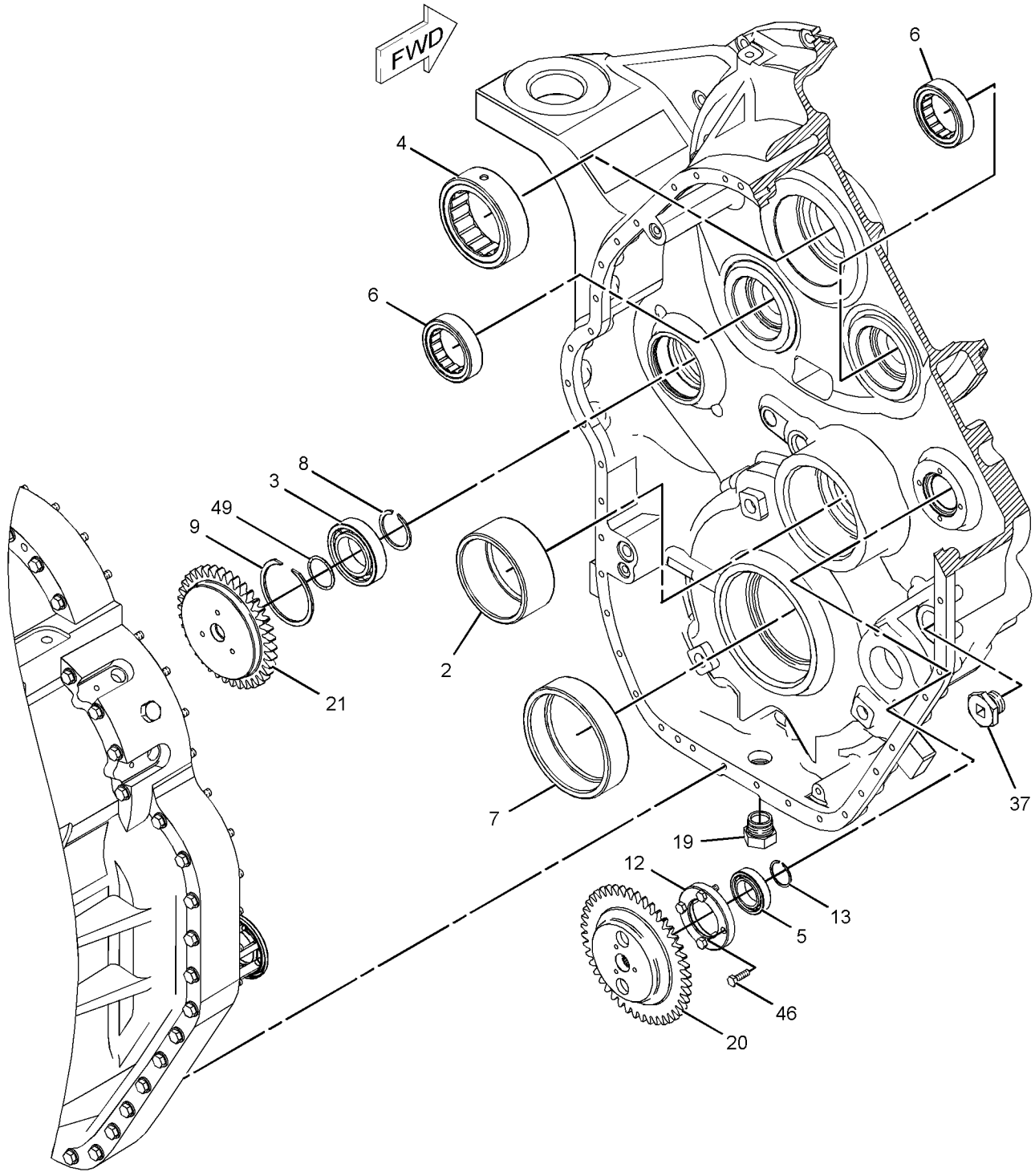

GRAPHIC #5 **<END>** g01132228

6G-1755 CHAIN GP-DRIVE–TANDEM

S/N: B9M1-UP

PART OF 234-7721 COMMON AR-MOTOR GRADER

SMCS-3261, 4063 **i02348775**

NOTE	REF NO	GRAPHIC REF	PART NUMBER	QTY	PART NAME 1 2 3 4 5 6 (PRODUCT LEVEL)	SEE PAGE
	1	1	**6G-1633**	4	CHAIN GP (TANDEM)	
					(EACH INCLUDES)	
	2	1	**6G-1631**	1	LINK-CONNECTING	
					(CHAIN TO CONSIST OF 24 PIN LINKS, 25 ROLLERLINKS, 1 CONNECTING LINK & COTTERS)	

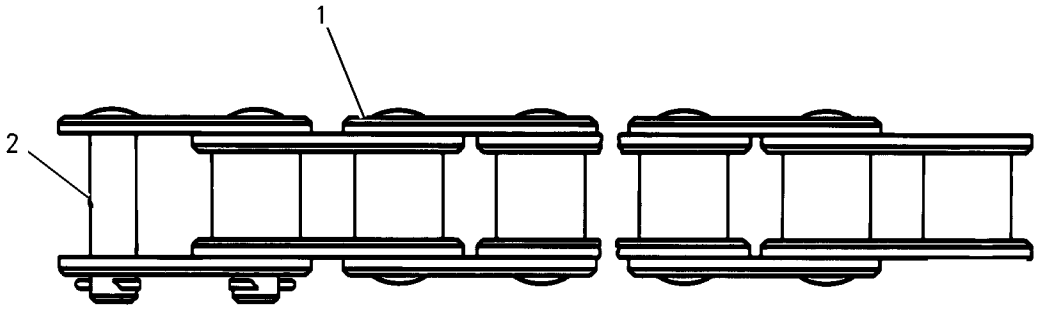

GRAPHIC #1 **<END>** g00852998

235-2412 CLUTCH GP-TRANSMISSION—FORWARD

S/N: DGX1-UP

PART OF 231-3005 TRANSMISSION AR

SMCS-3063, 3155, 3170 **i02235502**

NOTE	REF NO	GRAPHIC REF	PART NUMBER	QTY	PART NAME 1 2 3 4 5 6 (PRODUCT LEVEL)	SEE PAGE
	1	1	**6I-8911**	5	DISC-FRICTION	
	2	1	**6I-8912**	6	DISC-FRICTION	
	3	1	**6I-9502**	6	PLATE-CLUTCH	
	4	1	**6Y-1115**	4	RING-HALF	
	5	1	**6Y-1116**	1	GEAR AS (43-TEETH)	
	6	1	**6Y-1119**	1	CARRIER-SEAL	
	7	1	**7G-4822**	3	RING-SEAL	
	8	1	**7T-4897**	2	DISC-THRUST	
	9	1	**8E-5742**	2	RING-SEAL	
	10	1	**8E-8319**	4	DISC-THRUST	
	11	1	**8F-3469**	4	SEAL-O-RING	
	12	1	**9U-8815**	2	SPRING	
	13	1	**9U-9995**	6	PLATE-CLUTCH	
	14	1	**9W-2029**	1	RACE-THRUST BEARING	
	15	1	**9W-9371**	2	RING-SEAL	
	16	1	**9W-9905**	4	RING-LOCK	
	17	1	**108-5751**	2	DISC-FRICTION	
	18	1	**132-9625**	1	GEAR AS (50-TEETH)	
	19	1	**159-0308**	2	PISTON	
	20	1	**159-0927**	1	DISC-FRICTION	
	21	1	**161-6713**	2	PLATE-LOCK	
	22	1	**171-7091**	1	SHAFT AS	
	23	1	**247-8629**	2	VALVE AS	
	24	1	**247-9711**	2	HUB AS	
	25	1	**2K-1738**	1	BEARING-INNER	
	26	1	**4M-6107**	1	BEARING-INNER	
M	27	1	**5C-7423**	4	SCREW (M6X1X16-MM)	
	28	1	**5H-8985**	1	PIN-SPRING	
M	29	1	**6V-1819**	2	BOLT (M10X1.5X100-MM)	
	30	1	**8E-1263**	2	BEARING-ROLLER	

M-METRIC PART

PROOF

235-2412 **CLUTCH GP-TRANSMISSION** *(contd.)* **i02235502**

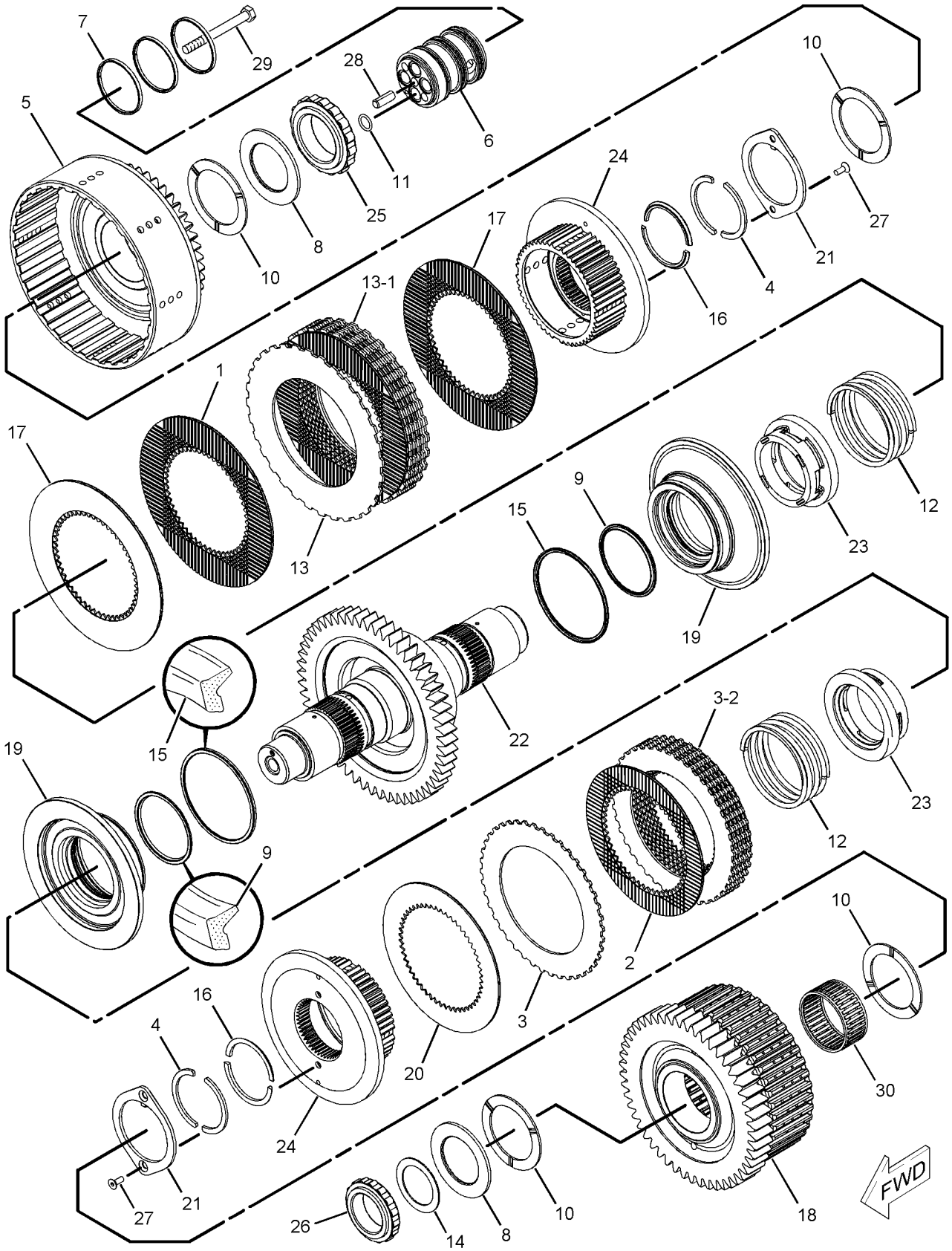

GRAPHIC #1 **<END>** g01137840

235-2413 CLUTCH GP-TRANSMISSION—REVERSE, SECOND

S/N: DGX1-UP

PART OF 231-3005 TRANSMISSION AR

SMCS-3063, 3155, 3170 **i02235504**

NOTE	REF NO	GRAPHIC REF	PART NUMBER	QTY	PART NAME 1 2 3 4 5 6 (PRODUCT LEVEL)	SEE PAGE
	1	1	**131-3919**	1	BEARING-ROLLER	
	2	1	**4M-6107**	1	BEARING-INNER	
	3	1	**8E-1263**	1	BEARING-ROLLER	
	4	1	**6I-8912**	10	DISC-FRICTION	
	5	1	**6I-9502**	9	PLATE-CLUTCH	
	6	1	**6Y-0976**	1	GEAR (29-TEETH)	
	7	1	**6Y-1114**	1	LOCKWASHER	
	8	1	**6Y-1115**	4	RING-HALF	
	9	1	**6Y-1119**	1	CARRIER-SEAL	
	10	1	**6Y-1887**	1	PISTON	
	11	1	**6Y-1888**	1	PLATE-CLUTCH	
	12	1	**6Y-1891**	1	HUB AS	
	13	1	**6Y-2307**	1	SPACER (61X82.55X43.88-MM THK)	
	14	1	**7G-4822**	3	RING-SEAL	
	15	1	**7T-4897**	1	DISC-THRUST	
	16	1	**8E-5734**	1	RING-SEAL EXTENSION	
	17	1	**8E-5742**	2	RING-SEAL	
	18	1	**8E-8319**	4	DISC-THRUST	
	19	1	**8F-3469**	4	SEAL-O-RING	
	20	1	**9U-8815**	1	SPRING	
	21	1	**9W-2029**	1	RACE-THRUST BEARING	
	22	1	**9W-9371**	1	RING-SEAL	
	23	1	**9W-9905**	4	RING-LOCK	
	24	1	**102-5881**	1	SPRING-WAVE	
	25	1	**132-9628**	1	GEAR AS (44-TEETH)	
		1	**6Y-1895**	1	BEARING-SLEEVE	
	26	1	**159-0308**	1	PISTON	
	27	1	**159-0927**	1	DISC-FRICTION	
	28	1	**161-6713**	1	PLATE-LOCK	
	29	1	**171-7095**	1	SHAFT AS	
	30	1	**247-8629**	1	VALVE AS	
	31	1	**247-9711**	1	HUB AS	
	32	1	**248-2886**	1	GEAR AS	
M	33	1	**5C-7423**	2	SCREW (M6X1X16-MM)	
	34	1	**5H-8985**	1	PIN-SPRING	
M	35	1	**6V-1819**	2	BOLT (M10X1.5X100-MM)	

M-METRIC PART

PROOF

235-2413 **CLUTCH GP-TRANSMISSION** *(contd.)* **i02235504**

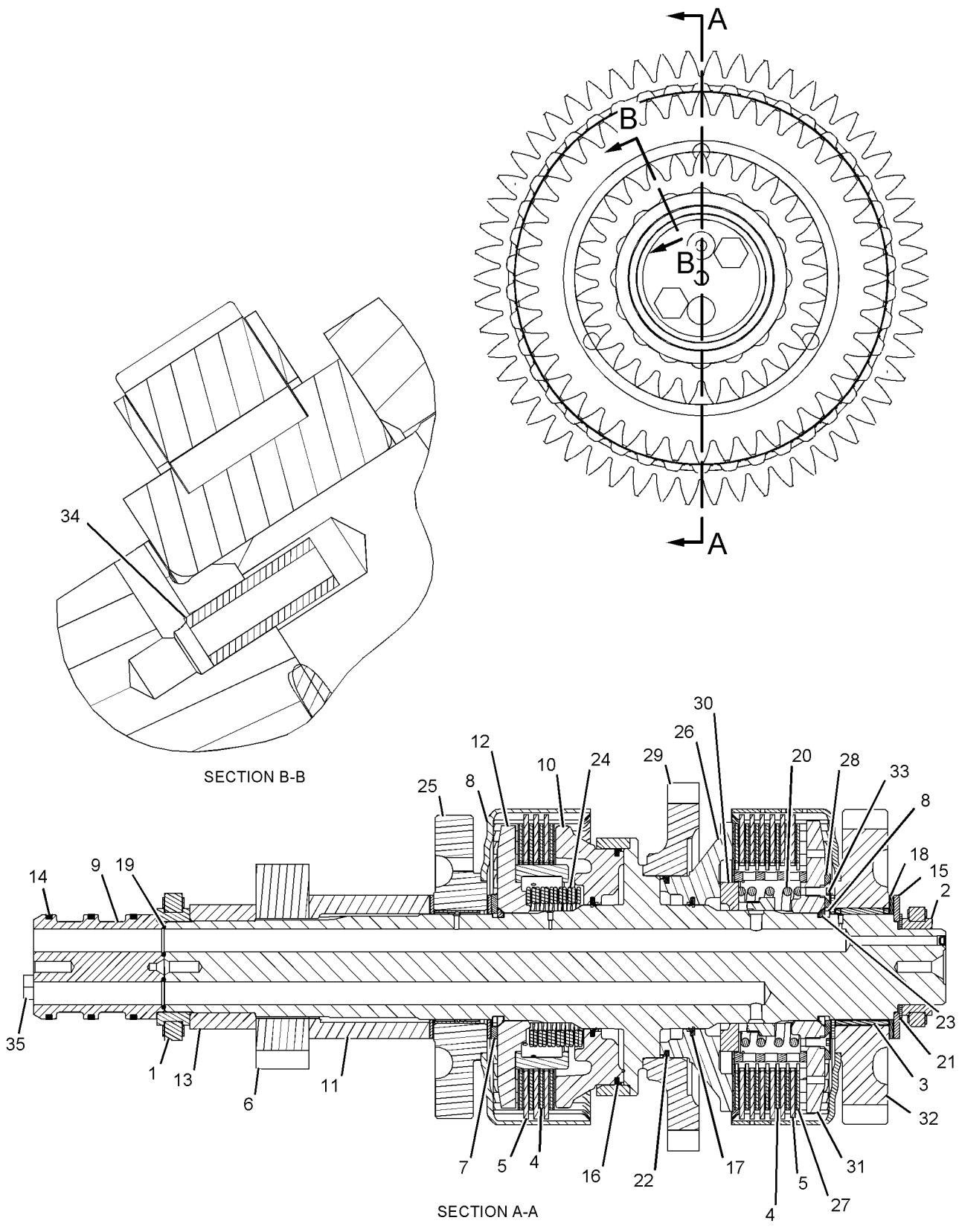

GRAPHIC #1 **<END>** g01132487

235-2414 CLUTCH GP-TRANSMISSION–1ST, 3RD

S/N: DGX1-UP

PART OF 231-3005 TRANSMISSION AR

SMCS-3063, 3155, 3170 **i02235506**

NOTE	REF NO	GRAPHIC REF	PART NUMBER	QTY	PART NAME 1 2 3 4 5 6 (PRODUCT LEVEL)	SEE PAGE
	1	1	**131-3919**	1	BEARING-ROLLER	
	2	1	**3B-8921**	1	BEARING-INNER	
	3	1	**6I-8912**	10	DISC-FRICTION	
	4	1	**6I-9502**	8	PLATE-CLUTCH	
	5	1	**6Y-0983**	1	GEAR (32-TEETH)	
	6	1	**6Y-1001**	1	GEAR (71-TEETH)	
	7	1	**6Y-1114**	2	LOCKWASHER	
	8	1	**6Y-1115**	4	RING-HALF	
	9	1	**6Y-1887**	2	PISTON	
	10	1	**6Y-1891**	1	HUB AS	
	11	1	**6Y-2312**	1	HUB AS	
	12	1	**6Y-2425**	1	CARRIER-SEAL	
	13	1	**7G-4822**	3	RING-SEAL	
	14	1	**7T-4897**	2	DISC-THRUST	
	15	1	**8E-5734**	2	RING-SEAL EXTENSION	
	16	1	**8E-5742**	2	RING-SEAL	
	17	1	**8E-8319**	4	DISC-THRUST	
	18	1	**8F-3469**	3	SEAL-O-RING	
	19	1	**9W-9905**	4	RING-LOCK	
	20	1	**102-5881**	2	SPRING-WAVE	
	21	1	**132-9630**	1	GEAR AS (54-TEETH)	
		1	**6Y-1895**	1	BEARING-SLEEVE	
	22	1	**132-9633**	1	GEAR AS (79-TEETH)	
		1	**6Y-2419**	1	BEARING-SLEEVE	
	23	1	**249-6718**	1	SHAFT AS	
	24	1	**5H-8985**	1	PIN-SPRING	
M	25	1	**6V-1819**	2	BOLT (M10X1.5X100-MM)	

M-METRIC PART

PROOF

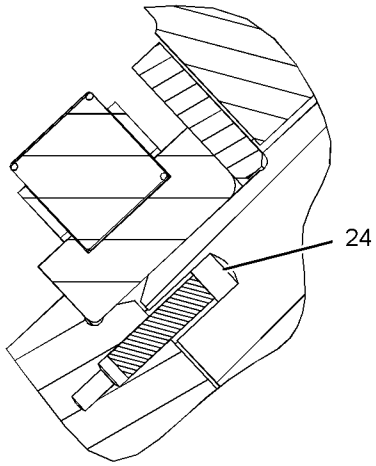

SECTION B-B

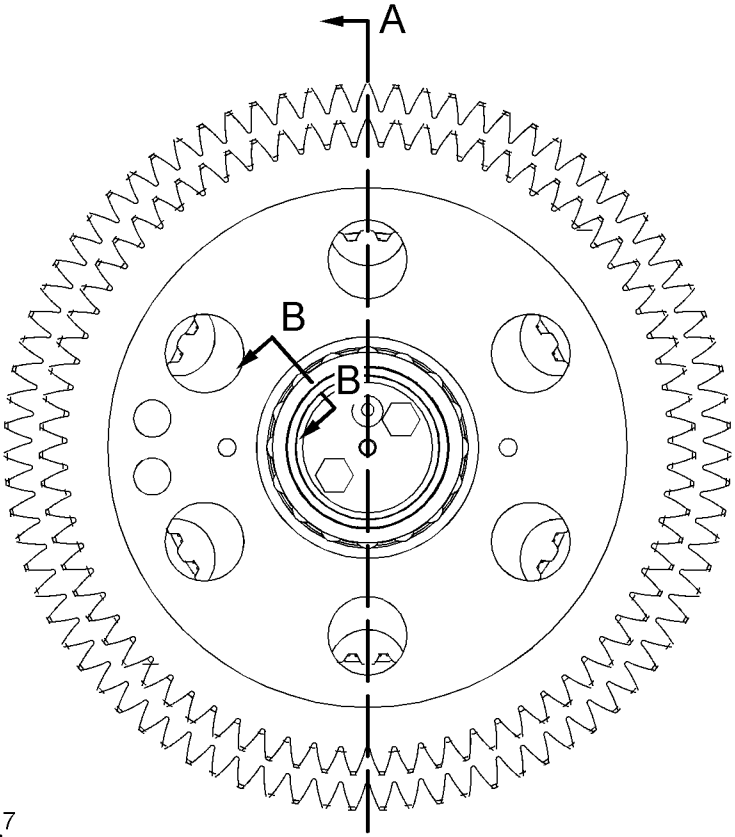

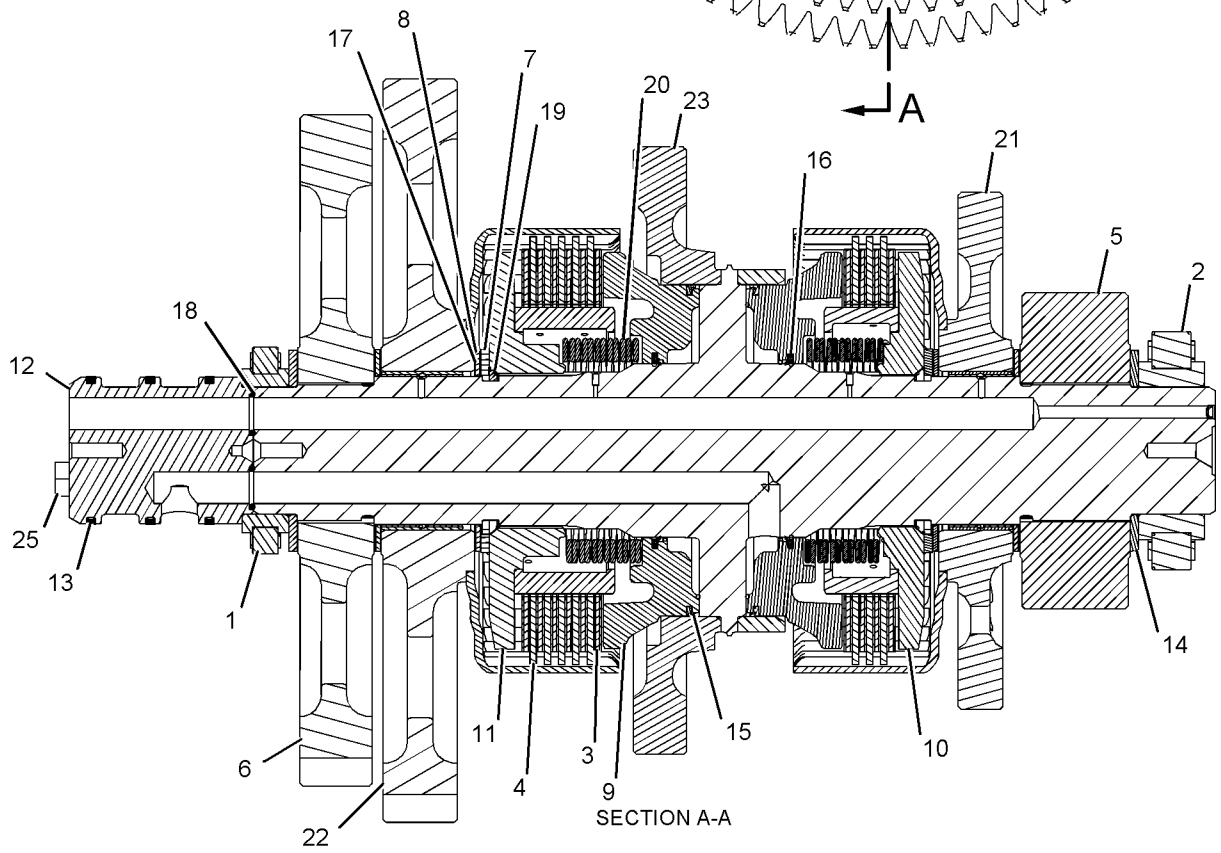

SECTION A-A

GRAPHIC #1 **<END>** g01132548

247-8303 CLUTCH GP-TRANSMISSION—HIGH, LOW

S/N: DGX1-UP

PART OF 231-3005 TRANSMISSION AR

SMCS-3063, 3155, 3170 **i02235509**

NOTE	REF NO	GRAPHIC REF	PART NUMBER	QTY	PART NAME 1 2 3 4 5 6 (PRODUCT LEVEL)	SEE PAGE
	1	1	**131-3919**	1	BEARING-ROLLER	
	2	1	**3B-8921**	1	BEARING-INNER	
	3	1	**3P-0337**	8	PLATE-CLUTCH	
	4	1	**6I-8912**	6	DISC-FRICTION	
	5	1	**6I-9502**	5	PLATE-CLUTCH	
	6	1	**6Y-1114**	2	LOCKWASHER	
	7	1	**6Y-1115**	4	RING-HALF	
	8	1	**6Y-1887**	1	PISTON	
	9	1	**6Y-1890**	1	RING-RETAINING	
	10	1	**6Y-2312**	1	HUB AS	
	11	1	**6Y-2425**	1	CARRIER-SEAL	
	12	1	**6Y-2428**	1	PISTON	
	13	1	**6Y-2429**	1	PISTON-BALANCE	
	14	1	**6Y-7981**	7	DISC-FRICTION	
	15	1	**7G-4822**	3	RING-SEAL	
	16	1	**7T-4897**	1	DISC-THRUST	
	17	1	**8E-1161**	1	ROTOR	
	18	1	**8E-1911**	1	GEAR AS	
		1	**9W-6467**	2	BEARING-SLEEVE	
	19	1	**8E-5734**	1	RING-SEAL EXTENSION	
	20	1	**8E-5736**	2	RING-SEAL EXTENSION	
	21	1	**8E-5742**	2	RING-SEAL	
	22	1	**8E-8319**	4	DISC-THRUST	
	23	1	**8F-3469**	3	SEAL-O-RING	
	24	1	**8M-4295**	15	SPRING	
	25	1	**9W-9905**	4	RING-LOCK	
	26	1	**102-5881**	1	SPRING-WAVE	
	27	1	**132-9637**	1	GEAR AS (43-TEETH)	
		1	**9W-6467**	2	BEARING-SLEEVE	
	28	1	**218-3339**	1	HUB AS	
	29	1	**247-9930**	1	SHAFT AS	
		1	**1P-0604**	1	PLUG-CUP	
M		1	**9X-2609**	1	SETSCREW-SOCKET (M8X1.25X8-MM)	
	30	1	**5H-8985**	1	PIN-SPRING	
M	31	1	**6V-1819**	2	BOLT (M10X1.5X100-MM)	

M-METRIC PART

PROOF

247-8303 **CLUTCH GP-TRANSMISSION** *(contd.)* **i02235509**

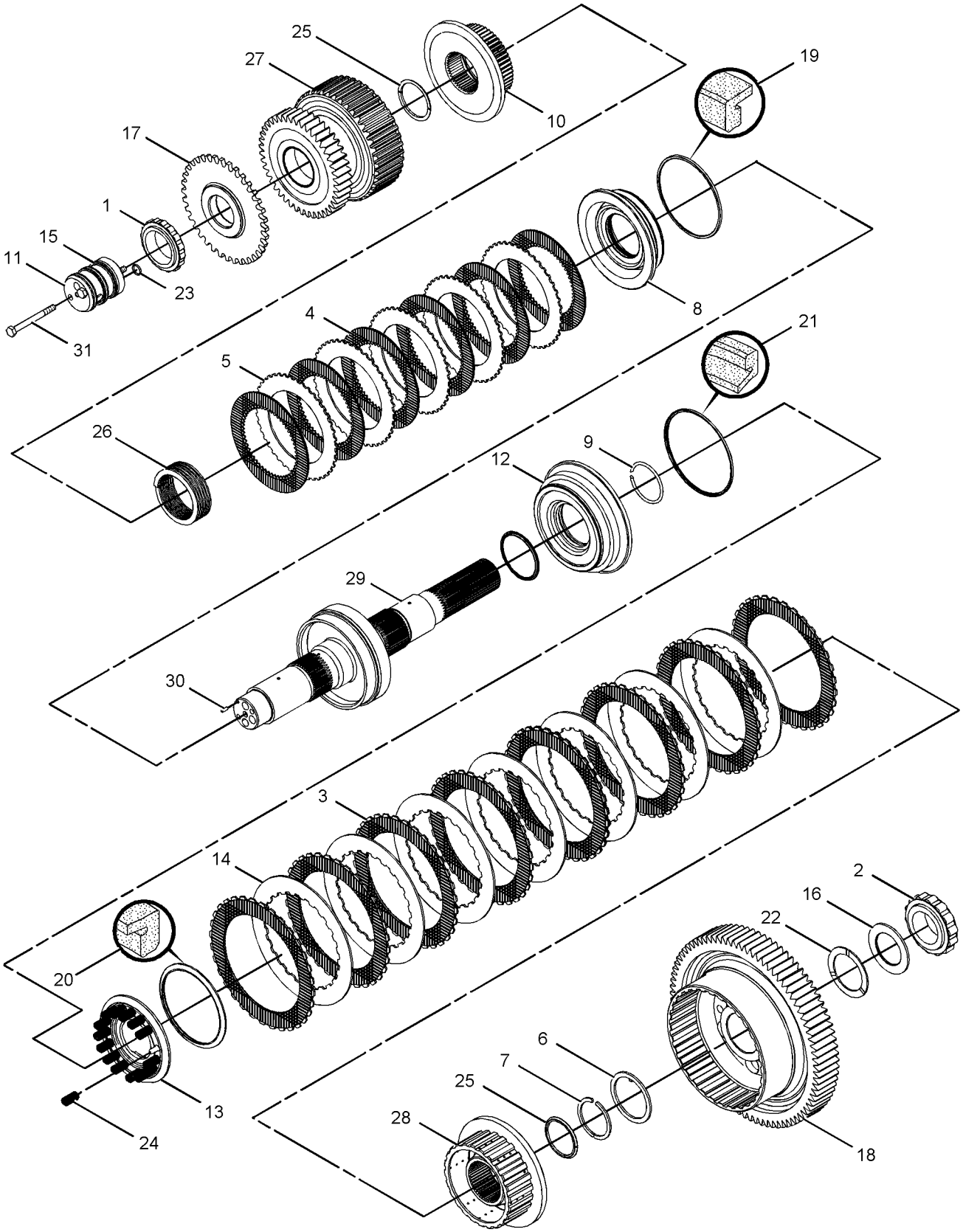

GRAPHIC #1 **<END>** g01134028

231-1511 CONTROL GP-DIFFERENTIAL LOCK

S/N: B9M1-UP

PART OF 234-7721 COMMON AR-MOTOR GRADER

SMCS-3264 **i02300704**

NOTE	REF NO	GRAPHIC REF	PART NUMBER	QTY	PART NAME 1 2 3 4 5 6 (PRODUCT LEVEL)	SEE PAGE
	1	1	**6V-0852**	1	CAP-DUST	
	3	1	*164-5567*	1	FITTING GP-COUPLING	
		1	**6V-3965**	1	FITTING AS (QUICK DISCONNECT)	
		1	**3J-1907**	1	SEAL-O-RING	
	10	1	*148-8325*	1	CONNECTOR AS	
		1	**6V-8641**	1	CONNECTOR	
		1	**3J-1907**	1	SEAL-O-RING	
		1	**4J-5477**	1	SEAL-O-RING	
	11	1	*148-8368*	1	ELBOW AS	
		1	**6V-8627**	1	ELBOW	
		1	**3J-1907**	1	SEAL-O-RING	
		1	**4J-5477**	1	SEAL-O-RING	
	12	1	*148-8374*	1	ELBOW AS	
		1	**6V-8723**	1	ELBOW	
		1	**3K-0360**	1	SEAL-O-RING	
		1	**6V-8397**	1	SEAL-O-RING	
	13	1	**148-8378**	1	ELBOW AS	
		1	**6V-8724**	1	ELBOW	
		1	**3J-1907**	1	SEAL-O-RING	
		1	**6V-8397**	1	SEAL-O-RING	
Y	14	1	**250-2139**	1	VALVE & MTG GP-SOLENOID	342
	15	1	**5P-7854**	1	CLIP	
	16	1	**6D-3479**	1	CLIP	
M	17	1	**8T-4121**	4	WASHER-HARD (11X21X2.5-MM THK)	
M	18	1	**8T-4133**	1	NUT (M10X1.5-THD)	
M	20	1	**8T-5005**	2	BOLT (M10X1.5X70-MM)	
	21	1	**270-5426**	1	PLATE AS	
	22	1	**270-5424**	1	TUBE AS	
	23	1	**270-2807**	1	TUBE AS	
I	24	1	**215-2693**	1	HOSE AS	
	25	1	*148-8423*	1	FITTING GP-HYDRAULIC	
		1	**3J-1907**	1	SEAL-O-RING	
		1	**4J-5477**	1	SEAL-O-RING	
		1	**8T-3311**	1	TEE	
M	26	1	**8T-4136**	1	BOLT (M10X1.5X25-MM)	

I-REFER TO HYDRAULIC INFORMATION SYSTEM
M-METRIC PART
Y-SEPARATE ILLUSTRATION

PROOF

231-1511 **CONTROL GP-DIFFERENTIAL LOCK** *(contd.)* **i02300704**

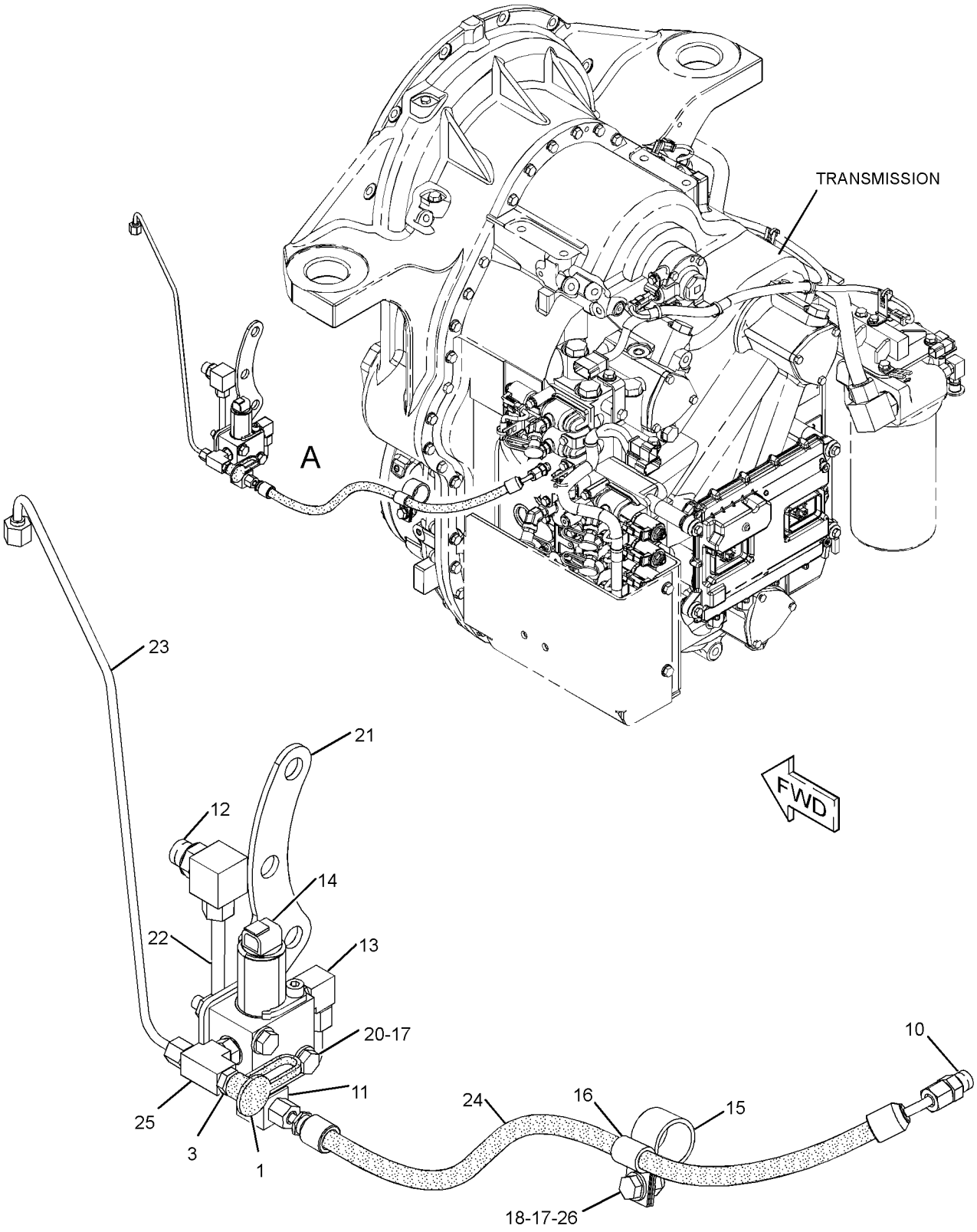

VIEW OF AREA A

GRAPHIC #1 **<END>** g01159141

262-5994 CONTROL GP-TRANSMISSION HYD

S/N: DGX1-UP

PART OF 231-3005 TRANSMISSION AR

SMCS-3073, 3167 **i02235512**

NOTE	PART NUMBER	QTY	PART NAME 1 2 3 4 5 6 (PRODUCT LEVEL)	SEE PAGE
Y	**244-3114**	8	VALVE GP-MODULATING (24-VOLT)	343
Y	**235-3530**	1	VALVE GP-RELIEF	344
Y	**248-5525**	1	MANIFOLD GP-CONTROL	566
	144-4613	1	ANGLE AS	
M	**7X-2536**	1	BOLT (M8X1.25X14-MM)	
M	**8T-3647**	1	BOLT (M8X1.25X80-MM)	
M	**8T-4137**	2	BOLT (M10X1.5X20-MM)	
M	**096-5866**	1	BOLT (M8X1.25X75-MM)	
M	**7X-2538**	2	BOLT (M8X1.25X100-MM)	
M	**8T-4136**	1	BOLT (M10X1.5X25-MM)	
M	**8T-4200**	11	BOLT (M8X1.25X16-MM)	
M	**8T-6869**	21	BOLT (M8X1.25X60-MM)	
M	**8T-6870**	5	BOLT (M8X1.25X70-MM)	
	197-6453	1	BRACKET AS	
M	**8T-3490**	1	NUT-WELD (M10X1.5-THD)	
	4P-7581	7	CLIP	
	101-3625	1	CLIP	
	130-5300	6	CLIP	
	132-5789	10	CLIP	
	262-1408	1	CONTROL GP-UNPROGRAMMED (TRANSMISSION)	
	6V-8077	4	ELBOW	
	258-4721	1	HARNESS AS-SENSOR (TRANSMISSION SPEED)	
	102-8801	1	KIT-RECEPTACLE (12-PIN)	
			(INCLUDES RECEPTACLE AS & WEDGE)	
	155-2270	6	KIT-CONNECTING PLUG (2-PIN)	
			(EACH INCLUDES PLUG AS & WEDGE)	
	258-4720	1	HARNESS AS-TRANSMISSION	
	102-8805	1	KIT-RECEPTACLE (6-PIN)	
	102-8801	1	KIT-RECEPTACLE (12-PIN)	
			(EACH INCLUDES RECEPTACLE AS & WEDGE)	
	155-2260	1	KIT-CONNECTING PLUG (3-PIN)	
	155-2270	9	KIT-CONNECTING PLUG (2-PIN)	
			(EACH INCLUDES PLUG AS & WEDGE)	
	230-4011	1	PLUG AS (2-PIN)	
	8T-9655	8	MOUNT-ISOLATION	
	8C-3428	1	RING-RETAINING	
	3J-1907	4	SEAL-O-RING	
	5J-3886	1	SEAL-O-RING	
	6V-9028	1	SEAL-O-RING	
	7J-2036	1	SEAL-O-RING	
	8S-0768	8	SEAL-O-RING	
	9X-4609	2	SEAL-O-RING	
	117-1385	3	SEAL-O-RING	
	191-8303	3	SENSOR GP-SPEED (TRANSMISSION OUTPUT, LOW)	
	191-8304	2	SENSOR GP-SPEED (TRANSMISSION OUTPUT, HIGH)	
	238-0112	1	SENSOR GP-TEMPERATURE (TRANSMISSION OIL)	
	252-6493	2	SPACER-SPECIAL	
	252-6494	1	SPACER-SPECIAL	
	252-6500	1	SPACER-SPECIAL	
	3S-2093	19	STRAP-CABLE	
	148-1925	2	VALVE-RELIEF	
	7X-0579	4	WASHER-HARD (8.8X25.5X2-MM THK)	
M	**8T-4121**	3	WASHER-HARD (11X21X2.5-MM THK)	
	8T-4224	40	WASHER-HARD (8.8X16X2-MM THK)	

M-METRIC PART

PROOF

262-5994 **CONTROL GP-TRANSMISSION HYD** *(contd.)* **i02235512**

Y-SEPARATE ILLUSTRATION

<END>

PROOF

262-8360 COOLER GP-TRANSMISSION OIL

S/N: B9M1-UP

PART OF 234-7721 COMMON AR-MOTOR GRADER

SMCS-1375 **i02287335**

NOTE	REF NO	GRAPHIC REF	PART NUMBER	QTY	PART NAME 1 2 3 4 5 6 (PRODUCT LEVEL)	SEE PAGE
Y	1	1	**272-1045**	1	COOLER GP-TRANSMISSION OIL	289
M	2	1	**7X-2562**	3	BOLT (M20X2.5X45-MM)	
	3	1	**8T-4123**	3	WASHER-PLATED (22X35X3.5-MM THK)	

M-METRIC PART
Y-SEPARATE ILLUSTRATION

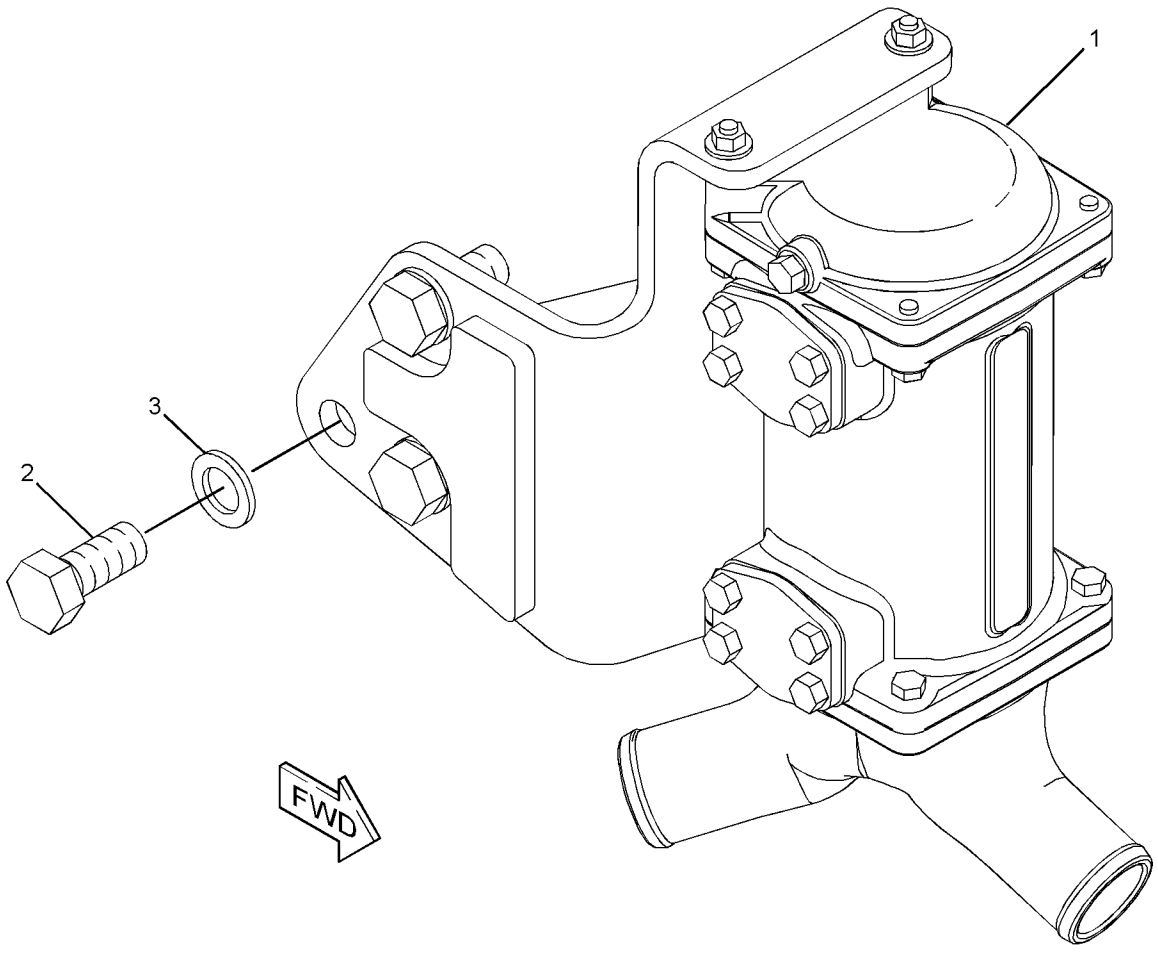

GRAPHIC #1 **<END>** g01157066

272-1045 COOLER GP-TRANSMISSION OIL

S/N: B9M1-UP

PART OF 262-8360 COOLER GP-TRANSMISSION OIL

SMCS-1375 **i02300262**

NOTE	REF NO	GRAPHIC REF	PART NUMBER	QTY	PART NAME 1 2 3 4 5 6 (PRODUCT LEVEL)	SEE PAGE
	1	1	**7E-8570**	1	BONNET	
	2	1	**175-7453**	1	CORE AS (TRANSMISSION OIL COOLER)	
	3	1	**262-7721**	1	BONNET	
	4	1	**262-7857**	1	BRACKET AS	
	5	1	**129-2861**	2	GASKET	
M	8	1	**5C-7261**	2	NUT (M8X1.25-THD)	
	9	1	**5P-4116**	2	WASHER-HARD (8.8X20.5X2-MM THK)	
	10	1	**6V-9027**	1	SEAL-O-RING	
	11	1	**7X-7729**	2	WASHER (11X25X3-MM THK)	
M	12	1	**8T-4136**	2	BOLT (M10X1.5X25-MM)	
M	13	1	**8T-6870**	2	BOLT (M8X1.25X70-MM)	
M	14	1	**8T-7547**	6	BOLT (M8X1.25X30-MM)	
	16	1	**9S-4182**	1	PLUG	

M-METRIC PART

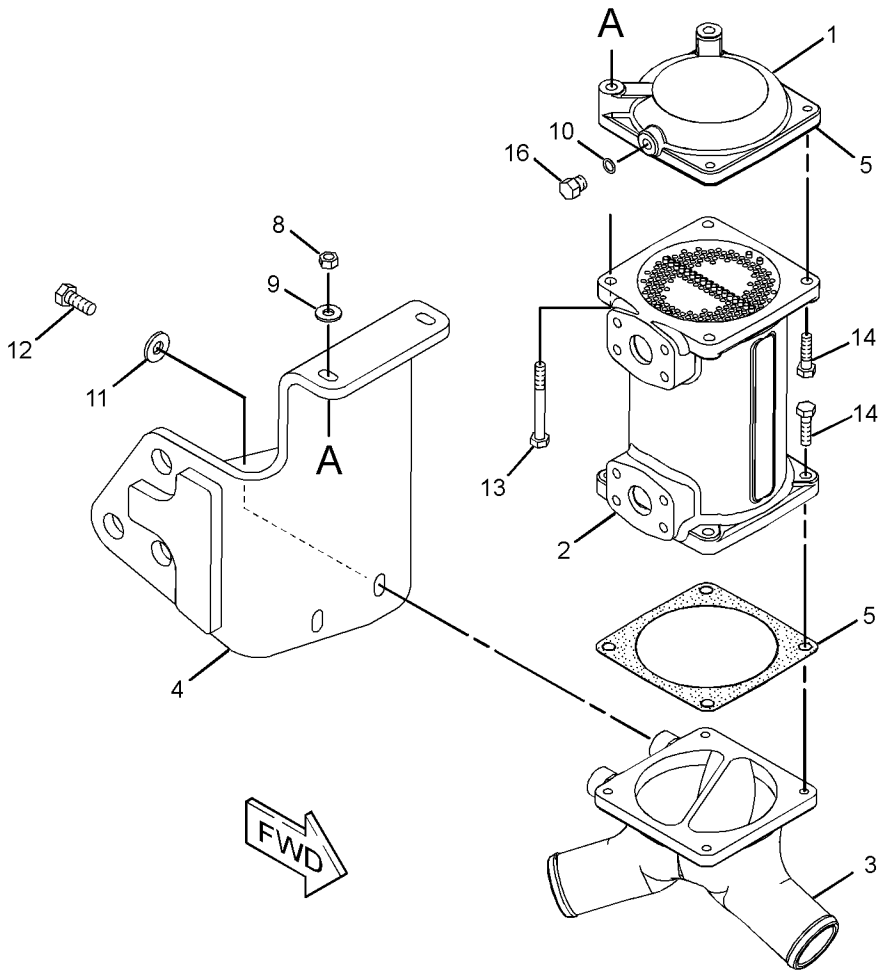

GRAPHIC #1 **<END>** g01157248

8E-3366 COUPLING GP-TORSIONAL–DRIVE

S/N: B9M1-UP

PART OF 234-7721 COMMON AR-MOTOR GRADER

SMCS-3252, 3279 **i00126548**

NOTE	REF NO	GRAPHIC REF	PART NUMBER	QTY	PART NAME 1 2 3 4 5 6 (PRODUCT LEVEL)	SEE PAGE
	1	1	**8E-1368**	1	COUPLING AS	
	2	1	**0S-1594**	12	BOLT (3/8-16X1IN)	

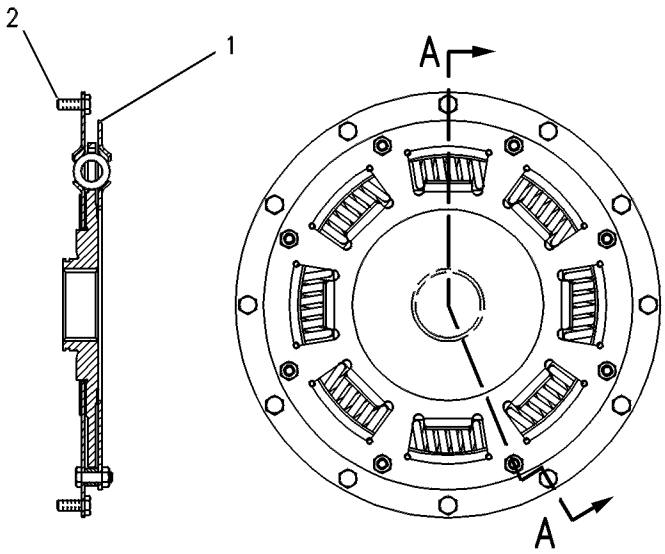

SECTION A–A

GRAPHIC #1 **<END>** g00108540

263-7434 COVER GP-SHIPPING

S/N: DGX1-UP

PART OF 231-3005 TRANSMISSION AR

SMCS-3030, 3064 **i02235517**

NOTE	REF NO	GRAPHIC REF	PART NUMBER	QTY	PART NAME 1 2 3 4 5 6 (PRODUCT LEVEL)	SEE PAGE
	2	1	**7J-3554**	1	COVER	
	3	1	**9H-0846**	1	SEAL-O-RING	
	4	1	**117-2927**	1	COVER-SHIPPING	
	5	1	**126-1773**	2	CAP-CONNECTOR	
	6	1	**175-3721**	1	COVER	
	7	1	**248-2217**	1	STRAP	
	8	1	**256-0196**	1	PLUG-SEALING	
	9	1	*148-8407*	1	PLUG AS	
		1	**9S-4191**	1	PLUG	
		1	**3J-1907**	1	SEAL-O-RING	
	10	1	*164-4180*	2	PLUG AS (DRAIN)	
					(EACH INCLUDES)	
		1	**9S-4181**	1	PLUG	
		1	**7M-8485**	1	SEAL-O-RING	
	11	1	**2D-0094**	1	GASKET	
	12	1	**4M-0189**	1	SEAL-O-RING	
	13	1	**5P-8245**	8	WASHER-HARD (13.5X25.5X3-MM THK)	
M	14	1	**6A-5591**	2	BOLT (M12X1.75X25-MM)	
M	15	1	**6V-3823**	4	BOLT (M12X1.75X60-MM)	
M	16	1	**6V-8149**	4	NUT (M12X1.75-THD)	
M	17	1	**8T-0293**	2	BOLT (M12X1.75X20-MM)	
M	18	1	**8T-4137**	2	BOLT (M10X1.5X20-MM)	

M-METRIC PART

PROOF

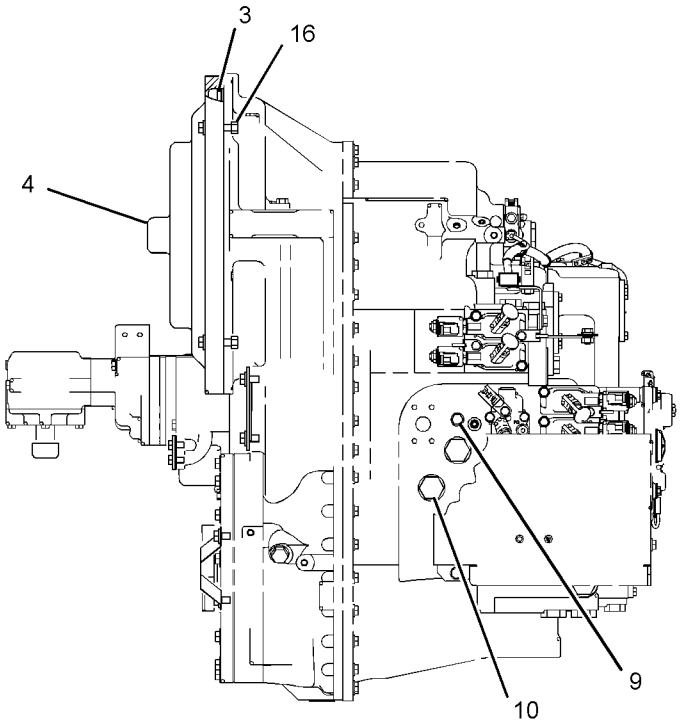

LEFT SIDE VIEW

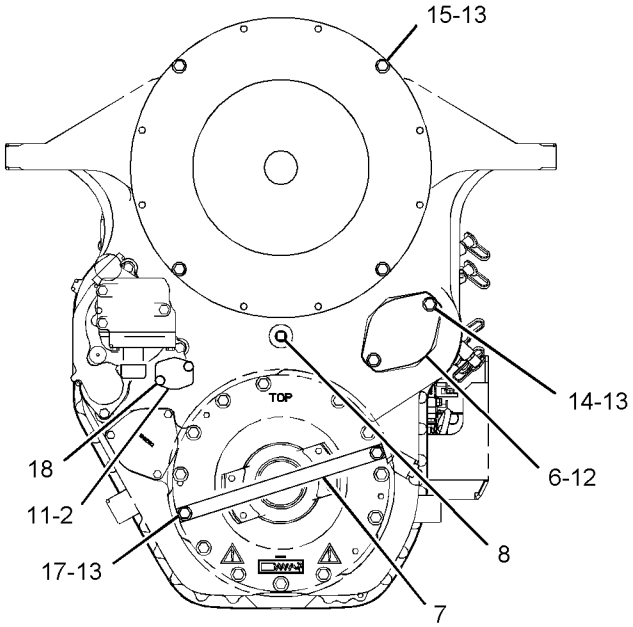

FRONT VIEW

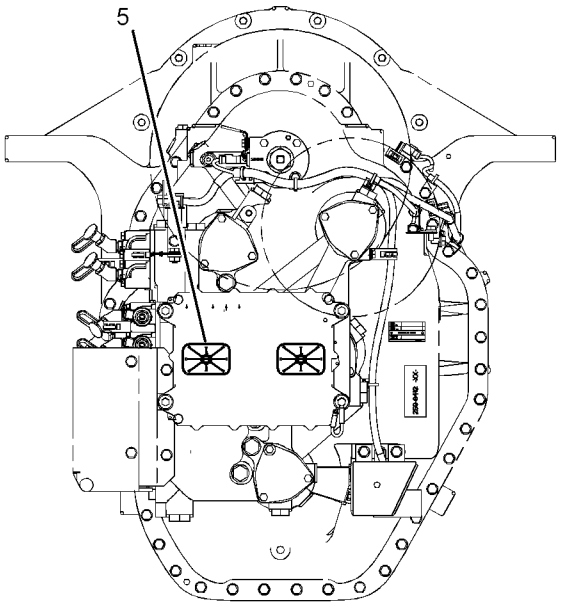

REAR VIEW

GRAPHIC #1 **<END>** g01132939

258-4459 DIFFERENTIAL & BEVEL GEAR GP

S/N: B9M1-UP

PART OF 246-7967 AXLE GP-REAR

SMCS-3256, 3258 **i02295544**

NOTE	REF NO	GRAPHIC REF	PART NUMBER	QTY	PART NAME 1 2 3 4 5 6 (PRODUCT LEVEL)	SEE PAGE
	1	1	**7D-1677**	1	RACE-BEARING INNER	
	2	1	**7S-4001**	1	SEAL-O-RING	
	3	1	**168-4377**	1	YOKE AS	
Y	4	1	**196-3150**	1	DIFFERENTIAL GP	295
	5	1	**201-7713**	1	BEARING AS	
	6	1	**201-8481**	1	LOCKNUT AS	
	7	1	**206-4666**	1	BEARING AS	
	8	1	**209-4527**	1	SHIM (4.3-MM THK)	
	9	1	**216-8425**	1	RETAINER	
	10	1	**222-7843**	1	SHROUD	
	11	1	**248-4147**	1	SET-BEVEL GEAR	
	12	1	**255-1205**	1	HOUSING	
M	13	1	**6V-4429**	20	BOLT (M16X2X40-MM)	
M	14	1	**6V-5686**	6	BOLT (M16X2X50-MM)	
M	15	1	**8T-0282**	1	BOLT (M16X2X120-MM)	
	16	1	**159-3046**	3	BOLT (M8X1.25X20-MM)	
	17	1	**9X-8268**	26	WASHER (17.5X30X3.5-MM THK)	

M-METRIC PART
Y-SEPARATE ILLUSTRATION

PROOF

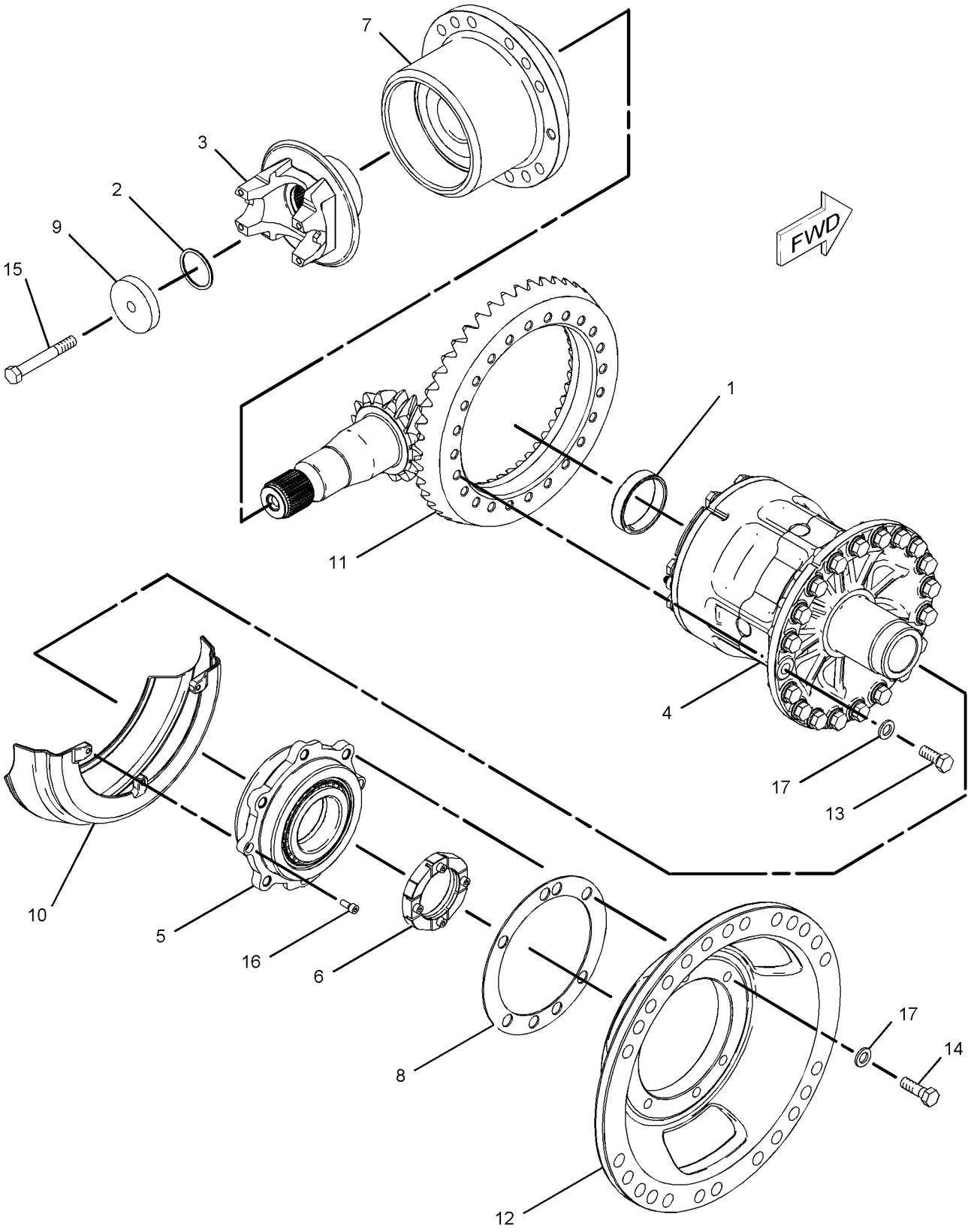

GRAPHIC #1 **<END>** g01138480

196-3150 DIFFERENTIAL GP

S/N: B9M1-UP

PART OF 258-4459 DIFFERENTIAL & BEVEL GEAR GP

SMCS-3258 **i02248550**

NOTE	REF NO	GRAPHIC REF	PART NUMBER	QTY	PART NAME 1 2 3 4 5 6 (PRODUCT LEVEL)	SEE PAGE
	1	1	**5F-9144**	3	SEAL-O-RING	
	2	1	**136-6551**	1	GEAR (16-TEETH)	
	3	1	**148-7841**	3	SPRING	
	4	1	**201-8468**	1	CASE-DIFFERENTIAL	
	5	1	**201-8469**	1	CASE-DIFFERENTIAL	
	6	1	**201-8470**	1	CASE-DIFFERENTIAL	
	7	1	**201-8471**	1	SPIDER	
	8	1	**201-8472**	4	PINION	
	9	1	**201-8473**	1	GEAR-DIFFERENTIAL BEVEL (16-TEETH) (CLUTCH)	
	10	1	**201-8474**	2	WASHER-THRUST	
	11	1	**201-8475**	4	WASHER-THRUST	
	12	1	**201-8476**	9	PLATE-SEPARATOR	
	13	1	**201-8477**	9	DISC-FRICTION	
	14	1	**201-8480**	1	PLATE-THRUST	
	15	1	**211-0132**	4	BEARING-SLEEVE	
	16	1	**221-8040**	3	DOWEL	
	17	1	**239-3105**	1	RING-THRUST	
M	18	1	**8T-5002**	8	BOLT (M16X180-MM)	
	19	1	**9X-8268**	8	WASHER (17.5X30X3.5-MM THK)	

M-METRIC PART

PROOF

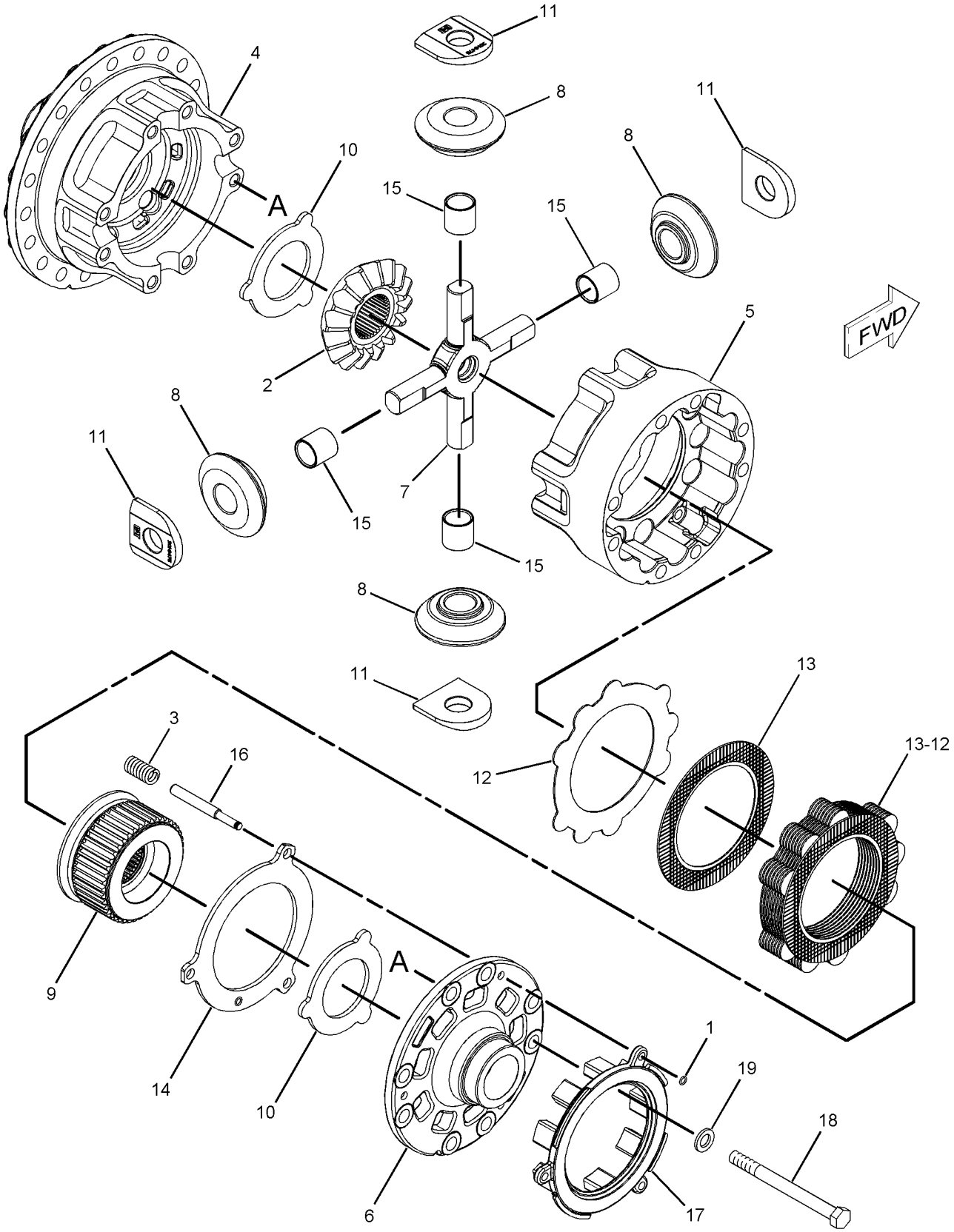

GRAPHIC #1 **<END>** g01133774

163-0397 DRAIN GP-ECOLOGY

S/N: B9M1-UP

PART OF 246-7967 AXLE GP-REAR

SMCS-3260 **i02227965**

NOTE	REF NO	GRAPHIC REF	PART NUMBER	QTY	PART NAME 1 2 3 4 5 6 (PRODUCT LEVEL)	SEE PAGE
	1	1	**173-0566**	1	DRAIN GP-ECOLOGY	
	1A	1	**2K-8199**	1	SEAL-O-RING	
	1B	1	**077-3241**	1	SEAL-O-RING	
	1C	1	**175-4966**	1	PLUG (DRAIN)	
Z	1D	1		1	BODY	
	2	1	**7M-8485**	1	SEAL-O-RING	

Z-NOT SERVICED SEPARATELY

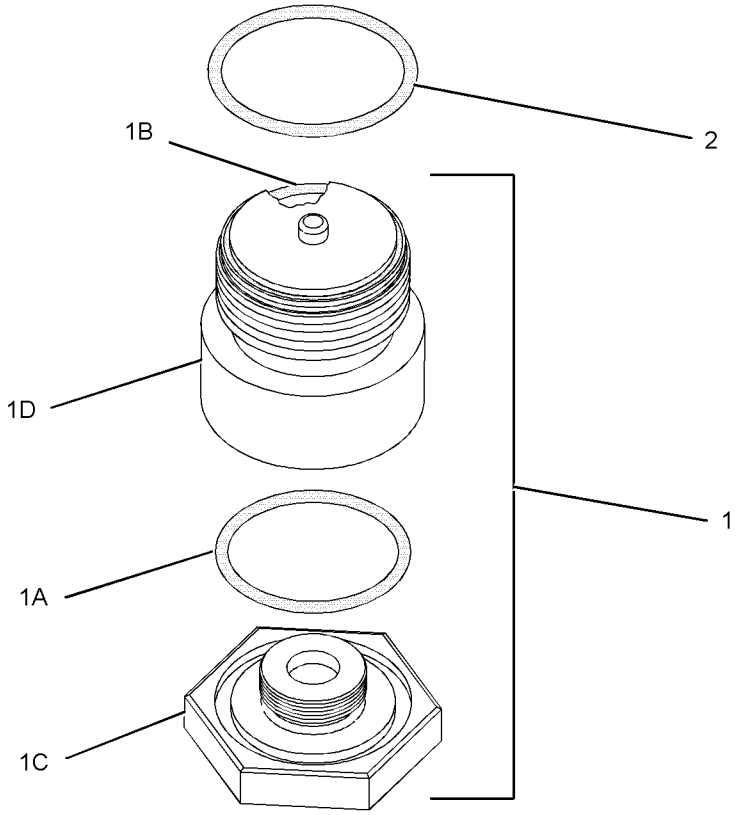

GRAPHIC #1 **<END>** g01123990

260-4803 DRIVE GP-WHEEL

S/N: B9M1-UP
ALL WHEEL DRIVE
PART OF 260-8698 AXLE GP-FRONT
AN ATTACHMENT

SMCS-4205, 4208, 4350, 4351, 4355 **i02249848**

NOTE	REF NO	GRAPHIC REF	PART NUMBER	QTY	PART NAME 1 2 3 4 5 6 (PRODUCT LEVEL)	SEE PAGE
	1	1	**260-4708**	1	GEAR GP (LH) (ALL WHEEL DRIVE)	
	2	1	**260-4709**	1	GEAR GP (RH) (ALL WHEEL DRIVE)	
	3	1	**260-8722**	2	COVER	
	4	1	**7X-0622**	6	WASHER (13X24X2.5-MM THK)	
M	5	1	**8T-4139**	6	BOLT (M12X1.75X30-MM)	

M-METRIC PART

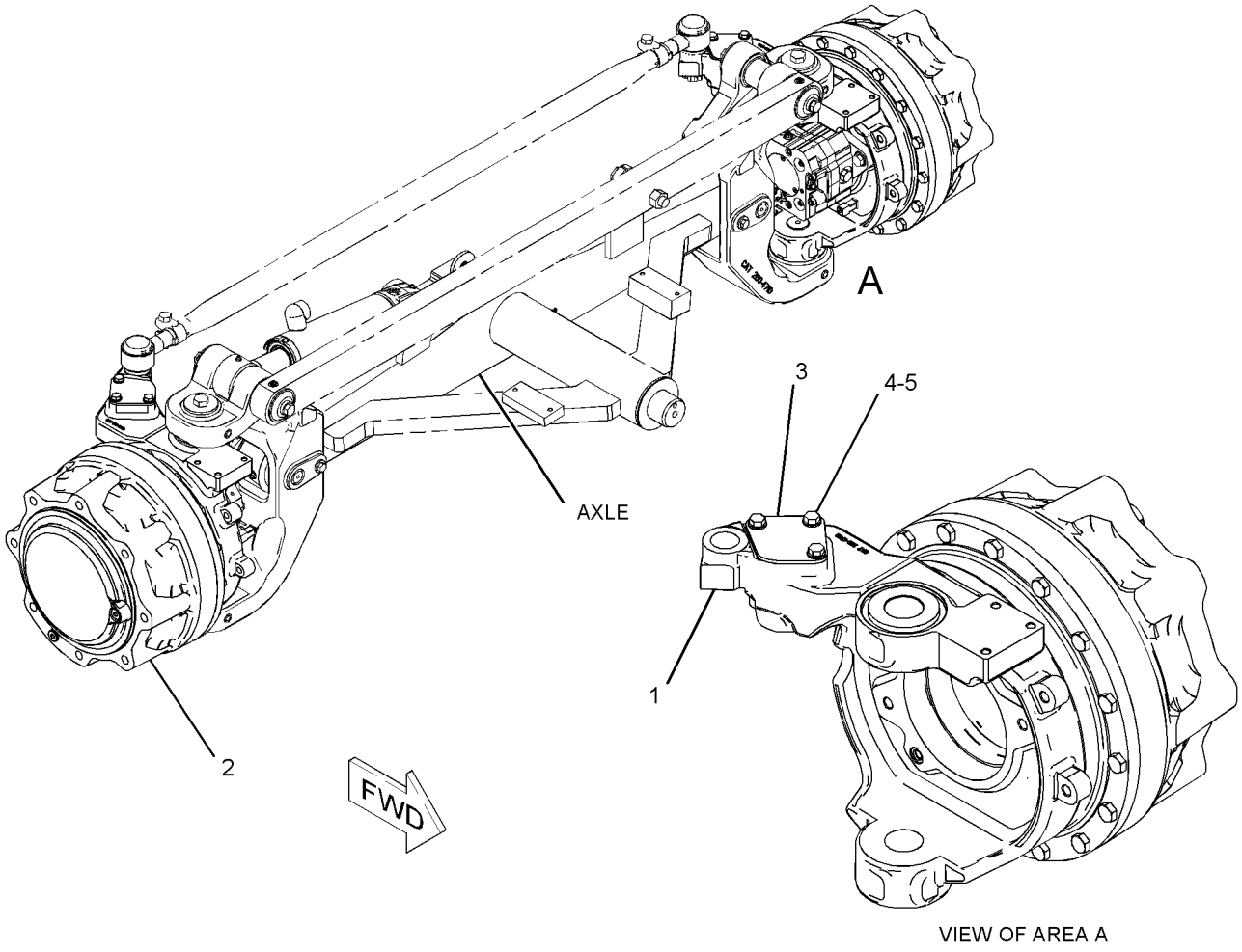

VIEW OF AREA A

GRAPHIC #1 **<END>** g01138323

247-4025 FILLER GP-POWER TRAIN OIL

S/N: B9M1-UP

PART OF 234-7721 COMMON AR-MOTOR GRADER

SMCS-3005, 3081 **i02297101**

NOTE	REF NO	GRAPHIC REF	PART NUMBER	QTY	PART NAME 1 2 3 4 5 6 (PRODUCT LEVEL)	SEE PAGE
	1	1	**9G-5127**	1	BREATHER AS (POWER TRAIN OIL TANK)	
	2	1	**254-3286**	1	GAUGE AS-OIL LEVEL (DIPSTICK) (POWER TRAIN OIL LEVEL)	
	3	1	**259-2620**	1	TUBE AS	
	4	1	**265-9383**	1	TUBE AS	
	5	1	**6V-5839**	2	WASHER (11X21X2.5-MM THK)	
	6	1	**7J-8611**	1	ELBOW	
	7	1	**8B-1615**	2	GASKET	
M	8	1	**8T-4196**	2	BOLT (M10X1.5X35-MM)	

M-METRIC PART

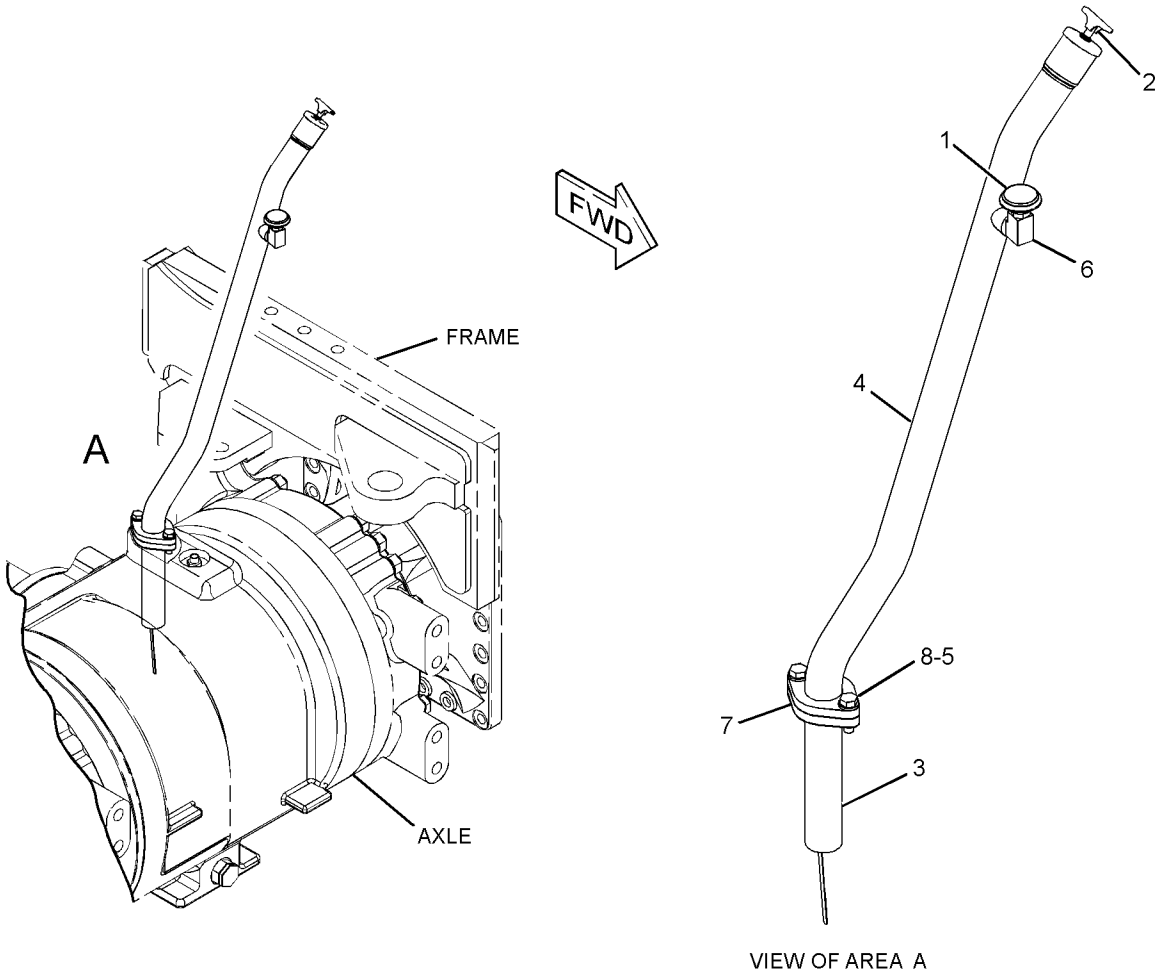

GRAPHIC #1 **<END>** g01154052

250-3507 FILTER & MTG GP-OIL

S/N: B9M1-UP

PART OF 231-5061 SUPPORT AR-REAR CHASSIS

SMCS-3067, 5068 **i02352977**

NOTE	REF NO	GRAPHIC REF	PART NUMBER	QTY	PART NAME 1 2 3 4 5 6 (PRODUCT LEVEL)	SEE PAGE
	1	1	**242-0407**	1	VALVE-DRAIN (TRANSMISSION OIL)	
	2	1	**245-7603**	1	TUBE AS	
	3	1	**245-8964**	1	BLOCK	
Y	4	1	**249-2307**	1	FILTER GP-OIL (HYDRAULIC TANK RETURN)	305
	5	1	**257-8897**	1	HOSE-MOLDED	
	6	1	**266-2022**	1	TUBE AS	
	7	1	*156-4283*	1	CONNECTOR AS	
		1	**6K-6307**	1	SEAL-O-RING	
		1	**8T-0315**	1	SEAL-O-RING	
		1	**8T-7926**	1	CONNECTOR	
	8	1	**4J-0524**	2	SEAL-O-RING	
M	9	1	**8T-4121**	8	WASHER-HARD (11X21X2.5-MM THK)	
M	10	1	**8T-4133**	2	NUT (M10X1.5-THD)	
M	11	1	**8T-4183**	8	BOLT (M12X1.75X40-MM)	
M	12	1	**8T-4195**	4	BOLT (M10X1.5X30-MM)	
M	13	1	**8T-4223**	8	WASHER-HARD (13.5X25.5X3-MM THK)	
M	14	1	**8T-6685**	2	BOLT (M10X1.5X110-MM)	
	15	1	**8T-6703**	2	CLAMP-HOSE	
	16	1	**8X-5489**	1	SLEEVE	
E	17	1	**9X-2023**		HOSE (31-CM)	

E-ORDER BY THE CENTIMETER
M-METRIC PART
Y-SEPARATE ILLUSTRATION

PROOF

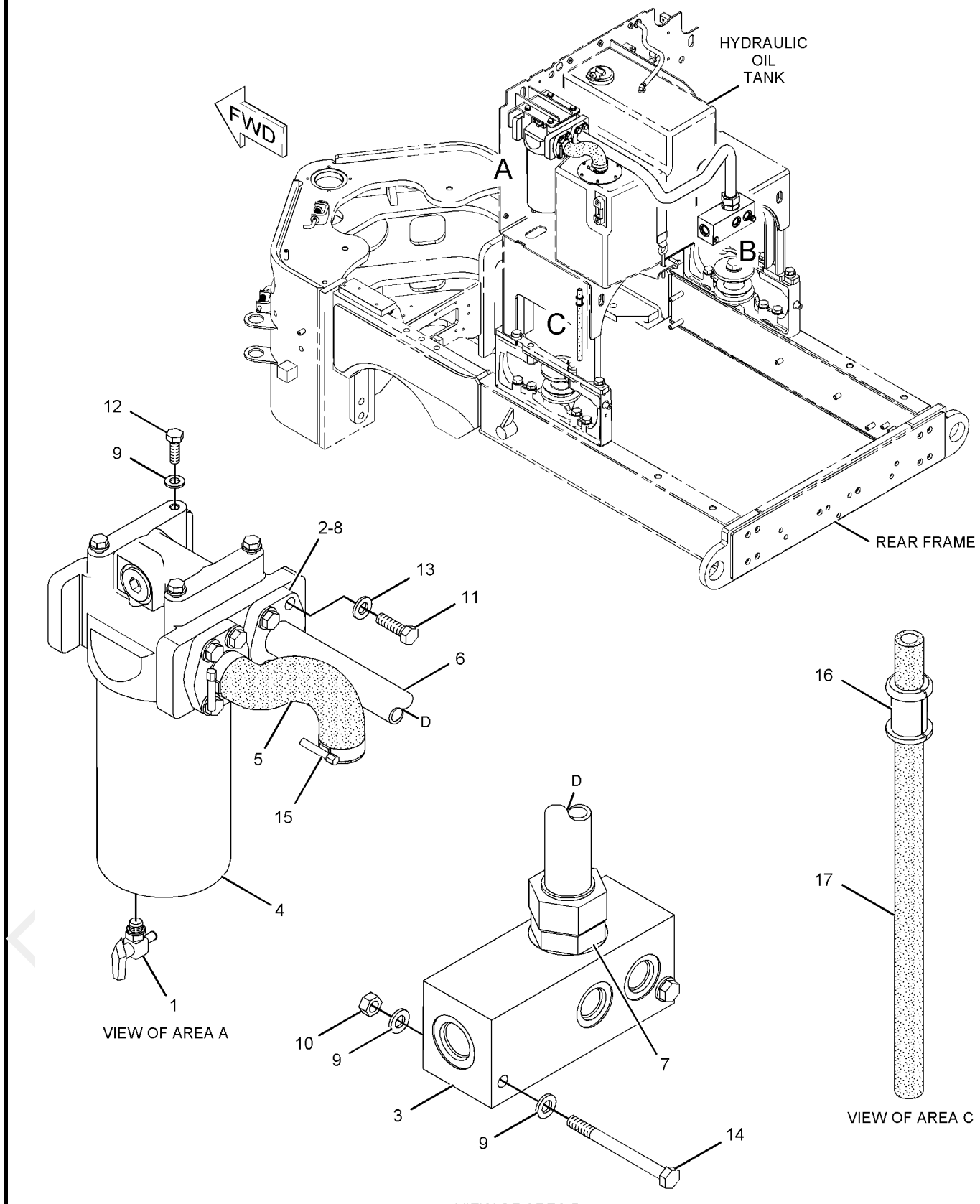

GRAPHIC #1 **<END>** g01144106

250-8292 FILTER & MTG GP-OIL–TRANSMISSION

S/N: DGX1-UP

PART OF 231-3005 TRANSMISSION AR

SMCS-3067, 5068 **i02285998**

NOTE	REF NO	GRAPHIC REF	PART NUMBER	QTY	PART NAME 1 2 3 4 5 6 (PRODUCT LEVEL)	SEE PAGE
Y	1	1	*241-6094*	1	FILTER GP-OIL	303
	2	1	**263-7433**	1	PLATE AS	
	3	1	**130-5300**	1	CLIP	
	4	1	**4P-7581**	1	CLIP	
	5	1	**8T-4121**	3	WASHER-HARD (11X21X2.5-MM THK)	
M	6	1	**8T-4184**	2	BOLT (M12X1.75X45-MM)	
M	7	1	**8T-4195**	2	BOLT (M10X1.5X30-MM)	
	8	1	**8T-4223**	2	WASHER-HARD (13.5X25.5X3-MM THK)	
M	9	1	**8T-5035**	1	BOLT (M10X1.5X65-MM)	

M-METRIC PART
Y-SEPARATE ILLUSTRATION

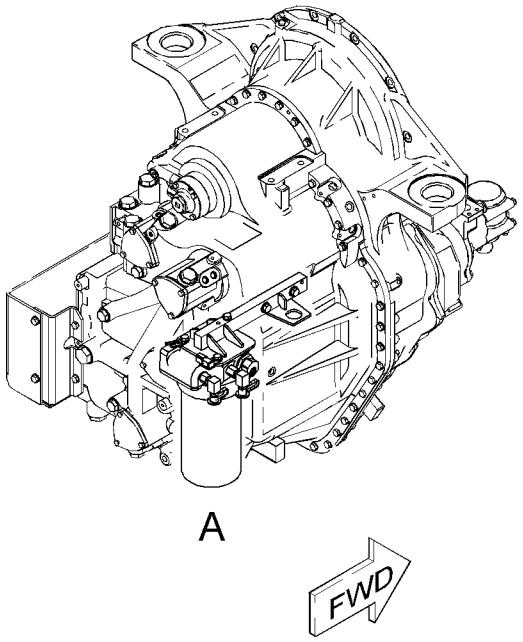

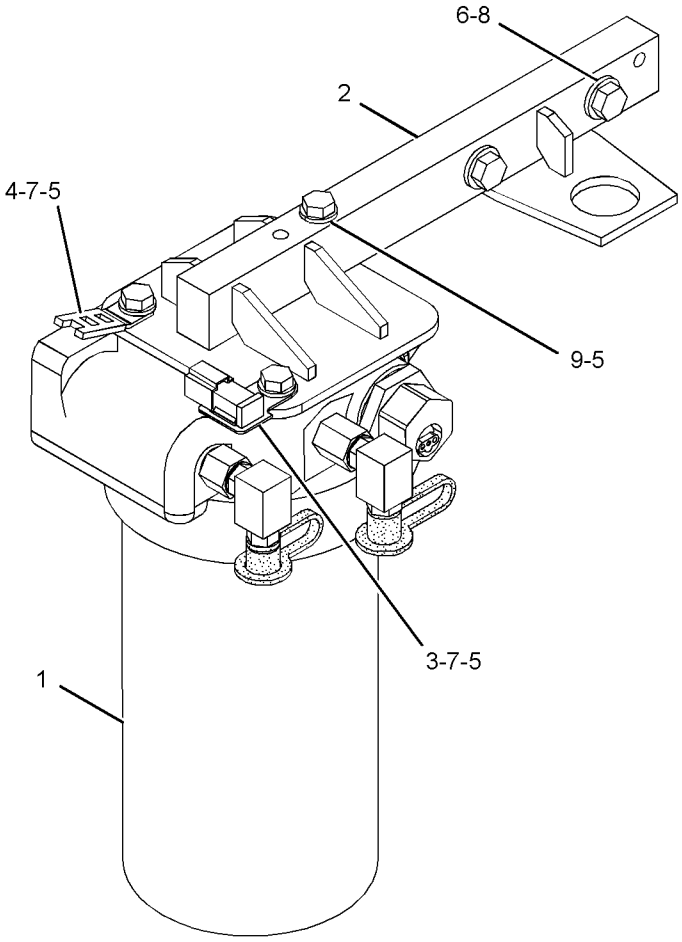

VIEW OF AREA A

GRAPHIC #1 **<END>** g01146890

241-6094 FILTER GP-OIL

S/N: DGX1-UP

PART OF 250-8292 FILTER & MTG GP-OIL

SMCS-3004, 3067 **i02333964**

NOTE	REF NO	GRAPHIC REF	PART NUMBER	QTY	PART NAME 1 2 3 4 5 6 (PRODUCT LEVEL)	SEE PAGE
	1	1	**1R-1809**	1	FILTER ELEMENT AS-OIL (HIGH EFFICIENCY) (TRANSMISSION)	
		1	**130-0229**	1	SEAL-O-RING	
	2	1	**6V-0852**	1	CAP-DUST (BLACK)	
	3	1	**8C-3451**	1	CAP-DUST (BLUE)	
	4	1	**241-3352**	1	HOUSING AS	
		1	**3J-1907**	1	SEAL-O-RING	
		1	**9S-8004**	1	PLUG	
Y	5	1	**241-6093**	1	BASE GP-OIL FILTER (TRANSMISSION)	31
	6	1	**150-4047**	1	ADAPTER AS	
		1	**3J-7354**	1	SEAL-O-RING	
		1	**8T-2353**	1	ADAPTER	
	7	1	**3J-1907**	4	SEAL-O-RING	
	8	1	**3J-7354**	1	SEAL-O-RING	
	9	1	**6V-0484**	1	ADAPTER-O-RING	
	10	1	**6V-3965**	1	FITTING AS (QUICK DISCONNECT)	
	11	1	**7W-7381**	1	FITTING-OUTLET	
	12	1	**8C-3446**	1	VALVE AS-FLUID SAMPLING (TRANSMISSION OIL)	
	13	1	**8C-6712**	1	ELBOW	
	14	1	**130-0229**	1	SEAL-O-RING	

Y-SEPARATE ILLUSTRATION

PROOF

241-6094 **FILTER GP-OIL** *(contd.)* **i02333964**

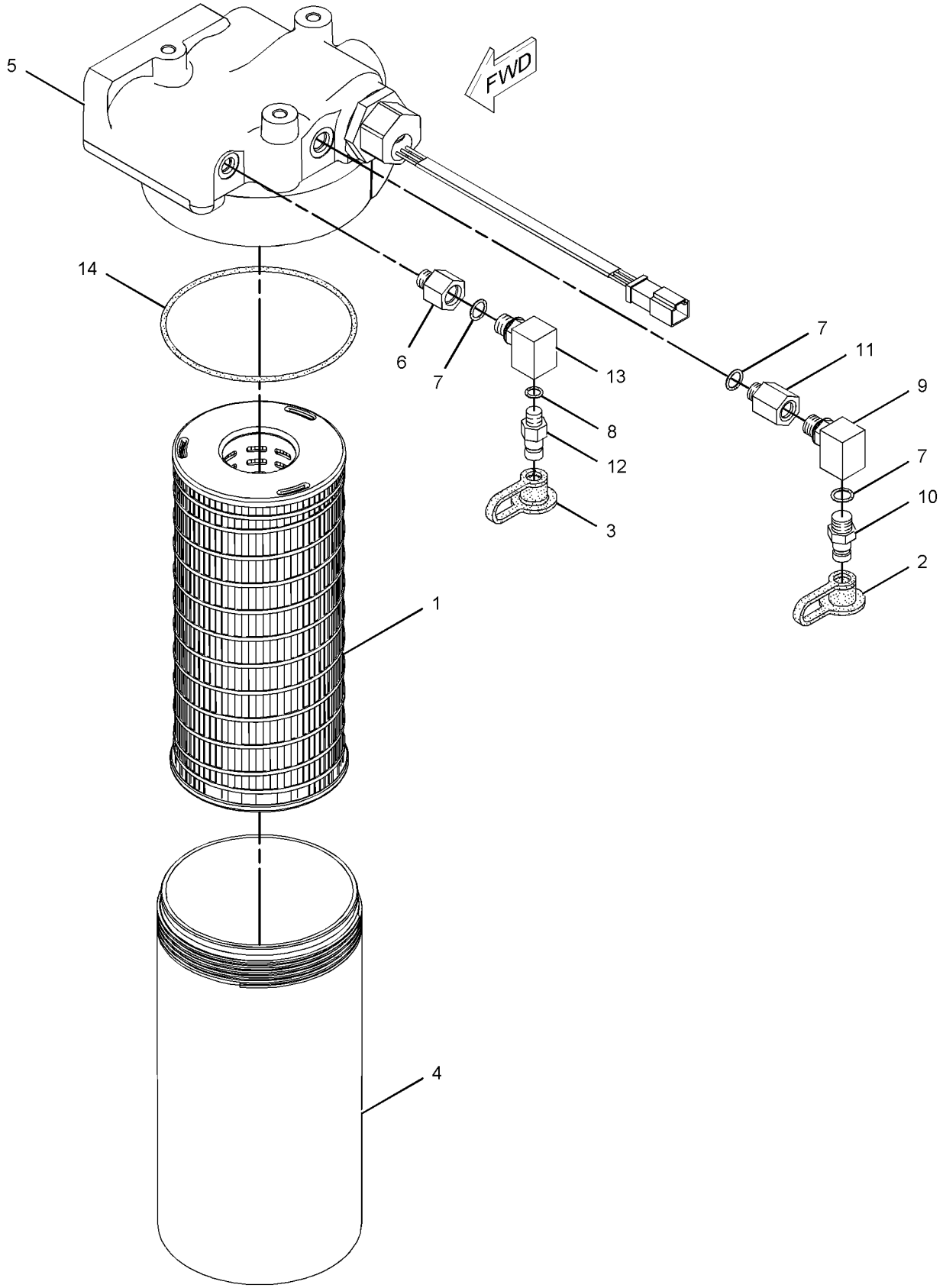

GRAPHIC #1 **<END>** g01136164

249-2307 FILTER GP-OIL

S/N: B9M1-UP

PART OF 250-3507 FILTER & MTG GP-OIL

SMCS-3004, 3067 **i02352988**

NOTE	REF NO	GRAPHIC REF	PART NUMBER	QTY	PART NAME 1 2 3 4 5 6 (PRODUCT LEVEL)	SEE PAGE
	1	1	**1R-1809**	1	FILTER ELEMENT AS-OIL (HIGH EFFICIENCY) (HYDRAULIC TANK)	
	2	1	**241-3352**	1	HOUSING AS	
		1	**3J-1907**	1	SEAL-O-RING	
		1	**9S-4191**	1	PLUG	
Y	3	1	**249-2308**	1	BASE GP-OIL FILTER	32
	4	1	**130-0229**	1	SEAL-O-RING	

Y-SEPARATE ILLUSTRATION

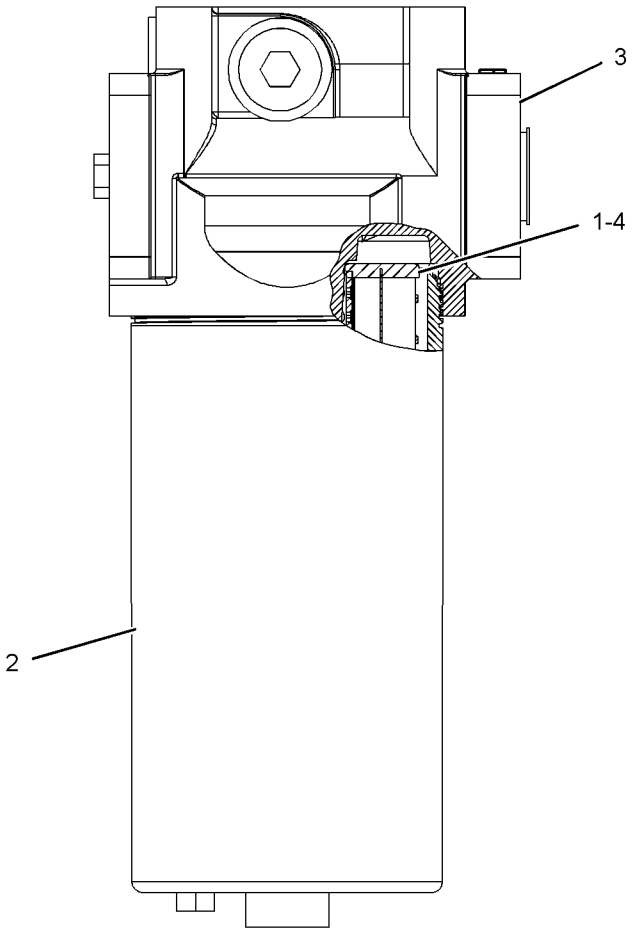

LEFT SIDE VIEW

GRAPHIC #1 **<END>** g01110635

POWER TRAIN

259-0039 FINAL DRIVE GP

S/N: B9M1-UP

PART OF 246-7967 AXLE GP-REAR

SMCS-4050 **i02297060**

NOTE	REF NO	GRAPHIC REF	PART NUMBER	QTY	PART NAME 1 2 3 4 5 6 (PRODUCT LEVEL)	SEE PAGE
	1	1	**4B-8394**	2	CUP-BEARING	
	2	1	**6G-3206**	2	WASHER-THRUST	
B	3	1	**7D-8439**	5	SHIM (0.007-MM THK)	
B	4	1	**7D-8441**	5	SHIM (0.005-MM THK)	
	5	1	**9D-3075**	1	RETAINER	
B	6	1	**9D-7047**	2	SHIM (0.02-MM THK)	
	7	1	**202-6473**	18	BOLT (M16X2X60-MM)	
	8	1	**239-4200**	3	GEAR-PLANETARY (32-TEETH)	
	9	1	**239-4204**	6	WASHER-THRUST	
	10	1	**239-4205**	1	GEAR-RING (84-TEETH)	
	11	1	**246-2722**	3	SHAFT	
	12	1	**253-9734**	1	CARRIER-PLANETARY	
	13	1	**257-8540**	6	BEARING-SPECIAL	
	14	1	**260-9429**	1	SHAFT-DRIVE	
	15	1	**262-2022**	1	HOUSING-FINAL DRIVE	
	16	1	**262-2036**	1	HOUSING-FINAL DRIVE	
	17	1	**262-5614**	2	SPROCKET	
	18	1	**263-4902**	3	RETAINER	
	19	1	**264-0194**	1	RETAINER	
B	20	1	**264-0196**	1	SHIM PACK (INCLUDES 10-SHIMS)	
	21	1	**266-0199**	2	RING-WEAR	
	22	1	**267-8628**	24	BOLT-LOCKING (M16X2X60-MM)	
M	23	1	**095-0658**	3	BOLT-SOCKET HEAD (M10X1.5X70-MM)	
M	24	1	**103-6169**	3	BOLT (M16X2X60-MM)	
	25	1	**198-4768**	24	WASHER-HARD (17.5X32X8-MM THK)	
	26	1	**2B-9174**	1	BEARING AS-TAPERED ROLLER	
	27	1	**3E-4353**	6	WASHER-HARD (11X25X3-MM THK)	
	28	1	**4D-3704**	18	WASHER-HARD (17X30X5-MM THK)	
	29	1	**6V-2449**	1	CONE-BEARING	
M	30	1	**6V-7732**	6	BOLT (M10X1.5X25-MM)	
	31	1	**6V-8081**	1	SEAL-LIP TYPE	
	32	1	**8D-3902**	1	SEAL-LIP TYPE	
	33	1	**8T-3727**	1	RING-RETAINING	
	34	1	**9F-2247**	1	PLUG-PIPE	

B-USE AS REQUIRED
M-METRIC PART

PROOF

259-0039 **FINAL DRIVE GP** *(contd.)* **i02297060**

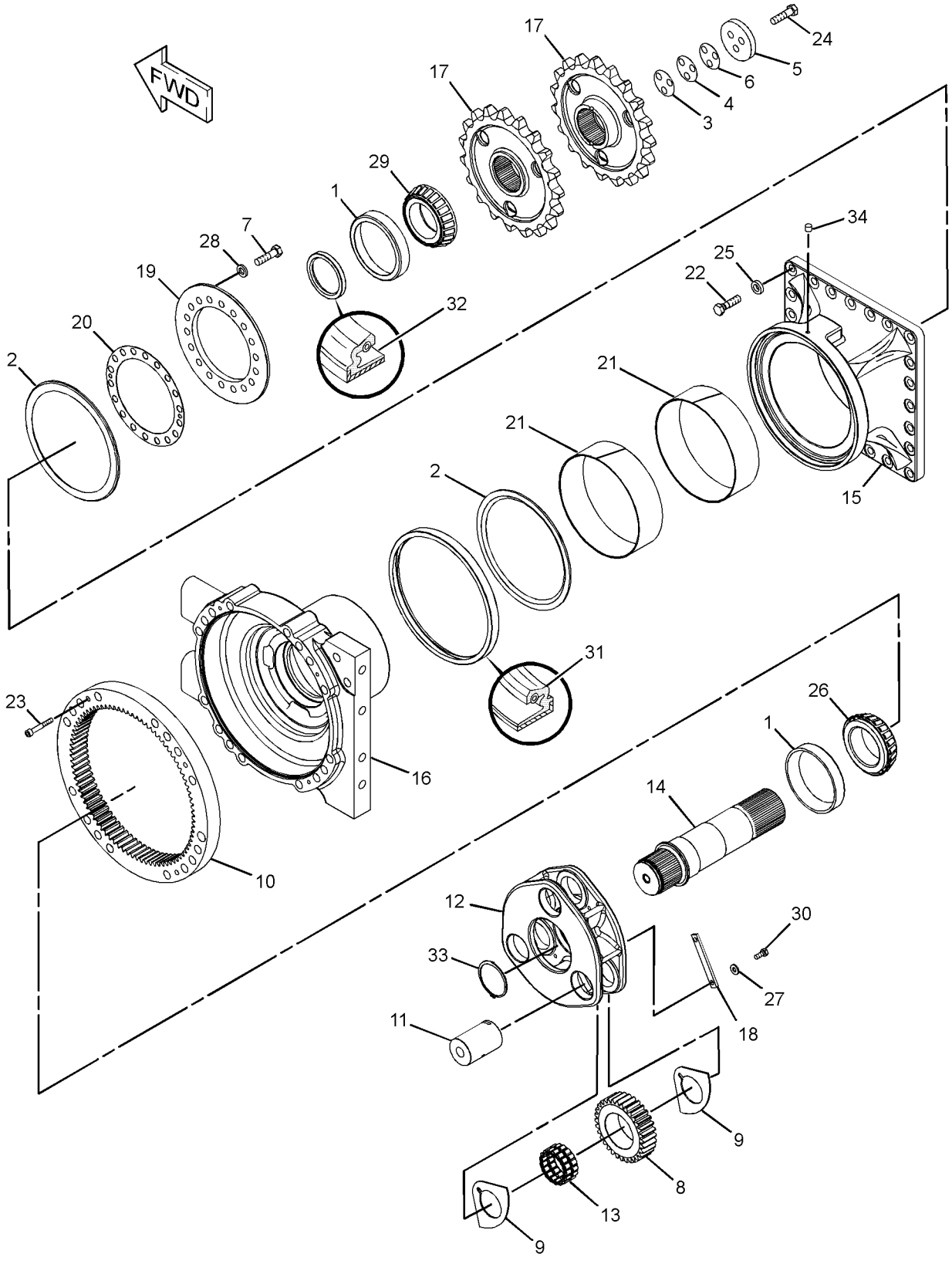

GRAPHIC #1 **<END>** g01158785

259-0040 FINAL DRIVE GP

S/N: B9M1-UP

PART OF 246-7967 AXLE GP-REAR

SMCS-4050 **i02297096**

NOTE	REF NO	GRAPHIC REF	PART NUMBER	QTY	PART NAME 1 2 3 4 5 6 (PRODUCT LEVEL)	SEE PAGE
	1	1	**4B-8394**	2	CUP-BEARING	
	2	1	**6G-3206**	2	WASHER-THRUST	
B	3	1	**7D-8439**	5	SHIM (0.007-MM THK)	
B	4	1	**7D-8441**	5	SHIM (0.005-MM THK)	
	5	1	**9D-3075**	1	RETAINER	
B	6	1	**9D-7047**	2	SHIM (0.02-MM THK)	
	7	1	**202-6473**	18	BOLT (M16X2X60-MM)	
	8	1	**239-4200**	3	GEAR-PLANETARY (32-TEETH)	
	9	1	**239-4204**	6	WASHER-THRUST	
	10	1	**239-4205**	1	GEAR-RING (84-TEETH)	
	11	1	**246-2722**	3	SHAFT	
	12	1	**253-9734**	1	CARRIER-PLANETARY	
	13	1	**257-8540**	6	BEARING-SPECIAL	
	14	1	**260-9429**	1	SHAFT-DRIVE	
	15	1	**262-2022**	1	HOUSING-FINAL DRIVE	
	16	1	**262-2037**	1	HOUSING-FINAL DRIVE	
	17	1	**262-5614**	2	SPROCKET	
	18	1	**263-4902**	3	RETAINER	
	19	1	**264-0194**	1	RETAINER	
B	20	1	**264-0196**	1	SHIM PACK (INCLUDES 10-SHIMS)	
	21	1	**266-0199**	2	RING-WEAR	
	22	1	**267-8628**	24	BOLT-LOCKING (M16X2X60-MM)	
M	23	1	**095-0658**	3	BOLT-SOCKET HEAD (M10X1.5X70-MM)	
M	24	1	**103-6169**	3	BOLT (M16X2X60-MM)	
	25	1	**198-4768**	24	WASHER-HARD (17.5X32X8-MM THK)	
	26	1	**2B-9174**	1	BEARING AS-TAPERED ROLLER	
	27	1	**3E-4353**	6	WASHER-HARD (11X25X3-MM THK)	
	28	1	**4D-3704**	18	WASHER-HARD (17X30X5-MM THK)	
	29	1	**6V-2449**	1	CONE-BEARING	
M	30	1	**6V-7732**	6	BOLT (M10X1.5X25-MM)	
	31	1	**6V-8081**	1	SEAL-LIP TYPE	
	32	1	**8D-3902**	1	SEAL-LIP TYPE	
	33	1	**8T-3727**	1	RING-RETAINING	
	34	1	**9F-2247**	1	PLUG-PIPE	

B-USE AS REQUIRED
M-METRIC PART

PROOF

259-0040 **FINAL DRIVE GP** *(contd.)* **i02297096**

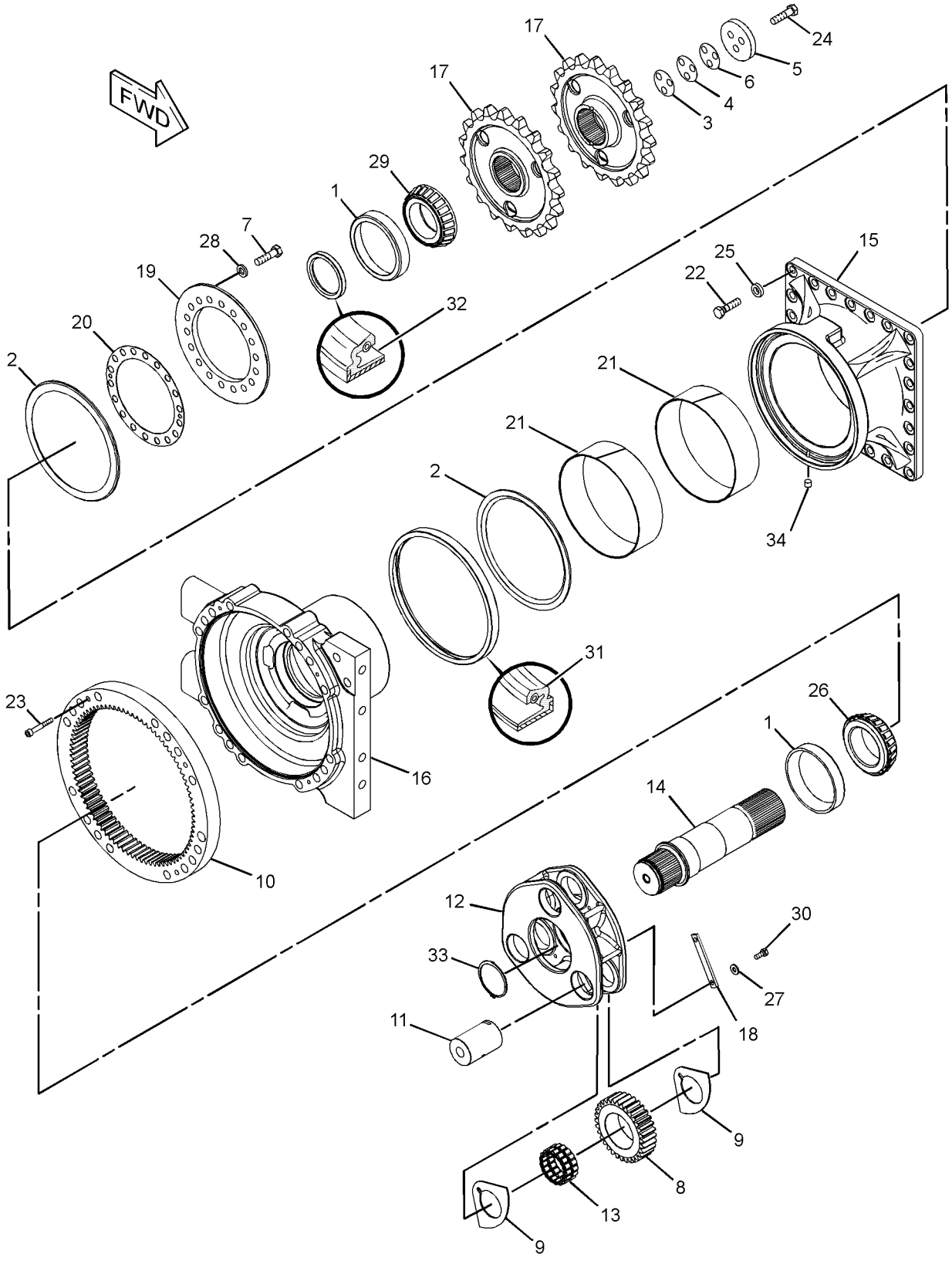

GRAPHIC #1 **<END>** g01153234

POWER TRAIN

231-8164 LINES GP-ALL WHEEL DRIVE

S/N: B9M1-UP
PART OF 261-0153 AXLE AR-FRONT
AN ATTACHMENT

SMCS-5057 **i02354599**

NOTE	REF NO	GRAPHIC REF	PART NUMBER	QTY	PART NAME 1 2 3 4 5 6 (PRODUCT LEVEL)	SEE PAGE
	1	4	**6V-0852**	2	CAP-DUST	
	2	4	*148-8425*	1	TEE AS	
		4	**5K-9090**	1	SEAL-O-RING	
		4	**8T-4834**	1	TEE-SWIVEL ORIFICE	
	3	4	**164-3651**	1	ADAPTER	
I	4	4	**173-7546**	1	HOSE AS	
	5	4	*177-1061*	1	ELBOW GP	
		4	**5K-9090**	1	SEAL-O-RING	
		4	**142-0038**	1	ELBOW	
	6	2	**178-0572**	6	STUD-TAPERLOCK (M10X1.5-THD)	
	7	4	**196-1803**	2	FILTER GP-OIL (ALL WHEEL DRIVE)	
					(EACH INCLUDES)	
		4	**134-0404**	1	SWITCH AS-PRESSURE (AWD OIL FILTER BYPASS)	
		4	**3J-1907**	1	SEAL-O-RING	
		4	**1G-8878**	1	FILTER ELEMENT-HYDRAULIC OIL (ALL WHEEL DRIVE)	
	8	2	*197-8940*	2	CONNECTOR AS	
					(EACH INCLUDES)	
		2	**2M-9780**	1	SEAL-O-RING	
		2	**7J-9108**	1	SEAL-O-RING	
		2	**8T-1576**	1	CONNECTOR (FACE SEAL)	
	9	4	*205-2357*	2	CONNECTOR AS	
					(EACH INCLUDES)	
		4	**3D-2824**	1	SEAL-O-RING	
		4	**6V-8398**	1	SEAL-O-RING	
		4	**8T-7968**	1	CONNECTOR	
BE	10	1	**6R-2052**		SLEEVE	
	11	4	*241-6197*	1	TEE AS	
		4	**5K-9090**	3	SEAL-O-RING	
		4	**241-6196**	1	TEE	
	12	3	*241-6208*	4	ELBOW AS	
					(EACH INCLUDES)	
		3	**2M-9780**	1	SEAL-O-RING	
		3	**5K-9090**	1	SEAL-O-RING	
		3	**119-6220**	1	ELBOW	
Y	13	1	**241-6272**	1	MANIFOLD GP-CONTROL (AWD, CLUTCH RELEASE)	
	14	2	**246-3343**	1	BLOCK	
	15	2	**246-3344**	1	BLOCK	
	16	2	**246-3345**	1	BLOCK	
	17	2	**246-3346**	1	BLOCK	
I	18	4	**246-3353**	1	HOSE AS	
I	19	4	**246-3363**	1	HOSE AS	
	20	2	**246-3375**	2	PLATE	
	21	2	**246-3377**	2	PLATE	
	22	1	**246-4418**	1	TUBE AS	
	23	3	**246-4422**	1	TUBE AS	
I	24	4	**246-4424**	2	HOSE AS	
I	25	1	**246-4427**	1	HOSE AS	
I	26	1	**246-4428**	2	HOSE AS	
I	27	1	**246-4429**	2	HOSE AS	
I	28	1	**246-4432**	1	HOSE AS	
I	29	1	**246-4433**	1	HOSE AS	
I	30	1	**246-4434**	1	HOSE AS	
I	31	1	**246-4435**	1	HOSE AS	
I	32	4	**246-4439**	1	HOSE AS	

PROOF

231-8164 LINES GP-ALL WHEEL DRIVE *(contd.)* i02354599

NOTE	REF NO	GRAPHIC REF	PART NUMBER	QTY	PART NAME 1 2 3 4 5 6 (PRODUCT LEVEL)	SEE PAGE
I	33	4	**246-4441**	1	HOSE AS	
I	34	1	**246-6317**	1	HOSE AS	
I	35	1	**246-6318**	1	HOSE AS	
I	36	1	**247-1770**	1	HOSE AS	
I	37	1	**247-1771**	1	HOSE AS	
I	38	4	**247-9623**	1	HOSE AS	
I	39	4	**247-9624**	1	HOSE AS	
	40	4	**248-4036**	1	TUBE AS	
	41	4	**248-4037**	1	TUBE AS	
I	42	4	**250-3153**	1	HOSE AS	
I	43	4	**253-3871**	1	HOSE AS	
I	44	4	**257-9180**	1	HOSE AS	
	45	1	**257-9182**	1	TUBE AS	
	46	2	**259-6388**	2	PLATE	
	47	1	**260-8711**	2	GUARD	
	48	3	*260-9143*	1	ELBOW AS	
		3	**6V-9746**	1	SEAL-O-RING	
		3	**109-5824**	1	ELBOW (SWIVEL)	
	49	2	**262-5697**	2	BLOCK	
	50	2	**262-5698**	4	BLOCK	
	51	2	**262-5699**	4	BLOCK	
	52	2	**262-5700**	1	BLOCK	
	53	2	**262-5701**	1	BLOCK	
	54	2	**262-5702**	1	BLOCK	
	55	2	**262-5703**	1	BLOCK	
	56	4	**262-6658**	1	PLATE AS	
	57	1	**262-7351**	1	TUBE AS	
	58	2	**268-8955**	2	SLEEVE-ABRASION	
	59	4	**271-1655**	2	TUBE AS	
	60	1	**271-1656**	1	TUBE AS	
	61	1	**271-1657**	1	TUBE AS	
	62	1	**271-1658**	1	TUBE AS	
	63	1	**271-1659**	1	TUBE AS	
I	64	4	**271-2387**	1	HOSE AS	
I	65	4	**271-2389**	1	HOSE AS	
	66	2	**092-7385**	3	CLIP	
M	67	2	**096-4883**	12	LOCKNUT (M10X1.5-THD)	
M	68	2	**116-3715**	4	STUD-TAPERLOCK (M10X1.5X85-MM)	
M	69	2	**140-9473**	2	STUD-TAPERLOCK (M10X1.5X100-MM)	
	70	4	**144-8344**	1	SPACER (11X19X20-MM THK)	
	71	2	*148-8316*	2	CONNECTOR AS	
					(EACH INCLUDES)	
		2	**3J-7354**	1	SEAL-O-RING	
		2	**4J-5477**	1	SEAL-O-RING	
		2	**6V-8647**	1	CONNECTOR	
	72	4	*148-8317*	1	CONNECTOR AS	
		4	**3D-2824**	1	SEAL-O-RING	
		4	**5K-9090**	1	SEAL-O-RING	
		4	**6V-8714**	1	CONNECTOR	
	73	3,4	*148-8322*	3	CONNECTOR GP	
					(EACH INCLUDES)	
		3,4	**2M-9780**	1	SEAL-O-RING	
		3,4	**6V-8640**	1	CONNECTOR	
		3,4	**6V-9746**	1	SEAL-O-RING	
	74	4	*148-8327*	2	CONNECTOR AS	
					(EACH INCLUDES)	
		4	**3D-2824**	1	SEAL-O-RING	
		4	**6V-8637**	1	CONNECTOR	
		4	**6V-9746**	1	SEAL-O-RING	

PROOF

231-8164 LINES GP-ALL WHEEL DRIVE *(contd.)* i02354599

NOTE	REF NO	GRAPHIC REF	PART NUMBER	QTY	PART NAME 1 2 3 4 5 6 (PRODUCT LEVEL)	SEE PAGE
	75	4	*148-8328*	1	CONNECTOR AS	
		4	**3D-2824**	1	SEAL-O-RING	
		4	**6V-8398**	1	SEAL-O-RING	
		4	**6V-8633**	1	CONNECTOR	
	76	4	*148-8335*	1	CONNECTOR AS	
		4	**5K-9090**	1	SEAL-O-RING	
		4	**6V-8635**	1	CONNECTOR	
		4	**7M-8485**	1	SEAL-O-RING	
	77	3	*148-8336*	2	CONNECTOR AS	
					(EACH INCLUDES)	
		3	**3J-1907**	1	SEAL-O-RING	
		3	**6V-8397**	1	SEAL-O-RING	
		3	**6V-8636**	1	CONNECTOR	
	78	2	**148-8353**	2	ELBOW AS	
					(EACH INCLUDES)	
		2	**3J-1907**	1	SEAL-O-RING	
		2	**6V-8397**	1	SEAL-O-RING	
		2	**6V-9001**	1	ELBOW	
	79	4	*148-8354*	1	ELBOW AS	
		4	**3K-0360**	1	SEAL-O-RING	
		4	**6V-8398**	1	SEAL-O-RING	
		4	**6V-9002**	1	ELBOW	
	80	4	*148-8355*	1	ELBOW AS	
		4	**5K-9090**	1	SEAL-O-RING	
		4	**6V-9005**	1	ELBOW	
		4	**7M-8485**	1	SEAL-O-RING	
	81	3	*148-8359*	2	ELBOW AS	
					(EACH INCLUDES)	
		3	**3K-0360**	1	SEAL-O-RING	
		3	**6V-9746**	1	SEAL-O-RING	
		3	**6V-9877**	1	ELBOW	
	82	4	*148-8362*	1	ELBOW GP	
		4	**3D-2824**	1	SEAL-O-RING	
		4	**5K-9090**	1	SEAL-O-RING	
		4	**8T-6684**	1	ELBOW (90-DEG)	
	83	2	*148-8369*	2	ELBOW AS	
					(EACH INCLUDES)	
		2	**3J-7354**	1	SEAL-O-RING	
		2	**4J-5477**	1	SEAL-O-RING	
		2	**6V-8628**	1	ELBOW	
	84	3	**148-8378**	2	ELBOW AS	
					(EACH INCLUDES)	
		3	**3J-1907**	1	SEAL-O-RING	
		3	**6V-8397**	1	SEAL-O-RING	
		3	**6V-8724**	1	ELBOW	
	85	4	*148-8381*	1	ELBOW AS	
		4	**3D-2824**	1	SEAL-O-RING	
		4	**6V-8398**	1	SEAL-O-RING	
		4	**8T-5429**	1	ELBOW	
	86	3,4	*148-8388*	3	ELBOW AS	
					(EACH INCLUDES)	
		3,4	**2M-9780**	1	SEAL-O-RING	
		3,4	**6V-8629**	1	ELBOW	
		3,4	**6V-9746**	1	SEAL-O-RING	
	87	3,4	*148-8392*	2	ELBOW AS	
					(EACH INCLUDES)	
		3,4	**6V-9746**	1	SEAL-O-RING	
		3,4	**6V-9853**	1	ELBOW	
	88	4	*148-8428*	1	TEE AS	

PROOF

231-8164 LINES GP-ALL WHEEL DRIVE *(contd.)* i02354599

NOTE	REF NO	GRAPHIC REF	PART NUMBER	QTY	PART NAME 1 2 3 4 5 6 (PRODUCT LEVEL)	SEE PAGE
		4	**3K-0360**	1	SEAL-O-RING	
		4	**6V-8398**	2	SEAL-O-RING	
		4	**6V-8782**	1	TEE	
	89	3	*148-8453*	1	TEE AS	
		3	**5K-9090**	1	SEAL-O-RING	
		3	**6V-8400**	2	SEAL-O-RING	
		3	**8T-5907**	1	TEE-UNION	
	90	2	**149-7738**	2	CLIP	
	91	2	*150-3035*	2	ELBOW AS	
					(EACH INCLUDES)	
		2	**6V-9746**	1	SEAL-O-RING	
		2	**8T-1718**	1	ELBOW	
	92	3	*150-3069*	1	UNION AS	
		3	**6V-8397**	4	SEAL-O-RING	
		3	**7X-3406**	1	UNION-CROSS	
	93	4	*153-6241*	1	ELBOW AS	
		4	**6V-8398**	1	SEAL-O-RING	
		4	**8C-8989**	1	ELBOW	
	94	4	*155-6258*	1	ELBOW AS	
		4	**3D-2824**	1	SEAL-O-RING	
		4	**6V-8398**	1	SEAL-O-RING	
		4	**127-1647**	1	ELBOW	
	95	3	*164-5549*	1	COUPLING GP	
		3	**3J-1907**	1	SEAL-O-RING	
		3	**4I-6287**	1	COUPLING AS	
	96	4	*164-5567*	2	FITTING GP-COUPLING	
					(EACH INCLUDES)	
		4	**3J-1907**	1	SEAL-O-RING	
		4	**6V-3965**	1	FITTING AS (QUICK DISCONNECT)	
	97	1	*164-5570*	1	UNION AS	
		1	**6V-8397**	2	SEAL-O-RING	
		1	**6V-8730**	1	UNION	
M	98	3	**180-3998**	1	STUD (M10X1.5X55-MM)	
	99	4	**1P-3702**	4	SEAL-RECTANGULAR	
	100	2	**1P-3703**	4	SEAL-RECTANGULAR	
	101	2	**1S-0994**	2	CLIP	
	102	4	**3E-4321**	1	CLIP	
	103	4	**3J-1907**	1	SEAL-O-RING	
	104	4	**3S-8665**	4	CLIP	
	105	4	**4D-7735**	1	CLIP	
	106	1,4	**4S-4455**	3	CLIP	
	107	3	**5P-7854**	1	CLIP	
	108	1	**5P-9297**	1	CLIP	
	109	1	**6D-4244**	4	CLIP	
	110	2	**6V-0400**	8	FLANGE-HALF	
	111	3	**6V-8558**	1	NUT-FACE SEAL (1-11/16-12-THD)	
	112	3	**6V-8947**	1	REDUCER	
	113	4	**6V-9172**	1	NUT (1-7/16-12-THD)	
	114	3,4	**6V-9746**	6	SEAL-O-RING	
	115	2,4	**7D-7233**	4	CLIP	
M	116	1	**7X-2553**	4	BOLT (M16X2X40-MM)	
	117	4	**8M-2773**	3	CLIP	
M	118	2,3,4	**8T-4121**	48	WASHER-HARD (11X21X2.5-MM THK)	
	119	4	**8T-4123**	1	WASHER-PLATED (22X35X3.5-MM THK)	
M	120	3,4	**8T-4133**	4	NUT (M10X1.5-THD)	
M	121	4	**8T-4136**	4	BOLT (M10X1.5X25-MM)	
M	122	4	**8T-4137**	8	BOLT (M10X1.5X20-MM)	
M	123	4	**8T-4182**	17	BOLT (M10X1.5X45-MM)	
M	124	2	**8T-4184**	16	BOLT (M12X1.75X45-MM)	

231-8164 **LINES GP-ALL WHEEL DRIVE** *(contd.)* **i02354599**

NOTE	REF NO	GRAPHIC REF	PART NUMBER	QTY	PART NAME 1 2 3 4 5 6 (PRODUCT LEVEL)	SEE PAGE
M	125	4	**8T-4195**	2	BOLT (M10X1.5X30-MM)	
M	126	2	**8T-4223**	16	WASHER-HARD (13.5X25.5X3-MM THK)	
M	127	4	**8T-4780**	1	BOLT (M20X2.5X30-MM)	
	128	4	**8T-5429**	1	ELBOW	
	129	4	**8T-9403**	8	FLANGE-HALF	
	130	4	**9X-8250**	1	CLIP	
	131	1	**9X-8257**	4	WASHER (17.5X30X3.5-MM THK)	

B-USE AS REQUIRED
E-ORDER BY THE CENTIMETER
I-REFER TO HYDRAULIC INFORMATION SYSTEM
M-METRIC PART
Y-SEPARATE ILLUSTRATION

PROOF

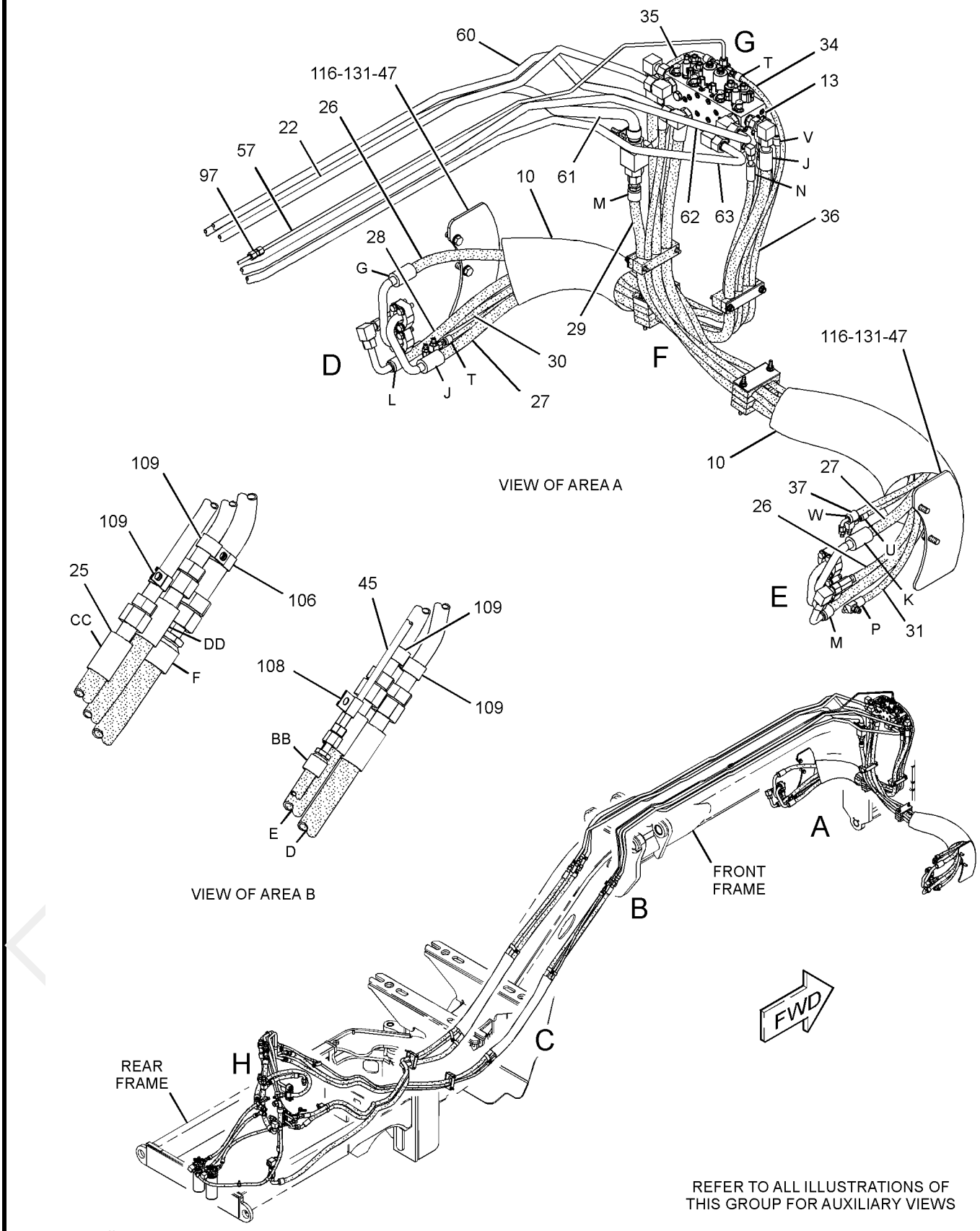

GRAPHIC #1

g01162742

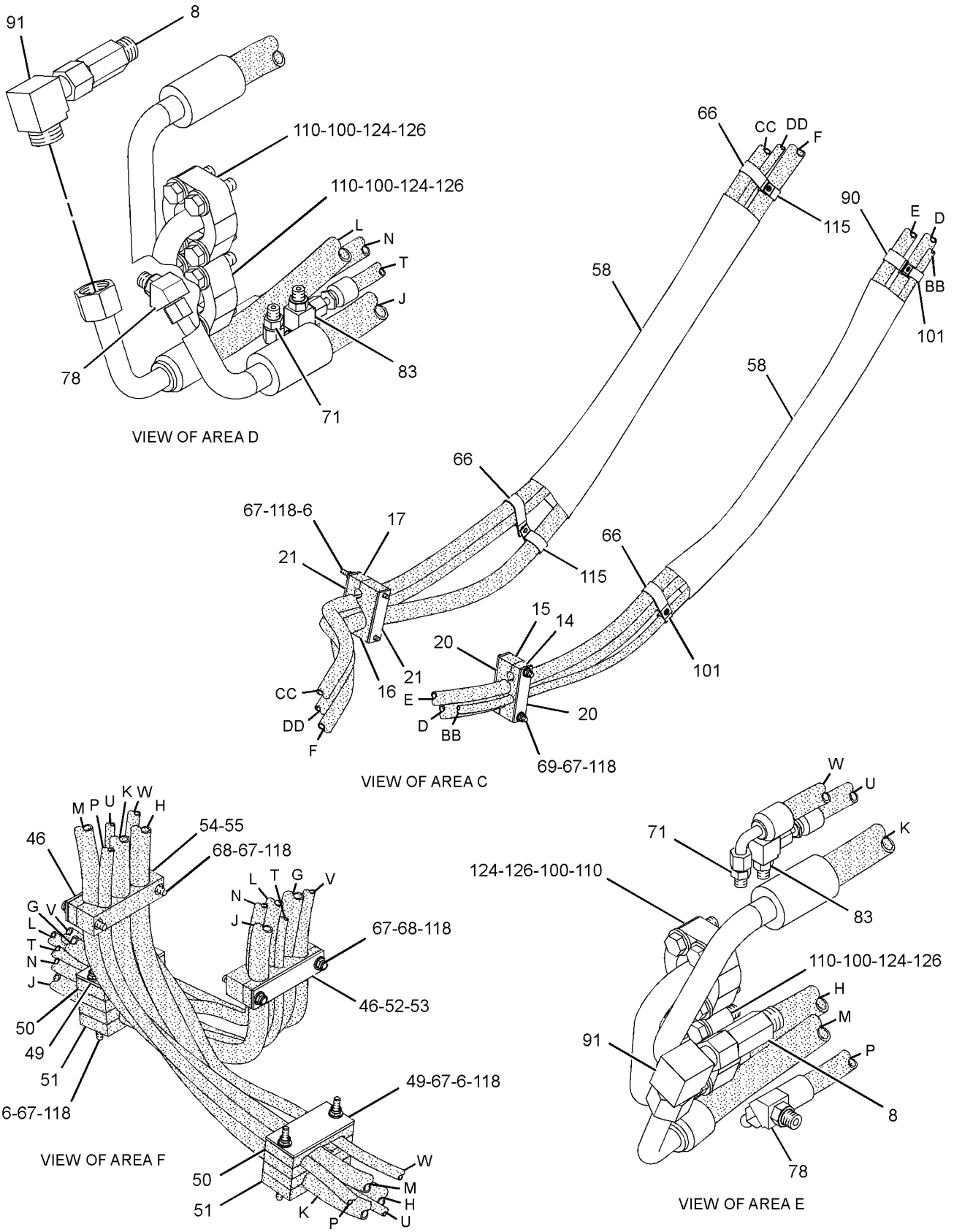

GRAPHIC #2

g01162743

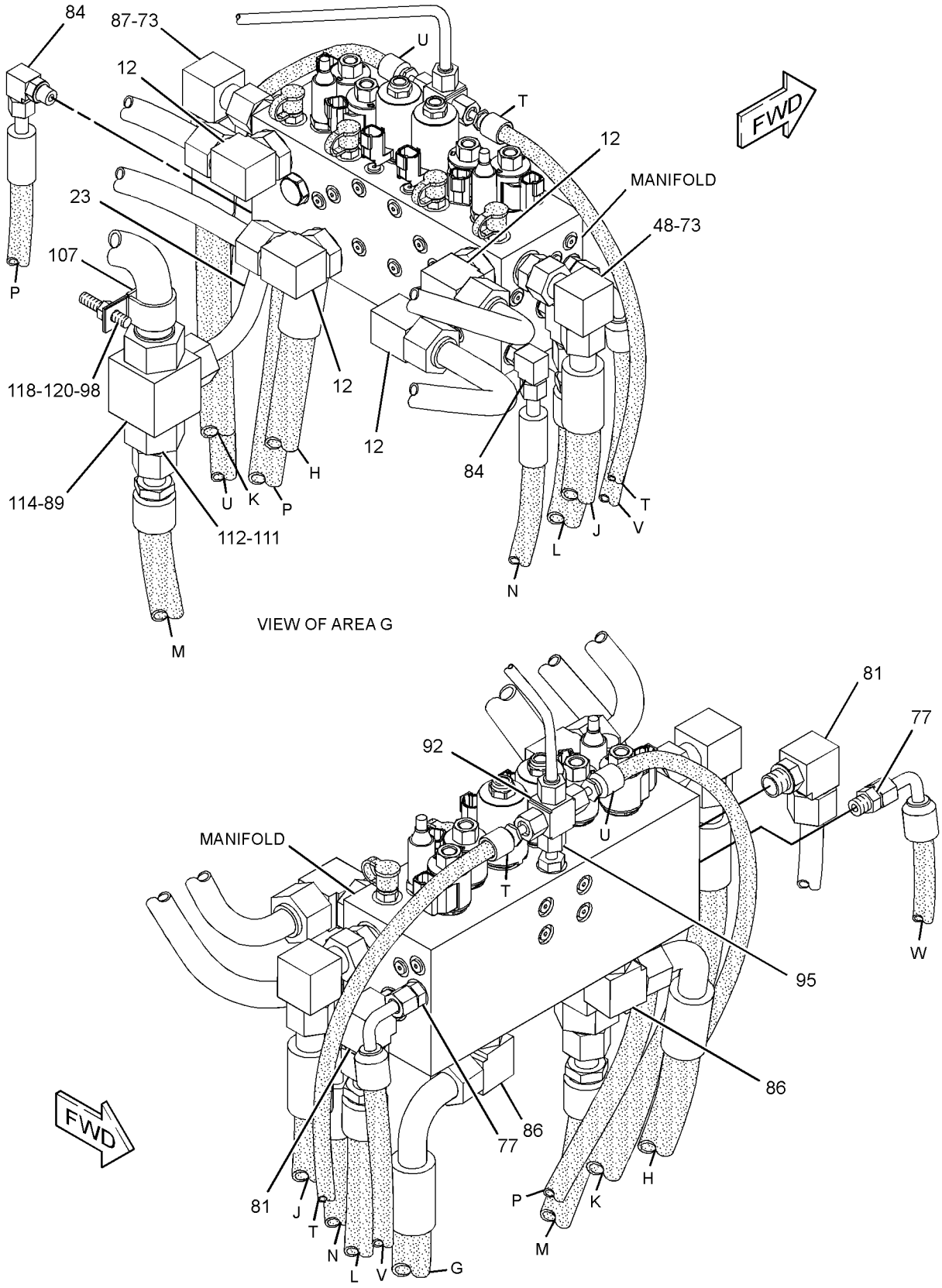

GRAPHIC #3

g01162744

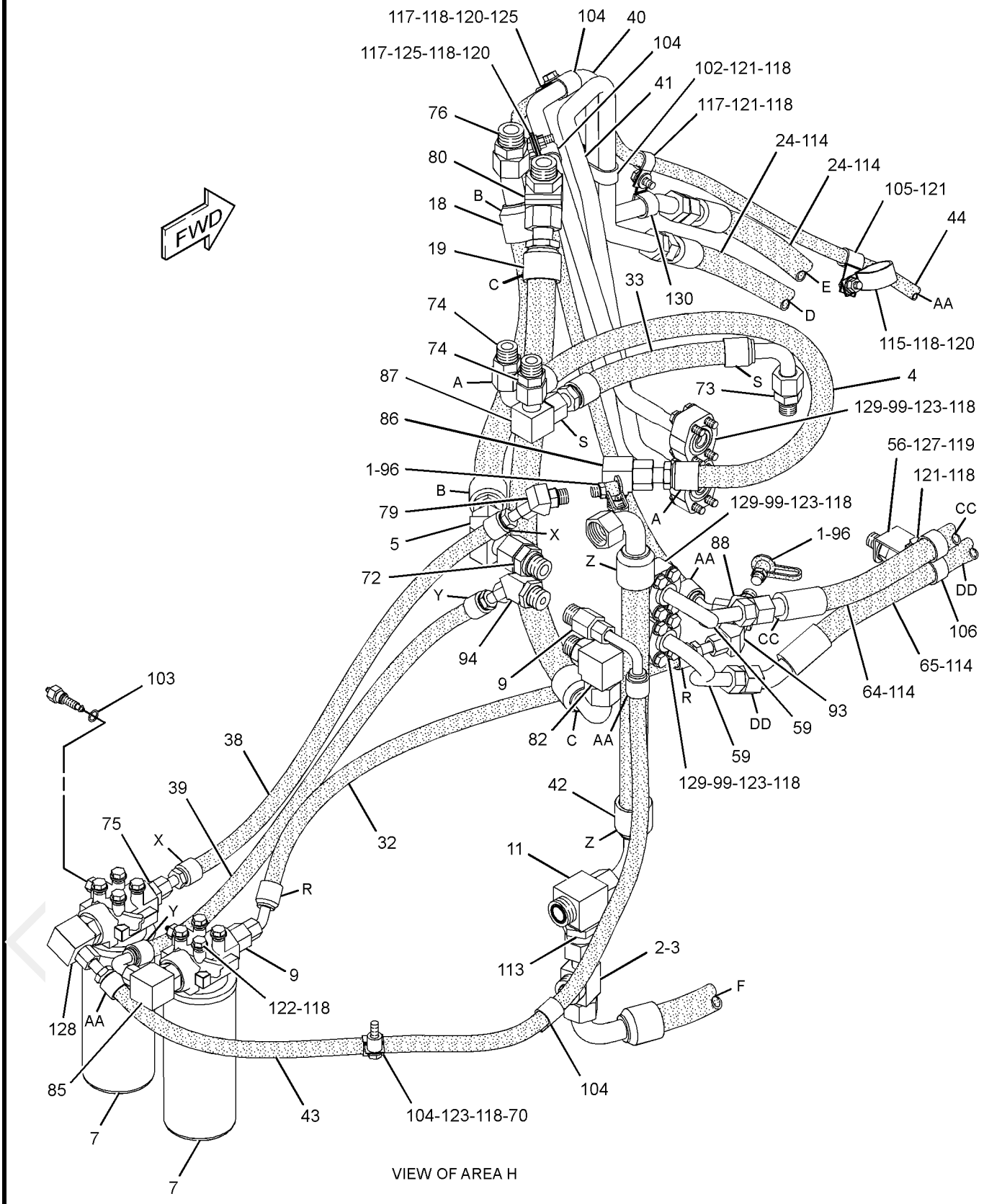

GRAPHIC #4 **<END>** g01175840

264-2994 LINES GP-ALL WHEEL DRIVE

S/N: B9M1-UP

PART OF 261-0153 AXLE AR-FRONT

AN ATTACHMENT

SMCS-5057 **i02277512**

NOTE	REF NO	GRAPHIC REF	PART NUMBER	QTY	PART NAME 1 2 3 4 5 6 (PRODUCT LEVEL)	SEE PAGE
I	1	1	**179-6964**	2	HOSE AS	
I	2	1	**238-6666**	1	HOSE AS	
I	3	1	**238-6667**	1	HOSE AS	
I	4	1	**241-9657**	2	HOSE AS	
	5	1	**253-0472**	1	PLATE AS	
	6	1	**270-7003**	1	TUBE AS	
	7	1	**270-7004**	1	TUBE AS	
M	8	1	**133-7810**	1	STUD-TAPERLOCK (M10X1.5-THD)	
	9	1	*148-8318*	1	CONNECTOR AS	
		1	**3K-0360**	1	SEAL-O-RING	
		1	**6V-8397**	1	SEAL-O-RING	
		1	**6V-8634**	1	CONNECTOR	
	10	1	*148-8340*	6	CONNECTOR AS	
					(EACH INCLUDES)	
		1	**3K-0360**	1	SEAL-O-RING	
		1	**6V-8398**	1	SEAL-O-RING	
		1	**6V-8639**	1	CONNECTOR	
	11	1	*148-8374*	1	ELBOW AS	
		1	**3K-0360**	1	SEAL-O-RING	
		1	**6V-8397**	1	SEAL-O-RING	
		1	**6V-8723**	1	ELBOW	
	12	1	*148-8444*	2	TEE AS-SWIVEL	
					(EACH INCLUDES)	
		1	**6V-8398**	2	SEAL-O-RING	
		1	**6V-9837**	1	TEE-SWIVEL	
	13	1	**1S-0994**	5	CLIP	
	14	1	**6V-8398**	2	SEAL-O-RING	
	15	1	**8T-4121**	11	WASHER-HARD (11X21X2.5-MM THK)	
M	16	1	**8T-4133**	2	NUT (M10X1.5-THD)	
M	17	1	**8T-4136**	1	BOLT (M10X1.5X25-MM)	
M	18	1	**8T-4137**	8	BOLT (M10X1.5X20-MM)	
	19	1	**9X-8250**	6	CLIP	

I-REFER TO HYDRAULIC INFORMATION SYSTEM
M-METRIC PART

PROOF

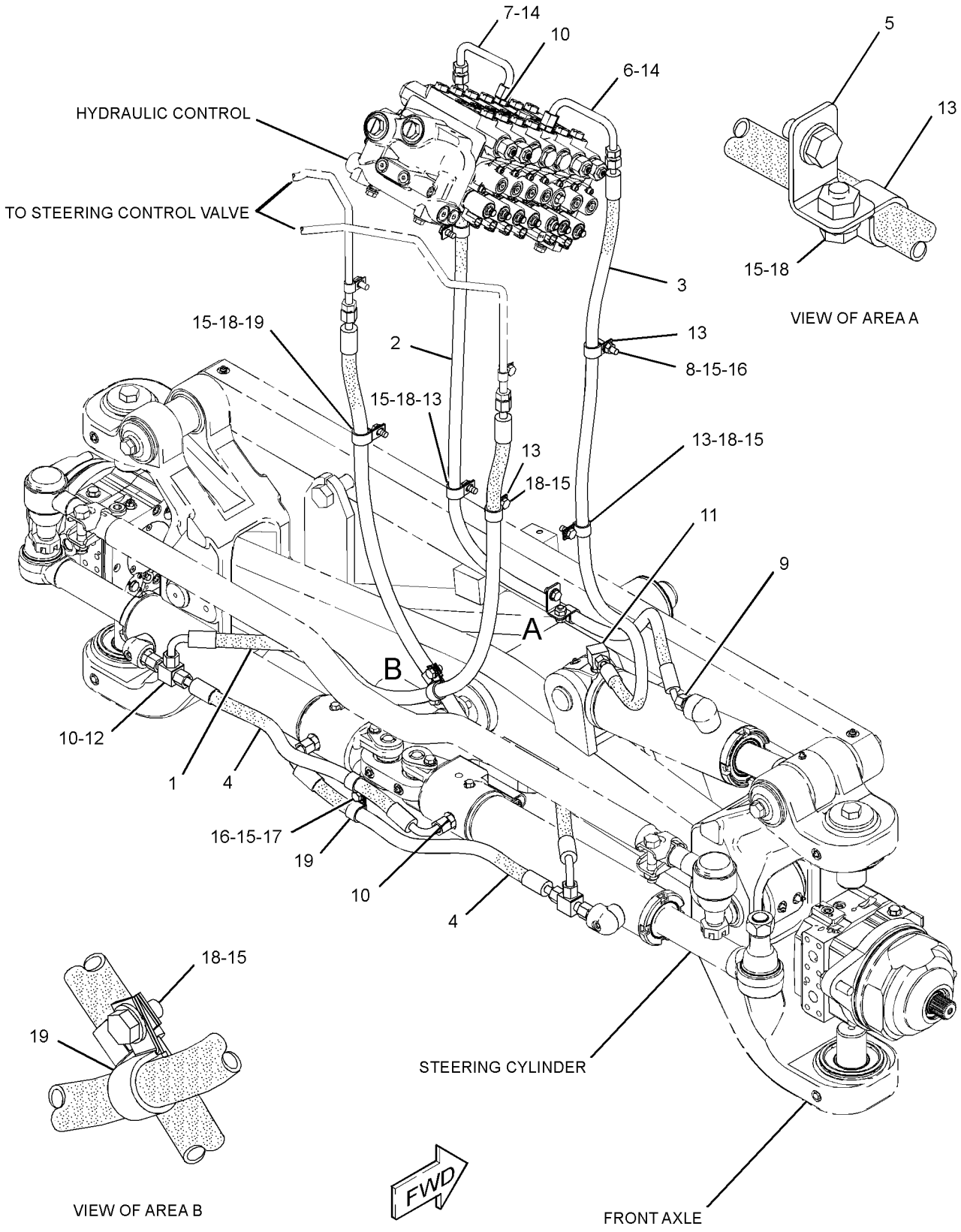

GRAPHIC #1 **<END>** g01156959

255-1244 LINES GP-POWER TAKE-OFF

S/N: B9M1-UP

PART OF 234-7721 COMMON AR-MOTOR GRADER

SMCS-3016 **i02297298**

NOTE	REF NO	GRAPHIC REF	PART NUMBER	QTY	PART NAME 1 2 3 4 5 6 (PRODUCT LEVEL)	SEE PAGE
	1	1	**271-5228**	1	TUBE AS	
	2	1	*148-8336*	2	CONNECTOR AS	
					(EACH INCLUDES)	
		1	**3J-1907**	1	SEAL-O-RING	
		1	**6V-8397**	1	SEAL-O-RING	
		1	**6V-8636**	1	CONNECTOR	

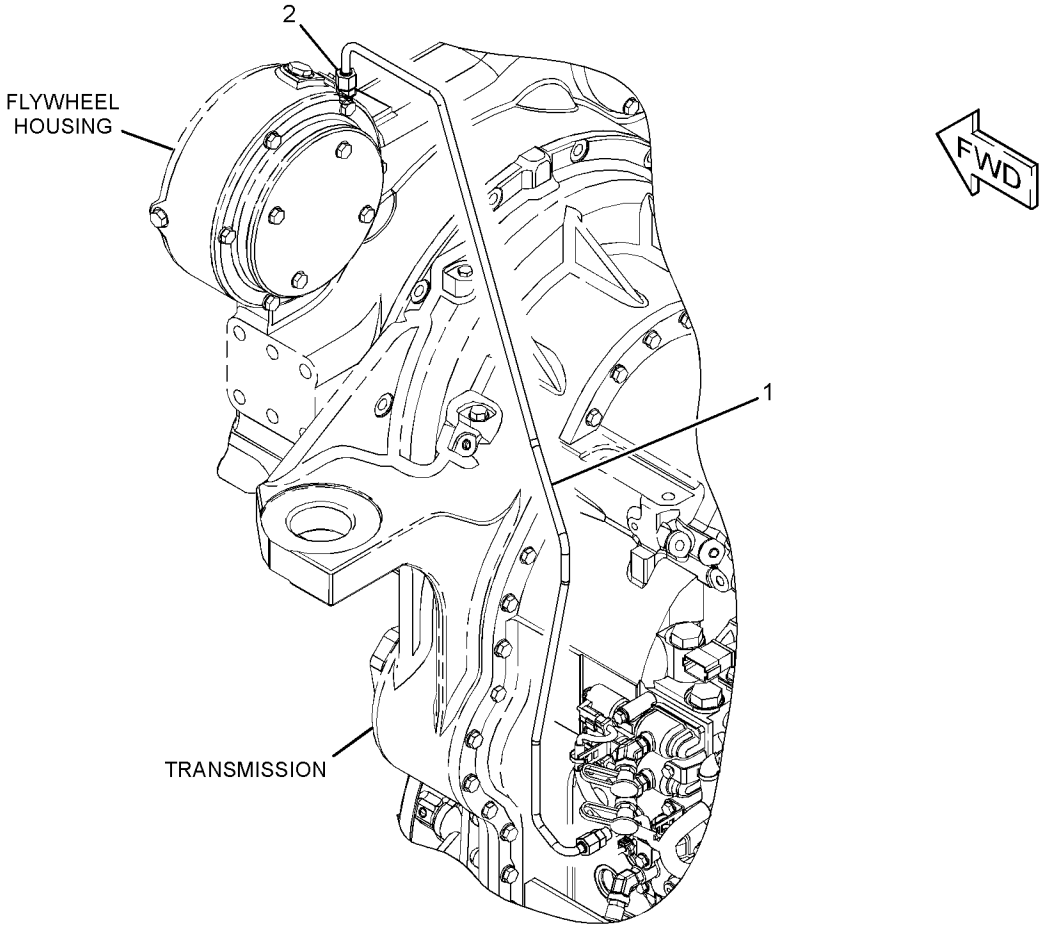

GRAPHIC #1 **<END>** g01158947

POWER TRAIN

255-1243 LINES GP-TRANSMISSION OIL

S/N: B9M1-UP

PART OF 234-7721 COMMON AR-MOTOR GRADER

SMCS-3154 **i02354596**

NOTE	REF NO	GRAPHIC REF	PART NUMBER	QTY	PART NAME 1 2 3 4 5 6 (PRODUCT LEVEL)	SEE PAGE
	1	2	**1H-9779**	1	CONNECTOR-HOSE	
	2	2	**3E-7445**	2	CLAMP-HOSE	
	3	1	**8T-4983**	2	CLAMP-HOSE	
	4	2	**033-6783**	1	FITTING	
	5	2	**166-4116**	1	SPACER (10X16X20-MM THK)	
	6	1	**246-6654**	1	HOSE	
	7	1	**250-2696**	1	TUBE AS	
	8	1	**250-2698**	1	TUBE AS	
I	9	2	**255-2091**	1	HOSE AS	
	10	1	**263-6675**	1	BRACKET AS	
M		1	**8T-3490**	1	NUT-WELD (M10X1.5-THD)	
	11	1	**263-6684**	1	TUBE AS	
	12	2	**264-0380**	1	TUBE AS	
	13	2	**264-0381**	1	TUBE AS	
	14	2	**266-7274**	1	TUBE AS	
I	15	2	**270-2705**	1	HOSE AS	
	16	1,2	**130-9984**	2	CLIP	
	17	2	*148-8323*	1	CONNECTOR GP	
		2	**2S-4078**	1	SEAL-O-RING	
		2	**5K-9090**	1	SEAL-O-RING	
		2	**6V-9875**	1	CONNECTOR	
	18	1	*148-8327*	1	CONNECTOR AS	
		1	**3D-2824**	1	SEAL-O-RING	
		1	**6V-8637**	1	CONNECTOR	
		1	**6V-9746**	1	SEAL-O-RING	
	19	2	*148-8335*	3	CONNECTOR AS	
					(EACH INCLUDES)	
		2	**5K-9090**	1	SEAL-O-RING	
		2	**6V-8635**	1	CONNECTOR	
		2	**7M-8485**	1	SEAL-O-RING	
	20	2	*148-8352*	1	ELBOW GP	
		2	**5K-9090**	1	SEAL-O-RING	
		2	**6V-9854**	1	ELBOW (SWIVEL)	
	21	1	**154-7159**	1	TEE	
	22	2	**1P-4577**	4	FLANGE-HALF	
	23	2	**1P-4578**	2	FLANGE-HALF	
	24	1	**3D-2824**	1	SEAL-O-RING	
	25	2	**4J-0520**	3	SEAL-O-RING	
	26	2	**4J-0522**	1	SEAL-O-RING	
	27	1	**4J-0524**	1	SEAL-O-RING	
	28	2	**5S-7382**	8	BOLT (3/8-16X1.375-IN)	
	29	2	**6V-8400**	1	SEAL-O-RING	
	30	1	**6V-9172**	1	NUT (1-7/16-12-THD)	
M	31	2	**7X-0818**	1	BOLT (M8X1.25X45-MM)	
	32	2	**8C-3206**	2	FLANGE-HALF	
	33	2	**8M-6678**	1	CLIP	
M	34	1,2	**8T-4121**	12	WASHER-HARD (11X21X2.5-MM THK)	
M	35	1,2	**8T-4133**	2	NUT (M10X1.5-THD)	
M	36	1,2	**8T-4136**	2	BOLT (M10X1.5X25-MM)	
M	37	2	**8T-4196**	8	BOLT (M10X1.5X35-MM)	
M	38	1	**8T-4223**	2	WASHER-HARD (13.5X25.5X3-MM THK)	
	39	2	**8T-4224**	1	WASHER-HARD (8.8X16X2-MM THK)	
M	40	1	**8T-4779**	2	BOLT (M16X2X35-MM)	
	41	2	**8T-4896**	8	WASHER-HARD (10.2X18.5X2.5-MM THK)	
M	42	1	**8T-4956**	2	BOLT (M12X1.75X35-MM)	
	43	1	**9X-8257**	2	WASHER (17.5X30X3.5-MM THK)	

PROOF

255-1243 LINES GP-TRANSMISSION OIL *(contd.)* i02354596

NOTE	REF NO	GRAPHIC REF	PART NUMBER	QTY	PART NAME 1 2 3 4 5 6 (PRODUCT LEVEL)	SEE PAGE
E	44	2	**5P-0765**		HOSE (53-CM)	

E-ORDER BY THE CENTIMETER
I-REFER TO HYDRAULIC INFORMATION SYSTEM
M-METRIC PART

PROOF

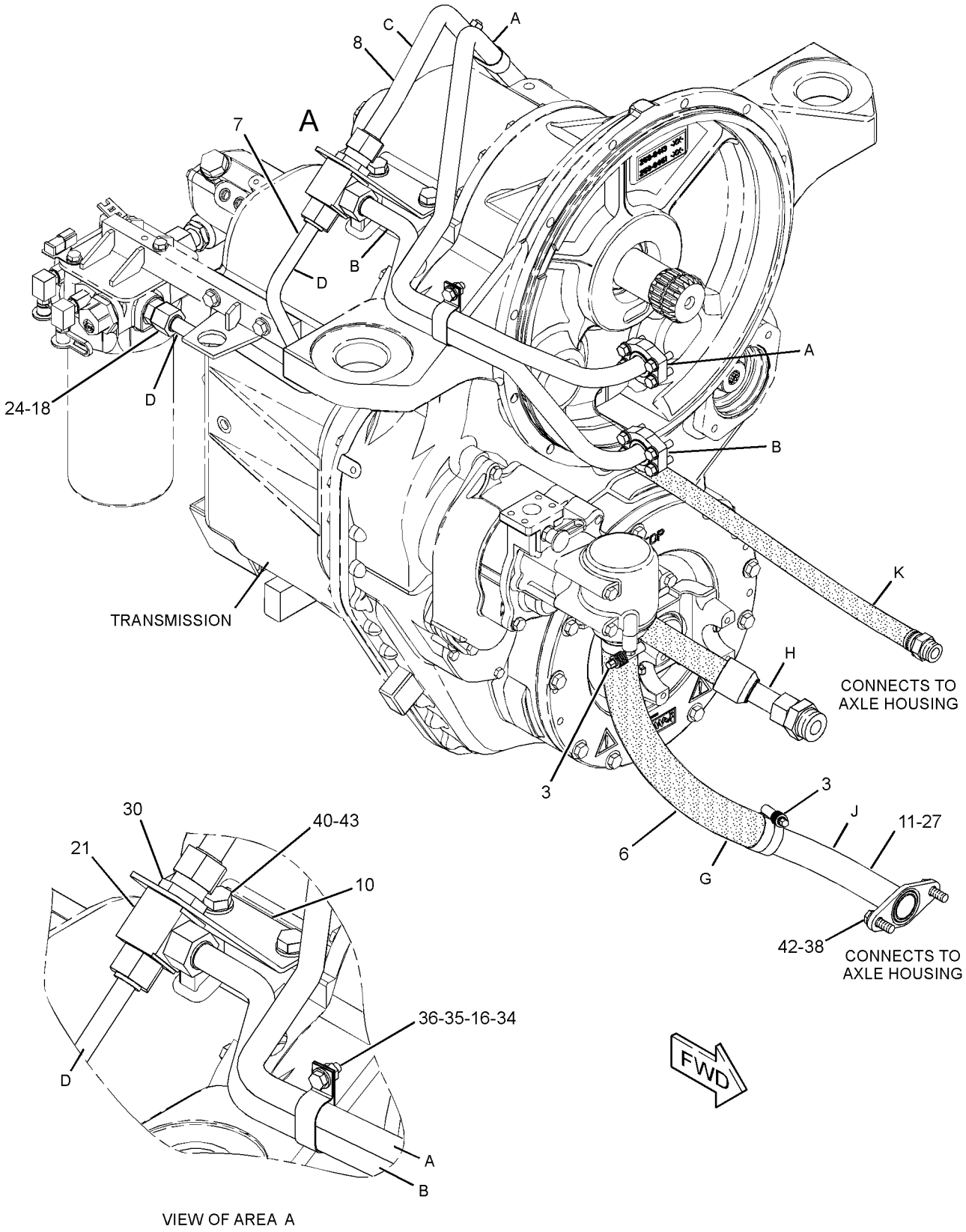

GRAPHIC #1 g01160549

255-1243 **LINES GP-TRANSMISSION OIL** *(contd.)* **i02354596**

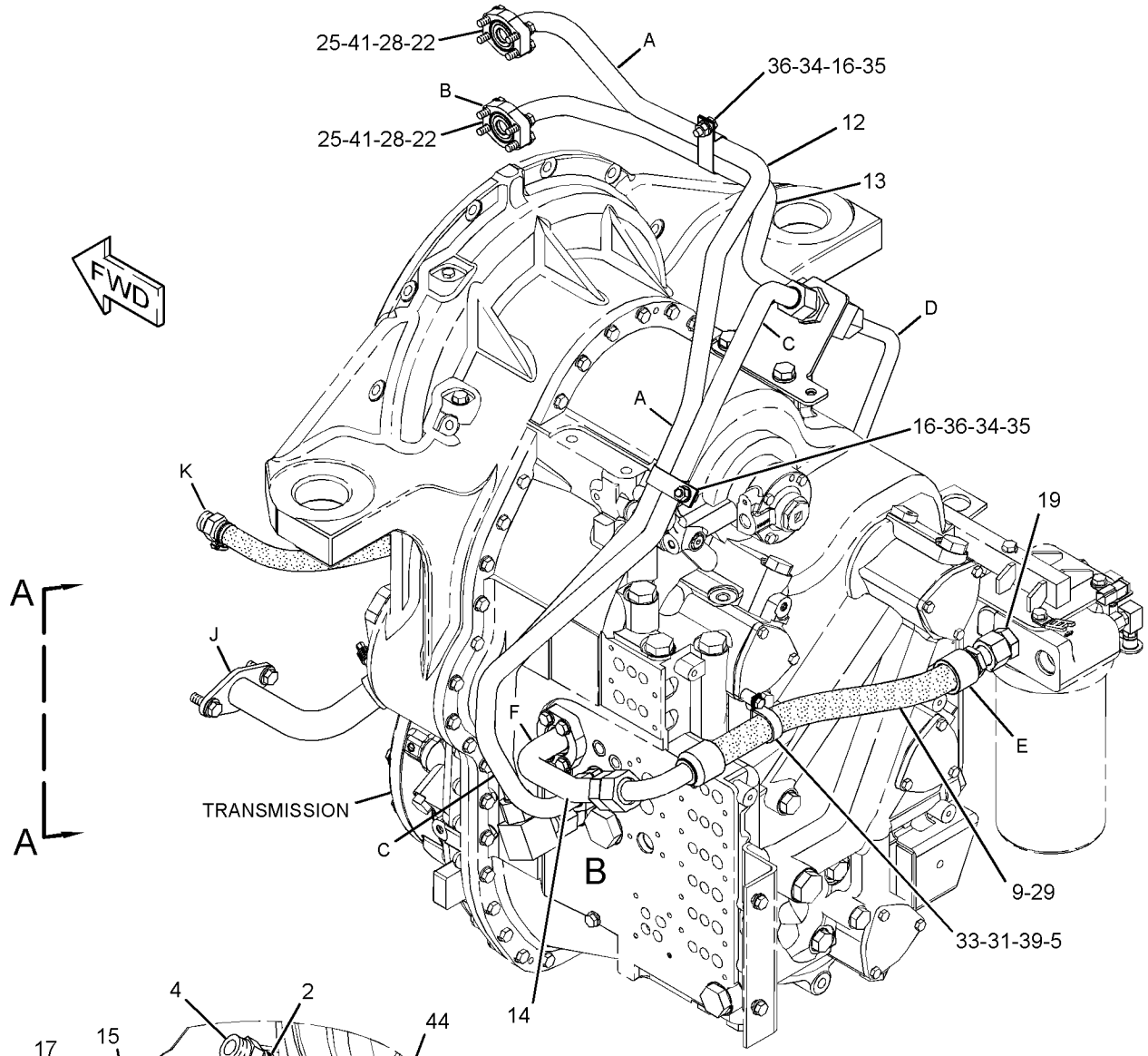

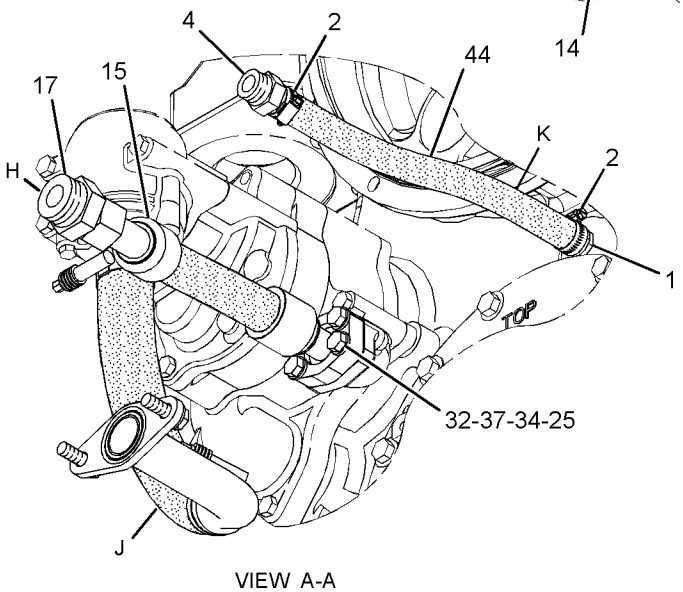

VIEW A-A

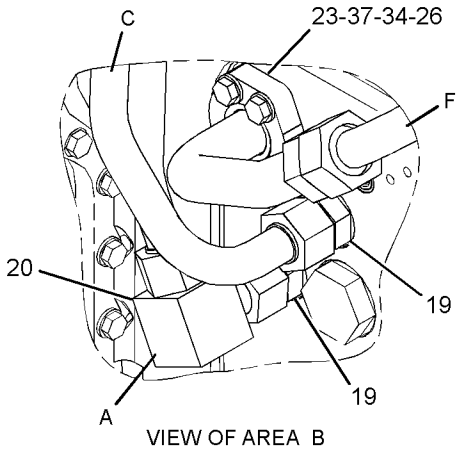

VIEW OF AREA B

GRAPHIC #2 **<END>** g01160550

262-6674 LINES GP-TRANSMISSION OIL

S/N: DGX1-UP

PART OF 231-3005 TRANSMISSION AR

SMCS-3154 **i02235516**

NOTE	REF NO	GRAPHIC REF	PART NUMBER	QTY	PART NAME 1 2 3 4 5 6 (PRODUCT LEVEL)	SEE PAGE
	1	1	**6V-0852**	1	CAP-DUST	
	2	1	**254-9955**	1	BLOCK	
	3	1	*148-8335*	2	CONNECTOR AS	
					(EACH INCLUDES)	
		1	**5K-9090**	1	SEAL-O-RING	
		1	**6V-8635**	1	CONNECTOR	
		1	**7M-8485**	1	SEAL-O-RING	
	4	1	*148-8357*	1	ELBOW AS	
		1	**5K-9090**	1	SEAL-O-RING	
		1	**6V-9008**	1	ELBOW	
		1	**7M-8485**	1	SEAL-O-RING	
	5	1	*164-5567*	1	FITTING GP-COUPLING	
		1	**3J-1907**	1	SEAL-O-RING	
		1	**6V-3965**	1	FITTING AS (QUICK DISCONNECT)	
	6	1	*169-5862*	1	ELBOW AS	
		1	**3J-1907**	1	SEAL-O-RING	
		1	**8C-6712**	1	ELBOW	
	7	1	**263-7437**	1	TUBE AS	
	8	1	**4F-7391**	1	SEAL-O-RING	
	9	1	**4S-1962**	1	CLIP	
M	10	1	**8T-1159**	4	BOLT-SOCKET HEAD (M10X1.5X25-MM)	
M	11	1	**8T-4121**	1	WASHER-HARD (11X21X2.5-MM THK)	
M	12	1	**8T-4137**	1	BOLT (M10X1.5X20-MM)	

M-METRIC PART

PROOF

262-6674 **LINES GP-TRANSMISSION OIL** *(contd.)* **i02235516**

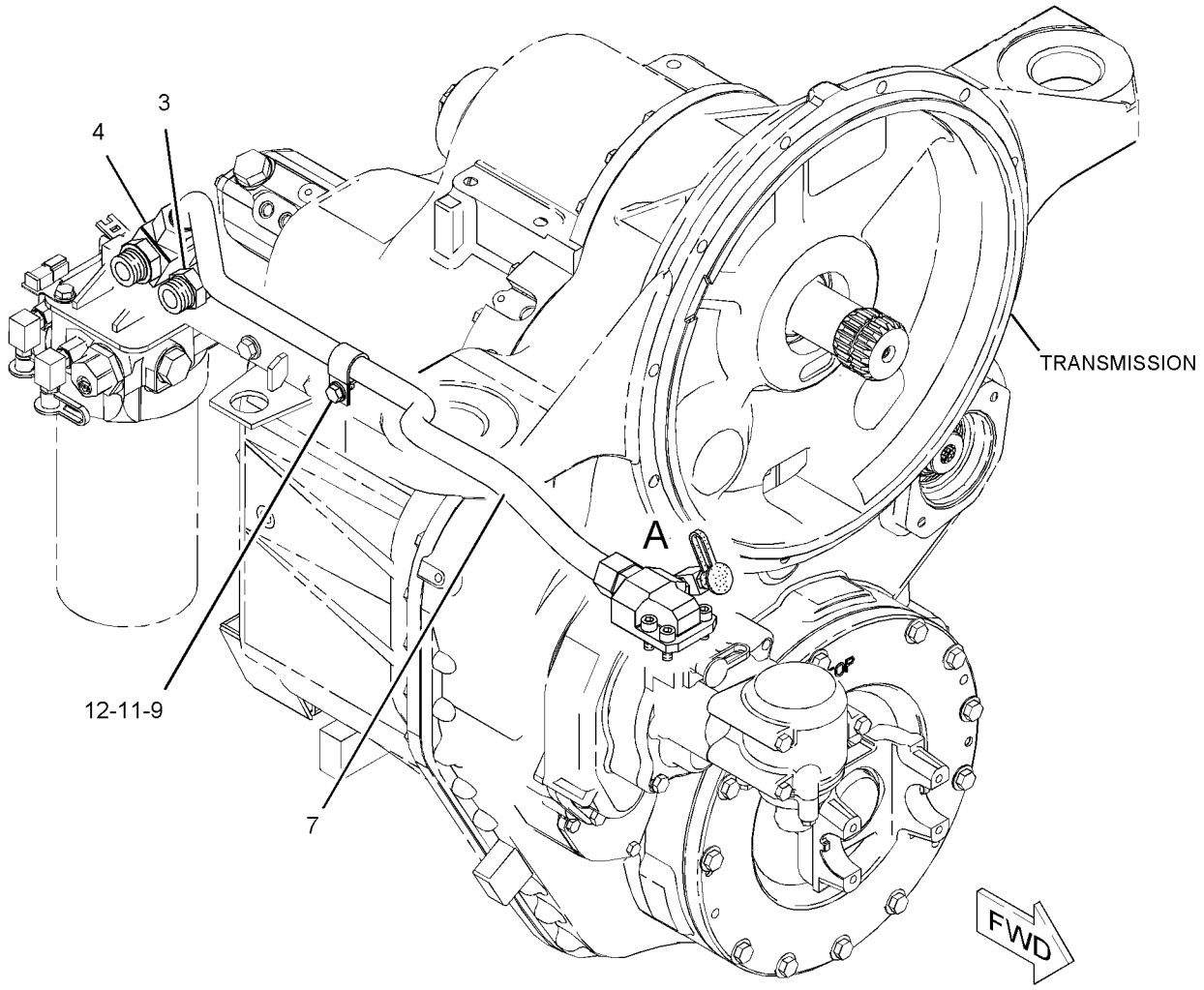

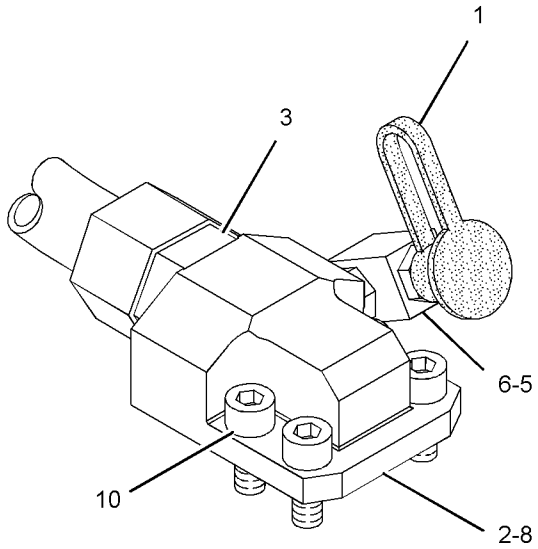

VIEW OF AREA A

GRAPHIC #1 **<END>** g01134717

260-4802 MOTOR GP-PISTON

S/N: B9M1-UP
ALL WHEEL DRIVE
PART OF 260-8698 AXLE GP-FRONT
AN ATTACHMENT

SMCS-4351 **i02249411**

NOTE	REF NO	GRAPHIC REF	PART NUMBER	QTY	PART NAME 1 2 3 4 5 6 (PRODUCT LEVEL)	SEE PAGE
	1	1	**246-4491**	1	MOTOR GP-PISTON (ALL WHEEL DRIVE)	
	2	1	**4H-6520**	1	SEAL-O-RING	
M	3	1	**8T-4193**	2	BOLT (M16X2X50-MM)	
	4	1	**9X-8257**	2	WASHER (17.5X30X3.5-MM THK)	

M-METRIC PART

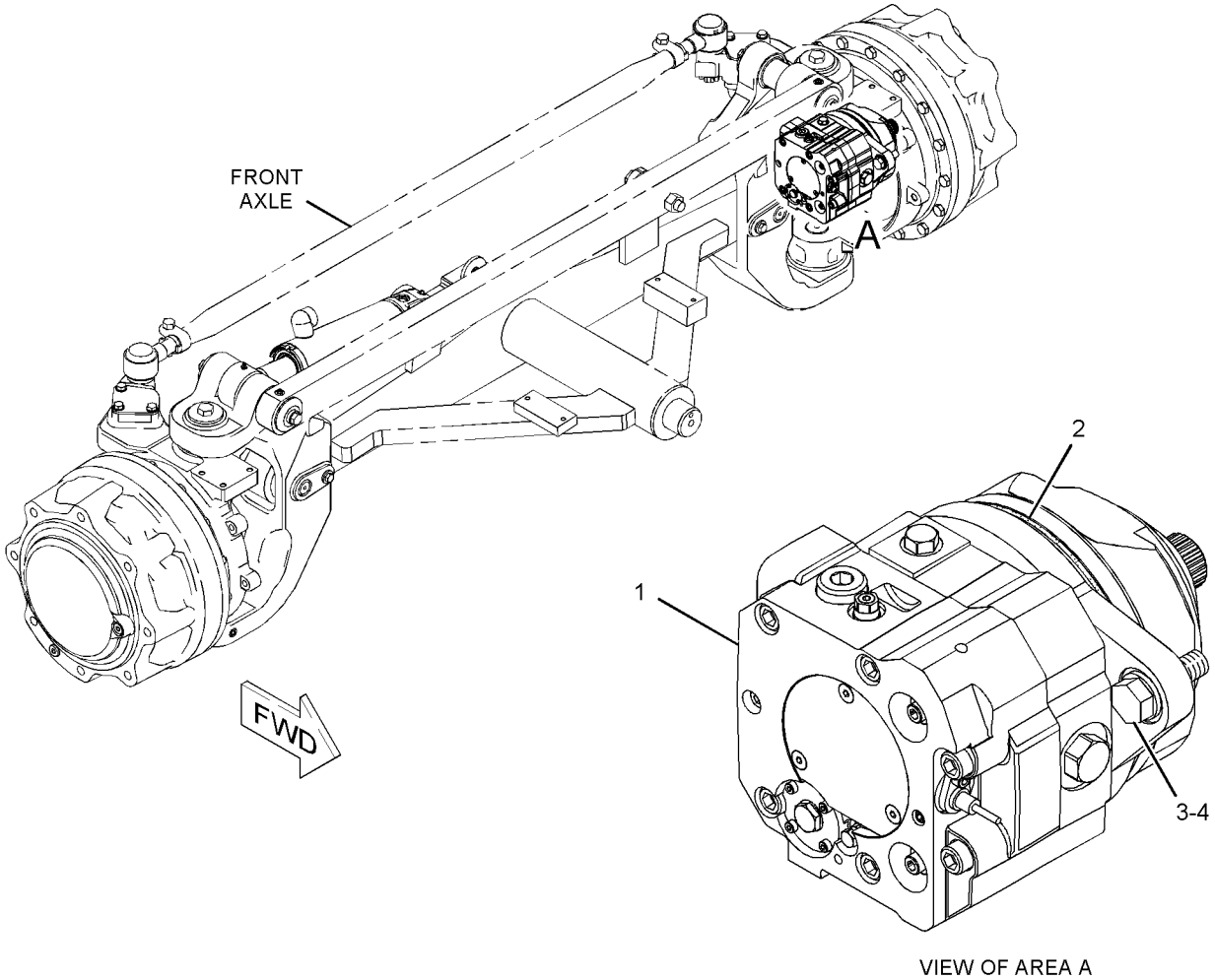

VIEW OF AREA A

GRAPHIC #1 **<END>** g01135531

255-1566 MOUNTING GP-WHEEL

S/N: B9M1-UP

PART OF 247-6481 AXLE AR-FRONT

AN ATTACHMENT

SMCS-4201 **i02251267**

NOTE	REF NO	GRAPHIC REF	PART NUMBER	QTY	PART NAME 1 2 3 4 5 6 (PRODUCT LEVEL)	SEE PAGE
	1	1	**198-4771**	60	WASHER-HARD (26X47X12-MM THK)	
M	2	1	**8T-0380**	60	BOLT (M24X3X60-MM)	

M-METRIC PART

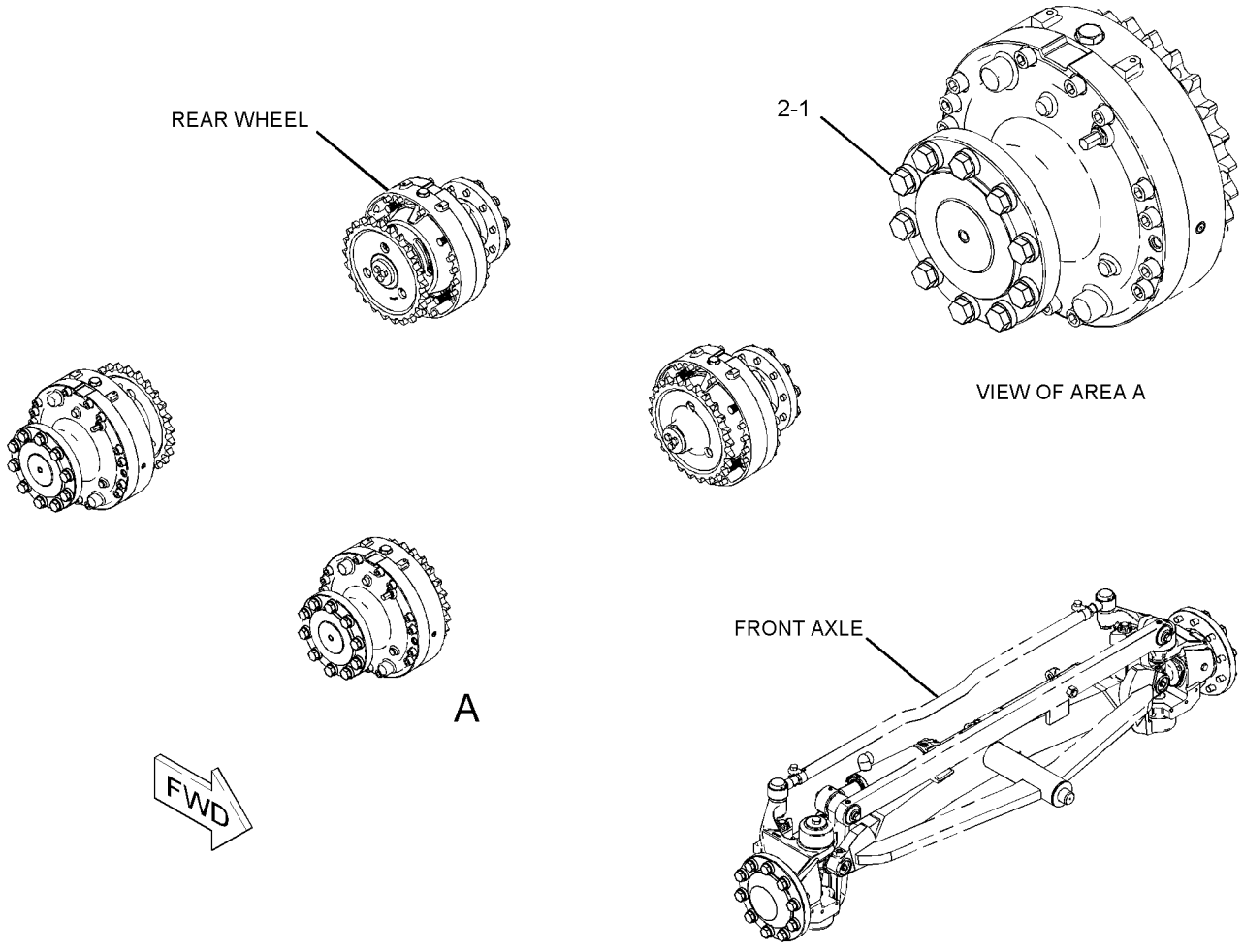

GRAPHIC #1 **<END>** g01133872

231-8159 PUMP & MTG GP-ALL WHEEL DRIVE

S/N: B9M1-UP
PART OF 261-0153 AXLE AR-FRONT
AN ATTACHMENT

SMCS-3203 **i02195581**

NOTE	REF NO	GRAPHIC REF	PART NUMBER	QTY	PART NAME 1 2 3 4 5 6 (PRODUCT LEVEL)	SEE PAGE
	1	1	**246-4490**	1	PUMP GP-PISTON (ALL WHEEL DRIVE)	
	2	1	**5F-3106**	1	SEAL-O-RING	
M	3	1	**8T-4193**	2	BOLT (M16X2X50-MM)	
	4	1	**9X-8257**	2	WASHER (17.5X30X3.5-MM THK)	
M	5	1	**8T-4121**	2	WASHER-HARD (11X21X2.5-MM THK)	
M	6	1	**8T-4137**	2	BOLT (M10X1.5X20-MM)	
	7	1	**257-8561**	1	PLATE	

M-METRIC PART

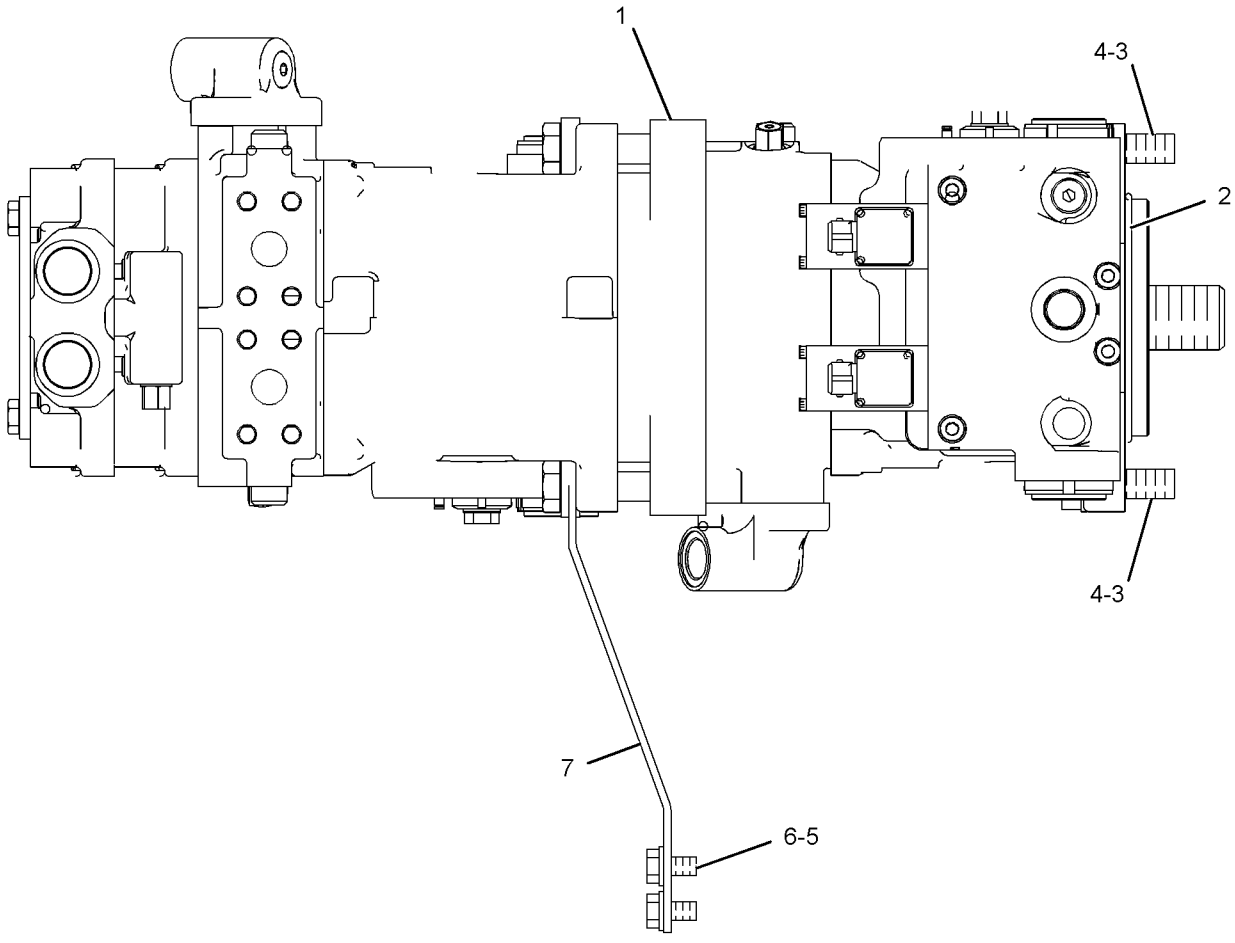

GRAPHIC #1 **<END>** g01110847

262-6672 PUMP & MTG GP-GEAR—TRANSMISSION

S/N: DGX1-UP

PART OF 231-3005 TRANSMISSION AR

SMCS-3066, 3115 **i02276649**

NOTE	PART NUMBER	QTY	PART NAME 1 2 3 4 5 6 (PRODUCT LEVEL)	SEE PAGE
Y	*263-7431*	1	PUMP GP-GEAR	332
M	**6V-5842**	2	BOLT (M10X1.5X40-MM)	
M	**8T-0644**	1	BOLT (M10X1.5X90-MM)	
	6V-0852	1	CAP-DUST	
	6V-3965	1	FITTING AS (QUICK DISCONNECT)	
	3J-1907	1	SEAL-O-RING	
	4F-7952	1	SEAL-O-RING	
	112-1574	1	SEAL-O-RING	

M-METRIC PART
Y-SEPARATE ILLUSTRATION

<END>

PROOF

263-7431 PUMP GP-GEAR–TRANSMISSION

S/N: DGX1-UP

PART OF 262-6672 PUMP & MTG GP-GEAR

SMCS-3066, 3115, 5073 **i02235513**

NOTE	REF NO	GRAPHIC REF	PART NUMBER	QTY	PART NAME 1 2 3 4 5 6 (PRODUCT LEVEL)	SEE PAGE
	1	1	**1S-5632**	1	BODY AS-OIL PUMP	
		1	**8M-8489**	4	DOWEL	
	2	1	**3S-0004**	5	WASHER (0.406X0.728X0.09-IN THK)	
	3	1	**6Y-5010**	8	WASHER (10.16X19X0.84-MM THK)	
	4	1	**7B-3028**	1	SCREW-DRIVE (NO 4X3/16-IN)	
	5	1	**116-4627**	2	GEAR (8-TEETH)	
	6	1	**234-0819**	1	BODY AS-OIL PUMP	
		1	**5M-3320**	2	BEARING-SLEEVE	
	7	1	**234-0821**	1	MANIFOLD AS-OIL PUMP	
		1	**8M-8489**	2	DOWEL	
		1	**9N-4155**	1	ADAPTER	
	8	1	**234-0823**	1	GEAR AS-OIL PUMP (12-TEETH)	
		1	**2B-9373**	1	KEY-WOODRUFF	
	9	1	**234-0826**	1	GEAR AS-OIL PUMP (12-TEETH)	
		1	**2B-9373**	1	KEY-WOODRUFF	
	10	1	**263-7428**	1	COVER AS-OIL PUMP	
		1	**5M-3320**	2	BEARING-SLEEVE	
	11	1	**265-9516**	1	PLATE	
	12	1	**112-1574**	1	SEAL-O-RING	
	13	1	**2B-9373**	1	KEY-WOODRUFF	
	14	1	**2D-8009**	3	SEAL-O-RING	
M	15	1	**8C-2926**	4	BOLT (M10X1.5X140-MM)	
M	16	1	**8T-0355**	1	BOLT (M10X1.5X110-MM)	

M-METRIC PART

PROOF

263-7431 **PUMP GP-GEAR** *(contd.)* **i02235513**

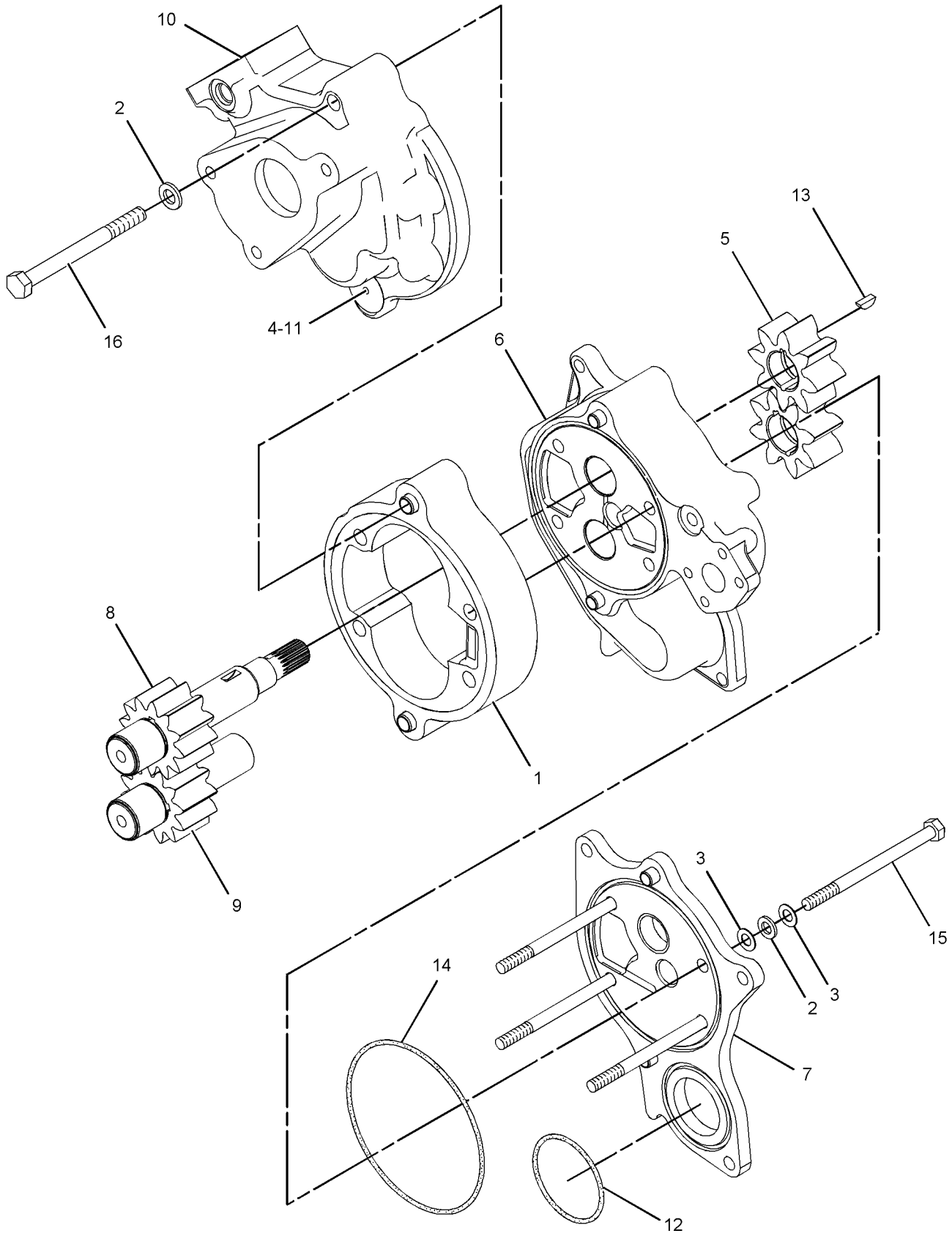

GRAPHIC #1 **<END>** g01133055

9W-5134 SCREEN GP-MAGNETIC–TRANSMISSION

S/N: DGX1-UP

PART OF 231-3005 TRANSMISSION AR

SMCS-3067 **i01399758**

NOTE	REF NO	GRAPHIC REF	PART NUMBER	QTY	PART NAME 1 2 3 4 5 6 (PRODUCT LEVEL)	SEE PAGE
	1	1	**6Y-3861**	1	COVER AS	
	2	1	**6Y-3860**	1	HOUSING-FILTER	
	3	1	**8S-9130**	1	SCREEN-SUCTION (TRANSMISSION)	
	4	1	**8S-9129**	1	FILTER-MAGNETIC (TRANSMISSION)	
	5	1	**5P-3863**	1	SEAL-O-RING	
M	6	1	**6V-5219**	3	BOLT (M8X1.25X40-MM)	
	7	1	**5F-8000**	1	SEAL-O-RING	
M	8	1	**8T-0355**	3	BOLT (M10X1.5X110-MM)	

M-METRIC PART

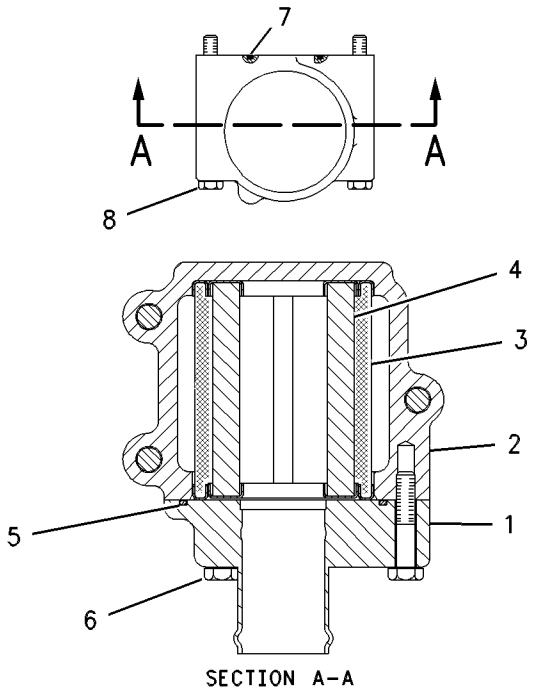

SECTION A-A

GRAPHIC #1 **<END>** g00552048

233-6370 SHAFT GP-DRIVE

S/N: B9M1-UP

PART OF 234-7721 COMMON AR-MOTOR GRADER

SMCS-3253 **i02248279**

NOTE	REF NO	GRAPHIC REF	PART NUMBER	QTY	PART NAME 1 2 3 4 5 6 (PRODUCT LEVEL)	SEE PAGE
	1	1	**4E-3273**	4	STRAP	
Y	2	1	**246-6465**	1	UNIVERSAL JOINT GP	341
	3	1	**249-7551**	2	SHIELD AS	
					(EACH INCLUDES)	
M		1	**8T-3597**	1	NUT-WELD (M12X1.75-THD)	
M	4	1	**4E-5985**	8	BOLT-12 POINT HEAD (M10X1.25X20-MM)	
M	5	1	**8T-4179**	2	BOLT (M12X1.75X20-MM)	
M	6	1	**8T-4192**	4	BOLT (M12X1.75X25-MM)	
	7	1	**8T-4223**	6	WASHER-HARD (13.5X25.5X3-MM THK)	

M-METRIC PART
Y-SEPARATE ILLUSTRATION

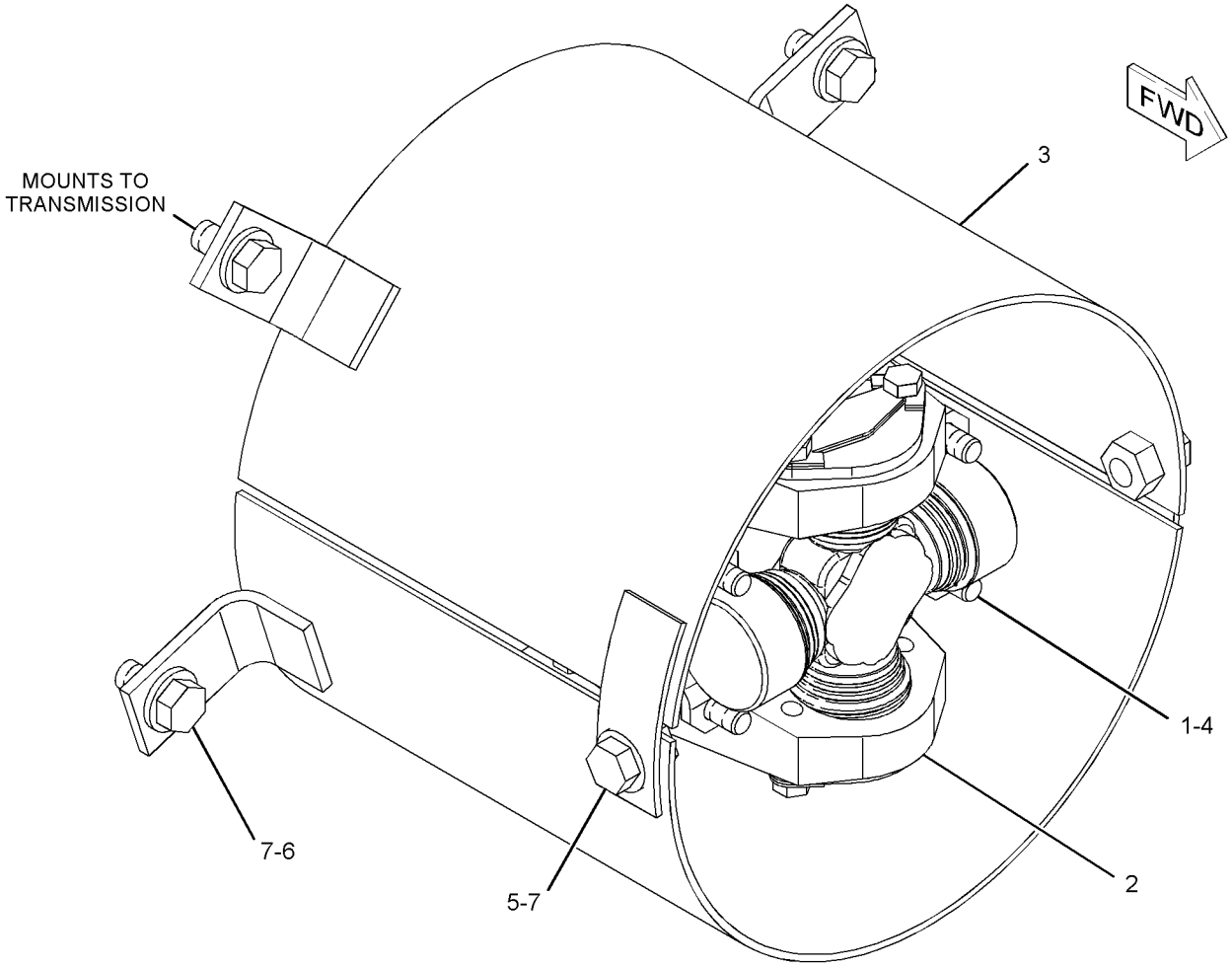

GRAPHIC #1 **<END>** g01133780

191-3602 SHAFT GP-INPUT

S/N: DGX1-UP

PART OF 231-3005 TRANSMISSION AR

SMCS-3063 **i02348782**

NOTE	REF NO	GRAPHIC REF	PART NUMBER	QTY	PART NAME 1 2 3 4 5 6 (PRODUCT LEVEL)	SEE PAGE
	1	1	**191-7724**	1	SHAFT AS	
		1	**4B-4845**	1	PLUG	
	2	1	**3T-4377**	2	SEAL-RING	
	3	1	**6Y-0591**	1	GEAR (45-TEETH)	
	4	1	**6Y-0590**	1	GEAR (38-TEETH)	
	5	1	**2H-6490**	1	BEARING-INNER	
	6	1	**1M-4095**	1	BEARING-INNER	

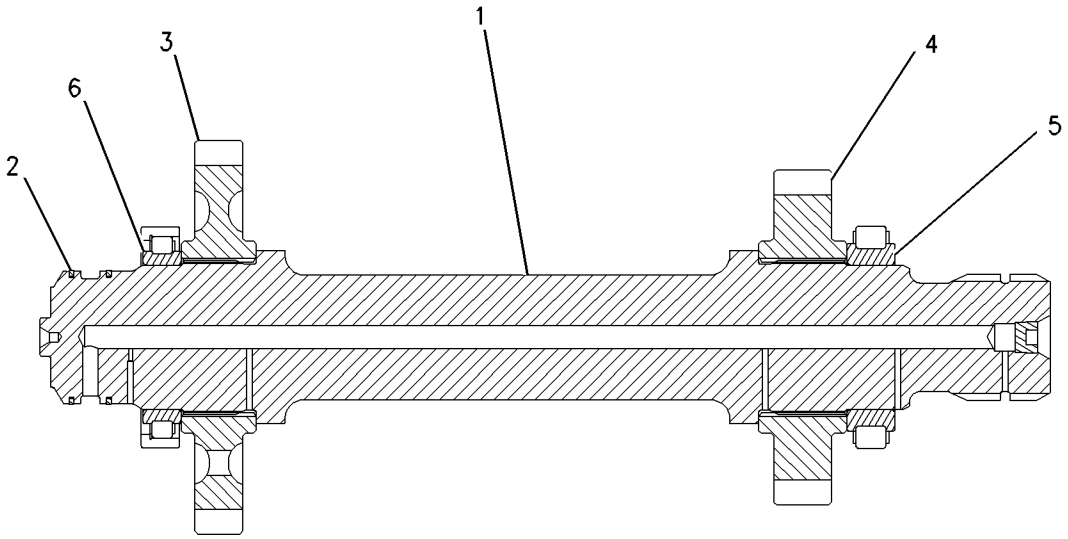

GRAPHIC #1 **<END>** g00788549

246-6357 TANDEM & COVER GP

S/N: B9M1-UP

PART OF 234-7721 COMMON AR-MOTOR GRADER

SMCS-4062, 4064 **i02348786**

NOTE	REF NO	GRAPHIC REF	PART NUMBER	QTY	PART NAME 1 2 3 4 5 6 (PRODUCT LEVEL)	SEE PAGE
	1	1	**2A-6938**	2	COVER	
	2	1	**3D-2981**	4	GASKET	
	3	1	**248-2378**	6	COVER	
	4	1	**248-6201**	4	COVER	
	5	1	**250-4091**	8	GASKET	
	6	1	*250-4095*	2	COVER AS	
					(EACH INCLUDES)	
		1	**4H-6112**	1	BREATHER AS (TANDEM)	
		1	**6B-5072**	1	BUSHING-REDUCING	
		1	**002-6453**	1	ELBOW	
		1	**250-4094**	1	COVER	
	7	1	**252-0875**	1	HOUSING AS-TANDEM DRIVE (RH)	
	8	1	**252-0883**	1	HOUSING AS-TANDEM DRIVE (LH)	
	9	1	**2G-9791**	2	GASKET	
	10	1	**2M-9780**	2	SEAL-O-RING	
	11	1	**3K-0360**	2	SEAL-O-RING	
M	12	1	**8T-4223**	32	WASHER-HARD (13.5X25.5X3-MM THK)	
	13	1	**6E-5047**	2	PLUG	
M	14	1	**8T-4139**	48	BOLT (M12X1.75X30-MM)	
	15	1	**9S-4190**	2	PLUG	

M-METRIC PART

PROOF

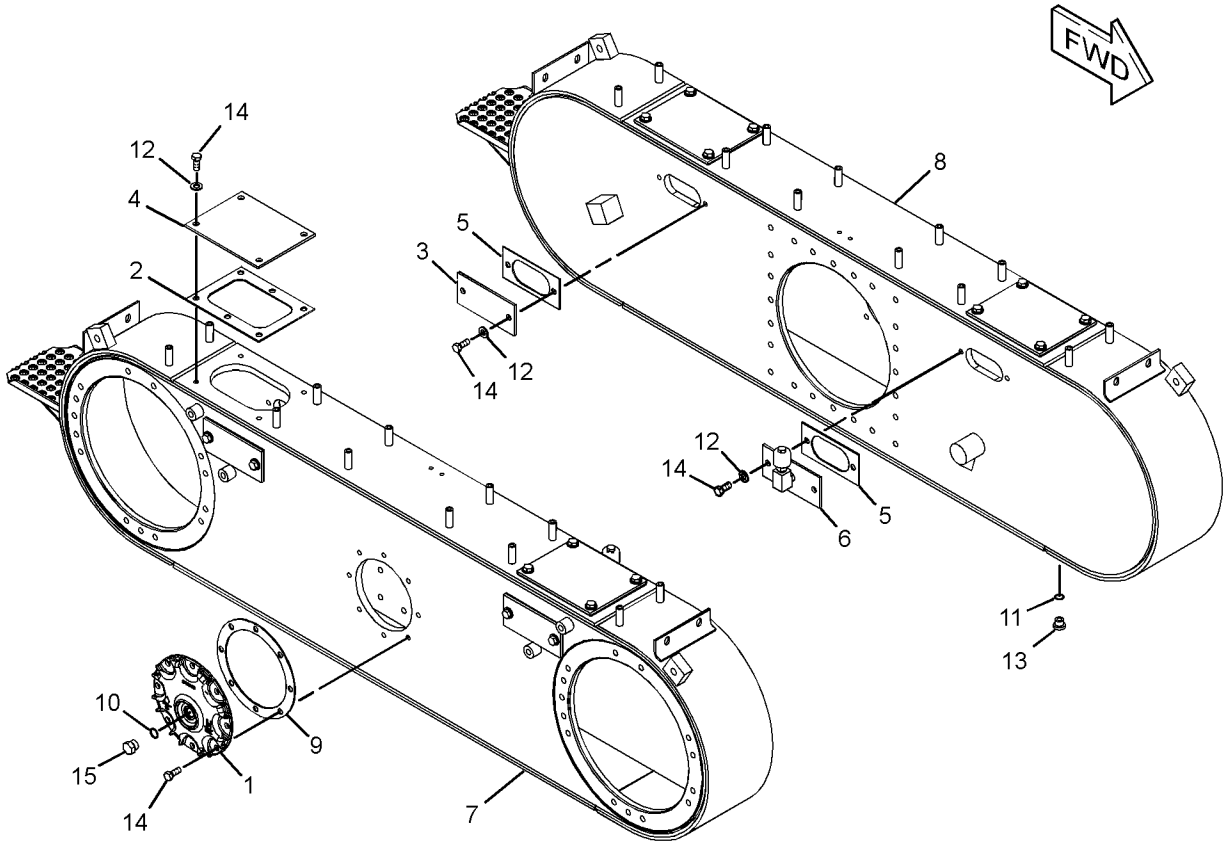

GRAPHIC #1 **<END>** g01156513

231-3005 TRANSMISSION AR

S/N: DGX1-UP

PART OF 234-7721 COMMON AR-MOTOR GRADER

SMCS-3030 **i02235500**

NOTE	REF NO	GRAPHIC REF	PART NUMBER	QTY	PART NAME 1 2 3 4 5 6 (PRODUCT LEVEL)	SEE PAGE
Y	1	1	*9W-5134*	1	SCREEN GP-MAGNETIC	334
Y	2	1	*191-3602*	1	SHAFT GP-INPUT	336
Y	3	1	*262-6672*	1	PUMP & MTG GP-GEAR	331
Y	4	1	*262-6673*	1	CASE & PARTS GP-PLANETARY	268
Y	5	1	*235-2412*	1	CLUTCH GP-TRANSMISSION (FORWARD)	276
Y	6	1	*235-2413*	1	CLUTCH GP-TRANSMISSION (REVERSE, SECOND)	278
Y	7	1	*235-2414*	1	CLUTCH GP-TRANSMISSION (1ST, 3RD)	280
Y	8	1	*262-5994*	1	CONTROL GP-TRANSMISSION HYD	286
Y	9	1	*246-8782*	1	BRAKE GP-PARKING	437
Y	10	1	*247-8303*	1	CLUTCH GP-TRANSMISSION (HIGH, LOW)	282
Y	11	1	*262-6674*	1	LINES GP-TRANSMISSION OIL	326
Y	12	1	*250-8292*	1	FILTER & MTG GP-OIL	302
Y	13	1	*263-7434*	1	COVER GP-SHIPPING	291

Y-SEPARATE ILLUSTRATION

PROOF

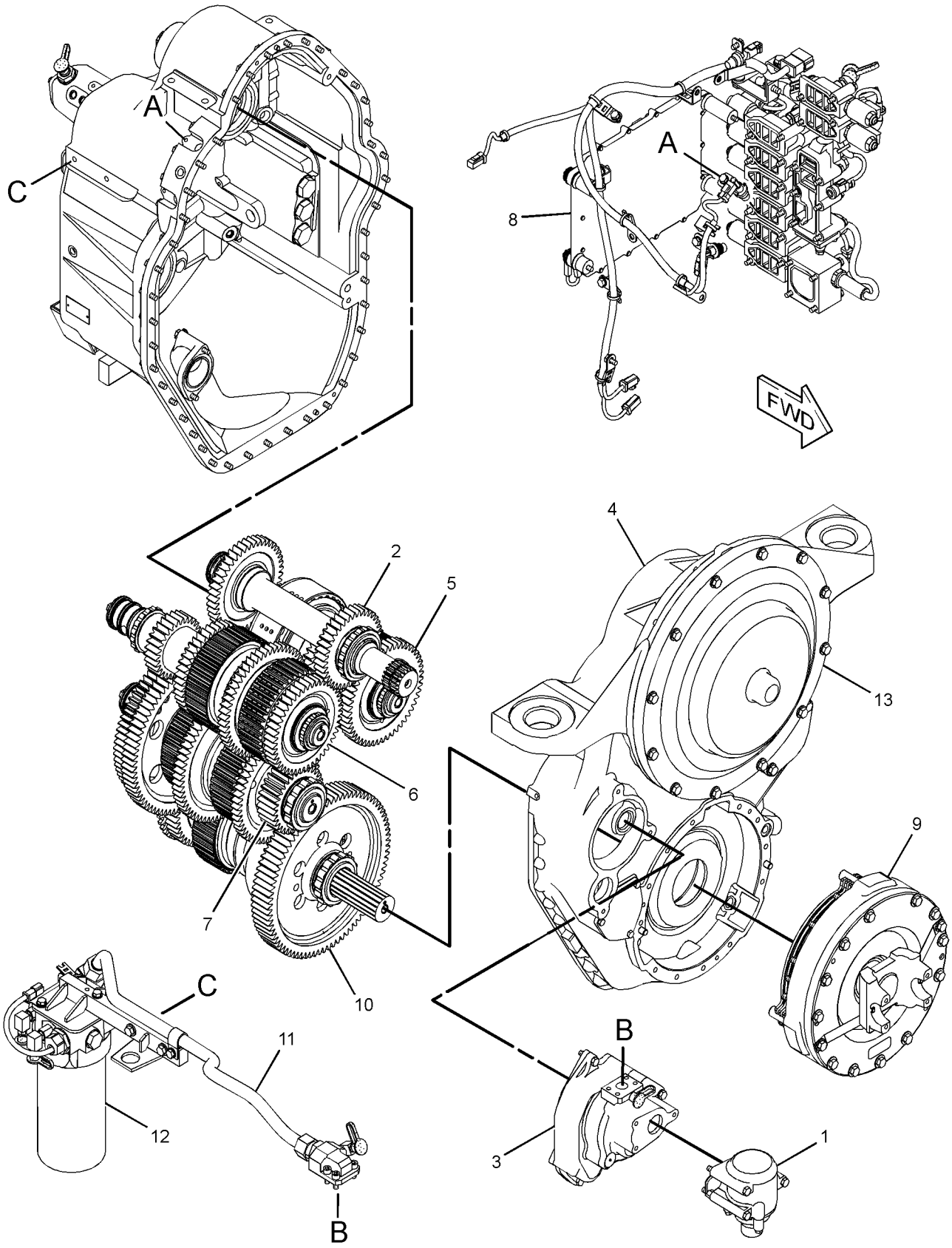

GRAPHIC #1 **<END>** g01160033

246-6465 UNIVERSAL JOINT GP

S/N: B9M1-UP

PART OF 233-6370 SHAFT GP-DRIVE

SMCS-3251, 3253 **i02248297**

NOTE	REF NO	GRAPHIC REF	PART NUMBER	QTY	PART NAME 1 2 3 4 5 6 (PRODUCT LEVEL)	SEE PAGE
	1	1	**235-5201**	2	SPIDER & BEARING GP	
					(EACH INCLUDES)	
M		1	**3E-4315**	4	BOLT-LOCKING (M8X1X14-MM)	
		1	**6W-4126**	2	STRAP-LOCKING	

M-METRIC PART

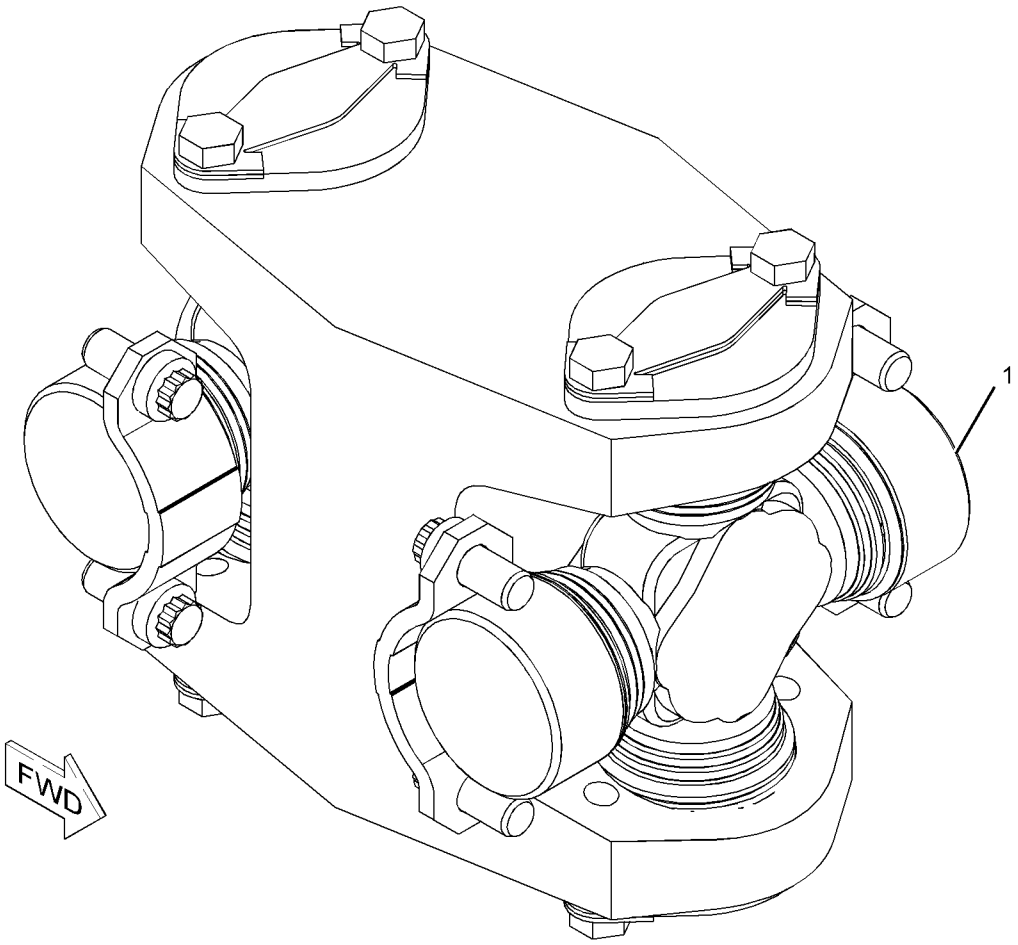

GRAPHIC #1 **<END>** g01133418

250-2139 VALVE & MTG GP-SOLENOID

S/N: B9M1-UP

PART OF 231-1511 CONTROL GP-DIFFERENTIAL LOCK

SMCS-5479 **i02348789**

NOTE	REF NO	GRAPHIC REF	PART NUMBER	QTY	PART NAME 1 2 3 4 5 6 (PRODUCT LEVEL)	SEE PAGE
M	1	1	**8T-1158**	1	BOLT-SOCKET HEAD (M8X1.25X20-MM)	
	2	1	**245-1181**	1	FLANGE	
	3	1	**245-3555**	1	VALVE GP-SOLENOID (DIFFERENTIAL LOCK)	
	4	1	**250-2138**	1	MANIFOLD	

M-METRIC PART

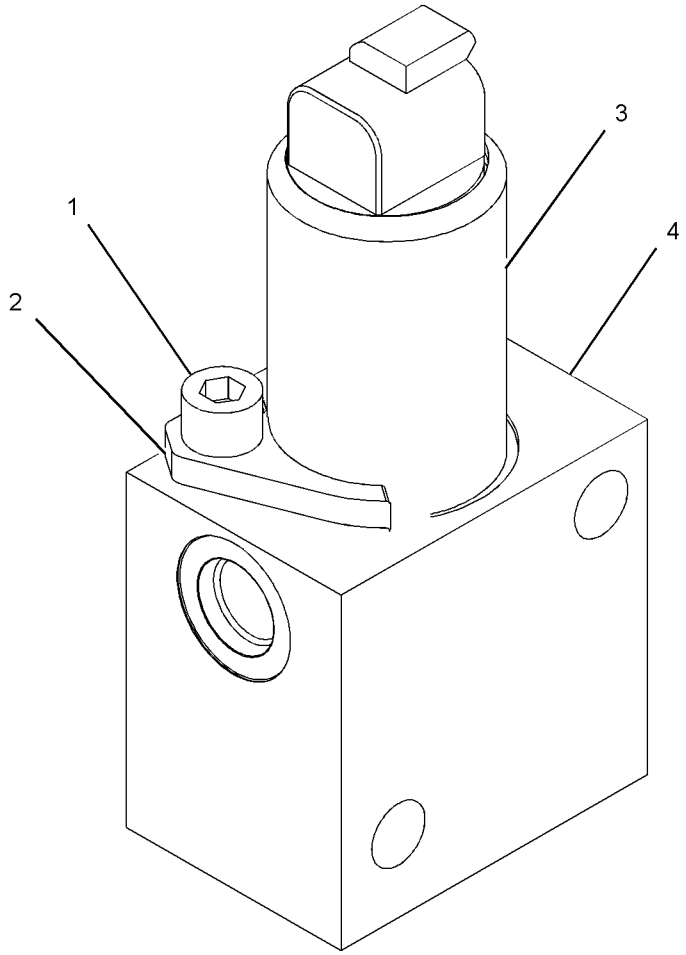

GRAPHIC #1 **<END>** g01109363

244-3114 VALVE GP-MODULATING

S/N: DGX1-UP
24-VOLT
PART OF 262-5994 CONTROL GP-TRANSMISSION HYD

SMCS-3139 **i02288027**

NOTE	REF NO	GRAPHIC REF	PART NUMBER	QTY	PART NAME 1 2 3 4 5 6 (PRODUCT LEVEL)	SEE PAGE
	1	1	**6V-3965**	1	FITTING AS (QUICK DISCONNECT)	
	2	1	**226-9622**	1	COIL AS	
	3	1	**3J-1907**	1	SEAL-O-RING	
	4	1	**164-2108**	1	WASHER (13.03X25.4X2.38-MM THK)	
	5	1	**167-9524**	1	NUT-SELF-LOCKING (1/2-28-THD)	

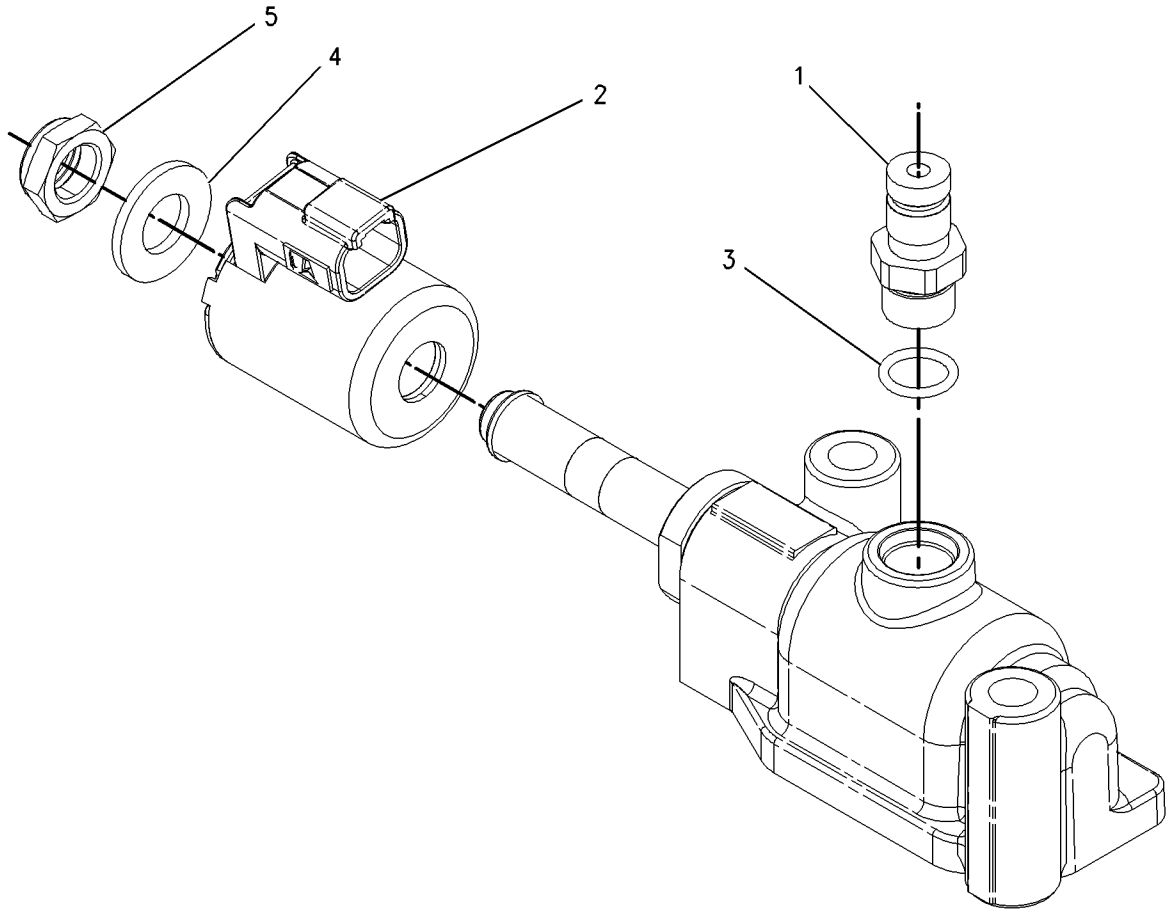

GRAPHIC #1 **<END>** g00919065

235-3530 VALVE GP-RELIEF

S/N: DGX1-UP

PART OF 262-5994 CONTROL GP-TRANSMISSION HYD

SMCS-3133 **i02178298**

NOTE	REF NO	GRAPHIC REF	PART NUMBER	QTY	PART NAME 1 2 3 4 5 6 (PRODUCT LEVEL)	SEE PAGE
	1	1	**2S-4663**	1	SEAL-O-RING	
	2	1	**2S-5835**	1	PISTON-LOAD	
	3	1	**3J-1907**	3	SEAL-O-RING	
	4	1	**3K-0360**	1	SEAL-O-RING	
	5	1	**4M-5905**	1	SCREW-ADJUSTMENT (5/16-18X1-IN)	
	6	1	**6V-0852**	1	CAP-DUST	
	7	1	**6V-3965**	1	FITTING AS (QUICK DISCONNECT)	
	8	1	**6V-8077**	1	ELBOW	
	10	1	**8E-1143**	1	SLUG	
	11	1	**8M-5253**	1	SEAL-O-RING	
	12	1	**9M-2110**	1	COVER-ADJUSTMENT	
	13	1	**115-4550**	1	COVER	
	15	1	**172-7968**	1	SPOOL AS	
		1	**3D-8317**	1	RING-RETAINING	
		1	**4B-9880**	1	BALL	
		1	**4M-2381**	1	SPRING	
		1	**9U-8669**	1	RETAINER	
	16	1	**174-7449**	1	SPRING	
M	18	1	**6V-3940**	2	BOLT (M8X1.25X25-MM)	
M	19	1	**6V-5218**	2	BOLT (M8X1.25X35-MM)	
	20	1	**9M-1974**	2	WASHER-HARD (8.8X16X2-MM THK)	
	21	1	**9S-8004**	1	PLUG	
	22	1	**9S-8005**	1	PLUG	

M-METRIC PART

PROOF

235-3530 **VALVE GP-RELIEF** *(contd.)* **i02178298**

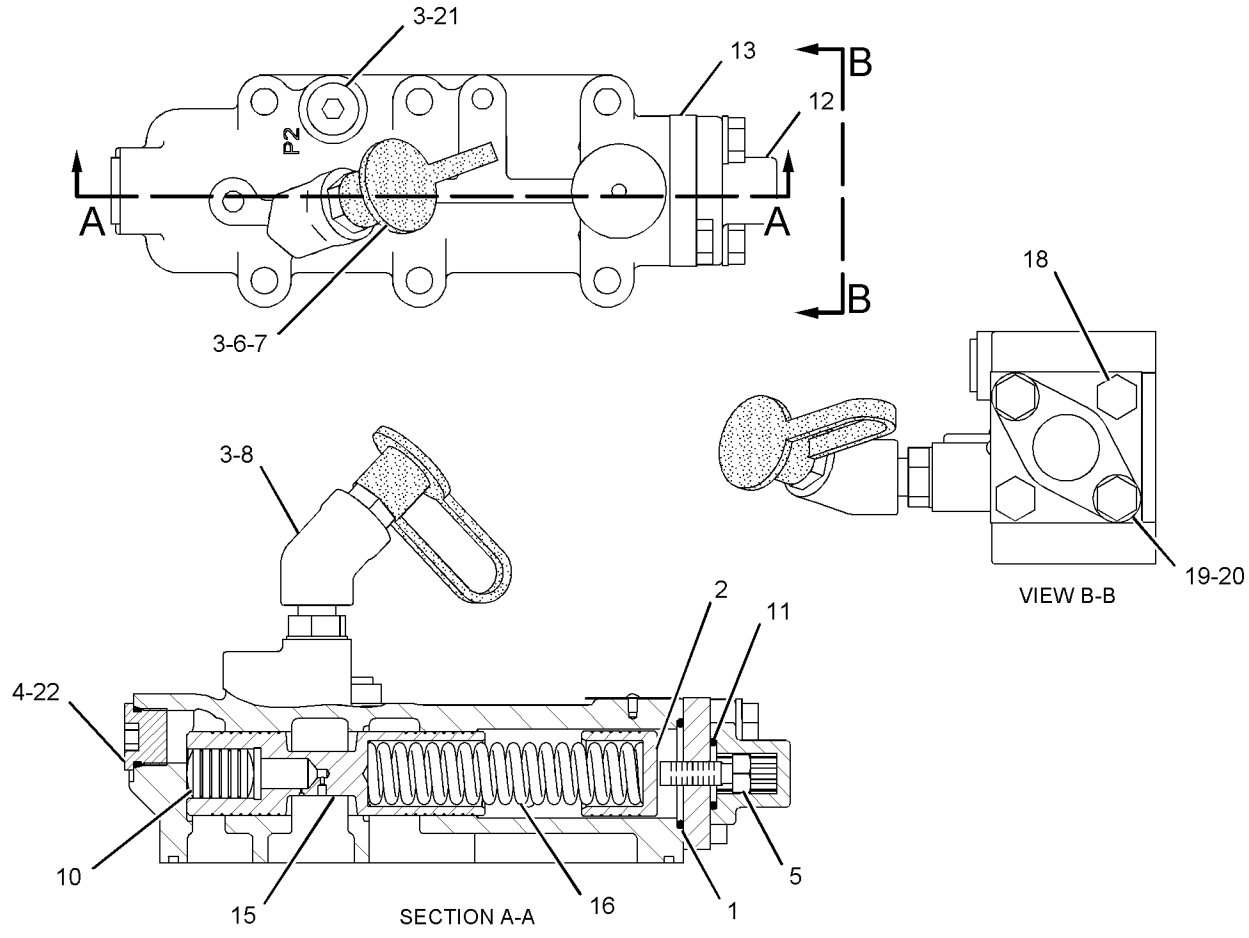

GRAPHIC #1 **<END>** g01109500

249-7841 WHEEL & TIRE AR

S/N: B9M1-UP
AN ATTACHMENT

SMCS-4200 **i02240468**

NOTE	PART NUMBER	QTY	PART NAME 1 2 3 4 5 6 (PRODUCT LEVEL)	SEE PAGE
Y	*252-0774*	4	WHEEL & TIRE AR	357
Y	*250-9691*	2	WHEEL & TIRE AR	347

Y-SEPARATE ILLUSTRATION

<END>

249-7842 WHEEL & TIRE AR

S/N: B9M1-UP
AN ATTACHMENT

SMCS-4200 **i02240472**

NOTE	PART NUMBER	QTY	PART NAME 1 2 3 4 5 6 (PRODUCT LEVEL)	SEE PAGE
Y	*252-0766*	4	WHEEL & TIRE GP	379
Y	*250-9779*	2	WHEEL & TIRE GP	367

Y-SEPARATE ILLUSTRATION

<END>

249-7843 WHEEL & TIRE AR

S/N: B9M1-UP
AN ATTACHMENT

SMCS-4200 **i02240474**

NOTE	PART NUMBER	QTY	PART NAME 1 2 3 4 5 6 (PRODUCT LEVEL)	SEE PAGE
Y	*252-0791*	4	WHEEL & TIRE GP	381
Y	*250-9762*	2	WHEEL & TIRE GP	366

Y-SEPARATE ILLUSTRATION

<END>

249-7845 WHEEL & TIRE AR

S/N: B9M1-UP
AN ATTACHMENT

SMCS-4200 **i02240566**

NOTE	PART NUMBER	QTY	PART NAME 1 2 3 4 5 6 (PRODUCT LEVEL)	SEE PAGE
Y	**252-0700**	4	WHEEL & TIRE GP	372
Y	*250-9709*	2	WHEEL & TIRE GP	366

Y-SEPARATE ILLUSTRATION

<END>

PROOF

250-9691 WHEEL & TIRE AR

S/N: B9M1-UP
PART OF 249-7841 WHEEL & TIRE AR
AN ATTACHMENT

SMCS-4200 **i02240467**

NOTE	PART NUMBER	QTY	PART NAME 1 2 3 4 5 6 (PRODUCT LEVEL)	SEE PAGE
Y	*252-0113*	1	WHEEL GP	398
	105-3249	1	TIRE (17.5-R25)	

Y-SEPARATE ILLUSTRATION

<END>

252-0667 WHEEL & TIRE AR

S/N: B9M1-UP
AN ATTACHMENT

SMCS-4200 **i02241831**

NOTE	PART NUMBER	QTY	PART NAME 1 2 3 4 5 6 (PRODUCT LEVEL)	SEE PAGE
Y	*252-0666*	6	WHEEL & TIRE GP	367

Y-SEPARATE ILLUSTRATION

<END>

252-0669 WHEEL & TIRE AR

S/N: B9M1-UP
AN ATTACHMENT

SMCS-4200 **i02241833**

NOTE	PART NUMBER	QTY	PART NAME 1 2 3 4 5 6 (PRODUCT LEVEL)	SEE PAGE
Y	*252-0666*	4	WHEEL & TIRE GP	367
Y	*252-0668*	2	WHEEL & TIRE GP	367

Y-SEPARATE ILLUSTRATION

<END>

252-0671 WHEEL & TIRE AR

S/N: B9M1-UP
AN ATTACHMENT

SMCS-4200 **i02241837**

NOTE	PART NUMBER	QTY	PART NAME 1 2 3 4 5 6 (PRODUCT LEVEL)	SEE PAGE
Y	*252-0670*	6	WHEEL & TIRE GP	368

Y-SEPARATE ILLUSTRATION

<END>

PROOF

252-0673 WHEEL & TIRE AR

S/N: B9M1-UP
AN ATTACHMENT

SMCS-4200 **i02241922**

NOTE	PART NUMBER	QTY	PART NAME 1 2 3 4 5 6 (PRODUCT LEVEL)	SEE PAGE
Y	*252-0670*	4	WHEEL & TIRE GP	368
Y	*252-0672*	2	WHEEL & TIRE GP	368

Y-SEPARATE ILLUSTRATION

<END>

252-0675 WHEEL & TIRE AR

S/N: B9M1-UP
AN ATTACHMENT

SMCS-4200 **i02241840**

NOTE	PART NUMBER	QTY	PART NAME 1 2 3 4 5 6 (PRODUCT LEVEL)	SEE PAGE
Y	*252-0674*	6	WHEEL & TIRE GP	368

Y-SEPARATE ILLUSTRATION

<END>

252-0677 WHEEL & TIRE AR

S/N: B9M1-UP
AN ATTACHMENT

SMCS-4200 **i02241926**

NOTE	PART NUMBER	QTY	PART NAME 1 2 3 4 5 6 (PRODUCT LEVEL)	SEE PAGE
Y	*252-0674*	4	WHEEL & TIRE GP	368
Y	*252-0676*	2	WHEEL & TIRE GP	369

Y-SEPARATE ILLUSTRATION

<END>

252-0679 WHEEL & TIRE AR

S/N: B9M1-UP
AN ATTACHMENT

SMCS-4200 **i02250498**

NOTE	PART NUMBER	QTY	PART NAME 1 2 3 4 5 6 (PRODUCT LEVEL)	SEE PAGE
Y	*252-0678*	6	WHEEL & TIRE GP	369

Y-SEPARATE ILLUSTRATION

<END>

PROOF

252-0681 WHEEL & TIRE AR

S/N: B9M1-UP
AN ATTACHMENT

SMCS-4200 **i02241935**

NOTE	PART NUMBER	QTY	PART NAME 1 2 3 4 5 6 (PRODUCT LEVEL)	SEE PAGE
Y	*252-0678*	4	WHEEL & TIRE GP	369
Y	*252-0680*	2	WHEEL & TIRE GP	369

Y-SEPARATE ILLUSTRATION

<END>

252-0683 WHEEL & TIRE AR

S/N: B9M1-UP
AN ATTACHMENT

SMCS-4200 **i02241941**

NOTE	PART NUMBER	QTY	PART NAME 1 2 3 4 5 6 (PRODUCT LEVEL)	SEE PAGE
Y	*252-0682*	6	WHEEL & TIRE GP	370

Y-SEPARATE ILLUSTRATION

<END>

252-0685 WHEEL & TIRE AR

S/N: B9M1-UP
AN ATTACHMENT

SMCS-4200 **i02241945**

NOTE	PART NUMBER	QTY	PART NAME 1 2 3 4 5 6 (PRODUCT LEVEL)	SEE PAGE
Y	*252-0682*	4	WHEEL & TIRE GP	370
Y	*252-0684*	2	WHEEL & TIRE GP	370

Y-SEPARATE ILLUSTRATION

<END>

252-0687 WHEEL & TIRE AR

S/N: B9M1-UP
AN ATTACHMENT

SMCS-4200 **i02241977**

NOTE	PART NUMBER	QTY	PART NAME 1 2 3 4 5 6 (PRODUCT LEVEL)	SEE PAGE
Y	*252-0686*	6	WHEEL & TIRE GP	370

Y-SEPARATE ILLUSTRATION

<END>

PROOF

252-0690 WHEEL & TIRE AR

S/N: B9M1-UP
AN ATTACHMENT

SMCS-4200 **i02241994**

NOTE	PART NUMBER	QTY	PART NAME 1 2 3 4 5 6 (PRODUCT LEVEL)	SEE PAGE
Y	*252-0686*	4	WHEEL & TIRE GP	370
Y	*252-0688*	2	WHEEL & TIRE GP	371

Y-SEPARATE ILLUSTRATION

<END>

252-0693 WHEEL & TIRE AR

S/N: B9M1-UP
AN ATTACHMENT

SMCS-4200 **i02242005**

NOTE	PART NUMBER	QTY	PART NAME 1 2 3 4 5 6 (PRODUCT LEVEL)	SEE PAGE
Y	*252-0692*	6	WHEEL & TIRE GP	371

Y-SEPARATE ILLUSTRATION

<END>

252-0695 WHEEL & TIRE AR

S/N: B9M1-UP
AN ATTACHMENT

SMCS-4200 **i02242027**

NOTE	PART NUMBER	QTY	PART NAME 1 2 3 4 5 6 (PRODUCT LEVEL)	SEE PAGE
Y	*252-0692*	4	WHEEL & TIRE GP	371
Y	*252-0694*	2	WHEEL & TIRE GP	371

Y-SEPARATE ILLUSTRATION

<END>

252-0697 WHEEL & TIRE AR

S/N: B9M1-UP
AN ATTACHMENT

SMCS-4200 **i02242040**

NOTE	PART NUMBER	QTY	PART NAME 1 2 3 4 5 6 (PRODUCT LEVEL)	SEE PAGE
Y	**252-0696**	6	WHEEL & TIRE GP	372

Y-SEPARATE ILLUSTRATION

<END>

PROOF

252-0699 WHEEL & TIRE AR

S/N: B9M1-UP
AN ATTACHMENT

SMCS-4200 **i02242056**

NOTE	PART NUMBER	QTY	PART NAME 1 2 3 4 5 6 (PRODUCT LEVEL)	SEE PAGE
Y	**252-0696**	4	WHEEL & TIRE GP	372
Y	**252-0698**	2	WHEEL & TIRE GP	372

Y-SEPARATE ILLUSTRATION

<END>

252-0701 WHEEL & TIRE AR

S/N: B9M1-UP
AN ATTACHMENT

SMCS-4200 **i02242059**

NOTE	PART NUMBER	QTY	PART NAME 1 2 3 4 5 6 (PRODUCT LEVEL)	SEE PAGE
Y	**252-0700**	6	WHEEL & TIRE GP	372

Y-SEPARATE ILLUSTRATION

<END>

252-0708 WHEEL & TIRE AR

S/N: B9M1-UP
AN ATTACHMENT

SMCS-4200 **i02242067**

NOTE	PART NUMBER	QTY	PART NAME 1 2 3 4 5 6 (PRODUCT LEVEL)	SEE PAGE
Y	**252-0707**	6	WHEEL & TIRE GP	373

Y-SEPARATE ILLUSTRATION

<END>

252-0710 WHEEL & TIRE AR

S/N: B9M1-UP
AN ATTACHMENT

SMCS-4200 **i02242071**

NOTE	PART NUMBER	QTY	PART NAME 1 2 3 4 5 6 (PRODUCT LEVEL)	SEE PAGE
Y	**252-0707**	4	WHEEL & TIRE GP	373
Y	**252-0709**	2	WHEEL & TIRE GP	373

Y-SEPARATE ILLUSTRATION

<END>

PROOF

252-0714 WHEEL & TIRE AR

S/N: B9M1-UP
AN ATTACHMENT

SMCS-4200 **i02242257**

NOTE	PART NUMBER	QTY	PART NAME 1 2 3 4 5 6 (PRODUCT LEVEL)	SEE PAGE
Y	**252-0713**	6	WHEEL & TIRE GP	373

Y-SEPARATE ILLUSTRATION

<END>

252-0716 WHEEL & TIRE AR

S/N: B9M1-UP
AN ATTACHMENT

SMCS-4200 **i02242271**

NOTE	PART NUMBER	QTY	PART NAME 1 2 3 4 5 6 (PRODUCT LEVEL)	SEE PAGE
Y	**252-0713**	4	WHEEL & TIRE GP	373
Y	**252-0715**	2	WHEEL & TIRE GP	374

Y-SEPARATE ILLUSTRATION

<END>

252-0720 WHEEL & TIRE AR

S/N: B9M1-UP
AN ATTACHMENT

SMCS-4200 **i02242275**

NOTE	PART NUMBER	QTY	PART NAME 1 2 3 4 5 6 (PRODUCT LEVEL)	SEE PAGE
Y	*252-0719*	6	WHEEL & TIRE GP	374

Y-SEPARATE ILLUSTRATION

<END>

252-0722 WHEEL & TIRE AR

S/N: B9M1-UP
AN ATTACHMENT

SMCS-4200 **i02242283**

NOTE	PART NUMBER	QTY	PART NAME 1 2 3 4 5 6 (PRODUCT LEVEL)	SEE PAGE
Y	*252-0719*	4	WHEEL & TIRE GP	374
Y	*252-0721*	2	WHEEL & TIRE GP	374

Y-SEPARATE ILLUSTRATION

<END>

PROOF

252-0727 WHEEL & TIRE AR

S/N: B9M1-UP
AN ATTACHMENT

SMCS-4200 **i02242289**

NOTE	PART NUMBER	QTY	PART NAME 1 2 3 4 5 6 (PRODUCT LEVEL)	SEE PAGE
Y	*252-0726*	6	WHEEL & TIRE GP	375

Y-SEPARATE ILLUSTRATION

<END>

252-0729 WHEEL & TIRE AR

S/N: B9M1-UP
AN ATTACHMENT

SMCS-4200 **i02242292**

NOTE	PART NUMBER	QTY	PART NAME 1 2 3 4 5 6 (PRODUCT LEVEL)	SEE PAGE
Y	*252-0726*	4	WHEEL & TIRE GP	375
Y	*252-0728*	2	WHEEL & TIRE GP	375

Y-SEPARATE ILLUSTRATION

<END>

252-0731 WHEEL & TIRE AR

S/N: B9M1-UP
AN ATTACHMENT

SMCS-4200 **i02281022**

NOTE	PART NUMBER	QTY	PART NAME 1 2 3 4 5 6 (PRODUCT LEVEL)	SEE PAGE
Y	*252-0730*	6	WHEEL & TIRE GP	375

Y-SEPARATE ILLUSTRATION

<END>

252-0733 WHEEL & TIRE AR

S/N: B9M1-UP
AN ATTACHMENT

SMCS-4200 **i02242341**

NOTE	PART NUMBER	QTY	PART NAME 1 2 3 4 5 6 (PRODUCT LEVEL)	SEE PAGE
Y	*252-0730*	4	WHEEL & TIRE GP	375
Y	*252-0732*	2	WHEEL & TIRE GP	376

Y-SEPARATE ILLUSTRATION

<END>

PROOF

252-0735 WHEEL & TIRE AR

S/N: B9M1-UP
AN ATTACHMENT

SMCS-4200 **i02242384**

NOTE	PART NUMBER	QTY	PART NAME 1 2 3 4 5 6 (PRODUCT LEVEL)	SEE PAGE
Y	**252-0734**	6	WHEEL & TIRE GP	376

Y-SEPARATE ILLUSTRATION

<END>

252-0747 WHEEL & TIRE AR

S/N: B9M1-UP
AN ATTACHMENT

SMCS-4200 **i02249996**

NOTE	PART NUMBER	QTY	PART NAME 1 2 3 4 5 6 (PRODUCT LEVEL)	SEE PAGE
Y	*252-0734*	4	WHEEL & TIRE GP	376
Y	*252-0746*	2	WHEEL & TIRE GP	376

Y-SEPARATE ILLUSTRATION

<END>

252-0749 WHEEL & TIRE AR

S/N: B9M1-UP
AN ATTACHMENT

SMCS-4200 **i02250004**

NOTE	PART NUMBER	QTY	PART NAME 1 2 3 4 5 6 (PRODUCT LEVEL)	SEE PAGE
Y	*252-0748*	6	WHEEL & TIRE GP	377

Y-SEPARATE ILLUSTRATION

<END>

252-0751 WHEEL & TIRE AR

S/N: B9M1-UP
AN ATTACHMENT

SMCS-4200 **i02250010**

NOTE	PART NUMBER	QTY	PART NAME 1 2 3 4 5 6 (PRODUCT LEVEL)	SEE PAGE
Y	*252-0748*	4	WHEEL & TIRE GP	377
Y	*252-0750*	2	WHEEL & TIRE GP	377

Y-SEPARATE ILLUSTRATION

<END>

PROOF

252-0753 WHEEL & TIRE AR

S/N: B9M1-UP
AN ATTACHMENT

SMCS-4200 **i02250020**

NOTE	PART NUMBER	QTY	PART NAME 1 2 3 4 5 6 (PRODUCT LEVEL)	SEE PAGE
Y	*252-0752*	6	WHEEL & TIRE GP	377

Y-SEPARATE ILLUSTRATION

<END>

252-0755 WHEEL & TIRE AR

S/N: B9M1-UP
AN ATTACHMENT

SMCS-4200 **i02250113**

NOTE	PART NUMBER	QTY	PART NAME 1 2 3 4 5 6 (PRODUCT LEVEL)	SEE PAGE
Y	*252-0752*	4	WHEEL & TIRE GP	377
Y	*252-0754*	2	WHEEL & TIRE GP	378

Y-SEPARATE ILLUSTRATION

<END>

252-0758 WHEEL & TIRE AR

S/N: B9M1-UP
AN ATTACHMENT

SMCS-4200 **i02250118**

NOTE	PART NUMBER	QTY	PART NAME 1 2 3 4 5 6 (PRODUCT LEVEL)	SEE PAGE
Y	*252-0757*	6	WHEEL & TIRE GP	378

Y-SEPARATE ILLUSTRATION

<END>

252-0761 WHEEL & TIRE AR

S/N: B9M1-UP
AN ATTACHMENT

SMCS-4200 **i02250127**

NOTE	PART NUMBER	QTY	PART NAME 1 2 3 4 5 6 (PRODUCT LEVEL)	SEE PAGE
Y	*252-0757*	4	WHEEL & TIRE GP	378
Y	*252-0760*	2	WHEEL & TIRE GP	378

Y-SEPARATE ILLUSTRATION

<END>

PROOF

252-0763 WHEEL & TIRE AR

S/N: B9M1-UP
AN ATTACHMENT

SMCS-4200 **i02250208**

NOTE	PART NUMBER	QTY	PART NAME 1 2 3 4 5 6 (PRODUCT LEVEL)	SEE PAGE
Y	*252-0762*	6	WHEEL & TIRE GP	379

Y-SEPARATE ILLUSTRATION

<END>

252-0765 WHEEL & TIRE AR

S/N: B9M1-UP
AN ATTACHMENT

SMCS-4200 **i02250261**

NOTE	PART NUMBER	QTY	PART NAME 1 2 3 4 5 6 (PRODUCT LEVEL)	SEE PAGE
Y	*252-0762*	4	WHEEL & TIRE GP	379
Y	*252-0764*	2	WHEEL & TIRE GP	379

Y-SEPARATE ILLUSTRATION

<END>

252-0767 WHEEL & TIRE AR

S/N: B9M1-UP
AN ATTACHMENT

SMCS-4200 **i02250277**

NOTE	PART NUMBER	QTY	PART NAME 1 2 3 4 5 6 (PRODUCT LEVEL)	SEE PAGE
Y	*252-0766*	6	WHEEL & TIRE GP	379

Y-SEPARATE ILLUSTRATION

<END>

252-0771 WHEEL & TIRE AR

S/N: B9M1-UP
AN ATTACHMENT

SMCS-4200 **i02250344**

NOTE	PART NUMBER	QTY	PART NAME 1 2 3 4 5 6 (PRODUCT LEVEL)	SEE PAGE
Y	*252-0770*	6	WHEEL & TIRE GP	380

Y-SEPARATE ILLUSTRATION

<END>

PROOF

252-0773 WHEEL & TIRE AR

S/N: B9M1-UP
AN ATTACHMENT

SMCS-4200 **i02250378**

NOTE	PART NUMBER	QTY	PART NAME 1 2 3 4 5 6 (PRODUCT LEVEL)	SEE PAGE
Y	*252-0770*	4	WHEEL & TIRE GP	380
Y	*252-0772*	2	WHEEL & TIRE GP	380

Y-SEPARATE ILLUSTRATION

<END>

252-0774 WHEEL & TIRE AR

S/N: B9M1-UP
PART OF 249-7841, 252-0775 WHEEL & TIRE AR
AN ATTACHMENT

SMCS-4200 **i02240429**

NOTE	PART NUMBER	QTY	PART NAME 1 2 3 4 5 6 (PRODUCT LEVEL)	SEE PAGE
Y	*252-0112*	1	WHEEL GP	397
	105-3249	1	TIRE (17.5-R25)	

Y-SEPARATE ILLUSTRATION

<END>

252-0775 WHEEL & TIRE AR

S/N: B9M1-UP
AN ATTACHMENT

SMCS-4200 **i02250399**

NOTE	PART NUMBER	QTY	PART NAME 1 2 3 4 5 6 (PRODUCT LEVEL)	SEE PAGE
Y	*252-0774*	6	WHEEL & TIRE AR	357

Y-SEPARATE ILLUSTRATION

<END>

252-0777 WHEEL & TIRE AR

S/N: B9M1-UP
AN ATTACHMENT

SMCS-4200 **i02250402**

NOTE	PART NUMBER	QTY	PART NAME 1 2 3 4 5 6 (PRODUCT LEVEL)	SEE PAGE
Y	*252-0776*	6	WHEEL & TIRE GP	380

Y-SEPARATE ILLUSTRATION

<END>

PROOF

252-0779 WHEEL & TIRE AR

S/N: B9M1-UP
AN ATTACHMENT

SMCS-4200 **i02250416**

NOTE	PART NUMBER	QTY	PART NAME 1 2 3 4 5 6 (PRODUCT LEVEL)	SEE PAGE
Y	*252-0776*	4	WHEEL & TIRE GP	380
Y	*252-0778*	2	WHEEL & TIRE GP	381

Y-SEPARATE ILLUSTRATION

<END>

252-0792 WHEEL & TIRE AR

S/N: B9M1-UP
AN ATTACHMENT

SMCS-4200 **i02250497**

NOTE	PART NUMBER	QTY	PART NAME 1 2 3 4 5 6 (PRODUCT LEVEL)	SEE PAGE
Y	*252-0791*	6	WHEEL & TIRE GP	381

Y-SEPARATE ILLUSTRATION

<END>

252-7948 WHEEL & TIRE AR

S/N: B9M1-UP
AN ATTACHMENT

SMCS-4200 **i02241697**

NOTE	PART NUMBER	QTY	PART NAME 1 2 3 4 5 6 (PRODUCT LEVEL)	SEE PAGE
Y	**252-7947**	6	WHEEL & TIRE GP	381

Y-SEPARATE ILLUSTRATION

<END>

254-7895 WHEEL & TIRE AR

S/N: B9M1-UP
AN ATTACHMENT

SMCS-4200 **i02289803**

NOTE	PART NUMBER	QTY	PART NAME 1 2 3 4 5 6 (PRODUCT LEVEL)	SEE PAGE
Y	*254-7880*	6	WHEEL & TIRE GP	382

Y-SEPARATE ILLUSTRATION

<END>

PROOF

254-7898 WHEEL & TIRE AR

S/N: B9M1-UP
AN ATTACHMENT

SMCS-4200 **i02289804**

NOTE	PART NUMBER	QTY	PART NAME 1 2 3 4 5 6 (PRODUCT LEVEL)	SEE PAGE
Y	*254-7884*	6	WHEEL & TIRE GP	382

Y-SEPARATE ILLUSTRATION

<END>

254-7899 WHEEL & TIRE AR

S/N: B9M1-UP
AN ATTACHMENT

SMCS-4200 **i02289807**

NOTE	PART NUMBER	QTY	PART NAME 1 2 3 4 5 6 (PRODUCT LEVEL)	SEE PAGE
Y	*254-7885*	6	WHEEL & TIRE GP	383

Y-SEPARATE ILLUSTRATION

<END>

254-7900 WHEEL & TIRE AR

S/N: B9M1-UP
AN ATTACHMENT

SMCS-4200 **i02289808**

NOTE	PART NUMBER	QTY	PART NAME 1 2 3 4 5 6 (PRODUCT LEVEL)	SEE PAGE
Y	*254-7886*	6	WHEEL & TIRE GP	383

Y-SEPARATE ILLUSTRATION

<END>

254-7901 WHEEL & TIRE AR

S/N: B9M1-UP
AN ATTACHMENT

SMCS-4200 **i02289809**

NOTE	PART NUMBER	QTY	PART NAME 1 2 3 4 5 6 (PRODUCT LEVEL)	SEE PAGE
Y	*254-7887*	6	WHEEL & TIRE GP	383

Y-SEPARATE ILLUSTRATION

<END>

PROOF

254-7902 WHEEL & TIRE AR

S/N: B9M1-UP

AN ATTACHMENT

SMCS-4200 **i02289810**

NOTE	PART NUMBER	QTY	PART NAME 1 2 3 4 5 6 (PRODUCT LEVEL)	SEE PAGE
Y	*254-7888*	6	WHEEL & TIRE GP	384

Y-SEPARATE ILLUSTRATION

<END>

254-7903 WHEEL & TIRE AR

S/N: B9M1-UP

AN ATTACHMENT

SMCS-4200 **i02289811**

NOTE	PART NUMBER	QTY	PART NAME 1 2 3 4 5 6 (PRODUCT LEVEL)	SEE PAGE
Y	*254-7889*	6	WHEEL & TIRE GP	384

Y-SEPARATE ILLUSTRATION

<END>

254-7904 WHEEL & TIRE AR

S/N: B9M1-UP

AN ATTACHMENT

SMCS-4200 **i02289821**

NOTE	PART NUMBER	QTY	PART NAME 1 2 3 4 5 6 (PRODUCT LEVEL)	SEE PAGE
Y	*254-7890*	6	WHEEL & TIRE GP	384

Y-SEPARATE ILLUSTRATION

<END>

254-7905 WHEEL & TIRE AR

S/N: B9M1-UP

AN ATTACHMENT

SMCS-4200 **i02289822**

NOTE	PART NUMBER	QTY	PART NAME 1 2 3 4 5 6 (PRODUCT LEVEL)	SEE PAGE
Y	*254-7891*	6	WHEEL & TIRE GP	385

Y-SEPARATE ILLUSTRATION

<END>

PROOF

254-7906 WHEEL & TIRE AR

S/N: B9M1-UP
AN ATTACHMENT

SMCS-4200 **i02289823**

NOTE	PART NUMBER	QTY	PART NAME 1 2 3 4 5 6 (PRODUCT LEVEL)	SEE PAGE
Y	*254-7892*	6	WHEEL & TIRE GP	385

Y-SEPARATE ILLUSTRATION

<END>

254-7907 WHEEL & TIRE AR

S/N: B9M1-UP
AN ATTACHMENT

SMCS-4200 **i02289825**

NOTE	PART NUMBER	QTY	PART NAME 1 2 3 4 5 6 (PRODUCT LEVEL)	SEE PAGE
Y	*254-7893*	6	WHEEL & TIRE GP	385

Y-SEPARATE ILLUSTRATION

<END>

254-7908 WHEEL & TIRE AR

S/N: B9M1-UP
AN ATTACHMENT

SMCS-4200 **i02289826**

NOTE	PART NUMBER	QTY	PART NAME 1 2 3 4 5 6 (PRODUCT LEVEL)	SEE PAGE
Y	*254-7894*	6	WHEEL & TIRE GP	386

Y-SEPARATE ILLUSTRATION

<END>

254-7957 WHEEL & TIRE AR

S/N: B9M1-UP
AN ATTACHMENT

SMCS-4200 **i02290009**

NOTE	PART NUMBER	QTY	PART NAME 1 2 3 4 5 6 (PRODUCT LEVEL)	SEE PAGE
Y	*254-7941*	6	WHEEL & TIRE GP	386

Y-SEPARATE ILLUSTRATION

<END>

PROOF

254-7958 WHEEL & TIRE AR

S/N: B9M1-UP

AN ATTACHMENT

SMCS-4200 **i02290011**

NOTE	PART NUMBER	QTY	PART NAME 1 2 3 4 5 6 (PRODUCT LEVEL)	SEE PAGE
Y	*254-7942*	6	WHEEL & TIRE GP	386

Y-SEPARATE ILLUSTRATION

<END>

254-7960 WHEEL & TIRE AR

S/N: B9M1-UP

AN ATTACHMENT

SMCS-4200 **i02290041**

NOTE	PART NUMBER	QTY	PART NAME 1 2 3 4 5 6 (PRODUCT LEVEL)	SEE PAGE
Y	*254-7944*	6	WHEEL & TIRE GP	387

Y-SEPARATE ILLUSTRATION

<END>

254-7961 WHEEL & TIRE AR

S/N: B9M1-UP

AN ATTACHMENT

SMCS-4200 **i02290044**

NOTE	PART NUMBER	QTY	PART NAME 1 2 3 4 5 6 (PRODUCT LEVEL)	SEE PAGE
Y	*254-7945*	6	WHEEL & TIRE GP	387

Y-SEPARATE ILLUSTRATION

<END>

254-7963 WHEEL & TIRE AR

S/N: B9M1-UP

AN ATTACHMENT

SMCS-4200 **i02250536**

NOTE	PART NUMBER	QTY	PART NAME 1 2 3 4 5 6 (PRODUCT LEVEL)	SEE PAGE
Y	*254-7947*	6	WHEEL & TIRE GP	387

Y-SEPARATE ILLUSTRATION

<END>

PROOF

254-7964 WHEEL & TIRE AR

S/N: B9M1-UP
AN ATTACHMENT

SMCS-4200 **i02250552**

NOTE	PART NUMBER	QTY	PART NAME 1 2 3 4 5 6 (PRODUCT LEVEL)	SEE PAGE
Y	*254-7948*	6	WHEEL & TIRE GP	388

Y-SEPARATE ILLUSTRATION

<END>

254-7965 WHEEL & TIRE AR

S/N: B9M1-UP
AN ATTACHMENT

SMCS-4200 **i02250554**

NOTE	PART NUMBER	QTY	PART NAME 1 2 3 4 5 6 (PRODUCT LEVEL)	SEE PAGE
Y	*254-7949*	6	WHEEL & TIRE GP	388

Y-SEPARATE ILLUSTRATION

<END>

254-7966 WHEEL & TIRE AR

S/N: B9M1-UP
AN ATTACHMENT

SMCS-4200 **i02250557**

NOTE	PART NUMBER	QTY	PART NAME 1 2 3 4 5 6 (PRODUCT LEVEL)	SEE PAGE
Y	*254-7950*	6	WHEEL & TIRE GP	388

Y-SEPARATE ILLUSTRATION

<END>

254-7967 WHEEL & TIRE AR

S/N: B9M1-UP
AN ATTACHMENT

SMCS-4200 **i02250559**

NOTE	PART NUMBER	QTY	PART NAME 1 2 3 4 5 6 (PRODUCT LEVEL)	SEE PAGE
Y	*254-7951*	6	WHEEL & TIRE GP	389

Y-SEPARATE ILLUSTRATION

<END>

PROOF

254-7968 WHEEL & TIRE AR

S/N: B9M1-UP

AN ATTACHMENT

SMCS-4200 **i02250560**

NOTE	PART NUMBER	QTY	PART NAME 1 2 3 4 5 6 (PRODUCT LEVEL)	SEE PAGE
Y	*254-7952*	6	WHEEL & TIRE GP	389

Y-SEPARATE ILLUSTRATION

<END>

254-7969 WHEEL & TIRE AR

S/N: B9M1-UP

AN ATTACHMENT

SMCS-4200 **i02250576**

NOTE	PART NUMBER	QTY	PART NAME 1 2 3 4 5 6 (PRODUCT LEVEL)	SEE PAGE
Y	*254-7953*	6	WHEEL & TIRE GP	389

Y-SEPARATE ILLUSTRATION

<END>

254-7970 WHEEL & TIRE AR

S/N: B9M1-UP

AN ATTACHMENT

SMCS-4200 **i02250579**

NOTE	PART NUMBER	QTY	PART NAME 1 2 3 4 5 6 (PRODUCT LEVEL)	SEE PAGE
Y	*254-7954*	6	WHEEL & TIRE GP	390

Y-SEPARATE ILLUSTRATION

<END>

254-7971 WHEEL & TIRE AR

S/N: B9M1-UP

AN ATTACHMENT

SMCS-4200 **i02250582**

NOTE	PART NUMBER	QTY	PART NAME 1 2 3 4 5 6 (PRODUCT LEVEL)	SEE PAGE
Y	*254-7955*	6	WHEEL & TIRE GP	390

Y-SEPARATE ILLUSTRATION

<END>

PROOF

254-7972 WHEEL & TIRE AR

S/N: B9M1-UP
AN ATTACHMENT

SMCS-4200 **i02250583**

NOTE	PART NUMBER	QTY	PART NAME 1 2 3 4 5 6 (PRODUCT LEVEL)	SEE PAGE
Y	*254-7956*	6	WHEEL & TIRE GP	390

Y-SEPARATE ILLUSTRATION

<END>

254-8057 WHEEL & TIRE AR

S/N: B9M1-UP
AN ATTACHMENT

SMCS-4200 **i02290114**

NOTE	PART NUMBER	QTY	PART NAME 1 2 3 4 5 6 (PRODUCT LEVEL)	SEE PAGE
Y	*254-8050*	6	WHEEL & TIRE GP	391

Y-SEPARATE ILLUSTRATION

<END>

254-8061 WHEEL & TIRE AR

S/N: B9M1-UP
AN ATTACHMENT

SMCS-4200 **i02290115**

NOTE	PART NUMBER	QTY	PART NAME 1 2 3 4 5 6 (PRODUCT LEVEL)	SEE PAGE
Y	*254-8053*	6	WHEEL & TIRE GP	391

Y-SEPARATE ILLUSTRATION

<END>

254-8062 WHEEL & TIRE AR

S/N: B9M1-UP
AN ATTACHMENT

SMCS-4200 **i02290124**

NOTE	PART NUMBER	QTY	PART NAME 1 2 3 4 5 6 (PRODUCT LEVEL)	SEE PAGE
Y	*254-8054*	6	WHEEL & TIRE GP	391

Y-SEPARATE ILLUSTRATION

<END>

PROOF

254-8063 WHEEL & TIRE AR

S/N: B9M1-UP
AN ATTACHMENT

SMCS-4200 **i02290121**

NOTE	PART NUMBER	QTY	PART NAME 1 2 3 4 5 6 (PRODUCT LEVEL)	SEE PAGE
Y	*254-8055*	6	WHEEL & TIRE GP	392

Y-SEPARATE ILLUSTRATION

<END>

254-8064 WHEEL & TIRE AR

S/N: B9M1-UP
AN ATTACHMENT

SMCS-4200 **i02290119**

NOTE	PART NUMBER	QTY	PART NAME 1 2 3 4 5 6 (PRODUCT LEVEL)	SEE PAGE
Y	*254-8056*	6	WHEEL & TIRE GP	392

Y-SEPARATE ILLUSTRATION

<END>

250-9709 WHEEL & TIRE GP

S/N: B9M1-UP
PART OF 249-7845 WHEEL & TIRE AR
AN ATTACHMENT

SMCS-4200 **i02240536**

NOTE	PART NUMBER	QTY	PART NAME 1 2 3 4 5 6 (PRODUCT LEVEL)	SEE PAGE
Y	*252-0110*	1	WHEEL GP	396
	141-0360	1	TIRE (14-R24)	

Y-SEPARATE ILLUSTRATION

<END>

250-9762 WHEEL & TIRE GP

S/N: B9M1-UP
PART OF 249-7843 WHEEL & TIRE AR
AN ATTACHMENT

SMCS-4200 **i02240473**

NOTE	PART NUMBER	QTY	PART NAME 1 2 3 4 5 6 (PRODUCT LEVEL)	SEE PAGE
Y	*252-0113*	1	WHEEL GP	398
	180-9853	1	TIRE (17.5-25)	

Y-SEPARATE ILLUSTRATION

<END>

PROOF

250-9779 WHEEL & TIRE GP

S/N: B9M1-UP
PART OF 249-7842 WHEEL & TIRE AR
AN ATTACHMENT

SMCS-4200 **i02246900**

NOTE	PART NUMBER	QTY	PART NAME 1 2 3 4 5 6 (PRODUCT LEVEL)	SEE PAGE
Y	*252-0113*	1	WHEEL GP	398
	6C-3246	1	TIRE (17.5-R25)	

Y-SEPARATE ILLUSTRATION

<END>

252-0666 WHEEL & TIRE GP

S/N: B9M1-UP
PART OF 252-0667, 252-0669 WHEEL & TIRE AR
AN ATTACHMENT

SMCS-4200 **i02241828**

NOTE	PART NUMBER	QTY	PART NAME 1 2 3 4 5 6 (PRODUCT LEVEL)	SEE PAGE
Y	*252-0108*	1	WHEEL GP	396
	142-6173	1	TIRE (14-24)	

Y-SEPARATE ILLUSTRATION

<END>

252-0668 WHEEL & TIRE GP

S/N: B9M1-UP
PART OF 252-0669 WHEEL & TIRE AR
AN ATTACHMENT

SMCS-4200 **i02241832**

NOTE	PART NUMBER	QTY	PART NAME 1 2 3 4 5 6 (PRODUCT LEVEL)	SEE PAGE
Y	*252-0110*	1	WHEEL GP	396
	142-6173	1	TIRE (14-24)	

Y-SEPARATE ILLUSTRATION

<END>

PROOF

252-0670 WHEEL & TIRE GP

S/N: B9M1-UP
PART OF 252-0671, 252-0673 WHEEL & TIRE AR
AN ATTACHMENT

SMCS-4200 **i02241836**

NOTE	PART NUMBER	QTY	PART NAME 1 2 3 4 5 6 (PRODUCT LEVEL)	SEE PAGE
Y	*252-0108*	1	WHEEL GP	396
	142-6174	1	TIRE (14-24)	

Y-SEPARATE ILLUSTRATION

<END>

252-0672 WHEEL & TIRE GP

S/N: B9M1-UP
PART OF 252-0673 WHEEL & TIRE AR
AN ATTACHMENT

SMCS-4200 **i02241919**

NOTE	PART NUMBER	QTY	PART NAME 1 2 3 4 5 6 (PRODUCT LEVEL)	SEE PAGE
Y	*252-0110*	1	WHEEL GP	396
	142-6174	1	TIRE (14-24)	

Y-SEPARATE ILLUSTRATION

<END>

252-0674 WHEEL & TIRE GP

S/N: B9M1-UP
PART OF 252-0675, 252-0677 WHEEL & TIRE AR
AN ATTACHMENT

SMCS-4200 **i02241841**

NOTE	PART NUMBER	QTY	PART NAME 1 2 3 4 5 6 (PRODUCT LEVEL)	SEE PAGE
Y	*252-0108*	1	WHEEL GP	396
	142-6175	1	TIRE (14-24)	

Y-SEPARATE ILLUSTRATION

<END>

PROOF

252-0676 WHEEL & TIRE GP

S/N: B9M1-UP
PART OF 252-0677 WHEEL & TIRE AR
AN ATTACHMENT

SMCS-4200 **i02241839**

NOTE	PART NUMBER	QTY	PART NAME 1 2 3 4 5 6 (PRODUCT LEVEL)	SEE PAGE
	142-6175	1	TIRE (14-24)	
Y	*252-0110*	1	WHEEL GP	396
Y-SEPARATE ILLUSTRATION				

<END>

252-0678 WHEEL & TIRE GP

S/N: B9M1-UP
PART OF 252-0679, 252-0681 WHEEL & TIRE AR
AN ATTACHMENT

SMCS-4200 **i02241934**

NOTE	PART NUMBER	QTY	PART NAME 1 2 3 4 5 6 (PRODUCT LEVEL)	SEE PAGE
Y	*252-0108*	1	WHEEL GP	396
	112-9813	1	TIRE (14-R24)	
Y-SEPARATE ILLUSTRATION				

<END>

252-0680 WHEEL & TIRE GP

S/N: B9M1-UP
PART OF 252-0681 WHEEL & TIRE AR
AN ATTACHMENT

SMCS-4200 **i02241929**

NOTE	PART NUMBER	QTY	PART NAME 1 2 3 4 5 6 (PRODUCT LEVEL)	SEE PAGE
Y	*252-0110*	1	WHEEL GP	396
	112-9813	1	TIRE (14-R24)	
Y-SEPARATE ILLUSTRATION				

<END>

PROOF

252-0682 WHEEL & TIRE GP

S/N: B9M1-UP
PART OF 252-0683, 252-0685 WHEEL & TIRE AR
AN ATTACHMENT

SMCS-4200 **i02241939**

NOTE	PART NUMBER	QTY	PART NAME 1 2 3 4 5 6 (PRODUCT LEVEL)	SEE PAGE
Y	*252-0108*	1	WHEEL GP	396
	123-3178	1	TIRE (14-R24)	

Y-SEPARATE ILLUSTRATION

<END>

252-0684 WHEEL & TIRE GP

S/N: B9M1-UP
PART OF 252-0685 WHEEL & TIRE AR
AN ATTACHMENT

SMCS-4200 **i02241944**

NOTE	PART NUMBER	QTY	PART NAME 1 2 3 4 5 6 (PRODUCT LEVEL)	SEE PAGE
Y	*252-0110*	1	WHEEL GP	396
	123-3178	1	TIRE (14-R24)	

Y-SEPARATE ILLUSTRATION

<END>

252-0686 WHEEL & TIRE GP

S/N: B9M1-UP
PART OF 252-0687, 252-0690 WHEEL & TIRE AR
AN ATTACHMENT

SMCS-4200 **i02241958**

NOTE	PART NUMBER	QTY	PART NAME 1 2 3 4 5 6 (PRODUCT LEVEL)	SEE PAGE
Y	*252-0108*	1	WHEEL GP	396
	106-1567	1	TIRE (14-R24)	

Y-SEPARATE ILLUSTRATION

<END>

PROOF

252-0688 WHEEL & TIRE GP

S/N: B9M1-UP
PART OF 252-0690 WHEEL & TIRE AR
AN ATTACHMENT

SMCS-4200 **i02241987**

NOTE	PART NUMBER	QTY	PART NAME 1 2 3 4 5 6 (PRODUCT LEVEL)	SEE PAGE
Y	*252-0110*	1	WHEEL GP	396
	106-1567	1	TIRE (14-R24)	

Y-SEPARATE ILLUSTRATION

<END>

252-0692 WHEEL & TIRE GP

S/N: B9M1-UP
PART OF 252-0693, 252-0695 WHEEL & TIRE AR
AN ATTACHMENT

SMCS-4200 **i02241998**

NOTE	PART NUMBER	QTY	PART NAME 1 2 3 4 5 6 (PRODUCT LEVEL)	SEE PAGE
Y	*252-0108*	1	WHEEL GP	396
	129-5454	1	TIRE (14-R24)	

Y-SEPARATE ILLUSTRATION

<END>

252-0694 WHEEL & TIRE GP

S/N: B9M1-UP
PART OF 252-0695 WHEEL & TIRE AR
AN ATTACHMENT

SMCS-4200 **i02242010**

NOTE	PART NUMBER	QTY	PART NAME 1 2 3 4 5 6 (PRODUCT LEVEL)	SEE PAGE
Y	*252-0110*	1	WHEEL GP	396
	129-5454	1	TIRE (14-R24)	

Y-SEPARATE ILLUSTRATION

<END>

PROOF

252-0696 WHEEL & TIRE GP

S/N: B9M1-UP
PART OF 252-0697, 252-0699 WHEEL & TIRE AR
AN ATTACHMENT

SMCS-4200 **i02242035**

NOTE	PART NUMBER	QTY	PART NAME 1 2 3 4 5 6 (PRODUCT LEVEL)	SEE PAGE
Y	**252-0108**	1	WHEEL GP	396
	184-1681	1	TIRE (14-R24)	

Y-SEPARATE ILLUSTRATION

<END>

252-0698 WHEEL & TIRE GP

S/N: B9M1-UP
PART OF 252-0699 WHEEL & TIRE AR
AN ATTACHMENT

SMCS-4200 **i02242046**

NOTE	PART NUMBER	QTY	PART NAME 1 2 3 4 5 6 (PRODUCT LEVEL)	SEE PAGE
Y	**252-0110**	1	WHEEL GP	396
	184-1681	1	TIRE (14-R24)	

Y-SEPARATE ILLUSTRATION

<END>

252-0700 WHEEL & TIRE GP

S/N: B9M1-UP
PART OF 249-7845, 252-0701 WHEEL & TIRE AR
AN ATTACHMENT

SMCS-4200 **i02240549**

NOTE	PART NUMBER	QTY	PART NAME 1 2 3 4 5 6 (PRODUCT LEVEL)	SEE PAGE
Y	**252-0108**	1	WHEEL GP	396
	141-0360	1	TIRE (14-R24)	

Y-SEPARATE ILLUSTRATION

<END>

PROOF

252-0707 WHEEL & TIRE GP

S/N: B9M1-UP
PART OF 252-0708, 252-0710 WHEEL & TIRE AR
AN ATTACHMENT

SMCS-4200 **i02242062**

NOTE	PART NUMBER	QTY	PART NAME 1 2 3 4 5 6 (PRODUCT LEVEL)	SEE PAGE
Y	**252-0108**	1	WHEEL GP	396
	140-3607	1	TIRE (14-R24)	

Y-SEPARATE ILLUSTRATION

<END>

252-0709 WHEEL & TIRE GP

S/N: B9M1-UP
PART OF 252-0710 WHEEL & TIRE AR
AN ATTACHMENT

SMCS-4200 **i02242069**

NOTE	PART NUMBER	QTY	PART NAME 1 2 3 4 5 6 (PRODUCT LEVEL)	SEE PAGE
Y	**252-0110**	1	WHEEL GP	396
	140-3607	1	TIRE (14-R24)	

Y-SEPARATE ILLUSTRATION

<END>

252-0713 WHEEL & TIRE GP

S/N: B9M1-UP
PART OF 252-0714, 252-0716 WHEEL & TIRE AR
AN ATTACHMENT

SMCS-4200 **i02242256**

NOTE	PART NUMBER	QTY	PART NAME 1 2 3 4 5 6 (PRODUCT LEVEL)	SEE PAGE
Y	**252-0108**	1	WHEEL GP	396
	8W-7957	1	TIRE (14-R24)	

Y-SEPARATE ILLUSTRATION

<END>

PROOF

252-0715 WHEEL & TIRE GP

S/N: B9M1-UP
PART OF 252-0716 WHEEL & TIRE AR
AN ATTACHMENT

SMCS-4200 **i02242262**

NOTE	PART NUMBER	QTY	PART NAME 1 2 3 4 5 6 (PRODUCT LEVEL)	SEE PAGE
Y	**252-0110**	1	WHEEL GP	396
	8W-7957	1	TIRE (14-R24)	

Y-SEPARATE ILLUSTRATION

<END>

252-0719 WHEEL & TIRE GP

S/N: B9M1-UP
PART OF 252-0720, 252-0722 WHEEL & TIRE AR
AN ATTACHMENT

SMCS-4200 **i02242273**

NOTE	PART NUMBER	QTY	PART NAME 1 2 3 4 5 6 (PRODUCT LEVEL)	SEE PAGE
Y	*252-0108*	1	WHEEL GP	396
	173-7830	1	TIRE (14-R24)	

Y-SEPARATE ILLUSTRATION

<END>

252-0721 WHEEL & TIRE GP

S/N: B9M1-UP
PART OF 252-0722 WHEEL & TIRE AR
AN ATTACHMENT

SMCS-4200 **i02242277**

NOTE	PART NUMBER	QTY	PART NAME 1 2 3 4 5 6 (PRODUCT LEVEL)	SEE PAGE
Y	*252-0110*	1	WHEEL GP	396
	173-7830	1	TIRE (14-R24)	

Y-SEPARATE ILLUSTRATION

<END>

PROOF

252-0726 WHEEL & TIRE GP

S/N: B9M1-UP
PART OF 252-0727, 252-0729 WHEEL & TIRE AR
AN ATTACHMENT

SMCS-4200 **i02242284**

NOTE	PART NUMBER	QTY	PART NAME 1 2 3 4 5 6 (PRODUCT LEVEL)	SEE PAGE
Y	*252-0112*	1	WHEEL GP	397
	142-6182	1	TIRE (17.5-25)	

Y-SEPARATE ILLUSTRATION

<END>

252-0728 WHEEL & TIRE GP

S/N: B9M1-UP
PART OF 252-0729 WHEEL & TIRE AR
AN ATTACHMENT

SMCS-4200 **i02242290**

NOTE	PART NUMBER	QTY	PART NAME 1 2 3 4 5 6 (PRODUCT LEVEL)	SEE PAGE
Y	*252-0113*	1	WHEEL GP	398
	142-6182	1	TIRE (17.5-25)	

Y-SEPARATE ILLUSTRATION

<END>

252-0730 WHEEL & TIRE GP

S/N: B9M1-UP
PART OF 252-0731, 252-0733 WHEEL & TIRE AR
AN ATTACHMENT

SMCS-4200 **i02334112**

NOTE	PART NUMBER	QTY	PART NAME 1 2 3 4 5 6 (PRODUCT LEVEL)	SEE PAGE
Y	*252-0112*	1	WHEEL GP	397
	142-6183	1	TIRE (17.5-25)	

Y-SEPARATE ILLUSTRATION

<END>

PROOF

252-0732 WHEEL & TIRE GP

S/N: B9M1-UP
PART OF 252-0733 WHEEL & TIRE AR
AN ATTACHMENT

SMCS-4200 **i02334111**

NOTE	PART NUMBER	QTY	PART NAME 1 2 3 4 5 6 (PRODUCT LEVEL)	SEE PAGE
Y	*252-0113*	1	WHEEL GP	398
	142-6183	1	TIRE (17.5-25)	

Y-SEPARATE ILLUSTRATION

<END>

252-0734 WHEEL & TIRE GP

S/N: B9M1-UP
PART OF 252-0735, 252-0747 WHEEL & TIRE AR
AN ATTACHMENT

SMCS-4200 **i02242365**

NOTE	PART NUMBER	QTY	PART NAME 1 2 3 4 5 6 (PRODUCT LEVEL)	SEE PAGE
Y	*252-0112*	1	WHEEL GP	397
	142-6184	1	TIRE (17.5-25)	

Y-SEPARATE ILLUSTRATION

<END>

252-0746 WHEEL & TIRE GP

S/N: B9M1-UP
PART OF 252-0747 WHEEL & TIRE AR
AN ATTACHMENT

SMCS-4200 **i02242402**

NOTE	PART NUMBER	QTY	PART NAME 1 2 3 4 5 6 (PRODUCT LEVEL)	SEE PAGE
Y	*252-0113*	1	WHEEL GP	398
	142-6184	1	TIRE (17.5-25)	

Y-SEPARATE ILLUSTRATION

<END>

PROOF

252-0748 WHEEL & TIRE GP

S/N: B9M1-UP
PART OF 252-0749, 252-0751 WHEEL & TIRE AR
AN ATTACHMENT

SMCS-4200 **i02250000**

NOTE	PART NUMBER	QTY	PART NAME 1 2 3 4 5 6 (PRODUCT LEVEL)	SEE PAGE
Y	*252-0112*	1	WHEEL GP	397
	142-6185	1	TIRE (17.5-25)	

Y-SEPARATE ILLUSTRATION

<END>

252-0750 WHEEL & TIRE GP

S/N: B9M1-UP
PART OF 252-0751 WHEEL & TIRE AR
AN ATTACHMENT

SMCS-4200 **i02250006**

NOTE	PART NUMBER	QTY	PART NAME 1 2 3 4 5 6 (PRODUCT LEVEL)	SEE PAGE
Y	*252-0113*	1	WHEEL GP	398
	142-6185	1	TIRE (17.5-25)	

Y-SEPARATE ILLUSTRATION

<END>

252-0752 WHEEL & TIRE GP

S/N: B9M1-UP
PART OF 252-0753, 252-0755 WHEEL & TIRE AR
AN ATTACHMENT

SMCS-4200 **i02250013**

NOTE	PART NUMBER	QTY	PART NAME 1 2 3 4 5 6 (PRODUCT LEVEL)	SEE PAGE
Y	*252-0112*	1	WHEEL GP	397
	142-6186	1	TIRE (17.5-25)	

Y-SEPARATE ILLUSTRATION

<END>

PROOF

252-0754 WHEEL & TIRE GP

S/N: B9M1-UP
PART OF 252-0755 WHEEL & TIRE AR
AN ATTACHMENT

SMCS-4200 **i02250024**

NOTE	PART NUMBER	QTY	PART NAME 1 2 3 4 5 6 (PRODUCT LEVEL)	SEE PAGE
Y	*252-0113*	1	WHEEL GP	398
	142-6186	1	TIRE (17.5-25)	

Y-SEPARATE ILLUSTRATION

<END>

252-0757 WHEEL & TIRE GP

S/N: B9M1-UP
PART OF 252-0758, 252-0761 WHEEL & TIRE AR
AN ATTACHMENT

SMCS-4200 **i02250115**

NOTE	PART NUMBER	QTY	PART NAME 1 2 3 4 5 6 (PRODUCT LEVEL)	SEE PAGE
Y	*252-0112*	1	WHEEL GP	397
	142-6187	1	TIRE (17.5-25)	

Y-SEPARATE ILLUSTRATION

<END>

252-0760 WHEEL & TIRE GP

S/N: B9M1-UP
PART OF 252-0761 WHEEL & TIRE AR
AN ATTACHMENT

SMCS-4200 **i02250125**

NOTE	PART NUMBER	QTY	PART NAME 1 2 3 4 5 6 (PRODUCT LEVEL)	SEE PAGE
Y	*252-0113*	1	WHEEL GP	398
	142-6187	1	TIRE (17.5-25)	

Y-SEPARATE ILLUSTRATION

<END>

PROOF

252-0762 WHEEL & TIRE GP

S/N: B9M1-UP
PART OF 252-0763, 252-0765 WHEEL & TIRE AR
AN ATTACHMENT

SMCS-4200 **i02250150**

NOTE	PART NUMBER	QTY	PART NAME 1 2 3 4 5 6 (PRODUCT LEVEL)	SEE PAGE
Y	*252-0112*	1	WHEEL GP	397
	6C-7366	1	TIRE (17.5-R25)	

Y-SEPARATE ILLUSTRATION

<END>

252-0764 WHEEL & TIRE GP

S/N: B9M1-UP
PART OF 252-0765 WHEEL & TIRE AR
AN ATTACHMENT

SMCS-4200 **i02250226**

NOTE	PART NUMBER	QTY	PART NAME 1 2 3 4 5 6 (PRODUCT LEVEL)	SEE PAGE
Y	*252-0113*	1	WHEEL GP	398
	6C-7366	1	TIRE (17.5-R25)	

Y-SEPARATE ILLUSTRATION

<END>

252-0766 WHEEL & TIRE GP

S/N: B9M1-UP
PART OF 249-7842, 252-0767 WHEEL & TIRE AR
AN ATTACHMENT

SMCS-4200 **i02240471**

NOTE	PART NUMBER	QTY	PART NAME 1 2 3 4 5 6 (PRODUCT LEVEL)	SEE PAGE
Y	*252-0112*	1	WHEEL GP	397
	6C-3246	1	TIRE (17.5-R25)	

Y-SEPARATE ILLUSTRATION

<END>

PROOF

252-0770 WHEEL & TIRE GP

S/N: B9M1-UP
PART OF 252-0771, 252-0773 WHEEL & TIRE AR
AN ATTACHMENT

SMCS-4200 **i02250337**

NOTE	PART NUMBER	QTY	PART NAME 1 2 3 4 5 6 (PRODUCT LEVEL)	SEE PAGE
Y	*252-0112*	1	WHEEL GP	397
	106-4835	1	TIRE (17.5-R25)	

Y-SEPARATE ILLUSTRATION

<END>

252-0772 WHEEL & TIRE GP

S/N: B9M1-UP
PART OF 252-0773 WHEEL & TIRE AR
AN ATTACHMENT

SMCS-4200 **i02250362**

NOTE	PART NUMBER	QTY	PART NAME 1 2 3 4 5 6 (PRODUCT LEVEL)	SEE PAGE
Y	*252-0113*	1	WHEEL GP	398
	106-4835	1	TIRE (17.5-R25)	

Y-SEPARATE ILLUSTRATION

<END>

252-0776 WHEEL & TIRE GP

S/N: B9M1-UP
PART OF 252-0777, 252-0779 WHEEL & TIRE AR
AN ATTACHMENT

SMCS-4200 **i02250401**

NOTE	PART NUMBER	QTY	PART NAME 1 2 3 4 5 6 (PRODUCT LEVEL)	SEE PAGE
Y	*252-0112*	1	WHEEL GP	397
	154-0051	1	TIRE (17.5-R25)	

Y-SEPARATE ILLUSTRATION

<END>

PROOF

252-0778 WHEEL & TIRE GP

S/N: B9M1-UP
PART OF 252-0779 WHEEL & TIRE AR
AN ATTACHMENT

SMCS-4200 **i02250414**

NOTE	PART NUMBER	QTY	PART NAME 1 2 3 4 5 6 (PRODUCT LEVEL)	SEE PAGE
Y	*252-0113*	1	WHEEL GP	398
	154-0051	1	TIRE (17.5-R25)	

Y-SEPARATE ILLUSTRATION

<END>

252-0791 WHEEL & TIRE GP

S/N: B9M1-UP
PART OF 249-7843, 252-0792 WHEEL & TIRE AR
AN ATTACHMENT

SMCS-4200 **i02246889**

NOTE	PART NUMBER	QTY	PART NAME 1 2 3 4 5 6 (PRODUCT LEVEL)	SEE PAGE
Y	**252-0112**	1	WHEEL GP	397
	180-9853	1	TIRE (17.5-25)	

Y-SEPARATE ILLUSTRATION

<END>

252-7947 WHEEL & TIRE GP

S/N: B9M1-UP
PART OF 252-7948 WHEEL & TIRE AR
AN ATTACHMENT

SMCS-4200 **i02241701**

NOTE	PART NUMBER	QTY	PART NAME 1 2 3 4 5 6 (PRODUCT LEVEL)	SEE PAGE
Y	**252-0106**	1	WHEEL GP	395
	142-6174	1	TIRE (14-24)	

Y-SEPARATE ILLUSTRATION

<END>

PROOF

254-7880 WHEEL & TIRE GP

S/N: B9M1-UP
PART OF 254-7895 WHEEL & TIRE AR
AN ATTACHMENT

SMCS-4200 **i02289521**

NOTE	PART NUMBER	QTY	PART NAME 1 2 3 4 5 6 (PRODUCT LEVEL)	SEE PAGE
Y	*252-0106*	1	WHEEL GP	395
	142-6165	1	TIRE (13-24)	

Y-SEPARATE ILLUSTRATION

<END>

254-7882 WHEEL & TIRE GP

S/N: B9M1-UP
AN ATTACHMENT

SMCS-4200 **i02289532**

NOTE	PART NUMBER	QTY	PART NAME 1 2 3 4 5 6 (PRODUCT LEVEL)	SEE PAGE
Y	*252-0106*	1	WHEEL GP	395
	142-6166	1	TIRE	

Y-SEPARATE ILLUSTRATION

<END>

254-7884 WHEEL & TIRE GP

S/N: B9M1-UP
PART OF 254-7898 WHEEL & TIRE AR
AN ATTACHMENT

SMCS-4200 **i02289540**

NOTE	PART NUMBER	QTY	PART NAME 1 2 3 4 5 6 (PRODUCT LEVEL)	SEE PAGE
Y	*252-0106*	1	WHEEL GP	395
	142-6168	1	TIRE (13-24)	

Y-SEPARATE ILLUSTRATION

<END>

PROOF

254-7885 WHEEL & TIRE GP

S/N: B9M1-UP
PART OF 254-7899 WHEEL & TIRE AR
AN ATTACHMENT

SMCS-4200 **i02289544**

NOTE	PART NUMBER	QTY	PART NAME 1 2 3 4 5 6 (PRODUCT LEVEL)	SEE PAGE
Y	*252-0106*	1	WHEEL GP	395
	142-6169	1	TIRE (13-24)	

Y-SEPARATE ILLUSTRATION

<END>

254-7886 WHEEL & TIRE GP

S/N: B9M1-UP
PART OF 254-7900 WHEEL & TIRE AR
AN ATTACHMENT

SMCS-4200 **i02289549**

NOTE	PART NUMBER	QTY	PART NAME 1 2 3 4 5 6 (PRODUCT LEVEL)	SEE PAGE
Y	*252-0106*	1	WHEEL GP	395
	112-9924	1	TIRE (13-R24)	

Y-SEPARATE ILLUSTRATION

<END>

254-7887 WHEEL & TIRE GP

S/N: B9M1-UP
PART OF 254-7901 WHEEL & TIRE AR
AN ATTACHMENT

SMCS-4200 **i02289553**

NOTE	PART NUMBER	QTY	PART NAME 1 2 3 4 5 6 (PRODUCT LEVEL)	SEE PAGE
Y	*252-0106*	1	WHEEL GP	395
	2A-7327	1	TIRE (13-R24)	

Y-SEPARATE ILLUSTRATION

<END>

PROOF

254-7888 WHEEL & TIRE GP

S/N: B9M1-UP
PART OF 254-7902 WHEEL & TIRE AR
AN ATTACHMENT

SMCS-4200 **i02289626**

NOTE	PART NUMBER	QTY	PART NAME 1 2 3 4 5 6 (PRODUCT LEVEL)	SEE PAGE
Y	*252-0106*	1	WHEEL GP	395
	142-6173	1	TIRE (14-24)	

Y-SEPARATE ILLUSTRATION

<END>

254-7889 WHEEL & TIRE GP

S/N: B9M1-UP
PART OF 254-7903 WHEEL & TIRE AR
AN ATTACHMENT

SMCS-4200 **i02289623**

NOTE	PART NUMBER	QTY	PART NAME 1 2 3 4 5 6 (PRODUCT LEVEL)	SEE PAGE
Y	*252-0106*	1	WHEEL GP	395
	142-6175	1	TIRE (14-24)	

Y-SEPARATE ILLUSTRATION

<END>

254-7890 WHEEL & TIRE GP

S/N: B9M1-UP
PART OF 254-7904 WHEEL & TIRE AR
AN ATTACHMENT

SMCS-4200 **i02289618**

NOTE	PART NUMBER	QTY	PART NAME 1 2 3 4 5 6 (PRODUCT LEVEL)	SEE PAGE
Y	*252-0106*	1	WHEEL GP	395
	112-9813	1	TIRE (14-R24)	

Y-SEPARATE ILLUSTRATION

<END>

PROOF

254-7891 WHEEL & TIRE GP

S/N: B9M1-UP
PART OF 254-7905 WHEEL & TIRE AR
AN ATTACHMENT

SMCS-4200 **i02289735**

NOTE	PART NUMBER	QTY	PART NAME 1 2 3 4 5 6 (PRODUCT LEVEL)	SEE PAGE
Y	*252-0106*	1	WHEEL GP	395
	123-3178	1	TIRE (14-R24)	

Y-SEPARATE ILLUSTRATION

<END>

254-7892 WHEEL & TIRE GP

S/N: B9M1-UP
PART OF 254-7906 WHEEL & TIRE AR
AN ATTACHMENT

SMCS-4200 **i02289799**

NOTE	PART NUMBER	QTY	PART NAME 1 2 3 4 5 6 (PRODUCT LEVEL)	SEE PAGE
Y	*252-0106*	1	WHEEL GP	395
	106-1567	1	TIRE (14-R24)	

Y-SEPARATE ILLUSTRATION

<END>

254-7893 WHEEL & TIRE GP

S/N: B9M1-UP
PART OF 254-7907 WHEEL & TIRE AR
AN ATTACHMENT

SMCS-4200 **i02289801**

NOTE	PART NUMBER	QTY	PART NAME 1 2 3 4 5 6 (PRODUCT LEVEL)	SEE PAGE
Y	*252-0106*	1	WHEEL GP	395
	129-5454	1	TIRE (14-R24)	

Y-SEPARATE ILLUSTRATION

<END>

PROOF

254-7894 WHEEL & TIRE GP

S/N: B9M1-UP
PART OF 254-7908 WHEEL & TIRE AR
AN ATTACHMENT

SMCS-4200 **i02289802**

NOTE	PART NUMBER	QTY	PART NAME 1 2 3 4 5 6 (PRODUCT LEVEL)	SEE PAGE
Y	*252-0106*	1	WHEEL GP	395
	184-1681	1	TIRE (14-R24)	

Y-SEPARATE ILLUSTRATION

<END>

254-7941 WHEEL & TIRE GP

S/N: B9M1-UP
PART OF 254-7957 WHEEL & TIRE AR
AN ATTACHMENT

SMCS-4200 **i02289828**

NOTE	PART NUMBER	QTY	PART NAME 1 2 3 4 5 6 (PRODUCT LEVEL)	SEE PAGE
Y	*252-0111*	1	WHEEL GP	397
	142-6176	1	TIRE (15.5-25)	

Y-SEPARATE ILLUSTRATION

<END>

254-7942 WHEEL & TIRE GP

S/N: B9M1-UP
PART OF 254-7958 WHEEL & TIRE AR
AN ATTACHMENT

SMCS-4200 **i02289899**

NOTE	PART NUMBER	QTY	PART NAME 1 2 3 4 5 6 (PRODUCT LEVEL)	SEE PAGE
Y	*252-0111*	1	WHEEL GP	397
	142-6177	1	TIRE (15.5-25)	

Y-SEPARATE ILLUSTRATION

<END>

PROOF

254-7944 WHEEL & TIRE GP

S/N: B9M1-UP
PART OF 254-7960 WHEEL & TIRE AR
AN ATTACHMENT

SMCS-4200 **i02289932**

NOTE	PART NUMBER	QTY	PART NAME 1 2 3 4 5 6 (PRODUCT LEVEL)	SEE PAGE
Y	*252-0111*	1	WHEEL GP	397
	142-6179	1	TIRE (15.5-25)	

Y-SEPARATE ILLUSTRATION

<END>

254-7945 WHEEL & TIRE GP

S/N: B9M1-UP
PART OF 254-7961 WHEEL & TIRE AR
AN ATTACHMENT

SMCS-4200 **i02289966**

NOTE	PART NUMBER	QTY	PART NAME 1 2 3 4 5 6 (PRODUCT LEVEL)	SEE PAGE
Y	*252-0111*	1	WHEEL GP	397
	256-6019	1	TIRE (15.5-25)	

Y-SEPARATE ILLUSTRATION

<END>

254-7947 WHEEL & TIRE GP

S/N: B9M1-UP
PART OF 254-7963 WHEEL & TIRE AR
AN ATTACHMENT

SMCS-4200 **i02250505**

NOTE	PART NUMBER	QTY	PART NAME 1 2 3 4 5 6 (PRODUCT LEVEL)	SEE PAGE
Y	*252-0111*	1	WHEEL GP	397
	142-6182	1	TIRE (17.5-25)	

Y-SEPARATE ILLUSTRATION

<END>

PROOF

254-7948 WHEEL & TIRE GP

S/N: B9M1-UP
PART OF 254-7964 WHEEL & TIRE AR
AN ATTACHMENT

SMCS-4200 **i02250508**

NOTE	PART NUMBER	QTY	PART NAME 1 2 3 4 5 6 (PRODUCT LEVEL)	SEE PAGE
Y	*252-0111*	1	WHEEL GP	397
	142-6183	1	TIRE (17.5-25)	

Y-SEPARATE ILLUSTRATION

<END>

254-7949 WHEEL & TIRE GP

S/N: B9M1-UP
PART OF 254-7965 WHEEL & TIRE AR
AN ATTACHMENT

SMCS-4200 **i02250509**

NOTE	PART NUMBER	QTY	PART NAME 1 2 3 4 5 6 (PRODUCT LEVEL)	SEE PAGE
Y	*252-0111*	1	WHEEL GP	397
	142-6184	1	TIRE (17.5-25)	

Y-SEPARATE ILLUSTRATION

<END>

254-7950 WHEEL & TIRE GP

S/N: B9M1-UP
PART OF 254-7966 WHEEL & TIRE AR
AN ATTACHMENT

SMCS-4200 **i02250511**

NOTE	PART NUMBER	QTY	PART NAME 1 2 3 4 5 6 (PRODUCT LEVEL)	SEE PAGE
Y	*252-0111*	1	WHEEL GP	397
	142-6185	1	TIRE (17.5-25)	

Y-SEPARATE ILLUSTRATION

<END>

PROOF

254-7951 WHEEL & TIRE GP

S/N: B9M1-UP
PART OF 254-7967 WHEEL & TIRE AR
AN ATTACHMENT

SMCS-4200 **i02250514**

NOTE	PART NUMBER	QTY	PART NAME 1 2 3 4 5 6 (PRODUCT LEVEL)	SEE PAGE
Y	*252-0111*	1	WHEEL GP	397
	142-6186	1	TIRE (17.5-25)	

Y-SEPARATE ILLUSTRATION

<END>

254-7952 WHEEL & TIRE GP

S/N: B9M1-UP
PART OF 254-7968 WHEEL & TIRE AR
AN ATTACHMENT

SMCS-4200 **i02250515**

NOTE	PART NUMBER	QTY	PART NAME 1 2 3 4 5 6 (PRODUCT LEVEL)	SEE PAGE
Y	*252-0111*	1	WHEEL GP	397
	142-6187	1	TIRE (17.5-25)	

Y-SEPARATE ILLUSTRATION

<END>

254-7953 WHEEL & TIRE GP

S/N: B9M1-UP
PART OF 254-7969 WHEEL & TIRE AR
AN ATTACHMENT

SMCS-4200 **i02250518**

NOTE	PART NUMBER	QTY	PART NAME 1 2 3 4 5 6 (PRODUCT LEVEL)	SEE PAGE
Y	*252-0111*	1	WHEEL GP	397
	6C-7366	1	TIRE (17.5-R25)	

Y-SEPARATE ILLUSTRATION

<END>

PROOF

254-7954 WHEEL & TIRE GP

S/N: B9M1-UP
PART OF 254-7970 WHEEL & TIRE AR
AN ATTACHMENT

SMCS-4200 **i02250521**

NOTE	PART NUMBER	QTY	PART NAME 1 2 3 4 5 6 (PRODUCT LEVEL)	SEE PAGE
Y	*252-0111*	1	WHEEL GP	397
	6C-3246	1	TIRE (17.5-R25)	

Y-SEPARATE ILLUSTRATION

<END>

254-7955 WHEEL & TIRE GP

S/N: B9M1-UP
PART OF 254-7971 WHEEL & TIRE AR
AN ATTACHMENT

SMCS-4200 **i02250524**

NOTE	PART NUMBER	QTY	PART NAME 1 2 3 4 5 6 (PRODUCT LEVEL)	SEE PAGE
Y	*252-0111*	1	WHEEL GP	397
	106-4835	1	TIRE (17.5-R25)	

Y-SEPARATE ILLUSTRATION

<END>

254-7956 WHEEL & TIRE GP

S/N: B9M1-UP
PART OF 254-7972 WHEEL & TIRE AR
AN ATTACHMENT

SMCS-4200 **i02250525**

NOTE	PART NUMBER	QTY	PART NAME 1 2 3 4 5 6 (PRODUCT LEVEL)	SEE PAGE
Y	*252-0111*	1	WHEEL GP	397
	105-3249	1	TIRE (17.5-R25)	

Y-SEPARATE ILLUSTRATION

<END>

PROOF

254-8050 WHEEL & TIRE GP

S/N: B9M1-UP
PART OF 254-8057 WHEEL & TIRE AR
AN ATTACHMENT

SMCS-4200 **i02290073**

NOTE	PART NUMBER	QTY	PART NAME 1 2 3 4 5 6 (PRODUCT LEVEL)	SEE PAGE
Y	*252-0108*	1	WHEEL GP	396
	142-6165	1	TIRE (13-24)	

Y-SEPARATE ILLUSTRATION

<END>

254-8053 WHEEL & TIRE GP

S/N: B9M1-UP
PART OF 254-8061 WHEEL & TIRE AR
AN ATTACHMENT

SMCS-4200 **i02290083**

NOTE	PART NUMBER	QTY	PART NAME 1 2 3 4 5 6 (PRODUCT LEVEL)	SEE PAGE
Y	*252-0108*	1	WHEEL GP	396
	142-6168	1	TIRE (13-24)	

Y-SEPARATE ILLUSTRATION

<END>

254-8054 WHEEL & TIRE GP

S/N: B9M1-UP
PART OF 254-8062 WHEEL & TIRE AR
AN ATTACHMENT

SMCS-4200 **i02290086**

NOTE	PART NUMBER	QTY	PART NAME 1 2 3 4 5 6 (PRODUCT LEVEL)	SEE PAGE
Y	*252-0108*	1	WHEEL GP	396
	142-6169	1	TIRE (13-24)	

Y-SEPARATE ILLUSTRATION

<END>

PROOF

254-8055 WHEEL & TIRE GP

S/N: B9M1-UP
PART OF 254-8063 WHEEL & TIRE AR
AN ATTACHMENT

SMCS-4200 **i02290111**

NOTE	PART NUMBER	QTY	PART NAME 1 2 3 4 5 6 (PRODUCT LEVEL)	SEE PAGE
Y	*252-0108*	1	WHEEL GP	396
	112-9924	1	TIRE (13-R24)	

Y-SEPARATE ILLUSTRATION

<END>

254-8056 WHEEL & TIRE GP

S/N: B9M1-UP
PART OF 254-8064 WHEEL & TIRE AR
AN ATTACHMENT

SMCS-4200 **i02290113**

NOTE	PART NUMBER	QTY	PART NAME 1 2 3 4 5 6 (PRODUCT LEVEL)	SEE PAGE
Y	*252-0108*	1	WHEEL GP	396
	2A-7327	1	TIRE (13-R24)	

Y-SEPARATE ILLUSTRATION

<END>

PROOF

246-7976 WHEEL AR

S/N: B9M1-UP

PART OF 234-7721 COMMON AR-MOTOR GRADER

SMCS-4208 **i02354356**

NOTE	REF NO	GRAPHIC REF	PART NUMBER	QTY	PART NAME 1 2 3 4 5 6 (PRODUCT LEVEL)	SEE PAGE
Y	1	1	*246-7972*	2	BRAKE GP-SERVICE (FRONT TANDEM)	439
Y	2	1	*246-7973*	2	BRAKE GP-SERVICE (REAR TANDEM)	441

Y-SEPARATE ILLUSTRATION

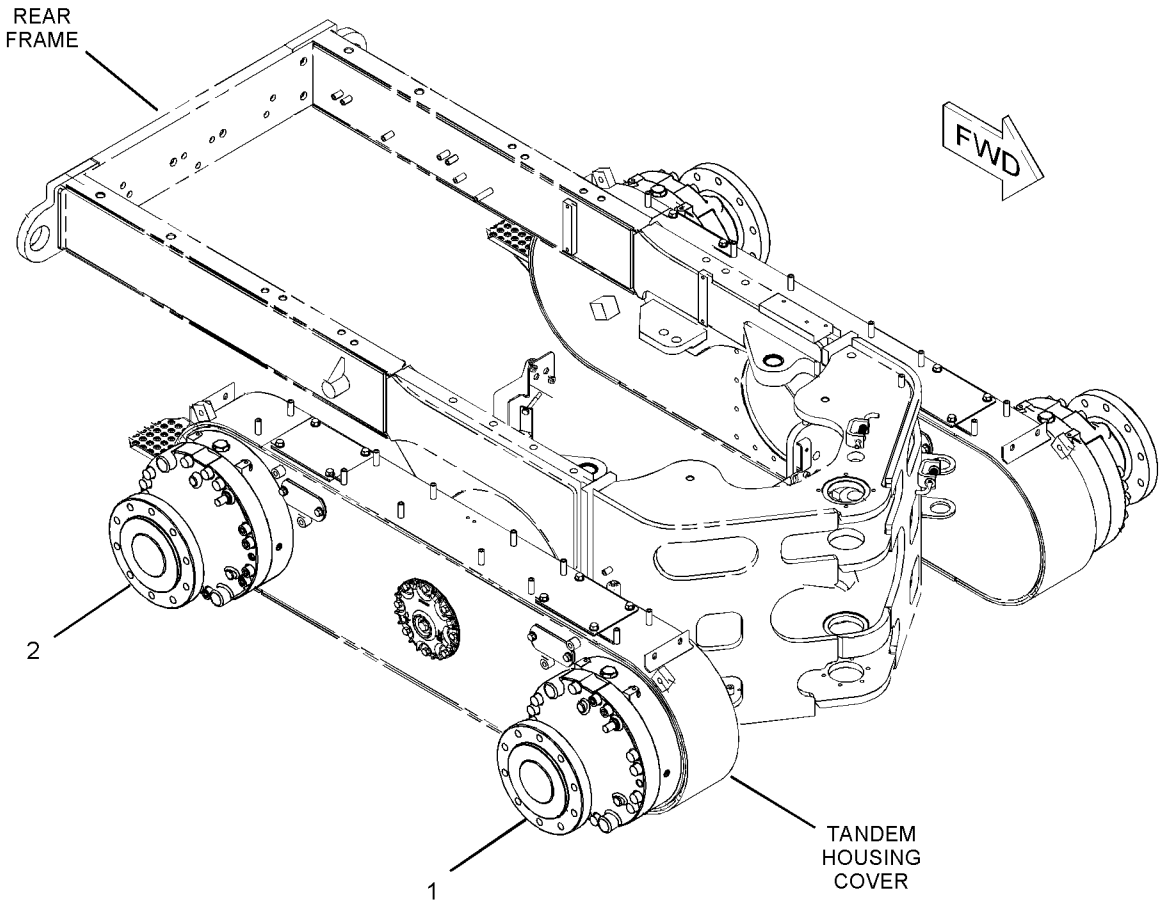

GRAPHIC #1 **<END>** g01149333

250-9786 WHEEL GP

S/N: B9M1-UP
(10X24)
PART OF 252-0110 WHEEL GP
AN ATTACHMENT

SMCS-4201, 4208 **i02228302**

NOTE	PART NUMBER	QTY	PART NAME 1 2 3 4 5 6 (PRODUCT LEVEL)	SEE PAGE
	8W-9566	1	FLANGE AS	
	250-1965	1	RIM AS	
	2D-2654	1	RING-LOCK	

<END>

250-9788 WHEEL GP—ALL WHEEL DRIVE

S/N: B9M1-UP
(14X25)
PART OF 252-0113 WHEEL GP
AN ATTACHMENT

SMCS-4201, 4208 **i02240435**

NOTE	PART NUMBER	QTY	PART NAME 1 2 3 4 5 6 (PRODUCT LEVEL)	SEE PAGE
	8W-9594	1	FLANGE AS	
	250-1966	1	RIM AS	
	4K-4881	1	RING-LOCK	

<END>

252-0102 WHEEL GP

S/N: B9M1-UP
(10X24)
PART OF 252-0108 WHEEL GP
AN ATTACHMENT

SMCS-4201, 4208 **i02240543**

NOTE	PART NUMBER	QTY	PART NAME 1 2 3 4 5 6 (PRODUCT LEVEL)	SEE PAGE
	8W-9566	1	FLANGE AS	
	252-0099	1	RIM AS	
	2D-2654	1	RING-LOCK	

<END>

PROOF

252-0104 WHEEL GP

S/N: B9M1-UP
(14X25)
PART OF 252-0112 WHEEL GP
AN ATTACHMENT

SMCS-4201, 4208 **i02240262**

NOTE	PART NUMBER	QTY	PART NAME 1 2 3 4 5 6 (PRODUCT LEVEL)	SEE PAGE
	8W-9594	1	FLANGE AS	
	252-0101	1	RIM AS	
	4K-4881	1	RING-LOCK	

<END>

252-0106 WHEEL GP

S/N: B9M1-UP
(9X24)
PART OF 252-7947, 254-7880, 254-7882, 254-7884, 254-7885, 254-7886, 254-7887, 254-7888, 254-7889, 254-7890, 254-7891, 254-7892, 254-7893, 254-7894 WHEEL & TIRE GP
AN ATTACHMENT

SMCS-4201, 4208 **i02241681**

NOTE	PART NUMBER	QTY	PART NAME 1 2 3 4 5 6 (PRODUCT LEVEL)	SEE PAGE
	252-0098	1	RIM AS	
	2D-2511	1	VALVE GP-TIRE (BASIC)	
	3D-2239	1	VALVE GP-TIRE (TIRE INFLATION)	
	6F-3930	1	CORE-VALVE	
	9K-7951	1	CAP-VALVE (STEM)	
	7D-5252	1	SPUD AS	
	2D-2507	1	SPUD	
	2D-2508	1	GROMMET	
	2D-2509	1	LOCKNUT (11/16-16-THD)	

<END>

PROOF

252-0108 WHEEL GP

S/N: B9M1-UP
(10X24)
PART OF 252-0666, 252-0670, 252-0674, 252-0678, 252-0682, 252-0686, 252-0692, 252-0696, 252-0700, 252-0707, 252-0713, 252-0719, 254-8050, 254-8053, 254-8054, 254-8055, 254-8056 WHEEL & TIRE GP
AN ATTACHMENT

SMCS-4201, 4208 **i02240547**

NOTE	PART NUMBER	QTY	PART NAME 1 2 3 4 5 6 (PRODUCT LEVEL)	SEE PAGE
Y	*252-0102*	1	WHEEL GP	394
	2D-2565	1	SEAL-O-RING	
	110-4213	1	VALVE GP-TIRE (TIRE INFLATION)	
	7D-5252	1	SPUD AS	
	2D-2507	1	SPUD	
	2D-2508	1	GROMMET	
	2D-2509	1	LOCKNUT (11/16-16-THD)	
	110-4214	1	STEM AS	
	6F-3930	1	CORE-VALVE	
	9K-7951	1	CAP-VALVE (STEM)	

Y-SEPARATE ILLUSTRATION

<END>

252-0110 WHEEL GP

S/N: B9M1-UP
(10X24)
PART OF 250-9709, 252-0668, 252-0672, 252-0676, 252-0680, 252-0684, 252-0688, 252-0694, 252-0698, 252-0709, 252-0715, 252-0721 WHEEL & TIRE GP
AN ATTACHMENT

SMCS-4201, 4208 **i02277763**

NOTE	PART NUMBER	QTY	PART NAME 1 2 3 4 5 6 (PRODUCT LEVEL)	SEE PAGE
Y	*250-9786*	1	WHEEL GP	394
	2D-2565	1	SEAL-O-RING	
	264-8214	1	VALVE GP-TIRE (TIRE INFLATION)	
	7D-5252	1	SPUD AS	
	2D-2507	1	SPUD	
	2D-2508	1	GROMMET	
	2D-2509	1	LOCKNUT (11/16-16-THD)	
	264-8233	1	VALVE-TIRE	
	6F-3930	1	CORE-VALVE	
	9K-7951	1	CAP-VALVE (STEM)	

Y-SEPARATE ILLUSTRATION

<END>

PROOF

252-0111 WHEEL GP

S/N: B9M1-UP
(13X25)
PART OF 254-7941, 254-7942, 254-7944, 254-7945, 254-7947, 254-7948, 254-7949, 254-7950, 254-7951, 254-7952, 254-7953, 254-7954, 254-7955, 254-7956 WHEEL & TIRE GP
AN ATTACHMENT

SMCS-4201, 4208 **i02241732**

NOTE	PART NUMBER	QTY	PART NAME 1 2 3 4 5 6 (PRODUCT LEVEL)	SEE PAGE
	252-0100	1	RIM AS	
	2G-6595	1	VALVE GP-TIRE (TIRE INFLATION)	
	6F-3930	1	CORE-VALVE	
	9K-7951	1	CAP-VALVE (STEM)	
	7D-5252	1	SPUD AS	
	2D-2507	1	SPUD	
	2D-2508	1	GROMMET	
	2D-2509	1	LOCKNUT (11/16-16-THD)	

<END>

252-0112 WHEEL GP

S/N: B9M1-UP
PART OF 252-0774 WHEEL & TIRE AR, 252-0726, 252-0730, 252-0734, 252-0748, 252-0752, 252-0757, 252-0762, 252-0766, 252-0770, 252-0776, 252-0791 WHEEL & TIRE GP
AN ATTACHMENT

SMCS-4201, 4208 **i02240202**

NOTE	PART NUMBER	QTY	PART NAME 1 2 3 4 5 6 (PRODUCT LEVEL)	SEE PAGE
Y	*252-0104*	1	WHEEL GP	395
	8W-3686	1	SEAL-O-RING	
	2G-6595	1	VALVE GP-TIRE (TIRE INFLATION)	
	6F-3930	1	CORE-VALVE	
	9K-7951	1	CAP-VALVE (STEM)	
	7D-5252	1	SPUD AS	
	2D-2507	1	SPUD	
	2D-2508	1	GROMMET	
	2D-2509	1	LOCKNUT (11/16-16-THD)	

Y-SEPARATE ILLUSTRATION

<END>

PROOF

252-0113 WHEEL GP

S/N: B9M1-UP

PART OF 250-9691 WHEEL & TIRE AR, 250-9762, 250-9779, 252-0728, 252-0732, 252-0746, 252-0750, 252-0754, 252-0760, 252-0764, 252-0772, 252-0778 WHEEL & TIRE GP

AN ATTACHMENT

SMCS-4201, 4208 **i02348790**

NOTE	PART NUMBER	QTY	PART NAME 1 2 3 4 5 6 (PRODUCT LEVEL)	SEE PAGE
Y	*250-9788*	1	WHEEL GP	394
	8W-3686	1	SEAL-O-RING	
	264-8214	1	VALVE GP-TIRE (TIRE INFLATION)	
	264-8233	1	VALVE-TIRE	
	6F-3930	1	CORE-VALVE	
	9K-7951	1	CAP-VALVE (STEM)	
	7D-5252	1	SPUD AS	
	2D-2507	1	SPUD	
	2D-2508	1	GROMMET	
	2D-2509	1	LOCKNUT (11/16-16-THD)	

Y-SEPARATE ILLUSTRATION

<END>

PROOF

246-6359 CASE & FRAME GP

S/N: B9M1-UP

PART OF 234-7721 COMMON AR-MOTOR GRADER

SMCS-7051 **i02286868**

NOTE	REF NO	GRAPHIC REF	PART NUMBER	QTY	PART NAME 1 2 3 4 5 6 (PRODUCT LEVEL)	SEE PAGE
	1	1	**5D-3887**	2	ROD	
	2	1	**6F-8499**	2	SPRING	
	3	1	**054-3788**	4	ORIFICE	
	4	1	**252-0807**	1	FRAME AS-ENGINE END	
	5	1	**3B-4615**	4	PIN-COTTER	
	6	1	**7K-9202**	4	SEAL-LIP TYPE	
	7	1	**8D-7086**	2	BEARING	

PROOF

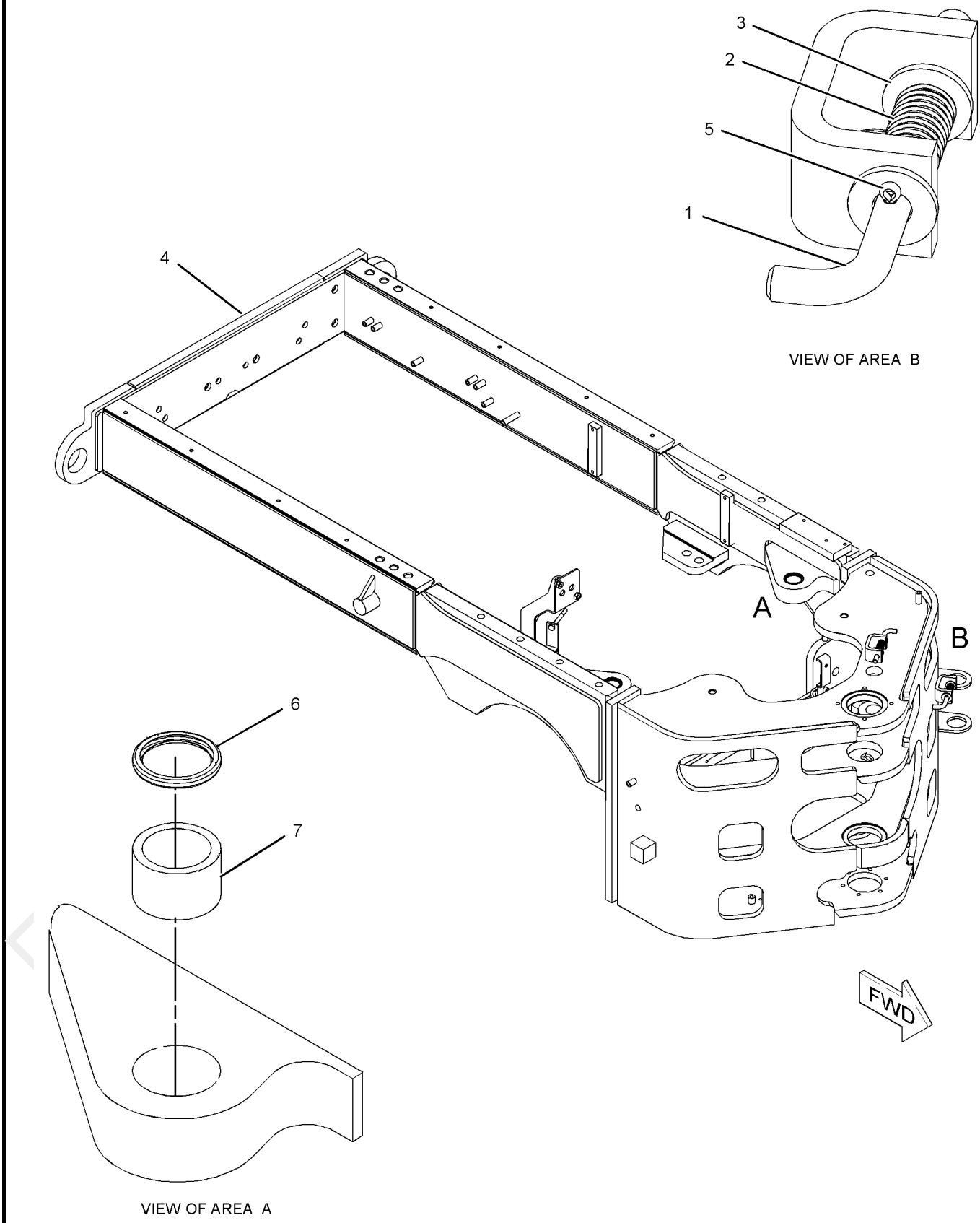

GRAPHIC #1 **<END>** g01148041

FRAME AND BODY

238-8757 COVER GP-ACCESS

S/N: B9M1-UP

AN ATTACHMENT

SMCS-726A **i02288568**

NOTE	PART NUMBER	QTY	PART NAME 1 2 3 4 5 6 (PRODUCT LEVEL)	SEE PAGE
			(NO SERVICED PARTS)	

<END>

PROOF

249-6691 COVER GP-ACCESS–SNOW

S/N: B9M1-UP

AN ATTACHMENT

SMCS-726A **i02234243**

NOTE	REF NO	GRAPHIC REF	PART NUMBER	QTY	PART NAME 1 2 3 4 5 6 (PRODUCT LEVEL)	SEE PAGE
	1	1	**199-4318**	44	TURNBUCKLE	
	2	1	**250-4353**	1	COVER (TOP)	
	3	1	**250-4354**	1	COVER (DOOR, RH)	
	4	1	**250-4355**	1	COVER (DOOR, LH)	
	5	1	**250-4356**	1	COVER (LOWER LEFT)	
	6	1	**250-4357**	1	COVER (TOP)	
	7	1	**250-4358**	1	COVER (DOOR, RH)	
	8	1	**250-4359**	1	COVER (DOOR, LH)	
	9	1	**250-4360**	1	COVER (LOWER LEFT)	
	10	1	**9N-1995**	88	RIVET-POP	

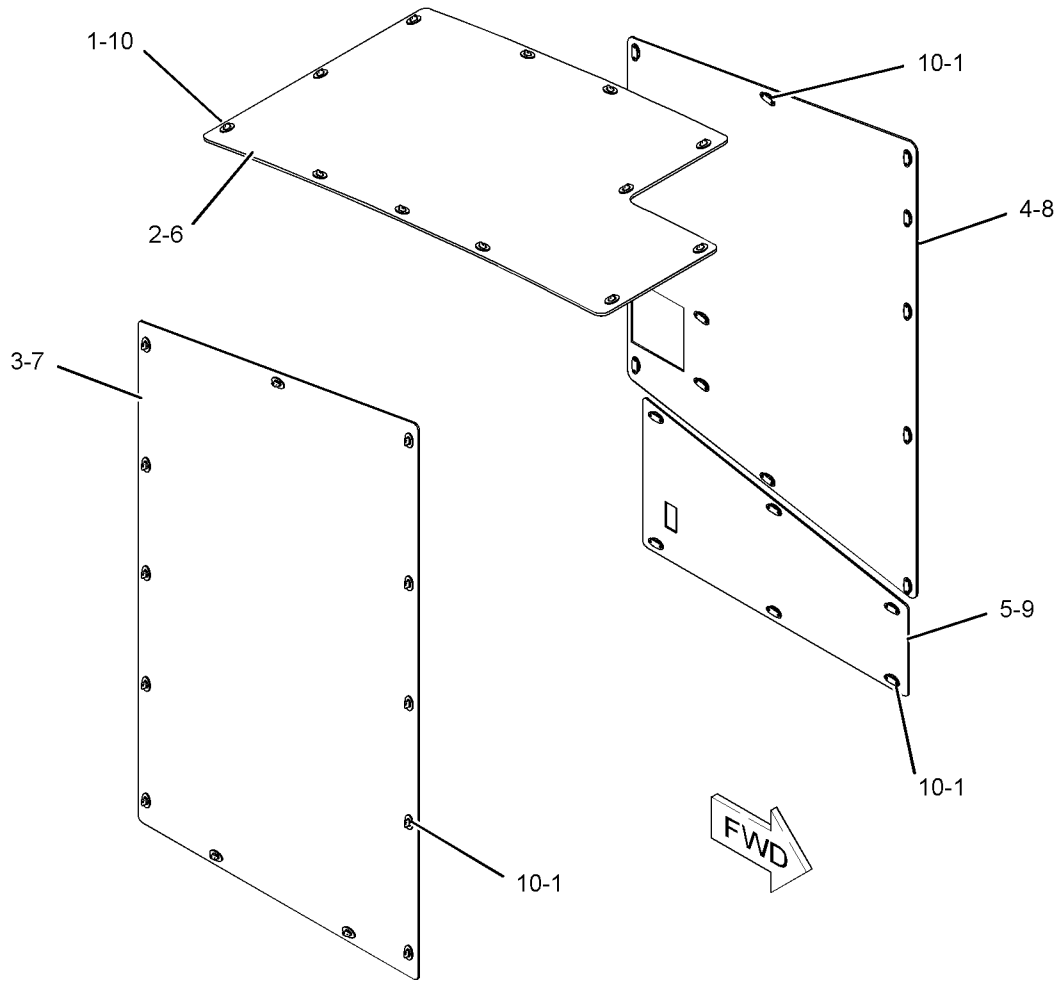

GRAPHIC #1 **<END>** g01126938

249-6692 COVER GP-ACCESS–SCREEN

S/N: B9M1-UP

AN ATTACHMENT

SMCS-726A **i02234242**

NOTE	REF NO	GRAPHIC REF	PART NUMBER	QTY	PART NAME 1 2 3 4 5 6 (PRODUCT LEVEL)	SEE PAGE
	1	1	**199-4318**	44	TURNBUCKLE	
	2	1	**250-4357**	1	COVER (TOP)	
	3	1	**250-4358**	1	COVER (DOOR, RH)	
	4	1	**250-4359**	1	COVER (DOOR, LH)	
	5	1	**250-4360**	1	COVER (LOWER LEFT)	
	6	1	**9N-1995**	88	RIVET-POP	

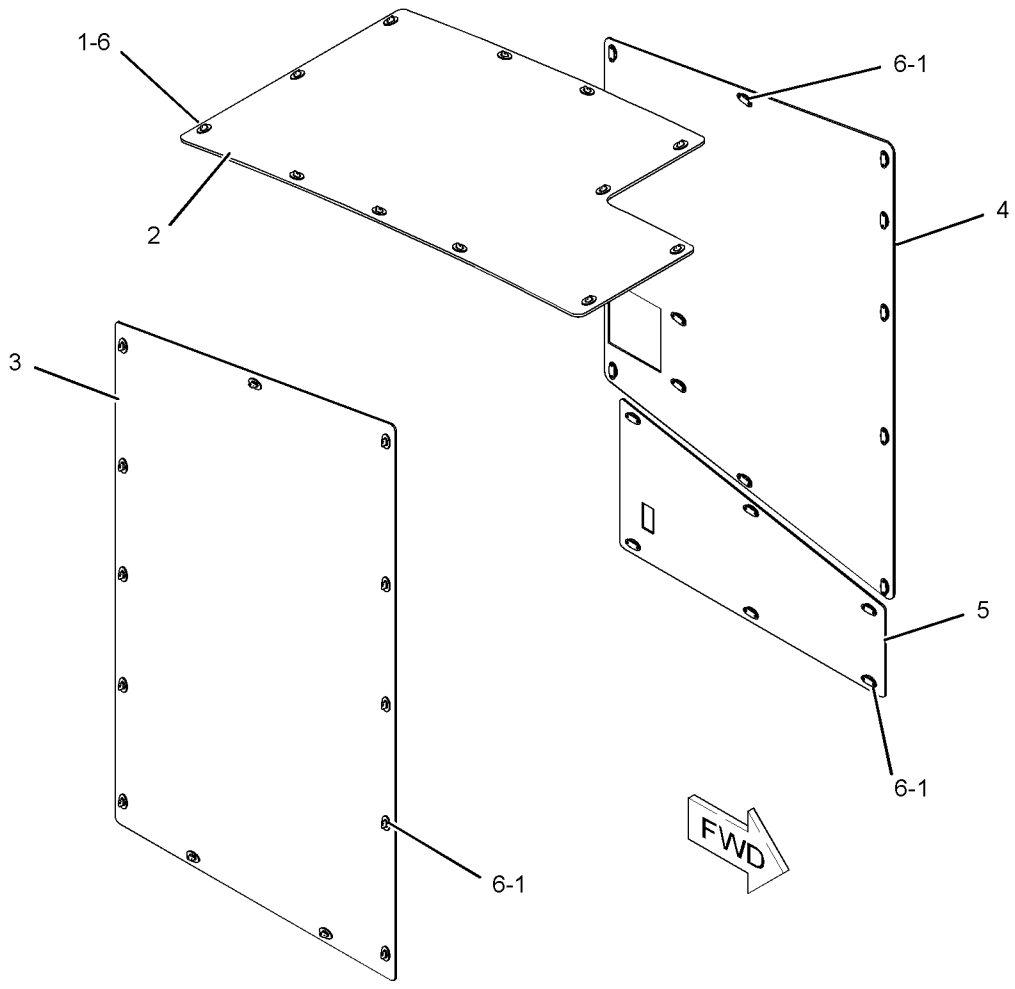

GRAPHIC #1

<END>

g01126962

238-1916 COVER GP-CONTROL VALVE

S/N: B9M1-UP

PART OF 234-7721 COMMON AR-MOTOR GRADER

SMCS-7150 **i02248630**

NOTE	REF NO	GRAPHIC REF	PART NUMBER	QTY	PART NAME 1 2 3 4 5 6 (PRODUCT LEVEL)	SEE PAGE
	1	1	**244-4923**	1	COVER	
	2	1	**244-4924**	1	COVER	
	3	1	**246-6306**	1	BRACKET AS	
M		1	**8T-3490**	6	NUT-WELD (M10X1.5-THD)	
M		1	**8T-3597**	4	NUT-WELD (M12X1.75-THD)	
	4	1	**246-6307**	1	BRACKET AS	
M		1	**8T-3490**	10	NUT-WELD (M10X1.5-THD)	
	5	1	**246-6308**	2	BRACKET AS	
					(EACH INCLUDES)	
M		1	**8T-3490**	1	NUT-WELD (M10X1.5-THD)	
	6	1	**247-3330**	1	COVER	
	7	1	**247-4288**	1	COVER AS	
M		1	**8T-3490**	3	NUT-WELD (M10X1.5-THD)	
	8	1	**247-4289**	1	COVER AS	
M		1	**8T-3490**	3	NUT-WELD (M10X1.5-THD)	
	9	1	**248-0322**	2	BRACKET AS	
					(EACH INCLUDES)	
M		1	**8T-3490**	1	NUT-WELD (M10X1.5-THD)	
	10	1	**5P-1076**	4	WASHER-HARD (13.5X30X4-MM THK)	
	11	1	**7X-7729**	51	WASHER (11X25X3-MM THK)	
M	12	1	**8T-4137**	47	BOLT (M10X1.5X20-MM)	
M	13	1	**8T-4192**	4	BOLT (M12X1.75X25-MM)	
M	14	1	**8T-4195**	4	BOLT (M10X1.5X30-MM)	

M-METRIC PART

PROOF

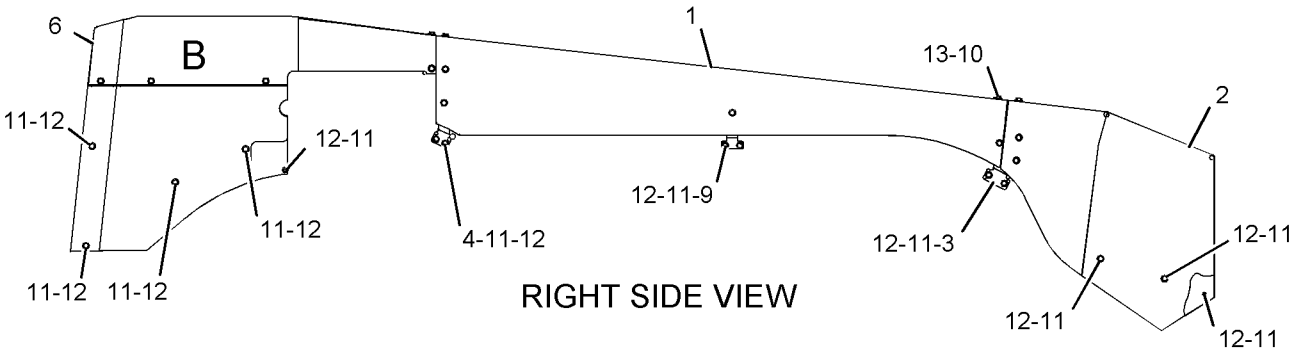

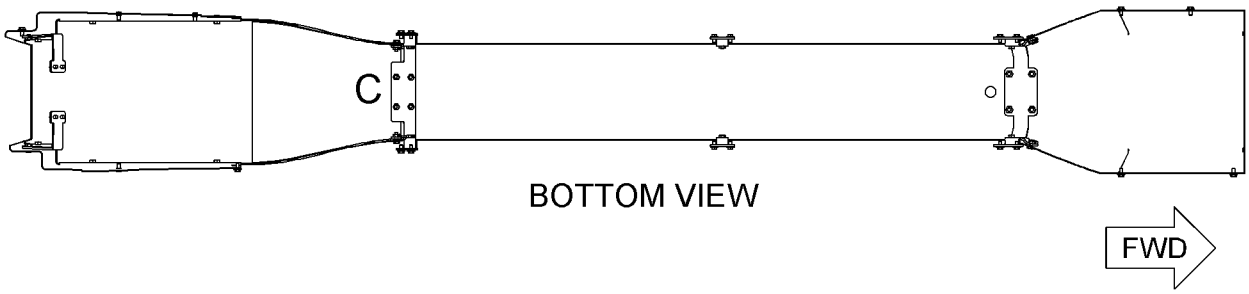

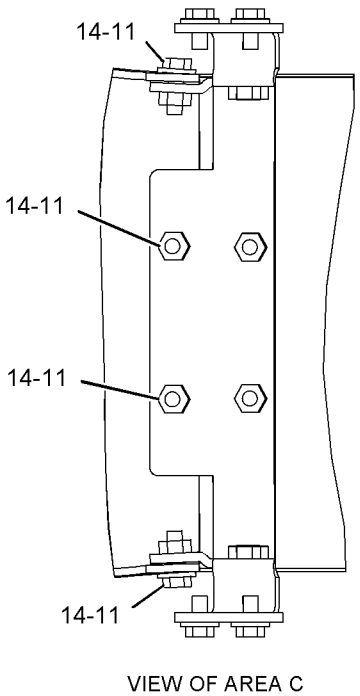

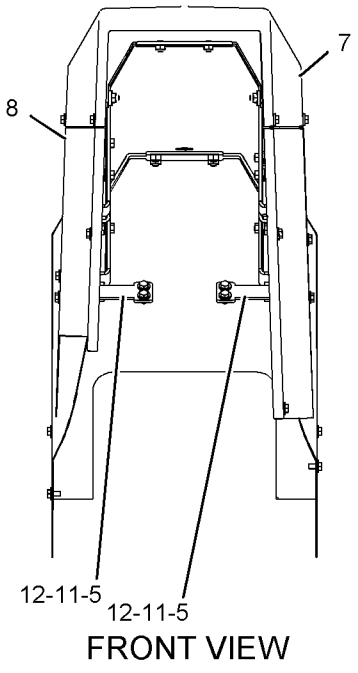

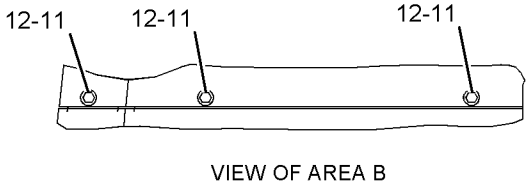

GRAPHIC #1 **<END>** g01134899

FRAME AND BODY

253-3325 ENCLOSURE GP-ENGINE

S/N: B9M1-UP

PART OF 234-7721 COMMON AR-MOTOR GRADER

SMCS-7263 **i02287273**

NOTE	REF NO	GRAPHIC REF	PART NUMBER	QTY	PART NAME 1 2 3 4 5 6 (PRODUCT LEVEL)	SEE PAGE
	1	2	**7X-1387**	6	WASHER (10.26X22.22X1.9-MM THK)	
	2	2	**113-8457**	2	ROD	
	3	2	**244-0402**	1	DOOR AS (LH)	
		2	**5P-3671**	4	RIVET-POP	
		2	**245-2802**	1	HINGE	
		2	**245-2803**	1	PLATE	
		2	**245-2838**	1	LATCH AS	
		2	**245-2839**	1	ANGLE	
	4	1	**245-2773**	1	DASH AS	
M		1	**8T-3490**	33	NUT-WELD (M10X1.5-THD)	
M		1	**8T-3612**	4	NUT-WELD (M8X1.25-THD)	
	5	2	**245-2777**	1	FRAME AS	
	6	1	**245-2778**	1	FRAME AS	
	7	1	**245-2779**	1	SHEET AS	
	8	1	**245-2780**	1	SHEET AS	
	9	1,2	**245-2781**	2	PANEL AS	
	10	1	**245-2782**	1	PANEL AS	
	11	1	**245-2783**	1	ANGLE	
	12	1	**245-2788**	1	DOOR AS (RH)	
		1	**5P-3671**	4	RIVET-POP	
		1	**245-2802**	1	HINGE	
		1	**245-2803**	1	PLATE	
		1	**245-2838**	1	LATCH AS	
		1	**245-2839**	1	ANGLE	
	13	1	**245-2804**	1	PLATE	
	14	1	**263-4887**	1	HOOD AS	
		1	**5P-4116**	32	WASHER-HARD (8.8X20.5X2-MM THK)	
		1	**7X-7729**	4	WASHER (11X25X3-MM THK)	
M		1	**8T-4137**	4	BOLT (M10X1.5X20-MM)	
M		1	**8T-4908**	32	BOLT (M8X1.25X25-MM)	
		1	**245-2797**	1	CORNER AS (RH)	
		1	**245-2798**	1	CORNER AS (LH)	
		1	**263-4888**	1	SHEET AS	
	15	1,2	**245-2806**	2	HANDHOLD	
	16	1	**245-2807**	1	BRACKET AS	
M		1	**8T-3490**	6	NUT-WELD (M10X1.5-THD)	
M		1	**8T-3612**	4	NUT-WELD (M8X1.25-THD)	
	17	2	**245-2821**	1	GUARD AS	
	18	1,2	**245-2827**	2	HANDHOLD	
	19	2	**245-2844**	1	ROD	
	20	2	**256-3854**	3	ANGLE	
	21	1	**258-9760**	1	BRACKET AS	
	22	2	**258-9761**	1	PANEL AS	
		2	**245-2802**	1	HINGE	
		2	**245-2838**	1	LATCH AS	
		2	**245-2839**	1	ANGLE	
	23	2	**258-9763**	1	PANEL AS	
	24	1	**267-5503**	2	HANDHOLD	
	25	2	**198-4777**	10	WASHER-HARD (11X25X10-MM THK)	
	26	1,2	**198-4778**	8	WASHER-HARD (13.5X30X12-MM THK)	
	27	2	**198-4780**	8	WASHER-HARD	
	28	2	**3B-4615**	6	PIN-COTTER	
M	29	1	**5C-7261**	4	NUT (M8X1.25-THD)	
	30	1,2	**5P-4116**	18	WASHER-HARD (8.8X20.5X2-MM THK)	
	31	2	**5P-8439**	3	GROMMET	
M	32	2	**7X-2555**	1	BOLT (M16X2X80-MM)	

PROOF

253-3325 **ENCLOSURE GP-ENGINE** *(contd.)* **i02287273**

NOTE	REF NO	GRAPHIC REF	PART NUMBER	QTY	PART NAME 1 2 3 4 5 6 (PRODUCT LEVEL)	SEE PAGE
	33	1,2	**7X-7729**	94	WASHER (11X25X3-MM THK)	
M	34	1,2	**8T-4133**	13	NUT (M10X1.5-THD)	
M	35	1,2	**8T-4136**	61	BOLT (M10X1.5X25-MM)	
M	36	2	**8T-4137**	4	BOLT (M10X1.5X20-MM)	
M	37	2	**8T-4140**	7	BOLT (M16X2X60-MM)	
M	38	1,2	**8T-4182**	16	BOLT (M10X1.5X45-MM)	
M	39	2	**8T-4195**	10	BOLT (M10X1.5X30-MM)	
M	40	1,2	**8T-4908**	14	BOLT (M8X1.25X25-MM)	
M	41	1,2	**8T-4956**	8	BOLT (M12X1.75X35-MM)	
BD	42	1,2	**5P-5670**		SEAL	

B-USE AS REQUIRED
D-ORDER BY THE METER
M-METRIC PART

PROOF

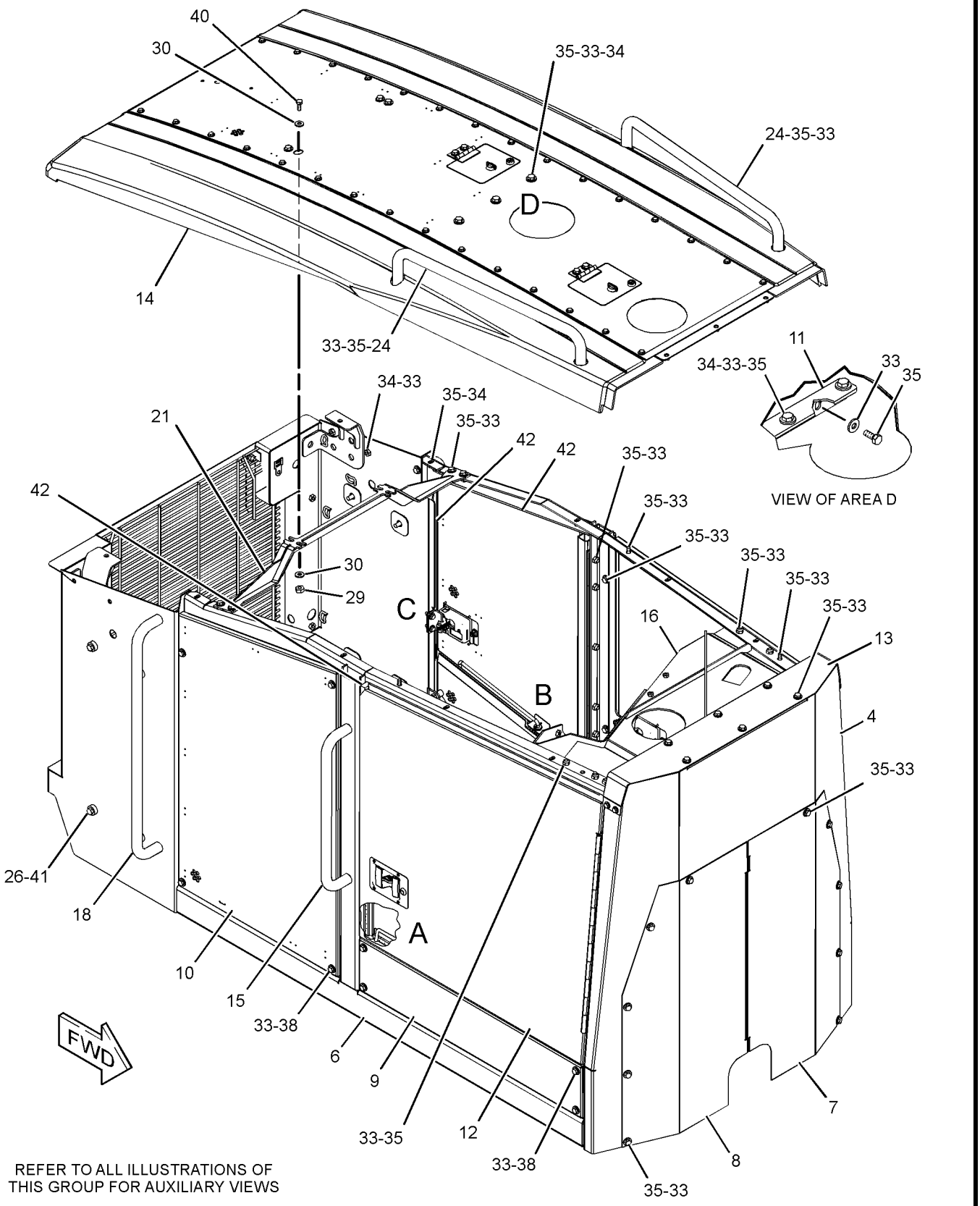

GRAPHIC #1 g01164608

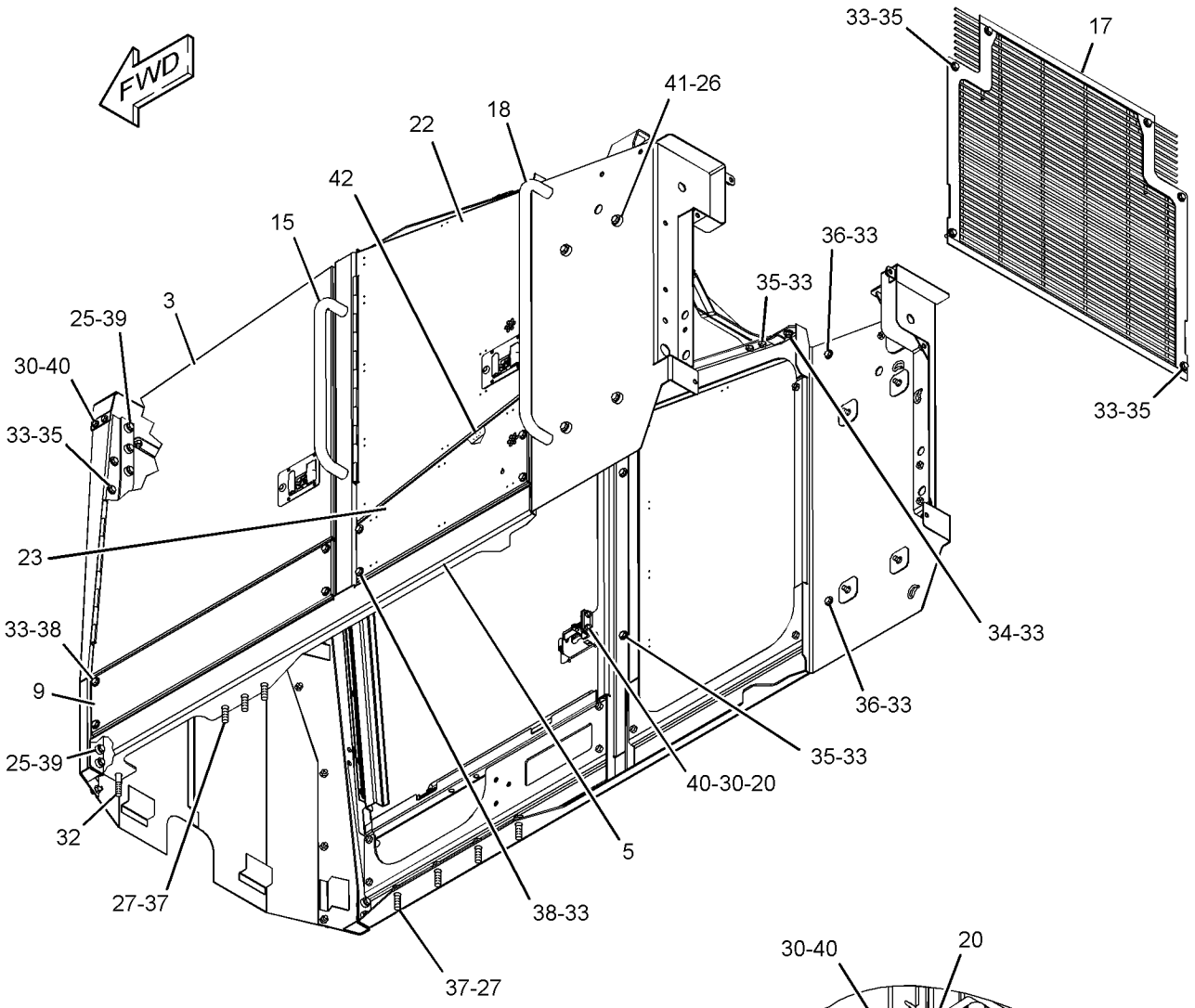

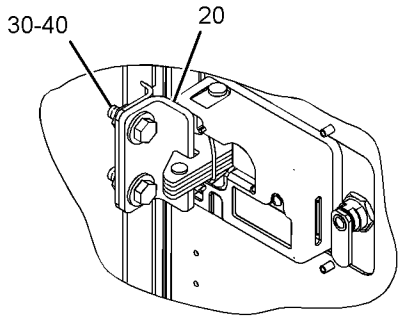

VIEW OF AREA C

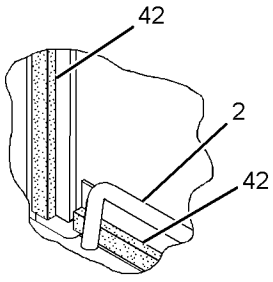

VIEW OF AREA A

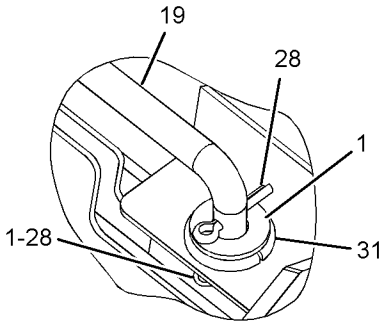

VIEW OF AREA B

GRAPHIC #2 **<END>** g01164610

231-5052 FENDER & SUPPORT GP–FRONT

S/N: B9M1-UP

AN ATTACHMENT

SMCS-7252 **i02322507**

NOTE	REF NO	GRAPHIC REF	PART NUMBER	QTY	PART NAME 1 2 3 4 5 6 (PRODUCT LEVEL)	SEE PAGE
	1	1	**246-3486**	2	FENDER	
	2	1	**246-3509**	4	PLATE AS	
	4	1	**246-3511**	4	PLATE AS	
	7	1	**262-3963**	2	SUPPORT AS	
	8	1	**263-5526**	1	TUBE AS (RH)	
	9	1	**263-5527**	1	TUBE AS (LH)	
	10	1	**263-5528**	1	TUBE AS (RH)	
	11	1	**263-5529**	1	TUBE AS (LH)	
	12	1	**263-7814**	1	BRACKET AS (RH)	
	13	1	**263-7815**	1	BRACKET AS (LH)	
M	14	1	**5P-8347**	16	BOLT (M8X1.25X70-MM)	
	16	1	**7X-0622**	18	WASHER (13X24X2.5-MM THK)	
	17	1	**8T-4121**	32	WASHER-HARD (11X21X2.5-MM THK)	
M	18	1	**8T-4133**	16	NUT (M10X1.5-THD)	
M	19	1	**8T-4139**	18	BOLT (M12X1.75X30-MM)	
M	20	1	**160-8492**	16	BOLT (M10X1.5X85-MM)	
	21	1	**8T-4224**	16	WASHER-HARD (8.8X16X2-MM THK)	

M-METRIC PART

PROOF

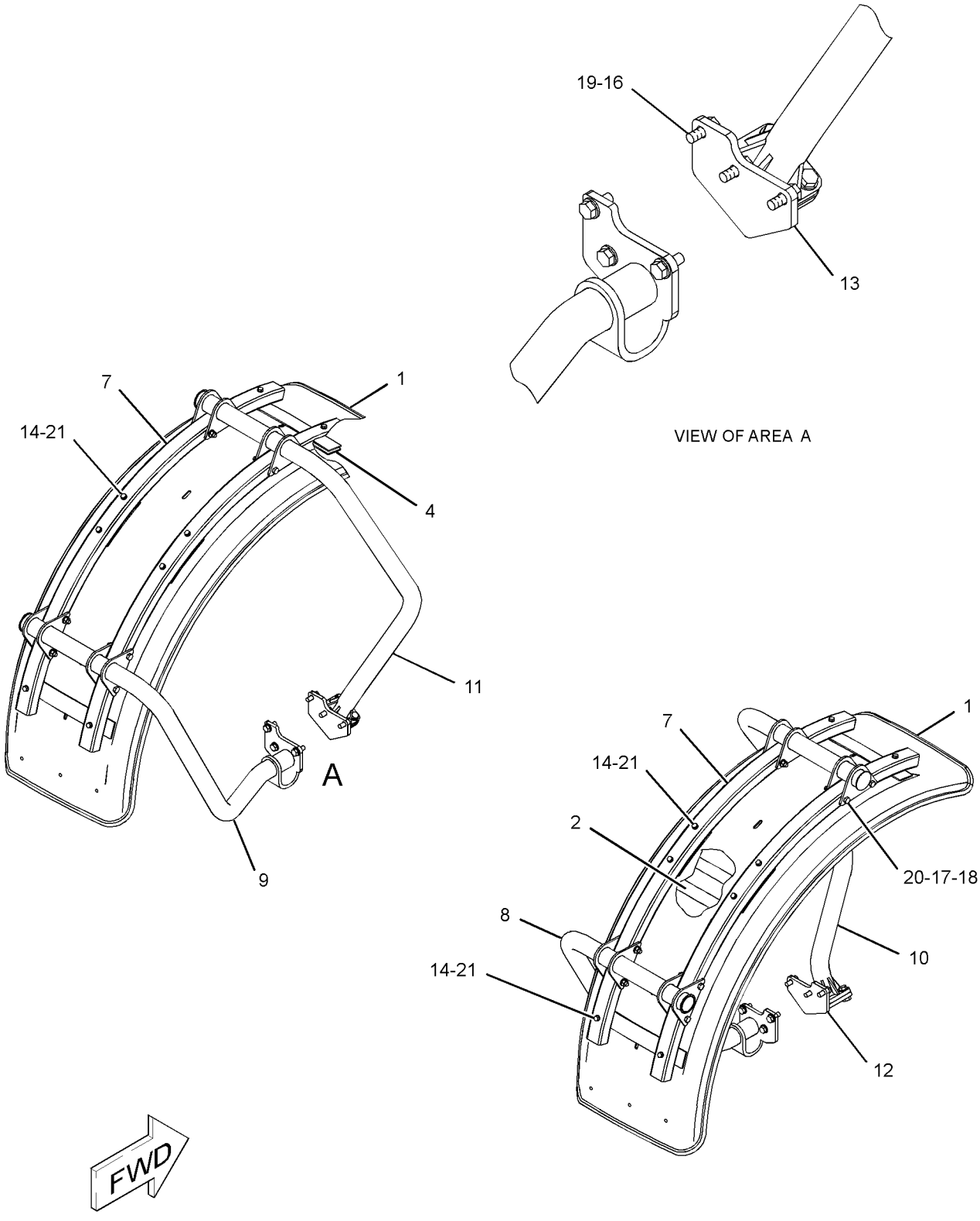

GRAPHIC #1 **<END>** g01161283

242-2452 FENDER & SUPPORT GP–REAR

S/N: B9M1-UP
PART OF 250-3818 ROADING AR
AN ATTACHMENT

SMCS-7252 **i02217885**

NOTE	REF NO	GRAPHIC REF	PART NUMBER	QTY	PART NAME 1 2 3 4 5 6 (PRODUCT LEVEL)	SEE PAGE
	1	1	**195-2274**	2	FILM-REFLECTOR (YELLOW) (FENDER)	
	2	1	**251-1140**	2	FENDER	
	3	1	**251-1141**	1	COVER	
	4	1	**251-1142**	1	COVER	
	5	1	**251-1145**	10	PLATE AS	
	6	1	**251-1151**	1	BRACKET AS	
	7	1	**251-1153**	2	PLATE AS	
	8	1	**251-1154**	1	BRACKET AS	
	9	1	**251-2449**	2	PLATE AS	
	10	1	**251-4378**	2	FENDER	
	11	1	**251-4383**	2	BRACKET AS	
	12	1	**251-4385**	1	COVER	
	13	1	**251-4386**	1	COVER	
	14	1	**265-4566**	1	SUPPORT AS	
	15	1	**265-4567**	1	SUPPORT AS	
	16	1	**265-4568**	1	SUPPORT AS	
	17	1	**265-4569**	1	SUPPORT AS	
M	18	1	**099-3649**	30	BOLT (M8X1.25X40-MM)	
	19	1	**5P-4116**	74	WASHER-HARD (8.8X20.5X2-MM THK)	
M	20	1	**7X-2554**	4	BOLT (M16X2X70-MM)	
M	21	1	**8T-4189**	20	BOLT (M8X1.25X20-MM)	
M	22	1	**8T-4779**	8	BOLT (M16X2X35-MM)	
M	23	1	**8T-4908**	24	BOLT (M8X1.25X25-MM)	
	24	1	**9X-8257**	12	WASHER (17.5X30X3.5-MM THK)	

M-METRIC PART

PROOF

242-2452 **FENDER & SUPPORT GP** *(contd.)* **i02217885**

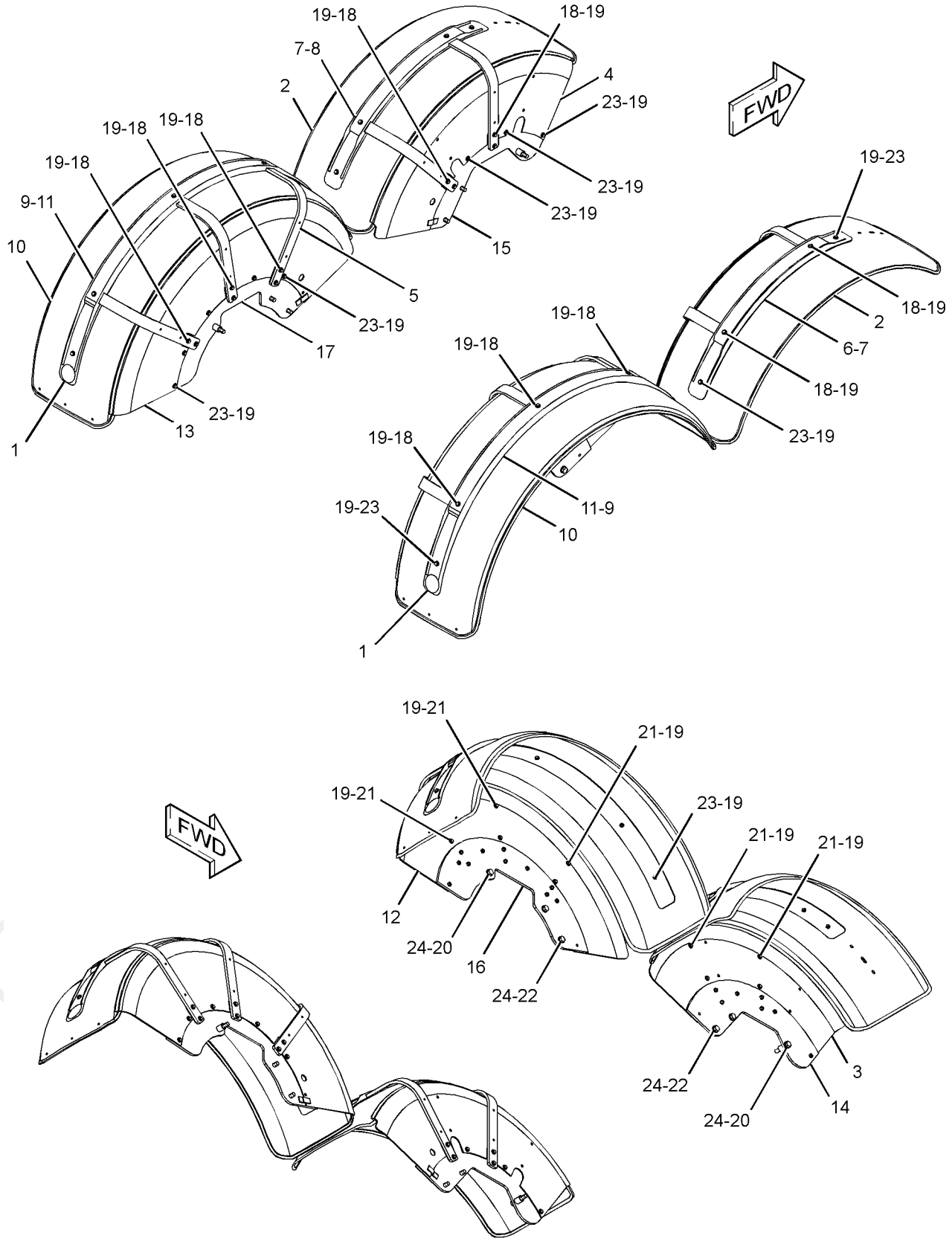

GRAPHIC #1 **<END>** g01153857

FRAME AND BODY

262-0412 FENDER & SUPPORT GP–FRONT

S/N: B9M1-UP

AN ATTACHMENT

SMCS-7252 **i02296706**

NOTE	REF NO	GRAPHIC REF	PART NUMBER	QTY	PART NAME 1 2 3 4 5 6 (PRODUCT LEVEL)	SEE PAGE
	1	1	**246-3486**	2	FENDER	
	2	1	**246-3509**	4	PLATE AS	
					(EACH INCLUDES)	
M		1	**8T-3612**	2	NUT-WELD (M8X1.25-THD)	
	3	1	**246-3511**	4	PLATE AS	
					(EACH INCLUDES)	
M		1	**8T-3612**	2	NUT-WELD (M8X1.25-THD)	
	4	1	**262-3963**	2	SUPPORT AS	
	5	1	**262-3969**	1	TUBE AS	
	6	1	**262-3970**	1	TUBE AS	
	7	1	**262-3971**	1	TUBE AS	
	8	1	**262-3972**	1	TUBE AS	
M	9	1	**160-8492**	16	BOLT (M10X1.5X85-MM)	
M	10	1	**5P-8347**	16	BOLT (M8X1.25X70-MM)	
	11	1	**7X-0622**	12	WASHER (13X24X2.5-MM THK)	
	12	1	**8T-4121**	32	WASHER-HARD (11X21X2.5-MM THK)	
M	13	1	**8T-4133**	16	NUT (M10X1.5-THD)	
M	14	1	**8T-4139**	12	BOLT (M12X1.75X30-MM)	
	15	1	**8T-4224**	16	WASHER-HARD (8.8X16X2-MM THK)	

M-METRIC PART

PROOF

262-0412 **FENDER & SUPPORT GP** *(contd.)* **i02296706**

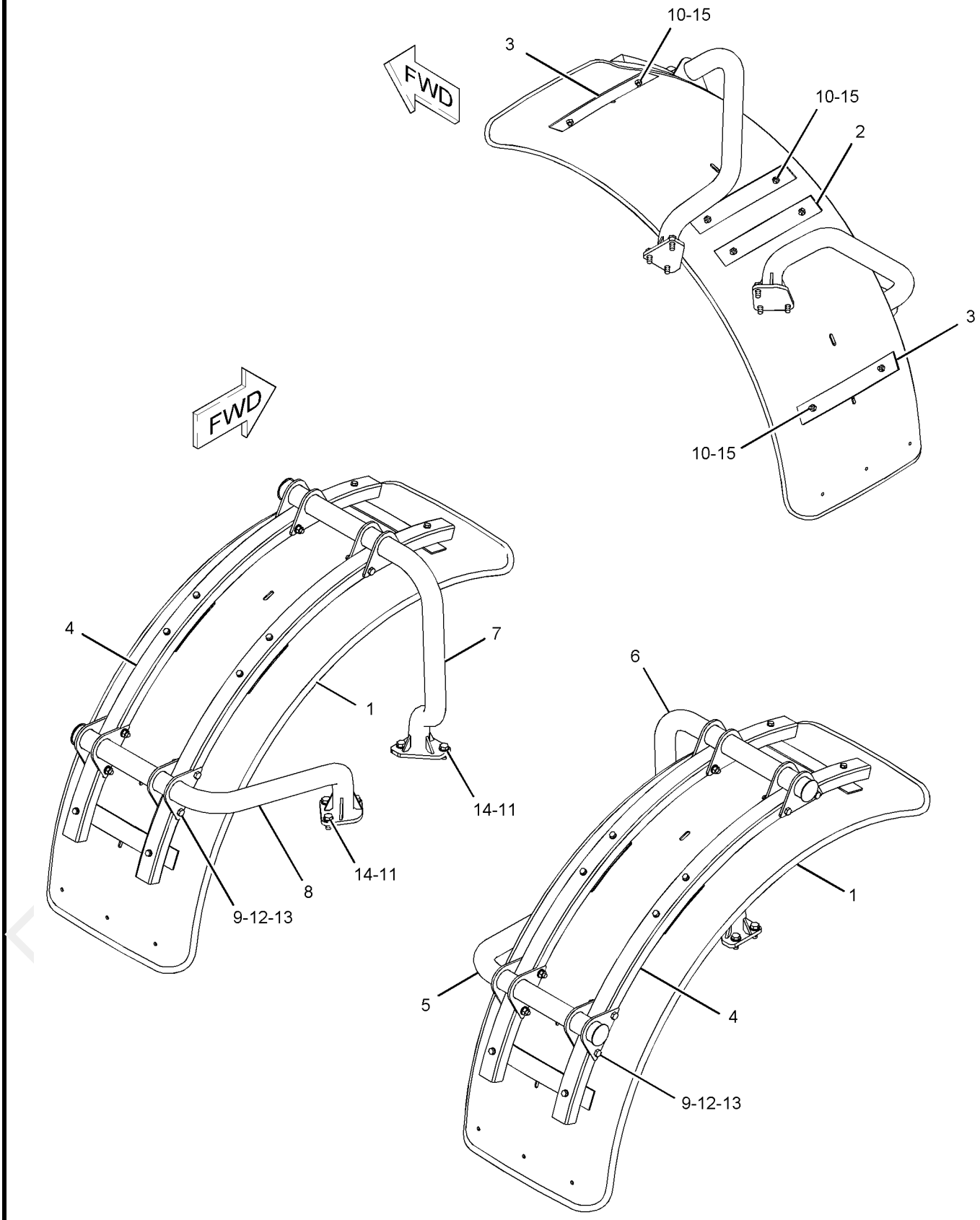

GRAPHIC #1 **<END>** g01150608

262-0413 FENDER & SUPPORT GP–REAR

S/N: B9M1-UP

AN ATTACHMENT

SMCS-7252 **i02299443**

NOTE	REF NO	GRAPHIC REF	PART NUMBER	QTY	PART NAME 1 2 3 4 5 6 (PRODUCT LEVEL)	SEE PAGE
	1	1	**195-2274**	2	FILM-REFLECTOR (YELLOW)	
	2	1	**248-3303**	1	SUPPORT AS	
	3	1	**248-3304**	1	SUPPORT AS	
	4	1	**248-6883**	1	SUPPORT AS	
	5	1	**248-6884**	1	SUPPORT AS	
	6	1	**251-1140**	2	FENDER	
	7	1	**251-1141**	1	COVER	
	8	1	**251-1142**	1	COVER	
	9	1	**251-1145**	10	PLATE AS	
	10	1	**251-1151**	1	BRACKET AS	
	11	1	**251-1153**	2	PLATE AS	
	12	1	**251-1154**	1	BRACKET AS	
	13	1	**251-2449**	2	PLATE AS	
	14	1	**251-4378**	2	FENDER	
	15	1	**251-4383**	2	BRACKET AS	
	16	1	**251-4385**	1	COVER	
	17	1	**251-4386**	1	COVER	
M	18	1	**099-3649**	30	BOLT (M8X1.25X40-MM)	
	19	1	**5P-4116**	74	WASHER-HARD (8.8X20.5X2-MM THK)	
M	20	1	**7X-2554**	4	BOLT (M16X2X70-MM)	
M	21	1	**8T-4189**	20	BOLT (M8X1.25X20-MM)	
M	22	1	**8T-4779**	8	BOLT (M16X2X35-MM)	
M	23	1	**8T-4908**	24	BOLT (M8X1.25X25-MM)	
	24	1	**9X-8257**	12	WASHER (17.5X30X3.5-MM THK)	

M-METRIC PART

PROOF

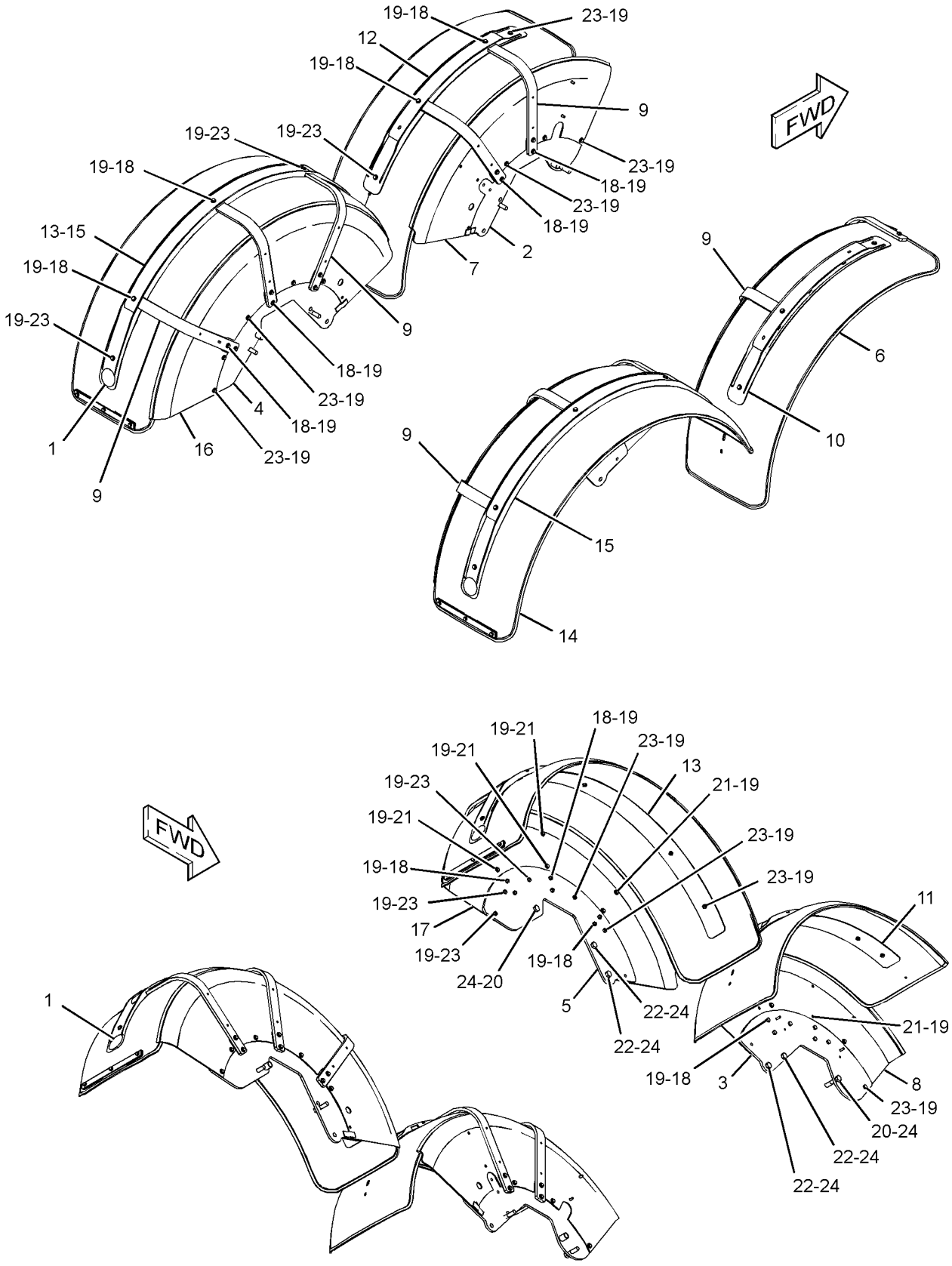

GRAPHIC #1 **<END>** g01157860

246-6350 FRAME GP-FRONT

S/N: B9M1-UP

PART OF 234-7721 COMMON AR-MOTOR GRADER

SMCS-7050, 7051 **i02286865**

NOTE	REF NO	GRAPHIC REF	PART NUMBER	QTY	PART NAME 1 2 3 4 5 6 (PRODUCT LEVEL)	SEE PAGE
	1	1	**7K-9202**	4	SEAL-LIP TYPE	
	2	1	**9D-6584**	1	SEAL-LIP TYPE	
	3	1	**9D-6589**	8	SEAL-LIP TYPE	
	4	1	**252-0828**	1	FRAME & MOUNTING AS	
	5	1	**252-0977**	1	PIN	
	6	1	**6K-4076**	1	BEARING-SLEEVE	
	7	1	**8D-7086**	2	BEARING	
	8	1	**8D-9159**	4	BEARING-SLEEVE	
	9	1	**9D-3311**	1	BEARING-SLEEVE	

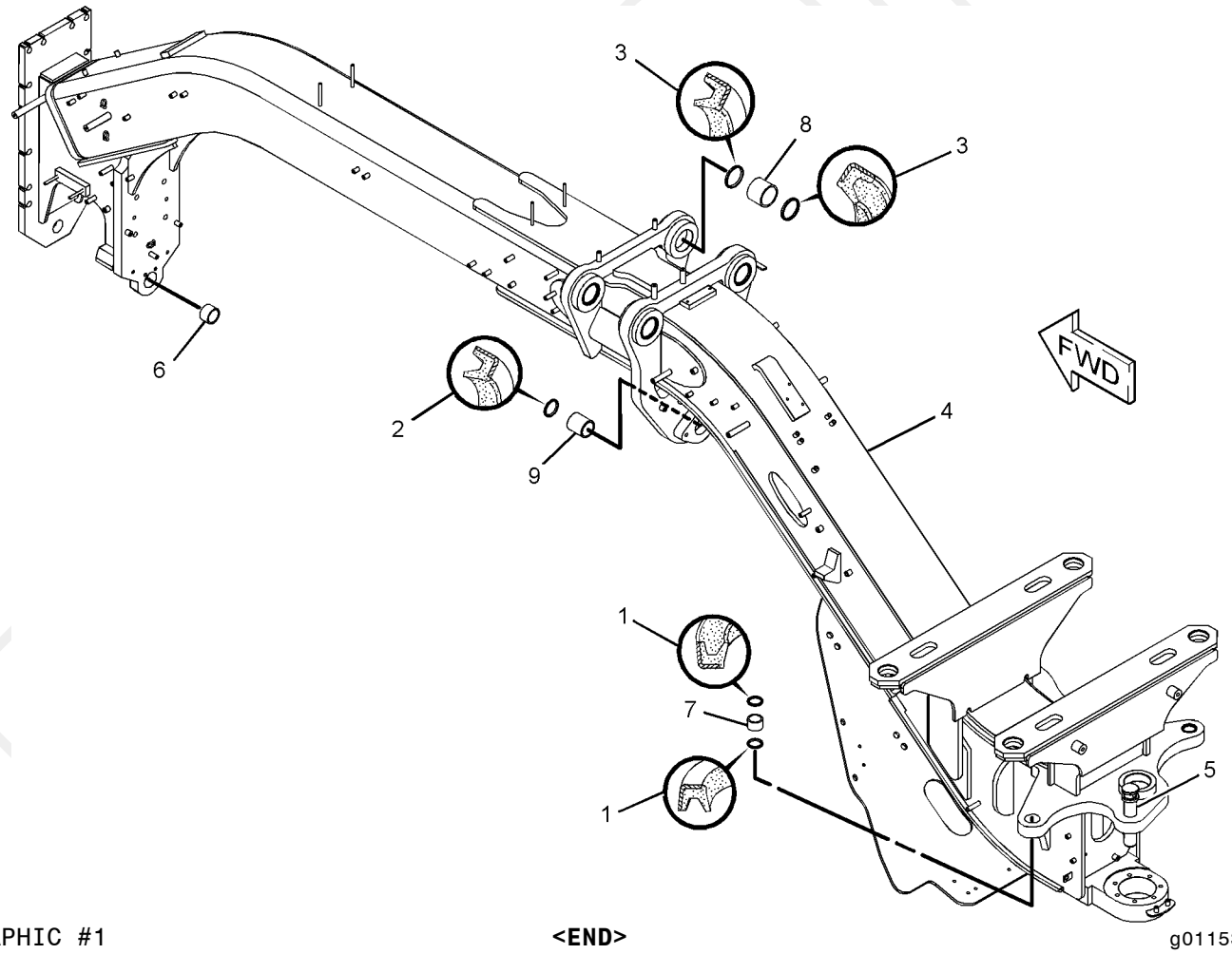

GRAPHIC #1 **<END>** g01153003

FRAME AND BODY

260-6557 GUARD GP-BOTTOM

S/N: B9M1-UP
PART OF 261-0182 OPTION AR-EU
AN ATTACHMENT

SMCS-7153 **i02250613**

NOTE	REF NO	GRAPHIC REF	PART NUMBER	QTY	PART NAME 1 2 3 4 5 6 (PRODUCT LEVEL)	SEE PAGE
	1	1	**7D-7496**	2	PIN AS	
	2	1	**259-2569**	1	SUPPORT AS	
	3	1	**259-8489**	1	PIVOT AS	
	4	1	**259-8490**	1	PIVOT AS	
	5	1	**260-6558**	1	GUARD AS	
	6	1	**8K-0530**	2	PIN-CABLE SOCKET	
	7	1	**8T-4123**	4	WASHER-PLATED (22X35X3.5-MM THK)	
M	8	1	**8T-4184**	8	BOLT (M12X1.75X45-MM)	
M	9	1	**8T-4187**	4	BOLT (M20X2.5X80-MM)	
	10	1	**8T-4223**	8	WASHER-HARD (13.5X25.5X3-MM THK)	

M-METRIC PART

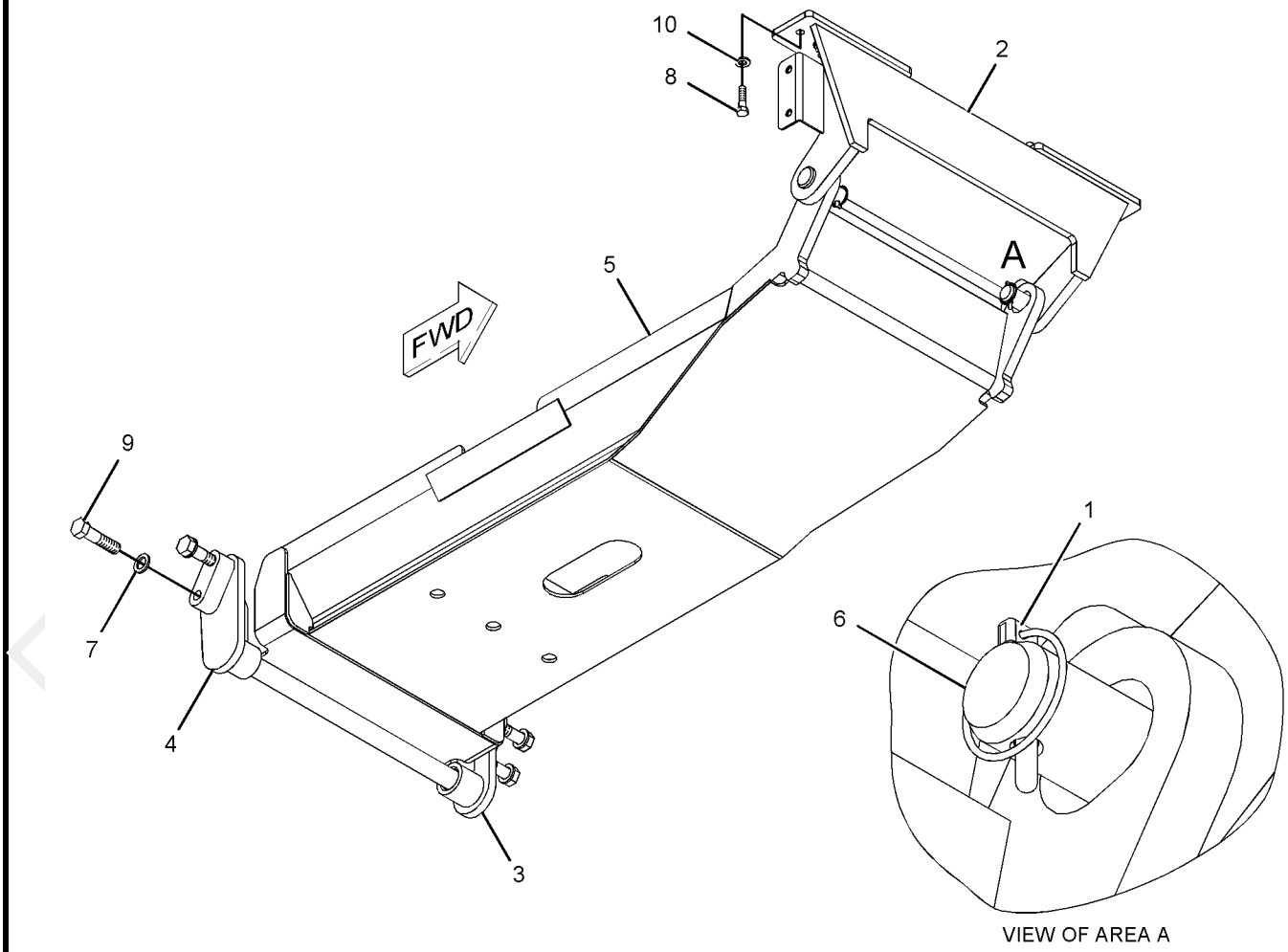

VIEW OF AREA A

GRAPHIC #1 **<END>** g01135262

266-2423 GUARD GP-BRAKE LINES

S/N: B9M1-UP

PART OF 234-7721 COMMON AR-MOTOR GRADER

SMCS-7166 **i02287534**

NOTE	REF NO	GRAPHIC REF	PART NUMBER	QTY	PART NAME 1 2 3 4 5 6 (PRODUCT LEVEL)	SEE PAGE
	1	1	**266-4665**	2	PLATE AS	
	2	1	**269-6977**	2	PLATE AS	
M	3	1	**8T-4121**	24	WASHER-HARD (11X21X2.5-MM THK)	
M	4	1	**8T-4137**	24	BOLT (M10X1.5X20-MM)	
M	5	1	**8T-4192**	8	BOLT (M12X1.75X25-MM)	

M-METRIC PART

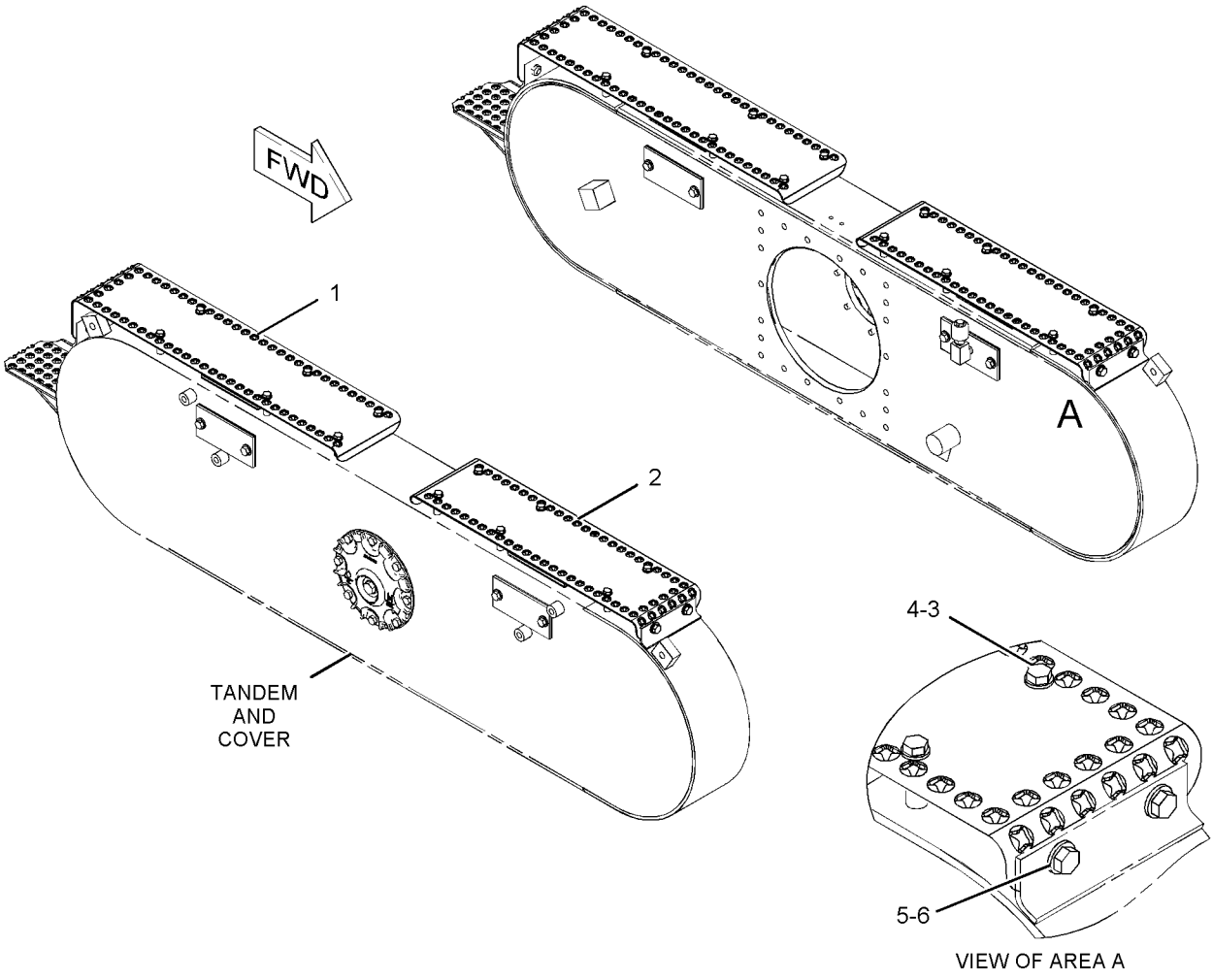

GRAPHIC #1 **<END>** g01148317

FRAME AND BODY

248-5068 GUARD GP-FUEL TANK

S/N: B9M1-UP
AN ATTACHMENT

SMCS-1273, 7150 **i02296352**

NOTE	REF NO	GRAPHIC REF	PART NUMBER	QTY	PART NAME 1 2 3 4 5 6 (PRODUCT LEVEL)	SEE PAGE
	1	1	**249-9186**	1	PLATE AS (RH)	
M		1	**8T-3597**	2	NUT-WELD (M12X1.75-THD)	
	2	1	**249-9189**	1	PLATE AS (LH)	
M		1	**8T-3597**	2	NUT-WELD (M12X1.75-THD)	
	3	1	**266-3563**	2	BRACKET AS	
					(EACH INCLUDES)	
M		1	**8T-3597**	2	NUT-WELD (M12X1.75-THD)	
	4	1	**271-0654**	4	BRACKET AS	
					(EACH INCLUDES)	
M		1	**8T-3597**	2	NUT-WELD (M12X1.75-THD)	
	5	1	**8T-4223**	16	WASHER-HARD (13.5X25.5X3-MM THK)	
M	6	1	**8T-4956**	16	BOLT (M12X1.75X35-MM)	

M-METRIC PART

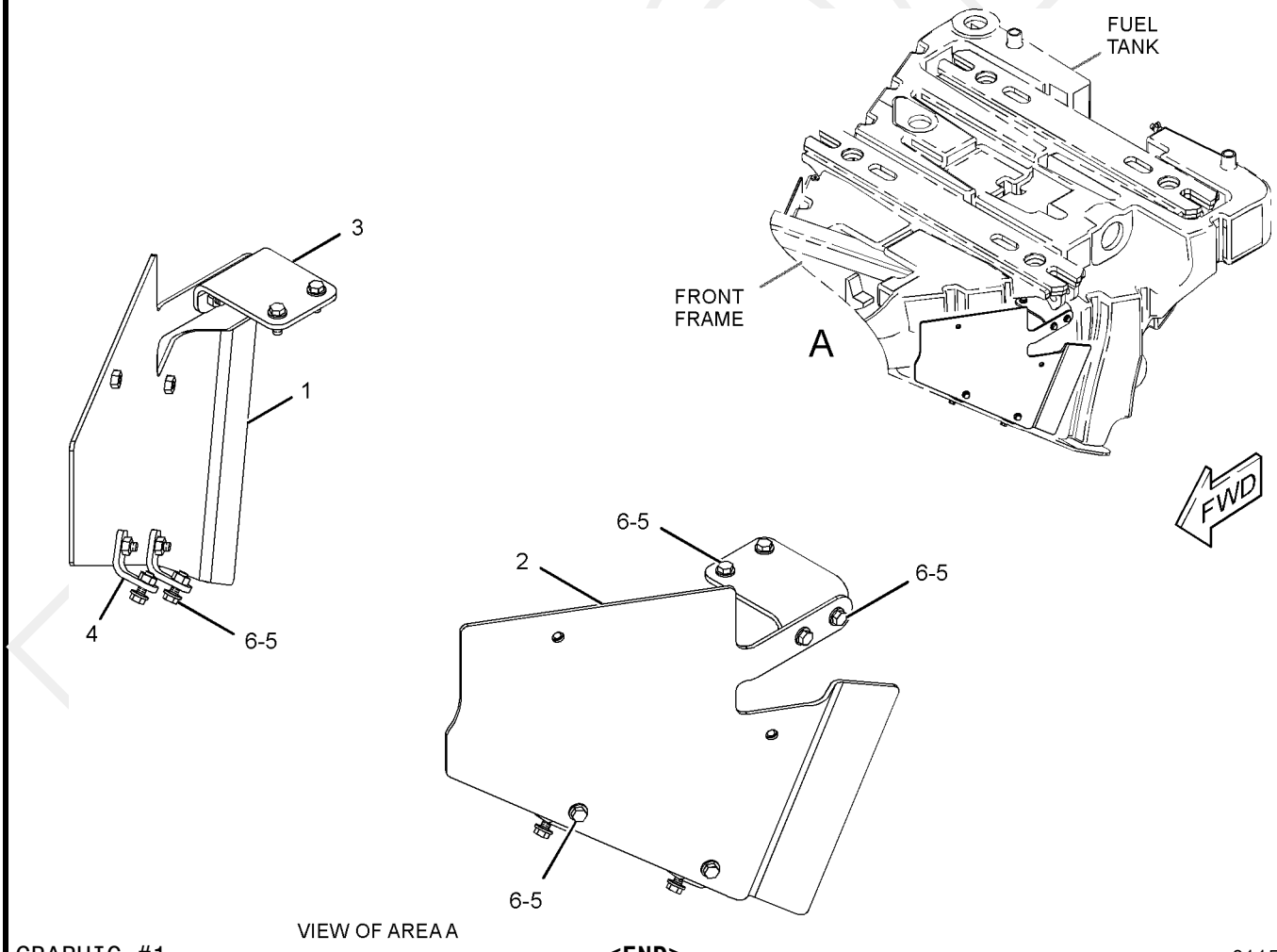

VIEW OF AREA A

GRAPHIC #1 **<END>** g01152979

232-2678 HITCH GP-ARTICULATING

S/N: B9M1-UP

PART OF 234-7721 COMMON AR-MOTOR GRADER

SMCS-7057, 7100 **i02242694**

NOTE	REF NO	GRAPHIC REF	PART NUMBER	QTY	PART NAME 1 2 3 4 5 6 (PRODUCT LEVEL)	SEE PAGE
	1	1	**2V-4332**	1	COLLAR	
	2	1	**4K-6781**	1	SPACER	
B	3	1	**4K-7464**	1	SHIM PACK (INCLUDES 19-SHIMS)	
	4	1	**4V-0015**	1	PLATE-LOCK	
	5	1	**5K-0871**	1	PIN-LOWER	
	6	1	**5K-0985**	1	BEARING AS-ROLLER	
	7	1	**5K-0987**	1	SPACER	
B	8	1	**5K-0988**	1	SHIM PACK (INCLUDES 35-SHIMS)	
	9	1	**5K-0989**	1	CAP-UPPER	
	10	1	**5K-0991**	1	CAP-LOWER	
	11	1	**252-0990**	1	BEARING-SLEEVE	
	12	1	**252-1824**	1	PIN	
	13	1	**259-9283**	1	COVER	
	14	1	**4K-7463**	2	SEAL-LIP TYPE	
	15	1	**4K-8734**	1	BEARING	
	16	1	**5K-0983**	2	SEAL-LIP TYPE	
	17	1	**5P-8245**	19	WASHER-HARD (13.5X25.5X3-MM THK)	
M	18	1	**6V-3823**	4	BOLT (M12X1.75X60-MM)	
M	19	1	**6V-5684**	2	BOLT (M12X1.75X45-MM)	
M	20	1	**6V-8197**	6	BOLT (M12X1.75X40-MM)	
M	21	1	**8T-0375**	4	BOLT (M16X2X45-MM)	
M	22	1	**8T-0646**	7	BOLT (M12X1.75X110-MM)	
	23	1	**9X-8268**	4	WASHER (17.5X30X3.5-MM THK)	

B-USE AS REQUIRED
M-METRIC PART

PROOF

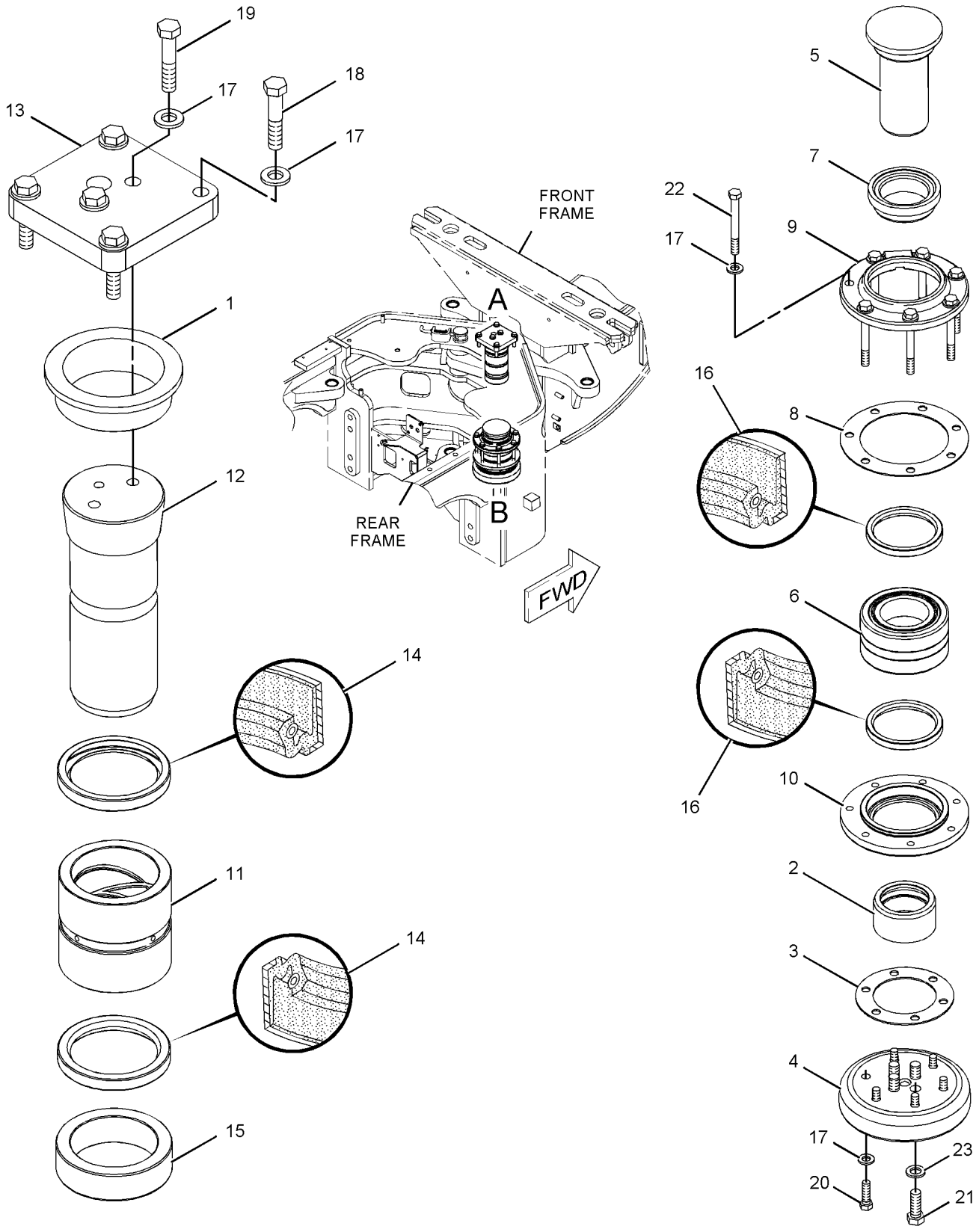

GRAPHIC #1

<END>

g01134586

FRAME AND BODY

264-2392 HITCH GP-TOWING

S/N: B9M1-UP

AN ATTACHMENT

SMCS-7100, 7103 **i02277696**

NOTE	REF NO	GRAPHIC REF	PART NUMBER	QTY	PART NAME 1 2 3 4 5 6 (PRODUCT LEVEL)	SEE PAGE
	1	1	**264-2393**	1	HITCH AS	
M	2	1	**6V-5845**	2	BOLT (M20X2.5X70-MM)	
	3	1	**6V-8237**	6	WASHER (26X44X4-MM THK)	
M	4	1	**8T-0380**	6	BOLT (M24X3X60-MM)	
	5	1	**8T-3282**	2	WASHER-HARD (22X35X3.5-MM THK)	

M-METRIC PART

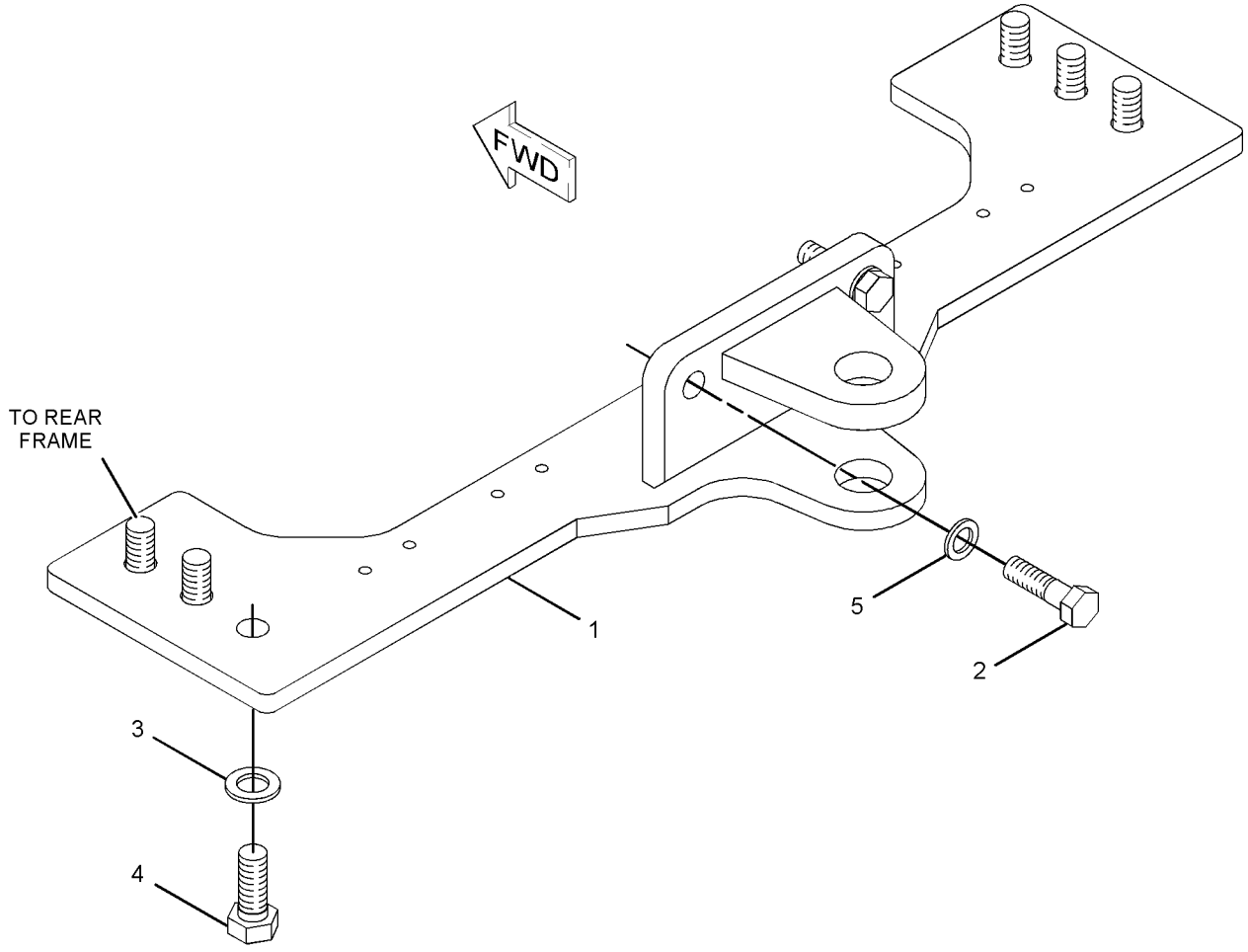

GRAPHIC #1 **<END>** g01142885

236-8921 LINES GP-GREASE–ARTICULATED HITCH BEARINGS

S/N: B9M1-UP

PART OF 234-7721 COMMON AR-MOTOR GRADER

SMCS-7510 **i02248410**

NOTE	REF NO	GRAPHIC REF	PART NUMBER	QTY	PART NAME 1 2 3 4 5 6 (PRODUCT LEVEL)	SEE PAGE
	1	1	**3B-8489**	2	FITTING-GREASE	
	2	1	**5D-0269**	2	ELBOW	
	3	1	**246-7882**	1	HOSE AS	
	4	1	**246-7883**	1	HOSE AS	
	5	1	**3B-7733**	1	FITTING	
	6	1	**3B-7896**	2	ELBOW-STREET	
	7	1	**5H-7826**	1	NIPPLE-PIPE	
	8	1	**5P-6629**	1	GROMMET	
	9	1	**6V-2383**	1	CLIP	
	10	1	**8T-4121**	1	WASHER-HARD (11X21X2.5-MM THK)	
M	11	1	**8T-4137**	1	BOLT (M10X1.5X20-MM)	

M-METRIC PART

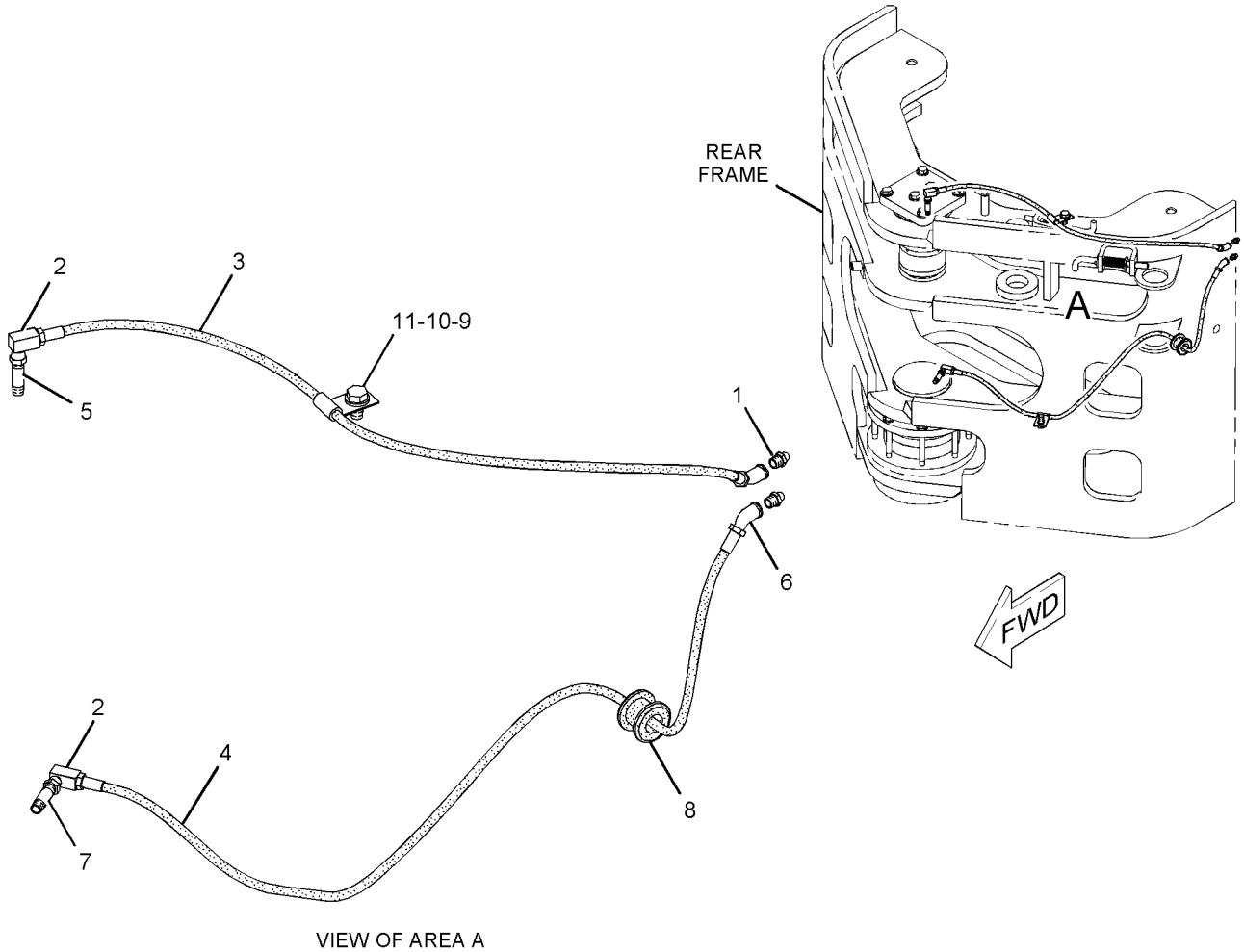

VIEW OF AREA A

GRAPHIC #1 **<END>** g01135082

260-7487 LINK GP-STEERING—NON ALL WHEEL DRIVE

S/N: B9M1-UP
PART OF 260-7453 AXLE GP-FRONT
AN ATTACHMENT

SMCS-4305 **i02251281**

NOTE	REF NO	GRAPHIC REF	PART NUMBER	QTY	PART NAME 1 2 3 4 5 6 (PRODUCT LEVEL)	SEE PAGE
	1	1	**141-6141**	2	CLAMP	
	2	1	**260-3790**	1	SOCKET GP-TIE ROD (LH) (STEERING)	
	3	1	**260-3792**	1	SOCKET GP-TIE ROD (RH) (STEERING)	
	4	1	**260-7489**	1	ROD	
	5	1	**1B-4367**	2	BOLT (5/8-11X3-IN)	
	6	1	**3K-2889**	2	LOCKNUT (5/8-11-THD)	

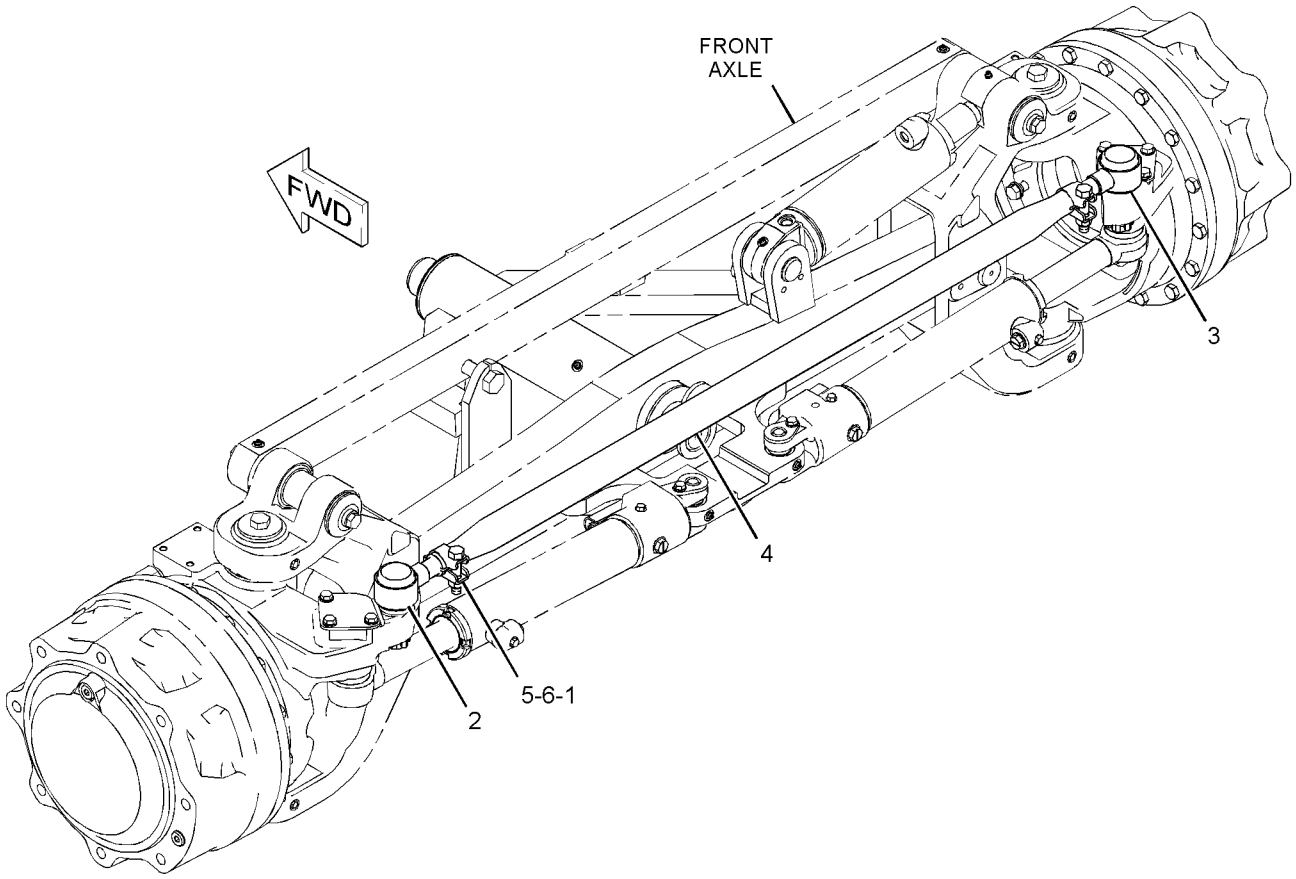

GRAPHIC #1 **<END>** g01135771

260-8707 LINK GP-STEERING—ALL WHEEL DRIVE

S/N: B9M1-UP
PART OF 260-8698 AXLE GP-FRONT
AN ATTACHMENT

SMCS-4305 **i02249854**

NOTE	REF NO	GRAPHIC REF	PART NUMBER	QTY	PART NAME 1 2 3 4 5 6 (PRODUCT LEVEL)	SEE PAGE
	1	1	**141-6141**	2	CLAMP	
	2	1	**260-3790**	1	SOCKET GP-TIE ROD (LH)	
	3	1	**260-3792**	1	SOCKET GP-TIE ROD (RH)	
	4	1	**260-8708**	1	ROD	
	5	1	**1B-4367**	2	BOLT (5/8-11X3-IN)	
	6	1	**3K-2889**	2	LOCKNUT (5/8-11-THD)	

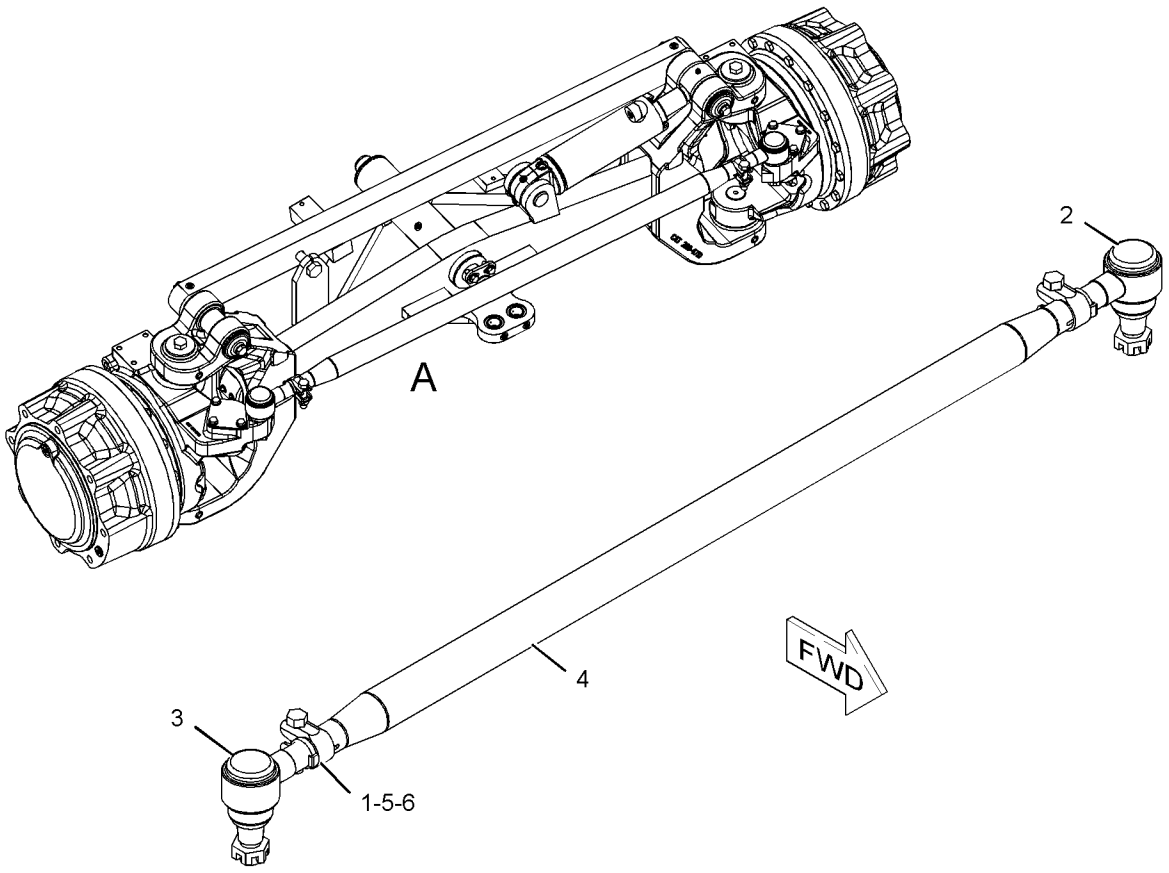

GRAPHIC #1 **<END>** g01137798

FRAME AND BODY

264-5051 MOUNTING GP-AXLE

S/N: B9M1-UP

PART OF 234-7721 COMMON AR-MOTOR GRADER

SMCS-3268, 3278 **i02248733**

NOTE	REF NO	GRAPHIC REF	PART NUMBER	QTY	PART NAME 1 2 3 4 5 6 (PRODUCT LEVEL)	SEE PAGE
	1	1	**198-4771**	12	WASHER-HARD (26X47X12-MM THK)	
M	2	1	**7X-2489**	8	BOLT (M24X3X100-MM)	
M	3	1	**8T-5878**	4	BOLT (M24X3X80-MM)	

M-METRIC PART

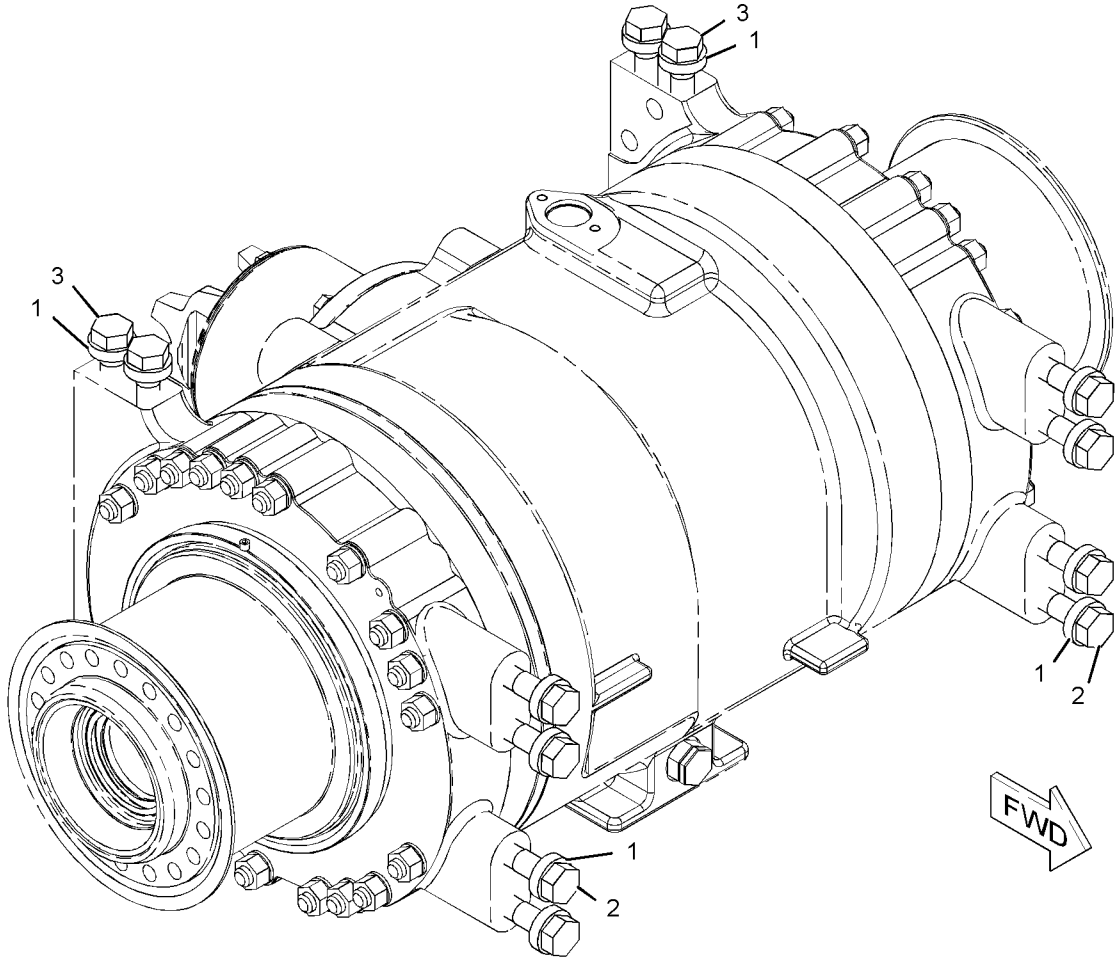

GRAPHIC #1 **<END>** g01135532

233-3366 MOUNTING GP-VALVE

S/N: B9M1-UP

PART OF 234-7721 COMMON AR-MOTOR GRADER

SMCS-5051 **i02248055**

NOTE	REF NO	GRAPHIC REF	PART NUMBER	QTY	PART NAME 1 2 3 4 5 6 (PRODUCT LEVEL)	SEE PAGE
	1	1	**246-6329**	1	PLATE AS	
M		1	**7X-0750**	2	BOSS-WELD (M10X1.5X55-MM)	
M		1	**8T-3490**	8	NUT-WELD (M10X1.5-THD)	
	2	1	**246-6330**	1	PLATE AS	
M		1	**8T-3490**	2	NUT-WELD (M10X1.5-THD)	
M		1	**8T-3612**	3	NUT-WELD (M8X1.25-THD)	
	3	1	**8T-4121**	20	WASHER-HARD (11X21X2.5-MM THK)	
M	4	1	**8T-4136**	18	BOLT (M10X1.5X25-MM)	
M	5	1	**8T-4137**	2	BOLT (M10X1.5X20-MM)	

M-METRIC PART

PROOF

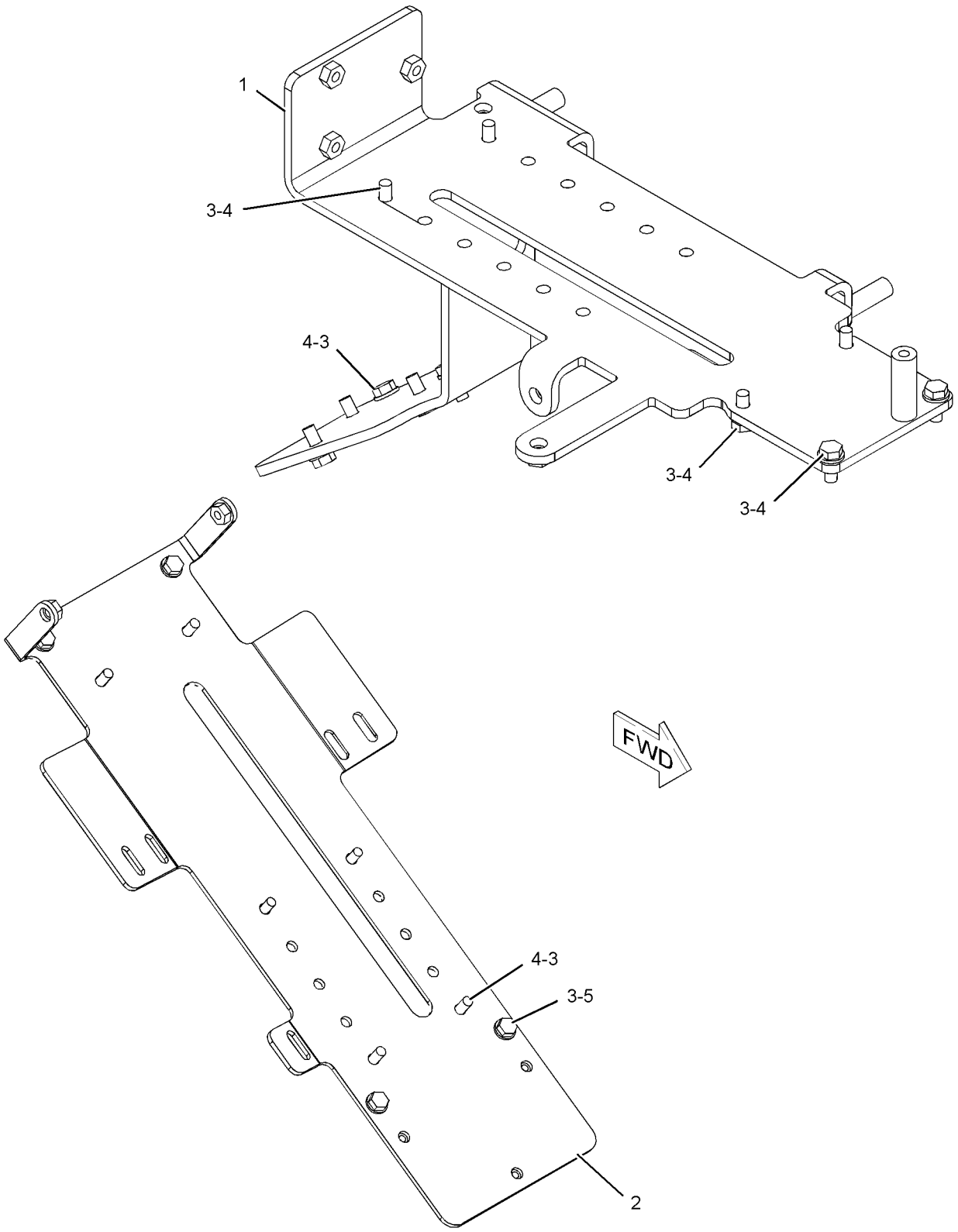

GRAPHIC #1 **<END>** g01133446

FRAME AND BODY

238-8758 STEP GP

S/N: B9M1-UP

PART OF 234-7721 COMMON AR-MOTOR GRADER

ALSO AN ATTACHMENT

SMCS-7254 **i02334034**

NOTE	REF NO	GRAPHIC REF	PART NUMBER	QTY	PART NAME 1 2 3 4 5 6 (PRODUCT LEVEL)	SEE PAGE
	1	1	**4V-9804**	6	PLATE	
	2	1	**244-2729**	3	STEP	
	3	1	**251-2290**	2	BELT (STEP ACCESS)	
	4	1	**252-6307**	4	BOLT-ROUND HEAD (M12X1.75X65-MM)	
	5	1	**254-5389**	1	PLATE	
M	6	1	**156-4974**	8	BOLT-ROUND HEAD (M12X1.75X60-MM)	
	7	1	**5P-1076**	3	WASHER-HARD (13.5X30X4-MM THK)	
M	8	1	**6V-7687**	12	LOCKNUT (M12X1.75-THD)	
	9	1	**8T-4223**	12	WASHER-HARD (13.5X25.5X3-MM THK)	
M	10	1	**8T-4956**	3	BOLT (M12X1.75X35-MM)	

M-METRIC PART

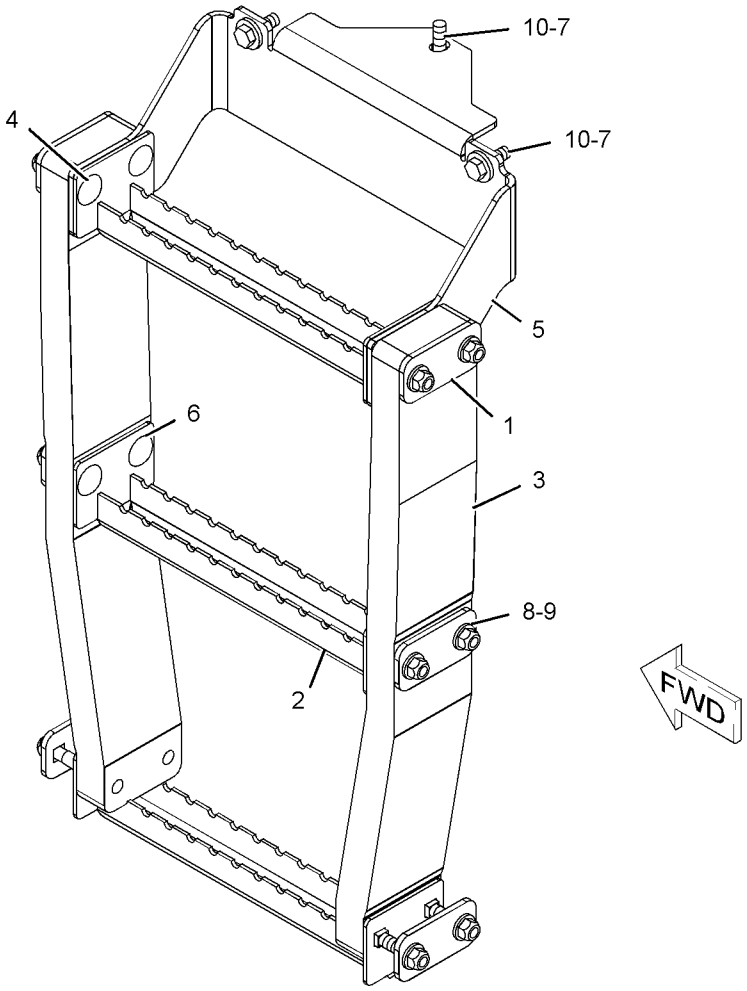

GRAPHIC #1 **<END>** g01134706

231-5061 SUPPORT AR-REAR CHASSIS

S/N: B9M1-UP

PART OF 234-7721 COMMON AR-MOTOR GRADER

SMCS-7509 **i02232834**

NOTE	REF NO	GRAPHIC REF	PART NUMBER	QTY	PART NAME 1 2 3 4 5 6 (PRODUCT LEVEL)	SEE PAGE
	1	1	**231-5049**	1	PLATFORM AS	
Y	2	1	**233-4259**	1	TANK & MTG GP-HYDRAULIC	582
Y	3	1	**250-3507**	1	FILTER & MTG GP-OIL (HYDRAULIC)	300
	4	1	**198-4781**	6	WASHER-HARD (22X40X10-MM THK)	
M	5	1	**7X-2563**	6	BOLT (M20X2.5X60-MM)	

M-METRIC PART
Y-SEPARATE ILLUSTRATION

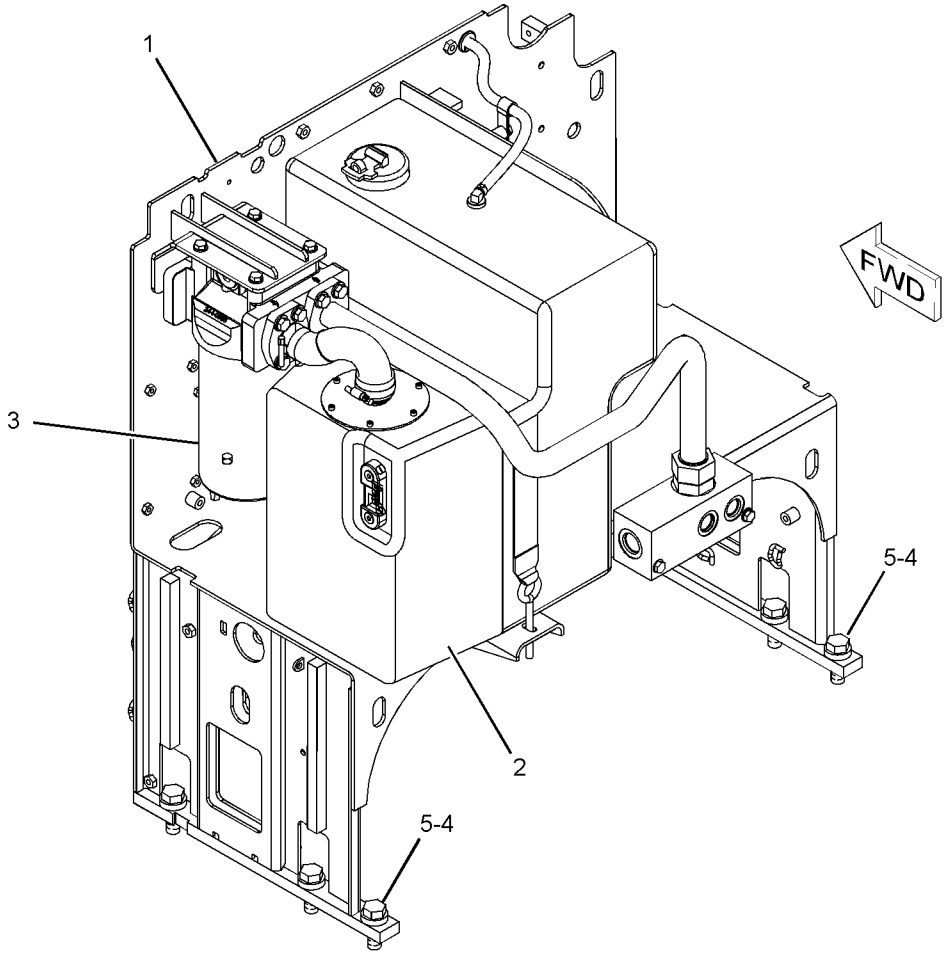

GRAPHIC #1 **<END>** g01126683

FRAME AND BODY

231-2316 SUPPORT GP-RADIATOR

S/N: B9M1-UP

PART OF 268-6570 COOLING AR

SMCS-1353 **i02348791**

NOTE	REF NO	GRAPHIC REF	PART NUMBER	QTY	PART NAME 1 2 3 4 5 6 (PRODUCT LEVEL)	SEE PAGE
	1	1	**247-9764**	1	SUPPORT AS (LH)	
	2	1	**247-9765**	1	SUPPORT AS (RH)	
	3	1	**247-9766**	1	BRACKET AS	
	4	1	**247-9769**	1	BRACKET AS	
	5	1	**248-0679**	1	BRACKET AS	
		1	**130-5300**	1	CLIP	
	6	1	**250-0683**	2	PLATE	
	7	1	**250-0684**	1	BAFFLE AS	
	8	1	**260-6878**	1	PLATE AS	
	9	1	**7X-7729**	11	WASHER (11X25X3-MM THK)	
	10	1	**8T-4121**	12	WASHER-HARD (11X21X2.5-MM THK)	
M	11	1	**8T-4133**	8	NUT (M10X1.5-THD)	
M	12	1	**8T-4136**	2	BOLT (M10X1.5X25-MM)	
M	13	1	**8T-4137**	8	BOLT (M10X1.5X20-MM)	
M	14	1	**8T-4195**	5	BOLT (M10X1.5X30-MM)	
M	15	1	**8T-4223**	8	WASHER-HARD (13.5X25.5X3-MM THK)	
M	16	1	**8T-4956**	8	BOLT (M12X1.75X35-MM)	
E	17	1	**112-9736**		SEAL (300-CM)	
E	18	1	**247-5838**		SEAL (8-CM)	
E	19	1	**103-2543**		SEAL (93-CM)	

E-ORDER BY THE CENTIMETER
M-METRIC PART

PROOF

231-2316 **SUPPORT GP-RADIATOR** *(contd.)* **i02348791**

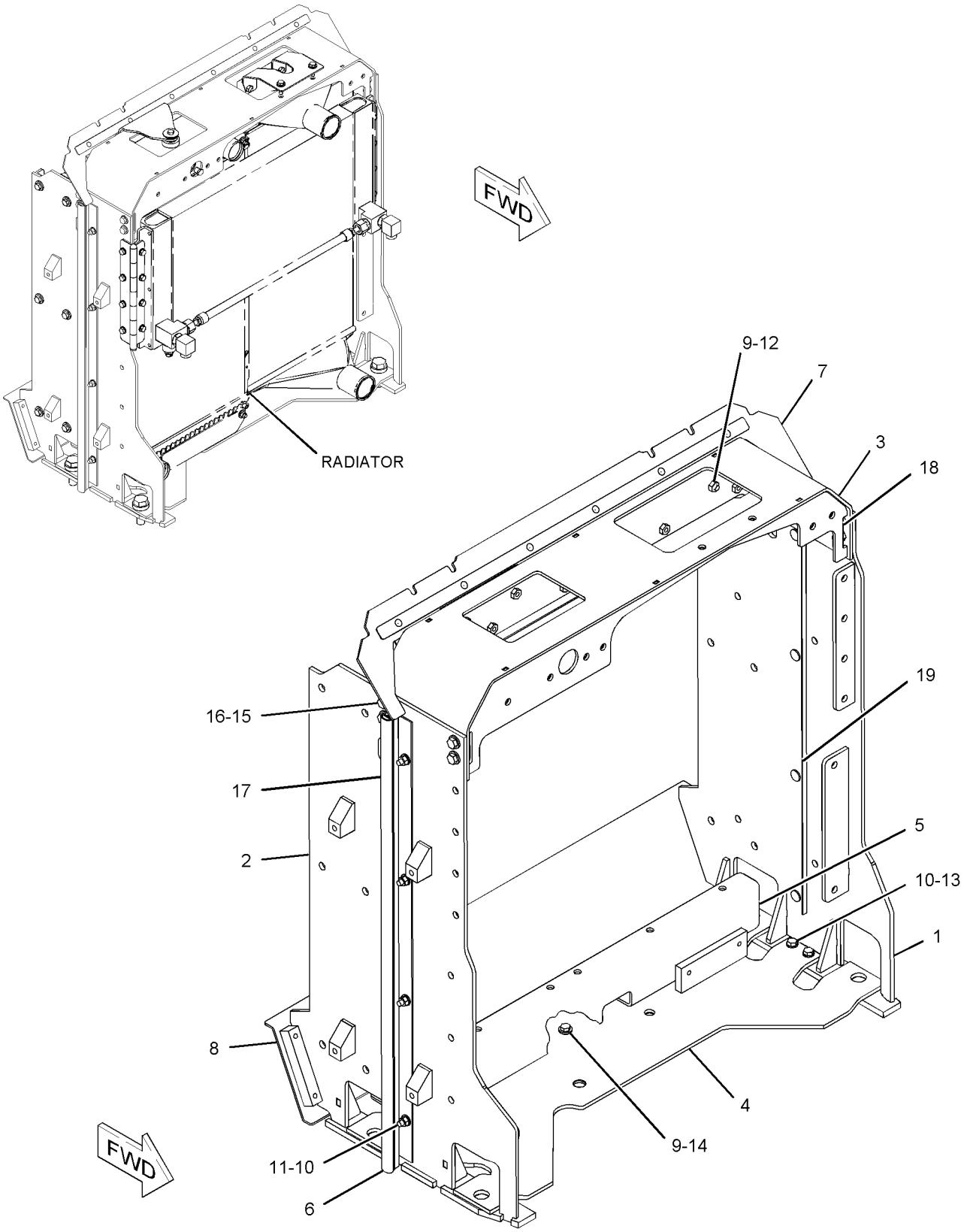

GRAPHIC #1 **<END>** g01126736

249-3860 ACCUMULATOR GP-BRAKE

S/N: B9M1-UP

PART OF 251-2243 LINES GP-SERVICE BRAKE

AN ATTACHMENT

SMCS-4263, 4264 **i02193669**

NOTE	REF NO	GRAPHIC REF	PART NUMBER	QTY	PART NAME 1 2 3 4 5 6 (PRODUCT LEVEL)	SEE PAGE
	1	1	**158-2336**	1	VALVE-GAS	
	2	1	**111-9110**	1	PROTECTOR-GAS VALVE	
J	3	1	**1J-9671**	1	SEAL-O-RING	
	4	1	**5M-3062**	2	BOLT (3/8-16X0.75-IN)	
					AVAILABLE REPAIR KIT(S):	
J			**203-1558**	1	KIT-SEAL (BRAKE ACCUMULATOR)	
					(INCLUDES SEAL)	

J-KIT MARKED J INCLUDES PART MARKED J

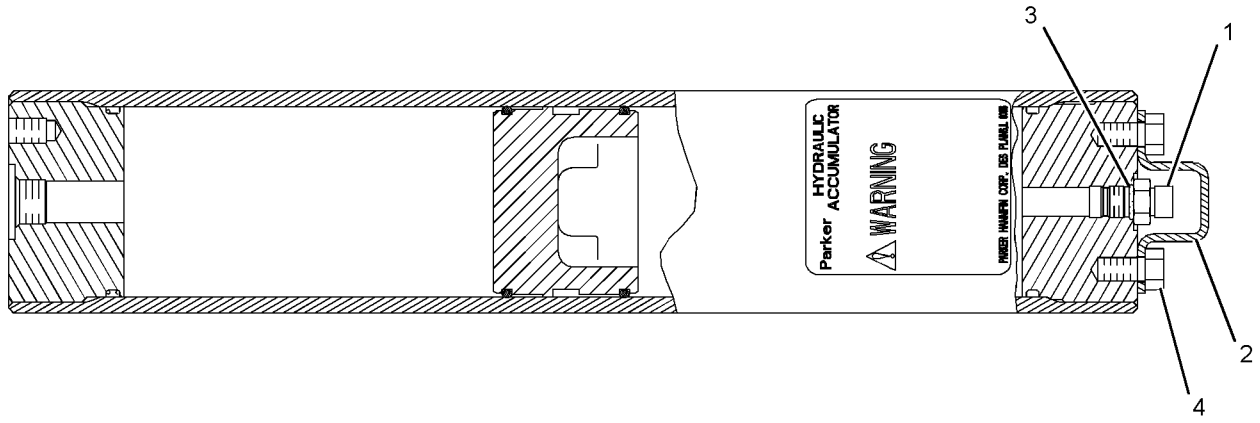

GRAPHIC #1 **<END>** g01110741

249-3862 ACCUMULATOR GP-BRAKE

S/N: B9M1-UP

PART OF 252-1811 LINES GP-SERVICE BRAKE

AN ATTACHMENT

SMCS-4263, 4264 **i02334038**

NOTE	REF NO	GRAPHIC REF	PART NUMBER	QTY	PART NAME 1 2 3 4 5 6 (PRODUCT LEVEL)	SEE PAGE
	1	1	**158-2336**	1	VALVE-GAS	
	2	1	**111-9110**	1	PROTECTOR-GAS VALVE	
	3	1	**1J-9671**	1	SEAL-O-RING	
	4	1	**5M-3062**	2	BOLT (3/8-16X0.75-IN)	
					AVAILABLE REPAIR KIT(S):	
			203-1558	1	KIT-SEAL (BRAKE ACCUMULATOR)	

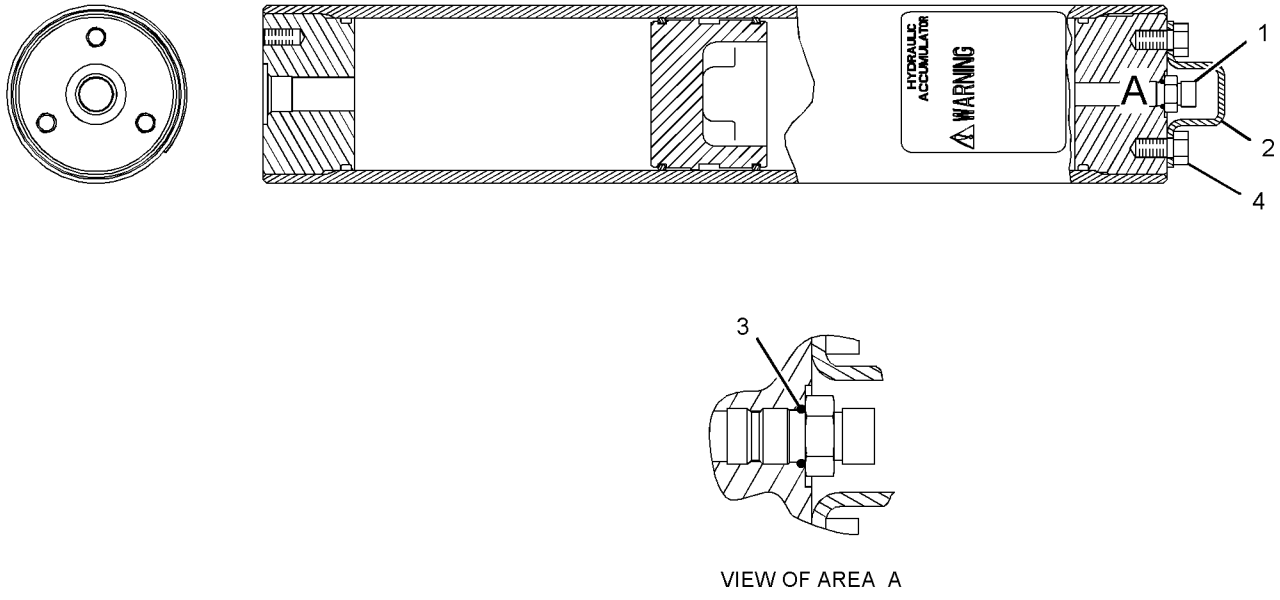

VIEW OF AREA A

GRAPHIC #1 **<END>** g01109727

246-8782 BRAKE GP-PARKING

S/N: DGX1-UP

PART OF 231-3005 TRANSMISSION AR

SMCS-3077, 4267 **i02348793**

NOTE	REF NO	GRAPHIC REF	PART NUMBER	QTY	PART NAME 1 2 3 4 5 6 (PRODUCT LEVEL)	SEE PAGE
	1	1	**9W-6068**	1	PLUG	
	2	1	**064-3843**	1	RING-SNAP	
	3	1	**171-9375**	1	SEAL-O-RING	
	4	1	**179-4182**	3	DOWEL	
	5	1	**187-3369**	2	SPRING	
	6	1	**188-0633**	1	SEAL-BRAKE	
	7	1	**193-2200**	1	SEAL-LIP TYPE	
	8	1	**241-3722**	1	FILM-WARNING (RECOIL SPRING)	
	9	1	**246-8777**	1	SEAL-BRAKE	
	10	1	**246-8779**	5	DISC-FRICTION	
	11	1	**246-8780**	6	PLATE-CLUTCH	
	12	1	**246-8783**	1	PLATE-SPRING	
	13	1	**246-8784**	1	PISTON	
	14	1	**246-8785**	1	HOUSING-PISTON	
	15	1	**246-8786**	1	HUB	
	16	1	**246-8787**	1	YOKE AS	
M	17	1	**129-3181**	3	BOLT-SOCKET HEAD (M10X1.5X55-MM)	
	18	1	**4J-8996**	1	SEAL-O-RING	
	19	1	**5M-7937**	2	DOWEL	
	20	1	**5P-5297**	1	RING-RETAINING	
	21	1	**7X-0605**	12	WASHER-HARD (13X28X1.6-MM THK)	
M	22	1	**7X-2549**	12	BOLT (M12X1.75X100-MM)	

M-METRIC PART

PROOF

246-8782 **BRAKE GP-PARKING** *(contd.)* **i02348793**

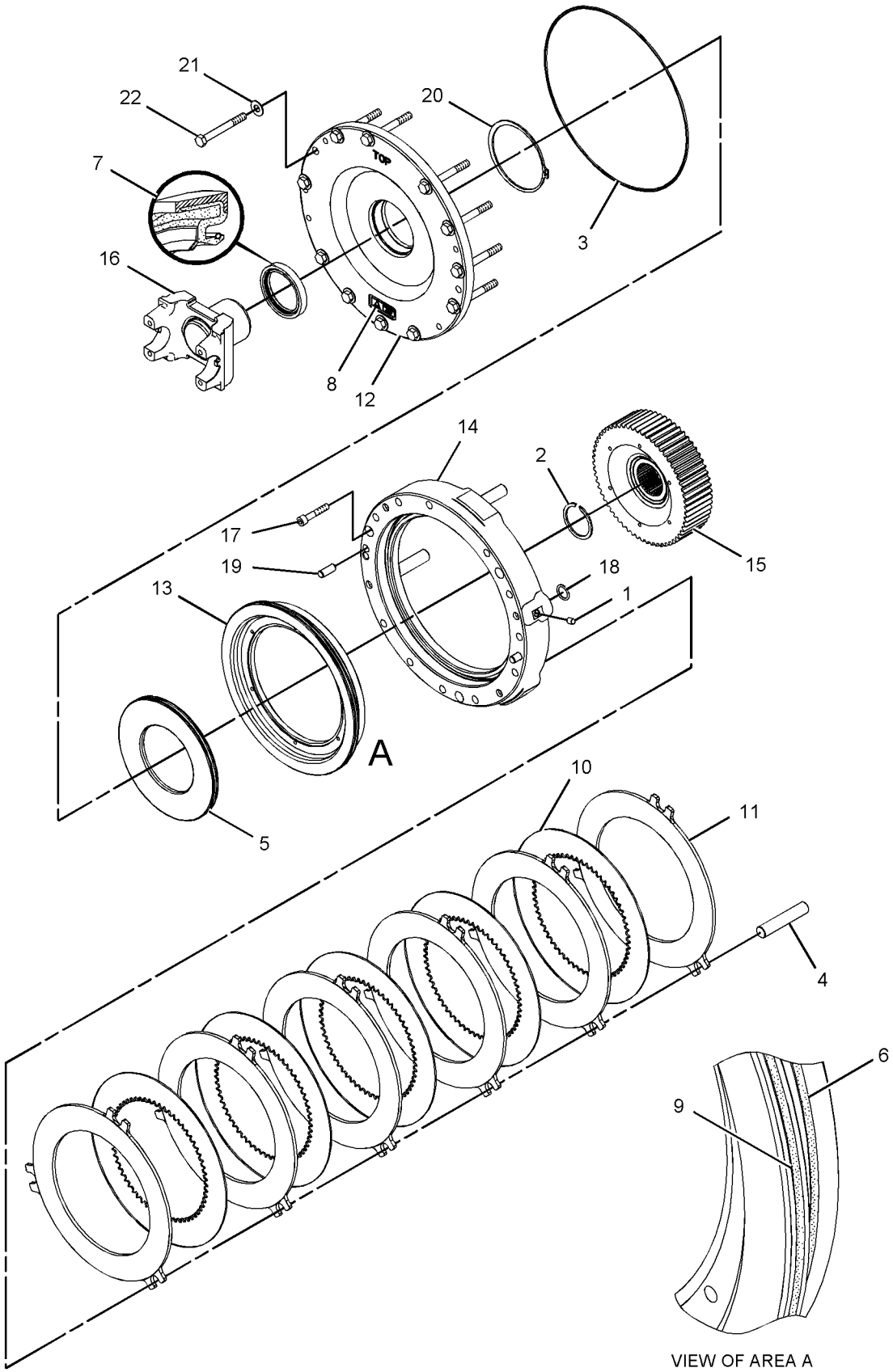

GRAPHIC #1 **<END>** g01150276

BRAKING SYSTEM

246-7972 BRAKE GP-SERVICE

S/N: B9M1-UP

PART OF 246-7976 WHEEL AR

SMCS-4251 **i02348795**

NOTE	REF NO	GRAPHIC REF	PART NUMBER	QTY	PART NAME 1 2 3 4 5 6 (PRODUCT LEVEL)	SEE PAGE
	1	1	**5H-3701**	1	SCREW-PURGE	
R	2	1	**5K-5288**	1	SEAL GP-DUO-CONE	
		1	**5K-5129**	2	RING-SEALING	
	3	1	**6B-3223**	2	CUP-BEARING	
B	4	1	**7D-8439**	4	SHIM (0.007-MM THK)	
B	5	1	**7D-8441**	1	SHIM (0.005-MM THK)	
	6	1	**9D-3075**	1	RETAINER	
B	7	1	**9D-7047**	4	SHIM (0.02-MM THK)	
	8	1	**9S-4181**	1	PLUG	
	9	1	**110-7149**	1	RING-RETAINING	
	10	1	**249-0204**	1	INDICATOR (BRAKE WEAR)	
	11	1	**259-6836**	6	DISC-FRICTION	
	12	1	**262-5599**	1	SPINDLE-WHEEL	
	13	1	**262-5603**	1	SPROCKET	
	14	1	**262-5604**	1	HOUSING	
	15	1	**262-5610**	1	HUB-BRAKE	
	16	1	**262-5612**	1	BRAKE GP-SERVICE	
		1	**4K-3531**	4	WASHER (.5X.688X.25-IN THK)	
		1	**8T-0255**	4	PIN-SPRING	
		1	**3J-7354**	1	SEAL-O-RING	
		1	**9S-8002**	1	PLUG	
	17	1	**266-6712**	14	BOLT-SOCKET HEAD (M20X2.5X160-MM)	
	18	1	**270-0518**	7	PLATE	
	19	1	**1A-2223**	2	DOWEL	
	20	1	**4B-7270**	1	CONE-BEARING	
M	21	1	**6V-3303**	3	BOLT (M16X2X60-MM)	
	22	1	**7D-8437**	1	CONE-BEARING	
	23	1	**7M-8485**	1	SEAL-O-RING	
	24	1	**7X-4805**	1	SEAL-O-RING	
	25	1	**8D-2414**	2	PIN	
M	26	1	**9X-2404**	2	BOLT-SOCKET HEAD (M20X2.5X90-MM)	

B-USE AS REQUIRED
M-METRIC PART
R-REMFG PART MAY BE AVAILABLE

PROOF

246-7972 **BRAKE GP-SERVICE** *(contd.)* **i02348795**

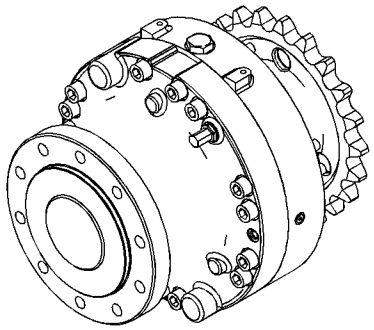

PICTORIAL VIEW

GRAPHIC #1 **<END>** g01155030

BRAKING SYSTEM

246-7973 BRAKE GP-SERVICE

S/N: B9M1-UP

PART OF 246-7976 WHEEL AR

SMCS-4251 **i02287271**

NOTE	REF NO	GRAPHIC REF	PART NUMBER	QTY	PART NAME 1 2 3 4 5 6 (PRODUCT LEVEL)	SEE PAGE
	1	1	**5H-3701**	1	SCREW-PURGE	
R	2	1	**5K-5288**	1	SEAL GP-DUO-CONE	
		1	**5K-5129**	2	RING-SEALING	
	3	1	**6B-3223**	2	CUP-BEARING	
B	4	1	**7D-8439**	4	SHIM (0.007-MM THK)	
B	5	1	**7D-8441**	1	SHIM (0.005-MM THK)	
	6	1	**9D-3075**	1	RETAINER	
B	7	1	**9D-7047**	4	SHIM (0.02-MM THK)	
	8	1	**9S-4181**	1	PLUG	
	9	1	**110-7149**	1	RING-RETAINING	
	10	1	**249-0204**	1	INDICATOR (BRAKE WEAR)	
	11	1	**259-6836**	6	DISC-FRICTION	
	12	1	**262-5599**	1	SPINDLE-WHEEL	
	13	1	**262-5603**	1	SPROCKET	
	14	1	**262-5604**	1	HOUSING	
	15	1	**262-5610**	1	HUB-BRAKE	
	16	1	**262-5612**	1	BRAKE GP-SERVICE	
		1	**4K-3531**	4	WASHER (.5X.688X.25-IN THK)	
		1	**8T-0255**	4	PIN-SPRING	
		1	**3J-7354**	1	SEAL-O-RING	
		1	**9S-8002**	1	PLUG	
	17	1	**266-6712**	14	BOLT-SOCKET HEAD (M20X2.5X160-MM)	
	18	1	**270-0518**	7	PLATE	
	19	1	**1A-2223**	2	DOWEL	
	20	1	**4B-7270**	1	CONE-BEARING	
M	21	1	**6V-3303**	3	BOLT (M16X2X60-MM)	
	22	1	**7D-8437**	1	CONE-BEARING	
	23	1	**7M-8485**	1	SEAL-O-RING	
	24	1	**7X-4805**	1	SEAL-O-RING	
	25	1	**8D-2414**	2	PIN	
M	26	1	**9X-2404**	2	BOLT-SOCKET HEAD (M20X2.5X90-MM)	

B-USE AS REQUIRED
M-METRIC PART
R-REMFG PART MAY BE AVAILABLE

PROOF

246-7973 **BRAKE GP-SERVICE** *(contd.)* **i02287271**

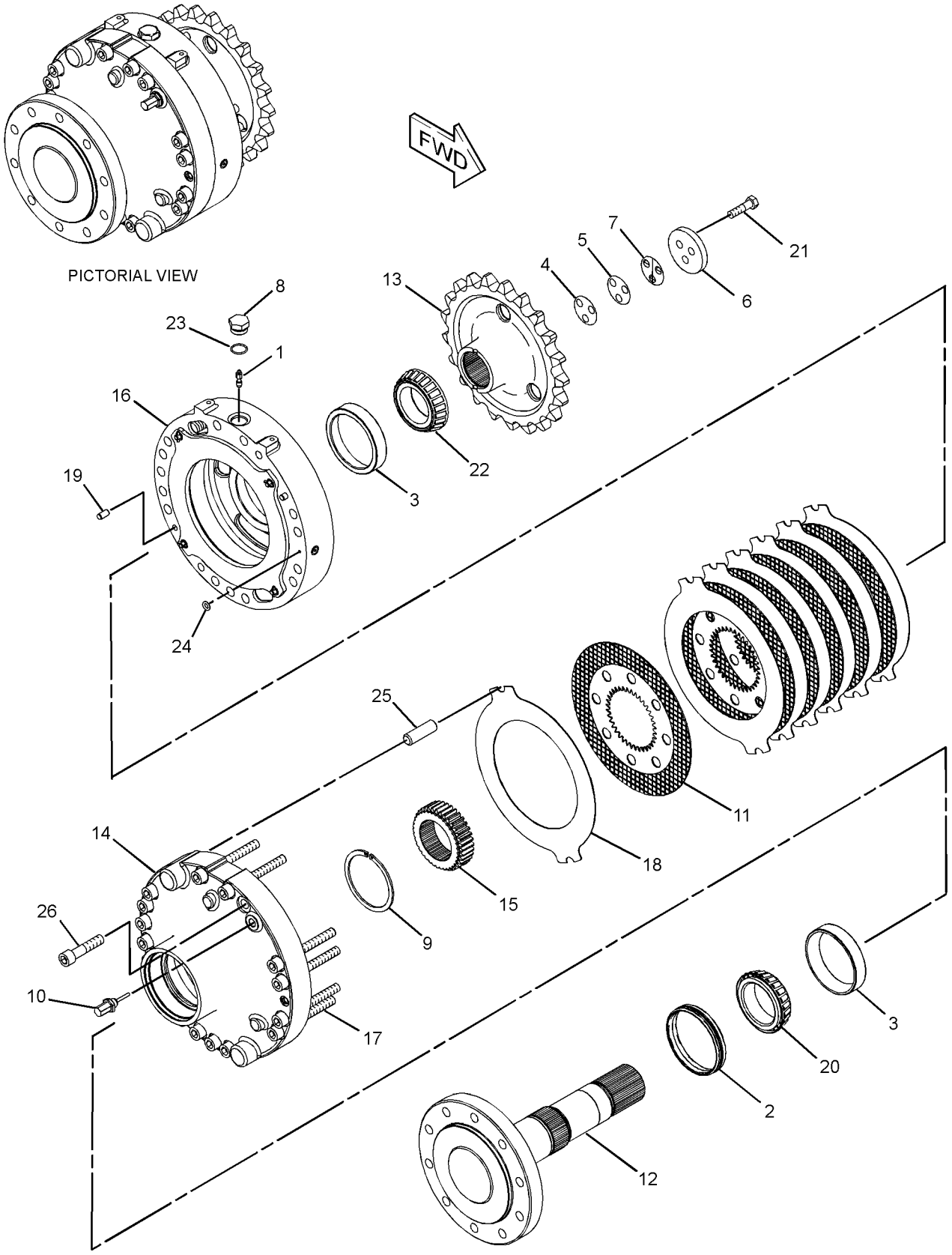

GRAPHIC #1 **<END>** g01154736

233-3142 CONTROL GP-SERVICE BRAKE

S/N: B9M1-UP
AN ATTACHMENT

SMCS-4265, 4269 **i02277694**

NOTE	REF NO	GRAPHIC REF	PART NUMBER	QTY	PART NAME 1 2 3 4 5 6 (PRODUCT LEVEL)	SEE PAGE
	1	1	**249-4080**	1	CONTROL GP-SERVICE BRAKE	
	2	1	**249-4091**	6	BLOCK	
Y	3	1	*251-2243*	1	LINES GP-SERVICE BRAKE	454
	4	1	**253-3476**	1	PLATE	
	5	1	**265-6640**	1	COVER AS.	
	6	1	**128-5924**	4	CLAMP	
	7	1	**8R-3393**	4	STRAP	
M	8	1	**8T-4137**	6	BOLT (M10X1.5X20-MM)	
M	9	1	**8T-4172**	3	BOLT (M10X1.5X80-MM)	
M	10	1	**8T-4195**	9	BOLT (M10X1.5X30-MM)	

M-METRIC PART
Y-SEPARATE ILLUSTRATION

PROOF

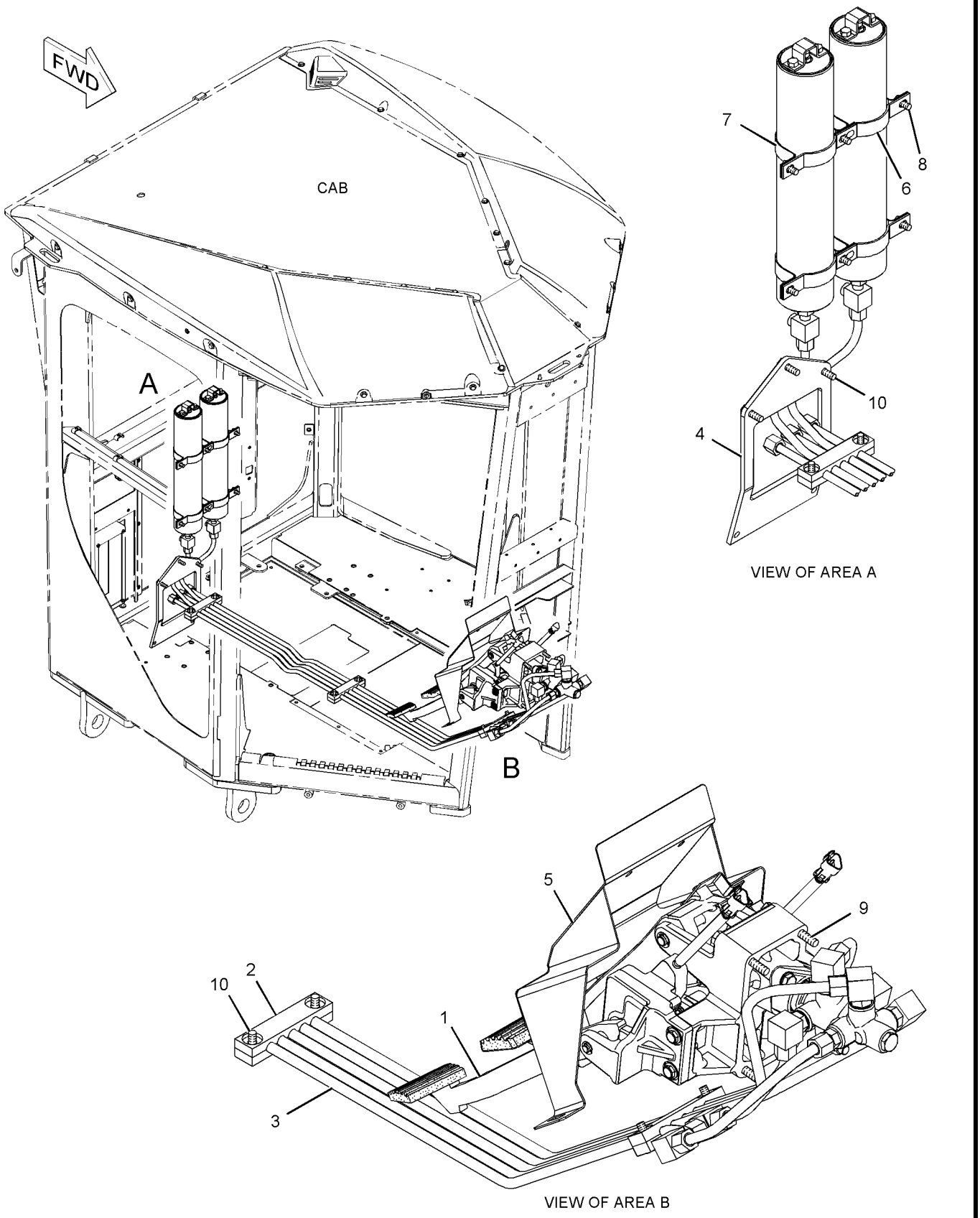

VIEW OF AREA A

VIEW OF AREA B

GRAPHIC #1 **<END>** g01143436

252-1810 CONTROL GP-SERVICE BRAKE

S/N: B9M1-UP
PART OF 261-0182 OPTION AR-EU
AN ATTACHMENT

SMCS-4265, 4269 **i02234451**

NOTE	REF NO	GRAPHIC REF	PART NUMBER	QTY	PART NAME 1 2 3 4 5 6 (PRODUCT LEVEL)	SEE PAGE
	1	1	**249-4080**	1	CONTROL GP-SERVICE BRAKE	
	2	1	**249-4091**	6	BLOCK	
Y	3	1	*252-1811*	1	LINES GP-SERVICE BRAKE	456
	4	1	**253-3476**	1	PLATE	
	5	1	**128-5924**	4	CLAMP	
	6	1	**8R-3393**	4	STRAP	
M	7	1	**8T-4137**	6	BOLT (M10X1.5X20-MM)	
M	8	1	**8T-4195**	9	BOLT (M10X1.5X30-MM)	
M	9	1	**8T-5005**	3	BOLT (M10X1.5X70-MM)	

M-METRIC PART
Y-SEPARATE ILLUSTRATION

PROOF

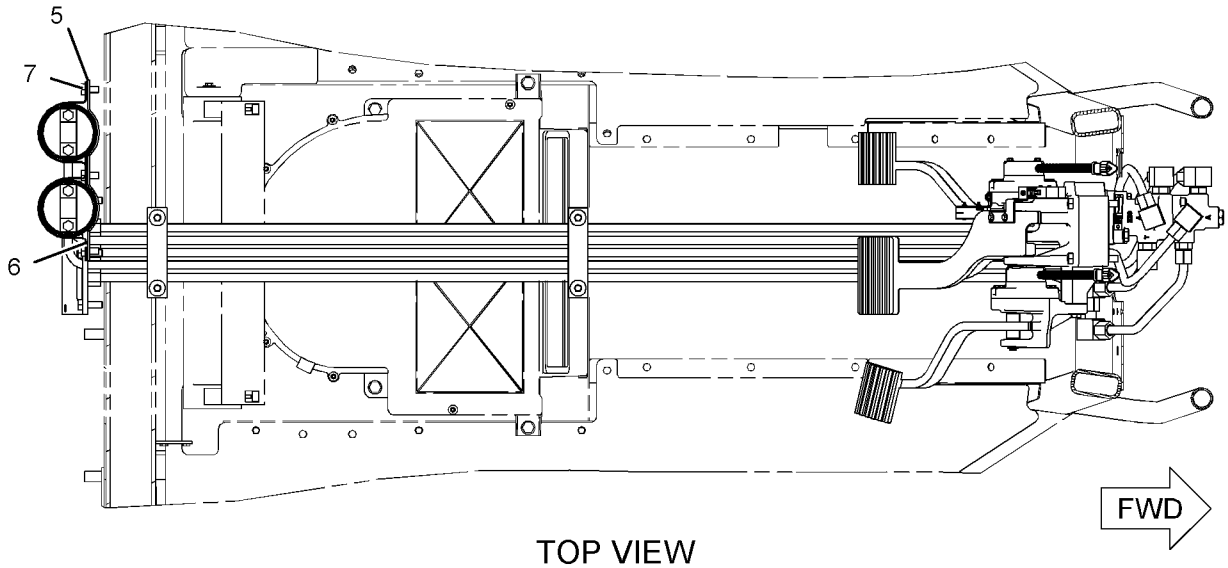

TOP VIEW

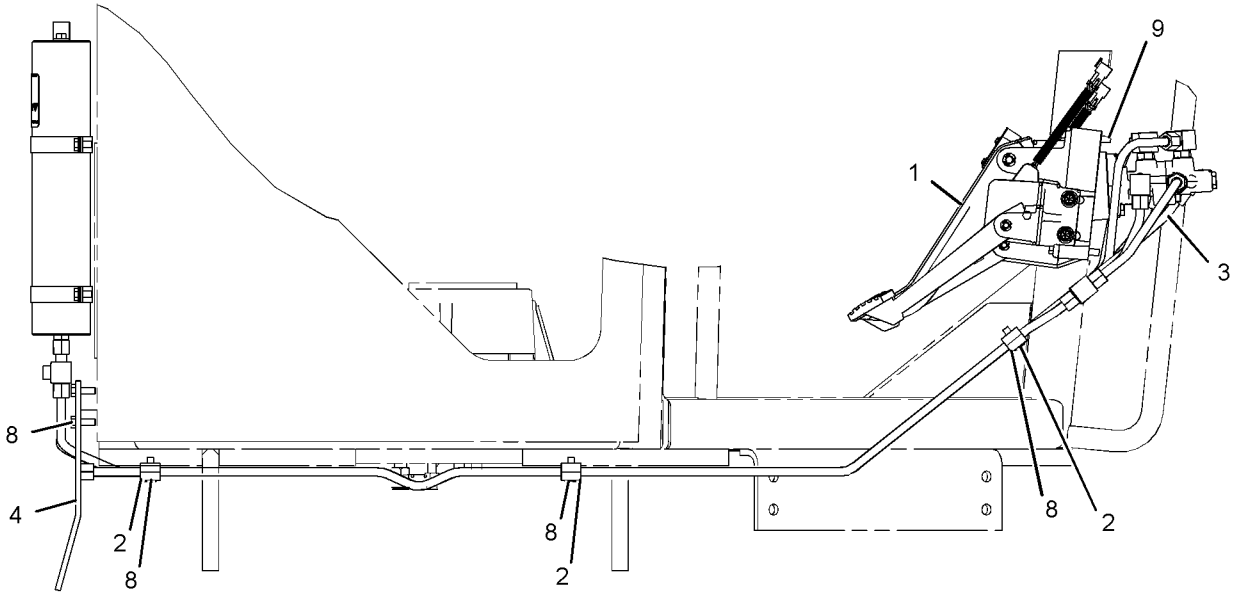

RIGHT SIDE VIEW

GRAPHIC #1 **<END>** g01128506

BRAKING SYSTEM

271-5397 CONTROL GP-SERVICE BRAKE

S/N: B9M1-UP

PART OF 234-7721 COMMON AR-MOTOR GRADER

SMCS-4265, 4269 **i02300327**

NOTE	REF NO	GRAPHIC REF	PART NUMBER	QTY	PART NAME 1 2 3 4 5 6 (PRODUCT LEVEL)	SEE PAGE
I	1	1	**238-5582**	2	HOSE AS	
I	2	2	**246-3298**	1	HOSE AS	
I	3	2	**246-3299**	1	HOSE AS	
I	4	1	**246-3300**	1	HOSE AS	
	5	1,3	**246-3314**	2	BLOCK	
	6	2	**247-4240**	1	BLOCK	
	7	2	**247-4241**	1	BLOCK	
	8	2	**247-4242**	1	BLOCK	
	9	2	**247-4247**	1	PLATE AS	
I	10	1,3	**250-2693**	2	HOSE AS	
	11	2	**253-2746**	1	GUARD-HOSE	
	12	1	**271-5576**	1	TUBE AS	
	13	1	**271-5578**	1	TUBE AS	
	14	1	**271-5580**	1	TUBE AS	
	15	1	**271-5581**	1	TUBE AS	
	16	1,2,3	**271-6465**	4	GUARD	
M	17	2	**096-4883**	2	LOCKNUT (M10X1.5-THD)	
M	18	2	**133-7810**	1	STUD-TAPERLOCK (M10X1.5-THD)	
	19	2	*148-8336*	3	CONNECTOR AS	
					(EACH INCLUDES)	
		2	**3J-1907**	1	SEAL-O-RING	
		2	**6V-8397**	1	SEAL-O-RING	
		2	**6V-8636**	1	CONNECTOR	
	20	1,3	**148-8353**	2	ELBOW AS	
					(EACH INCLUDES)	
		1,3	**3J-1907**	1	SEAL-O-RING	
		1,3	**6V-8397**	1	SEAL-O-RING	
		1,3	**6V-9001**	1	ELBOW	
	21	2	*148-8370*	2	ELBOW AS	
					(EACH INCLUDES)	
		2	**6V-8398**	1	SEAL-O-RING	
		2	**6V-9851**	1	ELBOW	
	22	1,3	*148-8407*	4	PLUG AS	
					(EACH INCLUDES)	
		1,3	**3J-1907**	1	SEAL-O-RING	
		1,3	**9S-4191**	1	PLUG	
	23	1,3	**150-0128**	2	UNION	
	24	1,2,3	*150-4043*	8	CONNECTOR AS	
					(EACH INCLUDES)	
		1,2,3	**3J-1907**	1	SEAL-O-RING	
		1,2,3	**6V-8398**	1	SEAL-O-RING	
		1,2,3	**6V-9873**	1	CONNECTOR	
	25	2	*153-6266*	3	UNION AS	
					(EACH INCLUDES)	
		2	**6V-8397**	1	SEAL-O-RING	
		2	**6V-8398**	1	SEAL-O-RING	
		2	**6V-8737**	1	UNION	
	26	1,2,3	**5K-3294**	12	CLIP	
	27	2	**6D-4246**	4	CLIP	
	28	1,3	**6V-8397**	4	SEAL-O-RING	
	29	1,3	**6V-9168**	2	NUT (11/16-16-THD)	
	30	1,2,3	**8T-4121**	18	WASHER-HARD (11X21X2.5-MM THK)	
M	31	2	**8T-4133**	1	NUT (M10X1.5-THD)	
M	32	1,2,3	**8T-4136**	8	BOLT (M10X1.5X25-MM)	
M	33	1,2,3	**8T-4137**	3	BOLT (M10X1.5X20-MM)	
M	34	1,3	**8T-4195**	4	BOLT (M10X1.5X30-MM)	

PROOF

271-5397 **CONTROL GP-SERVICE BRAKE** *(contd.)* **i02300327**

NOTE	REF NO	GRAPHIC REF	PART NUMBER	QTY	PART NAME 1 2 3 4 5 6 (PRODUCT LEVEL)	SEE PAGE
M	35	2	**8T-6685**	2	BOLT (M10X1.5X110-MM)	
	36	1,3	**9X-8250**	2	CLIP	

I-REFER TO HYDRAULIC INFORMATION SYSTEM
M-METRIC PART

PROOF

271-5397 **CONTROL GP-SERVICE BRAKE** *(contd.)* **i02300327**

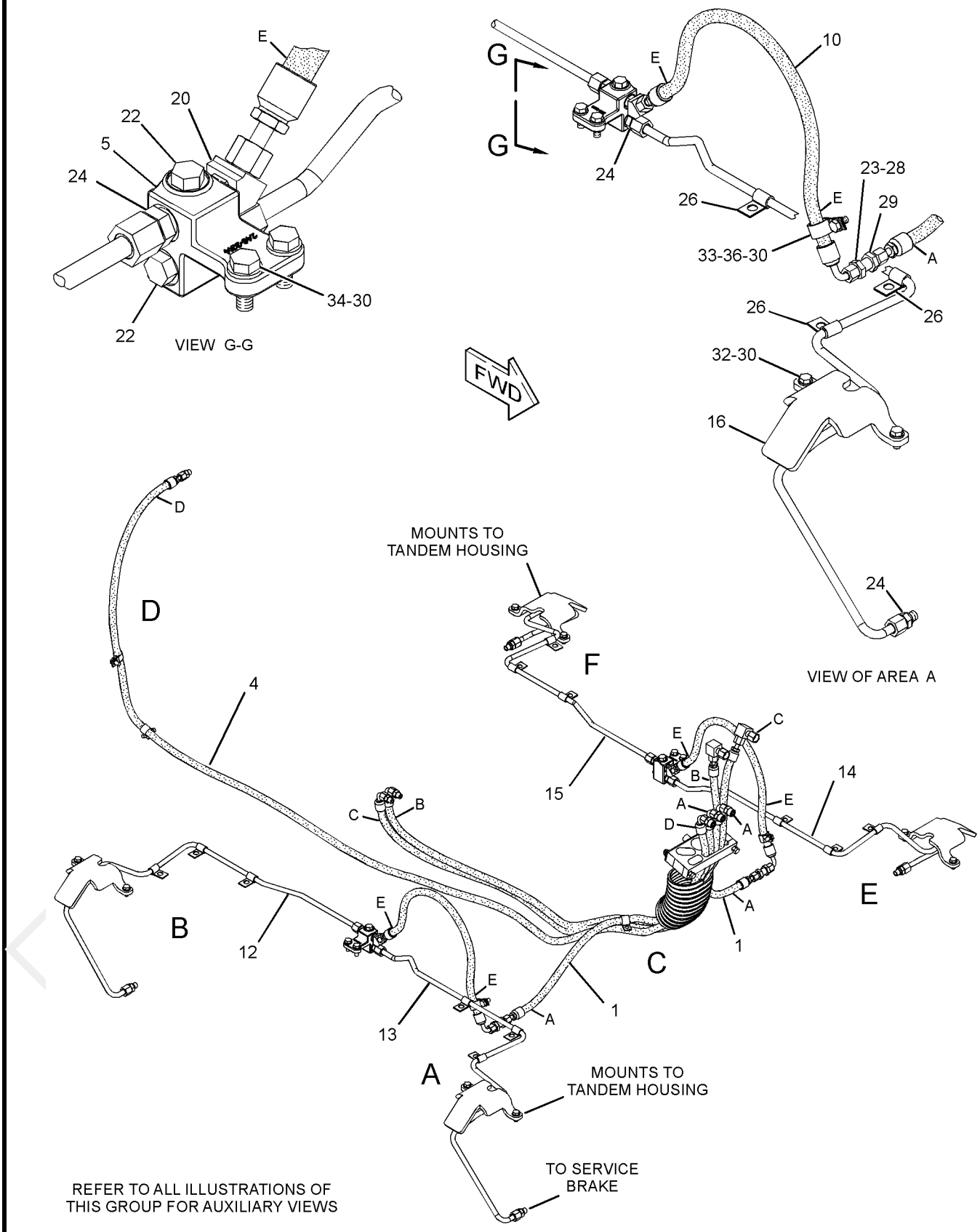

GRAPHIC #1

g01161376

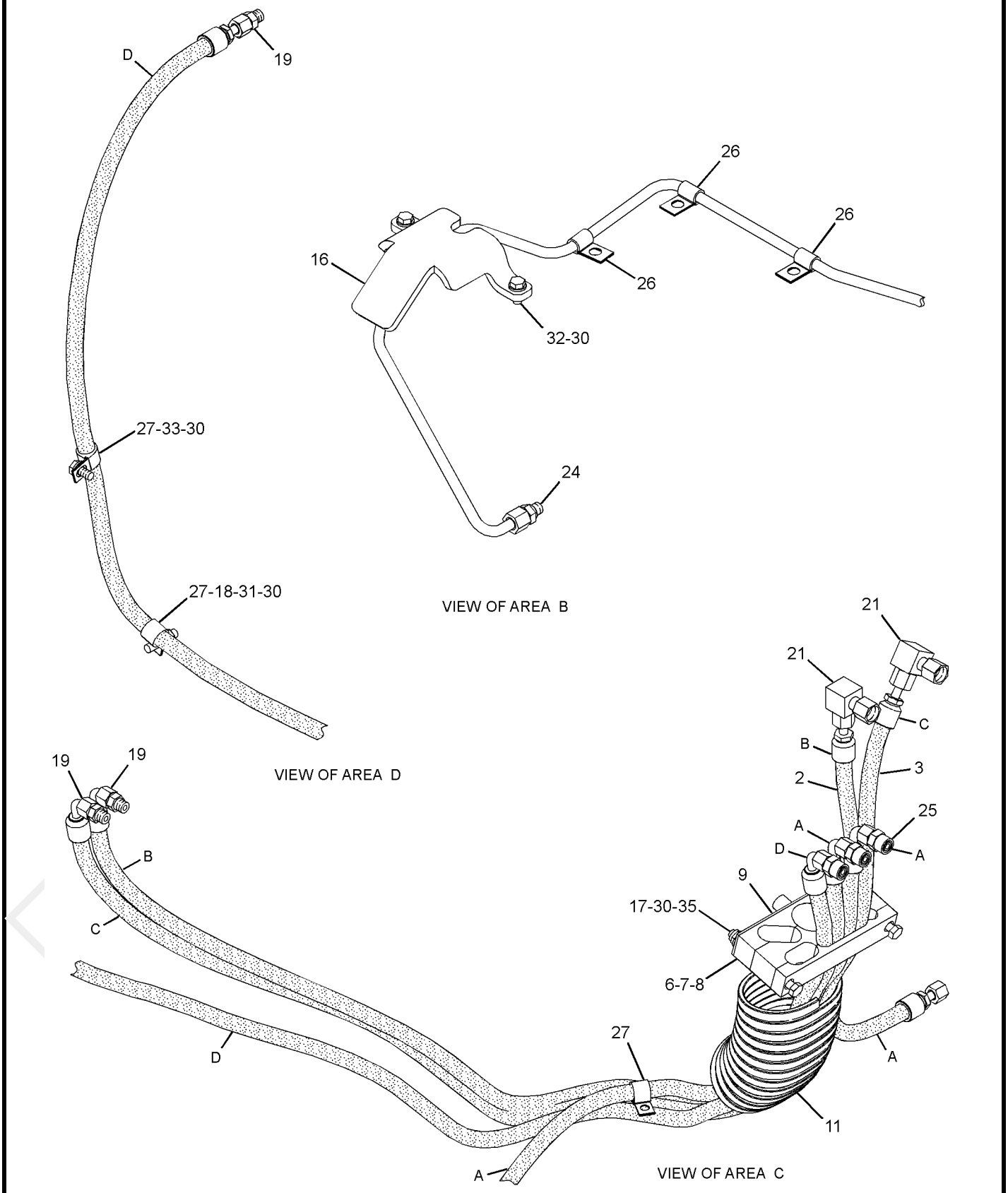

GRAPHIC #2

g01161377

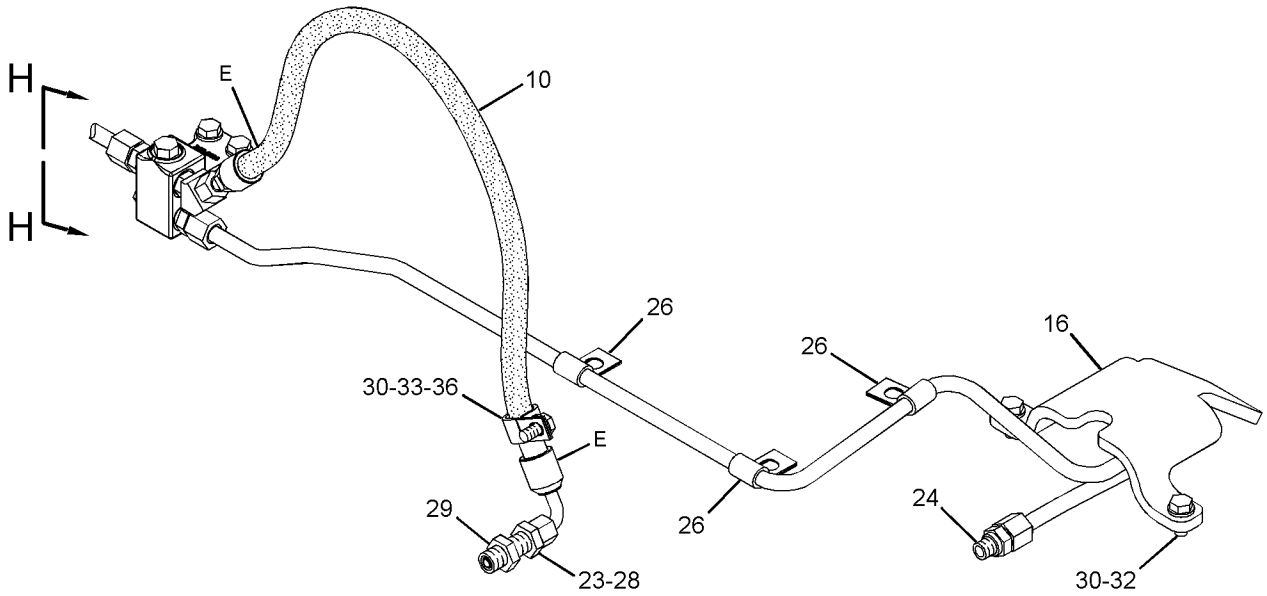

VIEW OF AREA E

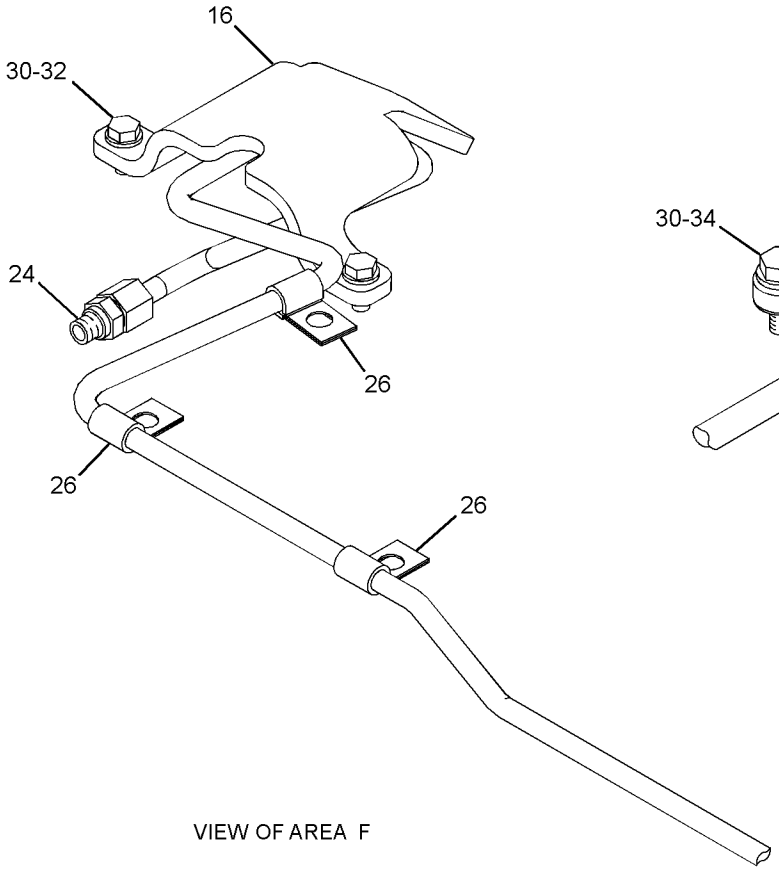

VIEW OF AREA F

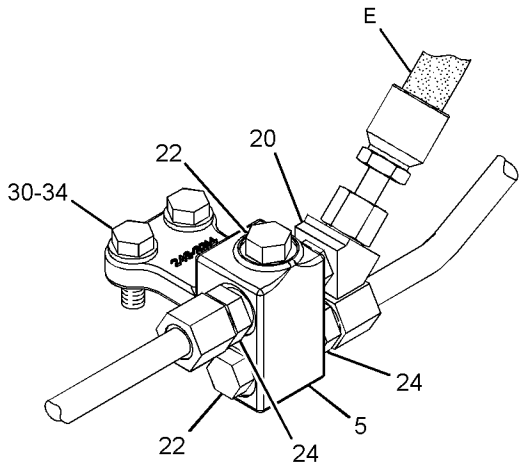

VIEW H-H

GRAPHIC #3 **<END>** g01161378

BRAKING SYSTEM

255-1250 LINES GP-AIR TANK

S/N: B9M1-UP
PART OF 261-0610 AIR COMPRESSOR AR
AN ATTACHMENT

SMCS-4272 **i02290710**

NOTE	REF NO	GRAPHIC REF	PART NUMBER	QTY	PART NAME 1 2 3 4 5 6 (PRODUCT LEVEL)	SEE PAGE
	1	1	**2D-8910**	1	ELBOW	
	2	1	**264-0387**	1	HOSE AS	
I	3	1	**264-0388**	1	HOSE AS	
	4	1	**1S-0994**	1	CLIP	
	5	1	**3D-2824**	1	SEAL-O-RING	
	6	1	**3D-5279**	1	GROMMET	
	7	1	**4D-2560**	1	CONNECTOR-PIPE	
	8	1	**4D-7388**	1	CLIP	
	9	1	**4D-7733**	3	CLIP	
	10	1	**4H-2558**	1	GROMMET	
	11	1	**4S-7606**	1	ELBOW	
	12	1	**6D-4492**	1	CONNECTOR	
	13	1	**8T-4121**	5	WASHER-HARD (11X21X2.5-MM THK)	
M	14	1	**8T-4133**	2	NUT (M10X1.5-THD)	
M	15	1	**8T-4137**	3	BOLT (M10X1.5X20-MM)	

I-REFER TO HYDRAULIC INFORMATION SYSTEM
M-METRIC PART

PROOF

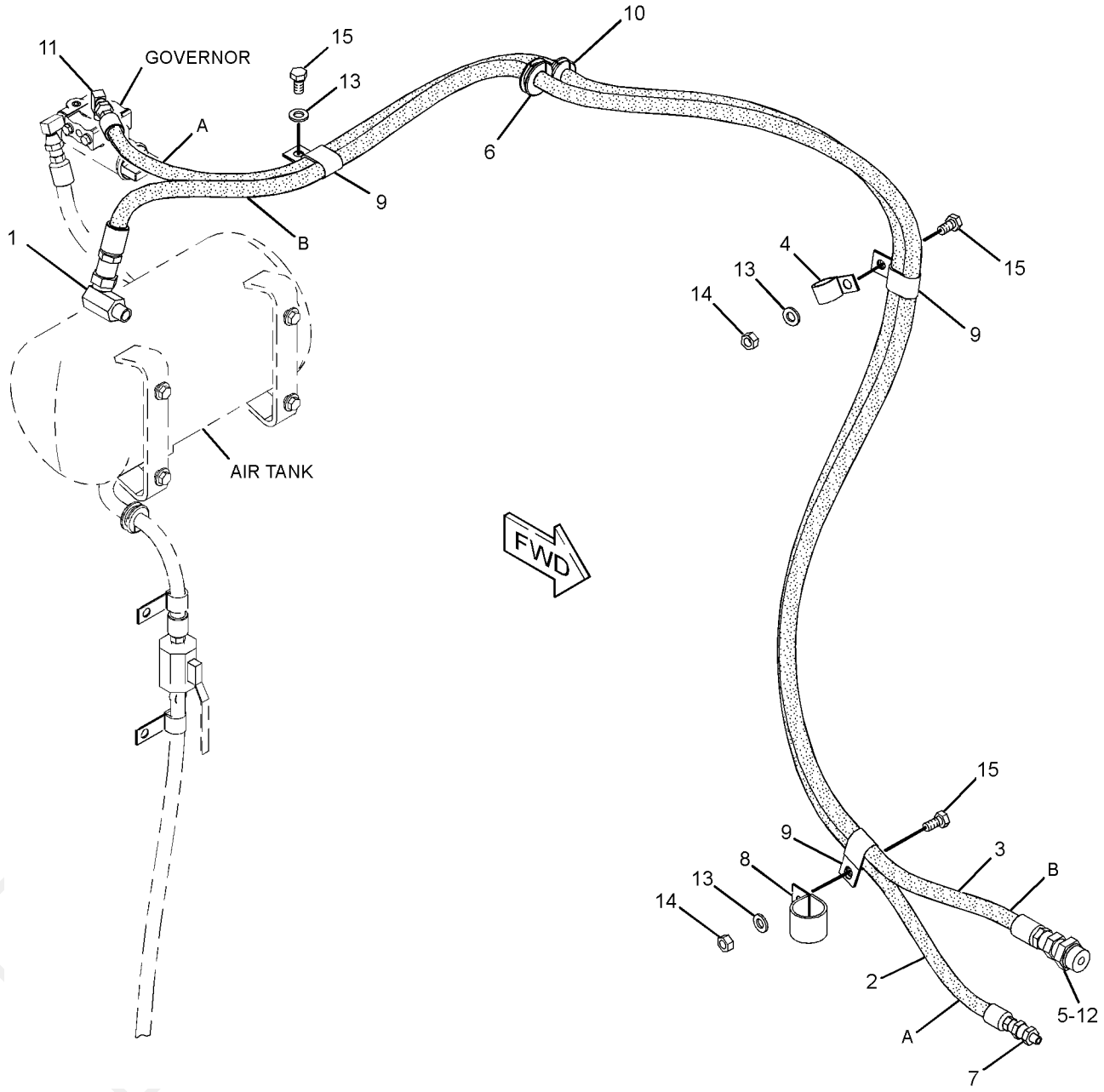

GRAPHIC #1 **<END>** g01152693

BRAKING SYSTEM

251-2243 LINES GP-SERVICE BRAKE

S/N: B9M1-UP

PART OF 233-3142 CONTROL GP-SERVICE BRAKE

AN ATTACHMENT

SMCS-4257 **i02193668**

NOTE	REF NO	GRAPHIC REF	PART NUMBER	QTY	PART NAME 1 2 3 4 5 6 (PRODUCT LEVEL)	SEE PAGE
	1	1	**246-3303**	1	TUBE AS	
	2	1	**246-3304**	1	TUBE AS	
	3	1	**246-3305**	1	TUBE AS	
	4	1	**246-3306**	1	TUBE AS	
	5	1	**246-3307**	1	TUBE AS	
	6	1	**249-4088**	1	TUBE AS	
	7	1	**249-4089**	1	TUBE AS	
	8	1	*148-8340*	3	CONNECTOR AS	
					(EACH INCLUDES)	
		1	**3K-0360**	1	SEAL-O-RING	
		1	**6V-8398**	1	SEAL-O-RING	
		1	**6V-8639**	1	CONNECTOR	
	9	1	*148-8364*	5	ELBOW AS	
					(EACH INCLUDES)	
		1	**3K-0360**	1	SEAL-O-RING	
		1	**6V-8398**	1	SEAL-O-RING	
		1	**6V-8625**	1	ELBOW	
	10	1	*148-8370*	1	ELBOW AS	
		1	**6V-8398**	1	SEAL-O-RING	
		1	**6V-9851**	1	ELBOW	
	11	1	*148-8444*	2	TEE AS-SWIVEL	
					(EACH INCLUDES)	
		1	**6V-8398**	2	SEAL-O-RING	
		1	**6V-9837**	1	TEE-SWIVEL	
	12	1	*148-8454*	1	TEE AS	
		1	**6V-8398**	3	SEAL-O-RING	
		1	**6V-8789**	1	TEE	
Y	13	1	*249-3860*	2	ACCUMULATOR GP-BRAKE	435

Y-SEPARATE ILLUSTRATION

PROOF

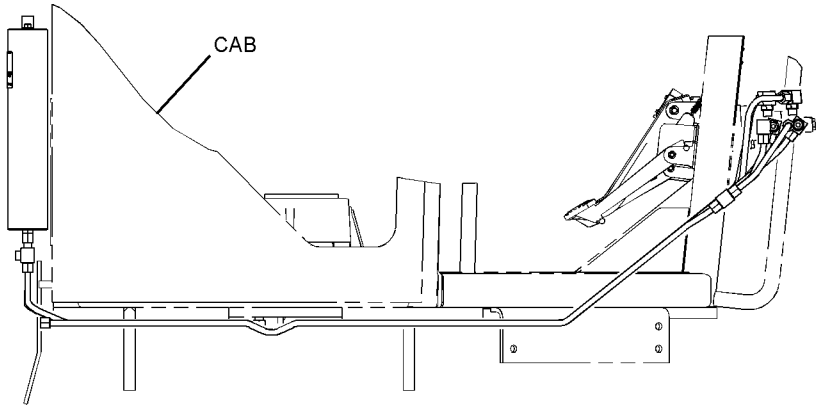

RIGHT SIDE VIEW

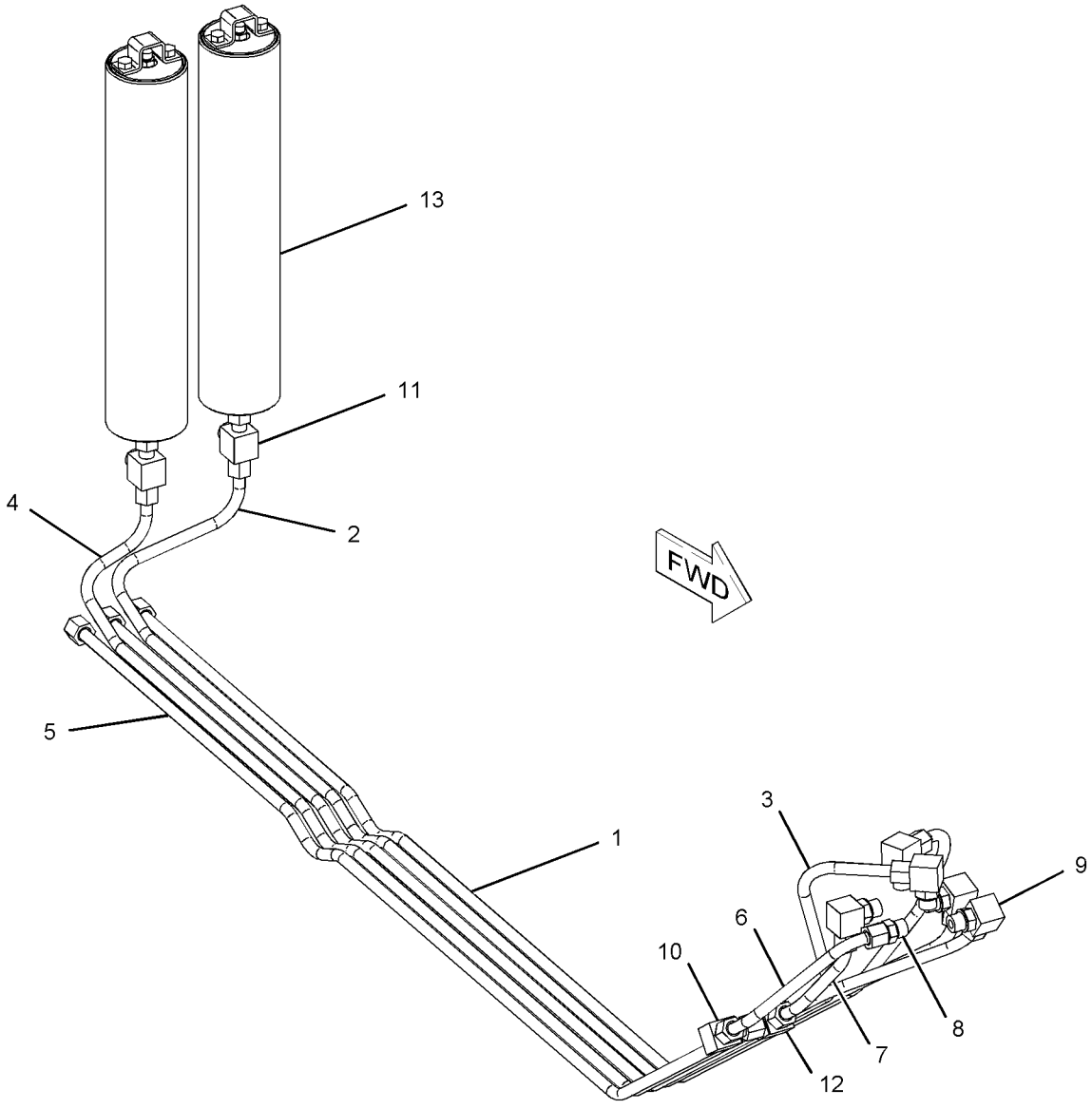

GRAPHIC #1 **<END>** g01110081

BRAKING SYSTEM

252-1811 LINES GP-SERVICE BRAKE

S/N: B9M1-UP

PART OF 252-1810 CONTROL GP-SERVICE BRAKE

AN ATTACHMENT

SMCS-4257 **i02185509**

NOTE	REF NO	GRAPHIC REF	PART NUMBER	QTY	PART NAME 1 2 3 4 5 6 (PRODUCT LEVEL)	SEE PAGE
	1	1	**246-3303**	1	TUBE AS	
	2	1	**246-3304**	1	TUBE AS	
	3	1	**246-3305**	1	TUBE AS	
	4	1	**246-3306**	1	TUBE AS	
	5	1	**246-3307**	1	TUBE AS	
	6	1	**249-4088**	1	TUBE AS	
	7	1	**249-4089**	1	TUBE AS	
	8	1	*148-8340*	3	CONNECTOR AS	
					(EACH INCLUDES)	
		1	**3K-0360**	1	SEAL-O-RING	
		1	**6V-8398**	1	SEAL-O-RING	
		1	**6V-8639**	1	CONNECTOR	
	9	1	*148-8364*	5	ELBOW AS	
					(EACH INCLUDES)	
		1	**3K-0360**	1	SEAL-O-RING	
		1	**6V-8398**	1	SEAL-O-RING	
		1	**6V-8625**	1	ELBOW	
	10	1	*148-8370*	1	ELBOW AS	
		1	**6V-8398**	1	SEAL-O-RING	
		1	**6V-9851**	1	ELBOW	
	11	1	*148-8444*	2	TEE AS-SWIVEL	
					(EACH INCLUDES)	
		1	**6V-8398**	2	SEAL-O-RING	
		1	**6V-9837**	1	TEE-SWIVEL	
	12	1	*148-8454*	1	TEE AS	
		1	**6V-8398**	3	SEAL-O-RING	
		1	**6V-8789**	1	TEE	
Y	13	1	**249-3862**	2	ACCUMULATOR GP-BRAKE	436

Y-SEPARATE ILLUSTRATION

PROOF

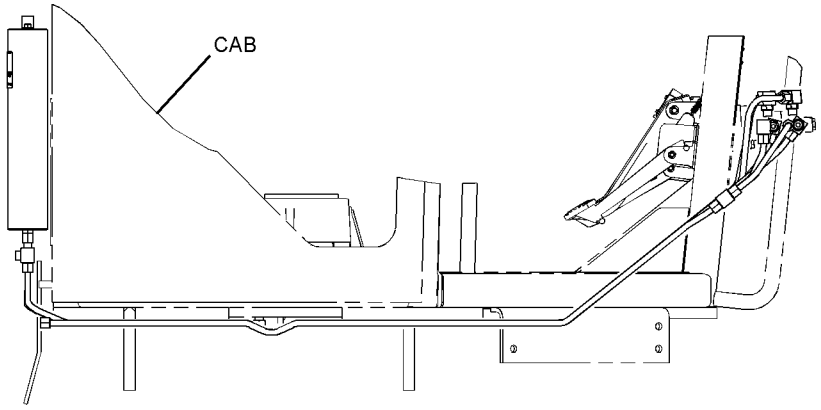

RIGHT SIDE VIEW

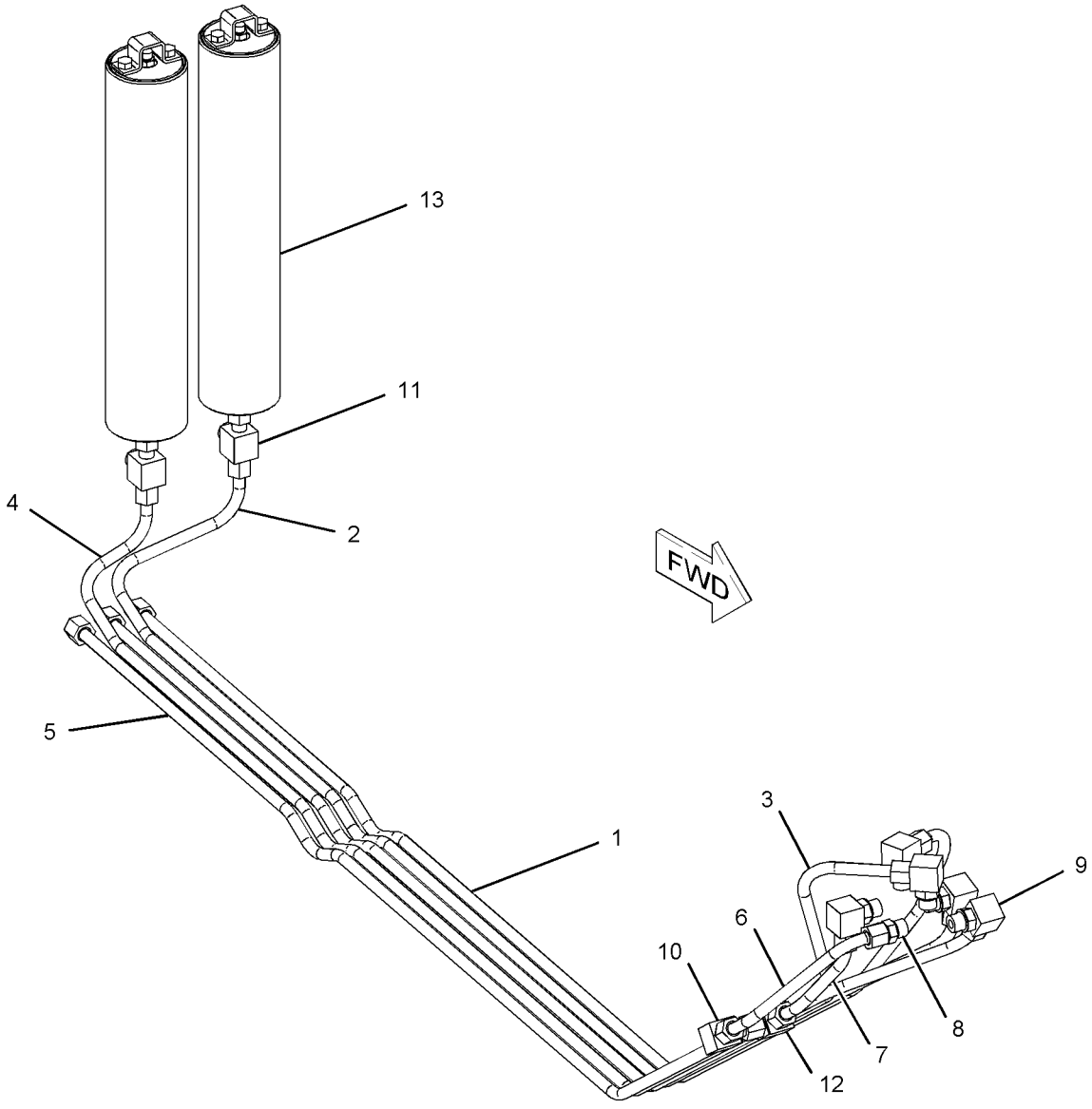

GRAPHIC #1 **<END>** g01113806

BRAKING SYSTEM

236-8922 TANK GP-AIR

S/N: B9M1-UP
PART OF 261-0610 AIR COMPRESSOR AR
AN ATTACHMENT

SMCS-4272 **i02290697**

NOTE	REF NO	GRAPHIC REF	PART NUMBER	QTY	PART NAME 1 2 3 4 5 6 (PRODUCT LEVEL)	SEE PAGE
	1	1	**1P-4278**	1	CLAMP-HOSE	
	2	1	**1P-9328**	1	FITTING	
	3	1	**2G-1034**	1	VALVE-AIR RELIEF	
	4	1	**5F-5434**	1	VALVE AS-RELIEF	
	5	1	**172-9284**	1	VALVE-BALL	
J	6	1	**205-7187**	1	GOVERNOR AS (AIR COMPRESSOR)	
	7	1	**177-0279**	1	HOSE AS	
	9	1	**246-6651**	1	TANK-AIR	
	13	1	**4H-2558**	1	GROMMET	
	14	1	**4S-7606**	1	ELBOW	
	15	1	**6K-8178**	2	CLIP	
	16	1	**6V-7535**	1	ELBOW-PIPE	
	17	1	**7J-8611**	1	ELBOW	
	18	1	**8T-6757**	4	PLUG-PIPE	
	20	1	**9X-8256**	2	WASHER (6.6X12X2-MM THK)	
B	21	1	**5P-1465**		HOSE (102-CM)	
	22	1	**174-5907**	1	CLIP	
	23	1	**164-5567**	1	FITTING GP-COUPLING	
M	24	1	**8T-4189**	4	BOLT (M8X1.25X20-MM)	
M	25	1	**8T-4137**	1	BOLT (M10X1.5X20-MM)	
M	26	1	**8T-4121**	1	WASHER-HARD (11X21X2.5-MM THK)	
M	27	1	**8T-3844**	2	BOLT (M6X1X70-MM)	
	28	1	**8C-4985**	1	ADAPTER	
	29	1	**6V-0852**	1	CAP-DUST	
I	30	1	**6D-9855**	1	HOSE AS	
	31	1	**5P-4116**	4	WASHER-HARD (8.8X20.5X2-MM THK)	
					AVAILABLE REPAIR KIT(S):	
J			**9M-0402**	1	KIT-GOVERNOR OVERHAUL (AIR COMPRESSOR)	
					(INCLUDES GROMMETS, FILTERS, SPRING, VALVE, COVER, RING & GASKET)	

B-USE AS REQUIRED
I-REFER TO HYDRAULIC INFORMATION SYSTEM
J-KIT MARKED J SERVICES PARTS MARKED J
M-METRIC PART

PROOF

236-8922 **TANK GP-AIR** *(contd.)* **i02290697**

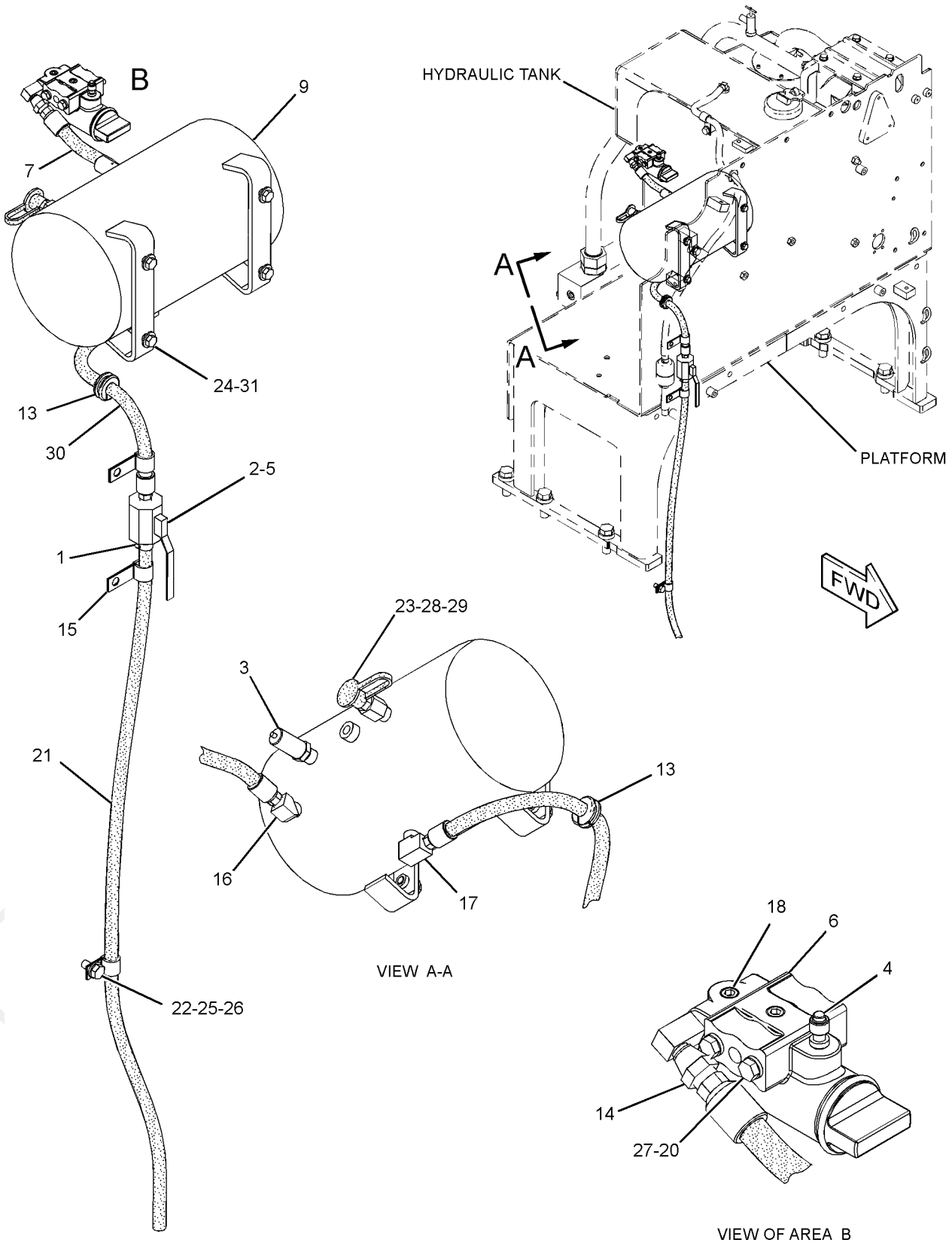

GRAPHIC #1 **<END>** g01153324

HYDRAULIC SYSTEM

242-5056 CONTROL AR-HYDRAULIC

S/N: B9M1-UP
AN ATTACHMENT

SMCS-5050 **i02334042**

NOTE	PART NUMBER	QTY	PART NAME 1 2 3 4 5 6 (PRODUCT LEVEL)	SEE PAGE
Y	**249-7298**	1	VALVE GP-BANK 3 (REAR)	585
Y	**248-6168**	1	VALVE GP-BANK 5 (FRONT)	589
M	**8T-4136**	8	BOLT (M10X1.5X25-MM)	
M	**8T-4121**	8	WASHER-HARD (11X21X2.5-MM THK)	

M-METRIC PART
Y-SEPARATE ILLUSTRATION

<END>

242-5057 CONTROL AR-HYDRAULIC

S/N: B9M1-UP
AN ATTACHMENT

SMCS-5050 **i02334045**

NOTE	PART NUMBER	QTY	PART NAME 1 2 3 4 5 6 (PRODUCT LEVEL)	SEE PAGE
Y	**233-3144**	1	CONTROL GP-IMPLEMENT (RIPPER)	130
Y	**248-6169**	1	VALVE GP-BANK 4 (REAR)	587
Y	**248-6168**	1	VALVE GP-BANK 5 (FRONT)	589
M	**8T-4136**	8	BOLT (M10X1.5X25-MM)	
M	**8T-4121**	8	WASHER-HARD (11X21X2.5-MM THK)	

M-METRIC PART
Y-SEPARATE ILLUSTRATION

<END>

242-5058 CONTROL AR-HYDRAULIC—FRONT LIFT

S/N: B9M1-UP
AN ATTACHMENT

SMCS-5050 **i02309911**

NOTE	PART NUMBER	QTY	PART NAME 1 2 3 4 5 6 (PRODUCT LEVEL)	SEE PAGE
Y	**231-1520**	1	LINES GP-HYDRAULIC	515
Y	**249-7298**	1	VALVE GP-BANK 3 (REAR)	585
Y	**249-7294**	1	VALVE GP-BANK 6 (FRONT)	595
M	**8T-4136**	8	BOLT (M10X1.5X25-MM)	
	238-8756	1	CONTROL GP-ELECTROHYDRAULIC (WITHOUT AUXILIARY LEVER)	
M	**8T-4121**	8	WASHER-HARD (11X21X2.5-MM THK)	

M-METRIC PART
Y-SEPARATE ILLUSTRATION

<END>

PROOF

242-5059 CONTROL AR-HYDRAULIC—SCARIFIER

S/N: B9M1-UP
AN ATTACHMENT

SMCS-5050 **i02334047**

NOTE	PART NUMBER	QTY	PART NAME 1 2 3 4 5 6 (PRODUCT LEVEL)	SEE PAGE
Y	**233-3144**	1	CONTROL GP-IMPLEMENT (RIPPER)	130
Y	**249-7298**	1	VALVE GP-BANK 3 (REAR)	585
Y	**249-7295**	1	VALVE GP-BANK 6 (FRONT)	597
M	**8T-4136**	8	BOLT (M10X1.5X25-MM)	
	8T-4121	8	WASHER-HARD (11X21X2.5-MM THK)	

M-METRIC PART
Y-SEPARATE ILLUSTRATION

<END>

242-5060 CONTROL AR-HYDRAULIC—RIPPER, FRONT LIFT

S/N: B9M1-UP
AN ATTACHMENT

SMCS-5050 **i02309918**

NOTE	PART NUMBER	QTY	PART NAME 1 2 3 4 5 6 (PRODUCT LEVEL)	SEE PAGE
Y	**233-3144**	1	CONTROL GP-IMPLEMENT (RIPPER)	130
Y	**231-1520**	1	LINES GP-HYDRAULIC	515
Y	**248-6169**	1	VALVE GP-BANK 4 (REAR)	587
Y	**249-7294**	1	VALVE GP-BANK 6 (FRONT)	595
M	**8T-4136**	8	BOLT (M10X1.5X25-MM)	
	238-8756	1	CONTROL GP-ELECTROHYDRAULIC (WITHOUT AUXILIARY LEVER)	
M	**8T-4121**	8	WASHER-HARD (11X21X2.5-MM THK)	

M-METRIC PART
Y-SEPARATE ILLUSTRATION

<END>

PROOF

HYDRAULIC SYSTEM

242-5061 CONTROL AR-HYDRAULIC

S/N: B9M1-UP

AN ATTACHMENT

SMCS-5050 **i02309908**

NOTE	PART NUMBER	QTY	PART NAME 1 2 3 4 5 6 (PRODUCT LEVEL)	SEE PAGE
Y	*233-3144*	1	CONTROL GP-IMPLEMENT (RIPPER)	130
Y	*238-8828*	1	CONTROL GP-UNPROGRAMMED (ECM)	134
Y	*250-9259*	1	ELECTRONICS GP-IMPLEMENT (SOFTWARE ONLY)	138
Y	*231-1520*	1	LINES GP-HYDRAULIC	515
Y	*249-7298*	1	VALVE GP-BANK 3 (REAR)	585
Y	*249-7296*	1	VALVE GP-BANK 7 (FRONT)	601
Y	*233-4613*	1	WIRING GP-FRONT	231
M	**8T-4136**	8	BOLT (M10X1.5X25-MM)	
	238-8756	1	CONTROL GP-ELECTROHYDRAULIC (WITHOUT AUXILIARY LEVER)	
M	**8T-4121**	8	WASHER-HARD (11X21X2.5-MM THK)	

M-METRIC PART
Y-SEPARATE ILLUSTRATION

<END>

242-5062 CONTROL AR-HYDRAULIC

S/N: B9M1-UP

AN ATTACHMENT

SMCS-5050 **i02309921**

NOTE	PART NUMBER	QTY	PART NAME 1 2 3 4 5 6 (PRODUCT LEVEL)	SEE PAGE
Y	*233-3144*	1	CONTROL GP-IMPLEMENT (RIPPER)	130
Y	*238-8828*	1	CONTROL GP-UNPROGRAMMED (ECM)	134
Y	*250-9259*	1	ELECTRONICS GP-IMPLEMENT (SOFTWARE ONLY)	138
Y	*231-1520*	1	LINES GP-HYDRAULIC	515
Y	*248-6169*	1	VALVE GP-BANK 4 (REAR)	587
Y	*249-5328*	1	VALVE GP-BANK 7 (FRONT)	599
Y	*233-4613*	1	WIRING GP-FRONT	231
M	**8T-4136**	8	BOLT (M10X1.5X25-MM)	
	238-8756	1	CONTROL GP-ELECTROHYDRAULIC (WITHOUT AUXILIARY LEVER)	
M	**8T-4121**	8	WASHER-HARD (11X21X2.5-MM THK)	

M-METRIC PART
Y-SEPARATE ILLUSTRATION

<END>

PROOF

HYDRAULIC SYSTEM

242-5063 CONTROL AR-HYDRAULIC

S/N: B9M1-UP
AN ATTACHMENT

SMCS-5050 **i02309923**

NOTE	PART NUMBER	QTY	PART NAME 1 2 3 4 5 6 (PRODUCT LEVEL)	SEE PAGE
Y	*250-9259*	1	ELECTRONICS GP-IMPLEMENT (SOFTWARE ONLY)	138
Y	*233-3147*	1	CONTROL GP-ELECTROHYDRAULIC (WITH AUXILIARY LEVER)	468
Y	*238-8828*	1	CONTROL GP-UNPROGRAMMED (ECM)	134
Y	*231-1520*	1	LINES GP-HYDRAULIC	515
Y	*249-7299*	1	VALVE GP-BANK 5 (REAR)	591
Y	*249-7294*	1	VALVE GP-BANK 6 (FRONT)	595
Y	*233-4613*	1	WIRING GP-FRONT	231
M	**8T-4136**	8	BOLT (M10X1.5X25-MM)	
M	**8T-4121**	8	WASHER-HARD (11X21X2.5-MM THK)	

M-METRIC PART
Y-SEPARATE ILLUSTRATION

<END>

242-5064 CONTROL AR-HYDRAULIC

S/N: B9M1-UP
AN ATTACHMENT

SMCS-5050 **i02309925**

NOTE	PART NUMBER	QTY	PART NAME 1 2 3 4 5 6 (PRODUCT LEVEL)	SEE PAGE
Y	**233-3147**	1	CONTROL GP-ELECTROHYDRAULIC (WITH AUXILIARY LEVER)	468
Y	**238-8828**	1	CONTROL GP-UNPROGRAMMED (ECM)	134
Y	**250-9259**	1	ELECTRONICS GP-IMPLEMENT (SOFTWARE ONLY)	138
Y	**231-1520**	1	LINES GP-HYDRAULIC	515
Y	**249-7299**	1	VALVE GP-BANK 5 (REAR)	591
Y	**249-5328**	1	VALVE GP-BANK 7 (FRONT)	599
Y	**233-4613**	1	WIRING GP-FRONT	231
M	**8T-4136**	8	BOLT (M10X1.5X25-MM)	
M	**8T-4121**	8	WASHER-HARD (11X21X2.5-MM THK)	

M-METRIC PART
Y-SEPARATE ILLUSTRATION

<END>

PROOF

HYDRAULIC SYSTEM

242-5066 CONTROL AR-HYDRAULIC

S/N: B9M1-UP

AN ATTACHMENT

SMCS-5050 **i02309933**

NOTE	PART NUMBER	QTY	PART NAME 1 2 3 4 5 6 (PRODUCT LEVEL)	SEE PAGE
Y	*233-3147*	1	CONTROL GP-ELECTROHYDRAULIC (WITH AUXILIARY LEVER)	468
Y	*233-3144*	1	CONTROL GP-IMPLEMENT (RIPPER)	130
Y	*238-8828*	1	CONTROL GP-UNPROGRAMMED (ECM)	134
Y	*250-9259*	1	ELECTRONICS GP-IMPLEMENT (SOFTWARE ONLY)	138
Y	*231-1520*	1	LINES GP-HYDRAULIC (FRONT LIFT)	515
Y	*249-5330*	1	VALVE GP-BANK 6 (REAR)	593
Y	*249-7294*	1	VALVE GP-BANK 6 (FRONT)	595
Y	*233-4613*	1	WIRING GP-FRONT	231
M	**8T-4136**	8	BOLT (M10X1.5X25-MM)	
	8T-4121	8	WASHER-HARD (11X21X2.5-MM THK)	

M-METRIC PART
Y-SEPARATE ILLUSTRATION

<END>

242-6107 CONTROL AR-HYDRAULIC

S/N: B9M1-UP

AN ATTACHMENT

SMCS-5050 **i02309936**

NOTE	PART NUMBER	QTY	PART NAME 1 2 3 4 5 6 (PRODUCT LEVEL)	SEE PAGE
Y	*233-3147*	1	CONTROL GP-ELECTROHYDRAULIC (WITH AUXILIARY LEVER)	468
Y	*233-3144*	1	CONTROL GP-IMPLEMENT (RIPPER)	130
Y	*238-8828*	1	CONTROL GP-UNPROGRAMMED (ECM)	134
Y	*250-9259*	1	ELECTRONICS GP-IMPLEMENT (SOFTWARE ONLY)	138
Y	*231-1520*	1	LINES GP-HYDRAULIC (FRONT LIFT)	515
Y	*249-5330*	1	VALVE GP-BANK 6 (REAR)	593
Y	*249-5329*	1	VALVE GP-BANK 8 (FRONT)	603
Y	*233-4613*	1	WIRING GP-FRONT	231
M	**8T-4136**	8	BOLT (M10X1.5X25-MM)	
	8T-4121	8	WASHER-HARD (11X21X2.5-MM THK)	

M-METRIC PART
Y-SEPARATE ILLUSTRATION

<END>

PROOF

HYDRAULIC SYSTEM

242-6108 CONTROL AR-HYDRAULIC

S/N: B9M1-UP
AN ATTACHMENT

SMCS-5050 **i02309937**

NOTE	PART NUMBER	QTY	PART NAME 1 2 3 4 5 6 (PRODUCT LEVEL)	SEE PAGE
Y	*238-8828*	1	CONTROL GP-UNPROGRAMMED (ECM)	134
Y	*250-9259*	1	ELECTRONICS GP-IMPLEMENT (SOFTWARE ONLY)	138
Y	*231-1520*	1	LINES GP-HYDRAULIC	515
Y	*249-7298*	1	VALVE GP-BANK 3 (REAR)	585
Y	*249-5328*	1	VALVE GP-BANK 7 (FRONT)	599
Y	*233-4613*	1	WIRING GP-FRONT	231
M	**8T-4136**	8	BOLT (M10X1.5X25-MM)	
	238-8756	1	CONTROL GP-ELECTROHYDRAULIC (WITHOUT AUXILIARY LEVER)	
M	**8T-4121**	8	WASHER-HARD (11X21X2.5-MM THK)	

M-METRIC PART
Y-SEPARATE ILLUSTRATION

<END>

242-6109 CONTROL AR-HYDRAULIC

S/N: B9M1-UP
AN ATTACHMENT

SMCS-5050 **i02309938**

NOTE	PART NUMBER	QTY	PART NAME 1 2 3 4 5 6 (PRODUCT LEVEL)	SEE PAGE
Y	*233-3147*	1	CONTROL GP-ELECTROHYDRAULIC (WITH AUXILIARY LEVER)	468
Y	*233-3144*	1	CONTROL GP-IMPLEMENT (RIPPER)	130
Y	*238-8828*	1	CONTROL GP-UNPROGRAMMED (ECM)	134
Y	*250-9259*	1	ELECTRONICS GP-IMPLEMENT (SOFTWARE ONLY)	138
Y	*248-6168*	1	VALVE GP-BANK 5 (FRONT)	589
Y	*249-5330*	1	VALVE GP-BANK 6 (REAR)	593
Y	*233-4613*	1	WIRING GP-FRONT	231
M	**8T-4136**	8	BOLT (M10X1.5X25-MM)	
M	**8T-4121**	8	WASHER-HARD (11X21X2.5-MM THK)	

M-METRIC PART
Y-SEPARATE ILLUSTRATION

<END>

PROOF

HYDRAULIC SYSTEM

242-6110 CONTROL AR-HYDRAULIC

S/N: B9M1-UP

AN ATTACHMENT

SMCS-5050 **i02309939**

NOTE	PART NUMBER	QTY	PART NAME 1 2 3 4 5 6 (PRODUCT LEVEL)	SEE PAGE
Y	*233-3147*	1	CONTROL GP-ELECTROHYDRAULIC (WITH AUXILIARY LEVER)	468
Y	*233-3144*	1	CONTROL GP-IMPLEMENT (RIPPER)	130
Y	*238-8828*	1	CONTROL GP-UNPROGRAMMED (ECM)	134
Y	*250-9259*	1	ELECTRONICS GP-IMPLEMENT (SOFTWARE ONLY)	138
Y	*231-1520*	1	LINES GP-HYDRAULIC	515
Y	*249-7298*	1	VALVE GP-BANK 3 (REAR)	585
Y	*249-7297*	1	VALVE GP-BANK 8 (FRONT)	605
Y	*233-4613*	1	WIRING GP-FRONT	231
M	**8T-4136**	8	BOLT (M10X1.5X25-MM)	
M	**8T-4121**	8	WASHER-HARD (11X21X2.5-MM THK)	

M-METRIC PART
Y-SEPARATE ILLUSTRATION

<END>

242-6111 CONTROL AR-HYDRAULIC

S/N: B9M1-UP

AN ATTACHMENT

SMCS-5050 **i02309942**

NOTE	PART NUMBER	QTY	PART NAME 1 2 3 4 5 6 (PRODUCT LEVEL)	SEE PAGE
Y	*233-3147*	1	CONTROL GP-ELECTROHYDRAULIC (WITH AUXILIARY LEVER)	468
Y	*233-3144*	1	CONTROL GP-IMPLEMENT (RIPPER)	130
Y	*238-8828*	1	CONTROL GP-UNPROGRAMMED (ECM)	134
Y	*250-9259*	1	ELECTRONICS GP-IMPLEMENT (SOFTWARE ONLY)	138
Y	*231-1520*	1	LINES GP-HYDRAULIC	515
Y	*249-7299*	1	VALVE GP-BANK 5 (REAR)	591
Y	*249-7296*	1	VALVE GP-BANK 7 (FRONT)	601
Y	*233-4613*	1	WIRING GP-FRONT	231
M	**8T-4136**	8	BOLT (M10X1.5X25-MM)	
M	**8T-4121**	8	WASHER-HARD (11X21X2.5-MM THK)	

M-METRIC PART
Y-SEPARATE ILLUSTRATION

<END>

PROOF

242-6112 CONTROL AR-HYDRAULIC

S/N: B9M1-UP
AN ATTACHMENT

SMCS-5050 **i02309943**

NOTE	PART NUMBER	QTY	PART NAME 1 2 3 4 5 6 (PRODUCT LEVEL)	SEE PAGE
Y	*233-3147*	1	CONTROL GP-ELECTROHYDRAULIC (WITH AUXILIARY LEVER)	468
Y	*233-3144*	1	CONTROL GP-IMPLEMENT (RIPPER)	130
Y	*238-8828*	1	CONTROL GP-UNPROGRAMMED (ECM)	134
Y	*250-9259*	1	ELECTRONICS GP-IMPLEMENT (SOFTWARE ONLY)	138
Y	*231-1520*	1	LINES GP-HYDRAULIC (FRONT LIFT)	515
Y	*249-5330*	1	VALVE GP-BANK 6 (REAR)	593
Y	*249-5328*	1	VALVE GP-BANK 7 (FRONT)	599
Y	*233-4613*	1	WIRING GP-FRONT	231
M	**8T-4136**	8	BOLT (M10X1.5X25-MM)	
M	**8T-4121**	8	WASHER-HARD (11X21X2.5-MM THK)	

M-METRIC PART
Y-SEPARATE ILLUSTRATION

<END>

242-6146 CONTROL AR-HYDRAULIC

S/N: B9M1-UP
AN ATTACHMENT

SMCS-5050 **i02309944**

NOTE	PART NUMBER	QTY	PART NAME 1 2 3 4 5 6 (PRODUCT LEVEL)	SEE PAGE
Y	*233-3147*	1	CONTROL GP-ELECTROHYDRAULIC (WITH AUXILIARY LEVER)	468
Y	*233-3144*	1	CONTROL GP-IMPLEMENT (RIPPER)	130
Y	*238-8828*	1	CONTROL GP-UNPROGRAMMED (ECM)	134
Y	*250-9259*	1	ELECTRONICS GP-IMPLEMENT (SOFTWARE ONLY)	138
Y	*231-1520*	1	LINES GP-HYDRAULIC (FRONT LIFT)	515
Y	*249-7299*	1	VALVE GP-BANK 5 (REAR)	591
Y	*249-7297*	1	VALVE GP-BANK 8 (FRONT)	605
Y	*233-4613*	1	WIRING GP-FRONT	231
M	**8T-4136**	8	BOLT (M10X1.5X25-MM)	
M	**8T-4121**	8	WASHER-HARD (11X21X2.5-MM THK)	

M-METRIC PART
Y-SEPARATE ILLUSTRATION

<END>

PROOF

HYDRAULIC SYSTEM

233-3147 CONTROL GP-ELECTROHYDRAULIC

S/N: B9M1-UP

PART OF 242-5063, 242-5064, 242-5066, 242-6107, 242-6109, 242-6110, 242-6111, 242-6112, 242-6146 CONTROL AR-HYDRAULIC AN ATTACHMENT

SMCS-5702, 5705 **i02185963**

NOTE	PART NUMBER	QTY	PART NAME 1 2 3 4 5 6 (PRODUCT LEVEL)	SEE PAGE
	238-8756	1	CONTROL GP-ELECTROHYDRAULIC (WITHOUT AUXILIARY LEVER) (JOYSTICK)	
	247-0737	1	CONTROL GP-JOYSTICK (OPERATOR STATION)	

<END>

PROOF

HYDRAULIC SYSTEM

233-3119 CONTROL GP-STEERING

S/N: B9M1-UP

AN ATTACHMENT

SMCS-4309, 4310, 4338, 4343 **i02277321**

NOTE	REF NO	GRAPHIC REF	PART NUMBER	QTY	PART NAME 1 2 3 4 5 6 (PRODUCT LEVEL)	SEE PAGE
	1	1	**8R-2916**	1	COVER AS (CAT, STEERING WHEEL)	
	2	1	**139-6039**	6	NUT (U-TYPE RETAINER)	
	3	1	**146-3793**	1	STEERING WHEEL	
	4	1	**171-3759**	1	SWITCH AS-LIMIT (STEERING COLUMN POSITION)	
	5	1	**241-4696**	1	PUMP GP-METERING (STEERING)	
	6	1	**244-2689**	1	BRACKET AS	
	7	1	**244-2690**	1	COVER (LOWER)	
	8	1	**244-2691**	1	COVER (MIDDLE)	
	9	1	**244-2692**	1	COVER (UPPER)	
	10	1	**245-5879**	1	STEERING COLUMN GP	
	11	1	**249-4087**	1	COVER (UPPER)	
	12	1	**250-2298**	1	LAMP-LED (24-VOLT, AMBER)	
	13	1	**250-2299**	1	LAMP-LED (24-VOLT, GREEN)	
	15	1	**254-5391**	1	BRACKET	
	16	1	**254-5392**	1	BRACKET	
	17	1	**261-4375**	1	FILM-STEERING (ENABLED)	
	18	1	**261-4376**	1	FILM-STEERING (DISABLE)	
M	19	1	**5C-9553**	6	BOLT (M6X1X16-MM)	
	20	1	**5P-1075**	4	WASHER-HARD (10.2X22.5X3-MM THK)	
M	21	1	**6V-9505**	2	SCREW-MACHINE (M6X1X20-MM)	
	22	1	**8T-2228**	12	WASHER-HARD (6.5X17X2-MM THK)	
M	24	1	**8T-4121**	6	WASHER-HARD (11X21X2.5-MM THK)	
M	25	1	**8T-4195**	6	BOLT (M10X1.5X30-MM)	
	26	1	**9B-7237**	4	BOLT (3/8-16X1.25-IN)	
M	27	1	**9X-2043**	10	SCREW-TRUSS HEAD (M6X1X14-MM)	
	28	1	**9X-8256**	6	WASHER (6.6X12X2-MM THK)	
	29	1	**225-3109**	2	SCREW-TRUSS HEAD	

M-METRIC PART

PROOF

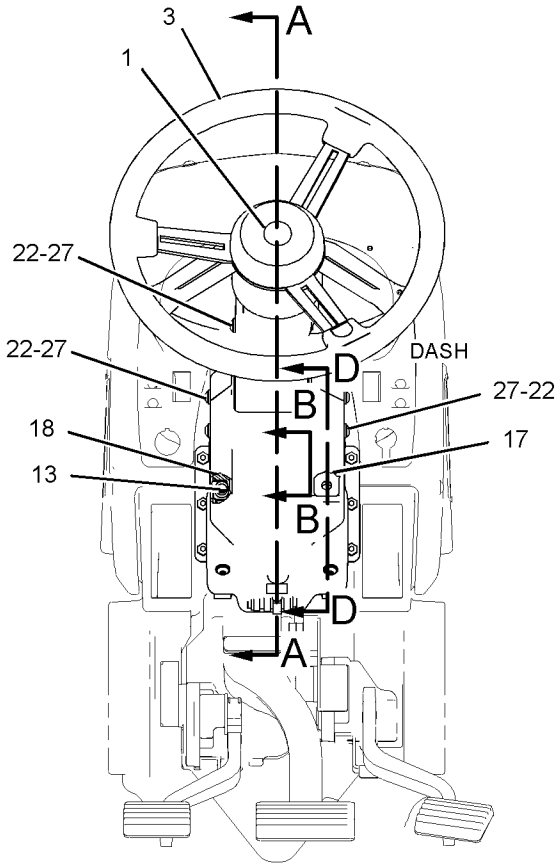

REAR VIEW

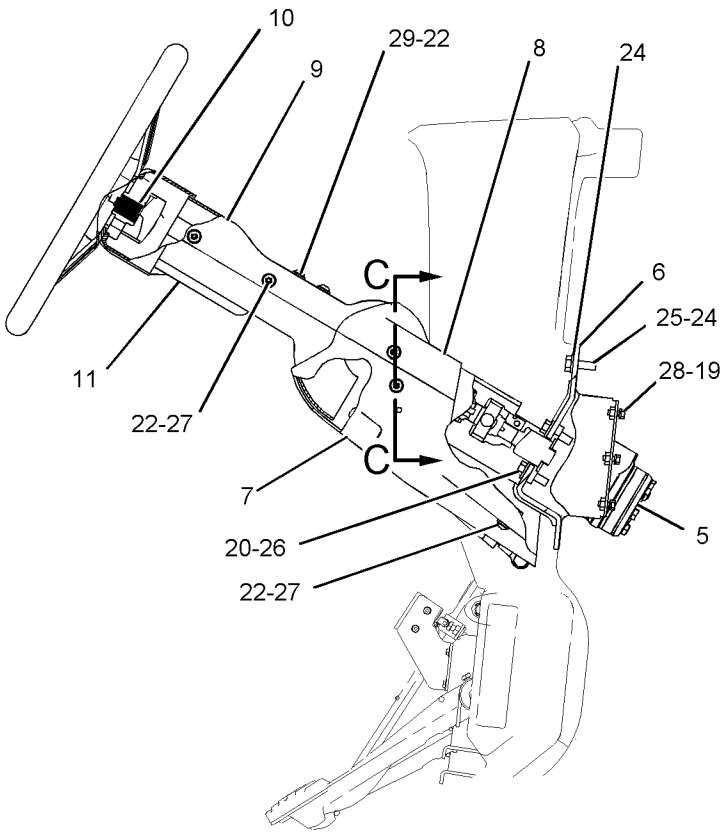

SECTION A-A

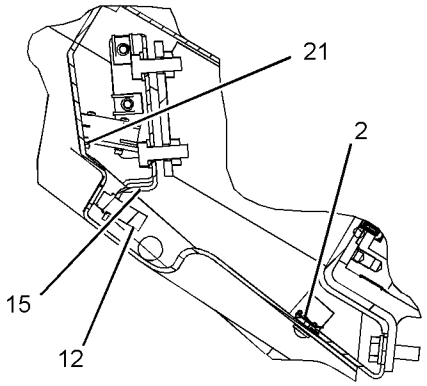

SECTION D-D

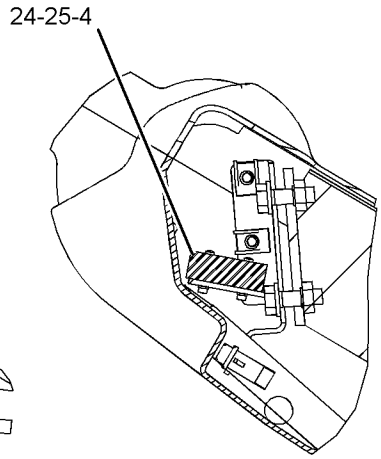

SECTION B-B

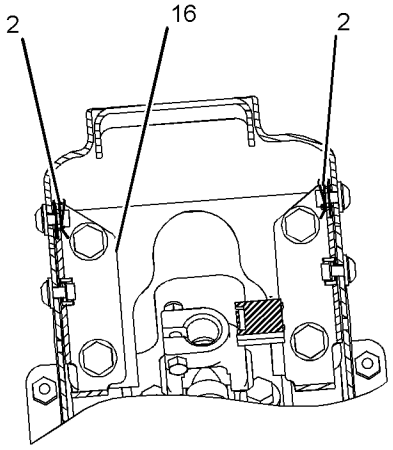

SECTION C-C

GRAPHIC #1 **<END>** g01140514

HYDRAULIC SYSTEM

241-8528 COOLER GP-HYDRAULIC OIL

S/N: B9M1-UP
PART OF 261-0153 AXLE AR-FRONT
AN ATTACHMENT

SMCS-1374 **i02295952**

NOTE	REF NO	GRAPHIC REF	PART NUMBER	QTY	PART NAME 1 2 3 4 5 6 (PRODUCT LEVEL)	SEE PAGE
I	1	1	**8X-9233**	1	HOSE AS	
Y	2	1	**130-9811**	1	SENSOR GP-TEMPERATURE (HYDRAULIC OIL)	190
	3	1	*188-2008*	1	ELBOW AS	
		1	**8T-7970**	1	ELBOW	
		1	**5K-9090**	1	SEAL-O-RING	
		1	**3D-2824**	1	SEAL-O-RING	
	4	1	**249-7814**	1	HINGE AS	
I	5	1	**253-1167**	1	HOSE AS	
	6	1	**266-1595**	1	VALVE GP-CHECK	
	7	1	**267-2776**	1	CORE AS-OIL COOLER (HYDRAULIC)	
	8	1	*148-8335*	2	CONNECTOR AS	
					(EACH INCLUDES)	
		1	**5K-9090**	1	SEAL-O-RING	
		1	**6V-8635**	1	CONNECTOR	
		1	**7M-8485**	1	SEAL-O-RING	
	9	1	*148-8357*	1	ELBOW AS	
		1	**5K-9090**	1	SEAL-O-RING	
		1	**6V-9008**	1	ELBOW	
		1	**7M-8485**	1	SEAL-O-RING	
	10	1	**3K-0360**	2	SEAL-O-RING	
M	11	1	**8T-4121**	12	WASHER-HARD (11X21X2.5-MM THK)	
M	12	1	**8T-4136**	4	BOLT (M10X1.5X25-MM)	
M	13	1	**8T-4195**	8	BOLT (M10X1.5X30-MM)	
	14	1	**9S-4185**	1	PLUG	

I-REFER TO HYDRAULIC INFORMATION SYSTEM
M-METRIC PART
Y-SEPARATE ILLUSTRATION

PROOF

241-8528 **COOLER GP-HYDRAULIC OIL** *(contd.)* **i02295952**

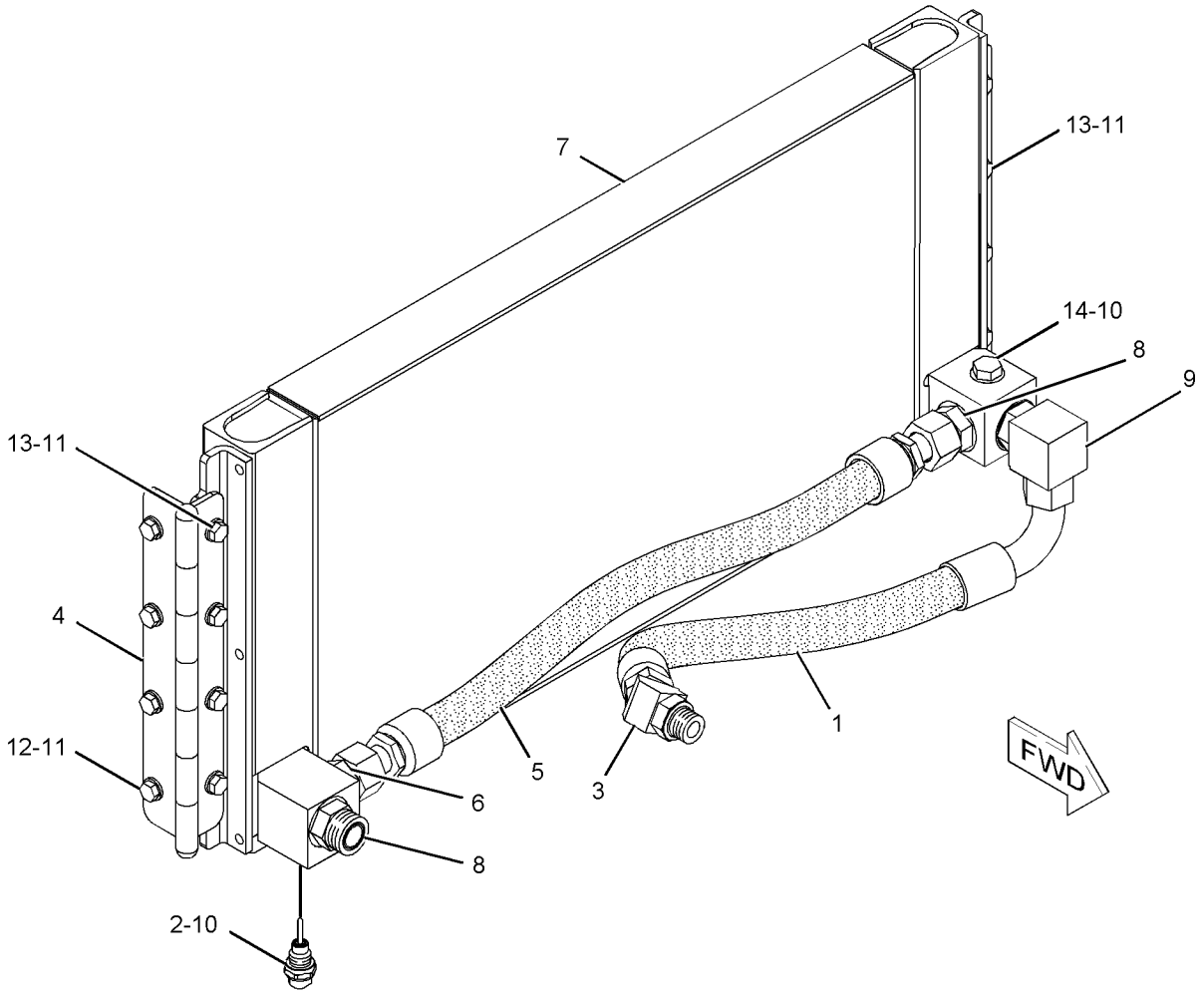

GRAPHIC #1 **<END>** g01150496

233-7721 CYLINDER & MTG GP-ARTICULATION

S/N: B9M1-UP

PART OF 234-7721 COMMON AR-MOTOR GRADER

SMCS-5265 **i02248351**

NOTE	REF NO	GRAPHIC REF	PART NUMBER	QTY	PART NAME 1 2 3 4 5 6 (PRODUCT LEVEL)	SEE PAGE
B	1	1	**2K-0420**	12	WASHER (1.766X3.5X0.032-IN THK)	
	2	1	**246-6047**	4	PIN AS	
Y	3	1	**247-0096**	2	CYLINDER GP-ARTICULATION	483
M	4	1	**6V-3668**	4	BOLT (M12X1.75X30-MM)	
	5	1	**7X-0622**	4	WASHER (13X24X2.5-MM THK)	

B-USE AS REQUIRED
M-METRIC PART
Y-SEPARATE ILLUSTRATION

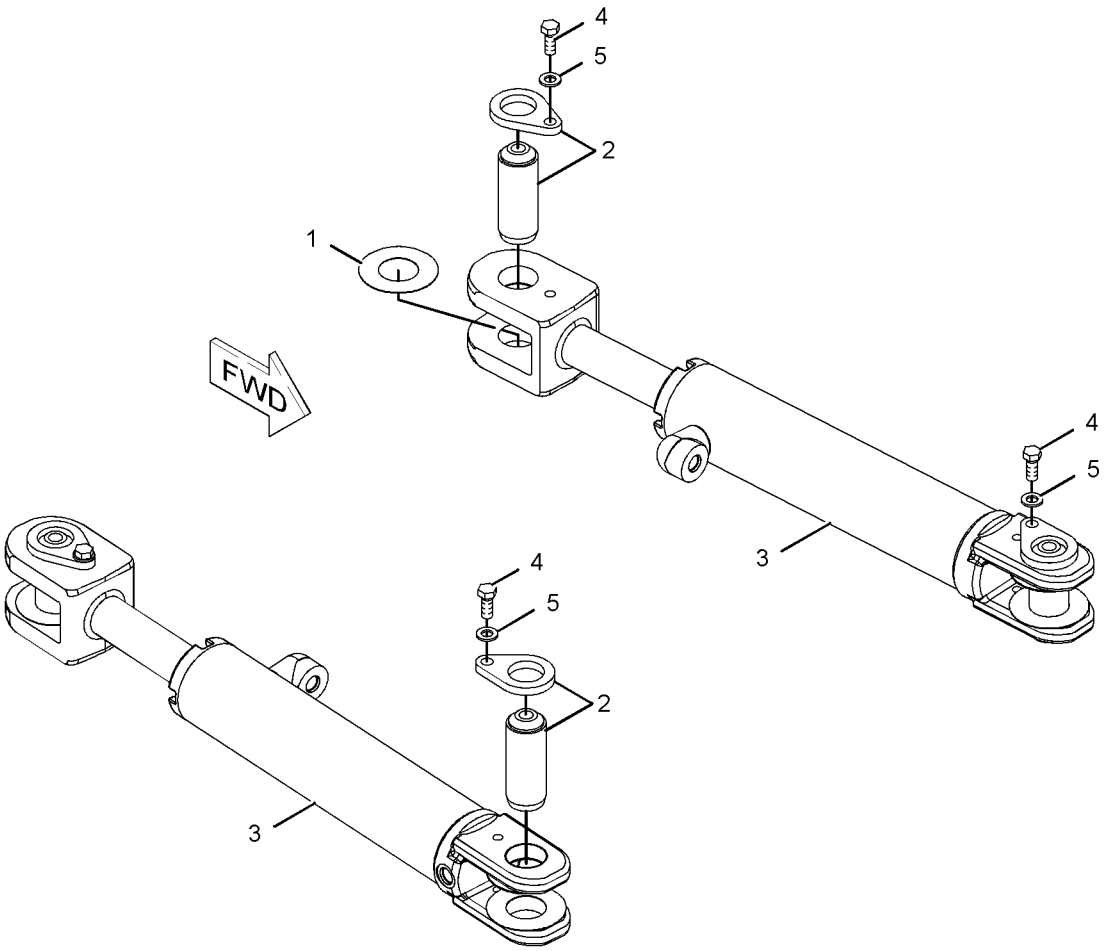

GRAPHIC #1 **<END>** g01134812

HYDRAULIC SYSTEM

263-2787 CYLINDER & MTG GP-BLADE LIFT

S/N: B9M1-UP

PART OF 234-7721 COMMON AR-MOTOR GRADER

SMCS-5102 **i02248700**

NOTE	REF NO	GRAPHIC REF	PART NUMBER	QTY	PART NAME 1 2 3 4 5 6 (PRODUCT LEVEL)	SEE PAGE
B	1	1	**2G-9103**	8	SHIM (0.5-MM THK)	
	2	1	**3B-8485**	2	FITTING-GREASE	
	3	1	**8W-2842**	4	CAP AS	
					(EACH INCLUDES)	
		1	**3P-1461**	1	SEAL-LIP TYPE	
		1	**8D-7996**	1	BEARING-SLEEVE	
	4	1	**8X-4741**	4	INSERT	
Y	5	1	**262-1900**	2	CYLINDER GP-LIFT (BLADE)	488
	6	1	**266-6149**	2	CAP	
M	7	1	**8T-0106**	8	BOLT (M12X1.75X100-MM)	
	8	1	**8T-4167**	4	WASHER-HARD (26X44X4-MM THK)	
	9	1	**8T-4223**	8	WASHER-HARD (13.5X25.5X3-MM THK)	
M	10	1	**8T-5878**	4	BOLT (M24X3X80-MM)	

B-USE AS REQUIRED
M-METRIC PART
Y-SEPARATE ILLUSTRATION

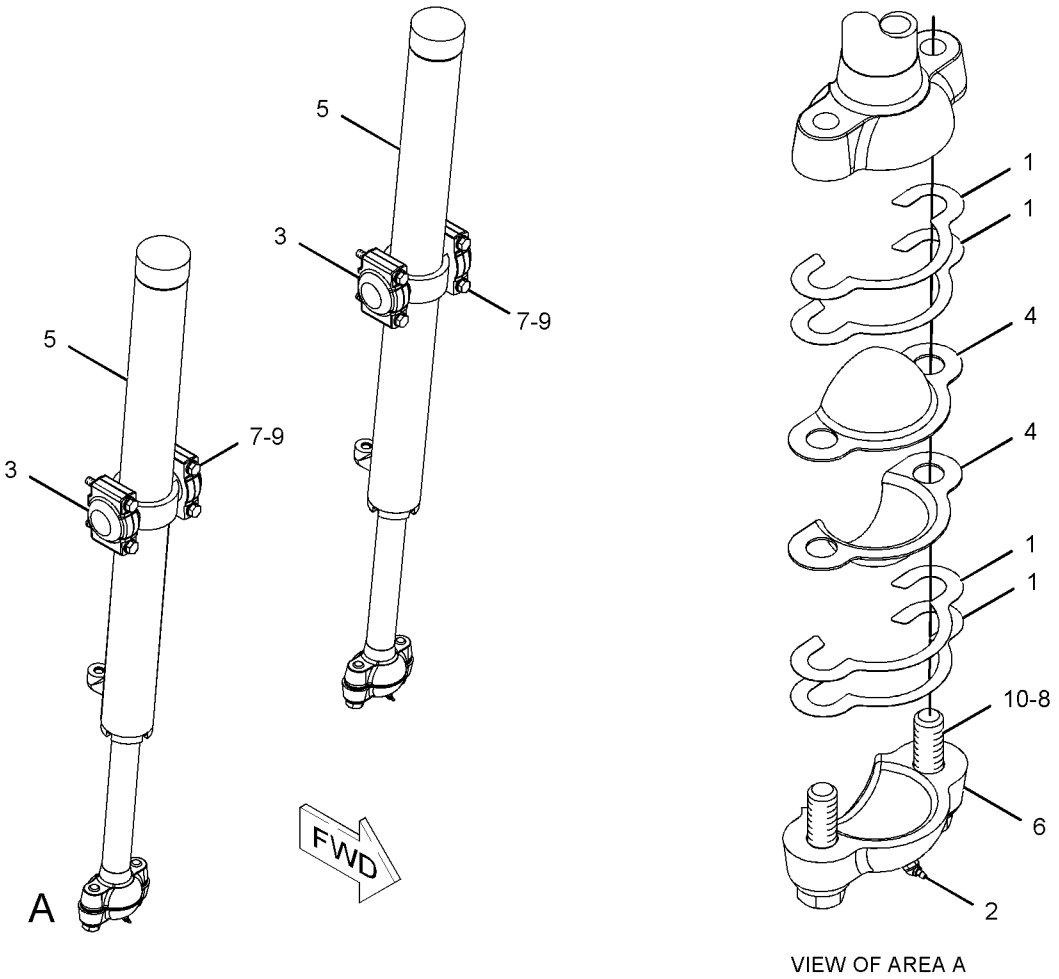

VIEW OF AREA A

GRAPHIC #1 **<END>** g01137476

HYDRAULIC SYSTEM

233-7723 CYLINDER & MTG GP-BLADE TIP

S/N: B9M1-UP

PART OF 234-7721 COMMON AR-MOTOR GRADER

SMCS-5106 **i02240318**

NOTE	REF NO	GRAPHIC REF	PART NUMBER	QTY	PART NAME 1 2 3 4 5 6 (PRODUCT LEVEL)	SEE PAGE
	1	1	**2G-3967**	2	SPACER (1.26X3X0.781-IN)	
	2	1	**8F-4102**	2	PLATE-SEAL	
Y	3	1	**131-7191**	1	CYLINDER GP-BLADE TIP	485
	4	1	**4J-1888**	1	PIN-COTTER	
	5	1	**8D-6687**	1	PIN	
	6	1	**8D-7678**	1	PIN	
M	7	1	**8T-4121**	1	WASHER-HARD (11X21X2.5-MM THK)	
M	8	1	**8T-4133**	1	NUT (M10X1.5-THD)	
M	9	1	**8T-4198**	1	BOLT (M10X1.5X100-MM)	

M-METRIC PART
Y-SEPARATE ILLUSTRATION

PROOF

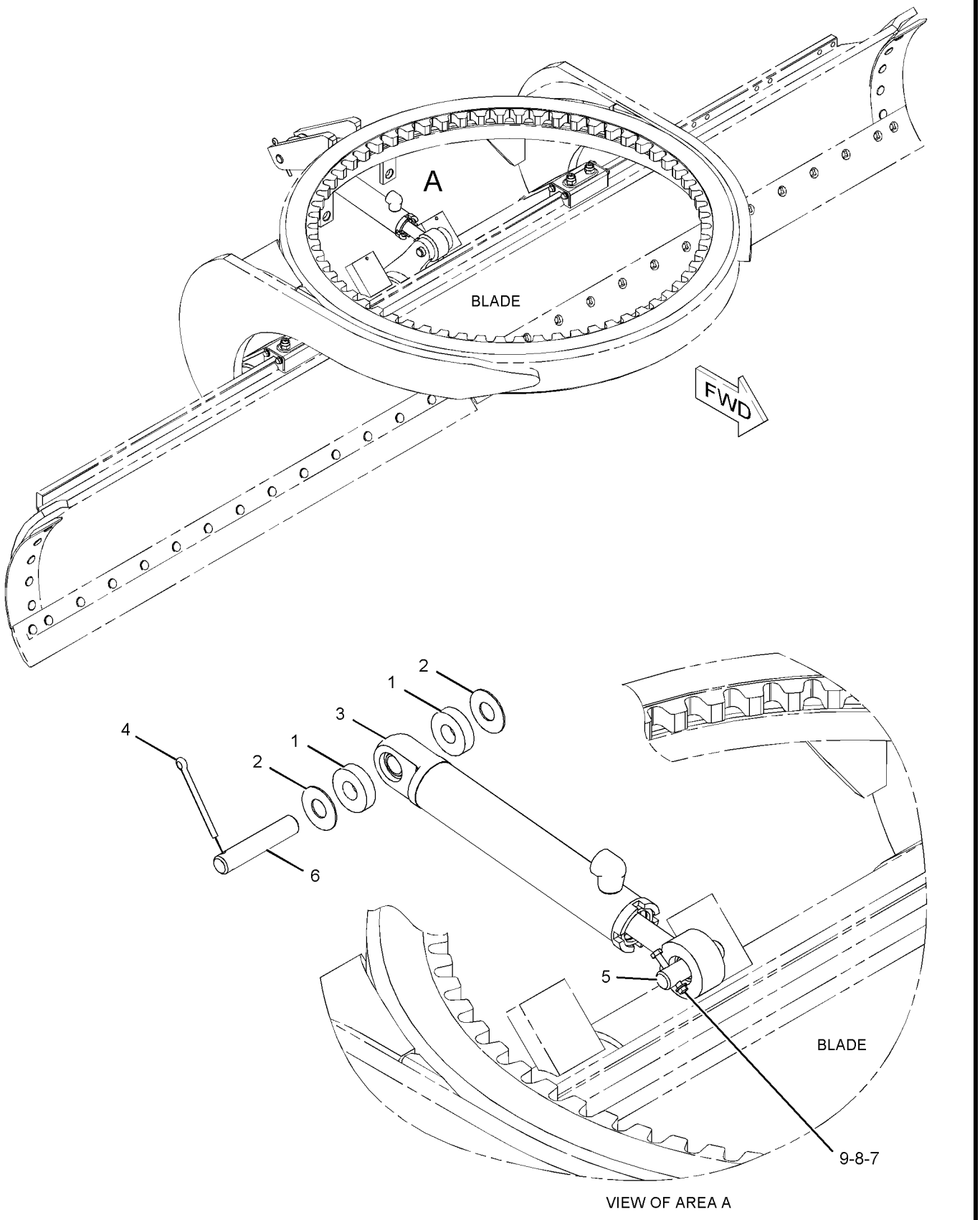

VIEW OF AREA A

GRAPHIC #1 **<END>** g01132329

263-2788 CYLINDER & MTG GP-CENTERSHIFT

S/N: B9M1-UP

PART OF 234-7721 COMMON AR-MOTOR GRADER

SMCS-5223 **i02248712**

NOTE	REF NO	GRAPHIC REF	PART NUMBER	QTY	PART NAME 1 2 3 4 5 6 (PRODUCT LEVEL)	SEE PAGE
B	1	1	**2G-9103**	8	SHIM (0.5-MM THK)	
	2	1	**3B-8485**	2	FITTING-GREASE	
	3	1	**8X-4741**	4	INSERT	
Y	4	1	**262-1907**	1	CYLINDER GP-CENTERSHIFT	486
	5	1	**266-6149**	2	CAP	
	6	1	**8T-4167**	4	WASHER-HARD (26X44X4-MM THK)	
M	7	1	**8T-5878**	4	BOLT (M24X3X80-MM)	

B-USE AS REQUIRED
M-METRIC PART
Y-SEPARATE ILLUSTRATION

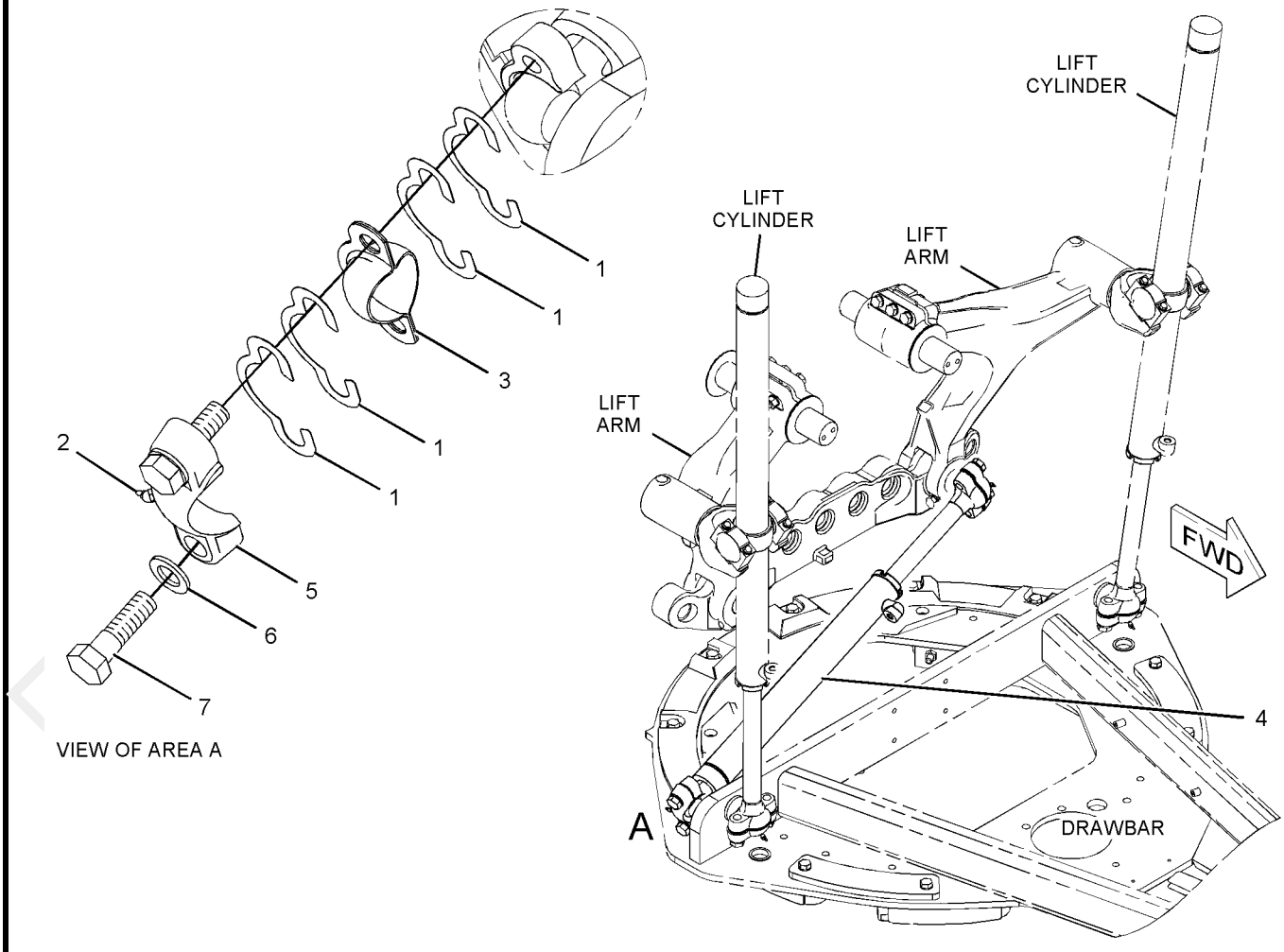

GRAPHIC #1 **<END>** g01139333

HYDRAULIC SYSTEM

8W-2913 CYLINDER & MTG GP-SCARIFIER

S/N: B9M1-UP
PART OF 108-1104, 113-0704 SCARIFIER AR
AN ATTACHMENT

SMCS-5213, 6165 **i01755896**

NOTE	REF NO	GRAPHIC REF	PART NUMBER	QTY	PART NAME 1 2 3 4 5 6 (PRODUCT LEVEL)	SEE PAGE
	1	1	**6G-7187**	2	LOCK	
	2	1	**7K-9202**	4	SEAL-LIP TYPE	
	3	1	**8D-7225**	2	PIN	
Y	4	1	**165-2510**	1	CYLINDER GP-SCARIFIER	491
	5	1	**0S-1621**	4	BOLT (1/2-13X1-IN)	
	6	1	**5P-8245**	4	WASHER-HARD (13.5X25.5X3-MM THK)	
	7	1	**8D-7086**	2	BEARING	

Y-SEPARATE ILLUSTRATION

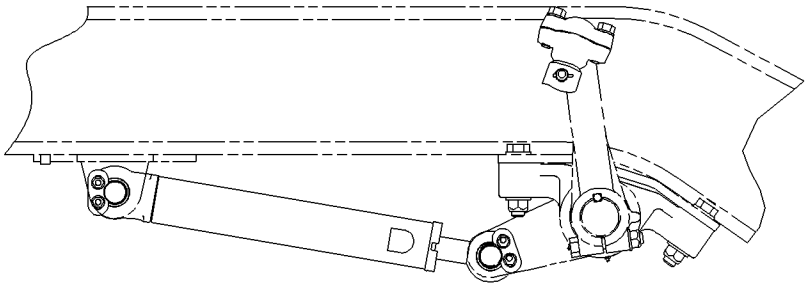

RIGHT SIDE VIEW

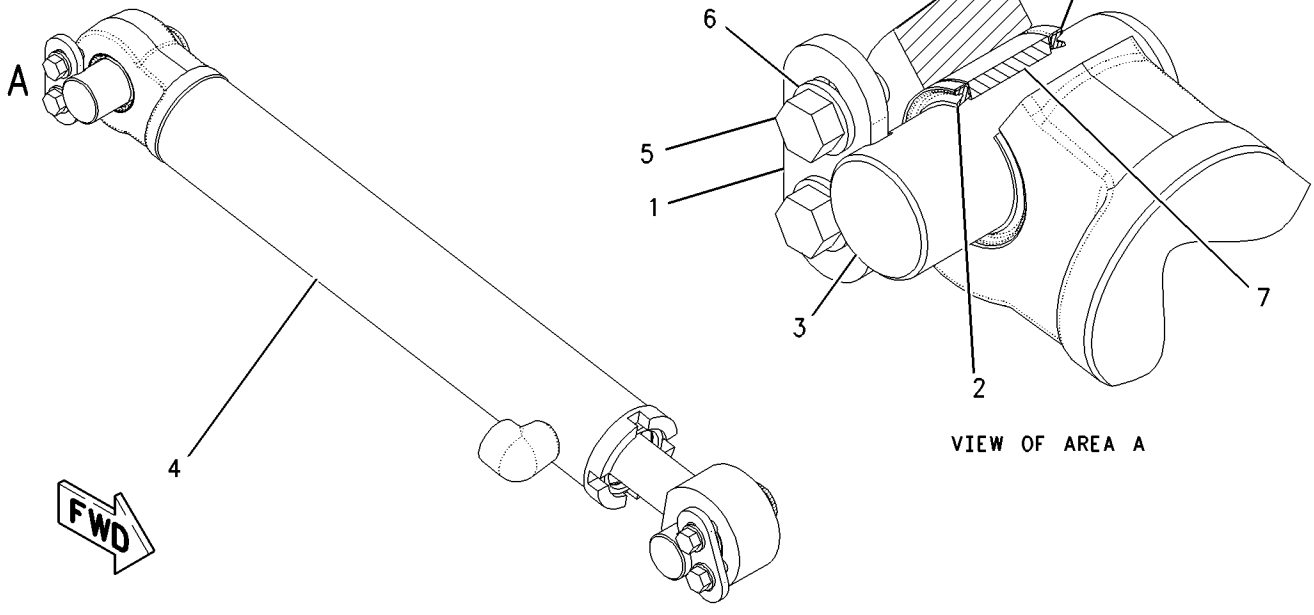

VIEW OF AREA A

GRAPHIC #1 **<END>** g00909948

246-6115 CYLINDER & MTG GP-SIDESHIFT

S/N: B9M1-UP

PART OF 234-7721 COMMON AR-MOTOR GRADER

SMCS-5229 **i02248633**

NOTE	REF NO	GRAPHIC REF	PART NUMBER	QTY	PART NAME 1 2 3 4 5 6 (PRODUCT LEVEL)	SEE PAGE
	1	1	**248-5627**	1	BRACKET	
Y	2	1	**249-4116**	1	CYLINDER GP-SIDESHIFT	492
	3	1	**249-5643**	1	PIN	
	4	1	**3B-4647**	2	PIN-COTTER	
	5	1	**5P-8248**	4	WASHER-HARD (20X36.5X3.5-MM THK)	
	6	1	**5T-8417**	1	PIN	
	7	1	**6H-0211**	6	WASHER (1.56X2.75X0.059-IN THK)	
	8	1	**8T-9399**	4	BOLT (3/4-10X2.25-IN)	

Y-SEPARATE ILLUSTRATION

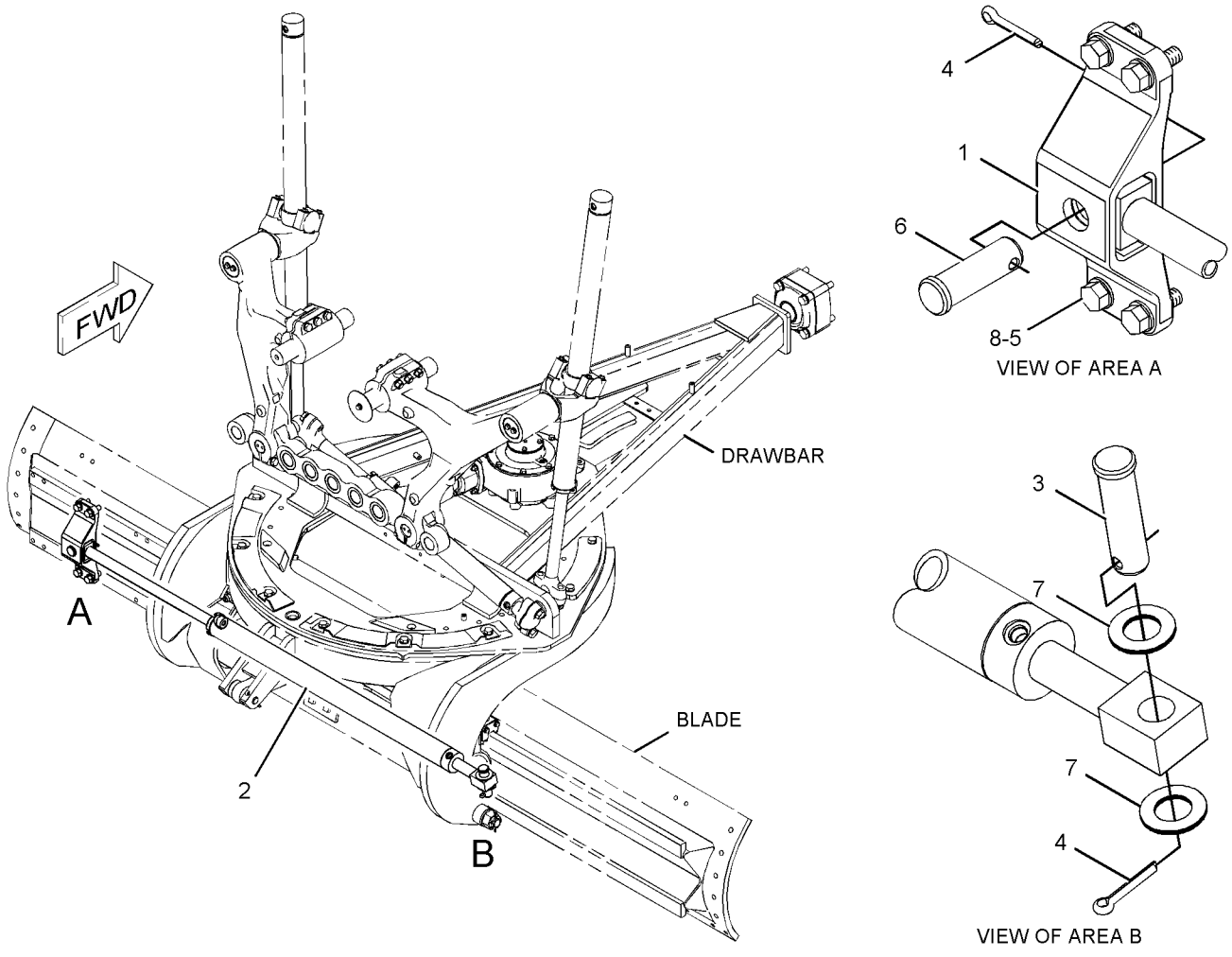

GRAPHIC #1 **<END>** g01134787

257-2294 CYLINDER & MTG GP-STEERING–

NON ALL WHEEL DRIVE
S/N: B9M1-UP
PART OF 260-7451 AXLE AR-FRONT
AN ATTACHMENT

SMCS-4303 **i02183780**

NOTE	REF NO	GRAPHIC REF	PART NUMBER	QTY	PART NAME 1 2 3 4 5 6 (PRODUCT LEVEL)	SEE PAGE
	1	1	**235-4137**	2	COVER	
	2	1	**249-3505**	2	RACE-BEARING	
Y	3	1	**255-8715**	2	CYLINDER GP-STEERING	493
	4	1	**257-2758**	2	PIN AS	
	5	1	**258-9981**	2	SPACER (32.16X38.1X8.65-MM THK)	
	6	1	**260-3793**	2	SEAL-BOOT	
	7	1	**260-6117**	2	BALL STUD	
	8	1	**1D-0906**	2	NUT-SLOTTED	
	9	1	**3B-4629**	2	PIN-COTTER	
	10	1	**3B-8489**	2	FITTING-GREASE	
	11	1	**3J-8500**	2	RING-RETAINING	
	12	1	**4F-8824**	2	SEAL-O-RING	
M	13	1	**8T-4121**	2	WASHER-HARD (11X21X2.5-MM THK)	
M	14	1	**8T-4137**	2	BOLT (M10X1.5X20-MM)	

M-METRIC PART
Y-SEPARATE ILLUSTRATION

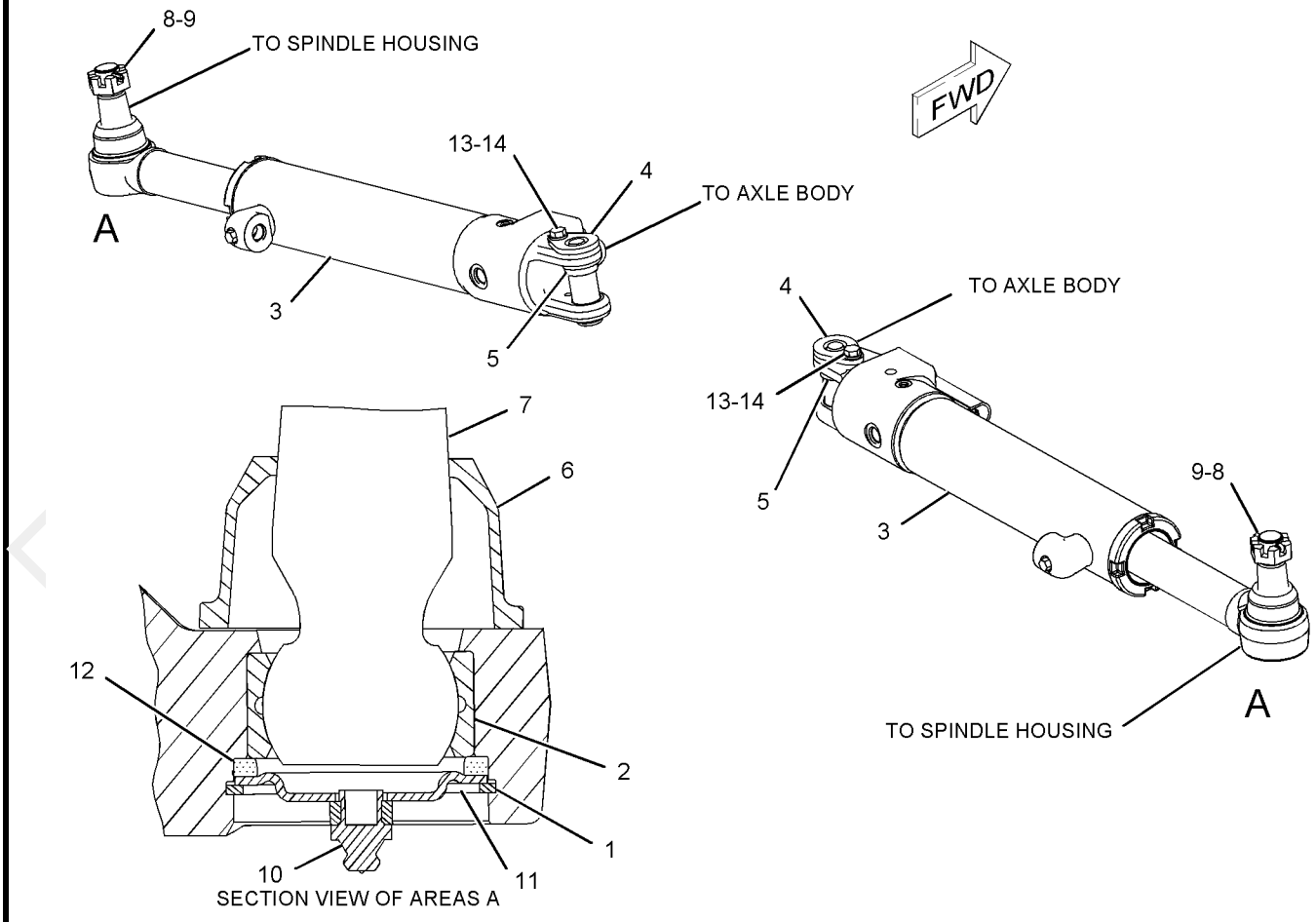

GRAPHIC #1 **<END>** g01109138

260-8709 CYLINDER & MTG GP-STEERING—ALL WHEEL DRIVE

S/N: B9M1-UP
PART OF 260-8696 AXLE AR-FRONT
AN ATTACHMENT

SMCS-4303 **i02249865**

NOTE	REF NO	GRAPHIC REF	PART NUMBER	QTY	PART NAME 1 2 3 4 5 6 (PRODUCT LEVEL)	SEE PAGE
	1	1	**3D-4904**	2	LOCKNUT (1-1/8-12-THD)	
	4	1	**257-2758**	2	PIN AS	
	5	1	**258-9981**	2	SPACER (32.16X38.1X8.65-MM THK)	
	6	1	**260-3793**	2	SEAL-BOOT	
	7	1	**260-6117**	2	BALL STUD	
Y	8	1	**262-5766**	2	CYLINDER GP-STEERING	495
	9	1	**3B-8489**	2	FITTING-GREASE	
	10	1	**3J-8500**	2	RING-RETAINING	
	11	1	**4F-8824**	2	SEAL-O-RING	
M	12	1	**8T-4121**	2	WASHER-HARD (11X21X2.5-MM THK)	
M	13	1	**8T-4137**	2	BOLT (M10X1.5X20-MM)	

M-METRIC PART
Y-SEPARATE ILLUSTRATION

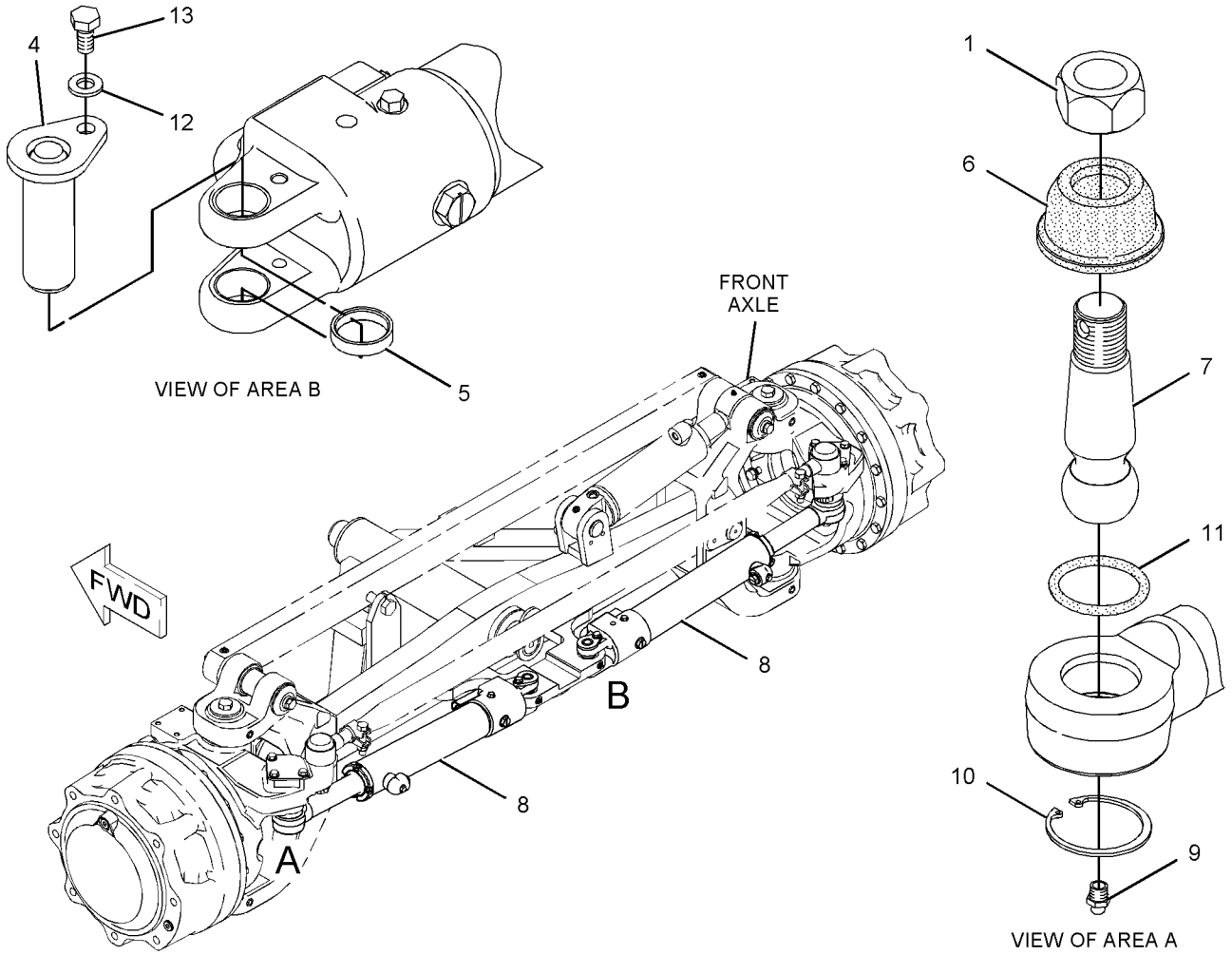

GRAPHIC #1 **<END>** g01135717

HYDRAULIC SYSTEM

260-8713 CYLINDER & MTG GP-WHEEL LEAN

S/N: B9M1-UP
PART OF 260-7453, 260-8698 AXLE GP-FRONT
AN ATTACHMENT

SMCS-5211 **i02234095**

NOTE	REF NO	GRAPHIC REF	PART NUMBER	QTY	PART NAME 1 2 3 4 5 6 (PRODUCT LEVEL)	SEE PAGE
	1	1	**264-9726**	1	PIN	
	2	1	**6G-7187**	1	LOCK	
	3	1	**7K-9202**	4	SEAL-LIP TYPE	
Y	4	1	**249-5299**	2	CYLINDER GP-WHEEL LEAN	497
	5	1	**3B-8489**	2	FITTING-GREASE	
	6	1	**5P-8245**	2	WASHER-HARD (13.5X25.5X3-MM THK)	
M	7	1	**6V-3668**	2	BOLT (M12X1.75X30-MM)	

M-METRIC PART
Y-SEPARATE ILLUSTRATION

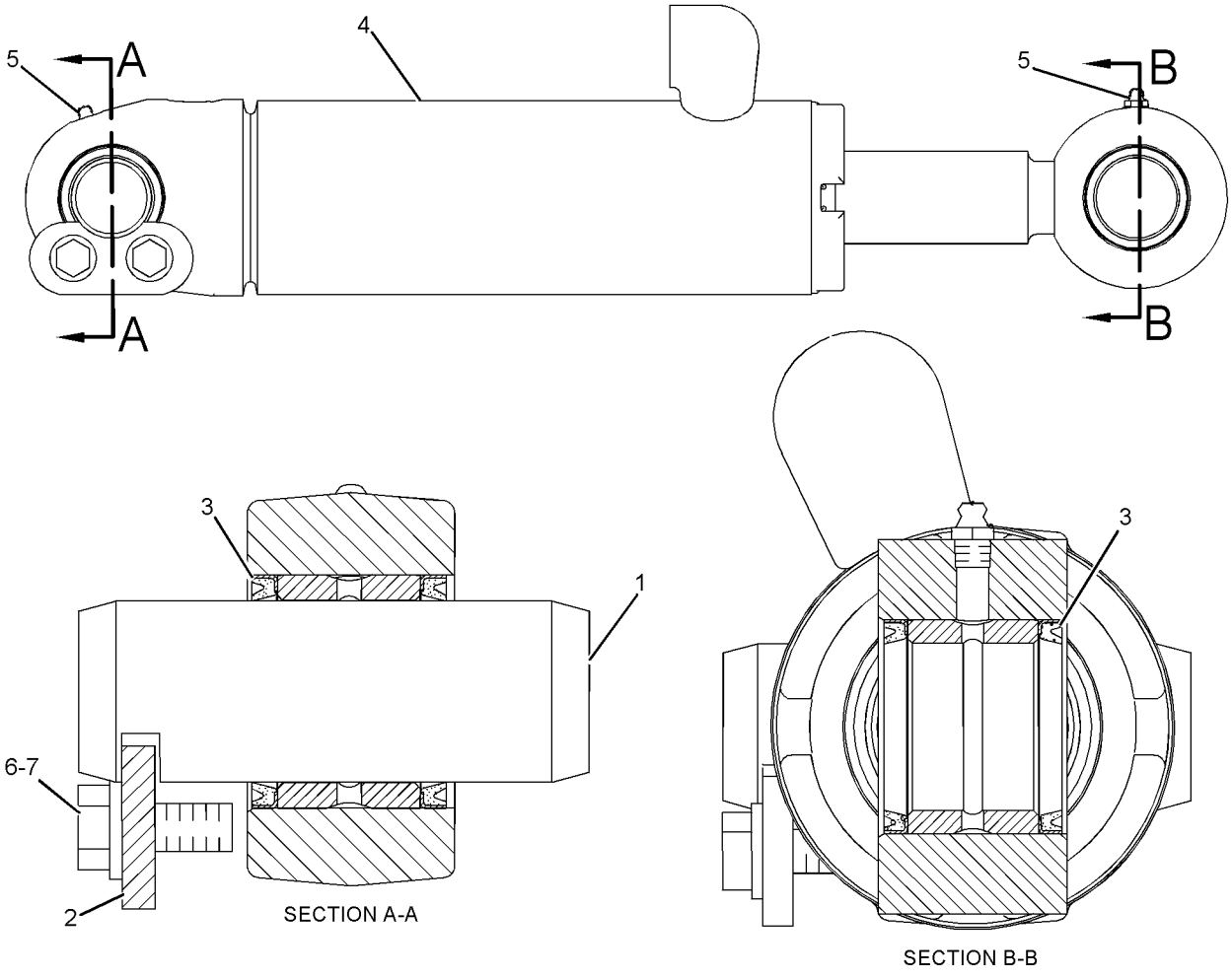

GRAPHIC #1 **<END>** g01112178

247-0096 CYLINDER GP-ARTICULATION

S/N: B9M1-UP

82.6-MM BORE X 282.3-MM STROKE

PART OF 233-7721 CYLINDER & MTG GP-ARTICULATION

SMCS-5265 **i02248376**

NOTE	REF NO	GRAPHIC REF	PART NUMBER	QTY	PART NAME 1 2 3 4 5 6 (PRODUCT LEVEL)	SEE PAGE
	1	1	**6E-0123**	1	HEAD	
		1	**227-1143**	1	SEAL-WIPER	
	2	1	**249-5300**	1	CYLINDER AS	
	3	1	**249-5303**	1	PISTON	
	4	1	**249-5304**	1	ROD AS	
		1	**249-5305**	1	YOKE	
		1	**249-5306**	1	ROD	
	5	1	**167-2192**	1	SEAL AS-BUFFER	
	6	1	**167-2302**	1	SEAL-U-CUP	
M	7	1	**173-9683**	1	BOLT (M30X3.5X90-MM)	
	8	1	**175-7897**	1	SEAL-O-RING	
	9	1	**227-1143**	1	SEAL-WIPER	
	10	1	**4T-6779**	1	RING	
	11	1	**6J-0793**	1	SEAL AS	
		1	**6J-0789**	1	RING-EXPANDER	
		1	**6J-0790**	1	SEAL	
	12	1	**6J-1381**	1	RING-BACKUP	
	13	1	**8J-6371**	1	RING-WEAR	
	14	1	**9X-8399**	1	WASHER (33X56X6-MM THK)	

M-METRIC PART

PROOF

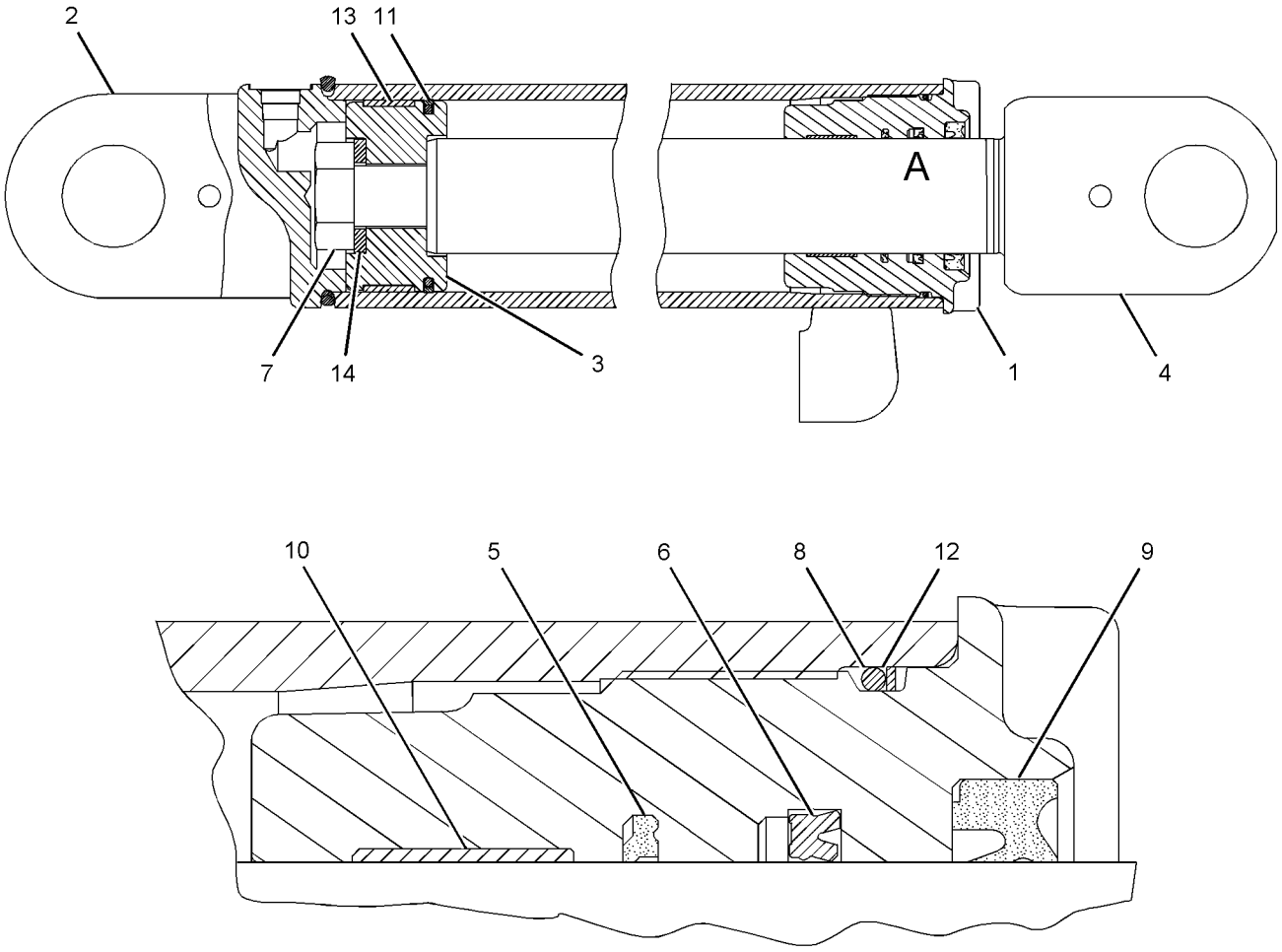

VIEW OF AREA A

GRAPHIC #1 **<END>** g01134839

HYDRAULIC SYSTEM

131-7191 CYLINDER GP-BLADE TIP

S/N: B9M1-UP
69.85 MM BORE X 307.00 MM STROKE
PART OF 233-7723 CYLINDER & MTG GP-BLADE TIP

SMCS-5106 **i02334052**

NOTE	REF NO	GRAPHIC REF	PART NUMBER	QTY	PART NAME 1 2 3 4 5 6 (PRODUCT LEVEL)	SEE PAGE
	1	1	**131-7194**	1	CYLINDER AS	
		1	**2D-8652**	1	BEARING	
M	2	1	**173-9685**	1	BOLT (M20X2.5X70-MM)	
	3	1	**8T-3282**	1	WASHER-HARD (22X35X3.5-MM THK)	
	4	1	**5J-7010**	1	SEAL AS	
	5	1	**8J-0112**	1	RING-WEAR	
	6	1	**9T-2457**	1	PISTON	
	7	1	**175-7895**	1	SEAL-O-RING	
	8	1	**4J-9225**	1	RING-BACKUP	
	9	1	**6E-4940**	1	HEAD	
	10	1	**131-7195**	1	ROD AS	
		1	**2D-8652**	1	BEARING	
	11	1	**4T-6780**	1	RING-WEAR	
	12	1	**167-2186**	1	SEAL AS-BUFFER	
	13	1	**167-2294**	1	SEAL-U-CUP	
	14	1	**226-8202**	1	SEAL-WIPER	

M-METRIC PART

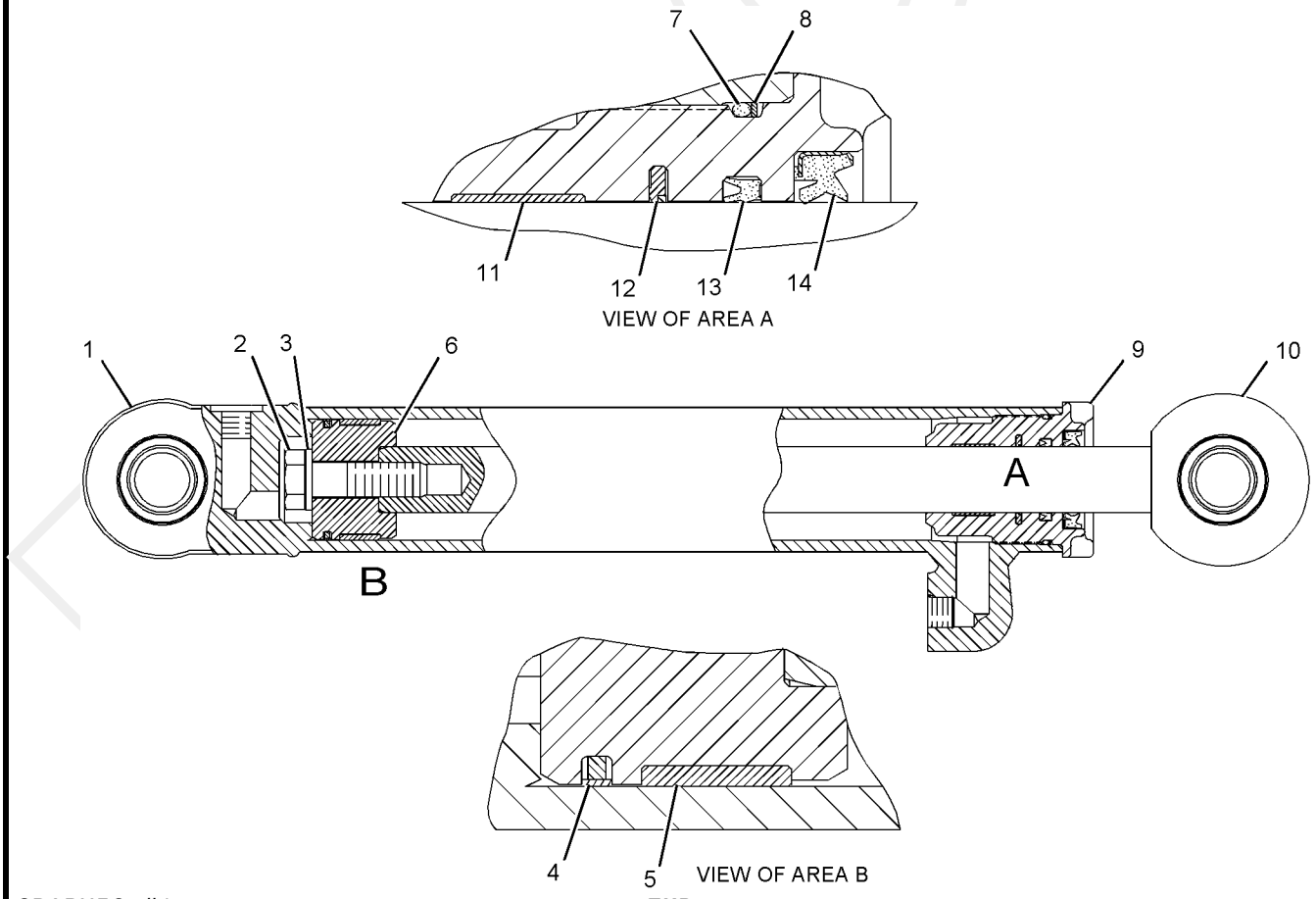

GRAPHIC #1

<END>

g01097877

262-1907 CYLINDER GP-CENTERSHIFT

S/N: B9M1-UP
76.2-MM BORE X 630-MM STROKE
PART OF 263-2788 CYLINDER & MTG GP-CENTERSHIFT

SMCS-5223 **i02248720**

NOTE	REF NO	GRAPHIC REF	PART NUMBER	QTY	PART NAME 1 2 3 4 5 6 (PRODUCT LEVEL)	SEE PAGE
	1	1	**6E-1131**	1	PISTON	
	2	1	**148-2593**	1	HEAD	
	3	1	**262-1920**	1	ROD AS	
	4	1	**262-1926**	1	CYLINDER AS	
	5	1	**167-2195**	1	SEAL AS-BUFFER	
	6	1	**167-2304**	1	SEAL-U-CUP	
M	7	1	**173-9683**	1	BOLT (M30X3.5X90-MM)	
	8	1	**175-7896**	1	SEAL-O-RING	
	9	1	**229-9382**	1	SEAL-WIPER	
	10	1	**3S-7023**	1	WASHER (34X57X6-MM THK)	
	11	1	**4T-5613**	1	RING-WEAR	
	12	1	**6J-1972**	1	SEAL AS	
	13	1	**6J-5731**	1	RING-BACKUP	
	14	1	**6J-5733**	1	RING-WEAR	

M-METRIC PART

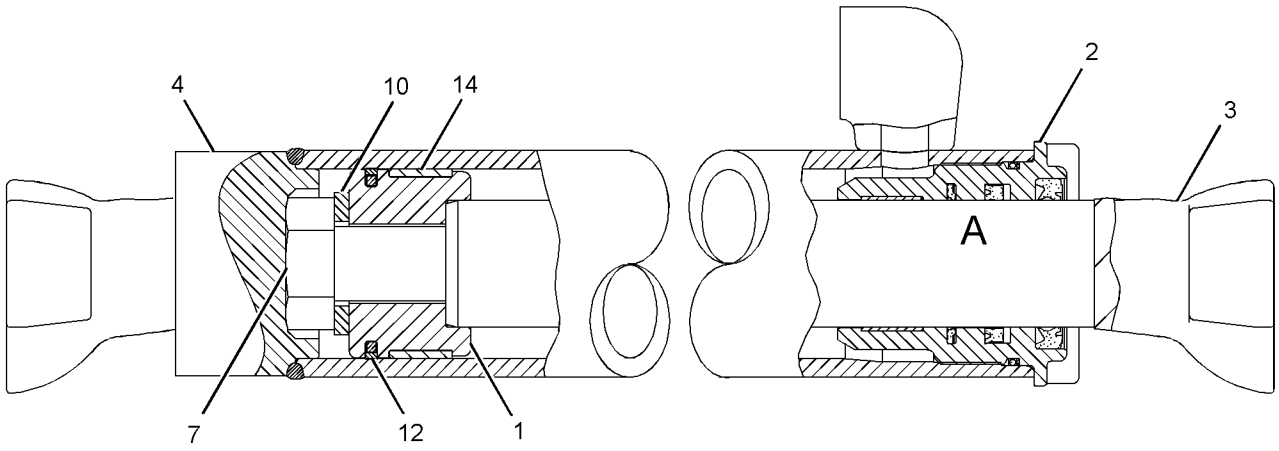

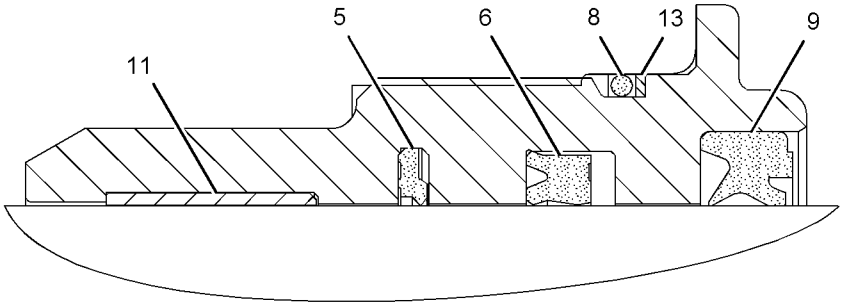

VIEW OF AREA A

GRAPHIC #1 **<END>** g01137549

163-0324 CYLINDER GP-HYDRAULIC–BULLDOZER

S/N: B9M1-UP
88.9MM BORE X 549MM STROKE
PART OF 143-7280, 201-1200, 213-6225 BLADE GP-BULLDOZER
AN ATTACHMENT

SMCS-7562 **i01972849**

NOTE	REF NO	GRAPHIC REF	PART NUMBER	QTY	PART NAME 1 2 3 4 5 6 (PRODUCT LEVEL)	SEE PAGE
R	1	1	**163-0325**	1	CYLINDER AS	
		1	**1K-6985**	2	RING-RETAINING	
		1	**9M-1328**	1	BEARING	
M	2	1	**173-9779**	1	BOLT (M24X3X80-MM)	
	3	1	**6V-8237**	1	WASHER (26X44X4-MM THK)	
	4	1	**163-0326**	1	PISTON	
	5	1	**175-7898**	1	SEAL-O-RING	
	6	1	**4J-9224**	1	RING-BACKUP	
	7	1	**163-0329**	1	HEAD	
R	8	1	**163-0327**	1	ROD AS	
		1	**1K-6985**	2	RING-RETAINING	
		1	**9M-1328**	1	BEARING	
	9	1	**7J-9885**	1	RING-WEAR	
	10	1	**4T-8054**	1	SEAL AS	
	11	1	**231-3539**	1	SEAL-WIPER	
	12	1	**167-2191**	1	SEAL AS-BUFFER	
	13	1	**167-2300**	1	SEAL-U-CUP	
	14	1	**4T-6907**	1	RING-WEAR	

M-METRIC PART
R-REMFG PART MAY BE AVAILABLE

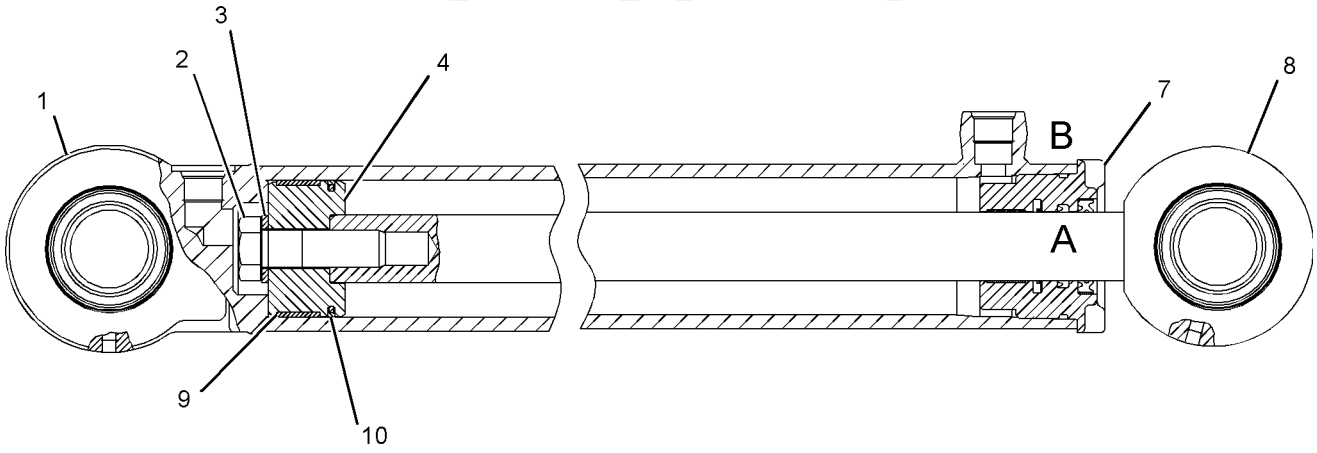

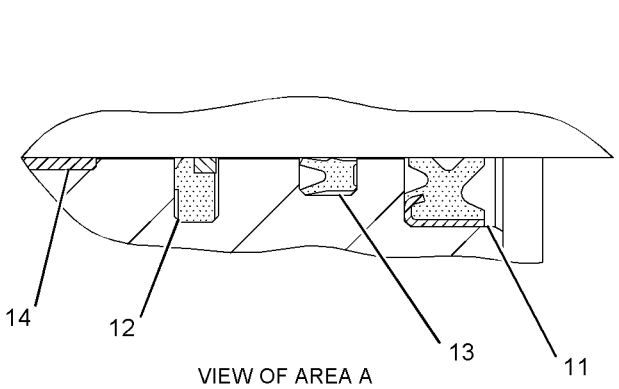

VIEW OF AREA A

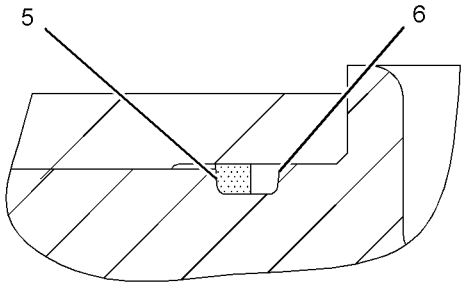

VIEW OF AREA B

GRAPHIC #1 **<END>** g01074172

HYDRAULIC SYSTEM

262-1900 CYLINDER GP-LIFT–BLADE

S/N: B9M1-UP
76.2-MM BORE X 1245-MM STROKE
PART OF 263-2787 CYLINDER & MTG GP-BLADE LIFT

SMCS-5102 **i02248704**

NOTE	REF NO	GRAPHIC REF	PART NUMBER	QTY	PART NAME 1 2 3 4 5 6 (PRODUCT LEVEL)	SEE PAGE
	1	1	**6E-1131**	1	PISTON	
R	2	1	**132-4928**	1	CYLINDER AS	
		1	**8J-6384**	2	BEARING-SLEEVE	
	3	1	**148-2593**	1	HEAD	
	4	1	**262-1919**	1	ROD AS	
	5	1	**167-2195**	1	SEAL AS-BUFFER	
	6	1	**167-2304**	1	SEAL-U-CUP	
M	7	1	**173-9683**	1	BOLT (M30X3.5X90-MM)	
	8	1	**175-7896**	1	SEAL-O-RING	
	9	1	**229-9382**	1	SEAL-WIPER	
	10	1	**3S-7023**	1	WASHER (34X57X6-MM THK)	
	11	1	**4T-5613**	1	RING-WEAR	
	12	1	**6J-1972**	1	SEAL AS	
	13	1	**6J-5731**	1	RING-BACKUP	
	14	1	**6J-5733**	1	RING-WEAR	

M-METRIC PART
R-REMFG PART MAY BE AVAILABLE

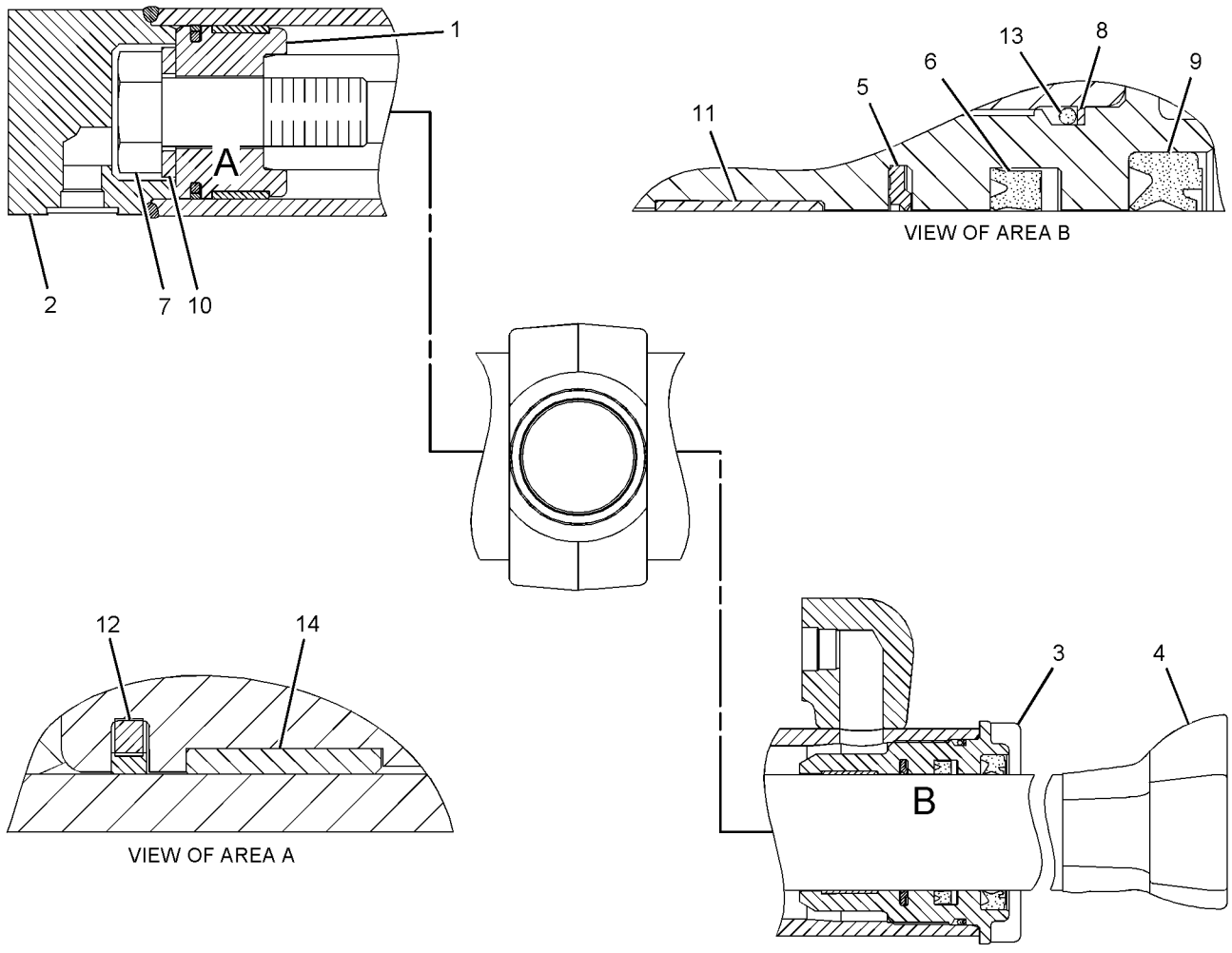

GRAPHIC #1 **<END>** g01139264

HYDRAULIC SYSTEM

113-7754 CYLINDER GP-RIPPER

S/N: B9M1-UP
101.6 MM BORE X 482.6 MM STROKE
PART OF 248-1322 RIPPER AR
AN ATTACHMENT

SMCS-5352, 5356 **i02348799**

NOTE	REF NO	GRAPHIC REF	PART NUMBER	QTY	PART NAME 1 2 3 4 5 6 (PRODUCT LEVEL)	SEE PAGE
R	1	1	**113-7755**	1	CYLINDER AS	
	1A	1	**8J-9911**	2	BEARING-SLEEVE	
		1	**9T-8958**	1	TRUNNION	
M	2	1	**173-9683**	1	BOLT (M30X3.5X90-MM)	
	3	1	**3S-7023**	1	WASHER (34X57X6-MM THK)	
J	4	1	**5J-5402**	1	SEAL AS	
J	5	1	**6J-2797**	1	RING-WEAR	
	6	1	**9T-3133**	1	PISTON	
R	7	1	**113-7756**	1	ROD AS	
	7A	1	**8J-9910**	1	BEARING-SLEEVE	
J	8	1	**175-7900**	1	SEAL-O-RING	
J	9	1	**2K-6830**	1	RING-BACKUP	
	10	1	**6E-0775**	1	HEAD	
JLN	11	1	**4T-5613**	1	RING-WEAR	
JLN	12	1	**167-2195**	1	SEAL AS-BUFFER	
JLN	13	1	**167-2304**	1	SEAL-U-CUP	
JLN	14	1	**229-9382**	1	SEAL-WIPER	
					AVAILABLE REPAIR KIT(S):	
J			**185-7688**	1	KIT-SEAL (RIPPER CYLINDER)	
					(INCLUDES SEAL-O-RING & BACKUP RING)	
L			**185-7690**	1	KIT-SEAL (RIPPER CYLINDER)	
					(INCLUDES SEAL AS, WEAR RING, HEAD SEAL, & SEAL)	
N			**185-7691**	1	KIT-SEAL (RIPPER CYLINDER)	
					(INCLUDES SEAL AS, WEAR RING, HEAD SEAL, & SEAL-O-RING)	

J-KIT MARKED J INCLUDES PARTS MARKED J
L-KIT MARKED L INCLUDES PARTS MARKED L
M-METRIC PART
N-KIT MARKED N INCLUDES PARTS MARKED N
R-REMFG PART MAY BE AVAILABLE

PROOF

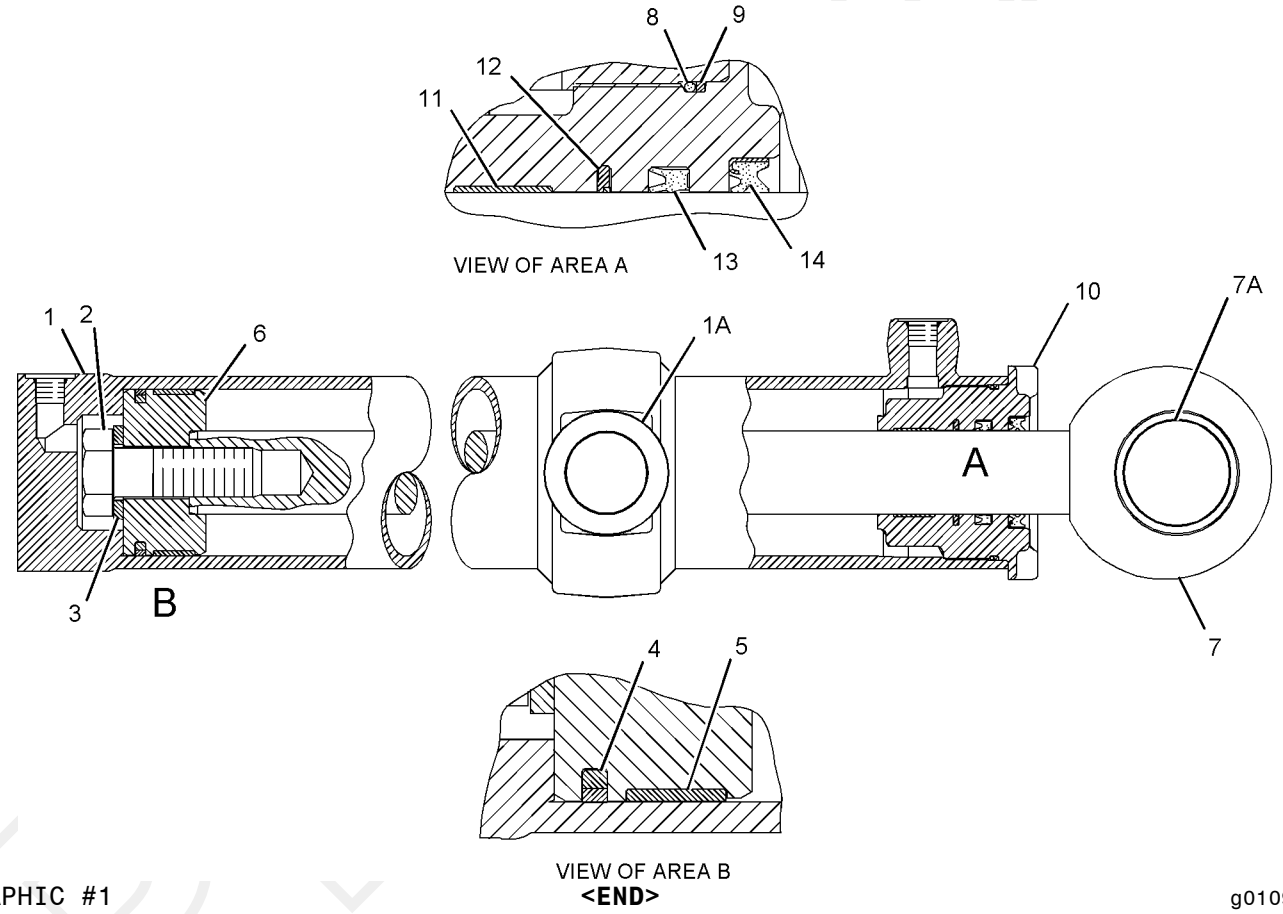

GRAPHIC #1

<END>

g01099854

165-2510 CYLINDER GP-SCARIFIER

S/N: B9M1-UP
76.2 MM BORE X 406.5 MM STROKE
PART OF 8W-2913 CYLINDER & MTG GP-SCARIFIER
AN ATTACHMENT

SMCS-5213 **i02334055**

NOTE	REF NO	GRAPHIC REF	PART NUMBER	QTY	PART NAME 1 2 3 4 5 6 (PRODUCT LEVEL)	SEE PAGE
	1	1	**9T-4211**	1	PISTON	
	2	1	**168-9108**	1	CYLINDER AS	
	3	1	**168-9110**	1	ROD AS	
	4	1	**184-9843**	1	HEAD	
	5	1	**167-2190**	1	SEAL AS-BUFFER	
	6	1	**167-2300**	1	SEAL-U-CUP	
	7	1	**231-3539**	1	SEAL-WIPER	
M	8	1	**173-9779**	1	BOLT (M24X3X80-MM)	
	9	1	**175-7896**	1	SEAL-O-RING	
	10	1	**4T-6907**	1	RING-WEAR	
	11	1	**6J-1972**	1	SEAL AS	
	12	1	**6J-5731**	1	RING-BACKUP	
	13	1	**6J-5733**	1	RING-WEAR	
	14	1	**6V-8237**	1	WASHER (26X44X4-MM THK)	

M-METRIC PART

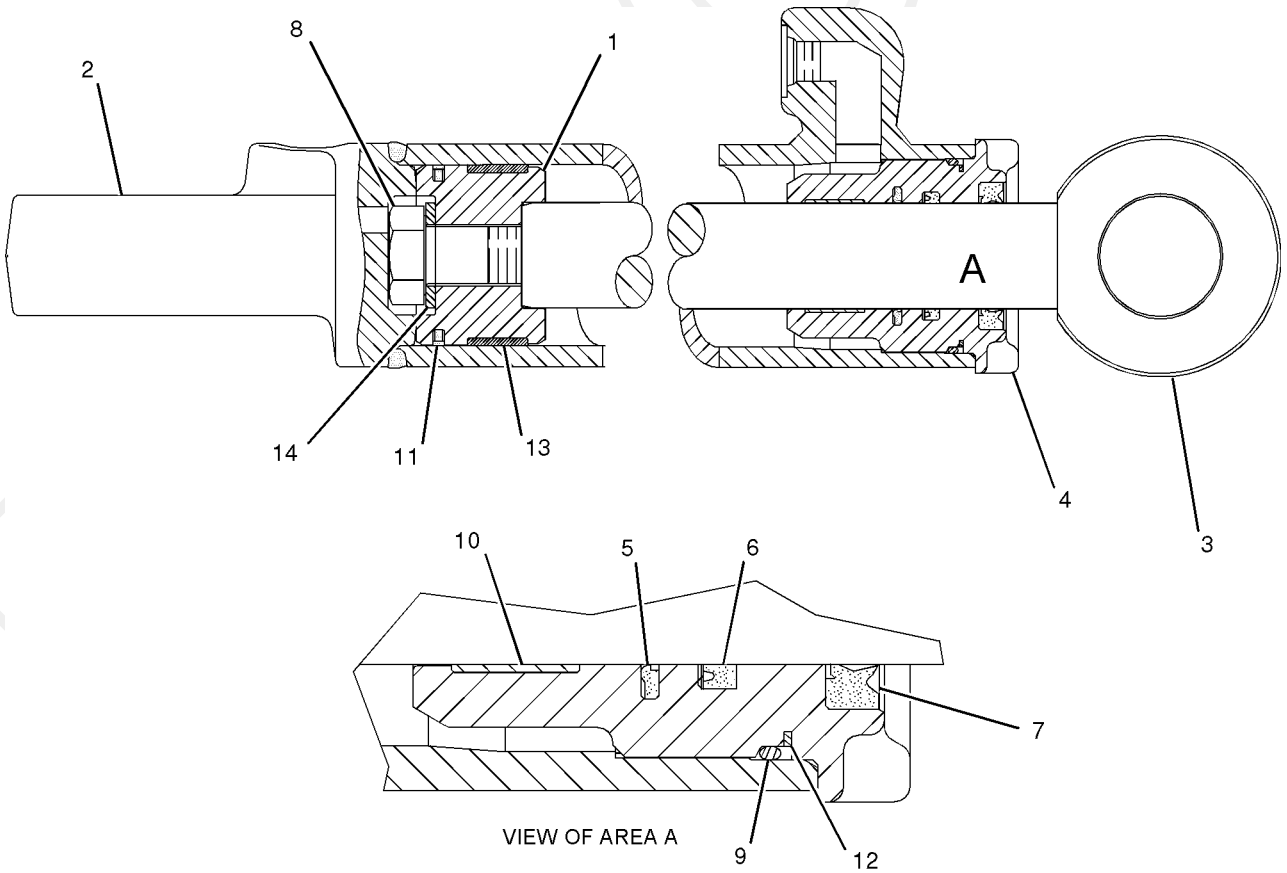

GRAPHIC #1 **<END>** g01045248

249-4116 CYLINDER GP-SIDESHIFT

S/N: B9M1-UP
76.2-MM BORE X 1175-MM STROKE
PART OF 246-6115 CYLINDER & MTG GP-SIDESHIFT

SMCS-5229 **i02248631**

NOTE	REF NO	GRAPHIC REF	PART NUMBER	QTY	PART NAME 1 2 3 4 5 6 (PRODUCT LEVEL)	SEE PAGE
	1	1	**249-4117**	1	CYLINDER AS	
M	2	1	**8T-0667**	1	BOLT (M24X3X100-MM)	
	3	1	**150-1280**	1	WASHER-HARD (26X44X22-MM THK)	
	4	1	**9T-4211**	1	PISTON	
	5	1	**175-7896**	1	SEAL-O-RING	
	6	1	**6J-5731**	1	RING-BACKUP	
	7	1	**249-4120**	1	ROD AS	
	8	1	**184-9843**	1	HEAD	
	9	1	**231-3539**	1	SEAL-WIPER	
	10	1	**167-2300**	1	SEAL-U-CUP	
	11	1	**167-2190**	1	SEAL AS-BUFFER	
	12	1	**4T-6907**	1	RING-WEAR	
	13	1	**6J-5733**	1	RING-WEAR	
	14	1	**6J-1972**	1	SEAL AS	

M-METRIC PART

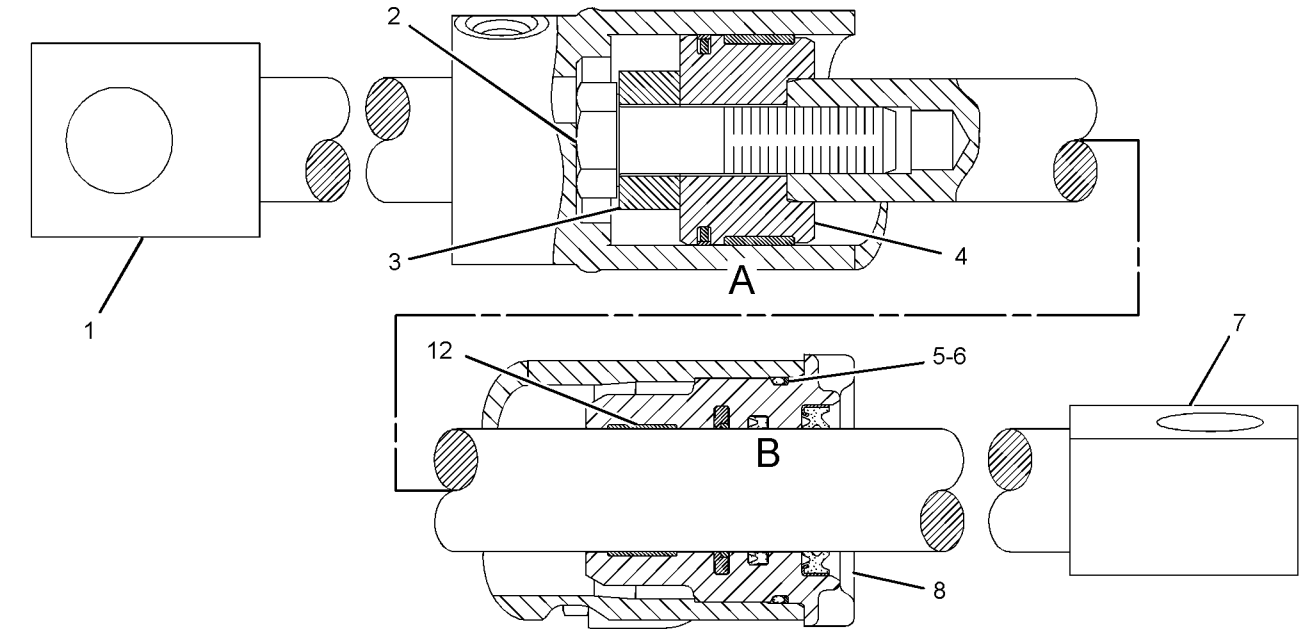

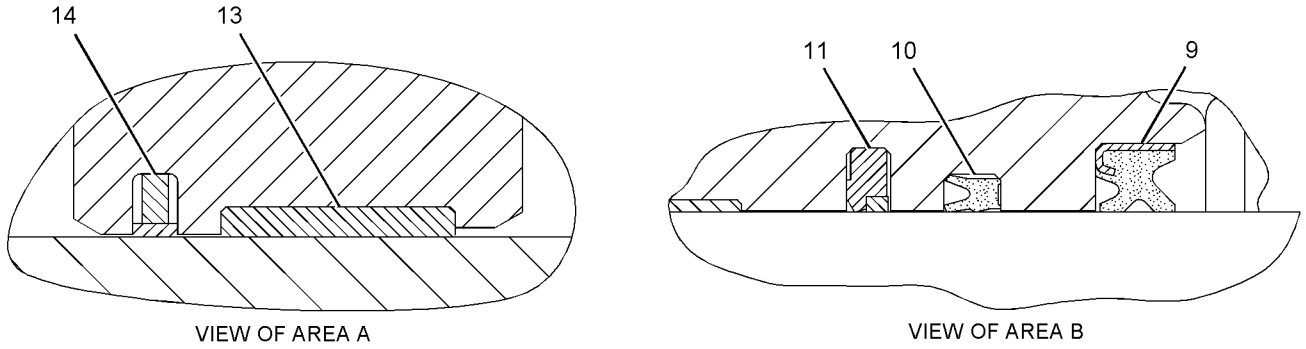

VIEW OF AREA A

VIEW OF AREA B

GRAPHIC #1 **<END>** g01139212

HYDRAULIC SYSTEM

255-8715 CYLINDER GP-STEERING

S/N: B9M1-UP
76.2MM BORE X 287.0MM STROKE
PART OF 257-2294 CYLINDER & MTG GP-STEERING
AN ATTACHMENT

SMCS-4303 **i02183783**

NOTE	REF NO	GRAPHIC REF	PART NUMBER	QTY	PART NAME 1 2 3 4 5 6 (PRODUCT LEVEL)	SEE PAGE
	1	1	**3E-3377**	1	WEDGE-RECEPTACLE LOCK (4-PIN)	
	2	1	**102-2244**	1	GROMMET	
	3	1	**151-7038**	1	HEAD	
	4	1	**212-0907**	1	PLATE-CONNECTOR	
	5	1	**214-6480**	1	PISTON	
	6	1	**217-3311**	1	MAGNET	
	7	1	**217-8763**	1	COVER-PROTECTION	
	8	1	**242-9514**	1	CARRIER	
	9	1	**242-9515**	1	RING-RETAINING	
	10	1	**248-8805**	1	ROD AS	
	11	1	**249-5193**	1	SENSOR GP-POSITION (STEERING CYLINDER)	
		1	**9X-3401**	3	PIN-CONNECTOR	
	12	1	**258-9864**	1	CYLINDER AS	
		1	**148-2592**	1	BOSS AS	
		1	**1N-5999**	1	PLUG	
		1	**7J-0204**	1	SEAL-O-RING	
	13	1	**167-2195**	1	SEAL AS-BUFFER	
	14	1	**167-2304**	1	SEAL-U-CUP	
	15	1	**188-2199**	1	SEAL-O-RING	
	16	1	**1H-7339**	1	SEAL-O-RING	
	17	1	**215-1942**	1	RING-BACKUP	
	18	1	**223-3353**	1	RING-WEAR	
	19	1	**229-9382**	1	SEAL-WIPER	
	20	1	**102-8804**	1	KIT-RECEPTACLE (4-PIN) (INCLUDES RECEPTACLE AS & WEDGE)	
	21	1	**3V-2431**	2	WASHER (10.2X16X2-MM THK)	
	22	1	**4S-5565**	2	BOLT	
	23	1	**4T-5613**	1	RING-WEAR	
	24	1	**5J-4561**	1	LOCKNUT (1-14-THD)	
	25	1	**6J-1972**	2	SEAL AS	
	27	1	**6J-5731**	1	RING-BACKUP	
	28	1	**8T-5070**	1	SETSCREW-SOCKET (3/8-16X0.5-IN)	
	29	1	**8T-8737**	1	PLUG-SEAL	
BE	30	1	**9X-1386**		SLEEVE	

B-USE AS REQUIRED
E-ORDER BY THE CENTIMETER

PROOF

255-8715 **CYLINDER GP-STEERING** *(contd.)* **i02183783**

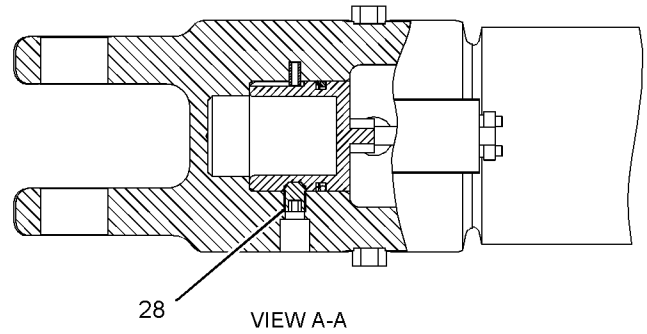

VIEW A-A

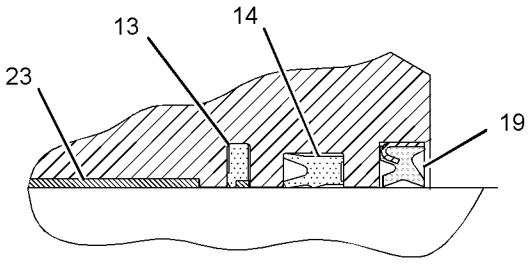

VIEW OF AREA B

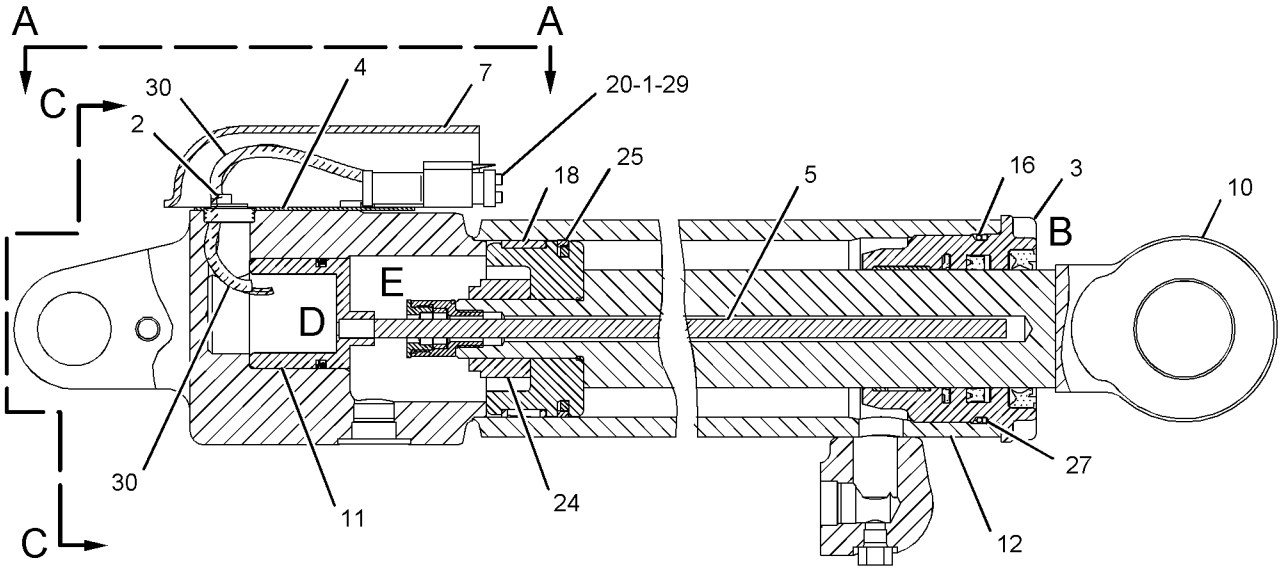

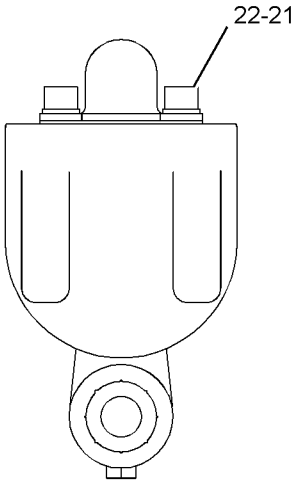

VIEW C-C

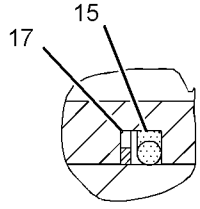

VIEW OF AREA D

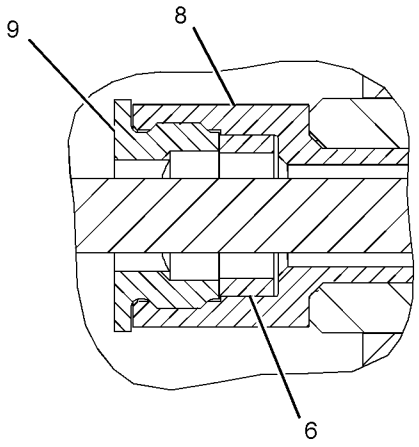

VIEW OF AREA E

GRAPHIC #1 **<END>** g01109003

262-5766 CYLINDER GP-STEERING—ALL WHEEL DRIVE

S/N: B9M1-UP
76.2-MM BORE X 305-MM STROKE
PART OF 260-8709 CYLINDER & MTG GP-STEERING
AN ATTACHMENT

SMCS-4303 **i02249869**

NOTE	REF NO	GRAPHIC REF	PART NUMBER	QTY	PART NAME 1 2 3 4 5 6 (PRODUCT LEVEL)	SEE PAGE
	1	1	**3E-3377**	1	WEDGE-RECEPTACLE LOCK (4-PIN)	
	2	1	**102-2244**	1	GROMMET	
	3	1	**151-7038**	1	HEAD	
	4	1	**212-0907**	1	PLATE-CONNECTOR	
	5	1	**214-6480**	1	PISTON	
	6	1	**217-3311**	1	MAGNET	
	7	1	**217-8763**	1	COVER-PROTECTION	
	8	1	**242-9514**	1	CARRIER	
	9	1	**242-9515**	1	RING-RETAINING	
	10	1	**262-5768**	1	CYLINDER AS	
		1	**148-2592**	1	BOSS AS	
		1	**260-1381**	1	CAP AS	
		1	**262-5771**	1	TUBE	
	11	1	**262-5769**	1	ROD AS	
		1	**248-8806**	1	EYE	
		1	**262-5770**	1	ROD	
	12	1	**167-2195**	1	SEAL AS-BUFFER	
	13	1	**167-2304**	1	SEAL-U-CUP	
	14	1	**188-2199**	1	SEAL-O-RING	
	15	1	**1H-7339**	1	SEAL-O-RING	
	16	1	**215-1942**	1	RING-BACKUP	
	17	1	**223-3353**	1	RING-WEAR	
	18	1	**229-9382**	1	SEAL-WIPER	
	19	1	**262-5906**	1	SENSOR GP-POSITION (STEERING CYLINDER)	
		1	**9X-3401**	3	PIN-CONNECTOR	
	20	1	**102-8804**	1	KIT-RECEPTACLE (4-PIN)	
					(INCLUDES RECEPTACLE AS & WEDGE)	
	21	1	**3V-2431**	2	WASHER (10.2X16X2-MM THK)	
	22	1	**4S-5565**	2	BOLT	
	23	1	**4T-5613**	1	RING-WEAR	
	24	1	**5J-4561**	1	LOCKNUT (1-14-THD)	
	25	1	*6J-1973*	1	RING-EXPANDER	
	26	1	*6J-1974*	1	SEAL	
	27	1	**6J-5731**	1	RING-BACKUP	
	28	1	**8T-5070**	1	SETSCREW-SOCKET (3/8-16X0.5-IN)	
	29	1	**8T-8737**	1	PLUG-SEAL	
E	30	1	**9X-1386**		SLEEVE (11.5-CM)	

E-ORDER BY THE CENTIMETER

PROOF

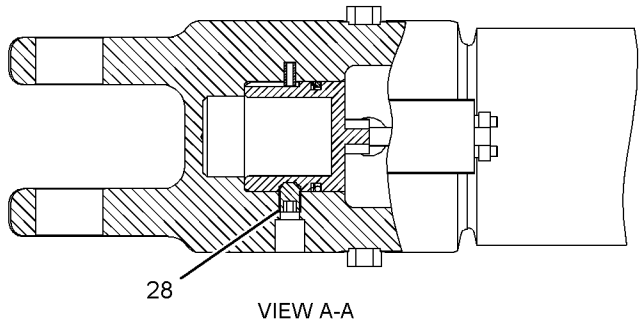

VIEW A-A

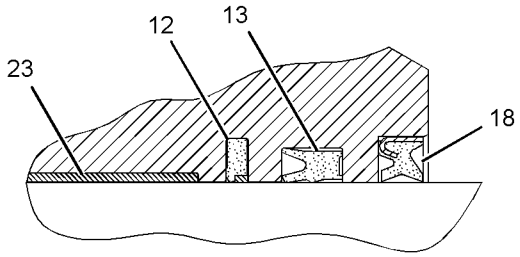

VIEW OF AREA B

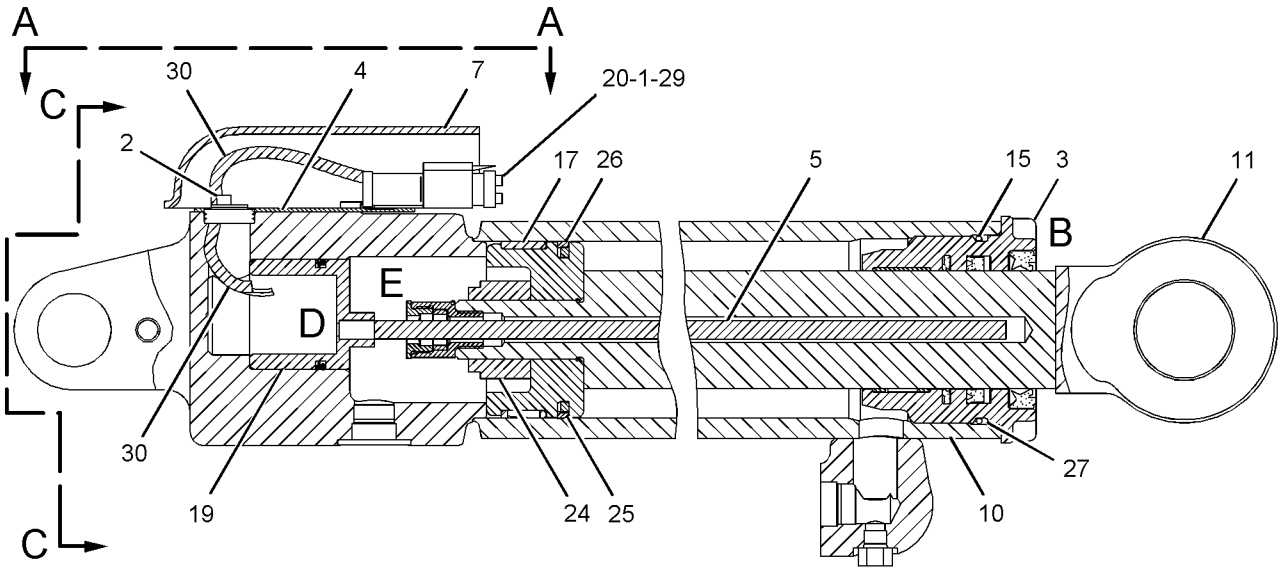

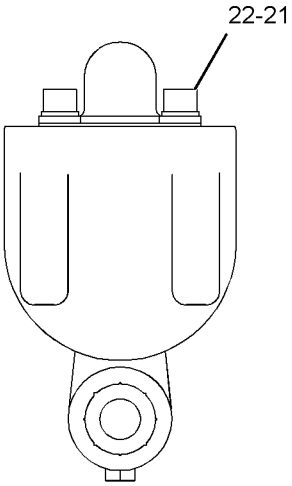

VIEW C-C

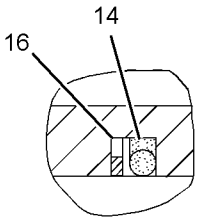

VIEW OF AREA D

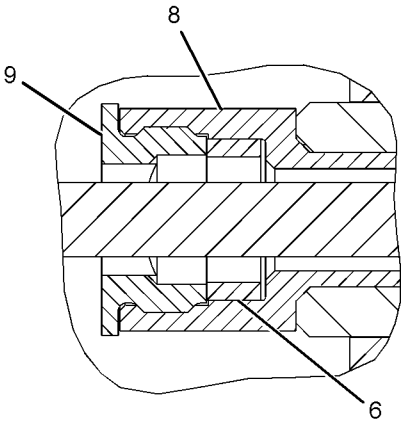

VIEW OF AREA E

GRAPHIC #1 **<END>** g01134464

249-5299 CYLINDER GP-WHEEL LEAN

S/N: B9M1-UP
88.9MM BORE X 149MM STROKE
PART OF 260-8713 CYLINDER & MTG GP-WHEEL LEAN
AN ATTACHMENT

SMCS-5211 **i02189514**

NOTE	REF NO	GRAPHIC REF	PART NUMBER	QTY	PART NAME 1 2 3 4 5 6 (PRODUCT LEVEL)	SEE PAGE
	1	1	**251-1550**	1	CYLINDER AS	
	1A	1	**2G-8631**	1	BEARING-SLEEVE	
M	2	1	**173-9683**	1	BOLT (M30X3.5X90-MM)	
	3	1	**9X-8399**	1	WASHER (33X56X6-MM THK)	
	4	1	**5J-7013**	1	SEAL AS	
		1	**5J-7011**	1	SEAL	
	5	1	**7J-9885**	1	RING-WEAR	
	6	1	**9T-9040**	1	PISTON	
	7	1	**175-7898**	1	SEAL-O-RING	
	8	1	**4J-9224**	1	RING-BACKUP	
	9	1	**6E-4974**	1	HEAD	
		1	**229-9382**	1	SEAL-WIPER	
	10	1	**121-9245**	1	ROD AS	
	10A	1	**2G-8631**	1	BEARING-SLEEVE	
	11	1	**229-9382**	1	SEAL-WIPER	
	12	1	**167-2304**	1	SEAL-U-CUP	
	13	1	**167-2195**	1	SEAL AS-BUFFER	
	14	1	**4T-5613**	1	RING-WEAR	

M-METRIC PART

PROOF

249-5299 **CYLINDER GP-WHEEL LEAN** *(contd.)* **i02189514**

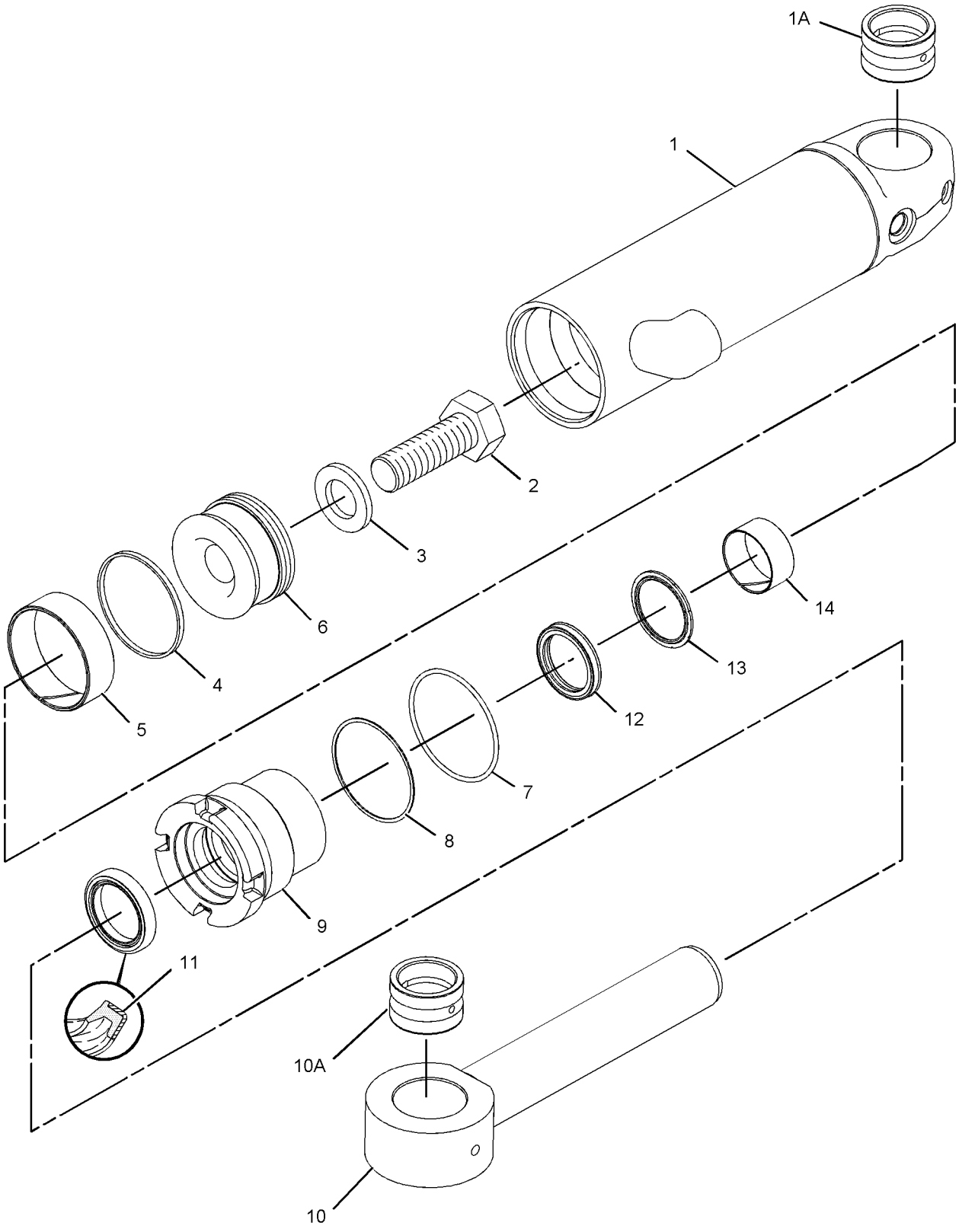

GRAPHIC #1 **<END>** g01111067

HYDRAULIC SYSTEM

253-4677 DRIVE GP-CIRCLE

S/N: B9M1-UP

PART OF 234-7721 COMMON AR-MOTOR GRADER

SMCS-5207 **i02248423**

NOTE	REF NO	GRAPHIC REF	PART NUMBER	QTY	PART NAME 1 2 3 4 5 6 (PRODUCT LEVEL)	SEE PAGE
	1	2	**1B-4038**	2	CUP-BEARING	
	2	2	**1B-4046**	2	CONE-BEARING	
	3	1	**2G-0478**	5	PLATE	
	4	2	**2G-6695**	1	BRACKET	
R	5	1	**5K-5288**	1	SEAL GP-DUO-CONE	
		1	**5K-5129**	2	RING-SEALING	
	6	1	**6G-5532**	1	SHAFT-DRIVE PINION	
	7	1	**6G-5533**	1	GEAR-WORM (36-TEETH)	
	8	1	**6G-5534**	1	COVER AS	
		1	**6G-5537**	1	BEARING	
	9	1	**6G-5538**	1	COVER	
	10	1	**6G-5542**	2	SPACER (119.2X178X9.3-MM THK)	
B	11	1	**6G-5543**	6	SHIM (0.13-MM THK)	
B	12	1	**6G-5544**	9	SHIM (0.25-MM THK)	
	13	1	**6G-5547**	1	PLATE	
	14	1	**6G-6122**	1	SPRING-DISC	
	15	1	**6Y-7953**	6	DISC-FRICTION	
B	16	2	**7D-8983**	10	SHIM (0.127-MM THK)	
B	17	2	**7D-8984**	6	SHIM (0.178-MM THK)	
	18	1	**8D-7423**	1	LOCK-NUT	
	19	1	**8D-7424**	1	SPACER (48X81X0.25-MM THK)	
	20	1	**8T-0336**	1	FITTING-PRESSURE RELIEF	
	21	1	**8W-5092**	1	PINION-CIRCLE DRIVE	
	22	2	**9D-1142**	1	WORM-CIRCLE DRIVE	
	23	2	**9D-1491**	1	COUPLING	
Y	24	2	**105-3196**	1	MOTOR GP-GEROTOR	572
	25	1	**253-4678**	1	HOUSING AS-DRIVE	
	26	1,2	**0S-1585**	7	BOLT (1/2-13X1.5-IN)	
	27	1	**198-4769**	2	WASHER (22X40X10-MM THK)	
	28	1	**1A-1415**	1	NUT (23/4X17/8-THD)	
	29	1	**1B-5174**	1	PLUG-PIPE	
	30	2	**1F-7958**	4	NUT-FULL (1/2-13-THD)	
	31	2	**1H-7339**	1	SEAL-O-RING	
	32	1	**2B-7410**	1	PLUG-PIPE (OIL DRAIN)	
	33	2	**2H-9247**	1	SEAL-O-RING	
	34	1	**4F-9653**	1	SEAL-O-RING	
	35	2	**4H-6996**	1	PIN-SPRING	
	36	1	**5H-4909**	1	SEAL-O-RING	
	37	1	**5K-8454**	3	BOLT (1/2-13X1.12-IN)	
	38	1,2	**5P-8245**	19	WASHER-HARD (13.5X25.5X3-MM THK)	
	39	1	**5S-7379**	4	BOLT (3/8-16X0.875-IN)	
	40	1	**6G-5539**	1	GASKET	
	41	1	**6G-5548**	1	SPACER (69.5X89X0.8-MM THK)	
	42	1	**6H-1717**	5	BOLT (1/2-13X1.125-IN)	
M	43	1	**6V-3669**	2	BOLT (M20X2.5X80-MM)	
M	44	1	**6V-7742**	4	NUT-FULL (M20X2.5-THD)	
	45	1	**8D-7425**	2	WASHER-THRUST	
	46	1	**8T-3282**	4	WASHER-HARD (22X35X3.5-MM THK)	
	47	1	**8T-4896**	4	WASHER-HARD (10.2X18.5X2.5-MM THK)	

B-USE AS REQUIRED
M-METRIC PART
R-REMFG PART MAY BE AVAILABLE
Y-SEPARATE ILLUSTRATION

PROOF

253-4677 **DRIVE GP-CIRCLE** *(contd.)* **i02248423**

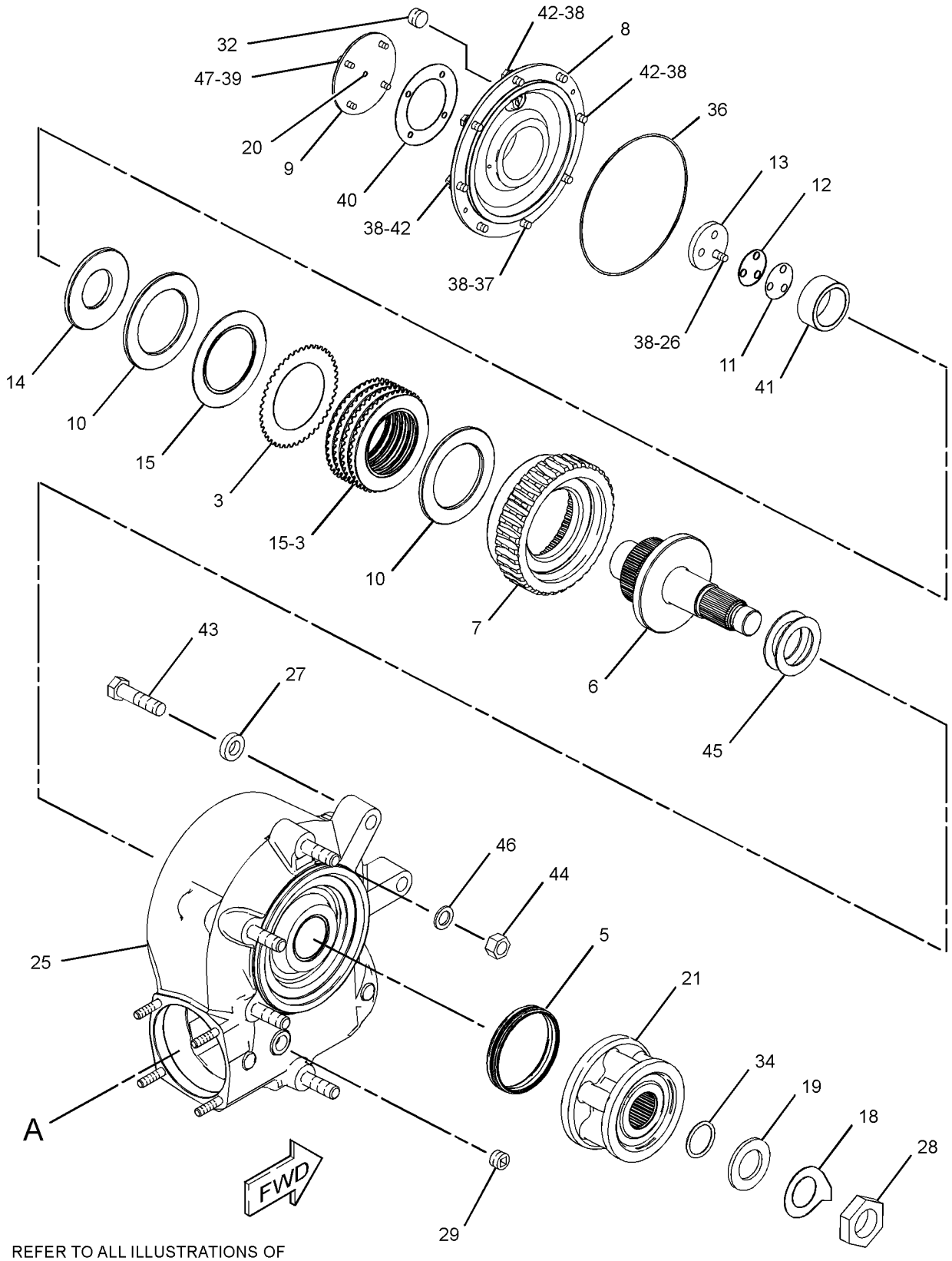

REFER TO ALL ILLUSTRATIONS OF
THIS GROUP FOR AUXILIARY VIEWS

GRAPHIC #1 g01156757

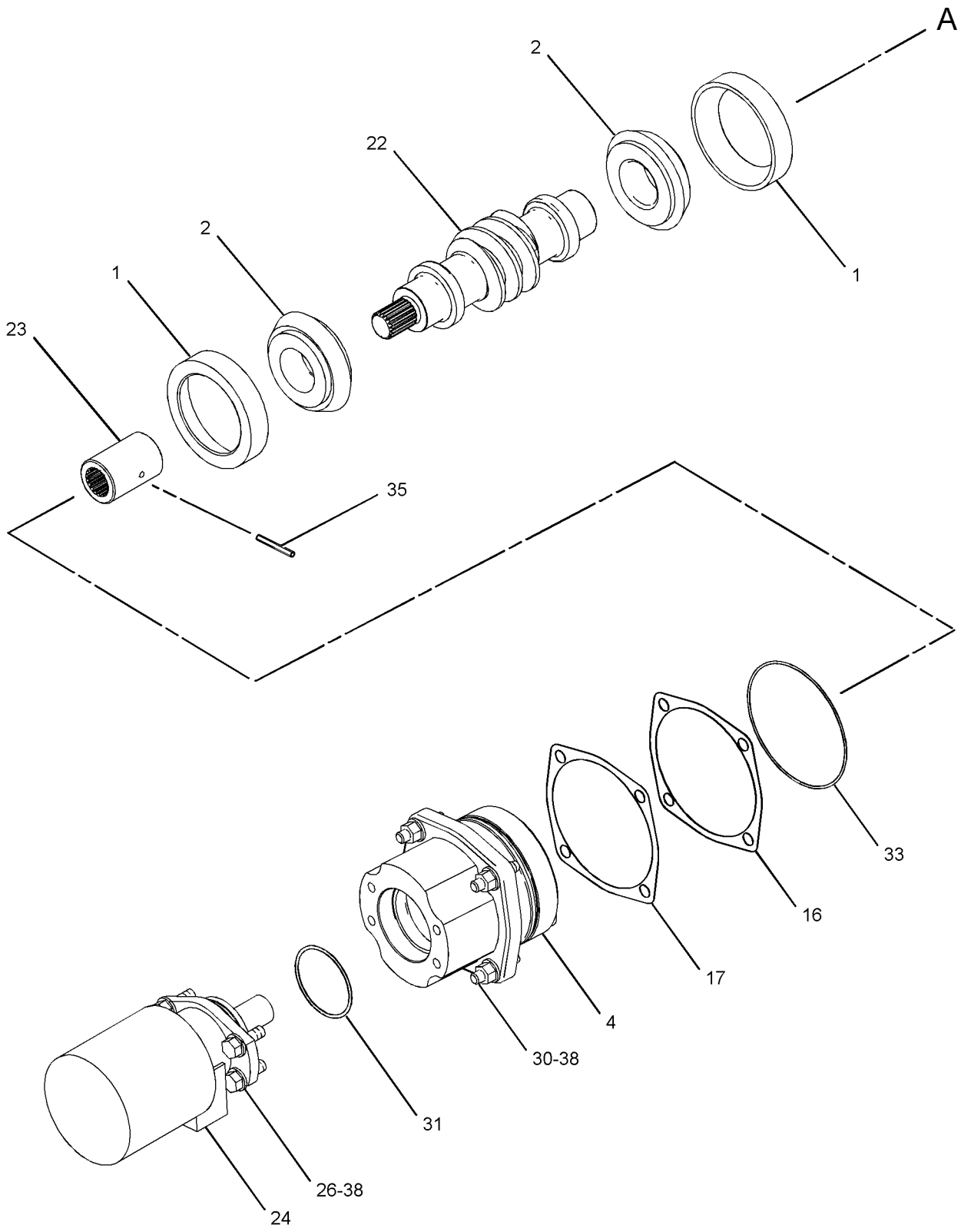

GRAPHIC #2 **<END>** g01156759

191-9784 FILTER GP-OIL

S/N: B9M1-UP
PART OF 250-1940, 251-4380 LINES GP-PUMP
AN ATTACHMENT

SMCS-5068, 5093 **i02225132**

NOTE	REF NO	GRAPHIC REF	PART NUMBER	QTY	PART NAME 1 2 3 4 5 6 (PRODUCT LEVEL)	SEE PAGE
	1	1	**1G-8878**	1	FILTER ELEMENT-HYDRAULIC OIL (PRIMARY)	
	2	1	**7X-8549**	1	SWITCH AS-PRESSURE (FILTER BYPASS)	
		1	**3J-1907**	1	SEAL-O-RING	
	3	1	**8C-3451**	1	CAP-DUST	
	4	1	**183-7264**	1	VALVE AS-FLUID SAMPLING	
	5	1	**3J-1907**	1	SEAL-O-RING	

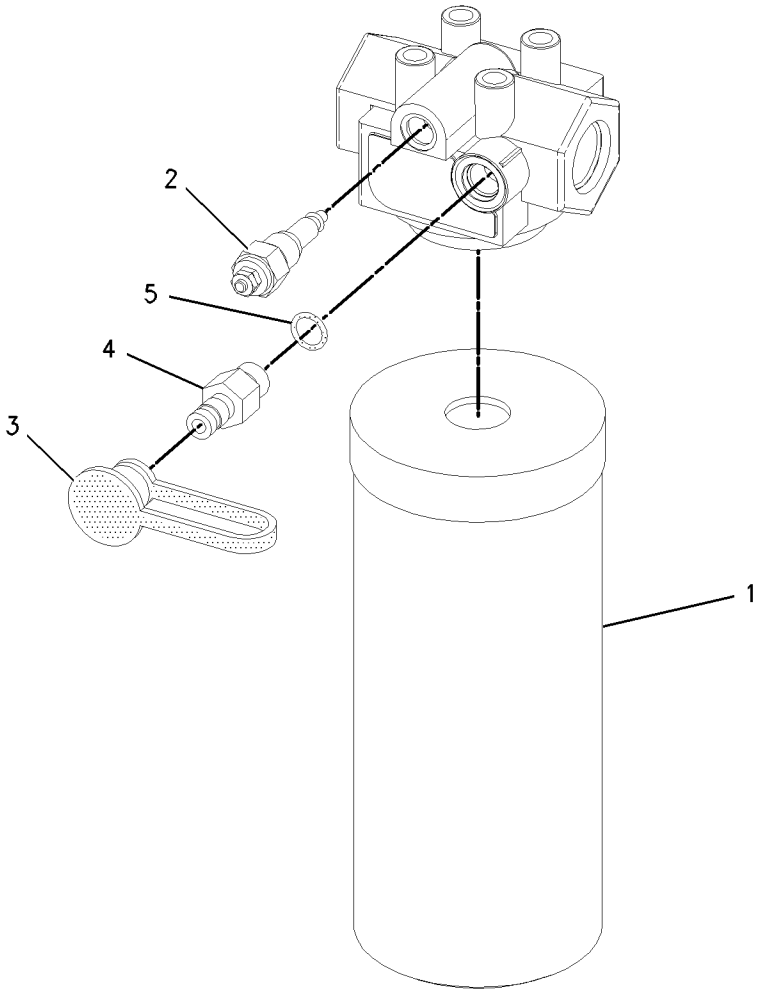

GRAPHIC #1 **<END>** g00977327

HYDRAULIC SYSTEM

247-0094 HYDRAULIC AR—NON ALL WHEEL DRIVE

S/N: B9M1-UP
AN ATTACHMENT

SMCS-5050 **i02235873**

NOTE	PART NUMBER	QTY	PART NAME 1 2 3 4 5 6 (PRODUCT LEVEL)	SEE PAGE
			(NO SERVICED PARTS)	

<END>

247-0095 HYDRAULIC AR—ALL WHEEL DRIVE

S/N: B9M1-UP
AN ATTACHMENT

SMCS-5050 **i02235874**

NOTE	PART NUMBER	QTY	PART NAME 1 2 3 4 5 6 (PRODUCT LEVEL)	SEE PAGE
			(NO SERVICED PARTS)	

<END>

248-0442 HYDRAULIC AR—NON ALL WHEEL DRIVE

S/N: B9M1-UP
BIODEGRADABLE HYDRAULIC OIL
AN ATTACHMENT

SMCS-5050 **i02235876**

NOTE	PART NUMBER	QTY	PART NAME 1 2 3 4 5 6 (PRODUCT LEVEL)	SEE PAGE
	141-6968	1	FILM-IDENTIFICATION (BIODEGRADABLE HYDRAULIC OIL)	
			ATTACH FILM NEAR IMPLEMENT OIL FILL	

<END>

248-0443 HYDRAULIC AR—ALL WHEEL DRIVE

S/N: B9M1-UP
BIODEGRADABLE HYDRAULIC OIL
AN ATTACHMENT

SMCS-5050 **i02235877**

NOTE	PART NUMBER	QTY	PART NAME 1 2 3 4 5 6 (PRODUCT LEVEL)	SEE PAGE
	141-6968	1	FILM-IDENTIFICATION (BIODEGRADABLE HYDRAULIC OIL)	
			ATTACH FILM NEAR IMPLEMENT OIL FILL	

<END>

PROOF

HYDRAULIC SYSTEM

231-1515 LINES GP-CENTERSHIFT LOCK

S/N: B9M1-UP

PART OF 234-7721 COMMON AR-MOTOR GRADER

SMCS-5221 **i02235532**

NOTE	REF NO	GRAPHIC REF	PART NUMBER	QTY	PART NAME 1 2 3 4 5 6 (PRODUCT LEVEL)	SEE PAGE
I	1	1	**8W-5094**	1	HOSE AS	
	2	1	**8Y-8503**	2	SPACER (0.8X1X40-IN THK)	
I	3	1	**266-9737**	1	HOSE AS	
M	4	1	**096-4883**	2	LOCKNUT (M10X1.5-THD)	
I	5	1	**112-9442**	1	HOSE AS	
M	6	1	**116-3715**	2	STUD-TAPERLOCK (M10X1.5X85-MM)	
	7	1	*148-8336*	2	CONNECTOR AS	
					(EACH INCLUDES)	
		1	**6V-8636**	1	CONNECTOR	
		1	**3J-1907**	1	SEAL-O-RING	
		1	**6V-8397**	1	SEAL-O-RING	
	8	1	*148-8367*	1	ELBOW AS	
		1	**6V-9850**	1	ELBOW	
		1	**6V-8397**	1	SEAL-O-RING	
	9	1	*148-8378*	2	ELBOW AS	
					(EACH INCLUDES)	
		1	**6V-8724**	1	ELBOW	
		1	**3J-1907**	1	SEAL-O-RING	
		1	**6V-8397**	1	SEAL-O-RING	
	10	1	**1S-0994**	1	CLIP	
	11	1	**8S-0948**	1	CLIP	
M	12	1	**8T-4121**	2	WASHER-HARD (11X21X2.5-MM THK)	

I-REFER TO HYDRAULIC INFORMATION SYSTEM
M-METRIC PART

PROOF

231-1515 **LINES GP-CENTERSHIFT LOCK** *(contd.)* **i02235532**

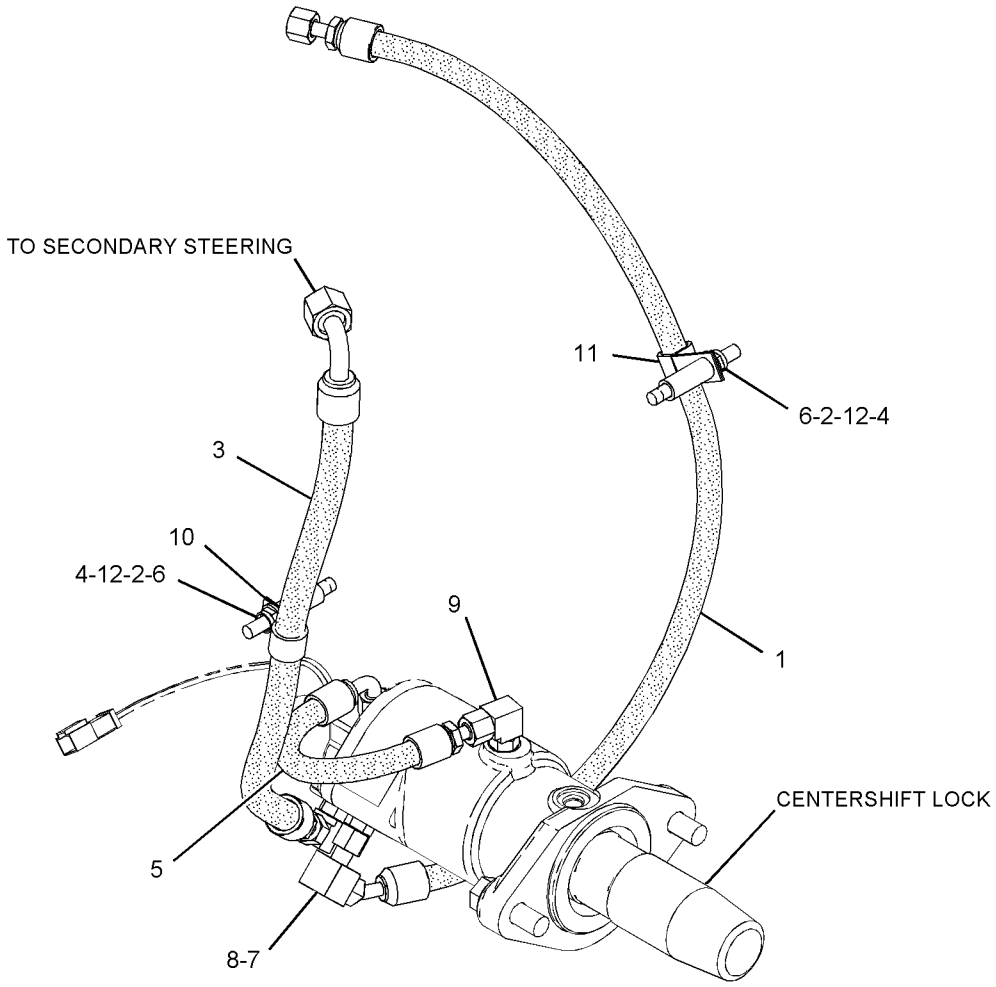

GRAPHIC #1 **<END>** g01132264

HYDRAULIC SYSTEM

264-2993 LINES GP-CENTERSHIFT LOCK

S/N: B9M1-UP
PART OF 247-6481 AXLE AR-FRONT
AN ATTACHMENT

SMCS-5221 **i02296351**

NOTE	REF NO	GRAPHIC REF	PART NUMBER	QTY	PART NAME 1 2 3 4 5 6 (PRODUCT LEVEL)	SEE PAGE
I	1	1	**179-6964**	2	HOSE AS	
	2	1	**253-0472**	1	PLATE AS	
M		1	**8T-3490**	1	NUT-WELD (M10X1.5-THD)	
I	3	1	**265-5098**	1	HOSE AS	
I	4	1	**265-5100**	1	HOSE AS	
I	5	1	**266-5953**	2	HOSE AS	
	6	1	**270-7003**	1	TUBE AS	
	7	1	**270-7004**	1	TUBE AS	
M	8	1	**133-7810**	1	STUD-TAPERLOCK (M10X1.5-THD)	
	9	1	*148-8318*	2	CONNECTOR AS	
					(EACH INCLUDES)	
		1	**3K-0360**	1	SEAL-O-RING	
		1	**6V-8397**	1	SEAL-O-RING	
		1	**6V-8634**	1	CONNECTOR	
	10	1	*148-8340*	5	CONNECTOR AS	
					(EACH INCLUDES)	
		1	**3K-0360**	1	SEAL-O-RING	
		1	**6V-8398**	1	SEAL-O-RING	
		1	**6V-8639**	1	CONNECTOR	
	11	1	*148-8374*	1	ELBOW AS	
		1	**3K-0360**	1	SEAL-O-RING	
		1	**6V-8397**	1	SEAL-O-RING	
		1	**6V-8723**	1	ELBOW	
	12	1	*148-8444*	2	TEE AS-SWIVEL	
					(EACH INCLUDES)	
		1	**6V-8398**	2	SEAL-O-RING	
		1	**6V-9837**	1	TEE-SWIVEL	
	13	1	**1S-0994**	5	CLIP	
	14	1	**6V-8398**	2	SEAL-O-RING	
	15	1	**8T-4121**	11	WASHER-HARD (11X21X2.5-MM THK)	
M	16	1	**8T-4133**	2	NUT (M10X1.5-THD)	
M	17	1	**8T-4136**	1	BOLT (M10X1.5X25-MM)	
M	18	1	**8T-4137**	8	BOLT (M10X1.5X20-MM)	
	19	1	**9X-8250**	6	CLIP	

I-REFER TO HYDRAULIC INFORMATION SYSTEM
M-METRIC PART

PROOF

264-2993 **LINES GP-CENTERSHIFT LOCK** *(contd.)* **i02296351**

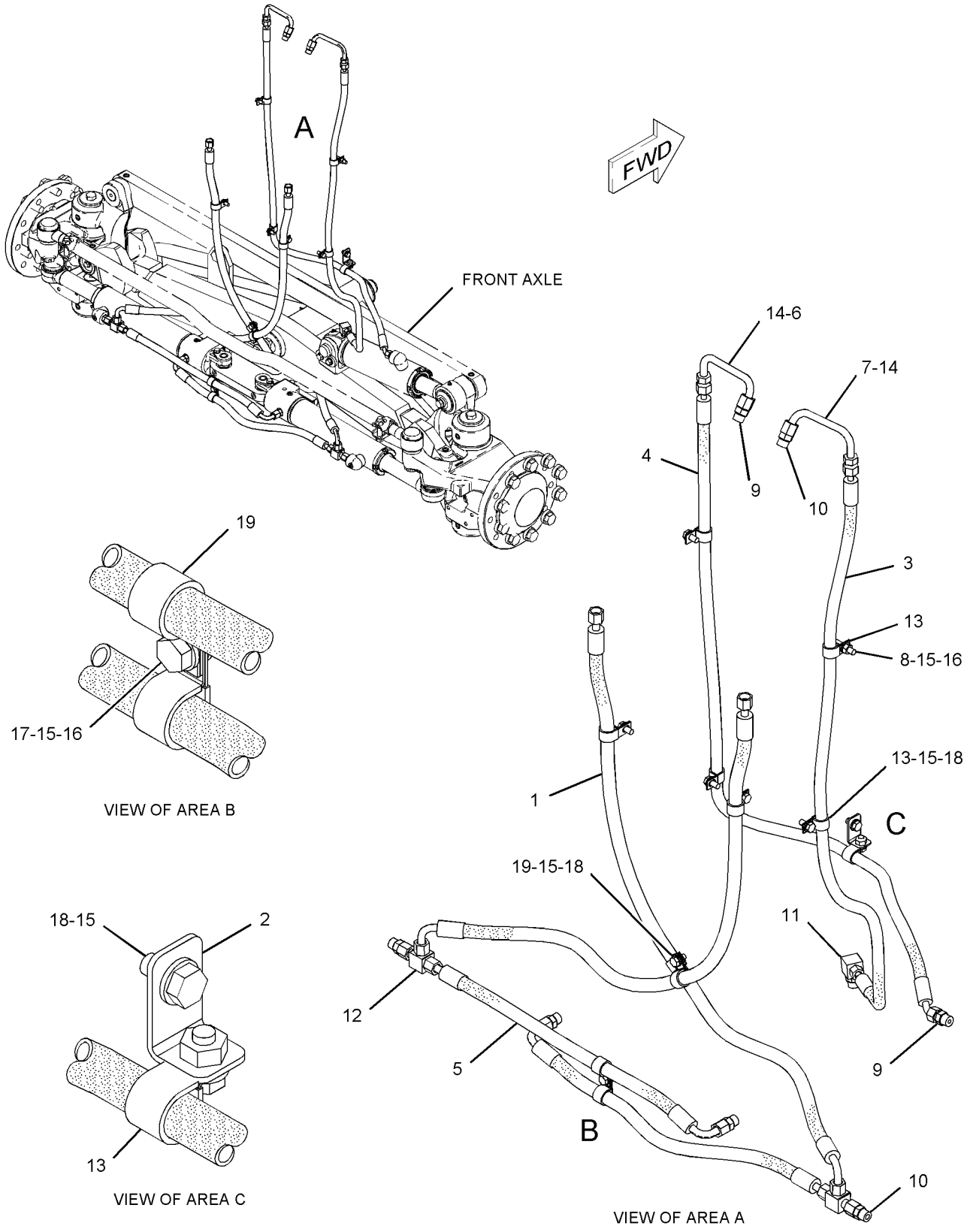

GRAPHIC #1 **<END>** g01150311

HYDRAULIC SYSTEM

8X-6070 LINES GP-HYDRAULIC—SCARIFIER

S/N: B9M1-UP

PART OF 108-1104, 113-0704 SCARIFIER AR

AN ATTACHMENT

SMCS-5057 **i01533118**

NOTE	REF NO	GRAPHIC REF	PART NUMBER	QTY	PART NAME 1 2 3 4 5 6 (PRODUCT LEVEL)	SEE PAGE
	1	1	**2B-0941**	1	SPACER (10.5X19X19-MM THK)	
	2	1	**4J-5468**	1	CLAMP	
I	3	1	**112-3199**	1	HOSE AS	
I	4	1	**112-3200**	1	HOSE AS	
	5	1	*164-5605*	1	CONNECTOR AS	
		1	**3K-0360**	1	SEAL-O-RING	
		1	**6V-8397**	1	SEAL-O-RING	
		1	**8T-0076**		CONNECTOR	
	6	1	*148-8318*	2	CONNECTOR AS	
					(EACH INCLUDES)	
		1	**3K-0360**	1	SEAL-O-RING	
		1	**6V-8397**	1	SEAL-O-RING	
		1	**6V-8634**	1	CONNECTOR	
	7	1	*148-8374*	1	ELBOW AS	
		1	**3K-0360**	1	SEAL-O-RING	
		1	**6V-8397**	1	SEAL-O-RING	
		1	**6V-8723**	1	ELBOW	
	8	1	**6D-4247**	1	CLIP	
	9	1	**7X-0289**	1	BOLT (3/8-16X1.875-IN)	
	10	1	**8T-4896**	1	WASHER-HARD (10.2X18.5X2.5-MM THK)	

I-REFER TO HYDRAULIC INFORMATION SYSTEM

PROOF

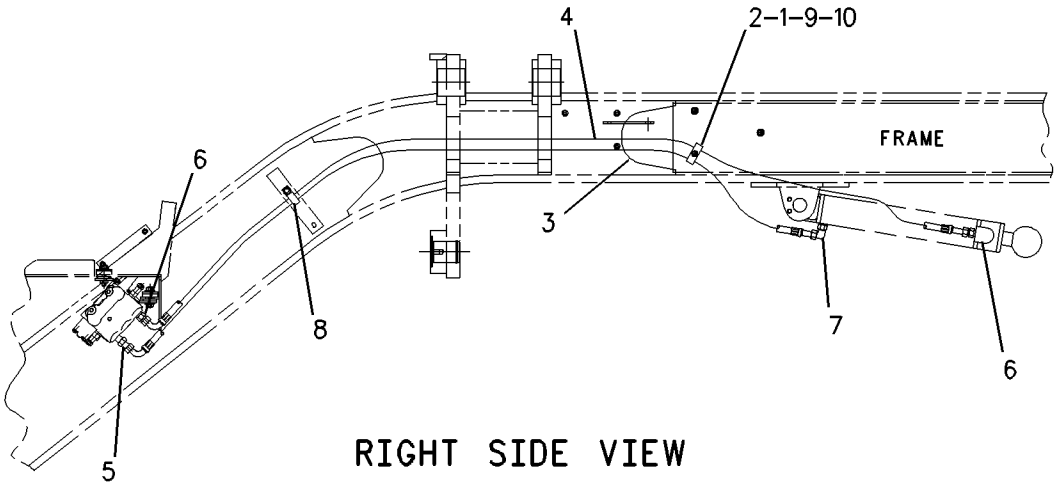

RIGHT SIDE VIEW

GRAPHIC #1 **<END>** g00633579

HYDRAULIC SYSTEM

231-1516 LINES GP-HYDRAULIC—WITHOUT ACCUMULATOR

S/N: B9M1-UP

AN ATTACHMENT

SMCS-5057 **i02250784**

NOTE	REF NO	GRAPHIC REF	PART NUMBER	QTY	PART NAME 1 2 3 4 5 6 (PRODUCT LEVEL)	SEE PAGE
	1	2	**2G-5493**	2	CLAMP	
	2	1,3	**5P-0599**	3	CLAMP	
	3	2	**7W-5672**	2	PIPE	
	4	2	**8T-1296**	2	WASHER (10.5X19X3.5-MM THK)	
	5	3	**8W-3991**	2	JUNCTION BLOCK	
I	6	2	**9R-4638**	1	HOSE AS	
I	7	2	**9R-8971**	1	HOSE AS	
I	8	2	**121-1344**	1	HOSE AS	
	9	1,2,3	*148-8340*	17	CONNECTOR AS	
					(EACH INCLUDES)	
		1,2,3	**3K-0360**	1	SEAL-O-RING	
		1,2,3	**6V-8398**	1	SEAL-O-RING	
		1,2,3	**6V-8639**	1	CONNECTOR	
	10	3	*148-8358*	1	ELBOW AS	
		3	**2M-9780**	1	SEAL-O-RING	
		3	**6V-8398**	1	SEAL-O-RING	
		3	**6V-8624**	1	ELBOW	
	11	2,3	*148-8364*	5	ELBOW AS	
					(EACH INCLUDES)	
		2,3	**3K-0360**	1	SEAL-O-RING	
		2,3	**6V-8398**	1	SEAL-O-RING	
		2,3	**6V-8625**	1	ELBOW	
	12	1,2,3	*148-8374*	8	ELBOW AS	
					(EACH INCLUDES)	
		1,2,3	**3K-0360**	1	SEAL-O-RING	
		1,2,3	**6V-8397**	1	SEAL-O-RING	
		1,2,3	**6V-8723**	1	ELBOW	
	13	2,3	*164-5605*	3	CONNECTOR AS	
					(EACH INCLUDES)	
		2,3	**3K-0360**	1	SEAL-O-RING	
		2,3	**6V-8397**	1	SEAL-O-RING	
		2,3	**8T-0076**	1	CONNECTOR	
I	14	1	**191-6669**	2	HOSE AS	
I	15	2	**219-2910**	1	HOSE AS	
I	16	2	**229-0700**	1	HOSE AS	
I	17	2	**238-5587**	3	HOSE AS	
I	18	2	**238-5588**	1	HOSE AS	
I	19	2	**238-5590**	1	HOSE AS	
	20	3	**245-1375**	1	GUIDE AS-HOSE	
	21	1	**246-3349**	2	BLOCK	
I	22	2	**246-4392**	1	HOSE AS	
I	23	2	**246-6311**	1	HOSE AS	
I	24	3	**246-6313**	1	HOSE AS	
I	25	2	**246-6327**	1	HOSE AS	
	26	2	**246-6341**	2	CLAMP	
	27	2	**246-6342**	8	CLAMP	
	28	3	**250-5719**	2	CLAMP AS	
	29	2	**257-9181**	1	TUBE AS	
	30	2	**257-9183**	1	TUBE AS	
	31	3	**262-9184**	1	BLOCK	
	32	1	**265-2122**	1	TUBE AS	
	33	1	**265-2123**	1	TUBE AS	
	34	3	**265-7628**	1	TUBE AS	
	35	3	**265-7629**	1	TUBE AS	
	36	2	**265-9706**	4	TUBE AS	
	37	2	**265-9707**	4	TUBE AS	

PROOF

HYDRAULIC SYSTEM

231-1516 **LINES GP-HYDRAULIC** *(contd.)* **i02250784**

NOTE	REF NO	GRAPHIC REF	PART NUMBER	QTY	PART NAME 1 2 3 4 5 6 (PRODUCT LEVEL)	SEE PAGE
I	38	2	**267-3002**	1	HOSE AS	
	39	1	**268-8954**	2	SLEEVE	
I	40	1	**271-7495**	2	HOSE AS	
M	41	1,2	**096-4883**	4	LOCKNUT (M10X1.5-THD)	
	42	1	**100-4336**	3	CLIP	
	43	2	**144-8344**	4	SPACER (11X19X20-MM THK)	
	44	3	*148-8318*	2	CONNECTOR AS	
					(EACH INCLUDES)	
		3	**3K-0360**	1	SEAL-O-RING	
		3	**6V-8397**	1	SEAL-O-RING	
		3	**6V-8634**	1	CONNECTOR	
	45	3	**148-8354**	2	ELBOW AS	
					(EACH INCLUDES)	
		3	**3K-0360**	1	SEAL-O-RING	
		3	**6V-8398**	1	SEAL-O-RING	
		3	**6V-9002**	1	ELBOW	
	46	2,3	*148-8363*	3	ELBOW GP	
					(EACH INCLUDES)	
		2,3	**3K-0360**	1	SEAL-O-RING	
		2,3	**6V-8397**	1	SEAL-O-RING	
		2,3	**6V-9876**	1	ELBOW	
	47	3	*148-8372*	1	ELBOW AS	
		3	**2M-9780**	1	SEAL-O-RING	
		3	**6V-8398**	1	SEAL-O-RING	
		3	**6V-8721**	1	ELBOW	
	48	3	*153-6241*	1	ELBOW AS	
		3	**6V-8398**	1	SEAL-O-RING	
		3	**8C-8989**	1	ELBOW	
	49	1	*153-6246*	2	TEE GP	
					(EACH INCLUDES)	
		1	**6V-8397**	3	SEAL-O-RING	
		1	**7X-0820**	1	TEE-UNION	
	51	1,2,3	**1S-0994**	12	CLIP	
I	52	3	**218-4487**	2	HOSE AS	
Y	53	3	**260-6502**	1	SWIVEL GP	580
	54	2	**2H-9889**	2	BOLT (3/8-16X2.375-IN)	
	55	3	**3B-4628**	2	PIN-COTTER	
	56	1	**5P-6994**	2	CLIP	
	57	2	**6D-4244**	2	CLIP	
	58	2,3	**6D-4247**	8	CLIP	
	59	1,2	**6V-8398**	12	SEAL-O-RING	
	60	2	**6V-8801**	2	NUT (3/8-16-THD)	
	61	1	**6V-9168**	2	NUT (11/16-16-THD)	
	62	3	**8D-9092**	1	PIN	
	63	2	**8M-2770**	2	CLIP	
M	64	1,2,3	**8T-4121**	35	WASHER-HARD (11X21X2.5-MM THK)	
M	65	1	**8T-4133**	4	NUT (M10X1.5-THD)	
M	66	1,2,3	**8T-4137**	18	BOLT (M10X1.5X20-MM)	
M	67	2	**8T-4186**	4	BOLT (M10X1.5X40-MM)	
M	68	3	**8T-4195**	2	BOLT (M10X1.5X30-MM)	
M	69	3	**8T-4223**	4	WASHER-HARD (13.5X25.5X3-MM THK)	
M	70	3	**8T-4648**	4	BOLT (M12X1.75X70-MM)	
	71	2	**8T-4896**	4	WASHER-HARD (10.2X18.5X2.5-MM THK)	
	72	3	**8T-4994**	2	WASHER-HARD (20X36.5X3.5-MM THK)	
M	73	3	**8T-5005**	2	BOLT (M10X1.5X70-MM)	
M	74	1,2	**8T-7044**	4	STUD-TAPERLOCK (M10X1.5X40-MM)	
I	75	3	**9R-1183**	1	HOSE AS	

I-REFER TO HYDRAULIC INFORMATION SYSTEM
M-METRIC PART
Y-SEPARATE ILLUSTRATION

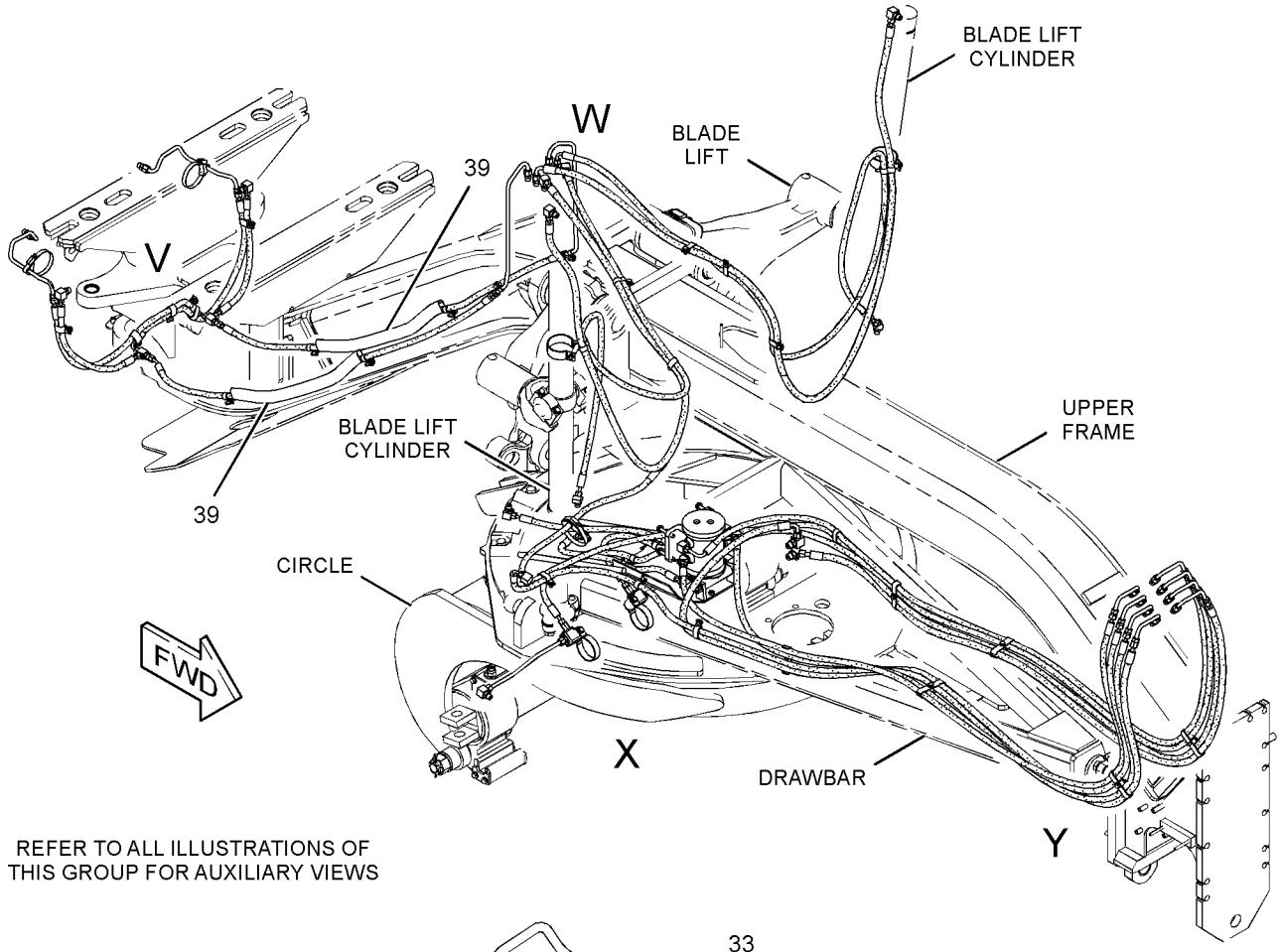

REFER TO ALL ILLUSTRATIONS OF THIS GROUP FOR AUXILIARY VIEWS

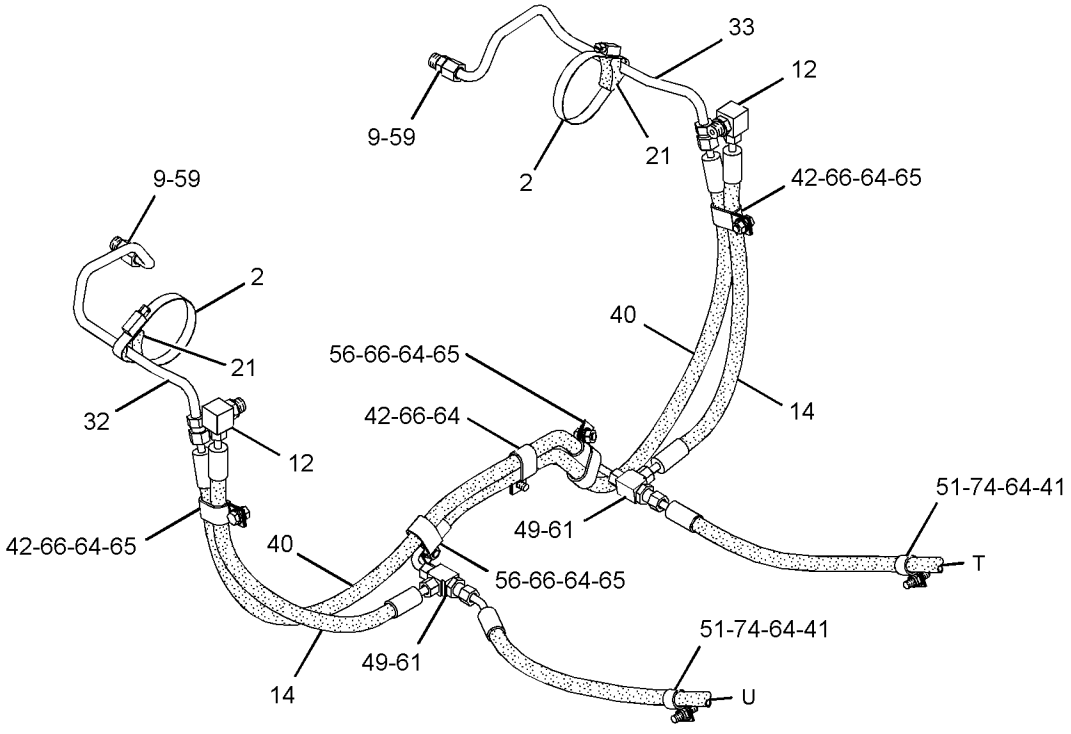

VIEW OF AREA V

GRAPHIC #1

g01154301

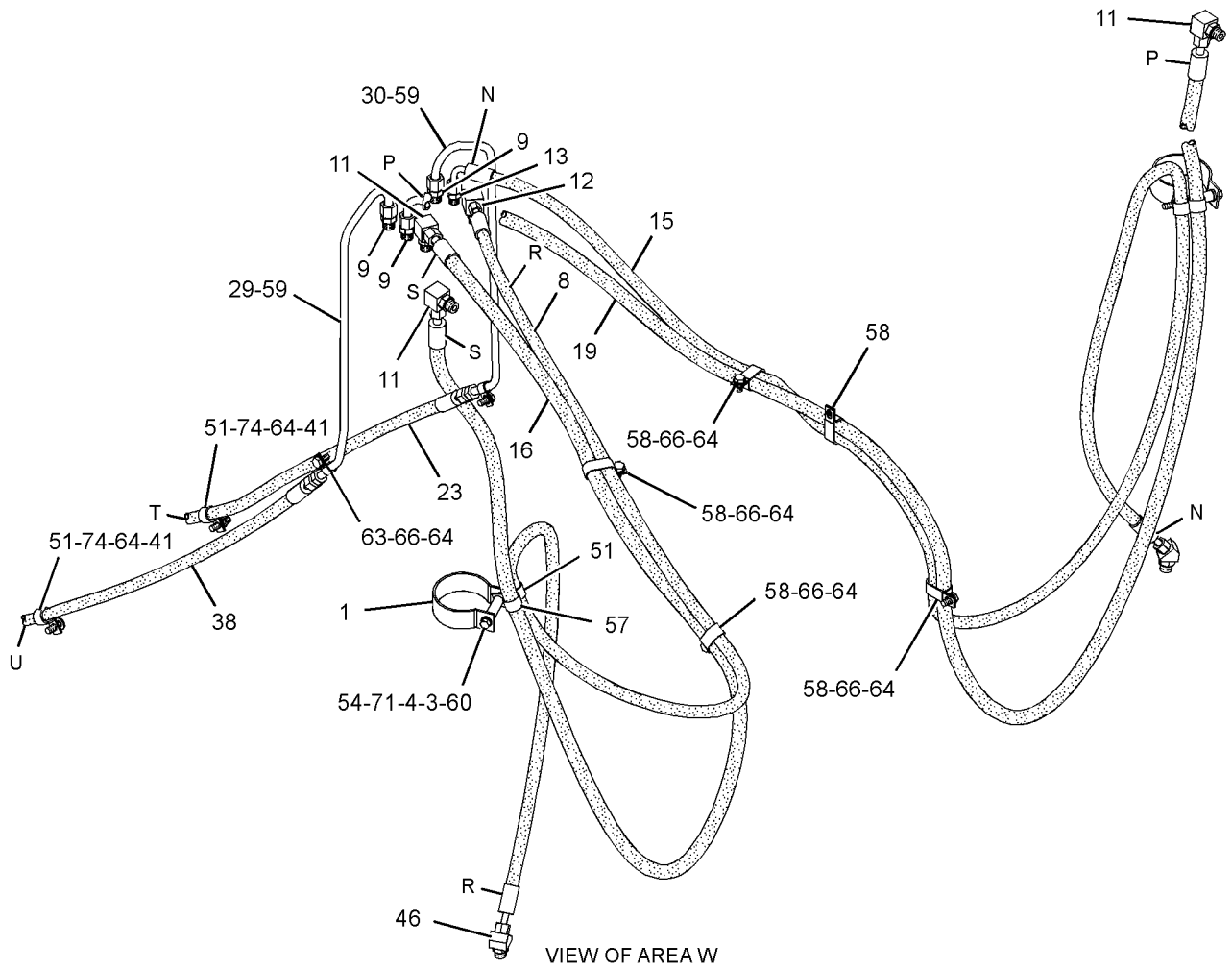

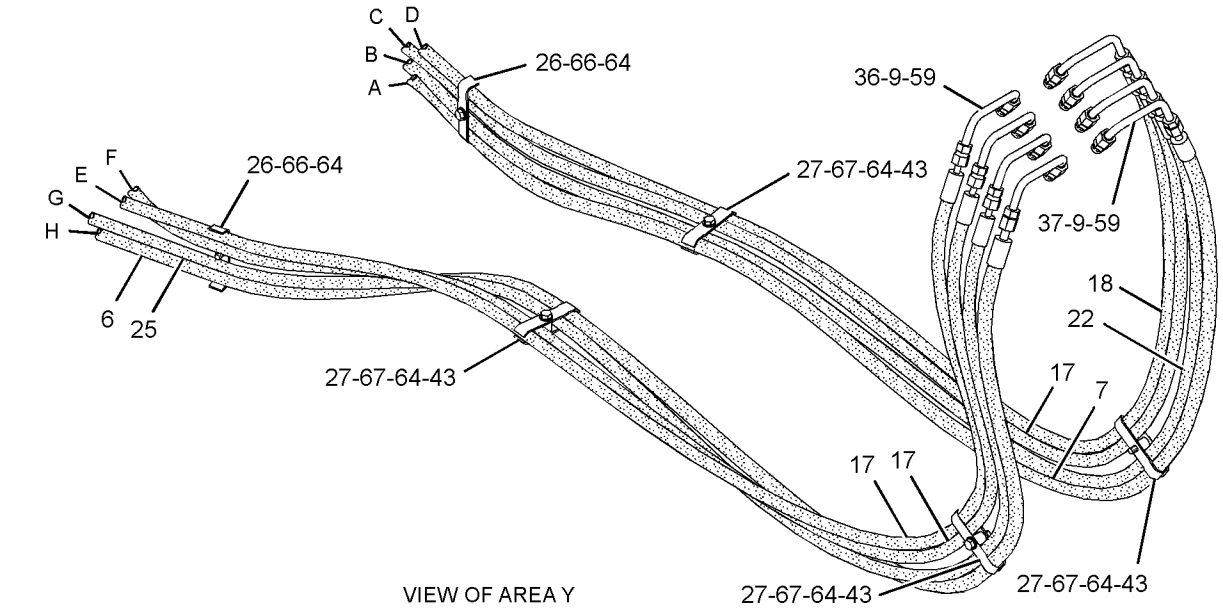

GRAPHIC #2 g01154302

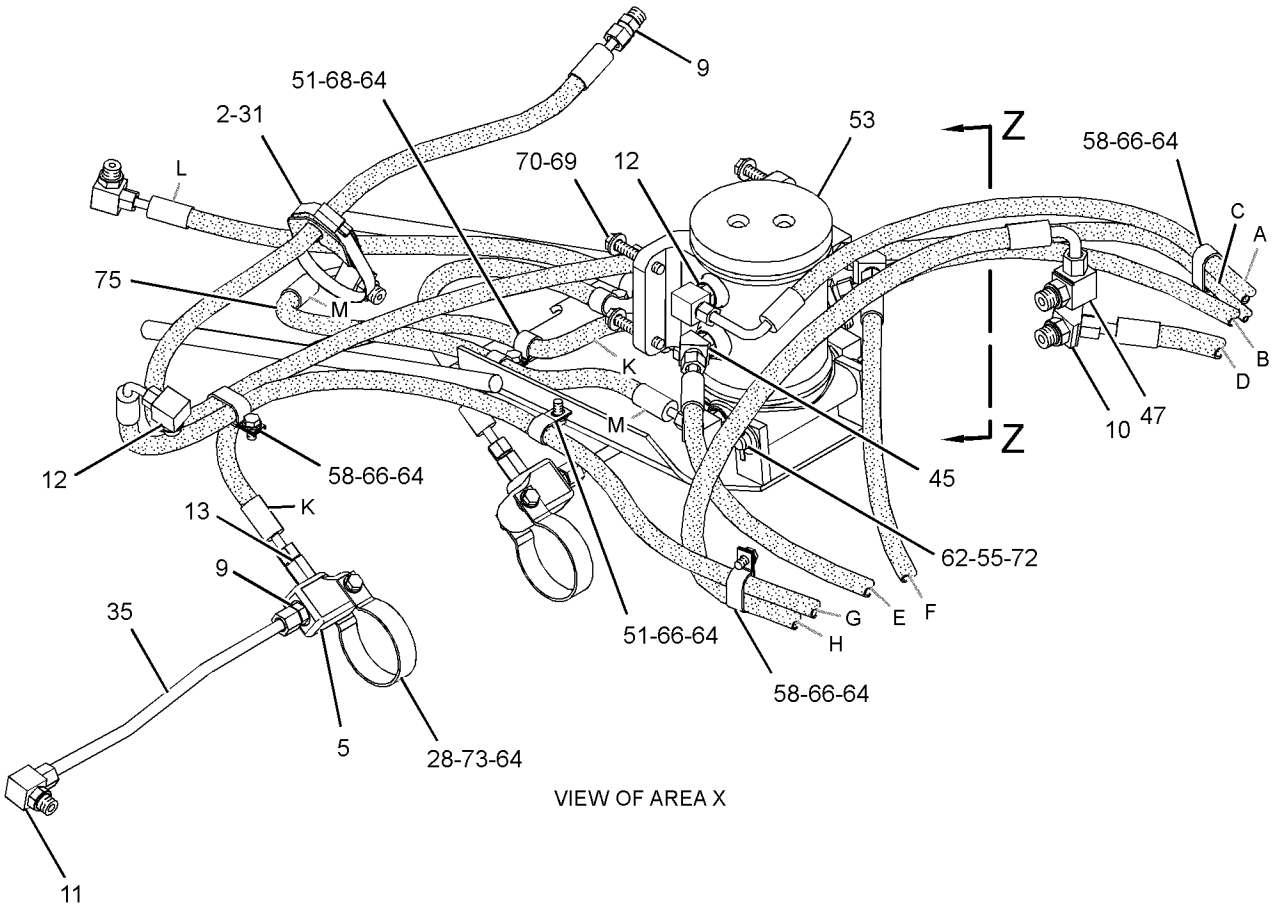

VIEW OF AREA X

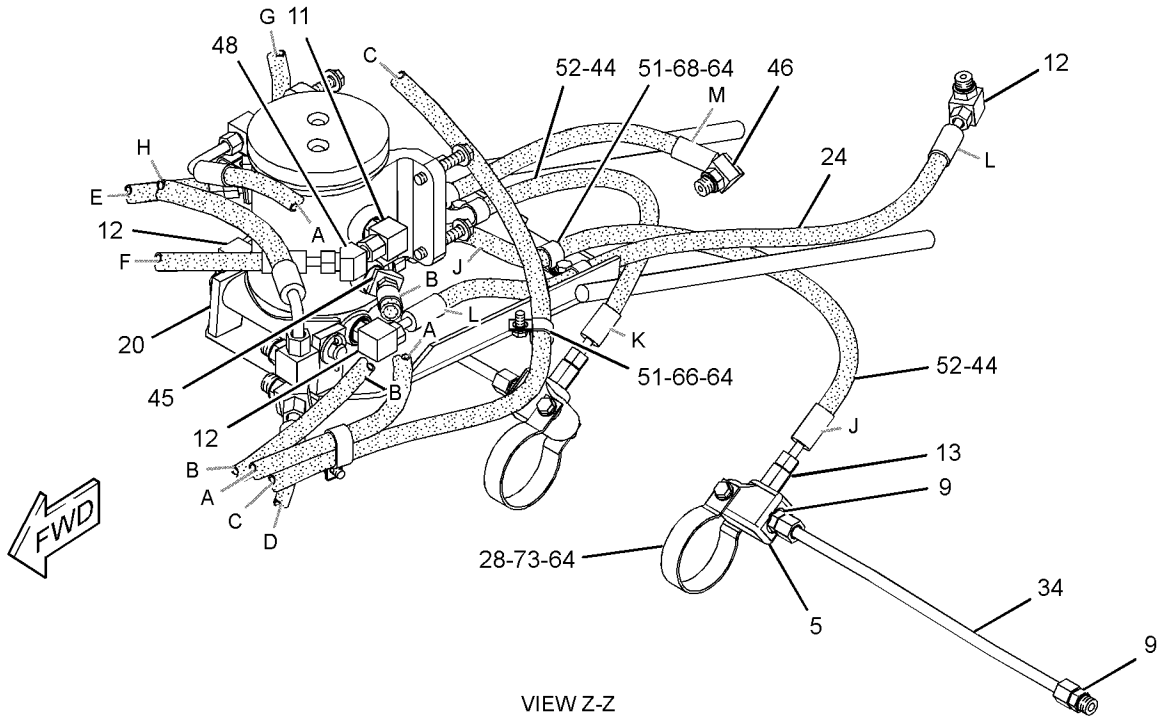

VIEW Z-Z

GRAPHIC #3 **<END>** g01154303

231-1520 LINES GP-HYDRAULIC–BLADE LIFT

S/N: B9M1-UP

PART OF 242-5058, 242-5060, 242-5061, 242-5062, 242-5063, 242-5064, 242-5066, 242-6107, 242-6108, 242-6110, 242-6111, 242-6112, 242-6146 CONTROL AR-HYDRAULIC AN ATTACHMENT

SMCS-5057 **i02234473**

NOTE	REF NO	GRAPHIC REF	PART NUMBER	QTY	PART NAME 1 2 3 4 5 6 (PRODUCT LEVEL)	SEE PAGE
	1	1	**133-3260**	1	SPACER (11X19X10-MM THK)	
I	2	1	**138-6321**	2	HOSE AS	
	3	1	*148-8340*	2	CONNECTOR AS	
					(EACH INCLUDES)	
		1	**6V-8639**	1	CONNECTOR	
		1	**6V-8398**	1	SEAL-O-RING	
		1	**3K-0360**	1	SEAL-O-RING	
	4	1	*150-4043*	2	CONNECTOR AS	
					(EACH INCLUDES)	
		1	**6V-9873**	1	CONNECTOR	
		1	**6V-8398**	1	SEAL-O-RING	
		1	**3J-1907**	1	SEAL-O-RING	
M	5	1	**180-3998**	1	STUD (M10X1.5X55-MM)	
	6	1	**8T-4121**	1	WASHER-HARD (11X21X2.5-MM THK)	
M	7	1	**8T-4133**	1	NUT (M10X1.5-THD)	
	8	1	**9X-8250**	2	CLIP	

I-REFER TO HYDRAULIC INFORMATION SYSTEM
M-METRIC PART

PROOF

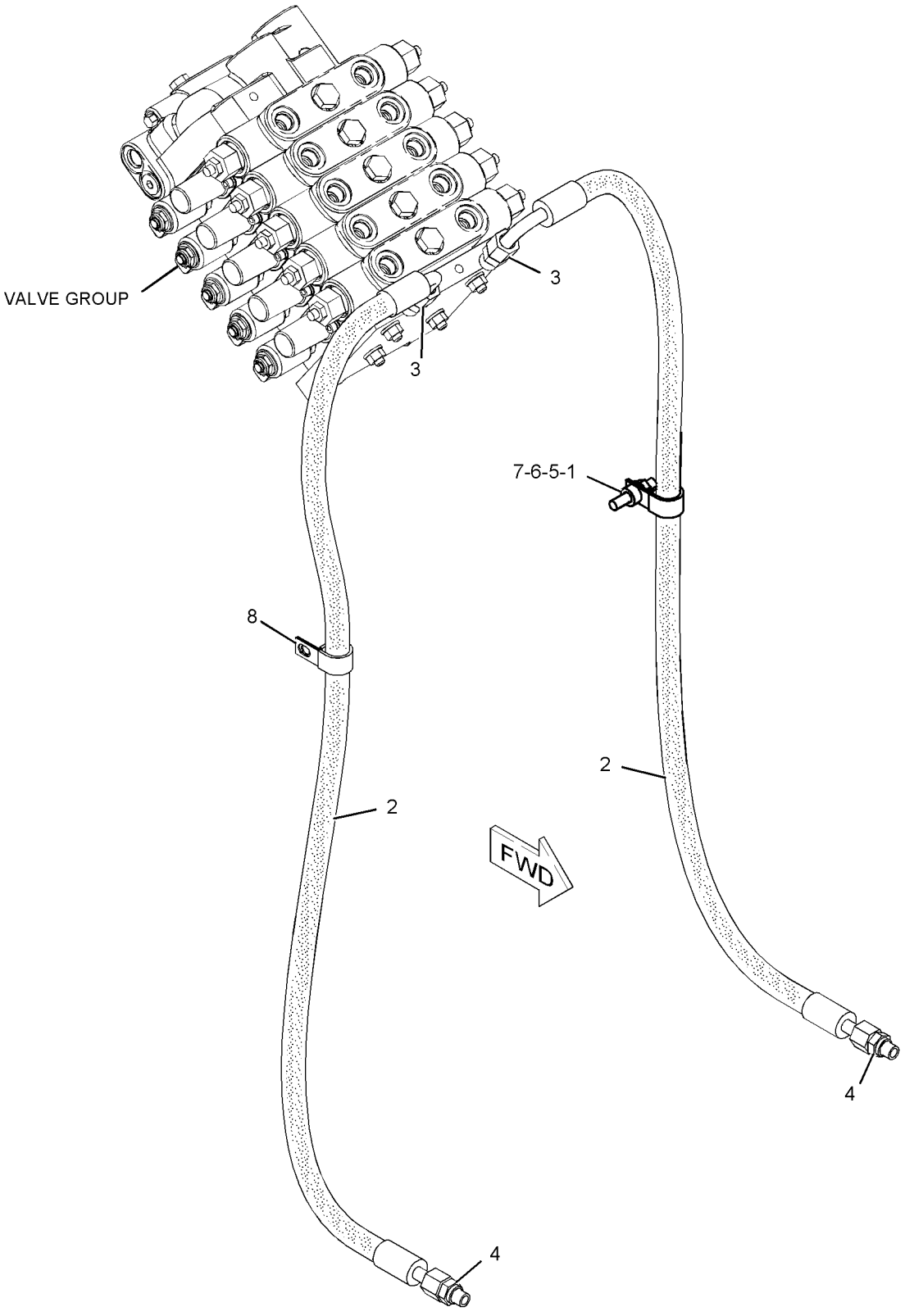

GRAPHIC #1 **<END>** g01133292

HYDRAULIC SYSTEM

231-1532 LINES GP-HYDRAULIC—WITH ACCUMULATOR

S/N: B9M1-UP

AN ATTACHMENT

SMCS-5057 **i02234605**

NOTE	REF NO	GRAPHIC REF	PART NUMBER	QTY	PART NAME 1 2 3 4 5 6 (PRODUCT LEVEL)	SEE PAGE
	1	2	**2G-5493**	2	CLAMP	
	2	3	**4N-5091**	2	SPACER (0.53X1X3.375-IN THK)	
	3	1,4	**5P-0599**	3	CLAMP	
	4	2	**7W-5672**	2	PIPE	
	5	2	**8T-1296**	2	WASHER (10.5X19X3.5-MM THK)	
	6	4	**8W-3991**	2	JUNCTION BLOCK	
I	7	3	**9R-4638**	1	HOSE AS	
I	8	3	**9R-8971**	1	HOSE AS	
I	9	2	**108-0711**	1	HOSE AS	
I	10	2	**121-1344**	1	HOSE AS	
I	11	2	**134-0744**	1	HOSE AS	
	12	3	**162-7449**	2	CLAMP	
	13	4	*164-5605*	3	CONNECTOR AS	
					(EACH INCLUDES)	
		4	**8T-0076**	1	CONNECTOR	
		4	**6V-8397**	1	SEAL-O-RING	
		4	**3K-0360**	1	SEAL-O-RING	
	14	3	*171-6466*	2	UNION AS	
					(EACH INCLUDES)	
		3	**5P-9810**	1	UNION	
		3	**3D-2824**	2	SEAL-O-RING	
I	15	1	**191-6669**	2	HOSE AS	
I	16	2	**219-2910**	1	HOSE AS	
J	17	3	**219-7265**	2	ACCUMULATOR GP (BLADE CUSHION)	
					(EACH INCLUDES)	
		3	**222-2367**	1	VALVE-GAS (HYDRAULIC ACCUMULATOR)	
		3	**241-0037**	1	FILM (HYDRAULIC ACCUMULATOR)	
I	18	3	**238-5587**	3	HOSE AS	
I	19	3	**238-5588**	1	HOSE AS	
	20	3,4	**245-1375**	1	GUIDE AS-HOSE	
M		3,4	**8T-3490**	3	NUT-WELD (M10X1.5-THD)	
		3,4	**246-6657**	1	GUIDE-HOSE	
	21	1	**246-3349**	2	BLOCK	
I	22	3	**246-4392**	1	HOSE AS	
I	23	2	**246-6311**	1	HOSE AS	
I	24	4	**246-6313**	1	HOSE AS	
I	25	2	**246-6322**	1	HOSE AS	
I	26	2	**246-6324**	1	HOSE AS	
I	27	3	**246-6327**	1	HOSE AS	
	28	3	**246-6341**	2	CLAMP	
	29	3	**246-6342**	8	CLAMP	
	30	4	**250-5719**	2	CLAMP AS	
Y	31	3	**253-1320**	2	MANIFOLD GP-CONTROL (BLADE CUSHION)	570
	32	3	**253-5366**	1	PLATE AS	
		3	**1F-0748**	2	NUT-WELD (1/2-13-THD)	
	33	2	**257-9181**	1	TUBE AS	
	34	2	**257-9183**	1	TUBE AS	
	35	4	**262-9184**	1	BLOCK	
	36	1	**265-2122**	1	TUBE AS	
	37	1	**265-2123**	1	TUBE AS	
	38	4	**265-7628**	1	TUBE AS	
	39	4	**265-7629**	1	TUBE AS	
	40	3	**265-9706**	4	TUBE AS	
	41	3	**265-9707**	4	TUBE AS	
I	42	2	**267-3002**	1	HOSE AS	
	43	1	**268-8954**	2	SLEEVE	

PROOF

231-1532 **LINES GP-HYDRAULIC** *(contd.)* **i02234605**

NOTE	REF NO	GRAPHIC REF	PART NUMBER	QTY	PART NAME 1 2 3 4 5 6 (PRODUCT LEVEL)	SEE PAGE
M	44	1,2	**096-4883**	4	LOCKNUT (M10X1.5-THD)	
	45	1	**100-4336**	3	CLIP	
	46	3	**144-8344**	4	SPACER (11X19X20-MM THK)	
	47	4	*148-8318*	2	CONNECTOR AS	
					(EACH INCLUDES)	
		4	**6V-8634**	1	CONNECTOR	
		4	**6V-8397**	1	SEAL-O-RING	
		4	**3K-0360**	1	SEAL-O-RING	
	48	3	*148-8328*	2	CONNECTOR AS	
					(EACH INCLUDES)	
		3	**6V-8633**	1	CONNECTOR	
		3	**6V-8398**	1	SEAL-O-RING	
		3	**3D-2824**	1	SEAL-O-RING	
	49	1,2,3,4	*148-8340*	17	CONNECTOR AS	
					(EACH INCLUDES)	
		1,2,3,4	**6V-8639**	1	CONNECTOR	
		1,2,3,4	**6V-8398**	1	SEAL-O-RING	
		1,2,3,4	**3K-0360**	1	SEAL-O-RING	
	50	4	*148-8354*	2	ELBOW AS	
					(EACH INCLUDES)	
		4	**6V-9002**	1	ELBOW	
		4	**6V-8398**	1	SEAL-O-RING	
		4	**3K-0360**	1	SEAL-O-RING	
	51	4	*148-8358*	1	ELBOW AS	
		4	**6V-8624**	1	ELBOW	
		4	**6V-8398**	1	SEAL-O-RING	
		4	**2M-9780**	1	SEAL-O-RING	
	52	2,4	*148-8363*	3	ELBOW GP	
					(EACH INCLUDES)	
		2,4	**6V-9876**	1	ELBOW	
		2,4	**6V-8397**	1	SEAL-O-RING	
		2,4	**3K-0360**	1	SEAL-O-RING	
	53	2,4	*148-8364*	5	ELBOW AS	
					(EACH INCLUDES)	
		2,4	**6V-8625**	1	ELBOW	
		2,4	**6V-8398**	1	SEAL-O-RING	
		2,4	**3K-0360**	1	SEAL-O-RING	
	54	4	*148-8372*	1	ELBOW AS	
		4	**6V-8721**	1	ELBOW	
		4	**6V-8398**	1	SEAL-O-RING	
		4	**2M-9780**	1	SEAL-O-RING	
	55	1,2,4	*148-8374*	8	ELBOW AS	
					(EACH INCLUDES)	
		1,2,4	**6V-8723**	1	ELBOW	
		1,2,4	**3K-0360**	1	SEAL-O-RING	
		1,2,4	**6V-8397**	1	SEAL-O-RING	
	56	3	*148-8444*	2	TEE AS-SWIVEL	
					(EACH INCLUDES)	
		3	**6V-9837**	1	TEE-SWIVEL	
		3	**6V-8398**	2	SEAL-O-RING	
	57	4	*153-6241*	1	ELBOW AS	
		4	**8C-8989**	1	ELBOW	
		4	**6V-8398**	1	SEAL-O-RING	
	58	1	*153-6246*	2	TEE GP	
					(EACH INCLUDES)	
		1	**7X-0820**	1	TEE-UNION	

PROOF

231-1532 **LINES GP-HYDRAULIC** *(contd.)* **i02234605**

NOTE	REF NO	GRAPHIC REF	PART NUMBER	QTY	PART NAME 1 2 3 4 5 6 (PRODUCT LEVEL)	SEE PAGE
		1	**6V-8397**	3	SEAL-O-RING	
M	60	3	**180-3998**	3	STUD (M10X1.5X55-MM)	
	61	1,2,4	**1S-0994**	12	CLIP	
I	62	4	**218-4487**	2	HOSE AS	
Y	63	4	**260-6502**	1	SWIVEL GP	580
I	64	1	**271-7495**	2	HOSE AS	
	65	2	**2H-9889**	2	BOLT (3/8-16X2.375-IN)	
	66	4	**3B-4628**	2	PIN-COTTER	
	67	2	**3E-4321**	1	CLIP	
	68	1	**5P-6994**	2	CLIP	
	69	2	**6D-4244**	2	CLIP	
	70	2,4	**6D-4247**	8	CLIP	
	71	1,2,3	**6V-8398**	12	SEAL-O-RING	
	72	2	**6V-8801**	2	NUT (3/8-16-THD)	
	73	1	**6V-9168**	2	NUT (11/16-16-THD)	
	74	3	**7X-0333**	2	BOLT (1/2-13X4.75-IN)	
	75	4	**8D-9092**	1	PIN	
	76	2	**8M-2770**	2	CLIP	
M	77	1,2,3, 4	**8T-4121**	40	WASHER-HARD (11X21X2.5-MM THK)	
M	78	1,3	**8T-4133**	7	NUT (M10X1.5-THD)	
M	79	1,2,3, 4	**8T-4137**	19	BOLT (M10X1.5X20-MM)	
M	80	3	**8T-4186**	4	BOLT (M10X1.5X40-MM)	
M	81	4	**8T-4195**	2	BOLT (M10X1.5X30-MM)	
M	82	3,4	**8T-4223**	6	WASHER-HARD (13.5X25.5X3-MM THK)	
M	83	4	**8T-4648**	4	BOLT (M12X1.75X70-MM)	
	84	2	**8T-4896**	4	WASHER-HARD (10.2X18.5X2.5-MM THK)	
	85	4	**8T-4994**	2	WASHER-HARD (20X36.5X3.5-MM THK)	
M	86	4	**8T-5005**	2	BOLT (M10X1.5X70-MM)	
M	87	1,2	**8T-7044**	4	STUD-TAPERLOCK (M10X1.5X40-MM)	
I	88	4	**9R-1183**	1	HOSE AS	
					AVAILABLE REPAIR KIT(S):	
J			**170-0493**	1	KIT-SEAL (HYDRAULIC ACCUMULATOR)	
					(INCLUDES SEALS, BACKUP WASHERS & PISTON RINGS)	

I-REFER TO HYDRAULIC INFORMATION SYSTEM
J-KIT MARKED J SERVICES PART MARKED J
M-METRIC PART
Y-SEPARATE ILLUSTRATION

PROOF

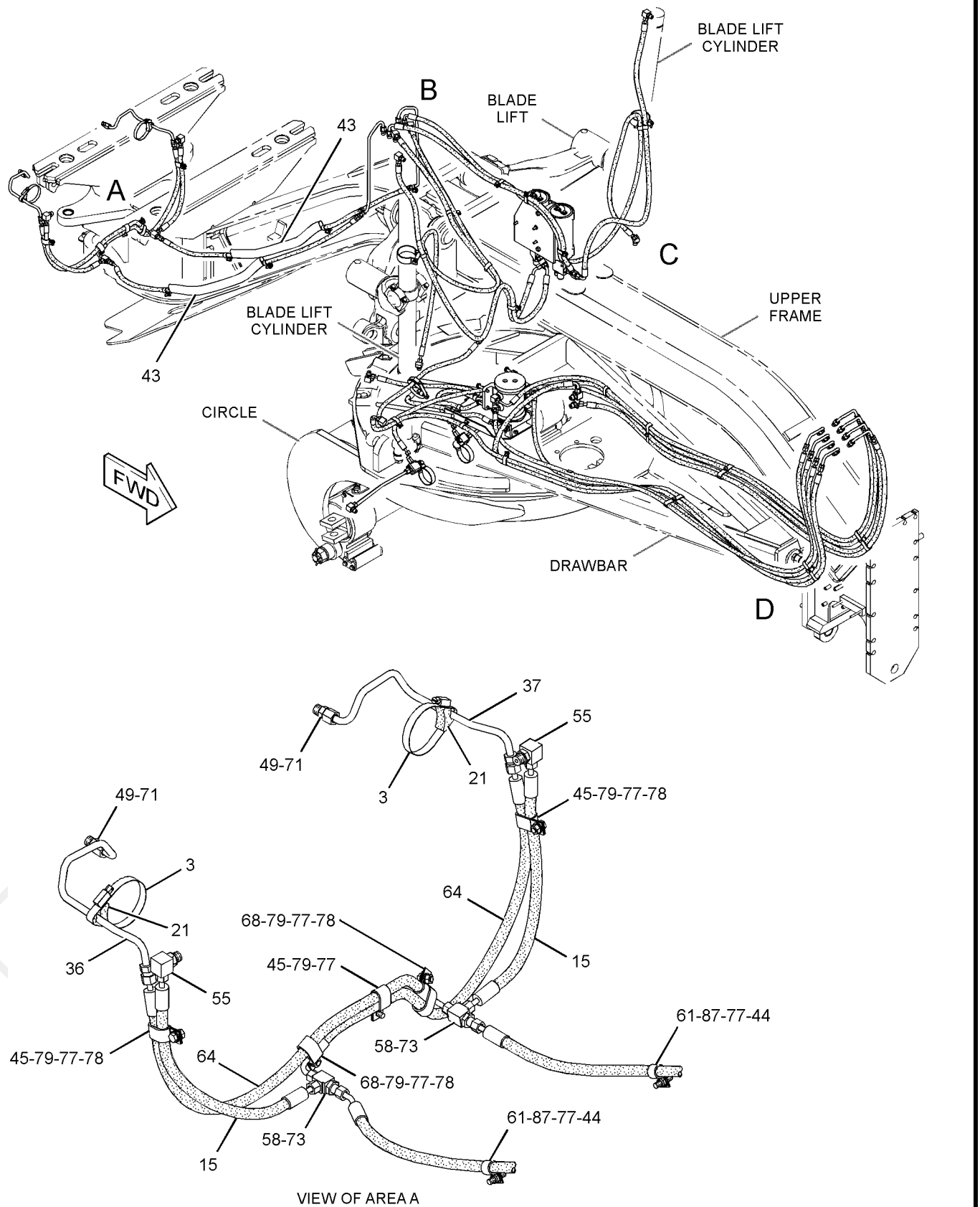

VIEW OF AREA A

GRAPHIC #1

g01152045

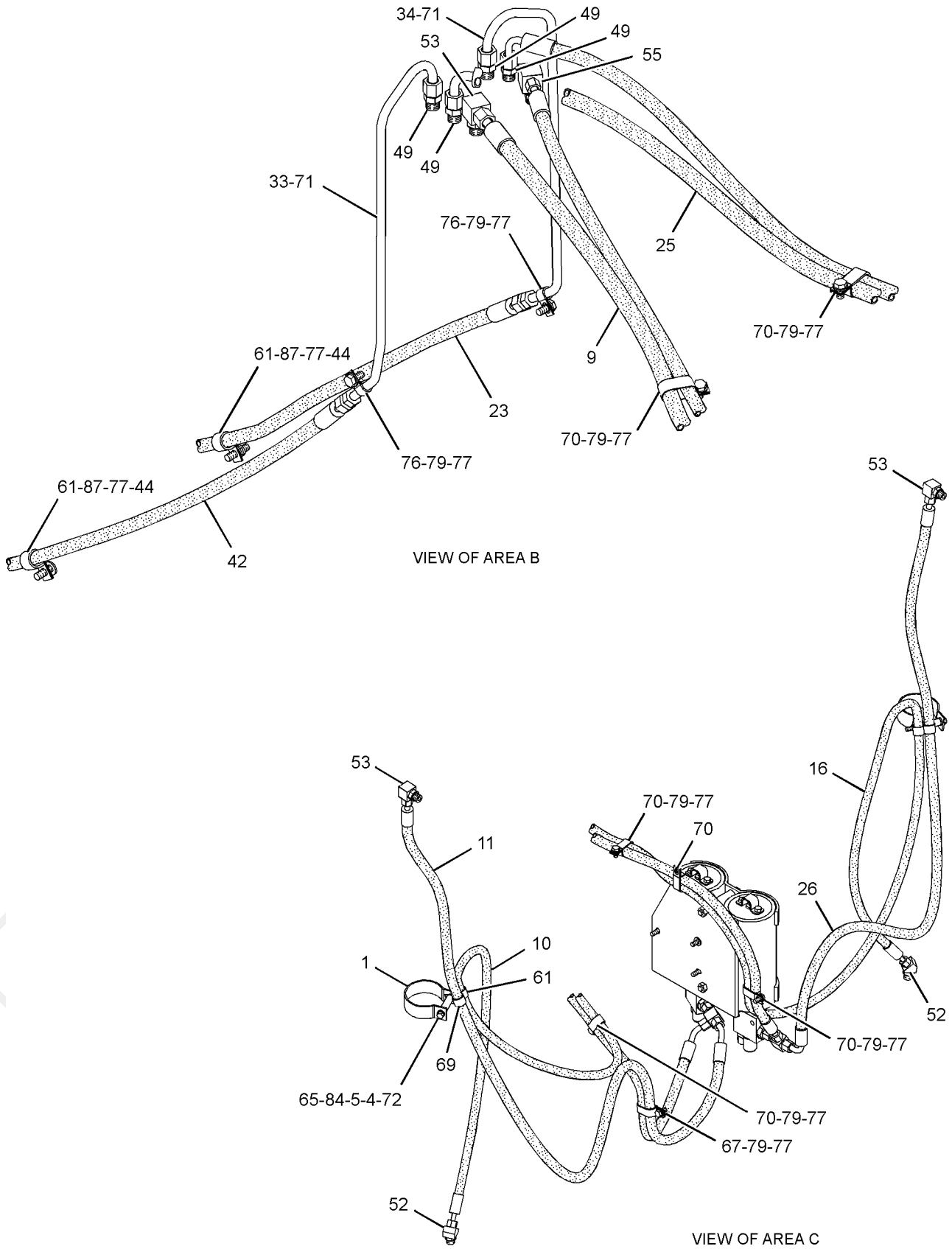

GRAPHIC #2

g01152046

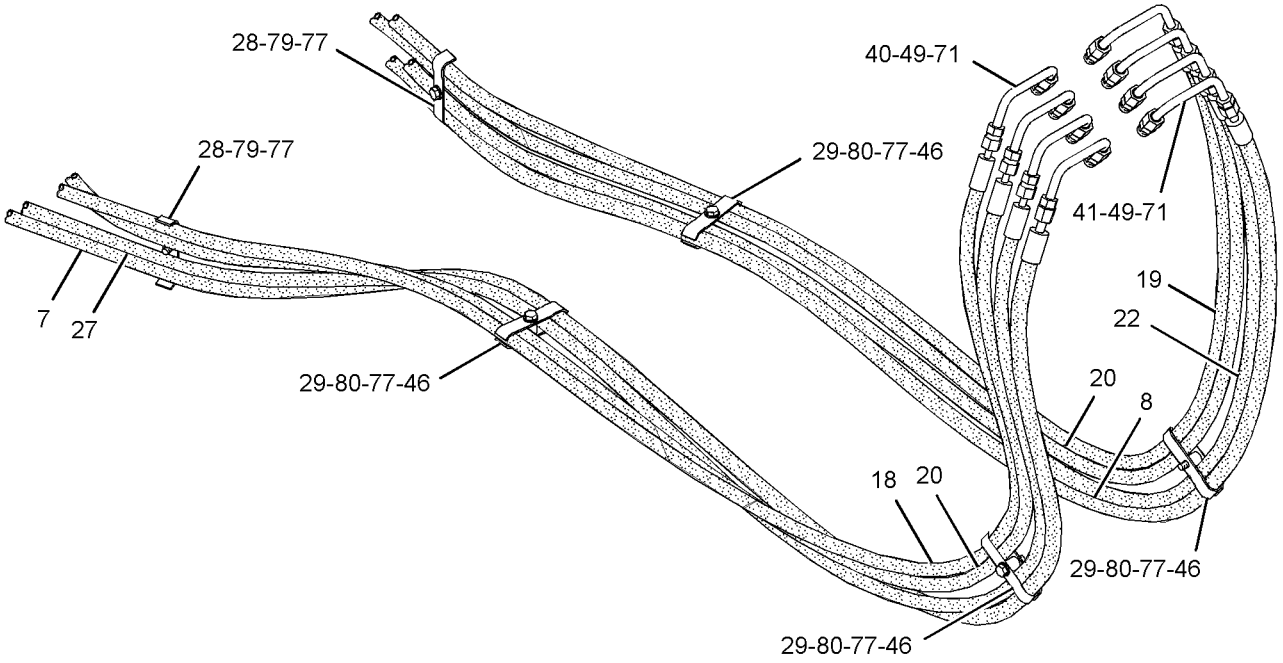

VIEW OF AREA D

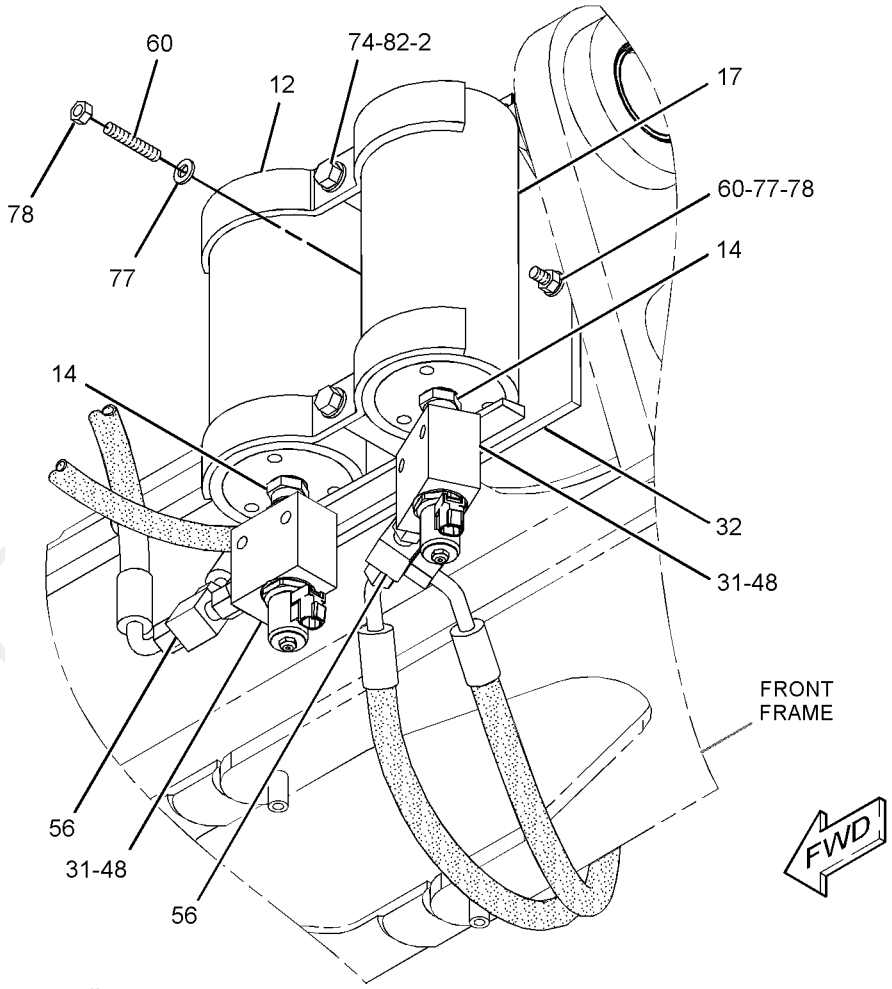

GRAPHIC #3

g01152047

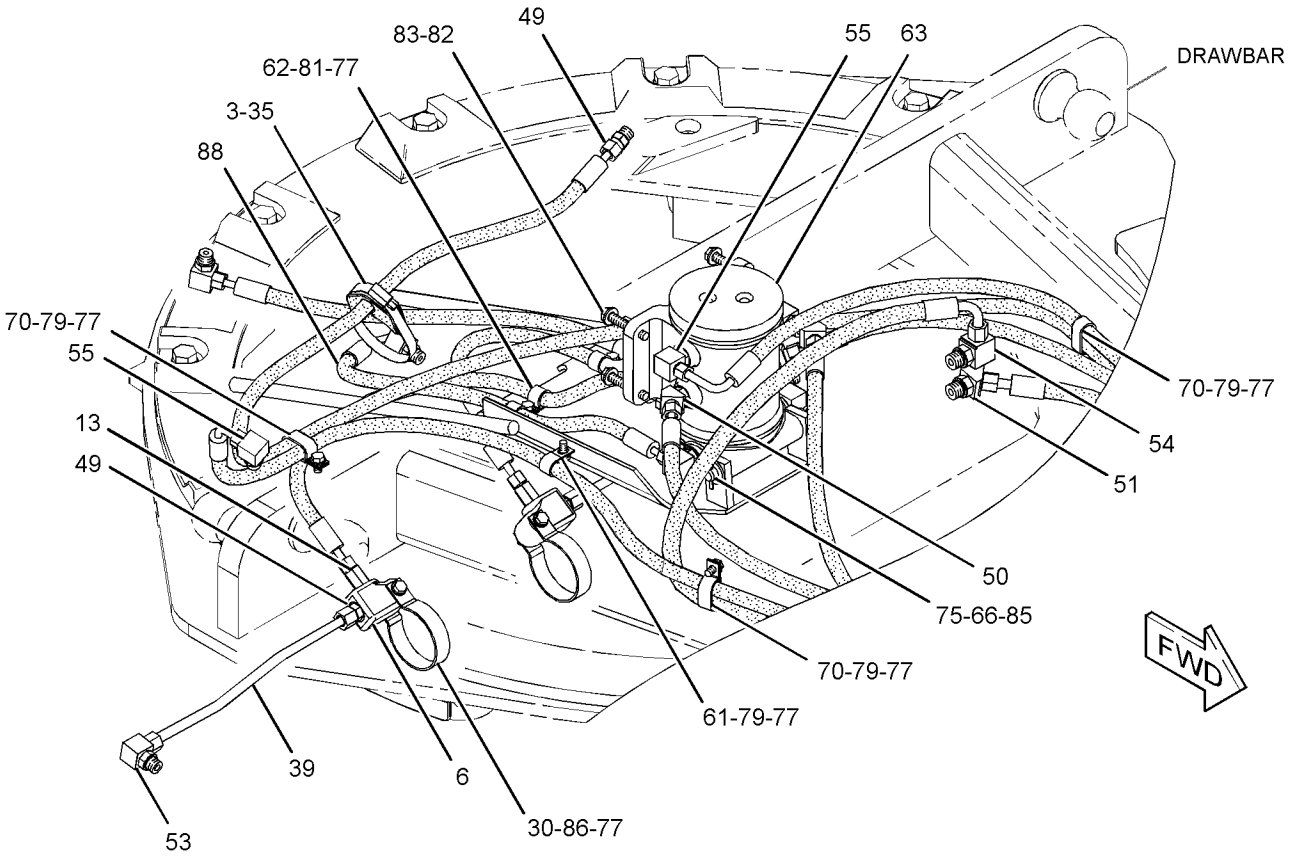

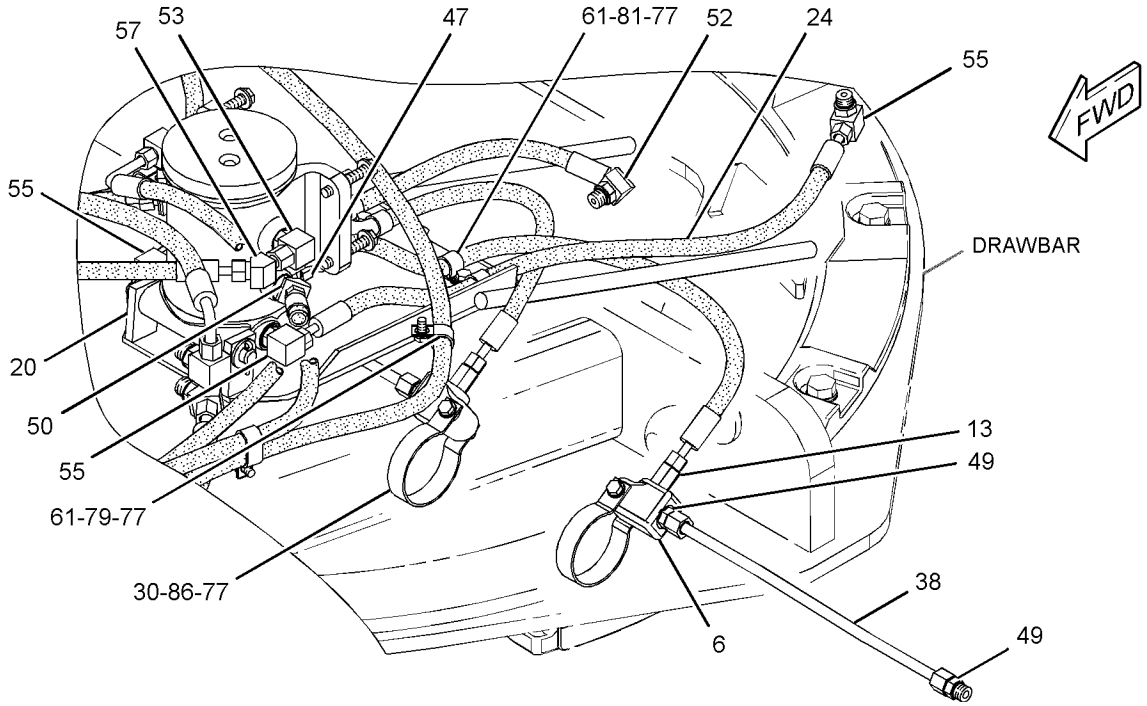

GRAPHIC #4 **<END>** g01152048

HYDRAULIC SYSTEM

231-1536 LINES GP-HYDRAULIC—PLOW, BULLDOZER ANGLE

S/N: B9M1-UP
2 CIRCUITS
AN ATTACHMENT

SMCS-5057 **i02237657**

NOTE	REF NO	GRAPHIC REF	PART NUMBER	QTY	PART NAME 1 2 3 4 5 6 (PRODUCT LEVEL)	SEE PAGE
I	1	1	**5T-9722**	2	HOSE AS	
I	2	1	**250-5697**	2	HOSE AS	
	3	1	*148-8340*	4	CONNECTOR AS	
					(EACH INCLUDES)	
		1	**3K-0360**	1	SEAL-O-RING	
		1	**6V-8398**	1	SEAL-O-RING	
		1	**6V-8639**	1	CONNECTOR	
	4	1	*150-4043*	4	CONNECTOR AS	
					(EACH INCLUDES)	
		1	**3J-1907**	1	SEAL-O-RING	
		1	**6V-8398**	1	SEAL-O-RING	
		1	**6V-9873**	1	CONNECTOR	
	5	1	**3E-4321**	2	CLIP	
	6	1	**6V-1228**	2	CLIP	

I-REFER TO HYDRAULIC INFORMATION SYSTEM

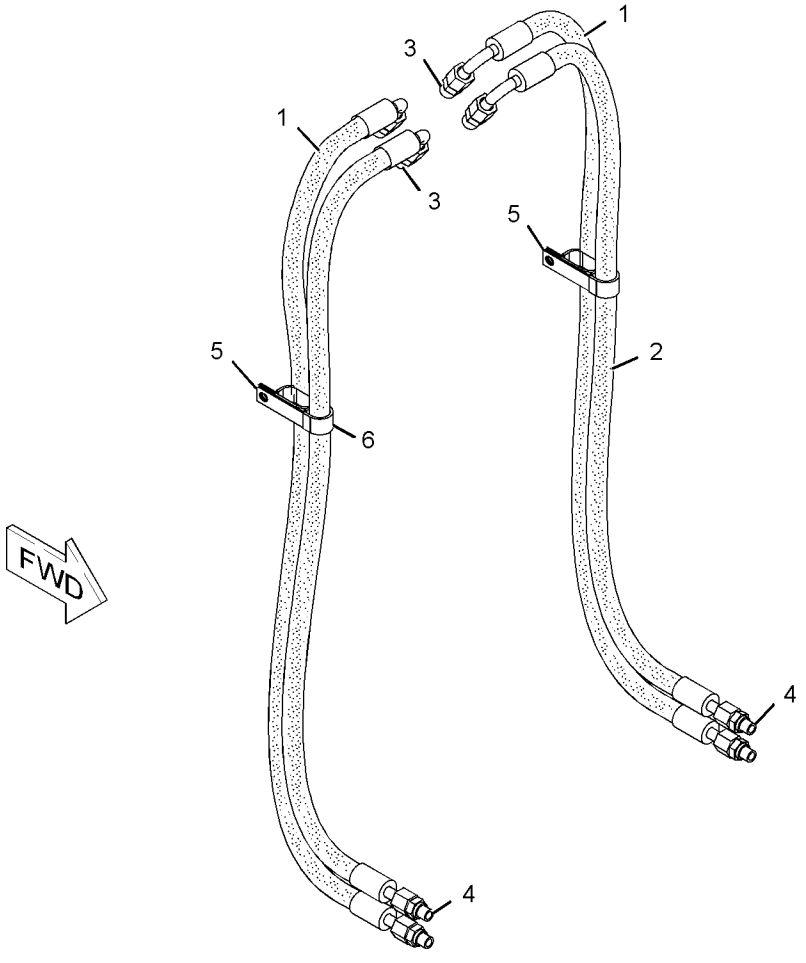

GRAPHIC #1 **<END>** g01136370

HYDRAULIC SYSTEM

231-1593 LINES GP-HYDRAULIC—PLOW, BULLDOZER ANGLE

S/N: B9M1-UP
1 CIRCUITS
AN ATTACHMENT

SMCS-5057 **i02237672**

NOTE	REF NO	GRAPHIC REF	PART NUMBER	QTY	PART NAME 1 2 3 4 5 6 (PRODUCT LEVEL)	SEE PAGE
I	1	1	**5T-9722**	2	HOSE AS	
	2	1	*148-8340*	2	CONNECTOR AS	
					(EACH INCLUDES)	
		1	**3K-0360**	1	SEAL-O-RING	
		1	**6V-8398**	1	SEAL-O-RING	
		1	**6V-8639**	1	CONNECTOR	
	3	1	*150-4043*	2	CONNECTOR AS	
					(EACH INCLUDES)	
		1	**3J-1907**	1	SEAL-O-RING	
		1	**6V-8398**	1	SEAL-O-RING	
		1	**6V-9873**	1	CONNECTOR	
	4	1	**3E-4321**	2	CLIP	

I-REFER TO HYDRAULIC INFORMATION SYSTEM

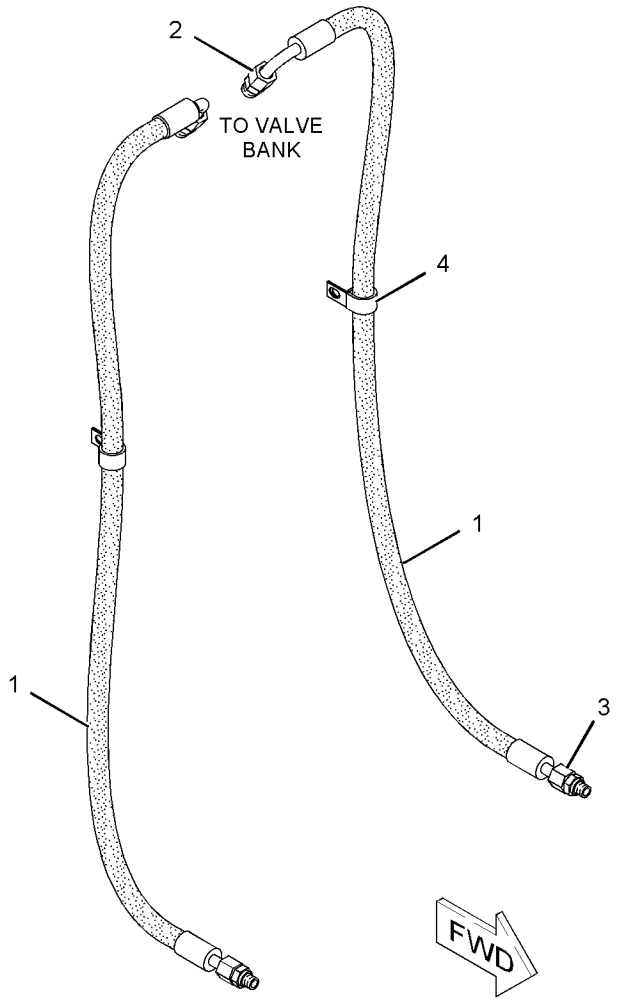

GRAPHIC #1 **<END>** g01132112

HYDRAULIC SYSTEM

266-3724 LINES GP-HYDRAULIC FAN

S/N: B9M1-UP

PART OF 269-1986 FAN AR-REVERSIBLE

AN ATTACHMENT

SMCS-1359, 1386, 1387, 5057 **i02290283**

NOTE	REF NO	GRAPHIC REF	PART NUMBER	QTY	PART NAME 1 2 3 4 5 6 (PRODUCT LEVEL)	SEE PAGE
I	1	2	**2T-2263**	1	HOSE AS	
	2	2	**6V-0852**	1	CAP-DUST	
I	3	1	**9R-5637**	1	HOSE AS	
	4	2	*148-8440*	1	TEE GP-ORFS	
		2	**3D-2824**	1	SEAL-O-RING	
		2	**6V-9746**	1	SEAL-O-RING	
		2	**8C-0569**	1	TEE-O-RING	
I	5	2	**149-6381**	1	HOSE AS	
Y	6	1	**237-0957**	1	SENSOR GP-PRESSURE	187
I	7	1	**246-7847**	1	HOSE AS	
I	8	1	**250-5700**	1	HOSE AS	
I	9	2	**250-5701**	1	HOSE AS	
Y	10	1	**251-8256**	1	MANIFOLD GP-CONTROL (BRAKE, HYDRAULIC FAN)	567
	11	1	**265-8969**	1	TUBE AS	
	12	2	*148-8315*	1	CONNECTOR AS	
		2	**2M-9780**	1	SEAL-O-RING	
		2	**6V-8642**	1	CONNECTOR	
		2	**7J-9108**	1	SEAL-O-RING	
	13	2	*148-8327*	1	CONNECTOR AS	
		2	**3D-2824**	1	SEAL-O-RING	
		2	**6V-8637**	1	CONNECTOR	
		2	**6V-9746**	1	SEAL-O-RING	
	14	2	*148-8339*	1	CONNECTOR AS	
		2	**6V-8716**	1	CONNECTOR	
		2	**6V-9746**	1	SEAL-O-RING	
		2	**7M-8485**	1	SEAL-O-RING	
	15	1	*148-8341*	1	CONNECTOR AS	
		1	**3D-2824**	1	SEAL-O-RING	
		1	**6V-8713**	1	CONNECTOR	
		1	**7J-9108**	1	SEAL-O-RING	
	16	2	*148-8345*	1	CONNECTOR AS	
		2	**2M-9780**	1	SEAL-O-RING	
		2	**6V-8398**	1	SEAL-O-RING	
		2	**6V-8638**	1	CONNECTOR	
	17	2	*148-8361*	1	ELBOW AS	
		2	**3J-7354**	1	SEAL-O-RING	
		2	**6V-8397**	1	SEAL-O-RING	
		2	**6V-9200**	1	ELBOW	
	18	1	*148-8365*	1	ELBOW AS	
		1	**3J-1907**	1	SEAL-O-RING	
		1	**6V-8398**	1	SEAL-O-RING	
		1	**8T-6876**	1	ELBOW	
	19	2	**148-8378**	1	ELBOW AS	
		2	**3J-1907**	1	SEAL-O-RING	
		2	**6V-8397**	1	SEAL-O-RING	
		2	**6V-8724**	1	ELBOW	
	20	1	*148-8393*	1	ELBOW GP	
		1	**6V-9852**	1	ELBOW (SWIVEL)	
		1	**7J-9108**	1	SEAL-O-RING	
	21	2	*164-5561*	1	ADAPTER AS	
		2	**2M-9780**	1	SEAL-O-RING	
		2	**5P-1042**	1	ADAPTER-O-RING	
	22	2	*164-5567*	1	FITTING GP-COUPLING	
		2	**3J-1907**	1	SEAL-O-RING	
		2	**6V-3965**	1	FITTING AS (QUICK DISCONNECT)	

PROOF

266-3724 **LINES GP-HYDRAULIC FAN** *(contd.)* **i02290283**

NOTE	REF NO	GRAPHIC REF	PART NUMBER	QTY	PART NAME 1 2 3 4 5 6 (PRODUCT LEVEL)	SEE PAGE
	23	2	*169-7391*	1	TEE GP	
		2	**6V-8398**	1	SEAL-O-RING	
		2	**6V-9352**	1	TEE-BULKHEAD	
		2	**7J-9108**	2	SEAL-O-RING	
	24	1	**177-8839**	2	CLIP	
	25	2	**4J-5267**	1	SEAL-O-RING	
	26	1	**4S-1962**	1	CLIP	
	27	1,2	**4S-4455**	4	CLIP	
	28	2	**6V-9169**	1	NUT-BULKHEAD (13/16-16-THD)	
	29	1	**7D-1553**	1	CLIP	
M	30	1	**7X-2543**	2	BOLT (M10X1.5X120-MM)	
	31	2	**8C-3205**	2	FLANGE-HALF	
M	32	1,2	**8T-4121**	13	WASHER-HARD (11X21X2.5-MM THK)	
M	33	1	**8T-4132**	1	NUT (M16X2-THD)	
M	34	1	**8T-4133**	2	NUT (M10X1.5-THD)	
M	35	1,2	**8T-4137**	5	BOLT (M10X1.5X20-MM)	
M	36	2	**8T-4196**	4	BOLT (M10X1.5X35-MM)	
M	37	1	**8T-4779**	2	BOLT (M16X2X35-MM)	
	38	1	**9X-8257**	3	WASHER (17.5X30X3.5-MM THK)	

I-REFER TO HYDRAULIC INFORMATION SYSTEM
M-METRIC PART
Y-SEPARATE ILLUSTRATION

PROOF

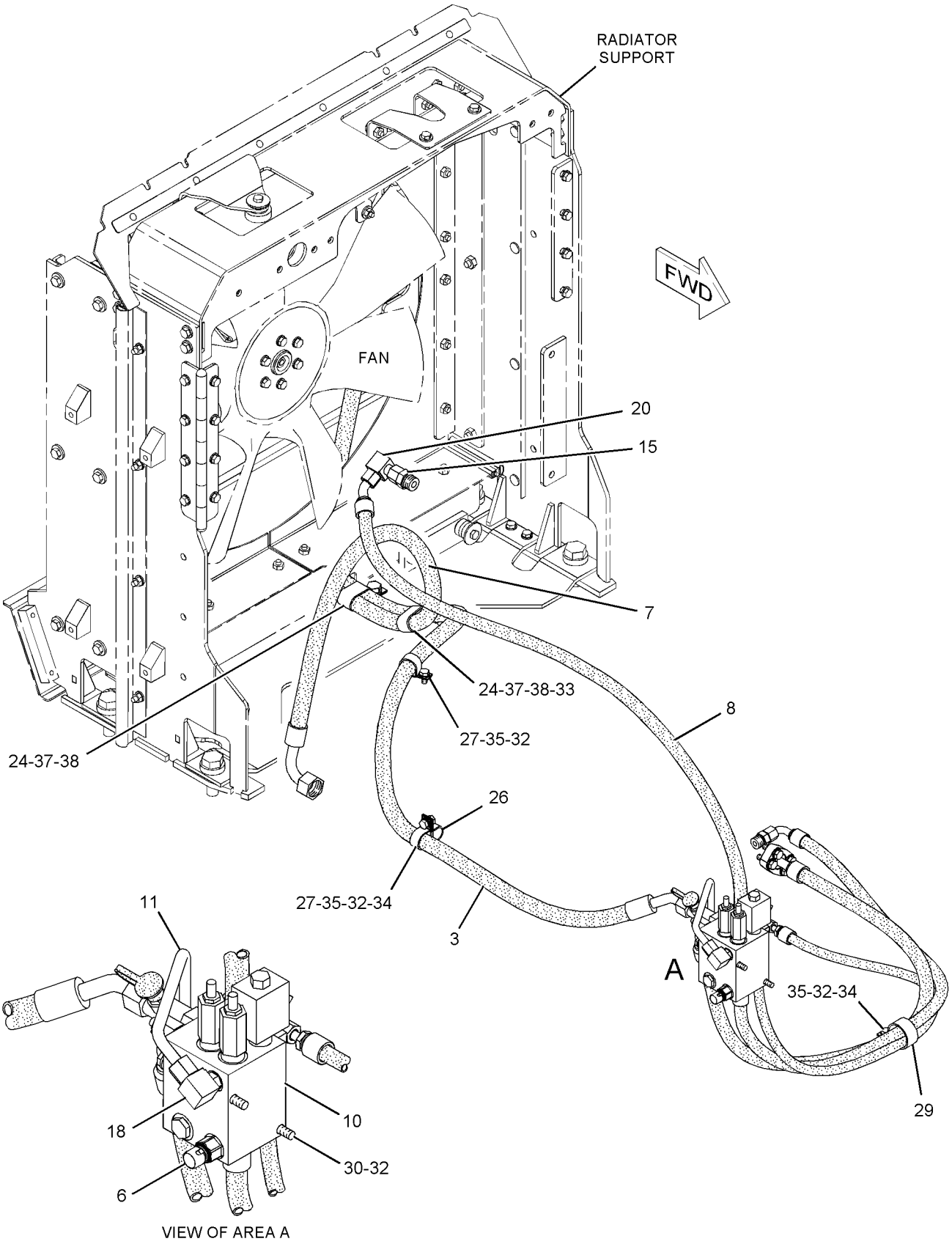

GRAPHIC #1 g01147708

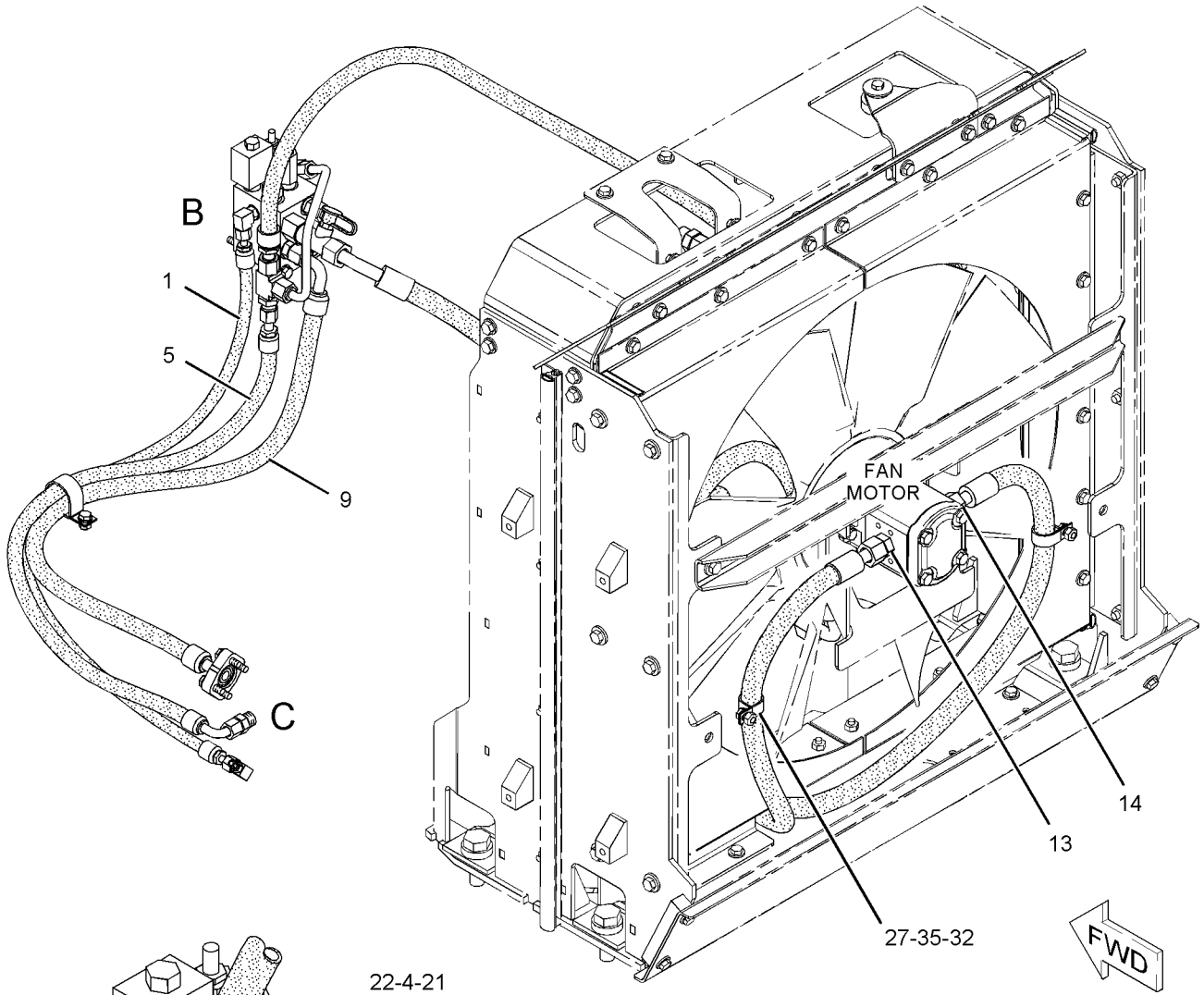

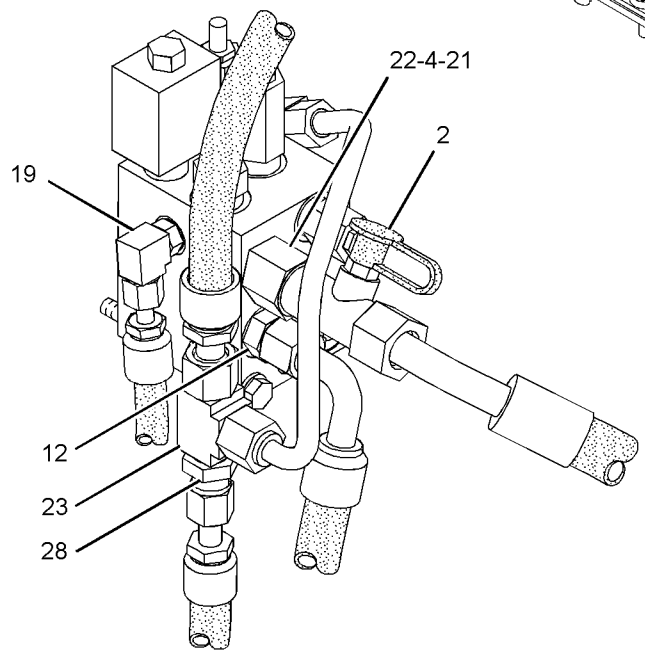

VIEW OF AREA B

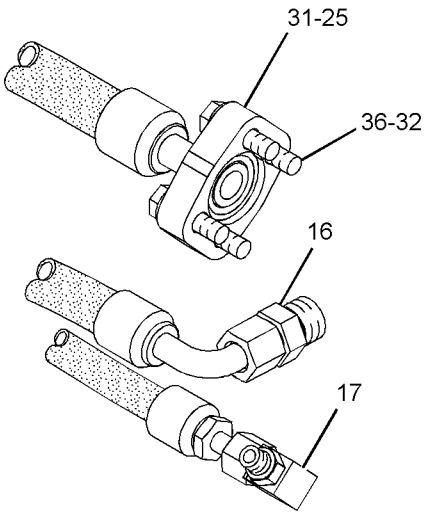

VIEW OF AREA C

GRAPHIC #2 **<END>** g01147709

HYDRAULIC SYSTEM

231-1523 LINES GP-PUMP—IMPLEMENT, STEERING

S/N: B9M1-UP

AN ATTACHMENT

SMCS-5057 **i02277692**

NOTE	REF NO	GRAPHIC REF	PART NUMBER	QTY	PART NAME 1 2 3 4 5 6 (PRODUCT LEVEL)	SEE PAGE
	1	2	**6R-7605**	1	VALVE-SHUTTLE	
	2	2	**245-7601**	1	TUBE AS	
	3	2	**246-3350**	1	TUBE AS	
	4	2	**246-3361**	1	TUBE AS	
	5	2	**246-6331**	1	TUBE AS	
	6	2	**246-6332**	1	TUBE AS	
	7	2	**246-6333**	1	TUBE AS	
	8	2	**246-6334**	1	TUBE AS	
	9	2	**246-6335**	1	TUBE AS	
	10	1,2	**246-6336**	1	TUBE AS	
	11	1	**248-4032**	2	BLOCK	
	12	1	**248-4033**	2	BLOCK	
	13	1	**248-4034**	2	BLOCK	
	14	1	**248-4035**	2	BLOCK	
	15	1,2	*250-1420*	2	CONNECTOR AS	
					(EACH INCLUDES)	
		1,2	**3K-0360**	1	SEAL-O-RING	
		1,2	**7J-9108**	1	SEAL-O-RING	
		1,2	**250-1419**	1	CONNECTOR	
Y	16	1	**250-1940**	1	LINES GP-PUMP	538
	17	1	**252-1867**	2	SEAL	
	18	2	**254-4486**	1	BLOCK	
	19	2	**271-6369**	1	TUBE AS	
	20	2	**271-6370**	1	TUBE AS	
M	21	1	**096-4883**	4	LOCKNUT (M10X1.5-THD)	
	22	2	*148-8315*	1	CONNECTOR AS	
		2	**2M-9780**	1	SEAL-O-RING	
		2	**6V-8642**	1	CONNECTOR	
		2	**7J-9108**	1	SEAL-O-RING	
	23	1,2	*148-8335*	5	CONNECTOR AS	
					(EACH INCLUDES)	
		1,2	**5K-9090**	1	SEAL-O-RING	
		1,2	**6V-8635**	1	CONNECTOR	
		1,2	**7M-8485**	1	SEAL-O-RING	
	24	2	*148-8336*	4	CONNECTOR AS	
					(EACH INCLUDES)	
		2	**3J-1907**	1	SEAL-O-RING	
		2	**6V-8397**	1	SEAL-O-RING	
		2	**6V-8636**	1	CONNECTOR	
	25	2	*148-8340*	3	CONNECTOR AS	
					(EACH INCLUDES)	
		2	**3K-0360**	1	SEAL-O-RING	
		2	**6V-8398**	1	SEAL-O-RING	
		2	**6V-8639**	1	CONNECTOR	
	26	2	*148-8342*	1	CONNECTOR GP	
		2	**3K-0360**	1	SEAL-O-RING	
		2	**6V-8632**	1	CONNECTOR	
		2	**7J-9108**	1	SEAL-O-RING	
	27	2	**148-8353**	1	ELBOW AS	
		2	**3J-1907**	1	SEAL-O-RING	
		2	**6V-8397**	1	SEAL-O-RING	
		2	**6V-9001**	1	ELBOW	
	28	2	*148-8355*	1	ELBOW AS	
		2	**5K-9090**	1	SEAL-O-RING	
		2	**6V-9005**	1	ELBOW	
		2	**7M-8485**	1	SEAL-O-RING	

PROOF

231-1523 LINES GP-PUMP *(contd.)* i02277692

NOTE	REF NO	GRAPHIC REF	PART NUMBER	QTY	PART NAME 1 2 3 4 5 6 (PRODUCT LEVEL)	SEE PAGE
	29	2	*148-8361*	1	ELBOW AS	
		2	**3J-7354**	1	SEAL-O-RING	
		2	**6V-8397**	1	SEAL-O-RING	
		2	**6V-9200**	1	ELBOW	
	30	2	**148-8378**	1	ELBOW AS	
		2	**3J-1907**	1	SEAL-O-RING	
		2	**6V-8397**	1	SEAL-O-RING	
		2	**6V-8724**	1	ELBOW	
	31	2	*148-8446*	1	TEE GP-SWIVEL	
		2	**6V-9838**	1	TEE-SWIVEL	
		2	**7J-9108**	2	SEAL-O-RING	
	32	2	*150-4031*	2	TEE AS	
					(EACH INCLUDES)	
		2	**6V-9845**	1	TEE-SWIVEL	
		2	**7J-9108**	3	SEAL-O-RING	
	33	2	*150-4048*	1	ELBOW AS	
		2	**3K-0360**	1	SEAL-O-RING	
		2	**6V-8722**	1	ELBOW	
		2	**7J-9108**	1	SEAL-O-RING	
	34	2	*164-5615*	2	ELBOW AS	
					(EACH INCLUDES)	
		2	**4K-1388**	1	SEAL-O-RING	
		2	**5K-9090**	1	SEAL-O-RING	
		2	**8T-8986**	1	ELBOW	
	35	1	*198-0143*	1	ELBOW AS	
		1	**7J-9108**	1	SEAL-O-RING	
		1	**157-2348**	1	ELBOW (SWIVEL)	
	36	2	**2M-9780**	1	SEAL-O-RING	
	37	2	**4J-0520**	1	SEAL-O-RING	
	38	1	**6V-8397**	1	SEAL-O-RING	
	39	2	**8C-3206**	2	FLANGE-HALF	
M	40	1,2	**8T-4121**	15	WASHER-HARD (11X21X2.5-MM THK)	
M	41	2	**8T-4136**	2	BOLT (M10X1.5X25-MM)	
M	42	2	**8T-4195**	1	BOLT (M10X1.5X30-MM)	
M	43	2	**8T-4196**	8	BOLT (M10X1.5X35-MM)	
	44	2	**9S-1350**	1	CLIP	
	45	2	**9X-2134**	1	ELBOW	

M-METRIC PART
Y-SEPARATE ILLUSTRATION

PROOF

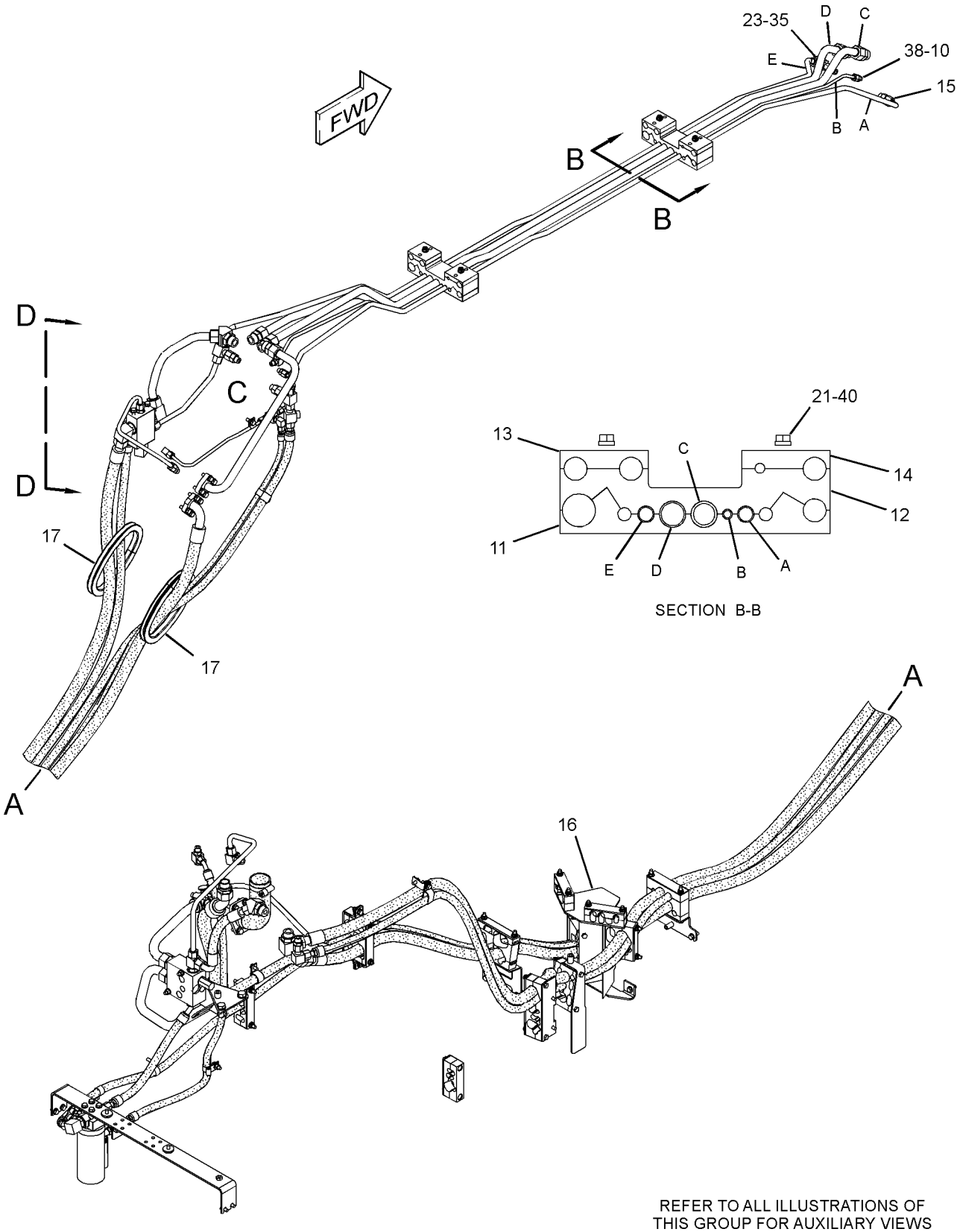

REFER TO ALL ILLUSTRATIONS OF
THIS GROUP FOR AUXILIARY VIEWS

GRAPHIC #1

g01163723

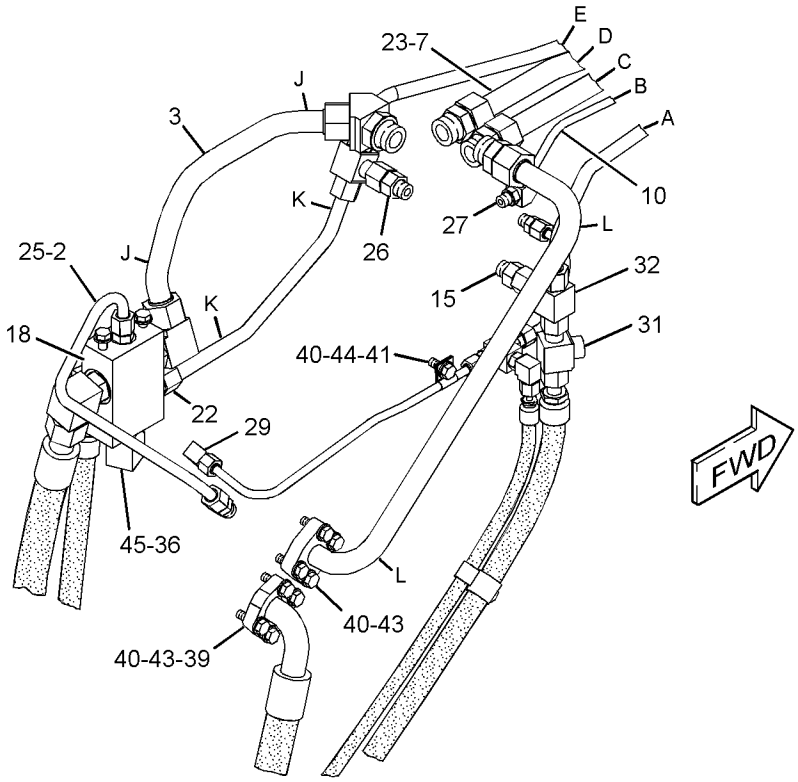

VIEW OF AREA C

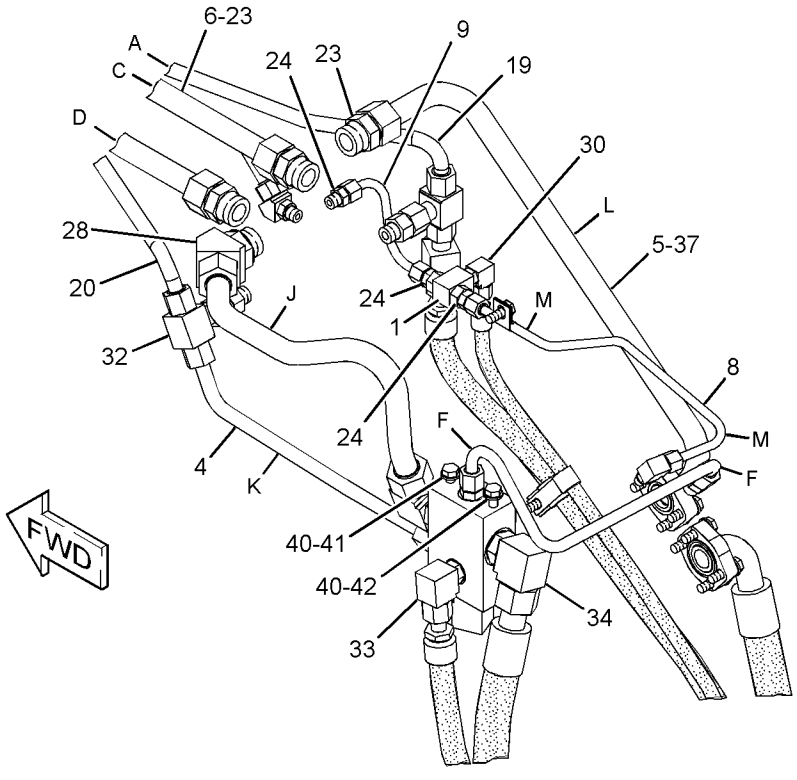

VIEW D-D

GRAPHIC #2 **<END>** g01163724

HYDRAULIC SYSTEM

237-6423 LINES GP-PUMP–SECONDARY STEERING

S/N: B9M1-UP

PART OF 261-0611, 261-0774 STEERING AR-SECONDARY

AN ATTACHMENT

SMCS-5057 **i02353257**

NOTE	REF NO	GRAPHIC REF	PART NUMBER	QTY	PART NAME 1 2 3 4 5 6 (PRODUCT LEVEL)	SEE PAGE
	1	2	**6R-7605**	1	VALVE-SHUTTLE	
	2	2	**245-7601**	1	TUBE AS	
	3	1	**245-7604**	1	TUBE AS	
	4	1	**245-7605**	1	TUBE AS	
	5	2	**246-3350**	1	TUBE AS	
	6	2	**246-3361**	1	TUBE AS	
	7	2	**246-6331**	1	TUBE AS	
	8	1	**246-6332**	1	TUBE AS	
	9	1	**246-6333**	1	TUBE AS	
	10	2	**246-6334**	1	TUBE AS	
	11	2	**246-6335**	1	TUBE AS	
	12	1	**246-6336**	1	TUBE AS	
	13	1	**248-4032**	2	BLOCK	
	14	1	**248-4033**	2	BLOCK	
	15	1	**248-4034**	2	BLOCK	
	16	1	**248-4035**	2	BLOCK	
	17	1,2	*250-1420*	2	CONNECTOR AS	
					(EACH INCLUDES)	
		1,2	**3K-0360**	1	SEAL-O-RING	
		1,2	**7J-9108**	1	SEAL-O-RING	
		1,2	**250-1419**	1	CONNECTOR	
Y	18	1	**251-4380**	1	LINES GP-PUMP (SECONDARY STEERING)	545
	19	2	**252-1867**	2	SEAL	
	20	2	**254-4486**	1	BLOCK	
M	21	1	**096-4883**	4	LOCKNUT (M10X1.5-THD)	
	22	2	*148-8315*	1	CONNECTOR AS	
		2	**2M-9780**	1	SEAL-O-RING	
		2	**6V-8642**	1	CONNECTOR	
		2	**7J-9108**	1	SEAL-O-RING	
	23	2	*148-8335*	5	CONNECTOR AS	
					(EACH INCLUDES)	
		2	**5K-9090**	1	SEAL-O-RING	
		2	**6V-8635**	1	CONNECTOR	
		2	**7M-8485**	1	SEAL-O-RING	
	24	1,2	*148-8336*	4	CONNECTOR AS	
					(EACH INCLUDES)	
		1,2	**3J-1907**	1	SEAL-O-RING	
		1,2	**6V-8397**	1	SEAL-O-RING	
		1,2	**6V-8636**	1	CONNECTOR	
	25	1,2	*148-8340*	3	CONNECTOR AS	
					(EACH INCLUDES)	
		1,2	**3K-0360**	1	SEAL-O-RING	
		1,2	**6V-8398**	1	SEAL-O-RING	
		1,2	**6V-8639**	1	CONNECTOR	
	26	2	*148-8342*	1	CONNECTOR GP	
		2	**3K-0360**	1	SEAL-O-RING	
		2	**6V-8632**	1	CONNECTOR	
		2	**7J-9108**	1	SEAL-O-RING	
	27	2	*148-8353*	1	ELBOW AS	
		2	**3J-1907**	1	SEAL-O-RING	
		2	**6V-8397**	1	SEAL-O-RING	
		2	**6V-9001**	1	ELBOW	
	28	2	*148-8355*	1	ELBOW AS	
		2	**5K-9090**	1	SEAL-O-RING	
		2	**6V-9005**	1	ELBOW	

PROOF

237-6423 **LINES GP-PUMP** *(contd.)* **i02353257**

NOTE	REF NO	GRAPHIC REF	PART NUMBER	QTY	PART NAME 1 2 3 4 5 6 (PRODUCT LEVEL)	SEE PAGE
		2	**7M-8485**	1	SEAL-O-RING	
	29	2	*148-8361*	1	ELBOW AS	
		2	**3J-7354**	1	SEAL-O-RING	
		2	**6V-8397**	1	SEAL-O-RING	
		2	**6V-9200**	1	ELBOW	
	30	2	*148-8378*	1	ELBOW AS	
		2	**3J-1907**	1	SEAL-O-RING	
		2	**6V-8397**	1	SEAL-O-RING	
		2	**6V-8724**	1	ELBOW	
	31	2	*148-8446*	1	TEE GP-SWIVEL	
		2	**6V-9838**	1	TEE-SWIVEL	
		2	**7J-9108**	2	SEAL-O-RING	
	32	2	*150-4031*	2	TEE AS	
					(EACH INCLUDES)	
		2	**6V-9845**	1	TEE-SWIVEL	
		2	**7J-9108**	3	SEAL-O-RING	
	33	2	*150-4048*	1	ELBOW AS	
		2	**3K-0360**	1	SEAL-O-RING	
		2	**6V-8722**	1	ELBOW	
		2	**7J-9108**	1	SEAL-O-RING	
	34	2	*164-5615*	2	ELBOW AS	
					(EACH INCLUDES)	
		2	**4K-1388**	1	SEAL-O-RING	
		2	**5K-9090**	1	SEAL-O-RING	
		2	**8T-8986**	1	ELBOW	
	35	1	*198-0143*	1	ELBOW AS	
		1	**7J-9108**	1	SEAL-O-RING	
		1	**157-2348**	1	ELBOW (SWIVEL)	
	36	2	**2M-9780**	1	SEAL-O-RING	
	37	2	**4J-0520**	1	SEAL-O-RING	
	38	2	**6V-8397**	1	SEAL-O-RING	
	39	2	**8C-3206**	2	FLANGE-HALF	
M	40	1,2	**8T-4121**	19	WASHER-HARD (11X21X2.5-MM THK)	
M	41	2	**8T-4136**	2	BOLT (M10X1.5X25-MM)	
M	42	1,2	**8T-4195**	5	BOLT (M10X1.5X30-MM)	
M	43	2	**8T-4196**	8	BOLT (M10X1.5X35-MM)	
	44	2	**9S-1350**	1	CLIP	
	45	2	**9X-2134**	1	ELBOW	

M-METRIC PART
Y-SEPARATE ILLUSTRATION

PROOF

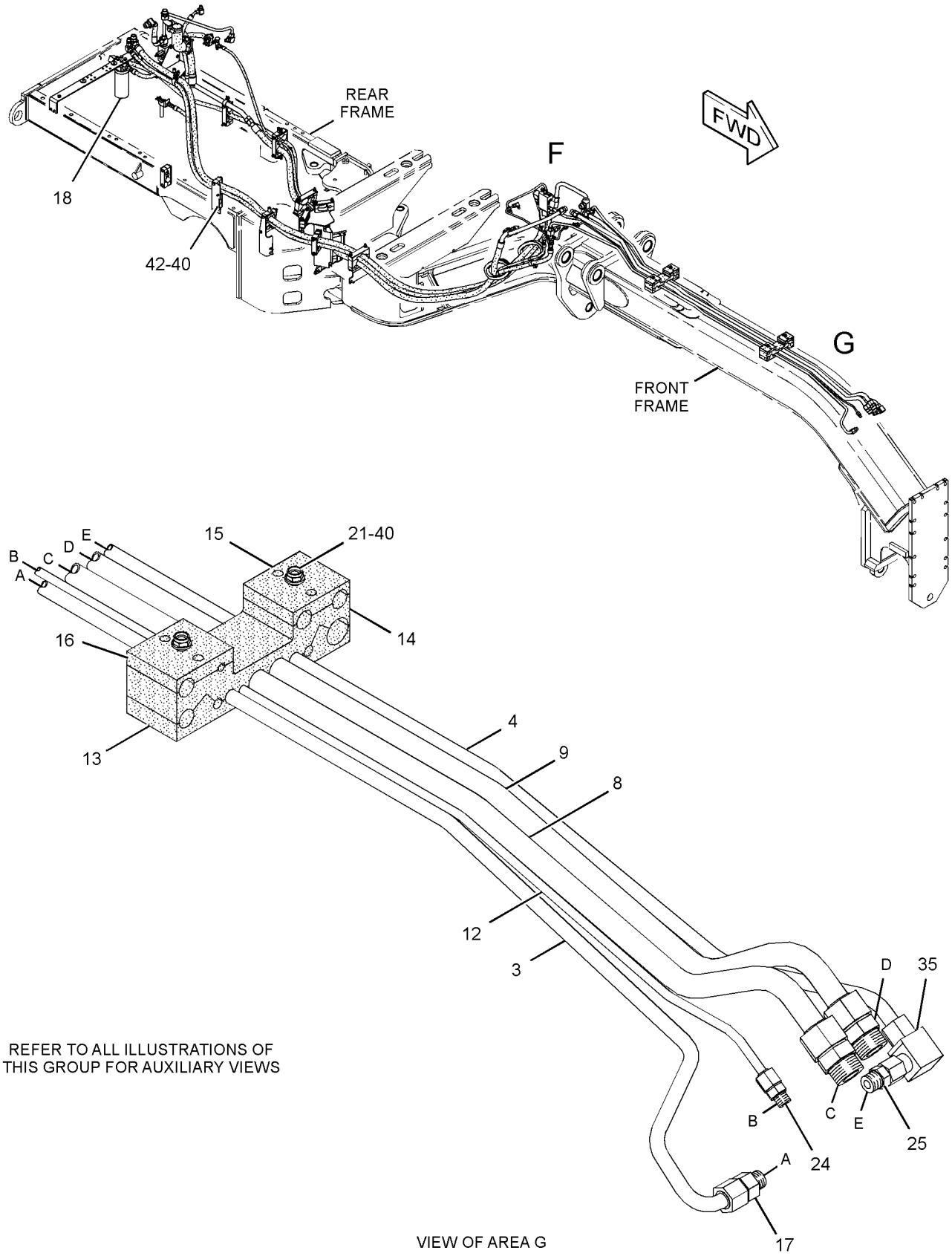

GRAPHIC #1

g01153754

237-6423 **LINES GP-PUMP** *(contd.)* **i02353257**

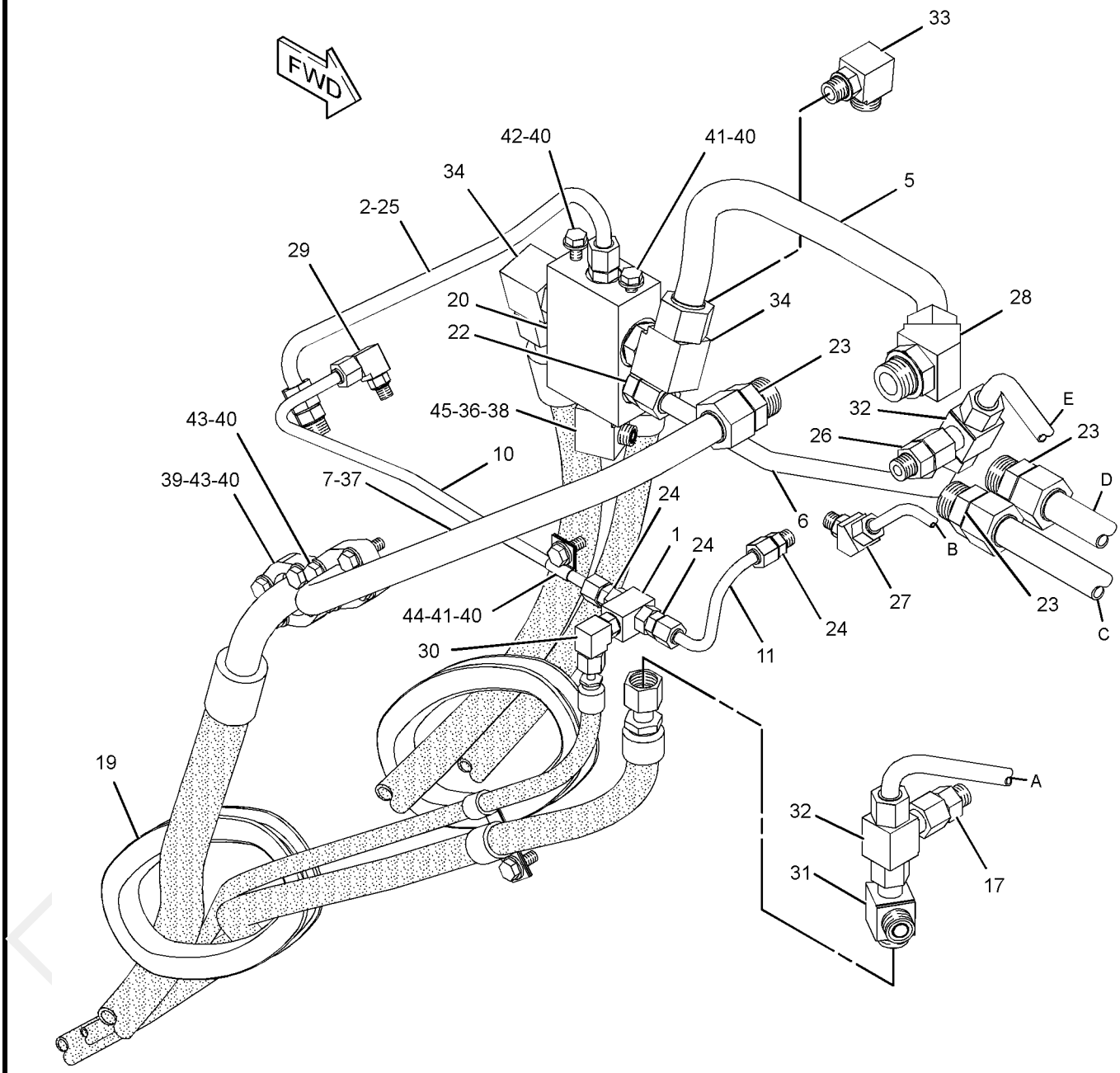

VIEW OF AREA F

GRAPHIC #2 **<END>** g01153755

HYDRAULIC SYSTEM

250-1940 LINES GP-PUMP

S/N: B9M1-UP
PART OF 231-1523 LINES GP-PUMP
AN ATTACHMENT

SMCS-5057 **i02277693**

NOTE	REF NO	GRAPHIC REF	PART NUMBER	QTY	PART NAME 1 2 3 4 5 6 (PRODUCT LEVEL)	SEE PAGE
	1	4	**5D-1026**	1	CLAMP-HOSE	
	2	3	**5P-4868**	2	CLAMP-HOSE	
	3	3	**6N-6984**	2	MOUNT-RUBBER	
	4	4	**6V-0852**	1	CAP-DUST	
	5	4	**6V-7238**	1	VALVE-SHUTOFF	
	6	3	**178-0572**	2	STUD-TAPERLOCK (M10X1.5-THD)	
	7	4	*184-2420*	1	ADAPTER AS	
		4	**3E-7401**	1	ADAPTER	
		4	**6V-8397**	1	SEAL-O-RING	
Y	8	3	**191-9784**	1	FILTER GP-OIL	502
I	9	1	**238-6672**	1	HOSE AS	
	10	2	**246-3347**	1	BLOCK	
	11	2	**246-3348**	1	BLOCK	
	12	3	**246-3352**	1	TUBE AS	
I	13	1	**246-3354**	1	HOSE AS	
I	14	3	**246-3355**	1	HOSE AS	
I	15	1	**246-3356**	1	HOSE AS	
	16	3	**245-7600**	1	TUBE AS	
I	17	1	**246-3358**	1	HOSE AS	
I	18	1	**246-3359**	1	HOSE AS	
I	19	3	**246-3362**	1	HOSE AS	
	20	3	**246-3372**	1	HOSE	
	21	2	**246-3378**	1	PLATE	
I	22	1	**246-6328**	1	HOSE AS	
	23	1	**247-4243**	1	BLOCK	
	24	1	**247-4244**	1	BLOCK	
	25	1	**247-4245**	1	BLOCK	
	26	1	**247-4246**	1	BLOCK	
	27	1	**247-4249**	1	PLATE AS	
	28	1	**247-4250**	1	PLATE	
	29	1	**247-4768**	1	BLOCK	
	30	1	**247-4769**	1	BLOCK	
	31	1	**248-4029**	1	BLOCK	
	32	1	**248-5235**	1	PLATE AS	
M		1	**7X-2544**	2	BOLT (M10X1.5X104-MM)	
M		1	**8T-4172**	2	BOLT (M10X1.5X80-MM)	
M		1	**8T-4178**	2	BOLT (M10X1.5X90-MM)	
M		1	**8T-5436**	2	BOLT (M10X1.5X130-MM)	
	33	1	**248-5236**	1	PLATE	
	34	3	*250-1454*	1	TEE AS	
		3	**3D-2824**	1	SEAL-O-RING	
		3	**6V-9746**	1	SEAL-O-RING	
		3	**7J-9108**	1	SEAL-O-RING	
		3	**118-4569**	1	TEE	
	35	3	**250-5709**	1	TUBE AS	
	36	2	**253-0472**	1	PLATE AS	
	37	2	**255-0683**	1	PLATE	
	38	1	**255-0686**	1	PLATE	
	39	3	**255-0688**	1	PLATE	
	40	4	**6V-8397**	1	SEAL-O-RING	
	41	2	**257-7066**	1	BRACKET AS	
M		2	**7X-2545**	2	BOLT (M10X1.5X150-MM)	
	42	1	**262-8361**	1	BLOCK	
	43	1	**262-8362**	1	BLOCK	
	44	1	**262-8363**	1	BLOCK	

REPROOF

250-1940 LINES GP-PUMP *(contd.)* i02277693

NOTE	REF NO	GRAPHIC REF	PART NUMBER	QTY	PART NAME 1 2 3 4 5 6 (PRODUCT LEVEL)	SEE PAGE
	45	1	**262-8364**	1	BLOCK	
	46	1	**262-8365**	1	BLOCK	
	47	1	**262-8366**	1	BLOCK	
	48	2	**262-8367**	1	BLOCK	
	49	2	**262-8368**	1	BLOCK	
	50	2	**262-8369**	1	BLOCK	
	51	2	**262-8370**	1	BLOCK	
	52	2	**262-8371**	1	BLOCK	
	53	2	**262-8372**	1	BLOCK	
	54	2	**262-8373**	1	BLOCK	
	55	2	**262-8374**	1	BLOCK	
	56	3	**262-8375**	1	BLOCK	
	57	3	**262-8376**	1	BLOCK	
	58	3	**262-8377**	1	BLOCK	
	59	3	**262-8378**	1	BLOCK	
	60	3	**262-8379**	1	BLOCK	
	61	2	**262-8380**	1	PLATE	
	62	2	**262-8381**	1	PLATE	
	63	3	**263-1790**	1	MANIFOLD GP-CONTROL	
	64	1	**264-0637**	1	PLATE	
	65	1	**264-0638**	1	PLATE	
	66	4	**266-8804**	1	PLATE	
	67	2	**270-7103**	1	PLATE AS	
M		2	**8T-5436**	2	BOLT (M10X1.5X130-MM)	
		2	**9R-6465**	1	BOSS	
	68	3	**271-1878**	1	PLATE AS	
M		3	**8T-3490**	1	NUT-WELD (M10X1.5-THD)	
I	69	3	**271-5242**	1	HOSE AS	
	70	3	**271-5615**	1	TUBE AS	
	71	3	**271-5617**	1	PLATE AS	
M	72	1,2,3	**096-4883**	20	LOCKNUT (M10X1.5-THD)	
	73	3	**119-5708**	1	CLIP	
	74	4	**126-6872**	1	TEE	
M	75	3	**140-9473**	2	STUD-TAPERLOCK (M10X1.5X100-MM)	
	76	1,4	*148-8315*	2	CONNECTOR AS	
					(EACH INCLUDES)	
		1,4	**2M-9780**	1	SEAL-O-RING	
		1,4	**6V-8642**	1	CONNECTOR	
		1,4	**7J-9108**	1	SEAL-O-RING	
	77	3	*148-8333*	1	CONNECTOR AS	
		3	**6V-8400**	1	SEAL-O-RING	
		3	**7M-8485**	1	SEAL-O-RING	
		3	**8T-7927**	1	CONNECTOR	
	78	4	*148-8334*	2	CONNECTOR AS	
					(EACH INCLUDES)	
		4	**2S-4078**	1	SEAL-O-RING	
		4	**6V-8400**	1	SEAL-O-RING	
		4	**8T-3611**	1	CONNECTOR	
	79	3	*148-8341*	1	CONNECTOR AS	
		3	**3D-2824**	1	SEAL-O-RING	
		3	**6V-8713**	1	CONNECTOR	
		3	**7J-9108**	1	SEAL-O-RING	
	80	1	*148-8357*	1	ELBOW AS	
		1	**5K-9090**	1	SEAL-O-RING	
		1	**6V-9008**	1	ELBOW	
		1	**7M-8485**	1	SEAL-O-RING	
	81	3	*148-8382*	1	ELBOW AS	
		3	**3D-2824**	1	SEAL-O-RING	
		3	**7J-9108**	1	SEAL-O-RING	

PROOF

250-1940 **LINES GP-PUMP** *(contd.)* **i02277693**

NOTE	REF NO	GRAPHIC REF	PART NUMBER	QTY	PART NAME 1 2 3 4 5 6 (PRODUCT LEVEL)	SEE PAGE
		3	**8T-0404**	1	ELBOW	
	82	3	*148-8390*	1	ELBOW AS	
		3	**2M-9780**	1	SEAL-O-RING	
		3	**6V-8626**	1	ELBOW	
		3	**7J-9108**	1	SEAL-O-RING	
	83	1	*148-8393*	1	ELBOW GP	
		1	**6V-9852**	1	ELBOW (SWIVEL)	
		1	**7J-9108**	1	SEAL-O-RING	
	84	3	*148-8428*	1	TEE AS	
		3	**3K-0360**	1	SEAL-O-RING	
		3	**6V-8398**	2	SEAL-O-RING	
		3	**6V-8782**	1	TEE	
	85	3	*150-4049*	1	ELBOW AS	
		3	**6V-9746**	1	SEAL-O-RING	
		3	**7M-8485**	1	SEAL-O-RING	
		3	**8T-4149**	1	ELBOW	
	86	4	*164-5567*	1	FITTING GP-COUPLING	
		4	**3J-1907**	1	SEAL-O-RING	
		4	**6V-3965**	1	FITTING AS (QUICK DISCONNECT)	
	87	1	**1P-7009**	1	CLIP	
	88	2	**271-8508**	1	PLATE AS	
M		2	**8T-4178**	2	BOLT (M10X1.5X90-MM)	
	89	3	**271-8510**	2	PLATE	
	90	4	**3K-0360**	1	SEAL-O-RING	
	91	3	**4J-0519**	1	SEAL-O-RING	
	92	1	**4J-0520**	1	SEAL-O-RING	
	93	1	**4S-1962**	1	CLIP	
	94	3	**5H-8848**	1	SEAL-O-RING	
	95	3	**5K-9090**	1	SEAL-O-RING	
	96	3	**5P-7854**	1	CLIP	
	97	4	**5P-9297**	1	CLIP	
	98	2	**6D-1641**	1	CLIP	
	99	3,4	**6D-4244**	2	CLIP	
	100	3	**6V-8400**	1	SEAL-O-RING	
	101	4	**6V-9168**	1	NUT (11/16-16-THD)	
	102	2	**7D-7233**	1	CLIP	
M	103	1	**7X-2544**	2	BOLT (M10X1.5X104-MM)	
M	104	3	**7X-2553**	2	BOLT (M16X2X40-MM)	
	105	3	**8M-4069**	4	WASHER (10.3X38.1X5-MM THK)	
M	106	4	**8T-0341**	2	BOLT-SOCKET HEAD (M10X1.5X60-MM)	
M	107	1,2,3,4	**8T-4121**	64	WASHER-HARD (11X21X2.5-MM THK)	
M	108	3,4	**8T-4133**	6	NUT (M10X1.5-THD)	
M	109	1,2	**8T-4136**	5	BOLT (M10X1.5X25-MM)	
M	110	2,3,4	**8T-4137**	16	BOLT (M10X1.5X20-MM)	
M	111	4	**8T-4178**	2	BOLT (M10X1.5X90-MM)	
M	112	3	**8T-4186**	2	BOLT (M10X1.5X40-MM)	
M	113	1,2,3,4	**8T-4195**	13	BOLT (M10X1.5X30-MM)	
M	114	3	**8T-4223**	4	WASHER-HARD (13.5X25.5X3-MM THK)	
M	115	3	**8T-4956**	4	BOLT (M12X1.75X35-MM)	
M	116	4	**8T-9515**	2	BOLT-SOCKET HEAD (M10X1.5X40-MM)	
	117	3	**9X-8250**	2	CLIP	
	118	3	**9X-8257**	2	WASHER (17.5X30X3.5-MM THK)	
G	119	4	**122-6871**		HOSE-HYDRAULIC (5-IN)	

G-ORDER BY THE INCH
I-REFER TO HYDRAULIC INFORMATION SYSTEM
M-METRIC PART
Y-SEPARATE ILLUSTRATION

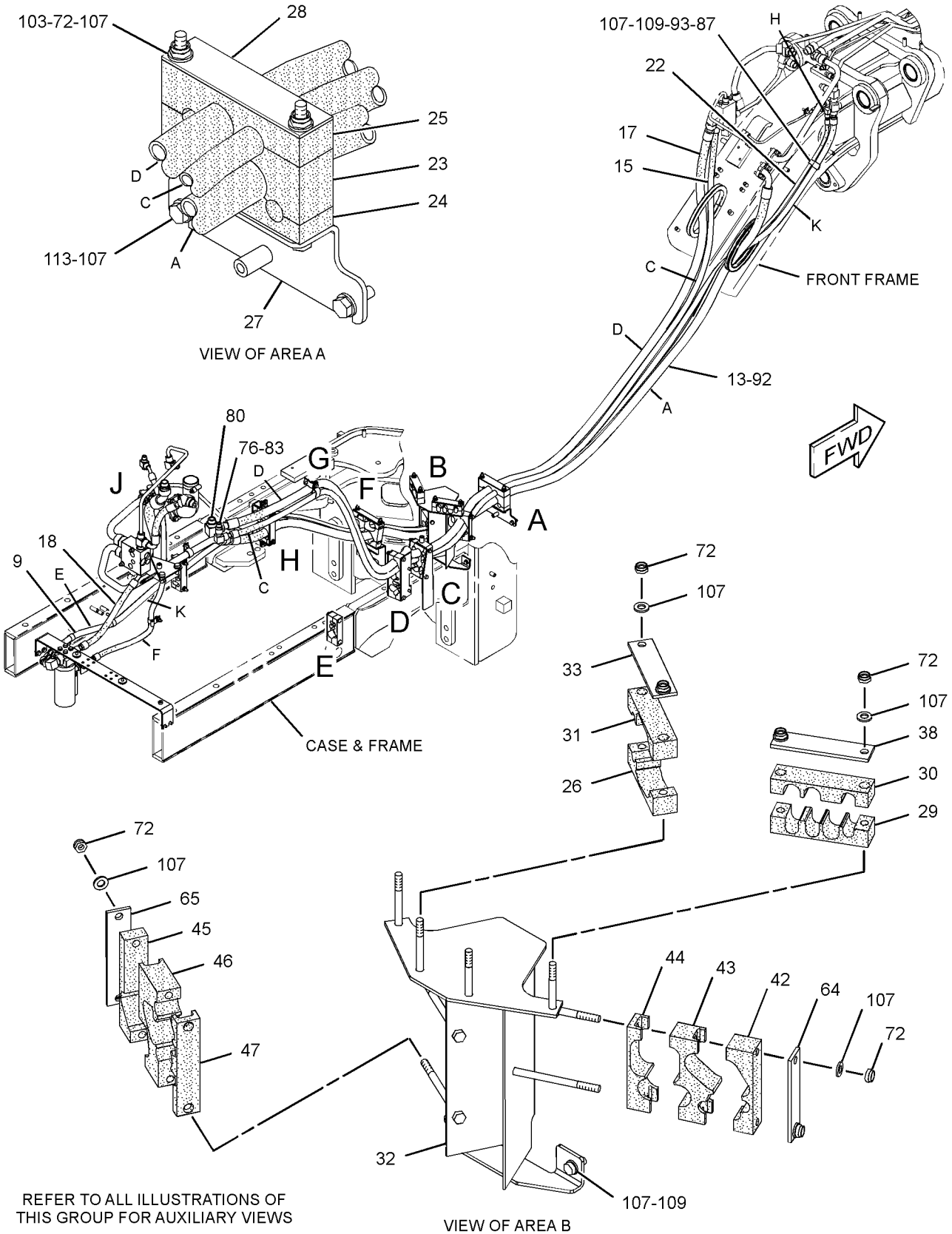

REFER TO ALL ILLUSTRATIONS OF THIS GROUP FOR AUXILIARY VIEWS

GRAPHIC #1

g01163666

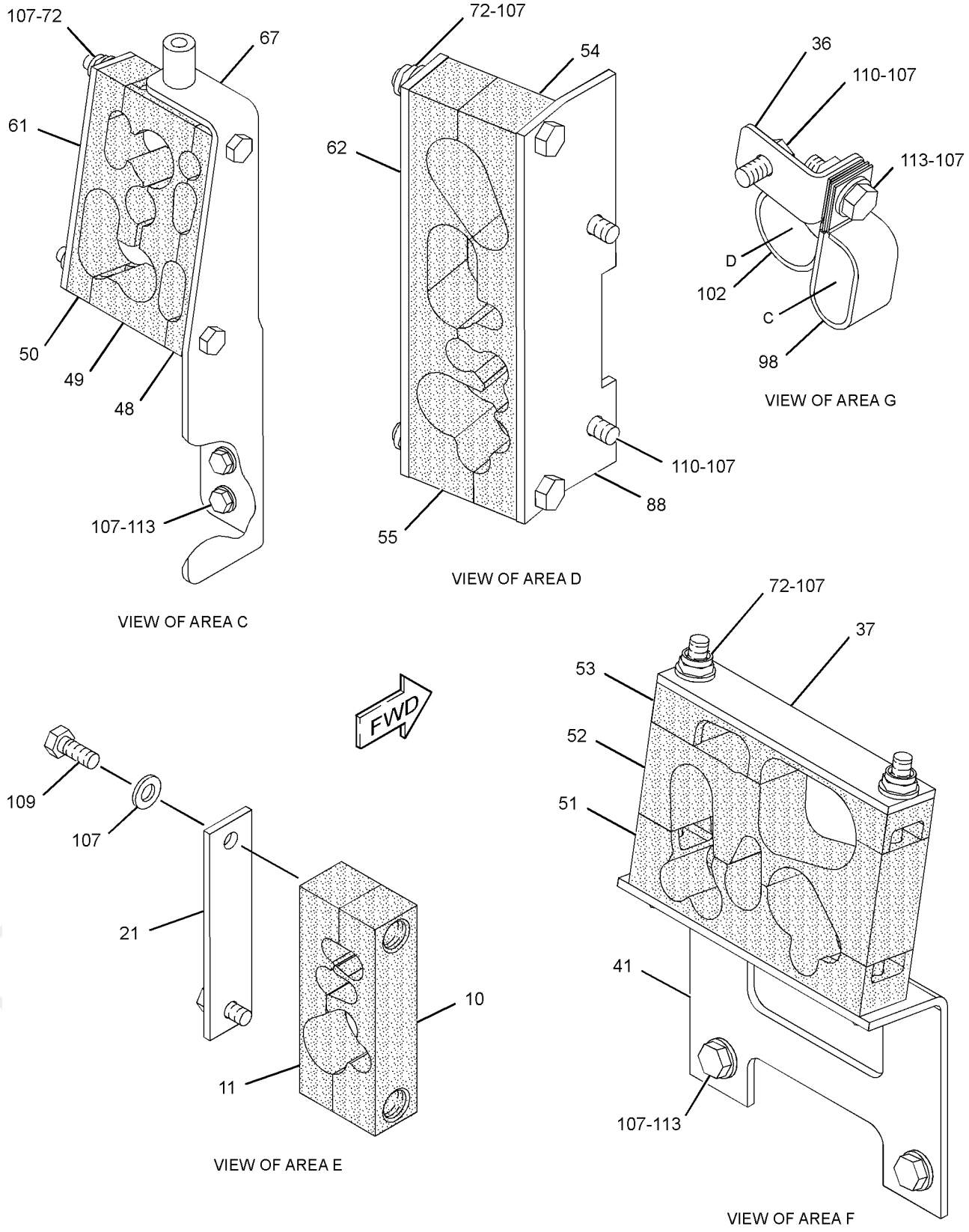

GRAPHIC #2

g01163667

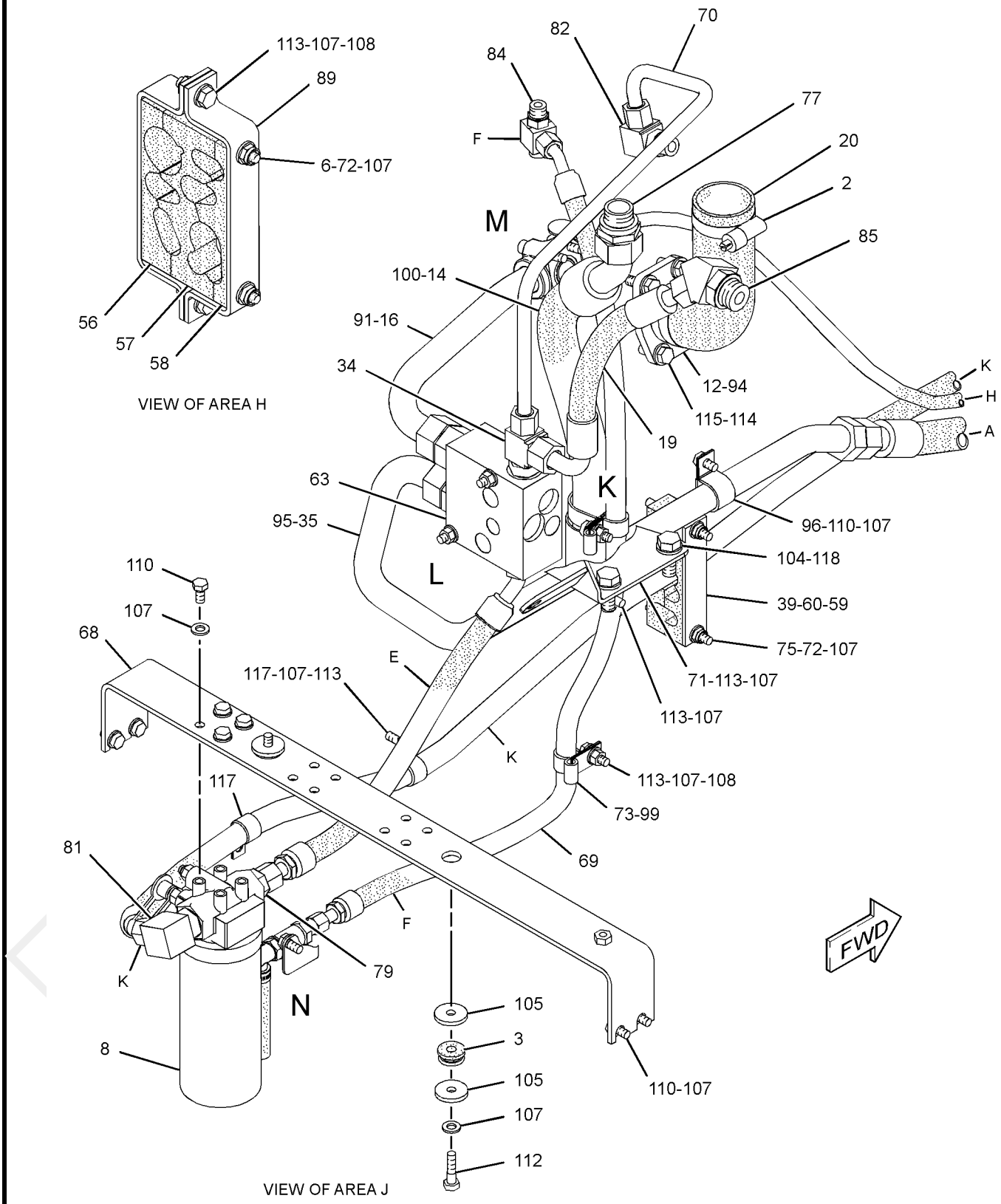

GRAPHIC #3

g01163668



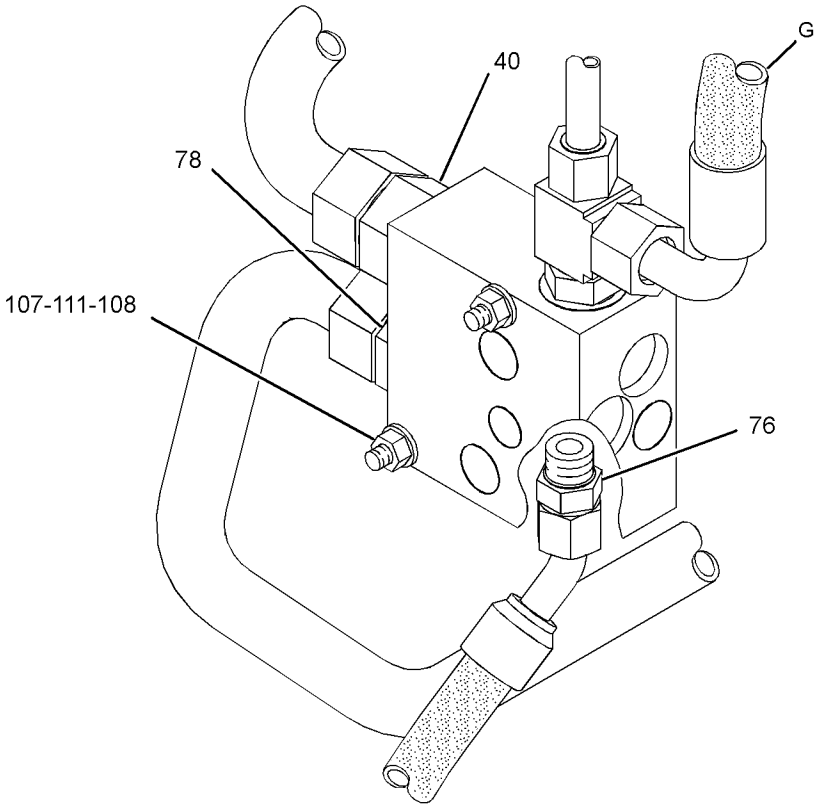

VIEW OF AREA L

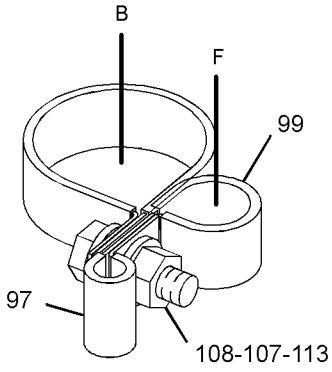

VIEW OF AREA K

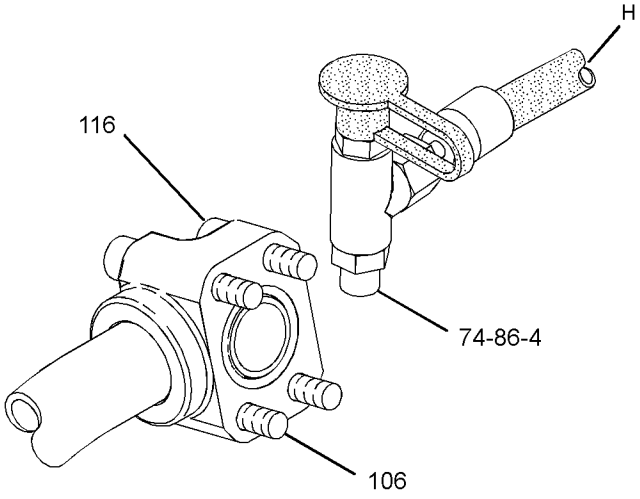

VIEW OF AREA M

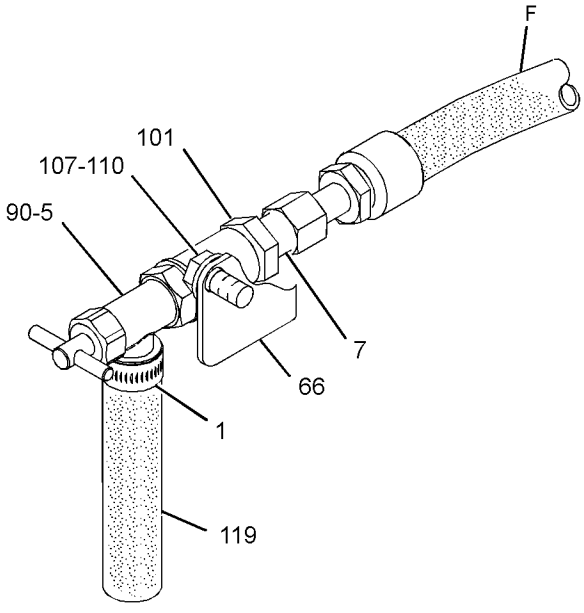

VIEW OF AREA N

GRAPHIC #4 **<END>** g01163669

HYDRAULIC SYSTEM

251-4380 LINES GP-PUMP—SECONDARY STEERING

S/N: B9M1-UP

PART OF 237-6423 LINES GP-PUMP

AN ATTACHMENT

SMCS-5057 **i02231042**

NOTE	REF NO	GRAPHIC REF	PART NUMBER	QTY	PART NAME 1 2 3 4 5 6 (PRODUCT LEVEL)	SEE PAGE
	1	4	**5D-1026**	1	CLAMP-HOSE	
	2	3	**5P-4868**	2	CLAMP-HOSE	
	3	3	**6N-6984**	2	MOUNT-RUBBER	
	4	4	**6V-0852**	1	CAP-DUST	
	5	4	**6V-7238**	1	VALVE-SHUTOFF	
	6	3	**178-0572**	2	STUD-TAPERLOCK (M10X1.5-THD)	
	7	4	*184-2420*	1	ADAPTER AS	
		4	**3E-7401**	1	ADAPTER	
		4	**6V-8397**	1	SEAL-O-RING	
Y	8	3	**191-9784**	1	FILTER GP-OIL	502
	9	1	**238-6671**	1	PLATE AS	
	10	2	**246-3347**	1	BLOCK	
	11	2	**246-3348**	1	BLOCK	
	12	3	**246-3352**	1	TUBE AS	
I	13	1	**246-3354**	1	HOSE AS	
I	14	3	**246-3355**	1	HOSE AS	
I	15	1	**246-3356**	1	HOSE AS	
	16	3	**246-3357**	1	TUBE AS	
I	17	1	**246-3358**	1	HOSE AS	
I	18	1	**246-3359**	1	HOSE AS	
I	19	3	**246-3362**	1	HOSE AS	
	20	3	**246-3372**	1	HOSE	
	21	2	**246-3378**	1	PLATE	
I	22	1,3	**246-6328**	1	HOSE AS	
	23	1	**247-4243**	1	BLOCK	
	24	1	**247-4244**	1	BLOCK	
	25	1	**247-4245**	1	BLOCK	
	26	1	**247-4246**	1	BLOCK	
	27	1	**247-4249**	1	PLATE AS	
	28	1	**247-4250**	1	PLATE	
	29	1	**247-4768**	1	BLOCK	
	30	1	**247-4769**	1	BLOCK	
	31	1	**248-4029**	1	BLOCK	
	32	1	**248-5235**	1	PLATE AS	
M		1	**7X-2544**	2	BOLT (M10X1.5X104-MM)	
M		1	**8T-4172**	2	BOLT (M10X1.5X80-MM)	
M		1	**8T-4178**	2	BOLT (M10X1.5X90-MM)	
M		1	**8T-5436**	2	BOLT (M10X1.5X130-MM)	
	33	1	**248-5236**	1	PLATE	
	34	3	*250-1454*	1	TEE AS	
		3	**3D-2824**	1	SEAL-O-RING	
		3	**6V-9746**	1	SEAL-O-RING	
		3	**7J-9108**	1	SEAL-O-RING	
	35	3	**250-5709**	1	TUBE AS	
	36	2	**253-0472**	1	PLATE AS	
	37	2	**255-0683**	1	PLATE	
	38	1	**255-0686**	1	PLATE	
	39	3	**255-0688**	1	PLATE	
	40	4	**255-3631**	1	VALVE GP-CHECK	
	41	2	**257-7066**	1	BRACKET AS	
M		2	**7X-2545**	2	BOLT (M10X1.5X150-MM)	
	42	1	**262-8361**	1	BLOCK	
	43	1	**262-8362**	1	BLOCK	
	44	1	**262-8363**	1	BLOCK	
	45	1	**262-8364**	1	BLOCK	

REPROOF

251-4380 **LINES GP-PUMP** ***(contd.)*** **i02231042**

NOTE	REF NO	GRAPHIC REF	PART NUMBER	QTY	PART NAME 1 2 3 4 5 6 (PRODUCT LEVEL)	SEE PAGE
	46	1	**262-8365**	1	BLOCK	
	47	1	**262-8366**	1	BLOCK	
	48	2	**262-8367**	1	BLOCK	
	49	2	**262-8368**	1	BLOCK	
	50	2	**262-8369**	1	BLOCK	
	51	2	**262-8370**	1	BLOCK	
	52	2	**262-8371**	1	BLOCK	
	53	2	**262-8372**	1	BLOCK	
	54	2	**262-8373**	1	BLOCK	
	55	2	**262-8374**	1	BLOCK	
	56	3	**262-8375**	1	BLOCK	
	57	3	**262-8376**	1	BLOCK	
	58	3	**262-8377**	1	BLOCK	
	59	3	**262-8378**	1	BLOCK	
	60	3	**262-8379**	1	BLOCK	
	61	2	**262-8380**	1	PLATE	
	62	2	**262-8381**	1	PLATE	
	63	3	**263-1790**	1	MANIFOLD GP-CONTROL	
	64	1	**264-0637**	1	PLATE	
	65	1	**264-0638**	1	PLATE	
	66	4	**266-8804**	1	PLATE	
	67	2	**270-7103**	1	PLATE AS	
M		2	**8T-5436**	2	BOLT (M10X1.5X130-MM)	
		2	**9R-6465**	1	BOSS	
	68	3	**271-1878**	1	PLATE AS	
I	69	3	**271-5242**	1	HOSE AS	
	70	3	**271-5615**	1	TUBE AS	
	71	3	**271-5617**	1	PLATE AS	
M	72	1,2,3	**096-4883**	20	LOCKNUT (M10X1.5-THD)	
	73	3	**119-5708**	1	CLIP	
	74	4	**126-6872**	1	TEE	
M	75	3	**140-9473**	2	STUD-TAPERLOCK (M10X1.5X100-MM)	
	76	1,4	*148-8315*	2	CONNECTOR AS	
					(EACH INCLUDES)	
		1,4	**2M-9780**	1	SEAL-O-RING	
		1,4	**6V-8642**	1	CONNECTOR	
		1,4	**7J-9108**	1	SEAL-O-RING	
	77	3	*148-8333*	1	CONNECTOR AS	
		3	**6V-8400**	1	SEAL-O-RING	
		3	**7M-8485**	1	SEAL-O-RING	
		3	**8T-7927**	1	CONNECTOR	
	78	4	*148-8334*	1	CONNECTOR AS	
		4	**2S-4078**	1	SEAL-O-RING	
		4	**6V-8400**	1	SEAL-O-RING	
		4	**8T-3611**	1	CONNECTOR	
	79	3	*148-8341*	1	CONNECTOR AS	
		3	**3D-2824**	1	SEAL-O-RING	
		3	**6V-8713**	1	CONNECTOR	
		3	**7J-9108**	1	SEAL-O-RING	
	80	1	*148-8357*	1	ELBOW AS	
		1	**5K-9090**	1	SEAL-O-RING	
		1	**6V-9008**	1	ELBOW	
		1	**7M-8485**	1	SEAL-O-RING	
	81	3	*148-8382*	1	ELBOW AS	
		3	**3D-2824**	1	SEAL-O-RING	
		3	**7J-9108**	1	SEAL-O-RING	
		3	**8T-0404**	1	ELBOW	
	82	3	*148-8390*	1	ELBOW AS	
		3	**2M-9780**	1	SEAL-O-RING	

PROOF

251-4380 **LINES GP-PUMP** *(contd.)* **i02231042**

NOTE	REF NO	GRAPHIC REF	PART NUMBER	QTY	PART NAME 1 2 3 4 5 6 (PRODUCT LEVEL)	SEE PAGE
		3	**6V-8626**	1	ELBOW	
		3	**7J-9108**	1	SEAL-O-RING	
	83	1	*148-8393*	1	ELBOW GP	
		1	**6V-9852**	1	ELBOW (SWIVEL)	
		1	**7J-9108**	1	SEAL-O-RING	
	84	3	*148-8428*	1	TEE AS	
		3	**3K-0360**	1	SEAL-O-RING	
		3	**6V-8398**	2	SEAL-O-RING	
		3	**6V-8782**	1	TEE	
	85	3	*150-4049*	1	ELBOW AS	
		3	**6V-9746**	1	SEAL-O-RING	
		3	**7M-8485**	1	SEAL-O-RING	
		3	**8T-4149**	1	ELBOW	
	86	4	*164-5567*	1	FITTING GP-COUPLING	
		4	**3J-1907**	1	SEAL-O-RING	
		4	**6V-3965**	1	FITTING AS (QUICK DISCONNECT)	
	87	1	**1P-7009**	1	CLIP	
	88	2	**271-8508**	1	PLATE AS	
		2	**271-8509**	2	PLATE	
	89	3	**271-8510**	2	PLATE	
	90	4	**6K-0360**	1	STRIP	
	91	3	**4J-0519**	1	SEAL-O-RING	
	92	1	**4J-0520**	1	SEAL-O-RING	
	93	1	**4S-1962**	1	CLIP	
	94	3	**5H-8848**	1	SEAL-O-RING	
	95	3	**5K-9090**	1	SEAL-O-RING	
	96	3	**5P-7854**	1	CLIP	
	97	4	**5P-9297**	1	CLIP	
	98	2	**6D-1641**	9	CLIP	
	99	3,4	**6D-4244**	2	CLIP	
	100	3	**6V-8400**	1	SEAL-O-RING	
	101	4	**6V-9168**	1	NUT (11/16-16-THD)	
	102	2	**7D-7233**	1	CLIP	
M	103	1	**7X-2544**	2	BOLT (M10X1.5X104-MM)	
M	104	3	**7X-2553**	2	BOLT (M16X2X40-MM)	
	105	3	**8M-4069**	4	WASHER (10.3X38.1X5-MM THK)	
M	106	4	**8T-0341**	2	BOLT-SOCKET HEAD (M10X1.5X60-MM)	
M	107	1,2,3,4	**8T-4121**	64	WASHER-HARD (11X21X2.5-MM THK)	
M	108	3,4	**8T-4133**	6	NUT (M10X1.5-THD)	
M	109	1,2	**8T-4136**	5	BOLT (M10X1.5X25-MM)	
M	110	2,3,4	**8T-4137**	16	BOLT (M10X1.5X20-MM)	
M	111	4	**8T-4178**	2	BOLT (M10X1.5X90-MM)	
M	112	3	**8T-4186**	2	BOLT (M10X1.5X40-MM)	
M	113	1,2,3,4	**8T-4195**	13	BOLT (M10X1.5X30-MM)	
M	114	3	**8T-4223**	4	WASHER-HARD (13.5X25.5X3-MM THK)	
M	115	3	**8T-4956**	4	BOLT (M12X1.75X35-MM)	
M	116	4	**8T-9515**	2	BOLT-SOCKET HEAD (M10X1.5X40-MM)	
	117	3	**9X-8250**	2	CLIP	
	118	3	**9X-8257**	2	WASHER (17.5X30X3.5-MM THK)	
G	119	4	**122-6871**		HOSE-HYDRAULIC (5-IN)	

G-ORDER BY THE INCH
I-REFER TO HYDRAULIC INFORMATION SYSTEM
M-METRIC PART
Y-SEPARATE ILLUSTRATION

REPRO OF

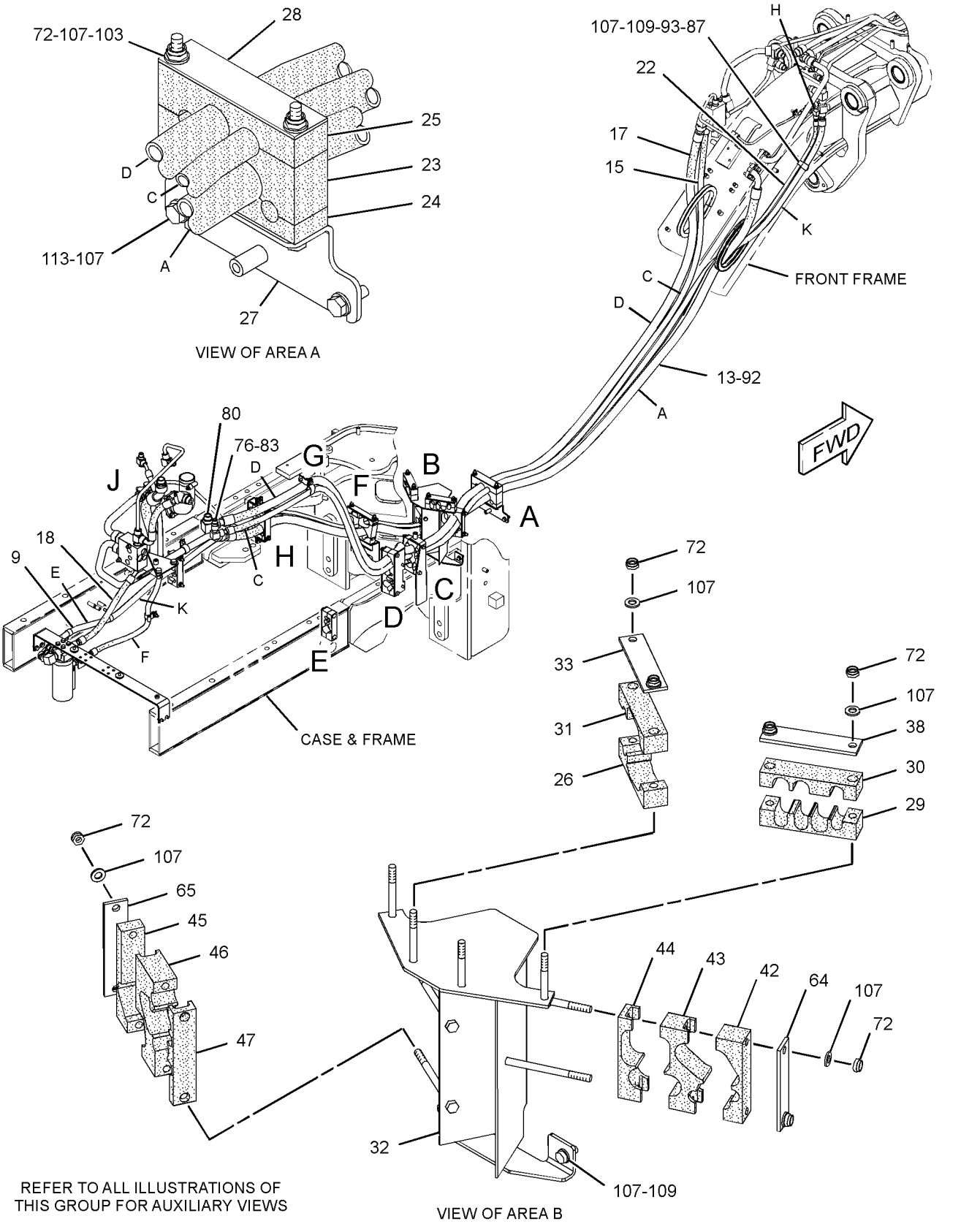

REFER TO ALL ILLUSTRATIONS OF THIS GROUP FOR AUXILIARY VIEWS

GRAPHIC #1

g01163429

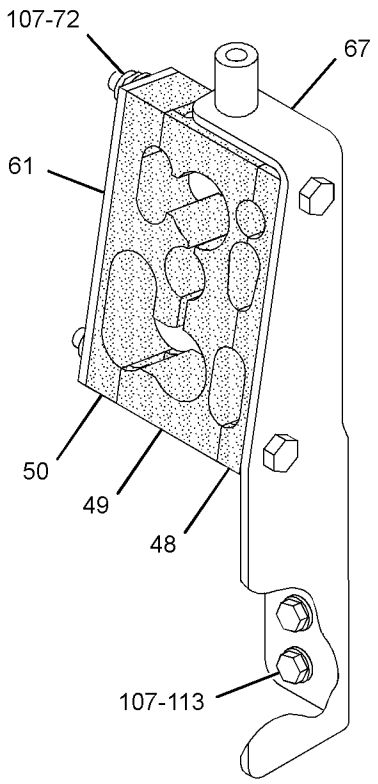

VIEW OF AREA C

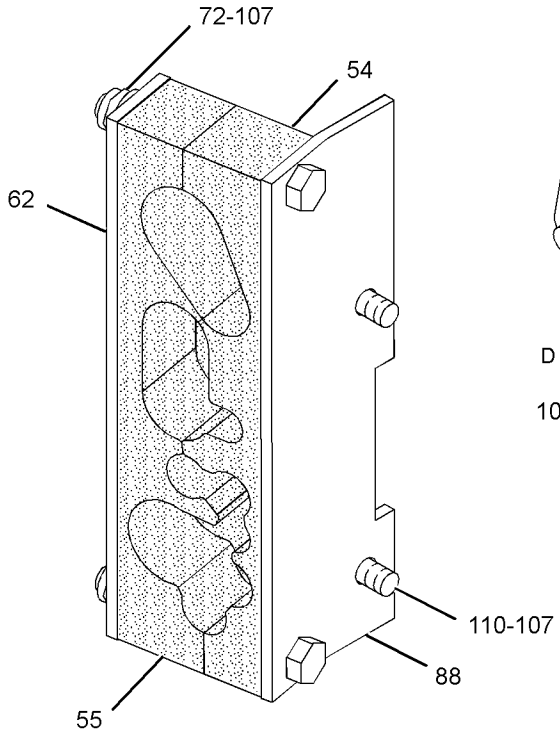

VIEW OF AREA D

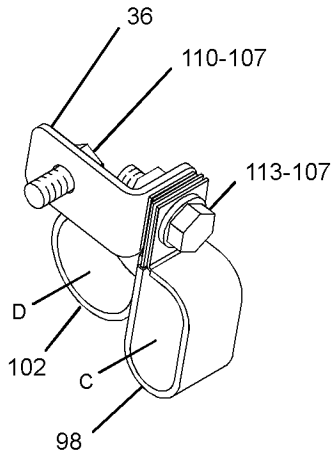

VIEW OF AREA G

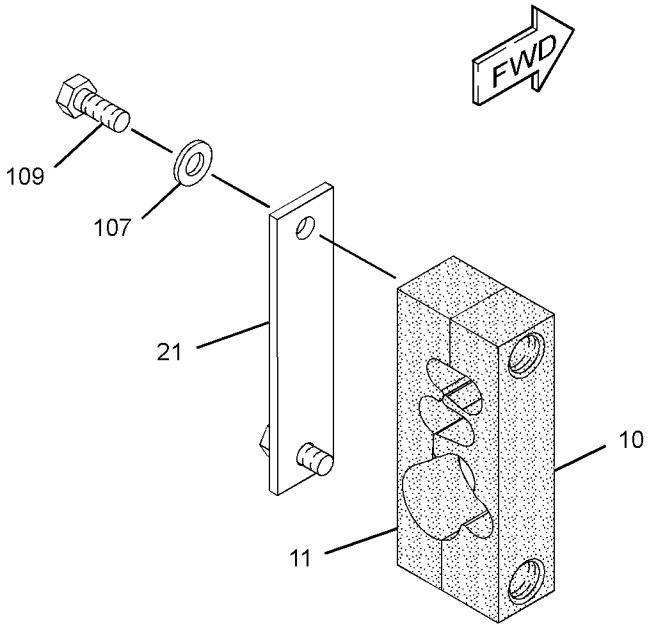

VIEW OF AREA E

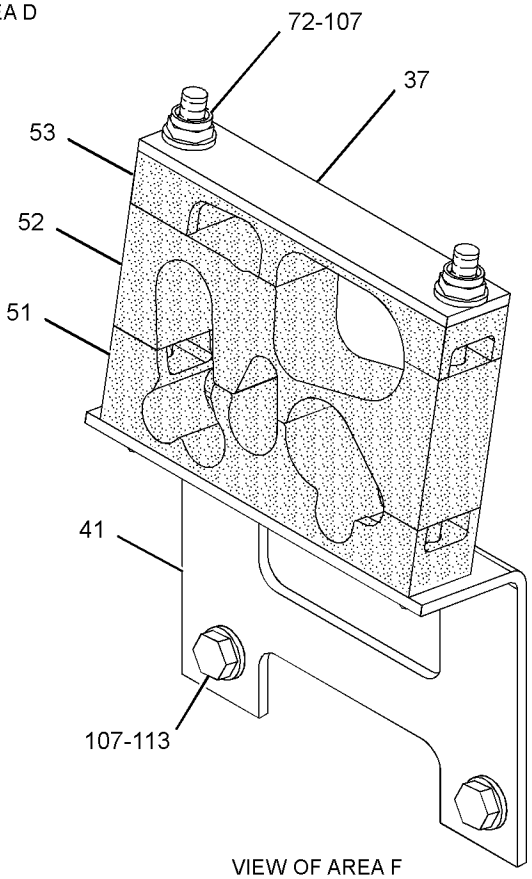

VIEW OF AREA F

GRAPHIC #2

g01163430

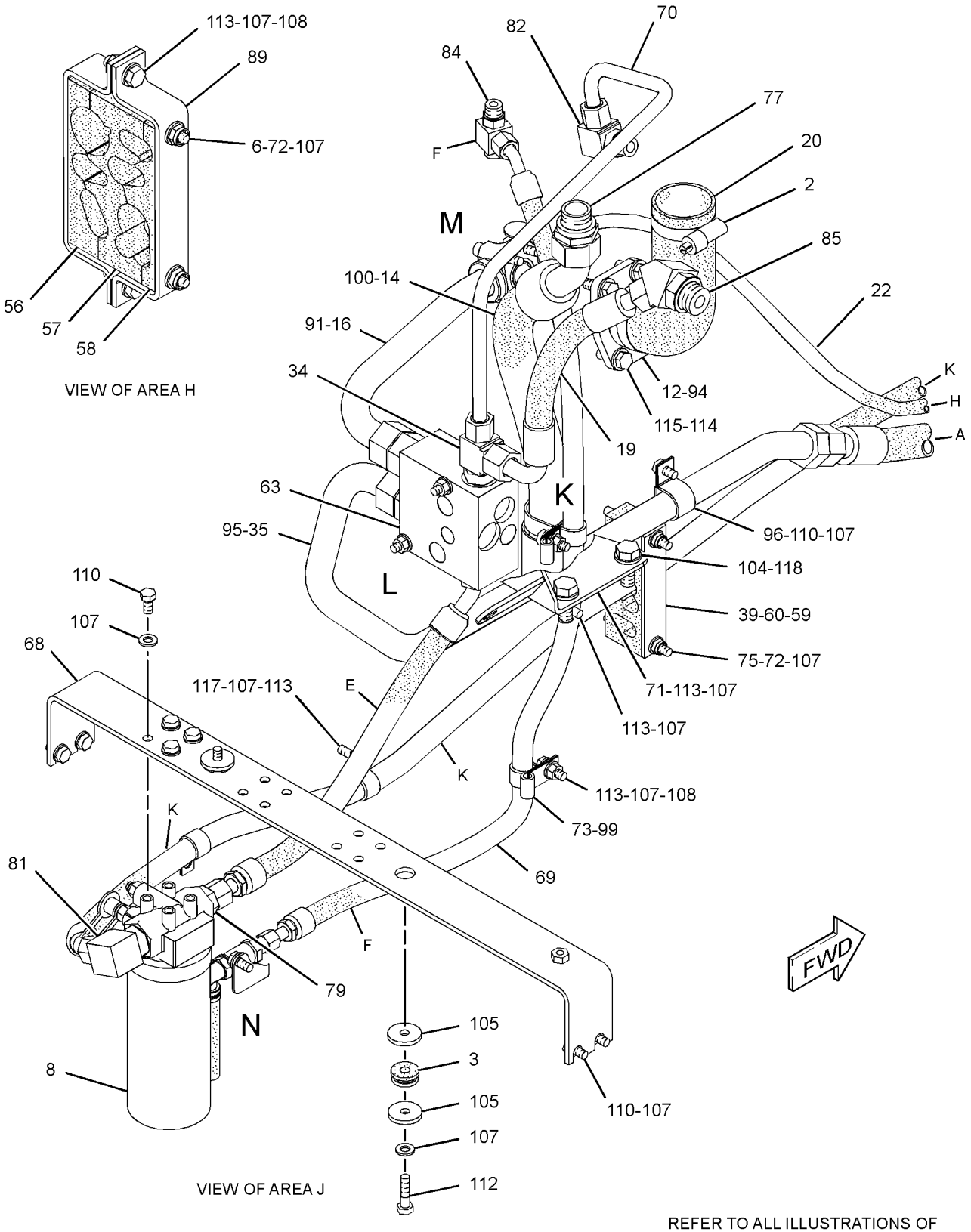

REFER TO ALL ILLUSTRATIONS OF THIS GROUP FOR AUXILIARY VIEWS

GRAPHIC #3

g01163431

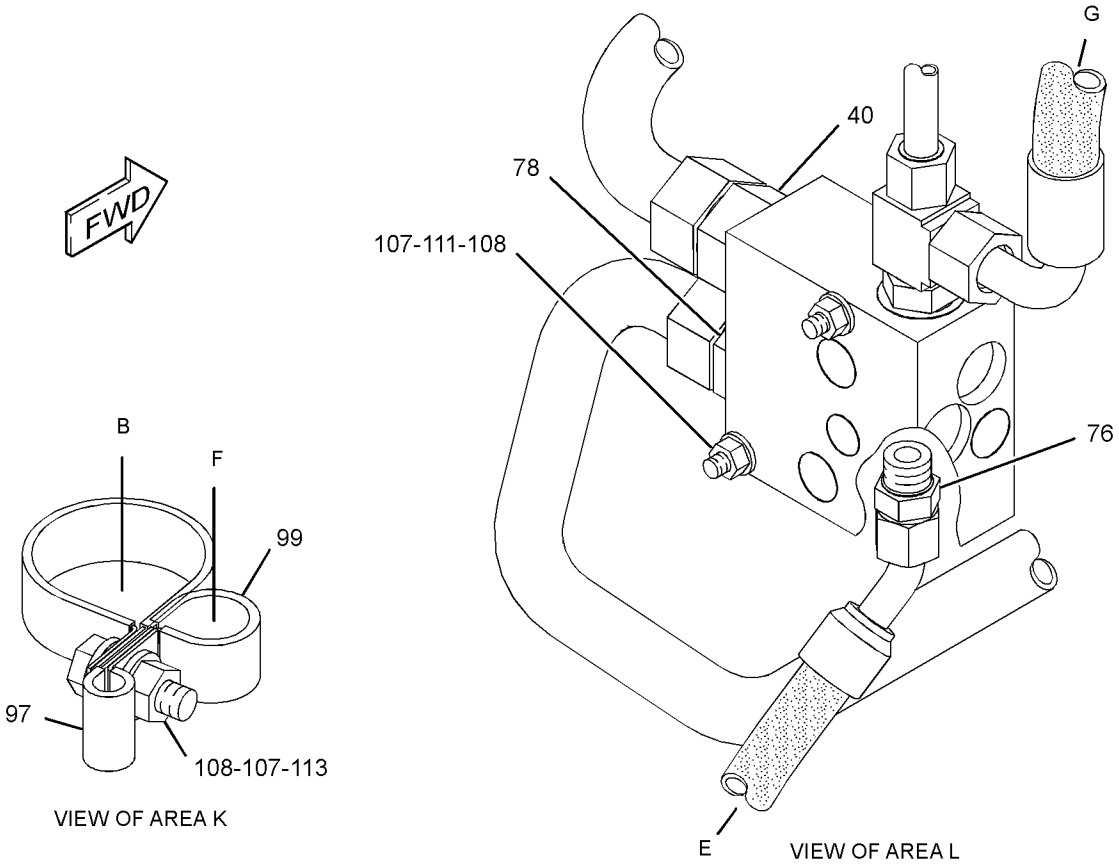

GRAPHIC #4 **<END>** g01163432

HYDRAULIC SYSTEM

250-4226 LINES GP-RIPPER–2 CIRCUITS

S/N: B9M1-UP

AN ATTACHMENT

SMCS-5057 **i02241534**

NOTE	REF NO	GRAPHIC REF	PART NUMBER	QTY	PART NAME 1 2 3 4 5 6 (PRODUCT LEVEL)	SEE PAGE
	1	1	*105-7167*	4	ADAPTER GP	
					(EACH INCLUDES)	
		1	**6V-8397**	2	SEAL-O-RING	
I	2	1	**238-5592**	1	HOSE AS	
I	3	1	**246-4389**	2	HOSE AS	
I	4	1	**247-1769**	1	HOSE AS	
	5	1	**248-4038**	1	TUBE AS	
	6	1	**248-4039**	1	TUBE AS	
	7	1	**259-4512**	1	TUBE AS	
	8	1	**259-4513**	1	TUBE AS	
	9	1	*148-8340*	4	CONNECTOR AS	
					(EACH INCLUDES)	
		1	**3K-0360**	1	SEAL-O-RING	
		1	**6V-8398**	1	SEAL-O-RING	
		1	**6V-8639**	1	CONNECTOR	
	10	1	**4D-9517**	1	CLIP	
	11	1	**5P-9299**	2	CLIP	
	12	1	**6D-4247**	8	CLIP	
	13	1	**6V-8398**	4	SEAL-O-RING	
	14	1	**6V-9168**	4	NUT (11/16-16-THD)	
	15	1	**6V-9829**	4	CAP AS	
	16	1	**8M-2770**	1	CLIP	
M	17	1	**8T-4121**	4	WASHER-HARD (11X21X2.5-MM THK)	
	18	1	**8T-4123**	4	WASHER-PLATED (22X35X3.5-MM THK)	
M	19	1	**8T-4137**	4	BOLT (M10X1.5X20-MM)	

I-REFER TO HYDRAULIC INFORMATION SYSTEM
M-METRIC PART

PROOF

250-4226 **LINES GP-RIPPER** *(contd.)* **i02241534**

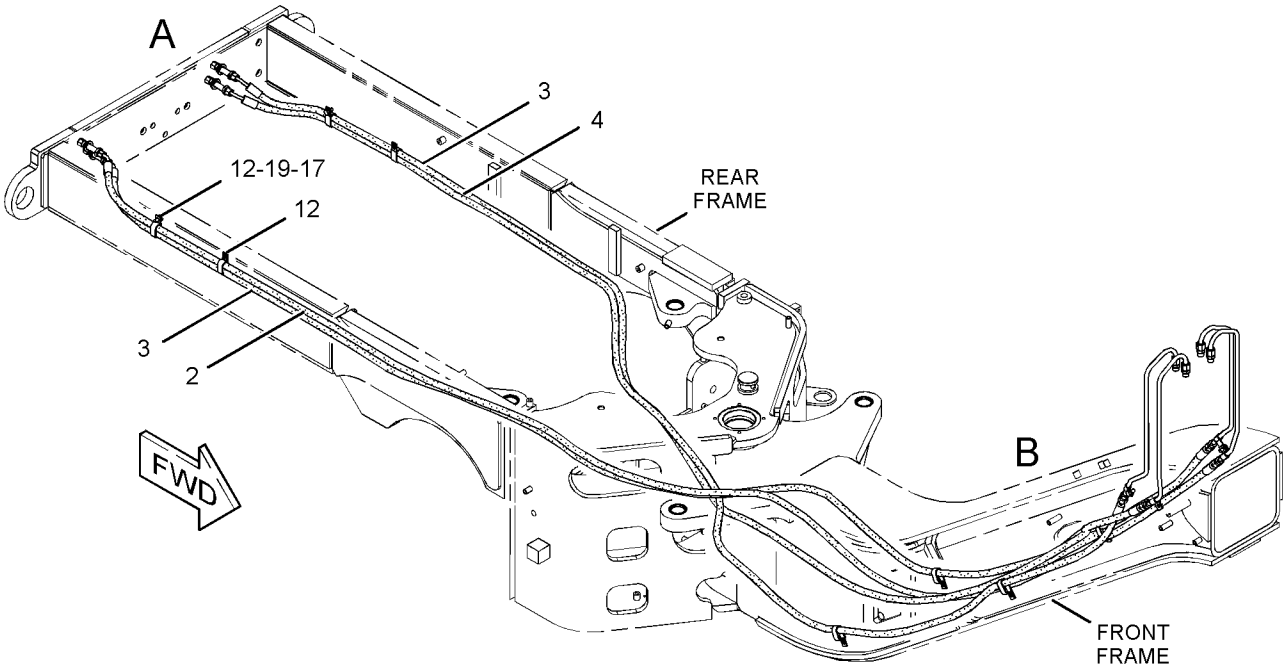

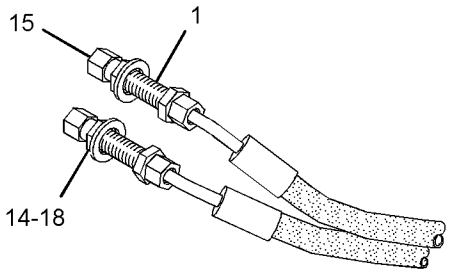

VIEW OF AREA A

VIEW OF AREA B

GRAPHIC #1

<END>

g01136819

HYDRAULIC SYSTEM

250-6181 LINES GP-RIPPER

S/N: B9M1-UP
PART OF 248-1322 RIPPER AR
AN ATTACHMENT

SMCS-5057 **i02236132**

NOTE	REF NO	GRAPHIC REF	PART NUMBER	QTY	PART NAME 1 2 3 4 5 6 (PRODUCT LEVEL)	SEE PAGE
I	1	1	**3T-6848**	1	HOSE AS	
I	2	1	**7I-5412**	1	HOSE AS	
	3	1	*148-8374*	2	ELBOW AS	
					(EACH INCLUDES)	
		1	**3K-0360**	1	SEAL-O-RING	
		1	**6V-8397**	1	SEAL-O-RING	
		1	**6V-8723**	1	ELBOW	
	4	1	**1S-3618**	1	CLIP	
	5	1	**3B-4506**	1	LOCKWASHER	
	6	1	**4B-5271**	2	WASHER (25.5X11.2X2-MM THK)	
	7	1	**4D-2886**	1	CLIP	
	8	1	**4L-6454**	1	BOLT (3/8-16X1-IN)	
	9	1	**6V-8801**	1	NUT (3/8-16-THD)	

I-REFER TO HYDRAULIC INFORMATION SYSTEM

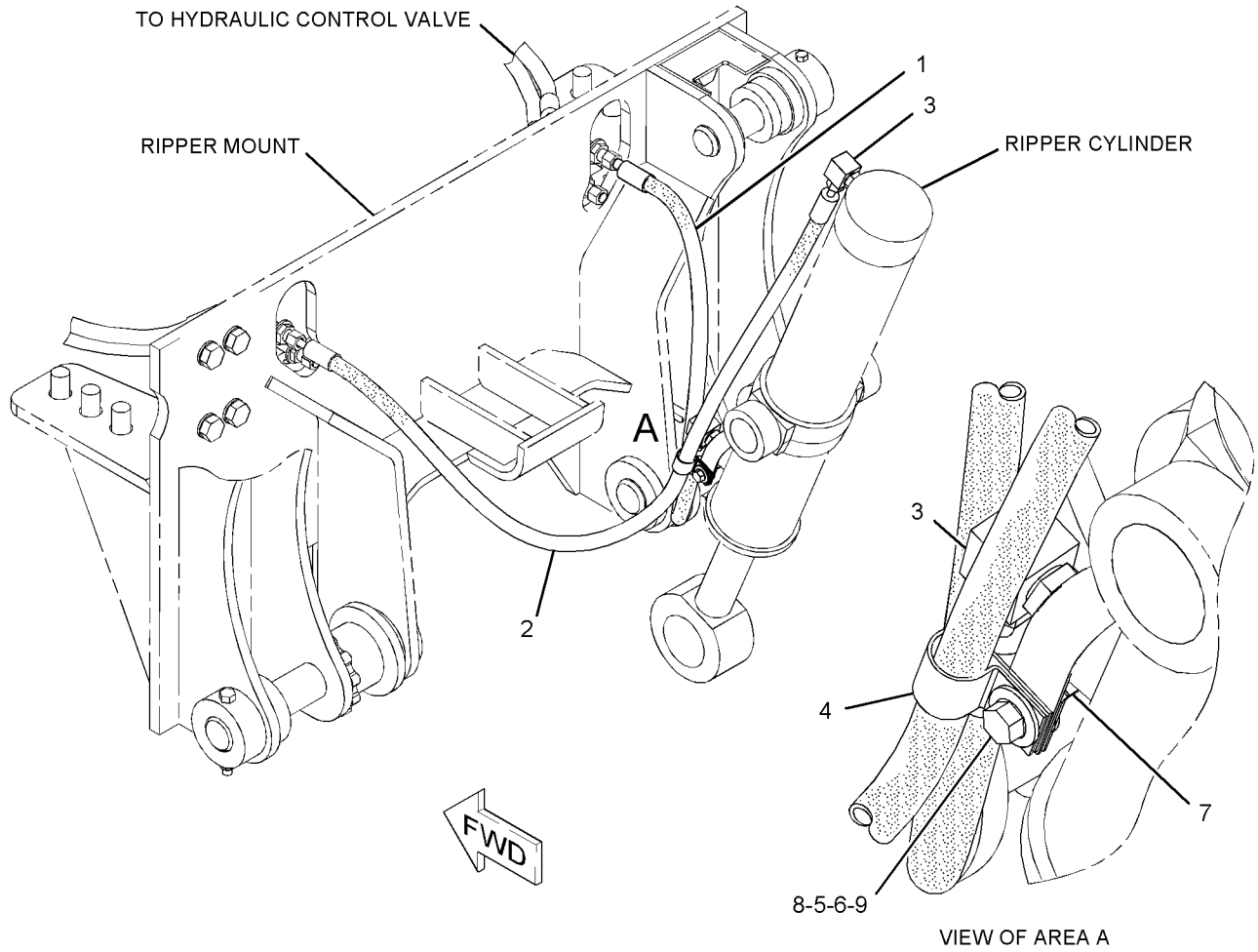

GRAPHIC #1 **<END>** g01134810

HYDRAULIC SYSTEM

231-1531 LINES GP-SECONDARY STEERING

S/N: B9M1-UP
PART OF 261-0774 STEERING AR-SECONDARY
AN ATTACHMENT

SMCS-4304 **i02230775**

NOTE	REF NO	GRAPHIC REF	PART NUMBER	QTY	PART NAME 1 2 3 4 5 6 (PRODUCT LEVEL)	SEE PAGE
I	1	1	**8W-0225**	1	HOSE AS	
	2	1	**9T-1013**	1	VALVE AS-CHECK	
		1	**3K-0360**	1	SEAL-O-RING	
		1	**6V-8398**	1	SEAL-O-RING	
	3	1	**9T-8071**	1	VALVE GP-RELIEF (SECONDARY STEERING)	
I	4	1	**245-9891**	1	HOSE AS	
I	5	1	**245-9892**	1	HOSE AS	
I	6	1	**247-4766**	1	HOSE AS	
	7	1	*148-8340*	2	CONNECTOR AS	
					(EACH INCLUDES)	
		1	**6V-8639**	1	CONNECTOR	
		1	**3K-0360**	1	SEAL-O-RING	
		1	**6V-8398**	1	SEAL-O-RING	
	8	1	*148-8358*	1	ELBOW AS	
		1	**2M-9780**	1	SEAL-O-RING	
		1	**6V-8398**	1	SEAL-O-RING	
		1	**6V-8624**	1	ELBOW	
	9	1	*148-8428*	1	TEE AS	
		1	**6V-8782**	1	TEE	
		1	**3K-0360**	1	SEAL-O-RING	
		1	**6V-8398**	2	SEAL-O-RING	
	10	1	*150-4043*	1	CONNECTOR AS	
		1	**3J-1907**	1	SEAL-O-RING	
		1	**6V-8398**	1	SEAL-O-RING	
		1	**6V-9873**	1	CONNECTOR	
	11	1	*153-6241*	1	ELBOW AS	
		1	**8C-8989**	1	ELBOW	
		1	**6V-8398**	1	SEAL-O-RING	
	12	1	*155-7321*	1	ADAPTER GP	
		1	**3D-2824**	1	SEAL-O-RING	
		1	**6V-1722**	1	ADAPTER-O-RING	
	13	1	**3E-4321**	1	CLIP	
	14	1	**8T-4121**	3	WASHER-HARD (11X21X2.5-MM THK)	
M	15	1	**8T-4137**	1	BOLT (M10X1.5X20-MM)	
M	16	1	**8T-4186**	2	BOLT (M10X1.5X40-MM)	

I-REFER TO HYDRAULIC INFORMATION SYSTEM
M-METRIC PART

PROOF

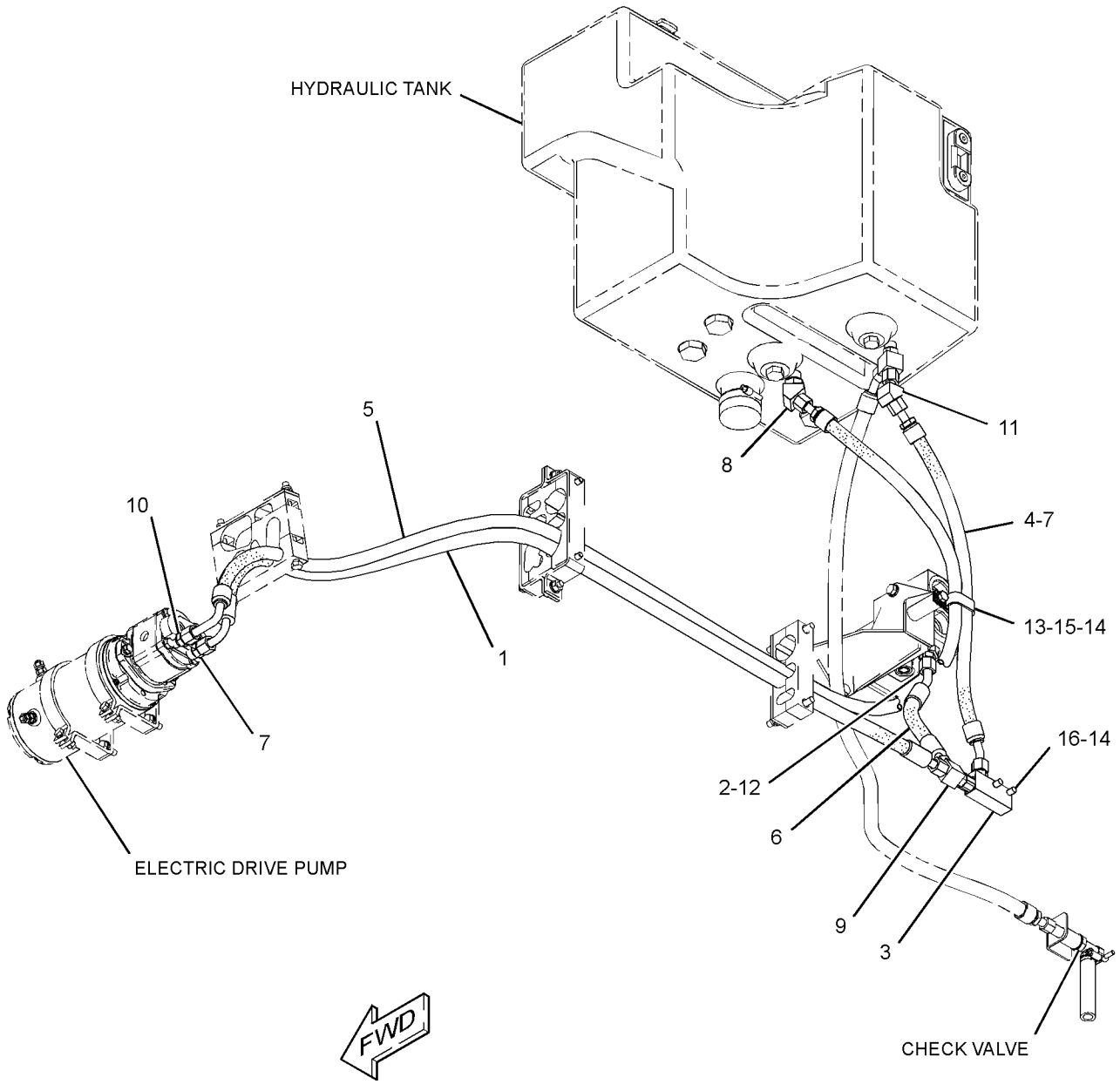

GRAPHIC #1 **<END>** g01156166

HYDRAULIC SYSTEM

263-7819 LINES GP-SECONDARY STEERING

S/N: B9M1-UP
PART OF 261-0611 STEERING AR-SECONDARY
AN ATTACHMENT

SMCS-4304 **i02348800**

NOTE	REF NO	GRAPHIC REF	PART NUMBER	QTY	PART NAME 1 2 3 4 5 6 (PRODUCT LEVEL)	SEE PAGE
	1	1	**9T-1013**	1	VALVE AS-CHECK	
		1	**3K-0360**	1	SEAL-O-RING	
		1	**6V-8398**	1	SEAL-O-RING	
	2	1	**9T-8071**	1	VALVE GP-RELIEF (SECONDARY STEERING)	
I	3	1	**245-9891**	1	HOSE AS	
	4	1	**247-1772**	1	HOSE AS	
I	5	1	**247-4766**	1	HOSE AS	
I	6	1	**257-9857**	1	HOSE AS	
	7	1	*148-8340*	1	CONNECTOR AS	
		1	**3K-0360**	1	SEAL-O-RING	
		1	**6V-8398**	1	SEAL-O-RING	
		1	**6V-8639**	1	CONNECTOR	
	8	1	**148-8354**	1	ELBOW AS	
		1	**3K-0360**	1	SEAL-O-RING	
		1	**6V-8398**	1	SEAL-O-RING	
		1	**6V-9002**	1	ELBOW	
	9	1	*148-8358*	1	ELBOW AS	
		1	**2M-9780**	1	SEAL-O-RING	
		1	**6V-8398**	1	SEAL-O-RING	
		1	**6V-8624**	1	ELBOW	
	10	1	*148-8365*	1	ELBOW AS	
		1	**3J-1907**	1	SEAL-O-RING	
		1	**6V-8398**	1	SEAL-O-RING	
		1	**8T-6876**	1	ELBOW	
	11	1	*148-8428*	1	TEE AS	
		1	**3K-0360**	1	SEAL-O-RING	
		1	**6V-8398**	2	SEAL-O-RING	
		1	**6V-8782**	1	TEE	
	12	1	*153-6241*	1	ELBOW AS	
		1	**6V-8398**	1	SEAL-O-RING	
		1	**8C-8989**	1	ELBOW	
	13	1	*155-7321*	1	ADAPTER GP	
		1	**3D-2824**	1	SEAL-O-RING	
		1	**6V-1722**	1	ADAPTER-O-RING	
	14	1	**3E-4321**	1	CLIP	
	15	1	**8T-4121**	3	WASHER-HARD (11X21X2.5-MM THK)	
M	16	1	**8T-4137**	1	BOLT (M10X1.5X20-MM)	
M	17	1	**8T-4186**	2	BOLT (M10X1.5X40-MM)	

I-REFER TO HYDRAULIC INFORMATION SYSTEM
M-METRIC PART

PROOF

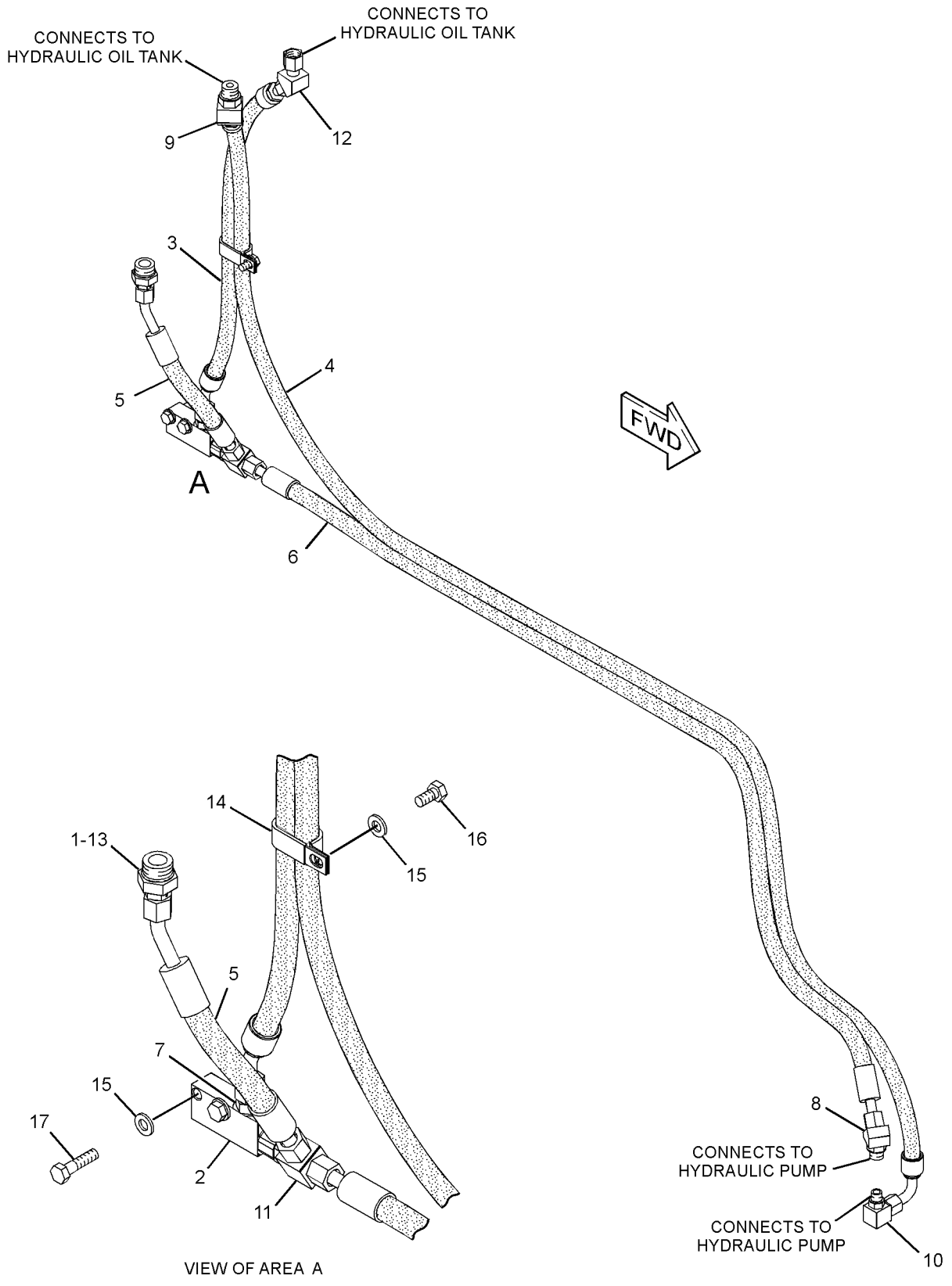

GRAPHIC #1 **<END>** g01158340

HYDRAULIC SYSTEM

231-1512 LINES GP-STEERING

S/N: B9M1-UP
AN ATTACHMENT

SMCS-4304 **i02250697**

NOTE	REF NO	GRAPHIC REF	PART NUMBER	QTY	PART NAME 1 2 3 4 5 6 (PRODUCT LEVEL)	SEE PAGE
	1	1	**245-1376**	1	TUBE AS	
	2	1	**245-1377**	1	TUBE AS	
	3	1	**245-1378**	1	TUBE AS	
	4	1	**245-1379**	1	TUBE AS	
	5	1	**245-1380**	1	TUBE AS	
	6	1	**245-1381**	1	TUBE AS	
	7	1	**246-7907**	1	TUBE AS	
	8	1	**247-4238**	1	TUBE AS	
Y	9	1	**254-3415**	1	MANIFOLD GP-CONTROL (STEERING BACKUP)	571
	10	1	**262-7444**	1	VALVE GP-STEERING (MAIN)	
	11	1	*148-8318*	4	CONNECTOR AS	
					(EACH INCLUDES)	
		1	**3K-0360**	1	SEAL-O-RING	
		1	**6V-8397**	1	SEAL-O-RING	
		1	**6V-8634**	1	CONNECTOR	
	12	1	*148-8336*	3	CONNECTOR AS	
					(EACH INCLUDES)	
		1	**3J-1907**	1	SEAL-O-RING	
		1	**6V-8397**	1	SEAL-O-RING	
		1	**6V-8636**	1	CONNECTOR	
	13	1	*148-8340*	2	CONNECTOR AS	
					(EACH INCLUDES)	
		1	**3K-0360**		SEAL-O-RING	
		1	**6V-8398**	1	SEAL-O-RING	
		1	**6V-8639**	1	CONNECTOR	
	14	1	*148-8378*	1	ELBOW AS	
		1	**3J-1907**	1	SEAL-O-RING	
		1	**6V-8397**	1	SEAL-O-RING	
		1	**6V-8724**	1	ELBOW	
	15	1	*164-5572*	2	UNION AS	
					(EACH INCLUDES)	
		1	**6V-8398**	2	SEAL-O-RING	
		1	**6V-8731**	1	UNION	
	16	1	**1B-3057**	2	CLIP	
	17	1	**6V-8398**	2	SEAL-O-RING	
	18	1	**8M-2770**	2	CLIP	
	19	1	**8T-4121**	6	WASHER-HARD (11X21X2.5-MM THK)	
M	20	1	**8T-4137**	2	BOLT (M10X1.5X20-MM)	
M	21	1	**8T-4195**	1	BOLT (M10X1.5X30-MM)	
M	22	1	**8T-5005**	1	BOLT (M10X1.5X70-MM)	
M	23	1	**8T-6466**	2	BOLT (M10X1.5X60-MM)	

M-METRIC PART
Y-SEPARATE ILLUSTRATION

PROOF

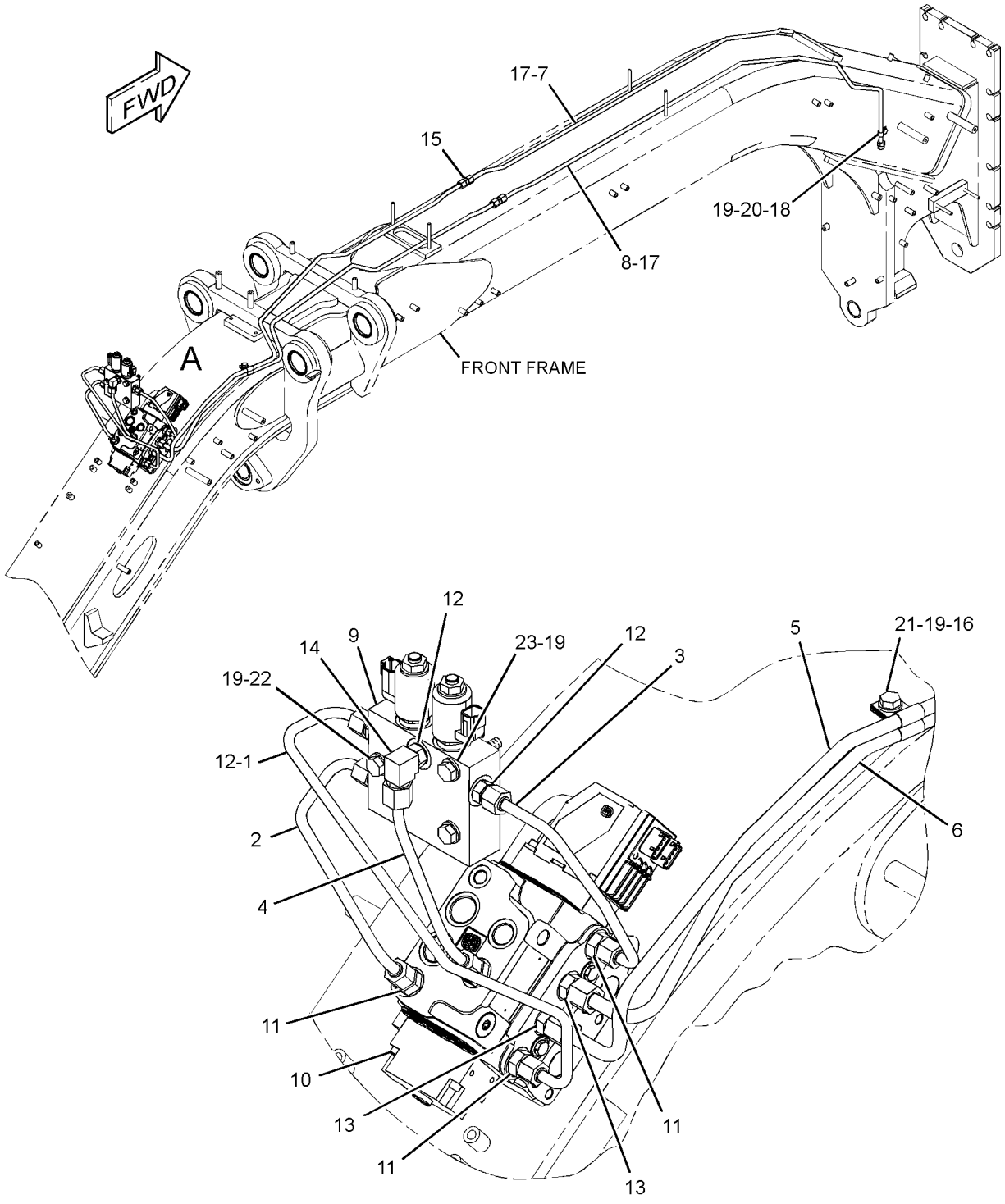

VIEW OF AREA A

GRAPHIC #1 **<END>** g01163180

HYDRAULIC SYSTEM

231-1526 LINES GP-STEERING

S/N: B9M1-UP

CANNOT BE USED WITH 231-1512—PAGE 559

AN ATTACHMENT

SMCS-4304 **i02234481**

NOTE	REF NO	GRAPHIC REF	PART NUMBER	QTY	PART NAME 1 2 3 4 5 6 (PRODUCT LEVEL)	SEE PAGE
	1	2	**6R-7605**	3	VALVE-SHUTTLE	
	2	2	**227-6744**	2	SWITCH GP-PRESSURE (HAND METERING UNIT)	
	3	1	**245-1380**	1	TUBE AS	
	4	1	**245-1381**	1	TUBE AS	
	5	2	**246-3364**	3	HOSE AS	
	6	2	**246-6655**	1	TUBE AS	
	7	1	**246-7907**	1	TUBE AS	
	8	2	**246-7912**	1	HOSE AS	
	9	1	**247-4238**	1	TUBE AS	
	10	2	**248-4040**	1	TUBE AS	
	11	2	**248-4041**	1	TUBE AS	
	12	2	**250-5710**	1	TUBE AS	
	13	2	**250-5711**	1	TUBE AS	
	14	2	**250-5712**	1	TUBE AS	
	15	2	**250-5713**	1	TUBE AS	
	16	2	**251-3290**	4	CONNECTOR	
	17	2	**252-2172**	1	BLOCK	
Y	18	2	**254-3415**	1	MANIFOLD GP-CONTROL (STEERING BACKUP)	571
	19	2	**262-7444**	1	VALVE GP-STEERING	
	20	2	*148-8318*	3	CONNECTOR AS	
					(EACH INCLUDES)	
		2	**3K-0360**	1	SEAL-O-RING	
		2	**6V-8397**	1	SEAL-O-RING	
		2	**6V-8634**	1	CONNECTOR	
	21	2	*148-8326*	1	CONNECTOR AS	
		2	**3J-7354**	1	SEAL-O-RING	
		2	**6V-8397**	1	SEAL-O-RING	
		2	**6V-9872**	1	CONNECTOR	
	22	2	*148-8336*	4	CONNECTOR AS	
					(EACH INCLUDES)	
		2	**3J-1907**	1	SEAL-O-RING	
		2	**6V-8397**	1	SEAL-O-RING	
		2	**6V-8636**	1	CONNECTOR	
	23	1	*148-8340*	2	CONNECTOR AS	
					(EACH INCLUDES)	
		1	**3K-0360**	1	SEAL-O-RING	
		1	**6V-8398**	1	SEAL-O-RING	
		1	**6V-8639**	1	CONNECTOR	
	24	2	**148-8378**	1	ELBOW AS	
		2	**3J-1907**	1	SEAL-O-RING	
		2	**6V-8397**	1	SEAL-O-RING	
		2	**6V-8724**	1	ELBOW	
	25	2	*148-8428*	1	TEE AS	
		2	**3K-0360**	1	SEAL-O-RING	
		2	**6V-8398**	2	SEAL-O-RING	
		2	**6V-8782**	1	TEE	
	26	2	*148-8434*	1	TEE AS	
		2	**6V-8397**	2	SEAL-O-RING	
		2	**6V-9843**	1	TEE-SWIVEL	
	27	2	*148-8439*	3	TEE AS	
					(EACH INCLUDES)	
		2	**3J-1907**	1	SEAL-O-RING	
		2	**6V-8397**	2	SEAL-O-RING	
		2	**6V-8774**	1	TEE	

PROOF

231-1526 **LINES GP-STEERING** *(contd.)* **i02234481**

NOTE	REF NO	GRAPHIC REF	PART NUMBER	QTY	PART NAME 1 2 3 4 5 6 (PRODUCT LEVEL)	SEE PAGE
	28	1	*164-5572*	2	UNION AS	
					(EACH INCLUDES)	
		1	**6V-8398**	2	SEAL-O-RING	
		1	**6V-8731**	1	UNION	
	29	2	**173-3993**	2	PLUG AS	
					(EACH INCLUDES)	
		2	**4J-7533**	1	SEAL-O-RING	
		2	**9S-8001**	1	PLUG	
	30	2	*175-7572*	3	UNION AS	
					(EACH INCLUDES)	
		2	**3J-1907**	2	SEAL-O-RING	
		2	**5P-4272**	1	UNION	
	31	1	**1B-3057**	2	CLIP	
	32	2	**3J-1907**	2	SEAL-O-RING	
	33	2	**3K-0360**	4	SEAL-O-RING	
	34	1	**6V-8398**	2	SEAL-O-RING	
	35	1	**8M-2770**	2	CLIP	
	36	1,2	**8T-4121**	8	WASHER-HARD (11X21X2.5-MM THK)	
M	37	2	**8T-4136**	2	BOLT (M10X1.5X25-MM)	
M	38	1	**8T-4137**	2	BOLT (M10X1.5X20-MM)	
M	39	1	**8T-4195**	1	BOLT (M10X1.5X30-MM)	
M	40	2	**8T-5005**	1	BOLT (M10X1.5X70-MM)	
M	41	2	**8T-6466**	2	BOLT (M10X1.5X60-MM)	

M-METRIC PART
Y-SEPARATE ILLUSTRATION

PROOF

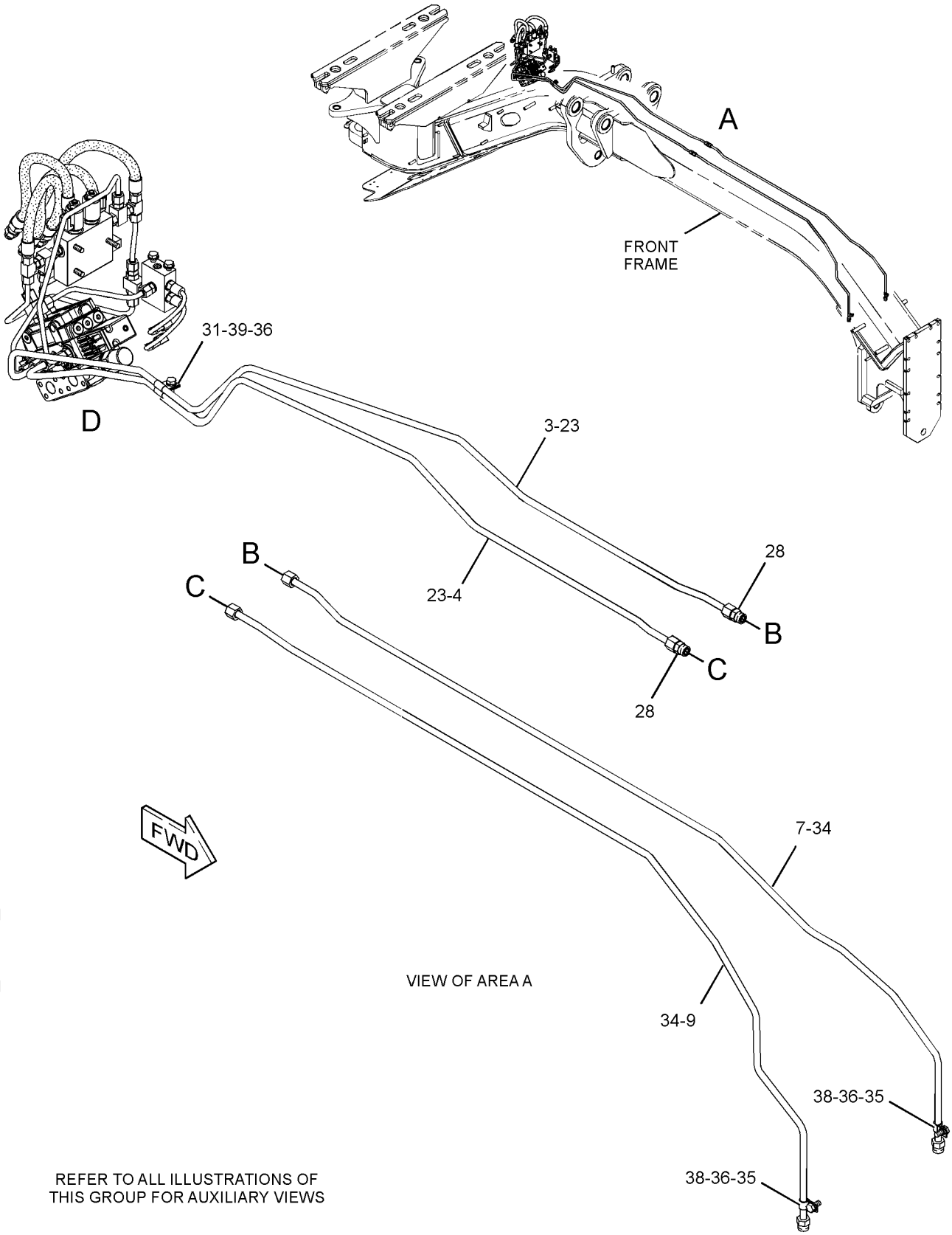

GRAPHIC #1

g01164760

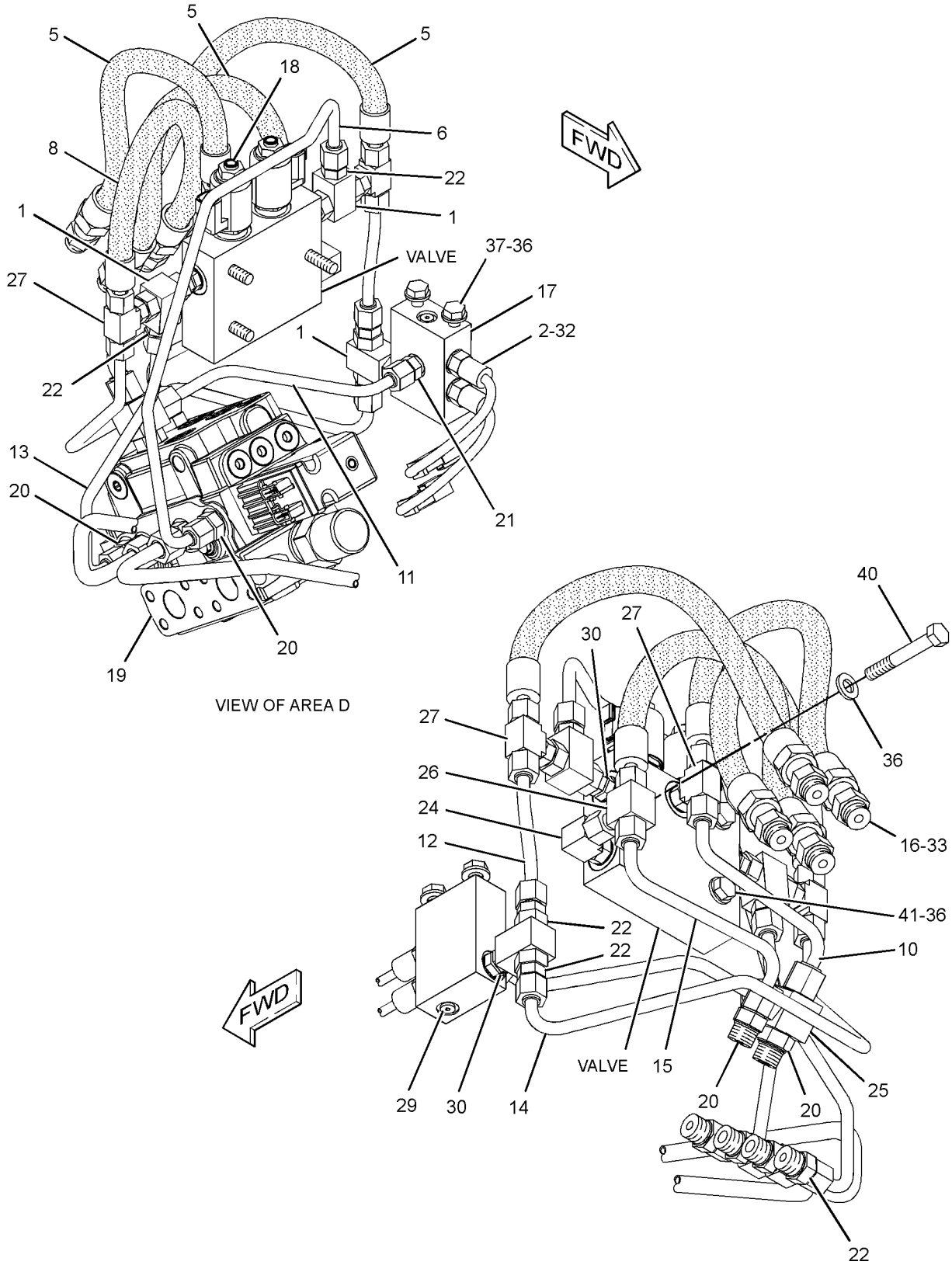

GRAPHIC #2 **<END>** g01164761

246-4477 LOCK GP-CENTERSHIFT

S/N: B9M1-UP

PART OF 234-7721 COMMON AR-MOTOR GRADER

SMCS-5221 **i02225136**

NOTE	REF NO	GRAPHIC REF	PART NUMBER	QTY	PART NAME 1 2 3 4 5 6 (PRODUCT LEVEL)	SEE PAGE
	1	1	**2H-3931**	1	SEAL-O-RING	
	2	1	**4T-8054**	1	SEAL AS	
	3	1	**8X-3749**	1	PISTON	
	4	1	**9D-6584**	1	SEAL-LIP TYPE	
	5	1	**115-0540**	1	CYLINDER	
	6	1	**115-0541**	1	PIN	
	7	1	**142-5787**	1	CAP	
Y	8	1	**152-8346**	1	VALVE GP-SOLENOID (CENTERSHIFT)	637
	9	1	**167-2307**	1	SEAL-U-CUP	
M	10	1	**6V-5686**	2	BOLT (M16X2X50-MM)	
	11	1	**7X-0346**	1	BOLT (5/8-11X2-IN)	
	12	1	**8T-4122**	1	WASHER-HARD (17X32X3.5-MM THK)	
	13	1	**8T-4223**	2	WASHER-HARD (13.5X25.5X3-MM THK)	
	14	1	**8T-8917**	2	BOLT (1/2-13X1.25-IN)	
	15	1	**9X-8257**	2	WASHER (17.5X30X3.5-MM THK)	

M-METRIC PART
Y-SEPARATE ILLUSTRATION

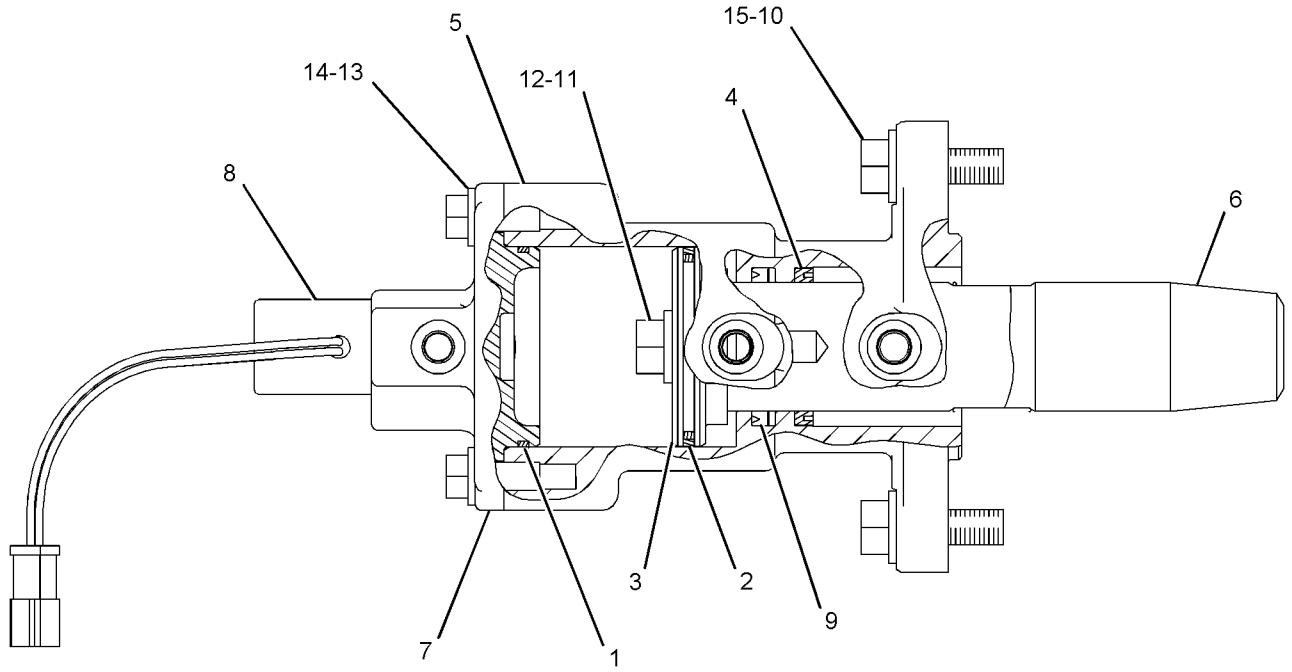

GRAPHIC #1 **<END>** g01109477

HYDRAULIC SYSTEM

248-5525 MANIFOLD GP-CONTROL

S/N: DGX1-UP

24-VOLT

PART OF 262-5994 CONTROL GP-TRANSMISSION HYD

SMCS-5051, 5069, 5264, 5467, 5479 **i02348797**

NOTE	REF NO	GRAPHIC REF	PART NUMBER	QTY	PART NAME 1 2 3 4 5 6 (PRODUCT LEVEL)	SEE PAGE
	1	1	**248-5524**	1	MANIFOLD AS	
	2	1	**248-5523**	1	VALVE GP-SOLENOID (PARKING BRAKE)	
M	3	1	**8T-1158**	1	BOLT-SOCKET HEAD (M8X1.25X20-MM)	

M-METRIC PART

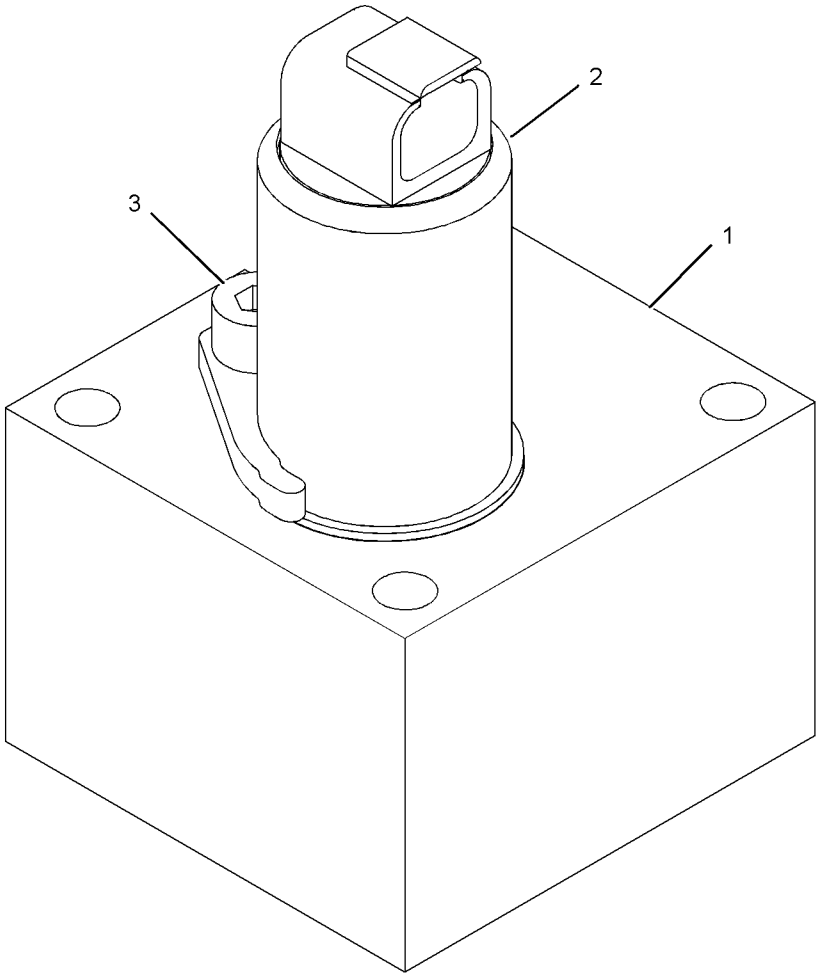

GRAPHIC #1 **<END>** g01110971

251-8256 MANIFOLD GP-CONTROL–BRAKE, HYDRAULIC FAN

S/N: B9M1-UP

PART OF 266-3724 LINES GP-HYDRAULIC FAN

AN ATTACHMENT

SMCS-5051, 5069, 5264, 5467, 5479 **i02348801**

NOTE	REF NO	GRAPHIC REF	PART NUMBER	QTY	PART NAME 1 2 3 4 5 6 (PRODUCT LEVEL)	SEE PAGE
J	1	2	**251-8331**	1	VALVE GP-DIVERTER (BRAKE ACCUMULATOR)	
Y	2	2	**251-8330**	1	VALVE GP-RELIEF (BRAKE ACCUMULATOR)	635
K	3	2	**239-0618**	1	VALVE GP-SHUTTLE (HYDRAULIC FAN)	
		2	**3H-0442**	1	SEAL-O-RING	
	4	2	**253-9742**	1	PLUG-ORIFICE	
	5	1,2	**9S-8001**	2	PLUG	
	6	1,2	**4J-7533**	2	SEAL-O-RING	
	7	2	**9S-8004**	1	PLUG	
	8	2	**3J-1907**	1	SEAL-O-RING	
Y	9	1	**249-5227**	1	VALVE GP-SHUTTLE (BRAKE ACCUMULATOR)	636
	10	2	**251-8389**	1	VALVE GP-RELIEF (BRAKE ACCUMULATOR)	
Y	11	2	**158-9956**	1	VALVE GP-CHECK (BRAKE, HYDRAULIC FAN)	607
Y	12	1	**189-8627**	1	VALVE GP-SOLENOID (HYDRAULIC FAN)	638
	13	1	**6E-5066**	1	SCREEN (BRAKE, HYDRAULIC FAN)	
Y	14	1	**252-9256**	1	VALVE GP-DIVERTER (HYDRAULIC FAN)	634
Y	15	2	**237-0957**	1	SENSOR GP-PRESSURE (BRAKE ACCUMULATOR)	187
	16	2	**6V-3305**	1	ADAPTER-O-RING (90-DEG)	
					AVAILABLE REPAIR KIT(S):	
J			**200-6282**	1	KIT-SEAL (DIVERTER VALVE)	
					(INCLUDES SEAL-O-RINGS, AND BACKUP RINGS)	
K			**239-5195**	1	KIT-SEAL (SHUTTLE VALVE)	
					(INCLUDES SEAL-O-RING, AND BACKUP RING)	

J-(NULL)
K-SEE MAST AR OR LIFT GP
Y-SEPARATE ILLUSTRATION

PROOF

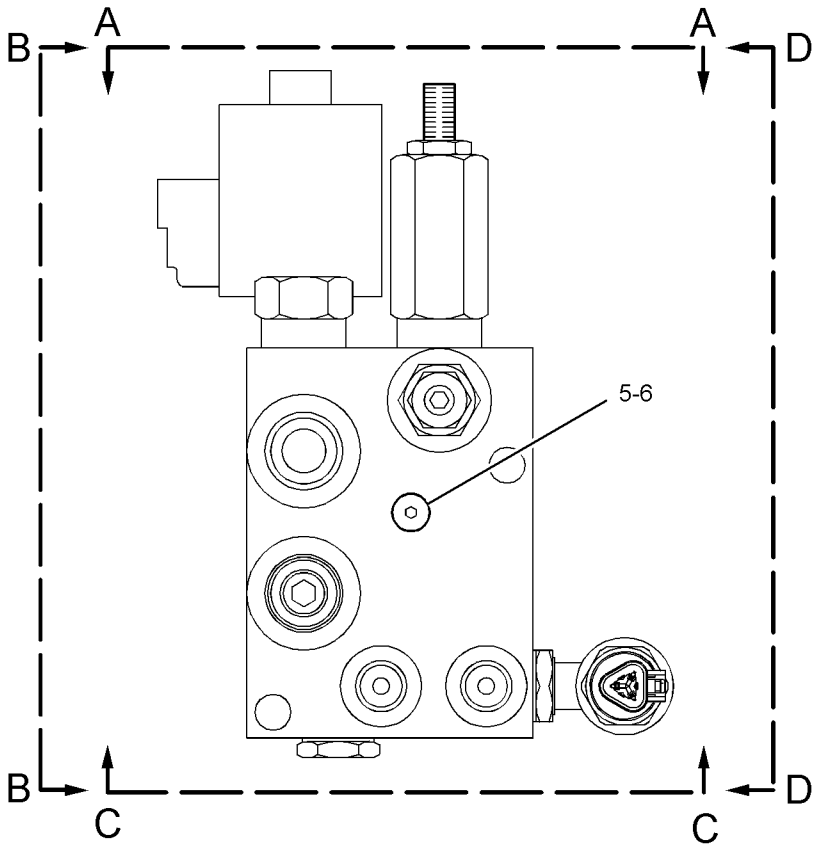

REFER TO ALL ILLUSTRATIONS OF
THIS GROUP FOR AUXILIARY VIEWS

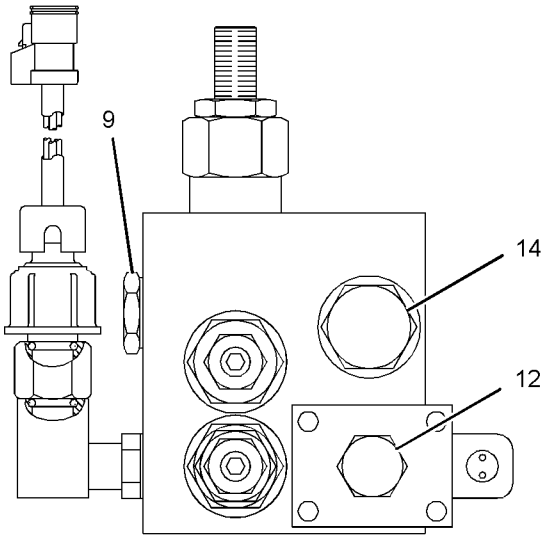

VIEW A-A

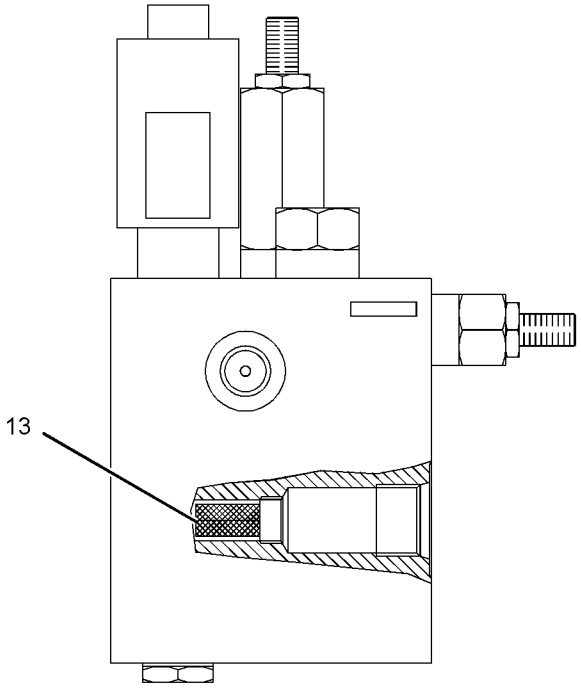

VIEW B-B

GRAPHIC #1

g01142975

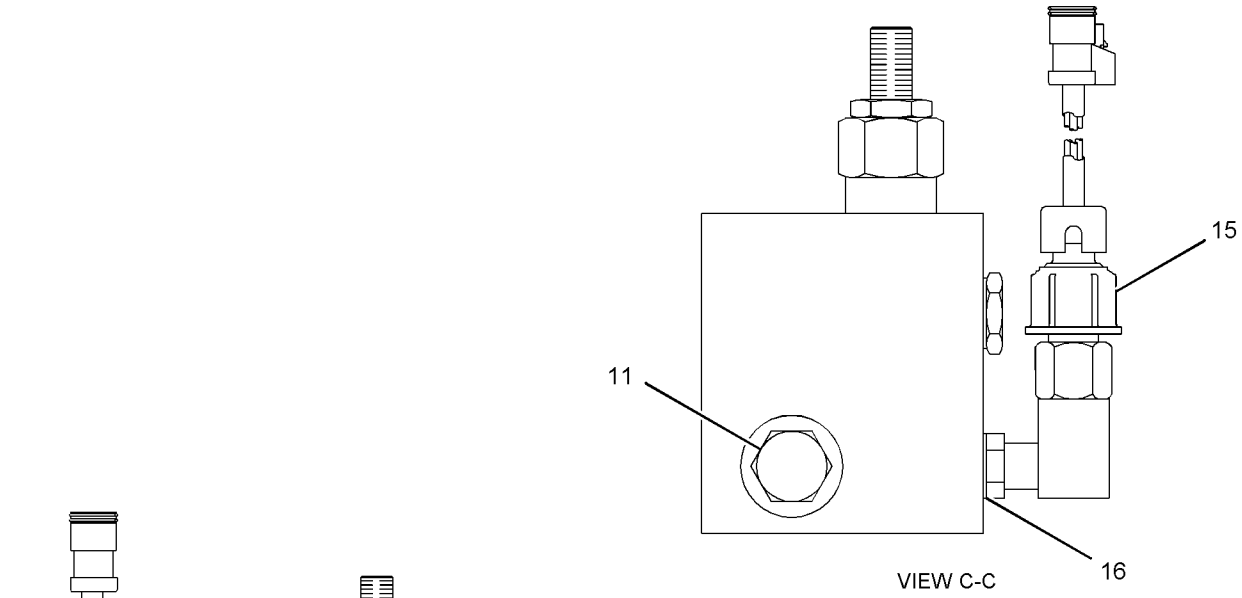

VIEW C-C

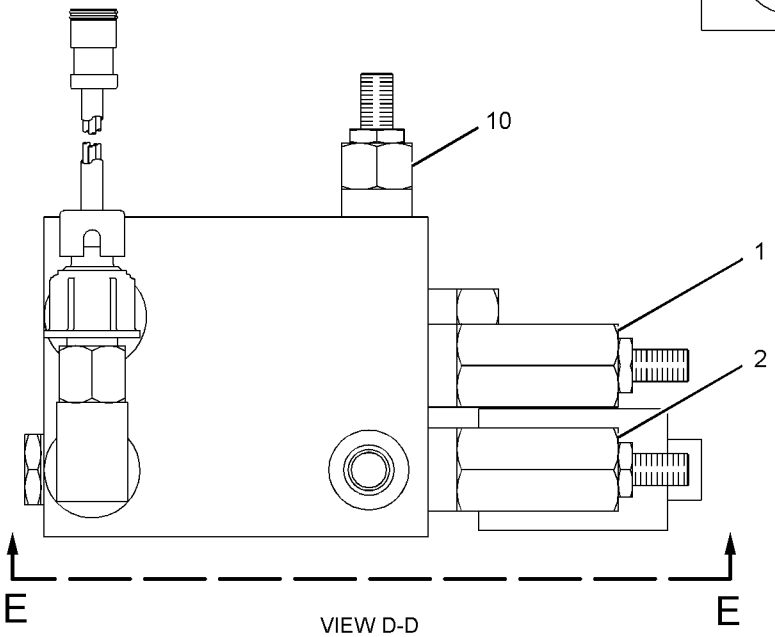

VIEW D-D

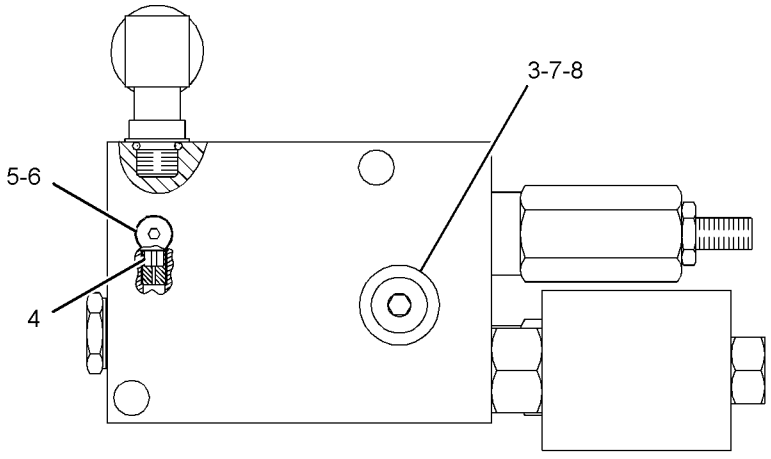

VIEW E-E

GRAPHIC #2 **<END>** g01142976

HYDRAULIC SYSTEM

253-1320 MANIFOLD GP-CONTROL–BLADE CUSHION

S/N: B9M1-UP

PART OF 231-1532 LINES GP-HYDRAULIC

AN ATTACHMENT

SMCS-5051, 5069, 5264, 5467, 5479 **i02348914**

NOTE	REF NO	GRAPHIC REF	PART NUMBER	QTY	PART NAME 1 2 3 4 5 6 (PRODUCT LEVEL)	SEE PAGE
	1	1	**244-8686**	1	VALVE GP-SOLENOID (BLADE CUSHION)	
		1	**249-0981**	1	COIL AS	

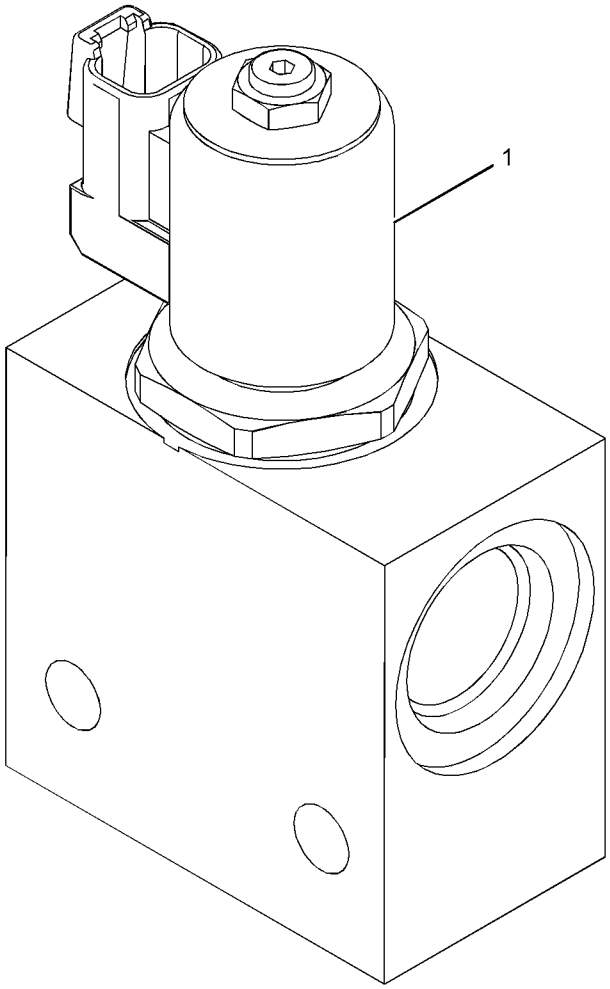

GRAPHIC #1 **<END>** g01143593

254-3415 MANIFOLD GP-CONTROL–STEERING BACKUP

S/N: B9M1-UP

PART OF 231-1512, 231-1526 LINES GP-STEERING

AN ATTACHMENT

SMCS-5051, 5069, 5264, 5467, 5479 **i02254212**

NOTE	REF NO	GRAPHIC REF	PART NUMBER	QTY	PART NAME 1 2 3 4 5 6 (PRODUCT LEVEL)	SEE PAGE
	2	1	**6E-5066**	1	SCREEN (STEERING)	
	3	1	*254-3413*	1	MANIFOLD AS	
		1	**124-1555**	1	PLUG	
Y	4	1	**254-3414**	2	VALVE GP-SOLENOID	639

Y-SEPARATE ILLUSTRATION

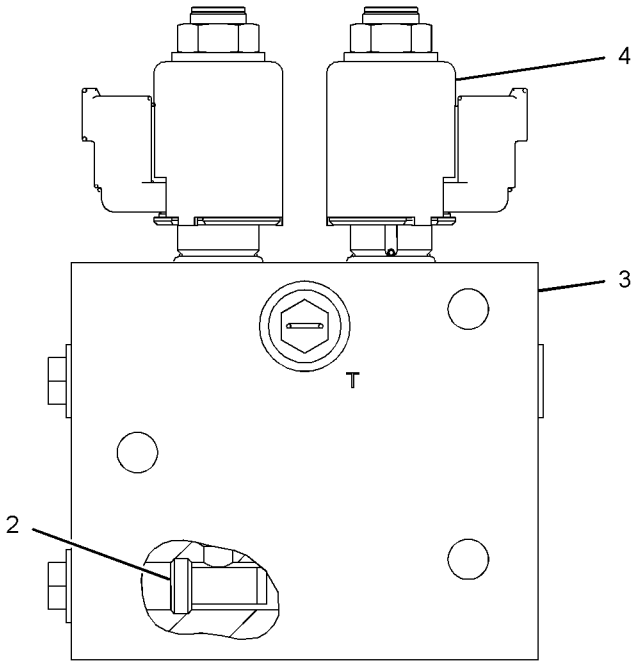

FRONT VIEW

GRAPHIC #1 **<END>** g01107180

HYDRAULIC SYSTEM

105-3196 MOTOR GP-GEROTOR—CIRCLE DRIVE

S/N: B9M1-UP

PART OF 253-4677 DRIVE GP-CIRCLE

SMCS-5082 **i02334058**

NOTE	REF NO	GRAPHIC REF	PART NUMBER	QTY	PART NAME 1 2 3 4 5 6 (PRODUCT LEVEL)	SEE PAGE
	1	1	**9T-8051**	7	BOLT (3/8-24X4.12-IN)	
	2	1	**9T-8070**	1	HOUSING AS	
	3	1	**6Y-2934**	1	BEARING-ROLLER	
	4	1	**6Y-2933**	2	RING-THRUST	
	5	1	**6Y-2932**	1	BEARING-THRUST	
	6	1	**8T-1698**	1	BEARING AS-NEEDLE	
	7	1	**9T-9071**	1	SHIM	
	8	1	**9T-8058**	1	BACKUP	
	9	1	**9T-8059**	1	SEAL	
	10	1	**9T-8056**	1	SHAFT	
	11	1	**6Y-2935**	1	BEARING	
	12	1	**9T-8053**	5	SEAL	
	13	1	**9T-8054**	1	LINK	
	14	1	**9T-8061**	1	PLATE	
	15	1	**9T-8063**	1	ROTOR SET	
	16	1	**9T-8065**	1	MANIFOLD	
	17	1	**9J-4963**	1	RING	
	18	1	**9T-8069**	1	PLATE AS	
	19	1	**9T-8067**	1	COVER	
	20	1	**7X-4733**	1	SEAL-LIP TYPE	
					AVAILABLE REPAIR KIT(S):	
			9T-9072	1	KIT-SEAL (MOTOR)	
					(INCLUDES RING, SHIM, SEALS & GREASE PACK)	

PROOF

105-3196 **MOTOR GP-GEROTOR** *(contd.)* **i02334058**

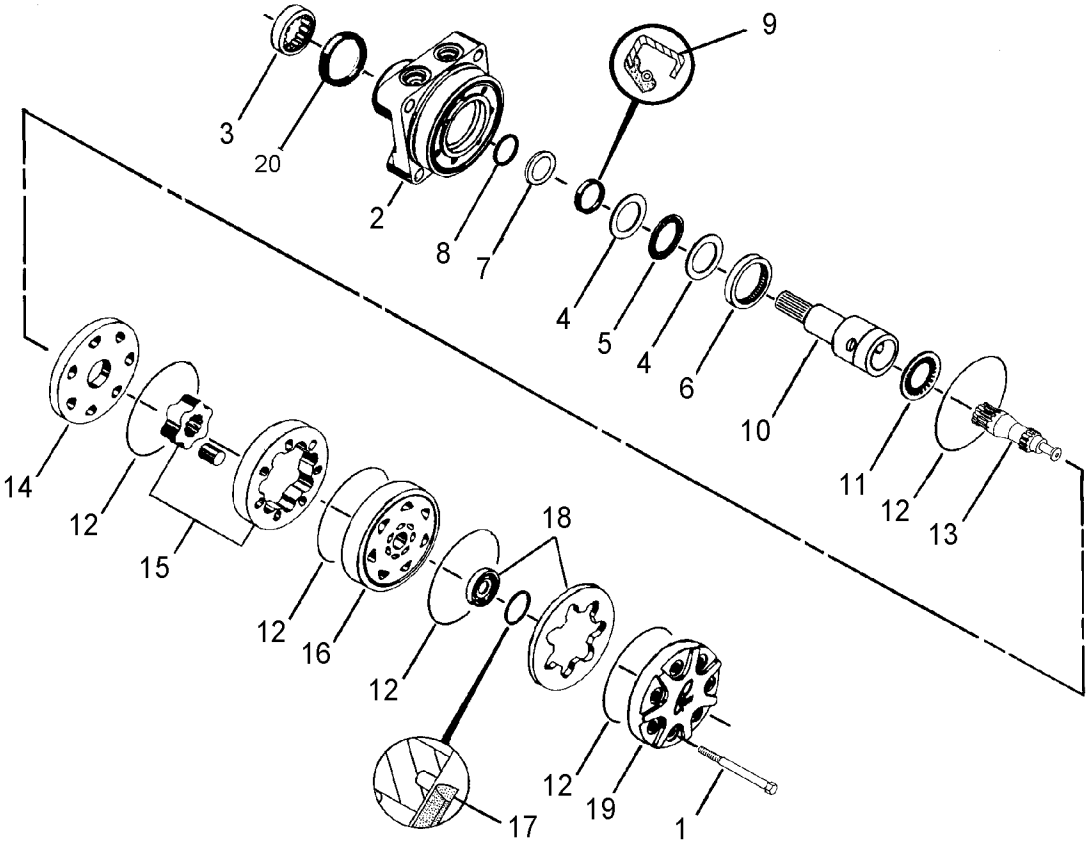

GRAPHIC #1 **<END>** g01164987

HYDRAULIC SYSTEM

250-1169 PUMP & MTG GP-ELECTRIC DRIVE

S/N: B9M1-UP
PART OF 261-0607 OIL CHANGE AR-HIGH SPEED
AN ATTACHMENT

SMCS-1325, 4324 **i02348803**

NOTE	REF NO	GRAPHIC REF	PART NUMBER	QTY	PART NAME 1 2 3 4 5 6 (PRODUCT LEVEL)	SEE PAGE
	1	1	**190-6123**	2	CLAMP	
	2	1	**190-6124**	2	CLAMP	
	3	1	**251-1624**	1	PUMP & MOTOR GP (HIGH SPEED OIL CHANGE)	
M	4	1	**5C-7261**	2	NUT (M8X1.25-THD)	
M	5	1	**7X-2537**	2	BOLT (M8X1.25X35-MM)	
M	6	1	**8T-4121**	4	WASHER-HARD (11X21X2.5-MM THK)	
M	7	1	**8T-4136**	2	BOLT (M10X1.5X25-MM)	
M	8	1	**8T-4195**	2	BOLT (M10X1.5X30-MM)	
	9	1	**8T-4224**	4	WASHER-HARD (8.8X16X2-MM THK)	

M-METRIC PART

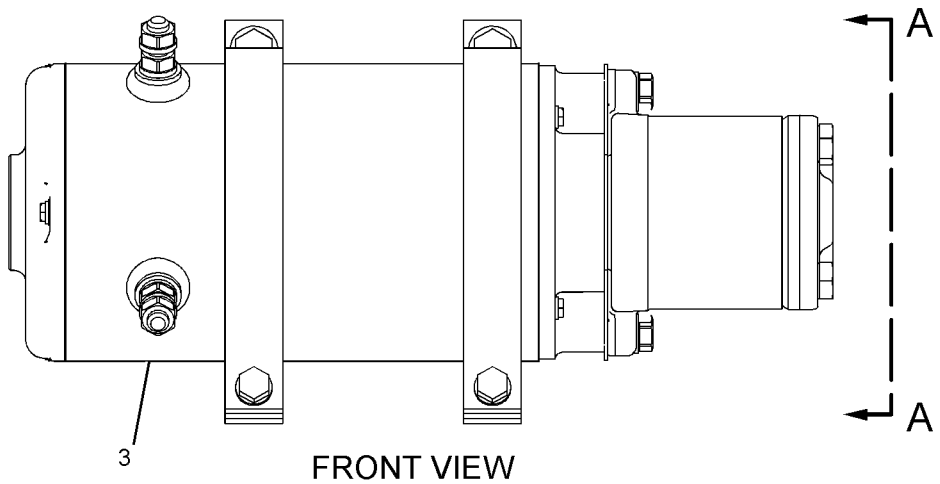

FRONT VIEW

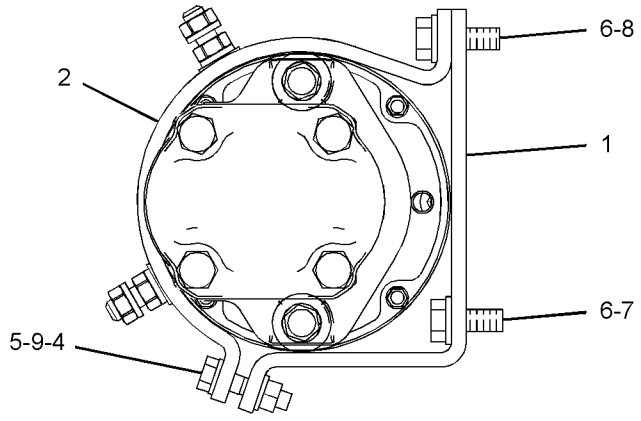

VIEW A-A

GRAPHIC #1 **<END>** g01109931

250-1170 PUMP & MTG GP-ELECTRIC DRIVE

S/N: B9M1-UP
PART OF 261-0774 STEERING AR-SECONDARY
AN ATTACHMENT

SMCS-1325, 4324 **i02348805**

NOTE	REF NO	GRAPHIC REF	PART NUMBER	QTY	PART NAME 1 2 3 4 5 6 (PRODUCT LEVEL)	SEE PAGE
	1	1	**190-6123**	2	CLAMP	
	2	1	**190-6124**	2	CLAMP	
	3	1	**259-2616**	1	PUMP GP-SECONDARY STEERING	
M	4	1	**5C-7261**	2	NUT (M8X1.25-THD)	
M	5	1	**7X-2537**	2	BOLT (M8X1.25X35-MM)	
M	6	1	**8T-4121**	4	WASHER-HARD (11X21X2.5-MM THK)	
M	7	1	**8T-4136**	2	BOLT (M10X1.5X25-MM)	
M	8	1	**8T-4195**	2	BOLT (M10X1.5X30-MM)	
	9	1	**8T-4224**	4	WASHER-HARD (8.8X16X2-MM THK)	

M-METRIC PART

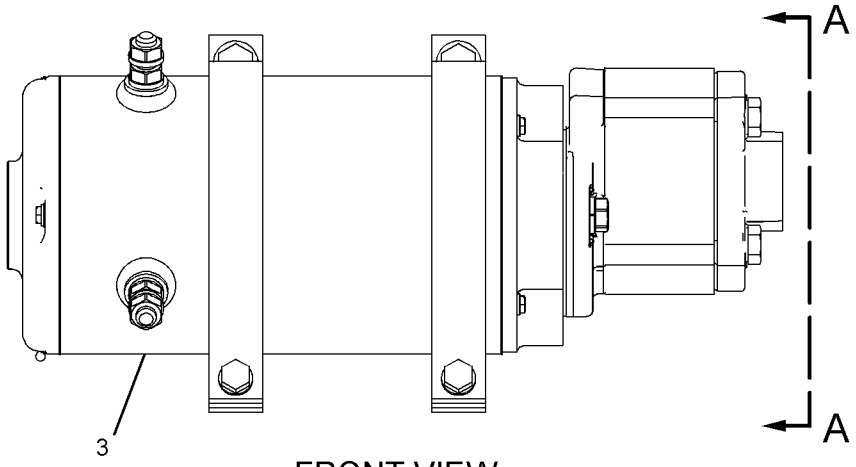

FRONT VIEW

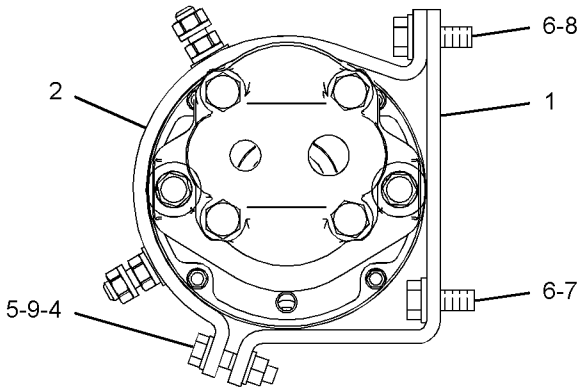

VIEW A-A

GRAPHIC #1 **<END>** g01109919

HYDRAULIC SYSTEM

250-1171 PUMP & MTG GP-ELECTRIC DRIVE

S/N: B9M1-UP
PART OF 261-0611 STEERING AR-SECONDARY
AN ATTACHMENT

SMCS-1325, 4324 **i02224969**

NOTE	REF NO	GRAPHIC REF	PART NUMBER	QTY	PART NAME 1 2 3 4 5 6 (PRODUCT LEVEL)	SEE PAGE
	1	1	**190-6123**	2	CLAMP	
	2	1	**190-6124**	2	CLAMP	
	3	1	**259-2615**	1	PUMP & MOTOR GP (QUICK EVAC, SECONDARY STEERING)	
M	4	1	**5C-7261**	2	NUT (M8X1.25-THD)	
M	5	1	**7X-2537**	2	BOLT (M8X1.25X35-MM)	
	6	1	**8T-4121**	4	WASHER-HARD (11X21X2.5-MM THK)	
M	7	1	**8T-4136**	2	BOLT (M10X1.5X25-MM)	
M	8	1	**8T-4195**	2	BOLT (M10X1.5X30-MM)	
	9	1	**8T-4224**	4	WASHER-HARD (8.8X16X2-MM THK)	

M-METRIC PART

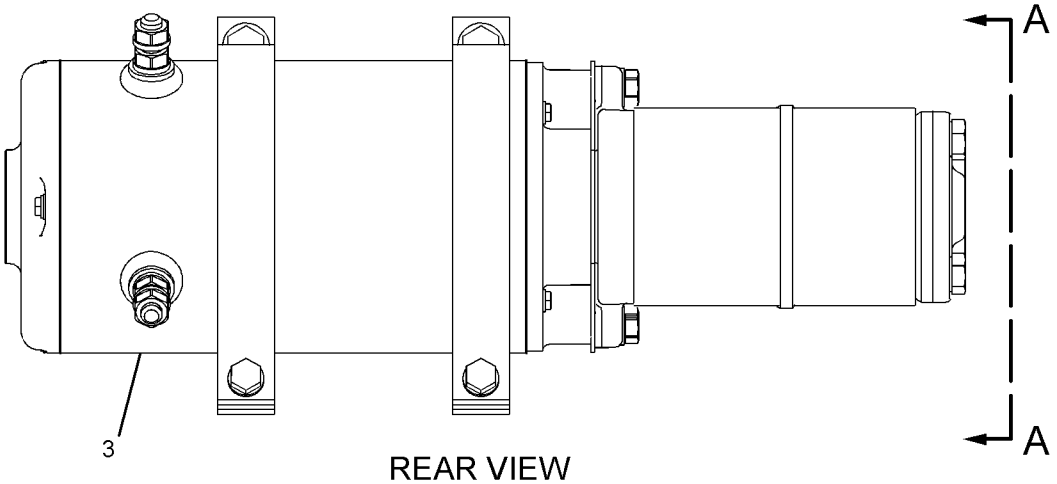

REAR VIEW

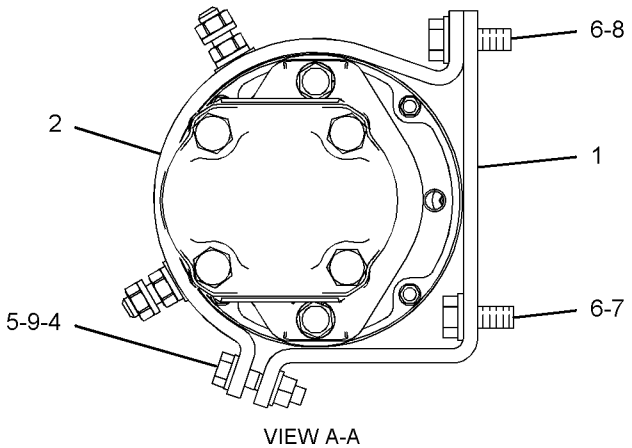

VIEW A-A

GRAPHIC #1 **<END>** g01122242

235-8552 PUMP & MTG GP-HYDRAULIC FAN

S/N: B9M1-UP

PART OF 234-7721 COMMON AR-MOTOR GRADER, 269-1986 FAN AR-REVERSIBLE ALSO AN ATTACHMENT

SMCS-1387 **i02295913**

NOTE	REF NO	GRAPHIC REF	PART NUMBER	QTY	PART NAME 1 2 3 4 5 6 (PRODUCT LEVEL)	SEE PAGE
	1	1	**250-5720**	1	PLATE AS	
M		1	**8T-6462**	1	BOSS-WELD (M10X1.5X25-MM OAL)	
	2	1	**250-8337**	1	PUMP GP-PISTON (BRAKE, HYDRAULIC FAN)	
	3	1	**270-5425**	1	TUBE AS	
	4	1	**1P-4578**	2	FLANGE-HALF	
	5	1	**4J-0522**	1	SEAL-O-RING	
	6	1	**4S-4455**	1	CLIP	
	7	1	**6D-7146**	1	SEAL-O-RING	
M	8	1	**8T-4121**	5	WASHER-HARD (11X21X2.5-MM THK)	
M	9	1	**8T-4137**	1	BOLT (M10X1.5X20-MM)	
M	10	1	**8T-4196**	4	BOLT (M10X1.5X35-MM)	
M	11	1	**8T-4223**	2	WASHER-HARD (13.5X25.5X3-MM THK)	
M	12	1	**8T-4956**	2	BOLT (M12X1.75X35-MM)	

M-METRIC PART

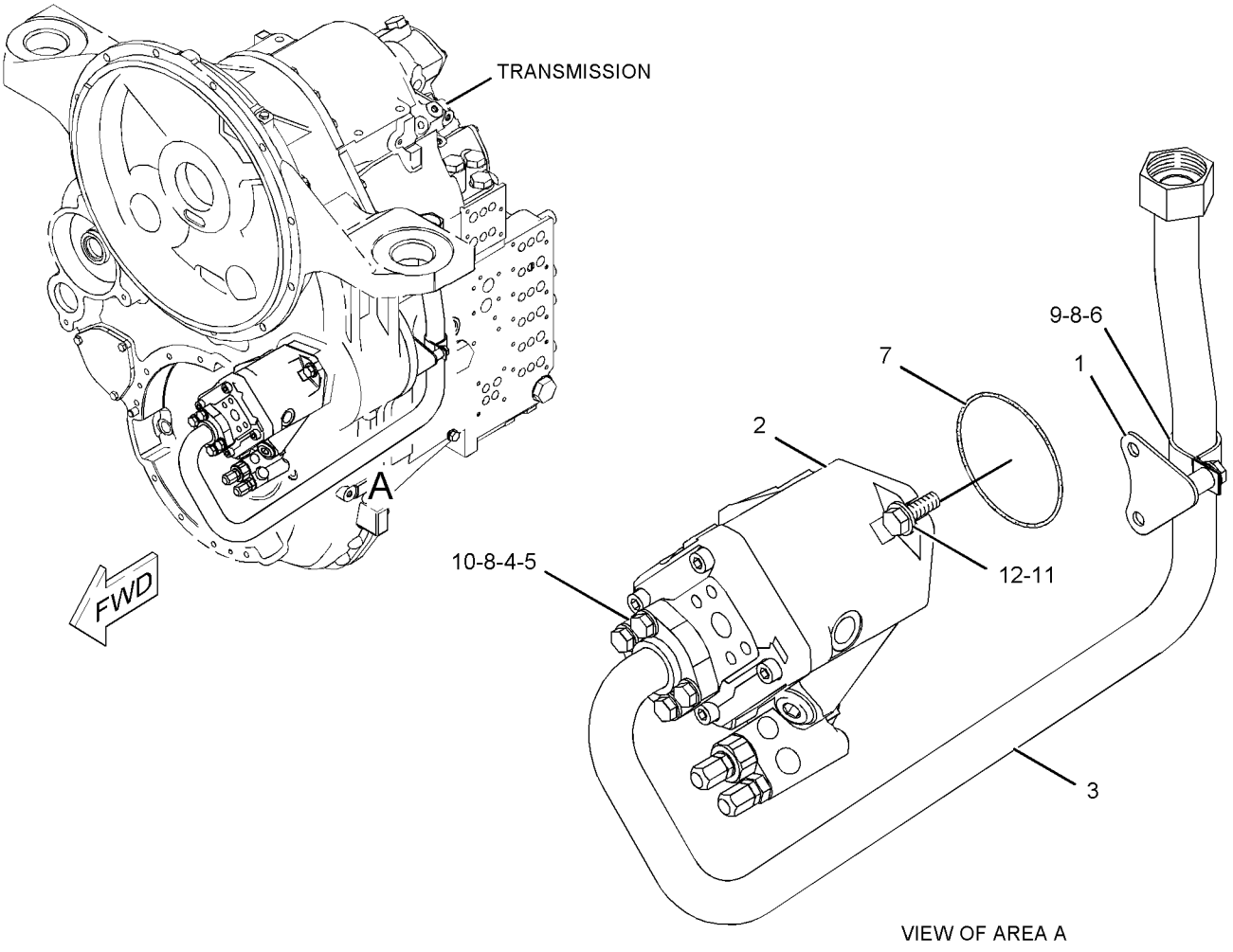

GRAPHIC #1 **<END>** g01144382

HYDRAULIC SYSTEM

231-1535 PUMP & MTG GP-PISTON—IMPLEMENT

S/N: B9M1-UP

PART OF 234-7721 COMMON AR-MOTOR GRADER

SMCS-5070 **i02235529**

NOTE	REF NO	GRAPHIC REF	PART NUMBER	QTY	PART NAME 1 2 3 4 5 6 (PRODUCT LEVEL)	SEE PAGE
	1	1	**236-7296**	1	PUMP GP-PISTON (IMPLEMENT)	
	2	1	**5F-3106**	1	SEAL-O-RING	
M	3	1	**8T-4183**	4	BOLT (M12X1.75X40-MM)	
	4	1	**8T-4223**	4	WASHER-HARD (13.5X25.5X3-MM THK)	

M-METRIC PART

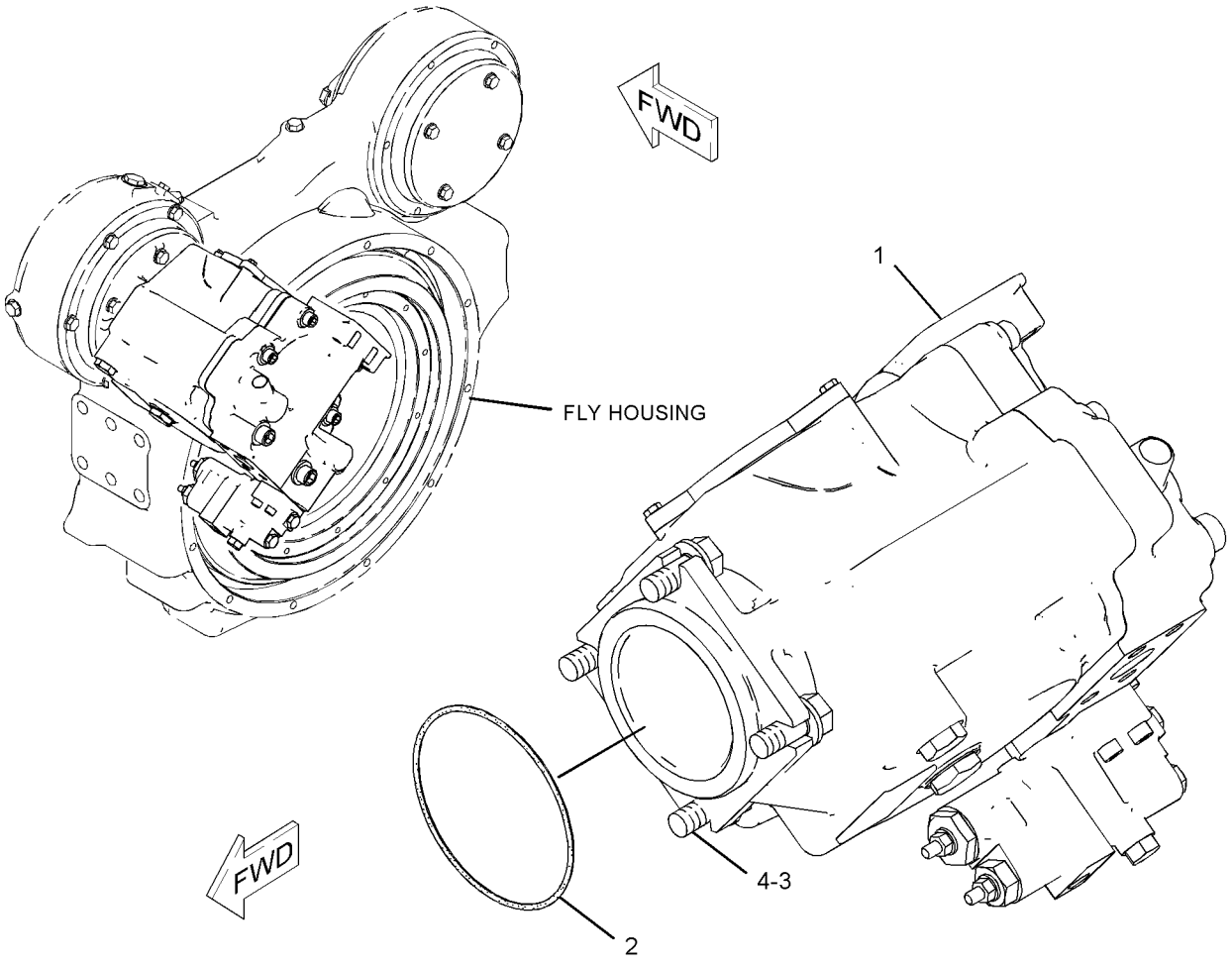

GRAPHIC #1 **<END>** g01133369

HYDRAULIC SYSTEM

261-0611 STEERING AR-SECONDARY

S/N: B9M1-UP

AN ATTACHMENT

SMCS-4300 **i02290922**

NOTE	PART NUMBER	QTY	PART NAME 1 2 3 4 5 6 (PRODUCT LEVEL)	SEE PAGE
Y	*246-6717*	1	LINES GP-ENGINE OIL DRAIN	40
Y	*237-6423*	1	LINES GP-PUMP	534
Y	*263-7819*	1	LINES GP-SECONDARY STEERING	557
Y	*250-1171*	1	PUMP & MTG GP-ELECTRIC DRIVE (SEC STEER, HS OIL CHANGE)	576
Y	*233-4646*	1	WIRING GP-ENGINE (OIL EVAC)	225
Y	*269-4150*	1	WIRING GP-SECONDARY STEERING	252

Y-SEPARATE ILLUSTRATION

<END>

261-0774 STEERING AR-SECONDARY

S/N: B9M1-UP

AN ATTACHMENT

SMCS-4300 **i02290990**

NOTE	PART NUMBER	QTY	PART NAME 1 2 3 4 5 6 (PRODUCT LEVEL)	SEE PAGE
Y	*237-6423*	1	LINES GP-PUMP	534
Y	*231-1531*	1	LINES GP-SECONDARY STEERING	555
Y	*250-1170*	1	PUMP & MTG GP-ELECTRIC DRIVE (SEC STEER, HS OIL CHANGE)	575
Y	*269-4150*	1	WIRING GP-SECONDARY STEERING	252

Y-SEPARATE ILLUSTRATION

<END>

PROOF

HYDRAULIC SYSTEM

260-6502 SWIVEL GP

S/N: B9M1-UP
PART OF 231-1516, 231-1532 LINES GP-HYDRAULIC
AN ATTACHMENT

SMCS-5060 **i02348806**

NOTE	REF NO	GRAPHIC REF	PART NUMBER	QTY	PART NAME 1 2 3 4 5 6 (PRODUCT LEVEL)	SEE PAGE
B	1	1	**5J-1246**	6	SHIM (0.13-MM THK)	
	2	1	**8J-2331**	7	SEAL	
	3	1	**173-1008**	1	ROTOR	
	4	1	**173-1009**	1	RETAINER	
	5	1	**223-0580**	1	COVER	
	7	1	**260-6501**	1	BODY	
	8	1	**173-1007**	2	SEAL	
	9	1	**1P-3700**	4	SEAL-RECTANGULAR	
	10	1	**2H-3928**	7	SEAL-O-RING	
	11	1	**4J-9964**	2	SEAL	
	12	1	**5P-2566**	6	BOLT (1/2-13X1.5-IN)	
M	13	1	**8T-4223**	4	WASHER-HARD (13.5X25.5X3-MM THK)	

B-USE AS REQUIRED
M-METRIC PART

PROOF

260-6502 SWIVEL GP *(contd.)* **i02348806**

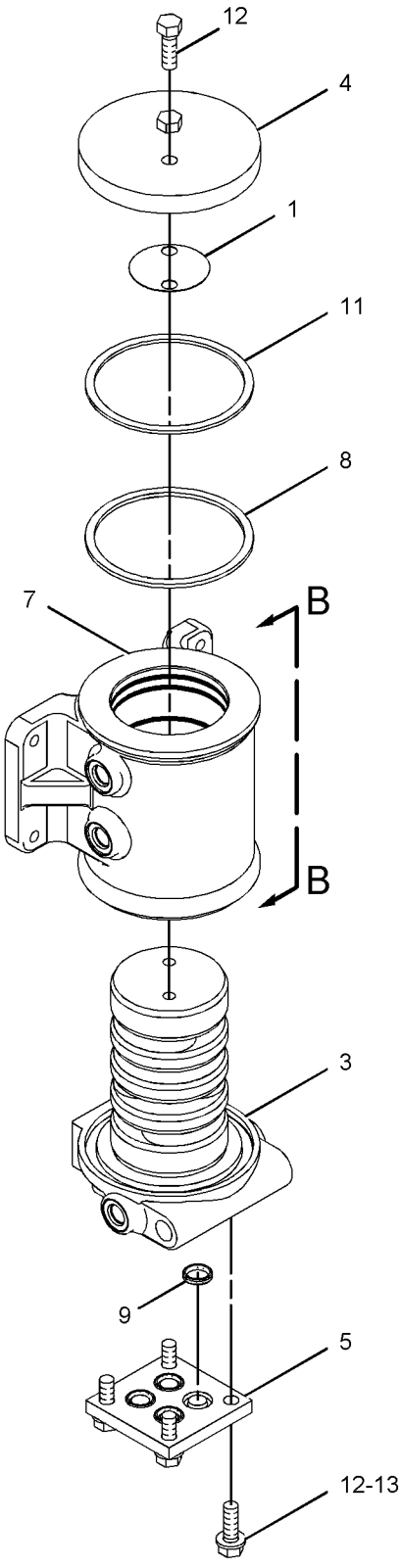

VIEW OF AREA A

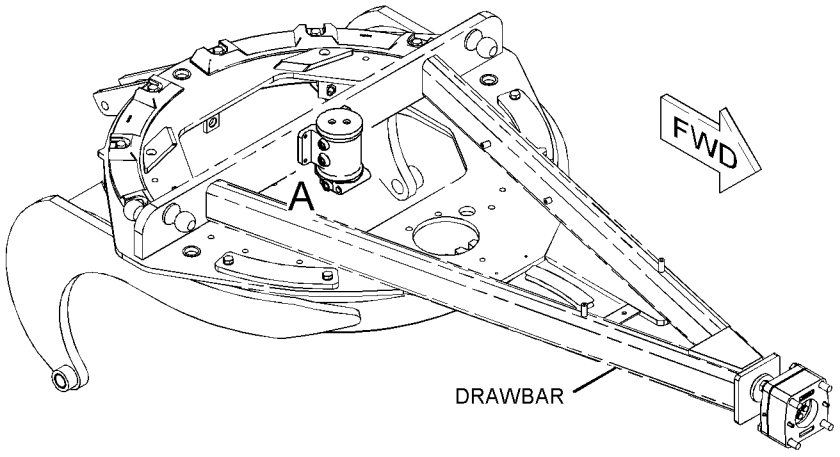

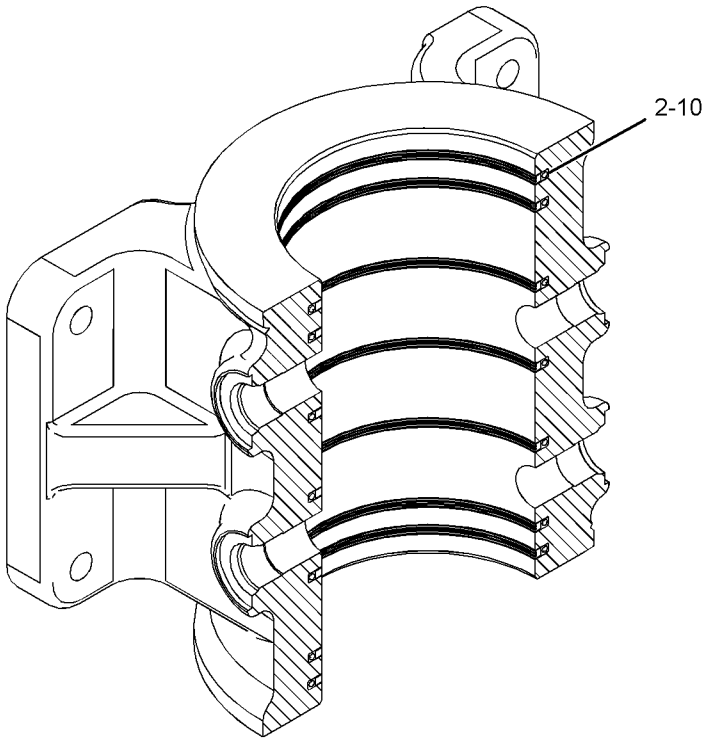

SECTION B-B

GRAPHIC #1 **<END>** g01142114

HYDRAULIC SYSTEM

233-4259 TANK & MTG GP-HYDRAULIC

S/N: B9M1-UP

PART OF 231-5061 SUPPORT AR-REAR CHASSIS

SMCS-4332, 5056, 5068 **i02233054**

NOTE	REF NO	GRAPHIC REF	PART NUMBER	QTY	PART NAME 1 2 3 4 5 6 (PRODUCT LEVEL)	SEE PAGE
	1	1	**1P-4278**	3	CLAMP-HOSE	
	2	1	**9R-9925**	1	FILTER-BREATHER (HYDRAULIC TANK)	
Y	3	1	**241-3867**	1	TANK GP-HYDRAULIC	584
	4	1	**250-2784**	1	STRAP AS	
	5	1	**4H-2558**	1	GROMMET	
	6	1	**6D-3479**	4	CLIP	
M	7	1	**8T-4121**	6	WASHER-HARD (11X21X2.5-MM THK)	
M	8	1	**8T-0389**	1	LOCKNUT (M10X1.5-THD)	
M	9	1	**8T-4137**	4	BOLT (M10X1.5X20-MM)	
M	10	1	**8T-4195**	1	BOLT (M10X1.5X30-MM)	
D	11	1	**5P-1442**		HOSE (108-CM)	

D-ORDER BY THE METER
M-METRIC PART
Y-SEPARATE ILLUSTRATION

PROOF

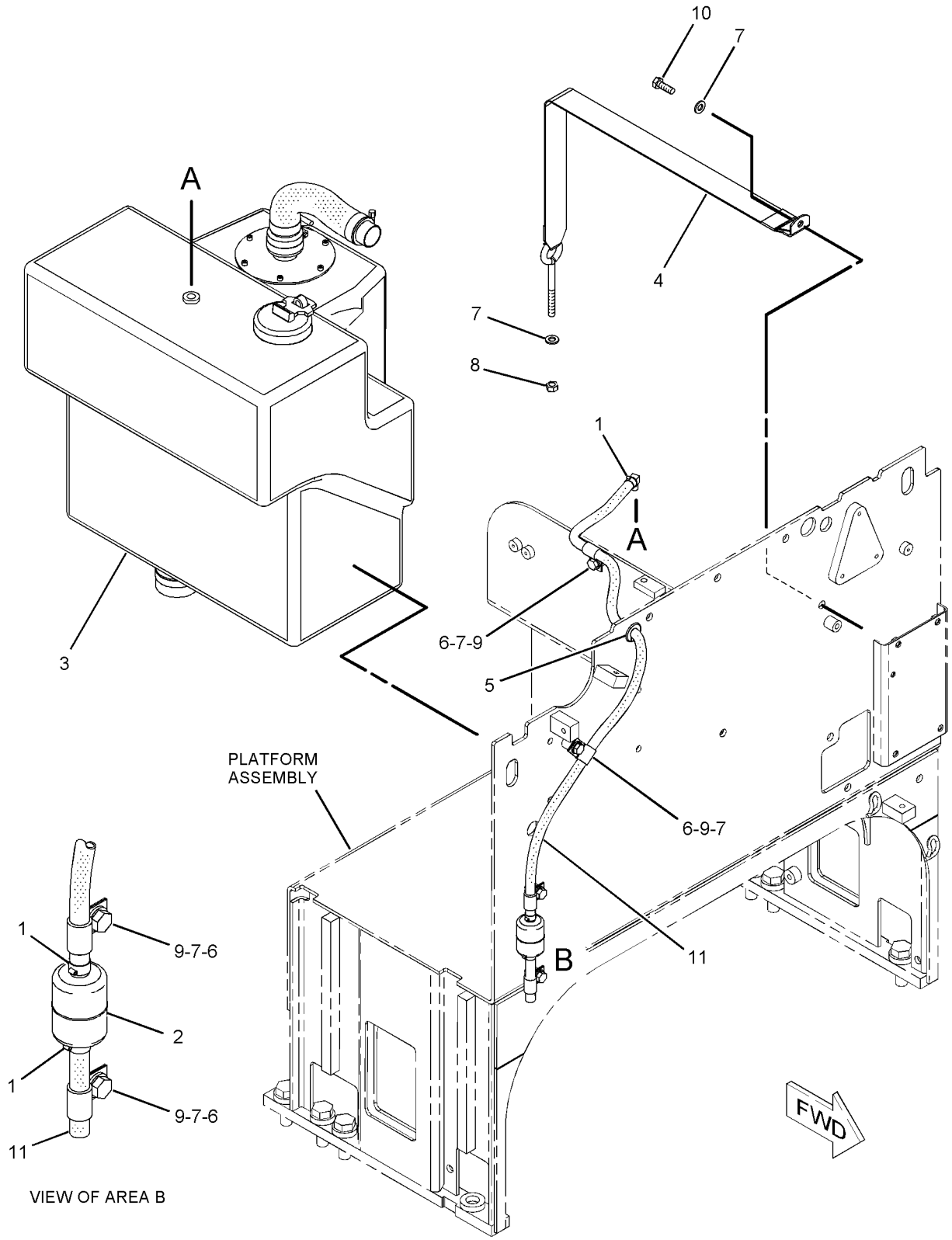

GRAPHIC #1 **<END>** g01105408

HYDRAULIC SYSTEM

241-3867 TANK GP-HYDRAULIC

S/N: B9M1-UP

PART OF 233-4259 TANK & MTG GP-HYDRAULIC

SMCS-4332, 5056, 5068 **i02348807**

NOTE	REF NO	GRAPHIC REF	PART NUMBER	QTY	PART NAME 1 2 3 4 5 6 (PRODUCT LEVEL)	SEE PAGE
	1	1	**6W-5698**	1	GROMMET	
	2	1	**142-8928**	1	ELBOW	
	3	1	**142-8937**	1	CAP AS-FILLER (HYDRAULIC TANK)	
	4	1	**241-3868**	1	TANK AS-HYDRAULIC	
	5	1	**250-3443**	1	TUBE AS	
M	6	1	**099-2374**	6	BOLT-SOCKET HEAD (M5X0.8X12-MM)	
	7	1	**132-3056**	1	SEAL-O-RING	

M-METRIC PART

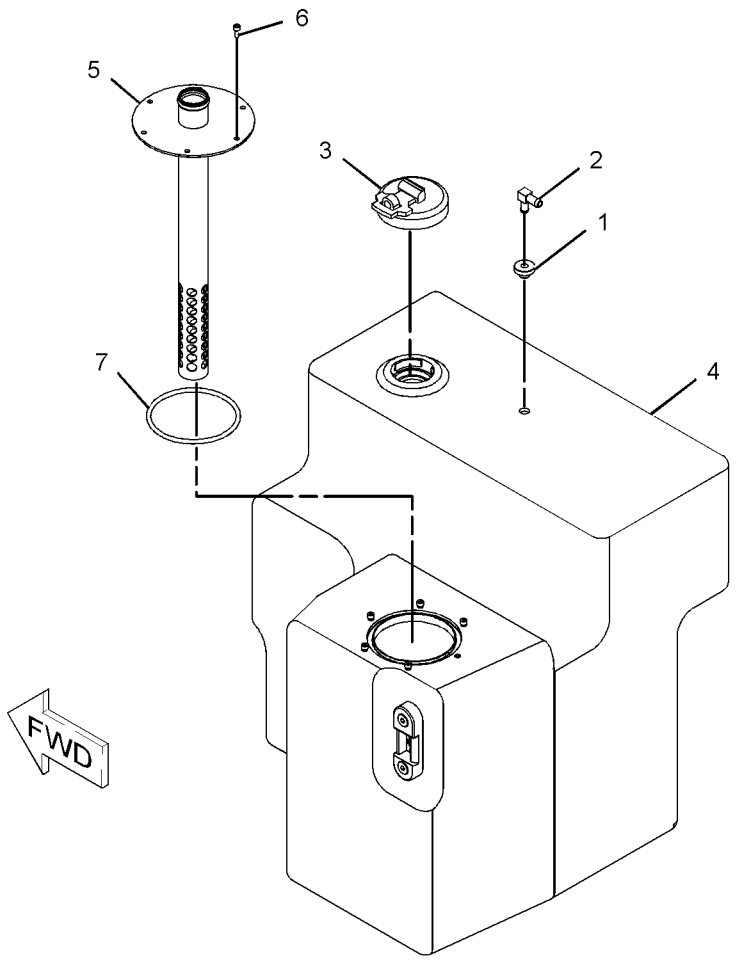

GRAPHIC #1 **<END>** g01108156

HYDRAULIC SYSTEM

249-7298 VALVE GP-BANK 3–REAR

S/N: B9M1-UP

PART OF 242-5056, 242-5058, 242-5059, 242-5061, 242-6108, 242-6110 CONTROL

AR-HYDRAULIC

AN ATTACHMENT

SMCS-5051 **i02296131**

NOTE	REF NO	GRAPHIC REF	PART NUMBER	QTY	PART NAME 1 2 3 4 5 6 (PRODUCT LEVEL)	SEE PAGE
	2	1	**096-3831**	1	ORIFICE	
	3	1	**243-3661**	1	COVER	
	4	1	**243-3662**	4	SEAL-INTEGRAL	
J	5	1	**243-5210**	1	VALVE GP-RELIEF (LOAD SENSING SIGNAL)	
		1	**2M-9780**	1	SEAL-O-RING	
		1	**161-6149**	1	SEAL-O-RING	
		1	**161-6161**	2	RING-BACKUP	
Y	6	1	**245-9532**	1	VALVE GP-CONTROL (ARTICULATION)	608
Y	7	1	**245-9533**	1	VALVE GP-CONTROL (BLADE LIFT) (LEFT)	610
Y	7A	1	**245-9533**	1	VALVE GP-CONTROL (BLADE LIFT) (RIGHT)	610
	8	1	**249-5636**	4	ROD	
	10	1	**259-0310**	1	MANIFOLD-INLET	
	11	1	*148-8395*	2	PLUG AS	
					(EACH INCLUDES)	
		1	**3K-0360**	1	SEAL-O-RING	
		1	**9S-8005**	1	PLUG	
	12	1	**162-0177**	1	PLUG AS	
		1	**3J-1907**	1	SEAL-O-RING	
		1	**9S-8004**	1	PLUG	
	13	1	**173-3993**	4	PLUG AS	
					(EACH INCLUDES)	
		1	**4J-7533**	1	SEAL-O-RING	
		1	**9S-8001**	1	PLUG	
	14	1	*183-7263*	1	PLUG AS	
		1	**3J-7354**	1	SEAL-O-RING	
		1	**9S-8002**	1	PLUG	
M	15	1	**8T-4121**	4	WASHER-HARD (11X21X2.5-MM THK)	
M	16	1	**8T-4133**	4	NUT (M10X1.5-THD)	
	17	1	*148-8411*	6	PLUG AS	
					(EACH INCLUDES)	
		1	**9S-4185**	1	PLUG	
		1	**3K-0360**	1	SEAL-O-RING	
					AVAILABLE REPAIR KIT(S):	
J			**133-5545**	1	KIT-SEAL (RELIEF VALVE) (LOAD SENSING SIGNAL)	
					(INCLUDES SEAL-O-RINGS & RING BACK-UP)	

J-(KIT MARKED J SERIVCES PARTS MARKED J)
M-METRIC PART
Y-SEPARATE ILLUSTRATION

PROOF

249-7298 **VALVE GP-BANK 3** ***(contd.)*** **i02296131**

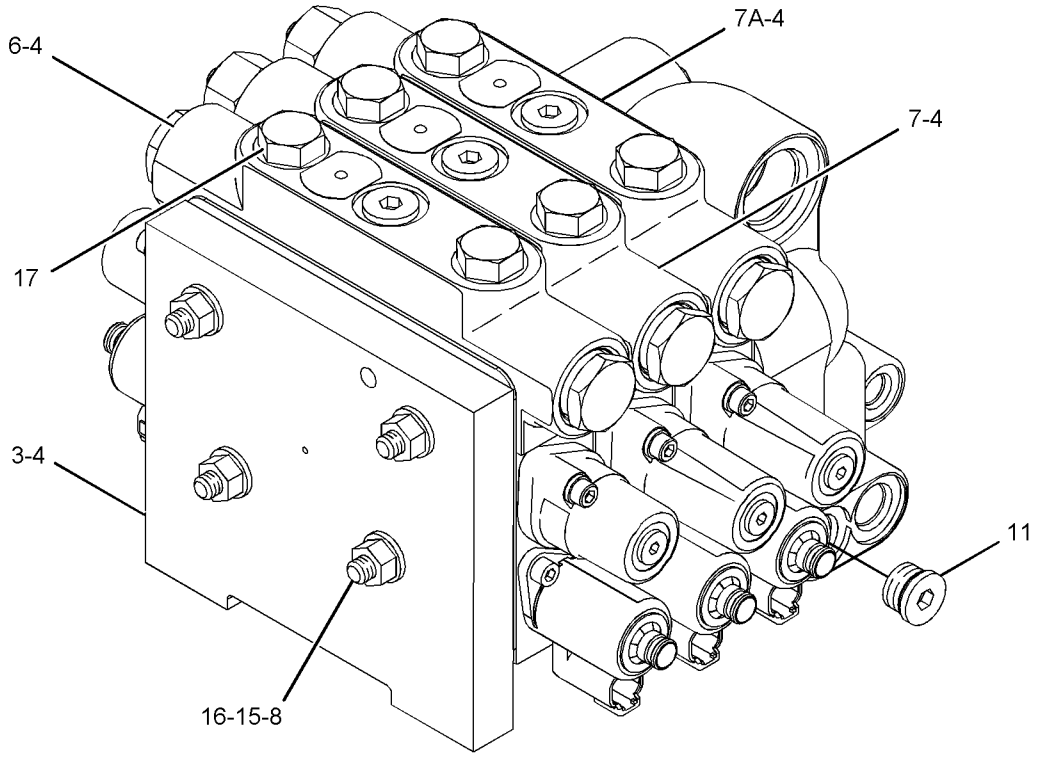

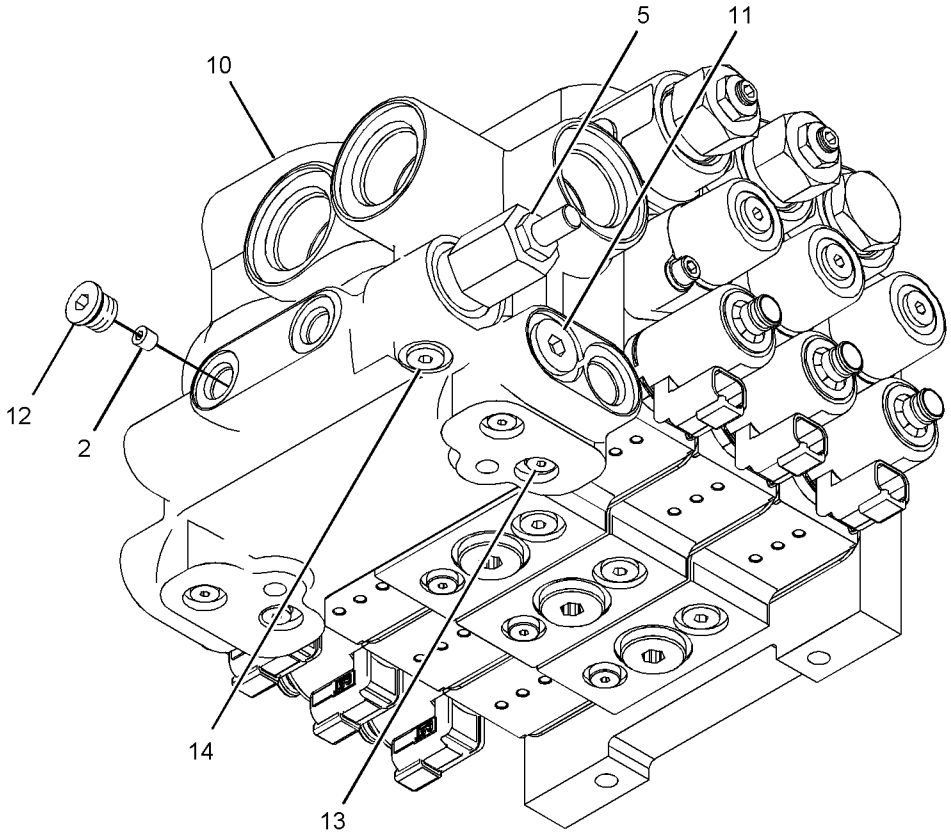

GRAPHIC #1 **<END>** g01150611

HYDRAULIC SYSTEM

248-6169 VALVE GP-BANK 4—REAR

S/N: B9M1-UP

PART OF 242-5057, 242-5060, 242-5062 CONTROL AR-HYDRAULIC AN ATTACHMENT

SMCS-5051 **i02334110**

NOTE	REF NO	GRAPHIC REF	PART NUMBER	QTY	PART NAME 1 2 3 4 5 6 (PRODUCT LEVEL)	SEE PAGE
	2	1	**096-3831**	1	ORIFICE	
	3	1	**243-3661**	1	COVER	
	4	1	**243-3662**	5	SEAL-INTEGRAL	
J	5	1	**243-5210**	1	VALVE GP-RELIEF (LOAD SENSING SIGNAL)	
		1	**2M-9780**	1	SEAL-O-RING	
		1	**161-6149**	1	SEAL-O-RING	
		1	**161-6161**	2	RING-BACKUP	
Y	6	1	**245-9532**	1	VALVE GP-CONTROL (ARTICULATION)	608
Y	7	1	**245-9533**	1	VALVE GP-CONTROL (BLADE LIFT) (LEFT)	610
Y	7A	1	**245-9533**	1	VALVE GP-CONTROL (BLADE LIFT) (RIGHT)	610
Y	8	1	**245-9541**	1	VALVE GP-CONTROL (RIPPER)	622
	10	1	**248-6175**	4	ROD	
	11	1	**259-0310**	1	MANIFOLD-INLET	
	12	1	*148-8395*	2	PLUG AS	
					(EACH INCLUDES)	
		1	**9S-8005**	1	PLUG	
		1	**3K-0360**	1	SEAL-O-RING	
	13	1	**162-0177**	1	PLUG AS	
		1	**9S-8004**	1	PLUG	
		1	**3J-1907**	1	SEAL-O-RING	
	14	1	**173-3993**	4	PLUG AS	
					(EACH INCLUDES)	
		1	**9S-8001**	1	PLUG	
		1	**4J-7533**	1	SEAL-O-RING	
	15	1	*183-7263*	1	PLUG AS	
		1	**9S-8002**	1	PLUG	
		1	**3J-7354**	1	SEAL-O-RING	
M	16	1	**8T-4121**	4	WASHER-HARD (11X21X2.5-MM THK)	
M	17	1	**8T-4133**	4	NUT (M10X1.5-THD)	
	18	1	**148-8411**	8	PLUG AS	
					(EACH INCLUDES)	
		1	**9S-4185**	1	PLUG	
		1	**3K-0360**	1	SEAL-O-RING	
					AVAILABLE REPAIR KIT(S):	
J			**133-5545**	1	KIT-SEAL (RELIEF VALVE)	
					(INCLUDES SEAL-O-RINGS & RING BACK-UPS)	

J-KIT MARKED J SERVICES PARTS MARKED J
M-METRIC PART
Y-SEPARATE ILLUSTRATION

PROOF

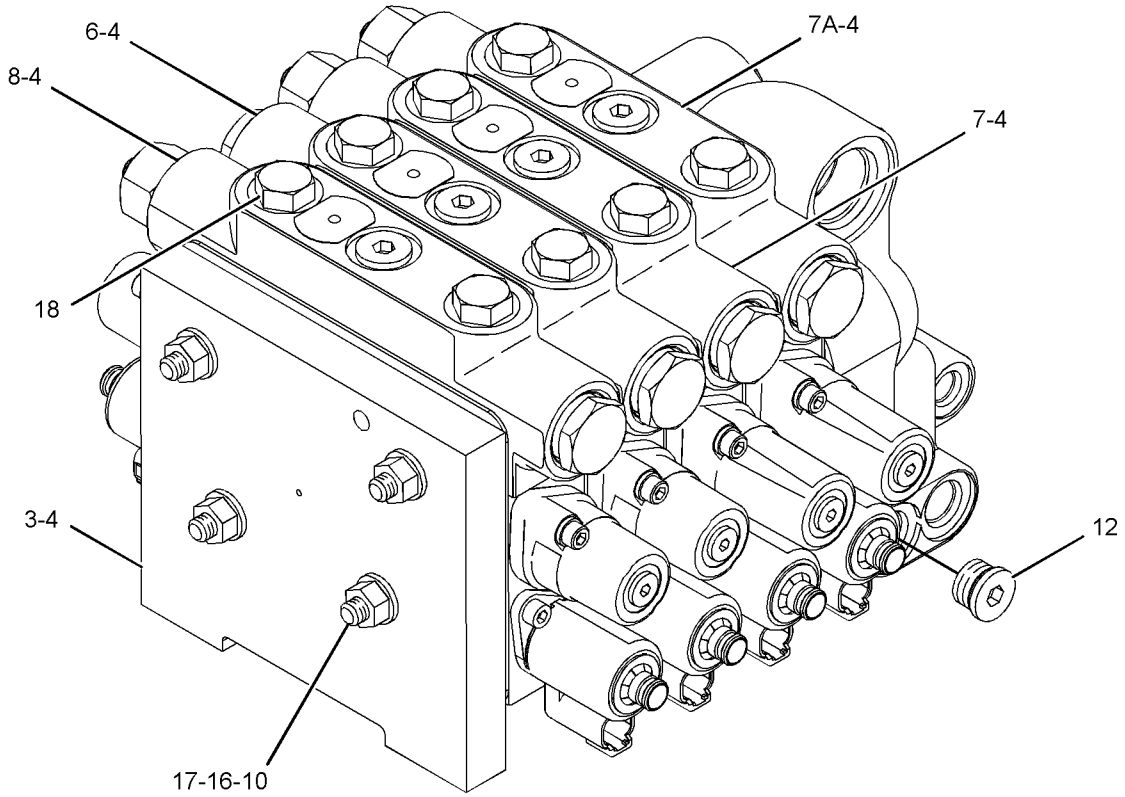

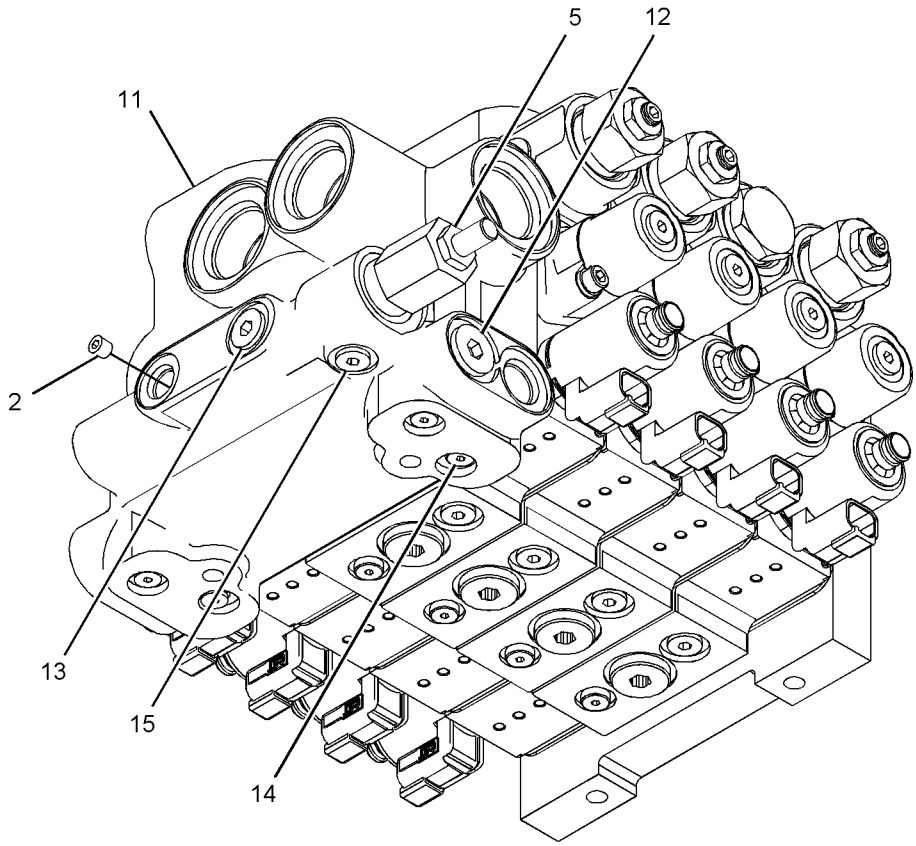

GRAPHIC #1 **<END>** g01150596

248-6168 VALVE GP-BANK 5–FRONT

S/N: B9M1-UP

PART OF 242-5056, 242-5057, 242-6109 CONTROL AR-HYDRAULIC

AN ATTACHMENT

SMCS-5051 **i02296072**

NOTE	REF NO	GRAPHIC REF	PART NUMBER	QTY	PART NAME 1 2 3 4 5 6 (PRODUCT LEVEL)	SEE PAGE
	2	1	**096-3831**	1	ORIFICE	
	3	1	**243-3661**	1	COVER	
	4	1	**243-3662**	6	SEAL-INTEGRAL	
Y	5	1	**245-9534**	1	VALVE GP-CONTROL (BLADE TIP)	612
Y	6	1	**245-9535**	1	VALVE GP-CONTROL (BLADE CENTERSHIFT)	614
Y	7	1	**245-9536**	1	VALVE GP-CONTROL (BLADE SIDESHIFT)	616
Y	8	1	**245-9537**	1	VALVE GP-CONTROL (CIRCLE DRIVE)	618
Y	9	1	**245-9539**	1	VALVE GP-CONTROL (WHEEL LEAN)	620
	11	1	**248-6174**	4	ROD	
	12	1	**259-0309**	1	MANIFOLD-INLET	
	13	1	*148-8395*	2	PLUG AS	
					(EACH INCLUDES)	
		1	**3K-0360**	1	SEAL-O-RING	
		1	**9S-8005**	1	PLUG	
	14	1	**162-0177**	1	PLUG AS	
		1	**3J-1907**	1	SEAL-O-RING	
		1	**9S-8004**	1	PLUG	
	15	1	**173-3993**	5	PLUG AS	
					(EACH INCLUDES)	
		1	**4J-7533**	1	SEAL-O-RING	
		1	**9S-8001**	1	PLUG	
M	16	1	**8T-4121**	4	WASHER-HARD (11X21X2.5-MM THK)	
M	17	1	**8T-4133**	4	NUT (M10X1.5-THD)	
	18	1	*148-8411*	10	PLUG AS	
					(EACH INCLUDES)	
		1	**9S-4185**	1	PLUG	
		1	**3K-0360**	1	SEAL-O-RING	

M-METRIC PART
Y-SEPARATE ILLUSTRATION

PROOF

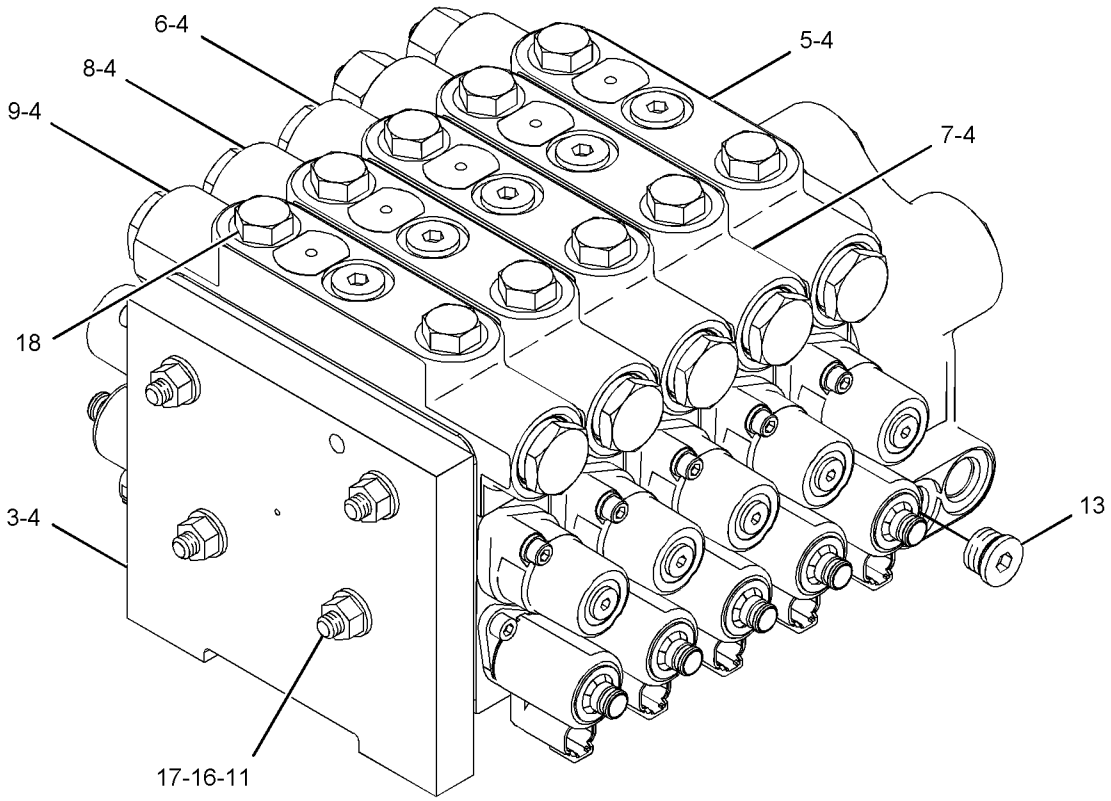

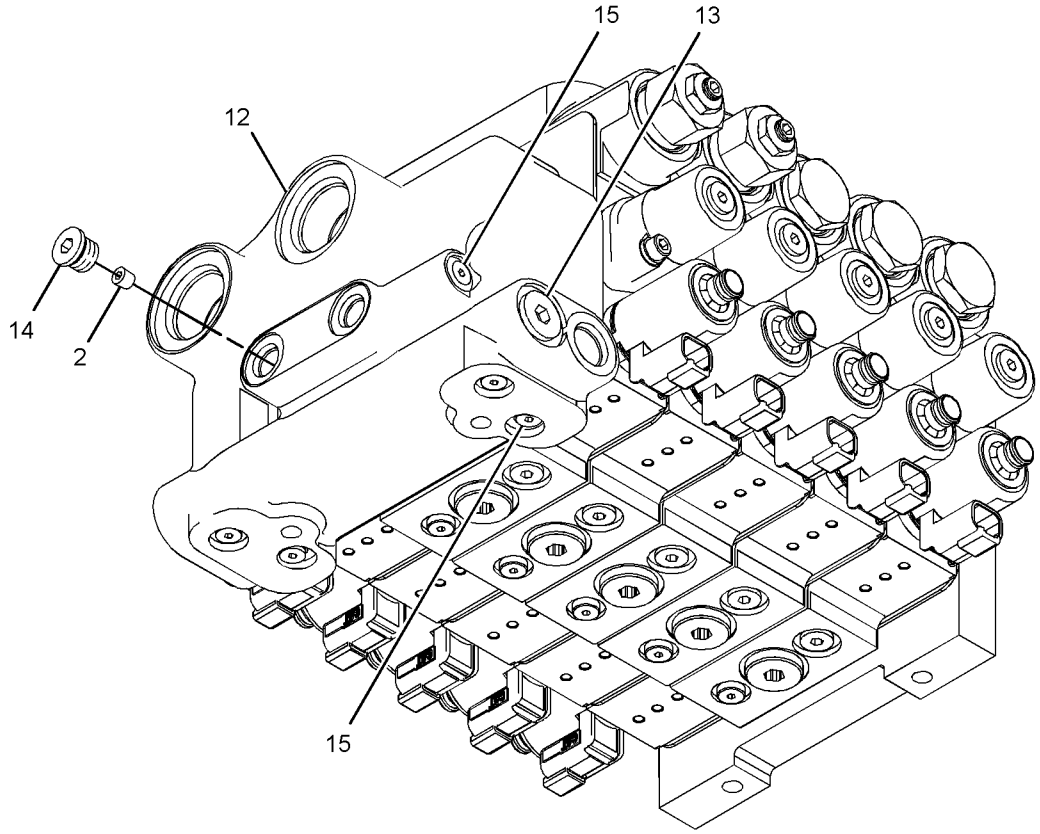

GRAPHIC #1 **<END>** g01150583

249-7299 VALVE GP-BANK 5–REAR

S/N: B9M1-UP

PART OF 242-5063, 242-5064, 242-6111, 242-6146 CONTROL AR-HYDRAULIC AN ATTACHMENT

SMCS-5051 **i02334107**

NOTE	REF NO	GRAPHIC REF	PART NUMBER	QTY	PART NAME 1 2 3 4 5 6 (PRODUCT LEVEL)	SEE PAGE
	2	1	**096-3831**	1	ORIFICE	
	3	1	**243-3661**	1	COVER	
	4	1	**243-3662**	6	SEAL-INTEGRAL	
J	5	1	**243-5210**	1	VALVE GP-RELIEF (PILOT OPERATED)	
		1	**2M-9780**	1	SEAL-O-RING	
		1	**161-6149**	1	SEAL-O-RING	
		1	**161-6161**	2	RING-BACKUP	
Y	6	1	**245-9532**	1	VALVE GP-CONTROL (ARTICULATION)	608
Y	7	1	**245-9533**	1	VALVE GP-CONTROL (BLADE LIFT) (LEFT)	610
Y	7A	1	**245-9533**	1	VALVE GP-CONTROL (BLADE LIFT) (RIGHT)	610
Y	8	1	**245-9542**	1	VALVE GP-CONTROL (WING TILT)	624
Y	9	1	**245-9543**	1	VALVE GP-CONTROL (WING LIFT) (WING LIFT)	626
	10	1	**248-6174**	4	ROD	
	12	1	**259-0310**	1	MANIFOLD-INLET	
	13	1	*148-8395*	2	PLUG AS	
					(EACH INCLUDES)	
		1	**3K-0360**	1	SEAL-O-RING	
		1	**9S-8005**	1	PLUG	
	14	1	**162-0177**	1	PLUG AS	
		1	**3J-1907**	1	SEAL-O-RING	
		1	**9S-8004**	1	PLUG	
	15	1	**173-3993**	4	PLUG AS	
					(EACH INCLUDES)	
		1	**4J-7533**	1	SEAL-O-RING	
		1	**9S-8001**	1	PLUG	
	16	1	*183-7263*	1	PLUG AS	
		1	**3J-7354**	1	SEAL-O-RING	
		1	**9S-8002**	1	PLUG	
M	17	1	**8T-4121**	4	WASHER-HARD (11X21X2.5-MM THK)	
M	18	1	**8T-4133**	4	NUT (M10X1.5-THD)	
	20	1	*148-8411*	10	PLUG AS	
					(EACH INCLUDES)	
		1	**9S-4185**	1	PLUG	
		1	**3K-0360**	1	SEAL-O-RING	
					AVAILABLE REPAIR KIT(S):	
J			**133-5545**	1	KIT-SEAL (RELIEF VALVE)	
					(INCLUDES SEAL-O-RINGS & RING BACK-UPS)	

J-KIT MARKED J SERVICES PART MARKED J
M-METRIC PART
Y-SEPARATE ILLUSTRATION

PROOF

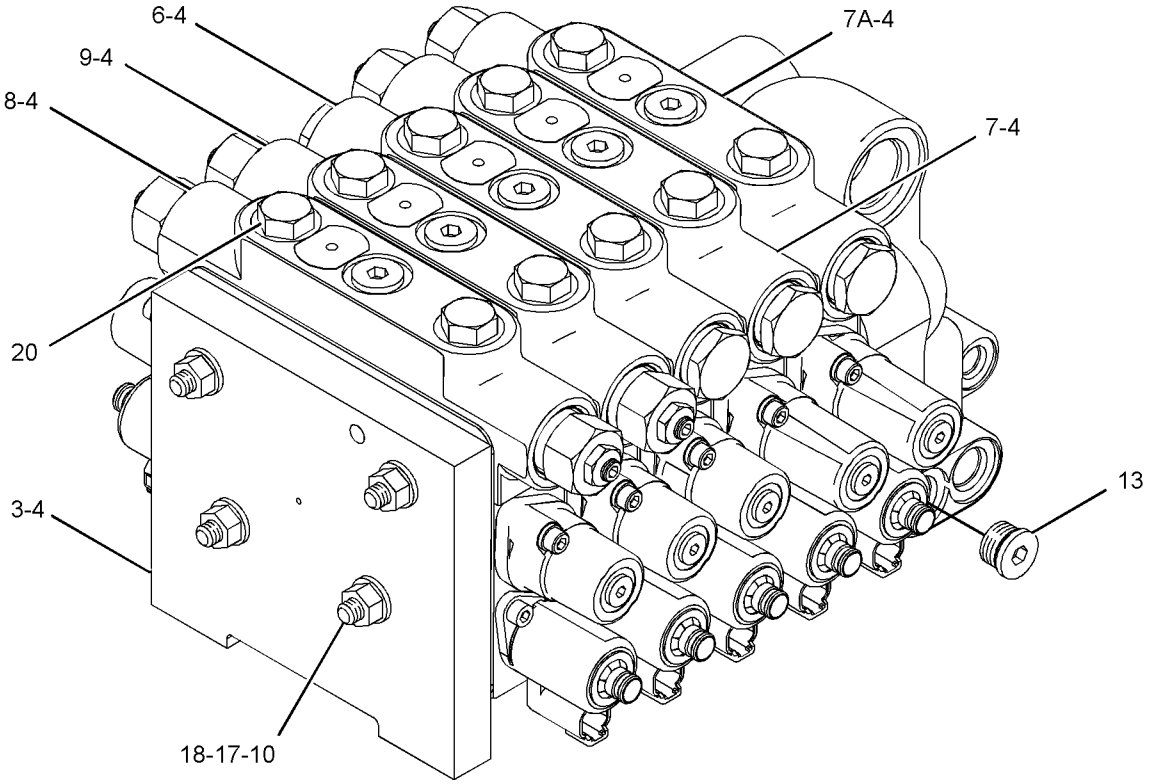

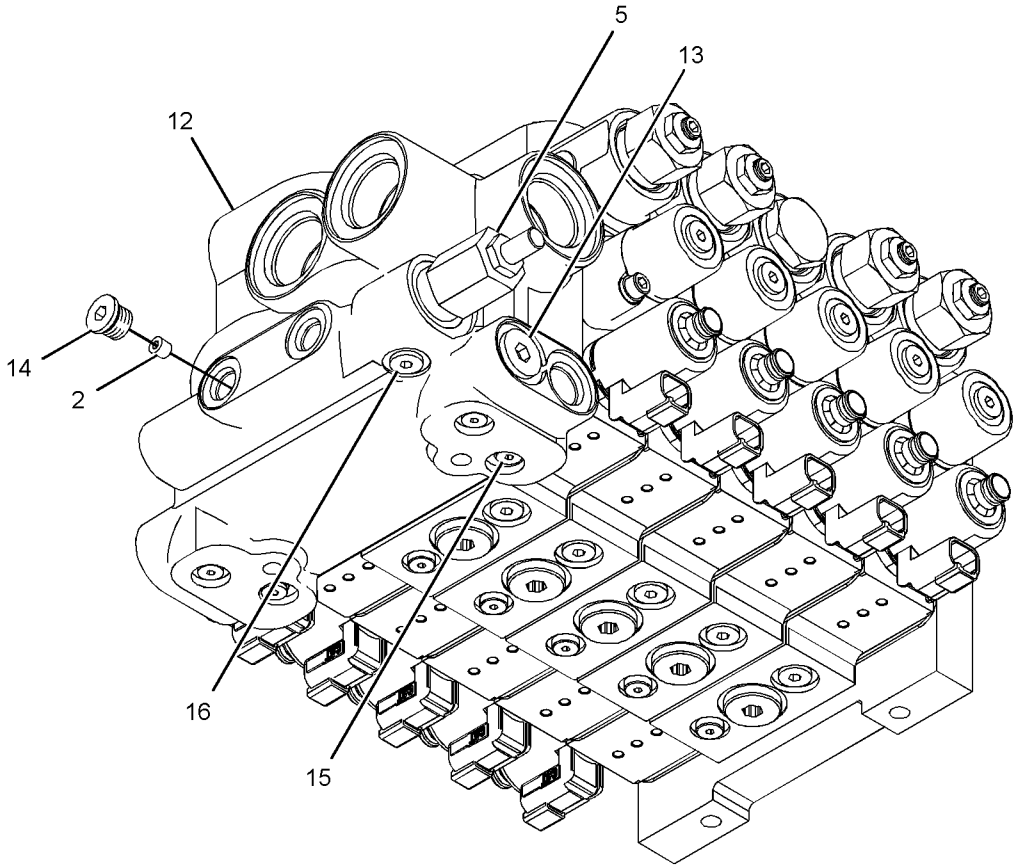

GRAPHIC #1 **<END>** g01150650

249-5330 VALVE GP-BANK 6–REAR

S/N: B9M1-UP

PART OF 242-5066, 242-6107, 242-6109, 242-6112 CONTROL AR-HYDRAULIC AN ATTACHMENT

SMCS-5051 **i02296258**

NOTE	REF NO	GRAPHIC REF	PART NUMBER	QTY	PART NAME 1 2 3 4 5 6 (PRODUCT LEVEL)	SEE PAGE
	2	1	**096-3831**	1	ORIFICE	
	3	1	**243-3661**	1	COVER	
	4	1	**243-3662**	7	SEAL-INTEGRAL	
J	5	1	**243-5210**	1	VALVE GP-RELIEF (LOAD SENSING SIGNAL)	
		1	**2M-9780**	1	SEAL-O-RING	
		1	**161-6149**	1	SEAL-O-RING	
		1	**161-6161**	2	RING-BACKUP	
Y	6	1	**245-9532**	1	VALVE GP-CONTROL (ARTICULATION)	608
Y	7	1	**245-9533**	1	VALVE GP-CONTROL (BLADE LIFT) (RIGHT)	610
Y	7A	1	**245-9533**	1	VALVE GP-CONTROL (BLADE LIFT) (LEFT)	610
Y	8	1	**245-9541**	1	VALVE GP-CONTROL (RIPPER)	622
Y	9	1	**245-9542**	1	VALVE GP-CONTROL (WING TILT)	624
Y	10	1	**245-9543**	1	VALVE GP-CONTROL (WING LIFT) (WING LIFT)	626
	12	1	**249-5334**	4	ROD	
	13	1	**259-0310**	1	MANIFOLD-INLET	
	14	1	*148-8395*	2	PLUG AS	
					(EACH INCLUDES)	
		1	**9S-8005**	1	PLUG	
		1	**3K-0360**	1	SEAL-O-RING	
	15	1	**162-0177**	1	PLUG AS	
		1	**9S-8004**	1	PLUG	
		1	**3J-1907**	1	SEAL-O-RING	
	16	1	**173-3993**	4	PLUG AS	
					(EACH INCLUDES)	
		1	**9S-8001**	1	PLUG	
		1	**4J-7533**	1	SEAL-O-RING	
	17	1	*183-7263*	1	PLUG AS	
		1	**9S-8002**	1	PLUG	
		1	**3J-7354**	1	SEAL-O-RING	
M	18	1	**8T-4121**	4	WASHER-HARD (11X21X2.5-MM THK)	
M	19	1	**8T-4133**	4	NUT (M10X1.5-THD)	
	20	1	*148-8411*	12	PLUG AS	
					(EACH INCLUDES)	
		1	**9S-4185**	1	PLUG	
		1	**3K-0360**	1	SEAL-O-RING	
					AVAILABLE REPAIR KIT(S):	
J			**133-5545**	1	KIT-SEAL (RELIEF VALVE) (LOAD SENSING SIGNAL)	
					(INCLUDES SEAL-O-RINGS & RING-BACKUPS)	

J-KIT MARKED J SERVICES PART MARKED J
M-METRIC PART
Y-SEPARATE ILLUSTRATION

PROOF

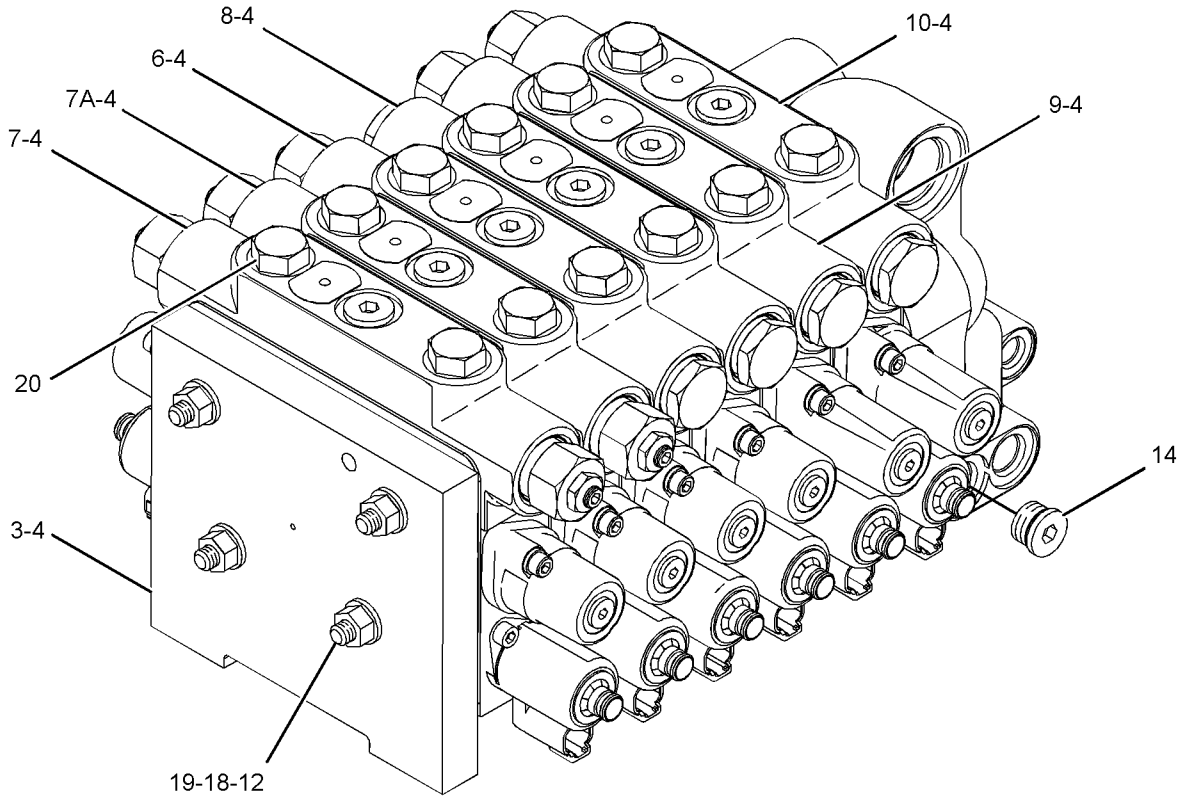

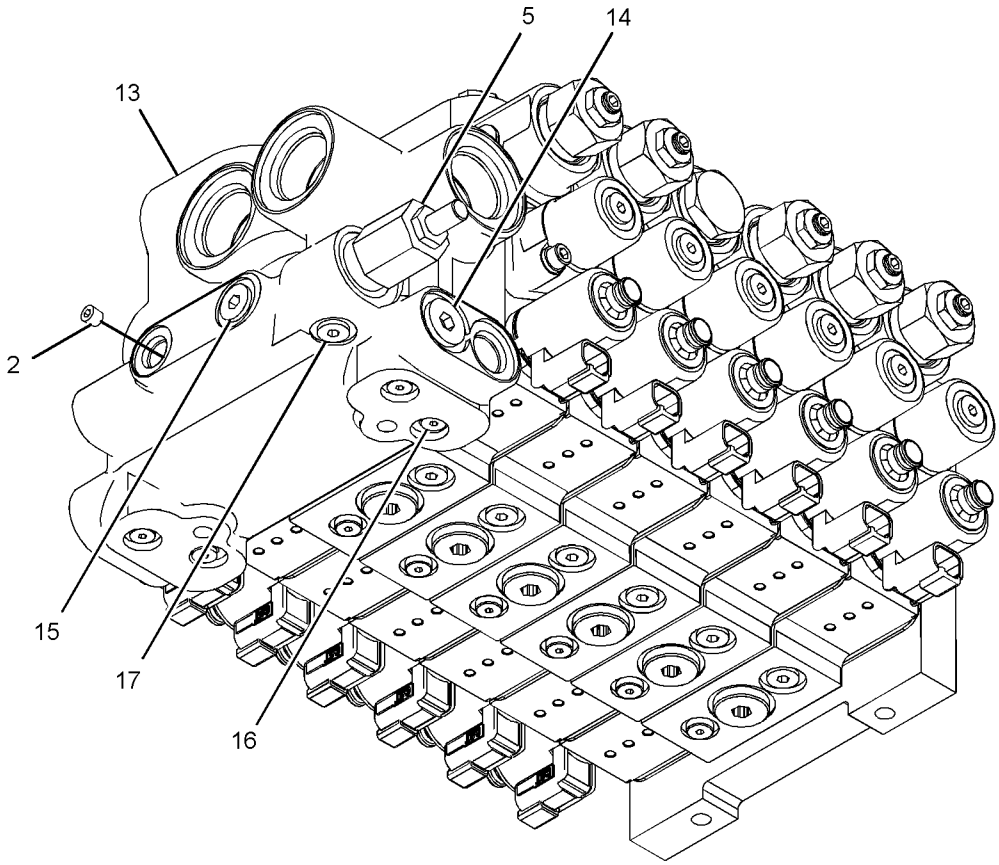

GRAPHIC #1 **<END>** g01150604

HYDRAULIC SYSTEM

249-7294 VALVE GP-BANK 6–FRONT

S/N: B9M1-UP

PART OF 242-5058, 242-5060, 242-5063, 242-5066 CONTROL AR-HYDRAULIC AN ATTACHMENT

SMCS-5051 **i02296100**

NOTE	REF NO	GRAPHIC REF	PART NUMBER	QTY	PART NAME 1 2 3 4 5 6 (PRODUCT LEVEL)	SEE PAGE
	2	1	**096-3831**	1	ORIFICE	
	3	1	**243-3661**	1	COVER	
	4	1	**243-3662**	7	SEAL-INTEGRAL	
Y	5	1	**245-9534**	1	VALVE GP-CONTROL (BLADE TIP)	612
Y	6	1	**245-9535**	1	VALVE GP-CONTROL (BLADE CENTERSHIFT)	614
Y	7	1	**245-9536**	1	VALVE GP-CONTROL (BLADE SIDESHIFT)	616
Y	8	1	**245-9537**	1	VALVE GP-CONTROL (CIRCLE DRIVE)	618
Y	9	1	**245-9539**	1	VALVE GP-CONTROL (WHEEL LEAN)	620
Y	10	1	**245-9544**	1	VALVE GP-CONTROL (PLOW, BULLDOZER LIFT)	628
	11	1	**249-5334**	4	ROD	
	13	1	**259-0309**	1	MANIFOLD-INLET	
	14	1	*148-8395*	2	PLUG AS	
					(EACH INCLUDES)	
		1	**3K-0360**	1	SEAL-O-RING	
		1	**9S-8005**	1	PLUG	
	15	1	**162-0177**	1	PLUG AS	
		1	**3J-1907**	1	SEAL-O-RING	
		1	**9S-8004**	1	PLUG	
	16	1	**173-3993**	5	PLUG AS	
					(EACH INCLUDES)	
		1	**4J-7533**	1	SEAL-O-RING	
		1	**9S-8001**	1	PLUG	
M	17	1	**8T-4121**	4	WASHER-HARD (11X21X2.5-MM THK)	
M	18	1	**8T-4133**	4	NUT (M10X1.5-THD)	
	19	1	**148-8411**	12	PLUG AS	
					(EACH INCLUDES)	
		1	**3K-0360**	1	SEAL-O-RING	
		1	**9S-4185**	1	PLUG	

M-METRIC PART
Y-SEPARATE ILLUSTRATION

PROOF

249-7294 **VALVE GP-BANK 6** *(contd.)* **i02296100**

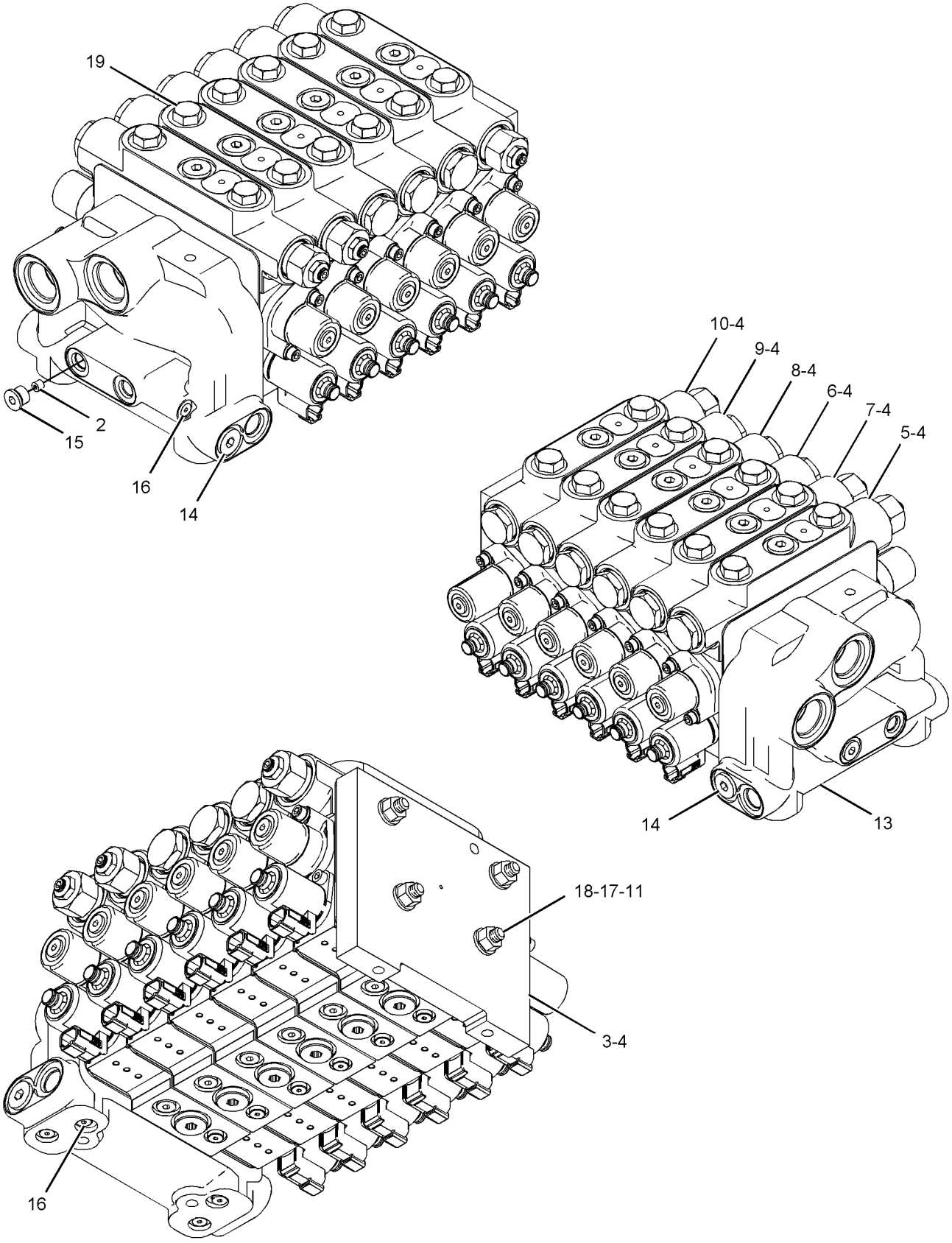

GRAPHIC #1 **<END>** g01150566

249-7295 VALVE GP-BANK 6–FRONT

S/N: B9M1-UP
PART OF 242-5059 CONTROL AR-HYDRAULIC
AN ATTACHMENT

SMCS-5051 **i02296128**

NOTE	REF NO	GRAPHIC REF	PART NUMBER	QTY	PART NAME 1 2 3 4 5 6 (PRODUCT LEVEL)	SEE PAGE
	2	1	**096-3831**	1	ORIFICE	
	3	1	**243-3661**	1	COVER	
	4	1	**243-3662**	7	SEAL-INTEGRAL	
Y	5	1	**245-9534**	1	VALVE GP-CONTROL (BLADE TIP)	612
Y	6	1	**245-9535**	1	VALVE GP-CONTROL (BLADE CENTERSHIFT)	614
Y	7	1	**245-9536**	1	VALVE GP-CONTROL (BLADE SIDESHIFT)	616
Y	8	1	**245-9537**	1	VALVE GP-CONTROL (CIRCLE DRIVE)	618
Y	9	1	**245-9539**	1	VALVE GP-CONTROL (WHEEL LEAN)	620
	10	1	**249-5334**	4	ROD	
Y	12	1	**249-7307**	1	VALVE GP-CONTROL (SCARIFIER)	632
	13	1	**259-0309**	1	MANIFOLD-INLET	
	14	1	*148-8395*	2	PLUG AS	
					(EACH INCLUDES)	
		1	**3K-0360**	1	SEAL-O-RING	
		1	**9S-8005**	1	PLUG	
	15	1	**162-0177**	1	PLUG AS	
		1	**3J-1907**	1	SEAL-O-RING	
		1	**9S-8004**	1	PLUG	
	16	1	**173-3993**	5	PLUG AS	
					(EACH INCLUDES)	
		1	**4J-7533**	1	SEAL-O-RING	
		1	**9S-8001**	1	PLUG	
M	17	1	**8T-4121**	4	WASHER-HARD (11X21X2.5-MM THK)	
M	18	1	**8T-4133**	4	NUT (M10X1.5-THD)	
	19	1	*148-8411*	12	PLUG AS	
					(EACH INCLUDES)	
		1	**9S-4185**	1	PLUG	
		1	**3K-0360**	1	SEAL-O-RING	

M-METRIC PART
Y-SEPARATE ILLUSTRATION

PROOF

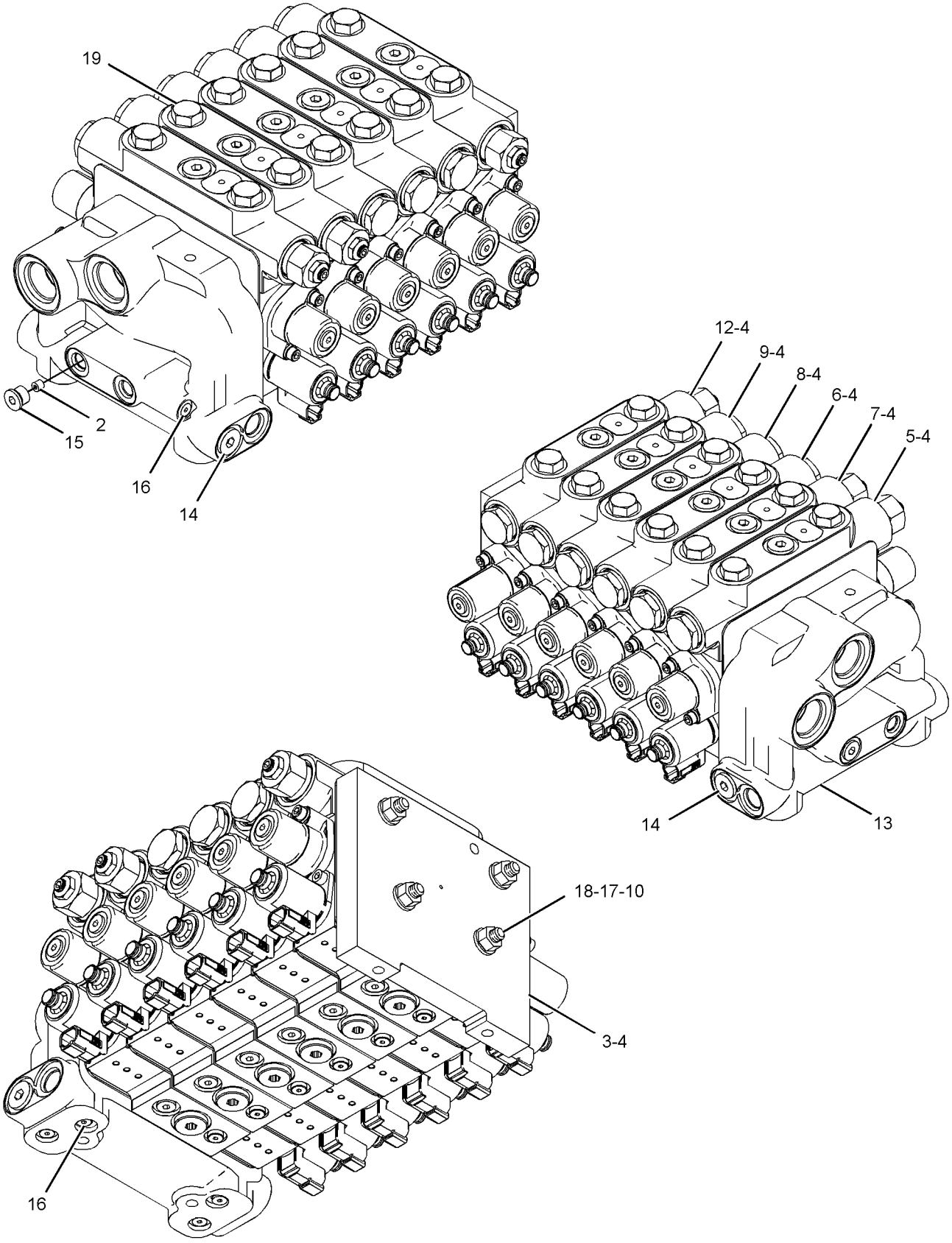

GRAPHIC #1 **<END>** g01150621

249-5328 VALVE GP-BANK 7–FRONT

S/N: B9M1-UP

PART OF 242-5062, 242-5064, 242-6108, 242-6112 CONTROL AR-HYDRAULIC AN ATTACHMENT

SMCS-5051 **i02296155**

NOTE	REF NO	GRAPHIC REF	PART NUMBER	QTY	PART NAME 1 2 3 4 5 6 (PRODUCT LEVEL)	SEE PAGE
	2	1	**096-3831**	1	ORIFICE	
	3	1	**243-3661**	1	COVER	
	4	1	**243-3662**	8	SEAL-INTEGRAL	
Y	5	1	**245-9534**	1	VALVE GP-CONTROL (BLADE TIP)	612
Y	6	1	**245-9535**	1	VALVE GP-CONTROL (BLADE CENTERSHIFT)	614
Y	7	1	**245-9536**	1	VALVE GP-CONTROL (BLADE SIDESHIFT)	616
Y	8	1	**245-9537**	1	VALVE GP-CONTROL (CIRCLE DRIVE)	618
Y	9	1	**245-9539**	1	VALVE GP-CONTROL (WHEEL LEAN)	620
Y	10	1	**245-9544**	1	VALVE GP-CONTROL (PLOW, BULLDOZER LIFT)	628
Y	11	1	**245-9545**	1	VALVE GP-CONTROL (PLOW ANGLE)	630
	12	1	**246-3193**	4	ROD	
	14	1	**259-0309**	1	MANIFOLD-INLET	
	15	1	*148-8395*	2	PLUG AS	
					(EACH INCLUDES)	
		1	**3K-0360**	1	SEAL-O-RING	
		1	**9S-8005**	1	PLUG	
	16	1	**162-0177**	1	PLUG AS	
		1	**3J-1907**	1	SEAL-O-RING	
		1	**9S-8004**	1	PLUG	
	17	1	**173-3993**	5	PLUG AS	
					(EACH INCLUDES)	
		1	**4J-7533**	1	SEAL-O-RING	
		1	**9S-8001**	1	PLUG	
M	18	1	**8T-4121**	4	WASHER-HARD (11X21X2.5-MM THK)	
M	19	1	**8T-4133**	4	NUT (M10X1.5-THD)	
	20	1	*148-8411*	14	PLUG AS	
					(EACH INCLUDES)	
		1	**9S-4185**	1	PLUG	
		1	**3K-0360**	1	SEAL-O-RING	

M-METRIC PART
Y-SEPARATE ILLUSTRATION

PROOF

249-5328 **VALVE GP-BANK 7** ***(contd.)*** **i02296155**

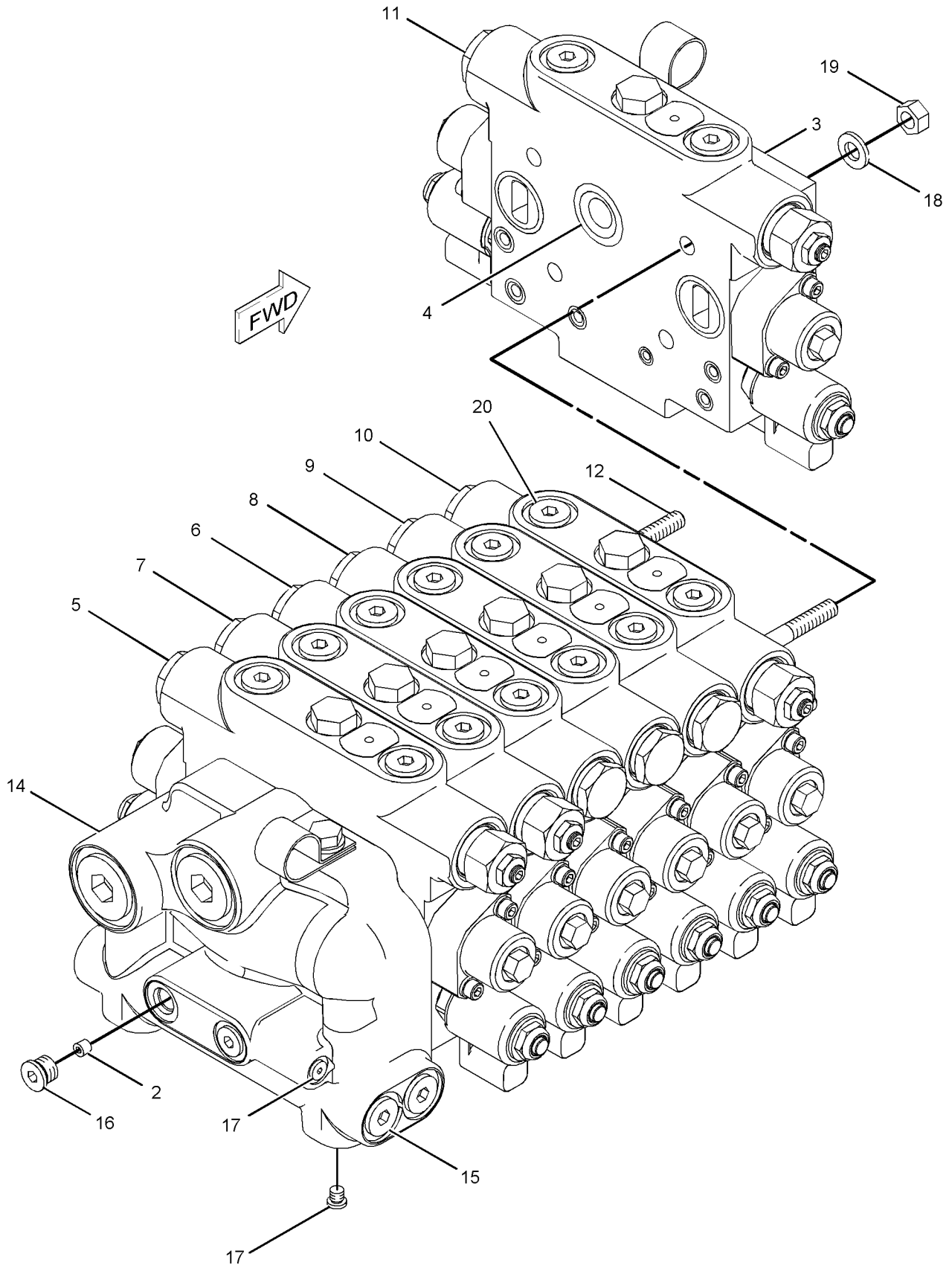

GRAPHIC #1 **<END>** g01150709

249-7296 VALVE GP-BANK 7–FRONT

S/N: B9M1-UP

PART OF 242-5061, 242-6111 CONTROL AR-HYDRAULIC

AN ATTACHMENT

SMCS-5051 **i02296144**

NOTE	REF NO	GRAPHIC REF	PART NUMBER	QTY	PART NAME 1 2 3 4 5 6 (PRODUCT LEVEL)	SEE PAGE
	2	1	**096-3831**	1	ORIFICE	
	3	1	**243-3661**	1	COVER	
	4	1	**243-3662**	8	SEAL-INTEGRAL	
Y	5	1	**245-9534**	1	VALVE GP-CONTROL (BLADE TIP)	612
Y	6	1	**245-9535**	1	VALVE GP-CONTROL (BLADE CENTERSHIFT)	614
Y	7	1	**245-9536**	1	VALVE GP-CONTROL (BLADE SIDESHIFT)	616
Y	8	1	**245-9537**	1	VALVE GP-CONTROL (CIRCLE DRIVE)	618
Y	9	1	**245-9539**	1	VALVE GP-CONTROL (WHEEL LEAN)	620
Y	10	1	**245-9544**	1	VALVE GP-CONTROL (PLOW, BULLDOZER LIFT)	628
	11	1	**246-3193**	4	ROD	
Y	13	1	**249-7307**	1	VALVE GP-CONTROL (SCARIFIER)	632
	14	1	**259-0309**	1	MANIFOLD-INLET	
	15	1	*148-8395*	2	PLUG AS	
					(EACH INCLUDES)	
		1	**3K-0360**	1	SEAL-O-RING	
		1	**9S-8005**	1	PLUG	
	16	1	**162-0177**	1	PLUG AS	
		1	**3J-1907**	1	SEAL-O-RING	
		1	**9S-8004**	1	PLUG	
	17	1	**173-3993**	5	PLUG AS	
					(EACH INCLUDES)	
		1	**4J-7533**	1	SEAL-O-RING	
		1	**9S-8001**	1	PLUG	
M	18	1	**8T-4121**	4	WASHER-HARD (11X21X2.5-MM THK)	
M	19	1	**8T-4133**	4	NUT (M10X1.5-THD)	
	20	1	*148-8411*	14	PLUG AS	
					(EACH INCLUDES)	
		1	**9S-4185**	1	PLUG	
		1	**3K-0360**	1	SEAL-O-RING	

M-METRIC PART
Y-SEPARATE ILLUSTRATION

PROOF

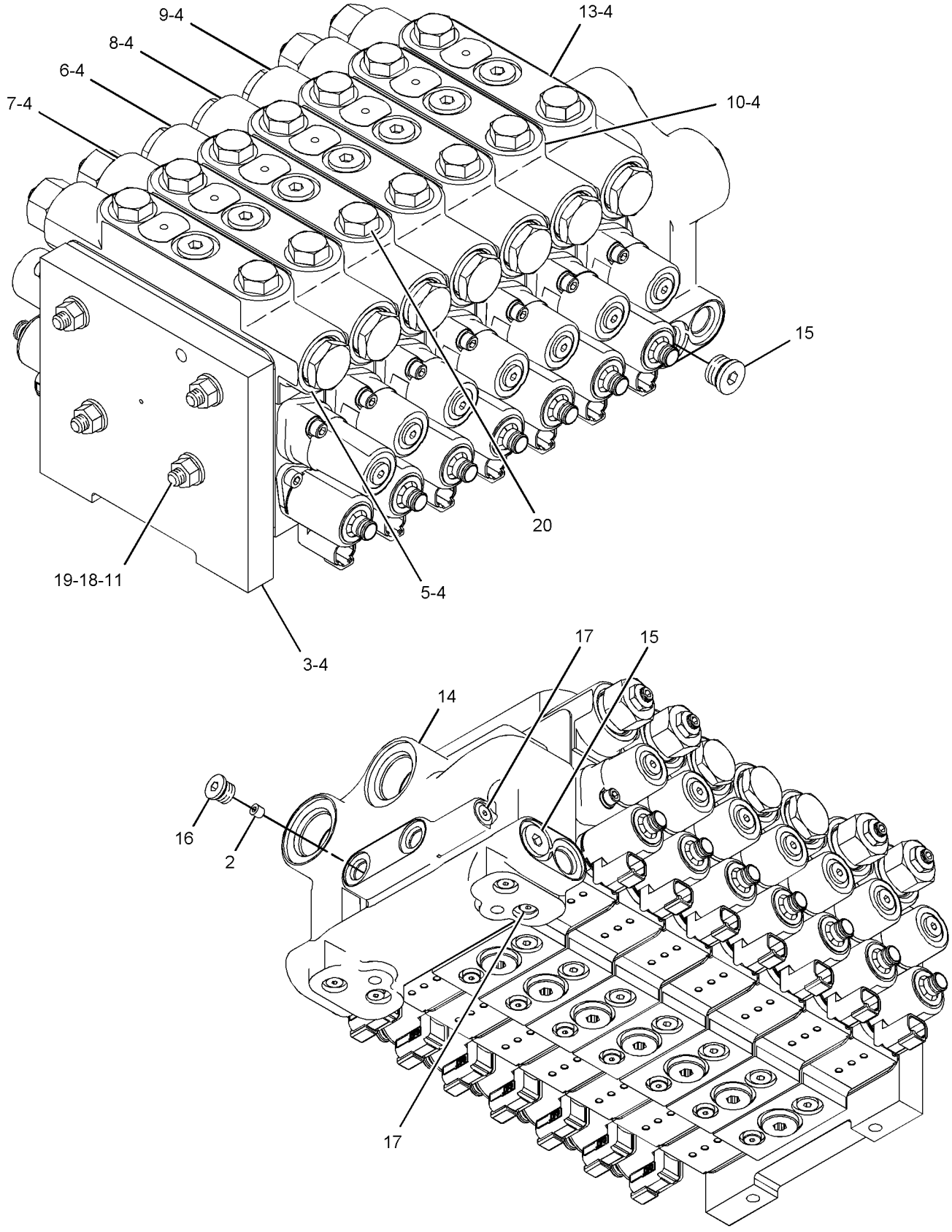

GRAPHIC #1 **<END>** g01150640

249-5329 VALVE GP-BANK 8–FRONT

S/N: B9M1-UP
PART OF 242-6107 CONTROL AR-HYDRAULIC
AN ATTACHMENT

SMCS-5051 **i02296176**

NOTE	REF NO	GRAPHIC REF	PART NUMBER	QTY	PART NAME 1 2 3 4 5 6 (PRODUCT LEVEL)	SEE PAGE
	2	1	**096-3831**	1	ORIFICE	
	3	1	**243-3661**	1	COVER	
	4	1	**243-3662**	9	SEAL-INTEGRAL	
Y	5	1	**245-9534**	1	VALVE GP-CONTROL (BLADE TIP)	612
Y	6	1	**245-9535**	1	VALVE GP-CONTROL (BLADE CENTERSHIFT)	614
Y	7	1	**245-9536**	1	VALVE GP-CONTROL (BLADE SIDESHIFT)	616
Y	8	1	**245-9537**	1	VALVE GP-CONTROL (CIRCLE DRIVE)	618
Y	9	1	**245-9539**	1	VALVE GP-CONTROL (WHEEL LEAN)	620
Y	10	1	**245-9544**	1	VALVE GP-CONTROL (PLOW, BULLDOZER LIFT)	628
Y	11	1	**245-9545**	2	VALVE GP-CONTROL (PLOW ANGLE)	630
	13	1	**249-5637**	4	ROD	
	14	1	**259-0309**	1	MANIFOLD-INLET	
	15	1	**148-8395**	2	PLUG AS	
					(EACH INCLUDES)	
		1	**9S-8005**	1	PLUG	
		1	**3K-0360**	1	SEAL-O-RING	
	16	1	**162-0177**	1	PLUG AS	
		1	**9S-8004**	1	PLUG	
		1	**3J-1907**	1	SEAL-O-RING	
	17	1	**173-3993**	5	PLUG AS	
					(EACH INCLUDES)	
		1	**9S-8001**	1	PLUG	
		1	**4J-7533**	1	SEAL-O-RING	
	18	1	**8T-4121**	4	WASHER-HARD (11X21X2.5-MM THK)	
M	19	1	**8T-4133**	4	NUT (M10X1.5-THD)	
	20	1	*148-8411*	16	PLUG AS	
					(EACH INCLUDES)	
		1	**9S-4185**	1	PLUG	
		1	**3K-0360**	1	SEAL-O-RING	

M-METRIC PART
Y-SEPARATE ILLUSTRATION

PROOF

249-5329 **VALVE GP-BANK 8** ***(contd.)*** **i02296176**

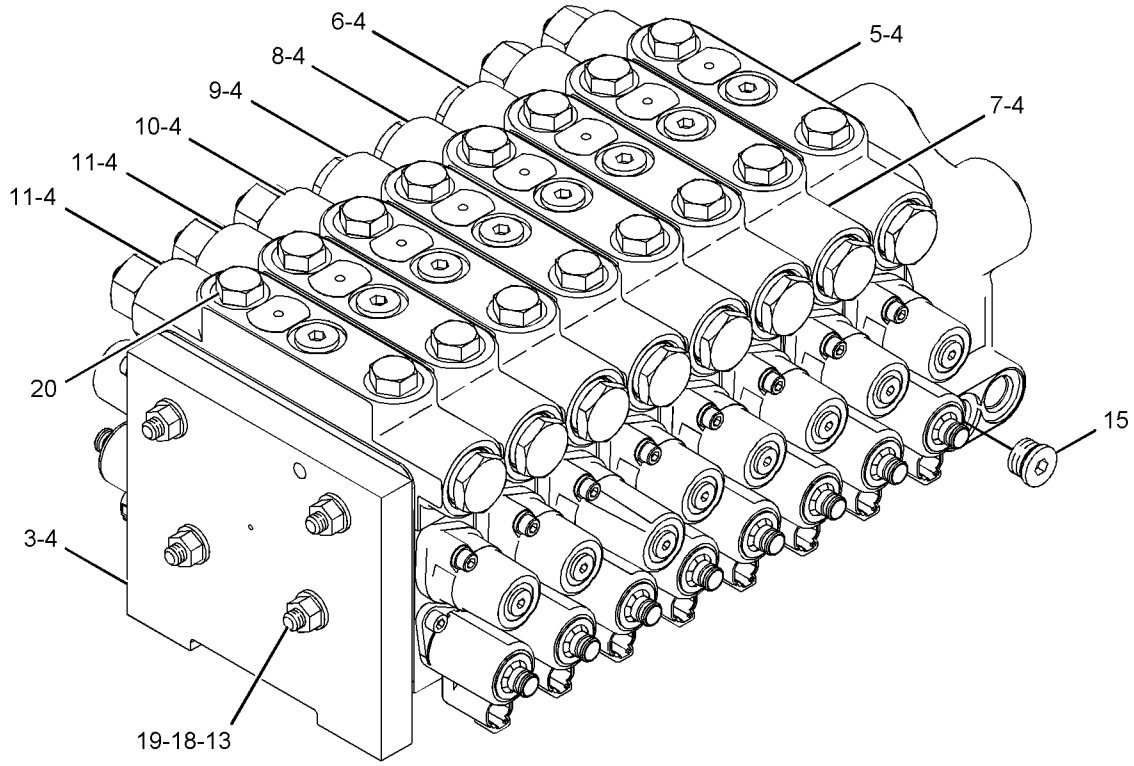

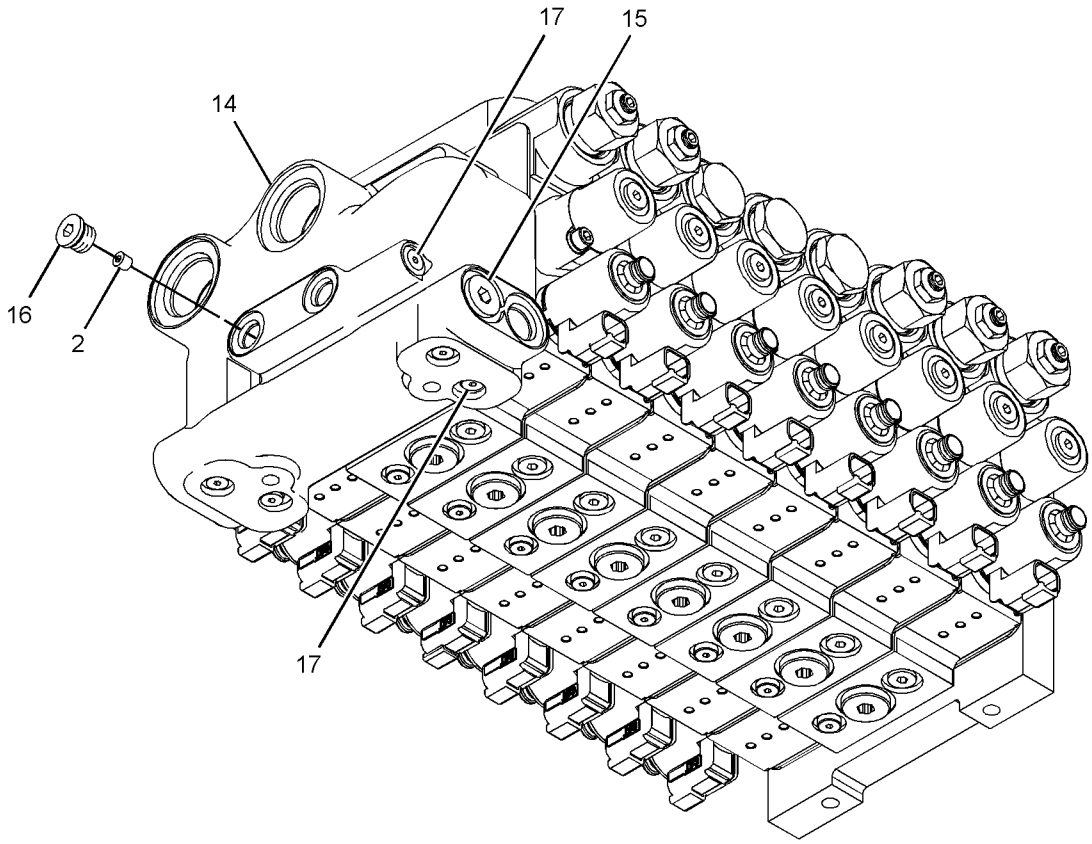

GRAPHIC #1 **<END>** g01150577

HYDRAULIC SYSTEM

249-7297 VALVE GP-BANK 8–FRONT

S/N: B9M1-UP

PART OF 242-6110, 242-6146 CONTROL AR-HYDRAULIC

AN ATTACHMENT

SMCS-5051 **i02229886**

NOTE	REF NO	GRAPHIC REF	PART NUMBER	QTY	PART NAME 1 2 3 4 5 6 (PRODUCT LEVEL)	SEE PAGE
	2	1	**096-3831**	1	ORIFICE	
	3	1	**243-3661**	1	COVER	
	4	1	**243-3662**	9	SEAL-INTEGRAL	
Y	5	1	**245-9534**	1	VALVE GP-CONTROL (BLADE TIP)	612
Y	6	1	**245-9535**	1	VALVE GP-CONTROL (BLADE CENTERSHIFT)	614
Y	7	1	**245-9536**	1	VALVE GP-CONTROL (BLADE SIDESHIFT)	616
Y	8	1	**245-9537**	1	VALVE GP-CONTROL (CIRCLE DRIVE)	618
Y	9	1	**245-9539**	1	VALVE GP-CONTROL (WHEEL LEAN)	620
Y	10	1	**245-9544**	1	VALVE GP-CONTROL (PLOW, BULLDOZER LIFT) (PLOW, BULLDOZER LIFT)	628
Y	11	1	**245-9545**	1	VALVE GP-CONTROL (PLOW ANGLE)	630
	12	1	**249-5637**	4	ROD	
Y	14	1	**249-7307**	1	VALVE GP-CONTROL (SCARIFIER)	632
	15	1	**259-0309**	1	MANIFOLD-INLET	
	16	1	**148-8395**	2	PLUG AS	
					(EACH INCLUDES)	
		1	**9S-8005**	1	PLUG	
		1	**3K-0360**	1	SEAL-O-RING	
	17	1	**162-0177**	1	PLUG AS	
		1	**9S-8004**	1	PLUG	
		1	**3J-1907**	1	SEAL-O-RING	
	18	1	**173-3993**	5	PLUG AS	
					(EACH INCLUDES)	
		1	**9S-8001**	1	PLUG	
		1	**4J-7533**	1	SEAL-O-RING	
M	19	1	**8T-4121**	4	WASHER-HARD (11X21X2.5-MM THK)	
M	20	1	**8T-4133**	4	NUT (M10X1.5-THD)	

M-METRIC PART
Y-SEPARATE ILLUSTRATION

PROOF

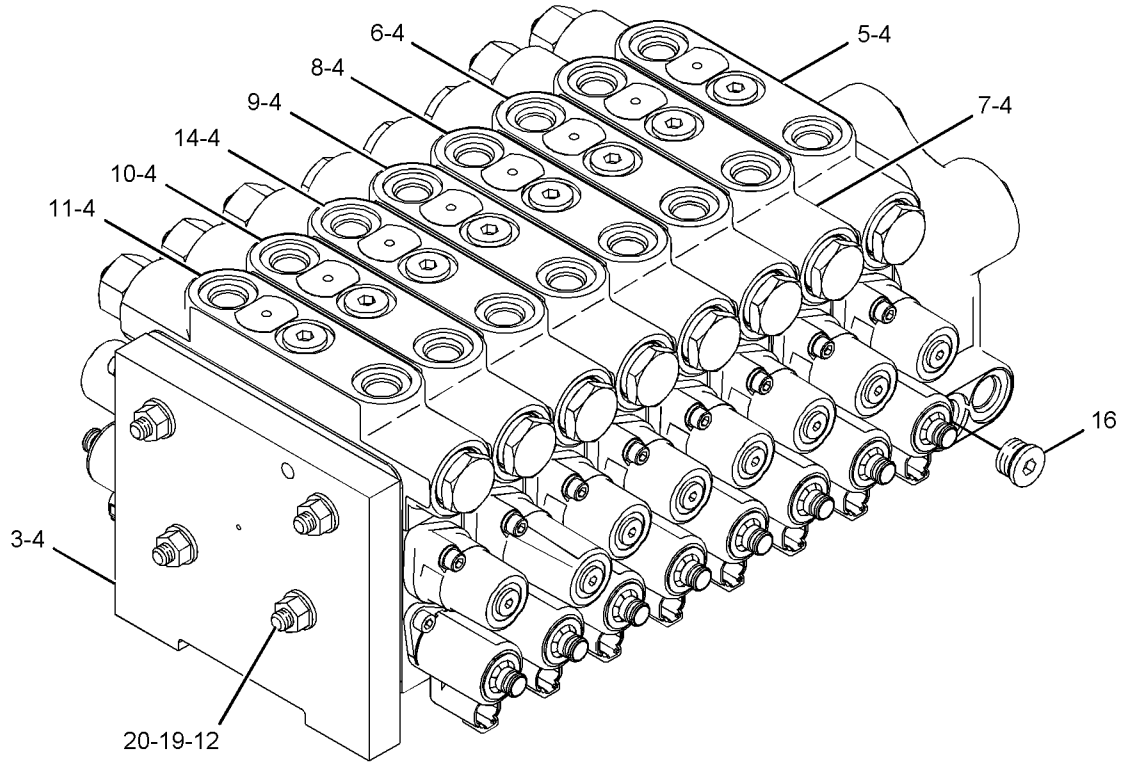

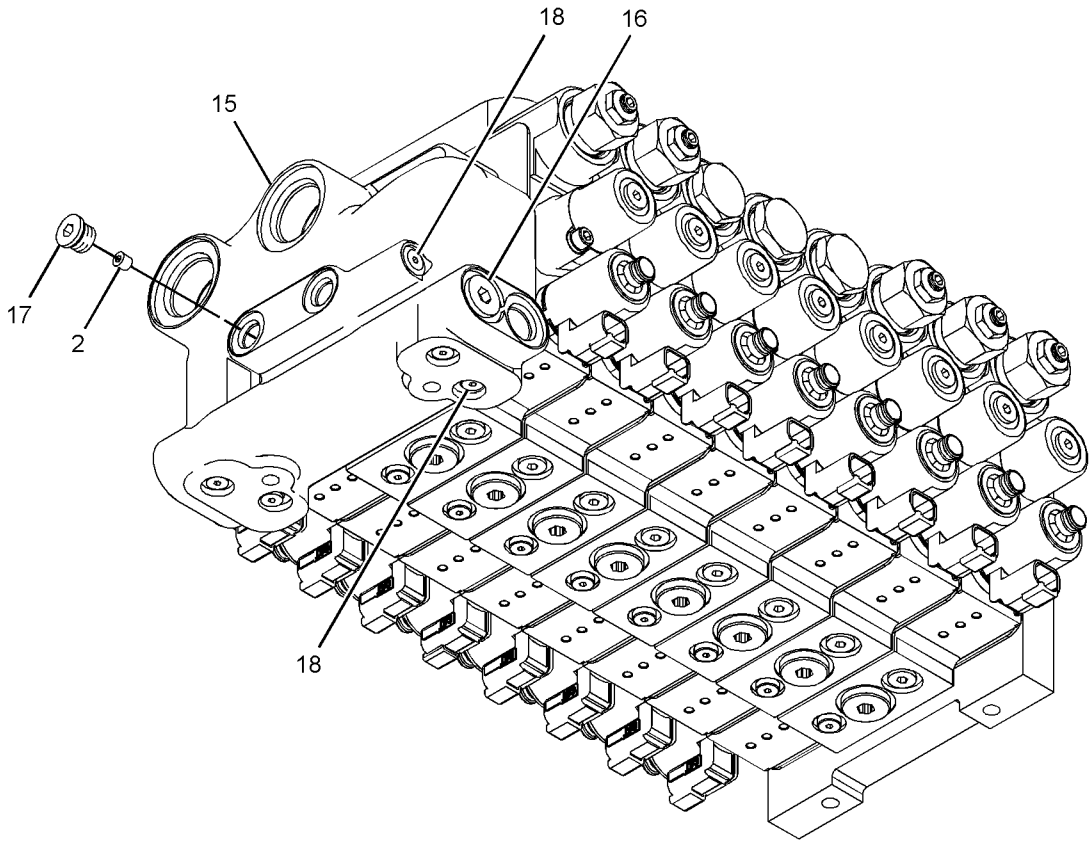

GRAPHIC #1 **<END>** g01138481

158-9956 VALVE GP-CHECK

S/N: B9M1-UP
PART OF 251-8256 MANIFOLD GP-CONTROL
AN ATTACHMENT

SMCS-5067 **i01950824**

NOTE	REF NO	GRAPHIC REF	PART NUMBER	QTY	PART NAME 1 2 3 4 5 6 (PRODUCT LEVEL)	SEE PAGE
	1	1	**3K-0360**	1	SEAL-O-RING	
	2	1	**161-6154**	1	SEAL-O-RING	
	3	1	**6E-0381**	1	RING-BACKUP	

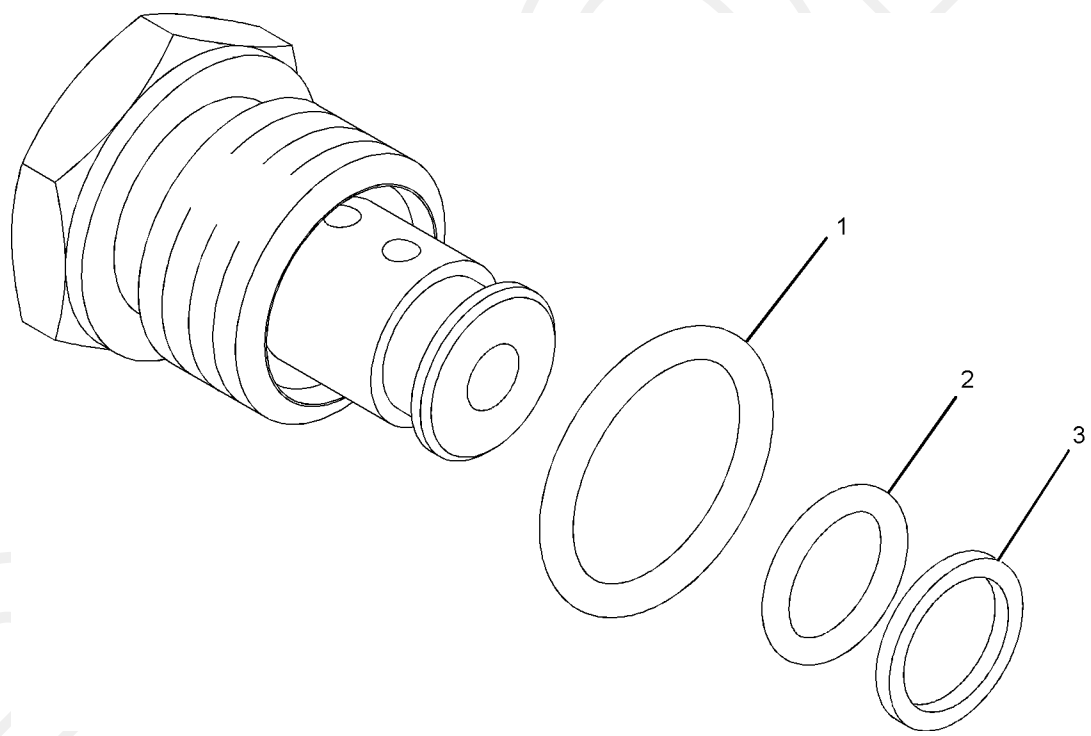

GRAPHIC #1 **<END>** g01016882

245-9532 VALVE GP-CONTROL–ARTICULATION

S/N: B9M1-UP

PART OF 249-7298 VALVE GP-BANK 3, 248-6169 VALVE GP-BANK 4, 249-7299 VALVE GP-BANK 5, 249-5330 VALVE GP-BANK 6 AN ATTACHMENT

SMCS-5051 **i02348808**

NOTE	REF NO	GRAPHIC REF	PART NUMBER	QTY	PART NAME 1 2 3 4 5 6 (PRODUCT LEVEL)	SEE PAGE
	2	1	**6E-3007**	1	SPRING	
	3	1	**9W-7783**	6	PLUG	
	4	1	**106-3659**	1	PISTON	
	5	1	**212-4961**	1	SPRING	
	6	1	**242-9264**	1	PLUG-ORIFICE	
	7	1	**243-2965**	1	SPOOL	
	8	1	**244-2579**	1	PLUG	
J	9	1	**245-9923**	2	VALVE GP-CHECK (ARTICULATION)	
					(EACH INCLUDES)	
		1	**3K-0360**	1	SEAL-O-RING	
		1	**6V-5326**	1	SEAL-O-RING	
		1	**6V-6580**	1	SEAL-O-RING	
	10	1	**247-0631**	2	RETAINER	
	11	1	**247-0632**	2	RETAINER	
	12	1	**250-2140**	2	VALVE GP-SOLENOID (ARTICULATION)	
					(EACH INCLUDES)	
		1	**4K-2039**	1	SEAL-O-RING	
		1	**5L-4758**	1	SEAL-O-RING	
		1	**6F-4855**	1	SEAL-O-RING	
	13	1	**251-1668**	2	COVER-SPRING	
	14	1	**254-3950**	1	STEM	
	15	1	**256-9773**	2	SPRING	
	16	1	**258-7943**	1	BODY-VALVE	
M	18	1	**136-4192**	4	BOLT (M6X1X35-MM)	
	19	1	*148-8395*	1	PLUG AS	
		1	**3K-0360**	1	SEAL-O-RING	
		1	**9S-8005**	1	PLUG	
	20	1	*183-7263*	3	PLUG AS	
					(EACH INCLUDES)	
		1	**3J-7354**	1	SEAL-O-RING	
		1	**9S-8002**	1	PLUG	
	21	1	**3K-0360**	1	SEAL-O-RING	
	22	1	**3S-9233**	2	SEAL-O-RING	
	23	1	**4J-7533**	1	SEAL-O-RING	
	24	1	**5B-9318**	1	BALL	
M	25	1	**8T-0267**	2	BOLT-SOCKET HEAD (M6X1X12-MM)	
	26	1	**9X-8256**	4	WASHER (6.6X12X2-MM THK)	
					AVAILABLE REPAIR KIT(S):	
J			**248-6887**	1	KIT-SEAL (CHECK VALVE) (ARTICULATION)	
					(INCLUDES SEAL-O-RINGS & BACKUP RING)	

J-KIT MARKED J SERVICES PARTS MARKED J
M-METRIC PART

PROOF

245-9532 **VALVE GP-CONTROL** *(contd.)* **i02348808**

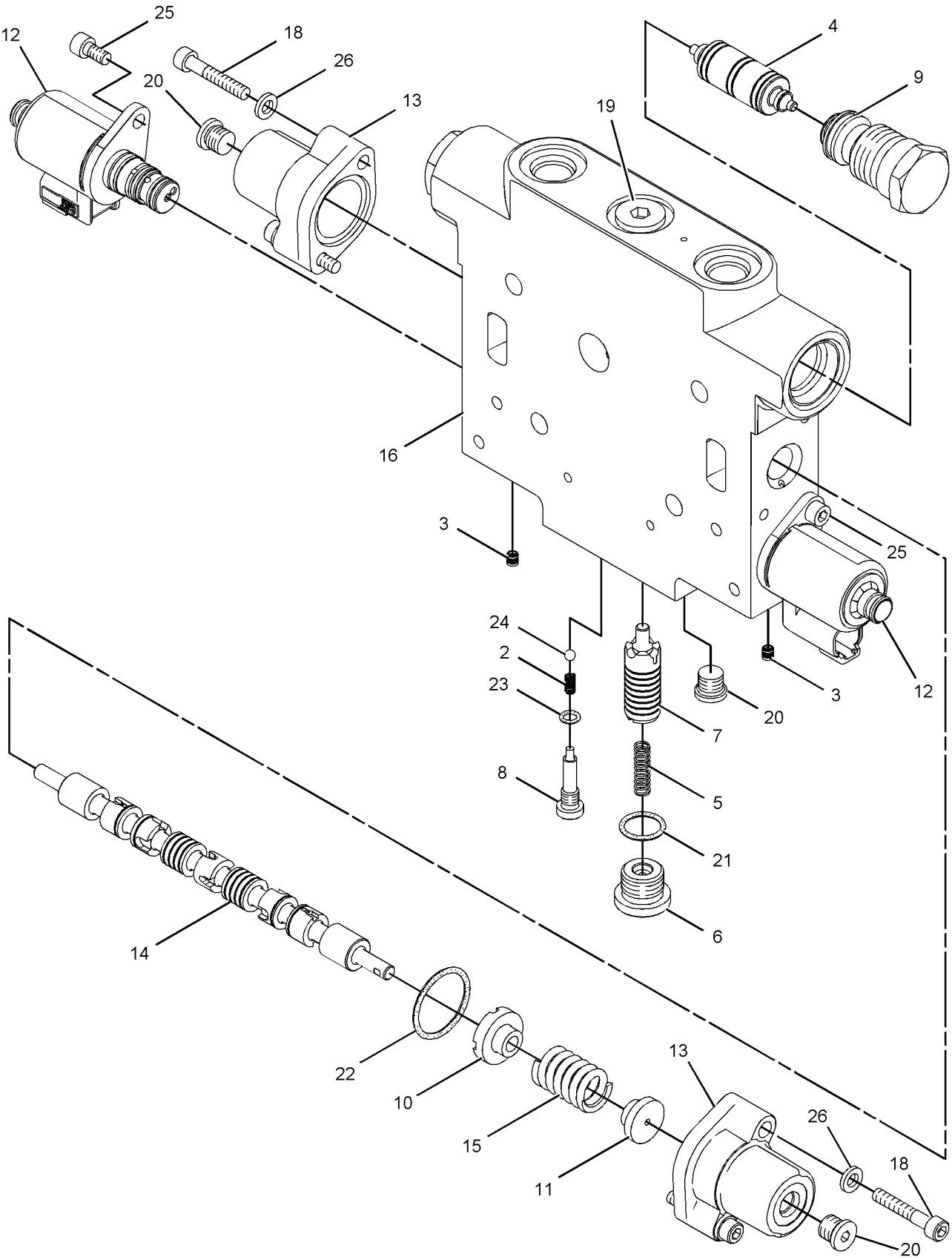

GRAPHIC #1 **<END>** g01137999

HYDRAULIC SYSTEM

245-9533 VALVE GP-CONTROL—BLADE LIFT

S/N: B9M1-UP

PART OF 249-7298 VALVE GP-BANK 3, 248-6169 VALVE GP-BANK 4, 249-7299 VALVE GP-BANK 5, 249-5330 VALVE GP-BANK 6

AN ATTACHMENT

SMCS-5051 **i02348809**

NOTE	REF NO	GRAPHIC REF	PART NUMBER	QTY	PART NAME 1 2 3 4 5 6 (PRODUCT LEVEL)	SEE PAGE
	2	1	**6E-3007**	1	SPRING	
	3	1	**9W-7783**	6	PLUG	
	4	1	**106-3660**	2	PISTON	
	5	1	**212-4961**	1	SPRING	
	6	1	**242-9264**	1	PLUG-ORIFICE	
	7	1	**243-2965**	1	SPOOL	
	8	1	**244-2579**	1	PLUG	
	9	1	**245-9044**	1	STEM	
J	10	1	**245-9923**	1	VALVE GP-CHECK (BLADE LIFT)	
		1	**3K-0360**	1	SEAL-O-RING	
		1	**6V-5326**	1	SEAL-O-RING	
		1	**6V-6580**	1	SEAL-O-RING	
J	11	1	**246-1566**	1	VALVE GP-CHECK & RELIEF (BLADE LIFT)	
		1	**3K-0360**	1	SEAL-O-RING	
		1	**6V-5326**	1	SEAL-O-RING	
		1	**6V-6580**	1	SEAL-O-RING	
	12	1	**247-0631**	2	RETAINER	
	13	1	**247-0632**	2	RETAINER	
	15	1	**250-2140**	2	VALVE GP-SOLENOID (BLADE LIFT)	
					(EACH INCLUDES)	
		1	**4K-2039**	1	SEAL-O-RING	
		1	**5L-4758**	1	SEAL-O-RING	
		1	**6F-4855**	1	SEAL-O-RING	
	16	1	**251-1668**	1	COVER-SPRING	
	17	1	**251-1669**	1	COVER-SPRING	
	18	1	**256-9773**	1	SPRING	
	19	1	**256-9774**	1	SPRING	
	20	1	**258-7943**	1	BODY-VALVE	
M	21	1	**136-4192**	4	BOLT (M6X1X35-MM)	
	22	1	*148-8395*	1	PLUG AS	
		1	**3K-0360**	1	SEAL-O-RING	
		1	**9S-8005**	1	PLUG	
	23	1	*183-7263*	3	PLUG AS	
					(EACH INCLUDES)	
		1	**3J-7354**	1	SEAL-O-RING	
		1	**9S-8002**	1	PLUG	
	24	1	**3K-0360**	1	SEAL-O-RING	
	25	1	**3S-9233**	2	SEAL-O-RING	
	26	1	**4J-7533**	1	SEAL-O-RING	
	27	1	**5B-9318**	1	BALL	
M	28	1	**8T-0267**	2	BOLT-SOCKET HEAD (M6X1X12-MM)	
	29	1	**9X-8256**	4	WASHER (6.6X12X2-MM THK)	
					AVAILABLE REPAIR KIT(S):	
J			**248-6887**	2	KIT-SEAL (CHECK VALVE) (BLADE LIFT)	
					(KIT INCLUDES SEAL-O-RINGS AND RING-BACKUP)	

J-KIT MARKED J SERVICES PARTS MARKED J
M-METRIC PART

PROOF

245-9533 **VALVE GP-CONTROL** *(contd.)* **i02348809**

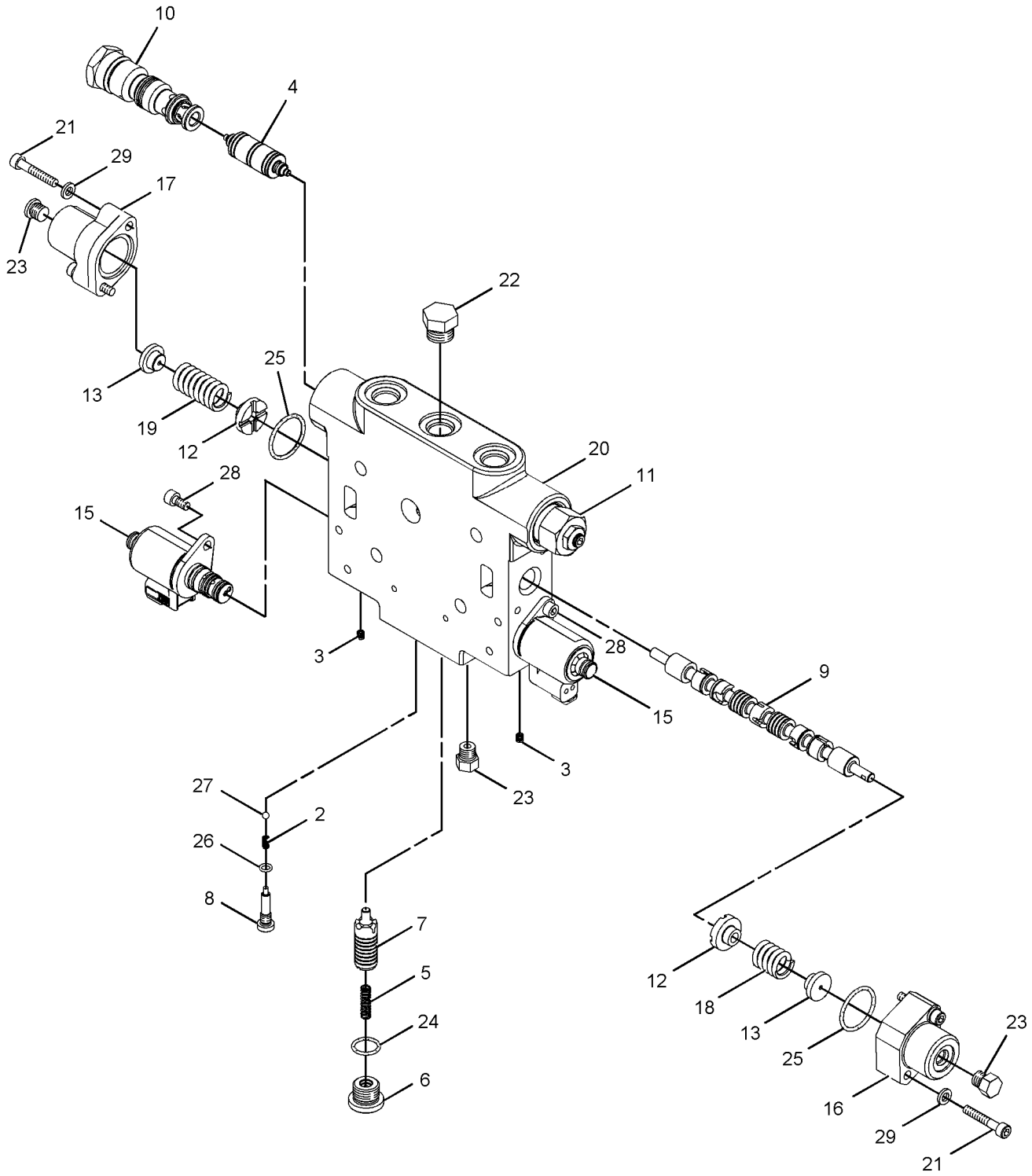

GRAPHIC #1 **<END>** g01138212

245-9534 VALVE GP-CONTROL–BLADE TIP

S/N: B9M1-UP

PART OF 248-6168 VALVE GP-BANK 5, 249-7294, 249-7295 VALVE GP-BANK 6, 249-5328, 249-7296 VALVE GP-BANK 7, 249-5329, 249-7297 VALVE GP-BANK 8 AN ATTACHMENT

SMCS-5051 **i02348810**

NOTE	REF NO	GRAPHIC REF	PART NUMBER	QTY	PART NAME 1 2 3 4 5 6 (PRODUCT LEVEL)	SEE PAGE
	2	1	**6E-3007**	1	SPRING	
	3	1	**9W-7783**	6	PLUG	
	4	1	**106-3659**	1	PISTON	
	5	1	**212-4961**	1	SPRING	
	6	1	**242-9264**	1	PLUG-ORIFICE	
	7	1	**243-2965**	1	SPOOL	
	8	1	**244-2579**	1	PLUG	
	9	1	**245-9045**	1	STEM	
J	10	1	**245-9923**	1	VALVE GP-CHECK (BLADE TIP)	
		1	**3K-0360**	1	SEAL-O-RING	
		1	**6V-5326**	1	SEAL-O-RING	
		1	**6V-6580**	1	SEAL-O-RING	
J	11	1	**246-1567**	1	VALVE GP-CHECK & RELIEF (BLADE TIP)	
		1	**3K-0360**	1	SEAL-O-RING	
		1	**6V-5326**	1	SEAL-O-RING	
		1	**6V-6580**	1	SEAL-O-RING	
	12	1	**247-0631**	2	RETAINER	
	13	1	**247-0632**	2	RETAINER	
	15	1	**250-2140**	2	VALVE GP-SOLENOID (BLADE TIP)	
					(EACH INCLUDES)	
		1	**4K-2039**	1	SEAL-O-RING	
		1	**5L-4758**	1	SEAL-O-RING	
		1	**6F-4855**	1	SEAL-O-RING	
	16	1	**251-1668**	2	COVER-SPRING	
	17	1	**256-9773**	2	SPRING	
	18	1	**258-7943**	1	BODY-VALVE	
M	19	1	**136-4192**	4	BOLT (M6X1X35-MM)	
	20	1	*148-8395*	1	PLUG AS	
		1	**3K-0360**	1	SEAL-O-RING	
		1	**9S-8005**	1	PLUG	
	21	1	*183-7263*	3	PLUG AS	
					(EACH INCLUDES)	
		1	**3J-7354**	1	SEAL-O-RING	
		1	**9S-8002**	1	PLUG	
	22	1	**3K-0360**	1	SEAL-O-RING	
	23	1	**3S-9233**	2	SEAL-O-RING	
	24	1	**4J-7533**	1	SEAL-O-RING	
	25	1	**5B-9318**	1	BALL	
M	26	1	**8T-0267**	2	BOLT-SOCKET HEAD (M6X1X12-MM)	
	27	1	**9X-8256**	4	WASHER (6.6X12X2-MM THK)	
					AVAILABLE REPAIR KIT(S):	
J			**248-6887**	2	KIT-SEAL (CHECK VALVE) (BLADE TIP)	
					(INCLUDES SEAL-O-RINGS, BACKUP RING)	

J-KIT MARKED J SERVICES PARTS MARKED J
M-METRIC PART

PROOF

245-9534 **VALVE GP-CONTROL** *(contd.)* **i02348810**

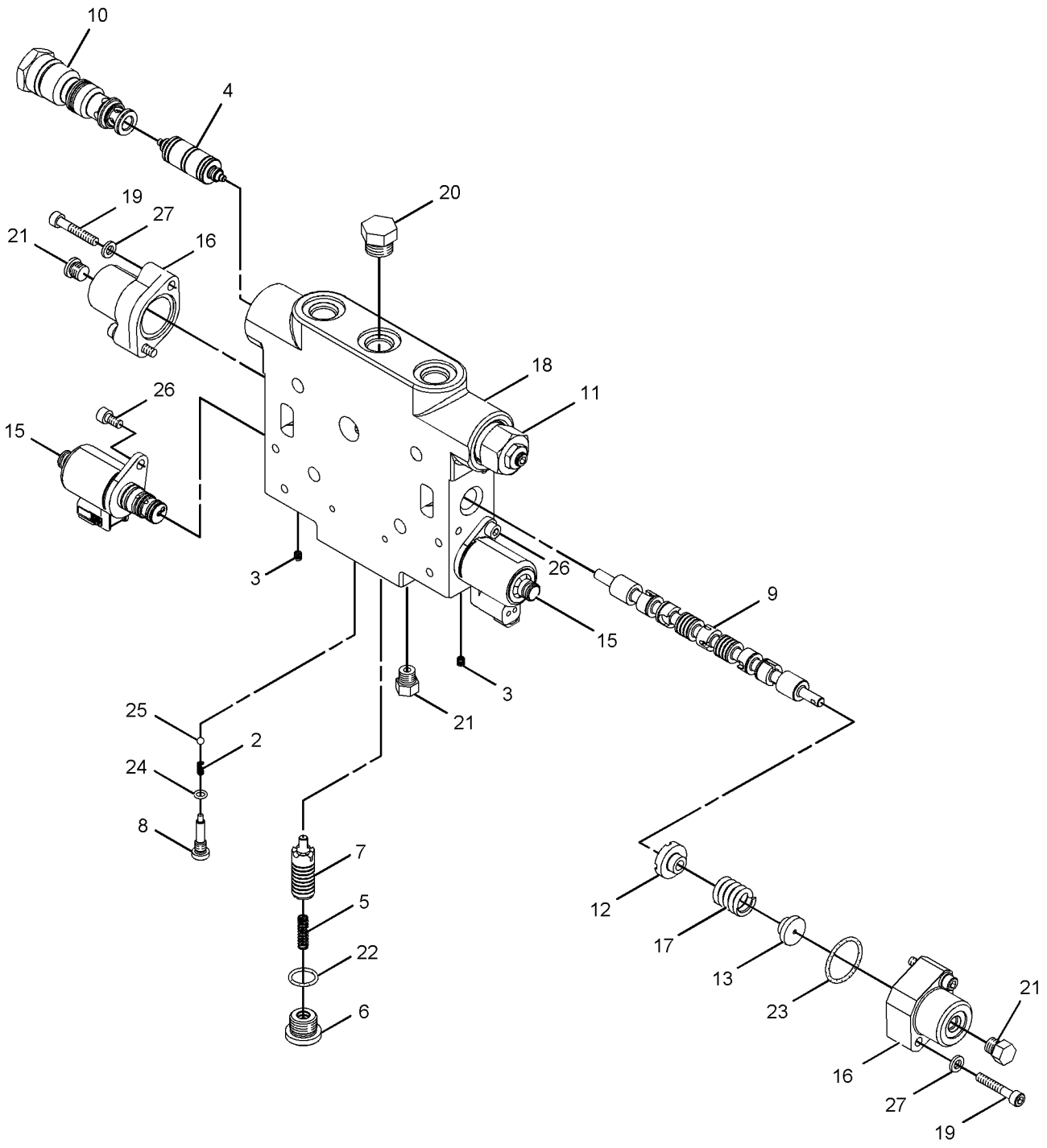

GRAPHIC #1 **<END>** g01138057

HYDRAULIC SYSTEM

245-9535 VALVE GP-CONTROL–BLADE CENTERSHIFT

S/N: B9M1-UP

PART OF 248-6168 VALVE GP-BANK 5, 249-7294, 249-7295 VALVE GP-BANK 6, 249-5328, 249-7296 VALVE GP-BANK 7, 249-5329, 249-7297 VALVE GP-BANK 8 AN ATTACHMENT

SMCS-5051 **i02348847**

NOTE	REF NO	GRAPHIC REF	PART NUMBER	QTY	PART NAME 1 2 3 4 5 6 (PRODUCT LEVEL)	SEE PAGE
	2	1	**6E-3007**	1	SPRING	
	3	1	**9W-7783**	6	PLUG	
	4	1	**106-3659**	1	PISTON	
	5	1	**212-4961**	1	SPRING	
	6	1	**242-9264**	1	PLUG-ORIFICE	
	7	1	**243-2965**	1	SPOOL	
	8	1	**244-2579**	1	PLUG	
	9	1	**245-9046**	1	STEM	
J	10	1	**245-9923**	2	VALVE GP-CHECK (BLADE CENTERSHIFT)	
					(EACH INCLUDES)	
		1	**3K-0360**	1	SEAL-O-RING	
		1	**6V-5326**	1	SEAL-O-RING	
		1	**6V-6580**	1	SEAL-O-RING	
	11	1	**247-0631**	2	RETAINER	
	12	1	**247-0632**	2	RETAINER	
	14	1	**250-2140**	2	VALVE GP-SOLENOID (BLADE CENTERSHIFT)	
					(EACH INCLUDES)	
		1	**4K-2039**	1	SEAL-O-RING	
		1	**5L-4758**	1	SEAL-O-RING	
		1	**6F-4855**	1	SEAL-O-RING	
	15	1	**251-1668**	2	COVER-SPRING	
	16	1	**256-9773**	2	SPRING	
	17	1	**258-7943**	1	BODY-VALVE	
M	18	1	**136-4192**	4	BOLT (M6X1X35-MM)	
	19	1	*148-8395*	1	PLUG AS	
		1	**3K-0360**	1	SEAL-O-RING	
		1	**9S-8005**	1	PLUG	
	20	1	*183-7263*	3	PLUG AS	
					(EACH INCLUDES)	
		1	**3J-7354**	1	SEAL-O-RING	
		1	**9S-8002**	1	PLUG	
	21	1	**3K-0360**	1	SEAL-O-RING	
	22	1	**3S-9233**	2	SEAL-O-RING	
	23	1	**4J-7533**	1	SEAL-O-RING	
	24	1	**5B-9318**	1	BALL	
M	25	1	**8T-0267**	2	BOLT-SOCKET HEAD (M6X1X12-MM)	
	26	1	**9X-8256**	4	WASHER (6.6X12X2-MM THK)	
					AVAILABLE REPAIR KIT(S):	
J			**248-6887**	2	KIT-SEAL (CHECK VALVE) (BLADE CENTERSHIFT)	
					(INCLUDES SEAL-O-RINGS, BACKUP RING)	

J-KIT MARKED J SERVICES PARTS MARKED J
M-METRIC PART

PROOF

245-9535 **VALVE GP-CONTROL** *(contd.)* **i02348847**

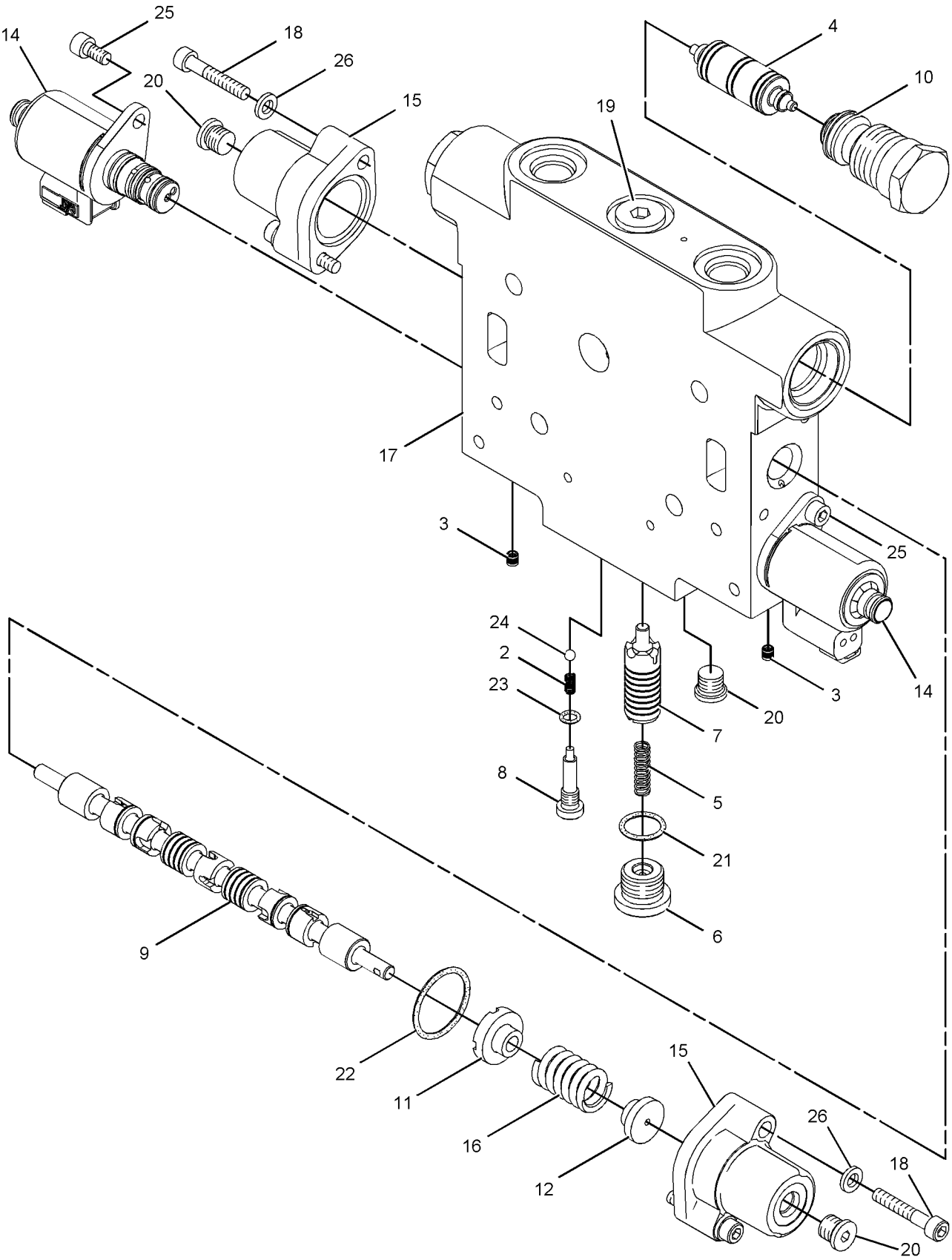

GRAPHIC #1 **<END>** g01138140

HYDRAULIC SYSTEM

245-9536 VALVE GP-CONTROL–BLADE SIDESHIFT

S/N: B9M1-UP

PART OF 248-6168 VALVE GP-BANK 5, 249-7294, 249-7295 VALVE GP-BANK 6, 249-5328, 249-7296 VALVE GP-BANK 7, 249-5329, 249-7297 VALVE GP-BANK 8 AN ATTACHMENT

SMCS-5051 **i02348851**

NOTE	REF NO	GRAPHIC REF	PART NUMBER	QTY	PART NAME 1 2 3 4 5 6 (PRODUCT LEVEL)	SEE PAGE
	2	1	**6E-3007**	1	SPRING	
	3	1	**9W-7783**	6	PLUG	
	4	1	**106-3659**	1	PISTON	
	5	1	**212-4961**	1	SPRING	
	6	1	**242-9264**	1	PLUG-ORIFICE	
	7	1	**243-2965**	1	SPOOL	
	8	1	**244-2579**	1	PLUG	
	9	1	**245-9047**	1	STEM	
J	10	1	**245-9923**	1	VALVE GP-CHECK (BLADE SIDESHIFT)	
		1	**6V-6580**	1	SEAL-O-RING	
		1	**3K-0360**	1	SEAL-O-RING	
		1	**6V-5326**	1	SEAL-O-RING	
J	11	1	**246-1567**	1	VALVE GP-CHECK & RELIEF (BLADE SIDESHIFT)	
		1	**6V-6580**	1	SEAL-O-RING	
		1	**3K-0360**	1	SEAL-O-RING	
		1	**6V-5326**	1	SEAL-O-RING	
	12	1	**247-0631**	2	RETAINER	
	13	1	**247-0632**	2	RETAINER	
	15	1	**250-2140**	2	VALVE GP-SOLENOID (BLADE SIDESHIFT)	
					(EACH INCLUDES)	
		1	**5L-4758**	1	SEAL-O-RING	
		1	**6F-4855**	1	SEAL-O-RING	
		1	**4K-2039**	1	SEAL-O-RING	
	16	1	**251-1668**	2	COVER-SPRING	
	17	1	**256-9773**	2	SPRING	
	18	1	**258-7943**	1	BODY-VALVE	
M	19	1	**136-4192**	4	BOLT (M6X1X35-MM)	
	20	1	*148-8395*	1	PLUG AS	
		1	**9S-8005**	1	PLUG	
		1	**3K-0360**	1	SEAL-O-RING	
	21	1	*183-7263*	3	PLUG AS	
					(EACH INCLUDES)	
		1	**9S-8002**	1	PLUG	
		1	**3J-7354**	1	SEAL-O-RING	
	22	1	**3K-0360**	1	SEAL-O-RING	
	23	1	**3S-9233**	2	SEAL-O-RING	
	24	1	**4J-7533**	1	SEAL-O-RING	
	25	1	**5B-9318**	1	BALL	
M	26	1	**8T-0267**	2	BOLT-SOCKET HEAD (M6X1X12-MM)	
	27	1	**9X-8256**	4	WASHER (6.6X12X2-MM THK)	
					AVAILABLE REPAIR KIT(S):	
J			**248-6887**	1	KIT-SEAL (CHECK VALVE) (BLADE SIDESHIFT)	
					(INCLUDES SEALS, BACKUP RING)	

J-KIT MARKED J SERVICES PART MARKED J
M-METRIC PART

PROOF

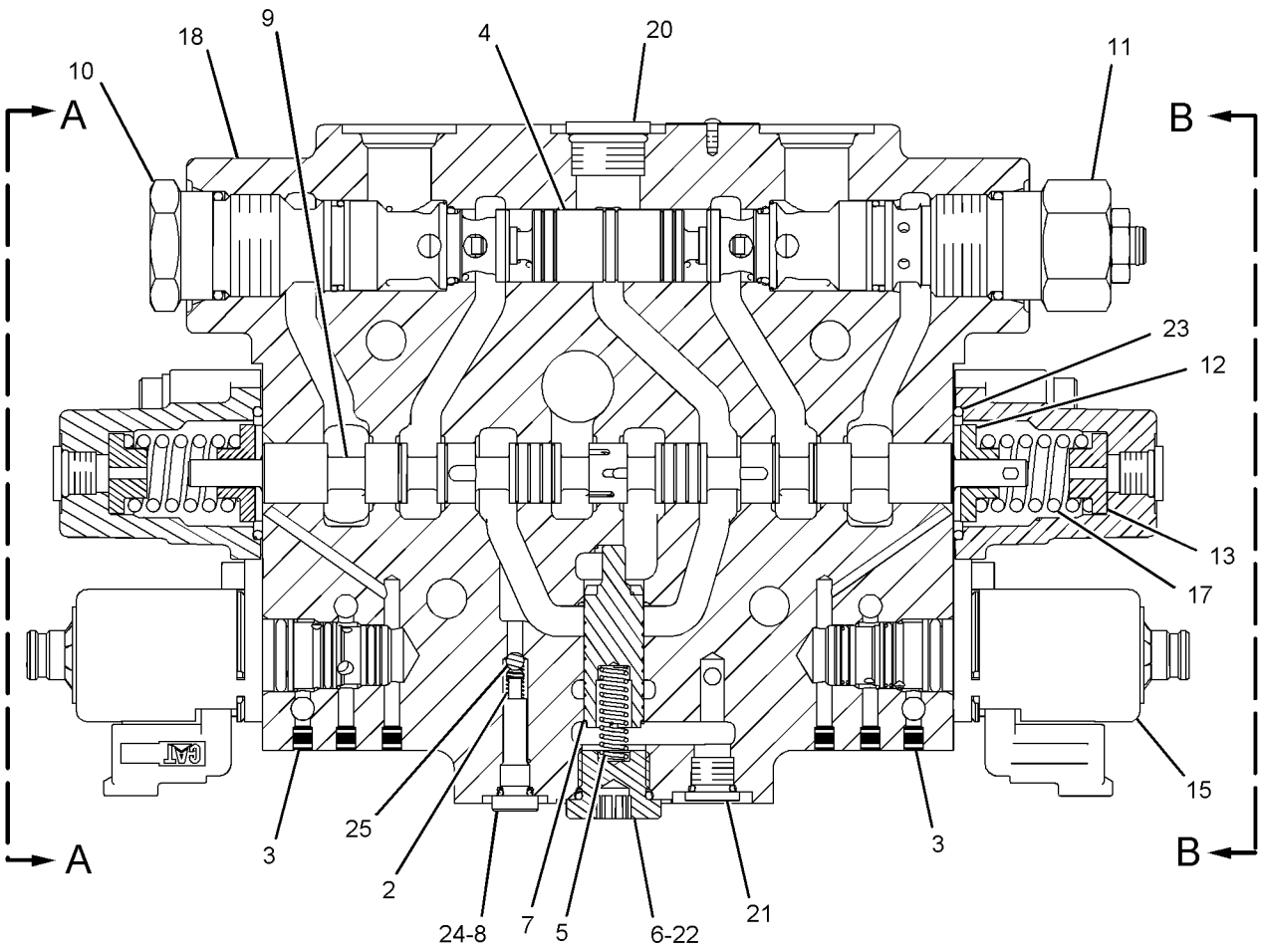

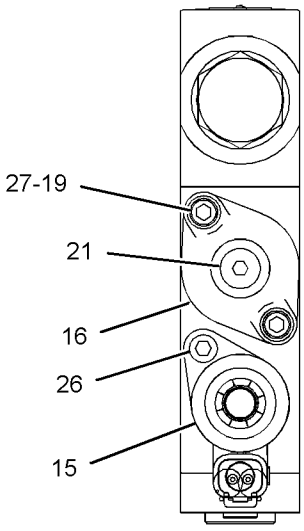

VIEW A-A

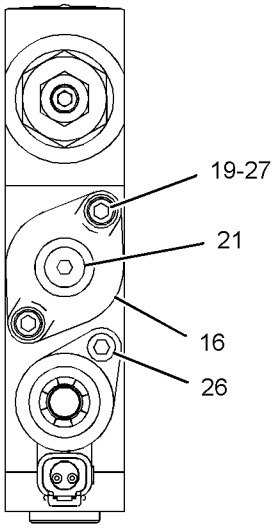

VIEW B-B

GRAPHIC #1 **<END>** g01131335

HYDRAULIC SYSTEM

245-9537 VALVE GP-CONTROL—CIRCLE DRIVE

S/N: B9M1-UP

PART OF 248-6168 VALVE GP-BANK 5, 249-7294, 249-7295 VALVE GP-BANK 6, 249-5328, 249-7296 VALVE GP-BANK 7, 249-5329, 249-7297 VALVE GP-BANK 8 AN ATTACHMENT

SMCS-5051 **i02348856**

NOTE	REF NO	GRAPHIC REF	PART NUMBER	QTY	PART NAME 1 2 3 4 5 6 (PRODUCT LEVEL)	SEE PAGE
	2	1	**6E-3007**	1	SPRING	
	3	1	**9W-7783**	6	PLUG	
	4	1	**106-3659**	1	PISTON	
	5	1	**212-4961**	1	SPRING	
	6	1	**242-9264**	1	PLUG-ORIFICE	
	7	1	**243-2965**	1	SPOOL	
	8	1	**244-2579**	1	PLUG	
	9	1	**245-9048**	1	STEM	
J	10	1	**245-9923**	2	VALVE GP-CHECK (CIRCLE DRIVE)	
					(EACH INCLUDES)	
		1	**3K-0360**	1	SEAL-O-RING	
		1	**6V-5326**	1	SEAL-O-RING	
		1	**6V-6580**	1	SEAL-O-RING	
	11	1	**247-0631**	2	RETAINER	
	12	1	**247-0632**	2	RETAINER	
	14	1	**250-2140**	2	VALVE GP-SOLENOID (CIRCLE DRIVE)	
					(EACH INCLUDES)	
		1	**4K-2039**	1	SEAL-O-RING	
		1	**5L-4758**	1	SEAL-O-RING	
		1	**6F-4855**	1	SEAL-O-RING	
	15	1	**251-1668**	2	COVER-SPRING	
	16	1	**256-9773**	2	SPRING	
	17	1	**258-7943**	1	BODY-VALVE	
M	18	1	**136-4192**	4	BOLT (M6X1X35-MM)	
	19	1	*148-8395*	1	PLUG AS	
		1	**3K-0360**	1	SEAL-O-RING	
		1	**9S-8005**	1	PLUG	
	20	1	*183-7263*	3	PLUG AS	
					(EACH INCLUDES)	
		1	**3J-7354**	1	SEAL-O-RING	
		1	**9S-8002**	1	PLUG	
	21	1	**3K-0360**	1	SEAL-O-RING	
	22	1	**3S-9233**	2	SEAL-O-RING	
	23	1	**4J-7533**	1	SEAL-O-RING	
	24	1	**5B-9318**	1	BALL	
M	25	1	**8T-0267**	2	BOLT-SOCKET HEAD (M6X1X12-MM)	
	26	1	**9X-8256**	4	WASHER (6.6X12X2-MM THK)	
					AVAILABLE REPAIR KIT(S):	
J			**248-6887**	2	KIT-SEAL (CHECK VALVE) (CIRCLE DRIVE)	
					(INCLUDES SEAL-O-RINGS)	

J-KIT MARKED J SERVICES PARTS MARKED J
M-METRIC PART

REPRO

245-9537 **VALVE GP-CONTROL** *(contd.)* **i02348856**

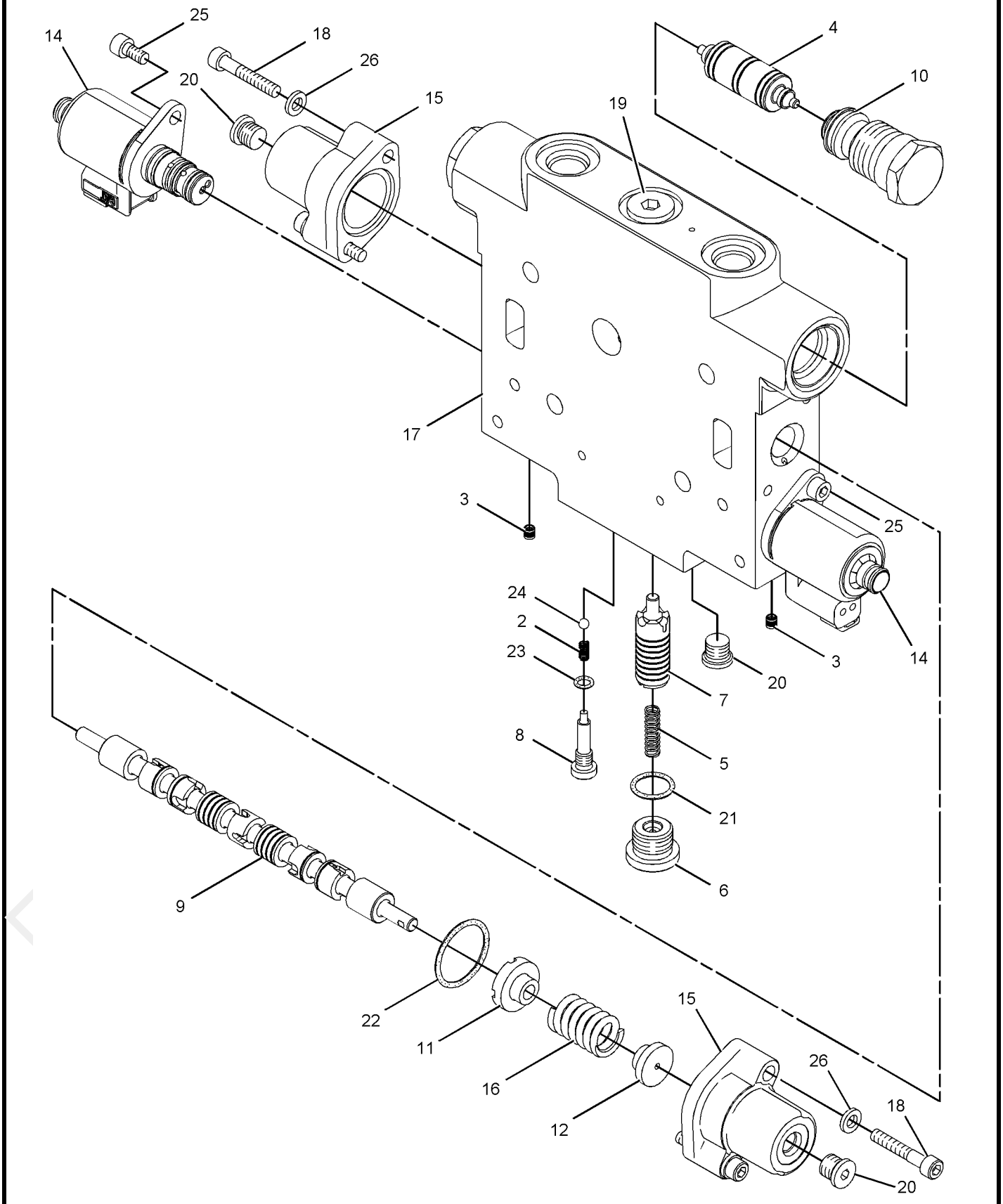

GRAPHIC #1 **<END>** g01138292

245-9539 VALVE GP-CONTROL—WHEEL LEAN

S/N: B9M1-UP

PART OF 248-6168 VALVE GP-BANK 5, 249-7294, 249-7295 VALVE GP-BANK 6, 249-5328, 249-7296 VALVE GP-BANK 7, 249-5329, 249-7297 VALVE GP-BANK 8 AN ATTACHMENT

SMCS-5051 **i02348861**

NOTE	REF NO	GRAPHIC REF	PART NUMBER	QTY	PART NAME 1 2 3 4 5 6 (PRODUCT LEVEL)	SEE PAGE
	2	1	**6E-3007**	1	SPRING	
	3	1	**9W-7783**	6	PLUG	
	4	1	**106-3659**	1	PISTON	
	5	1	**212-4961**	1	SPRING	
	6	1	**242-9264**	1	PLUG-ORIFICE	
	7	1	**243-2965**	1	SPOOL	
	8	1	**244-2579**	1	PLUG	
	9	1	**245-9049**	1	STEM	
J	10	1	**245-9923**	2	VALVE GP-CHECK (WHEEL LEAN)	
					(EACH INCLUDES)	
		1	**3K-0360**	1	SEAL-O-RING	
		1	**6V-5326**	1	SEAL-O-RING	
		1	**6V-6580**	1	SEAL-O-RING	
	11	1	**247-0631**	2	RETAINER	
	12	1	**247-0632**	2	RETAINER	
	14	1	**250-2140**	2	VALVE GP-SOLENOID (WHEEL LEAN)	
					(EACH INCLUDES)	
		1	**4K-2039**	1	SEAL-O-RING	
		1	**5L-4758**	1	SEAL-O-RING	
		1	**6F-4855**	1	SEAL-O-RING	
	15	1	**251-1668**	2	COVER-SPRING	
	16	1	**256-9773**	2	SPRING	
	17	1	**258-7943**	1	BODY-VALVE	
M	18	1	**136-4192**	4	BOLT (M6X1X35-MM)	
	19	1	*148-8395*	1	PLUG AS	
		1	**3K-0360**	1	SEAL-O-RING	
		1	**9S-8005**	1	PLUG	
	20	1	*183-7263*	3	PLUG AS	
					(EACH INCLUDES)	
		1	**3J-7354**	1	SEAL-O-RING	
		1	**9S-8002**	1	PLUG	
	21	1	**3K-0360**	1	SEAL-O-RING	
	22	1	**3S-9233**	2	SEAL-O-RING	
	23	1	**4J-7533**	1	SEAL-O-RING	
	24	1	**5B-9318**	1	BALL	
M	25	1	**8T-0267**	2	BOLT-SOCKET HEAD (M6X1X12-MM)	
	26	1	**9X-8256**	4	WASHER (6.6X12X2-MM THK)	
					AVAILABLE REPAIR KIT(S):	
J			**248-6887**	2	KIT-SEAL (CHECK VALVE) (WHEEL LEAN)	
					(KIT INCLUDES SEAL-O-RINGS, BACKUP RING)	

J-KIT MARKED J SERVICES PART MARKED J
M-METRIC PART

PROOF

245-9539 **VALVE GP-CONTROL** *(contd.)* **i02348861**

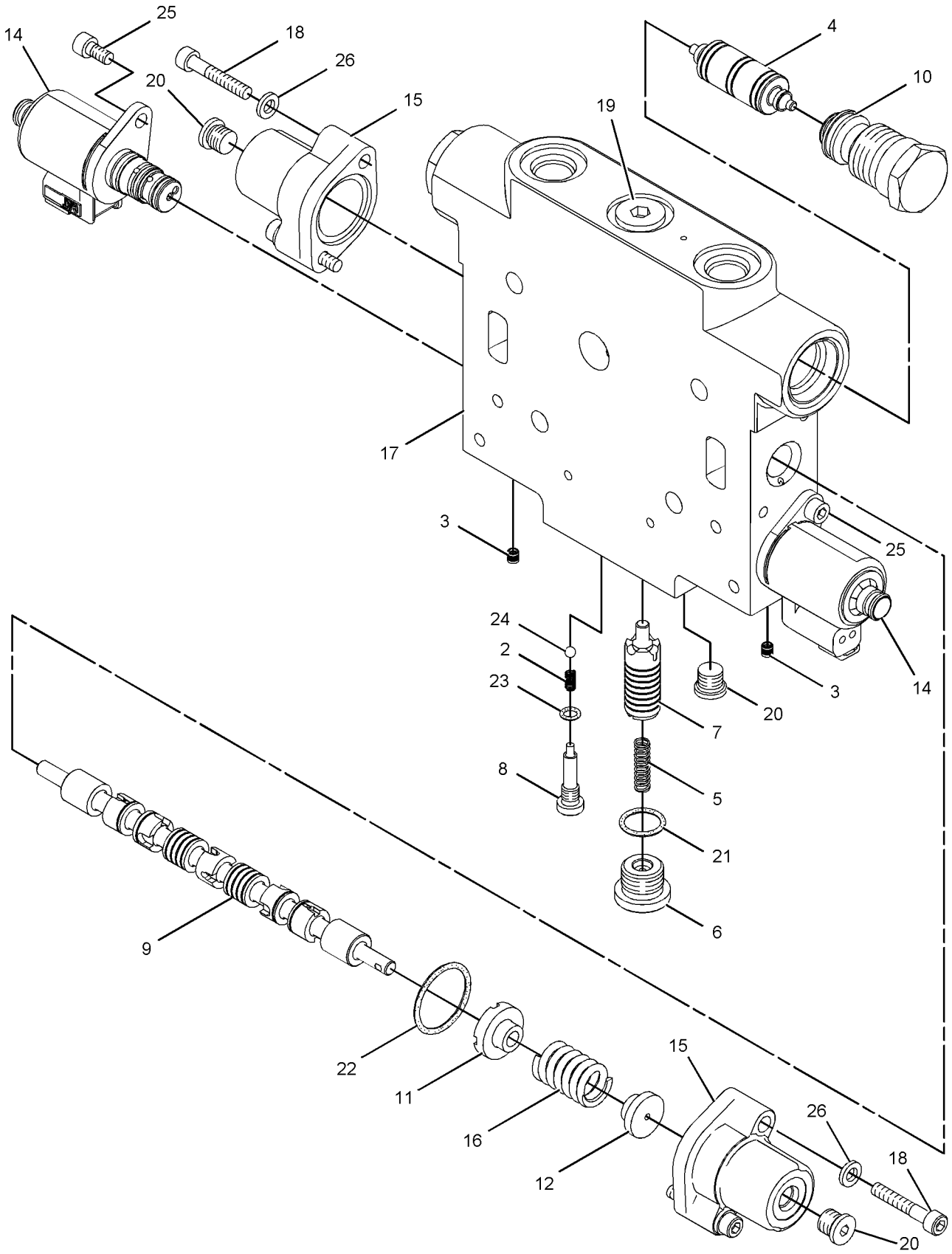

GRAPHIC #1 **<END>** g01138325

245-9541 VALVE GP-CONTROL–RIPPER

S/N: B9M1-UP

PART OF 248-6169 VALVE GP-BANK 4, 249-5330 VALVE GP-BANK 6

AN ATTACHMENT

SMCS-5051 **i02348865**

NOTE	REF NO	GRAPHIC REF	PART NUMBER	QTY	PART NAME 1 2 3 4 5 6 (PRODUCT LEVEL)	SEE PAGE
	2	1	**6E-3007**	1	SPRING	
	3	1	**9W-7783**	6	PLUG	
	4	1	**106-3659**	1	PISTON	
	5	1	**212-4961**	1	SPRING	
	6	1	**242-9264**	1	PLUG-ORIFICE	
	7	1	**243-2965**	1	SPOOL	
	8	1	**244-2579**	1	PLUG	
J	9	1	**245-9923**	1	VALVE GP-CHECK (RIPPER)	
		1	**3K-0360**	1	SEAL-O-RING	
		1	**6V-5326**	1	SEAL-O-RING	
		1	**6V-6580**	1	SEAL-O-RING	
J	10	1	**246-1567**	1	VALVE GP-CHECK & RELIEF (RIPPER)	
		1	**3K-0360**	1	SEAL-O-RING	
		1	**6V-5326**	1	SEAL-O-RING	
		1	**6V-6580**	1	SEAL-O-RING	
	11	1	**247-0631**	2	RETAINER	
	12	1	**247-0632**	2	RETAINER	
	13	1	**250-2140**	2	VALVE GP-SOLENOID (RIPPER)	
					(EACH INCLUDES)	
		1	**4K-2039**	1	SEAL-O-RING	
		1	**5L-4758**	1	SEAL-O-RING	
		1	**6F-4855**	1	SEAL-O-RING	
	14	1	**251-1668**	2	COVER-SPRING	
	15	1	**254-3950**	1	STEM	
	16	1	**256-9773**	2	SPRING	
	17	1	**258-7943**	1	BODY-VALVE	
M	19	1	**136-4192**	4	BOLT (M6X1X35-MM)	
	20	1	*148-8395*	1	PLUG AS	
		1	**3K-0360**	1	SEAL-O-RING	
		1	**9S-8005**	1	PLUG	
	21	1	*183-7263*	3	PLUG AS	
					(EACH INCLUDES)	
		1	**3J-7354**	1	SEAL-O-RING	
		1	**9S-8002**	1	PLUG	
	22	1	**3K-0360**	1	SEAL-O-RING	
	23	1	**3S-9233**	2	SEAL-O-RING	
	24	1	**4J-7533**	1	SEAL-O-RING	
	25	1	**5B-9318**	1	BALL	
M	26	1	**8T-0267**	2	BOLT-SOCKET HEAD (M6X1X12-MM)	
	27	1	**9X-8256**	4	WASHER (6.6X12X2-MM THK)	
					AVAILABLE REPAIR KIT(S):	
J			**248-6887**	2	KIT-SEAL (CHECK VALVE) (RIPPER)	
					(INCLUDES SEAL-O-RINGS, BACKUP RING)	

J-KIT MARKED J SERVICES PARTS MARKED J
M-METRIC PART

PROOF

245-9541 **VALVE GP-CONTROL** *(contd.)* **i02348865**

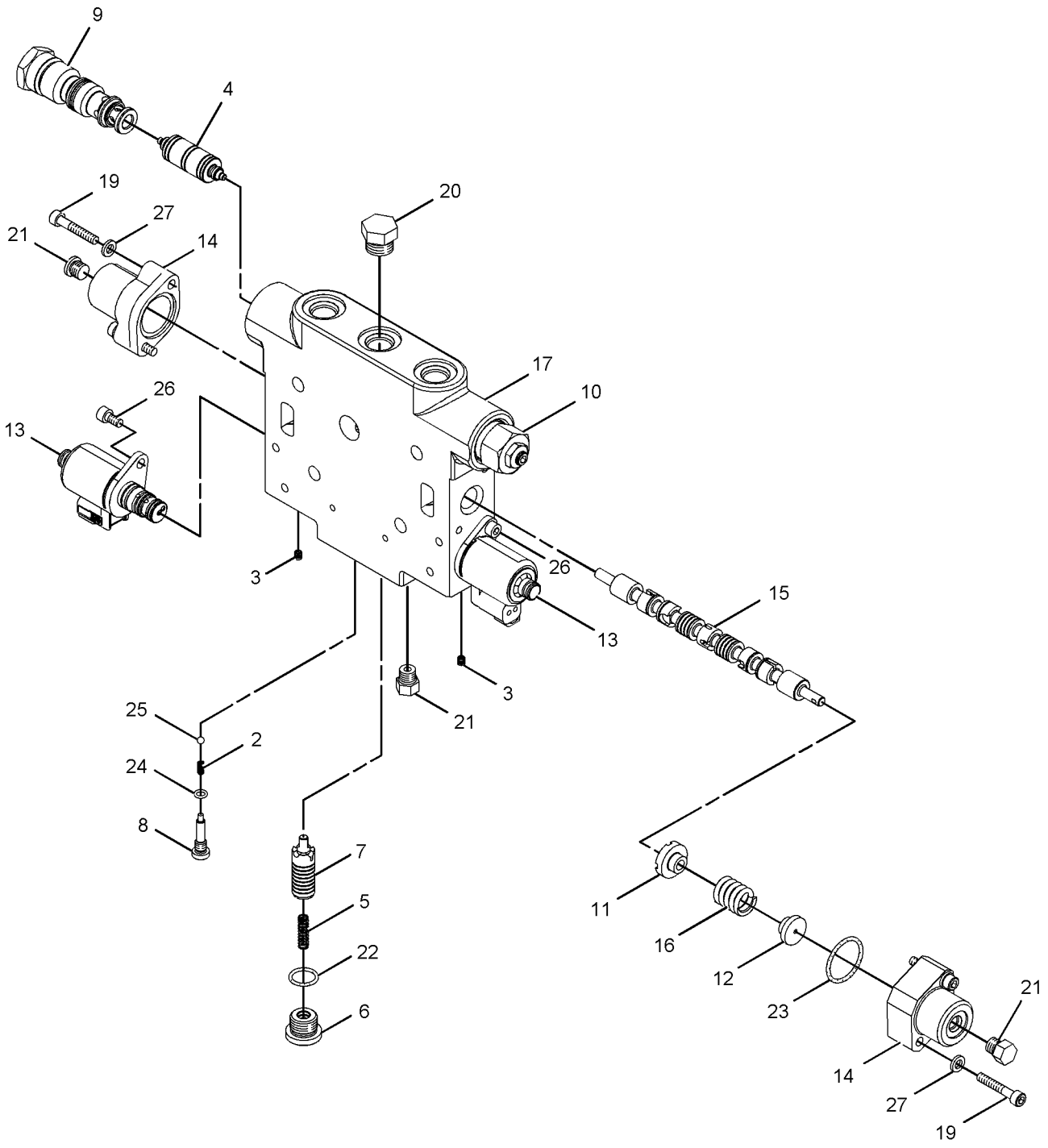

GRAPHIC #1 **<END>** g01138331

245-9542 VALVE GP-CONTROL—WING TILT

S/N: B9M1-UP
PART OF 249-7299 VALVE GP-BANK 5, 249-5330 VALVE GP-BANK 6
AN ATTACHMENT

SMCS-5051 **i02348871**

NOTE	REF NO	GRAPHIC REF	PART NUMBER	QTY	PART NAME 1 2 3 4 5 6 (PRODUCT LEVEL)	SEE PAGE
	2	1	**6E-3007**	1	SPRING	
	3	1	**9W-7783**	6	PLUG	
	4	1	**106-3659**	1	PISTON	
	5	1	**212-4961**	1	SPRING	
	6	1	**242-9264**	1	PLUG-ORIFICE	
	7	1	**243-2965**	1	SPOOL	
	8	1	**244-2579**	1	PLUG	
J	9	1	**246-1567**	2	VALVE GP-CHECK & RELIEF (WING TILT)	
					(EACH INCLUDES)	
		1	**3K-0360**	1	SEAL-O-RING	
		1	**6V-5326**	1	SEAL-O-RING	
		1	**6V-6580**	1	SEAL-O-RING	
	10	1	**247-0631**	2	RETAINER	
	11	1	**247-0632**	2	RETAINER	
	13	1	**250-2140**	2	VALVE GP-SOLENOID (WING TILT)	
					(EACH INCLUDES)	
		1	**4K-2039**	1	SEAL-O-RING	
		1	**5L-4758**	1	SEAL-O-RING	
		1	**6F-4855**	1	SEAL-O-RING	
	14	1	**251-1668**	2	COVER-SPRING	
	15	1	**254-3951**	1	STEM	
	16	1	**256-9773**	2	SPRING	
	17	1	**258-7943**	1	BODY-VALVE	
M	18	1	**136-4192**	4	BOLT (M6X1X35-MM)	
	19	1	*148-8395*	1	PLUG AS	
		1	**3K-0360**	1	SEAL-O-RING	
		1	**9S-8005**	1	PLUG	
	20	1	*183-7263*	3	PLUG AS	
					(EACH INCLUDES)	
		1	**3J-7354**	1	SEAL-O-RING	
		1	**9S-8002**	1	PLUG	
	21	1	**3K-0360**	1	SEAL-O-RING	
	22	1	**3S-9233**	2	SEAL-O-RING	
	23	1	**4J-7533**	1	SEAL-O-RING	
	24	1	**5B-9318**	1	BALL	
M	25	1	**8T-0267**	2	BOLT-SOCKET HEAD (M6X1X12-MM)	
	26	1	**9X-8256**	4	WASHER (6.6X12X2-MM THK)	
					AVAILABLE REPAIR KIT(S):	
J			**248-6887**	2	KIT-SEAL (CHECK VALVE) (WING TILT)	
					(INCLUDES SEAL-O-RINGS, BACKUP RING)	

J-KIT MARKED J SERVICES PARTS MARKED J
M-METRIC PART

PROOF

245-9542 **VALVE GP-CONTROL** *(contd.)* **i02348871**

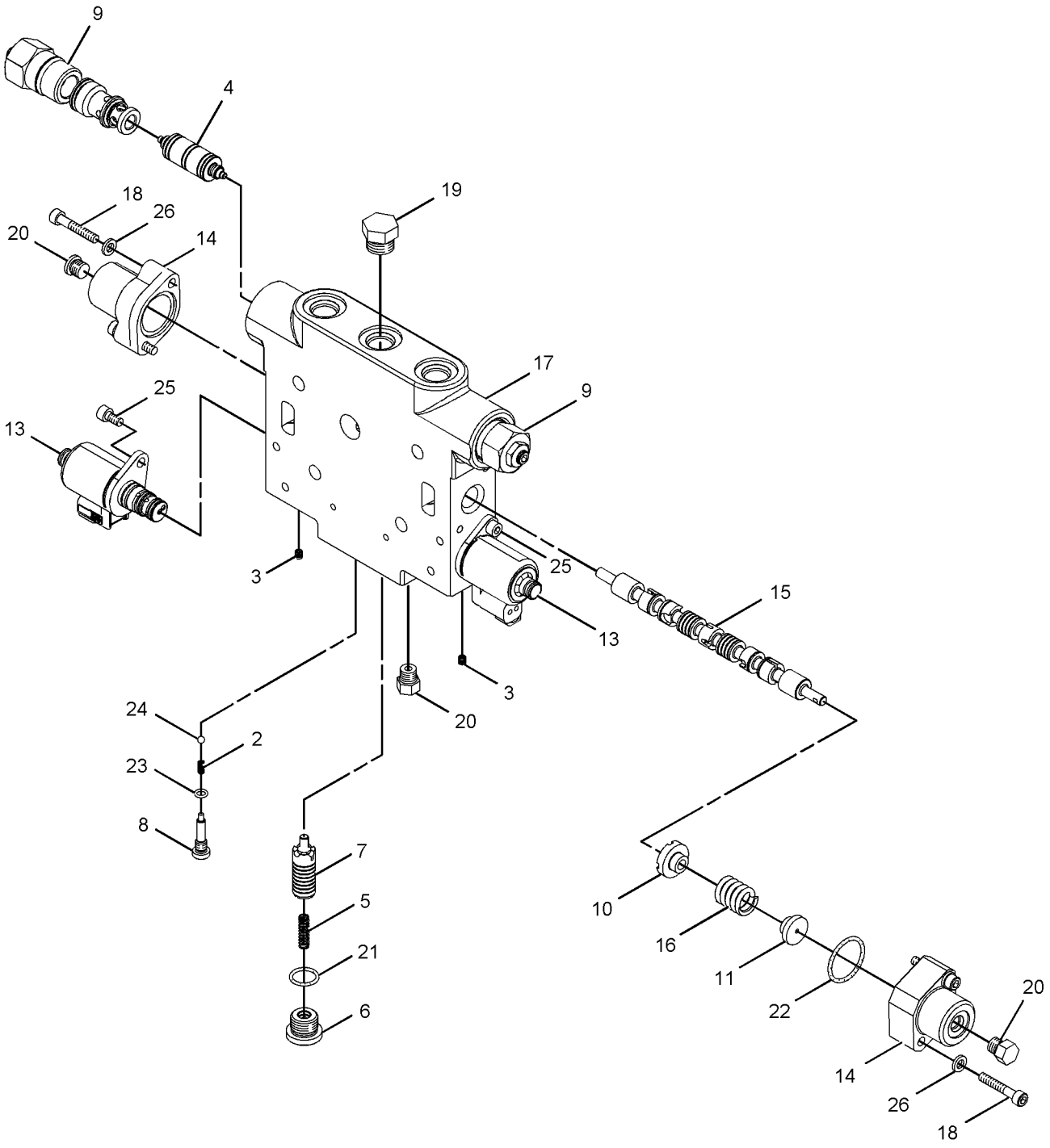

GRAPHIC #1 **<END>** g01138953

HYDRAULIC SYSTEM

245-9543 VALVE GP-CONTROL—WING LIFT

S/N: B9M1-UP

PART OF 249-7299 VALVE GP-BANK 5, 249-5330 VALVE GP-BANK 6

AN ATTACHMENT

SMCS-5051 **i02348900**

NOTE	REF NO	GRAPHIC REF	PART NUMBER	QTY	PART NAME 1 2 3 4 5 6 (PRODUCT LEVEL)	SEE PAGE
	2	1	**6E-3007**	1	SPRING	
	3	1	**9W-7783**	6	PLUG	
	4	1	**106-3659**	1	PISTON	
	5	1	**189-8898**	2	VALVE GP-SOLENOID (WING LIFT)	
					(EACH INCLUDES)	
		1	**164-2108**	1	WASHER (13.03X25.4X2.38-MM THK)	
		1	**185-4253**	1	VALVE AS	
		1	**218-2373**	1	NUT (1/2-28-THD)	
		1	**226-9622**	1	COIL AS	
	7	1	**242-9264**	1	PLUG-ORIFICE	
	8	1	**243-2965**	1	SPOOL	
	9	1	**243-3657**	1	BODY-VALVE	
	10	1	**244-2579**	1	PLUG	
	11	1	**245-9055**	1	STEM	
J	12	1	**246-1567**	2	VALVE GP-CHECK & RELIEF (WING LIFT)	
					(EACH INCLUDES)	
		1	**3K-0360**	1	SEAL-O-RING	
		1	**6V-5326**	1	SEAL-O-RING	
		1	**6V-6580**	1	SEAL-O-RING	
	13	1	**246-9860**	2	SPRING	
	14	1	**247-0628**	2	HOUSING	
	15	1	**247-0631**	2	RETAINER	
	16	1	**247-0632**	2	RETAINER	
M	18	1	**136-4192**	4	BOLT (M6X1X35-MM)	
	19	1	*148-8411*	1	PLUG AS	
		1	**3K-0360**	1	SEAL-O-RING	
		1	**9S-4185**	1	PLUG	
	20	1	*155-3624*	3	PLUG AS	
					(EACH INCLUDES)	
		1	**3J-7354**	1	SEAL-O-RING	
		1	**9S-4182**	1	PLUG	
	21	1	**3K-0360**	1	SEAL-O-RING	
	22	1	**3S-9233**	2	SEAL-O-RING	
	23	1	**4J-7533**	1	SEAL-O-RING	
	24	1	**5B-9318**	1	BALL	
	25	1	**9X-8256**	4	WASHER (6.6X12X2-MM THK)	
					AVAILABLE REPAIR KIT(S):	
J			**248-6887**	1	KIT-SEAL (CHECK VALVE) (WING LIFT)	
					(KIT INCLUDES SEAL-O-RINGS)	

J-KIT MARKED J SERVICES PART MARKED J
M-METRIC PART

PROOF

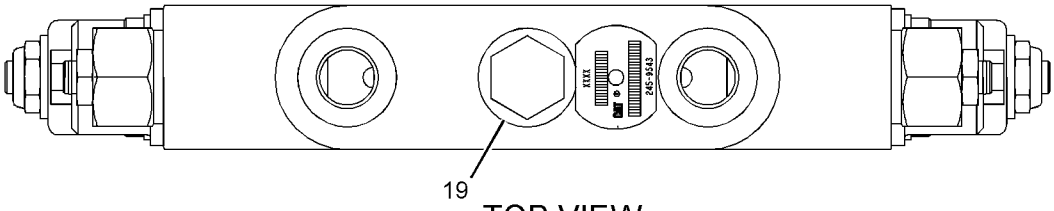

TOP VIEW

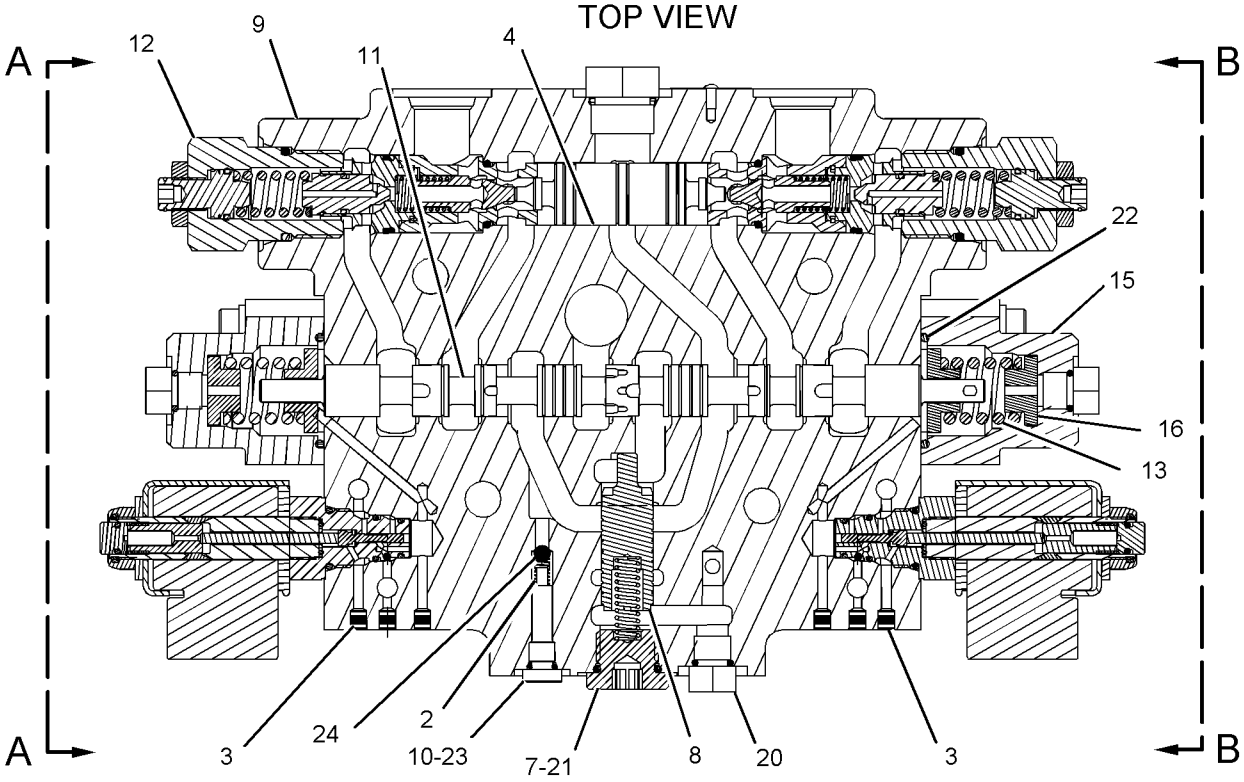

FRONT VIEW

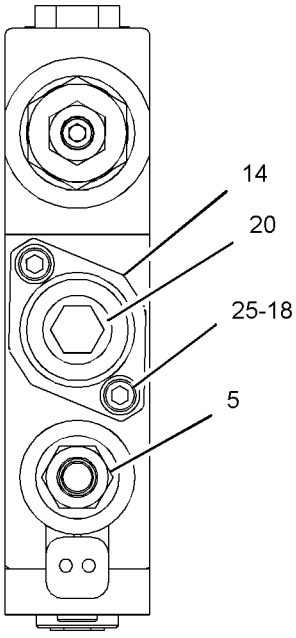

VIEW A-A

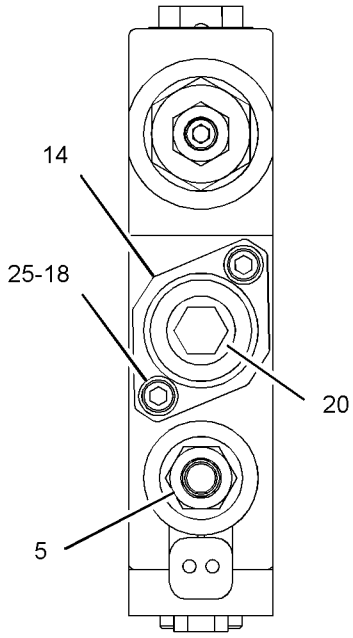

VIEW B-B

GRAPHIC #1 **<END>** g01109009

HYDRAULIC SYSTEM

245-9544 VALVE GP-CONTROL—PLOW, BULLDOZER LIFT

S/N: B9M1-UP

PART OF 249-7294 VALVE GP-BANK 6, 249-5328, 249-7296 VALVE GP-BANK 7, 249-5329, 249-7297 VALVE GP-BANK 8 AN ATTACHMENT

SMCS-5051 **i02348905**

NOTE	REF NO	GRAPHIC REF	PART NUMBER	QTY	PART NAME 1 2 3 4 5 6 (PRODUCT LEVEL)	SEE PAGE
	2	1	**6E-3007**	1	SPRING	
	3	1	**9W-7783**	6	PLUG	
	4	1	**106-3660**	2	PISTON	
	5	1	**189-8898**	2	VALVE GP-SOLENOID (PLOW, BULLDOZER LIFT)	
					(EACH INCLUDES)	
		1	**164-2108**	1	WASHER (13.03X25.4X2.38-MM THK)	
		1	**185-4253**	1	VALVE AS	
		1	**218-2373**	1	NUT (1/2-28-THD)	
		1	**226-9622**	1	COIL AS	
	7	1	**242-9264**	1	PLUG-ORIFICE	
	8	1	**243-2965**	1	SPOOL	
	9	1	**243-3657**	1	BODY-VALVE	
	10	1	**244-2579**	1	PLUG	
	11	1	**245-9054**	1	STEM	
J	12	1	**245-9923**	1	VALVE GP-CHECK (PLOW, BULLDOZER LIFT)	
		1	**3K-0360**	1	SEAL-O-RING	
		1	**6V-5326**	1	SEAL-O-RING	
		1	**6V-6580**	1	SEAL-O-RING	
J	13	1	**246-1566**	1	VALVE GP-CHECK & RELIEF (PLOW, BULLDOZER LIFT)	
		1	**3K-0360**	1	SEAL-O-RING	
		1	**6V-5326**	1	SEAL-O-RING	
		1	**6V-6580**	1	SEAL-O-RING	
	14	1	**246-9860**	1	SPRING	
	15	1	**246-9861**	1	SPRING	
	16	1	**247-0628**	1	HOUSING	
	17	1	**247-0629**	1	HOUSING	
	18	1	**247-0631**	2	RETAINER	
	19	1	**247-0632**	2	RETAINER	
M	21	1	**136-4192**	4	BOLT (M6X1X35-MM)	
	22	1	*148-8411*	1	PLUG AS	
		1	**3K-0360**	1	SEAL-O-RING	
		1	**9S-4185**	1	PLUG	
	23	1	*155-3624*	3	PLUG AS	
		1	**3J-7354**	1	SEAL-O-RING	
		1	**9S-4182**	1	PLUG	
	24	1	**3K-0360**	1	SEAL-O-RING	
	25	1	**3S-9233**	2	SEAL-O-RING	
	26	1	**4J-7533**	1	SEAL-O-RING	
	27	1	**5B-9318**	1	BALL	
	28	1	**9X-8256**	4	WASHER (6.6X12X2-MM THK)	
					AVAILABLE REPAIR KIT(S):	
J			**248-6887**	1	KIT-SEAL (CHECK VALVE) (PLOW, BULLDOZER LIFT)	
					(KIT INCLUDES SEAL-O-RINGS)	

J-KIT MARKED J AVAILABLE FOR PARTS MARKED J
M-METRIC PART

PROOF

245-9544 **VALVE GP-CONTROL** *(contd.)* **i02348905**

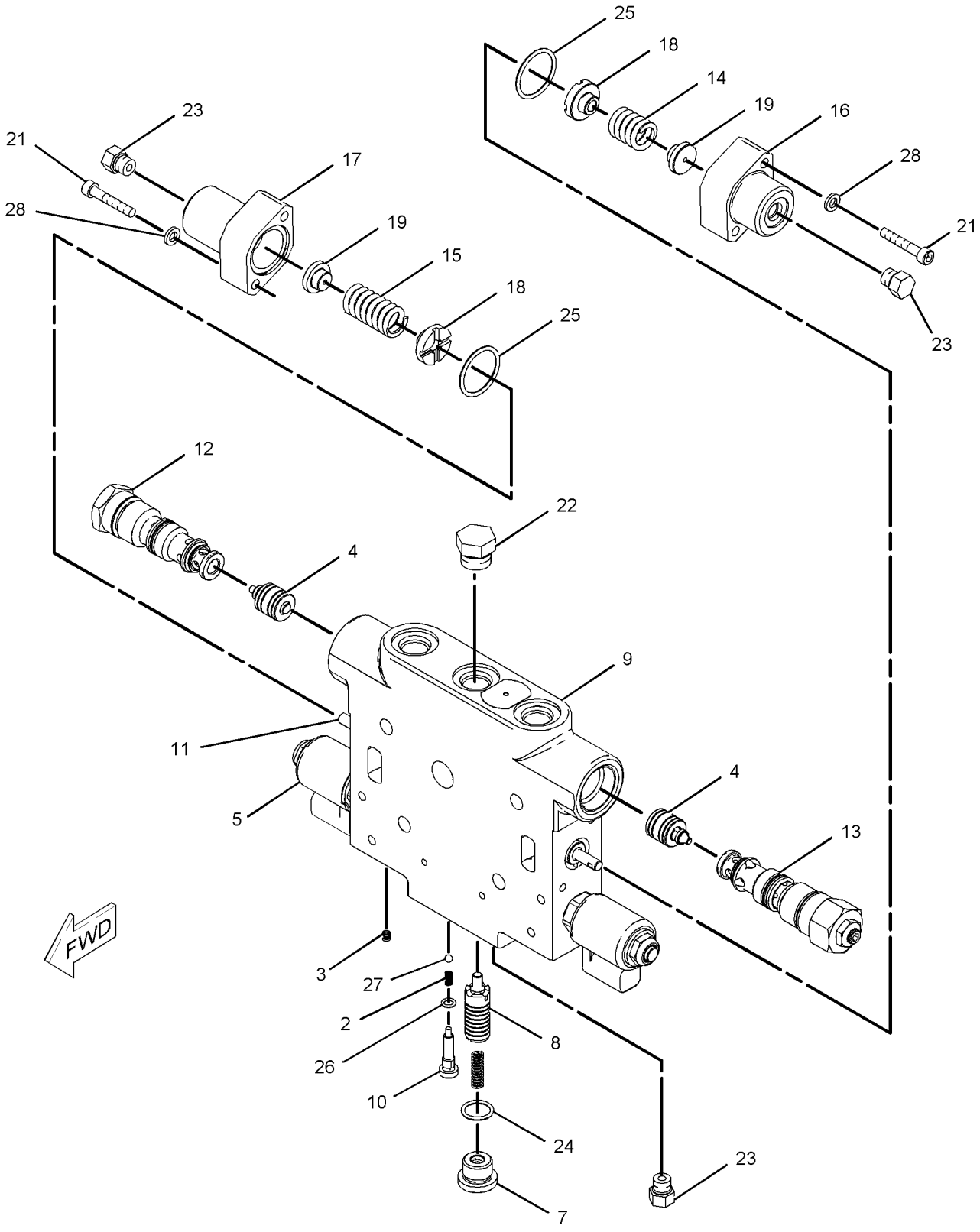

GRAPHIC #1 **<END>** g01108958

HYDRAULIC SYSTEM

245-9545 VALVE GP-CONTROL—PLOW ANGLE

S/N: B9M1-UP

PART OF 249-5328 VALVE GP-BANK 7, 249-5329, 249-7297 VALVE GP-BANK 8 AN ATTACHMENT

SMCS-5051 **i02348910**

NOTE	REF NO	GRAPHIC REF	PART NUMBER	QTY	PART NAME 1 2 3 4 5 6 (PRODUCT LEVEL)	SEE PAGE
	2	1	**6E-3007**	1	SPRING	
	3	1	**9W-7783**	6	PLUG	
	4	1	**106-3659**	1	PISTON	
	5	1	**189-8898**	2	VALVE GP-SOLENOID (PLOW ANGLE)	
					(EACH INCLUDES)	
		1	**164-2108**	1	WASHER (13.03X25.4X2.38-MM THK)	
		1	**185-4253**	1	VALVE AS	
		1	**218-2373**	1	NUT (1/2-28-THD)	
		1	**226-9622**	1	COIL AS	
	7	1	**242-9264**	1	PLUG-ORIFICE	
	8	1	**243-2965**	1	SPOOL	
	9	1	**243-3657**	1	BODY-VALVE	
	10	1	**244-2579**	1	PLUG	
	11	1	**245-9055**	1	STEM	
J	12	1	**245-9923**	1	VALVE GP-CHECK	
		1	**3K-0360**	1	SEAL-O-RING	
		1	**6V-5326**	1	SEAL-O-RING	
		1	**6V-6580**	1	SEAL-O-RING	
J	13	1	**246-1567**	1	VALVE GP-CHECK & RELIEF (PLOW ANGLE)	
		1	**3K-0360**	1	SEAL-O-RING	
		1	**6V-5326**	1	SEAL-O-RING	
		1	**6V-6580**	1	SEAL-O-RING	
	14	1	**246-9860**	2	SPRING	
	15	1	**247-0628**	2	HOUSING	
	16	1	**247-0631**	2	RETAINER	
	17	1	**247-0632**	2	RETAINER	
M	19	1	**136-4192**	4	BOLT (M6X1X35-MM)	
	20	1	*148-8411*	1	PLUG AS	
		1	**3K-0360**	1	SEAL-O-RING	
		1	**9S-4185**	1	PLUG	
	21	1	*155-3624*	3	PLUG AS	
					(EACH INCLUDES)	
		1	**3J-7354**	1	SEAL-O-RING	
		1	**9S-4182**	1	PLUG	
	22	1	**3K-0360**	1	SEAL-O-RING	
	23	1	**3S-9233**	2	SEAL-O-RING	
	24	1	**4J-7533**	1	SEAL-O-RING	
	25	1	**5B-9318**	1	BALL	
	26	1	**9X-8256**	4	WASHER (6.6X12X2-MM THK)	
					AVAILABLE REPAIR KIT(S):	
J			**248-6887**	1	KIT-SEAL (CHECK VALVE) (PLOW ANGLE)	
					(KIT INCLUDES SEAL-O-RINGS & BACKUP RING)	

J-KIT MARKED J SERVICES PARTS MARKED J
M-METRIC PART

DEERE

245-9545 **VALVE GP-CONTROL** *(contd.)* **i02348910**

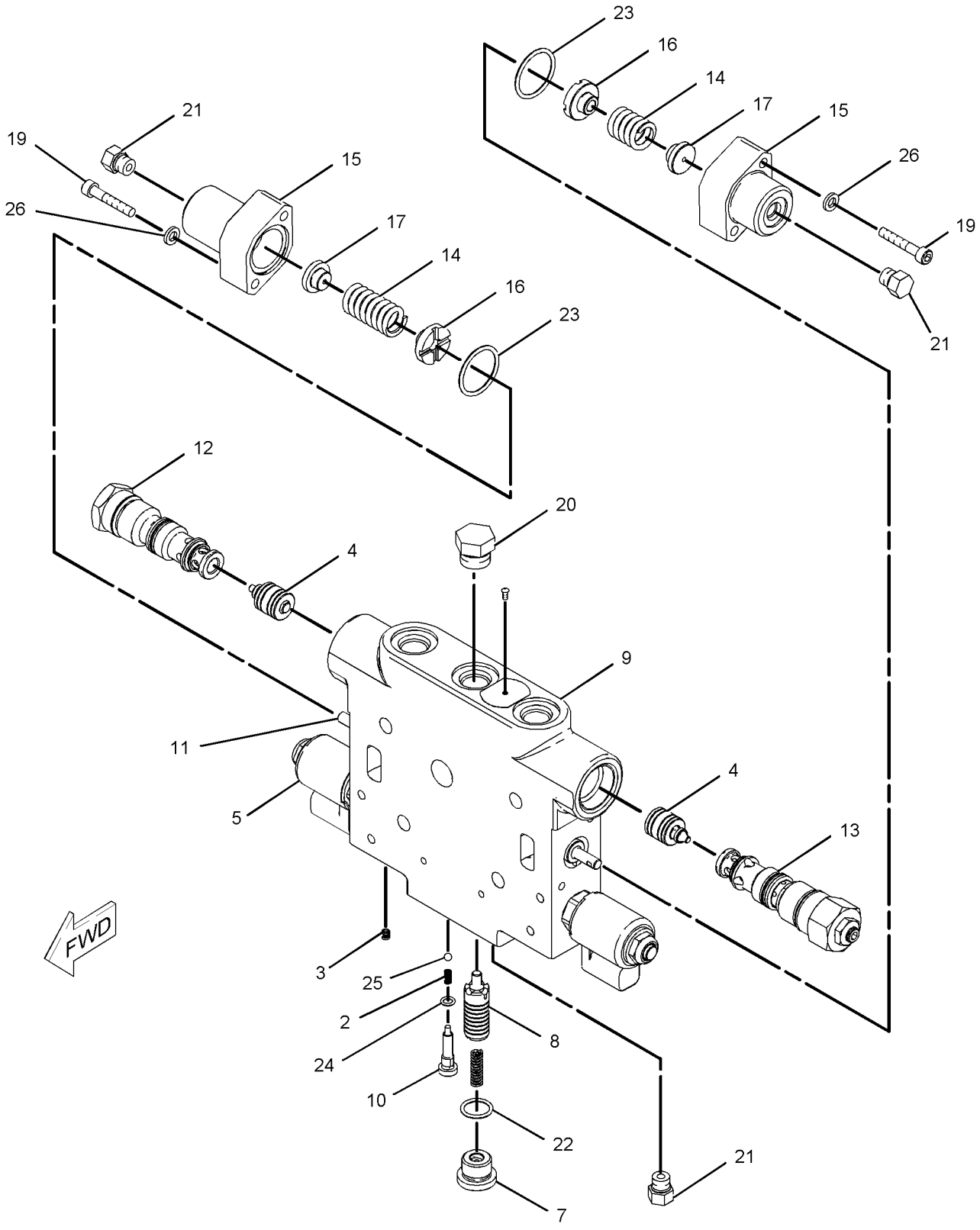

GRAPHIC #1 **<END>** g01109071

HYDRAULIC SYSTEM

249-7307 VALVE GP-CONTROL—SCARIFIER

S/N: B9M1-UP

PART OF 249-7295 VALVE GP-BANK 6, 249-7296 VALVE GP-BANK 7, 249-7297 VALVE GP-BANK 8

AN ATTACHMENT

SMCS-5051 **i02348912**

NOTE	REF NO	GRAPHIC REF	PART NUMBER	QTY	PART NAME 1 2 3 4 5 6 (PRODUCT LEVEL)	SEE PAGE
	2	1	**6E-3007**	1	SPRING	
	3	1	**9W-7783**	6	PLUG	
	4	1	**106-3659**	1	PISTON	
	5	1	**212-4961**	1	SPRING	
	6	1	**242-9264**	1	PLUG-ORIFICE	
	7	1	**243-2965**	1	SPOOL	
	8	1	**244-2579**	1	PLUG	
	9	1	**245-9041**	1	STEM	
J	10	1	**245-9923**	1	VALVE GP-CHECK	
		1	**3K-0360**	1	SEAL-O-RING	
		1	**6V-5326**	1	SEAL-O-RING	
		1	**6V-6580**	1	SEAL-O-RING	
	11	1	**247-0631**	2	RETAINER	
	12	1	**247-0632**	2	RETAINER	
J	14	1	**249-7309**	1	VALVE GP-CHECK & RELIEF (SCARIFIER)	
		1	**3K-0360**	1	SEAL-O-RING	
		1	**6V-5326**	1	SEAL-O-RING	
		1	**6V-6580**	1	SEAL-O-RING	
	15	1	**250-2140**	2	VALVE GP-SOLENOID (SCARIFIER)	
					(EACH INCLUDES)	
		1	**4K-2039**	1	SEAL-O-RING	
		1	**5L-4758**	1	SEAL-O-RING	
		1	**6F-4855**	1	SEAL-O-RING	
	16	1	**251-1668**	2	COVER-SPRING	
	17	1	**256-9773**	2	SPRING	
	18	1	**258-7943**	1	BODY-VALVE	
M	19	1	**136-4192**	4	BOLT (M6X1X35-MM)	
	20	1	*148-8395*	1	PLUG AS	
		1	**3K-0360**	1	SEAL-O-RING	
		1	**9S-8005**	1	PLUG	
	21	1	*183-7263*	3	PLUG AS	
					(EACH INCLUDES)	
		1	**3J-7354**	1	SEAL-O-RING	
		1	**9S-8002**	1	PLUG	
	22	1	**3K-0360**	1	SEAL-O-RING	
	23	1	**3S-9233**	2	SEAL-O-RING	
	24	1	**4J-7533**	1	SEAL-O-RING	
	25	1	**5B-9318**	1	BALL	
M	26	1	**8T-0267**	2	BOLT-SOCKET HEAD (M6X1X12-MM)	
	27	1	**9X-8256**	4	WASHER (6.6X12X2-MM THK)	
					AVAILABLE REPAIR KIT(S):	
J			**248-6887**	2	KIT-SEAL (CHECK VALVE) (SCARIFIER)	
					(INCLUDES SEAL-O-RINGS)	

J-KIT MARKED J SERVICES PARTS MARKED J
M-METRIC PART

PROOF

249-7307 **VALVE GP-CONTROL** *(contd.)* **i02348912**

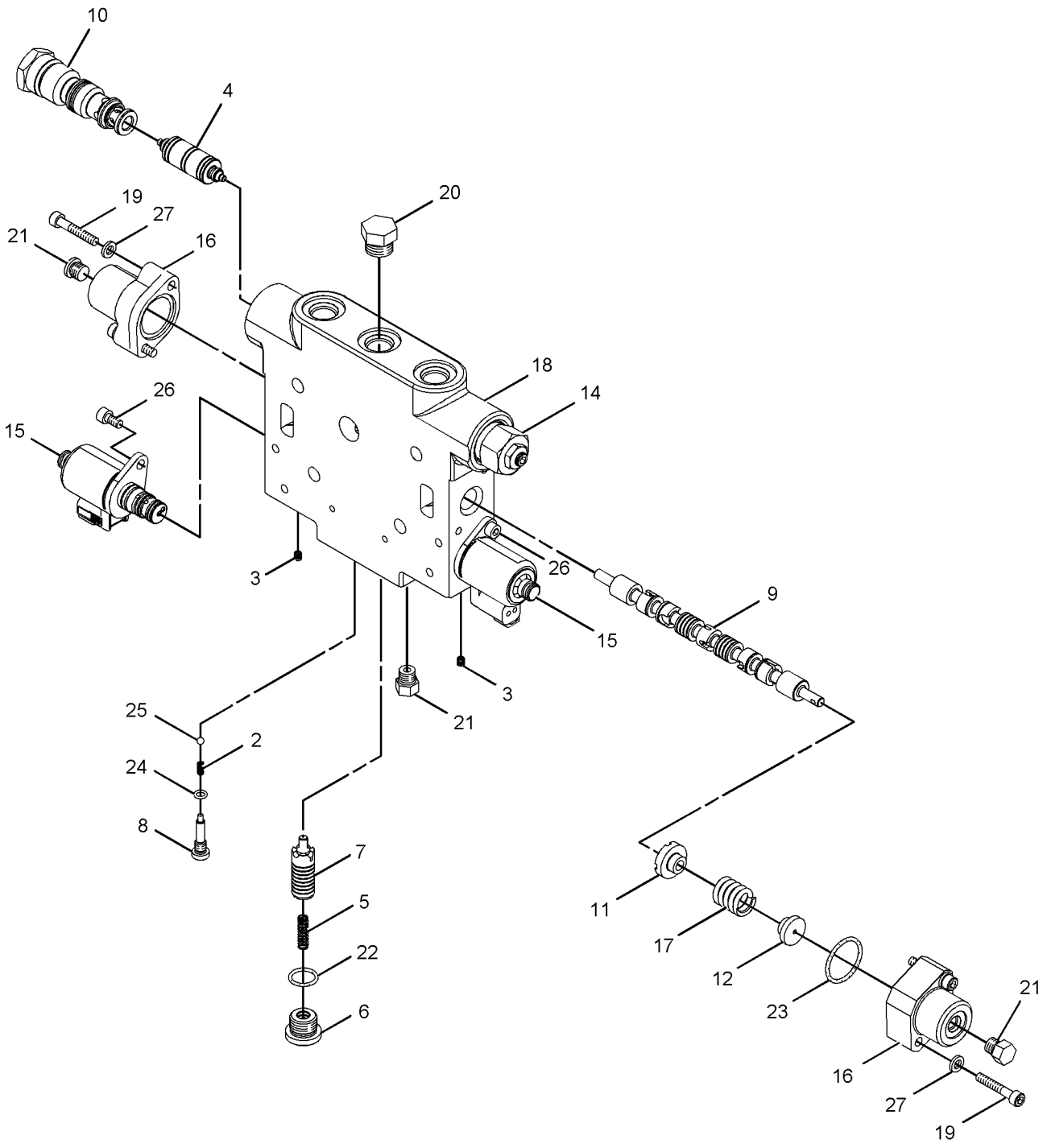

GRAPHIC #1 **<END>** g01138247

HYDRAULIC SYSTEM

252-9256 VALVE GP-DIVERTER

S/N: B9M1-UP
PART OF 251-8256 MANIFOLD GP-CONTROL
AN ATTACHMENT

SMCS-5066 **i02179203**

NOTE	REF NO	GRAPHIC REF	PART NUMBER	QTY	PART NAME 1 2 3 4 5 6 (PRODUCT LEVEL)	SEE PAGE
J	1	1	**2M-9780**	1	SEAL-O-RING	
J	2	1	**6V-5142**	1	SEAL-O-RING	
J	3	1	**169-1617**	2	RING-BACKUP	
J	4	1	**095-1751**	1	SEAL-O-RING	
J	5	1	**169-1616**	2	RING-BACKUP	
					AVAILABLE REPAIR KIT(S):	
J			**200-6282**	1	KIT-SEAL (DIVERTER VALVE) (HYDRAULIC FAN FLUID FLOW)	
					(INCLUDES SEALS & RINGS)	

J-KIT MARKED J SERVICES PARTS MARKED J

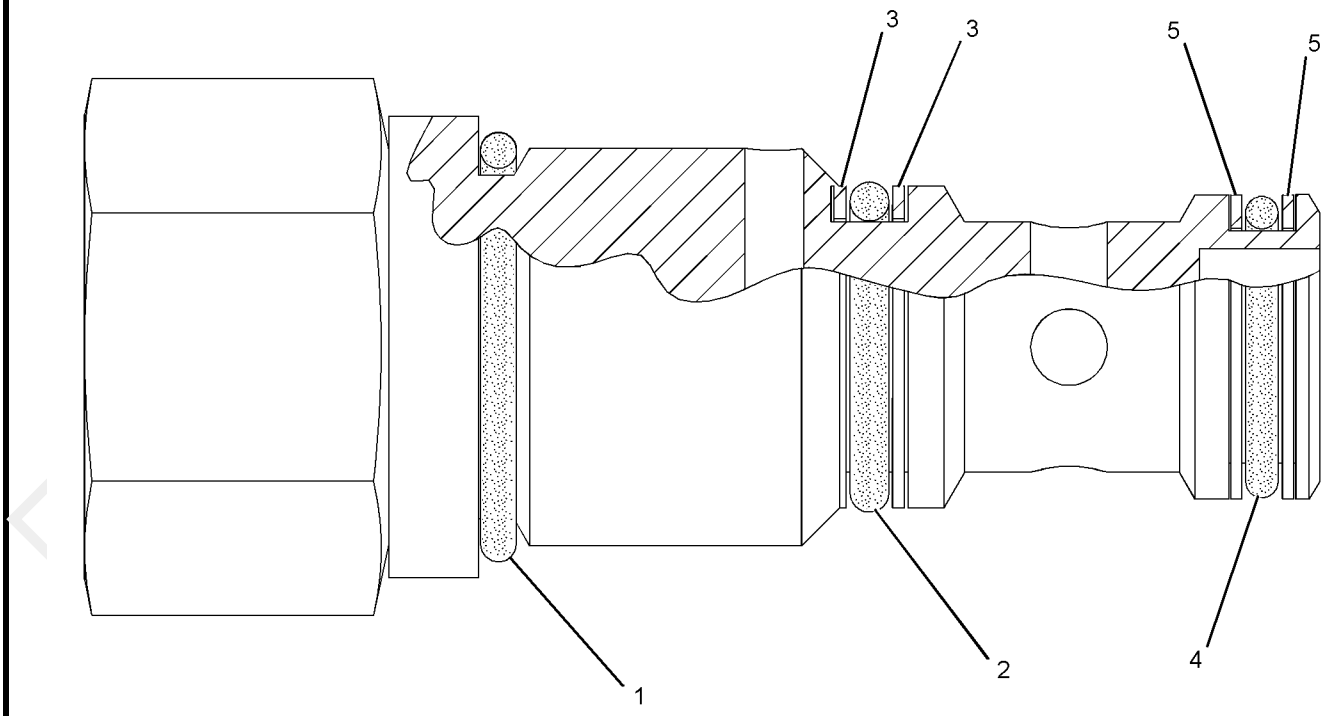

GRAPHIC #1 **<END>** g01109584

251-8330 VALVE GP-RELIEF–BRAKE ACCUMULATOR

S/N: B9M1-UP

PART OF 251-8256 MANIFOLD GP-CONTROL

AN ATTACHMENT

SMCS-4322, 5069, 5072, 5117 **i02202961**

NOTE	REF NO	GRAPHIC REF	PART NUMBER	QTY	PART NAME 1 2 3 4 5 6 (PRODUCT LEVEL)	SEE PAGE
J	1	1	**2M-9780**	1	SEAL-O-RING	
J	2	1	**161-6149**	1	SEAL-O-RING	
J	3	1	**161-6161**	2	RING-BACKUP	
					AVAILABLE REPAIR KIT(S):	
			133-5545	1	KIT-SEAL (RELIEF VALVE)	
					KIT INCLUDES SEAL-O-RINGS & BACKUP RINGS	
J-(KIT MARKED J SERVICES PARTS MARKED J)						

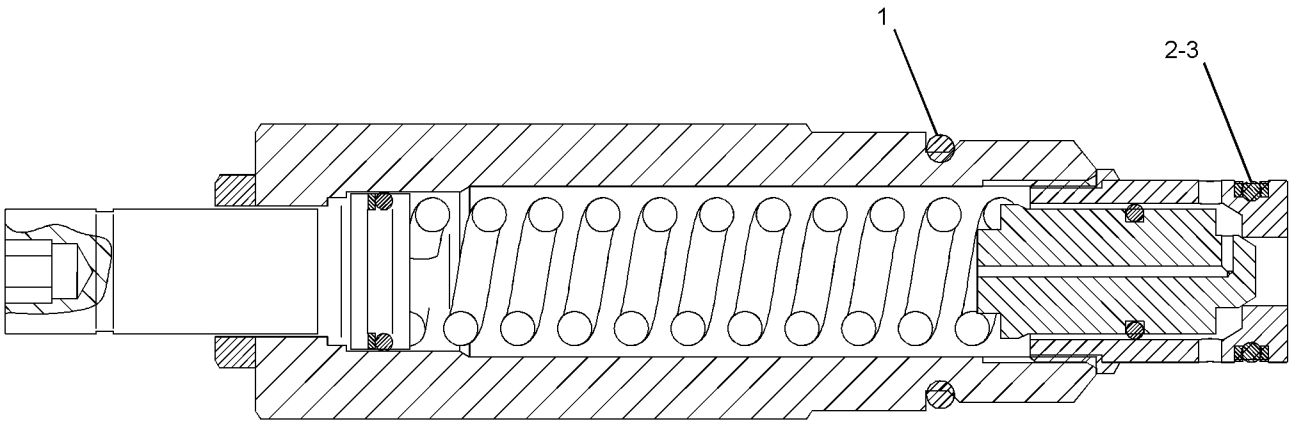

GRAPHIC #1 **<END>** g01113664

HYDRAULIC SYSTEM

249-5227 VALVE GP-SHUTTLE–BRAKE ACCUMULATOR

S/N: B9M1-UP
PART OF 251-8256 MANIFOLD GP-CONTROL
AN ATTACHMENT

SMCS-5079 **i02085102**

NOTE	REF NO	GRAPHIC REF	PART NUMBER	QTY	PART NAME 1 2 3 4 5 6 (PRODUCT LEVEL)	SEE PAGE
	1	1	**3K-0360**	1	SEAL-O-RING	
	2	1	**161-6149**	1	SEAL-O-RING	
	3	1	**095-1750**	1	SEAL-O-RING	
	4	1	**161-6161**	1	RING-BACKUP	
	5	1	**187-0541**	1	RING-BACKUP	

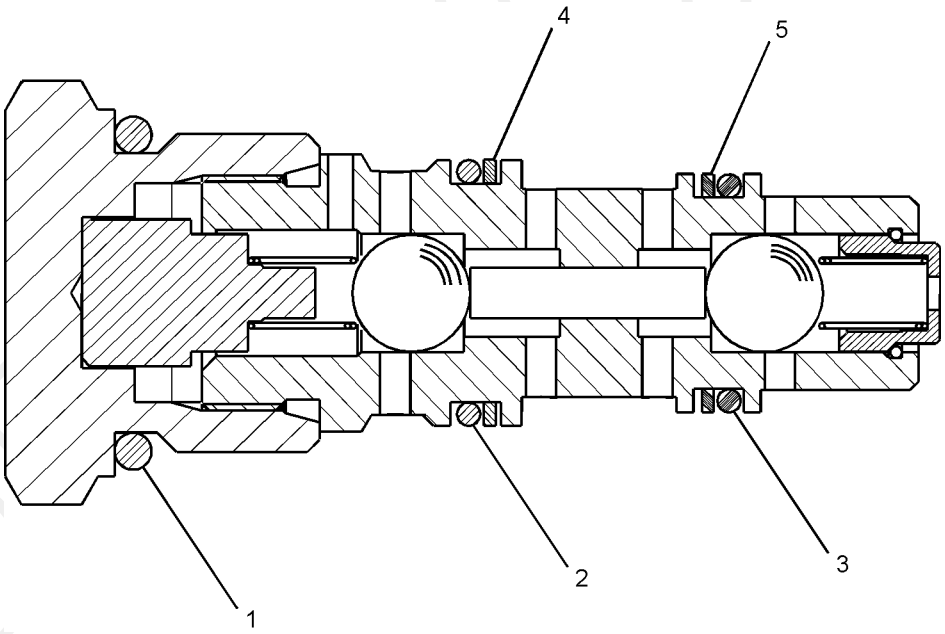

GRAPHIC #1 **<END>** g01064226

PROOF

152-8346 VALVE GP-SOLENOID–CENTERSHIFT

S/N: B9M1-UP
24-VOLT
PART OF 246-4477 LOCK GP-CENTERSHIFT

SMCS-5479 **i02257148**

NOTE	REF NO	GRAPHIC REF	PART NUMBER	QTY	PART NAME 1 2 3 4 5 6 (PRODUCT LEVEL)	SEE PAGE
	1	1	**111-0343**	1	LOCKNUT (5/16-18-THD)	
	2	1	**8C-9987**	1	WASHER (8.3X28X2.5-MM THK)	
	3	1	**170-7485**	1	VALVE AS	
		1	**8C-9987**	1	WASHER (8.3X28X2.5-MM THK)	
		1	**111-0343**	1	LOCKNUT (5/16-18-THD)	
	4	1	**141-6787**	1	COIL AS	
		1	**102-8802**	1	KIT-RECEPTACLE (2-PIN)	
					(INCLUDES RECEPTACLE AS AND WEDGE)	
		1	**3E-3365**	1	WEDGE-RECEPTACLE LOCK (2-PIN)	
		1	**8T-8729**	2	PIN-CONNECTOR	
		1	**1S-9593**	2	STRAP-CABLE	
					AVAILABLE REPAIR KIT(S):	
			109-3036	1	KIT-SEAL (SOLENOID VALVE)	
					(INCLUDES SEALS & RINGS)	

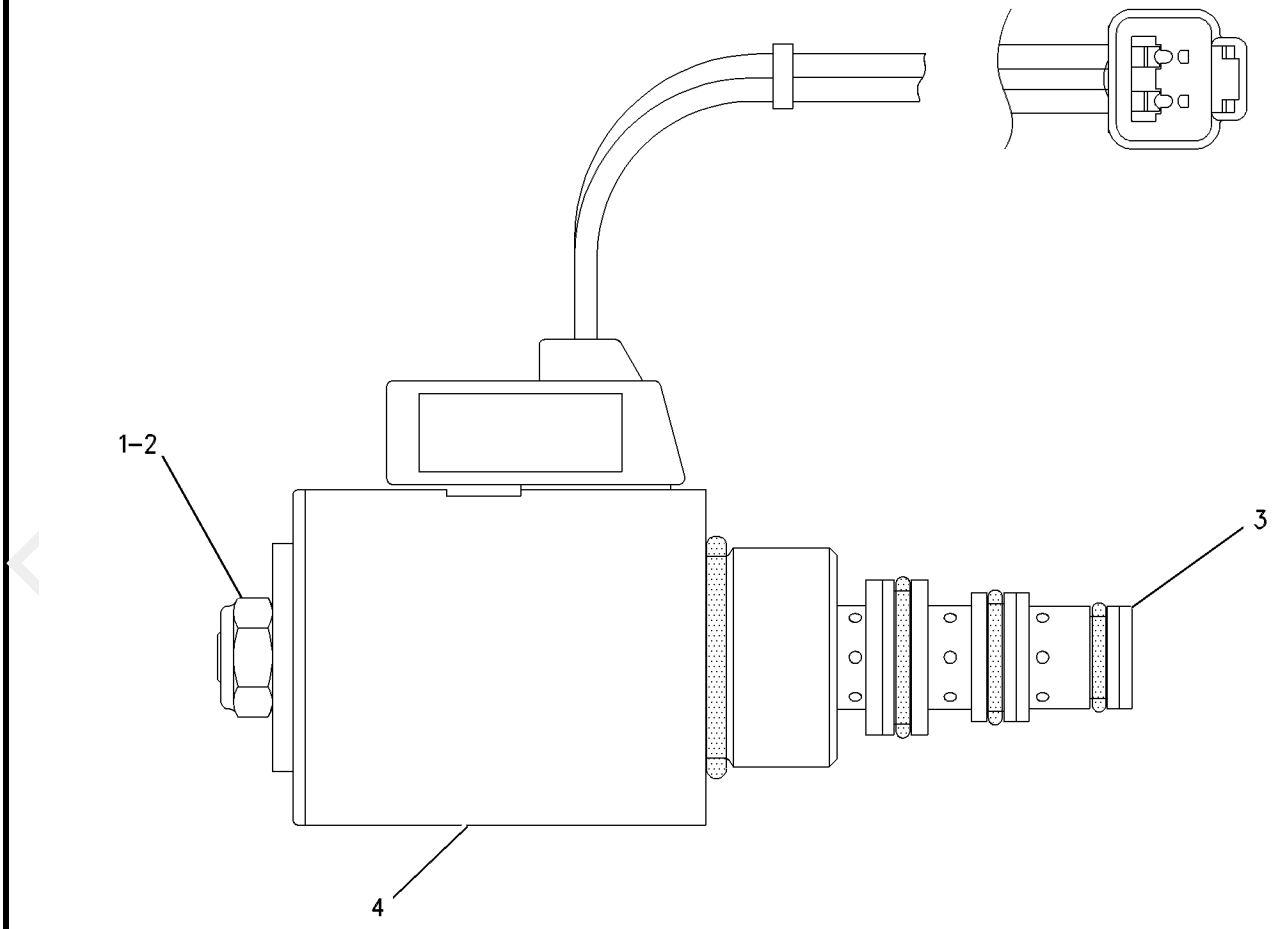

GRAPHIC #1 **<END>** g00612050

189-8627 VALVE GP-SOLENOID–HYDRAULIC FAN

S/N: B9M1-UP
24-VOLT
PART OF 251-8256 MANIFOLD GP-CONTROL
AN ATTACHMENT

SMCS-5479 **i02212885**

NOTE	REF NO	GRAPHIC REF	PART NUMBER	QTY	PART NAME 1 2 3 4 5 6 (PRODUCT LEVEL)	SEE PAGE
	1	1	**146-3728**	1	WASHER-SPRING	
	2	1	**187-8191**	1	COIL AS	
Z	3	1		1	CARTRIDGE AS	
Z	4	1		1	ADAPTER AS	

Z-NOT SERVICED SEPARATELY

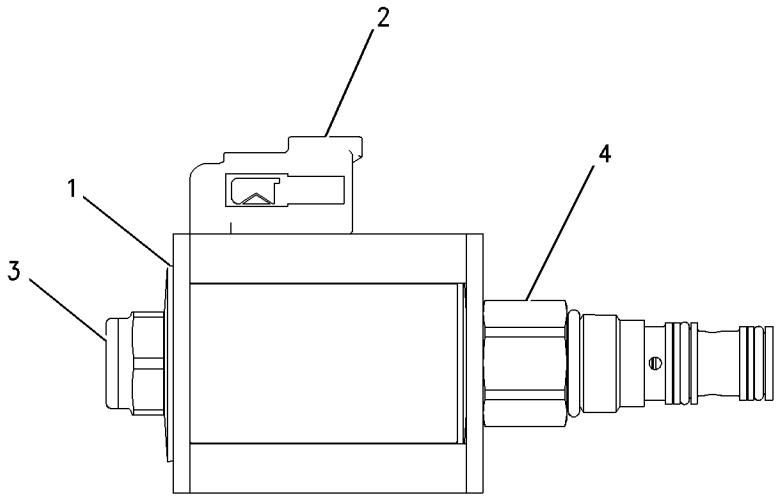

GRAPHIC #1 **<END>** g00849217

254-3414 VALVE GP-SOLENOID—SECONDARY STEERING

S/N: B9M1-UP
12-VOLT
PART OF 254-3415 MANIFOLD GP-CONTROL
AN ATTACHMENT

SMCS-5479 **i02183580**

NOTE	REF NO	GRAPHIC REF	PART NUMBER	QTY	PART NAME 1 2 3 4 5 6 (PRODUCT LEVEL)	SEE PAGE
	1	1	**164-2108**	1	WASHER (13.03X25.4X2.38-MM THK)	
	3	1	**218-2373**	1	NUT (1/2-28-THD)	
	4	1	**226-9629**	1	COIL AS-SOLENOID	
					AVAILABLE REPAIR KIT(S):	
			108-2148	1	KIT-SEAL (STEERING)	
					(INCLUDES SEALS)	

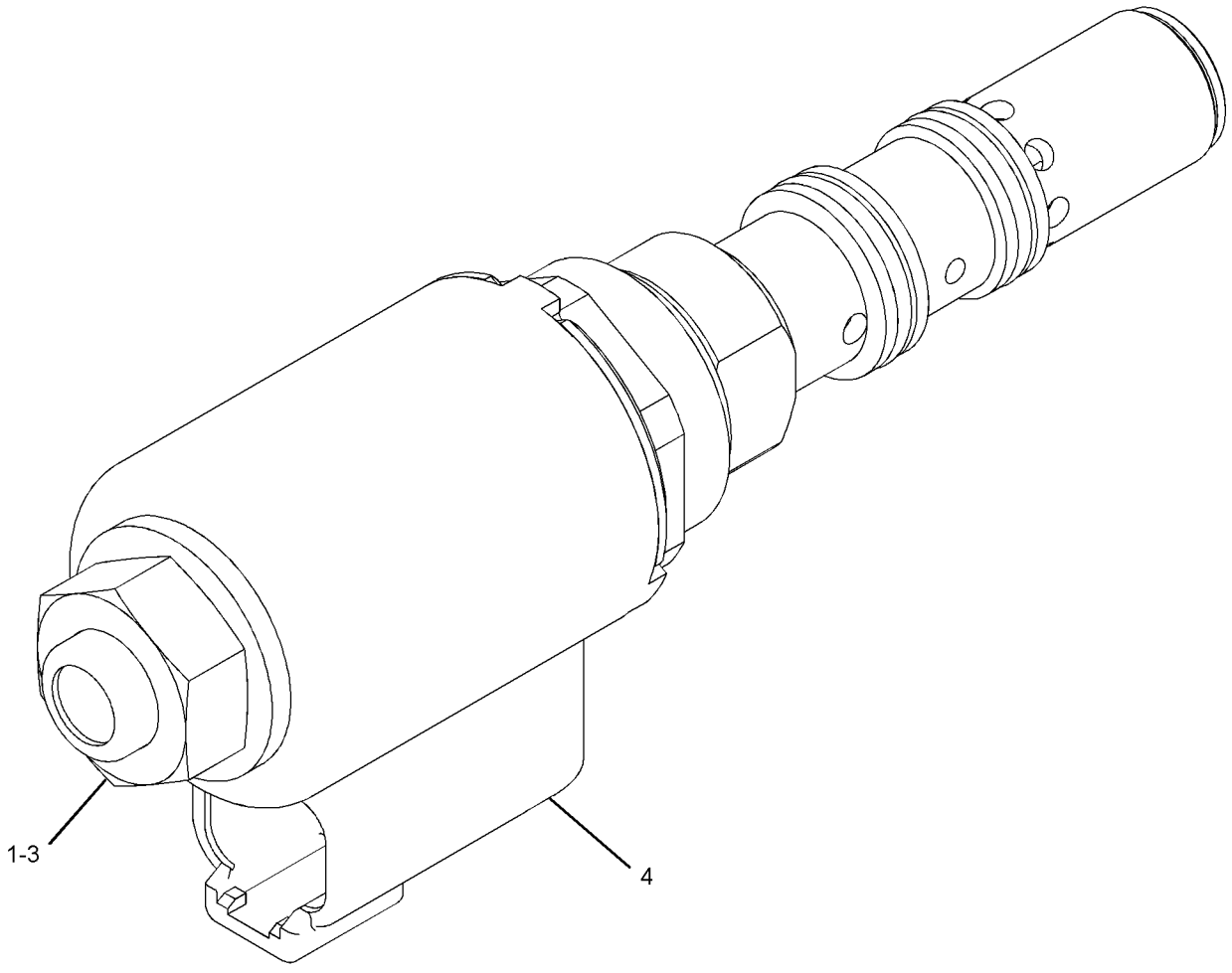

GRAPHIC #1 **<END>** g01108813

243-6660 CIRCLE GP

S/N: B9M1-UP

PART OF 234-7721 COMMON AR-MOTOR GRADER

SMCS-6152, 6154, 6155 **i02286789**

NOTE	REF NO	GRAPHIC REF	PART NUMBER	QTY	PART NAME 1 2 3 4 5 6 (PRODUCT LEVEL)	SEE PAGE
B	1	1	**190-0627**	6	SHIM (2-MM THK)	
	2	1	**243-6650**	1	CIRCLE AS	
		1	**194-4175**	4	BEARING-SLEEVE	
		1	**8D-9882**	2	BLOCK-FILLER	
		1	**8D-9886**	1	BRACE	
		1	**8D-9887**	1	BRACE	
		1	**147-6143**	1	PLATE-LH	
		1	**147-6144**	1	PLATE-RH	
		1	**2G-3971**	1	BRACKET AS	
	3	1	**243-6652**	4	COVER	
	4	1	**243-6662**	2	STRIP-WEAR	
	5	1	**243-6663**	2	STRIP-WEAR	
	6	1	**243-6664**	2	STRIP-WEAR	
Y	7	1	**252-7086**	1	MOUNTING GP-BLADE	682
	8	1	**253-4645**	2	SHAFT	
	9	1	**253-4646**	2	PLATE AS	
	10	1	**265-6722**	4	COVER	
M	11	1	**095-1235**	4	NUT-CASTLE	
	12	1	**3B-4643**	4	PIN-COTTER	
	13	1	**5P-8245**	16	WASHER-HARD (13.5X25.5X3-MM THK)	
M	14	1	**6V-3668**	16	BOLT (M12X1.75X30-MM)	
M	15	1	**6V-7688**	6	LOCKNUT (M20X2.5-THD)	
	16	1	**7X-7740**	4	WASHER (45X78X8-MM THK)	
M	17	1	**8T-5064**	6	SETSCREW-SOCKET (M20X2.5X60-MM)	

B-USE AS REQUIRED
M-METRIC PART
Y-SEPARATE ILLUSTRATION

PROOF

243-6660 **CIRCLE GP** *(contd.)* **i02286789**

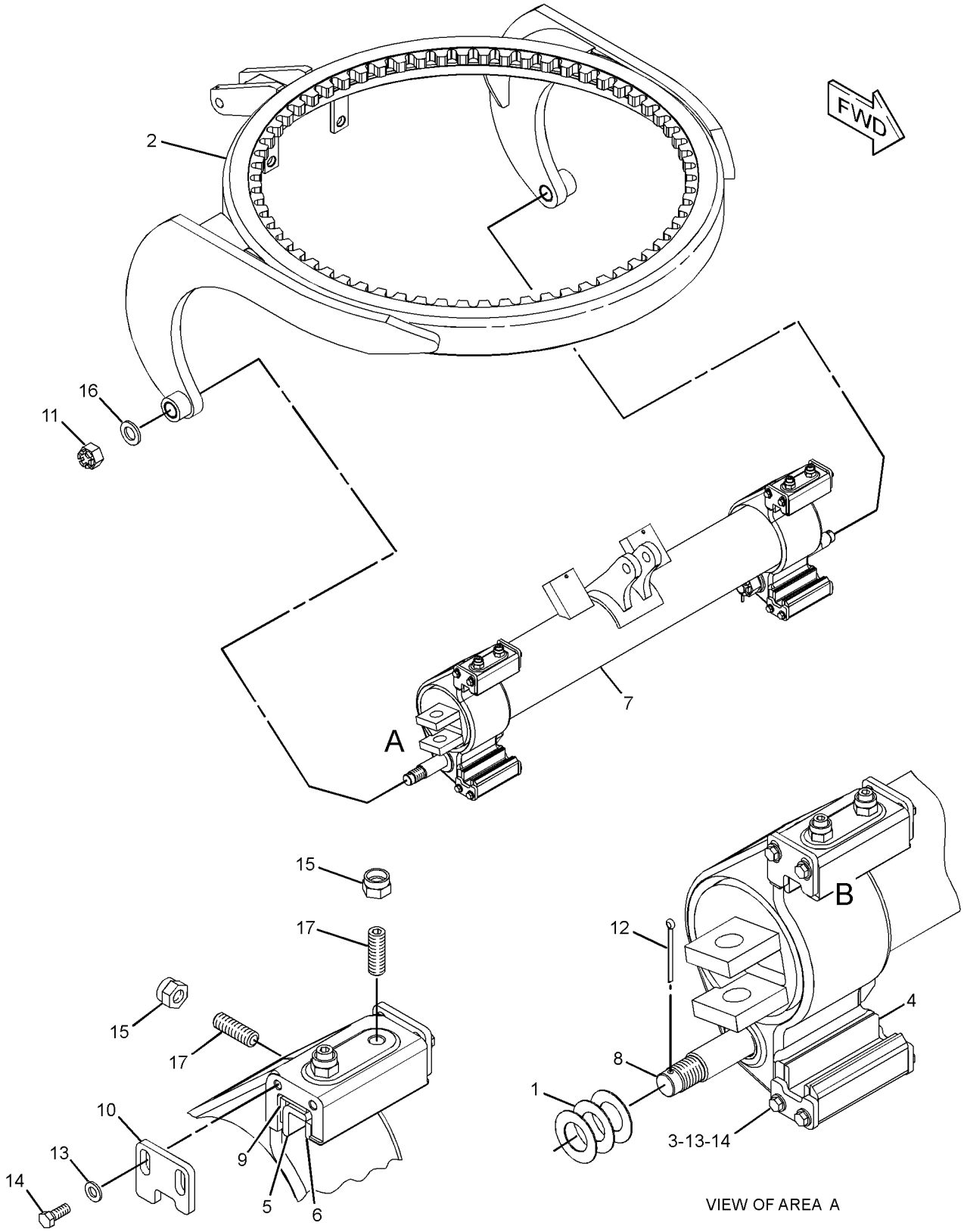

GRAPHIC #1 **<END>** g01159040

IMPLEMENTS

253-4630 DRAWBAR GP

S/N: B9M1-UP

PART OF 234-7721 COMMON AR-MOTOR GRADER

SMCS-6153 **i02297125**

NOTE	REF NO	GRAPHIC REF	PART NUMBER	QTY	PART NAME 1 2 3 4 5 6 (PRODUCT LEVEL)	SEE PAGE
	1	2	**1D-5119**	12	NUT (3/4-10-THD)	
	2	1	**3B-8489**	1	FITTING-GREASE	
	3	1	**6G-5442**	1	BALL	
	4	1	**7J-8782**	3	PLUG	
	5	2	**128-9656**	6	STRIP-WEAR	
	6	2	**213-8179**	6	SHOE-CIRCLE GUIDE	
	7	1	**253-4651**	1	DRAWBAR & YOKE AS	
	8	1	**253-4652**	6	STRIP-WEAR	
B	9	1	**253-4653**	6	SHIM (10-MM THK)	
B	10	1	**253-4654**	12	SHIM (0.25-MM THK)	
B	11	1	**253-4655**	42	SHIM (0.5-MM THK)	
	12	1	**253-4656**	2	PLATE	
	13	1	**261-4672**	1	CAP (DRAWBAR)	
	14	1	**261-4673**	1	ADAPTER	
B	15	1	**261-4674**	4	SHIM (0.8-MM THK)	
B	16	1	**261-4675**	6	SHIM (0.25-MM THK)	
B	17	1	**261-4676**	1	SHIM (0.12-MM THK)	
	18	1	**265-6721**	2	COVER	
	19	1	**110-2456**	2	PIN-SPRING	
	20	2	**4B-3604**	12	SETSCREW-SQUARE HEAD (3/4-10X2.5-IN)	
	21	1	**5P-8291**	5	BOLT (3/4-16X2-IN)	
	22	1	**6V-8237**	4	WASHER (26X44X4-MM THK)	
M	23	1	**6V-8653**	2	BOLT-SOCKET HEAD (M6X1X40-MM)	
M	24	2	**8T-0070**	18	BOLT (M20X2.5X120-MM)	
M	25	1	**8T-0652**	12	BOLT (M20X2.5X45-MM)	
	26	1	**238-7545**	4	BOLT (M22X2.5X150-MM)	
	27	1	**8T-3282**	10	WASHER-HARD (22X35X3.5-MM THK)	
	28	2	**8T-5439**	18	WASHER (21.5X45X6-MM THK)	
	29	1	**9R-2205**	2	BOSS	
BF			**253-4654**	24	SHIM (0.25-MM THK)	
BF			**253-4655**	60	SHIM (0.5-MM THK)	

B-USE AS REQUIRED
F-NOT SHOWN
M-METRIC PART

PROOF

253-4630 **DRAWBAR GP** *(contd.)* **i02297125**

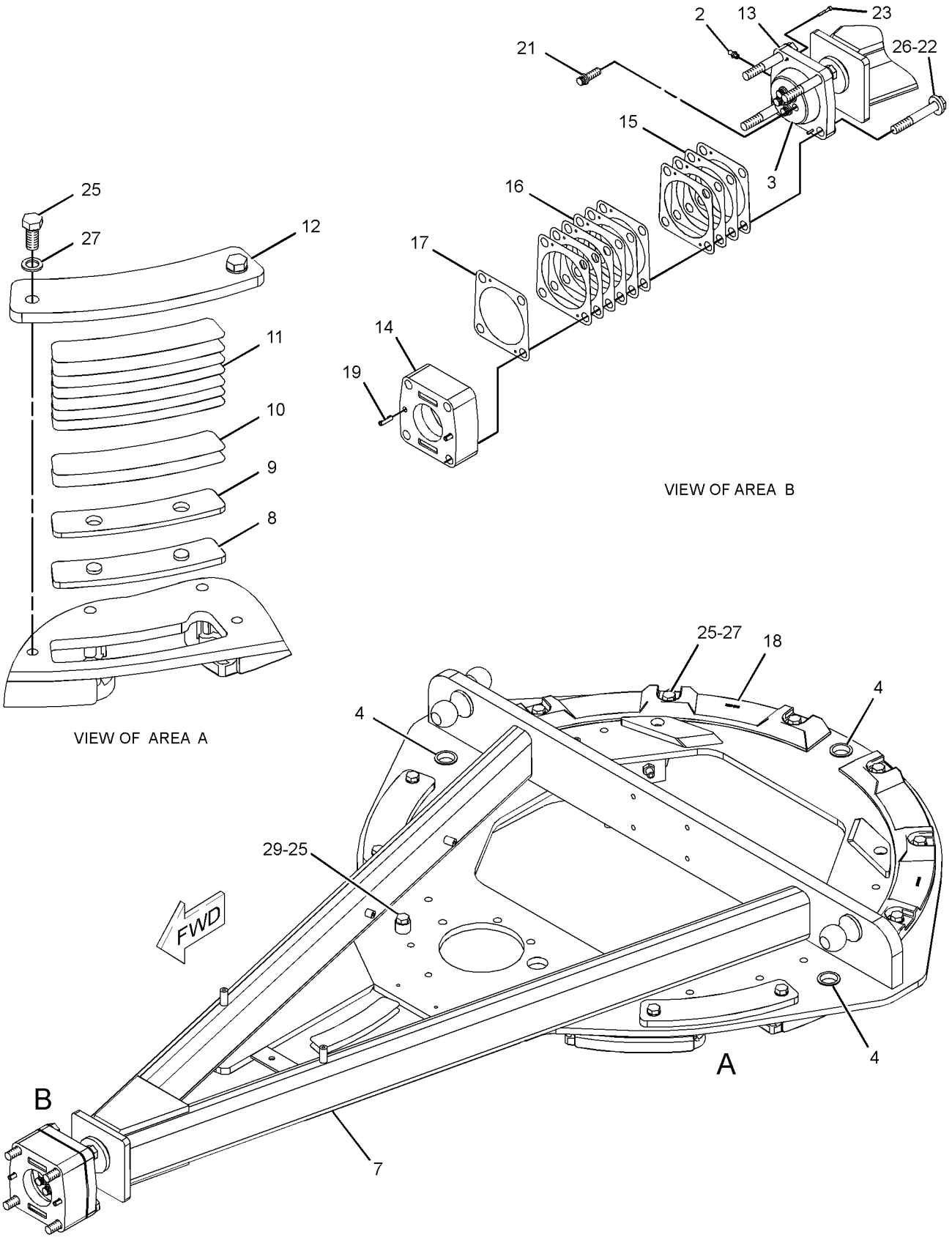

GRAPHIC #1 g01159165

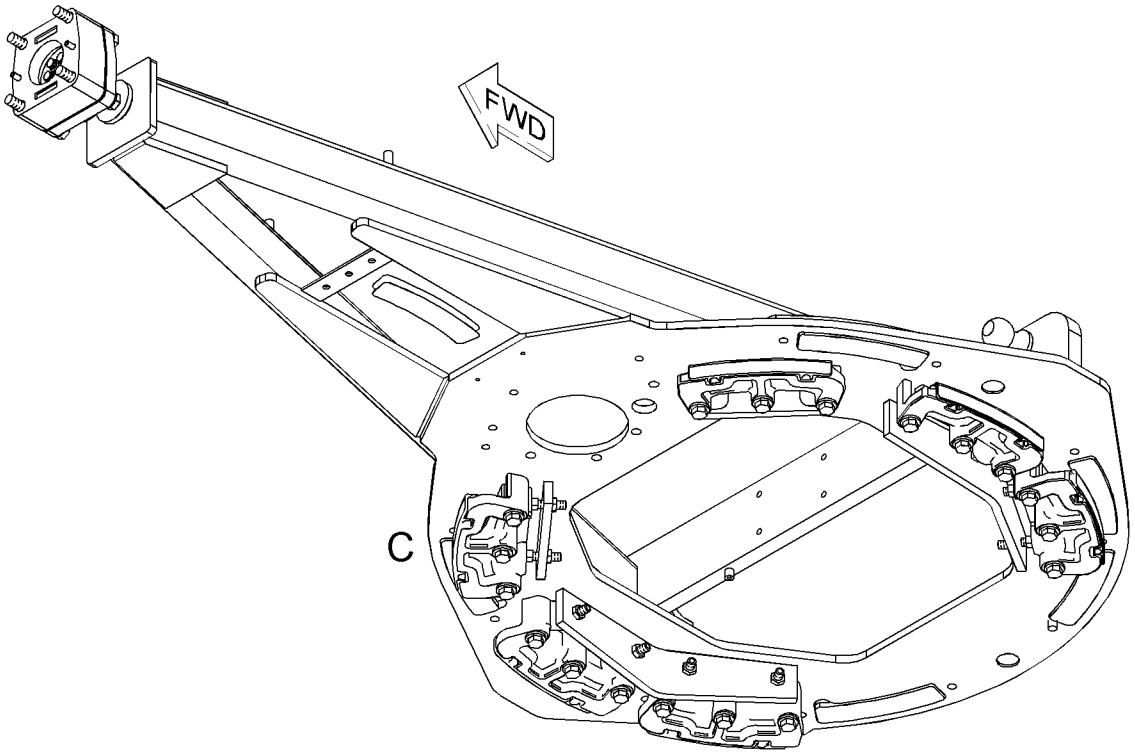

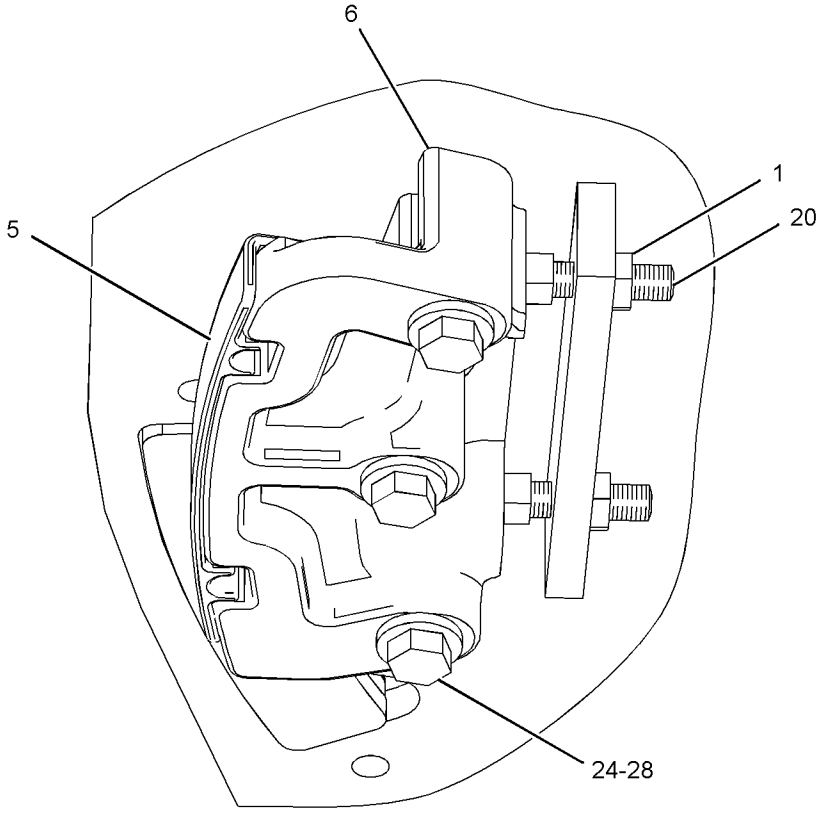

VIEW OF AREA C

GRAPHIC #2

<END>

g01159166

251-4342 MOUNTING GP-GRADE CONTROL–DRAWBAR

S/N: B9M1-UP
PART OF 251-3230 INSTALLATION AR-GRADE CONTROL
AN ATTACHMENT

SMCS-6154, 7220 **i02254224**

NOTE	REF NO	GRAPHIC REF	PART NUMBER	QTY	PART NAME 1 2 3 4 5 6 (PRODUCT LEVEL)	SEE PAGE
	1	1	**255-3431**	1	BRACKET	
	2	1	**187-7738**	2	WASHER-HARD (21X36.5X3.5-MM THK)	
M	3	1	**9R-2672**	2	BOSS-THREADED	

M-METRIC PART

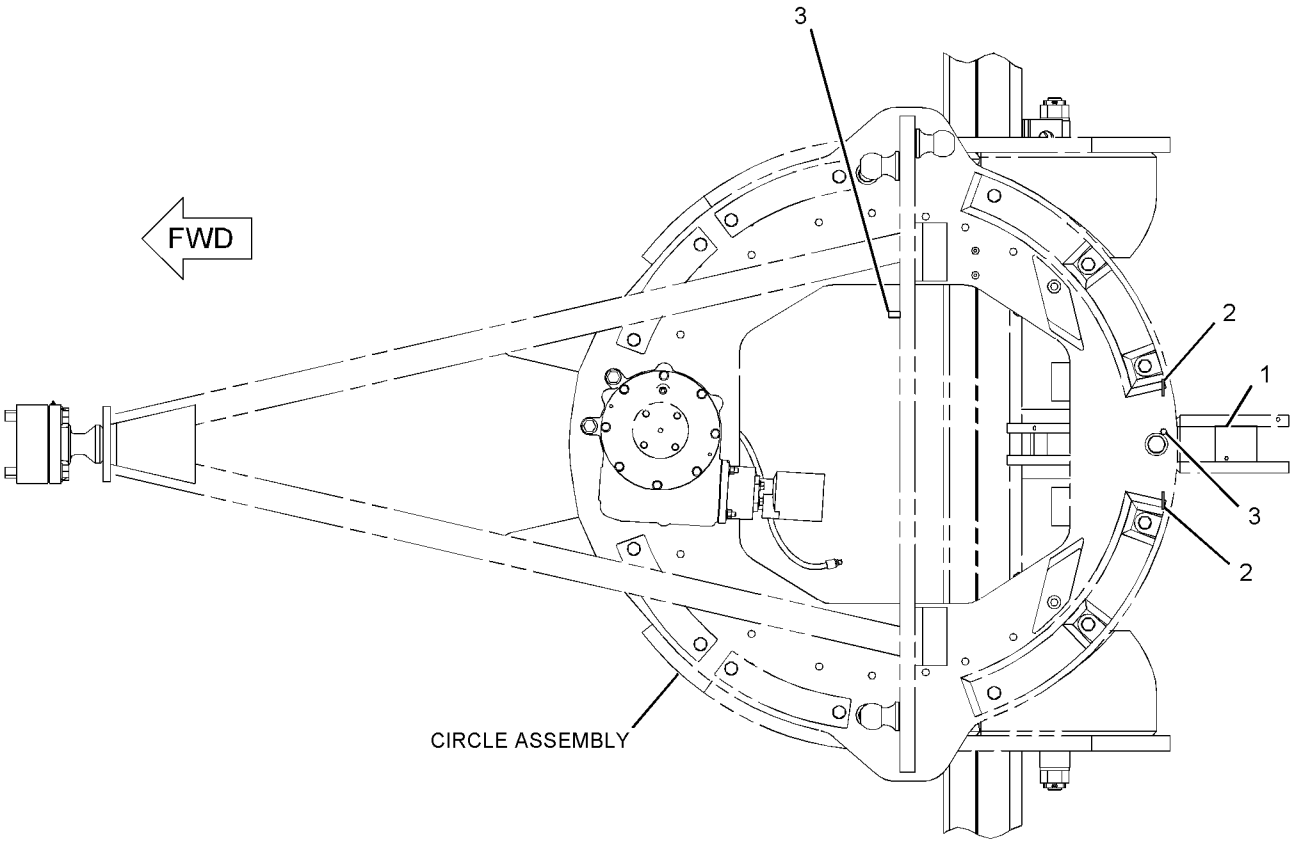

TOP VIEW

GRAPHIC #1 **<END>** g01127028

250-3071 PLATE GP-PUSH

S/N: B9M1-UP

AN ATTACHMENT

SMCS-6077 **i02240671**

NOTE	PART NUMBER	QTY	PART NAME 1 2 3 4 5 6 (PRODUCT LEVEL)	SEE PAGE
M	**6V-5845**	8	BOLT (M20X2.5X70-MM)	
	259-4476	1	PLATE AS-PUSH	
	5J-7333	2	HOOK	
	154-1580	8	WASHER-HARD (M22X38X6-MM THK)	

M-METRIC PART

<END>

PROOF

WORK TOOLS

233-7149 BIT GP

S/N: B9M1-UP

AN ATTACHMENT

SMCS-6804 **i02240366**

NOTE	PART NUMBER	QTY	PART NAME 1 2 3 4 5 6 (PRODUCT LEVEL)	SEE PAGE
	232-2142	2	BIT	
	8E-5529	2	BIT-END	
	1J-6762	12	BOLT-PLOW (3/4-10X3-IN)	
	2J-3506	12	NUT-FULL (3/4-10-THD)	

<END>

233-7161 BIT GP

S/N: B9M1-UP

AN ATTACHMENT

SMCS-6804 **i02280365**

NOTE	PART NUMBER	QTY	PART NAME 1 2 3 4 5 6 (PRODUCT LEVEL)	SEE PAGE
	159-0318	4	ADAPTER	
	6Y-4339	60	BIT AS	
			(EACH INCLUDES)	
	068-4860	1	RING-RETAINING	
	5J-4771	28	BOLT-PLOW (3/4-10X2.75-IN)	
	2J-3506	28	NUT-FULL (3/4-10-THD)	

<END>

233-7162 BIT GP

S/N: B9M1-UP

AN ATTACHMENT

SMCS-6804 **i02280364**

NOTE	PART NUMBER	QTY	PART NAME 1 2 3 4 5 6 (PRODUCT LEVEL)	SEE PAGE
	159-0313	4	ADAPTER	
	105-5180	48	BIT AS	
			(EACH INCLUDES)	
	068-4860	1	RING-RETAINING	
	5J-4771	28	BOLT-PLOW (3/4-10X2.75-IN)	
	2J-3506	28	NUT-FULL (3/4-10-THD)	

<END>

PROOF

WORK TOOLS

233-7163 BIT GP

S/N: B9M1-UP

AN ATTACHMENT

SMCS-6804 **i02280363**

NOTE	PART NUMBER	QTY	PART NAME 1 2 3 4 5 6 (PRODUCT LEVEL)	SEE PAGE
	159-0317	2	ADAPTER	
	159-0318	2	ADAPTER	
	6Y-4339	70	BIT AS	
			(EACH INCLUDES)	
	068-4860	1	RING-RETAINING	
	5J-4771	32	BOLT-PLOW (3/4-10X2.75-IN)	
	2J-3506	32	NUT-FULL (3/4-10-THD)	

<END>

233-7164 BIT GP

S/N: B9M1-UP

AN ATTACHMENT

SMCS-6804 **i02280362**

NOTE	PART NUMBER	QTY	PART NAME 1 2 3 4 5 6 (PRODUCT LEVEL)	SEE PAGE
	159-0313	2	ADAPTER	
	159-0314	2	ADAPTER	
	105-5180	56	BIT AS	
			(EACH INCLUDES)	
	068-4860	1	RING-RETAINING	
	5J-4771	32	BOLT-PLOW (3/4-10X2.75-IN)	
	2J-3506	32	NUT-FULL (3/4-10-THD)	

<END>

268-8690 BIT GP

S/N: B9M1-UP

AN ATTACHMENT

SMCS-6804 **i02280361**

NOTE	PART NUMBER	QTY	PART NAME 1 2 3 4 5 6 (PRODUCT LEVEL)	SEE PAGE
	159-0318	4	ADAPTER	
	105-5180	60	BIT AS	
			(EACH INCLUDES)	
	068-4860	1	RING-RETAINING	
	5J-4771	28	BOLT-PLOW (3/4-10X2.75-IN)	
	2J-3506	28	NUT-FULL (3/4-10-THD)	

<END>

PROOF

WORK TOOLS

268-8691 BIT GP

S/N: B9M1-UP

AN ATTACHMENT

SMCS-6804 **i02280324**

NOTE	PART NUMBER	QTY	PART NAME 1 2 3 4 5 6 (PRODUCT LEVEL)	SEE PAGE
	159-0318	4	ADAPTER	
	105-5183	60	BIT AS	
			(EACH INCLUDES)	
	068-4860	1	RING-RETAINING	
	5J-4771	28	BOLT-PLOW (3/4-10X2.75-IN)	
	2J-3506	28	NUT-FULL (3/4-10-THD)	

<END>

268-8692 BIT GP

S/N: B9M1-UP

AN ATTACHMENT

SMCS-6804 **i02280359**

NOTE	PART NUMBER	QTY	PART NAME 1 2 3 4 5 6 (PRODUCT LEVEL)	SEE PAGE
	159-0313	4	ADAPTER	
	6Y-4339	48	BIT AS	
			(EACH INCLUDES)	
	068-4860	1	RING-RETAINING	
	5J-4771	28	BOLT-PLOW (3/4-10X2.75-IN)	
	2J-3506	28	NUT-FULL (3/4-10-THD)	

<END>

268-8693 BIT GP

S/N: B9M1-UP

AN ATTACHMENT

SMCS-6804 **i02277800**

NOTE	PART NUMBER	QTY	PART NAME 1 2 3 4 5 6 (PRODUCT LEVEL)	SEE PAGE
	159-0313	4	ADAPTER	
	105-5183	48	BIT AS	
			(EACH INCLUDES)	
	068-4860	1	RING-RETAINING	
	5J-4771	28	BOLT-PLOW (3/4-10X2.75-IN)	
	2J-3506	28	NUT-FULL (3/4-10-THD)	

<END>

PROOF

WORK TOOLS

268-8694 BIT GP

S/N: B9M1-UP

AN ATTACHMENT

SMCS-6804 **i02280358**

NOTE	PART NUMBER	QTY	PART NAME 1 2 3 4 5 6 (PRODUCT LEVEL)	SEE PAGE
	159-0317	2	ADAPTER	
	159-0318	2	ADAPTER	
	105-5180	70	BIT AS	
			(EACH INCLUDES)	
	068-4860	1	RING-RETAINING	
	5J-4771	32	BOLT-PLOW (3/4-10X2.75-IN)	
	2J-3506	32	NUT-FULL (3/4-10-THD)	

<END>

268-8695 BIT GP

S/N: B9M1-UP

AN ATTACHMENT

SMCS-6804 **i02277806**

NOTE	PART NUMBER	QTY	PART NAME 1 2 3 4 5 6 (PRODUCT LEVEL)	SEE PAGE
	159-0317	2	ADAPTER	
	159-0318	2	ADAPTER	
	105-5183	70	BIT AS	
			(EACH INCLUDES)	
	068-4860	1	RING-RETAINING	
	5J-4771	32	BOLT-PLOW (3/4-10X2.75-IN)	
	2J-3506	32	NUT-FULL (3/4-10-THD)	

<END>

268-8696 BIT GP

S/N: B9M1-UP

AN ATTACHMENT

SMCS-6804 **i02277807**

NOTE	PART NUMBER	QTY	PART NAME 1 2 3 4 5 6 (PRODUCT LEVEL)	SEE PAGE
	159-0313	2	ADAPTER	
	159-0314	2	ADAPTER	
	6Y-4339	56	BIT AS	
			(EACH INCLUDES)	
	068-4860	1	RING-RETAINING	
	5J-4771	32	BOLT-PLOW (3/4-10X2.75-IN)	
	2J-3506	32	NUT-FULL (3/4-10-THD)	

<END>

PROOF

WORK TOOLS

268-8697 BIT GP

S/N: B9M1-UP
AN ATTACHMENT

SMCS-6804 **i02277812**

NOTE	PART NUMBER	QTY	PART NAME 1 2 3 4 5 6 (PRODUCT LEVEL)	SEE PAGE
	159-0313	2	ADAPTER	
	159-0314	2	ADAPTER	
	105-5183	56	BIT AS	
			(EACH INCLUDES)	
	068-4860	1	RING-RETAINING	
	5J-4771	32	BOLT-PLOW (3/4-10X2.75-IN)	
	2J-3506	32	NUT-FULL (3/4-10-THD)	

<END>

233-7148 BIT GP-END

S/N: B9M1-UP
AN ATTACHMENT

SMCS-6804 **i02193657**

NOTE	PART NUMBER	QTY	PART NAME 1 2 3 4 5 6 (PRODUCT LEVEL)	SEE PAGE
	8E-5529	2	BIT-END	
	5J-4773	10	BOLT-PLOW (3/4-10X2.5-IN)	
	2J-3506	10	NUT-FULL (3/4-10-THD)	

<END>

233-7160 BIT GP-END

S/N: B9M1-UP
AN ATTACHMENT

SMCS-6804 **i02302346**

NOTE	PART NUMBER	QTY	PART NAME 1 2 3 4 5 6 (PRODUCT LEVEL)	SEE PAGE
	6Y-2805	2	BIT-END	
	8E-5529	2	BIT-END	
	1J-6762	4	BOLT-PLOW (3/4-10X3-IN)	
	5F-8933	8	BOLT-PLOW (3/4-10X3.75-IN)	
	2J-3506	12	NUT-FULL (3/4-10-THD)	

<END>

PROOF

WORK TOOLS

243-6702 BLADE GP–12-FT

S/N: B9M1-UP

AN ATTACHMENT

SMCS-6151 **i02251017**

NOTE	REF NO	GRAPHIC REF	PART NUMBER	QTY	PART NAME 1 2 3 4 5 6 (PRODUCT LEVEL)	SEE PAGE
	1	1	**260-7792**	1	MOLDBOARD AS	
		1	**260-7785**	1	REINFORCEMENT	
		1	**260-7797**	1	RAIL-MOLDBOARD	
		1	**260-7798**	1	RAIL-MOLDBOARD	
		1	**261-6958**	2	PLATE	

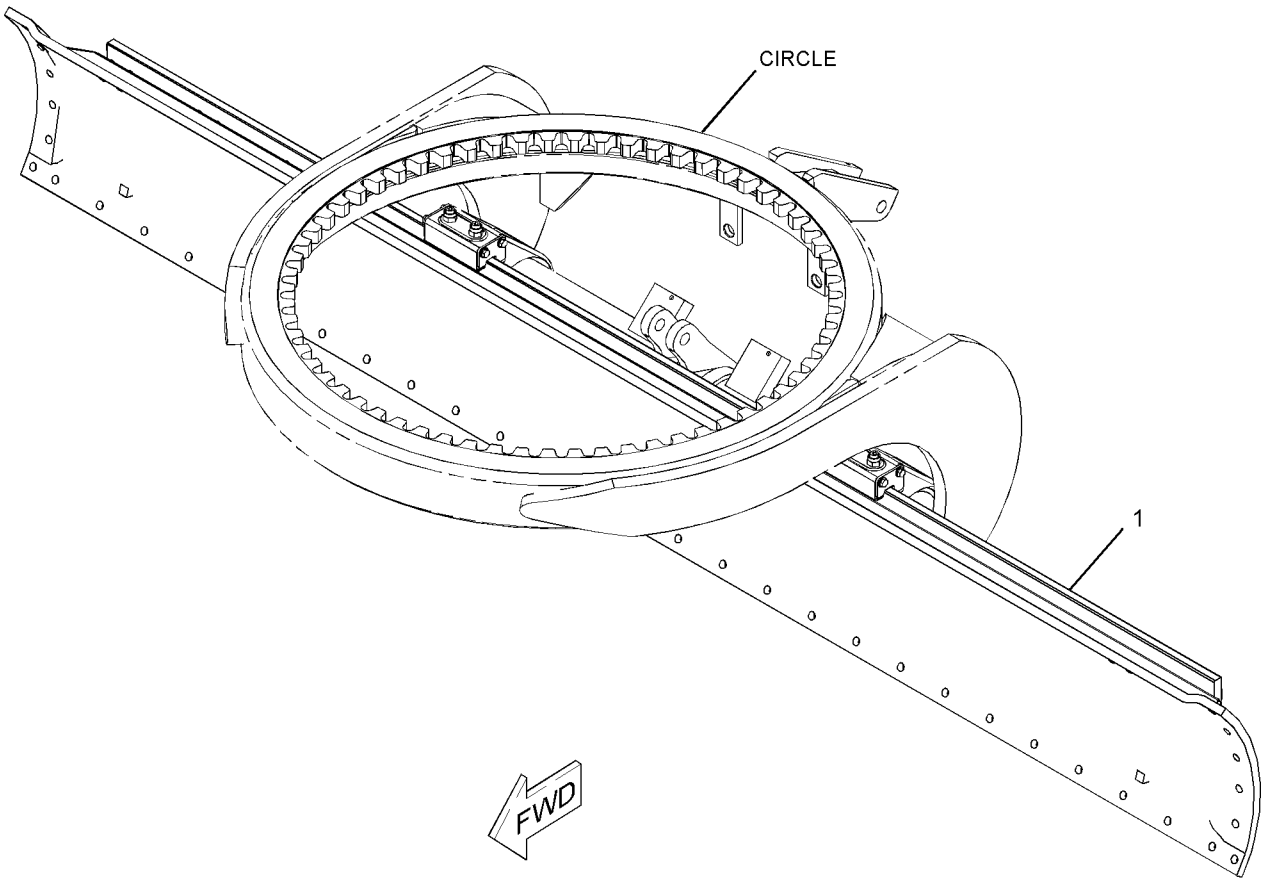

GRAPHIC #1 **<END>** g01129892

WORK TOOLS

243-6703 BLADE GP–14 FT X 24 IN

S/N: B9M1-UP

AN ATTACHMENT

SMCS-6151 **i02231224**

NOTE	REF NO	GRAPHIC REF	PART NUMBER	QTY	PART NAME 1 2 3 4 5 6 (PRODUCT LEVEL)	SEE PAGE
	1	1	**260-7793**	1	MOLDBOARD AS	
		1	**260-7791**	1	REINFORCEMENT	
		1	**261-6958**	2	PLATE	
		1	**261-6959**	1	RAIL-MOLDBOARD	
		1	**261-6960**	1	RAIL-MOLDBOARD	

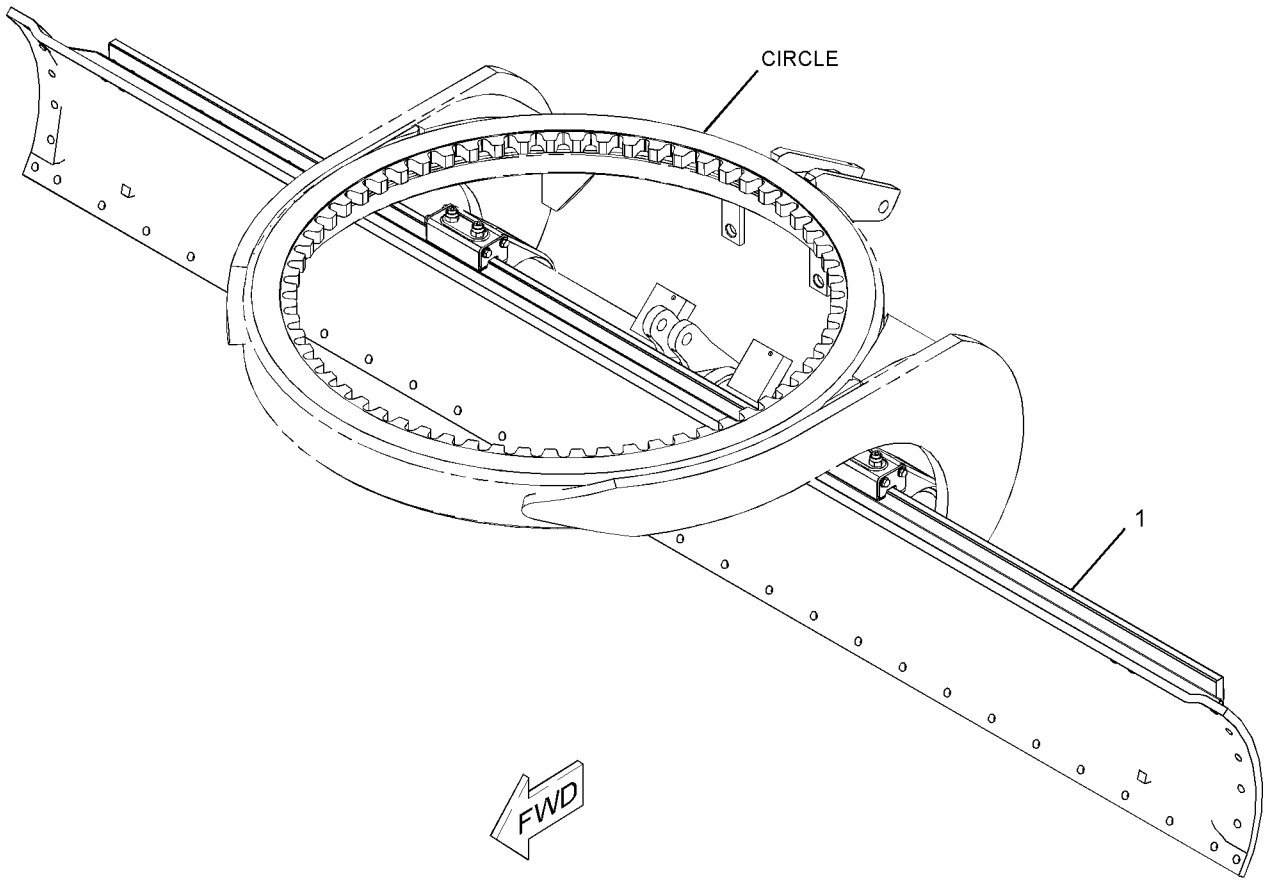

GRAPHIC #1 **<END>** g01129892

WORK TOOLS

243-6704 BLADE GP–14 FT X 27 IN

S/N: B9M1-UP

AN ATTACHMENT

SMCS-6151 **i02231237**

NOTE	REF NO	GRAPHIC REF	PART NUMBER	QTY	PART NAME 1 2 3 4 5 6 (PRODUCT LEVEL)	SEE PAGE
	1	1	**260-7794**	1	MOLDBOARD AS	
		1	**260-7791**	1	REINFORCEMENT	
		1	**261-6958**	2	PLATE	
		1	**261-6959**	1	RAIL-MOLDBOARD	
		1	**261-6960**	1	RAIL-MOLDBOARD	

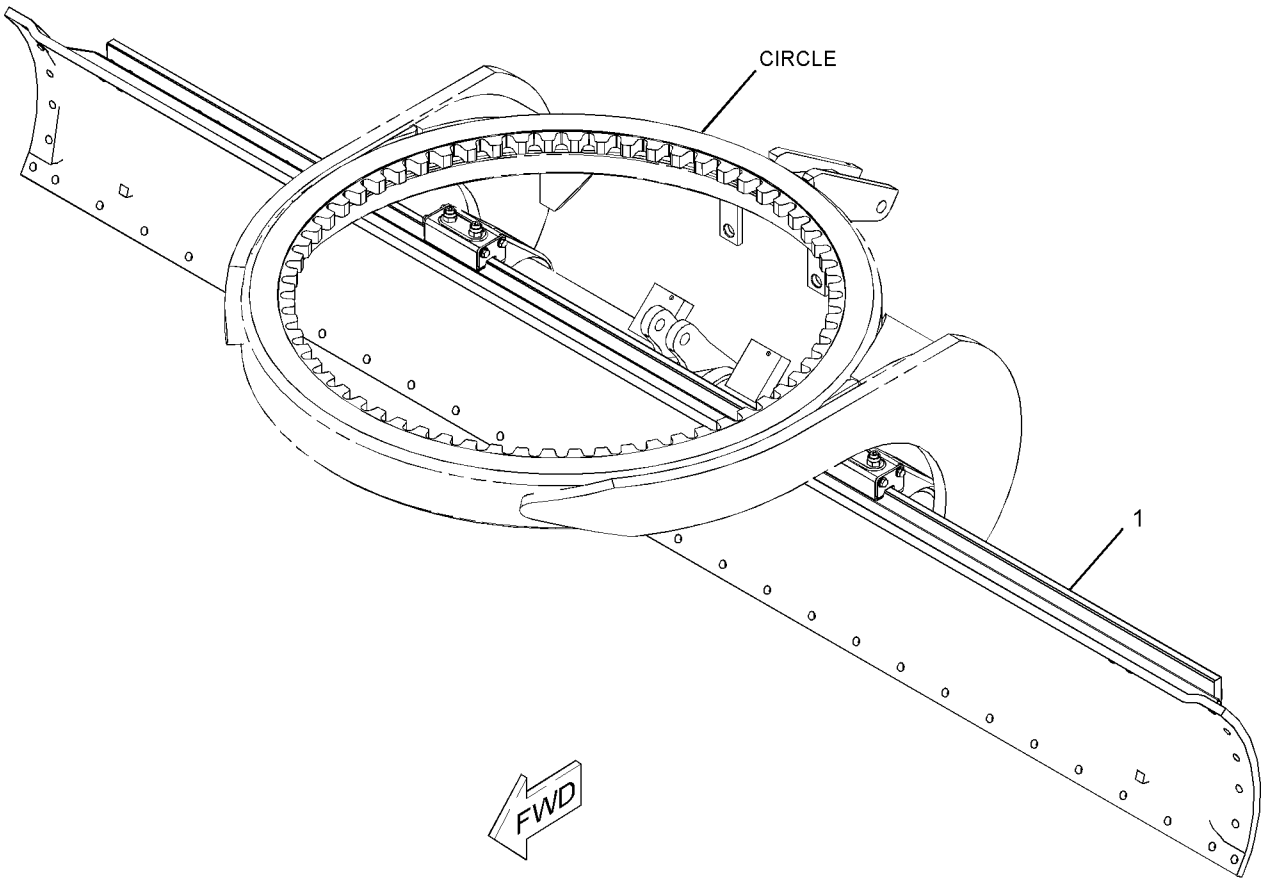

GRAPHIC #1 **<END>** g01129893

WORK TOOLS

143-7280 BLADE GP-BULLDOZER—FRONT

S/N: B9M1-UP
AN ATTACHMENT

SMCS-6060 **i02355199**

NOTE	REF NO	GRAPHIC REF	PART NUMBER	QTY	PART NAME 1 2 3 4 5 6 (PRODUCT LEVEL)	SEE PAGE
	1	1	**2K-2306**	2	LINK	
	2	2	**3B-8489**	2	FITTING-GREASE	
	3	2,3	**3B-8491**	8	FITTING-GREASE	
	4	1	**4T-3010**	2	EDGE-CUTTING	
	5	2,3	**7P-1577**	8	PIN AS	
I	6	1	**113-0999**	2	HOSE AS	
	7	1,2	**136-1711**	2	PIN AS	
Y	8	1	**163-0324**	1	CYLINDER GP-HYDRAULIC	487
	9	1	**169-4088**	1	LINK AS	
		1	**5K-2657**	1	LINK AS	
	10	1	**169-4089**	1	EDGE-CUTTING	
	11	1	**169-4090**	1	PLATE AS	
	12	1	**169-4092**	1	MOLDBOARD AS	
		1	**2C-9259**	2	PLATE-IDENTIFICATION (CAT)	
		1	**111-9758**	1	PLATE	
	13	1	**247-4412**	1	PLATE AS	
	14	1	**2J-3506**	17	NUT-FULL (3/4-10-THD)	
	15	1	**3D-2824**	2	SEAL-O-RING	
M	16	1	**4F-7827**	17	BOLT-PLOW (3/4-10X57.15-MM)	
	17	2,3	**5M-6214**	4	PLUG-PIPE	
B	18	1,2,3	**5V-6454**	18	WASHER (1.6-MM THK)	
B	19	2,3	**5V-6455**	20	WASHER (52X120X1 THK)	
	20	1	**6V-8182**	12	NUT (3/4-10-THD)	
	21	1	**6V-8397**	6	SEAL-O-RING	
	22	1	**6V-8987**	2	ELBOW	
	23	1	**6V-9168**	2	NUT (11/16-16-THD)	
	24	1	**6V-9343**	2	ELBOW	
	25	1,2,3	**7G-8839**	10	SPACER (13.5X57X6-MM THK)	
M	26	2	**7X-2553**	8	BOLT (M16X2X40-MM)	
	27	1	**8C-8842**	12	BOLT (3/4-10X4-IN)	
M	28	1,2,3	**8T-4139**	10	BOLT (M12X1.75X30-MM)	
	29	1	**8X-3663**	24	WASHER (20X45X12-MM THK)	
	30	2	**9X-8257**	8	WASHER (17.5X30X3.5-MM THK)	

B-USE AS REQUIRED
I-REFER TO HYDRAULIC INFORMATION SYSTEM
M-METRIC PART
Y-SEPARATE ILLUSTRATION

PROOF

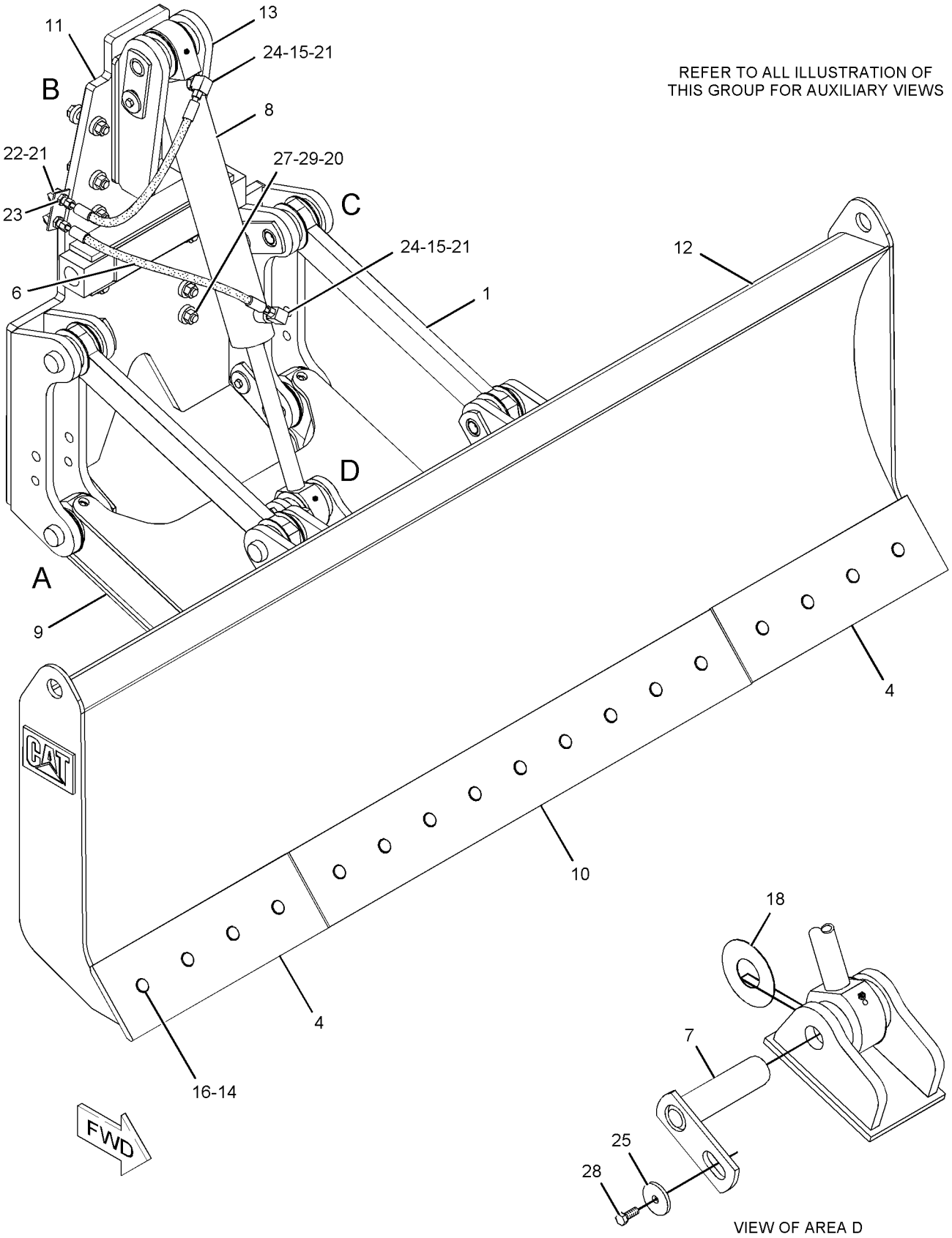

GRAPHIC #1 g01148146

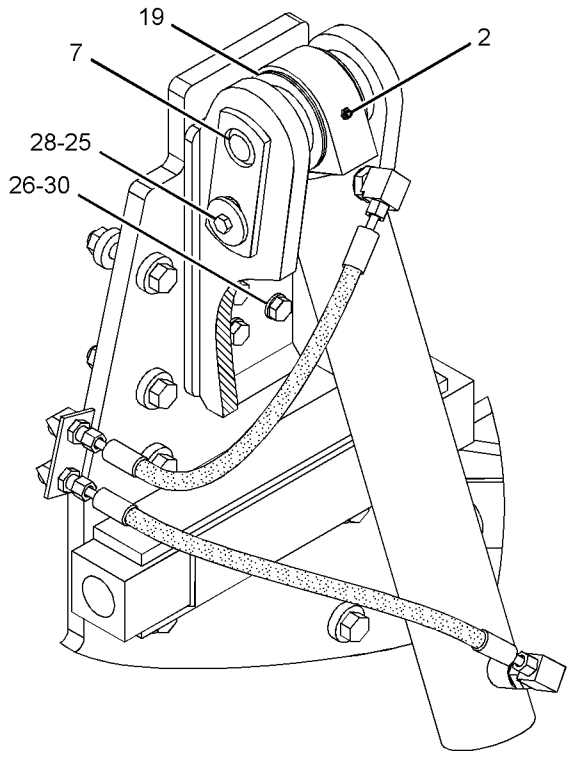

VIEW OF AREA B

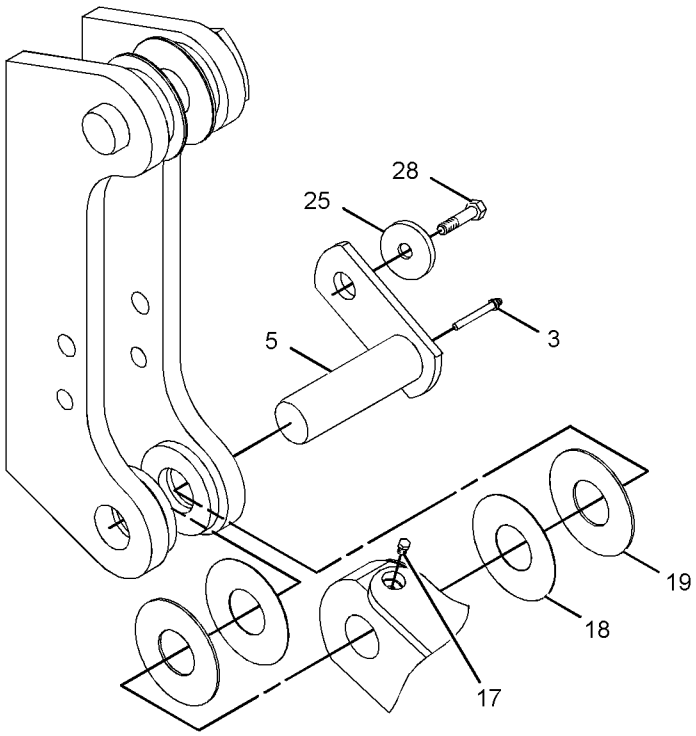

VIEW OF AREA A

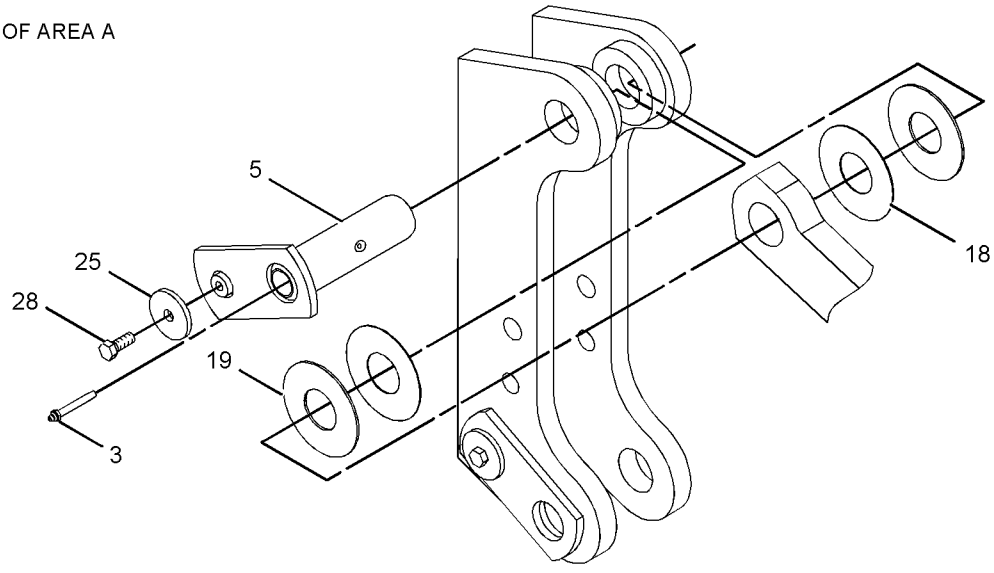

VIEW OF AREA C

GRAPHIC #2

g01148147

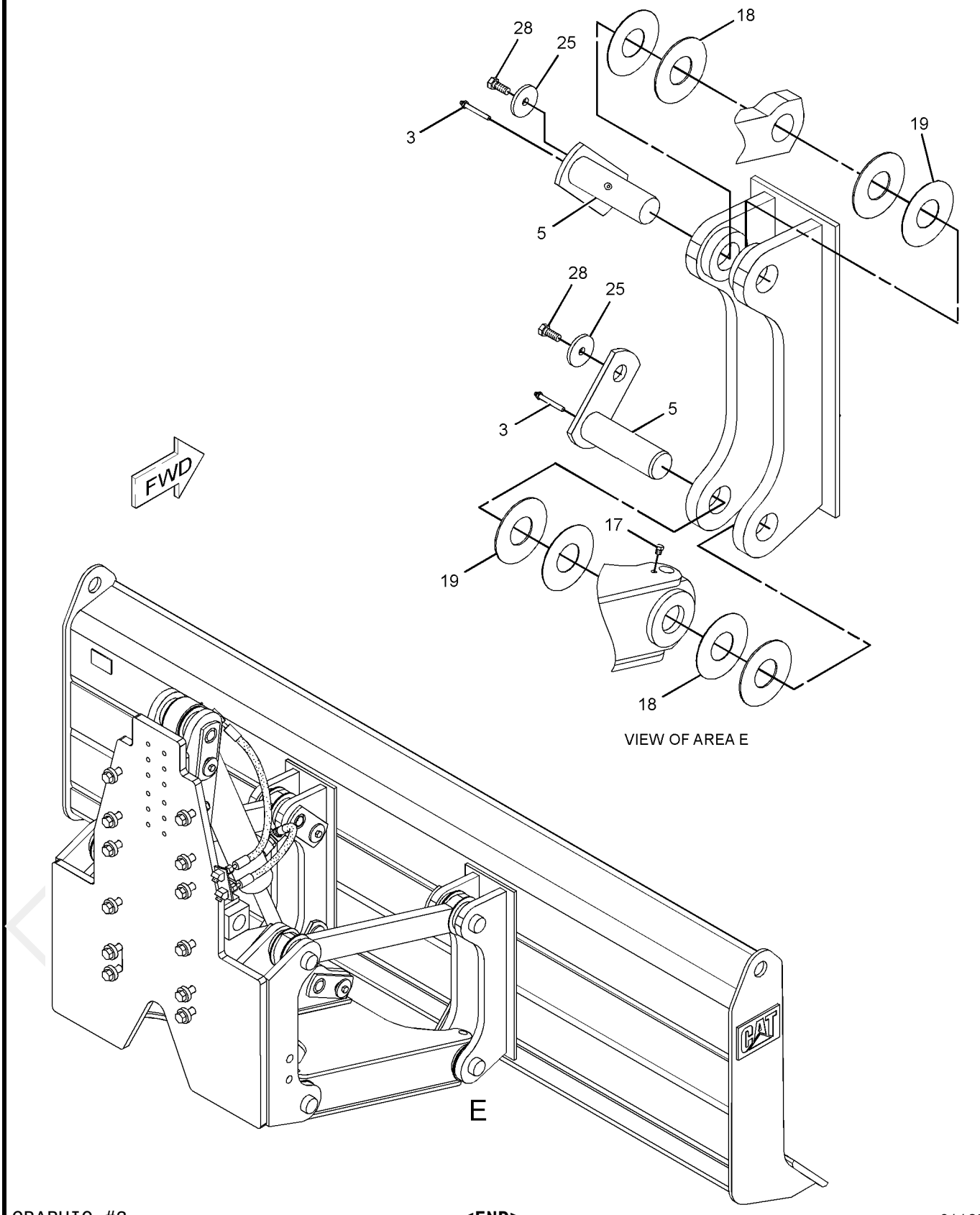

GRAPHIC #3 **<END>** g01165403

WORK TOOLS

152-1353 BLADE GP-BULLDOZER

S/N: B9M1-UP
AN ATTACHMENT

SMCS-6060 **i02348919**

NOTE	REF NO	GRAPHIC REF	PART NUMBER	QTY	PART NAME 1 2 3 4 5 6 (PRODUCT LEVEL)	SEE PAGE
	1	1	**1D-4610**	4	BOLT (3/4-10X3.25-IN)	
	2	1	**4T-3028**	3	EDGE-CUTTING	
	3	1	**4T-3051**	1	BIT-END	
	4	1	**4T-3052**	1	BIT-END	
	5	1	**137-4234**	1	PLATE-IDENTIFICATION (WORK TOOL INFORMATION)	
	6	1	**171-4808**	2	BASE AS	
	7	1	**173-1172**	2	SHOE AS	
	8	1	**179-1633**	2	PIN	
Y	9	1	**258-4500**	1	BLADE AS	
	10	1	**2J-3506**	4	NUT-FULL (3/4-10-THD)	
	11	1	**3B-5301**	4	PIN-COTTER	
	12	1	**3F-5108**	24	BOLT-PLOW (5/8-11X2.25-IN)	
	13	1	**4K-0367**	24	NUT-FULL (5/8-11-THD)	
	14	1	**5P-8248**	4	WASHER-HARD (20X36.5X3.5-MM THK)	

Y-SEPARATE ILLUSTRATION

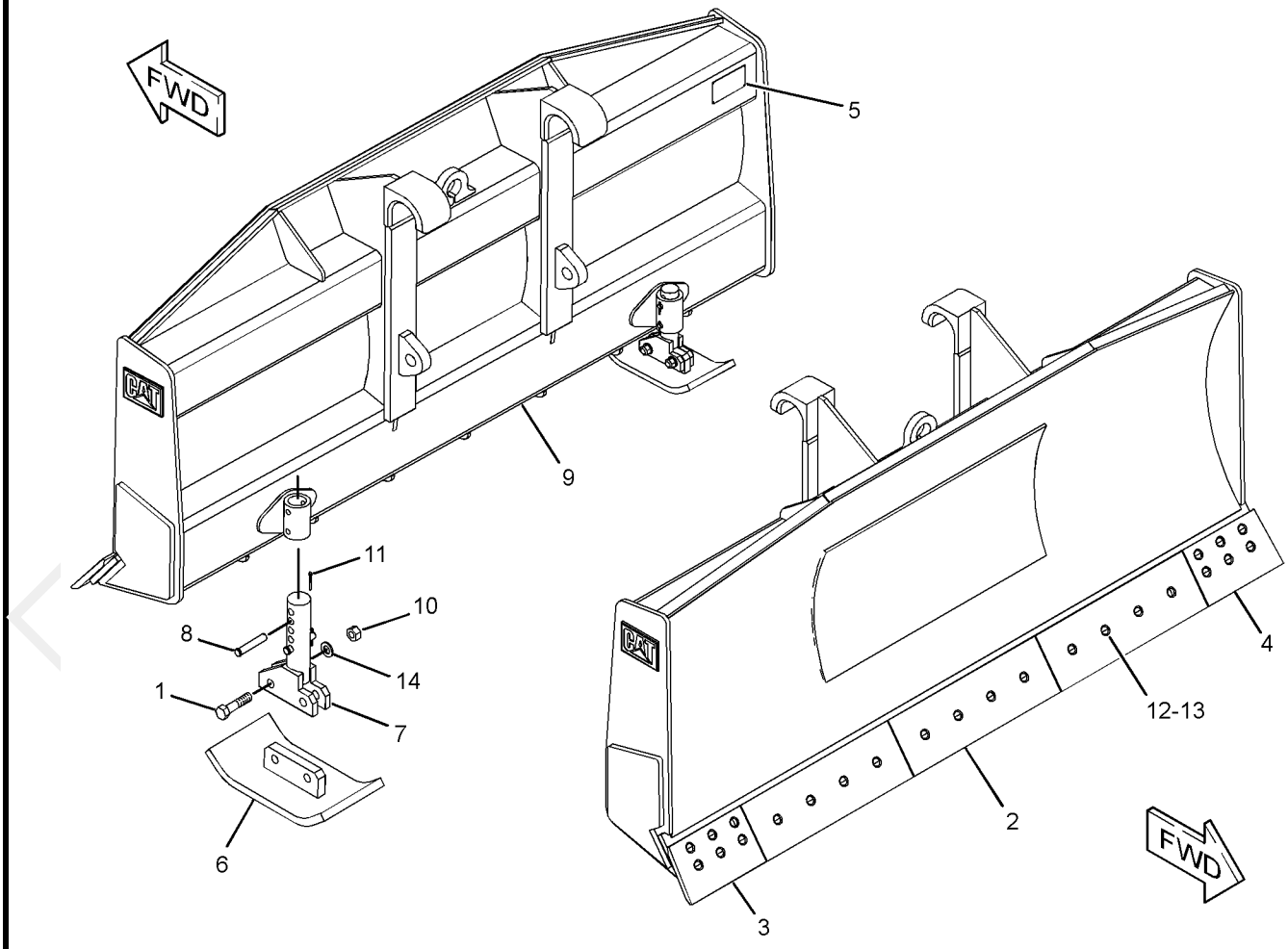

GRAPHIC #1 **<END>** g01161619

WORK TOOLS

201-1200 BLADE GP-BULLDOZER

S/N: B9M1-UP

AN ATTACHMENT

SMCS-6060 **i02355195**

NOTE	REF NO	GRAPHIC REF	PART NUMBER	QTY	PART NAME 1 2 3 4 5 6 (PRODUCT LEVEL)	SEE PAGE
	1	1	**2K-2306**	2	LINK	
	2	2	**3B-8489**	2	FITTING-GREASE	
	3	2,3	**3B-8491**	8	FITTING-GREASE	
	4	1	**4T-2315**	1	EDGE-CUTTING	
	5	1	**4T-8353**	2	BIT-END	
	6	2,3	**7P-1577**	8	PIN AS	
I	7	2	**113-0999**	2	HOSE AS	
	8	1,2	**136-1711**	2	PIN AS	
Y	9	1	**163-0324**	1	CYLINDER GP-HYDRAULIC	487
	10	1	**169-4088**	1	LINK AS	
		1	**5K-2657**	1	LINK AS	
	11	1	**169-4090**	1	PLATE AS	
	12	1	**201-1201**	1	MOLDBOARD AS	
		1	**2C-9259**	2	PLATE-IDENTIFICATION (CAT)	
		1	**111-9758**	1	PLATE	
	13	1	**247-4412**	1	PLATE AS	
	14	1	**2J-3506**	17	NUT-FULL (3/4-10-THD)	
	15	1	**3D-2824**	2	SEAL-O-RING	
M	16	1	**4F-7827**	17	BOLT-PLOW (3/4-10X57.15-MM)	
	17	2,3	**5M-6214**	4	PLUG-PIPE	
B	18	1,2,3	**5V-6454**	18	WASHER (1.6-MM THK)	
B	19	2,3	**5V-6455**	20	WASHER (52X120X1 THK)	
	20	2	**6V-8182**	12	NUT (3/4-10-THD)	
	21	1,2	**6V-8397**	6	SEAL-O-RING	
	22	2	**6V-8987**	2	ELBOW	
	23	2	**6V-9168**	2	NUT (11/16-16-THD)	
	24	1	**6V-9343**	2	ELBOW	
	25	1,2,3	**7G-8839**	10	SPACER (13.5X57X6-MM THK)	
M	26	2	**7X-2553**	8	BOLT (M16X2X40-MM)	
	27	2	**8C-8842**	12	BOLT (3/4-10X4-IN)	
M	28	1,2,3	**8T-4139**	10	BOLT (M12X1.75X30-MM)	
	29	2	**8X-3663**	24	WASHER (20X45X12-MM THK)	
	30	2	**9X-8257**	8	WASHER (17.5X30X3.5-MM THK)	

B-USE AS REQUIRED
I-REFER TO HYDRAULIC INFORMATION SYSTEM
M-METRIC PART
Y-SEPARATE ILLUSTRATION

PROOF

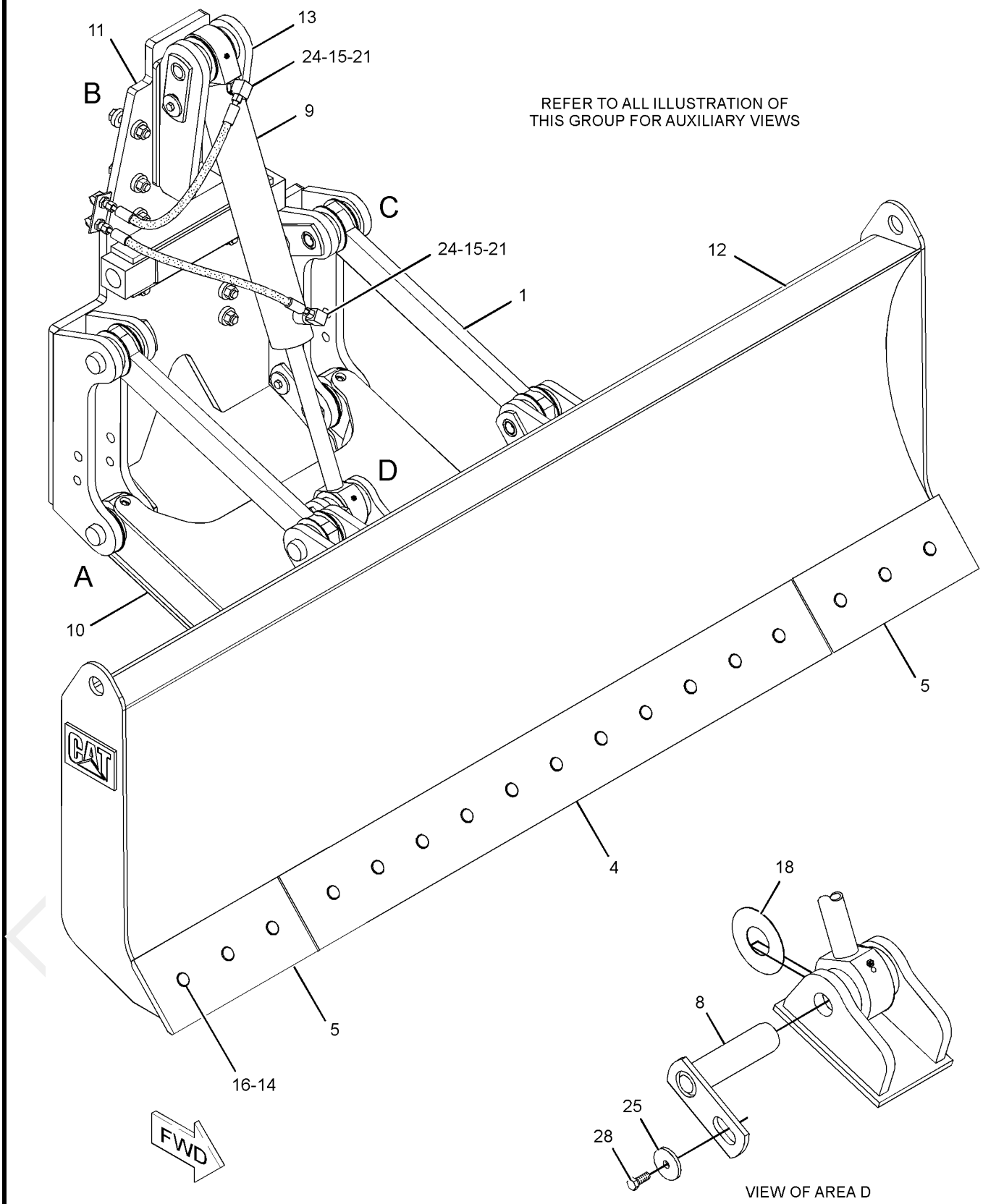

GRAPHIC #1 g01156070

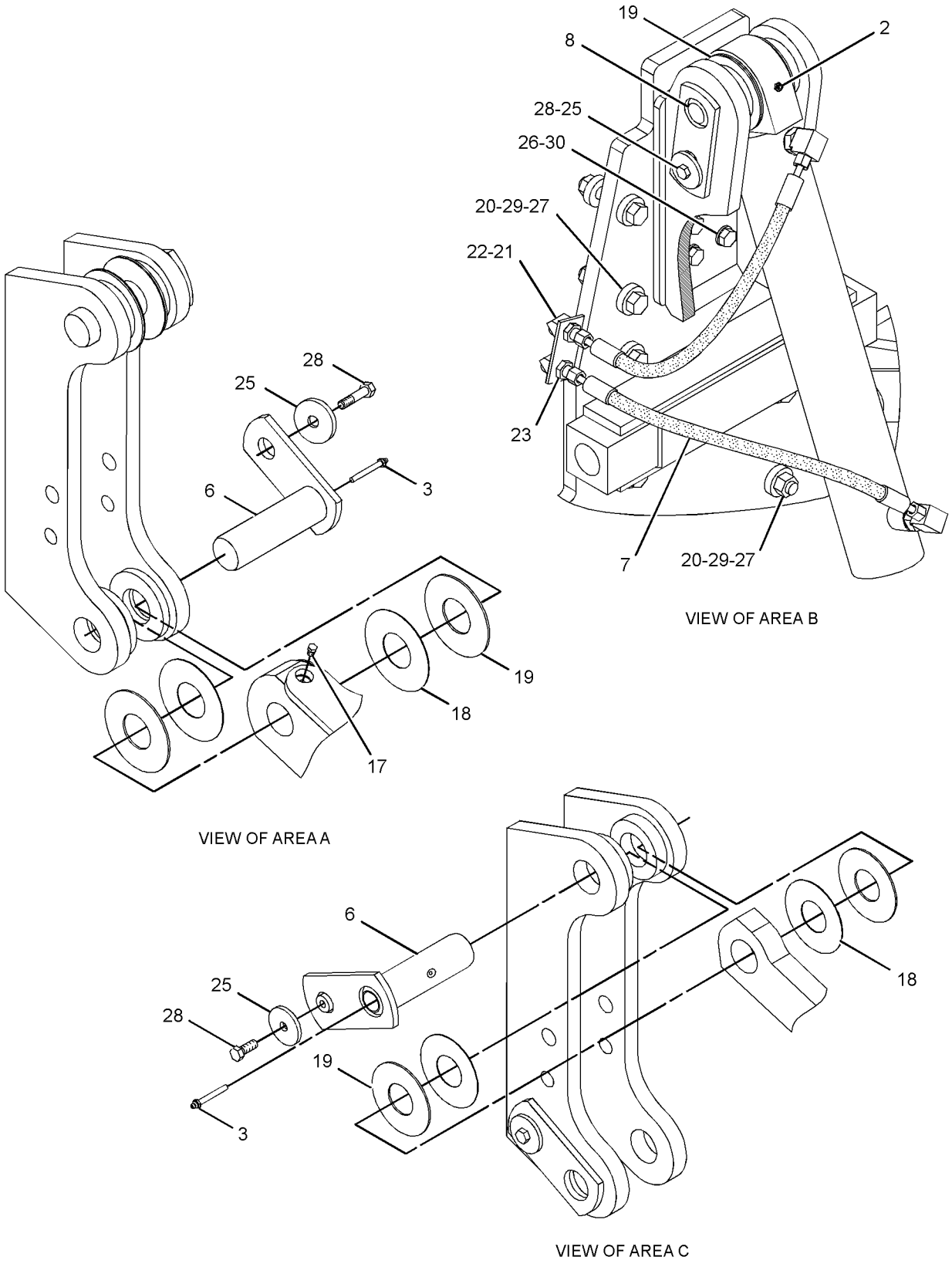

GRAPHIC #2 g01156071

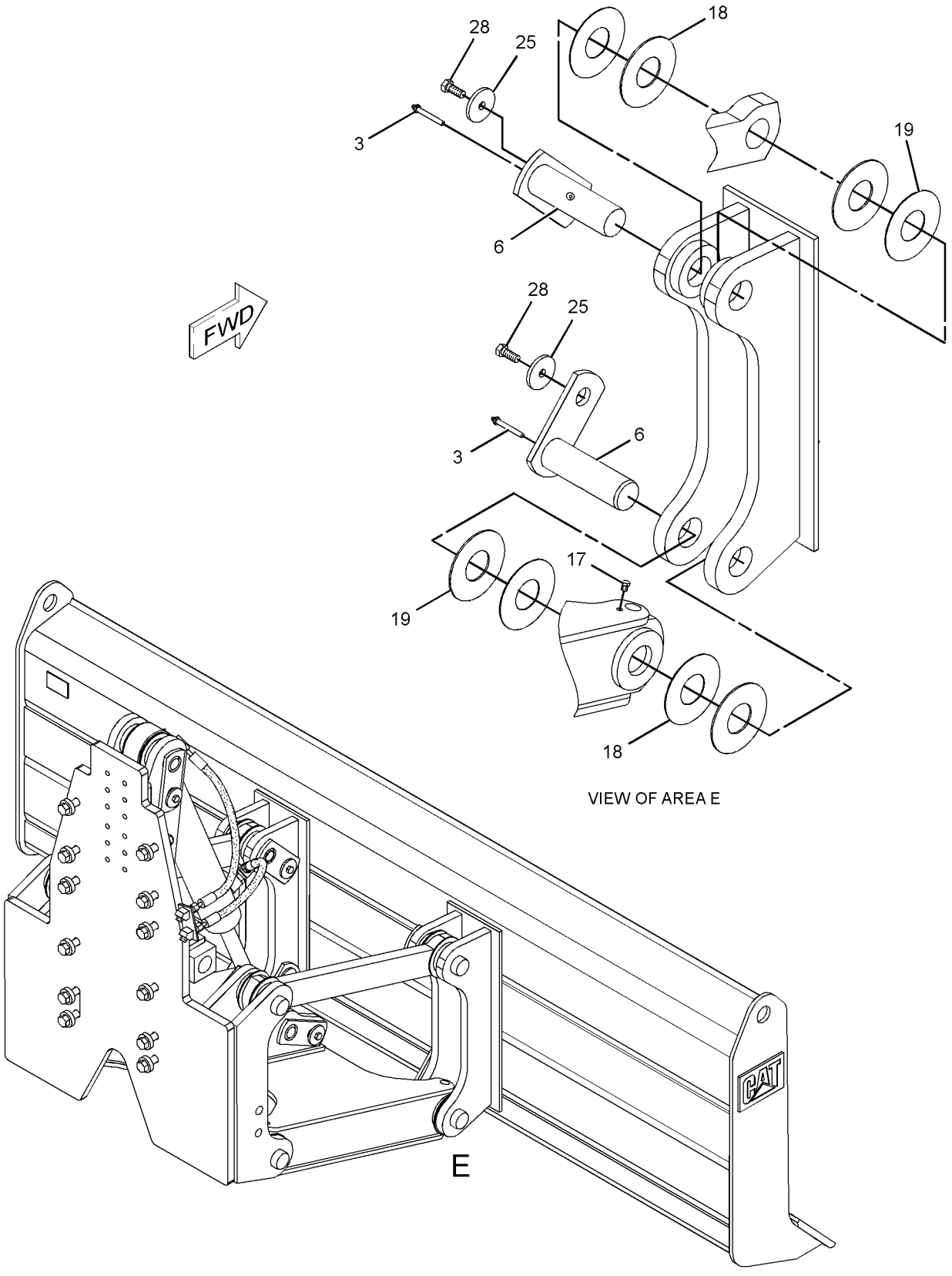

GRAPHIC #3 **<END>** g01165427

WORK TOOLS

213-6225 BLADE GP-BULLDOZER—FRONT

S/N: B9M1-UP

AN ATTACHMENT

SMCS-6060 **i02348923**

NOTE	REF NO	GRAPHIC REF	PART NUMBER	QTY	PART NAME 1 2 3 4 5 6 (PRODUCT LEVEL)	SEE PAGE
	1	1	**2K-2306**	2	LINK	
	2	2	**3B-8489**	2	FITTING-GREASE	
	3	2,4	**3B-8491**	8	FITTING-GREASE	
	4	2	**3J-1770**	2	LOCK PIN	
	5	1	**4T-0231**	2	RETAINER	
	6	1	**4T-8353**	2	BIT-END	
	7	1	**4T-8378**	1	EDGE-CUTTING	
	8	2	**5G-6277**	2	PIN AS	
					(EACH INCLUDES)	
		2	**1M-8534**	1	PIN-DRAWBAR	
	9	2,4	**7P-1577**	8	PIN AS	
	10	1	**8T-7038**	2	FILM-WARNING (DO NOT LIFT) (BLADE)	
I	12	2	**113-0999**	2	HOSE AS	
	13	4	**128-0883**	2	FLANGE	
	14	2,3	**136-1711**	2	PIN AS	
Y	15	1	**163-0324**	1	CYLINDER GP-HYDRAULIC	487
	16	3	**169-4088**	1	LINK AS	
		3	**5K-2657**	1	LINK AS	
	17	1	**169-4090**	1	PLATE AS	
	18	1	**177-4548**	4	PIN	
	19	1,4	**178-6875**	8	RETAINER	
	20	4	**213-6226**	2	PLATE	
	21	1	**213-6231**	1	MOLDBOARD AS	
	22	1	**213-6254**	1	BLADE AS (RH)	
		1	**2C-9259**	1	PLATE-IDENTIFICATION (CAT)	
	23	4	**213-6261**	2	PLATE	
	24	4	**213-6274**	2	BOLT-SPECIAL	
	25	4	**213-6275**	4	PIN	
	26	1	**213-6279**	1	BLADE AS (LH)	
		1	**2C-9259**	1	PLATE-IDENTIFICATION (CAT)	
	27	2	**219-3336**	2	FILM-WARNING	
	28	2	**220-4305**	2	PLATE AS	
	29	1	**247-4412**	1	PLATE AS	
	30	4	**138-1645**	2	PIN-SPRING	
	31	1	**2J-3506**	19	NUT-FULL (3/4-10-THD)	
	32	2	**3D-2824**	2	SEAL-O-RING	
M	33	1	**4F-7827**	19	BOLT-PLOW (3/4-10X57.15-MM)	
	34	1,4	**5M-6214**	4	PLUG-PIPE	
B	35	2,3,4	**5V-6454**	18	WASHER (1.6-MM THK)	
B	36	2,4	**5V-6455**	20	WASHER (52X120X1 THK)	
M	37	4	**6V-3940**	8	BOLT (M8X1.25X25-MM)	
	38	2	**6V-8182**	12	NUT (3/4-10-THD)	
	39	4	**6V-8237**	4	WASHER (26X44X4-MM THK)	
	40	2	**6V-8397**	6	SEAL-O-RING	
	41	2	**6V-8987**	2	ELBOW	
	42	2	**6V-9168**	2	NUT (11/16-16-THD)	
	43	2	**6V-9343**	2	ELBOW	
	44	2,3,4	**7G-8839**	10	SPACER (13.5X57X6-MM THK)	
M	45	2	**7X-2465**	2	BOLT (M24X3X180-MM)	
M	46	2	**7X-2553**	8	BOLT (M16X2X40-MM)	
	47	2	**8C-8842**	12	BOLT (3/4-10X4-IN)	
M	48	2	**8T-4001**	2	NUT (M24X3-THD)	
M	49	2,3,4	**8T-4139**	10	BOLT (M12X1.75X30-MM)	
	50	2	**8T-4167**	20	WASHER-HARD (26X44X4-MM THK)	
M	51	4	**8T-4179**	4	BOLT (M12X1.75X20-MM)	
M	52	1,4	**8T-4223**	22	WASHER-HARD (13.5X25.5X3-MM THK)	

PROOF

213-6225 **BLADE GP-BULLDOZER** *(contd.)* **i02348923**

NOTE	REF NO	GRAPHIC REF	PART NUMBER	QTY	PART NAME 1 2 3 4 5 6 (PRODUCT LEVEL)	SEE PAGE
	53	4	**8T-4224**	8	WASHER-HARD (8.8X16X2-MM THK)	
M	54	1,4	**8T-4956**	18	BOLT (M12X1.75X35-MM)	
	55	2	**8X-3663**	24	WASHER (20X45X12-MM THK)	
	56	2	**9X-8257**	8	WASHER (17.5X30X3.5-MM THK)	

B-USE AS REQUIRED
I-REFER TO HYDRAULIC INFORMATION SYSTEM
M-METRIC PART
Y-SEPARATE ILLUSTRATION

PROOF

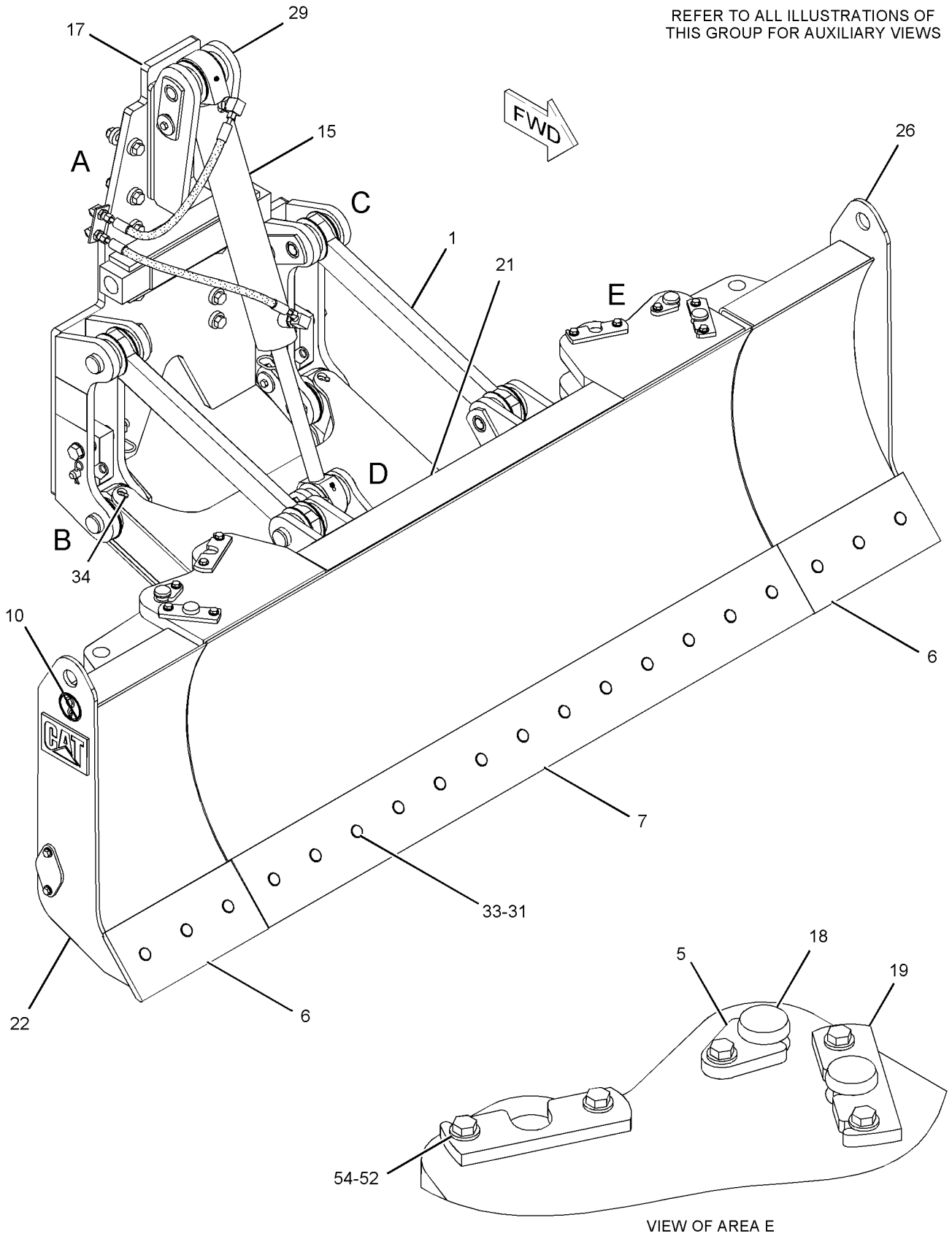

GRAPHIC #1 g01147501

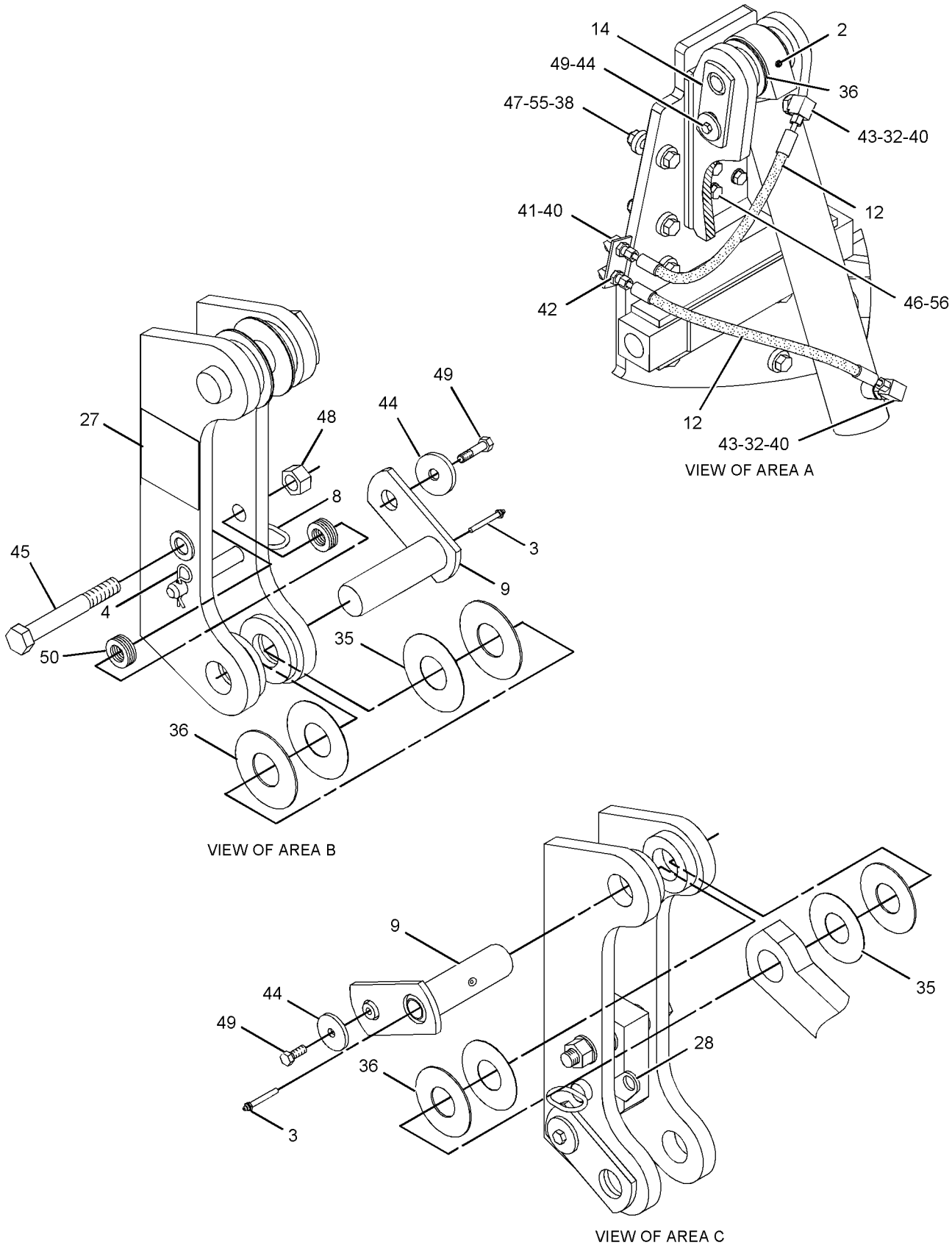

GRAPHIC #2

g01147502

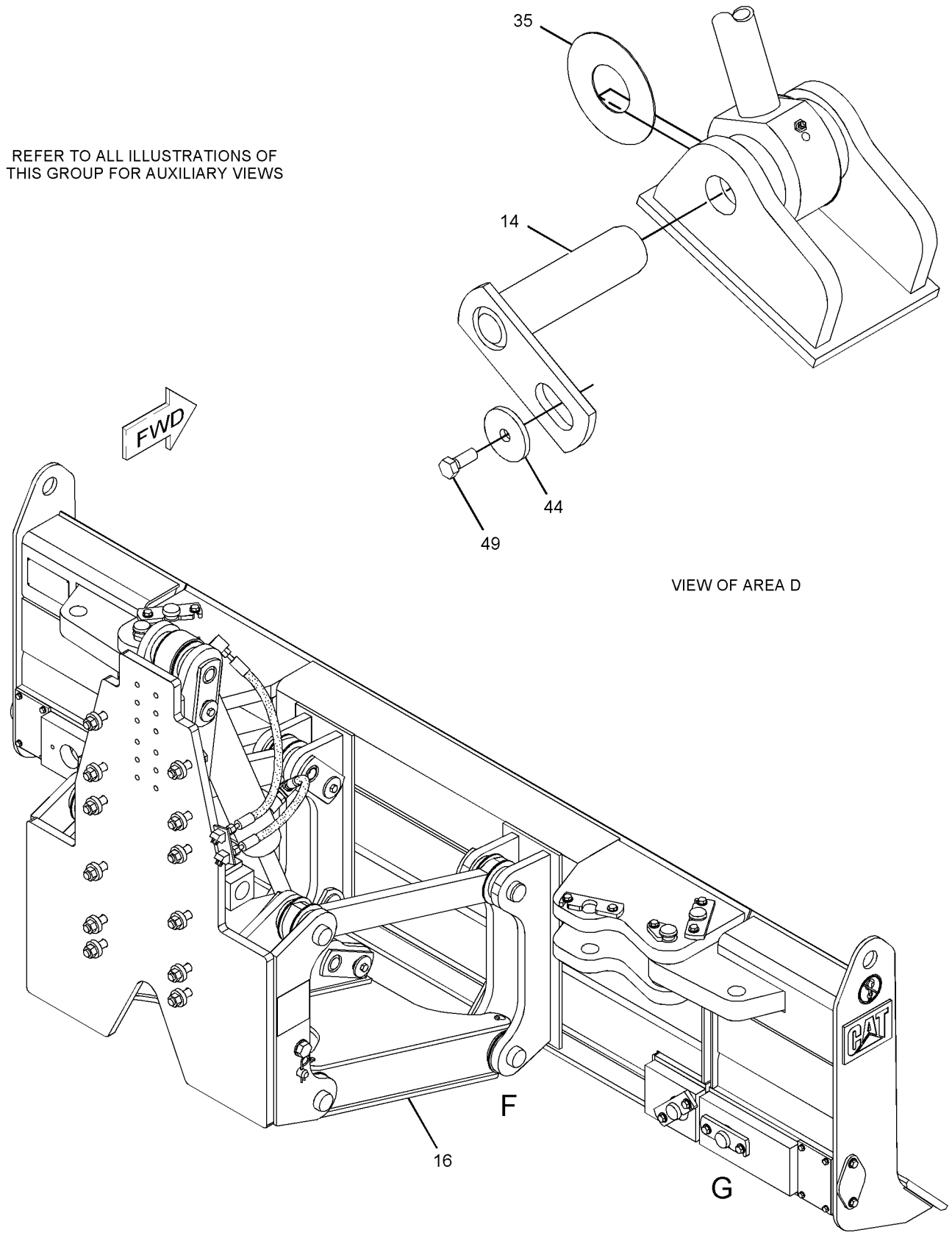

GRAPHIC #3 g01147504

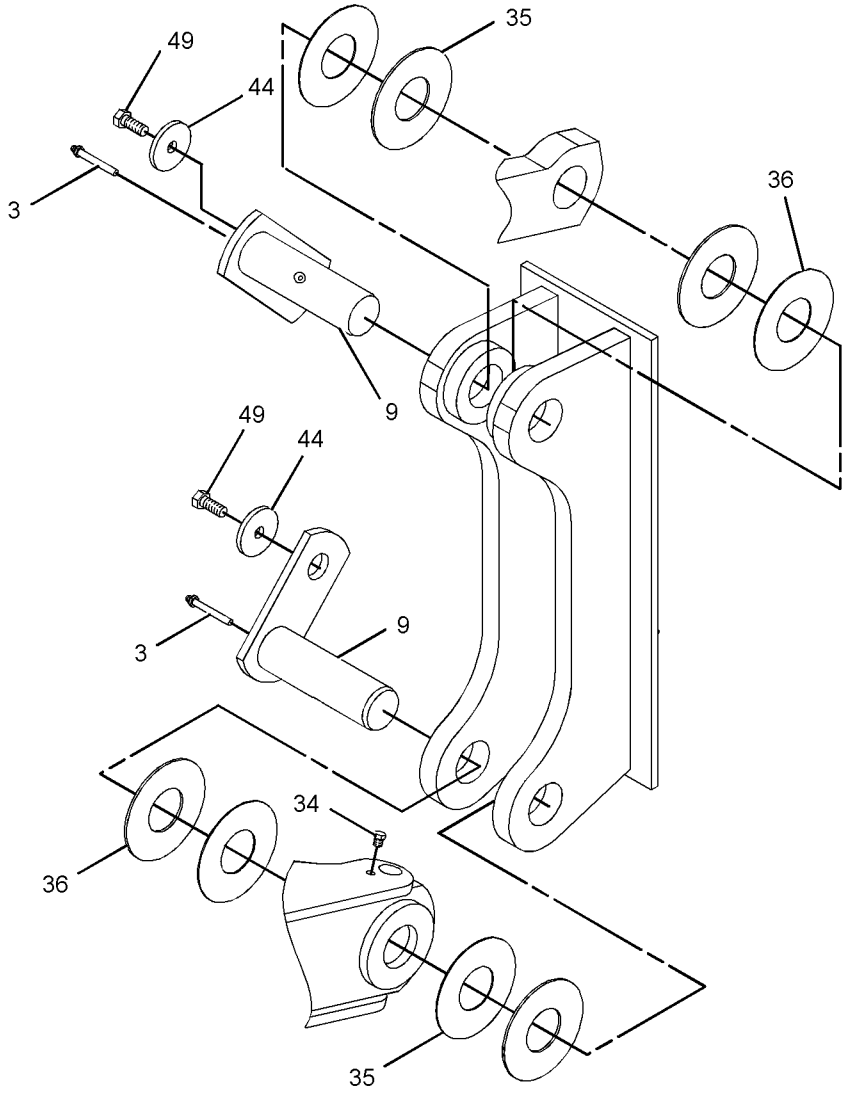

VIEW OF AREA F

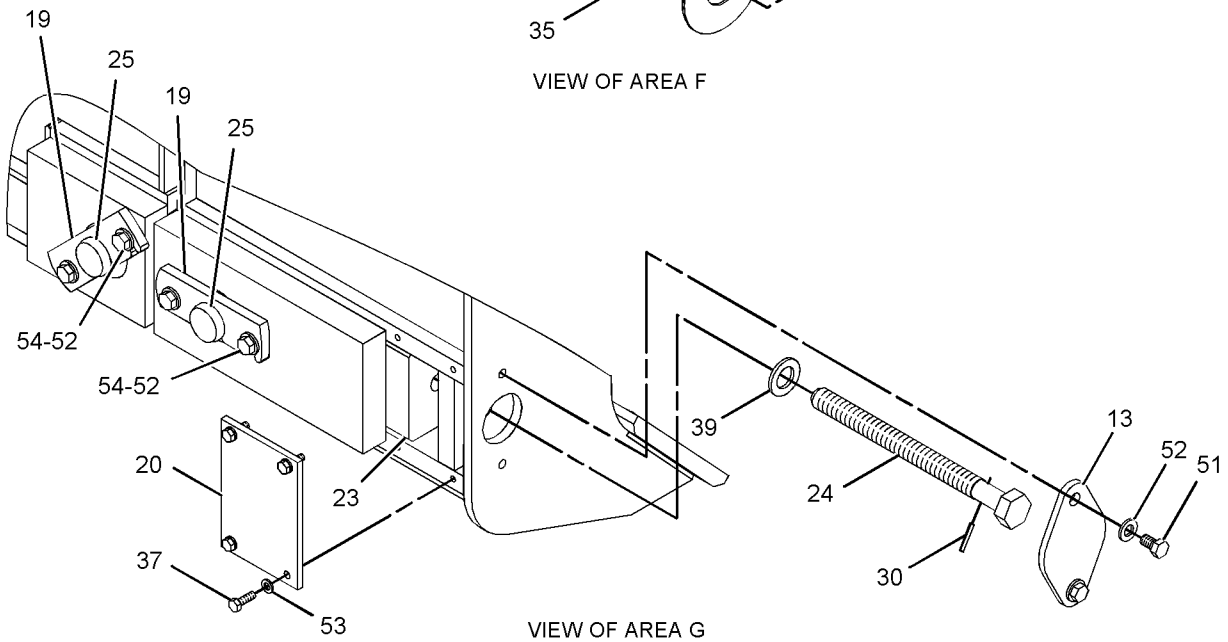

VIEW OF AREA G

GRAPHIC #4

<END>

g01147505

WORK TOOLS

116-0379 BRACKET GP-SCARIFIER

S/N: B9M1-UP
PART OF 108-1104, 113-0704 SCARIFIER AR
AN ATTACHMENT

SMCS-6162 **i01003232**

NOTE	REF NO	GRAPHIC REF	PART NUMBER	QTY	PART NAME 1 2 3 4 5 6 (PRODUCT LEVEL)	SEE PAGE
	1	1	**8W-0684**	1	BRACKET AS	
	2	1	**8W-0681**	1	PLATE	

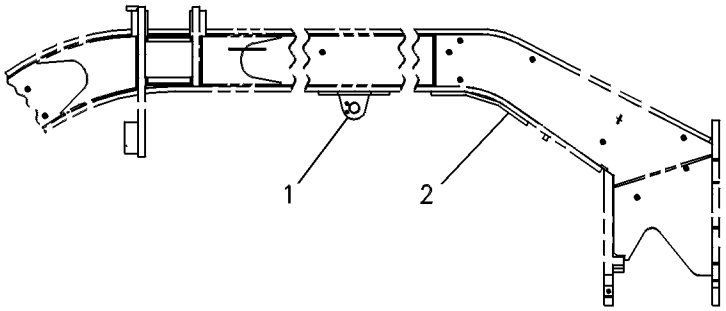

GRAPHIC #1 **<END>** g00108689

PROOF

233-7139 EDGE GP-CUTTING

S/N: B9M1-UP
AN ATTACHMENT

SMCS-6801 **i02322640**

NOTE	PART NUMBER	QTY	PART NAME 1 2 3 4 5 6 (PRODUCT LEVEL)	SEE PAGE
	5J-4773	26	BOLT-PLOW (3/4-10X2.5-IN)	
	9J-3657	2	EDGE-CUTTING	
	2J-3506	26	NUT-FULL (3/4-10-THD)	

<END>

233-7140 EDGE GP-CUTTING

S/N: B9M1-UP
AN ATTACHMENT

SMCS-6801 **i02322645**

NOTE	PART NUMBER	QTY	PART NAME 1 2 3 4 5 6 (PRODUCT LEVEL)	SEE PAGE
	5J-4773	26	BOLT-PLOW (3/4-10X2.5-IN)	
	7D-1576	2	EDGE-CUTTING	
	2J-3506	26	NUT-FULL (3/4-10-THD)	

<END>

233-7141 EDGE GP-CUTTING

S/N: B9M1-UP
AN ATTACHMENT

SMCS-6801 **i02323647**

NOTE	PART NUMBER	QTY	PART NAME 1 2 3 4 5 6 (PRODUCT LEVEL)	SEE PAGE
	5J-4773	26	BOLT-PLOW (3/4-10X2.5-IN)	
	9J-7701	2	EDGE-CUTTING	
	2J-3506	26	NUT-FULL (3/4-10-THD)	

<END>

PROOF

WORK TOOLS

233-7142 EDGE GP-CUTTING

S/N: B9M1-UP

AN ATTACHMENT

SMCS-6801 **i02322668**

NOTE	REF NO	GRAPHIC REF	PART NUMBER	QTY	PART NAME 1 2 3 4 5 6 (PRODUCT LEVEL)	SEE PAGE
	1	1	**9J-3658**	2	EDGE-CUTTING	
	2	1	**2J-3506**	30	NUT-FULL (3/4-10-THD)	
	3	1	**5J-4773**	30	BOLT-PLOW (3/4-10X2.5-IN)	

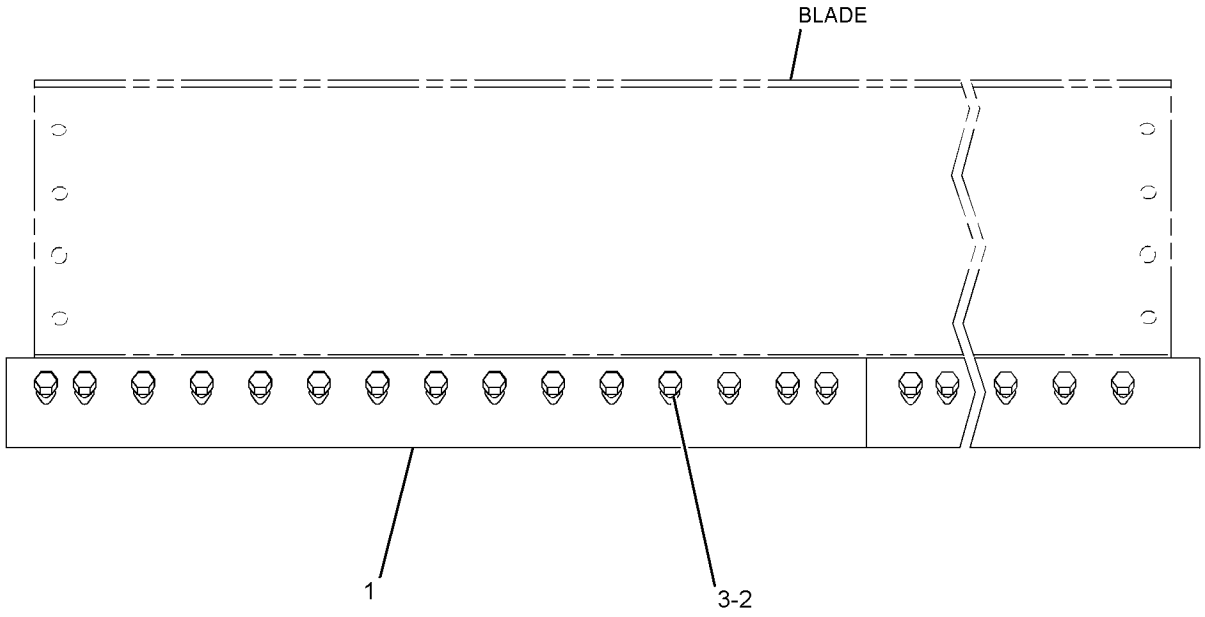

GRAPHIC #1 **<END>** g01161796

WORK TOOLS

233-7143 EDGE GP-CUTTING

S/N: B9M1-UP

AN ATTACHMENT

SMCS-6801 **i02302047**

NOTE	PART NUMBER	QTY	PART NAME 1 2 3 4 5 6 (PRODUCT LEVEL)	SEE PAGE
	5J-4773	30	BOLT-PLOW (3/4-10X2.5-IN)	
	7D-1577	2	EDGE-CUTTING (7-FT EACH)	
	2J-3506	30	NUT-FULL (3/4-10-THD)	

<END>

233-7144 EDGE GP-CUTTING

S/N: B9M1-UP

AN ATTACHMENT

SMCS-6801 **i02302048**

NOTE	PART NUMBER	QTY	PART NAME 1 2 3 4 5 6 (PRODUCT LEVEL)	SEE PAGE
	5J-4773	30	BOLT-PLOW (3/4-10X2.5-IN)	
	7D-1158	2	EDGE-CUTTING (7-FT EACH)	
	2J-3506	30	NUT-FULL (3/4-10-THD)	

<END>

PROOF

WORK TOOLS

110-5326 EXTENSION GP-BLADE–RH

S/N: B9M1-UP
2 FT WITH 3/4 IN BOLT
AN ATTACHMENT

SMCS-6173 **i02334879**

NOTE	REF NO	GRAPHIC REF	PART NUMBER	QTY	PART NAME 1 2 3 4 5 6 (PRODUCT LEVEL)	SEE PAGE
	1	1	**5J-4773**	6	BOLT-PLOW (3/4-10X2.5-IN)	
	2	1	**2J-3506**	16	NUT-FULL (3/4-10-THD)	
	3	1	**176-5639**	1	PLATE AS	
	4	1	**5F-8933**	10	BOLT-PLOW (3/4-10X3.75-IN)	
	5	1	**110-5336**	1	ANGLE AS	
	6	1	**110-5334**	3	SPACER (3-MM THK)	
	7	1	**3G-2165**	1	EDGE-CUTTING	
	8	1	**133-7523**	1	EXTENSION-RH	
	9	1	**9X-8885**	2	BOLT (3/4-10X2.25-IN)	
	10	1	**2S-0115**	2	WASHER-HARD (20X36.5X5-MM THK)	
B	11	1	**176-5642**	1	SPACER (2-MM THK)	
B	12	1	**176-5643**	2	SPACER (1-MM THK)	

B-USE AS REQUIRED

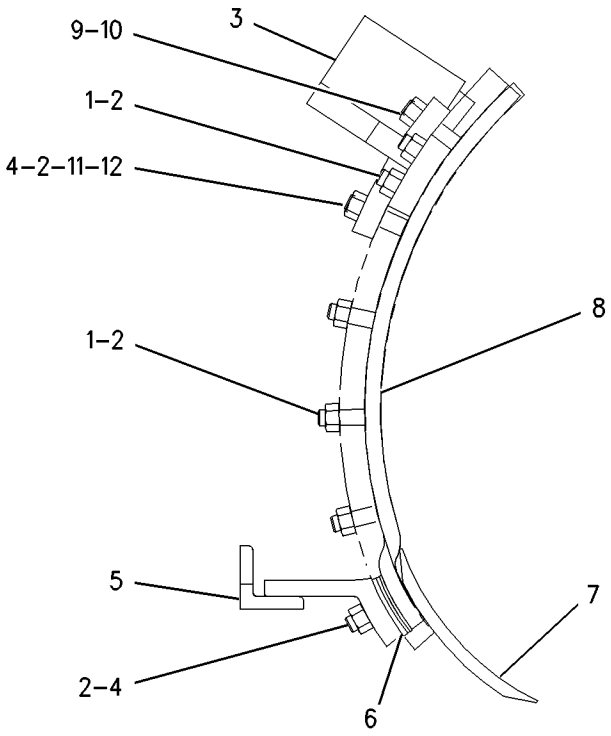

GRAPHIC #1 **<END>** g00638547

PROOF

WORK TOOLS

110-5327 EXTENSION GP-BLADE–LH

S/N: B9M1-UP
2 FT WITH 3/4 IN BOLT
AN ATTACHMENT

SMCS-6173 **i01650463**

NOTE	REF NO	GRAPHIC REF	PART NUMBER	QTY	PART NAME 1 2 3 4 5 6 (PRODUCT LEVEL)	SEE PAGE
	1	1	**133-7524**	1	EXTENSION-LH	
	2	1	**3G-2165**	1	EDGE-CUTTING	
	3	1	**176-5638**	1	PLATE AS	
	4	1	**110-5334**	3	SPACER (3-MM THK)	
	5	1	**110-5335**	1	ANGLE AS	
	6	1	**5F-8933**	10	BOLT-PLOW (3/4-10X3.75-IN)	
	7	1	**2J-3506**	16	NUT-FULL (3/4-10-THD)	
	8	1	**5J-4773**	6	BOLT-PLOW (3/4-10X2.5-IN)	
	9	1	**9X-8885**	2	BOLT (3/4-10X2.25-IN)	
	10	1	**2S-0115**	2	WASHER-HARD (20X36.5X5-MM THK)	
B	11	1	**176-5642**	1	SPACER (2-MM THK)	
B	12	1	**176-5643**	2	SPACER (1-MM THK)	

B-USE AS REQUIRED

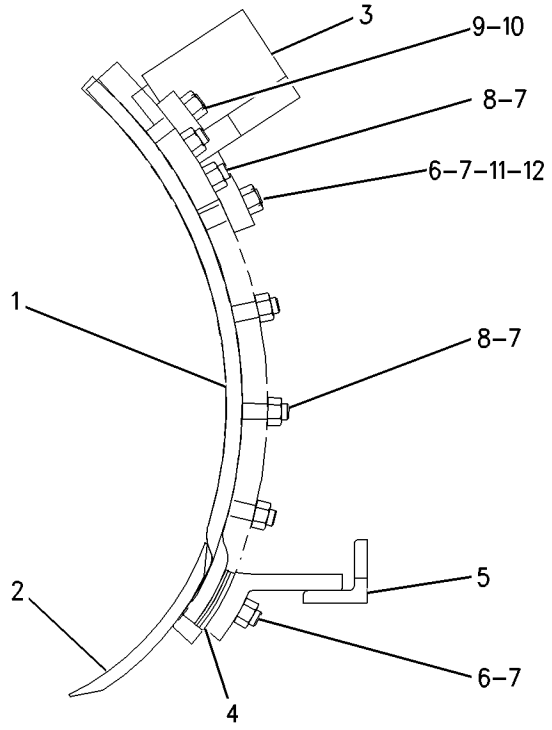

GRAPHIC #1 **<END>** g00638560

PROOF

WORK TOOLS

243-6685 EXTENSION GP-BLADE—RH

S/N: B9M1-UP
2-FT
AN ATTACHMENT

SMCS-6173 **i02231082**

NOTE	REF NO	GRAPHIC REF	PART NUMBER	QTY	PART NAME 1 2 3 4 5 6 (PRODUCT LEVEL)	SEE PAGE
	1	1	**110-5334**	2	SPACER (3-MM THK)	
	2	1	**110-5336**	1	ANGLE AS	
B	3	1	**176-5642**	1	SPACER (2-MM THK)	
B	4	1	**176-5643**	2	SPACER (1-MM THK)	
	5	1	**232-2146**	1	EDGE-CUTTING	
	6	1	**243-6683**	1	EXTENSION	
	7	1	**243-6684**	1	PLATE AS	
	8	1	**2J-3506**	15	NUT-FULL (3/4-10-THD)	
	9	1	**2S-0115**	2	WASHER-HARD (20X36.5X5-MM THK)	
	10	1	**5F-8933**	10	BOLT-PLOW (3/4-10X3.75-IN)	
	11	1	**5J-4773**	5	BOLT-PLOW (3/4-10X2.5-IN)	
	12	1	**9X-8885**	2	BOLT (3/4-10X2.25-IN)	

B-USE AS REQUIRED

PROOF

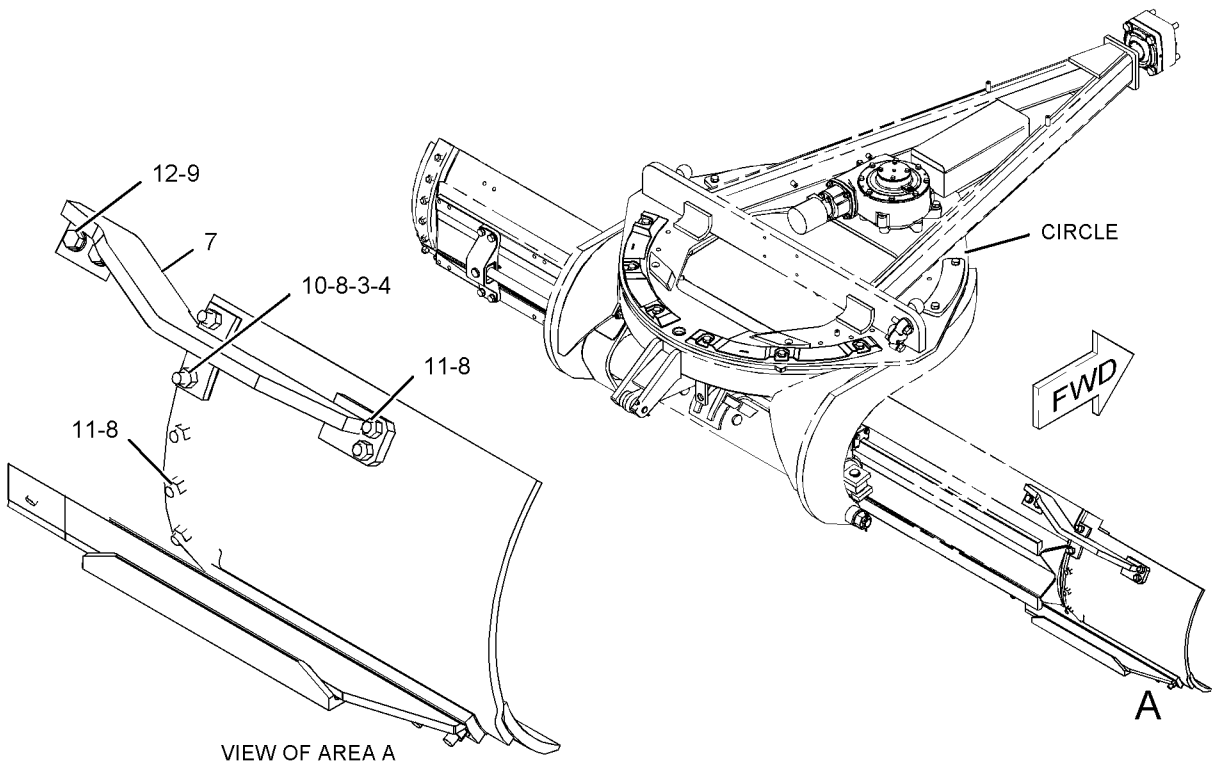

VIEW OF AREA A

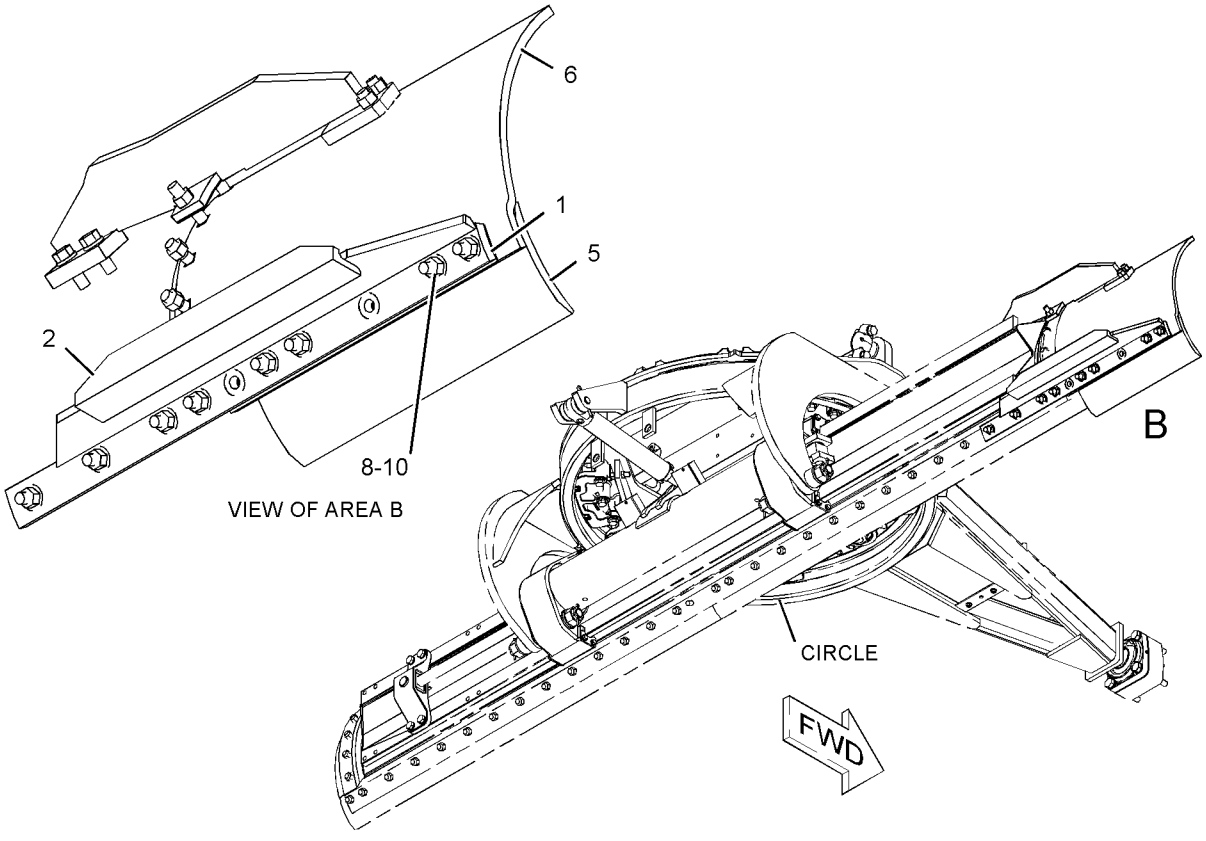

VIEW OF AREA B

GRAPHIC #1 **<END>** g01129959

WORK TOOLS

250-0615 EXTENSION GP-BLADE–2-FT, LH

S/N: B9M1-UP

AN ATTACHMENT

SMCS-6173 **i02240663**

NOTE	REF NO	GRAPHIC REF	PART NUMBER	QTY	PART NAME 1 2 3 4 5 6 (PRODUCT LEVEL)	SEE PAGE
	1	1	**110-5334**	2	SPACER (3-MM THK)	
	2	1	**110-5335**	1	ANGLE AS	
B	3	1	**176-5642**	1	SPACER (2-MM THK)	
B	4	1	**176-5643**	2	SPACER (1-MM THK)	
	5	1	**232-2146**	1	EDGE-CUTTING	
	6	1	**250-0613**	1	EXTENSION	
	7	1	**250-0614**	1	PLATE AS.	
	8	1	**2J-3506**	15	NUT-FULL (3/4-10-THD)	
	9	1	**2S-0115**	2	WASHER-HARD (20X36.5X5-MM THK)	
	10	1	**5F-8933**	10	BOLT-PLOW (3/4-10X3.75-IN)	
	11	1	**5J-4773**	5	BOLT-PLOW (3/4-10X2.5-IN)	
	12	1	**9X-8885**	2	BOLT (3/4-10X2.25-IN)	

B-USE AS REQUIRED

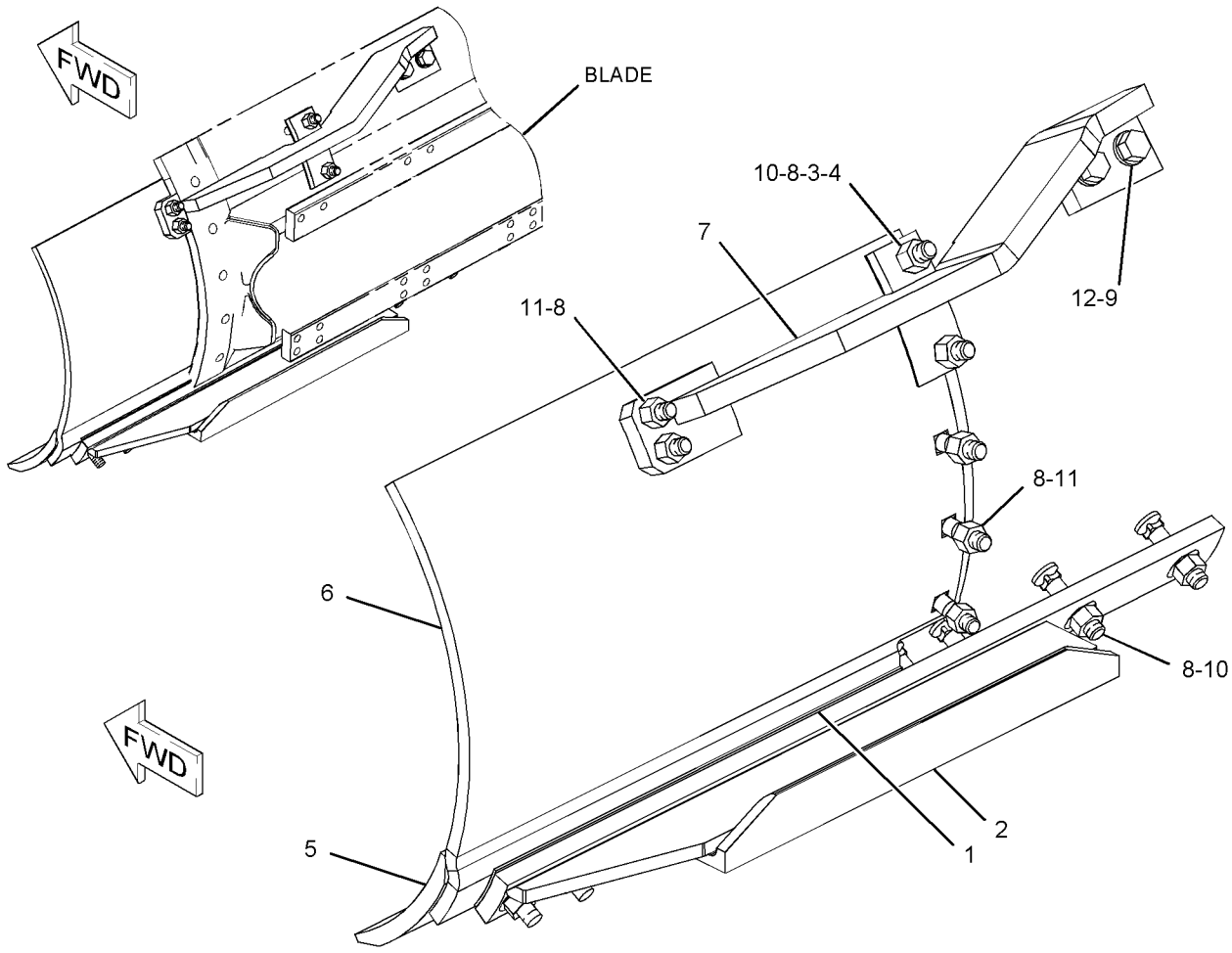

GRAPHIC #1 **<END>** g01134922

WORK TOOLS

261-8536 LIFT GP-BLADE

S/N: B9M1-UP

PART OF 234-7721 COMMON AR-MOTOR GRADER

SMCS-6151 **i02334653**

NOTE	REF NO	GRAPHIC REF	PART NUMBER	QTY	PART NAME 1 2 3 4 5 6 (PRODUCT LEVEL)	SEE PAGE
	1	1	**7D-8875**	4	WASHER-THRUST (2.52X3.62X0.08-IN THK)	
	2	1	**7D-8878**	4	WASHER-THRUST (3.02X4.22X0.08-IN THK)	
B	3	2	**8D-4336**	2	WASHER-THRUST (3.02X5.75X0.08-MM THK)	
	4	2	**8X-5106**	1	STUD-BALL	
	5	1	**8X-5107**	1	PIN	
	6	1	**8X-5109**	1	BAR AS	
		1	**8X-5108**	2	BEARING-SLEEVE	
		1	**124-5836**	5	BUSHING	
B	7	2	**123-8187**	2	WASHER-THRUST (76.6X146X1-MM THK)	
	8	2	**259-4483**	2	PIN	
	9	2	**259-4492**	2	LOCK	
	10	1	**261-8537**	1	ARM AS (LH)	
	11	1	**261-8538**	1	ARM AS (RH)	
	12	1	**261-8541**	2	YOKE AS	
	13	1	**261-8543**	2	RETAINER	
	14	2	**261-8545**	1	PLATE	
	15	2	**261-8547**	2	LOCK	
	16	2	**2M-0849**	1	WASHER-HARD (13.5X25.5X5-MM THK)	
	17	1,2	**3P-1461**	4	SEAL-LIP TYPE	
	18	1	**5F-0149**	2	SEAL-O-RING	
M	19	2	**6V-3823**	1	BOLT (M12X1.75X60-MM)	
M	20	1	**6V-5684**	4	BOLT (M12X1.75X45-MM)	
M	21	2	**6V-7742**	6	NUT-FULL (M20X2.5-THD)	
	22	1	**7D-8876**	2	WASHER-THRUST (65.07X92.08X2.39-MM THK)	
	23	1	**7D-8877**	2	WASHER-THRUST (77.77X107.19X2.39-MM THK)	
	24	1	**7D-8883**	2	SEAL	
M	25	2	**8T-0070**	6	BOLT (M20X2.5X120-MM)	
M	26	1,2	**8T-0362**	4	BOLT (M20X2.5X110-MM)	
	27	1,2	**8T-3282**	16	WASHER-HARD (22X35X3.5-MM THK)	
	28	1	**8T-4223**	4	WASHER-HARD (13.5X25.5X3-MM THK)	
	29	1	**7H-2444**	2	SEAL	
	30	1	**7D-8884**	2	SEAL	
B	31	1	**7D-8882**	2	SHIM (0.508-MM THK)	
B	32	1	**7D-8881**	6	SHIM (0.254-MM THK)	
B	33	1	**7D-8879**	8	SHIM (0.127-MM THK)	

B-USE AS REQUIRED
M-METRIC PART

PROOF

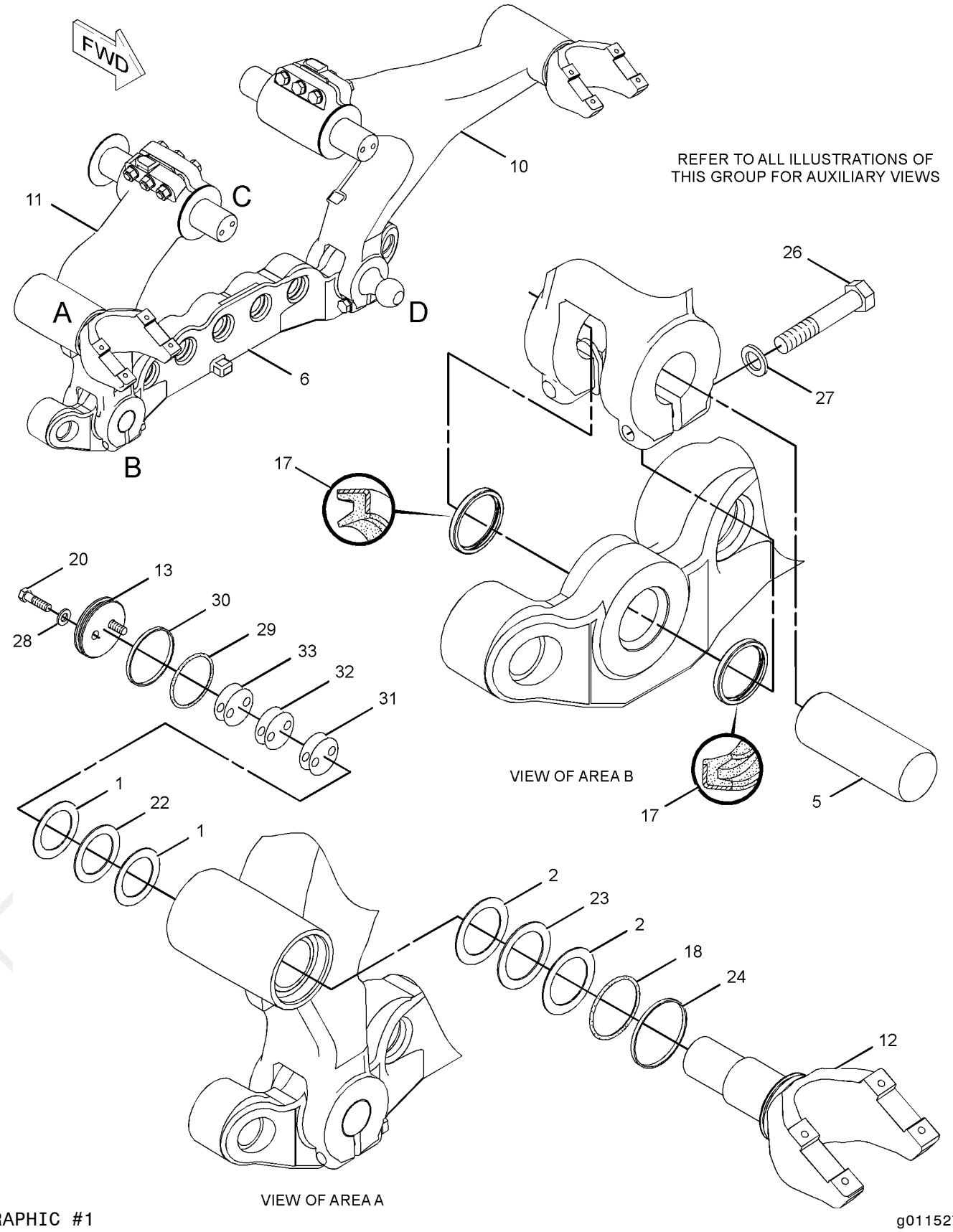

GRAPHIC #1 g01152778

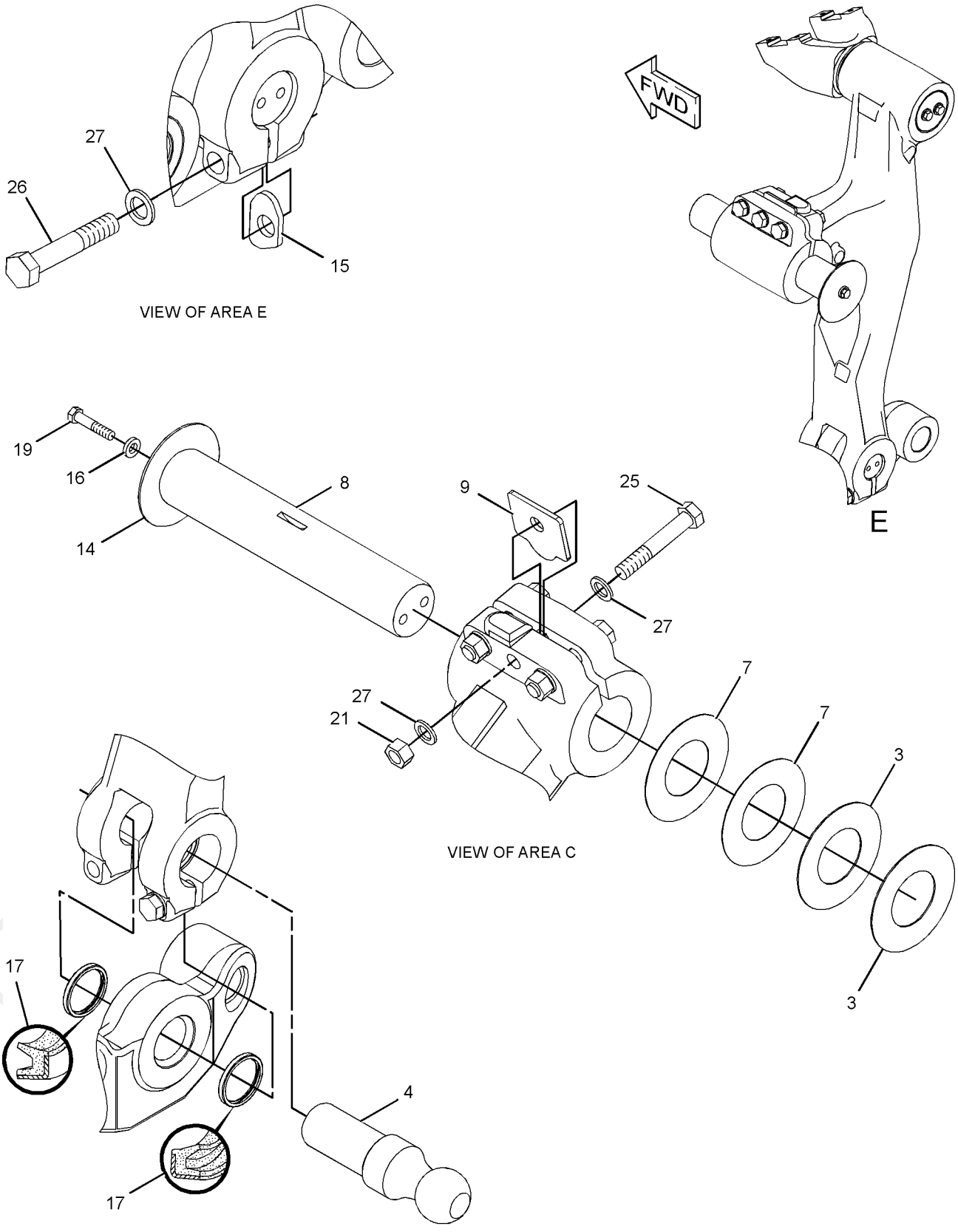

GRAPHIC #2 **<END>** g01152779

WORK TOOLS

252-7086 MOUNTING GP-BLADE

S/N: B9M1-UP

PART OF 243-6660 CIRCLE GP

SMCS-6151 **i02286790**

NOTE	REF NO	GRAPHIC REF	PART NUMBER	QTY	PART NAME 1 2 3 4 5 6 (PRODUCT LEVEL)	SEE PAGE
	1	1	**194-4175**	4	BEARING-SLEEVE	

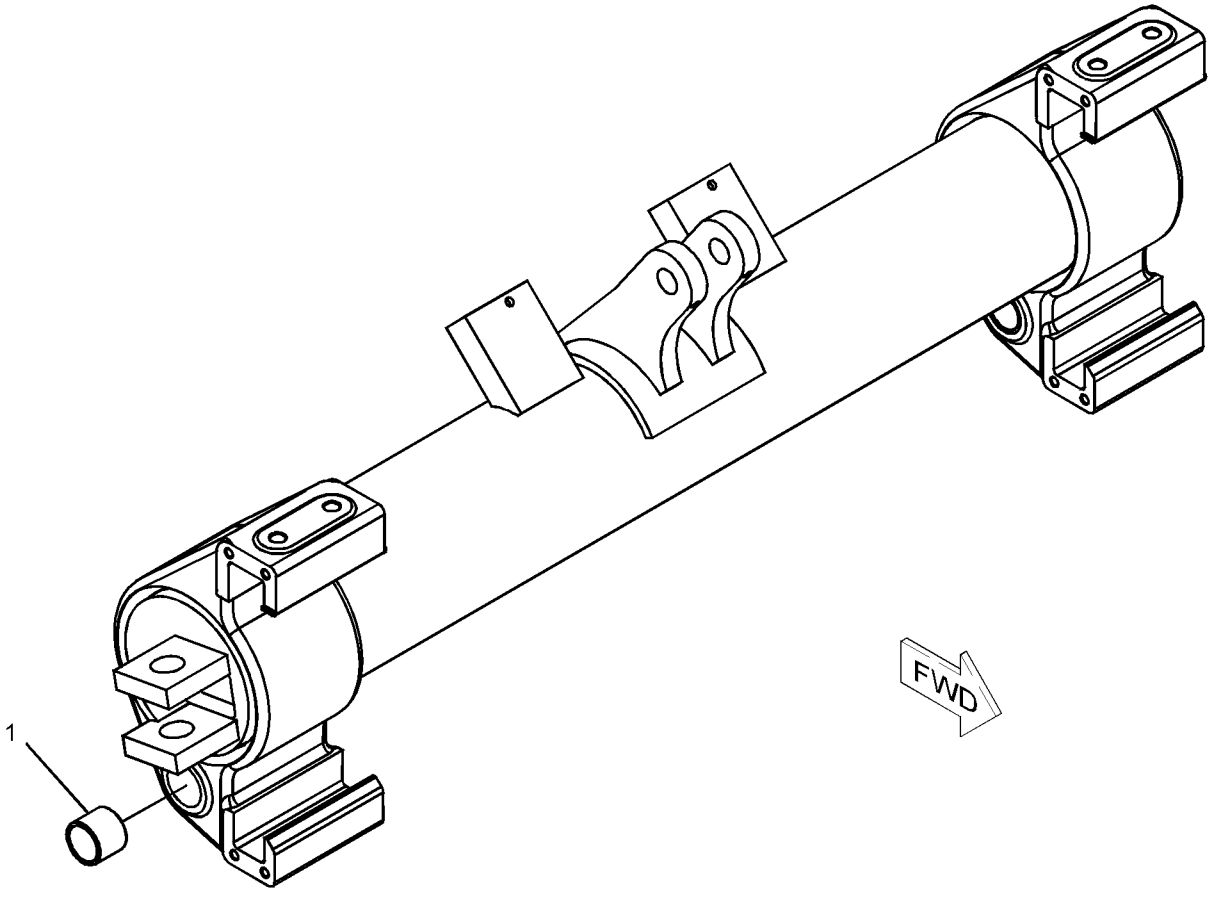

GRAPHIC #1 **<END>** g01148127

WORK TOOLS

251-4188 MOUNTING GP-GRADE CONTROL–BLADE

S/N: B9M1-UP
PART OF 251-3230 INSTALLATION AR-GRADE CONTROL
AN ATTACHMENT

SMCS-6151, 7220 **i02234344**

NOTE	REF NO	GRAPHIC REF	PART NUMBER	QTY	PART NAME 1 2 3 4 5 6 (PRODUCT LEVEL)	SEE PAGE
	1	1	**244-1900**	2	BRACKET	

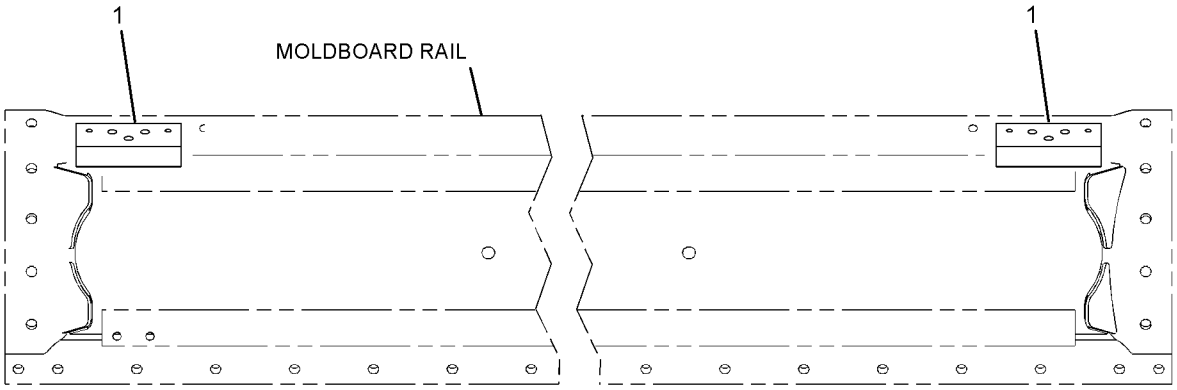

REAR VIEW

GRAPHIC #1 **<END>** g01127070

WORK TOOLS

248-1323 MOUNTING GP-RIPPER

S/N: B9M1-UP
PART OF 248-1322 RIPPER AR
AN ATTACHMENT

SMCS-6165, 6324 **i02286237**

NOTE	REF NO	GRAPHIC REF	PART NUMBER	QTY	PART NAME 1 2 3 4 5 6 (PRODUCT LEVEL)	SEE PAGE
	1	1	**3W-7254**	2	SPACER (47X80X20-MM THK)	
	2	1	**3W-7256**	2	SPACER (47X80X16-MM THK)	
	3	1	**6P-5647**	2	BOSS	
	4	1	**104-4523**	2	CAM AS	
	5	1	**248-1325**	1	LINK	
	6	1	**248-1326**	1	PLATE AS	
	7	1	**257-3568**	2	BRACKET AS	
					(EACH INCLUDES)	
		1	**1J-2315**	2	BOSS	
	8	1	**263-9495**	1	LINK	
	9	1	**270-3844**	2	PIN	
M	10	1	**106-4175**	8	BOLT (M20X2.5X60-MM)	
M	11	1	**129-3180**	4	LOCKNUT (M12X1.75-THD)	
	12	1	**267-3504**	8	BOLT (M24X3X100-MM)	
	13	1	**267-3506**	6	WASHER-HARD	
	14	1	**267-3507**	8	WASHER-HARD	
	15	1	**267-3508**	8	WASHER-HARD	
M	16	1	**8T-0389**	2	LOCKNUT (M10X1.5-THD)	
M	17	1	**8T-5041**	2	BOLT (M12X1.75X120-MM)	
M	18	1	**8T-5092**	2	BOLT (M12X1.75X150-MM)	
M	19	1	**8T-6685**	2	BOLT (M10X1.5X110-MM)	
	20	1	**9W-7469**	2	PIN	
	21	1	**9W-7470**	2	PIN	
M	22	1	**9X-2615**	6	BOLT	

M-METRIC PART

PROOF

248-1323 **MOUNTING GP-RIPPER** *(contd.)* **i02286237**

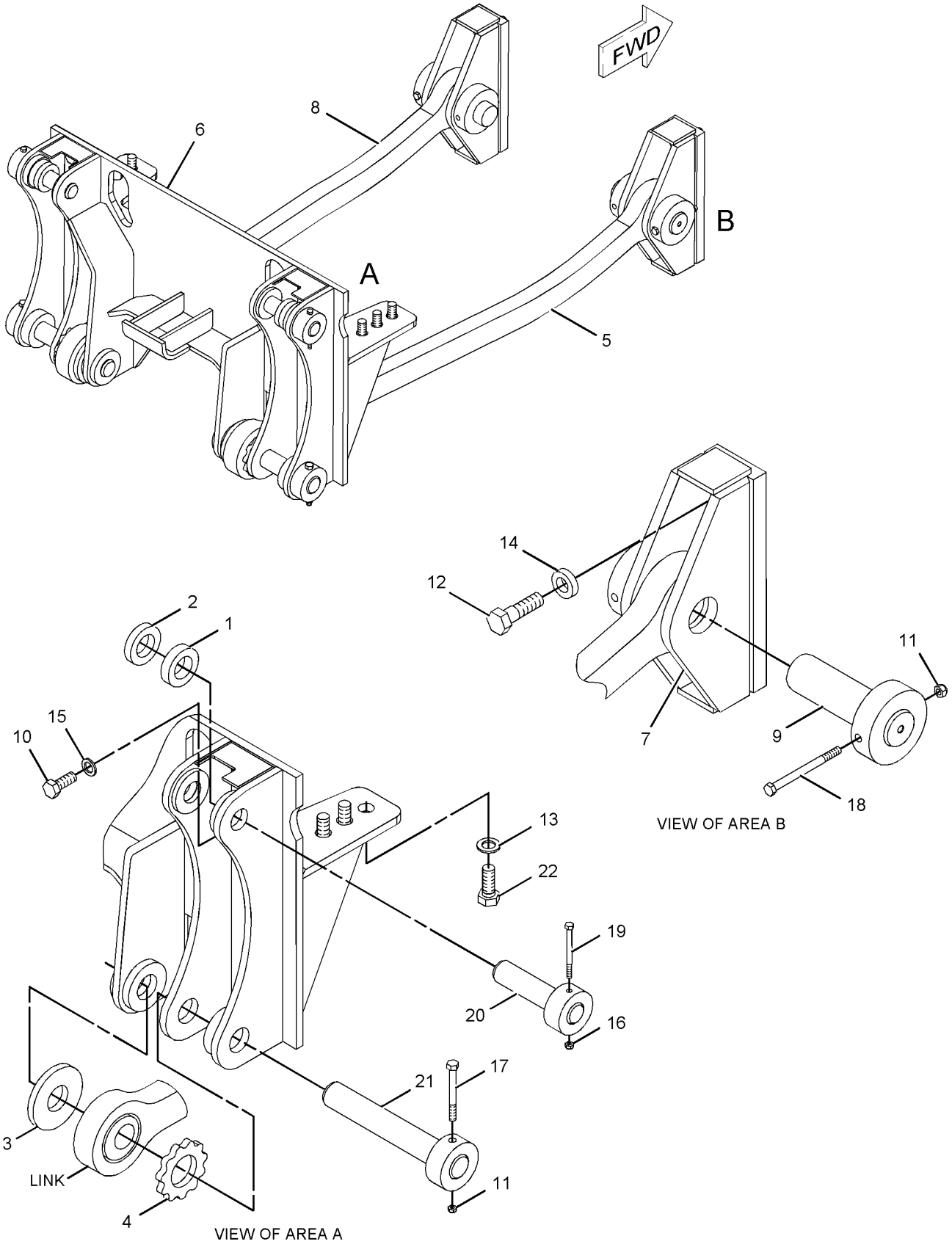

GRAPHIC #1 **<END>** g01147912

249-7587 MOUNTING GP-SNOW WING–RIGHT

S/N: B9M1-UP

AN ATTACHMENT

SMCS-6158 **i02236362**

NOTE	REF NO	GRAPHIC REF	PART NUMBER	QTY	PART NAME 1 2 3 4 5 6 (PRODUCT LEVEL)	SEE PAGE
	1	1	**255-2410**	1	PLATE	
	2	1	**260-6729**	1	PLATE AS.	
	3	1	**260-6730**	1	PLATE AS.	
	4	1	**260-6731**	1	PLATE AS.	

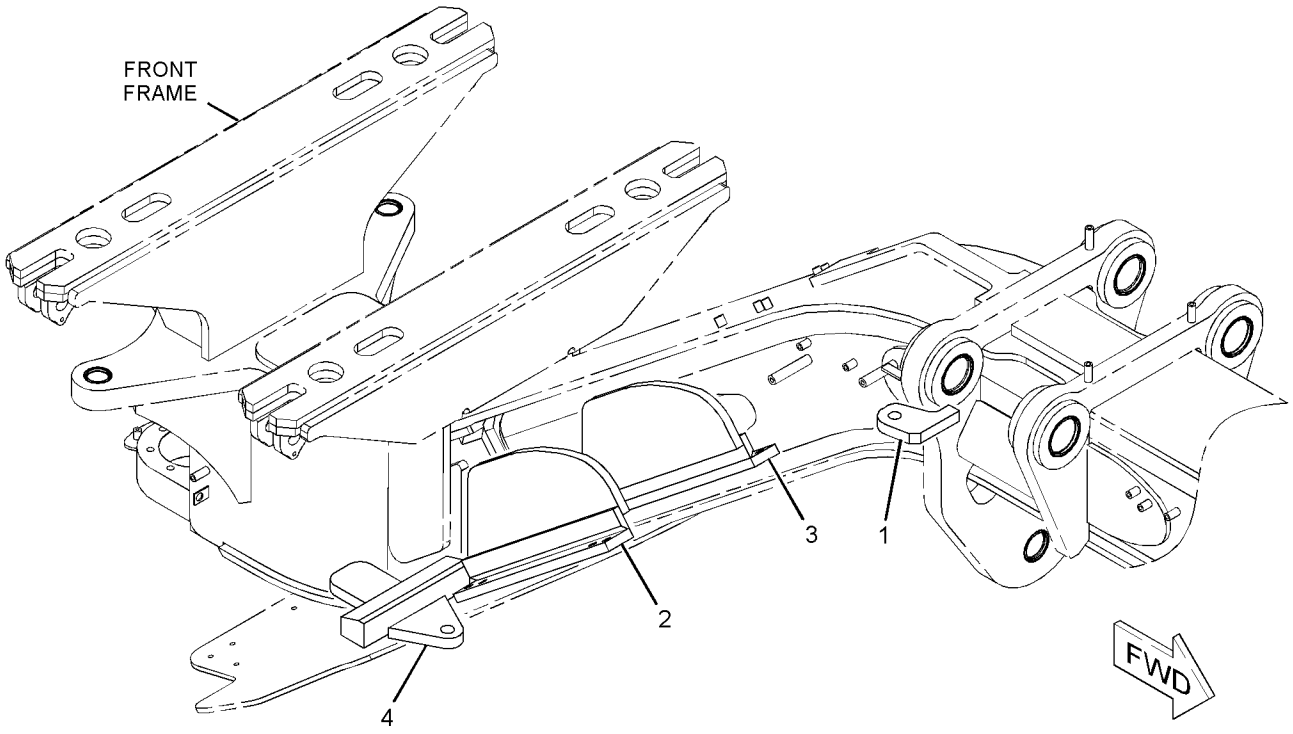

GRAPHIC #1 **<END>** g01135847

WORK TOOLS

257-5176 MOUNTING GP-SNOW WING—FRONT LIFT

S/N: B9M1-UP
AN ATTACHMENT

SMCS-6158 **i02250599**

NOTE	REF NO	GRAPHIC REF	PART NUMBER	QTY	PART NAME 1 2 3 4 5 6 (PRODUCT LEVEL)	SEE PAGE
	1	1	**257-5177**	2	PLATE	

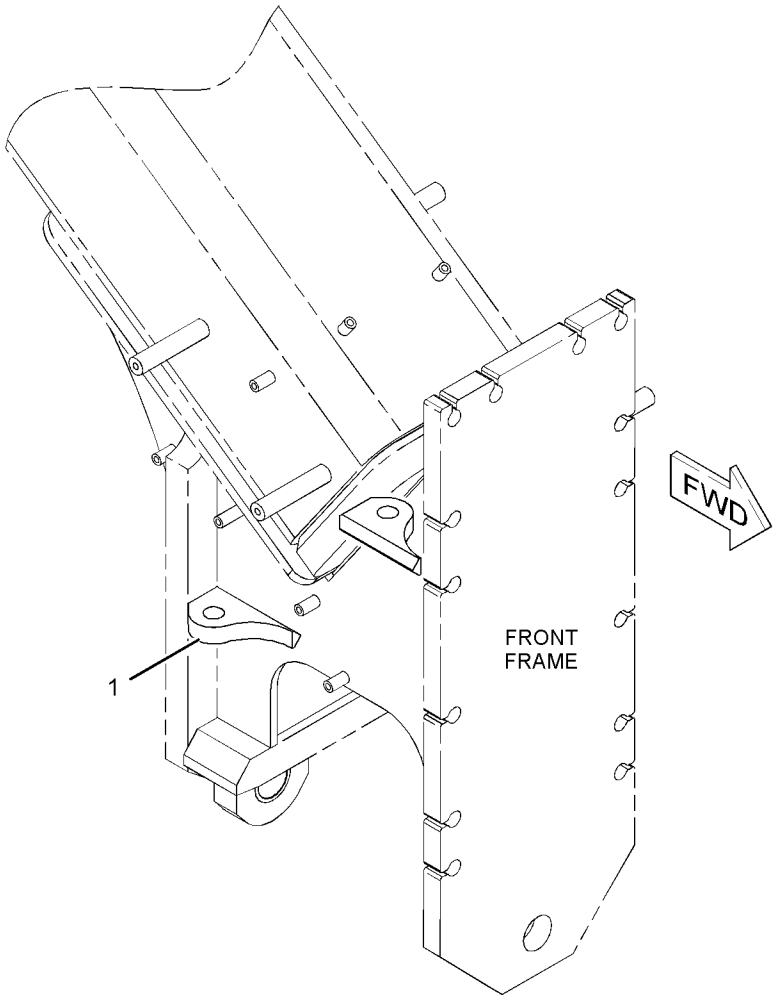

GRAPHIC #1 **<END>** g01135848

WORK TOOLS

248-1322 RIPPER AR

S/N: B9M1-UP

AN ATTACHMENT

SMCS-6325 **i02236135**

NOTE	REF NO	GRAPHIC REF	PART NUMBER	QTY	PART NAME 1 2 3 4 5 6 (PRODUCT LEVEL)	SEE PAGE
Y	1	1	*8J-7024*	1	RIPPER GP	689
Y	3	1	**113-7754**	1	CYLINDER GP-RIPPER	489
Y	4	1	**248-1323**	1	MOUNTING GP-RIPPER	684
Y	5	1	**250-6181**	1	LINES GP-RIPPER	554

Y-SEPARATE ILLUSTRATION

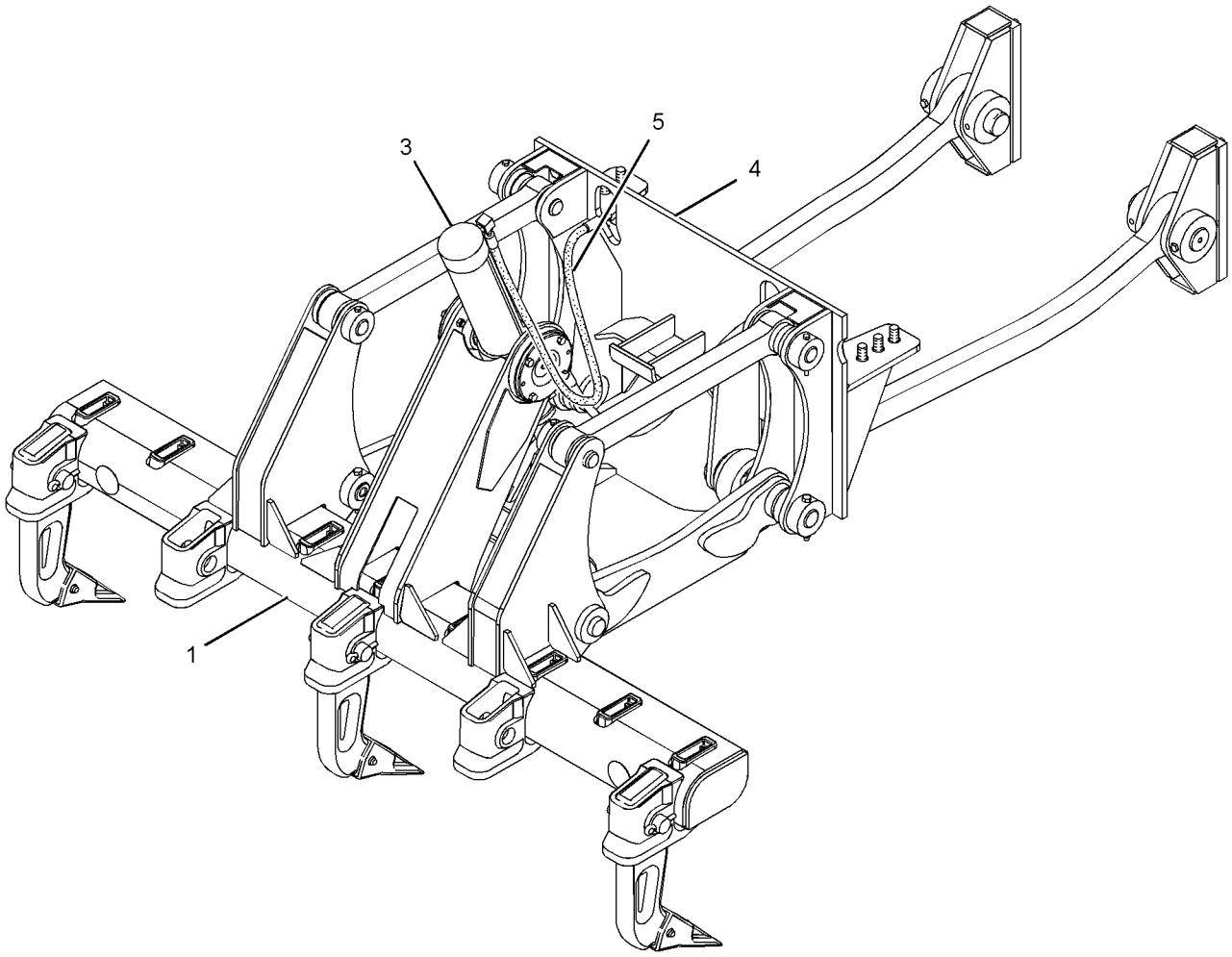

GRAPHIC #1 **<END>** g01134097

WORK TOOLS

8J-7024 RIPPER GP–3 TEETH

S/N: B9M1-UP
PART OF 248-1322 RIPPER AR
AN ATTACHMENT

SMCS-6325 **i01961835**

NOTE	REF NO	GRAPHIC REF	PART NUMBER	QTY	PART NAME 1 2 3 4 5 6 (PRODUCT LEVEL)	SEE PAGE
	2	1	**2K-0120**	1	PIN	
	3	1	**2K-0703**	1	BAR	
	4	1	**3B-8489**	3	FITTING-GREASE (RIPPER CYLINDER BEARING)	
	5	1	**4K-3004**	2	BEARING-TRUNNION SUPPLEMENTARY	
	6	1	**4K-3150**	2	PIN	
	7	1	**190-5386**	2	FILM-IDENTIFICATION (ROUND RED REFLECTIVE)	
Y	8	1	*8J-1434*	3	TOOTH GP-RIPPER (3 TEETH)	700
	9	1	**9J-0096**	2	LINK AS-UPPER	
					(EACH INCLUDES)	
	9A	1	**3G-2581**	2	BEARING	
	10	1	**9W-3155**	1	CARRIAGE AS	
		1	**112-3690**	5	HOLDER-BIT	
	11	1	**187-0953**	1	LINK AS-LOWER	
	11A	1	**3G-2579**	4	BEARING	
	12	1	**1K-6872**	10	LOCKNUT (1/2-13-THD)	
	13	1	**2D-0626**	8	SEAL	
	14	1	**2K-4973**	2	LOCKNUT (3/8-16-THD)	
	15	1	**5P-2228**	2	BOLT (1/2-13X1-IN)	
	16	1	**5P-2424**	8	BOLT (1/2-13X2.25-IN)	
	17	1	**7K-9203**	8	SEAL-LIP TYPE	
	18	1	**7X-0333**	2	BOLT (1/2-13X4.75-IN)	
	19	1	**8J-7008**	2	PIN	
	20	1	**8T-9378**	2	BOLT (3/8-16X4-IN)	

Y-SEPARATE ILLUSTRATION

PROOF

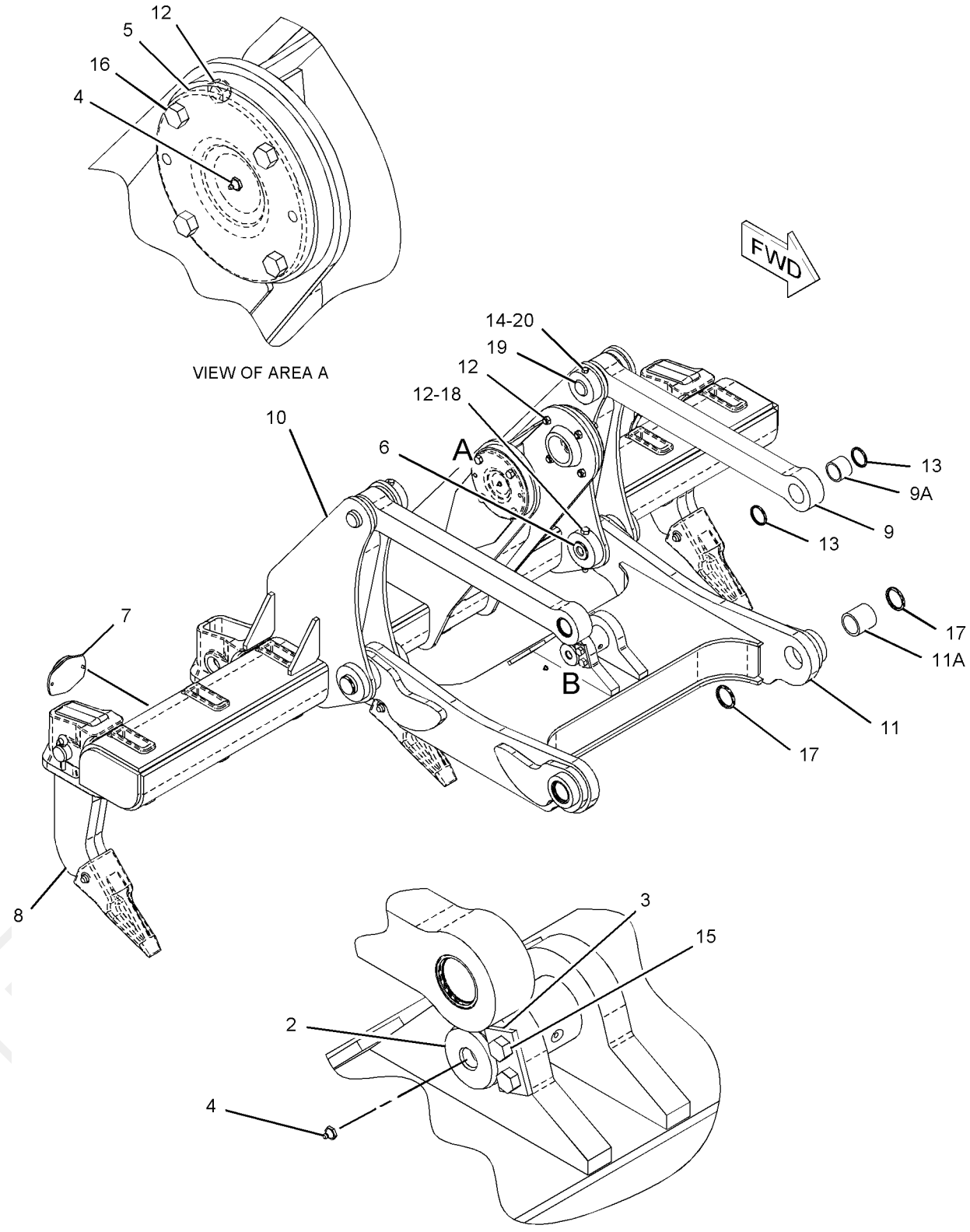

GRAPHIC #1

<END>

g01068995

108-1104 SCARIFIER AR—VEE TYPE

S/N: B9M1-UP
AN ATTACHMENT

SMCS-6162, 6325, 6811 **i01650485**

NOTE	PART NUMBER	QTY	PART NAME 1 2 3 4 5 6 (PRODUCT LEVEL)	SEE PAGE
Y	*116-0379*	1	BRACKET GP-SCARIFIER	670
Y	*8W-2913*	1	CYLINDER & MTG GP-SCARIFIER	478
Y	*8X-6070*	1	LINES GP-HYDRAULIC (SCARIFIER)	508
Y	*8X-6080*	1	SCARIFIER GP (VEE TYPE)	692

Y-SEPARATE ILLUSTRATION

<END>

113-0704 SCARIFIER AR—STRAIGHT

S/N: B9M1-UP
AN ATTACHMENT

SMCS-6162, 6325, 6811 **i01650490**

NOTE	PART NUMBER	QTY	PART NAME 1 2 3 4 5 6 (PRODUCT LEVEL)	SEE PAGE
Y	*116-0379*	1	BRACKET GP-SCARIFIER	670
Y	*8W-2913*	1	CYLINDER & MTG GP-SCARIFIER	478
Y	*8X-6070*	1	LINES GP-HYDRAULIC (SCARIFIER)	508
Y	*111-3883*	1	SCARIFIER GP (STRAIGHT)	695

Y-SEPARATE ILLUSTRATION

<END>

PROOF

WORK TOOLS

8X-6080 SCARIFIER GP—VEE TYPE

S/N: B9M1-UP
PART OF 108-1104 SCARIFIER AR
AN ATTACHMENT

SMCS-6162, 6325, 6811 **i02334787**

NOTE	REF NO	GRAPHIC REF	PART NUMBER	QTY	PART NAME 1 2 3 4 5 6 (PRODUCT LEVEL)	SEE PAGE
	1	1	**9D-5516**	2	LINK AS-LIFT	
					(EACH INCLUDES)	
		1	**7D-2135**	1	SOCKET-BALL	
	2	1	**7D-2196**	2	SLEEVE AS-LINK	
					(EACH INCLUDES)	
		1	**7D-2136**	1	SOCKET-BALL	
	3	1	**5D-8161**	2	PIN	
		1	**5D-8159**	2	PIN AS	
	4	1	**107-8375**	1	SHAFT AS	
	5	1	**118-7880**	1	DRAWBAR AS	
	6	1	**8W-5597**	1	STUD-BALL	
	7	1	**2G-7728**	2	COLLAR	
	8	1	**2G-7309**	1	SHAFT	
	9	1	**8X-6075**	1	BOLSTER AS	
	10	1	**1D-4612**	4	BOLT (3/4-10X4-IN)	
		1	**2J-3506**	4	NUT-FULL (3/4-10-THD)	
		1	**8X-3663**	8	WASHER (20X45X12-MM THK)	
	11	1	**5B-0577**	2	COLLAR	
	12	1	**9X-8875**	2	BOLT (1/2-13X3.5-IN)	
		1	**1F-7958**	2	NUT-FULL (1/2-13-THD)	
		1	**5P-8245**	2	WASHER-HARD (13.5X25.5X3-MM THK)	
	13	1	**5K-1458**	11	GROMMET	
	14	1	**8W-0663**	2	BRACKET AS	
					(EACH INCLUDES)	
		1	**3B-8489**	1	FITTING-GREASE (SCARIFIER)	
		1	**107-8374**	2	BEARING	
	15	1	**118-7881**	1	DRAWBAR AS	
	16	1	**8W-5597**	1	STUD-BALL	
	17	1	**2G-7728**	2	COLLAR	
	18	1	**1A-0224**	2	BOLT (7/8-14X3.5-IN)	
		1	**1B-4208**	2	NUT-FULL (7/8-14-THD)	
	19	1	**8H-4040**	4	BOLT (1-1/8-12X4.5-IN)	
		1	**3D-4904**	4	LOCKNUT (1-1/8-12-THD)	
		1	**3S-1349**	4	WASHER-HARD (31X52.5X6-MM THK)	
	20	1	**5K-1459**	11	LOCK PIN	
	21	1	**2G-4332**	1	BLOCK AS-SCARIFIER	
		1	**7D-8825**	11	SPACER	
		1	**7D-8826**	11	SPACER	
	22	1	**6B-3260**	1	TOOL	
	23	1	**2H-3746**	4	BOLT (1-14X5-IN)	
		1	**2K-7471**	4	LOCKNUT (1-14-MM THD)	
		1	**5P-8250**	8	WASHER (28X49X5-MM THK)	
	24	2	**3B-8489**	4	FITTING-GREASE (SCARIFIER)	
	25	2	**4D-6086**	2	KEY	
	26	2	**6F-6992**	4	CAP-BALL SOCKET	
B		2	**7F-1327**	32	SHIM (0.03-IN THK)	
	27	2	**6Y-5230**	11	TOOTH-SCARIFIER	
	28	2	**6K-0545**	4	LOCKNUT (7/8X19-THD)	
	29	2	**7X-0390**	4	BOLT (7/8-9X5-IN)	
		2	**8C-6913**	4	WASHER-HARD (24X41.5X4-MM THK)	
	30	2	**195-7218**	11	SHANK	
	31	2	**1A-8063**	8	BOLT (3/4-10X2.5-IN)	
	32	2	**5P-8248**	8	WASHER-HARD (20X36.5X3.5-MM THK)	
	33	2	**8D-1268**	2	ARM AS-LIFT	
					(EACH INCLUDES)	

PROOF

8X-6080 **SCARIFIER GP** *(contd.)* **i02334787**

NOTE	REF NO	GRAPHIC REF	PART NUMBER	QTY	PART NAME 1 2 3 4 5 6 (PRODUCT LEVEL)	SEE PAGE
		2	**7D-8245**	1	STUD-BALL	
B	34	1	**198-9812**	2	SPACER (83X145X2-MM THK)	
B		1	**198-9811**	2	SPACER (83X145X3-MM THK)	

B-USE AS REQUIRED

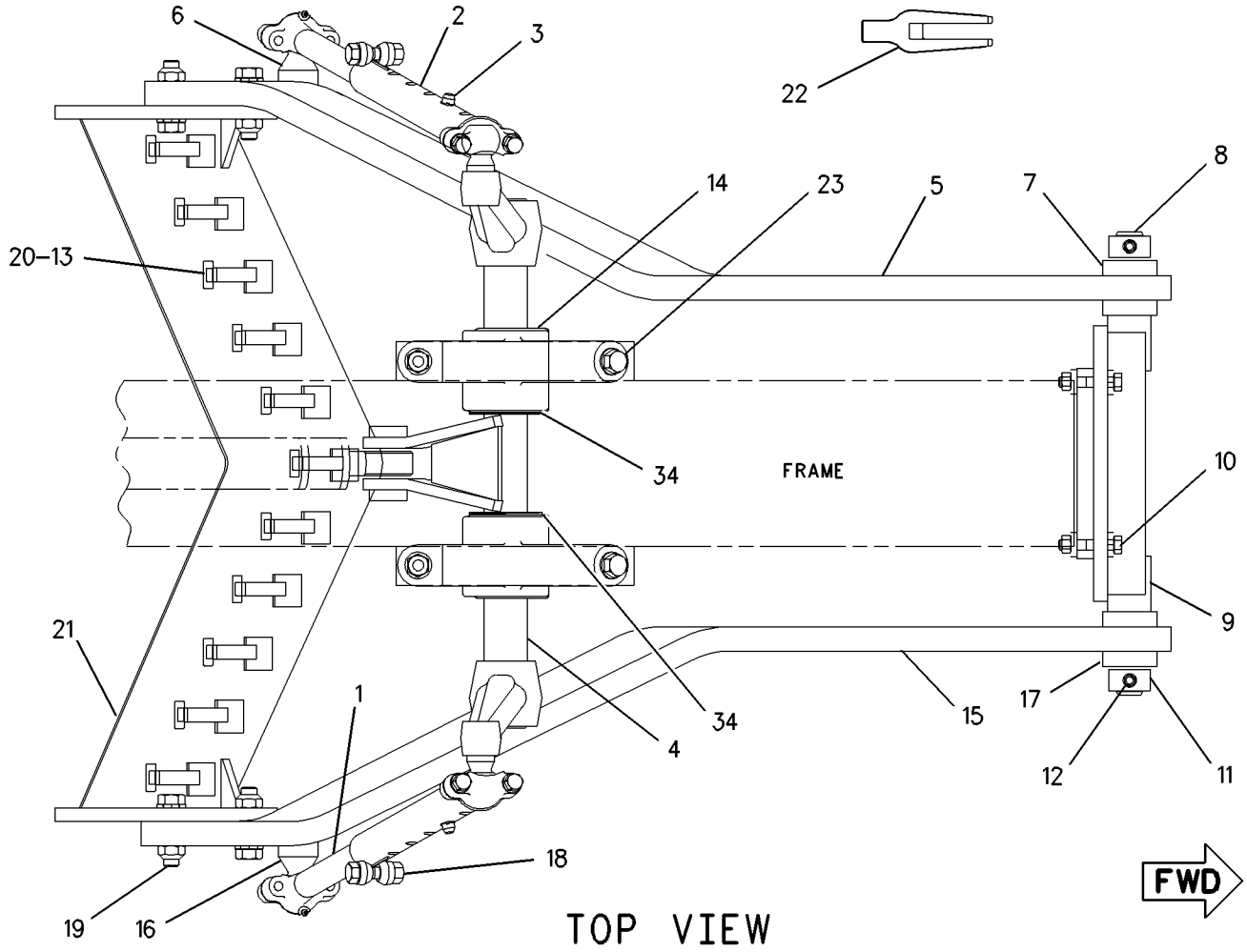

GRAPHIC #1 g00762234

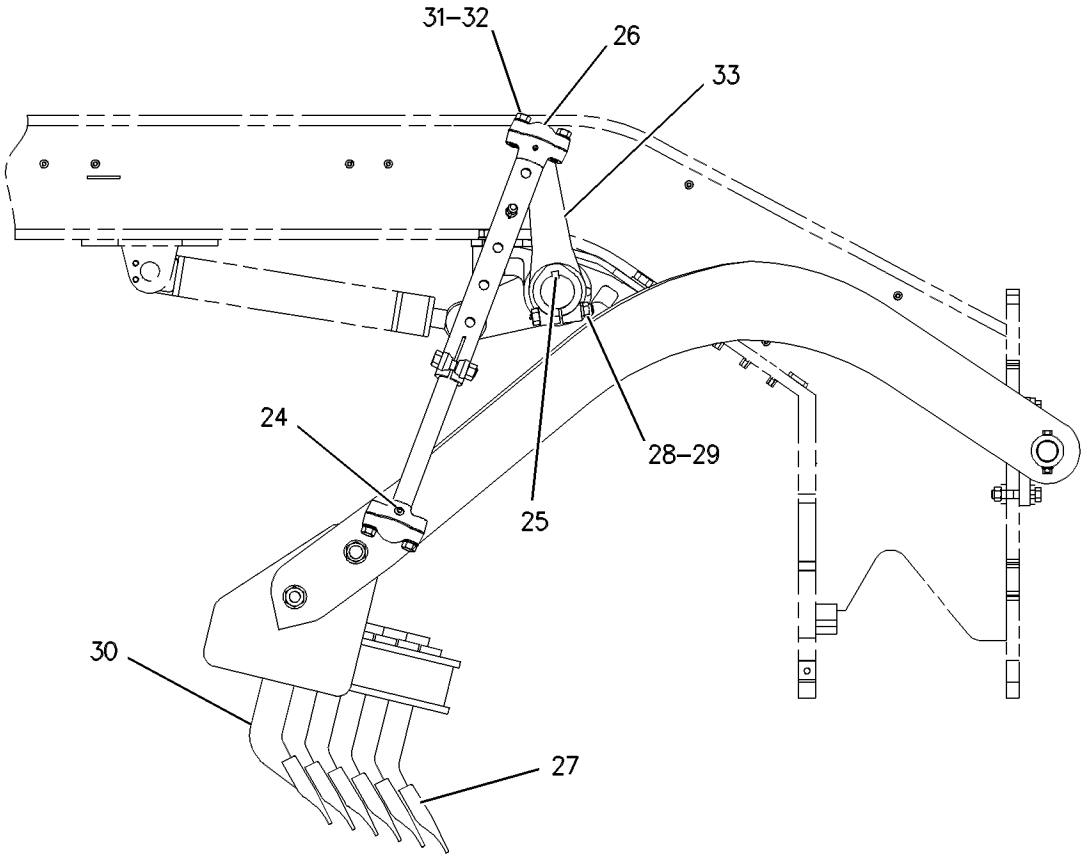

RIGHT SIDE VIEW

GRAPHIC #2

<END>

g00304037

WORK TOOLS

111-3883 SCARIFIER GP—STRAIGHT

S/N: B9M1-UP
PART OF 113-0704 SCARIFIER AR
AN ATTACHMENT

SMCS-6162, 6325, 6811 **i02334819**

NOTE	REF NO	GRAPHIC REF	PART NUMBER	QTY	PART NAME 1 2 3 4 5 6 (PRODUCT LEVEL)	SEE PAGE
	1	1	**9D-5516**	2	LINK AS-LIFT	
					(EACH INCLUDES)	
		1	**7D-2135**	1	SOCKET-BALL	
	2	1	**7D-2196**	2	SLEEVE AS-LINK	
					(EACH INCLUDES)	
		1	**7D-2136**	1	SOCKET-BALL	
	3	1	**5D-8161**	2	PIN	
		1	**5D-8159**	2	PIN AS	
	4	1	**107-8375**	1	SHAFT AS	
	5	1	**118-7880**	1	DRAWBAR AS	
	6	1	**8W-5597**	1	STUD-BALL	
	7	1	**2G-7728**	2	COLLAR	
	8	1	**2G-7309**	1	SHAFT	
	9	1	**8X-6075**	1	BOLSTER AS	
	10	1	**1D-4612**	4	BOLT (3/4-10X4-IN)	
		1	**2J-3506**	4	NUT-FULL (3/4-10-THD)	
		1	**8X-3663**	8	WASHER (20X45X12-MM THK)	
	11	1	**5B-0577**	2	COLLAR	
	12	1	**9X-8875**	2	BOLT (1/2-13X3.5-IN)	
		1	**1F-7958**	2	NUT-FULL (1/2-13-THD)	
		1	**5P-8245**	2	WASHER-HARD (13.5X25.5X3-MM THK)	
	13	1	**5K-1458**	11	GROMMET	
	14	1	**8W-0663**	2	BRACKET AS	
					(EACH INCLUDES)	
		1	**3B-8489**	1	FITTING-GREASE (SCARIFIER)	
		1	**107-8374**	2	BEARING	
	15	1	**118-7881**	1	DRAWBAR AS	
	16	1	**8W-5597**	1	STUD-BALL	
	17	1	**2G-7728**	2	COLLAR	
	18	1	**1A-0224**	2	BOLT (7/8-14X3.5-IN)	
		1	**1B-4208**	2	NUT-FULL (7/8-14-THD)	
	19	1	**8H-4040**	4	BOLT (1-1/8-12X4.5-IN)	
		1	**3D-4904**	4	LOCKNUT (1-1/8-12-THD)	
		1	**3S-1349**	4	WASHER-HARD (31X52.5X6-MM THK)	
	20	1	**5K-1459**	11	LOCK PIN	
	21	1	**2G-7149**	1	BLOCK AS	
	22	1	**6B-3260**	1	TOOL	
	23	1	**2H-3746**	4	BOLT (1-14X5-IN)	
		1	**2K-7471**	4	LOCKNUT (1-14-MM THD)	
		1	**5P-8250**	8	WASHER (28X49X5-MM THK)	
	24	2	**3B-8489**	4	FITTING-GREASE (SCARIFIER)	
	25	2	**4D-6086**	2	KEY	
	26	2	**6F-6992**	4	CAP-BALL SOCKET	
B		2	**7F-1327**	32	SHIM (0.03-IN THK)	
	27	2	**6Y-5230**	11	TOOTH-SCARIFIER	
	28	2	**6K-0545**	4	LOCKNUT (7/8X19-THD)	
	29	2	**7X-0390**	4	BOLT (7/8-9X5-IN)	
		2	**8C-6913**	4	WASHER-HARD (24X41.5X4-MM THK)	
	30	2	**195-7219**	17	SHANK	
	31	2	**1A-8063**	8	BOLT (3/4-10X2.5-IN)	
	32	2	**5P-8248**	8	WASHER-HARD (20X36.5X3.5-MM THK)	
	33	2	**8D-1268**	2	ARM AS-LIFT	
					(EACH INCLUDES)	
		2	**7D-8245**	1	STUD-BALL	
B	34	1	**198-9811**	2	SPACER (83X145X3-MM THK)	

PROOF

111-3883 **SCARIFIER GP** *(contd.)* **i02334819**

NOTE	REF NO	GRAPHIC REF	PART NUMBER	QTY	PART NAME 1 2 3 4 5 6 (PRODUCT LEVEL)	SEE PAGE
B	35	1	**198-9812**	2	SPACER (83X145X2-MM THK)	

B-USE AS REQUIRED

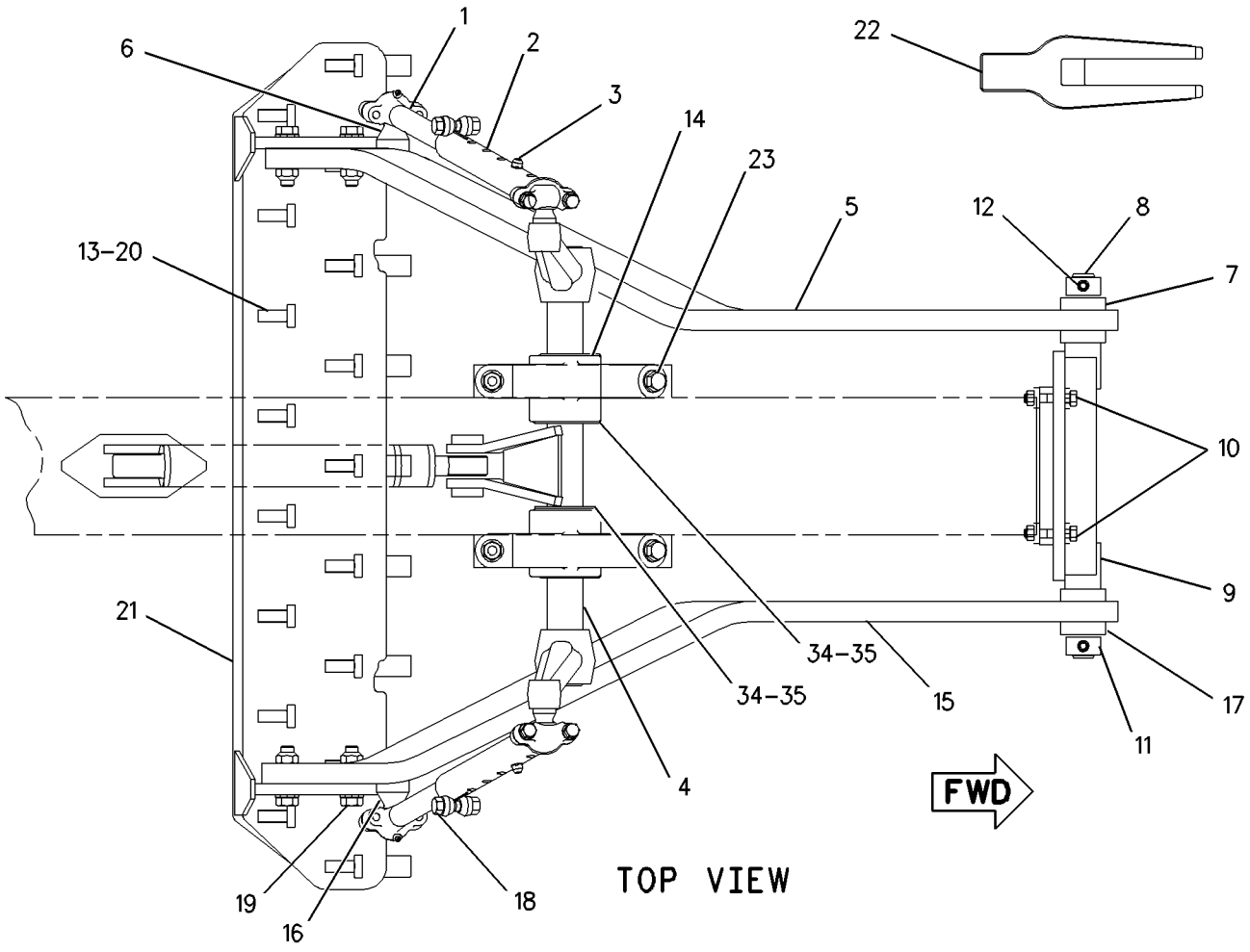

GRAPHIC #1 g00772503

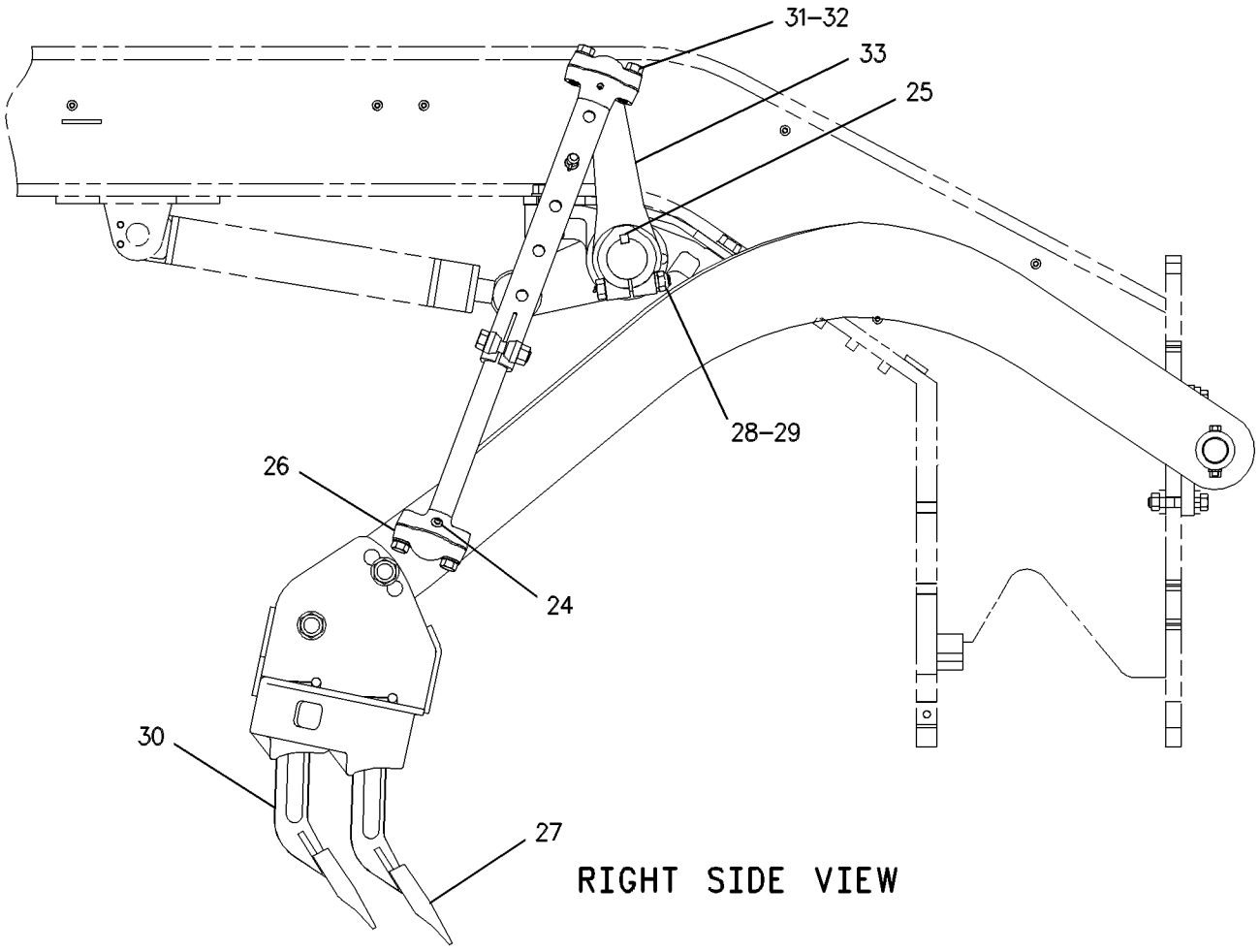

GRAPHIC #2 **<END>** g00304036

WORK TOOLS

212-6231 SCARIFIER GP–11-TEETH

S/N: B9M1-UP

AN ATTACHMENT

SMCS-6162, 6325, 6811 **i02353489**

NOTE	REF NO	GRAPHIC REF	PART NUMBER	QTY	PART NAME 1 2 3 4 5 6 (PRODUCT LEVEL)	SEE PAGE
	1	1	**5K-1459**	11	LOCK PIN	
	2	1	**6Y-5230**	11	TOOTH-SCARIFIER	
	3	1	**137-4234**	1	PLATE-IDENTIFICATION (WORK TOOL INFORMATION)	
	4	1	**195-7218**	11	SHANK	
	5	1	**212-6279**	1	SCARIFIER GP	

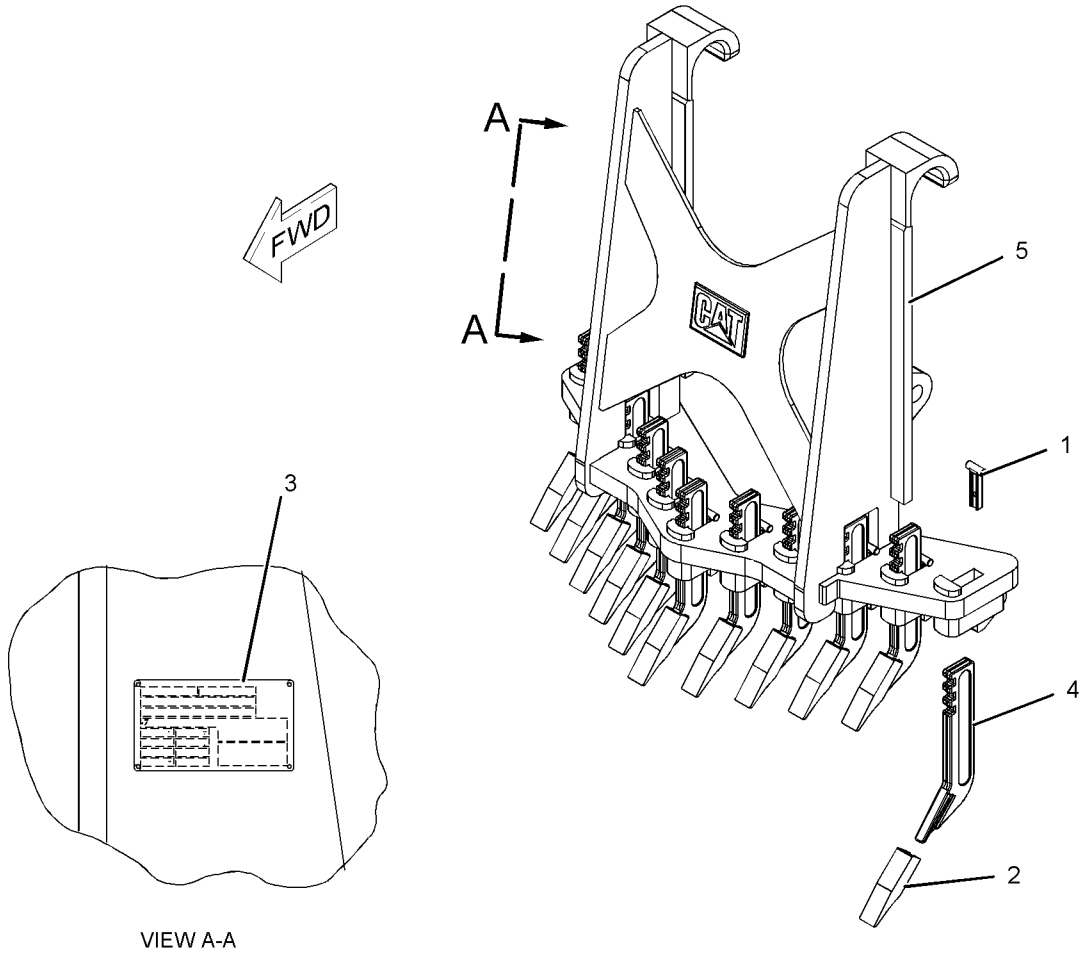

VIEW A-A

GRAPHIC #1 **<END>** g01144656

WORK TOOLS

212-6232 SCARIFIER GP—5-TEETH

S/N: B9M1-UP

AN ATTACHMENT

SMCS-6162, 6325, 6811 **i02348933**

NOTE	REF NO	GRAPHIC REF	PART NUMBER	QTY	PART NAME 1 2 3 4 5 6 (PRODUCT LEVEL)	SEE PAGE
	1	1	**5K-1459**	5	LOCK PIN	
	2	1	**6Y-5230**	5	TOOTH-SCARIFIER	
	3	1	**137-4234**	1	PLATE-IDENTIFICATION (WORK TOOL INFORMATION)	
	4	1	**195-7218**	5	SHANK	
	5	1	**212-6279**	1	SCARIFIER GP (HYDRAULIC)	

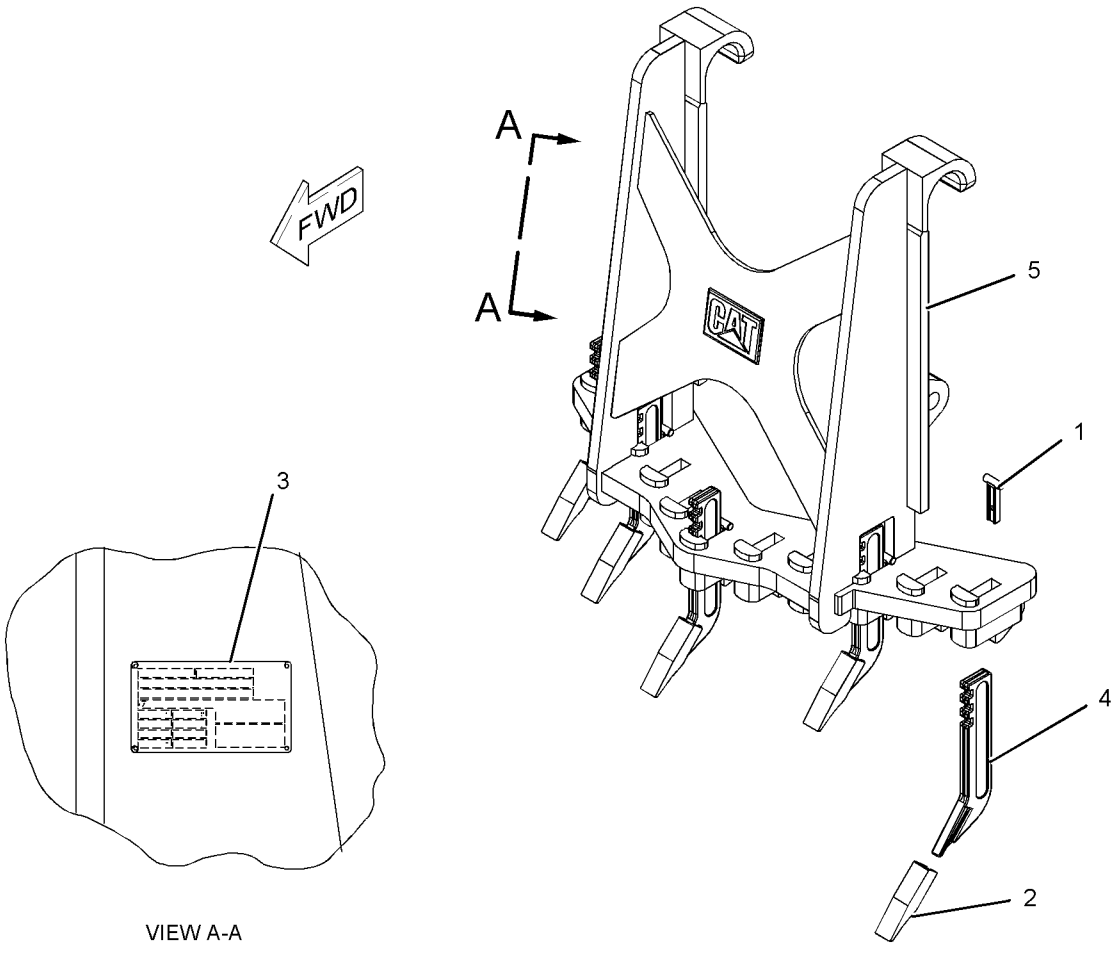

GRAPHIC #1 **<END>** g01144649

WORK TOOLS

8J-1434 TOOTH GP-RIPPER—3-TEETH

S/N: B9M1-UP
PART OF 8J-7024 RIPPER GP
AN ATTACHMENT

SMCS-6808 **i01181216**

NOTE	REF NO	GRAPHIC REF	PART NUMBER	QTY	PART NAME 1 2 3 4 5 6 (PRODUCT LEVEL)	SEE PAGE
	1	1	**3B-5325**	1	PIN-COTTER (PIN)	
C	2	1	**2K-6413**	1	PIN	
C	3	1	**9J-6586**	1	SHANK	
	4	1	**136-8308**	1	PIN	
	5	1	**6Y-0309**	1	TIP-RIPPER (PENETRATION)	
	6	1	**114-0359**	1	RETAINER AS (G.E.T.)	

C-CHANGE FROM PREVIOUS TYPE

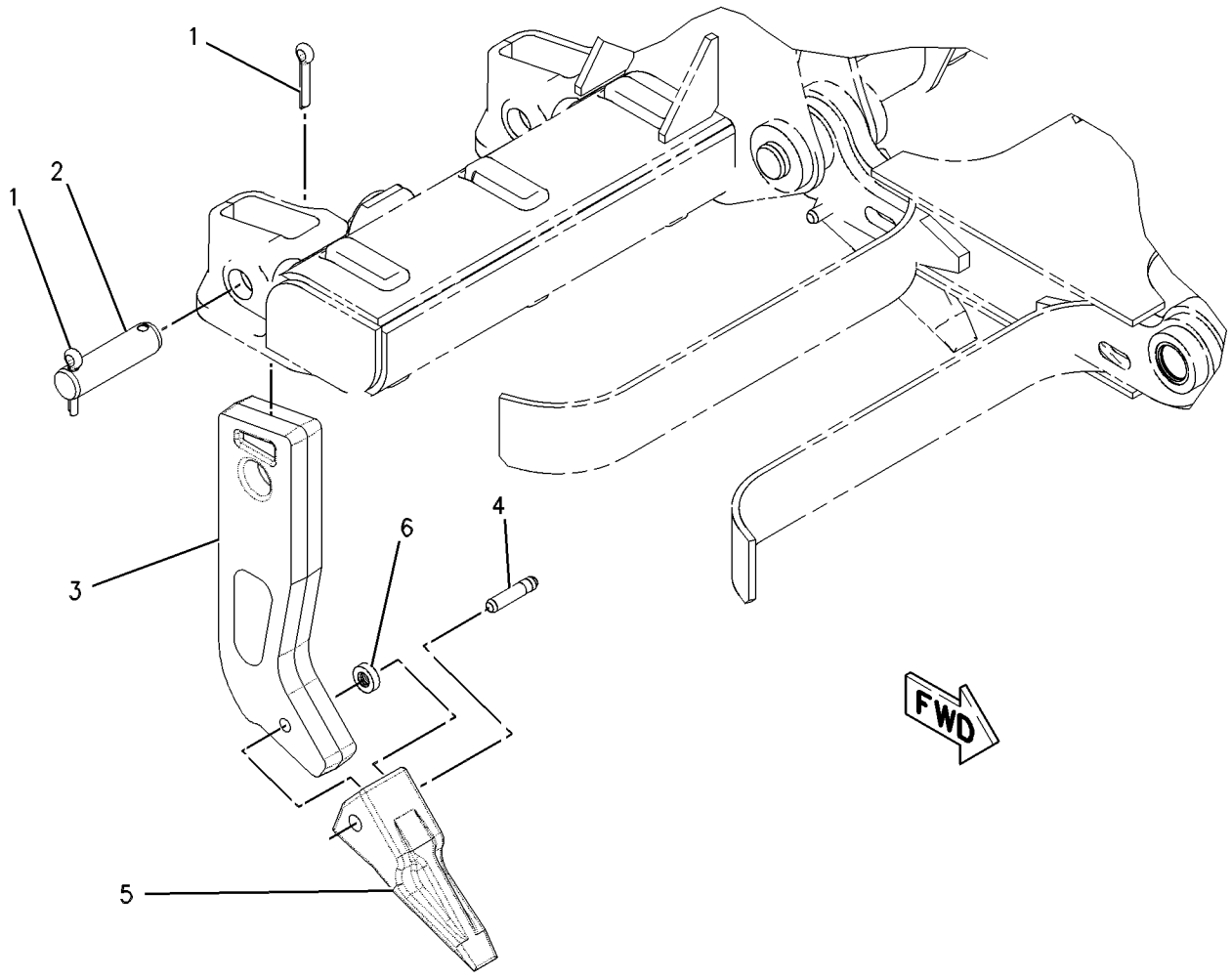

GRAPHIC #1 **<END>** g00632727

OPERATOR STATION

173-1028 ADJUSTER GP-SEAT

S/N: B9M1-UP
PART OF 244-5002, 244-5006 SEAT GP
AN ATTACHMENT

SMCS-7321 **i02011756**

NOTE	REF NO	GRAPHIC REF	PART NUMBER	QTY	PART NAME 1 2 3 4 5 6 (PRODUCT LEVEL)	SEE PAGE
	1	1	**4V-8256**	4	SPRING	
	2	1	**117-4492**	1	ROD	
	3	1	**136-1544**	1	LATCH AS-LH	
	4	1	**156-5545**	1	LATCH AS-RH	
	5	1	**164-4531**	1	ROD	
	6	1	**170-1112**	1	PLATE AS	
	7	1	**170-1114**	1	HANDLE (SLIDE ADJUSTMENT)	
	8	1	**170-1115**	1	HANDLE (TILT ADJUSTMENT)	
	9	1	**132-0338**	2	WASHER-PLASTIC (13X31.7X.8-MM THK)	
	10	1	**2K-4973**	2	LOCKNUT (3/8-16-THD)	
	11	1	**7X-0608**	2	WASHER-HARD (10.2X16X2-MM THK)	

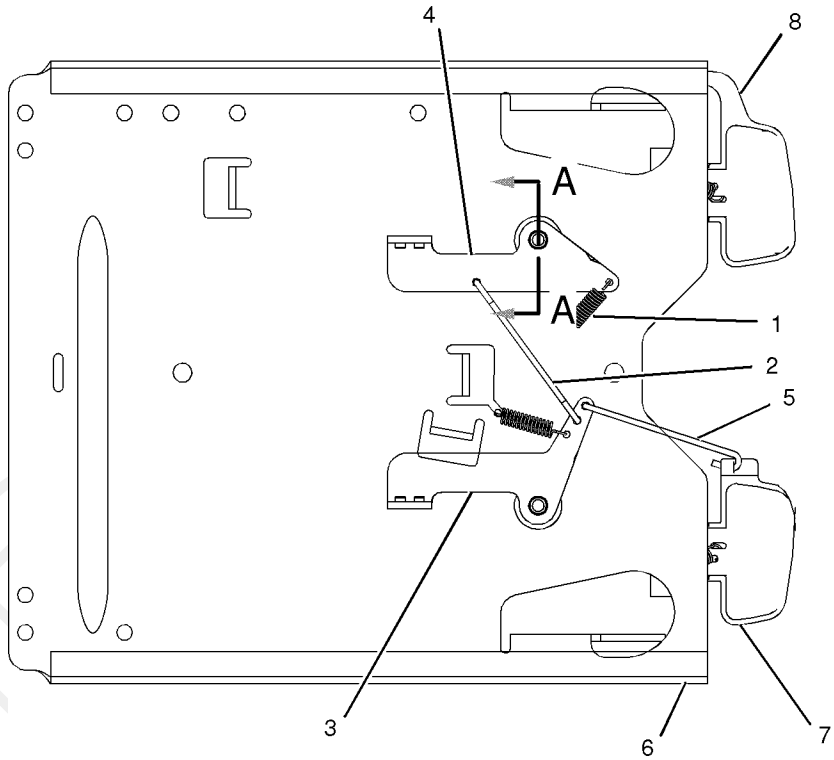

BOTTOM VIEW

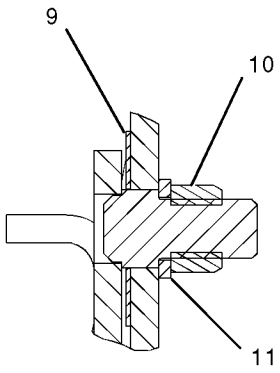

SECTION A-A

GRAPHIC #1 **<END>** g01040300

OPERATOR STATION

237-3970 AIR COMPRESSOR GP-SEAT

S/N: B9M1-UP

PART OF 199-5725, 256-8768 SUSPENSION GP-SEAT

AN ATTACHMENT

SMCS-731S, 7324 **i02012095**

NOTE	REF NO	GRAPHIC REF	PART NUMBER	QTY	PART NAME 1 2 3 4 5 6 (PRODUCT LEVEL)	SEE PAGE
					(NO SERVICED PARTS)	

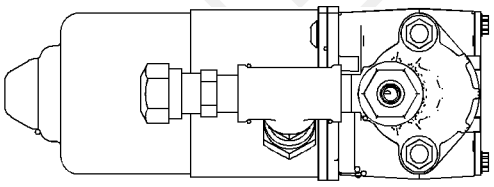

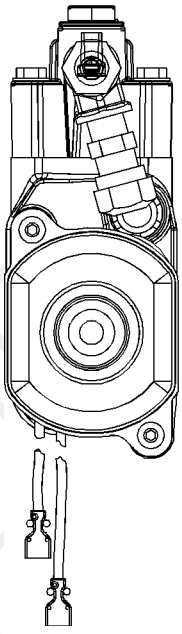

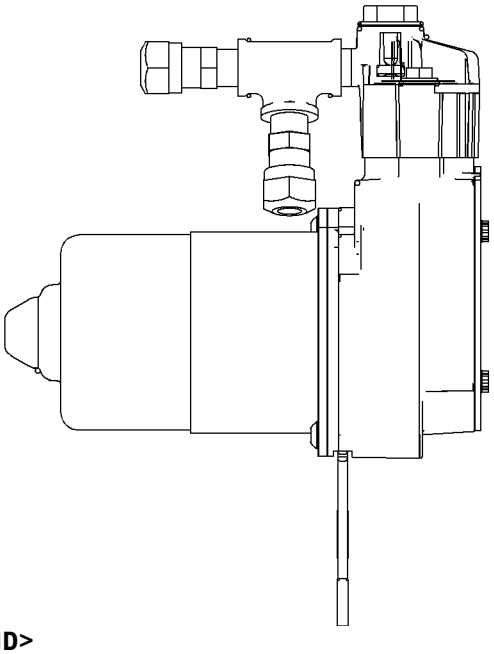

GRAPHIC #1

<END>

g01040576

PREL

OPERATOR STATION

244-2722 AIR CONDITIONER & MOUNTING GP

S/N: B9M1-UP

PART OF 233-3149 AIR CONDITIONER GP

AN ATTACHMENT

SMCS-7320 **i02277495**

NOTE	REF NO	GRAPHIC REF	PART NUMBER	QTY	PART NAME 1 2 3 4 5 6 (PRODUCT LEVEL)	SEE PAGE
Y	1	1	**238-8849**	1	AIR CONDITIONER GP	707
	2	1	**249-0410**	2	GASKET (BLOWER FAN)	
	3	1	**249-0411**	1	GASKET (DUCT)	
	4	1	**249-0937**	1	DUCT	
	5	1	**265-7454**	1	GASKET	
	6	1	**266-3753**	2	SPACER	
	7	1	**118-5619**	2	SCREW-FLAT HEAD (NO 0.6-20X1-IN)	
M	8	1	**8T-4121**	4	WASHER-HARD (11X21X2.5-MM THK)	
M	9	1	**8T-4142**	2	BOLT-FLANGE HEAD (M5X0.8X12-MM)	
M	10	1	**8T-4172**	2	BOLT (M10X1.5X80-MM)	
M	11	1	**8T-4196**	2	BOLT (M10X1.5X35-MM)	
BD	12	1	**5P-5637**		SEAL	
BD	13	1	**5P-5927**		SEAL	

B-USE AS REQUIRED
D-ORDER BY THE METER
M-METRIC PART
Y-SEPARATE ILLUSTRATION

PROOF

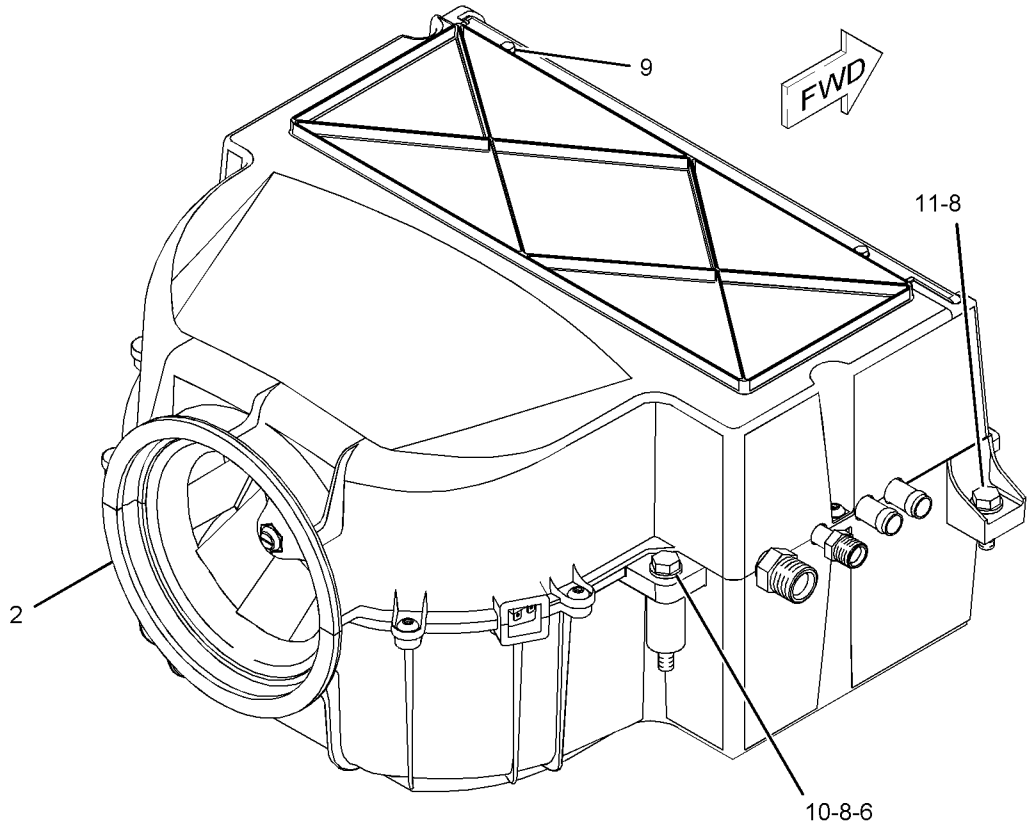

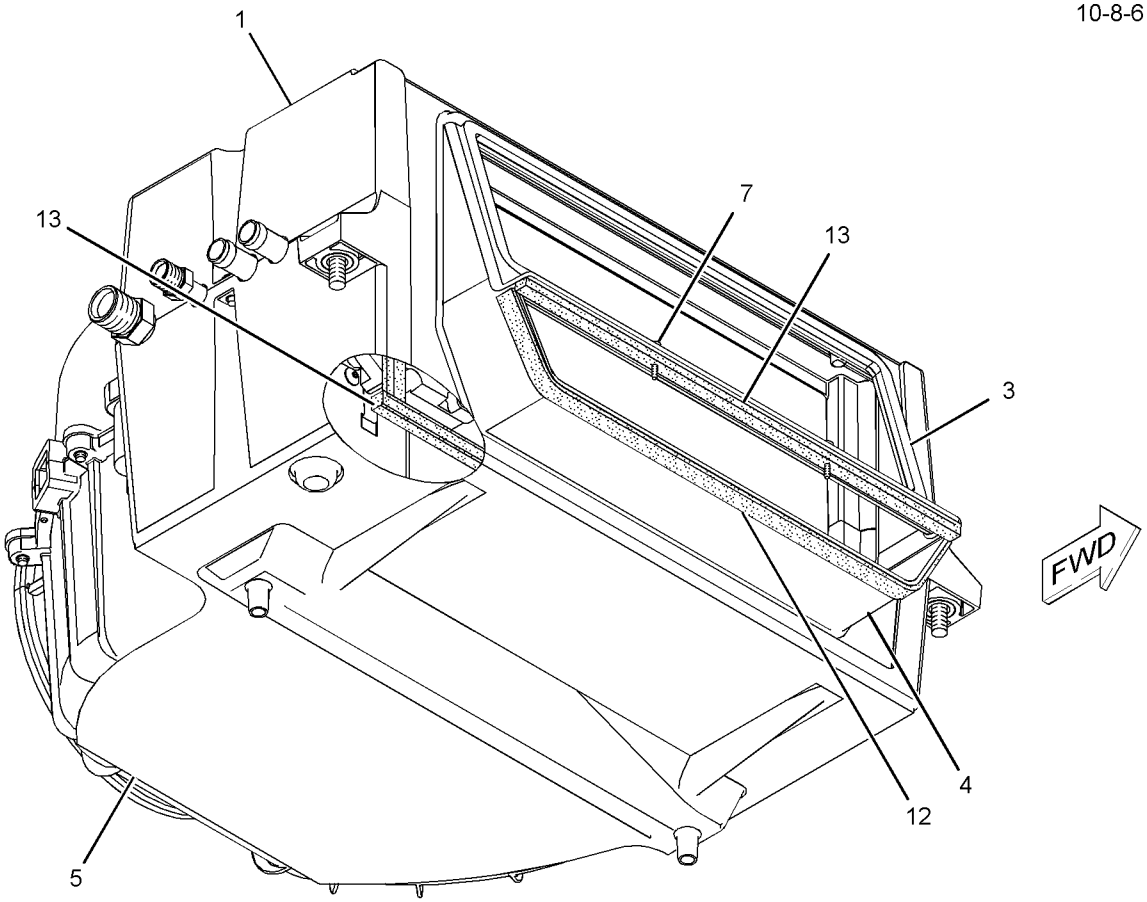

GRAPHIC #1 **<END>** g01142271

OPERATOR STATION

261-0775 AIR CONDITIONER AR

S/N: B9M1-UP

AN ATTACHMENT

SMCS-7320 **i02299389**

NOTE	PART NUMBER	QTY	PART NAME 1 2 3 4 5 6 (PRODUCT LEVEL)	SEE PAGE
Y	*233-3149*	1	AIR CONDITIONER GP	706
Y	*246-6714*	1	COMPRESSOR GP-REFRIGERANT	712
Y	*232-4738*	1	CONDENSER & MTG GP-REFRIGERANT	713
Y	*255-1249*	1	LINES GP-AIR CONDITIONER	743
Y	*255-1248*	1	LINES GP-HEATER	746
Y	*233-3129*	1	PANEL GP-CAB	756

Y-SEPARATE ILLUSTRATION

<END>

261-0839 AIR CONDITIONER AR–HEATER

S/N: B9M1-UP

AN ATTACHMENT

SMCS-7320 **i02299434**

NOTE	PART NUMBER	QTY	PART NAME 1 2 3 4 5 6 (PRODUCT LEVEL)	SEE PAGE
Y	*233-3130*	1	HEATER GP-CAB	
Y	*255-1248*	1	LINES GP-HEATER	746
Y	*233-3129*	1	PANEL GP-CAB	756

Y-SEPARATE ILLUSTRATION

<END>

PROOF

OPERATOR STATION

233-3149 AIR CONDITIONER GP

S/N: B9M1-UP
PART OF 261-0775 AIR CONDITIONER AR
AN ATTACHMENT

SMCS-7320 **i02183725**

NOTE	REF NO	GRAPHIC REF	PART NUMBER	QTY	PART NAME 1 2 3 4 5 6 (PRODUCT LEVEL)	SEE PAGE
	1	1	**110-6393**	1	PLATE-INSTRUCTION (AIR CONDITIONER)	
Y	2	1	*233-3291*	1	CONTROL GP-AIR & TEMPERATURE	717
Y	3	1	*244-2701*	1	DUCT & FILTER GP-AIR	731
Y	4	1	*244-2702*	1	LINES GP-AIR CONDITIONER	741
Y	5	1	*244-2722*	1	AIR CONDITIONER & MOUNTING GP	703
Y	6	1	*250-2933*	1	LINES GP-HEATER	745

Y-SEPARATE ILLUSTRATION

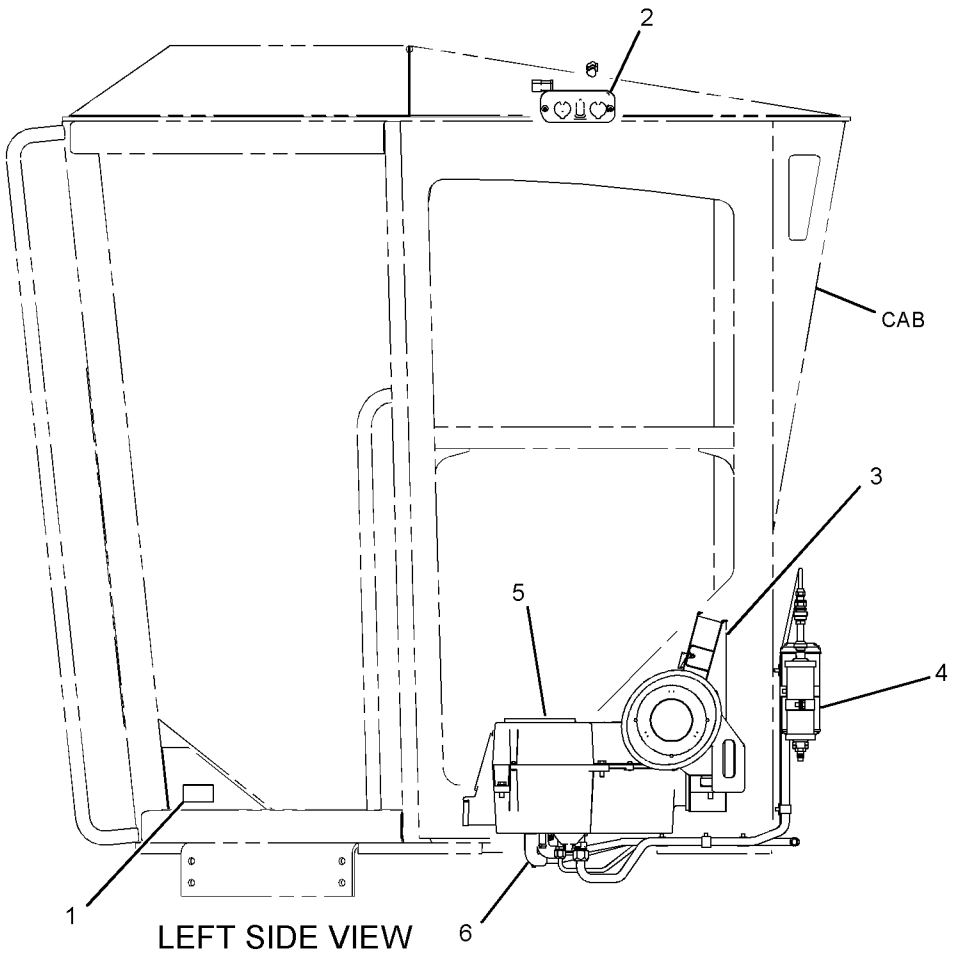

GRAPHIC #1 **<END>** g01109294

OPERATOR STATION

238-8849 AIR CONDITIONER GP

S/N: B9M1-UP

PART OF 244-2722 AIR CONDITIONER & MOUNTING GP

AN ATTACHMENT

SMCS-7320 **i02348940**

NOTE	REF NO	GRAPHIC REF	PART NUMBER	QTY	PART NAME 1 2 3 4 5 6 (PRODUCT LEVEL)	SEE PAGE
	1	1	**3E-5464**	1	SWITCH AS-TEMPERATURE (AIR CONDITIONER)	
	2	1	**6T-6708**	2	WASHER (7X28.6X4.1-MM THK)	
	3	1	**125-9740**	1	RESISTOR	
	4	1	**133-9012**	1	FUSE (15-AMPERE)	
	5	1	**174-1497**	1	MOTOR AS-BLOWER (24-VOLT, A/C, HEATER)	
	6	1	**238-8839**	1	CORE AS-HEATER	
	7	1	**238-8840**	1	COIL AS-EVAPORATOR	
	8	1	**238-8841**	1	VALVE AS-CONTROL (AIR CONDITIONER)	
	9	1	**245-1596**	1	ACTUATOR	
	10	1	**248-2924**	2	SPACER (4.3X9.5X19.1-MM THK)	
	11	1	**248-6772**	4	SCREW-MACHINE (8-16X7.75-IN)	
	12	1	**249-0934**	1	CASE AS	
	13	1	**249-0935**	1	PLATE	
	14	1	**249-0936**	1	PLATE	
	15	1	**249-0938**	1	CASE	
	16	1	**250-7556**	3	SCREW-HEX HEAD (8-15X8.3X0.33-IN)	
M	17	1	**129-3178**	1	LOCKNUT (M6X1-THD)	
M	18	1	**141-9784**	1	BOLT (M6X1X190-MM)	
	19	1	**4M-6582**	1	SEAL-O-RING	
	20	1	**6L-7159**	3	SCREW-MACHINE (8-32X0.313-IN)	
	21	1	**6P-1301**	1	GROMMET	
	22	1	**6V-1668**	2	WASHER (6.5X29.1X3-MM THK)	
M	23	1	**7Y-7256**	2	SCREW-TRUSS HEAD (M4X0.7-MM)	
M	24	1	**8T-4138**	4	BOLT (M6X1X20-MM)	
	25	1	**8T-4205**	2	WASHER-HARD (7.2X14.5X2-MM THK)	
	26	1	**9X-2038**	4	WASHER (7X19X2-MM THK)	
M	27	1	**9X-2044**	6	SCREW-TRUSS HEAD (M6X1X16-MM)	

M-METRIC PART

PROOF

REFER TO ALL ILLUSTRATIONS OF
THIS GROUP FOR AUXILIARY VIEWS

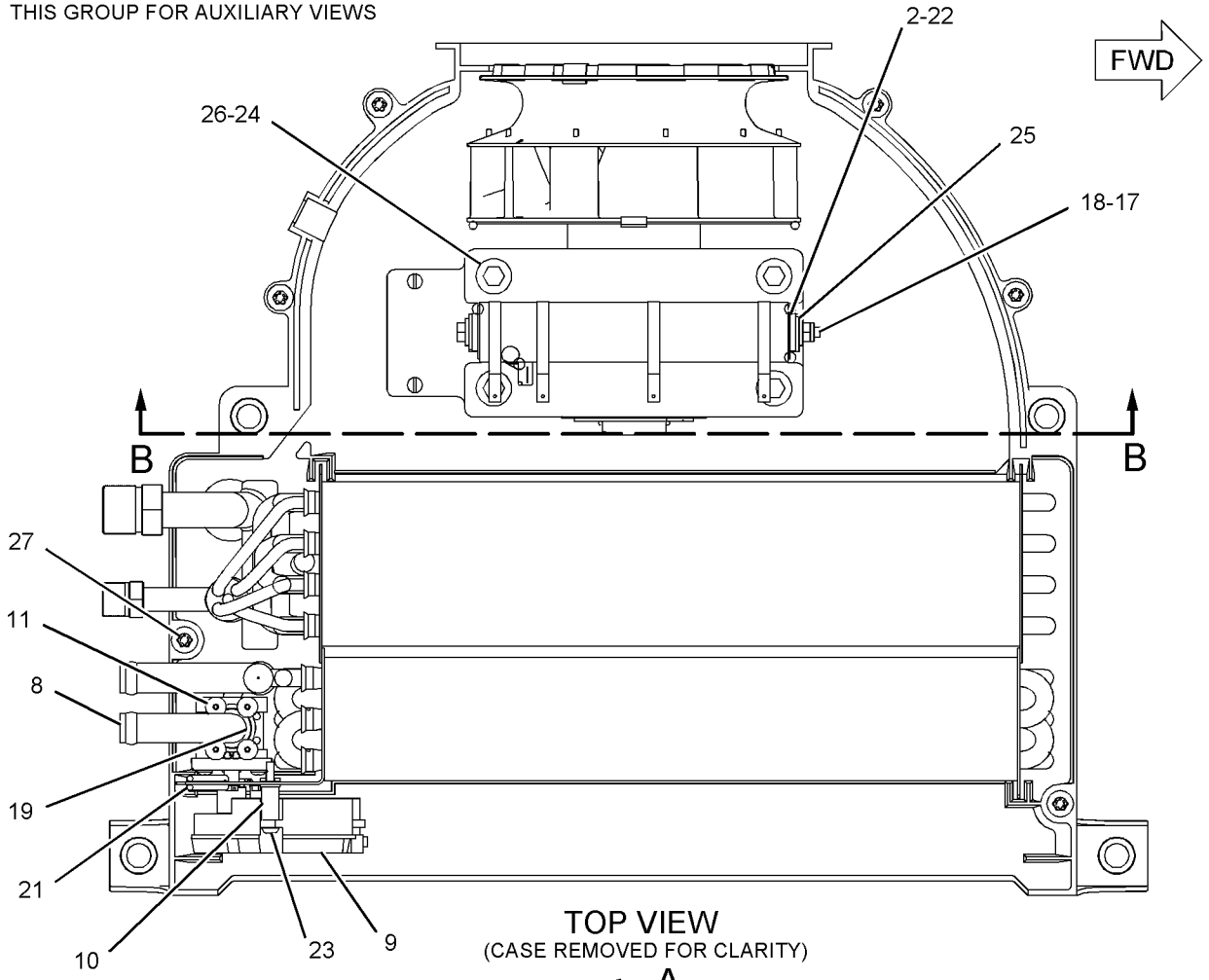

TOP VIEW
(CASE REMOVED FOR CLARITY)

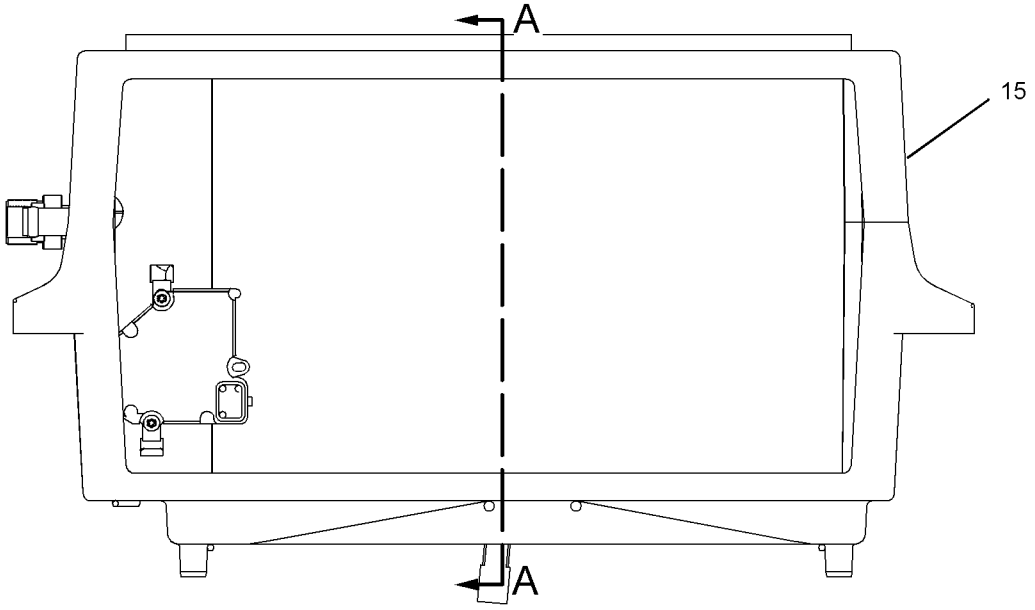

RIGHT SIDE VIEW

GRAPHIC #1 g01110558

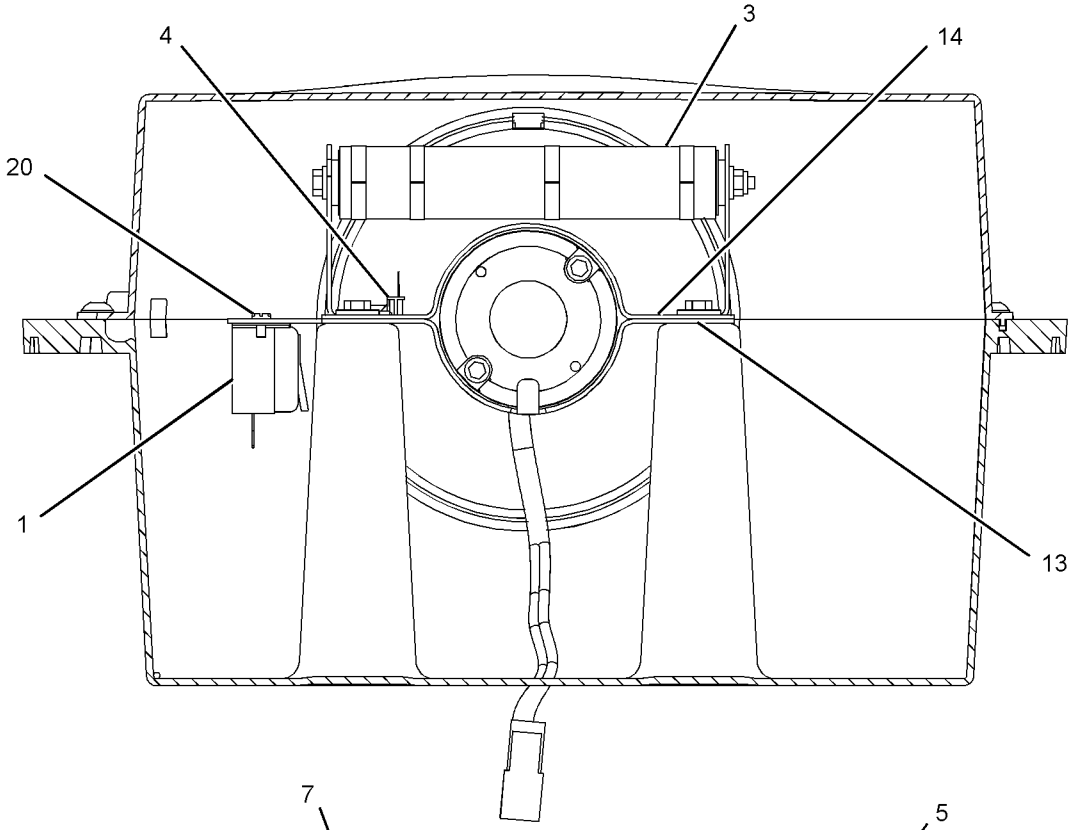

SECTION B-B

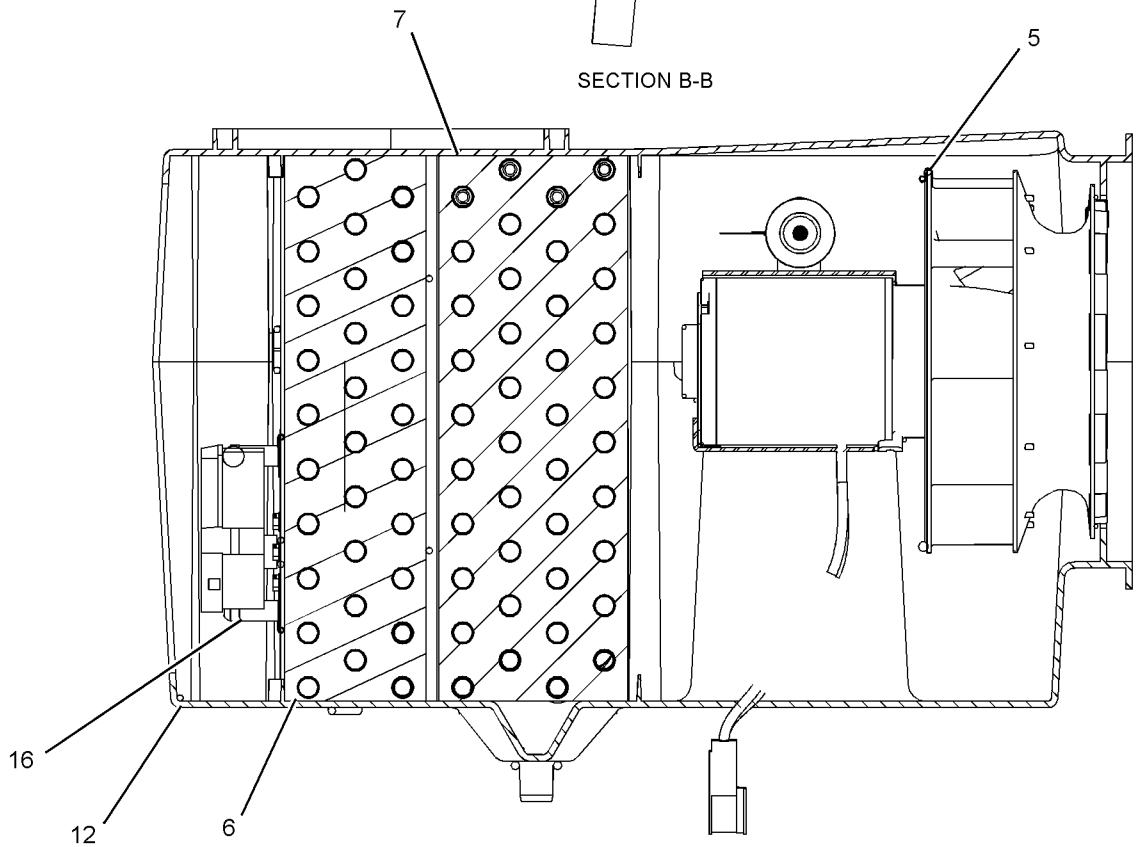

SECTION A-A

GRAPHIC #2 **<END>** g01110559

OPERATOR STATION

254-5399 CAB AR

S/N: B9M1-UP

PART OF 234-7721 COMMON AR-MOTOR GRADER

SMCS-7301 **i02300217**

NOTE	PART NUMBER	QTY	PART NAME 1 2 3 4 5 6 (PRODUCT LEVEL)	SEE PAGE
Y	*233-3145*	1	CONTROL & MTG GP-IMPLEMENT	129
Y	*233-3146*	1	CONTROL & MTG GP-JOYSTICK	714
Y	*263-2590*	1	COVER GP-CAB	719
Y	*233-3112*	1	DOOR GP-CAB	723
Y	*233-3214*	1	LINER GP-CAB	740
Y	*233-3120*	1	PANEL GP-CAB	754
Y	*233-3133*	1	ROOF GP-CAB	759
Y	*233-3152*	1	TRIM GP-CAB	782
Y	*233-3113*	1	WINDOW GP-CAB	783
Y	*233-3138*	1	WIPER & WASHER GP-WINDOW	787
Y	*233-3114*	1	WIRING GP-CAB	217
	254-5400	1	CAB AS-ROPS	
	7T-1099	27	LINK	
M	**6V-9632**	17	NUT-WELD (M6X1-THD)	
M	**8T-3490**	4	NUT-WELD (M10X1.5-THD)	
	9R-3572	4	BOSS (M12X20-MM)	
	254-5395	1	MOUNTING GP	
	3E-4898	4	SLEEVE	
M	**7X-2465**	4	BOLT (M24X3X180-MM)	
	7Y-2174	8	WASHER	
	117-8131	8	MOUNT	
	267-3179	1	FILM-INFORMATION (ROPS, FOPS, READ OMM)	

M-METRIC PART
Y-SEPARATE ILLUSTRATION

<END>

PROOF

OPERATOR STATION

163-0872 COMPRESSOR GP-REFRIGERANT

S/N: B9M1-UP

PART OF 246-6714 COMPRESSOR GP-REFRIGERANT

AN ATTACHMENT

SMCS-1802 **i01992010**

NOTE	REF NO	GRAPHIC REF	PART NUMBER	QTY	PART NAME 1 2 3 4 5 6 (PRODUCT LEVEL)	SEE PAGE
	1	1	**102-8802**	1	KIT-RECEPTACLE (2-PIN)	
					(INCLUDES RECEPTACLE AS AND WEDGE)	
	2	1	**114-3469**	1	VALVE GP-RELIEF (REFRIGERANT COMPRESSOR)	
		1	**9X-7378**	1	SEAL-O-RING	
	3	1	**7T-4532**	1	PLUG AS	
	4	1	**9X-7385**	2	SEAL-O-RING	
B	5	1	**4C-2959**		OIL-AIR CONDITIONER	

B-USE AS REQUIRED

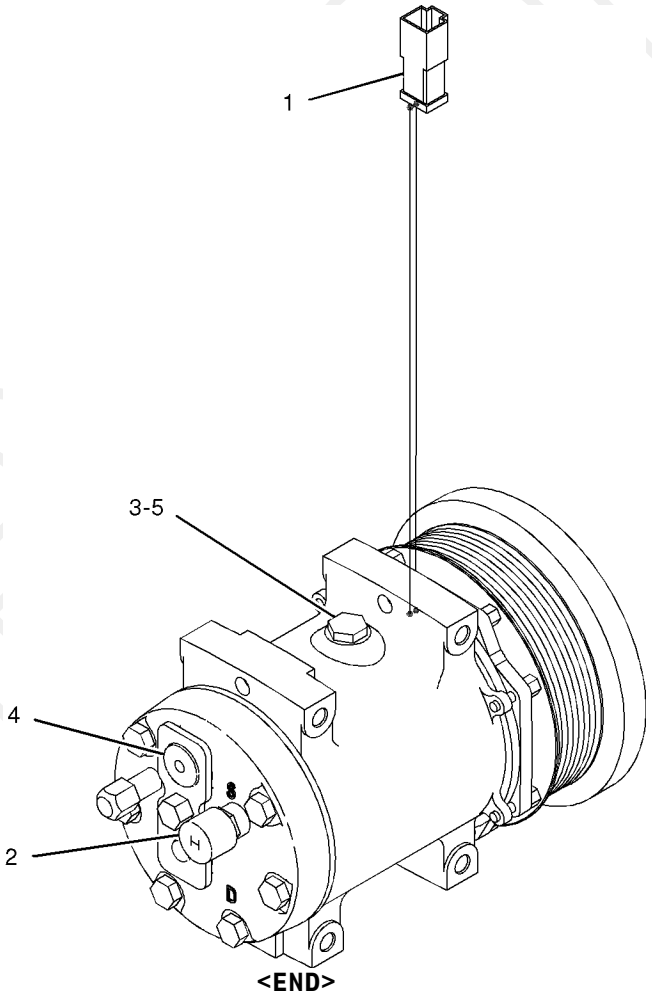

GRAPHIC #1 **<END>** g01031701

OPERATOR STATION

246-6714 COMPRESSOR GP-REFRIGERANT

S/N: B9M1-UP
PART OF 261-0775 AIR CONDITIONER AR
AN ATTACHMENT

SMCS-1802 **i02291010**

NOTE	REF NO	GRAPHIC REF	PART NUMBER	QTY	PART NAME 1 2 3 4 5 6 (PRODUCT LEVEL)	SEE PAGE
	1	1	**7W-3872**	2	SLEEVE	
Y	2	1	**163-0872**	1	COMPRESSOR GP-REFRIGERANT	711
	3	1	**266-6026**	1	SUPPORT	
	4	1	**198-4776**	3	WASHER-HARD (8.8X20X8-MM THK)	
M	5	1	**7X-2537**	4	BOLT (M8X1.25X35-MM)	
M	6	1	**7X-2538**	4	BOLT (M8X1.25X100-MM)	
	7	1	**8T-4224**	5	WASHER-HARD (8.8X16X2-MM THK)	

M-METRIC PART
Y-SEPARATE ILLUSTRATION

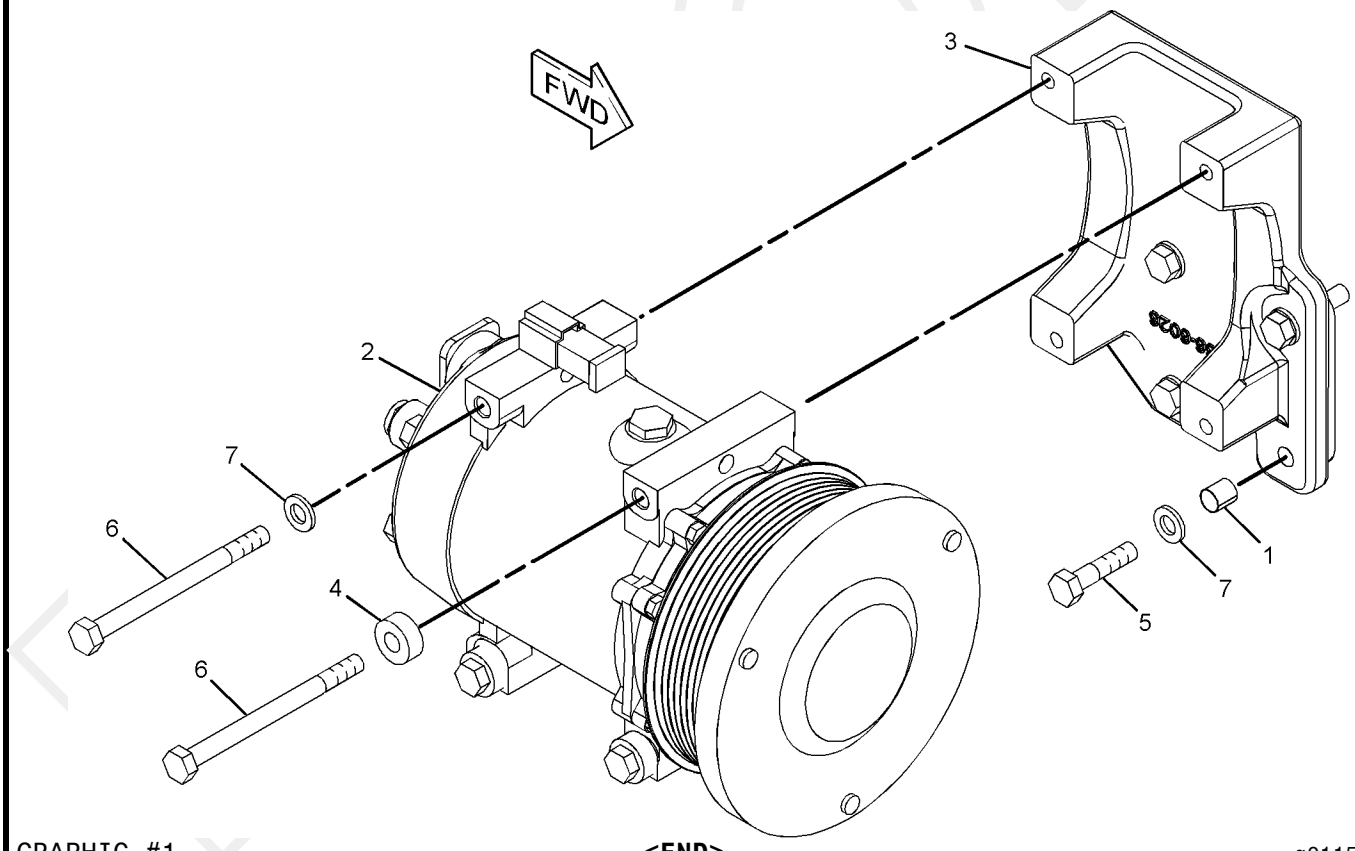

GRAPHIC #1 **<END>** g01152332

OPERATOR STATION

232-4738 CONDENSER & MTG GP-REFRIGERANT

S/N: B9M1-UP
PART OF 261-0775 AIR CONDITIONER AR
AN ATTACHMENT

SMCS-1805 **i02348943**

NOTE	REF NO	GRAPHIC REF	PART NUMBER	QTY	PART NAME 1 2 3 4 5 6 (PRODUCT LEVEL)	SEE PAGE
	1	1	**251-0982**	1	CORE AS-CONDENSER (REFRIGERANT)	
	2	1	**251-1216**	1	HINGE AS	
M		1	**8T-3490**	3	NUT-WELD (M10X1.5-THD)	
	3	1	**7X-7729**	5	WASHER (11X25X3-MM THK)	
	4	1	**8T-4121**	4	WASHER-HARD (11X21X2.5-MM THK)	
M	5	1	**8T-4133**	2	NUT (M10X1.5-THD)	
M	6	1	**8T-4136**	7	BOLT (M10X1.5X25-MM)	

M-METRIC PART

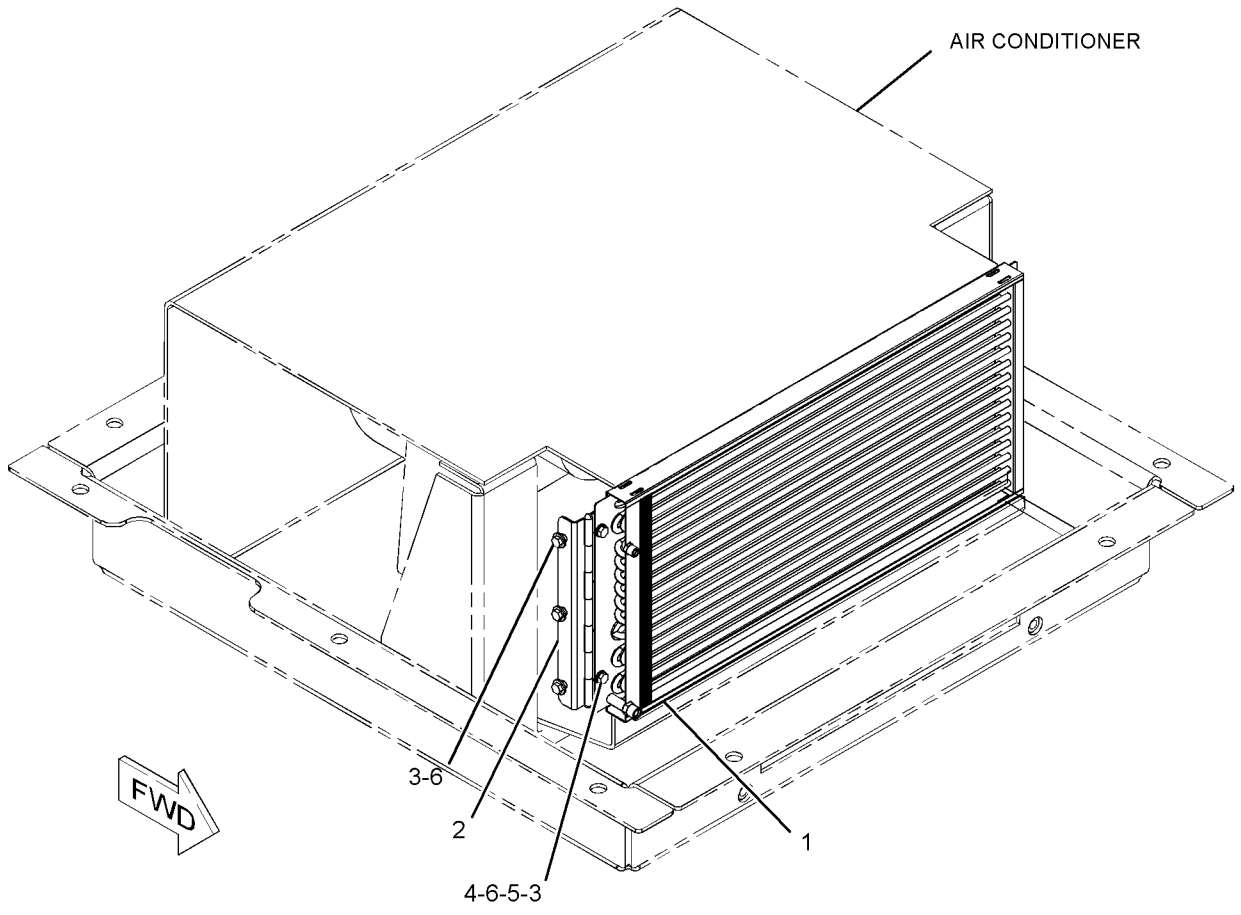

GRAPHIC #1 **<END>** g01111852

OPERATOR STATION

233-3146 CONTROL & MTG GP-JOYSTICK

S/N: B9M1-UP

PART OF 254-5399 CAB AR

SMCS-5063, 5705 **i02334049**

NOTE	REF NO	GRAPHIC REF	PART NUMBER	QTY	PART NAME 1 2 3 4 5 6 (PRODUCT LEVEL)	SEE PAGE
Y	1	1	**233-3224**	1	SUPPORT GP-CONTROL (JOYSTICK, LH)	770
Y	2	1	**233-3225**	1	SUPPORT GP-CONTROL (JOYSTICK, RH)	772
	3	1	**233-3277**	1	BRACKET AS	
	4	1	**233-3278**	1	BRACKET AS	
	5	2	**251-2247**	2	GROMMET	
	6	1	**251-2272**	1	COVER	
	7	1	**251-2273**	1	COVER	
	8	1	**251-2274**	1	COVER	
	9	1	**251-2275**	1	COVER	
	10	2	**260-3044**	1	COVER	
	11	2	**260-3045**	1	COVER	
	12	1	**170-1821**	1	SWITCH AS-PUSH BUTTON (HORN)	
		1	**6F-0253**	1	LOCKWASHER	
		1	**8T-8729**	2	PIN-CONNECTOR	
		1	**172-3511**	1	NUT (5/8-24-THD)	
	13	1	**233-3117**	1	CONTROL GP-JOYSTICK (LH)	
		1	**247-0733**	1	BOOT	
	14	1	**233-3118**	1	CONTROL GP-JOYSTICK (RH)	
		1	**247-0733**	1	BOOT	
	15	1	**249-5482**	1	SWITCH AS-ROCKER (TURN SIGNAL)	
	16	2	**5W-1437**	8	LOCKWASHER	
	17	1	**6V-5839**	8	WASHER (11X21X2.5-MM THK)	
M	18	2	**8T-0269**	8	BOLT-SOCKET HEAD (M6X1X20-MM)	
	19	2	**8T-2228**	12	WASHER-HARD (6.5X17X2-MM THK)	
M	20	1	**8T-4196**	8	BOLT (M10X1.5X35-MM)	
M	21	2	**8T-4200**	6	BOLT (M8X1.25X16-MM)	
	22	2	**8T-4224**	6	WASHER-HARD (8.8X16X2-MM THK)	
M	23	2	**9X-2044**	16	SCREW-TRUSS HEAD (M6X1X16-MM)	
BD	24	2	**5P-9909**		SEAL	
	25	1	**102-8802**	1	KIT-RECEPTACLE (2-PIN) (INCLUDES RECEPTACLE AS & WEDGE)	
	26	1	**140-5945**	1	FILM-IDENTIFICATION (HORN)	

B-USE AS REQUIRED
D-ORDER BY THE METER
M-METRIC PART
Y-SEPARATE ILLUSTRATION

PROOF

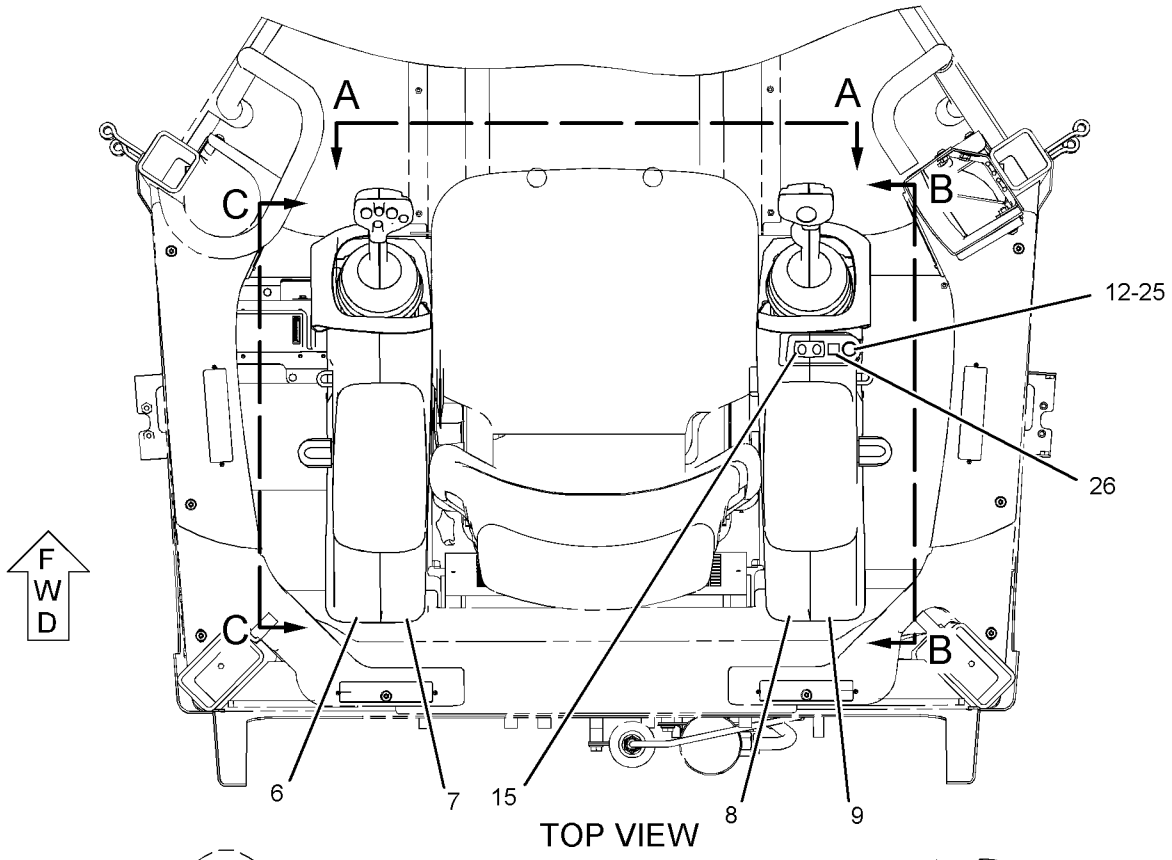

TOP VIEW

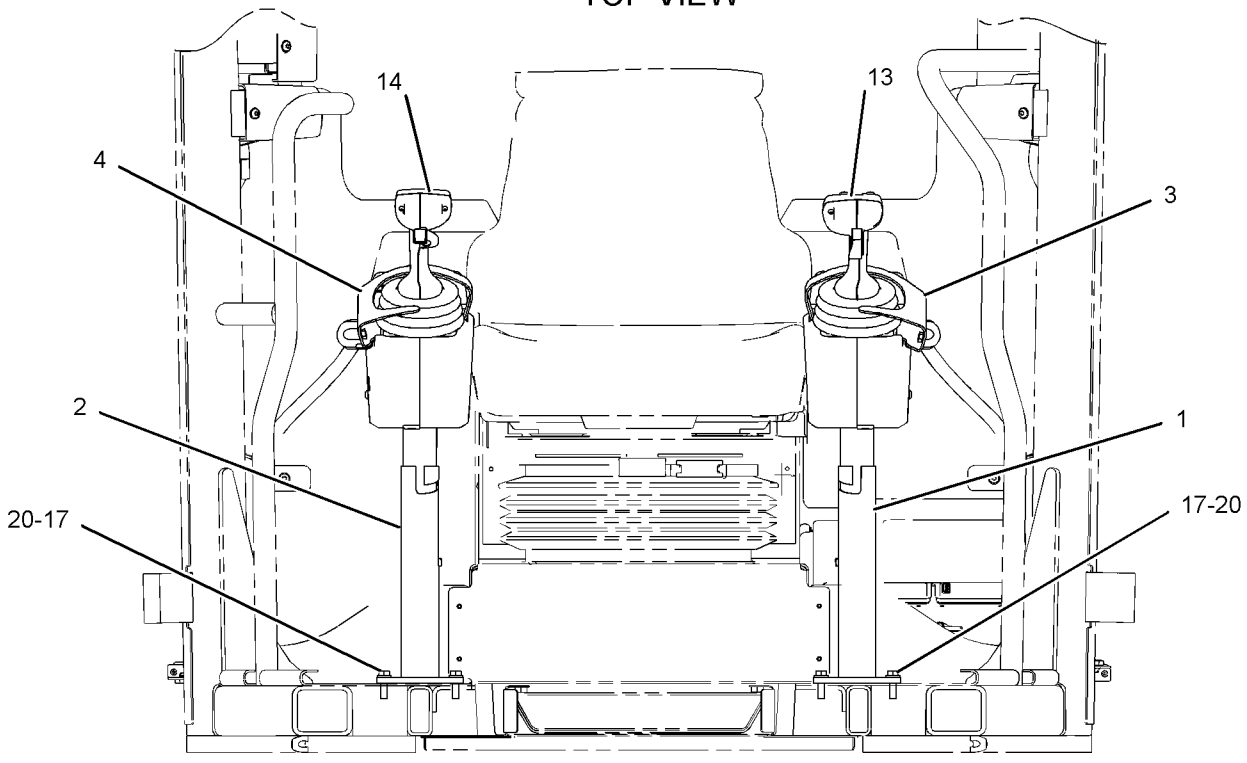

VIEW A-A

REFER TO ALL ILLUSTRATIONS OF THIS GROUP FOR AUXILIARY VIEWS

GRAPHIC #1

g01150292

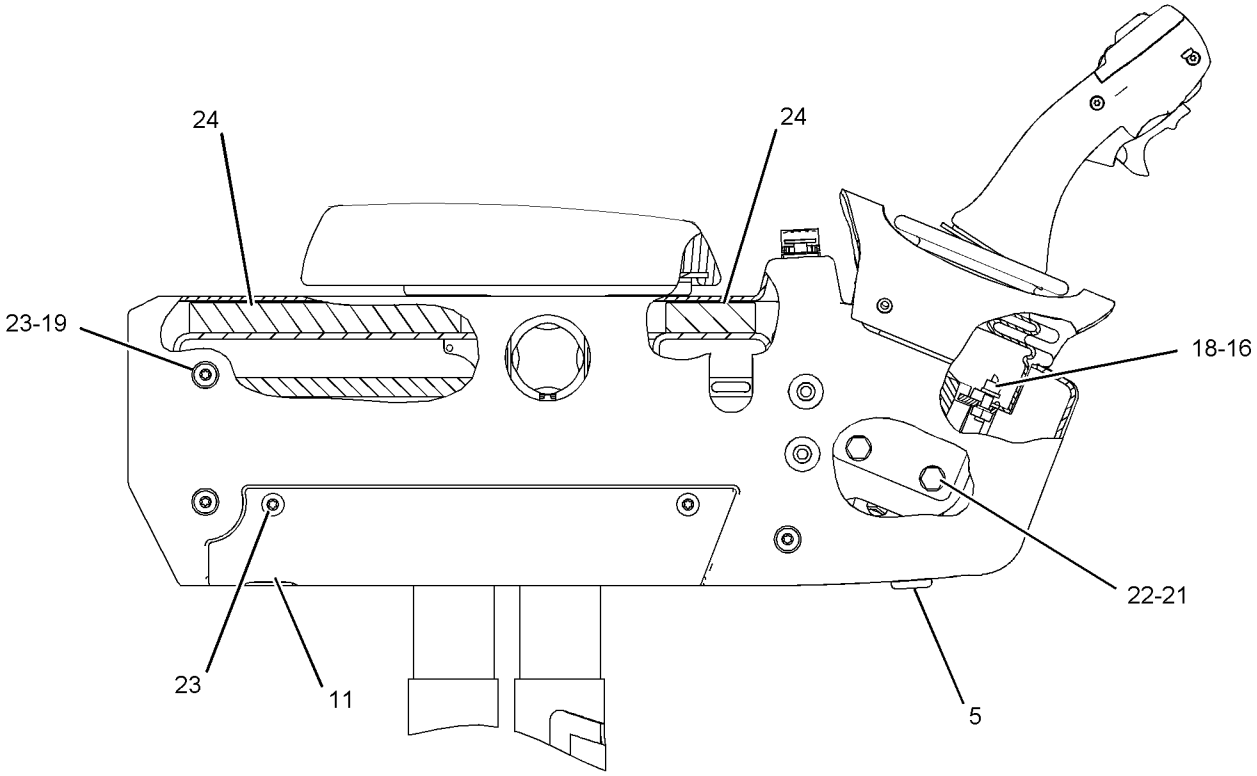

VIEW B-B

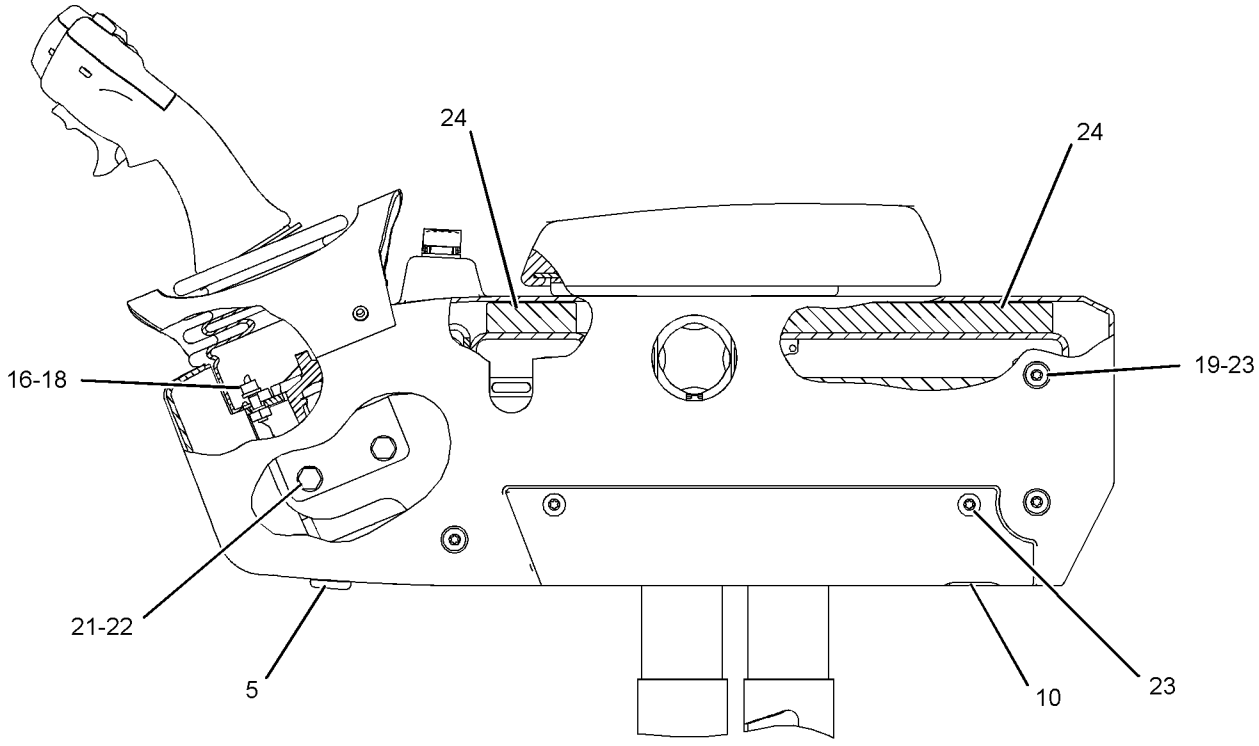

VIEW C-C

GRAPHIC #2 **<END>** g01110543

OPERATOR STATION

233-3291 CONTROL GP-AIR & TEMPERATURE

S/N: B9M1-UP

PART OF 233-3149 AIR CONDITIONER GP

AN ATTACHMENT

SMCS-7451 **i02183732**

NOTE	REF NO	GRAPHIC REF	PART NUMBER	QTY	PART NAME 1 2 3 4 5 6 (PRODUCT LEVEL)	SEE PAGE
	1	1	**248-4220**	1	PANEL AS	
	2	1	**251-1196**	1	SWITCH AS-ROCKER (AIR CONDITIONER ON, OFF)	
M	3	1	**9X-2045**	2	SCREW-TRUSS HEAD (M6X1X20-MM)	

M-METRIC PART

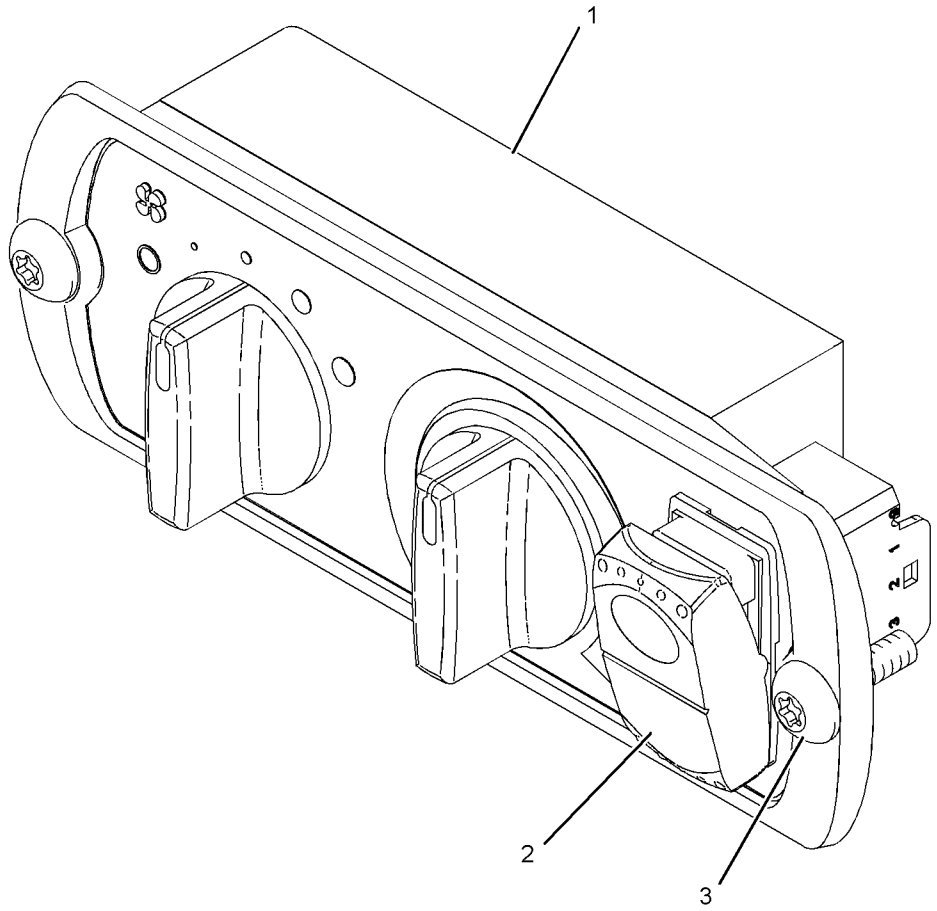

GRAPHIC #1 **<END>** g01111375

OPERATOR STATION

239-5025 CONTROL GP-UNPRGMED MONITOR–MESSENGER

S/N: B9M1-UP

PART OF 250-9254 ELECTRONICS GP-MONITOR, 233-3114 WIRING GP-CAB

SMCS-7610 **i02348944**

NOTE	REF NO	GRAPHIC REF	PART NUMBER	QTY	PART NAME 1 2 3 4 5 6 (PRODUCT LEVEL)	SEE PAGE
	1	1	**208-8375**	2	BRACKET	
	2	1	*239-5024*	1	CONTROL GP-MONITOR (MESSENGER)	
	2A	1	**124-0312**	1	SCREW-PAN HEAD (8-16X0.32-IN)	
	3	1	**242-2461**	1	BEZEL	
	4	1	**156-6198**	4	SCREW-MACHINE (6-20X0.37-IN)	

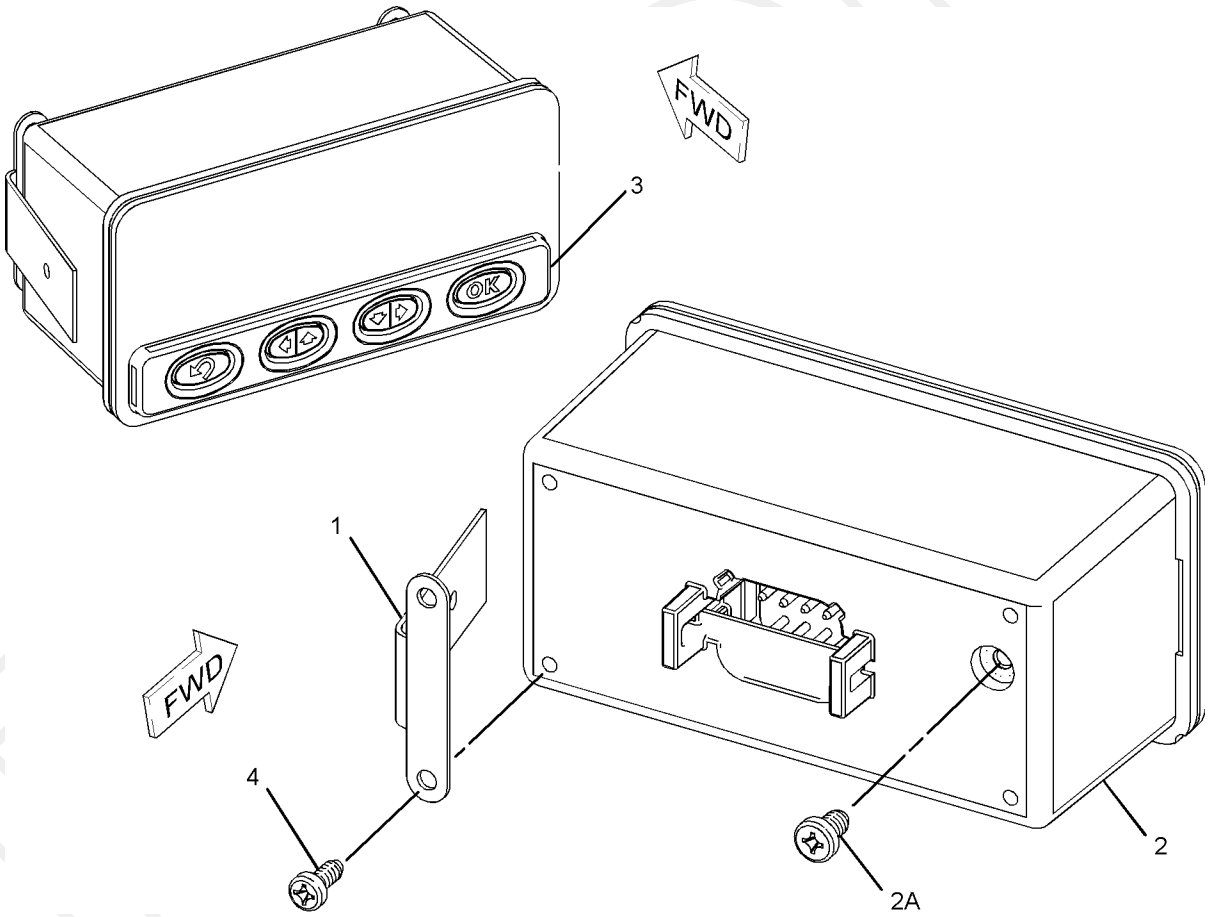

GRAPHIC #1 **<END>** g01103089

OPERATOR STATION

263-2590 COVER GP-CAB

S/N: B9M1-UP

PART OF 254-5399 CAB AR

SMCS-7301 **i02276607**

NOTE	REF NO	GRAPHIC REF	PART NUMBER	QTY	PART NAME 1 2 3 4 5 6 (PRODUCT LEVEL)	SEE PAGE
	1	1	**263-2589**	1	COVER	
	2	1	**5P-4116**	3	WASHER-HARD (8.8X20.5X2-MM THK)	
M	3	1	**8T-4189**	3	BOLT (M8X1.25X20-MM)	
BD	4	1	**6V-5746**		TRIM	

B-USE AS REQUIRED
D-ORDER BY THE METER
M-METRIC PART

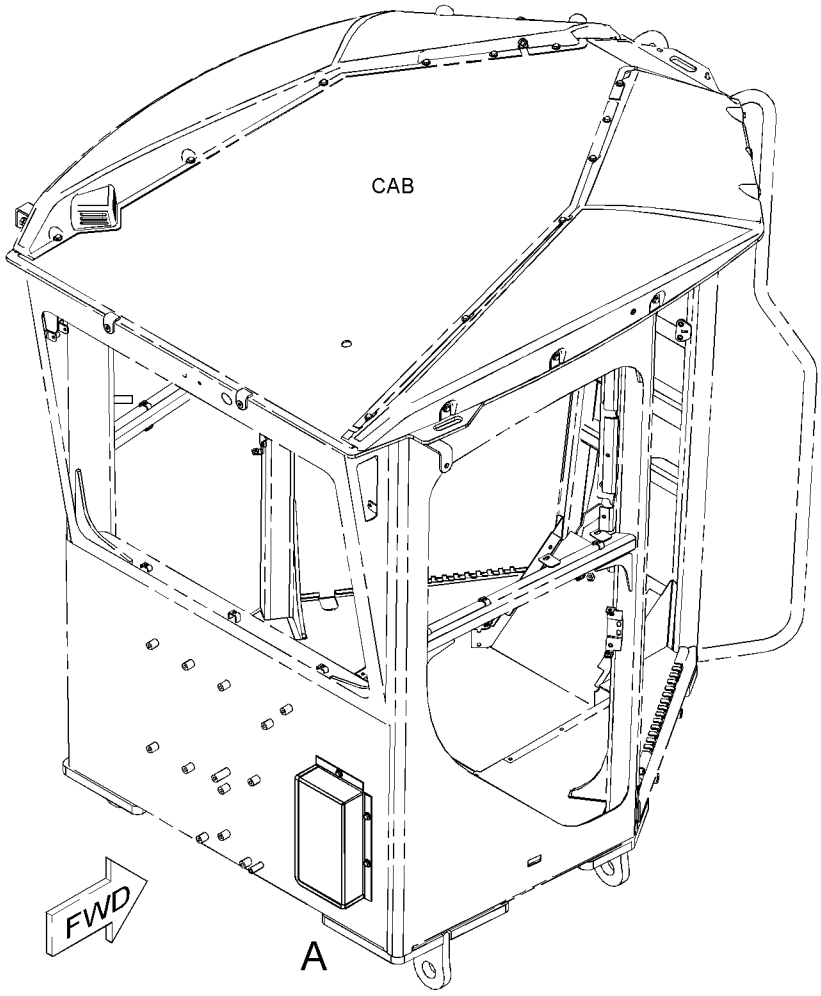

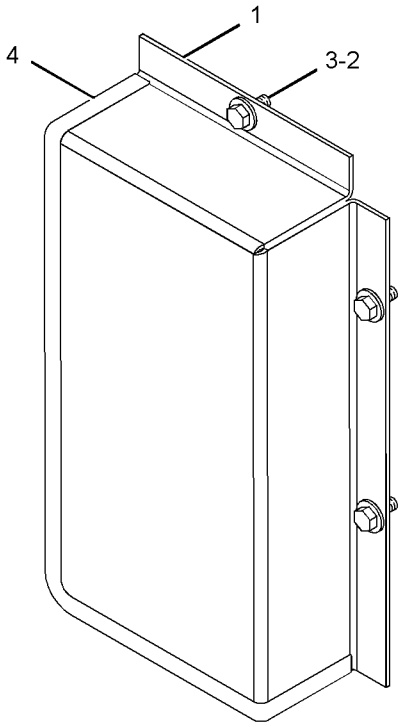

VIEW OF AREA A

GRAPHIC #1 **<END>** g01144301

OPERATOR STATION

265-8945 COVER GP-STEERING COLUMN

S/N: B9M1-UP

AN ATTACHMENT

SMCS-4310, 5258 **i02250644**

NOTE	REF NO	GRAPHIC REF	PART NUMBER	QTY	PART NAME 1 2 3 4 5 6 (PRODUCT LEVEL)	SEE PAGE
	1	1	**260-3041**	1	COVER	

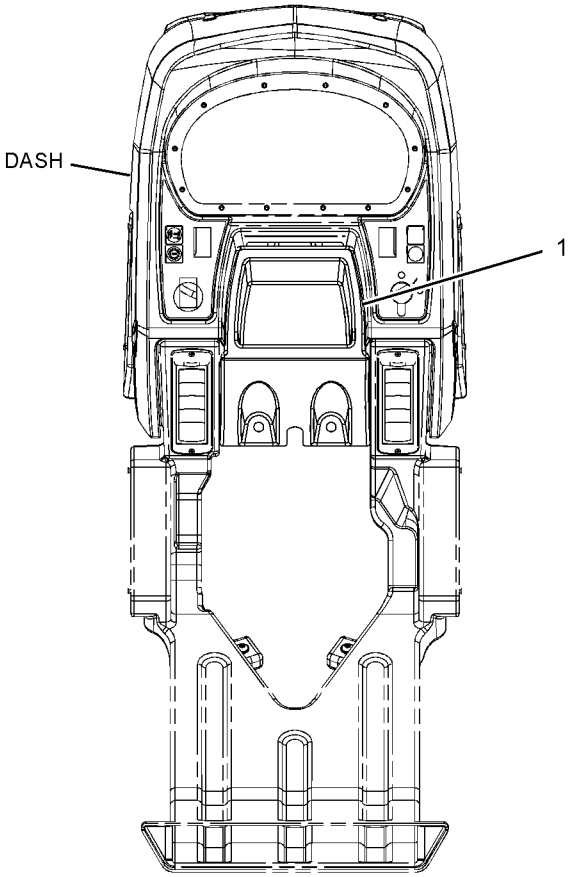

FRONT VIEW
(FROM OPERATOR STATION)

GRAPHIC #1 **<END>** g01135347

OPERATOR STATION

252-1804 CUSHION GP-ARM—RH

S/N: B9M1-UP

PART OF 233-3225 SUPPORT GP-CONTROL

SMCS-7307 **i02178507**

NOTE	REF NO	GRAPHIC REF	PART NUMBER	QTY	PART NAME 1 2 3 4 5 6 (PRODUCT LEVEL)	SEE PAGE
	1	1	**233-3245**	1	PLATE	
	2	1	**233-3273**	1	CUSHION AS (RH)	
M	3	1	**5C-9553**	2	BOLT (M6X1X16-MM)	
	4	1	**9X-8256**	2	WASHER (6.6X12X2-MM THK)	

M-METRIC PART

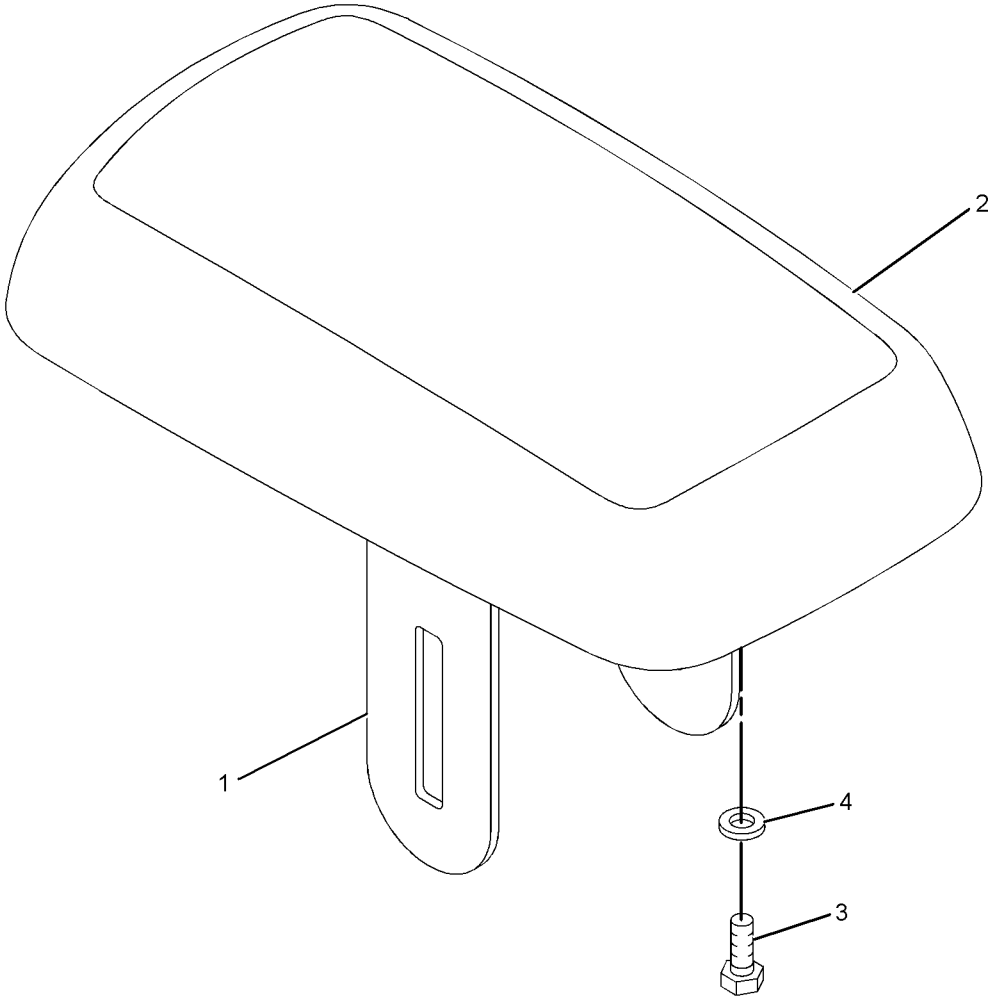

GRAPHIC #1 **<END>** g01109276

OPERATOR STATION

252-1805 CUSHION GP-ARM–LH

S/N: B9M1-UP

PART OF 233-3224 SUPPORT GP-CONTROL

SMCS-7307 **i02178500**

NOTE	REF NO	GRAPHIC REF	PART NUMBER	QTY	PART NAME 1 2 3 4 5 6 (PRODUCT LEVEL)	SEE PAGE
	1	1	**233-3245**	1	PLATE	
	2	1	**233-3272**	1	CUSHION AS (LH)	
M	3	1	**5C-9553**	2	BOLT (M6X1X16-MM)	
	4	1	**9X-8256**	2	WASHER (6.6X12X2-MM THK)	

M-METRIC PART

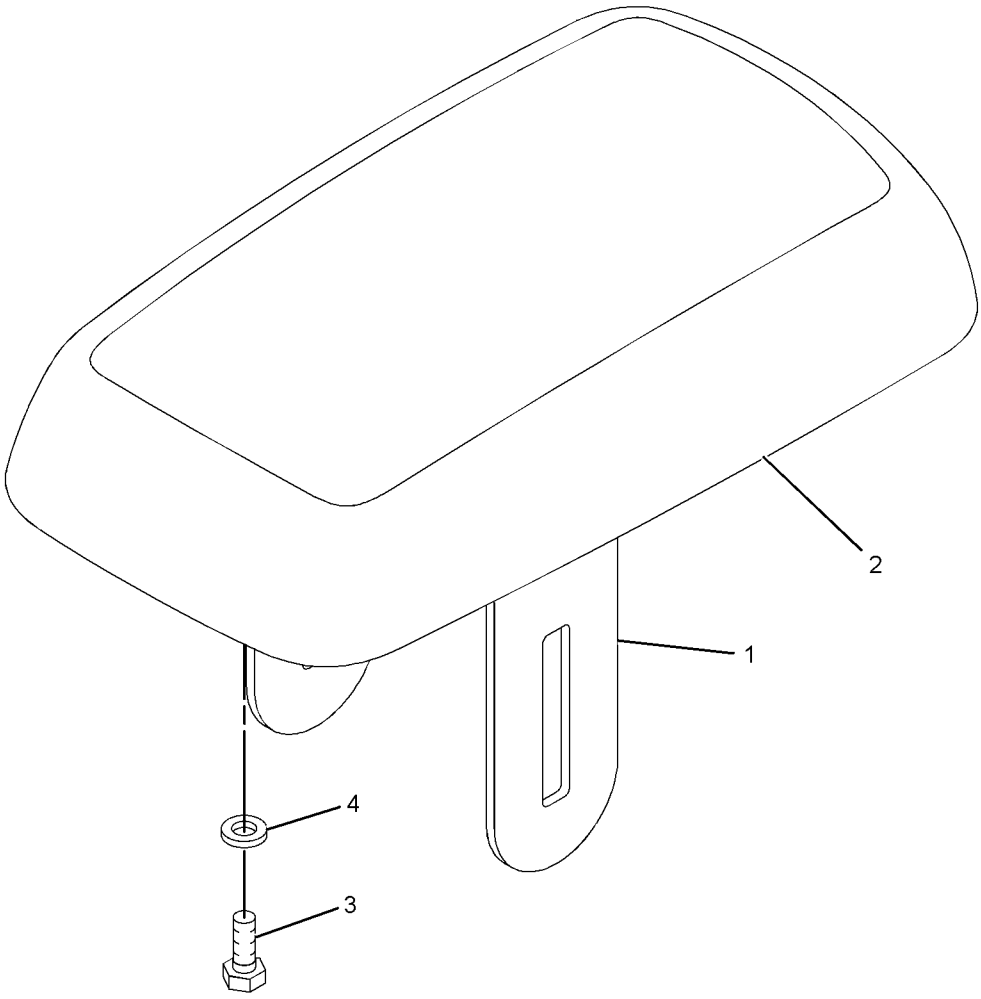

GRAPHIC #1 **<END>** g01109286

OPERATOR STATION

233-3112 DOOR GP-CAB—CAB, LH

S/N: B9M1-UP

PART OF 254-5399 CAB AR

SMCS-7308 **i02247999**

NOTE	REF NO	GRAPHIC REF	PART NUMBER	QTY	PART NAME 1 2 3 4 5 6 (PRODUCT LEVEL)	SEE PAGE
	1	1	**106-6553**	1	BUMPER-CONICAL	
	2	1,2	**114-6658**	16	WASHER (6.5X17X1-MM THK)	
	3	1	**115-9345**	1	KNOB-CONTROL (DOOR RELEASE)	
	4	1	**139-6039**	6	NUT (U-TYPE RETAINER)	
	5	1	**247-3970**	1	DOOR AS (LH)	
M		1	**6V-9632**	2	NUT-WELD (M6X1-THD)	
	6	2	**249-2409**	1	COVER	
	7	2	**249-2411**	1	PLATE	
	8	2	**249-2426**	1	STRIKER AS	
	9	1	**251-6160**	1	LATCH AS	
	10	2	**252-4426**	1	LATCH AS	
	11	1	**257-9345**	1	STRIKER	
	12	1	**259-0538**	1	BRACKET AS	
		1	**1F-0750**	1	NUT-WELD (3/8-16-THD)	
	13	1	**260-6615**	1	SPACER	
	14	1	**261-1731**	1	BOOT	
	15	1	**261-5524**	1	COVER AS	
	16	1	**262-1585**	1	HANDLE GP-DOOR	
M		1	**6V-5683**	1	BOLT (M6X1X16-MM)	
		1	**249-2403**	1	HANDLE AS	
	17	1,2	**262-1894**	1	ROD AS	
	18	1	**262-4772**	3	CLIP	
	19	1,2	**263-2574**	2	CLIP	
	20	2	**268-3522**	1	COVER	
	21	2	**268-3523**	1	BUSHING	
	22	1	**268-3528**	1	PLATE	
	23	1	**268-3531**	2	HINGE AS	
	24	1	**268-3534**	1	GLASS (LH)	
M	25	1	**111-4627**	2	SCREW-MACHINE (M6X1X30-MM)	
	26	2	**143-0089**	1	GROMMET	
	27	1	**249-2404**	1	BELLCRANK (LH)	
Y	28	1	**249-4095**	1	WIPER GP-WINDOW	793
	29	1	**257-0552**	1	COVER	
	30	1	**260-8744**	1	RELEASE AS-LATCH (CAB DOOR, LH)	
		1	**121-9855**	1	LEVER AS	
		1	**260-8743**	1	CABLE AS	
		1	**7S-9930**	2	RING-RETAINING	
		1	**159-0052**	2	PIN-CLEVIS	
M	31	2	**3E-8020**	4	SCREW-TRUSS HEAD (M6X1X25-MM)	
	32	1,2	**6V-7636**	2	PIN AS-SPRING	
M	33	1	**8C-8451**	1	BOLT (M6X1X40-MM)	
	34	1	**8T-4121**	6	WASHER-HARD (11X21X2.5-MM THK)	
M	35	1	**8T-4195**	6	BOLT (M10X1.5X30-MM)	
	36	1	**8T-4224**	2	WASHER-HARD (8.8X16X2-MM THK)	
M	37	1	**8T-7547**	2	BOLT (M8X1.25X30-MM)	
M	38	2	**9X-2041**	2	SCREW-TRUSS HEAD (M10X1.5X20-MM)	
M	39	1	**9X-2043**	6	SCREW-TRUSS HEAD (M6X1X14-MM)	
M	40	1,2	**9X-2044**	16	SCREW-TRUSS HEAD (M6X1X16-MM)	
M	41	1	**9X-2045**	1	SCREW-TRUSS HEAD (M6X1X20-MM)	
	42	1	**9X-8256**	1	WASHER (6.6X12X2-MM THK)	
BE	43	2	**178-8894**		SEAL	
BE	44	1	**268-3644**		SEAL	

B-USE AS REQUIRED
E-ORDER BY THE CENTIMETER
M-METRIC PART
Y-SEPARATE ILLUSTRATION

REPRO

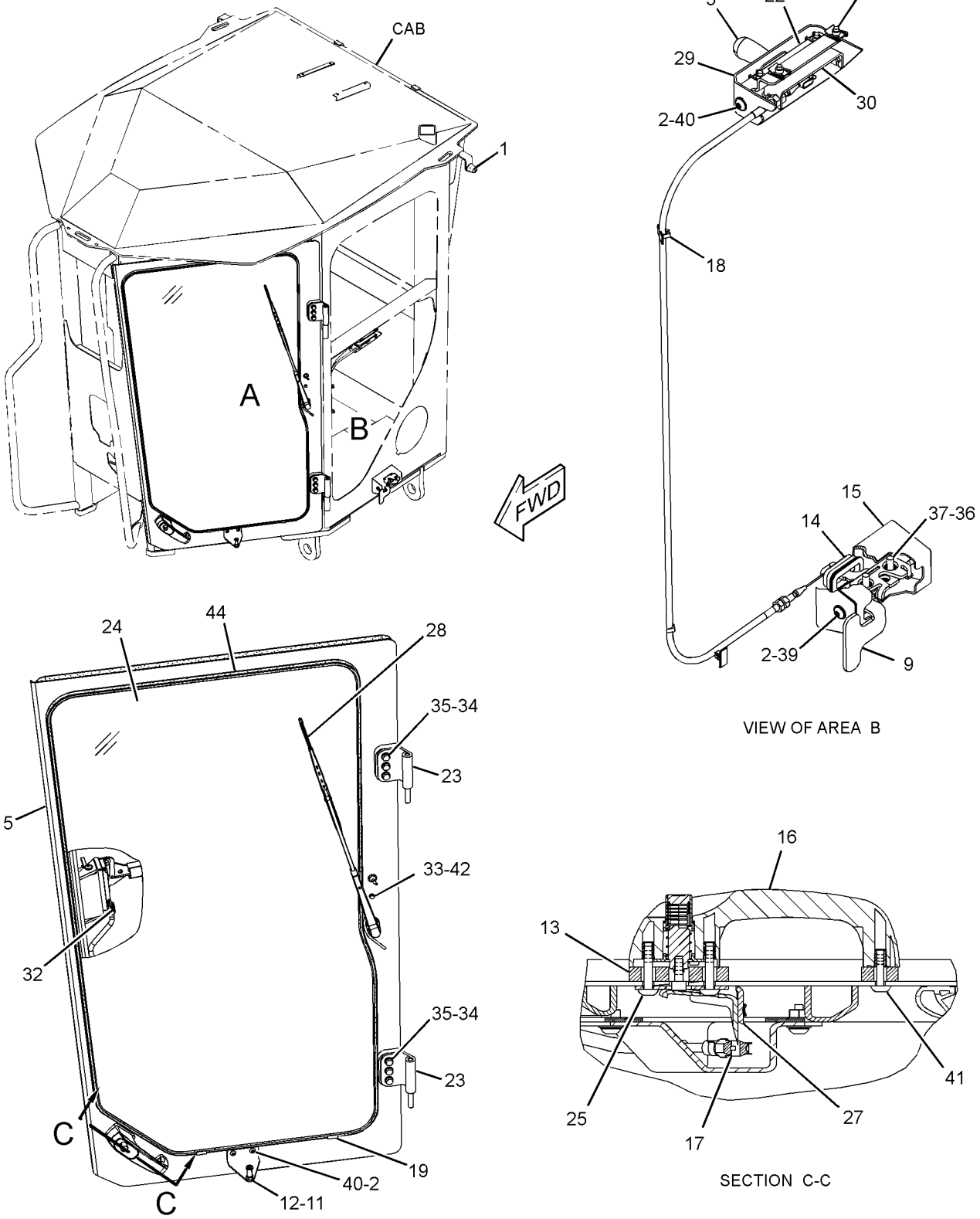

GRAPHIC #1

g01162258

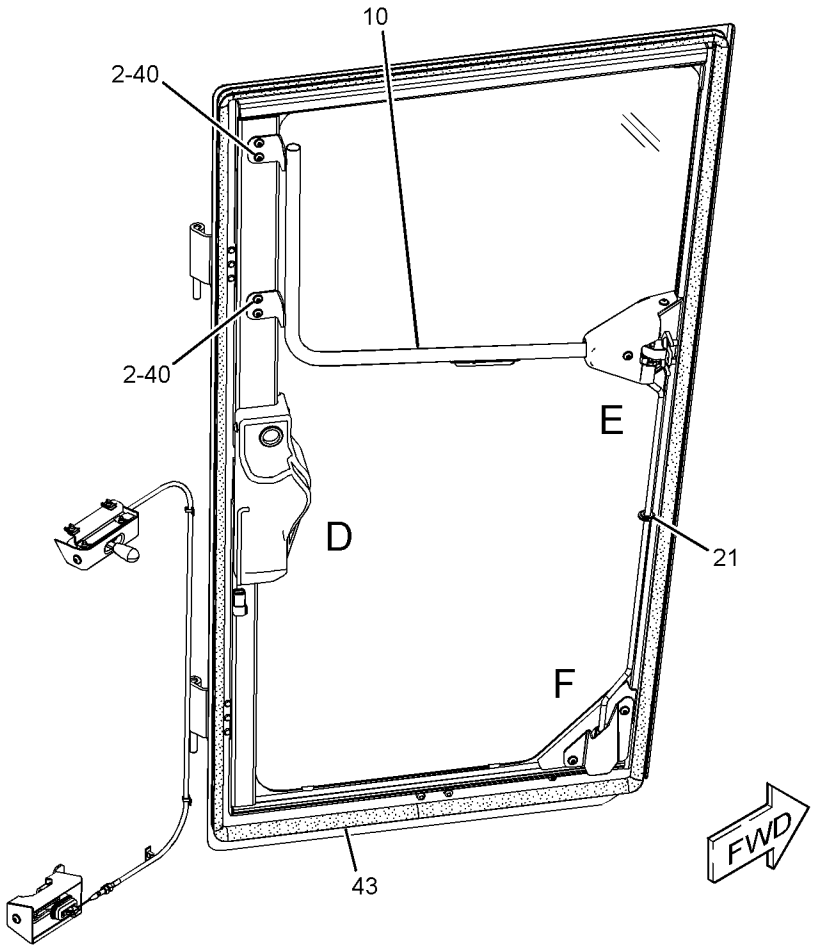

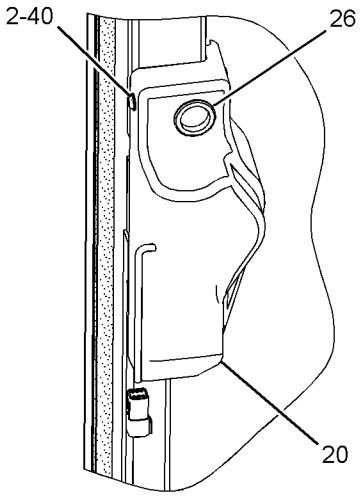

VIEW OF AREA D

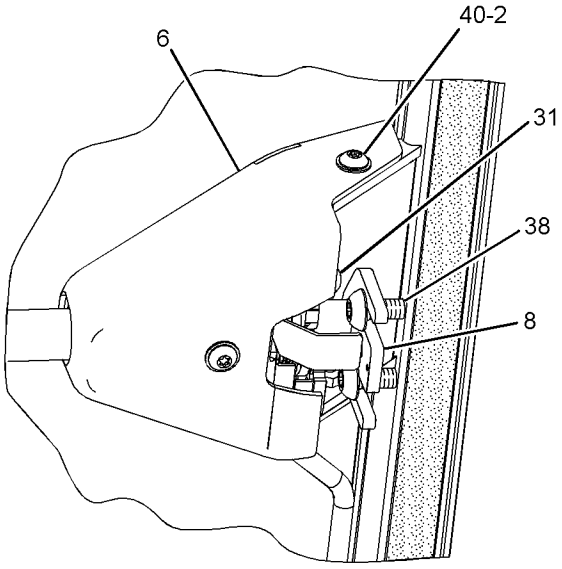

VIEW OF AREA E

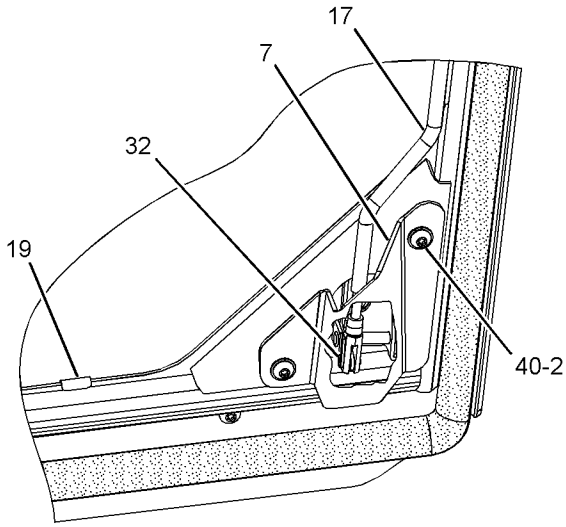

VIEW OF AREA F

GRAPHIC #2 **<END>** g01162259

OPERATOR STATION

233-3230 DOOR GP-CAB—RH

S/N: B9M1-UP

AN ATTACHMENT

SMCS-7308 **i02286135**

NOTE	REF NO	GRAPHIC REF	PART NUMBER	QTY	PART NAME 1 2 3 4 5 6 (PRODUCT LEVEL)	SEE PAGE
	1	1	**106-6553**	1	BUMPER-CONICAL	
	2	1,2	**114-6658**	16	WASHER (6.5X17X1-MM THK)	
	3	1	**115-9345**	1	KNOB-CONTROL (DOOR RELEASE)	
	4	1	**139-6039**	6	NUT (U-TYPE RETAINER)	
	5	1	**247-3969**	1	DOOR AS	
M		1	**6V-9632**	2	NUT-WELD (M6X1-THD)	
	6	2	**249-2412**	1	PLATE	
	7	2	**249-2426**	1	STRIKER AS	
	8	1	**251-6160**	1	LATCH AS	
	9	2	**252-4428**	1	LATCH AS	
	10	2	**257-0553**	1	COVER	
	11	1	**257-9345**	1	STRIKER	
	12	1	**259-0538**	1	BRACKET AS	
		1	**1F-0750**	1	NUT-WELD (3/8-16-THD)	
	13	1	**260-6615**	1	SPACER	
	14	1	**261-1731**	1	BOOT	
	15	1	**261-5524**	1	COVER AS	
	16	1	**262-1585**	1	HANDLE GP-DOOR	
M		1	**6V-5683**	1	BOLT (M6X1X16-MM)	
		1	**249-2403**	1	HANDLE AS	
	17	1	**262-4772**	3	CLIP	
	18	1,2	**263-2574**	2	CLIP	
	19	2	**268-3523**	1	BUSHING	
	20	1	**268-3529**	1	PLATE	
	21	1	**268-3532**	2	HINGE AS	
	22	1	**268-3535**	1	GLASS	
M	23	1	**111-4627**	2	SCREW-MACHINE (M6X1X30-MM)	
	24	2	**143-0089**	1	GROMMET	
	25	2	**249-2408**	1	LEVER (RH)	
Y	26	1	**249-4096**	1	WIPER GP-WINDOW	795
	27	1	**260-8745**	1	RELEASE AS-LATCH (CAB DOOR, RH)	
		1	**121-9855**	1	LEVER AS	
		1	**260-8743**	1	CABLE AS	
		1	**7S-9930**	2	RING-RETAINING	
		1	**159-0052**	2	PIN-CLEVIS	
	28	1	**260-9135**	1	COVER	
	29	2	**262-1895**	1	ROD AS	
M	30	2	**3E-8020**	4	SCREW-TRUSS HEAD (M6X1X25-MM)	
	31	1	**6V-7636**	2	PIN AS-SPRING	
M	32	1	**8C-8451**	1	BOLT (M6X1X40-MM)	
M	33	1	**8T-4121**	6	WASHER-HARD (11X21X2.5-MM THK)	
M	34	1	**8T-4195**	6	BOLT (M10X1.5X30-MM)	
	35	1	**8T-4224**	2	WASHER-HARD (8.8X16X2-MM THK)	
M	36	1	**8T-7547**	2	BOLT (M8X1.25X30-MM)	
M	37	2	**9X-2041**	2	SCREW-TRUSS HEAD (M10X1.5X20-MM)	
M	38	1	**9X-2043**	6	SCREW-TRUSS HEAD (M6X1X14-MM)	
M	39	1,2	**9X-2044**	16	SCREW-TRUSS HEAD (M6X1X16-MM)	
M	40	1	**9X-2045**	1	SCREW-TRUSS HEAD (M6X1X20-MM)	
	41	1	**9X-8256**	1	WASHER (6.6X12X2-MM THK)	
	42	2	**268-3527**	1	COVER	
BE	43	2	**178-8894**		SEAL	
BE	44	1	**268-3644**		SEAL	

B-USE AS REQUIRED
E-ORDER BY THE CENTIMETER
M-METRIC PART
Y-SEPARATE ILLUSTRATION

PROOF

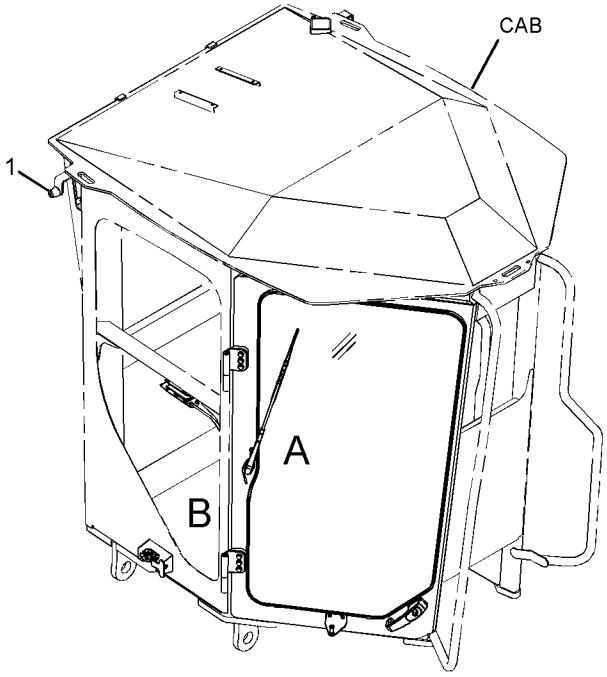



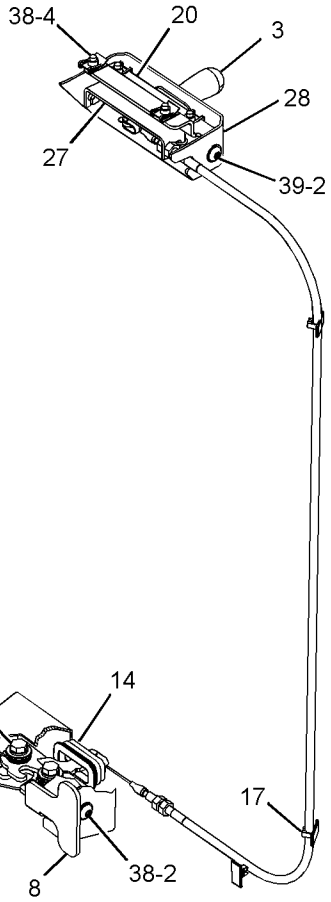

VIEW OF AREA B

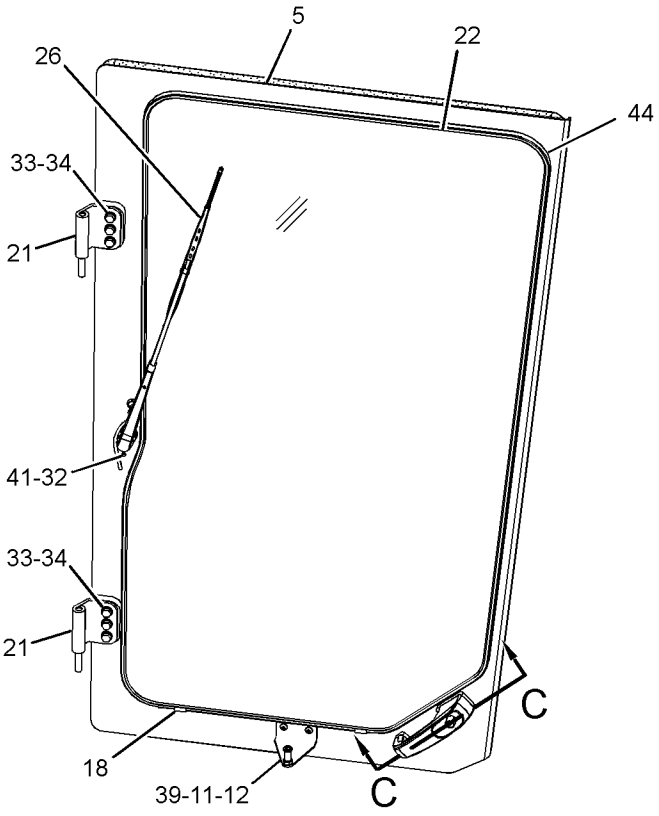

VIEW OF AREA A

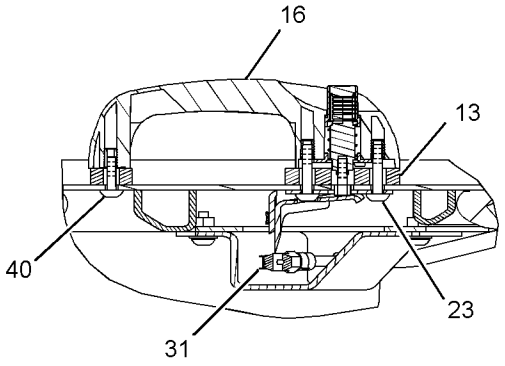

SECTION C-C

GRAPHIC #1 g01161954

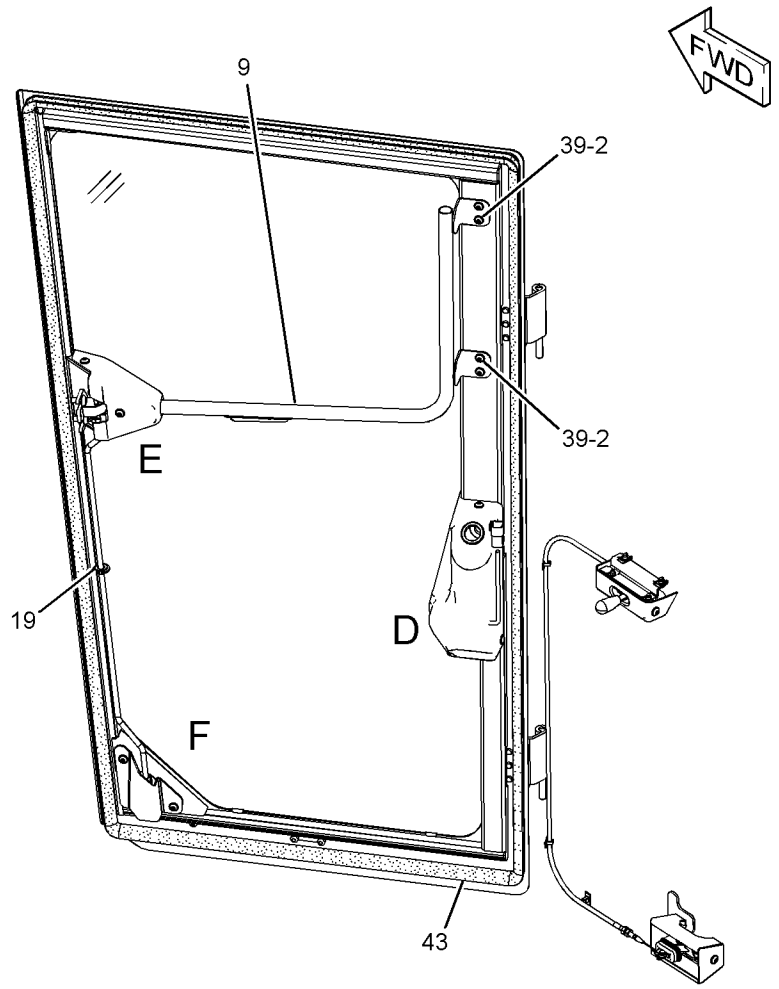

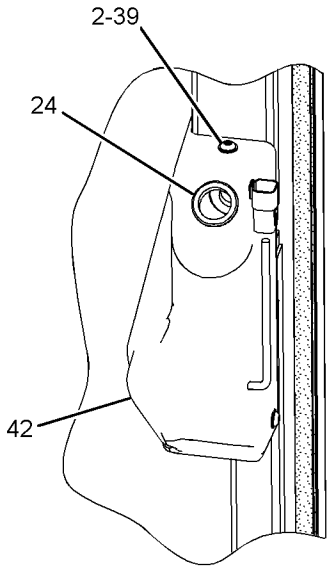

VIEW OF AREA D

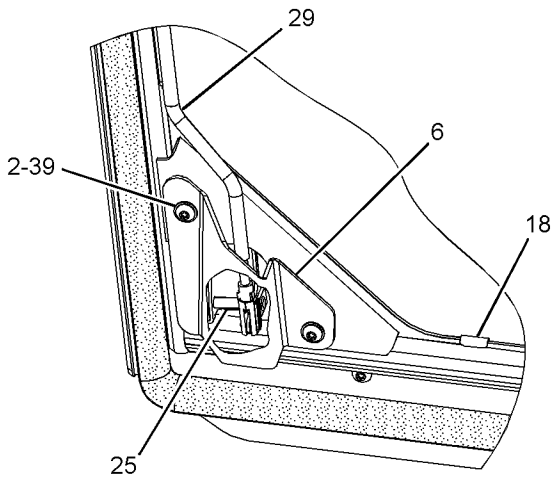

VIEW OF AREA E

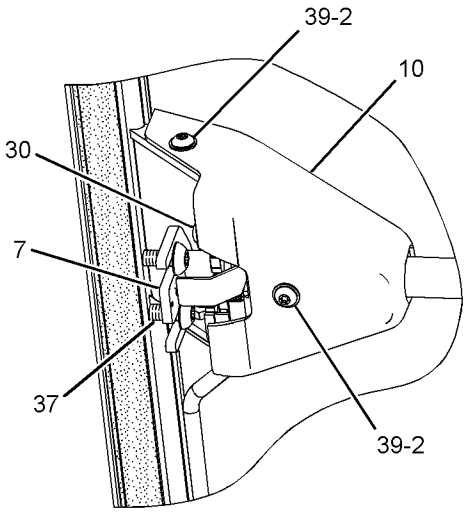

VIEW OF AREA F

GRAPHIC #2 **<END>** g01161956

OPERATOR STATION

233-3287 DOOR GP-CAB—ALTERNATE EXIT

S/N: B9M1-UP

AN ATTACHMENT

SMCS-7308 **i02322610**

NOTE	REF NO	GRAPHIC REF	PART NUMBER	QTY	PART NAME 1 2 3 4 5 6 (PRODUCT LEVEL)	SEE PAGE
	1	1	**114-6658**	9	WASHER (6.5X17X1-MM THK)	
	2	1	**247-3969**	1	DOOR AS	
M		1	**6V-9632**	11	NUT-WELD (M6X1-THD)	
M		1	**7X-2478**	2	NUT-WELD	
		1	**7T-1099**	2	LINK	
	3	1	**249-2426**	1	STRIKER AS	
	4	1	**249-2427**	3	PLUG	
	5	1	**249-2428**	1	PLATE	
	6	1	**262-4546**	1	BOOT	
	7	1	**268-3527**	1	COVER	
	8	1	**268-3532**	2	HINGE AS	
	9	1	**268-3535**	1	GLASS	
	10	1	**271-3267**	1	COVER	
	11	1	**143-0089**	1	GROMMET	
Y	12	1	**249-4096**	1	WIPER GP-WINDOW	795
	13	1	**2M-4004**	1	BUTTON-PLUG	
M	14	1	**3E-8020**	4	SCREW-TRUSS HEAD (M6X1X25-MM)	
M	15	1	**8C-8451**	1	BOLT (M6X1X40-MM)	
M	16	1	**8T-4121**	6	WASHER-HARD (11X21X2.5-MM THK)	
M	17	1	**8T-4195**	6	BOLT (M10X1.5X30-MM)	
M	18	1	**9X-2041**	2	SCREW-TRUSS HEAD (M10X1.5X20-MM)	
M	19	1	**9X-2044**	9	SCREW-TRUSS HEAD (M6X1X16-MM)	
	20	1	**9X-8256**	1	WASHER (6.6X12X2-MM THK)	
	21	1	**268-3533**	1	LATCH AS	
BE	22	1	**178-8894**		SEAL	
BE	23	1	**268-3644**		SEAL	

B-USE AS REQUIRED
E-ORDER BY THE CENTIMETER
M-METRIC PART
Y-SEPARATE ILLUSTRATION

PROOF

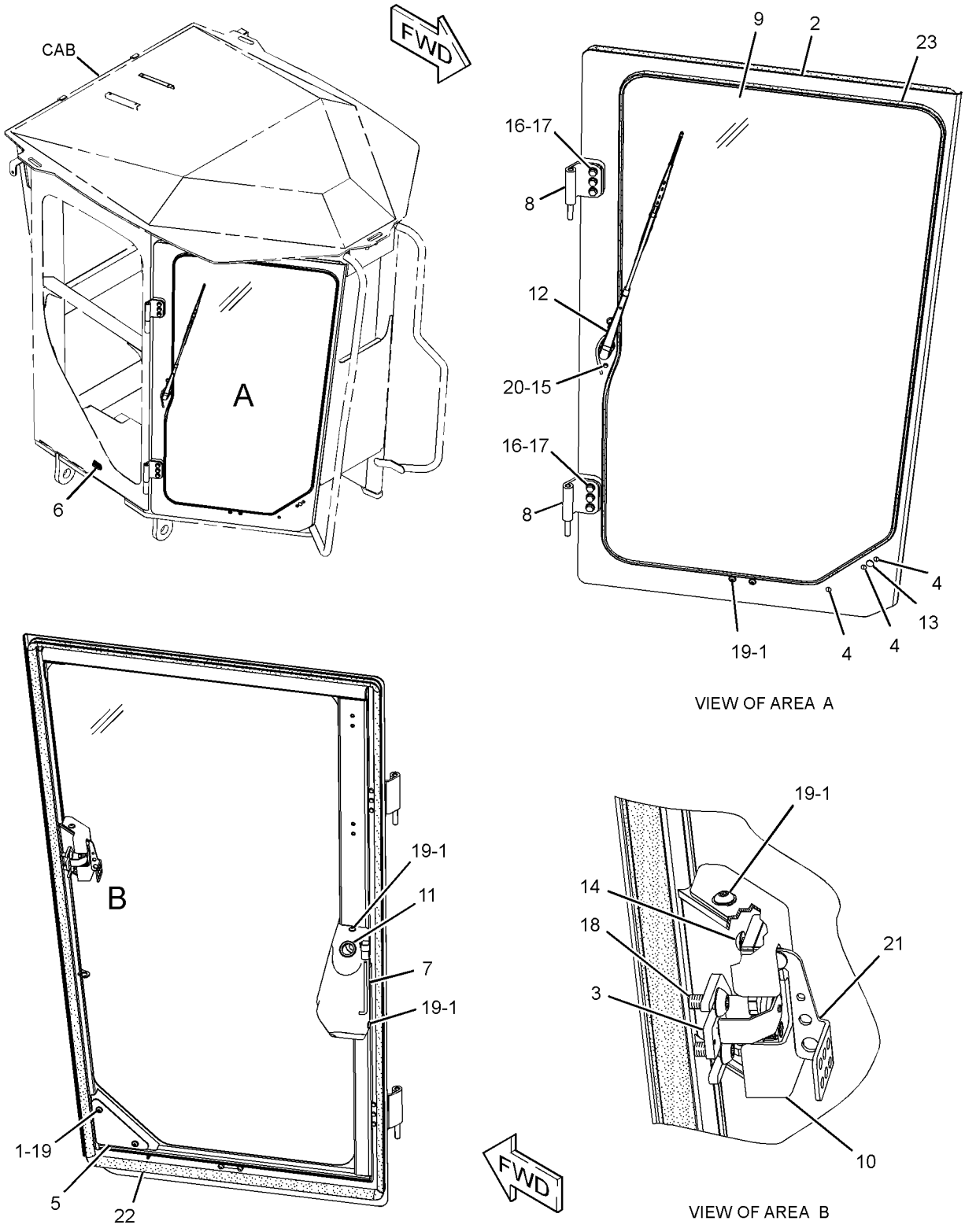

GRAPHIC #1 **<END>** g01161525

OPERATOR STATION

244-2701 DUCT & FILTER GP-AIR

S/N: B9M1-UP
PART OF 233-3149 AIR CONDITIONER GP
AN ATTACHMENT

SMCS-7337, 7342 **i02286260**

NOTE	REF NO	GRAPHIC REF	PART NUMBER	QTY	PART NAME 1 2 3 4 5 6 (PRODUCT LEVEL)	SEE PAGE
	1	1	**149-1912**	1	FILTER AS-AIR (CAB HEATER, AIR CONDITIONER)	
	2	1	**185-9464**	2	LATCH AS	
	3	1	**201-2648**	1	COVER	
	4	1	**249-1286**	1	DUCT AS	
	5	1	**249-1287**	1	DUCT	
	6	1	**249-1288**	1	DUCT	
	7	1	**119-3355**	1	FILTER-AIR (CAB HEATER, AIR CONDITIONER)	
	8	1	**5P-4115**	1	WASHER-HARD (7.2X19X2-MM THK)	
M	9	1	**6V-6317**	2	BOLT (M10X1.5X20-MM)	
M	10	1	**8T-0640**	1	BOLT (M6X1X30-MM)	
	11	1	**8T-4121**	2	WASHER-HARD (11X21X2.5-MM THK)	
	12	1	**6C-3680**	4	RIVET-POP	

M-METRIC PART

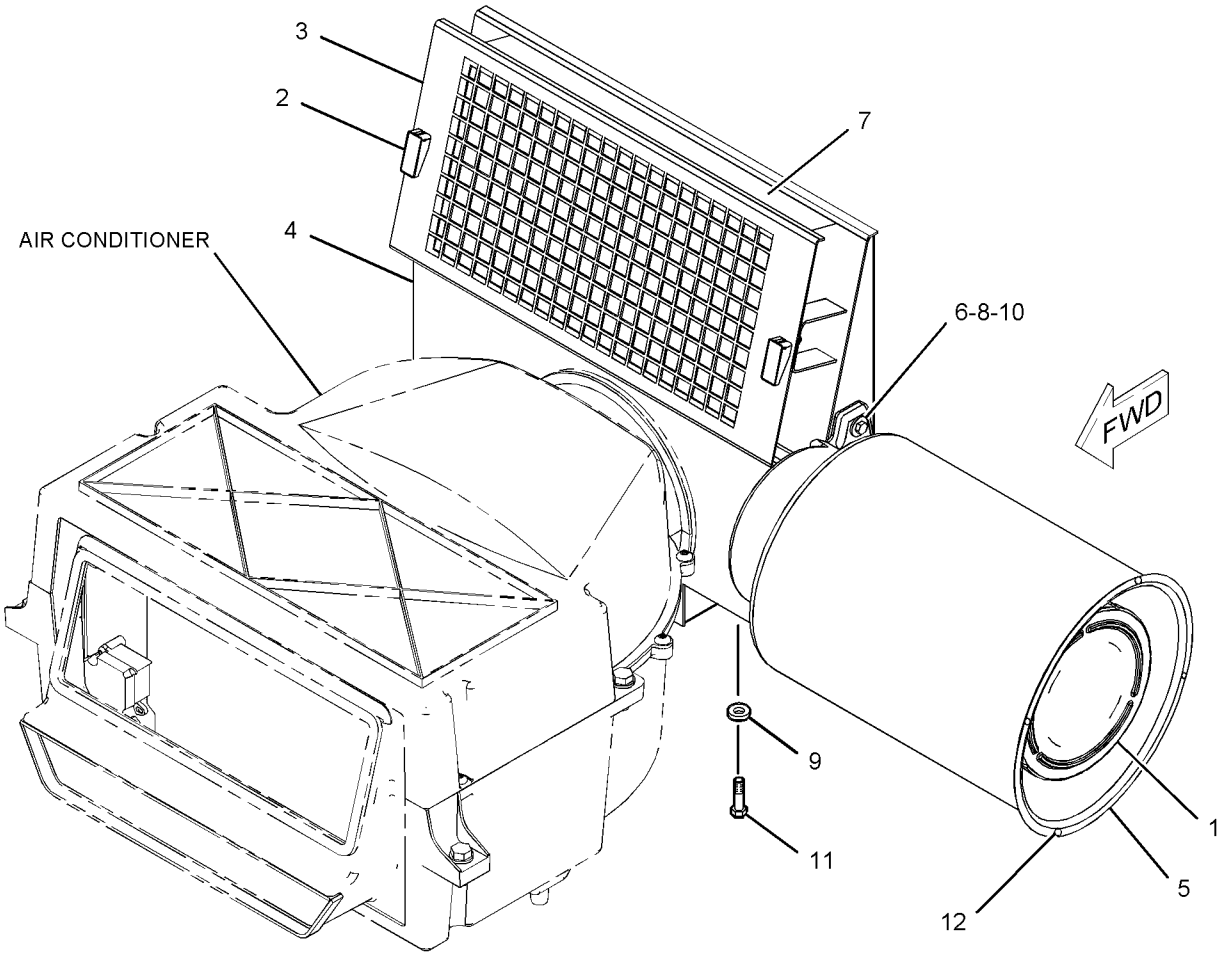

GRAPHIC #1 **<END>** g01141740

OPERATOR STATION

170-5334 FAN GP-CIRCULATING

S/N: B9M1-UP
24-VOLT
PART OF 233-3137 FAN GP-DEFROSTER
AN ATTACHMENT

SMCS-7316 **i02292253**

NOTE	REF NO	GRAPHIC REF	PART NUMBER	QTY	PART NAME 1 2 3 4 5 6 (PRODUCT LEVEL)	SEE PAGE
	1	1	**3D-8747**	1	BRACKET	
	2	1	**3D-8748**	1	FAN AS (4-BLADE)	
	3	1	**3D-8749**	1	GUARD	
	4	1	**3T-6774**	1	GROMMET	
	5	1	**9X-9689**	1	BASE-FAN	
	6	1	**135-1979**	1	BRACKET	
Y	7	1	**170-5335**	1	MOTOR GP-ELECTRIC (DEFROSTER FAN)	174
	8	1	**031-4155**	1	LOCKNUT (5/16-18-THD)	
	9	1	**1B-2713**	1	BOLT (1/4-20X1.75-IN)	
	10	1	**1M-1230**	2	NUT & LOCK AS (10-32-THD)	
	11	1	**2D-6235**	1	LOCKNUT (1/4-20-THD)	
	12	1	**3D-8752**	1	LOCKNUT (5/16-24-THD)	
	13	1	**4M-0061**	1	BOLT (5/16-18X0.75-IN)	
	14	1	**5P-0537**	4	WASHER-HARD (7.2X14.5X2-MM THK)	
	15	1	**6G-5987**	1	BRACKET	
	16	1	**7L-8316**	1	SETSCREW-SOCKET (10-32X2.54-IN)	
	17	1	**7T-0582**	1	BOLT	
	18	1	**9M-1974**	3	WASHER-HARD (8.8X16X2-MM THK)	
	19	1	**9T-5241**	2	WASHER (9.53X18X1-MM THK)	

Y-SEPARATE ILLUSTRATION

PROOF

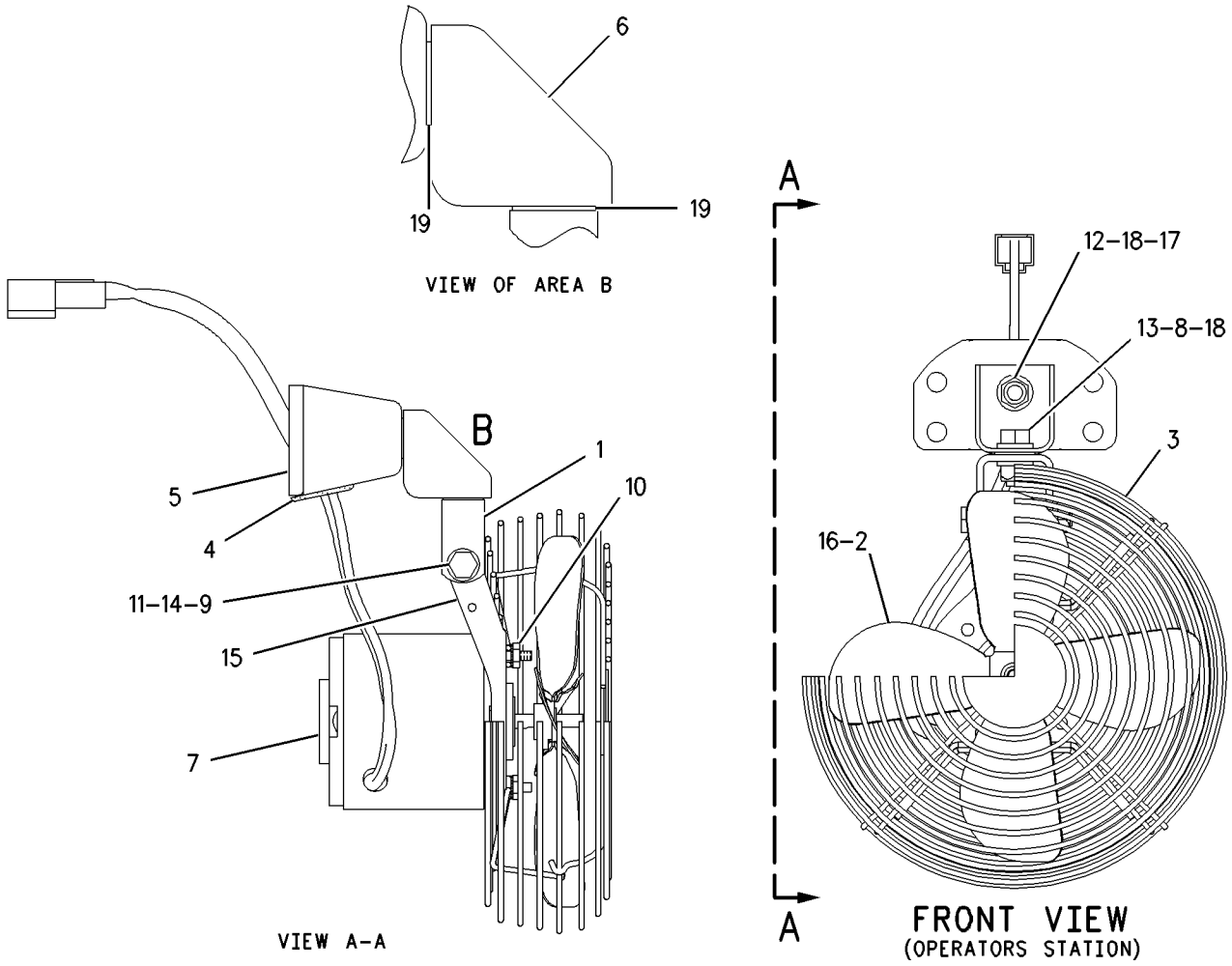

GRAPHIC #1 **<END>** g00761361

OPERATOR STATION

233-3137 FAN GP-DEFROSTER

S/N: B9M1-UP
PART OF 261-0187 SNOW AR-MOTOR GRADER
AN ATTACHMENT

SMCS-7316 **i02295893**

NOTE	REF NO	GRAPHIC REF	PART NUMBER	QTY	PART NAME 1 2 3 4 5 6 (PRODUCT LEVEL)	SEE PAGE
	1	1	**7T-4003**	1	RESISTOR	
Y	2	1	*170-5334*	1	FAN GP-CIRCULATING	732
	3	1	**236-4611**	1	SWITCH AS-ROCKER (FAN BLOWER SPEED)	
M	4	1	**9X-1046**	2	SCREW (M4X0.7X18-MM)	
M	5	1	**9X-2046**	4	SCREW-TRUSS HEAD (M6X1X35-MM)	

M-METRIC PART
Y-SEPARATE ILLUSTRATION

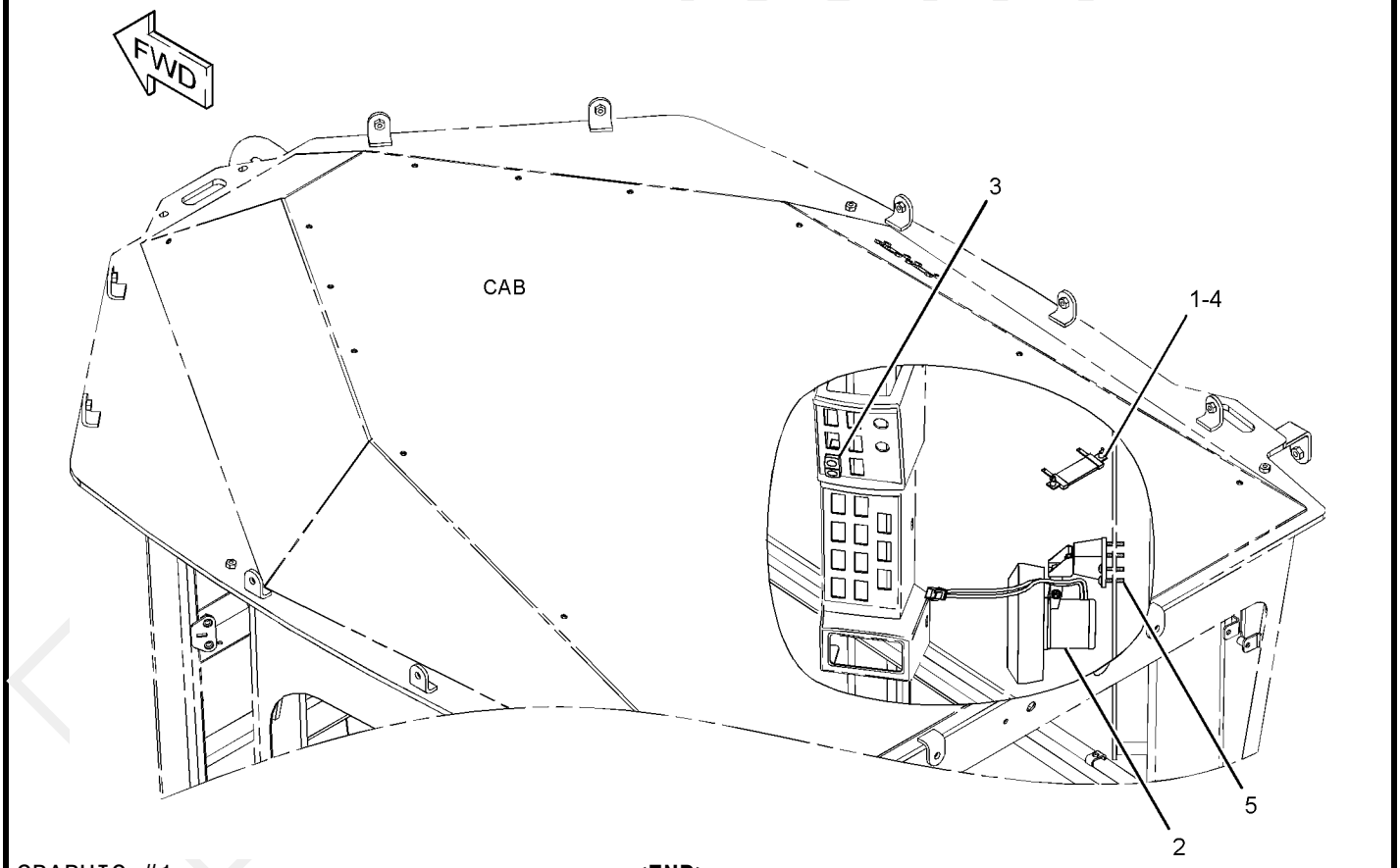

GRAPHIC #1 **<END>** g01152468

OPERATOR STATION

174-2231 HOUSING GP-SEAT SUSPENSION

S/N: B9M1-UP

PART OF 160-7165 SUSPENSION GP-SEAT

AN ATTACHMENT

SMCS-7321, 7324 **i02270624**

NOTE	REF NO	GRAPHIC REF	PART NUMBER	QTY	PART NAME 1 2 3 4 5 6 (PRODUCT LEVEL)	SEE PAGE
	1	1	**1Y-7927**	1	PIN	
	2	1	**2D-6235**	2	LOCKNUT (1/4-20-THD)	
	3	1	**2M-7819**	4	RING-RETAINING	
	4	1	**3D-2975**	2	RING-RETAINING	
	5	1	**4B-5059**	6	WASHER (29.5X15X2.5-MM THK)	
	6	1	**4N-2927**	2	RACE-THRUST BEARING	
	7	1	**5D-4822**	2	RING-RETAINING	
	8	1	**5P-8445**	4	RING-RETAINING	
	9	1	**5V-0770**	2	BOLT-CARRIAGE (1/4-20X0.74-IN)	
	10	1	**7M-7219**	1	BEARING-THRUST	
	11	1	**7V-5191**	2	SPACER (28X10X7.1-MM THK)	
	12	1	**8L-8413**	2	STRAP-CABLE	
	13	1	**8S-7803**	4	RING-RETAINING	
	14	1	**8Y-6041**	1	ARM AS	
	15	1	**8Y-6045**	1	CAM	
	16	1	**8Y-6046**	1	PIN	
	17	1	**8Y-6047**	2	PIN	
	18	1	**8Y-6060**	2	ROLLER	
	19	1	**8Y-6062**	1	LINK-ACTUATOR	
	20	1	**8Y-6063**	1	LINK-ACTUATOR	
	21	1	**8Y-6064**	2	ROLLER-SLIDER	
	22	1	**8Y-6066**	1	SPRING	
	23	1	**8Y-6067**	1	SPACER (10.54-MM THK)	
	24	1	**8Y-6068**	1	NUT (3/8X16-THD)	
	25	1	**8Y-6069**	1	ADJUSTER AS	
	26	1	**9X-8918**	3	SCREW-FLAT HEAD (8-32X0.5-IN)	
	27	1	**095-0878**	1	PIN-SPRING	
	28	1	**131-4242**	1	BOLT (3/8-16X5.18-IN)	
	29	1	**131-5167**	1	KNOB AS-ADJUSTMENT (WEIGHT)	
	30	1	**161-5967**	1	SHAFT	
	31	1	**174-2237**	1	HOUSING AS-UPPER	
JZ	32	1		1	KNOB-HEIGHT (SUSPENSION SEAT)	
JZ	33	1		1	KNOB-HEIGHT (SUSPENSION SEAT)	
LZ	34	1		2	SPRING	
LZ	35	1		2	BUSHING	
VZ	36	1		2	SPRING	
VZ	37	1		2	SPACER	
VZ	38	1		2	BUSHING-GUIDE	
VZ	39	1		2	ROD	
PZ	40	1		1	TAPE-INDICATOR	
PZ	41	1		1	GUIDE	
SZ	42	1		1	PIN	
SZ	43	1		1	FOLLOWER-CAM	
TZ	44	1		1	PIN	
TZ	45	1		1	FOLLOWER-CAM	
UZ	46	1		2	ROLLER AS	
UZ	47	1		1	ROLLER AS	
QZ	48	1		3	BUMPER	
					AVAILABLE REPAIR KIT(S):	
J			**8Y-5945**	1	KIT-SUSPENSION KNOB (HEIGHT ADJUSTMENT) (SUSPENSION SEAT)	
L			**8Y-6859**	1	KIT-SPRING (SUSPENSION SEAT)	
V			**8Y-6860**	1	KIT-SPRING (HEIGHT ADJUSTMENT) (SUSPENSION SEAT)	

PROOF

174-2231 **HOUSING GP-SEAT SUSPENSION** *(contd.)* **i02270624**

NOTE	REF NO	GRAPHIC REF	PART NUMBER	QTY	PART NAME 1 2 3 4 5 6 (PRODUCT LEVEL)	SEE PAGE
P			**100-3224**	1	KIT-INDICATOR (WEIGHT ADJUSTMENT) (SUSPENSION SEAT)	
Q			**100-5179**	1	KIT-BUMPER (WEIGHT ADJUSTMENT) (SUSPENSION SEAT)	
S			**108-4086**	1	KIT-FOLLOWER (SUSPENSION SEAT)	
T			**108-4087**	1	KIT-FOLLOWER (SUSPENSION SEAT)	
U			**108-4103**	1	KIT-BEARING (SUSPENSION SEAT)	

J-KIT MARKED J INCLUDES PARTS MARKED J
L-KIT MARKED L INCLUDES PARTS MARKED L AND RETAINING RING
P-KIT MARKED P INCLUDES PARTS MARKED P AND CABLE STRAP
Q-KIT MARKED Q INCLUDES PARTS MARKED Q
S-KIT MARKED S INCLUDES PARTS MARKED S
T-KIT MARKED T INCLUDES PARTS MARKED T
U-KIT MARKED U INCLUDES PARTS MARKED U
V-KIT MARKED V INCLUDES PARTS MARKED V
Z-NOT SERVICED SEPARATELY

PROOF

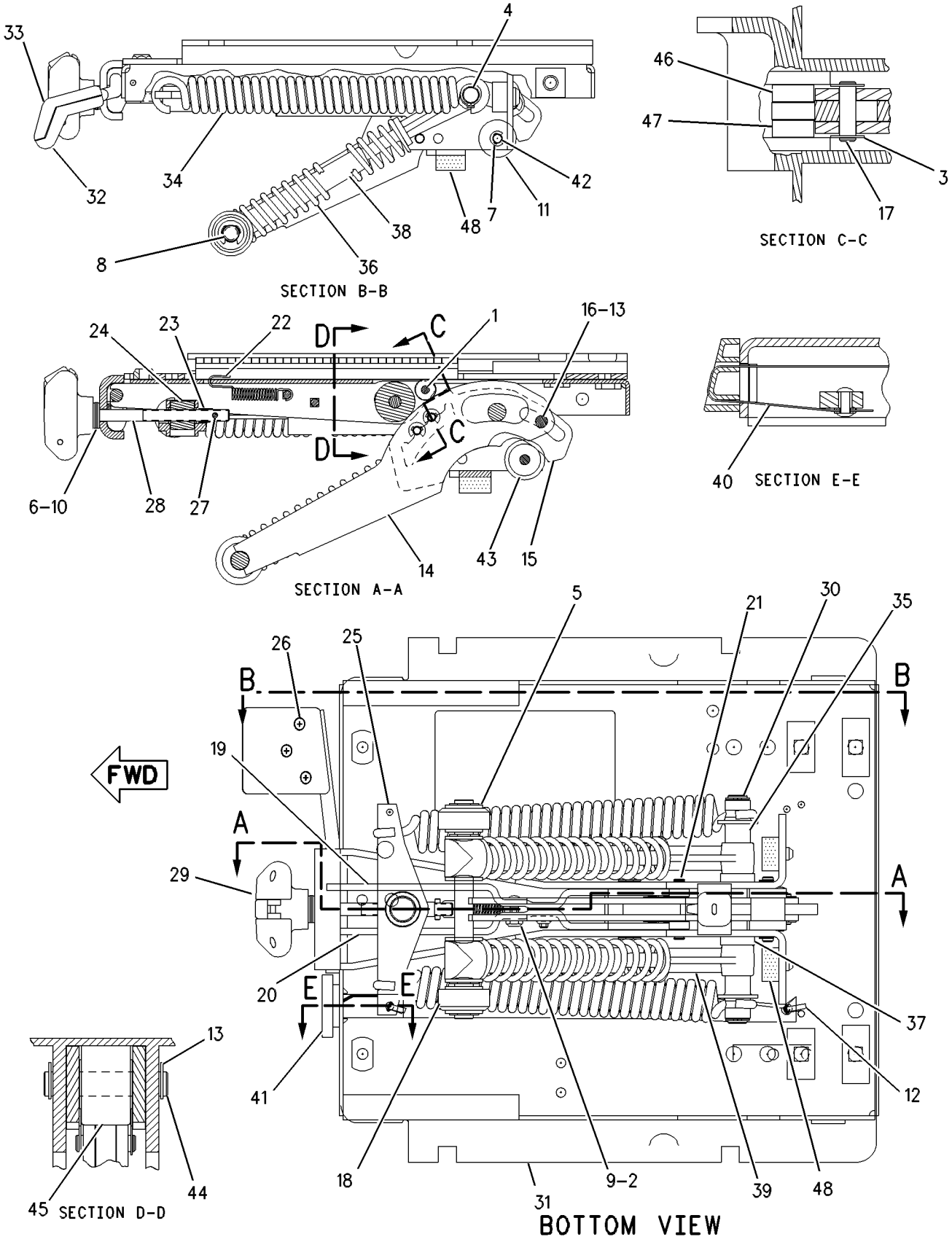

GRAPHIC #1 **<END>** g00608620

OPERATOR STATION

233-3122 INSTALLATION GP-RADIO

S/N: B9M1-UP

AN ATTACHMENT

SMCS-7338 **i02193598**

NOTE	REF NO	GRAPHIC REF	PART NUMBER	QTY	PART NAME 1 2 3 4 5 6 (PRODUCT LEVEL)	SEE PAGE
	1	1	**6T-7695**	2	SPEAKER AS-RADIO	
	2	1	**7K-1181**	1	STRAP-CABLE	
	3	1	**8E-1118**	1	ANTENNA AS	
	4	1	**101-3055**	2	COVER-SPEAKER	
	5	1	**109-8981**	1	CABLE AS-COAXIAL	
	6	1	**103-9425**	8	SCREW-MACHINE (8-32X1-IN)	

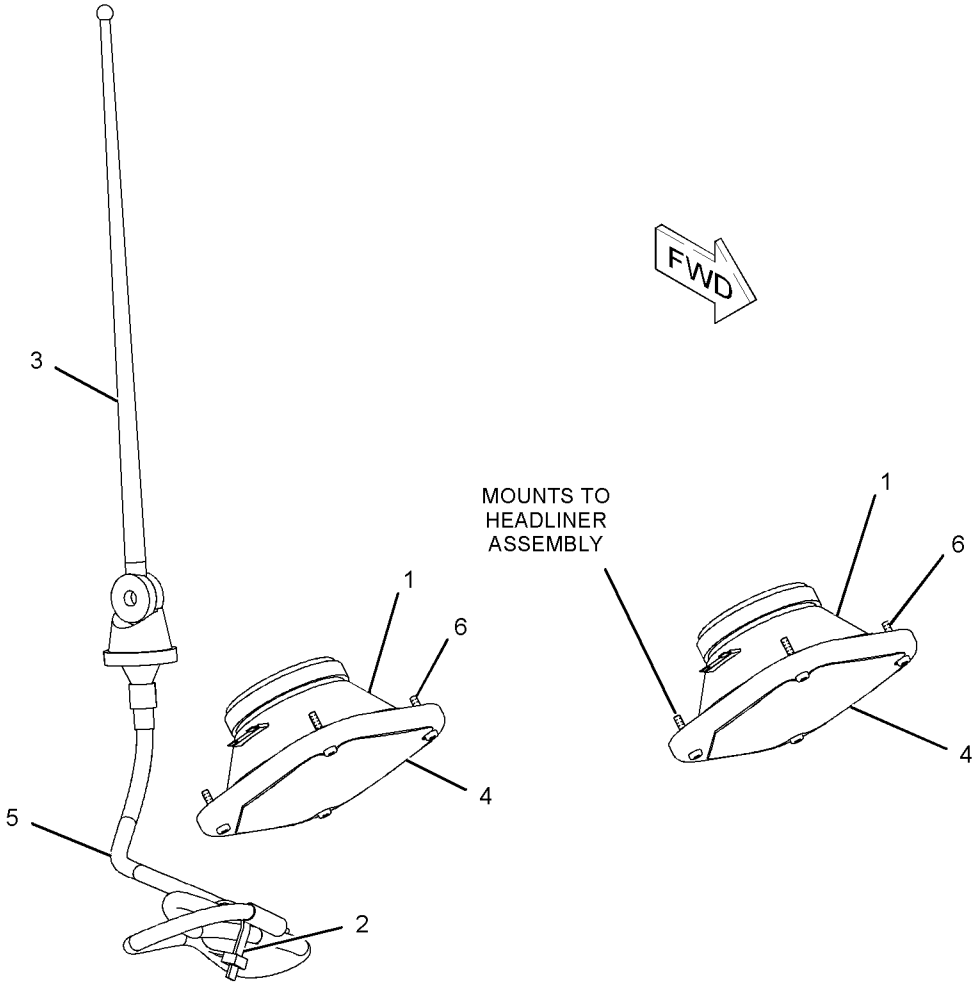

GRAPHIC #1 **<END>** g01114364

OPERATOR STATION

245-2840 INSULATION GP-WEATHER

S/N: B9M1-UP
AN ATTACHMENT

SMCS-7329 **i02203719**

NOTE	REF NO	GRAPHIC REF	PART NUMBER	QTY	PART NAME 1 2 3 4 5 6 (PRODUCT LEVEL)	SEE PAGE
	1	1	**245-2841**	1	SHIELD	
	2	1	**245-2842**	1	SHIELD	
	3	1	**7X-7729**	12	WASHER (11X25X3-MM THK)	
M	4	1	**8T-4136**	12	BOLT (M10X1.5X25-MM)	

M-METRIC PART

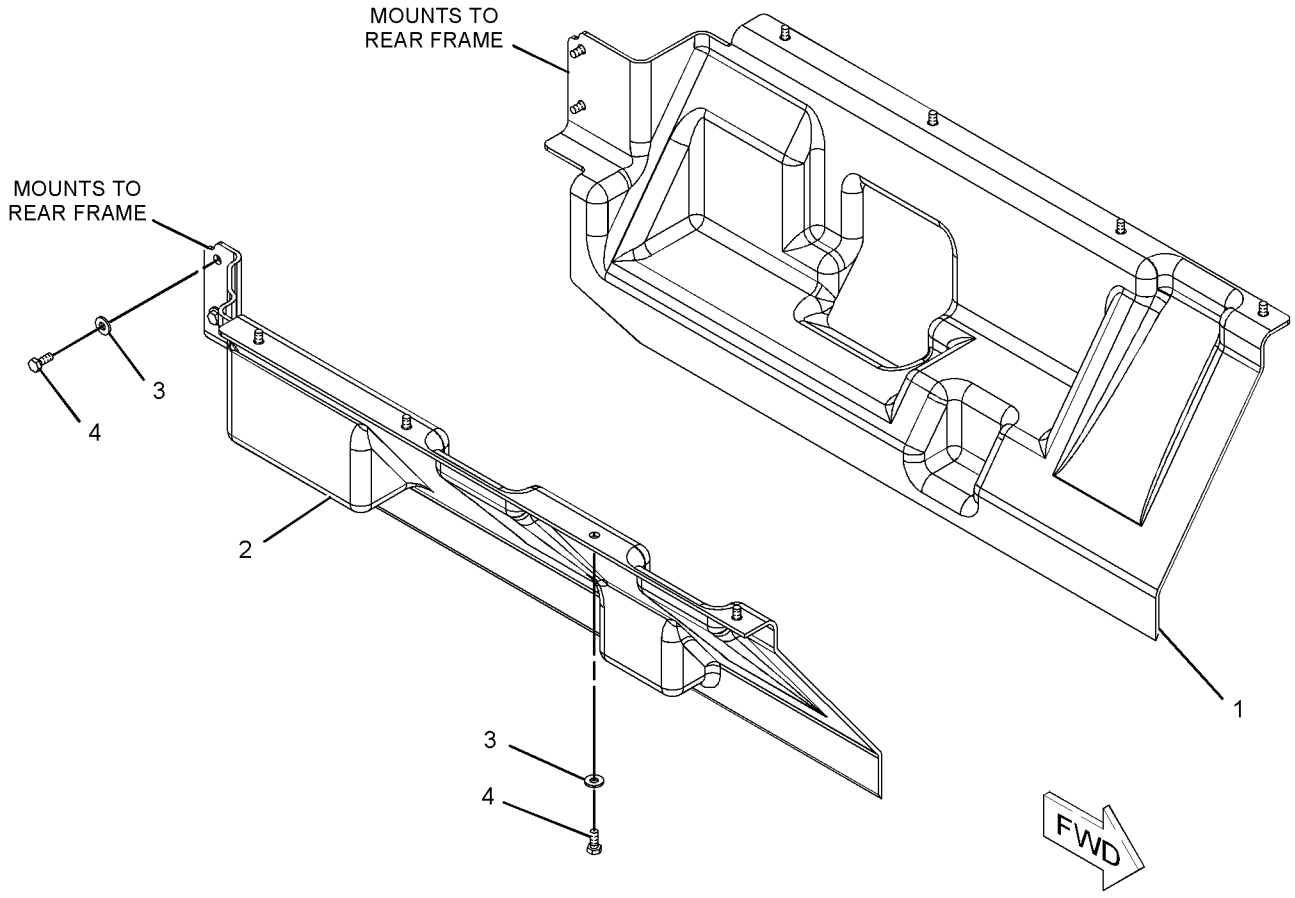

GRAPHIC #1 **<END>** g01113714

OPERATOR STATION

233-3214 LINER GP-CAB

S/N: B9M1-UP

PART OF 254-5399 CAB AR

SMCS-7329 **i02334832**

NOTE	PART NUMBER	QTY	PART NAME 1 2 3 4 5 6 (PRODUCT LEVEL)	SEE PAGE
Y	**3E-6389**	1	LAMP GP-DOME (24-VOLT, WITH SWITCH)	149
	254-5387	1	COVER	
	263-2588	1	COVER	
	263-2573	1	FILM-INSTRUCTION (WIPER)	
	233-3281	1	HEADLINER AS	
	250-8335	2	LAMP AS (24-VOLT)	
	186-3735	2	PIN-CONNECTOR (16-GA TO 18-GA)	
	102-8802	1	KIT-RECEPTACLE (2-PIN)	
			(INCLUDES RECEPTACLE AS & WEDGE)	
	9F-8125	3	LOCKWASHER	
	139-6039	22	NUT (U-TYPE RETAINER)	
	251-2390	1	PANEL	
	5T-1625	1	PLATE AS	
	249-4097	1	PLATE AS	
	251-2388	1	PLATE AS	
	033-4814	3	SCREW (10-32X1-IN)	
	9K-5635	10	SCREW-TAPPING (8-18X1-IN)	
M	**9X-2044**	8	SCREW-TRUSS HEAD (M6X1X16-MM)	
M	**9X-2045**	18	SCREW-TRUSS HEAD (M6X1X20-MM)	
	114-6658	19	WASHER (6.5X17X1-MM THK)	
	101-2867	7	WASHER-HARD (7.2X25X2-MM THK)	

M-METRIC PART
Y-SEPARATE ILLUSTRATION

<END>

PROOF

OPERATOR STATION

244-2702 LINES GP-AIR CONDITIONER

S/N: B9M1-UP

PART OF 233-3149 AIR CONDITIONER GP

AN ATTACHMENT

SMCS-1808, 7320 **i02277489**

NOTE	REF NO	GRAPHIC REF	PART NUMBER	QTY	PART NAME 1 2 3 4 5 6 (PRODUCT LEVEL)	SEE PAGE
	1	1	**186-6189**	1	ACCUMULATOR GP-REFRIGERANT	
	2	1	**250-3528**	1	TUBE AS	
	3	1	**250-3529**	1	TUBE AS	
	4	1	**257-3226**	1	RECEIVER-DRYER	
I	5	1	**260-5807**	1	HOSE AS	
I	6	1	**260-5808**	1	HOSE AS	
	7	1	**128-5924**	1	CLAMP	
	8	1	**5P-9297**	1	CLIP	
	9	1	**8R-3393**	1	STRAP	
	10	1	**8S-6109**	1	CLIP (SLOT)	
	11	1	**8S-6110**	1	CLIP (TAB)	
	12	1	**8T-4121**	5	WASHER-HARD (11X21X2.5-MM THK)	
M	13	1	**8T-4136**	2	BOLT (M10X1.5X25-MM)	
M	14	1	**8T-4137**	1	BOLT (M10X1.5X20-MM)	
M	15	1	**8T-4191**	2	BOLT (M10X1.5X16-MM)	
	16	1	**9M-8406**	1	CLIP	
	17	1	**9X-7381**	2	SEAL-O-RING	
	18	1	**9X-7382**	2	SEAL-O-RING	
	19	1	**9X-7383**	2	SEAL-O-RING	
	20	1	**9X-8250**	1	CLIP	

I-REFER TO HYDRAULIC INFORMATION SYSTEM
M-METRIC PART

PROOF

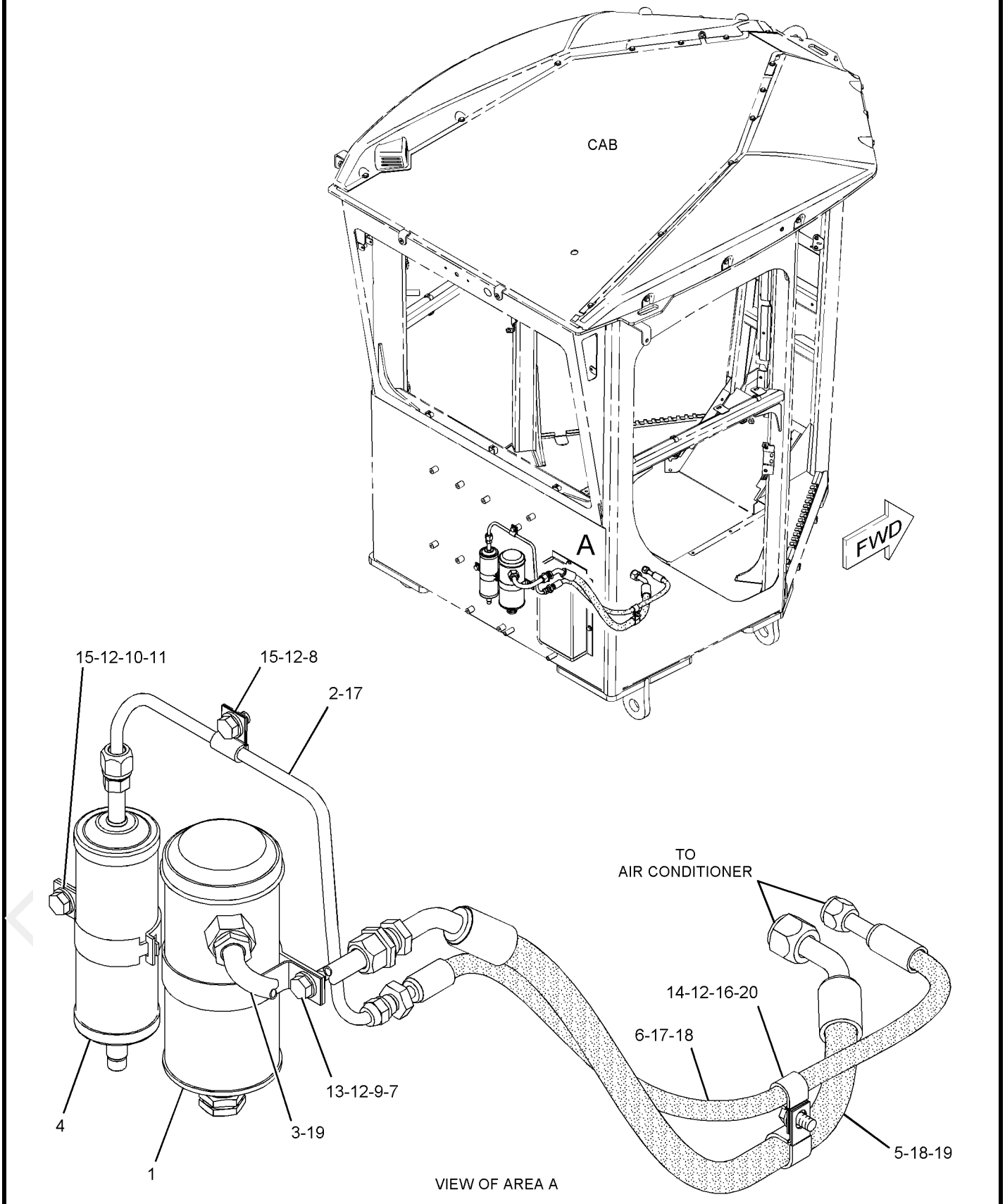

GRAPHIC #1

<END>

g01142541

OPERATOR STATION

255-1249 LINES GP-AIR CONDITIONER

S/N: B9M1-UP

PART OF 261-0775 AIR CONDITIONER AR

AN ATTACHMENT

SMCS-1808, 7320 **i02291022**

NOTE	REF NO	GRAPHIC REF	PART NUMBER	QTY	PART NAME 1 2 3 4 5 6 (PRODUCT LEVEL)	SEE PAGE
	1	1	**1P-6356**	1	PLATE	
I	2	1	**247-1765**	1	HOSE AS.	
I	3	1	**247-1767**	1	HOSE AS	
	4	1	**264-0495**	1	TUBE AS	
	5	1	**264-0496**	1	TUBE AS	
I	6	1	**271-6649**	1	HOSE AS.	
M	7	1	**085-8091**	1	BOLT (M10X1.5X55-MM)	
	8	1	**5K-5338**	1	CLIP	
	9	1	**5P-1075**	1	WASHER-HARD (10.2X22.5X3-MM THK)	
	10	1	**5P-9299**	1	CLIP	
	11	1	**6K-8178**	1	CLIP	
	12	1	**9X-7380**	2	SEAL-O-RING	
	13	1	**9X-7381**	2	SEAL-O-RING	
	14	1	**9X-7382**	1	SEAL-O-RING	
	15	1	**9X-7383**	1	SEAL-O-RING	
	16	1	**9X-7385**	2	SEAL-O-RING	

I-REFER TO HYDRAULIC INFORMATION SYSTEM
M-METRIC PART

PROOF

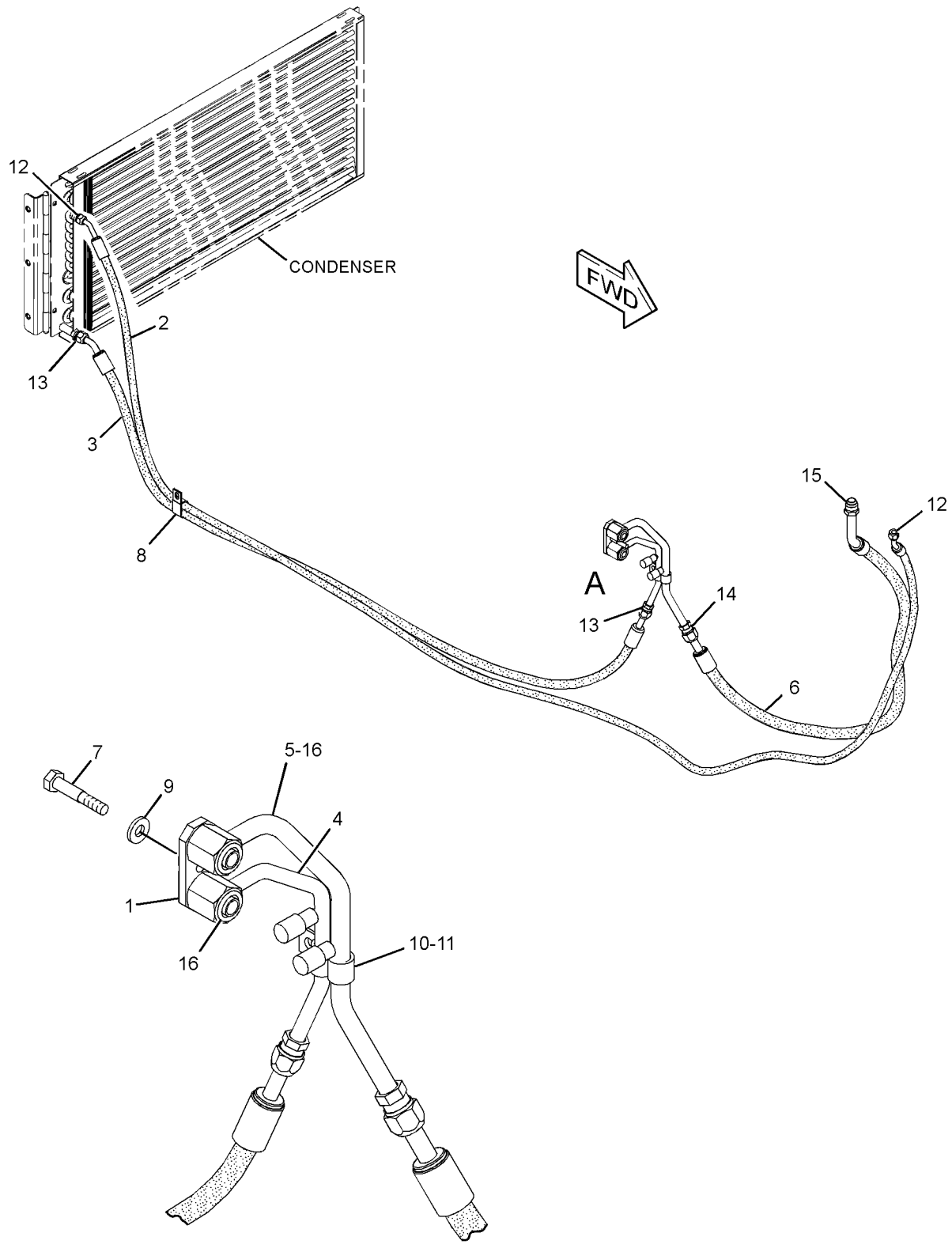

GRAPHIC #1 **<END>** g01158019

OPERATOR STATION

250-2933 LINES GP-HEATER

S/N: B9M1-UP
PART OF 233-3149 AIR CONDITIONER GP
AN ATTACHMENT

SMCS-1812, 7304 **i02277499**

NOTE	REF NO	GRAPHIC REF	PART NUMBER	QTY	PART NAME 1 2 3 4 5 6 (PRODUCT LEVEL)	SEE PAGE
	1	1	**5P-6670**	1	FILM-INSTRUCTION (WATER IN, WATER OUT)	
	2	1	**9X-2488**	4	CLAMP-HOSE	
	3	1	**260-5806**	1	PLATE AS	
	4	1	**5P-4116**	2	WASHER-HARD (8.8X20.5X2-MM THK)	
	5	1	**6D-1641**	1	CLIP	
M	6	1	**8T-4121**	1	WASHER-HARD (11X21X2.5-MM THK)	
M	7	1	**8T-4137**	1	BOLT (M10X1.5X20-MM)	
M	8	1	**8T-4908**	2	BOLT (M8X1.25X25-MM)	
E	9	1	**136-1953**		HOSE (172-CM)	
BD	10	1	**5P-5908**		SEAL	

B-USE AS REQUIRED
D-ORDER BY THE METER
E-ORDER BY THE CENTIMETER
M-METRIC PART

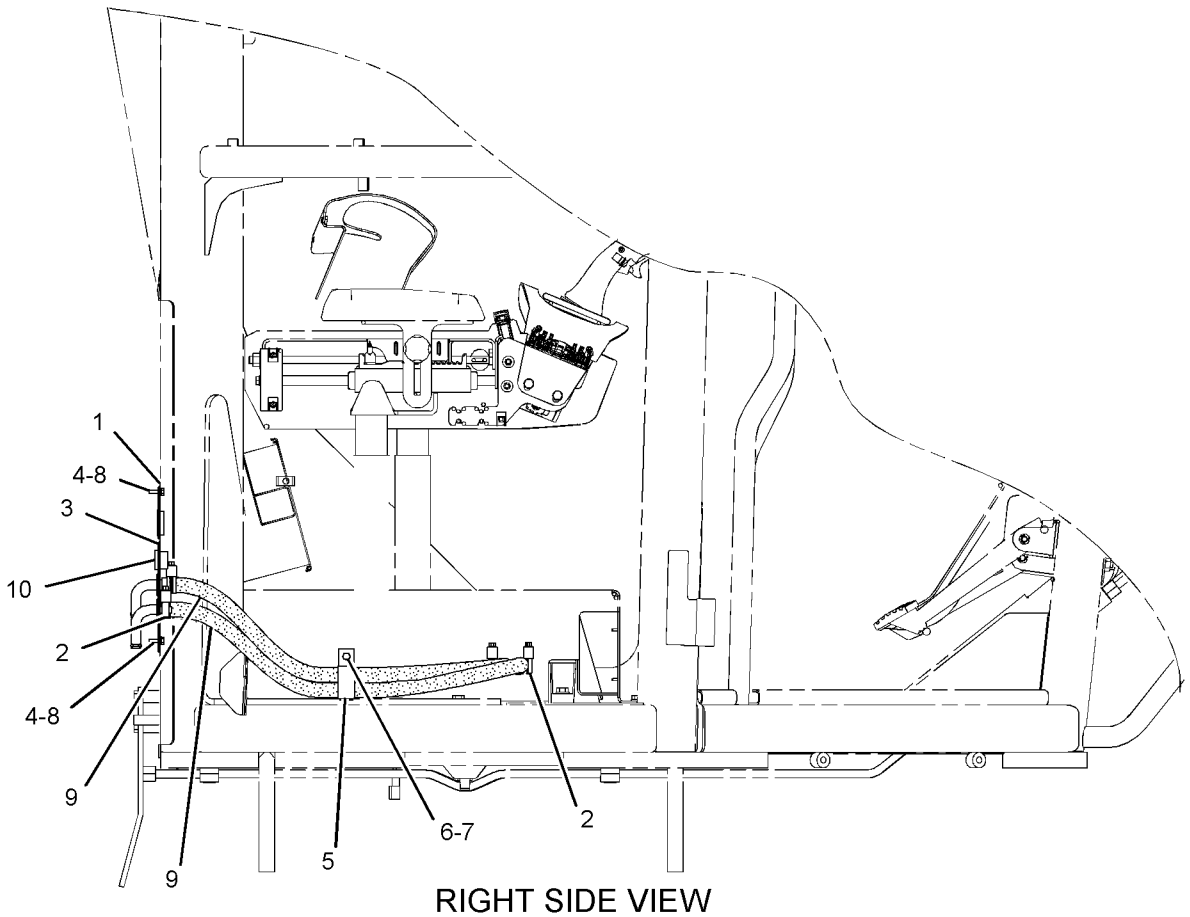

RIGHT SIDE VIEW

GRAPHIC #1 **<END>** g01141792

OPERATOR STATION

255-1248 LINES GP-HEATER

S/N: B9M1-UP
PART OF 261-0775, 261-0839 AIR CONDITIONER AR
AN ATTACHMENT

SMCS-1812, 7304 **i02291020**

NOTE	REF NO	GRAPHIC REF	PART NUMBER	QTY	PART NAME 1 2 3 4 5 6 (PRODUCT LEVEL)	SEE PAGE
	1	1	**5D-1026**	4	CLAMP-HOSE	
	2	1	**6I-6547**	1	ELBOW	
	3	1	**8F-8151**	1	VALVE AS-SHUTOFF	
	4	1	**194-4864**	1	ELBOW	
	5	1	**250-5718**	1	PLATE AS	
M		1	**8T-3490**	1	NUT-WELD (M10X1.5-THD)	
	6	1	**2M-9780**	1	SEAL-O-RING	
	7	1	**3K-0360**	1	SEAL-O-RING	
M	8	1	**8T-4121**	1	WASHER-HARD (11X21X2.5-MM THK)	
M	9	1	**8T-4195**	1	BOLT (M10X1.5X30-MM)	
M	10	1	**8T-4779**	1	BOLT (M16X2X35-MM)	
	11	1	**9X-8250**	1	CLIP	
	12	1	**9X-8257**	1	WASHER (17.5X30X3.5-MM THK)	
E	13	1	**5P-0767**		HOSE (335-CM)	

E-ORDER BY THE CENTIMETER
M-METRIC PART

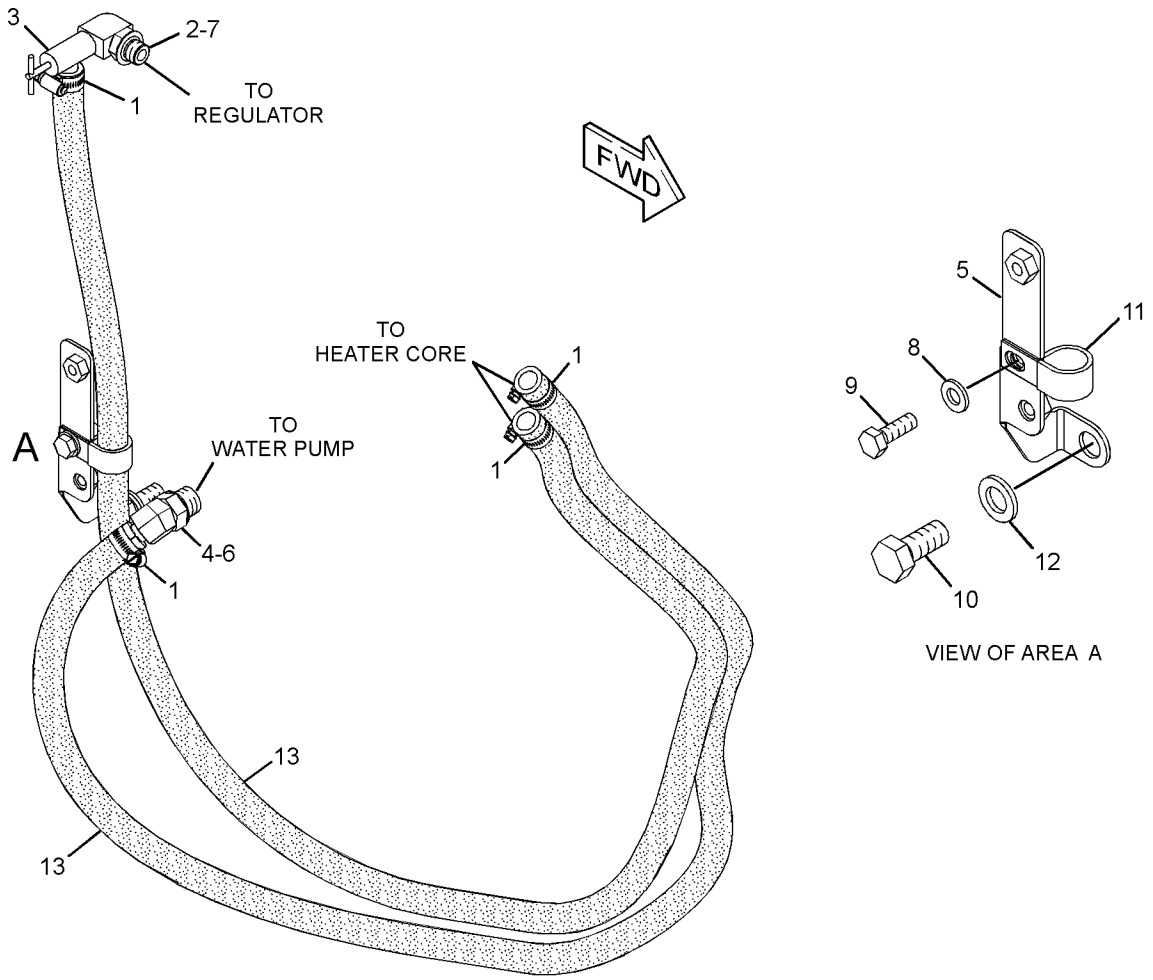

GRAPHIC #1 **<END>** g01158531

OPERATOR STATION

105-9659 MIRROR GP-REAR VIEW

S/N: B9M1-UP

PART OF 233-3208 MIRROR GP-REAR VIEW

AN ATTACHMENT

SMCS-7319 **i01901909**

NOTE	REF NO	GRAPHIC REF	PART NUMBER	QTY	PART NAME 1 2 3 4 5 6 (PRODUCT LEVEL)	SEE PAGE
	1	1	**9P-9388**	1	KNOB (MIRROR ADJUSTMENT)	
	2	1	**5P-6874**	1	MIRROR (REAR VIEW)	
	3	1	**5K-9179**	1	BOLT-ROUND HEAD (3/8-16X11-IN)	
	4	1	**6Y-5113**	1	BRACKET	
M	5	1	**8T-4121**	2	WASHER-HARD (11X21X2.5-MM THK)	
M	6	1	**8T-4195**	2	BOLT (M10X1.5X30-MM)	

M-METRIC PART

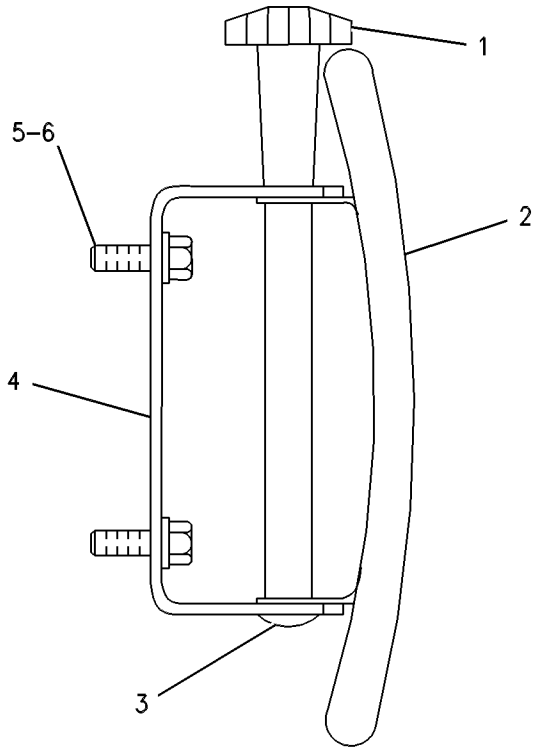

GRAPHIC #1 **<END>** g00254288

PDF

OPERATOR STATION

233-3208 MIRROR GP-REAR VIEW

S/N: B9M1-UP

AN ATTACHMENT

SMCS-7319 **i02183394**

NOTE	PART NUMBER	QTY	PART NAME 1 2 3 4 5 6 (PRODUCT LEVEL)	SEE PAGE
Y	*105-9659*	1	MIRROR GP-REAR VIEW	747

Y-SEPARATE ILLUSTRATION

<END>

PROOF

OPERATOR STATION

233-3295 MIRROR GP-REAR VIEW

S/N: B9M1-UP
PART OF 250-3818 ROADING AR
AN ATTACHMENT

SMCS-7319 **i02277402**

NOTE	REF NO	GRAPHIC REF	PART NUMBER	QTY	PART NAME 1 2 3 4 5 6 (PRODUCT LEVEL)	SEE PAGE
	1	1	**123-4586**	4	BLOCK	
	2	1	**145-7214**	4	BLOCK	
	3	1	**259-4758**	2	MIRROR AS	
	4	1	**265-8941**	2	TUBE AS	
M	5	1	**8T-4121**	8	WASHER-HARD (11X21X2.5-MM THK)	
M	6	1	**8T-4185**	8	BOLT (M10X1.5X50-MM)	

M-METRIC PART

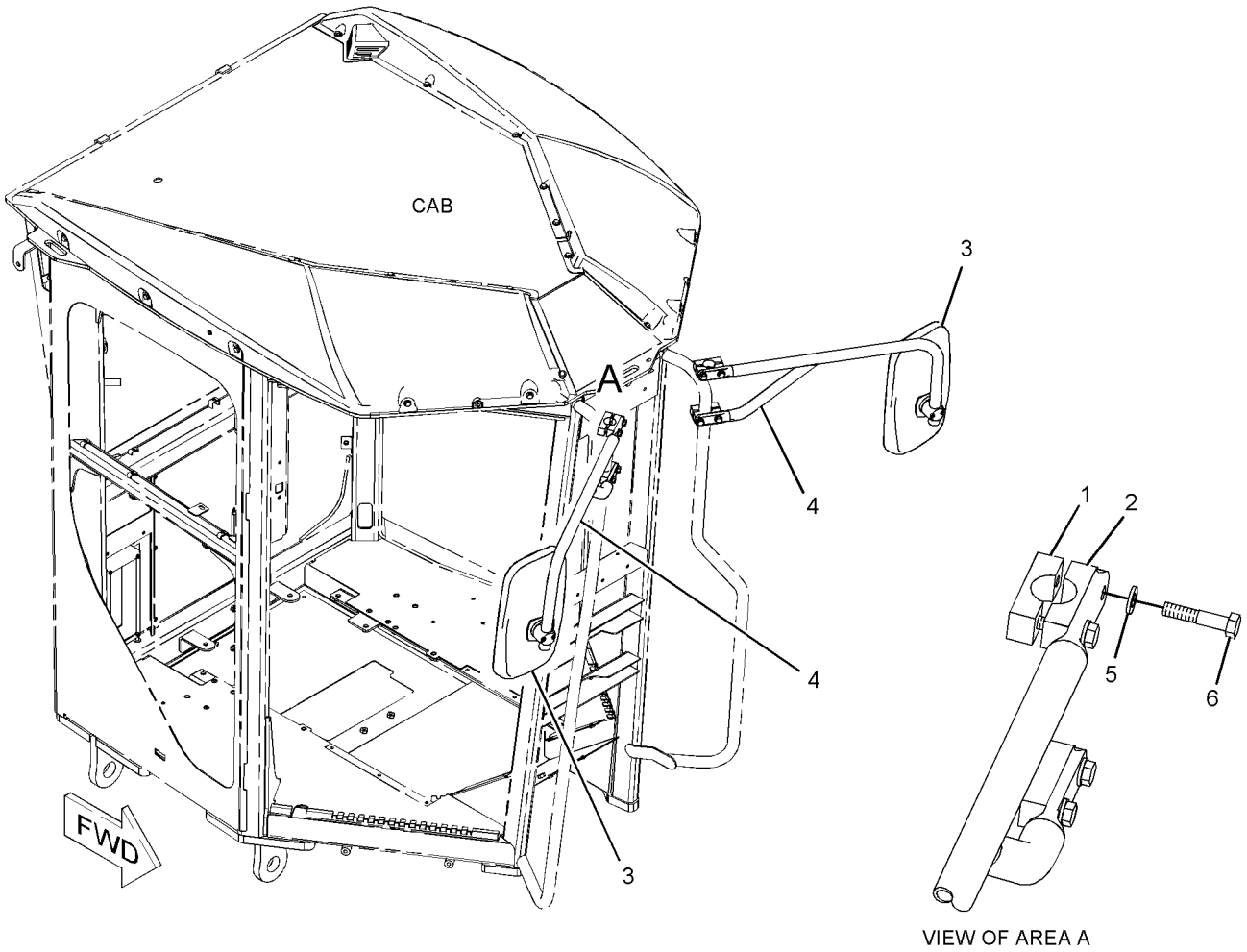

GRAPHIC #1 **<END>** g01142028

OPERATOR STATION

233-3296 MIRROR GP-REAR VIEW

S/N: B9M1-UP
PART OF 261-0187 SNOW AR-MOTOR GRADER
AN ATTACHMENT

SMCS-7319 **i02277403**

NOTE	REF NO	GRAPHIC REF	PART NUMBER	QTY	PART NAME 1 2 3 4 5 6 (PRODUCT LEVEL)	SEE PAGE
	1	1	**123-4586**	4	BLOCK	
	2	1	**145-7214**	4	BLOCK	
	3	1	**236-4630**	1	SWITCH AS-ROCKER (HEATED MIRRORS)	
	4	1	**259-4759**	2	MIRROR AS	
					(EACH INCLUDES)	
		1	**102-8802**	1	KIT-RECEPTACLE (2-PIN)	
		1	**186-3735**	2	PIN-CONNECTOR (16-GA TO 18-GA)	
	5	1	**265-8941**	2	TUBE AS	
M	6	1	**8T-4121**	8	WASHER-HARD (11X21X2.5-MM THK)	
M	7	1	**8T-4185**	8	BOLT (M10X1.5X50-MM)	

M-METRIC PART

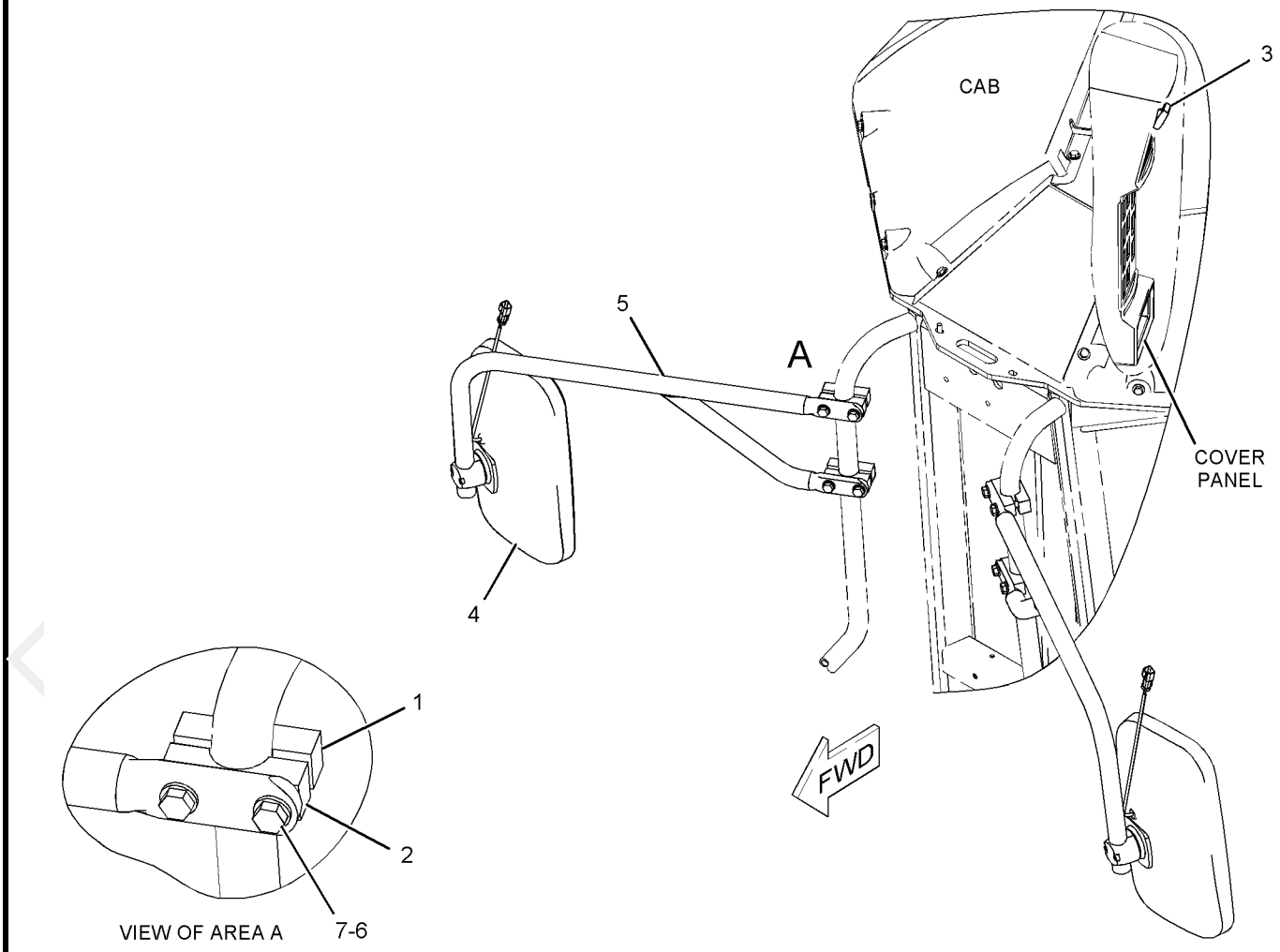

GRAPHIC #1 **<END>** g01142843

OPERATOR STATION

248-2617 MOTOR GP-WINDOW WIPER

S/N: B9M1-UP
24 VOLT
PART OF 233-3138 WIPER & WASHER GP-WINDOW

SMCS-7305 **i02248031**

NOTE	REF NO	GRAPHIC REF	PART NUMBER	QTY	PART NAME 1 2 3 4 5 6 (PRODUCT LEVEL)	SEE PAGE
	1	1	**135-0611**	1	MOTOR AS-WINDOW WIPER (24-VOLT) (RH)	
		1	**8T-8737**	1	PLUG-SEAL	
		1	**186-3735**	1	PIN-CONNECTOR (16-GA TO 18-GA)	
		1	**102-8805**	1	KIT-RECEPTACLE (6-PIN)	
					(INCLUDES RECEPTACLE AS & WEDGE)	
	2	1	**206-5823**	2	CAP (WIPER)	
	3	1	**3F-9556**	2	LOCKWASHER	
M	4	1	**5C-7261**	2	NUT (M8X1.25-THD)	

M-METRIC PART

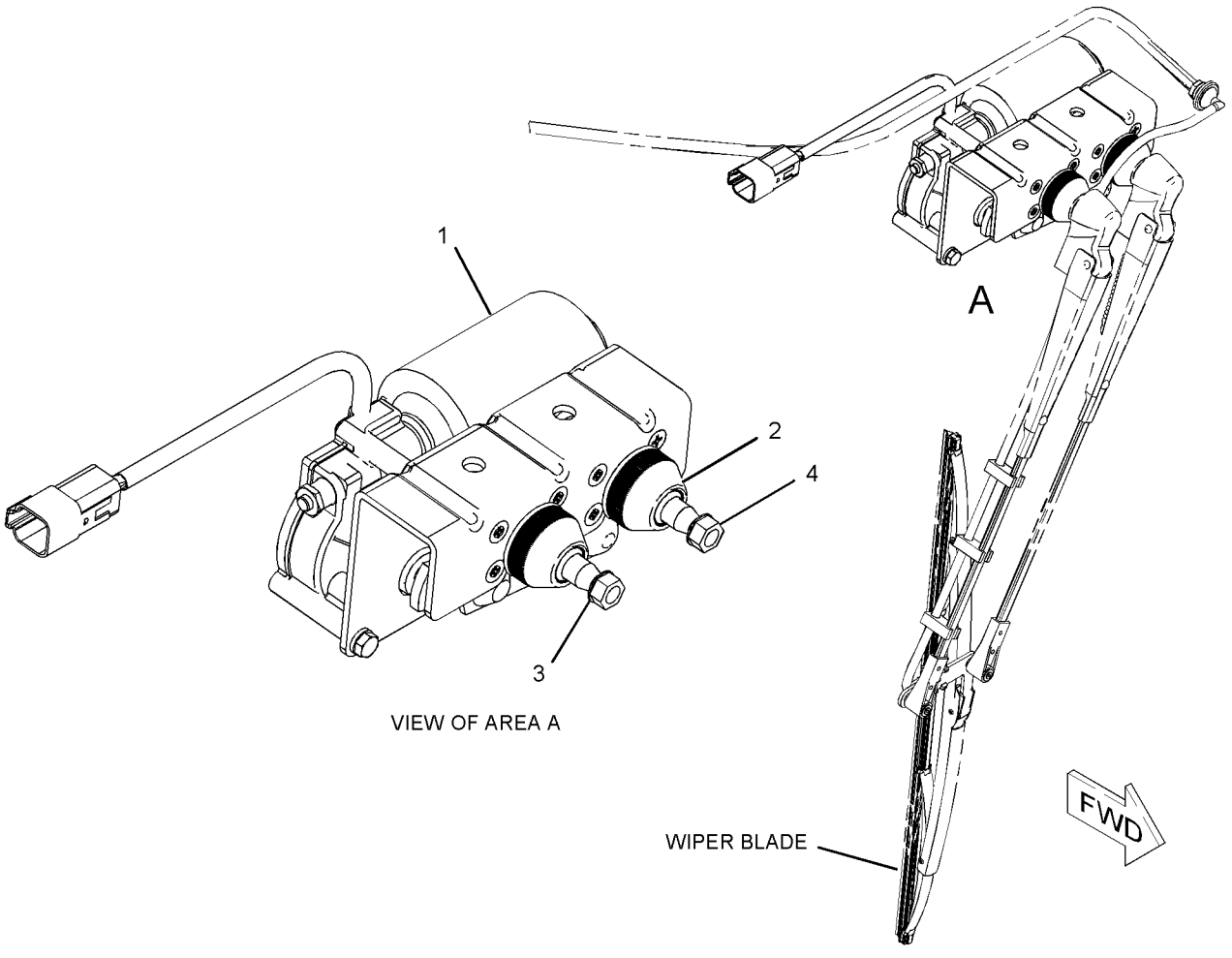

GRAPHIC #1 **<END>** g01135743

OPERATOR STATION

178-0604 PAN GP-BACKREST–CLOTH

S/N: B9M1-UP
PART OF 244-5002, 244-5006 SEAT GP
AN ATTACHMENT

SMCS-7312 **i02267748**

NOTE	REF NO	GRAPHIC REF	PART NUMBER	QTY	PART NAME 1 2 3 4 5 6 (PRODUCT LEVEL)	SEE PAGE
	1	1	**164-4883**	1	KNOB-LUMBAR	
Y	2	1	*178-0605*	1	PAN GP-BACKREST (CLOTH)	753
	3	1	**233-6745**	1	CUSHION AS (CLOTH)	
	4	1	**250-4628**	3	PLUG	
	5	1	**8T-7566**	1	PIN-SPRING	

Y-SEPARATE ILLUSTRATION

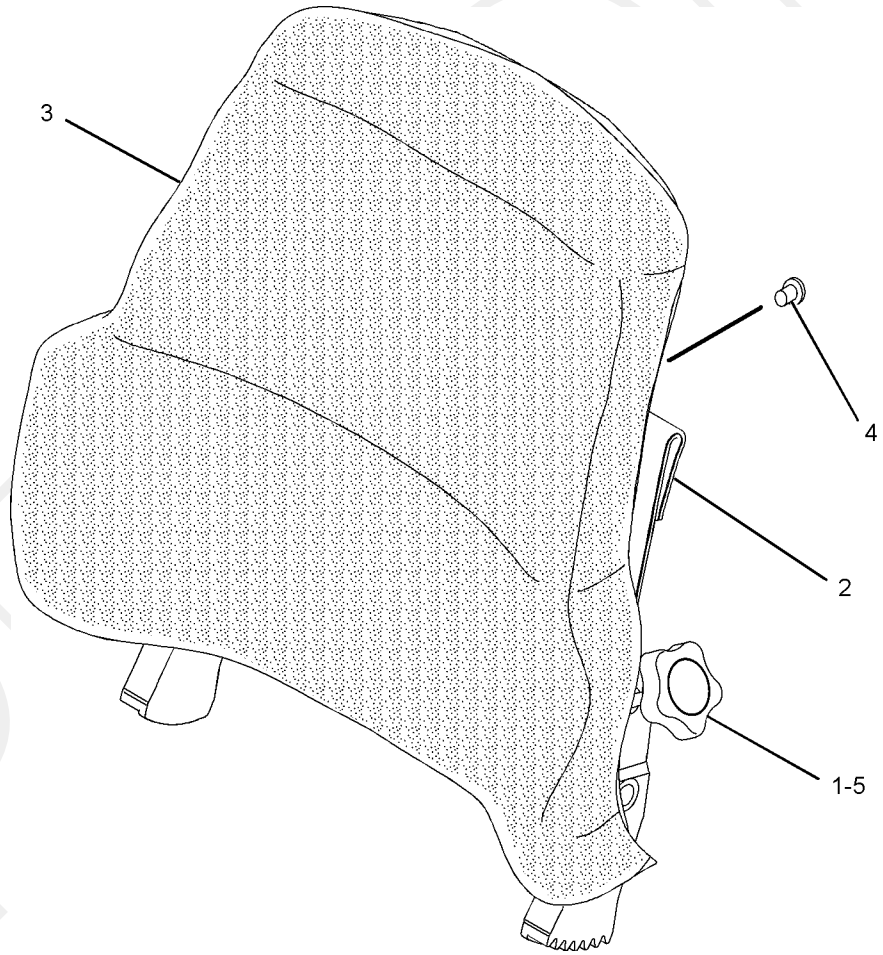

GRAPHIC #1 **<END>** g01092296

OPERATOR STATION

178-0605 PAN GP-BACKREST

S/N: B9M1-UP

PART OF 178-0604 PAN GP-BACKREST

AN ATTACHMENT

SMCS-7312 **i01508995**

NOTE	REF NO	GRAPHIC REF	PART NUMBER	QTY	PART NAME 1 2 3 4 5 6 (PRODUCT LEVEL)	SEE PAGE
	1	1	**4K-9429**	8	RIVET-POP	
	2	1	**5P-7957**	1	LANYARD	
	3	1	**136-1543**	1	PLATE AS-LUMBAR	
	4	1	**173-2052**	1	RETAINER	
	5	1	**178-7907**	1	HOLDER	
	6	1	**177-4930**	1	PAN AS-BACK	

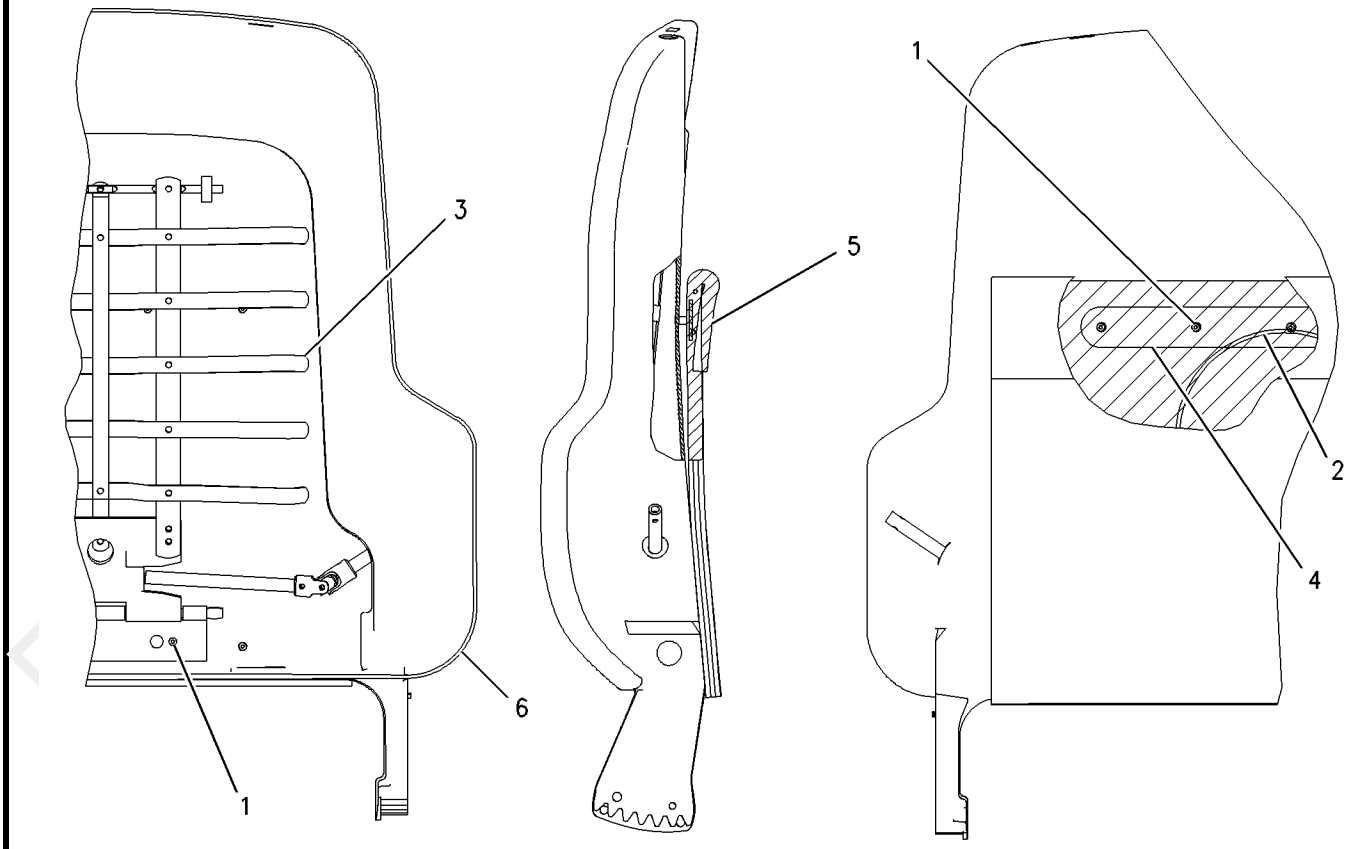

GRAPHIC #1 **<END>** g00716497

OPERATOR STATION

233-3120 PANEL GP-CAB–FRONT

S/N: B9M1-UP

PART OF 254-5399 CAB AR

SMCS-7301 **i02178414**

NOTE	REF NO	GRAPHIC REF	PART NUMBER	QTY	PART NAME 1 2 3 4 5 6 (PRODUCT LEVEL)	SEE PAGE
	1	1	**233-3280**	1	PANEL GP-INSTRUMENT (DISPLAY)	
	2	1	**114-6658**	9	WASHER (6.5X17X1-MM THK)	
	3	1	**171-4047**	5	LOUVER AS	
	4	1	**223-0455**	2	LOUVER AS	
	5	1	**238-8796**	1	PLENUM	
	6	1	**251-2250**	1	PLENUM AS	
	7	1	**251-2252**	1	PANEL AS	
	8	1	**118-5619**	14	SCREW-FLAT HEAD (NO 0.6-20X1-IN)	
	9	1	**197-5107**	2	SCREW-TRUSS HEAD	
M	10	1	**9X-2043**	5	SCREW-TRUSS HEAD (M6X1X14-MM)	
M	11	1	**9X-2046**	2	SCREW-TRUSS HEAD (M6X1X35-MM)	

M-METRIC PART

PROOF

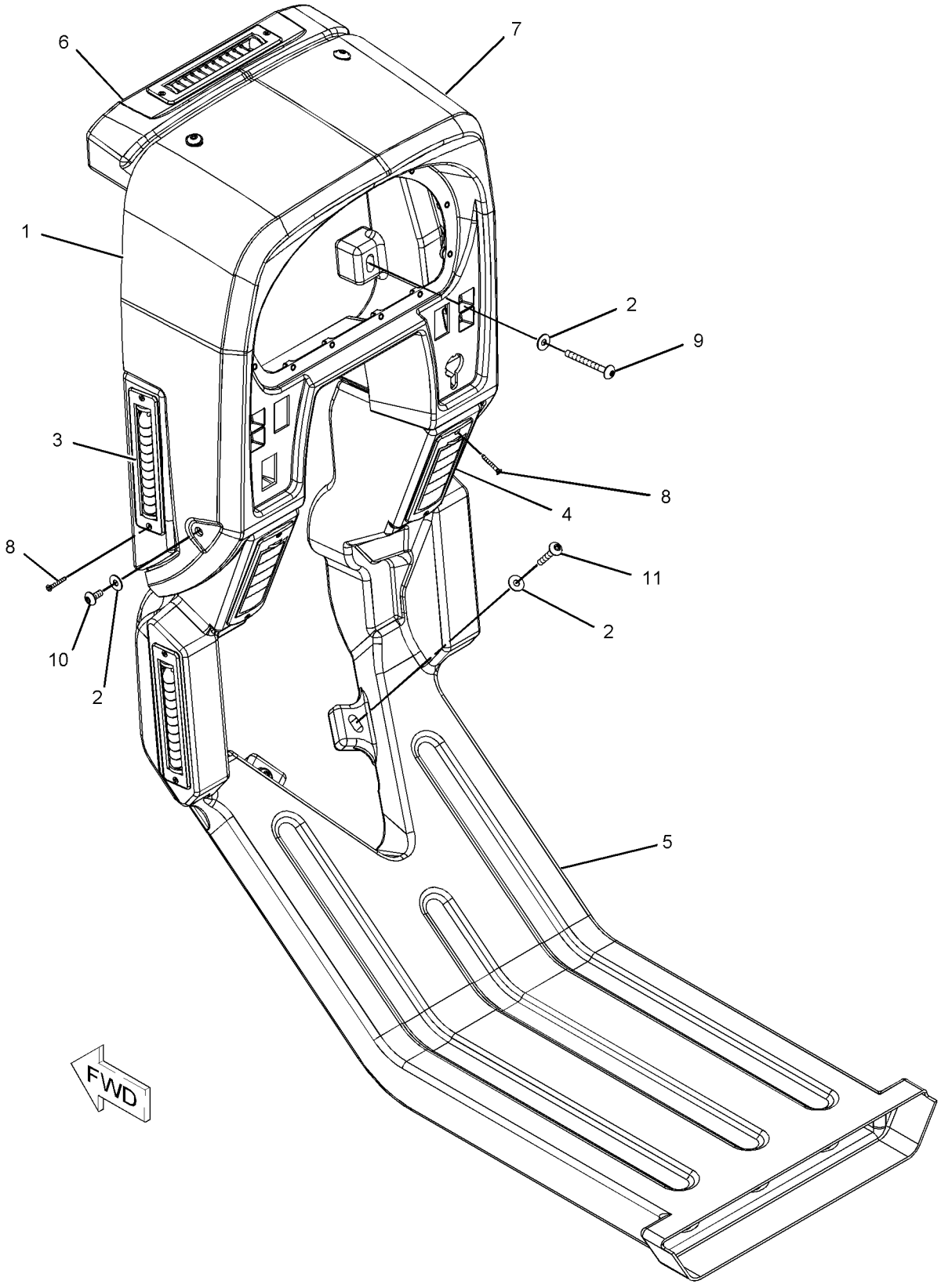

GRAPHIC #1 **<END>** g01109312

OPERATOR STATION

233-3129 PANEL GP-CAB

S/N: B9M1-UP
HVAC
PART OF 261-0775, 261-0839 AIR CONDITIONER AR
AN ATTACHMENT

SMCS-7301 **i02286053**

NOTE	PART NUMBER	QTY	PART NAME 1 2 3 4 5 6 (PRODUCT LEVEL)	SEE PAGE
M	**8T-4195**	6	BOLT (M10X1.5X30-MM)	
	267-3170	1	COVER	
	252-1814	1	COVER AS	
	265-6640	1	COVER AS.	
	171-4047	4	LOUVER AS	
	223-0455	4	LOUVER AS	
	139-6039	16	NUT (U-TYPE RETAINER)	
	2V-2015	1	NUT-SPEED	
	265-8949	1	PANEL AS (LH)	
	265-8950	1	PANEL AS (RH)	
	233-3283	1	PANEL-COVER (LH)	
	233-3284	1	PANEL-COVER (RH)	
	263-2577	1	PLATE	
	263-2578	1	PLATE	
	263-2576	1	PLATE AS	
	5G-7065	1	BOSS	
M	**6V-9632**	1	NUT-WELD (M6X1-THD)	
M	**9R-2672**	1	BOSS-THREADED	
	268-3517	1	PLATE AS	
	268-3530	2	PLENUM	
	238-8797	1	PLENUM (LOWER LEFT)	
	238-8798	1	PLENUM (LOWER RIGHT)	
	238-8801	1	PLENUM (RH)	
	238-8802	1	PLENUM (LH)	
	251-2248	1	PLENUM AS (RH)	
	251-2249	1	PLENUM AS (LH)	
	132-3332	8	SCREW (M4X16-MM)	
	118-5619	12	SCREW-FLAT HEAD (NO 0.6-20X1-IN)	
M	**6V-9672**	6	SCREW-MACHINE (M4X0.7X16-MM)	
M	**3E-8020**	2	SCREW-TRUSS HEAD (M6X1X25-MM)	
M	**9X-2044**	25	SCREW-TRUSS HEAD (M6X1X16-MM)	
BD	**8T-5372**		SEAL	
	7G-4824	1	STRAP	
	8E-7791	1	STRAP	
	233-3216	1	SUPPORT AS	
M	**6V-9632**	3	NUT-WELD (M6X1-THD)	
M	**8T-3490**	4	NUT-WELD (M10X1.5-THD)	
	7K-4199	1	THUMBSCREW	
	114-6658	25	WASHER (6.5X17X1-MM THK)	
	8T-4121	6	WASHER-HARD (11X21X2.5-MM THK)	

B-USE AS REQUIRED
D-ORDER BY THE METER
M-METRIC PART

<END>

PROOF

OPERATOR STATION

233-3123 RADIO GP

S/N: B9M1-UP

AN ATTACHMENT

SMCS-7338 **i02193597**

NOTE	REF NO	GRAPHIC REF	PART NUMBER	QTY	PART NAME 1 2 3 4 5 6 (PRODUCT LEVEL)	SEE PAGE
	1	1	**136-5490**	1	BUSHING	
	2	1	**200-5728**	1	HARNESS AS-RADIO	
		1	**160-3518**	1	KIT-RECEPTACLE (8-PIN)	
					(INCLUDES RECEPTACLE AS & WEDGE)	
	3	1	**200-5729**	1	RADIO GP (AM/FM/WB)	

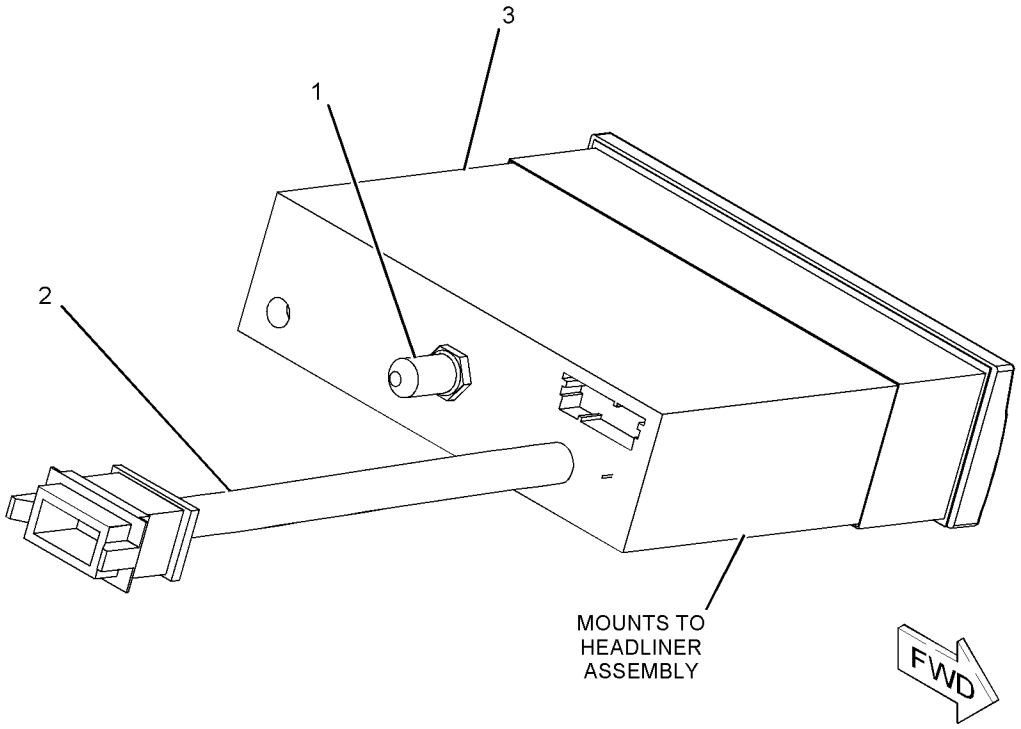

GRAPHIC #1 **<END>** g01114367

OPERATOR STATION

210-2270 RECLINER GP-SEAT

S/N: B9M1-UP
PART OF 244-5002, 244-5006 SEAT GP
AN ATTACHMENT

SMCS-7312 **i02348953**

NOTE	REF NO	GRAPHIC REF	PART NUMBER	QTY	PART NAME 1 2 3 4 5 6 (PRODUCT LEVEL)	SEE PAGE
	1	1	**177-1862**	1	BRACKET (SEAT BELT)	
	2	1	**210-2262**	1	BRACKET AS	
	3	1	**210-2263**	1	BRACKET AS	
	4	1	**210-2266**	1	GEAR (14-TEETH)	
	5	1	**210-2268**	1	SHAFT AS	
	6	1	**217-7933**	1	LATCH	
	7	1	**236-5197**	1	SPRING	
	8	1	**031-0214**	1	BOLT-LOCKING (1/4-20X0.5-IN)	
	9	1	**101-2867**	1	WASHER-HARD (7.2X25X2-MM THK)	
	10	1	**4M-6425**	1	BOLT (5/16-18X1-IN)	
	11	1	**5M-2894**	1	WASHER-HARD (10.2X18.5X2.5-MM THK)	
	12	1	**5S-7383**	1	BOLT (3/8-16X1.75-IN)	
	13	1	**8T-4224**	1	WASHER-HARD (8.8X16X2-MM THK)	

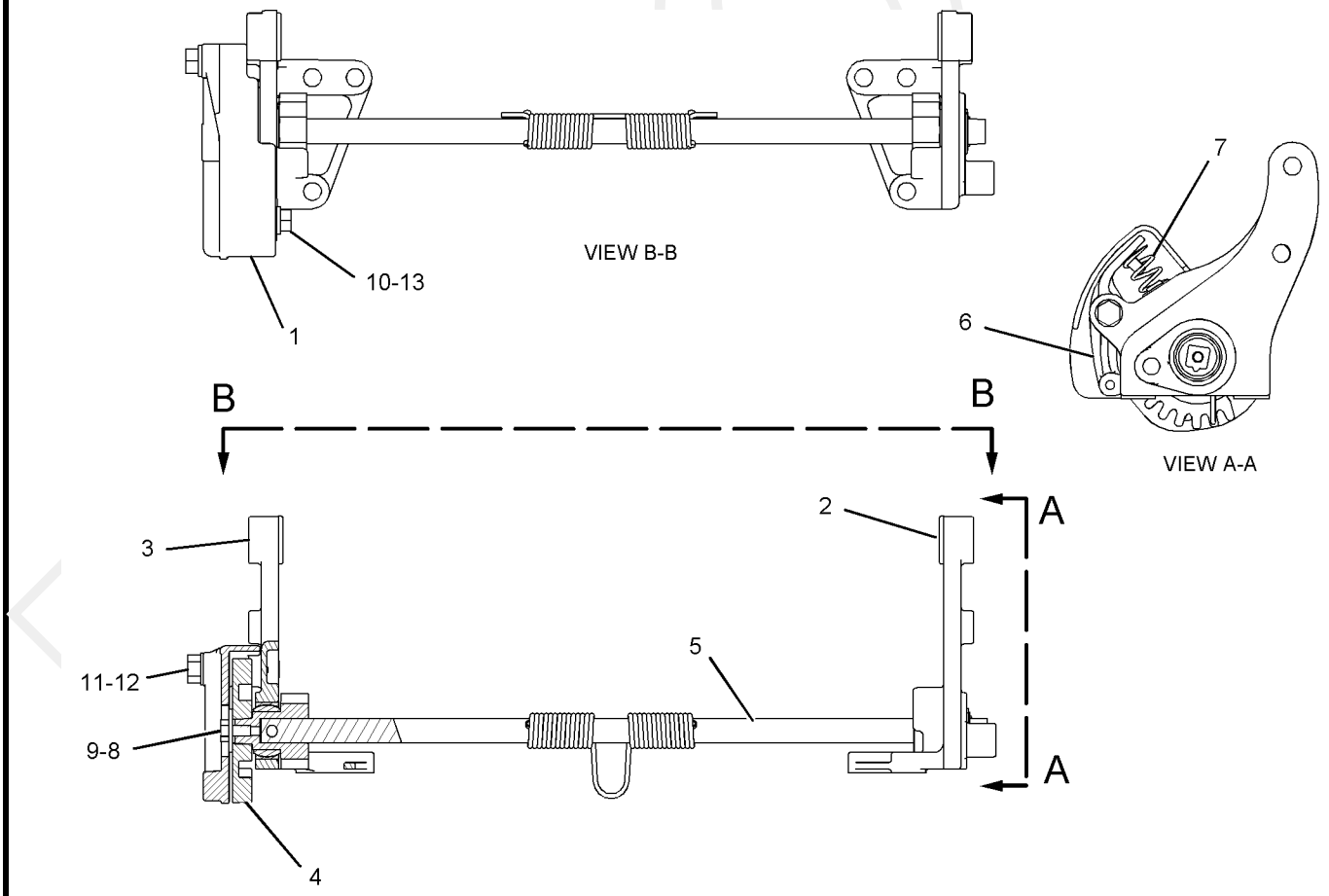

GRAPHIC #1 **<END>** g01040293

OPERATOR STATION

233-3133 ROOF GP-CAB

S/N: B9M1-UP
PART OF 254-5399 CAB AR

SMCS-7301 **i02247970**

NOTE	PART NUMBER	QTY	PART NAME 1 2 3 4 5 6 (PRODUCT LEVEL)	SEE PAGE
	244-2713	1	BAR AS	
	244-2714	1	BAR AS	
M	**8T-4189**	24	BOLT (M8X1.25X20-MM)	
M	**8T-4908**	8	BOLT (M8X1.25X25-MM)	
	032-9828	1	GROMMET	
	251-2247	5	GROMMET	
	233-3209	1	PANEL (LH)	
	249-4073	1	PANEL (RH)	
	5P-4116	32	WASHER-HARD (8.8X20.5X2-MM THK)	

M-METRIC PART

<END>

233-3116 SEAT & MOUNTING GP

S/N: B9M1-UP
AN ATTACHMENT

SMCS-7312 **i02183331**

NOTE	PART NUMBER	QTY	PART NAME 1 2 3 4 5 6 (PRODUCT LEVEL)	SEE PAGE
Y	*243-6740*	1	SEAT GP-SUSPENSION	769
M	**8T-4121**	4	WASHER-HARD (11X21X2.5-MM THK)	
M	**8T-4136**	4	BOLT (M10X1.5X25-MM)	

M-METRIC PART
Y-SEPARATE ILLUSTRATION

<END>

233-3150 SEAT & MOUNTING GP

S/N: B9M1-UP
AN ATTACHMENT

SMCS-7312 **i02183343**

NOTE	PART NUMBER	QTY	PART NAME 1 2 3 4 5 6 (PRODUCT LEVEL)	SEE PAGE
Y	*238-6683*	1	SEAT GP-SUSPENSION	767
M	**8T-4136**	4	BOLT (M10X1.5X25-MM)	
	8T-4121	4	WASHER-HARD (11X21X2.5-MM THK)	

M-METRIC PART
Y-SEPARATE ILLUSTRATION

<END>

PROOF

OPERATOR STATION

238-8807 SEAT & MOUNTING GP

S/N: B9M1-UP

AN ATTACHMENT

SMCS-7312 **i02183625**

NOTE	PART NUMBER	QTY	PART NAME 1 2 3 4 5 6 (PRODUCT LEVEL)	SEE PAGE
Y	*241-1077*	1	SEAT GP-SUSPENSION	768
M	**8T-4121**	4	WASHER-HARD (11X21X2.5-MM THK)	
M	**8T-4136**	4	BOLT (M10X1.5X25-MM)	

M-METRIC PART
Y-SEPARATE ILLUSTRATION

<END>

PROOF

OPERATOR STATION

244-5001 SEAT GP

S/N: B9M1-UP

PART OF 238-6683, 243-6740 SEAT GP-SUSPENSION

AN ATTACHMENT

SMCS-7312 **i02267086**

NOTE	REF NO	GRAPHIC REF	PART NUMBER	QTY	PART NAME 1 2 3 4 5 6 (PRODUCT LEVEL)	SEE PAGE
	1	1	**177-4937**	1	SPACER (11.7X19.8X20.3-MM THK)	
	2	1	**222-0345**	1	SEAT BELT GP	
	3	1	**229-1494**	1	EXTENSION GP-BACKREST (CLOTH)	
Y	4	1	**244-5002**	1	SEAT GP (CLOTH)	762
	5	1	**0T-0244**	1	BOLT (7/16-20X1.25-IN)	
	6	1	**205-6388**	1	BOLT (7/16-20X44.45-MM)	

Y-SEPARATE ILLUSTRATION

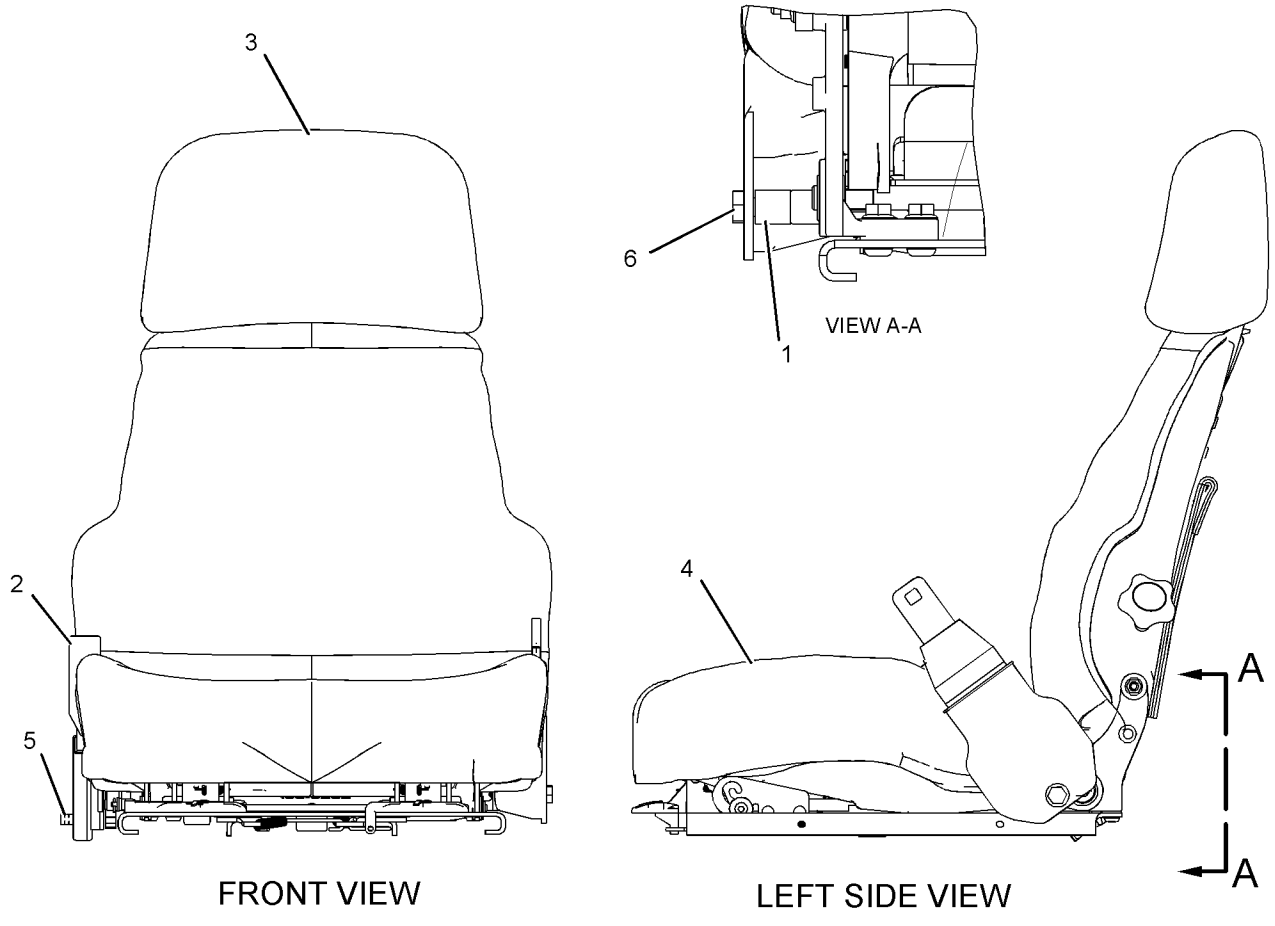

GRAPHIC #1 **<END>** g01111839

OPERATOR STATION

244-5002 SEAT GP—CLOTH

S/N: B9M1-UP
PART OF 244-5001 SEAT GP
AN ATTACHMENT

SMCS-7312 **i02183326**

NOTE	REF NO	GRAPHIC REF	PART NUMBER	QTY	PART NAME 1 2 3 4 5 6 (PRODUCT LEVEL)	SEE PAGE
	1	1	**8Y-6277**	2	SPACER (10.5X28.6X10-MM THK)	
	2	1	**143-1288**	8	LOCKNUT-FLANGE (3/8-16-THD)	
	3	1	**171-6682**	1	BAR	
	4	1	**172-2416**	2	PIN	
Y	5	1	*173-1028*	1	ADJUSTER GP-SEAT	701
	6	1	**177-1863**	2	BOLT-PIVOT (3/8-16X2.89-IN)	
Y	7	1	*178-0604*	1	PAN GP-BACKREST (CLOTH)	752
	8	1	**184-2298**	1	ROD	
	9	1	**184-2299**	4	WASHER (7X25.4X2.54-MM THK)	
Y	10	1	*210-2270*	1	RECLINER GP-SEAT	758
	11	1	**243-6737**	1	PAN AS	
	12	1	**095-0843**	2	PIN-COTTER	
	13	1	**171-1230**	6	SCREW-BUTTON HEAD (3/8-16X1-IN)	
	14	1	**5V-1496**	2	RETAINER	
	15	1	**6V-7646**	2	WASHER-HARD (7.2X25X2-MM THK)	
	16	1	**8T-0328**	1	WASHER-HARD (5.5X10X1-MM THK)	
	17	1	**8T-4205**	1	WASHER-HARD (7.2X14.5X2-MM THK)	

Y-SEPARATE ILLUSTRATION

PROOF

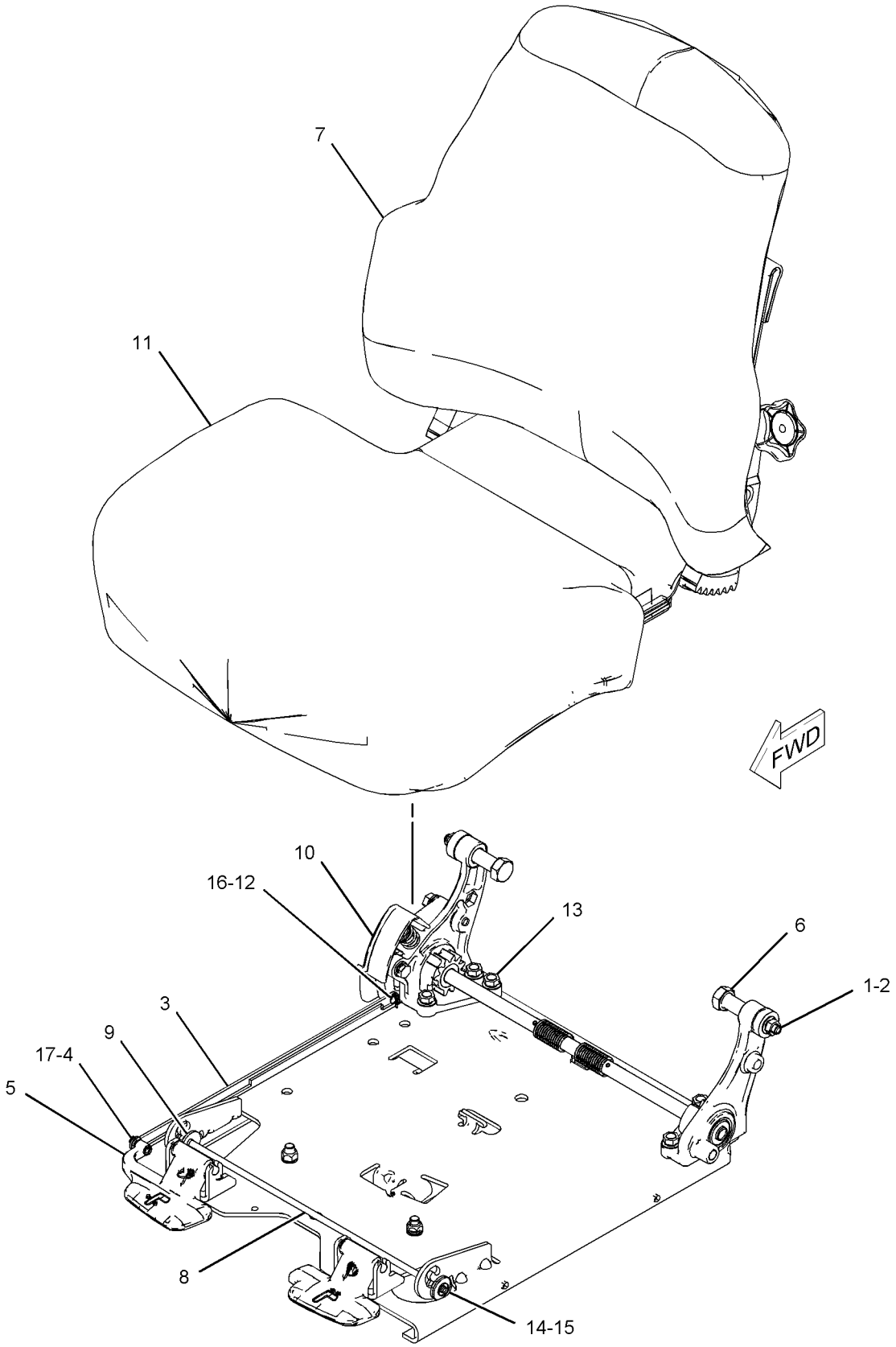

GRAPHIC #1 **<END>** g01106711

OPERATOR STATION

244-5005 SEAT GP—CLOTH, HEATED

S/N: B9M1-UP
PART OF 241-1077 SEAT GP-SUSPENSION
AN ATTACHMENT

SMCS-7312 **i02267087**

NOTE	REF NO	GRAPHIC REF	PART NUMBER	QTY	PART NAME 1 2 3 4 5 6 (PRODUCT LEVEL)	SEE PAGE
	1	1	**177-4937**	1	SPACER (11.7X19.8X20.3-MM THK)	
J	2	1	**222-0345**	1	SEAT BELT GP	
	3	1	**229-1494**	1	EXTENSION GP-BACKREST (CLOTH)	
Y	4	1	**244-5006**	1	SEAT GP (CLOTH, HEATED)	765
J	5	1	**0T-0244**	1	BOLT (7/16-20X1.25-IN)	
J	6	1	**205-6388**	1	BOLT (7/16-20X44.45-MM)	

J-SEAT BELT GROUP MARKED INCLUDE PARTS MARKED J
Y-SEPARATE ILLUSTRATION

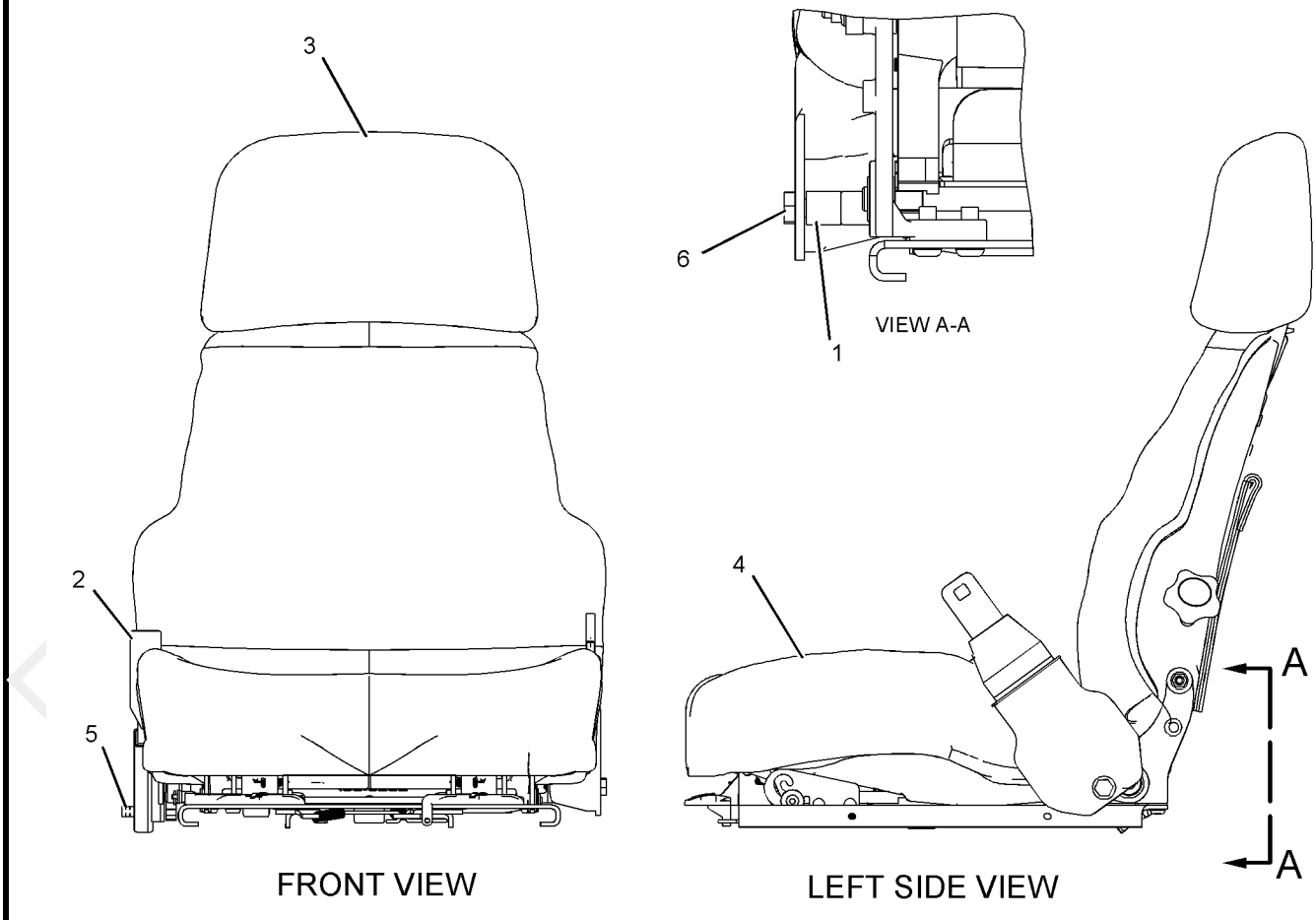

GRAPHIC #1 **<END>** g01111884

OPERATOR STATION

244-5006 SEAT GP—CLOTH, HEATED

S/N: B9M1-UP
PART OF 244-5005 SEAT GP
AN ATTACHMENT

SMCS-7312 **i02183634**

NOTE	REF NO	GRAPHIC REF	PART NUMBER	QTY	PART NAME 1 2 3 4 5 6 (PRODUCT LEVEL)	SEE PAGE
	1	1	**8Y-6277**	2	SPACER (10.5X28.6X10-MM THK)	
	2	1	**143-1288**	8	LOCKNUT-FLANGE (3/8-16-THD)	
	3	1	**171-6682**	1	BAR	
	4	1	**172-2416**	2	PIN	
Y	5	1	**173-1028**	1	ADJUSTER GP-SEAT	701
	6	1	**177-1863**	2	BOLT-PIVOT (3/8-16X2.89-IN)	
Y	7	1	**178-0604**	1	PAN GP-BACKREST (CLOTH)	752
	8	1	**184-2298**	1	ROD	
	9	1	**184-2299**	4	WASHER (7X25.4X2.54-MM THK)	
Y	10	1	*210-2270*	1	RECLINER GP-SEAT	758
	11	1	**243-6738**	1	PAN AS-SEAT (HEATED)	
	12	1	**095-0843**	2	PIN-COTTER	
	13	1	**171-1230**	6	SCREW-BUTTON HEAD (3/8-16X1-IN)	
	14	1	**5V-1496**	2	RETAINER	
	15	1	**6V-7646**	2	WASHER-HARD (7.2X25X2-MM THK)	
	16	1	**8T-4205**	2	WASHER-HARD (7.2X14.5X2-MM THK)	

Y-SEPARATE ILLUSTRATION

PROOF

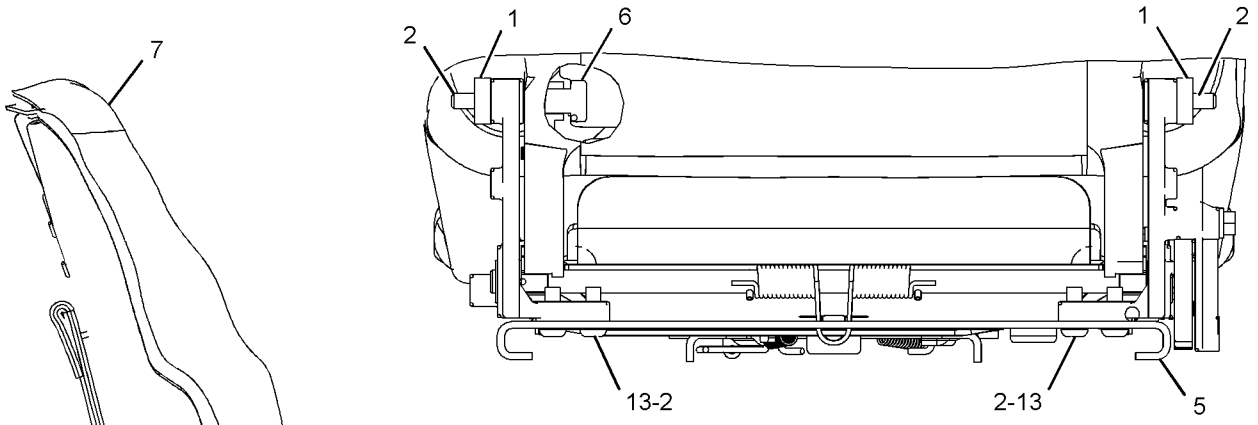

REAR VIEW

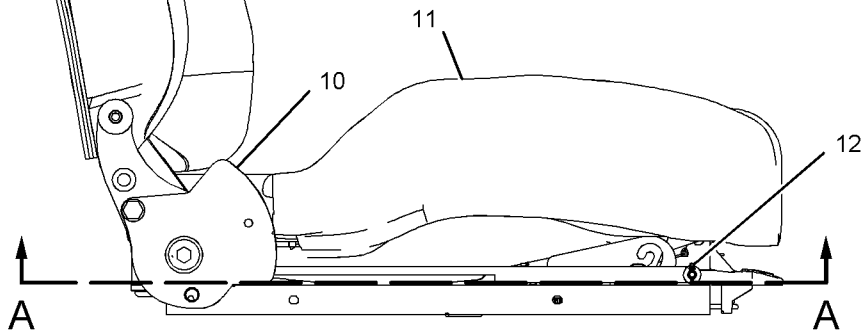

RIGHT SIDE VIEW

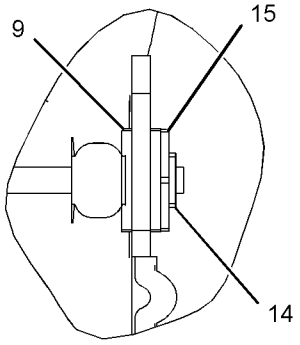

VIEW OF AREA D

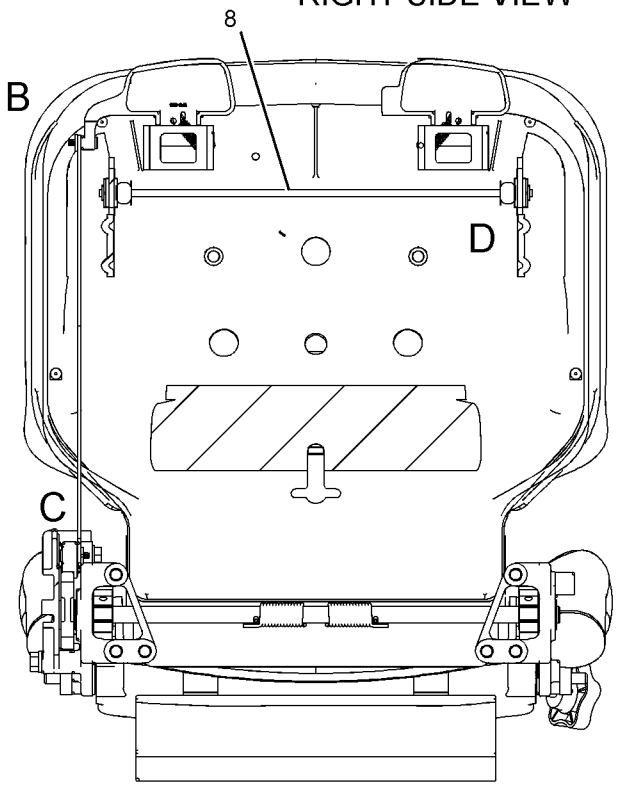

SECTION A-A

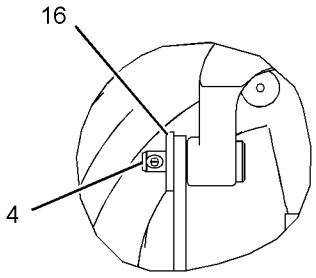

VIEW OF AREA B

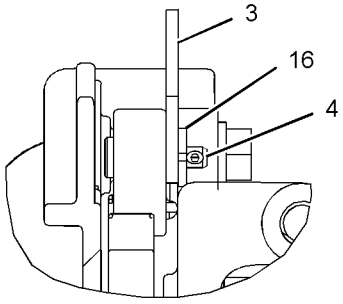

VIEW OF AREA C

GRAPHIC #1 **<END>** g01110184

238-6683 SEAT GP-SUSPENSION

S/N: B9M1-UP

PART OF 233-3150 SEAT & MOUNTING GP

AN ATTACHMENT

SMCS-7312 **i02297639**

NOTE	REF NO	GRAPHIC REF	PART NUMBER	QTY	PART NAME 1 2 3 4 5 6 (PRODUCT LEVEL)	SEE PAGE
JZ	1	1		4	BLOCK-SLIDER	
J	2	1	**173-5787**	4	SETSCREW (1/4-20-THD)	
Y	3	1	**256-8768**	1	SUSPENSION GP-SEAT (AIR)	779
J	4	1	**203-7703**	2	WASHER-HARD (10.2X22.22X2.38-MM THK)	
Y	5	1	**244-5001**	1	SEAT GP	761
J	6	1	**4F-4879**	1	BOLT (3/8-16X0.5-IN)	
					AVAILABLE REPAIR KIT(S):	
J			**173-7035**	1	KIT-SLIDER BLOCK (SEAT)	
					(INCLUDES WASHER, BOLT, BLOCK SLIDER & SETSCREW)	

J-KIT MARKED J INCLUDES PARTS MARKED J
Y-SEPARATE ILLUSTRATION
Z-NOT SERVICED SEPARATELY

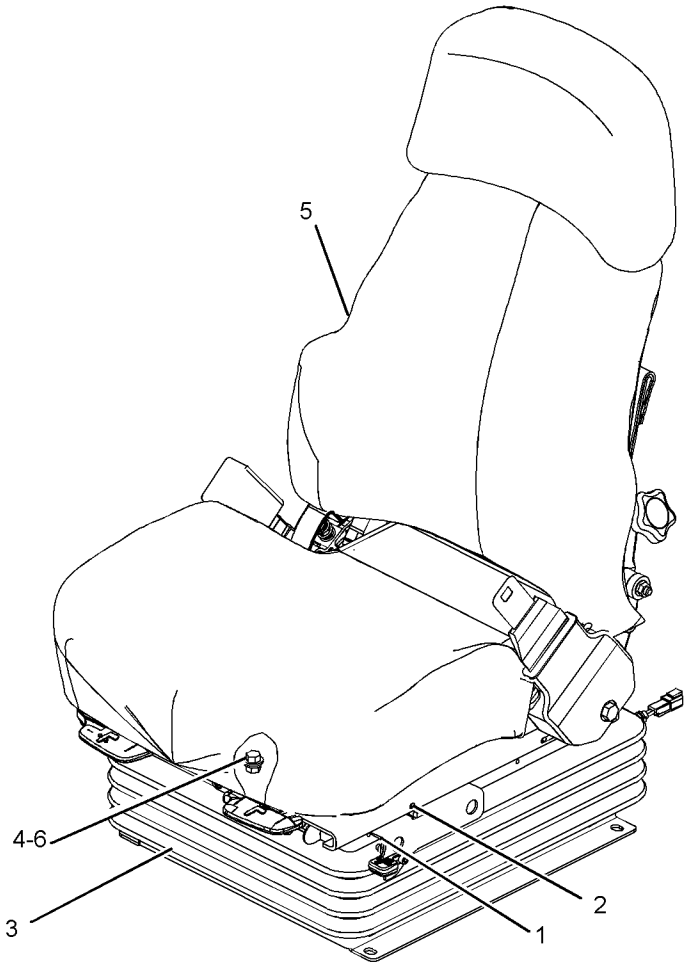

GRAPHIC #1 **<END>** g01110094

OPERATOR STATION

241-1077 SEAT GP-SUSPENSION–CLOTH, HEATED

S/N: B9M1-UP
PART OF 238-8807 SEAT & MOUNTING GP
AN ATTACHMENT

SMCS-7312 **i02334865**

NOTE	REF NO	GRAPHIC REF	PART NUMBER	QTY	PART NAME 1 2 3 4 5 6 (PRODUCT LEVEL)	SEE PAGE
JZ	1	1		4	BLOCK-SLIDER	
J	2	1	**173-5787**	4	SETSCREW (1/4-20-THD)	
Y	3	1	**199-5725**	1	SUSPENSION GP-SEAT (AIR) (HEATED, 24-VOLT)	777
J	4	1	**203-7703**	2	WASHER-HARD (10.2X22.22X2.38-MM THK)	
Y	5	1	**244-5005**	1	SEAT GP (HEATED)	764
J	6	1	**4F-4879**	1	BOLT (3/8-16X0.5-IN)	
					AVAILABLE REPAIR KIT(S):	
J			**173-7035**	1	KIT-SLIDER BLOCK (SUSPENSION SEAT)	
					(INCLUDES SCREWS, WASHERS, BLOCK SLIDERS & BOLT)	

J-KIT MARKED J CONTAINS PARTS MARKED J
Y-SEPARATE ILLUSTRATION
Z-NOT SERVICED SEPARATELY

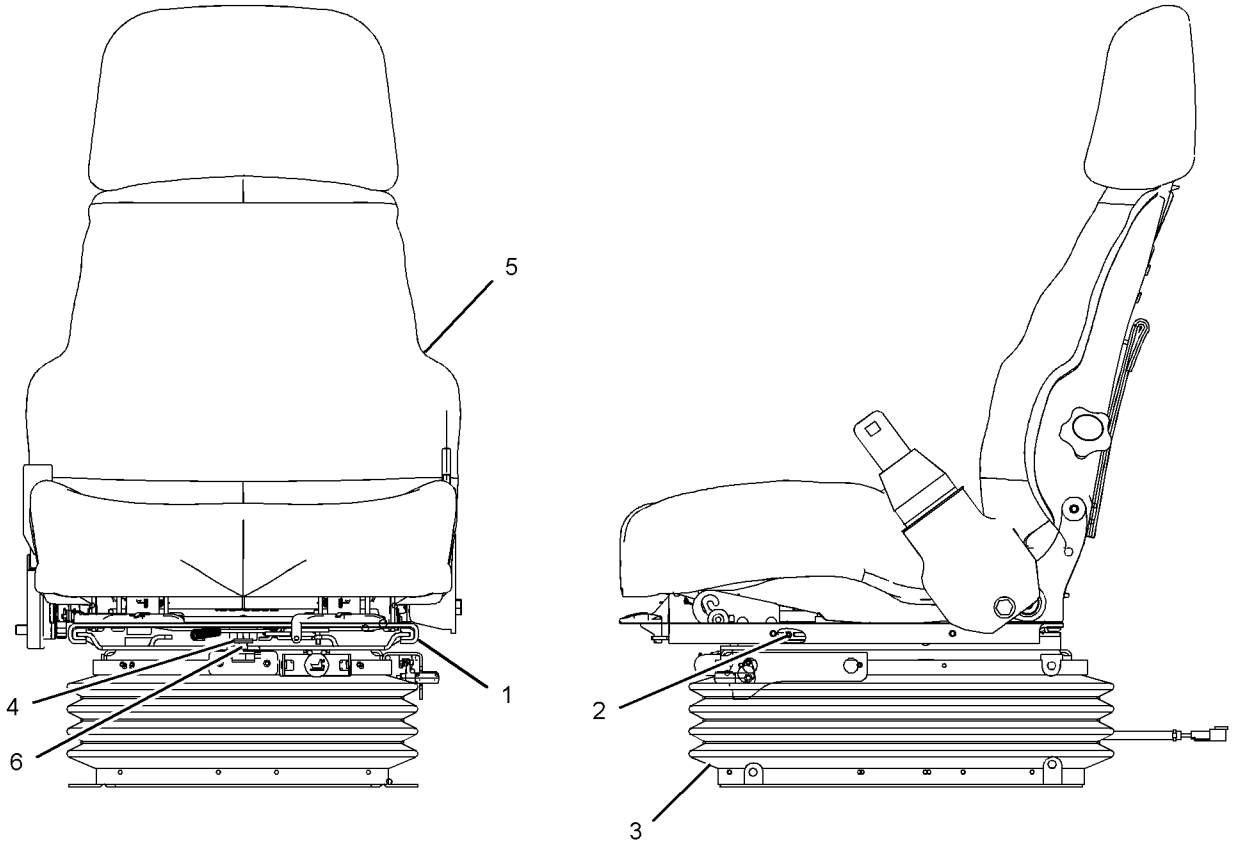

GRAPHIC #1 **<END>** g01110029

OPERATOR STATION

243-6740 SEAT GP-SUSPENSION

S/N: B9M1-UP

PART OF 233-3116 SEAT & MOUNTING GP

AN ATTACHMENT

SMCS-7312 **i02183295**

NOTE	REF NO	GRAPHIC REF	PART NUMBER	QTY	PART NAME 1 2 3 4 5 6 (PRODUCT LEVEL)	SEE PAGE
Y	1	1	**160-7165**	1	SUSPENSION GP-SEAT	775
JZ				4	BLOCK-SLIDER	
J	3	1	**173-5787**	4	SETSCREW (1/4-20-THD)	
J	4	1	**203-7703**	2	WASHER-HARD (10.2X22.22X2.38-MM THK)	
Y	5	1	**244-5001**	1	SEAT GP	761
J	6	1	**4F-4879**	1	BOLT (3/8-16X0.5-IN)	
					AVAILABLE REPAIR KIT(S):	
J			**173-7035**	1	KIT-SLIDER BLOCK (SEAT)	
					(INCLUDES WASHER, SCREW, BOLT & BLOCK-SLIDER)	

J-KIT MARKED J INCLUDES PARTS MARKED J
Y-SEPARATE ILLUSTRATION
Z-NOT SERVICED SEPARATELY

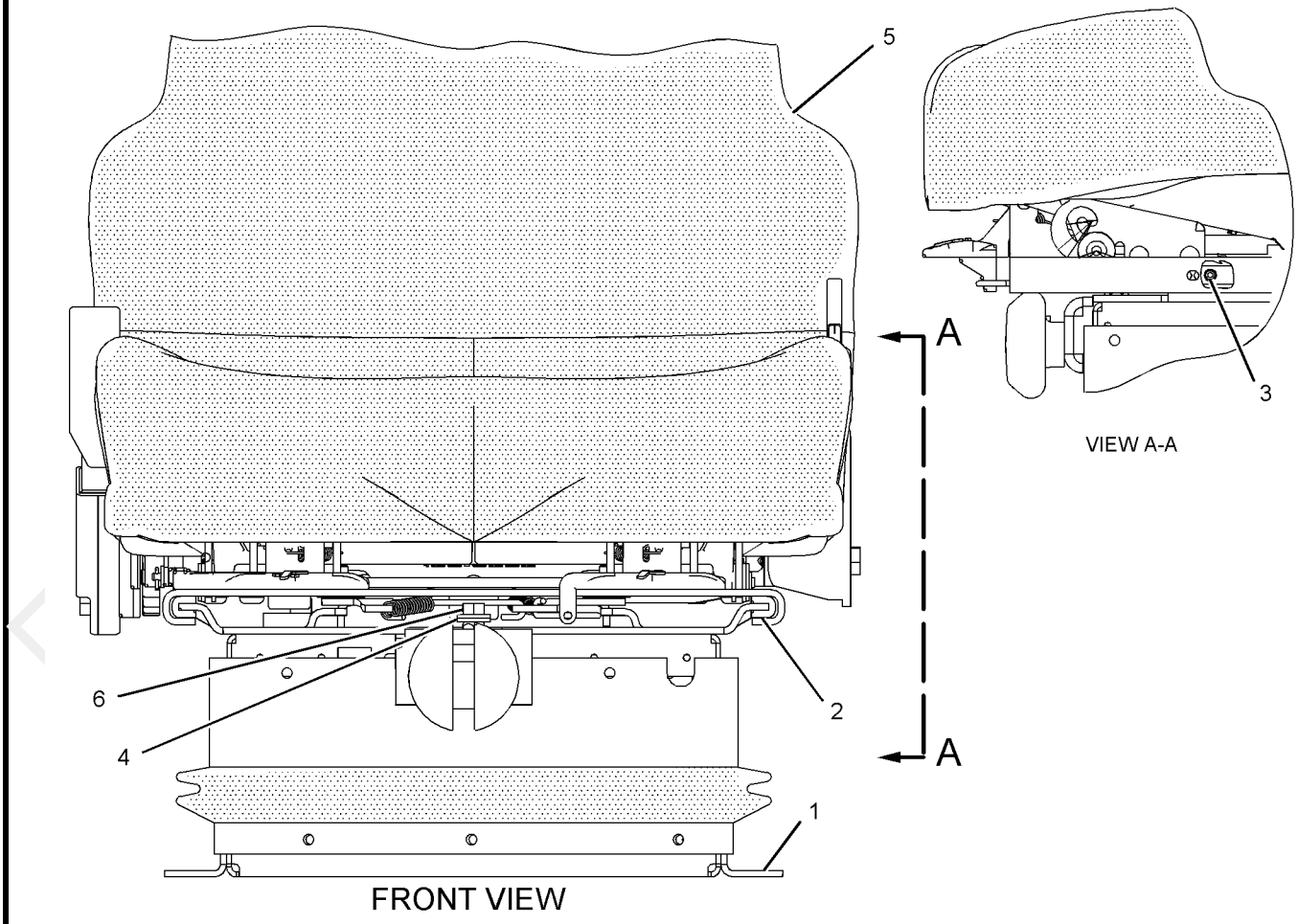

GRAPHIC #1 **<END>** g01109160

OPERATOR STATION

233-3224 SUPPORT GP-CONTROL–LH

S/N: B9M1-UP

PART OF 233-3146 CONTROL & MTG GP-JOYSTICK

SMCS-4343, 6150 **i02254165**

NOTE	REF NO	GRAPHIC REF	PART NUMBER	QTY	PART NAME 1 2 3 4 5 6 (PRODUCT LEVEL)	SEE PAGE
	1	1	**8X-1386**	1	SPACER (12.2X23X22-MM THK)	
	2	1	**139-6039**	6	NUT (U-TYPE RETAINER)	
	3	1	**233-3226**	1	SUPPORT AS (LH)	
	4	1	**233-3227**	1	SUPPORT AS (LH)	
	5	1	**233-3248**	2	BUSHING	
	6	1	**233-3252**	1	SHAFT AS	
	7	1	**233-3275**	1	BRACKET	
	8	1	**251-2276**	1	BRACKET	
Y	9	1	**252-1805**	1	CUSHION GP-ARM (LH)	722
	10	1	**252-1807**	1	SUPPORT AS (LH)	
	11	1	**253-3482**	1	KNOB AS	
		1	**164-1214**	1	KNOB	
	12	1	**253-3483**	1	PLATE AS	
	13	1	**253-3484**	2	WASHER (13X46X3.5-MM THK)	
M	14	1	**5C-9553**	2	BOLT (M6X1X16-MM)	
	15	1	**7J-5925**	1	PIN-COTTER	
	16	1	**7X-0578**	2	WASHER-HARD (10.2X32X2.5-MM THK)	
	17	1	**8T-4224**	7	WASHER-HARD (8.8X16X2-MM THK)	
M	18	1	**8T-4908**	7	BOLT (M8X1.25X25-MM)	
M	19	1	**9X-2043**	2	SCREW-TRUSS HEAD (M6X1X14-MM)	
	20	1	**9X-8256**	2	WASHER (6.6X12X2-MM THK)	

M-METRIC PART
Y-SEPARATE ILLUSTRATION

PROOF

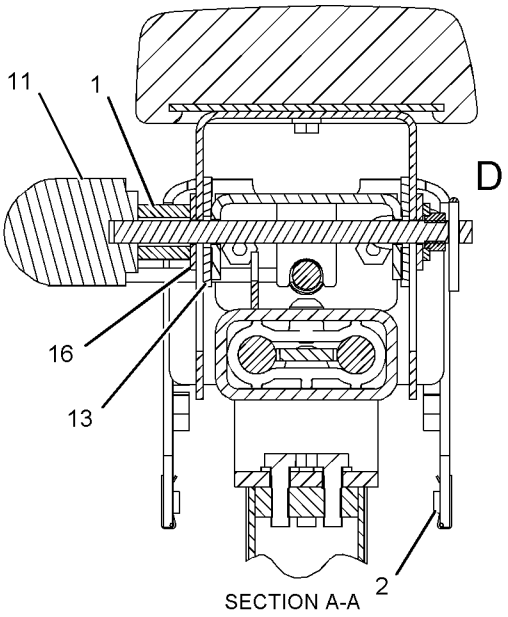

SECTION A-A

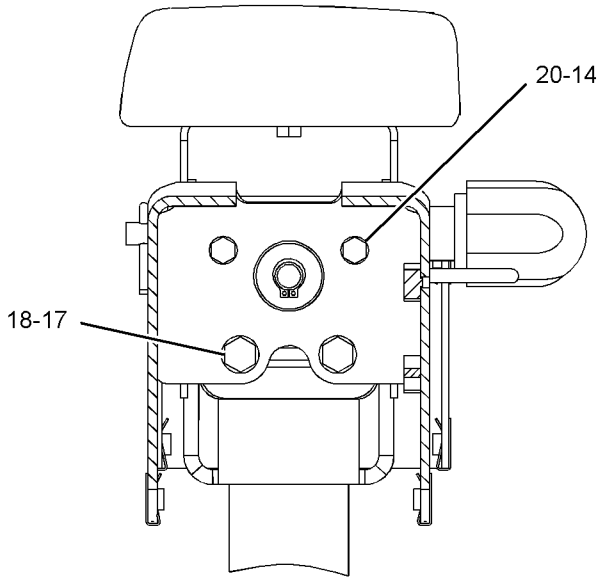

SECTION B-B

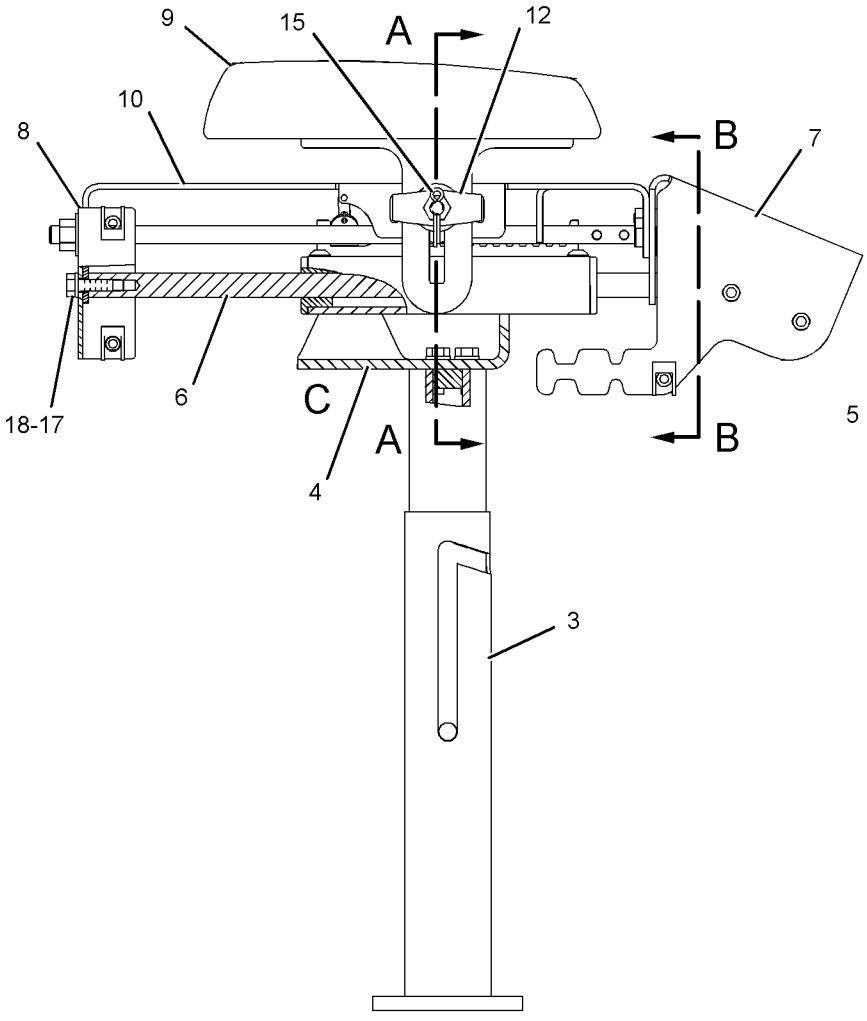

RIGHT SIDE VIEW

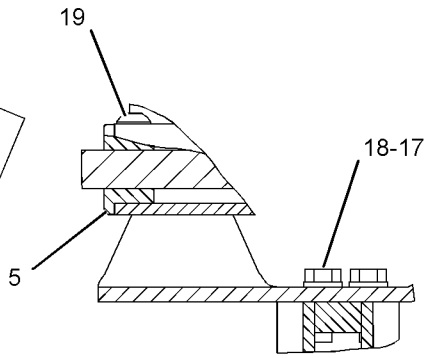

VIEW OF AREA C

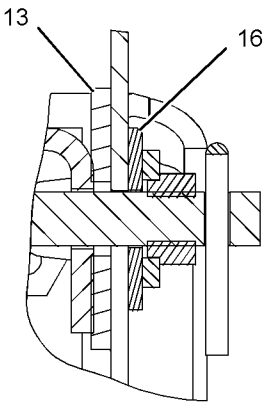

VIEW OF AREA D

GRAPHIC #1 **<END>** g01110163

OPERATOR STATION

233-3225 SUPPORT GP-CONTROL—RH

S/N: B9M1-UP

PART OF 233-3146 CONTROL & MTG GP-JOYSTICK

SMCS-4343, 6150 **i02254166**

NOTE	REF NO	GRAPHIC REF	PART NUMBER	QTY	PART NAME 1 2 3 4 5 6 (PRODUCT LEVEL)	SEE PAGE
	1	1	**8X-1386**	1	SPACER (12.2X23X22-MM THK)	
	2	1	**139-6039**	6	NUT (U-TYPE RETAINER)	
	3	1	**233-3248**	2	BUSHING	
	4	1	**233-3252**	1	SHAFT AS	
	5	1	**233-3270**	1	SUPPORT AS (RH)	
	6	1	**233-3275**	1	BRACKET	
	7	1	**235-6190**	1	BRACKET	
Y	8	1	**252-1804**	1	CUSHION GP-ARM (RH)	721
	9	1	**252-1808**	1	SUPPORT AS (RH)	
	10	1	**253-3482**	1	KNOB AS	
		1	**164-1214**	1	KNOB	
	11	1	**253-3483**	1	PLATE AS	
	12	1	**253-3484**	2	WASHER (13X46X3.5-MM THK)	
	13	1	**235-6178**	1	SUPPORT AS (RH)	
M	14	1	**5C-9553**	2	BOLT (M6X1X16-MM)	
	15	1	**7J-5925**	1	PIN-COTTER	
	16	1	**7X-0578**	2	WASHER-HARD (10.2X32X2.5-MM THK)	
	17	1	**8T-4224**	7	WASHER-HARD (8.8X16X2-MM THK)	
M	18	1	**8T-4908**	7	BOLT (M8X1.25X25-MM)	
M	19	1	**9X-2043**	2	SCREW-TRUSS HEAD (M6X1X14-MM)	
	20	1	**9X-8256**	2	WASHER (6.6X12X2-MM THK)	

M-METRIC PART
Y-SEPARATE ILLUSTRATION

PROOF

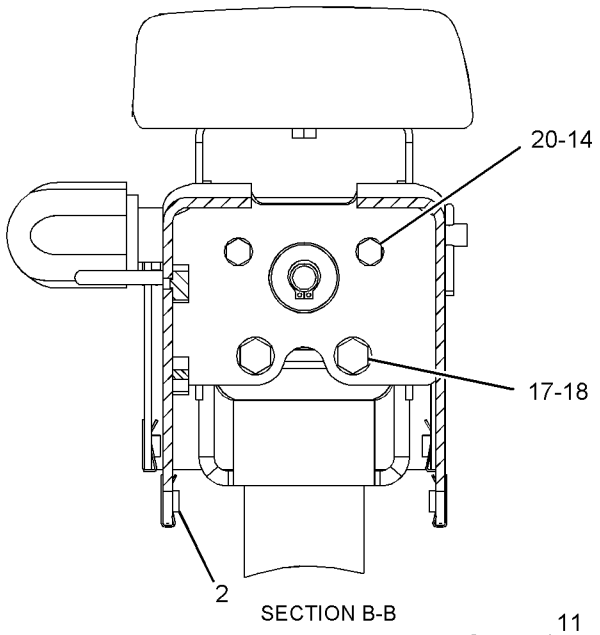

SECTION B-B

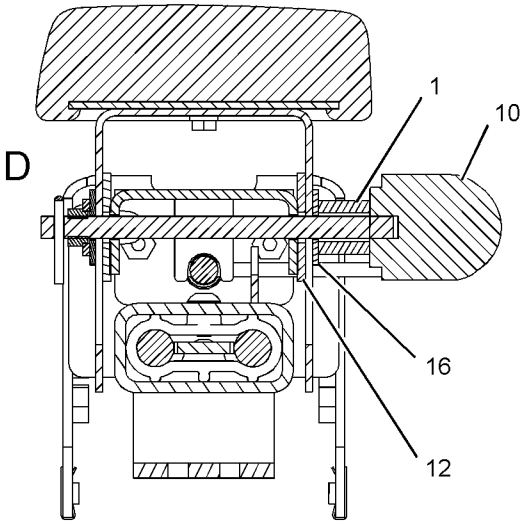

SECTION A-A

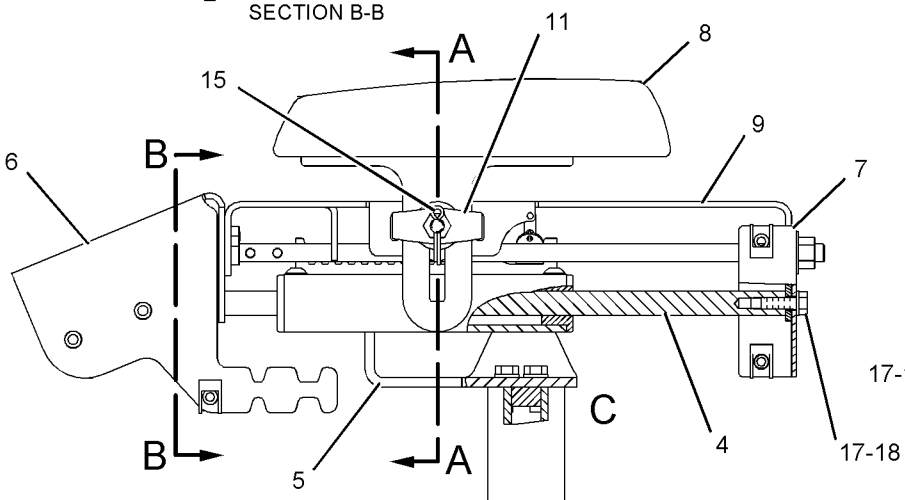

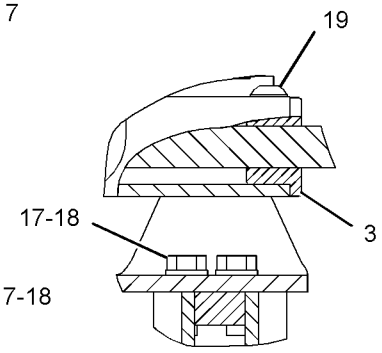

VIEW OF AREA C

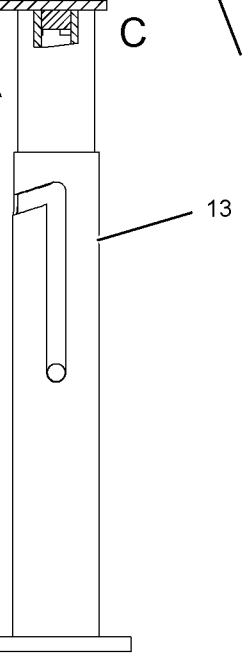

LEFT SIDE VIEW

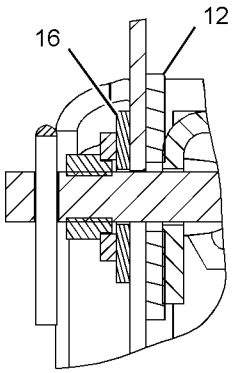

VIEW OF AREA D

GRAPHIC #1

<END>

g01110098

OPERATOR STATION

231-5055 SUPPRESSION GP-SOUND–ENGINE ENCLOSURE

S/N: B9M1-UP
EUROPEAN MARKET
PART OF 261-0182 OPTION AR-EU
AN ATTACHMENT

SMCS-7329, 7330 **i02236784**

NOTE	REF NO	GRAPHIC REF	PART NUMBER	QTY	PART NAME 1 2 3 4 5 6 (PRODUCT LEVEL)	SEE PAGE
	1	1	**245-2815**	2	INSULATION	
	2	1	**245-2816**	1	INSULATION	
	3	1	**245-2817**	1	INSULATION	
	4	1	**245-2818**	1	INSULATION	
	5	1	**245-2819**	1	INSULATION	
	6	1	**245-2820**	1	INSULATION	
	7	1	**245-2857**	1	INSULATION	
	8	1	**245-2859**	1	INSULATION	

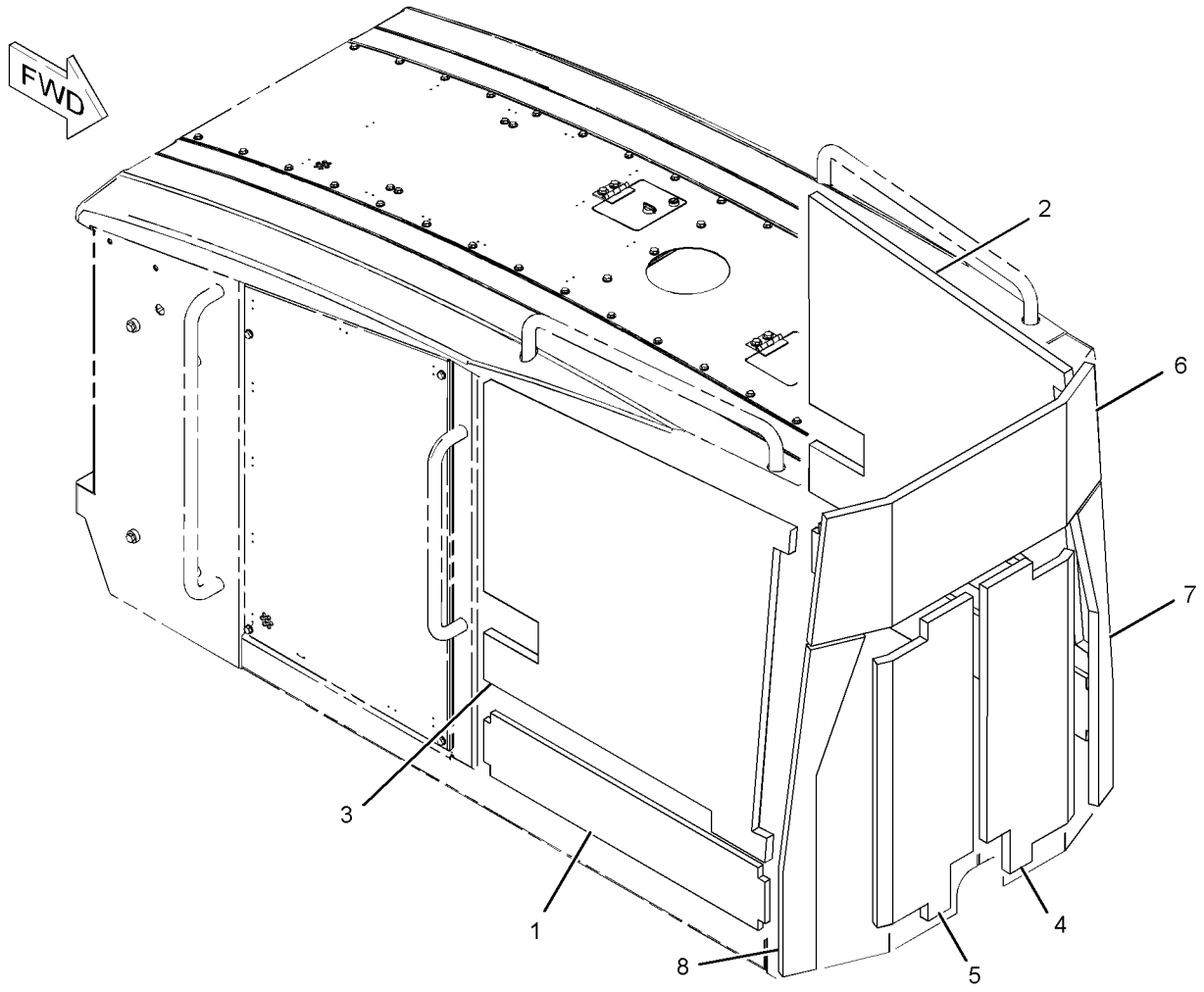

GRAPHIC #1 **<END>** g01135800

OPERATOR STATION

160-7165 SUSPENSION GP-SEAT

S/N: B9M1-UP
PART OF 243-6740 SEAT GP-SUSPENSION
AN ATTACHMENT

SMCS-7324 **i02238322**

NOTE	REF NO	GRAPHIC REF	PART NUMBER	QTY	PART NAME 1 2 3 4 5 6 (PRODUCT LEVEL)	SEE PAGE
	1	1	**2K-4973**	2	LOCKNUT (3/8-16-THD)	
	2	1	**4V-7884**	2	BEARING	
	3	1	**4V-8577**	4	BEARING	
	4	1	**5V-1497**	1	RETAINER	
	5	1	**8Y-5965**	1	ABSORBER AS-SHOCK	
	6	1	**8Y-6012**	1	ARM AS-SUSPENSION	
	7	1	**8Y-6014**	1	HOUSING AS-LOWER	
	8	1	**8Y-6024**	2	SHAFT AS	
J	9	1	**101-0003**	20	FASTENER	
J	10	1	**166-6781**	6	FASTENER	
J	11	1	**163-1146**	3	FASTENER	
	12	1	**145-0326**	1	FILM-INSTRUCTION (SEAT ADJUSTMENT)	
	13	1	**169-7380**	1	BOLT-SOCKET HEAD (3/8-16X0.375-IN)	
Y	14	1	**174-2231**	1	HOUSING GP-SEAT SUSPENSION	735
J	15	1	**197-7689**	3	FASTENER	
					AVAILABLE REPAIR KIT(S):	
J				1	KIT-SUSPENSION BOOT	
					(INCLUDES BOOT, RETAINER & FASTENERS)	
				1	KIT-BELT TETHER	
					(INCLUDES BELTS)	
				1	KIT-SUSPENSION ROLLER	
					(INCLUDES ROLLERS)	

J-KIT MARKED J INCLUDES PARTS MARKED J
Y-SEPARATE ILLUSTRATION

PROOF

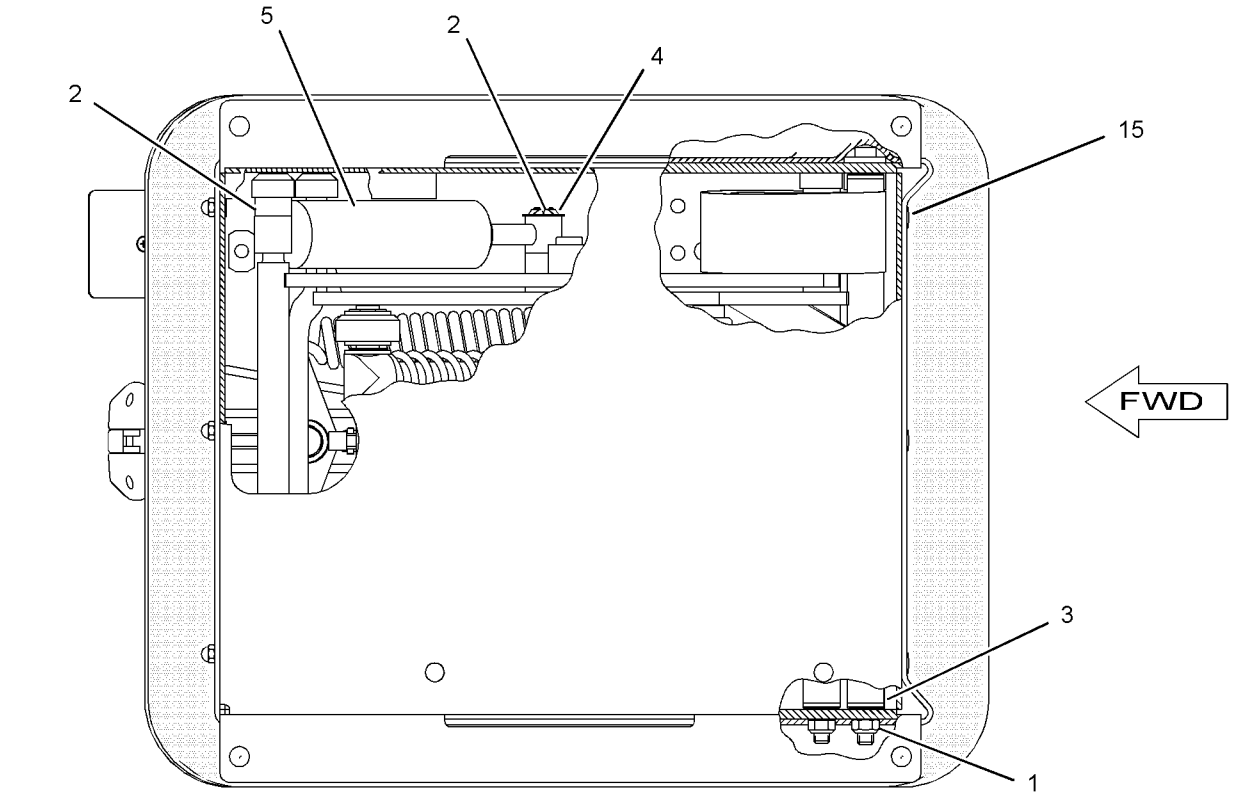

BOTTOM VIEW

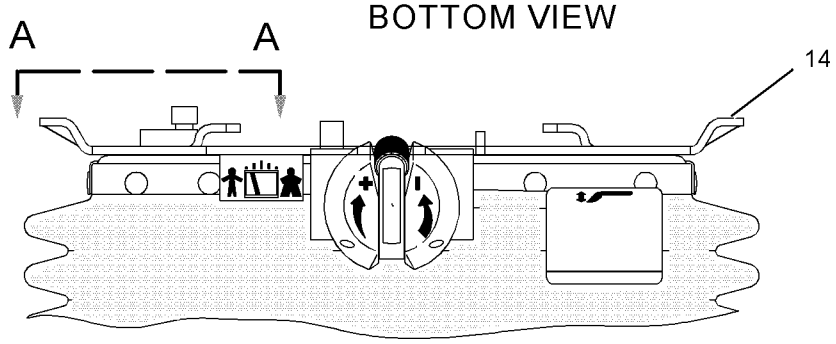

FRONT VIEW

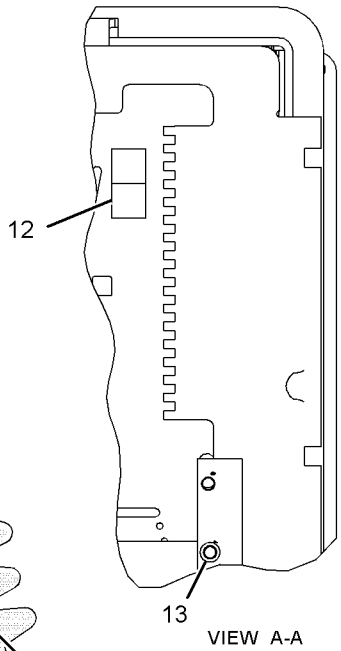

VIEW A-A

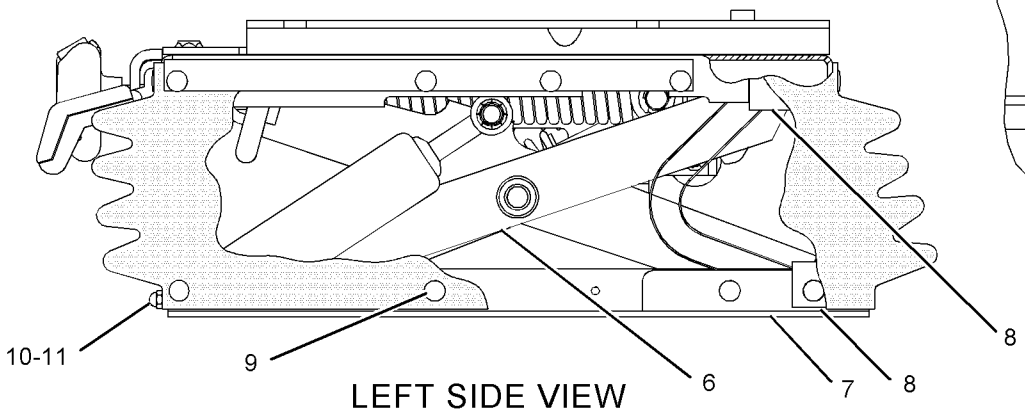

LEFT SIDE VIEW

GRAPHIC #1 **<END>** g01129757

OPERATOR STATION

199-5725 SUSPENSION GP-SEAT—AIR

S/N: B9M1-UP
PART OF 241-1077 SEAT GP-SUSPENSION
AN ATTACHMENT

SMCS-7324 **i02348970**

NOTE	REF NO	GRAPHIC REF	PART NUMBER	QTY	PART NAME 1 2 3 4 5 6 (PRODUCT LEVEL)	SEE PAGE
	1	1	**3P-9900**	5	WASHER (10.5X30X3-MM THK)	
	2	1	**4B-4278**	2	WASHER (10.2X20.5X1.6-MM THK)	
	3	1	**4V-8577**	12	BEARING	
	4	1	**8L-8413**	1	STRAP-CABLE	
	5	1	**145-0326**	1	FILM-INSTRUCTION (SEAT ADJUSTMENT)	
	6	1	**237-3943**	1	BRACKET	
	7	1	**164-1234**	1	PLATE	
	8	1	**101-0003**	26	FASTENER	
	9	1	**169-7380**	1	BOLT-SOCKET HEAD (3/8-16X0.375-IN)	
	10	1	**186-5107**	2	SCREW (NO 8X1.25-IN)	
	11	1	**192-7752**	4	SHAFT AS	
	12	1	**192-7755**	1	HOUSING AS	
	13	1	**192-7760**	1	SHAFT	
	14	1	**192-7767**	1	SCISSORS AS	
	15	1	**192-7783**	1	TOGGLE AS (WIDE)	
	16	1	**192-7787**	1	TOGGLE AS (NARROW)	
	17	1	**192-7790**	1	HOUSING AS	
	18	1	**192-7795**	1	BOOT	
	19	1	**192-7805**	1	HARNESS AS-VALVE (SEAT AIR COMPRESSOR)	
		1	**102-8802**	1	KIT-RECEPTACLE (2-PIN)	
					(INCLUDES RECEPTACLE AS & WEDGE)	
	20	1	**192-7810**	1	SPRING AS-AIR	
		1	**5P-4423**	1	ELBOW	
		1	**163-1135**	1	SPRING	
	21	1	**192-7812**	1	BOLT-SHOULDER	
	22	1	**192-7820**	3	BUMPER	
	23	1	**192-7822**	1	SHAFT	
Y	24	1	**237-3970**	1	AIR COMPRESSOR GP-SEAT	702
	25	1	**1H-8296**	1	SCREW-MACHINE (3/8-16X0.52-IN)	
	26	1	**2K-4973**	8	LOCKNUT (3/8-16-THD)	
	27	1	**3J-4818**	1	LOCKWASHER	
M	28	1	**5C-2890**	3	NUT (M6X1-THD)	
	29	1	**8T-9371**	1	BOLT (3/8-16X0.5-IN)	
BE	30	1	**211-5358**		CONDUIT (35.6-CM)	
BE	31	1	**211-5358**		CONDUIT (26.7-CM)	
BD	32	1	**5P-6010**		TUBE	
BD	33	1	**5P-6010**		TUBE	
					AVAILABLE REPAIR KIT(S):	
			192-7799	1	KIT-AIR VALVE (SEAT)	
					(INCLUDES KNOB ASSEMBLY)	
			212-7779	1	KIT-SHOCK ABSORBER (SEAT)	
					(INCLUDES LOCKNUTS, BALL, LOCKWASHER, STRAP, SPRING, CLAMP, ADJUSTERS, BOLTS, BEARINGS, WASHERS, SHOCK ABSORBER,	
					BRACKETS, KIT, CABLE ASSEMBLY, & KNOB)	
			213-5170	1	KIT-INDICATOR (SEAT)	
					(INCLUDES BOLTS, NUTS, ROD, ARM, & HOUSING)	
			211-9294	1	KIT-TETHER (SEAT)	
					(INCLUDES TETHER)	

B-USE AS REQUIRED
D-ORDER BY THE METER
E-ORDER BY THE CENTIMETER
M-METRIC PART
Y-SEPARATE ILLUSTRATION

PROOF

199-5725 SUSPENSION GP-SEAT *(contd.)* i02348970

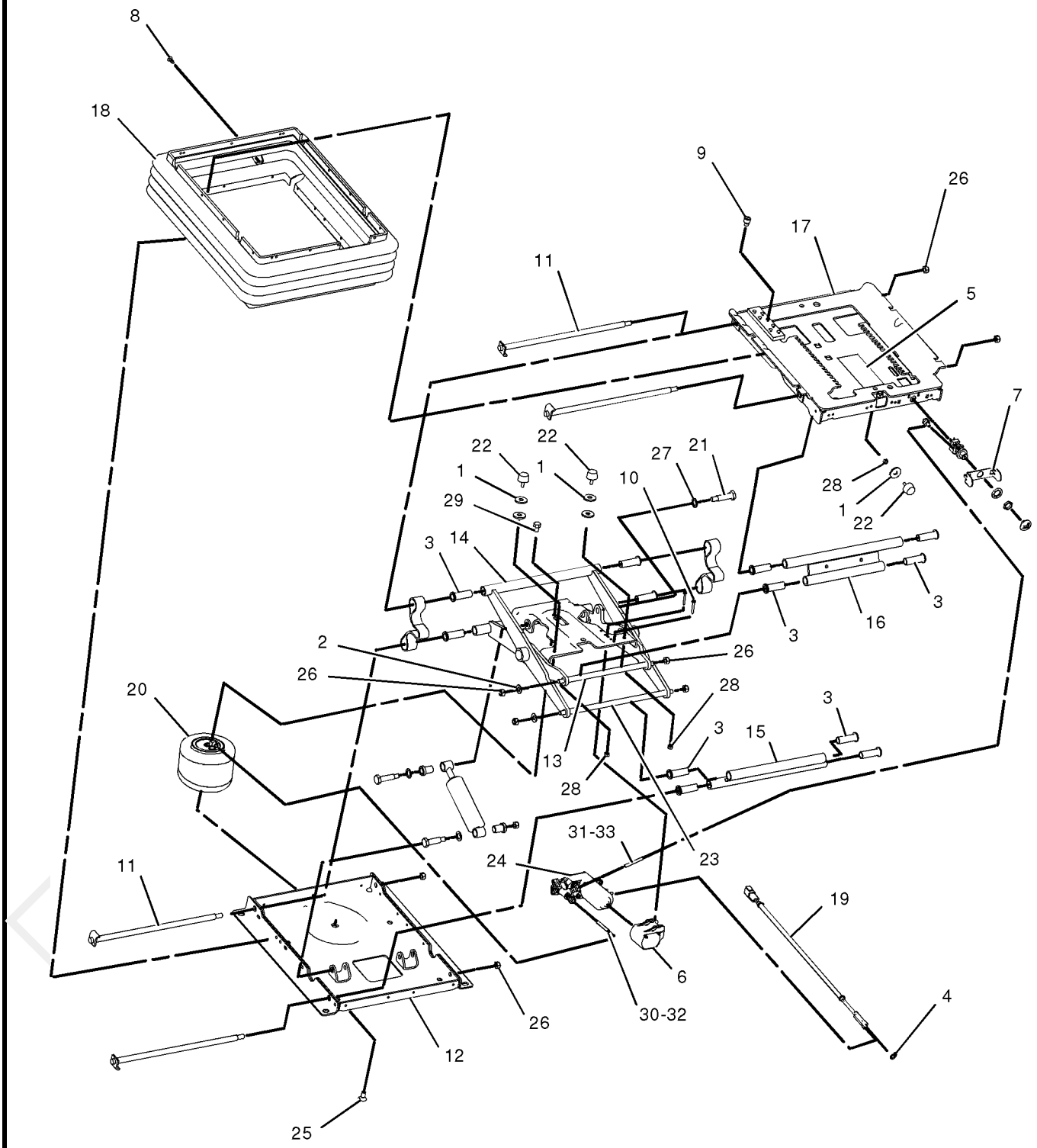

GRAPHIC #1 **<END>** g01054555

OPERATOR STATION

256-8768 SUSPENSION GP-SEAT—AIR

S/N: B9M1-UP
PART OF 238-6683 SEAT GP-SUSPENSION
AN ATTACHMENT

SMCS-7324 **i02348976**

NOTE	REF NO	GRAPHIC REF	PART NUMBER	QTY	PART NAME 1 2 3 4 5 6 (PRODUCT LEVEL)	SEE PAGE
	1	1	**3P-9900**	5	WASHER (10.5X30X3-MM THK)	
	2	1	**4B-4278**	2	WASHER (10.2X20.5X1.6-MM THK)	
	3	1	**4V-8577**	12	BEARING	
	4	1	**8L-8413**	1	STRAP-CABLE	
	5	1	**101-0003**	26	FASTENER	
	6	1	**145-0326**	1	FILM-INSTRUCTION (SEAT ADJUSTMENT)	
	7	1	**164-1234**	1	PLATE	
	8	1	**169-7380**	1	BOLT-SOCKET HEAD (3/8-16X0.375-IN)	
	9	1	**186-5107**	2	SCREW (NO 8X1.25-IN)	
	10	1	**192-7752**	4	SHAFT AS	
	11	1	**192-7755**	1	HOUSING AS	
	12	1	**192-7760**	1	SHAFT	
	13	1	**192-7767**	1	SCISSORS AS	
	14	1	**192-7783**	1	TOGGLE AS	
	15	1	**192-7787**	1	TOGGLE AS	
	16	1	**192-7790**	1	HOUSING AS	
		1	**2K-4973**	1	LOCKNUT (3/8-16-THD)	
	17	1	**192-7795**	1	BOOT	
	18	1	**192-7805**	1	HARNESS AS-VALVE (SEAT AIR COMPRESSOR)	
		1	**102-8802**	1	KIT-RECEPTACLE (2-PIN)	
					(INCLUDES RECEPTACLE AS AND WEDGE)	
		1	**102-8802**	1	KIT-RECEPTACLE (2-PIN)	
					(INCLUDES RECEPTACLE AS AND WEDGE)	
	19	1	**192-7810**	1	SPRING AS-AIR	
		1	**5P-4423**	1	ELBOW	
		1	**163-1135**	1	SPRING	
	20	1	**192-7812**	1	BOLT-SHOULDER	
	21	1	**192-7820**	3	BUMPER	
	22	1	**192-7822**	1	SHAFT	
	23	1	**237-3943**	1	BRACKET	
Y	24	1	**237-3970**	1	AIR COMPRESSOR GP-SEAT	702
	25	1	**1H-8296**	1	SCREW-MACHINE (3/8-16X0.52-IN)	
	26	1	**2K-4973**	8	LOCKNUT (3/8-16-THD)	
	27	1	**3J-4818**	1	LOCKWASHER	
M	28	1	**5C-2890**	3	NUT (M6X1-THD)	
	29	1	**5P-6010**	1	TUBE	
	30	1	**8T-9371**	1	BOLT (3/8-16X0.5-IN)	
	31	1	**211-5358**	100	CONDUIT	
					AVAILABLE REPAIR KIT(S):	
			192-7799	1	KIT-AIR VALVE (SEAT)	
					(INCLUDES KNOB ASSEMBLY)	
			212-7779	1	KIT-SHOCK ABSORBER (SEAT)	
					(INCLUDES, LOCKNUTS, BALL, LOCKWASHER, STRAP, SPRING, CLAMP, ADJUSTERS, BOLTS, BEARINGS, WASHERS, SHOCK ABSORBER,	
					BRACKETS, KIT, CABLE ASSEMBLY, AND KNOB)	
			213-5170	1	KIT-INDICATOR (SEAT)	
					(INCLUDES BOLTS, NUTS, ROD, ARM, AND HOUSING)	
			211-9294	1	KIT-TETHER (SEAT)	
					(INCLUDES TETHER)	

M-METRIC PART
Y-SEPARATE ILLUSTRATION

256-8768 SUSPENSION GP-SEAT *(contd.)* i02348976

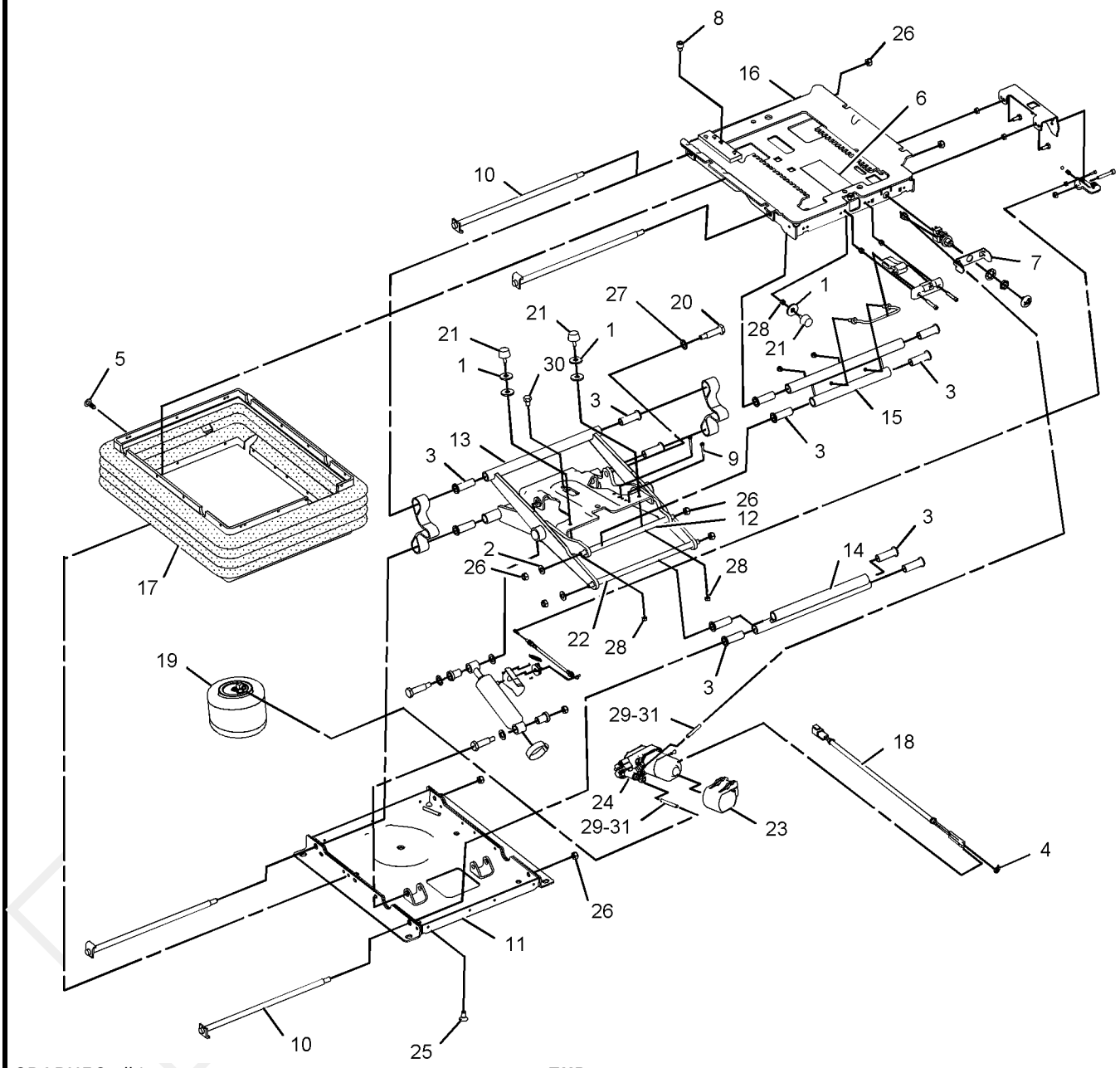

GRAPHIC #1 **<END>** g01100128

OPERATOR STATION

248-3164 TANK GP-WINDOW WASHER

S/N: B9M1-UP

PART OF 233-3138 WIPER & WASHER GP-WINDOW

SMCS-7306 **i02248037**

NOTE	REF NO	GRAPHIC REF	PART NUMBER	QTY	PART NAME 1 2 3 4 5 6 (PRODUCT LEVEL)	SEE PAGE
	1	1	**6W-5698**	1	GROMMET	
	2	1	**7T-8890**	3	PUMP AS-WASHER	
	3	1	**8T-5914**	3	GROMMET	
	4	1	**204-2581**	3	VALVE AS-CHECK (WINDOW WASHER)	
	5	1	**249-0904**	1	SWITCH-LIQUID LEVEL (WASHER FLUID)	
	6	1	**254-0079**	1	TANK-WASHER	
	7	1	**261-3345**	1	CONNECTOR	
	8	1	**267-8715**	3	PLUG	
E	9	1	**144-0195**		HOSE (30-CM)	

E-ORDER BY THE CENTIMETER

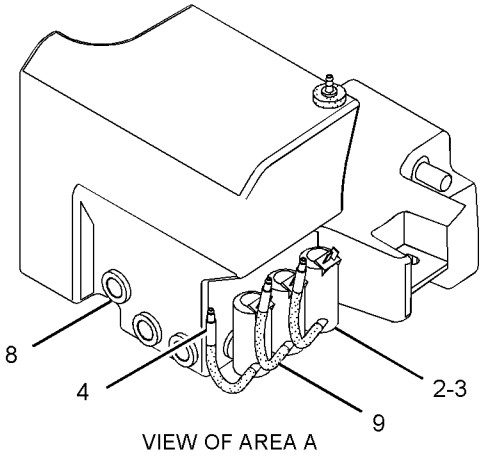

VIEW OF AREA A

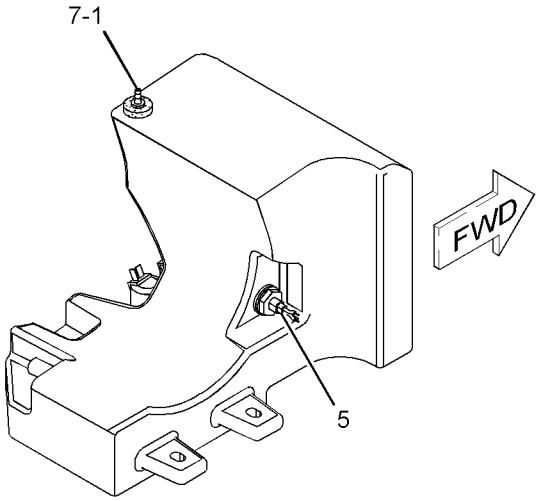

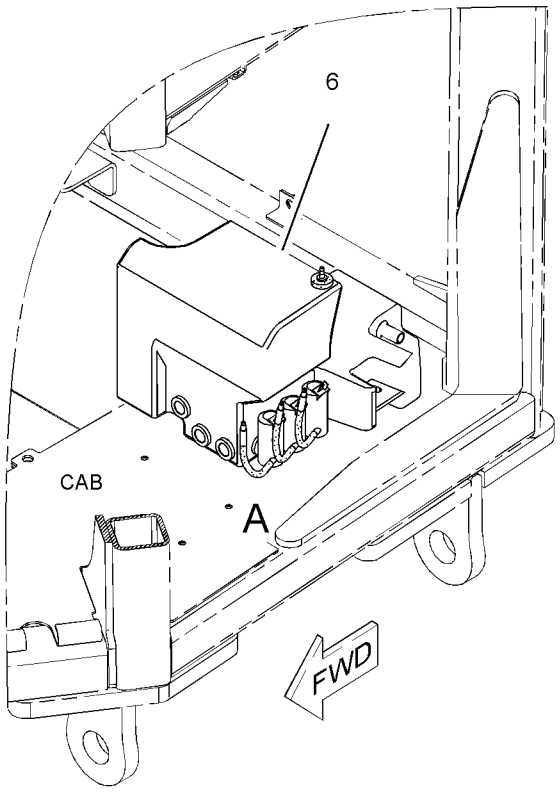

GRAPHIC #1 **<END>** g01134291

OPERATOR STATION

233-3152 TRIM GP-CAB

S/N: B9M1-UP

PART OF 254-5399 CAB AR

SMCS-7329 **i02285915**

NOTE	PART NUMBER	QTY	PART NAME 1 2 3 4 5 6 (PRODUCT LEVEL)	SEE PAGE
	190-8505	1	ASHTRAY	
M	**8T-4191**	4	BOLT (M10X1.5X16-MM)	
	238-8767	1	COVER	
M	**6V-9632**	2	NUT-WELD (M6X1-THD)	
M	**8T-3490**	2	NUT-WELD (M10X1.5-THD)	
	265-8935	1	COVER	
	267-3175	1	COVER	
	251-2289	2	COVER AS	
			(EACH INCLUDES)	
M	**6V-9632**	5	NUT-WELD (M6X1-THD)	
	233-3299	1	FLOOR MAT (CAB)	
	6V-8928	1	HOOK-COAT	
	224-3969	1	INDICATOR-LEVEL (TEMPERATURE)	
	238-8803	1	PANEL-COVER	
M	**9X-2043**	6	SCREW-TRUSS HEAD (M6X1X14-MM)	
M	**9X-2045**	11	SCREW-TRUSS HEAD (M6X1X20-MM)	
	114-6658	6	WASHER (6.5X17X1-MM THK)	
	5P-4115	10	WASHER-HARD (7.2X19X2-MM THK)	
M	**8T-4121**	4	WASHER-HARD (11X21X2.5-MM THK)	

M-METRIC PART

<END>

PROOF

OPERATOR STATION

233-3113 WINDOW GP-CAB–REAR

S/N: B9M1-UP
LOWER DOOR
PART OF 254-5399 CAB AR
ALSO AN ATTACHMENT

SMCS-7310 **i02286117**

NOTE	REF NO	GRAPHIC REF	PART NUMBER	QTY	PART NAME 1 2 3 4 5 6 (PRODUCT LEVEL)	SEE PAGE
	1	1	**233-3235**	1	GLASS-REAR	
	2	1	**233-3236**	1	GLASS (LH)	
	3	1	**233-3238**	1	GLASS (RH)	
	4	1	**263-2574**	6	CLIP	
BE	5	1	**3E-3000**		SEAL	

B-USE AS REQUIRED
E-ORDER BY THE CENTIMETER

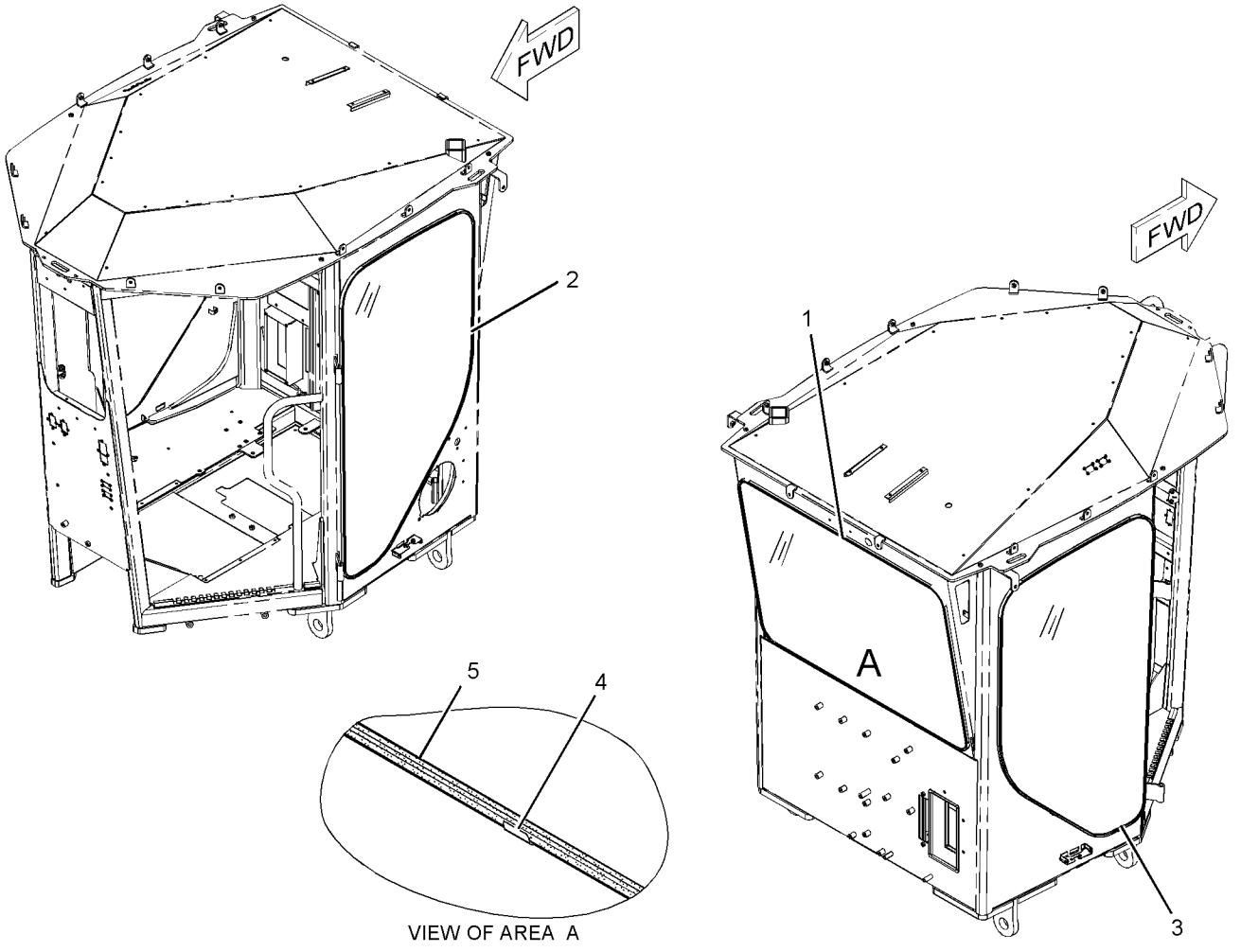

GRAPHIC #1 **<END>** g01148096

OPERATOR STATION

233-3140 WINDOW GP-CAB–FRONT

S/N: B9M1-UP
AN ATTACHMENT

SMCS-7310 **i02183339**

NOTE	REF NO	GRAPHIC REF	PART NUMBER	QTY	PART NAME 1 2 3 4 5 6 (PRODUCT LEVEL)	SEE PAGE
	1	1	**114-6658**	6	WASHER (6.5X17X1-MM THK)	
	2	1	**238-8760**	1	GLASS-FRONT	
	3	1	**249-4081**	2	BRACKET	
M	4	1	**9X-2045**	6	SCREW-TRUSS HEAD (M6X1X20-MM)	
BE	5	1	**148-5353**		SEAL	

B-USE AS REQUIRED
E-ORDER BY THE CENTIMETER
M-METRIC PART

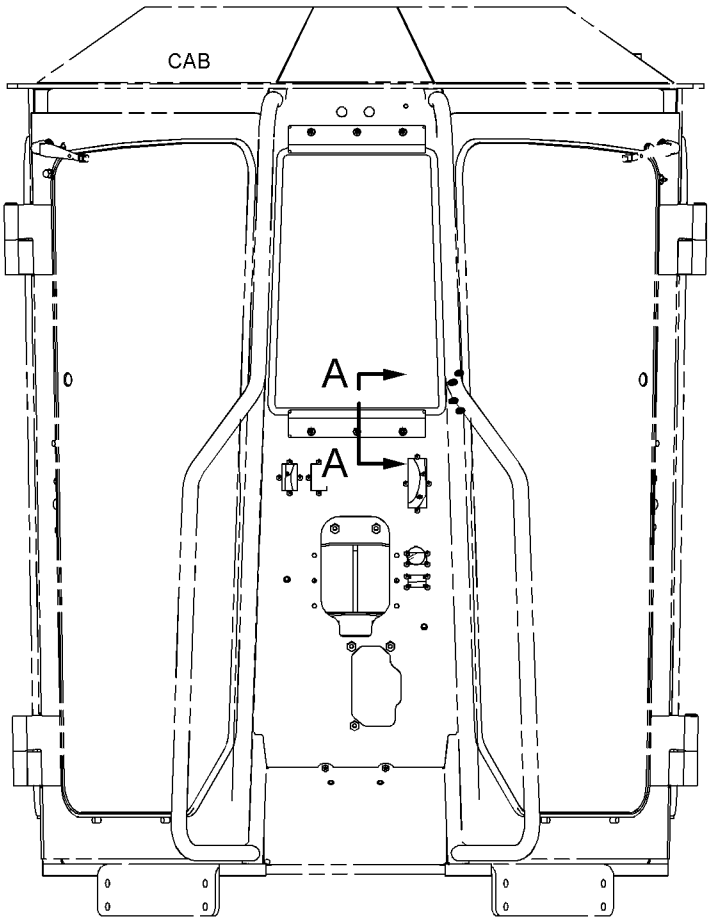

FRONT VIEW

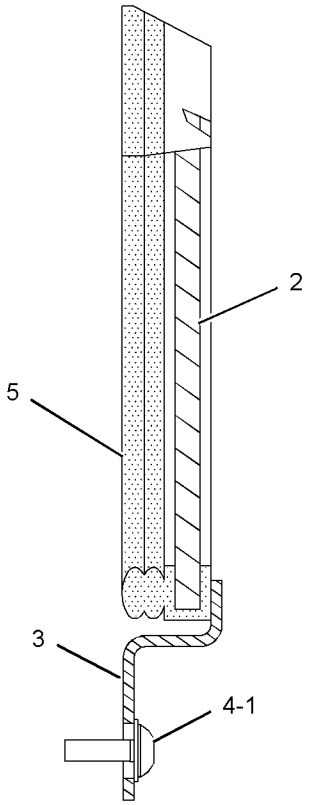

SECTION A-A

GRAPHIC #1 **<END>** g01110119

OPERATOR STATION

233-3286 WINDOW GP-CAB—FRONT

S/N: B9M1-UP
AN ATTACHMENT

SMCS-7310 **i02277380**

NOTE	REF NO	GRAPHIC REF	PART NUMBER	QTY	PART NAME 1 2 3 4 5 6 (PRODUCT LEVEL)	SEE PAGE
M	1	1	**9X-2045**	3	SCREW-TRUSS HEAD (M6X1X20-MM)	
	2	1	**114-6658**	3	WASHER (6.5X17X1-MM THK)	
	3	1	**251-2364**	1	BRACKET AS	
	4	1	**251-2365**	1	HINGE AS	
	5	1	**251-2422**	1	BRACKET	
	6	1	**251-4207**	1	LATCH AS	
	7	1	**254-5094**	1	GLASS (VENT WINDOW)	
	8	1	**225-3109**	2	SCREW-TRUSS HEAD	
M	9	1	**5C-8312**	2	NUT (M4X0.7-THD)	
BE	10	1	**148-5353**		SEAL	

B-USE AS REQUIRED
E-ORDER BY THE CENTIMETER
M-METRIC PART

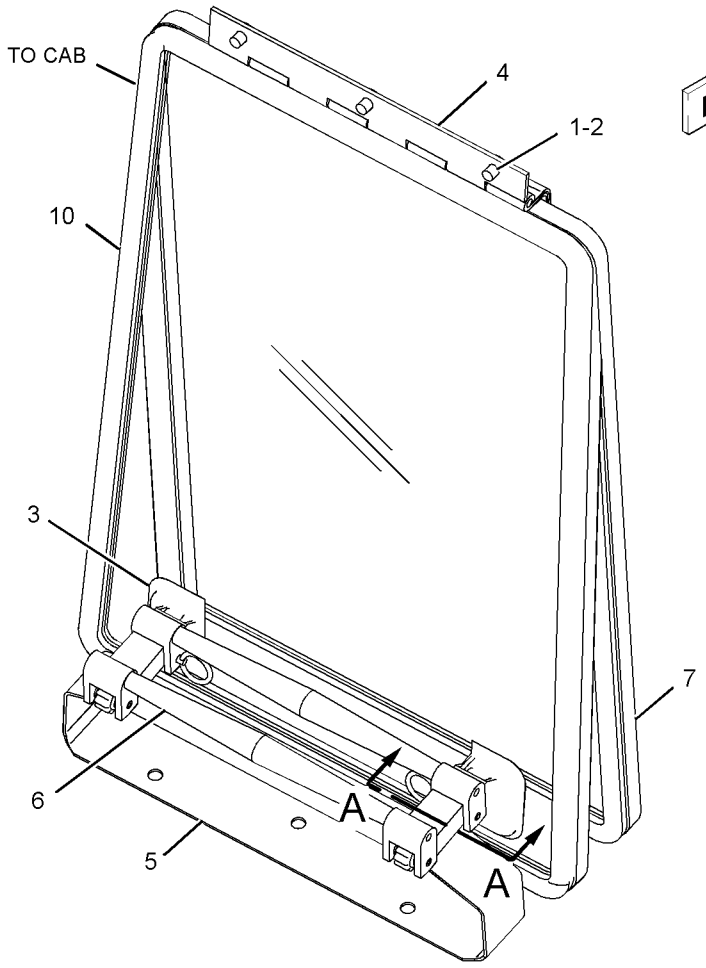

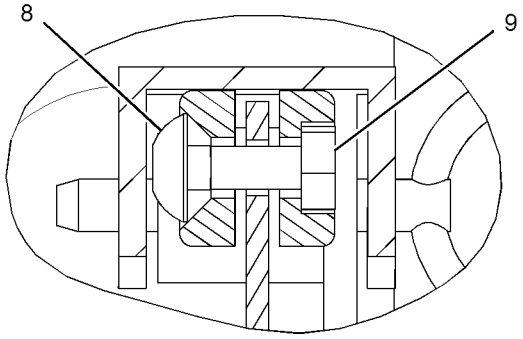

SECTION A-A

GRAPHIC #1 **<END>** g01141380

OPERATOR STATION

260-6724 WINDOW GP-CAB—REAR, LH, RH

S/N: B9M1-UP

AN ATTACHMENT

SMCS-7310 **i02295959**

NOTE	REF NO	GRAPHIC REF	PART NUMBER	QTY	PART NAME 1 2 3 4 5 6 (PRODUCT LEVEL)	SEE PAGE
	1	1	**233-3235**	1	GLASS-REAR	
	2	1	**260-6725**	1	GLASS (CAB, LH)	
	3	1	**260-6726**	1	GLASS (CAB, RH)	
	4	1	**263-2574**	6	CLIP	
BE	5	1	**3E-3000**		SEAL	

B-USE AS REQUIRED
E-ORDER BY THE CENTIMETER

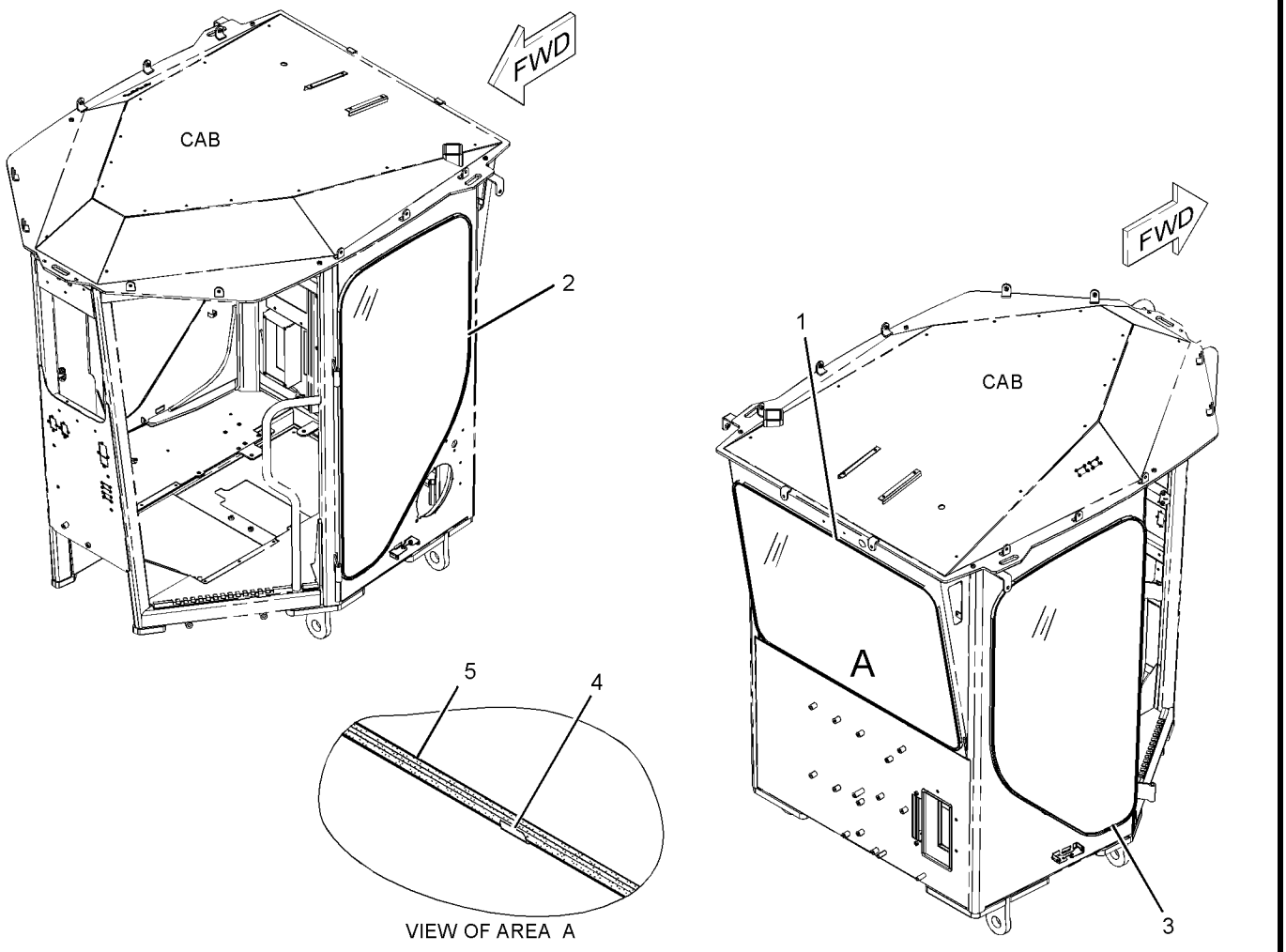

GRAPHIC #1 **<END>** g01148319

OPERATOR STATION

233-3138 WIPER & WASHER GP-WINDOW

S/N: B9M1-UP

PART OF 254-5399 CAB AR

SMCS-7305, 7306 **i02248034**

NOTE	REF NO	GRAPHIC REF	PART NUMBER	QTY	PART NAME 1 2 3 4 5 6 (PRODUCT LEVEL)	SEE PAGE
	1	1	**5D-1026**	2	CLAMP-HOSE	
	2	1	**6V-5853**	1	BLADE AS-WIPER (FRONT)	
B	3	1	**7K-1181**	19	STRAP-CABLE	
	4	1	**8T-5400**	1	CONNECTOR	
	5	1	**114-6658**	3	WASHER (6.5X17X1-MM THK)	
	6	1	**180-0149**	3	TUBE	
	7	1	**248-2621**	1	ARM GP-WINDOW WIPER (WINDOW WASHER, WIPER)	
		1	**136-3188**	3	CLIP	
		1	**136-3191**	1	NOZZLE AS-WASHER	
E		1	**194-5171**		HOSE (55-CM)	
Y	8	1	**248-3164**	1	TANK GP-WINDOW WASHER	781
	9	1	**253-4115**	1	SPOUT	
	10	1	**261-1885**	1	CAP-VENTED	
	11	1	**101-2867**	3	WASHER-HARD (7.2X25X2-MM THK)	
Y	12	1	**248-2617**	1	MOTOR GP-WINDOW WIPER (FRONT WIPER, WASHER)	751
M	13	1	**9X-2044**	3	SCREW-TRUSS HEAD (M6X1X16-MM)	
M	14	1	**9X-2046**	3	SCREW-TRUSS HEAD (M6X1X35-MM)	
E	15	1	**153-2817**		HOSE (41-CM)	
E	16	1	**144-0195**		HOSE (355-CM)	
E	16A	1	**144-0195**		HOSE (449-CM)	
E	16B	1	**144-0195**		HOSE (86-CM)	
E	16C	1	**144-0195**		HOSE (398-CM)	

B-USE AS REQUIRED
E-ORDER BY THE CENTIMETER
M-METRIC PART
Y-SEPARATE ILLUSTRATION

PROOF

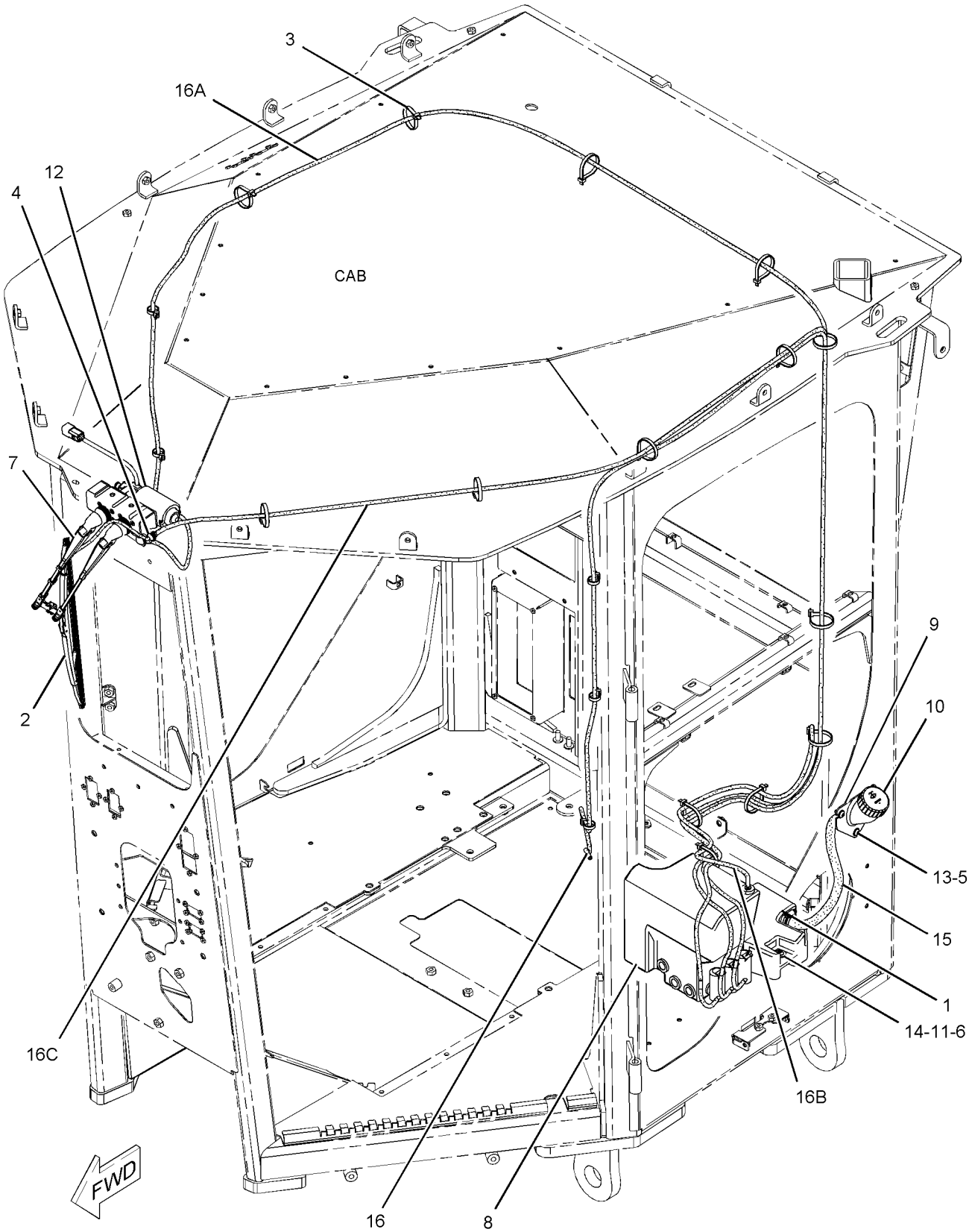

GRAPHIC #1 **<END>** g01133597

OPERATOR STATION

233-3139 WIPER GP-WINDOW–REAR

S/N: B9M1-UP
PART OF 261-0187 SNOW AR-MOTOR GRADER
AN ATTACHMENT

SMCS-7305 **i02348979**

NOTE	REF NO	GRAPHIC REF	PART NUMBER	QTY	PART NAME 1 2 3 4 5 6 (PRODUCT LEVEL)	SEE PAGE
	1	1	**8T-5400**	1	CONNECTOR	
	2	1	**112-5869**	1	ARM AS-WIPER	
	3	1	**146-6433**	1	BLADE AS-WIPER (REAR WIPER)	
	4	1	**204-2581**	1	VALVE AS-CHECK	
	5	1	**250-5529**	1	MOTOR GP-WINDOW WIPER (REAR)	
		1	**8T-8737**	1	PLUG-SEAL	
		1	**102-8804**	1	KIT-RECEPTACLE (4-PIN)	
					(INCLUDES RECEPTACLE AS & WEDGE)	
		1	**186-3735**	5	PIN-CONNECTOR (16-GA TO 18-GA)	
E	6	1	**144-0195**		HOSE (297-CM)	
	7	1	**8T-5914**	1	GROMMET	
	8	1	**7T-8890**	1	PUMP AS-WASHER	
Y	9	1	**3E-0155**	1	SWITCH GP-WIPER (24-VOLT)	214

E-ORDER BY THE CENTIMETER
Y-SEPARATE ILLUSTRATION

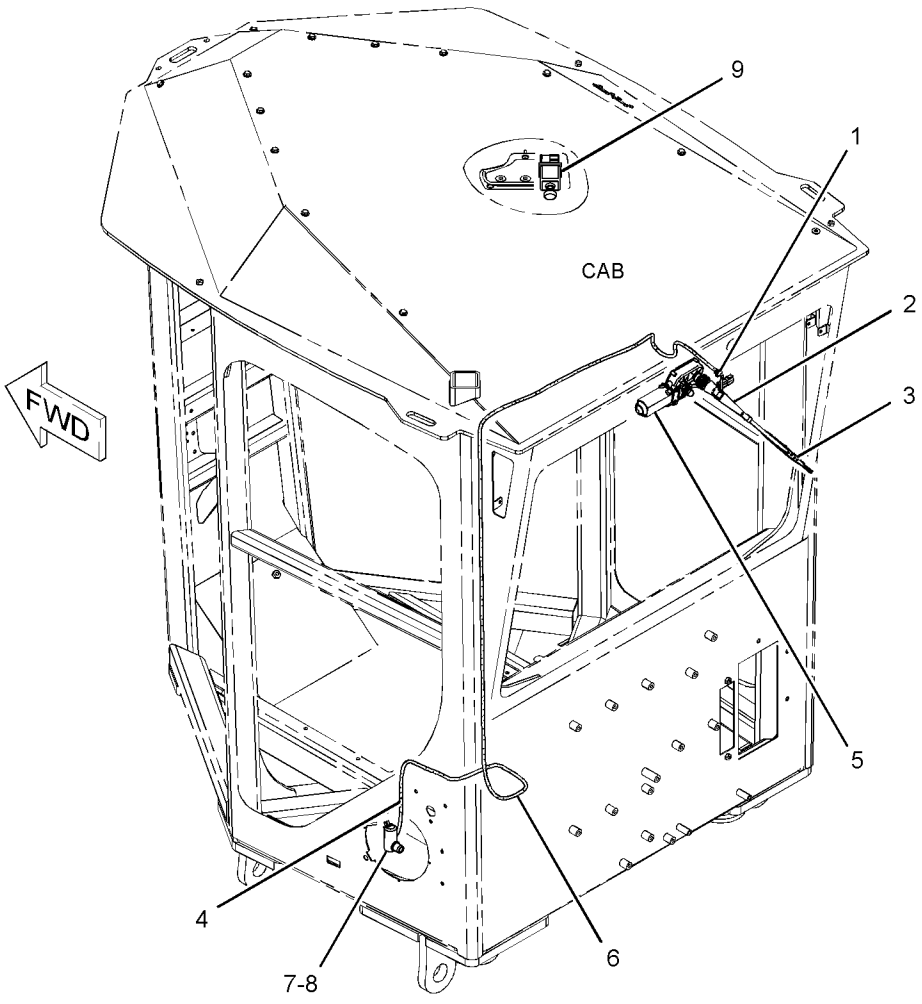

GRAPHIC #1 **<END>** g01141070

OPERATOR STATION

233-3188 WIPER GP-WINDOW—SIDE, LH

S/N: B9M1-UP
PART OF 261-0187 SNOW AR-MOTOR GRADER
AN ATTACHMENT

SMCS-7305 **i02277591**

NOTE	REF NO	GRAPHIC REF	PART NUMBER	QTY	PART NAME 1 2 3 4 5 6 (PRODUCT LEVEL)	SEE PAGE
	1	1	**6V-5851**	1	BLADE AS-WIPER (LEFT)	
	2	1	**204-2581**	1	VALVE AS-CHECK	
	3	1	**260-2577**	1	MOTOR GP-WINDOW WIPER (LEFT)	
		1	**3F-9556**	1	LOCKWASHER	
M		1	**5C-7261**	1	NUT (M8X1.25-THD)	
		1	**102-8803**	1	KIT-RECEPTACLE (3-PIN)	
					(INCLUDES RECEPTACLE AS & WEDGE)	
		1	**186-3735**	1	PIN-CONNECTOR (16-GA TO 18-GA)	
		1	**260-6438**	1	PLATE	
	4	1	**260-2579**	1	ARM AS-WIPER	
E	5	1	**144-0195**		HOSE (158-CM)	
	6	1	**8T-5914**	1	GROMMET	
	7	1	**7T-8890**	1	PUMP AS-WASHER	

E-ORDER BY THE CENTIMETER
M-METRIC PART

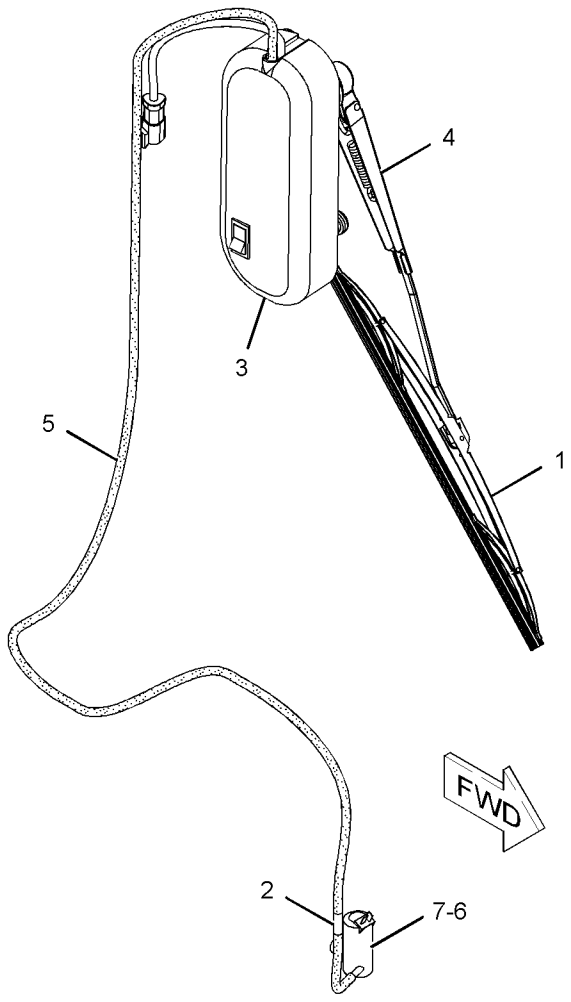

GRAPHIC #1 **<END>** g01143230

OPERATOR STATION

233-3190 WIPER GP-WINDOW—SIDE, RH

S/N: B9M1-UP
PART OF 261-0187 SNOW AR-MOTOR GRADER
AN ATTACHMENT

SMCS-7305 **i02277596**

NOTE	REF NO	GRAPHIC REF	PART NUMBER	QTY	PART NAME 1 2 3 4 5 6 (PRODUCT LEVEL)	SEE PAGE
	1	1	**6V-5851**	1	BLADE AS-WIPER (RH DOOR)	
	2	1	**6V-5852**	1	ARM AS-WIPER	
B	3	1	**7K-1181**	2	STRAP-CABLE	
	4	1	**204-2581**	1	VALVE AS-CHECK	
	5	1	**248-2628**	1	MOTOR GP-WINDOW WIPER (RH DOOR)	
		1	**3F-9556**	1	LOCKWASHER	
M		1	**5C-7261**	1	NUT (M8X1.25-THD)	
		1	**102-8803**	1	KIT-RECEPTACLE (3-PIN)	
		1	**186-3735**	1	PIN-CONNECTOR (16-GA TO 18-GA)	
		1	**208-8759**	1	PLATE	
E	6	1	**144-0195**		HOSE (396-CM)	
	7	1	**8T-5914**	1	GROMMET	
	8	1	**7T-8890**	1	PUMP AS-WASHER	

B-USE AS REQUIRED
E-ORDER BY THE CENTIMETER
M-METRIC PART

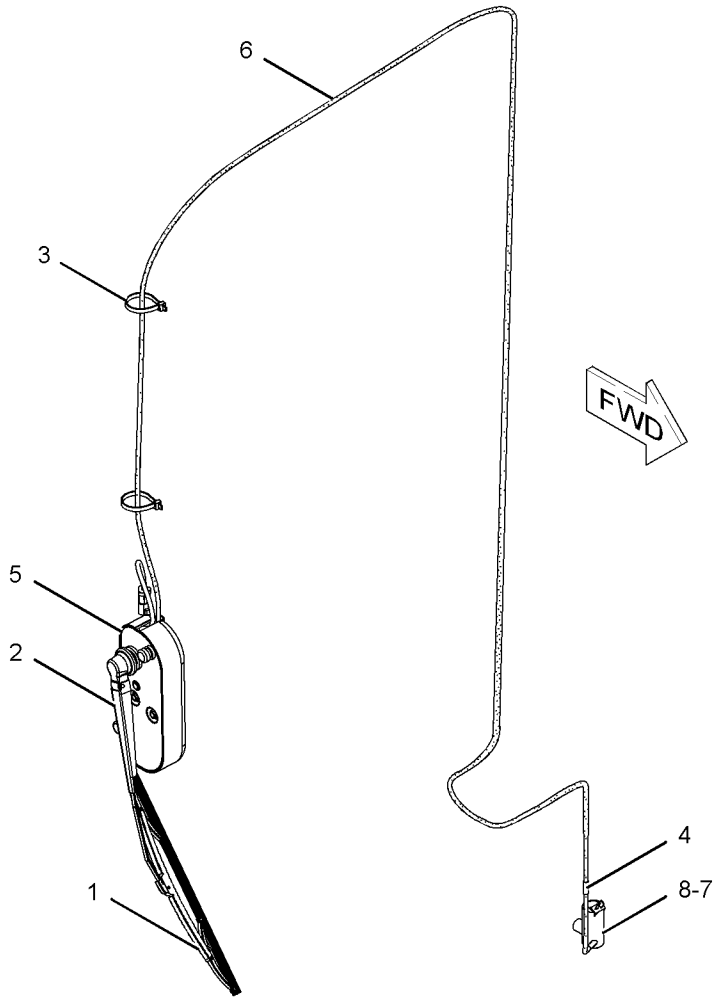

GRAPHIC #1 **<END>** g01143228

OPERATOR STATION

244-2695 WIPER GP-WINDOW—RH, LOWER

S/N: B9M1-UP

AN ATTACHMENT

SMCS-7305 **i02209302**

NOTE	REF NO	GRAPHIC REF	PART NUMBER	QTY	PART NAME 1 2 3 4 5 6 (PRODUCT LEVEL)	SEE PAGE
	1	1	**6V-5851**	1	BLADE AS-WIPER (RH DOOR)	
B	2	1	**7K-1181**	2	STRAP-CABLE	
	3	1	**8T-5400**	1	CONNECTOR	
	4	1	**254-7589**	1	WIPER PIVOT GP (RH DOOR)	
		1	**3F-9556**	1	LOCKWASHER	
M		1	**5C-7261**	1	NUT (M8X1.25-THD)	
	5	1	**256-9448**	1	ARM GP-WIPER (RH DOOR)	
		1	**136-3193**	1	NOZZLE AS-WASHER	
E		1	**194-5171**		HOSE (34-CM)	
	6	1	**170-2986**	1	GROMMET	
	7	1	**6K-9632**	1	TEE	
E	8	1	**144-0195**		HOSE (44-CM)	

B-USE AS REQUIRED
E-ORDER BY THE CENTIMETER
M-METRIC PART

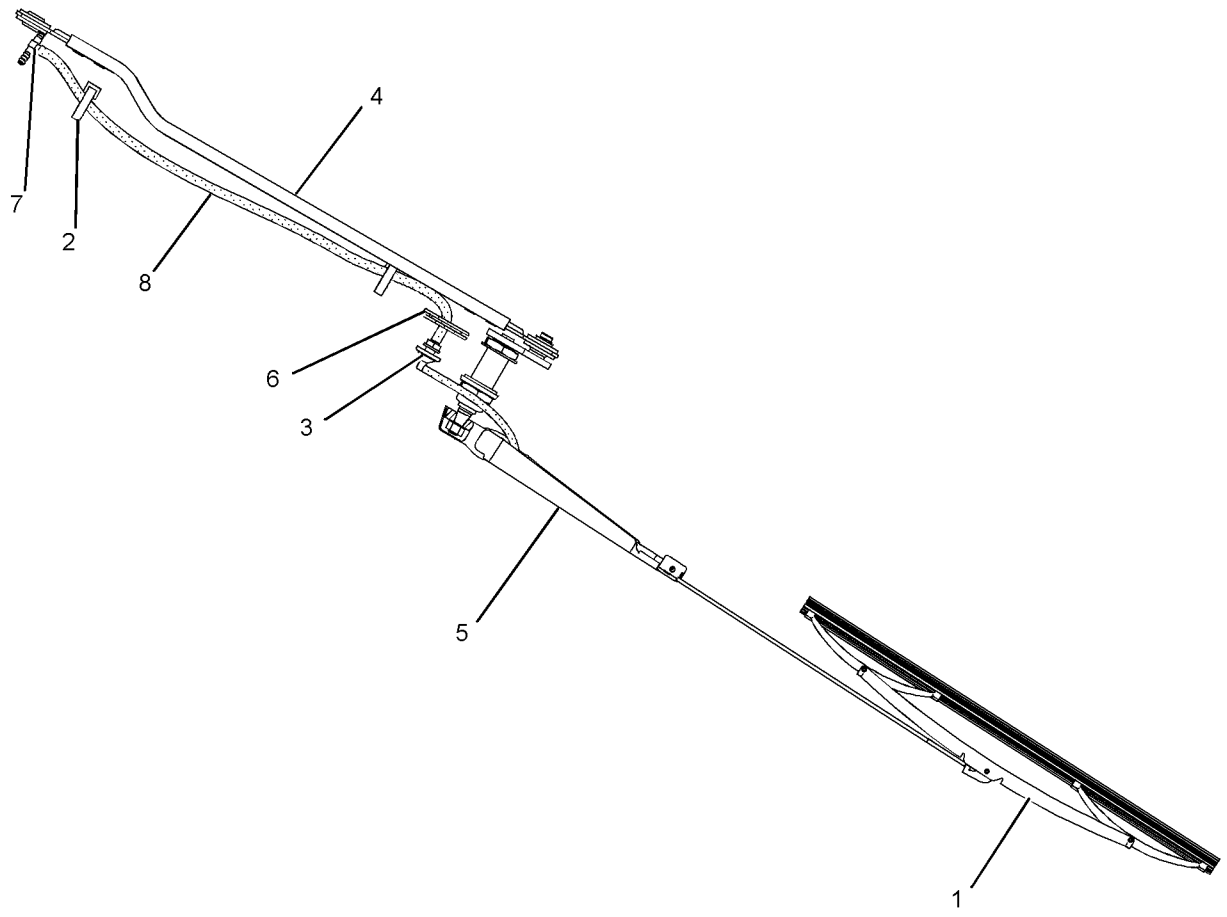

GRAPHIC #1 **<END>** g01115575

249-4095 WIPER GP-WINDOW—DOOR, LH

S/N: B9M1-UP

PART OF 233-3112 DOOR GP-CAB

SMCS-7305 **i02248001**

NOTE	REF NO	GRAPHIC REF	PART NUMBER	QTY	PART NAME 1 2 3 4 5 6 (PRODUCT LEVEL)	SEE PAGE
	1	1	**8T-5400**	1	CONNECTOR	
	2	1	**127-6509**	1	ARM AS (WIPER, DOOR)	
	3	1	**146-6433**	1	BLADE AS-WIPER (DOOR, LH)	
	4	1	**266-8807**	1	MOTOR GP-WINDOW WIPER (DOOR, LH)	
		1	**3F-9556**	1	LOCKWASHER	
M		1	**5C-7261**	1	NUT (M8X1.25-THD)	
		1	**206-5823**	1	CAP (WIPER)	
		1	**135-0611**	1	MOTOR AS-WINDOW WIPER (24-VOLT)	
	5	1	**170-2986**	1	GROMMET	
M	6	1	**7X-2533**	1	BOLT (M6X1X35-MM)	
	7	1	**9X-8256**	1	WASHER (6.6X12X2-MM THK)	

M-METRIC PART

PROOF

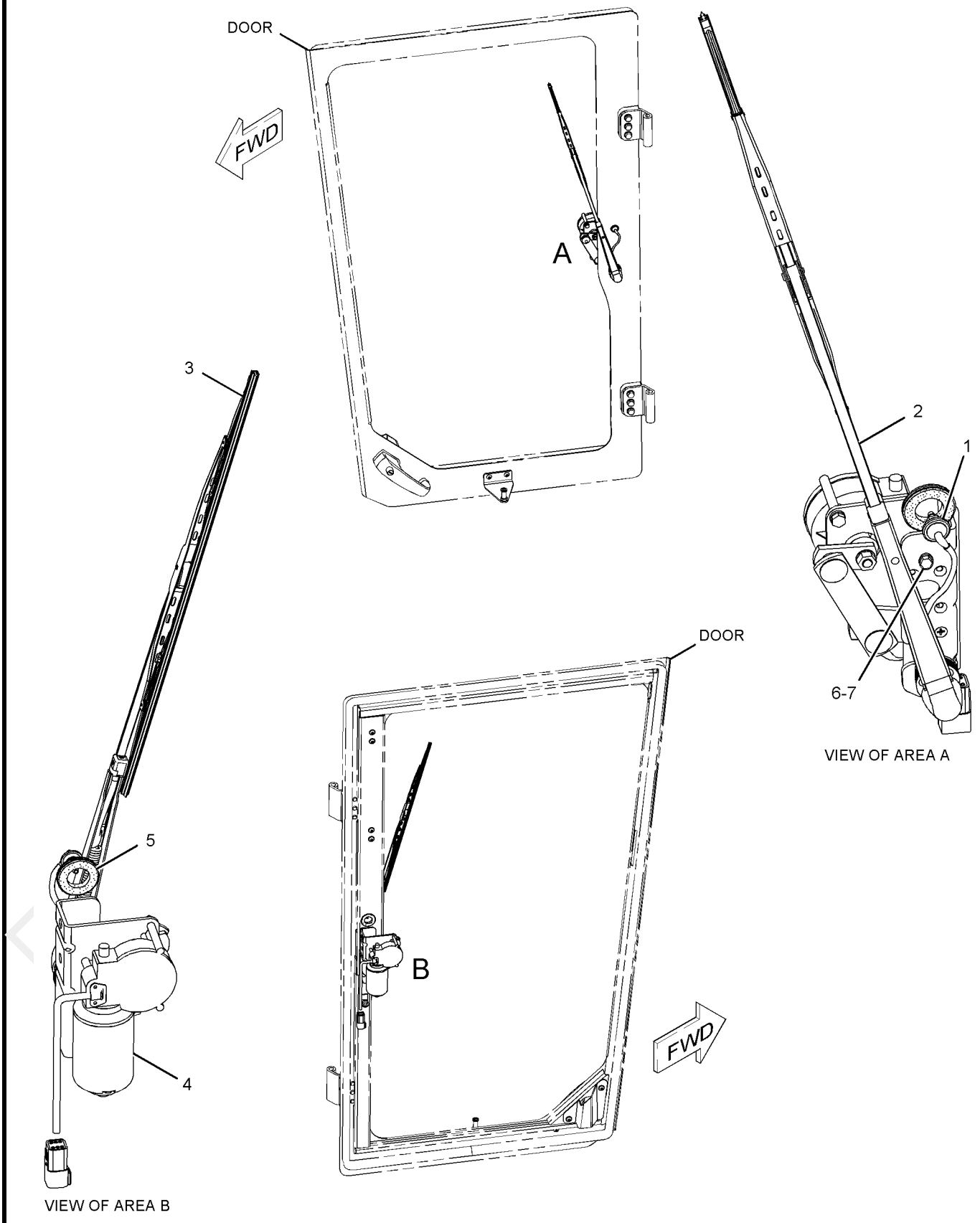

GRAPHIC #1 **<END>** g01135697

OPERATOR STATION

249-4096 WIPER GP-WINDOW

S/N: B9M1-UP

PART OF 233-3230, 233-3287 DOOR GP-CAB

AN ATTACHMENT

SMCS-7305 **i02290177**

NOTE	REF NO	GRAPHIC REF	PART NUMBER	QTY	PART NAME 1 2 3 4 5 6 (PRODUCT LEVEL)	SEE PAGE
	1	1	**8T-5400**	1	CONNECTOR	
	2	1	**127-6509**	1	ARM AS (DOOR, RH)	
	3	1	**146-6433**	1	BLADE AS-WIPER (DOOR, RH)	
	4	1	**266-8921**	1	MOTOR GP-WINDOW WIPER (RH)	
		1	**3F-9556**	1	LOCKWASHER	
M		1	**5C-7261**	1	NUT (M8X1.25-THD)	
		1	**135-0611**	1	MOTOR AS-WINDOW WIPER (24-VOLT)	
		1	**206-5823**	1	CAP (WIPER)	
	5	1	**170-2986**	1	GROMMET	
M	6	1	**7X-2533**	1	BOLT (M6X1X35-MM)	
	7	1	**9X-8256**	3	WASHER (6.6X12X2-MM THK)	

M-METRIC PART

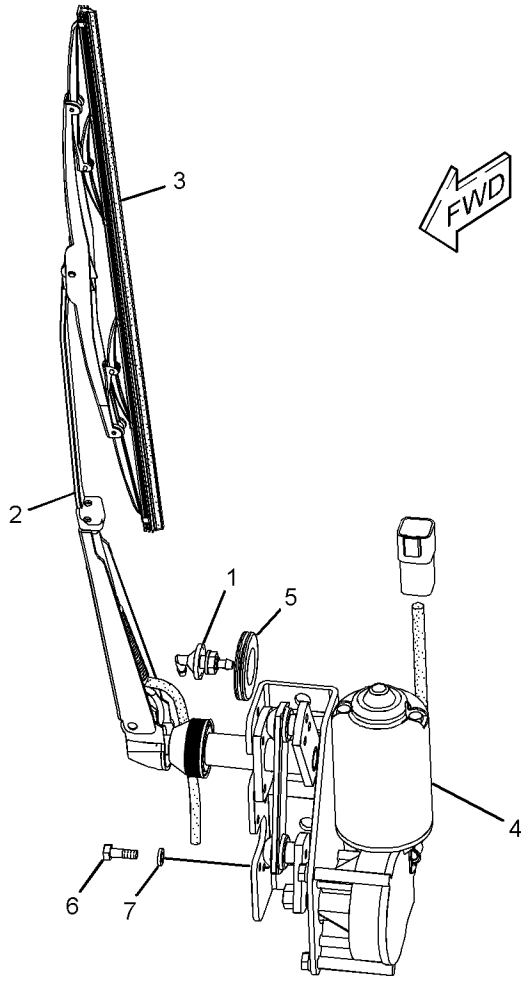

GRAPHIC #1 **<END>** g01164141

SERVICE EQUIPMENT AND SUPPLIES

247-8622 BOX GP-TOOL

S/N: B9M1-UP

PART OF 234-7721 COMMON AR-MOTOR GRADER

SMCS-7259 **i02179450**

NOTE	REF NO	GRAPHIC REF	PART NUMBER	QTY	PART NAME 1 2 3 4 5 6 (PRODUCT LEVEL)	SEE PAGE
	1	1	**246-2641**	1	PADLOCK GP (TOOL BOX)	
		1	**5P-8500**	1	KEY	
	2	1	**8W-0791**	1	BOX AS-TOOL	
	3	1	**132-7551**	2	SPACER (11X19X6-MM THK)	
	4	1	**7X-7729**	4	WASHER (11X25X3-MM THK)	
M	5	1	**8T-4133**	2	NUT (M10X1.5-THD)	
M	6	1	**8T-4136**	4	BOLT (M10X1.5X25-MM)	

M-METRIC PART

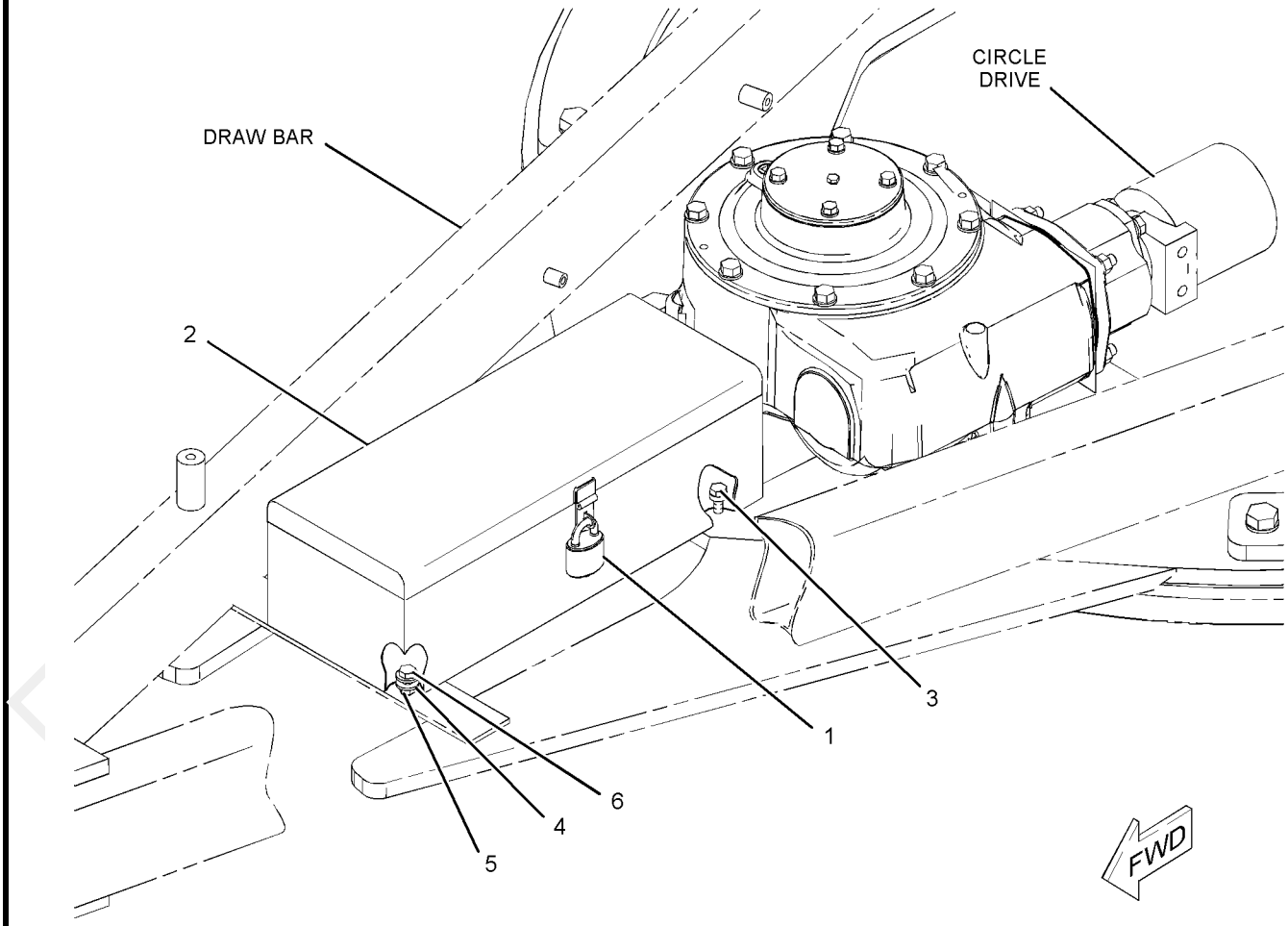

GRAPHIC #1 **<END>** g01108409

SERVICE EQUIPMENT AND SUPPLIES

246-6703 FILM GP

S/N: B9M1-UP

AN ATTACHMENT

SMCS-0375, 7000, 7405, 7557 **i02290230**

NOTE	PART NUMBER	QTY	PART NAME 1 2 3 4 5 6 (PRODUCT LEVEL)	SEE PAGE
Y	**115-5852**	1	PLATE & FILM GP	798
Y-SEPARATE ILLUSTRATION				

<END>

246-6711 FILM GP

S/N: B9M1-UP

AN ATTACHMENT

SMCS-0375, 7000, 7405, 7557 **i02288662**

NOTE	PART NUMBER	QTY	PART NAME 1 2 3 4 5 6 (PRODUCT LEVEL)	SEE PAGE
Y	**115-5852**	1	PLATE & FILM GP	798
	249-6751	1	SOFTWARE-CONFIGURATION	
Y-SEPARATE ILLUSTRATION				

<END>

262-4795 FILM GP

S/N: B9M1-UP

AN ATTACHMENT

SMCS-0375, 7000, 7405, 7557 **i02291052**

NOTE	PART NUMBER	QTY	PART NAME 1 2 3 4 5 6 (PRODUCT LEVEL)	SEE PAGE
Y	**115-5852**	1	PLATE & FILM GP	798
	249-6751	1	SOFTWARE-CONFIGURATION	
Y-SEPARATE ILLUSTRATION				

<END>

267-3183 FILM GP

S/N: B9M1-UP

AN ATTACHMENT

SMCS-0375, 7000, 7405, 7557 **i02290233**

NOTE	PART NUMBER	QTY	PART NAME 1 2 3 4 5 6 (PRODUCT LEVEL)	SEE PAGE
	140-5945	1	FILM-IDENTIFICATION (HORN)	
	159-3759	1	FILM-INSTRUCTION (DO NOT DRILL, WELD ROPS)	
	225-3305	1	FILM-WARNING (READ OPERATION MANUAL)	
	227-7390	1	FILM-WARNING (SEAT BELT)	
	249-6687	1	FILM-WARNING (CRUSH HAZARD)	

<END>

PROOF

SERVICE EQUIPMENT AND SUPPLIES

115-5852 PLATE & FILM GP—ENGINE

S/N: B9M1-UP

PART OF 246-6703, 246-6711, 262-4795 FILM GP

AN ATTACHMENT

SMCS-7405, 7557 **i02276757**

NOTE	PART NUMBER	QTY	PART NAME 1 2 3 4 5 6 (PRODUCT LEVEL)	SEE PAGE
	122-9760	1	FILM-INFORMATION (SILVER ULTRAPLATE) (ENGINE)	
			(ON RH REAR VALVE COVER IN FRONT OF RECESS OR BOSS, VISIBLE FROM REAR OF ENGINE)	
	122-9761	1	FILM-INFORMATION (LAMINATE) (ENGINE)	
			(APPLY LAMINATE OVER SILVER FILM)	

<END>

PROOF

SERVICE EQUIPMENT AND SUPPLIES

247-0093 PLATE & FILM GP

S/N: B9M1-UP

PART OF 261-0153 AXLE AR-FRONT

AN ATTACHMENT

SMCS-7405, 7557 **i02356283**

NOTE	PART NUMBER	QTY	PART NAME 1 2 3 4 5 6 (PRODUCT LEVEL)	SEE PAGE
	252-9616	1	FILM GP	
	225-4150	1	PLATE-SERVICE INFORMATION (MACHINE)	
			ON LEFT SIDE OF MAIN FRAME BEHIND LIFT CYL BRACKET BELOW MAIN FRAME PLATE	
	239-6989	1	PLATE-SERIAL NUMBER (MACHINE)	
			ON LEFT SIDE OF MAIN FRAME BEHIND LIFT CYL BRACKET BELOW MAIN FRAME PLATE	
A	**4W-1413**	1	PLATE-SERIAL NUMBER (ENGINE)	
	134-7258	1	FILM-INFORMATION (EXTENDED LIFE COOLANT-READ OMM)	
			UNDER RADIATOR FILL LID TO BE READ FROM LH SIDE OF MACHINE	
	1P-2807	2	FILM-INFORMATION (LIFT EYE LOCATION)	
			ON OUTBOARD SIDE OF RH & LH BLADE LIFT ARMS	
	5P-1175	1	FILM-IDENTIFICATION (ENGINE OIL FILL)	
			ON ENGINE OIL FILLER CAP	
	190-5386	2	FILM-IDENTIFICATION (ROUND RED REFLECTIVE)	
			NEAR LIFTING EYES ON REAR PLATE OF CASE AND FRAME	
	146-6747	1	FILM-INFORMATION (24-VOLT)	
			ON SERVICE CENTER ACCESS DOOR	
	9X-8355	1	FILM-INDICATOR (BLADE CENTERSHIFT)	
			ON RH BLADE LIFT PIN	
	109-0361	1	FILM-INSTRUCTION (ENGINE SHUTDOWN)	
			ON ENGINE SHUTOFF SWITCH	
	7X-3229	2	FILM-INSTRUCTION (LIFT EYE, TIE-DOWN LOCATION)	
			BY CENTERING ON OUTSIDE OF RH & LH REAR FRAME RAILS FORWARD OF THE LIFTING EYES	
	7X-7644	2	FILM-INFORMATION (TIE-DOWN)	
			TOWARD FRONT OF LH & RH SIDE OF AXLE TUBE IN BOLSTER	
	5P-1174	1	FILM-TRANSMISSION OIL (FILLER CAP)	
			ON XMSN OIL FILLER CAP	
	263-6901	1	FILM-WARNING (HOT FLUID)	
			UNDER RADIATOR FILL LID TO BE READ FROM LH SIDE OF MACHINE	
	225-0313	1	FILM-WARNING (JUMP START, READ OMM)	
			ON SERVICE CENTER ACCESS DOOR	
	226-1242	2	FILM-WARNING (CRUSH HAZARD, STAY BACK)	
			ON ENGINE DASH	
	226-1275	1	FILM-WARNING (CRUSH HAZARD, READ MANUAL)	
			ON ENGINE DASH	
	239-4990	2	FILM-WARNING (HIGH PRESSURE CYLINDER)	
			ON BRAKE ACCUMULATORS ON REAR OF CAB	

A-NOT PART OF THIS GROUP

<END>

PROOF

MEMORANDA

PROOF

PART NUMBER INDEX

Part	Page
0	
0S-1585	499
0S-1594	290
0S-1616	247
0S-1621	478
0T-0244	761
	764
1	
1A-0224	692
	695
1A-1415	499
1A-2223	439
	441
1A-8063	692
	695
1B-2578	208
1B-2713	732
1B-3057	559
	562
1B-4038	499
1B-4046	499
1B-4208	692
	695
1B-4367	426
	427
1B-5170	269
1B-5174	499
1D-0906	480
1D-4610	659
1D-4612	692
	695
1D-5119	642
1F-0748	517
1F-0750	88
	723
	726
1F-7567	37
	42
1F-7958	499
	692
	695
1G-8878	310
	502
1H-3244	100
	102
1H-7339	493
	495
	499
1H-8296	777
	779
1H-9779	322
1J-2315	684
1J-6762	647
	651
1J-9671	17
	55
	435
	436
1K-6872	689
1K-6985	487
1M-1230	732
1M-4095	336
1M-6119	112
	116
	120
1M-6120	112
	116
	120
1M-6718	203
1M-8534	664
1N-5999	493
1P-0604	282
1P-2807	799
1P-3700	580
1P-3702	313
1P-3703	313
1P-4278	458
	582
1P-4577	322
1P-4578	322
	577
1P-4582	76
1P-6356	743
1P-7009	540
	547
1P-9328	458
1R-0762	81
1R-0770	83
1R-1807	34
1R-1809	303
	305
1S-0994	59
	86
	313
	319
	452
	504
	506
	511
	519
1S-2563	37
1S-3618	554
1S-5632	332
1S-6420	227
1S-7251	112
	116
	120
	202
	244
	252
1S-7252	112
	116
	120
	202
	244
	252
1S-9593	637
1T-0043	268
1T-0205	268
1U-8846	9
	17
	66
	67
	269
1V-6688	241
	250
1V-7801	79
1W-2431	73
1W-4738	16
1W-4741	16
1W-4746	16
1Y-7927	735
2	
2A-1162	17
2A-3034	68
2A-6938	337
2A-7327	383
	392
2B-0941	508
2B-7410	499
2B-9174	306
	308
2B-9304	79
2B-9373	332
2C-9259	655
	660
	664
2D-0094	291
2D-0626	689
2D-2507	395
	396
	397
	398
2D-2508	395
	396
	397
	398
2D-2509	395
	396
	397
	398
2D-2511	395
2D-2565	396
2D-2654	394
2D-6235	732
	735
2D-8009	332
2D-8652	262
	265
	485
2D-8910	452
2F-7888	247
2G-0478	499
2G-0617	155
	157
2G-0988	155
	157
2G-1034	458
2G-3865	261
2G-3967	475
2G-3971	640
2G-4332	692
2G-5493	510
	517
2G-5667	261
	264
2G-5673	261
	264
2G-6595	397
2G-6695	499
2G-7149	695
2G-7309	692
	695
2G-7728	692
	695
2G-8615	261
	264
2G-8624	260
2G-8626	261
	264
2G-8631	262
	264
	497
2G-8741	261
	264
2G-8777	261
	264
2G-8793	265
2G-9103	474
	477
2G-9791	337
2H-3746	692
	695
2H-3920	203
	214
2H-3922	206
2H-3928	580
2H-3931	565
2H-6489	268
2H-6490	336
2H-9247	499
2H-9889	511
	519
2J-0157	269
2J-3506	647
	648
	649
	650
	651
	655
	659
	660
	664
	671
	672
	673
	674
	675
	676
	678
	692
	695
2J-8163	261
2K-0120	689
2K-0420	473
2K-0703	689
2K-1738	276
2K-2306	655
	660
	664
2K-4821	100
	102
2K-4973	689

PROOF

► **PRIMARY REFERENCE**

PART NUMBER INDEX

Part	Page
	701
	775
	777
	779
2K-5340	266
2K-6413	700
2K-6830	489
2K-7471	692
	695
2K-8199	297
2M-0849	679
2M-4004	729
2M-4453	55
2M-6102	225
2M-7819	735
2M-9780	34
	40
	55
	86
	268
	310
	311
	312
	337
	510
	511
	518
	526
	530
	531
	534
	535
	539
	540
	546
	555
	557
	585
	587
	591
	593
	634
	635
	746
2P-2537	34
2P-2975	112
	116
	120
2P-4358	5
2Q-7926	225
2R-6806	84
2S-0115	674
	675
	676
	678
2S-2053	36
2S-3029	268
2S-4078	31
	32
	269
	322
	539
	546
2S-4663	344
2S-5835	344
2S-7010	79
2T-1925	93
	95
2T-2263	526
2V-2015	756
2V-2043	45
2V-4332	422
2W-6544	9
2W-7381	14
2Y-5829	42

3

Part	Page
3B-4506	554
3B-4615	399
	406
3B-4628	511
	519
3B-4629	261
	480
3B-4643	640
3B-4647	479
3B-5301	250
	659
3B-5325	700
3B-7733	425
3B-7896	425
3B-8485	264
	474
	477
3B-8489	260
	264
	425
	480
	481
	482
	642
	655
	660
	664
	689
	692
	695
3B-8491	655
	660
	664
3B-8921	280
	282
3C-6969	225
3D-2239	395
3D-2824	6
	25
	26
	39
	40
	45
	55
	59
	71
	205
	268
	310
	311
	312
3D-2975	735
3D-2981	337
3D-4904	481
	692
	695
3D-5279	452
3D-8317	344
3D-8747	732
3D-8748	732
3D-8749	732
3D-8752	732
3E-0125	197
3E-0127	197
3E-0128	197
3E-0129	197
3E-0130	197
3E-0131	197
3E-0132	197
3E-0133	197
3E-0134	197
3E-0135	197
3E-0136	197
3E-0137	197
3E-0138	197
3E-0139	197
3E-0140	197
3E-0141	197
3E-0142	197
3E-0144	197
3E-0145	197
3E-0146	197
3E-0155	▶214
	217
	789
3E-3000	783
	786
3E-3365	99
	161
	165
	166
	174
	191
	203
	205
	211
	215
	227
	637
3E-3368	180
	313
	322
	452
	471
	517
	518
	526
	538
	539
	545
	546
	555
	557
	655
	660
	664
	735
	337
	481
	692
	695
	452
	344
	732
	732
	732
	732
	197
	197
	197
	197
	197
	197
	197
	197
	197
	197
	197
	197
	197
	197
	197
	197
	197
	197
	197
	217
	789
	783
	786
	99
	161
	165
	166
	174
	191
	203
	205
	211
	215
	227
	637
	180
3E-3371	181
	147
	149
	162
	178
	179
	246
3E-3377	227
	250
	493
	495
3E-3389	214
3E-3636	227
3E-4315	341
3E-4321	313
	519
	524
	525
	555
	557
3E-4352	36
	176
3E-4353	306
	308
3E-4369	79
3E-4887	21
3E-4888	21
3E-4898	710
3E-5169	225
	247
3E-5239	146
	212
	217
	225
	247
	252
3E-5464	707
3E-6328	▶99
	217
3E-6389	▶149
	740
3E-6753	250
3E-7401	52
	538
	545
3E-7445	86
	322
3E-7775	200
3E-8017	61
3E-8020	130
	723
	726
	729
	756
3E-8320	112
	116
	120
3F-0379	200
3F-5108	659
3F-9556	100
	102
	209
	751
	790
	791

PROOF

PART NUMBER INDEX

Part	Page	Part	Page	Part	Page	Part	Page
	792		779		518		131
	793	3J-5390	56		524		134
	795	3J-7354	6		525		142
3G-2165	674		17		530		147
	675		32		531		173
3G-2579	689		34		534		175
3G-2581	689		50		535		195
3H-0442	567		176		540		216
3J-1770	664		266		547		217
3J-1907	6		303		552		232
	17		311		554		237
	32		312		555		239
	43		439		557		241
	65		441		559		246
	81		526		561		250
	84		531		562		254
	93		535		585		286
	95		561		587	3S-6049	116
	227		585		589		120
	268		587		591	3S-6050	116
	284		591		593		120
	286		593		595	3S-6931	266
	291		608		597	3S-7023	486
	303		610		599		488
	305		612		601		489
	310		614		603	3S-8665	247
	312		616		605		313
	313		618		607	3S-9233	608
	321		620		608		610
	326		622		610		612
	331		624		612		614
	343		626		614		616
	344		628		616		618
	447		630		618		620
	502		632		620		622
	504	3J-8500	480		622		624
	515		481		624		626
	524	3K-0360	5		626		628
	525		6		628		630
	526		17		630		632
	530		27		632	3S-9557	218
	531		34		636	3T-0849	203
	534		40		746	3T-2662	124
	535		50	3K-0715	269	3T-3422	200
	540		52	3K-2889	426	3T-3434	200
	547		55		427	3T-4377	336
	555		59	3K-8106	124	3T-6774	732
	557		67	3K-8460	17	3T-6848	554
	559		81		176	3T-8724	▶140
	561		261	3K-9520	155	3T-9549	31
	562		284		157	3V-2431	493
	567		312	3P-0337	282		495
	585		313	3P-0764	196	3W-7254	684
	587		319	3P-1156	38	3W-7256	684
	589		337	3P-1461	474		
	591		344		679		
	593		454	3P-1932	34	**4**	
	595		456	3P-2404	234		
	597		471	3P-9900	777	4B-2049	197
	599		506		779	4B-3604	642
	601		508	3S-0004	332	4B-4274	124
	603		510	3S-1349	692		247
	605		511		695	4B-4278	777
3J-3679	55		515	3S-2093	81		779
3J-4818	777		517		86	4B-4845	336

▶ **PRIMARY REFERENCE**

PROOF

PART NUMBER INDEX

Part	Page
4B-4863	76
	93
	95
4B-5059	735
4B-5271	554
4B-7270	439
	441
4B-8394	306
	308
4B-9880	344
4C-2959	711
4C-9612	25
4D-1326	208
4D-2560	452
4D-2886	554
4D-3704	306
	308
4D-6086	692
	695
4D-7388	452
4D-7733	452
4D-7735	6
	313
4D-7794	227
	232
	247
	254
4D-9517	552
4E-3273	335
4E-5985	335
4F-2294	210
4F-4879	767
	768
	769
4F-6024	16
4F-7391	326
4F-7827	655
	660
	664
4F-7952	331
4F-8824	480
	481
4F-9029	43
4F-9653	499
4H-2558	452
	458
	582
4H-6112	337
4H-6520	328
4H-6996	499
4H-7869	202
4I-6287	313
4J-0519	540
	547
4J-0520	322
	531
	535
	540
	547
4J-0522	322
	577
4J-0524	55
	300
	322
4J-0527	76
4J-1888	475
4J-5267	527
4J-5468	508
4J-5477	6
	266
	284
	311
	312
4J-7533	562
	567
	585
	587
	589
	591
	593
	595
	597
	599
	601
	603
	605
	608
	610
	612
	614
	616
	618
	620
	622
	624
	626
	628
	630
	632
4J-8996	437
4J-9224	487
	497
4J-9225	485
4J-9964	580
4K-0367	659
4K-1388	531
	535
4K-2039	608
	610
	612
	614
	616
	618
	620
4K-3004	689
4K-3150	689
4K-3531	439
	441
4K-4881	394
	395
4K-6781	422
4K-7463	422
4K-7464	422
4K-8302	244
4K-8603	268
4K-8734	422
4K-8864	225
	231
	232
	244
4K-9429	753
4K-9821	196
4K-9822	196
4L-3641	42
4L-6454	554
4L-6499	208
4L-9337	81
4M-0061	732
4M-0189	17
	291
4M-1831	200
4M-2381	344
4M-5905	344
4M-6107	276
	278
4M-6108	268
4M-6425	758
4M-6582	707
4N-1230	16
4N-2927	735
4N-5091	517
4N-7521	197
4P-4369	36
4P-5918	9
4P-7581	81
	227
	247
	286
	302
4P-7582	227
4P-8134	195
4S-1962	247
	254
	326
	527
	540
	547
4S-4455	313
	527
	577
4S-5565	493
	495
4S-7606	452
	458
4T-0231	664
4T-2315	660
4T-3010	655
4T-3028	659
4T-3051	659
4T-3052	659
4T-3490	268
4T-5613	486
	488
	489
	493
	495
	497
4T-6779	483
4T-6780	485
4T-6907	487
	491
	492
4T-8054	487
	565
4T-8353	660
	664
4T-8378	664
4V-0015	422
4V-7884	775
4V-8256	701
4V-8577	775
	777
	779
4V-9804	431
4W-0253	54
4W-1016	3
	►29
4W-1413	799
4W-2026	10
4W-2232	38
4W-7592	54
4Y-9652	9
	5
5A-3604	78
5B-0577	692
	695
5B-9318	608
	610
	612
	614
	616
	618
	620
	622
	624
	626
	628
	630
	632
5C-2890	125
	241
	250
	777
	779
5C-7261	9
	11
	84
	86
	289
	406
	574
	575
	576
	751
	790
	791
	792
	793
	795
5C-7423	276
	278
5C-8312	785
5C-9553	218
	469

PROOF

PART NUMBER INDEX

Part	Page	Part	Page	Part	Page	Part	Page
	721		675	5M-3320	332		406
	722		676	5M-6214	264		412
	770		678		655		416
	772	5J-5402	489		660		458
5C-9583	173	5J-7010	485		664		719
5D-0269	425	5J-7011	497	5M-7937	268		745
5D-1026	52	5J-7013	497		437		759
	59	5J-7333	646	5P-0537	165	5P-4272	562
	538	5K-0871	422		247	5P-4423	777
	545	5K-0983	422		732		779
	746	5K-0985	422	5P-0597	79	5P-4483	268
	787	5K-0987	422	5P-0599	227	5P-4868	538
5D-3887	399	5K-0988	422		510		545
5D-4822	735	5K-0989	422		517	5P-4961	52
5D-8159	692	5K-0991	422	5P-0747	202		93
	695	5K-1458	692		252		95
5D-8161	692		695	5P-0761	252	5P-5297	437
	695	5K-1459	692	5P-0765	323	5P-5630	196
5F-0149	679		695	5P-0767	746	5P-5637	703
5F-0304	17		698	5P-1042	526	5P-5670	407
5F-1678	269		699	5P-1075	469	5P-5908	745
5F-3092	269	5K-2657	655		743	5P-5927	703
5F-3106	330		660	5P-1076	47	5P-6010	777
	578		664		79		779
5F-3999	17	5K-3294	447		227	5P-6629	425
5F-5434	458	5K-5129	261		250	5P-6670	745
5F-8000	334		439		264	5P-6874	747
5F-8933	651		441		404	5P-6994	511
	674		499		431		519
	675	5K-5288	261	5P-1174	799	5P-7814	176
	676		439	5P-1175	799	5P-7854	227
	678		441	5P-1230	59		234
5F-9144	295		499	5P-1251	59		284
5F-9657	140	5K-5338	743	5P-1259	52		313
	141	5K-8454	499	5P-1262	52		540
5G-6277	664	5K-9090	310	5P-1442	93		547
5G-7065	756		311		95	5P-7957	753
5G-7817	52		312		582	5P-7958	217
5G-9603	227		313	5P-1465	458	5P-7970	37
5H-0793	268		322	5P-1471	79	5P-8066	42
5H-2767	269		326	5P-2228	689	5P-8196	34
5H-3701	439		471	5P-2424	689	5P-8245	10
	441		530	5P-2566	580		15
5H-4909	499		531	5P-2618	76		17
5H-7826	425		534	5P-2948	196		30
5H-8848	540		535	5P-3671	406		47
	547		539	5P-3863	269		261
5H-8985	276		540		334		264
	278		546	5P-3924	268		291
	280		547	5P-4115	241		422
	282	5K-9179	747		250		478
5J-1246	580	5L-4507	125		731		482
5J-3886	286	5L-4758	608		782		499
5J-4561	493		610	5P-4116	52		640
	495		612		86		692
5J-4771	647		614		112		695
	648		616		116	5P-8246	17
	649		618		120	5P-8247	100
	650		620		131		102
	651		622		134	5P-8248	479
5J-4773	651		624		173		659
	671		632		216		692
	672	5M-2894	758		233		695
	673	5M-3062	435		247	5P-8250	692
	674		436		289		695

► **PRIMARY REFERENCE**

PROOF

PART NUMBER INDEX

Part	Page
5P-8291	642
5P-8309	56
5P-8347	50
	410
	414
5P-8439	406
5P-8445	735
5P-8500	796
5P-8843	262
	265
5P-8890	261
	264
5P-9135	232
5P-9297	227
	247
	313
	540
	547
	741
5P-9299	86
	247
	552
	743
5P-9436	71
5P-9617	50
5P-9810	517
5P-9909	714
5S-7349	100
	102
	200
5S-7379	499
5S-7382	322
5S-7383	758
5T-0906	260
5T-1625	740
5T-8417	479
5T-9722	524
	525
5V-0770	735
5V-1496	762
	765
5V-1497	775
5V-6454	655
	660
	664
5V-6455	655
	660
	664
5W-1437	714
5W-8591	145

6

Part	Page
6A-5591	17
	291
6B-3223	439
	441
6B-3260	692
	695
6B-4312	86
6B-5072	337
6B-6684	47
6C-3246	367
	379
	390
6C-3680	731
6C-7366	379
	389
6D-1004	5
6D-1641	540
	547
	745
6D-3479	254
	284
	582
6D-4244	313
	511
	519
	540
	547
6D-4246	247
	447
6D-4247	508
	511
	519
	552
6D-4492	452
6D-4636	40
6D-7146	577
6D-9855	458
6E-0123	483
6E-0381	607
6E-0775	489
6E-1131	486
	488
6E-3007	608
	610
	612
	614
	616
	618
	620
	622
	624
	626
	628
	630
	632
6E-4940	485
6E-4974	497
6E-5047	337
6E-5066	567
	571
6F-0253	714
6F-0612	247
6F-3930	395
	396
	397
	398
6F-4855	608
	610
	612
	614
	616
	618
	620
	622
	624
	632
6F-6992	692
	695
6F-7045	206
6F-7062	26
6F-8499	399
6G-1631	275
6G-1633	275
6G-1755	1
	▶275
6G-3206	306
	308
6G-5442	642
6G-5532	499
6G-5533	499
6G-5534	499
6G-5537	499
6G-5538	499
6G-5539	499
6G-5542	499
6G-5543	499
6G-5544	499
6G-5547	499
6G-5548	499
6G-5987	732
6G-6122	499
6G-7187	261
	264
	478
	482
6H-0211	479
6H-1717	499
6I-1418	129
	131
	134
	146
	233
6I-6547	746
6I-8642	268
6I-8911	276
6I-8912	276
	278
	280
	282
6I-9248	266
6I-9249	266
6I-9502	276
	278
	280
	282
6J-0789	483
6J-0790	483
6J-0793	483
6J-1381	483
6J-1972	486
	488
	491
	492
	493
6J-1973	495
6J-1974	495
6J-2797	489
6J-5731	486
	488
	491
	492
	493
6J-5733	486
	488
	491
	492
6K-0360	547
6K-0545	692
	695
6K-4076	418
6K-6307	300
6K-8178	458
	743
6K-9632	792
6L-7159	707
6L-7751	247
6N-3826	200
6N-6984	538
	545
6P-1301	707
6P-5647	684
6R-2052	310
6R-7605	530
	534
	561
6T-3631	225
	246
6T-3632	225
	246
6T-3633	225
	246
6T-3643	125
6T-3644	125
6T-6708	707
6T-7695	738
6V-0400	313
6V-0484	303
6V-0852	284
	303
	310
	326
	331
	344
	458
	526
	538
	545
6V-1228	524
6V-1230	52
6V-1581	52
6V-1582	52
6V-1668	707
6V-1720	268
6V-1722	555
	557
6V-1819	276
	278
	280
	282
6V-1820	5
	16
	269
6V-2317	9
	11
	34

PROOF

PART NUMBER INDEX

Part	Page	Part	Page	Part	Page	Part	Page
	37		344		630		313
	195	6V-5219	12		632		319
6V-2383	425		43	6V-6609	50		321
6V-2449	306		334		193		447
	308	6V-5221	5	6V-6923	98		504
6V-2686	196	6V-5223	50	6V-7238	538		506
6V-2722	112	6V-5326	608		545		508
	116		610	6V-7535	458		510
	120		612	6V-7555	234		511
6V-3250	50		614	6V-7636	723		517
6V-3265	254		616		726		518
6V-3303	234		618	6V-7646	762		519
	439		620		765		526
	441		622	6V-7673	16		530
6V-3305	567		624	6V-7687	250		531
6V-3668	260		626		431		534
	264		628	6V-7688	640		535
	473		630	6V-7732	306		538
	482		632		308		545
	640	6V-5582	▶197	6V-7742	261		552
6V-3669	260		199		266		554
	499	6V-5683	723		499		559
6V-3823	291		726		679		561
	422	6V-5684	422	6V-8077	286		655
	679		679		344		660
6V-3918	54	6V-5686	266	6V-8081	306		664
6V-3940	38		293		308	6V-8398	6
	50		565	6V-8149	10		86
	176	6V-5696	10		291		310
	269		30	6V-8182	655		312
	344		260		660		313
	664	6V-5698	9		664		319
6V-3965	284	6V-5746	719	6V-8186	209		447
	303	6V-5839	5	6V-8187	124		454
	313		8	6V-8188	104		456
	326		11		106		506
	331		16		108		510
	343		17		110		511
	344		38		197		515
	526		42		200		518
	540		299	6V-8189	100		519
	547		714		102		524
6V-4248	38	6V-5842	331	6V-8197	422		525
	42	6V-5844	17	6V-8202	112		526
6V-4249	14		260		116		527
6V-4292	52		264		120		530
	59	6V-5845	424		269		534
6V-4429	293		646	6V-8212	269		540
6V-4589	97	6V-5851	790	6V-8225	165		547
	211		791	6V-8237	424		552
6V-4604	47		792		487		555
6V-5048	176	6V-5852	791		491		557
	183	6V-5853	787		642		559
	184	6V-6317	731		664		561
	188	6V-6580	608	6V-8367	52		562
6V-5049	55		610	6V-8369	203	6V-8400	313
	92		612		214		322
	176		614	6V-8376	124		539
	182		616		125		540
6V-5142	634		618	6V-8378	200		546
6V-5192	17		620		208		547
6V-5217	37		622		209	6V-8523	59
6V-5218	42		624	6V-8397	52	6V-8558	313
	88		626		284	6V-8624	510
	195		628		312		518

▶ **PRIMARY REFERENCE**

PROOF

PART NUMBER INDEX

Part	Page	Part	Page	Part	Page	Part	Page
	555		534		530		518
	557		539		534	6V-9838	531
6V-8625	454		546	6V-9007	39		535
	456	6V-8647	311		45	6V-9843	561
	510	6V-8653	642	6V-9008	326	6V-9845	531
	518	6V-8713	526		471		535
6V-8626	540		539		539	6V-9850	504
	547		546		546	6V-9851	447
6V-8627	6	6V-8714	311	6V-9027	50		454
	284	6V-8716	526		289		456
6V-8628	6	6V-8721	86	6V-9028	286	6V-9852	526
	312		511	6V-9168	52		540
6V-8629	312		518		447		547
6V-8632	530	6V-8722	40		511	6V-9853	312
	534		531		519	6V-9854	322
6V-8633	312		535		540	6V-9872	561
	518	6V-8723	284		547	6V-9873	447
6V-8634	319		319		552		515
	506		506		655		524
	508		508		660		525
	511		510		664		555
	518		518	6V-9169	527	6V-9875	322
	559		554	6V-9170	40	6V-9876	511
	561	6V-8724	284	6V-9172	313		518
6V-8635	312		312		322	6V-9877	312
	322		504	6V-9182	45	6W-4126	341
	326		526	6V-9189	146	6W-5698	584
	471		531		150		781
	530		535		151	6Y-0309	700
	534		559	6V-9200	526	6Y-0590	336
6V-8636	312		561		531	6Y-0591	336
	321	6V-8730	313		535	6Y-0976	278
	447	6V-8731	559	6V-9343	655	6Y-0983	280
	504		562		660	6Y-1001	280
	530	6V-8737	447		664	6Y-1114	278
	534	6V-8774	561	6V-9352	527		280
	559	6V-8777	40	6V-9505	469		282
	561	6V-8782	313	6V-9632	218	6Y-1115	276
6V-8637	311		540		710		278
	322		547		723		280
	526		555		726		282
6V-8638	86		557		729	6Y-1116	276
	526		561		756	6Y-1119	276
6V-8639	6	6V-8789	454		782		278
	319		456	6V-9671	225	6Y-1887	278
	454	6V-8801	511	6V-9672	756		280
	456		519	6V-9746	6		282
	506		554		39	6Y-1888	278
	510	6V-8928	782		40	6Y-1890	282
	515	6V-8947	313		45	6Y-1891	278
	518	6V-8987	655		311		280
	524		660		312	6Y-1895	278
	525		664		313		280
	530	6V-8993	266		322	6Y-2307	278
	534	6V-9001	312		526	6Y-2312	280
	552		447		538		282
	555		530		540	6Y-2419	280
	557		534		545	6Y-2425	280
	559	6V-9002	6		547		282
	561		312	6V-9829	552	6Y-2428	282
6V-8640	311		511	6V-9836	52	6Y-2429	282
6V-8641	284		518	6V-9837	319	6Y-2805	651
6V-8642	40		557		454	6Y-2932	572
	526	6V-9004	6		456	6Y-2933	572
	530	6V-9005	312		506	6Y-2934	572

PROOF

PART NUMBER INDEX

Part	Page
6Y-2935	572
6Y-3083	268
6Y-3860	334
6Y-3861	334
6Y-4339	647
	648
	649
	650
6Y-5010	332
6Y-5113	747
6Y-5230	692
	695
	698
	699
6Y-7953	499
6Y-7981	282
6Y-9960	21
7	
7B-3028	332
7C-1493	34
7C-3571	29
7C-4163	29
7C-7431	61
7C-9279	3
	▶38
7C-9280	38
7D-1158	673
7D-1553	527
7D-1576	671
7D-1577	673
7D-1677	293
7D-2135	692
	695
7D-2136	692
	695
7D-2196	692
	695
7D-5252	395
	396
	397
	398
7D-7233	59
	247
	313
	540
	547
7D-7496	419
7D-8245	693
	695
7D-8437	439
	441
7D-8439	306
	308
	439
	441
7D-8441	306
	308
	439
	441
7D-8636	260
7D-8637	260
7D-8643	261
7D-8825	692
7D-8826	692
7D-8875	679
7D-8876	679
7D-8877	679
7D-8878	679
7D-8879	679
7D-8881	679
7D-8882	679
7D-8883	679
7D-8884	679
7D-8983	499
7D-8984	499
7E-0759	50
7E-1313	23
7E-3443	104
	106
7E-4761	52
7E-8570	289
7F-1327	692
	695
7G-4822	276
	278
	280
	282
7G-4824	756
7G-4998	31
	32
7G-8839	655
	660
	664
7H-2444	679
7I-5412	554
7J-0204	254
	493
7J-2036	286
7J-3554	291
7J-5925	770
	772
7J-8611	299
	458
7J-8782	642
7J-9108	40
	310
	526
	527
	530
	531
	534
	535
	538
	539
	540
	545
	546
	547
7J-9885	487
	497
7K-1181	124
	146
	223
	227
	231
	232
	234
	247
	252
	254
	738
	787
	791
	792
7K-4129	76
7K-4199	756
7K-9202	261
	262
	264
	399
	418
	478
	482
7K-9203	689
7L-2894	200
7L-8316	732
7L-9061	211
7M-1297	31
	32
7M-7219	735
7M-8485	32
	45
	93
	95
	268
	269
	291
	297
	312
	322
	326
	439
	441
	471
	526
	530
	534
	535
	539
	540
	546
	547
7N-0718	112
	116
	120
	▶206
7N-2059	196
7N-5274	116
	120
7N-9801	215
7N-9943	149
7P-1577	655
	660
	664
7S-4001	293
7S-6369	195
7S-9930	723
	726
7T-0020	149
7T-0582	732
7T-1099	213
	710
	729
7T-3267	200
7T-3268	200
7T-3271	200
7T-3276	200
7T-3277	200
7T-3278	200
7T-3279	200
7T-3451	200
7T-3454	200
7T-3974	200
7T-4003	734
7T-4532	711
7T-4897	276
	278
	280
	282
7T-6496	268
7T-6799	217
7T-8890	781
	789
	790
	791
7T-9302	214
7U-4891	217
7V-5191	735
7W-3871	9
7W-3872	9
	104
	106
	712
7W-5340	38
7W-5672	510
	517
7W-7381	303
7X-0289	508
7X-0333	519
	689
7X-0338	104
	106
	108
	110
7X-0346	565
7X-0390	692
	695
7X-0562	197
	200
7X-0578	770
	772
7X-0579	286
7X-0605	237
	244
	437
7X-0608	701
7X-0620	208
7X-0622	298
	410
	414
	473
7X-0632	6
7X-0750	429
7X-0818	322
7X-0820	511
	518
7X-1387	406

▶ **PRIMARY REFERENCE**

PROOF

PART NUMBER INDEX

Part	Page
7X-2393	250
7X-2465	664
	710
7X-2478	729
7X-2489	428
7X-2533	793
	795
7X-2536	59
	286
7X-2537	104
	106
	233
	574
	575
	576
	712
7X-2538	286
	712
7X-2539	89
7X-2543	527
7X-2544	538
	540
	545
	547
7X-2545	538
	545
7X-2546	56
7X-2548	244
7X-2549	437
7X-2553	313
	540
	547
	655
	660
	664
7X-2554	412
	416
7X-2555	406
7X-2559	79
7X-2561	260
	264
7X-2562	288
7X-2563	432
7X-2565	21
7X-2576	46
7X-2585	21
7X-2619	225
	247
	252
7X-3229	799
7X-3373	200
7X-3406	313
7X-4733	572
7X-4805	439
	441
7X-6222	246
7X-6315	136
	194
7X-7644	799
7X-7700	93
	95
7X-7729	47
	52
	56
	62
	86
	244
	250
	261
	289
	404
	406
	407
	433
	713
	739
	796
7X-7740	640
7X-7958	39
	40
7X-8549	502
7Y-2174	710
7Y-7256	707
8B-1615	299
8C-0537	17
8C-0569	526
8C-2926	332
8C-3056	124
8C-3205	527
8C-3206	322
	531
	535
8C-3428	286
8C-3445	34
8C-3446	34
	303
8C-3451	303
	502
8C-3655	200
8C-4985	458
8C-5053	93
	95
8C-5607	142
	147
8C-5608	142
	147
8C-5918	112
	116
	120
8C-6354	217
8C-6712	303
	326
8C-6868	93
	95
8C-6913	692
	695
8C-6959	86
8C-8451	723
	726
	729
8C-8842	655
	660
	664
8C-8977	234
8C-8989	313
	511
8C-9987	637
8D-1268	692
	695
8D-2414	439
	441
8D-2811	261
8D-3902	306
	308
8D-4336	679
8D-6687	475
8D-7086	399
	418
8D-7225	478
8D-7423	499
8D-7424	499
8D-7425	499
8D-7678	475
8D-7996	474
8D-9092	511
	519
8D-9159	418
8D-9882	640
8D-9886	640
8D-9887	640
8E-1118	738
8E-1143	344
8E-1161	282
8E-1263	276
	278
8E-1368	290
8E-1911	282
8E-3366	1
	▶290
8E-5529	647
	651
8E-5734	278
	280
	282
8E-5736	282
8E-5742	276
	278
	280
	282
8E-7791	756
8E-8319	276
	278
	280
	282
8F-1434	197
	200
	208
	209
8F-1974	227
8F-3469	276
	278
	280
	282
8F-4102	475
8F-6302	247
8F-8151	746
8H-1141	200
8H-2046	33
8H-3481	161
8H-4040	692
	695
8H-5303	206
8H-5306	206
8J-0112	485
8J-1434	689
	▶700
8J-2331	580
8J-6371	483
8J-6384	488
8J-7008	689
8J-7024	688
	▶689
8J-9910	489
8J-9911	489
8K-0530	419
8L-2786	34
	81
	192
8L-5189	266
8L-8413	735
	777
	779
8M-2770	247
	511
	519
	552
	559
	562
8M-2773	59
	86
	241
	247
	250
	254
	313
8M-4069	540
	547
8M-4295	282
8M-4992	269
8M-5253	344
8M-6521	268
8M-6678	322
8M-8489	332
8M-9315	17
8N-0869	112
	116
	120
	244
	252
8N-1517	124
8N-1518	246
8N-1521	246
8N-1725	116
	120
8R-2916	469
8R-3393	443
	445
	741
8R-8088	106
	108
	110
8S-0768	286

8

PROOF

▶ PRIMARY REFERENCE

PART NUMBER INDEX

Part	Page	Part	Page	Part	Page	Part	Page
8S-0948	504		11	8T-3666	14		452
8S-2634	112		17	8T-3727	306		458
	116	8T-0644	55		308		460
	120		331	8T-3844	458		461
8S-4950	81	8T-0646	422	8T-3998	125		462
8S-6109	741	8T-0652	642	8T-4001	664		463
8S-6110	741	8T-0667	492	8T-4121	6		464
8S-7048	247	8T-1117	59		19		465
8S-7803	735	8T-1158	342		20		466
8S-9129	334		566		23		467
8S-9130	334	8T-1159	326		39		469
8T-0070	642	8T-1296	510		40		471
	679		517		45		475
8T-0076	508	8T-1576	310		47		480
	510	8T-1698	572		59		481
	517	8T-1718	313		68		504
8T-0100	11	8T-2228	469		86		506
	67		714		104		511
8T-0106	474	8T-2353	176		106		515
8T-0255	439		303		108		519
	441	8T-2396	5		110		527
8T-0267	608	8T-2947	142		112		531
	610	8T-3282	261		116		535
	612		266		120		540
	614		424		125		547
	616		485		129		552
	618		499		131		555
	620		642		150		557
	622		679		151		559
	624	8T-3311	284		155		562
	632	8T-3490	52		157		574
8T-0269	714		68		167		575
8T-0273	266		88		168		576
8T-0276	34		104		169		577
8T-0282	293		106		170		582
8T-0293	26		108		171		585
	291		110		172		587
8T-0315	300		217		197		589
8T-0328	137		234		218		591
	197		244		225		593
	200		268		227		595
	203		286		231		597
	218		322		232		599
	762		404		234		601
8T-0336	499		406		241		603
8T-0341	540		429		244		605
	547		506		247		703
8T-0355	332		517		254		713
	334		539		269		723
8T-0362	679		710		284		726
8T-0372	30		713		286		729
8T-0375	422		746		300		731
8T-0380	260		756		302		741
	329		782		313		745
	424	8T-3597	73		319		746
8T-0389	116		335		322		747
	120		404		326		749
	159		421		330		750
	160	8T-3611	539		410		756
	582		546		414		759
	684	8T-3612	250		420		760
8T-0404	540		406		425		782
	546		414		429	8T-4122	565
8T-0640	731		429		433	8T-4123	21
8T-0643	8	8T-3647	286		447		68

► **PRIMARY REFERENCE**

PROOF

PART NUMBER INDEX

Part	Page	Part	Page	Part	Page	Part	Page
	288		247		330		244
	313		250		404		335
	419		254		406		664
	552		269		407	8T-4182	234
8T-4132	527		284		420		254
8T-4133	56		286		425		313
	59		289		429		407
	86		313		433	8T-4183	21
	104		319		443		73
	106		322		445		300
	125		407		447		578
	152		429		452	8T-4184	302
	153		433		458		313
	154		447		480		419
	155		460		481	8T-4185	52
	157		461		506		62
	197		462		511		104
	218		463		519		106
	225		464		527		116
	227		465		540		120
	234		466		547		225
	247		467		552		749
	254		471		555		750
	284		506		557	8T-4186	20
	300		531		559		56
	313		535		562		59
	319		540		577		104
	322		547		582		106
	407		562		741		108
	410		574		745		110
	414		575	8T-4138	125		254
	433		576		142		511
	447		713		707		519
	452		739	8T-4139	47		540
	475		741		264		547
	506		759		298		555
	511		760		337		557
	515		796		410	8T-4187	419
	519	8T-4137	45		414	8T-4189	52
	527		47		655		76
	540		59		660		112
	547		112		664		150
	585		116	8T-4140	407		151
	587		120	8T-4142	703		216
	589		125	8T-4149	540		233
	591		129		547		247
	593		167	8T-4167	474		269
	595		169		477		412
	597		170		664		416
	599		171	8T-4172	231		458
	601		172		241		719
	603		218		269		759
	605		225		443	8T-4191	131
	713		227		538		228
	796		232		545		244
8T-4136	6		234		703		247
	19		244	8T-4176	79		741
	39		247		250		782
	40		260	8T-4178	227	8T-4192	52
	47		269		538		79
	59		286		540		335
	168		291		545		404
	225		313		547		420
	227		319	8T-4179	79	8T-4193	328
	244		326		228		330

PROOF

PART NUMBER INDEX

Part	Page	Part	Page	Part	Page	Part	Page
8T-4194	21		714		575		284
	244	8T-4205	100		576		445
8T-4195	20		102		665		511
	23		124		712		519
	47		200		714		559
	62		218		723		562
	68		247		726	8T-5035	302
	73		707		758	8T-5041	684
	104		762		770	8T-5064	640
	106		765		772	8T-5070	493
	112	8T-4223	6	8T-4226	56		495
	116		52		62	8T-5092	684
	120		79	8T-4648	511	8T-5372	756
	125		104		519	8T-5389	40
	155		106	8T-4779	244	8T-5400	787
	157		108		322		789
	244		110		412		792
	247		112		416		793
	300		116		527		795
	302		120		746	8T-5410	203
	314		125	8T-4780	68	8T-5412	155
	404		155		314	8T-5429	55
	407		157	8T-4834	310		312
	433		244	8T-4835	104		314
	443		250		106	8T-5436	538
	445		300		108		539
	447		302		110		545
	469		314	8T-4896	81		546
	471		322		322	8T-5439	642
	511		335		499	8T-5878	428
	519		337		508		474
	531		419		511		477
	535		421		519	8T-5907	313
	540		431	8T-4908	76	8T-5914	781
	547		433		173		789
	559		474		406		790
	562		511		407		791
	574		519		412	8T-6381	21
	575		540		416	8T-6462	577
	576		547		745	8T-6466	104
	582		565		759		106
	723		577		770		228
	726		578		772		559
	729		580	8T-4956	47		562
	746		664		244	8T-6684	312
	747		679		322	8T-6685	300
	756	8T-4224	9		407		448
8T-4196	23		11		421		684
	52		37		431	8T-6699	203
	56		59		433	8T-6703	300
	62		63		540	8T-6757	458
	73		100		547	8T-6765	269
	86		102		577	8T-6868	6
	269		104		665	8T-6869	89
	299		106	8T-4983	322		286
	322		112	8T-4994	511	8T-6870	286
	527		145		519		289
	531		196	8T-5001	157	8T-6876	526
	535		233	8T-5002	295		557
	577		247	8T-5005	86	8T-6912	129
	703		286		104		131
	714		322		106		134
8T-4198	475		410		108	8T-7038	664
8T-4200	196		414		110	8T-7044	511
	286		574		228		519

► **PRIMARY REFERENCE**

PROOF

PART NUMBER INDEX

Part	Page
8T-7547	289
	723
	726
8T-7566	203
	752
8T-7876	266
8T-7926	300
8T-7927	539
	546
8T-7968	310
8T-7970	471
8T-7971	21
8T-8441	266
8T-8566	200
8T-8569	200
8T-8729	149
	163
	178
	191
	637
	714
8T-8737	81
	159
	160
	175
	214
	493
	495
	751
	789
8T-8874	243
8T-8917	565
8T-8919	76
8T-8986	531
	535
8T-9371	777
	779
8T-9378	689
8T-9399	479
8T-9403	314
8T-9405	76
	78
	93
	95
	112
	116
	120
	125
	134
	218
8T-9515	540
	547
8T-9636	217
8T-9655	89
	128
	129
	131
	134
	146
	233
	286
8T-9756	112
	120
8T-9884	200
8W-0225	555
8W-0663	692
	695
8W-0681	670
8W-0684	670
8W-0791	796
8W-2842	474
8W-2913	▶478
	691
8W-3686	397
	398
8W-3991	510
	517
8W-5092	499
8W-5094	504
8W-5597	692
	695
8W-6466	262
8W-6469	262
8W-7957	373
	374
8W-8528	244
8W-9566	394
8W-9594	394
	395
8X-1386	770
	772
8X-3663	655
	660
	665
	692
	695
8X-3749	565
8X-4741	474
	477
8X-5106	679
8X-5107	679
8X-5108	679
8X-5109	679
8X-5489	300
8X-6070	▶508
	691
8X-6075	692
	695
8X-6080	691
	▶692
8X-9233	471
8Y-5945	735
8Y-5965	775
8Y-6012	775
8Y-6014	775
8Y-6024	775
8Y-6041	735
8Y-6045	735
8Y-6046	735
8Y-6047	735
8Y-6060	735
8Y-6062	735
8Y-6063	735
8Y-6064	735
8Y-6066	735
8Y-6067	735
8Y-6068	735
8Y-6069	735
8Y-6277	762
	765
8Y-6859	735
8Y-6860	735
8Y-8503	504
8Y-9603	202
9B-7233	124
	125
9B-7237	469
9C-2741	228
9D-1142	499
9D-1491	499
9D-3075	306
	308
	439
	441
9D-3311	418
9D-3523	261
	264
9D-5516	692
	695
9D-6196	52
9D-6197	52
9D-6584	418
	565
9D-6589	418
9D-7047	306
	308
	439
	441
9D-9797	261
9F-2247	306
	308
9F-5644	206
9F-8125	740
9G-0002	112
	116
	120
9G-0005	112
	116
	120
9G-5127	299
9G-5211	264
9G-8909	112
	116
	120
	244
	252
9H-0846	291
9J-0096	689
9J-3657	671
9J-3658	672
9J-4963	572
9J-6586	700
9J-7701	671
9K-5635	740
9K-7951	395
	396
	397
	398
9L-6331	225
9L-6770	100
	102
9M-0402	458
9M-1328	487
9M-1974	5
	9
	12
	34
	38
	42
	50
	54
	67
	76
	84
	88
	128
	195
	344
	732
9M-2042	268
9M-2092	261
	264
9M-2110	344
9M-2904	36
9M-4972	247
9M-7958	93
	95
9M-8406	247
	252
	741
9N-0869	33
	89
	128
	129
	146
9N-1995	402
	403
9N-4155	332
9P-2495	228
9P-9388	747
9R-1183	511
	519
9R-2205	642
9R-2672	645
	756
9R-3572	710
9R-4638	510
	517
9R-5008	68
9R-5637	526
9R-6414	116
	120
9R-6465	539
	546
9R-7942	164
9R-8870	227
9R-8971	510
	517
9R-9925	582
9S-1316	250
9S-1350	531
	535
9S-4167	81
9S-4181	93
	95
	269

9

▶ PRIMARY REFERENCE

PROOF

PART NUMBER INDEX

Part	Page	Part	Page	Part	Page	Part	Page
	291		616	9T-8053	572		116
	439		618	9T-8054	572		120
	441		620	9T-8056	572		125
9S-4182	17		622	9T-8058	572		244
	32		624	9T-8059	572	9X-1046	218
	50		632	9T-8061	572		734
	289	9S-8003	55	9T-8063	572	9X-1054	225
	626	9S-8004	84	9T-8065	572		246
	628		268	9T-8067	572		247
	630		303	9T-8069	572		252
9S-4183	268		344	9T-8070	572	9X-1386	493
9S-4185	34		567	9T-8071	555		495
	50		585		557	9X-1813	146
	261		587	9T-8958	489		180
	471		589	9T-9040	497		181
	585		591	9T-9071	572		185
	587		593	9T-9072	572		187
	589		595	9U-8669	344		205
	591		597	9U-8815	276		211
	593		599		278		216
	595		601	9U-9995	276	9X-2023	300
	597		603	9V-1312	250	9X-2032	218
	599		605	9W-0335	218	9X-2038	707
	601	9S-8005	5	9W-0852	174	9X-2041	723
	603		17		214		726
	626		27	9W-1441	217		729
	628		50	9W-1442	217	9X-2043	131
	630		55	9W-1454	268		469
9S-4190	268		67	9W-1991	228		723
	337		81	9W-2029	276		726
9S-4191	17		344		278		754
	32		585	9W-3155	689		770
	43		587	9W-5134	▶334		772
	65		589		339		782
	176		591	9W-6068	437	9X-2044	218
	268		593	9W-6465	268		243
	291		595	9W-6467	282		707
	305		597	9W-6582	21		714
	447		599	9W-6584	21		723
9S-6130	269		601	9W-7038	268		726
9S-8001	562		603	9W-7469	684		729
	567		605	9W-7470	684		740
	585		608	9W-7783	608		756
	587		610		610		787
	589		612		612	9X-2045	717
	591		614		614		723
	593		616		616		726
	595		618		618		740
	597		620		620		782
	599		622		622		784
	601		624		624		785
	603		632		626	9X-2046	734
	605	9S-8006	55		628		754
9S-8002	176	9S-8008	25		630		787
	266		26		632	9X-2098	34
	439	9S-8010	32	9W-9371	276	9X-2099	9
	441	9S-9334	32		278		11
	585	9T-1013	555	9W-9905	276	9X-2125	260
	587		557		278	9X-2133	59
	591	9T-2457	485		280	9X-2134	531
	593	9T-3133	489		282		535
	608	9T-4211	491	9W-9920	21	9X-2201	79
	610		492	9X-0195	244	9X-2205	93
	612	9T-5241	732	9X-0262	176		95
	614	9T-8051	572	9X-0941	112	9X-2404	439

▶ **PRIMARY REFERENCE**

PROOF

PART NUMBER INDEX

Part	Page
	441
9X-2488	745
9X-2609	282
9X-2615	684
9X-3068	166
9X-3294	►141
9X-3401	493
	495
9X-3463	152
	153
	154
9X-3465	159
	160
9X-4244	152
	153
	154
9X-4385	234
9X-4391	227
	246
9X-4493	166
9X-4494	161
9X-4609	286
9X-4824	200
9X-6165	142
	147
9X-6381	233
9X-6772	142
	246
9X-7143	131
9X-7144	254
9X-7146	234
9X-7345	171
	172
9X-7378	711
9X-7380	743
9X-7381	741
	743
9X-7382	741
	743
9X-7383	741
	743
9X-7385	711
	743
9X-7849	165
9X-8121	164
9X-8250	314
	319
	448
	506
	515
	540
	547
	741
	746
9X-8256	125
	142
	203
	225
	241
	247
	250
	252
	458
	469
	608
	610
	612
	614
	616
	618
	620
	622
	624
	626
	628
	630
	632
	721
	722
	723
	726
	729
	770
	772
	793
	795
9X-8257	234
	244
	314
	322
	328
	330
	412
	416
	527
	540
	547
	565
	655
	660
	665
	746
9X-8258	21
9X-8267	5
9X-8268	17
	266
	293
	295
	422
9X-8355	799
9X-8399	483
	497
9X-8403	176
9X-8600	93
	95
9X-8875	692
	695
9X-8885	674
	675
	676
	678
9X-8918	735
9X-9120	244
9X-9365	167
	171
	234
9X-9689	732

0

Part	Page
002-3448	11
002-6453	337
010-2573	247
030-0060	260
030-0061	260
030-1707	244
030-1709	244
030-1712	124
	195
030-8188	81
030-8194	90
031-0214	758
031-4155	732
032-9828	759
033-4814	740
033-6033	98
033-6783	322
033-8248	225
	227
	231
	232
	234
	247
036-9823	200
054-3788	399
061-9455	11
064-3843	437
067-2551	227
068-4860	647
	648
	649
	650
	651
070-0107	75
077-3241	297
085-8091	743
092-7385	311
095-0658	306
	308
095-0843	762
	765
095-0878	735
095-1235	640
095-1750	636
095-1751	634
096-3831	585
	587
	589
	591
	593
	595
	597
	599
	601
	603
	605
096-4883	311
	447
	504
	511
	518
	530
	534
	539
	546
096-5866	286
096-5962	225
096-6166	112
	116
	120
	124
	134
	218
097-4896	244
099-2374	584
099-3649	63
	268
	412
	416

1

Part	Page
100-3224	736
100-3253	159
	160
100-3254	159
	160
100-3255	159
	160
100-4336	511
	518
100-5179	736
101-0003	775
	777
	779
101-2867	740
	758
	787
101-3055	738
101-3128	128
101-3625	286
102-2244	493
	495
102-5881	278
	280
	282
102-8801	142
	217
	225
	237
	246
	250
	254
	286
102-8802	99
	124
	131
	146
	147
	155
	157
	161
	163
	165
	166
	173
	174

PROOF

► PRIMARY REFERENCE

PART NUMBER INDEX

Part	Page	Part	Page	Part	Page	Part	Page
	191		254	110-5326	▶674		784
	203	103-2006	93	110-5327	▶675		785
	205		95	110-5334	674		787
	209	103-2543	433		675	115-0540	565
	211	103-6169	306		676	115-0541	565
	215		308		678	115-1615	146
	216	103-9425	738	110-5335	675	115-4223	50
	217	104-3601	161		678	115-4550	344
	225	104-4523	684	110-5336	674	115-5852	797
	227	105-3196	499		676		▶798
	231		▶572	110-6109	131	115-8109	146
	232	105-3249	347	110-6393	706	115-9345	723
	237		357	110-7149	439		726
	241		390		441	116-0379	▶670
	246	105-5180	647	110-7563	▶163		691
	250		648	110-7618	9	116-3715	311
	637		650	110-7886	214		504
	711	105-5183	649	110-7887	217	116-4627	332
	714		650	110-8826	45	117-1385	286
	740		651	110-8827	45	117-2927	291
	750	105-7167	552	111-0343	637	117-3437	54
	777	105-9659	▶747	111-3883	691	117-4492	701
	779		748		▶695	117-7640	234
102-8803	81	106-1567	370	111-4627	723	117-8131	710
	146		371		726	117-9409	250
	149		385	111-9110	435	118-0911	34
	162	106-3659	608		436	118-1727	3
	178		612	111-9758	655		▶10
	179		614		660	118-3534	124
	227		616	112-0858	203	118-4569	538
	241		618	112-1574	331	118-5619	703
	246		620		332		754
	250		622	112-3199	508		756
	254		624	112-3200	508	118-7880	692
	790		626	112-3690	689		695
	791		630	112-5869	789	118-7881	692
102-8804	130		632	112-9442	504		695
	134	106-3660	610	112-9736	47	119-2942	42
	217		628		433	119-3025	54
	227	106-4175	684	112-9813	369	119-3355	731
	233	106-4835	380		384	119-5708	539
	234		390	112-9924	383		546
	241	106-6553	723		392	119-6220	310
	250		726	113-0704	▶691	120-9027	150
	493	107-8374	692	113-0999	655		151
	495		695		660	121-1344	510
	789	107-8375	692		664		517
102-8805	147		695	113-7754	▶489	121-3307	62
	155	108-0711	517		688	121-9245	497
	157	108-1104	▶691	113-7755	489	121-9855	723
	159	108-2148	639	113-7756	489		726
	160	108-3612	11	113-8457	406	122-6871	540
	217	108-4086	736	114-0359	700		547
	225	108-4087	736	114-2687	42	122-8164	233
	232	108-4103	736	114-3469	711	122-9760	798
	246	108-5751	276	114-6658	131	122-9761	798
	252	109-0361	799		217	123-0790	104
	254	109-3036	637		243		106
	286	109-5824	311		723		108
	751	109-8981	738		726		110
102-8806	81	110-0361	3		729	123-3178	370
	175		▶8		740		385
	214	110-2456	642		754	123-4586	749
	217	110-4213	396		756		750
	233	110-4214	396		782	123-5150	40

▶ **PRIMARY REFERENCE**

PROOF

PART NUMBER INDEX

Part	Page	Part	Page	Part	Page	Part	Page
123-8187	679		247	133-9012	707		756
123-8829	266		250	134-0404	310		770
124-0312	718		254	134-0744	517		772
124-1555	571		286	134-2540	218	140-0860	244
124-5836	679		302		234	140-3607	373
124-7790	28		433	134-3355	227	140-3668	▶164
	104	130-5301	155		247	140-5945	714
	106		157	134-3987	247		797
124-7791	28		247	134-4126	136	140-7684	225
	104	130-9811	▶190		194	140-9473	311
	106		192	134-7258	799		539
124-7792	28		193	135-0426	▶162		546
	104		471		241	141-0360	366
	106	130-9984	322	135-0611	751		372
	108	131-0353	67		793	141-1480	73
	110	131-2182	20		795	141-4976	146
125-4124	247		104	135-1979	732	141-6141	426
125-9740	707		106	135-2142	8		427
126-1757	11	131-3919	278	135-2543	195	141-6787	637
126-1773	291		280	135-9819	6	141-6968	503
126-1774	134		282		10	141-9784	707
	142	131-4242	735	136-0822	11	142-0038	310
	246	131-4428	262	136-0823	11	142-2527	203
126-5027	58		265	136-1543	753	142-4443	112
126-5466	50	131-5167	735	136-1544	701		116
126-6872	539	131-6143	68	136-1711	655		120
	546	131-7191	475		660		244
126-7574	136		▶485		664		252
126-8237	104	131-7194	485	136-1953	745	142-5787	565
	106	131-7195	485	136-3188	787	142-6165	382
126-8240	20	132-0111	147	136-3191	787		391
	104	132-0338	701	136-3193	792	142-6166	382
	106	132-3056	584	136-4192	608	142-6168	382
127-1647	313	132-3332	756		610		391
127-3008	203	132-4928	488		612	142-6169	383
127-4838	203	132-5789	218		614		391
127-6509	793		227		616	142-6173	367
	795		247		618		384
127-8158	163		286		620	142-6174	368
128-0883	664	132-7551	170		622		381
128-5924	443		172		624	142-6175	368
	445		796		626		369
	741	132-8487	234		628		384
128-6157	217	132-9625	276		630	142-6176	386
128-9656	642	132-9628	278		632	142-6177	386
129-1170	54	132-9630	280	136-5490	757	142-6179	387
129-2861	289	132-9633	280	136-6551	295	142-6182	375
129-3178	146	132-9637	282	136-7227	90		387
	707	133-2198	31	136-8308	700	142-6183	375
129-3180	684		32	137-4234	659		376
129-3181	437	133-3260	515		698		388
129-5454	371	133-5545	585		699	142-6184	376
	385		587	137-9410	155		388
129-7679	39		591		157	142-6185	377
130-0229	303		593	138-0444	93		388
	305		635		95	142-6186	377
130-3515	159	133-5631	268	138-1645	664		378
	160	133-6934	231	138-6321	515		389
130-5300	155		234	139-2116	246	142-6187	378
	157		254	139-2380	37		389
	213	133-7523	674	139-3526	11	142-8928	584
	225	133-7524	675	139-6039	469	142-8937	584
	227	133-7810	319		723	143-0089	723
	234		447		726		726
	241		506		740		729

PROOF

PART NUMBER INDEX

Part	Page
143-1288	762
	765
143-4654	33
143-7280	▶655
143-9392	128
144-0195	781
	787
	789
	790
	791
	792
144-4613	286
144-8344	59
	311
	511
	518
145-0326	775
	777
	779
145-2901	28
	104
	106
145-7028	▶191
	254
145-7214	749
	750
145-8039	268
146-1842	260
	264
146-1843	260
146-3728	638
146-3793	469
146-6433	789
	793
	795
146-6747	799
146-7453	39
	40
147-1445	131
	134
	246
147-1446	131
	134
	246
147-5088	54
147-6143	640
147-6144	640
148-1925	286
148-2592	493
	495
148-2593	486
	488
148-5353	784
	785
148-7841	295
148-8315	40
	526
	530
	534
	539
	546
148-8316	311
148-8317	311
148-8318	319
	506
	508
	511
	518
	559
	561
148-8322	311
148-8323	322
148-8325	284
148-8326	561
148-8327	311
	322
	526
148-8328	312
	518
148-8333	539
	546
148-8334	539
	546
148-8335	312
	322
	326
	471
	530
	534
148-8336	312
	321
	447
	504
	530
	534
	559
	561
148-8339	526
148-8340	6
	319
	454
	456
	506
	510
	515
	518
	524
	525
	530
	534
	552
	555
	557
	559
	561
148-8341	526
	539
	546
148-8342	530
	534
148-8345	86
	526
148-8347	39
	45
148-8352	322
148-8353	312
	447
	530
	534
148-8354	6
	312
	511
	518
	557
148-8355	312
	530
	534
148-8357	326
	471
	539
	546
148-8358	510
	518
	555
	557
148-8359	312
148-8360	45
148-8361	526
	531
	535
148-8362	312
148-8363	511
	518
148-8364	454
	456
	510
	518
148-8365	526
	557
148-8367	504
148-8368	6
	284
148-8369	6
	312
148-8370	447
	454
	456
148-8372	86
	511
	518
148-8374	284
	319
	506
	508
	510
	518
	554
148-8378	284
	312
	504
	526
	531
	535
	559
	561
148-8381	312
148-8382	539
	546
148-8388	312
148-8390	540
	546
148-8392	312
148-8393	526
	540
	547
148-8395	17
	55
	81
	585
	587
	589
	591
	593
	595
	597
	599
	601
	603
	605
	608
	610
	612
	614
	616
	618
	620
	622
	624
	632
148-8405	17
148-8407	17
	268
	291
	447
148-8408	268
148-8410	268
148-8411	261
	585
	587
	589
	591
	593
	595
	597
	599
	601
	603
	626
	628
	630
148-8423	284
148-8425	310
148-8428	312
	540
	547
	555
	557
	561
148-8433	52
148-8434	561
148-8439	561
148-8440	526
148-8444	319
	454
	456
	506
	518
148-8446	531
	535
148-8453	313

▶ **PRIMARY REFERENCE**

PROOF

PART NUMBER INDEX

Part	Page
148-8454	454
	456
149-1912	731
149-5262	217
149-6381	526
149-7738	313
149-9129	84
149-9818	146
150-0128	447
150-1280	492
150-3026	52
	59
150-3035	313
150-3069	313
150-4031	531
	535
150-4036	34
150-4043	447
	515
	524
	525
	555
150-4047	303
150-4048	40
	531
	535
150-4049	540
	547
150-4052	266
151-4977	78
151-6320	146
151-7038	493
	495
151-8754	150
	151
152-1353	▶659
152-3952	54
152-5013	3
	▶23
152-8346	565
	▶637
153-2817	787
153-2995	40
153-5043	191
153-5700	120
153-5710	116
153-6237	6
153-6241	313
	511
	518
	555
	557
153-6244	40
153-6246	511
	518
153-6259	40
153-6266	447
154-0051	380
	381
154-1580	646
154-7159	322
154-8030	72
154-9023	50
154-9025	52
155-2255	131
	142
	217
	231
	237
	241
	246
	250
	254
155-2256	217
	233
155-2257	217
155-2260	131
	146
	180
	181
	185
	187
	217
	225
	227
	241
	246
	250
	286
155-2265	147
	217
	232
	233
	237
	239
155-2270	81
	124
	131
	146
	147
	173
	210
	217
	225
	227
	231
	232
	237
	241
	246
	250
	252
	254
	286
155-2271	250
155-2272	131
	134
	227
	234
	241
	250
	254
155-2273	246
155-2274	131
	155
	157
	217
	225
	227
	232
	239
	246
	247
	254
155-2276	185
155-3624	17
	626
	628
	630
155-6258	313
155-7321	555
	557
156-0283	250
156-4283	300
156-4974	431
156-5545	701
156-6155	194
156-6198	718
157-0670	50
	52
157-2348	531
	535
158-2336	435
	436
158-9956	567
	▶607
159-0052	723
	726
159-0286	11
159-0303	3
	▶26
159-0308	276
	278
159-0313	647
	648
	649
	650
	651
159-0314	648
	650
	651
159-0317	648
	650
159-0318	647
	648
	649
	650
159-0927	276
	278
159-3046	293
159-3759	797
159-7342	2
159-8047	244
159-8048	244
159-8049	112
	116
	120
	244
	252
159-8050	112
	116
	120
	244
160-2351	261
	264
160-2443	▶178
	246
160-3518	757
160-5131	50
160-7165	769
	▶775
160-7689	246
160-7690	142
160-8184	16
160-8492	268
	410
	414
161-1703	182
161-1704	184
161-1705	183
161-5967	735
161-6149	585
	587
	591
	593
	635
	636
161-6154	607
161-6161	585
	587
	591
	593
	635
	636
161-6713	276
	278
162-0177	268
	585
	587
	589
	591
	593
	595
	597
	599
	601
	603
	605
162-3148	36
162-7449	517
162-8068	3
	▶27
163-0324	▶487
	655
	660
	664
163-0325	487
163-0326	487
163-0327	487
163-0329	487
163-0397	266
	▶297
163-0872	▶711
	712
163-1135	777
	779
163-1146	775
164-0210	33
164-1214	770
	772

PROOF

PART NUMBER INDEX

Part	Page	Part	Page	Part	Page	Part	Page
164-1234	777		489	171-9375	437		218
	779		493	172-2416	762	174-9570	▶83
164-2108	343		495		765		91
	626		497	172-3511	714	175-1367	9
	628	167-2307	565	172-6298	72	175-3223	▶28
	630	167-8121	14	172-7968	344		104
	639	167-9524	343	172-9284	458		106
164-3651	310	168-4377	293	172-9367	14	175-3225	104
164-4180	268	168-9108	491	173-0566	297		106
	291	168-9110	491	173-1007	580	175-3676	25
164-4531	701	169-1616	634	173-1008	580	175-3721	17
164-4883	752	169-1617	634	173-1009	580		291
164-5549	313	169-2932	39	173-1028	▶701	175-4966	297
164-5561	526		40		762	175-7453	289
164-5567	284	169-3130	▶20		765	175-7572	562
	313		108	173-1172	659	175-7895	485
	326		110	173-2052	753	175-7896	486
	458	169-4088	655	173-3993	562		488
	526		660		585		491
	540		664		587		492
	547	169-4089	655		589	175-7897	483
164-5570	313	169-4090	655		591	175-7898	487
164-5572	559		660		593		497
	562		664		595	175-7900	489
164-5605	508	169-4092	655		597	176-5638	675
	510	169-5414	234		599	176-5639	674
	517		246		601	176-5642	674
164-5615	531	169-5861	176		603		675
	535	169-5862	326		605		676
164-5616	269	169-7380	775	173-5787	767		678
164-5619	55		777		768	176-5643	674
164-6867	81		779		769		675
164-7556	152	169-7391	527	173-7035	767		676
	153	170-0493	519		768		678
	154	170-1112	701		769	177-0279	458
164-7577	31	170-1114	701	173-7126	83	177-0581	68
	▶205	170-1115	701	173-7546	310	177-1061	310
165-2510	478	170-1821	714	173-7830	374	177-1862	758
	▶491	170-2512	225	173-9683	483	177-1863	762
165-5655	146	170-2986	792		486		765
166-0691	246		793		488	177-4548	664
166-2905	25		795		489	177-4930	753
166-4116	322	170-3462	225		497	177-4937	761
166-5229	134	170-3794	244	173-9685	485		764
	217	170-5334	▶732	173-9779	487	177-8839	527
166-6781	775		734		491	177-9656	217
167-1795	55	170-5335	▶174	174-0503	234	177-9953	▶100
167-2186	485		732		246		104
167-2190	491	170-7485	637	174-1497	707		108
	492	171-1230	762	174-2231	▶735	178-0572	310
167-2191	487		765		775		538
167-2192	483	171-2210	124	174-2237	735		545
167-2195	486	171-2212	124	174-5907	112	178-0604	▶752
	488	171-3759	469		116		762
	489	171-4047	754		120		765
	493		756		227	178-0605	752
	495	171-4808	659		232		▶753
	497	171-5672	▶166		234	178-6875	664
167-2294	485		241		244	178-7907	753
167-2300	487		250		252	178-8894	723
	491	171-6466	517		254		726
	492	171-6682	762		458		729
167-2302	483		765	174-7449	344	179-0006	▶208
167-2304	486	171-7091	276	174-7875	227		252
	488	171-7095	278	174-8131	137	179-1633	659

▶ **PRIMARY REFERENCE**

PROOF

PART NUMBER INDEX

Part	Page
179-4182	437
179-6964	319
	506
179-7383	5
179-9392	217
180-0149	787
180-3998	72
	313
	515
	519
180-7110	124
180-9340	180
180-9853	366
	381
180-9900	217
183-3399	42
183-3406	176
183-6854	72
183-6856	72
183-7263	176
	266
	585
	587
	591
	593
	608
	610
	612
	614
	616
	618
	620
	622
	624
	632
183-7264	502
184-0982	146
184-1681	372
	386
184-2298	762
	765
184-2299	762
	765
184-2420	52
	538
	545
184-2472	194
184-2509	52
184-3579	137
184-9843	491
	492
185-2638	100
	102
185-2639	100
	102
185-2643	100
185-2644	100
	102
185-2645	100
	102
185-2647	100
	102
185-2648	100
	102
185-2650	100
	102
185-2651	100
	102
185-2653	100
	102
185-2654	100
	102
185-2655	100
	102
185-2658	100
	102
185-4253	626
	628
	630
185-6335	203
185-6350	45
185-7688	489
185-7690	489
185-7691	489
185-9464	731
186-0357	84
186-3735	99
	146
	159
	160
	161
	162
	165
	166
	173
	179
	205
	209
	211
	214
	215
	217
	225
	227
	246
	250
	740
	750
	751
	789
	790
	791
186-3736	210
186-5107	777
	779
186-6189	741
187-0541	636
187-0953	689
187-3369	437
187-7738	645
187-8191	638
187-8194	16
187-8674	112
	116
	120
	124
187-8675	124
188-0633	437
188-2008	471
188-2162	268
188-2199	493
	495
188-3959	116
	120
189-3158	124
	212
	246
	252
189-8627	567
	▶638
189-8772	72
189-8779	▶65
	66
189-8780	3
	▶66
189-8898	626
	628
	630
190-0627	640
190-1105	86
	▶89
190-4885	86
190-5212	268
190-5386	689
	799
190-6123	574
	575
	576
190-6124	574
	575
	576
190-7541	78
190-7613	134
190-7614	233
190-8505	782
191-1782	89
191-1783	89
191-3602	▶336
	339
191-6669	510
	517
191-7724	336
191-8303	286
191-8304	286
191-9784	▶502
	538
	545
192-7752	777
	779
192-7755	777
	779
192-7760	777
	779
192-7767	777
	779
192-7783	777
	779
192-7787	777
	779
192-7790	777
	779
192-7795	777
	779
192-7799	777
	779
192-7805	777
	779
192-7810	777
	779
192-7812	777
	779
192-7820	777
	779
192-7822	777
	779
193-2200	437
193-8335	40
193-8570	200
194-4175	640
	682
194-4254	217
194-4864	746
194-5123	3
	▶37
194-5130	37
194-5131	37
194-5171	787
	792
194-5226	181
	185
194-5227	185
194-6523	93
	95
194-6722	▶180
	246
194-6725	▶181
	188
194-8742	266
195-2274	412
	416
195-5837	17
195-7218	692
	698
	699
195-7219	695
196-1803	310
196-1912	3
	▶19
196-1914	19
196-3150	293
	▶295
197-4977	268
197-5107	754
197-6453	286
197-7689	775
197-8391	81
	176
	▶192
197-8392	176
	▶193
197-8393	176
	▶182
197-8394	176
	▶183
197-8419	42
197-8820	▶102
	106
	110
197-8940	310
198-0143	531

PROOF

PART NUMBER INDEX

Part	Page
	535
198-0315	163
198-0316	163
198-2714	3
198-4768	261
	264
	306
	308
198-4769	499
198-4771	260
	329
	428
198-4776	712
198-4777	62
	73
	406
198-4778	56
	73
	406
198-4780	406
198-4781	432
198-4782	46
198-5389	146
	147
198-9811	693
	695
198-9812	693
	696
199-4318	402
	403
199-5725	768
	▶777
199-7891	100
	102
199-8436	100
	102
199-9907	93
	95
199-9985	78

2

Part	Page
200-5125	146
200-5728	757
200-5729	757
200-6260	146
200-6282	567
	634
201-1200	▶660
201-1201	660
201-2648	731
201-7713	293
201-8468	295
201-8469	295
201-8470	295
201-8471	295
201-8472	295
201-8473	295
201-8474	295
201-8475	295
201-8476	295
201-8477	295
201-8480	295
201-8481	293
201-8646	40
201-9041	233
201-9774	34
202-6473	306
	308
202-6611	152
	154
202-6614	153
203-1558	435
	436
203-3768	72
203-3940	189
203-7703	767
	768
	769
203-9808	76
	78
204-2581	781
	789
	790
	791
205-0626	102
205-0826	146
	147
205-2357	310
205-3081	3
	▶11
205-6388	761
	764
205-7187	458
205-8257	146
	147
206-4228	3
	▶50
206-4666	293
206-4669	39
	40
206-5162	147
	194
206-5165	194
206-5208	147
206-5823	751
	793
	795
206-6875	34
207-1556	▶199
	202
207-1557	199
	▶200
207-5262	146
	▶194
207-6136	142
208-0800	93
	95
208-6054	52
208-8375	718
208-8759	791
209-4527	293
209-4578	68
209-5582	209
209-6638	150
	151
209-9234	90
210-1747	176
	▶184
210-2262	758
210-2263	758
210-2266	758
210-2268	758
210-2270	▶758
	762
	765
210-3321	9
210-7722	72
210-8422	▶150
	170
	172
210-8423	▶151
	168
211-0132	295
211-5358	777
	779
211-7730	90
211-9294	777
	779
212-0907	493
	495
212-3924	▶161
	212
	243
212-4174	39
	40
212-4287	3
212-4621	76
212-4669	76
212-4670	76
212-4961	608
	610
	612
	614
	616
	618
	620
	622
	624
	632
212-6231	▶698
212-6232	▶699
212-6279	698
	699
212-6933	52
212-7779	777
	779
213-2323	146
213-3733	173
213-5170	777
	779
213-6225	▶664
213-6226	664
213-6231	664
213-6254	664
213-6261	664
213-6274	664
213-6275	664
213-6279	664
213-8179	642
213-9100	216
214-2470	257
214-6480	493
	495
214-7567	186
214-7568	42
215-1942	493
	495
215-2693	284
215-6672	165
215-6673	165
215-6674	165
216-0906	93
	95
216-2211	70
	71
216-8425	293
217-3311	493
	495
217-5701	12
	13
217-7933	758
217-8763	493
	495
217-9060	50
218-0404	147
218-2373	626
	628
	630
	639
218-3339	282
218-4487	511
	519
219-0314	63
219-2392	▶179
	203
219-2910	510
	517
219-3336	664
219-6314	147
	194
219-6607	147
219-7265	517
220-0771	202
220-1194	3
	▶36
220-4125	70
	71
220-4305	664
220-8678	83
221-0318	78
221-0319	76
	78
221-2828	266
221-3494	42
221-8040	295
222-0345	761
	764
222-2367	517
222-3870	146
222-5893	9
222-5915	50
222-5946	3
	▶33
222-5947	3
	▶9
222-5952	3
	▶12
222-7843	293

▶ **PRIMARY REFERENCE**

PROOF

PART NUMBER INDEX

Part	Page
222-7890	217
222-9201	76
223-0455	754
	756
223-0580	580
223-3353	493
	495
223-7577	195
	▶209
224-0003	▶5
	6
224-2821	173
224-3385	146
224-3969	782
224-4536	▶185
	186
224-8645	250
224-9814	84
225-0313	799
225-3109	131
	469
	785
225-3305	797
225-4150	799
225-8513	146
226-1242	799
226-1275	799
226-5602	146
226-8202	485
226-8696	43
226-9622	343
	626
	628
	630
226-9629	639
227-1143	483
227-3812	81
227-5942	50
227-6715	104
	106
227-6744	561
227-7390	797
228-3621	14
228-6051	159
	160
228-6052	159
	160
228-6053	159
	160
228-6054	159
	160
228-6056	159
	160
228-6089	217
228-8510	36
229-0700	510
229-1494	761
	764
229-2580	217
229-8851	195
229-8870	92
229-9382	486
	488
	489
	493
	495
	497
229-9969	150
	151
229-9972	150
	151
229-9974	150
	151
230-4011	286
230-6368	112
230-7490	131
	▶133
	138
	139
230-8173	146
231-0878	1
	▶3
231-0879	3
231-1511	1
	▶284
231-1512	▶559
231-1515	1
	▶504
231-1516	▶510
231-1520	460
	461
	462
	463
	464
	465
	466
	467
	▶515
231-1523	▶530
231-1526	▶561
231-1531	▶555
	579
231-1532	▶517
231-1535	1
	▶578
231-1536	▶524
231-1593	▶525
231-1977	3
	▶176
231-2114	1
	▶63
231-2156	1
	▶21
231-2311	46
	▶62
231-2313	▶47
	49
231-2315	46
	▶56
231-2316	46
	▶433
231-3005	1
	▶339
231-3047	84
231-3539	487
	491
	492
231-3914	40
231-5049	432
231-5052	▶410
231-5055	2
	▶774
231-5061	1
	▶432
231-8159	260
	▶330
231-8164	260
	▶310
232-0343	84
	▶92
232-1767	76
232-2142	647
232-2146	676
	678
232-2678	1
	▶422
232-4738	705
	▶713
232-6136	250
233-0891	128
233-3112	710
	▶723
233-3113	710
	▶783
233-3114	▶217
	710
233-3116	▶759
233-3117	714
233-3118	714
233-3119	▶469
233-3120	710
	▶754
233-3122	▶738
233-3123	▶757
233-3124	▶212
233-3125	▶237
233-3126	▶145
233-3127	2
	▶213
233-3129	705
	▶756
233-3130	705
233-3133	710
	▶759
233-3134	▶137
233-3137	2
	▶734
233-3138	710
	▶787
233-3139	2
	▶789
233-3140	▶784
233-3142	▶443
233-3144	▶130
	460
	461
	462
	464
	465
	466
	467
233-3145	▶129
	710
233-3146	710
	▶714
233-3147	463
	464
	465
	466
	467
	▶468
233-3149	705
	▶706
233-3150	▶759
233-3152	710
	▶782
233-3188	2
	▶790
233-3190	2
	▶791
233-3208	▶748
233-3209	759
233-3214	710
	▶740
233-3216	756
233-3224	714
	▶770
233-3225	714
	▶772
233-3226	770
233-3227	770
233-3230	▶726
233-3235	783
	786
233-3236	783
233-3238	783
233-3245	721
	722
233-3248	770
	772
233-3252	770
	772
233-3270	772
233-3272	722
233-3273	721
233-3275	770
	772
233-3277	714
233-3278	714
233-3280	754
233-3281	740
233-3283	756
233-3284	756
233-3286	▶785
233-3287	▶729
233-3288	144
	▶233
233-3291	706
	▶717
233-3295	2
	▶749
233-3296	2
	▶750
233-3299	782
233-3366	1
	▶429
233-3387	▶75
233-4259	432
	▶582
233-4600	1

PROOF

PART NUMBER INDEX

Part	Page
	▶227
233-4603	▶112
233-4610	▶155
233-4611	▶116
233-4613	▶231
	462
	463
	464
	465
	466
	467
233-4614	155
	157
233-4615	▶167
233-4616	▶168
233-4618	▶169
233-4619	▶170
233-4620	▶171
233-4621	▶172
233-4623	▶250
233-4624	▶157
233-4625	227
233-4626	234
233-4631	2
	▶173
233-4637	▶232
233-4645	124
233-4646	44
	▶225
	579
233-6370	1
	▶335
233-6742	81
	▶97
233-6745	752
233-7139	▶671
233-7140	▶671
233-7141	▶671
233-7142	▶672
233-7143	▶673
233-7144	▶673
233-7148	▶651
233-7149	▶647
233-7160	▶651
233-7161	▶647
233-7162	▶647
233-7163	▶648
233-7164	▶648
233-7654	34
233-7721	1
	▶473
233-7723	1
	▶475
233-8134	268
234-0819	332
234-0821	332
234-0823	332
234-0826	332
234-4324	145
	▶152
234-4325	▶153
	167
	169
	171
	237
234-4326	▶154
	237
234-7721	▶1
234-7730	152
	153
	154
234-7731	152
	153
	154
235-2412	▶276
	339
235-2413	▶278
	339
235-2414	▶280
	339
235-3530	286
	▶344
235-3595	81
235-3937	▶165
235-4137	480
235-5201	341
235-6176	217
235-6177	131
235-6178	772
235-6180	237
235-6183	134
235-6188	▶142
235-6190	772
235-6194	▶254
	260
235-6195	213
235-6196	▶239
235-8200	3
	▶175
235-8552	1
	49
	▶577
235-8724	91
235-8725	90
	▶91
235-9679	3
	▶195
235-9778	246
236-1918	254
236-1920	246
236-1921	254
236-1924	▶120
236-1928	241
236-1929	252
236-2335	155
	157
236-2338	241
	250
236-2340	112
	116
	120
236-2341	116
	120
236-2342	116
	120
236-2344	244
236-4226	227
236-4413	▶54
	55
236-4420	54
236-4421	54
236-4505	246
236-4611	734
236-4615	217
236-4616	217
236-4630	750
236-5197	758
236-6220	176
	▶186
236-6221	176
	▶189
236-7296	578
236-8921	1
	▶425
236-8922	4
	▶458
237-0957	▶187
	526
	567
237-3943	777
	779
237-3970	▶702
	777
	779
237-5176	50
237-5920	▶146
237-6423	▶534
	579
237-8063	3
	▶43
237-9310	81
237-9736	213
238-0112	286
238-0296	97
	▶98
238-1916	1
	▶404
238-2797	155
	157
	▶159
238-2798	155
	157
	▶160
238-5582	447
238-5587	510
	517
238-5588	510
	517
238-5590	510
238-5592	552
238-6666	319
238-6667	319
238-6671	545
238-6672	538
238-6683	759
	▶767
238-7545	642
238-8749	239
238-8753	145
238-8756	460
	461
	462
	465
	468
238-8757	▶401
238-8758	1
	▶431
238-8760	784
238-8763	▶207
238-8767	782
238-8796	754
238-8797	756
238-8798	756
238-8799	131
238-8801	756
238-8802	756
238-8803	782
238-8807	▶760
238-8808	▶131
	260
238-8809	131
	▶203
238-8813	147
238-8818	129
238-8824	257
238-8827	▶147
238-8828	▶134
	462
	463
	464
	465
	466
	467
238-8829	218
238-8838	233
238-8839	707
238-8840	707
238-8841	707
238-8844	203
238-8849	703
	▶707
238-8850	130
238-9561	2
	▶196
239-0618	567
239-1134	196
	▶215
239-2396	81
	▶188
239-3105	295
239-4200	306
	308
239-4204	306
	308
239-4205	306
	308
239-4990	799
239-5024	718
239-5025	139
	217
	▶718
239-5195	567
239-6375	244
239-6379	241
239-6383	144
	▶234
239-6989	799
239-9954	▶136
	142
240-7193	227

▶ **PRIMARY REFERENCE**

PART NUMBER INDEX

Part	Page	Part	Page	Part	Page	Part	Page
241-0037	517		616	243-6664	640	245-1375	510
241-1077	760		618	243-6683	676		517
	▶768		620	243-6684	676	245-1376	559
241-2794	3		622	243-6685	▶676	245-1377	559
	▶67		624	243-6702	▶652	245-1378	559
241-3352	303		626	243-6703	▶653	245-1379	559
	305		628	243-6704	▶654	245-1380	559
241-3722	437		630	243-6737	762		561
241-3867	582		632	243-6738	765	245-1381	559
	▶584	242-9514	493	243-6740	759		561
241-3868	584		495		▶769	245-1596	707
241-4194	196	242-9515	493	244-0355	32	245-1739	16
241-4696	469		495	244-0402	406	245-2773	406
241-5645	11	243-1352	168	244-1900	144	245-2777	406
241-6093	▶31	243-2289	56		683	245-2778	406
	303	243-2965	608	244-2579	608	245-2779	406
241-6094	302		610		610	245-2780	406
	▶303		612		612	245-2781	406
241-6185	71		614		614	245-2782	406
241-6196	310		616		616	245-2783	406
241-6197	310		618		618	245-2788	406
241-6208	310		620		620	245-2797	406
241-6272	310		622		622	245-2798	406
241-8368	124		624		624	245-2802	406
	▶210		626		626	245-2803	406
241-8528	260		628		628	245-2804	406
	▶471		630		630	245-2806	406
241-8534	47		632		632	245-2807	406
241-9584	▶76	243-3657	626	244-2689	469	245-2810	250
	95		628	244-2690	469	245-2811	250
241-9585	▶78		630	244-2691	469	245-2812	250
	93	243-3661	585	244-2692	469	245-2813	250
241-9657	319		587	244-2695	▶792	245-2814	250
242-0407	300		589	244-2696	130	245-2815	774
242-0588	159		591	244-2697	130	245-2816	774
	160		593	244-2701	706	245-2817	774
242-2411	12		595		▶731	245-2818	774
	▶13		597	244-2702	706	245-2819	774
242-2452	2		599		▶741	245-2820	774
	▶412		601	244-2710	203	245-2821	406
242-2461	718		603	244-2711	203	245-2827	406
242-3282	147		605	244-2712	203	245-2838	406
	203	243-3662	585	244-2713	759	245-2839	406
242-3864	34		587	244-2714	759	245-2840	▶739
242-5056	▶460		589	244-2722	▶703	245-2841	739
242-5057	▶460		591		706	245-2842	739
242-5058	▶460		593	244-2729	431	245-2844	406
242-5059	▶461		595	244-3114	286	245-2857	774
242-5060	▶461		597		▶343	245-2859	774
242-5061	▶462		599	244-3168	128	245-3555	342
242-5062	▶462		601	244-4923	404	245-4630	189
242-5063	▶463		603	244-4924	404	245-5879	469
242-5064	▶463		605	244-5001	▶761	245-6375	64
242-5066	▶464	243-5063	62		767	245-6376	64
242-6107	▶464	243-5210	585		769	245-6795	65
242-6108	▶465		587	244-5002	761	245-7600	538
242-6109	▶465		591		▶762	245-7601	530
242-6110	▶466		593	244-5005	▶764		534
242-6111	▶466	243-6464	194		768	245-7603	300
242-6112	▶467	243-6650	640	244-5006	764	245-7604	534
242-6146	▶467	243-6652	640		▶765	245-7605	534
242-9264	608	243-6660	1	244-5889	234	245-8964	300
	610		▶640	244-5923	257	245-9041	632
	612	243-6662	640	244-8686	570	245-9044	610
	614	243-6663	640	245-1181	342	245-9045	612

PROOF

▶ PRIMARY REFERENCE

PART NUMBER INDEX

Part	Page
245-9046	614
	▶626
245-9047	616
245-9048	618
245-9049	620
245-9054	628
245-9055	626
	630
245-9532	585
	587
	591
	593
	▶608
245-9533	585
	587
	591
	593
	▶610
245-9534	589
	595
	597
	599
	601
	603
	605
	▶612
245-9535	589
	595
	597
	599
	601
	603
	605
	▶614
245-9536	589
	595
	597
	599
	601
	603
	605
	▶616
245-9537	589
	595
	597
	599
	601
	603
	605
	▶618
245-9539	589
	595
	597
	599
	601
	603
	605
	▶620
245-9541	587
	593
	▶622
245-9542	591
	593
	▶624
245-9543	591
	593
245-9544	595
	599
	601
	603
	605
	▶628
245-9545	599
	603
	605
	▶630
245-9891	555
	557
245-9892	555
245-9923	608
	610
	612
	614
	616
	618
	620
	622
	628
	630
	632
246-1566	610
	628
246-1567	612
	616
	622
	624
	626
	630
246-1670	116
	120
246-1671	116
	120
246-1672	157
246-1674	170
246-1676	169
246-1685	173
246-1686	231
246-2641	796
246-2722	306
	308
246-3193	599
	601
246-3298	447
246-3299	447
246-3300	447
246-3303	454
	456
246-3304	454
	456
246-3305	454
	456
246-3306	454
	456
246-3307	454
	456
246-3314	447
246-3343	310
246-3344	310
246-3345	310
246-3346	310
246-3347	538
	545
246-3348	538
	545
246-3349	510
	517
246-3350	530
	534
246-3352	538
	545
246-3353	310
246-3354	538
	545
246-3355	538
	545
246-3356	538
	545
246-3357	545
246-3358	538
	545
246-3359	538
	545
246-3361	530
	534
246-3362	538
	545
246-3363	310
246-3364	561
246-3372	538
	545
246-3375	310
246-3377	310
246-3378	538
	545
246-3486	410
	414
246-3509	410
	414
246-3511	410
	414
246-4389	552
246-4392	510
	517
246-4418	310
246-4422	310
246-4424	310
246-4427	310
246-4428	310
246-4429	310
246-4432	310
246-4433	310
246-4434	310
246-4435	310
246-4439	310
246-4441	311
246-4477	1
	▶565
246-4490	330
246-4491	328
246-4611	63
246-4612	64
246-4615	64
246-5083	12
246-6047	473
246-6115	1
	▶479
246-6306	404
246-6307	404
246-6308	404
246-6311	510
	517
246-6313	510
	517
246-6317	311
246-6318	311
246-6322	517
246-6324	517
246-6327	510
	517
246-6328	538
	545
246-6329	429
246-6330	429
246-6331	530
	534
246-6332	530
	534
246-6333	530
	534
246-6334	530
	534
246-6335	530
	534
246-6336	530
	534
246-6341	510
	517
246-6342	510
	517
246-6350	1
	▶418
246-6357	1
	▶337
246-6359	1
	▶399
246-6465	335
	▶341
246-6651	458
246-6654	322
246-6655	561
246-6657	517
246-6701	▶104
246-6703	▶797
246-6704	1
	▶68
246-6705	▶39
246-6706	1
	▶86
246-6707	1
	▶52
246-6709	1
	▶73
246-6711	▶797
246-6712	▶45
246-6714	705
	▶712
246-6715	▶106
246-6717	▶40
	44
	579

▶ **PRIMARY REFERENCE**

PART NUMBER INDEX

Part	Page
246-6719	4
	▶6
246-7847	526
246-7882	425
246-7883	425
246-7907	559
	561
246-7912	561
246-7967	1
	▶266
246-7972	393
	▶439
246-7973	393
	▶441
246-7976	1
	▶393
246-8627	140
246-8628	141
246-8630	140
246-8631	141
246-8777	437
246-8779	437
246-8780	437
246-8782	339
	▶437
246-8783	437
246-8784	437
246-8785	437
246-8786	437
246-8787	437
246-9345	3
	▶128
246-9353	175
246-9860	626
	628
	630
246-9861	628
247-0093	260
	▶799
247-0094	▶503
247-0095	▶503
247-0096	473
	▶483
247-0270	3
	▶30
247-0271	30
247-0628	626
	628
	630
247-0629	628
247-0631	608
	610
	612
	614
	616
	618
	620
	622
	624
	626
	628
	630
	632
247-0632	608
	610
	612
	614
	616
	618
	620
	622
	624
	626
	628
	630
	632
247-0733	714
247-0737	468
247-0740	130
247-1765	743
247-1767	743
247-1769	552
247-1770	311
247-1771	311
247-1772	557
247-3330	404
247-3969	726
	729
247-3970	723
247-4025	1
	▶299
247-4238	559
	561
247-4240	447
247-4241	447
247-4242	447
247-4243	538
	545
247-4244	538
	545
247-4245	538
	545
247-4246	538
	545
247-4247	447
247-4249	538
	545
247-4250	538
	545
247-4288	404
247-4289	404
247-4412	655
	660
	664
247-4546	84
247-4766	555
	557
247-4768	538
	545
247-4769	538
	545
247-5838	433
247-6430	▶241
247-6440	112
247-6441	112
247-6447	124
247-6481	▶257
247-6482	58
247-8303	▶282
	339
247-8602	68
247-8622	1
	▶796
247-8629	276
	278
247-9623	311
247-9624	311
247-9711	276
	278
247-9729	63
	▶64
247-9764	433
247-9765	433
247-9766	433
247-9769	433
247-9930	282
248-0322	404
248-0409	47
248-0442	▶503
248-0443	▶503
248-0671	47
248-0674	47
248-0675	47
248-0676	62
248-0677	56
248-0679	433
248-0716	3
	▶202
248-1322	▶688
248-1323	▶684
	688
248-1325	684
248-1326	684
248-1367	268
248-2046	268
248-2217	291
248-2378	337
248-2617	▶751
	787
248-2621	787
248-2628	791
248-2633	76
	78
248-2886	278
248-2924	707
248-3164	▶781
	787
248-3303	416
248-3304	416
248-4029	538
	545
248-4032	530
	534
248-4033	530
	534
248-4034	530
	534
248-4035	530
	534
248-4036	311
248-4037	311
248-4038	552
248-4039	552
248-4040	561
248-4041	561
248-4147	293
248-4220	717
248-4765	93
	95
248-5068	▶421
248-5081	217
248-5235	538
	545
248-5236	538
	545
248-5523	566
248-5524	566
248-5525	286
	▶566
248-5627	479
248-6168	460
	465
	▶589
248-6169	460
	461
	462
	▶587
248-6174	589
	591
248-6175	587
248-6199	▶58
	59
248-6201	337
248-6225	261
248-6364	68
248-6772	707
248-6883	416
248-6884	416
248-6887	608
	610
	612
	614
	616
	618
	620
	622
	624
	626
	628
	630
	632
248-6925	▶257
248-8805	493
248-8806	495
249-0150	12
249-0204	439
	441
249-0410	703
249-0411	703
249-0904	781
249-0934	707
249-0935	707
249-0936	707
249-0937	703
249-0938	707
249-0981	570
249-1286	731
249-1287	731
249-1288	731
249-2307	300

PROOF

PART NUMBER INDEX

Part	Page	Part	Page	Part	Page	Part	Page
	▶305		▶593	250-0614	678	250-4356	402
249-2308	▶32	249-5334	593	250-0615	▶678	250-4357	402
	305		595	250-0683	433		403
249-2403	723		597	250-0684	433	250-4358	402
	726	249-5479	212	250-0846	234		403
249-2404	723	249-5480	145	250-1169	44	250-4359	402
249-2408	726		207		▶574		403
249-2409	723	249-5482	714	250-1170	▶575	250-4360	402
249-2411	723	249-5486	217		579		403
249-2412	726	249-5487	217	250-1171	▶576	250-4628	752
249-2426	723	249-5488	237		579	250-4659	40
	726	249-5493	217	250-1419	530	250-5529	789
	729	249-5636	585		534	250-5697	524
249-2427	729	249-5637	603	250-1420	530	250-5700	526
249-2428	729		605		534	250-5701	526
249-3505	480	249-5643	479	250-1454	538	250-5709	538
249-3860	▶435	249-6687	797		545		545
	454	249-6691	▶402	250-1940	530	250-5710	561
249-3862	▶436	249-6692	▶403		▶538	250-5711	561
	456	249-6718	280	250-1965	394	250-5712	561
249-4073	759	249-6751	797	250-1966	394	250-5713	561
249-4077	145	249-7294	460	250-2002	260	250-5718	244
249-4078	145		461	250-2138	342		746
249-4080	443		463	250-2139	284	250-5719	510
	445		464		▶342		517
249-4081	784		▶595	250-2140	608	250-5720	577
249-4087	469	249-7295	461		610	250-5744	232
249-4088	454		▶597		612	250-6181	▶554
	456	249-7296	462		614		688
249-4089	454		466		616	250-6901	234
	456		▶601		618	250-7556	707
249-4091	443	249-7297	466		620	250-8292	▶302
	445		467		622		339
249-4095	723		▶605		624	250-8305	15
	▶793	249-7298	460		632	250-8306	3
249-4096	726		461	250-2177	196		▶88
	729		462	250-2298	469	250-8307	88
	▶795		465	250-2299	203	250-8308	3
249-4097	740		466		217		▶16
249-4098	131		▶585		469	250-8309	3
249-4099	203	249-7299	463	250-2693	447		▶14
249-4116	479		466	250-2696	322	250-8312	3
	▶492		467	250-2698	322		▶15
249-4117	492		▶591	250-2784	582	250-8313	3
249-4120	492	249-7307	597	250-2933	706		▶81
249-5193	493		601		▶745	250-8314	3
249-5227	567		605	250-2984	63		▶84
	▶636		▶632	250-3010	217	250-8315	3
249-5299	482	249-7309	632	250-3071	▶646		▶42
	▶497	249-7386	56	250-3153	311	250-8316	42
249-5300	483	249-7551	335	250-3443	584	250-8317	42
249-5303	483	249-7587	▶686	250-3507	▶300	250-8318	3
249-5304	483	249-7814	471		432		▶61
249-5305	483	249-7815	56	250-3528	741	250-8320	3
249-5306	483	249-7841	▶346	250-3529	741		▶25
249-5328	462	249-7842	▶346	250-3818	▶2	250-8335	740
	463	249-7843	▶346	250-3865	76	250-8337	577
	465	249-7845	▶346	250-4091	337	250-9200	76
	467	249-8540	39	250-4094	337	250-9254	1
	▶599		40	250-4095	337		▶139
249-5329	464	249-8721	47	250-4226	▶552	250-9255	1
	▶603	249-8722	47	250-4330	155		▶139
249-5330	464	249-9186	421	250-4353	402	250-9257	1
	465	249-9189	421	250-4354	402		▶138
	467	250-0613	678	250-4355	402	250-9258	1

PROOF

▶ **PRIMARY REFERENCE**

PART NUMBER INDEX

Part	Page	Part	Page	Part	Page	Part	Page
	▶138	251-1668	608	251-8248	223		379
250-9259	▶138		610	251-8256	526		380
	462		612		▶567		381
	463		614	251-8330	567		▶398
	464		616		▶635	252-0666	347
	465		618	251-8331	567		▶367
	466		620	251-8389	567	252-0667	▶347
	467		622	252-0098	395	252-0668	347
250-9260	▶139		624	252-0099	394		▶367
	260		632	252-0100	397	252-0669	▶347
250-9262	138	251-1669	610	252-0101	395	252-0670	347
250-9263	138	251-1809	247	252-0102	▶394		348
250-9266	139	251-2243	443		396		▶368
250-9267	139		▶454	252-0104	▶395	252-0671	▶347
250-9269	138	251-2247	714		397	252-0672	348
250-9270	138		759	252-0106	381		▶368
250-9292	139	251-2248	756		382	252-0673	▶348
250-9293	139	251-2249	756		383	252-0674	348
250-9301	93	251-2250	754		384		▶368
	95	251-2252	754		385	252-0675	▶348
250-9302	93	251-2253	147		386	252-0676	348
	95	251-2272	714		▶395		▶369
250-9304	78	251-2273	714	252-0108	367	252-0677	▶348
250-9305	93	251-2274	714		368	252-0678	348
	95	251-2275	714		369		349
250-9691	346	251-2276	770		370		▶369
	▶347	251-2289	782		371	252-0679	▶348
250-9709	346	251-2290	431		372	252-0680	349
	▶366	251-2305	16		373		▶369
250-9762	346	251-2364	785		374	252-0681	▶349
	▶366	251-2365	785		391	252-0682	349
250-9779	346	251-2388	740		392		▶370
	▶367	251-2390	740		▶396	252-0683	▶349
250-9786	▶394	251-2422	785	252-0110	366	252-0684	349
	396	251-2449	412		367		▶370
250-9788	▶394		416		368	252-0685	▶349
	398	251-2468	▶124		369	252-0686	349
250-9831	47		244		370		350
250-9979	139	251-2469	124		371		▶370
250-9980	139	251-3106	268		372	252-0687	▶349
251-0982	713	251-3109	268		373	252-0688	350
251-1133	234	251-3230	▶144		374		▶371
251-1135	3	251-3265	247		▶396	252-0690	▶350
	▶17	251-3290	561	252-0111	386	252-0692	350
251-1139	17	251-4188	144		387		▶371
251-1140	412		▶683		388	252-0693	▶350
	416	251-4207	785		389	252-0694	350
251-1141	412	251-4342	144		390		▶371
	416		▶645		▶397	252-0695	▶350
251-1142	412	251-4378	412	252-0112	357	252-0696	350
	416		416		375		351
251-1145	412	251-4380	534		376		▶372
	416		▶545		377	252-0697	▶350
251-1151	412	251-4383	412		378	252-0698	351
	416		416		379		▶372
251-1153	412	251-4385	412		380	252-0699	▶351
	416		416		381	252-0700	346
251-1154	412	251-4386	412		▶397		351
	416		416	252-0113	347		▶372
251-1196	717	251-4812	16		366	252-0701	▶351
251-1197	217	251-5743	75		367	252-0707	351
251-1216	713	251-6160	723		375		▶373
251-1217	76		726		376	252-0708	▶351
251-1550	497	251-6673	268		377	252-0709	351
251-1624	574	251-6674	268		378		▶373

PROOF

▶ PRIMARY REFERENCE

PART NUMBER INDEX

Part	Page
252-0710	▶351
252-0713	352
	▶373
252-0714	▶352
252-0715	352
	▶374
252-0716	▶352
252-0719	352
	▶374
252-0720	▶352
252-0721	352
	▶374
252-0722	▶352
252-0726	353
	▶375
252-0727	▶353
252-0728	353
	▶375
252-0729	▶353
252-0730	353
	▶375
252-0731	▶353
252-0732	353
	▶376
252-0733	▶353
252-0734	354
	▶376
252-0735	▶354
252-0746	354
	▶376
252-0747	▶354
252-0748	354
	▶377
252-0749	▶354
252-0750	354
	▶377
252-0751	▶354
252-0752	355
	▶377
252-0753	▶355
252-0754	355
	▶378
252-0755	▶355
252-0757	355
	▶378
252-0758	▶355
252-0760	355
	▶378
252-0761	▶355
252-0762	356
	▶379
252-0763	▶356
252-0764	356
	▶379
252-0765	▶356
252-0766	346
	356
	▶379
252-0767	▶356
252-0770	356
	357
	▶380
252-0771	▶356
252-0772	357
	▶380
252-0773	▶357
252-0774	346
	357
252-0775	▶357
252-0776	357
	358
	▶380
252-0777	▶357
252-0778	358
	▶381
252-0779	▶358
252-0791	346
	358
	▶381
252-0792	▶358
252-0807	399
252-0828	418
252-0875	337
252-0883	337
252-0977	418
252-0990	422
252-1272	47
252-1462	70
	71
252-1804	▶721
	772
252-1805	▶722
	770
252-1807	770
252-1808	772
252-1810	2
	▶445
252-1811	445
	▶456
252-1814	756
252-1824	422
252-1867	530
	534
252-2172	561
252-4426	723
252-4428	726
252-5224	218
252-6307	431
252-6493	286
252-6494	286
252-6500	286
252-7086	640
	▶682
252-7947	358
	▶381
252-7948	▶358
252-8000	▶223
252-9256	567
	▶634
252-9513	47
252-9616	799
253-0472	319
	506
	538
	545
253-1167	471
253-1320	517
	▶570
253-1687	21
253-1688	21
253-2111	124
253-2723	▶108
253-2724	▶110
253-2746	447
253-3325	1
	▶406
253-3476	443
	445
253-3482	770
	772
253-3483	770
	772
253-3484	770
	772
253-3491	218
253-3871	311
253-4115	787
253-4630	1
	▶642
253-4645	640
253-4646	640
253-4651	642
253-4652	642
253-4653	642
253-4654	642
253-4655	642
253-4656	642
253-4677	1
	▶499
253-4678	499
253-5331	144
253-5366	517
253-6016	234
253-7536	68
253-7576	86
253-9323	23
253-9557	124
253-9734	306
	308
253-9742	567
254-0079	781
254-0083	▶144
254-0084	▶144
254-3286	299
254-3413	571
254-3414	571
	▶639
254-3415	559
	561
	▶571
254-3950	608
	622
254-3951	624
254-4486	530
	534
254-5036	246
254-5038	124
254-5094	785
254-5387	740
254-5389	431
254-5391	469
254-5392	469
254-5395	710
254-5399	1
	▶710
254-5400	710
254-6802	68
254-6997	1
	▶59
254-7589	792
254-7880	358
	▶382
254-7882	▶382
254-7884	359
	▶382
254-7885	359
	▶383
254-7886	359
	▶383
254-7887	359
	▶383
254-7888	360
	▶384
254-7889	360
	▶384
254-7890	360
	▶384
254-7891	360
	▶385
254-7892	361
	▶385
254-7893	361
	▶385
254-7894	361
	▶386
254-7895	▶358
254-7898	▶359
254-7899	▶359
254-7900	▶359
254-7901	▶359
254-7902	▶360
254-7903	▶360
254-7904	▶360
254-7905	▶360
254-7906	▶361
254-7907	▶361
254-7908	▶361
254-7941	361
	▶386
254-7942	362
	▶386
254-7944	362
	▶387
254-7945	362
	▶387
254-7947	362
	▶387
254-7948	363
	▶388
254-7949	363
	▶388
254-7950	363
	▶388
254-7951	363
	▶389
254-7952	364
	▶389
254-7953	364
	▶389
254-7954	364

PROOF

▶ **PRIMARY REFERENCE**

PART NUMBER INDEX

Part	Page
	▶390
254-7955	364
	▶390
254-7956	365
	▶390
254-7957	▶361
254-7958	▶362
254-7960	▶362
254-7961	▶362
254-7963	▶362
254-7964	▶363
254-7965	▶363
254-7966	▶363
254-7967	▶363
254-7968	▶364
254-7969	▶364
254-7970	▶364
254-7971	▶364
254-7972	▶365
254-8050	365
	▶391
254-8053	365
	▶391
254-8054	365
	▶391
254-8055	366
	▶392
254-8056	366
	▶392
254-8057	▶365
254-8061	▶365
254-8062	▶365
254-8063	▶366
254-8064	▶366
254-9955	326
255-0683	538
	545
255-0686	538
	545
255-0688	538
	545
255-0955	266
255-1205	293
255-1243	1
	▶322
255-1244	1
	▶321
255-1248	705
	▶746
255-1249	705
	▶743
255-1250	4
	▶452
255-1283	▶70
255-1284	4
	▶71
255-1566	257
	▶329
255-2091	322
255-2410	686
255-3431	645
255-3631	545
255-5142	266
255-5284	128
255-8715	480
256-0193	25
256-0196	291
256-3216	124
256-3652	124
256-3854	406
256-5308	56
256-6019	387
256-6070	15
256-6630	244
256-6783	124
256-6788	124
256-6915	89
	▶90
256-8768	767
	▶779
256-9448	792
256-9651	15
256-9773	608
	610
	612
	614
	616
	618
	620
	622
	624
	632
256-9774	610
257-0552	723
257-0553	726
257-2294	258
	▶480
257-2758	480
	481
257-3226	741
257-3568	684
257-4967	247
257-5176	▶687
257-5177	687
257-5703	61
257-7066	538
	545
257-7224	1
	▶216
257-7240	124
257-7241	124
257-8299	67
257-8467	3
	▶72
257-8540	306
	308
257-8561	330
257-8897	300
257-9180	311
257-9181	510
	517
257-9182	311
257-9183	510
	517
257-9345	723
	726
257-9458	124
257-9799	261
	264
257-9857	557
258-0883	81
	▶211
258-4459	266
	▶293
258-4500	659
258-4720	286
258-4721	286
258-7049	254
258-7943	608
	610
	612
	614
	616
	618
	620
	622
	624
	632
258-8675	93
	95
258-8676	93
	95
258-8699	79
258-8948	247
258-8949	247
258-9760	406
258-9761	406
258-9763	406
258-9864	493
258-9981	480
	481
259-0039	266
	▶306
259-0040	266
	▶308
259-0134	173
259-0309	589
	595
	597
	599
	601
	603
	605
259-0310	585
	587
	591
	593
259-0538	723
	726
259-2569	419
259-2615	576
259-2616	575
259-2620	299
259-4476	646
259-4483	679
259-4492	679
259-4512	552
259-4513	552
259-4728	254
259-4758	749
259-4759	750
259-5453	73
259-6388	311
259-6836	439
259-8489	419
259-8490	419
259-9283	422
260-0174	252
260-0175	252
260-1381	495
260-2577	790
260-2579	790
260-3037	218
260-3041	720
260-3044	714
260-3045	714
260-3404	252
260-3790	426
	427
260-3792	426
	427
260-3793	480
	481
260-4708	298
260-4709	298
260-4710	264
260-4802	264
	▶328
260-4803	264
	▶298
260-5806	745
260-5807	741
260-5808	741
260-6117	480
	481
260-6438	790
260-6501	580
260-6502	511
	519
	▶580
260-6557	2
	▶419
260-6558	419
260-6615	723
	726
260-6724	▶786
260-6725	786
260-6726	786
260-6729	686
260-6730	686
260-6731	686
260-6878	433
260-7451	257
	▶258
260-7453	258
	▶260
260-7455	260
	▶262
260-7456	262
260-7460	260
260-7461	260
260-7462	260
260-7463	260
260-7464	260
260-7465	260
260-7477	260
260-7481	261
260-7482	260

▶ PRIMARY REFERENCE

PROOF

PART NUMBER INDEX

Part	Page
260-7483	260
260-7486	261
260-7487	260
	▶426
260-7489	426
260-7785	652
260-7791	653
	654
260-7792	652
260-7793	653
260-7794	654
260-7797	652
260-7798	652
260-8602	261
260-8696	▶259
	260
260-8698	259
	▶264
260-8699	264
	▶265
260-8700	265
260-8703	264
260-8704	264
260-8706	264
260-8707	264
	▶427
260-8708	427
260-8709	259
	▶481
260-8711	311
260-8713	260
	264
	▶482
260-8715	264
260-8719	264
260-8721	264
260-8722	298
260-8740	268
260-8741	268
260-8743	723
	726
260-8744	723
260-8745	726
260-9135	726
260-9143	311
260-9429	306
	308
260-9430	266
261-0153	▶260
261-0182	▶2
261-0187	▶2
261-0607	▶44
261-0610	▶4
261-0611	▶579
261-0747	124
261-0774	▶579
261-0775	▶705
261-0839	▶705
261-1731	723
	726
261-1885	787
261-3086	124
261-3223	223
261-3345	781
261-3405	124
261-3613	172
261-3753	234
261-4375	469
261-4376	469
261-4377	40
	45
261-4378	40
261-4672	642
261-4673	642
261-4674	642
261-4675	642
261-4676	642
261-5524	723
	726
261-6958	652
	653
	654
261-6959	653
	654
261-6960	653
	654
261-7575	73
261-8536	1
	▶679
261-8537	679
261-8538	679
261-8541	679
261-8543	679
261-8545	679
261-8547	679
261-9391	142
261-9601	227
261-9602	227
261-9603	227
262-0412	▶414
262-0413	▶416
262-0568	64
262-0982	142
262-1408	129
	134
	286
262-1564	254
262-1585	723
	726
262-1894	723
262-1895	726
262-1900	474
	▶488
262-1907	477
	▶486
262-1919	488
262-1920	486
262-1926	486
262-2022	306
	308
262-2036	306
262-2037	308
262-3963	410
	414
262-3969	414
262-3970	414
262-3971	414
262-3972	414
262-4037	254
262-4546	729
262-4772	723
	726
262-4795	▶797
262-4961	218
262-4972	2
	▶243
262-5599	439
	441
262-5603	439
	441
262-5604	439
	441
262-5610	439
	441
262-5612	439
	441
262-5614	306
	308
262-5697	311
262-5698	311
262-5699	311
262-5700	311
262-5701	311
262-5702	311
262-5703	311
262-5766	481
	▶495
262-5768	495
262-5769	495
262-5770	495
262-5771	495
262-5906	495
262-5994	▶286
	339
262-6658	311
262-6672	▶331
	339
262-6673	▶268
	339
262-6674	▶326
	339
262-7351	311
262-7444	559
	561
262-7687	52
262-7688	52
262-7689	52
262-7692	52
262-7721	289
262-7857	289
262-8057	68
262-8058	68
262-8360	1
	▶288
262-8361	538
	545
262-8362	538
	545
262-8363	538
	545
262-8364	539
	545
262-8365	539
	546
262-8366	539
	546
262-8367	539
	546
262-8368	539
	546
262-8369	539
	546
262-8370	539
	546
262-8371	539
	546
262-8372	539
	546
262-8373	539
	546
262-8374	539
	546
262-8375	539
	546
262-8376	539
	546
262-8377	539
	546
262-8378	539
	546
262-8379	539
	546
262-8380	539
	546
262-8381	539
	546
262-9184	510
	517
263-0008	112
263-1786	104
	106
	108
263-1790	539
	546
263-1823	227
263-2571	243
263-2573	740
263-2574	723
	726
	783
	786
263-2576	756
263-2577	756
263-2578	756
263-2588	740
263-2589	719
263-2590	710
	▶719
263-2787	1
	▶474
263-2788	1
	▶477
263-3350	70
	71
263-3351	70
	71
263-4887	406
263-4888	406
263-4902	306

▶ **PRIMARY REFERENCE**

PROOF

PART NUMBER INDEX

Part	Page	Part	Page	Part	Page	Part	Page
	308	264-8233	396		441	268-8690	▶648
263-5526	410		398	266-7274	322	268-8691	▶649
263-5527	410	264-9726	482	266-7531	104	268-8692	▶649
263-5528	410	265-2122	510		106	268-8693	▶649
263-5529	410		517	266-7532	79	268-8694	▶650
263-6675	322	265-2123	510	266-7589	59	268-8695	▶650
263-6684	322		517	266-7650	52	268-8696	▶650
263-6901	799	265-4043	6	266-7651	52	268-8697	▶651
263-7428	332	265-4049	6	266-7711	47	268-8954	511
263-7429	269	265-4050	6	266-7712	47		517
263-7431	331	265-4566	412	266-7713	47	268-8955	311
	▶332	265-4567	412	266-8568	47	269-1021	93
263-7433	302	265-4568	412	266-8804	539		95
263-7434	▶291	265-4569	412		546	269-1986	▶49
	339	265-5098	506	266-8807	793	269-2896	266
263-7437	326	265-5100	506	266-8921	795	269-4150	44
263-7814	410	265-6631	112	266-9737	504		▶252
263-7815	410		116	267-1851	40		579
263-7819	▶557		120	267-1852	40	269-4152	1
	579	265-6640	443	267-2098	225		▶244
263-8527	104		756	267-2099	112	269-4153	244
	106	265-6721	642	267-2100	244	269-4154	244
263-8528	108	265-6722	640	267-2776	471	269-4155	112
	110	265-7454	703	267-3002	511		116
263-8948	142	265-7628	510		517		120
263-9088	142		517	267-3170	756	269-4156	247
263-9495	684	265-7629	510	267-3175	782	269-4157	244
264-0194	306		517	267-3179	710	269-6275	6
	308	265-8935	782	267-3183	▶797	269-6650	52
264-0196	306	265-8941	749	267-3504	684	269-6977	420
	308		750	267-3506	684	270-0518	439
264-0380	322	265-8945	▶720	267-3507	684		441
264-0381	322	265-8949	756	267-3508	684	270-2705	322
264-0387	452	265-8950	756	267-5503	406	270-2807	284
264-0388	452	265-8969	526	267-6599	3	270-3651	79
264-0495	743	265-9383	299		▶34	270-3844	684
264-0496	743	265-9385	52	267-8628	306	270-5424	284
264-0637	539	265-9516	332		308	270-5425	577
	546	265-9706	510	267-8715	781	270-5426	284
264-0638	539		517	267-9386	68	270-6986	1
	546	265-9707	510	268-3517	756		▶79
264-1180	261		517	268-3522	723	270-6987	▶93
	264	266-0199	306	268-3523	723	270-6988	▶95
264-1434	3		308		726	270-7003	319
	▶55	266-1595	471	268-3527	726		506
264-2392	▶424	266-2022	300		729	270-7004	319
264-2393	424	266-2423	1	268-3528	723		506
264-2993	257		▶420	268-3529	726	270-7103	539
	▶506	266-2963	86	268-3530	756		546
264-2994	260	266-2964	86	268-3531	723	270-9583	79
	▶319	266-2965	86	268-3532	726	271-0654	421
264-3152	73	266-3563	421		729	271-1655	311
264-5051	1	266-3706	86	268-3533	729	271-1656	311
	▶428	266-3724	49	268-3534	723	271-1657	311
264-6798	73		▶526	268-3535	726	271-1658	311
264-6870	104	266-3753	703		729	271-1659	311
	106	266-4616	266	268-3644	723	271-1878	539
264-7021	104	266-4665	420		726		546
	106	266-5953	506		729	271-2387	311
	108	266-6025	108	268-5817	104	271-2389	311
	110		110		106	271-3267	729
264-7522	2	266-6026	712		108	271-3959	45
	▶246	266-6149	474		110	271-5228	321
264-8214	396		477	268-6570	1	271-5242	539
	398	266-6712	439		▶46		546

PROOF

PART NUMBER INDEX

Part	Page	Part	Page	Part	Page	Part	Page
271-5397	1						
	►447						
271-5576	447						
271-5578	447						
271-5580	447						
271-5581	447						
271-5615	539						
	546						
271-5617	539						
	546						
271-6369	530						
271-6370	530						
271-6465	447						
271-6649	743						
271-7495	511						
	519						
271-8508	540						
	547						
271-8509	547						
271-8510	540						
	547						
272-1045	288						
	►289						
272-9877	52						
272-9878	52						
273-2644	52						
273-2694	52						

PROOF

► **PRIMARY REFERENCE**

MEMORANDA

PROOF

PROOF

CATERPILLAR®

PROOF

© 2005 Caterpillar
All Rights Reserved

Printed in U.S.A.