ABRIL 1989

FIATALLIS®

RUTHZIL TRATOR COMERCIAL DE PEÇAS LTDA 11 97083-6812 ROLANDO CITRANGULO

14C

Crawler Tractor

S/N 050101 - UP

PARTS CATALOG

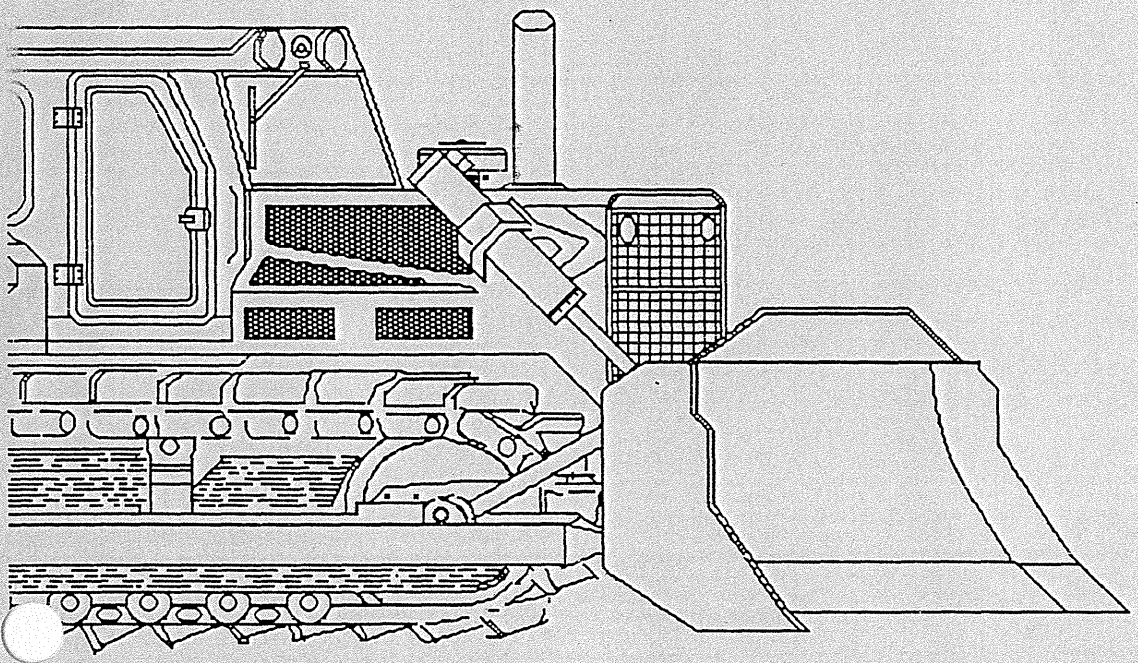

FORM 73143552
Revised 4-89

14C

PARTS CATALOG – CATALOGO PARTI DI RICAMBIO – CATALOGUE DES PIECES DETACHEES
ERSATZTEILKATALOG – CATÁLOGO DE PIEZAS DE REPUESTO

WARNING	-	study the operation and maintenance instruction manual through before starting, operating, maintaining, fueling or servicing this machine
ATTENZIONE	-	leggere attentamente il manuale delle istruzioni per l'Uso e la Manutenzione prima di procedere alle operazioni di avviamento, impiego, manutenzione, rifornimento combustibile od altri interventi sulla macchina
ATTENTION	-	lisez attentivement le manuel d'instruction pour la conduite et l'entretien avant d'effectuer les operations de mise en marche, utilisation, entretien, ravitaillement en combustible ou d'autres operations sur l'engin
ACHTUNG	-	Betriebs - und Wartungsanleitung aufmerksam durchlesen, bevor das Gerät angelassen, gefahren, gewartet, betankt oder eingestellt wird
ATENCIÓN	-	lea atentamente el manual de empleo y cuidado antes de poner manos a las operaciones de puesta en marcha, manejo, mantenimiento, repostado de combustible, y otras que fuere

COPYRIGHT BY FIATALLIS

Reproduction of text and illustrations or any part thereof is not permitted
È vietata la riproduzione anche parziale del testo e delle illustrazioni
La reproduction même partielle du texte et des illustrations est interdite
Textnachdruck und Reproduktion der Abbildungen auch auszugsweise verboten
Se prohibe la imitación o copia del texto y de los grabados

Stampa - Linea Grafica Dessí - Chieri (TO)

GENERAL INDEX

Ordering parts	3
How to use the Catalog	3/1
Alphabetical Index	3/3
Optional Equipment	5
Indentification	4
Numberical Index	6
Hose parts	7
Painting and marking	8
Kit list (part kits)	9
Summary of major sections	10

TABLE DES MATIERES

Instruction pour la commande des pieces detachees	3/6
Model d'emploi du catalogue	3/9
Identification	4
Liste des variantes	5
Liste numerique des pieces detachees	6
Pieces pour flexibles	7
Peinture et decalcomanies	8
Liste des jeux reparation	9
Index des sections principales	10

INDICE GENERAL

Como se piden los recambios	5/9
Modo de empleo del catalogo	3/10
Identification	4
Lista de variantes	5
Indice numerico de las piezas	6
Piezas para mangueras	7
Pintura y calcomanias	8
Indice dos juegos de reparacion	9
Indice de los capitulos principales	10

NOTICE

The right is reserved to change the construction or material of any parts where it seems desirable to do so without incurring the obligation of installing such changes on units already delivered.
Additional publications pertaining to this model and to all other FIATALLIS products are available through FIATALLIS dealers. Publications are generally available in several languages.
Refer to Service Publications Index form 604.07.026 for all such publications; the index is available from FIATALLIS.

INSTRUCTIONS FOR ORDERING PARTS

At the time this parts catalog was published the listed part numbers were current. It is our policy to constantly improve our machines and therefore, part numbers and design may change.
When ordering parts, verify part numbers through your dealer's microfiche and master numerical index which are up to date with all the latest part numbers.

ORDER PARTS FROM THE DEALER COVERING THE LOCAL TERRITORY

Orders for spare parts must include the following data (see page 4):

- Model, Serial Number, Engine model, Engine serial number, marked on engine block.
- Specify the part number (shown on Spare Parts Catalog list), possibly completed by it description. If parts refer to an assembly which has a model or serial number, also include this information.
- Give post office address, town, county and state where parts are to be shipped.
- Also specify whether material is to be shipped by freight, express or parcel post.
- Confirm all telephone or telegraph orders in writing.

Parts can only be returned to/through the dealer from whom the parts were purchased and **must have prior written authorisation.** Each return will be treated individually.
Unless claims for shortages or errors are made immediately upon receipt of goods, they will not be considered.
When broken goods are received, a full description of the damage should be made by the carrier agent on the freight bill.
FIATALLIS responsibility is limited, and ceases upon completion of sale conditions provided for each delivery.

USE OF THE CATALOG

To locate the spare parts correctly, proceed as follows:
a) Consult the **version list** on page 4 to find the code number of the version involved; see following para 1 **(6)**.
b) Consult the illustrations and the associated **spare parts lists** as directed below in **1** and **2**.
c) To identify the component of the possible special equipment of the machine, consult the **optional equipment list** on page **5** to find the code number and subgroup.

1. **Illustrations** (see example on page 2/1)
Illustrations show the spare parts of each subgroup. The spare parts illustrated are identified by a **reference number** (ITEM). This number may be replaced by other indications, for example:
E3.06: Part shown only in subgroup **E3.06**
Moreover, each illustration shows:
— **Subgroup number (1)** — **Sheet number (2)** used when one subgroup covers several sheets, and — **Updating indication (3)**, for example:
Suffix **06**, to print no. **604.01.046**, indicates that subgroup modification is shown in **6th** updating of the catalog dated **23-2-81**. When code **(3)**, is missing, no changes were introduced. **Updating publication description, if any (4); subgroup title (5)** — **version code (6)** whith reference to previous point (a).
In lack of said codes, the illustration applies to all model versions coverd by the catalog.
— **Indication of part kit (7)**, with associated part numbers and part kit symbol. (See page 9 for kit composition).

2. **Spare parts list** (see example on page 2/1)
They list the spare parts of each subgroup contained in the corresponding illustrations. The following is shown for each part:
(8) ITEM: **number associating the part shown with the respective "part number".**
(9) PART NUMBER: **spare part order number.**
(10) Q.TY: **total quantity of the part.** The quantity may be replaced by the following indications:
L = supplied by length, **K** = kit to be ordered in the desired quantity.
(11) TRANS. CODE: **For retrieval of the French, German, Spanish translations** of the part name (consult the basic part names in last section of Catalog; page A1).

(12) DESCRIPTION/DENOMINAZIONE: **Description of the part in English and Italian.** In case of modification, the part name is completed by the EFFECTIVENES INDICATION and DIRECTION FOR REPLACEMENT.
Effectiveness example:
Up to frame no. 004652 **(13)**: installed on machines with frame nos. up to 004652.
From frame no. 004653 **(14)**: installed on machines with frame nos. from 004653.
Examples of direction for replacement:
4606783 = 79021573 **(15)**: on exhaustion of stocks of part 4606783 fit part 79021573.
4606787 = 79021574 + 79021576 **(16)**: on exhaustion of stocks of part 4606787 fit part 79021574 plus 79021576.
4606792 = 79021576 – 4606794 **(17)**: on exhaustion of stocks of part 4606792 fit 79021576 and discard 4606794.
If no directions for replacement are given under effectiveness indication, this means that the old and new parts are not interchangeable and, hence, the former must be supplied as spare.
Other useful indications may be provided **(18)** under DESCRIPTION/ DENOMINAZIONE after sign — (for French, German, Spanish equivalents, see additional list heading the basic part name list, page Ao). Terms RIGHT/DESTRO and LEFT/SINISTRO refer to the direction of machine forward travel.
Should the word WRONG appear next to a part name without the corresponding CORRECT on the line immediately below it means that the associated part was erroneously included at an earlier stage.
(19) Reference symbol for tracing the illustration on the fiche and model.
(20) Subgroup, illustration number (when the subgroup includes more than one illustration), page number (when the listing for one illustration takes more than one page).
(21) Optional equipment code: this number indicates that parts listed and marked (*) belong to that given **equipment.** If on the contrary the code appears on the illustration only, it means that all parts of the subgroup belong to the special equipment in question (See para (c) above).
(22) Standard part dimensional data.

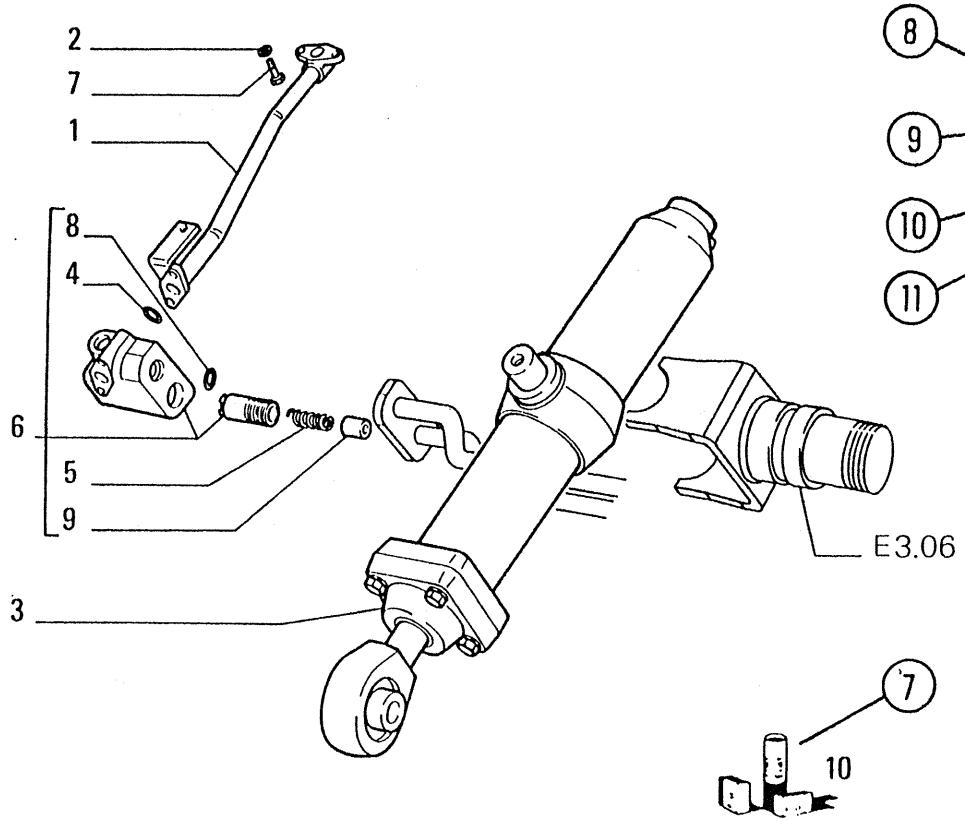

ITEM	PART NUMBER	QTY	TRANS CODE	DESCRIPTION	DESCRIZIONE
1	4318965	1	193T	PIPE - RIGHT	TUBO - DESTRO
	4513436	1	193T	PIPE - RIGHT (*)	TUBO - DESTRO (*)
	4606783	1	193T	PIPE - LEFT	TUBO - SINISTRO
			53F	PRIOR TO S/N 004652	FINO AL TELAIO 004642
				4606783 = 79021573	4606783 = 79021573
	79021573	1	193T	PIPE - LEFT	TUBO - SINISTRO
			4D	S/N 004653 AND UP	DAL TELAIO 004653
2	12638601	2	131R	WASHER 10×18	ROSETTA 10×18
3	4606786	1	164C	CYLINDER - RIGHT ASSEMBLY	CILINDRO - DESTRO COMPLETO
				SEE SGR. E3.32	VEDERE SGR. E3.32
	4606787	1	164C	CYLINDER - LEFT ASSEMBLY	CILINDRO - SINISTRO COMPLETO
				SEE SGR. E3.32	VEDERE SGR. E3.32
			53F	PRIOR TO S/N 004652	FINO AL TELAIO 004652
				4606787 = 79021574 + 79021576	4606787 = 79021574 + 79021576
	79021574	1	164C	CYLINDER - LEFT ASSEMBLY	CILINDRO - SINISTRO COMPLETO
			4D	S/N 004653 AND UP	DAL TELAIO 004653
4	4606788	1	55A	SEAL - WRONG	ANELLO DI TENUTA - ERRATA
	4606789	1	55A	SEAL - CORRECT	ANELLO DI TENUTA - CORRIGE
5	4606790	1	100M	SPRING	MOLLA
6	4606791	1	10V	VALVE - RIGHT ASSEMBLY	VALVOLA - DESTRO COMPLETO
	4606792	1	10V	VALVE - LEFT ASSEMBLY	VALVOLA - SINISTRO COMPLETO
			53F	PRIOR TO S/N 004652	FINO AL TELAIO 004652
				4606792 = 79021576 - 4606794	4606792 = 79021576 - 4606794
	79021576	1	10V	VALVE - LEFT ASSEMBLY	VALVOLA - SINISTRO COMPLETO
			4D	S/N 004653 AN UP	DAL TELAIO 004653
7	11307021	2	40V	SCREW 10×1,25×40	VITE 10×1,25×40
8	14453381	1	55A	SEAL 1,78×15,60	ANELLO DI TENUTA 1,78×15,60
9	4606795	1	50T	PLUG	TAPPO
10	79021577	K	1K	KIT SEE PAGE 9	CORREDO VEDERE PAGINA 9
(*)			469P	FOR OPTIONAL 30.1070.06.1	PER VARIANTE 30.1070.06.1

Optional / Variante 30.1070.06.1

ALPHABETICAL INDEX

ACCESSORIES..... H104(1)(2)
AIR CLEANER..... A222,A222/2
AIR COMPRESSOR MOUNTING & LINES..... E101(2)
ALTERNATOR..... A119,/1,F301/2,F301(3)
ASPIRATOR..... A222/1
BACKUP ALARM..... F401/3(1)(2),F501
BATTERIES & CABLES..... F301(1)(2)
BATTERY HEATER..... A243/4(2)
BATTERY MOUNTING..... F301/1
BELT,DRIVE..... A119,A409(2),/1,/3
BEVEL GEAR & SHAFT..... B406
BOTTOM GUARDS..... L312/1,L312(1)(2)
BRAKE CONTROL..... C101(1)(2),C101/1(1)(2)
BRAKE DRUM..... D220
BRAKES..... C101(3)
CAB..... L104(1)
  DOOR ASSEMBLY..... L109
  DRYER & CONDENSER LINES..... E101(4)
  EVAPORATOR & LINES..... E101(3)
  GLASS..... L104(4)
  HEATER HOSES..... E102(2)
  HEATING & COOLING UNIT..... E102(1)
  REAR SCREEN..... L104/1
  SOUND SUPPORESSION..... L104(3)
  SEAL GROUP..... L104/2
  WINDSHIELD WASHERS & WIPERS..... F505
  WIRING..... F401/2(1),F401(6)
CAMSHAFT..... A107,/1
CANOPY..... L308
C-FRAME..... E310
COLD WEATHER STARTING AIDS..... A243
CONNECTING ROD..... A105,/1
CONTROL VALVES (DOZER,TILT)..... E302(1)
COOLANT FILTER LINES..... A402/1(3)
COWL..... L101(3),L101(4),L101(4A)
CRANKSHAFT..... A103(1),/1(1)
CRANKSHAFT DAMPER..... A104,/1
CRANKSHAFT PULLEY..... A115,A119
CYLINDER BLOCK..... A101(1),/1(1)
CYLINDER HEAD..... A101(2),/1(2)
CYLINDER MOUNTING (DOZER)..... E306
CYLINDER SLEEVE..... A101(1),/1(1)
CYLINDERS
  DOZER..... E332
  TILT..... E332/1,/2,/4
  RIPPER..... E332/3
CYLINDERS & PIPING (DOZER)..... E302(6)
CYLINDERS & PIPING (RIPPER)..... E302/1,/4
DIAGNOSTIC SYSTEM..... B501(1)(2)
DOZER CYLINDER GUARD..... E302/5
DOZER PUMP & LINES..... E302(4)
DOZER PUMP DRIVE..... E302(2)
DOZER VALVE & LINES..... E302(3)(5)(8)
DRAWBAR..... D102,D102/1,D103/1
ELEMENTS
  AIR CLEANER..... A223,/1
  COOLANT FILTER..... A402/2(3)
  DOZER HYDRAULIC SYSTEM FILTER..... E328
  ENGINE OIL FILTER..... A303,/1
  FUEL FILTER..... A201(1),A226,/1
  FUEL FILTER (SEDIMENT BOWL)..... A224/1(3),A225,/1
  STEERING FILTER..... D224,D228,D228/1
  TORQUE CONVERTER FILTER..... B109(1)
  TRANSMISSION HYDRAULIC SYSTEM OIL FILTER..... B217
ENGINE..... A000,/1
ENGINE & MOUNTING..... A001,A002/1
ENGINE BREATHER..... A125,/1
ENGINE COOLANT HEATER... A243/2-6,A243/3(1)(2),A243/4(3)
ENGINE DECELERATOR..... A221(1)
ENGINE LUBRICATION SYSTEM..... A301(4),/1(3)(4)
ENGINE OIL COOLER..... A303,/1,A404
ENGINE OIL HEATER..... A243/4(1)
ENGINE SHUT-OFF CONTROL..... A221(1)
EQUILIZING BEAM..... D301
EXHAUST PIPE..... A256,/1
FAN..... A409(2),A409/1,/2/,3
FAN DRIVE..... A409(1)(2),A409/1,/3
FAN GUARD..... A401(1)
FILTERS
  COOLANT..... A402/3(3)
  ENGINE OIL..... A303,/1,A401(2),A301/1(2)
  FUEL..... A224(4),/1(3)
  STEERING OIL..... D224,D228,D228/1
  TORQUE CONVERTER OIL..... B109(1)
  TRANSMISSION OIL..... B217
FINAL DRIVE
  CASES..... B408,B411
  HOUSING..... B408
  INTERMEDIATE GEARS..... B412
  OUTBOARD BEARING & SEAL..... D333
  PINION SHAFT..... B406
  SPROCKET SHAFT..... D333
FLOOR..... L304(1)(2)
FLYWHEEL..... A103(1),/1(1)
FLYWHEEL HOUSING..... A102(2),/1(2)
FUEL FILTERS..... A224/1(3),A224(4)
FUEL FILTER & LINES..... A224/1(3),A224(4)
FUEL HEATER..... A243/2(1)
FUEL HEATER LINES..... A201/1
FUEL LINES..... A201(1)
FUEL RETURN LINES..... A224(2),A224/1(4)
FUEL TANK..... A201(2)
FUEL TANK GUARD..... A201/A
FUEL/WATER SEPARATOR..... A201(1B)
GAUGES
  BEVEL GEAR COMP.OIL LEVEL..... B408
  ENGINE OIL LEVEL..... A301/1(3),A301(4)
  ENGINE OIL PRESSURE..... A301(3)
  ENGINE TEMPERATURE..... F510,F510A
  FUEL LEVEL..... A201(1)
  HOUR METER..... F510,(A)
  HYDRAULIC OIL LEVEL..... E328
  TRANSMISSION OIL LEVEL..... B206,B206/1
  TRANSMISSION OIL PRESSURE..... F501
  TRANSMISSION OIL TEMPERATURE GAUGE..... F510,F510A
GEARSHIFT CONTROLS..... B207,B210,B210/A(1)(2)
HAND BRAKE..... C135
HAND PRIMING PUMP..... A224/1(2),A225,A225/1
HEAT EXCHANGER(ENGINE)..... A303(2),/1(2)
HEAT EXCHANGER(TRANSMISSION..... B221,/1,/2
HOOD..... L101(2)
HOOD SIDE PLATES..... L101(2),/2(2)(3),/3(2)(3),L101/1
HORN..... F401(5),F501
HOUR METER DRIVE..... A108,/1
HYDRAULIC STEERING CONTROL..... C102,C102/1
HYDRAULIC TANK..... E328
HYDRAULIC TILT..... E302/2,/3
HYDRAULIC TILT PIPING..... E302/2,/3
HYDRAULIC TRACK ADJUSTER..... D334(3)(4)
IMPLEMENT CONTROLS..... E325(1)(2)
INECJTION NOZZLE..... A235,/1,/2,/3
INJECTION NOZZLES & LINES..... A224(2)(3),/1(4)
INJECTION PUMP..... A224(1),.1(1)(2)
  ADVANCE VARIATOR..... A233
  CAMSHAFT..... A227(2),/1(2)
  GOVERNOR..... A228(1)-A228/2(5)
  GOVERNOR WEIGHTS..... A233,A237
  HOUSING & COVER..... A227,/1(1),/2(1)
INJECTION PUMP DRIVE..... A116./1
KIT INDEX..... 9-9/9
LIGHTS
  HEAD..... F629(1)
  REAR FLOOD..... F629(2)
  TAIL..... F401/1(5)
  WARNING (ELECTRICAL SYSTEM)..... F401(1)
LIGHTS & WIRING..... F401(1-5),F401/1(1)-(7),/4
MAIN BEARINGS..... A103(2),/1(2)

ALPHABETICAL INDEX

MAIN FRAME..... D101
MAIN HOUSING..... B408
MANIFOLDS
  EXHAUST..... A254,/1
  INTAKE..... A254,/1
  WATER OUTLET..... A402(2)(3),/2(2)
MOLDBOARD..... E313,E313/1,/2
MOLDBOARD BRACES..... E310/2,/3,/4
MOLDBOARD STRUTS..... E310/5
MUFFLER..... A256,/1
NUMERICAL INDEX..... 7-7/80
OIL COOLER(TRANSMISSION)..... B218,/1
OIL FILTER & LINES..... A301(2)
OIL PAN..... A102(2),/1(1)
OIL PUMPS (ENGINE)..... A301(1),/1(1)
OPTIONAL EQUIPMENT..... 5/1-5/7
PAINTING & MARKING..... 8,L125
PISTON..... A105,/1
PULL HOOK..... D101
PUMP
  DOZER..... E329,E329/1
  ENGINE OIL..... A302,A302/1,/2
  ENGINE PRIMER..... A224/1(2),A225,/2
  FUEL INJECTION..... A224(1),/1(1)
  STEERING..... D227(1-3),D227/A(1-3)
  TRANSMISSION OIL..... B111
  WATER..... A403,/1
PUSH BEAMS & STRUTS..... E310/2,/3,/4,/5
RADIATOR & MOUNTING..... A401(1)(2)
RADIATOR CURTAIN..... L101/3,/4
RADIATOR GUARD..... L101(1),/2(1)
REAR FENDERS..... L304(1),/1
REAR FLOOD LIGHT..... F401(4)
RIPPER LIFTING ARMS..... E310/1
RIPPER MOUNTS..... E305
RIPPER TEETH & SHANK..... E315,E315A
SEAT..... L601/1
SEAT & FUEL TANK SUPPORT..... L101(4)(4A),/2(4)
SEAT PANELS..... L310(1-4)
SPEED SELECTION GEAR SHIFT..... B207
SPROCKET GUARD..... L311(1)
STARTER..... F201,/1
STEERING CLUTCHES..... D220
STEERING CONTROL..... D223(1)(2)
STEERING CONTROL VALVE LINES..... C102,C102/1
STEEEING LEVERS & LINKAGE..... D222(1)(2)
SWEEPS..... L308/1,/2
TACHOMETER DRIVE..... A108,/1
THERMOSTAT..... A402(2),A402/2(1)
THROTTLE CONTROL..... A221(1)(2)
TILT CYLINDER PIPING..... E302/2,/2A,/3
TIMING GEAR HOUSING..... A102(1),/1(1)
TIMING GEARS..... A106,/1
TOOLS..... H101(1)(2),/1,H101A(1)(2)
TORQUE CONVERTER..... B105
TORQUE CONVERTER HOUSING & COVERS..... B108
TORQUE CONVERTER PUMP & VALVE LINE... B109(2),B110(1)(2)
TRACK..... D340(1-3),/1(1-3)
TRACK CARRIER ROLLER..... D338
TRACK FRAME..... D330,D330/1
TRACK FRAME CROSS BAR..... D331
TRACK IDLER..... D334(1)(2)
TRACK RELEASE..... D334(3)(3A)(4)
TRACK RELEASE GUARDS..... L311(1)
TRACK ROLLER..... D337,D337/1
TRACK ROLLER GUARD..... L311(1)(2)
TRANSMISSION
  CASE & COVERS..... B201(1)(2)(3)
  FORWARD & 1ST SPEED SHAFT..... B204(3),B204/3(3)
  INPUT SHAFT (YOKE)..... B204/3
  OUTPUT SHAFT..... B204(2)
  2ND & 3RD SPEED SHAFT..... B204(2)
  REVERSE SHAFT..... B204(4)
TRANSMISSION & TORQUE CONVERTER VENT LINES..... B115
TRANSMISSION HEAT EXCHANGER..... B218,/1
TRANSMISSION HYDRAULIC CONTROL..... B230(1)(2)(3)
TRANSMISSION OIL LINES..... B206,/1,/2
TRANSMISSION LOCK LEVER..... B238
TURBOCHARGER & MOUNTING..... A252
TURBOCHARGER DRAIN LING..... A301/1(5)
UNIVERSAL JOINT..... B301
VALVE OPERATING MECHAMISM..... A107,/1
VALVES
  DOZER CONTROL..... E331(1)(2)
  DOZER TILT CONTROL..... E331(1-3)
  EXHAUST..... A107,/1
  INTAKE..... A107,/1
  STEERING CONTROL..... D229(1,2),D230,/1
  TRANSMISSION DISTRIBUTOR VALVE..... B233(1-4)
VARIATIONS LIST..... 5/1-5/7
WATER OUTLET MANIFOLD..... A402(2)(3),/2(2)
WATER PUMP DRIVE..... A115
WATER PUMP & LINES..... A402(1-4),/1,/2(1)(2)

ATTENTION

FIATALLIS se réserve le droit de modifier la construction ou le matériau de toute pièce, si cela se révèle nécessaire, sans devoir apporter ces modifications sur les pièces déjà livrées.
D'autres publications concernant ce modèle et tous les autres modèles FIATALLIS sont disponibles près au des Concessionnaires. En général, ces publications sont disponibles en plusieurs langues.
Pour trouver ces publications, se référer au catalogue des publications techniques 604.07.026. Des exemplaires du catalogue sont disponibles près au des Concessionnaires FIATALLIS.

INSTRUCTIONS POUR LA COMMANDE DES PIECES DE RECHANGE

Les numéros de commande indiqués sur ce catalogue sont mis à jour à la date de sortie de la publication. Nous nous efforçons constamment d'améliorer les machines et, par conséquent, les numéros de commande et les illustrations peuvent ne plus être à jour.
Au moment de passer commande des pièces de rechange, contrôler les numéros de commande près au de Votre Concessionnaire, qui despose des microfiches et de la liste générale des pièces de rechange.

PASSER COMMANDE DE PIECES DE RECHANGE CHEZ LE CONCESSIONNAIRE DE VOTRE ZONE

Les commandes de pièces de rechange doivent comporter les indications suivantes (voir page 4):

- Modèle de la machine, Numéro du chassis, Type du moteur, Numéro du moteur estampillé sur le bâti moteur.
- Indiquer le numéro de commande de la pièce désirée (indiquée sur les listes du catalogue), accompagné si possible de sa désignation. Si les pièces se rapportent à un groupe possédant son propre numéro de modèle ou de série, indiquer aussi ce dernier.
- Indiquer dans l'adresse, le bureau de poste, la ville, la région et le pays où les pièces de rechange doivent être envoyées.
- Indiquer de plus les modalités d'expédition du matériel (par mer, par terre, exprès ou colis postal).
- Confirmer par écrit toutes les commandes anticipées par téléphone ou télégraphe.

En cas de renvois de pièces, ils pourront être effectués seulement à/ou par l'intermédiaire du Concessionnaire chez lequel les pièces ont été achetées et **Ils devront être autorisés au préalable par écrit**. Tour renvoi sera examiné à la fois.
Les réclamations pour manques et défauts, qui ne seront pas présentées immédiatement à la réception de la marchandise, seront rejetées.
En cas de réception de marchandise endommagée, une description complète doit être présentée par l'agent transporteur sur le bordereau d'expédition.
La responsabilité de FIATALLIS se limite et cesse au moment de l'exécution des conditions de vente prévues pour chaque fourniture.

REGLES POUR LA CONSULTATION DU CATALOGUE

En vue d'une recherche correcte des pièces de rechange, il est nécessaire de:

a) Consulter la **liste des versions** à page 4, pour repérer le code numérique éventuel de la version concernée; voir paragraphe 1, point (6) ci-après.

b) Consulter les **planches illustrées** et leurs **listes de pièces de rechange**, comme indiqué aux paragraphes **1 et 2.**

c) Pour les modèles comportant des variantes, consulter la **liste des variantes** à page 5, où il est reporté le numéro code correspondant, par ordre progressif, et la liste des sous-groupes concernés.

1. **Illustrations** (voir exemple page 2/5)
Elles représentent les pièces de rechange de chaque groupe dans lesquels la machine est divisée.
Les pièces de rechange représentées sont repérées par le **numéro de référence** (ITEM). Le numéro de référence peut être remplacé par d'autres indications, par exemple:
E3.06: pièce illustrée exclusivement au Sgr. **E3.06.**
Chaque illustration reporte en outre:
Code de sous-groupe (1) — numéro de feuille (2), utilisé lorsque ce même sous-groupe comporte plusieurs planches — **indications de mise à jour (3)**, par exemple:
Le suffixe **06**, ajouté au numéro d'imprimé **604.01.046**, indique que le sous-groupe a été modifié avec la 6ème mise à jour du catalogue, parue en date **23 février 1981.** Le manque de l'indication **(3)** signifie qu'aucune modification n'a été apportée. **Indication de la parution d'une mise à jour éventuelle (4) — désignation du sous-groupe (5) — code de la version (6)**, avec référence au point **(a)** précédent. L'absence de codes veut dire que la planche est valable pour toutes les versions du modèle auquel se rapporte le catalogue — **indication de l'existance de kits de rechange (7)**, avec les numéros de référence correspondants (pour la composition des trousses voir page 9).

2. **Listes des pièces de rechange** (voir exemple page 2/5)
Ces listes énumèrent les pièces de rechange de chaque groupe, contenues dans les illustrations correspondantes, et elles reportent pour chaque pièce:
(8) ITEM: **numéro d'apparlage de la pièce représentée avec son « part number ».**
(9) PART NUMBER: **numéro de commande de la pièce de rechange.**
(10) Q.TY: **quantité totale de la pièce**, rapportée à la planche. La quantité peut être remplacée par les indications suivantes:
L: livré par longueur, **K**: kit à demander dans les quantités désirées.
(11) TRANS. CODE: **code pour la recherche de la traduction en français, allemand, espagnol** de la description (consulter la liste des désignations base au fond du catalogue, page A1).
(12) DESCRIPTION/DENOMINAZIONE: **description de la pièce en anglais et en italien.** En cas de modification, la désignation est complétée par l'INDICATION D'EFFECTUATION et les INSTRUCTIONS DE RECHANGE éventuelles.
Exemple d'indication d'effectuation d'une modification:
jusqu'au châssis n° 004652 **(13)**: montée sur les tracteurs avec numéro de châssis jusqu'à 004652;
à partir du châssis n° 004653 **(14)**: montée sur les tracteurs avec numéro de châssis à partir de 004653.
Exemple d'instructions de rechange:
4606783 = 79021573 **(15)**: dès l'épuisement des stocks de la pièce 4606783, monter la pièce 79021573;
4606787 = 79021574 + 79021576 **(16)**: dès l'epuisement des stocks de la pièce 4606787, monter la pièce 79021574 plus la pièce 79021576;
4606792 = 79021576 – 4606794 **(17)**: dès l'épuisement des stocks de la pièce 4606792, monter la pièce 79021576 en éliminant la pièce 4606794.
Si l'indication d'effectuation est suivie d'instructions de rechange, cela veut dire que la pièce avant-modification doit être toujours livrée de rechange, du fait qu'elle n'est pas interchangeable avec celle modifiée.
D'autres indications utiles **(18)** peuvent figurer dans la colonne DESCRIPTION/DENOMINAZIONE, après le signe — (pour la traduction de ces termes de l'anglais ou de l'italien en français, allemand et espagnol voir la liste des désignations supplémentaires au début de la liste des désignations de base, page Ao). Les termes RIGHT/DROIT et LEFT/GAUCHE se rapportent à la direction de roulement avant du tracteur.
Si le terme WRONG/ERRATA figure à côté de la désignation sans le terme correspondant CORRECT/CORRIGEZ à la ligne suivante, cela veut dire que cette pièce avait été incluse par erreur.
(19) Réference pour trouver la planche sur la fiche et modèle.
(20) Sous-groupe, numéro de planche (si le sous-groupe comporte plusieurs illustrations), numéro de page (si la liste des pièces de rechange d'une illustration occupe plus d'une page).
(21) Numéro-code de la variante: indique que les pièces énumérées et repérées par (*) concernent la variante indiquée; si par contre le code ne figure que dans l'illustration, cela signifie que toutes les pièces du sous-groupe appartiennent à la variante indiquée (voir point c précédent).
(22) Dimensions des pièces normalisées.

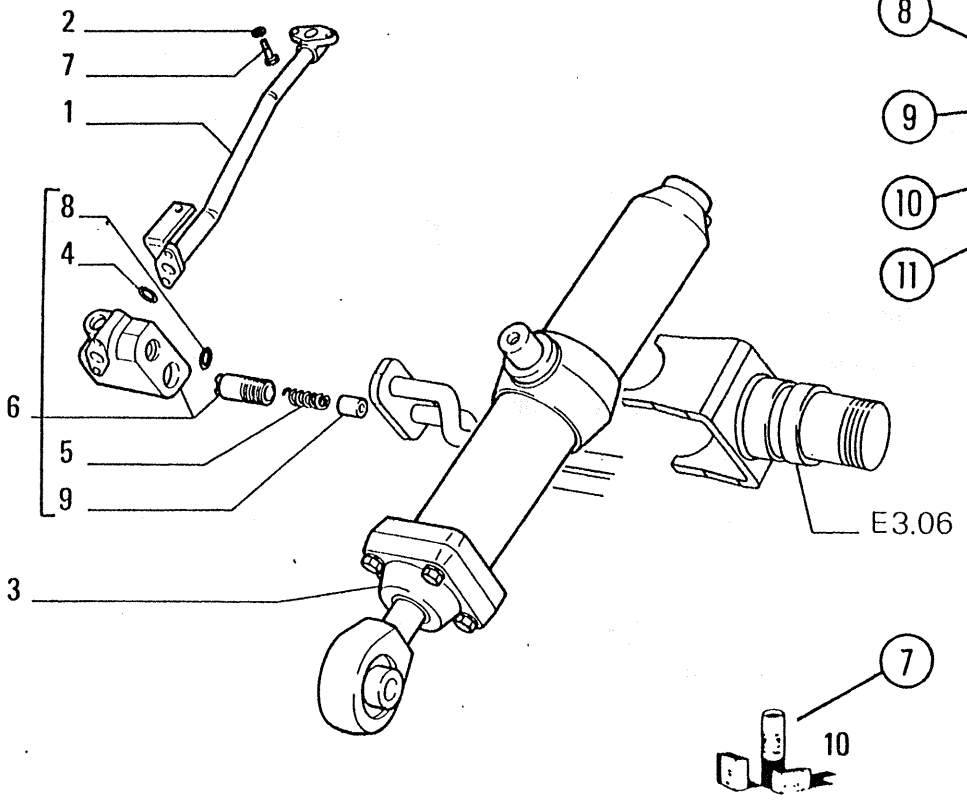

ITEM	PART NUMBER	QTY	TRANS CODE	DESCRIPTION	DESCRIZIONE
1	4318965	1	193T	PIPE - RIGHT	TUBO - DESTRO
	4513436	1	193T	PIPE - RIGHT (*)	TUBO - DESTRO (*)
	4606783	1	193T	PIPE - LEFT	TUBO - SINISTRO
			53F	PRIOR TO S/N 004652	FINO AL TELAIO 004642
				4606783 = 79021573	4606783 = 79021573
	79021573	1	193T	PIPE - LEFT	TUBO - SINISTRO
			4D	S/N 004653 AND UP	DAL TELAIO 004653
2	12638601	2	131R	WASHER 10×18	ROSETTA 10×18
3	4606786	1	164C	CYLINDER - RIGHT ASSEMBLY	CILINDRO - DESTRO COMPLETO
				SEE SGR. E3.32	VEDERE SGR. E3.32
	4606787	1	164C	CYLINDER - LEFT ASSEMBLY	CILINDRO - SINISTRO COMPLETO
				SEE SGR. E3.32	VEDERE SGR. E3.32
			53F	PRIOR TO S/N 004652	FINO AL TELAIO 004652
				4606787 = 79021574 + 79021576	4606787 = 79021574 + 79021576
	79021574	1	164C	CYLINDER - LEFT ASSEMBLY	CILINDRO - SINISTRO COMPLETO
			4D	S/N 004653 AND UP	DAL TELAIO 004653
4	4606788	1	55A	SEAL - WRONG	ANELLO DI TENUTA - ERRATA
	4606789	1	55A	SEAL - CORRECT	ANELLO DI TENUTA - CORRIGE
5	4606790	1	100M	SPRING	MOLLA
6	4606791	1	10V	VALVE - RIGHT ASSEMBLY	VALVOLA - DESTRO COMPLETO
	4606792	1	10V	VALVE - LEFT ASSEMBLY	VALVOLA - SINISTRO COMPLETO
			53F	PRIOR TO S/N 004652	FINO AL TELAIO 004652
				4606792 = 79021576 - 4606794	4606792 = 79021576 - 4606794
	79021576	1	10V	VALVE - LEFT ASSEMBLY	VALVOLA - SINISTRO COMPLETO
			4D	S/N 004653 AN UP	DAL TELAIO 004653
7	11307021	2	40V	SCREW 10×1,25×40	VITE 10×1,25×40
8	14453381	1	55A	SEAL 1,78×15,60	ANELLO DI TENUTA 1,78×15,60
9	4606795	1	50T	PLUG	TAPPO
10	79021577	K	1K	KIT SEE PAGE 9	CORREDO VEDERE PAGINA 9
(*)			469P	FOR OPTIONAL 30.1070.06.1	PER VARIANTE 30.1070.06.1

(8) (9) (10) (11) (12) (13) (15) (14) (16) (18) (17) (22) (21)

Optional
Variante 30.1070.06.1

ADVERTENCIA

FIATALLIS se reserva el derecho de modificar la construcción o el material de cualquier pieza, si ello resultase procedente, pero sin obligarse a aplicar tales modificaciones a las unidades ya en servicio.
Otras publicaciones referentes a este modelo, lo mismo que a todos los restantes modelos FIATALLIS, son disponibles en los Concesionarios. Tales publicaciones, por lo general, son disponibles en diversas lenguas.
Para conocer tales publicaciones consúltese el catálogo de las publicaciones técnicas 604.07.026. Ejemplares de este catálogo obran en los Concesionarios FIATALLIS.

COMO SE ENCARGAN LOS RECAMBIOS

Los números de catálogo de las piezas reseñadas en esta publicatión están al día hasta la fecha de salida a luz de la misma. Nuestra política estriba en el afán de mejorar constantemente las máquinas, y por lo tanto, los números de catálogo y los grabados a veces puede no sean más efectivos. Con motivo, pues, de ir a encargar piezas de repuesto, verifique los números de catálogo con su Concesionario, el cual dispone de las microfichas y de la lista general de los recambios puesta al día.

ENCARGUENSE LOS RECAMBIOS AL CONCESIONARIO DE SU ZONA

Los encargos de piezas de repuesto tienen que incluir los datos siguientes (véase página 4):

- Modelo de la máquina, Número de fabricación del chasis, Modelo del motor, Número de fabricación del motor, punzonado en el bloque de cilindros.
- Indicar el número de catálogo de cada pieza encargada - tal cual figura en las listas del catálogo - posiblemente acompañado de la denominación que corresponde.

Si los recambios pertenecen a un conjunto que posee su propio número de modelo o de serie, indíquense incluso tales datos.

- En la dirección indíquense la oficina de correos, la ciudad, provincia y nación a donde han de remitirse los recambios.
- Además, indíquense las modalidades de expedición del material: transporte marítimo, terrestre, expreso, o paquete postal.
- Confirmar per escrito todos los encargos anunciados por teléfono y por cable.

Eventuales devoluciones de piezas podrán hacerse tan sólo al/o por conducto del Concesionario al cual se han comprado las piezas, y **deberán ser previamente autorizadas por escrito**. Cada devolución se tomará en cuenta según se merece.
Las reclamaciones por faltas o defectos no se tomarán en cuenta, a no ser que vengan efectuadas inmediatamente después de recibir la mercancía.
En caso de que se reciba mercancía que ha sufrido daños, una completa descripción del daño debería ser efectuada por el agente del transportista en el mismo documento de expedición.
La responsabilidad de FIATALLIS es limitada y cesa al complirse las condiciones de venta provistas para cada aprovisionamiento.

CÓMO SE MANEJA EL CATÁLOGO

Para buscar correctamente las piezas de repuesto, es preciso:
a) Consultar **la lista de versiones**, pág. 4, para identificar, en su caso, el código numérico de la versión que interesa; véase el siguiente párrafo **1**, punto **(6)**.
b) Consultar las **láminas** y las respectivas **listas de piezas de repuesto**, conforme se explica en los párrafos **1** y **2**.
c) Para los modelos que comprenden variantes, consultar la **lista de variantes**, pág. 5, donde se indica incluso el correspondiente número de código por orden progresivo, y la lista de los subgrupos afectados.

1. **Láminas** (véase el ejemplo, pág. 2/9)
Representan las piezas de repuesto de cada subgrupo en que se divide la máquina. Las piezas de repuesto representadas se designan mediante un **número de referencia** (ITEM), el cual puede ir sustituído por otras indicaciones; ejemplo:
E3.06: pieza ilustrada únicamente en el Sgr. **E3.06.**
Además, en cada lámina figuran:
El código del subgrupo (1) — el número de la hoja (2), cuando el mismo subgrupo comprende más de una lámina — **la indicación de su revisión (3)**; ejemplo: el sufijo **06**, que se agrega al número de la publicación **604.01.046**, significa que el subgrupo ha sido modificado en la **6ª** revisión del catálogo, editado en fecha de **23 de febrero de 1981**; de carecer la indicación **(3)**, significa que no ha habido modificaciones; — **la indicación, en su caso, de la publicación de la revisión (4) — la denominación del subgrupo (5) — el código de la versión (6),** con referencia al punto **(a)** que antecede; de faltar ese código, se entiende que la lámina es aplicable a todas las versiones del modelo de que se trata en el catálogo; — **la indicación de la existencia de fornituras de recambios (7),** con los respectivos números de referencia (véase en la pág. 9 la composición de las fornituras).

2. **Listas de las piezas de repuesto** (véase el ejemplo en la pág. 2/9)
En ellas se reseñan las piezas de repuesto de cada subgrupo representadas en las láminas correspondientes, indicando para cada pieza:
(8) ITEM: **el número de cada pieza representada que se acompaña a su « part number »**.
(9) PART NUMBER: **número de catálogo de cada pieza de repuesto**.
(10) Q.TY: **número total de la pieza** representada en la lámina; este número puede reemplazarse con las indicaciones siguientes: **L** = se entrega en trozos de suficiente longitud; **K** = fornitura que debe encargarse en la cantidad deseada.
(11) TRANS. CODE: **código para buscar la traducción al francés, alemán y español** de la denominación (consúltese la lista de las denominaciones base al final del catálogo, pág. A1).
(12) DESCRIPTION/DENOMINAZIONE: **denominación de la pieza en inglés e italiano**. En caso de modificaciones, la denominación viene integrada por la INDICACIONES DE SU APLICACIÓN y, en su caso, por las NORMAS DE RECAMBIO.
Ejemplo de indicación de aplicación de la modificación:
hasta el chasis nº 004652 **(13)**: incorporada a las máquinas con chasis hasta el número 004652;
a partir del chasis nº 004653 **(14)**: incorporada a las máquinas a partir del chasis con número 004653.
Ejemplo de normas de recambio:
4606783 = 79021573 **(15)**: al agotarse las reservas en almacén de la pieza 4606783, aplíquese la 79021573;
4606787 = 79021574 + 79021576 **(16)**: al agotarse las reservas en almacén de la pieza 4606787, aplíquese la 79021574 más la 79021576;
4606792 = 79021576 – 4606794 **(17)**: al agotarse las reservas en almacén de la pieza 4606792, aplíquese la 79021576 eliminando la 4606794.
Suponiendo que a la indicación de incorporación no se acompañen normas de recambio, ello significa que siempre tiene que entregarse el recambio de la pieza ante-modificación, por no ser intercambiable con aquella post-modificación.
Otras indicaciones útiles **(18)** pueden consignarse en la columna DESCRIPTION/DENOMINAZIONE, después del signo — (la traducción de estas voces del inglés o italiano al francés, alemán y español, figura en la lista de voces suplementarias que precede a la lista de denominaciones base (pág. Ao). Las voces RIGHT/DERECHO y LEFT/IZQUIERDO se refieren al sentido de marcha de la máquina.
Suponiendo que a una denominación se acompañe la palabra WRONG/DONDE DICE, y en el renglón siguiente no aparezca la correspondiente CORRECT/LEASE, significa que la pieza sobra, por un error.
(19) Ideograma para localizar la lámina en la ficha y modelo.
(20) Subgrupo, número de la lámina (si acaso el subgrupo comprende grabados diversos), número de la página (si acaso la lista de piezas de repuesto de una misma lámina ocupa más páginas).
(21) Número de código de la variante: indica que las piezas reseñadas y contraseñadas con (*) pertenecen a aquella misma variante. En cambio, si el código aparece tan sólo en la lámina, significa que todas las piezas de ese subgrupo pertenecen a esa variante (véase el punto c) que antecede.
(22) Dimensiones de las piezas normalizadas.

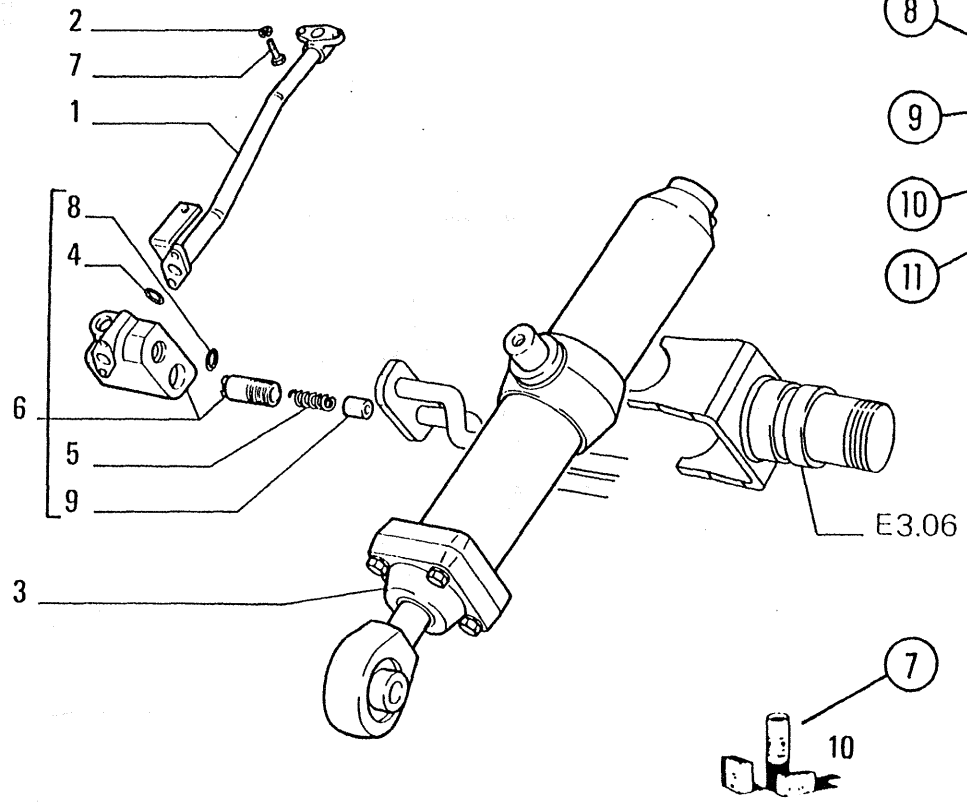

ITEM	PART NUMBER	QTY	TRANS CODE	DESCRIPTION	DESCRIZIONE
1	4318965	1	193T	PIPE - RIGHT	TUBO - DESTRO
	4513436	1	193T	PIPE - RIGHT (*)	TUBO - DESTRO (*)
	4606783	1	193T	PIPE - LEFT	TUBO - SINISTRO
			53F	PRIOR TO S/N 004652	FINO AL TELAIO 004642
				4606783 = 79021573	4606783 = 79021573
	79021573	1	193T	PIPE - LEFT	TUBO - SINISTRO
			4D	S/N 004653 AND UP	DAL TELAIO 004653
2	12638601	2	131R	WASHER 10×18	ROSETTA 10×18
3	4606786	1	164C	CYLINDER - RIGHT ASSEMBLY	CILINDRO - DESTRO COMPLETO
				SEE SGR. E3.32	VEDERE SGR. E3.32
	4606787	1	164C	CYLINDER - LEFT ASSEMBLY	CILINDRO - SINISTRO COMPLETO
				SEE SGR. E3.32	VEDERE SGR. E3.32
			53F	PRIOR TO S/N 004652	FINO AL TELAIO 004652
				4606787 = 79021574 + 79021576	4606787 = 79021574 + 79021576
	79021574	1	164C	CYLINDER - LEFT ASSEMBLY	CILINDRO - SINISTRO COMPLETO
			4D	S/N 004653 AND UP	DAL TELAIO 004653
4	4606788	1	55A	SEAL - WRONG	ANELLO DI TENUTA - ERRATA
	4606789	1	55A	SEAL - CORRECT	ANELLO DI TENUTA - CORRIGE
5	4606790	1	100M	SPRING	MOLLA
6	4606791	1	10V	VALVE - RIGHT ASSEMBLY	VALVOLA - DESTRO COMPLETO
	4606792	1	10V	VALVE - LEFT ASSEMBLY	VALVOLA - SINISTRO COMPLETO
			53F	PRIOR TO S/N 004652	FINO AL TELAIO 004652
				4606792 = 79021576 - 4606794	4606792 = 79021576 - 4606794
	79021576	1	10V	VALVE - LEFT ASSEMBLY	VALVOLA - SINISTRO COMPLETO
			4D	S/N 004653 AN UP	DAL TELAIO 004653
7	11307021	2	40V	SCREW 10×1,25×40	VITE 10×1,25×40
8	14453381	1	55A	SEAL 1,78×15,60	ANELLO DI TENUTA 1,78×15,60
9	4606795	1	50T	PLUG	TAPPO
10	79021577	K	1K	KIT SEE PAGE 9	CORREDO VEDERE PAGINA 9
(*)			469P	FOR OPTIONAL 30.1070.06.1	PER VARIANTE 30.1070.06.1

Optional / Variante 30.1070.06.1

IDENTIFICATION AND VERSION LIST - IDENTIFICAZIONE ED ELENCO DELLE VERSIONI
IDENTIFICATION ET LISTE DES VERSIONS - KENNZEICHEN UND VERZEICHNIS DER VERSIONEN - IDENTIFICACION Y LISTA DE VERSIONES

MODELS MODELES MODELOS	ENGINEERING CODE DESIGNATION TECHNIQUE DESIGNACION TECNICA	MODEL SERIAL NUMBER NUMERO DE SERIE DU MODELE NUMERO DE SERIE DEL MODELO		ENGINE MODEL MODELE DU MOTEUR MODELO DEL MOTOR	NUMERICAL CODE CODE NUMERIQUE CODIGO NUMERICO
		PRODUCT CODE CODE DE PRODUCTION CODIGO DEL PRODUCTO	UNIT NO. NUMERO DE L'UNITE NUM. DE LA UNIDAD		
14C	625.950.00.4	D14D1T	050.101	8205.03.531	01
14C	625.960.00.4	D14D1TL	050.339	8205.03.531	03
14C WINTERIZ.	625.950.00.4	D14D1T	052.052	8205.03.531	05
14C	625.950.00.4	D14D1T	052.919	8365.SIA11.01	06

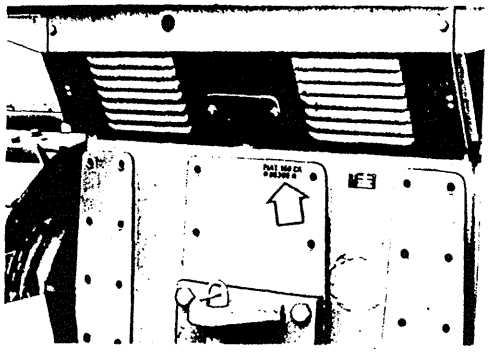

Machine serial number location
Emplacement du numéro de serie de la machine
Ubicación del número de serie de la maquina

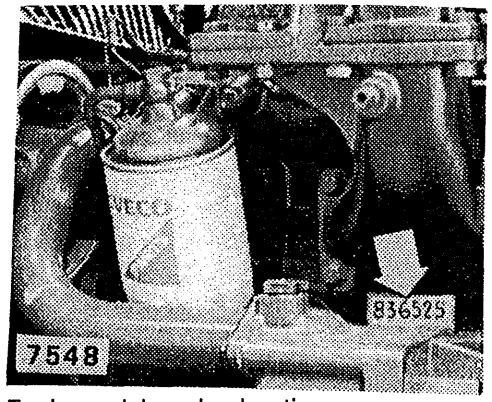

Engine serial number location
Emplacement du numéro de serie du moteur
Ubicación del número de serie del motor

RECORD YOUR SERIAL NUMBERS BELOW
ENREGISTREZ VOS NUMEROS DE SERIE CI-DESSOUS
ANOTE AQUI LOS NUMEROS DE SERIE

MACHINE SERIAL NUMBER
NUMERO DE SERIE DE LA MACHINE
NUMERO DE SERIE DE LA MAQUINA

ENGINE SERIAL NUMBER
NUMERO DE SERIE DU MOTEUR
NUMERO DE SERIE DEL MOTOR

OPTIONAL EQUIPMENT – ELENCO DELLE VARIANTI
LISTE DES VARIANTES – LISTE DER VARIATEN – LISTA DE VARIANTES

CODE - CODICE - CODE KENNUMMER - CODICO	SGR.	DESCRIPTION - DENOMINAZIONE DESIGNATION - BENENNUNG - DENOMINACIONES
30.0020.18.1	D2.22 - L1.01 - L3.04 - L3.10	OPERATOR COMPARTMENT SOUND INSULATION – INSONORIZZAZIONE POSTO GUIDA – INSONORISATION DU POSTE DE CONDUITE – INNER SCHALLDAEMPFUNG FUER FAHRER STAND – INSONORIZACION INTERIOR DEL PUESTO DE CONDUCION
30.0021.08.1 Units with 8205 Engine	A102, A254, A402(1)(2)(3)(4), D101, D333, D334(2), D337, D338, F201, F205/2, F301(1), F301(2A), F401(2)(3), L101(1)(2), L101/1, L304(1), L310(1)	WINTERIZATION – WINTERIZZAZIONE – EQUIPEMENT HIVER – WINTERAUSTUESTUNG – VERSION PARA CLIMA ARTICO
		WINTERIZATION – WINTERIZZAZIONE – EQUIPEMENT HIVER – WINTERAUSRUESTUNG – VERSION PARA CLIMA ARTICO
30.0022.24.1	A2.01 - A4.09/1 - L1.01/2 - L3.04	OUTSIDE SOUND ABATMENT – INSONORIZZAZIONE ESTERNA – INSONORIZATION EXTERIEURE – AEUSSERE SCHALLDAEMPFUNG – INSONORIZACION EXTERNA
30.0045.01.1	A2.01/A	FUEL-OIL TANK GUARD – RIPARO SERBATOIO COMBUSTIBILE OLIO – PROTECTION DE RESERVOIR A GAS-OIL HUILE – BRENNSTOFF-OELBEHAELTERABDECKUNG – PROTECCION DE DEPOSITO DE GAS-OIL ACEITE
30.0046.05.1	L3.04	TANK BOTTOM HEAVY DUTY GUARD – RIPARO INFERIORE SERBATOIO RINFORZATO – PROTECTION INFERIEURE RENFORCEE DE RESERVOIR – VERSTAERKTE OELBEHALTERABDECKUNG – DEFENSA INFERIOR REFORZADA DE DEPOSITO

30.0174.01.1	A4.01	RADIATOR – RADIATORE – RADIATEUR – KUEHLER – RADIADOR
30.0178.06.1	A4.09/2	FAN AND FAN DRIVE – VENTILATORE E SUO COMANDO – VENTILATEUR ET SA COMMANDE – LUEFTER UND LUEFTERANTRIEB – VENTILADOR Y SU MANDO
30.0187.07.1	A2.22/1	AIR CLEANER AND DUCTS – FILTRO ARIA E TUBAZIONI – FILTRE A AIR ET CANALISATIONS – LUFTFILTER UND LEITUNGEN – FILTRO DE AIRE Y TUBERIAS
30.0204.10.1	A2.43	COLD STARTING AID – DISPOSITIVO AVVIAMENTO A FREDDO – DISPOSITIF DE DEMARRAGE A FROID – KALTSTARTVORRICHTUNG – DISPOSITIVO TERMOSTARTER
30.0204.18.1	A2.43/1	COLD STARTING AID – DISPOSITIVO AVVIAMENTO A FREDDO – DISPOSITIF DE DEMARRAGE A FROID – KALTSTARTVORRICHTUNG – DISPOSITIVO TERMOSTARTER
30.0311.01.1	F2.01 - F2.05/1 - F3.01 - F4.01	STARTER MOTOR – MOTORINO DI AVVIAMENTO – DEMARREUR – ANLASSER – MOTOR DE ARRANQUE
30.0370.01.1	C1.02/1 - C1.08/1 - D2.22 - L1.01	BRAKES-CLUTCHES COMBINED CONTROL – COMANDO COMBINATO FRENI FRIZIONI – COMMANDE COUPLEE FREINS EMBRAYAGES – KOMBISTEUERUNG FUER BREMSEN UND KUPPLUNGEN – MANDO COMBINADO DE FRENOS Y EMBRAGUES
30.0505.04.1	D3.40/1	LUBRICATED TRACK CHAIN – CATENARIA LUBRIFICATA – CHAINE ASSEMBLEE LUBRIFICI GESCHMIERTE RAUPENKETTE – CADENA ENGRASADA
30.0505.05.1	D3.40	LUBRICATED TRACK CHAIN – CATENARIA LUBRIFICATA – CHAINE ASSEMBLEE LUBRIFICE GESCHMIERTE RAUPENKETTE – CADENA ENGRASADA
30.0530.09.1 (1-2)	D3.40	TRACK SHOES 550 mm – SUOLE 550 mm – TUILES DE 550 mm – BODEHPLATTEN 550 mm – ZAPATAS 550 mm
30.0530.11.1	D3.40/1	TRACK SHOES 550 mm – SUOLE 550 mm – TUILES DE 550 mm – BODEHPLATTEN 550 mm – ZAPATAS 550 mm

30.0531.10.1	D3.40	TRACK SHOES 600 mm – SUOLE 600 mm – TUILES DE 600 mm – BODEHPLATTEN 600 mm – ZAPATAS 600 mm
30.0531.12.1	D3.40/1	TRACK SHOES 600 mm – SUOLE 600 mm – TUILES DE 600 mm – BODEHPLATTEN 600 mm – ZAPATAS 600 mm
30.0535.06.1	D3.40	TRACK SHOES 500 mm (HEAVY DUTY) – SUOLE 500 mm (IMPIEGO GRAVOSO) – TUILES DE 500 mm (SERVICE SEVERS) – BODEMPLATTEN 500 mm (SCHWER-EINSATZ) – ZAPATAS 500 mm (REFORZADAS)
30.0535.07.2	D3.40/1	TRACK SHOES 500 mm – SUOLE 500 mm – TUILES DE 500 mm – BODEHPLATTEN 500 mm – ZAPATAS 500 mm
30.0592.01.1	L1.03/1 - L1.04/1	CAB FORESTRY – CABINA FORESTALE – CABINE DE FORESTAGE – FAHRERHAUS FUER FORSTEINSATZ – CABINA FORESTAL
30.0563.08.1	L3.11	TRACK FRAME ROLLER GUARD – RIPARI RUOTE CARRELLO – CARTER DE ROUES DE CHARIOT – ABDECKUNGEN FUER KETTENROLLEN – PROTECCIONES RUEDA DEL CARRO
30.0563.09.1	L3.11	TRACK FRAME ROLLER GUARD – RIPARI RUOTE CARRELLO – CARTER DE ROUES DE CHARIOT – ABDECKUNGEN FUER KETTENROLLEN – PROTECCIONES RUEDA DEL CARRO
30.0564.02.2	E3.02/3 - E3.10/4 - E3.32/1	HYDRAULIC TILT CONTROL – TILT IDRAULICO – TILT HYDRAULIQUE – HYDRAULIK QUERNEIGUNG – TILT HIDRAULICO
30.0565.01.1	E3.10	C-FRAME GUIDE BRACKETS – GUIDE PER ARCONE – GUIDAGES D'ETRIER – FUERUNGSPLATTENDES U-RAHMEN – GUIAS DE ARCON
30.0580.02.1	E1.02 - L1.03 - L1.04	CAB – CABINA – CABINE – FAHRERHAUS – CABINA
30.0736.02.1	F3.01/1	MOUNTINGS FOR SAE BATTERIE – PREDISPOSIZIONE BATTERIE SAE – FIXATIONS POUR BATTERIE SAE – BEFESTIGUNGSAUGEN FUER BATTERIE SAE – ANCLAJES PARA BATERIA SAE

30.0748.09.1	F3.01	HIGH CAPACITY BATTERIES – BATTERIE MAGGIORATE – BATTERIES A HAUTE CAPACITE – HOCHLEISTUNGSBATTERIEN – BATERIAS MAS POTENTES
30.0753.08.1	A1.19 - F3.01 - F3.03/1	ALTERNATOR – ALTERNATORE – ALTERNATEUR – DREHSTROM-LICHTMASCHINE – ALTERNADOR
30.0758.03.1	F4.01	REAR HEADLAMPS – PROIETTORI POSTERIORI – PROJECTEURS ARRIERE – SCHEINWERFERS HINTERER – PROYECTORES POSTERIORES
30.0759.09.1	B2.30 - B2.30/1 - F4.01 - F4.01/1 F5.01	BACK-UP ALARM WITHOUT HORN SIGNAL – BACK-UP ALARM SENZA AVVISATORE – BACK-UP ALARM SANS AVERTISSEUR SONORE – BACK-UP OHNE SIGNALHORN – BACK-UP ALARM SIN AVISADOR
30.0760.09.1	F4.01/3	BACK-UP ALARM – BACK-UP ALARM – BACK-UP ALARM – BACK-UP ALARM – BACK-UP ALARM
30.0767.01.1	F4.01/2	CAB HEADLAMPS – PROIETTORI CABINA – PROJECTEURS DE CABINE – SCHEINWERFERS DES FAHRERHAUSES – PROYECTORES DE CABINA
30.0780.03.1	B5.01	DIAGNOSTIC SYSTEM – DIAGNOSTICA CENTRALIZZATA – DIAGNOSTIC CENTRALISE – ZENTRALE FEHLERSUCHANLAGE – DIAGNOSTICO CENTRAL
30.0780.04.1	B5.01	DIAGNOSTIC SYSTEM – DIAGNOSTICA CENTRALIZZATA – DIAGNOSTIC CENTRALISE – ZENTRALE FEHLERSUCHANLAGE – DIAGNOSTICO CENTRAL
30.0805.01.1	B4.08	PTO SHAFT – ALBERO PRESA DI FORZA – ARBRE DE PRISE DE FORCE – ANTRIEBSWELLE FUER ZAPFWELLE – EJE DE LA TOMA FUERZA

30.0835.04.1	L1.01	ADDITIONAL REINFORCED RADIATOR GUARD – RIPARO CUFFIA SUPPLEMENTARE PROTECTION REINFORCEE SUPPLEMENTAIRE – KUEHLERSCHUTZ, ZUSAETZLICHER – DEFENSA RADIADOR AUXILIAR
30.0836.08.1	L1.01/1	PERFORATED SIDE PANELS – FIANCHETTI FORATI – TABLIERS LATERALS PERCES GELOCHTE SEITENTEILE – COSTADOS LATERALES AGUJEREADOS
30.0843.10.1	L1.01	INSTRUMENT PANEL SAFETY COVER – COPERCHI CRUSCOTTO ANTIVANDALO – CAPOT DE SECURITE POUR TABLEAU DE BORD – SICHERHEITS DECKEL FUER SCHALTBRETT – TAPAS ANTIVANDALISMOS DEL TABLERO
30.0852.05.1	L3.10 - L6.01/1 - L6.04/1	SUSPENSION SEAT – SEDILE CON SOSPENSIONE ELASTICA – SIEGE SUR SUSPENSIONS – GEFERDERTER SITZ – ASIENTO DE SUSPENSION ELASTICA
30.0870.02.1	A2.01/A - A2.56 - E3.02/5 - L1.01 L3.04 - L3.08/1	FORESTRY PROTECTIONS – PROTEZIONI FORESTALI – PROTECTION FORESTIERE – SCHUTZ FUER FORSTEINSATZ – PROTECCION FORESTAL
30.0875.18.1	L3.12/1	APRONS – RIPARI INFERIORI – PROTECTIONS INFERIEURES – UNTERE SCHUTZBLECKE – BLINDAJE INFERIOR
30.0876.24.1	L3.08	ROPS CANOPY – STRUTTURA ROPS – STRUCTURE DE PROTECTION ROPS – ROPS DACH – TOLDO ROPS
30.0890.01.1	D1.03/1	SWINGING DRAWBAR – BARRA DI TRAINO OSCILLANTE – TIMON OSCILLANT D'ATTELAGE ZUGPENDEL – BARRA DE ARRASTRE OSCILANTE
30.0891.01.2	D1.02/1	REAR HEAVY OUTY TOW HOOK – GANCIO TRAINO POSTERIORE RINFORZATA – CROCHET ARRIERE REINFORCE – HINTERER ZUGHAKEN VERSTAERKT – ENGANCHE POSTERIOR REFORZADO
30.0920.01.3	E3.15/A	RIPPER TEETH – DENTI SCARIFICATORE – DENTS DE SCARIFICATEUR – REISSZAEHNE – DIENTES DE ESCARIFICADOR

30.0920.13.1	E3.02/1 - E3.05 - E3.10/1 E3.15/A - E3.32/3	RIPPER PD14 – RIPPER PD14 – RIPPER PD14 – RIPPER PD14 – RIPPER PD14
30.0935.07.1	E3.15	TOOTH – UTENSILE – DENT – REISSZAHN – DIENTE
30.0993.02.1	H1.04	FUEL TRANSFER PUMP – POMPA TRAVASO COMBUSTIBILE – POMPE DE TRANSVASEMENT DE COMBUSTIBLE – UMGIESSPUMPE FUER KRAFTSTOFF – BOMBA DE REPOSTADO DE COMBUSTIBLE
30.0995.11.1	H1.01	TOOLS – ATTREZZI – OUTILS – WERKZEUGE – HERRAMIENTAS
30.0995.13.1	H1.01/A	TOOLS – ATTREZZI – OUTILS – WERKZEUGE – HERRAMIENTAS
30.1001.04.1	E3.10 - H1.01/1	C-FRAME – ARCONE – ETRIER – U-RAHMEN – ARCON
30.1011.03.1	E3.10/2	STRUTS – FORCELLE – FOURCHES – GABELN – HORQUILLAS
30.1012.02.1	E3.10/3	HEAVY DUTY STRUTS – FORCELLE RINFORZATE – TIRANTS RENFORCES – VERSTAERKTE STANGEN – TIRANTES REFORZADOS
30.1015.09.1	E3.13/2	ANGLING MOLDBOARD – LAMA HA (ANGOLABILE) – LAME D'ANGLEDOZER – SCHWENKENSCHILD – HOJA ANGLEDOZER
30.1040.03.1	E3.10/5 - H1.01/1	PUSH BEAMS AND BRACES – BRACCI E TIRANTI – BRAS ET TIRANTS – SCHUBHOLMEN UND STREBEN – BRAZOS Y TIRANTES
30.1055.05.1	E3.13	SEMI-U MOLDBOARD – LAMA HSU (SEMI-U) – LAME DEMI-U – SEMI-U SCHILD – HOJA EN FORMA DE SEMI-U
30.1056.05.1	E3.13/1	HS MOLDBOARD (STRAIGHT) – LAMA HS (DIRITTA) – LAME HS (DROITE) – SCHILD HS (GERADE) – HOJA HS (RECTA)
30.1070.10.1	E3.02/2 - E3.32/2	TILT CYLINDER – CILINDRO TILT – VERIN DE TILT – TILTZYLINDER – CILINDRO TILT

30.1078.17.1	E3.02/4 - E3.25	REAR EQUIPMENT CONTROL AND LINE – COMANDO E TUBAZIONI ATTREZZO POSTERIORE COMMANDE ET TUYAUTERIE D'OUTIL POSTERIEUR – BETAETITUNG UND LEITUNGEN FUER HECKAUSRUESTUNG – MANDO Y TUBERIA DEL UTIL POSTERIOR
30.1095.08.1	D3.30	REINFORCEMENTS – MENSOLE – CONSOLES – STUETZEN – REFUERZOS
30.1124.06.1	E3.02/3 - E3.10/4 - E3.32/1	HYDRAULIC TILT CONTROL – TILT IDRAULICO – TILT HYDRAULIQUE – HYDRAULIK QUERNEIGUNG – TILT HIDRAULICO
30.1250.03.1	E3.13/2	ANGLING MOLDBOARD MOUNTINGS – FISSAGGIO LAMA HA (PER LAMA ANGOLABILE) FIXATION POUR LAME HA (D'ANGLEDOZER) – BEFESTIGUNGSELEMENTE FUER SCHWENKENSCHILD – ANCLAJES PARA HOJA ANGLEDOZER
30.0021.09.1 UNITS WITH 8365 ENGINES.	A1.15 - A2.43/4 - A4.02/2 - A4.09/3 - D1.01 - D2.23 - D2.33 - D2.37 - D3.34 - D3.38 F2.01/1 - F3.01 - F3.01/3 - F4.01 - L1.01 - L1.01/4	WINTERIZZATION – WINTERIZZAZIONE – EQUIPEMENT HIVER – WINTERAUSRUESTUNG – VERSION PARA CLIMA ARTICO
30.0370.04.1	C1.01 C1.02/1 C1.08/1 D2.22 - L1.01	BRAKES/STEERING CLUTCHES COMBINED CONTROL - COMANDO COMBINATO FRENI-FRIZIONI – COMMANDE COUPLEE FREINS EMBRAYAGES – KOMBISTEUERUNG FUER BREMSEN UND KUPPLUNGEN – MANDO COMBINADO DE FRENOS Y EMBRAGUES
30.9116.02.1	F4.01/5	FANA VERSION – ALLESTIMENTO FANA – VERSION FANA – FANA ZULASSUNG – ANCLAJES PARA FANA
30.0856.01.1	L1.03/2	ROPS CAB WITH LAMINATED FRONT GLASS – CABINA SICUREZZA CON VETRO STRATIFICATO – CABINE DE SECURITE AVEC GLACE AVANT FEUILLETE E ROPS – KABINE MIT FRONTSCHEIBE AUS VERBUNDGLASS – CABINA ANTIVUELCO CON CRISTAL ANTERIOR ESTRATIFICADO
30.0879.15.1	L3.08/2	FORESTRY PROTECTIONS – PROTEZIONI FORESTALI – PROTECTION FORESTIERE – SCHUTZ FUER FORSTEINSATZ – PROTECCION FORESTAL

NUMERICAL INDEX - INDICE NUMERICO - LISTE NUMERIQUE - NUMERISCHES ERSATZEILVERZEICHNIS - INDICE NUMERICO

ITEM	PART N.	SGR.	TAV.	PAG.
4	1	A2.24	1	1
1	1	A2.24/ 1	1	1
5	2	A2.24	1	1
2	2	A2.24/ 1	1	1
5	3	A2.24	1	1
1	14687	D2.20	1	1
1	15629	D1.03	1	1
1	15629	D1.03/ 1	1	1
1	17510	B1.05/ 1	1	1
2	17511	B1.05/ 1	1	1
6	77265	A2.27/ 2	2	1
1	539705	A1.02	2	1
2	539706	A1.02	2	1
1	541674	A3.01	4	1
15	546575	B2.10/ A	2	1
1	546575	D2.22	1	1
1	546819	E3.06	1	1
1	546858	B2.35/ 1	1	1
2	547737	D1.03	1	1
1	547737	L3.12	1	1
1	547737	L3.12	2	1
1	547737	L3.12/ 1	1	1
2.	549537	H1.01/ A	2	1
1	552699	F2.01	1	1
2	552699	F3.01	1	1
1	555486	H1.01	1	1
1	555486	H1.01/ A	2	1
1	563024	D3.34	2	1
1	564473	A1.01	1	1
1	564473	A1.02	1	1
1	565153	D2.23	2	1
2	565154	D2.23	2	1
3	567406	D1.03	1	1
2	567406	D1.03/ 1	1	1
1	567406	E3.10/ 2	1	1
1	567406	E3.10/ 3	1	1
1	567406	E3.10/ 4	1	1
1	567406	L1.01	1	1
1	568292	B1.10	2	1
1	568292	D2.23	1	1
3	572749	A1.02	2	1
1	573251	A3.03	1	1
1	575131	F4.01/ 1	5	1
1	575874	D2.29	1	1
1	575881	B2.13	2	1
3	575884	B1.05/ 1	1	1
1	575885	B2.33	2	1
1	575885	B2.33/ 1	2	1
2	575888	B2.33	2	1
2	575888	B2.33/ 1	2	1
2	575888	D2.29	1	1
1	575893	B2.33/ 1	1	1
1	575893	B2.33/ 1	5	1
2	578228	F4.01/ 1	5	1
3	578337	F4.01/ 1	5	1
2	579891	A1.02	1	1
1	581073	B1.09	1	1
1	581073	B1.09/ 1	1	1
3	581235	B2.33	2	1
3	581235	B2.33/ 1	2	1
4	581237	B2.33/ 1	2	1
1	581238	B2.33/ 1	3	1
4	581241	B2.33	2	1
2	581241	B2.33/ 1	3	1
5	581243	B2.33	2	1
5	581243	B2.33/ 1	2	1
3	581244	B2.33/ 1	3	1
4	581245	B2.33/ 1	3	1
1	581371	B2.04	2	1
1	581371	B2.04	3	1
1	581371	B2.04	4	1
1	581371	B2.04/ 3	2	1
1	581371	B2.04/ 3	3	1
1	581371	B2.04/ 3	4	1
1	581394	B2.06/ 1	1	1
1	581492	B2.17	1	1
1	581492	B2.17/ 1	1	1
1	581492	D2.28	1	1
1	581492	D2.28/ 1	1	1
1	581492	E3.28	1	1
1	581593	B2.35	1	1
1	581593	B2.35/ A	1	1
2	581593	B2.35/ 1	1	1
1	581593	B2.35/ 2	1	1
2	581598	B1.09	1	1
2	581598	B1.09/ 1	1	1
3	581599	B1.09	1	1
3	581599	B1.09/ 1	1	1
4	581600	B1.09	1	1
4	581600	B1.09/ 1	1	1
5	581604	B1.09	1	1
5	581604	B1.09/ 1	1	1
6	581605	B1.09	1	1
6	581605	B1.09/ 1	1	1
3	581610	D2.23	2	1
3	581658	D2.29	1	1
1	581658	E3.02	3	1
4	581967	D2.29	1	1
3	582081	H1.01/ A	2	1
2	583058	B2.35	1	1
2	583058	B2.35/ A	1	1
3	583058	B2.35/ 1	1	1
2	583058	B2.35/ 2	1	1
4	584089	B1.05/ 1	1	1
5	584091	B1.05/ 1	1	1

ITEM	PART N.	SGR.	TAV.	PAG.
6	584092	B1.05/ 1	1	1
1	584103	B1.05/ 1	2	1
3	584976	B2.35	1	1
1	585338	A2.54	1	1
4	585592	A1.02	2	1
1	585834	A2.01	1	1
1	585914	A2.24	2	1
1	586166	B2.08	1	1
1	586166	D2.29	2	1
1	586171	B2.33	4	1
1	586441	B2.01	3	1
1	586441	B2.01/ 1	3	1
1	586442	B2.01	2	1
1	586442	B2.01/ 1	2	1
2	586443	B2.01/ 1	3	1
2	586446	B2.01	3	1
3	586446	B2.01/ 1	3	1
2	586447	B2.01	2	1
2	586447	B2.01/ 1	2	1
1	586455	B4.06	1	1
2	586491	D2.20	1	1
3	586521	D2.20	1	1
2	586524	B4.06	1	1
3	586528	B4.06	1	1
4	586537	D2.20	1	1
4	586575	B4.06	1	1
5	586614	D2.20	1	1
2	586661	B2.04/ 3	4	1
2	586675	B2.04	2	1
2	586675	B2.04/ 3	2	1
2	586680	B2.04/ 3	3	1
1	586691	B1.10	1	1
1	586691	B1.10/ 1	1	1
2	586691	D2.23	1	1
1	586695	B2.01	1	1
1	586695	B2.01/ 1	1	1
1	586702	B2.05/ 1	1	1
5	586704	B4.06	1	1
11	586707	B2.10/ A	2	1
2	586707	B2.13	2	1
1	586707	C1.01	2	1
2	586707	D2.22	1	1
1	586720	B4.08	1	1
5	586726	B4.12	1	1
6	586727	B4.06	1	1
3	586728	B2.01	2	1
3	586728	B2.01	3	1
3	586728	B2.01/ 1	2	1
4	586728	B2.01/ 1	3	1
2	586740	B2.01	1	1
2	586740	B2.01/ 1	1	1
6	586741	D2.20	1	1
1	586743	D3.33	1	1
7	586750	D2.20	1	1
8	586751	D2.20	1	1
2	586780	D3.33	1	1
7	586793	B4.06	1	1
7	586794	B4.06	1	1
7	586795	B4.06	1	1
2	586817	B2.06/ 1	1	1
3	586819	B2.06/ 1	1	1
4	586824	B2.06/ 1	1	1
1	586832	B2.30	1	1
5	586832	B2.30	2	1
1	586832	B2.30/ 1	1	1
2	586836	B2.30/ 1	1	1
2	586838	B2.30	1	1
3	586838	B2.30/ 1	1	1
3	586839	B2.30	1	1
4	586839	B2.30/ 1	1	1
5	586851	B2.33/ 1	3	1
2	586852	B2.33/ 1	1	1
7	586857	B1.05/ 1	1	1
5	586858	B2.06/ 1	1	1
6	586859	B2.06/ 1	1	1
3	586931	D3.33	1	1
4	586932	D3.33	1	1
1	586977	B1.08	1	1
1	586977	B1.08/ 1	1	1
1	586979	E3.02	2	1
10	586986	B4.06	1	1
10	586987	B4.06	1	1
10	586988	B4.06	1	1
1	587003	D3.38	1	1
2	587004	D3.38	1	1
1	587019	D3.34	1	1
2	587020	D3.34	1	1
2	587045	B4.08	1	1
1	587083	D3.30/ 1	1	1
3	587088	B2.01	1	1
3	587089	D3.34	1	1
1	587093	B2.06	1	1
7	587093	B2.06/ 1	1	1
3	587130	D2.23	1	1
4	587131	D2.23	1	1
2	587138	D2.29	2	1
3	587141	D2.29	2	1
4	587142	D2.29	2	1
5	587155	D2.29	2	1
5	587158	D2.29	1	1
1	587201	D3.30	1	1
4	587234	D3.34	3A	1
1	587246	D3.34	4	1
1	587255	D3.34	3	1
1	587255	D3.34	3A	1

ITEM	PART N.	SGR.	TAV.	PAG.
2	587256	D3.34	3	1
2	587256	D3.34	3A	1
3	587271	D3.34	3	1
4	587272	D3.34	3	1
5	587273	D3.34	3	1
6	587274	D3.34	3	1
3	587394	D2.22	1	1
4	587406	D2.22	1	1
5	587408	D2.22	1	1
6	587409	D2.22	1	1
7	587410	D2.22	1	1
1	587468	A2.21	2	1
2	587626	D3.30	1	1
2	587626	D3.30/ 1	1	1
1	587643	D3.31	1	1
16	587779	B1.09	2	2
1	587779	B1.09/ 1	2	1
3	587779	B2.33/ 1	1	1
2	587817	B1.05/ 1	2	1
3	587829	B1.05/ 1	2	1
4	587830	B1.05/ 1	2	1
5	587831	B1.05/ 1	2	1
8	587836	B1.05/ 1	1	1
9	587840	B1.05/ 1	1	1
10	587842	B1.05/ 1	1	1
11	587844	B1.05/ 1	1	1
1	587912	A0.02	1	1
8	588040	B2.06/ 1	1	1
3	588867	D3.30	1	1
1	588884	B1.11	1	1
2	588893	B1.10	2	1
1	588893	B1.10/ 1	2	1
2	588904	B1.11	1	1
3	588905	B1.11	1	1
4	588912	B1.11	1	1
5	588913	B1.11	1	1
6	588915	B1.11	1	1
3	588967	D3.38	1	1
1	589425	B1.15	1	1
2	589559	D3.34	4	1
1	589923	B2.34	1	1
1	590072	A1.08	1	1
1	590329	B4.11	1	1
4	590386	B2.01/ 1	2	1
9	590390	D2.20	1	1
1	590390	D2.24	1	1
3	590393	B4.08	1	1
1	590394	B4.12	1	1
1	590446	B2.33	1	1
2	590448	B1.08	1	1
2	590448	B1.08/ 1	1	1
7	590456	B1.09	1	1
7	590456	B1.09/ 1	1	1
8	590496	B1.09	1	1
8	590496	B1.09/ 1	1	1
1	590496	B2.33	1	1
2	590533	B2.04	3	1
3	590533	B2.04/ 3	3	1
2	590537	B2.04	4	1
3	590537	B2.04/ 3	4	1
2	590731	B1.15	1	1
4	590851	B4.08	1	1
5	590852	D2.23	1	1
12	591033	B1.05/ 1	1	1
7	591055	B1.11	1	1
1	591070	A3.01	2	1
1	591112	B2.33/ 1	6	1
6	591112	D2.29	1	1
6	591115	D2.29	2	1
7	591126	D2.29	1	1
1	591148	D3.01	1	1
7	591217	D2.29	2	1
1	591246	L3.11	1	1
8	591247	D2.29	1	1
6	591276	B2.33	2	1
1	591308	D1.02	1	1
4	591390	B2.01	2	1
5	591390	B2.01/ 1	2	1
5	591391	B2.01	2	1
6	591391	B2.01/ 1	2	1
6	591392	B2.01	2	1
7	591392	B2.01/ 1	2	1
7	591393	B2.01	2	1
8	591393	B2.01/ 1	2	1
8	591413	D2.22	1	1
9	591414	D2.22	1	1
10	591420	D2.22	1	1
1	591420	L3.10	3	1
6	591421	D2.23	1	1
2	591424	D2.24	1	1
3	591426	D2.24	1	1
4	591429	D2.24	1	1
5	591431	D2.24	1	1
6	591434	D2.24	1	1
5	591567	A1.02	2	1
6	591568	A1.02	2	1
6	591575	B1.05/ 1	2	1
7	591622	B1.05/ 1	2	1
2	591693	H1.01	1	1
8	591707	B1.11	1	1
9	591794	B1.11	1	1
4	591794	D2.23	2	1
3	592043	B1.15	1	1
4	592046	B1.15	1	1
1	592046	B1.15/ 1	1	1

ITEM	PART N.	SGR.	TAV.	PAG.
3	592075	B1.08	1	1
3	592075	B1.08/ 1	1	1
2	592151	B1.10/ 1	2	1
3	592153	B1.10	2	1
4	592195	B2.35/ 1	1	1
5	592196	B2.35/ 1	1	1
5	592437	H1.01/ A	2	1
4	592487	B2.04/ 3	4	1
1	592915	B3.01	1	1
2	593096	D3.31	1	1
2	593097	D3.31	1	1
2	593098	D3.31	1	1
1	593101	A3.01	1	1
2	593121	A2.01	1	1
4	593198	B2.35	1	1
3	593198	B2.35/ A	1	1
6	593198	B2.35/ 1	1	1
3	593198	B2.35/ 2	1	1
7	593431	B4.06	1	1
8	593521	B2.01	2	1
9	593521	B2.01/ 1	2	1
7	593607	D2.23	1	1
2	593763	A3.03	1	1
4	594317	D3.30	1	1
5	594320	D3.33	1	1
6	594322	D3.33	1	1
7	594323	D3.33	1	1
5	594324	D3.30	1	1
8	594325	D3.33	1	1
9	594326	D3.33	1	1
9	594327	D3.33	1	1
9	594328	D3.33	1	1
9	594329	D3.33	1	1
9	594330	D3.33	1	1
9	594331	D3.33	1	1

ITEM	PART N.	SGR.	TAV.	PAG.
6	594343	D3.30	1	1
7	594633	D3.34	3	1
5	594633	D3.34	3A	1
8	594634	D3.34	3	1
6	594634	D3.34	3A	1
9	594637	D3.34	3	1
7	594637	D3.34	3A	1
10	594638	D3.34	3	1
8	594638	D3.34	3A	1
11	594640	D3.34	3	1
9	594640	D3.34	3A	1
7	594666	D3.30	1	1
12	594692	D3.34	3	1
10	594692	D3.34	3A	1
2	595208	F2.01	1	1
3	595357	A2.01	1	1
4	595358	A2.01	1	1
1	595360	B1.08/ 1	2	1
5	595489	D3.31	1	1
1	595594	A2.22	1	1
2	595595	A2.22	1	1
3	595596	A2.22	1	1
7	595609	D2.24	1	1
9	595736	D2.29	1	1
27	595878	D2.29	1	2
13	596105	D3.34	3	1
2	596678	D3.01	1	1
3	596679	D3.01	1	1
5	597092	B2.35	1	1
4	597092	B2.35/ A	1	1
7	597092	B2.35/ 1	1	1
4	597092	B2.35/ 2	1	1
3	597109	A1.02	1	1
10	597258	D2.20	1	1
6	597415	B2.35	1	1

ITEM	PART N.	SGR.	TAV.	PAG.
5	597415	B2.35/ A	1	1
8	597415	B2.35/ 1	1	1
5	597415	B2.35/ 2	1	1
9	597795	B2.35/ 1	1	1
2	599296	C1.01	2	1
3	599299	C1.01	2	1
4	599300	C1.01	2	1
5	599301	C1.01	2	1
6	599302	C1.01	2	1
7	599303	C1.01	2	1
8	599307	C1.01	2	1
9	599308	C1.01	2	1
10	599309	C1.01	2	1
1	604369	A1.07	1	1
1	656829	A2.35	1	1
1	702537	A3.01/ 1	2	1
1	705736	A3.01/ 1	3	1
1	756671	A2.24	3	1
2	757265	A2.24	3	1
1	758732	A1.16/ 1	1	1
27	759850	A2.24/ 1	1	2
3	759915	A2.24	3	1
4	759916	A2.24	3	1
5	764099	A2.24	3	1
6	767013	A2.24	3	1
7	767014	A2.24	3	1
8	767111	A2.24	3	1
1	767111	A2.24/ 1	4	1
1	770057	A2.24	4	1
15	770057	A2.24/ 1	3	1
12	770444	A2.28	2	1
9	770763	A2.24	3	1
10	770879	A2.24	3	1
9	771034	A2.24	3	1
2	771326	A2.24/ 1	4	1

ITEM	PART N.	SGR.	TAV.	PAG.
12	771370	A2.24	3	1
3	771404	A2.24/ 1	4	1
7	772057	A2.28/ 2	5	1
10	772060	A2.27/ 2	1	1
10	772114	A2.25/ 2	1	1
12	772116	A2.25/ 2	1	1
7	772117	A2.25/ 2	1	1
4	772125	A2.25/ 2	1	1
1	772129	A2.25/ 2	1	1
3	772173	A2.24/ 1	1	1
18	772191	A2.27/ 2	2	3
16	772195	A2.27/ 2	2	3
20	772211	A2.27/ 2	2	3
4	772213	A2.27/ 2	2	1
26	772218	A2.27/ 2	1	2
6	772227	A2.27/ 2	2	1
6	772228	A2.27/ 2	2	1
6	772229	A2.27/ 2	2	1
6	772230	A2.27/ 2	2	1
6	772231	A2.27/ 2	2	1
6	772232	A2.27/ 2	2	1
6	772233	A2.27/ 2	2	1
6	772234	A2.27/ 2	2	1
6	772235	A2.27/ 2	2	1
6	772236	A2.27/ 2	2	1
6	772237	A2.27/ 2	2	1
6	772238	A2.27/ 2	2	1
6	772239	A2.27/ 2	2	1
6	772240	A2.27/ 2	2	1
6	772241	A2.27/ 2	2	1
6	772242	A2.27/ 2	2	1
6	772243	A2.27/ 2	2	1
6	772244	A2.27/ 2	2	1
6	772245	A2.27/ 2	2	2
6	772246	A2.27/ 2	2	2
6	772247	A2.27/ 2	2	2
6	772248	A2.27/ 2	2	2
6	772249	A2.27/ 2	2	2
6	772250	A2.27/ 2	2	2
6	772251	A2.27/ 2	2	2
6	772252	A2.27/ 2	2	2
6	772253	A2.27/ 2	2	2
6	772254	A2.27/ 2	2	2
6	772255	A2.27/ 2	2	2
6	772256	A2.27/ 2	2	2
6	772257	A2.27/ 2	2	2
6	772258	A2.27/ 2	2	2
6	772259	A2.27/ 2	2	2
6	772260	A2.27/ 2	2	2
6	772261	A2.27/ 2	2	2
6	772262	A2.27/ 2	2	2
6	772263	A2.27/ 2	2	2
6	772264	A2.27/ 2	2	2
6	772266	A2.27/ 2	2	2
6	772267	A2.27/ 2	2	2
6	772268	A2.27/ 2	2	2
6	772269	A2.27/ 2	2	2
8	772270	A2.27/ 2	2	2
30	772272	A2.27/ 2	2	3
30	772273	A2.27/ 2	2	3
20	772274	A2.27/ 2	1	1
23	772275	A2.27/ 2	2	3
2	772277	A2.27/ 2	2	1
2	772278	A2.27/ 2	2	1
2	772279	A2.27/ 2	2	1
2	772280	A2.27/ 2	2	1
10	772281	A2.27/ 2	2	3
25	772284	A2.27/ 2	1	1
25	772285	A2.27/ 2	1	1
25	772286	A2.27/ 2	1	1
25	772287	A2.27/ 2	1	1
25	772288	A2.27/ 2	1	2
25	772289	A2.27/ 2	1	2
25	772290	A2.27/ 2	1	2
11	772292	A2.27/ 2	1	1
35	772293	A2.27/ 1	2	4
13	772298	A2.27/ 2	2	3
13	772303	A2.27/ 2	1	1
3	772305	A2.27/ 2	2	1
12	772307	A2.27/ 2	2	3
19	772324	A2.27/ 2	2	3
21	772332	A2.27/ 2	1	1
21	772332	A2.28/ 2	2	1
22	772334	A2.27/ 2	1	1
2	772335	A2.27/ 2	1	1
5	772336	A2.27/ 2	2	1
22	772351	A2.27/ 2	2	3
7	772352	A2.27/ 2	2	2
3	772353	A2.27/ 2	1	1
5	772354	A2.27/ 2	1	1
4	772359	A2.27	2	1
7	772359	A2.27/ 1	2	2
24	772386	A2.27/ 2	1	1
27	772387	A2.27/ 2	2	3
15	772387	A2.28/ 2	5	1
11	772388	A2.27/ 2	2	3
24	772389	A2.27/ 2	2	3
25	772390	A2.27/ 2	2	3
23	772477	A2.28/ 2	3	1
4	772480	A2.28/ 2	3	1
6	772482	A2.28/ 2	3	1
8	772484	A2.28/ 2	3	1
10	772486	A2.28/ 2	3	1
7	772522	A2.37	1	1
10	772525	A2.37	1	1

ITEM	PART N.	SGR.	TAV.	PAG.
10	772526	A2.37	1	1
10	772527	A2.37	1	1
10	772528	A2.37	1	1
10	772529	A2.37	1	1
10	772530	A2.37	1	1
10	772531	A2.37	1	1
10	772532	A2.37	1	1
10	772533	A2.37	1	1
10	772534	A2.37	1	1
10	772535	A2.37	1	1
17	772566	A2.28/ 2	2	1
16	772567	A2.28/ 2	2	1
5	772568	A2.28/ 2	2	1
19	772577	A2.28/ 2	2	1
20	772579	A2.28/ 2	2	1
14	772580	A2.37	1	1
15	772581	A2.37	1	1
12	772611	A2.28/ 2	1	1
10	772618	A2.28/ 2	1	1
19	772619	A2.28/ 2	1	1
8	772621	A2.28/ 2	4	1
7	772648	A2.28/ 2	4	1
3	772649	A2.28/ 2	1	1
18	772671	A2.28/ 2	3	1
2	772703	A2.28/ 2	2	1
3	772726	A2.28/ 2	5	1
6	772761	A2.37	1	1
14	772823	A2.28/ 2	2	1
17	772825	A2.28/ 2	1	1
17	772826	A2.28/ 2	1	1
17	772827	A2.28/ 2	1	1
17	772828	A2.28/ 2	1	1
7	772829	A2.28/ 2	1	1
12	772847	A2.28/ 2	2	1
13	772852	A2.28/ 2	2	1
18	772873	A2.37	1	2
2	772901	A2.37	1	1
1	772902	A2.37	1	1
9	773184	A2.25/ 2	1	1
15	773204	A2.28/ 2	1	1
6	773283	A2.27/ 2	1	1
9	773365	A2.27/ 2	2	2
14	773471	A2.28/ 2	1	1
2	773527	A2.28/ 2	5	1
15	773534	A2.27/ 2	2	3
6	773566	A2.28/ 2	5	1
4	773577	A2.28/ 2	5	1
20	773634	A2.28/ 2	1	1
4	773669	A2.28/ 2	1	1
16	773689	A2.28/ 2	3	1
6	773693	A2.28/ 2	2	1
7	773695	A2.28/ 2	2	1
6	773699	A2.28/ 2	4	1
9	773700	A2.28/ 2	3	1
15	773701	A2.28/ 2	3	1
17	773702	A2.28/ 2	3	1
1	773707	A2.28/ 2	3	1
5	773712	A2.28/ 2	4	1
5	773714	A2.28/ 2	3	1
11	773716	A2.28/ 2	3	1
2	773717	A2.28/ 2	3	1
13	773718	A2.28/ 2	3	1
19	773719	A2.28/ 2	3	1
15	773763	A2.28/ 1	2	1
8	773813	A2.35/ 1	1	1
8	773838	A2.37	1	1
16	773839	A2.37	1	1
17	773840	A2.37	1	2
9	773841	A2.37	1	1
9	773842	A2.37	1	1
9	773843	A2.37	1	1
12	773854	A2.37	1	1
13	773855	A2.37	1	1
11	773861	A2.37	1	1
2	773921	A2.28/ 2	1	1
10	773963	A2.28/ 2	5	1
13	773964	A2.28/ 2	5	1
28	774043	A2.27/ 2	1	2
3	774044	A2.27/ 1	1	1
15	774044	A2.27/ 2	1	1
19	774152	A2.28/ 1	2	1
10	774244	A2.27	2	1
26	774244	A2.27/ 1	2	3
4	774244	A2.27/ 2	1	1
10	774245	A2.28/ 2	2	1
9	774246	A2.28/ 2	2	1
20	774300	A2.27	2	1
14	774300	A2.27/ 1	2	3
14	774300	A2.27/ 2	2	3
4	774339	A2.28/ 2	2	1
3	774340	A2.28/ 2	2	1
3	774344	A2.37	1	1
5	774364	A2.27	2	1
8	774364	A2.27/ 1	2	2
32	774370	A2.28/ 1	2	2
40	774371	A2.28/ 1	2	2
5	774401	A2.28/ 2	5	1
27	774485	A2.27/ 2	1	2
9	774651	A2.27/ 1	2	2
29	774651	A2.27/ 2	2	3
6	774656	A2.33	1	1
1	774660	A2.28/ 2	1	1
14	774661	A2.28/ 2	5	1
25	774812	A2.27	2	2
21	774874	A2.27/ 2	2	3

ITEM	PART N.	SGR.	TAV.	PAG.
26	774875	A2.27/ 2	2	3
7	774881	A2.27/ 2	1	1
1	774922	A2.27/ 2	1	1
17	774923	A2.27/ 2	1	1
16	774924	A2.27/ 2	1	1
8	775114	A2.25/ 2	1	1
18	775120	A2.25/ 1	1	1
5	775120	A2.25/ 2	1	1
18	775137	A2.28/ 2	2	1
28	775309	A2.27/ 2	2	3
24	777246	A2.28/ 1	2	1
2	851425	A1.01	1	1
2	852409	A3.01	2	1
3	852410	A3.01	2	1
3	1113231	E3.02	4	1
37	1133680	A2.27	2	2
20	1133680	A2.27/ 1	2	3
7	1136607	A2.28/ 1	3	1
24	1136607	A2.28/ 2	3	1
4	1287773	A2.25/ 1	1	1
2	1287773	A2.25/ 2	1	1
19	1288472	A2.28	3	2
9	1288472	A2.28/ 1	4	1
16	1288626	A2.28	2	1
5	1288626	A2.28/ 1	3	1
14	1288654	A2.28	1	1
22	1288654	A2.28/ 1	1	1
9	1288713	A2.28	1	1
7	1288713	A2.28/ 1	1	1
9	1288713	A2.28/ 2	1	1
30	1288821	A2.28	2	3
26	1288953	A2.28	2	3
2	1289782	A2.25/ 1	1	1
12	1290550	A2.25/ 1	1	1
11	1290550	A2.25/ 2	1	1
6	1290591	A2.25/ 2	1	1
10	1290593	A2.25/ 1	1	1
3	1290593	A2.25/ 2	1	1
5	1290634	A2.25/ 1	1	1
8	1290635	A2.25/ 1	1	1
6	1290637	A2.25/ 1	1	1
15	1300955	A2.28	2	1
6	1300955	A2.28/ 1	3	1
9	1300955	A2.28/ 2	4	1
3	1306677	A2.28/ 1	4	1
9	1306692	A2.28/ 2	5	1
1	1307188	F3.03/ B	1	1
22	1307608	A2.28	3	2
19	1307608	A2.28/ 1	4	1
9	1307609	A2.28	3	1
18	1307609	A2.28/ 1	4	1
8	1307838	A2.28/ 2	5	1
9	1308399	F3.03/ B	1	1
3	1445880	D2.30	1	1
7	1901385	A1.03/ 1	2	2
7	1901386	A1.03/ 1	2	2
7	1901387	A1.03/ 1	2	2
7	1901388	A1.03/ 1	2	2
7	1901832	A1.03/ 1	2	2
7	1901833	A1.03/ 1	2	2
7	1901834	A1.03/ 1	2	2
7	1901835	A1.03/ 1	2	2
7	1901836	A1.03/ 1	2	2
11	1901993	A1.05/ 1	1	2
11	1901994	A1.05/ 1	1	2
11	1901995	A1.05/ 1	1	2
11	1901996	A1.05/ 1	1	2
11	1901997	A1.05/ 1	1	2
11	1902586	A1.05/ 1	1	2
11	1930234	A1.05/ 1	1	2
18	2537590	A2.28	3	1
4	4027910	A3.01	2	1
3	4057844	H1.01	1	1
3	4073976	F2.01	1	1
4	4073977	F2.01	1	1
4	4098831	F4.01/ 1	5	1
1	4151244	F4.01	2	1
1	4151244	F4.01/ 1	2	1
1	4161222	A1.01/ 1	2	1
2	4161222	A3.01/ 1	3	1
1	4182461	F4.01	1	1
1	4182461	F4.01/ 1	1	1
1	4182461	H1.04	1	1
2	4182462	F4.01	1	1
2	4182462	F4.01/ 1	1	1
1	4184495	A4.02	2	1
2	4232606	A1.01/ 1	2	1
2	4232606	A3.01	4	1
1	4238805	F5.01	1	1
1	4293094	L3.10	1	1
3	4305449	A2.43/ 1	1	1
1	4306182	B2.10	1	1
1	4470778	A1.19/ 1	1	1
9	4470778	F3.01	3	2
2	4500461	A1.07	1	1
2	4500462	A1.07	1	1
2	4500463	A1.07	1	1
5	4500477	A1.07	1	1
6	4500478	A1.07	1	1
3	4502626	A1.01	1	1
1	4502935	A1.01	2	1
4	4502935	B2.01	1	1
4	4502935	B2.01/ 1	1	1
5	4503811	A3.01	2	1
3	4511313	A3.01	4	1

ITEM	PART N.	SGR.	TAV.	PAG.
1	4512870	A1.16	1	1
2	4513436	A1.19/ 1	1	1
1	4513436	A4.09	1	1
3	4513714	A3.03	1	1
1	4513714	A4.02	4	1
4	4513940	A1.02	1	1
7	4525591	A1.07	1	1
8	4525592	A1.07	1	1
1	4526173	A1.06	1	1
2	4526340	A1.16	1	1
5	4526511	A1.02	1	1
9	4526645	A1.07	1	1
10	4526648	A1.07	1	1
10	4526899	B1.11	1	1
5	4526899	D2.23	2	1
11	4526900	B1.11	1	1
6	4526900	D2.23	2	1
11	4526961	A1.07	1	1
1	4527400	A3.01/ 1	1	1
2	4528393	A1.01	2	1
12	4528881	A1.07	1	1
7	4530113	A1.02	2	1
6	4530119	A1.02	1	1
7	4530120	A1.02	1	1
8	4530121	A1.02	1	1
8	4530123	A1.02	2	1
9	4533969	A1.02	1	1
2	4535237	A4.02/ 2	2	1
13	4535822	A1.07	1	1
14	4535823	A1.07	1	1
3	4538013	A1.16	1	1
4	4538571	A3.03	1	1
4	4539357	A1.16	1	1
5	4541266	A1.16	1	1
15	4542203	A1.07	1	1
13	4543282	A2.24	3	1
2	4543472	A2.54	1	1
16	4544093	A1.07	1	1
18	4544152	A1.07	1	1
18	4544153	A1.07	1	1
18	4544154	A1.07	1	1
10	4547528	A1.02	1	1
1	4549368	A4.02	3	1
1	4555591	A3.02	1	1
1	4555591	A3.02/ 1	1	1
2	4555595	A3.02/ 1	1	1
1	4560434	A1.02/ 1	1	1
2	4565357	A1.07	1	1
6	4568946	A3.01	2	1
1	4577310	A2.54/ 1	1	1
2	4578607	A4.02	2	1
22	4579263	A1.07	1	1
2	4579771	A4.02	3	1
5	4586020	A2.01	1	1
3	4588654	A2.54	1	1
1	4591439	A4.02	1	1
3	4592177	A4.02	3	1
1	4595833	A3.03/ 1	1	1
3	4595833	A4.02	2	1
47	4595833	A4.02/ 2	2	2
22	4598124	A4.02/ 2	2	1
1	4601834	A1.06/ 1	1	1
2	4604833	A1.06/ 1	1	1
26	4604833	A1.16/ 1	1	1
6	4605412	A1.16	1	1
1	4606028	A4.03	1	1
2	4606034	A4.03	1	1
2	4606042	A4.02	1	1
4	4606046	A4.02	3	1
3	4606094	A4.02	1	1
1	4606319	A1.04	1	1
2	4606319	A1.06	1	1
2	4607072	A1.04	1	1
3	4607073	A1.04	1	1
4	4607074	A1.04	1	1
2	4607210	A1.03	1	1
3	4607211	A1.06	1	1
7	4608219	A1.16	1	1
23	4609090	A1.07	1	1
24	4609091	A1.07	1	1
25	4609095	A1.07	1	1
8	4614264	A1.16	1	1
4	4614887	A4.02	2	1
5	4616134	A4.02	2	1
6	4616135	A4.02	2	1
26	4619885	A1.07	1	1
4	4620035	A1.06	1	1
3	4622228	A1.03	1	1
5	4622832	A4.02	3	1
27	4623643	A1.07	1	2
9	4623710	A1.16	1	1
10	4623711	A1.16	1	1
11	4623714	A1.16	1	1
5	4623877	A1.04	1	1
6	4623879	A4.02	3	1
28	4625147	A1.07	1	2
1	4626466	A2.26	1	1
1	4626466	A2.26/ 1	1	1
29	4626478	A1.07	1	2
29	4626479	A1.07	1	2
2	4626942	A2.24	2	1
4	4627301	A1.01	1	1
3	4628329	A1.01	2	1
12	4628548	A1.25/ 1	1	1
4	4628548	A4.02	1	1

ITEM	PART N.	SGR.	TAV.	PAG.
31	4628569	A1.07	1	2
2	4629138	A4.09	1	1
3	4629139	A4.09	1	1
5	4630549	A1.06	1	1
2	4630672	A3.01	1	1
3	4630677	A3.01	1	1
4	4630679	A3.01	1	1
1	4632113	A3.01/ 1	5	1
2	4632123	A2.52	1	1
1	4632138	A1.25	1	1
4	4633359	A1.03	1	1
5	4636397	A3.03	1	1
6	4636399	A3.03	1	1
7	4636458	A3.03	1	1
2	4638335	A1.25	1	1
3	4638337	A1.25	1	1
4	4638506	A1.25	1	1
5	4638619	A1.25	1	1
6	4638621	A1.25	1	1
7	4638635	A1.25	1	1
8	4638675	A1.25	1	1
7	4640742	A4.02	3	1
3	4641201	A3.01/ 1	3	1
3	4642042	A4.03	1	1
5	4642953	A3.01	1	1
9	4643288	A1.25	1	1
1	4643544	A1.19	1	1
3	4643583	A2.24	2	1
6	4643591	A3.01	1	1
1	4646715	A1.05	1	1
7	4647659	A2.24/ 1	4	1
9	4647661	A2.24/ 1	4	1
32	4647838	A1.07	1	2
32	4647839	A1.07	1	2
32	4647840	A1.07	1	2
32	4647841	A1.07	1	2
36	4647842	A1.07	1	2
36	4647843	A1.07	1	2
36	4647844	A1.07	1	2
36	4647845	A1.07	1	2
40	4647846	A1.07	1	2
40	4647847	A1.07	1	2
8	4649718	A3.03	1	1
9	4649719	A3.03	1	1
6	4649835	A1.06	1	1
42	4651275	A1.07	1	2
5	4652838	A4.02	1	1
4	4654927	A1.01	2	1
5	4654929	A1.01	2	1
8	4655298	A4.02	3	1
13	4657459	A2.24	3	1
10	4657869	A3.03	1	1
43	4658030	A1.07	1	2
44	4658031	A1.07	1	3
6	4661218	A4.02	1	1
1	4662846	A2.43	1	1
2	4662848	A2.43	1	1
5	4663640	A1.01	1	1
1	4665222	A1.03	2	1
2	4665225	A1.03	2	1
1	4665226	A1.03	2	1
2	4665227	A1.03	2	1
3	4667498	A1.06/ 1	1	1
3	4667498	A1.16/ 1	1	1
11	4667755	A3.03	1	1
3	4667852	A3.02/ 1	1	1
2	4667853	A3.02	1	1
45	4668035	A1.07	1	3
10	4668861	A1.25	1	1
11	4668862	A1.25	1	1
12	4668863	A1.25	1	1
7	4669894	A4.02	2	1
11	4670137	A1.06	1	1
7	4670139	A1.06	1	1
1	4670937	A1.06/ 1	1	1
40	4671767	A1.07	1	2
29	4671768	A1.07	1	2
6	4671890	A1.01	1	1
6	4671891	A1.01	2	1
2	4672154	A1.05	1	1
7	4672767	A1.01	1	1
8	4672768	A1.01	1	1
7	4672842	A3.01	1	1
8	4672985	A1.06	1	1
9	4672986	A1.06	1	1
8	4677094	A3.01	1	1
9	4678900	A1.01	1	1
9	4678901	A1.01	1	1
7	4678902	A1.01	2	1
3	4678907	A1.05	1	1
4	4678908	A1.05	1	1
5	4678909	A1.05	1	1
6	4678912	A1.05	1	1
6	4678913	A1.05	1	1
8	4678999	A1.05	1	1
14	4679070	A2.24	3	1
9	4679234	A1.01	1	1
11	4679615	A1.02	1	1
48	4679616	A1.07	1	3
12	4681598	A1.02	1	1
4	4681776	A4.02/ 2	3	1
49	4684088	A1.07	1	3
50	4684089	A1.07	1	3
2	4684881	A3.01/ 1	1	1
9	4687474	A1.05	1	1

ITEM	PART N.	SGR.	TAV.	PAG.
2	4690738	A2.24	4	1
1	4690738	A2.24/ 1	3	1
5	4691301	A1.03	2	1
5	4691302	A1.03	2	1
5	4691303	A1.03	2	1
5	4691304	A1.03	2	1
5	4691305	A1.03	2	1
5	4691306	A1.03	2	1
11	4691307	A1.03	2	1
11	4691308	A1.03	2	1
11	4691309	A1.03	2	1
11	4691310	A1.03	2	1
11	4691311	A1.03	2	1
11	4691312	A1.03	2	1
17	4691313	A1.03	2	1
17	4691314	A1.03	2	1
17	4691315	A1.03	2	1
17	4691316	A1.03	2	1
17	4691317	A1.03	2	1
17	4691318	A1.03	2	1
23	4691319	A1.03	2	1
23	4691320	A1.03	2	1
23	4691321	A1.03	2	1
23	4691322	A1.03	2	1
23	4691323	A1.03	2	1
23	4691324	A1.03	2	2
29	4691325	A1.03	2	2
29	4691326	A1.03	2	2
29	4691327	A1.03	2	2
29	4691328	A1.03	2	2
29	4691329	A1.03	2	2
29	4691330	A1.03	2	2
35	4691331	A1.03	2	2
35	4691332	A1.03	2	2
35	4691333	A1.03	2	2
35	4691334	A1.03	2	2
35	4691335	A1.03	2	2
35	4691336	A1.03	2	2
41	4691337	A1.03	2	2
41	4691338	A1.03	2	2
41	4691339	A1.03	2	2
41	4691340	A1.03	2	2
41	4691341	A1.03	2	2
41	4691342	A1.03	2	2
3	4692711	A3.01/ 1	1	1
10	4693705	A1.05	1	1
5	4695903	A1.03	1	1
7	4697153	A3.01	2	1
11	4698031	A1.05	1	1
11	4698032	A1.05	1	1
11	4698033	A1.05	1	1
11	4698034	A1.05	1	1
11	4698035	A1.05	1	1
11	4698036	A1.05	1	1
3	4699521	A1.01/ 1	2	1
1	4700412	A3.01/ 1	4	1
2	4700487	A2.26/ 1	1	1
3	4702471	A2.24	4	1
2	4703645	A3.01/ 1	2	1
2	4705975	F3.01	1	1
10	4707319	A2.24/ 1	4	1
1	4707320	A1.01/ 1	1	1
2	4707321	A1.01/ 1	1	1
3	4707322	A1.01/ 1	1	1
1	4707775	A1.03/ 1	2	1
1	4707776	A1.03/ 1	2	1
2	4707779	A1.03/ 1	2	1
2	4707780	A1.03/ 1	2	1
2	4707860	A3.01/ 1	5	1
1	4708063	A1.03/ 1	2	1
1	4708064	A1.03/ 1	2	1
2	4708069	A1.03/ 1	2	1
2	4708070	A1.03/ 1	2	1
4	4708079	A1.06/ 1	1	1
5	4708105	A1.06/ 1	1	1
6	4708213	A1.06/ 1	1	1
6	4708213	A1.16/ 1	1	1
2	4708220	A1.02/ 1	1	1
7	4708423	A1.06/ 1	1	1
8	4708424	A1.06/ 1	1	1
3	4708557	A1.02/ 1	1	1
1	4710645	A1.15	1	1
7	4711552	A1.16/ 1	1	1
1	4711596	A1.08/ 1	1	1
2	4711597	A1.08/ 1	1	1
2	4711702	A4.03/ 1	1	1
3	4711705	A4.03/ 1	1	1
1	4711786	A1.04/ 1	1	1
2	4711787	A1.04/ 1	1	1
2	4711933	A1.15	1	1
3	4712083	A4.02/ 2	2	1
4	4712547	A1.02/ 1	1	1
1	4712663	A1.05/ 1	1	1
1	4712664	A1.05/ 1	1	1
8	4712737	A1.16/ 1	1	1
4	4713556	A1.01/ 1	1	1
2	4713668	A3.01/ 1	4	1
5	4718316	A1.01/ 1	1	1
5	4718317	A1.01/ 1	1	1
5	4718318	A1.01/ 1	1	1
6	4718319	A1.01/ 1	1	1
6	4718320	A1.01/ 1	1	1
6	4718321	A1.01/ 1	1	1
7	4718322	A1.01/ 1	1	1
7	4718323	A1.01/ 1	1	1

ITEM	PART N.	SGR.	TAV.	PAG.
7	4718324	A1.01/ 1	1	1
5	4718603	A1.01/ 1	2	1
6	4718732	A1.02/ 1	1	1
7	4718900	A1.02/ 1	1	1
8	4718901	A1.02/ 1	1	1
9	4718902	A1.02/ 1	1	1
10	4720070	A1.02/ 1	1	1
11	4720071	A1.02/ 1	1	1
12	4720072	A1.02/ 1	1	1
3	4720881	A3.01/ 1	2	1
1	4720887	A3.02/ 2	1	1
4	4721103	A3.01/ 1	1	1
2	4721106	A3.02/ 2	1	1
3	4721107	A3.02/ 2	1	1
4	4721108	A3.02/ 2	1	1
5	4721109	A3.02/ 2	1	1
6	4721110	A3.02/ 2	1	1
2	4721387	A4.09/ 3	1	1
3	4721388	A4.09/ 3	1	1
4	4721389	A4.09/ 3	1	1
5	4721391	A4.09/ 3	1	1
6	4721392	A4.09/ 3	1	1
17	4722140	A2.56	1	1
8	4722140	A2.56/ 1	1	1
2	4722162	A1.05/ 1	1	1
4	4722291	A4.02/ 2	2	1
1	4722292	A4.02/ 2	1	1
2	4722294	A4.02/ 2	1	1
3	4722301	A1.15	1	1
3	4722302	A1.19/ 1	1	1
1	4722522	F3.01/ 2	1	1
3	4722645	A1.03/ 1	2	1
3	4722646	A1.03/ 1	2	1
3	4722647	A1.03/ 1	2	1
3	4722648	A1.03/ 1	2	1
3	4722649	A1.03/ 1	2	1
3	4722650	A1.03/ 1	2	1
4	4722651	A1.03/ 1	2	1
4	4722652	A1.03/ 1	2	1
4	4722653	A1.03/ 1	2	1
4	4722654	A1.03/ 1	2	1
4	4722655	A1.03/ 1	2	1
4	4722656	A1.03/ 1	2	1
5	4722693	A1.03/ 1	2	1
5	4722694	A1.03/ 1	2	1
5	4722695	A1.03/ 1	2	1
5	4722696	A1.03/ 1	2	1
5	4722697	A1.03/ 1	2	1
5	4722698	A1.03/ 1	2	2
6	4722699	A1.03/ 1	2	2
6	4722700	A1.03/ 1	2	2
6	4722701	A1.03/ 1	2	2
6	4722702	A1.03/ 1	2	2
6	4722703	A1.03/ 1	2	2
6	4722704	A1.03/ 1	2	2
2	4722722	B2.18/ 1	1	1
9	4722819	A1.16/ 1	1	1
11	4722822	A1.16/ 1	1	1
6	4723225	A1.01/ 1	2	1
5	4723428	A3.01/ 1	3	1
5	4724228	A3.01/ 1	1	1
6	4724237	A3.01/ 1	1	1
6	4724638	A3.01/ 1	3	1
10	4725095	A2.52	1	1
8	4725203	A4.02	2	1
12	4725315	A3.03	1	1
1	4725775	A1.07/ 1	1	1
2	4726657	A4.02	4	1
4	4726790	A3.01/ 1	2	1
20	4726808	A1.01/ 1	1	2
3	4727066	A3.01/ 1	5	1
5	4727245	F2.01	1	1
9	4727399	A4.09/ 3	1	1
2	4728940	A1.19	1	1
26	4729704	A2.54/ 1	1	1
3	4730530	A4.02/ 2	1	1
6	4731242	A1.03	1	1
9	4731414	A1.01/ 1	1	1
2	4731530	A1.07/ 1	1	1
2	4731532	A1.07/ 1	1	1
7	4734133	A1.07/ 1	1	2
10	4734134	A1.07/ 1	1	2
1	4734354	A1.03/ 1	1	1
4	4734562	A4.02/ 2	3	1
8	4734714	F2.01/ 1	1	1
7	4734747	A2.52	1	1
4	4735379	A1.15	1	1
4	4735380	A1.19/ 1	1	1
5	4735638	A1.15	1	1
7	4736313	A3.01/ 1	1	1
4	4736405	A4.09	1	1
5	4736406	A4.09	1	1
3	4736567	A4.02	4	1
8	4737249	A3.01/ 1	1	1
25	4737709	A2.54/ 1	1	1
5	4737909	A4.02/ 2	2	1
7	4738772	F3.01	3	1
1	4739076	A4.09/ 3	1	1
4	4739628	A4.02/ 2	3	1
9	4740422	A3.01	1	1
10	4740423	A3.01	1	1
4	4741072	A2.24	2	1
9	4741299	A4.02	2	1
9	4741299	A4.02	3	1
10	4741300	A4.02	3	1

ITEM	PART N.	SGR.	TAV.	PAG.
2	4741301	A3.03/ 1	1	1
6	4741955	A4.02/ 2	2	1
2	4741955	B2.06	1	1
9	4741955	B2.06/ 1	1	1
5	4741955	B2.06/ 2	1	1
22	4742406	A2.54/ 1	1	1
24	4742408	A2.54/ 1	1	1
3	4742848	A2.26	1	1
2	4742848	A2.26/ 1	1	1
1	4744740	F3.01	3	1
3	4744741	A1.19	1	1
7	4746085	A2.54/ 1	1	1
9	4746941	A1.07/ 1	1	2
10	4747678	A4.02	2	1
7	4749164	F2.01/ 1	1	1
12	4750416	A2.24/ 1	4	1
3	4750417	A2.24/ 1	4	1
17	4750441	A1.05	1	1
17	4750442	A1.05	1	1
12	4750505	A2.24/ 1	4	1
12	4750518	A2.24/ 1	1	1
11	4750519	A2.24/ 1	1	1
5	4750523	A1.16/ 1	1	1
15	4750524	A2.24/ 1	1	1
13	4750525	A2.24/ 1	1	1
14	4750526	A2.24/ 1	1	1
10	4750806	A1.01/ 1	1	1
11	4750807	A1.01/ 1	1	1
11	4750808	A1.01/ 1	1	1
11	4750809	A1.01/ 1	1	1
11	4750810	A1.01/ 1	1	1
11	4750811	A1.01/ 1	1	1
11	4750812	A1.01/ 1	1	1
11	4750813	A1.01/ 1	1	1
11	4750814	A1.01/ 1	1	1
11	4750815	A1.01/ 1	1	1
11	4750816	A1.01/ 1	1	1
11	4750817	A1.01/ 1	1	1
11	4750818	A1.01/ 1	1	2
11	4750819	A1.01/ 1	1	2
11	4750820	A1.01/ 1	1	2
11	4750821	A1.01/ 1	1	2
11	4750822	A1.01/ 1	1	2
11	4751048	A1.07/ 1	1	2
1	4751060	F3.01	1	1
12	4752172	A1.07/ 1	1	2
12	4752173	A1.07/ 1	1	2
13	4752190	A1.07/ 1	1	2
4	4752484	A3.01/ 1	5	1
7	4753434	A4.02/ 2	2	1
8	4753435	A4.02/ 2	2	1
2	4753580	A1.07/ 1	1	1
2	4754088	A1.07/ 1	1	1
5	4754590	A3.03/ 1	1	1
5	4754648	A3.01/ 1	2	1
5	4754648	A3.01/ 1	5	1
6	4754649	A3.01/ 1	5	1
7	4754651	A3.01/ 1	5	1
6	4754653	A3.03/ 1	1	1
5	4754839	B2.18/ 1	1	1
12	4754928	A1.16	1	1
1	4754980	A2.24	1	1
6	4756160	A4.09	1	1
2	4756500	A1.07/ 1	1	1
2	4756501	A1.07/ 1	1	1
2	4756502	A1.07/ 1	1	1
2	4756503	A1.07/ 1	1	1
15	4756612	A2.24	3	1
34	4756612	A2.24/ 1	4	2
16	4756614	A2.24	3	1
35	4756614	A2.24/ 1	4	2
17	4756615	A2.24	3	1
36	4756615	A2.24/ 1	4	2
18	4756616	A2.24	3	1
37	4756616	A2.24/ 1	4	2
19	4756617	A2.24	3	1
4	4757006	A4.03	1	1
5	4757008	A4.03	1	1
7	4757193	F3.01	3	1
6	4758021	A4.03	1	1
7	4758023	A4.03	1	1
8	4758268	A4.03	1	1
9	4758414	A4.03	1	1
10	4758416	A4.03	1	1
3	4758794	A1.07/ 1	1	1
3	4758795	A1.07/ 1	1	1
3	4758796	A1.07/ 1	1	1
3	4758797	A1.07/ 1	1	1
4	4758798	A1.07/ 1	1	1
4	4758799	A1.07/ 1	1	1
4	4758800	A1.07/ 1	1	1
4	4758801	A1.07/ 1	1	1
4	4759290	A4.02/ 2	1	1
1	4760463	A1.02/ 1	2	1
7	4760489	A1.01/ 1	2	1
10	4760837	A2.24	3	1
7	4761555	A4.09	1	1
4	4761558	A1.19	1	1
11	4761559	A4.03	1	1
8	4761563	A4.09	1	1
9	4761570	A4.09	1	1
10	4761571	A4.09	1	1
11	4761572	A4.09	1	1
12	4761573	A4.09	1	1
13	4761576	A4.09	1	1

ITEM	PART N.	SGR.	TAV.	PAG.
14	4761579	A4.09	1	1
15	4761580	A4.09	1	1
16	4761581	A4.09	1	1
17	4761582	A4.09	1	1
7	4761615	A4.02	1	1
12	4761955	A4.03	1	1
9	4763626	A4.02/ 2	2	1
5	4764040	A1.19	1	1
18	4764041	A4.09	1	1
11	4764705	A1.01/ 1	1	2
11	4764706	A1.01/ 1	1	2
11	4764707	A1.01/ 1	1	2
11	4764708	A1.01/ 1	1	2
11	4764709	A1.01/ 1	1	2
10	4764722	A4.02/ 2	2	1
3	4765377	A2.52	1	1
5	4765554	A1.03/ 1	1	1
2	4765719	A2.24	1	1
10	4766706	A1.16/ 1	1	1
17	4766747	A3.01/ 1	4	1
2	4766813	A1.16/ 1	1	1
5	4770463	A1.02/ 1	1	1
4	4771030	A1.05/ 1	1	1
24	4771075	A1.25/ 1	1	1
26	4771078	A1.25/ 1	1	1
29	4771079	A1.25/ 1	1	1
28	4771080	A1.25/ 1	1	1
30	4771081	A1.25/ 1	1	1
1	4773266	B2.18/ 1	1	1
32	4774692	A1.25/ 1	1	2
9	4774760	A3.01/ 1	1	1
4	4775752	A1.05/ 1	1	1
5	4775753	A1.05/ 1	1	1
5	4775754	A1.05/ 1	1	1
5	4775755	A1.05/ 1	1	1
5	4775756	A1.05/ 1	1	1
5	4775757	A1.05/ 1	1	1
5	4775758	A1.05/ 1	1	1
5	4775759	A1.05/ 1	1	1
5	4775760	A1.05/ 1	1	1
5	4775761	A1.05/ 1	1	1
5	4775762	A1.05/ 1	1	1
5	4775763	A1.05/ 1	1	1
5	4775764	A1.05/ 1	1	1
2	4775901	A1.16/ 1	1	1
2	4776364	A2.24	1	1
5	4777183	A2.24/ 1	4	1
6	4777184	A2.24/ 1	4	1
4	4777185	A2.24/ 1	4	1
8	4780206	A3.01/ 1	5	1
13	4780974	F2.01	1	1
10	4783070	A2.24/ 1	2	1
13	4783239	F2.01	1	1
5	4786841	A1.07/ 1	1	2
11	4787632	A4.02/ 2	2	1
2	4787637	A2.43/ 2	2	1
3	4787733	A3.03/ 1	1	1
2	4788145	A1.03/ 1	1	1
8	4792383	A2.24/ 1	4	1
9	4793790	A2.54/ 1	1	1
1	4793794	A1.03/ 1	2	1
2	4794193	A1.03/ 1	2	1
19	4795296	A2.24/ 1	4	1
8	4795309	A1.25/ 1	1	1
7	4795338	A3.03/ 1	1	1
12	4795605	A4.02/ 2	2	1
5	4795606	B2.18/ 1	1	1
21	4795607	A4.02/ 2	2	1
13	4795627	A4.02/ 2	2	1
1	4795729	B2.18/ 1	1	1
14	4796114	A1.02/ 1	1	1
15	4796117	A1.02/ 1	1	1
6	4796208	A1.05/ 1	1	1
6	4796209	A1.05/ 1	1	1
1	4797317	A2.24/ 1	2	1
2	4797320	A2.24/ 1	2	1
4	4798421	A1.01/ 1	2	1
3	4798423	A2.54/ 1	1	1
6	4798425	A1.07/ 1	1	2
16	4798426	A1.07/ 1	1	2
8	4798427	A1.07/ 1	1	2
12	4799046	A1.16/ 1	1	1
6	4799278	A3.01/ 1	2	1
4	4799337	A3.03/ 1	1	1
4	4799609	A2.54/ 1	1	1
19	4799685	A2.24	3	1
38	4799685	A2.24/ 1	4	2
7	4800402	A1.05/ 1	1	1
7	4800403	A1.05/ 1	1	1
8	4802128	A1.05/ 1	1	1
3	4802671	A1.05/ 1	1	1
10	4803059	A2.54/ 1	1	1
6	4803098	A2.52	1	1
15	4803138	A4.02/ 2	2	1
2	4804290	A1.25/ 1	1	1
25	4804462	A1.07	1	1
10	4804648	A1.01/ 1	2	1
3	4804763	A1.25/ 1	1	1
26	4805697	A2.24/ 1	4	2
8	4806152	A1.01/ 1	1	1
20	4806153	A3.01/ 1	1	1
6	4806154	A1.25/ 1	1	1
41	4806746	A2.24/ 1	4	2
13	4806748	A2.24/ 1	4	1
14	4806749	A2.24/ 1	4	1

ITEM	PART N.	SGR.	TAV.	PAG.
15	4806750	A2.24/ 1	4	1
16	4806751	A2.24/ 1	4	1
17	4806752	A2.24/ 1	4	1
18	4806753	A2.24/ 1	4	1
21	4806845	A3.01/ 1	5	1
4	4806851	A3.01/ 1	3	1
7	4806853	A3.01/ 1	3	1
5	4807113	A4.02/ 2	1	1
4	4807115	A4.03/ 1	1	1
6	4807116	A4.03/ 1	1	1
18	4807273	A4.02/ 2	3	1
9	4807395	A4.03/ 1	1	1
3	4807719	A2.24/ 1	3	1
2	4807721	A2.24/ 1	3	1
8	4807728	A4.02/ 2	3	1
2	4807730	A4.02/ 2	3	1
5	4808079	A4.03/ 1	1	1
5	4808080	A4.03/ 1	1	1
5	4808121	A2.52	1	1
11	4808232	A2.24/ 1	4	1
27	4808233	A2.24/ 1	4	2
7	4808268	F3.01	3	1
2	4808268	F3.01/ 2	1	1
27	4808546	A2.54/ 1	1	1
7	4808727	A4.02/ 2	1	1
3	4808788	A1.03/ 1	1	1
6	4808790	A1.03/ 1	1	1
4	4809521	A2.24/ 1	1	1
4	4811336	A1.16/ 1	1	1
3	4811426	A1.04/ 1	1	1
21	4812552	A1.25/ 1	1	1
25	4812557	A1.25/ 1	1	1
8	4813560	A4.09/ 3	1	1
1	4813602	A2.52	1	1
5	4815035	A3.01/ 1	4	1

ITEM	PART N.	SGR.	TAV.	PAG.
3	4816170	F2.01/ 1	1	1
6	4816287	A2.24/ 1	1	1
11	4817374	A2.24/ 1	1	1
9	4817433	A3.01/ 1	3	1
2	4817522	A2.54/ 1	1	1
5	4818721	A2.54/ 1	1	1
6	4818722	A2.54/ 1	1	1
2	4821100	A1.02/ 1	2	1
3	4821412	A1.05/ 1	1	1
13	4822279	A1.02/ 1	1	1
8	4822309	A3.01/ 1	3	1
4	4871771	A2.24	4	1
4	4871771	A2.24/ 1	3	1
5	4871773	A2.24	4	1
5	4871773	A2.24/ 1	3	1
6	4871774	A2.24	4	1
6	4871774	A2.24/ 1	3	1
11	4873369	A4.02	2	1
2	4950259	F3.01	1	1
3	4950479	B2.18/ 1	1	1
4	4950480	B2.18/ 1	1	1
1	4950481	B2.18	1	1
10	4951201	D3.34	4	1
3	4951301	B2.04	2	1
3	4951301	B2.04	3	1
3	4951301	B2.04	4	1
3	4951301	B2.04/ 3	2	1
4	4951301	B2.04/ 3	3	1
5	4951301	B2.04/ 3	4	1
14	4951546	D3.34	3	1
12	4951546	D3.34	3A	1
1	4951818	C1.01/ 1	2	1
8	4951841	D2.29	2	1
3	4952553	F4.01	1	1
3	4952553	F4.01/ 1	1	1

ITEM	PART N.	SGR.	TAV.	PAG.
12	4952685	B1.11	1	1
7	4953610	B2.35	1	1
10	4953884	D2.29	1	1
2	4953896	E3.02	2	1
13	4954028	B1.05/ 1	1	1
3	4954336	F3.01	1	1
2	4954385	A1.08	1	1
9	4954424	A1.02	2	1
3	4954426	A1.08	1	1
8	4954498	D2.23	1	1
9	4954874	B1.09	1	1
9	4954874	B1.09/ 1	1	1
2	4954923	B1.15/ 1	1	1
1	4955074	A0.02/ 1	1	1
2	4955094	A0.02	1	1
3	4955390	H1.01/ A	2	1
3	4955443	D1.03/ 1	1	1
3	4955449	D1.03/ 1	1	1
5	4955451	D1.03/ 1	1	1
4	4955452	D1.03	1	1
2	4955458	D1.02	1	1
15	4955484	D3.34	3	1
5	4955502	D1.03	1	1
6	4955502	D1.03/ 1	1	1
8	4955520	B1.05/ 1	2	1
7	4955552	D1.03/ 1	1	1
8	4955553	D1.03/ 1	1	1
8	4955605	D3.30	1	1
4	4956181	B1.10	2	1
2	4956208	B1.10	1	1
2	4956208	B1.10/ 1	1	1
3	4956212	B1.10	2	1
3	4957531	B2.06	1	1
10	4957531	B2.06/ 1	1	1
21	4957531	B2.06/ 2	1	1

ITEM	PART N.	SGR.	TAV.	PAG.
1	4957607	L3.04	2	1
11	4958134	C1.01	2	1
12	4958201	C1.01	2	1
2	4958508	C1.01/ 1	2	1
1	4959324	A4.01	1	1
2	4959660	B4.12	1	1
3	4959661	B4.12	1	1
10	4960068	B1.09	1	1
10	4960068	B1.09/ 1	1	1
51	4960162	A1.07	1	3
13	4960319	B1.11	1	1
14	4960321	B1.11	1	1
15	4960322	B1.11	1	1
16	4960323	B1.11	1	1
17	4960324	B1.11	1	1
3	4960453	B1.10/ 1	2	1
4	4960456	B2.06	1	1
4	4960759	B2.04	4	1
6	4960759	B2.04/ 3	4	1
1	4961101	B1.09	2	1
5	4961971	B2.01	1	1
6	4961972	B2.01/ 1	3	1
7	4961974	B2.01/ 1	3	1
9	4962011	B1.05/ 1	2	1
4	4962039	B2.01	3	1
5	4962046	B2.01	3	1
9	4962047	B2.01	2	1
6	4962048	B2.01	1	1
5	4962048	B2.01/ 1	1	1
4	4962186	B2.04	3	1
4	4962190	B2.04	2	1
5	4962194	B2.04	3	1
5	4962194	B2.04	4	1
6	4962196	B2.04	3	1
5	4962196	B2.04/ 3	3	1
5	4962197	B2.04	2	1
6	4962198	B2.04	2	1
1	4962198	B2.04/ 2	4	1
7	4962201	B2.04	2	1
31	4962201	B2.04/ 1	1	2
4	4962419	B2.30	1	1
1	4962494	B2.33	3	1
2	4962496	B2.33	3	1
3	4962497	B2.33	3	1
4	4962498	B2.33	3	1
5	4962499	B2.33	3	1
5	4962648	B4.08	1	1
11	4963762	A3.01	1	1
4	4963951	D3.38	1	1
5	4964148	B2.30	1	1
4	4964318	A2.26	1	1
3	4964318	A2.26/ 1	1	1
5	4964320	A2.26	1	1
4	4964320	A2.26/ 1	1	1
2	4964322	A2.26/ 1	1	1
6	4964323	A2.26	1	1
5	4964323	A2.26/ 1	1	1
2	4964396	B2.17	1	1
3	4964396	D2.28	1	1
2	4964475	F4.01	2	1
2	4964475	F4.01/ 1	2	1
7	4964486	A2.26	1	1
6	4964486	A2.26/ 1	1	1
8	4964487	A2.26	1	1
7	4964487	A2.26/ 1	1	1
9	4965120	A2.26	1	1
8	4965120	A2.26/ 1	1	1
7	4965428	A1.03	1	1
2	4965830	B1.09/ 1	2	1
5	4965899	B2.06	1	1
1	4966394	D1.01	1	1
1	4966862	B2.04/ 3	1	1
2	4966863	B2.04/ 3	1	1
1	4966864	B2.05	1	1
6	4967197	A2.01	1	1
2	4967197	E3.28	1	1
6	4967422	B2.06	1	1
22	4967422	B2.06/ 2	1	1
3	4967635	C1.01/ 1	2	1
1	4967704	L1.01/ 1	1	1
28	4967704	L1.01/ 2	2	2
1	4967704	L1.01/ 2	3	1
2	4967724	E3.02	3	1
1	4967724	E3.02/ 4	1	1
6	4967729	B4.08	1	1
7	4968762	B4.08	1	1
2	4969273	B2.05	1	1
3	4969274	B2.05	1	1
3	4970200	B2.04/ 3	1	1
4	4970200	B2.05	1	1
13	4970225	C1.01	2	1
2	4970504	A2.21	2	1
1	4970504	B2.07	1	1
1	4970504	B2.07/ 1	1	1
1	4970504	B2.13	1	1
7	4971843	A2.01	1	1
9	4972293	D2.29	2	1
10	4972404	B2.01	2	1
6	4972404	B2.01	3	1
10	4972404	B2.01/ 1	2	1
8	4972404	B2.01/ 1	3	1
10	4972430	D2.29	2	1
11	4972431	D2.29	2	1
12	4972432	D2.29	2	1
13	4972433	D2.29	2	1

ITEM	PART N.	SGR.	TAV.	PAG.
5	4972664	B1.15	1	1
3	4972664	B1.15/ 1	1	1
4	4972932	A2.54	1	1
8	4973208	B4.08	1	1
3	4974277	A3.02	1	1
4	4974297	A3.02/ 1	1	1
5	4974299	A3.02/ 1	1	1
3	4974467	B1.09/ 1	2	1
2	4974468	B2.08	1	1
11	4974471	B2.06/ 1	1	1
1	4974664	F3.01/ 1	1	1
8	4975732	B2.04	2	1
14	4976146	D2.29	2	1
7	4977072	B2.10/ A	2	1
1	4977072	B2.38	1	1
1	4977098	A4.01	2	1
2	4977099	A4.01	2	1
3	4977100	A4.01	2	1
8	4977118	A2.01	1	1
9	4977122	A2.01	1	1
9	4977442	B2.04	2	1
4	4977442	B2.04/ 3	2	1
4	4977601	A4.02	4	1
6	4977809	D1.03	1	1
9	4977809	D1.03/ 1	1	1
7	4977813	D1.03	1	1
10	4977813	D1.03/ 1	1	1
11	4977820	D1.03/ 1	1	1
5	4978830	D3.38	1	1
5	4978953	B1.10	2	1
4	4978953	B1.10/ 1	2	1
6	4978994	B2.30/ 1	1	1
7	4979102	B2.30/ 1	1	1
8	4979137	B2.30/ 1	1	1
6	4979157	B2.30	1	1
7	4979204	B2.04/ 3	4	1
3	4979711	B2.17	1	1
2	4979711	B2.17/ 1	1	1
4	4979711	D2.28	1	1
2	4979711	D2.28/ 1	1	1
4	4979712	B2.17	1	1
3	4979712	B2.17/ 1	1	1
5	4979712	D2.28	1	1
3	4979712	D2.28/ 1	1	1
5	4979713	B2.17	1	1
6	4979713	D2.28	1	1
6	4979714	B2.17	1	1
4	4979714	B2.17/ 1	1	1
7	4979714	D2.28	1	1
4	4979714	D2.28/ 1	1	1
8	4979887	D1.03	1	1
9	4979888	D1.03	1	1
4	4980622	H1.01	1	1
2	4980622	H1.01/ A	2	1
11	4981056	B2.01	2	1
11	4981056	B2.01/ 1	2	1
2	4981108	L3.11	1	1
2	4981112	L3.11	1	1
12	4981270	A3.01	1	1
13	4981271	A3.01	1	1
4	4981273	A3.02	1	1
6	4981273	A3.02/ 1	1	1
7	4981274	A3.02/ 1	1	1
5	4981746	H1.01	1	1
3	4981746	H1.01/ A	2	1
6	4982020	L1.04	2	1
6	4982020	L1.04/ 1	2	1
2	4982082	D3.34	2	1
1	4982082	D3.37	1	1
1	4982082	D3.37/ 1	1	1
6	4982082	D3.38	1	1
10	4982111	B2.04	2	1
1	4982114	B2.04	1	1
11	4982114	B2.05	1	1
7	4982115	B2.04	3	1
3	4982514	A2.43	1	1
22	4982514	A2.43/ 2	2	1
1	4982514	E3.02	4	1
1	4982514	E3.02	8	1
4	4982514	F4.01	1	1
1	4982514	F4.01	3	1
9	4982514	F4.01/ 1	3	1
5	4982514	F4.01/ 1	5	1
10	4982644	A2.01	1	1
3	4982684	D3.34	2	1
2	4982684	D3.37	1	1
2	4982684	D3.37/ 1	1	1
7	4982944	B2.01	3	1
1	4983237	H1.01/ A	2	1
1	4983613	C1.01	3	1
1	4983695	L1.01	2	1
2	4983696	L1.01	2	1
3	4983697	L1.01	2	1
4	4983700	L1.01	2	1
1	4983905	B2.04/ 1	2	1
1	4983905	B2.04/ 1	3	1
1	4983905	B2.04/ 1	4	1
1	4983905	B2.04/ 2	1	1
1	4983905	B2.04/ 2	2	1
1	4983905	B2.04/ 2	3	1
2	4983905	B2.04/ 2	4	1
1	4983917	B2.04/ 1	1	1
1	4984156	B2.33/ 1	4	1
4	4984186	A2.43	1	1
2	4984188	B2.33/ 1	4	1

ITEM	PART N.	SGR.	TAV.	PAG.
28	4984333	L1.04	6	2
3	4984517	A2.21	2	1
4	4984525	A2.21	2	1
5	4984549	A2.21	2	1
6	4984550	A2.21	2	1
6	4984830	B2.10/ A	2	1
2	4984830	B2.38	1	1
2	4984982	L3.10	1	1
23	4984991	A3.03	1	1
1	4985147	C1.35	1	1
1	4985147	E3.25	1	1
1	4985147	E3.25	2	1
22	4985332	B2.10/ A	2	1
3	4985332	B2.38	1	1
2	4985332	C1.35	1	1
6	4985508	B2.04	4	1
1	4985734	C1.01	1	1
4	4985734	C1.01/ 1	2	1
3	4986716	B1.10	1	1
4	4986725	B1.10	1	1
6	4986852	B1.10	2	1
7	4988758	B1.10	2	1
8	4988760	B1.10	2	1
6	4989256	B2.33	3	1
6	4989256	B2.33/ 1	3	1
7	4989257	B2.33	3	1
7	4989257	B2.33/ 1	3	1
8	4989258	B2.33	3	1
8	4989258	B2.33/ 1	3	1
1	4989258	E3.31	1	1
9	4989259	B2.33	3	1
9	4989259	B2.33/ 1	3	1
10	4989261	B2.33	3	1
10	4989261	B2.33/ 1	3	1
2	4989261	E3.31	1	1
7	4989488	A2.21	2	1
14	4989572	A3.01	1	1
8	4989767	A2.21	2	1
13	4989877	D3.34	1	1
14	4989878	D3.34	1	1
4	4989879	D3.34	1	1
8	4989904	B2.35	1	1
18	4989904	B2.35/ A	1	1
10	4989904	B2.35/ 1	1	1
7	4989907	B2.30	1	1
2	4990403	B1.09	2	1
4	4990403	B1.09/ 1	2	1
3	4990404	B1.09	2	1
5	4990404	B1.09/ 1	2	1
4	4990407	B1.09	2	1
6	4990407	B1.09/ 1	2	1
3	4992081	E3.28	1	1
4	4992083	E3.28	1	1
5	4992088	E3.28	1	1
11	4992213	A2.01	1	1
3	4994039	A0.02	1	1
14	4995665	B1.05/ 1	1	1
15	4995666	B1.05/ 1	1	1
26	4996300	B1.10	1	2
3	4996300	B1.10/ 1	1	1
9	4996300	D2.23	1	1
4	4998870	A1.08	1	1
1	5106092	D2.27	2	1
1	5106093	D2.27	1	1
3	5106240	D2.23	2	1
7	5109263	A2.56/ 1	1	1
1	5110478	D2.27/ 1	1	1
1	5110478	D2.27/ 1A	1	1
13	5112623	A1.08/ 1	1	1
12	5120204	D2.27	1	1
2	5120207	D2.27	1	1
3	5120207	D2.27	2	1
3	5120481	D2.23	2	1
12	5120484	D2.27/ 1A	1	1
11	5120496	D2.27	1	1
7	5120647	D2.27	1	1
3	5120783	D2.23	2	1
1	5120785	D2.27	2	1
9	5120786	D2.27	1	1
11	5120787	D2.27	2	1
10	5120788	D2.27	1	1
1	5120789	D2.27	1	1
1	7302756	A4.03/ 1	1	1
1	7302776	A4.03/ 1	1	1
14	7940403	E3.02/ 1	1	1
28	7952359	B2.04	2	2
21	8029580	A1.01/ 1	1	2
8	8105210	A2.52	1	1
9	8105211	A2.52	1	1
	8109873	A0.00/ 1	1	1
30	8122151	A2.28/ 1	2	2
3	8268534	D1.02	1	1
10	8268534	D1.03	1	1
12	8268534	D1.03/ 1	1	1
1	8270126	E3.10	1	1
1	8270126	E3.10/ 1	1	1
1	8270126	E3.10/ 5	1	1
1	8270126	E3.13	1	1
1	8270126	E3.13/ 1	1	1
1	8270126	E3.13/ 2	1	1
2	8270259	E3.10/ 5	1	1
3	8270283	E3.10/ 5	1	1
2	8271634	E3.06	1	1
1	8272198	E3.29	1	1
2	8272206	E3.29	1	1

ITEM	PART N.	SGR.	TAV.	PAG.
3	8272207	E3.29	1	1
4	8272209	E3.29	1	1
5	8272966	E3.29	1	1
6	8272969	E3.29	1	1
4	8273060	E3.10/ 5	1	1
7	8273107	E3.29	1	1
2	8273214	E3.13/ 2	1	1
2	8273262	E3.10/ 2	1	1
2	8273262	E3.10/ 4	1	1
8	8273361	E3.29	1	1
1	8273439	E3.31	2	1
2	8273530	E3.13	1	1
2	8273530	E3.13/ 1	1	1
3	8273530	E3.13/ 2	1	1
3	8273605	E3.06	1	1
3	8273635	E3.13	1	1
3	8273635	E3.13/ 1	1	1
1	8273636	E3.32/ 2	1	1
4	8273637	E3.13	1	1
4	8273637	E3.13/ 1	1	1
3	8273641	E3.10/ 4	1	1
1	8273909	D2.27	3	1
2	8273909	D2.27/ 1	1	1
2	8273909	D2.27/ 1A	1	1
2	8273911	D2.27	2	1
3	8273911	D2.27/ 1	1	1
3	8273911	D2.27/ 1A	1	1
2	8273912	D2.27	1	1
3	8273912	D2.27	2	1
4	8273912	D2.27/ 1	1	1
4	8273912	D2.27/ 1A	1	1
3	8273915	D2.27	1	1
5	8273915	D2.27/ 1	1	1
4	8273916	D2.27	1	1
6	8273916	D2.27/ 1	1	1

ITEM	PART N.	SGR.	TAV.	PAG.
4	8273917	D2.27	2	1
7	8273917	D2.27/ 1	1	1
5	8273918	D2.27	2	1
8	8273918	D2.27/ 1	1	1
8	8273918	D2.27/ 1A	1	1
6	8273919	D2.27	2	1
9	8273919	D2.27/ 1	1	1
9	8273919	D2.27/ 1A	1	1
7	8273920	D2.27	2	1
10	8273920	D2.27/ 1	1	1
10	8273920	D2.27/ 1A	1	1
11	8273940	D2.27/ 1	1	1
11	8273940	D2.27/ 1A	1	1
12	8273968	D2.27/ 1	1	1
13	8273969	D2.27/ 1	1	1
14	8274234	D2.27/ 1	1	1
14	8274234	D2.27/ 1A	1	1
3	8274306	B2.13	2	1
2	8274616	E3.10	1	1
8	8280107	D2.27	2	1
2	8280120	E3.31	2	1
15	8280168	D2.27/ 1	1	1
15	8280168	D2.27/ 1A	1	1
16	8280169	D2.27/ 1	1	1
16	8280169	D2.27/ 1A	1	1
5	8280178	E3.10/ 5	1	1
6	8280182	E3.10/ 5	1	1
5	8280182	E3.13	1	1
5	8280182	E3.13/ 1	1	1
7	8280195	E3.10/ 5	1	1
8	8280196	E3.10/ 5	1	1
6	8280206	E3.13	1	1
6	8280206	E3.13/ 1	1	1
7	8280209	E3.13	1	1
7	8280209	E3.13/ 1	1	1

ITEM	PART N.	SGR.	TAV.	PAG.
6	8280351	B2.35/ A	1	1
6	8280351	B2.35/ 2	1	1
3	8280573	E3.10	1	1
4	8280908	E3.10	1	1
9	8280908	E3.10/ 5	1	1
5	8280915	E3.10	1	1
10	8280915	E3.10/ 5	1	1
5	8281025	D2.27	1	1
6	8281030	D2.27	1	1
7	8281033	D2.27	1	1
8	8281034	D2.27	1	1
8	8281034	D2.27	2	1
9	8281199	E3.29	1	1
10	8281200	E3.29	1	1
2	8281201	D2.27	3	1
17	8281201	D2.27/ 1	1	1
17	8281201	D2.27/ 1A	1	1
1	8281282	E3.15	1	1
1	8281282	E3.15/ A	1	1
2	8281284	E3.15	1	1
2	8281284	E3.15/ A	1	1
3	8281285	E3.15	1	1
3	8281285	E3.15/ A	1	1
1	8281325	E3.32	1	1
1	8281325	E3.32/ 4	1	1
18	8281576	D2.27/ 1	1	1
18	8281576	D2.27/ 1A	1	1
9	8281615	D2.27	2	1
9	8281617	D2.27	1	1
10	8281618	D2.27	2	1
11	8281619	D2.27	2	1
10	8281620	D2.27	1	1
11	8281789	D2.27	1	1
1	8281824	E3.32/ 1	1	1
1	8281824	E3.32/ 3	1	1

ITEM	PART N.	SGR.	TAV.	PAG.
8	8282270	E3.13	1	1
8	8282270	E3.13/ 1	1	1
4	8282270	E3.13/ 2	1	1
11	8283375	E3.10/ 5	1	1
12	8283376	E3.10/ 5	1	1
13	8283381	E3.10/ 5	1	1
2	8283381	E3.32/ 2	1	1
12	8283478	D2.27	1	1
19	8283478	D2.27/ 1	1	1
19	8283478	D2.27/ 1A	1	1
3	8283665	E3.31	2	1
4	8283667	E3.31	2	1
11	8283944	E3.29	1	1
5	8284408	E3.31	2	1
1	8284842	E3.02/ 2	1	1
1	8284842	E3.02/ 3	1	1
2	8285989	E3.10/ 1	1	1
3	8285990	E3.10/ 1	1	1
12	8286368	E3.29	1	1
13	8287209	E3.29	1	1
3	8287286	E3.31	1	1
6	8287302	E3.31	2	1
7	8287304	E3.31	2	1
8	8287305	E3.31	2	1
14	8287883	E3.29	1	1
14	8288224	E3.10/ 5	1	1
16	8288764	D3.34	3	1
5	8288935	B2.17/ 1	1	1
5	8288935	D2.28/ 1	1	1
6	8290362	E3.10	1	1
9	8290702	E3.13	1	1
9	8290702	E3.13/ 1	1	1
2	8291505	E3.32/ 1	1	1
2	8291505	E3.32/ 3	1	1
2	8291552	E3.32	1	1
2	8291552	E3.32/ 4	1	1
4	8291846	D3.01	1	1
15	8291846	E3.10/ 5	1	1
3	8292220	E3.32/ 2	1	1
4	8292221	E3.32/ 2	1	1
5	8292259	E3.32/ 2	1	1
2	8292704	E3.02/ 4	1	1
3	8293307	E3.02	2	1
15	8293311	E3.29	1	1
4	8293313	E3.31	1	1
5	8293314	E3.31	1	1
9	8293315	E3.31	2	1
10	8293317	E3.31	2	1
11	8293320	E3.31	2	1
12	8293322	E3.31	2	1
6	8293330	E3.31	1	1
7	8293334	E3.31	1	1
8	8293337	E3.31	1	1
9	8293369	E3.31	1	1
3	8293408	E3.10/ 2	1	1
4	8293408	E3.10/ 4	1	1
4	8293413	E3.10/ 2	1	1
5	8293413	E3.10/ 4	1	1
5	8293416	E3.10/ 2	1	1
2	8293416	E3.10/ 3	1	1
6	8293416	E3.10/ 4	1	1
6	8293417	E3.10/ 2	1	1
3	8293417	E3.10/ 3	1	1
7	8293417	E3.10/ 4	1	1
16	8293816	E3.10/ 5	1	1
5	8294269	E3.13/ 2	1	1
10	8294271	E3.13	1	1
10	8294271	E3.13/ 1	1	1
6	8294271	E3.13/ 2	1	1
7	8294273	E3.13/ 2	1	1
8	8294274	E3.13/ 2	1	1
7	8294275	E3.10/ 2	1	1
4	8294275	E3.10/ 3	1	1
8	8294275	E3.10/ 4	1	1
2	8294287	E3.25	1	1
8	8294515	E3.10/ 2	1	1
9	8294516	E3.10/ 2	1	1
9	8294516	E3.10/ 4	1	1
10	8294522	E3.10/ 2	1	1
11	8294668	E3.13	1	1
11	8294668	E3.13/ 1	1	1
5	8294704	E3.10/ 3	1	1
6	8294705	E3.10/ 3	1	1
7	8294716	E3.10/ 3	1	1
8	8294719	E3.10/ 3	1	1
17	8294765	E3.10/ 5	1	1
18	8294767	E3.10/ 5	1	1
13	8294814	D2.27	1	1
3	8294816	D2.27	3	1
12	8294905	D2.27	2	1
4	8294907	D2.27	3	1
10	8295685	E3.31	1	1
11	8295690	E3.31	1	1
12	8295844	E3.31	1	1
13	8295864	E3.31	1	1
14	8295865	E3.31	1	1
2	8295908	E3.02	8	1
7	8296138	E3.10	1	1
19	8296138	E3.10/ 5	1	1
20	8296145	E3.10/ 5	1	1
21	8296146	E3.10/ 5	1	1
22	8296188	E3.10/ 5	1	1
23	8296190	E3.10/ 5	1	1
9	8296247	E3.13/ 2	1	1
3	8296248	E3.25	1	1

ITEM	PART N.	SGR.	TAV.	PAG.
4	8296250	E3.25	1	1
5	8296251	E3.25	1	1
6	8296252	E3.25	1	1
7	8296255	E3.25	1	1
8	8296256	E3.25	1	1
9	8296257	E3.25	1	1
10	8296430	E3.25	1	1
11	8296431	E3.25	1	1
12	8296486	E3.13	1	1
13	8296487	E3.13	1	1
11	8296559	E3.10/ 2	1	1
9	8296559	E3.10/ 3	1	1
10	8296559	E3.10/ 4	1	1
15	8296577	E3.31	1	1
12	8296635	E3.25	1	1
2	8296636	E3.02/ 2	1	1
16	8296845	E3.29	1	1
16	8296936	E3.31	1	1
8	8297154	E3.10	1	1
12	8297645	E3.13/ 1	1	1
13	8297646	E3.13/ 1	1	1
10	8297916	E3.10/ 3	1	1
13	8297918	E3.31	2	1
11	8297920	E3.10/ 3	1	1
12	8297923	E3.10/ 3	1	1
13	8297924	E3.10/ 3	1	1
3	8298055	E3.32/ 1	1	1
3	8298055	E3.32/ 3	1	1
6	8298072	E3.32/ 2	1	1
14	8298146	E3.10/ 3	1	1
12	8298162	E3.10/ 2	1	1
11	8298162	E3.10/ 4	1	1
13	8298171	E3.10/ 2	1	1
12	8298171	E3.10/ 4	1	1
14	8298172	E3.10/ 2	1	1
13	8298172	E3.10/ 4	1	1
13	8298318	E3.25	1	1
14	8298319	E3.25	1	1
3	8298424	D2.23	2	1
15	8298461	E3.25	1	1
3	8298607	E3.32	1	1
3	8298607	E3.32/ 4	1	1
2	8299095	E3.25	2	1
1	8299227	D2.27/ 2	1	1
2	8299228	D2.27/ 2	1	1
3	8299229	D2.27/ 2	1	1
4	8299230	D2.27/ A	2	1
4	8299230	D2.27/ 2	1	1
5	8299231	D2.27/ 2	1	1
6	8299232	D2.27/ 2	1	1
7	8299233	D2.27/ 2	1	1
8	8299234	D2.27/ 2	1	1
9	8299235	D2.27/ 2	1	1
10	8299236	D2.27/ 2	1	1
11	8299237	D2.27/ 2	1	1
12	8299238	D2.27/ 2	1	1
13	8299239	D2.27/ 2	1	1
16	8299252	E3.25	1	1
4	8299713	E3.10/ 1	1	1
5	8299715	E3.10/ 1	1	1
6	8299716	E3.10/ 1	1	1
7	8299718	E3.10/ 1	1	1
4	8299723	E3.32/ 3	1	1
8	8299739	E3.10/ 1	1	1
5	8299739	E3.32/ 3	1	1
9	8299740	E3.10/ 1	1	1
4	8299740	E3.32/ 1	1	1
6	8299740	E3.32/ 3	1	1
5	8299754	E3.32/ 1	1	1
7	8299754	E3.32/ 3	1	1
6	8299755	E3.32/ 1	1	1
8	8299755	E3.32/ 3	1	1
9	8299758	E3.32/ 3	1	1
1	8299759	E3.02/ 1	1	1
10	8299906	E3.10/ 1	1	1
1	8299929	E3.05	1	1
4	8299968	E3.15	1	1
4	8299968	E3.15/ A	1	1
2	8299995	E3.05	1	1
11	8299995	E3.10/ 1	1	1
12	8505175	A1.01/ 1	1	2
9	8541600	A1.25/ 1	1	1
7	8815069	A3.01/ 1	2	1
9	8817913	A1.06/ 1	1	1
3	8818504	A1.02/ 1	2	1
4	8818505	A1.02/ 1	2	1
7	8818691	A1.07/ 1	1	2
16	8819262	A4.02/ 2	2	1
10	8820450	A3.01/ 1	3	1
17	8820457	A4.02/ 2	2	1
9	8822385	A1.07/ 1	1	2
14	8822963	A1.07/ 1	1	2
4	8823773	A1.04/ 1	1	1
5	8823774	A1.04/ 1	1	1
15	8823993	A1.07/ 1	1	2
6	8826149	A4.02/ 2	1	1
21	8826317	A1.01/ 1	1	2
22	8826318	A1.01/ 1	1	2
23	8826319	A1.01/ 1	1	3
1	8828284	A1.07/ 1	1	1
30	8828576	A1.07/ 1	1	3
1	8828869	A1.07/ 1	1	1
31	8829237	A1.07/ 1	1	3
31	8829262	A1.07/ 1	1	3
31	8829263	A1.07/ 1	1	3

ITEM	PART N.	SGR.	TAV.	PAG.
9	8829266	A1.05/ 1	1	1
8	8829321	A1.01/ 1	2	1
9	8829393	A1.05/ 1	1	1
22	8829581	A1.01/ 1	1	3
23	8829582	A1.01/ 1	1	3
13	8829588	A1.01/ 1	1	2
9	8829611	A1.01/ 1	2	1
20	8830045	A1.07/ 1	1	2
20	8830409	A2.24/ 1	4	2
7	8831035	A4.02/ 2	1	1
6	8831256	A1.04/ 1	1	1
25	9001906	A2.28	2	3
13	9001950	A2.28	3	1
1	9001950	A2.28/ 1	1	1
23	9007831	A2.28	2	2
6	9007836	A2.28	2	1
23	9007840	A2.28	1	2
2	9007840	A2.28/ 1	1	1
9	9009114	A2.28	2	1
5	9009114	A2.28/ 1	2	1
13	9009121	A2.28	1	1
3	9009121	A2.28/ 1	1	1
13	9009122	A2.28	1	1
3	9009122	A2.28/ 1	1	1
22	9009127	A2.28	3	2
9	9009128	A2.28	3	1
2	9009403	A2.35	1	1
3	9009406	A2.35	1	1
13	9009625	A2.28	1	1
3	9009625	A2.28/ 1	1	1
13	9009626	A2.28	1	1
3	9009626	A2.28/ 1	1	1
9	9011280	A2.28	1	1
1	9915528	B1.05	1	1
2	9915534	B1.05	1	1
3	9920143	B1.05	1	1
4	9920146	B1.05	1	1
1	9920276	B2.21	1	1
3	9920276	B2.21/ 1	1	1
2	9920277	B2.21	1	1
4	9920277	B2.21/ 1	1	1
1	9920280	A4.04	1	1
5	9921020	B1.05	1	1
6	9921021	B1.05	1	1
7	9921026	B1.05	1	1
8	9921028	B1.05	1	1
9	9921030	B1.05	1	1
10	9921054	B1.05	1	1
2	9922394	A2.25	1	1
3	9922405	A2.25	1	1
3	9922405	A2.25/ 1	1	1
4	9922406	A2.25	1	1
28	9923751	A2.27	2	2
21	9929127	A2.28	1	1
26	9929164	A2.27	2	2
5	9929170	A2.25	1	1
15	9929176	A2.27	2	1
1	9929178	A2.27	1	1
24	9929178	A2.27	2	2
13	9929609	A2.28	2	1
16	9929609	A2.28/ 1	2	1
25	9929651	A2.27	2	2
4	9929701	A2.28	1	1
1	9929739	F2.05/ A	1	1
6	9930047	A2.25	1	1
7	9930048	A2.25	1	1
7	9930048	A2.25/ 1	1	1
8	9930049	A2.25	1	1
9	9930050	A2.25	1	1
9	9930050	A2.25/ 1	1	1
10	9930053	A2.25	1	1
11	9930055	A2.25	1	1
11	9930055	A2.25/ 1	1	1
12	9930057	A2.25	1	1
3	9930414	A2.28	3	1
6	9930414	A2.28/ 1	4	1
8	9930417	A2.28	3	1
17	9930417	A2.28/ 1	4	1
13	9930446	A2.25	1	1
13	9930446	A2.25/ 1	1	1
4	9930866	A2.35	1	1
5	9930867	A2.35	1	1
6	9930868	A2.35	1	1
7	9930869	A2.35	1	1
8	9930870	A2.35	1	1
9	9930871	A2.35	1	1
22	9930880	A2.28	1	2
10	9930880	A2.28/ 1	1	1
3	9932279	A2.24	1	1
31	9960123	A2.28	2	3
14	9982762	A2.28/ 1	3	1
11	9982912	A2.27/ 1	2	2
1	10000871	A2.21	1	1
11	10005010	D2.22	1	1
9	10033410	A2.21	2	1
2	10112800	C1.01	1	1
1	10112800	C1.01/ 1	1	1
3	10114100	C1.01	1	1
2	10114100	C1.01/ 1	1	1
9	10119040	B4.08	1	1
5	10138386	A4.02	4	1
14	10138386	A4.02/ 2	2	1
33	10151911	B2.01	2	2
33	10151911	B2.01/ 1	2	2
21	10158400	A1.07/ 1	1	2

ITEM	PART N.	SGR.	TAV.	PAG.
1	10158601	A2.33	1	1
2	10158601	B2.13	1	1
14	10158700	A1.01/ 1	1	2
1	10165240	A3.01	3	1
8	10165240	B2.30	1	1
5	10165440	A2.24	2	1
2	10165911	A3.01	3	1
6	10166111	A2.24	2	1
7	10166440	A2.24	2	1
4	10168790	A2.22	1	1
13	10169290	A2.43/ 2	2	1
10	10169290	A2.43/ 3	1	1
7	10180217	A2.24/ 1	1	1
14	10181714	A3.01/ 1	3	1
8	10181717	A2.24/ 1	1	1
1	10181717	B5.01	1	1
16	10182211	A4.02/ 1	1	1
42	10182217	B2.06	1	2
18	10182217	B2.06/ 2	1	1
6	10182617	A4.02	4	1
5	10182617	B1.10/ 1	2	1
10	10182617	L1.04	6	1
1	10182817	B2.30/ 1	2	1
9	10183217	A2.24/ 1	1	1
9	10184217	B1.10	2	1
8	10184311	A2.24	2	1
7	10184311	A2.24	4	1
7	10184311	A2.24/ 1	3	1
29	10184311	A2.24/ 1	4	2
11	10184314	A4.02/ 2	3	1
12	10184317	A2.01	1	1
3	10184317	A2.24/ 1	2	1
3	10184317	A3.01	3	1
2	10184317	B2.30/ 1	2	1
1	10184317	C1.02/ 1	1	1
10	10184317	D2.23	1	1
9	10184414	A3.01/ 1	5	1
1	10184417	C1.02	1	1
10	10184517	B1.10	2	1
9	10184517	L1.04	6	1
17	10205720	A2.28/ 1	1	1
11	10205720	A2.28/ 2	1	1
3	10205910	E3.25	2	1
7	10205920	A3.02/ 2	1	1
17	10205920	L3.25	1	1
10	10206010	A1.06/ 1	1	1
13	10206320	A1.16	1	1
23	10206320	A2.27/ 1	2	3
17	10206320	A2.27/ 2	2	3
15	10206610	D3.33	1	1
12	10248471	D2.22	1	1
19	10249417	A4.09	1	1
5	10249510	C1.01/ 1	2	1
10	10257060	A3.01/ 1	5	1
19	10257060	A4.02/ 2	2	1
13	10257060	A4.03	1	1
16	10257060	B1.05/ 1	1	1
7	10257060	B2.06	1	1
12	10257060	B2.06/ 1	1	1
11	10257060	B2.33	3	1
11	10257060	B2.33/ 1	3	1
2	10257060	B2.33/ 1	6	1
2	10257060	C1.02	1	1
14	10257060	E3.31	2	1
3	10257060	F4.01	2	1
3	10257060	F4.01/ 1	2	1
11	10257385	B1.10	2	1
11	10257385	L1.04	6	1
8	10257460	A3.03/ 1	1	1
12	10257460	A4.02	2	1
7	10257460	A4.02	4	1
7	10257460	B1.09/ 1	2	1
6	10257460	B1.10/ 1	2	1
3	10257460	B2.08	1	1
11	10257460	D2.29	1	1
15	10257460	D2.29	2	1
4	10257460	F4.01	2	1
4	10257460	F4.01/ 1	2	1
4	10259960	B1.08	1	1
4	10259960	B1.08/ 1	1	1
8	10259960	B1.09/ 1	2	1
6	10259960	B1.15	1	1
4	10259960	B1.15/ 1	1	1
7	10260060	A3.01/ 1	4	1
3	10260060	E3.02	3	1
16	10260160	A1.02/ 1	1	1
15	10260160	A2.43/ 2	6	1
8	10260160	A3.01	2	1
13	10260160	A3.03	1	1
8	10260160	A4.02/ 2	1	1
1	10260160	B2.30	3	1
1	10260160	B2.30/ 1	3	1
2	10260160	B2.33	1	1
2	10260160	B2.33	4	1
3	10260160	B2.33/ 1	4	1
1	10260160	C1.08/ 1	1	1
17	10260160	E3.31	1	1
1	10260160	F4.01/ 3	1	1
8	10260360	A4.02	1	1
13	10260360	A4.02	2	1
11	10260360	A4.02	3	1
18	10260360	A4.02/ 1	1	1
16	10262660	D2.29	2	1
52	10262760	A1.07	1	3
18	10263160	B1.11	1	1

ITEM	PART N.	SGR.	TAV.	PAG.
14	10263360	A2.54/ 1	1	1
17	10263460	A1.02/ 1	1	1
8	10263460	A3.01/ 1	2	1
11	10263460	A3.01/ 1	5	1
14	10263460	A3.03	1	1
9	10263460	A3.03/ 1	1	1
6	10263460	E3.28	1	1
43	10264060	B2.06	1	2
16	10264560	A2.43/ 2	2	1
3	10264560	A2.43/ 3	1	1
25	10264560	B1.10	2	2
11	10264560	B2.35/ 1	1	1
18	10264660	E3.31	1	1
30	10265060	A3.01/ 1	3	2
9	10265160	A3.01/ 1	2	1
10	10265160	A3.03/ 1	1	1
5	10265160	B1.08	1	1
5	10265160	B1.08/ 1	1	1
15	10265160	E3.31	2	1
8	10268350	A1.01	2	1
14	10268450	A4.03	1	1
18	10269350	A1.01/ 1	1	2
2	10273001	B4.11	1	1
1	10275001	A4.02/ 2	2	1
41	10275011	A2.01	1	3
41	10275040	A2.01	1	3
10	10275040	A3.01/ 1	2	1
11	10275040	A3.03/ 1	1	1
12	10276740	A3.03/ 1	1	1
6	10276740	B1.08	1	1
6	10276740	B1.08/ 1	1	1
16	10276740	E3.31	2	1
12	10278301	B2.01	2	1
7	10278301	E3.28	1	1
10	10278311	A1.02	2	1
12	10278311	B2.01/ 1	2	1
9	10278311	B4.08	1	1
8	10278311	E3.28	1	1
12	10278660	A4.02	3	1
9	10279460	A3.01	2	1
3	10279460	A3.01/ 1	4	1
14	10279560	A2.43/ 2	2	1
2	10279560	A2.43/ 3	1	1
20	10279560	A4.02/ 2	2	1
1	10279560	F4.01/ 1	1	1
1	10279560	F4.01/ 4	1	1
13	10279985	A2.01	1	1
9	10280050	A2.26/ 1	1	1
9	10280060	A2.24	2	1
8	10280060	A2.24/ 1	3	1
30	10280060	A2.24/ 1	4	2
10	10280060	A3.01	2	1
12	10280060	A4.02/ 2	3	1
11	10280060	B1.09	1	1
11	10280060	B1.09/ 1	1	1
3	10280060	B2.30/ 1	2	1
11	10280060	D2.23	1	1
11	10282285	A1.02	2	1
8	10282460	A2.24	4	1
10	10282460	A2.26	1	1
9	10282460	A2.26/ 1	1	1
4	10282460	A3.01	3	1
4	10282460	A3.01	4	1
2	10282460	C1.02/ 1	1	1
4	10282460	E3.02	3	1
12	10284260	A3.01	2	1
9	10284460	A2.43/ 1	1	1
7	10284460	B2.17	1	1
3	10284460	B2.30/ 1	2	1
4	10284460	D2.27	2	1
7	10284460	D2.27/ 1A	1	1
8	10284460	D2.28	1	1
13	10284460	F4.01/ 1	1	2
13	10284460	F4.01/ 4	1	1
48	10284585	A4.02/ 2	2	2
12	10284585	L1.04	6	1
6	10287380	H1.01	1	1
4	10287380	H1.01/ A	2	1
7	10291790	B1.15	1	1
5	10291790	B1.15/ 1	1	1
12	10296160	A1.01	1	1
10	10296160	A2.24/ 1	1	1
7	10296160	B1.08/ 1	1	1
13	10296160	B2.01	2	1
13	10296160	B2.01/ 1	2	1
40	10296160	B2.06	1	2
13	10296160	B2.06/ 2	1	1
2	10296160	B2.30/ 1	3	1
4	10296160	B2.33/ 1	1	1
12	10296160	B2.35/ 1	1	1
17	10296160	D2.29	1	1
5	10296160	E3.02	3	1
3	10296160	E3.02/ 4	1	1
2	10296160	F4.01/ 3	1	1
13	10296260	A1.01	1	1
17	10296260	A4.02/ 1	1	1
15	10296260	B2.06/ 2	1	1
9	10296260	B2.35	1	1
7	10296260	B2.35/ A	1	1
13	10296260	B2.35/ 1	1	1
7	10296260	B2.35/ 2	1	1
16	10296580	A2.54/ 1	1	1
13	10296585	B1.10	2	1
22	10296585	B1.10/ 1	2	1
14	10296585	B2.01	2	1

ITEM	PART N.	SGR.	TAV.	PAG.
14	10296585	B2.01/ 1	2	1
10	10296585	B4.08	1	1
9	10296585	E3.28	1	1
14	10296685	A2.01	1	1
49	10296685	A4.02/ 2	2	2
8	10296685	B1.15	1	1
6	10296685	B1.15/ 1	1	1
14	10296685	B2.06/ 2	1	1
7	10297085	B1.08	1	1
2	10297085	B1.08/ 1	2	1
11	10297085	B4.08	1	1
3	10297085	B4.11	1	1
11	10298350	A2.26	1	1
10	10298350	A2.26/ 1	1	1
15	10298360	A1.01/ 1	1	2
7	10298360	A1.25/ 1	1	1
5	10298360	A2.22/ 2	1	1
11	10298360	A3.01/ 1	3	1
4	10298360	A3.01/ 1	4	1
3	10298360	D2.27/ A	2	1
5	10298360	F4.01	2	1
5	10298360	F4.01/ 1	2	1
15	10298460	A3.01/ 1	3	1
14	10298460	A4.02	2	1
2	10298460	B5.01	1	1
19	10298460	E3.31	1	1
9	10298460	F4.01/ 1	1	1
9	10298460	F4.01/ 4	1	1
8	10300511	B1.08/ 1	1	1
15	10300511	B2.01	2	1
15	10300511	B2.01/ 1	2	1
41	10300511	B2.06	1	2
12	10300511	B2.06/ 2	1	1
3	10300511	B2.33	1	1
5	10300511	B2.33/ 1	1	1
14	10300511	B2.35/ 1	1	1
14	10300571	A1.01	1	1
3	10300571	D2.29	1	1
6	10300571	E3.02	3	1
4	10300571	E3.02/ 4	1	1
1	10300611	D2.30	1	1
1	10300611	D2.30/ 1	1	1
9	10300671	A2.27/ 2	1	1
23	10300711	A4.02/ 2	2	1
17	10300711	E3.31	2	1
15	10300771	A4.03	1	1
19	10300811	B1.11	1	1
14	10303360	B1.10	2	1
10	10303460	B2.35	1	1
8	10303460	B2.35/ A	1	1
8	10303460	B2.35/ 2	1	1
26	10304611	B1.10	2	2
9	10305271	A4.02	1	1
34	10305271	A4.02	2	2
27	10305271	A4.02	3	1
8	10306371	B1.08	1	1
3	10306371	B1.08/ 1	2	1
12	10306371	B4.08	1	1
53	10322410	A1.07	1	3
10	10332810	E3.28	1	1
20	10333310	A2.28/ 1	1	1
16	10333310	A2.28/ 2	1	1
2	10333310	B2.04/ 1	1	1
3	10333410	B2.04/ 1	1	1
2	10333410	B2.04/ 1	2	1
2	10333410	B2.04/ 1	3	1
2	10333410	B2.04/ 2	1	1
2	10333410	B2.04/ 2	2	1
2	10333410	B2.04/ 2	3	1
3	10333410	B2.04/ 2	4	1
9	10333910	B2.35/ A	1	1
9	10333910	B2.35/ 2	1	1
11	10336210	D2.20	1	1
4	10337110	B2.30/ 1	2	1
13	10337810	B4.08	1	1
12	10344711	L1.04	2	1
12	10344711	L1.04/ 1	2	1
1	10352442	H1.04	2	1
20	10355511	A2.27/ 1	1	1
7	10356111	A4.03/ 1	1	1
14	10376411	A2.28/ 1	4	1
6	10376511	A2.28/ 2	1	1
27	10376621	A2.27/ 1	2	3
11	10376721	A2.28/ 2	5	1
19	10376821	A2.28	2	1
2	10376921	A2.28/ 1	3	1
2	10376921	A2.28/ 2	4	1
15	10377011	A2.28	3	1
11	10377011	A2.28/ 1	1	1
22	10377011	A2.28/ 2	2	1
1	10389311	A2.28/ 1	4	1
16	10389321	A2.28	3	1
9	10389321	A2.28/ 1	2	1
11	10389321	A2.28/ 2	2	1
11	10389321	F3.03/ A	1	1
20	10389421	A2.28/ 2	3	1
17	10389511	D3.34	3	1
15	10389511	D3.34	3A	1
3	10397280	L3.10	1	1
20	10397880	L1.01	3	1
7	10399180	L1.04	6	1
7	10399180	L1.04/ 1	7	1
15	10418300	A4.02	2	1
9	10440990	A4.02/ 2	1	1
5	10441590	F4.01	1	1

ITEM	PART N.	SGR.	TAV.	PAG.
14	10441590	F4.01/ 1	1	2
11	10441590	F4.01/ 4	1	1
4	10441890	F4.01/ 1	1	1
12	10442290	A2.01/ 1	1	1
25	10444621	A2.43/ 2	6	1
12	10449390	A3.01/ 1	3	1
13	10449890	A3.01	2	1
8	10449890	A3.01/ 1	4	1
1	10449890	F4.01	5	1
1	10449890	F4.01/ 1	7	1
1	10449890	F4.01/ 3	2	1
28	10450090	A2.24/ 1	4	2
13	10450090	A3.01/ 1	3	1
1	10450090	F4.01	4	1
1	10450090	F4.01/ 1	4	1
5	10450190	A1.08	1	1
9	10450190	A1.08/ 1	1	1
14	10450190	A3.01	2	1
2	10450190	A4.01	1	1
2	10450190	F4.01	4	1
2	10450190	F4.01/ 1	4	1
4	10450390	F3.01	1	1
5	10450590	F4.01/ 1	1	1
5	10450590	F4.01/ 4	1	1
12	10450690	A3.01/ 1	5	1
4	10450790	F3.01	1	1
15	10450890	A2.01	1	1
2	10450890	F4.01	5	1
10	10450890	F4.01/ 1	1	1
6	10450890	F4.01/ 1	5	1
7	10450890	F4.01/ 4	1	1
11	10450990	F4.01/ 1	1	1
10	10450990	F4.01/ 4	1	1
16	10486110	B2.01	2	1
16	10486110	B2.01/ 1	2	1
2	10516470	H1.04	1	1
7	10516471	A2.27	1	1
29	10516471	A2.27	2	2
18	10516471	A2.28	1	1
18	10516471	A2.28	2	1
5	10516471	A2.28	3	1
8	10516471	B2.06	1	1
13	10516471	B2.06/ 1	1	1
9	10516471	B2.30	1	1
6	10516471	B2.30	2	1
10	10516471	B2.30/ 1	1	1
4	10516471	C1.01	1	1
3	10516471	C1.01/ 1	1	1
9	10516471	D2.23	2	1
7	10516471	F4.01/ 1	5	1
2	10516471	H1.04	2	1
7	10516471	L1.04	1	1
10	10516471	L1.04	7	1
7	10516471	L1.04/ 1	1	1
10	10516471	L1.04/ 1	8	1
1	10516471	L3.10	4	1
10	10516479	A2.01/ 1	1	1
8	10516479	A2.43/ 2	3	1
1	10516479	A2.43/ 4	1	1
6	10516671	A1.08	1	1
10	10516671	A1.08/ 1	1	1
10	10516671	A2.21	2	1
3	10516671	A4.01	1	1
4	10516671	A4.01	2	1
2	10516671	A4.04	1	1
9	10516671	B1.08	1	1
9	10516671	B1.08/ 1	1	1
12	10516671	B1.09	1	1
12	10516671	B1.09/ 1	1	1
5	10516671	B1.10	1	1
15	10516671	B1.10	2	2
6	10516671	B1.10/ 1	1	1
20	10516671	B1.11	1	1
7	10516671	B2.01	1	1
17	10516671	B2.01	2	1
6	10516671	B2.01/ 1	1	1
17	10516671	B2.01/ 1	2	1
14	10516671	B2.06/ 1	1	1
10	10516671	B2.30	1	1
18	10516671	E3.25	1	1
4	10516671	E3.25	2	1
8	10516671	F4.01/ 1	5	1
1	10516671	L1.01	3	1
1	10516671	L1.01	4	1
1	10516671	L1.01	4A	1
2	10516671	L1.01/ 2	1	1
3	10516671	L1.04	10	1
13	10516671	L1.04/ 1	11	1
4	10516671	L3.10	1	1
2	10516679	A2.43/ 4	1	1
3	10516870	B2.21	1	1
2	10516871	A2.01/ A	1	1
1	10516871	A2.22/ 1	1	1
12	10516871	A2.27	1	1
5	10516871	A4.01	2	1
10	10516871	B1.05/ 1	2	1
10	10516871	B1.08	1	1
10	10516871	B1.08/ 1	1	1
5	10516871	B1.09	2	1
9	10516871	B1.09/ 1	2	1
6	10516871	B1.10	1	1
16	10516871	B1.10	2	2
7	10516871	B1.10/ 1	1	1
7	10516871	B1.10/ 1	2	1
8	10516871	B2.01	1	1

ITEM	PART N.	SGR.	TAV.	PAG.
18	10516871	B2.01	2	1
8	10516871	B2.01	3	1
7	10516871	B2.01/ 1	1	1
18	10516871	B2.01/ 1	2	1
9	10516871	B2.01/ 1	3	1
7	10516871	B2.04	4	1
8	10516871	B2.04/ 3	4	1
10	10516871	B2.06	1	1
15	10516871	B2.06/ 1	1	1
2	10516871	B2.07	1	1
2	10516871	B2.07/ 1	1	1
2	10516871	B2.10	1	1
24	10516871	B2.10/ A	2	1
11	10516871	B2.30	1	1
4	10516871	B2.33	1	1
3	10516871	B2.33	4	1
6	10516871	B2.33/ 1	1	1
4	10516871	B2.33/ 1	4	1
3	10516871	B2.33/ 1	6	1
3	10516871	C1.02/ 1	1	1
3	10516871	C1.35	1	1
13	10516871	D2.22	1	1
6	10516871	D2.27/ 1A	1	1
7	10516871	D3.38	1	1
1	10516871	E3.02	1	1
19	10516871	E3.25	1	1
5	10516871	E3.25	2	1
11	10516871	E3.28	1	1
5	10516871	F3.01	1	1
4	10516871	F4.01	4	1
5	10516871	F4.01/ 1	1	1
14	10516871	L1.04	1	1
14	10516871	L1.04/ 1	1	1
4	10516871	L3.04/ 1	1	1
1	10516871	L3.08	1	1

ITEM	PART N.	SGR.	TAV.	PAG.
1	10516871	L3.08/ 1	1	1
1	10516871	L3.08/ 2	1	1
5	10516871	L3.10	1	1
4	10516871	L3.11	1	1
12	10516877	A1.02	2	1
3	10516879	A2.43/ 4	1	1
6	10517071	A4.01	2	1
7	10517071	B1.10	1	1
8	10517071	B1.10/ 1	1	1
19	10517071	B2.01	2	1
32	10517071	B2.01/ 1	2	2
10	10517071	B2.01/ 1	3	1
5	10517071	C1.01	1	1
4	10517071	C1.01/ 1	1	1
14	10517071	D2.22	1	1
14	10517071	D2.23	1	1
2	10517071	E3.02	1	1
12	10517071	E3.10/ 1	1	1
15	10517071	E3.10/ 2	1	1
2	10517071	F3.01/ 1	1	1
2	10517071	L1.01	3	1
5	10517071	L3.11	1	1
1	10517071	L6.01	1	1
1	10517071	L6.01/ 1	1	1
18	10517079	E3.02	5	1
14	10517171	C1.01	2	1
1	10517171	E3.02/ 5	1	1
4	10517171	E3.06	1	1
9	10517171	E3.10	1	1
16	10517171	E3.10/ 2	1	1
15	10517171	E3.10/ 3	1	1
24	10517171	E3.10/ 5	1	1
14	10517171	E3.13	1	1
14	10517171	E3.13/ 1	1	1
10	10517171	E3.13/ 2	1	1

ITEM	PART N.	SGR.	TAV.	PAG.
3	10517171	L1.01	3	1
6	10517171	L3.11	1	1
4	10517271	A0.02	1	1
20	10517271	A4.09	1	1
4	10517271	B1.08/ 1	2	1
9	10517271	B2.01	1	1
8	10517271	B2.01/ 1	1	1
3	10517271	D3.30/ 1	1	1
8	10517271	D3.38	1	1
4	10517271	E3.02	2	1
25	10517271	E3.10/ 5	1	1
15	10517271	E3.13	1	1
15	10517271	E3.13/ 1	1	1
7	10517271	L3.11	1	1
1	10517271	L3.11	2	1
10	10517371	E3.10	1	1
11	10517371	E3.13/ 2	1	1
26	10517471	E3.10/ 5	1	1
16	10517471	E3.13	1	1
16	10517471	E3.13/ 1	1	1
12	10517471	E3.13/ 2	1	1
1	10517471	L1.03	1	1
1	10517471	L1.03/ 1	1	1
2	10517471	L3.08	1	1
4	10517671	D1.02	1	1
1	10517671	D1.02/ 1	1	1
13	10517671	D1.03/ 1	1	1
3	10517671	E3.05	1	1
12	10517671	E3.10	1	1
27	10517671	E3.10/ 5	1	1
2	10517671	L3.08/ 1	1	1
2	10517671	L3.08/ 2	1	1
22	10519301	L1.04	7	1
22	10519301	L1.04/ 1	8	1
23	10519401	A1.25/ 1	1	1

ITEM	PART N.	SGR.	TAV.	PAG.
6	10519401	L1.04	1	1
6	10519401	L1.04/ 1	1	1
35	10519421	L1.04	7	1
35	10519421	L1.04/ 1	8	1
11	10519601	A2.43/ 2	1	1
5	10519601	A3.01	4	1
15	10519601	C1.01	2	1
1	10519601	L1.04	10	1
11	10519601	L1.04/ 1	11	1
2	10519620	L6.01	1	1
2	10519621	A2.21	1	1
1	10519621	E3.02	5	1
8	10519621	L1.04	1	1
8	10519621	L1.04/ 1	1	1
1	10519621	L3.10	2	1
4	10519621	L3.10	3	1
17	10520001	A2.54/ 1	1	1
15	10520001	D2.22	1	2
1	10520001	F4.01/ 2	2	1
2	10520020	F3.01	3	1
3	10520021	A2.21	1	1
11	10520021	A2.21	2	1
4	10520021	C1.35	1	1
16	10520021	D2.22	1	2
1	10520021	F3.01	2	1
3	10520021	F3.01/ 1	1	1
4	10520021	L1.01	3	1
5	10520021	L3.10	3	1
3	10520021	L6.01	1	1
2	10520021	L6.01/ 1	1	1
2	10520101	B2.10/ A	2	1
4	10520101	B2.38	1	1
5	10520101	L1.01	3	1
6	10520121	C1.01	1	1
31	10520121	C1.01	2	2
6	10520121	C1.01/ 1	2	1
5	10520121	C1.35	1	1
6	10520121	F2.01	1	1
5	10520221	A0.02	1	1
18	10520221	L1.04	9	1
18	10520221	L1.04/ 1	10	1
6	10520221	L3.10	3	1
11	10520321	D1.03	1	1
3	10520401	L3.08	1	1
8	10520427	L3.11	1	1
2	10520427	L3.11	2	1
2	10520431	L1.03	1	1
2	10520431	L1.03/ 1	1	1
3	10520621	L3.08/ 1	1	1
3	10520621	L3.08/ 2	1	1
3	10569371	B2.13	1	1
5	10569471	E3.02/ 4	1	1
15	10571371	L1.04	6	1
15	10571371	L1.04/ 1	7	1
18	10571471	D3.34	3	1
32	10571479	A2.28	2	3
7	10571570	A4.02/ 1	1	1
2	10571570	L1.01/ 3	2	1
4	10571571	A2.21	1	1
21	10571571	A2.24	3	1
39	10571571	A2.24/ 1	4	2
6	10571571	F4.01	1	1
6	10571571	F4.01/ 1	1	1
2	10571571	F4.01/ 3	2	1
2	10571571	F5.01	1	1
2	10571571	L1.01	4	1
2	10571571	L1.01	4A	1
2	10571571	L1.01/ 1	1	1
2	10571571	L1.01/ 2	2	1
1	10571571	L1.01/ 3	1	1
10	10571571	L1.04	2	1
10	10571571	L1.04/ 1	2	1
15	10571579	A2.43/ 1	1	1
15	10571579	D2.23	1	1
31	10571579	F2.05/ 3	1	2
16	10571579	F3.01	1	2
3	10571717	F4.01	4	1
4	10571717	F4.01	5	1
22	10571770	A4.02/ 1	1	1
3	10571770	F4.01	5	1
2	10571770	F4.01/ 1	7	1
3	10571770	F4.01/ 3	2	1
16	10571771	A2.01	1	1
5	10571771	A2.21	1	1
24	10571771	A2.43/ 2	2	1
6	10571771	A3.01	4	1
5	10571771	B2.30/ 1	2	1
15	10571771	D2.23	1	1
17	10571771	D2.29	2	1
2	10571771	E3.02	5	1
3	10571771	E3.02	8	1
6	10571771	F3.01	1	1
6	10571771	F4.01	2	1
3	10571771	F4.01	4	1
4	10571771	F4.01	5	1
6	10571771	F4.01/ 1	2	1
3	10571771	F4.01/ 1	4	1
2	10571771	F5.01	1	1
3	10571771	L1.01/ 1	1	1
3	10571771	L1.01/ 2	2	1
2	10571771	L1.01/ 2	3	1
3	10571771	L1.01/ 3	2	1
2	10571771	L1.01/ 3	3	1
31	10571771	L1.04	1	2
31	10571771	L1.04/ 1	1	2

ITEM	PART N.	SGR.	TAV.	PAG.
6	10571771	L3.10	1	1
2	10571771	L3.10	3	1
12	10571779	A2.56/ 1	1	1
1	10571779	B2.21/ 2	1	1
1	10571779	L1.04/ 1	4	1
7	10571871	A1.08	1	1
7	10571871	A1.08/ 1	1	1
17	10571871	A2.01	1	1
5	10571871	A2.22	1	1
1	10571871	A2.56	1	1
9	10571871	B2.06	1	1
24	10571871	B2.06/ 2	1	1
4	10571871	B2.13	1	1
4	10571871	B2.13	2	1
19	10571871	B2.13	3	1
14	10571871	B4.08	1	1
3	10571871	B5.01	1	1
3	10571871	C1.02	1	1
12	10571871	D1.03	1	1
16	10571871	D2.23	1	2
8	10571871	D2.24	1	1
9	10571871	D3.30	1	1
19	10571871	D3.34	3	1
17	10571871	D3.34	3A	1
7	10571871	E3.02	3	1
1	10571871	E3.02	6	1
1	10571871	E3.02	7	1
4	10571871	E3.02	8	1
2	10571871	E3.02/ 1	1	1
3	10571871	E3.02/ 2	1	1
2	10571871	E3.02/ 3	1	1
6	10571871	E3.02/ 4	1	1
20	10571871	E3.31	1	1
18	10571871	E3.31	2	1
2	10571871	F4.01	3	1

ITEM	PART N.	SGR.	TAV.	PAG.
4	10571871	F4.01	4	1
1	10571871	F4.01/ 1	3	1
4	10571871	F4.01/ 1	4	1
5	10571871	L1.01	2	1
6	10571871	L1.01	3	1
4	10571871	L1.01/ 1	1	1
4	10571871	L1.01/ 2	2	1
3	10571871	L1.01/ 2	3	1
4	10571871	L1.01/ 3	2	1
3	10571871	L1.03	1	1
3	10571871	L1.03/ 1	1	1
4	10571871	L1.04	6	1
4	10571871	L1.04/ 1	7	1
2	10571871	L3.04	1	1
1	10571871	L3.04	2	1
4	10571871	L3.08	1	1
37	10571871	L3.10	1	2
19	10571871	L3.10	2	1
3	10571871	L3.10	3	1
15	10571871	L3.12	1	2
16	10571871	L3.12/ 1	1	1
18	10571879	A2.01	1	1
24	10571879	A4.02/ 2	2	2
4	10571879	D2.27	1	1
4	10571879	D2.27/ A	1	1
18	10571971	A2.01	1	1
11	10571971	A2.22/ 1	1	1
14	10571971	B4.06	1	1
15	10571971	B4.08	1	1
17	10571971	D2.23	1	2
5	10571971	D3.01	1	1
10	10571971	D3.30	1	1
16	10571971	D3.33	1	1
3	10571971	E3.02	1	1
5	10571971	E3.02	2	1

ITEM	PART N.	SGR.	TAV.	PAG.
8	10571971	E3.02	3	1
2	10571971	E3.02	4	1
3	10571971	E3.02	5	1
3	10571971	E3.02/ 1	1	1
4	10571971	E3.02/ 2	1	1
3	10571971	E3.02/ 3	1	1
7	10571971	E3.02/ 4	1	1
4	10571971	E3.05	1	1
14	10571971	E3.10/ 4	1	1
1	10571971	E3.29/ 1	1	1
5	10571971	F4.01	4	1
8	10571971	F4.01/ 5	1	1
3	10571971	L1.01	1	1
6	10571971	L1.01	2	1
5	10571971	L1.01/ 1	1	1
5	10571971	L1.01/ 2	2	1
4	10571971	L1.01/ 2	3	1
5	10571971	L1.01/ 3	2	1
4	10571971	L1.01/ 3	3	1
5	10571971	L3.04/ 1	1	1
20	10571971	L3.10	2	1
19	10572071	A2.01	1	1
16	10572071	B4.08	1	1
4	10572071	B4.11	1	1
13	10572071	E3.10/ 1	1	1
15	10572071	E3.10/ 4	1	1
5	10572171	B4.11	1	1
2	10572171	D1.01	1	1
13	10572171	D1.03	1	1
11	10572171	D3.30	1	1
3	10572171	D3.34	4	1
3	10572171	D3.37	1	1
3	10572171	D3.37/ 1	1	1
14	10572171	E3.10/ 1	1	1
2	10572171	L3.12	1	1

ITEM	PART N.	SGR.	TAV.	PAG.
2	10572171	L3.12/ 1	1	1
14	10572271	D1.03	1	1
3	10572271	L3.12	1	1
2	10572271	L3.12	2	1
3	10572271	L3.12/ 1	1	1
12	10572371	D3.30	1	1
4	10572371	D3.34	4	1
16	10572371	E3.10/ 4	1	1
7	10572371	E3.32/ 2	1	1
9	10572371	L3.11	1	1
3	10572371	L3.11	2	1
17	10572471	D3.33	1	1
3	10572571	D1.01	1	1
15	10572571	D1.03	1	1
3	10572571	L1.01	4	1
3	10572571	L1.01	4A	1
9	10615270	A2.43/ 2	4	1
33	10615270	A2.43/ 2	6	2
19	10615771	E3.31	2	1
7	10615771	L1.04	2	1
15	10615771	L1.04	7	1
7	10615771	L1.04/ 1	2	1
15	10615771	L1.04/ 1	8	1
4	10616871	F4.01	4	1
4	10720121	A2.43/ 4	1	1
16	10725611	A4.03	1	1
6	10725911	A2.21	1	1
3	10725911	H1.04	2	1
4	10725940	H1.04	2	1
21	10726611	A4.09	1	1
11	10730321	B2.35	1	1
10	10730321	B2.35/ A	1	1
15	10730321	B2.35/ 1	1	1
10	10730321	B2.35/ 2	1	1
5	10730521	A2.54	1	1
17	10731101	D2.22	1	2
12	10733601	A2.21	2	1
16	10733601	C1.01	2	1
5	10733601	C1.01/ 1	1	1
18	10733601	D2.22	1	2
7	10734201	A2.21	1	1
13	10734201	A2.21	2	1
9	10734201	A2.28/ 1	3	1
22	10734201	A2.28/ 2	3	1
17	10734201	C1.01	2	1
21	10734201	E3.31	1	1
7	10734201	L1.01	2	1
3	10734201	L3.04	1	1
16	10734401	B2.06/ 1	1	1
3	10734401	B2.10	1	1
5	10734401	B2.10/ A	2	1
5	10734401	B2.13	1	1
8	10734401	L1.01	2	1
7	10734601	C1.01	1	1
32	10734601	C1.01	2	2
7	10734601	C1.01/ 1	2	1
6	10734601	C1.35	1	1
15	10734801	A3.01	1	1
8	10735001	C1.01/ 1	2	1
5	10788021	A2.43/ 4	1	1
6	10788221	F4.01	4	1
5	10788221	F4.01/ 1	4	1
20	10788721	E3.25	1	1
6	10790121	A2.43/ 4	1	1
9	10790911	L1.04	9	1
9	10790911	L1.04/ 1	10	1
8	10791011	A2.21	1	1
9	10791021	A2.24/ 1	3	1
9	10791021	L1.01	2	1
8	10791021	L1.04	2	1
8	10791021	L1.04/ 1	2	1
7	10791211	B2.10/ A	1	1
19	10791211	D2.22	1	2
4	10791221	B2.10	1	1
20	10791221	D2.22	1	2
8	10791321	C1.01	1	1
9	10791321	C1.01/ 1	2	1
22	10791421	A4.09	1	1
8	10791911	B2.10/ A	1	1
5	10791921	B2.10	1	1
12	10793121	B2.06	1	1
17	10793121	B2.06/ 1	1	1
5	10794040	H1.04	2	1
25	10795001	A2.28/ 1	2	1
20	10795001	A2.28/ 1	4	1
1	10795001	A2.28/ 2	2	1
2	10796301	L3.10	2	1
7	10796301	L3.10	3	1
9	10796401	A2.21	1	1
14	10796401	A2.21	2	1
7	10796401	C1.35	1	1
21	10796401	D2.22	1	2
12	10796401	E3.28	1	1
2	10796401	F3.01	2	1
8	10796401	L3.10	3	1
9	10797101	L3.10	3	1
11	10797701	B1.05/ 1	2	1
39	10798101	L1.01	1	2
13	10801630	A1.02	2	1
16	10804801	A2.43/ 2	5	1
13	10837610	A1.02	1	1
5	10837610	A3.02	1	1
8	10837610	A3.02/ 1	1	1
10	10837710	A2.24	2	1
18	10837710	D3.33	1	1

ITEM	PART N.	SGR.	TAV.	PAG.
14	10837810	A1.02	1	1
14	10837810	A1.02	2	1
8	10839510	A3.02/ 2	1	1
12	10839510	D2.20	1	1
5	10839510	E3.06	1	1
14	10839610	A1.16	1	1
6	10839610	A3.02	1	1
9	10839610	A3.02/ 1	1	1
12	10839610	B1.05/ 1	2	1
9	10839710	B2.01	3	1
11	10839710	B2.01/ 1	3	1
18	10839810	A1.02/ 1	1	1
5	10839810	A1.02/ 1	2	1
10	10839810	B2.01	1	1
9	10839810	B2.01/ 1	1	1
1	10858090	F4.01/ 2	1	1
1	10858090	L1.04/ 1	11	1
1	10863190	L1.04	5	1
10	10902014	A4.02/ 2	1	1
21	10902021	A2.24/ 1	4	2
30	10902021	L1.04	7	1
30	10902021	L1.04/ 1	8	1
9	10902031	L1.04	2	1
9	10902031	L1.04/ 1	2	1
5	10902111	L1.04	1	1
5	10902111	L1.04/ 1	1	1
6	10902121	A1.02/ 1	2	1
13	10902121	A1.16/ 1	1	1
23	10902121	A4.09	1	1
7	10902121	L3.10	1	1
10	10902131	A2.21	1	1
6	10902131	A2.43/ 2	3	1
22	10902211	A2.24	3	2
40	10902211	A2.24/ 1	4	2
15	10902221	A1.02	2	1
4	10902221	A2.28/ 1	2	1
15	10902221	A2.28/ 2	2	1
4	10902221	A2.43/ 2	6	1
13	10902324	A3.01/ 1	5	1
24	10902421	A2.28	1	2
13	10902421	A2.28/ 2	1	1
12	10902421	B2.30	1	1
11	10902421	B2.30/ 1	1	1
4	10902421	F4.01/ 3	2	1
26	10902421	L1.04	7	1
26	10902421	L1.04/ 1	8	1
2	10902431	L1.01/ 3	1	1
21	10902521	A2.28/ 1	1	1
21	10902521	A2.28/ 2	1	1
9	10902531	A2.01/ 1	1	1
4	10902531	A4.02/ 1	1	1
9	10902621	A2.24	4	1
10	10902621	A2.24/ 1	3	1
3	10902621	A2.28/ 2	4	1
7	10902621	A2.43/ 4	1	1
13	10902621	B2.06	1	1
18	10902621	B2.06/ 1	1	1
7	10902621	B2.30	2	1
12	10902621	B2.30/ 1	1	1
17	10902621	F3.01	1	2
3	10902621	H1.04	1	1
11	10902624	A3.01/ 1	4	1
6	10902631	A2.24/ 1	2	1
14	10902631	A2.43/ 1	1	1
14	10902631	B2.06	1	1
6	10902631	L1.01/ 1	1	1
6	10902631	L1.01/ 2	2	1
6	10902631	L1.01/ 3	2	1
22	10902811	A1.25/ 1	1	1
4	10902821	F5.01	1	1
1	10902831	B1.10	2	1
1	10902831	D2.23	1	1
10	10903021	D2.23	2	2
8	10903221	B2.30	2	1
16	10923421	A1.02	2	1
16	10977521	A4.02	2	1
6	10977521	B1.09	2	1
10	10977521	B1.09/ 1	2	1
6	10977711	A2.43/ 3	2	1
21	10977821	L1.04	7	1
21	10977821	L1.04/ 1	8	1
23	10978021	A2.24	3	2
31	10979231	L1.01	3	2
9	10979421	C1.01	1	1
6	10979431	C1.01/ 1	1	1
6	10979440	H1.04	2	1
19	10980721	A1.02/ 1	1	1
16	11006631	E3.02	7	1
17	11006831	E3.02	7	1
4	11014400	D3.30/ 1	1	1
27	11039720	A2.28/ 1	1	1
18	11039720	A2.28/ 2	1	1
4	11048990	L1.04	10	1
2	11048990	L1.04/ 1	11	1
7	11052090	F4.01	1	1
7	11052090	F4.01/ 1	1	1
3	11055275	B2.10/ A	2	1
18	11057176	D2.29	2	1
13	11057876	B1.09	1	1
13	11057876	B1.09/ 1	1	1
5	11057876	B2.13	2	1
2	11057876	B2.34	1	1
2	11058076	B2.33/ 1	5	1
4	11058675	B2.33	4	1
1	11058675	C1.08	1	1

ITEM	PART N.	SGR.	TAV.	PAG.
5	11058676	B2.33/ 1	4	1
14	11058676	D2.27/ 2	1	1
3	11058876	A1.08/ 1	1	1
2	11059075	C1.08/ 1	1	1
14	11059575	A1.16/ 1	1	1
10	11060076	A1.05/ 1	1	1
22	11060176	E3.31	1	1
2	11060476	E3.29/ 1	1	1
24	11060575	A4.09	1	1
17	11060576	E3.29	1	1
2	11061075	C1.08	1	1
13	11061076	B1.05/ 1	2	1
17	11061576	A4.03	1	1
27	11062176	A1.25/ 1	1	1
18	11062476	A4.03	1	1
4	11062476	B2.04/ 1	1	1
3	11062476	B2.04/ 2	1	1
4	11062976	E3.32	1	1
4	11062976	E3.32/ 4	1	1
19	11063275	A1.05	1	1
30	11065476	A2.43/ 2	6	2
25	11066076	A4.09	1	1
10	11066275	C1.01/ 1	2	1
3	11066275	C1.08/ 1	1	1
5	11066276	B2.38	1	1
18	11066675	C1.01	2	1
6	11066876	B2.13	2	1
16	11066876	B2.13	3	1
22	11066876	D2.22	1	2
22	11066976	A1.07/ 1	1	2
54	11067375	A1.07	1	3
8	11067476	B1.10	1	1
8	11067476	B1.10/ 1	2	1
11	11067476	D2.23	2	2
2	11068876	B2.05/ 1	1	1
6	11069076	E3.02	2	1
5	11069376	B2.05	1	1
7	11069376	E3.02	2	1
6	11069876	B2.05	1	1
17	11070576	B1.05/ 1	1	1
11	11071376	B2.04	2	1
8	11071376	B2.04	3	1
8	11071376	B2.04	4	1
6	11071376	B2.04/ 3	3	1
9	11071876	B2.04	4	1
18	11075976	B1.05/ 1	1	1
3	11077976	B2.04/ 1	3	1
3	11077976	B2.04/ 2	3	1
14	11087876	A2.28/ 2	3	1
3	11088076	B2.07	1	1
3	11088076	B2.07/ 1	1	1
6	11088076	B2.10	1	1
9	11088076	B2.10/ A	1	1
28	11088076	B2.10/ A	2	2
8	11103031	A1.08	1	1
8	11103031	A1.08/ 1	1	1
4	11103031	B2.07	1	1
4	11103031	B2.07/ 1	1	1
4	11103031	E3.02	1	1
7	11103031	F3.01	1	1
3	11103031	F4.01	3	1
7	11103031	F4.01	4	1
2	11103031	F4.01/ 1	3	1
6	11103031	F4.01/ 1	4	1
3	11103031	L3.10	2	1
21	11106031	A2.01	1	1
3	11106031	A2.01/ A	1	1
5	11106031	E3.02/ 2	1	1
4	11106031	E3.02/ 3	1	1
6	11106031	E3.25	2	1
13	11106031	E3.28	1	1
8	11106031	F4.01/ 1	1	1
8	11106031	L3.10	1	1
4	11106031	L3.10	2	1
10	11106031	L3.11	1	1
30	11106121	B2.10/ A	2	2
4	11106131	E3.02/ 1	1	1
11	11106231	A2.22/ 2	1	1
7	11106231	A4.01	2	1
11	11106231	B2.06	1	1
23	11106231	B2.06/ 2	1	1
8	11106231	E3.02/ 4	1	1
9	11106231	F4.01/ 1	5	1
4	11106231	L3.04	1	1
2	11106231	L3.04	2	1
9	11106231	L3.10	1	1
20	11106324	A2.52	1	1
6	11106431	A2.22	1	1
2	11106431	A2.22/ 1	1	1
2	11106431	A2.56	1	1
14	11106431	A2.56/ 1	1	1
25	11106431	A4.02/ 2	2	2
7	11106431	B2.10	1	1
16	11106431	D1.03	1	1
7	11106431	L1.01/ 1	1	1
7	11106431	L1.01/ 2	2	1
7	11106431	L1.01/ 3	2	1
12	11106431	L1.04	1	1
12	11106431	L1.04/ 1	1	1
3	11106431	L3.04	2	1
6	11106431	L3.04/ 1	1	1
5	11106431	L3.08	1	1
10	11106431	L3.10	1	1
10	11106431	L3.10	3	1
7	11106631	A2.22	1	1

ITEM	PART N.	SGR.	TAV.	PAG.
3	11106631	A2.56	1	1
5	11106631	B2.07	1	1
5	11106631	B2.07/ 1	1	1
4	11106631	C1.02/ 1	1	1
9	11106631	E3.02	3	1
2	11106631	E3.02	6	1
6	11106631	E3.02/ 2	1	1
7	11106631	L1.01	3	1
6	11106631	L3.04	1	1
14	11106631	L3.12	1	2
15	11106631	L3.12/ 1	1	1
4	11106831	A2.56	1	1
3	11106831	E3.02	6	1
21	11106831	E3.25	1	1
10	11106831	L1.01	2	1
8	11106831	L1.01/ 1	1	1
5	11106831	L1.01/ 2	3	1
5	11107031	E3.02/ 3	1	1
22	11107031	E3.25	1	1
2	11107031	L3.10	4	1
3	11107231	A2.56	1	1
9	11107231	E3.02/ 4	1	1
4	11107331	E3.02	6	1
4	11107331	L3.08/ 1	1	1
4	11107331	L3.08/ 2	1	1
6	11107431	E3.02/ 3	1	1
10	11107731	E3.02	3	1
10	11107731	E3.02/ 4	1	1
21	11112131	A2.01	1	2
7	11112231	C1.01/ 1	1	1
5	11112231	E3.02/ 1	1	1
8	11112231	F4.01	4	1
7	11112231	F4.01/ 5	1	1
11	11112231	L1.01	2	1
5	11112231	L3.10	2	1

ITEM	PART N.	SGR.	TAV.	PAG.
4	11112231	L6.01	1	1
3	11112231	L6.01/ 1	1	1
10	11112431	C1.01	1	1
5	11112431	E3.02	1	1
19	11112431	E3.02	5	1
7	11112431	E3.02/ 2	1	1
7	11112431	E3.02/ 3	1	1
5	11112431	E3.05	1	1
15	11112431	E3.10/ 1	1	1
4	11112431	F3.01/ 1	1	1
5	11112431	L1.01	1	1
8	11112431	L1.01	3	1
3	11112431	L3.10	4	1
11	11112431	L3.11	1	1
6	11112631	D3.01	1	1
4	11112631	E3.02	5	1
3	11112631	F3.01	2	1
5	11112631	F3.01/ 1	1	1
12	11112631	L1.01	2	1
4	11112631	L1.01	4	1
4	11112631	L1.01	4A	1
9	11112631	L1.01/ 1	1	1
8	11112631	L1.01/ 2	2	1
6	11112631	L1.01/ 2	3	1
8	11112631	L1.01/ 3	2	1
6	11112631	L1.01/ 3	3	1
7	11112631	L3.04/ 1	1	1
3	11112821	E3.29/ 1	1	1
6	11113031	E3.02	1	1
16	11113031	E3.02	5	1
5	11113231	E3.02	8	1
6	11113231	L1.01	1	1
8	11113431	E3.02/ 2	1	1
8	11113431	E3.02/ 3	1	1
11	11113431	E3.02/ 4	1	1

ITEM	PART N.	SGR.	TAV.	PAG.
1	11113521	B3.16	1	1
8	11113631	A4.01	2	1
12	11113631	E3.02/ 4	1	1
9	11113731	A4.01	2	1
11	11113731	E3.02	3	1
4	11113731	E3.02	4	1
13	11113731	E3.02/ 4	1	1
7	11113731	L3.04	1	1
12	11113831	E3.02	3	1
14	11113831	E3.02/ 4	1	1
17	11113831	E3.10/ 2	1	1
17	11113831	E3.10/ 4	1	1
5	11114031	E3.15	1	1
5	11114031	E3.15/ A	1	1
13	11114631	E3.02	3	1
13	11115531	E3.10	1	1
16	11115531	E3.10/ 1	1	1
28	11115531	E3.10/ 5	1	2
17	11115531	E3.13	1	1
17	11115531	E3.13/ 1	1	1
13	11115531	E3.13/ 2	1	1
22	11115631	A2.01	1	2
6	11115631	E3.06	1	1
9	11115631	L1.01	3	1
8	11116031	L3.04	1	1
29	11116431	E3.10/ 5	1	2
7	11116531	E3.06	1	1
2	11116673	E3.02/ 5	1	1
18	11116831	E3.10/ 2	1	1
16	11116831	E3.10/ 3	1	1
18	11116831	E3.10/ 4	1	1
17	11117031	E3.10/ 3	1	1
3	11118373	E3.02/ 5	1	1
17	11118537	E3.10/ 1	1	1
18	11120137	E3.13	1	1

ITEM	PART N.	SGR.	TAV.	PAG.
18	11120137	E3.13/ 1	1	1
4	11124931	L1.03	1	1
4	11124931	L1.03/ 1	1	1
6	11124931	L3.08	1	1
5	11127531	A2.01/ A	1	1
5	11127537	A2.01/ A	1	1
30	11127537	E3.10/ 5	1	2
19	11127537	E3.13	1	1
19	11127537	E3.13/ 1	1	1
12	11190579	A2.24/ 1	3	1
21	11190579	A2.52	1	1
29	11190579	A2.54/ 1	1	1
41	11190579	A4.02/ 2	2	2
10	11193870	A3.01/ 1	1	1
2	11193871	A2.33	1	1
11	11193871	A4.02/ 2	1	1
35	11193879	A1.02/ 1	1	2
16	11193879	A1.16/ 1	1	1
15	11193879	A1.25/ 1	1	1
25	11193879	A2.24/ 1	1	2
19	11193879	A2.52	1	1
16	11193879	A3.01/ 1	3	1
10	11193879	A3.01/ 1	4	1
14	11193879	A3.01/ 1	5	1
13	11193879	A4.02/ 2	3	1
13	11193979	A3.03/ 1	1	1
15	11194071	A3.01	2	1
8	11194071	A4.02	4	1
16	11194079	A3.01	2	1
10	11194079	A4.02	1	1
17	11194079	A4.02	2	1
5	11194179	F2.01/ 1	1	1
1	11195371	A2.43/ 4	2	1
24	11195471	A2.24	3	2
17	11195471	A2.28	3	1
8	11195471	A2.43/ 3	2	1
7	11195471	B1.09	2	1
11	11195471	B1.09/ 1	2	1
16	11195471	D3.34	3A	1
11	11195471	L1.04	7	1
11	11195471	L1.04/ 1	8	1
12	11197179	A4.02/ 2	1	1
15	11197771	A1.02	1	1
17	11197771	A1.02	2	1
7	11197771	A1.02/ 1	2	1
15	11197771	A1.16/ 1	1	1
10	11197771	A2.24	4	1
18	11197771	A4.02	2	1
26	11197771	A4.09	1	1
11	11197779	A2.24/ 1	3	1
13	11197779	A3.01/ 1	4	1
15	11197779	A3.01/ 1	5	1
3	11197779	F3.01/ 2	1	1
11	11198070	A3.01/ 1	1	1
9	11198071	A1.01	2	1
16	11198071	A1.02	1	1
18	11198071	A1.02	2	1
20	11198071	A1.02/ 1	1	1
4	11198071	A1.08/ 1	1	1
15	11198071	A1.16	1	1
13	11198071	A1.25	1	1
16	11198071	A3.01	1	1
12	11198071	A3.01/ 1	1	1
9	11198071	A3.02/ 2	1	1
15	11198071	A3.03	1	1
11	11198071	A4.02	1	1
19	11198071	A4.02	2	1
13	11198071	A4.02	3	1
9	11198071	A4.02	4	1
19	11198071	A4.03	1	1
17	11198079	A3.01/ 1	3	1
27	11198171	A4.09	1	1
27	11198179	A4.02/ 2	2	2
4	11198179	F3.01/ 2	1	1
11	11198371	A1.01/ 1	2	1
17	11198371	A1.02	1	1
19	11198371	A1.02	2	1
55	11198371	A1.07	1	3
9	11198371	A1.08	1	1
16	11198371	A1.16	1	1
6	11198371	A1.19	1	1
14	11198371	A1.25	1	1
11	11198371	A2.24	2	1
25	11198371	A2.24	3	2
11	11198371	A2.24	4	1
6	11198371	A2.54	1	1
17	11198371	A3.01	1	1
17	11198371	A3.01	2	1
7	11198371	A3.01	4	1
16	11198371	A3.03	1	1
12	11198371	A4.02	1	1
20	11198371	A4.02	2	1
28	11198371	A4.09	1	2
1	11198371	A4.09	2	1
1	11198371	A4.09/ 1	1	1
21	11198379	A1.02/ 1	1	1
7	11198379	A1.15	1	1
19	11198379	A2.24/ 1	1	1
11	11198379	A3.01/ 1	2	1
28	11198379	A4.02/ 2	2	2
11	11198379	A4.09/ 3	1	1
7	11198379	B2.18/ 1	1	1
5	11198379	F3.01/ 2	1	1
12	11198471	A2.24	4	1
56	11198671	A1.07	1	3

ITEM	PART N.	SGR.	TAV.	PAG.
2	11198671	B2.18	1	1
7	11198671	F2.01	1	1
2	11198671	F3.01	3	1
22	11198679	A1.02/ 1	1	1
21	11198679	A2.24/ 1	1	1
12	11198679	A3.01/ 1	2	1
6	11198679	F3.01/ 2	1	1
35	11198771	A1.02	1	2
13	11198779	A3.01/ 1	2	1
10	11200171	A1.08	1	1
12	11200579	A4.09/ 3	1	1
23	11234724	A1.02/ 1	1	1
9	11234731	B1.10	1	1
17	11234731	B1.10	2	2
10	11234731	B1.10/ 1	1	1
10	11234731	B2.01	3	1
12	11234731	B2.01/ 1	3	1
18	11234731	D2.23	1	2
19	11255930	C1.01	2	1
6	11255931	B4.11	1	1
32	11260313	A2.24/ 1	4	2
33	11264113	A2.24/ 1	4	2
8	11288021	A1.15	1	1
2	11288031	A4.09	2	1
8	11288031	B1.09	2	1
12	11288031	B1.09/ 1	2	1
23	11288031	L3.31	1	1
8	11288034	B1.09	2	1
11	11306921	A1.08	1	1
7	11306921	A1.19	1	1
13	11306921	A2.24	4	1
29	11306924	A4.02/ 2	2	2
20	11306931	B2.01	2	1
11	11306931	B2.01	3	1
19	11306931	B2.01/ 1	2	1
5	11306931	B2.01/ 1	3	1
6	11306931	B2.13	1	1
15	11306931	B2.30	1	1
5	11306931	B2.33	1	1
7	11306931	B2.33/ 1	1	1
4	11306931	C1.02	1	1
9	11306931	D3.38	1	1
20	11307021	A1.02	2	1
5	11307021	A1.19/ 1	1	1
14	11307021	A2.24	4	1
14	11307021	A3.01/ 1	2	1
17	11307021	A3.03	1	1
9	11307030	A1.15	1	1
12	11307031	A1.01/ 1	2	1
2	11307031	A4.09/ 1	1	1
1	11307031	A4.09/ 2	1	1
9	11307031	B1.10	1	1
18	11307031	B1.10	2	2
9	11307031	B1.10/ 1	2	1
9	11307031	D2.24	1	1
1	11307031	F3.01	3	1
18	11307034	B1.10	2	2
23	11343721	A1.07/ 1	1	2
30	11343724	A4.02/ 2	2	2
13	11343731	A1.01/ 1	2	1
15	11343731	B2.06	1	1
5	11343731	B2.33	4	1
6	11343731	B2.33/ 1	4	1
6	11390531	A0.02	1	1
4	11390537	A0.02/ 1	1	1
12	11390537	L3.11	1	1
4	11390537	L3.11	2	1
7	11391531	B4.11	1	1
4	11391531	L3.12	1	1
4	11391531	L3.12/ 1	1	1
10	11391537	D3.38	1	1
8	11394331	B4.11	1	1
13	11394331	L3.11	1	1
7	11398031	A0.02	1	1
17	11398131	D1.03	1	1
14	11398137	D1.03/ 1	1	1
5	11398137	L1.01	4	1
5	11398137	L1.01	4A	1
17	11408331	B4.08	1	1
14	11408637	L3.11	1	1
5	11408637	L3.11	2	1
7	11500210	A2.27/ 1	1	1
23	11500210	A2.27/ 2	1	1
34	11500421	A1.02	1	2
23	11690921	E3.25	1	1
5	11701621	E3.02	5	1
38	11701711	L3.10	1	2
8	11701721	A2.22	1	1
3	11701721	A2.22/ 1	1	1
17	11701721	A2.27/ 1	1	1
18	11701721	A2.27/ 2	1	1
5	11701721	A2.56	1	1
15	11701721	A2.56/ 1	1	1
31	11701721	B2.10/ A	2	2
14	11701721	E3.02	3	1
6	11701721	E3.02/ 1	1	1
15	11701721	E3.02/ 4	1	1
10	11701721	L1.01	3	1
15	11701721	L1.04	1	1
15	11701721	L1.04/ 1	1	1
9	11701721	L3.04	1	1
7	11701721	L3.08	1	1
4	11701721	L3.10	4	1
10	11702921	A4.01	2	1
15	11702921	E3.02/ 3	1	1

ITEM	PART N.	SGR.	TAV.	PAG.
19	11702921	E3.10/ 2	1	1
19	11702921	E3.10/ 4	1	1
4	11702921	F3.01	2	1
8	11702921	F4.01	1	1
9	11702921	F4.01	4	1
9	11702921	F4.01/ 1	1	1
9	11702921	F4.01/ 5	1	1
13	11702921	L1.01	2	1
4	11702921	L6.01/ 1	1	1
14	11761721	A2.22/ 2	1	1
57	11795430	A1.07	1	3
9	11797524	F2.01/ 1	1	1
8	11797530	F2.01	1	1
10	11800420	A1.01	2	1
8	11800430	E3.02	2	1
11	11800530	B2.01	1	1
10	11800530	B2.01/ 1	1	1
5	11813930	A0.02/ 1	1	1
18	11901617	A3.01/ 1	4	1
18	11901711	A3.01/ 1	3	1
19	11902017	A3.01/ 1	4	1
16	11902417	B2.30	1	1
19	11903111	A3.01/ 1	3	1
6	11903111	B2.33	4	1
7	11903111	B2.33/ 1	4	1
24	11903111	E3.31	1	1
16	11903171	A1.01/ 1	1	2
24	11903171	A1.02/ 1	1	1
18	11903171	A3.03	1	1
4	11903171	C1.08/ 1	1	1
18	11903711	A3.01	2	1
6	11903714	A3.01/ 1	4	1
19	11903717	B1.09	2	2
10	11903717	B1.10	2	1
16	11903717	B2.06	1	1
19	11903717	B2.06/ 1	1	1
20	11903717	B2.06/ 2	1	1
17	11903717	B2.30	1	1
2	11903717	B2.30	3	1
3	11903717	B2.30/ 1	3	1
3	11903717	F4.01/ 3	1	1
4	11903811	A1.25/ 1	1	1
19	11903811	A3.01	2	1
20	11903814	A3.01/ 1	3	1
14	11903814	A3.01/ 1	4	1
13	11903814	A4.02/ 2	1	1
18	11903817	A2.22/ 2	1	1
3	11903817	B2.30	3	1
4	11903817	B2.30/ 1	3	1
4	11903817	F4.01/ 3	1	1
8	11945008	F3.01	1	1
9	11947708	F3.01	1	1
8	11947908	F3.01	1	1
19	12034621	A2.27/ 2	1	1
15	12034671	A2.27/ 1	1	1
19	12035370	A2.43/ 2	6	1
13	12035470	A2.43/ 2	4	1
31	12035470	A2.43/ 2	6	2
10	12035471	A2.28/ 1	2	1
2	12035471	A2.28/ 1	4	1
8	12035471	A2.28/ 2	2	1
21	12035471	A2.28/ 2	3	1
5	12035670	A2.43/ 2	6	1
14	12035671	A2.27/ 1	1	1
21	12035671	A2.27/ 1	2	3
14	12035671	A2.27/ 2	1	1
1	12035671	A2.27/ 2	2	1
12	12035671	A2.28/ 1	1	1
1	12035671	A2.28/ 1	3	1
13	12035671	A2.28/ 1	4	1
5	12035671	A2.28/ 2	1	1
1	12035671	A2.28/ 2	4	1
1	12035671	A2.28/ 2	5	1
10	12075186	A4.02	4	1
10	12084385	A1.25/ 1	1	1
14	12088086	A4.02	3	1
4	12163221	E3.02/ 5	1	1
20	12163221	E3.10/ 2	1	1
18	12163221	E3.10/ 3	1	1
20	12163221	E3.10/ 4	1	1
31	12163221	E3.10/ 5	1	2
11	12163221	L1.01	3	1
14	12163727	E3.10	1	1
32	12163727	E3.10/ 5	1	2
18	12163911	A1.02	1	1
58	12163921	A1.07	1	3
12	12163921	A2.22/ 1	1	1
5	12164021	E3.02/ 5	1	1
9	12164021	F2.01	1	1
10	12164021	F2.01/ 1	1	1
15	12164021	L3.11	1	1
8	12164121	A0.02	1	1
6	12164121	A0.02/ 1	1	1
12	12164127	B2.01	1	1
11	12164127	B2.01/ 1	1	1
11	12164127	D3.38	1	1
9	12164127	E3.02	2	1
4	12164321	B4.12	1	1
20	12164327	E3.13	1	1
20	12164327	E3.13/ 1	1	1
14	12164327	E3.13/ 2	1	1
13	12164421	A4.09/ 3	1	1
19	12164421	D3.33	1	1
9	12164521	A0.02	1	1
7	12164521	A0.02/ 1	1	1

ITEM	PART N.	SGR.	TAV.	PAG.
18	12164521	D1.03	1	1
6	12164521	L1.01	4	1
6	12164521	L1.01	4A	1
5	12164521	L3.08/ 1	1	1
5	12164521	L3.08/ 2	1	1
15	12164527	D1.03/ 1	1	1
22	12164711	A1.02	2	1
17	12164711	A1.16	1	1
8	12164711	A1.19	1	1
26	12164711	A2.24	3	2
18	12164711	A2.24/ 1	1	1
13	12164711	A4.02	1	1
21	12164711	A4.02	2	1
29	12164711	A4.09	1	2
14	12164711	A4.09/ 3	1	1
8	12164711	B2.18/ 1	1	1
23	12164711	D2.22	1	2
18	12164721	A0.02/ 1	1	1
24	12164721	A1.07/ 1	1	2
15	12164721	A2.52	1	1
7	12164721	A2.54	1	1
18	12164721	A2.56/ 1	1	1
20	12164721	A3.01	2	1
21	12164721	B1.11	1	1
12	12164721	B2.01	3	1
13	12164721	B2.01/ 1	3	1
8	12164721	B2.10	1	1
25	12164721	B2.10/ A	2	1
7	12164721	B2.13	1	1
7	12164721	B2.13	2	1
15	12164721	B4.06	1	1
4	12164721	B5.01	1	1
3	12164721	D2.27	1	1
3	12164721	D2.27/ A	1	1
5	12164721	D2.27/ 1A	1	1

ITEM	PART N.	SGR.	TAV.	PAG.
7	12164721	L1.01	1	1
15	12173690	A4.02	3	1
16	12173890	A3.01/ 1	5	1
19	12173890	B1.10	2	2
10	12173890	B1.10/ 1	2	1
4	12173890	H1.04	1	1
11	12173990	B1.10/ 1	1	1
19	12173990	D2.23	1	2
15	12174090	A1.25	1	1
11	12174090	A1.25/ 1	1	1
8	12174090	A2.43/ 2	1	1
14	12174090	A4.02	1	1
15	12174190	E3.02	3	1
8	12174390	A2.54	1	1
9	12174490	A2.22	1	1
10	12174590	A2.22	1	1
4	12174790	A2.22/ 1	1	1
1	12174790	A2.43/ 2	2	1
4	12174790	A2.52	1	1
22	12174790	A4.02	2	1
16	12174790	A4.02	3	1
11	12174790	A4.02	4	1
31	12174790	A4.02/ 2	2	2
10	12174790	B1.10	1	1
16	12174790	E3.02/ 4	1	1
10	12174890	A2.43/ 2	1	1
15	12174890	A4.02	1	1
12	12174890	A4.02	4	1
16	12174890	E3.02	3	1
17	12174890	E3.02/ 4	1	1
32	12179190	A4.02/ 2	2	2
23	12179490	A2.01	1	2
8	12179490	A2.01/ 1	1	1
12	12179490	A2.24	2	1
21	12179590	A3.01	2	1

ITEM	PART N.	SGR.	TAV.	PAG.
13	12179590	A4.02	4	1
8	12179590	L1.04	6	1
2	12179990	L1.04	6	1
2	12179990	L1.04/ 1	7	1
5	12276080	A2.43/ 2	3	1
16	12354521	A1.25	1	1
30	12429421	A4.09	1	2
25	12429821	A1.02/ 1	1	1
26	12430121	A1.02/ 1	1	1
17	12554521	L1.04	6	1
17	12554521	L1.04/ 1	7	1
2	12574121	F2.05/ A	1	1
2	12574121	F2.05/ 3	1	1
14	12574511	A1.01/ 1	2	1
31	12574511	A4.09	1	2
18	12575121	E3.10/ 1	1	1
2	12577511	B3.16	1	1
6	12577521	E3.15	1	1
6	12577521	E3.15/ A	1	1
2	12577521	F4.01/ 2	2	1
11	12598371	L3.10	1	1
37	12598471	L1.04	7	2
37	12598471	L1.04/ 1	8	2
21	12604171	F3.03/ A	1	1
12	12604171	F3.03/ B	1	1
2	12604271	A2.28	3	1
7	12604271	A2.28/ 1	4	1
9	12605371	B1.15	1	1
7	12605371	B1.15/ 1	1	1
10	12605571	F4.01/ 1	5	1
11	12605671	B1.10	1	1
11	12605671	B1.10/ 1	2	1
24	12605770	D2.22	1	2
5	12605971	D3.34	1	1
11	12606871	A2.27	1	1

ITEM	PART N.	SGR.	TAV.	PAG.
16	12606871	A2.27/ 1	1	1
17	12624501	A4.02	3	1
1	12626321	A1.19	1	1
20	12638101	D3.34	3	1
18	12638101	D3.34	3A	1
13	12638601	A2.52	1	1
13	12638601	B1.09/ 1	2	1
8	12638601	B2.13	1	1
8	12638601	B2.17	1	1
5	12638601	C1.02/ 1	1	1
10	12638601	D2.28	1	1
5	12638601	L1.03	1	1
5	12638601	L1.03/ 1	1	1
8	12638601	L3.08	1	1
18	12638620	A2.54/ 1	1	1
11	12638621	A2.21	1	1
15	12638621	A2.21	2	1
14	12638621	E3.28	1	1
11	12638621	L3.10	3	1
15	12638660	A1.01/ 1	2	1
5	12638660	A2.43	1	1
21	12638660	A3.01/ 1	3	1
16	12639701	A2.21	2	1
31	12639701	L1.04	7	1
31	12639701	L1.04/ 1	8	1
9	12642001	L1.04	1	1
13	12642001	L1.04	7	1
9	12642001	L1.04/ 1	1	1
13	12642001	L1.04/ 1	8	1
11	12642021	A4.01	2	1
38	12642021	L1.04	7	2
38	12642021	L1.04/ 1	8	2
12	12642021	L3.10	1	1
17	12642721	A2.21	2	1
4	12642801	A2.01	2	1
13	12642801	L1.01/ 2	1	1
29	12642801	L1.01/ 2	2	2
23	12642801	L1.01/ 2	3	2
29	12642801	L1.01/ 3	2	2
23	12642801	L1.01/ 3	3	1
16	12642801	L3.04	2	2
16	12643701	L1.04	7	1
1	12643701	L1.04	8	1
1	12643701	L1.04	9	1
16	12643701	L1.04/ 1	8	1
1	12643701	L1.04/ 1	9	1
1	12643701	L1.04/ 1	10	1
12	12644321	A4.01	2	1
12	12644321	L1.01	3	1
10	12644321	L3.04	1	1
13	12644321	L3.10	1	1
6	12644401	A4.02/ 1	1	1
13	12644421	A4.01	2	1
10	12644421	L1.01/ 1	1	1
9	12644421	L1.01/ 2	2	1
9	12644421	L1.01/ 3	2	1
14	12644421	L3.10	1	1
24	12644921	A2.01	1	2
4	12645031	A2.22/ 2	1	1
12	12646201	A2.43/ 2	1	1
22	12646701	A3.01	2	1
15	12646701	A3.01/ 1	4	1
16	12646701	A4.02	1	1
14	12646701	A4.02	4	1
3	12646701	F3.01	3	1
6	12646701	L1.04	6	1
6	12646701	L1.04/ 1	7	1
13	12646720	A2.56/ 1	1	1
24	12646721	A2.24/ 1	1	2
4	12646721	A4.01	1	1
11	12646721	L1.01/ 1	1	1
10	12646721	L1.01/ 2	2	1
7	12646721	L1.01/ 2	3	1
10	12646721	L1.01/ 3	2	1
7	12646721	L1.01/ 3	3	1
15	12646721	L3.10	1	1
12	12646721	L3.10	3	1
5	12646721	L6.01/ 1	1	1
25	12646801	A1.07/ 1	1	2
10	12646801	A1.15	1	1
16	12646801	B4.06	1	1
9	12646811	B2.10	1	1
33	12646811	B2.10/ A	2	2
8	12646821	C1.35	1	1
17	12646821	E3.02	3	1
18	12646821	E3.02/ 4	1	1
14	12646821	L1.01	2	1
12	12646821	L1.01/ 1	1	1
11	12646821	L1.01/ 2	2	1
8	12646821	L1.01/ 2	3	1
11	12646821	L1.01/ 3	2	1
13	12646821	L1.04	1	1
18	12646821	L1.04	6	1
13	12646821	L1.04/ 1	1	1
18	12646821	L1.04/ 1	7	1
11	12646821	L3.04	1	1
5	12646821	L3.04	2	1
9	12646821	L3.08	1	1
16	12646821	L3.10	1	1
6	12646821	L3.10	2	1
13	12646821	L3.10	3	1
16	12646821	L3.11	1	1
8	12646829	L3.04/ 1	1	1
7	12646901	F3.01/ 2	1	1
22	12646921	A2.24/ 1	1	1

ITEM	PART N.	SGR.	TAV.	PAG.
14	12646921	A4.01	2	1
7	12646921	E3.02	1	1
6	12646921	E3.02	5	1
8	12646921	L1.01	1	1
15	12646921	L1.01	2	1
13	12646921	L1.01/ 1	1	1
12	12646921	L1.01/ 2	2	1
12	12646921	L1.01/ 3	2	1
7	12646921	L3.10	2	1
17	12646921	L3.11	1	1
26	12647001	A3.01/ 1	3	1
19	12647001	D2.29	2	1
15	12664701	A4.02	4	1
17	12949310	B4.06	1	1
18	12953110	B4.06	1	1
9	13271611	A2.43/ 2	6	1
7	13271811	A2.43/ 2	5	1
8	13272011	A2.43/ 2	4	1
12	13274011	A2.43/ 2	4	1
9	13275811	F4.01	1	1
10	13275811	F4.01/ 1	1	1
7	13275917	L1.01	4	1
7	13275917	L1.01	4A	1
10	13276011	B1.15	1	1
8	13276011	B1.15/ 1	1	1
17	13279217	L3.10	1	1
18	13279611	A2.21	2	1
8	13297317	L1.01	4	1
8	13297317	L1.01	4A	1
9	13301717	L1.01	4	1
9	13301717	L1.01	4A	1
13	13303511	L1.01	3	1
3	13305221	F2.05/ A	1	1
3	13305221	F2.05/ 3	1	1
7	13310911	L1.04	7	1
7	13310911	L1.04/ 1	8	1
9	13401176	C1.35	1	1
10	13401876	D2.24	1	1
9	13404476	B2.17	1	1
6	13404476	B2.17/ 1	1	1
11	13404476	D2.28	1	1
6	13404476	D2.28/ 1	1	1
3	13407211	B3.16	1	1
11	13407211	C1.01	1	1
11	13407211	C1.01/ 1	2	1
13	13407211	D3.30	1	1
21	13407211	D3.34	3	1
6	13407211	E3.05	1	1
8	13407211	E3.06	1	1
15	13407211	E3.10	1	1
19	13407211	E3.10/ 1	1	1
33	13407211	E3.10/ 5	1	2
21	13407211	E3.13	1	1
21	13407211	E3.13/ 1	1	1
5	13407211	E3.32	1	1
5	13407211	E3.32/ 4	1	1
9	13407211	L1.01	1	1
14	13407811	D3.30	1	1
5	13407811	D3.30/ 1	1	1
3	13420776	B2.34	1	1
19	13449321	A1.02	1	1
23	13449321	A1.02	2	1
18	13449420	A1.16	1	1
15	13449521	A4.09/ 3	1	1
12	13449530	B2.01/ 1	1	1
23	13449730	A3.01	2	1
13	13449730	B2.01	3	1
13	13449730	B2.01/ 1	1	1
14	13449730	B2.01/ 1	3	1
17	13449821	A1.16/ 1	1	1
17	13449821	A2.24/ 1	1	1
16	13449821	A4.09/ 3	1	1
9	13449830	A2.54	1	1
14	13449930	B2.01	3	1
15	13449930	B2.01/ 1	3	1
27	13450530	A2.24	3	2
15	13450730	A0.02/ 1	1	1
23	13453221	A4.02	2	1
15	13453521	A3.01/ 1	2	1
6	13453521	B2.18/ 1	1	1
17	13453721	A4.02	1	1
32	13453721	A4.09	1	2
20	13517021	A4.03	1	1
16	13517030	B2.01/ 1	3	1
21	13517321	A4.03	1	1
23	13517630	A2.24/ 1	4	2
22	13517921	A4.03	1	1
19	13526170	A2.54/ 1	1	1
10	13530421	F2.01	1	1
16	13532521	A3.01/ 1	2	1
24	13543321	A4.02	2	1
16	13543324	A1.25/ 1	1	1
22	13543324	A3.01/ 1	3	1
33	13543324	A4.02/ 2	2	2
14	13543324	A4.02/ 2	3	1
17	13543424	A2.52	1	1
25	13543521	A4.02	2	1
17	13543821	A1.25	1	1
13	13546121	A2.24/ 1	3	1
11	13550201	B2.35/ A	1	1
11	13550201	B2.35/ 2	1	1
24	13550301	A3.01	2	1
20	13598011	A1.02	1	1
10	13598221	A0.02	1	1
4	13598521	B4.12	1	1

ITEM	PART N.	SGR.	TAV.	PAG.
28	13606011	A3.01/ 1	3	2
21	13683909	A3.01/ 1	1	1
8	13739911	A4.03/ 1	1	1
15	13868350	A4.01	2	1
2	13879740	C1.01	3	1
24	13905070	E3.25	1	1
34	13917770	E3.10/ 5	1	2
21	13920770	E3.10/ 2	1	1
21	13920770	E3.10/ 4	1	1
19	13921070	E3.10/ 3	1	1
23	14044171	A4.03	1	1
36	14048117	L1.04	7	1
36	14048117	L1.04/ 1	8	1
18	14048211	B2.30	1	1
39	14048217	L1.04	7	2
39	14048217	L1.04/ 1	8	2
13	14048227	A3.01/ 1	1	1
6	14048717	A1.19/ 1	1	1
14	14054511	L1.04	2	1
14	14054511	L1.04/ 1	2	1
10	14054911	B2.17	1	1
12	14054911	D2.28	1	1
25	14056211	E3.31	1	1
32	14084211	L1.04	7	1
32	14084211	L1.04/ 1	8	1
10	14142490	F4.01	1	1
11	14142490	F4.01/ 1	1	1
1	14142490	F4.01/ 1	6	1
6	14142490	F4.01/ 2	1	1
11	14142690	F4.01	1	1
10	14142690	F4.01	4	1
3	14142690	F4.01/ 2	2	1
12	14147690	F4.01/ 1	1	1
11	14149690	F4.01/ 1	5	1
13	14157470	D2.29	1	1
14	14158470	L1.01/ 1	1	1
9	14158470	L1.01/ 2	3	1
9	14158470	L1.01/ 3	3	1
9	14159770	B2.13	1	1
8	14161770	B2.13	3	1
10	14161770	L1.01	1	1
16	14161770	L1.01	2	1
20	14161970	E3.31	2	1
26	14162070	E3.31	1	1
7	14162201	E3.25	2	1
8	14162270	E3.25	2	1
25	14163170	D2.22	1	2
11	14163170	L1.01	1	1
17	14163170	L1.01	2	1
9	14163670	B2.04	3	1
9	14163970	B2.13	2	1
12	14164270	C1.01/ 1	2	1
6	14164370	B2.07	1	1
6	14164370	B2.07/ 1	1	1
7	14164470	E3.05	1	1
14	14164770	L3.10	3	1
16	14167570	A1.01/ 1	2	1
18	14167770	B4.08	1	1
10	14168070	C1.35	1	1
12	14168170	A2.21	1	1
16	14173370	D1.03/ 1	1	1
59	14196370	A1.07	1	3
11	14198810	B1.08	1	1
11	14198810	B1.08/ 1	1	1
19	14198810	B4.06	1	1
20	14198811	C1.01	2	1
10	14199100	B2.13	2	1
11	14199511	A0.02	1	1
26	14233021	A1.07/ 1	1	2
10	14233230	A1.06	1	1
4	14233230	B2.04/ 3	1	1
7	14233230	B2.05	1	1
17	14233421	A1.01/ 1	2	1
10	14233430	E3.02	2	1
18	14233621	A1.16/ 1	1	1
3	14233630	B2.05/ 1	1	1
20	14233730	B2.06/ 1	1	1
4	14233730	D3.34	2	1
4	14233730	D3.37	1	1
4	14233730	D3.37/ 1	1	1
10	14233830	B2.04/ 3	4	1
17	14233930	B2.06	1	1
10	14233930	B2.06/ 2	1	1
11	14238030	A1.06/ 1	1	1
19	14238030	A1.16	1	1
33	14238031	B4.08	1	2
27	14238130	E3.31	1	1
19	14238721	A1.16/ 1	1	1
7	14239230	A3.02	1	1
10	14239230	A3.02/ 1	1	1
19	14239430	B1.05/ 1	1	1
5	14244710	D3.34	4	1
20	14257830	B4.06	1	1
13	14257830	D2.20	1	1
6	14257830	D3.34	1	1
12	14257831	A0.02	1	1
9	14257931	B4.11	1	1
6	14258030	D3.31	1	1
21	14258130	B4.06	1	1
8	14258131	A0.02/ 1	1	1
12	14258431	L1.01	1	1
7	14259030	D3.31	1	1
12	14274430	D3.38	1	1
12	14274530	B2.04	2	1
5	14274530	B2.04/ 1	1	1

ITEM	PART N.	SGR.	TAV.	PAG.
22	14274530	D3.34	3	1
8	14274630	A1.02/ 1	2	1
9	14274721	A1.19	1	1
13	14274821	A2.24	2	1
8	14274831	A0.02/ 1	1	1
2	14274930	B3.01	1	1
1	14274930	B3.01/ 1	1	1
14	14275121	A2.24	2	1
15	14275321	A2.24	2	1
11	14282370	A1.01	2	1
8	14282370	A1.03	1	1
18	14282470	A1.01/ 1	2	1
12	14282670	A1.01	2	1
15	14282770	A1.01	1	1
17	14282770	A1.01/ 1	1	2
16	14283370	A1.01	1	1
18	14303521	A2.43/ 2	6	1
27	14304121	A2.43/ 2	6	1
4	14305431	F2.05/ A	1	1
4	14305431	F2.05/ 3	1	1
10	14306337	B2.13	1	1
15	14306420	D2.27/ 2	1	1
12	14307630	B1.10	1	1
12	14307630	B1.10/ 1	2	1
3	14307820	A2.33	1	1
19	14323611	B4.08	1	1
19	14323811	A3.03	1	1
18	14323911	A1.01/ 1	1	2
27	14323911	A1.02/ 1	1	1
14	14323911	D2.29	1	1
10	14324011	A2.54	1	1
20	14324801	B4.08	1	1
15	14324811	D2.29	1	1
16	14324911	D2.29	1	1
12	14325301	B2.35/ A	1	1
16	14325301	B2.35/ 1	1	1
12	14325301	B2.35/ 2	1	1
12	14325311	B1.08	1	1
12	14325311	B1.08/ 1	1	1
12	14325311	B2.35	1	1
17	14325501	A1.01	1	1
13	14325511	B1.08	1	1
13	14325511	B1.08/ 1	1	1
21	14325511	B4.08	1	1
14	14325611	B1.08	1	1
14	14325611	B1.08/ 1	1	1
24	14326301	A1.02	2	1
9	14326311	A1.02/ 1	2	1
18	14327301	A4.02	3	1
60	14328501	A1.07	1	3
25	14328701	A1.16/ 1	1	1
19	14328801	A1.01/ 1	1	2
18	14329101	A1.01	1	1
19	14329301	A1.01/ 1	1	2
20	14330260	B1.09	2	2
11	14330260	B1.10	2	1
18	14330260	B2.06	1	1
21	14330260	B2.06/ 1	1	1
19	14330260	B2.06/ 2	1	1
19	14330260	B2.30	1	1
4	14330260	B2.30	3	1
5	14330260	B2.30/ 1	3	1
17	14330260	D2.29	1	2
5	14330260	F4.01/ 3	1	1
17	14358721	A2.43/ 2	4	1
21	14452980	E3.31	2	1
3	14452981	B2.33/ 1	5	1
14	14453080	B1.09/ 1	2	1
29	14453180	A2.33	1	2
15	14453180	B1.08	1	1
15	14453180	B1.08/ 1	1	1
7	14453180	B2.33	4	1
8	14453180	B2.33/ 1	4	1
5	14453581	A1.08/ 1	1	1
4	14453581	B2.34	1	1
8	14453680	B2.33	4	1
9	14453680	B2.33/ 1	4	1
10	14453780	B2.10	1	1
9	14453780	B2.33	4	1
24	14453981	A2.24/ 1	4	2
15	14454180	B1.09/ 1	2	1
8	14455280	F3.01/ 2	1	1
4	14456481	E3.29/ 1	1	1
20	14456781	A1.16/ 1	1	1
20	14456880	B2.30	1	1
6	14456880	B2.30/ 1	2	1
5	14456880	C1.08/ 1	1	1
2	14456880	E3.02	7	1
20	14456881	B1.10	2	2
13	14456881	B1.10/ 1	2	1
21	14456881	B2.01	2	1
20	14456881	B2.01/ 1	2	1
19	14456881	B2.06	1	1
22	14456881	B2.06/ 1	1	1
21	14456881	B2.30	1	1
9	14456881	B2.30	2	1
13	14456881	B2.30/ 1	1	1
6	14456881	B2.33	1	1
8	14456881	B2.33/ 1	1	1
4	14456881	B2.33/ 1	5	1
10	14456980	B2.30	2	1
20	14456980	D2.23	1	2
11	14456980	D2.24	1	1
18	14456980	D2.29	1	2
2	14456980	D2.30	1	1

ITEM	PART N.	SGR.	TAV.	PAG.
20	14456981	B2.06	1	1
23	14456981	B2.06/ 1	1	1
23	14456981	B2.30	1	1
14	14456981	B2.30/ 1	1	1
16	14457080	A4.02	4	1
11	14457080	B2.10	1	1
10	14457080	B2.10/ A	1	1
18	14457080	B2.10/ A	2	1
11	14457080	B2.13	1	1
21	14457081	B2.06	1	1
24	14457081	B2.06/ 1	1	1
5	14457081	B2.33/ 1	5	1
14	14457180	B1.09	1	1
14	14457180	B1.09/ 1	1	1
21	14457180	B1.10	2	2
25	14457180	B2.06/ 1	1	1
12	14457180	B2.10	1	1
12	14457180	D2.24	1	1
20	14457270	D2.23	1	2
9	14457280	B1.09	2	1
16	14457280	B1.09/ 1	2	1
7	14457280	B2.07	1	1
7	14457280	B2.07/ 1	1	1
11	14457280	B2.13	2	1
15	14457280	B2.13	3	1
7	14457280	B2.17/ 1	1	1
7	14457280	B2.33	1	1
9	14457280	B2.33/ 1	1	1
21	14457280	D2.23	1	2
7	14457280	D2.28/ 1	1	1
20	14457280	D2.29	2	1
2	14457280	D2.30	1	1
2	14457280	D2.30/ 1	1	1
29	14457281	B2.04	2	2
17	14457281	B2.04	3	1
20	14457281	B2.04	4	1
5	14457281	B2.04/ 3	2	1
7	14457281	B2.04/ 3	3	1
11	14457281	B2.04/ 3	4	1
7	14457281	B2.13	3	1
12	14457380	A1.08	1	1
22	14457380	B1.10	2	2
14	14457380	B1.10/ 1	2	1
10	14457380	B2.33/ 1	1	1
6	14457380	B2.33/ 1	5	1
22	14457380	D2.23	1	2
19	14457380	D2.29	1	2
26	14457381	B2.06/ 1	1	1
12	14457480	B2.13	1	1
22	14457580	B2.06	1	1
27	14457580	B2.06/ 1	1	2
13	14457580	D2.24	1	1
21	14457581	A1.16/ 1	1	1
14	14457581	A3.01/ 1	1	1
33	14457680	A4.09	1	2
13	14457680	B1.10	1	1
13	14457680	B1.10/ 1	1	1
3	14457680	C1.08	1	1
23	14457680	D2.23	1	2
17	14457681	A3.01/ 1	2	1
16	14457681	A4.02/ 2	3	1
13	14457681	B2.35/ A	1	1
13	14457681	B2.35/ 2	1	1
6	14457880	C1.08/ 1	1	1
15	14457881	B1.09	1	1
15	14457881	B1.09/ 1	1	1
18	14458081	A3.01/ 1	2	1
17	14458081	A3.01/ 1	5	1
20	14458081	A3.03	1	1
28	14458281	A1.02/ 1	1	2
14	14458380	B1.10/ 1	1	1
24	14458380	D2.23	1	2
5	14458380	D2.27	3	1
23	14458381	B2.06	1	1
28	14458381	B2.06/ 1	1	2
11	14458381	B2.06/ 2	1	1
22	14458580	E3.31	2	1
3	14458680	E3.02	7	1
3	14458880	D2.30/ 1	1	1
14	14459081	A3.03/ 1	1	1
19	14459381	A1.01/ 1	2	1
4	14459680	E3.02	7	1
4	14459780	C1.08	1	1
6	14459781	B2.04/ 1	1	1
3	14459781	B2.04/ 1	2	1
4	14459781	B2.04/ 1	3	1
2	14459781	B2.04/ 1	4	1
4	14459781	B2.04/ 2	1	1
3	14459781	B2.04/ 2	2	1
4	14459781	B2.04/ 2	3	1
4	14459781	B2.04/ 2	4	1
11	14460280	E3.02	2	1
6	14460380	D2.27	3	1
20	14460380	D2.27/ 1	1	1
20	14460380	D2.27/ 1A	1	1
16	14460380	D2.27/ 2	1	1
5	14460680	B1.08/ 1	2	1
16	14461181	A2.24/ 1	1	1
12	14461680	E3.02	2	1
22	14462881	B1.11	1	1
9	14462980	B2.10/ A	2	1
23	14462980	D3.34	3	1
10	14463080	B1.09	2	1
7	14463080	B2.33	2	1
12	14463080	B2.33	3	1

ITEM	PART N.	SGR.	TAV.	PAG.
6	14463080	B2.33/ 1	2	1
12	14463080	B2.33/ 1	3	1
9	14463080	E3.02/ 3	1	1
21	14463180	C1.01	2	1
5	14463180	E3.02	6	1
7	14463180	E3.02/ 1	1	1
12	14463181	A1.06/ 1	1	1
6	14463280	C1.02/ 1	1	1
6	14463280	E3.02	6	1
11	14463281	B1.09	2	1
17	14463281	B1.09/ 1	2	1
5	14463580	E3.02	7	1
9	14463580	E3.02/ 2	1	1
14	14463680	B1.10	1	1
15	14463680	B1.10/ 1	1	1
24	14463680	B2.06	1	1
17	14463680	B2.06/ 2	1	1
25	14463680	D2.23	1	2
16	14463681	B1.09	1	1
16	14463681	B1.09/ 1	1	1
18	14463681	B1.09/ 1	2	1
12	14463781	B1.09	2	1
10	14463781	B2.33/ 1	4	1
28	14463880	E3.31	1	2
22	14463881	A1.16/ 1	1	1
13	14463881	B2.04	2	1
10	14463881	B2.04	3	1
10	14463881	B2.04	4	1
6	14463881	B2.04/ 3	2	1
8	14463881	B2.04/ 3	3	1
12	14463881	B2.04/ 3	4	1
30	14463981	A2.33	1	2
25	14464080	A2.01	1	2
18	14464080	E3.02	3	1
5	14464080	E3.02	4	1
19	14464080	E3.02/ 4	1	1
20	14464180	E3.02/ 4	1	1
31	14464281	A1.25/ 1	1	1
25	14464380	A2.01	1	2
13	14464380	D3.38	1	1
19	14464380	E3.02	3	1
6	14464380	E3.02	4	1
21	14464380	E3.02/ 4	1	1
2	14464381	B2.04	1	1
14	14464381	B2.04	2	1
3	14464381	B3.01	1	1
2	14464381	B3.01/ 1	1	1
26	14464480	A2.01	1	2
20	14464580	E3.02	3	1
22	14464580	E3.02/ 4	1	1
5	14464680	D3.34	2	1
5	14464680	D3.37	1	1
5	14464680	D3.37/ 1	1	1
15	14464981	B2.04	2	1
16	14465181	B2.04	2	1
13	14465280	E3.02	2	1
9	14465280	E3.06	1	1
13	14465282	A1.08	1	1
22	14465480	B4.06	1	1
23	14465481	B1.11	1	1
11	14465481	B2.04	4	1
13	14465481	B2.04/ 3	4	1
14	14465481	D2.20	1	1
6	14465880	E3.32	1	1
6	14465880	E3.32/ 4	1	1
21	14465980	B2.01/ 1	2	1
22	14465981	B2.01	2	1
3	14465981	B2.04	1	1
17	14465981	B2.04	2	1
7	14466080	E3.32	1	1
7	14466080	E3.32/ 1	1	1
10	14466080	E3.32/ 3	1	1
7	14466080	E3.32/ 4	1	1
6	14466280	D3.34	2	1
6	14466280	D3.37	1	1
6	14466280	D3.37/ 1	1	1
17	14466281	B1.09	1	1
17	14466281	B1.09/ 1	1	1
8	14466380	E3.32/ 1	1	1
11	14466380	E3.32/ 3	1	1
27	14466489	A2.01	1	2
28	14466880	A2.01	1	2
15	14466880	E3.28	1	1
23	14467680	B4.06	1	1
20	14467681	B1.05/ 1	1	1
24	14467780	B4.06	1	1
7	14467781	B2.04/ 1	1	1
4	14467781	B2.04/ 1	2	1
5	14467781	B2.04/ 1	3	1
3	14467781	B2.04/ 1	4	1
5	14467781	B2.04/ 2	1	1
4	14467781	B2.04/ 2	2	1
5	14467781	B2.04/ 2	3	1
5	14467781	B2.04/ 2	4	1
15	14467781	D2.20	1	1
29	14467980	A2.01	1	2
25	14467980	B4.06	1	1
16	14467980	E3.28	1	1
8	14468181	B2.04/ 1	1	1
22	14468580	B4.08	1	1
20	14468580	D3.33	1	1
21	14468881	B1.05/ 1	1	1
5	14470980	C1.08	1	1
9	14471480	F5.10	1	1
14	14472180	D3.38	1	1

ITEM	PART N.	SGR.	TAV.	PAG.
14	14473180	D2.24	1	1
15	14473580	D3.30	1	1
25	14476582	A1.02	2	1
14	14477180	B1.05/ 1	2	1
10	14483481	A1.02/ 1	2	1
16	14493301	A2.43/ 1	1	1
5	14496401	F2.05/ A	1	1
8	14496431	A2.24/ 1	2	1
16	14496431	B1.10	2	2
21	14496501	A4.02/ 1	1	1
15	14496501	D2.23	1	2
2	14496501	L1.04/ 1	4	1
7	14496540	A2.43/ 1	1	1
13	14496601	L3.12	1	2
14	14496601	L3.12/ 1	1	1
7	14496621	A2.56	1	1
17	14496631	A0.02/ 1	1	1
12	14496631	A2.22/ 2	1	1
17	14496631	A2.56/ 1	1	1
5	14496631	B1.09	2	1
8	14496631	B2.06/ 2	1	1
2	14496931	A0.02/ 1	1	1
24	14497821	F3.03/ 1	1	1
16	14499401	A2.28/ 1	3	1
7	14499401	A2.28/ 2	3	1
4	14499431	F4.01/ 1	1	1
4	14499431	F4.01/ 4	1	1
28	14499501	L1.04	7	1
28	14499501	L1.04/ 1	8	1
1	14522421	H1.01/ A	1	1
1	14525021	H1.01/ A	1	1
26	14543170	D2.22	1	2
11	14549170	C1.35	1	1
23	14549270	B4.08	1	1
1	14549579	H1.01/ A	1	1
1	14549879	H1.01/ A	1	1
1	14550079	H1.01/ A	1	1
6	14567080	B2.38	1	1
15	14567080	L1.01/ 1	1	1
13	14567080	L1.01/ 2	2	1
10	14567080	L1.01/ 2	3	1
13	14567080	L1.01/ 3	2	1
10	14567080	L1.01/ 3	3	1
14	14567280	L1.01	3	1
4	14569480	F4.01	3	1
3	14569480	F4.01/ 1	3	1
5	14570280	F4.01	3	1
4	14570280	F4.01/ 1	3	1
5	14582790	H1.01/ A	1	1
1	14585778	H1.01/ 1	1	1
14	14591787	A4.01	1	1
23	14600370	A1.16/ 1	1	1
24	14601170	B2.13	3	1
9	14601270	E3.25	2	1
13	14601470	B2.13	1	1
7	14601770	D3.01	1	1
13	14606970	B2.13	2	1
13	14609770	B2.35	1	1
2	14625979	H1.01/ A	1	1
9	14626090	H1.01/ A	1	1
9	14626290	H1.01/ A	1	1
4	14626671	H1.01/ A	1	1
2	14638079	H1.01/ A	1	1
2	14638179	H1.01/ A	1	1
1	14641995	A2.01	2	1
3	14641995	L1.01/ 2	1	1
14	14641995	L1.01/ 2	2	1
11	14641995	L1.01/ 2	3	1
14	14641995	L1.01/ 3	2	1
11	14641995	L1.01/ 3	3	1
6	14641995	L3.04	2	1
25	14642091	L1.04	7	1
25	14642091	L1.04/ 1	8	1
1	14642095	A2.01	2	1
3	14642095	L1.01/ 2	1	1
14	14642095	L1.01/ 2	2	1
11	14642095	L1.01/ 2	3	1
6	14642095	L3.04	2	1
12	14642591	L1.04	4	1
12	14642591	L1.04/ 1	5	1
19	14688417	B1.09/ 1	2	1
29	14759721	A2.27/ 2	1	2
13	14907070	B2.13	2	1
6	15213831	E3.02	8	1
7	15213931	E3.02	5	1
7	15233231	D3.34	2	1
13	15540331	A2.22/ 1	1	1
18	15540331	L3.11	1	1
23	15540431	B2.01	2	1
22	15540431	B2.01/ 1	2	1
16	15540431	D3.30	1	1
20	15540521	A2.24/ 1	1	1
3	15540521	B2.18	1	1
15	15540531	B1.10	1	1
16	15540531	B1.10/ 1	1	1
26	15540531	B4.06	1	2
24	15540531	B4.08	1	1
26	15540531	D2.23	1	2
6	15540631	D3.34	4	1
23	15540631	E3.02/ 4	1	1
29	15540724	A1.02/ 1	1	2
26	15540730	A1.02	2	1
20	15541021	A2.54/ 1	1	1
5	15541031	B5.01	1	1
14	15541031	E3.02	2	1

ITEM	PART N.	SGR.	TAV.	PAG.
19	15541121	A3.01/ 1	2	1
21	15541131	D3.33	1	1
19	15541131	L3.11	1	1
20	15541321	A3.01/ 1	2	1
21	15541621	A2.54/ 1	1	1
21	15541821	A3.01/ 1	2	1
1	15541821	F3.01	3	1
9	15541921	F3.01/ 2	1	1
27	15542331	D2.22	1	2
27	15543331	D2.23	1	2
14	15642702	L1.04	6	1
14	15642702	L1.04/ 1	7	1
8	15645301	B2.07	1	1
39	15645501	L3.10	1	2
5	15663101	L6.01	1	1
6	15663101	L6.01/ 1	1	1
13	15840537	B2.01	1	1
14	15840537	B2.01/ 1	1	1
20	15840537	L3.11	1	1
6	15840537	L3.11	2	1
15	15846437	D3.38	1	1
21	15853631	E3.02	3	1
15	15888721	D2.24	1	1
16	15888731	B1.10	1	1
25	15888731	B2.06	1	1
20	15888731	B2.13	3	1
5	15888831	B2.21/ 1	1	1
4	15888831	B2.33/ 1	6	1
21	15896211	A1.02	1	1
8	15896211	A2.27	1	1
8	15896211	A2.28	1	1
15	15896211	A4.02/ 2	1	1
7	15896211	F2.05/ A	1	1
7	15896211	F2.05/ 3	1	1
10	15896211	F3.01/ 2	1	1
12	15896211	F4.01/ 1	5	1
6	15896211	F5.01	1	1
5	15896211	H1.04	1	1
2	15896211	L1.04	8	1
2	15896211	L1.04	9	1
2	15896211	L1.04/ 1	9	1
2	15896211	L1.04/ 1	10	1
10	15896218	F3.01	1	1
11	15896221	A2.01/ 1	1	1
7	15896221	A2.24/ 1	2	1
22	15896221	A2.24/ 1	4	2
18	15896221	A2.27/ 1	1	1
12	15896221	A2.27/ 2	1	1
13	15896221	A2.28/ 1	1	1
12	15896221	A2.28/ 1	2	1
8	15896221	A2.28/ 2	1	1
12	15896221	A2.28/ 2	5	1
5	15896221	A2.37	1	1
17	15896221	A2.43/ 1	1	1
7	15896221	A2.43/ 2	3	1
5	15896221	A4.02/ 1	1	1
16	15896221	L1.01/ 1	1	1
15	15896221	L1.01/ 2	2	1
3	15896221	L1.01/ 3	1	1
15	15896221	L1.01/ 3	2	1
10	15896411	A2.28	3	1
16	15896411	A2.28/ 1	4	1
7	15896411	A2.43/ 3	2	1
23	15896411	L1.04	7	1
23	15896411	L1.04/ 1	8	1
3	15901501	A2.43/ 2	4	1
2	15902621	L1.04	5	1
2	15902621	L1.04/ 1	6	1
7	15916871	B2.21/ 1	1	1
6	15970321	L1.03	1	1
6	15970321	L1.03/ 1	1	1
10	15970331	L3.08	1	1
3	15970421	L1.04	6	1
3	15970421	L1.04/ 1	7	1
28	15970431	D2.23	1	2
22	15970521	A1.02	1	1
18	15970521	A3.01	1	1
8	15970521	A3.01	4	1
16	15970531	B1.08	1	1
16	15970531	B1.08/ 1	1	1
17	15970531	B1.10	1	1
21	15970531	B1.10/ 1	1	1
29	15970531	B2.06/ 1	1	2
22	15970531	C1.01	2	1
6	15970631	B5.01	1	1
18	15970721	A4.02	1	1
28	15970724	A2.54/ 1	1	1
34	15970724	A4.02/ 2	2	2
23	15970730	A1.02	1	1
17	15970731	B1.08	1	1
17	15970731	B1.08/ 1	1	1
14	15970731	B2.01	1	1
24	15970731	B2.01	2	1
15	15970731	B2.01	3	1
15	15970731	B2.01/ 1	1	1
23	15970731	B2.01/ 1	2	1
17	15970731	B2.01/ 1	3	1
12	15970731	B2.04	4	1
14	15970731	B2.04/ 3	4	1
26	15970731	B2.06	1	2
30	15970731	B2.06/ 1	1	2
25	15970731	B4.08	1	2
12	15970731	C1.35	1	1
16	15970731	D2.24	1	1
17	15970731	D3.30	1	1

ITEM	PART N.	SGR.	TAV.	PAG.
24	15970731	D3.34	3	1
21	15970731	D3.34	3A	1
27	15970921	A1.02	2	2
3	15970921	A1.19	1	1
11	15970921	A2.54	1	1
9	15970921	A3.01	4	1
4	15970921	B2.21	1	1
30	15970924	A1.02/ 1	1	2
61	15970930	A1.07	1	3
14	15970930	A2.52	1	1
15	15970931	B1.05/ 1	2	1
17	15970931	B1.08	1	1
17	15970931	B1.08/ 1	1	1
20	15970931	B1.09/ 1	2	1
25	15970931	B2.01	2	1
24	15970931	B2.01/ 1	2	1
6	15970931	B2.21/ 1	1	1
10	15970931	B2.33	4	1
11	15970931	B2.33/ 1	4	1
15	15971321	A2.24	4	1
42	15971324	A4.02/ 2	2	2
24	15971421	A1.02	1	1
31	15971521	A1.02/ 1	1	2
16	15971531	A0.02/ 1	1	1
24	15971531	B2.30	1	1
16	15971621	A2.24	2	1
17	15971634	A4.09/ 3	1	1
32	15971721	A1.02/ 1	1	2
23	15971831	E3.31	2	1
35	15971924	A4.02/ 2	2	2
24	15972031	E3.31	2	1
36	15972224	A4.02/ 2	2	2
33	15972424	A1.02/ 1	1	2
5	15972431	B2.33/ 1	6	1
29	15972431	E3.31	1	2
16	15972621	A2.24	4	1
14	15972621	A2.24/ 1	3	1
11	15972724	F3.01/ 2	1	1
5	15973134	D2.27/ A	2	1
21	15977531	L3.11	1	1
6	15979831	E3.02/ 5	1	1
6	15980337	B1.08/ 1	2	1
4	15981031	D1.01	1	1
7	15981031	D3.34	4	1
18	15981331	D3.30	1	1
6	15981337	D3.30/ 1	1	1
7	15981337	D3.37	1	1
7	15981337	D3.37/ 1	1	1
7	15981531	D3.37	1	1
19	15981831	D3.30	1	1
7	15981837	D3.30/ 1	1	1
16	15983837	E3.10	1	1
5	15984131	L3.12	1	1
3	15984131	L3.12	2	1
5	15984131	L3.12/ 1	1	1
19	15984331	D1.03	1	1
5	15988231	B4.12	1	1
20	15988331	D3.30	1	1
8	15988731	D3.34	4	1
13	15992631	L1.01	1	1
22	15992731	D3.33	1	1
14	15993631	L1.01	1	1
17	15997137	D1.03/ 1	1	1
2	15997231	D1.02/ 1	1	1
22	15997231	D3.33	1	1
5	15997237	D1.02	1	1
13	15997331	A0.02	1	1
10	15997331	A0.02/ 1	1	1
8	15997337	E3.05	1	1
5	15997531	D1.01	1	1
6	15997531	L3.08/ 2	1	1
6	15997537	L3.08/ 1	1	1
20	15997731	D1.03	1	1
18	15997737	D1.03/ 1	1	1
27	16005531	B2.06	1	2
31	16005531	B2.06/ 1	1	2
7	16038540	H1.04	2	1
25	16042921	A3.01	2	1
19	16042931	L1.04	6	1
19	16042931	L1.04/ 1	7	1
9	16043024	A3.01/ 1	4	1
11	16043031	F4.01	4	1
5	16043031	F4.01	5	1
7	16043031	F4.01/ 1	4	1
3	16043031	F4.01/ 1	7	1
5	16043031	F4.01/ 3	2	1
23	16043131	A2.43/ 2	2	1
19	16043131	B1.08	1	1
19	16043131	B1.08/ 1	1	1
21	16043131	D2.29	2	1
4	16043131	L1.01/ 2	1	1
26	16043221	A3.01	2	1
12	16043221	L1.04	7	1
12	16043221	L1.04/ 1	8	1
13	16043224	A1.25/ 1	1	1
23	16043224	A3.01/ 1	3	1
14	16043231	A1.08	1	1
11	16043231	A1.08/ 1	1	1
5	16043231	A4.01	1	1
15	16043231	B2.01	1	1
16	16043231	B2.01/ 1	1	1
4	16043231	F3.01	3	1
7	16043231	F4.01	2	1
11	16043231	F4.01	4	1
6	16043231	F4.01	5	1

ITEM	PART N.	SGR.	TAV.	PAG.
7	16043231	F4.01/ 1	2	1
3	16043231	L1.04/ 1	4	1
15	16043324	A3.01/ 1	1	1
16	16043324	A3.01/ 1	4	1
10	16043331	A3.01	4	1
3	16043331	F4.01/ 1	1	1
3	16043331	F4.01/ 4	1	1
6	16043421	A1.08/ 1	1	1
19	16043421	A3.01	1	1
10	16043421	A3.02/ 2	1	1
19	16043421	A4.02	1	1
17	16043421	A4.02	4	1
2	16043421	L1.04	10	1
12	16043421	L1.04/ 1	11	1
12	16043431	A2.24/ 1	2	1
19	16043431	A4.02/ 1	1	1
26	16043431	B2.01	2	1
25	16043431	B2.01/ 1	2	1
25	16043431	B2.30	1	1
22	16043431	D2.29	2	1
17	16043431	L1.01/ 1	1	1
16	16043431	L1.01/ 2	2	1
12	16043431	L1.01/ 2	3	1
16	16043431	L1.01/ 3	2	1
12	16043431	L1.01/ 3	3	1
30	16043431	L1.04	1	2
30	16043431	L1.04/ 1	1	2
18	16043431	L3.10	1	1
7	16043431	L6.01/ 1	1	1
8	16043521	A2.43/ 4	1	1
12	16043524	A2.43/ 1	1	1
9	16043531	A2.56/ 1	1	1
11	16043531	A3.01	4	1
6	16043531	A4.01	1	1
16	16043531	A4.01	2	1
19	16043531	L3.10	1	1
13	16043621	A1.01	2	1
24	16043621	A1.16/ 1	1	1
20	16043621	A3.01	1	1
21	16043621	A3.03	1	1
20	16043621	A4.02	1	1
26	16043621	A4.02	2	1
19	16043621	A4.02	3	1
18	16043621	A4.02	4	1
16	16043621	A4.02/ 2	1	1
16	16043624	A3.01/ 1	1	1
18	16043624	A3.01/ 1	5	1
37	16043624	A4.02/ 2	2	2
30	16043631	A2.01	1	2
13	16043631	A2.21	1	1
18	16043631	B1.09	1	1
18	16043631	B1.09/ 1	1	1
26	16043631	B2.30	1	1
4	16043631	F5.01	1	1
15	16043631	L3.10	3	1
6	16043631	L6.01	1	1
19	16043671	A4.02	4	1
25	16043821	A1.02	1	1
28	16043821	A1.02	2	2
34	16043821	A1.02/ 1	1	2
11	16043821	A3.02/ 2	1	1
20	16043821	A4.02	3	1
24	16043824	A3.01/ 1	3	1
38	16043824	A4.02/ 2	2	2
3	16043831	A2.22/ 2	1	1
6	16043831	A4.01	1	1
27	16043831	B2.30	1	2
23	16043921	A2.24/ 1	1	2
21	16043921	A3.01	1	1
15	16043921	A3.03/ 1	1	1
3	16043921	A4.04	1	1
27	16043924	A3.01/ 1	3	1
19	16043924	A3.01/ 1	5	1
32	16043931	B2.06/ 1	1	2
23	16043931	D2.29	2	1
2	16043934	B2.21/ 2	1	1
36	16044021	A1.02/ 1	1	2
21	16044021	A4.02	3	1
17	16044024	A3.01/ 1	1	1
11	16044031	A2.22	1	1
16	16044031	A2.22/ 2	1	1
8	16044031	A2.56	1	1
10	16044031	A2.56/ 1	1	1
26	16044121	A1.02	1	1
22	16044121	A3.01	1	1
27	16044121	A4.02	2	2
20	16044130	A1.16	1	1
18	16044131	B1.10	1	1
17	16044131	B1.10/ 1	1	1
6	16044131	D2.23	1	1
25	16044131	E3.25	1	1
10	16044131	E3.25	2	1
27	16044221	A1.02	1	1
18	16044221	A3.01/ 1	1	1
12	16044221	A3.02/ 2	1	1
41	16044321	A1.02/ 1	1	2
28	16044421	A1.02	1	2
23	16044521	A3.01	1	1
20	16044524	A3.01/ 1	5	1
6	16044531	E3.02	8	1
3	16044634	B2.21/ 2	1	1
29	16044821	A1.02	1	2
12	16044821	F3.01/ 2	1	1
19	16044831	B1.10	1	1
37	16045021	A1.02/ 1	1	2

ITEM	PART N.	SGR.	TAV.	PAG.
26	16045021	A2.24/ 1	1	2
18	16045230	A1.25	1	1
16	16045421	A3.03/ 1	1	1
39	16045724	A4.02/ 2	2	2
17	16047071	E3.10	1	1
18	16047137	E3.10	1	1
35	16047137	E3.10/ 5	1	2
8	16050831	E3.32/ 2	1	1
14	16054631	A2.21	1	1
33	16060531	B2.06/ 1	1	2
14	16061531	B2.13	1	1
38	16100811	A1.02/ 1	1	2
19	16100811	A1.25	1	1
14	16100811	A1.25/ 1	1	1
15	16100811	A2.21	1	1
18	16100811	A2.52	1	1
27	16100811	A3.01	2	2
25	16100811	A3.01/ 1	3	1
21	16100811	A4.02	1	1
28	16100811	A4.02	2	2
20	16100811	A4.02	4	1
40	16100811	A4.02/ 2	2	2
17	16100811	A4.02/ 2	3	1
24	16100811	A4.03	1	1
34	16100811	A4.09	1	2
13	16100811	F4.01/ 1	5	1
11	16100818	F3.01	1	2
15	16100821	A1.08	1	1
12	16100821	A1.08/ 1	1	1
21	16100821	A1.16	1	1
12	16100821	A2.22	1	1
17	16100821	A2.22/ 2	1	1
25	16100821	A2.24/ 1	4	2
31	16100821	A2.33	1	2
9	16100821	A2.56	1	1
11	16100821	A2.56/ 1	1	1
12	16100821	A3.01	4	1
20	16100821	A4.02/ 1	1	1
7	16100821	B2.30/ 1	2	1
26	16100821	E3.25	1	1
11	16100821	E3.25	2	1
7	16100821	F4.01	5	1
14	16100821	F4.01/ 1	5	1
4	16100821	F4.01/ 1	7	1
6	16100821	F5.01	1	1
22	16101511	A3.01/ 1	2	1
11	16101511	F2.01	1	1
5	16101511	F3.01	3	1
13	16101511	F3.01/ 2	1	1
18	16101521	A2.56	1	1
15	16101521	E3.02	2	1
6	16101521	F2.05/ A	1	1
6	16101521	F2.05/ 3	1	1
7	16102311	C1.02/ 1	1	1
16	16102321	A2.21	1	1
11	16102321	L1.01	4	1
11	16102321	L1.01	4A	1
28	16103621	D2.22	1	3
25	16103821	E3.31	2	1
9	16104111	A2.43/ 2	1	1
10	16104111	L1.04	1	1
5	16104111	L1.04	6	1
14	16104111	L1.04	7	1
10	16104111	L1.04/ 1	1	1
5	16104111	L1.04/ 1	7	1
14	16104111	L1.04/ 1	8	1
7	16104121	L6.01	1	1
8	16104121	L6.01/ 1	1	1
21	16105021	D3.30	1	1
7	16105021	D3.34	1	1
34	16105621	B2.06/ 1	1	2
13	16105621	B2.10	1	1
4	16105621	B2.10/ A	2	1
15	16105621	B2.13	1	1
8	16109221	D3.01	1	1
8	16160131	E3.02/ 1	1	1
15	16162437	E3.13/ 2	1	1
7	16163431	L3.08/ 2	1	1
7	16163437	L3.08/ 1	1	1
19	16323531	A2.56/ 1	1	1
3	16326331	A4.09	2	1
3	16326331	A4.09/ 1	1	1
15	16434631	L1.01	3	1
21	16500211	A4.02/ 2	3	1
19	16506811	A4.02/ 2	3	1
20	16507511	A4.02/ 2	3	1
22	16508160	A4.02/ 2	3	1
6	20062990	E3.02	7	1
20	20063000	D2.29	1	2
21	20063390	D2.29	1	2
26	20063440	E3.31	2	1
18	20063450	B2.04	2	1
9	20063450	B2.04/ 1	1	1
25	20063460	D3.34	3	2
5	20063470	B2.34	1	1
26	20063470	D3.34	3	2
22	20063470	D3.34	3A	1
15	20063500	B2.13	2	1
17	20063520	B2.35/ 1	1	1
14	20063530	B2.35	1	1
11	20063580	B2.33/ 1	1	1
7	20063580	B2.33/ 1	5	1
4	20141040	B2.04	1	1
5	20141040	B2.04/ 3	1	1
8	20229990	B2.05	1	1

ITEM	PART N.	SGR.	TAV.	PAG.
22	20439480	B2.04	2	1
9	20439480	B2.04/ 3	2	1
16	20685450	B1.05/ 1	2	1
20	20685450	B1.10	1	1
15	20685450	B1.10/ 1	2	1
12	20685450	D2.23	2	2
13	20943310	B2.04	4	1
15	20943310	B2.04/ 3	4	1
10	24907860	B2.04/ 1	1	1
6	24907860	B2.04/ 2	1	1
8	24912631	F4.01	2	1
8	24912631	F4.01/ 1	2	1
6	24940180	B4.12	1	1
7	24940300	B4.12	1	1
8	24940310	B4.12	1	1
9	24940320	B4.12	1	1
1	24941650	F3.03/ A	1	1
7	24941650	F3.03/ B	1	1
1	24941650	F3.03/ 1	1	1
2	24941660	F3.03/ A	1	1
3	24941660	F3.03/ B	1	1
2	24941660	F3.03/ 1	1	1
16	24976420	E3.02	2	1
4	26072930	B2.05/ 1	1	1
19	26794660	B2.04	2	1
7	26794660	B2.04/ 3	2	1
22	26794670	B1.05/ 1	1	1
17	26797990	E3.02	2	1
27	26800210	B4.06	1	2
28	28041720	B4.06	1	2
18	28042490	E3.02	2	1
20	28042500	B2.04	2	1
11	28042500	B2.04	3	1
14	28042500	B2.04	4	1
9	28042500	B2.04/ 3	3	1
16	28042500	B2.04/ 3	4	1
23	28042550	B1.05/ 1	1	1
5	28042600	B2.04/ 1	2	1
5	28042600	B2.04/ 2	2	1
6	28042610	B2.04/ 1	3	1
6	28042610	B2.04/ 2	3	1
5	28995930	B2.05/ 1	1	1
15	28996360	B2.04	4	1
17	28996360	B2.04/ 3	4	1
18	28996530	A4.09/ 3	1	1
19	28996680	A4.09/ 3	1	1
27	38812780	A1.07/ 1	1	3
28	38814907	A1.07/ 1	1	3
29	38819032	A1.07/ 1	1	3
39	38822532	A1.02/ 1	1	2
44	38824001	A4.02/ 2	2	2
20	38829614	A1.01/ 1	2	1
19	38830379	A3.01/ 1	1	1
4	38952312	A1.03/ 1	1	1
5	40000030	B2.04	1	1
6	40000030	B2.04/ 3	1	1
16	40000110	B2.04	4	1
18	40000110	B2.04/ 3	4	1
9	40000130	B2.05	1	1
6	40000130	B2.05/ 1	1	1
30	40000730	A1.02	1	2
22	40001120	A1.16	1	1
40	40002440	A1.02/ 1	1	2
12	45015482	L3.04	1	1
5	45017038	L3.10	4	1
8	45482314	H1.04	2	1
31	60024509	A2.01	1	2
5	61520107	F3.01	3	1
17	61585054	A2.24	2	1
5	61585291	A1.19	1	1
29	61585664	A4.02	2	2
12	61589000	A2.54	1	1
21	61589003	A4.02	4	1
31	61589010	A1.02	1	2
22	61589012	A4.02	3	1
23	61589013	A4.02	3	1
4	61589020	B2.18	1	1
5	61589022	B2.18	1	1
22	61589023	A4.02	4	1
28	61589024	A3.01	2	2
24	61589027	A4.02	3	1
29	61589034	A3.01	2	2
13	61589036	A2.54	1	1
30	61589048	A4.02	2	2
30	61589057	A1.02	2	2
29	61589062	A1.02	2	2
6	61589066	F3.01	3	1
23	61589068	A4.02	4	1
35	61589069	A4.09	1	2
10	61589070	A1.19	1	1
10	61589094	A1.19	1	1
6	61589095	F3.01	3	1
10	61589109	A4.02	2	1
9	61694001	A1.03	1	1
25	61694003	A4.02	3	1
6	61694008	B2.18	1	1
24	61694009	A4.02	4	1
7	61694013	B2.18	1	1
26	61694015	A4.02	3	1
30	61694017	A3.01	2	2
31	61694018	A4.02	2	2
17	61694022	A2.24	4	1
18	61694027	A2.24	4	1
9	61694031	A1.03	1	1
12	61694033	F2.01	1	1

ITEM	PART N.	SGR.	TAV.	PAG.
24	61694035	A3.01	1	1
32	61694042	A4.02	2	2
31	61694052	A3.01	2	2
32	61694054	A3.01	2	2
33	61694055	A4.02	2	2
19	61694057	A1.01	1	1
33	61694059	A3.01	2	2
13	61694062	F2.01	1	1
1	61694063	A0.00	1	1
25	61694077	A4.02	4	1
1	61694078	A0.00	1	1
22	61694081	A4.02	1	1
18	61694084	A2.24	2	1
1	61694119	A0.00	1	1
1	61694120	A0.00	1	1
33	61694122	A3.01	2	2
3	70048922	F4.05	1	1
1	70182763	F4.05	1	1
1	70189001	F3.03	1	1
2	70189002	F3.03	1	1
1	70197810	A2.23/ 1	1	1
1	70239517	A2.23	1	1
1	70621429	F4.01/ 5	1	1
11	70628362	B1.05	1	1
2	70638282	F4.05	1	1
1	70649665	F2.05	1	1
1	70649665	F2.05/ 1	1	1
2	70662609	A2.23/ 1	1	1
3	70664343	A2.23/ 1	1	1
4	70677008	L1.01/ 4	1	1
4	70684733	A2.23/ 1	1	1
2	70910510	F2.05	1	1
2	70910510	F2.05/ 1	1	1
5	70911028	L1.01/ 4	1	1
3	70913177	F4.01/ 5	1	1
12	70915480	B1.05	1	1
3	70916964	F2.05/ 1	1	1
2	70917385	A2.43/ 4	2	1
3	70917443	A2.43/ 4	2	1
13	70917673	B1.05	1	1
11	70919439	F3.01/ 3	1	1
1	70920574	F3.01	3	1
3	70920583	L1.01/ 4	1	1
14	70921422	B1.05	1	1
15	70921458	B1.05	1	1
16	70922405	B1.05	1	1
16	70922996	B1.05	1	1
48	70923558	F2.05	1	2
4	70923558	F2.05/ 1	1	1
19	70923558	F2.05/ 2	1	1
4	70923560	F2.05	1	1
5	70923560	F2.05/ 1	1	1
18	70923560	F2.05/ 2	1	1
5	70923588	F2.05	1	1
6	70923819	F2.05/ 1	1	1
17	70923819	F2.05/ 2	1	1
6	70924100	F2.05	1	1
7	70924100	F2.05/ 1	1	1
16	70924100	F2.05/ 2	1	1
1	70925055	A2.43/ 4	3	1
2	70925056	A2.43/ 4	3	1
3	70925064	A2.43/ 4	3	1
2	70926192	F4.01/ 5	1	1
7	70927726	F2.05	1	1
8	70927726	F2.05/ 1	1	1
26	70928623	A2.43/ 2	2	1
10	70929156	F3.01/ 3	1	1
7	70935147	A2.43/ 2	1	1
9	71304372	H1.04	2	1
10	71304373	H1.04	2	1
11	71304374	H1.04	2	1
12	71304375	H1.04	2	1
13	71304376	H1.04	2	1
14	71304377	H1.04	2	1
15	71304378	H1.04	2	1
16	71304379	H1.04	2	1
17	71304380	H1.04	2	1
18	71304381	H1.04	2	1
19	71304385	H1.04	2	1
20	71304386	H1.04	2	1
21	71304387	H1.04	2	1
22	71304388	H1.04	2	1
23	71304389	H1.04	2	1
3	71304923	H1.01/ A	1	1
16	71305289	B2.13	2	1
1	71309808	L1.25	1	1
17	73012085	B1.05	1	1
18	73034877	B1.05	1	1
19	73037927	B1.05	1	1
20	73037960	B1.05	1	1
21	73037966	B1.05	1	1
22	73037967	B1.05	1	1
23	73039119	B1.05	1	1
24	73046938	B1.05	1	1
5	73059827	A2.23/ 1	1	1
20	73070893	A4.09/ 3	1	1
8	73112215	F2.05	1	1
9	73112215	F2.05/ 1	1	1
9	73116823	F2.05	1	1
10	73116823	F2.05/ 1	1	1
49	73116831	F2.05	1	2
21	73116846	F2.05/ 2	1	1
11	73116858	F2.05/ 1	1	1
10	73116859	F2.05	1	1
12	73116859	F2.05/ 1	1	1

ITEM	PART N.	SGR.	TAV.	PAG.
12	73116869	F2.05	1	1
13	73116869	F2.05/ 1	1	1
20	73116869	F2.05/ 2	1	1
13	73116870	F2.05	1	1
14	73116871	F2.05	1	1
14	73116871	F2.05/ 1	1	1
15	73116872	F2.05	1	1
15	73116872	F2.05/ 1	1	1
16	73116874	F2.05	1	1
16	73116877	F2.05/ 1	1	1
10	73116877	F2.05/ 2	1	1
17	73116879	F2.05/ 1	1	1
18	73116881	F2.05/ 1	1	1
19	73116883	F2.05/ 1	1	1
17	73116888	F2.05	1	1
20	73116888	F2.05/ 1	1	1
18	73116889	F2.05	1	1
21	73116889	F2.05/ 1	1	1
19	73116890	F2.05	1	1
22	73116890	F2.05/ 1	1	1
20	73116891	F2.05	1	1
23	73116891	F2.05/ 1	1	1
47	73116894	F2.05	1	2
24	73116901	F2.05/ 1	1	1
21	73116902	F2.05	1	1
25	73116905	F2.05/ 1	1	1
22	73116906	F2.05	1	1
26	73116906	F2.05/ 1	1	1
23	73116908	F2.05	1	1
27	73116908	F2.05/ 1	1	1
24	73116949	F2.05	1	1
28	73116949	F2.05/ 1	1	2
25	73116953	F2.05	1	1
29	73116953	F2.05/ 1	1	2
26	73116960	F2.05	1	1
30	73116960	F2.05/ 1	1	2
27	73116961	F2.05	1	1
28	73116962	F2.05	1	1
31	73116962	F2.05/ 1	1	2
15	73116962	F2.05/ 2	1	1
29	73116964	F2.05	1	1
32	73116964	F2.05/ 1	1	2
30	73116966	F2.05	1	2
33	73116966	F2.05/ 1	1	2
31	73116970	F2.05	1	2
34	73116970	F2.05/ 1	1	2
32	73116976	F2.05	1	2
35	73116976	F2.05/ 1	1	2
33	73116977	F2.05	1	2
36	73116977	F2.05/ 1	1	2
16	73116977	F2.05/ 2	1	1
37	73116982	F2.05/ 1	1	2
34	73116986	F2.05	1	2
38	73116986	F2.05/ 1	1	2
14	73116986	F2.05/ 2	1	1
35	73116988	F2.05	1	2
39	73116988	F2.05/ 1	1	2
3	73117031	F3.03	1	1
4	73117032	F3.03	1	1
5	73117036	F3.03	1	1
6	73117038	F3.03	1	1
7	73117044	F3.03	1	1
8	73117056	F3.03	1	1
9	73117058	F3.03	1	1
10	73117073	F3.03	1	1
11	73117087	F3.03	1	1
12	73117088	F3.03	1	1
13	73117096	F3.03	1	1
14	73117103	F3.03	1	1
15	73117119	F3.03	1	1
16	73117126	F3.03	1	1
17	73117731	F3.03	1	1
18	73117733	F3.03	1	1
19	73117734	F3.03	1	1
20	73117735	F3.03	1	1
21	73117737	F3.03	1	1
22	73117739	F3.03	1	1
23	73117740	F3.03	1	1
24	73117741	F3.03	1	1
25	73117742	F3.03	1	1
26	73117744	F3.03	1	1
27	73117746	F3.03	1	1
28	73117747	F3.03	1	2
29	73117748	F3.03	1	2
30	73117750	F3.03	1	2
32	73117752	F3.03	1	2
33	73117754	F3.03	1	2
7	73119134	F3.01	3	1
34	73119570	F3.03	1	2
35	73119636	F3.03	1	2
36	73119637	F3.03	1	2
11	73128581	A1.15	1	1
36	73129765	F2.05	1	2
40	73129765	F2.05/ 1	1	2
12	73129765	F2.05/ 2	1	1
13	73130196	F2.01	1	1
37	73130580	F2.05	1	2
41	73130580	F2.05/ 1	1	2
38	73130581	F2.05	1	2
39	73130582	F2.05	1	2
42	73130583	F2.05/ 1	1	2
9	73130583	F2.05/ 2	1	1
40	73130585	F2.05	1	2
41	73130586	F2.05	1	2
42	73130587	F2.05	1	2

ITEM	PART N.	SGR.	TAV.	PAG.
43	73130587	F2.05/ 1	1	2
43	73130588	F2.05	1	2
44	73130590	F2.05	1	2
45	73130591	F2.05	1	2
46	73130592	F2.05	1	2
44	73130594	F2.05/ 1	1	2
45	73130672	F2.05/ 1	1	2
11	73130672	F2.05/ 2	1	1
37	73131960	F3.03	1	2
6	73131968	F4.01/ 3	2	1
38	73133823	F3.03	1	2
10	73153575	F4.01/ 5	1	1
9	73298447	A2.43/ 4	1	1
10	73298448	A2.43/ 4	1	1
11	73298449	A2.43/ 4	1	1
4	73298455	A2.43/ 4	2	1
5	73298456	A2.43/ 4	2	1
12	73298457	A2.43/ 4	1	1
13	73298458	A2.43/ 4	1	1
2	73299354	L1.01/ 4	1	1
5	73299355	F3.01/ 3	1	1
2	73299357	F3.01/ 3	1	1
12	73299359	F3.01/ 3	1	1
1	73299360	F3.01/ 3	1	1
6	73299362	F3.01/ 3	1	1
9	73299363	F3.01/ 3	1	1
8	73299364	F3.01/ 3	1	1
7	73299365	F3.01/ 3	1	1
2	74055119	A2.23	1	1
14	76000122	A2.22/ 1	1	1
1	76000224	B2.10/ A	2	1
7	76000224	B2.38	1	1
12	76000307	L3.08/ 2	1	1
21	76000889	B1.10	1	1
12	76000905	F4.01	1	1
12	76000905	F4.01	4	1
13	76000905	F4.01/ 1	1	2
15	76000911	L1.01	1	1
7	76000971	A2.01/ A	1	1
17	76000971	L1.01	4A	1
7	76000972	A2.01/ A	1	1
17	76000972	L1.01	4A	1
4	76000977	A2.01/ A	1	1
1	76000979	A2.01/ A	1	1
8	76000983	L3.04	2	1
9	76001012	L3.04	2	1
22	76001167	A3.03	1	1
20	76001167	B1.08	1	1
20	76001167	B1.08/ 1	1	1
14	76001234	B2.10	1	1
35	76001287	B2.06/ 1	1	2
13	76001299	L3.04	1	1
13	76001300	L3.04	1	1
13	76001301	L3.04	1	1
19	76001632	A2.21	2	1
9	76001715	L3.08/ 1	1	1
9	76001715	L3.08/ 2	1	1
9	76001768	D3.37	1	1
8	76001768	D3.37/ 1	1	1
10	76001769	D3.37	1	1
9	76001769	D3.37/ 1	1	1
11	76001770	D3.37	1	1
10	76001770	D3.37/ 1	1	1
16	76001792	L3.08/ 2	1	1
16	76001827	L1.01	1	1
16	76001828	L1.01	1	1
16	76001829	L1.01	1	1
8	76001965	D3.34	2	1
7	76001996	E3.02	8	1
3	76002034	L1.04	1	1
3	76002034	L1.04/ 1	1	1
11	76002034	L3.08	1	1
8	76002034	L3.08/ 1	1	1
8	76002034	L3.08/ 2	1	1
7	76002172	E3.02/ 5	1	1
5	76002365	B2.30	3	1
6	76002365	B2.30/ 1	3	1
6	76002365	F4.01/ 3	1	1
9	76002402	L6.01/ 1	1	1
16	76002439	L1.01	3	1
17	76002440	L1.01	3	1
6	76002522	B2.04/ 1	2	1
6	76002522	B2.04/ 2	2	1
4	76002604	B3.16	1	1
4	76002708	B3.01	1	1
3	76002708	B3.01/ 1	1	1
24	76002712	B1.05/ 1	1	1
21	76002789	B1.09/ 1	2	1
9	76002816	D3.01	1	1
7	76002926	L3.11	2	1
8	76002927	L3.11	2	1
8	76002928	L3.11	2	1
22	76002929	L3.11	1	1
23	76002930	L3.11	1	2
23	76002931	L3.11	1	2
23	76003051	D3.33	1	2
13	76003116	C1.35	1	1
7	76003179	E3.02	4	1
24	76003182	E3.02/ 4	1	1
14	76003327	C1.35	1	1
5	76003332	F3.01	2	1
6	76003355	F3.01/ 1	1	1
6	76003367	F3.01	2	1
22	76003577	L3.10	2	1
21	76003774	B1.08	1	1

ITEM	PART N.	SGR.	TAV.	PAG.
21	76003774	B1.08/ 1	1	1
12	76003796	L1.01	4	1
12	76003796	L1.01	4A	1
20	76003845	L3.10	1	1
9	76003935	D3.34	2	1
12	76003935	D3.37	1	1
11	76003935	D3.37/ 1	1	1
10	76003936	D3.34	2	1
13	76003936	D3.37	1	1
12	76003936	D3.37/ 1	1	1
36	76003975	E3.10/ 5	1	2
25	76003995	B1.05	1	1
22	76004031	D3.30	1	1
9	76004056	B1.15/ 1	1	1
15	76004222	B2.35	1	1
13	76004302	B1.09	2	1
25	76004368	L3.11	1	2
10	76004368	L3.11	2	1
7	76004440	F3.01	2	1
8	76004446	E3.32	1	1
8	76004446	E3.32/ 4	1	1
38	76004658	E3.10/ 5	1	2
10	76004699	B4.12	1	1
14	76004728	L3.08/ 2	1	1
15	76004729	L3.08/ 2	1	1
12	76004740	L3.08/ 1	1	1
15	76004839	C1.35	1	1
14	76004863	D3.37	1	1
13	76004863	D3.37/ 1	1	1
15	76004865	D3.37	1	1
14	76004865	D3.37/ 1	1	1
16	76004872	D3.37	1	1
15	76004872	D3.37/ 1	1	1
17	76004873	D3.37	1	1
16	76004873	D3.37/ 1	1	1
16	76004874	D3.38	1	1
17	76004875	D3.38	1	1
7	76004927	F3.01/ 1	1	1
8	76004928	F3.01/ 1	1	1
4	76005321	D2.29	1	1
10	76005455	D3.01	1	1
3	76005866	D3.34	2	1
2	76005866	D3.37	1	1
2	76005866	D3.37/ 1	1	1
10	76005867	D3.34	2	1
13	76005867	D3.37	1	1
12	76005867	D3.37/ 1	1	1
2	76006357	B1.08	1	1
2	76006357	B1.08/ 1	1	1
2	76006681	A2.01/ 1	1	1
6	76006971	A2.43/ 2	1	1
32	76007578	L1.01	2	2
33	76007579	L1.01	2	2
34	76007581	L1.01	2	2
26	76007585	B4.08	1	2
7	76007789	F3.01	2	1
6	76007790	F3.01	2	1
4	76007862	B1.10	2	1
34	76007870	D2.23	1	3
34	76007871	D2.23	1	3
23	76007874	B1.10	2	2
32	76007926	B4.08	1	2
13	76007978	B1.09	2	1
22	76007980	B1.09/ 1	2	1
14	76007995	F4.01	2	1
2	76008038	A2.56/ 1	1	1
8	76008086	F3.01	3	1
9	76008089	A2.22/ 1	1	1
5	76008487	B2.04	2	1
10	76008553	A2.22/ 1	1	1
6	76008978	L3.12	2	1
8	76008979	L3.12	1	1
9	76008980	L3.12	1	1
10	76008981	L3.12	1	1
11	76008985	L3.12	1	2
5	76008985	L3.12	2	1
8	76008986	L3.12/ 1	1	1
9	76008987	L3.12/ 1	1	1
11	76008988	L3.12/ 1	1	1
12	76008989	L3.12/ 1	1	1
10	76008990	L3.12/ 1	1	1
6	76009059	A2.43/ 1	1	1
17	76009237	D3.37	1	1
16	76009237	D3.37/ 1	1	1
16	76009238	D3.37	1	1
15	76009238	D3.37/ 1	1	1
14	76009442	D3.34	3A	1
3	76010047	A2.43/ 3	2	1
5	76010048	A2.43/ 3	2	1
4	76010049	A2.43/ 3	2	1
9	76010050	A2.43/ 3	2	1
1	76010051	A2.43/ 3	2	1
8	76010056	F3.01	3	2
11	76010251	D3.34	3A	1
19	76010253	D3.34	3A	1
11	76010255	D3.34	4	1
11	76010260	D3.34	4	1
29	76010291	D2.23	1	3
3	76010291	D2.30	1	1
4	76010291	D2.30/ 1	1	1
11	76010518	A4.01	1	1
12	76010537	A2.56	1	1
14	76010702	D3.34	2	1
14	76010703	D3.34	2	1
12	76010852	L3.12	1	2

ITEM	PART N.	SGR.	TAV.	PAG.
13	76010852	L3.12/ 1	1	1
8	76011071	B1.05/ 1	1	1
13	76011242	D3.01	1	1
8	76012249	F3.01	3	2
30	76012278	L1.01	3	2
28	76012358	L1.01	3	2
13	76012378	D3.34	3A	1
21	76013059	A4.09/ 3	1	1
2	76013147	A2.43/ 1	1	1
17	76013240	D3.38	1	1
8	76013366	F3.01	3	2
10	76013417	A1.19	1	1
13	76013437	D2.29	2	1
1	76013671	L1.03/ 2	1	1
1	76013799	A2.43/ 2	1	1
5	76013809	A2.43/ 2	1	1
5	76013810	A2.01/ 1	1	1
4	76013811	A2.01/ 1	1	1
1	76013812	A2.43/ 2	3	1
2	76013815	A2.43/ 2	1	1
18	76013819	A2.43/ 2	2	1
21	76013820	A2.43/ 2	2	1
9	76013831	A2.43/ 2	3	1
13	76013838	L1.03/ 1	1	1
35	76013847	L1.01	1	2
16	76013857	A2.56	1	1
13	76013858	L3.08/ 1	1	1
4	76013866	L1.01/ 3	1	1
9	76013868	E3.02/ 5	1	1
9	76013869	E3.02/ 5	1	1
10	76013880	E3.02/ 5	1	1
19	76013885	L1.01	4A	1
17	76013886	D3.37	1	2
16	76013887	D3.37	1	1
14	76013888	D3.34	2	1
14	76013889	D3.34	2	2
25	76013913	F4.01	1	2
23	76013914	F4.01	4	2
14	76013915	F4.01	2	1
20	76013916	F4.01	1	1
21	76013917	F4.01	1	1
3	76013918	L1.04/ 1	11	1
12	76013922	F3.01	1	2
3	76013923	F3.01	1	1
28	76013924	L1.01	3	2
18	76013952	L1.01/ 3	2	1
24	76013956	L1.01/ 3	3	1
1	76013957	L3.04/ 1	1	1
2	76013964	L3.04/ 1	1	1
23	76013971	L1.01/ 3	2	1
14	76013989	F4.01	4	1
16	76013990	F2.01	1	2
6	76013990	F2.01/ 1	1	1
3	76014012	A2.01/ 1	1	1
25	76014098	A2.43/ 2	2	1
12	76014098	A2.43/ 3	1	1
8	76014112	D1.01	1	1
1	76014207	A2.43/ 2	4	1
6	76014218	A2.01/ 1	1	1
18	76014254	L1.01	3	1
29	76014307	L3.04	1	2
7	76014309	L1.01/ 3	1	1
7	76014324	A2.43/ 2	2	1
6	76014325	A2.43/ 2	2	1
11	76014325	A2.43/ 3	1	1
20	76014348	L3.04	1	1
17	76014363	A2.43/ 4	1	1
2	76014366	A2.43/ 2	3	1
40	76014387	L3.10	1	2
10	76014388	A2.43/ 2	3	1
11	76014389	A2.43/ 2	3	1
13	76014390	L3.08/ 2	1	1
12	76014411	A2.43/ 2	3	1
13	76014412	A2.43/ 2	3	1
14	76014413	A2.43/ 2	3	1
15	76014414	A2.43/ 2	3	1
16	76014415	A2.43/ 2	3	1
7	76014453	A2.01/ 1	1	1
13	76014454	A2.43/ 2	1	1
16	76014456	L1.04/ 1	1	1
16	76014457	L1.04/ 1	2	1
15	76014458	L1.04/ 1	2	1
4	76014459	L1.04/ 1	4	1
5	76014460	L1.04/ 1	4	1
6	76014461	L1.04/ 1	4	1
7	76014462	L1.04/ 1	4	1
8	76014463	L1.04/ 1	4	1
9	76014464	L1.04/ 1	4	1
10	76014465	L1.04/ 1	4	1
4	76014466	L1.04/ 1	11	1
5	76014481	L1.04/ 1	6	1
8	76014485	E3.02/ 5	1	1
33	76014544	A2.01	1	2
40	76014545	A2.01	1	3
21	76014560	B1.10	1	1
2	76014572	A2.43/ 3	2	1
1	76014575	A0.00	1	1
1	76014576	A0.00	1	1
13	76014703	A2.43/ 1	1	1
2	76014730	A2.43/ 1	1	1
4	76014890	A2.24/ 1	2	1
18	76015705	A4.02/ 2	2	1
12	76015720	B1.15	1	1
14	76015875	A2.43/ 4	1	1
18	76015878	A2.43/ 4	1	1

ITEM	PART N.	SGR.	TAV.	PAG.
5	76015881	A2.43/ 4	3	1
6	76015890	A2.43/ 4	2	1
11	76015955	A1.15	1	1
11	76015957	A4.02/ 2	2	1
4	76015958	A4.02/ 2	2	1
14	76015959	A4.02/ 2	2	1
18	76015961	A4.02/ 2	2	1
8	76015975	A4.09/ 3	1	1
17	76016084	D3.37	1	2
16	76016084	D3.37/ 1	1	1
16	76016085	D3.37	1	1
15	76016085	D3.37/ 1	1	1
14	76016086	D3.34	2	2
14	76016087	D3.34	2	2
17	76016088	D3.38	1	1
5	76016174	F4.01/ 5	1	1
6	76016175	F4.01/ 5	1	1
2	76016538	B2.06/ 2	1	1
7	76016565	D1.01	1	1
6	76016652	F4.01/ 1	1	1
6	76016652	F4.01/ 4	1	1
12	76016653	F4.01/ 1	1	1
12	76016653	F4.01/ 4	1	1
3	76016654	A2.56/ 1	1	1
15	76016673	E3.32/ 2	1	1
5	76016674	A2.56/ 1	1	1
1	76016711	E3.02/ 1	1	1
13	76016714	E3.02/ 3	1	1
10	76016716	E3.02/ 2	1	1
25	76016902	F4.01	4	2
21	76016903	F4.01	1	1
21	76016920	B1.08	1	2
17	76016980	A4.02/ 2	1	1
4	76016982	A2.43/ 4	3	1
46	76016982	A4.02/ 2	2	2

ITEM	PART N.	SGR.	TAV.	PAG.
6	76016983	F4.01/ 1	1	1
6	76016983	F4.01/ 4	1	1
7	76016985	A2.43/ 4	3	1
6	76016986	A2.43/ 4	3	1
8	76016987	A2.43/ 4	3	1
21	76016988	A2.43/ 4	1	1
9	76016989	D1.01	1	1
1	76016993	L1.01/ 4	1	1
3	76016995	F3.01/ 3	1	1
4	76016996	F3.01/ 3	1	1
19	76017025	F4.01	4	2
3	79000019	A2.26/ 1	1	1
16	79000996	B2.35	1	1
14	79000996	B2.35/ A	1	1
18	79000996	B2.35/ 1	1	1
14	79000996	B2.35/ 2	1	1
29	79001013	B4.06	1	2
7	79001971	B5.01	1	1
27	79002121	D3.34	3	2
23	79002121	D3.34	3A	1
28	79002142	D3.34	3	2
15	79002642	B2.10	1	1
4	79002642	B2.10/ A	1	1
29	79002642	D2.22	1	3
27	79003603	E3.31	2	1
12	79003622	C1.01	1	1
19	79004342	A2.24	2	1
8	79004433	B2.33	2	1
7	79004433	B2.33/ 1	2	1
23	79004433	D2.29	1	2
17	79004598	D2.24	1	1
11	79004817	D3.01	1	1
13	79004943	C1.01	1	1
18	79004949	L1.01	3	1
23	79005063	C1.01	2	1

ITEM	PART N.	SGR.	TAV.	PAG.
14	79005068	C1.01	1	2
15	79005071	C1.01	1	2
16	79005072	C1.01	1	2
17	79005073	C1.01	1	2
13	79005073	C1.01/ 1	2	1
18	79005075	C1.01	1	2
14	79005075	C1.01/ 1	2	1
19	79005077	C1.01	1	2
15	79005077	C1.01/ 1	2	1
26	79005086	B4.08	1	2
11	79005163	D3.34	2	1
29	79005165	D3.34	3	2
30	79005166	D3.34	3	2
31	79005171	D3.34	3	2
32	79005172	D3.34	3	2
30	79005177	D2.22	1	3
31	79005178	D2.22	1	3
32	79005180	D2.22	1	3
33	79005182	D2.22	1	3
34	79005188	D2.22	1	3
9	79005191	D3.34	4	1
33	79005197	D3.34	3	2
33	79005198	D3.34	3	2
35	79005212	D2.22	1	3
16	79005238	L3.04	1	1
6	79005239	L3.12	1	1
4	79005239	L3.12	2	1
6	79005239	L3.12/ 1	1	1
6	79005240	A2.01/ A	1	1
26	79005240	L3.11	1	2
11	79005240	L3.11	2	1
7	79005240	L3.12	1	1
7	79005240	L3.12/ 1	1	1
19	79005241	L1.01	1	1
20	79005242	L1.01	1	1

ITEM	PART N.	SGR.	TAV.	PAG.
13	79005242	L1.01	4	1
13	79005242	L1.01	4A	1
17	79005242	L3.04	1	1
7	79005244	E3.02	6	1
8	79005430	E3.02	1	1
16	79005452	B2.13	1	1
9	79005587	B2.07	1	1
8	79005587	B2.07/ 1	1	1
10	79005594	B2.07	1	1
9	79005594	B2.07/ 1	1	1
11	79005596	B2.07	1	1
10	79005596	B2.07/ 1	1	1
16	79005596	B2.10	1	1
11	79005596	B2.10/ A	1	1
27	79005596	B2.10/ A	2	1
17	79005596	B2.13	1	1
12	79005597	B2.07	1	1
11	79005597	B2.07/ 1	1	1
13	79005598	B2.07	1	1
12	79005598	B2.07/ 1	1	1
14	79005599	B2.07	1	1
13	79005599	B2.07/ 1	1	1
17	79005599	B2.10	1	1
12	79005599	B2.10/ A	1	1
29	79005599	B2.10/ A	2	2
18	79005601	B2.10	1	1
6	79005601	B2.10/ A	1	1
17	79005601	B2.10/ A	2	1
18	79005601	B2.13	1	1
19	79005602	B2.10	1	1
3	79005602	B2.10/ A	1	1
15	79005607	B2.07	1	1
14	79005607	B2.07/ 1	1	1
16	79005610	B2.07	1	1
13	79005643	A2.22	1	1
11	79005645	A1.03	1	1
20	79005647	B2.10	1	1
21	79005647	B2.10/ A	2	1
19	79005647	B2.13	1	1
21	79005648	B2.10	1	1
20	79005648	B2.13	1	1
17	79005774	E3.28	1	1
18	79005776	E3.28	1	1
21	79005781	L1.01	1	1
22	79005784	L1.01	1	1
23	79005787	L1.01	1	1
19	79005840	E3.02	2	1
20	79005842	E3.02	2	1
17	79005924	A2.21	1	1
18	79005934	A2.21	1	1
19	79005935	A2.21	1	1
20	79005936	A2.21	1	1
16	79005942	C1.35	1	1
17	79005943	C1.35	1	1
18	79005957	C1.35	1	1
19	79005958	C1.35	1	1
20	79005959	C1.35	1	1
21	79005962	C1.35	1	1
22	79005965	C1.35	1	1
12	79005968	D3.01	1	1
11	79005973	B4.12	1	1
22	79006025	B2.10	1	1
23	79006041	B2.10	1	1
24	79006042	B2.10	1	1
25	79006059	B2.10	1	1
5	79006059	B2.10/ A	1	1
19	79006059	B2.10/ A	2	1
26	79006062	B2.10	1	1
19	79006212	E3.28	1	1
18	79006219	L1.01	2	1
18	79006238	L3.04	1	1
8	79006250	L3.10	2	1
2	79006255	L3.10	1	1
17	79006339	B2.07	1	1
15	79006339	B2.07/ 1	1	1
20	79006356	E3.28	1	1
13	79006370	F4.01	1	1
14	79006370	F4.01/ 1	1	2
36	79006426	B2.06/ 1	1	2
8	79006441	B2.33	1	1
12	79006444	B2.33/ 1	1	1
12	79006532	E3.25	2	1
16	79006552	B2.07/ 1	1	1
11	79006596	B2.33	4	1
9	79006606	B2.33	2	1
8	79006606	B2.33/ 1	2	1
12	79006613	B2.33/ 1	4	1
13	79006627	B2.33/ 1	4	1
21	79006628	A2.21	1	1
14	79006705	B2.33/ 1	4	1
16	79006765	D2.20	1	1
17	79006766	D2.20	1	1
22	79006832	B1.09/ 1	2	2
22	79006918	B1.08	1	2
22	79006918	B1.08/ 1	1	1
20	79006975	C1.01	1	2
8	79006975	C1.01/ 1	1	1
32	79007135	A2.01	1	2
26	79007210	B1.05	1	2
10	79007301	B2.33	2	1
12	79007453	D3.34	2	1
18	79007453	D3.37	1	2
17	79007453	D3.37/ 1	1	1
18	79007453	D3.38	1	1
22	79007483	E3.02	3	1

ITEM	PART N.	SGR.	TAV.	PAG.
25	79007483	E3.02/ 4	1	1
23	79007491	E3.02	3	1
26	79007491	E3.02/ 4	1	1
24	79007492	E3.02	3	1
27	79007492	E3.02/ 4	1	1
4	79007671	B2.06	1	1
27	79007711	B4.08	1	2
29	79007717	D2.23	1	3
4	79007717	D2.30	1	1
27	79007737	B2.01	2	2
23	79007748	B1.10	2	2
7	79007994	L1.03	1	1
7	79007994	L1.03/ 1	1	1
12	79007994	L3.08	1	1
8	79007997	L1.03	1	1
8	79007997	L1.03/ 1	1	1
12	79007997	L3.08	1	1
9	79007998	L1.03	1	1
9	79007998	L1.03/ 1	1	1
14	79007998	L3.08	1	1
18	79008006	B1.10/ 1	1	1
33	79008048	A2.01	1	2
16	79008159	B1.10/ 1	2	1
23	79008162	D3.30	1	1
8	79008162	D3.30/ 1	1	1
27	79008330	B1.05	1	2
28	79008331	B1.05	1	2
29	79008332	B1.05	1	2
30	79008333	B1.05	1	2
26	79008585	B2.01/ 1	2	1
28	79008888	E3.02/ 4	1	2
24	79009016	L1.01	1	1
19	79009016	L1.01	2	1
9	79009070	L3.10	2	1
29	79009247	B2.06	1	2
37	79009247	B2.06/ 1	1	2
27	79009345	L3.11	1	2
22	79009557	B1.10	1	1
17	79009557	B1.10/ 1	2	1
13	79009557	D2.23	2	2
11	79009581	D3.34	3	1
9	79009581	D3.34	3A	1
11	79009582	D3.34	3	1
9	79009582	D3.34	3A	1
28	79009596	L3.11	1	2
12	79009596	L3.11	2	1
14	79009642	L1.01	4	1
14	79009642	L1.01	4A	1
9	79009667	F3.01/ 1	1	1
10	79009670	F3.01/ 1	1	1
21	79009676	C1.01	1	2
16	79009676	C1.01/ 1	2	1
22	79009677	C1.01	1	2
17	79009677	C1.01/ 1	2	1
11	79009696	B1.15	1	1
36	79009720	D2.22	1	3
23	79009980	C1.35	1	1
19	79010023	L1.01	3	1
19	79010026	L1.01	3	1
11	79010056	B2.04/ 1	1	1
7	79010056	B2.04/ 1	2	1
7	79010056	B2.04/ 1	3	1
4	79010056	B2.04/ 1	4	1
7	79010056	B2.04/ 2	1	1
7	79010056	B2.04/ 2	2	1
7	79010056	B2.04/ 2	3	1
6	79010056	B2.04/ 2	4	1
19	79010160	L3.04	1	1
34	79010217	A2.01	1	2
20	79010219	A2.24	2	1
31	79010219	A2.24/ 1	4	2
16	79010401	L3.10	3	1
28	79010455	E3.31	2	2
5	79010476	B3.01	1	1
8	79010554	F4.01/ 1	1	1
8	79010554	F4.01/ 4	1	1
12	79010783	B1.15	1	1
10	79010783	B1.15/ 1	1	1
11	79010787	F3.01/ 1	1	1
23	79010926	B1.10	1	1
18	79010926	B1.10/ 1	2	1
14	79010926	D2.23	2	2
24	79010927	B1.10	1	1
19	79010927	B1.10/ 1	2	1
15	79010927	D2.23	2	2
33	79011029	A1.02	1	2
14	79011031	A2.54	1	1
23	79011059	A3.03	1	1
15	79011089	B2.33/ 1	4	1
4	79011168	A4.09	2	1
15	79011217	A2.54	1	1
5	79011229	A3.01	3	1
38	79011261	B2.06/ 1	1	2
23	79011272	B1.08	1	2
23	79011273	B1.08/ 1	1	1
13	79011287	A2.22/ 2	1	1
17	79011398	B1.05/ 1	2	1
17	79011405	A2.43/ 2	2	1
8	79011405	A2.43/ 3	1	1
8	79011405	B5.01	1	1
6	79011406	F4.01	3	1
7	79011406	F4.01/ 1	1	1
5	79011406	F4.01/ 1	3	1
14	79011406	F4.01/ 4	1	1
7	79011407	F4.01	3	1

ITEM	PART N.	SGR.	TAV.	PAG.
6	79011407	F4.01/ 1	3	1
3	79011419	C1.01	3	1
4	79011420	C1.01	3	1
5	79011455	C1.01	3	1
23	79011553	C1.01	1	2
18	79011553	C1.01/ 1	2	1
31	79011561	B1.05	1	2
14	79011643	F4.01	1	1
15	79011643	F4.01/ 1	1	2
15	79011645	F4.01	1	1
16	79011645	F4.01/ 1	1	2
6	79011645	L1.04	10	1
5	79011645	L1.04/ 1	11	1
16	79011647	F4.01	1	1
17	79011647	F4.01/ 1	1	2
2	79011647	F4.01/ 2	1	1
17	79011649	F4.01	1	1
18	79011649	F4.01/ 1	1	2
3	79011649	F4.01/ 2	1	1
13	79011742	B2.33/ 1	3	1
29	79011775	E3.31	2	2
11	79011784	A0.02/ 1	1	1
29	79012004	E3.02/ 4	1	2
9	79012130	B2.33	1	1
13	79012130	B2.33/ 1	1	1
28	79012131	B4.08	1	2
28	79012132	B4.08	1	2
24	79012134	C1.01	2	1
24	79012135	C1.01	2	1
16	79012577	B2.33/ 1	4	1
10	79012583	L6.01/ 1	1	1
11	79012587	L6.01/ 1	1	1
7	79012600	B2.30/ 1	3	1
7	79012600	F4.01/ 3	1	1
7	79012722	C1.08/ 1	1	1
8	79012725	C1.02/ 1	1	1
9	79012727	C1.02/ 1	1	1
10	79012730	C1.02/ 1	1	1
24	79012735	D2.29	1	2
1	79012738	D2.22	2	1
9	79012800	D3.30/ 1	1	1
9	79012801	D3.30/ 1	1	1
10	79012920	A2.56	1	1
18	79012948	D2.20	1	1
14	79012964	A1.01	2	1
15	79012965	A1.01	2	1
2	79013147	A2.43/ 1	1	1
11	79013204	A0.02/ 1	1	1
10	79013215	L3.10	2	1
21	79013216	L1.01	3	2
22	79013217	L1.01	3	2
23	79013220	L1.01	3	2
24	79013222	L1.01	3	2
22	79013255	A2.21	1	1
6	79013260	A2.43	1	1
7	79013261	A2.43	1	1
8	79013262	A2.43	1	1
26	79013412	F4.01	1	2
24	79013412	F4.01	4	2
35	79013422	A2.01	1	2
9	79013422	A2.43	1	1
8	79013422	A2.43/ 1	1	1
23	79013422	B1.09/ 1	2	2
2	79013422	D2.22	2	1
8	79013422	F4.01	3	1
13	79013422	F4.01	4	1
8	79013422	F4.01	5	1
7	79013422	F4.01/ 1	3	1
8	79013422	F4.01/ 1	4	1
5	79013422	F4.01/ 1	7	1
7	79013422	F4.01/ 3	2	1
3	79013460	B2.06/ 2	1	1
6	79013586	H1.04	1	1
24	79013599	H1.04	2	1
7	79013600	H1.04	1	1
8	79013601	H1.04	1	1
25	79013657	L1.01	3	2
21	79013746	E3.02	2	1
13	79013815	A0.02/ 1	1	1
9	79013868	E3.02	1	1
6	79013963	C1.08	1	1
5	79013964	C1.02	1	1
6	79013965	C1.02	1	1
7	79013985	C1.08	1	1
26	79013990	C1.01	2	1
27	79014013	C1.01	2	1
17	79014021	A4.01	2	1
6	79014027	C1.01	3	1
22	79014057	L3.10	1	1
30	79014062	B4.08	1	2
30	79014068	B4.08	1	2
20	79014117	L1.01	2	1
20	79014188	L3.04	1	1
8	79014270	C1.08	1	1
28	79014271	C1.01	2	2
24	79014342	B1.11	1	1
7	79014392	C1.01	3	1
6	79014619	D1.01	1	1
13	79014970	D3.34	2	1
7	79015068	C1.02	1	1
29	79015086	C1.01	2	2
9	79015095	C1.08	1	1
24	79015261	C1.01	1	2
19	79015261	C1.01/ 1	2	1
25	79015262	C1.01	1	2

ITEM	PART N.	SGR.	TAV.	PAG.
20	79015262	C1.01/ 1	2	1
10	79015264	L1.03	1	1
10	79015264	L1.03/ 1	1	1
15	79015264	L3.08	1	1
10	79015264	L3.08/ 1	1	1
10	79015264	L3.08/ 2	1	1
14	79015487	B2.33/ 1	3	1
13	79015488	B2.33	3	1
5	79015576	L1.01/ 2	1	1
8	79015880	A3.02	1	1
6	79015905	L1.01/ 2	1	1
14	79016165	F2.01	1	1
27	79016216	B2.10	1	2
9	79016224	C1.01/ 1	1	1
28	79016227	B2.10	1	2
2	79016227	B2.10/ A	1	1
19	79016607	B1.10/ 1	1	1
30	79016613	D2.23	1	3
3	79016694	D1.02/ 1	1	1
4	79016702	D1.02/ 1	1	1
10	79016712	E3.02	6	1
10	79016713	E3.02	6	1
30	79016721	E3.02/ 4	1	2
45	79016981	A4.02/ 2	2	2
14	79017173	F4.01	4	1
9	79017173	F4.01/ 1	4	1
11	79017173	L1.03	1	1
11	79017173	L1.03/ 1	1	1
16	79017173	L3.08	1	1
6	79017295	L3.10	4	1
6	79017297	L3.10	4	1
17	79017735	L1.04	2	1
17	79017735	L1.04/ 1	2	1
18	79017736	L1.04	2	1
18	79017736	L1.04/ 1	2	1
4	79017741	L1.04	2	1
4	79017741	L1.04/ 1	2	1
5	79017742	L1.04	2	1
5	79017742	L1.04/ 1	2	1
4	79017755	L1.04	9	1
4	79017755	L1.04/ 1	10	1
7	79017866	L1.04	9	1
7	79017866	L1.04/ 1	10	1
11	79017885	L3.08/ 1	1	1
11	79017885	L3.08/ 2	1	1
7	79018014	L1.01/ 2	1	1
8	79018020	L1.01/ 2	1	1
12	79018477	F3.01	1	2
10	79018559	B2.10/ A	2	1
3	79018671	L1.04	9	1
3	79018671	L1.04/ 1	10	1
4	79018675	L1.04	1	1
4	79018675	L1.04/ 1	1	1
30	79018679	C1.01	2	2
11	79018790	A2.56	1	1
8	79018837	L3.10	4	1
29	79018913	L3.11	1	2
29	79018914	L3.11	1	2
2	79019033	B2.21/ 1	1	1
21	79019060	E3.28	1	1
22	79019062	E3.28	1	1
23	79019065	E3.28	1	1
15	79019363	F4.01	4	2
4	79019363	F4.01/ 5	1	1
15	79019490	F2.01	1	1
3	79019513	F3.01	1	1
16	79019783	A1.08	1	1
37	79019853	D2.22	1	3
38	79019855	D2.22	1	4
6	79020188	B2.30	3	1
8	79020188	B2.30/ 1	3	1
8	79020188	F4.01/ 3	1	1
16	79020354	F2.01	1	2
6	79020354	F2.01/ 1	1	1
1	79020444	F3.01	1	1
31	79020454	L3.11	1	2
31	79020458	L3.11	1	2
11	79020471	C1.02/ 1	1	1
9	79020824	L1.04	3	1
9	79020824	L1.04/ 1	3	1
5	79020827	L1.04	3	1
5	79020827	L1.04/ 1	3	1
7	79020828	L1.04	3	1
7	79020828	L1.04/ 1	3	1
6	79020829	L1.04	3	1
6	79020829	L1.04/ 1	3	1
8	79020830	L1.04	3	1
8	79020830	L1.04/ 1	3	1
6	79020834	L1.04	8	1
12	79020834	L1.04	9	1
6	79020834	L1.04/ 1	9	1
12	79020834	L1.04/ 1	10	1
10	79020836	L1.04	9	1
10	79020836	L1.04/ 1	10	1
14	79020838	L1.04	9	1
14	79020838	L1.04/ 1	10	1
17	79020842	L1.04	8	1
17	79020842	L1.04/ 1	9	1
18	79020843	L1.04	8	1
18	79020843	L1.04/ 1	9	1
16	79020844	L1.04	8	1
16	79020844	L1.04/ 1	9	1
15	79020846	L1.04	8	1
17	79020846	L1.04	9	1
15	79020846	L1.04/ 1	9	1

ITEM	PART N.	SGR.	TAV.	PAG.
17	79020846	L1.04/ 1	10	1
23	79020848	L1.04	6	1
23	79020848	L1.04/ 1	7	1
45	79020854	L1.04	7	2
45	79020854	L1.04/ 1	8	2
27	79020876	L1.04	1	1
27	79020876	L1.04/ 1	1	1
42	79020881	L1.04	7	2
42	79020881	L1.04/ 1	8	2
43	79020882	L1.04	7	2
43	79020882	L1.04/ 1	8	2
26	79020883	L1.04	6	2
27	79020884	L1.04	6	2
48	79020887	L1.04	7	2
48	79020887	L1.04/ 1	8	2
14	79020912	A2.25	1	1
54	79020916	L1.04	7	2
54	79020916	L1.04/ 1	8	2
55	79020918	L1.04	7	2
55	79020918	L1.04/ 1	8	2
8	79020919	L1.04	9	1
8	79020919	L1.04/ 1	10	1
56	79020920	L1.04	7	2
56	79020920	L1.04/ 1	8	2
57	79020921	L1.04	7	2
57	79020921	L1.04/ 1	8	2
58	79020922	L1.04	7	2
58	79020922	L1.04/ 1	8	2
59	79020923	L1.04	7	2
59	79020923	L1.04/ 1	8	2
3	79020934	L1.04	5	1
3	79020934	L1.04/ 1	6	1
8	79020936	L1.04	10	1
5	79020937	L1.04	7	1
5	79020937	L1.04/ 1	8	1
3	79020938	L1.04	7	1
3	79020938	L1.04/ 1	8	1
20	79020952	L1.04	8	1
20	79020952	L1.04/ 1	9	1
7	79020961	H1.01	1	1
25	79021009	L1.01	1	2
26	79021232	L1.04	1	1
26	79021232	L1.04/ 1	1	1
22	79021233	L1.04	6	1
22	79021233	L1.04/ 1	7	1
1	79021238	L1.04	3	1
1	79021238	L1.04/ 1	3	1
2	79021239	L1.04	3	1
2	79021239	L1.04/ 1	3	1
19	79021240	L1.04	2	1
19	79021240	L1.04/ 1	2	1
20	79021241	L1.04	2	1
20	79021241	L1.04/ 1	2	1
3	79021242	L1.04	3	1
3	79021242	L1.04/ 1	3	1
4	79021243	L1.04	3	1
4	79021243	L1.04/ 1	3	1
18	79021245	L1.04	1	1
18	79021245	L1.04/ 1	1	1
19	79021246	L1.04	1	1
19	79021246	L1.04/ 1	1	1
20	79021247	L1.04	1	1
20	79021247	L1.04/ 1	1	1
21	79021248	L1.04	1	1
21	79021248	L1.04/ 1	1	1
4	79021252	L1.04	8	1
4	79021252	L1.04/ 1	9	1
5	79021253	L1.04	8	1
5	79021253	L1.04/ 1	9	1
4	79021303	A4.04	1	1
5	79021304	A4.04	1	1
8	79021459	L1.04	7	1
8	79021459	L1.04/ 1	8	1
7	79021522	L1.04	8	1
7	79021522	L1.04/ 1	9	1
19	79021557	L1.04	8	1
19	79021557	L1.04/ 1	9	1
1	79021573	L1.04	1	1
1	79021573	L1.04/ 1	1	1
21	79021738	L1.04	2	1
21	79021738	L1.04/ 1	2	1
8	79021741	L1.04	8	1
8	79021741	L1.04/ 1	9	1
9	79021742	L1.04	8	1
9	79021742	L1.04/ 1	9	1
10	79021743	L1.04	8	1
10	79021743	L1.04/ 1	9	1
9	79021911	E3.32	1	1
9	79021911	E3.32/ 4	1	1
39	79021915	E3.10/ 5	1	2
10	79021957	E3.32	1	1
10	79021957	E3.32/ 4	1	1
11	79021958	E3.32	1	1
11	79021958	E3.32/ 4	1	1
12	79021959	E3.32	1	1
12	79021959	E3.32/ 4	1	1
3	79022466	F3.03/ A	1	1
11	79022466	F3.03/ B	1	1
4	79022468	F3.03/ A	1	1
4	79022468	F3.03/ B	1	1
4	79022468	F3.03/ I	1	1
5	79022473	F3.03/ A	1	1
6	79022474	F3.03/ A	1	1
7	79022475	F3.03/ A	1	1
8	79022476	F3.03/ A	1	1

ITEM	PART N.	SGR.	TAV.	PAG.
9	79022479	F3.03/ A	1	1
10	79022480	F3.03/ A	1	1
15	79022480	F3.03/ B	1	1
16	79022481	A2.28	3	1
13	79022481	F3.03/ B	1	1
12	79022484	F3.03/ A	1	1
12	79022484	F3.03/ 1	1	1
13	79022485	F3.03/ A	1	1
20	79022485	F3.03/ B	1	1
1	79022774	F5.10	1	1
28	79022964	E1.02	2	1
28	79022964	L1.04/ 1	13	1
7	79022965	E1.02	2	1
7	79022965	L1.04/ 1	13	1
8	79022966	E1.02	2	1
8	79022966	L1.04/ 1	13	1
9	79022967	E1.02	2	1
9	79022967	L1.04/ 1	13	1
26	79022971	E1.02	2	1
26	79022971	L1.04/ 1	13	1
30	79022973	E1.02	2	1
30	79022973	L1.04/ 1	13	1
15	79022975	E1.02	2	1
15	79022975	L1.04/ 1	13	1
7	79022977	E1.02	1	1
7	79022977	L1.04/ 1	12	1
8	79023080	L6.01	1	1
12	79023080	L6.01/ 1	1	1
16	79023084	E1.02	1	1
16	79023084	L1.04/ 1	12	1
17	79023085	E1.02	1	1
17	79023085	L1.04/ 1	12	1
24	79023099	E1.02	2	1
24	79023099	L1.04/ 1	13	1
24	79023515	B1.09/ 1	2	2
14	79023635	A2.28	2	1
19	79023635	A2.28/ 1	3	1
19	79023636	A2.28	2	1
20	79023638	A2.28/ 1	2	1
20	79023639	A2.28/ 1	2	1
20	79023640	A2.28/ 1	2	1
17	79023642	A2.28/ 1	2	1
18	79023644	A2.28/ 1	2	1
8	79023645	A2.28	2	1
26	79023645	A2.28/ 1	2	2
7	79023646	A2.28	2	1
22	79023646	A2.28/ 1	2	1
6	79023647	A2.28	2	1
11	79023648	A2.28	2	1
11	79023648	A2.28/ 1	2	1
10	79023651	A2.28	1	1
19	79023651	A2.28/ 1	1	1
5	79023652	A2.28	1	1
14	79023652	A2.28/ 1	1	1
25	79023653	A2.28	1	2
14	79023654	A2.28	1	1
15	79023656	A2.28	1	1
21	79023657	A2.28	1	1
7	79023658	A2.28	1	1
16	79023658	A2.28/ 1	1	1
20	79023659	A2.28	1	1
17	79023660	A2.28	1	1
26	79023660	A2.28/ 1	1	1
6	79023661	A2.28	1	1
15	79023661	A2.28/ 1	1	1
12	79023662	A2.28	1	1
24	79023662	A2.28/ 1	1	1
15	79023663	A2.28	2	1
3	79023664	A2.28	1	1
18	79023664	A2.28/ 1	1	1
8	79023665	A2.27	1	1
16	79023666	A2.28	2	1
1	79023667	A2.28	1	1
6	79023668	A2.28	3	1
10	79023669	A2.28	2	1
27	79023669	A2.28/ 1	2	2
5	79023670	A2.28	2	1
23	79023670	A2.28/ 1	2	1
23	79023671	A2.28	3	2
11	79023671	A2.28/ 1	4	1
1	79023672	A2.28	3	1
10	79023672	A2.28/ 1	4	1
4	79023673	A2.28	3	1
5	79023673	A2.28/ 1	4	1
18	79023674	A2.28	3	1
20	79023675	A2.28	3	2
8	79023675	A2.28/ 1	4	1
19	79023676	A2.28	3	2
9	79023676	A2.28/ 1	4	1
19	79023677	A2.28	3	2
19	79023678	A2.28	3	2
9	79023678	A2.28/ 1	4	1
19	79023679	A2.28	3	2
9	79023679	A2.28/ 1	4	1
7	79023680	A2.28	3	1
21	79023680	A2.28/ 1	4	1
12	79023682	A2.28	3	1
15	79023682	A2.28/ 1	4	1
11	79023683	A2.28	3	1
22	79023683	A2.28/ 1	4	1
17	79023684	A2.28	2	1
4	79023684	A2.28/ 1	3	1
21	79023685	A2.28	3	2
12	79023685	A2.28/ 1	4	1
26	79023686	A2.28	2	3

ITEM	PART N.	SGR.	TAV.	PAG.
21	79023687	A2.28	2	1
20	79023688	A2.28	2	1
24	79023689	A2.28	2	2
31	79023689	A2.28/ 1	2	2
24	79023690	A2.28	2	2
31	79023690	A2.28/ 1	2	2
24	79023691	A2.28	2	2
31	79023691	A2.28/ 1	2	2
24	79023692	A2.28	2	2
31	79023692	A2.28/ 1	2	2
24	79023693	A2.28	2	2
31	79023693	A2.28/ 1	2	2
24	79023694	A2.28	2	2
31	79023694	A2.28/ 1	2	2
24	79023695	A2.28	2	2
31	79023695	A2.28/ 1	2	2
24	79023696	A2.28	2	2
31	79023696	A2.28/ 1	2	2
24	79023697	A2.28	2	2
31	79023697	A2.28/ 1	2	2
24	79023698	A2.28	2	2
31	79023698	A2.28/ 1	2	2
24	79023699	A2.28	2	2
31	79023699	A2.28/ 1	2	2
22	79023700	A2.28	2	2
28	79023700	A2.28/ 1	2	2
3	79023852	A2.28	2	1
20	79023900	E3.10/ 1	1	1
10	79023949	A2.35	1	1
26	79023984	L1.01	1	2
21	79023984	L1.01	2	1
27	79023986	L1.01	1	2
22	79023986	L1.01	2	1
20	79024057	D3.34	3A	1
9	79024057	E3.32/ 2	1	1
10	79024058	E3.32/ 2	1	1
24	79024059	D3.34	3A	1
11	79024059	E3.32/ 2	1	1
9	79024350	L6.01	1	1
10	79024588	L6.01	1	1
11	79024644	L6.01	1	1
28	79024802	L1.01	1	2
9	79024883	E3.05	1	1
10	79024884	E3.05	1	1
49	79025028	L1.04	7	2
49	79025028	L1.04/ 1	8	2
11	79025399	L3.10	2	1
17	79025453	L3.10	3	1
18	79025458	L3.10	3	1
12	79025462	L3.10	2	1
13	79025467	L3.10	2	1
14	79025468	L3.10	2	1
15	79025469	L3.10	2	1
16	79025470	L3.10	2	1
19	79025470	L3.10	3	1
14	79025490	F3.03/ A	1	1
15	79025492	F3.03/ A	1	1
16	79025494	F3.03/ A	1	1
8	79025494	F3.03/ B	1	1
16	79025494	F3.03/ 1	1	1
20	79025508	L3.10	3	1
23	79025535	L3.10	1	1
24	79025536	L3.10	1	1
25	79025540	L3.10	1	1
26	79025541	L3.10	1	1
21	79025548	L3.10	3	1
11	79025920	L1.04	1	1
17	79025920	L3.08	1	1
9	79025921	L1.04	7	1
9	79025921	L1.04/ 1	8	1
11	79026139	L1.04	8	1
11	79026139	L1.04	9	1
11	79026139	L1.04/ 1	9	1
11	79026139	L1.04/ 1	10	1
22	79026148	L3.10	3	1
23	79026149	L3.10	3	1
25	79026154	L3.10	3	1
13	79026217	L1.04	9	1
13	79026217	L1.04/ 1	10	1
44	79026220	L1.04	7	2
44	79026220	L1.04/ 1	8	2
12	79026262	L1.04	8	1
12	79026262	L1.04/ 1	9	1
13	79026297	L6.01	1	1
12	79026298	L6.01	1	1
9	79026502	A2.27	2	1
24	79026502	A2.27/ 1	2	3
4	79026505	A2.27	1	1
6	79026505	A2.27/ 1	1	1
1	79026514	A2.27/ 1	2	1
1	79026515	A2.27/ 1	2	1
1	79026516	A2.27/ 1	2	1
1	79026517	A2.27/ 1	2	1
1	79026518	A2.27/ 1	2	1
1	79026519	A2.27/ 1	2	1
1	79026520	A2.27/ 1	2	1
1	79026521	A2.27/ 1	2	1
1	79026522	A2.27/ 1	2	1
1	79026523	A2.27/ 1	2	1
1	79026524	A2.27/ 1	2	1
1	79026525	A2.27/ 1	2	1
1	79026526	A2.27/ 1	2	1
1	79026527	A2.27/ 1	2	1
1	79026528	A2.27/ 1	2	1
1	79026529	A2.27/ 1	2	1

ITEM	PART N.	SGR.	TAV.	PAG.
1	79026530	A2.27/ 1	2	1
1	79026531	A2.27/ 1	2	1
1	79026532	A2.27/ 1	2	1
1	79026533	A2.27/ 1	2	1
1	79026534	A2.27/ 1	2	1
1	79026535	A2.27/ 1	2	1
1	79026536	A2.27/ 1	2	1
1	79026537	A2.27/ 1	2	1
1	79026538	A2.27/ 1	2	1
1	79026539	A2.27/ 1	2	1
1	79026540	A2.27/ 1	2	1
1	79026541	A2.27/ 1	2	2
1	79026542	A2.27/ 1	2	2
1	79026543	A2.27/ 1	2	2
1	79026544	A2.27/ 1	2	2
1	79026545	A2.27/ 1	2	2
1	79026546	A2.27/ 1	2	2
1	79026547	A2.27/ 1	2	2
1	79026548	A2.27/ 1	2	2
1	79026549	A2.27/ 1	2	2
1	79026550	A2.27/ 1	2	2
1	79026551	A2.27/ 1	2	2
1	79026552	A2.27/ 1	2	2
1	79026553	A2.27/ 1	2	2
1	79026554	A2.27/ 1	2	2
1	79026555	A2.27/ 1	2	2
1	79026556	A2.27/ 1	2	2
14	79026566	L6.01/ 1	1	1
12	79026624	A2.27/ 1	1	1
21	79026691	B2.04	2	1
8	79026691	B2.04/ 3	2	1
12	79026693	B2.04/ 1	1	1
8	79026693	B2.04/ 2	1	1
8	79026694	B2.04/ 2	3	1
13	79026695	B2.04/ 1	1	1
9	79026695	B2.04/ 2	1	1
14	79026845	B2.04/ 1	1	1
10	79026845	B2.04/ 2	1	1
21	79027055	L3.10	2	1
26	79027056	L3.10	3	1
27	79027057	L3.10	3	1
28	79027058	L3.10	3	2
30	79027076	E3.31	2	2
31	79027078	E3.31	2	2
17	79027131	F2.01	1	2
24	79027153	L3.10	3	1
17	79027176	B2.33/ 1	4	1
18	79027177	B2.33/ 1	4	1
19	79027178	B2.33/ 1	4	1
20	79027179	B2.33/ 1	4	1
9	79027180	B2.33/ 1	2	1
29	79027428	L3.10	3	2
27	79027559	L3.10	1	2
12	79027854	F3.01/ 1	1	1
24	79027906	C1.35	1	1
16	79028149	A2.25	1	1
15	79028149	A2.25/ 1	1	1
7	79028222	A2.22/ 1	1	1
8	79028225	A2.22/ 1	1	1
6	79028229	A2.22/ 1	1	1
13	79028262	E3.25	2	1
30	79028272	L3.10	3	2
2	79028289	F5.10	1	1
24	79028299	E3.28	1	1
31	79028347	L3.10	3	2
12	79028418	F3.01	1	2
4	79028508	F4.01/ 2	2	1
8	79028807	H1.01	1	1
9	79028808	H1.01	1	1
10	79028809	H1.01	1	1
11	79028810	H1.01	1	1
12	79028811	H1.01	1	1
13	79028812	H1.01	1	1
14	79028813	H1.01	1	1
15	79028814	H1.01	1	1
16	79028815	H1.01	1	1
17	79028816	H1.01	1	1
1	79028817	H1.01	2	1
2	79028818	H1.01	2	1
3	79028819	H1.01	2	1
4	79028820	H1.01	2	1
5	79028821	H1.01	2	1
6	79028822	H1.01	2	1
7	79028823	H1.01	2	1
8	79028824	H1.01	2	1
9	79028825	H1.01	2	1
10	79028826	H1.01	2	1
11	79028827	H1.01	2	1
12	79028828	H1.01	2	1
13	79028829	H1.01	2	1
14	79028830	H1.01	2	1
15	79028831	H1.01	2	1
22	79028871	B2.04	2	1
9	79028871	B2.04/ 3	2	1
5	79028876	D2.30	1	1
5	79028876	D2.30/ 1	1	1
6	79028977	H1.01/ A	1	1
6	79028978	H1.01/ A	1	1
18	79028979	H1.01	1	1
6	79028979	H1.01/ A	1	1
6	79028980	H1.01/ A	1	1
19	79028981	H1.01	1	1
7	79028981	H1.01/ A	1	1
26	79029428	L1.01	3	2
27	79029429	L1.01	3	2

ITEM	PART N.	SGR.	TAV.	PAG.
8	79029692	F3.01	2	1
14	79029712	B1.09	2	2
14	79029742	A0.02	1	1
14	79029743	A0.02	1	1
2	79029949	L1.03/ 2	1	1
2	79030099	F4.01/ 1	1	1
2	79030099	F4.01/ 4	1	1
21	79030141	B2.33/ 1	4	1
16	79030200	H1.01	2	1
3	79030200	H1.01/ A	2	1
9	79030400	F4.01	2	1
9	79030400	F4.01/ 1	2	1
1	79030434	H1.01/ A	2	1
12	79030524	C1.02/ 1	1	1
8	79030525	C1.08/ 1	1	1
9	79030526	C1.08/ 1	1	1
10	79030527	C1.08/ 1	1	1
11	79030528	C1.08/ 1	1	1
12	79030529	C1.08/ 1	1	1
13	79030530	C1.08/ 1	1	1
14	79030531	C1.08/ 1	1	2
15	79030532	C1.08/ 1	1	2
13	79030533	C1.02/ 1	1	2
25	79030538	D2.29	1	2
21	79030567	D1.03	1	1
22	79030632	D1.03	1	1
3	79030670	D2.22	2	1
23	79030675	D1.03	1	1
24	79030775	D1.03	1	1
25	79030817	D1.03	1	1
26	79030973	D1.03	1	2
27	79031006	D1.03	1	2
3	79031139	E3.02	2	1
2	79031247	A2.27	1	1
3	79031248	A2.27	2	1

ITEM	PART N.	SGR.	TAV.	PAG.
6	79031248	A2.27/ 1	2	2
16	79031355	F4.01	4	2
10	79031355	F4.01/ 1	4	1
10	79031497	E3.02/ 2	1	1
12	79031500	E3.32/ 2	1	1
13	79031505	E3.32/ 2	1	1
14	79031518	E3.32/ 2	1	1
24	79031520	D3.33	1	2
25	79031688	D3.33	1	2
21	79031690	C1.01/ 1	2	1
22	79031691	C1.01/ 1	2	1
23	79031693	C1.01/ 1	2	1
23	79031695	C1.01/ 1	2	1
25	79031696	C1.01/ 1	2	1
25	79031697	C1.01/ 1	2	1
4	79031699	D2.22	2	1
10	79031700	C1.01/ 1	1	1
11	79031703	C1.01/ 1	1	1
9	79031705	F3.01	2	1
4	79031718	D2.22	2	1
12	79031720	C1.01/ 1	1	1
17	79031725	F3.03/ A	1	1
10	79031751	B4.11	1	1
10	79031753	B4.11	1	1
12	79031754	B4.11	1	1
12	79031755	B4.11	1	1
26	79031756	D3.33	1	2
27	79031757	D3.33	1	2
28	79031758	D3.33	1	2
29	79031759	D3.33	1	2
30	79031760	D3.33	1	2
31	79031761	D3.33	1	2
2	79031813	L1.04	2	1
2	79031813	L1.04/ 1	2	1
3	79031814	L1.04	2	1

ITEM	PART N.	SGR.	TAV.	PAG.
3	79031814	L1.04/ 1	2	1
24	79031815	L1.04	2	1
24	79031815	L1.04/ 1	2	1
23	79031816	L1.04	2	1
23	79031816	L1.04/ 1	2	1
13	79031887	E3.32	1	1
13	79031887	E3.32/ 4	1	1
8	79031906	D3.34	1	1
9	79031909	D3.34	1	1
29	79031929	L1.01	1	2
18	79031935	L1.01/ 1	1	1
23	79031935	L1.01/ 3	2	1
18	79031938	L1.01/ 1	1	1
20	79031946	L1.01/ 1	1	1
17	79031946	L1.01/ 3	3	1
20	79031948	L1.01/ 1	1	1
22	79031951	L1.01/ 1	1	1
22	79031953	L1.01/ 1	1	1
24	79031957	L1.01/ 1	1	1
23	79031960	L1.01	2	2
23	79031962	L1.01	2	2
25	79031971	L1.01/ 1	1	2
22	79031971	L1.01/ 2	3	2
22	79031971	L1.01/ 3	3	1
26	79031972	L1.01/ 1	1	2
13	79031972	L1.01/ 2	3	1
13	79031972	L1.01/ 3	3	1
26	79031973	L1.01/ 1	1	2
13	79031973	L1.01/ 2	3	1
28	79031995	L1.01/ 1	1	2
17	79031995	L1.01/ 2	2	1
17	79031995	L1.01/ 3	2	1
29	79031996	L1.01/ 1	1	2
18	79031996	L1.01/ 2	2	1
18	79031996	L1.01/ 3	2	1

ITEM	PART N.	SGR.	TAV.	PAG.
29	79031997	L1.01/ 1	1	2
18	79031997	L1.01/ 2	2	2
31	79032000	L1.01/ 1	1	2
1	79032000	L1.01/ 2	2	1
32	79032001	L1.01/ 1	1	2
20	79032001	L1.01/ 2	2	2
32	79032002	L1.01/ 1	1	2
20	79032002	L1.01/ 2	2	2
25	79032003	L1.01	2	2
34	79032003	L1.01/ 1	1	2
22	79032003	L1.01/ 2	2	2
15	79032003	L1.01/ 2	3	1
22	79032003	L1.01/ 3	2	1
15	79032003	L1.01/ 3	3	1
3	79032003	L3.04/ 1	1	1
4	79032014	A4.09/ 1	1	1
10	79032029	D3.34	1	1
11	79032030	D3.34	1	1
12	79032032	D3.34	1	1
36	79032036	A2.01	1	3
26	79032040	L1.01	2	2
26	79032041	L1.01	2	2
7	79032057	A4.01	1	1
18	79032064	A4.01	2	1
18	79032066	A4.01	2	1
20	79032070	A4.01	2	1
8	79032071	A4.01	1	1
9	79032072	A4.01	1	1
10	79032076	A4.01	1	1
11	79032077	A4.01	1	1
11	79032089	B2.17	1	1
14	79032089	D2.28	1	1
18	79032093	D2.24	1	1
24	79032095	B1.10	2	2
20	79032096	B1.10/ 1	1	1
20	79032097	B1.10/ 1	2	1
25	79032099	E3.02	3	1
31	79032099	E3.02/ 4	1	2
30	79032105	L1.01	1	2
12	79032111	A4.01	1	1
13	79032137	A4.01	1	1
25	79032177	D3.30	1	1
25	79032180	D3.30	1	1
30	79032197	E3.31	1	2
28	79032198	L1.01	2	2
23	79032204	B2.04	2	1
12	79032204	B2.04	3	1
11	79032204	B2.04/ 2	1	1
8	79032204	B2.04/ 2	2	1
27	79032205	B2.01/ 1	2	2
37	79032207	A2.01	1	3
4	79032223	F4.01/ 2	1	1
6	79032223	L1.04/ 1	11	1
11	79032224	L1.04	10	1
12	79032225	L1.04	10	1
7	79032225	L1.04/ 1	11	1
6	79032238	B3.01	1	1
4	79032238	B3.01/ 1	1	1
28	79032239	B2.01	2	2
16	79032241	B2.01	3	1
16	79032243	B2.01	1	1
17	79032280	F4.01	4	2
11	79032280	F4.01/ 1	4	1
21	79032299	A4.01	2	1
6	79032300	B2.04	1	1
7	79032300	B2.04/ 3	1	1
13	79032302	B2.04	3	1
24	79032303	B2.04	2	1
7	79032304	B2.04	1	1
10	79032304	B2.05	1	1
29	79032305	B2.01	2	2
27	79032305	B2.01/ 1	2	2
16	79032307	A2.27	2	1
37	79032308	A2.27	2	2
1	79032311	A2.27	2	1
2	79032311	A2.27/ 1	2	2
16	79032312	A2.27	1	1
10	79032312	A2.27/ 1	1	1
1	79032312	F2.05/ 3	1	1
10	79032313	A2.27	1	1
13	79032314	D3.01	1	1
39	79032330	B2.06/ 1	1	2
17	79032335	A2.28	3	1
16	79032337	A2.28	1	1
28	79032337	A2.28/ 1	1	2
19	79032338	A2.28	1	1
16	79032351	A2.25/ 1	1	1
18	79032352	A2.25	1	1
17	79032352	A2.25/ 1	1	1
31	79032368	L1.01	1	2
32	79032369	L1.01	1	2
14	79032370	D3.01	1	1
30	79032376	B2.06	1	2
40	79032376	B2.06/ 1	1	2
31	79032377	B2.06	1	2
41	79032377	B2.06/ 1	1	2
30	79032385	B2.01	2	2
28	79032385	B2.01/ 1	2	2
18	79032396	F4.01	1	1
18	79032396	F4.01	4	2
19	79032398	F4.01	1	1
19	79032398	F4.01/ 1	1	2
7	79032403	D1.01	1	1
26	79032445	D2.29	1	2
27	79032446	D2.29	1	2

ITEM	PART N.	SGR.	TAV.	PAG.
19	79032448	D2.24	1	1
20	79032449	D2.24	1	1
21	79032450	D2.24	1	1
31	79032451	D2.23	1	3
25	79032456	B2.04	2	1
8	79032463	B2.33/ 1	5	1
17	79032464	B2.04	4	1
2	79032552	A4.09/ 2	1	1
31	79032557	B2.01	2	2
29	79032557	B2.01/ 1	2	2
8	79032592	E3.02	6	1
7	79032594	E3.02	7	1
8	79032595	E3.02	7	1
9	79032598	E3.02	7	1
10	79032599	E3.02	7	1
11	79032600	E3.02	7	1
12	79032601	E3.02	7	1
8	79032631	B2.04/ 1	2	1
9	79032631	B2.04/ 2	2	1
15	79032633	B2.04/ 1	1	1
8	79032633	B2.04/ 1	3	1
5	79032633	B2.04/ 1	4	1
12	79032633	B2.04/ 2	1	1
9	79032633	B2.04/ 2	3	1
7	79032633	B2.04/ 2	4	1
16	79032635	B2.04/ 1	1	1
17	79032636	B2.04/ 1	1	1
9	79032638	B2.04/ 1	3	1
9	79032640	B2.04/ 1	2	1
10	79032640	B2.04/ 2	2	1
18	79032653	B2.04/ 1	1	2
27	79032657	B2.04	2	2
15	79032657	B2.04	3	1
18	79032657	B2.04	4	1
10	79032657	B2.04/ 3	2	1
10	79032657	B2.04/ 3	3	1
19	79032657	B2.04/ 3	4	1
32	79032658	E3.31	2	2
33	79032659	E3.31	2	2
34	79032662	E3.31	2	2
30	79032669	B2.01/ 1	2	2
20	79032672	B2.04/ 1	1	2
5	79032706	E3.29/ 1	1	1
6	79032707	E3.29/ 1	1	1
7	79032708	E3.29/ 1	1	1
8	79032709	E3.29/ 1	1	1
9	79032710	E3.29/ 1	1	1
10	79032711	E3.29/ 1	1	1
11	79032712	E3.29/ 1	1	1
12	79032713	E3.29/ 1	1	1
13	79032714	E3.29/ 1	1	1
14	79032715	E3.29/ 1	1	1
15	79032716	E3.29/ 1	1	1
16	79032717	E3.29/ 1	1	1
17	79032718	E3.29/ 1	1	1
18	79032739	E3.29/ 1	1	1
14	79032803	B2.04	3	1
8	79032827	L3.12	1	1
9	79032828	L3.12	1	1
10	79032829	L3.12	1	1
11	79032830	L3.12	1	2
5	79032830	L3.12	2	1
9	79032872	L1.04	10	1
10	79032892	L3.06	1	1
8	79032894	B2.04/ 2	4	1
11	79032899	B2.04/ 3	3	1
32	79032920	B2.06	1	2
44	79032921	B2.06/ 1	1	2
32	79032931	D2.23	1	3
15	79033008	B1.09	2	2
28	79033008	B1.09/ 1	2	2
14	79033126	E3.25	2	1
10	79033172	F4.01	2	1
10	79033172	F4.01/ 1	2	1
26	79033189	D3.30	1	2
31	79033190	E3.31	1	2
11	79033292	E3.02/ 2	1	1
12	79033293	E3.02/ 2	1	1
13	79033299	E3.02/ 2	1	1
9	79033326	E3.02	6	1
9	79033326	E3.02/ 1	1	1
25	79033421	A2.28/ 1	1	1
14	79033538	C1.02/ 1	1	2
15	79033539	C1.02/ 1	1	2
16	79033541	C1.02/ 1	1	2
33	79033542	D2.23	1	3
34	79033543	D2.23	1	3
14	79033562	E3.02/ 2	1	1
18	79033580	F3.03/ A	1	1
14	79033582	F3.03/ B	1	1
18	79033602	B2.01/ 1	3	1
12	79033605	B2.04/ 3	3	1
7	79033606	B2.05/ 1	1	1
11	79033607	B2.04/ 3	2	1
12	79033609	B2.04/ 3	2	1
13	79033613	B2.04/ 3	3	1
11	79033615	E3.06	1	1
5	79033616	F4.01/ 2	2	1
17	79033629	L3.10	2	1
15	79033631	L1.01	4	1
15	79033631	L1.01	4A	1
15	79033661	E3.25	2	1
16	79033672	E3.25	2	1
17	79033674	E3.25	2	1
28	79033760	L3.10	1	2

ITEM	PART N.	SGR.	TAV.	PAG.
25	79033762	E3.28	1	1
12	79033801	L1.03	1	1
12	79033801	L1.03/ 1	1	1
18	79033801	L3.08	1	1
23	79033897	A4.02	1	1
37	79033919	D3.34	3	2
19	79033950	L3.08	1	1
35	79033997	D2.23	1	4
4	79034006	B2.13	3	1
18	79034012	B2.13	2	1
19	79034013	B2.13	2	1
10	79034018	B2.13	3	1
21	79034025	B2.13	2	1
22	79034026	B2.13	2	1
22	79034032	B2.13	3	1
18	79034034	B2.13	3	1
32	79034040	E3.02/ 4	1	2
26	79034041	E3.02	3	1
4	79034122	B2.21/ 2	1	1
5	79034123	B2.21/ 2	1	1
6	79034124	B2.21/ 2	1	1
29	79034167	L3.10	1	2
10	79034173	E3.02/ 3	1	1
11	79034191	E3.02/ 3	1	1
12	79034225	E3.02/ 3	1	1
30	79034264	L3.10	1	2
6	79034326	L3.12	2	1
3	79034342	L1.04	8	1
3	79034342	L1.04/ 1	9	1
26	79034440	L3.28	1	1
31	79034465	L3.10	1	2
32	79034466	L3.10	1	2
22	79034570	L1.04	2	1
22	79034570	L1.04/ 1	2	1
27	79034585	E3.02	3	2
7	79034605	L3.04	2	1
6	79034654	L1.04	9	1
6	79034654	L1.04/ 1	10	1
29	79034707	L1.01	2	2
10	79034720	B2.33/ 1	2	1
11	79034721	B2.33/ 1	2	1
12	79034723	B2.33/ 1	2	1
13	79034729	B2.33/ 1	2	1
19	79034733	B2.01/ 1	3	1
33	79034735	B2.06	1	2
34	79034736	B2.06	1	2
35	79034737	B2.06	1	2
17	79034885	B2.13	3	1
12	79034898	B2.13	3	1
5	79034900	B2.13	3	1
2	79034903	B2.13	3	1
1	79034904	B2.13	3	1
8	79034906	B2.30/ 1	2	1
3	79035005	B2.13	3	1
33	79035177	E3.02/ 4	1	2
34	79035178	E3.02/ 4	1	2
35	79035179	E3.02/ 4	1	2
36	79035180	E3.02/ 4	1	2
37	79035183	E3.02/ 4	1	2
23	79035221	A2.21	1	1
24	79035226	A2.21	1	1
1	79035287	B2.33	1	1
14	79035287	B2.33/ 1	1	1
9	79035287	B2.33/ 1	5	1
10	79035289	B2.33/ 1	5	1
6	79035290	B2.33/ 1	6	1
7	79035291	B2.33/ 1	6	1
8	79035292	B2.33/ 1	6	1
11	79035293	B2.33/ 1	5	1
12	79035294	B2.33/ 1	5	1
13	79035295	B2.33/ 1	5	1
14	79035296	B2.33/ 1	5	1
15	79035297	B2.33/ 1	5	1
9	79035298	B2.33/ 1	6	1
1	79035329	D3.40	2	1
1	79035329	D3.40/ 1	2	1
20	79035366	A2.21	2	1
25	79035370	A2.21	1	1
26	79035375	A2.21	1	1
21	79035376	A2.21	2	1
27	79035378	A2.21	1	2
26	79035383	B1.09/ 1	2	2
33	79035385	L1.01	1	2
16	79035411	L1.01	4	1
16	79035411	L1.01	4A	1
7	79035411	L1.04	10	1
8	79035411	L1.04/ 1	11	1
11	79035418	F4.01	2	1
11	79035418	F4.01/ 1	2	1
12	79035419	F4.01	2	1
12	79035419	F4.01/ 1	2	1
9	79035434	F3.01	3	2
3	79035435	D3.40	1	1
1	79035435	D3.40/ 1	1	1
4	79035436	D3.40	1	1
2	79035436	D3.40/ 1	1	1
27	79035483	A2.28	2	3
7	79035483	A2.28/ 1	2	1
28	79035484	A2.28	2	3
1	79035484	A2.28/ 1	2	1
5	79035485	F2.05/ 3	1	1
5	79035488	F4.01/ 2	1	1
28	79035513	L1.01	3	2
11	79035675	E3.05	1	1
19	79035722	D2.20	1	1

ITEM	PART N.	SGR.	TAV.	PAG.
20	79035724	D2.20	1	1
21	79035725	D2.20	1	1
22	79035726	D2.20	1	1
23	79035727	D2.20	1	1
24	79035728	D2.20	1	1
25	79035729	D2.20	1	2
5	79035740	A4.09	2	1
9	79035786	L3.10	4	1
10	79035787	L3.10	4	1
32	79035788	L3.10	3	2
18	79035794	B2.07	1	1
41	79035794	L3.10	1	2
19	79035795	B2.07	1	1
42	79035795	L3.10	1	2
5	79035809	D3.40	1	1
3	79035809	D3.40/ 1	1	1
6	79035810	D3.40	1	1
4	79035810	D3.40/ 1	1	1
7	79035811	D3.40	1	1
5	79035811	D3.40/ 1	1	1
8	79035814	D3.40	1	1
6	79035814	D3.40/ 1	1	1
9	79035815	D3.40	1	1
7	79035815	D3.40/ 1	1	1
10	79035816	D3.40	1	1
8	79035816	D3.40/ 1	1	1
11	79035817	D3.40	1	1
9	79035817	D3.40/ 1	1	1
11	79035818	D3.40	1	1
9	79035818	D3.40/ 1	1	1
2	79035819	D3.40	2	1
3	79035819	D3.40	3	1
2	79035819	D3.40/ 1	2	1
3	79035819	D3.40/ 1	3	1
3	79035821	D3.40	2	1

ITEM	PART N.	SGR.	TAV.	PAG.
2	79035821	D3.40	3	1
3	79035821	D3.40/ 1	2	1
2	79035821	D3.40/ 1	3	1
4	79035823	D3.40	2	1
4	79035823	D3.40	3	1
4	79035823	D3.40/ 1	2	1
4	79035823	D3.40/ 1	3	1
5	79035824	D3.40	2	1
5	79035824	D3.40/ 1	3	1
11	79035825	D3.40	1	1
9	79035825	D3.40/ 1	1	1
11	79035826	D3.40	1	1
9	79035826	D3.40/ 1	1	1
11	79035828	D3.40	1	1
9	79035828	D3.40/ 1	1	1
11	79035829	D3.40	1	1
9	79035829	D3.40/ 1	1	1
11	79035840	D3.40	1	1
9	79035840	D3.40/ 1	1	1
11	79035841	D3.40	1	1
9	79035841	D3.40/ 1	1	1
28	79035846	B2.10	1	2
24	79035849	B2.10	1	1
21	79035861	B2.13	1	1
30	79035895	D2.23	1	3
13	79035908	F3.01	1	2
11	79035917	D3.40/ 1	1	1
23	79035918	D3.40	1	1
6	79035953	D2.30	1	1
7	79035954	D2.30	1	1
7	79035954	D2.30/ 1	1	1
8	79035955	D2.30	1	1
8	79035955	D2.30/ 1	1	1
9	79035956	D2.30	1	1
9	79035956	D2.30/ 1	1	1

ITEM	PART N.	SGR.	TAV.	PAG.
5	79035959	A2.24/ 1	2	1
10	79035959	D2.30	1	1
10	79035959	D2.30/ 1	1	1
11	79035960	D2.30	1	1
11	79035960	D2.30/ 1	1	1
12	79035961	D2.30	1	1
12	79035961	D2.30/ 1	1	1
18	79035976	L3.10	2	1
15	79035977	L1.01	4	1
15	79035977	L1.01	4A	1
14	79035992	B4.11	1	1
1	79035997	L4.10	1	1
1	79035998	L4.10/ 1	1	1
1	79035999	L4.10/ 2	1	1
1	79036000	L4.10/ 3	1	1
1	79036001	L4.10/ 5	1	1
1	79036002	L4.10/ 4	1	1
27	79036005	B1.09/ 1	2	2
32	79036027	B4.08	1	2
10	79036511	D3.34	4	1
14	79036545	D3.34	2	2
14	79036546	D3.34	2	2
16	79036547	D3.34	2	2
8	79036651	C1.02	1	1
9	79036653	C1.02	1	1
10	79036659	E3.02	6	1
10	79036660	E3.02	6	1
14	79036667	E3.32	1	1
15	79036669	E3.32	1	1
14	79036669	E3.32/ 4	1	1
6	79036670	D3.40	2	1
6	79036671	D3.40/ 1	2	1
16	79036678	E3.32	1	1
15	79036678	E3.32/ 4	1	1
38	79036690	E3.02/ 4	1	2

ITEM	PART N.	SGR.	TAV.	PAG.
39	79036692	E3.02/ 4	1	2
17	79036739	E3.32	1	1
17	79036740	E3.32	1	1
6	79036753	A4.09	2	1
33	79036804	L3.10	1	2
7	79036817	A4.09	2	1
8	79036818	A4.09	2	1
5	79036818	A4.09/ 1	1	1
34	79036868	L3.10	1	2
21	79036885	B2.04/ 1	1	2
11	79036885	B2.04/ 1	2	1
11	79036885	B2.04/ 1	3	1
7	79036885	B2.04/ 1	4	1
13	79036885	B2.04/ 2	1	1
11	79036885	B2.04/ 2	2	1
10	79036885	B2.04/ 2	3	1
9	79036885	B2.04/ 2	4	1
22	79036886	B2.04/ 1	1	2
35	79036899	E3.31	2	2
36	79036900	E3.31	2	2
37	79036901	E3.31	2	2
38	79036909	E3.31	2	2
35	79036926	L3.10	1	2
24	79036941	A4.02	1	1
34	79036971	L3.10	3	2
38	79037005	A2.01	1	3
7	79037006	A4.09	2	1
6	79037006	A4.09/ 1	1	1
36	79037020	L3.10	1	2
13	79037026	L3.02/ 3	1	1
9	79037027	E3.32/ 1	1	1
10	79037030	E3.32/ 1	1	1
30	79037031	L1.01	2	2
34	79037033	L1.01	1	2
35	79037279	L1.01	1	2
36	79037282	L1.01	1	2
37	79037285	L1.01	1	2
20	79037292	F4.01/ 1	1	2
22	79037311	E3.10/ 4	1	1
23	79037314	E3.10/ 4	1	1
21	79037316	E3.10/ 1	1	1
15	79037318	F4.01/ 1	5	1
12	79037334	E3.02	6	2
12	79037339	E3.02	6	2
14	79037345	E3.02	6	2
21	79037349	F4.01/ 1	1	2
19	79037369	F4.01	4	2
20	79037370	F4.01	1	1
21	79037375	A1.01/ 1	2	1
21	79037382	F4.01	1	1
47	79037386	A1.03	2	2
20	79037415	A1.05	1	1
47	79037428	A1.03	2	2
21	79037448	A1.01/ 1	2	1
42	79037448	A1.02/ 1	1	2
11	79037448	A1.02/ 1	2	1
31	79037448	A3.01/ 1	3	2
47	79037475	A1.03	2	2
24	79037499	L1.01/ 1	1	2
22	79037532	F4.01/ 1	1	2
22	79037533	F4.01/ 1	1	2
36	79037539	L1.01/ 1	1	3
16	79037539	L1.01/ 2	3	1
16	79037539	L1.01/ 3	3	1
21	79037635	L3.04	1	1
22	79037636	L3.04	1	1
40	79037650	E3.02/ 4	1	2
8	79037671	B2.17/ 1	1	1
8	79037671	D2.28/ 1	1	1
9	79037672	B2.17/ 1	1	1
9	79037672	D2.28/ 1	1	1
11	79037673	B2.17/ 1	1	1
11	79037673	D2.28/ 1	1	2
22	79037729	E3.10/ 1	1	1
13	79037732	L1.04	6	1
13	79037732	L1.04/ 1	7	1
32	79037754	E3.31	1	2
23	79037755	E3.10/ 1	1	1
4	79037810	F5.10	1	1
13	79037996	L6.01/ 1	1	1
5	79038023	A2.22/ 1	1	1
33	79038104	E3.31	1	2
25	79038139	B1.10	1	2
21	79038139	B1.10/ 1	2	1
25	79038141	B1.11	1	1
26	79038142	B1.11	1	1
9	79038148	F4.01	5	1
6	79038148	F4.01/ 1	7	1
10	79038149	F4.01	5	1
7	79038149	F4.01/ 1	7	1
8	79038149	F4.01/ 3	2	1
24	79038162	E3.10/ 1	1	1
12	79038167	E3.05	1	1
50	79038195	L1.04	7	2
50	79038195	L1.04/ 1	8	2
39	79038223	E3.31	2	2
7	79038229	E3.15	1	1
8	79038232	E3.15	1	1
8	79038232	E3.15/ A	1	1
13	79038238	E3.05	1	1
1	79038241	A2.35/ 1	1	1
24	79038242	A2.33	1	1
2	79038242	A2.35/ 1	1	1
3	79038244	A2.35/ 1	1	1
4	79038245	A2.35/ 1	1	1

ITEM	PART N.	SGR.	TAV.	PAG.
5	79038246	A2.35/ 1	1	1
6	79038248	A2.35/ 1	1	1
7	79038250	A2.35/ 1	1	1
8	79038251	A2.35/ 1	1	1
9	79038253	A2.35/ 1	1	1
10	79038254	A2.35/ 1	1	1
11	79038255	A2.35/ 1	1	1
39	79038268	A2.01	1	3
40	79038291	A2.01	1	3
27	79038293	E3.28	1	1
9	79038298	B5.01	1	1
10	79038299	B5.01	1	1
12	79038300	B5.01	1	1
15	79038308	E3.32/ 2	1	1
17	79038342	B2.01	3	1
32	79038344	B2.01	2	2
36	79038345	B2.06	1	2
42	79038345	B2.06/ 1	1	2
26	79038351	B1.10	1	2
9	79038351	D2.23	1	1
10	79038352	B2.17/ 1	1	1
10	79038352	D2.28/ 1	1	2
37	79038354	B2.06	1	2
38	79038355	B2.06	1	2
10	79038361	E3.02	1	1
19	79038365	E3.32	1	1
16	79038365	E3.32/ 4	1	1
17	79038372	A1.08	1	1
14	79038372	A1.08/ 1	1	1
20	79038373	F4.01	4	2
8	79038373	F4.01/ 1	3	1
18	79038377	A2.27	1	1
1	79038377	A2.27/ 1	1	1
1	79038378	A2.25	1	1
1	79038378	A2.25/ 1	1	1

ITEM	PART N.	SGR.	TAV.	PAG.
3	79038379	A2.27	1	1
5	79038379	A2.27/ 1	1	1
13	79038380	A2.27	1	1
8	79038380	A2.27/ 1	1	1
17	79038381	A2.27	1	1
13	79038381	A2.27/ 1	1	1
14	79038381	A2.28	3	1
9	79038381	A2.28/ 1	1	1
8	79038381	F2.05/ A	1	1
8	79038381	F2.05/ 3	1	1
40	79038383	A2.27	2	3
37	79038383	A2.27/ 1	2	4
40	79038384	A2.27	2	3
37	79038384	A2.27/ 1	2	4
40	79038385	A2.27	2	3
37	79038385	A2.27/ 1	2	4
40	79038386	A2.27	2	3
37	79038386	A2.27/ 1	2	4
11	79038387	A2.27	2	1
36	79038387	A2.27/ 1	2	4
12	79038388	A2.27	2	1
34	79038388	A2.27/ 1	2	4
23	79038389	A2.27	2	2
29	79038389	A2.27/ 1	2	3
18	79038390	A2.27	2	1
15	79038390	A2.27/ 1	2	3
15	79038391	A2.27	2	1
13	79038391	A2.27/ 1	2	3
13	79038392	A2.27	2	1
17	79038392	A2.27/ 1	2	3
38	79038393	A2.27	2	2
18	79038393	A2.27/ 1	2	3
7	79038437	A2.27	2	1
39	79038438	A2.27	2	2
19	79038438	A2.27/ 1	2	3

ITEM	PART N.	SGR.	TAV.	PAG.
14	79038439	A2.27	2	1
16	79038439	A2.27/ 1	2	3
17	79038440	A2.27	2	1
19	79038442	A2.27	2	1
12	79038442	A2.27/ 1	2	2
21	79038446	A2.27	2	1
5	79038446	A2.27/ 1	2	2
6	79038447	A2.27	2	1
4	79038447	A2.27/ 1	2	2
2	79038448	A2.27	2	1
3	79038448	A2.27/ 1	2	2
22	79038451	A2.27	2	2
10	79038451	A2.27/ 1	2	2
34	79038452	A2.27	2	2
30	79038452	A2.27/ 1	2	3
33	79038453	A2.27	2	2
33	79038453	A2.27/ 1	2	3
35	79038454	A2.27	2	2
22	79038454	A2.27/ 1	2	3
30	79038456	A2.27	2	2
28	79038456	A2.27/ 1	2	3
31	79038457	A2.27	2	2
31	79038457	A2.27/ 1	2	3
31	79038458	A2.27	2	2
31	79038458	A2.27/ 1	2	3
31	79038459	A2.27	2	2
31	79038459	A2.27/ 1	2	3
31	79038460	A2.27	2	2
31	79038460	A2.27/ 1	2	3
31	79038461	A2.27	2	2
31	79038461	A2.27/ 1	2	3
31	79038462	A2.27	2	2
31	79038462	A2.27/ 1	2	3
31	79038463	A2.27	2	2
31	79038463	A2.27/ 1	2	3

ITEM	PART N.	SGR.	TAV.	PAG.
32	79038464	A2.27	2	2
32	79038464	A2.27/ 1	2	3
19	79038465	A2.27	1	1
6	79038466	A2.27	1	1
2	79038466	A2.27/ 1	1	1
20	79038467	A2.27	1	1
9	79038467	A2.27/ 1	1	1
21	79038468	A2.27	1	1
11	79038468	A2.27/ 1	1	1
5	79038470	A2.27	1	1
19	79038470	A2.27/ 1	1	1
1	79038471	A2.27	1	1
24	79038471	A2.27	2	2
4	79038471	A2.27/ 1	1	1
10	79038471	A2.28/ 1	3	1
15	79038473	A2.27	1	1
14	79038474	A2.27	1	1
8	79038718	A2.27	2	1
25	79038718	A2.27/ 1	2	3
40	79038721	A2.27/ 1	2	4
26	79038722	A2.27/ 1	1	1
40	79038722	A2.27/ 1	2	4
11	79038723	E3.32/ 1	1	1
12	79038723	E3.32/ 3	1	1
12	79038724	E3.32/ 1	1	1
13	79038724	E3.32/ 3	1	1
39	79038732	B2.06	1	2
21	79038734	F4.01	4	2
12	79038734	F4.01/ 1	4	1
22	79038735	F4.01	4	2
13	79038735	F4.01/ 1	4	1
9	79038746	B2.30/ 1	2	1
8	79038773	L3.04	2	1
9	79038775	L3.04	2	1
23	79038776	L3.04	1	1
24	79038778	L3.04	1	2
25	79038780	L3.04	1	2
28	79038784	A2.21	1	2
29	79038790	A2.21	1	2
1	79038794	B2.30	2	1
2	79038800	B2.30	2	1
20	79038891	B2.04/ 3	4	1
31	79038894	B2.01/ 1	2	2
23	79038905	B2.04/ 1	1	2
12	79038905	B2.04/ 1	2	1
12	79038905	B2.04/ 1	3	1
8	79038905	B2.04/ 1	4	1
14	79038905	B2.04/ 2	1	1
12	79038905	B2.04/ 2	2	1
11	79038905	B2.04/ 2	3	1
10	79038905	B2.04/ 2	4	1
43	79038920	B2.06/ 1	1	2
9	79038941	L1.01/ 2	1	1
10	79038943	L1.01/ 2	1	1
11	79038944	L1.01/ 2	1	1
12	79038945	L1.01/ 2	1	1
23	79038949	L1.01/ 2	2	2
23	79038950	L1.01/ 2	2	2
25	79038951	L1.01/ 2	2	2
17	79038954	L1.01/ 2	3	1
17	79038955	L1.01/ 2	3	1
19	79039196	L1.01/ 2	3	1
20	79039197	L1.01/ 2	3	1
20	79039197	L1.01/ 3	3	1
21	79039200	L1.01/ 2	3	2
21	79039200	L1.01/ 3	3	1
21	79039201	L1.01/ 2	3	2
26	79039202	L1.01/ 2	2	2
26	79039202	L1.01/ 3	2	2
27	79039204	L1.01/ 2	2	2
27	79039204	L1.01/ 3	2	2
10	79039208	L3.04	2	1
11	79039209	L3.04	2	1
12	79039210	L3.04	2	1
13	79039211	L3.04	2	1
1	79039220	L1.01/ 2	4	1
2	79039221	L1.01/ 2	4	1
30	79039234	A2.21	1	2
27	79039241	L1.01/ 2	2	2
14	79039242	L3.04	2	1
11	79039310	E3.02	1	1
25	79039325	D3.40	1	1
12	79039325	D3.40/ 1	1	1
25	79039329	L1.04	1	1
25	79039329	L1.04/ 1	1	1
29	79039330	L1.04	1	2
29	79039330	L1.04/ 1	1	2
22	79039331	L1.04	1	1
22	79039331	L1.04/ 1	1	1
23	79039332	L1.04	1	1
23	79039332	L1.04/ 1	1	1
24	79039333	L1.04	1	1
24	79039333	L1.04/ 1	1	1
17	79039334	L1.04	1	1
17	79039334	L1.04/ 1	1	1
27	79039383	L1.04	7	1
27	79039383	L1.04/ 1	8	1
28	79039397	E3.02	3	2
41	79039397	E3.02/ 4	1	2
28	79039539	B2.30	1	2
10	79039541	B2.33	1	1
4	79039740	A2.28/ 1	4	1
4	79039743	A2.28	2	1
6	79039743	A2.28/ 1	2	1
13	79039751	A2.28/ 1	2	1

ITEM	PART N.	SGR.	TAV.	PAG.
14	79039752	A2.28/ 1	2	1
29	79039753	A2.28/ 1	2	2
13	79039754	A2.28/ 1	3	1
15	79039755	A2.28/ 1	3	1
17	79039757	A2.28/ 1	3	1
18	79039758	A2.28/ 1	3	1
12	79039759	A2.28/ 1	3	1
8	79039761	A2.28/ 1	3	1
3	79039762	A2.28/ 1	3	1
3	79039763	A2.28/ 1	2	1
2	79039765	A2.28/ 1	2	1
15	79039773	A2.25	1	1
14	79039773	A2.25/ 1	1	1
4	79039775	A2.33	1	1
6	79039777	A2.33	1	1
7	79039778	A2.33	1	1
8	79039779	A2.33	1	1
9	79039780	A2.33	1	1
10	79039781	A2.33	1	1
11	79039782	A2.33	1	1
12	79039783	A2.33	1	1
13	79039784	A2.33	1	1
13	79039785	A2.33	1	1
13	79039786	A2.33	1	1
16	79039787	A2.33	1	1
17	79039788	A2.33	1	1
18	79039789	A2.33	1	1
19	79039790	A2.33	1	1
20	79039791	A2.33	1	1
21	79039792	A2.33	1	1
22	79039793	A2.33	1	1
23	79039794	A2.33	1	1
24	79039795	A2.33	1	1
25	79039796	A2.33	1	1
26	79039797	A2.33	1	1
27	79039798	A2.33	1	2
28	79039799	A2.33	1	2
13	79039833	F4.01	2	1
13	79039833	F4.01/ 1	2	1
2	79039841	L1.04	4	1
2	79039841	L1.04/ 1	5	1
6	79039843	L1.04	4	1
6	79039843	L1.04/ 1	5	1
5	79039844	L1.04	4	1
5	79039844	L1.04/ 1	5	1
4	79039845	L1.04	4	1
4	79039845	L1.04/ 1	5	1
3	79039846	L1.04	4	1
3	79039846	L1.04/ 1	5	1
14	79040250	B2.33/ 1	2	1
15	79040253	B2.33/ 1	2	1
4	79040265	A4.09	2	1
7	79040265	A4.09/ 1	1	1
2	79040296	A2.01	2	1
3	79040297	A2.01	2	1
10	79040393	E3.02/ 1	1	1
11	79040400	E3.02/ 1	1	1
11	79040401	E3.02/ 1	1	1
13	79040402	E3.02/ 1	1	1
13	79040404	E3.02/ 1	1	1
14	79040405	E3.02/ 1	1	1
17	79040412	E3.02/ 1	1	1
18	79040413	E3.02/ 1	1	1
8	79040437	E3.02	8	1
26	79040505	L3.04	1	2
27	79040517	L3.04	1	2
29	79040541	E3.02	3	2
8	79040542	E3.02	4	1
17	79040713	A2.43/ 2	3	1
22	79040713	F4.01	1	2
42	79040758	E3.02/ 4	1	2
6	79040791	B2.34	1	1
7	79040793	B2.34	1	1
8	79040798	B2.34	1	1
9	79040800	B2.04/ 1	4	1
24	79040802	B2.04/ 1	1	2
13	79040802	B2.04/ 1	2	1
13	79040802	B2.04/ 1	3	1
10	79040802	B2.04/ 1	4	1
15	79040802	B2.04/ 2	1	1
13	79040802	B2.04/ 2	2	1
12	79040802	B2.04/ 2	3	1
11	79040802	B2.04/ 2	4	1
25	79040803	B2.04/ 1	1	2
14	79040803	B2.04/ 1	2	1
14	79040803	B2.04/ 1	3	1
11	79040803	B2.04/ 1	4	1
16	79040803	B2.04/ 2	1	1
14	79040803	B2.04/ 2	2	1
13	79040803	B2.04/ 2	3	1
12	79040803	B2.04/ 2	4	1
28	79040804	B2.04	2	2
16	79040804	B2.04	3	1
19	79040804	B2.04	4	1
13	79040804	B2.04/ 3	2	1
14	79040804	B2.04/ 3	3	1
21	79040804	B2.04/ 3	4	1
16	79040807	B1.09	2	2
11	79040807	B2.33	1	1
12	79040809	B2.33	4	1
3	79040811	B2.30	2	1
15	79040822	E3.02/ 2	1	1
14	79040822	E3.02/ 3	1	1
11	79040823	L3.10	4	1
29	79040825	L1.01	3	2

ITEM	PART N.	SGR.	TAV.	PAG.
3	79040872	A2.24	1	1
10	79040912	L1.04	4	1
10	79040912	L1.04/ 1	5	1
8	79040928	L1.04	4	1
8	79040928	L1.04/ 1	5	1
7	79040929	L1.04	4	1
7	79040929	L1.04/ 1	5	1
11	79040931	A2.28/ 1	3	1
15	79041060	E3.02	6	2
15	79041061	E3.02	6	2
13	79041062	E3.02	7	1
13	79041063	E3.02	7	1
8	79041064	E3.02	5	1
9	79041071	E3.02	4	1
17	79041150	E3.02	6	2
17	79041151	E3.02	6	3
15	79041152	E3.02	7	1
2	79041163	L1.25	1	1
9	79041175	E3.02	5	1
10	79041183	E3.02	5	1
11	79041186	E3.02	5	1
12	79041190	E3.02	5	1
13	79041191	E3.02	5	1
14	79041192	E3.02	5	1
20	79041235	B2.01/ 1	3	1
17	79041237	B2.01/ 1	1	1
21	79041239	B2.01/ 1	3	1
18	79041265	B2.01/ 1	1	1
11	79041283	D3.40	1	1
11	79041284	D3.40	1	1
25	79041355	D3.30	1	2
25	79041356	D3.30	1	2
13	79041445	L1.03	1	1
16	79041455	L1.04	1	1
24	79041458	L1.04	6	1
25	79041459	L1.04	6	2
51	79041460	L1.04	7	2
51	79041460	L1.04/ 1	8	2
52	79041461	L1.04	7	2
52	79041461	L1.04/ 1	8	2
46	79041467	L1.04	7	2
46	79041467	L1.04/ 1	8	2
47	79041468	L1.04	7	2
47	79041468	L1.04/ 1	8	2
53	79041471	L1.04	7	2
53	79041471	L1.04/ 1	8	2
9	79041610	E3.02	8	1
10	79041613	E3.02	8	1
12	79041632	E3.02	6	2
12	79041634	E3.02	6	2
15	79041635	E3.02	7	1
3	79041640	L1.25	1	1
14	79041641	D3.01	1	1
4	79041642	L1.25	1	1
16	79041643	F4.01/ 1	5	1
10	79041646	D3.34	4	1
17	79041649	F4.01/ 1	5	1
11	79041651	E3.02	8	1
37	79041782	D2.23	1	4
13	79041783	D2.30	1	1
13	79041783	D2.30/ 1	1	1
14	79041784	D2.30	1	1
14	79041784	D2.30/ 1	1	1
15	79041785	D2.30	1	1
16	79041796	L1.04	6	1
16	79041796	L1.04/ 1	7	1
12	79041834	E3.02/ 3	1	1
15	79041839	E3.02	5	1
26	79041938	B2.04	2	2
30	79041946	L1.01	1	2
26	79041947	B2.04/ 1	1	2
15	79041947	B2.04/ 1	2	1
15	79041947	B2.04/ 1	3	1
12	79041947	B2.04/ 1	4	1
17	79041947	B2.04/ 2	1	1
15	79041947	B2.04/ 2	2	1
14	79041947	B2.04/ 2	3	1
13	79041947	B2.04/ 2	4	1
24	79041948	F4.01/ 1	1	2
16	79041949	B2.04/ 1	2	1
16	79041949	B2.04/ 2	2	1
27	79041950	B2.04/ 1	1	2
17	79041950	B2.04/ 1	2	1
16	79041950	B2.04/ 1	3	1
13	79041950	B2.04/ 1	4	1
18	79041950	B2.04/ 2	1	1
17	79041950	B2.04/ 2	2	1
15	79041950	B2.04/ 2	3	1
14	79041950	B2.04/ 2	4	1
28	79041951	B2.04/ 1	1	2
18	79041951	B2.04/ 1	2	1
17	79041951	B2.04/ 1	3	1
14	79041951	B2.04/ 1	4	1
19	79041951	B2.04/ 2	1	1
18	79041951	B2.04/ 2	2	1
16	79041951	B2.04/ 2	3	1
15	79041951	B2.04/ 2	4	1
29	79041952	B2.04/ 1	1	2
40	79041961	L1.04	7	2
40	79041961	L1.04/ 1	8	2
41	79041962	L1.04	7	2
41	79041962	L1.04/ 1	8	2
30	79041966	B2.04/ 1	1	2
19	79041966	B2.04/ 1	2	1
18	79041966	B2.04/ 1	3	1

ITEM	PART N.	SGR.	TAV.	PAG.
15	79041966	B2.04/ 1	4	1
20	79041966	B2.04/ 2	1	1
19	79041966	B2.04/ 2	2	1
17	79041966	B2.04/ 2	3	1
16	79041966	B2.04/ 2	4	1
1	79041966	B5.01	2	1
25	79041987	D3.30	1	2
25	79041990	D3.30	1	2
10	79041992	B5.01	1	1
13	79041993	B5.01	1	1
13	79041994	B5.01	1	1
13	79041995	B5.01	1	1
1	79041996	B5.01	2	1
16	79041997	B5.01	1	1
28	79042034	L1.01	3	2
20	79042052	L1.04	6	1
20	79042052	L1.04/ 1	7	1
21	79042053	L1.04	6	1
21	79042053	L1.04/ 1	7	1
14	79042093	A2.22	1	1
16	79042094	L1.04	9	1
16	79042094	L1.04/ 1	10	1
15	79042095	L1.04	9	1
15	79042095	L1.04/ 1	10	1
12	79042102	A2.56	1	1
13	79042115	A2.56	1	1
14	79042118	A2.56	1	1
15	79042121	A2.56	1	1
16	79042124	A2.56	1	1
5	79042128	B2.21	1	1
15	79042136	A2.22	1	1
18	79042186	L1.01	4	1
16	79042201	A2.22	1	1
3	79042202	A2.23	1	1
4	79042203	A2.23	1	1
17	79042204	A2.22	1	1
6	79042204	A2.56/ 1	1	1
18	79042207	A2.22	1	1
19	79042208	A2.22	1	1
17	79042208	A2.56	1	1
28	79042222	L3.04	1	2
20	79042224	A2.22	1	1
8	79042258	B2.05/ 1	1	1
9	79042259	B2.05/ 1	1	1
10	79042260	B2.05/ 1	1	1
11	79042261	B2.05/ 1	1	1
14	79042262	B2.04/ 3	2	1
12	79042263	B2.05/ 1	1	1
13	79042264	B2.05/ 1	1	1
14	79042265	B2.05/ 1	1	1
15	79042266	B2.05/ 1	1	1
15	79042267	B2.04/ 3	2	1
31	79042325	L1.01	2	2
13	79042386	B2.33	4	1
14	79042388	B2.33	4	1
15	79042389	B2.33	4	1
29	79042401	L3.04	1	2
12	79042406	L1.01	4	1
34	79042529	D2.23	1	3
17	79042565	B5.01	1	1
5	79042633	F5.10	1	1
6	79042639	F5.10	1	1
7	79042640	F5.10	1	1
8	79042641	F5.10	1	1
23	79042643	F4.01	1	2
25	79042643	F4.01/ 1	1	2
24	79042644	F4.01	1	2
26	79042644	F4.01/ 1	1	2
31	79042679	B2.13	2	1
32	79042680	B2.13	2	1
13	79042682	B2.13	3	1
9	79042684	B2.13	3	1
35	79042687	B2.13	2	1
14	79042688	B2.13	3	1
37	79042690	B2.13	2	1
23	79042691	B2.13	3	1
21	79042693	B2.13	3	1
22	79042694	B2.13	1	1
11	79042694	B2.13	3	1
41	79042701	B2.13	2	1
42	79042757	B2.13	2	1
6	79042758	B2.13	3	1
2	79042812	F4.01/ 1	6	1
3	79042813	F4.01/ 1	6	1
25	79042823	F4.01	1	2
27	79042823	F4.01/ 1	1	2
23	79042843	F4.01	4	2
14	79042843	F4.01/ 1	4	1
14	79042844	F4.01	2	1
14	79042844	F4.01/ 1	2	1
31	79042879	A2.21	1	2
18	79042888	L1.01	3	1
14	79042894	A3.01	4	1
15	79042898	A3.01	4	1
17	79042903	A3.01	4	1
15	79042926	A3.01	4	1
16	79042930	A3.01	4	1
23	79042945	B2.13	1	1
24	79042948	B2.13	1	1
25	79042949	B2.13	1	1
26	79042951	B2.13	1	1
27	79042954	B2.13	1	1
28	79042957	B2.13	1	2
29	79042960	B2.13	1	2
30	79042961	B2.13	1	2

ITEM	PART N.	SGR.	TAV.	PAG.
31	79042964	B2.13	1	2
2	79042965	L3.10	1	1
32	79042966	B2.13	1	2
10	79043002	B2.30/ 1	2	1
11	79043003	B2.30/ 1	2	1
12	79043004	B2.30/ 1	2	1
6	79043015	D2.22	2	1
4	79043018	F4.01/ 1	6	1
5	79043019	F4.01/ 1	6	1
5	79043020	F4.01/ 1	6	1
15	79043026	B2.30/ 1	1	1
15	79043028	B2.33/ 1	1	1
12	79043081	L1.01	4	1
26	79043091	A2.21	1	1
21	79043102	L1.01	4	1
21	79043102	L1.01	4A	1
15	79043143	L1.04	2	1
16	79043144	L1.04	2	1
16	79043491	B2.07	1	1
20	79043494	B2.10/ A	2	1
14	79043503	B2.10/ A	2	1
8	79043507	B2.10/ A	2	1
13	79043508	B2.10/ A	2	1
16	79043509	B2.10/ A	2	1
12	79043511	B2.10/ A	2	1
31	79043516	B2.10	1	2
23	79043516	B2.10/ A	2	1
9	79043546	B2.34	1	1
10	79043547	B2.34	1	1
11	79043548	B2.34	1	1
12	79043549	B2.34	1	1
13	79043550	B2.34	1	1
14	79043551	B2.34	1	1
43	79043575	E3.02/ 4	1	2
44	79043576	E3.02/ 4	1	2

ITEM	PART N.	SGR.	TAV.	PAG.
22	79043577	E3.13/ 1	1	1
22	79043584	E3.13	1	1
4	79043621	B2.30	2	1
16	79043664	E3.13/ 2	1	1
30	79043710	L3.10	1	2
3	79043802	D3.34	3	1
3	79043802	D3.34	3A	1
15	79043806	L3.04	2	1
1	79043890	L4.10/ 6	1	1
1	79043891	L4.10/ 7	1	1
1	79043892	L4.10/ 8	1	1
1	79043893	L4.10/ 9	1	1
1	79043894	L4.10/10	1	1
1	79043895	L4.10/11	1	1
13	79043950	B1.09	2	1
15	79043952	B2.35/ A	1	1
15	79043952	B2.35/ 2	1	1
16	79043953	B2.35/ A	1	1
16	79043953	B2.35/ 2	1	1
17	79043954	B2.35/ A	1	1
17	79043954	B2.35/ 2	1	1
18	79043955	B1.09	2	2
8	79043955	B1.10	2	1
44	79043960	B2.06	1	2
33	79043964	B2.06	1	2
8	79043966	B1.08	1	1
12	79044016	D3.34	2	1
18	79044016	D3.37	1	2
17	79044016	D3.37/ 1	1	1
18	79044016	D3.38	1	1
6	79044017	D3.34	2	1
6	79044017	D3.37	1	1
6	79044017	D3.37/ 1	1	1
5	79044018	D3.34	2	1
5	79044018	D3.37	1	1

ITEM	PART N.	SGR.	TAV.	PAG.
5	79044018	D3.37/ 1	1	1
14	79044023	D3.38	1	1
13	79044025	D3.38	1	1
23	79044027	D3.33	1	2
15	79044134	F3.01	1	2
14	79044135	F3.01	1	2
13	79044137	F3.01	1	2
19	79044168	F4.01	4	2
8	79044179	A2.43/ 2	2	1
4	79044179	A2.43/ 3	1	1
9	79044180	A2.43/ 2	2	1
1	79044180	A2.43/ 3	1	1
10	79044181	A2.43/ 2	2	1
5	79044181	A2.43/ 3	1	1
11	79044182	A2.43/ 2	2	1
6	79044182	A2.43/ 3	1	1
12	79044183	A2.43/ 2	2	1
7	79044183	A2.43/ 3	1	1
3	79044184	A2.43/ 2	1	1
5	79044187	L1.01/ 3	1	1
4	79044212	A2.43/ 2	1	1
4	79044233	A2.43/ 2	2	1
10	79044372	E3.02	6	1
10	79044373	E3.02	6	1
17	79044374	E3.32/ 4	1	1
18	79044379	E3.32/ 4	1	1
18	79044380	E3.32/ 4	1	1
9	79044381	E3.32/ 3	1	1
5	79044639	L1.25	1	1
8	79044692	B2.35	1	1
10	79044692	B2.35/ 1	1	1
23	79044711	F4.01	4	2
14	79044711	F4.01/ 1	4	1
3	79044801	A2.43/ 2	2	1
5	79044805	A2.43/ 2	2	1

ITEM	PART N.	SGR.	TAV.	PAG.
6	79044809	L1.01/ 3	1	1
12	79044868	A2.56	1	1
33	79045063	D3.34	3	2
33	79045065	D3.34	3	2
33	79045067	L1.04	7	1
33	79045067	L1.04/ 1	8	1
16	79045236	E3.02/ 3	1	1
16	79045316	L1.01	3	1
5	79045319	L1.04	9	1
5	79045319	L1.04/ 1	10	1
33	79045321	D2.23	1	3
1	79045358	A2.01/ 1	1	1
27	79045516	E3.02	3	2
36	79045814	L3.10	1	2
26	79045842	D3.40	1	1
13	79045843	D3.40/ 1	1	1
12	79045845	E3.02	8	1
13	79045869	A3.01	4	1
11	79045918	A2.28	1	1
23	79045918	A2.28/ 1	1	1
8	79045919	A2.28/ 1	1	1
2	79045920	A2.28	2	1
8	79045920	A2.28/ 1	2	1
1	79045921	A2.28	2	1
21	79045921	A2.28/ 1	2	1
3	79046214	D1.03	1	1
2	79046252	A2.28	1	1
3	79046454	B1.10	1	1
13	79046497	A2.56	1	1
14	79046499	A2.56	1	1
15	79046500	A2.56	1	1
19	79046501	A2.56	1	2
19	79046502	A2.56	1	2
6	79046506	L3.12	2	1
8	79046507	L3.12	1	1
9	79046508	L3.12	1	1
10	79046509	L3.12	1	2
11	79046510	L3.12	1	2
5	79046510	L3.12	2	1
33	79046544	A2.28	2	3
33	79046545	A2.28	2	3
33	79046546	A2.28	2	3
2	79046549	A2.28	3	1
9	79046604	L1.04	4	1
9	79046604	L1.04/ 1	5	1
1	79046606	L1.04	4	1
1	79046606	L1.04/ 1	5	1
4	79046903	A2.01	1	1
13	79046910	L1.04	4	1
13	79046910	L1.04/ 1	5	1
5	79047022	A2.23	1	1
6	79047024	A2.23	1	1
7	79047025	A2.23	1	1
31	79047162	L1.01/ 1	1	2
1	79047162	L1.01/ 2	2	1
1	79047162	L1.01/ 3	2	1
32	79047163	L1.01/ 1	1	2
20	79047163	L1.01/ 2	2	2
20	79047163	L1.01/ 3	2	1
32	79047164	L1.01/ 1	1	2
20	79047164	L1.01/ 2	2	2
20	79047164	L1.01/ 3	2	1
7	79047702	B2.21/ 2	1	1
15	79047727	E3.32/ 2	1	1
19	79047728	E3.32	1	1
16	79047728	E3.32/ 4	1	1
11	79047729	E3.32/ 1	1	1
12	79047729	E3.32/ 3	1	1
1	79047918	E3.02/ 1	1	1
10	79047919	E3.02	6	2
10	79047920	E3.02	6	2
13	79047921	E3.02/ 3	1	1
10	79047922	E3.02/ 2	1	1
10	79047924	E3.02	6	2
10	79047925	E3.02	6	2
25	79048257	D1.03	1	1
7	79048260	D3.40	2	1
16	79048326	F4.01	4	2
10	79048326	F4.01/ 1	4	1
1	79049304	L1.04	2	1
1	79049304	L1.04/ 1	2	1
25	79049305	L1.04	2	1
25	79049305	L1.04/ 1	2	1
26	79049306	L1.04	2	1
26	79049306	L1.04/ 1	2	1
16	79050036	B5.01	1	1
17	79050039	B5.01	1	1
2	79050328	L1.04	1	1
10	79050328	L1.04	10	1
2	79050328	L1.04/ 1	1	1
60	79050330	L1.04	7	2
60	79050330	L1.04/ 1	8	2
26	79050406	A2.21	1	2
18	79050421	L3.04	1	1
12	79050435	A2.27	1	1
7	79050753	A2.27	2	1
26	79050766	B2.10/ A	2	1
1	79050769	B2.10/ A	1	1
32	79050813	B2.10/ A	2	2
45	79050849	B2.06/ 1	1	2
34	79050904	B4.08	1	2
32	79050924	B4.08	1	2
5	79050951	A2.27	2	1
4	79050952	A2.27	2	1
39	79050953	A2.27	2	3

ITEM	PART N.	SGR.	TAV.	PAG.
10	79050954	A2.27	2	1
20	79050955	A2.27	2	1
9	79050956	A2.27	1	1
11	79051014	F4.01	1	1
10	79051014	F4.01	4	1
12	79051020	F4.01/ 1	1	1
11	79051055	L1.04	4	1
11	79051055	L1.04/ 1	5	1
17	79051192	B1.09	2	2
29	79051192	B1.09/ 1	2	2
1	79051194	F5.10/ A	1	1
15	79051198	F4.01	2	1
2	79051200	F5.10/ A	1	1
17	79051845	A2.25	1	1
11	79051870	L1.04	2	1
11	79051870	L1.04/ 1	2	1
16	79052359	B2.04	3	1
19	79052359	B2.04	4	1
13	79052359	B2.04/ 3	2	1
14	79052359	B2.04/ 3	3	1
21	79052359	B2.04/ 3	4	1
9	79053146	A4.09	2	1
7	79053146	A4.09/ 3	1	1
4	79053153	B2.30	2	1
13	79053154	B2.34	1	1
12	79053155	B2.34	1	1
11	79053168	B2.34	1	1
15	79053290	A2.22/ 2	1	1
25	79053350	F4.01	1	2
29	79053427	L1.04	7	1
29	79053427	L1.04/ 1	8	1
28	79053428	L1.04	1	2
28	79053428	L1.04/ 1	1	2
1	79053430	L1.04	6	1
1	79053430	L1.04/ 1	7	1
6	79053472	L1.04	7	1
6	79053472	L1.04/ 1	8	1
5	79053473	L1.04	10	1
14	79053473	L1.04/ 1	11	1
15	79053475	B2.34	1	1
14	79054093	B1.09	2	2
9	79054094	B1.05	1	1
4	79054137	F5.10	1	1
3	79054137	F5.10/ A	1	1
5	79054141	F5.10	1	1
4	79054141	F5.10/ A	1	1
12	79054632	L1.01	4A	1
12	79054633	L1.01	4A	1
18	79054634	L1.01	4A	1
23	79054635	L1.01	4A	1
22	79054636	L1.01	4A	1
4	79055900	D2.29	1	1
17	79055990	B2.01/ 1	1	1
21	79055991	B2.01/ 1	3	1
28	79056086	F4.01/ 1	1	2
25	79056470	F4.01	4	2
7	79056506	B2.04/ 2	1	1
5	79056511	L1.04	5	1
8	79056754	E3.02	8	1
10	79056768	L1.04/ 1	11	1
11	79057506	B2.04/ 1	1	1
7	79057506	B2.04/ 1	2	1
7	79057506	B2.04/ 1	3	1
4	79057506	B2.04/ 1	4	1
7	79057506	B2.04/ 2	2	1
7	79057506	B2.04/ 2	3	1
6	79057506	B2.04/ 2	4	1
38	79057760	L1.01	1	2
7	79058251	E3.15/ A	1	1
9	79058480	F2.05/ A	1	1
9	79058480	F2.05/ 3	1	1
10	79058481	F2.05/ A	1	1
17	79058481	F2.05/ 3	1	1
11	79058482	F2.05/ A	1	1
11	79058482	F2.05/ 3	1	1
12	79058483	F2.05/ A	1	1
12	79058483	F2.05/ 3	1	1
13	79058484	F2.05/ A	1	1
13	79058484	F2.05/ 3	1	1
14	79058485	F2.05/ A	1	1
14	79058485	F2.05/ 3	1	1
15	79058486	F2.05/ A	1	1
15	79058486	F2.05/ 3	1	1
16	79058487	F2.05/ A	1	1
16	79058487	F2.05/ 3	1	1
17	79058488	F2.05/ A	1	1
18	79058489	F2.05/ A	1	1
18	79058489	F2.05/ 3	1	1
19	79058490	F2.05/ A	1	1
19	79058490	F2.05/ 3	1	1
20	79058491	F2.05/ A	1	1
20	79058491	F2.05/ 3	1	1
21	79058492	F2.05/ A	1	1
21	79058492	F2.05/ 3	1	1
22	79058493	F2.05/ A	1	1
22	79058493	F2.05/ 3	1	1
23	79058494	F2.05/ A	1	1
24	79058495	F2.05/ A	1	1
24	79058495	F2.05/ 3	1	1
25	79058496	F2.05/ A	1	1
25	79058496	F2.05/ 3	1	1
26	79058497	F2.05/ A	1	1
26	79058497	F2.05/ 3	1	1
27	79058498	F2.05/ A	1	1
27	79058498	F2.05/ 3	1	1

ITEM	PART N.	SGR.	TAV.	PAG.
28	79058499	F2.05/ A	1	2
28	79058499	F2.05/ 3	1	2
29	79058500	F2.05/ A	1	2
29	79058500	F2.05/ 3	1	2
30	79058501	F2.05/ A	1	2
30	79058501	F2.05/ 3	1	2
31	79058502	F2.05/ A	1	2
32	79058503	F2.05/ A	1	2
32	79058503	F2.05/ 3	1	2
2	79058573	D2.27/ A	1	1
2	79058573	D2.27/ A	2	1
9	79058644	F4.01	2	1
9	79058644	F4.01/ 1	2	1
7	79060710	B1.05/ 1	1	1
17	79061043	E3.02	5	1
3	79061087	D2.20	1	1
35	79062441	L1.01	1	2
1	79062556	A4.02/ 1	1	1
2	79062557	A4.02/ 1	1	1
3	79062558	A4.02/ 1	1	1
13	79062559	A4.02/ 1	1	1
15	79062562	A4.02/ 1	1	1
14	79062563	A4.02/ 1	1	1
9	79062564	A4.02/ 1	1	1
10	79062565	A4.02/ 1	1	1
11	79062567	A4.02/ 1	1	1
12	79062569	A4.02/ 1	1	1
8	79062573	A4.02/ 1	1	1
30	79062575	A1.02	2	2
1	79062587	F3.01	1	1
8	79062734	H1.01/ A	1	1
29	79062768	A2.28	2	3
24	79062771	A2.28	2	2
24	79062772	A2.28	2	2
24	79062773	A2.28	2	2
24	79062774	A2.28	2	2
24	79062775	A2.28	2	2
24	79062776	A2.28	2	2
24	79062777	A2.28	2	2
24	79062778	A2.28	2	2
24	79062779	A2.28	2	2
24	79062780	A2.28	2	2
24	79062781	A2.28	2	2
24	79062782	A2.28	2	2
24	79062783	A2.28	2	2
24	79062784	A2.28	2	2
24	79062785	A2.28	2	3
24	79062786	A2.28	2	3
24	79062788	A2.28	2	3
23	79063957	F2.05/ 3	1	1
11	79064201	B2.01	2	1
11	79064201	B2.01/ 1	2	1
4	79064503	B2.01	3	1
11	79064620	L1.04/ 1	1	1
23	79065245	B1.08	1	2
1	79065453	B2.06/ 2	1	1
4	79065459	B2.06/ 2	1	1
6	79065462	B2.06/ 2	1	1
14	79065663	A0.02/ 1	1	1
3	79066184	D2.23	2	1
20	79066515	F3.03/ A	1	1
2	79066515	F3.03/ B	1	1
1	79067804	F3.01	1	1
13	79068111	F2.05/ 2	1	1
4	79068201	A2.43/ 2	3	1
4	79068251	B1.10	2	1
1	79068357	A2.56/ 1	1	1
4	79068379	A2.56/ 1	1	1
5	79068427	F2.05/ 2	1	1
6	79068428	F2.05/ 2	1	1
4	79068429	F2.05/ 2	1	1
1	79068430	F2.05/ 2	1	1
2	79068431	F2.05/ 2	1	1
8	79068432	F2.05/ 2	1	1
7	79068433	F2.05/ 2	1	1
3	79068434	F2.05/ 2	1	1
13	79068721	B1.09	2	1
18	79068722	B2.35/ 2	1	1
16	79069353	B1.09	2	2
15	79069639	A2.43/ 2	2	1
9	79069639	A2.43/ 3	1	1
6	79069690	D2.27/ A	1	1
10	79069691	D2.27/ A	1	1
1	79069693	D2.27/ A	2	1
1	79069695	D2.27/ A	3	1
1	79069696	D2.27/ A	1	1
7	79069697	D2.27/ A	1	1
9	79069698	D2.27/ A	1	1
11	79069701	D2.27/ A	1	1
8	79069701	D2.27/ A	2	1
2	79069701	D2.27/ A	3	1
7	79069702	D2.27/ A	2	1
12	79069703	D2.27/ A	1	1
6	79069704	D2.27/ A	2	1
8	79069960	D2.27/ A	1	1
5	79069961	D2.27/ A	1	1
16	79070220	D2.30/ 1	1	1
17	79070221	D2.30/ 1	1	1
15	79070222	D2.30/ 1	1	1
1	79070235	A2.35/ 3	1	1
1	79070238	A2.35/ 2	1	1
3	79070487	A2.43/ 2	3	1
17	79070615	B2.04/ 1	1	1
6	79071530	A2.22/ 2	1	1
1	79071533	A1.25/ 1	1	1

ITEM	PART N.	SGR.	TAV.	PAG.
9	79071533	A2.22/ 2	1	1
10	79071537	A2.22/ 2	1	1
8	79071765	B2.04/ 1	2	1
9	79071765	B2.04/ 2	2	1
15	79071781	B2.04/ 1	1	1
8	79071781	B2.04/ 1	3	1
5	79071781	B2.04/ 1	4	1
12	79071781	B2.04/ 2	1	1
9	79071781	B2.04/ 2	3	1
7	79071781	B2.04/ 2	4	1
16	79071783	B2.04/ 1	1	1
3	79071789	B2.04/ 1	1	1
2	79071789	B2.04/ 1	2	1
2	79071789	B2.04/ 1	3	1
2	79071789	B2.04/ 2	1	1
2	79071789	B2.04/ 2	2	1
2	79071789	B2.04/ 2	3	1
3	79071789	B2.04/ 2	4	1
11	79072543	F4.01	2	1
11	79072543	F4.01/ 1	2	1
12	79072544	F4.01	2	1
12	79072544	F4.01/ 1	2	1
2	79072959	B2.04/ 1	1	1
1	79072961	A2.43/ 1	1	1
17	79073033	F4.01	4	2
11	79073033	F4.01/ 1	1	1
11	79073033	F4.01/ 1	4	1
1	79073956	A2.53	1	1
20	79074702	F3.03/ 1	1	1
3	79074704	F3.03/ 1	1	1
8	79074705	F3.03/ 1	1	1
19	79074706	F3.03/ B	1	1
19	79074706	F3.03/ 1	1	1
13	79074707	F3.03/ 1	1	1
14	79074708	F3.03/ 1	1	1
10	79074709	F3.03/ 1	1	1
21	79074710	F3.03/ 1	1	1
11	79074711	F3.03/ 1	1	1
17	79074712	F3.03/ 1	1	1
18	79074713	F3.03/ 1	1	1
23	79074714	F3.03/ 1	1	1
5	79074715	F3.03/ 1	1	1
4	79075454	A2.43/ 1	1	1
19	79075883	F3.03/ A	1	1
22	79075883	F3.03/ 1	1	1
28	79076189	A2.27	2	2
10	79076344	F4.01	2	1
10	79076344	F4.01/ 1	2	1
37	79077036	D2.23	1	4
6	79077037	D2.30/ 1	1	1
30	79077584	B2.04/ 1	1	2
19	79077584	B2.04/ 1	2	1
18	79077584	B2.04/ 1	3	1
15	79077584	B2.04/ 1	4	1
20	79077584	B2.04/ 2	1	1
19	79077584	B2.04/ 2	2	1
17	79077584	B2.04/ 2	3	1
16	79077584	B2.04/ 2	4	1
29	79078337	A3.01/ 1	3	2
5	79078781	F3.03/ B	1	1
6	79078921	F3.03/ B	1	1
10	79078922	F3.03/ B	1	1
16	79078923	F3.03/ B	1	1
17	79078924	F3.03/ B	1	1
21	79078925	F3.03/ B	1	1
18	79078926	F3.03/ B	1	1
1	79079932	D3.40	3	1
1	79079933	D3.40/ 1	3	1
14	79080362	D2.29	2	1
1	79081451	A2.22/ 2	1	1
11	79081674	A2.24/ 1	2	1
10	79082221	D3.40	3	1
10	79082221	D3.40/ 1	3	1
7	79082230	D3.40	3	1
7	79082230	D3.40/ 1	3	1
6	79082231	D3.40	3	1
6	79082231	D3.40/ 1	3	1
9	79082232	D3.40	3	1
9	79082232	D3.40/ 1	3	1
8	79082233	D3.40	3	1
8	79082233	D3.40/ 1	3	1
5	79082234	D3.40	3	1
5	79082234	D3.40/ 1	3	1
20	79083426	A2.43/ 2	2	1
19	79083427	A2.43/ 2	2	1
2	79083438	A2.43/ 2	4	1
4	79083439	A2.43/ 2	4	1
5	79083440	A2.43/ 2	4	1
6	79083441	A2.43/ 2	4	1
7	79083442	A2.43/ 2	4	1
10	79083443	A2.43/ 2	4	1
11	79083444	A2.43/ 2	4	1
14	79083445	A2.43/ 2	4	1
15	79083446	A2.43/ 2	4	1
16	79083447	A2.43/ 2	4	1
2	79083448	A2.43/ 2	5	1
18	79083449	A2.43/ 2	4	1
19	79083450	A2.43/ 2	4	1
20	79083451	A2.43/ 2	4	1
3	79083452	A2.43/ 2	5	1
4	79083453	A2.43/ 2	5	1
5	79083454	A2.43/ 2	5	1
6	79083455	A2.43/ 2	5	1
1	79083456	A2.43/ 2	6	1
2	79083457	A2.43/ 2	6	1

ITEM	PART N.	SGR.	TAV.	PAG.
3	79083458	A2.43/ 2	6	1
6	79083459	A2.43/ 2	6	1
7	79083460	A2.43/ 2	6	1
8	79083461	A2.43/ 2	6	1
10	79083462	A2.43/ 2	6	1
11	79083463	A2.43/ 2	6	1
12	79083464	A2.43/ 2	6	1
13	79083465	A2.43/ 2	6	1
14	79083466	A2.43/ 2	6	1
32	79083467	A2.43/ 2	6	2
16	79083468	A2.43/ 2	6	1
17	79083469	A2.43/ 2	6	1
20	79083470	A2.43/ 2	6	1
21	79083471	A2.43/ 2	6	1
22	79083472	A2.43/ 2	6	1
23	79083473	A2.43/ 2	6	1
24	79083474	A2.43/ 2	6	1
26	79083475	A2.43/ 2	6	1
28	79083476	A2.43/ 2	6	2
29	79083477	A2.43/ 2	6	2
25	79083478	A2.43/ 2	5	1
8	79083479	A2.43/ 2	5	1
9	79083480	A2.43/ 2	5	1
10	79083481	A2.43/ 2	5	1
11	79083482	A2.43/ 2	5	1
12	79083483	A2.43/ 2	5	1
13	79083486	A2.43/ 2	5	1
14	79083487	A2.43/ 2	5	1
15	79083488	A2.43/ 2	5	1
17	79083489	A2.43/ 2	5	1
18	79083490	A2.43/ 2	5	1
19	79083491	A2.43/ 2	5	1
20	79083492	A2.43/ 2	5	1
21	79083493	A2.43/ 2	5	1
22	79083494	A2.43/ 2	5	1
23	79083495	A2.43/ 2	5	1
24	79083496	A2.43/ 2	5	1
1	79083497	A2.43/ 2	5	1
42	79083842	A2.01	1	3
9	79083842	A2.24/ 1	2	1
7	79083842	B1.15	1	1
9	79083844	A2.43/ 4	3	1
43	79083847	A4.02/ 2	2	2
14	79083848	A4.02/ 2	1	1
8	79083849	A2.22/ 2	1	1
2	79083852	A2.22/ 2	1	1
1	79084207	L4.10	1	1
23	79084753	A2.01	1	2
22	79086656	A2.52	1	1
30	79086656	A2.54/ 1	1	2
22	79086656	A3.01/ 1	5	1
18	79086656	A4.02/ 2	1	1
50	79086656	A4.02/ 2	2	3
33	79087380	A2.01	1	2
40	79087381	A2.01	1	3
17	79087383	A4.02/ 2	1	1
45	79087384	A4.02/ 2	2	2
46	79087385	A4.02/ 2	2	2
9	79087387	A4.01	1	1
12	79087388	A4.01	1	1
13	79087389	A4.01	1	1
7	79087390	A2.22/ 2	1	1
31	79087392	L1.01	2	2
28	79087393	L1.01	3	2
11	79087394	L3.12	1	2
9	79087395	L3.12	1	1
29	79087821	A2.21	1	2
20	79088038	A2.43/ 4	1	1
19	79088085	A2.43/ 4	1	1
16	79088086	A2.43/ 4	1	1
15	79088089	A2.43/ 4	1	1
11	79092232	E3.32/ 1	1	1
12	79092232	E3.32/ 3	1	1
19	79093023	E3.32	1	1
5	81113543	A2.24/ 1	1	1
24	98203238	L1.01	3	2

00000000..	A001	11306921..	A119	70669359..	A243	70919310..	F505	70929665..	E101(3)	73108357..	L104(3)	73114701..	E102(1)	73124643..	F401(4)
00587912..	A001	11390531..	A001	70677004..	F501	70919312..	E101(3)	70929915..	E102(1)	73108440..	L601/1	73114702..	E102(1)	73124664..	E102(1)
04182461..	F401(1)	11398031..	A001	70677006..	A243	70919383..	E101(3)	70930494..	E101(4)	73108441..	L601/1	73114722..	E102(1)	73124665..	E102(1)
04182462..	F401(1)	11702921..	F401(3)	70677008..	L308	70919439..	L104(1)	70930495..	F505	73110484..	A243	73115559..	A243	73124704..	E102(1)
04643544..	A119	11945008..	F301(1)	70677012..	L308	70920237..	L104(1)	70930850..	L104/1	73110689..	L308	73115562..	A243	73124879..	E102(1)
04728940..	A119	11947708..	F301(1)	70685147..	L308	70920558..	L104(1)	70930871..	E101(3)	73110691..	L308	73115563..	A243	73130094..	L104/2
04744741..	A119	12164121..	A001	70695471..	F301(1)	70920582..	L109	70931274..	L308	73110713..	L308	73115567..	A243	73130095..	L104/2
04761558..	A119	12164521..	A001	70695694..	F629(1)	70920651..	L601/1	70932508..	E101(3)	73110860..	L308	73115568..	A243	73130096..	L104/2
04764040..	A119	12164711..	A119	70696241..	L109	70921076..	L601/1	70932509..	E101(2)	73110861..	L308	73115662..	A243	73132158..	A243
04950259..	F301(1)	13275811..	F401(1)	70696242..	L104(1)	70921175..	L308	70932510..	E101(2)	73110862..	L308	73118599..	F401(4)	73132473..	L104/2
04952553..	F401(1)	13598221..	A001	70696260..	F505	70921241..	L308	70932747..	A243	73110865..	L308	73118605..	F401(4)	73133864..	L109
04954336..	F301(1)	13605711..	L601/1	70696279..	F401(4)	70921556..	L104/1	70932835..	E101(4)	73112223..	F505	73121737..	E101(4)	73133865..	L104(1)
04955094..	A001	14142490..	F401(1)	70697501..	L308	70921565..	E101(2)	70932944..	L308	73112224..	L104(1)	73121841..	F505	73133867..	L104(1)
04982514..	F401(1)	14199511..	A001	70907722..	F505	70921912..	L104/2	70933135..	E101(2)	73112299..	F505	73121861..	F505	73133868..	L104(1)
04984322..	E102(2)	14257831..	A001	70910210..	L104(1)	70921914..	L104/2	70936230..	F505	73112915..	F401(4)	73122184..	E101(4)	73133886..	L104(1)
04994039..	A001	14274721..	A119	70910243..	F505	70921915..	L104/2	70936290..	F505	73114664..	L104(1)	73122739..	F501	73133887..	L104(1)
10182617..	E102(2)	15896218..	F301(1)	70910287..	L601/1	70922121..	E102(1)	73052086..	A243	73114665..	E102(2)	73122995..	F505	73133888..	L104(1)
10284585..	E102(2)	15970421..	A243	70910533..	F505	70922200..	E101(4)	73063488..	L104(3)	73114666..	E101(3)	73124144..	L104(3)	73133906..	L104(1)
10295385..	E102(2)	15997331..	A001	70911024..	F505	70922287..	L104(1)	73064776..	L308	73114668..	E101(2)	73124231..	L104(1)	73133938..	L104/2
10441590..	F401(1)	16043031..	F401(3)	70911025..	E101(2)	70922300..	E101(3)	73070169..	A243	73114669..	E101(2)	73124232..	L104(1)	73133939..	L104/2
10450090..	F401(3)	16043621..	L601/1	70911026..	L601/1	70922660..	E102(2)	73074000..	E102(2)	73114670..	E101(3)	73124233..	L104(1)	73133940..	L104/2
10450190..	F401(3)	16043631..	A243	70911030..	L104(1)	70922744..	L104(1)	73075836..	L109	73114671..	F505	73124234..	L104(1)	73134296..	E102(1)
10450390..	F301(1)	16100818..	F301(1)	70911041..	E101(2)	70922763..	E101(4)	73075858..	L601/1	73114678..	L104(1)	73124235..	L104(1)	73134316..	E102/1
10516670..	A243	16100821..	A243	70911114..	A243	70922843..	E101(2)	73077433..	L109	73114679..	E101(4)	73124236..	L104(1)	73137759..	L109
10516671..	L601/1	16327231..	A119	70911327..	A243	70925369..	E102(1)	73107110..	E102(1)	73114680..	E101(4)	73124242..	L104(3)	73137760..	L109
10516871..	L601/1	61589070..	A119	70911841..	A243	70926192..	L109	73107188..	F505	73114681..	E101(4)	73124243..	L104(3)	73137761..	L109
10517271..	A001	70023633..	L308	70912241..	L104(1)	70927084..	E102(1)	73107263..	E102(2)	73114682..	E101(4)	73124245..	L104(3)	73137762..	L109
10520221..	A001	70048922..	F629(1)	70912441..	L104/1	70927219..	L104(1)	73107282..	E101(3)	73114683..	E101(4)	73124246..	L104(3)	73137763..	L104(1)
10571571..	F401(1)	70089894..	E102(2)	70912589..	A243	70927340..	E101(4)	73107446..	E102(1)	73114684..	E101(4)	73124247..	L104(3)	73137764..	L104(1)
10571771..	F301(1)	70182763..	F629(1)	70912597..	E101(4)	70927401..	L109	73107447..	F505	73114685..	E101(4)	73124248..	L104(3)	73137765..	L104(1)
10571871..	F401(3)	70183714..	F401(4)	70912731..	F629(1)	70928138..	A243	73107623..	E101(3)	73114687..	E102(1)	73124249..	L104(3)	73137766..	L104(1)
10571971..	F401(3)	70621428..	F629(1)	70912739..	F629(1)	70928182..	E102/1	73107629..	E102(1)	73114689..	F401(4)	73124250..	L104(3)	73137767..	L109
10788221..	F401(3)	70621429..	F401(1)	70913432..	L104/1	70928358..	L104(1)	73107631..	E101(3)	73114691..	E101(3)	73124253..	L104(1)	73137768..	L109
10902430..	F501	70621724..	F629(1)	70915891..	E101(2)	70928452..	L104(1)	73107633..	E101(3)	73114692..	E101(3)	73124255..	E101(3)	73137769..	L104(1)
11052090..	F401(1)	70623195..	L104/2	70916964..	E102/1	70928470..	L104/2	73107635..	E101(3)	73114694..	E101(3)	73124256..	E101(3)	73137770..	L109
11103031..	F301(1)	70638282..	F629(1)	70917415..	F505	70928532..	L308	73107640..	E101(2)	73114695..	E101(3)	73124257..	L104(1)	73137771..	L109
11106231..	L601/1	70639388..	A243	70917452..	E102(1)	70928669..	L104/1	73107652..	E101(4)	73114696..	E102(1)	73124258..	L104(1)	73137772..	E102(2)
11112231..	F401(3)	70648167..	L104/2	70917479..	E101(4)	70928745..	E102(1)	73107665..	E101(4)	73114697..	E102(1)	73124616..	L104(1)	73137773..	F401(4)
11124931..	L308	70648180..	L308	70917730..	E101(4)	70929011..	E101(2)	73107666..	E102(1)	73114698..	E102(1)	73124638..	F505	73137778..	L104(1)
11198371..	A119	70665630..	F505	70919262..	F401(1)	70929167..	E101(4)	73108330..	L109	73114699..	E102(1)	73124639..	F505	73138080..	A243

73140363..	L104/1	79038373..	F401(3)	73148592...	A401(1B)	73299351...	A402/1	79035581...	E302/2A
73142112..	E102(1)	79038734..	F401(3)	73151560...	L104/2	73299354...	L101(1)	79035674...	E325(3)
73143763..	A243	79038735..	F401(3)	73152678...	A126	73299355...	F301(2A)	79036327...	E332/2A
73143936..	F401(3)	79040713..	F401(1)	73152679...	A126	73299356...	F301(2A)	79037569...	8
73144413..	F401(1)	79042643..	F401(1)	73152686...	A126	73299357...	F301(2A)	79038112...	E325(3)
73144497..	E102/1	79042644..	F401(1)	73152692...	A126	73299359...	F301(2A)	79038114...	E331(4)
73144498..	E102/1	79042823..	F401(1)	73152697...	A126	73299360...	F301(2A)	79038117...	E331(4)
73144501..	E102/1	79042843..	F401(3)	73152733...	F301(1A)	73299362...	F301(2A)	79038118...	E331(4)
73144502..	E102/1	Late Additions		73153056...	A401(1B)	73299363...	F301(2A)	79038119...	E331(4)
73144810..	E101(2)	00577567...	E331(4)	73154056...	A222	73299365...	F301(2A)	79038122...	E331(4)
		00772746...	A228/1(2)	73154057...	A222	76004810...	L308	79038370...	E332/2A
		00774457...	A233	73154063...	L101(2)	76014248...	A402(1)	79038733...	E325(3)
73144813..	E101(2)	04641875...	A224(3)	73154066...	8408	76014482...	A402/1	79038765...	E302/2A
73144814..	E101(2)	04641876...	A224(3)	73154067...	L104(1)	76014483...	A402/1	79040403...	E302/1
73144815..	E101(2)	04955094...	A001/2	73154083...	L101/1	76014486...	A402(1)	79040815...	E302/2A
73144816..	A119	05112653...	A108/1	73154084...	L101/1	76014487...	A402(1)	79040816...	E302/2A
73144817..	E101(2)	07329364...	F301(2A)	73154085...	L101/1	76014490...	D223(1)	79040831...	E302/2A
73144818..	E101(2)	08273636...	E332/2A	73154087...	L101/1	76016638...	8206/2	79040835...	L101(1)
73144819..	E101(2)	08283381...	E332/2A	73154088...	L101/1	76016682...	E332/2A	79042084...	E325(3)
73145059..	E101(2)	08284750...	E331(3)	73154090...	L101/1	76016717...	E332/2A	79044038...	A254
73145121..	E101(2)	08284751...	E331(3)	73154123...	A224(4)	76044231...	A401(2)	79044040...	A402(3)
73147248..	A001	08284753...	E331(3)	73154190...	8206/3	79006025...	E325(3)	79044041...	A402(2)
		08284807...	E331(3)	73154281...	A401(1A)	79012214...	A224(3)	79044043...	A402(3)
		08292259...	E332/2A	73154337...	A126	79012215...	A224(3)	79045257...	E302/2A
		08292367...	E332/2A	73154340...	A126	79012216...	A224(3)	79045848...	E331(3)
		08293266...	E331(3)	73154342...	A126	79012217...	A224(3)	79047469...	E331(4)
		08298265...	E332/2A	73154343...	A126	79012218...	A224(3)	79052359...	8204(2)
74029499..	A243	08298365...	E331(4)	73154344...	A126	79012219...	A224(3)	79056470...	F401(4)
76000905..	F401(1)	08829580...	A101/1(1)	73154345...	A126	79012691...	8	79059803...	8
76002402..	L601/1	10166411...	A224(2)	73154347...	A126	79012804...	8	79065575...	E332/2A
79006370..	F401(1)	10182614...	D223(1)	73154348...	A126	79017642...	8	79065576...	E332/2A
79011643..	F401(1)	10263360...	D223(1)	73154349...	A126	79018891...	8	79065577...	E332/2A
79011645..	F401(1)	10449890...	A301/1(3)	73154350...	A126	79019346...	8		
79011647..	F401(1)	11197779...	A402/2(1)	73154357...	A126	79019360...	8		
79011649..	F401(1)	11198471...	A224(4)	73154358...	A126	79019898...	8		
79013422..	F401(3)	11306921...	A224(4)	73154415...	A126	79026864...	E331(4)		
79017173..	F401(3)	11701721...	A222/2	73154416...	A126	79028476...	8		
		12646801...	E325(2)	73154419...	A126	79028866...	E331(4)		
		14458880...	D230	73154462...	E313	79029692...	F301(2A)		
		15977531...	B411	73154463...	A126	79030758...	E331(3)		
		16163437...	L308/2	73154471...	E313	79030794...	E302/2A		
		73021313...	A401(2)	73154479...	E313	79030796...	E325(3)		
79018477..	F301(1)	73053290...	A222/2	73154480...	E313	79030799...	E325(3)		
79019363..	F401(3)	73057574...	B206/3	73154677...	8411	79030800...	E325(3)		
79029742..	A001	73108409...	E101(4)	73155020...	A126	79030803...	E325(3)		
79029743..	A001	73108410...	E101(3)	73155151...	L125	79030804...	E325(3)		
79031355..	F401(3)	73114678...	L101(4A)	73155376...	A401(1)	79030846...	E302/2A		
79032398..	F401(1)	73131594...	B206/3	73155404...	A401(1B)	79030853...	E325(3)		
79035908..	F301(1)	73144554...	F301(1A)	73155405...	A401(1B)	79030855...	E325(3)		
79035976..	L601/1	73144555...	F301(1A)	73155536...	A401(1B)	79031505...	E332/2A		
79037370..	F401(1)	73145013...	E101(2)	73155736...	L125	79031650...	E332/2A		
79037382..	F401(1)	73145014...	E101(2)	73155737...	L125	79032043...	E302/2A		
		73145058...	E101(2)	73155738...	L125	79033553...	E302/2A		
		73145235...	A256	73155838...	L125	79033555...	E302/2A		
		73146691...	A401(1A)	73298448...	A402/1	79033557...	E302/2A		
				73298505...	A402/1	79033562...	E302/2A		
				73299349...	A402/1	79033563...	E302/2A		
				73299350...	A402/1	79035580...	E302/2A		

FIATALLIS NTR. 15.12.82

HOSE – TUBO FLESSIBILE – TUYAU FLEXIBLE – MANGA FLEXIBLE – SCHLAUCH

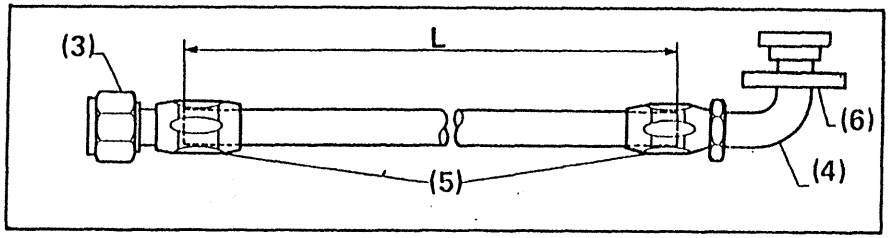



TYPE E
TIPO

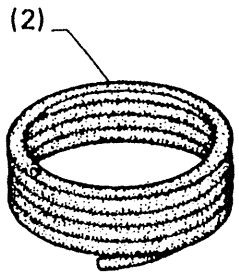

TYPE A
TIPO

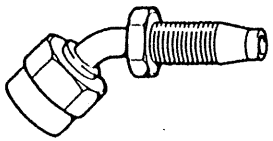

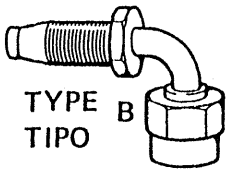

TYPE B
TIPO

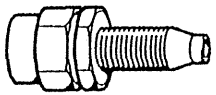

TYPE D
TIPO

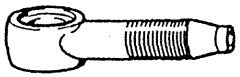

TYPE C
TIPO

NOTE : In the right hand column (1) the crimped–type hose assembly (fittings not re usable) is identified. Assembly number shown in the left hand column (1) indicates available replacement hose assembly (no crimped–type) with reusable components; the other columns indicate the components numbers for hose constructions in the field.

NOTA : La colonna (1) all'estrema destra identifica il tubo completo del tipo graffato dotato di raccordi non riutilizzabili. La colonna (1) all'estrema sinistra indica il tubo completo non graffato, dotato di raccordi riutilizzabili; le altre colonne riportano i numeri dei componenti per consentire la costruzione del tubo sul campo.

NOTE : La colonne (1) à l'extrême droite, indique le flexible complet plissé, muni de raccords non réutilisables. La colonne (1) à l'extrême gauche indique le flexible complet non plissé, muni de raccords réutilisables; les autres colonnes fournissent les numéros des composants permettant de construire le flexible sur place.

NOTA : La primera columna (1) a la derecha designa la manguera completa del tipo de solapa y dotado de racoros non recuperables. La primera (1) a la izquierda señala la manguera completa dotada de racores recuperables; las restantes columnas señalan los números de los componentes para facilitar la construcción del tubo en obras.

HINWEIS: In Spalt (1, ganz rechts) ist der komplette Schlauch der gefalteten Bauart mit nicht wieder anwendbaren Anschlüssen angegeben. In Spalt (1, ganz links) ist der komplette, faltenlose Schlauch mit wieder anwendbaren Anschlüssen angegeben. Die weiteren Spalte enthalten die Nummern der Bestandteile zum Zusammenbau des Schlauches auf dem Feld.

(1)	(2)	L	(3)	TYPE (3)	(4)	TYPE (4)	(5)	(6)	(1)

PAINTING AND MARKING

ITEM	PART NO.	QTY.	CODE	DESCRIPTION	DENOMINAZIONE
1	73127995	-	501U	PAINT,12 OZ.SPRAY CAN	VERNICE
2	73127996	-	501U	PAINT,GAL.CAN	VERNICE
3	79037569	1	8D	DECAL, LUBE & SERVICE GUIDE	DECALCOMANIA
4	73107895	1	8D	DECAL,"DO NOT START"	DECALCOMANIA
5	73108799	1	8D	DECAL,OPERATION	DECALCOMANIA
6	79012804	1	8D	DECAL,STARTUP,SHUTDOWN	DECALCOMANIA
7	73107891	1	8D	DECAL,MASTER SWITCH	DECALCOMANIA
8	73107881	2	8D	DECAL,BLADES & BELTS	DECALCOMANIA
9	73107897	2	8D	DECAL, INOPERATIVE BRAKES	DECALCOMANIA
10	73107890	4	8D	DECAL,SCISSORS POINT	DECALCOMANIA
11	73109131	1	8D	DECAL,INSTRUCTION MANUAL LOCATION	DECALCOMANIA
12	73107882	2	8D	DECAL,FLAMMABLE VAPORS	DECALCOMANIA
13	73107884	1	8D	DECAL,FLUID PRESSURE	DECALCOMANIA
14	73108929	2	8D	DECAL,TRACK TENSION	DECALCOMANIA
15	73107893	4	8D	DECAL,TRACK RELEASE SPRING	DECALCOMANIA
16	79016937	1	8D	DECAL,STEERING CLUTCH SPRING	DECALCOMANIA
17	--------	1	8D	DECAL,"ROPS"	DECALCOMANIA
18	73109097	2	8D	DECAL,COOLING SYSTEM	DECALCOMANIA
19	79012691	1	8D	DECAL,LIFTING POINTS	DECALCOMANIA
20	79017642	1	105P	PLATE,THROTTLE CONTROL	PIASTRA
21	79018891	1	8D	DECAL,IMPLEMENT CONT.	DECALCOMANIA
22	79019346	1	105P	PLATE,IMPLEMENT CONT.	PIASTRA
23	79019360	1	8D	DECAL,SHIFT CONTROL	DECALCOMANIA
24	79059803	1	8D	DECAL, FROWARD & REVERSE	DECALCOMANIA
25	79019898	1	8D	DECAL,LOCKING LEVER	DECALCOMANIA
26	79028476	1	8D	DECAL, IMPLEMENT LOCKING	DECALCOMANIA

KIT INDEX - INDICE DEI KITS - LISTE DES KITS - VERZEICHNIS DER ERSATSTEILSETZE - INDICE DE FORNITURAS

PART NUMBER	ITEM	KIT COMP. PART. N.	QTY	SGR.	TAV.	PAG.	GRID POS.	TRANS CODE	DESCRIPTION	DENOMINAZIONE
1901385										
	1	4707775	2	A1.03/ 1	2	1		90S	HALF RING	SEMIANELLO
	2	4707779	2	A1.03/ 1	2	1		90S	HALF RING	SEMIANELLO
1901386										
	1	4707776	2	A1.03/ 1	2	1		90S	HALF RING	SEMIANELLO
	2	4707780	2	A1.03/ 1	2	1		90S	HALF RING	SEMIANELLO
1901387										
	1	4708063	2	A1.03/ 1	2	1		90S	HALF RING	SEMIANELLO
	2	4708069	2	A1.03/ 1	2	1		90S	HALF RING	SEMIANELLO
1901388										
	1	4708064	2	A1.03/ 1	2	1		90S	HALF RING	SEMIANELLO
	2	4708070	2	A1.03/ 1	2	1		90S	HALF RING	SEMIANELLO
1901832										
	3	4722645	4	A1.03/ 1	2	1		103S	HALF BEARING	SEMICUSCINETTO
	4	4722651	4	A1.03/ 1	2	1		103S	HALF BEARING	SEMICUSCINETTO
	5	4722693	3	A1.03/ 1	2	1		103S	HALF BEARING	SEMICUSCINETTO
	6	4722699	3	A1.03/ 1	2	2		103S	HALF BEARING	SEMICUSCINETTO
1901833										
	3	4722646	4	A1.03/ 1	2	1		103S	HALF BEARING	SEMICUSCINETTO
	4	4722652	4	A1.03/ 1	2	1		103S	HALF BEARING	SEMICUSCINETTO
	5	4722694	3	A1.03/ 1	2	1		103S	HALF BEARING	SEMICUSCINETTO
	6	4722700	3	A1.03/ 1	2	2		103S	HALF BEARING	SEMICUSCINETTO
1901834										
	3	4722647	4	A1.03/ 1	2	1		103S	HALF BEARING	SEMICUSCINETTO

PART NUMBER	ITEM	KIT COMP. PART. N.	QTY	SGR.	TAV.	PAG.	GRID POS.	TRANS CODE	DESCRIPTION	DENOMINAZIONE
1901834										
	4	4722653	4	A1.03/ 1	2	1		103S	HALF BEARING	SEMICUSCINETTO
	5	4722695	3	A1.03/ 1	2	1		103S	HALF BEARING	SEMICUSCINETTO
	6	4722701	3	A1.03/ 1	2	2		103S	HALF BEARING	SEMICUSCINETTO
1901835										
	3	4722648	4	A1.03/ 1	2	1		103S	HALF BEARING	SEMICUSCINETTO
	4	4722654	4	A1.03/ 1	2	1		103S	HALF BEARING	SEMICUSCINETTO
	5	4722696	3	A1.03/ 1	2	1		103S	HALF BEARING	SEMICUSCINETTO
	6	4722702	3	A1.03/ 1	2	2		103S	HALF BEARING	SEMICUSCINETTO
1901836										
	3	4722649	4	A1.03/ 1	2	1		103S	HALF BEARING	SEMICUSCINETTO
	4	4722655	4	A1.03/ 1	2	1		103S	HALF BEARING	SEMICUSCINETTO
	5	4722697	3	A1.03/ 1	2	1		103S	HALF BEARING	SEMICUSCINETTO
	6	4722703	3	A1.03/ 1	2	2		103S	HALF BEARING	SEMICUSCINETTO
1901993										
	5	4775753	2	A1.05/ 1	1	1		103S	HALF BEARING	SEMICUSCINETTO
1901994										
	5	4775754	2	A1.05/ 1	1	1		103S	HALF BEARING	SEMICUSCINETTO
1901995										
	5	4775755	2	A1.05/ 1	1	1		103S	HALF BEARING	SEMICUSCINETTO
1901996										
	5	4775756	2	A1.05/ 1	1	1		103S	HALF BEARING	SEMICUSCINETTO
1901997										
	5	4775757	2	A1.05/ 1	1	1		103S	HALF BEARING	SEMICUSCINETTO

PART NUMBER	ITEM	KIT COMP. PART. N.	QTY	SGR.	TAV.	PAG.	GRID POS.	TRANS CODE	DESCRIPTION	DENOMINAZIONE
1902586										
	1	4712663	1	A1.05/ 1	1	1		50A	OILSCRAPER RING	ANELLO RASCHIAOLIO
	6	4796208	1	A1.05/ 1	1	1		53A	PISTON RING	ANELLO STANTUFFO
	7	4800402	1	A1.05/ 1	1	1		80P	PIN	PERNO
	3	4802671	1	A1.05/ 1	1	1		235S	PISTON	STANTUFFO
	9	8829266	1	A1.05/ 1	1	1		53A	PISTON RING	ANELLO STANTUFFO
	10	11060076	2	A1.05/ 1	1	1		187A	SNAP RING	ANELLO ELASTICO
1930234										
	1	4712663	1	A1.05/ 1	1	1		50A	OILSCRAPER RING	ANELLO RASCHIAOLIO
	6	4796208	1	A1.05/ 1	1	1		53A	PISTON RING	ANELLO STANTUFFO
	9	8829266	1	A1.05/ 1	1	1		53A	PISTON RING	ANELLO STANTUFFO
8281200										
	2	8272206	2	E3.29	1	1		158G	O-RING	GUARNIZIONE O-R
	3	8272207	2	E3.29	1	1		158G	O-RING	GUARNIZIONE O-R
	5	8272966	1	E3.29	1	1		75D	SPACER	DISTANZIALE
	9	8281199	2	E3.29	1	1		158G	O-RING	GUARNIZIONE O-R
	14	8287883	2	E3.29	1	1		158G	O-RING	GUARNIZIONE O-R
8281576										
	1	5110478	2	D2.27/ 1	1	1		123G	SEAL ASSY	GUARNIZIONE TENUTA FRONTALE
	1	5110478	2	D2.27/1A	1	1		123G	SEAL ASSY	GUARNIZIONE TENUTA FRONTALE
	2	8273909	2	D2.27/ 1	1	1		158G	O-RING	GUARNIZIONE O-R
	2	8273909	2	D2.27/1A	1	1		158G	O-RING	GUARNIZIONE O-R
	20	14460380	2	D2.27/ 1	1	1		158G	O-RING	GUARNIZIONE O-R
	20	14460380	2	D2.27/1A	1	1		158G	O-RING	GUARNIZIONE O-R
8294907										
	1	8273909	4	D2.27	3	1		158G	O-RING	GUARNIZIONE O-R
	2	8281201	4	D2.27	3	1		158G	O-RING	GUARNIZIONE O-R

PART NUMBER	ITEM	KIT COMP. PART. N.	QTY	SGR.	TAV.	PAG.	GRID POS.	TRANS CODE	DESCRIPTION	DENOMINAZIONE
8294907										
	3	8294816	3	D2.27	3	1		158G	O-RING	GUARNIZIONE O-R
	5	14458380	1	D2.27	3	1		158G	O-RING	GUARNIZIONE O-R
8299227										
	11	8299237	1	D2.27/ 2	1	1		158G	O-RING	GUARNIZIONE O-R
	12	8299238	2	D2.27/ 2	1	1		158G	O-RING	GUARNIZIONE O-R
	13	8299239	2	D2.27/ 2	1	1		158G	O-RING	GUARNIZIONE O-R
	16	14460380	2	D2.27/ 2	1	1		158G	O-RING	GUARNIZIONE O-R
79011168										
	4	79011168	K	A4.09	2	1		174C	BELTS	CINGHIE
79032739										
	4	14456481	2	E3.29/ 1	1	1		158G	O-RING	GUARNIZIONE O-R
	12	79032713	2	E3.29/ 1	1	1		123G	SEAL ASSY	GUARNIZIONE TENUTA FRONTALE
	14	79032715	2	E3.29/ 1	1	1		123G	SEAL ASSY	GUARNIZIONE TENUTA FRONTALE
	15	79032716	2	E3.29/ 1	1	1		45A	RING	ANELLO
	16	79032717	2	E3.29/ 1	1	1		123G	SEAL ASSY	GUARNIZIONE TENUTA FRONTALE
	17	79032718	2	E3.29/ 1	1	1		45A	RING	ANELLO
79035998										
	1	79035998	K	L4.10/ 1	1	1		2K	KIT	KIT
79035999										
	1	79035999	K	L4.10/ 2	1	1		2K	KIT	KIT
79036000										
	1	79036000	K	L4.10/ 3	1	1		2K	KIT	KIT
79036001										
	1	79036001	K	L4.10/ 5	1	1		2K	KIT	KIT

PART NUMBER	ITEM	KIT COMP. PART. N.	QTY	SGR.	TAV.	PAG.	GRID POS.	TRANS CODE	DESCRIPTION	DENOMINAZIONE
79036002										
	1	79036002	K	L4.10/ 4	1	1		2K	KIT	KIT
79037375										
	1	4161222	2	A1.01/ 1	2	1		122G	SEAL	GUARNIZIONE
	7	4760489	1	A1.01/ 1	2	1		122G	SEAL	GUARNIZIONE
	8	8829321	2	A1.01/ 1	2	1		122G	SEAL	GUARNIZIONE
	15	12638660	4	A1.01/ 1	2	1		131R	WASHER	ROSETTA
79037415										
	11	4698031	12	A1.05	1	1		103S	HALF BEARING	SEMICUSCINETTO
79037428										
	5	4691303	1	A1.03	2	1		103S	HALF BEARING	SEMICUSCINETTO
	11	4691309	1	A1.03	2	1		103S	HALF BEARING	SEMICUSCINETTO
	17	4691315	4	A1.03	2	1		103S	HALF BEARING	SEMICUSCINETTO
	23	4691321	1	A1.03	2	1		103S	HALF BEARING	SEMICUSCINETTO
	29	4691327	2	A1.03	2	2		103S	HALF BEARING	SEMICUSCINETTO
	35	4691333	1	A1.03	2	2		103S	HALF BEARING	SEMICUSCINETTO
	41	4691339	4	A1.03	2	2		103S	HALF BEARING	SEMICUSCINETTO
79037448										
	10	4720070	1	A1.02/ 1	1	1		122G	SEAL	GUARNIZIONE
	5	4723428	1	A3.01/ 1	3	1		122G	SEAL	GUARNIZIONE
	14	4796114	1	A1.02/ 1	1	1		122G	SEAL	GUARNIZIONE
	15	4796117	1	A1.02/ 1	1	1		122G	SEAL	GUARNIZIONE
	4	8818505	1	A1.02/ 1	2	1		122G	SEAL	GUARNIZIONE
	28	14458281	1	A1.02/ 1	1	2		158G	O-RING	GUARNIZIONE O-R
	19	14459381	1	A1.01/ 1	2	1		158G	O-RING	GUARNIZIONE O-R
	10	14483481	1	A1.02/ 1	2	1		158G	O-RING	GUARNIZIONE O-R
79037475										
	5	4691302	1	A1.03	2	1		103S	HALF BEARING	SEMICUSCINETTO

PART NUMBER	ITEM	KIT COMP. PART. N.	QTY	SGR.	TAV.	PAG.	GRID POS.	TRANS CODE	DESCRIPTION	DENOMINAZIONE
79037475										
	11	4691308	1	A1.03	2	1		103S	HALF BEARING	SEMICUSCINETTO
	17	4691314	4	A1.03	2	1		103S	HALF BEARING	SEMICUSCINETTO
	23	4691320	4	A1.03	2	1		103S	HALF BEARING	SEMICUSCINETTO
	29	4691326	2	A1.03	2	2		103S	HALF BEARING	SEMICUSCINETTO
	35	4691332	1	A1.03	2	2		103S	HALF BEARING	SEMICUSCINETTO
	41	4691338	4	A1.03	2	2		103S	HALF BEARING	SEMICUSCINETTO
79037786										
	5	4691301	1	A1.03	2	1		103S	HALF BEARING	SEMICUSCINETTO
	11	4691307	1	A1.03	2	1		103S	HALF BEARING	SEMICUSCINETTO
	17	4691313	4	A1.03	2	1		103S	HALF BEARING	SEMICUSCINETTO
	23	4691319	1	A1.03	2	1		103S	HALF BEARING	SEMICUSCINETTO
	29	4691325	2	A1.03	2	2		103S	HALF BEARING	SEMICUSCINETTO
	35	4691331	1	A1.03	2	2		103S	HALF BEARING	SEMICUSCINETTO
	41	4691337	4	A1.03	2	2		103S	HALF BEARING	SEMICUSCINETTO
79037997										
	1	79035997	K	L4.10	1	1		2K	KIT	KIT
79038721										
	6	79031248	6	A2.27/ 1	2	2		131R	WASHER	ROSETTA
	2	79032311	6	A2.27/ 1	2	2		20R	FITTING	RACCORDO
	13	79038391	6	A2.27/ 1	2	3		45A	RING	ANELLO
	17	79038392	6	A2.27/ 1	2	3		131R	WASHER	ROSETTA
	18	79038393	6	A2.27/ 1	2	3		75D	SPACER	DISTANZIALE
	19	79038438	6	A2.27/ 1	2	3		158G	O-RING	GUARNIZIONE O-R
	16	79038439	6	A2.27/ 1	2	3		65C	BOOT	CAPPUCCIO
	5	79038446	6	A2.27/ 1	2	2		100M	SPRING	MOLLA
	4	79038447	1	A2.27/ 1	2	2		50T	PLUG	TAPPO
	3	79038448	6	A2.27/ 1	2	2		158G	O-RING	GUARNIZIONE O-R

PART NUMBER	ITEM	KIT COMP. PART. N.	QTY	SGR.	TAV.	PAG.	GRID POS.	TRANS CODE	DESCRIPTION	DENOMINAZIONE
79038721										
	10	79038451	12	A2.27/ 1	2	2		158G	O-RING	GUARNIZIONE O-R
79038722										
	6	79031248	6	A2.27/ 1	2	2		131R	WASHER	ROSETTA
	13	79038381	7	A2.27/ 1	1	1		131R	WASHER	ROSETTA
	19	79038438	6	A2.27/ 1	2	3		158G	O-RING	GUARNIZIONE O-R
	3	79038448	6	A2.27/ 1	2	2		158G	O-RING	GUARNIZIONE O-R
	10	79038451	12	A2.27/ 1	2	2		158G	O-RING	GUARNIZIONE O-R
	33	79038453	1	A2.27/ 1	2	3		158G	O-RING	GUARNIZIONE O-R
	32	79038464	1	A2.27/ 1	2	3		158G	O-RING	GUARNIZIONE O-R
	2	79038466	1	A2.27/ 1	1	1		123G	SEAL ASSY	GUARNIZIONE TENUTA FRONTALE
	9	79038467	1	A2.27/ 1	1	1		123G	SEAL ASSY	GUARNIZIONE TENUTA FRONTALE
	4	79038471	1	A2.27/ 1	1	1		123G	SEAL ASSY	GUARNIZIONE TENUTA FRONTALE
79040265										
	4	79040265	K	A4.09	2	1		174C	BELTS	CINGHIE
	7	79040265	K	A4.09/ 1	1	1		174C	BELTS	CINGHIE
79045842										
	8	79035814	304	D3.40	1	1		40V	SCREW	VITE
	9	79035815	8	D3.40	1	1		40V	SCREW	VITE
	10	79035816	304	D3.40	1	1		10D	NUT	DADO
	11	79035817	76	D3.40	1	1		295S	SHOE	SUOLA
	11	79035818	2	D3.40	1	1		295S	SHOE	SUOLA
	23	79035918	2	D3.40	1	1		97C	TRACK CHAIN	CATENARIA
79045843										
	6	79035814	320	D3.40/ 1	1	1		40V	SCREW	VITE
	7	79035815	8	D3.40/ 1	1	1		40V	SCREW	VITE
	8	79035816	320	D3.40/ 1	1	1		10D	NUT	DADO

PART NUMBER	ITEM	KIT COMP. PART. N.	QTY	SGR.	TAV.	PAG.	GRID POS.	TRANS CODE	DESCRIPTION	DENOMINAZIONE
79045843										
	9	79035817	.80	D3.40/ 1	1	1		295S	SHOE	SUOLA
	9	79035818	2	D3.40/ 1	1	1		295S	SHOE	SUOLA
	11	79035917	2	D3.40/ 1	1	1		97C	TRACK CHAIN	CATENARIA
79048260										
	8	79035814	304	D3.40	1	1		40V	SCREW	VITE
	9	79035815	8	D3.40	1	1		40V	SCREW	VITE
	10	79035816	304	D3.40	1	1		10D	NUT	DADO
	11	79035817	76	D3.40	1	1		295S	SHOE	SUOLA
	11	79035818	2	D3.40	1	1		295S	SHOE	SUOLA
	6	79036670	2	D3.40	2	1		97C	TRACK CHAIN	CATENARIA
79057695										
	8	79035814	304	D3.40	1	1		40V	SCREW	VITE
	9	79035815	8	D3.40	1	1		40V	SCREW	VITE
	10	79035816	304	D3.40	1	1		10D	NUT	DADO
	11	79035828	76	D3.40	1	1		295S	SHOE	SUOLA
	11	79035829	2	D3.40	1	1		295S	SHOE	SUOLA
	6	79036670	2	D3.40	2	1		97C	TRACK CHAIN	CATENARIA
79058458										
	1	9929739	1	F2.05/ A	1	1		40V	SCREW	VITE
	8	79038381	1	F2.05/ A	1	1		45A	RING	ANELLO
79058481										
	17	79058481	K	F2.05/ 3	1	1		2K	KIT	KIT
79058485										
	1	79032312	1	F2.05/ 3	1	1		40V	SCREW	VITE
	8	79038381	1	F2.05/ 3	1	1		45A	RING	ANELLO

PART NUMBER	ITEM	KIT COMP. PART. N.	QTY	SGR.	TAV.	PAG.	GRID POS.	TRANS CODE	DESCRIPTION	DENOMINAZIONE
79058487	16	79058487	K	F2.05/ 3	1	1		2K	KIT	KIT
79058490	19	79058490	K	F2.05/ 3	1	1		2K	KIT	KIT
79058491	20	79058491	K	F2.05/ 3	1	1		2K	KIT	KIT
79058492	21	79058492	K	F2.05/ 3	1	1		2K	KIT	KIT
79058495	24	79058495	K	F2.05/ 3	1	1		2K	KIT	KIT
79058498	27	79058498	K	F2.05/ 3	1	1		2K	KIT	KIT
79058787	16	79058487	K	F2.05/ 3	1	1		2K	KIT	KIT
79068427	5	79068427	1	F2.05/ 2	1	1		1K	KIT SEE PAGE 9	KIT VED. PAG.9
79068428	6	79068428	1	F2.05/ 2	1	1		1K	KIT SEE PAGE 9	KIT VED. PAG.9
79068430	1	79068430	1	F2.05/ 2	1	1		1K	KIT SEE PAGE 9	KIT VED. PAG.9
79068431	2	79068431	1	F2.05/ 2	1	1		1K	KIT SEE PAGE 9	KIT VED. PAG.9

PART NUMBER	ITEM	KIT COMP. PART. N.	QTY	SGR.	TAV.	PAG.	GRID POS.	TRANS CODE	DESCRIPTION	DENOMINAZIONE
79068432										
	8	79068432	1	F2.05/ 2	1	1		1K	KIT SEE PAGE 9	KIT VED. PAG.9
79068433										
	7	79068433	1	F2.05/ 2	1	1		1K	KIT SEE PAGE 9	KIT VED. PAG.9
79068434										
	3	79068434	1	F2.05/ 2	1	1		1K	KIT SEE PAGE 9	KIT VED. PAG.9
79070235										
	1	79070235	K	A2.35/ 3	1	1		2K	KIT	KIT
79070238										
	1	79070238	K	A2.35/ 2	1	1		2K	KIT	KIT
79086656										
	1	4632113	1	A3.01/ 1	5	1		122G	SEAL	GUARNIZIONE
	2	4632123	1	A2.52	1	1		120G	GASKET	GUARNIZIONE PIANA
	2	4707860	1	A3.01/ 1	5	1		122G	SEAL	GUARNIZIONE
	7	4734747	1	A2.52	1	1		122G	SEAL	GUARNIZIONE
	7	4746085	2	A2.54/ 1	1	1		120G	GASKET	GUARNIZIONE PIANA
	6	4803098	1	A2.52	1	1		122G	SEAL	GUARNIZIONE
	15	4803138	4	A4.02/ 2	2	1		122G	SEAL	GUARNIZIONE
	5	4818721	1	A2.54/ 1	1	1		120G	GASKET	GUARNIZIONE PIANA
	6	4818722	2	A2.54/ 1	1	1		120G	GASKET	GUARNIZIONE PIANA
	6	8826149	1	A4.02/ 2	1	1		122G	SEAL	GUARNIZIONE

"FILTER CARE" KIT
MODEL: 14C (FOR S/N 050101 THRU 052918)
UNITS WITH 8205 IVECO
250 HOUR KIT

PART NUMBER: 75126623

QUANTITY	PART NUMBER	DESCRIPTION
2	04667755	LUBE OIL FILTER
1	09930048	STRAINER
1	04788504	FUEL FILTER

"FILTER CARE" KIT
MODEL: 14C (FOR S/N 052919 AND UP)
UNITS WITH 8365IVECO
250 HOUR KIT

PART NUMBER: 75127713

QUANTITY	PART NUMBER	DESCRIPTION
2	01902102	ENGINE OIL FILTER
1	10263460	OIL PLUG SEAL

"FILTER CARE" KIT
MODEL: 14C (FOR S/N 050101 THRU 052918)
UNITS WITH 8205 IVECO
500 HOUR KIT

PART NUMBER: 75125971

QUANTITY	PART NUMBER	DESCRIPTION
1	09930048	STRAINER
1	04788504	FUEL FILTER
1	04788503	FILTER FUEL
1	70924772	O-RING STEERING FILTER
1	00591434	GASKET STEERING FILTER
1	70923596	O-RING HYDRAULIC ELEMENT
1	10282285	SEAL OIL DRAIN PLUG
1	79034440	FILTER HYDRAULIC
2	04667755	LUBE OIL FILTER
1	79032093	FILTER STEERING

NOTE: Clean and Reuse Transmission, Torque Converter, and Steering Suction Strainers 79034233, 79032089 and 79037673.

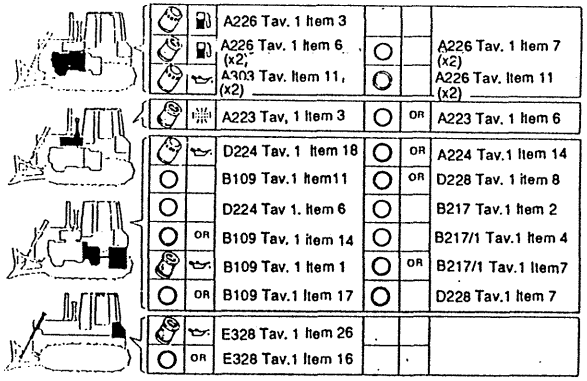

"FILTER CARE" KIT
MODEL: 14C (FOR S/N 052919 AND UP)
UNITS WITH 8365 IVECO
500 HOUR KIT

PART NUMBER: 75127714

QUANTITY	PART NUMBER	DESCRIPTION
2	01902101	ENGINE OIL FILTER
1	10263460	OIL PLUG SEAL
1	70697635	WATER FILTER
1	79034233	CONVERTER FILTER
1	14466281	SEAL
1	01902096	FUEL FILTER
1	04788503	FUEL FILTER
1	79032089	TRANSMISSION FILTER
1	79034440	HYDRAULIC FILTER
1	79032231	HYDRAULIC FILTER
1	79026104	STEERING FILTER
2	04979714	SEAL STEERING & TRANS FILTER

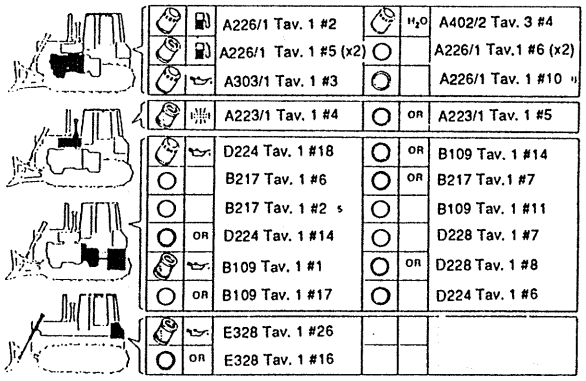

"FILTER CARE" KIT
MODEL: 14C (FOR S/N 050101 THRU 052918)
UNITS WITH 8205 IVECO
1000 HOUR KIT

PART NUMBER: 75125972

QUANTITY	PART NUMBER	DESCRIPTION
1	09930048	STRAINER
1	04788504	FUEL FILTER
1	04788503	FILTER FUEL
1	70924772	O-RING STEERING FILTER
1	00591434	GASKET STEERING FILTER
1	70923596	O-RING HYDRAULIC ELEMENT
1	10282285	SEAL OIL DRAIN PLUG
1	79034440	FILTER HYDRAULIC
2	04667755	LUBE OIL FILTER
1	79032093	FILTER STEERING
3	10296585	GASKET TRANSMISSION STEERING
1	79047024	GASKET AIR FILTER
4	10297085	GASKET FINAL DRIVE DRAIN PLUG
1	79042202	FILTER PRIMARY AIR
1	79042203	FILTER SAFETY AIR

NOTE: Clean and Reuse: Transmission, Torque Converter, and Steering Suction Strainers 79034233, 79032089 and 79037673. Transmission Breather; Engine Breather.

"FILTER CARE" KIT
MODEL: 14C (FOR S/N 052919 AND UP)
UNITS WITH 8365 IVECO
1000 HOUR KIT

PART NUMBER: 75127715

QUANTITY	PART NUMBER	DESCRIPTION
2	01902102	ENGINE OIL FILTER
1	10263460	OIL PLUG SEAL
1	70697635	WATER FILTER
1	79034233	CONVERTER FILTER
1	14466281	SEAL
1	01902096	FUEL FILTER
1	04788503	FUEL FILTER
1	79032089	TRANSMISSION FILTER
1	79034440	HYDRAULIC FILTER
1	79032231	HYDRAULIC FILTER
1	79026104	STEERING FILTER
2	04979714	SEAL STEERING & TRANS.
1	79043778	AIR CLEANER
1	79043779	AIIR CLEANER

FIATALLIS

SUMMARY OF MAJOR SECTIONS - INDICE DELLE SEZIONI PRINCIPALI - INDEX DES SECTIONS PRINCIPALES - INHALT DER HAUPTABSCHNITTE - INDICE DE LOS CAPITULOS PRINCIPALES

ENGINE MOTORE MOTEUR MOTOR MOTOR	Sgr	A
MECHANICAL TRANSMISSION - CLUTCH - TRANSMISSION - TRANSMISSION SHAFT - AXLES TRASMISSIONE MECCANICA - FRIZIONE - CAMBIO - ALBERO DI TRASMISSIONE - PONTI TRANSMISSION MECANIQUE - EMBRAYAGE - BOITE DE VITESSES - ARBRE DE TRANSMISSION - PONTS MECHANISCHE KRAFTÜBERTRAGUNG - KUPPLUNG - GETRIEBE - GELENKWELLE - ACHSEN TRANSMISSION MECANICA - EMBRAGUE - CAMBIO - ARBOL DE TRANSMISSION - PUENTES	Sgr	B
BRAKES (MECHANICAL OR HYDRAULIC) FRENI (MECCANICI O IDRAULICI) FREINS (MECANIQUES OU HYDRAULIQUES) BREMSEN (MECHANISCHE ODER HYDRAULISCHE) FRENOS (MECANICOS O HIDRAULICOS)	Sgr	C
FRAME - STEERING - SUSPENSIONS - WHEELS - UNDERCARRIAGE - HYDRAULIC TRANSMISSION TELAIO - STERZO - SOSPENSIONI - RUOTE - CINGOLATURA - TRASMISSIONE IDRAULICA CADRE - DIRECTION - SUSPENSIONS - ROUES - TRAIN DE ROULEMENT - TRANSMISSION HYDRAULIQUE RAHMEN - LENKUNG - AUFHÄNGUNGEN - RÄDER - KETTENLAUFWERK - HYDRAULISCHER ANTRIEB BASTIDOR - DIRECCION - SUSPENSION - RUEDAS - TREN DE RODAJE - TRANSMISSION HIDRAULICA	Sgr	D
AUXILIARY ATTACHMENTS (AND EQUIPMENT) ORGANI SUSSIDIARI (E ATTREZZI) ORGANES AUXILIAIRES (ET EQUIPEMENT) NEBENAGGREGATE (UND GERÄTE) GRUPOS AUXILIARES (Y EQUIPO)	Sgr	E
ELECTRICAL SYSTEM IMPIANTO ELETTRICO SYSTEME ELECTRIQUE ELEKTRISCHE ANLAGE SISTEMA ELECTRICO	Sgr	F
AIR SYSTEM IMPIANTO PNEUMATICO SYSTEME PNEUMATIQUE DRUCKLUFTANLAGE SISTEMA NEUMATICO	Sgr	G
TOOLS ATTREZZI OUTILLAGES WERKZEUGE UTILES	Sgr	H
BODY CARROZZERIA CARROSSERIE AUFBAU CARROCERIA	Sgr	L
	Sgr	

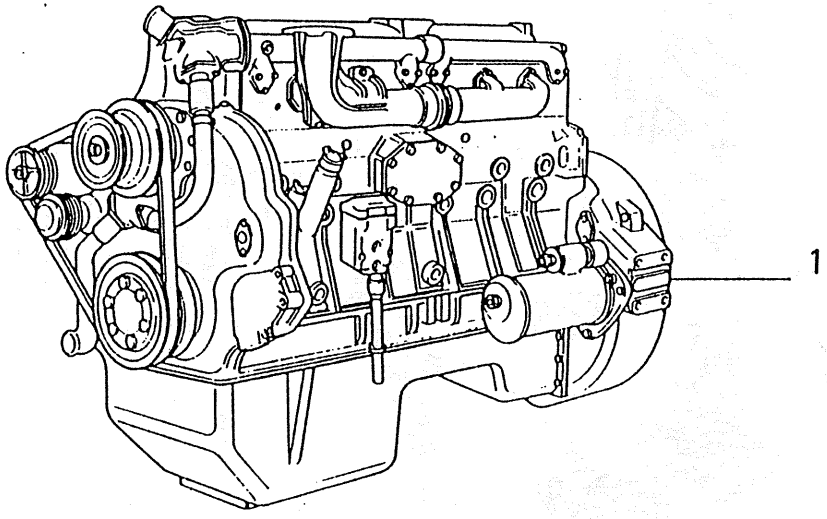

ITEM	PART NO.	QTY.	CODE	DESCRIPTION	DENOMINAZIONE
1	61694078	1	139M	ENGINE ASSEMBLY	MOTORE COMPLESSIVO
			600X	PRIOR TO UNIT #051057	FINO AL TELAIO.....
	61694120	1	139M	ENGINE ASSEMBLY	MOTORE COMPLESSIVO
			600Y	UNIT NO.051057 AND UP	DAL TELAIO.....

JSAGE: UNITS EQUIPPED WITH 8205 ENGINE.

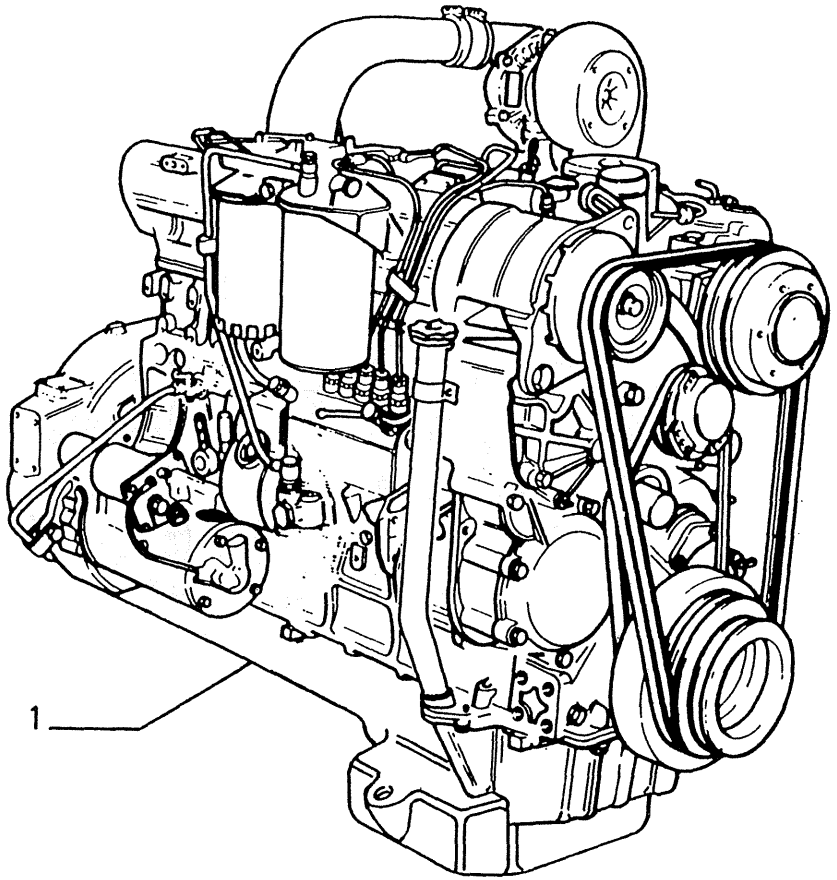

USAGE: Units with 8365 Engine

ITEM	PART NUMBER	QTY	TRANS CODE	DESCRIPTION	DESCRIZIONE
	8109873	1	130M	ENGINE COMAL	MOTORE TERMICO COMAL

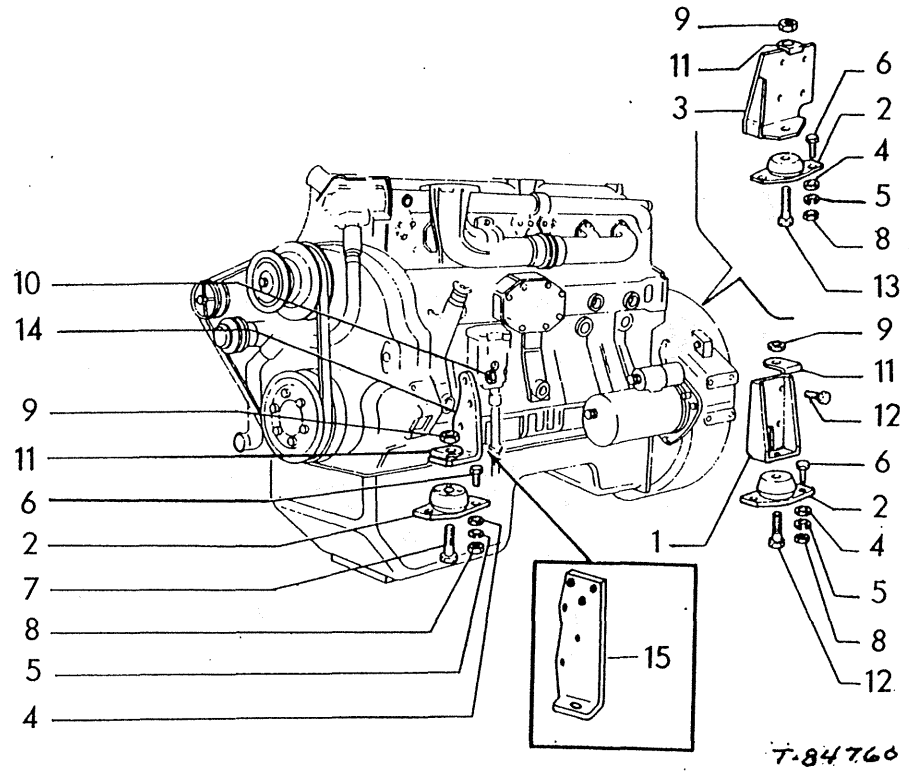

ITEM	PART NO.	QTY.	LEX.	DESCRIPTION	DENOMINAZIONE
1	00587912	1	300S	SUPPORT	SUPPORTO
			600H	REAR	POSTERIORE
			600B	RIGHT	DESTRO
2	04955094	4	61T	PAD, CUSHIONING	TASSELLO ELASTICO
3	04994039	1	300S	SUPPORT	SUPPORTO
			600H	REAR	POSTERIORE
			600A	LEFT	SINISTRO
4	10517271	8	131R	WASHER,16.2 X 4	ROSETTA
5	10520221	8	131R	WASHER,16.4 X 28	ROSETTA
6	11390531	8	40V	CAPSCREW,16 X 1.5 X 40	VITE
7	11398031	2	40V	CAPSCREW,24 X 2 X 75	VITE
8	12164121	8	10D	NUT,16 X 1.5 X 13	DADO
9	12164521	4	10D	NUT,24 X 2 X 19	DADO
10	13598221	6	10D	NUT,14 X 1.5 X 14	DADO
11	14199511	4	113P	LOCKPLATE,24.7 X 64	PIASTRINA DI SICUREZZA
12	14257831	8	40V	CAPSCREW,16 X 1.5 X 35	VITE
13	15997331	2	40V	CAPSCREW,24 X 2 X 70	VITE
14	79029742	1	300S	SUPPORT	SUPPORTO
			600G	FRONT	ANTERIORE
			600B	RIGHT	DESTRO
	79029743	1	300S	SUPPORT	SUPPORTO
			600G	FRONT	ANTERIORE
			600A	LEFT	SINISTRO
15	a73147248	1	300S	SUPPORT	SUPPORTO
			600A	LEFT	SINISTRO

a. UNITS WITH AIR CONDITIONING.
UNITA' CON ARIA CONDIZIONATA.
ENGINS AVEC CLIMATISATION.
MASCHINEN MIT KLIMAANLAGE.
MAQUINAS CON AIRE ACONDICIONADO.

USAGE: Units with 8205 engine

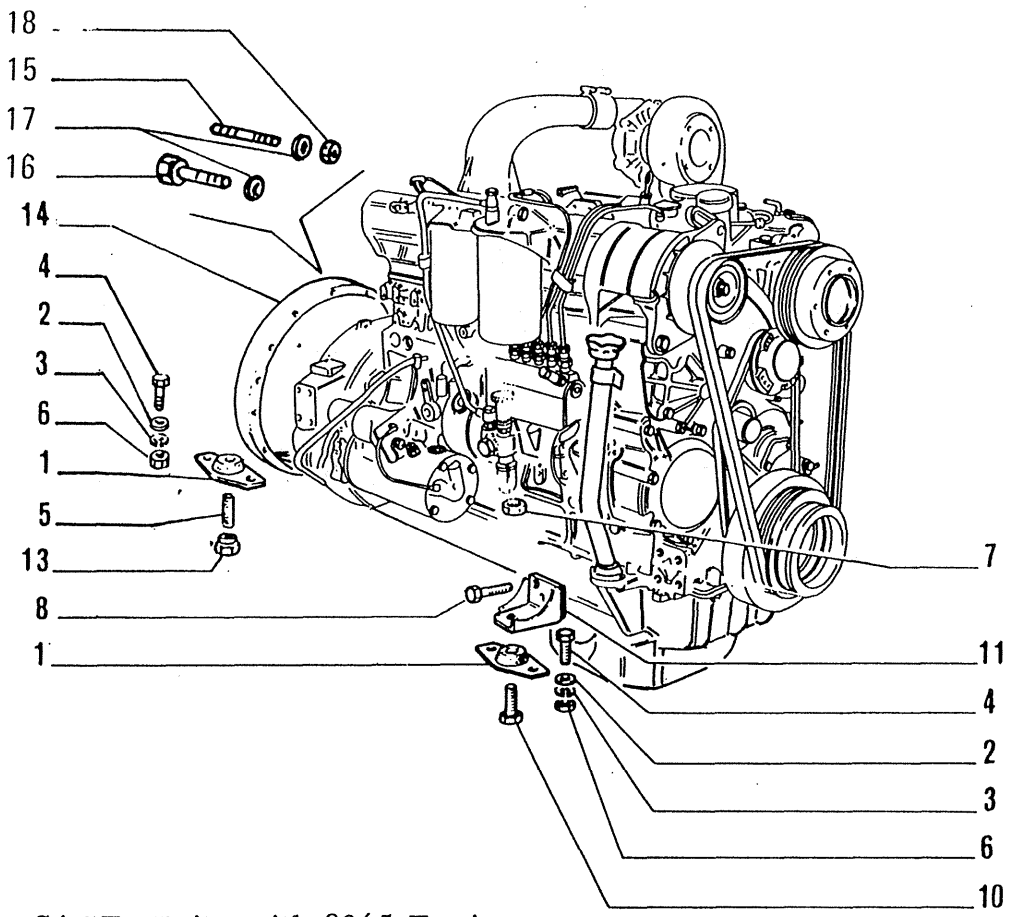

USAGE: Units with 8365 Engine

ITEM	PART NUMBER	QTY	TRANS CODE	DESCRIPTION	DESCRIZIONE
1	4955094	4	61T	CUSHION PAD	TASSELLO ELASTICO
2	14496931	8	131R	WASHER 16,8x30	ROSETTA 16,8x30
4	11390537	8	40V	SCREW 16x1,5x40	VITE 16x1,5x40
5	11813930	2	210P	STUD 24x2x97	PRIGIONIERO 24x2x97
6	12164121	8	10D	NUT 16x1,5x13	DADO 16x1,5x13
7	12164521	2	10D	NUT 24x2x19	DADO 24x2x19
8	14258131	4	40V	SCREW 16x1,5x50	VITE 16x1,5x50
	14274831	4	40V	SCREW 12x1825x45	VITE 12x1825x45
10	15997331	2	40V	SCREW 24x2x70	VITE 24x2x70
11	79011784	1	300S	SUPPORT - FRONT RIGHT	SUPPORTO - ANTERIORE DESTRO
	79013204	1	300S	SUPPORT - FRONT LEFT	SUPPORTO - ANTERIORE SINISTR
13	79013815	2	10D	NUT	DADO
14	79065663	1	75D	SPACER	DISTANZIALE
15	13450730	1	210P	STUD 10x1,25x80	PRIGIONIERO 10x1,25x80
16	15971531	12	40V	SCREW 10x1,25x85	VITE 10x1,25x85
17	14496631	13	131R	WASHER 10,5x21	ROSETTA 10,5x21
18	12164721	1	10D	NUT 10x1,25x8	DADO 10x1,25x8

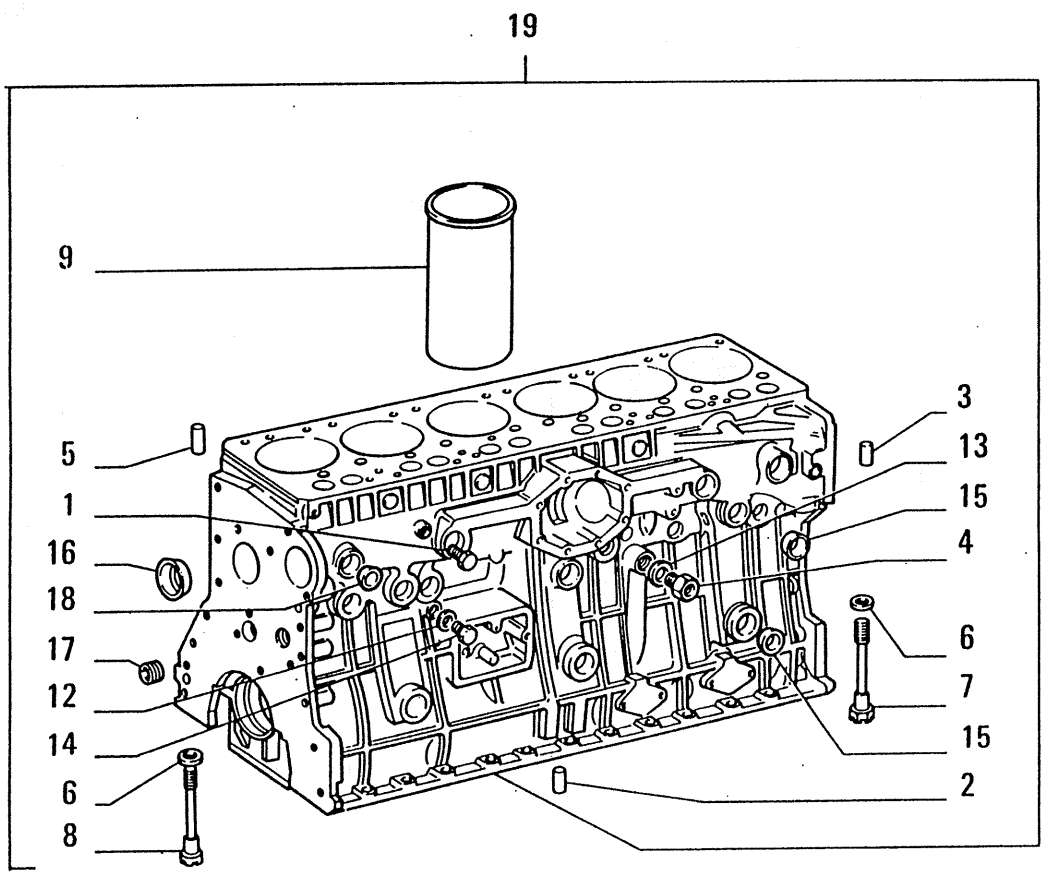

04854 USAGE: Units with 8205 Engine

ITEM	PART NUMBER	QTY	TRANS CODE	DESCRIPTION	DESCRIZIONE
1	564473	1	50T	PLUG	TAPPO
2	851425	2	90G	DOWEL	GRANO
3	4502626	2	90G	DOWEL	GRANO
4	4627301	1	50T	PLUG	TAPPO
5	4663640	1	90G	DOWEL	GRANO
6	4671890	14	131R	WASHER	ROSETTA
7	4672767	10	40V	SCREW	VITE
8	4672768	4	40V	SCREW	VITE
9	4678900	6	35C	CYLILINER +0,00	CAMICIA +0,00
	4678901	6	35C	CYLILINER +0,25	CAMICIA +0,25
	4679234	6	35C	CYLILINER +0,05	CAMICIA +0,05
12	10296160	1	133R	SEAL 12,2x18	ROSETTA DI TENUTA 12,2x18
13	10296260	1	133R	SEAL 28,3x36	ROSETTA DI TENUTA 28,3x36
14	10300571	1	50T	PLUG 12x1,5x8	TAPPO 12x1,5x8
15	14282770	22	50T	PLUG 36x9	TAPPO 36x9
16	14283370	2	50T	PLUG 63x12	TAPPO 63x12
17	14325501	2	50T	PLUG 28x1,5x13	TAPPO 28x1,5x13
18	14329101	1	50T	PLUG 30x9	TAPPO 30x9
19	61694057	1	20B	CRANKCASE	BASAMENTO MOTORE

CRANKCASE AND CYLINDER HEAD – BASAMENTO E TESTA CILINDRI – BATI E CULASSE
KURBELGEHAEUSE UND ZYLINDERKOPF – BLOQUE DE CILINDROS Y CULATA

USAGE: Units with 8365 Engine

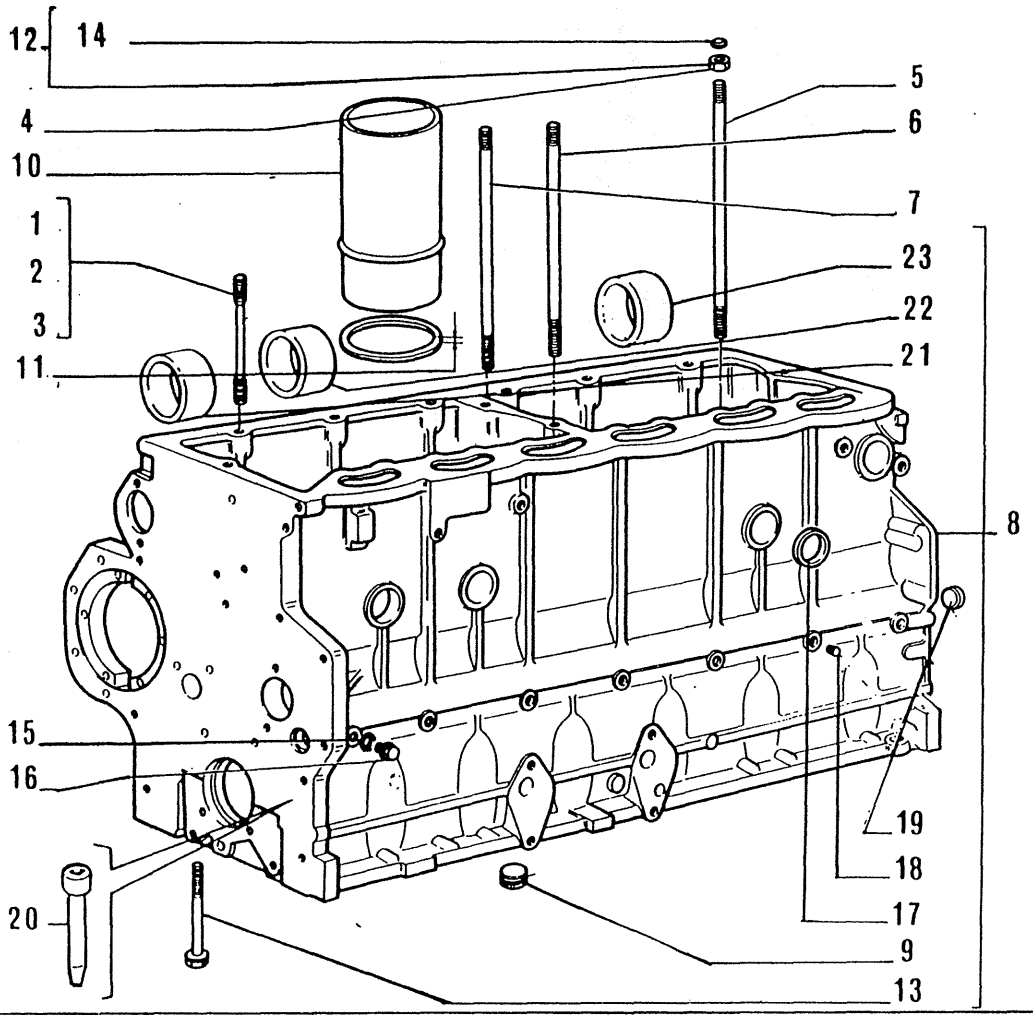

ITEM	PART NUMBER	QTY	TRANS CODE	DESCRIPTION	DESCRIZIONE
1	4707320	6	210P	STUD +0,053+0,116	PRIGIONIERO +0,053+0,116
2	4707321	6	210P	STUD +0,124+0,164	PRIGIONIERO +0,124+0,164
3	4707322	6	210P	STUD +0,005+0,045	PRIGIONIERO +0,005+0,045
4	4713556	26	10D	NUT - IN ALTERNATIVE	DADO - IN ALTERNATIVA
5	4718316	4	210P	STUD +0,053+0,116	PRIGIONIERO +0,053+0,116
	4718317	4	210P	STUD +0,124+0,164	PRIGIONIERO +0,124+0,164
	4718318	4	210P	STUD +0,005+0,045	PRIGIONIERO +0,005+0,045
6	4718319	10	210P	STUD +0,053+0,116	PRIGIONIERO +0,053+0,116
	4718320	10	210P	STUD +0,124+0,164	PRIGIONIERO +0,124+0,164
	4718321	10	210P	STUD +0,005+0,045	PRIGIONIERO +0,005+0,045
7	4718322	6	210P	STUD +0,053+0,116	PRIGIONIERO +0,053+0,116
	4718323	6	210P	STUD +0,124+0,164	PRIGIONIERO +0,124+0,164
	4718324	6	210P	STUD +0,005+0,045	PRIGIONIERO +0,005+0,045
8	4806152	1	20B	CRANKCASE - ASSEMBLY	BASAMENTO MOTORE - COMPLETO
9	4731414	1	50T	PLUG	TAPPO
10	4750806	6	35C	CYLILINER	CAMICIA
11	4750807		198S	SHIM 3,09	SPESSORE 3,09
	4750808		198S	SHIM 3,11	SPESSORE 3,11
	4750809		198S	SHIM 3,13	SPESSORE 3,13
	4750810		198S	SHIM 3,15	SPESSORE 3,15
	4750811		198S	SHIM 3,17	SPESSORE 3,17
	4750812		198S	SHIM 3,19	SPESSORE 3,19
	4750813		198S	SHIM 3,21	SPESSORE 3,21
	4750814		198S	SHIM 3,23	SPESSORE 3,23
	4750815		198S	SHIM 3,25	SPESSORE 3,25
	4750816		198S	SHIM 3,27	SPESSORE 3,27
	4750817		198S	SHIM 3,29	SPESSORE 3,29

USAGE: Units with 8365 Engine

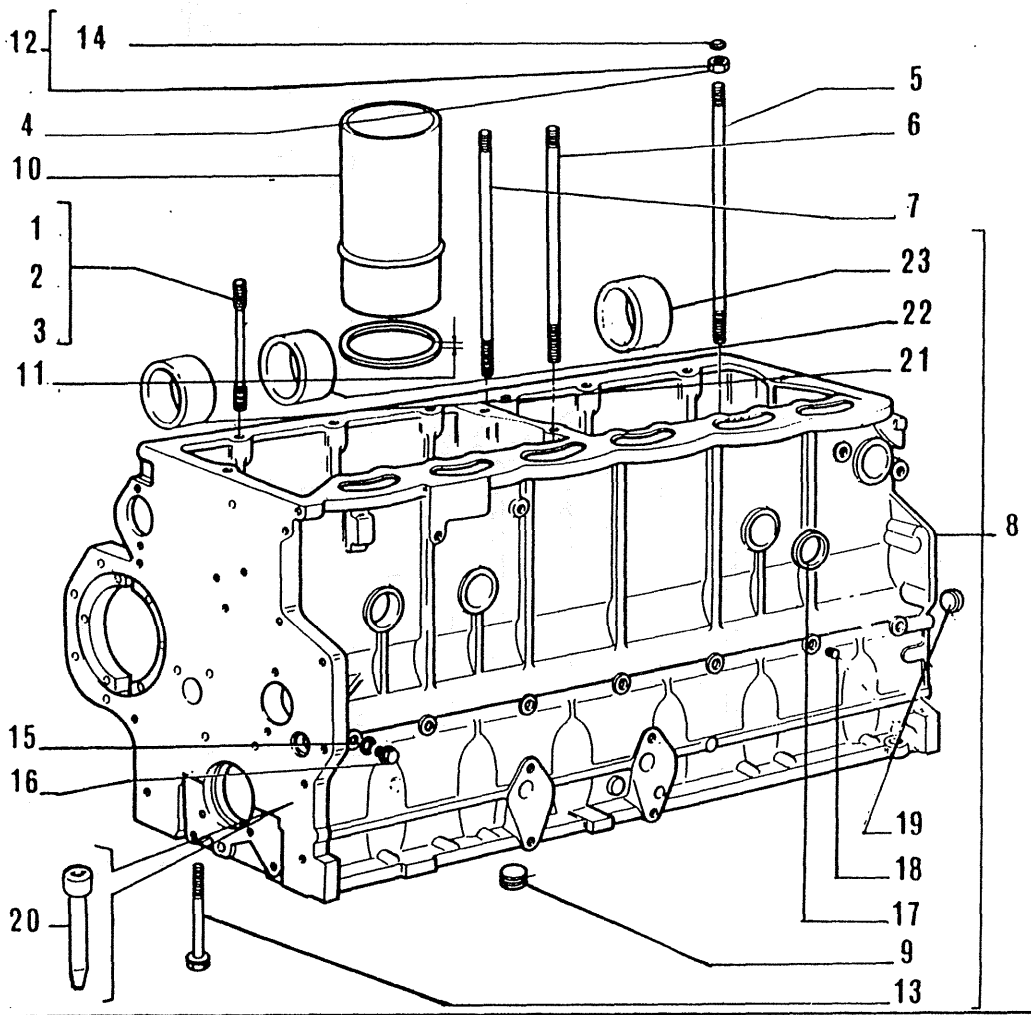

ITEM	PART NUMBER	QTY	TRANS CODE	DESCRIPTION	DESCRIZIONE
11	4750818		198S	SHIM 3,31	SPESSORE 3,31
	4750819		198S	SHIM 3,33	SPESSORE 3,33
	4750820		198S	SHIM 3,35	SPESSORE 3,35
	4750821		198S	SHIM 3,37	SPESSORE 3,37
	4750822		198S	SHIM 3,39	SPESSORE 3,39
	4764705		198S	SHIM 3,41	SPESSORE 3,41
	4764706		198S	SHIM 3,43	SPESSORE 3,43
	4764707		198S	SHIM 3,45	SPESSORE 3,45
	4764708		198S	SHIM 3,47	SPESSORE 3,47
	4764709		198S	SHIM 3,49	SPESSORE 3,49
12	8505175	26	10D	NUT - ASSEMBLY IN ALTERNATIVE	DADO - COMPLETO IN ALTERNATIVA
13	8829588	14	40V	SCREW	VITE
14	10158700	26	50T	PLUG 18x2	TAPPO 18x2
15	10298360	1	133R	SEAL 10,2x16	ROSETTA DI TENUTA 10,2x16
16	11903171	1	50T	PLUG 10x1,25x7	TAPPO 10x1,25x7
17	14282770	6	50T	PLUG 36x9	TAPPO 36x9
18	10269350	2	50T	PLUG 10x1,25x55	TAPPO 10x1,25x55
	14323911	4	50T	PLUG 10x1,25x14	TAPPO 10x1,25x14
19	14328801	2	50T	PLUG 22x7	TAPPO 22x7
	14329301	1	50T	PLUG 42x13	TAPPO 42x13
20	4726808	6	20U	JET	UGELLO
21	8829580	1	95B	BUSHING - FRONT IN ALTERNATIVE	BOCCOLA - ANTERIORE IN ALTERNATIVA
	8826317	1	95B	BUSHING - FRONT IN ALTERNATIVE	BOCCOLA - ANTERIORE IN ALTERNATIVA
22	8826318	5	95B	BUSHING - INNER IN ALTERNATIVE	BOCCOLA - INTERNO IN ALTERNATIVA

USAGE: Units with 8365 Engine

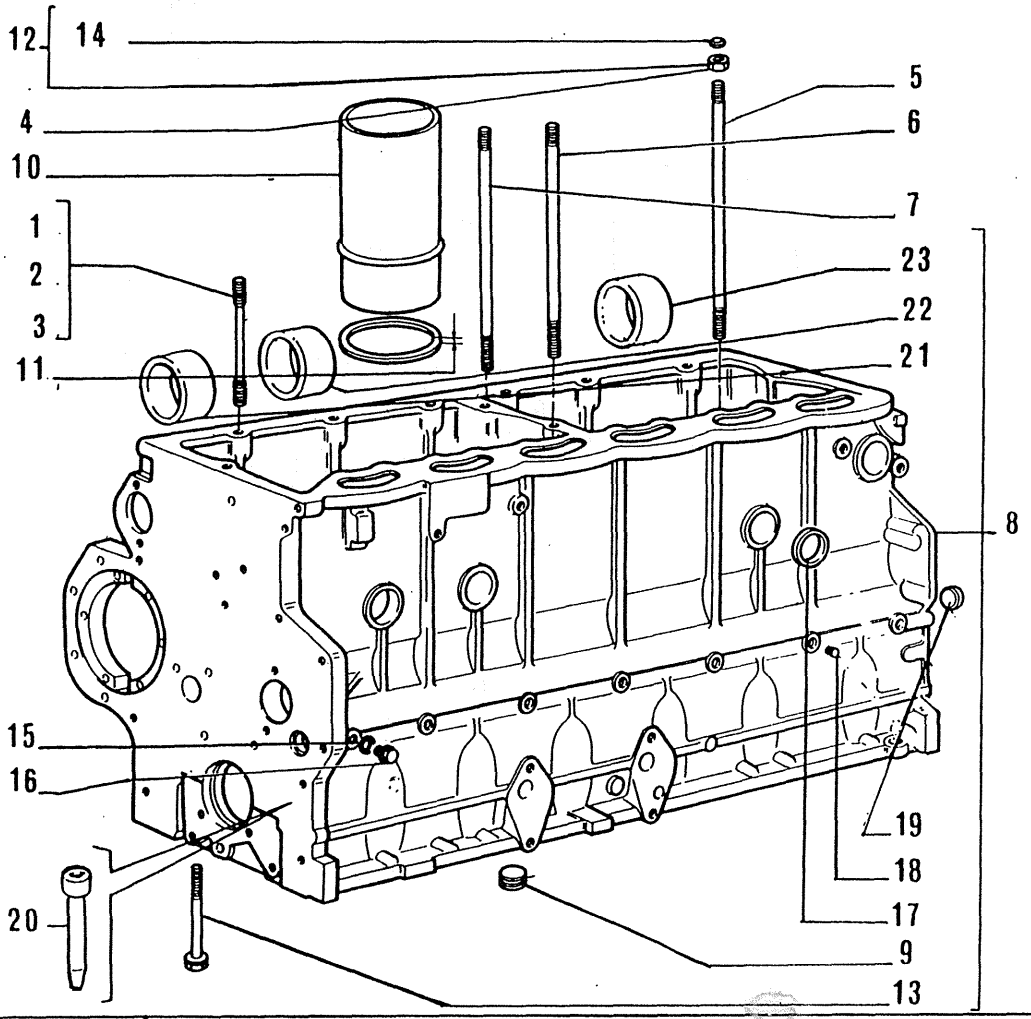

ITEM	PART NUMBER	QTY	TRANS CODE	DESCRIPTION	DESCRIZIONE
22	8829581	5	95B	BUSHING - INNER IN ALTERNATIVE	BOCCOLA - INTERNO IN ALTERNATIVA
23	8826319	1	95B	BUSHING - REAR IN ALTERNATIVE	BOCCOLA - POSTERIORE IN ALTERNATIVA
	8829582	1	95B	BUSHING - REAR IN ALTERNATIVE	BOCCOLA - POSTERIORE IN ALTERNATIVA

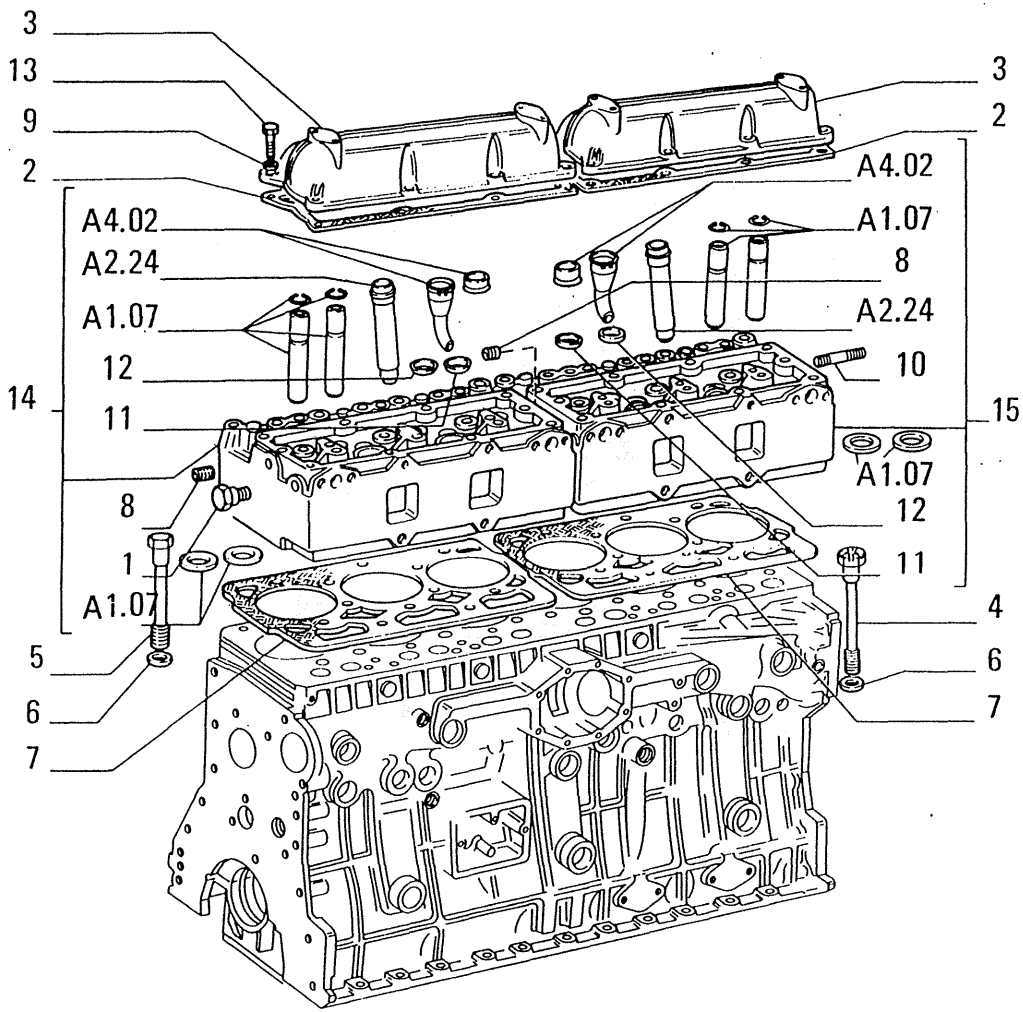

ITEM	PART NUMBER	QTY	TRANS CODE	DESCRIPTION	DESCRIZIONE
1	4502935	1	30G	HOOK	GANCIO
2	4528393	2	123G	SEAL ASSY	GUARNIZIONE TENUTA FRONTALE
3	4628329	2	265C	COVER	COPERCHIO
4	4654927	24	40V	SCREW	VITE
5	4654929	4	40V	SCREW	VITE
6	4671891	28	131R	WASHER	ROSETTA
7	4678902	2	123G	SEAL ASSY	GUARNIZIONE TENUTA FRONTALE
8	10268350	2	50T	PLUG 8x1,25x55	TAPPO 8x1,25x55
9	11198071	16	131R	WASHER 8,2x15	ROSETTA 8,2x15
10	11800420	2	210P	STUD 16x1,5x57	PRIGIONIERO 16x1,5x57
11	14282370	4	50T	PLUG 25x7	TAPPO 25x7
12	14282670	8	50T	PLUG 32x9	TAPPO 32x9
13	16043621	16	40V	SCREW 8x1,25x25	VITE 8x1,25x25
14	79012964	1	113T	CYLINDER HEAD - FRONT	TESTA CILINDRI - ANTERIORE
15	79012965	1	113T	CYLINDER HEAD - REAR	TESTA CILINDRI - POSTERIORE

(04855) USAGE: Units with 8205 Engine

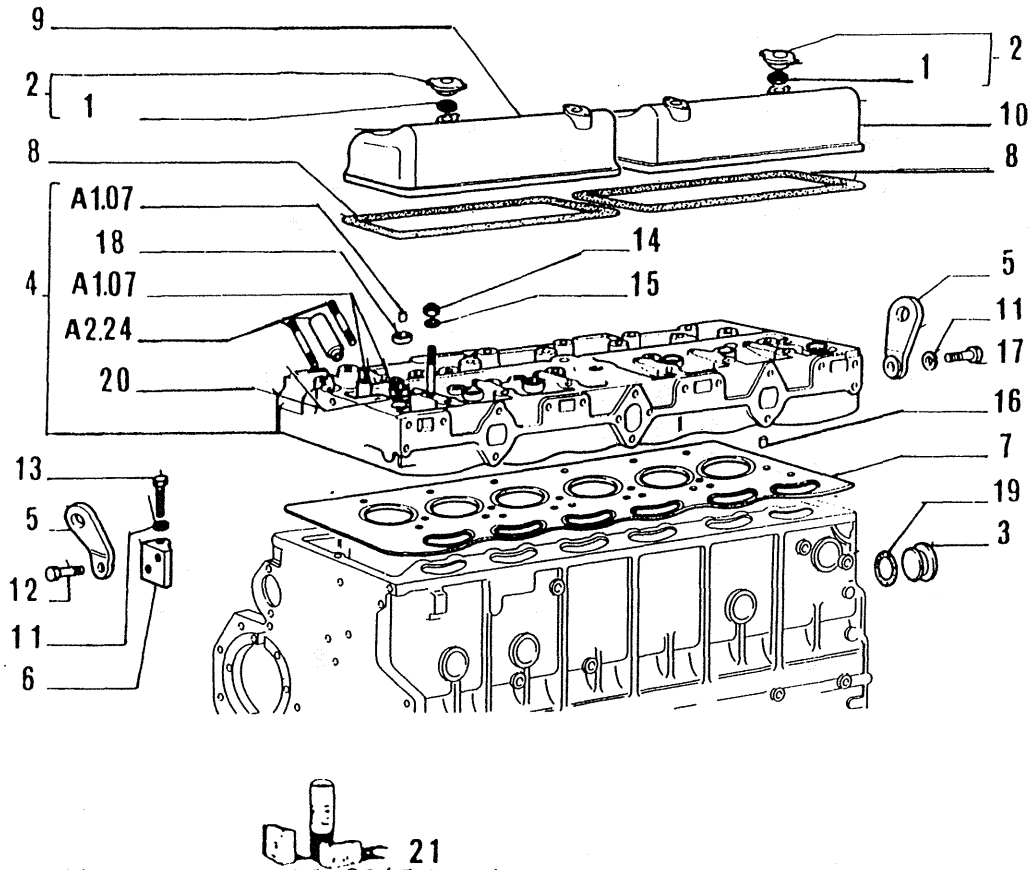

USAGE: Units with 8365 Engine

ITEM	PART NUMBER	QTY	TRANS CODE	DESCRIPTION	DESCRIZIONE
1	4161222	2	122G	SEAL	GUARNIZIONE
2	4232606	2	54T	FILLER CAP - ASSEMBLY	TAPPO INTRODUZIONE - COMPLET
3	4699521	1	265C	COVER - REAR	COPERCHIO - POSTERIORE
4	4798421	1	113T	CYLINDER HEAD - ASSEMBLY	TESTA CILINDRI - COMPLETO
5	4718603	2	120	EYELET	OCCHIELLO
6	4723225	1	74B	BLOCK	BLOCCHETTO
7	4760489	1	122G	SEAL	GUARNIZIONE
8	8829321	2	122G	SEAL	GUARNIZIONE
9	8829611	1	265C	COVER - UPPER FRONT	COPERCHIO - SUPERIORE ANTERIORE
10	4804648	1	265C	COVER - UPPER REAR	COPERCHIO - SUPERIORE POSTERIORE
11	11198371	2	132R	LOCKWASHER 10,5x20	ROSETTA DI SICUREZZA 10,5x20
12	11307031	1	40V	SCREW 10x1,25x40	VITE 10x1,25x40
13	11343731	1	40V	SCREW 10x1,25x65	VITE 10x1,25x65
14	12574511	4	10D	NUT 10x1,25x12,3	DADO 10x1,25x12,3
15	12638660	4	131R	WASHER 10,2x18	ROSETTA 10,2x18
16	14167570	2	200S	PIN 6,4x12	SPINA 6,4x12
17	14233421	1	40V	SCREW 10x1,25x25	VITE 10x1,25x25
18	14282470	19	50T	PLUG 28x9	TAPPO 28x9
19	14459381	1	158G	O-RING 2,62x48,90	GUARNIZIONE O-R 2,62x48,90
20	38829614	4	210P	STUD	PRIGIONIERO
21	79037375	K	1K	KIT SEE PAGE 9	KIT VED. PAG.9
	79037448	K	1K	KIT SEE PAGE 9	KIT VED. PAG.9

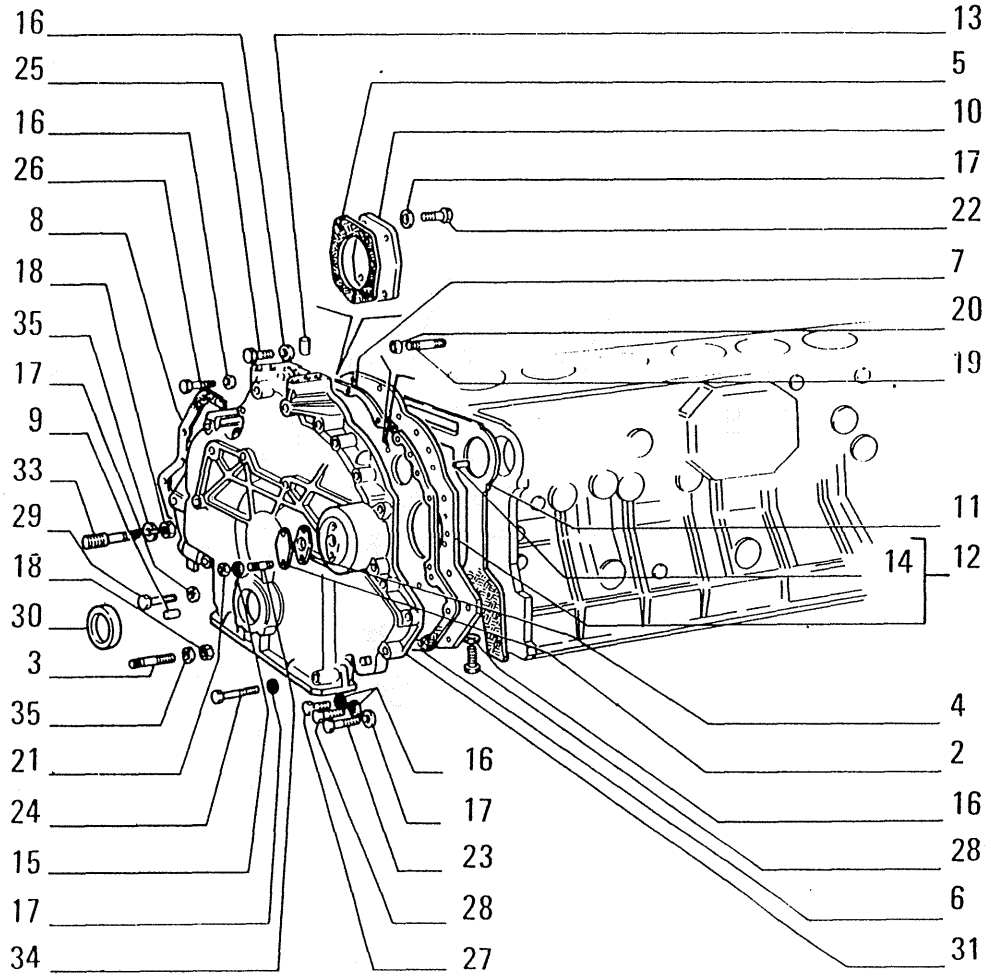

ITEM	PART NUMBER	QTY	TRANS CODE	DESCRIPTION	DESCRIZIONE
1	564473	3	50T	PLUG	TAPPO
2	579891	1	265C	COVER	COPERCHIO
3	597109	4	184C	STUD	COLONNETTA
4	4513940	1	123G	SEAL ASSY	GUARNIZIONE TENUTA FRONTALE
5	4526511	1	123G	SEAL ASSY	GUARNIZIONE TENUTA FRONTALE
6	4530119	1	123G	SEAL ASSY	GUARNIZIONE TENUTA FRONTALE
7	4530120	1	123G	SEAL ASSY	GUARNIZIONE TENUTA FRONTALE
8	4530121	1	123G	SEAL ASSY	GUARNIZIONE TENUTA FRONTALE
9	4533969	1	90G	DOWEL	GRANO
10	4547528	1	265C	COVER	COPERCHIO
11	4679615	1	123G	SEAL ASSY	GUARNIZIONE TENUTA FRONTALE
12	4681598	1	105P	PLATE - FRONT ASSEMBLY	PIASTRA - ANTERIORE COMPLETO
13	10837610	2	90G	DOWEL 8x22	GRANO 8x22
14	10837810	2	90G	DOWEL 12x30	GRANO 12x30
15	11197771	2	131R	WASHER 6,4x12	ROSETTA 6,4x12
16	11198071	13	131R	WASHER 8,2x15	ROSETTA 8,2x15
17	11198371	17	131R	WASHER 10,5x20	ROSETTA 10,5x20
18	12163911	6	10D	NUT 12x1,5x10	DADO 12x1,5x10
19	13449321	2	210P	STUD 10x1,25x35	PRIGIONIERO 10x1,25x35
20	13598011	2	10D	NUT 10x1,25x10	DADO 10x1,25x10
21	15896211	2	10D	NUT 6x1x5	DADO 6x1x5
22	15970521	4	40V	SCREW 10x1,25x20	VITE 10x1,25x20
23	15970730	11	40V	SCREW 10x1,25x25	VITE 10x1,25x25
24	15971421	2	40V	SCREW 10x1,25x80	VITE 10x1,25x80
25	16043821	9	40V	SCREW 8x1,25x30	VITE 8x1,25x30
26	16044121	5	40V	SCREW 8x1,25x45	VITE 8x1,25x45
27	16044221	1	40V	SCREW 8x1,25x50	VITE 8x1,25x50

04856 USAGE: Units with 8205 Engine

OIL SUMP AND CRAKCASE COVERS – COPPA E COPERCHI BASAMENTO – CARTER D'HUILE ET COUVERCLES DE BATI OELWANNE UND DECKEL DES KURBELGEHAEUSES CARTER DE ACEITE Y TAPAS DEL BLOQUE

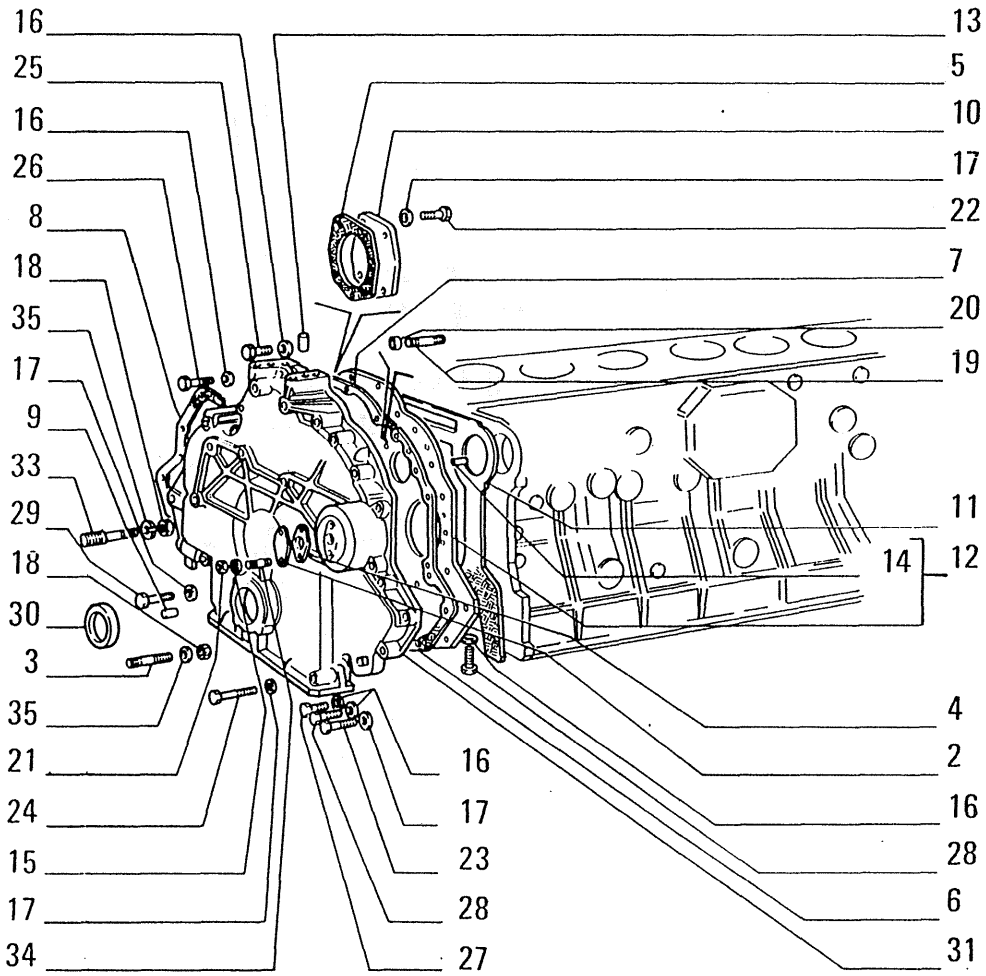

ITEM	PART NUMBER	QTY	TRANS CODE	DESCRIPTION	DESCRIZIONE
28	16044421	5	40V	SCREW 8x1,25x60	VITE 8x1,25x60
29	16044821	1	40V	SCREW 8x1,25x80	VITE 8x1,25x80
30	40000730	1	158G	O-RING 70x90	GUARNIZIONE O-R 70x90
31	61589010	1	265C	COVER - FRONT	COPERCHIO - ANTERIORE
33	79011029	2	184C	STUD	COLONNETTA
34	11500421	2	210P	STUD 6x1x29	PRIGIONIERO 6x1x29
35	11198771	6	131R	WASHER 13x30	ROSETTA 13x30

(04856) USAGE: Units with 8205 Engine

OIL SUMP AND CRAKCASE COVERS – COPPA E COPERCHI BASAMENTO -- CARTER D'HUILE ET COUVERCLES DE BATI -- OELWANNE UND DECKEL DES KURBELGEHAEUSES – CARTER DE ACEITE Y TAPAS DEL BLOQUE

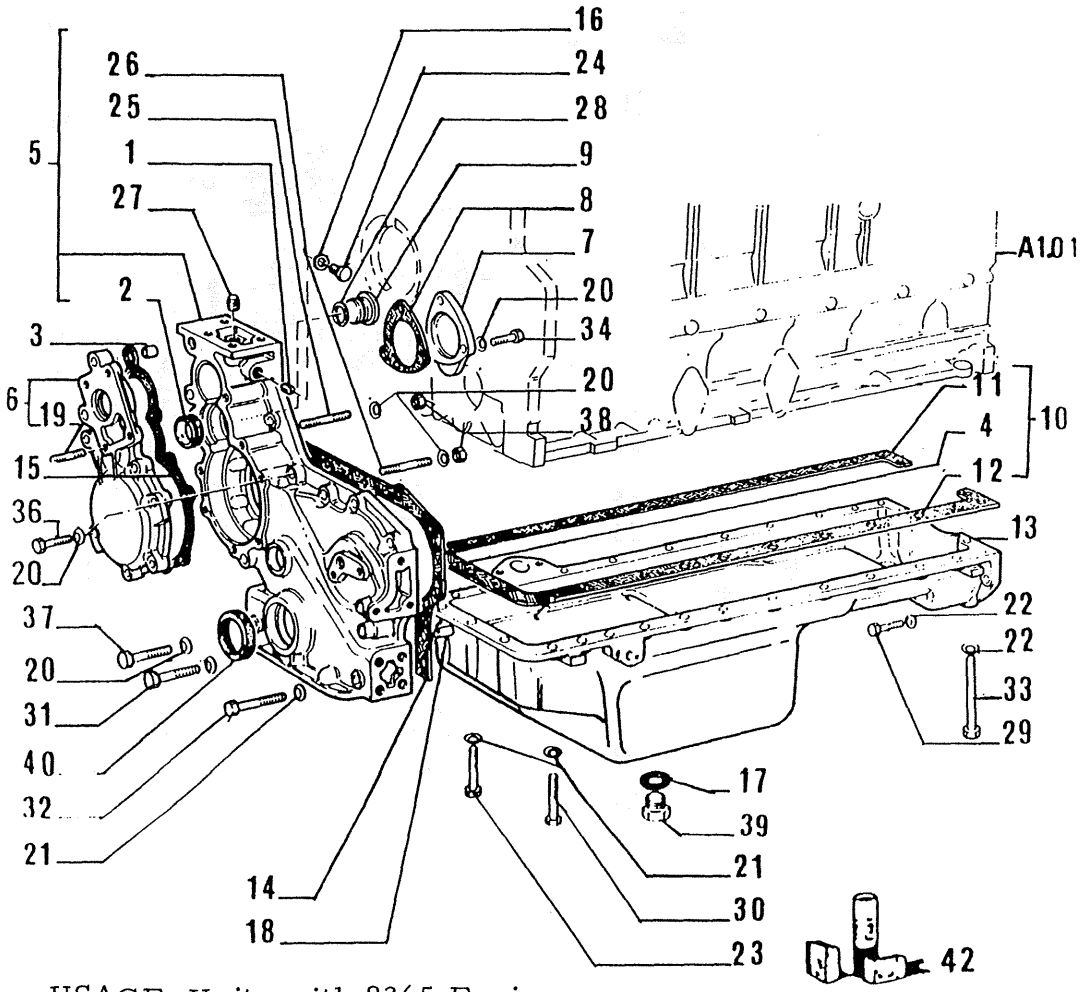

USAGE: Units with 8365 Engine

ITEM	PART NUMBER	QTY	TRANS CODE	DESCRIPTION	DESCRIZIONE
1	4560434	1	50T	PLUG	TAPPO
2	4708220	1	95B	BUSHING	BOCCOLA
3	4708557	1	90G	DOWEL	GRANO
4	4712547	1	122G	SEAL - FRONT	GUARNIZIONE - ANTERIORE
5	4770463	1	265C	COVER - FRONT ASSEMBLY	COPERCHIO - ANTERIORE COMPLE
6	4718732	1	265C	COVER - ASSEMBLY	COPERCHIO - COMPLETO
7	4718900	1	265C	COVER	COPERCHIO
8	4718901	1	122G	SEAL	GUARNIZIONE
9	4718902	1	50T	PLUG	TAPPO
10	4720070	1	122G	SEAL - ASSEMBLY	GUARNIZIONE - COMPLETO
11	4720071	1	122G	SEAL - RIGHT	GUARNIZIONE - DESTRO
12	4720072	1	122G	SEAL - LEFT	GUARNIZIONE - SINISTRO
13	4822279	1	275C	SUMP	COPPA
14	4796114	1	122G	SEAL	GUARNIZIONE
15	4796117	1	122G	SEAL	GUARNIZIONE
16	10260160	1	122G	SEAL 10,2x14	GUARNIZIONE 10,2x14
17	10263460	1	122G	SEAL 22,2x28	GUARNIZIONE 22,2x28
18	10839810	1	90G	DOWEL 12x18	GRANO 12x18
19	10980721	1	210P	STUD 6x1x43	PRIGIONIERO 6x1x43
20	11198071	18	132R	LOCKWASHER 8,2x15	ROSETTA DI SICUREZZA 8,2x15
21	11198379	32	132R	LOCKWASHER 10,5x20	ROSETTA DI SICUREZZA 10,5x20
22	11198679	3	132R	LOCKWASHER 13x24	ROSETTA DI SICUREZZA 13x24
23	11234724	1	40V	SCREW 10x1,25x45	VITE 10x1,25x45
24	11903171	1	50T	PLUG 10x1,25x7	TAPPO 10x1,25x7
25	12429821	3	210P	STUD 8x1,25x50	PRIGIONIERO 8x1,25x50
26	12430121	1	210P	STUD 8x1,25x65	PRIGIONIERO 8x1,25x65
27	14323911	1	50T	PLUG 10x1,25x14	TAPPO 10x1,25x14

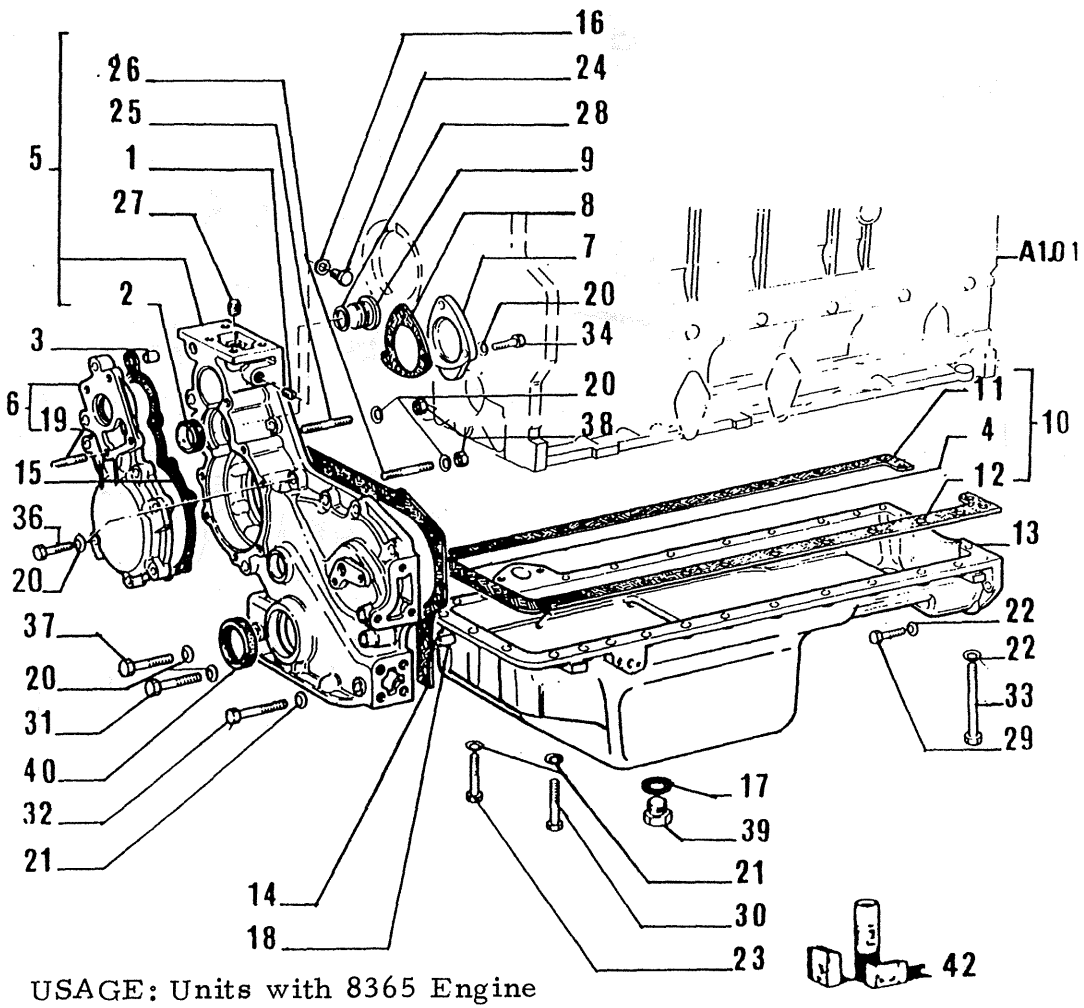

USAGE: Units with 8365 Engine

ITEM	PART NUMBER	QTY	TRANS CODE	DESCRIPTION	DESCRIZIONE
28	14458281	1	158G	O-RING 2,62x31,42	GUARNIZIONE O-R 2,62x31,42
29	15540724	3	40V	SCREW 12x1,25x45	VITE 12x1,25x45
30	15970924	25	40V	SCREW 10x1,25x35	VITE 10x1,25x35
31	15971521	2	40V	SCREW 10x1,25x85	VITE 10x1,25x85
32	15971721	2	40V	SCREW 10x1,25x95	VITE 10x1,25x95
33	15972424	2	40V	SCREW 10x1,25x130	VITE 10x1,25x130
34	16043821	1	40V	SCREW 8x1,25x30	VITE 8x1,25x30
35	11193879	16	132R	LOCKWASHER 8,4x16	ROSETTA DI SICUREZZA 8,4x16
36	16044021	14	40V	SCREW 8x1,25x40	VITE 8x1,25x40
37	16045021	1	40V	SCREW 8x1,25x90	VITE 8x1,25x90
38	16100811	4	10D	NUT 8x1,25x6,5	DADO 8x1,25x6,5
39	38822532	1	50T	PLUG	TAPPO
40	40002440	1	45A	RING 75x100	ANELLO 75x100
41	16044321	1	40V	SCREW 8x1,25x55	VITE 8x1,25x55
42	79037448	K	1K	KIT SEE PAGE 9	KIT VED. PAG.9

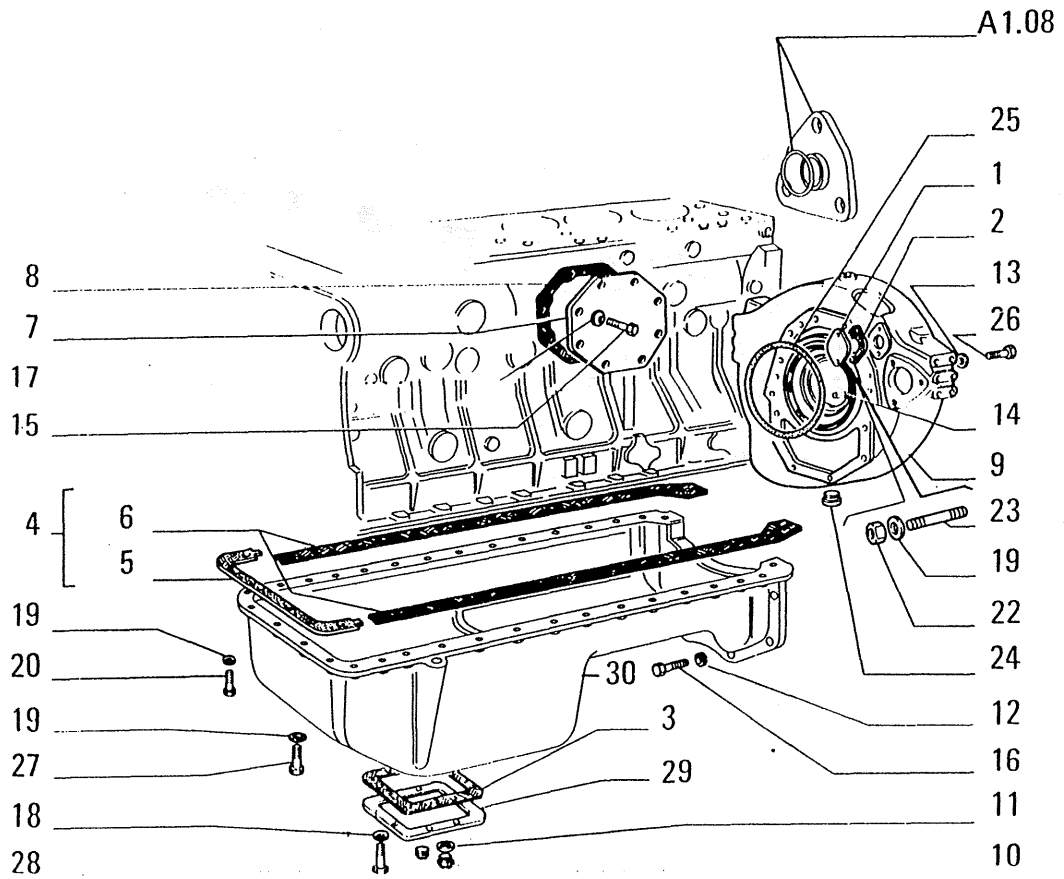

ITEM	PART NUMBER	QTY	TRANS CODE	DESCRIPTION	DESCRIZIONE
1	539705	1	265C	COVER	COPERCHIO
2	539706	1	123G	SEAL ASSY	GUARNIZIONE TENUTA FRONTAL
3	572749	1	123G	SEAL ASSY	GUARNIZIONE TENUTA FRONTAL
4	585592	1	123G	SEAL ASSY	GUARNIZIONE TENUTA FRONTAL
5	591567	1	123G	SEAL ASSY - FRONT	GUARNIZIONE TENUTA FRONTAL - ANTERIORE
6	591568	2	123G	SEAL ASSY - SIDE	GUARNIZIONE TENUTA FRONTAL - LATERALE
7	4530113	1	265C	COVER	COPERCHIO
8	4530123	1	123G	SEAL ASSY	GUARNIZIONE TENUTA FRONTAL
9	4954424	1	300S	SUPPORT - REAR	SUPPORTO - POSTERIORE
10	10278311	2	50T	PLUG 28x1,5x11	TAPPO 28x1,5x11
11	10282285	2	133R	SEAL 28,3x36	ROSETTA DI TENUTA 28,3x36
12	10516877	2	131R	WASHER 10,2x2,5	ROSETTA 10,2x2,5
13	10801630	10	131R	WASHER 12,4x28	ROSETTA 12,4x28
14	10837810	2	90G	DOWEL 12x30	GRANO 12x30
15	10902221	8	40V	SCREW 6x1x16	VITE 6x1x16
16	10923421	2	40V	SCREW 10x1,25x30	VITE 10x1,25x30
17	11197771	8	131R	WASHER 6,4x12	ROSETTA 6,4x12
18	11198071	8	131R	WASHER 8,2x15	ROSETTA 8,2x15
19	11198371	37	131R	WASHER 10,5x20	ROSETTA 10,5x20
20	11307021	32	40V	SCREW 10x1,25x40	VITE 10x1,25x40
22	12164711	2	10D	NUT 10x1,25x8	DADO 10x1,25x8
23	13449321	2	210P	STUD 10x1,25x35	PRIGIONIERO 10x1,25x35
24	14326301	1	50T	PLUG 28x1,5x22	TAPPO 28x1,5x22
25	14476582	1	158G	O-RING 6,98x253,4	GUARNIZIONE O-R 6,98x253,4
26	15540730	10	40V	SCREW 12x1,25x45	VITE 12x1,25x45

(04857) USAGE: Units with 8205 Engine

OIL SUMP AND CRANKCASE COVERS – COPPA E COPERCHI BASAMENTO – CARTER D'HUILE ET COUVERCLES DE BATI – OELWANNE UND DECKEL DES KURBELGEHAEUSES – CARTER DE ACEITE Y TAPAS DEL BLOQUE

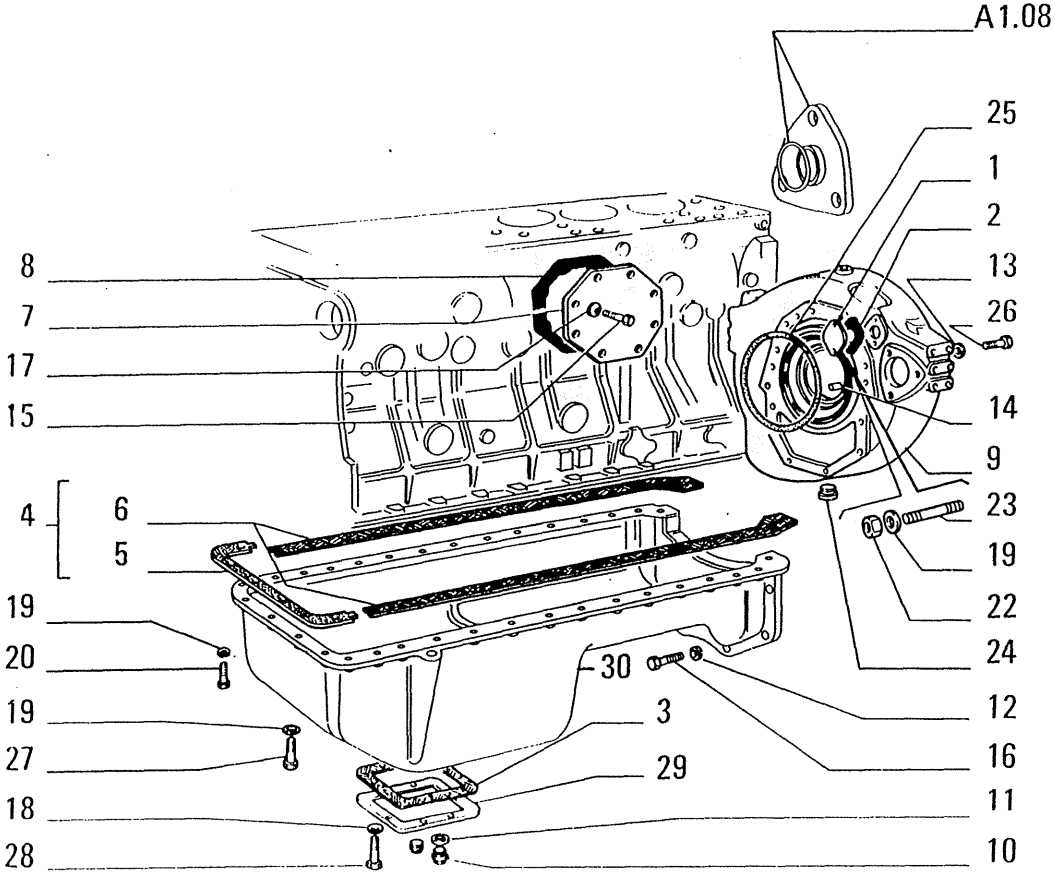

ITEM	PART NUMBER	QTY	TRANS CODE	DESCRIPTION	DESCRIZIONE
27	15970921	4	40V	SCREW 10x1,25x35	VITE 10x1,25x35
28	16043821	8	40V	SCREW 8x1,25x30	VITE 8x1,25x30
29	61589062	1	265C	COVER	COPERCHIO
30	61589057	1	274C	OIL SUMP 01- .-03- . . .	COPPA OLIO 01-02-03-04
	79062575	1	274C	OIL SUMP 05-(*)	COPPA OLIO 05-(*)
(*)			469P	FOR SPECIAL EQUIPMENT 30.0021.08.1	PER VARIANTE 30.0021.07.1

04857 USAGE: Units with 8205 Engine

OIL SUMP AND CRANKCASE COVERS – COPPA E COPERCHI BASAMENTO – CARTER D'HUILE ET COUVERCLES DE BATI – OELWANNE UND DECKEL DES KURBELGEHAEUSES – CARTER DE ACEITE Y TAPAS DEL BLOQUE

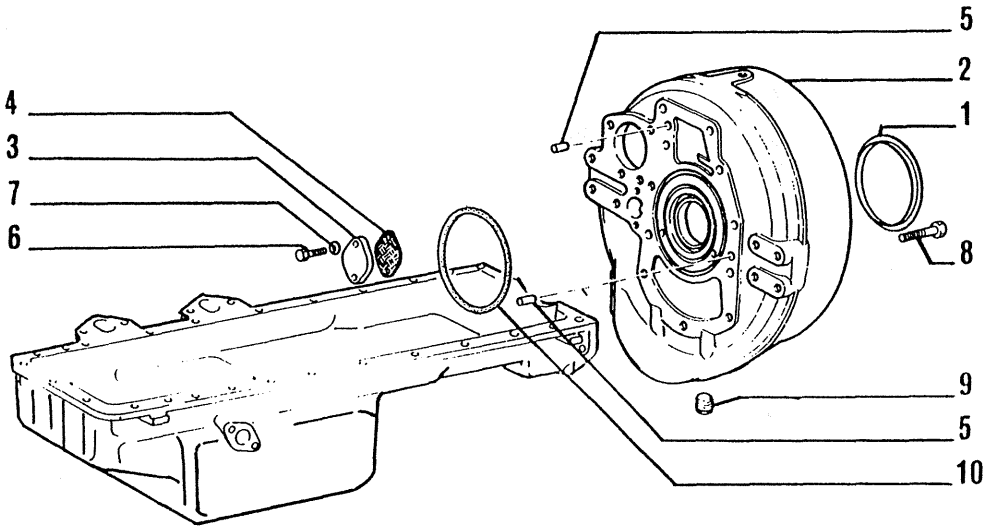



USAGE: Units with 8365 Engine

ITEM	PART NUMBER	QTY	TRANS CODE	DESCRIPTION	DESCRIZIONE
1	4760463	1	45A	RING	ANELLO
2	4821100	1	300S	SUPPORT - REAR ASSEMBLY	SUPPORTO - POSTERIORE COMPLE
3	8818504	1	265C	COVER	COPERCHIO
4	8818505	1	122G	SEAL	GUARNIZIONE
5	10839810	2	90G	DOWEL 12x18	GRANO 12x18
6	10902121	2	40V	SCREW 6x1x14	VITE 6x1x14
7	11197771	2	132R	LOCKWASHER 6,4x12	ROSETTA DI SICUREZZA 6,4x12
8	14274630	8	40V	SCREW 12x1,25x35	VITE 12x1,25x35
9	14326311	1	50T	PLUG 28x1,5x22	TAPPO 28x1,5x22
10	14483481	1	158G	O-RING 3,53x221,6	GUARNIZIONE O-R 3,53x221,6
11	79037448	K	1K	KIT SEE PAGE 9	KIT VED. PAG.9

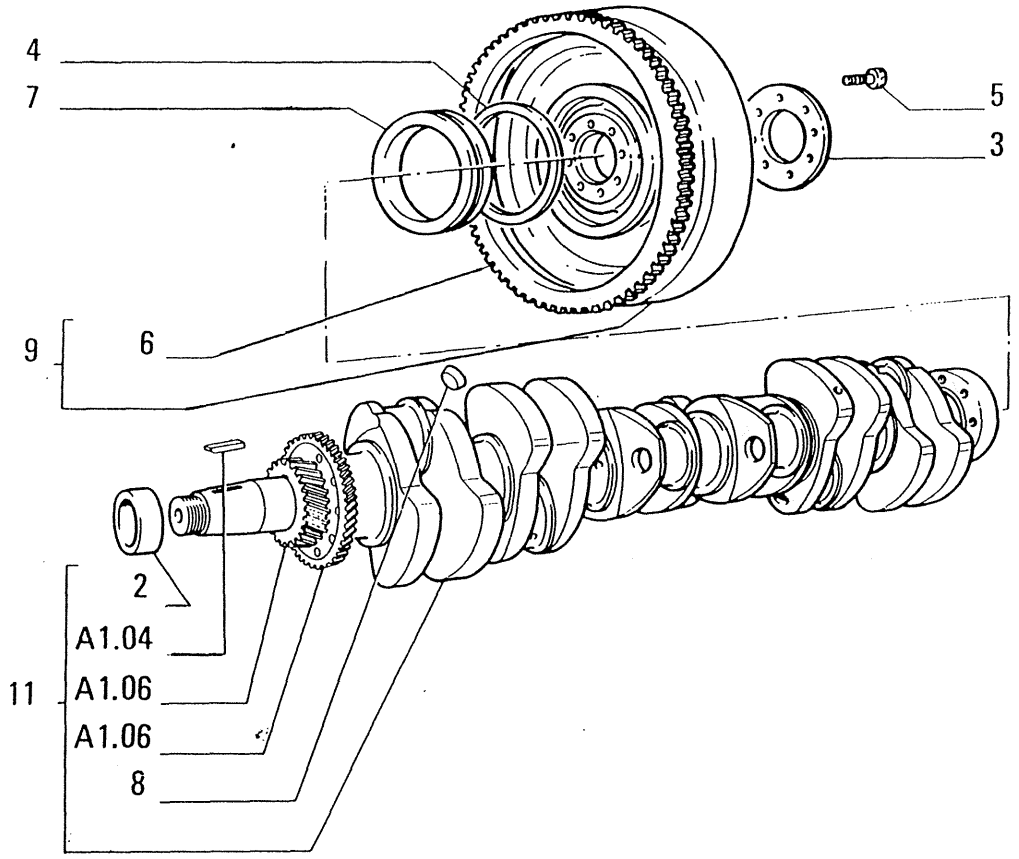

ITEM	PART NUMBER	QTY	TRANS CODE	DESCRIPTION	DESCRIZIONE
2	4607210	1	45A	RING	ANELLO
3	4622228	1	131R	WASHER	ROSETTA
4	4633359	1	95B	BUSHING	BOCCOLA
5	4695903	8	40V	SCREW	VITE
6	4731242	1	297C	RING GEAR	CORONA DENTATA
7	4965428	1	95B	BUSHING	BOCCOLA
8	14282370	6	50T	PLUG 25x7	TAPPO 25x7
9	61694031	1	48V	FLYWHEEL - ASSEMBLY	VOLANO - COMPLETO (02-04) VOLANO - COMPLETO (01-03)(05)
11	79005645	1	18A	CRANKSHAFT	ALBERO MOTORE

(04858) USAGE: Units with 8205 Engine

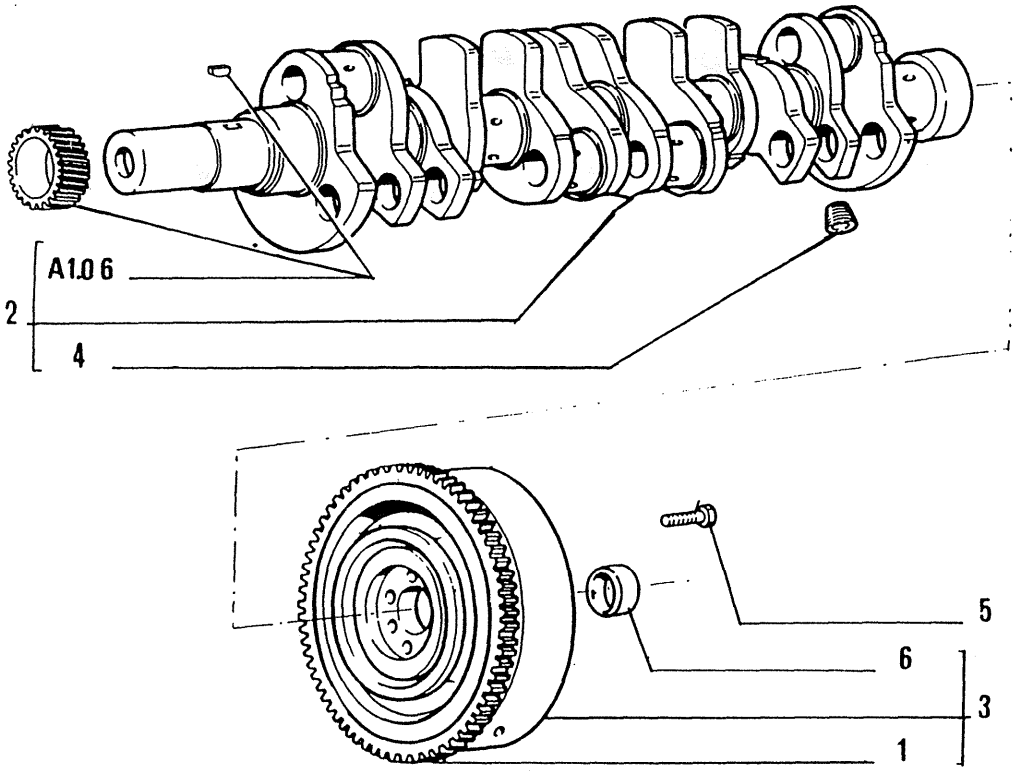

ITEM	PART NUMBER	QTY	TRANS CODE	DESCRIPTION	DESCRIZIONE
1	4734354	1	297C	RING GEAR	CORONA DENTATA
2	4788145	1	18A	CRANKSHAFT - ASSEMBLY	ALBERO MOTORE - COMPLETO
3	4808788	1	48V	FLYWHEEL - ASSEMBLY	VOLANO - COMPLETO
4	38952312	6	50T	PLUG	TAPPO
5	4765554	7	40V	SCREW	VITE
6	4808790	1	95B	BUSHING	BOCCOLA

USAGE: Units with 8365 Engine

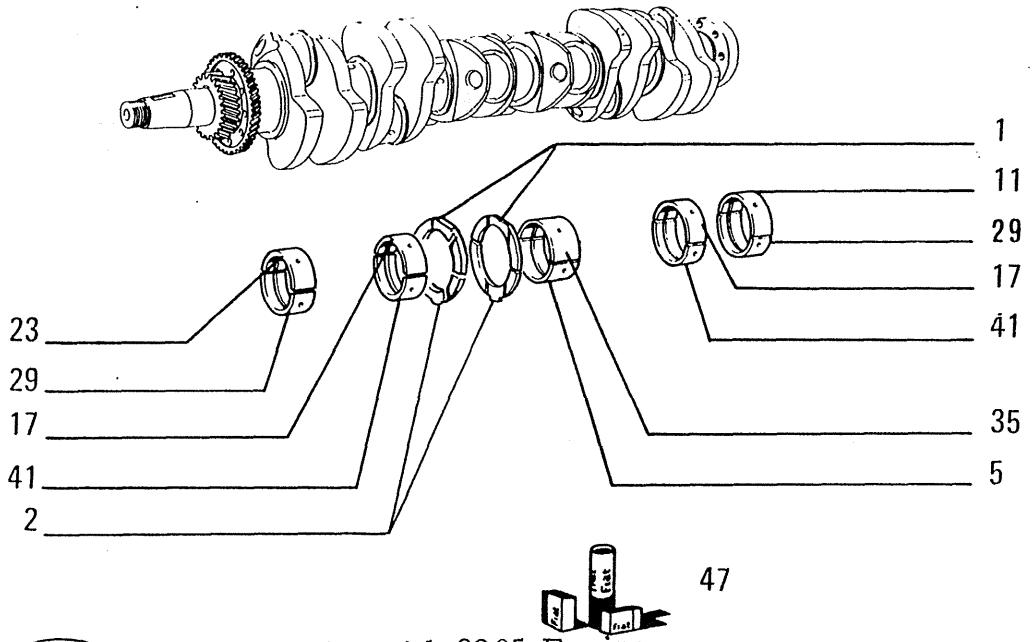

(04859) USAGE: Units with 8205 Engine

ITEM	PART NUMBER	QTY	TRANS CODE	DESCRIPTION	DESCRIZIONE
1	4665222	2	90S	HALF RING +0,127	SEMIANELLO +0,127
	4665226	2	90S	HALF RING +0,000	SEMIANELLO +0,000
2	4665225	1	90S	HALF RING +0,127	SEMIANELLO +0,127
	4665227	1	90S	HALF RING +0,000	SEMIANELLO +0,000
5	4691301	1	103S	HALF BEARING -0,000	SEMICUSCINETTO -0,000
	4691302	1	103S	HALF BEARING -0,254	SEMICUSCINETTO -0,254
	4691303	1	103S	HALF BEARING -0,508	SEMICUSCINETTO -0,508
	4691304	1	103S	HALF BEARING -0,762	SEMICUSCINETTO -0,762
	4691305	1	103S	HALF BEARING -1,016	SEMICUSCINETTO -1,016
	4691306	1	103S	HALF BEARING -0,101	SEMICUSCINETTO -0,101
11	4691307	1	103S	HALF BEARING -0,000	SEMICUSCINETTO -0,000
	4691308	1	103S	HALF BEARING -0,254	SEMICUSCINETTO -0,254
	4691309	1	103S	HALF BEARING -0,508	SEMICUSCINETTO -0,508
	4691310	1	103S	HALF BEARING -0,762	SEMICUSCINETTO -0,762
	4691311	1	103S	HALF BEARING -1,016	SEMICUSCINETTO -1,016
	4691312	1	103S	HALF BEARING -0,101	SEMICUSCINETTO -0,101
17	4691313	4	103S	HALF BEARING -0,000	SEMICUSCINETTO -0,000
	4691314	4	103S	HALF BEARING -0,254	SEMICUSCINETTO -0,254
	4691315	4	103S	HALF BEARING -0,508	SEMICUSCINETTO -0,508
	4691316	4	103S	HALF BEARING -0,762	SEMICUSCINETTO -0,762
	4691317	4	103S	HALF BEARING -1,016	SEMICUSCINETTO -1,016
	4691318	4	103S	HALF BEARING -0,101	SEMICUSCINETTO -0,101
23	4691319	1	103S	HALF BEARING -0,000	SEMICUSCINETTO -0,000
	4691320	1	103S	HALF BEARING -0,254	SEMICUSCINETTO -0,254
	4691321	1	103S	HALF BEARING -0,508	SEMICUSCINETTO -0,508
	4691322	1	103S	HALF BEARING -0,762	SEMICUSCINETTO -0,762
	4691323	1	103S	HALF BEARING -1,016	SEMICUSCINETTO -1,016

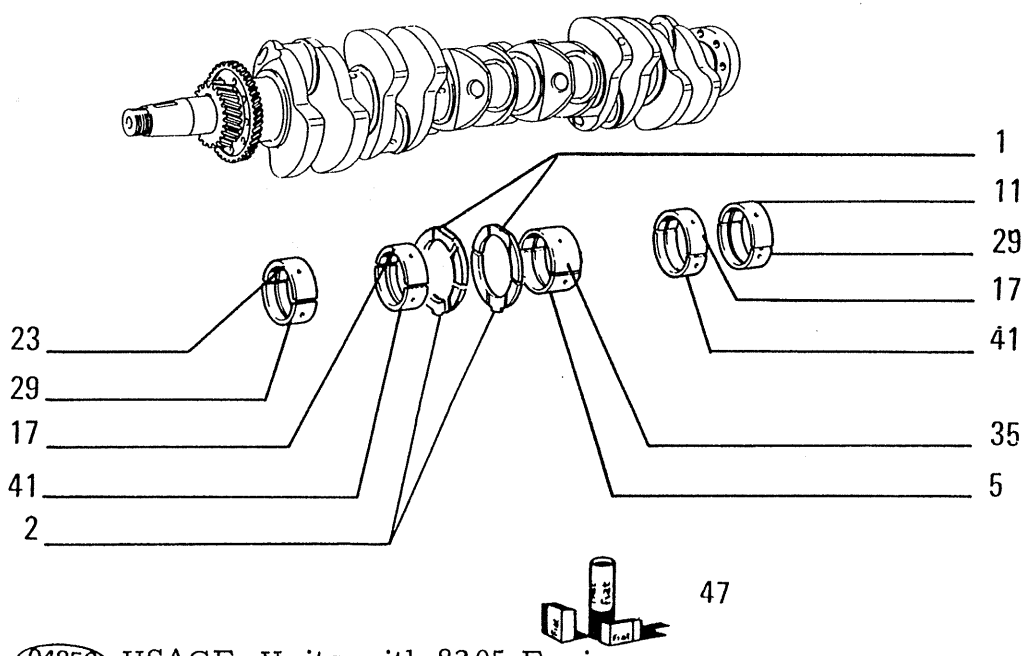

04859 USAGE: Units with 8205 Engine

ITEM	PART NUMBER	QTY	TRANS CODE	DESCRIPTION	DESCRIZIONE
23	4691324	1	103S	HALF BEARING -0,101	SEMICUSCINETTO -0,101
29	4691325	2	103S	HALF BEARING -0,000	SEMICUSCINETTO -0,000
	4691326	2	103S	HALF BEARING -0,254	SEMICUSCINETTO -0,254
	4691327	2	103S	HALF BEARING -0,508	SEMICUSCINETTO -0,508
	4691328	2	103S	HALF BEARING -0,762	SEMICUSCINETTO -0,762
	4691329	2	103S	HALF BEARING -1,016	SEMICUSCINETTO -1,016
	4691330	2	103S	HALF BEARING -0,101	SEMICUSCINETTO -0,101
35	4691331	1	103S	HALF BEARING -0,000	SEMICUSCINETTO -0,000
	4691332	1	103S	HALF BEARING -0,254	SEMICUSCINETTO -0,254
	4691333	1	103S	HALF BEARING -0,508	SEMICUSCINETTO -0,508
	4691334	1	103S	HALF BEARING -0,762	SEMICUSCINETTO -0,762
	4691335	1	103S	HALF BEARING 1,016	SEMICUSCINETTO 1,016
	4691336	1	103S	HALF BEARING 0,101	SEMICUSCINETTO 0,101
41	4691337	4	103S	HALF BEARING -0,000	SEMICUSCINETTO -0,000
	4691338	4	103S	HALF BEARING -0,254	SEMICUSCINETTO -0,254
	4691339	4	103S	HALF BEARING -0,508	SEMICUSCINETTO -0,508
	4691340	4	103S	HALF BEARING -0,762	SEMICUSCINETTO -0,762
	4691341	4	103S	HALF BEARING -1,016	SEMICUSCINETTO -1,016
	4691342	4	103S	HALF BEARING -0,101	SEMICUSCINETTO -0,101
47	79037386	K	1K	KIT SEE PAGE 9	KIT VED. PAG.9
	79037428	K	1K	KIT SEE PAGE 9	KIT VED. PAG.9
	79037475	K	1K	KIT SEE PAGE 9	KIT VED. PAG.9

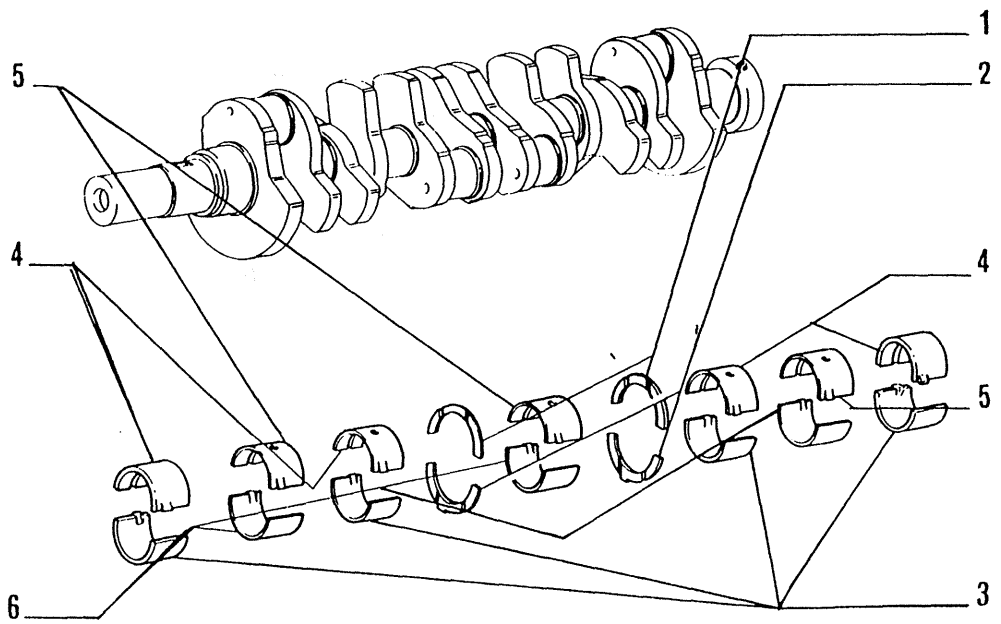



USAGE: Units with 8365 Engine

ITEM	PART NUMBER	QTY	TRANS CODE	DESCRIPTION	DESCRIZIONE
1	4707775	2	90S	HALF RING +0,000	SEMIANELLO +0,000
	4707776	2	90S	HALF RING +0,127	SEMIANELLO +0,127
	4708063	2	90S	HALF RING +0,254	SEMIANELLO +0,254
	4708064	2	90S	HALF RING +0,508	SEMIANELLO +0,508
	4793794	2	90S	HALF RING +0,381	SEMIANELLO +0,381
2	4707779	2	90S	HALF RING +0,000	SEMIANELLO +0,000
	4707780	2	90S	HALF RING +0,127	SEMIANELLO +0,127
	4708069	2	90S	HALF RING +0,254	SEMIANELLO +0,254
	4708070	2	90S	HALF RING +0,508	SEMIANELLO +0,508
	4794193	2	90S	HALF RING +0,381	SEMIANELLO +0,381
3	4722645	4	103S	HALF BEARING -0,000	SEMICUSCINETTO -0,000
	4722646	4	103S	HALF BEARING -0,254	SEMICUSCINETTO -0,254
	4722647	4	103S	HALF BEARING -0,508	SEMICUSCINETTO -0,508
	4722648	4	103S	HALF BEARING -0,762	SEMICUSCINETTO -0,762
	4722649	4	103S	HALF BEARING -1,016	SEMICUSCINETTO -1,016
	4722650	4	103S	HALF BEARING -0,127	SEMICUSCINETTO -0,127
4	4722651	4	103S	HALF BEARING -0,000	SEMICUSCINETTO -0,000
	4722652	4	103S	HALF BEARING -0,254	SEMICUSCINETTO -0,254
	4722653	4	103S	HALF BEARING -0,508	SEMICUSCINETTO -0,508
	4722654	4	103S	HALF BEARING -0,762	SEMICUSCINETTO -0,762
	4722655	4	103S	HALF BEARING -1,016	SEMICUSCINETTO -1,016
	4722656	4	103S	HALF BEARING -0,127	SEMICUSCINETTO -0,127
5	4722693	3	103S	HALF BEARING -0,000	SEMICUSCINETTO -0,000
	4722694	3	103S	HALF BEARING -0,254	SEMICUSCINETTO -0,254
	4722695	3	103S	HALF BEARING -0,508	SEMICUSCINETTO -0,508
	4722696	3	103S	HALF BEARING -0,762	SEMICUSCINETTO -0,762
	4722697	3	103S	HALF BEARING -1,016	SEMICUSCINETTO -1,016

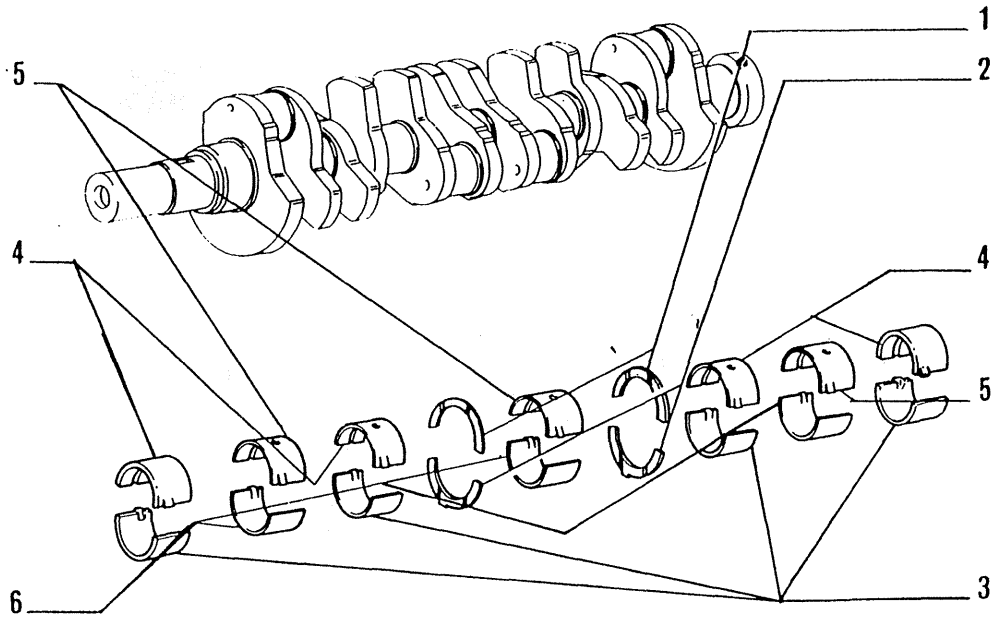



USAGE: Units with 8365 Engine

ITEM	PART NUMBER	QTY	TRANS CODE	DESCRIPTION	DESCRIZIONE
5	4722698	3	103S	HALF BEARING -0,127	SEMICUSCINETTO -0,127
6	4722699	3	103S	HALF BEARING -0,000	SEMICUSCINETTO -0,000
	4722700	3	103S	HALF BEARING -0,254	SEMICUSCINETTO -0,254
	4722701	3	103S	HALF BEARING -0,508	SEMICUSCINETTO -0,508
	4722702	3	103S	HALF BEARING -0,762	SEMICUSCINETTO -0,762
	4722703	3	103S	HALF BEARING -1,016	SEMICUSCINETTO -1,016
	4722704	3	103S	HALF BEARING -0,127	SEMICUSCINETTO -0,127
7	1901385	K	1K	KIT SEE PAGE 9	KIT VED. PAG.9
	1901386	K	1K	KIT SEE PAGE 9	KIT VED. PAG.9
	1901387	K	1K	KIT SEE PAGE 9	KIT VED. PAG.9
	1901388	K	1K	KIT SEE PAGE 9	KIT VED. PAG.9
	1901832	K	1K	KIT SEE PAGE 9	KIT VED. PAG.9
	1901833	K	1K	KIT SEE PAGE 9	KIT VED. PAG.9
	1901834	K	1K	KIT SEE PAGE 9	KIT VED. PAG.9
	1901835	K	1K	KIT SEE PAGE 9	KIT VED. PAG.9
	1901836	K	1K	KIT SEE PAGE 9	KIT VED. PAG.9

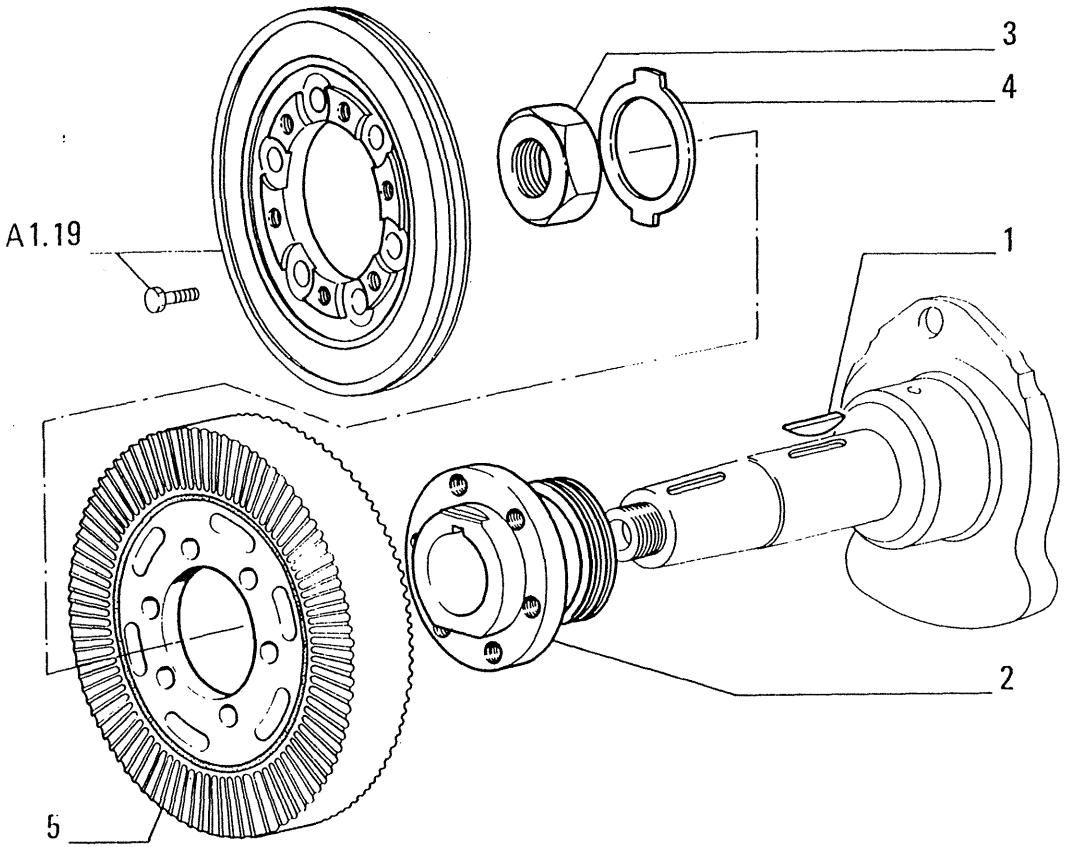

ITEM	PART NUMBER	QTY	TRANS CODE	DESCRIPTION	DESCRIZIONE
1	4606319	1	60L	KEY	LINGUETTA
2	4607072	1	135M	HUB	MOZZO
3	4607073	1	10D	NUT	DADO
4	4607074	1	131R	WASHER	ROSETTA
5	4623877	1	164S	DAMPER	SMORZATORE

(04864) USAGE: Units with 8205 Engine

DAMPER – SMORZATORE PER ALBERO MOTORE – DAMPER DE VILEBREQUIN – SCHWINGUNGSDAEMPFER – ANTIVIBRADOR DEL CIGUEÑAL

A1.04

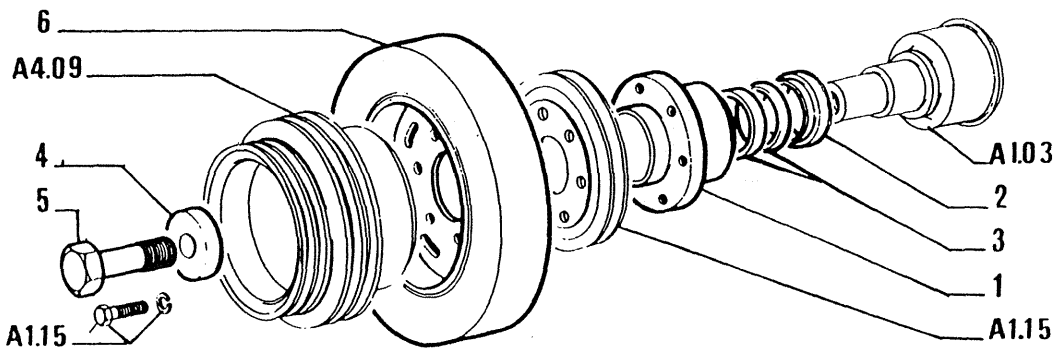

ITEM	PART NUMBER	QTY	TRANS CODE	DESCRIPTION	DESCRIZIONE
1	4711786	1	135M	HUB	MOZZO
2	4711787	1	75D	SPACER	DISTANZIALE
3	4811426	1	45A	RING	ANELLO
4	8823773	1	131R	WASHER	ROSETTA
5	8823774	1	40V	SCREW	VITE
6	8831256	1	164S	DAMPER	SMORZATORE

USAGE: Units with 8365 Engine

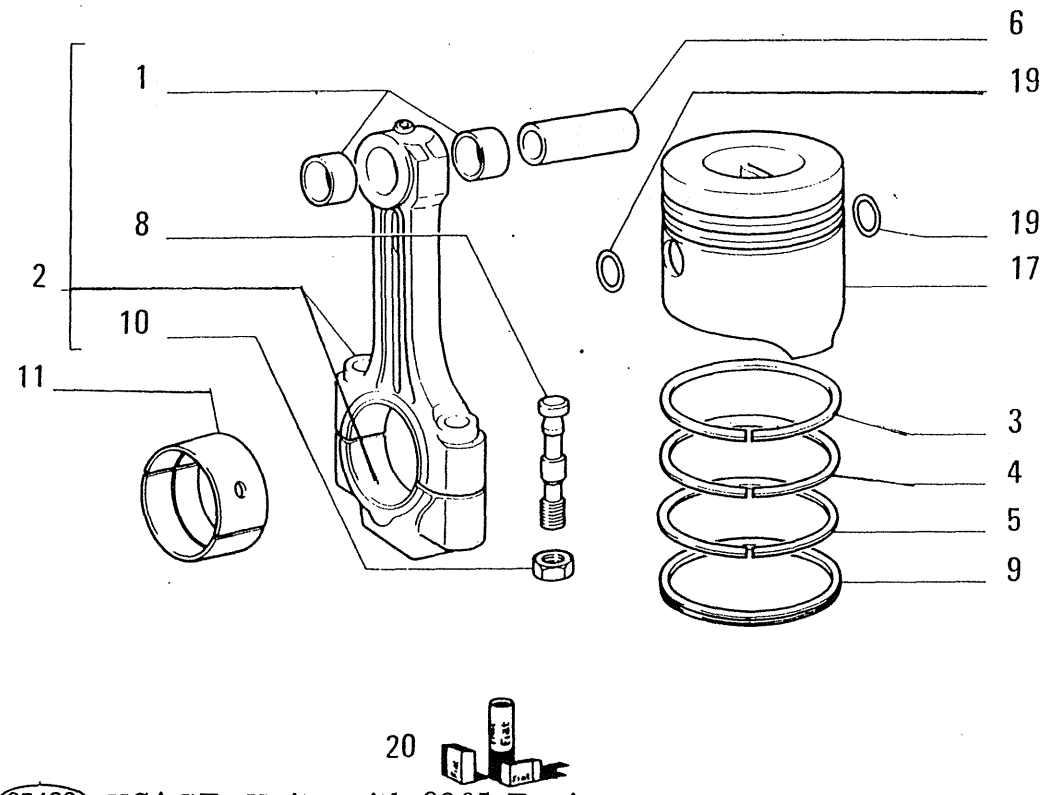

ITEM	PART NUMBER	QTY	TRANS CODE	DESCRIPTION	DESCRIZIONE
1	4646715	12	95B	BUSHING	BOCCOLA
2	4672154	6	50B	LINK - ASSEMBLY	BIELLA - COMPLETO
3	4678907	6	53A	PISTON RING	ANELLO STANTUFFO
4	4678908	6	53A	PISTON RING	ANELLO STANTUFFO
5	4678909	6	50A	OILSCRAPER RING	ANELLO RASCHIAOLIO
6	4678912	6	80P	PIN +0,0	PERNO +0,0
	4678913	6	80P	PIN +0,2	PERNO +0,2
8	4678999	12	40V	SCREW	VITE
9	4687474	6	50A	OILSCRAPER RING	ANELLO RASCHIAOLIO
10	4693705	12	10D	NUT	DADO
11	4698031	12	103S	HALF BEARING -0,000	SEMICUSCINETTO -0,000
	4698032	12	103S	HALF BEARING -0,254	SEMICUSCINETTO -0,254
	4698033	12	103S	HALF BEARING -0,508	SEMICUSCINETTO -0,508
	4698034	12	103S	HALF BEARING -0,762	SEMICUSCINETTO -0,762
	4698035	12	103S	HALF BEARING -1,016	SEMICUSCINETTO -1,016
	4698036	12	103S	HALF BEARING -0,101	SEMICUSCINETTO -0,101
17	4750441	6	235S	PISTON (CLASSE A)	STANTUFFO (CLASSE A)
	4750442	6	235S	PISTON (CLASSE B)	STANTUFFO (CLASSE B)
19	11063275	12	51A	LOCKRING 47,5x4,5	ANELLO DI SICUREZZA 47,5x4,5
20	79037415	K	1K	KIT SEE PAGE 9	KIT VED. PAG.9

(05420) USAGE: Units with 8205 Engine

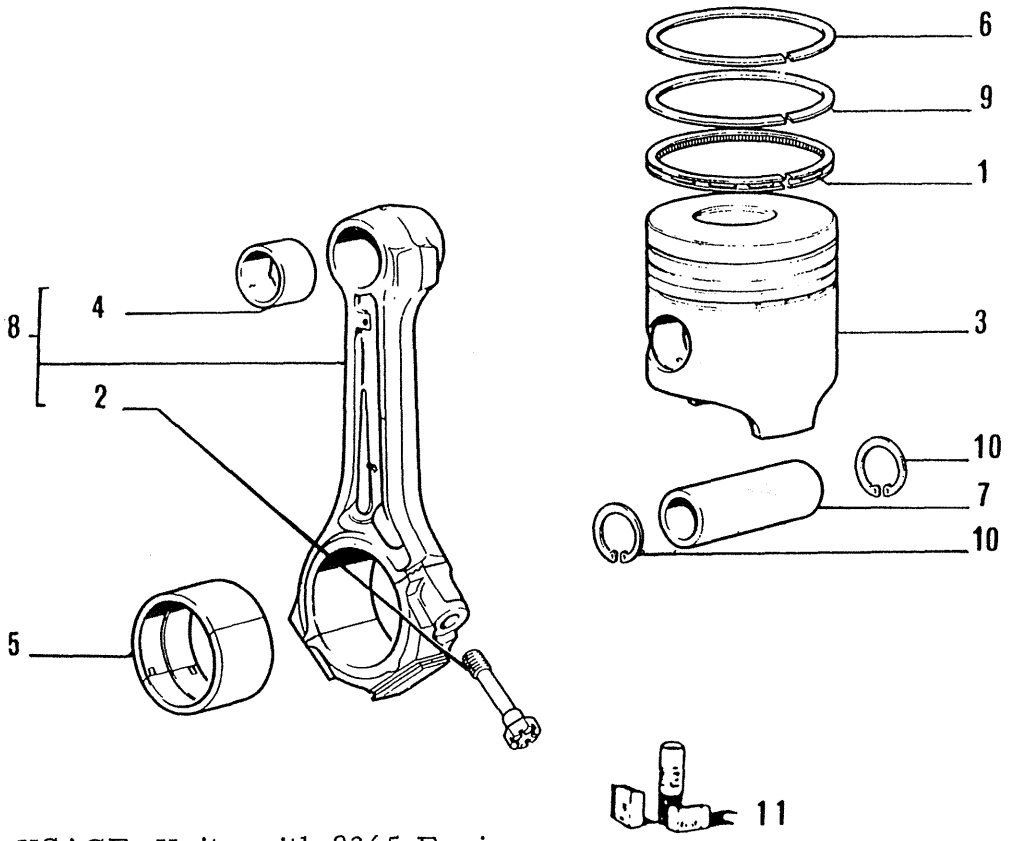

USAGE: Units with 8365 Engine

ITEM	PART NUMBER	QTY	TRANS CODE	DESCRIPTION	DESCRIZIONE
1	4712663	6	50A	OILSCRAPER RING +0,0	ANELLO RASCHIAOLIO +0,0
	4712664	6	50A	OILSCRAPER RING +0,6	ANELLO RASCHIAOLIO +0,6
2	4722162	12	40V	SCREW	VITE
3	4802671	6	235S	PISTON +0,0	STANTUFFO +0,0
	4821412	6	235S	PISTON +0,6	STANTUFFO +0,6
4	4771030	6	95B	BUSHING - IN ALTERNATIVE	BOCCOLA - IN ALTERNATIVA
	4775752	6	95B	BUSHING - IN ALTERNATIVE	BOCCOLA - IN ALTERNATIVA
5	4775753	12	103S	HALF BEARING -0,000	SEMICUSCINETTO -0,000
	4775754	12	103S	HALF BEARING -0,254	SEMICUSCINETTO -0,254
	4775755	12	103S	HALF BEARING -0,508	SEMICUSCINETTO -0,508
	4775756	12	103S	HALF BEARING -0,762	SEMICUSCINETTO -0,762
	4775757	12	103S	HALF BEARING -1,016	SEMICUSCINETTO -1,016
	4775758	12	103S	HALF BEARING -0,127	SEMICUSCINETTO -0,127
	4775759	12	103S	HALF BEARING -0,000	SEMICUSCINETTO -0,000
	4775760	12	103S	HALF BEARING -0,254	SEMICUSCINETTO -0,254
	4775761	12	103S	HALF BEARING -0,508	SEMICUSCINETTO -0,508
	4775762	12	103S	HALF BEARING -0,762	SEMICUSCINETTO -0,762
	4775763	12	103S	HALF BEARING -1,016	SEMICUSCINETTO -1,016
	4775764	12	103S	HALF BEARING -0,127	SEMICUSCINETTO -0,127
6	4796208	6	53A	PISTON RING +0,0	ANELLO STANTUFFO +0,0
	4796209	6	53A	PISTON RING +0,6	ANELLO STANTUFFO +0,6
7	4800402	6	80P	PIN +0,0	PERNO +0,0
	4800403	6	80P	PIN +0,2	PERNO +0,2
8	4802128	6	50B	LINK - ASSEMBLY	BIELLA - COMPLETO
9	8829266	6	53A	PISTON RING +0,0	ANELLO STANTUFFO +0,0
	8829393	6	53A	PISTON RING +0,6	ANELLO STANTUFFO +0,6
10	11060076	12	187A	SNAP RING 45,5x1,75	ANELLO ELASTICO 45,5x1,75

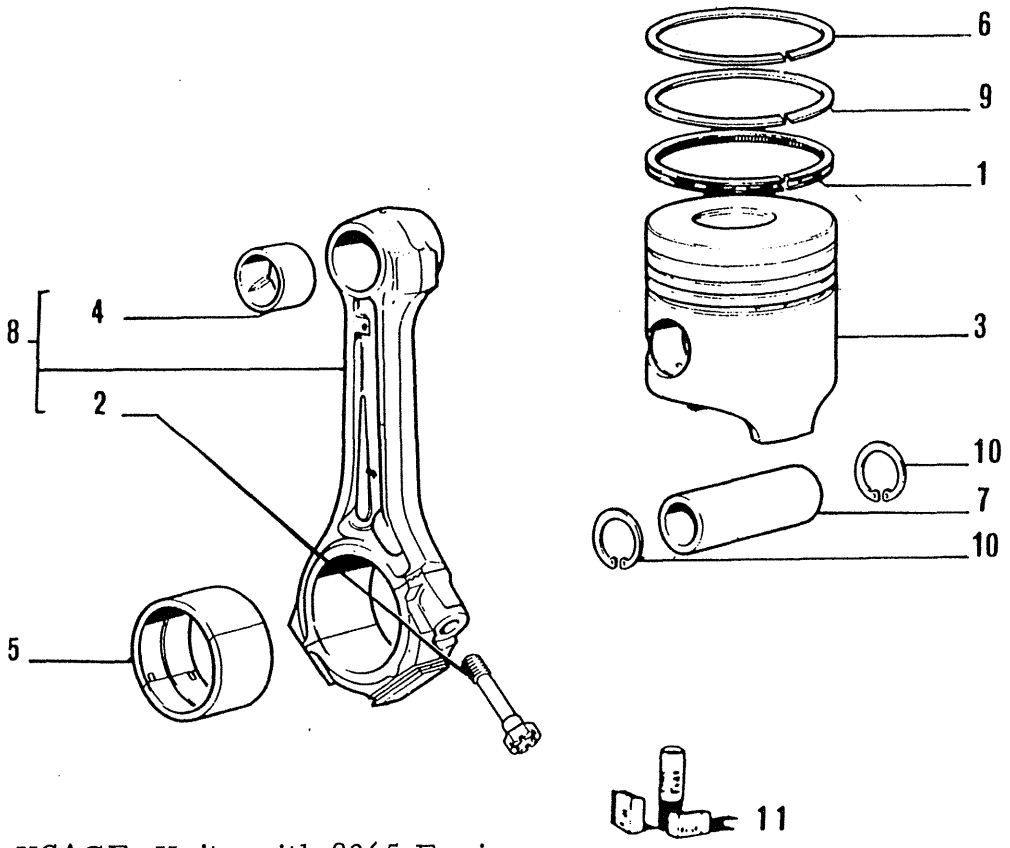

USAGE: Units with 8365 Engine

ITEM	PART NUMBER	QTY	TRANS CODE	DESCRIPTION	DESCRIZIONE
11	1901993	K	1K	KIT SEE PAGE 9	KIT VED. PAG.9
	1901994	K	1K	KIT SEE PAGE 9	KIT VED. PAG.9
	1901995	K	1K	KIT SEE PAGE 9	KIT VED. PAG.9
	1901996	K	1K	KIT SEE PAGE 9	KIT VED. PAG.9
	1901997	K	1K	KIT SEE PAGE 9	KIT VED. PAG.9
	1902586	K	1K	KIT SEE PAGE 9	KIT VED. PAG.9
	1930234	K	1K	KIT SEE PAGE 9	KIT VED. PAG.9

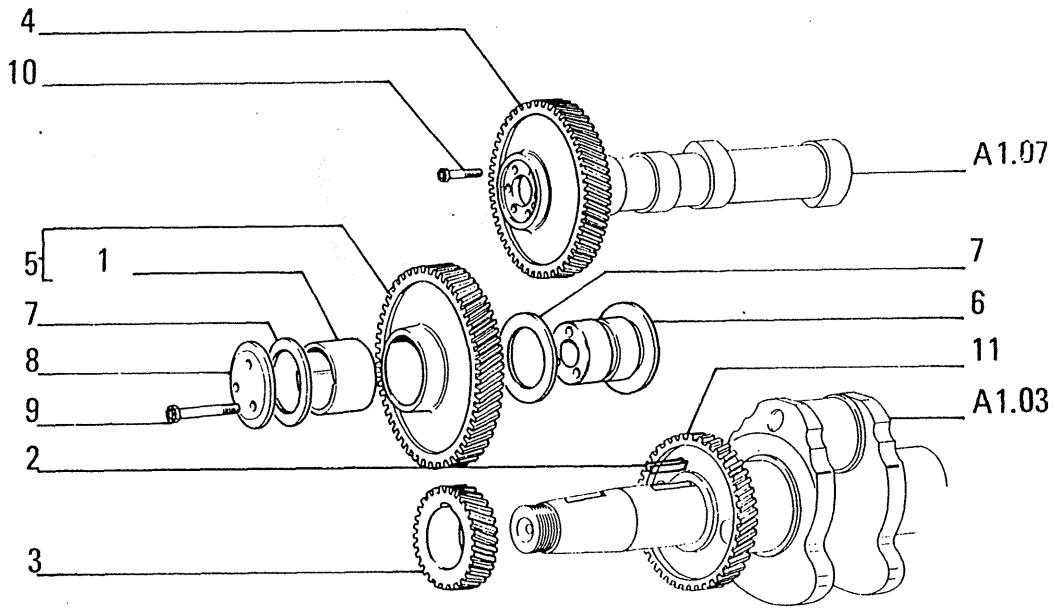

ITEM	PART NUMBER	QTY	TRANS CODE	DESCRIPTION	DESCRIZIONE
1	4526173	1	95B	BUSHING	BOCCOLA
2	4606319	1	60L	KEY	LINGUETTA
3	4607211	1	50I	GEAR	INGRANAGGIO
4	4620035	1	50I	GEAR	INGRANAGGIO
5	4630549	1	50I	GEAR - ASSEMBLY	INGRANAGGIO - COMPLETO
6	4649835		80P	PIN	PERNO
7	4670139	2	46A	THRUST RING	ANELLO REGGISPINTA
8	4672985	1	70F	FLANGE	FLANGIA
9	4672986	3	40V	SCREW	VITE
10	14233230	6	40V	SCREW 10x1,25x20	VITE 10x1,25x20
11	4670137	1	50I	GEAR	INGRANAGGIO

(03922) USAGE: Units with 8205 Engine

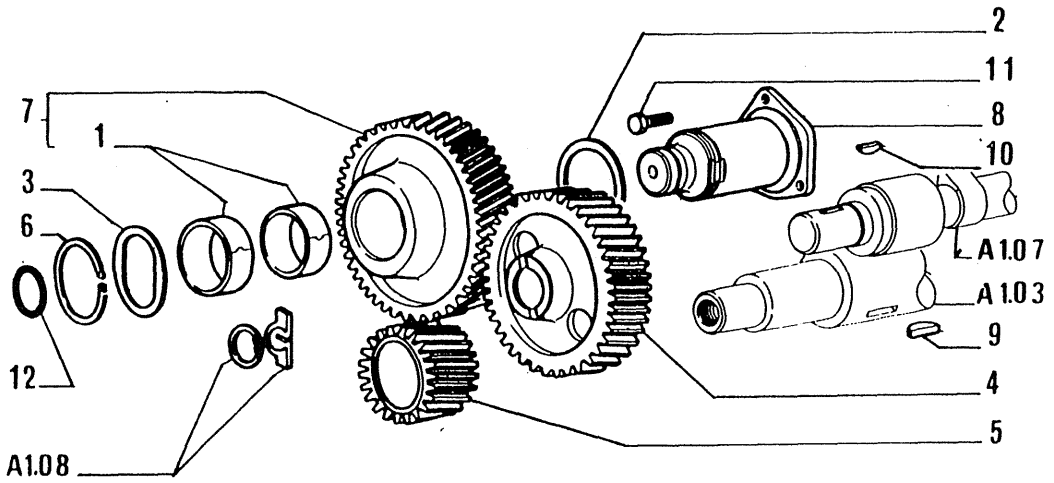

ITEM	PART NUMBER	QTY	TRANS CODE	DESCRIPTION	DESCRIZIONE
1	4601834	2	95B	BUSHING - IN ALTERNATIVE	BOCCOLA - IN ALTERNATIVA
	4670937	2	95B	BUSHING - IN ALTERNATIVE	BOCCOLA - IN ALTERNATIVA
2	4604833	1	23R	THRUST PLATE	RALLA DI SPINTA
3	4667498	1	46A	THRUST RING	ANELLO REGGISPINTA
4	4708079	1	50I	GEAR	INGRANAGGIO
5	4708105	1	50I	GEAR	INGRANAGGIO
6	4708213	1	51A	LOCKRING	ANELLO DI SICUREZZA
7	4708423	1	50I	GEAR - ASSEMBLY	INGRANAGGIO - COMPLETO
8	4708424	1	80P	PIN	PERNO
9	8817913	1	60L	KEY	LINGUETTA
10	10206010	1	60L	KEY 11x6	LINGUETTA 11x6
11	14238030	3	40V	SCREW 8x1,25x20	VITE 8x1,25x20
12	14463181	1	158G	O-RING 3,53x23,39	GUARNIZIONE O-R 3,53x23,39

USAGE: Units with 8365 Engine

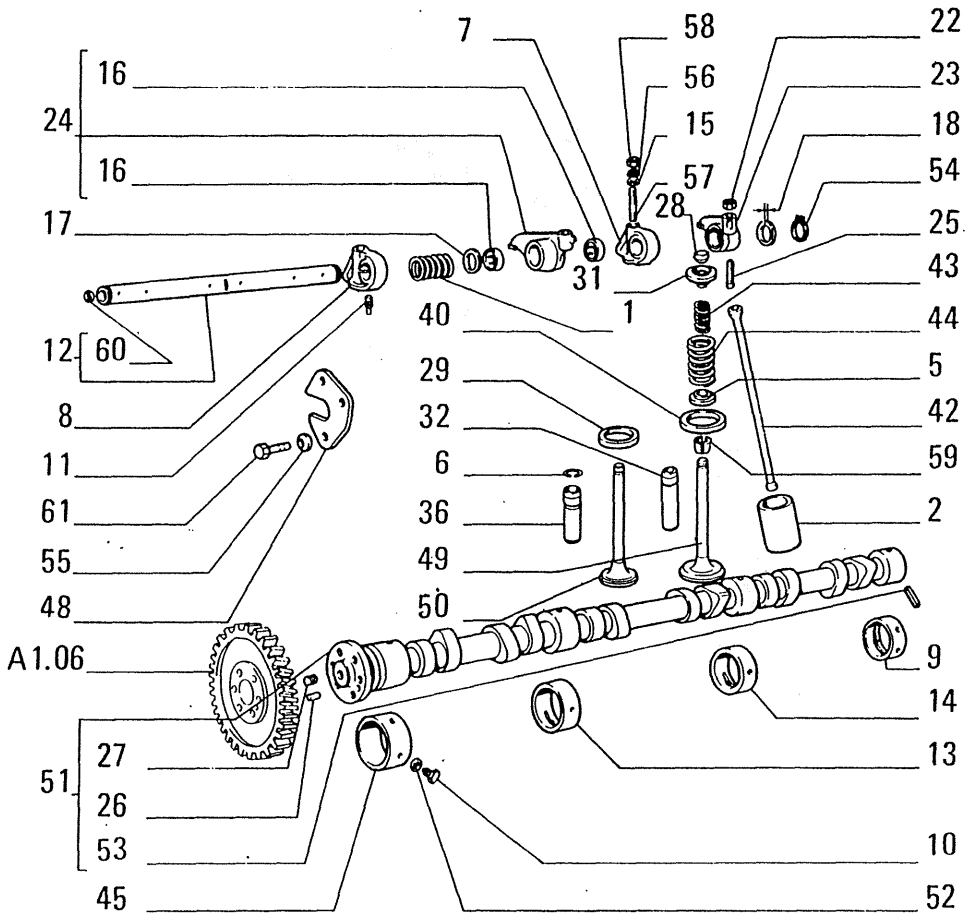

ITEM	PART NUMBER	QTY	TRANS CODE	DESCRIPTION	DESCRIZIONE
1	604369	4	100M	SPRING	MOLLA
2	4500461	12	121P	TAPPET PLATE +0,0	PIATTELLO DELLA PUNTERIA +0,0
	4500462	12	121P	TAPPET PLATE +0,1	PIATTELLO DELLA PUNTERIA +0,1
	4500463	12	121P	TAPPET PLATE +0,2	PIATTELLO DELLA PUNTERIA +0,2
	4565357	12	121P	TAPPET PLATE +0,3	PIATTELLO DELLA PUNTERIA +0,3
5	4500477	12	60S	CUP - LOWER	SCODELLINO - INFERIORE
6	4500478	12	45A	RING	ANELLO
7	4525591	2	300S	SUPPORT	SUPPORTO
8	4525592	4	300S	SUPPORT	SUPPORTO
9	4526645	1	95B	BUSHING - REAR	BOCCOLA - POSTERIORE
10	4526648	4	40V	SCREW	VITE
11	4526961	2	90G	DOWEL	GRANO
12	4528881	2	16A	SHAFT - ASSEMBLY	ALBERO - COMPLETO
13	4535822	1	95B	BUSHING	BOCCOLA
14	4535823	1	95B	BUSHING	BOCCOLA
15	4542203	6	131R	WASHER	ROSETTA
16	4544093	24	95B	BUSHING	BOCCOLA
17	4544152	8	131R	WASHER	ROSETTA
18	4544152	4	131R	WASHER - THICKNESS 1,5	ROSETTA - SPESSORE 1,5
	4544153	4	131R	WASHER - THICKNESS 2	ROSETTA - SPESSORE 2
	4544154	4	131R	WASHER - THICKNESS 2,5	ROSETTA - SPESSORE 2,5
22	4579263	12	10D	NUT	DADO
23	4609090	6	55B	ROCKER - LEFT ASSEMBLY	BILANCIERE - SINISTRO COMPLETO
24	4609091	6	55B	ROCKER - RIGHT ASSEMBLY	BILANCIERE - DESTRO COMPLETO
25	4609095	12	40V	SCREW C1481	VITE C1481
	4804462	12	40V	SCREW D1481	VITE D1481
26	4619885	1	90G	DOWEL	GRANO

C 1481 → Mot.n. 1676 D 1481 Mot.n. 1677 →

(04861) USAGE: Units with 8205 Engine

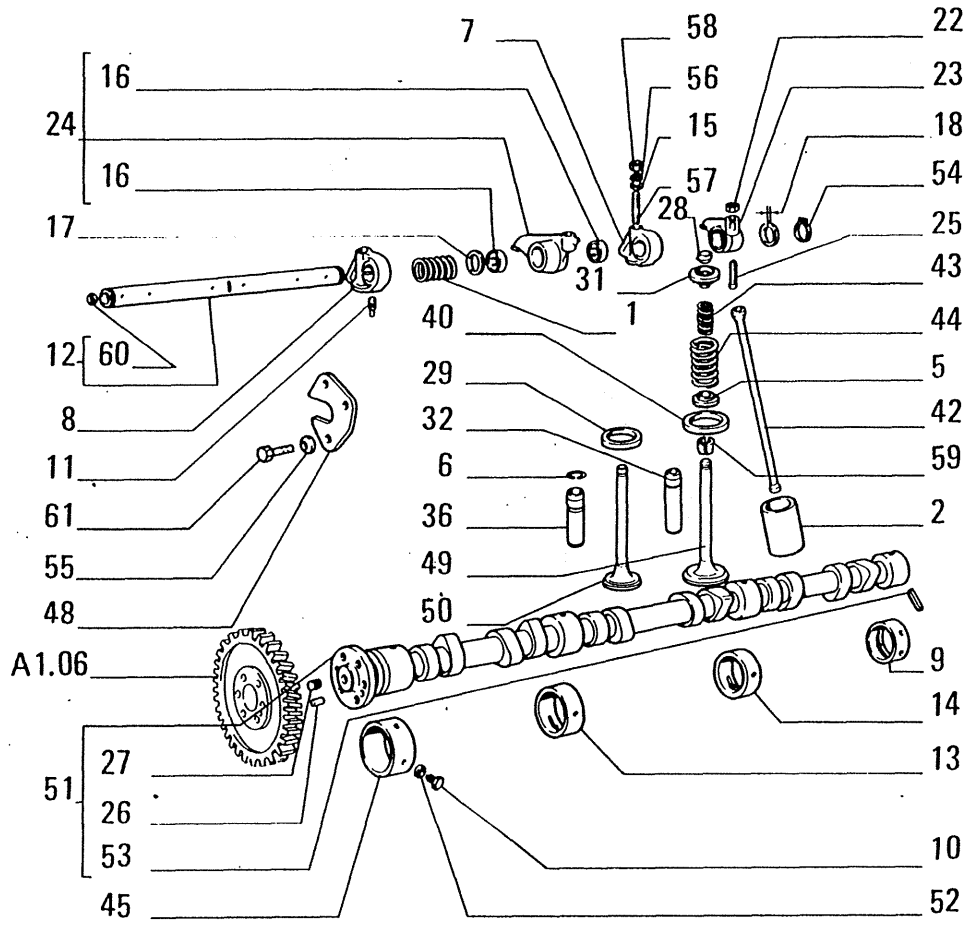

(04861) USAGE: Units with 8205 Engine

ITEM	PART NUMBER	QTY	TRANS CODE	DESCRIPTION	DESCRIZIONE
27	4623643	1	50T	PLUG	TAPPO
28	4625147	12	65C	BOOT	CAPPUCCIO
29	4626478	6	74S	VALVE SEAT +0,00	SEDE DELLA VALVOLA +0,00
	4626479	6	74S	VALVE SEAT +0,2	SEDE DELLA VALVOLA +0,2
	4671768	6	74S	VALVE SEAT +0,05	SEDE DELLA VALVOLA +0,05
31	4628569	12	60S	CUP - UPPER	SCODELLINO - SUPERIORE
32	4647838	6	151G	INTAKE VALVE GUIDE +0,00	GUIDA DELLA VALVOLA DI ASPIRAZIONE +0,00
	4647839	6	151G	INTAKE VALVE GUIDE +0,04	GUIDA DELLA VALVOLA DI ASPIRAZIONE +0,04
	4647840	6	151G	INTAKE VALVE GUIDE +0,20	GUIDA DELLA VALVOLA DI ASPIRAZIONE +0,20
	4647841	6	151G	INTAKE VALVE GUIDE +0,24	GUIDA DELLA VALVOLA DI ASPIRAZIONE +0,24
36	4647842	6	152G	EXHAUST VALVE GUIDE +0,00	GUIDA DELLA VALVOLA DI SCARICO +0,00
	4647843	6	152G	EXHAUST VALVE GUIDE +0,04	GUIDA DELLA VALVOLA DI SCARICO +0,04
	4647844	6	152G	EXHAUST VALVE GUIDE +0,20	GUIDA DELLA VALVOLA DI SCARICO +0,20
	4647845	6	152G	EXHAUST VALVE GUIDE +0,24	GUIDA DELLA VALVOLA DI SCARICO +0,24
40	4647846	6	74S	VALVE SEAT +0,00	SEDE DELLA VALVOLA +0,00
	4647847	6	74S	VALVE SEAT +0,2	SEDE DELLA VALVOLA +0,2
	4671767	6	74S	VALVE SEAT +0,05	SEDE DELLA VALVOLA +0,05
42	4651275	12	90A	ROD	ASTA
43	4658030	12	100M	SPRING - INNER	MOLLA - INTERNO

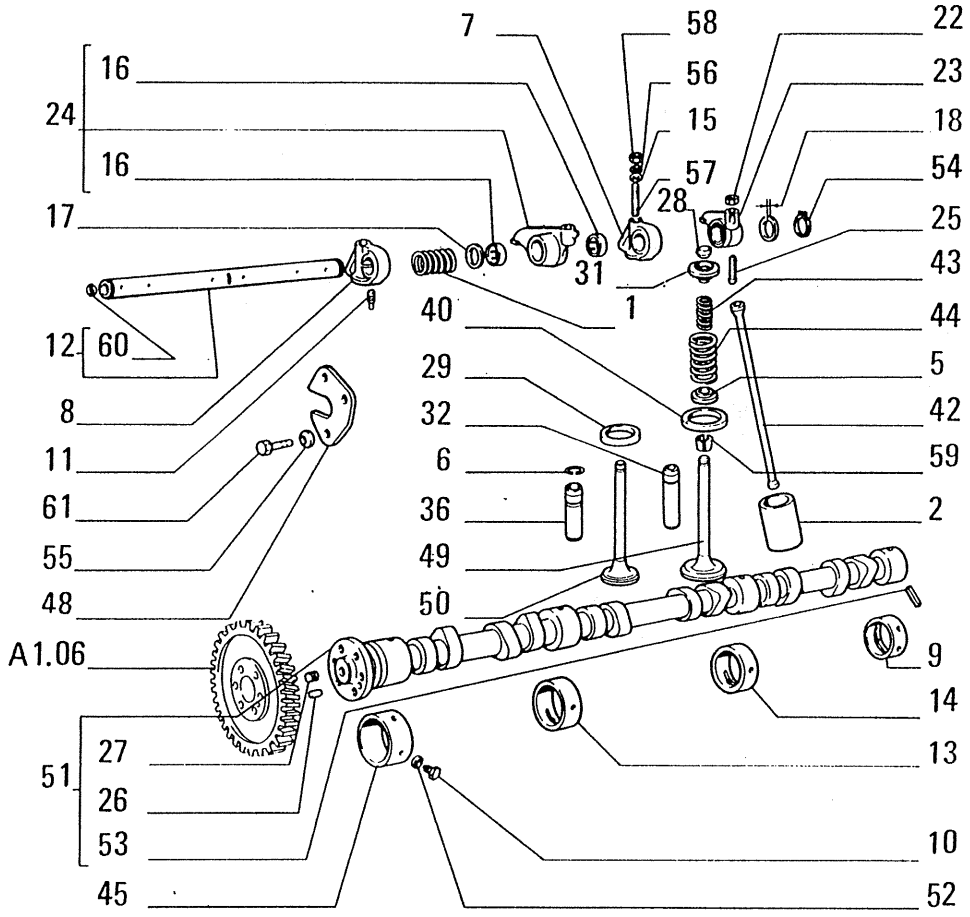

ITEM	PART NUMBER	QTY	TRANS CODE	DESCRIPTION	DESCRIZIONE
44	4658031	12	100M	SPRING - OUTER	MOLLA - ESTERNO
45	4668035	1	95B	BUSHING - FRONT	BOCCOLA - ANTERIORE
48	4679616	1	105P	PLATE	PIASTRA
49	4684088	6	111V	INTAKE VALVE	VALVOLA ASPIRAZIONE
50	4684089	6	112V	EXHAUST VALVE	VALVOLA SCARICO
51	4960162	1	17A	CAMSHAFT	ALBERO AD ECCENTRICI
52	10262760	4	123G	SEAL ASSY 8,2x14	GUARNIZIONE TENUTA FRONTALE 8,2x14
53	10322410	1	200S	PIN 2,5x32	SPINA 2,5x32
54	11067375	4	51A	LOCKRING 23,2x1,2	ANELLO DI SICUREZZA 23,2x1,2
55	11198371	3	131R	WASHER 10,5x20	ROSETTA 10,5x20
56	11198671	6	131R	WASHER 13x24	ROSETTA 13x24
57	11795430	6	210P	STUD 12x1,5x93	PRIGIONIERO 12x1,5x93
58	12163921	6	10D	NUT 12x1,5x10	DADO 12x1,5x10
59	14196370	24	100S	LOCK CONE 9,82x10	SEMICONO 9,82x10
60	14328501	4	50T	PLUG 16x5	TAPPO 16x5
61	15970930	3	40V	SCREW 10x1,25x35	VITE 10x1,25x35

(04861) USAGE: Units with 8205 Engine

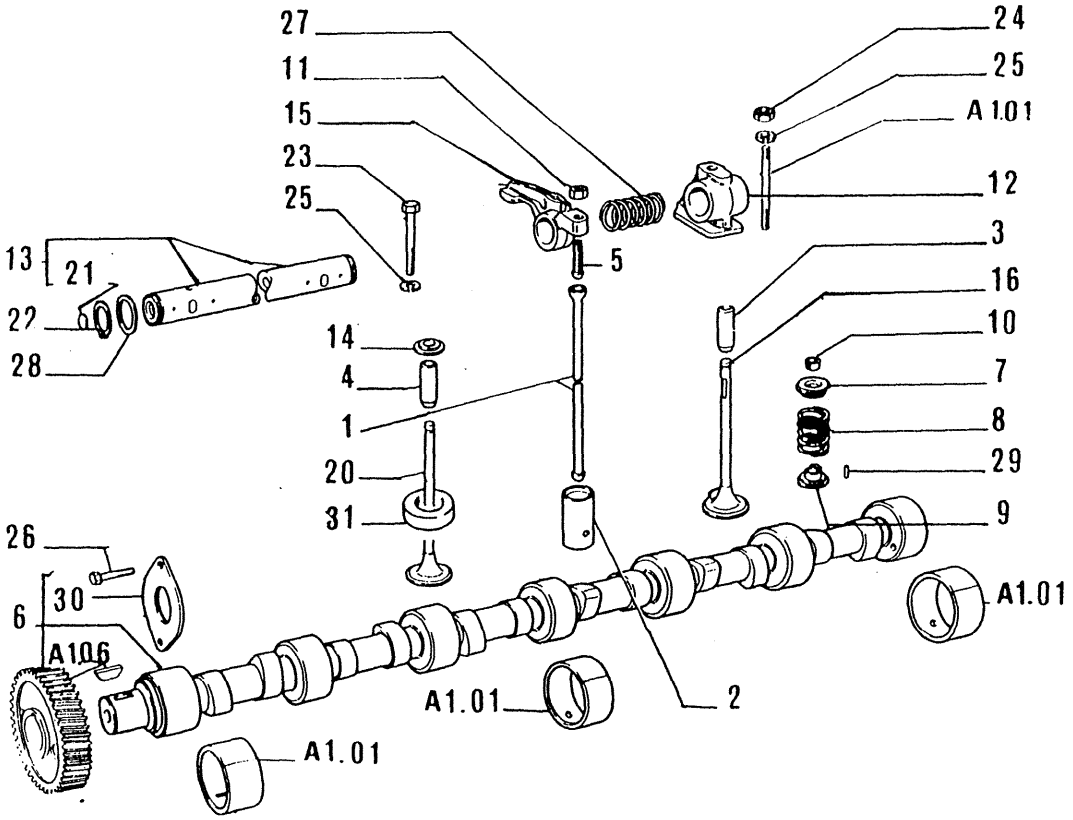

ITEM	PART NUMBER	QTY	TRANS CODE	DESCRIPTION	DESCRIZIONE
1	4725775	12	90A	ROD - IN ALTERNATIVE	ASTA - IN ALTERNATIVA
	8828284	12	90A	ROD - IN ALTERNATIVE	ASTA - IN ALTERNATIVA
	8828869	12	90A	ROD - IN ALTERNATIVE	ASTA - IN ALTERNATIVA
2	4731530	12	240P	TAPPET +0,0	PUNTERIA +0,0
	4731532	12	240P	TAPPET +0,4	PUNTERIA +0,4
	4753580	12	240P	TAPPET +0,0	PUNTERIA +0,0
	4754088	12	240P	TAPPET +0,4	PUNTERIA +0,4
	4756500	12	240P	TAPPET +0,3	PUNTERIA +0,3
	4756501	12	240P	TAPPET +0,5	PUNTERIA +0,5
	4756502	12	240P	TAPPET +0,3	PUNTERIA +0,3
	4756503	12	240P	TAPPET +0,5	PUNTERIA +0,5
3	4758794	6	151G	INTAKE VALVE GUIDE +0,0	GUIDA DELLA VALVOLA DI ASPIR ZIONE +0,0
	4758795	6	151G	INTAKE VALVE GUIDE +0,04	GUIDA DELLA VALVOLA DI ASPIR ZIONE +0,04
	4758796	6	151G	INTAKE VALVE GUIDE +0,2	GUIDA DELLA VALVOLA DI ASPIR ZIONE +0,2
	4758797	6	151G	INTAKE VALVE GUIDE +0,4	GUIDA DELLA VALVOLA DI ASPIR ZIONE +0,4
4	4758798	6	152G	EXHAUST VALVE GUIDE +0,0	GUIDA DELLA VALVOLA DI SCARI +0,0
	4758799	6	152G	EXHAUST VALVE GUIDE +0,04	GUIDA DELLA VALVOLA DI SCARI +0,04
	4758800	6	152G	EXHAUST VALVE GUIDE +0,2	GUIDA DELLA VALVOLA DI SCARI +0,2
	4758801	6	152G	EXHAUST VALVE GUIDE +0,4	GUIDA DELLA VALVOLA DI SCARI +0,4

USAGE: Units with 8365 Engine

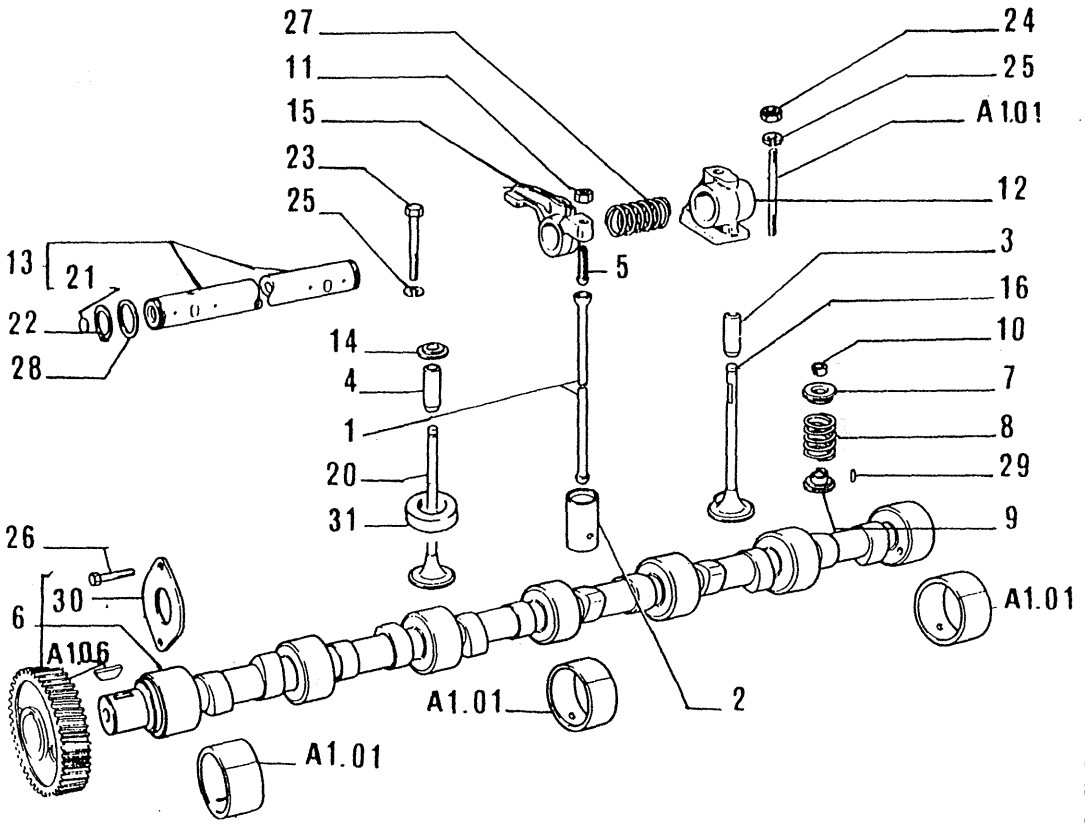

ITEM	PART NUMBER	QTY	TRANS CODE	DESCRIPTION	DESCRIZIONE
5	4786841	12	40V	SCREW	VITE
6	4798425	1	17A	CAMSHAFT - ASSEMBLY	ALBERO AD ECCENTRICI - COMPLETO
7	4734133	12	60S	CUP - UPPER IN ALTERNATIVE	SCODELLINO - SUPERIORE IN ALTERNATIVA
	8818691	12	60S	CUP - UPPER IN ALTERNATIVE	SCODELLINO - SUPERIORE IN ALTERNATIVA
8	4798427	12	100M	SPRING	MOLLA
9	4746941	6	60S	CUP - LOWER IN ALTERNATIVE	SCODELLINO - INFERIORE IN ALTERNATIVA
	8822385	6	60S	CUP - LOWER IN ALTERNATIVE	SCODELLINO - INFERIORE IN ALTERNATIVA
10	4734134	24	100S	LOCK CONE	SEMICONO
11	4751048	12	10D	NUT	DADO
12	4752172	6	300S	SUPPORT - IN ALTERNATIVE	SUPPORTO - IN ALTERNATIVA
	4752173	6	300S	SUPPORT - IN ALTERNATIVE	SUPPORTO - IN ALTERNATIVA
13	4752190	2	11A	SPINDLE - ASSEMBLY	ALBERINO - COMPLETO
14	8822963	6	60S	CUP - LOWER	SCODELLINO - INFERIORE
15	8823993	12	55B	ROCKER	BILANCIERE
16	4798426	6	111V	INTAKE VALVE	VALVOLA ASPIRAZIONE
20	8830045	6	112V	EXHAUST VALVE	VALVOLA SCARICO
21	10158400	4	50T	PLUG 12x1,5	TAPPO 12x1,5
22	11066976	4	51A	LOCKRING 19,5x1,2	ANELLO DI SICUREZZA 19,5x1,2
23	11343721	2	40V	SCREW 10x1,25x65	VITE 10x1,25x65
24	12164721	4	10D	NUT 10x1,25x8	DADO 10x1,25x8
25	12646801	6	132R	LOCKWASHER 10,2x25	ROSETTA DI SICUREZZA 10,2x25
26	14233021	2	40V	SCREW 10x1,25x16	VITE 10x1,25x16

USAGE: Units with 8365 Engine

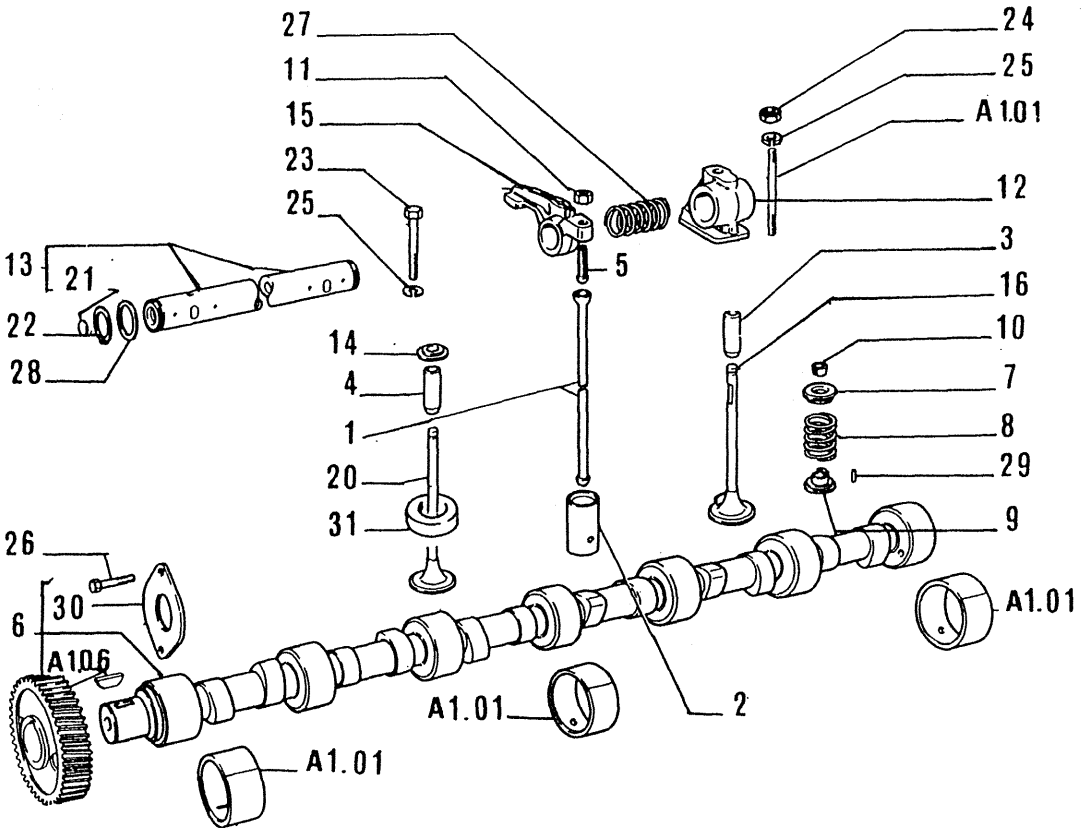

ITEM	PART NUMBER	QTY	TRANS CODE	DESCRIPTION	DESCRIZIONE
27	38812780	4	100M	SPRING	MOLLA
28	38814907	4	131R	WASHER	ROSETTA
29	38819032	6	90G	DOWEL	GRANO
30	8828576	1	105P	PLATE	PIASTRA
31	8829237	6	69S	SEAT +0,0	SEDE +0,0
	8829262	6	69S	SEAT +0,2	SEDE +0,2
	8829263	6	69S	SEAT +0,05	SEDE +0,05

USAGE: Units with 8365 Engine

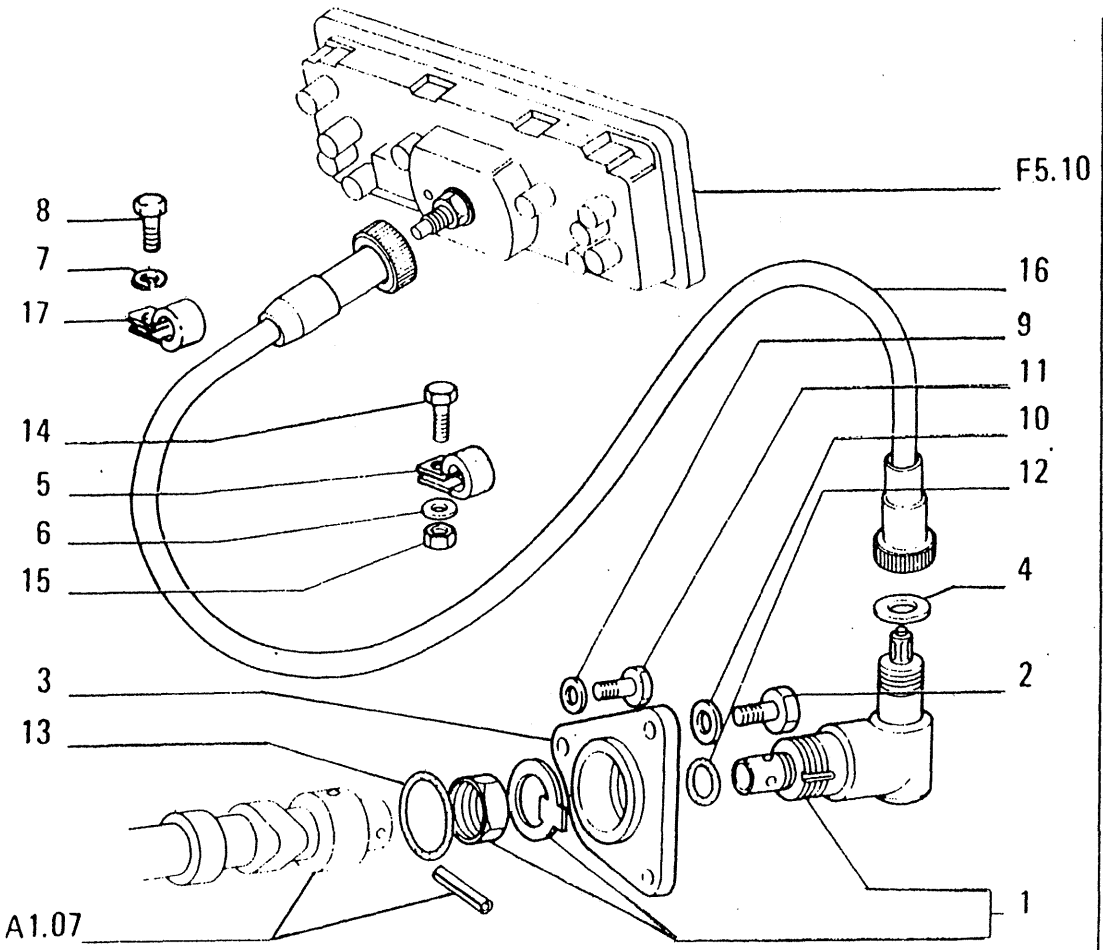

ITEM	PART NUMBER	QTY	TRANS CODE	DESCRIPTION	DESCRIZIONE
1	590072	1	64R	MITER GEARING	RINVIO ANGOLARE
2	4954385	2	40V	SCREW	VITE
3	4954426	1	265C	COVER	COPERCHIO
4	4998870	1	133R	SEAL	ROSETTA DI TENUTA
5	10450190	2	225S	BRACKET 66x9	STAFFA 66x9
6	10516671	2	131R	WASHER 8,1x2,2	ROSETTA 8,1x2,2
7	10571871	2	131R	WASHER 10,2x2,2	ROSETTA 10,2x2,2
8	11103031	2	40V	SCREW 10x1,5x18	VITE 10x1,5x18
9	11198371	1	131R	WASHER 10,5x20	ROSETTA 10,5x20
10	11200171	2	131R	WASHER 15x32	ROSETTA 15x32
11	11306921	1	40V	SCREW 10x1,25x30	VITE 10x1,25x30
12	14457380	1	158G	O-RING 2,62x17,12	GUARNIZIONE O-R 2,62x17,12
13	14465282	1	158G	O-RING 3,53x75,79	GUARNIZIONE O-R 3,53x75,79
14	16043231	2	40V	SCREW 8x1,25x16	VITE 8x1,25x16
15	16100821	2	10D	NUT 8x1,25x6,5	DADO 8x1,25x6,5
16	79019783	1	165T	FLEXIBLE SHAFT	TRASMISSIONE FLESSIBILE
17	79038372	2	231S	CLIP	STAFFETTA

(04862) USAGE: Units with 8205 Engine

HOURMETER AND TACHOMETER DRIVE – COMANDO CONOTACHIMETRO – COMMANDE D'HOROTACHYMETRE – TRAKTORMETERANTRIEB – ARRASTRE DEL HOROTACOMETRO

A1.08

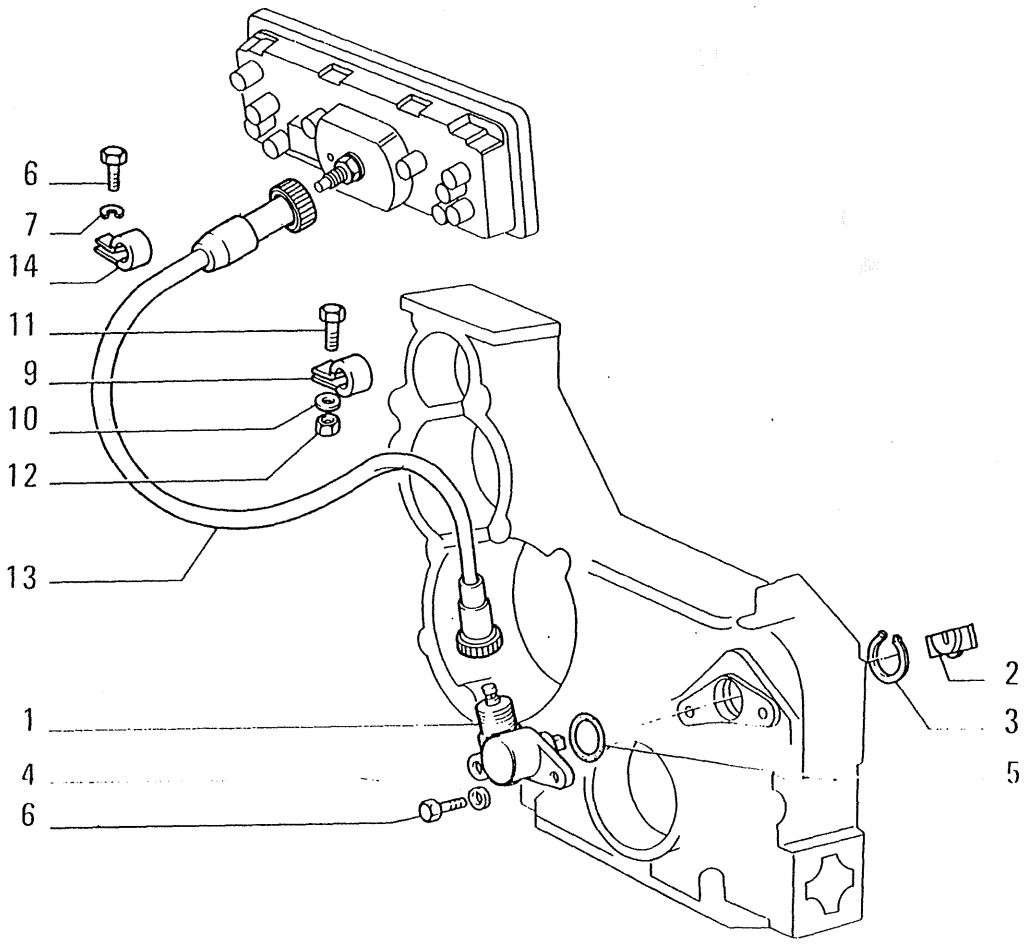

ITEM	PART NUMBER	QTY	TRANS CODE	DESCRIPTION	DESCRIZIONE
1	4711596	1	64R	MITER GEARING	RINVIO ANGOLARE
2	4711597	1	74B	BLOCK	BLOCCHETTO
3	11058876	1	51A	LOCKRING 32,1x1,2	ANELLO DI SICUREZZA 32,1x1,2
4	11198071	2	131R	WASHER 8,2x15	ROSETTA 8,2x15
5	14453581	1	158G	O-RING 1,78x18,77	GUARNIZIONE O-R 1,78x18,77
6	16043421	2	40V	SCREW 8x1,25x20	VITE 8x1,25x20
7	10571871	2	40V	SCREW 10,2x2,2	VITE 10,2x2,2
8	11103031	2	40V	SCREW 10x1,5x18	VITE 10x1,5x18
9	10450190	2	225S	BRACKET 66x9	STAFFA 66x9
10	10516671	2	131R	WASHER 8,1x2,2	ROSETTA 8,1x2,2
11	16043231	2	40V	SCREW 8x1,25x16	VITE 8x1,25x16
12	16100821	2	10D	NUT 8x1,25x6,5	DADO 8x1,25x6,5
13	05112653	1	165T	FLEXIBLE SHAFT	TRASMISSIONE FLESSIBILE
14	79038372	2	231S	CLIP	STAFFETTA

USAGE: Units with 8365 Engine

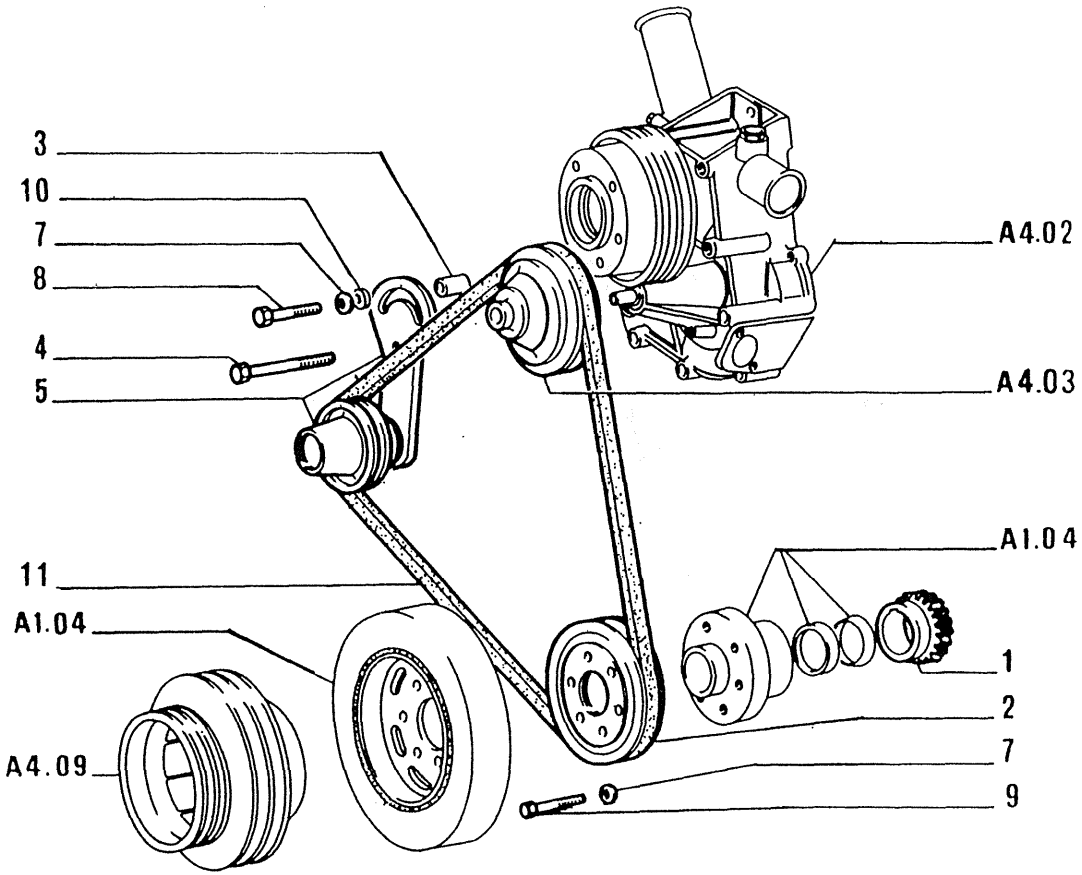

ITEM	PART NUMBER	QTY	TRANS CODE	DESCRIPTION	DESCRIZIONE
1	4710645	1	50I	GEAR	INGRANAGGIO
2	4711933	1	230P	PULLEY	PULEGGIA
3	4722301	1	75D	SPACER	DISTANZIALE
4	4735379	1	40V	SCREW	VITE
5	4735638	1	87T	BELT STRETCHER	TENDICINGHIA
7	11198379	7	132R	LOCKWASHER 10,5x20	ROSETTA DI SICUREZZA 10,5x20
8	11288021	1	40V	SCREW 10x1,25x60	VITE 10x1,25x60
9	11307030	6	40V	SCREW 10x1,25x40	VITE 10x1,25x40
10	12646801	1	132R	LOCKWASHER 10,2x25	ROSETTA DI SICUREZZA 10,2x25
11	73128581	1	173C	BELT	CINGHIA
	76015955	1	173C	BELT (*)	CINGHIA (*)
(*)			469P	FOR SPECIAL EQUIPMENT 30.0021.09.1	PER VARIANTE 30.0021.09.1

USAGE: Units with 8365 Engine

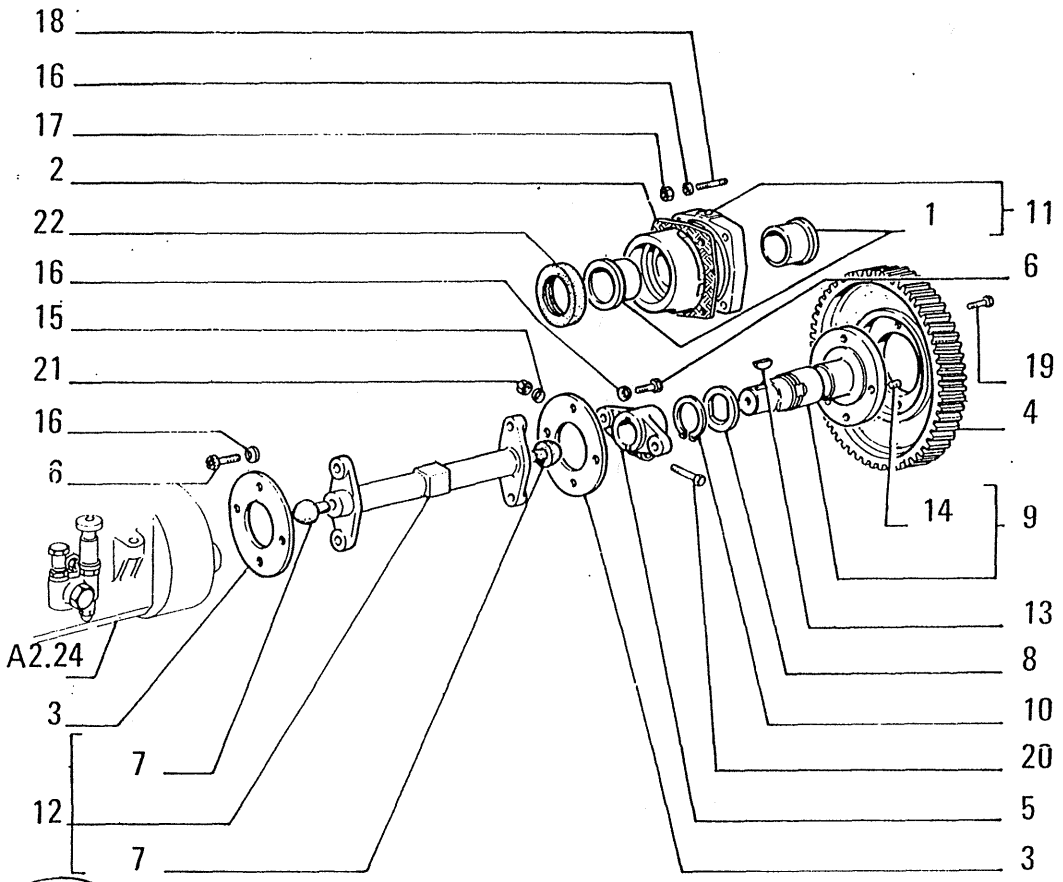

03925 USAGE: Units with 8205 Engine

ITEM	PART NUMBER	QTY	TRANS CODE	DESCRIPTION	DESCRIZIONE
1	4512870	2	95B	BUSHING	BOCCOLA
2	4526340	1	123G	SEAL ASSY	GUARNIZIONE TENUTA FRONTALE
3	4538013	14	110P	PLAQUE	PIASTRINA
4	4539357	1	50I	GEAR	INGRANAGGIO
5	4541266	1	30M	SLEEVE	MANICOTTO
6	4605412	8	40V	SCREW	VITE
7	4608219	2	25T	RUBBER PAD	TAMPONE DI GOMMA
8	4614264	1	131R	WASHER	ROSETTA
9	4623710	1	16A	SHAFT - ASSEMBLY	ALBERO - COMPLETO
10	4623711	1	51A	LOCKRING	ANELLO DI SICUREZZA
11	4623714	1	300S	SUPPORT - ASSEMBLY	SUPPORTO - COMPLETO
12	4754928	1	11A	SPINDLE	ALBERINO
13	10206320	1	60L	KEY 7,5x5	LINGUETTA 7,5x5
14	10839610	1	90G	DOWEL 8x12	GRANO 8x12
15	11198071	1	131R	WASHER 8,2x15	ROSETTA 8,2x15
16	11198371	12	131R	WASHER 10,5x20	ROSETTA 10,5x20
17	12164711	4	10D	NUT 10x1,25x8	DADO 10x1,25x8
18	13449420	4	40V	SCREW 10x1,25x37	VITE 10x1,25x37
19	14238030	4	40V	SCREW 8x1,25x20	VITE 8x1,25x20
20	16044130	1	40V	SCREW 8x1,25x45	VITE 8x1,25x45
21	16100821	1	10D	NUT 8x1,25x6,5	DADO 8x1,25x6,5
22	40001120	1	158G	O-RING 32x65	GUARNIZIONE O-R 32x65

INJECTION PUMP DRIVE – COMANDO POMPA INIEZIONE – COMMANDE DE POMPE D'INJECTION – EINSPRITZPUMPENANTRIEB – ARRASTRE DE LA BOMBA DE INYECCIÓN

A1.16

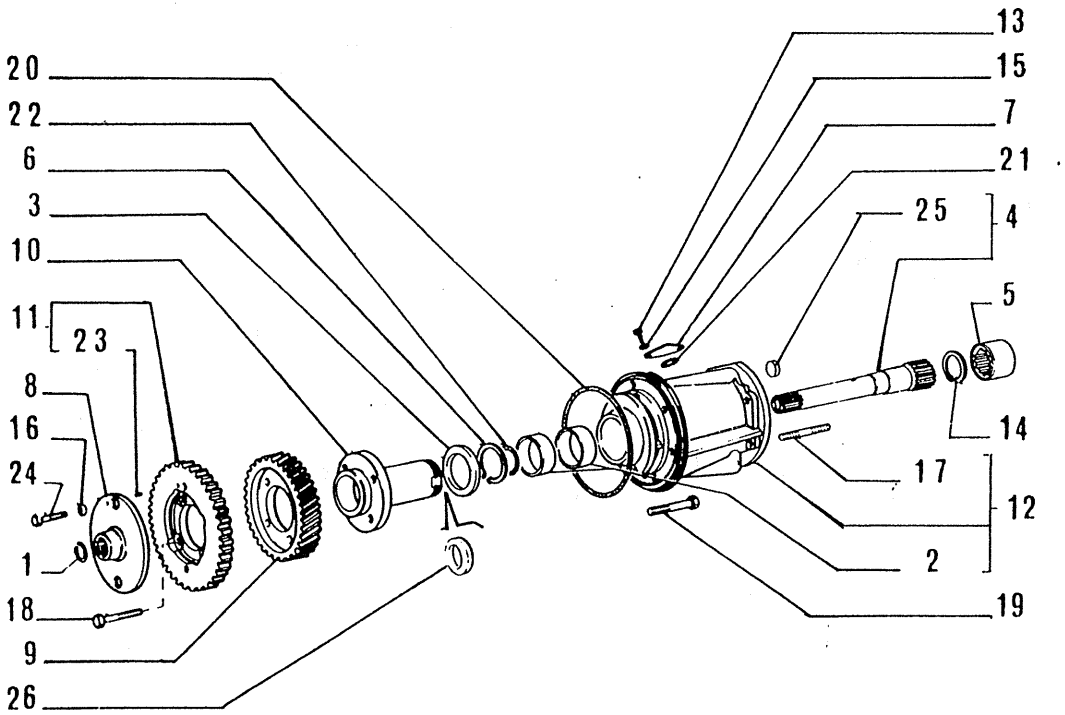

ITEM	PART NUMBER	QTY	TRANS CODE	DESCRIPTION	DESCRIZIONE
1	758732	1	51A	LOCKRING	ANELLO DI SICUREZZA
2	4766813	2	95B	BUSHING - IN ALTERNATIVA	BOCCOLA - IN ALTERNATIVA
	4775901	2	95B	BUSHING - IN ALTERNATIVA	BOCCOLA - IN ALTERNATIVA
3	4667498	1	131R	WASHER	ROSETTA
4	4811336	1	16A	SHAFT - ASSEMBLY	ALBERO - COMPLETO
5	4750523	1	33M	DRAG SLEEVE	MANICOTTO DI TRASCINAMENTO
6	4708213	1	51A	LOCKRING	ANELLO DI SICUREZZA
7	4711552	1	265C	COVER	COPERCHIO
8	4712737	1	33M	DRAG SLEEVE	MANICOTTO DI TRASCINAMENTO
9	4722819	1	50I	GEAR	INGRANAGGIO
10	4766706	1	16A	SHAFT	ALBERO
11	4722822	1	50I	GEAR - ASSEMBLY	INGRANAGGIO - COMPLETO
12	4799046	1	300S	SUPPORT - ASSEMBLY	SUPPORTO - COMPLETO
13	10902121	2	40V	SCREW 6x1x14	VITE 6x1x14
14	11059575	1	51A	LOCKRING 38,8x1,5	ANELLO DI SICUREZZA 38,8x1,5
15	11197771	2	132R	LOCKWASHER 6,4x12	ROSETTA DI SICUREZZA 6,4x12
16	11193879	2	132R	LOCKWASHER 8,4x16	ROSETTA DI SICUREZZA 8,4x16
17	13449821	4	210P	STUD 10x1,25x50	PRIGIONIERO 10x1,25x50
18	14233621	4	40V	SCREW 10x1,25x30	VITE 10x1,25x30
19	14238721	6	40V	SCREW 8x1,25x45	VITE 8x1,25x45
20	14456781	1	158G	O-RING 1,78x133,1	GUARNIZIONE O-R 1,78x133,1
21	14457581	1	158G	O-RING 2,62x20,29	GUARNIZIONE O-R 2,62x20,29
22	14463881	1	158G	O-RING 3,53x34,52	GUARNIZIONE O-R 3,53x34,52
23	14600370	1	200S	PIN 5x10	SPINA 5x10
24	16043621	2	40V	SCREW 8x1,25x25	VITE 8x1,25x25
25	14328701	1	50T	PLUG 20x6	TAPPO 20x6
26	4604833	1	45A	RING	ANELLO

USAGE: Units with 8365 Engine

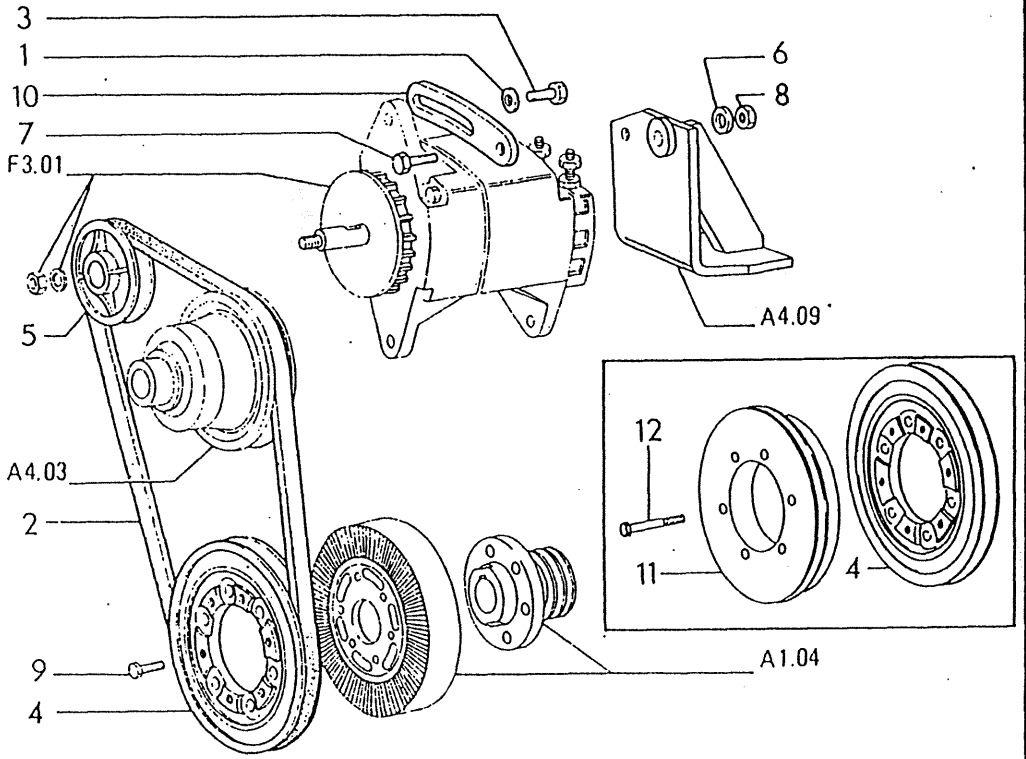

ITEM	PART NO.	QTY.	LEX.	DESCRIPTION	DENOMINAZIONE
1	04643544	1	131R	WASHER	ROSETTA
			602A	PRIOR TO ENGINE S/N 1074	FINO AL MOTORE
	12626321	1	131R	WASHER	ROSETTA
			602B	ENGINE S/N 1074 & UP	DAL MOTORE .....
2	04728940	1	173C	BELT	CINGHIA
3	04744741	1	40V	CAPSCREW	VITE
			602A	PRIOR TO ENGINE S/N 1074	FINO AL MOTORE
	15970921	1	40V	CAPSCREW,10 X 1.25 X 35	VITE
			602B	ENGINE S/N 1074 & UP	DAL MOTORE .....
4	04761558	1	230P	PULLEY	PULEGGIA
5	04764040	1	230P	PULLEY	PULEGGIA
			602A	PRIOR TO ENGINE S/N 1074	FINO AL MOTORE
	61585291	1	230P	PULLEY	PULEGGIA
			602B	ENGINE S/N 1074 & UP	DAL MOTORE .....
6	11198371	1	131R	WASHER,10.5 X 20	ROSETTA
7	11306921	1	40V	CAPSCREW,10 X 1.25 X 30	VITE
8	12164711	1	10D	NUT,10 X 1.25 X 8	DADO
9	a14274721	6	40V	CAPSCREW,12 X 1.25 X 40	VITE
10	61589070	1	87T	BELT STRETCHER,01,03	TENDICINGHIA
			602A	PRIOR TO ENGINE S/N 1074	FINO AL MOTORE
	61589094	1	87T	BELT STRETCHER,01,03	TENDICINGHIA
			602B	ENGINE S/N 1074 & UP	DAL MOTORE .....
	76013417	1	87T	BELT STRETCHER,05	TENDICINGHIA
11	b73144816	1	230P	PULLEY	PULEGGIA
12	b16327231	6	40V	CAPSCREW	VITE

01,03 UNITS WITH 8205 ENGINE.
05 WINTERIZED UNITS.

a.UNITS WITHOUT AIR CONDITIONING.

b.UNITS WITH AIR CONDITIONING.

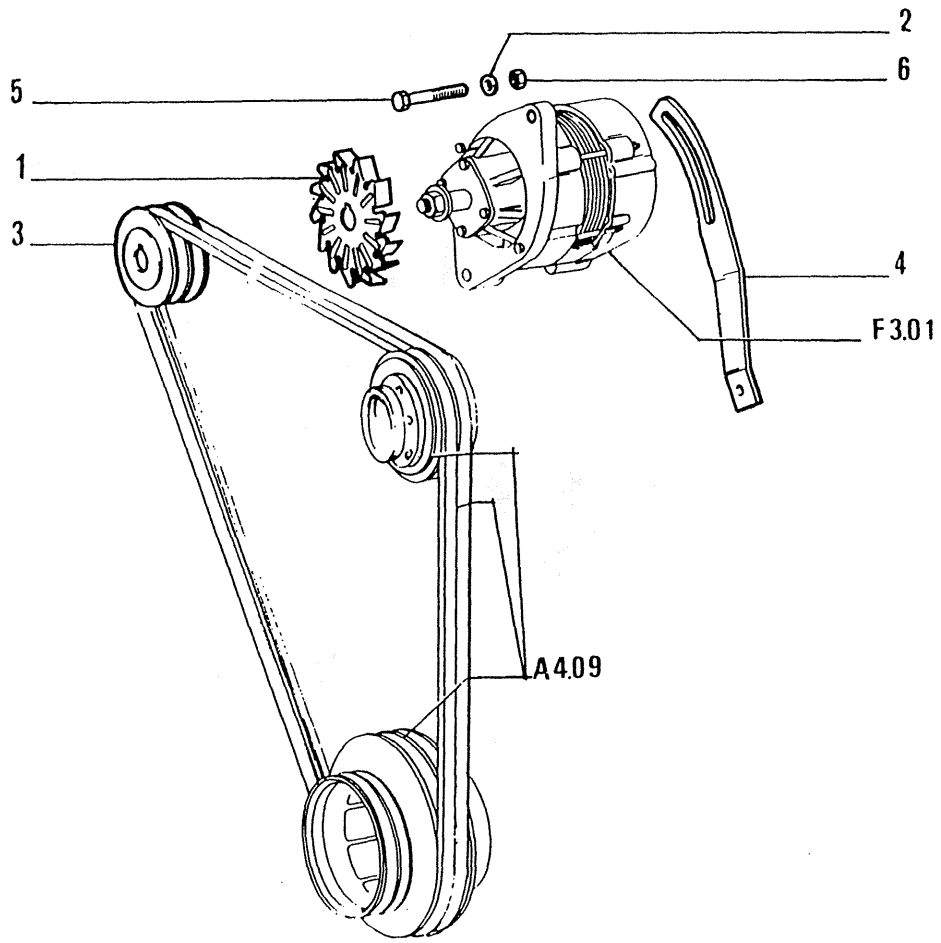

ITEM	PART NUMBER	QTY	TRANS CODE	DESCRIPTION	DESCRIZIONE
1	4470778	1	36V	BLOWER	VENTOLA
2	4513436	1	131R	WASHER	ROSETTA
3	4722302	1	230P	PULLEY	PULEGGIA
4	4735380	1	87T	BELT STRETCHER	TENDICINGHIA
5	11307021	1	40V	SCREW 10x1,25x40	VITE 10x1,25x40
6	14048717	1	10D	NUT 10x1,25x11	DADO 10x1,25x11

USAGE: Units with 8365 Engine

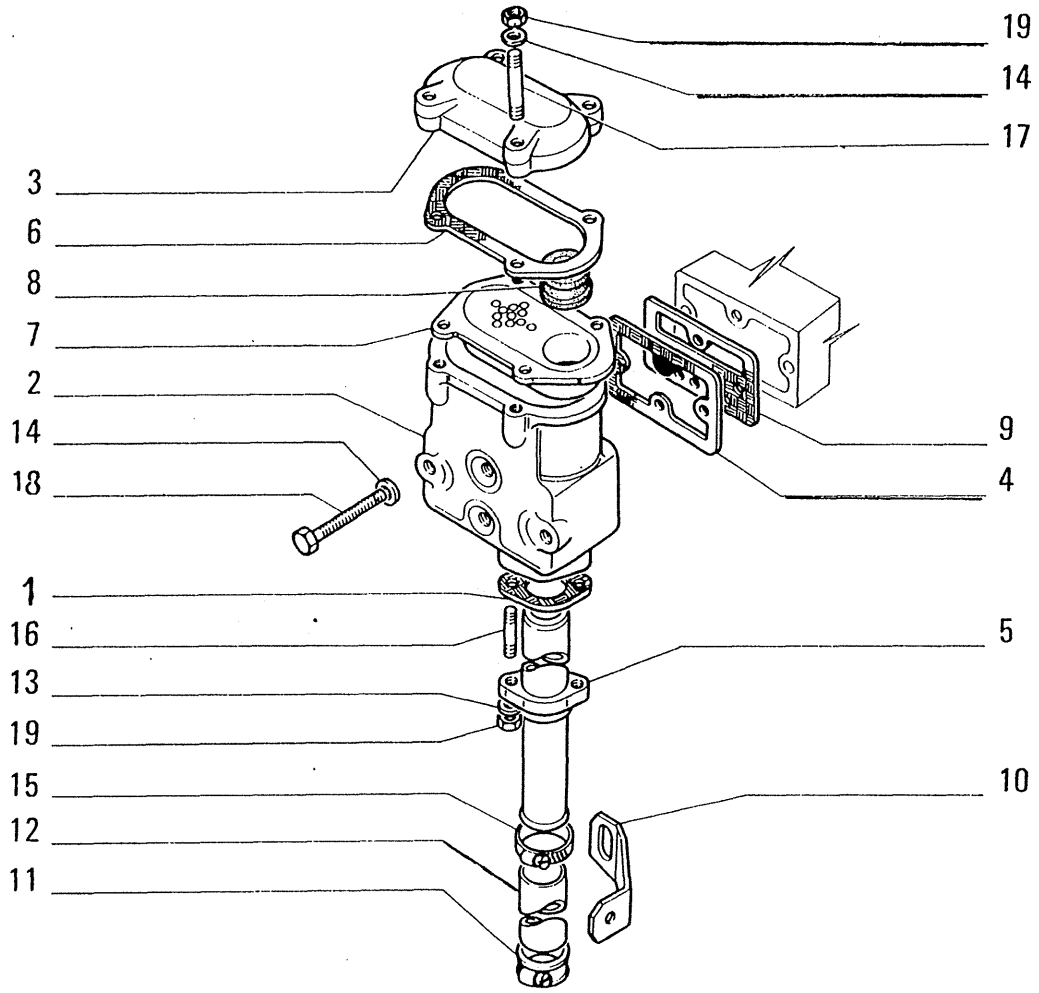

ITEM	PART NUMBER	QTY	TRANS CODE	DESCRIPTION	DESCRIZIONE
1	4632138	1	123G	SEAL ASSY	GUARNIZIONE TENUTA FRONTALE
2	4638335	1	300C	BODY	CORPO
3	4638337	1	265C	COVER	COPERCHIO
4	4638506	2	123G	SEAL ASSY	GUARNIZIONE TENUTA FRONTALE
5	4638619	1	193T	TUBE	TUBO RIGIDO
6	4638621	2	123G	SEAL ASSY	GUARNIZIONE TENUTA FRONTALE
7	4638635	1	20E	FILTERING ELEMENT	ELEMENTO FILTRANTE
8	4638675	1	158G	O-RING	GUARNIZIONE O-R
9	4643288	1	39P	BULKHEAD	PARATIA
10	4668861	1	231S	CLIP	STAFFETTA
11	4668862	1	31F	CLAMP	FASCETTA
12	4668863	1	30M	SLEEVE	MANICOTTO
13	11198071	2	131R	WASHER 8,2x15	ROSETTA 8,2x15
14	11198371	8	131R	WASHER 10,5x20	ROSETTA 10,5x20
15	12174090	1	180C	COLLAR 32/52x14	COLLARE 32/52x14
16	12354521	2	210P	STUD 8x1,25x38	PRIGIONIERO 8x1,25x38
17	13543821	4	210P	STUD 8x1,25x56	PRIGIONIERO 8x1,25x56
18	16045230	4	40V	SCREW 8x1,25x100	VITE 8x1,25x100
19	16100811	6	10D	NUT 8x1,25x6,5	DADO 8x1,25x6,5

(05419) USAGE: Units with 8205 Engine

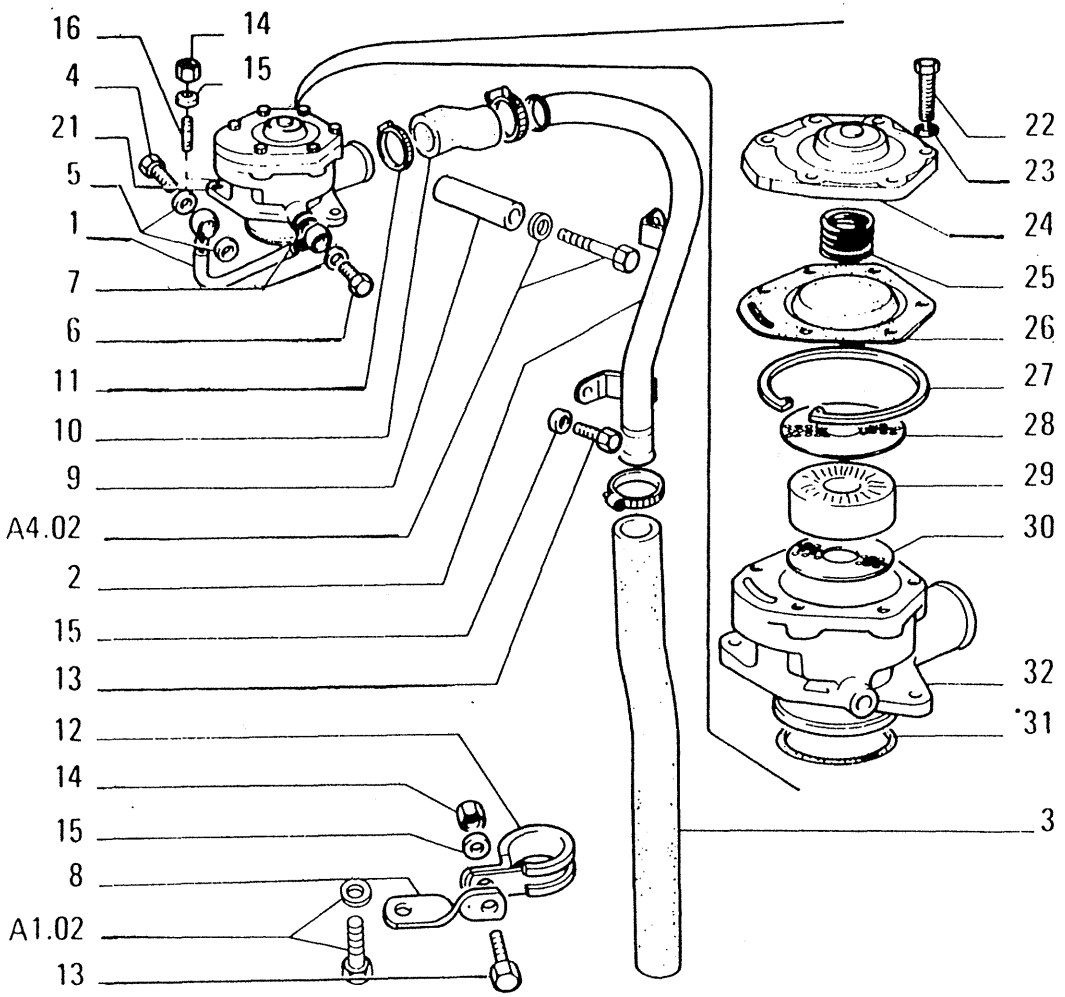

USAGE: Units with 8365 Engine

ITEM	PART NUMBER	QTY	TRANS CODE	DESCRIPTION	DESCRIZIONE
1	79071533	1	193T	TUBE	TUBO RIGIDO
2	4804290	1	193T	TUBE	TUBO RIGIDO
3	4804763	1	285T	HOSE	TUBO FLESSIBILE
4	11903811	1	20R	FITTING 10x1,25x19	RACCORDO 10x1,25x19
5	10298360	2	120G	GASKET 10,2x16	GUARNIZIONE PIANA 10,2x16
6	4806154	1	20R	FITTING	RACCORDO
7	10298360	2	120G	GASKET 10,2x16	GUARNIZIONE PIANA 10,2x16
8	4795309	1	231S	CLIP	STAFFETTA
9	8541600	1	75D	SPACER	DISTANZIALE
10	12084385	1	30M	SLEEVE	MANICOTTO
11	12174090	3	180C	COLLAR 32/52x14	COLLARE 32/52x14
12	4628548	1	180C	COLLAR	COLLARE
13	16043224	2	40V	SCREW 8x1,25x16	VITE 8x1,25x16
14	16100811	3	10D	NUT 8x1,25x6,5	DADO 8x1,25x6,5
15	11193879	4	131R	WASHER 8,4x16	ROSETTA 8,4x16
16	13543324	2	210P	STUD 8x1,25x36	PRIGIONIERO 8x1,25x36
21	4812552	1	145S	BREATHER - ASSEMBLY	SFIATATOIO - COMPLETO
22	10902811	6	40V	SCREW	VITE
23	10519401	6	131R	WASHER 6,15x12	ROSETTA 6,15x12
24	4771075	1	265C	COVER	COPERCHIO
25	4812557	1	100M	SPRING	MOLLA
26	4771078	1	75M	DIAPHRAGM	MEMBRANA
27	11062176	1	187A	SNAP RING 90,5x3	ANELLO ELASTICO 90,5x3
28	4771080	1	80F	BOTTOM PLATE	FONDELLO
29	4771079	1	20E	FILTERING ELEMENT	ELEMENTO FILTRANTE
30	4771081	1	80F	BOTTOM PLATE	FONDELLO
31	14464281	1	158G	O-RING 3,53x44,04	GUARNIZIONE O-R 3,53x44,04

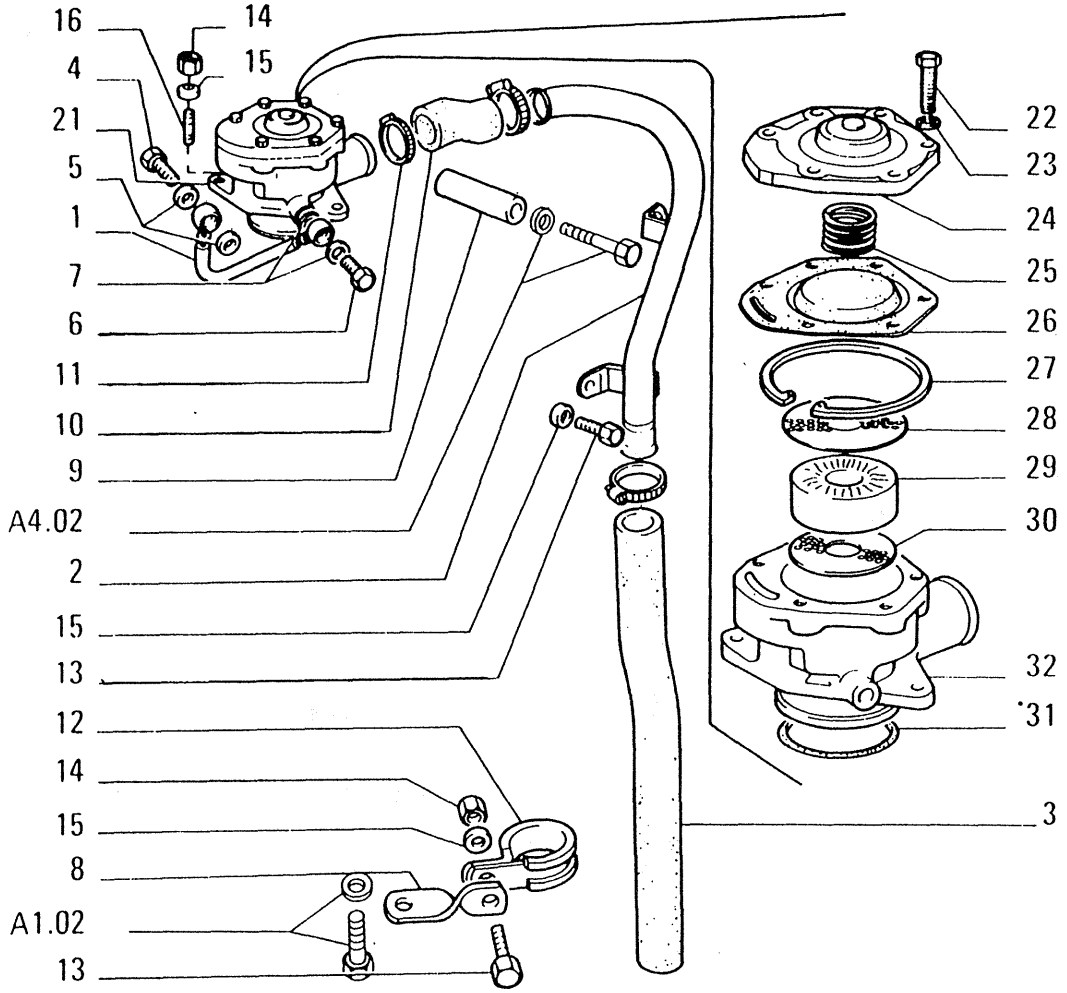

USAGE: Units with 8365 Engine

ITEM	PART NUMBER	QTY	TRANS CODE	DESCRIPTION	DESCRIZIONE
32	4774692	1	35S	CASE	SCATOLA

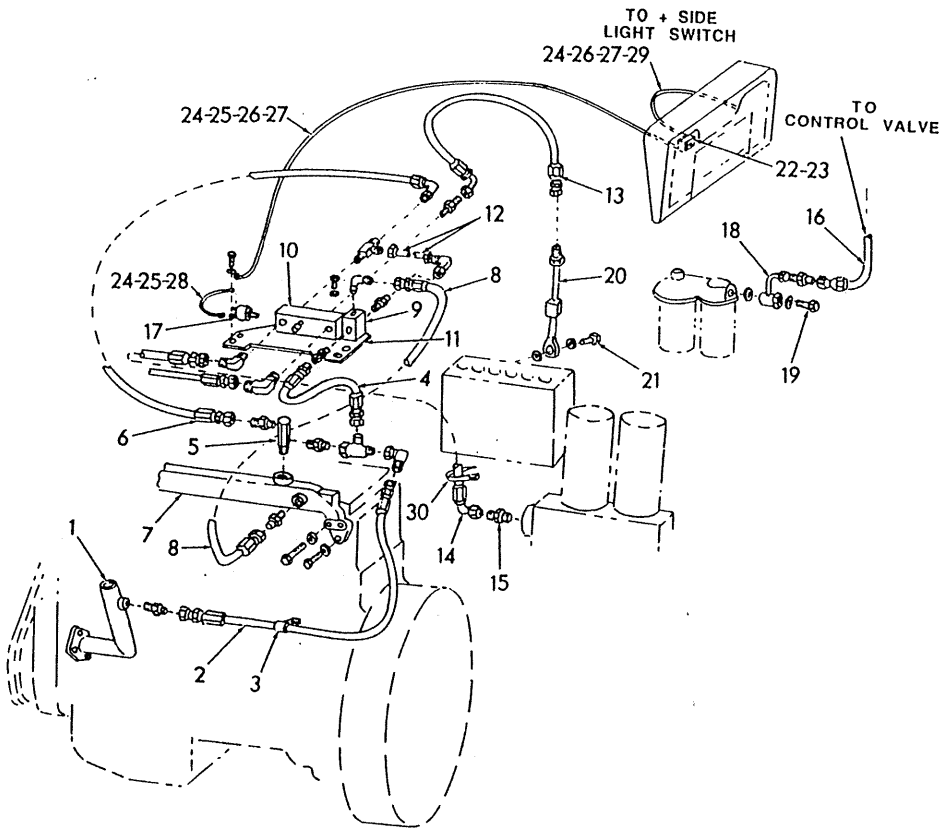

USAGE: SPECIAL EQUIPMENT. UNITS WITH 8205 ENGINE.

ITEM	PART NO.	QTY.	CODE	DESCRIPTION	DENOMINAZIONE
1	73154419	1	206T	TUBE	TUBO
2	73154349	1	192T	HOSE	TUBO FLESSIBILE
	70919062	1	75B	CONNECTOR,3/8"	BLOCCHETTO CONNESSIONE
	70921013	1	85G	ELBOW,90°,3/8"	GOMITO
3	70662494	1	89G	CLIP	GRAFFETTA
4	73154347	1	192T	HOSE	TUBO FLESSIBILE
	70921297	1	16R	TEE	RACCORDO A 3 VIE
	70919062	1	75B	CONNECTOR,3/8"	BLOCCHETTO CONNESSIONE
	70919135	1	85G	ELBOW	GOMITO
5	73114202	1	37R	TEMPERATURE CONTROL	REGOLATORE TEMPER.
6	73154345	1	192T	HOSE	TUBO FLESSIBILE
	70919062	1	75B	CONNECTOR,3/8"	BLOCCHETTO CONNESSIONE
	70919205	1	75B	CONNECTOR	BLOCCHETTO CONNESSIONE
	70926768	1	57R	REDUCER, PRESSURE	RIDUTTORE DI PRESSIONE
	70921298	1	16R	TEE	RACCORDO A 3 VIE
7	73154415	1	188C	MANIFOLD	COLLETTORE
	16043621	2	40V	CAPSCREW,M8X1.25X25	VITE
	16044121	4	40V	CAPSCREW,M8X1.25X45	VITE
	11198071	6	131R	WASHER	ROSETTA
8	73154348	1	192T	HOSE	TUBO FLESSIBILE
	70919171	1	75B	CONNECTOR	BLOCCHETTO CONNESSIONE
	70919173	1	85G	ELBOW,90°	GOMITO
9	73127801	1	10V	VALVE,COOLANT LOSS	VALVOLA
	70928138	4	40V	CAPSCREW,1/4"NC X 5/8"	VITE
	70928190	4	131R	WASHER	ROSETTA
10	73152697	1	10V	VALVE, CONTROL	VALVOLA
	70922300	2	40V	CAPSCREW,3/8"NC X 3/4"	VITE
	70677006	2	131R	WASHER	ROSETTA
11	73154340	1	105P	PLATE	PIASTRA
	16043221	4	40V	CAPSCREW	VITE
	10571771	4	132R	LOCKWASHER	ROSETTA DI SICUREZZA
12	73130817	1	206T	TUBE	TUBO
	70921279	1	85G	ELBOW,90°	GOMITO
	70919205	1	75B	CONNECTOR	BLOCCHETTO CONNESSIONE
13	73154343	1	192T	HOSE	TUBO FLESSIBILE
	70919172	1	75B	CONNECTOR	BLOCCHETTO CONNESSIONE

ENGINE PROTECTION SYSTEM

A126

Added April 1989

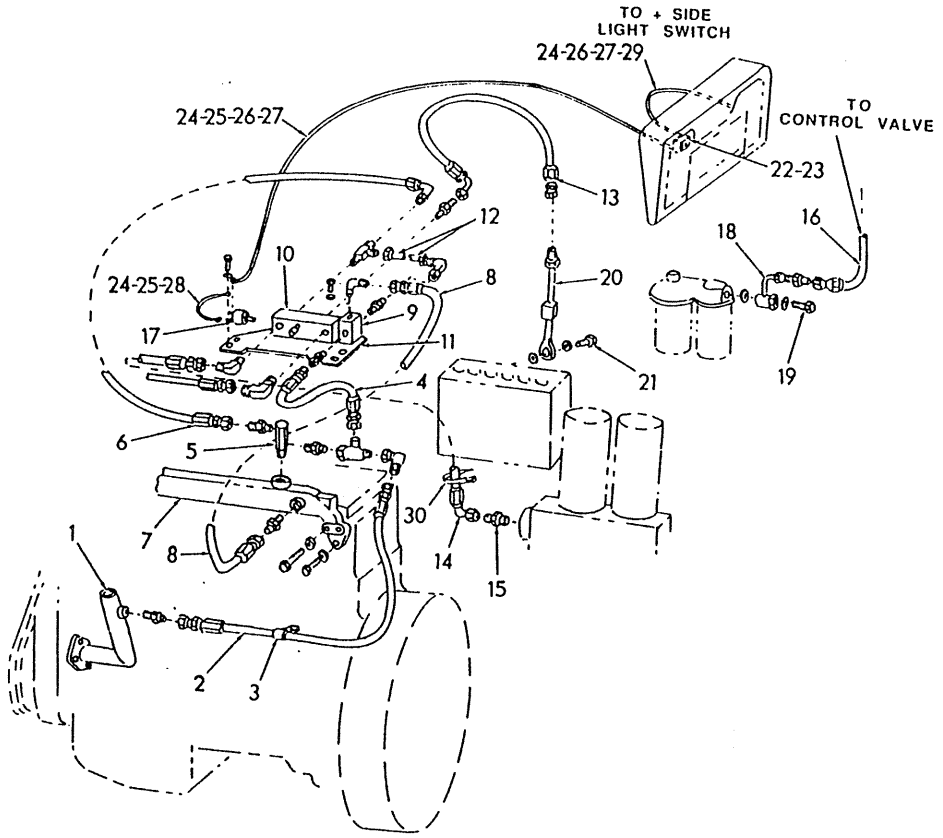

ITEM	PART NO.	QTY.	CODE	DESCRIPTION	DENOMINAZIONE
14	73154344	1	192T	HOSE	TUBO FLESSIBILE
	70919173	2	85G	ELBOW,90°	GOMITO
15	73152692	1	55T	ADAPTER	ADATTATORE
16	73154342	1	192T	HOSE	TUBO FLESSIBILE
	70919136	1	85G	ELBOW,90°	GOMITO
17	73152686	1	75I	SWITCH,PRESSURE	INTERRUTTORE
18	73154357	1	206T	TUBE	TUBO
19	00770057	1	20R	FITTING	RACCORDO
	10280060	2	123G	GASKET	GUARNIZIONE DI TENUTA
20	73154416	1	206T	TUBE	TUBO
21	10184311	1	20R	FITTING	RACCORDO
	10280060	2	123G	GASKET	GUARNIZIONE DI TENUTA
22	73152678	1	87S	INDICATOR	SEGNALATORE
23	73152679	1	8D	DECAL	DECALCOMANIA
24	73152693	-	60F	WIRE,10'	FILO
25	73154358	2	60C	TERMINAL, WIRE	CAPOCORDA
26	73154350	2	60C	TERMINAL, WIRE	CAPOCORDA
27	73154463	2	35S	HOUSING	SCATOLA
28	73154337	1	60C	TERMINAL, WIRE	CAPOCORDA
29	73155020	1	75B	CONNECTOR	BLOCCHETTO CONNESSIONE
30	70198775	6	501H	TIE	TIRANTE
			600P	AS REQUIRED	DEFINITO AL MONTAGGIO

USAGE: SPECIAL EQUIPMENT. UNITS WITH 8205 ENGINE.

ENGINE PROTECTION SYSTEM

A126

Added April 1989

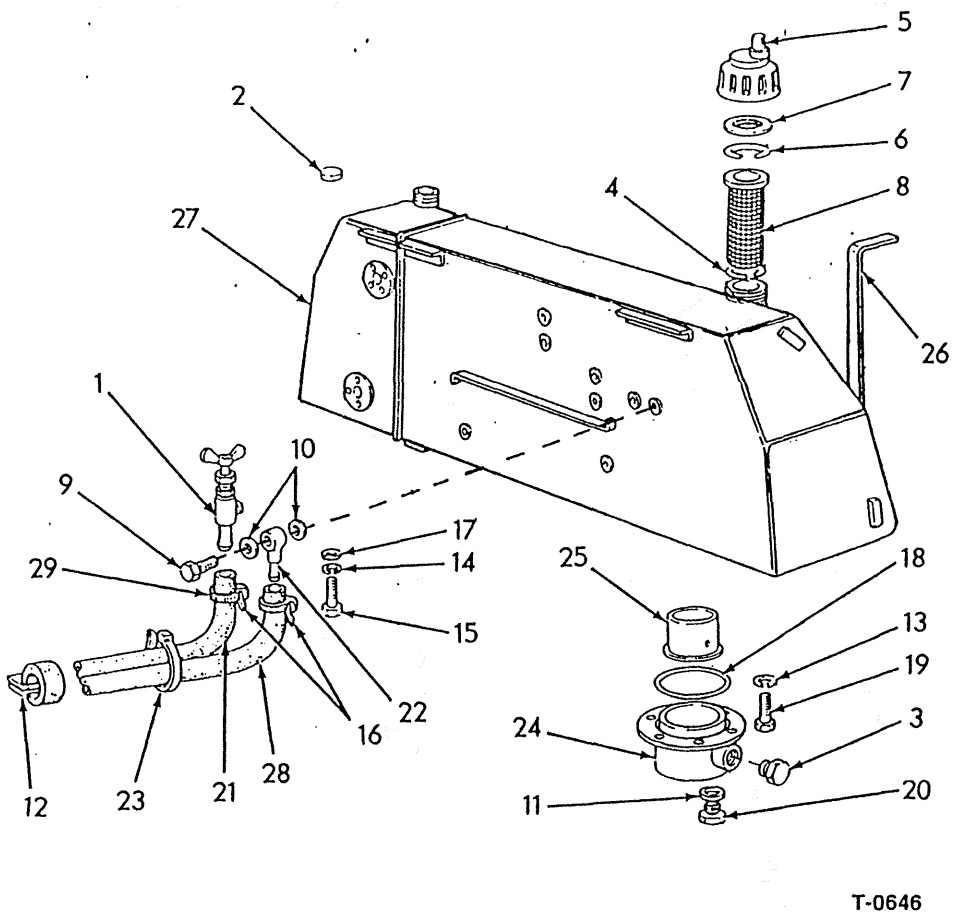

ITEM	PART NO.	QTY.	CODE	DESCRIPTION	DENOMINAZIONE
1	00585834	1	150R	COCK	RUBINETTO
2	04586020	1	60D	DISC	DISCO
3	04967197	1	311	GAUGE, LEVEL	INDICATORE LIVELLO
4	04971843	1	56A	RING, RETAINING	ANELLO DI RITEGNO
5	04977118	1	54T	CAP, FILLER	TAPPO DI INTRODUZIONE
			600L	INCLUDES ITEMS 6,7	INCLUDE PARTIC.(1)
6	04977122	1	56A	RING, RETAINING	ANELLO DI RITEGNO
7	60024509	1	133R	SEAL	GUARNIZIONE TENUTA
8	04982644	1	65F	FILTER	FILTRO
9	10184317	1	50T	PLUG	TAPPO
10	10279985	2	133R	SEAL	GUARNIZIONE TENUTA
11	10296685	1	133R	SEAL	GUARNIZIONE TENUTA
12	10450890	4	120M	CLAMP	MORSETTO COLLARE
13	10571771	6	131R	WASHER	ROSETTA
14	10572071	8	131R	WASHER	ROSETTA
15	11115631	8	40V	CAPSCREW,14X2X35	VITE
16	12179490	4	120M	CLAMP,01,03,05	MORSETTO COLLARE
			600X	PRIOR TO UNIT #052550	FINO AL TELAIO.....
	79084753	4	120M	CLAMP,01,03,05,06	MORSETTO COLLARE
			600Y	UNIT NO.052550 AND UP	DAL TELAIO.....
17	12644921	8	131R	WASHER	ROSETTA
18	14466489	1	55A	O-RING	ANELLO DI TENUTA
19	16043631	6	40V	CAPSCREW,8X1.25X25	VITE
20	79007135	1	50T	PLUG,01,03	TAPPO
21	79008048	1	192T	HOSE,01,03,05	TUBO FLESSIBILE
			600X	PRIOR TO UNIT #052550	FINO AL TELAIO.....
	76014544	1	192T	HOSE,01,03,05	TUBO FLESSIBILE
			600Y	UNIT NO. 052550 AND UP	DAL TELAIO.....
	79087380	1	192T	HOSE,06	TUBO FLESSIBILE
22	79010217	1	20R	FITTING	RACCORDO
23	79013422	2	120M	CLAMP	MORSETTO COLLARE
24	79032036	1	265C	COVER	COPERCHIO
25	79032207	1	206T	TUBE	TUBO
26	79037005	1	311	GAUGE, LEVEL	INDICATORE LIVELLO
27	79038268	1	115S	TANK	SERBATOIO
			600L	INCLUDES ITEM 2	INCLUDE PARTIC.(1)

FUEL TANK & LINES

A201 | 1

Revised April 1989

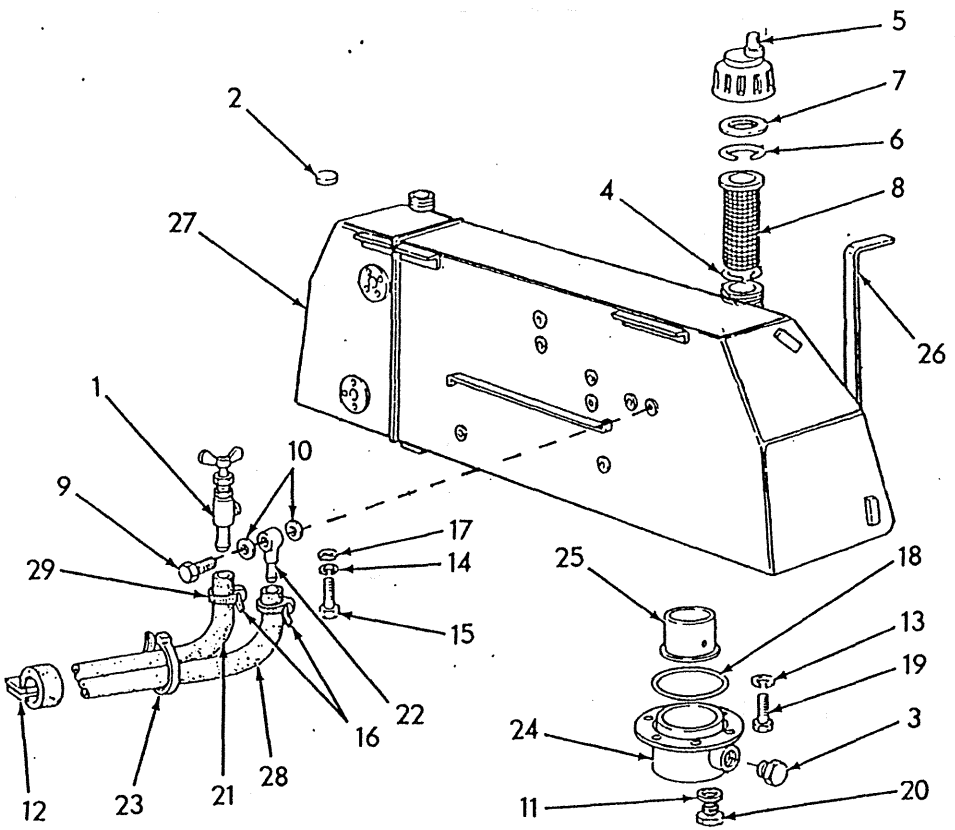

T-0646

ITEM	PART NO.	QTY.	CODE	DESCRIPTION	DENOMINAZIONE
28	79038291	1	192T	HOSE,01,03,05	TUBO FLESSIBILE
			600X	PRIOR TO UNIT #052550	FINO AL TELAIO.....
	76014545	1	192T	HOSE,01,03,05	TUBO FLESSIBILE
			600Y	UNIT NO. 052550 AND UP	DAL TELAIO.....
	79087381	1	192T	HOSE,06	TUBO FLESSIBILE
29	79083842	2	120M	CLAMP	MORSETTO COLLARE

01,03,05 FOR 8205 ENG.
06 FOR 8365 ENGINES

FUEL TANK & LINES

A201 | 1

Revised April 1989

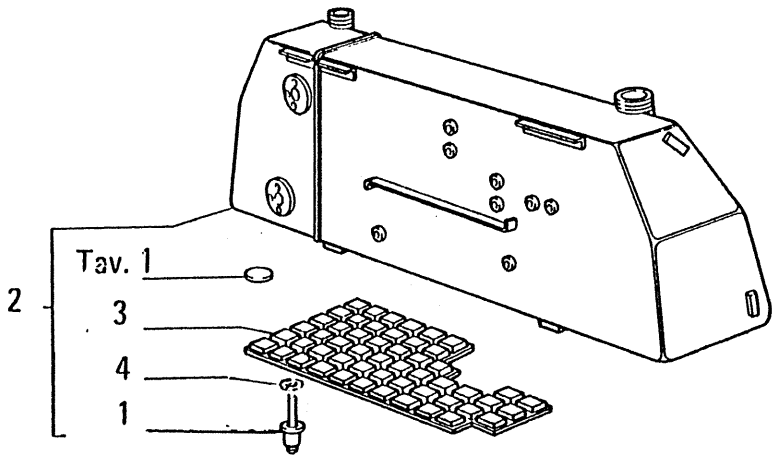

ITEM	PART NUMBER	QTY	TRANS CODE	DESCRIPTION	DESCRIZIONE
1	14641995	10	55R	RIVET (01)( )(03)(*) 2 3×10.4	RIBATTINO (01)(02)(03)(*) 2 3×10 4 DAL TELAIO 050101 RIBATTINO (01-02-03)(*) 2.3×12 FINO AL TELAIO 050100
2	79040296	1	115S	TANK - ASSEMBLY (*)	SERBATOIO - COMPLETO (*)
3	79040297	1	25P	PANEL (01- -03)(*)	PANNELLO (01-02-03)(*)
4	12642801	10	131R	WASHER (01) ½)(03)(*) 4 15×12.5	ROSETTA (01)(02)(03)(*) 4.15×12.5 DAL TELAIO 050101
(*)			469P	FOR SPECIAL EQUIPMENT 30 0022 24 1	PER VARIANTE 30 0022 2

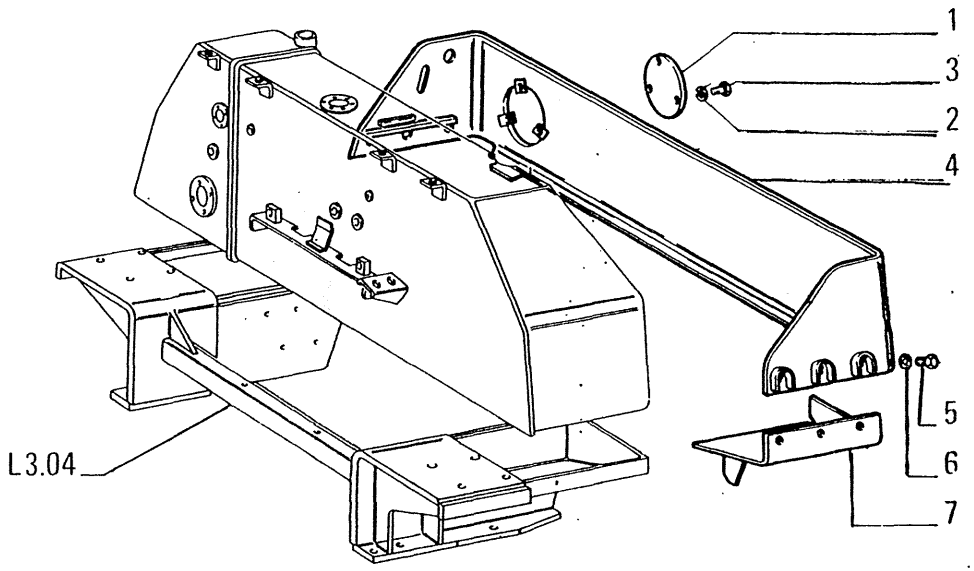

OPTIONAL 30.0045.01.1
VARIANTE

ITEM	PART NUMBER	QTY	TRANS CODE	DESCRIPTION	DESCRIZIONE
1	76000979	1	265C	COVER (01) (03)	COPERCHIO (01)(02)(03)(04)
		1	265C	COVER (05)(*)	COPERCHIO (05)(*)
2	10516871	3	131R	WASHER (01) (03) 10x2,5	ROSETTA (01)(02)(03)(04) 10x2,5
		3	131R	WASHER (05)(*) 10x2,5	ROSETTA (05)(*) 10x2,5
3	11106031	3	40V	SCREW (01) (03) 10x1,5x20	VITE (01)(02)(03)(04) 10x1,5x20
		3	40V	SCREW (05)(*) 10x1,5x20	VITE (05)(*) 10x1,5x20
4	76000977	1	70R	GUARD (01) (03)	RIPARO (01)(02)(03)(04)
		1	70R	GUARD (05)(*)	RIPARO (05)(*)
5	11127531	6	40V	SCREW (05)(*) 16x2x35	VITE (05)(*) 16x2x35
	11127537	6	40V	SCREW (01) (03) 16x2x35	VITE (01)(02)(03)(04) 16x2x3
6	79005240	6	131R	WASHER (01) (03)	ROSETTA (01)(02)(03)(04)
		6	131R	WASHER (05)(*)	ROSETTA (05)(*)
7	76000971	1	300S	SUPPORT - RIGHT (01) (03)	SUPPORTO - DESTRO (01)(02)(03)(04)
	76000972	1	300S	SUPPORT - LEFT (01) (03)	SUPPORTO - SINISTRO (01)(02)(03)(04)
(*)			469P	FOR SPECIAL EQUIPMENT 30.0870.02.1	PER VARIANTE 30.0870.02.1

USAGE: Units with 8205 Engine

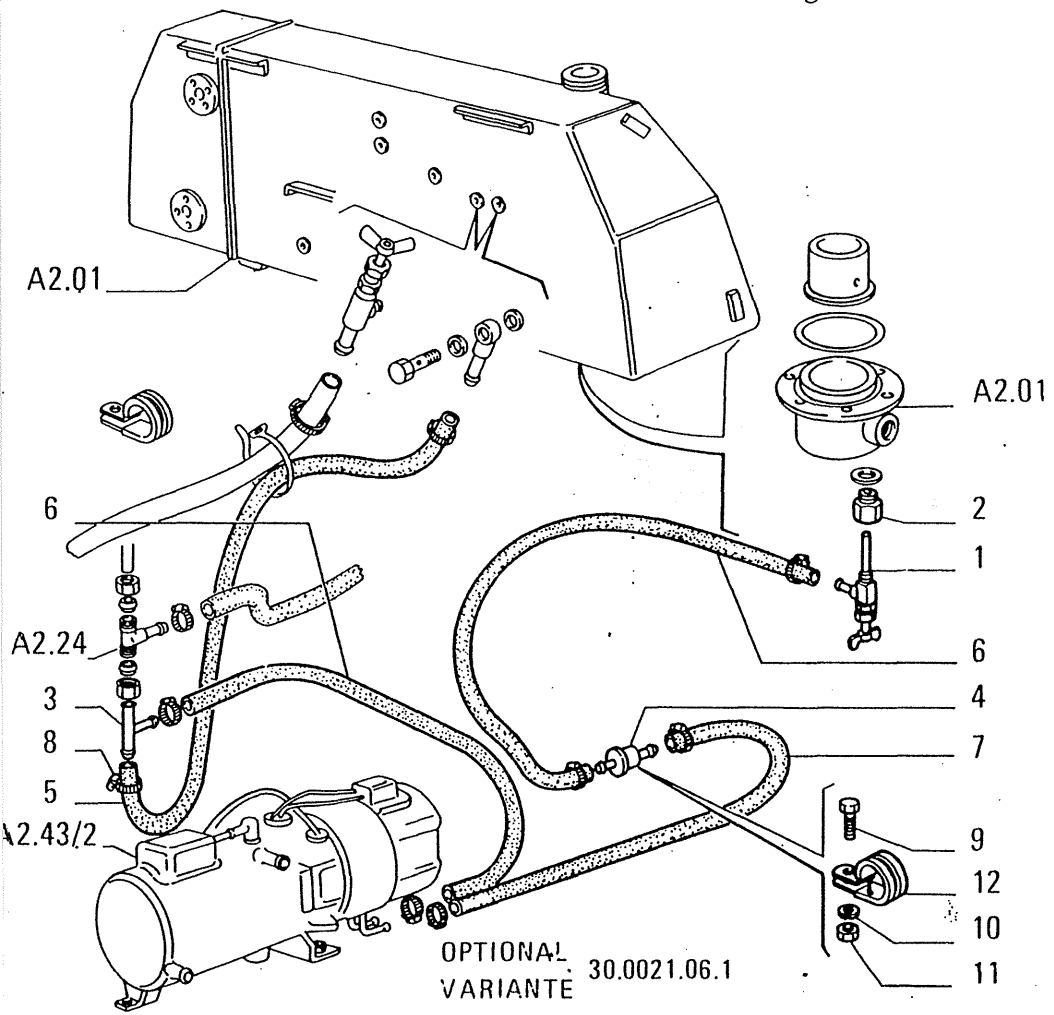

ITEM	PART NUMBER	QTY	TRANS CODE	DESCRIPTION	DESCRIZIONE
1	79045358	1	150R	COCK	RUBINETTO
2	76006681	1	20R	FITTING	RACCORDO
3	76014012	1	20R	FITTING	RACCORDO
4	76013811	1	64F	FUEL FILTER	FILTRO COMBUSTIBILE
5	76013810	L	192T	HOSE ASSY	TUBO FLESS.C/RACCORDI
6	76014218	L	192T	HOSE ASSY	TUBO FLESS.C/RACCORDI
7	76014453	L	192T	HOSE ASSY	TUBO FLESS.C/RACCORDI
8	12179490	6	180C	COLLAR 9/16x8	COLLARE 9/16x8
9	10902531	1	40V	SCREW 6x1x22	VITE 6x1x22
10	10516479	1	170R	LOCKWASHER 6,1x1,8	ROSETTA EL. 6,1x1,8
11	15896221	1	10D	NUT 6x1x5	DADO 6x1x5
12	10442290	1	231S	CLIP	STAFFETTA

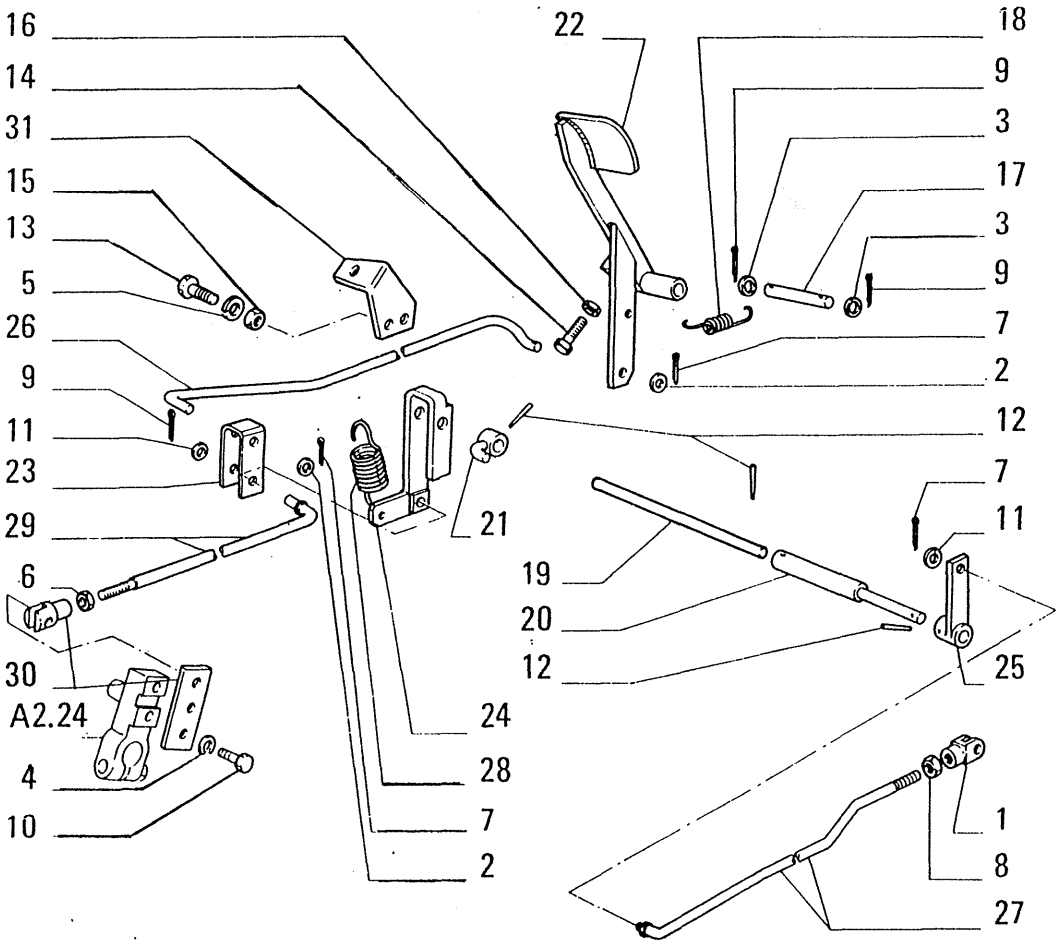

04870

ITEM	PART NUMBER	QTY	TRANS CODE	DESCRIPTION	DESCRIZIONE
1	10000871	1	85F	YOKE 10x1,25x10	FORCELLA 10x1,25x10
2	10519621	2	131R	WASHER 8,45x17	ROSETTA 8,45x17
3	10520021	2	131R	WASHER 12,2x22	ROSETTA 12,2x22
4	10571571	2	131R	WASHER 6,1x1,6	ROSETTA 6,1x1,6
5	10571771	2	131R	WASHER 8,1x2	ROSETTA 8,1x2
6	10725911	1	10D	NUT 6x1x4	DADO 6x1x4
7	10734201	2	270C	COTTER PIN 1,7x18,5	COPIGLIA 1,7x18,5
8	10791011	1	10D	NUT 10x1,25x6	DADO 10x1,25x6
9	10796401	4	270C	COTTER PIN 2,7x27,6	COPIGLIA 2,7x27,6
10	10902131	2	40V	SCREW 6x1x14	VITE 6x1x14
11	12638621	2	131R	WASHER 10,2x18	ROSETTA 10,2x18
12	14168170	3	200S	PIN 6,4x25	SPINA 6,4x25
13	16043631	2	40V	SCREW 8x1,25x25	VITE 8x1,25x25
14	16054631	1	40V	SCREW 8x1,25x40	VITE 8x1,25x40
15	16100811	2	10D	NUT 8x1,25x6,5	DADO 8x1,25x6,5
16	16102321	1	10D	NUT 8x1,25x5	DADO 8x1,25x5
17	79005924	1	16A	SHAFT	ALBERO
18	79005934	1	100M	SPRING	MOLLA
19	79005935	1	16A	SHAFT - RIGHT	ALBERO - DESTRO
20	79005936	1	16A	SHAFT - LEFT	ALBERO - SINISTRO
21	79006628	1	45L	LEVER	LEVA
22	79013255	1	60P	PEDAL	PEDALE
23	79035221	1	45L	LEVER	LEVA
24	79035226	1	45L	LEVER	LEVA
25	79035370	1	45L	LEVER	LEVA
26	79035375	1	142T	TIEROD **C1097**	TIRANTE **C1097**
	79043091	1	142T	TIEROD **D1097**	TIRANTE **D1097**

C 1097 → Tel.n. 050154
D 1097 Tel.n. 050155 →

THROTTLE CONTROL LINKAGE – COMANDI ACCELERATORE – COMMANDES D'ACCELERATEUR
GASREGULIERUNG – MANDOS DEL ACELERADOR –

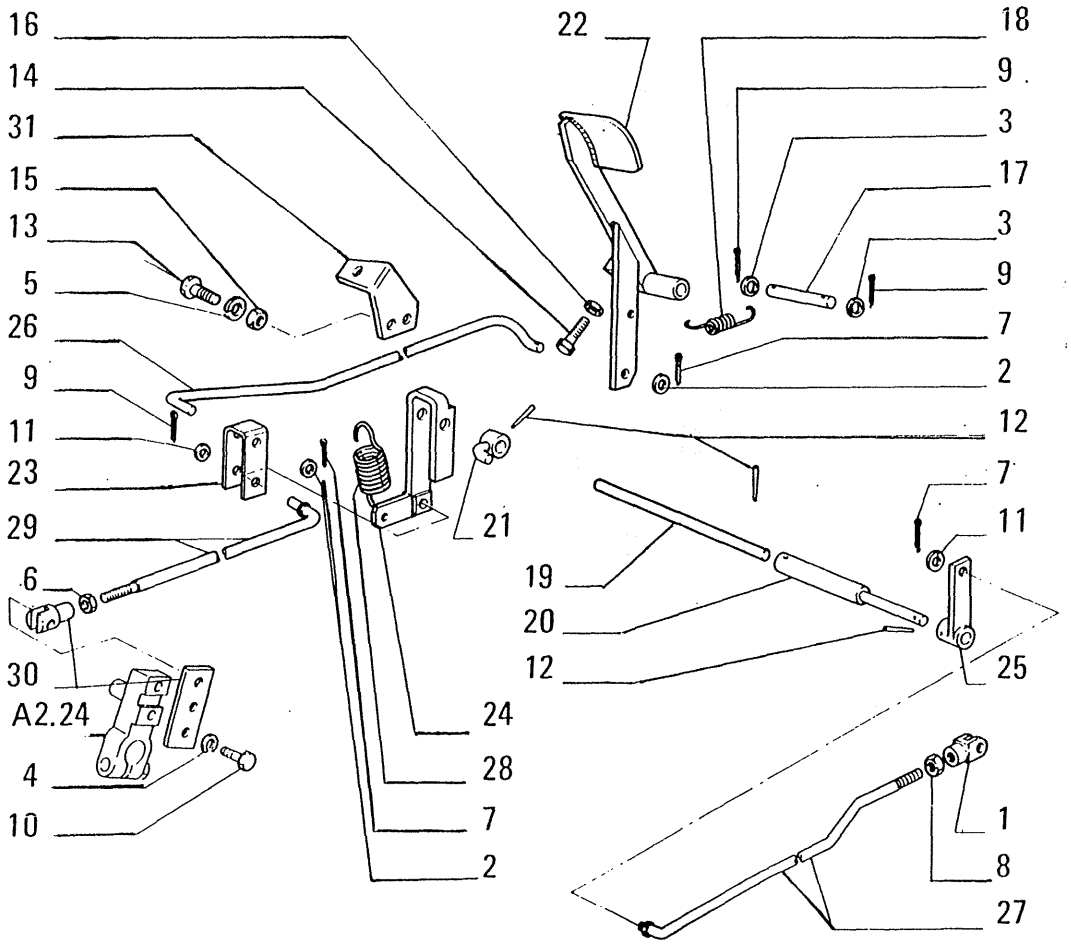

ITEM	PART NUMBER	QTY	TRANS CODE	DESCRIPTION	DESCRIZIONE
26	79043091	1	142T	TIEROD **C1429**	TIRANTE **C1429**
	79050406	1	142T	TIEROD **D1429**	TIRANTE **D1429**
27	79035378	1	142T	TIEROD	TIRANTE
28	79038784	1	100M	SPRING	MOLLA
29	79038790	1	142T	TIEROD - FRONT (01- -03- -05)	TIRANTE - ANTERIORE (01-02-03-04-05)
	79087821	1	142T	TIEROD - FRONT (06)	TIRANTE - ANTERIORE (06)
30	79039234	1	45L	LEVER - FRONT ASSEMBLY	LEVA - ANTERIORE COMPLETO
31	79042879	1	225S	BRACKET	STAFFA

C 1429 → Tel.n. 050980
D 1429 Tel.n. 050981 →
(01- -03- -05) Units with 8205 Engine
(06) Units with 8365 Engine

04870

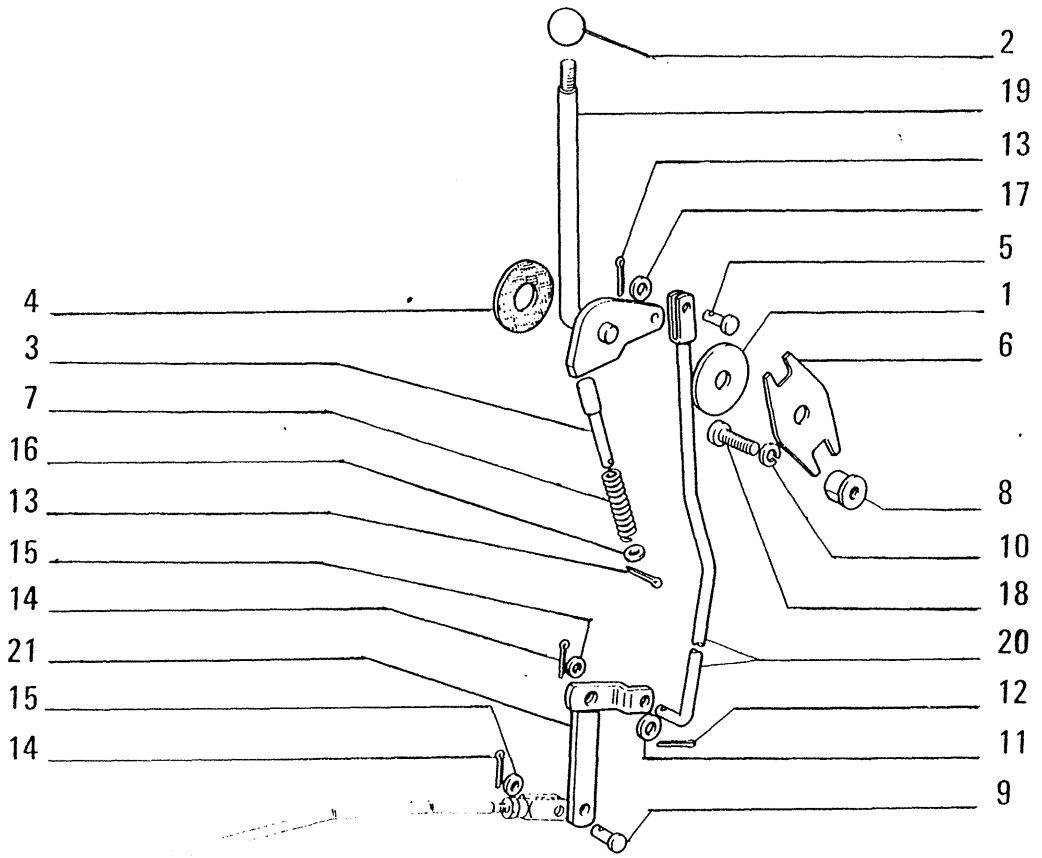

ITEM	PART NUMBER	QTY	TRANS CODE	DESCRIPTION	DESCRIZIONE
1	587468	1	60D	DISC	DISCO
2	4970504	1	150P	KNOB	POMELLO
3	4984517	1	80P	PIN	PERNO
4	4984525	1	60D	DISC	DISCO
5	4984549	1	80P	PIN	PERNO
6	4984550	1	100M	SPRING	MOLLA
7	4989488	1	100M	SPRING	MOLLA
8	4989767	2	10D	NUT	DADO
9	10033410	1	80P	PIN 10x27	PERNO 10x27
10	10516671	2	131R	WASHER 8,1x2,2	ROSETTA 8,1x2,2
11	10520021	1	131R	WASHER 12,2x22	ROSETTA 12,2x22
12	10733601	1	270C	COTTER PIN 2,7x31,6	COPIGLIA 2,7x31,6
13	10734201	2	270C	COTTER PIN 1,7x18,5	COPIGLIA 1,7x18,5
14	10796401	2	270C	COTTER PIN 2,7x27,6	COPIGLIA 2,7x27,6
15	12638621	2	131R	WASHER 10,2x18	ROSETTA 10,2x18
16	12639701	1	131R	WASHER 6,15x11	ROSETTA 6,15x11
17	12642721	1	131R	WASHER 8,15x12	ROSETTA 8,15x12
18	13279611	2	40V	SCREW 8x1,25x25	VITE 8x1,25x25
19	76001632	1	45L	LEVER	LEVA
20	79035366	1	142T	TIEROD - UPPER	TIRANTE - SUPERIORE
21	79035376	1	45L	LEVER - REAR	LEVA - POSTERIORE

04871

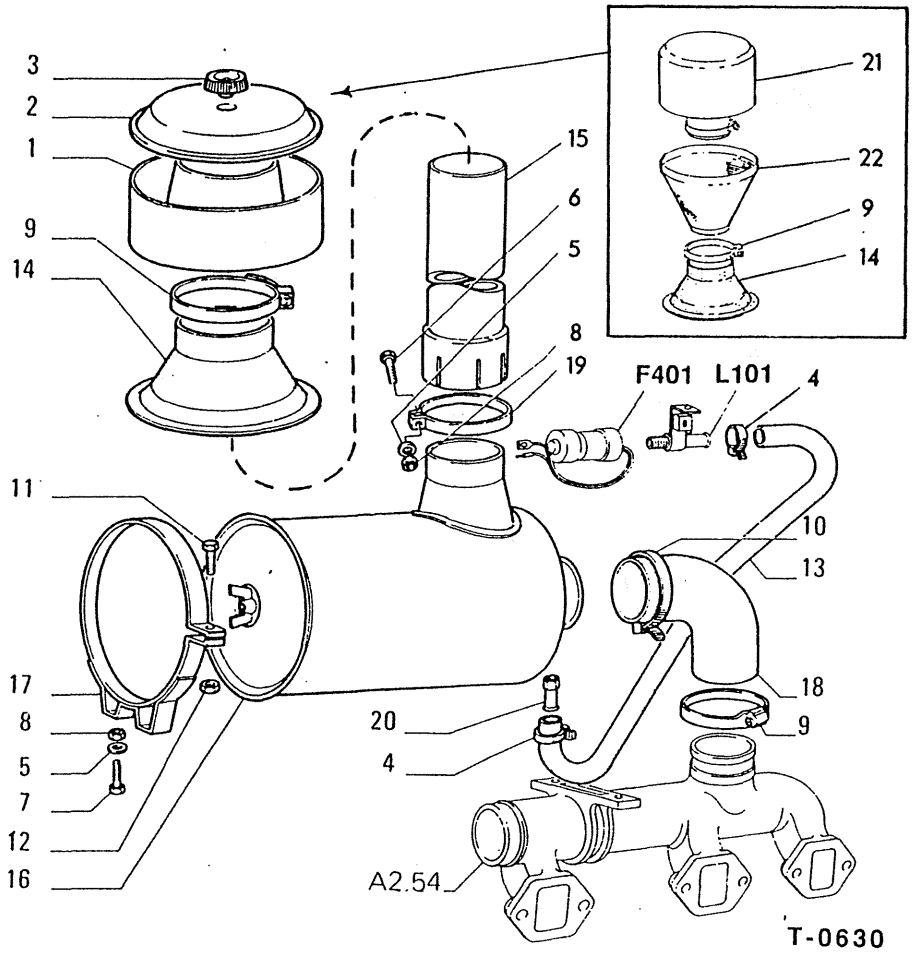

ITEM	PART NO.	QTY.	CODE	DESCRIPTION	DENOMINAZIONE
1	a00595594	1	300C	BODY	CORPO
2	a00595595	1	265C	COVER	COPERCHIO
3	a00595596	1	10D	NUT	DADO
4	10168790	2	180C	COLLAR,15.5X1	COLLARE
5	10571871	1	131R	WASHER,10.2X2.2	ROSETTA
6	11106431	1	40V	CAPSCREW,10X1.5X30	VITE
7	11106631	1	40V	CAPSCREW,10X1.5X35	VITE
8	11701721	1	10D	NUT,10X1.5X8	DADO
9	12174490	1	180C	COLLAR,92/112X14	COLLARE
10	12174590	1	180C	COLLAR,107/127X14	COLLARE
11	16044031	2	40V	CAPSCREW,8X1.25X40	VITE
12	16100821	2	10D	NUT,8X1.25X6.5	DADO
13	79005643	1	192T	HOSE	TUBO FLESSIBILE
14	79042093	1	70R	CANOPY	RIPARO
15	79042136	1	193T	PIPE	TUBO
16	79042201	1	66F	AIR CLEANER(A223)	FILTRO ARIA
17	79042204	2	225S	STEP	STAFFA
18	79042207	1	30M	SLEEVE, FLEXIBLE	MANICOTTO FLESSIBILE
19	79042208	1	180C	COLLAR	COLLARE
20	79042224	1	20R	FITTING	RACCORDO
21	b73154056	1	201P	PRECLEANER	PREFILTRO
22	b73154057	1	110S	SCREEN	SEPARATORE

a.NOT USED ON UNITS EQUIPPED FOR SANITARY LANDFILL.

b.UNIT EQUIPPED FOR SANITARY LANDFILL OR FORESTRY.

USAGE: UNITS WITH 8205 ENGINE.

AIR CLEANER & DUCTS

A222

Revised April 1989

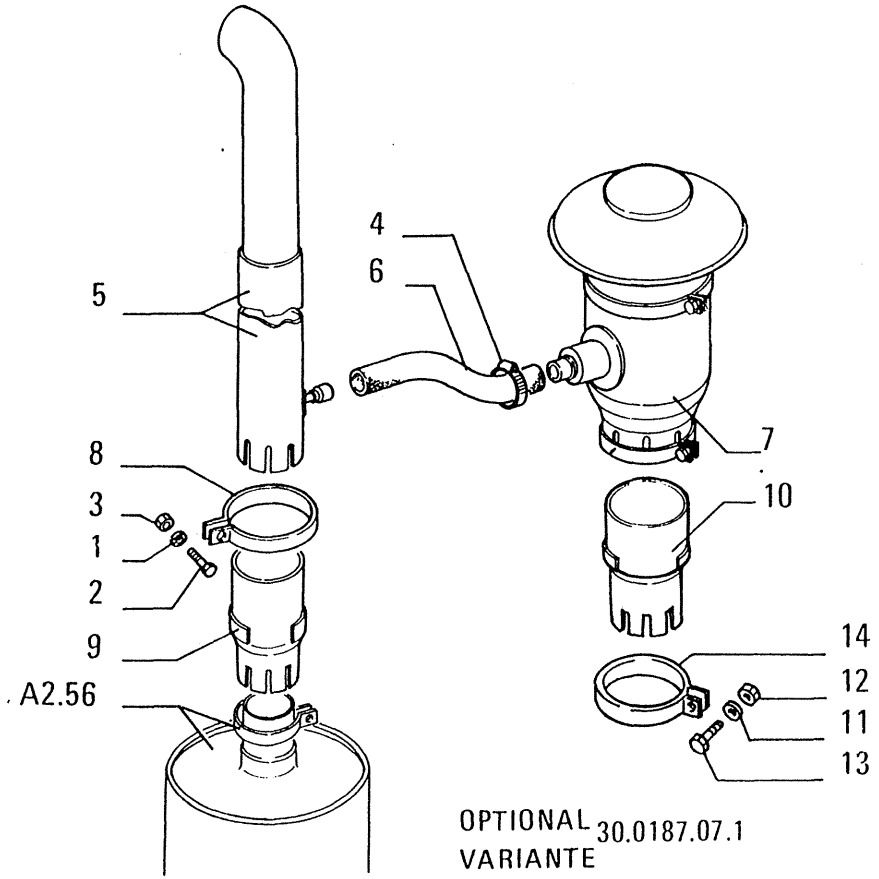

ITEM	PART NUMBER	QTY	TRANS CODE	DESCRIPTION	DESCRIZIONE
1	10516871	1	132R	LOCKWASHER 10x2,5	ROSETTA DI SICUREZZA 10x2,5
2	11106431	1	40V	SCREW 10x1,5x30	VITE 10x1,5x30
3	11701721	1	10D	NUT 10x1,5x8	DADO 10x1,5x8
4	12174790	2	180C	COLLAR 47/67x14	COLLARE 47/67x14
5	79038023	1	193T	TUBE	TUBO RIGIDO
6	79028229	1	30M	SLEEVE	MANICOTTO
7	79028222	1	201P	PRECLEANER	PREFILTRO
8	79028225	1	180C	COLLAR	COLLARE
9	76008089	1	193T	TUBE	TUBO RIGIDO
10	76008553	1	193T	TUBE	TUBO RIGIDO
11	10571971	1	131R	WASHER 12,2x2,5	ROSETTA 12,2x2,5
12	12163921	1	10D	NUT 12x1,5x10	DADO 12x1,5x10
13	15540331	1	40V	SCREW 12x1,25x25	VITE 12x1,25x25
14	76000122	1	180C	COLLAR	COLLARE

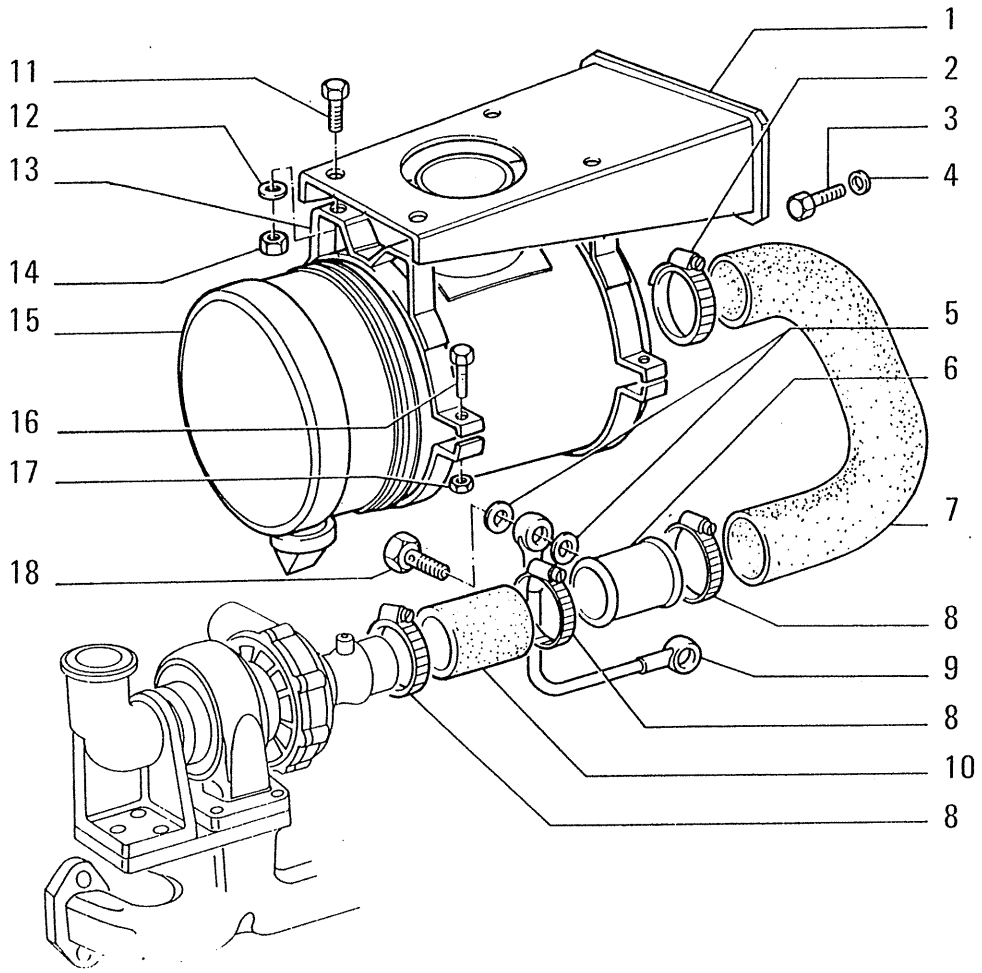

USAGE: Units with 8365 Engine

ITEM	PART NUMBER	QTY	TRANS CODE	DESCRIPTION	DESCRIZIONE
1	79081451	1	300S	SUPPORT	SUPPORTO
2	79083852	1	180C	COLLAR	COLLARE
3	16043831	4	40V	SCREW 8x1,25x30	VITE 8x1,25x30
4	12645031	4	131R	WASHER 8,15x21	ROSETTA 8,15x21
5	10298360	2	120G	GASKET 10,2x16	GUARNIZIONE PIANA 10,2x16
6	79071530	1	193T	TUBE	TUBO RIGIDO
7	79087390	1	285T	HOSE	TUBO FLESSIBILE
8	79083849	3	180C	COLLAR	COLLARE
9	79071533	1	193T	TUBE	TUBO RIGIDO
10	79071537	1	30M	SLEEVE	MANICOTTO
11	11106231	4	40V	SCREW 10x1,5x25	VITE 10x1,5x25
12	14496631	4	131R	WASHER 10,5x21	ROSETTA 10,5x21
13	79011287	2	180C	COLLAR	COLLARE
14	11701721	4	10D	NUT	DADO
15	73053290	1	66F	AIR CLEANER - ASSEMBLY SEE SGR. A223/ 1	FILTRO ARIA - COMPLETO VEDERE SGR. A223/ 1
16	16044031	2	40V	SCREW 8x1,25x40	VITE 8x1,25x40
17	16100821	2	10D	NUT 8x1,25x6,5	DADO 8x1,25x6,5
18	11903817	1	20R	FITTING 10x1,25x19	RACCORDO 10x1,25x19

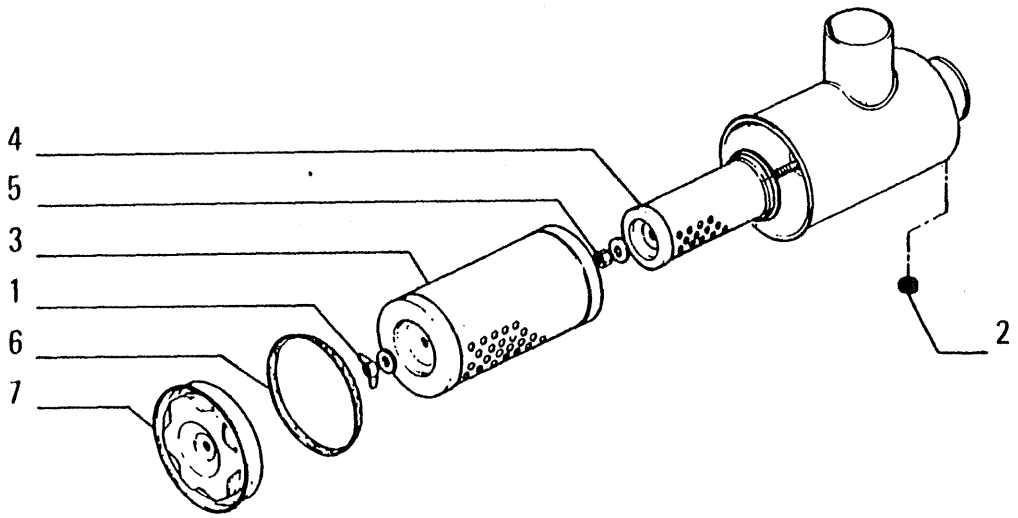

ITEM	PART NUMBER	QTY	TRANS CODE	DESCRIPTION	DESCRIZIONE
1	70239517	1	10D	NUT	DADO
2	74055119	1	50T	PLUG	TAPPO
3	79042202	1	20E	FILTERING ELEMENT	ELEMENTO FILTRANTE
4	79042203	1	20E	FILTERING ELEMENT	ELEMENTO FILTRANTE
5	79047022	1	10D	NUT	DADO
6	79047024	1	123G	GASKET	GUARNIZIONE DI TENUTA
7	79047025	1	265C	COVER	COPERCHIO

USAGE: Units with 8205 Engine

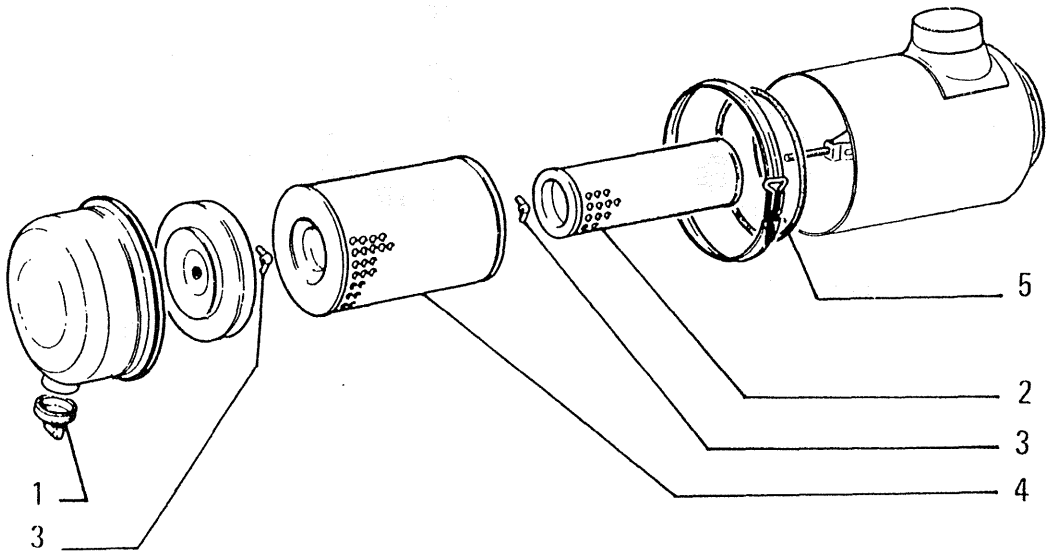

ITEM	PART NUMBER	QTY	TRANS CODE	DESCRIPTION	DESCRIZIONE
1	70197810	1	10V	VALVE	VALVOLA
2	70662609	1	20E	FILTERING ELEMENT	ELEMENTO FILTRANTE
3	70664343	2	10D	NUT	DADO
4	70684733	1	20E	FILTERING ELEMENT	ELEMENTO FILTRANTE
5	73059827	1	122G	SEAL	GUARNIZIONE

USAGE: Units with 8365 Engine

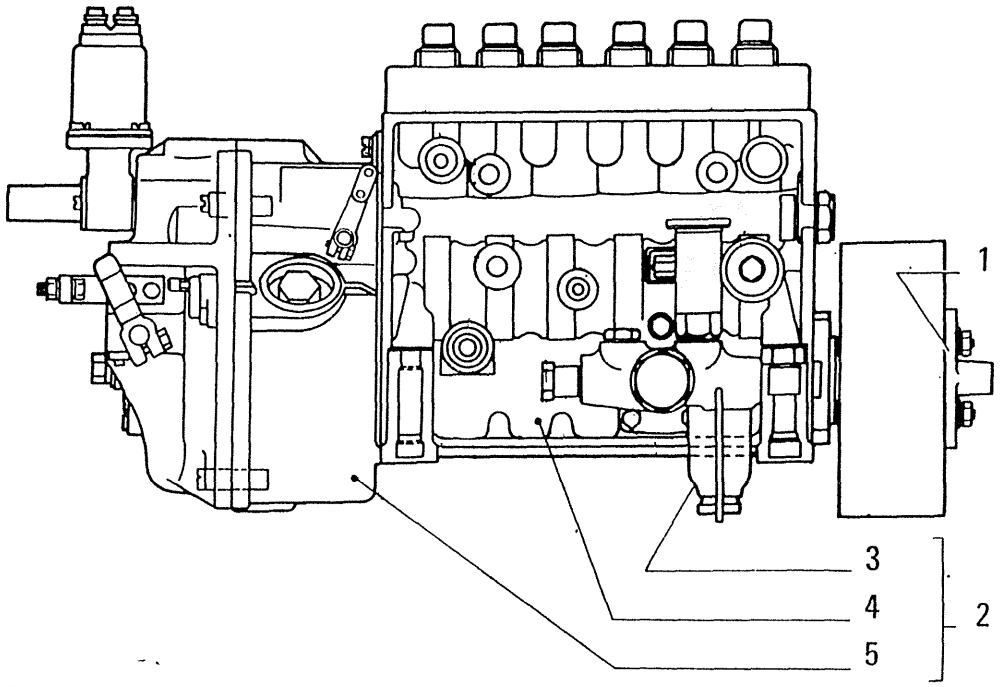

ITEM	PART NUMBER	QTY	TRANS CODE	DESCRIPTION	DESCRIZIONE
1	4754980	1	16V	ADVANCE VARIATOR - ASSEMBLY SEE SGR. A2.33	VARIATORE DI ANTICIPO - COMPLETO VEDERE SGR. A2.33
2	4765719	1	109G	INJECTION EQUIPMENT - ASSEMBLY IN ALTERNATIVE	GRUPPO INIEZIONE - COMPLETO IN ALTERNATIVA
	4776364	1	109G	INJECTION EQUIPMENT - ASSEMBLY IN ALTERNATIVE D1473	GRUPPO INIEZIONE - COMPLETO IN ALTERNATIVA D1473
3	9932279	1	154P	FUEL PUMP - ASSEMBLY IN ALTERNATIVE SEE SGR. A2.25	POMPA ALIMENTAZIONE - COMPLETO IN ALTERNATIVA VEDERE SGR. A2.25
	79040872	1	154P	FUEL PUMP - ASSEMBLY IN ALTERNATIVE SEE SGR. A2.25/1 D1473	POMPA ALIMENTAZIONE - COMPLETO IN ALTERNATIVA VEDERE SGR. A2.25/1 D1473
4	1	1	158P	INJECTION PUMP - ASSEMBLY IN ALTERNATIVE SEE SGR. A2.27 (*)	POMPA INIEZIONE - COMPLETO IN ALTERNATIVA VEDERE SGR. A2.27 (*)
	2	1	158P	INJECTION PUMP - ASSEMBLY IN ALTERNATIVE SEE SGR. A2.27/1(*) D1473	POMPA INIEZIONE - COMPLETO IN ALTERNATIVA VEDERE SGR. A2.27/1(*) D1473
5	2	1	28R	SPEED GOVERNOR - ASSEMBLY IN ALTERNATIVE SEE SGR. A2.28 (*)	REGOLATORE DI VELOCITÀ - COMPLETO IN ALTERNATIVA VEDERE SGR. A2.28 (*)
	3	1	28R	SPEED GOVERNOR - ASSEMBLY IN ALTERNATIVE SEE SGR. A2.28/1(*) D1473	REGOLATORE DI VELOCITÀ - COMPLETO IN ALTERNATIVA VEDERE SGR. A2.28/1(*) D1473
(*)			148S	ONLY SEPARATE PARTS ARE SERVICED	SI FORNISCONO SOLO LE PARTI

D 1473 Mot.n. 1181 →

04876 USAGE: Units with 8205 Engine

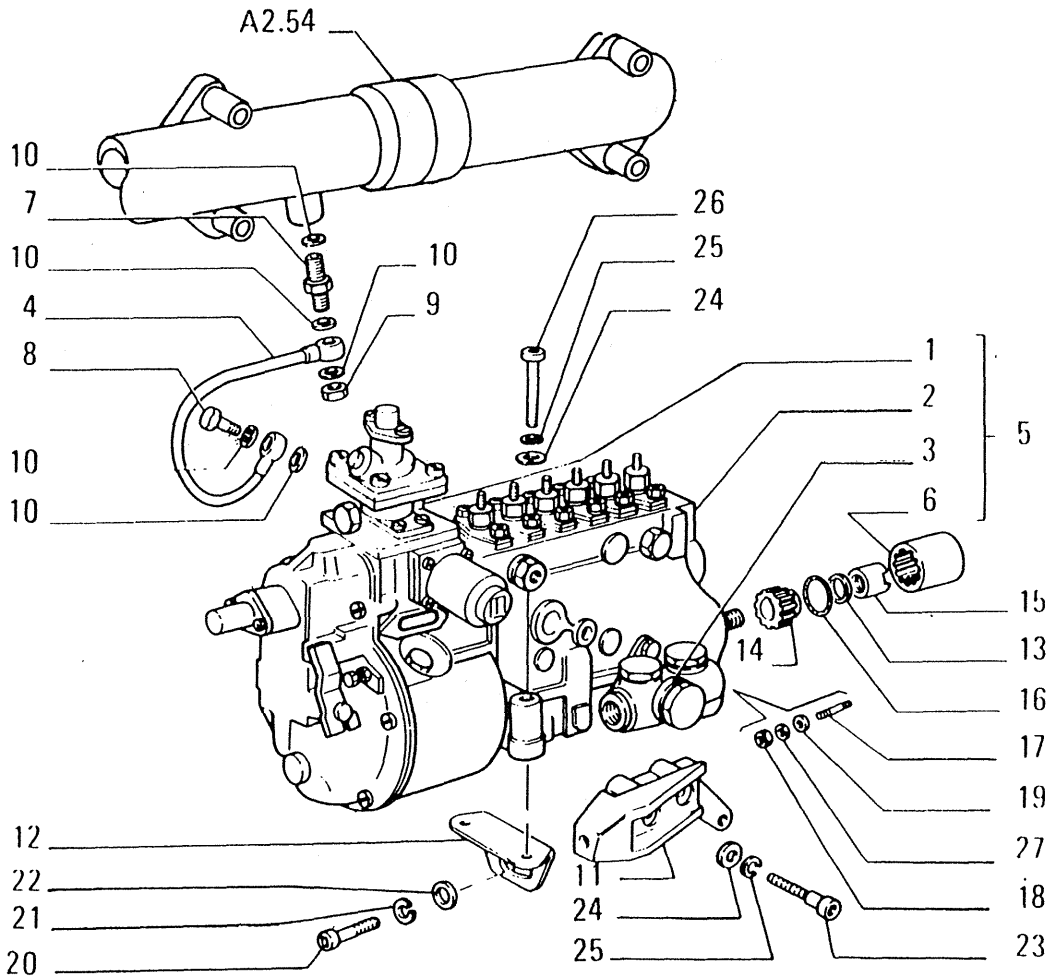

USAGE: Units with 8365 Engine

ITEM	PART NUMBER	QTY	TRANS CODE	DESCRIPTION	DESCRIZIONE
1	1	1	28R	SPEED GOVERNOR - ASSEMBLY SEE SGR. A2.28/ 2 (*)	REGOLATORE DI VELOCITA' - COMPLETO VEDERE SGR. A2.28/ 2 (*)
2	2	1	158P	INJECTION PUMP - ASSEMBLY SEE SGR. A2.27/ 2 (*)	POMPA INIEZIONE - COMPLETO VEDERE SGR. A2.27/ 2 (*)
3	772173	1	154P	FUEL PUMP - ASSEMBLY SEE SGR. A2.25/ 2	POMPA ALIMENTAZIONE - COMPLET: VEDERE SGR. A2.25/ 2
4	4809521	1	193T	TUBE	TUBO RIGIDO
5	81113543	1	109G	INJECTION EQUIPMENT - ASSEMBLY	GRUPPO INIEZIONE - COMPLETO
6	4816287	1	95B	BUSHING	BOCCOLA
7	10180217	1	20R	FITTING 12x1,5x12x1,5	RACCORDO 12x1,5x12x1,5
8	10181717	1	20R	FITTING 12x1,5x11	RACCORDO 12x1,5x11
9	10183217	1	50T	PLUG 12x1,5x14	TAPPO 12x1,5x14
10	10296160	5	120G	GASKET 12,2x18	GUARNIZIONE PIANA 12,2x18
11	4750519	1	300S	SUPPORT	SUPPORTO
	4817374	1	300S	SUPPORT	SUPPORTO
12	4750518	1	225S	BRACKET	STAFFA
13	4750525	1	131R	WASHER	ROSETTA
14	4750526	1	95B	BUSHING	BOCCOLA
15	4750524	1	10D	NUT	DADO
16	14461181	1	158G	O-RING 2,62x88,57	GUARNIZIONE O-R 2,62x88,57
17	13449821	4	210P	STUD 10x1,25x50	PRIGIONIERO 10x1,25x50
18	12164711	4	10D	NUT 10x1,25x8	DADO 10x1,25x8
19	11198379	4	170R	LOCKWASHER 10,5x20	ROSETTA EL. 10,5x20
20	15540521	1	40V	SCREW 12x1,25x35	VITE 12x1,25x35
21	11198679	1	170R	LOCKWASHER 13x24	ROSETTA EL. 13x24
22	12646921	1	131R	WASHER 12,2x28	ROSETTA 12,2x28

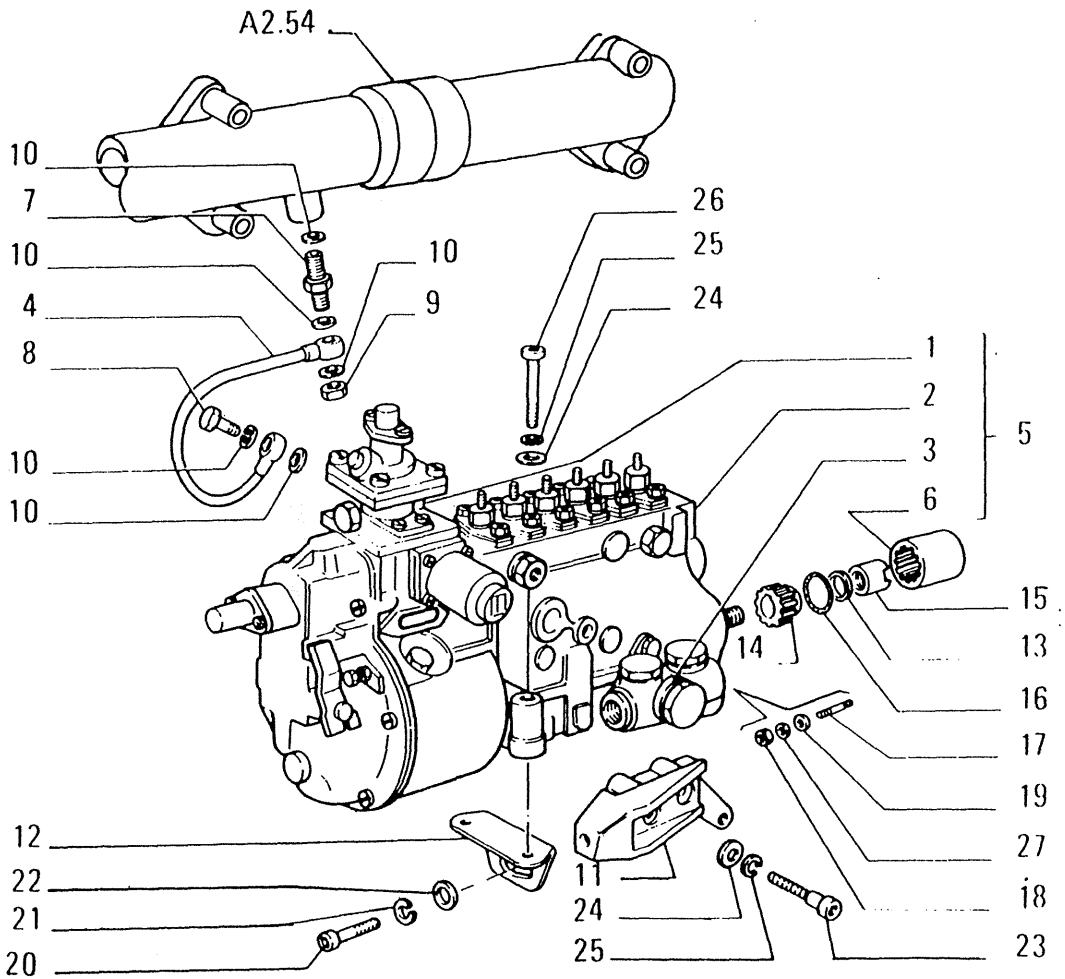

USAGE: Units with 8365 Engine

ITEM	PART NUMBER	QTY	TRANS CODE	DESCRIPTION	DESCRIZIONE
23	16043921	2	40V	SCREW 8x1,25x35	VITE 8x1,25x35
24	12646721	4	131R	WASHER 8,15x20	ROSETTA 8,15x20
25	11193879	4	170R	LOCKWASHER 8,4x16	ROSETTA EL. 8,4x16
26	16045021	2	40V	SCREW 8x1,25x90	VITE 8x1,25x90
27	759850	4	131R	WASHER	ROSETTA
(*)			148S	ONLY SEPARATE PARTS ARE SERVICED	SI FORNISCONO SOLO LE PARTI

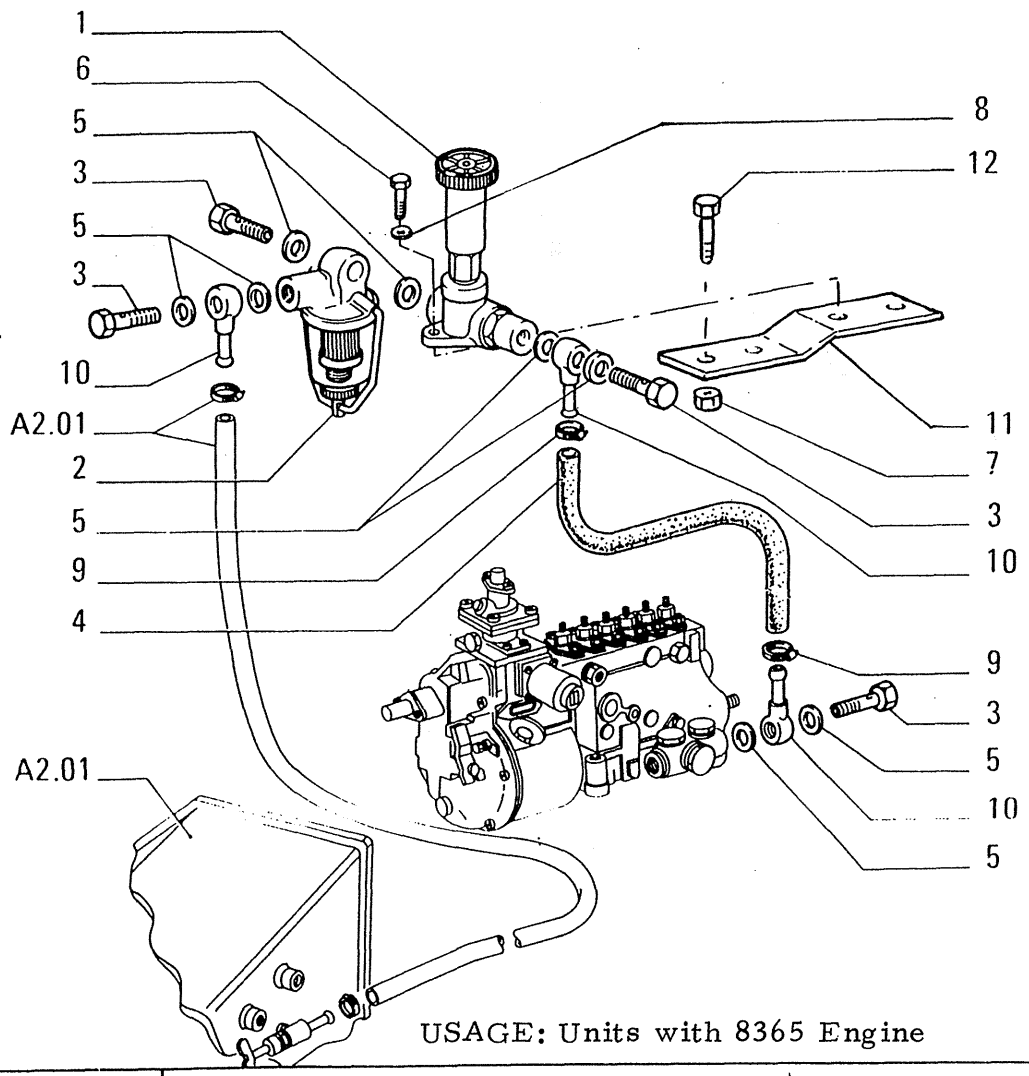

USAGE: Units with 8365 Engine

ITEM	PART NUMBER	QTY	TRANS CODE	DESCRIPTION	DESCRIZIONE
1	4797317	1	155P	PUMP	POMPA
2	4797320	1	64F	FUEL FILTER	FILTRO COMBUSTIBILE
3	10184317	4	20R	FITTING 14x1,5x27	RACCORDO 14x1,5x27
4	76014890	5	285T	HOSE	TUBO FLESSIBILE
5	79035959	8	120G	GASKET	GUARNIZIONE PIANA
6	10902631	2	40V	SCREW 6x1x25	VITE 6x1x25
7	15896221	2	10D	NUT 6x1x5	DADO 6x1x5
8	14496431	2	170R	LOCKWASHER 6,4x12,5	ROSETTA EL. 6,4x12,5
9	79083842	2	180C	COLLAR	COLLARE
10	4783070	3	20R	FITTING	RACCORDO
11	79081674	1	225S	BRACKET	STAFFA
12	16043431	2	40V	SCREW 8x1,25x20	VITE 8x1,25x20

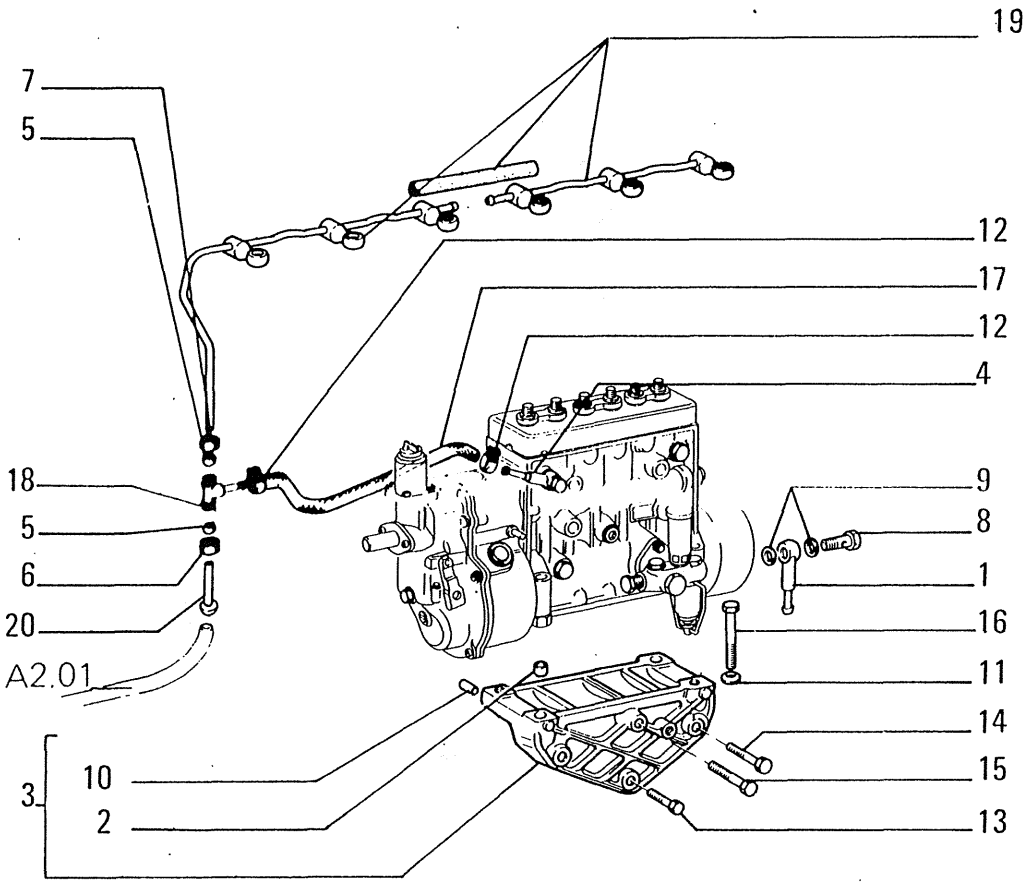

ITEM	PART NUMBER	QTY	TRANS CODE	DESCRIPTION	DESCRIZIONE
1	585914	1	20R	FITTING	RACCORDO
2	4626942	2	90G	DOWEL	GRANO
3	4643583	1	300S	SUPPORT - ASSEMBLY	SUPPORTO - COMPLETO
4	4741072	1	20R	FITTING	RACCORDO
5	10165440	1	45A	RING 8,6x7	ANELLO 8,6x7
6	10166411	1	10D	NUT 12x1x13,5	DADO 12x1x13,5
7	10166440	1	10D	NUT 20x1x17	DADO 20x1x17
8	10184311	1	90B	FILLER PLUG 14x1,5x27	BOCCHETTONE INTRODUZIONE 14x1,5x27
9	10280060	2	133R	SEAL 14,2x20	ROSETTA DI TENUTA 14,2x20
10	10837710	2	90G	DOWEL 10x25	GRANO 10x25
11	11198371	4	131R	WASHER 10,5x20	ROSETTA 10,5x20
12	12179490	2	180C	COLLAR 9/16x8	COLLARE 9/16x8
13	14274821	1	40V	SCREW 12x1,25x45	VITE 12x1,25x45
14	14275121	2	40V	SCREW 12x1,25x60	VITE 12x1,25x60
15	14275321	1	40V	SCREW 12x1,25x70	VITE 12x1,25x70
16	15971621	4	40V	SCREW 10x1,25x90	VITE 10x1,25x90
17	61585054	1	30M	SLEEVE	MANICOTTO
18	61694084	1	20R	FITTING	RACCORDO
19	79004342	1	193T	TUBE	TUBO RIGIDO
20	79010219	1	193T	TUBE	TUBO RIGIDO

(03936) USAGE: Units with 8205 Engine

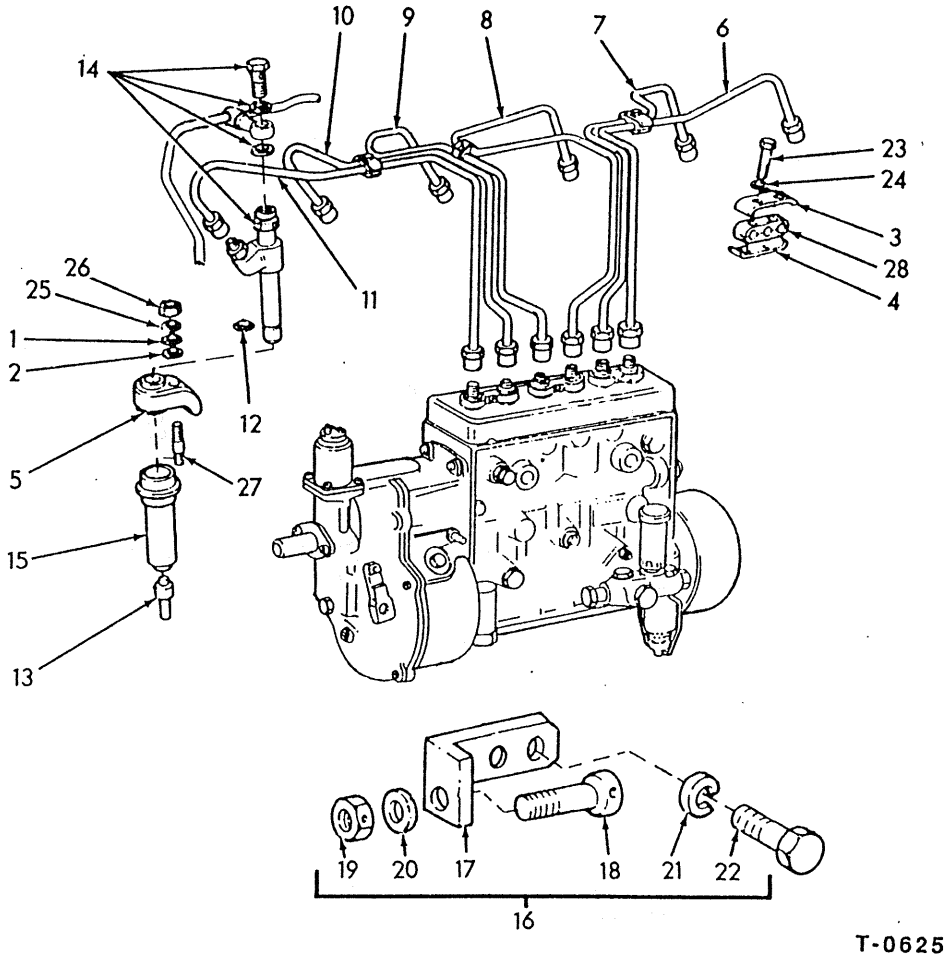

ITEM	PART NO.	QTY.	CODE	DESCRIPTION	DENOMINAZIONE
1	00756671	6	131R	WASHER	ROSETTA
2	00757265	6	131R	WASHER	ROSETTA
3	04641876	2	97S	CLAMP, HALF	SEMIMORSETTO
4	04641875	2	97S	CLAMP, HALF	SEMIMORSETTO
5	00764099	6	80M	BRACKET	MENSOLA
6	79012214	1	206T	TUBE(#1)	TUBO
7	79012215	1	206T	TUBE(#2)	TUBO
8	79012216	1	206T	TUBE(#3)	TUBO
9	79012217	1	206T	TUBE(#4)	TUBO
10	79012218	1	206T	TUBE(#5)	TUBO
11	79012219	1	206T	TUBE(#6)	TUBO
12	00767111	6	131R	WASHER	ROSETTA
13	00770763	6	148P	NOZZLE	POLVERIZZATORE
	00771034	6	148P	NOZZLE	POLVERIZZATORE
14	00770879	6	148P	NOZZLE(A235)	POLVERIZZATORE
			602A	PRIOR TO ENGINE S/N 0836	FINO AL MOTORE....
	04760837	6	148P	NOZZLE(A235/1)	POLVERIZZATORE
			602B	ENGINE S/N 0836 AND UP	DAL MOTORE....
15	04679070	6	195P	HOLDER, NOZZLE	PORTAPOLVERIZZATORE
16	04756612	1	30R	GOVERNOR	REGOLATORE
			600L	INCLUDES ITEMS 17-22	INCLUDE PARTIC.(1)
17	04756614	1	80M	BRACKET	MENSOLA
18	04756615	1	42V	SCREW	VITE
19	04756616	1	10D	NUT	DADO
20	04756617	2	75D	SPACER	DISTANZIALE
			602A	PRIOR TO ENGINE S/N 1525	FINO AL MOTORE....
	04799685	2	75D	SPACER	DISTANZIALE
			602B	ENGINE S/N 1525 AND UP	DAL MOTORE....
21	10571571	2	132R	LOCKWASHER	ROSETTA DI SICUREZZA
22	10902211	2	40V	CAPSCREW,M6X1X16	VITE
23	10978021	4	40V	CAPSCREW,M5X0.8X20	VITE
24	11195471	4	131R	WASHER	ROSETTA
25	11198371	6	131R	WASHER	ROSETTA
26	12164711	6	10D	NUT,M10	DADO
27	13450530	6	210P	STUD,M10	PRIGIONIERO

USAGE: UNITS WITH 8205 ENGINE.

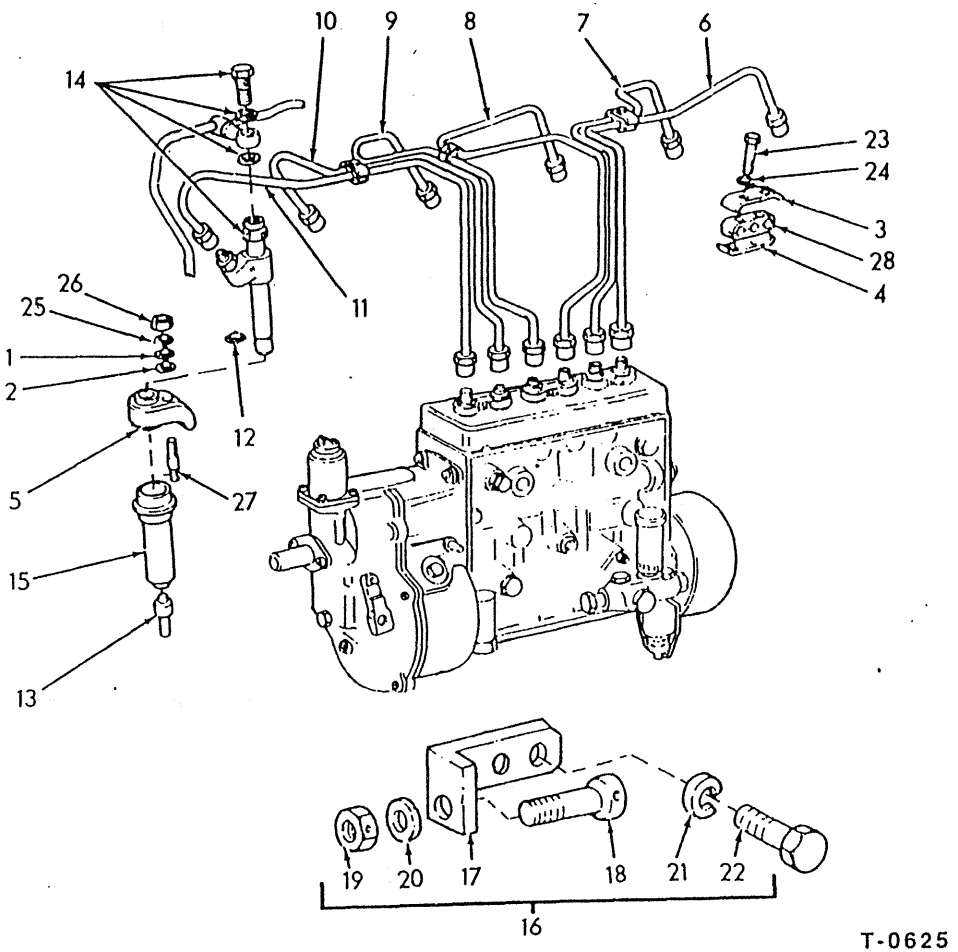

T-0625

ITEM	PART NO.	QTY.	CODE	DESCRIPTION	DENOMINAZIONE
28	04657459	2	105P	PLATE	PIASTRA
			602A	PRIOR TO ENGINE S/N 0936	FINO AL MOTORE....
	04543282	2	105P	PLATE	PIASTRA
			602B	ENGINE S/N 0936 AND UP	DAL MOTORE....

USAGE: UNITS WITH 8205 ENGINE.

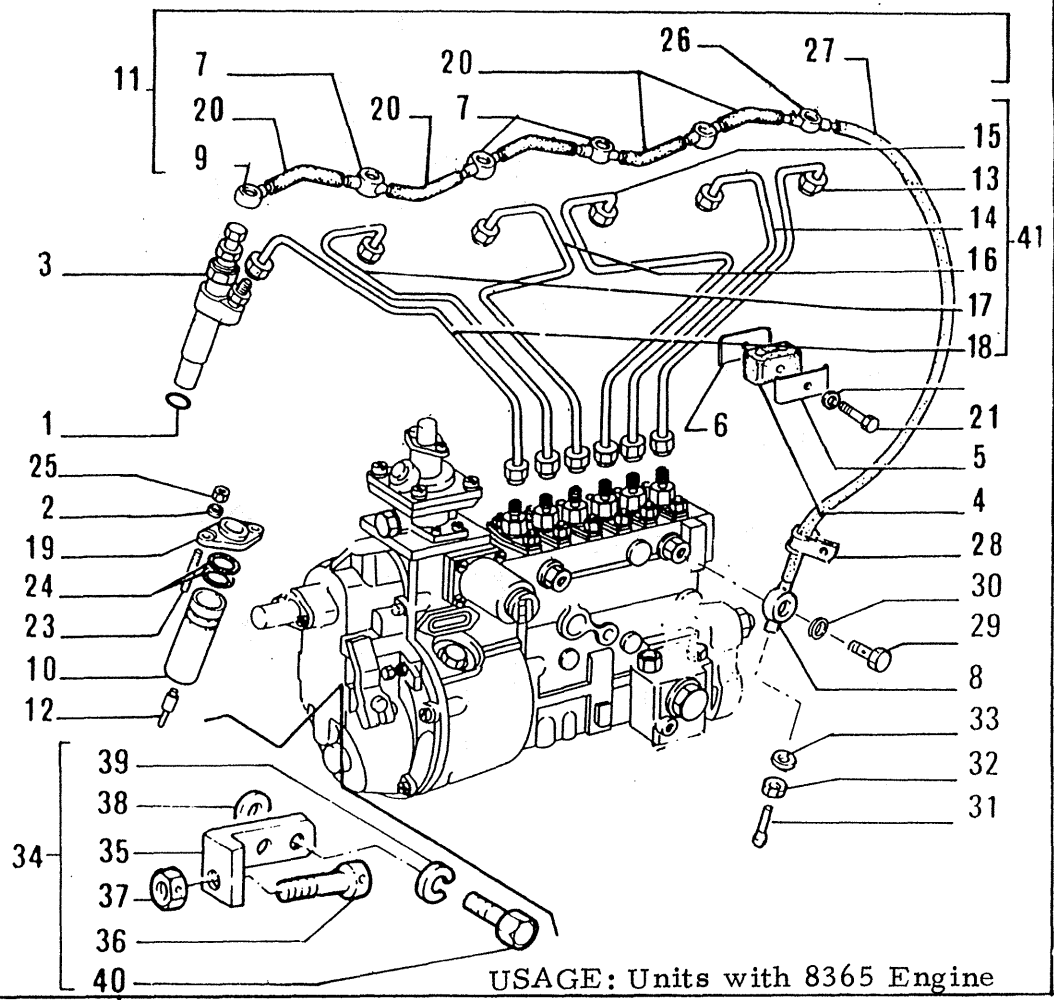

USAGE: Units with 8365 Engine

ITEM	PART NUMBER	QTY	TRANS CODE	DESCRIPTION	DESCRIZIONE
1	767111	6	158G	O-RING	GUARNIZIONE O-R
2	771326	12	131R	WASHER	ROSETTA
3	771404	6	195P	NOZZLE HOLDER - ASSEMBLY	PORTAPOLVERIZZATORE - COMPLETO
				IN ALTERNATIVE SEE	IN ALTERNATIVA VEDERE
				SGR. A2.35/ 3	SGR. A2.35/ 3
	4750417	6	195P	NOZZLE HOLDER - ASSEMBLY	PORTAPOLVERIZZATORE - COMPLETO
				IN ALTERNATIVE SEE	IN ALTERNATIVA VEDERE
				SGR. A2.35/ 2	SGR. A2.35/ 2
4	4777185	6	78B	FASTENING BLOCK	BLOCCHETTO DI FISSAGGIO
5	4777183	6	225S	BRACKET	STAFFA
6	4777184	6	225S	BRACKET	STAFFA
7	4647659	4	20R	FITTING	RACCORDO
8	4792383	1	20R	FITTING	RACCORDO
9	4647661	1	20R	FITTING	RACCORDO
10	4707319	6	101A	CASING	ASTUCCIO
11	4808232	1	193T	TUBE - ASSEMBLY	TUBO RIGIDO - COMPLETO
12	4750416	6	148P	NOZZLE - IN ALTERNATIVE (WEBER)	POLVERIZZATORE - IN ALTERNATIVA (WEBER)
	4750505	6	148P	NOZZLE - IN ALTERNATIVE (BOSCH)	POLVERIZZATORE - IN ALTERNATIVA (BOSCH)
13	4806748	1	193T	TUBE N.1	TUBO RIGIDO N.1
14	4806749	1	193T	TUBE N.2	TUBO RIGIDO N.2
15	4806750	1	193T	TUBE N.3	TUBO RIGIDO N.3
16	4806751	1	193T	TUBE N.4	TUBO RIGIDO N.4
17	4806752	1	193T	TUBE N.5	TUBO RIGIDO N.5
18	4806753	1	193T	TUBE N.6	TUBO RIGIDO N.6
19	4795296	6	225S	BRACKET	STAFFA

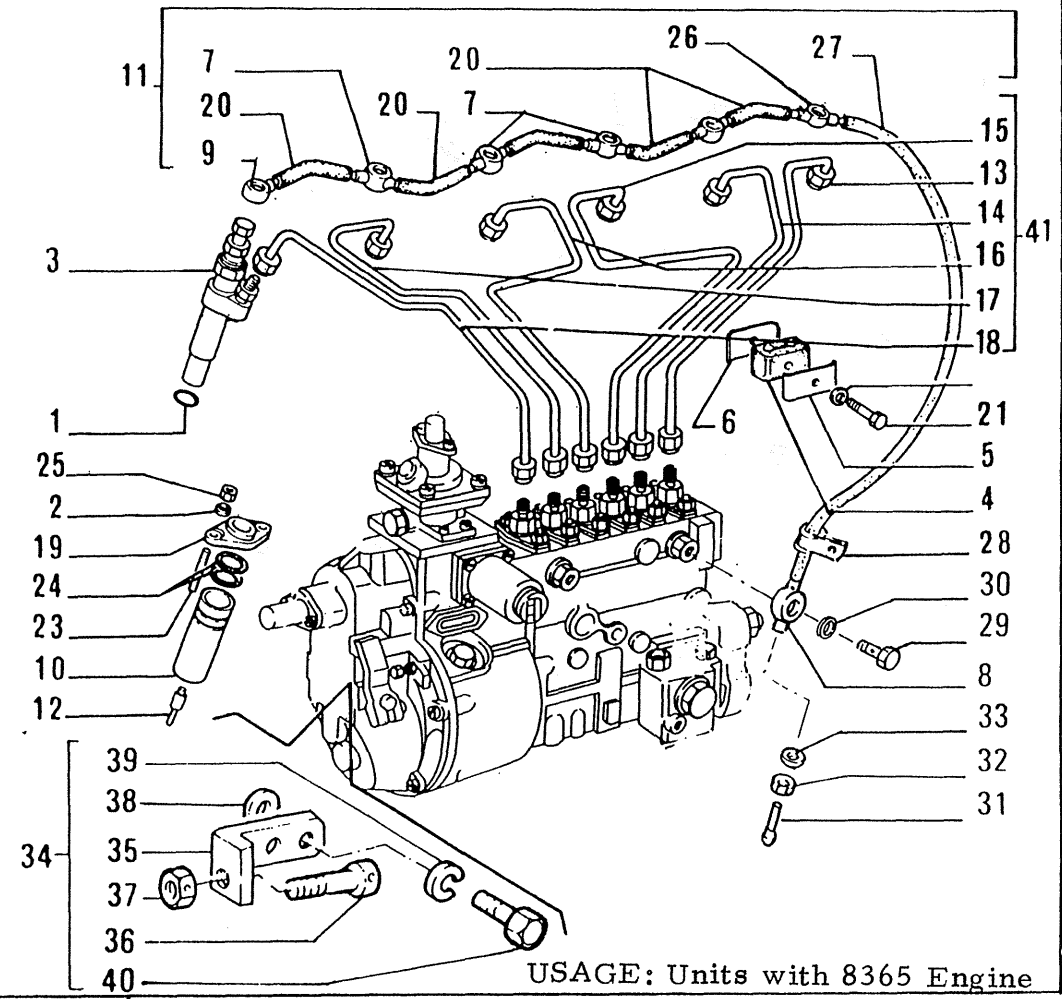

USAGE: Units with 8365 Engine

ITEM	PART NUMBER	QTY	TRANS CODE	DESCRIPTION	DESCRIZIONE
20	8830409	5	285T	HOSE	TUBO FLESSIBILE
21	10902021	6	40V	SCREW 6x1x12	VITE 6x1x12
22	15896221	6	10D	NUT 6x1x5	DADO 6x1x5
23	13517630	12	210P	STUD 8x1,25x62	PRIGIONIERO 8x1,25x62
24	14453981	12	158G	O-RING 1,78x25,12	GUARNIZIONE O-R 1,78x25,12
25	16100821	12	10D	NUT 8x1,25x6,5	DADO 8x1,25x6,5
26	4805697	1	20R	FITTING	RACCORDO
27	4808233	1	193T	TUBE	TUBO RIGIDO
28	10450090	1	231S	CLIP 8x9	STAFFETTA 8x9
29	10184311	1	20R	FITTING 14x1,5x27	RACCORDO 14x1,5x27
30	10280060	1	120G	GASKET 14,2x20	GUARNIZIONE PIANA 14,2x20
31	79010219	1	193T	TUBE	TUBO RIGIDO
32	11260313	1	10D	NUT 14x1,5x14,5	DADO 14x1,5x14,5
33	11264113	1	158G	O-RING 8x11	GUARNIZIONE O-R 8x11
34	4756612	1	111G	GOVERNOR ASSEMBLY - ASSEMBLY	GRUPPO DI REGOLAZIONE - COMPLETO
35	4756614	1	225S	BRACKET	STAFFA
36	4756615	1	40V	SCREW	VITE
37	4756616	1	10D	NUT	DADO
38	4799685	2	75D	SPACER	DISTANZIALE
39	10571571	2	131R	WASHER 6,1x1,6	ROSETTA 6,1x1,6
40	10902211	2	40V	SCREW 6x1x16	VITE 6x1x16
41	4806746	1	193T	TUBE - ASSEMBLY	TUBO RIGIDO - COMPLETO

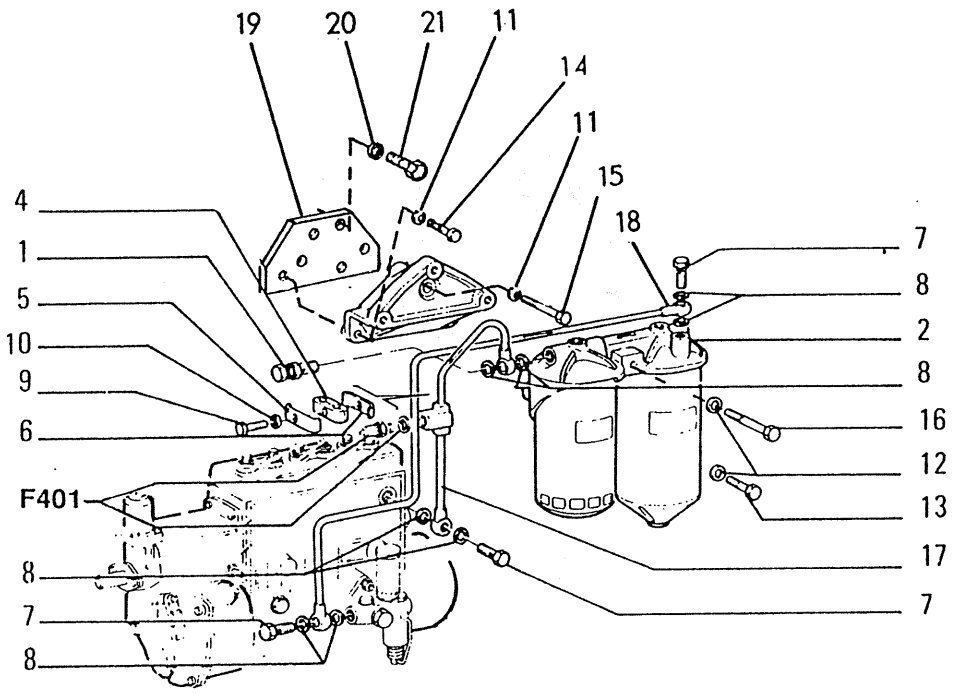

T-0629

ITEM	PART NO.	QTY.	CODE	DESCRIPTION	DENOMINAZIONE
1	00770057	1	20R	FITTING	RACCORDO
2	04690738	1	64F	FILTER,FUEL(A226)	FILTRO COMBUSTIBILE
3	04702471	1	300S	SUPPORT	SUPPORTO
4	04871771	1	74B	BLOCK	BLOCCHETTO
5	04871773	1	120M	CLAMP	MORSETTO COLLARE
6	04871774	1	120M	CLAMP	MORSETTO COLLARE
7	10184311	3	20R	FITTING,14X1.5X27	RACCORDO
8	10282460	8	133R	SEAL,14.2X20	GUARNIZIONE TENUTA
9	10902621	1	40V	CAPSCREW,6X1X25	VITE
10	11197771	1	131R	WASHER,6.4X12	ROSETTA
11	11198371	3	131R	WASHER,10.5X20	ROSETTA
12	11198471	3	131R	WASHER,10.5X27	ROSETTA
13	11306921	2	40V	CAPSCREW,10X1.25X30	VITE
14	11307021	2	40V	CAPSCREW,10X1.25X40	VITE
15	15971321	1	40V	CAPSCREW,10X1.25X75	VITE
16	15972621	1	40V	CAPSCREW,10X1.25X140	VITE
17	61694022	1	206T	TUBE	TUBO
18	61694027	1	206T	TUBE	TUBO
19	a73154123	1	105P	PLATE	PIASTRA
20	11198471	3	131R	WASHER,M10	ROSETTA
21	11306921	3	40V	CAPSCREW,M10X.125X30	VITE

a.UNITS WITH 50 AMP "DELCO-REMY" ALTERNATOR 1117254.

USAGE: UNITS WITH 8205 ENGINE.

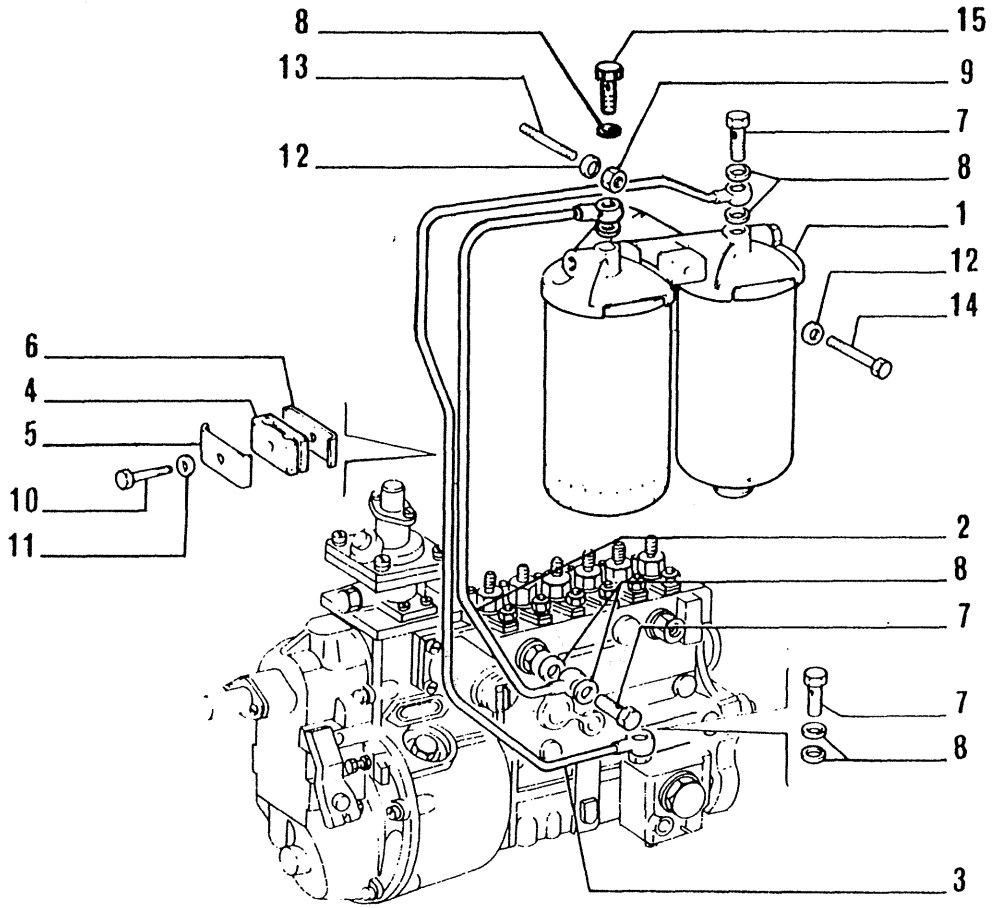

ITEM	PART NUMBER	QTY	TRANS CODE	DESCRIPTION	DESCRIZIONE
1	4690738	1	64F	FUEL FILTER - ASSEMBLY SEE SGR. A2.26/ 1	FILTRO COMBUSTIBILE - COMPLETO VEDERE SGR. A2.26/ 1
2	4807721	1	193T	TUBE	TUBO RIGIDO
3	4807719	1	193T	TUBE	TUBO RIGIDO
4	4871771	1	78B	FASTENING BLOCK	BLOCCHETTO DI FISSAGGIO
5	4871773	1	225S	BRACKET - LOWER	STAFFA - INFERIORE
6	4871774	1	225S	BRACKET - UPPER	STAFFA - SUPERIORE
7	10184311	3	20R	FITTING 14x1,5x27	RACCORDO 14x1,5x27
8	10280060	8	120G	GASKET 14,2x20	GUARNIZIONE PIANA 14,2x20
9	10791021	2	10D	NUT 10x1,25x6	DADO 10x1,25x6
10	10902621	1	40V	SCREW 6x1x25	VITE 6x1x25
11	11197779	1	132R	LOCKWASHER 6,4x12	ROSETTA DI SICUREZZA 6,4x12
12	11190579	3	132R	LOCKWASHER	ROSETTA DI SICUREZZA
13	13546121	2	210P	STUD 10x1,25x40	PRIGIONIERO 10x1,25x40
14	15972621	1	40V	SCREW 10x1,25x140	VITE 10x1,25x140
15	770057	1	20R	FITTING	RACCORDO

USAGE: Units with 8365 Engine

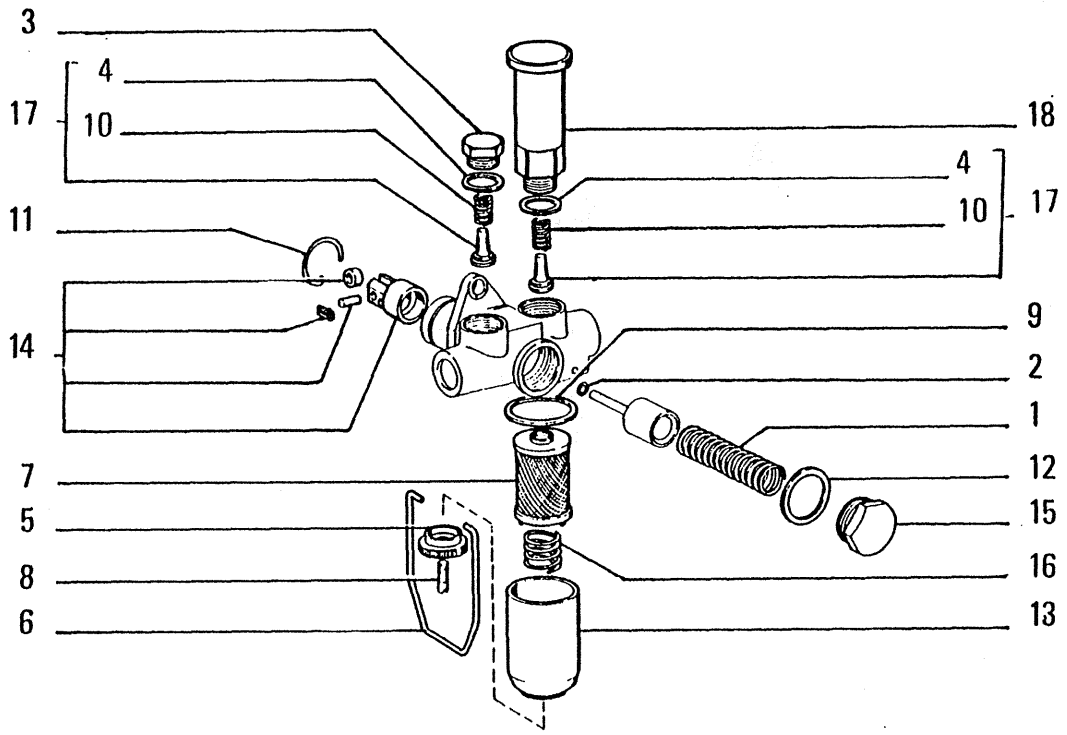

ITEM	PART NUMBER	QTY	TRANS CODE	DESCRIPTION	DESCRIZIONE
1	79038378	1	100M	SPRING	MOLLA
2	9922394	1	55A	O-RING	ANELLO DI TENUTA
3	9922405	1	50T	PLUG	TAPPO
4	9922406	2	131R	WASHER	ROSETTA
5	9929170	1	10D	NUT	DADO
6	9930047	1	225S	BRACKET	STAFFA
7	9930048	1	65F	FILTER	FILTRO
8	9930049	1	40V	SCREW	VITE
9	9930050	1	55A	O-RING	ANELLO DI TENUTA
10	9930053	2	100M	SPRING	MOLLA
11	9930055	1	51A	LOCKRING	ANELLO DI SICUREZZA
12	9930057	1	131R	WASHER	ROSETTA
13	9930446	1	19V	PAN	VASCHETTA
14	79020912	1	240P	TAPPET	PUNTERIA
15	79039773	1	50T	PLUG	TAPPO
16	79028149	1	100M	SPRING	MOLLA
17	79051845	2	10V	VALVE - ASSEMBLY	VALVOLA - COMPLETO
18	79032352	1	156P	HAND PUMP	POMPA A MANO

C 1473 → Mot.n. 1180

03939 USAGE: Units with 8205 Engine

9932279

FUEL PUMP – POMPA ALIMENTAZIONE – POMPE D'ALIMENTATION – KRAFTSTOFFPUMPE – BOMBA DE ALIMENTACIÓN

A2.25

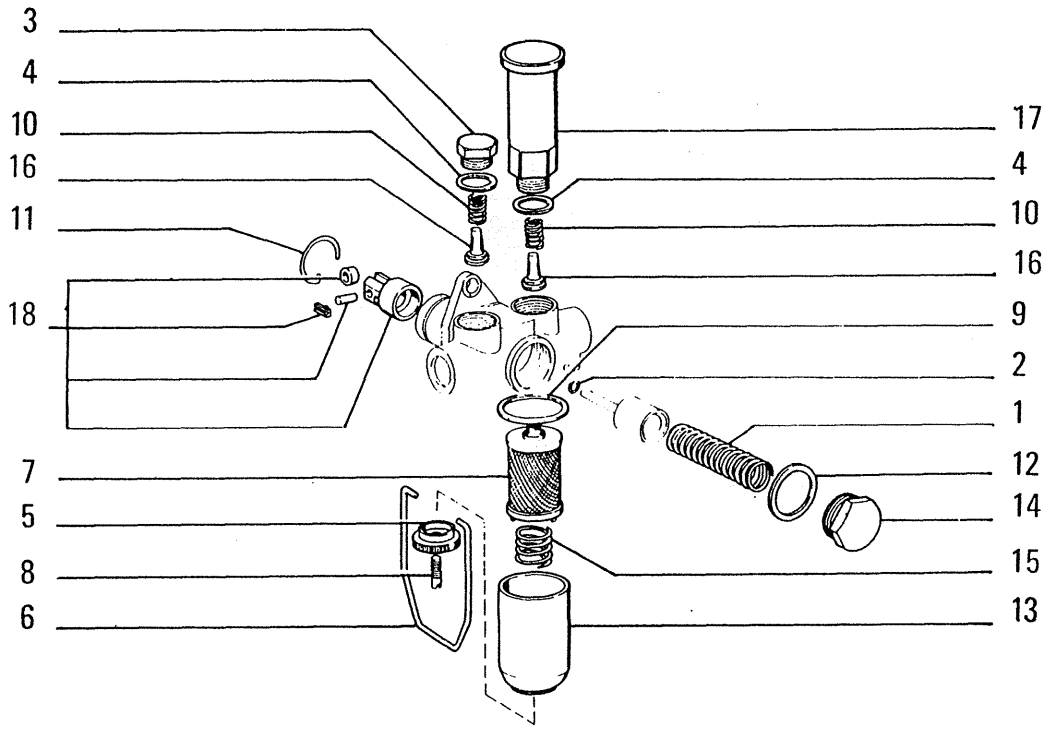

ITEM	PART NUMBER	QTY	TRANS CODE	DESCRIPTION	DESCRIZIONE
1	79038378	1	100M	SPRING	MOLLA
2	1289782	1	158G	O-RING	GUARNIZIONE O-R
3	9922405	1	50T	PLUG	TAPPO
4	1287773	2	131R	WASHER	ROSETTA
5	1290634	1	10D	NUT	DADO
6	1290637	1	225S	BRACKET	STAFFA
7	9930048	1	65F	FILTER	FILTRO
8	1290635	1	40V	SCREW	VITE
9	9930050	1	158G	O-RING	GUARNIZIONE O-R
10	1290593	2	100M	SPRING	MOLLA
11	9930055	1	51A	LOCKRING	ANELLO DI SICUREZZA
12	1290550	1	131R	WASHER	ROSETTA
13	9930446	1	19V	PAN	VASCHETTA
14	79039773	1	50T	PLUG	TAPPO
15	79028149	1	100M	SPRING	MOLLA
16	79032351	2	10V	VALVE	VALVOLA
17	79032352	1	156P	HAND PUMP	POMPA A MANO
18	775120	1	240P	TAPPET - ASSEMBLY	PUNTERIA - COMPLETO

D 1473 Mot.n. 1181 →
USAGE: Units with 8205 Engine

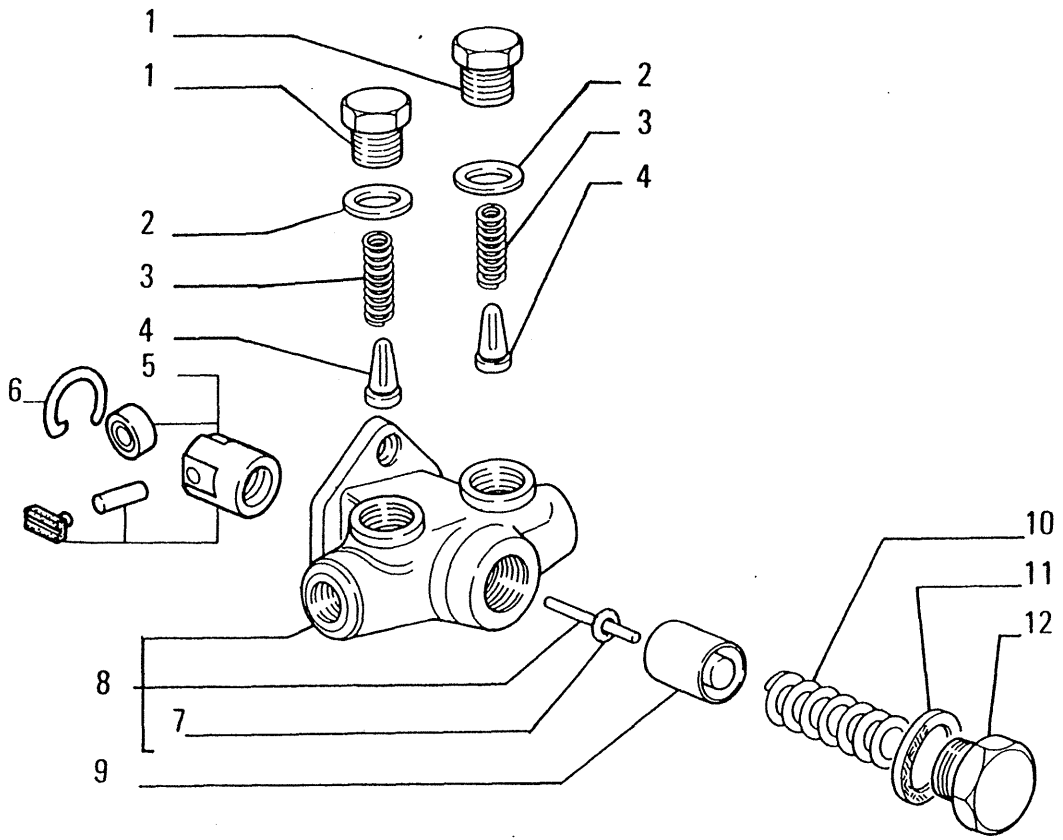

ITEM	PART NUMBER	QTY	TRANS CODE	DESCRIPTION	DESCRIZIONE
1	772129	2	50T	PLUG	TAPPO
2	1287773	2	131R	WASHER	ROSETTA
3	1290593	2	100M	SPRING	MOLLA
4	772125	2	10V	VALVE	VALVOLA
5	775120	1	240P	TAPPET	PUNTERIA
6	1290591	1	51A	LOCKRING	ANELLO DI SICUREZZA
7	772117	1	158G	O-RING	GUARNIZIONE O-R
8	775114	1	300C	BODY - ASSEMBLY	CORPO - COMPLETO
9	773184	1	235S	PISTON	STANTUFFO
10	772114	1	100M	SPRING	MOLLA
11	1290550	1	131R	WASHER	ROSETTA
12	772116	1	50T	PLUG	TAPPO

USAGE: Units with 8365 Engine

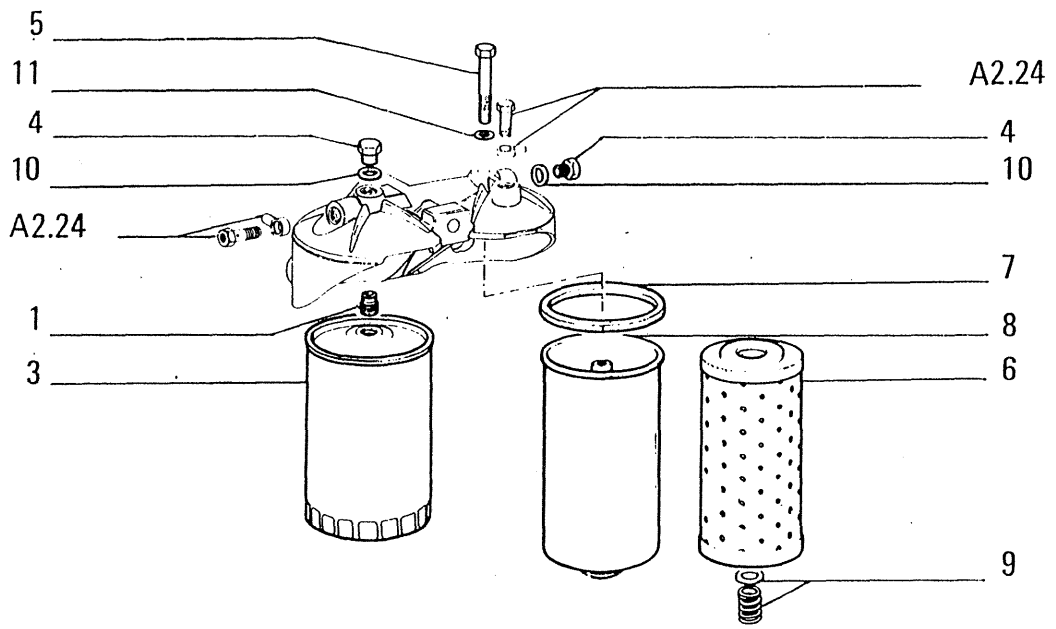

ITEM	PART NUMBER	QTY	TRANS CODE	DESCRIPTION	DESCRIZIONE
1	4626466	1	20R	FITTING	RACCORDO
3	4742848	1	84C	FILTERING ELEMENT	CARTUCCIA FILTRANTE
4	4964318	2	50T	PLUG	TAPPO
5	4964320	1	40V	SCREW	VITE
6	4964323	1	84C	FILTERING ELEMENT	CARTUCCIA FILTRANTE
7	4964486	1	123G	SEAL ASSY	GUARNIZIONE TENUTA FRONTALI
8	4964487	1	19V	PAN	VASCHETTA
9	4965120	1	100M	SPRING	MOLLA
10	10282460	2	133R	SEAL 14,2x20	ROSETTA DI TENUTA 14,2x20
11	10298350	1	133R	SEAL 10,2x16	ROSETTA DI TENUTA 10,2x16

(03940) USAGE: Units with 8205 Engine

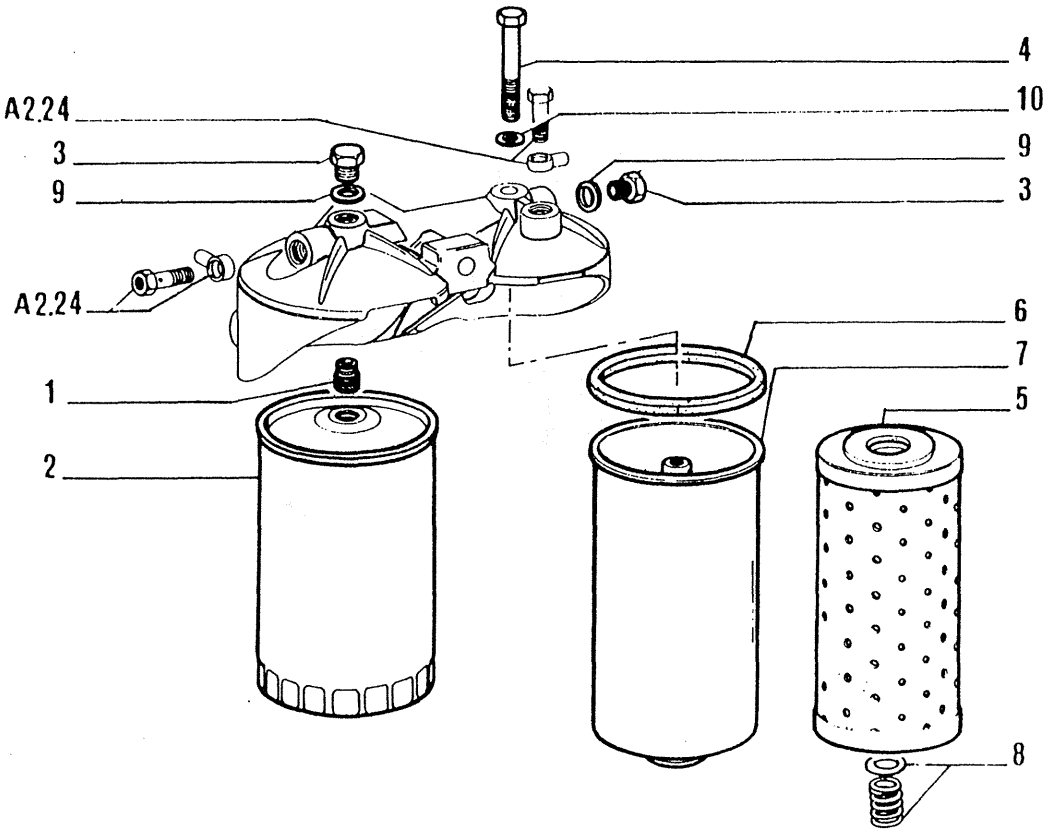

ITEM	PART NUMBER	QTY	TRANS CODE	DESCRIPTION	DESCRIZIONE
1	4626466	1	20R	FITTING	RACCORDO
2	4700487	1	20E	FILTERING ELEMENT - IN ALTERNATIVE	ELEMENTO FILTRANTE - IN ALTERNATIVA
	4742848	1	20E	FILTERING ELEMENT - IN ALTERNATIVE	ELEMENTO FILTRANTE - IN ALTERNATIVA
	4964322	1	20E	FILTERING ELEMENT - IN ALTERNATIVE	ELEMENTO FILTRANTE - IN ALTERNATIVA
3	4964318	2	50T	PLUG - IN ALTERNATIVE	TAPPO - IN ALTERNATIVA
	79000019	2	50T	PLUG - IN ALTERNATIVE	TAPPO - IN ALTERNATIVA
4	4964320	1	40V	SCREW	VITE
5	4964323	1	20E	FILTERING ELEMENT	ELEMENTO FILTRANTE
6	4964486	1	120G	GASKET	GUARNIZIONE PIANA
7	4964487	1	255C	FILTER SHELL	CONTENITORE FILTRO
8	4965120	1	100M	SPRING	MOLLA
9	10280050	2	120G	GASKET - IN ALTERNATIVE 14,2x20	GUARNIZIONE PIANA - IN ALTERNATIVA 14,2x20
	10282460	2	120G	GASKET - IN ALTERNATIVE 14,2x20	GUARNIZIONE PIANA - IN ALTERNATIVA 14,2x20
10	10298350	1	120G	GASKET 10,2x16	GUARNIZIONE PIANA 10,2x16

USAGE: Units with 8365 Engine

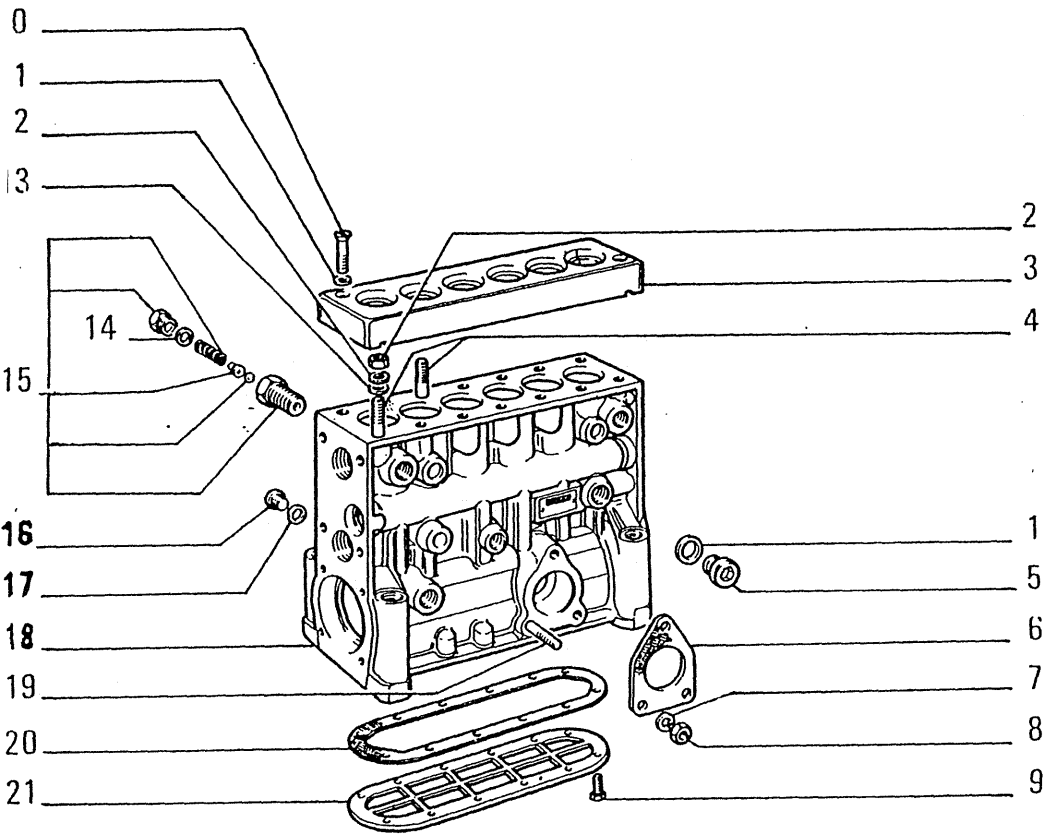

ITEM	PART NUMBER	QTY	TRANS CODE	DESCRIPTION	DESCRIZIONE
1	9929178	1	133R	SEAL C1471	ROSETTA DI TENUTA C1471
	79038471	1	131R	WASHER D1471	ROSETTA D1471
2	79031247	12	10D	NUT	DADO
3	79038379	1	265C	COVER	COPERCHIO
4	79026505	12	210P	STUD	PRIGIONIERO
5	79038470	1	50T	PLUG	TAPPO
6	79038466	1	123G	SEAL ASSY	GUARNIZIONE TENUTA FRONTA
7	10516471	3	132R	LOCKWASHER 6,1x1,8	ROSETTA DI SICUREZZA 6,1x1,8
8	15896211	3	10D	NUT 6x1x5 C1471	DADO 6x1x5 C1471
	79023665	3	10D	NUT D1471	DADO D1471
9	79050956	12	40V	SCREW	VITE
10	79032313	2	40V	SCREW	VITE
11	12606871	2	131R	WASHER 6,1x12 C1471	ROSETTA 6,1x12 C1471
12	10516871	12	132R	LOCKWASHER 10x2,5 C1471	ROSETTA DI SICUREZZA 10x2,5 C1471
	79050435	12	131R	WASHER D1471	ROSETTA D1471
13	79038380	12	131R	WASHER	ROSETTA
14	79038474	6	131R	WASHER	ROSETTA
15	79038473	1	10V	VALVE - ASSEMBLY	VALVOLA - COMPLETO
16	79032312	6	50T	PLUG	TAPPO
17	79038381	6	131R	WASHER	ROSETTA
18	79038377	1	300C	BODY	CORPO
19	79038465	3	210P	STUD	PRIGIONIERO
20	79038467	1	123G	SEAL ASSY	GUARNIZIONE TENUTA FRONTA
21	79038468	1	265C	COVER	COPERCHIO

C 1471 → Tel.n. 051100
D 1471 Tel.n. 051101 →

C 1473 mot. n. → 1180
USAGE: Units with 8205 Engine

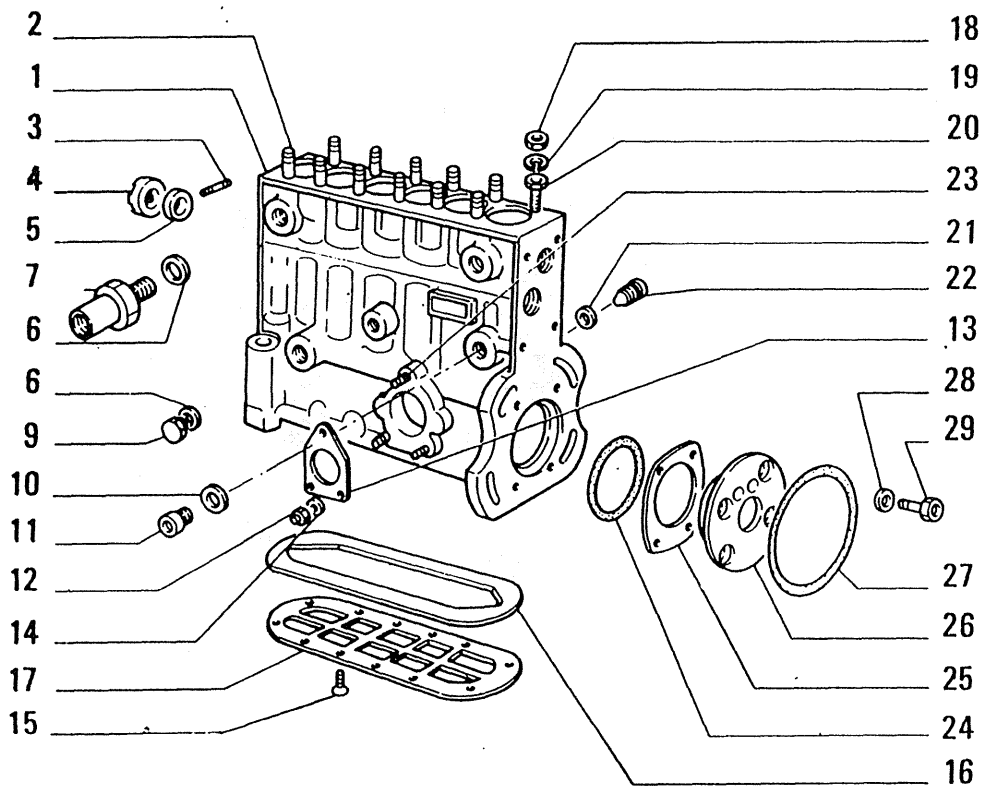

USAGE: Units with 8365 Engine

ITEM	PART NUMBER	QTY	TRANS CODE	DESCRIPTION	DESCRIZIONE
1	774922	1	300C	BODY	CORPO
2	772335	12	210P	STUD	PRIGIONIERO
3	772353	1	200S	PIN	SPINA
4	774244	1	50G	RING NUT	GHIERA
5	772354	2	45A	RING	ANELLO
6	773283	2	122G	SEAL	GUARNIZIONE
7	774881	1	7V	OVERPRESSURE VALVE	VALVOLA SOVRAPRESSIONE
9	10300671	1	50T	PLUG 14x1,5x9	TAPPO 14x1,5x9
10	772060	1	122G	SEAL	GUARNIZIONE
11	772292	1	50T	PLUG	TAPPO
12	15896221	3	10D	NUT 6x1x5	DADO 6x1x5
13	772303	1	120G	GASKET	GUARNIZIONE PIANA
14	12035671	3	170R	LOCKWASHER 6,1x1,3	ROSETTA EL. 6,1x1,3
15	774044	12	40V	SCREW	VITE
16	774924	1	122G	SEAL	GUARNIZIONE
17	774923	1	265C	COVER - LOWER	COPERCHIO - INFERIORE
18	11701721	12	10D	NUT 10x1,5x8	DADO 10x1,5x8
19	12034621	12	170R	LOCKWASHER	ROSETTA EL.
20	772274	12	131R	WASHER	ROSETTA
21	772332	6	122G	SEAL	GUARNIZIONE
22	772334	6	50T	PLUG	TAPPO
23	11500210	3	210P	STUD 6x1x25	PRIGIONIERO 6x1x25
24	772386	1	158G	O-RING	GUARNIZIONE O-R
25	772284		110P	PLAQUE - THICKNESS 0,10	PIASTRINA - SPESSORE 0,10
	772285		110P	PLAQUE - THICKNESS 0,12	PIASTRINA - SPESSORE 0,12
	772286		110P	PLAQUE - THICKNESS 0,14	PIASTRINA - SPESSORE 0,14
	772287		110P	PLAQUE - THICKNESS 0,16	PIASTRINA - SPESSORE 0,16

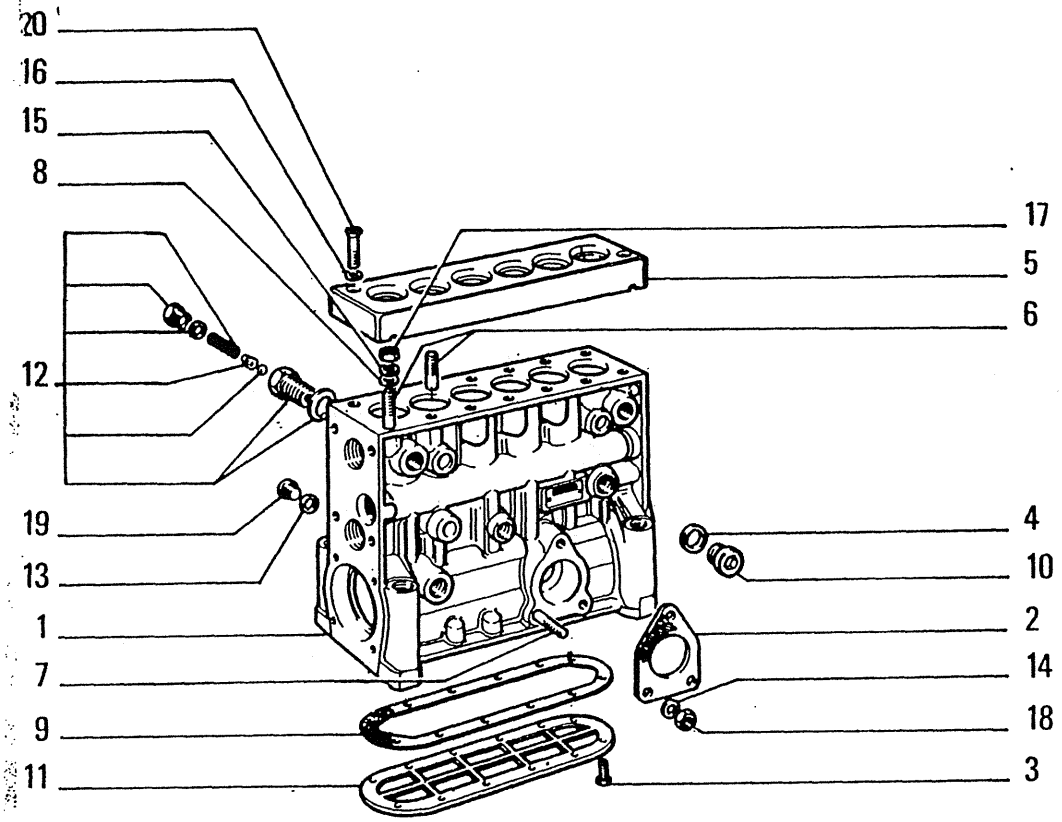

ITEM	PART NUMBER	QTY	TRANS CODE	DESCRIPTION	DESCRIZIONE
1	79038377	1	300C	BODY	CORPO
2	79038466	1	123G	SEAL ASSY	GUARNIZIONE TENUTA FRONTALE
3	774044	12	40V	SCREW	VITE
4	79038471	1	123G	SEAL ASSY	GUARNIZIONE TENUTA FRONTALE
5	79038379	1	265C	COVER	COPERCHIO
6	79026505	12	210P	STUD	PRIGIONIERO
7	11500210	3	210P	STUD 6x1x25	PRIGIONIERO 6x1x25
8	79038380	12	131R	WASHER	ROSETTA
9	79038467	1	123G	SEAL ASSY	GUARNIZIONE TENUTA FRONTALE
10	79032312	6	50T	PLUG	TAPPO
11	79038468	1	265C	COVER	COPERCHIO
12	79026624	1	10V	VALVE	VALVOLA
13	79038381	6	131R	WASHER	ROSETTA
14	12035671	3	131R	WASHER 6,1x1,3	ROSETTA 6,1x1,3
15	12034671	12	131R	WASHER 10,2x1,8	ROSETTA 10,2x1,8
16	12606871	2	131R	WASHER 6,1x12	ROSETTA 6,1x12
17	11701721	12	10D	NUT 10x1,5x8	DADO 10x1,5x8
18	15896221	3	10D	NUT 6x1x5	DADO 6x1x5
19	79038470	1	50T	PLUG	TAPPO
20	10355511	2	40V	SCREW 6x1x30	VITE 6x1x30
26	79038722	K	1K	KIT SEE PAGE 9	KIT VED. PAG.9

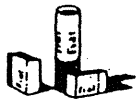

D 1473 Mot.n. 1181 ↦ USAGE: Units with 8205 Engine

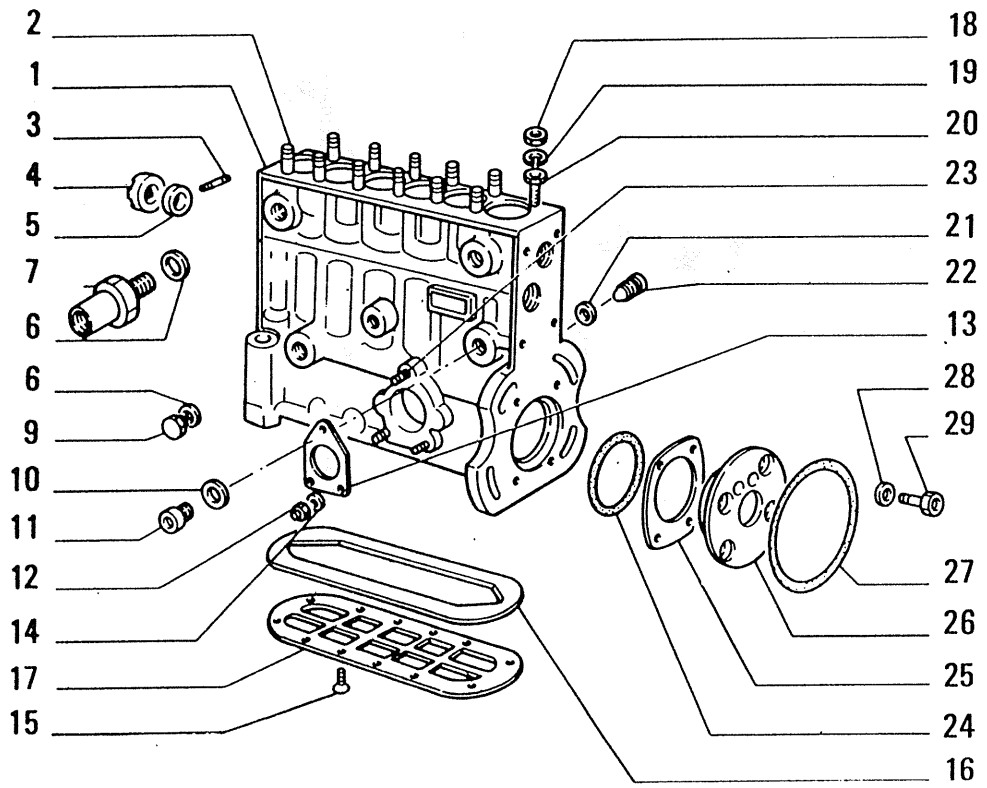

ITEM	PART NUMBER	QTY	TRANS CODE	DESCRIPTION	DESCRIZIONE
25	772288		110P	PLAQUE - THICKNESS 0,18	PIASTRINA - SPESSORE 0,18
	772289		110P	PLAQUE - THICKNESS 0,30	PIASTRINA - SPESSORE 0,30
	772290		110P	PLAQUE - THICKNESS 0,50	PIASTRINA - SPESSORE 0,50
26	772218	1	265C	COVER	COPERCHIO
27	774485	1	158G	O-RING	GUARNIZIONE O-R
28	774043	4	131R	WASHER	ROSETTA
29	14759721	4	40V	SCREW	VITE

USAGE; Units with 8365 Engine

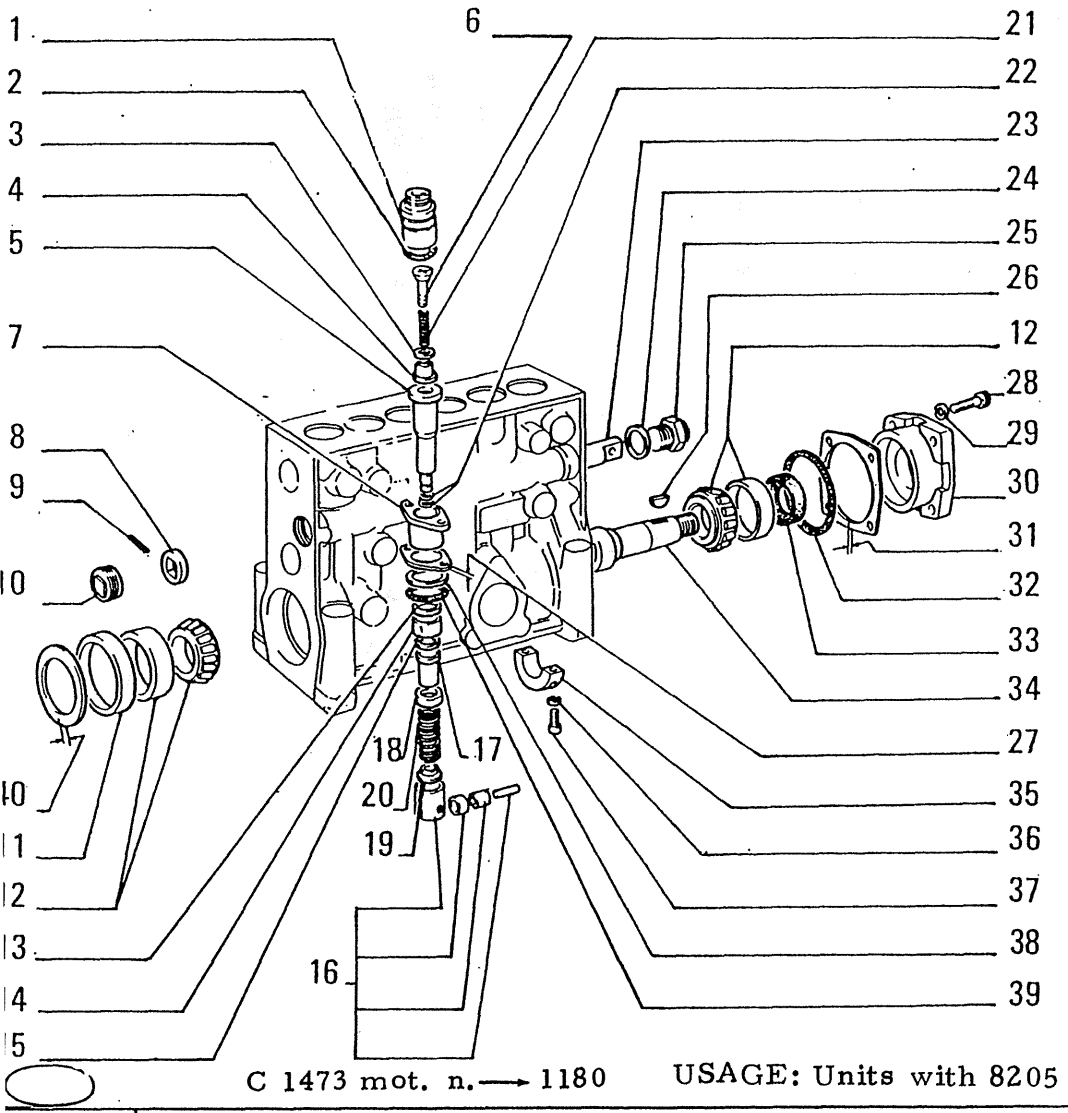

C 1473 mot. n. ⟶ 1180 USAGE: Units with 8205

ITEM	PART NUMBER	QTY.	TRANS CODE	DESCRIPTION	DESCRIZIONE
1	79032311	6	20R	FITTING	RACCORDO
2	79038448	6	158G	O-RING	GUARNIZIONE O-R
3	79031248	6	131R	WASHER	ROSETTA
4	772359	6	10V	VALVE D1471	VALVOLA D1471
	79050952	6	10V	VALVE C1471	VALVOLA C1471
5	774364	6	163C	BARREL D1471	CILINDRETTO D1471
	79050951	6	163C	BARREL C1471	CILINDRETTO C1471
6	79038447	6	50T	PLUG	TAPPO
7	79038437	6	70F	FLANGE C1471	FLANGIA C1471
	79050753	6	70F	FLANGE D1471	FLANGIA D1471
8	79038718	2	95B	BUSHING	BOCCOLA
9	79026502	1	202S	SPRING PIN	SPINA ELASTICA
10	774244	1	50G	RING NUT D1471	GHIERA D1471
	79050954	1	50G	RING NUT C1471	GHIERA C1471
11	79038387	1	45A	RING	ANELLO
12	79038388	2	341C	BEARING	CUSCINETTO
13	79038392	6	131R	WASHER	ROSETTA
14	79038439	6	65C	BOOT	CAPPUCCIO
15	9929176	6	45A	RING C1471	ANELLO C1471
	79038391	6	45A	RING D1471	ANELLO D1471
16	79032307	6	240P	TAPPET - ASSEMBLY	PUNTERIA - COMPLETO
17	79038440	6	145B	GUIDE BUSHING	BUSSOLA
18	79038390	6	120P	PLATE	PIATTELLO
19	79038442	6	120P	PLATE	PIATTELLO
20	774300	6	100M	SPRING D1471	MOLLA D1471
	79050955	6	100M	SPRING C1471	MOLLA C1471
21	79038446	6	100M	SPRING	MOLLA

C 1471 → Tel.n. 051100
D 1471 Tel.n. 051101 →

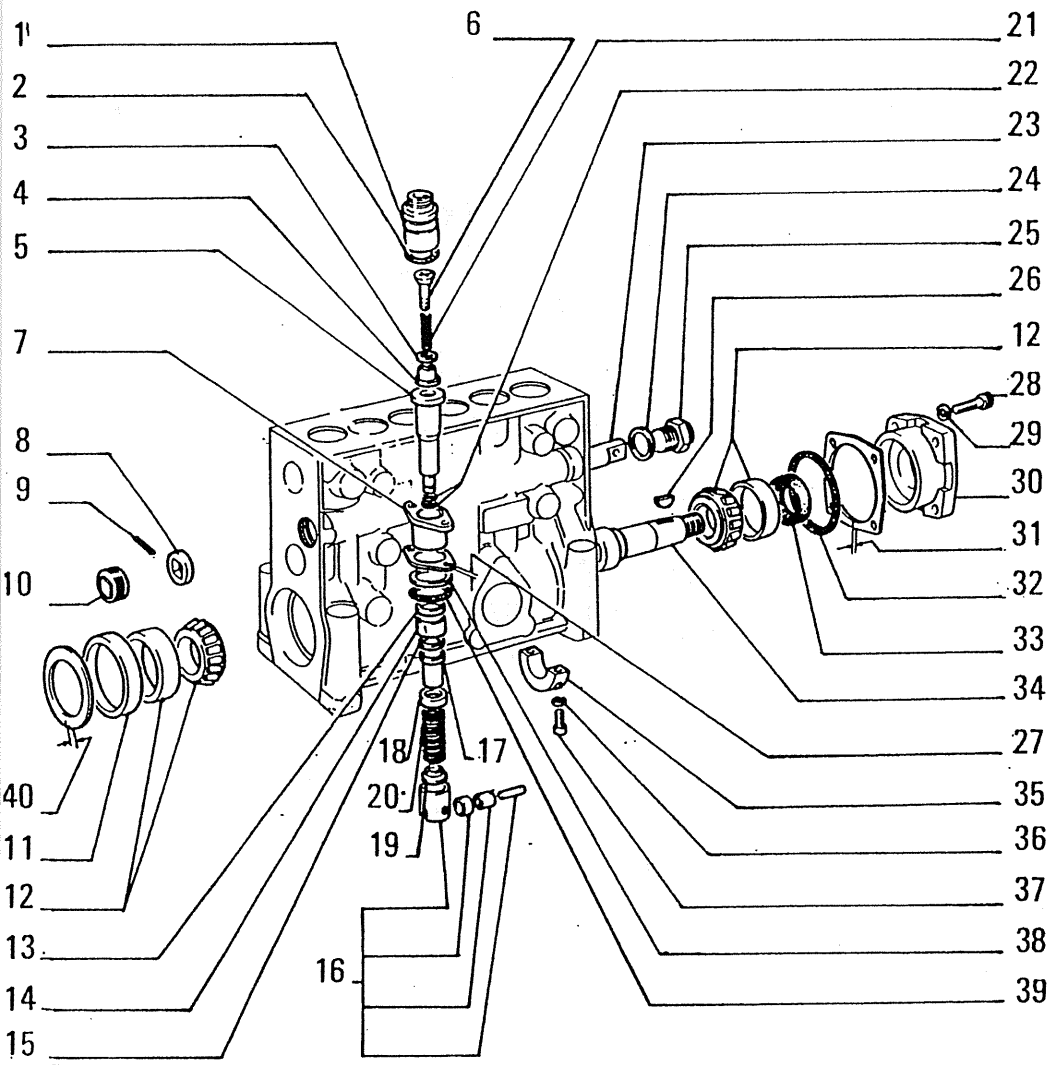

C 1473 mot. n. ⟶ 1180 USAGE;Units with 8205 Engine

ITEM	PART NUMBER	QTY	TRANS CODE	DESCRIPTION	DESCRIZIONE
22	79038451	12	158G	O-RING	GUARNIZIONE O-R
23	79038389	1	88A	ADJUSTING ROD	ASTA DI REGOLAZIONE
24	9929178	1	120G	GASKET C1471	GUARNIZIONE PIANA C1471
	79038471	1	120G	GASKET D1471	GUARNIZIONE PIANA D1471
25	774812	1	50T	PLUG D1452	TAPPO D1452
	9929651	1	50T	PLUG C1452	TAPPO C1452
26	9929164	1	158C	WOODRUFF KEY	LINGUETTA A DISCO
28	9923751	4	40V	SCREW C1471	VITE C1471
	79076189	4	40V	SCREW D1471	VITE D1471
29	10516471	2	131R	WASHER 6,1x1,8	ROSETTA 6,1x1,8
30	79038456	1	265C	COVER	COPERCHIO
31	79038457		198S	SHIM 0,10	SPESSORE 0,10
	79038458		198S	SHIM 0,12	SPESSORE 0,12
	79038459		198S	SHIM 0,14	SPESSORE 0,14
	79038460		198S	SHIM 0,16	SPESSORE 0,16
	79038461		198S	SHIM 0,18	SPESSORE 0,18
	79038462		198S	SHIM 0,30	SPESSORE 0,30
	79038463		198S	SHIM 0,50	SPESSORE 0,50
32	79038464	1	158G	O-RING	GUARNIZIONE O-R
33	79038453	1	158G	O-RING	GUARNIZIONE O-R
34	79038452	1	16A	SHAFT	ALBERO
35	79038454	1	103S	HALF BEARING	SEMICUSCINETTO
36	10516471	6	131R	WASHER 6,1x1,8	ROSETTA 6,1x1,8
37	1133680	2	40V	SCREW D1471	VITE D1471
	79032308	2	40V	SCREW C1471	VITE C1471
38	79038393	6	75D	SPACER C1471	DISTANZIALE C1471
39	79038438	6	158G	O-RING D1471	GUARNIZIONE O-R D1471

C 1452 → Mot.n. 01076 C 1471 → Tel.n. 051100
D 1452 Mot.n. 01077 → D 1471 Tel.n. 051101 →

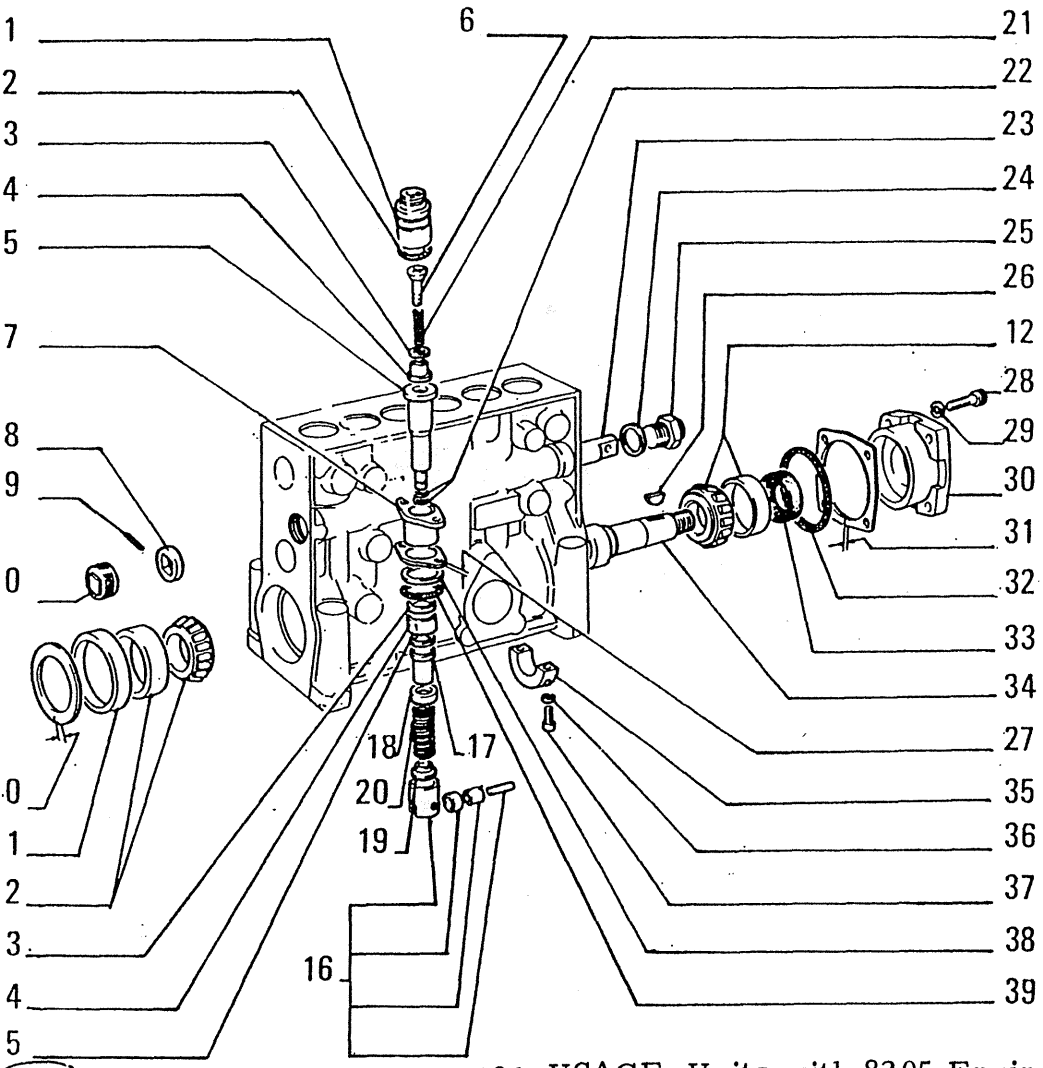

C 1473 mot. n. ⟶ 1180 USAGE: Units with 8205 Engine

ITEM	PART NUMBER	QTY	TRANS CODE	DESCRIPTION	DESCRIZIONE
39	79050953	6	158G	O-RING C1471	GUARNIZIONE O-R C1471
40	79038383		198S	SHIM 1,2	SPESSORE 1,2
	79038384		198S	SHIM 1,5	SPESSORE 1,5
	79038385		198S	SHIM 1,8	SPESSORE 1,8
	79038386		198S	SHIM 2,0	SPESSORE 2,0

C 1471 → Tel.n. 051100

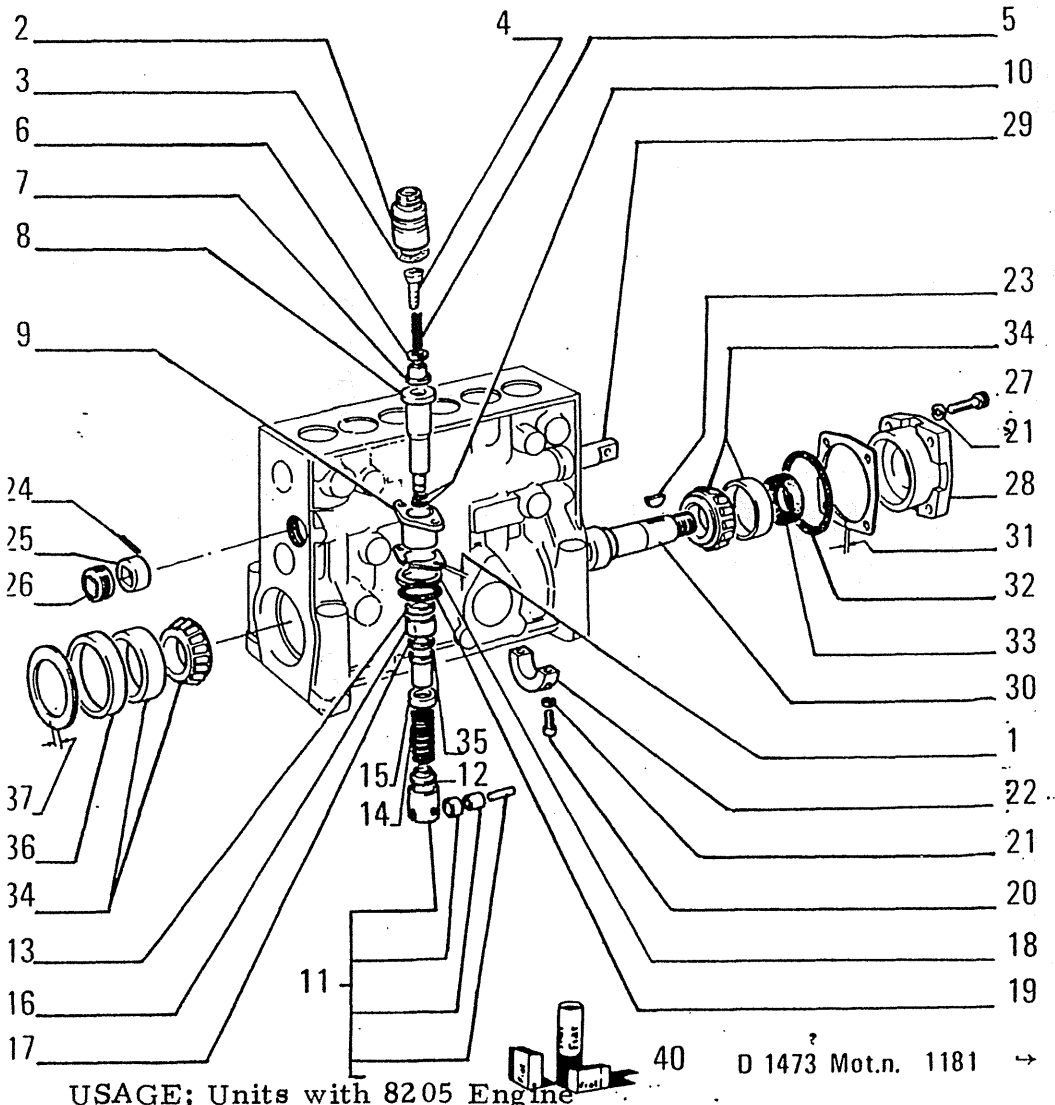

USAGE; Units with 8205 Engine

ITEM	PART NUMBER	QTY	TRANS CODE	DESCRIPTION	DESCRIZIONE
1	79026514		131R	WASHER 0,40	ROSETTA 0,40
	79026515		131R	WASHER 0,45	ROSETTA 0,45
	79026516		131R	WASHER 0,50	ROSETTA 0,50
	79026517		131R	WASHER 0,55	ROSETTA 0,55
	79026518		131R	WASHER 0,60	ROSETTA 0,60
	79026519		131R	WASHER 0,65	ROSETTA 0,65
	79026520		131R	WASHER 0,70	ROSETTA 0,70
	79026521		131R	WASHER 0,75	ROSETTA 0,75
	79026522		131R	WASHER 0,80	ROSETTA 0,80
	79026523		131R	WASHER 0,85	ROSETTA 0,85
	79026524		131R	WASHER 0,90	ROSETTA 0,90
	79026525		131R	WASHER 0,95	ROSETTA 0,95
	79026526		131R	WASHER 1,00	ROSETTA 1,00
	79026527		131R	WASHER 1,05	ROSETTA 1,05
	79026528		131R	WASHER 1,10	ROSETTA 1,10
	79026529		131R	WASHER 1,15	ROSETTA 1,15
	79026530		131R	WASHER 1,20	ROSETTA 1,20
	79026531		131R	WASHER 1,25	ROSETTA 1,25
	79026532		131R	WASHER 1,30	ROSETTA 1,30
	79026533		131R	WASHER 1,35	ROSETTA 1,35
	79026534		131R	WASHER 1,40	ROSETTA 1,40
	79026535		131R	WASHER 1,45	ROSETTA 1,45
	79026536		131R	WASHER 1,50	ROSETTA 1,50
	79026537		131R	WASHER 1,55	ROSETTA 1,55
	79026538		131R	WASHER 1,60	ROSETTA 1,60
	79026539		131R	WASHER 1,65	ROSETTA 1,65
	79026540		131R	WASHER 1,70	ROSETTA 1,70

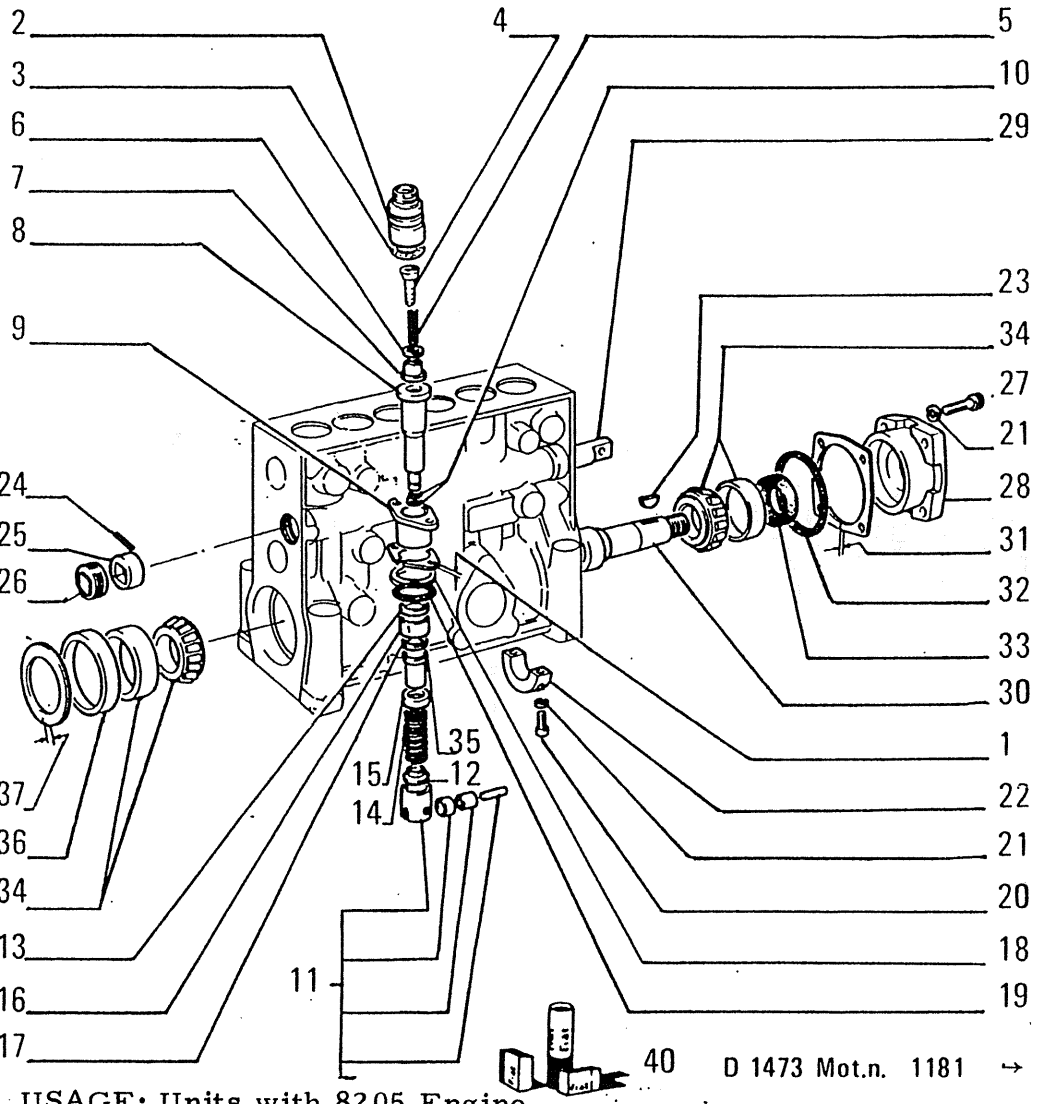

D 1473 Mot.n. 1181 →

USAGE: Units with 8205 Engine

ITEM	PART NUMBER	QTY	TRANS CODE	DESCRIPTION	DESCRIZIONE
1	79026541		131R	WASHER 1,75	ROSETTA 1,75
	79026542		131R	WASHER 1,80	ROSETTA 1,80
	79026543		131R	WASHER 1,85	ROSETTA 1,85
	79026544		131R	WASHER 1,90	ROSETTA 1,90
	79026545		131R	WASHER 1,95	ROSETTA 1,95
	79026546		131R	WASHER 2,00	ROSETTA 2,00
	79026547		131R	WASHER 2,05	ROSETTA 2,05
	79026548		131R	WASHER 2,10	ROSETTA 2,10
	79026549		131R	WASHER 2,15	ROSETTA 2,15
	79026550		131R	WASHER 2,20	ROSETTA 2,20
	79026551		131R	WASHER 2,25	ROSETTA 2,25
	79026552		131R	WASHER 2,30	ROSETTA 2,30
	79026553		131R	WASHER 2,35	ROSETTA 2,35
	79026554		131R	WASHER 2,40	ROSETTA 2,40
	79026555		131R	WASHER 2,45	ROSETTA 2,45
	79026556		131R	WASHER 2,50	ROSETTA 2,50
2	79032311	6	20R	FITTING	RACCORDO
3	79038448	6	158G	O-RING	GUARNIZIONE O-R
4	79038447	6	50T	PLUG	TAPPO
5	79038446	6	100M	SPRING	MOLLA
6	79031248	6	131R	WASHER	ROSETTA
7	772359	6	10V	VALVE	VALVOLA
8	774364	6	164C	CYLINDER	CILINDRO
9	774651	6	70F	FLANGE	FLANGIA
10	79038451	12	158G	O-RING	GUARNIZIONE O-R
11	9982912	6	240P	TAPPET - ASSEMBLY	PUNTERIA - COMPLETO
12	79038442	6	120P	PLATE	PIATTELLO

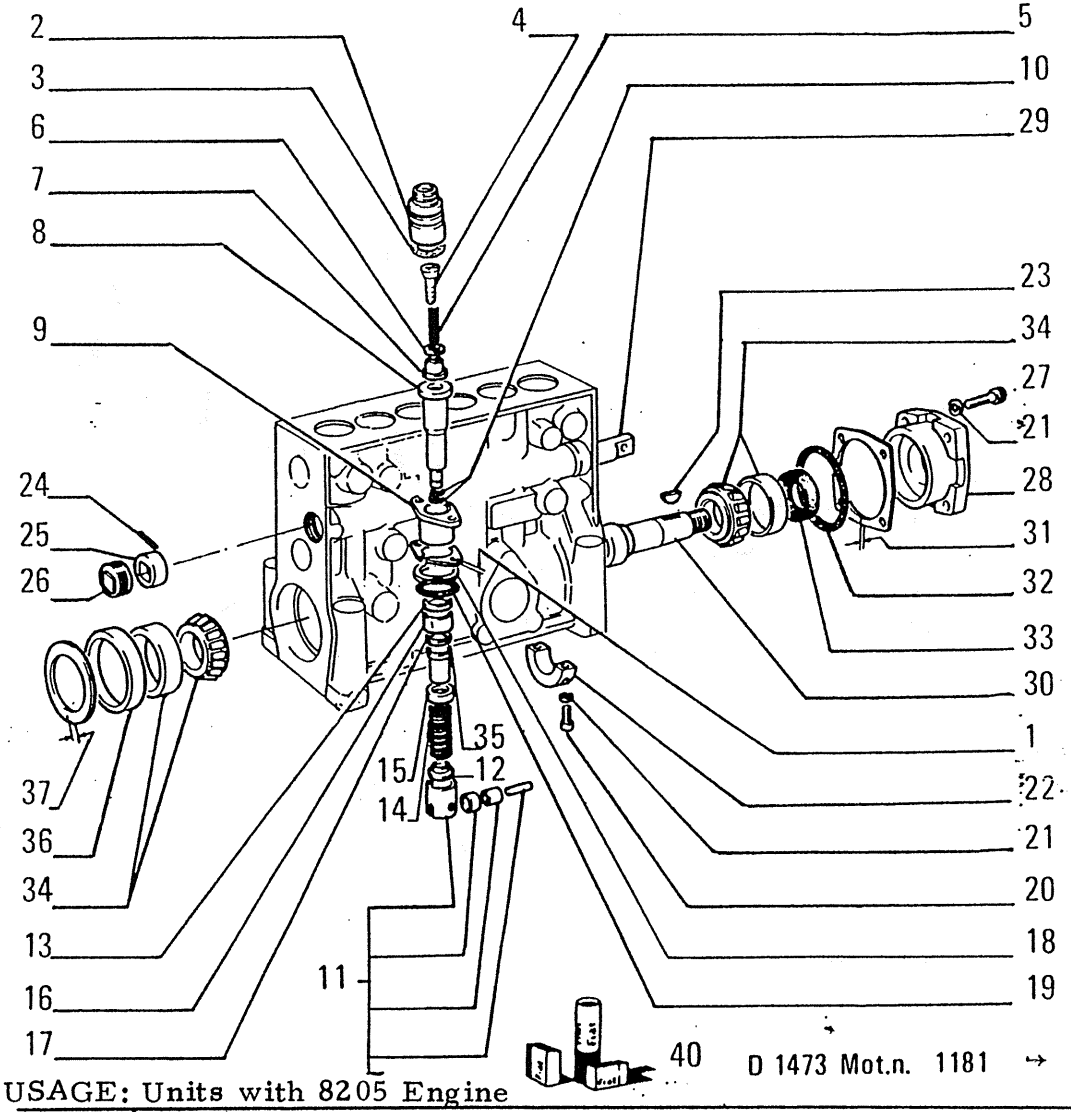

USAGE: Units with 8205 Engine

ITEM	PART NUMBER	QTY	TRANS CODE	DESCRIPTION	DESCRIZIONE
13	79038391	6	45A	RING	ANELLO
14	774300	6	100M	SPRING	MOLLA
15	79038390	6	120P	PLATE	PIATTELLO
16	79038439	6	65C	BOOT	CAPPUCCIO
17	79038392	6	131R	WASHER	ROSETTA
18	79038393	6	75D	SPACER	DISTANZIALE
19	79038438	6	158G	O-RING	GUARNIZIONE O-R
20	1133680	2	40V	SCREW	VITE
21	12035671	6	131R	WASHER 6,1x1,3	ROSETTA 6,1x1,3
22	79038454	1	103S	HALF BEARING	SEMICUSCINETTO
23	10206320	1	60L	KEY 7,5x5	LINGUETTA 7,5x5
24	79026502	1	200S	PIN	SPINA
25	79038718	2	95B	BUSHING	BOCCOLA
26	774244	1	99B	THREADED BUSH	BOCCOLA FILETTATA
27	10376621	4	40V	SCREW	VITE
28	79038456	1	265C	COVER	COPERCHIO
29	79038389	1	88A	ADJUSTING ROD	ASTA DI REGOLAZIONE
30	79038452	1	17A	CAMSHAFT	ALBERO AD ECCENTRICI
31	79038457		198S	SHIM 0,10	SPESSORE 0,10
	79038458		198S	SHIM 0,12	SPESSORE 0,12
	79038459		198S	SHIM 0,14	SPESSORE 0,14
	79038460		198S	SHIM 0,16	SPESSORE 0,16
	79038461		198S	SHIM 0,18	SPESSORE 0,18
	79038462		198S	SHIM 0,30	SPESSORE 0,30
	79038463		198S	SHIM 0,50	SPESSORE 0,50
32	79038464	1	158G	O-RING	GUARNIZIONE O-R
33	79038453	1	158G	O-RING	GUARNIZIONE O-R

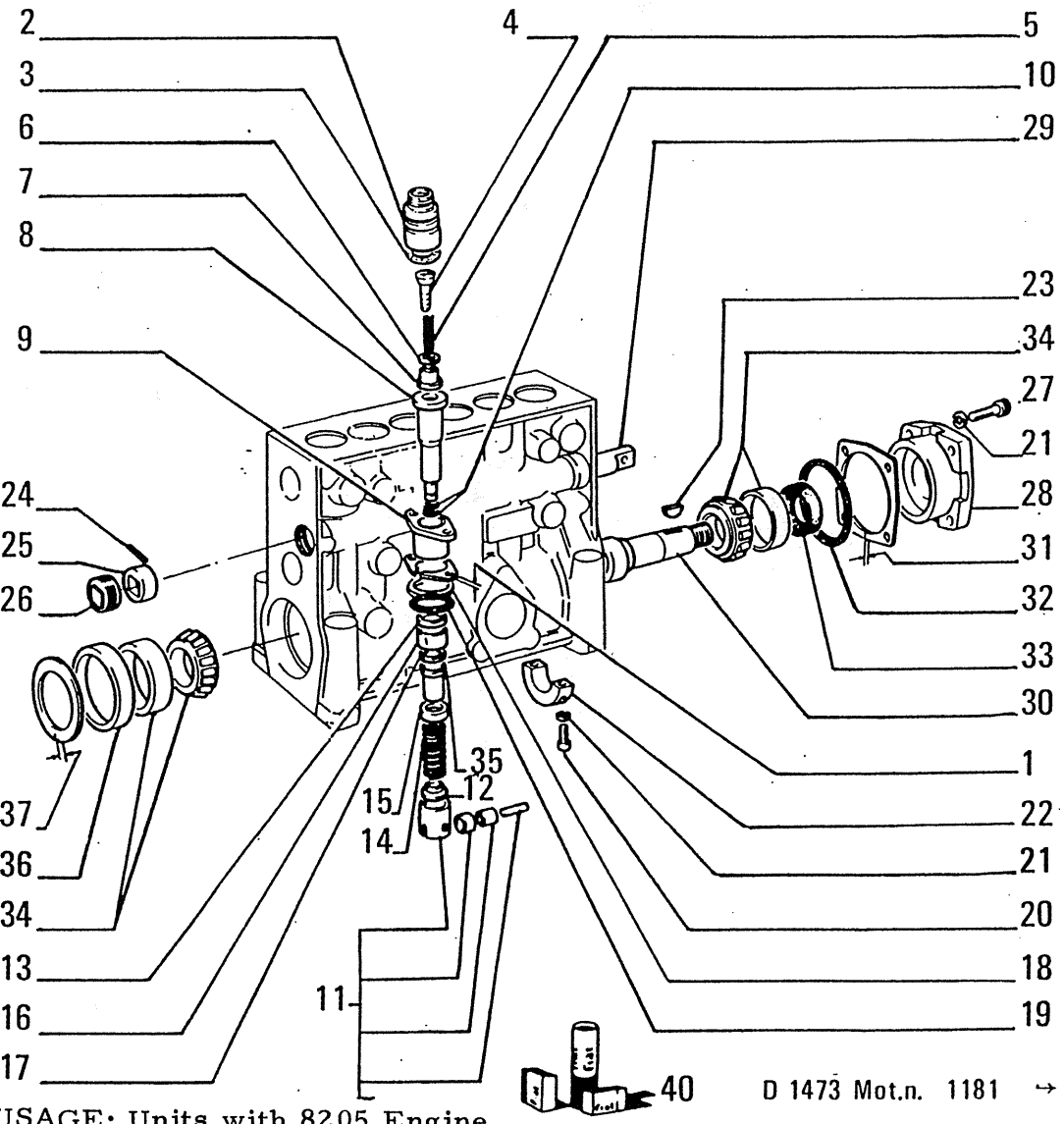

ITEM	PART NUMBER	QTY	TRANS CODE	DESCRIPTION	DESCRIZIONE
34	79038388	2	341C	BEARING	CUSCINETTO
35	772293	6	145B	GUIDE BUSHING	BUSSOLA
36	79038387	1	45A	RING	ANELLO
37	79038383		198S	SHIM 1,20	SPESSORE 1,20
	79038384		198S	SHIM 1,50	SPESSORE 1,50
	79038385		198S	SHIM 1,80	SPESSORE 1,80
	79038386		198S	SHIM 2,00	SPESSORE 2,00
40	79038721	K	1K	KIT SEE PAGE 9	KIT VED. PAG.9
	79038722	K	1K	KIT SEE PAGE 9	KIT VED. PAG.9

USAGE: Units with 8205 Engine

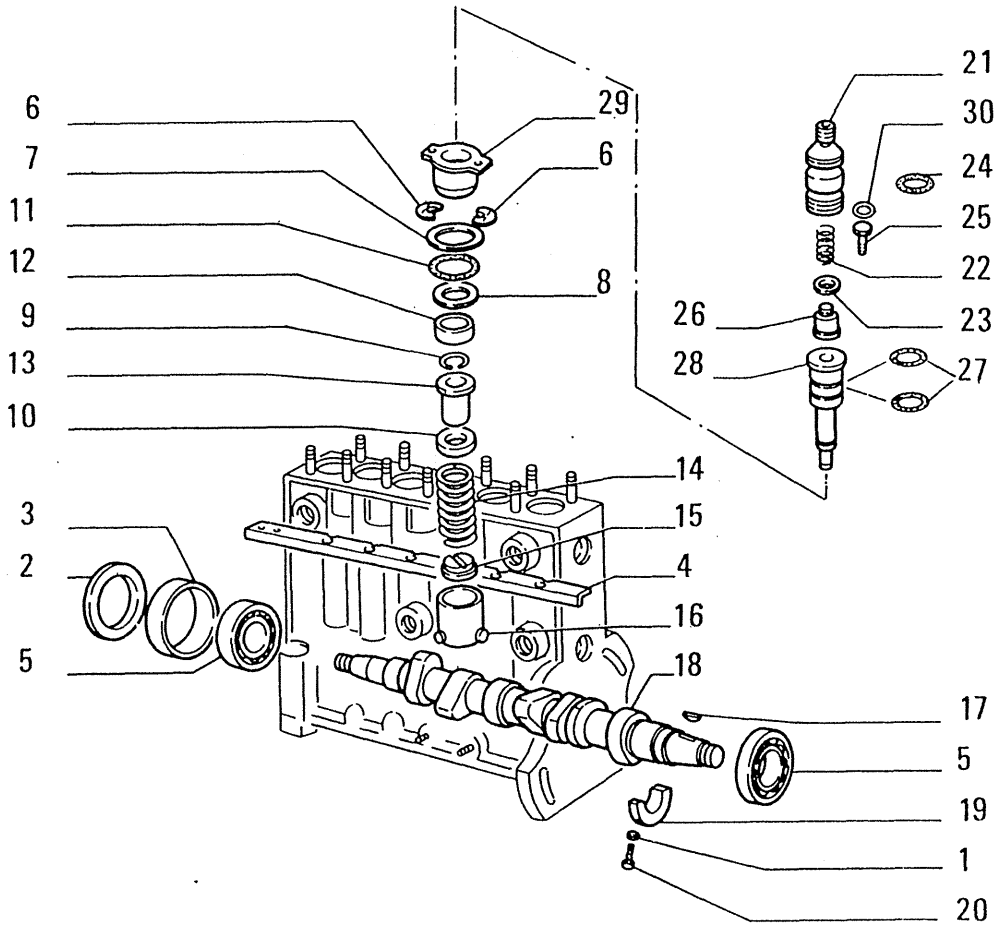

ITEM	PART NUMBER	QTY	TRANS CODE	DESCRIPTION	DESCRIZIONE
1	12035671	2	170R	LOCKWASHER 6,1x1,3	ROSETTA EL. 6,1x1,3
2	772277		45A	RING - THICKNESS 1,20	ANELLO - SPESSORE 1,20
	772278		45A	RING - THICKNESS 1,50	ANELLO - SPESSORE 1,50
	772279		45A	RING - THICKNESS 1,80	ANELLO - SPESSORE 1,80
	772280		45A	RING - THICKNESS 2,00	ANELLO - SPESSORE 2,00
3	772305	1	75D	SPACER	DISTANZIALE
4	772213	1	90A	ROD	ASTA
5	772336	2	341C	BEARING	CUSCINETTO
6	77265		110P	PLAQUE - THICKNESS 2,30	PIASTRINA - SPESSORE 2,30
	772227		110P	PLAQUE - THICKNESS 0,40	PIASTRINA - SPESSORE 0,40
	772228		110P	PLAQUE - THICKNESS 0,45	PIASTRINA - SPESSORE 0,45
	772229		110P	PLAQUE - THICKNESS 0,50	PIASTRINA - SPESSORE 0,50
	772230		110P	PLAQUE - THICKNESS 0,55	PIASTRINA - SPESSORE 0,55
	772231		110P	PLAQUE - THICKNESS 0,60	PIASTRINA - SPESSORE 0,60
	772232		110P	PLAQUE - THICKNESS 0,65	PIASTRINA - SPESSORE 0,65
	772233		110P	PLAQUE - THICKNESS 0,70	PIASTRINA - SPESSORE 0,70
	772234		110P	PLAQUE - THICKNESS 0,75	PIASTRINA - SPESSORE 0,75
	772235		110P	PLAQUE - THICKNESS 0,80	PIASTRINA - SPESSORE 0,80
	772236		110P	PLAQUE - THICKNESS 0,85	PIASTRINA - SPESSORE 0,85
	772237		110P	PLAQUE - THICKNESS 0,90	PIASTRINA - SPESSORE 0,90
	772238		110P	PLAQUE - THICKNESS 0,95	PIASTRINA - SPESSORE 0,95
	772239		110P	PLAQUE - THICKNESS 1,00	PIASTRINA - SPESSORE 1,00
	772240		110P	PLAQUE - THICKNESS 1,05	PIASTRINA - SPESSORE 1,05
	772241		110P	PLAQUE - THICKNESS 1,10	PIASTRINA - SPESSORE 1,10
	772242		110P	PLAQUE - THICKNESS 1,15	PIASTRINA - SPESSORE 1,15
	772243		110P	PLAQUE - THICKNESS 1,20	PIASTRINA - SPESSORE 1,20
	772244		110P	PLAQUE - THICKNESS 1,25	PIASTRINA - SPESSORE 1,25

USAGE: Units with 8365 Engine

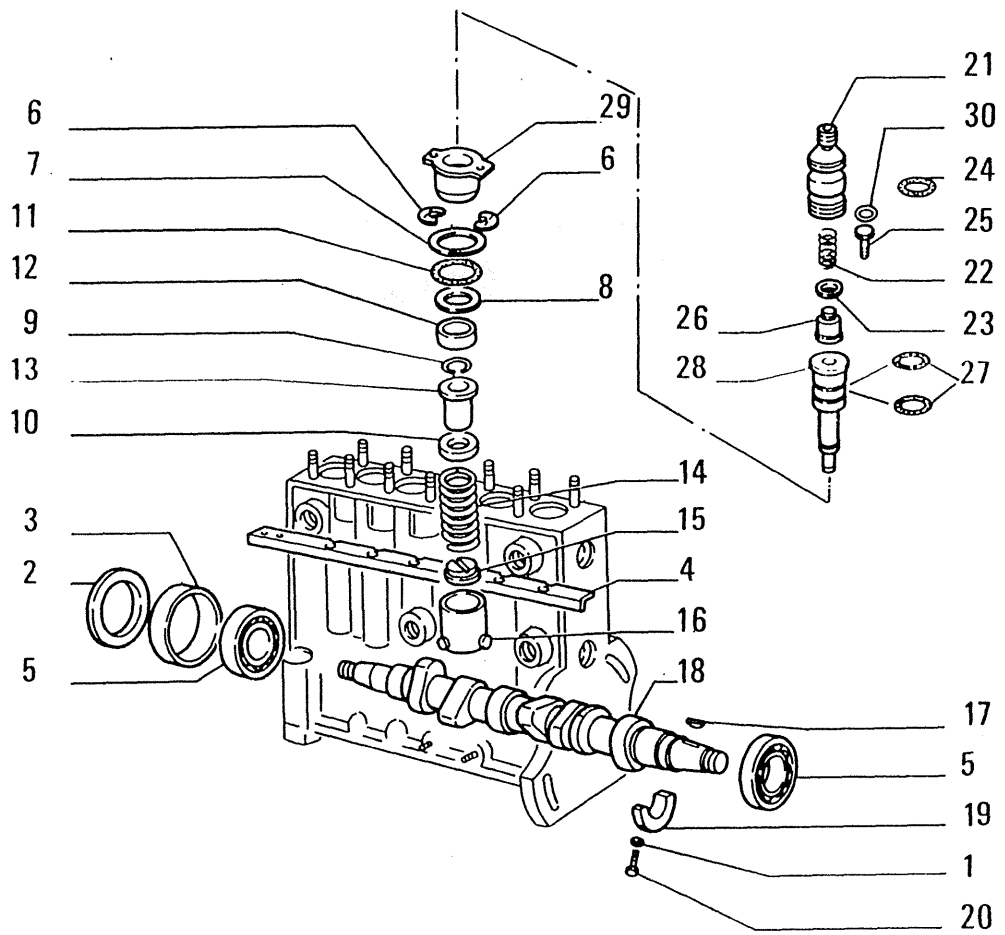

ITEM	PART NUMBER	QTY	TRANS CODE	DESCRIPTION	DESCRIZIONE
6	772245		110P	PLAQUE - THICKNESS 1,30	PIASTRINA - SPESSORE 1,30
	772246		110P	PLAQUE - THICKNESS 1,35	PIASTRINA - SPESSORE 1,35
	772247		110P	PLAQUE - THICKNESS 1,40	PIASTRINA - SPESSORE 1,40
	772248		110P	PLAQUE - THICKNESS 1,45	PIASTRINA - SPESSORE 1,45
	772249		110P	PLAQUE - THICKNESS 1,50	PIASTRINA - SPESSORE 1,50
	772250		110P	PLAQUE - THICKNESS 1,55	PIASTRINA - SPESSORE 1,55
	772251		110P	PLAQUE - THICKNESS 1,60	PIASTRINA - SPESSORE 1,60
	772252		110P	PLAQUE - THICKNESS 1,65	PIASTRINA - SPESSORE 1,65
	772253		110P	PLAQUE - THICKNESS 1,70	PIASTRINA - SPESSORE 1,70
	772254		110P	PLAQUE - THICKNESS 1,75	PIASTRINA - SPESSORE 1,75
	772255		110P	PLAQUE - THICKNESS 1,80	PIASTRINA - SPESSORE 1,80
	772256		110P	PLAQUE - THICKNESS 1,85	PIASTRINA - SPESSORE 1,85
	772257		110P	PLAQUE - THICKNESS 1,90	PIASTRINA - SPESSORE 1,90
	772258		110P	PLAQUE - THICKNESS 1,95	PIASTRINA - SPESSORE 1,95
	772259		110P	PLAQUE - THICKNESS 2,00	PIASTRINA - SPESSORE 2,00
	772260		110P	PLAQUE - THICKNESS 2,05	PIASTRINA - SPESSORE 2,05
	772261		110P	PLAQUE - THICKNESS 2,10	PIASTRINA - SPESSORE 2,10
	772262		110P	PLAQUE - THICKNESS 2,15	PIASTRINA - SPESSORE 2,15
	772263		110P	PLAQUE - THICKNESS 2,20	PIASTRINA - SPESSORE 2,20
	772264		110P	PLAQUE - THICKNESS 2,25	PIASTRINA - SPESSORE 2,25
	772266		110P	PLAQUE - THICKNESS 2,35	PIASTRINA - SPESSORE 2,35
	772267		110P	PLAQUE - THICKNESS 2,40	PIASTRINA - SPESSORE 2,40
	772268		110P	PLAQUE - THICKNESS 2,45	PIASTRINA - SPESSORE 2,45
	772269		110P	PLAQUE - THICKNESS 2,50	PIASTRINA - SPESSORE 2,50
7	772352	6	75D	SPACER	DISTANZIALE
8	772270	6	131R	WASHER	ROSETTA
9	773365	9	45A	RING	ANELLO

USAGE: Units with 8365 Engine

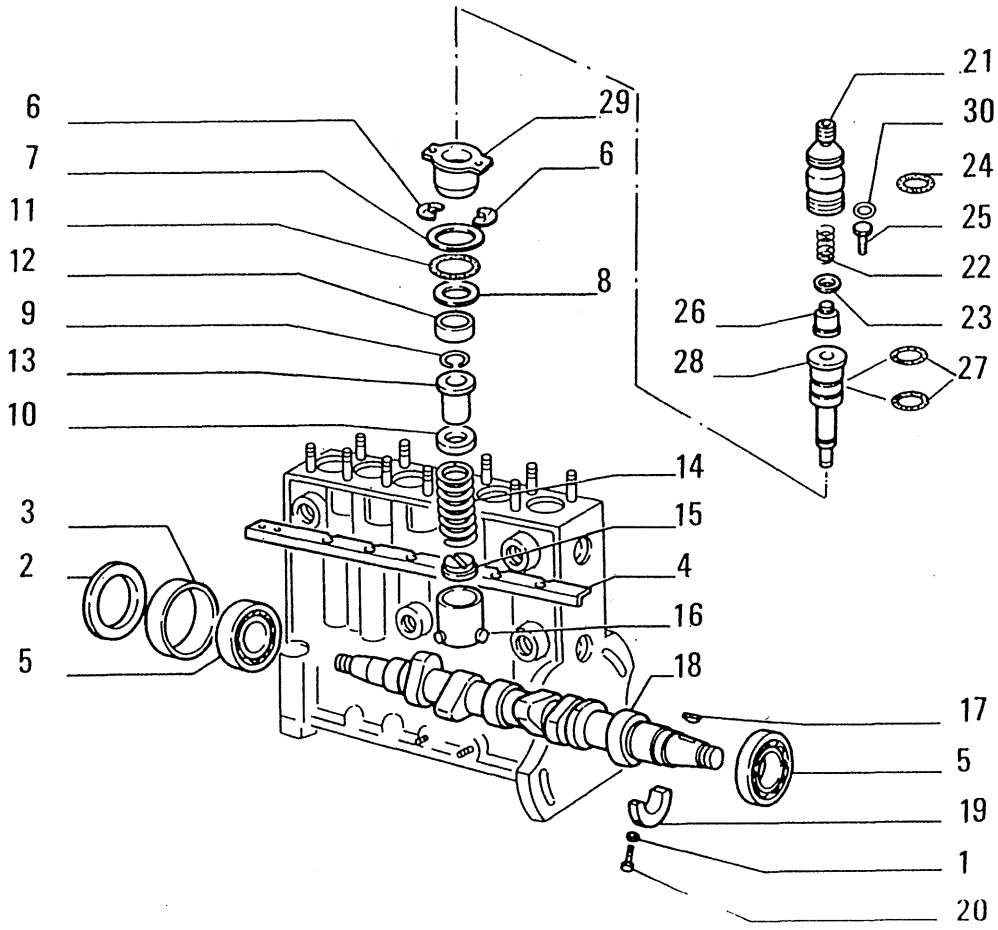

ITEM	PART NUMBER	QTY	TRANS CODE	DESCRIPTION	DESCRIZIONE
10	772281	6	120P	PLATE	PIATTELLO
11	772388	6	158G	O-RING	GUARNIZIONE O-R
12	772307	6	95B	BUSHING	BOCCOLA
13	772298	6	95B	BUSHING	BOCCOLA
14	774300	6	100M	SPRING	MOLLA
15	773534	6	120P	PLATE	PIATTELLO
16	772195	6	240P	TAPPET	PUNTERIA
17	10206320	1	60L	KEY 7,5x5	LINGUETTA 7,5x5
18	772191	1	17R	FOUR-WAY FITTING	RACCORDO A 4 VIE
19	772324	1	103S	HALF BEARING	SEMICUSCINETTO
20	772211	2	40V	SCREW	VITE
21	774874	6	20R	FITTING	RACCORDO
22	772351	6	100M	SPRING	MOLLA
23	772275	6	122G	SEAL	GUARNIZIONE
24	772389	6	158G	O-RING	GUARNIZIONE O-R
25	772390	6	145G	GUIDE	GUIDA
26	774875	6	10V	VALVE	VALVOLA
27	772387	12	158G	O-RING	GUARNIZIONE O-R
28	775309	6	130P	PLUNGER	PISTONCINO
29	774651	6	70F	FLANGE	FLANGIA
30	772272		131R	WASHER - THICKNESS 0,5	ROSETTA - SPESSORE 0,5
	772273		131R	WASHER - THICKNESS 0,2	ROSETTA - SPESSORE 0,2

USAGE: Units with 8365 Engine

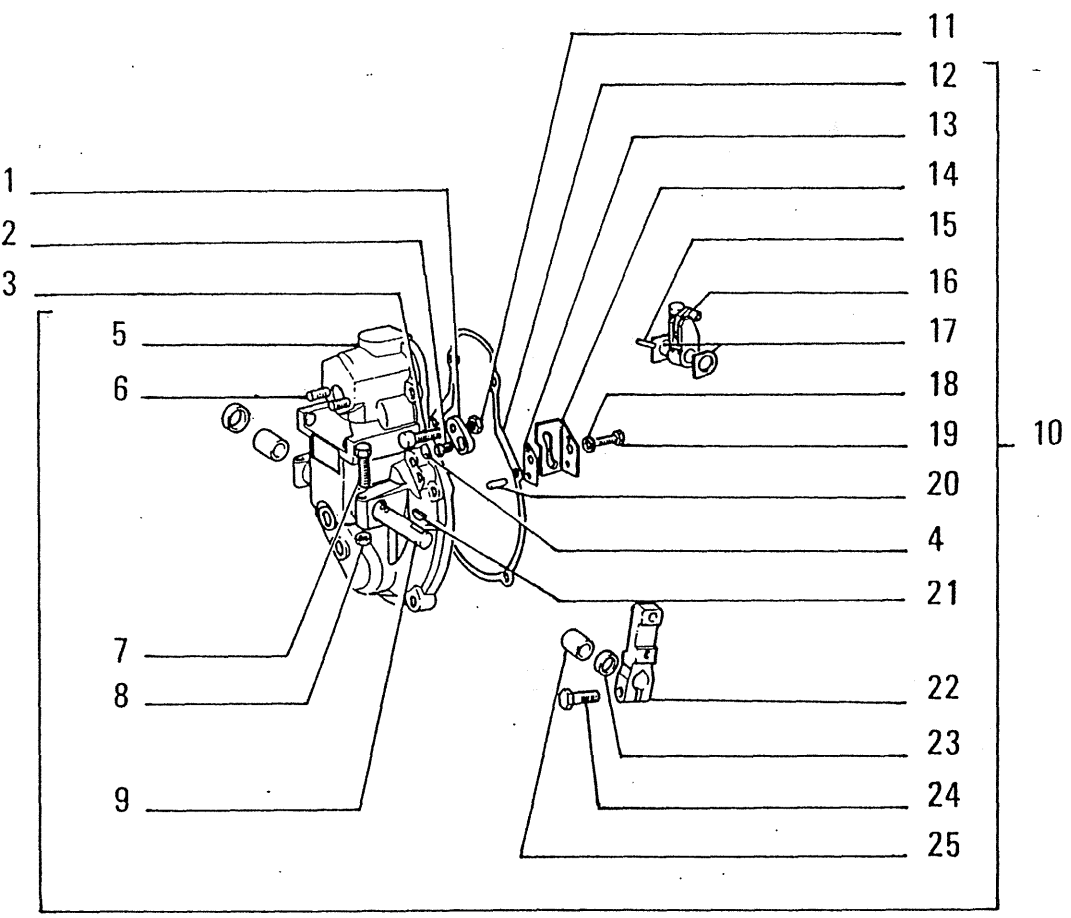

ITEM	PART NUMBER	QTY	TRANS CODE	DESCRIPTION	DESCRIZIONE
1	79023667	1	110P	PLAQUE	PIASTRINA
2	79046252	1	40V	SCREW	VITE
3	79023664	1	40V	SCREW	VITE
4	9929701	1	50T	PLUG	TAPPO
5	79023652	1	265C	COVER	COPERCHIO
6	79023661	2	210P	STUD	PRIGIONIERO
7	79023658	1	40V	SCREW	VITE
8	15896211	2	10D	NUT 6x1x5	DADO 6x1x5
9	1288713	1	11A	SPINDLE D1471	ALBERINO D1471
	9011280	1	11A	SPINDLE C1471	ALBERINO C1471
10	79023651	1	265C	COVER - ASSEMBLY	COPERCHIO - COMPLETO
11	79045918	1	10D	NUT	DADO
12	79023662	1	123G	SEAL ASSY	GUARNIZIONE TENUTA FRONTAL
13	9009121		198S	SHIM 0,2	SPESSORE 0,2
	9009122		198S	SHIM 0,3	SPESSORE 0,3
	9009625		198S	SHIM 0,8	SPESSORE 0,8
	9009626		198S	SHIM 0,5	SPESSORE 0,5
14	1288654	1	215S	CONNECTING PLATE D1471	SQUADRETTA D1471
	79023654	1	215S	CONNECTING PLATE C1471	SQUADRETTA C1471
15	79023656	2	200S	PIN	SPINA
16	79032337	1	45L	LEVER	LEVA
17	79023660	2	210P	STUD	PRIGIONIERO
18	10516471	1	132R	LOCKWASHER 6,1x1,8	ROSETTA DI SICUREZZA 6,1x1,8
19	79032338	1	40V	SCREW	VITE
20	79023659	2	200S	PIN	SPINA
21	9929127	1	60L	KEY D1471	LINGUETTA D1471
	79023657	1	60L	KEY C1471	LINGUETTA C1471

C 1471 → Tel.n. 051100
D 1471 Tel.n. 051101 →

C 1473 mot. n. → 1180 USAGE: Units with 8205 Engine

RQV 425....1000 PA438–1

SPEED GOVERNOR – REGOLATORE DI VELOCITA' – REGULATEUR DE VITESSE – DREHZAHLREGLES – REGULADOR D. VELOCIDAD

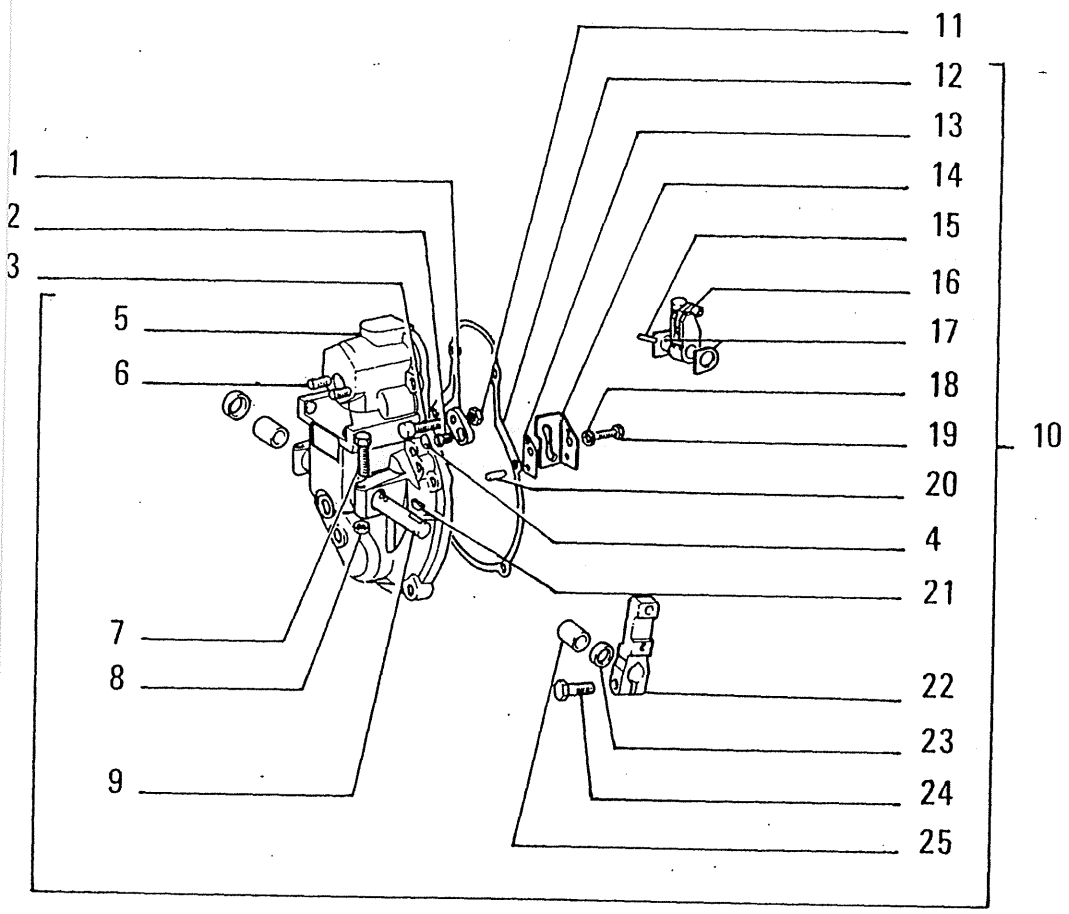

ITEM	PART NUMBER	QTY	TRANS CODE	DESCRIPTION	DESCRIZIONE
22	9930880	1	45L	LEVER	LEVA
23	9007840	2	133R	SEAL	ROSETTA DI TENUTA
24	10902421	1	40V	SCREW 6x1x20	VITE 6x1x20
25	79023653	2	95B	BUSHING	BOCCOLA

C 1473 mot. n. ⟶ 1180 USAGE: Units with 8205 Engine

RQV 425....1000 PA438–1

SPEED GOVERNOR – REGOLATORE DI VELOCITA' – REGULATEUR DE VITESSE – DREHZAHLREGLES – REGULADOR D. VELOCIDAD

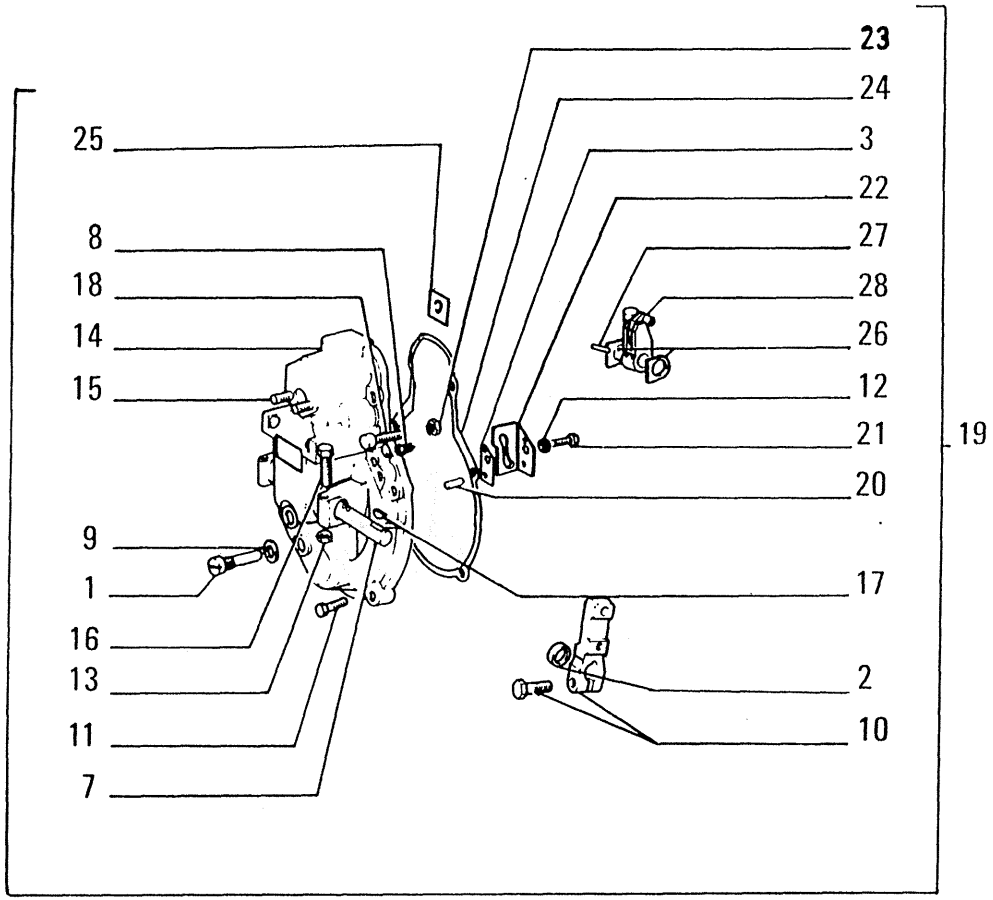

ITEM	PART NUMBER	QTY	TRANS CODE	DESCRIPTION	DESCRIZIONE
1	9001950	1	40V	SCREW	VITE
2	9007840	2	45A	RING	ANELLO
3	9009121		110P	PLAQUE 0,2 MM	PIASTRINA 0,2 MM
	9009122		110P	PLAQUE 0,3 MM	PIASTRINA 0,3 MM
	9009625		110P	PLAQUE 0,8 MM	PIASTRINA 0,8 MM
	9009626		110P	PLAQUE 0,5 MM	PIASTRINA 0,5 MM
7	1288713	1	11A	SPINDLE	ALBERINO
8	79045919	1	40V	SCREW	VITE
9	79038381	1	131R	WASHER	ROSETTA
10	9930880	1	45L	LEVER	LEVA
11	10377011	5	40V	SCREW 6x1x25	VITE 6x1x25
12	12035671	1	131R	WASHER 6,1x1,3	ROSETTA 6,1x1,3
13	15896221	3	10D	NUT 6x1x5	DADO 6x1x5
14	79023652	1	265C	COVER	COPERCHIO
15	79023661	2	210P	STUD	PRIGIONIERO
16	79023658	1	40V	SCREW	VITE
17	10205720	1	60L	KEY 5x3	LINGUETTA 5x3
18	79023664	1	40V	SCREW	VITE
19	79023651	1	265C	COVER - ASSEMBLY	COPERCHIO - COMPLETO
20	10333310	2	200S	PIN 4x12	SPINA 4x12
21	10902521	1	40V	SCREW 6x1x22	VITE 6x1x22
22	1288654	1	215S	CONNECTING PLATE	SQUADRETTA
23	79045918	1	10D	NUT	DADO
24	79023662	1	123G	SEAL ASSY	GUARNIZIONE TENUTA FRONTALE
25	79033421	1	110P	PLAQUE	PIASTRINA
26	79023660	2	110P	PLAQUE	PIASTRINA
27	11039720	2	200S	PIN 3x20	SPINA 3x20

(03943) D 1473 mot.n. 1181 → USAGE: Units with 8205 Engine

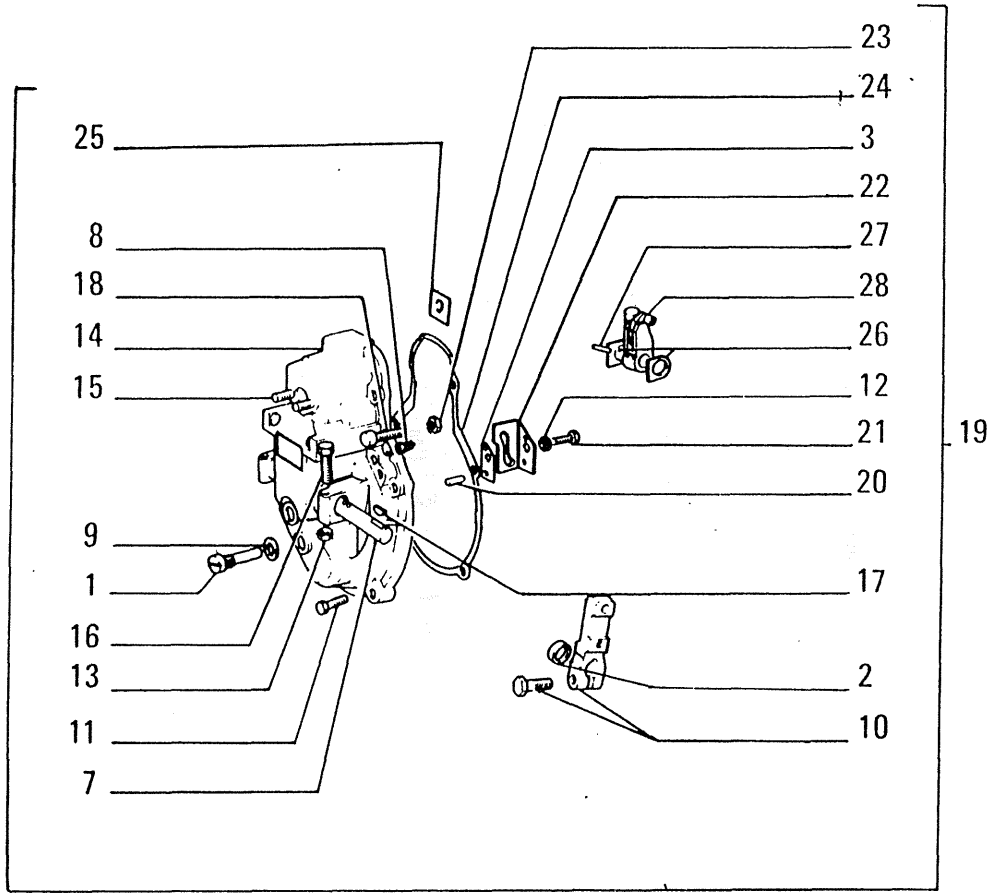

ITEM	PART NUMBER	QTY	TRANS CODE	DESCRIPTION	DESCRIZIONE
28	79032337	1	45L	LEVER	LEVA

D 1473 mot.n. 1181 →

USAGE: Units with 8205 Engine

(03943)

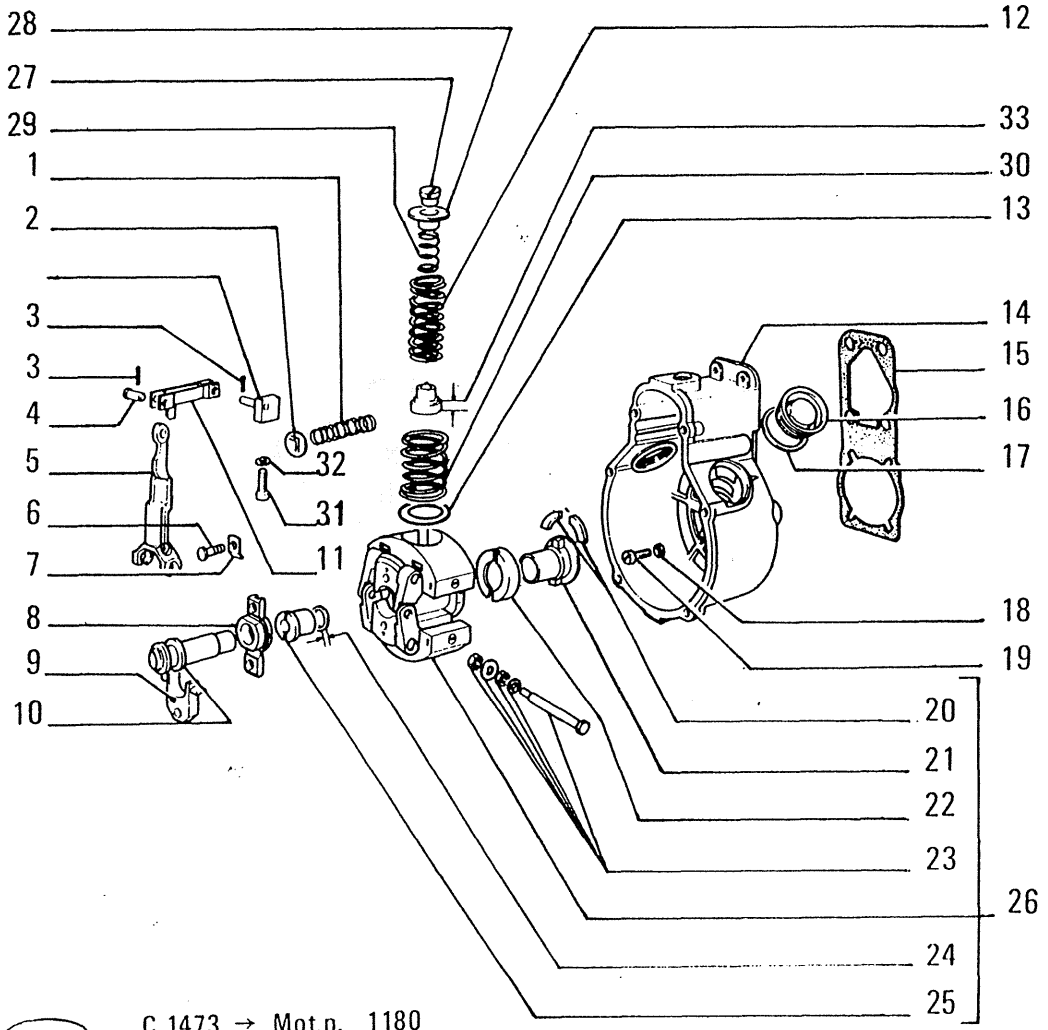

C 1473 → Mot.n. 1180

USAGE:Units with 8205 Engine

ITEM	PART NUMBER	QTY	TRANS CODE	DESCRIPTION	DESCRIZIONE
1	79045921	1	100M	SPRING	MOLLA
2	79045920	1	120P	PLATE	PIATTELLO
3	79023852	3	270C	COTTER PIN	COPIGLIA
4	79039743	1	80P	PIN	PERNO
5	79023670	1	45L	LEVER	LEVA
6	9007836	2	40V	SCREW **C1471**	VITE **C1471**
	79023647	2	40V	SCREW **D1471**	VITE **D1471**
7	79023646	2	110P	PLAQUE	PIASTRINA
8	79023645	1	95B	BUSHING	BOCCOLA
9	9009114	1	165S	ARTICULATION	SNODO
10	79023669	1	80P	PIN	PERNO
11	79023648	1	85F	YOKE	FORCELLA
12	770444	2	100M	SPRING	MOLLA
13	9929609	2	131R	WASHER	ROSETTA
14	79023635	1	35S	CASE	SCATOLA
15	1300955	1	123G	SEAL ASSY **D1471**	GUARNIZIONE TENUTA FRONTALE **D1471**
	79023663	1	123G	SEAL ASSY **C1471**	GUARNIZIONE TENUTA FRONTALE **C1471**
16	1288626	2	50T	PLUG **D1471**	TAPPO **D1471**
	79023666	2	50T	PLUG **C1471**	TAPPO **C1471**
17	79023684	2	131R	WASHER	ROSETTA
18	10516471	8	132R	LOCKWASHER 6,1x1,8	ROSETTA DI SICUREZZA 6,1x1,8
19	10376821	8	40V	SCREW **D1471**	VITE **D1471**
	79023636	8	40V	SCREW **C1471**	VITE **C1471**
20	79023688	4	61T	CUSHION PAD	TASSELLO ELASTICO
21	79023687	1	67G	COUPLING	GIUNTO

C 1471 → Tel.n. 051100
D 1471 Tel.n. 051101 →

OPTIONAL 30.0370.01.1

VARIANTE

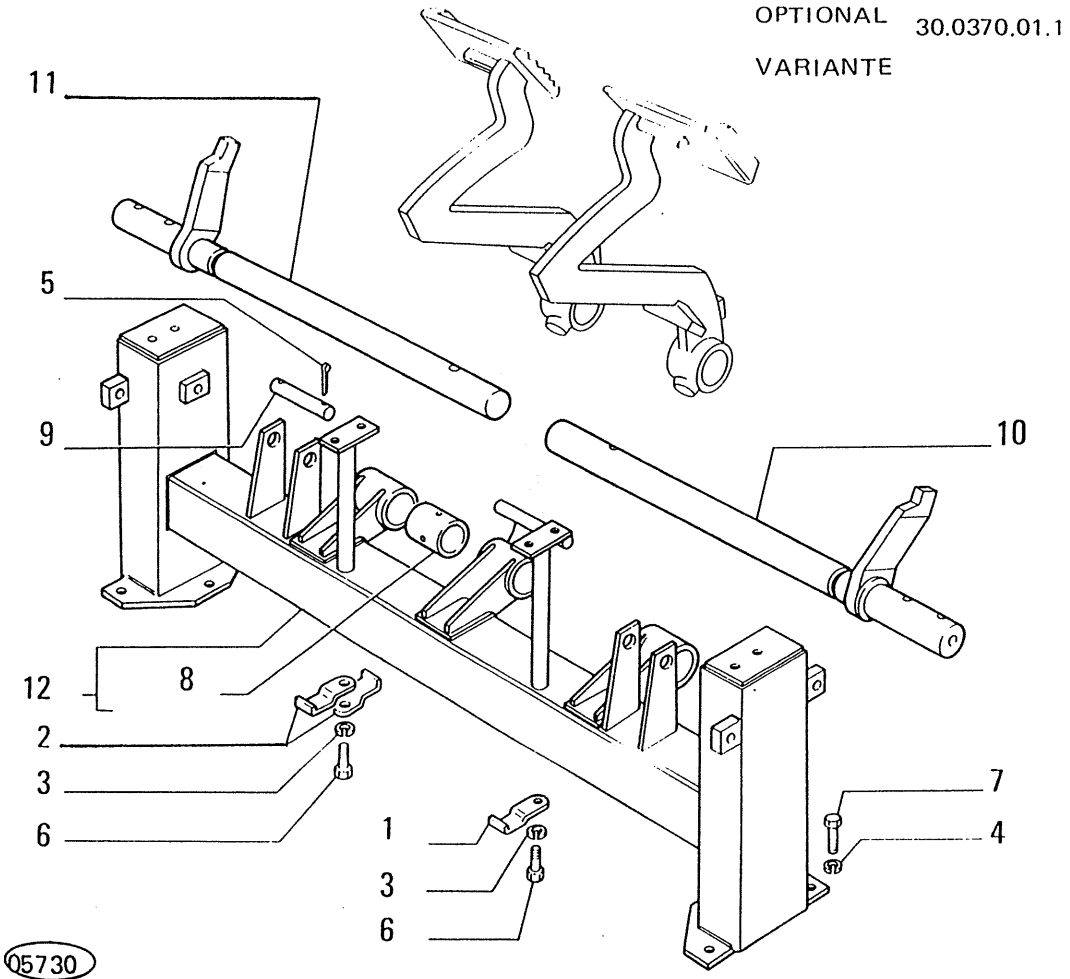

ITEM	PART NUMBER	QTY	TRANS CODE	DESCRIPTION	DESCRIZIONE
1	10112800	1	225S	BRACKET 5x7	STAFFA 5x7
2	10114100	4	225S	BRACKET 10,5x7	STAFFA 10,5x7
3	10516471	4	131R	WASHER 6,1x1,8	ROSETTA 6,1x1,8
4	10517071	6	131R	WASHER 12,2x3,1	ROSETTA 12,2x3,1
5	10733601	2	270C	COTTER PIN 2,7x31,6	COPIGLIA 2,7x31,6
6	10979431	4	40V	SCREW 6x1x10	VITE 6x1x10
7	11112231	6	40V	SCREW 12x1,75x22	VITE 12x1,75x22
8	79006975	3	95B	BUSHING	BOCCOLA
9	79016224	2	80P	PIN	PERNO
10	79031700	1	16A	SHAFT - ASSEMBLY RIGHT	ALBERO - COMPLETO DESTRO
11	79031703	1	16A	SHAFT - ASSEMBLY LEFT	ALBERO - COMPLETO SINISTRO
12	79031720	1	180T	CROSS BEAM - ASSEMBLY	TRAVERSA - COMPLETO

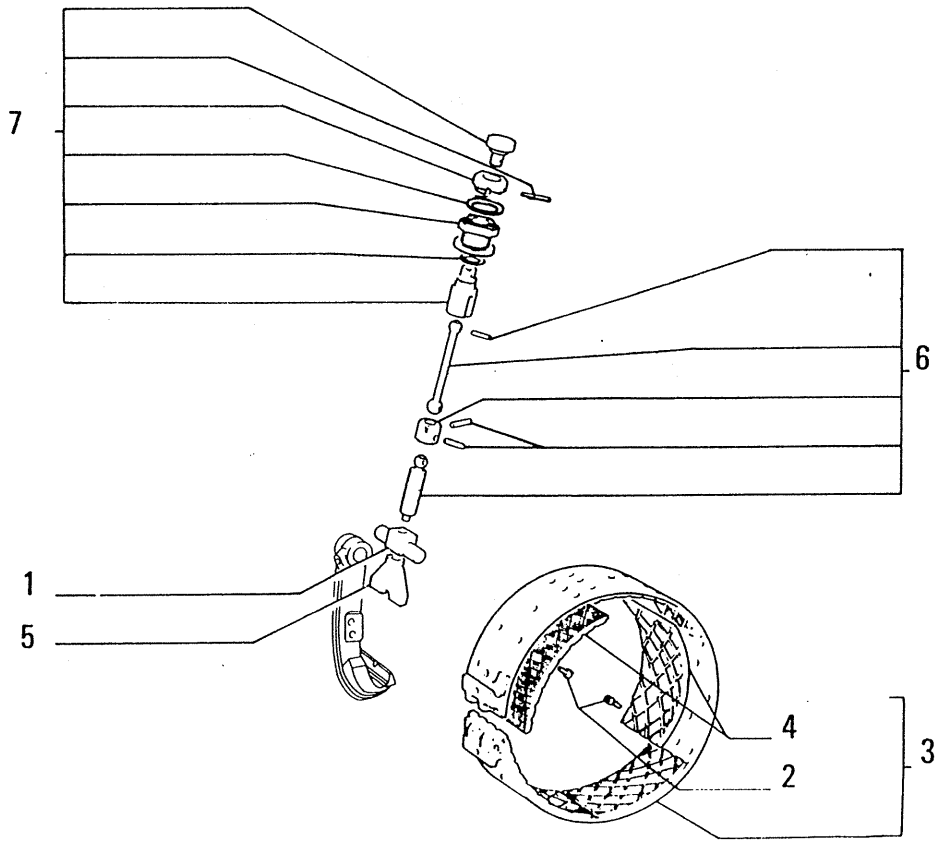

ITEM	PART NUMBER	QTY	TRANS CODE	DESCRIPTION	DESCRIZIONE
1	4983613	2	80P	PIN	PERNO
2	13879740	100	55R	RIVET 6x12	RIBATTINO 6x12
3	79011419	2	24N	BRAKE BAND - ASSEMBLY	NASTRO FRENO - COMPLETO
4	79011420	10	120G	GASKET	GUARNIZIONE PIANA
5	79011455	2	238P	PUSH ROD	PUNTALE
6	79014027	2	40V	SCREW	VITE
7	79014392	2	145G	GUIDE	GUIDA

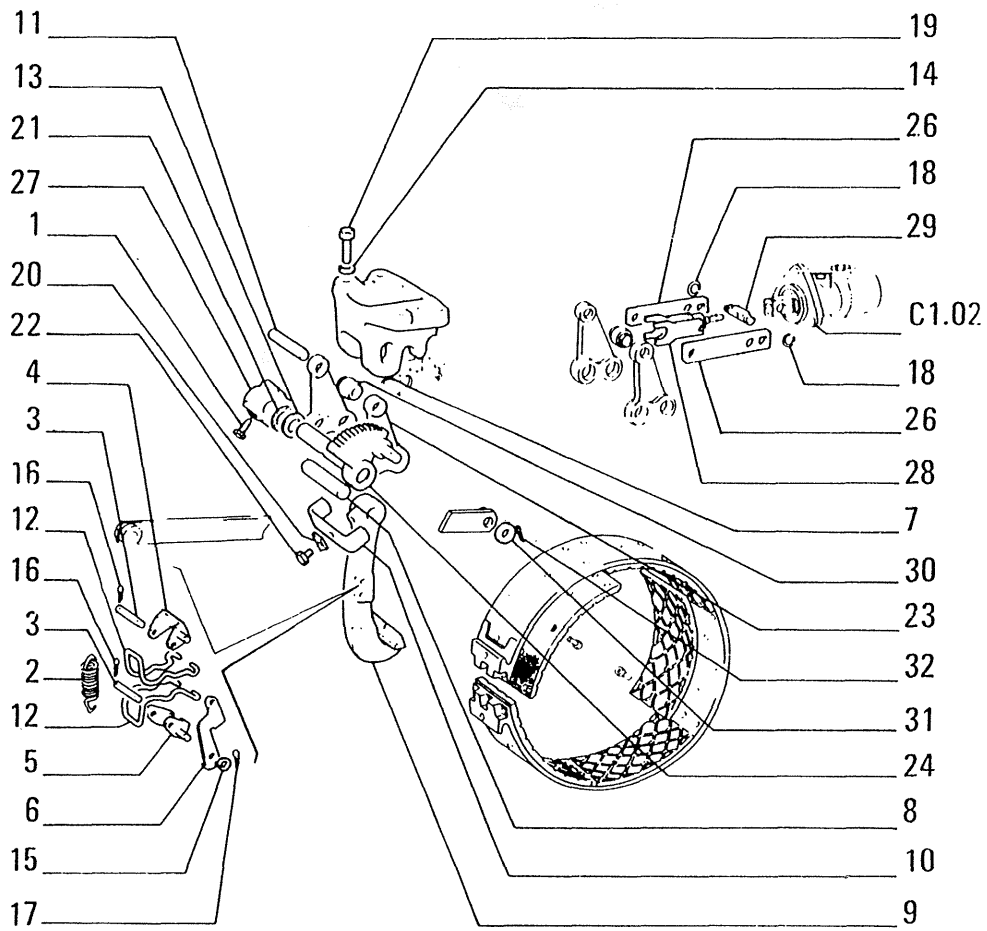

ITEM	PART NUMBER	QTY	TRANS CODE	DESCRIPTION	DESCRIZIONE
28	79014271	2	274S	ROD	STELO
29	79015086	2	80P	PIN	PERNO
30	79018679	2	157R	ROLLER	RULLO
31	10520121	2	131R	WASHER 14,4x26	ROSETTA 14,4x26
32	10734601	2	270C	COTTER PIN 2,7x37,6	COPIGLIA 2,7x37,6

05728

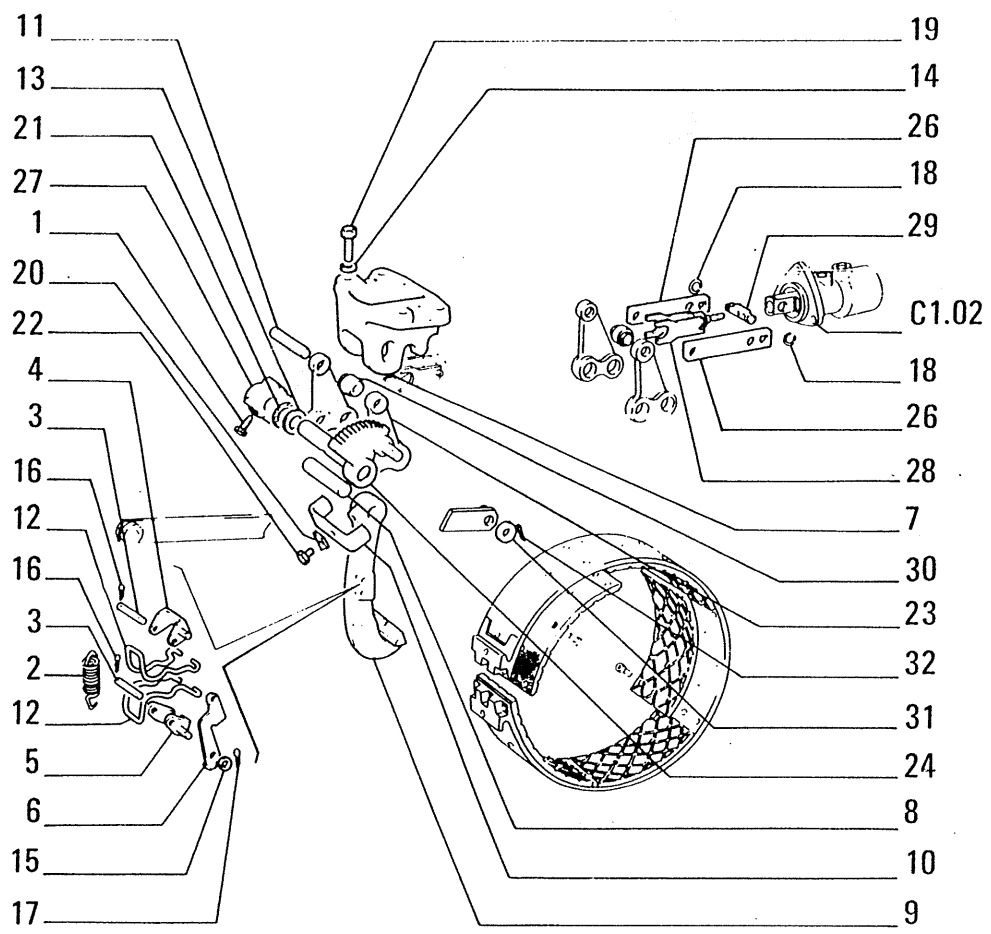

ITEM	PART NUMBER	QTY	TRANS CODE	DESCRIPTION	DESCRIZIONE
1	586707	2	40V	SCREW	VITE
2	599296	2	100M	SPRING	MOLLA
3	599299	4	80P	PIN	PERNO
4	599300	2	85F	YOKE - UPPER	FORCELLA - SUPERIORE
5	599301	2	85F	YOKE - LOWER	FORCELLA - INFERIORE
6	599302	2	45L	LEVER	LEVA
7	599303	2	300S	SUPPORT	SUPPORTO
8	599307	2	80P	PIN	PERNO
9	599308	2	45L	LEVER	LEVA
10	599309	2	225S	BRACKET	STAFFA
11	4958134	2	80P	PIN - UPPER	PERNO - SUPERIORE
12	4958201	4	130B	ARM	BRACCIO
13	4970225	2	45A	RING	ANELLO
14	10517171	8	131R	WASHER 14,2x3,5	ROSETTA 14,2x3,5
15	10519601	2	131R	WASHER 8,15x17	ROSETTA 8,15x17
16	10733601	8	270C	COTTER PIN 2,7x31,6	COPIGLIA 2,7x31,6
17	10734201	2	270C	COTTER PIN 1,7x18,5	COPIGLIA 1,7x18,5
18	11066675	4	51A	LOCKRING 16,5x1,2	ANELLO DI SICUREZZA 16,5x1,2
19	11255930	8	40V	SCREW 14x1,5x40	VITE 14x1,5x40
20	14198811	2	113P	LOCKPLATE 10,4x20	PIASTRINA DI SICUREZZA 10,4x20
21	14463180	2	158G	O-RING 3,53x23,39	GUARNIZIONE O-R 3,53x23,39
22	15970531	2	40V	SCREW 10x1,25x20	VITE 10x1,25x20
23	79005063	4	45L	LEVER	LEVA
24	79012134	1	45L	LEVER - RIGHT	LEVA - DESTRO
	79012135	1	45L	LEVER - LEFT	LEVA - SINISTRO
26	79013990	4	60B	SHACKLE	BISCOTTINO
27	79014013	2	10E	ECCENTRIC	ECCENTRICO

Q5728

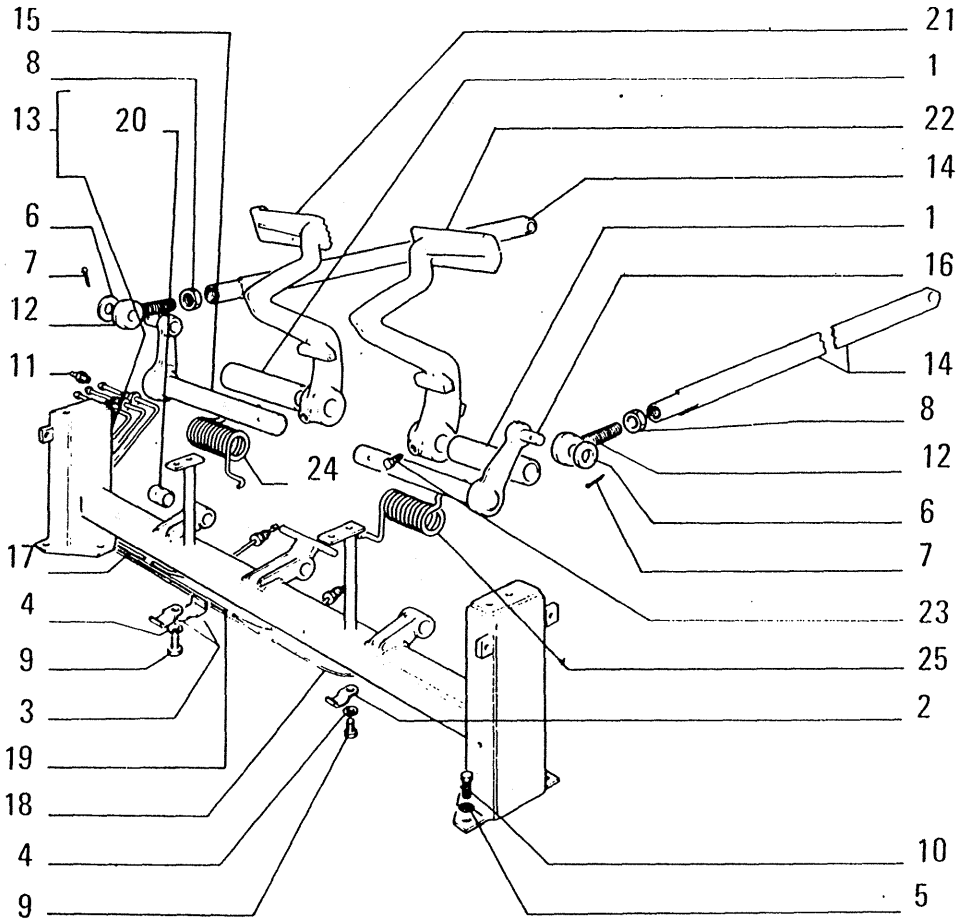

ITEM	PART NUMBER	QTY	TRANS CODE	DESCRIPTION	DESCRIZIONE
14	79005068	2	142T	TIEROD (*)	TIRANTE (*)
15	79005071	1	45L	LEVER - RIGHT ASSEMBLY	LEVA - DESTRO COMPLETO
		1	45L	LEVER - RIGHT ASSEMBLY (*)	LEVA - DESTRO COMPLETO (*)
16	79005072	1	45L	LEVER - LEFT ASSEMBLY	LEVA - SINISTRO COMPLETO
		1	45L	LEVER - LEFT ASSEMBLY (*)	LEVA - SINISTRO COMPLETO (*)
17	79005073	1	193T	TUBE - RIGHT	TUBO RIGIDO - DESTRO
		1	193T	TUBE - RIGHT (*)	TUBO RIGIDO - DESTRO (*)
18	79005075	1	193T	TUBE - LEFT	TUBO RIGIDO - SINISTRO
		1	193T	TUBE - LEFT (*)	TUBO RIGIDO - SINISTRO (*)
19	79005077	1	193T	TUBE	TUBO RIGIDO
		1	193T	TUBE (*)	TUBO RIGIDO (*)
20	79006975	3	95B	BUSHING	BOCCOLA
		3	95B	BUSHING (*)	BOCCOLA (*)
21	79009676	1	45L	LEVER - RIGHT ASSEMBLY	LEVA - DESTRO COMPLETO
		1	45L	LEVER - RIGHT ASSEMBLY (*)	LEVA - DESTRO COMPLETO (*)
22	79009677	1	45L	LEVER - LEFT ASSEMBLY	LEVA - SINISTRO COMPLETO
		1	45L	LEVER - LEFT ASSEMBLY (*)	LEVA - SINISTRO COMPLETO (*)
23	79011553	2	40V	SCREW	VITE
		2	40V	SCREW (*)	VITE (*)
24	79015261	1	100M	SPRING	MOLLA
		1	100M	SPRING (*)	MOLLA (*)
25	79015262	1	100M	SPRING	MOLLA
		1	100M	SPRING (*)	MOLLA (*)
(*)			469P	FOR SPECIAL EQUIPMENT 30.0370.04.1	PER VARIANTE 30.0370.04.1

05727

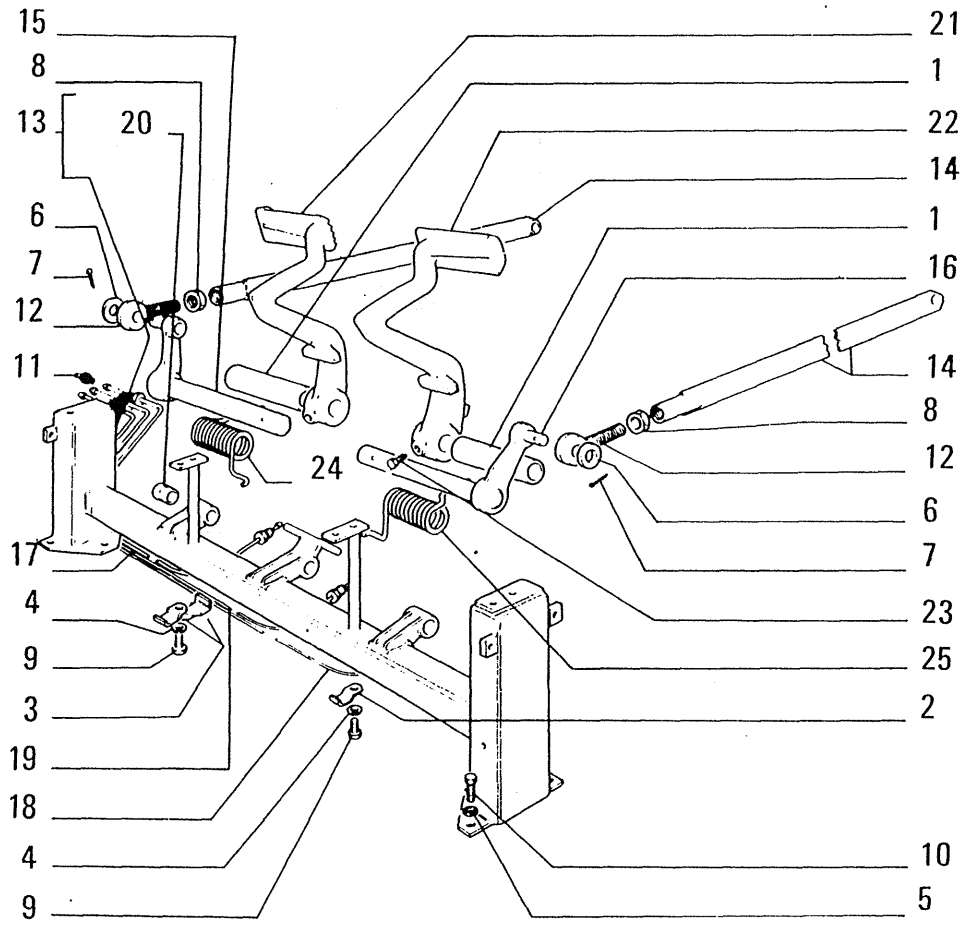

ITEM	PART NUMBER	QTY	TRANS CODE	DESCRIPTION	DESCRIZIONE
1	4985734	2	75D	SPACER	DISTANZIALE
		2	75D	SPACER (*)	DISTANZIALE (*)
2	10112800	1	231S	CLIP 5x7	STAFFETTA 5x7
		1	231S	CLIP (*) 5x7	STAFFETTA (*) 5x7
3	10114100	4	231S	CLIP 10,5x7	STAFFETTA 10,5x7
		4	231S	CLIP (*) 10,5x7	STAFFETTA (*) 10,5x7
4	10516471	4	131R	WASHER 6,1x1,8	ROSETTA 6,1x1,8
		4	131R	WASHER (*) 6,1x1,8	ROSETTA (*) 6,1x1,8
5	10517071	6	131R	WASHER 12,2x3,1	ROSETTA 12,2x3,1
		6	131R	WASHER (*) 12,2x3,1	ROSETTA (*) 12,2x3,1
6	10520121	2	131R	WASHER 14,4x26	ROSETTA 14,4x26
		2	131R	WASHER (*) 14,4x26	ROSETTA (*) 14,4x26
7	10734601	2	270C	COTTER PIN 2,7x37,6	COPIGLIA 2,7x37,6
		2	270C	COTTER PIN (*) 2,7x37,6	COPIGLIA (*) 2,7x37,6
8	10791321	2	10D	NUT 14x1,5x8	DADO 14x1,5x8
		2	10D	NUT (*) 14x1,5x8	DADO (*) 14x1,5x8
9	10979421	4	40V	SCREW 6x1x10	VITE 6x1x10
		4	40V	SCREW (*) 6x1x10	VITE (*) 6x1x10
10	11112431	6	40V	SCREW 12x1,75x30	VITE 12x1,75x30
		6	40V	SCREW (*) 12x1,75x30	VITE (*) 12x1,75x30
11	13407211	3	60I	GREASE FITTING 10x1	INGRASSATORE 10x1
		3	60I	GREASE FITTING (*) 10x1	INGRASSATORE (*) 10x1
12	79003622	2	62E	TIEROD HEAD	ESTREMITA' DEL TIRANTE
		2	62E	TIEROD HEAD (*)	ESTREMITA' DEL TIRANTE (*)
13	79004943	1	180T	CROSS BEAM - ASSEMBLY	TRAVERSA - COMPLETO
		1	180T	CROSS BEAM - ASSEMBLY (*)	TRAVERSA - COMPLETO (*)
14	79005068	2	142T	TIEROD	TIRANTE

05727

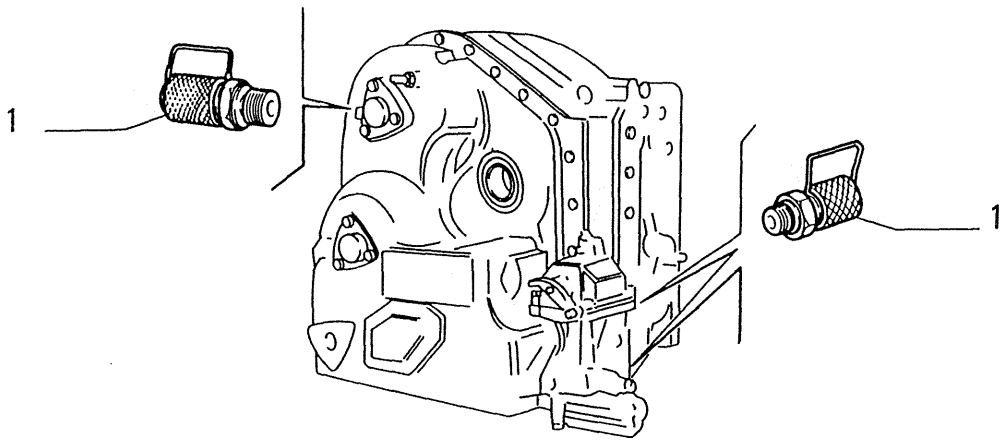

OPTIONAL

VARIANTE 30.0780.03.1

ITEM	PART NUMBER	QTY	TRANS CODE	DESCRIPTION	DESCRIZIONE
1	79041966	3	20R	FITTING - WRONG	RACCORDO - ERRATA
	79041996	3	20R	FITTING - CORRECT	RACCORDO - CORRIGE

05571

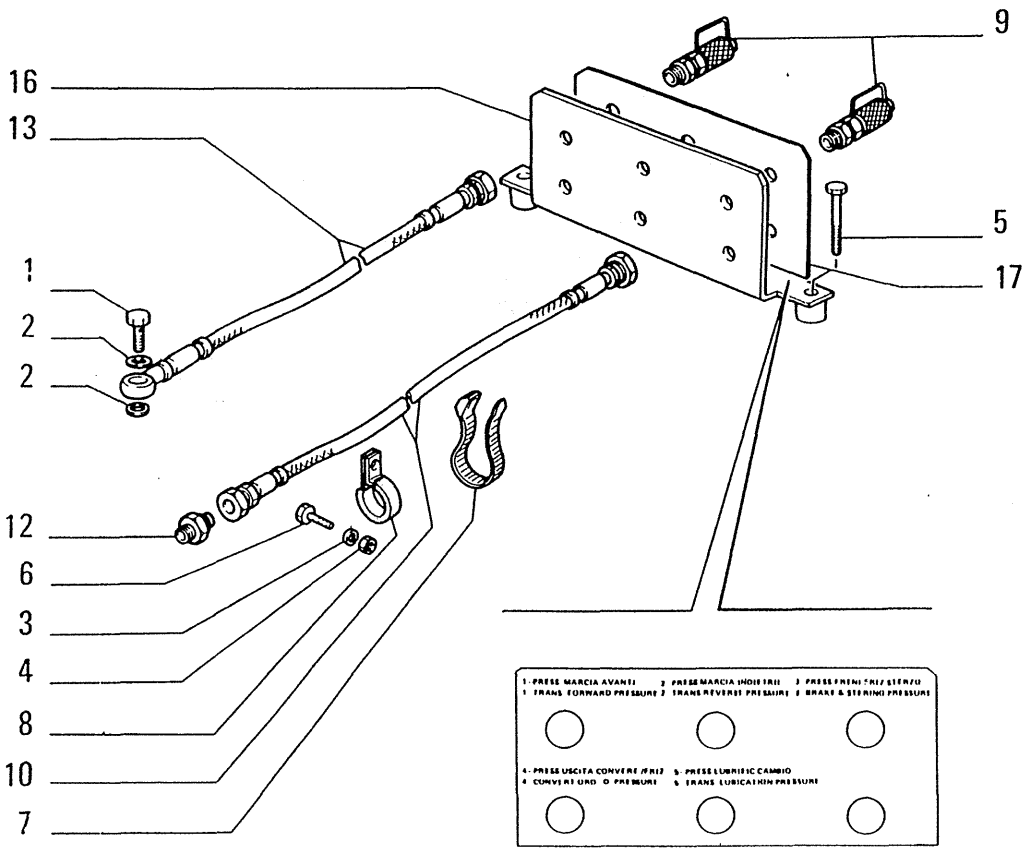

OPTIONAL

VARIANTE

30.0780.03.1

ITEM	PART NUMBER	QTY	TRANS CODE	DESCRIPTION	DESCRIZIONE
1	10181717	3	90B	FILLER PLUG 12x1,5x11	BOCCHETTONE INTRODUZIONE 12x1,5x11
2	10298460	6	133R	SEAL 12,2x18	ROSETTA DI TENUTA 12,2x18
3	10571871	1	131R	WASHER 10,2x2,2	ROSETTA 10,2x2,2
4	12164721	1	10D	NUT 10x1,25x8	DADO 10x1,25x8
5	15541031	2	40V	SCREW 12x1,25x60	VITE 12x1,25x60
6	15970631	1	40V	SCREW 10x1,25x22	VITE 10x1,25x22
7	79001971	2	31F	CLAMP	FASCETTA
8	79011405	1	231S	CLIP	STAFFETTA
9	79038298	5	20R	FITTING	RACCORDO
10	79038299	1	193T	TUBE	TUBO RIGIDO
	79041992	1	193T	TUBE	TUBO RIGIDO
12	79038300	2	20R	FITTING	RACCORDO
13	79041993	1	193T	TUBE	TUBO RIGIDO
	79041994	1	193T	TUBE	TUBO RIGIDO
	79041995	1	193T	TUBE	TUBO RIGIDO
16	79041997	1	225S	BRACKET C1420	STAFFA C1420
	79050036	1	225S	BRACKET D1420	STAFFA D1420
17	79042565	1	65T	DECAL C1420	TARGA C1420
	79050039	1	65T	DECAL D1420	TARGA D1420

C 1420 → Tel.n. 050640
D 1420 Tel.n. 050641 →

05570

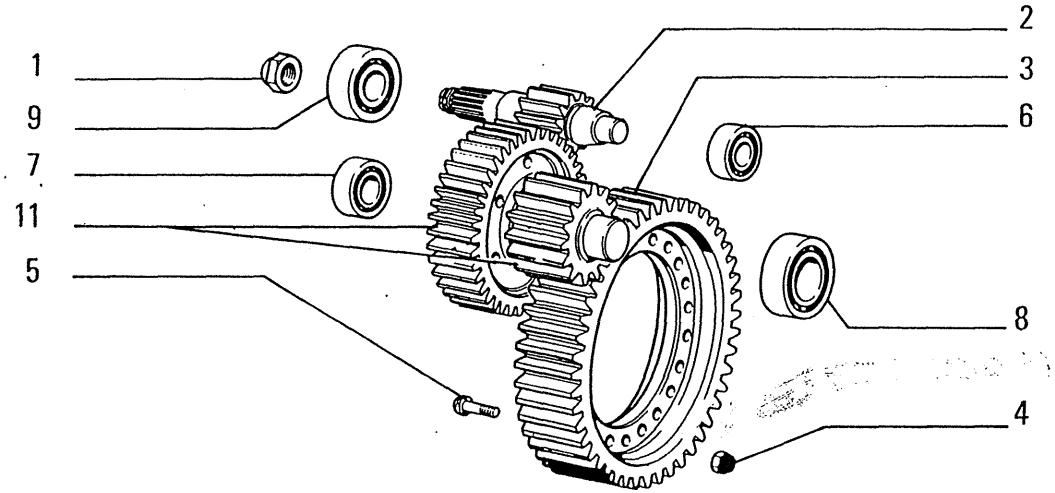

ITEM	PART NUMBER	QTY	TRANS CODE	DESCRIPTION	DESCRIZIONE
1	590394	2	10D	NUT	DADO
2	4959660	2	50I	GEAR	INGRANAGGIO
3	4959661	2	50I	GEAR	INGRANAGGIO
					DADO 20x1,5x16 C1099
4	13598521	44	10D	NUT 20x1,5x20	DADO 20x1,5x20 D1099
5	586726	44	40V	SCREW	VITE D1099
					VITE 20x1,5x55 C1099
6	24940180	2	341C	BEARING EST. 40x90	CUSCINETTO EST. 40x90
7	24940300	2	341C	BEARING INT. 55x120	CUSCINETTO INT. 55x120
8	24940310	2	341C	BEARING EST. 70x150	CUSCINETTO EST. 70x150
9	24940320	2	341C	BEARING INT. 60x150	CUSCINETTO INT. 60x150
					PIASTRINA DI SICUREZZA C1099
11	79005973	2	50I	GEAR	INGRANAGGIO

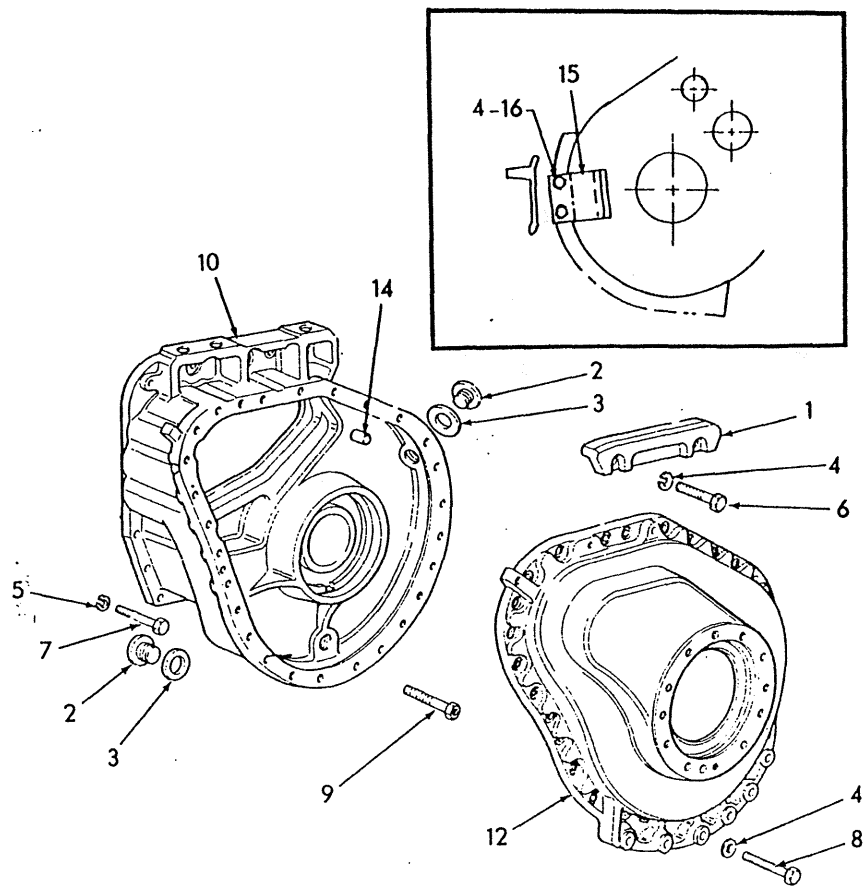

T-0491

ITEM	PART NO.	QTY.	CODE	DESCRIPTION	DENOMINAZIONE
1	00590329	2	197S	PAD, UPPER	SPESSORE ELASTICO
2	10273001	4	50T	PLUG,4X1.5X13	TAPPO
3	10297085	4	123G	GASKET,40.3X49	GUARNIZIONE DI TENUTA
4	10572071	58	131R	WASHER,14.2X3	ROSETTA
5	10572171	42	131R	WASHER,16X3.5	ROSETTA
6	11255931	4	40V	CAPSCREW,14X1.5X40	VITE
7	11391531	42	40V	CAPSCREW,16X1.5X45	VITE
8	a11394331	54	40V	CAPSCREW,14X1.5X40	VITE
9	14257931	8	40V	CAPSCREW,16X1.5X40	VITE
10	79031751	1	80C	CASE	CARCASSA
			600A	LEFT	SINISTRO
	79031753	1	80C	CASE	CARCASSA
			600B	RIGHT	DESTRO
12	79031754	1	265C	COVER	COPERCHIO
			600A	LEFT	SINISTRO
	79031755	1	265C	COVER	COPERCHIO
			600B	RIGHT	DESTRO
14	79035992	6	90G	DOWEL	GRANO
15	b73154677	2	115G	GUARD	PROTEZIONE
16	b15977531	4	40V	CAPSCREW,M14X1.5X60	VITE

a.4 LESS USED ON UNITS EQUIPPED FOR SANITARY LANDFILL OPERATION.

b.UNITS EQUIPPED FOR SANITARY LANDFILL.

MAIN HOUSING SIDE COVERS

B411

Revised April 1989

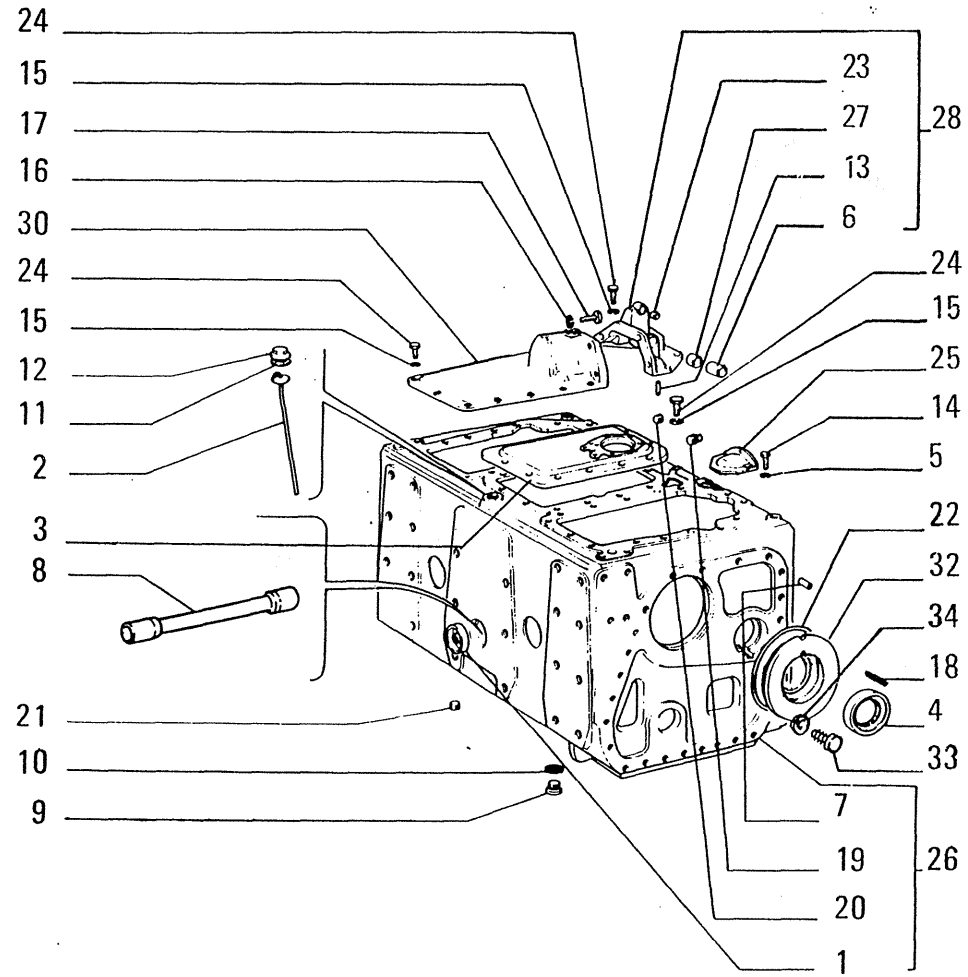

05477

ITEM	PART NUMBER	QTY	TRANS CODE	DESCRIPTION	DESCRIZIONE
25	15970731	3	40V	SCREW 10x1,25x25	VITE 10x1,25x25
26	76007585	1	35S	CASE - ASSEMBLY **D1421**	SCATOLA - COMPLETO **D1421**
	79005086	1	35S	CASE - ASSEMBLY **C1421**	SCATOLA - COMPLETO **C1421**
27	79007711	2	95B	BUSHING - OUTER	BOCCOLA - ESTERNO
28	79012131	1	265C	COVER - ASSEMBLY RIGHT	COPERCHIO - COMPLETO DESTRO
	79012132	1	265C	COVER - ASSEMBLY LEFT	COPERCHIO - COMPLETO SINISTRO
30	79014062	1	265C	COVER - REAR RIGHT	COPERCHIO - POSTERIORE DESTRO
	79014068	1	265C	COVER - REAR LEFT	COPERCHIO - POSTERIORE SINISTRO
32	76007926	2	35S	CASE **D1434**	SCATOLA **D1434**
	79036027	2	35S	CASE **C1421**	SCATOLA **C1421**
	79050924	2	35S	CASE **D1421**	SCATOLA **D1421**
		2	35S	CASE **C1434**	SCATOLA **C1434**
33	14238031	2	40V	SCREW 8x1,25x20 **D1421**	VITE 8x1,25x20 **D1421**
34	79050904	2	45A	RING **D1421**	ANELLO **D1421**
(*)			469P	FOR SPECIAL EQUIPMENT 30.0805.01.1	PER VARIANTE 30.0805.01.1
35a	73154066	2	105P 600T	PLATE REQUIRES WELDING	PIASTRA

C 1421 → Tel.n. 050479 C 1434 → Tel.n. 050995
D 1421 Tel.n. 050480 → D 1434 Tel.n. 050996 →

a.UNIT EQUIPPED FOR SANITARY LANDFILL OR FORESTRY.

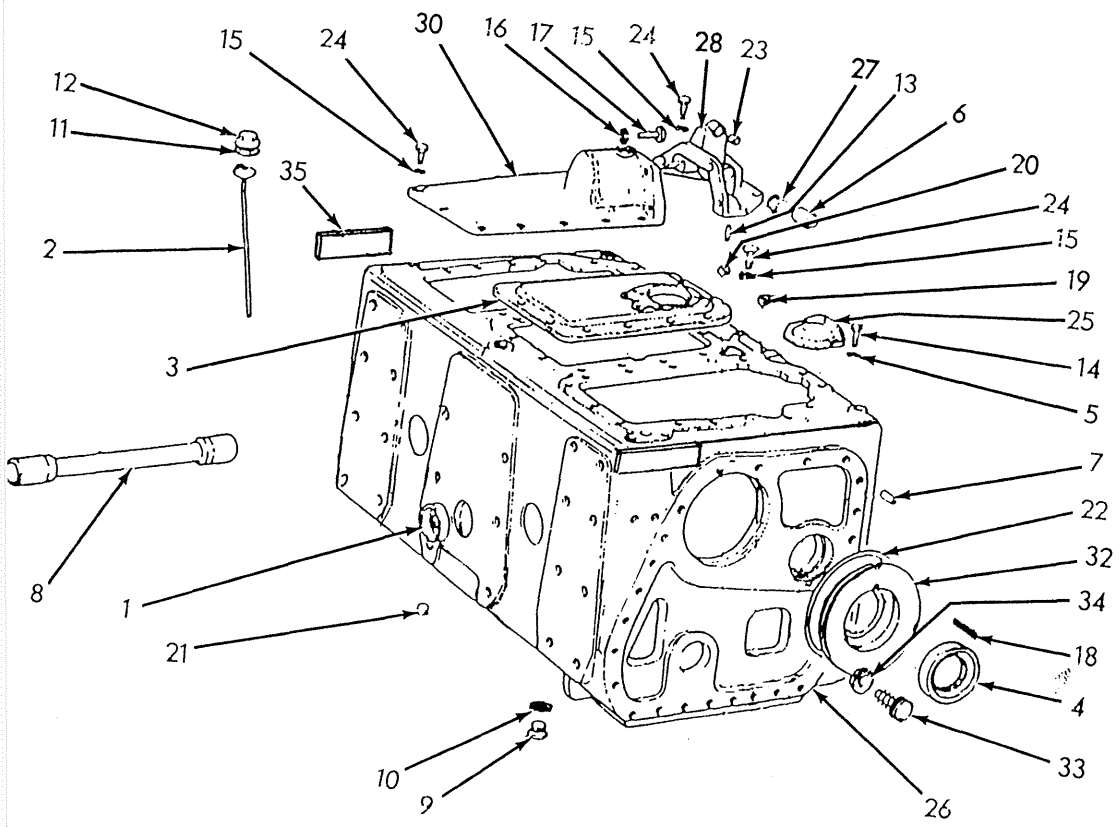

ITEM	PART NUMBER	QTY	TRANS CODE	DESCRIPTION	DESCRIZIONE
1	586720	1	50T	PLUG	TAPPO
2	587045	1	91A	DIPSTICK	ASTA LIVELLO
3	590393	1	265C	COVER	COPERCHIO
4	590851	2	158G	O-RING	GUARNIZIONE O-R
5	4962648	1	265C	COVER - FRONT	COPERCHIO - ANTERIORE
6	4967729	2	95B	BUSHING - INNER	BOCCOLA - INTERNO
7	4968762	2	90G	DOWEL	GRANO
8	4973208	1	16A	SHAFT (*)	ALBERO (*)
9	10119040	2	50T	PLUG 27x2x16 **D1967**	TAPPO 27x2x16 **D1967**
	10278311	1	50T	PLUG 28x1,5x11 **C1967**	TAPPO 28x1,5x11 **C1967**
10	10296585	1	133R	SEAL 28,3x36 **C1967**	ROSETTA DI TENUTA 28,3x36 **C1967**
11	10297085	1	133R	SEAL 40,3x48	ROSETTA DI TENUTA 40,3x48
12	10306371	1	50T	PLUG 40x1,5x13	TAPPO 40x1,5x13
13	10337810	2	80P	PIN 8x28	PERNO 8x28
14	10571871	3	131R	WASHER 10,2x2,2	ROSETTA 10,2x2,2
15	10571971	42	131R	WASHER 12,2x2,5	ROSETTA 12,2x2,5
16	10572071	6	131R	WASHER 14,2x3	ROSETTA 14,2x3
17	11408331	6	40V	SCREW 14x1,5x35	VITE 14x1,5x35
18	14167770	2	200S	PIN 6,4x16 **C1421**	SPINA 6,4x16 **C1421**
19	14323611	3	50T	PLUG 18x1,5x21	TAPPO 18x1,5x21
20	14324801	1	50T	PLUG 12x1,5x13	TAPPO 12x1,5x13
21	14325511	1	50T	PLUG 28x1,5x13 **C1967**	TAPPO 28x1,5x13 **C1967**
22	14468580	2	158G	O-RING 3,53x209,1 **C1421**	GUARNIZIONE O-R 3,53x209,1 **C1421**
23	14549270	2	95B	BUSHING 16x22	BOCCOLA 16x22
24	15540531	42	40V	SCREW 12x1,25x35	VITE 12x1,25x35

C 1421 → Tel.n. 050479

C 1967 → tel. n. 052874

D 1967 tel. n. 052875 →

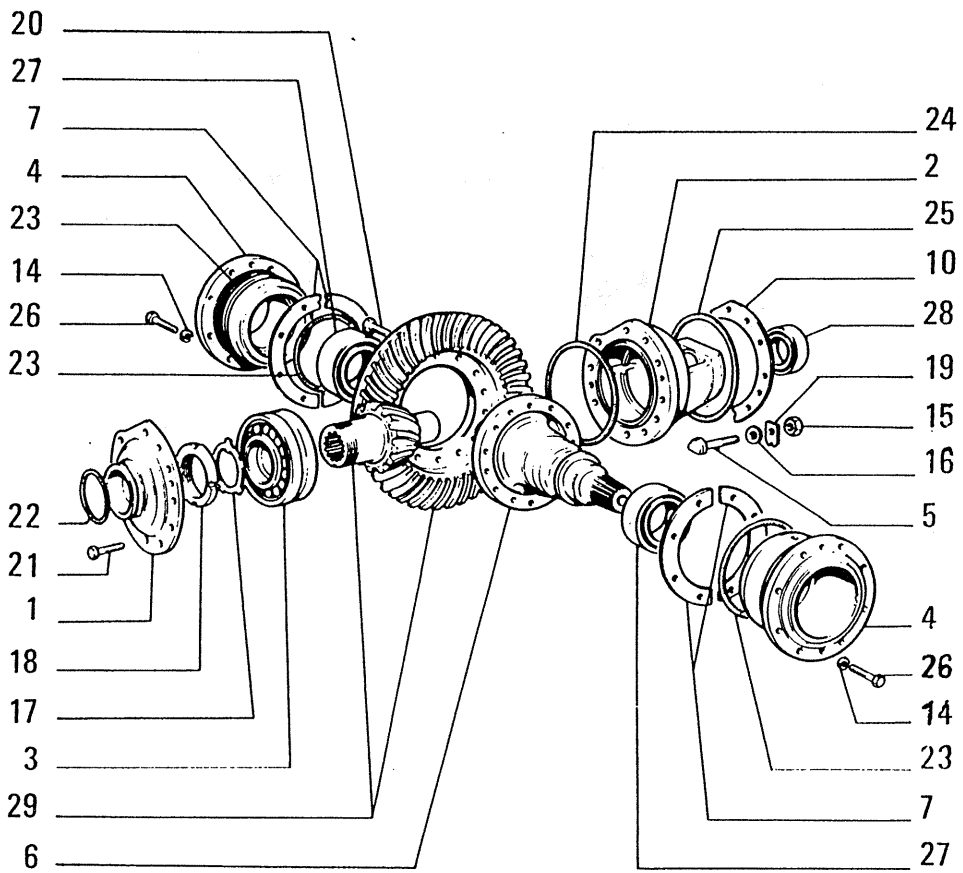

ITEM	PART NUMBER	QTY	TRANS CODE	DESCRIPTION	DESCRIZIONE
26	15540531	16	40V	SCREW 12x1,25x35	VITE 12x1,25x35
27	26800210	2	341C	BEARING 75x130	CUSCINETTO 75x130
28	28041720	1	341C	BEARING 35x72	CUSCINETTO 35x72
29	79001013	1	285C	BEVEL GEAR SET	COPPIA CONICA

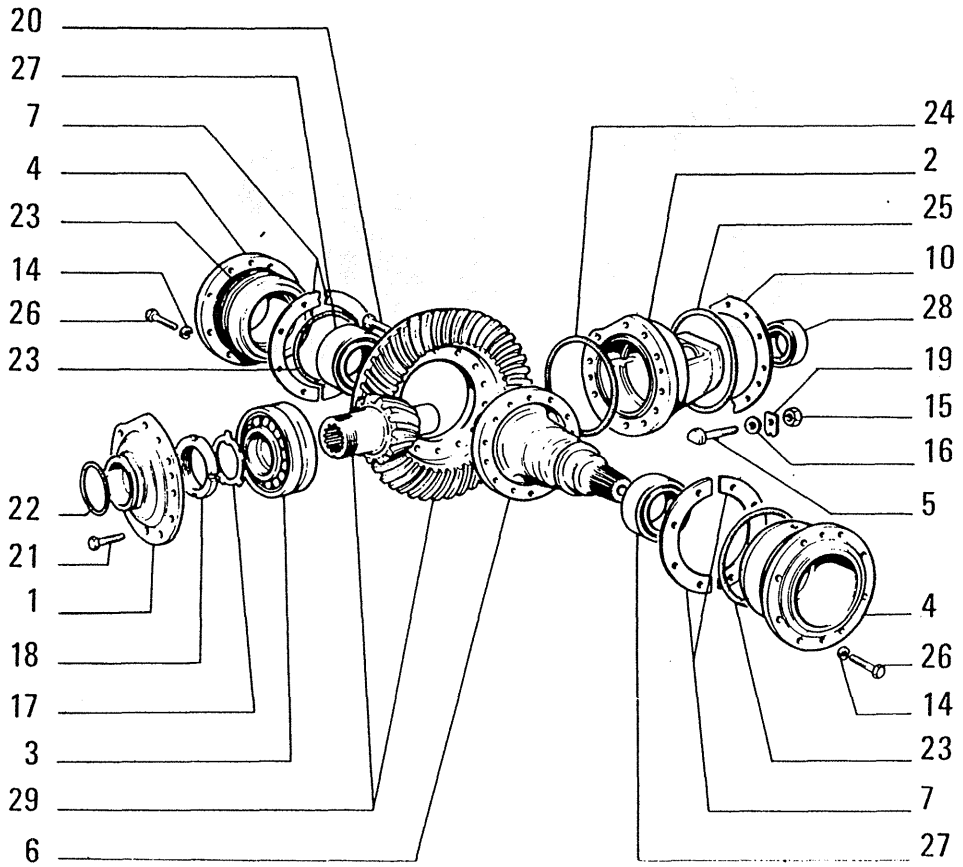

ITEM	PART NUMBER	QTY	TRANS CODE	DESCRIPTION	DESCRIZIONE
1	586455	1	265C	COVER	COPERCHIO
2	586524	1	300S	SUPPORT	SUPPORTO
3	586528	1	341C	BEARING	CUSCINETTO
4	586575	2	300S	SUPPORT	SUPPORTO
5	586704	1	40V	SCREW	VITE
6	586727	1	16A	SHAFT	ALBERO
7	586793		198S	SHIM 0,7	SPESSORE 0,7
	586794		198S	SHIM 0,5	SPESSORE 0,5
	586795		198S	SHIM 0,3	SPESSORE 0,3
	593431		198S	SHIM 0,15	SPESSORE 0,15
10	586986		198S	SHIM 0,2	SPESSORE 0,2
	586987		198S	SHIM 0,5	SPESSORE 0,5
	586988		198S	SHIM 1	SPESSORE 1
14	10571971	16	131R	WASHER 12,2x2,5	ROSETTA 12,2x2,5
15	12164721	1	10D	NUT 10x1,25x8	DADO 10x1,25x8
16	12646801	1	131R	WASHER 10,2x25	ROSETTA 10,2x25
17	12949310	1	131R	WASHER 85x101	ROSETTA 85x101
18	12953110	1	51G	THREADED RING 85x1,5x110	GHIERA FILETTATA 85x1,5x110
19	14198810	1	113P	LOCKPLATE 10,4x20	PIASTRINA DI SICUREZZA 10,4x20
20	14257830	14	40V	SCREW 16x1,5x35	VITE 16x1,5x35
21	14258130	11	40V	SCREW 16x1,5x50	VITE 16x1,5x50
22	14465480	1	158G	O-RING ANT. 3,53x82,14	GUARNIZIONE O-R ANT. 3,53x82,14
23	14467680	4	158G	O-RING 3,53x152	GUARNIZIONE O-R 3,53x152
24	14467780	1	158G	O-RING POST. 3,53x158,3	GUARNIZIONE O-R POST. 3,53x158,3
25	14467980	1	158G	O-RING 3,53x171	GUARNIZIONE O-R 3,53x171

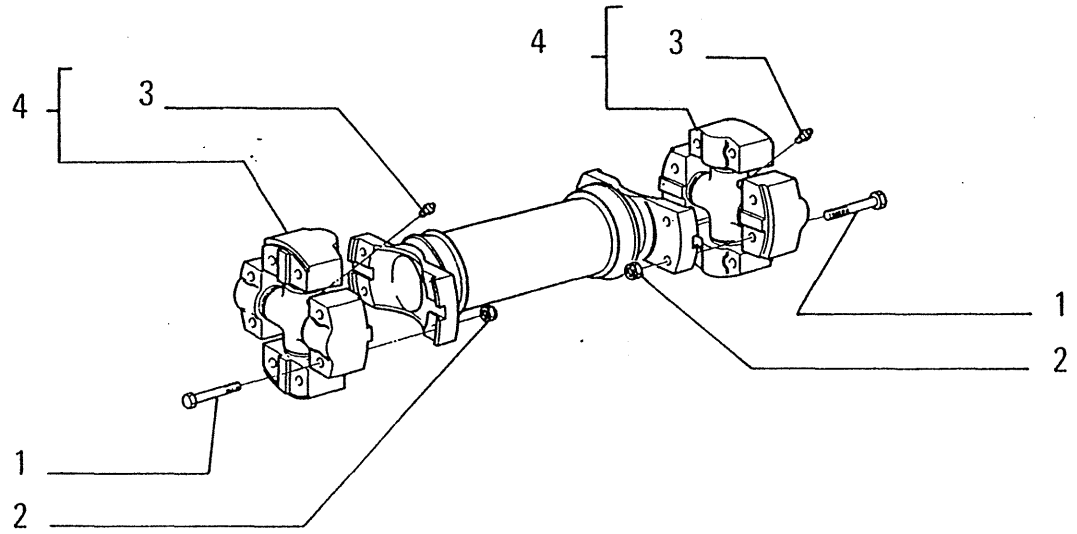

ITEM	PART NUMBER	QTY	TRANS CODE	DESCRIPTION	DESCRIZIONE
1	11113521	8	40V	SCREW 12x1,75x65	VITE 12x1,75x65
2	12577511	8	10D	NUT 12x1,75x14,8	DADO 12x1,75x14,8
3	13407211	2	60I	GREASE FITTING 10x1	INGRASSATORE 10x1
4	76002604	2	320C	SPIDER - ASSEMBLY	CROCIERA - COMPLETO

05474

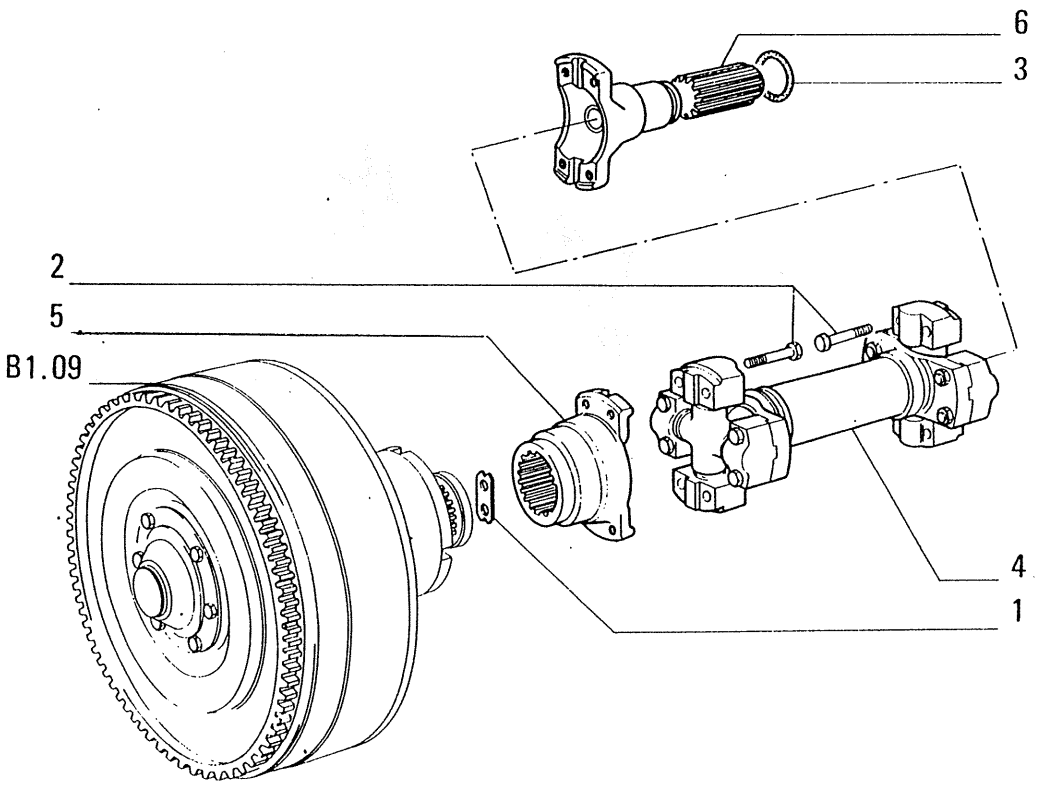

ITEM	PART NUMBER	QTY	TRANS CODE	DESCRIPTION	DESCRIZIONE
1	592915	1	110P	PLAQUE	PIASTRINA
2	14274930	8	40V	SCREW 12x1,25x50	VITE 12x1,25x50
3	14464381	1	158G	O-RING 3,53x47,22	GUARNIZIONE O-R 3,53x47,22
4	76002708	1	23A	DRIVE SHAFT - ASSEMBLY SEE SGR. B3.16	ALBERO TRASMISSIONE - COMPLETO VEDERE SGR. B3.16
5	79010476	1	30M	SLEEVE	MANICOTTO
6	79032238	1	16A	SHAFT	ALBERO

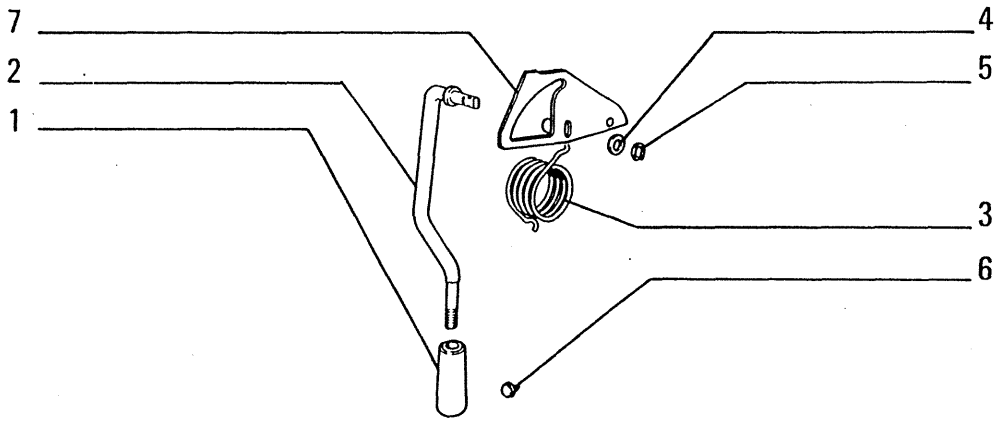

ITEM	PART NUMBER	QTY	TRANS CODE	DESCRIPTION	DESCRIZIONE
1	4977072	1	25I	HANDGRIP	IMPUGNATURA
2	4984830	1	45L	LEVER	LEVA
3	4985332	1	100M	SPRING	MOLLA
4	10520101	1	131R	WASHER 14,4x26	ROSETTA 14,4x26
5	11066276	1	51A	LOCKRING 12,9x1	ANELLO DI SICUREZZA 12,9x1
6	14567080	1	121B	RUBBER STUD 8,5x14	BOTTONE DI GOMMA 8,5x14
7	76000224	1	105P	PLATE	PIASTRA

05471

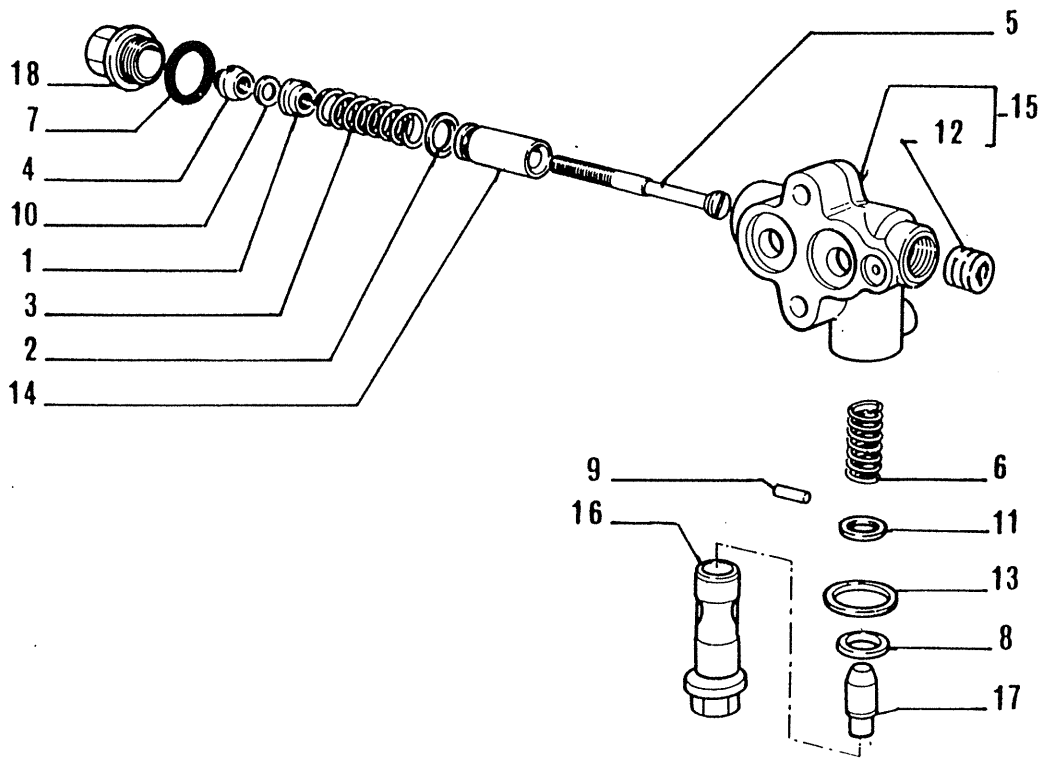

TORQUE CONVERTER
CONVERTITORE DI COPPIA USAGE: Unit S/N 052919 and up

ITEM	PART NUMBER	QTY	TRANS CODE	DESCRIPTION	DESCRIZIONE
1	581593	1	51G	THREADED RING	GHIERA FILETTATA
2	583058	1	131R	WASHER	ROSETTA
3	593198	1	100M	SPRING	MOLLA
4	597092	1	235S	PISTON	STANTUFFO
5	597415	1	141T	THREADED TIEROD	TIRANTE FILETTATO
6	8280351	1	100M	SPRING	MOLLA
7	10296260	1	120G	GASKET 28,3x36	GUARNIZIONE PIANA 28,3x36
8	10303460	1	120G	GASKET 30,3x36	GUARNIZIONE PIANA 30,3x36
9	10333910	1	80P	PIN 4x25	PERNO 4x25
10	10730321	1	131R	WASHER 8,15x17	ROSETTA 8,15x17
11	13550201		131R	WASHER 6,15x13	ROSETTA 6,15x13
12	14325301	1	50T	PLUG 22x1,5x13	TAPPO 22x1,5x13
13	14457681	1	158G	O-RING 2,62x21,89	GUARNIZIONE O-R 2,62x21,89
14	79000996	1	75F	CARRIER	FLOTTANTE
15	79043952	1	300C	BODY - ASSEMBLY	CORPO - COMPLETO
16	79043953	1	74S	VALVE SEAT	SEDE DELLA VALVOLA
17	79043954	1	130P	PLUNGER	PISTONCINO
18	79068722	1	50T	PLUG	TAPPO

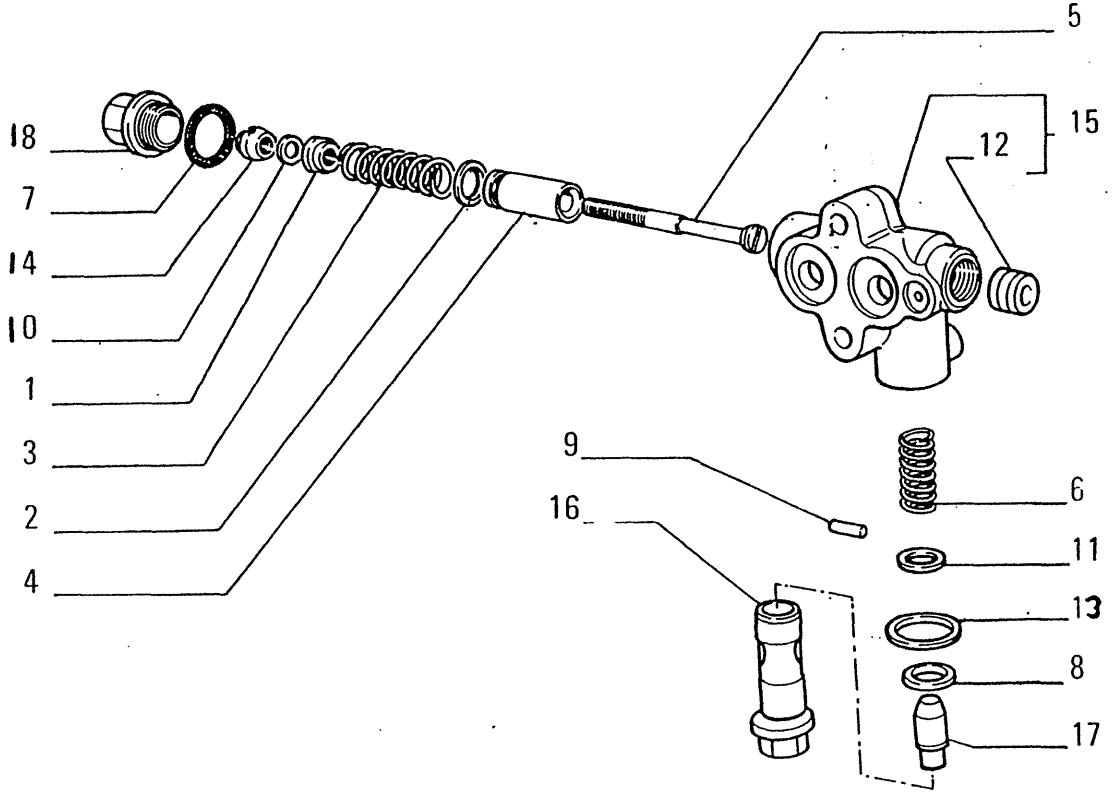

ITEM	PART NUMBER	QTY	TRANS CODE	DESCRIPTION	DESCRIZIONE
1	581593	1	51G	THREADED RING	GHIERA FILETTATA
2	583058	1	131R	WASHER	ROSETTA
3	593198	1	100M	SPRING	MOLLA
4	597092	1	235S	PISTON	STANTUFFO
5	597415	1	141T	THREADED TIEROD	TIRANTE FILETTATO
6	8280351	1	100M	SPRING	MOLLA
7	10296260	1	133R	SEAL 28,3x36	ROSETTA DI TENUTA 28,3x36
8	10303460	1	133R	SEAL 30,3x36	ROSETTA DI TENUTA 30,3x36
9	10333910	1	80P	PIN 4x25	PERNO 4x25
10	10730321	1	131R	WASHER 8,15x17	ROSETTA 8,15x17
11	13550201	1	131R	WASHER 6,15x13	ROSETTA 6,15x13
12	14325301	1	50T	PLUG 22x1,5x13	TAPPO 22x1,5x13
13	14457681	1	133R	SEAL 2,62x21,89	ROSETTA DI TENUTA 2,62x21,89
14	79000996	1	75F	CARRIER	FLOTTANTE
15	79043952	1	300C	BODY - ASSEMBLY	CORPO - COMPLETO
16	79043953	1	74S	VALVE SEAT	SEDE DELLA VALVOLA
17	79043954	1	130P	PLUNGER	PISTONCINO
18	4989904	1	50T	PLUG	TAPPO

D 1436 Tel.n. 050972 thru 052918

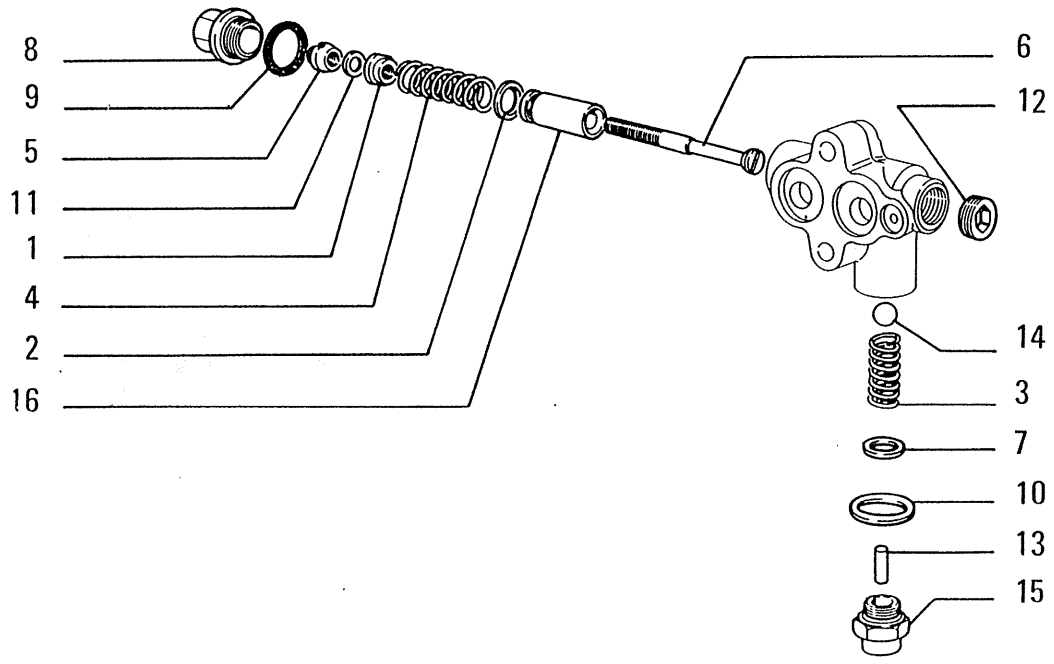

ITEM	PART NUMBER	QTY	TRANS CODE	DESCRIPTION	DESCRIZIONE
1	581593	1	50G	RING NUT	GHIERA
2	583058	1	131R	WASHER	ROSETTA
3	584976	1	100M	SPRING	MOLLA
4	593198	1	100M	SPRING	MOLLA
5	597092	1	235S	PISTON	STANTUFFO
6	597415	1	142T	TIEROD	TIRANTE
7	4953610		131R	WASHER	ROSETTA
8	4989904	1	50T	PLUG C1454	TAPPO C1454
	79044692	1	50T	PLUG D1454	TAPPO D1454
9	10296260	1	133R	SEAL 28,3x36	ROSETTA DI TENUTA 28,3x36
10	10303460	1	133R	SEAL 30,3x36	ROSETTA DI TENUTA 30,3x36
11	10730321	1	131R	WASHER 8,15x17	ROSETTA 8,15x17
12	14325311	1	50T	PLUG 22x1,5x13	TAPPO 22x1,5x13
13	14609770	1	200S	PIN	SPINA
14	20063530	1	140S	BALL 19,051	SFERA 19,051
15	76004222	1	50T	PLUG	TAPPO
16	79000996	1	75F	CARRIER	FLOTTANTE

C 1454 → Tel.n. 051636
D 1454 Tel.n. 051637 →

05469

C 1436 → tel.n. 050971

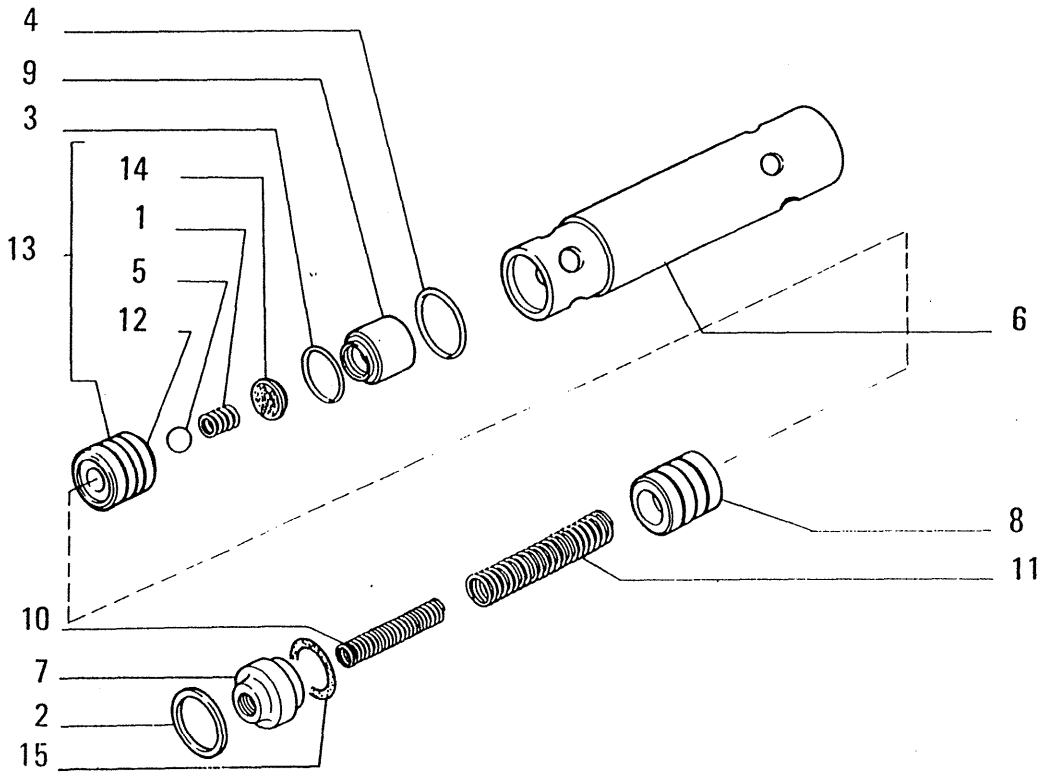

ITEM	PART NUMBER	QTY	TRANS CODE	DESCRIPTION	DESCRIZIONE
1	589923	1	100M	SPRING	MOLLA
2	11057876	1	51A	LOCKRING 21,5x1	ANELLO DI SICUREZZA 21,5x1
3	13420776	1	51A	LOCKRING	ANELLO DI SICUREZZA
4	14453581	1	158G	O-RING 1,78x18,77	GUARNIZIONE O-R 1,78x18,77
5	20063470	1	140S	BALL 7,938	SFERA 7,938
6	79040791	1	300C	BODY	CORPO
7	79040793	1	50T	PLUG	TAPPO
8	79040798	1	235S	PISTON	STANTUFFO
9	79043546	1	69S	SEAT	SEDE
10	79043547	1	100M	SPRING	MOLLA
11	79043548	1	100M	SPRING - OUTER C1430	MOLLA - ESTERNO C1430
	79053168	1	100M	SPRING - OUTER D1430	MOLLA - ESTERNO D1430
12	79043549	1	300C	BODY C1430	CORPO C1430
	79053155	1	300C	BODY D1430	CORPO D1430
13	79043550	1	10V	VALVE - ASSEMBLY C1430	VALVOLA - COMPLETO C1430
	79053154	1	10V	VALVE - ASSEMBLY D1430	VALVOLA - COMPLETO D1430
14	79043551	1	69S	SEAT	SEDE
15	79053475	12	131R	WASHER D1430	ROSETTA D1430

C 1430 → Tel.n. 050831
D 1430 Tel.n. 050832 →

05468

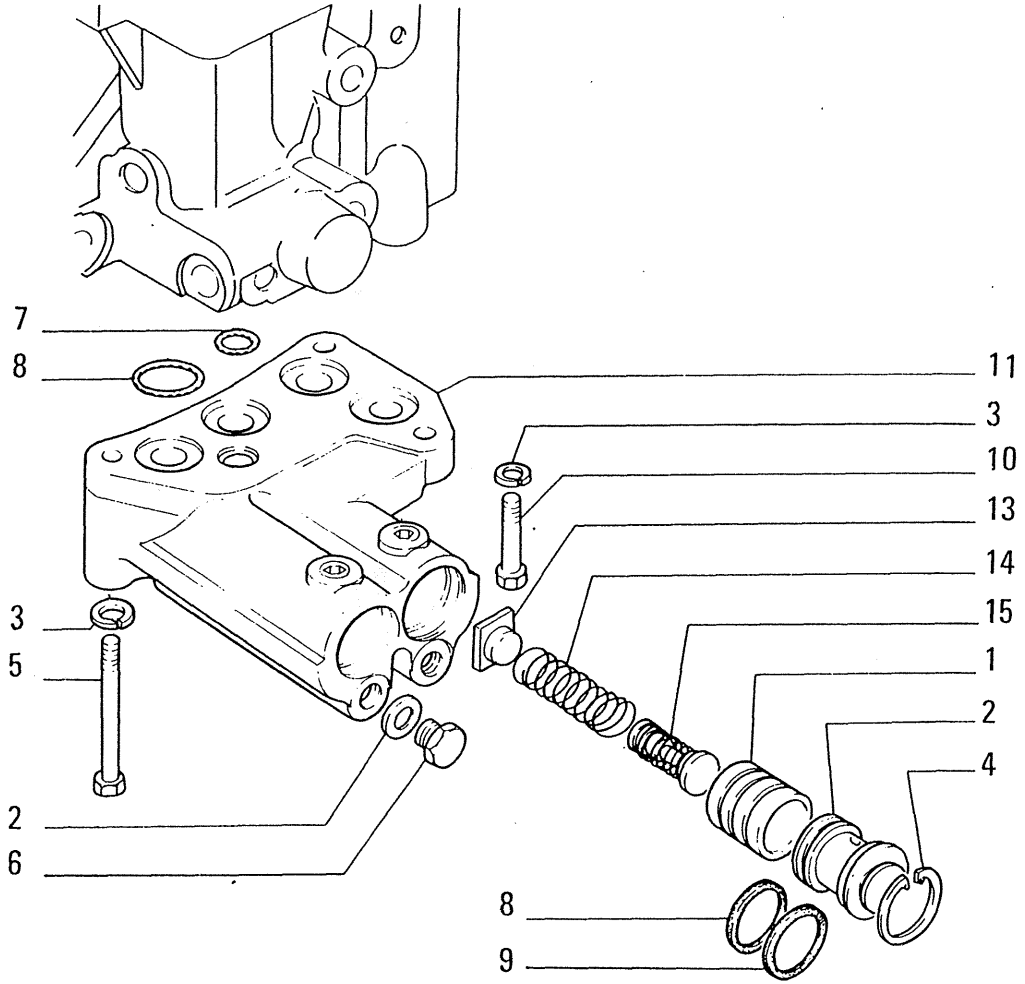

ITEM	PART NUMBER	QTY	TRANS CODE	DESCRIPTION	DESCRIZIONE
1	586171	2	235S	PISTON	STANTUFFO
2	10260160	2	133R	SEAL 10,2x14	ROSETTA DI TENUTA 10,2x14
3	10516871	3	131R	WASHER 10x2,5	ROSETTA 10x2,5
4	11058675	2	51A	LOCKRING 30,1x1,2	ANELLO DI SICUREZZA 30,1x1,2
5	11343731	1	40V	SCREW 10x1,25x65	VITE 10x1,25x65
6	11903111	2	50T	PLUG 10x1,25x7	TAPPO 10x1,25x7
7	14453180	1	158G	O-RING 1,78x12,42	GUARNIZIONE O-R 1,78x12,42
8	14453680	5	158G	O-RING 1,78x20,35	GUARNIZIONE O-R 1,78x20,35
9	14453780	2	158G	O-RING 1,78x21,95	GUARNIZIONE O-R 1,78x21,95
10	15970931	2	40V	SCREW 10x1,25x35	VITE 10x1,25x35
11	79006596	1	300C	BODY	CORPO
12	79040809	2	50T	PLUG	TAPPO
13	79042386	2	120P	PLATE	PIATTELLO
14	79042388	2	100M	SPRING - OUTER	MOLLA - ESTERNO
15	79042389	2	100M	SPRING - INNER	MOLLA - INTERNO

05467

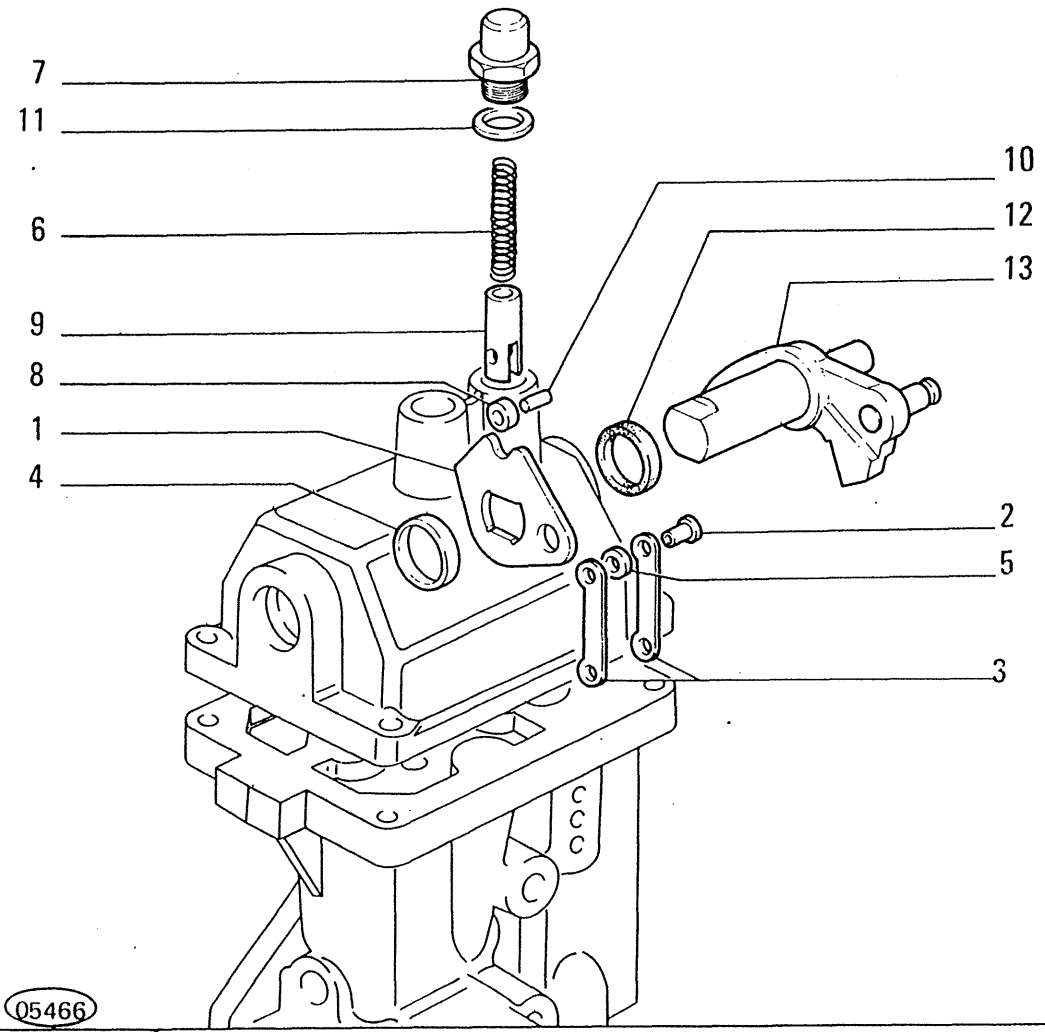

ITEM	PART NUMBER	QTY	TRANS CODE	DESCRIPTION	DESCRIZIONE
1	4962494	1	10E	ECCENTRIC	ECCENTRICO
2	4962496	1	80P	PIN	PERNO
3	4962497	2	50B	LINK	BIELLA
4	4962498	1	75D	SPACER	DISTANZIALE
5	4962499	2	75D	SPACER	DISTANZIALE
6	4989256	2	100M	SPRING	MOLLA
7	4989257	2	50T	PLUG	TAPPO
8	4989258	2	157R	ROLLER	RULLO
9	4989259	2	240P	TAPPET	PUNTERIA
10	4989261	2	80P	PIN	PERNO
11	10257060	2	133R	SEAL 16,2x22	ROSETTA DI TENUTA 16,2x22
12	14463080	1	158G	O-RING 3,53x21,82	GUARNIZIONE O-R 3,53x21,82
13	79015488	1	45L	LEVER - OUTER	LEVA - ESTERNO

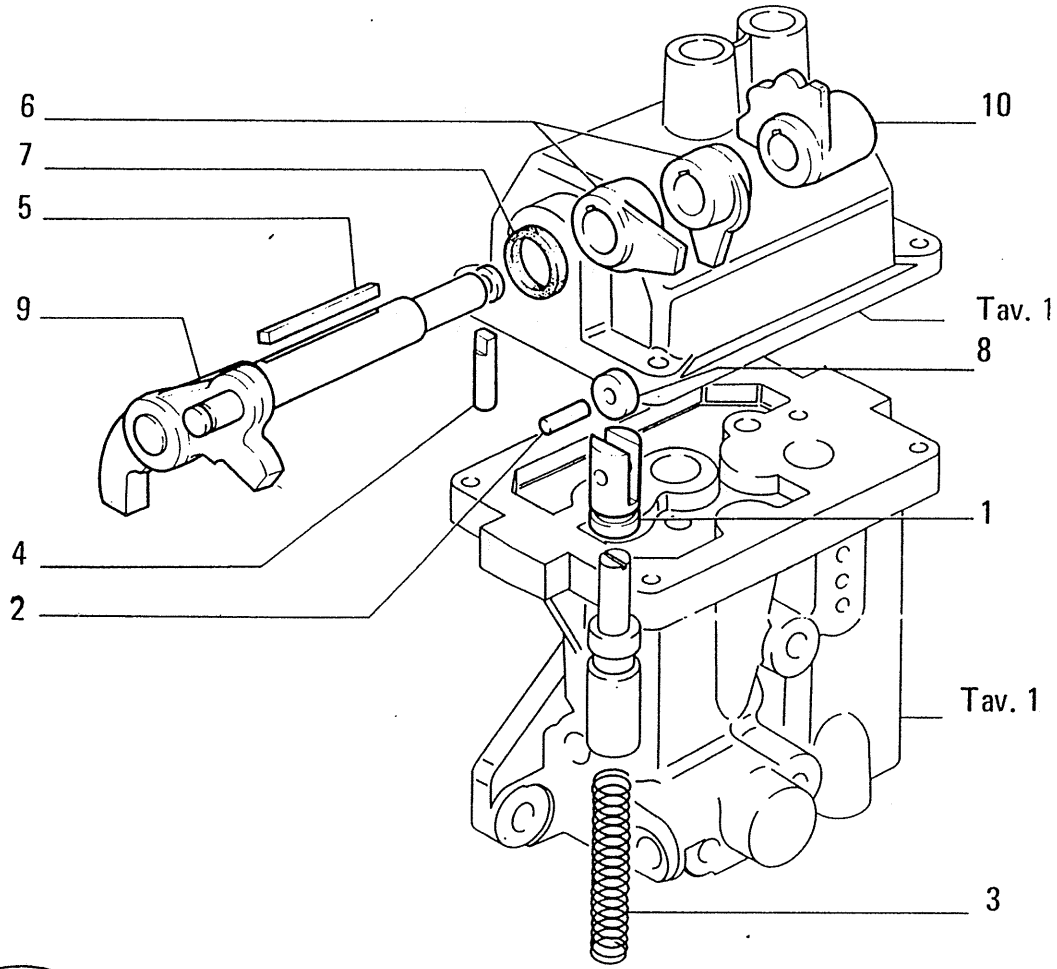

ITEM	PART NUMBER	QTY	TRANS CODE	DESCRIPTION	DESCRIZIONE
1	575885	2	240P	TAPPET	PUNTERIA
2	575888	3	80P	PIN	PERNO
3	581235	2	100M	SPRING	MOLLA
4	581241	1	80P	PIN	PERNO
5	581243	1	158C	WOODRUFF KEY	LINGUETTA A DISCO
6	591276	2	10E	ECCENTRIC	ECCENTRICO
7	14463080	1	158G	O-RING 3,53x21,82	GUARNIZIONE O-R 3,53x21,82
8	79004433	2	157R	ROLLER	RULLO
9	79006606	1	45L	LEVER - OUTER	LEVA - ESTERNO
10	79007301	1	10E	ECCENTRIC	ECCENTRICO

05465

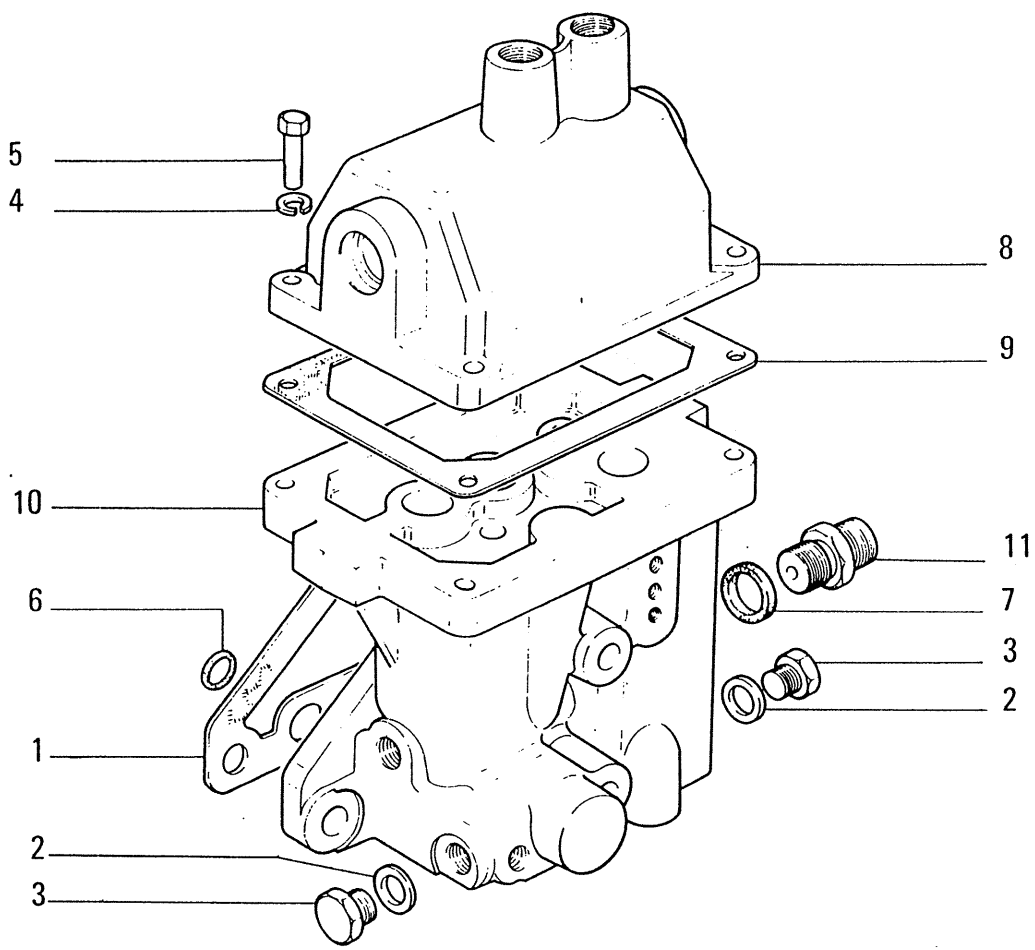

05464

ITEM	PART NUMBER	QTY	TRANS CODE	DESCRIPTION	DESCRIZIONE
1	590446	1	123G	SEAL ASSY - CORRECT **C1961**	GUARNIZIONE TENUTA FRONTALE - CORRIGE **C1961**
	590496	1	123G	SEAL ASSY - WRONG	GUARNIZIONE TENUTA FRONTALE - ERRATA
	79035287	1	123G	SEAL ASSY **D1961**	GUARNIZIONE TENUTA FRONTALE **D1961**
2	10260160	3	133R	SEAL 10,2x14	ROSETTA DI TENUTA 10,2x14
3	10300511	3	50T	PLUG 12x1,5x8	TAPPO 12x1,5x8
4	10516871	4	131R	WASHER 10x2,5	ROSETTA 10x2,5
5	11306931	4	40V	SCREW 10x1,25x30	VITE 10x1,25x30
6	14456881	4	158G	O-RING 2,62x9,19	GUARNIZIONE O-R 2,62x9,19
7	14457280	2	158G	O-RING 2,62x15,54	GUARNIZIONE O-R 2,62x15,54
8	79006441	1	265C	COVER	COPERCHIO
9	79012130	1	123G	SEAL ASSY	GUARNIZIONE TENUTA FRONTALE
10	79039541	1	300C	BODY	CORPO
11	79040807	1	20R	FITTING	RACCORDO

C 1961 → tel. n. 052541
D 1961 tel. n. 052542 →

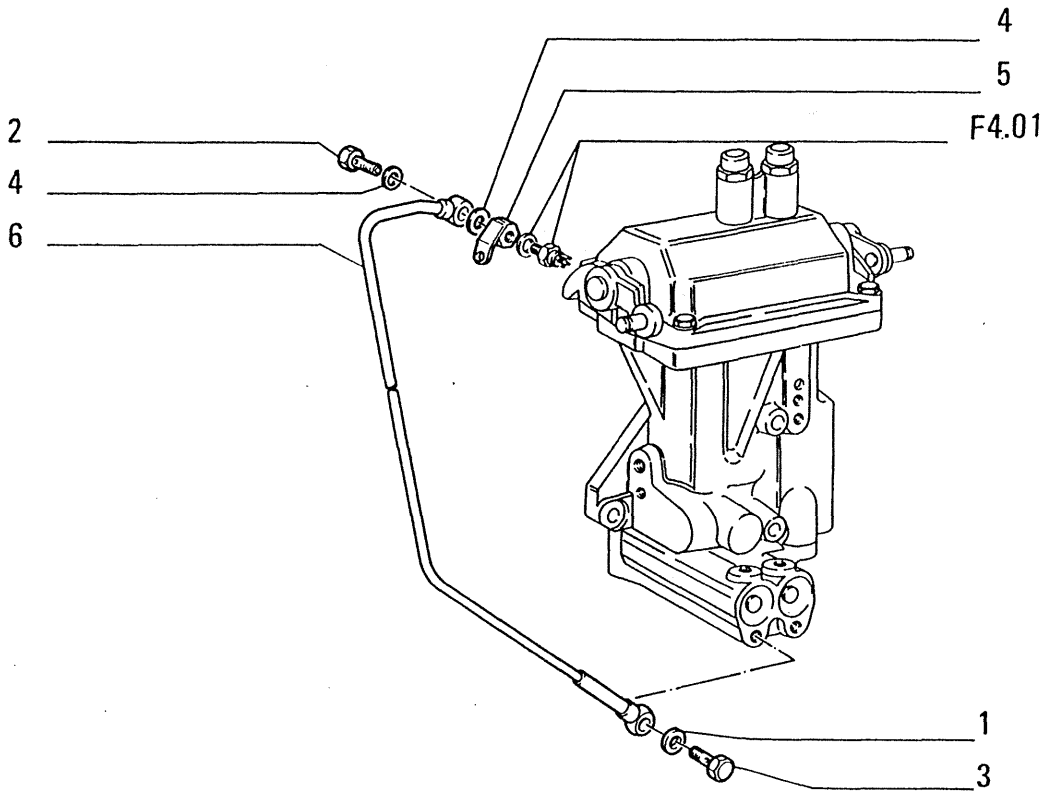

ITEM	PART NUMBER	QTY	TRANS CODE	DESCRIPTION	DESCRIZIONE
1	10260160	1	133R	SEAL (*) 10,2x14	ROSETTA DI TENUTA (*) 10,2x14
2	11903717	1	90B	FILLER PLUG (*) 8x1,25x16	BOCCHETTONE INTRODUZIONE (*) 8x1,25x16
3	11903817	1	90B	FILLER PLUG (*) 10x1,25x19	BOCCHETTONE INTRODUZIONE (*) 10x1,25x19
4	14330260	2	133R	SEAL (*) 8,2x12	ROSETTA DI TENUTA (*) 8,2x12
5	76002365	1	300S	SUPPORT (*)	SUPPORTO (*)
6	79020188	1	193T	TUBE (*)	TUBO RIGIDO (*)
(*)			469P	FOR SPECIAL EQUIPMENT 30.0759.09.1	PER VARIANTE 30.0759.09.1

05093

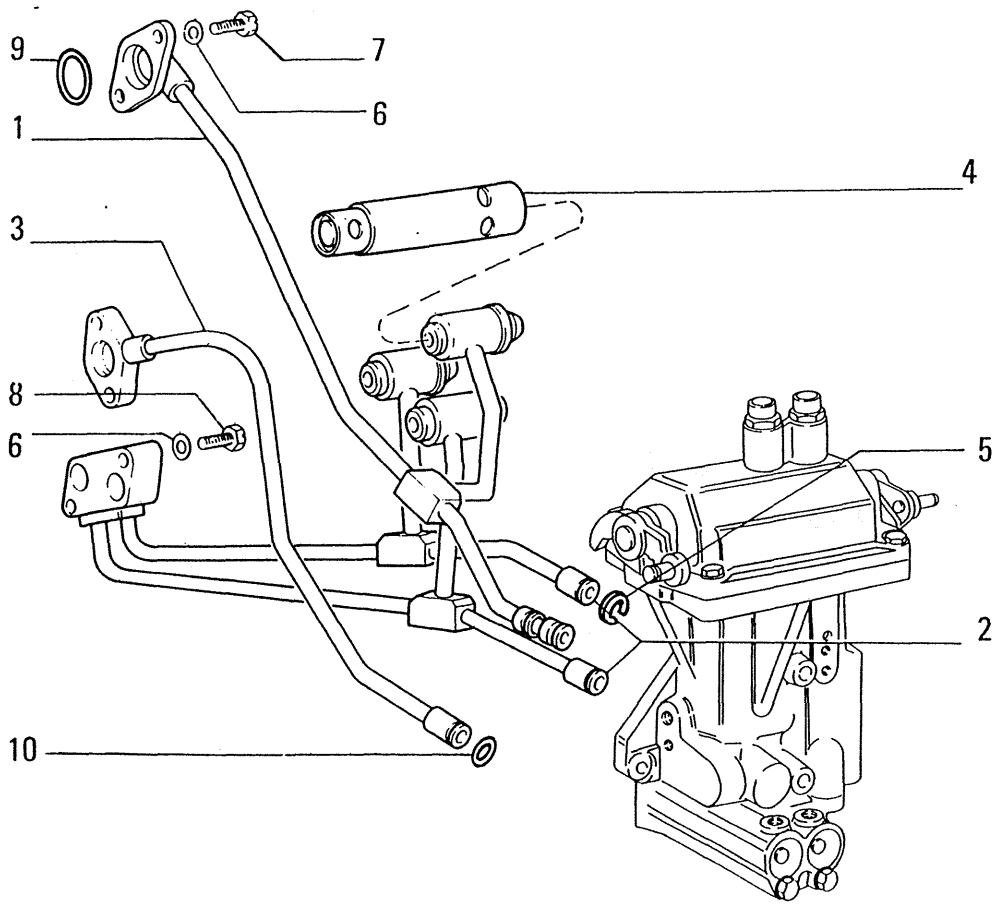

ITEM	PART NUMBER	QTY	TRANS CODE	DESCRIPTION	DESCRIZIONE
1	79038794	1	193T	TUBE	TUBO RIGIDO
2	79038800	1	190T	LINE	TUBAZIONE
3	79040811	1	193T	TUBE	TUBO RIGIDO
4	79043621	3	10V	VALVE - ASSEMBLY SEE SGR. B2.34 C1430	VALVOLA - COMPLETO VEDERE SGR. B2.34 C1430
	79053153	3	10V	VALVE - ASSEMBLY SEE SGR. B2.34 D1430	VALVOLA - COMPLETO VEDERE SGR. B2.34 D1430
5	586832	3	56A	RETAINING RING	ANELLO DI RITEGNO
6	10516471	6	131R	WASHER 6,1x1,8	ROSETTA 6,1x1,8
7	10902621	4	40V	SCREW 6x1x25	VITE 6x1x25
8	10903221	2	40V	SCREW 6x1x40	VITE 6x1x40
9	14456881	4	158G	O-RING 2,62x9,19	GUARNIZIONE O-R 2,62x9,19
10	14456980	1	158G	O-RING 2,62x10,77	GUARNIZIONE O-R 2,62x10,77

C 1430 → Tel.n. 050831
D 1430 Tel.n. 050832 →

Q5092

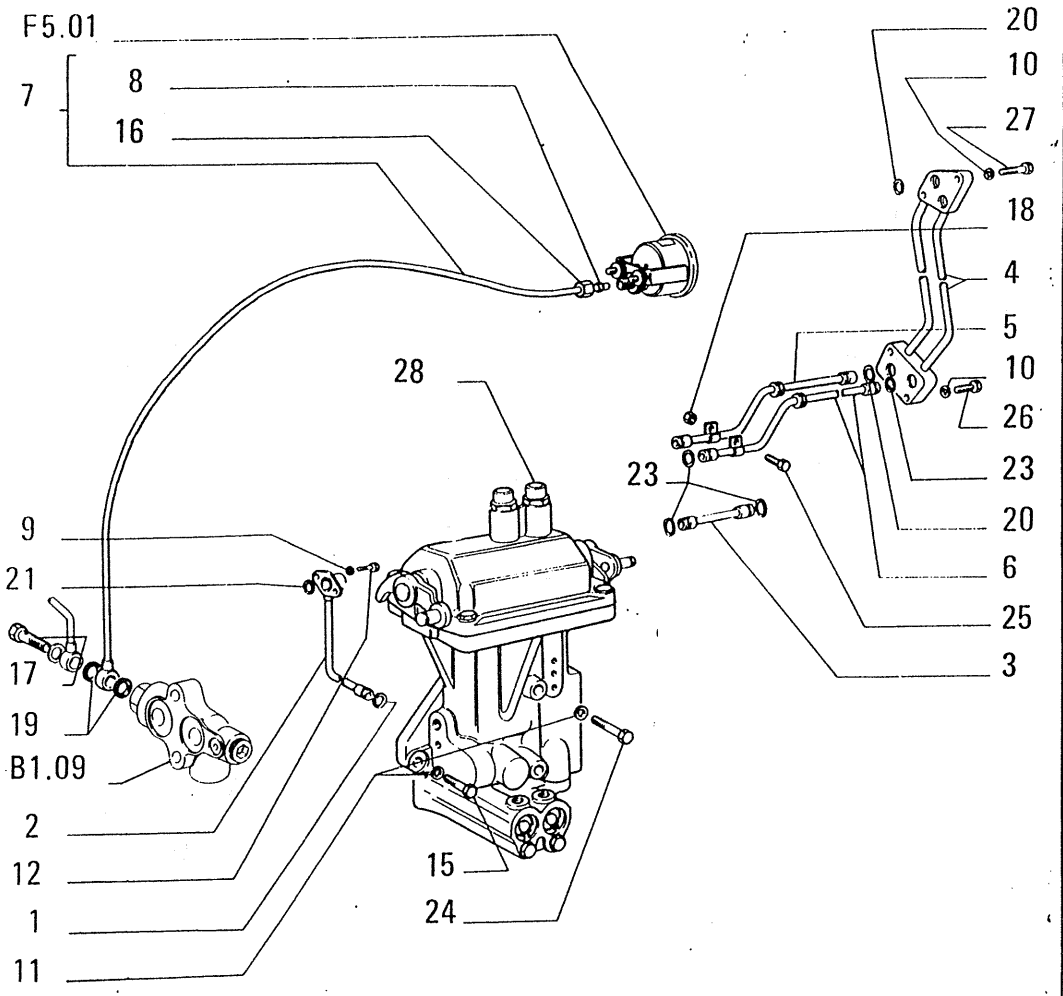

05091

FIATALLIS **B2.30 TAV. 1 PAG.1**

ITEM	PART NUMBER	QTY	TRANS CODE	DESCRIPTION	DESCRIZIONE
1	586832	1	56A	RETAINING RING	ANELLO DI RITEGNO
2	586838	1	193T	TUBE - FRONT	TUBO RIGIDO - ANTERIORE
3	586839	1	193T	TUBE - REAR	TUBO RIGIDO - POSTERIORE
4	4962419	1	190T	LINE	TUBAZIONE
5	4964148	1	193T	TUBE - REAR	TUBO RIGIDO - POSTERIORE
6	4979157	1	193T	TUBE - REAR	TUBO RIGIDO - POSTERIORE
7	4989907	1	193T	TUBE - ASSEMBLY C1454	TUBO RIGIDO - COMPLETO C1454
8	10165240	1	58A	BALL SLEEVE 4,6x5 C1454	ANELLO A DOPPIO CONO 4,6x5 C1454
9	10516471	2	131R	WASHER 6,1x1,8	ROSETTA 6,1x1,8
10	10516671	4	131R	WASHER 8,1x2,2	ROSETTA 8,1x2,2
11	10516871	5	131R	WASHER 10x2,5	ROSETTA 10x2,5
12	10902421	2	40V	SCREW 6x1x20	VITE 6x1x20
15	11306931	3	40V	SCREW 10x1,25x30	VITE 10x1,25x30
16	11902417	1	10D	NUT 10x1,25x12 C1454	DADO 10x1,25x12 C1454
17	11903717	1	90B	FILLER PLUG 8x1,25x16 C1454	BOCCHETTONE INTRODUZIONE 8x1,25x16 C1454
18	14048211	1	10D	NUT 8x1,25x8,8	DADO 8x1,25x8,8
19	14330260	2	133R	SEAL 8,2x12 C1454	ROSETTA DI TENUTA 8,2x12 C1454
20	14456880	3	158G	O-RING 2,62x9,19	GUARNIZIONE O-R 2,62x9,19
21	14456881	1	158G	O-RING 2,62x9,19	GUARNIZIONE O-R 2,62x9,19
23	14456981	5	158G	O-RING 2,62x10,77	GUARNIZIONE O-R 2,62x10,77
24	15971531	2	40V	SCREW 10x1,25x85	VITE 10x1,25x85
25	16043431	1	40V	SCREW 8x1,25x20	VITE 8x1,25x20
26	16043631	2	40V	SCREW 8x1,25x25	VITE 8x1,25x25
27	16043831	2	40V	SCREW 8x1,25x30	VITE 8x1,25x30
28	79039539	1	83D	CONTROL VALVE - ASSEMBLY SEE SGR. B2.33	DISTRIBUTORE - COMPLETO VEDERE

C 1454 → Tel.n. 051636

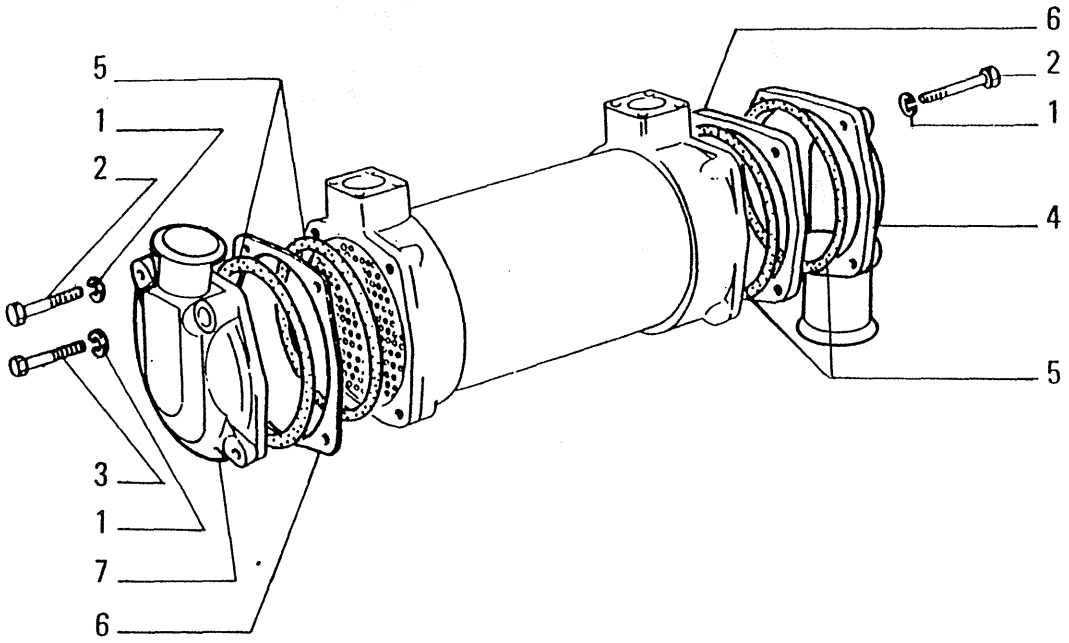

TORQUE CONVERTER
CONVERTITORE DI COPPIA USAGE: Units with 8365 Engine

ITEM	PART NUMBER	QTY	TRANS CODE	DESCRIPTION	DESCRIZIONE
1	10571779	8	131R	WASHER 8,1x2	ROSETTA 8,1x2
2	16043934	7	40V	SCREW 8x1,25x35	VITE 8x1,25x35
3	16044634	1	40V	SCREW 8x1,25x70	VITE 8x1,25x70
4	79034122	1	265C	COVER	COPERCHIO
5	79034123	4	123G	SEAL ASSY	GUARNIZIONE TENUTA FRONTAL
6	79034124	2	75D	SPACER	DISTANZIALE
7	79047702	1	265C	COVER	COPERCHIO

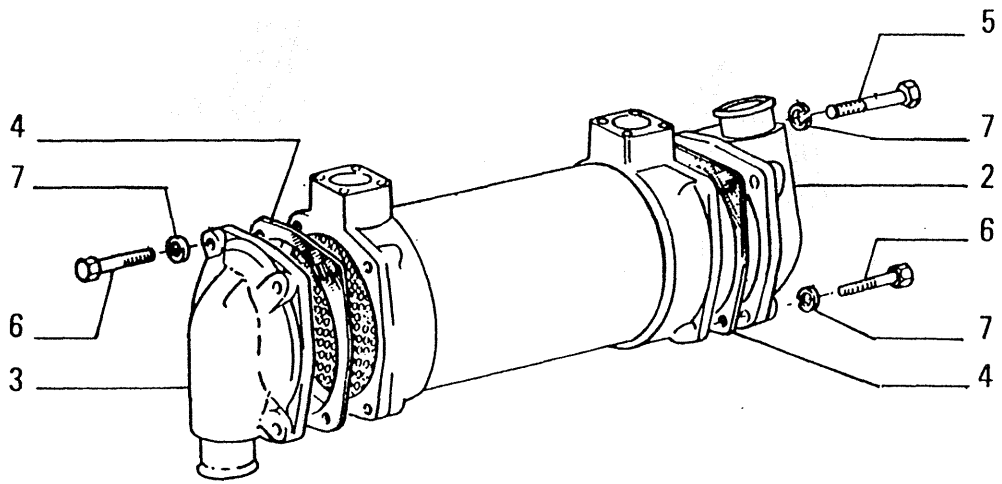

ITEM	PART NUMBER	QTY	TRANS CODE	DESCRIPTION	DESCRIZIONE
2	79019033	1	265C	COVER	COPERCHIO
3	9920276	1	265C	COVER	COPERCHIO
4	9920277	2	122G	SEAL	GUARNIZIONE
5	15888831	1	40V	SCREW 10x1,25x70	VITE 10x1,25x70
6	15970931	7	40V	SCREW 10x1,25x35	VITE 10x1,25x35
7	15916871	8	170R	LOCKWASHER 4,2x13	ROSETTA EL. 4,2x13

TORQUE CONVERTER
CONVERTITORE DI COPPIA USAGE: Units with 8365 Engine

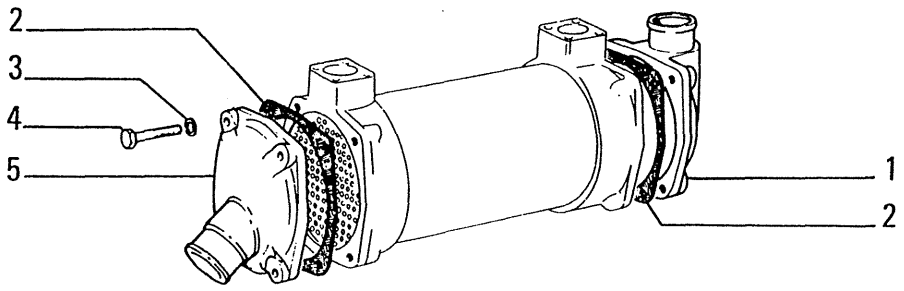

ITEM	PART NUMBER	QTY	TRANS CODE	DESCRIPTION	DESCRIZIONE
1	9920276	1	265C	COVER	COPERCHIO
2	9920277	2	123G	SEAL ASSY	GUARNIZIONE TENUTA FRONTALE
3	10516870	8	131R	WASHER 10,2x2,5	ROSETTA 10,2x2,5
4	15970921	8	40V	SCREW 10x1,25x35	VITE 10x1,25x35
5	79042128	1	265C	COVER	COPERCHIO

05463 USAGE: Units with 8205 Engine

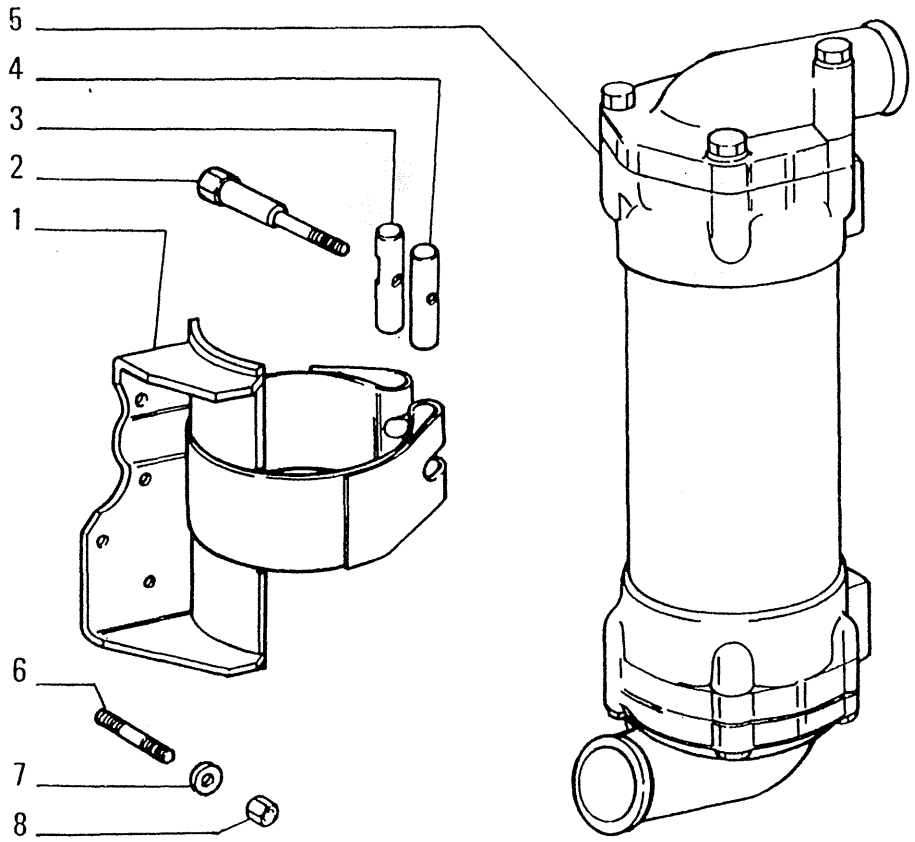

ITEM	PART NUMBER	QTY	TRANS CODE	DESCRIPTION	DESCRIZIONE
1	4773266	1	300S	SUPPORT PER 4795606	SUPPORTO PER 4795606
	4795729	1	300S	SUPPORT PER 4754839	SUPPORTO PER 4754839
2	4722722	1	40V	SCREW	VITE
3	4950479	1	74B	BLOCK	BLOCCHETTO
4	4950480	1	74B	BLOCK	BLOCCHETTO
5	4754839	1	25S	HEAT EXCHANGER - IN ALTERNATIVE ASSEMBLY SEE SGR. B2.21/1	SCAMBIATORE DI CALORE - IN ALTERNATIVA COMPLETO VEDERE SGR. B2.21/1
	4795606	1	25S	HEAT EXCHANGER - IN ALTERNATIVE ASSEMBLY SEE SGR. B2.21/2	SCAMBIATORE DI CALORE - IN ALTERNATIVA COMPLETO VEDERE SGR. B2.21/2
6	13453521	4	210P	STUD 10x1,25x50	PRIGIONIERO 10x1,25x50
7	11198379	4	131R	WASHER 10,5x20	ROSETTA 10,5x20
8	12164711	4	10D	NUT 10x1,25x8	DADO 10x1,25x8

USAGE: Units with8365 Engine

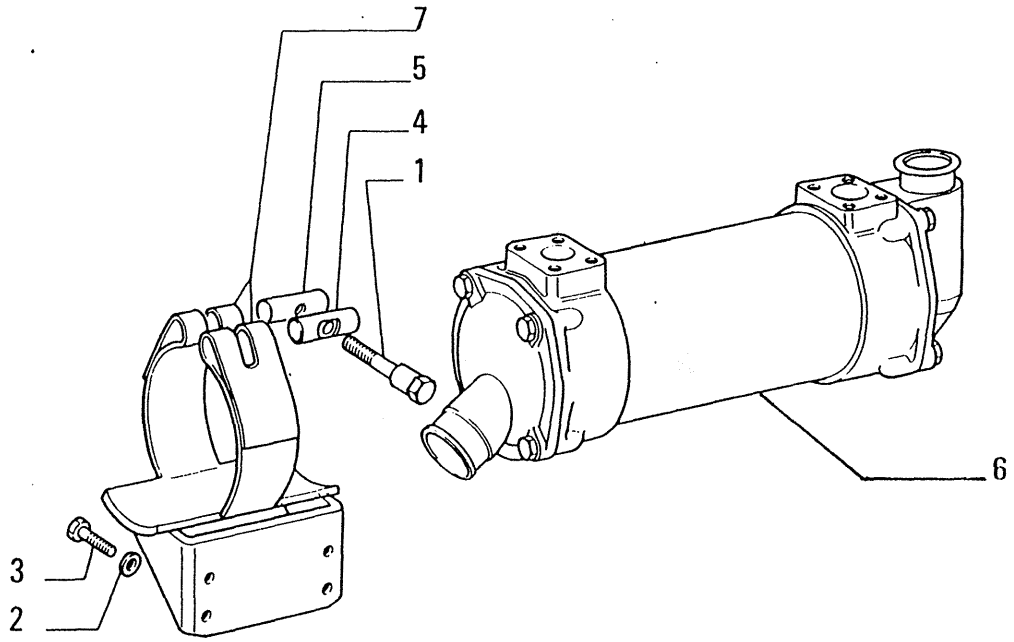

ITEM	PART NUMBER	QTY	TRANS CODE	DESCRIPTION	DESCRIZIONE
1	4950481	1	40V	SCREW	VITE
2	11198671	4	131R	WASHER 13x24	ROSETTA 13x24
3	15540521	4	40V	SCREW 12x1,25x35	VITE 12x1,25x35
4	61589020	1	60T	BLOCK	TASSELLO
5	61589022	1	60T	BLOCK	TASSELLO
6	61694008	1	25S	HEAT EXCHANGER - ASSEMBLY SEE SGR. B2.21	SCAMBIATORE DI CALORE - COMPLETO VEDERE SGR. B2.21
7	61694013	1	300S	SUPPORT	SUPPORTO

(05462) USAGE: Units with 8205 Engine

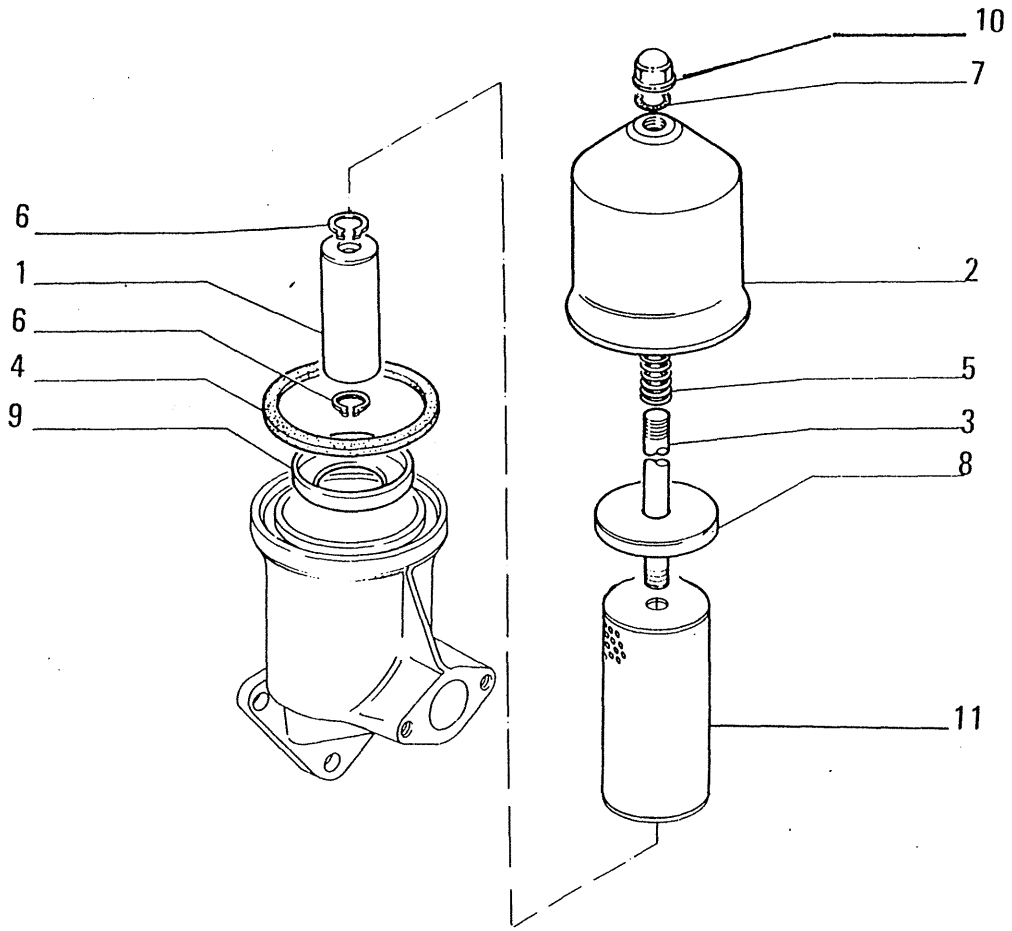

ITEM	PART NUMBER	QTY	TRANS CODE	DESCRIPTION	DESCRIZIONE
1	581492	1	54C	MAGNETIC ROD	CANDELA MAGNETICA
2	4979711	1	265C	COVER	COPERCHIO
3	4979712	1	210P	STUD	PRIGIONIERO
4	4979714	1	123G	SEAL ASSY	GUARNIZIONE TENUTA FRONTALE
5	8288935	1	100M	SPRING	MOLLA
6	13404476	2	51A	LOCKRING 9,6x1,2	ANELLO DI SICUREZZA 9,6x1,2
7	14457280	1	158G	O-RING 2,62x15,54	GUARNIZIONE O-R 2,62x15,54
8	79037671	1	265C	COVER - UPPER	COPERCHIO - SUPERIORE
9	79037672	1	265C	COVER - LOWER	COPERCHIO - INFERIORE
10	79038352	1	10D	NUT	DADO
11	79037673	1	20E	FILTERING ELEMENT	ELEMENTO FILTRANTE

(05461) C 1457 → Tel.n. 051636

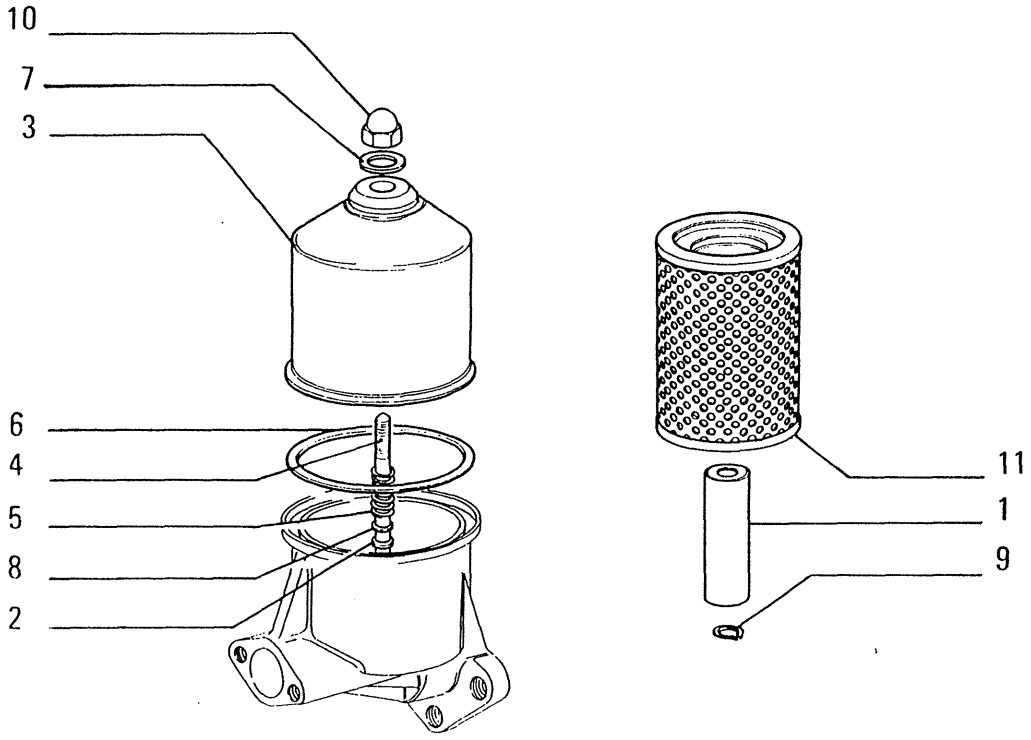

ITEM	PART NUMBER	QTY	TRANS CODE	DESCRIPTION	DESCRIZIONE
1	581492	1	54C	MAGNETIC ROD	CANDELA MAGNETICA
2	4964396	1	133R	SEAL	ROSETTA DI TENUTA
3	4979711	1	265C	COVER	COPERCHIO
4	4979712	1	40V	SCREW	VITE
5	4979713	1	100M	SPRING	MOLLA
6	4979714	1	133R	SEAL	ROSETTA DI TENUTA
7	10284460	1	133R	SEAL 10,2x16	ROSETTA DI TENUTA 10,2x16
8	12638601	1	131R	WASHER 10,2x18	ROSETTA 10,2x18
9	13404476	1	51A	LOCKRING 9,6x1,2	ANELLO DI SICUREZZA 9,6x1,2
10	14054911	1	10D	NUT 10x1,25x19	DADO 10x1,25x19
11	79032089	1	20E	FILTERING ELEMENT	ELEMENTO FILTRANTE

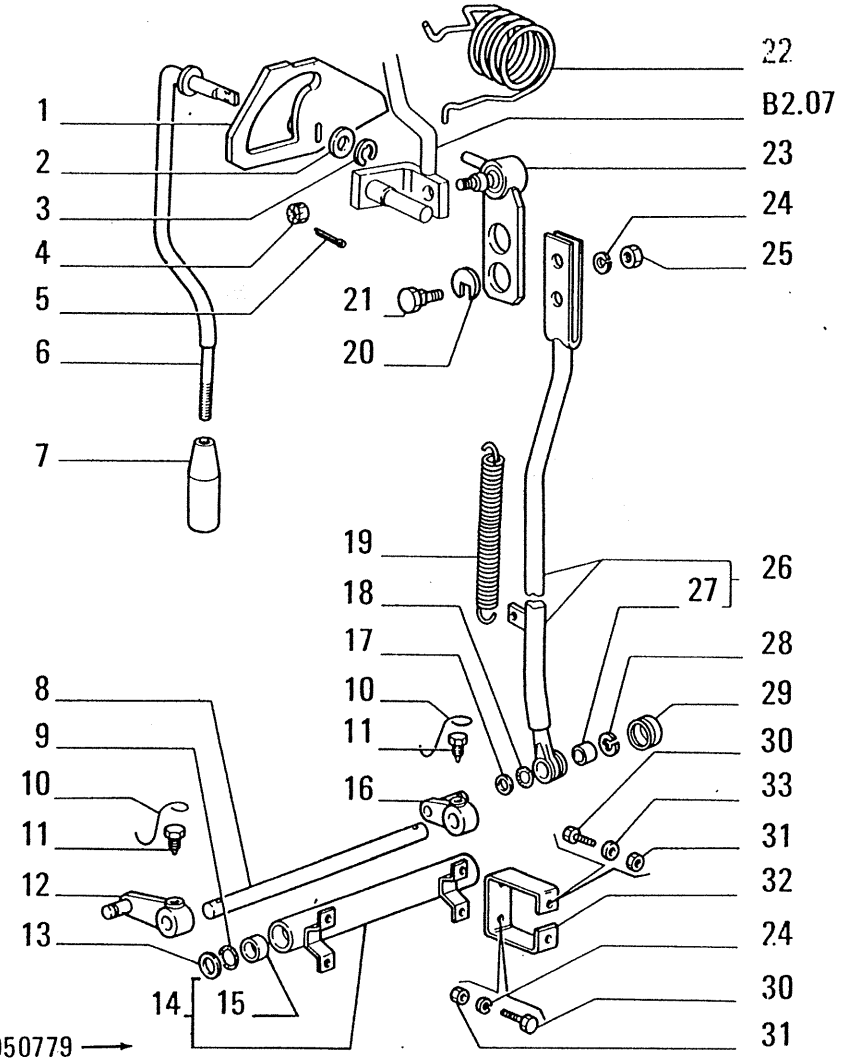

ITEM	PART NUMBER	QTY	TRANS CODE	DESCRIPTION	DESCRIZIONE
28	11088076	1	45A	RING 9x18,5	ANELLO 9x18,5
29	79005599	1	60S	CUP	SCODELLINO
30	11106121	8	40V	SCREW	VITE
31	11701721	8	10D	NUT 10x1,5x8	DADO 10x1,5x8
32	79050813	1	75D	SPACER	DISTANZIALE
33	12646811	4	131R	WASHER 10,2x25	ROSETTA 10,2x25

D 1428 Tel.n.050779 →

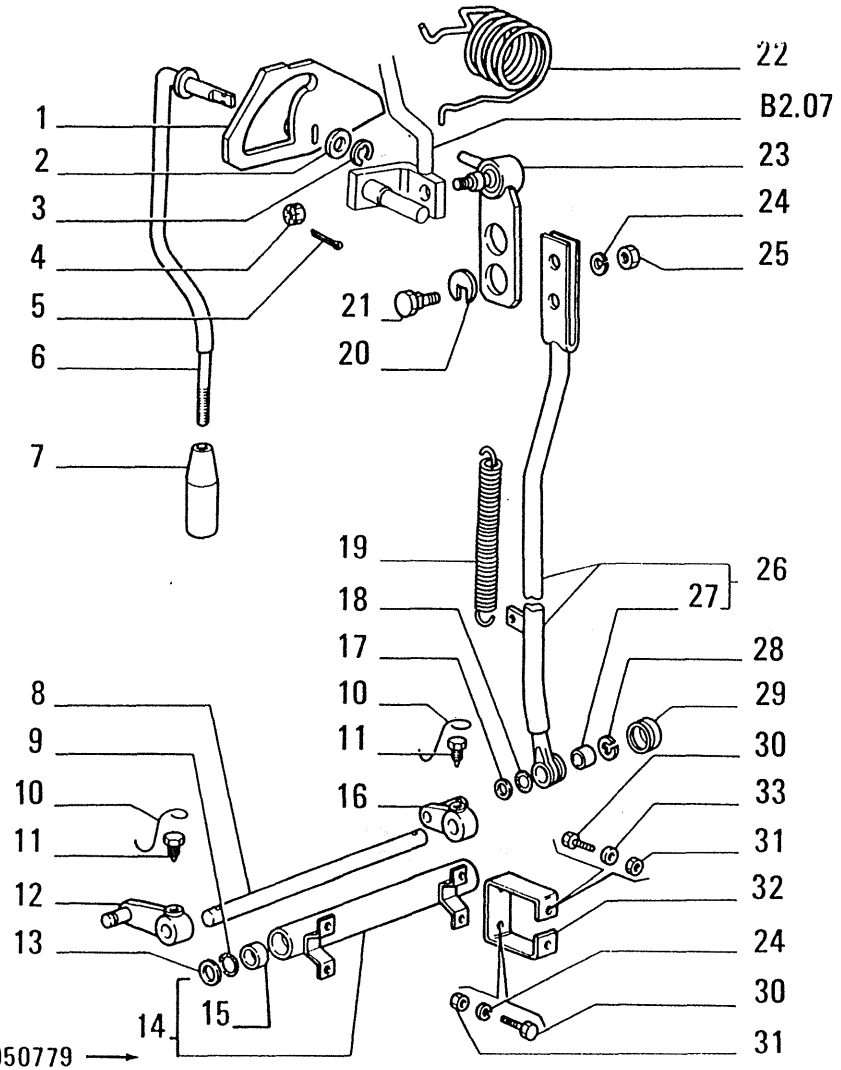

ITEM	PART NUMBER	QTY	TRANS CODE	DESCRIPTION	DESCRIZIONE
1	76000224	1	105P	PLATE	PIASTRA
2	10520101	1	131R	WASHER 14,4x26	ROSETTA 14,4x26
3	11055275	1	45A	RING	ANELLO
4	16105621	1	10D	NUT 8x1,25x9,5	DADO 8x1,25x9,5
5	10734401	1	270C	COTTER PIN 1,7x28,5	COPIGLIA 1,7x28,5
6	4984830	1	45L	LEVER	LEVA
7	4977072	1	25I	HANDGRIP	IMPUGNATURA
8	79043507	1	16A	SHAFT	ALBERO
9	14462980	2	158G	O-RING 3,53x20,22	GUARNIZIONE O-R 3,53x20,22
10	79018559	2	61F	STEEL WIRE	FILO ACCIAIO
11	586707	2	40V	SCREW	VITE
12	79043511	1	45L	LEVER - ASSEMBLY	LEVA - COMPLETO
13	79043508	2	45A	RING	ANELLO
14	79043503	1	300S	SUPPORT - ASSEMBLY	SUPPORTO - COMPLETO
15	546575	2	95B	BUSHING	BOCCOLA
16	79043509	1	45L	LEVER - ASSEMBLY	LEVA - COMPLETO
17	79005601	1	198S	SHIM	SPESSORE
18	14457080	1	158G	O-RING 2,62x12,37	GUARNIZIONE O-R 2,62x12,37
19	79006059	1	100M	SPRING	MOLLA
20	79043494	2	131R	WASHER	ROSETTA
21	79005647	2	40V	SCREW	VITE
22	4985332	1	100M	SPRING	MOLLA
23	79043516	1	61E	END	ESTREMITÀ
24	10516871	6	131R	WASHER 10x2,5	ROSETTA 10x2,5
25	12164721	2	10D	NUT 10x1,25x8	DADO 10x1,25x8
26	79050766	1	142T	TIEROD - ASSEMBLY	TIRANTE - COMPLETO
27	79005596	1	95B	BUSHING	BOCCOLA

D 1428 Tel.n.050779 →

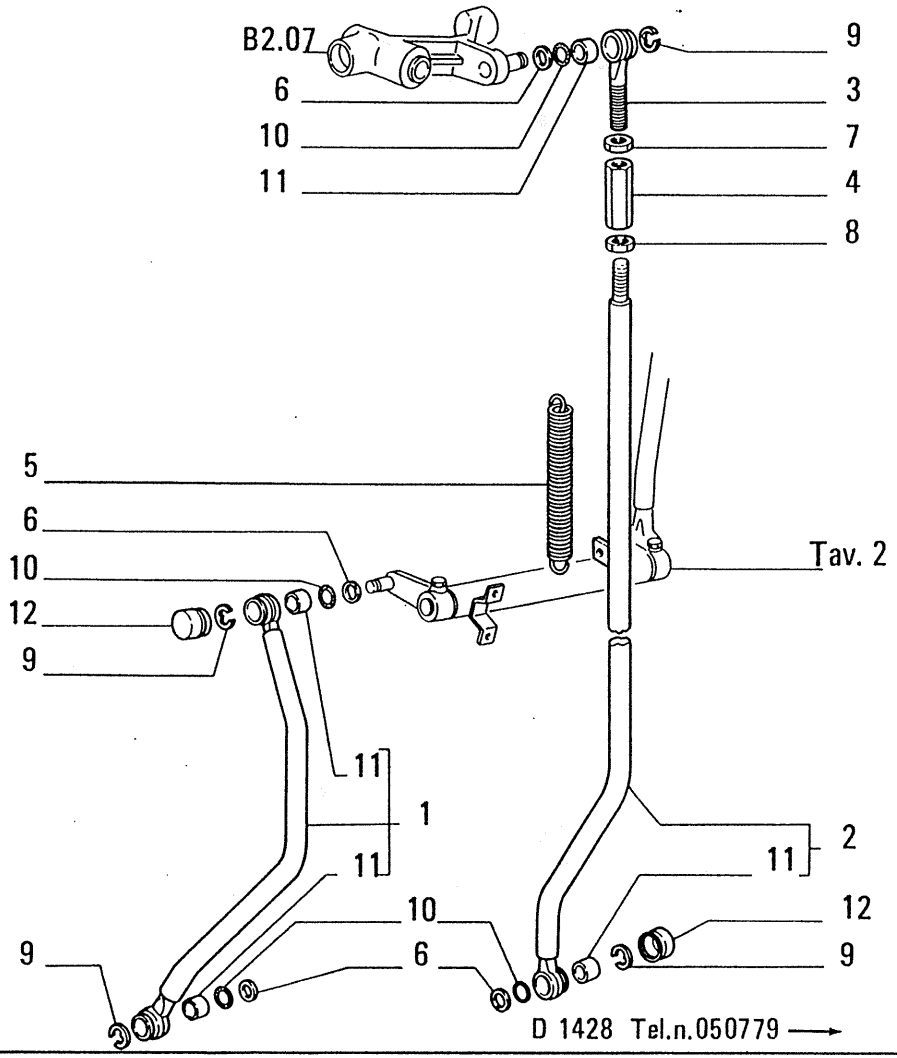

ITEM	PART NUMBER	QTY	TRANS CODE	DESCRIPTION	DESCRIZIONE
1	79050769	1	142T	TIEROD - ASSEMBLY	TIRANTE - COMPLETO
2	79016227	1	142T	TIEROD - ASSEMBLY	TIRANTE - COMPLETO
3	79005602	1	61E	END	ESTREMITÀ
4	79002642	1	30M	SLEEVE	MANICOTTO
5	79006059	1	100M	SPRING	MOLLA
6	79005601	4	198S	SHIM	SPESSORE
7	10791211	1	10D	NUT 12x1,5x7	DADO 12x1,5x7
8	10791911	1	10D	NUT 12x1,5x7	DADO 12x1,5x7
9	11088076	4	45A	RING 9x18,5	ANELLO 9x18,5
10	14457080	4	158G	O-RING 2,62x12,37	GUARNIZIONE O-R 2,62x12,37
11	79005596	4	95B	BUSHING	BOCCOLA
12	79005599	2	60S	CUP	SCODELLINO

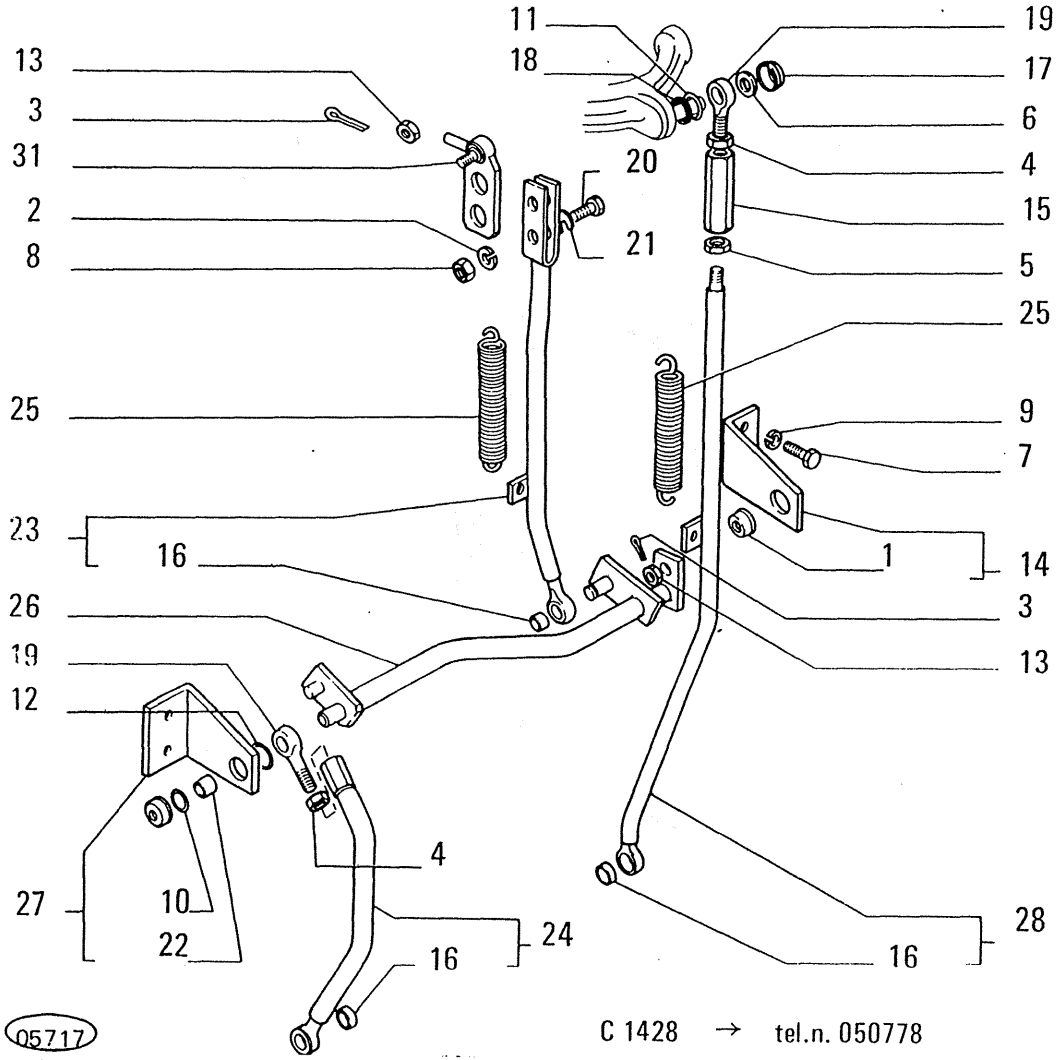

ITEM	PART NUMBER	QTY	TRANS CODE	DESCRIPTION	DESCRIZIONE
27	79016216	1	300S	SUPPORT - FRONT ASSEMBLY	SUPPORTO - ANTERIORE COMPLETO
28	79016227	1	142T	TIEROD - ASSEMBLY	TIRANTE - COMPLETO (01-03) TIRANTE (02-04)
31	79043516	1	61E	END	ESTREMITÀ

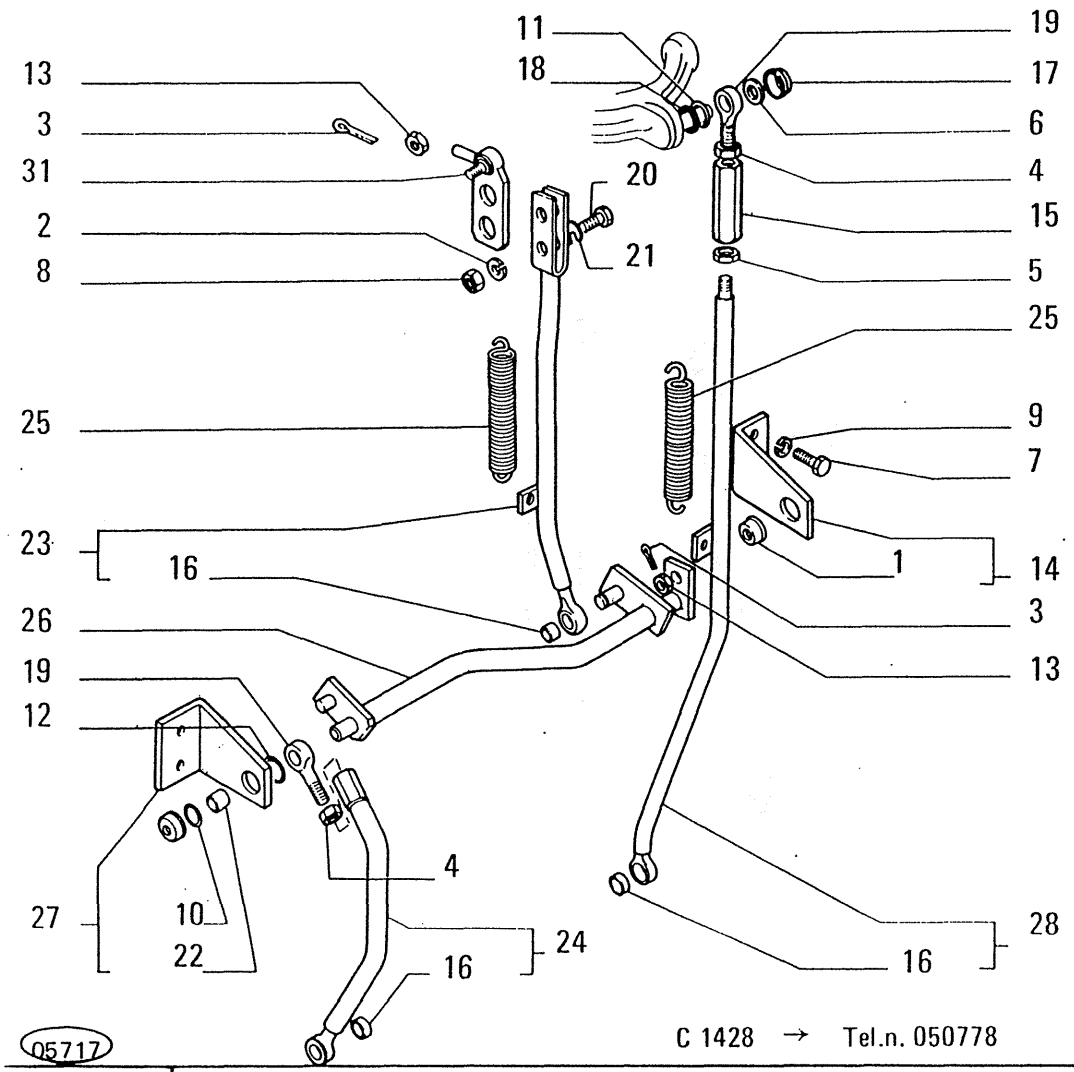

05717

C 1428 → Tel.n. 050778

ITEM	PART NUMBER	QTY	TRANS CODE	DESCRIPTION	DESCRIZIONE
1	4306182	1	65C	BOOT	CAPPUCCIO
2	10516871	6	131R	WASHER 10x2,5	ROSETTA 10x2,5
3	10734401	2	270C	COTTER PIN 1,7x28,5	COPIGLIA 1,7x28,5
4	10791221	2	10D	NUT 11x1,25x7	DADO 11x1,25x7
5	10791921	1	10D	NUT 12x1,5x7	DADO 12x1,5x7
6	11088076	5	51A	LOCKRING 9x18,5	ANELLO DI SICUREZZA 9x18,5
7	11106431	4	40V	SCREW 10x1,5x30	VITE 10x1,5x30
8	12164721	2	10D	NUT 10x1,25x8	DADO 10x1,25x8
9	12646811	4	131R	WASHER 10,2x25	ROSETTA 10,2x25
10	14453780	1	158G	O-RING 1,78x21,95	GUARNIZIONE O-R 1,78x21,95
11	14457080	5	158G	O-RING 2,62x12,37	GUARNIZIONE O-R 2,62x12,37
12	14457180	1	158G	O-RING 2,62x13,94	GUARNIZIONE O-R 2,62x13,94
13	16105621	2	10D	NUT 8x1,25x9,5	DADO 8x1,25x9,5
14	76001234	1	300S	SUPPORT - REAR ASSEMBLY	SUPPORTO - POSTERIORE COMPLETO
15	79002642	1	30M	SLEEVE	MANICOTTO
16	79005596	5	95B	BUSHING	BOCCOLA
17	79005599	5	60S	CUP	SCODELLINO
18	79005601	5	75D	SPACER	DISTANZIALE
19	79005602	2	61E	END	ESTREMITÀ
20	79005647	2	40V	SCREW	VITE
21	79005648	2	131R	WASHER	ROSETTA
22	79006025	1	95B	BUSHING	BOCCOLA
23	79006041	1	142T	TIEROD - UPPER ASSEMBLY	TIRANTE - SUPERIORE COMPLETO
24	79006042	1	142T	TIEROD - LOWER	TIRANTE - INFERIORE (01-03) TIRANTE (02-04)
25	79006059	2	100M	SPRING	MOLLA
26	79006062	1	16A	SHAFT	ALBERO

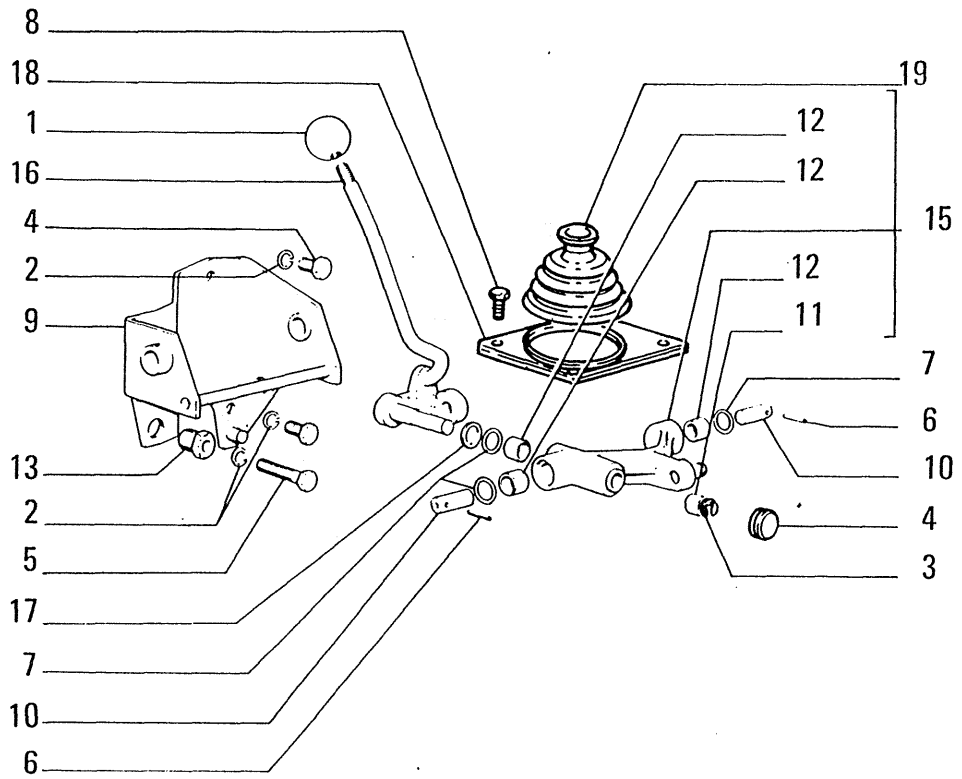

ITEM	PART NUMBER	QTY	TRANS CODE	DESCRIPTION	DESCRIZIONE
1	4970504	1	25I	HANDGRIP	IMPUGNATURA
2	10516871	3	131R	WASHER 10x2,5	ROSETTA 10x2,5
3	11088076	1	51A	LOCKRING 9x18,5	ANELLO DI SICUREZZA 9x18,5
4	11103031	2	40V	SCREW 10x1,5x18	VITE 10x1,5x18
5	11106631	1	40V	SCREW 10x1,5x35	VITE 10x1,5x35
6	14164370	2	200S	PIN 4,4x30	SPINA 4,4x30
7	14457280	3	158G	O-RING 2,62x15,54	GUARNIZIONE O-R 2,62x15,54
8	15645301	4	40V	SCREW (01) (*) 4,8x9,5	VITE (01) (*) 4,8x9,5
9	79005587	1	300S	SUPPORT	SUPPORTO
10	79005594	2	80P	PIN	PERNO
11	79005596	1	95B	BUSHING	BOCCOLA
12	79005597	3	95B	BUSHING	BOCCOLA
13	79005598	1	40V	SCREW	VITE
14	79005599	1	60S	CUP	SCODELLINO
15	79005607	1	45L	LEVER - ASSEMBLY	LEVA - COMPLETO
16	79005610	1	45L	LEVER C1428	LEVA C1428
	79043491	1	45L	LEVER D1428	LEVA D1428
17	79006339	1	75D	SPACER C1428	DISTANZIALE C1428
		2	75D	SPACER D1428	DISTANZIALE D1428
18	79035794	1	300S	SUPPORT (01) (*)	SUPPORTO (01) (*)
19	79035795	1	330C	RADIATOR GUARD (01) (*)	CUFFIA RADIATORE (01) (*)
(*)			469P	FOR SPECIAL EQUIPMENT 30.0020.18.1	PER VARIANTE 30.0020.18.1

C 1428 → Tel.n. 050778
D 1428 Tel.n. 050779 →

05458

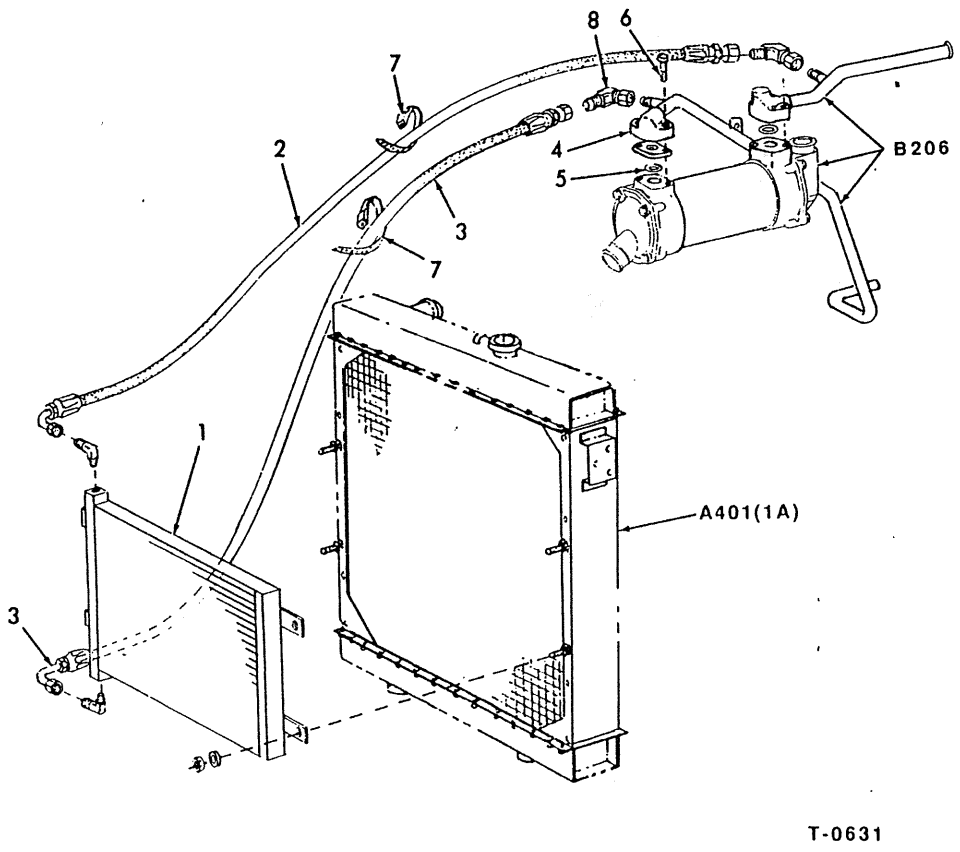

T-0631

ITEM	PART NO.	QTY.	CODE	DESCRIPTION	DENOMINAZIONE
1	73057574	1	38R	COOLER	SCAMBIATORE
	16043637	4	40V	CAPSCREW	VITE
			600T	REQUIRES WELDING	DA SALDARE
	70677005	4	131R	WASHER	ROSETTA
	16100821	4	10D	NUT	DADO
2	73131594	1	192T	HOSE	TUBO FLESSIBILE
	70919269	1	85G	ELBOW,90°	GOMITO
	70926300	1	85G	ELBOW,90°	GOMITO
3	70688673	1	192T	HOSE	TUBO FLESSIBILE
	70919269	1	85G	ELBOW,90°	GOMITO
	70926300	1	85G	ELBOW,45°	GOMITO
4	73154190	1	105P	PLATE	PIASTRA
5	70926843	1	55A	O-RING	ANELLO DI TENUTA
6	11343831	2	40V	CAPSCREW	VITE
7	70930871	2	501H	TIE	TIRANTE
8	70647165	2	75B	CONNECTOR	BLOCCHETTO CONNESSIONE
			600T	REQUIRES WELDING	DA SALDARE

USAGE: UNITS EQUIPPED FOR SANITARY LANDFILL OR FORESTRY OPERATION.

TRANSMISSION COOLER PIPING

B206/3

Added April 1989

USAGE: Unit #052919 and up

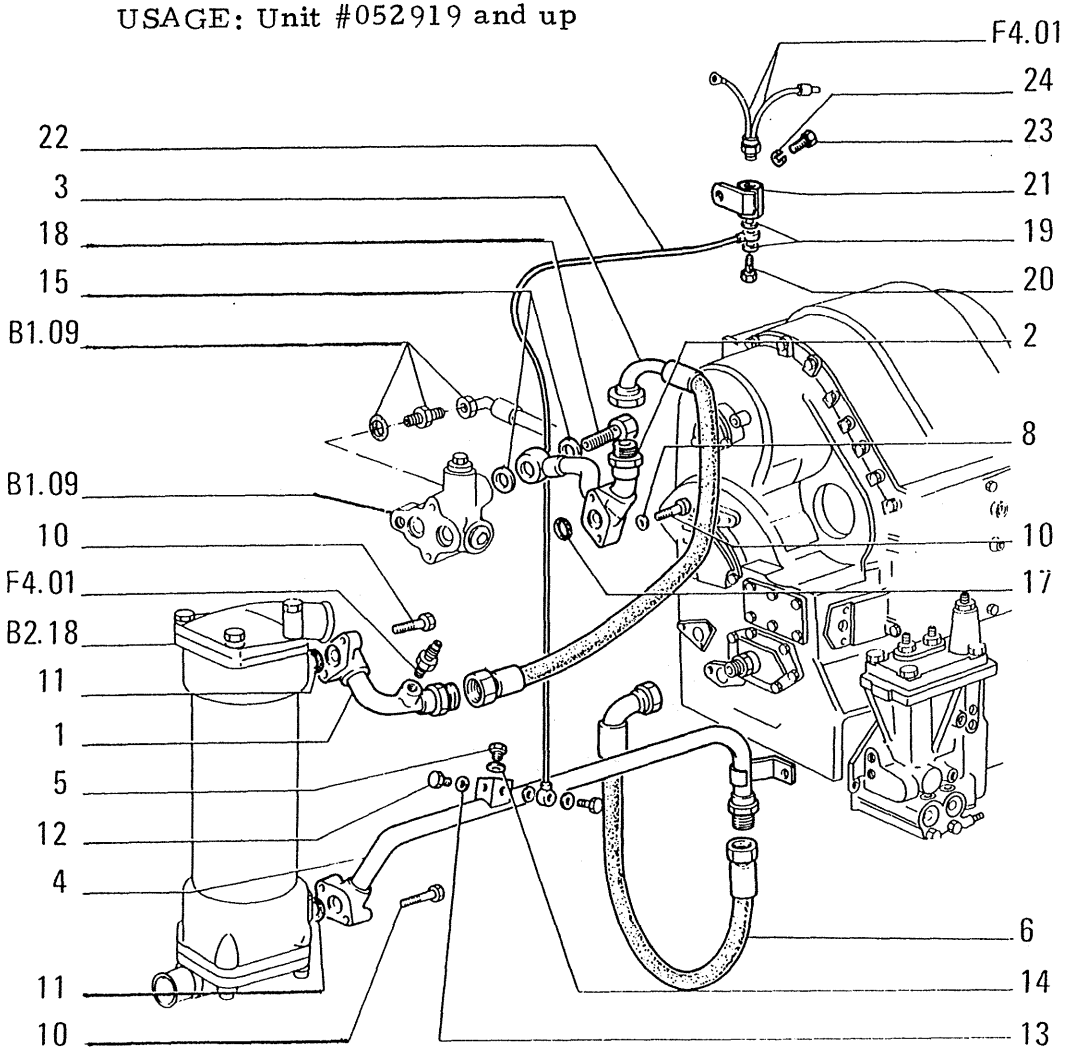

ITEM	PART NUMBER	QTY	TRANS CODE	DESCRIPTION	DESCRIZIONE
1	79065453	1	193T	TUBE	TUBO RIGIDO
2	76016638	1	193T	TUBE	TUBO RIGIDO
3	79013460	1	192T	HOSE ASSY	TUBO FLESS.C/RACCORDI
4	79065459	1	193T	TUBE	TUBO RIGIDO
5	4741955	1	50T	PLUG	TAPPO
6	79065462	1	192T	HOSE ASSY	TUBO FLESS.C/RACCORDI
8	14496631	2	170R	LOCKWASHER 10,5x21	ROSETTA EL. 10,5x21
10	14233930	6	40V	SCREW 10x1,25x45	VITE 10x1,25x45
11	14458381	2	158G	O-RING 2,62x32,99	GUARNIZIONE O-R 2,62x32,99
12	10300511	1	50T	PLUG 12x1,5x8	TAPPO 12x1,5x8
13	10296160	1	120G	GASKET 12,2x18	GUARNIZIONE PIANA 12,2x18
14	10296685	1	120G	GASKET 16,2x22	GUARNIZIONE PIANA 16,2x22
15	10296260	2	120G	GASKET 28,3x36	GUARNIZIONE PIANA 28,3x36
17	14463680	1	158G	O-RING 3,53x31,34	GUARNIZIONE O-R 3,53x31,34
18	10182217	1	20R	FITTING 28x1,5x19	RACCORDO 28x1,5x19
19	14330260	4	120G	GASKET 8,2x12	GUARNIZIONE PIANA 8,2x12
20	11903717	2	20R	FITTING 8x1,25x16	RACCORDO 8x1,25x16
21	4957531	1	300S	SUPPORT	SUPPORTO
22	4967422	1	193T	TUBE	TUBO RIGIDO
23	11106231	1	40V	SCREW 10x1,5x25	VITE 10x1,5x25
24	10571871	1	170R	LOCKWASHER 10,2x2,2	ROSETTA EL. 10,2x2,2

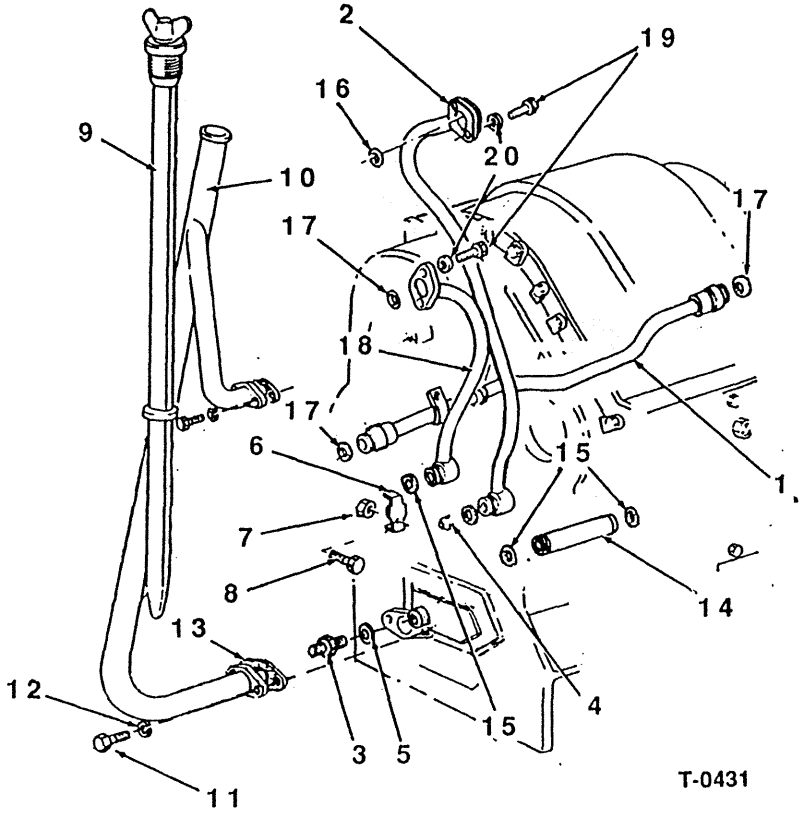

ITEM	PART NO.	QTY.	CODE	DESCRIPTION	DENOMINAZIONE
1	79038355	1	206T	TUBE	TUBO
2	79038732	1	206T	TUBE	TUBO
3	79007671	1	20R	FITTING	RACCORDO
4	79038354	1	40G	JET	GETTO
5	14457580	1	80P	PIN,1.7X28.5	PERNO
6	04965899	1	80M	BRACKET	MENSOLA
7	10793121	1	10D	NUT,10X1.25X10	DADO
8	16005531	1	40V	CAPSCREW,10X1.25X50	VITE
9	79038345	1	91A	DIPSTICK	ASTA DI LIVELLO
10	79009247	1	206T	TUBE	TUBO
11	15970731	4	40V	CAPSCREW,10X1.25X25	VITE
12	10516871	4	131R	WASHER,10X2.5	ROSETTA
13	00587093	2	133R	SEAL	GUARNIZIONE TENUTA
14	79032376	1	206T	TUBE	TUBO
15	14457081	4	55A	O-RING,2.62X12.37	ANELLO DI TENUTA
16	14456881	1	55A	O-RING,2.62X9.19	ANELLO DI TENUTA
17	14456981	5	55A	O-RING,2.62X10.77	ANELLO DI TENUTA
18	79086549	1	206T	TUBE	TUBO
19	10902631	4	40V	CAPSCREW,6X1X25	VITE
20	10516471	4	131R	WASHER,6.1X1.8	ROSETTA

USAGE: UNIT NO. 052919 AND UP.

USAGE: Units prior to 052919

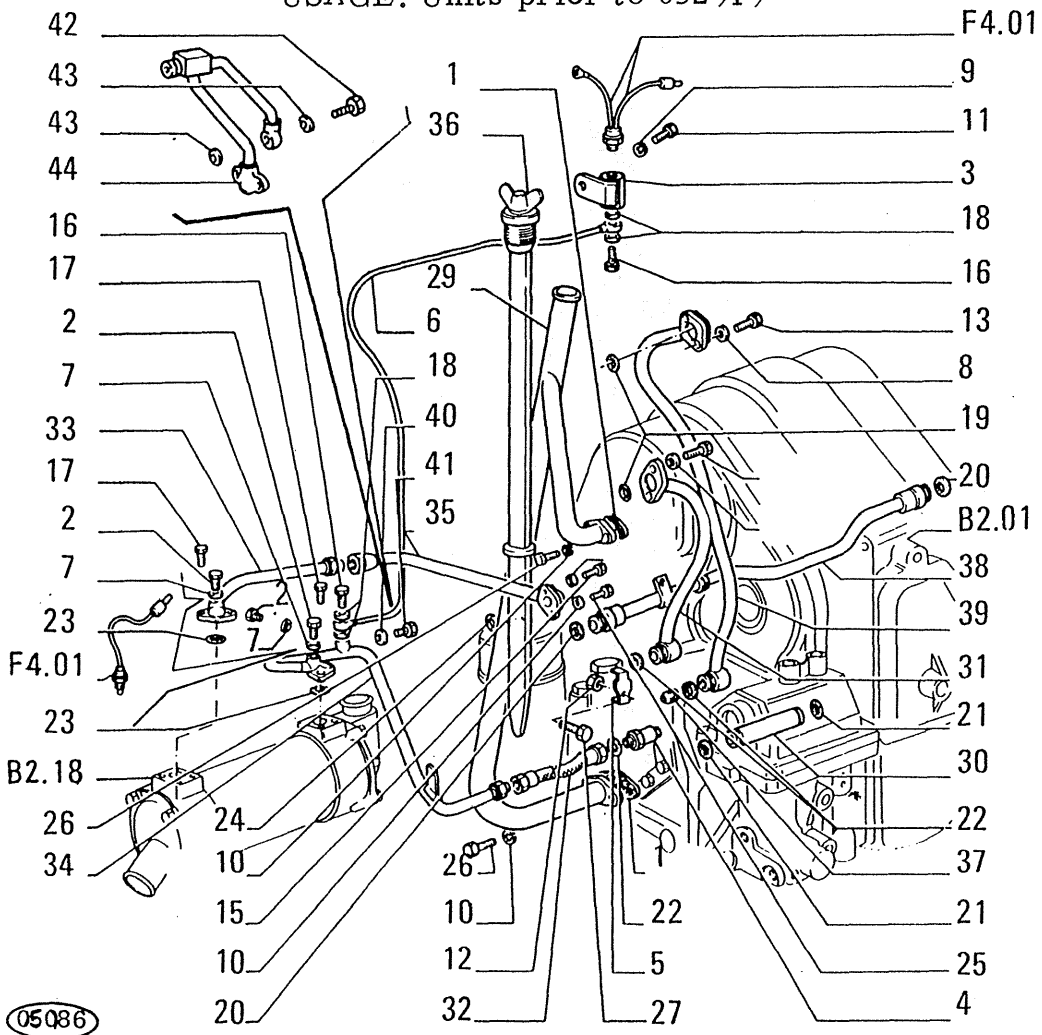

05086

ITEM	PART NUMBER	QTY	TRANS CODE	DESCRIPTION	DESCRIZIONE
26	15970731	4	40V	SCREW 10x1,25x25	VITE 10x1,25x25
27	16005531	1	40V	SCREW 10x1,25x50	VITE 10x1,25x50
29	79009247	1	193T	TUBE	TUBO RIGIDO
30	79032376	1	193T	TUBE - FRONT	TUBO RIGIDO - ANTERIORE
31	79032377	1	193T	TUBE	TUBO RIGIDO
32	79032920	1	192T	HOSE ASSY	TUBO FLESS.C/RACCORDI
33	79034735	1	193T	TUBE - FRONT C1436	TUBO RIGIDO - ANTERIORE C1436
	79043964	1	193T	TUBE - FRONT D1436	TUBO RIGIDO - ANTERIORE D1436
34	79034736	1	193T	TUBE - FRONT	TUBO RIGIDO - ANTERIORE
35	79034737	1	193T	TUBE - REAR C1436	TUBO RIGIDO - POSTERIORE C1436
36	79038345	1	53T	DIPSTICK W/CAP	TAPPO DI INTRODUZIONE OLIO CON ASTA LIVELLO
37	79038354	1	20U	JET	UGELLO
38	79038355	1	193T	TUBE	TUBO RIGIDO
39	79038732	1	193T	TUBE	TUBO RIGIDO
40	10296160	1	133R	SEAL 12,2x18	ROSETTA DI TENUTA 12,2x18
41	10300511	1	50T	PLUG 12x1,5x8	TAPPO 12x1,5x8
42	10182217	1	90B	FILLER PLUG 28x1,5x19 D1436	BOCCHETTONE INTRODUZIONE 28x1,5x19 D1436
43	10264060	2	131R	WASHER 18,2x24 D1436	ROSETTA 18,2x24 D1436
44	79043960	1	193T	TUBE - REAR D1436	TUBO RIGIDO - POSTERIORE D1436

C 1436 → Tel.n. 050971
D 1436 Tel.n. 050972 →

USAGE: Units prior to 052919

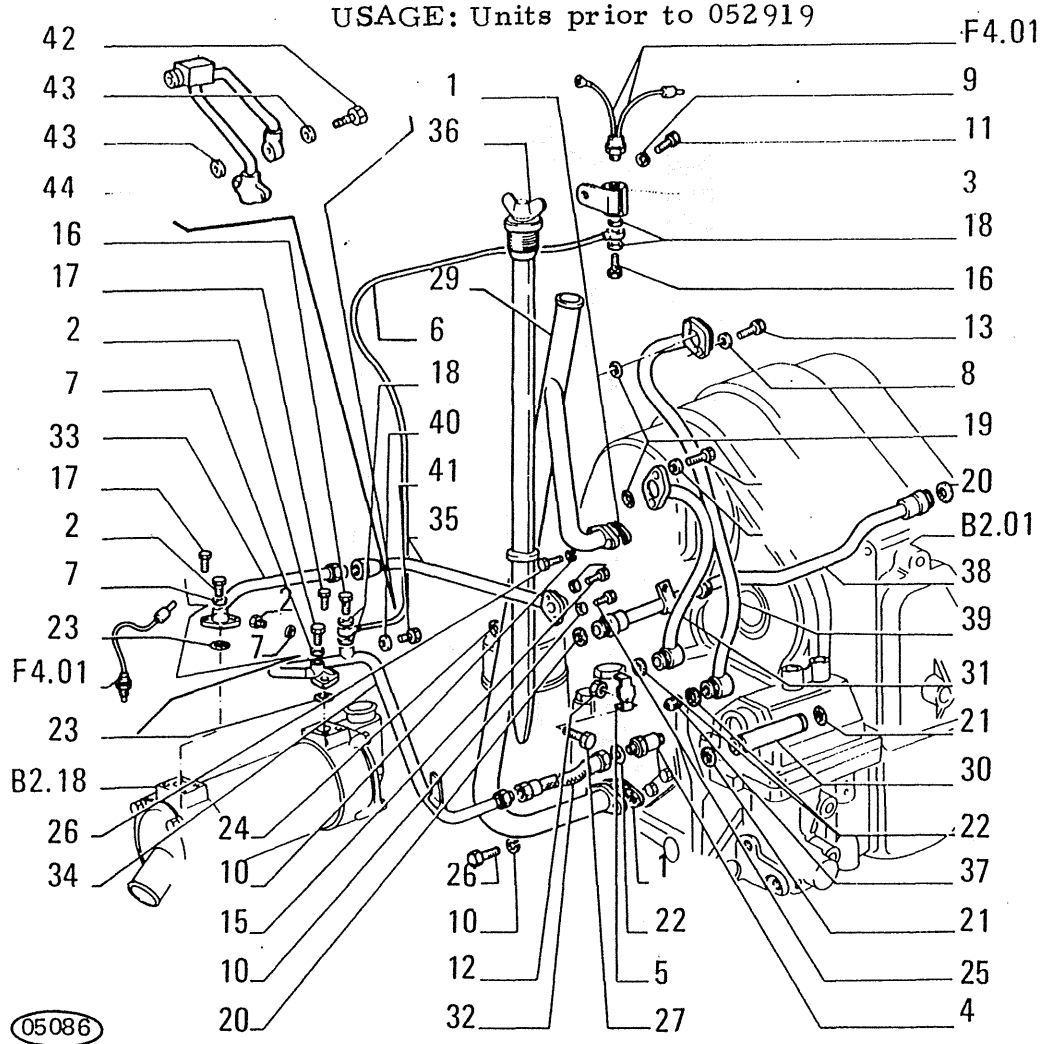

05086

ITEM	PART NUMBER	QTY	TRANS CODE	DESCRIPTION	DESCRIZIONE
1	587093	2	123G	SEAL ASSY	GUARNIZIONE TENUTA FRONTALE
2	4741955	3	50T	PLUG	TAPPO
3	4957531	1	300S	SUPPORT	SUPPORTO
4	4960456	1	20R	FITTING C1436	RACCORDO C1436
	79007671	1	20R	FITTING D1436	RACCORDO D1436
5	4965899	1	225S	BRACKET	STAFFA
6	4967422	1	193T	TUBE	TUBO RIGIDO
7	10257060	3	133R	SEAL 16,2x22	ROSETTA DI TENUTA 16,2x22
8	10516471	6	131R	WASHER 6,1x1,8	ROSETTA 6,1x1,8
9	10571871	1	131R	WASHER 10,2x2,2	ROSETTA 10,2x2,2
10	10516871	6	131R	WASHER 10x2,5	ROSETTA 10x2,5
11	11106231	1	40V	SCREW 10x1,5x25	VITE 10x1,5x25
12	10793121	1	10D	NUT 10x1,25x10	DADO 10x1,25x10
13	10902621	4	40V	SCREW 6x1x25	VITE 6x1x25
14	10902631	2	40V	SCREW 6x1x25	VITE 6x1x25
15	11343731	1	40V	SCREW 10x1,25x65	VITE 10x1,25x65
16	11903717	1	90B	FILLER PLUG 8x1,25x16	BOCCHETTONE INTRODUZIONE 8x1,25x16
17	14233930	4	40V	SCREW 10x1,25x45	VITE 10x1,25x45
18	14330260	2	133R	SEAL 8,2x12	ROSETTA DI TENUTA 8,2x12
19	14456881	3	158G	O-RING 2,62x9,19	GUARNIZIONE O-R 2,62x9,19
20	14456981	2	158G	O-RING 2,62x10,77	GUARNIZIONE O-R 2,62x10,77
21	14457081	2	158G	O-RING 2,62x12,37	GUARNIZIONE O-R 2,62x12,37
22	14457580	2	158G	O-RING 2,62x20,29	GUARNIZIONE O-R 2,62x20,29
23	14458381	2	158G	O-RING 2,62x32,99	GUARNIZIONE O-R 2,62x32,99
24	14463680	1	158G	O-RING 3,53x31,34	GUARNIZIONE O-R 3,53x31,34
25	15888731	1	40V	SCREW 10x1,25x55	VITE 10x1,25x55

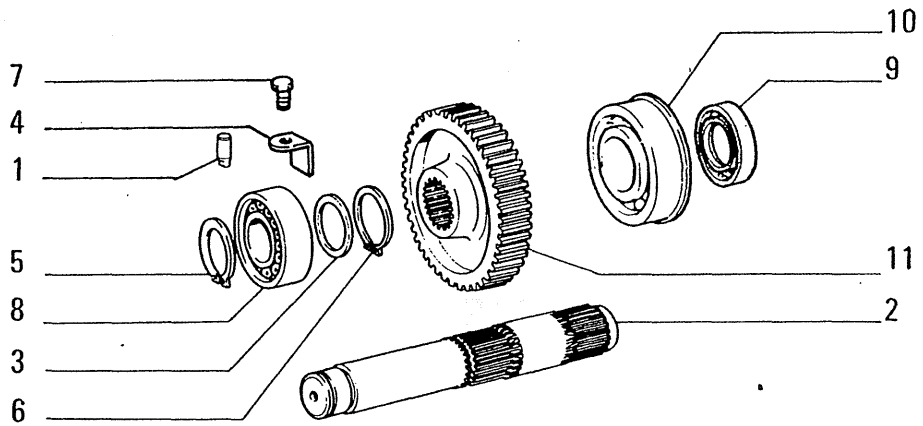

ITEM	PART NUMBER	QTY	TRANS CODE	DESCRIPTION	DESCRIZIONE
1	4966864	1	90G	DOWEL	GRANO
2	4969273	1	16A	SHAFT	ALBERO
3	4969274	1	131R	WASHER	ROSETTA
4	4970200	1	215S	CONNECTING PLATE	SQUADRETTA
5	11069376	1	51A	LOCKRING 45,8x2	ANELLO DI SICUREZZA 45,8x2
6	11069876	1	51A	LOCKRING 55,8x2	ANELLO DI SICUREZZA 55,8x2
7	14233230	1	40V	SCREW 10x1,25x20	VITE 10x1,25x20
8	20229990	1	341C	BEARING 50x110	CUSCINETTO 50x110
9	40000130	1	158G	O-RING 60x90	GUARNIZIONE O-R 60x90
10	79032304	1	341C	BEARING	CUSCINETTO
11	4982114	1	50I	GEAR	INGRANAGGIO

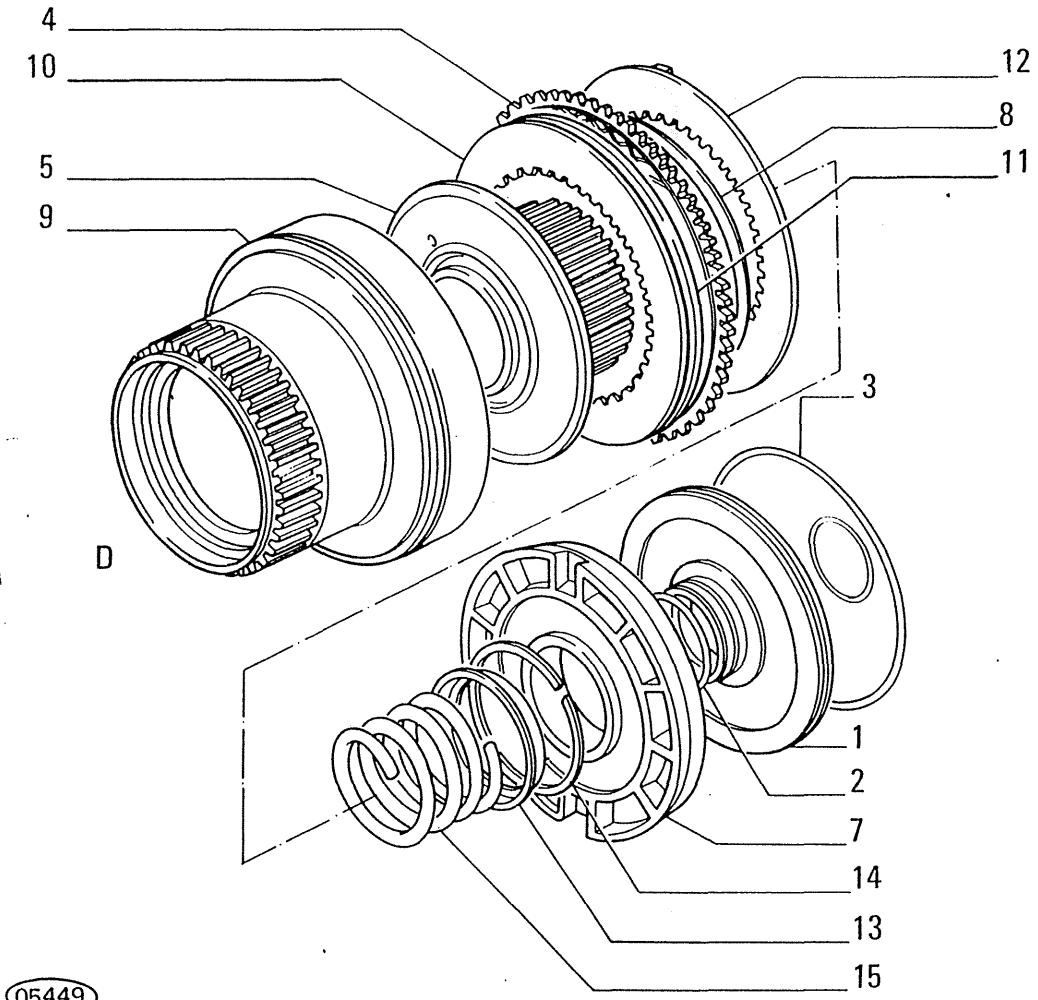

05449

ITEM	PART NUMBER	QTY	TRANS CODE	DESCRIPTION	DESCRIZIONE
1	4983905	1	235S	PISTON	STANTUFFO
2	14459781	1	158G	O-RING 2,62x55,24	GUARNIZIONE O-R 2,62x55,24
3	14467781	1	158G	O-RING 3,53x158,3	GUARNIZIONE O-R 3,53x158,3
4	79010056	8	60D	DISC C1471	DISCO C1471
	79057506	8	60D	DISC D1471	DISCO D1471
5	79032633	1	20T	DRUM C1463	TAMBURO C1463
	79071781	1	20T	DRUM D1463	TAMBURO D1463
7	79036885	1	235S	PISTON	STANTUFFO
8	79038905	8	100M	SPRING	MOLLA
9	79040800	1	20T	DRUM - OUTER	TAMBURO - ESTERNO
10	79040802	7	60D	DISC	DISCO
11	79040803		198S	SHIM	SPESSORE
12	79041947	1	60D	DISC	DISCO
13	79041950	1	60S	CUP	SCODELLINO
14	79041951	1	51A	LOCKRING	ANELLO DI SICUREZZA
15	79041966	1	100M	SPRING C1464	MOLLA C1464
	79077584	1	100M	SPRING D1464	MOLLA D1464

C 1463 → Tel.n. 051880 →
D 1463 Tel.n. 051880 →

C 1464 → Tel.n. 051899
D 1464 Tel.n. 051900 →

C 1471 → Tel.n. 051100
D 1471 Tel.n. 051101 →

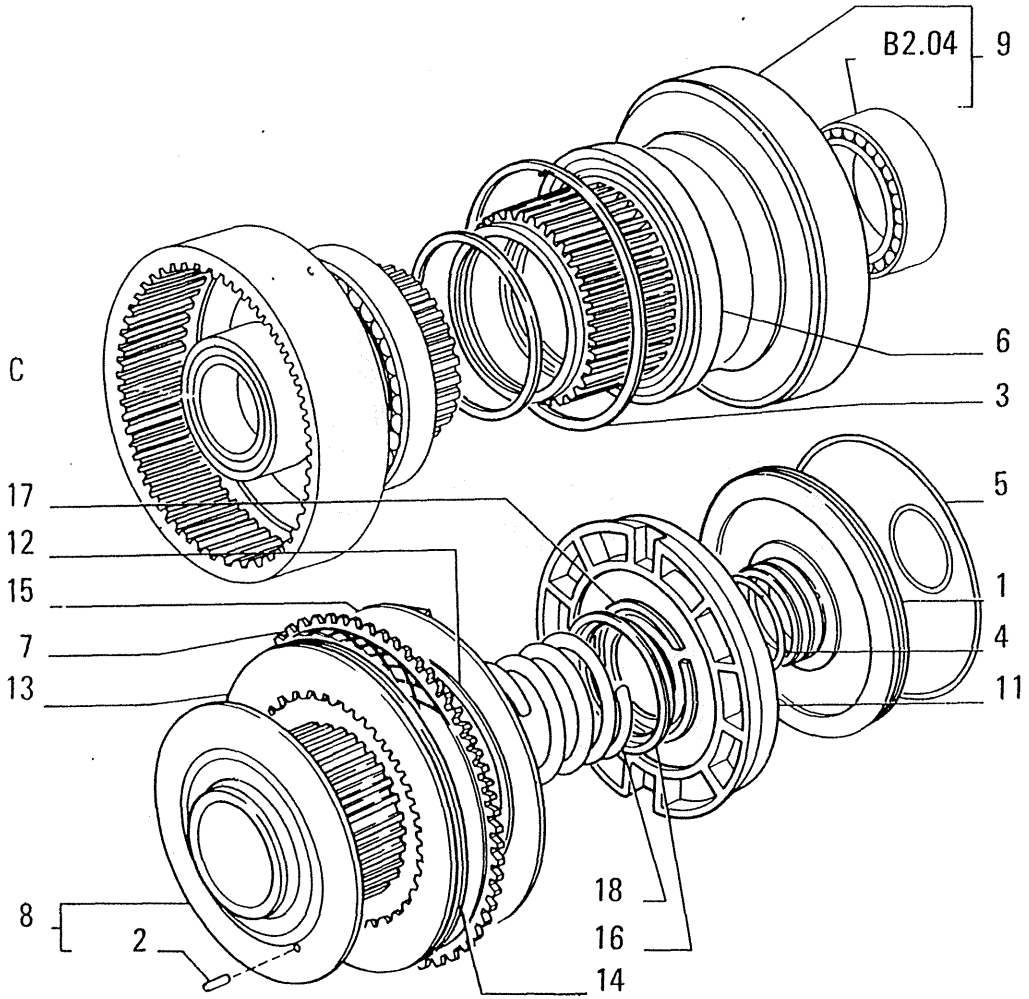

05448

ITEM	PART NUMBER	QTY	TRANS CODE	DESCRIPTION	DESCRIZIONE
1	4983905	1	235S	PISTON	STANTUFFO
2	10333410	3	80P	PIN 4x14 C1463	PERNO 4x14 C1463
	79071789	3	80P	PIN D1463	PERNO D1463
3	11077976	1	51A	LOCKRING 169x4	ANELLO DI SICUREZZA 169x4
4	14459781	1	158G	O-RING 2,62x55,24	GUARNIZIONE O-R 2,62x55,24
5	14467781	1	158G	O-RING 3,53x158,3	GUARNIZIONE O-R 3,53x158,3
6	28042610	1	341C	BEARING 105x160	CUSCINETTO 105x160
7	79010056	8	60D	DISC C1471	DISCO C1471
	79057506	8	60D	DISC D1471	DISCO D1471
8	79032633	1	20T	DRUM C1463	TAMBURO C1463
	79071781	1	20T	DRUM D1463	TAMBURO D1463
9	79032638	1	20T	DRUM - ASSEMBLY OUTER	TAMBURO - COMPLETO ESTERNO
11	79036885	1	235S	PISTON	STANTUFFO
12	79038905	8	100M	SPRING	MOLLA
13	79040802	7	60D	DISC	DISCO
14	79040803		198S	SHIM	SPESSORE
15	79041947	1	60D	DISC	DISCO
16	79041950	1	60S	CUP	SCODELLINO
17	79041951	1	51A	LOCKRING	ANELLO DI SICUREZZA
18	79041966	1	100M	SPRING C1464	MOLLA C1464
	79077584	1	100M	SPRING D1464	MOLLA D1464

C 1463 → Tel.n. 051879
D 1463 Tel.n. 051880 →

C 1464 → Tel.n. 051899
D 1464 Tel.n. 051900 →

C 1471 → Tel.n. 051100
D 1471 Tel.n. 051101 →

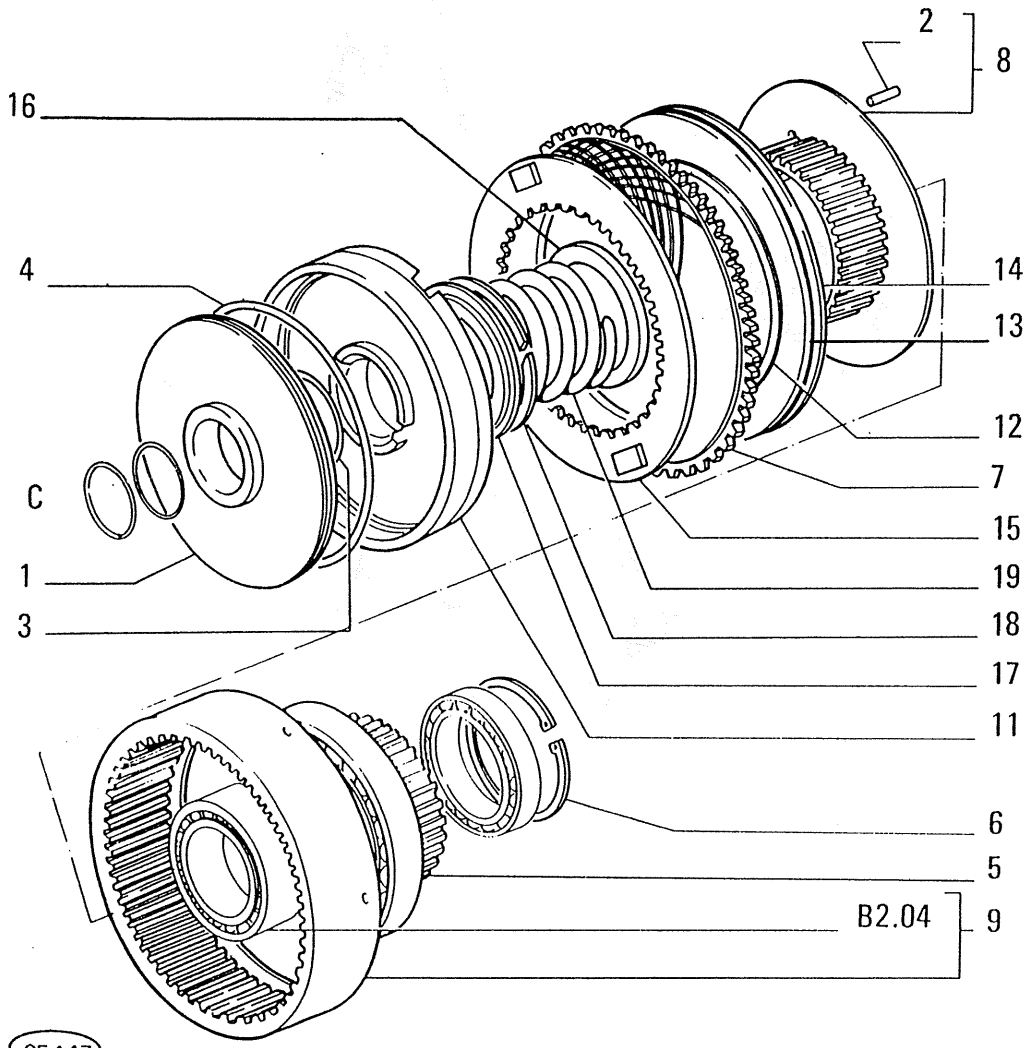

ITEM	PART NUMBER	QTY	TRANS CODE	DESCRIPTION	DESCRIZIONE
1	4983905	1	235S	PISTON	STANTUFFO
2	10333410	3	80P	PIN 4x14 C1463	PERNO 4x14 C1463
	79071789	3	80P	PIN D1463	PERNO D1463
3	14459781	1	158G	O-RING 2,62x55,24	GUARNIZIONE O-R 2,62x55,24
4	14467781	1	158G	O-RING 3,53x158,3	GUARNIZIONE O-R 3,53x158,3
5	28042600	1	341C	BEARING 100x150	CUSCINETTO 100x150
6	76002522	2	51A	LOCKRING	ANELLO DI SICUREZZA
7	79010056	10	60D	DISC C1471	DISCO C1471
	79057506	10	60D	DISC D1471	DISCO D1471
8	79032631	1	20T	DRUM - ASSEMBLY INNER C1463	TAMBURO - COMPLETO INTERNO C1463
	79071765	1	20T	DRUM - ASSEMBLY INNER D1463	TAMBURO - COMPLETO INTERNO D1463
9	79032640	1	20T	DRUM - ASSEMBLY OUTER	TAMBURO - COMPLETO ESTERNO
11	79036885	1	235S	PISTON	STANTUFFO
12	79038905	10	100M	SPRING	MOLLA
13	79040802	9	60D	DISC	DISCO
14	79040803		198S	SHIM	SPESSORE
15	79041947	1	60D	DISC	DISCO
16	79041949	1	75D	SPACER	DISTANZIALE
17	79041950	1	60S	CUP	SCODELLINO
18	79041951	1	51A	LOCKRING	ANELLO DI SICUREZZA
19	79041966	1	100M	SPRING C1464	MOLLA C1464
	79077584	1	100M	SPRING D1464	MOLLA D1464

C 1463 → Tel.n. 051879
D 1463 Tel.n. 051880 →
C 1464 → Tel.n. 051899
D 1464 Tel.n. 051900 →
C 1471 → Tel.n. 051100
D 1471 Tel.n. 051101 →

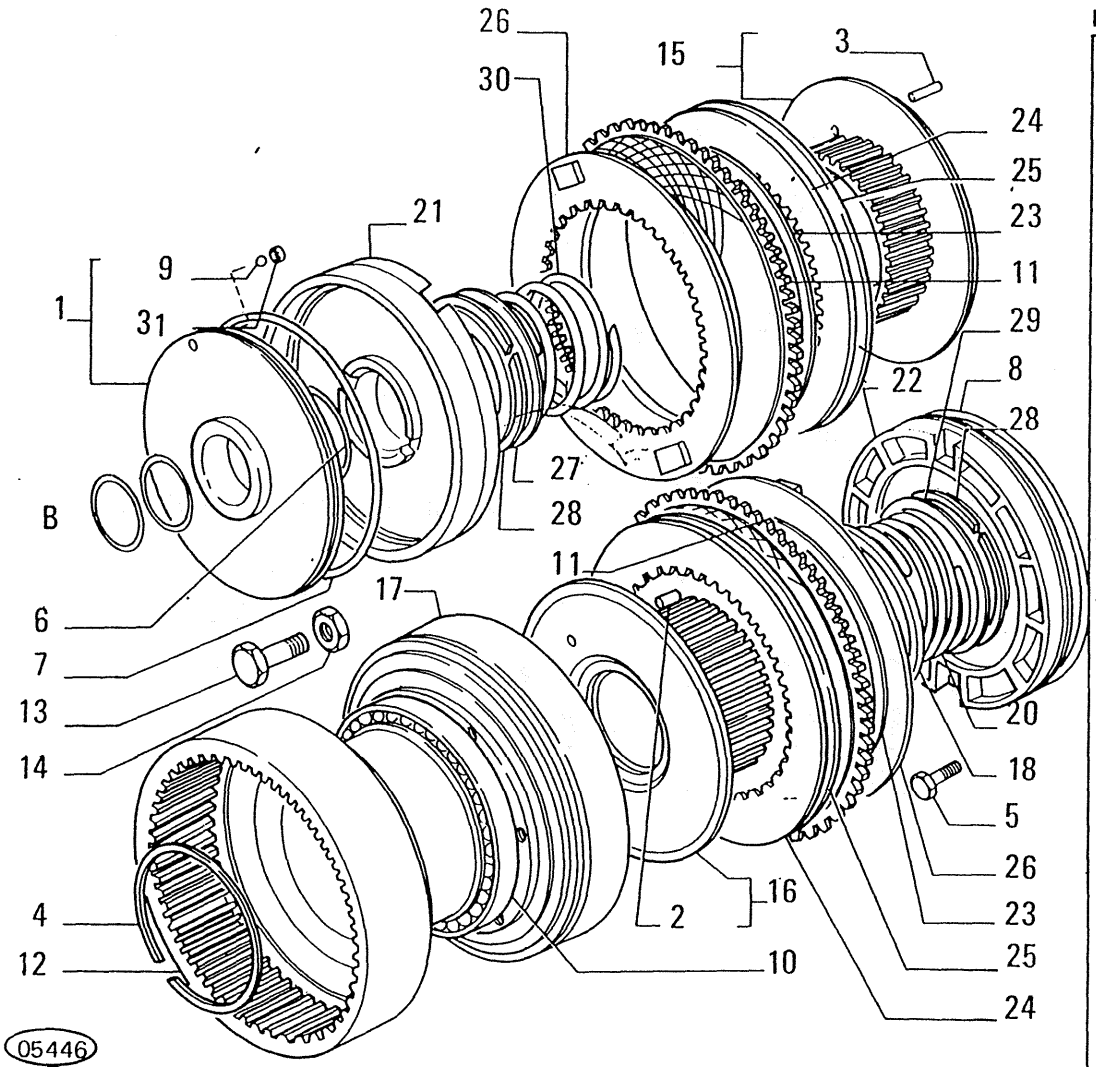

ITEM	PART NUMBER	QTY	TRANS CODE	DESCRIPTION	DESCRIZIONE
18	79032653	1	60S	CUP	SCODELLINO
20	79032672	1	100M	SPRING	MOLLA
21	79036885	1	235S	PISTON	STANTUFFO
22	79036886	1	235S	PISTON	STANTUFFO
23	79038905	14	100M	SPRING	MOLLA
24	79040802	12	60D	DISC	DISCO
25	79040803		198S	SHIM	SPESSORE
26	79041947	2	60D	DISC	DISCO
27	79041950	1	60S	CUP	SCODELLINO
28	79041951	2	51A	LOCKRING	ANELLO DI SICUREZZA
29	79041952	1	60S	CUP	SCODELLINO
30	79041966	1	100M	SPRING C1464	MOLLA C1464
	79077584	1	100M	SPRING D1464	MOLLA D1464
31	4962201	1	60S	CUP	SCODELLINO

C 1464 → Tel.n. 051899
D 1464 Tel.n. 051900 →

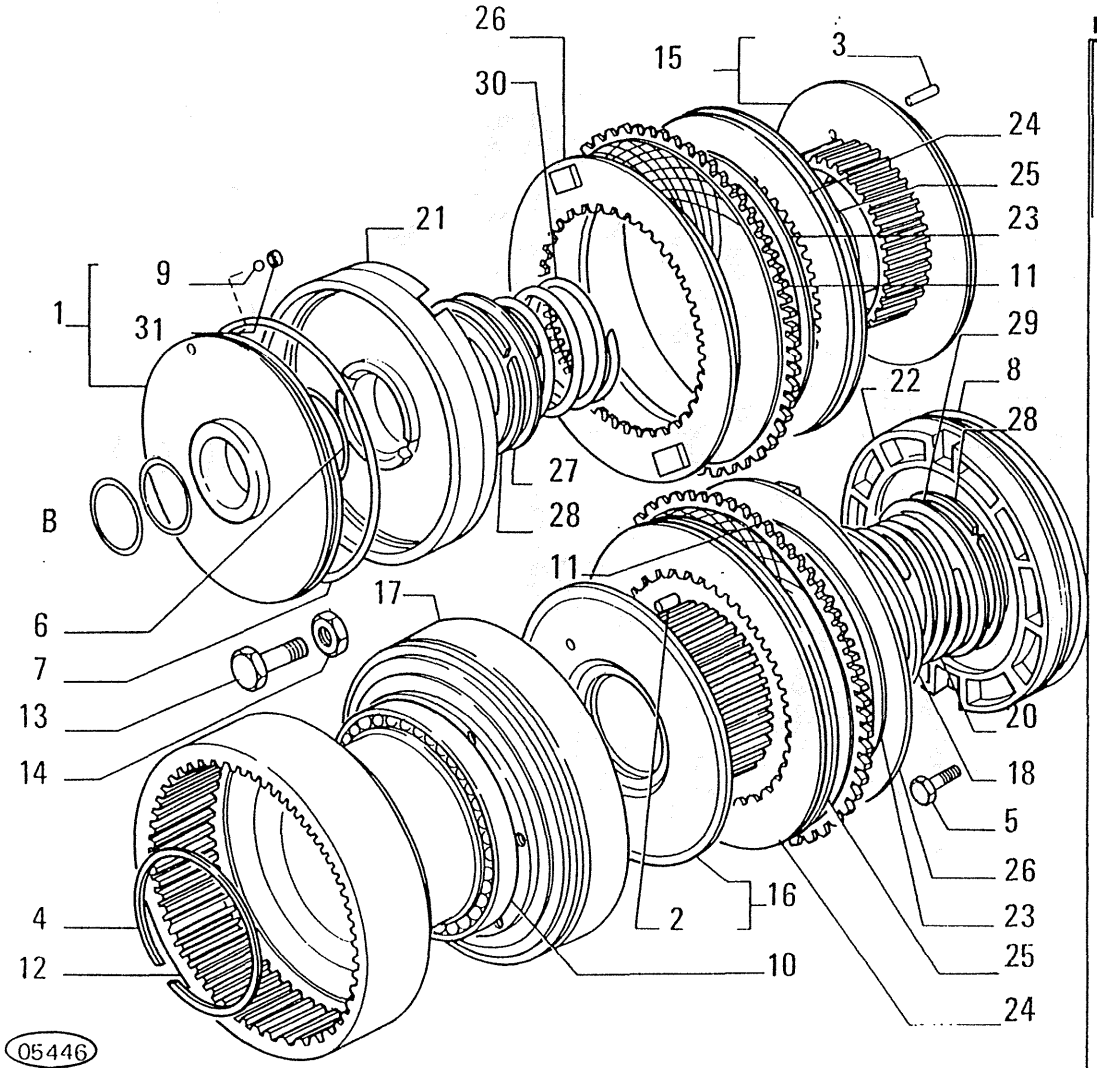

ITEM	PART NUMBER	QTY	TRANS CODE	DESCRIPTION	DESCRIZIONE
1	4983917	1	235S	PISTON	STANTUFFO
2	10333310	3	80P	PIN 4x12 C1463	PERNO 4x12 C1463
	79072959	3	80P	PIN D1463	PERNO D1463
3	10333410	6	80P	PIN 4x14 C1463	PERNO 4x14 C1463
	79071789	6	80P	PIN D1463	PERNO D1463
4	11062476	1	51A	LOCKRING 95,5x3	ANELLO DI SICUREZZA 95,5x3
5	14274530	6	40V	SCREW 12x1,25x30	VITE 12x1,25x30
6	14459781	1	158G	O-RING 2,62x55,24	GUARNIZIONE O-R 2,62x55,24
7	14467781	1	158G	O-RING 3,53x158,3	GUARNIZIONE O-R 3,53x158,3
8	14468181	1	158G	O-RING 3,53x183,7	GUARNIZIONE O-R 3,53x183,7
9	20063450	1	140S	BALL 6,350	SFERA 6,350
10	24907860	1	341C	BEARING 100x150	CUSCINETTO 100x150
11	79010056	14	60D	DISC C1463	DISCO C1463
	79057506	4	60D	DISC D1463	DISCO D1463
12	79026693	1	20T	DRUM - ASSEMBLY OUTER	TAMBURO - COMPLETO ESTERNO
13	79026695	2	40V	SCREW	VITE
14	79026845	2	10D	NUT	DADO
15	79032633	1	20T	DRUM - ASSEMBLY INNER C1463	TAMBURO - COMPLETO INTERNO C1463
	79071781	1	20T	DRUM - INNER ASSEMBLY D1463	TAMBURO - INTERNO COMPLETO D1463
16	79032635	1	20T	DRUM - INNER ASSEMBLY C1463	TAMBURO - INTERNO COMPLETO C1463
	79071783	1	20T	DRUM - INNER ASSEMBLY D1463	TAMBURO - INTERNO COMPLETO D1463
17	79032636	1	20T	DRUM - OUTER C1463	TAMBURO - ESTERNO C1463
	79070615	1	20T	DRUM - OUTER D1463	TAMBURO - ESTERNO D1463

C 1463 → Tel.n. 051879
D 1463 Tel.n. 051880 →

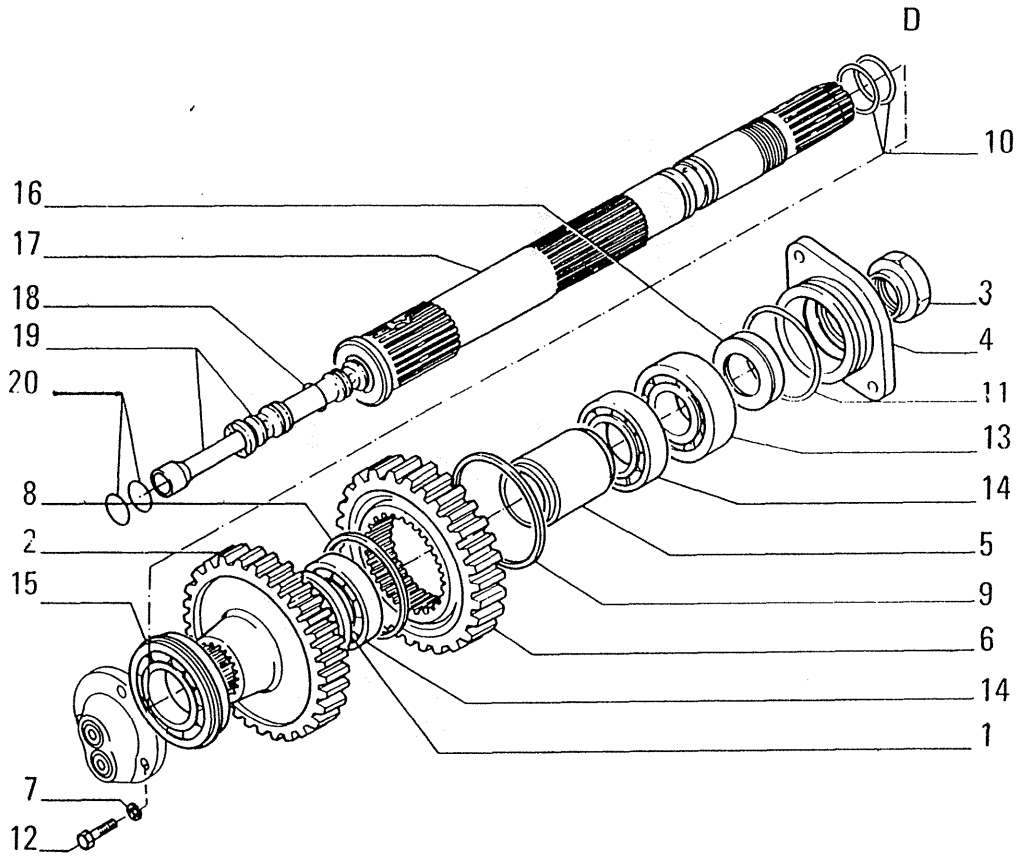

ITEM	PART NUMBER	QTY	TRANS CODE	DESCRIPTION	DESCRIZIONE
1	581371	1	45A	RING	ANELLO
2	590537	1	50I	GEAR	INGRANAGGIO
3	4951301	1	10D	NUT	DADO
4	4960759	1	70F	FLANGE	FLANGIA
5	4962194	1	75D	SPACER	DISTANZIALE
6	4985508	1	50I	GEAR	INGRANAGGIO
7	10516871	2	131R	WASHER 10x2,5	ROSETTA 10x2,5
8	11071376	1	51A	LOCKRING 84,5x3	ANELLO DI SICUREZZA 84,5x3
9	11071876	1	51A	LOCKRING 94,5x3	ANELLO DI SICUREZZA 94,5x3
10	14463881	2	158G	O-RING 3,53x34,52	GUARNIZIONE O-R 3,53x34,52
11	14465481	1	158G	O-RING 3,53x82,14	GUARNIZIONE O-R 3,53x82,14
12	15970731	2	40V	SCREW 10x1,25x25	VITE 10x1,25x25
13	20943310	1	341C	BEARING 40x90	CUSCINETTO 40x90
14	28042500	2	341C	BEARING 50x80	CUSCINETTO 50x80
15	28996360	1	341C	BEARING 60x110	CUSCINETTO 60x110
16	40000110	1	158G	O-RING 35x62	GUARNIZIONE O-R 35x62
17	79032464	1	16A	SHAFT - ASSEMBLY	ALBERO - COMPLETO
18	79032657	2	158G	O-RING	GUARNIZIONE O-R
19	79040804	1	80P	PIN C1432	PERNO C1432
	79052359	2	80P	PIN D1432	PERNO D1432
20	14457281	2	158G	O-RING 2,62x15,54	GUARNIZIONE O-R 2,62x15,54

C 1432 → Tel.n. 050853
D 1432 Tel.n. 050854 →

05445

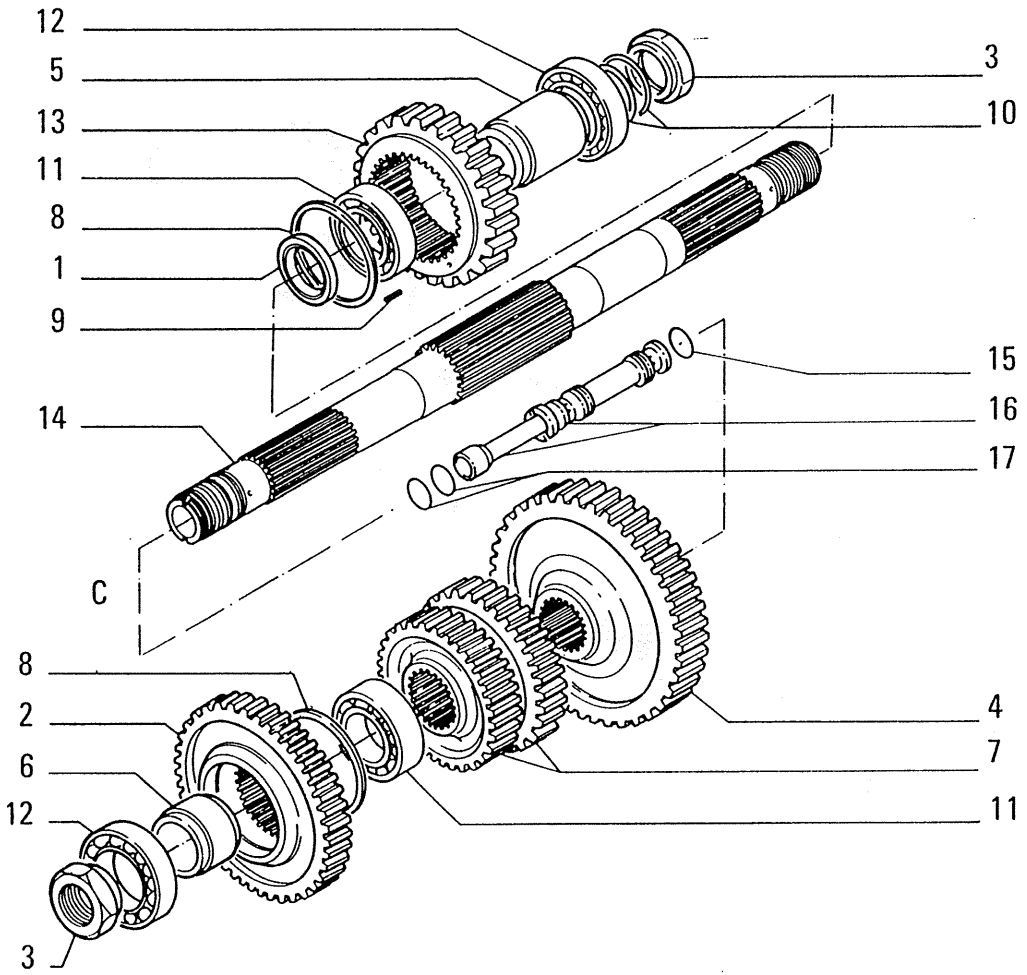

ITEM	PART NUMBER	QTY	TRANS CODE	DESCRIPTION	DESCRIZIONE
1	581371	2	45A	RING	ANELLO
2	590533	1	50I	GEAR	INGRANAGGIO
3	4951301	2	10D	NUT	DADO
4	4962186	1	50I	GEAR	INGRANAGGIO
5	4962194	1	75D	SPACER	DISTANZIALE
6	4962196	1	75D	SPACER	DISTANZIALE
7	4982115	1	50I	GEAR	INGRANAGGIO
8	11071376	2	51A	LOCKRING 84,5x3	ANELLO DI SICUREZZA 84,5x3
9	14163670	2	200S	PIN 4,4x14	SPINA 4,4x14
10	14463881	4	158G	O-RING 3,53x34,52	GUARNIZIONE O-R 3,53x34,52
11	28042500	2	341C	BEARING 50x80	CUSCINETTO 50x80
12	79032204	2	341C	BEARING	CUSCINETTO
13	79032302	1	50I	GEAR	INGRANAGGIO
14	79032803	1	16A	SHAFT	ALBERO
15	79032657	4	158G	O-RING	GUARNIZIONE O-R
16	79040804	2	80P	PIN C1432	PERNO C1432
	79052359	2	80P	PIN D1432	PERNO D1432
17	14457281	4	158G	O-RING 2,62x15,54	GUARNIZIONE O-R 2,62x15,54

C 1432 → Tel.n. 050853
D 1432 Tel.n. 050854 →

05444

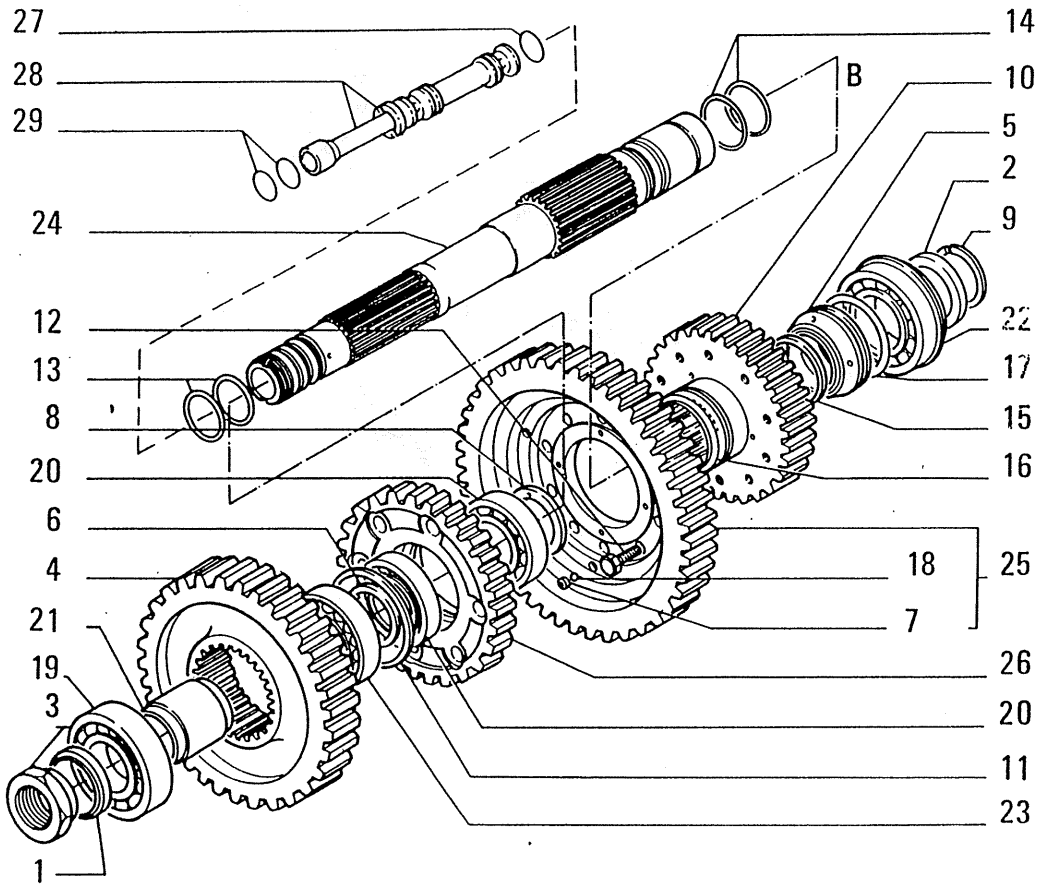

ITEM	PART NUMBER	QTY	TRANS CODE	DESCRIPTION	DESCRIZIONE
26	79041938	1	50I	GEAR	INGRANAGGIO
27	79032657	4	158G	O-RING	GUARNIZIONE O-R
28	79052359	2	80P	PIN D1432	PERNO D1432
	79040804	2	80P	PIN C1432	PERNO C1432
29	14457281	4	158G	O-RING 2,62x15,54	GUARNIZIONE O-R 2,62x15,54

C 1432 → Tel.n. 050853
D 1432 Tel.n. 050854 →

Q5443

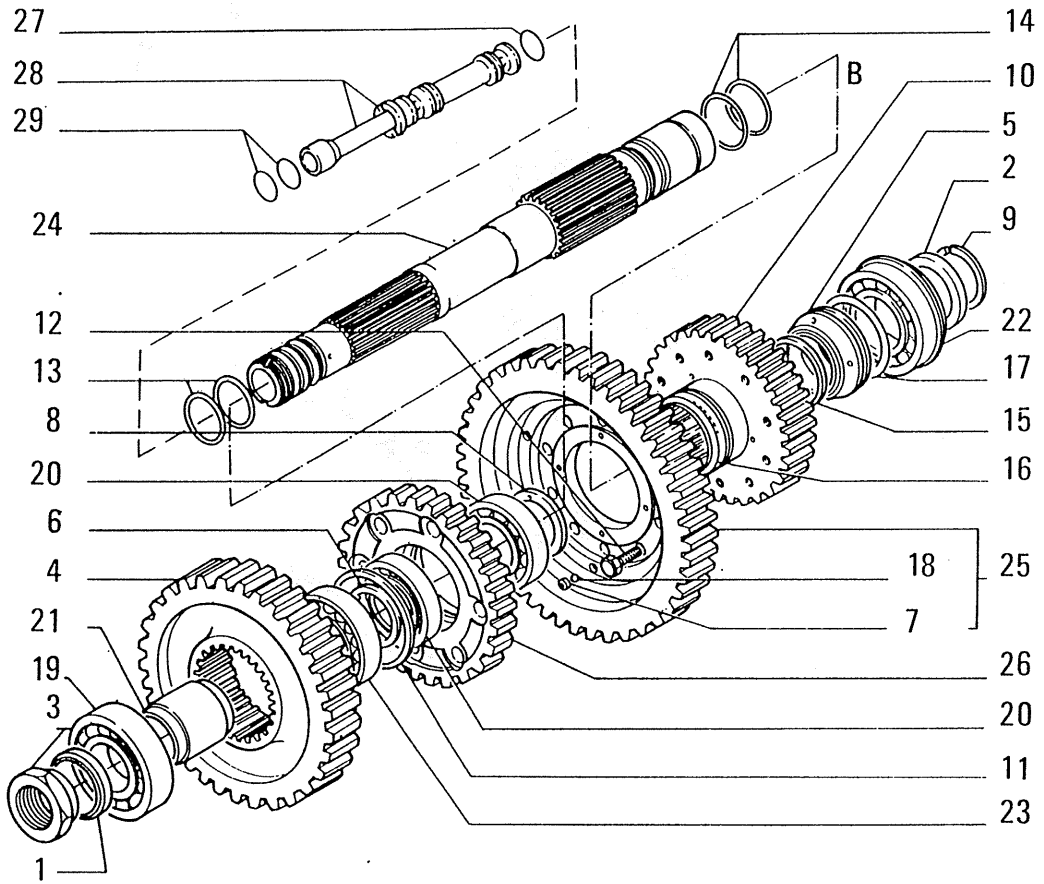

05443

ITEM	PART NUMBER	QTY	TRANS CODE	DESCRIPTION	DESCRIZIONE
1	581371	1	45A	RING	ANELLO
2	586675	1	45A	RING	ANELLO
3	4951301	1	10D	NUT	DADO
4	4962190	1	50I	GEAR	INGRANAGGIO
5	4962197	1	45A	RING C1435	ANELLO C1435
	76008487	1	45A	RING D1435	ANELLO D1435
6	4962198	2	75D	SPACER	DISTANZIALE
7	4962201	2	60S	CUP	SCODELLINO
8	4975732	1	45A	RING	ANELLO
9	4977442	2	90S	HALF RING	SEMIANELLO
10	4982111	1	50I	GEAR	INGRANAGGIO
11	11071376	1	51A	LOCKRING 84,5x3	ANELLO DI SICUREZZA 84,5x3
12	14274530	10	40V	SCREW 12x1,25x30	VITE 12x1,25x30
13	14463881	2	158G	O-RING 3,53x34,52	GUARNIZIONE O-R 3,53x34,52
14	14464381	2	158G	O-RING 3,53x47,22	GUARNIZIONE O-R 3,53x47,22
15	14464981	1	158G	O-RING 3,53x66,27	GUARNIZIONE O-R 3,53x66,27
16	14465181	1	158G	O-RING 3,53x72,62	GUARNIZIONE O-R 3,53x72,62
17	14465981	1	158G	O-RING 3,53x98,02	GUARNIZIONE O-R 3,53x98,02
18	20063450	2	140S	BALL 6,350	SFERA 6,350
19	26794660	1	341C	BEARING 50x90	CUSCINETTO 50x90
20	28042500	2	341C	BEARING 50x80	CUSCINETTO 50x80
21	79026691	1	75D	SPACER	DISTANZIALE
22	20439480	1	341C	BEARING D1433	CUSCINETTO D1433
	79028871	1	341C	BEARING C1433	CUSCINETTO C1433
23	79032204	1	341C	BEARING	CUSCINETTO
24	79032303	1	16A	SHAFT	ALBERO
25	79032456	1	50I	GEAR - ASSEMBLY	INGRANAGGIO - COMPLETO

C 1433 → Tel.n. 050990 C 1435 → Tel.n. 050995
D 1433 Tel.n. 050991 →_____ D 1435 Tel.n. 050996 →

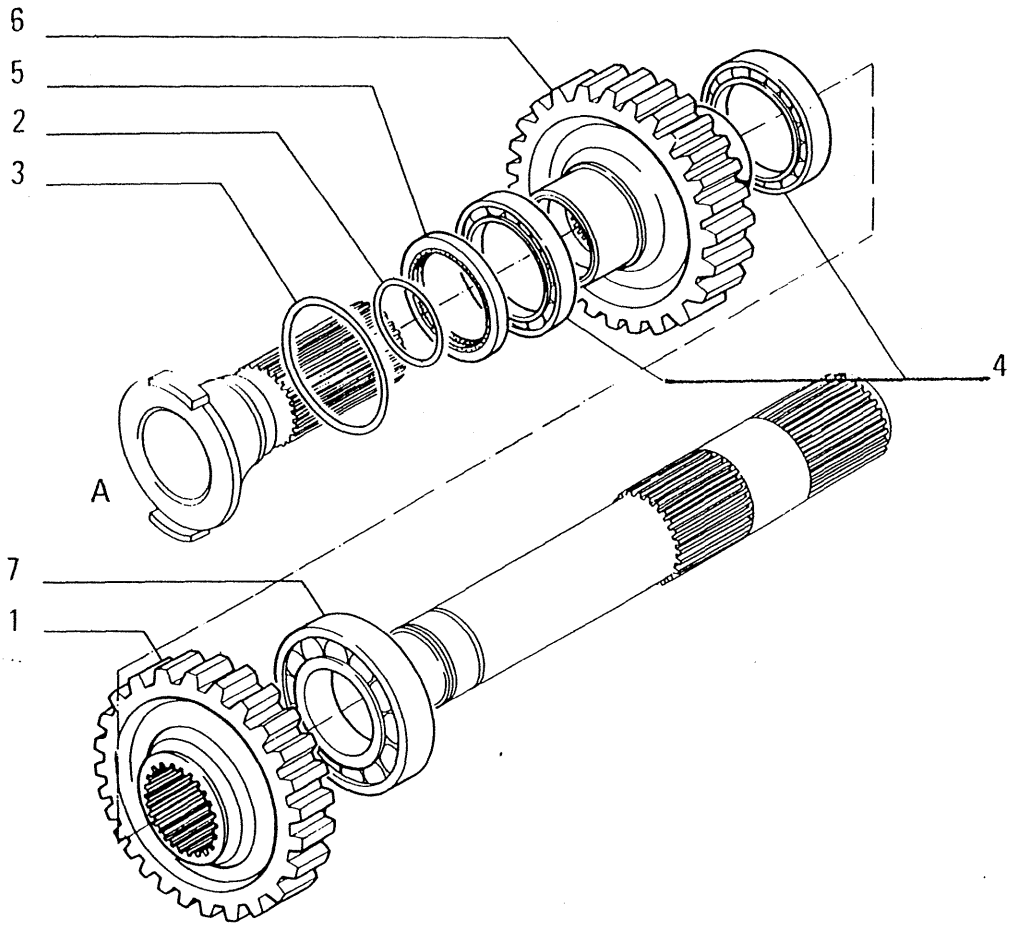

ITEM	PART NUMBER	QTY	TRANS CODE	DESCRIPTION	DESCRIZIONE
1	4982114	1	50I	GEAR	INGRANAGGIO
2	14464381	1	158G	O-RING 3,53x47,22	GUARNIZIONE O-R 3,53x47,22
3	14465981	1	158G	O-RING 3,53x98,02	GUARNIZIONE O-R 3,53x98,02
4	20141040	2	341C	BEARING 60x110	CUSCINETTO 60x110
5	40000030	1	158G	O-RING 60x80	GUARNIZIONE O-R 60x80
6	79032300	1	50I	GEAR	INGRANAGGIO
7	79032304	1	341C	BEARING	CUSCINETTO

05442

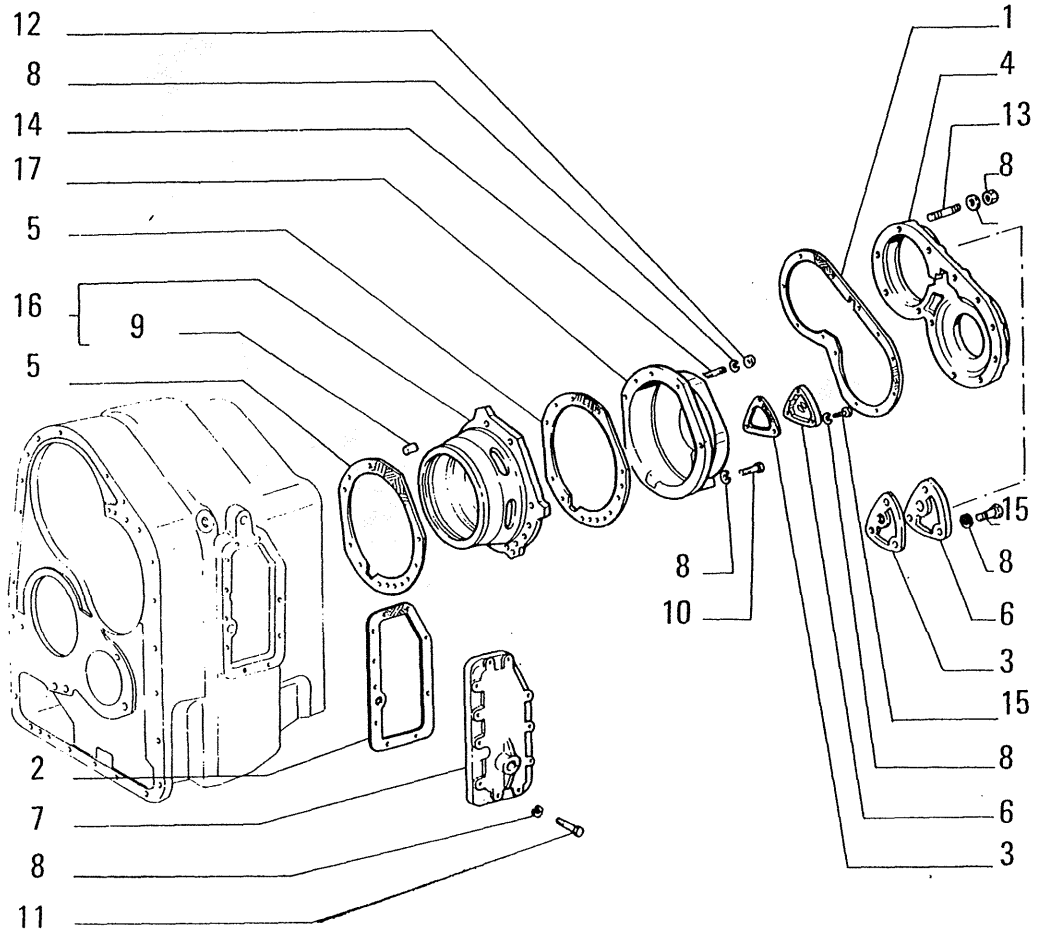

ITEM	PART NUMBER	QTY	TRANS CODE	DESCRIPTION	DESCRIZIONE
1	586441	1	123G	SEAL ASSY	GUARNIZIONE TENUTA FRONTALE
2	586446	1	123G	SEAL ASSY	GUARNIZIONE TENUTA FRONTALE
3	586728	2	123G	SEAL ASSY	GUARNIZIONE TENUTA FRONTALE
4	4962039	1	265C	COVER - REAR C1465	COPERCHIO - POSTERIORE C1465
	79064503	1	265C	COVER - REAR D1465	COPERCHIO - POSTERIORE D1465
5	4962046	2	123G	SEAL ASSY	GUARNIZIONE TENUTA FRONTALE
6	4972404	2	265C	COVER	COPERCHIO
7	4982944	1	265C	COVER - SIDE LEFT	COPERCHIO - LATERALE SINISTRO
8	10516871	32	131R	WASHER 10x2,5	ROSETTA 10x2,5
9	10839710	2	90G	DOWEL 10x15	GRANO 10x15
10	11234731	7	40V	SCREW 10x1,25x45	VITE 10x1,25x45
11	11306931	11	40V	SCREW 10x1,25x30	VITE 10x1,25x30
12	12164721	27	10D	NUT 10x1,25x8	DADO 10x1,25x8
13	13449730	12	210P	STUD 10x1,25x45	PRIGIONIERO 10x1,25x45
14	13449930	3	210P	STUD 10x1,25x55	PRIGIONIERO 10x1,25x55
15	15970731	6	40V	SCREW 10x1,25x25	VITE 10x1,25x25
16	79032241	1	300S	SUPPORT - ASSEMBLY	SUPPORTO - COMPLETO
17	79038342	1	265C	COVER - REAR ASSEMBLY	COPERCHIO - POSTERIORE COMPLETO

C 1465 → Tel.n. 051883
D 1465 Tel.n. 051884 →

05211

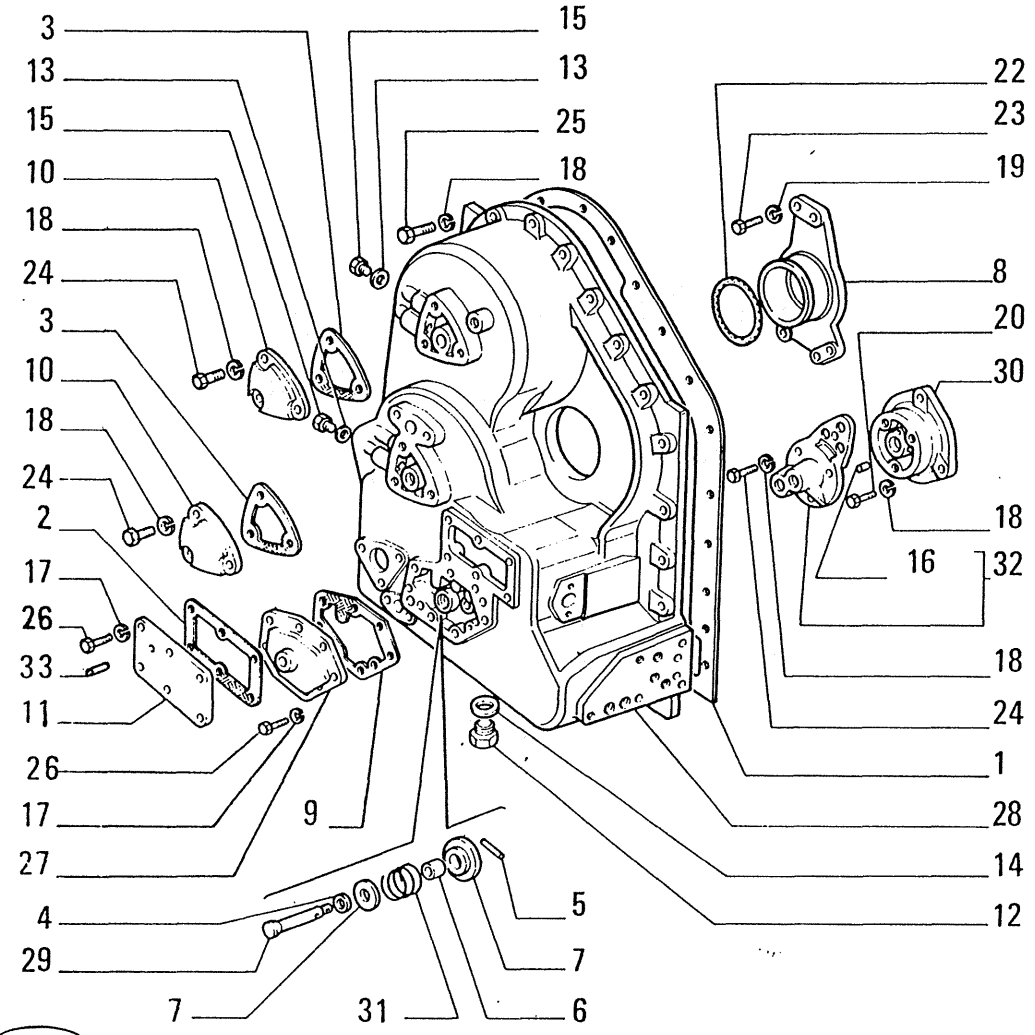

05067

ITEM	PART NUMBER	QTY	TRANS CODE	DESCRIPTION	DESCRIZIONE
27	79007737	1	265C	COVER	COPERCHIO
28	79032239	1	265C	COVER - FRONT ASSEMBLY	COPERCHIO - ANTERIORE COMPLETO
29	79032305	1	80P	PIN	PERNO
30	79032385	1	265C	COVER - ASSEMBLY	COPERCHIO - COMPLETO
31	79032557	1	100M	SPRING	MOLLA
32	79038344	1	265C	COVER - ASSEMBLY	COPERCHIO - COMPLETO
33	10151911	1	50T	PLUG 24x1,5x10 D1458	TAPPO 24x1,5x10 D1458

D 1458 Tel.n. 051740 →

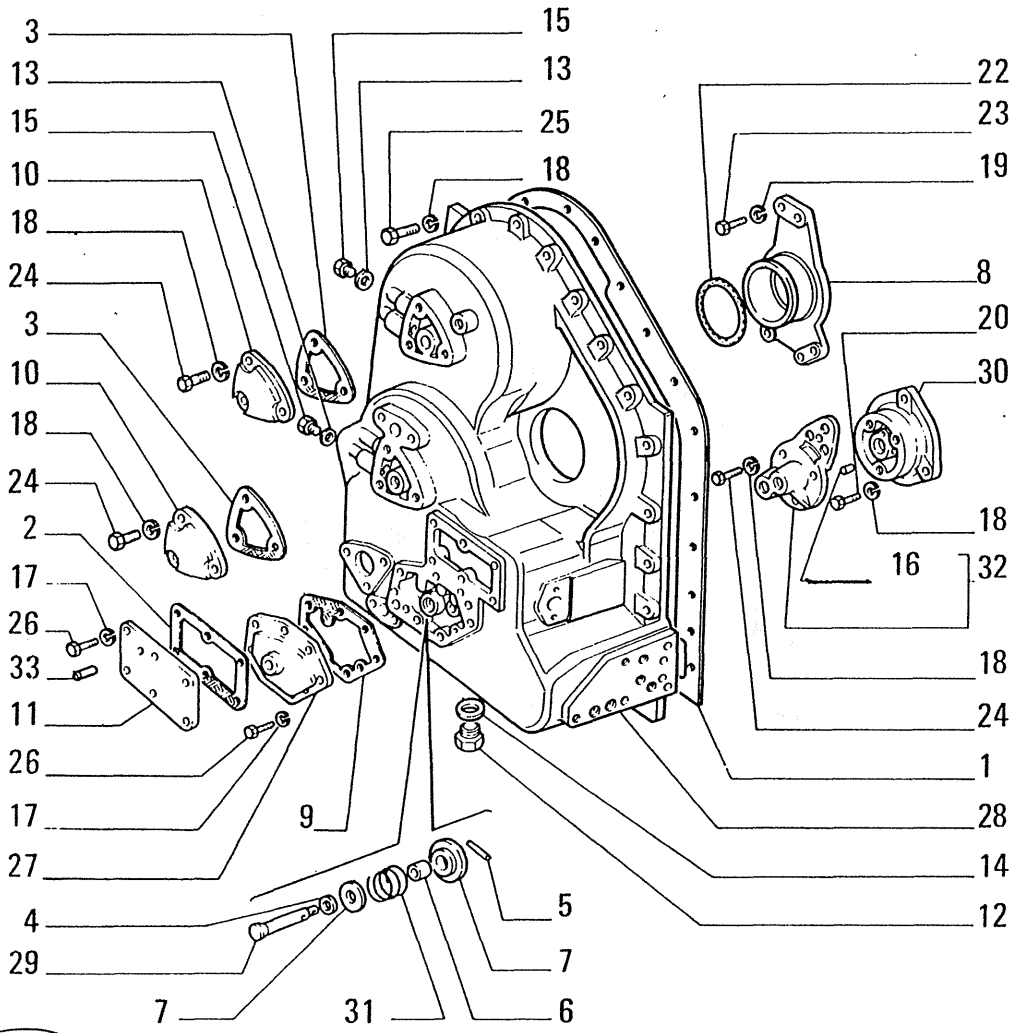

05067

ITEM	PART NUMBER	QTY	TRANS CODE	DESCRIPTION	DESCRIZIONE
1	586442	1	123G	SEAL ASSY	GUARNIZIONE TENUTA FRONTALE
2	586447	1	123G	SEAL ASSY	GUARNIZIONE TENUTA FRONTALE
3	586728	2	123G	SEAL ASSY	GUARNIZIONE TENUTA FRONTALE
4	591390	1	120P	PLATE	PIATTELLO
5	591391	1	80P	PIN	PERNO
6	591392	1	75D	SPACER	DISTANZIALE
7	591393	1	60S	CUP	SCODELLINO
8	593521	1	300S	SUPPORT	SUPPORTO
9	4962047	1	123G	SEAL ASSY	GUARNIZIONE TENUTA FRONTALE
10	4972404	2	265C	COVER	COPERCHIO
11	4981056	1	265C	COVER C1458	COPERCHIO C1458
	79064201	1	265C	COVER D1458	COPERCHIO D1458
12	10278301	1	50T	PLUG 28x1,5x11	TAPPO 28x1,5x11
13	10296160	2	133R	SEAL 12,2x18	ROSETTA DI TENUTA 12,2x18
14	10296585	1	133R	SEAL 28,3x36	ROSETTA DI TENUTA 28,3x36
15	10300511	2	50T	PLUG 12x1,5x8	TAPPO 12x1,5x8
16	10486110	1	90G	DOWEL 4x8	GRANO 4x8
17	10516671	6	131R	WASHER 8,1x2,2	ROSETTA 8,1x2,2
18	10516871	51	131R	WASHER 10x2,5	ROSETTA 10x2,5
19	10517071	3	131R	WASHER 12,2x3,1	ROSETTA 12,2x3,1
20	11306931	3	40V	SCREW 10x1,25x30	VITE 10x1,25x30
21	14456881	3	158G	O-RING 2,62x9,19	GUARNIZIONE O-R 2,62x9,19
22	14465981	1	158G	O-RING 3,53x98,02	GUARNIZIONE O-R 3,53x98,02
23	15540431	3	40V	SCREW 12x1,25x30	VITE 12x1,25x30
24	15970731	10	40V	SCREW 10x1,25x25	VITE 10x1,25x25
25	15970931	26	40V	SCREW 10x1,25x35	VITE 10x1,25x35
26	16043431	14	40V	SCREW 8x1,25x20	VITE 8x1,25x20

C 1458 → Tel.n. 051739
D 1458 Tel.n. 051740 →

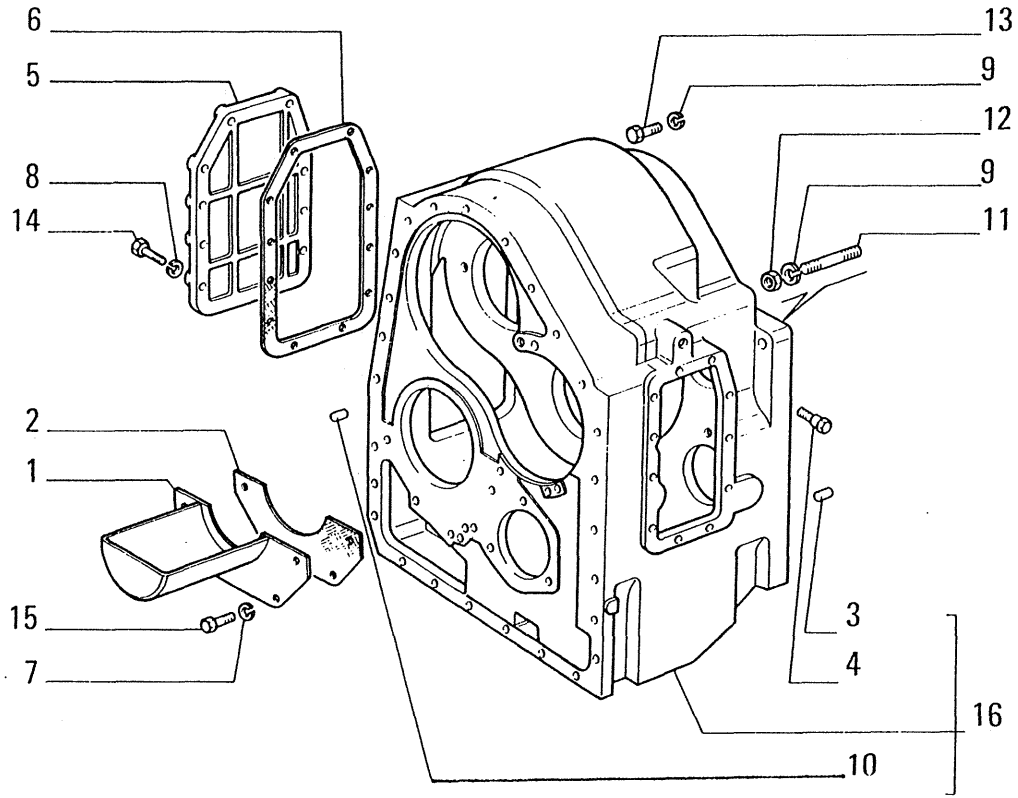

ITEM	PART NUMBER	QTY	TRANS CODE	DESCRIPTION	DESCRIZIONE
1	586695	1	19V	PAN	VASCHETTA
2	586740	1	123G	SEAL ASSY	GUARNIZIONE TENUTA FRONTALE
3	587088	1	90G	DOWEL	GRANO
4	4502935	2	30G	HOOK	GANCIO
5	4961971	1	265C	COVER - SIDE RIGHT	COPERCHIO - LATERALE DESTRO
6	4962048	1	123G	SEAL ASSY	GUARNIZIONE TENUTA FRONTALE
7	10516671	4	131R	WASHER 8,1x2,2	ROSETTA 8,1x2,2
8	10516871	12	131R	WASHER 10x2,5	ROSETTA 10x2,5
9	10517271	7	131R	WASHER 16,2x4	ROSETTA 16,2x4
10	10839810	3	90G	DOWEL 12x18	GRANO 12x18
11	11800530	3	210P	STUD 16x1,5x62	PRIGIONIERO 16x1,5x62
12	12164127	3	10D	NUT 16x1,5x13	DADO 16x1,5x13
13	15840537	4	40V	SCREW 16x1,5x50	VITE 16x1,5x50
14	15970731	12	40V	SCREW 10x1,25x25	VITE 10x1,25x25
15	16043231	4	40V	SCREW 8x1,25x16	VITE 8x1,25x16
16	79032243	1	35S	CASE - ASSEMBLY	SCATOLA - COMPLETO

(05068)

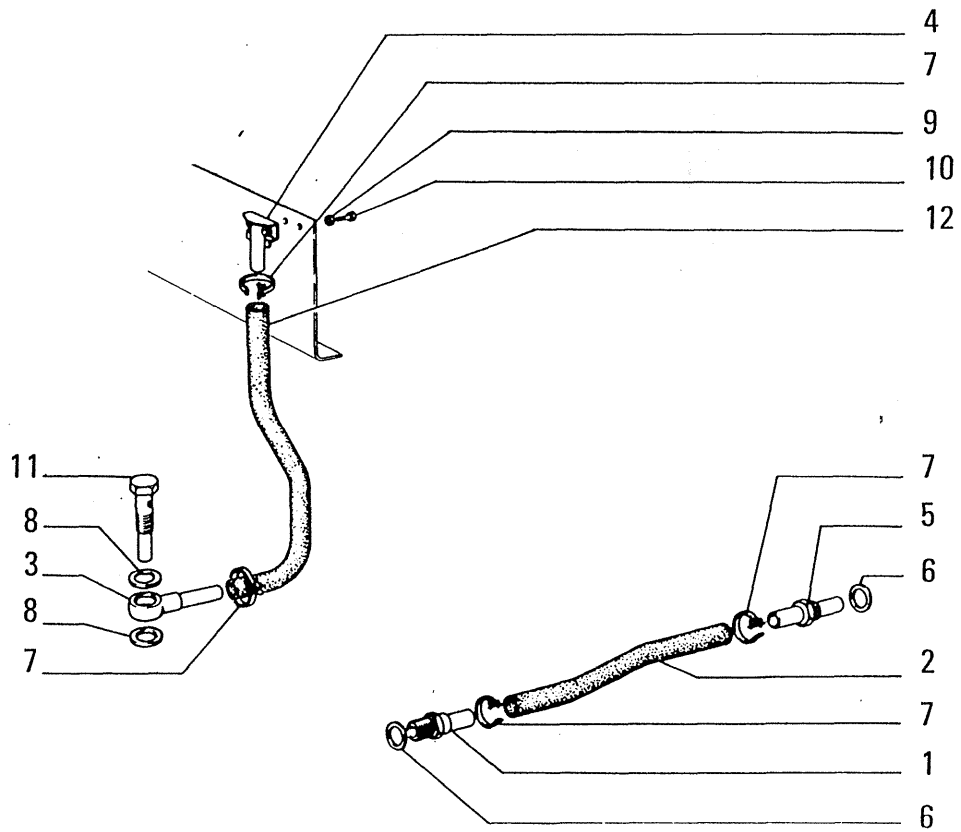

ITEM	PART NUMBER	QTY	TRANS CODE	DESCRIPTION	DESCRIZIONE
1	589425	1	20R	FITTING	RACCORDO
2	590731	1	192T	HOSE ASSY (01-03-05)	TUBO FLESS.C/RACCORDI (01-03-05)
	76015720	1	192T	HOSE ASSY (06)	TUBO FLESS.C/RACCORDI (06)
3	592043	1	20R	FITTING	RACCORDO
4	592046	1	65F	FILTER	FILTRO
5	4972664	1	20R	FITTING	RACCORDO
6	10259960	2	133R	SEAL 18,2x24	ROSETTA DI TENUTA 18,2x24
7	10291790	4	180C	COLLAR (01-03-05) 171x20	COLLARE (01-03-05) 171x20
	79083842	4	180C	COLLAR (06)	COLLARE (06)
8	10296685	2	133R	SEAL 16,2x22	ROSETTA DI TENUTA 16,2x22
9	12605371	2	131R	WASHER 6,1x11,7	ROSETTA 6,1x11,7
10	13276011	2	40V	SCREW 6x1x12	VITE 6x1x12
11	79009696	1	90B	FILLER PLUG	BOCCHETTONE INTRODUZIONE
12	76015720	1	192T	HOSE ASSY (06)	TUBO FLESS.C/RACCORDI (06)
	79010783	1	192T	HOSE ASSY (01-03-05)	TUBO FLESS.C/RACCORDI (01-03-05)

(01-03-05) Units prior to 052919
(06) Unit #052919 and up

05441

01 - 03
05 - 06

TRANSMISSION AND TORQUE CONVERTER VENT LINES – TUBAZIONI SFIATO CONVERTITORE E CAMBIO – TUBES D'EVENT DE CONVERTISSEUR ET BOITE DE VITESSES - ENTLUEFTUNGSLETTUNGEN FUER WANDLER UND GETRIEBE – TUBERÍAS DE VENTILACIÓN DEL CONVERTIDOR Y CAMBIO

B1.15

N.T.R. 169 - 30.07.1988

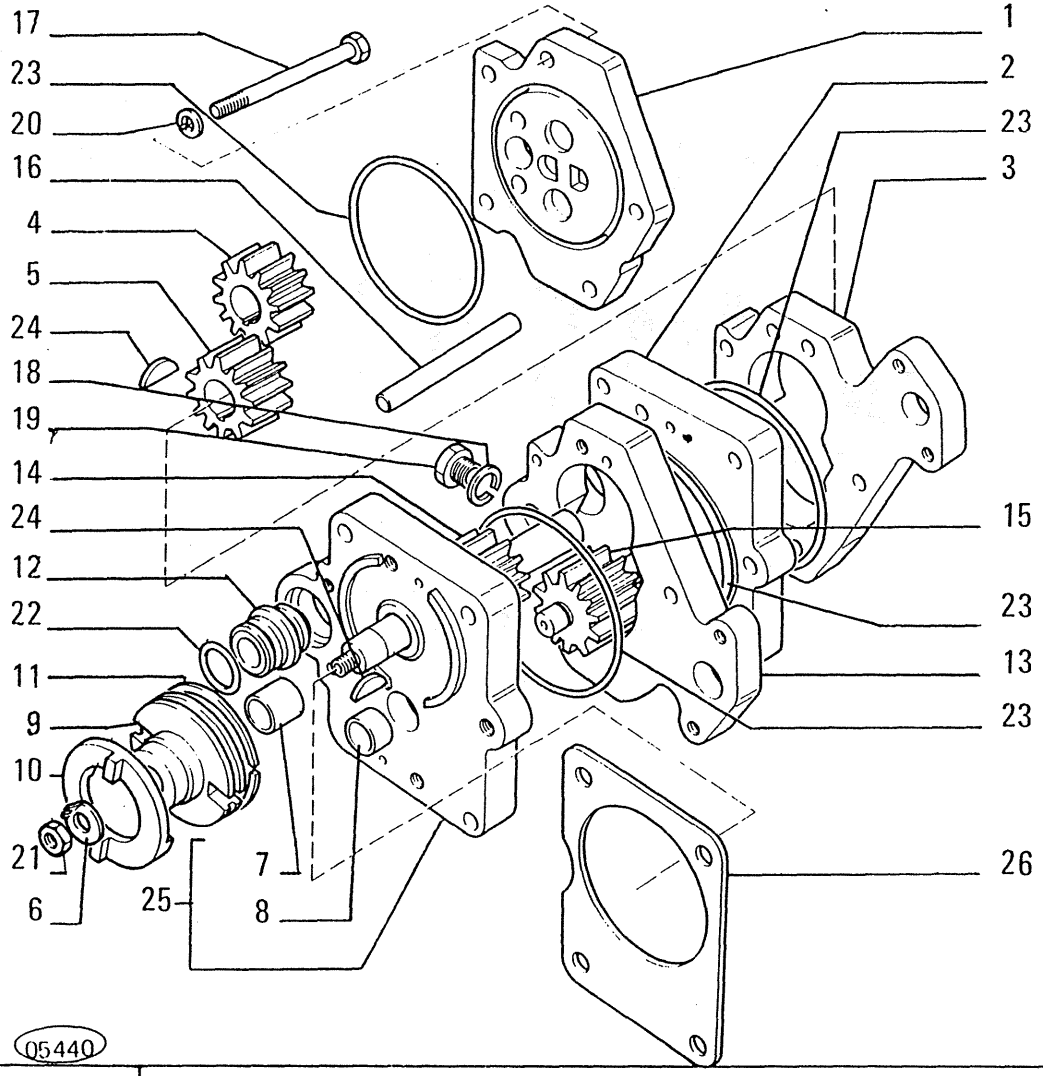

FIATALLIS **B1.11 TAV. 1 PAG.1**

ITEM	PART NUMBER	QTY	TRANS CODE	DESCRIPTION	DESCRIZIONE
1	588884	1	265C	COVER	COPERCHIO
2	588904	1	75D	SPACER - FRONT ASSEMBLY	DISTANZIALE - ANTERIORE COMPLETO
3	588905	1	300C	BODY	CORPO
4	588912	1	50I	GEAR	INGRANAGGIO
5	588913	1	50I	GEAR	INGRANAGGIO
6	588915	1	131R	WASHER	ROSETTA
7	591055	1	95B	BUSHING	BOCCOLA
8	591707	3	95B	BUSHING	BOCCOLA
9	591794	1	30M	SLEEVE	MANICOTTO
10	4526899	1	45A	RING	ANELLO
11	4526900	1	51A	LOCKRING	ANELLO DI SICUREZZA
12	4952685	1	20R	FITTING	RACCORDO
13	4960319	1	300C	BODY	CORPO
14	4960321	1	50I	GEAR	INGRANAGGIO
15	4960322	1	50I	GEAR	INGRANAGGIO
16	4960323	2	80P	PIN	PERNO
17	4960324	5	40V	SCREW	VITE
18	10263160	1	133R	SEAL 18,2x24	ROSETTA DI TENUTA 18,2x24
19	10300811	1	50T	PLUG 18x1,5x9	TAPPO 18x1,5x9
20	10516671	5	131R	WASHER 8,1x2,2	ROSETTA 8,1x2,2
21	12164721	1	10D	NUT 10x1,25x8	DADO 10x1,25x8
22	14462881	3	158G	O-RING 3,53x18,64	GUARNIZIONE O-R 3,53x18,64
23	14465481	4	158G	O-RING 3,53x82,14	GUARNIZIONE O-R 3,53x82,14
24	79014342	2	60L	KEY	LINGUETTA
25	79038141	1	265C	COVER - ASSEMBLY	COPERCHIO - COMPLETO
26	79038142	1	123G	SEAL ASSY	GUARNIZIONE TENUTA FRONTALE

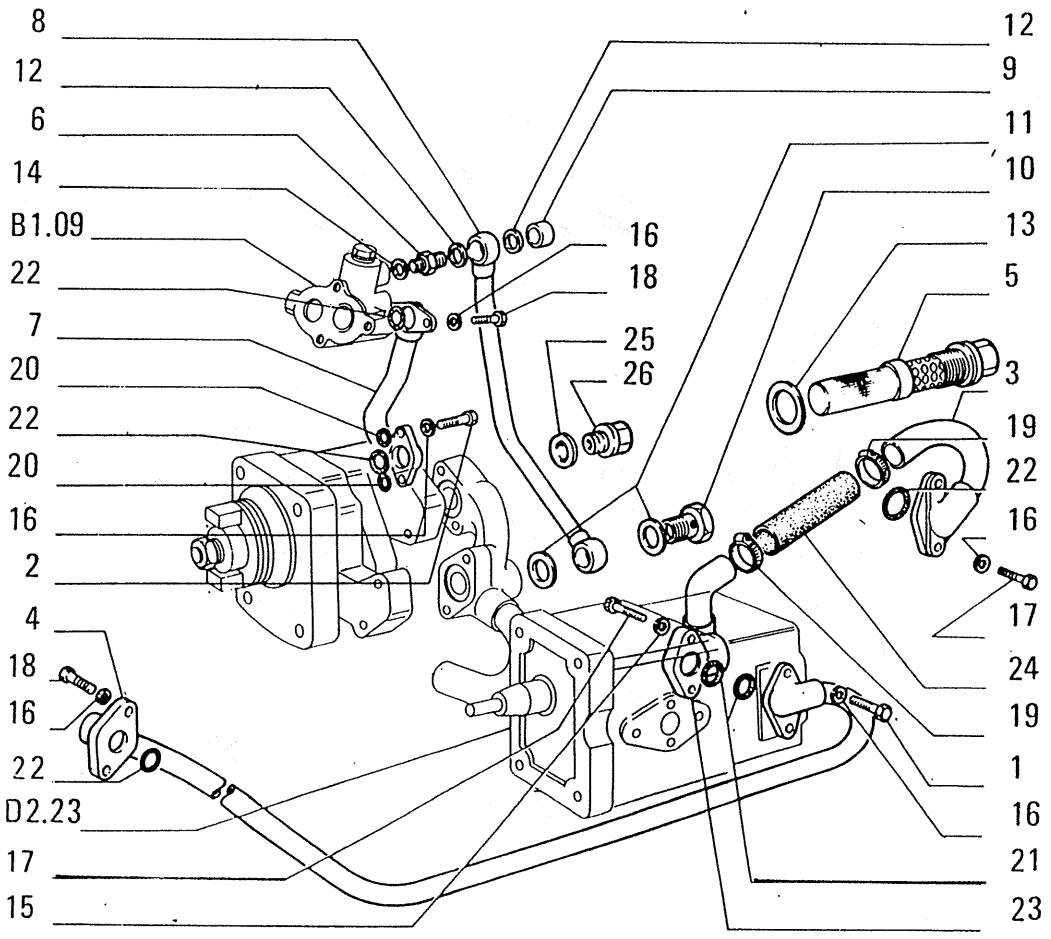

ITEM	PART NUMBER	QTY	TRANS CODE	DESCRIPTION	DESCRIZIONE
15	10516671	4	131R	WASHER 8,1x2,2	ROSETTA 8,1x2,2
16	10516871	8	131R	WASHER (01-03-05) 10x2,5	ROSETTA (01-03-05) 10x2,5
	14496431	2	131R	WASHER (06) 6,4x12,5	ROSETTA (06) 6,4x12,5
17	11234731	4	40V	SCREW 10x1,25x45	VITE 10x1,25x45
18	11307031	4	40V	SCREW (01-03-05) 10x1,25x40	VITE (01-03-05) 10x1,25x40
	11307034	2	40V	SCREW (06) 10x1,25x40	VITE (06) 10x1,25x40
19	12173890	2	180C	COLLAR 24/36x14	COLLARE 24/36x14
20	14456881	2	158G	O-RING 2,62x9,19	GUARNIZIONE O-R 2,62x9,19
21	14457180	2	158G	O-RING 2,62x13,94	GUARNIZIONE O-R 2,62x13,94
22	14457380	4	158G	O-RING 2,62x17,12	GUARNIZIONE O-R 2,62x17,12
23	76007874	1	193T	TUBE - FRONT **D1442**	TUBO RIGIDO - ANTERIORE **D1442**
	79007748	1	193T	TUBE - FRONT **C1442**	TUBO RIGIDO - ANTERIORE **C1442**
24	79032095	1	30M	SLEEVE	MANICOTTO
25	10264560	1	133R	SEAL (06) 24,3x32	ROSETTA DI TENUTA (06) 24,3x32
26	10304611	1	50T	PLUG (06) 24x1,5x14	TAPPO (06) 24x1,5x14

C 1442 → Tel.n. 051180
D 1442 Tel.n. 051181 →

(01-03-05) Units prior to 052919
(06) Unit # 052919-up

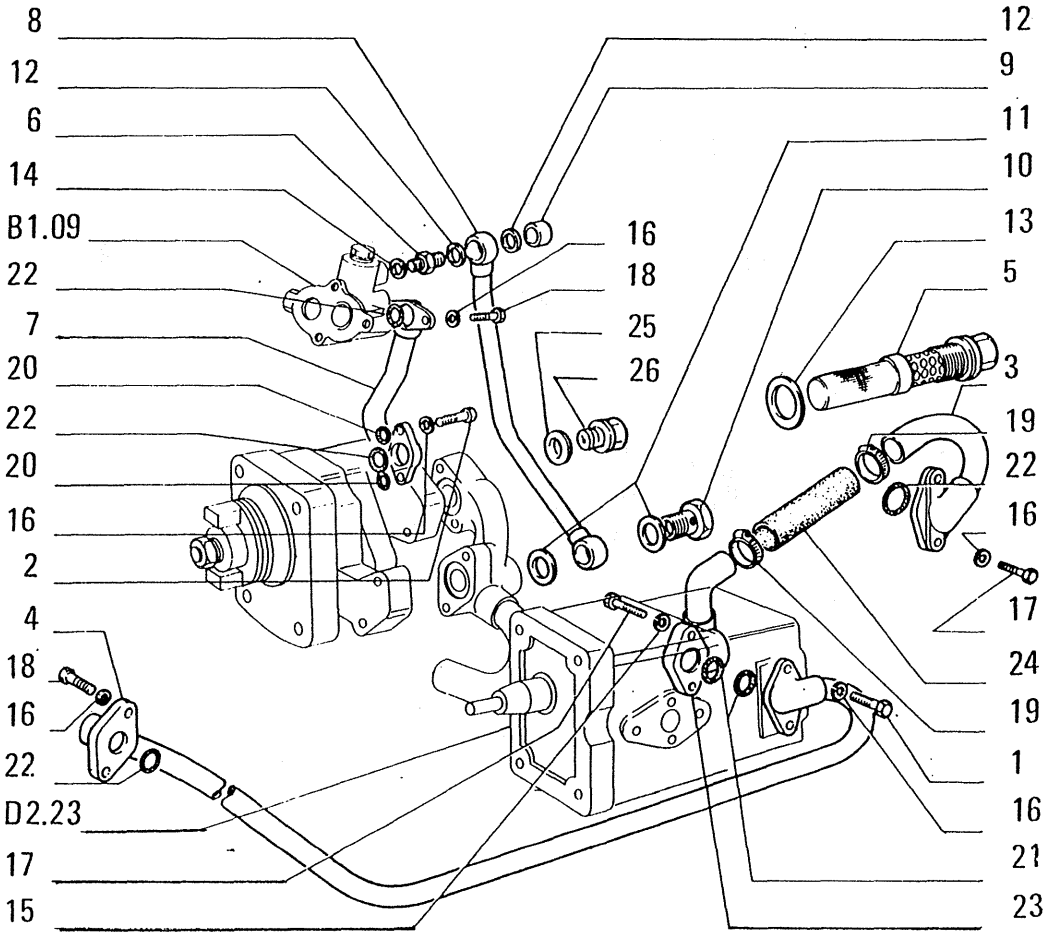

05066

ITEM	PART NUMBER	QTY	TRANS CODE	DESCRIPTION	DESCRIZIONE
1	568292	2	40V	SCREW (01-03-05)	VITE (01-03-05)
	10902831	2	40V	SCREW (06) 6x1x30	VITE (06) 6x1x30
2	588893	2	40V	SCREW	VITE
3	592153	1	193T	TUBE **C1436**	TUBO RIGIDO **C1436**
	4956212	1	193T	TUBE **D1436**	TUBO RIGIDO **D1436**
4	4956181	1	193T	TUBE (01-03-05) **C1442**	TUBO RIGIDO (01-03-05) **C1442**
	76007862	1	193T	TUBE (01-03-05) **D1442**	TUBO RIGIDO (01-03-05) **D1442**
	79068251	1	193T	TUBE (06) s/n 052919-up	TUBO RIGIDO (06)
5	4978953	1	65F	FILTER	FILTRO
6	4986852	1	20R	FITTING	RACCORDO
7	4988758	1	193T	TUBE	TUBO RIGIDO
8	4988760	1	193T	TUBE **C1436**	TUBO RIGIDO **C1436**
	79043955	1	193T	TUBE - REAR **D1436**	TUBO RIGIDO - POSTERIORE **D1436**
9	10184217	1	50T	PLUG 24x1,5x18	TAPPO 24x1,5x18
10	10184517	1	90B	FILLER PLUG 24x1,5x14,5 **C1436**	BOCCHETTONE INTRODUZIONE 24x1,5x14,5 **C1436**
	11903717	2	90B	FILLER PLUG 8x1,25x16 **D1436**	BOCCHETTONE INTRODUZIONE 8x1,25x16 **D1436**
11	10257385	2	133R	SEAL 24x32 **C1436**	ROSETTA DI TENUTA 24x32 **C1436**
	14330260	4	131R	WASHER 8,2x12 **D1436**	ROSETTA 8,2x12 **D1436**
12	10264560	2	133R	SEAL 24,3x32	ROSETTA DI TENUTA 24,3x32
13	10296585	1	133R	SEAL 28,3x36	ROSETTA DI TENUTA 28,3x36
14	10303360	1	133R	SEAL 27,3x32	ROSETTA DI TENUTA 27,3x32

C 1436 → Tel.n. 050971 C 1442 → Tel.n. 051180
D 1436 Tel.n. 050972 → D 1442 Tel.n. 051181 thru 052918

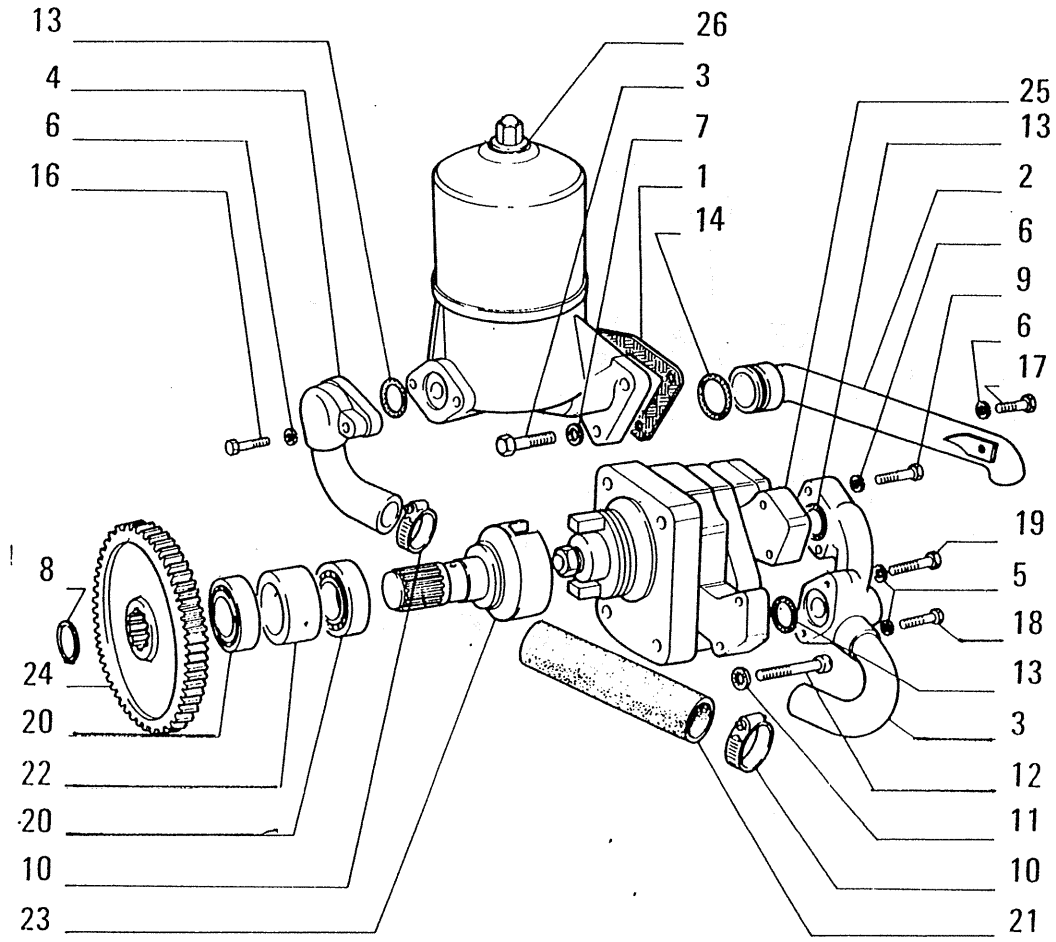

05064

ITEM	PART NUMBER	QTY	TRANS CODE	DESCRIPTION	DESCRIZIONE
25	79038139	1	153P	OIL PUMP - ASSEMBLY SEE SGR. B1.11	POMPA OLIO - COMPLETO VEDERI SGR. B1.11
26	4996300	1	67F	OIL FILTER - ASSEMBLY SEE SGR. B2.17 **D1457**	FILTRO OLIO - COMPLETO VEDERE SGR. B2.17 **D1457**
	79038351	1	67F	OIL FILTER - ASSEMBLY SEE SGR. B2.17/1 **C1457**	FILTRO OLIO - COMPLETO VEDERI SGR. B2.17/1 **C1457**

C 1457 → Tel.n. 051636
D 1457 Tel.n. 051637 →

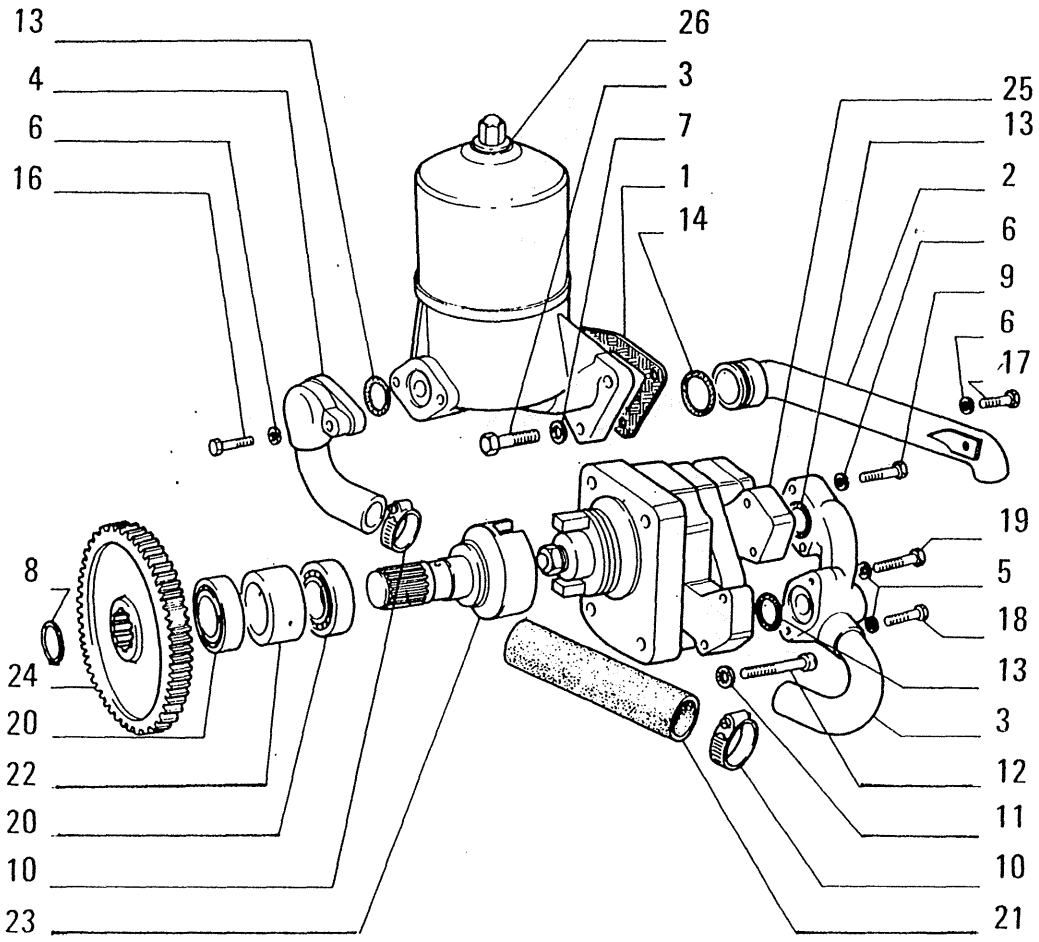

05064

ITEM	PART NUMBER	QTY	TRANS CODE	DESCRIPTION	DESCRIZIONE
1	586691	1	123G	SEAL ASSY	GUARNIZIONE TENUTA FRONTALE
2	4956208	1	193T	TUBE	TUBO RIGIDO
3	4986716	1	193T	TUBE **C1436**	TUBO RIGIDO **C1436**
	79046454	1	193T	TUBE **D1436**	TUBO RIGIDO **D1436**
4	4986725	1	193T	TUBE	TUBO RIGIDO
5	10516671	2	131R	WASHER 8,1x2,2	ROSETTA 8,1x2,2
6	10516871	4	131R	WASHER 10x2,5	ROSETTA 10x2,5
7	10517071	3	131R	WASHER 12,2x3,1	ROSETTA 12,2x3,1
8	11067476	1	51A	LOCKRING 24,2x1,2	ANELLO DI SICUREZZA 24,2x1,2
9	11234731	2	40V	SCREW 10x1,25x45 **D1436**	VITE 10x1,25x45 **D1436**
	11307031	2	40V	SCREW 10x1,25x40 **C1436**	VITE 10x1,25x40 **C1436**
10	12174790	2	180C	COLLAR 47/67x14	COLLARE 47/67x14
11	12605671	4	131R	WASHER 10,2x17,8	ROSETTA 10,2x17,8
12	14307630	4	40V	SCREW 10x1,25x35	VITE 10x1,25x35
13	14457680	3	158G	O-RING 2,62x21,89	GUARNIZIONE O-R 2,62x21,89
14	14463680	1	158G	O-RING 3,53x31,34	GUARNIZIONE O-R 3,53x31,34
15	15540531	3	40V	SCREW 12x1,25x35	VITE 12x1,25x35
16	15888731	2	40V	SCREW 10x1,25x55	VITE 10x1,25x55
17	15970531	1	40V	SCREW 10x1,25x20	VITE 10x1,25x20
18	16044131	1	40V	SCREW 8x1,25x45	VITE 8x1,25x45
19	16044831	1	40V	SCREW 8x1,25x80	VITE 8x1,25x80
20	20685450	2	341C	BEARING 30x62	CUSCINETTO 30x62
21	76000889	1	30M	SLEEVE (01-03-05)	MANICOTTO (01-03-05)
	76014560	1	30M	SLEEVE (06)	MANICOTTO (06)
22	79009557	1	75D	SPACER	DISTANZIALE
23	79010926	1	16A	SHAFT	ALBERO
24	79010927	1	50I	GEAR	INGRANAGGIO

C 1436 → Tel.n. 050971
D 1436 Tel.n. 050972 →

(01-03-03) Prior to unit #052919
(06) Unit #052919-up

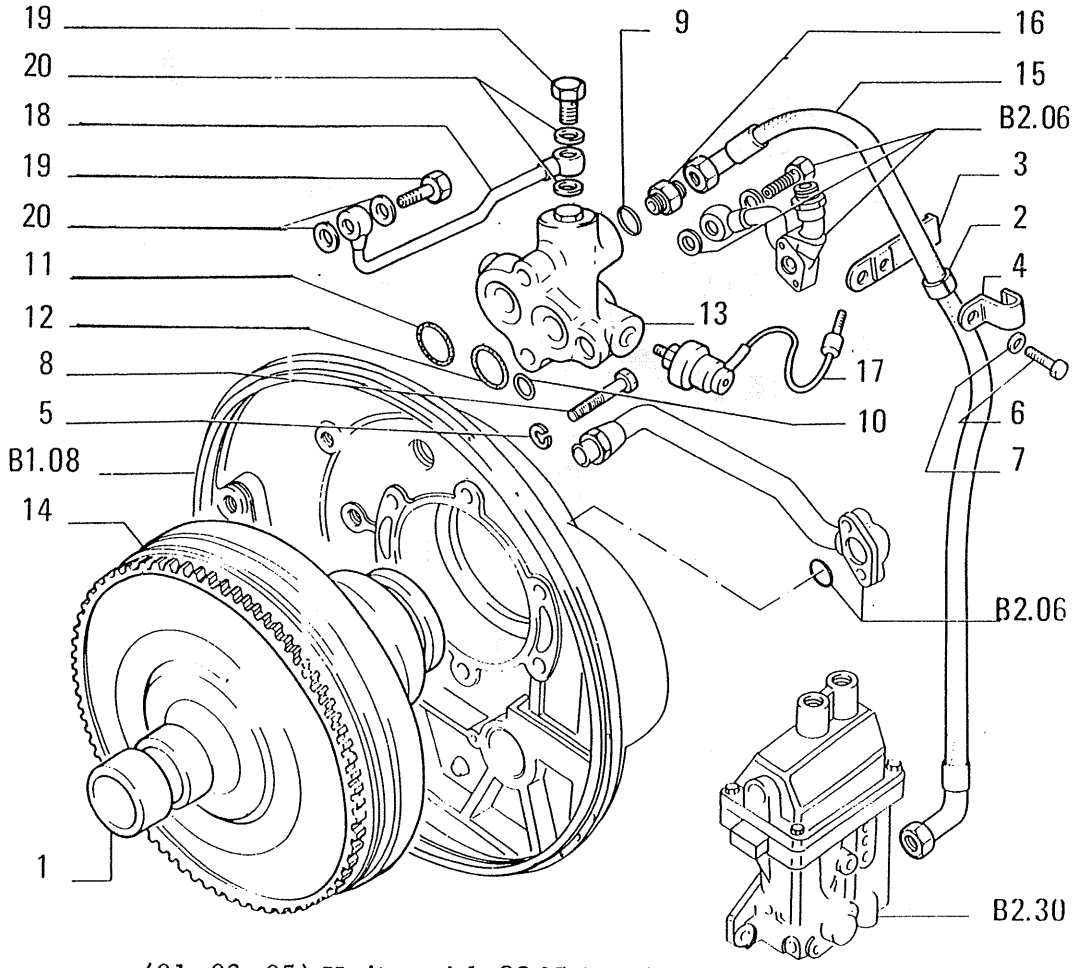

ITEM	PART NUMBER	QTY	TRANS CODE	DESCRIPTION	DESCRIZIONE
14	79029712	1	259C	TORQUE CONVERTER - ASSEMBLY SEE SGR. B1.05 **C1422**	CONVERTITORE DI COPPIA - COMPLETO VEDERE SGR. B1.05 **C1422**
	79054093	1	259C	TORQUE CONVERTER - ASSEMBLY SEE SGR. B1.05 **D1422**	CONVERTITORE DI COPPIA - COMPLETO VEDERE SGR. B1.05 **D1422**
15	79033008	1	192T	HOSE ASSY	TUBO FLESS.C/RACCORDI
16	587779	1	20R	FITTING (01-03-05) **D1422**	RACCORDO (01-03-05) **D1422**
	79040807	1	20R	FITTING (01-03-05) **C1422**	RACCORDO (01-03-05) **C1422**
	79069353	1	20R	FITTING (06)	RACCORDO (06)
17	79051192	1	160T	SENDING UNIT **D1454**	TRASMETTITORE **D1454**
18	79043955	1	193T	TUBE (06)	TUBO RIGIDO (06)
19	11903717	2	20R	FITTING (06) 8x1,25x16	RACCORDO (06) 8x1,25x16
20	14330260	4	120G	GASKET (06) 8,2x12	GUARNIZIONE PIANA (06) 8,2x12

C 1422 → Tel.n. 050758
D 1422 Tel.n. 050759 → D 1454 Tel.n. 051637 →

(01-03-05) Units with 8205 Engine
(06) Units with 8365 Engine

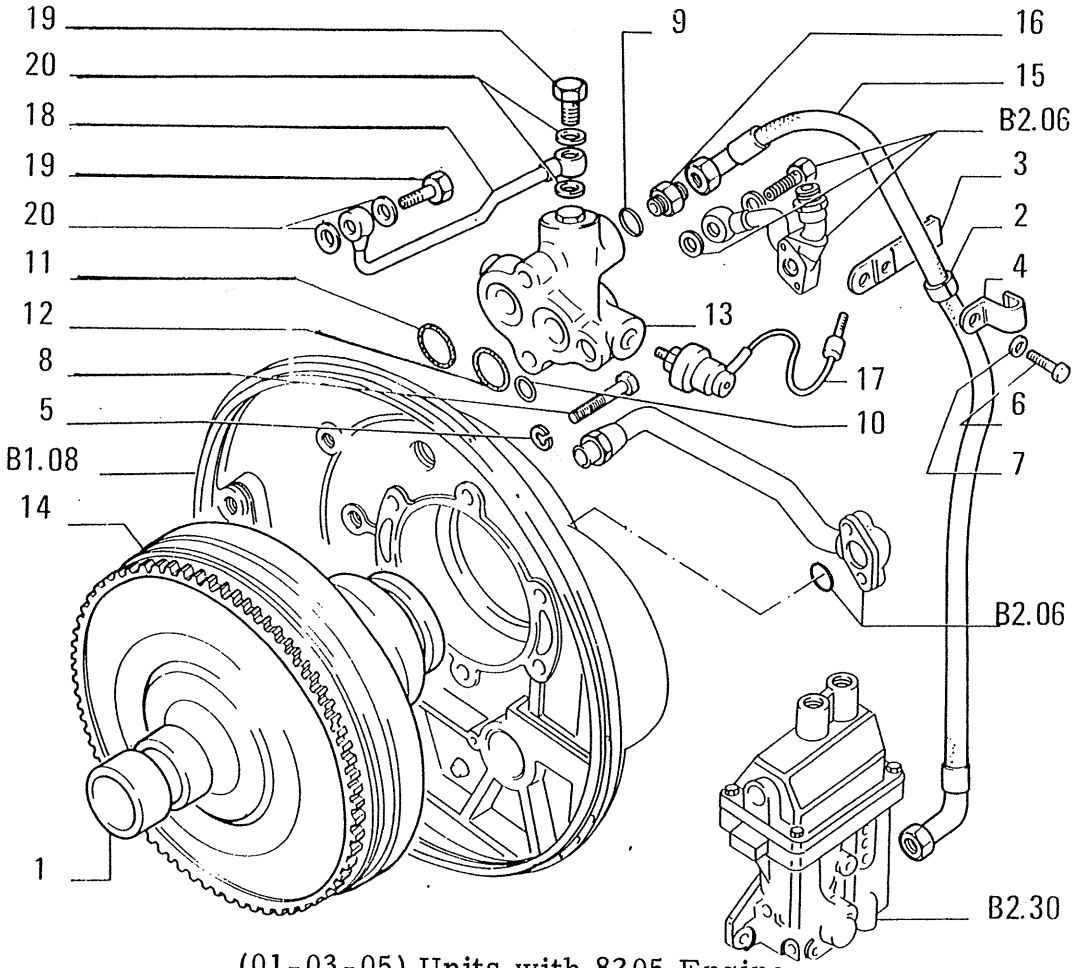

(01-03-05) Units with 8205 Engine
(06) Units with 8365 Engine

ITEM	PART NUMBER	QTY	TRANS CODE	DESCRIPTION	DESCRIZIONE
1	4961101	1	95B	BUSHING	BOCCOLA
2	4990403	1	31F	CLAMP	FASCETTA
3	4990404	1	98S	HALF BRACKET - LOWER	SEMISTAFFA - INFERIORE
4	4990407	1	98S	HALF BRACKET - UPPER	SEMISTAFFA - SUPERIORE
5	10516871	2	131R	WASHER (01-03-05) 10x2,5	ROSETTA (01-03-05) 10x2,5
	14496631	2	131R	WASHER (06) 10,5x21	ROSETTA (06) 10,5x21
6	10977521	1	40V	SCREW 5x0,8x10	VITE 5x0,8x10
7	11195471	1	131R	WASHER 5,1x1,1	ROSETTA 5,1x1,1
8	11288031	2	40V	SCREW (01-03-05) 10x1,25x60	VITE (01-03-05) 10x1,25x60
	11288034	2	40V	SCREW (06)	VITE (06)
9	14457280	1	158G	O-RING 2,62x15,54	GUARNIZIONE O-R 2,62x15,54
10	14463080	1	158G	O-RING 3,53x21,82	GUARNIZIONE O-R 3,53x21,82
11	14463281	1	158G	O-RING 3,53x24,99	GUARNIZIONE O-R 3,53x24,99
12	14463781	1	158G	O-RING 3,53x32,92	GUARNIZIONE O-R 3,53x32,92
13	76004302	1	10V	VALVE - ASSEMBLY SEE SGR. B2.35 **C1436** (01-03-05)	VALVOLA - COMPLETO VEDERE SGR. B2.35 **C1436** (01-03-05)
	76007978	1	10V	VALVE - ASSEMBLY SEE SGR. B2.35/A **D1454** (01-03-05)	VALVOLA - COMPLETO VEDERE SGR. B2.35/A **D1454** (01-03-05)
	79043950	1	10V	VALVE - ASSEMBLY SEE SGR. B2.35/A **D1436** (01-03-05)	VALVOLA - COMPLETO VEDERE SGR. B2.35/A **D1436** (01-03-05)
		1	10V	VALVE - ASSEMBLY SEE SGR. B2.35/A **C1454** (01-03-05)	VALVOLA - COMPLETO VEDERE SGR. B2.35/A **C1454** (01-03-05)
	79068721	1	10V	VALVE (06) B235/2	VALVOLA (06) COMPL.VED

C 1436 → Tel.n. 050971 C 1454 → Tel.n. 051636
D 1436 Tel.n. 050972 → D 1454 Tel.n. 051637 →

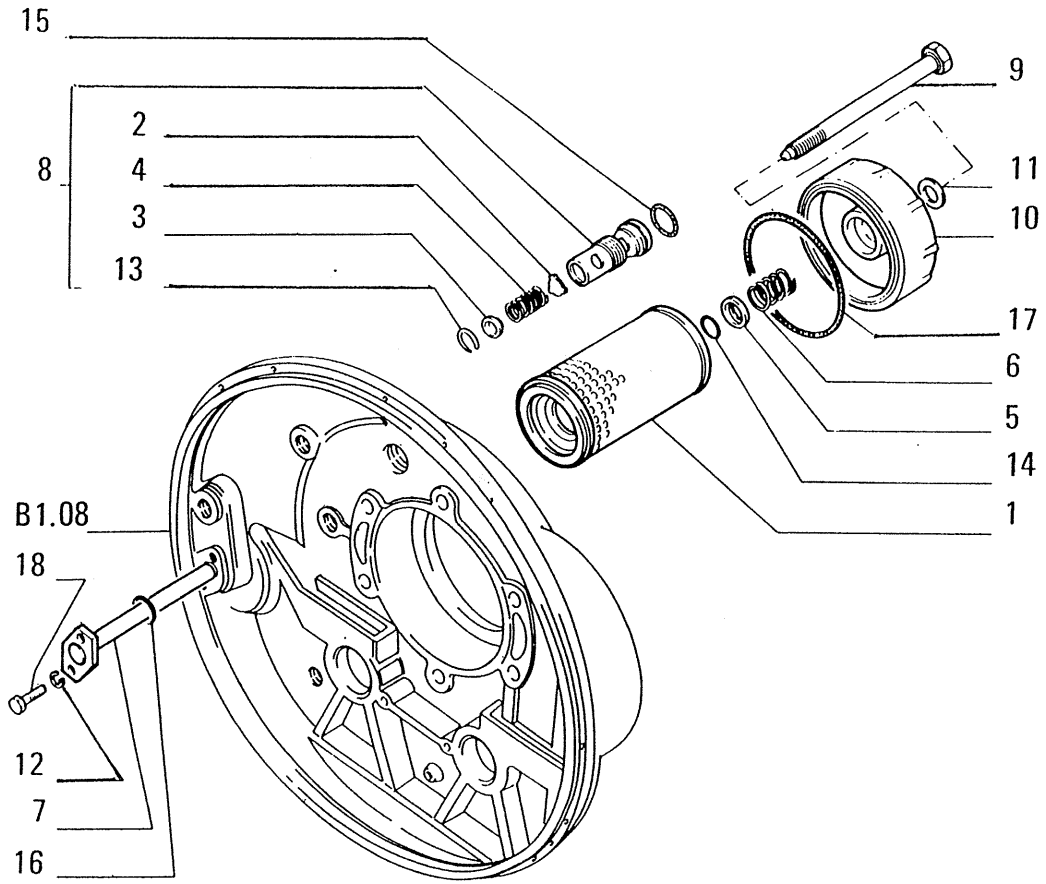

(01-03-05) Units with 8205 Engine
(06) Units with 8365 Engine

05060

ITEM	PART NUMBER	QTY	TRANS CODE	DESCRIPTION	DESCRIZIONE
1	581073	1	65F	FILTER	FILTRO
2	581598	1	75F	CARRIER	FLOTTANTE
3	581599	1	60S	CUP	SCODELLINO
4	581600	1	100M	SPRING	MOLLA
5	581604	1	60S	CUP	SCODELLINO
6	581605	1	100M	SPRING	MOLLA
7	590456	1	184C	STUD	COLONNETTA
8	590496	1	10V	VALVE - ASSEMBLY	VALVOLA - COMPLETO
9	4954874	1	40V	SCREW	VITE
10	4960068	1	265C	COVER	COPERCHIO
11	10280060	1	133R	SEAL 14,2x20	ROSETTA DI TENUTA 14,2x20
12	10516671	2	131R	WASHER 8,1x2,2	ROSETTA 8,1x2,2
13	11057876	1	51A	LOCKRING 21,5x1	ANELLO DI SICUREZZA 21,5x1
14	14457180	1	158G	O-RING 2,62x13,94	GUARNIZIONE O-R 2,62x13,94
15	14457881	1	158G	O-RING 2,62x25,07	GUARNIZIONE O-R 2,62x25,07
16	14463681	2	158G	O-RING 3,53x31,34	GUARNIZIONE O-R 3,53x31,34
17	14466281	1	158G	O-RING 3,53x107,54	GUARNIZIONE O-R 3,53x107,54
18	16043631	2	40V	SCREW 8x1,25x25	VITE 8x1,25x25

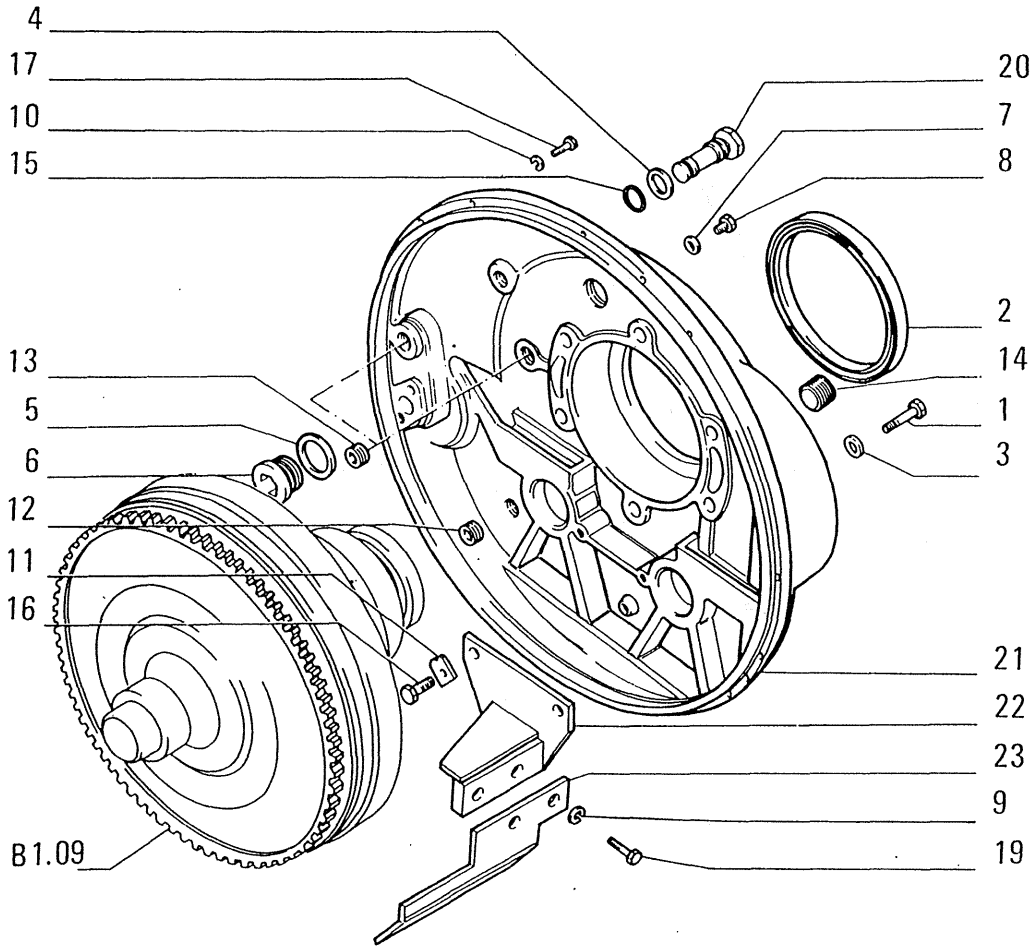

(01-03-05) Units with 8205 Engine
(06) Units with 8365 Engine

ITEM	PART NUMBER	QTY	TRANS CODE	DESCRIPTION	DESCRIZIONE
21	76016920	1	265C	COVER (06)	COPERCHIO (06)
22	79006918	1	20D	DEFLECTOR	DEFLETTORE
23	79011272	1	20D	DEFLECTOR (01-03-05)	DEFLETTORE (01-03-05)
	79065245	1	20D	DEFLECTOR (06)	DEFLETTORE (06)

05059

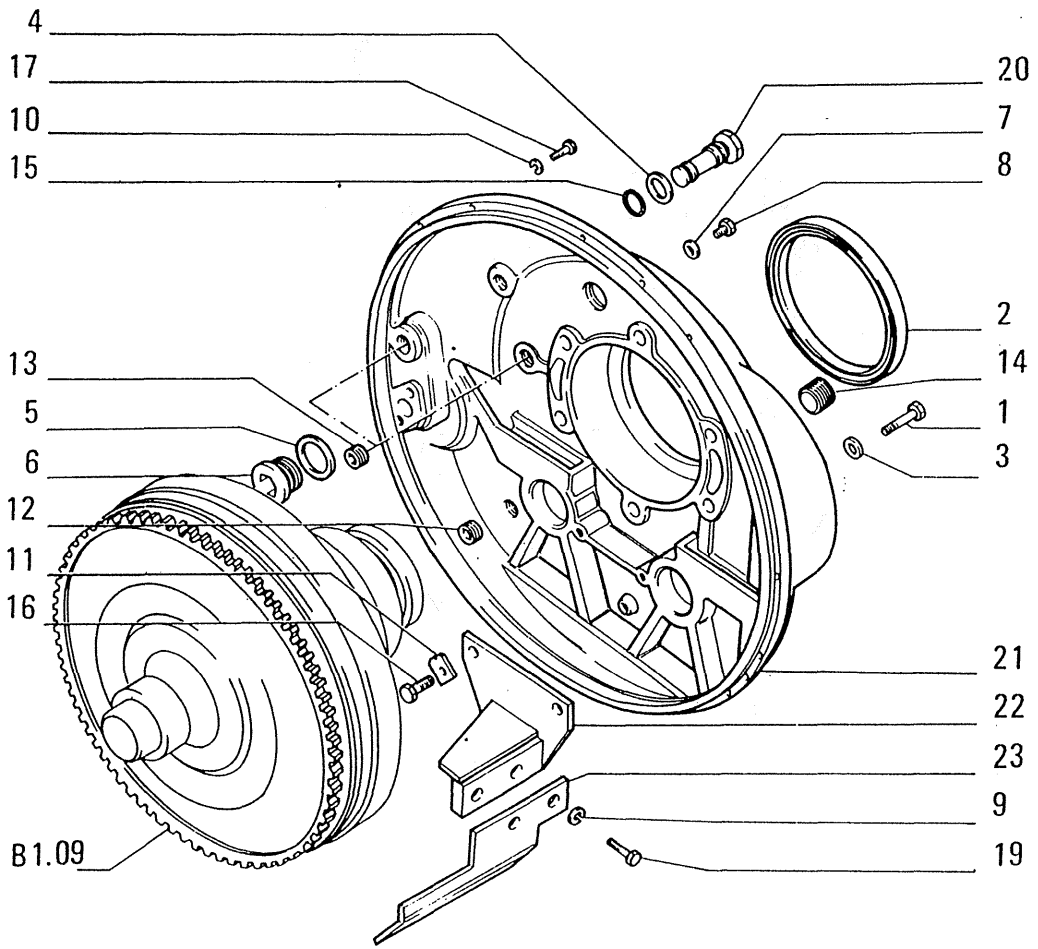

(01-03-05) Units with 8205 Engine
(06) Units with 8365 Engine

ITEM	PART NUMBER	QTY	TRANS CODE	DESCRIPTION	DESCRIZIONE
1	586977	6	40V	SCREW	VITE
2	590448	1	123G	SEAL ASSY (01-03-05) **C1419**	GUARNIZIONE TENUTA FRONTALE (01-03-05) **C1419**
	76006357	1	123G	SEAL ASSY (01-03-05) **D1419**	GUARNIZIONE TENUTA FRONTALE (01-03-05) **D1419**
		1	123G	SEAL ASSY (06)	GUARNIZIONE TENUTA FRONTALE (06)
3	592075	6	131R	WASHER	ROSETTA
4	10259960	1	133R	SEAL 18,2x24	ROSETTA DI TENUTA 18,2x24
5	10265160	1	133R	SEAL 35,3x41	ROSETTA DI TENUTA 35,3x41
6	10276740	1	50T	PLUG 35x1,5x13	TAPPO 35x1,5x13
7	10297085	1	133R	SEAL 40,3x48	ROSETTA DI TENUTA 40,3x48
8	10306371	1	50T	PLUG 40x1,5x13 **C1436**	TAPPO 40x1,5x13 **C1436**
	79043966	1	50T	PLUG **D1436**	TAPPO **D1436**
9	10516671	2	131R	WASHER 8,1x2,2	ROSETTA 8,1x2,2
10	10516871	13	131R	WASHER 10x2,5	ROSETTA 10x2,5
11	14198810	3	131R	WASHER 10,4x20	ROSETTA 10,4x20
12	14325311	1	50T	PLUG 22x1,5x13	TAPPO 22x1,5x13
13	14325511	2	50T	PLUG 28x1,5x13	TAPPO 28x1,5x13
14	14325611	1	50T	PLUG 35x1,5x14	TAPPO 35x1,5x14
15	14453180	1	158G	O-RING 1,78x12,42	GUARNIZIONE O-R 1,78x12,42
16	15970531	3	40V	SCREW 10x1,25x20	VITE 10x1,25x20
17	15970731	1	40V	SCREW 10x1,25x25	VITE 10x1,25x25
	15970931	12	40V	SCREW 10x1,25x35	VITE 10x1,25x35
19	16043131	2	40V	SCREW 8x1,25x14	VITE 8x1,25x14
20	76001167	1	50T	PLUG	TAPPO
21	76003774	1	265C	COVER (01-03-05)	COPERCHIO (01-03-05)

C 1419 → Tel.n. 050343 C 1436 → Tel.n. 050971
D 1419 Tel.n. 050344 → D 1436 Tel.n. 050972 →

05059

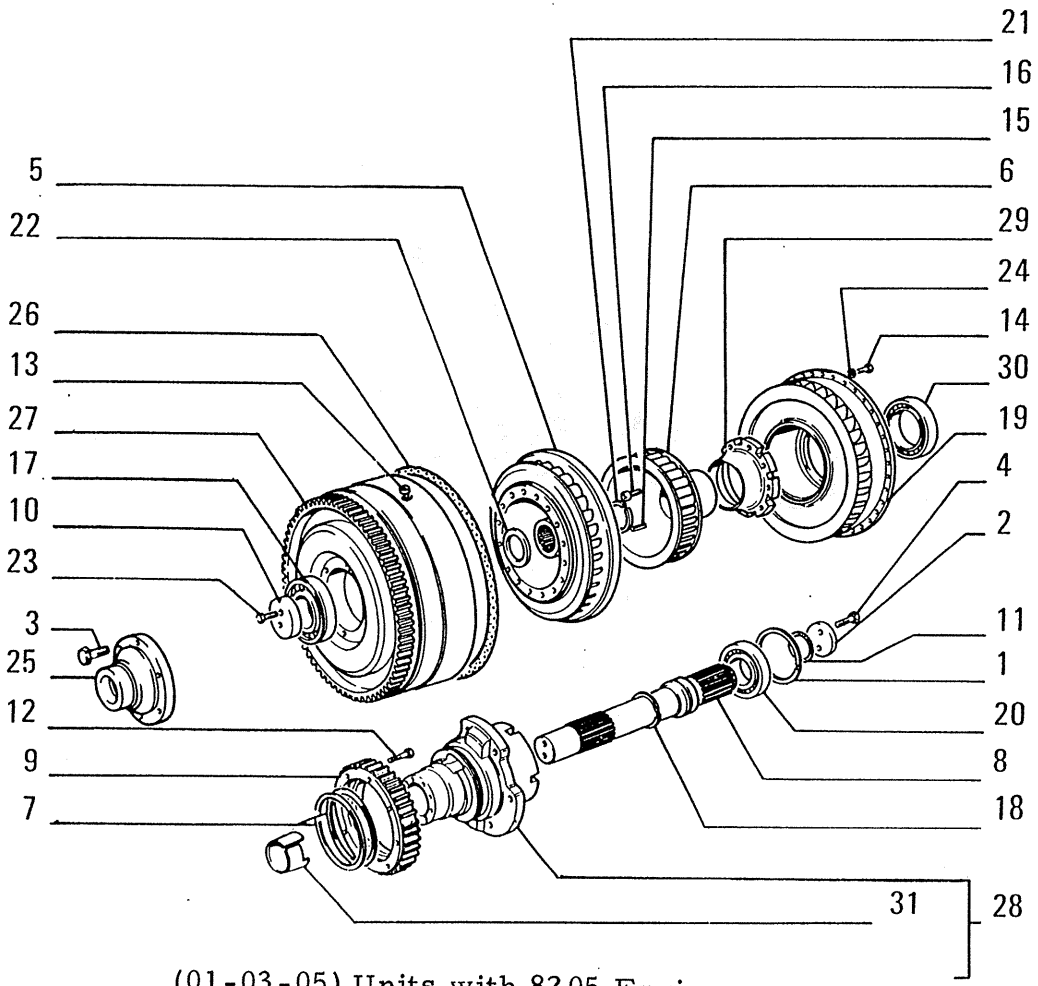

(01-03-05) Units with 8205 Engine
(06) Units with 8365 Engine

05433

ITEM	PART NUMBER	QTY	TRANS CODE	DESCRIPTION	DESCRIZIONE
26	79007210	1	158G	O-RING	GUARNIZIONE O-R
27	79008330	1	60G	IMPELLER - FRONT	GIRANTE - ANTERIORE
28	79008331	1	300S	SUPPORT	SUPPORTO
29	79008332	1	35S	CASE	SCATOLA
30	79008333	1	341C	BEARING	CUSCINETTO
31	79011561	1	30M	SLEEVE	MANICOTTO

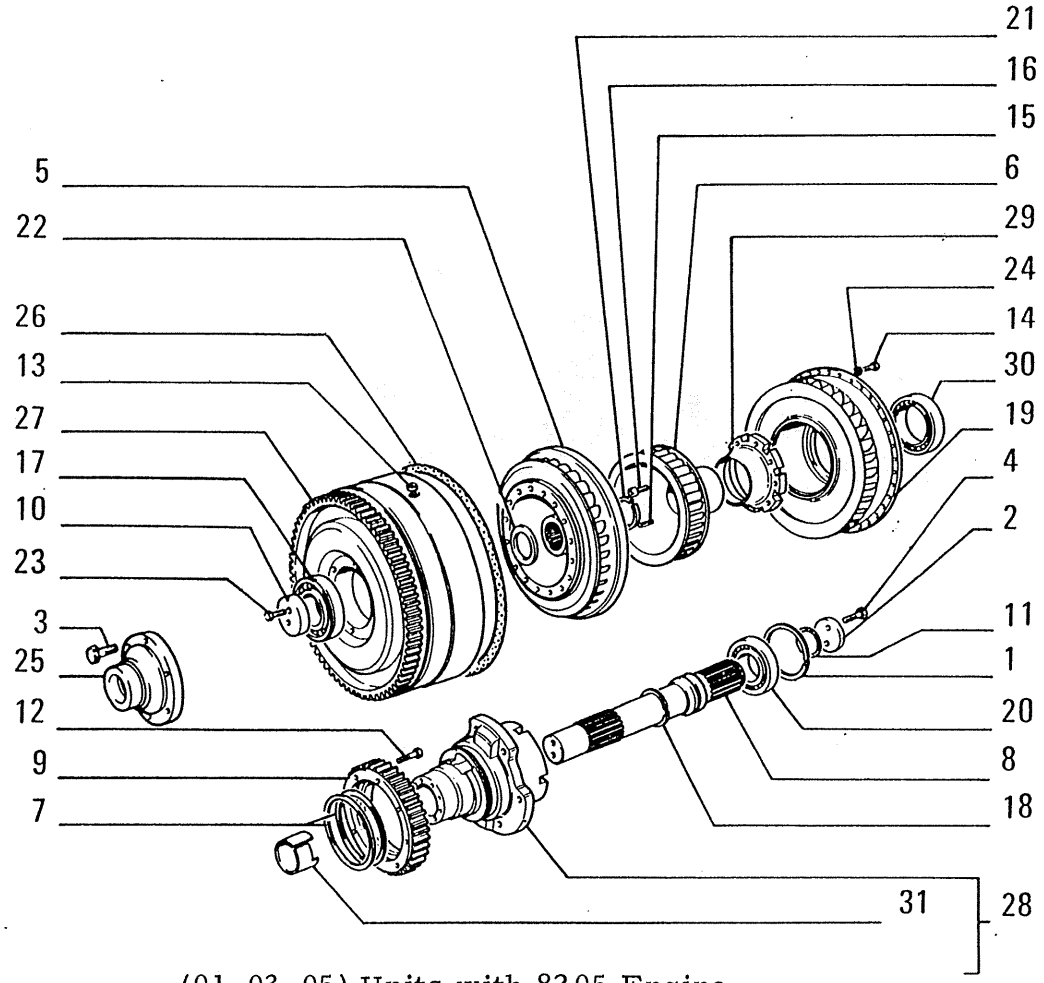

(01-03-05) Units with 8205 Engine
(06) Units with 8365 Engine

05433

ITEM	PART NUMBER	QTY	TRANS CODE	DESCRIPTION	DESCRIZIONE
1	9915528	1	51A	LOCKRING	ANELLO DI SICUREZZA
2	9915534	1	105P	PLATE	PIASTRA
3	9920143	6	40V	SCREW	VITE
4	9920146	2	40V	SCREW	VITE
5	9921020	1	60G	IMPELLER	GIRANTE
6	9921021	1	271S	STATOR	STATORE
7	9921026	1	45A	RING	ANELLO
8	9921028	1	16A	SHAFT	ALBERO
9	9921030	1	50I	GEAR C1422	INGRANAGGIO C1422
	79054094	1	50I	GEAR D1422	INGRANAGGIO D1422
10	9921054	1	105P	PLATE	PIASTRA
11	70628362	1	158G	O-RING	GUARNIZIONE O-R
12	70915480	8	40V	SCREW	VITE
13	70917673	2	50T	PLUG	TAPPO
14	70921422	36	40V	SCREW	VITE
15	70921458	6	90G	DOWEL	GRANO
16	70922405	6	40V	SCREW D1422	VITE D1422
	70922996	8	40V	SCREW C1422	VITE C1422
17	73012085	1	341C	BEARING	CUSCINETTO
18	73034877	1	45A	RING	ANELLO
19	73037927	1	60G	IMPELLER - REAR	GIRANTE - POSTERIORE
20	73037960	1	341C	BEARING	CUSCINETTO
21	73037966	1	45A	RING	ANELLO
22	73037967	1	131R	WASHER	ROSETTA
23	73039119	2	40V	SCREW	VITE
24	73046938	36	131R	WASHER	ROSETTA
25	76003995	1	30M	SLEEVE	MANICOTTO

C 1422 → Tel.n. 050758
D 1422 Tel.n. 050759 →

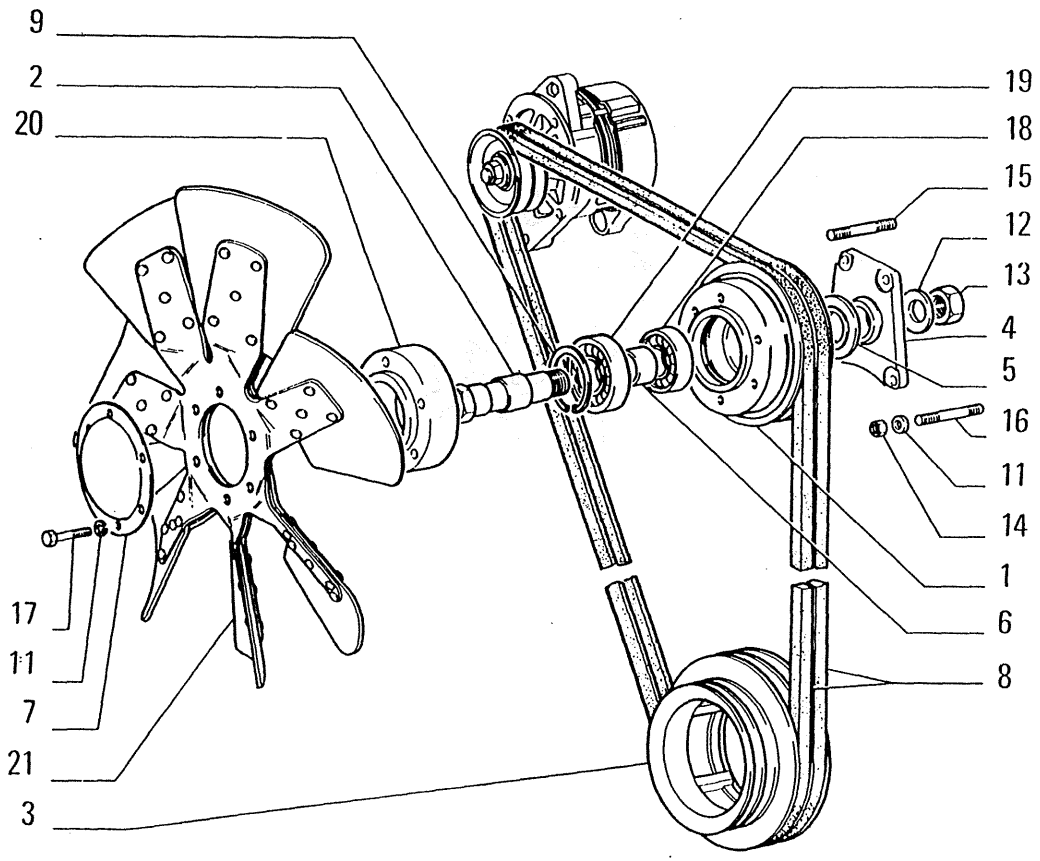

USAGE: Units with 8365 Engine

ITEM	PART NUMBER	QTY	TRANS CODE	DESCRIPTION	DESCRIZIONE
1	4739076	1	230P	PULLEY	PULEGGIA
2	4721387	1	80P	PIN	PERNO
3	4721388	1	230P	PULLEY	PULEGGIA
4	4721389	1	300S	SUPPORT	SUPPORTO
5	4721391	1	75D	SPACER	DISTANZIALE
6	4721392	1	75D	SPACER	DISTANZIALE
7	79053146	1	265C	COVER	COPERCHIO
8	4813560	1	173C	BELT	CINGHIA
	76015975	1	173C	BELT (*)	CINGHIA (*)
9	4727399	1	51A	LOCKRING	ANELLO DI SICUREZZA
11	11198379	10	132R	LOCKWASHER 10,5x20	ROSETTA DI SICUREZZA 10,5x20
12	11200579	1	132R	LOCKWASHER 23,4x42	ROSETTA DI SICUREZZA 23,4x42
13	12164421	1	10D	NUT 22x1,5x18	DADO 22x1,5x18
14	12164711	4	10D	NUT 10x1,25x8	DADO 10x1,25x8
15	13449521	2	210P	STUD 10x1,25x40	PRIGIONIERO 10x1,25x40
16	13449821	2	210P	STUD 10x1,25x50	PRIGIONIERO 10x1,25x50
17	15971634	6	40V	SCREW 10x1,25x90	VITE 10x1,25x90
18	28996530	1	341C	BEARING - REAR 30x62	CUSCINETTO - POSTERIORE 30x6
19	28996680	1	341C	BEARING - FRONT 30x72	CUSCINETTO - ANTERIORE 30x72
20	73070893	1	75D	SPACER	DISTANZIALE
21	76013059	1	30V	FAN	VENTILATORE
(*)			469P	FOR SPECIAL EQUIPMENT 30.0021.09.1	PER VARIANTE 30.0021.09.1

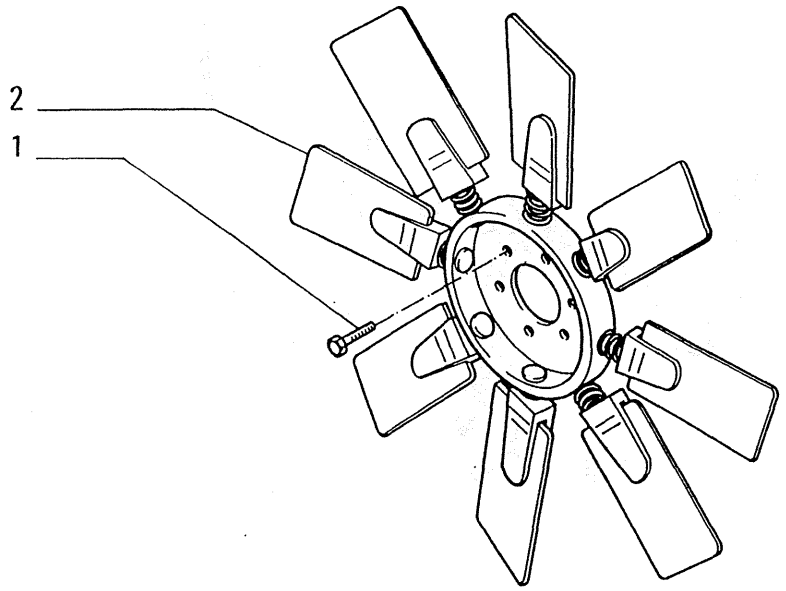

ITEM	PART NUMBER	QTY	TRANS CODE	DESCRIPTION	DESCRIZIONE
1	11307031	6	40V	SCREW 10x1,25x40	VITE 10x1,25x40
2	79032552	1	30V	FAN	VENTILATORE

OPTIONAL
VARIANTE 30.0178.06.1

USAGE: Units with 8205 Engine

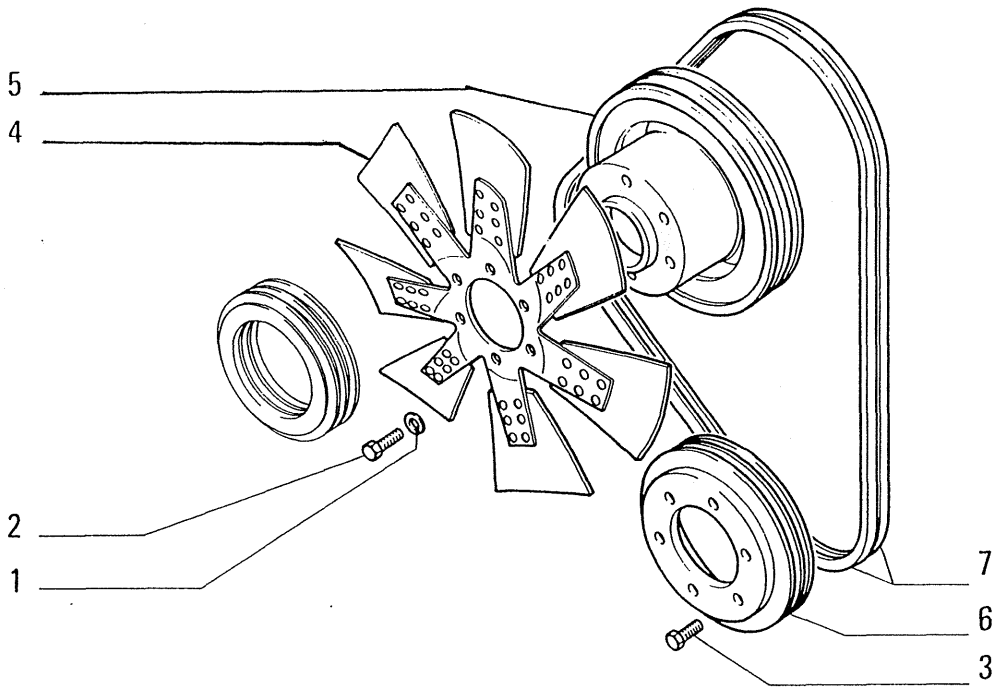

ITEM	PART NUMBER	QTY	TRANS CODE	DESCRIPTION	DESCRIZIONE
1	11198371	6	131R	WASHER 10,5x20	ROSETTA 10,5x20
2	11307031	6	40V	SCREW 10x1,25x40	VITE 10x1,25x40
3	16326331	6	40V	SCREW 12x1,25x35	VITE 12x1,25x35
4	79032014	1	30V	FAN	VENTILATORE
5	79036818	1	230P	PULLEY	PULEGGIA
6	79037006	1	230P	PULLEY	PULEGGIA
7	79040265	K	174C	BELTS	CINGHIE

05695

OPTIONAL
VARIANTE

30.0022.24.1 USAGE: Units with 8205 Engine

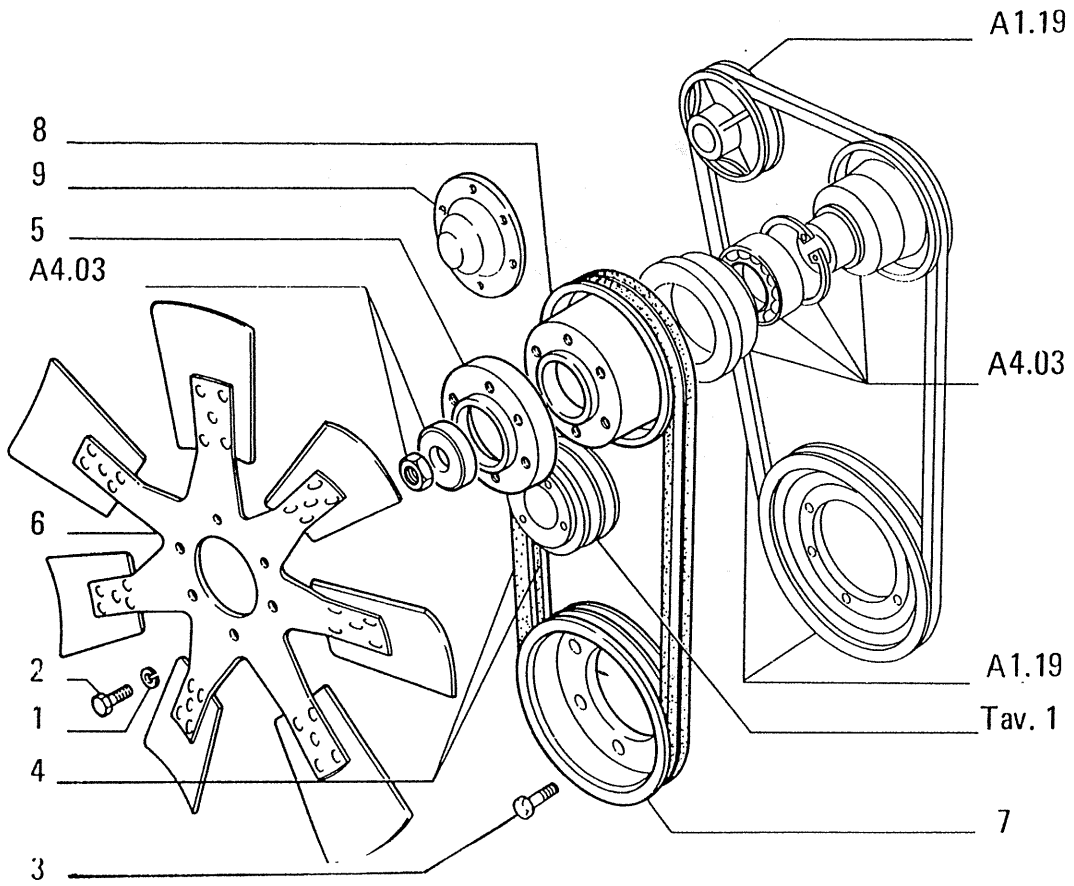

ITEM	PART NUMBER	QTY	TRANS CODE	DESCRIPTION	DESCRIZIONE
1	11198371	6	131R	WASHER 10,5x20	ROSETTA 10,5x20
2	11288031	6	40V	SCREW 10x1,25x60	VITE 10x1,25x60
3	16326331	6	40V	SCREW 12x1,25x35	VITE 12x1,25x35
4	79011168	K	174C	BELTS (01-03)	CINGHIE (01-03)
					CINGHIE (02-04)
5	79035740	1	75D	SPACER	DISTANZIALE
6	79036753	1	30V	FAN	VENTILATORE
7	79036817	1	230P	PULLEY (01-03)	PULEGGIA (01-03)
					PULEGGIA (02-04)
8	79036818	1	230P	PULLEY	PULEGGIA
9	79053146	1	265C	COVER D1416	COPERCHIO D1416

D 1416 Tel.n. 050343 →

04869 USAGE: Units with 8205 Engine

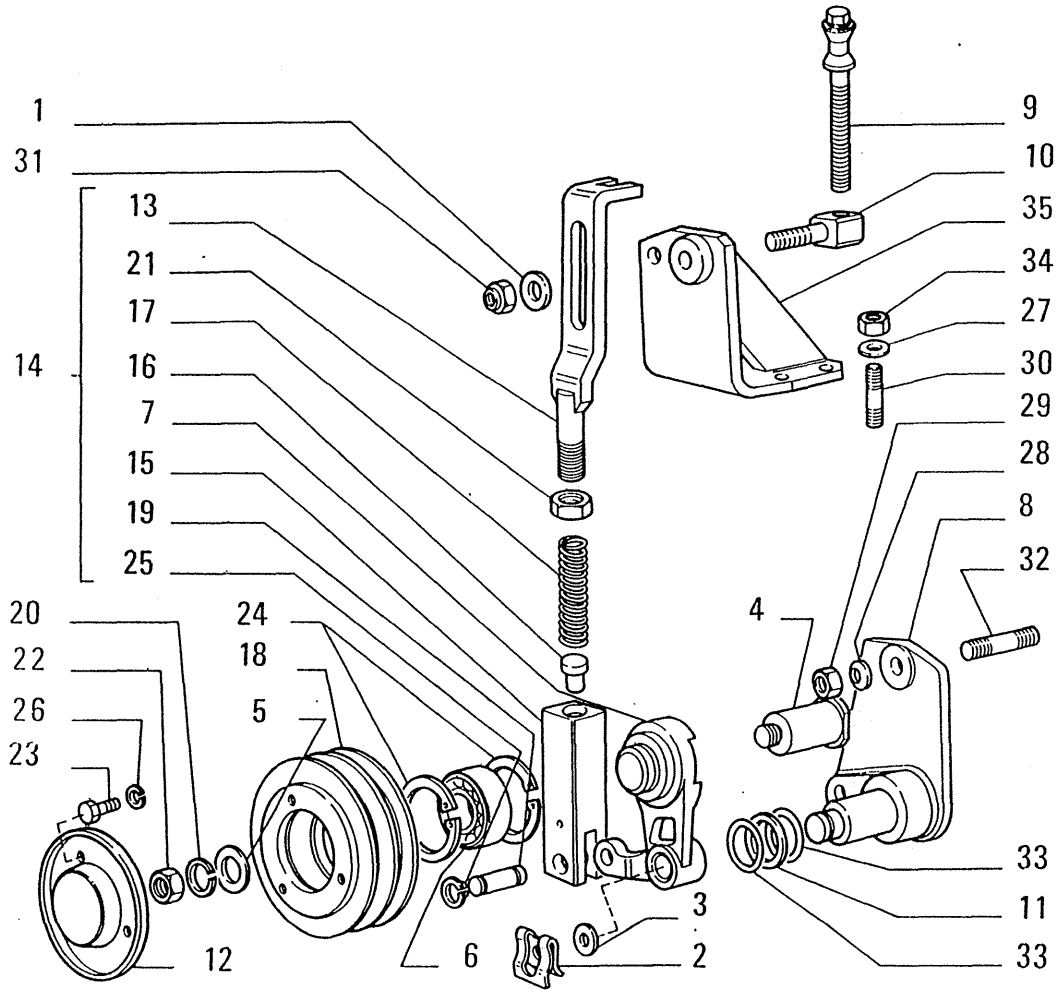

ITEM	PART NUMBER	QTY	TRANS CODE	DESCRIPTION	DESCRIZIONE
28	11198371	2	131R	WASHER 10,5x20	ROSETTA 10,5x20
29	12164711	2	10D	NUT 10x1,25x8	DADO 10x1,25x8
30	12429421	4	210P	STUD 8x1,25x40	PRIGIONIERO 8x1,25x40
31	12574511	1	10D	NUT 10x1,25x12,3	DADO 10x1,25x12,3
32	13453721	2	210P	STUD 10x1,25x55	PRIGIONIERO 10x1,25x55
33	14457680	2	158G	O-RING 2,62x21,89	GUARNIZIONE O-R 2,62x21,89
34	16100811	4	10D	NUT 8x1,25x6,5	DADO 8x1,25x6,5
35	61589069	1	300S	SUPPORT	SUPPORTO

(04868) USAGE: Units with 8205 Engine

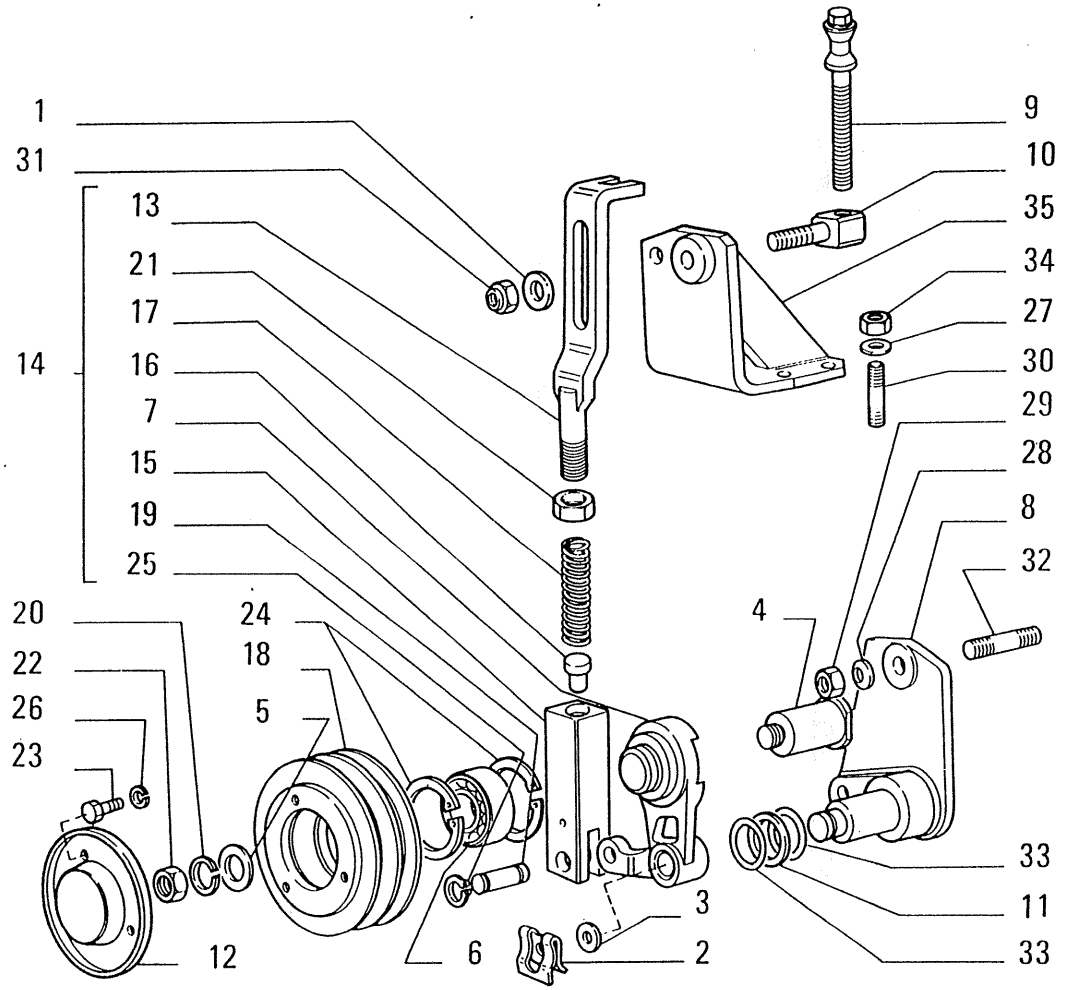

ITEM	PART NUMBER	QTY	TRANS CODE	DESCRIPTION	DESCRIZIONE
1	4513436	1	131R	WASHER	ROSETTA
2	4629138	1	51A	LOCKRING	ANELLO DI SICUREZZA
3	4629139	1	131R	WASHER	ROSETTA
4	4736405	1	80P	PIN	PERNO
5	4736406	1	131R	WASHER	ROSETTA
6	4756160	1	341C	BEARING	CUSCINETTO
7	4761555	1	130B	ARM	BRACCIO
8	4761563	1	300S	SUPPORT	SUPPORTO
9	4761570	1	40V	SCREW	VITE
10	4761571	1	81P	SECURING PIN	PERNO DI FISSAGGIO
11	4761572	1	75D	SPACER	DISTANZIALE
12	4761573	1	265C	COVER	COPERCHIO
13	4761576	1	87T	BELT STRETCHER	TENDICINGHIA
14	4761579	1	87T	BELT STRETCHER - ASSEMBLY	TENDICINGHIA - COMPLETO
15	4761580	1	244P	STRUT	PUNTONE
16	4761581	1	80P	PIN	PERNO
17	4761582	1	100M	SPRING	MOLLA
18	4764041	1	230P	PULLEY	PULEGGIA
19	10249417	1	80P	PIN 12x32	PERNO 12x32
20	10517271	1	131R	WASHER 16,2x4	ROSETTA 16,2x4
21	10726611	1	10D	NUT 18x1,5x9	DADO 18x1,5x9
22	10791421	1	10D	NUT 16x1,5x8	DADO 16x1,5x8
23	10902121	3	40V	SCREW 6x1x14	VITE 6x1x14
24	11060575	2	51A	LOCKRING 56,2x2	ANELLO DI SICUREZZA 56,2x2
25	11066076	2	51A	LOCKRING 11x1	ANELLO DI SICUREZZA 11x1
26	11197771	3	131R	WASHER 6,4x12	ROSETTA 6,4x12
27	11198171	4	131R	WASHER 8,4x22	ROSETTA 8,4x22

(04868) USAGE: Units with 8205 Engine

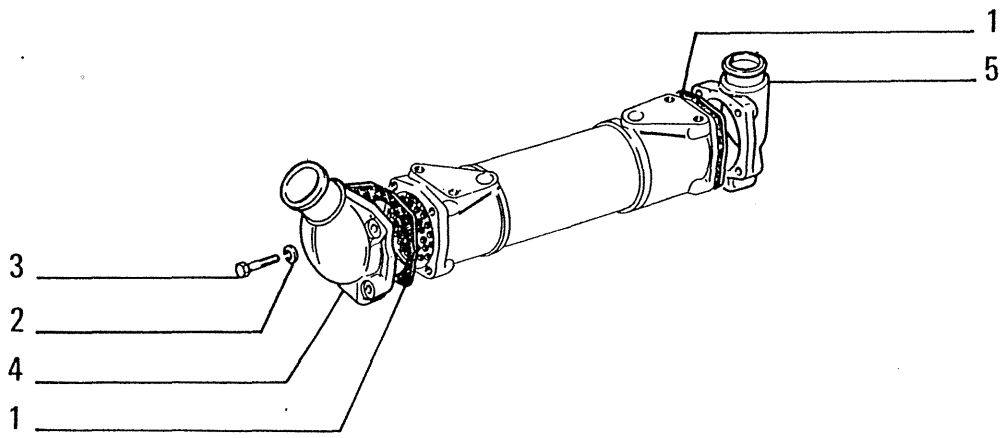

ITEM	PART NUMBER	QTY	TRANS CODE	DESCRIPTION	DESCRIZIONE
1	9920280	2	123G	SEAL ASSY	GUARNIZIONE TENUTA FRONTALE
2	10516671	8	131R	WASHER 8,1x2,2	ROSETTA 8,1x2,2
3	16043921	8	40V	SCREW 8x1,25x35	VITE 8x1,25x35
4	79021303	1	265C	COVER	COPERCHIO
5	79021304	1	265C	COVER	COPERCHIO

(03973) USAGE: Units with 8205 Engine

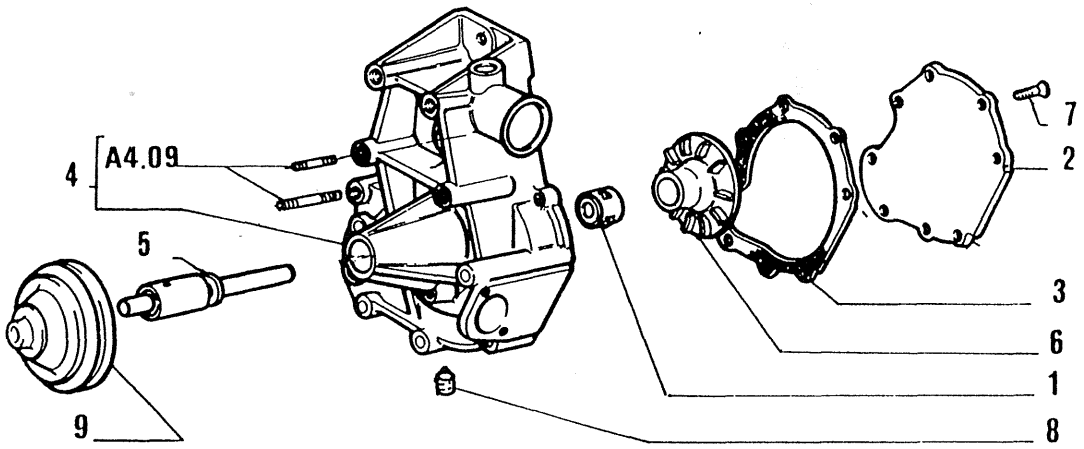

ITEM	PART NUMBER	QTY	TRANS CODE	DESCRIPTION	DESCRIZIONE
1	7302756	1	95B	BUSHING - IN ALTERNATIVE	BOCCOLA - IN ALTERNATIVA
	7302776	1	95B	BUSHING - IN ALTERNATIVE	BOCCOLA - IN ALTERNATIVA
2	4711702	1	265C	COVER	COPERCHIO
3	4711705	1	122G	SEAL	GUARNIZIONE
4	4807115	1	300C	BODY - ASSEMBLY	CORPO - COMPLETO
5	4808079	1	341C	BEARING - IN ALTERNATIVE	CUSCINETTO - IN ALTERNATIVA
	4808080	1	341C	BEARING - IN ALTERNATIVE	CUSCINETTO - IN ALTERNATIVA
6	4807116	1	60G	IMPELLER	GIRANTE
7	10356111	3	40V	SCREW 8x1,25x16	VITE 8x1,25x16
8	13739911	1	90G	DOWEL 8x1,25x18	GRANO 8x1,25x18
9	4807395	1	230P	PULLEY	PULEGGIA

USAGE: Units with 8365 Engine

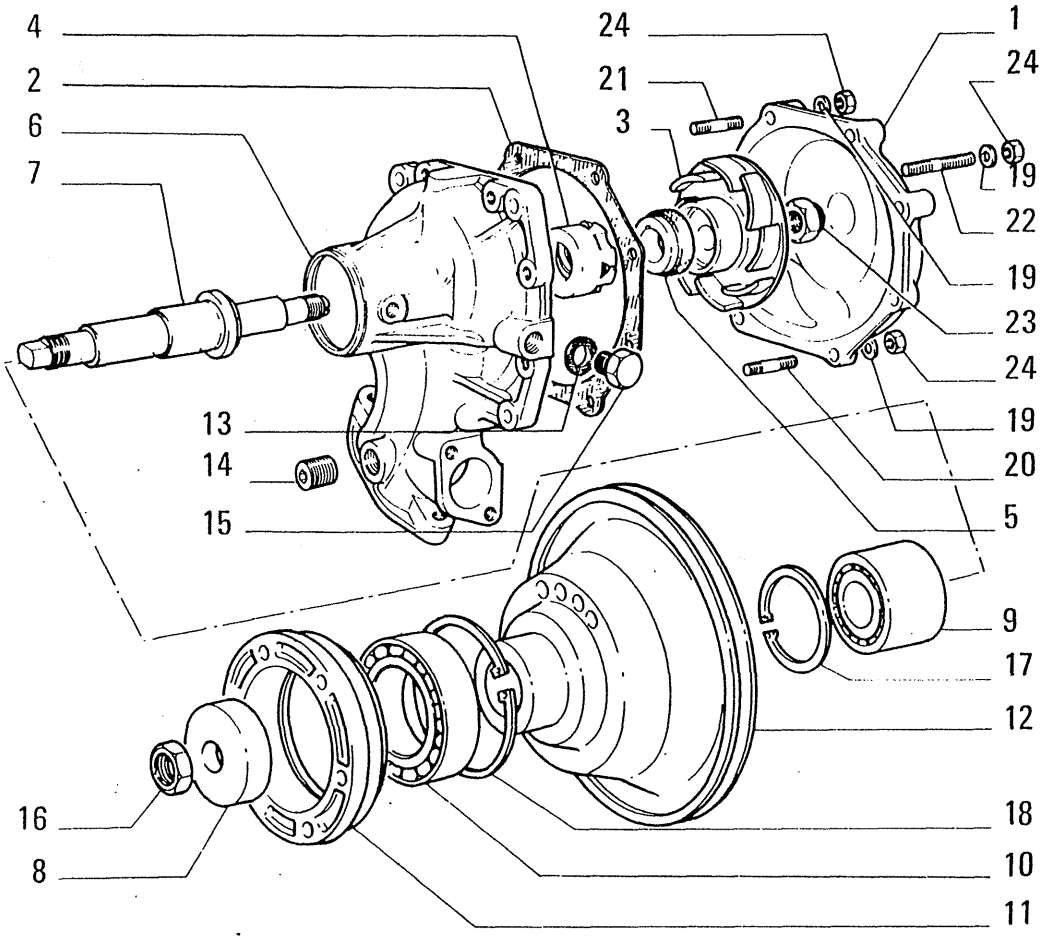

ITEM	PART NUMBER	QTY	TRANS CODE	DESCRIPTION	DESCRIZIONE
1	4606028	1	265C	COVER	COPERCHIO
2	4606034	1	123G	SEAL ASSY	GUARNIZIONE TENUTA FRONTALE
3	4642042	1	60G	IMPELLER	GIRANTE
4	4757006	1	95B	BUSHING	BOCCOLA
5	4757008	1	95B	BUSHING	BOCCOLA
6	4758021	1	300C	BODY	CORPO
7	4758023	1	16A	SHAFT	ALBERO
8	4758268	1	131R	WASHER	ROSETTA
9	4758414	1	341C	BEARING	CUSCINETTO
10	4758416	1	341C	BEARING	CUSCINETTO
11	4761559	1	135M	HUB	MOZZO
12	4761955	1	230P	PULLEY	PULEGGIA
13	10257060	1	133R	SEAL 16,2x22	ROSETTA DI TENUTA 16,2x22
14	10268450	1	50T	PLUG 20x1,5x11	TAPPO 20x1,5x11
15	10300771	1	50T	PLUG 16x1,5x9	TAPPO 16x1,5x9
16	10725611	1	10D	NUT 22x1,5x10	DADO 22x1,5x10
17	11061576	1	51A	LOCKRING 76,5x2,5	ANELLO DI SICUREZZA 76,5x2,5
18	11062476	1	51A	LOCKRING 95,5x3	ANELLO DI SICUREZZA 95,5x3
19	11198071	7	131R	WASHER 8,2x15	ROSETTA 8,2x15
20	13517021	3	210P	STUD 8x1,25x37	PRIGIONIERO 8x1,25x37
21	13517321	3	210P	STUD 8x1,25x47	PRIGIONIERO 8x1,25x47
22	13517921	1	210P	STUD 8x1,25x77	PRIGIONIERO 8x1,25x77
23	14044171	1	10D	NUT 18x1,5x17	DADO 18x1,5x17
24	16100811	7	10D	NUT 8x1,25x6,5	DADO 8x1,25x6,5

(05431) USAGE: Units with 8205 Engine

4761615

WATER PUMP – POMPA ACQUA – POMPE A EAU – WASSERPUMPE –
BOMBA DE AGUA

A4.03

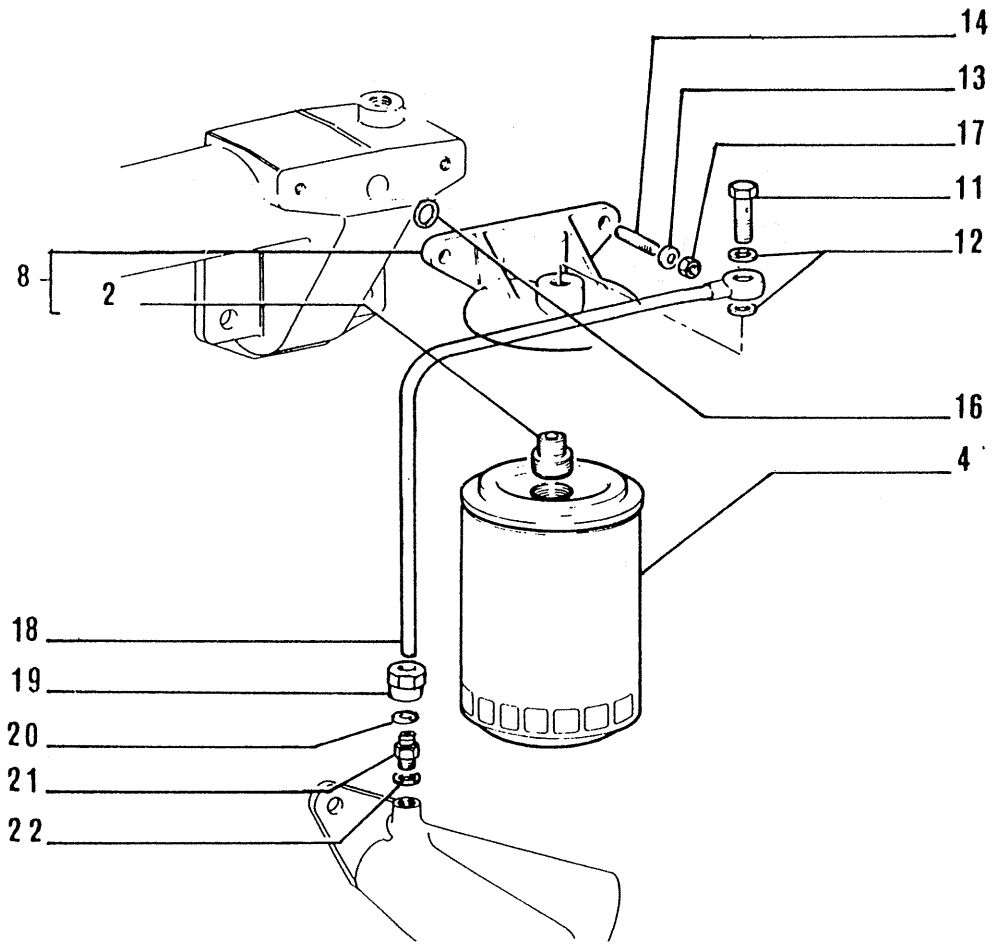

USAGE: Units with 8365 Engine

ITEM	PART NUMBER	QTY	TRANS CODE	DESCRIPTION	DESCRIZIONE
2	4807730	1	20R	FITTING	RACCORDO
4	4681776	1	84C	FILTERING ELEMENT	CARTUCCIA FILTRANTE
				- IN ALTERNATIVE	- IN ALTERNATIVA
	4734562	1	84C	FILTERING ELEMENT	CARTUCCIA FILTRANTE
				- IN ALTERNATIVE	- IN ALTERNATIVA
	4739628	1	84C	FILTERING ELEMENT	CARTUCCIA FILTRANTE
				- IN ALTERNATIVE	- IN ALTERNATIVA
8	4807728	1	300C	BODY - ASSEMBLY	CORPO - COMPLETO
11	10184314	1	20R	FITTING 14x1,5x27	RACCORDO 14x1,5x27
12	10280060	2	120G	GASKET 14,2x20	GUARNIZIONE PIANA 14,2x20
13	11193879	2	132R	LOCKWASHER 8,4x16	ROSETTA DI SICUREZZA 8,4x16
14	13543324	2	210P	STUD 8x1,25x36	PRIGIONIERO 8x1,25x36
16	14457681	1	158G	O-RING 2,62x21,89	GUARNIZIONE O-R 2,62x21,89
17	16100811	2	10D	NUT 8x1,25x6,5	DADO 8x1,25x6,5
18	4807273	1	193T	TUBE	TUBO RIGIDO
19	16506811	1	10D	NUT 10x1x11	DADO 10x1x11
20	16507511	1	158G	O-RING 10x13	GUARNIZIONE O-R 10x13
21	16500211	1	20R	FITTING 14x1,5x16x1,5	RACCORDO 14x1,5x16x1,5
22	16508160	1	132R	LOCKWASHER 14,2x17,9	ROSETTA DI SICUREZZA 14,2x17,9

USAGE: Units with 8365 Engine

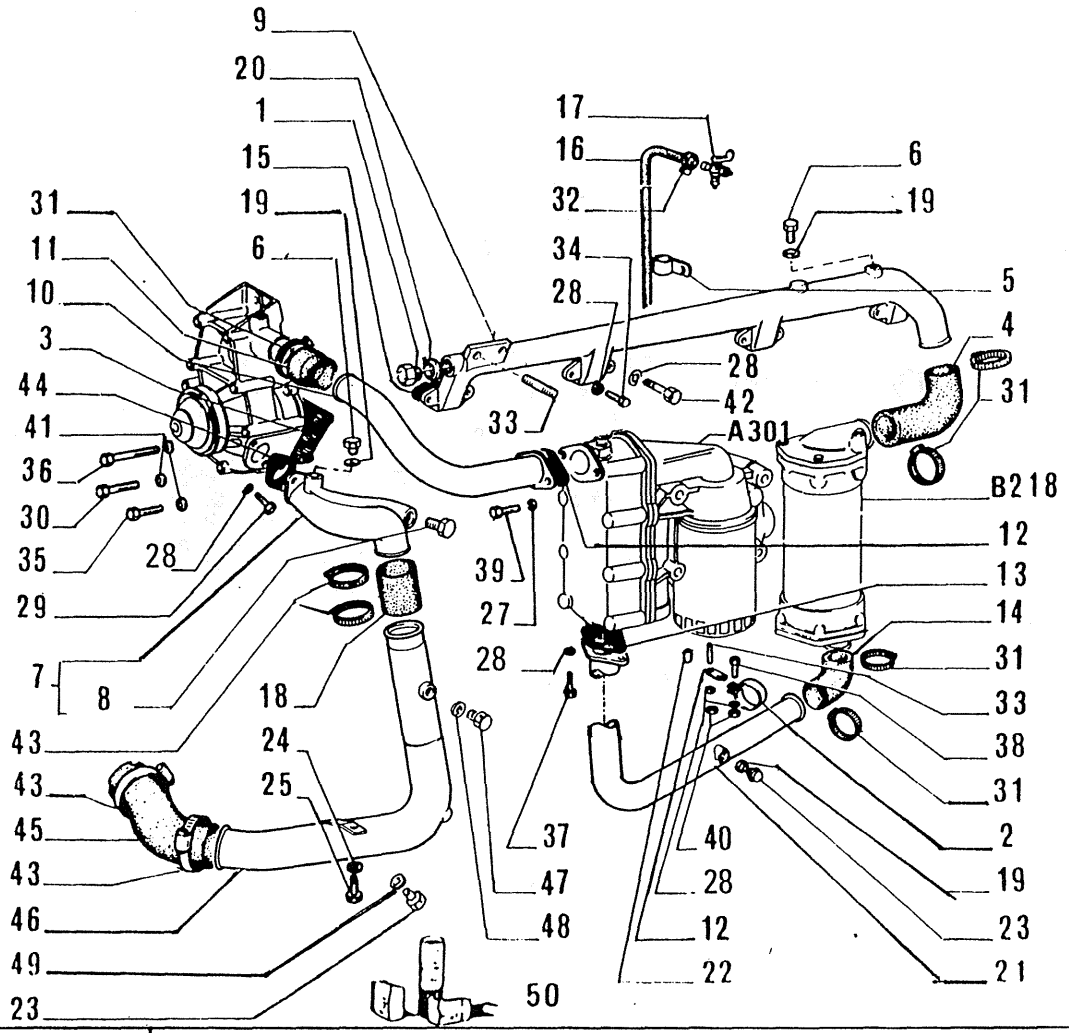

ITEM	PART NUMBER	QTY	TRANS CODE	DESCRIPTION	DESCRIZIONE
50 (*)	79086656	K	1K 469P	KIT SEE PAGE 9 FOR SPECIAL EQUIPMENT 30.0021.09.1	KIT VED. PAG.9 PER VARIANTE 30.0021.09.1

USAGE:Units with 8365 Engine

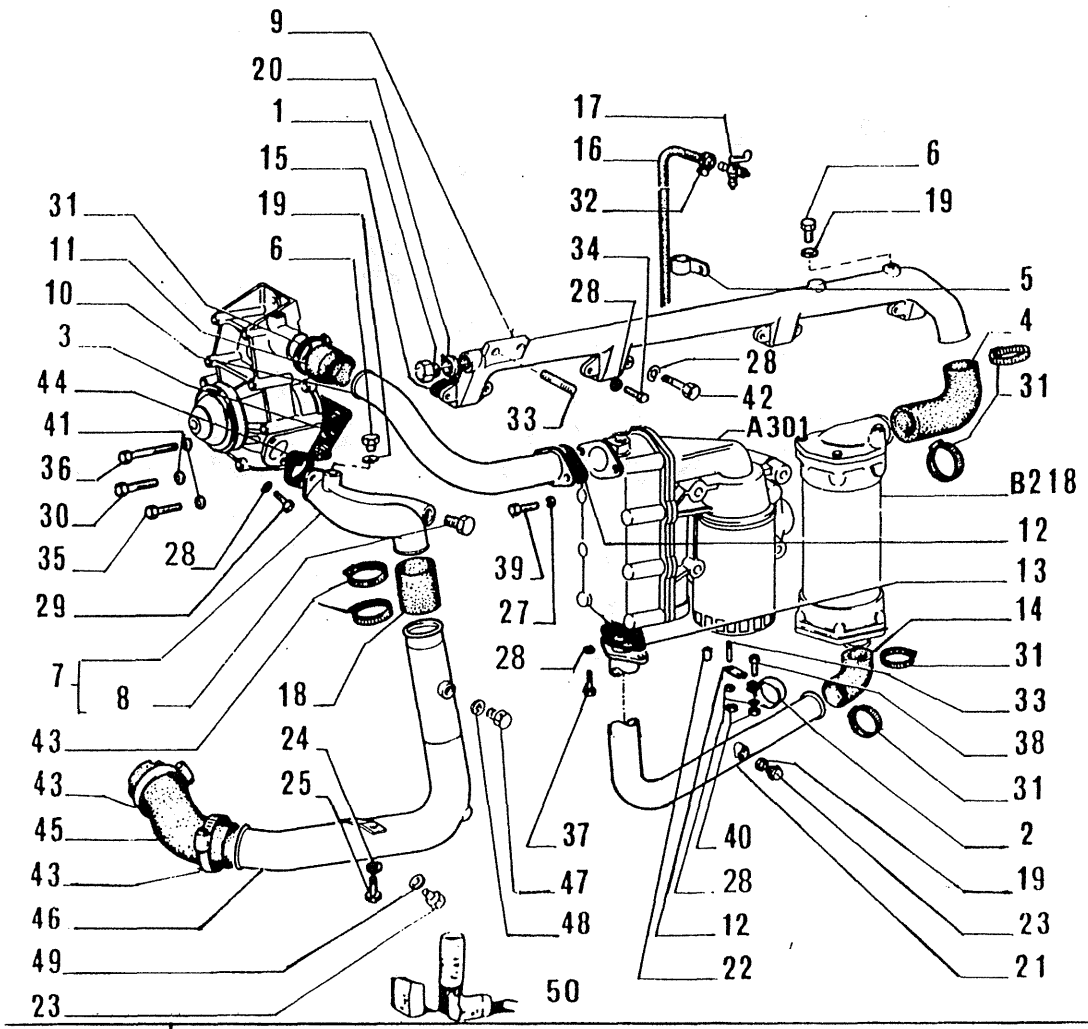

ITEM	PART NUMBER	QTY	TRANS CODE	DESCRIPTION	DESCRIZIONE
24	10571879	1	132R	LOCKWASHER 10,2x2,5	ROSETTA DI SICUREZZA 10,2x2,5
25	11106431	1	40V	SCREW 10x1,5x30	VITE 10x1,5x30
27	11198179	2	132R	LOCKWASHER 8,4x22	ROSETTA DI SICUREZZA 8,4x22
28	11198379	14	132R	LOCKWASHER 10,5x20	ROSETTA DI SICUREZZA 10,5x20
29	11306924	2	40V	SCREW 10x1,25x30	VITE 10x1,25x30
30	11343724	2	40V	SCREW 10x1,25x65	VITE 10x1,25x65
31	12174790	6	180C	COLLAR 47/67x14	COLLARE 47/67x14
32	12179190	1	180C	COLLAR 11/19x5	COLLARE 11/19x5
33	13543324	2	210P	STUD 8x1,25x36	PRIGIONIERO 8x1,25x36
34	15970724	7	40V	SCREW 10x1,25x25	VITE 10x1,25x25
35	15971924	1	40V	SCREW 10x1,25x105	VITE 10x1,25x105
36	15972224	1	40V	SCREW 10x1,25x120	VITE 10x1,25x120
37	16043624	2	40V	SCREW 8x1,25x25	VITE 8x1,25x25
38	16043824	1	40V	SCREW 8x1,25x30	VITE 8x1,25x30
39	16045724	2	40V	SCREW 8x1,25x125	VITE 8x1,25x125
40	16100811	2	10D	NUT 8x1,25x6,5	DADO 8x1,25x6,5
41	11190579	4	132R	LOCKWASHER	ROSETTA DI SICUREZZA
42	15971324	1	40V	SCREW 10x1,25x75	VITE 10x1,25x75
43	79083847	4	180C	COLLAR	COLLARE
44	38824001	1	120G	GASKET	GUARNIZIONE PIANA
45	79016981	1	30M	SLEEVE (*)	MANICOTTO (*)
	79087384	1	30M	SLEEVE	MANICOTTO
46	76016982	1	193T	TUBE (*)	TUBO RIGIDO (*)
	79087385	1	193T	TUBE	TUBO RIGIDO
47	4595833	1	50T	PLUG	TAPPO
48	10284585	1	120G	GASKET 20,2x26	GUARNIZIONE PIANA 20,2x26
49	10296685	1	120G	GASKET 16,2x22	GUARNIZIONE PIANA 16,2x22

USAGE: Units with 8365 Engine

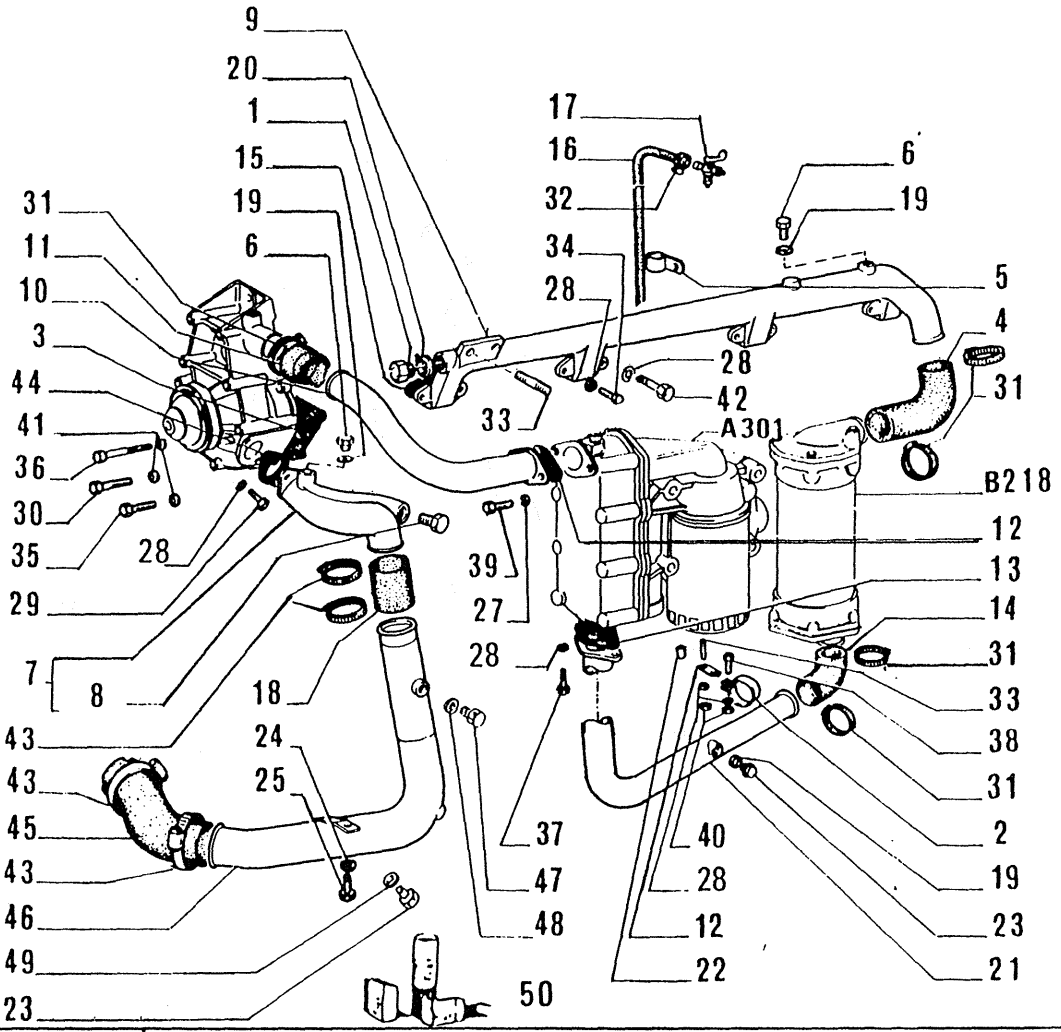

FIATALLIS **A4.02/ 2 TAV. 2 PAG.1**

ITEM	PART NUMBER	QTY	TRANS CODE	DESCRIPTION	DESCRIZIONE
1	10275001	1	50T	PLUG 22x1,5x10	TAPPO 22x1,5x10
2	4535237	1	180C	COLLAR	COLLARE
3	4712083	1	120G	GASKET	GUARNIZIONE PIANA
4	4722291	1	30M	SLEEVE	MANICOTTO
	76015958	1	30M	SLEEVE (*)	MANICOTTO (*)
5	4737909	1	231S	CLIP	STAFFETTA
6	4741955	2	50T	PLUG	TAPPO
7	4753434	1	193T	TUBE - ASSEMBLY	TUBO RIGIDO - COMPLETO
8	4753435	1	50T	PLUG	TAPPO
9	4763626	1	188C	MANIFOLD	COLLETTORE
10	4764722	1	193T	TUBE	TUBO RIGIDO
11	4787632	1	30M	SLEEVE	MANICOTTO
	76015957	1	30M	SLEEVE (*)	MANICOTTO (*)
12	4795605	1	231S	CLIP	STAFFETTA
13	4795627	2	122G	SEAL	GUARNIZIONE
14	10138386	1	30M	SLEEVE 45x60	MANICOTTO 45x60
	76015959	1	30M	SLEEVE (*)	MANICOTTO (*)
15	4803138	5	122G	SEAL	GUARNIZIONE
16	8819262	1	285T	HOSE	TUBO FLESSIBILE
17	8820457	1	150R	COCK	RUBINETTO
18	76015705	1	30M	SLEEVE	MANICOTTO
	76015961	1	30M	SLEEVE (*)	MANICOTTO (*)
19	10257060	3	120G	GASKET 16,2x22	GUARNIZIONE PIANA 16,2x22
20	10279560	1	120G	GASKET 22,2x28	GUARNIZIONE PIANA 22,2x28
21	4795607	1	193T	TUBE	TUBO RIGIDO
22	4598124	1	75D	SPACER	DISTANZIALE
23	10300711	2	50T	PLUG 16x1,5x9	TAPPO 16x1,5x9

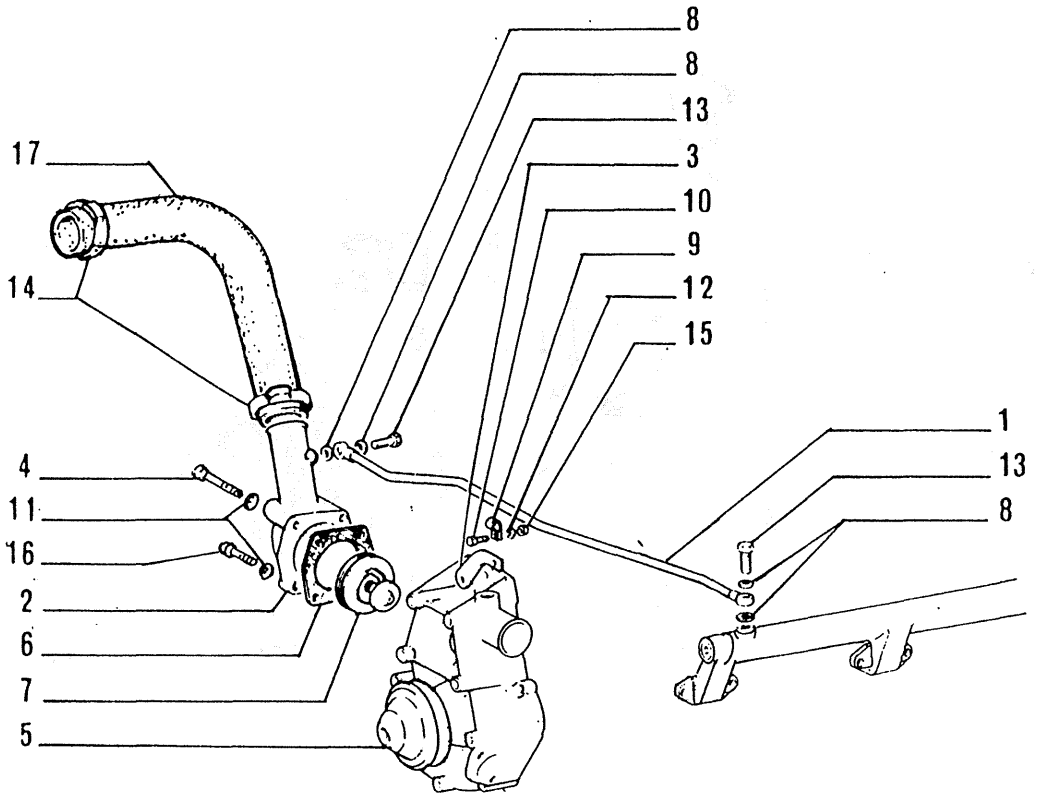

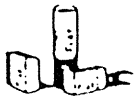
18USAGE: Units with 8365 Engine

ITEM	PART NUMBER	QTY	TRANS CODE	DESCRIPTION	DESCRIZIONE
1	4722292	1	193T	TUBE	TUBO RIGIDO
2	4722294	1	85G	ELBOW	GOMITO
3	4730530	1	231S	CLIP	STAFFETTA
4	4759290	2	40V	SCREW	VITE
5	4807113	1	152P	WATER PUMP - ASSEMBLY SEE SGR. A4.03/1	POMPA ACQUA - COMPLETO VEDERI SGR. A4.03/1
6	8826149	1	122G	SEAL	GUARNIZIONE
7	4808727	1	96I	THERMOSTAT - IN ALTERNATIVE	TERMOSTATO - IN ALTERNATIVA
	8831035	1	96T	THERMOSTAT - IN ALTERNATIVE	TERMOSTATO - IN ALTERNATIVA
8	10260160	4	120G	GASKET 10,2x14	GUARNIZIONE PIANA 10,2x14
9	10440990	1	231S	CLIP 6x7	STAFFETTA 6x7
10	10902014	1	40V	SCREW 6x1x12	VITE 6x1x12
11	11193871	4	132R	LOCKWASHER 8,4x16	ROSETTA DI SICUREZZA 8,4x16
12	11197779	1	132R	LOCKWASHER	ROSETTA DI SICUREZZA
13	11903814	2	20R	FITTING 10x1,25x19	RACCORDO 10x1,25x19
14	79083848	2	180C	COLLAR	COLLARE
15	15896211	1	10D	NUT 6x1x5	DADO 6x1x5
16	16043621	2	40V	SCREW 8x1,25x25	VITE 8x1,25x25
17	76016980	1	30M	SLEEVE (*)	MANICOTTO (*)
	79087383	1	30M	SLEEVE	MANICOTTO
18	79086656	K	1K	KIT SEE PAGE 9	KIT VED. PAG.9

USAGE: Units with 8205 Engine

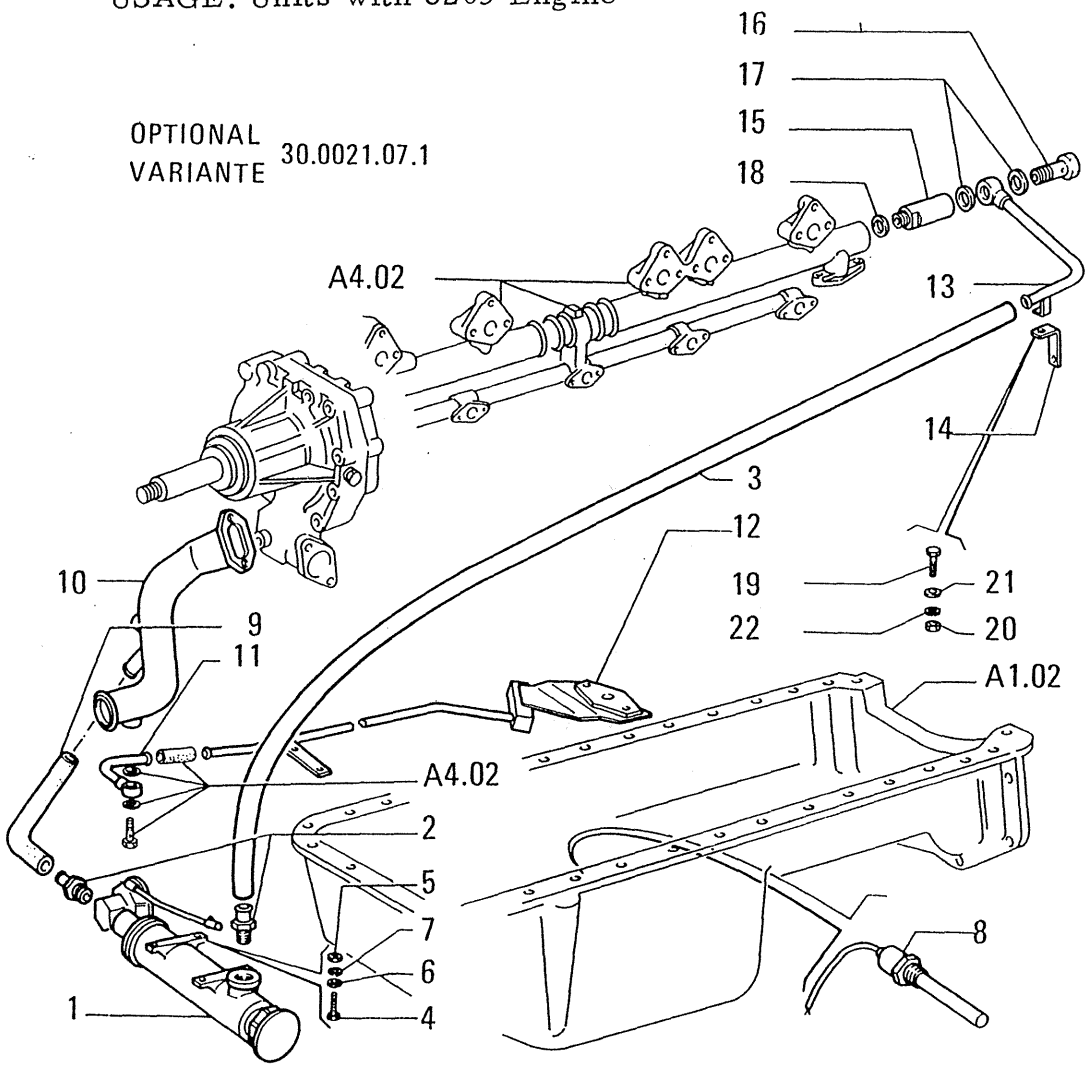

ITEM	PART NUMBER	QTY	TRANS CODE	DESCRIPTION	DESCRIZIONE
1	79062556	1	105R	HEATER	RISCALDATORE
2	79062557	2	20R	FITTING	RACCORDO
3	79062558	1	30M	SLEEVE	MANICOTTO
4	10902531	4	40V	SCREW 6x1x22	VITE 6x1x22
5	15896221	4	10D	NUT 6x1x5	DADO 6x1x5
6	12644401	4	132R	LOCKWASHER 6,15x15	ROSETTA DI SICUREZZA 6,15x15
7	10571570	4	170R	LOCKWASHER 6,1x1,6	ROSETTA EL. 6,1x1,6
8	79062573	1	105R	HEATER	RISCALDATORE
9	79062564	1	30M	SLEEVE	MANICOTTO
10	79062565	1	193T	TUBE	TUBO RIGIDO
11	79062567	1	193T	TUBE	TUBO RIGIDO
12	79062569	1	193T	TUBE	TUBO RIGIDO
13	79062559	1	193T	TUBE	TUBO RIGIDO
14	79062563	1	231S	CLIP	STAFFETTA
15	79062562	1	75D	SPACER	DISTANZIALE
16	10182211	1	90B	FILLER PLUG	BOCCHETTONE INTRODUZIONE
17	10296260	2	122G	SEAL 28,3x36	GUARNIZIONE 28,3x36
18	10260360	1	122G	SEAL 24,3x32	GUARNIZIONE 24,3x32
19	16043431	1	40V	SCREW 8x1,25x20	VITE 8x1,25x20
20	16100821	1	10D	NUT 8x1,25x6,5	DADO 8x1,25x6,5
21	14496501	1	132R	LOCKWASHER 8,4x17	ROSETTA DI SICUREZZA 8,4x17
22	10571770	1	170R	LOCKWASHER 8,1x2	ROSETTA EL. 8,1x2

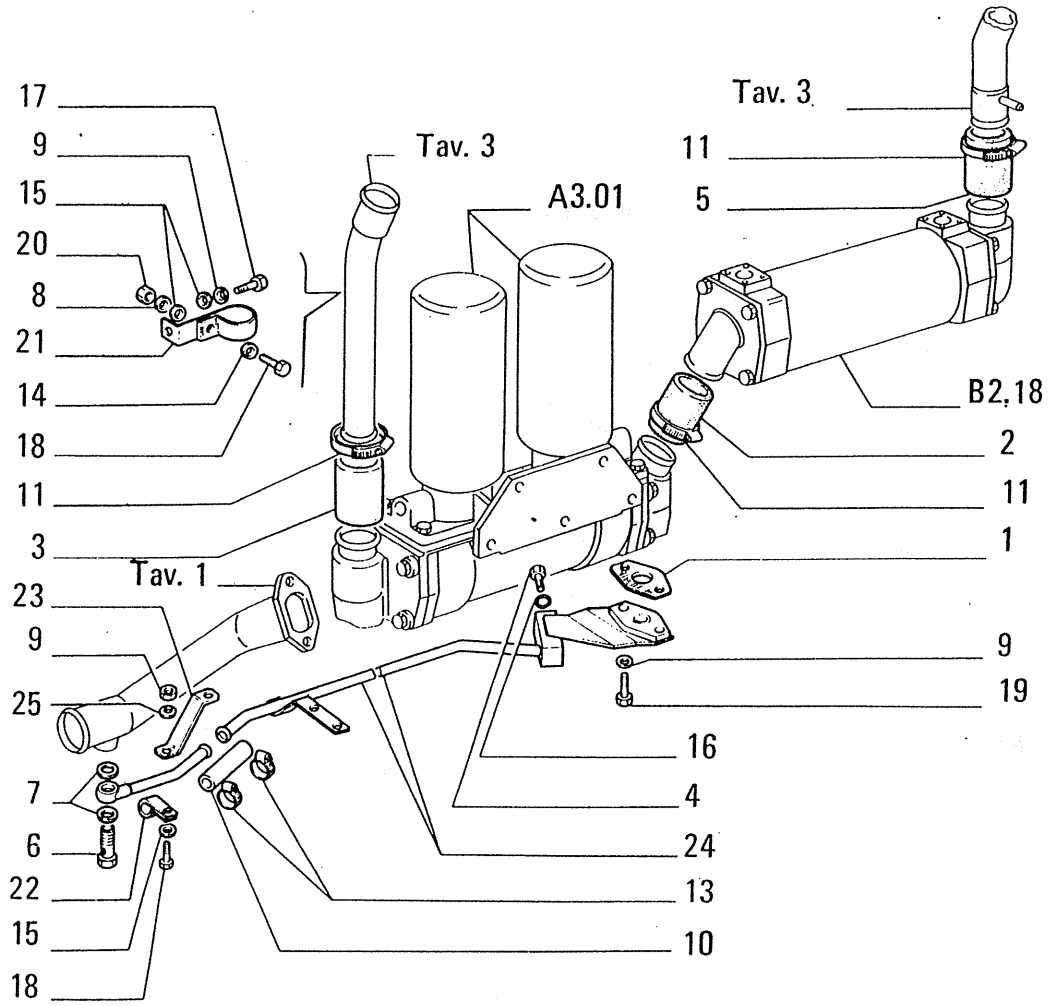

(05430) USAGE: Units with 8205 Engine

FIATALLIS **A4.02 TAV. 4 PAG.1**

ITEM	PART NUMBER	QTY	TRANS CODE	DESCRIPTION	DESCRIZIONE
1	4513714	1	123G	SEAL ASSY	GUARNIZIONE TENUTA FRONTALE
2	4726657	1	30M	SLEEVE	MANICOTTO
3	4736567	1	30M	SLEEVE	MANICOTTO
4	4977601	1	50T	PLUG	TAPPO
5	10138386	1	30M	SLEEVE 45x60	MANICOTTO 45x60
6	10182617	1	90B	FILLER PLUG 20x1,5x14	BOCCHETTONE INTRODUZIONE 20x1,5x14
7	10257460	2	133R	SEAL 20,2x26	ROSETTA DI TENUTA 20,2x26
8	11194071	2	131R	WASHER 8,4x16	ROSETTA 8,4x16
9	11198071	3	131R	WASHER 8,2x15	ROSETTA 8,2x15
10	12075186	1	30M	SLEEVE 15x80	MANICOTTO 15x80
11	12174790	4	180C	COLLAR 47/67x14	COLLARE 47/67x14
12	12174890	2	180C	COLLAR 62/82x14	COLLARE 62/82x14
13	12179590	2	180C	COLLAR 14/24x8	COLLARE 14/24x8
14	12646701	2	131R	WASHER 8,15x20	ROSETTA 8,15x20
15	12664701	2	131R	WASHER	ROSETTA
16	14457080	1	158G	O-RING 2,62x12,37	GUARNIZIONE O-R 2,62x12,37
17	16043421	1	40V	SCREW 8x1,25x20	VITE 8x1,25x20
18	16043621	2	40V	SCREW 8x1,25x25	VITE 8x1,25x25
19	16043671	2	40V	SCREW 8x1,25x25	VITE 8x1,25x25
20	16100811	2	10D	NUT 8x1,25x6,5	DADO 8x1,25x6,5
21	61589003	1	231S	CLIP	STAFFETTA
22	61589023	1	231S	CLIP	STAFFETTA
23	61589068	1	231S	CLIP	STAFFETTA
24	61694009	1	193T	TUBE	TUBO RIGIDO
25	61694077	1	193T	TUBE	TUBO RIGIDO

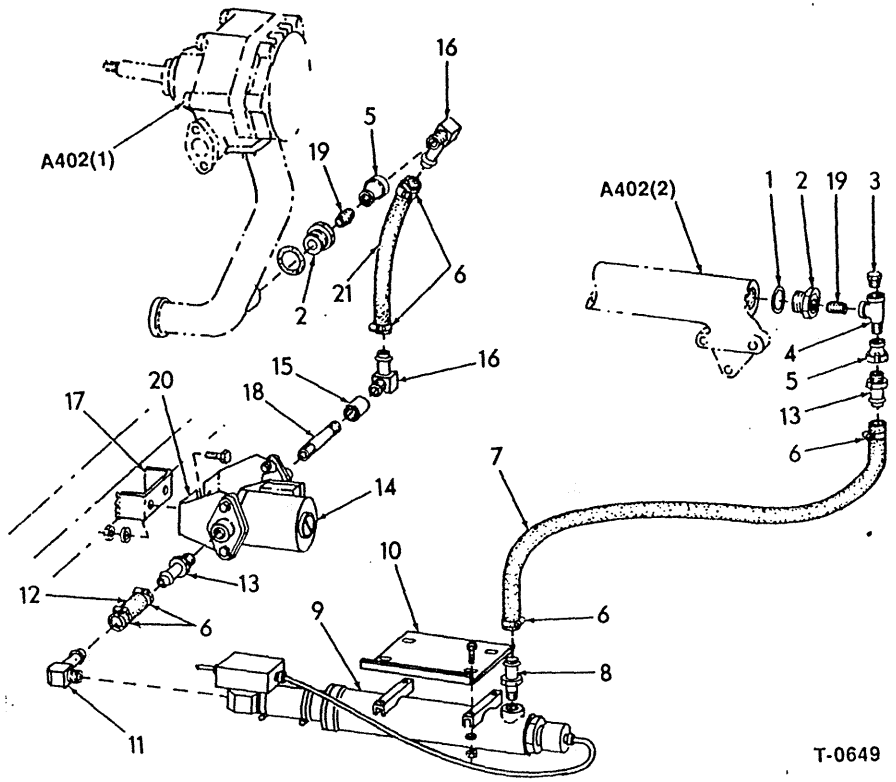

ITEM	PART NO.	QTY.	CODE	DESCRIPTION	DENOMINAZIONE
1	10260360	1	123G	GASKET	GUARNIZIONE DI TENUTA
2	73074000	2	57R	REDUCER, PRESSURE	RIDUTTORE DI PRESSIONE
3	70918951	1	50T	PLUG	TAPPO
4	70913257	1	16R	TEE	RACCORDO A 3 VIE
5	70919638	2	67G	COUPLING,3/8" - 3/4"	GIUNTO
6	70921912	6	120M	CLAMP	MORSETTO COLLARE
7	73299349	1	192T	HOSE	TUBO FLESSIBILE
8	70925056	1	28N	NIPPLE	NIPPLO
9	73298447	1	105R	HEATER	RISCALDATORE
	70927401	4	40V	CAPSCREW,1/4"NC X 1"	VITE
	70677004	4	131R	WASHER	ROSETTA
	70911024	4	10D	NUT,1/4"NC	DADO
10	73299351	1	105P	PLATE	PIASTRA
			600T	REQUIRES WELDING	DA SALDARE
11	70925058	1	28N	NIPPLE,90°	NIPPLO
12	76014483	1	192T	HOSE	TUBO FLESSIBILE
13	70925055	2	28N	NIPPLE	NIPPLO
14	73298448	1	155P	PUMP	POMPA
			600N	SERVICED AS A UNIT	FORNITO COME COMPLESS.
15	70901767	1	67G	COUPLING	GIUNTO
16	70925064	2	28N	NIPPLE,90°	NIPPLO
17	73299350	1	80M	BRACKET	MENSOLA
			600T	REQUIRES WELDING	DA SALDARE
18	70912085	1	28N	NIPPLE	NIPPLO
19	70901489	2	28N	NIPPLE	NIPPLO
20	73298505	2	80M	BRACKET	MENSOLA
	70927373	2	40V	CAPSCREW,5/16"NCX7/8"	VITE
	70929662	2	131R	WASHER	ROSETTA
	70911025	2	10D	NUT,5/16"NC	DADO
21	76014482	1	192T	HOSE	TUBO FLESSIBILE

USAGE: UNITS WITH 8205 ENGINE.

WATER PUMP & LINES

A402/1

Revised April 1989

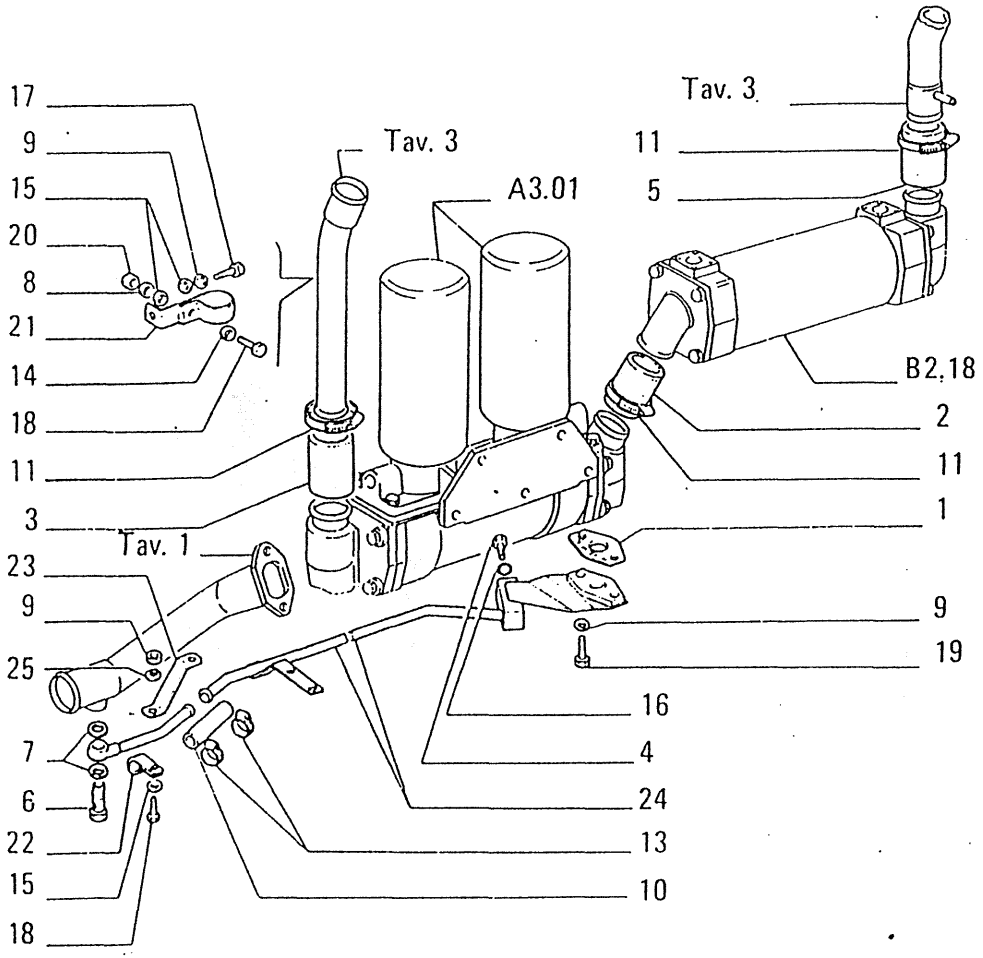

ITEM	PART NO.	QTY.	CODE	DESCRIPTION	DENOMINAZIONE
1	04513714	1	123G	GASKET	GUARNIZIONE DI TENUTA
2	04726657	1	59C	SLEEVE,01,03	CANNOTTO
	79044803	1	59C	SLEEVE,05(*)	CANNOTTO
3	04736567	1	59C	SLEEVE,01,03	CANNOTTO
	79044802	1	59C	SLEEVE,05(*)	CANNOTTO
4	04977601	1	50T	PLUG	TAPPO
5	10138386	1	59C	SLEEVE,01,03	CANNOTTO
	79044045	1	59C	SLEEVE,05(*)	CANNOTTO
6	10182617	1	90B	UNION,20X1.5X14	BOCCHETTONE
7	10257460	2	133R	SEAL,20.2X26	GUARNIZIONE TENUTA
8	11194071	2	131R	WASHER,8.4X16	ROSETTA
9	11198071	3	131R	WASHER,8.2X15	ROSETTA
10	12075186	1	59C	SLEEVE,01,03	CANNOTTO
	79047504	1	59C	SLEEVE,05(*)	CANNOTTO
11	12174790	4	180C	COLLAR,47/67X14	COLLARE
12	12174890	2	180C	COLLAR,62/82X14	COLLARE
13	12179590	2	180C	COLLAR,14/24X8	COLLARE
14	12646701	2	131R	WASHER,8.15X20	ROSETTA
15	12646701	2	131R	WASHER	ROSETTA
16	14457080	1	55A	O-RING	ANELLO DI TENUTA
17	16043421	1	40V	CAPSCREW,8X1.25X20	VITE
18	16043621	2	40V	CAPSCREW,8X1.25X25	VITE
19	16043671	2	40V	CAPSCREW,8X1.25X25	VITE
20	16100811	2	10D	NUT,8X1.25X6.5	DADO
21	61589003	1	231S	BRACKET, SMALL	STAFFETTA
22	61589023	1	231S	BRACKET, SMALL	STAFFETTA
23	61589068	1	231S	BRACKET, SMALL	STAFFETTA
24	61694009	1	193T	PIPE	TUBO
25	61694077	1	193T	PIPE	TUBO

(*)SPECIAL EQUIPMENT
30.0021.081

USAGE: UNITS WITH 8205 ENGINE.

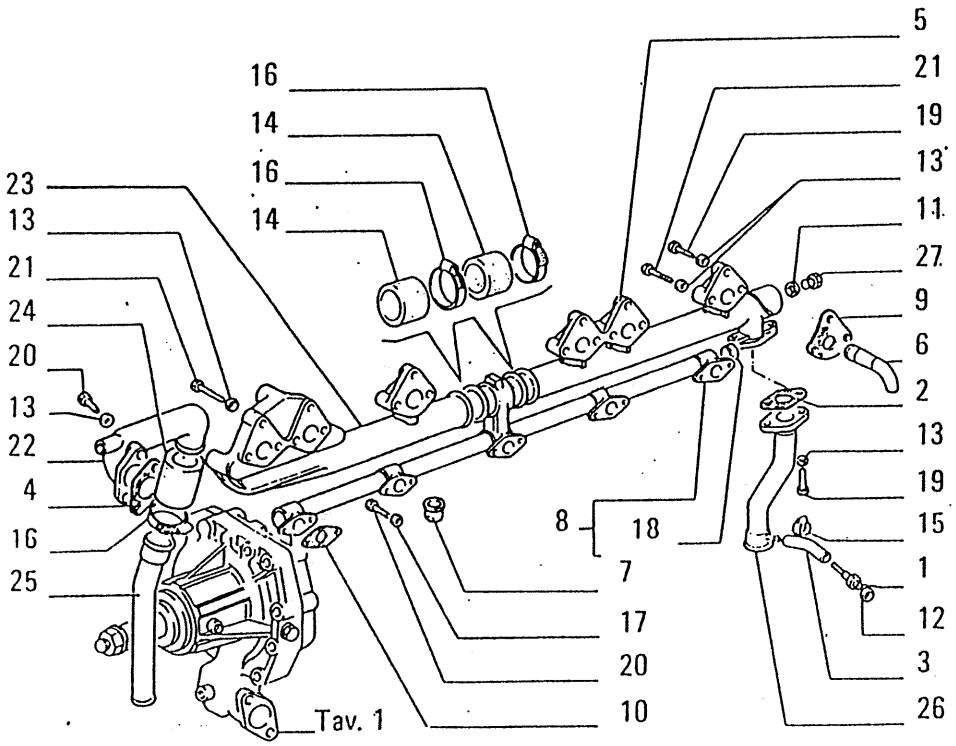

ITEM	PART NO.	QTY.	CODE	DESCRIPTION	DENOMINAZIONE
1	04549368	1	20R	FITTING	RACCORDO
2	04579771	1	123G	GASKET	GUARNIZIONE DI TENUTA
3	04592177	1	59C	SLEEVE,01,03	CANNOTTO
	79044040	1	59C	SLEEVE,05(*)	CANNOTTO
4	04606046	1	123G	GASKET	GUARNIZIONE DI TENUTA
5	04622832	1	188C	MANIFOLD	COLLETTORE
6	04623879	6	260C	CONVEYOR	CONVOGLIATORE
7	04640742	4	260C	CONVEYOR	CONVOGLIATORE
8	04655298	1	193T	PIPE	TUBO
9	04741299	6	123G	GASKET	GUARNIZIONE DI TENUTA
10	04741300	5	123G	GASKET	GUARNIZIONE DI TENUTA
11	10260360	1	133R	SEAL,24.3X32	GUARNIZIONE TENUTA
12	10278660	1	133R	SEAL,16.2X22	GUARNIZIONE TENUTA
13	11198071	22	131R	WASHER,8.2X15	ROSETTA
14	12088086	2	59C	SLEEVE,01,03	CANNOTTO
	79044043	2	59C	SLEEVE,05(*)	CANNOTTO
15	12173690	2	180C	COLLAR 14/22X14	COLLARE
16	12174790	6	180C	COLLAR,47/67X14	COLLARE
17	12624501	10	131R	WASHER,8.15X15	ROSETTA
18	14327301	2	50T	PLUG,17X5	TAPPO
19	16043621	6	40V	CAPSCREW,8X1.25X25	VITE
20	16043821	6	40V	CAPSCREW,8X1.25X30	VITE
21	16044021	20	40V	CAPSCREW,8X1.25X40	VITE
22	61589012	1	193T	PIPE	TUBO
23	61589013	1	188C	MANIFOLD	COLLETTORE
24	61589027	1	30M	SLEEVE, FLEXIBLE	MANICOTTO FLESSIBILE
25	61694003	1	193T	PIPE	TUBO
26	61694015	1	193T	PIPE	TUBO
27	10305271	1	50T	PLUG,20X1.5X10	TAPPO

(*)SPECIAL EQUIPMENT
30.0021.081

USAGE: UNITS WITH 8205 ENGINE.

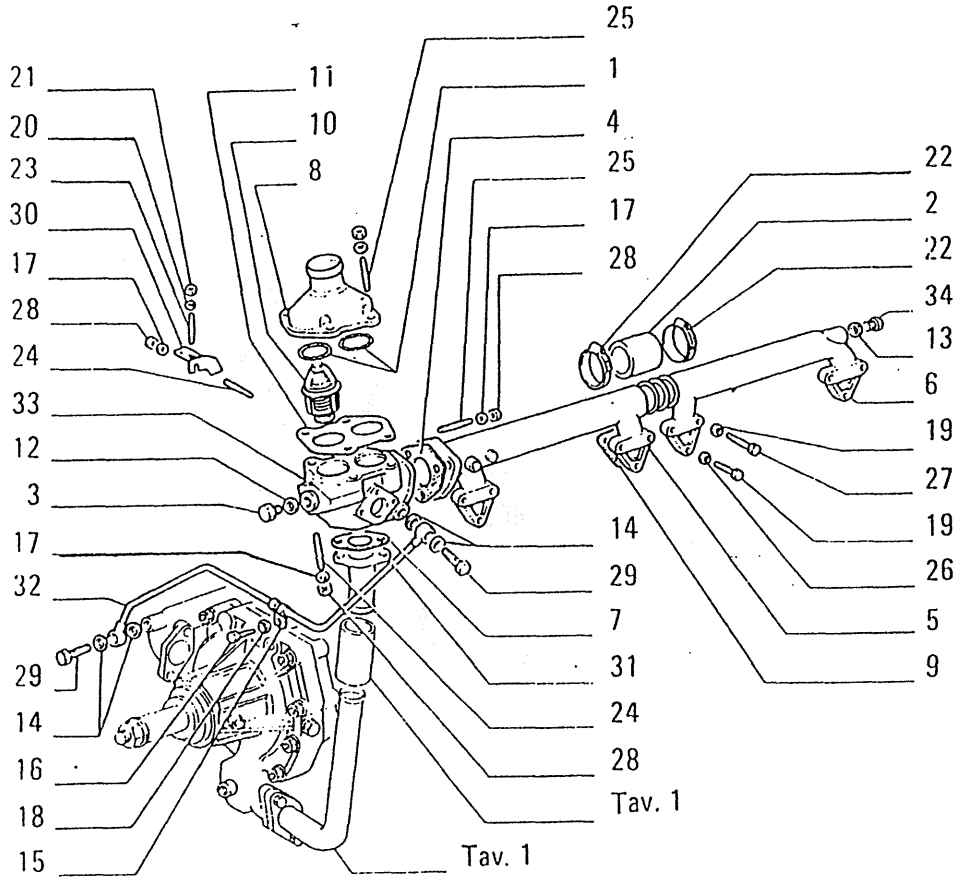

ITEM	PART NO.	QTY.	CODE	DESCRIPTION	DENOMINAZIONE
33	61694055	1	300C	BODY	CORPO
34	10305271	1	50T	PLUG,2-X1.5X10,01,03	TAPPO

(*)SPECIAL EQUIPMENT
30.0021.081

USAGE: UNITS WITH 8205 ENGINE.

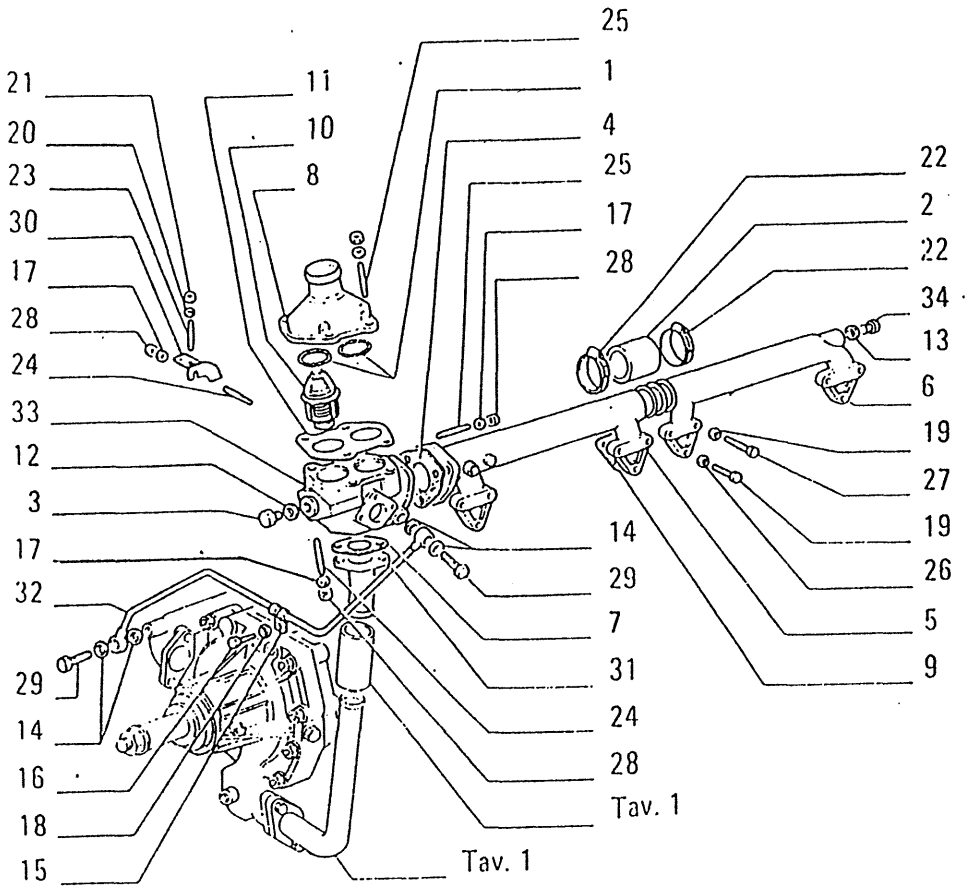

ITEM	PART NO.	QTY.	CODE	DESCRIPTION	DENOMINAZIONE
1	04184495	2	123G	GASKET	GUARNIZIONE DI TENUTA
2	04578607	1	59C	SLEEVE,01,03	CANNOTTO
	79044041	1	59C	SLEEVE,05(*)	CANNOTTO
3	04595833	1	50T	PLUG	TAPPO
4	04614887	1	123G	GASKET	GUARNIZIONE DI TENUTA
5	04616134	1	188C	MANIFOLD	COLLETTORE
6	04616135	1	188C	MANIFOLD	COLLETTORE
7	04669894	1	123G	GASKET	GUARNIZIONE DI TENUTA
8	04725203	1	265C	COVER	COPERCHIO
9	04741299	4	123G	GASKET	GUARNIZIONE DI TENUTA
10	04747678	2	96T	THERMOSTAT	TERMOSTATO
			602A	PRIOR TO ENGINE S/N 0655	FINO AL MOTORE....
	61589109	2	96T	THERMOSTAT	TERMOSTATO
			602B	ENGINE S/N 0655 -UP	DAL MOTORE....
11	04873369	1	123G	GASKET	GUARNIZIONE DI TENUTA
12	10257460	1	133R	SEAL,20.2X26	GUARNIZIONE TENUTA
13	10260360	1	133R	SEAL,24.3X32,01,03	GUARNIZIONE TENUTA
14	10298460	4	133R	SEAL,12.2X18	GUARNIZIONE TENUTA
15	10418300	1	180C	COLLAR,8X7	COLLARE
16	10977521	1	40V	CAPSCREW,5X0.8X10	VITE
17	11194079	10	131R	WASHER,8.4X16	ROSETTA
18	11197771	1	131R	WASHER,6.4X12	ROSETTA
19	11198071	12	131R	WASHER,8.2X15	ROSETTA
20	11198371	1	131R	WASHER,10.5X20	ROSETTA
21	12164711	1	10D	NUT,10X1.25X8	DADO
22	12174790	2	180C	COLLAR,4/67X14	COLLARE
23	13453221	1	210P	STUD,10X1.25X45	PRIGIONIERO
24	13543321	3	210P	STUD,8X1.25X36	PRIGIONIERO
25	13543521	7	210P	STUD,8X1.25X41	PRIGIONIERO
26	16043621	4	40V	CAPSCREW,8X1.25X25	VITE
27	16044121	8	40V	CAPSCREW,8X1.25X45	VITE
28	16100811	10	10D	NUT,8X1.25X6.5	DADO
29	61585664	2	90B	UNION	BOCCHETTONE
30	61589048	1	231S	BRACKET, SMALL	STAFFETTA
31	61694018	1	193T	PIPE,01,03	TUBO
32	61694042	1	193T	PIPE	TUBO

USAGE: UNITS WITH 8205 ENGINE.

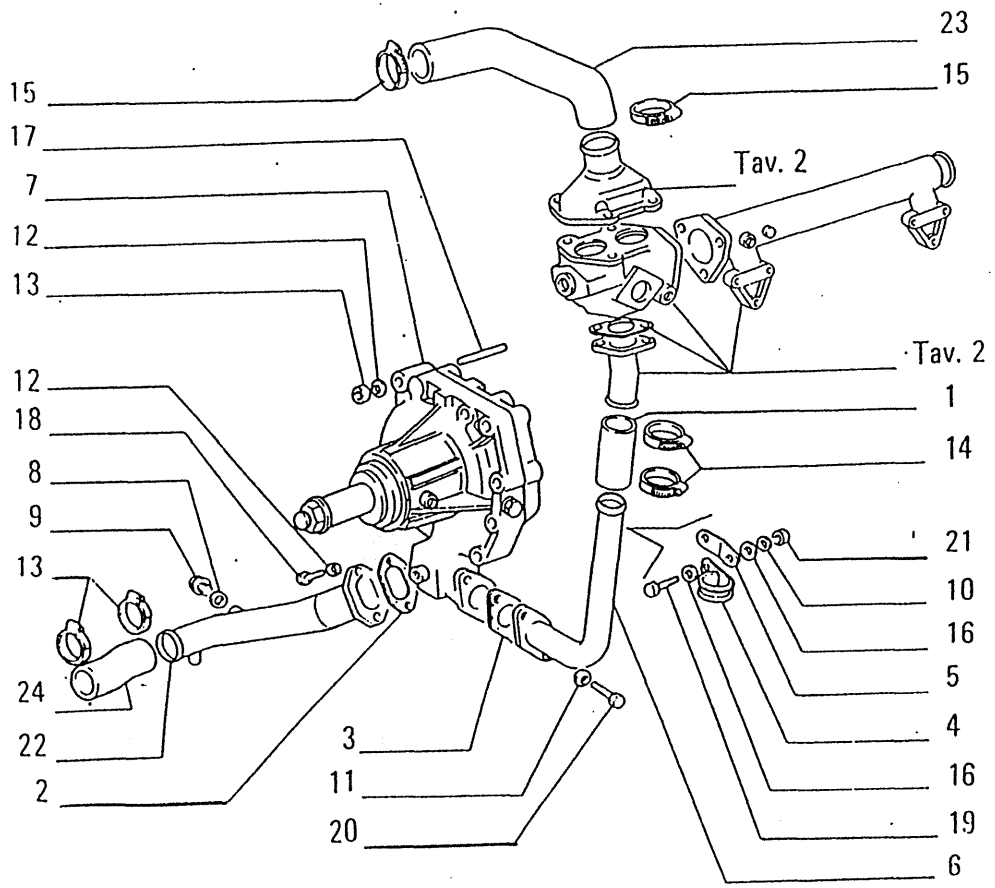

ITEM	PART NO.	QTY.	CODE	DESCRIPTION	DENOMINAZIONE
1	04591439	1	59C	SLEEVE,01,03	CANNOTTO
	76014248	1	59C	SLEEVE,05(*)	CANNOTTO
2	04606042	1	123G	GASKET	GUARNIZIONE DI TENUTA
3	04606094	1	123G	GASKET	GUARNIZIONE DI TENUTA
4	04628548	1	231S	BRACKET, SMALL	STAFFETTA
5	04652838	1	231S	BRAKCET,SMALL,01,03	STAFFETTA
6	04661218	1	193T	PIPE,01,03	TUBO
7	04761615	1	152P	PUMP,WATER(A403)	POMPA ACQUA
8	10260360	1	133R	SEAL,24.3X32	GUARNIZIONE TENUTA
9	10305271	1	50T	PLUG,20X1.5X10,01,03	TAPPO
10	11194079	1	131R	WASHER,8.4X16	ROSETTA
11	11198071	12	131R	WASHER,8.2X15	ROSETTA
12	11198371	6	131R	WASHER,10.5X20	ROSETTA
13	12164711	4	10D	NUT,10X1.25X8	DADO
14	12174090	2	180C	COLLAR,32/52X14	COLLARE
15	12174890	4	180C	COLLAR,62/82X14	COLLARE
16	12646701	2	131R	WASHER,8.15X20	ROSETTA
17	13453721	4	210P	STUD,10X1.25X55	PRIGIONIERO
18	15970721	2	40V	CAPSCREW,10X1.25X25	VITE
19	16043421	1	40V	CAPSCREW,8X1.25X20	VITE
20	16043621	2	40V	CAPSCREW,8X1.25X25	VITE
21	16100811	1	10D	NUT,8X1.25X6.5	DADO
22	61694081	1	193T	PIPE	TUBO
23	79033897	1	59C	SLEEVE,01,03	CANNOTTO
	76014486	1	59C	SLEEVE,05,(*)	CANNOTTO
24	79036941	1	59C	SLEEVE,01,03	CANNOTTO
	76014487	1	59C	SLEEVE,05(*)	CANNOTTO

(*)SPECIAL EQUIPMENT
30.0021.081

USAGE: UNITS WITH 8205 ENGINE.

	WATER PUMP & LINES	A402	1
		Revised April 1989	

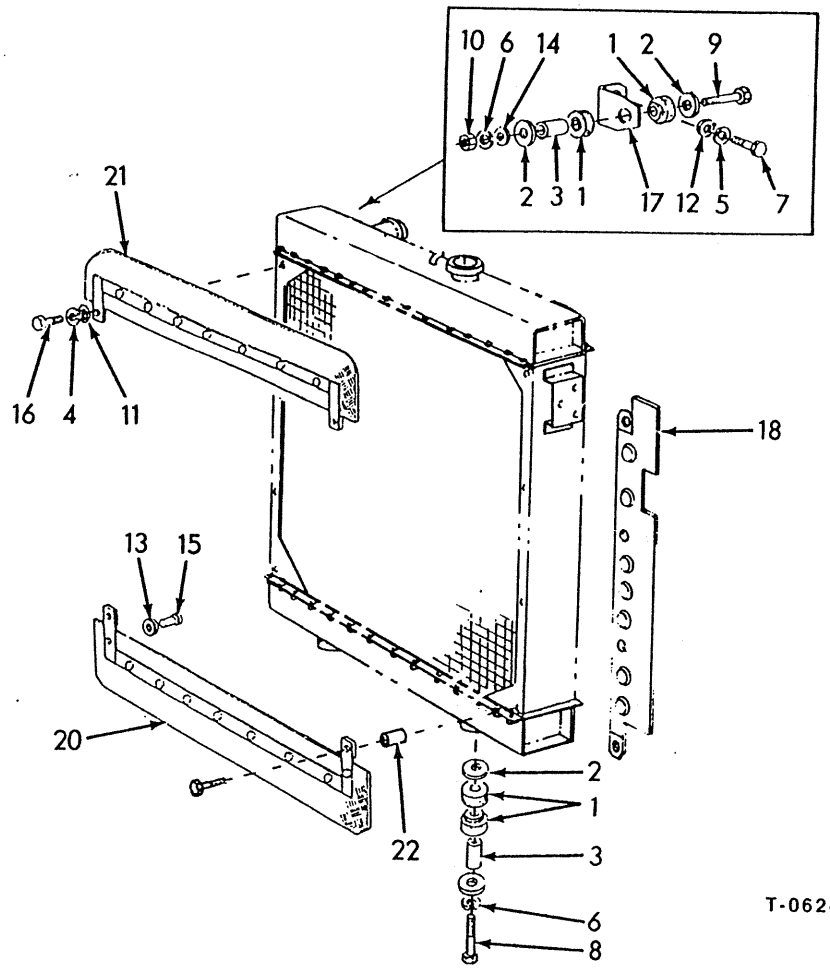

ITEM	PART NO.	QTY.	CODE	DESCRIPTION	DENOMINAZIONE
1	04977098	8	345C	CUSHION	CUSCINO
2	04977099	-	131R	WASHER	ROSETTA
3	04977100	4	75D	SPACER	DISTANZIALE
4	10516671	4	131R	WASHER,8.1X2.2	ROSETTA
5	10516871	6	131R	WASHER,10X2.5	ROSETTA
6	10517071	4	131R	WASHER,12.2X3.1	ROSETTA
7	11106231	6	40V	CAPSCREW,10X1.5X25	VITE
8	11113631	2	40V	CAPSCREW,12X1.75X70	VITE
9	11113731	2	40V	CAPSCREW,12X1.75X75	VITE
10	11702921	2	10D	NUT,12X1.75X10	DADO
11	12642021	4	131R	WASHER,8.15X25	ROSETTA
12	12644321	6	131R	WASHER,10.2X35	ROSETTA
13	12644421	32	131R	WASHER,6.15X15	ROSETTA
14	12646921	2	131R	WASHER,12.2X28	ROSETTA
15	13868350	32	55R	RIVET,5X12	RIBATTINO
16	16043531	4	40V	CAPSCREW,8X1.25X22	VITE
	a76044231	4	40V	CAPSCREW	VITE
17	79014021	2	80M	BRACKET	MENSOLA
18	79032064	1	101S	BAFFLE	DEFLETTORE
			600A	LEFT	SINISTRO
	79032066	1	101S	BAFFLE	DEFLETTORE
			600B	RIGHT	DESTRO
20	79032070	1	101S	BAFFLE	DEFLETTORE
			600D	LOWER	INFERIORE
21	79032299	1	101S	BAFFLE	DEFLETTORE
			600C	UPPER	SUPERIORE
22	a73021313	4	75D	SPACER	DISTANZIALE

a.UNITS EQUIPPED FOR SANITARY LANDFILL OR FORESTRY.

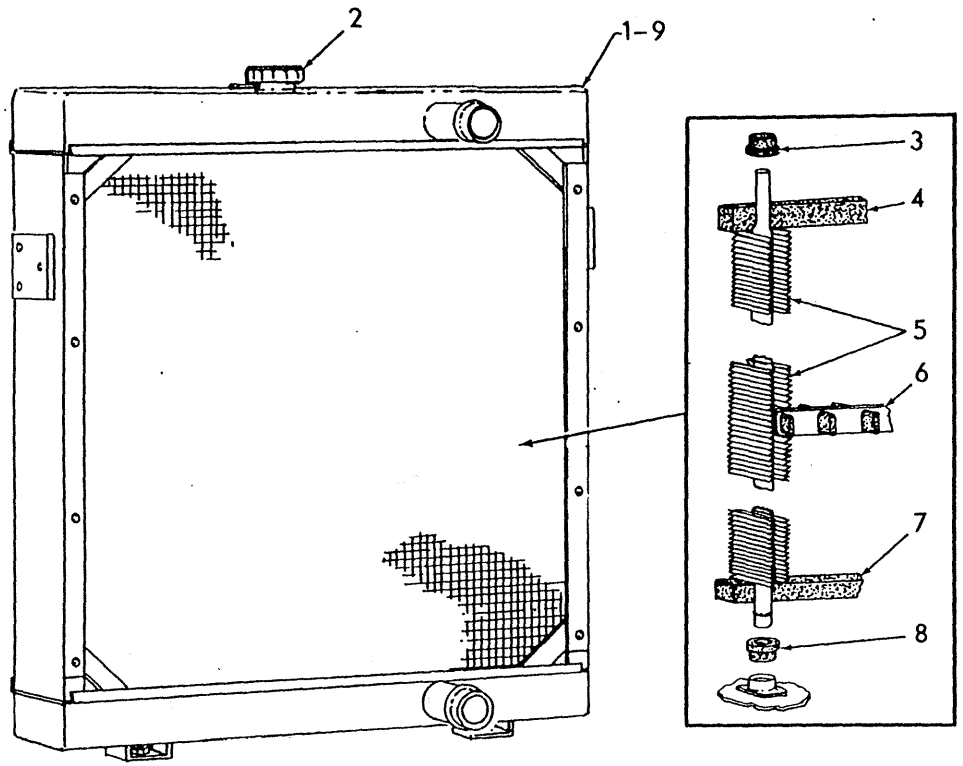

T-0115

ITEM	PART NO.	QTY.	CODE	DESCRIPTION	DENOMINAZIONE
1	73155376	1	19R	RADIATOR	RADIATORE
			600L	INCLUDES ITEMS 1-9	INCLUDE PARTIC.(1)
2	73155536	1	20C	CAP	CALOTTA
3	73148591	136	500J	GROMMET, UPPER	ANELLO
4	73153056	1	101S	BAFFLE	DEFLETTORE
5	73155404	136	206T	TUBE	TUBO
6	73155405	1	206T	TUBE	TUBO
7	73153057	1	101S	BAFFLE, LOWER	DEFLETTORE
8	73148592	136	500J	GROMMET, LOWER	ANELLO
9	--------	1	171	FRAME	INCASTELLATURA
			601C	NOT SERVICED	NON FORNITO DI RICAMB.

RADIATOR ASSEMBLY (MESABI)

A401 | 1B

Added April 1989

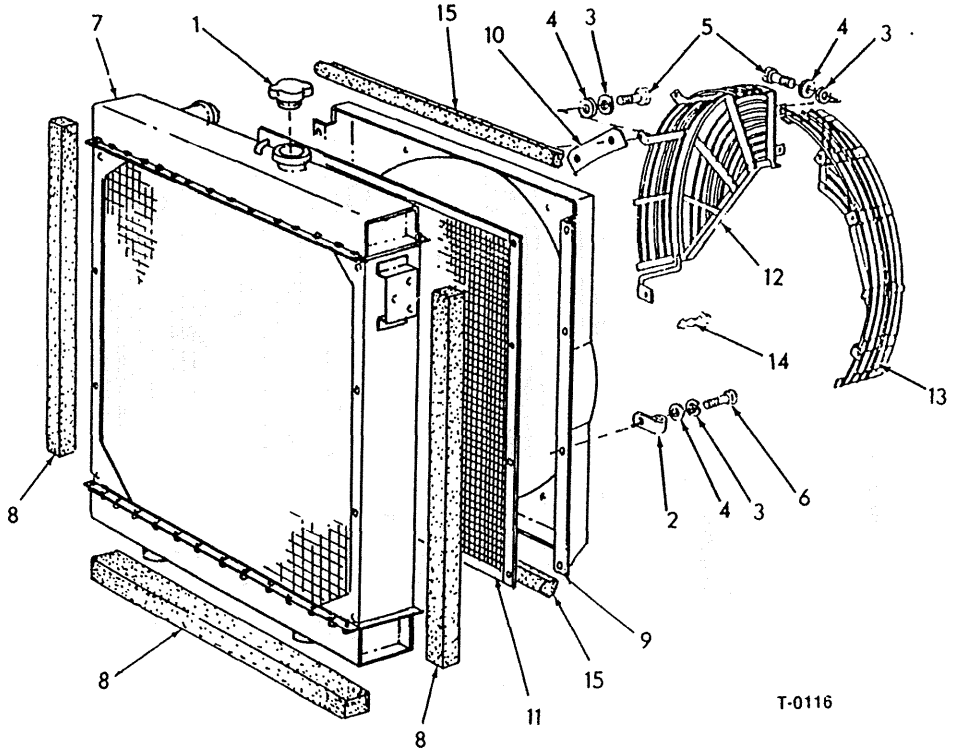

ITEM	PART NO.	QTY.	CODE	DESCRIPTION	DENOMINAZIONE
1	04959324	1	50T	PLUG	TAPPO
2	10450190	2	89G	CLIP,SMALL 66X 9	GRAFFETTA
3	10516671	22	131R	WASHER,8.1X2.2	ROSETTA
4	12646721	18	131R	WASHER,8.15X20	ROSETTA
5	16043231	10	40V	CAPSCREW,8X1.25X16	VITE
6	16043531	12	40V	CAPSCREW,8X1.25X22	VITE
	16043831	8	40V	CAPSCREW,8X1.25X30(*)	VITE
7	73154281	1	19R	RADIATOR	RADIATORE
	73155376	1	19R	RADIATOR,MESABI(A401(1B)	RADIATORE
9	79032072	1	79F	SHROUD	FODERA
	79087387	1	79F	SHROUD 06	FODERA
10	79032076	1	25P	PANEL	PANNELLO
11	76010518	1	44R	GRID(*)	RETE
	79032077	1	44R	GRID	RETE
12	79032111	1	115G	GUARD 01,03,05 RIGHT	PROTEZIONE
	79087388	1	115G	GUARD 06 RIGHT	PROTEZIONE
13	79032137	1	115G	GUARD 01,03,05 LEFT	PROTEZIONE
	79087389	1	115G	GUARD 06 LEFT	PROTEZIONE
14	14591787	4	42V	SCREW 8X12	VITE
15	73146691	-	133R	SEAL,25'	GUARNIZIONE TENUTA
			600P	AS REQUIRED	DEFINITO AL MONTAGGIO

(*)SPECIAL EQUIPMENT
30.0174.01.1

01,03,05 FOR 8205 ENGINE.

06 FOR 8365 ENGINE.

USAGE: UNITS EQUIPPED FOR SANITARY LANDFILL OR FORESTRY OPERATION.

	RADIATOR	A401	1A
		Added April 1989	

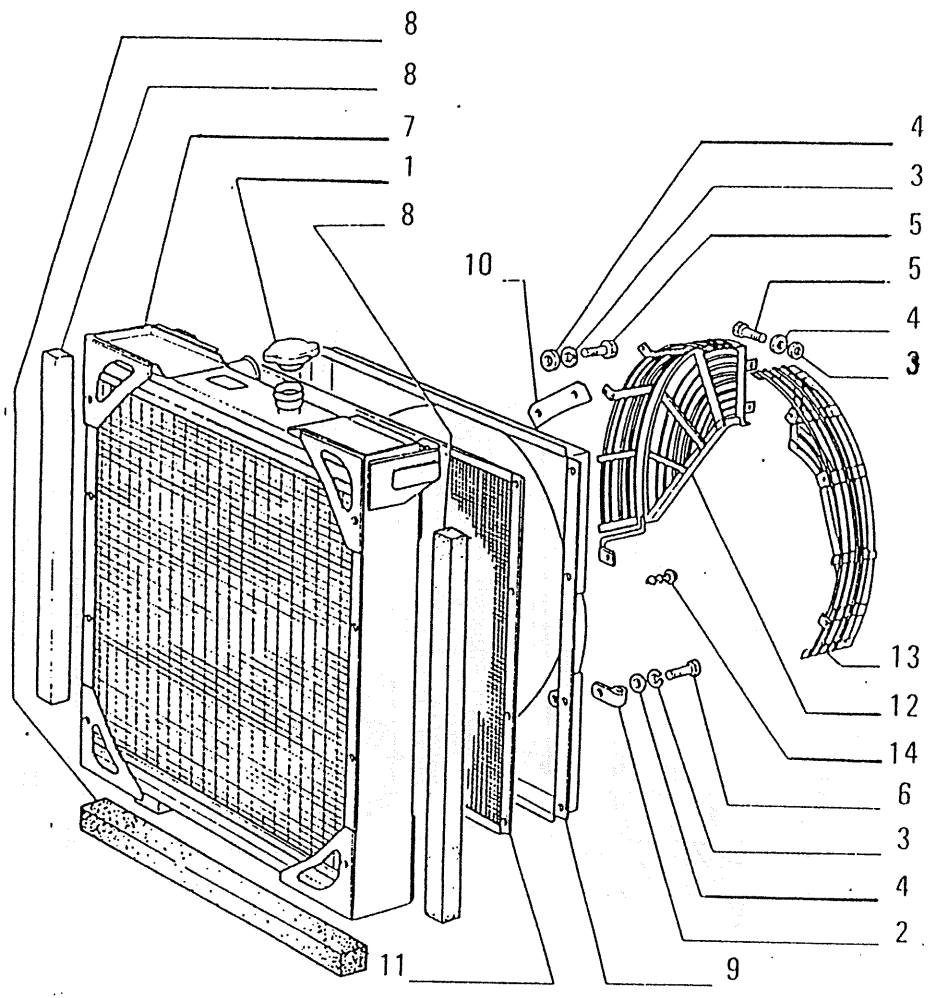

ITEM	PART NO.	QTY.	CODE	DESCRIPTION	DENOMINAZIONE
1	04959324	1	50T	PLUG	TAPPO
2	10450190	2	89G	CLIP, SMALL 66X9	GRAFFETTA
3	10516671	22	131R	WASHER,8.1X2.2	ROSETTA
4	12646721	18	131R	WASHER,8.15X20	ROSETTA
5	16043231	10	40V	CAPSCREW,8X1.25X16	VITE
6	16043531	12	40V	CAPSCREW,8X1.25X22	VITE
	16043831	8	40V	CAPSCREW,8X1.25X30(*)	VITE
7	79032057	1	19R	RADIATOR	RADIATORE
	73155376	1	19R	RADIATOR(MESABI,A401(1B)	RADIATORE
8	79032071	4	120G	GASKET,01,03,05	GUARNIZIONE FRENO
9	79032072	1	79G	SHROUD	FODERA
	79087387	1	79G	SHOURD 06	FODERA
10	79032076	1	25P	PANEL	PANNELLO
11	76010518	1	44R	GRID(*)	RETE
	79032077	1	44R	GRID	RETE
12	79032111	1	115G	GUARD 01,03,05 RIGHT	PROTEZIONE
	79087388	1	115G	GUARD 06, RIGHT	PROTEZIONE
13	79032137	1	115G	GUARD 01,03,05 LEFT	PROTEZIONE
	79087389	1	115G	GUARD 06 LEFT	PROTEZIONE
14	14591787	4	42V	VALVE 8X12	VITE
			600Y	UNIT NO.050535 AND UP	DAL TELAIO.....

(*)SPECIAL EQUIPMENT
30.0174.01.1

01,03,05 FOR 8205 ENGINE.

06 FOR 8365 ENGINE.

RADIATOR

A401 | 1

Revised April 1989

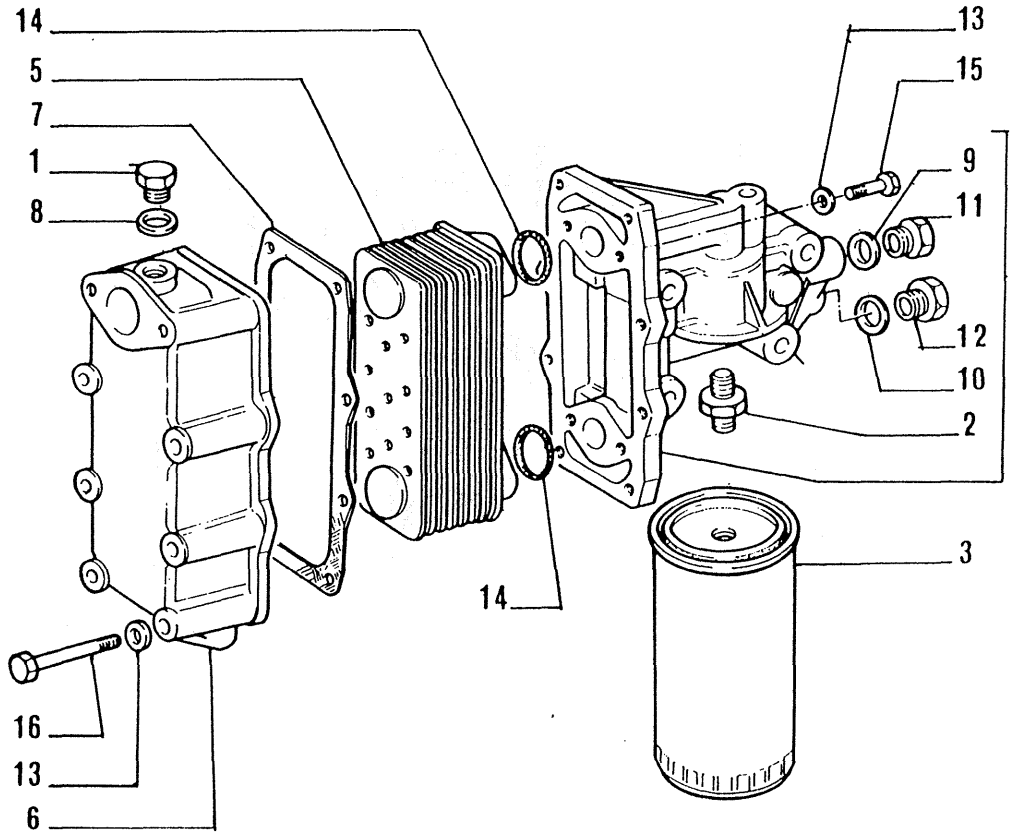

ITEM	PART NUMBER	QTY	TRANS CODE	DESCRIPTION	DESCRIZIONE
1	4595833	1	50T	PLUG	TAPPO
2	4741301	1	20R	FITTING	RACCORDO
3	4787733	1	20E	FILTERING ELEMENT	ELEMENTO FILTRANTE
4	4799337	1	300S	SUPPORT - ASSEMBLY	SUPPORTO - COMPLETO
5	4754590	1	25S	HEAT EXCHANGER	SCAMBIATORE DI CALORE
6	4754653	1	35S	CASE	SCATOLA
7	4795338	1	120G	GASKET	GUARNIZIONE PIANA
8	10257460	1	120G	GASKET 20,2x26	GUARNIZIONE PIANA 20,2x26
9	10263460	3	120G	GASKET 22,2x28	GUARNIZIONE PIANA 22,2x28
10	10265160	1	120G	GASKET 35,3x41	GUARNIZIONE PIANA 35,3x41
11	10275040	3	50T	PLUG 22x1,5x10	TAPPO 22x1,5x10
12	10276740	1	50T	PLUG 35x1,5x13	TAPPO 35x1,5x13
13	11193979	10	132R	LOCKWASHER 8,4x22	ROSETTA DI SICUREZZA 8,4x22
14	14459081	2	158G	O-RING 2,62x44,12	GUARNIZIONE O-R 2,62x44,12
15	16043921	4	40V	SCREW 8x1,25x35	VITE 8x1,25x35
16	16045421	6	40V	SCREW 8x1,25x110	VITE 8x1,25x110

ENGINI
MOTORE USAGE: Units with 8365 Engine

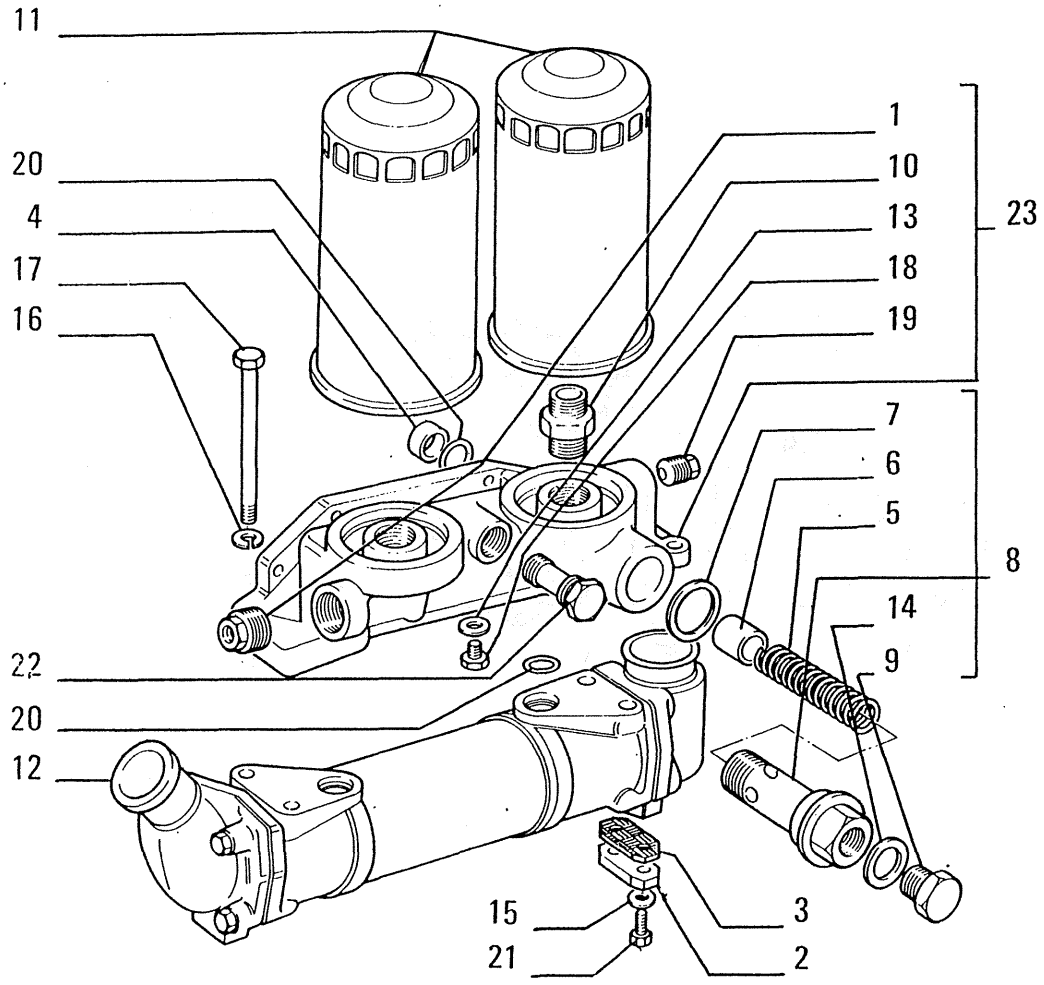

05426 USAGE: Units with 8205 Engine

ITEM	PART NUMBER	QTY	TRANS CODE	DESCRIPTION	DESCRIZIONE
1	573251	1	50T	PLUG	TAPPO
2	593763	1	265C	COVER	COPERCHIO
3	4513714	1	123G	SEAL ASSY	GUARNIZIONE TENUTA FRONTALE
4	4538571	2	90G	DOWEL	GRANO
5	4636397	1	100M	SPRING	MOLLA
6	4636399	1	10V	VALVE	VALVOLA
7	4636458	1	133R	SEAL	ROSETTA DI TENUTA
8	4649718	1	10V	VALVE - ASSEMBLY	VALVOLA - COMPLETO
9	4649719	1	50T	PLUG	TAPPO
10	4657869	2	20R	FITTING	RACCORDO
11	4667755	2	84C	FILTERING ELEMENT	CARTUCCIA FILTRANTE
12	4725315	1	25S	HEAT EXCHANGER - ASSEMBLY SEE SGR. A4.04	SCAMBIATORE DI CALORE - COMPLETO VEDERE SGR. A4.04
13	10260160	1	133R	SEAL 10,2x14 C1472	ROSETTA DI TENUTA 10,2x14 C1472
14	10263460	1	133R	SEAL 22,2x28	ROSETTA DI TENUTA 22,2x28
15	11198071	2	131R	WASHER 8,2x15	ROSETTA 8,2x15
16	11198371	4	131R	WASHER 10,5x20	ROSETTA 10,5x20
17	11307021	4	40V	SCREW 10x1,25x40	VITE 10x1,25x40
18	11903171	1	50T	PLUG 10x1,25x7 C1472	TAPPO 10x1,25x7 C1472
19	14323811	1	50T	PLUG 20x1,5x21	TAPPO 20x1,5x21
20	14458081	4	158G	O-RING 2,62x28,24	GUARNIZIONE O-R 2,62x28,24
21	16043621	2	40V	SCREW 8x1,25x25	VITE 8x1,25x25
22	76001167	1	50T	PLUG	TAPPO
23	4984991	1	300C	BODY D1472	CORPO D1472
	79011059	1	300C	BODY - ASSEMBLY C1472	CORPO - COMPLETO C1472

C 1472 → Mot.n. 1141
D 1472 Mot.n. 1142 →

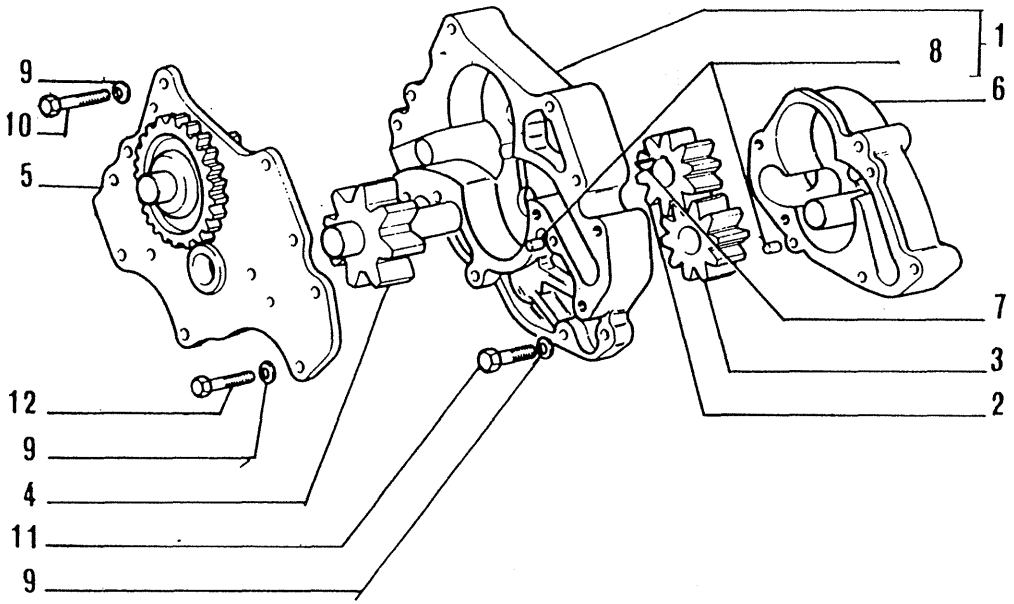

ITEM	PART NUMBER	QTY	TRANS CODE	DESCRIPTION	DESCRIZIONE
1	4720887	1	300C	BODY - ASSEMBLY	CORPO - COMPLETO
2	4721106	1	50I	GEAR	INGRANAGGIO
3	4721107	1	50I	GEAR	INGRANAGGIO
4	4721108	1	16A	SHAFT	ALBERO
5	4721109	1	265C	COVER	COPERCHIO
6	4721110	1	265C	COVER	COPERCHIO
7	10205920	1	60L	KEY 9x5	LINGUETTA 9x5
8	10839510	4	90G	DOWEL 6x9	GRANO 6x9
9	11198071	10	132R	LOCKWASHER 8,2x15	ROSETTA DI SICUREZZA 8,2x15
10	16043421	5	40V	SCREW 8x1,25x20	VITE 8x1,25x20
11	16043821	2	40V	SCREW 8x1,25x30	VITE 8x1,25x30
12	16044221	3	40V	SCREW 8x1,25x50	VITE 8x1,25x50

ENGINE
MOTORE

USAGE: Units with 8365 Engine

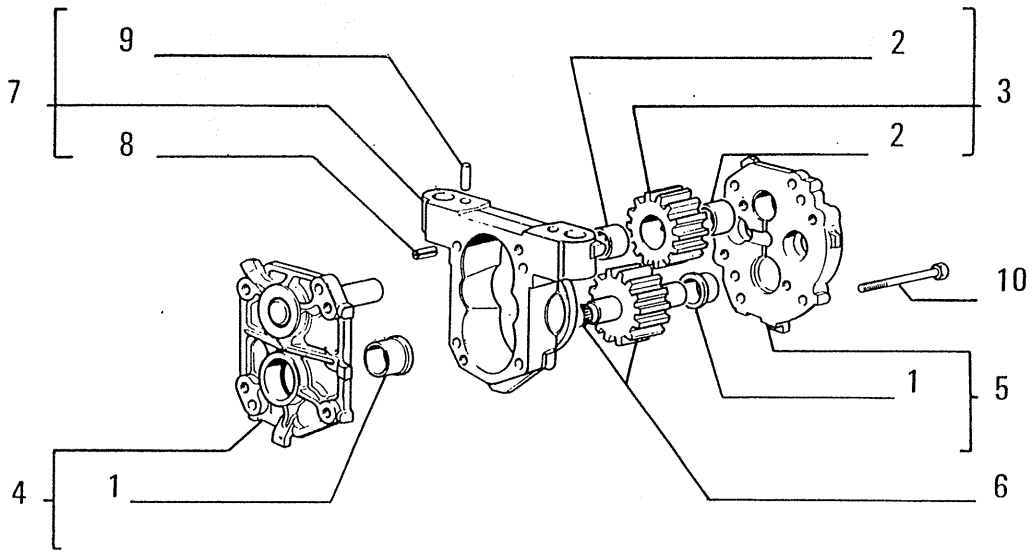

ITEM	PART NUMBER	QTY	TRANS CODE	DESCRIPTION	DESCRIZIONE
1	4555591	2	95B	BUSHING	BOCCOLA
2	4555595	2	95B	BUSHING	BOCCOLA
3	4667852	1	50I	GEAR - ASSEMBLY	INGRANAGGIO - COMPLETO
4	4974297	1	265C	COVER - ASSEMBLY	COPERCHIO - COMPLETO
5	4974299	1	265C	COVER - ASSEMBLY	COPERCHIO - COMPLETO
6	4981273	1	50I	GEAR	INGRANAGGIO
7	4981274	1	300C	BODY - ASSEMBLY	CORPO - COMPLETO
8	10837610	4	200S	PIN 8x22	SPINA 8x22
9	10839610	2	90G	DOWEL 8x12	GRANO 8x12
10	14239230	4	40V	SCREW 8x1,25x65	VITE 8x1,25x65

05425 USAGE: Units with 8205 Engine

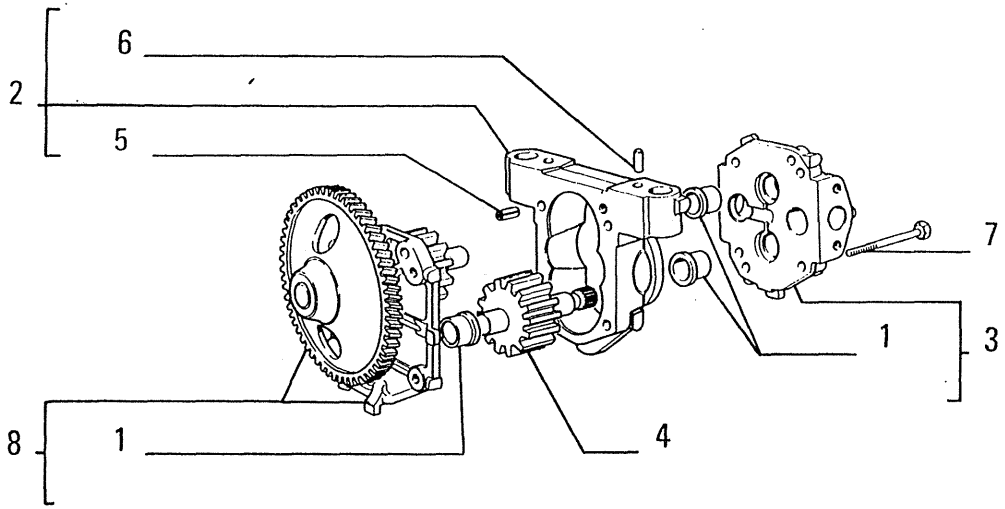

ITEM	PART NUMBER	QTY	TRANS CODE	DESCRIPTION	DESCRIZIONE
1	4555591	3	95B	BUSHING	BOCCOLA
2	4667853	1	300C	BODY - ASSEMBLY	CORPO - COMPLETO
3	4974277	1	265C	COVER - ASSEMBLY	COPERCHIO - COMPLETO
4	4981273	1	50I	GEAR	INGRANAGGIO
5	10837610	4	200S	PIN 8x22	SPINA 8x22
6	10839610	2	90G	DOWEL 8x12	GRANO 8x12
7	14239230	4	40V	SCREW 8x1,25x65	VITE 8x1,25x65
8	79015880	1	50I	GEAR - ASSEMBLY	INGRANAGGIO - COMPLETO

(05424) USAGE: Units with 8205 Engine

USAGE: Units with 8365 Engine

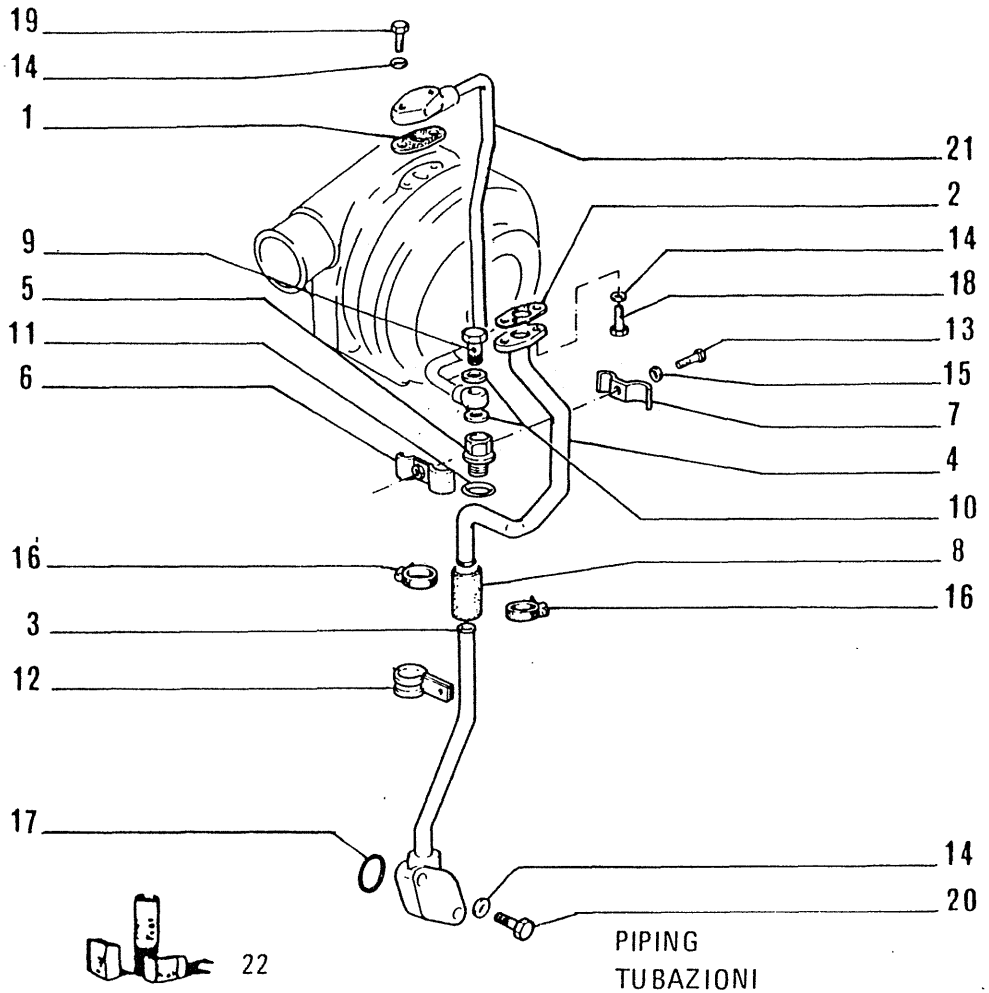

PIPING
TUBAZIONI

ITEM	PART NUMBER	QTY	TRANS CODE	DESCRIPTION	DESCRIZIONE
1	4632113	1	122G	SEAL	GUARNIZIONE
2	4707860	1	122G	SEAL	GUARNIZIONE
3	4727066	1	193T	TUBE - LOWER	TUBO RIGIDO - INFERIORE
4	4752484	1	193T	TUBE - UPPER	TUBO RIGIDO - SUPERIORE
5	4754648	1	20R	FITTING	RACCORDO
6	4754649	1	225S	BRACKET	STAFFA
7	4754651	1	225S	BRACKET	STAFFA
8	4780206	1	30M	SLEEVE	MANICOTTO
9	10184414	1	20R	FITTING 16x1,5x31,0	RACCORDO 16x1,5x31,0
10	10257060	2	120G	GASKET 16,2x22	GUARNIZIONE PIANA 16,2x22
11	10263460	1	158G	O-RING 22,2x28	GUARNIZIONE O-R 22,2x28
12	10450690	2	231S	CLIP 20x9	STAFFETTA 20x9
13	10902324	1	40V	SCREW 6x1x18	VITE 6x1x18
14	11193879	6	132R	LOCKWASHER 8,4x16	ROSETTA DI SICUREZZA 8,4x16
15	11197779	1	132R	LOCKWASHER 6,4x12	ROSETTA DI SICUREZZA 6,4x12
16	12173890	2	180C	COLLAR 24/36x14	COLLARE 24/36x14
17	14458081	1	158G	O-RING 2,62x28,24	GUARNIZIONE O-R 2,62x28,24
18	16043624	2	40V	SCREW 8x1,25x25	VITE 8x1,25x25
19	16043924	2	40V	SCREW 8x1,25x35	VITE 8x1,25x35
20	16044524	2	40V	SCREW 8x1,25x65	VITE 8x1,25x65
21	4806845	1	193T	TUBE	TUBO RIGIDO
22	79086656	K	1K	KIT SEE PAGE 9	KIT VED. PAG.9

USAGE: Units with 8365 Engine

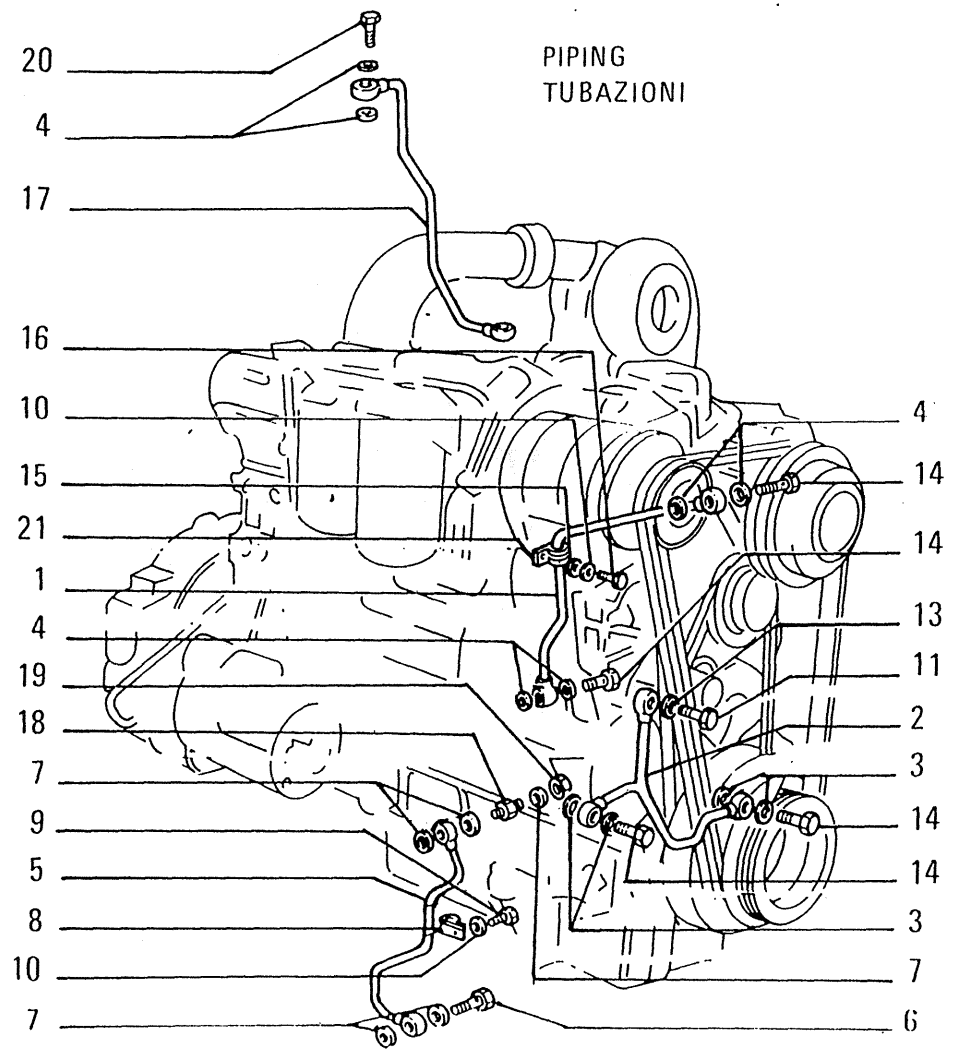

ITEM	PART NUMBER	QTY	TRANS CODE	DESCRIPTION	DESCRIZIONE
1	4700412	1	190T	LINE - FRONT	TUBAZIONE - ANTERIORE
2	4713668	1	193T	TUBE	TUBO RIGIDO
3	10279460	4	120G	GASKET 10,2x16	GUARNIZIONE PIANA 10,2x16
4	10298360	8	123G	SEAL ASSY 10,2x16	GUARNIZIONE TENUTA FRONTALE 10,2x16
5	4815035	1	193T	TUBE	TUBO RIGIDO
6	11903714	1	90B	FILLER PLUG 8x1,25x16	BOCCHETTONE INTRODUZIONE 8x1,25x16
7	10260060	5	123G	SEAL ASSY 8,2x14	GUARNIZIONE TENUTA FRONTALE 8,2x14
8	10449890	1	231S	CLIP 6x9	STAFFETTA 6x9
9	16043024	1	40V	SCREW 8x1,25x12	VITE 8x1,25x12
10	11193879	2	132R	LOCKWASHER 8,4x16	ROSETTA DI SICUREZZA 8,4x16
11	10902624	1	40V	SCREW 6x1x25	VITE 6x1x25
13	11197779	1	132R	LOCKWASHER 6,4x12	ROSETTA DI SICUREZZA 6,4x12
14	11903814	6	90B	FILLER PLUG 10x1,25x19	BOCCHETTONE INTRODUZIONE 10x1,25x19
15	12646701	2	131R	WASHER 8,15x20	ROSETTA 8,15x20
16	16043324	1	40V	SCREW 8x1,25x18	VITE 8x1,25x18
17	4766747	1	193T	TUBE	TUBO RIGIDO
18	11901617	1	90B	FILLER PLUG 8x1,25x8x1,25	BOCCHETTONE INTRODUZIONE 8x1,25x8x1,25
19	11902017	1	50T	PLUG 8x1,25x11	TAPPO 8x1,25x11
21	10449890	1	231S	CLIP 6x9	STAFFETTA 6x9

USAGE: Units with 8365 Engine

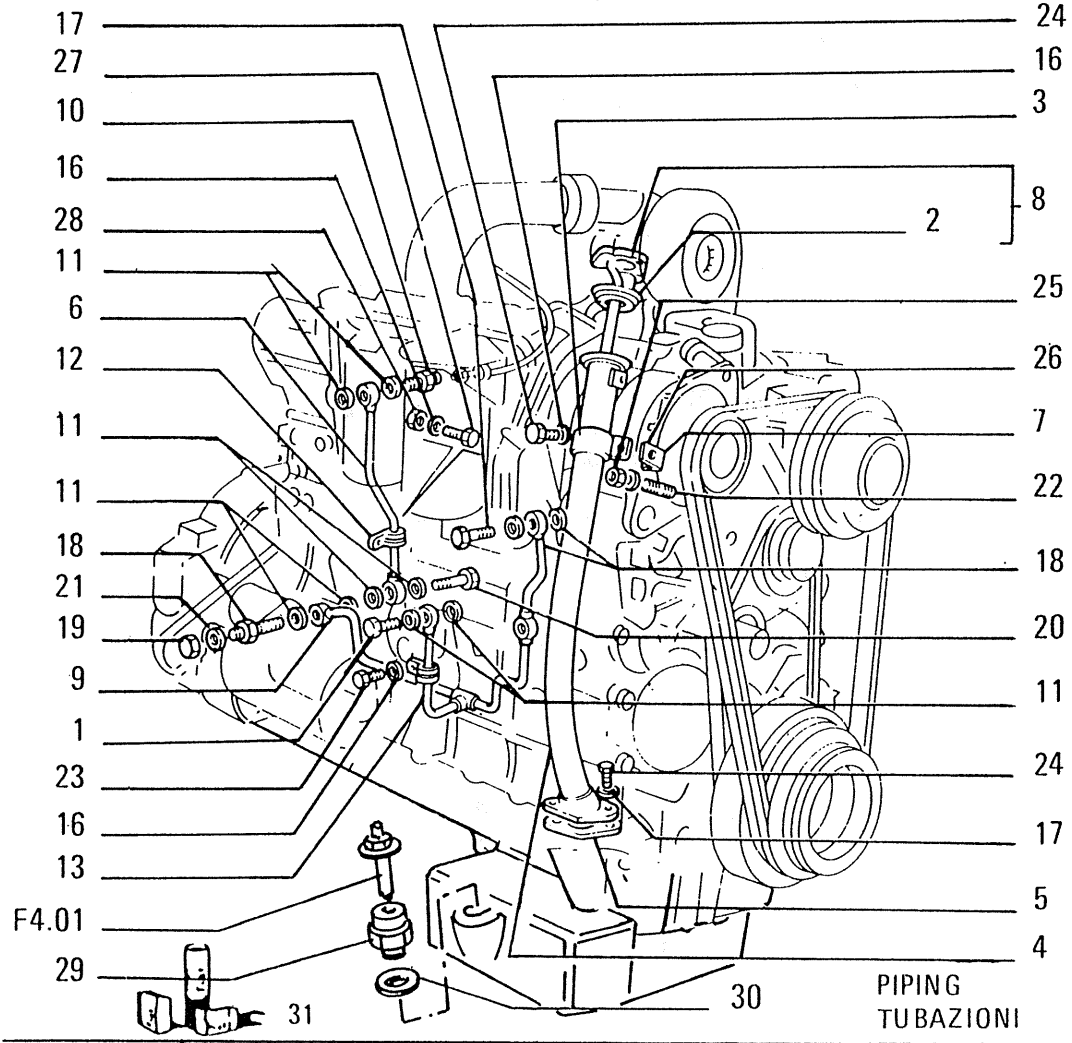

ITEM	PART NUMBER	QTY	TRANS CODE	DESCRIPTION	DESCRIZIONE
28	13606011	1	75D	SPACER 8,5x18	DISTANZIALE 8,5x18
29	79078337	1	75D	SPACER	DISTANZIALE
30	10265060	1	120G	GASKET 32,3x38	GUARNIZIONE PIANA 32,3x38
31	79037448	K	1K	KIT SEE PAGE 9	KIT VED. PAG.9

USAGE: Units with 8365 Engine

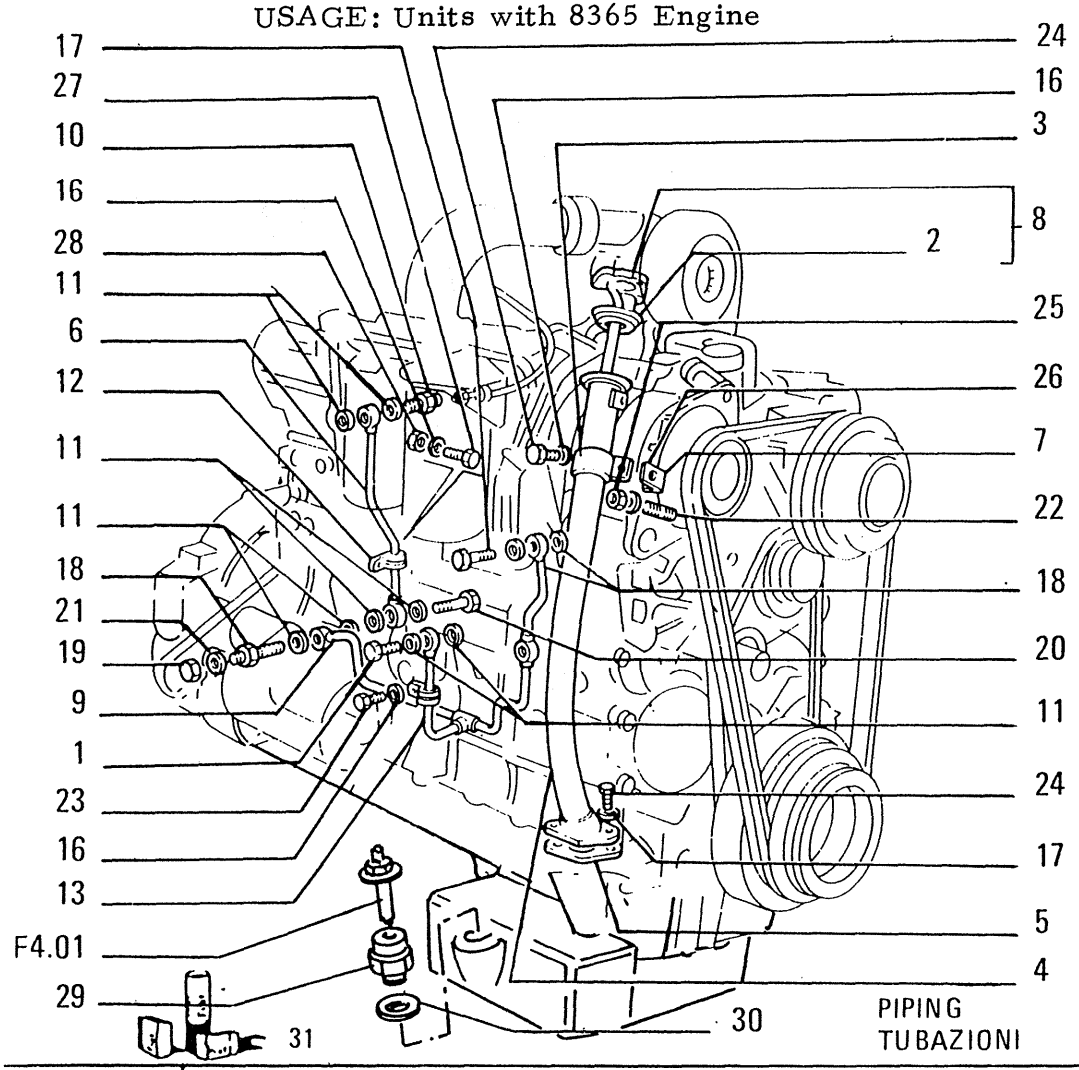

ITEM	PART NUMBER	QTY	TRANS CODE	DESCRIPTION	DESCRIZIONE
1	705736	1	20R	FITTING	RACCORDO
2	4161222	1	122G	SEAL	GUARNIZIONE
3	4641201	1	180C	COLLAR	COLLARE
4	4806851	1	193T	TUBE	TUBO RIGIDO
5	4723428	1	122G	SEAL	GUARNIZIONE
6	4724638	1	193T	TUBE	TUBO RIGIDO
7	4806853	1	225S	BRACKET	STAFFA
8	4822309	1	91A	DIPSTICK - ASSEMBLY	ASTA LIVELLO - COMPLETO
9	4817433	1	193T	TUBE	TUBO RIGIDO
10	8820450	1	20R	FITTING	RACCORDO
11	10298360	9	122G	SEAL 10,2x16	GUARNIZIONE 10,2x16
12	10449890	1	231S	CLIP	STAFFETTA
13	10450090	1	231S	CLIP 8x9	STAFFETTA 8x9
14	10181714	2	20R	FITTING 12x1,5x11	RACCORDO 12x1,5x11
15	10298460	4	122G	SEAL 12,2x18	GUARNIZIONE 12,2x18
16	11193879	3	132R	LOCKWASHER 8,4x16	ROSETTA DI SICUREZZA 8,4x16
17	11198079	2	132R	LOCKWASHER 8,2x15	ROSETTA DI SICUREZZA 8,2x15
18	11901711	1	20R	FITTING 10x1,25x10x1,22	RACCORDO 10x1,25x10x1,22
19	11903111	1	50T	PLUG 10x1,25x7	TAPPO 10x1,25x7
20	11903814	2	20R	FITTING 10x1,25x19	RACCORDO 10x1,25x19
21	12638660	1	131R	WASHER 10,2x18	ROSETTA 10,2x18
22	13543324	1	210P	STUD 8x1,25x36	PRIGIONIERO 8x1,25x36
23	16043224	1	40V	SCREW 8x1,25x16	VITE 8x1,25x16
24	16043824	3	40V	SCREW 8x1,25x30	VITE 8x1,25x30
25	16100811	2	10D	NUT 8x1,25x6,5	DADO 8x1,25x6,5
26	12647001	1	131R	WASHER 8,15x25	ROSETTA 8,15x25
27	16043924	1	40V	SCREW 8x1,25x35	VITE 8x1,25x35

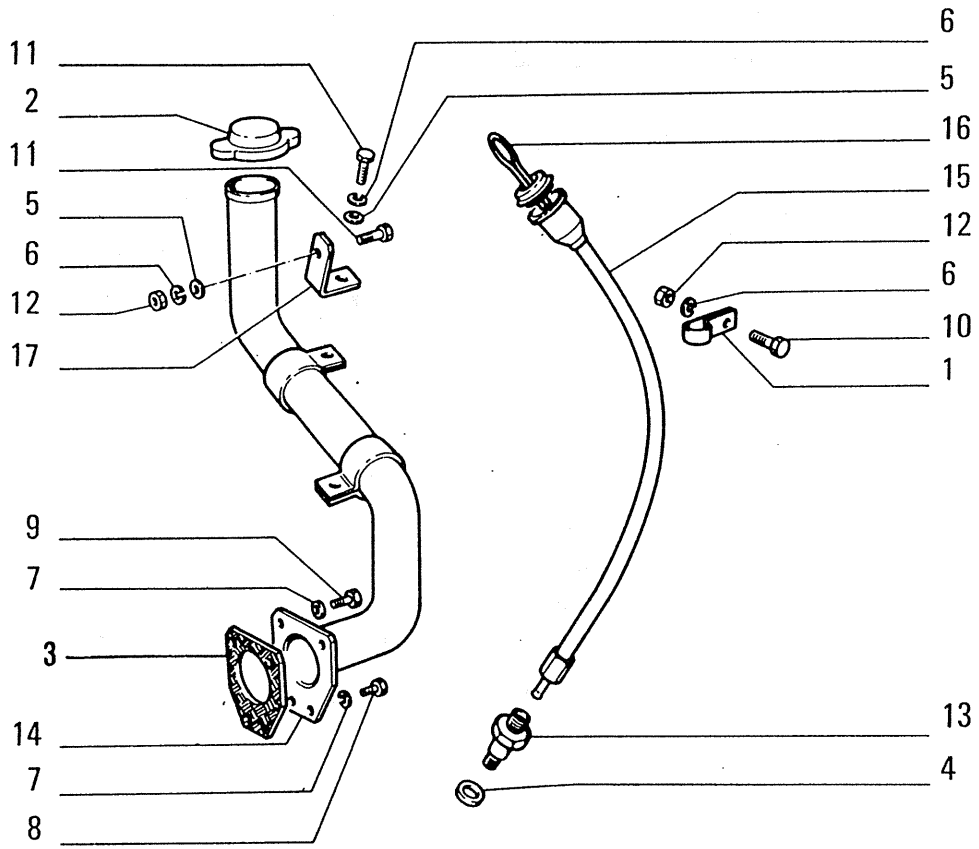

ITEM	PART NUMBER	QTY	TRANS CODE	DESCRIPTION	DESCRIZIONE
1	541674	1	231S	CLIP	STAFFETTA
2	4232606	1	50T	PLUG	TAPPO
3	4511313	1	123G	SEAL ASSY	GUARNIZIONE TENUTA FRONTALE
4	10282460	1	133R	SEAL 14,2x20	ROSETTA DI TENUTA 14,2x20
5	10519601	2	131R	WASHER 8,15x17	ROSETTA 8,15x17
6	10571771	3	133R	SEAL 8,1x2	ROSETTA DI TENUTA 8,1x2
7	11198371	4	131R	WASHER 10,5x20	ROSETTA 10,5x20
8	15970521	3	40V	SCREW 10x1,25x20	VITE 10x1,25x20
9	15970921	1	40V	SCREW 10x1,25x35	VITE 10x1,25x35
10	16043331	1	40V	SCREW 8x1,25x18	VITE 8x1,25x18
11	16043531	2	40V	SCREW 8x1,25x22	VITE 8x1,25x22
12	16100821	2	10D	NUT 8x1,25x6,5	DADO 8x1,25x6,5
13	79045869	1	90B	FILLER PLUG	BOCCHETTONE INTRODUZIONE
14	79042894	1	90B	FILLER PLUG	BOCCHETTONE INTRODUZIONE
15	79042898	1	193T	TUBE - WRONG	TUBO RIGIDO - ERRATA
	79042926	1	193T	TUBE - CORRECT	TUBO RIGIDO - CORRIGE
16	79042930	1	53T	DIPSTICK W/CAP	TAPPO DI INTRODUZIONE OLIO CON ASTA LIVELLO
17	79042903	1	231S	CLIP	STAFFETTA

05423 USAGE: Units with 8205 Engine

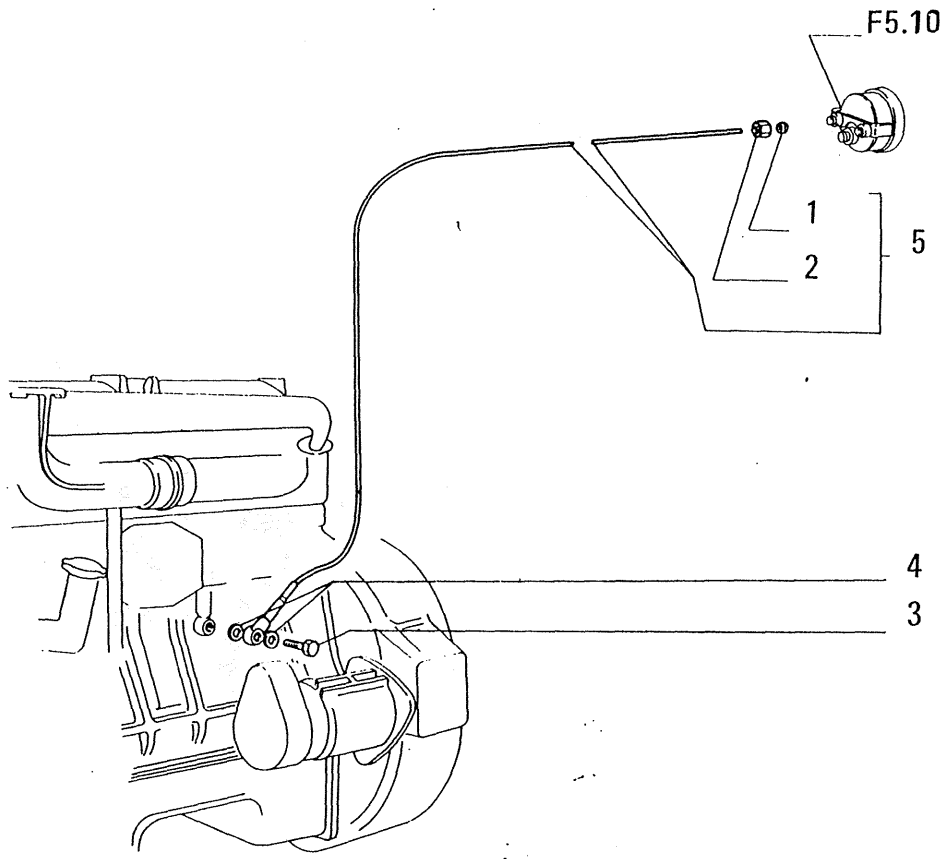

ITEM	PART NUMBER	QTY	TRANS CODE	DESCRIPTION	DESCRIZIONE
1	10165240	1	58A	BALL SLEEVE 4,6x5	ANELLO A DOPPIO CONO 4,6x5 C1454
2	10165911	1	10D	NUT 8x0,75x10,5	DADO 8x0,75x10,5 C1454
3	10184317	1	90B	FILLER PLUG 14x1,5x27	BOCCHETTONE INTRODUZIONE 14x1,5x27 C1454
4	10282460	2	133R	SEAL 14,2x20	ROSETTA DI TENUTA 14,2x20 C1454
5	79011229	1	193T	TUBE - ASSEMBLY	TUBO RIGIDO - COMPLETO C1454

05051 C 1454 → tel.n. 051636 USAGE: Units with 8205 Engine

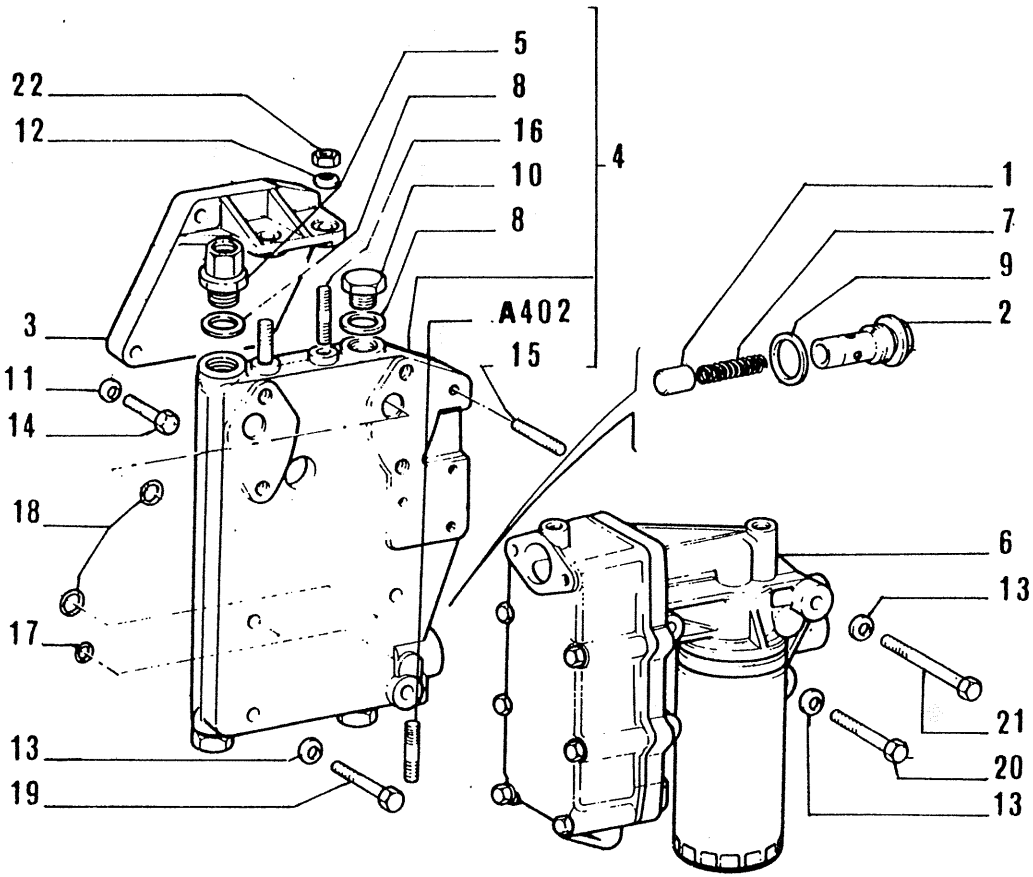

OIL FILTER AND HEAT EXCHANGER
FILTRO OLIO E SCAMBIATORE DI CALORE

USAGE: Units with 8365 Engine

ITEM	PART NUMBER	QTY	TRANS CODE	DESCRIPTION	DESCRIZIONE
1	702537	1	10V	VALVE	VALVOLA
2	4703645	1	300C	BODY	CORPO
3	4720881	1	80M	BRACKET	MENSOLA
4	4726790	1	75D	SPACER - ASSEMBLY	DISTANZIALE - COMPLETO
5	4754648	1	20R	FITTING	RACCORDO
6	4799278	1	67F	OIL FILTER - ASSEMBLY SEE SGR. A3.03/ 1	FILTRO OLIO - COMPLETO VEDERE SGR. A3.03/ 1
7	8815069	1	100M	SPRING	MOLLA
8	10263460	4	120G	GASKET 22,2x28	GUARNIZIONE PIANA 22,2x28
9	10265160	1	120G	GASKET 35,3x41	GUARNIZIONE PIANA 35,3x41
10	10275040	3	50T	PLUG 22x1,5x10	TAPPO 22x1,5x10
11	11198379	3	132R	LOCKWASHER 10,5x20	ROSETTA DI SICUREZZA 10,5x20
12	11198679	2	132R	LOCKWASHER 13x24	ROSETTA DI SICUREZZA 13x24
13	11198779	8	132R	LOCKWASHER 13x30	ROSETTA DI SICUREZZA 13x30
14	11307021	3	40V	SCREW 10x1,25x40	VITE 10x1,25x40
15	13453521	3	210P	STUD 10x1,25x50	PRIGIONIERO 10x1,25x50
16	13532521	2	210P	STUD 12x1,25x54	PRIGIONIERO 12x1,25x54
17	14457681	2	158G	O-RING 2,62x21,89	GUARNIZIONE O-R 2,62x21,89
18	14458081	4	158G	O-RING 2,62x28,24	GUARNIZIONE O-R 2,62x28,24
19	15541121	4	40V	SCREW 12x1,25x65	VITE 12x1,25x65
20	15541321	1	40V	SCREW 12x1,25x75	VITE 12x1,25x75
21	15541821	3	40V	SCREW 12x1,25x120	VITE 12x1,25x120
22	16101511	2	10D	NUT 12x1,25x10	DADO 12x1,25x10

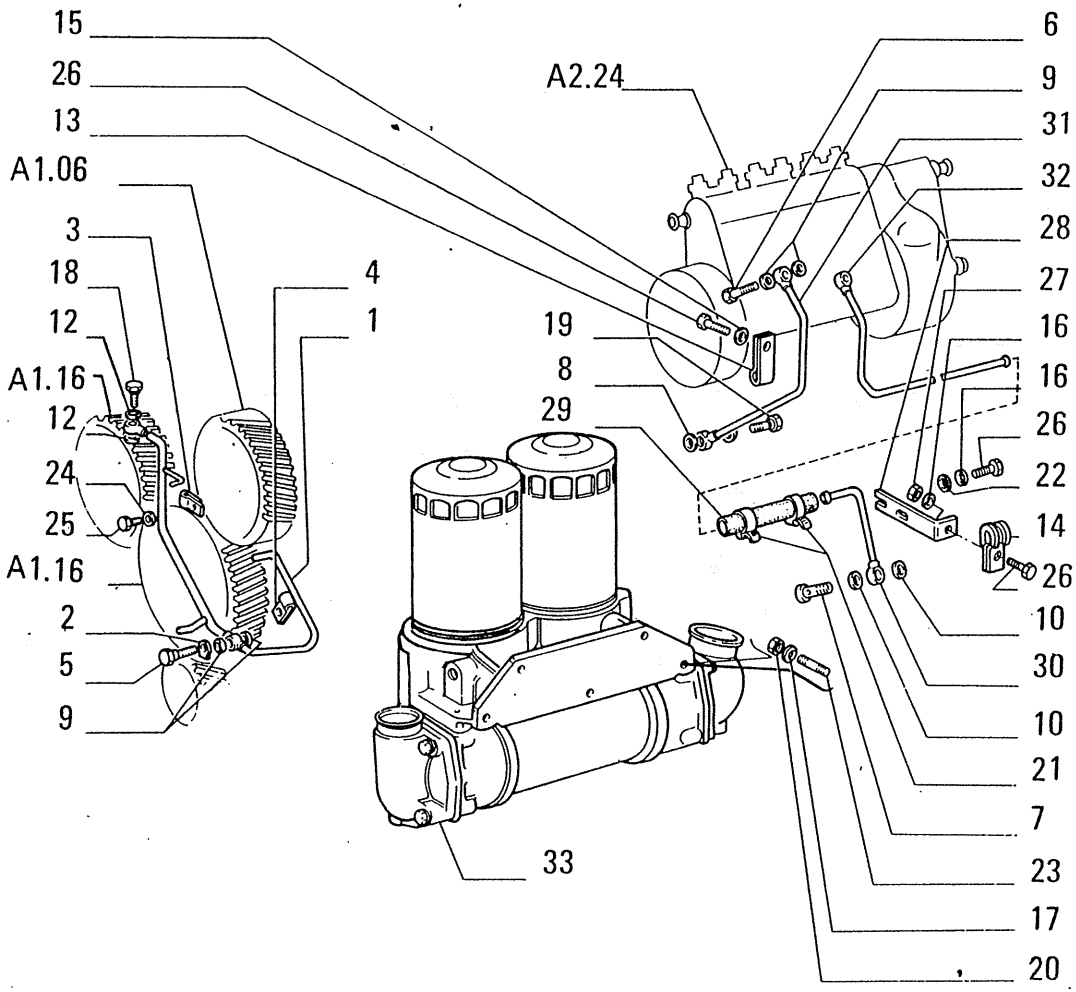

FIATALLIS FD14 **A3.01 TAV. 2 PAG.2**

ITEM	PART NUMBER	QTY	TRANS CODE	DESCRIPTION	DESCRIZIONE
27	16100811	1	10D	NUT 8x1,25x6,5	DADO 8x1,25x6,5
28	61589024	1	231S	CLIP	STAFFETTA
29	61589034	1	192T	HOSE ASSY	TUBO FLESS.C/RACCORDI
30	61694017	1	193T	TUBE	TUBO RIGIDO
31	61694052	1	193T	TUBE	TUBO RIGIDO
32	61694054	1	193T	TUBE	TUBO RIGIDO
33	61694059	1	68F	OIL FILTER AND HEAT EXCHANGERS - ASSEMBLY SEE SGR. A3.03 C1472	FILTRI OLIO E SCAMBIATORI CALORE - COMPLETO VEDERE SGR. A3.03 C1472
	61694122	1	68F	OIL FILTER AND HEAT EXCHANGERS - ASSEMBLY SEE SGR. A3.03 D1472	FILTRI OLIO E SCAMBIATORI CALORE - COMPLETO VEDERE SGR. A3.03 D1472

C 1472 → Mot.n. 1141
D 1472 Mot.n. 1142 →

05050 USAGE: Units with 8205 Engine

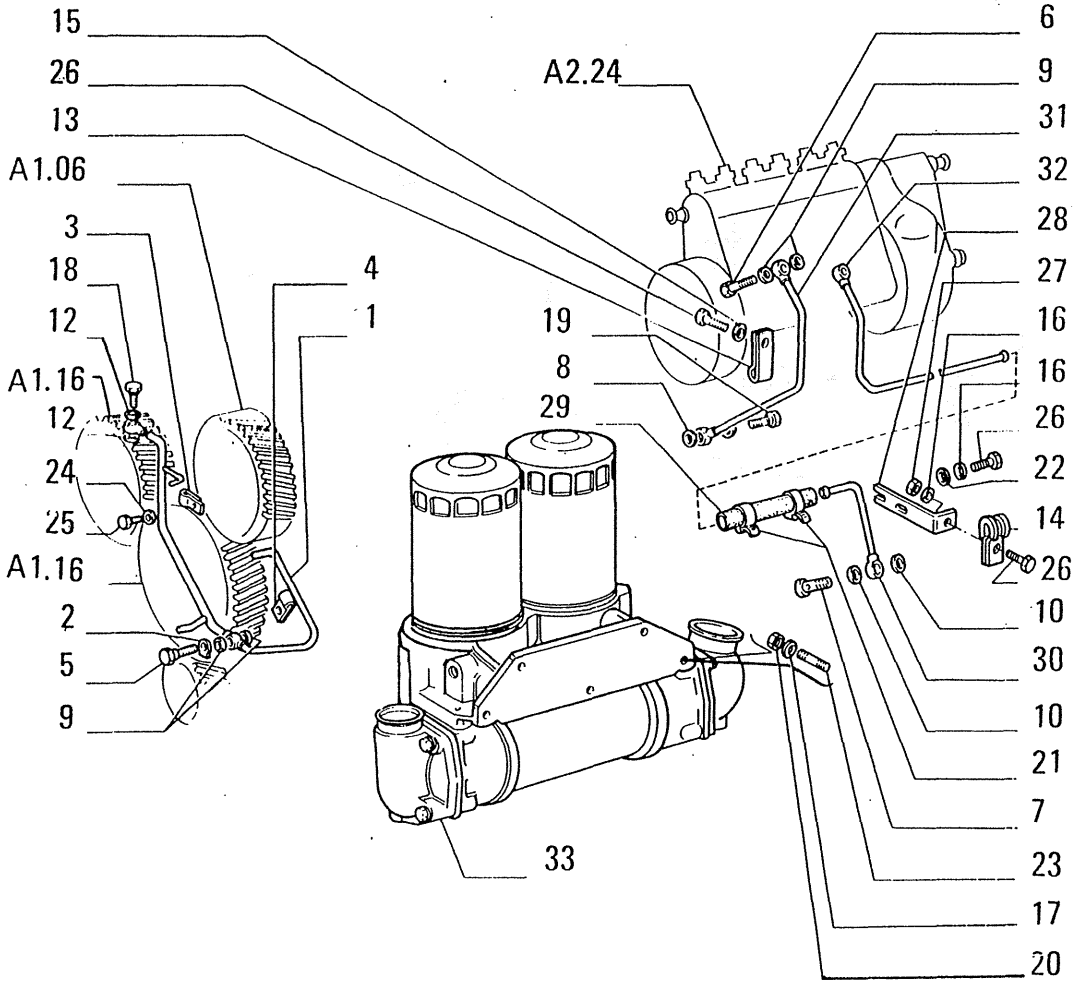

ITEM	PART NUMBER	QTY	TRANS CODE	DESCRIPTION	DESCRIZIONE
1	591070	1	193T	TUBE	TUBO RIGIDO
2	852409	1	131R	WASHER	ROSETTA
3	852410	1	231S	CLIP - RIGHT	STAFFETTA - DESTRO
4	4027910	1	231S	CLIP - LEFT	STAFFETTA - SINISTRO
5	4503811	1	90B	FILLER PLUG	BOCCHETTONE INTRODUZIONE
6	4568946	1	90B	FILLER PLUG	BOCCHETTONE INTRODUZIONE
7	4697153	1	90B	FILLER PLUG	BOCCHETTONE INTRODUZIONE
8	10260160	2	133R	SEAL 10,2x14	ROSETTA DI TENUTA 10,2x14
9	10279460	4	133R	SEAL 10,2x16	ROSETTA DI TENUTA 10,2x16
10	10280060	2	133R	SEAL 14,2x20	ROSETTA DI TENUTA 14,2x20
12	10284260	2	133R	SEAL 8,2x12	ROSETTA DI TENUTA 8,2x12
13	10449890	1	180C	COLLAR 6x9	COLLARE 6x9
14	10450190	1	180C	COLLAR 66x9	COLLARE 66x9
15	11194071	1	131R	WASHER 8,4x16	ROSETTA 8,4x16
16	11194079	3	131R	WASHER 8,4x16	ROSETTA 8,4x16
17	11198371	1	131R	WASHER 10,5x20	ROSETTA 10,5x20
18	11903711	1	90B	FILLER PLUG 8x1,25x16	BOCCHETTONE INTRODUZIONE 8x1,25x16
19	11903811	1	90B	FILLER PLUG 10x1,25x19	BOCCHETTONE INTRODUZIONE 10x1,25x19
20	12164721	5	10D	NUT 10x1,25x8	DADO 10x1,25x8
21	12179590	2	180C	COLLAR 14/24x8	COLLARE 14/24x8
22	12646701	2	131R	WASHER 8,15x20	ROSETTA 8,15x20
23	13449730	5	40V	SCREW 10x1,25x45	VITE 10x1,25x45
24	13550301	1	131R	WASHER 8,15x18	ROSETTA 8,15x18
25	16042921	1	40V	SCREW 8x1,25x10	VITE 8x1,25x10
26	16043221	4	40V	SCREW 8x1,25x16	VITE 8x1,25x16

(05050) USAGE: Units with 8205 Engine

OIL PUMP
POMPA OLIO

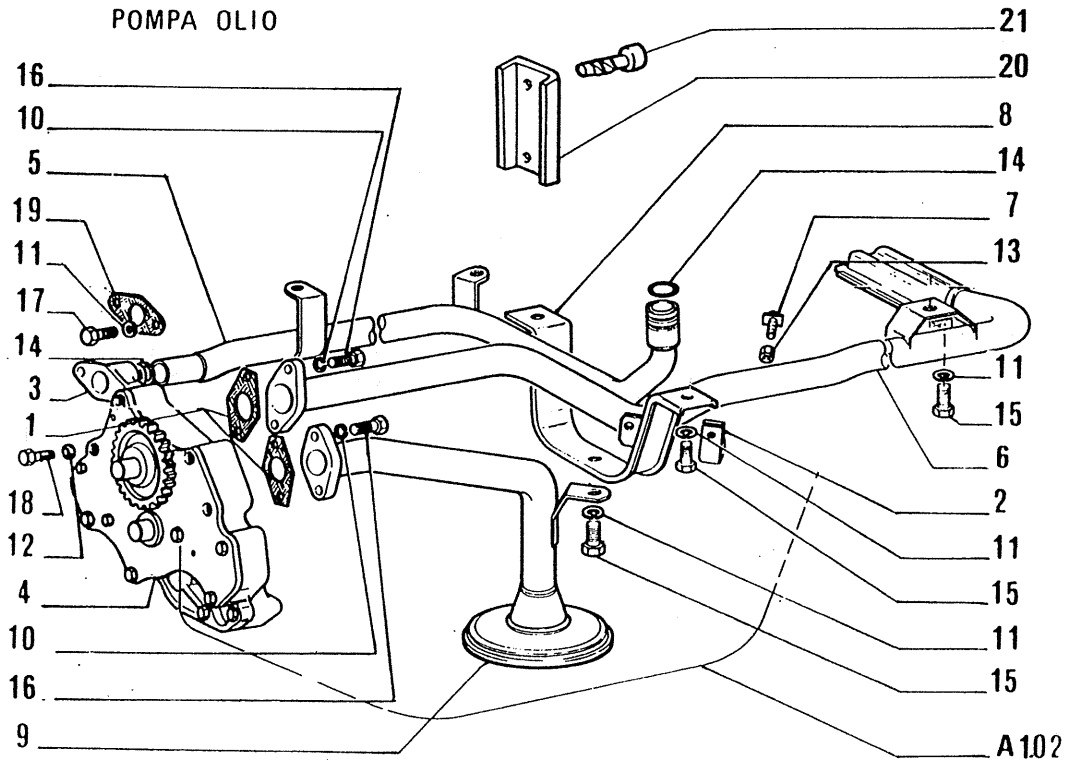

ITEM	PART NUMBER	QTY	TRANS CODE	DESCRIPTION	DESCRIZIONE
1	4527400	2	122G	SEAL	GUARNIZIONE
2	4684881	1	231S	CLIP	STAFFETTA
3	4692711	1	20R	FITTING - FRONT	RACCORDO - ANTERIORE
4	4721103	1	153P	OIL PUMP - ASSEMBLY SEE SGR. A3.02/ 2	POMPA OLIO - COMPLETO VEDERE SGR. A3.02/ 2
5	4724228	1	193T	TUBE	TUBO RIGIDO
6	4724237	1	193T	TUBE	TUBO RIGIDO
7	4736313	1	40V	SCREW	VITE
8	4737249	1	231S	CLIP	STAFFETTA
9	4774760	1	193T	TUBE	TUBO RIGIDO
10	11193870	4	132R	LOCKWASHER 8,4x22	ROSETTA DI SICUREZZA 8,4x22
11	11198070	8	132R	LOCKWASHER 8,2x15	ROSETTA DI SICUREZZA 8,2x15
12	11198071	4	132R	LOCKWASHER 8,2x15	ROSETTA DI SICUREZZA 8,2x15
13	14048227	1	10D	NUT 8x1,25x8,8	DADO 8x1,25x8,8
14	14457581	4	158G	O-RING 2,62x20,29	GUARNIZIONE O-R 2,62x20,29
15	16043324	6	40V	SCREW 8x1,25x18	VITE 8x1,25x18
16	16043624	4	40V	SCREW 8x1,25x25	VITE 8x1,25x25
17	16044024	2	40V	SCREW 8x1,25x40	VITE 8x1,25x40
18	16044221	4	40V	SCREW 8x1,25x50	VITE 8x1,25x50
19	38830379	1	122G	SEAL	GUARNIZIONE
20	4806153	1	20D	DEFLECTOR	DEFLETTORE
21	13683909	2	40V	SCREW	VITE

USAGE: Units with 8365 Engine

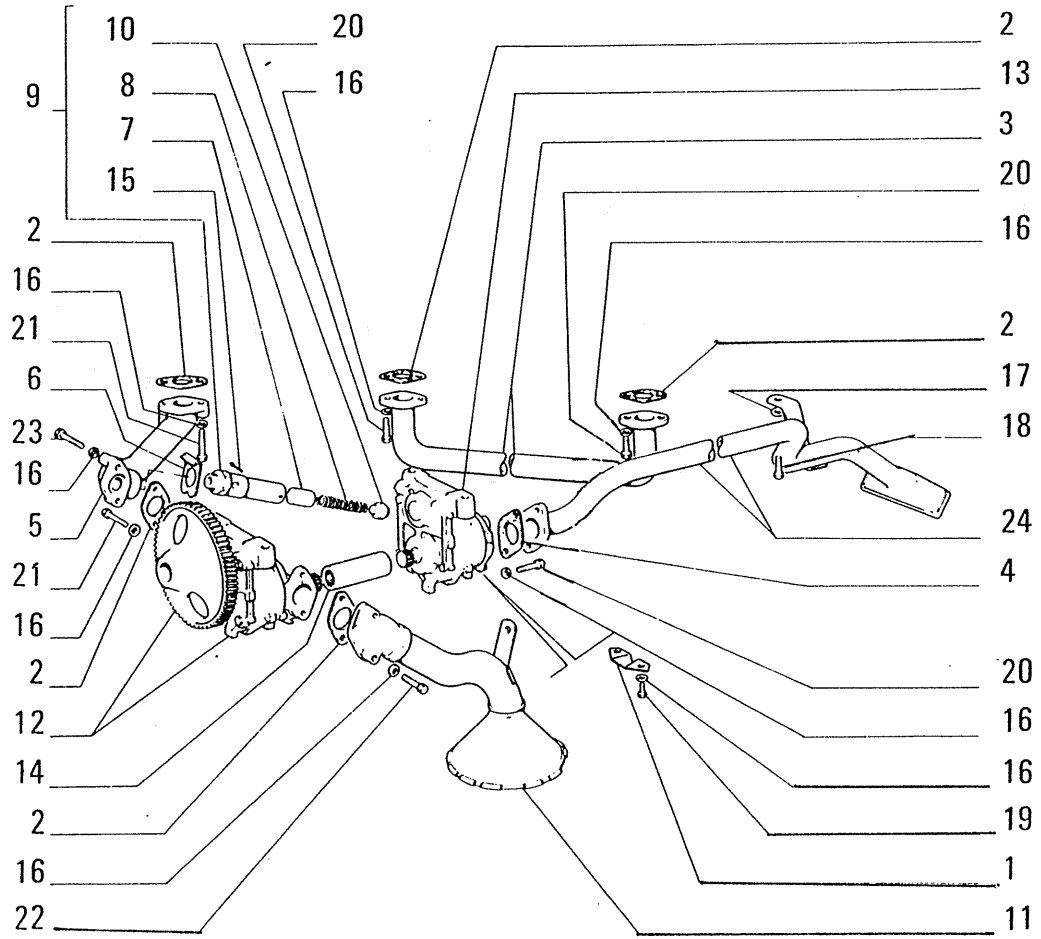

05049 USAGE: Units with 8205 Engine

ITEM	PART NUMBER	QTY	TRANS CODE	DESCRIPTION	DESCRIZIONE
1	593101	1	20D	DEFLECTOR	DEFLETTORE
2	4630672	5	123G	SEAL ASSY	GUARNIZIONE TENUTA FRONTALE
3	4630677	1	193T	TUBE	TUBO RIGIDO
4	4630679	1	123G	SEAL ASSY	GUARNIZIONE TENUTA FRONTALE
5	4642953	1	193T	TUBE	TUBO RIGIDO
6	4643591	1	113P	LOCKPLATE	PIASTRINA DI SICUREZZA
7	4672842	1	10V	VALVE	VALVOLA
8	4677094	1	100M	SPRING	MOLLA
9	4740422	1	10V	VALVE - ASSEMBLY	VALVOLA - COMPLETO
10	4740423	1	50T	PLUG	TAPPO
11	4963762	1	193T	TUBE	TUBO RIGIDO
12	4981270	1	153P	OIL PUMP - ASSEMBLY SEE SGR. A3.02	POMPA OLIO - COMPLETO VEDERE SGR. A3.02
13	4981271	1	153P	OIL PUMP - ASSEMBLY SEE SGR. A3.02/1	POMPA OLIO - COMPLETO VEDERE SGR. A3.02/1
14	4989572	1	30M	SLEEVE	MANICOTTO
15	10734801	1	270C	COTTER PIN 2,7x45,6	COPIGLIA 2,7x45,6
16	11198071	14	131R	WASHER 8,2x15	ROSETTA 8,2x15
17	11198371	1	131R	WASHER 10,5x20	ROSETTA 10,5x20
18	15970521	1	40V	SCREW 10x1,25x20	VITE 10x1,25x20
19	16043421	2	40V	SCREW 8x1,25x20	VITE 8x1,25x20
20	16043621	6	40V	SCREW 8x1,25x25	VITE 8x1,25x25
21	16043921	2	40V	SCREW 8x1,25x35	VITE 8x1,25x35
22	16044121	2	40V	SCREW 8x1,25x45	VITE 8x1,25x45
23	16044521	2	40V	SCREW 8x1,25x65	VITE 8x1,25x65
24	61694035	1	193T	TUBE	TUBO RIGIDO

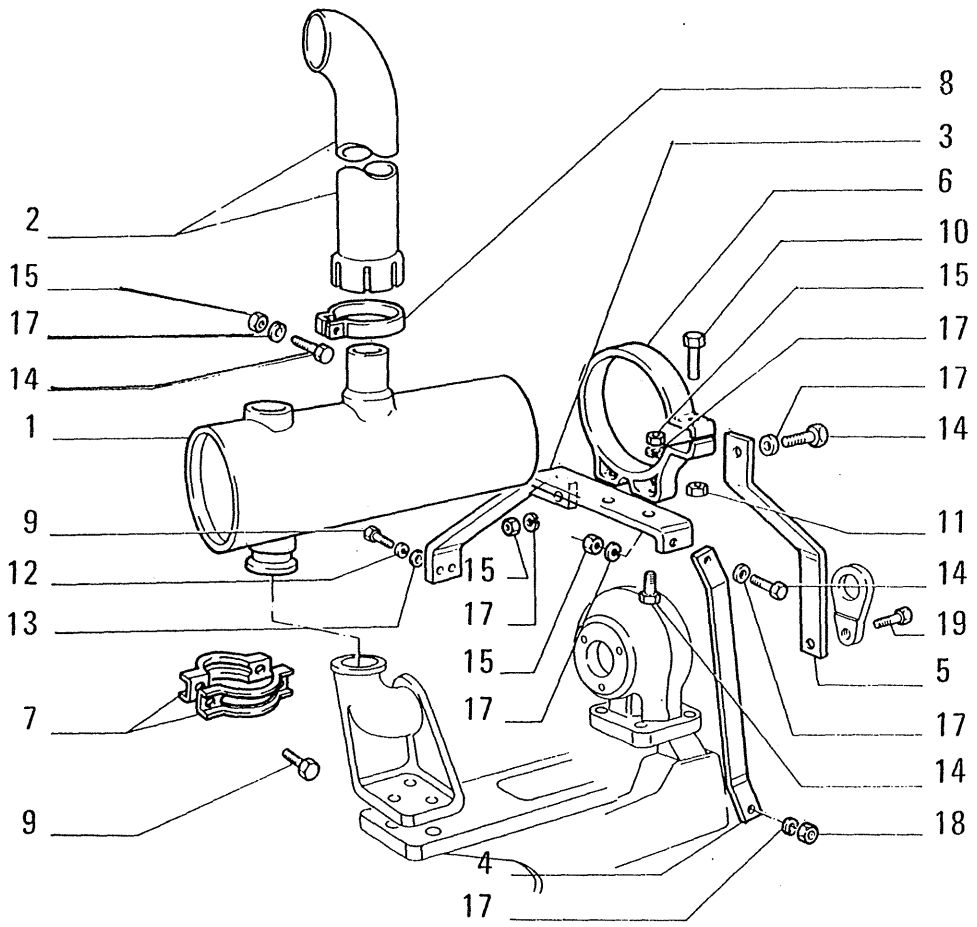

ITEM	PART NUMBER	QTY	TRANS CODE	DESCRIPTION	DESCRIZIONE
1	79068357	1	160S	MUFFLER	SILENZIATORE
2	76008038	1	222P	EXTENSION	PROLUNGA
3	76016654	1	225S	BRACKET	STAFFA
4	79068379	1	225S	BRACKET	STAFFA
5	76016674	1	225S	BRACKET	STAFFA
6	79042204	1	225S	BRACKET	STAFFA
7	5109263	2	180C	COLLAR	COLLARE
8	4722140	1	180C	COLLAR	COLLARE
9	16043531	4	40V	SCREW 8x1,25x22	VITE 8x1,25x22
10	16044031	1	40V	SCREW 8x1,25x40	VITE 8x1,25x40
11	16100821	1	10D	NUT 8x1,25x6,5	DADO 8x1,25x6,5
12	10571779	2	170R	LOCKWASHER 8,1x2	ROSETTA EL. 8,1x2
13	12646720	2	131R	WASHER 8,15x20	ROSETTA 8,15x20
14	11106431	5	40V	SCREW 10x1,5x30	VITE 10x1,5x30
15	11701721	5	10D	NUT 10x1,5x8	DADO 10x1,5x8
17	14496631	8	170R	LOCKWASHER 10,5x21	ROSETTA EL. 10,5x21
18	12164721	1	10D	NUT 10x1,25x8	DADO 10x1,25x8
19	16323531	1	40V	SCREW 10x1,25x30	VITE 10x1,25x30

USAGE: Units with 8365 Engine

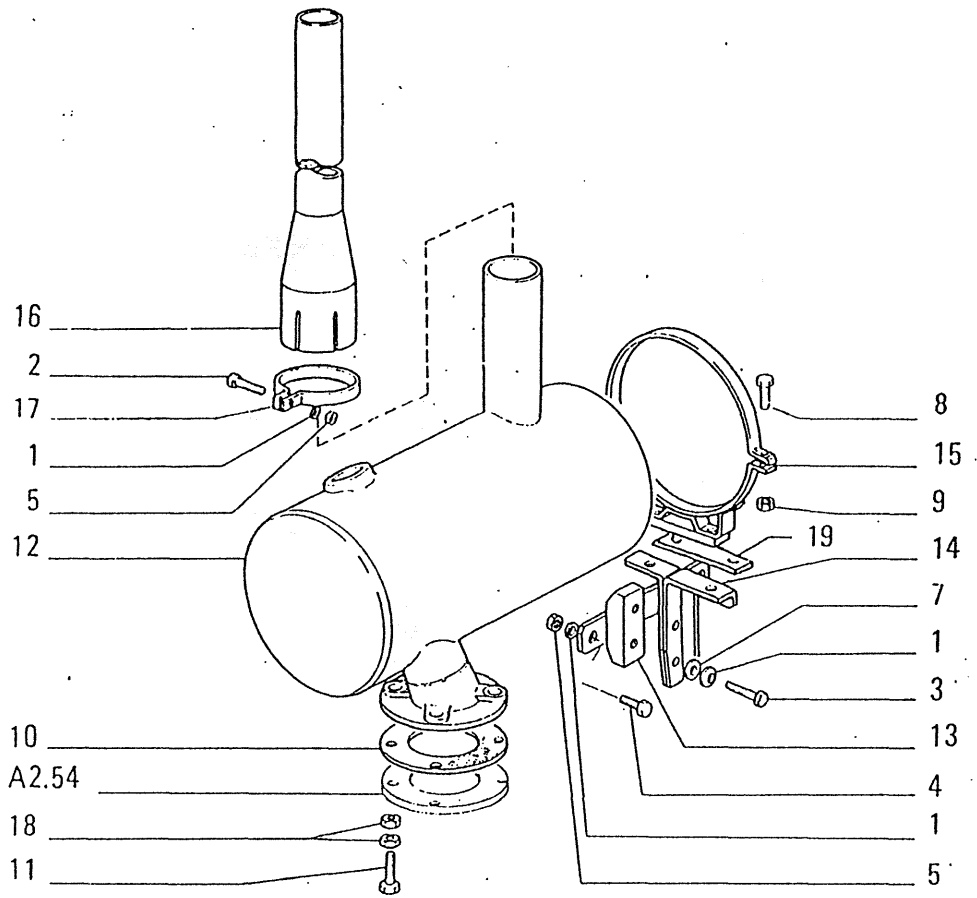

ITEM	PART NO.	QTY.	CODE	DESCRIPTION	DENOMINAZIONE
1	10571871	5	131R	WASHER,10.2X2.2	ROSETTA
2	11106431	1	40V	CAPSCREW	CAPSCREW,10X1.5X30
3	11107231	2	40V	CAPSCREW,M10X1.5X50	VITE
4	11106831	2	40V	CAPSCREW,10X1.5X40	VITE
5	11701721	3	10D	NUT,10X1.5X8	DADO
7	14496621	2	131R	WASHER,10.5X21	ROSETTA
8	16044031	1	40V	CAPSCREW,8X1.25X40	VITE
9	16100821	1	10D	NUT,8X1.25X6.5	DADO
10	79012920	1	123G	GASKET	GUARNIZIONE DI TENUTA
11	79018790	4	40V	CAPSCREW	VITE
12	79044868	1	160S	MUFFLER	SILENZIATORE
			600X	PRIOR TO UNIT #051433	FINO AL TELAIO.....
	76010537	1	160S	MUFFLER	SILENZIATORE
			600Y	UNIT NO.051433 AND UP	DAL TELAIO.....
	a73145235	1	160S	MUFFLER	SILENZIATORE
13	79046497	1	300S	SUPPORT	SUPPORTO
14	79046499	1	225S	STEP	STAFFA
15	79046500	1	225S	STEP	STAFFA
16	76013857	1	222P	EXTENSION,05(*)	PROLUNGA
	79042124	1	222P	EXTENSION,01,03	PROLUNGA
17	79042208	1	120M	CLAMP	MORSETTO COLLARE
			600X	PRIOT TO UNIT #050266	FINO AL TELAIO.....
	04722140	1	120M	CLAMP	MORSETTO COLLARE
			600Y	UNIT NO.050266 AND UP	DAL TELAIO.....
18	16101521	8	10D	NUT,12X1.25X10	DADO
19	79046501	1	198S	SHIM, ADJUSTMENT	SPESSORE DI REGISTRO
	79046502	-	198S	SHIM, ADJUSTMENT	SPESSORE DI REGISTRO

(*)SPECIAL EQUIPMENT
30.0870.02.1

a.UNITS EQUIPPED FOR FORESTRY OPERATION.

USAGE: UNITS WITH 8205 ENGINE.

EXHAUST PIPE

A256

Revised April 1989

USAGE: Units with 8365 Engine

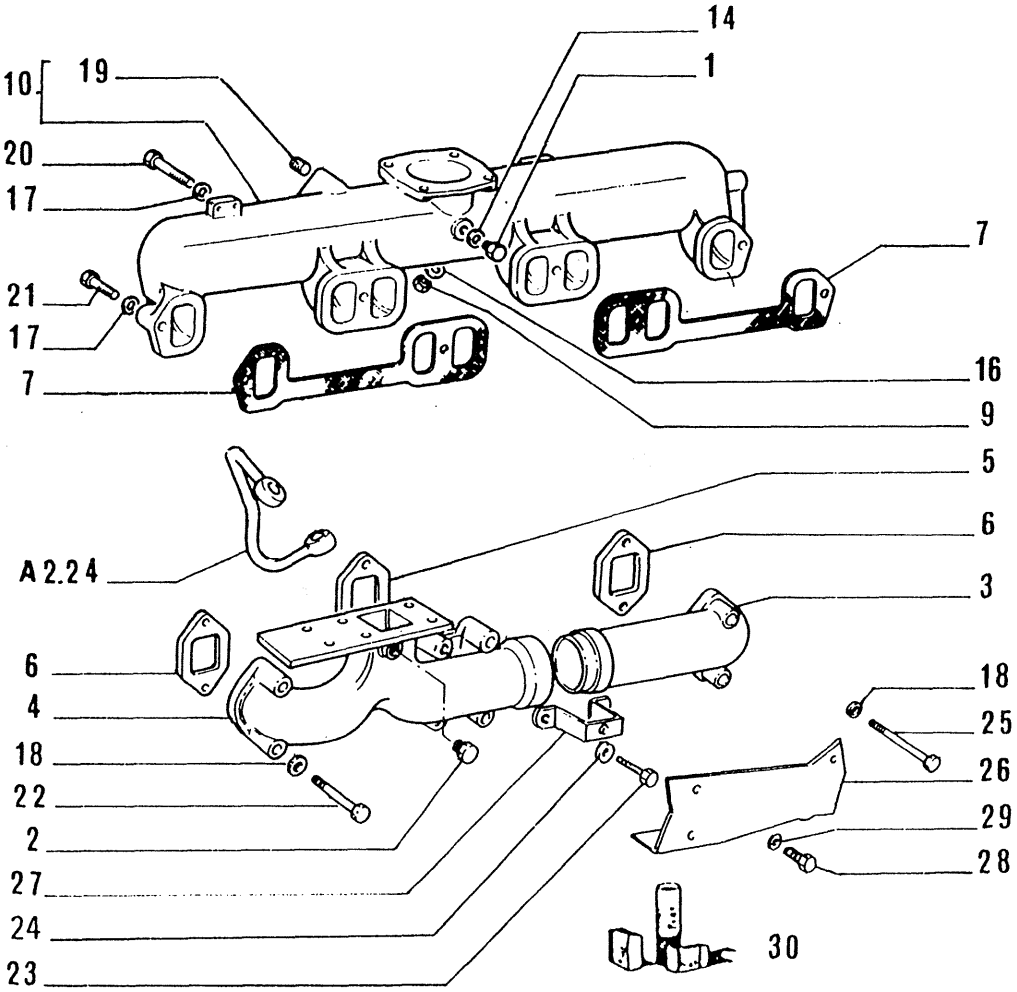

ITEM	PART NUMBER	QTY	TRANS CODE	DESCRIPTION	DESCRIZIONE
30	79086656	K	1K	KIT SEE PAGE 9	KIT VED. PAG.9

USAGE: Units with 8365 Engine

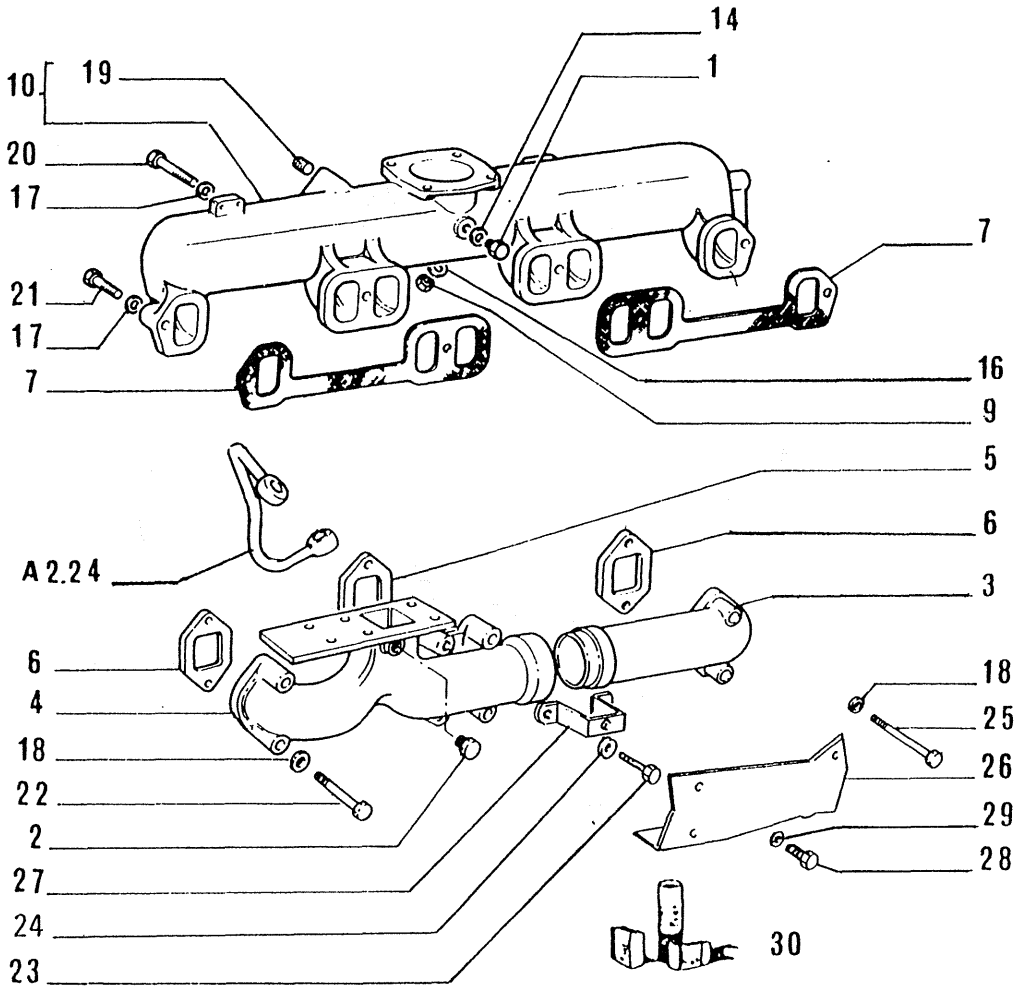

ITEM	PART NUMBER	QTY	TRANS CODE	DESCRIPTION	DESCRIZIONE
1	4577310	1	50T	PLUG	TAPPO
2	4817522	1	50T	PLUG	TAPPO
3	4798423	1	230C	EXHAUST MANIFOLD - REAR	COLLETTORE DI SCARICO - POSTERIORE
4	4799609	1	230C	EXHAUST MANIFOLD - FRONT	COLLETTORE DI SCARICO - ANTERIORE
5	4818721	1	120G	GASKET	GUARNIZIONE PIANA
6	4818722	2	120G	GASKET	GUARNIZIONE PIANA
7	4746085	2	120G	GASKET	GUARNIZIONE PIANA
9	4793790	2	50T	PLUG	TAPPO
10	4803059	1	225C	INTAKE MANIFOLD - ASSEMBLY	COLLETTORE ASPIRAZIONE - COMPLETO
14	10263360	1	120G	GASKET 20,2x26	GUARNIZIONE PIANA 20,2x26
16	10296580	2	120G	GASKET 28,3x36	GUARNIZIONE PIANA 28,3x36
17	10520001	4	131R	WASHER 12,2x22	ROSETTA 12,2x22
18	12638620	1	131R	WASHER 10,2x18	ROSETTA 10,2x18
19	13526170	1	50T	PLUG 10x1,25x20	TAPPO 10x1,25x20
20	15541021	2	40V	SCREW 12x1,25x60	VITE 12x1,25x60
21	15541621	2	40V	SCREW 12x1,25x100	VITE 12x1,25x100
22	4742406	3	40V	SCREW	VITE
23	4742406	4	40V	SCREW	VITE
24	4742408	4	75D	SPACER	DISTANZIALE
25	4737709	1	40V	SCREW	VITE
26	4729704	1	70R	GUARD	RIPARO
27	4808546	2	225S	BRACKET	STAFFA
28	15970724	2	40V	SCREW 10x1,25x25	VITE 10x1,25x25
29	11190579	2	132R	LOCKWASHER	ROSETTA DI SICUREZZA

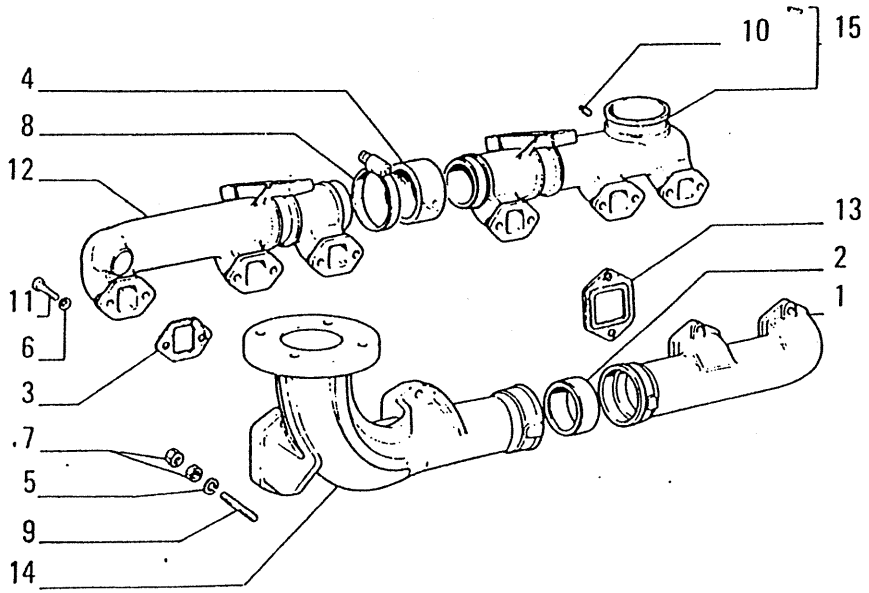

ITEM	PART NO.	QTY.	CODE	DESCRIPTION	DENOMINAZIONE
1	00585338	1	188C	MANIFOLD - REAR	COLLETTORE
2	04543472	1	59C	SLEEVE	CANNOTTO
3	04588654	6	123G	GASKET	GUARNIZIONE DI TENUTA
4	04972932	1	59C	SLEEVE,01,03	CANNOTTO
	79044038	1	59C	SLEEVE,05(*)	CANNOTTO
5	10730521	8	131R	WASHER,10.2X20	ROSETTA
6	11198371	12	131R	WASHER,10.5X20	ROSETTA
7	12164721	16	10D	NUT,10X1.25X8	DADO
8	12174390	2	180C	COLLAR	COLLARE
9	13449830	8	210P	STUD,10X1.25X50	PRIGIONIERO
10	14324011	1	50T	PLUG,10X1X9	TAPPO
11	15970921	12	40V	CAPSCREW,10X1.25X35	VITE
12	61589000	1	188C	MANIFOLD - FRONT	COLLETTORE
13	61589036	4	123G	GASKET	GUARNIZIONE DI TENUTA
14	79011031	1	188C	MANIFOLD - FRONT	COLLETTORE
15	79011217	1	188C	MANIFOLD - REAR	COLLETTORE

(*)SPECIAL EQUIPMENT EQUIP.
30.0021.081

ISAGE: UNITS WITH 8205 ENGINE.

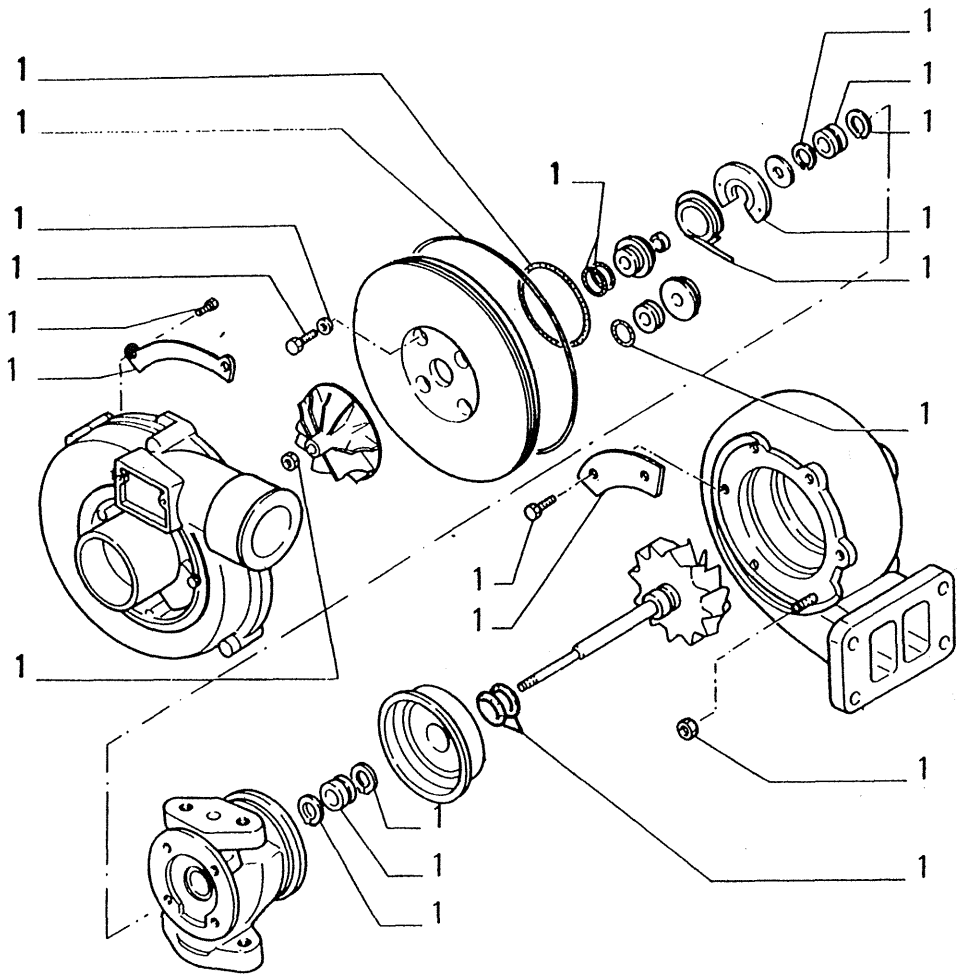

ITEM	PART NUMBER	QTY	TRANS CODE	DESCRIPTION	DESCRIZIONE
1	79073956	K	2K KIT	KIT	KIT

USAGE: Units with 8365 Engine

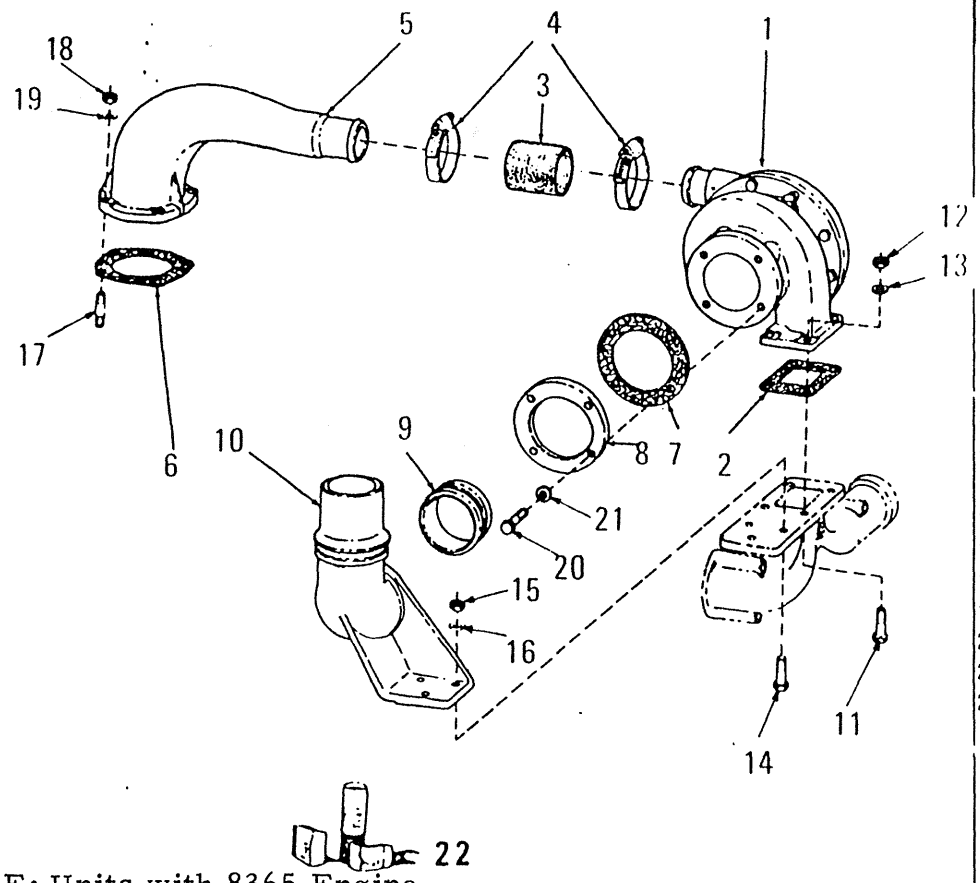

ITEM	PART NUMBER	QTY	TRANS CODE	DESCRIPTION	DESCRIZIONE
1	4813602	1	210T	TURBOCHARGER - ASSEMBLY SEE SGR. A2.53	TURBOCOMPRESSORE - COMPLETO VEDERE SGR. A2.53
2	4632123	1	120G	GASKET	GUARNIZIONE PIANA
3	4765377	1	30M	SLEEVE	MANICOTTO
4	12174790	2	180C	COLLAR 47/67x14	COLLARE 47/67x14
5	4808121	1	85G	ELBOW	GOMITO
6	4803098	1	122G	SEAL	GUARNIZIONE
7	4734747	1	122G	SEAL	GUARNIZIONE
8	8105210	1	75D	SPACER	DISTANZIALE
9	8105211	1	45A	RING	ANELLO
10	4725095	1	85G	ELBOW	GOMITO
11	15970930	4	40V	SCREW 10x1,25x35	VITE 10x1,25x35
12	12164721	4	10D	NUT 10x1,25x8	DADO 10x1,25x8
13	12638601	4	131R	WASHER 10,2x18	ROSETTA 10,2x18
14	15970930	3	40V	SCREW 10x1,25x35	VITE 10x1,25x35
15	12164721	3	10D	NUT 10x1,25x8	DADO 10x1,25x8
16	12638601	3	131R	WASHER 10,2x18	ROSETTA 10,2x18
17	13543424	4	210P	STUD 8x1,25x44	PRIGIONIERO 8x1,25x44
18	16100811	4	10D	NUT 8x1,25x6,5	DADO 8x1,25x6,5
19	11193879	4	132R	LOCKWASHER 8,4x16	ROSETTA DI SICUREZZA 8,4x16
20	11106324	4	40V	SCREW 10x1,5x28	VITE 10x1,5x28
21	11190579	4	132R	LOCKWASHER	ROSETTA DI SICUREZZA
22	79086656	K	1K	KIT SEE PAGE 9	KIT VED. PAG.9

USAGE: Units with 8365 Engine

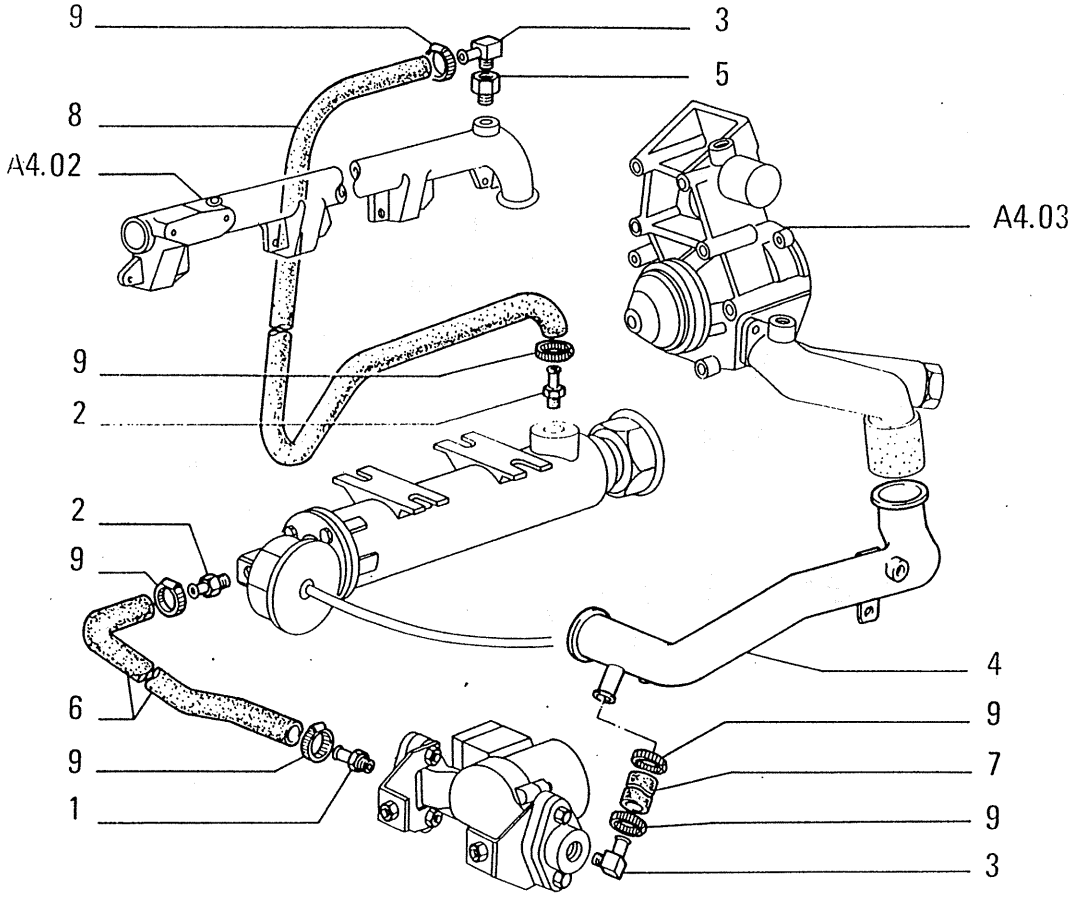

ITEM	PART NUMBER	QTY	TRANS CODE	DESCRIPTION	DESCRIZIONE
1	70925055	1	20R	FITTING	RACCORDO
2	70925056	2	20R	FITTING	RACCORDO
3	70925064	2	20R	FITTING	RACCORDO
4	76016982	1	193T	TUBE	TUBO RIGIDO
5	76015881	1	20R	FITTING	RACCORDO
6	76016986	1	285T	HOSE	TUBO FLESSIBILE
7	76016985	1	285T	HOSE	TUBO FLESSIBILE
8	76016987	1	285T	HOSE	TUBO FLESSIBILE
9	79083844	6	180C	COLLAR	COLLARE

OPTIONAL VARIANTE 30.0021.09.1

USAGE: UNITS WITH 8365 ENGINE

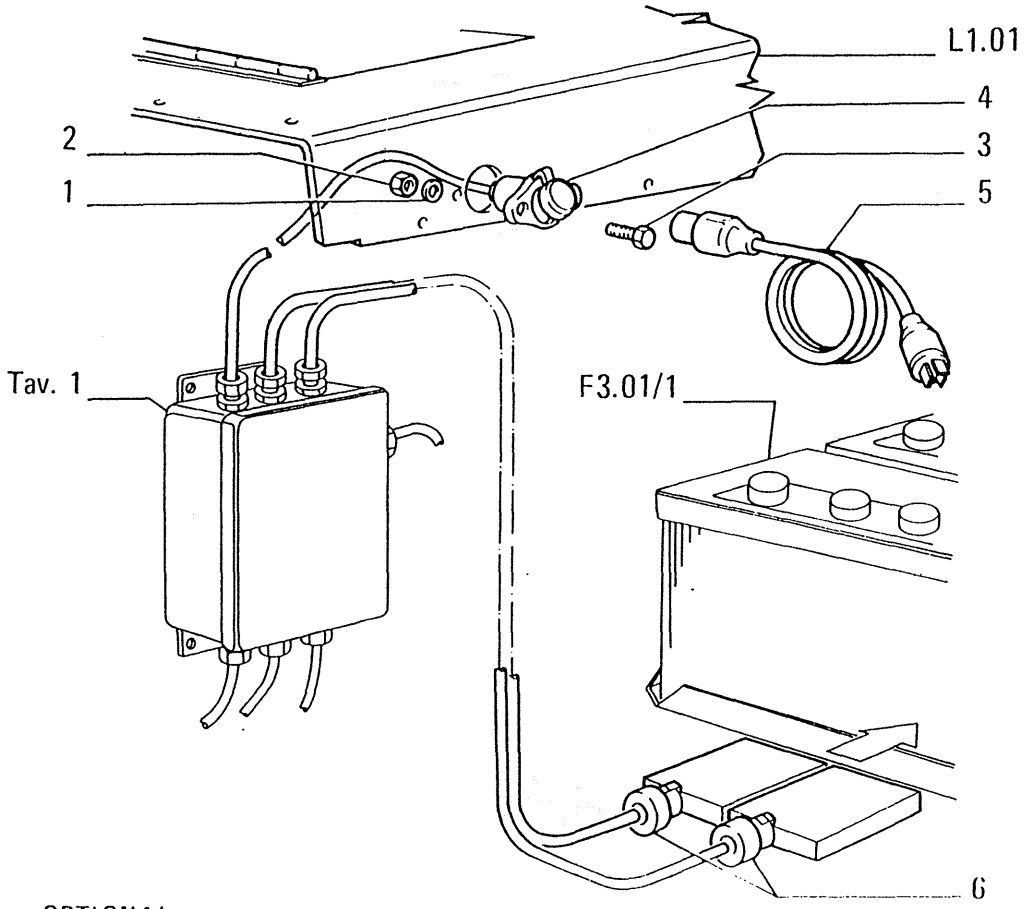

OPTIONAL 30.0021.09.1
VARIANTE
USAGE

ITEM	PART NUMBER	QTY	TRANS CODE	DESCRIPTION	DESCRIZIONE
1	11195371	2	170R	LOCKWASHER 4,1x0,9	ROSETTA EL. 4,1x0,9
2	70917385	2	10D	NUT	DADO
3	70917443	2	40V	SCREW	VITE
4	73298455	1	205P	RECEPTACLE	PRESA DI CORRENTE
5	73298456	1	222P	EXTENSION	PROLUNGA
6	76015890	2	105R	HEATER	RISCALDATORE

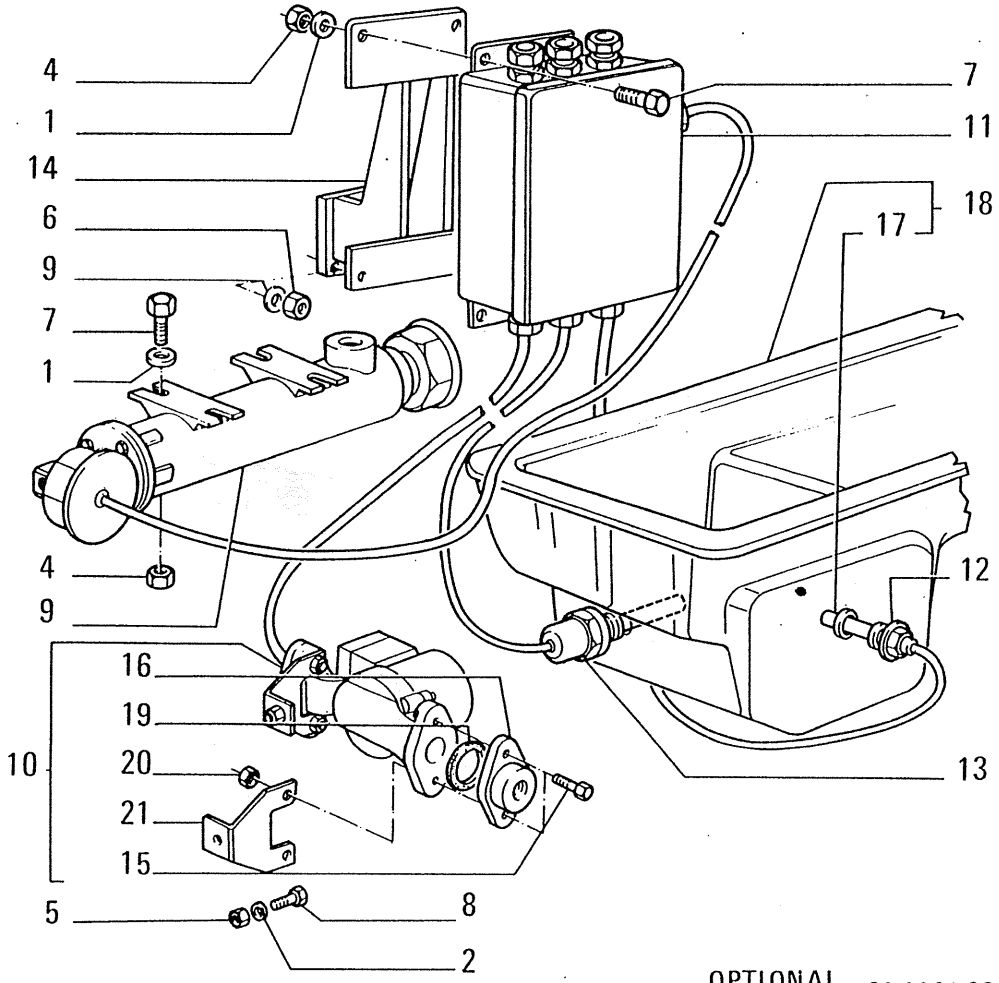

OPTIONAL
VARIANTE 30.0021.09.1

USAGE: UNITS WITH 8365 ENGINE

ITEM	PART NUMBER	QTY	TRANS CODE	DESCRIPTION	DESCRIZIONE
1	10516479	8	170R	LOCKWASHER 6,1x1,8	ROSETTA EL. 6,1x1,8
2	10516679	2	170R	LOCKWASHER 8,1x2,2	ROSETTA EL. 8,1x2,2
3	10516879	3	170R	LOCKWASHER 10,2x2,5	ROSETTA EL. 10,2x2,5
4	10720121	8	10D	NUT 6x1x6	DADO 6x1x6
5	10788021	2	10D	NUT 8x1,25x8	DADO 8x1,25x8
6	10790121	3	10D	NUT 10x1,25x10	DADO 10x1,25x10
7	10902621	8	40V	SCREW 6x1x25	VITE 6x1x25
8	16043521	2	40V	SCREW 8x1,25x22	VITE 8x1,25x22
9	73298447	1	105R	HEATER ENGINE COOLANT	RISCALDATORE ENGINE COOLANT
10	73298448	1	152P	WATER PUMP - ASSEMBLY	POMPA ACQUA - COMPLETO
11	73298449	1	35S	CASE	SCATOLA
12	73298457	1	96T	THERMOSTAT	TERMOSTATO
13	73298458	1	105R	HEATER ENGINE OIL	RISCALDATORE ENGINE OIL
14	76015875	1	300S	SUPPORT	SUPPORTO
15	79088089	4	40V	SCREW	VITE
16	79088086	2	70F	FLANGE	FLANGIA
17	76014363	2	95B	BUSHING	BOCCOLA
18	76015878	1	274C	OIL SUMP - ASSEMBLY	COPPA OLIO - COMPLETO
19	79088085	2	122G	SEAL	GUARNIZIONE
20	79088038	4	10D	NUT	DADO
21	76016988	2	225S	BRACKET	STAFFA

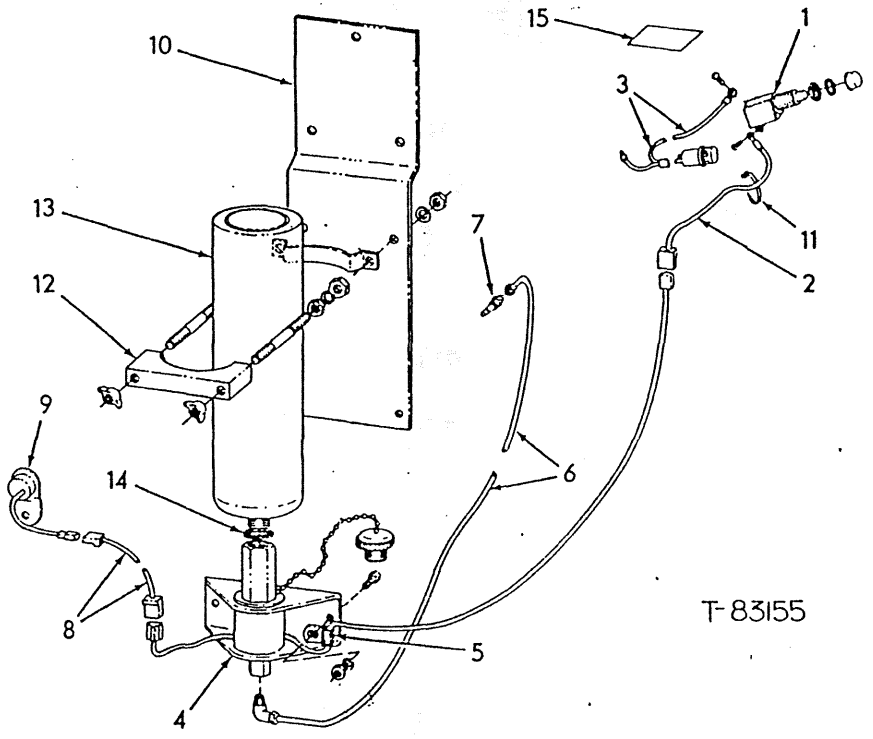

ITEM	PART NO.	QTY.	LEX.	DESCRIPTION	DENOMINAZIONE
1	73115559	1	75I	SWITCH(INCLUDES BOOT)	INTERRUTTORE
2	73115562	1	111C	CABLE, ELECTRIC	CAVO ELETTRICO
3	73143763	1	111C	CABLE, ELECTRIC	CAVO ELETTRICO
4	73115563	1	10V	VALVE	VALVOLA
	70928138	2	40V	CAPSCREW,1/4"NC X 5/8"	VITE
	70911114	4	131R	WASHER	ROSETTA
	70911327	2	10D	NUT,1/4"NC	DADO
5	70639388	1	89G	CLIP	GRAFFETTA
6	73110484	1	206T	TUBE	TUBO
	73052086	1	85G	ELBOW	GOMITO
	70911841	2	59C	SLEEVE	CANNOTTO
	70912589	2	10D	NUT	DADO
7	73115662	1	500E	ATOMIZER	POLVERIZZATORE
8	73115567	1	111C	CABLE, ELECTRIC	CAVO ELETTRICO
9	73115568	1	500F	THERMOGUARD	SCUDO TERMICO
	15970421	1	40V	CAPSCREW,M6 X 1 X 10MM	VITE
	70677006	1	131R	WASHER	ROSETTA
10	73138080	1	80M	BRACKET	MENSOLA
	16043631	3	40V	CAPSCREW, M8 X 1.25 X 25	VITE
	70911114	3	131R	WASHER	ROSETTA
	10516670	3	132R	LOCKWASHER	ROSETTA DI SICUREZZA
	16100821	3	10D	NUT,M8 X 1.25	DADO
11	70932747	6	501H	TIE	TIRANTE
12	70669359	1	120M	CLAMP	MORSETTO COLLARE
13	73132158	1	164C	CYLINDER	CILINDRO
			600L	INCLUDES ITEM(S)14	INCLUDE PARTIC.(I)
14	73070169	1	123G	GASKET	GUARNIZIONE DI TENUTA
15	74029499	1	8D	DECAL	DECALCOMANIA

COLD WEATHER START

A243

Revised April 1989

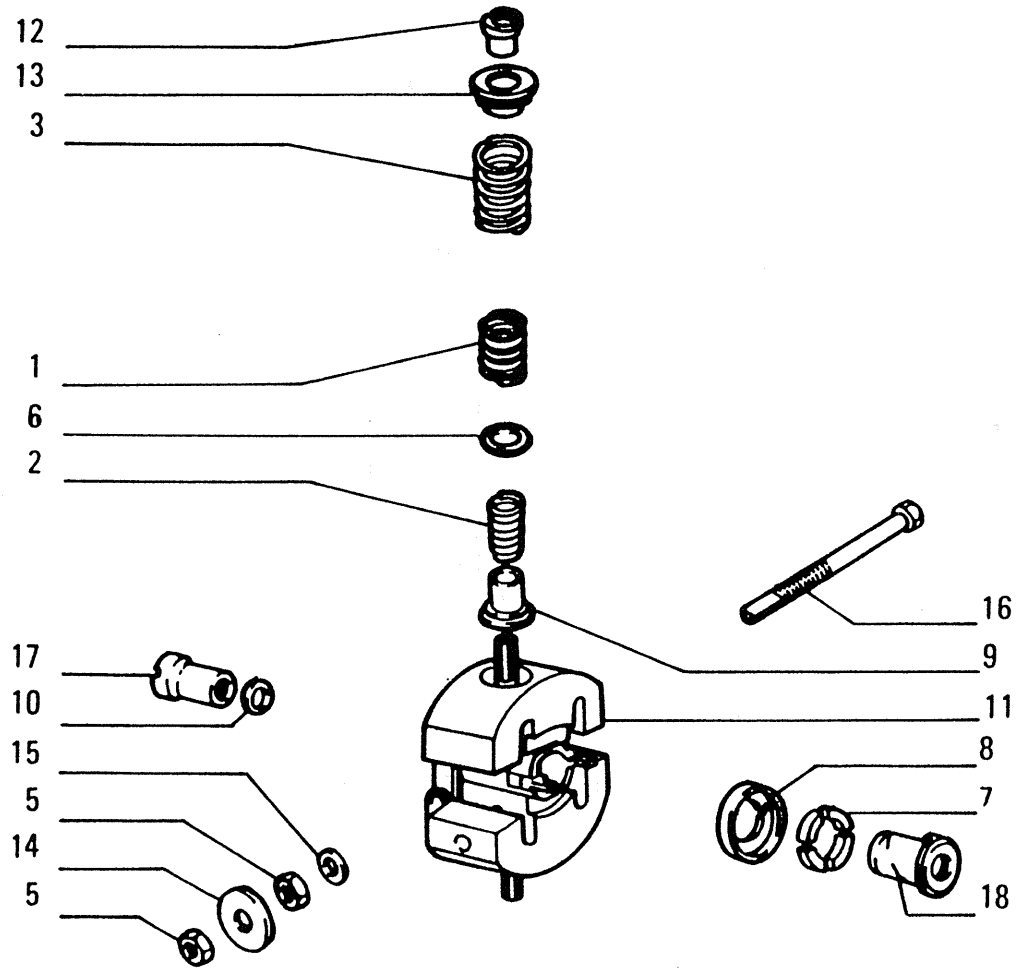

ITEM	PART NUMBER	QTY	TRANS CODE	DESCRIPTION	DESCRIZIONE
17	773840	1	50G	RING NUT	GHIERA
18	772873	1	67G	COUPLING	GIUNTO

USAGE: Units with 8365 Engine

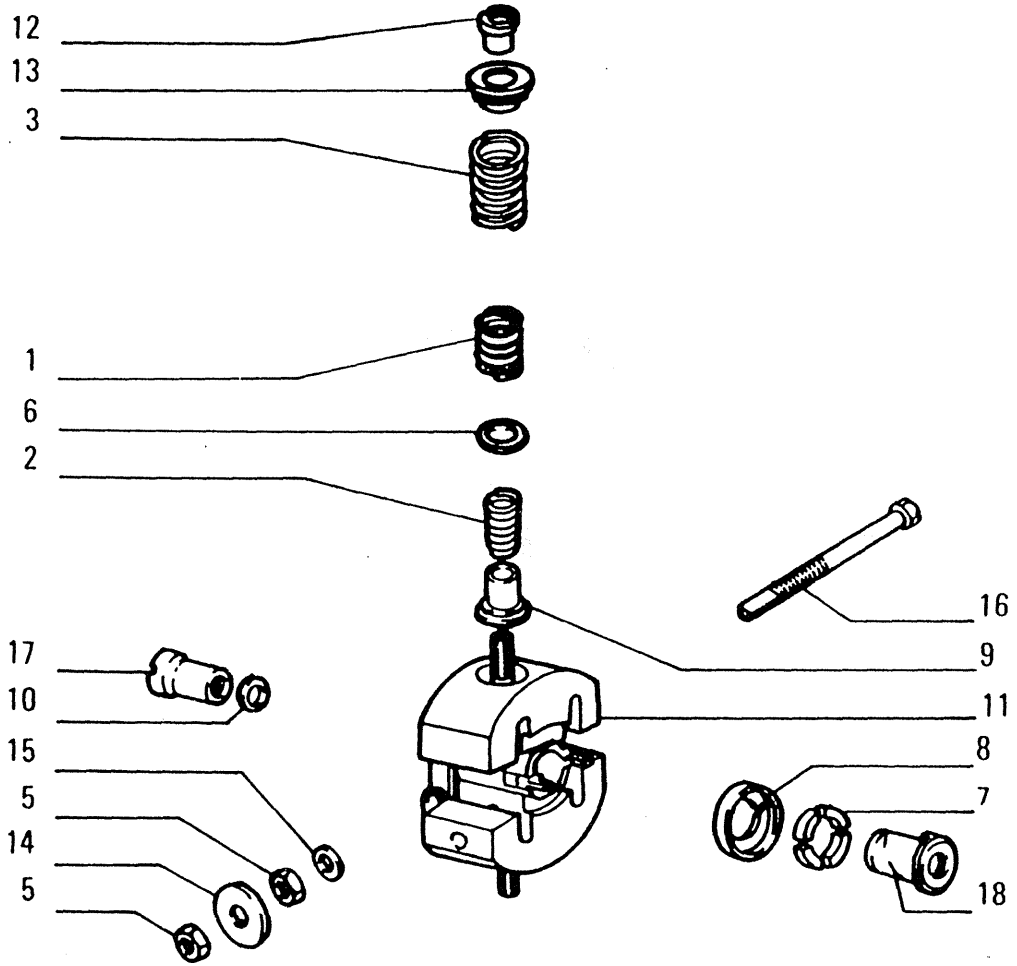

USAGE: Units with 8365 Engine

ITEM	PART NUMBER	QTY	TRANS CODE	DESCRIPTION	DESCRIZIONE
1	772902	2	100M	SPRING	MOLLA
2	772901	2	100M	SPRING	MOLLA
3	774344	2	100M	SPRING	MOLLA
5	15896221	2	10D	NUT 6x1x5	DADO 6x1x5
6	772761	2	131R	WASHER	ROSETTA
7	772522	4	90S	HALF RING	SEMIANELLO
8	773838	1	60S	CUP	SCODELLINO
9	773841	2	120P	PLATE - THICKNESS 3,25	PIATTELLO - SPESSORE 3,25
	773842	2	120P	PLATE - THICKNESS 3,10	PIATTELLO - SPESSORE 3,10
	773843	2	120P	PLATE - THICKNESS 2,95	PIATTELLO - SPESSORE 2,95
10	772525	1	131R	WASHER - THICKNESS 2,00	ROSETTA - SPESSORE 2,00
	772526	1	131R	WASHER - THICKNESS 1,90	ROSETTA - SPESSORE 1,90
	772527	1	131R	WASHER - THICKNESS 1,80	ROSETTA - SPESSORE 1,80
	772528	1	131R	WASHER - THICKNESS 1,70	ROSETTA - SPESSORE 1,70
	772529	1	131R	WASHER - THICKNESS 1,75	ROSETTA - SPESSORE 1,75
	772530	1	131R	WASHER - THICKNESS 1,85	ROSETTA - SPESSORE 1,85
	772531	1	131R	WASHER - THICKNESS 1,95	ROSETTA - SPESSORE 1,95
	772532	1	131R	WASHER - THICKNESS 1,60	ROSETTA - SPESSORE 1,60
	772533	1	131R	WASHER - THICKNESS 1,65	ROSETTA - SPESSORE 1,65
	772534	1	131R	WASHER - THICKNESS 2,05	ROSETTA - SPESSORE 2,05
	772535	1	131R	WASHER - THICKNESS 2,10	ROSETTA - SPESSORE 2,10
11	773861	1	169R	REGULATOR	REGOLATORE
12	773854	2	50G	RING NUT	GHIERA
13	773855	2	120P	PLATE	PIATTELLO
14	772580	1	131R	WASHER	ROSETTA
15	772581	1	131R	WASHER	ROSETTA
16	773839	1	40V	SCREW	VITE

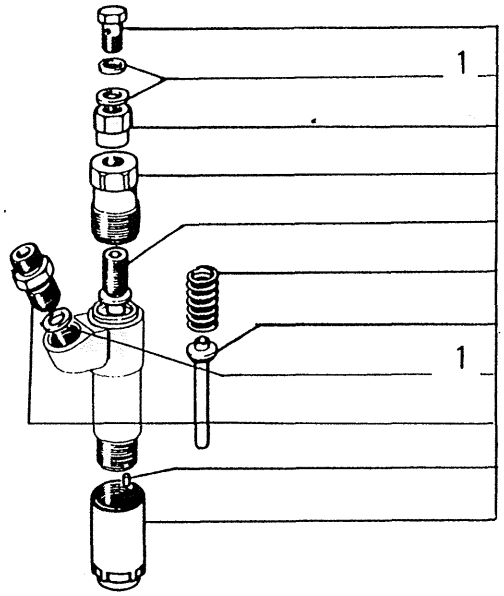

A2.24

ITEM	PART NUMBER	QTY	TRANS CODE	DESCRIPTION	DESCRIZIONE
1	79070235	K	2K KIT	KIT	KIT



USAGE: Units with 8365 Engine

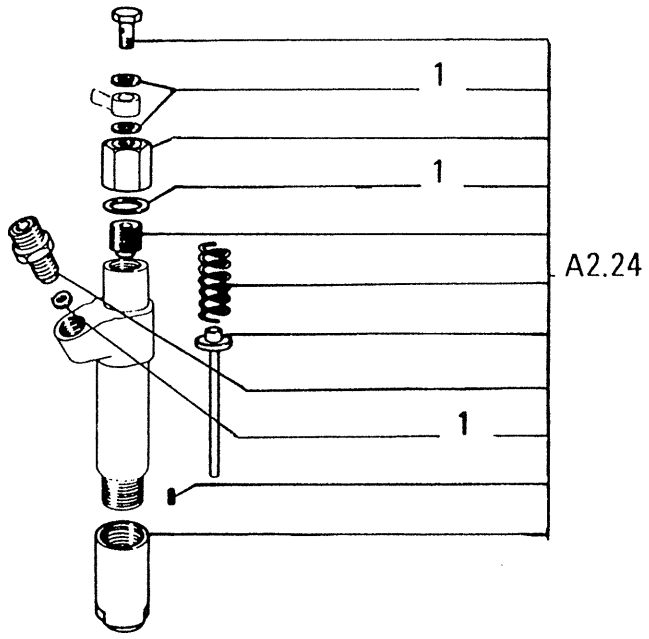

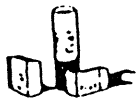

ITEM	PART NUMBER	QTY	TRANS CODE	DESCRIPTION	DESCRIZIONE
1	79070238	K	2K KIT		KIT

USAGE: Units with 8365 Engine

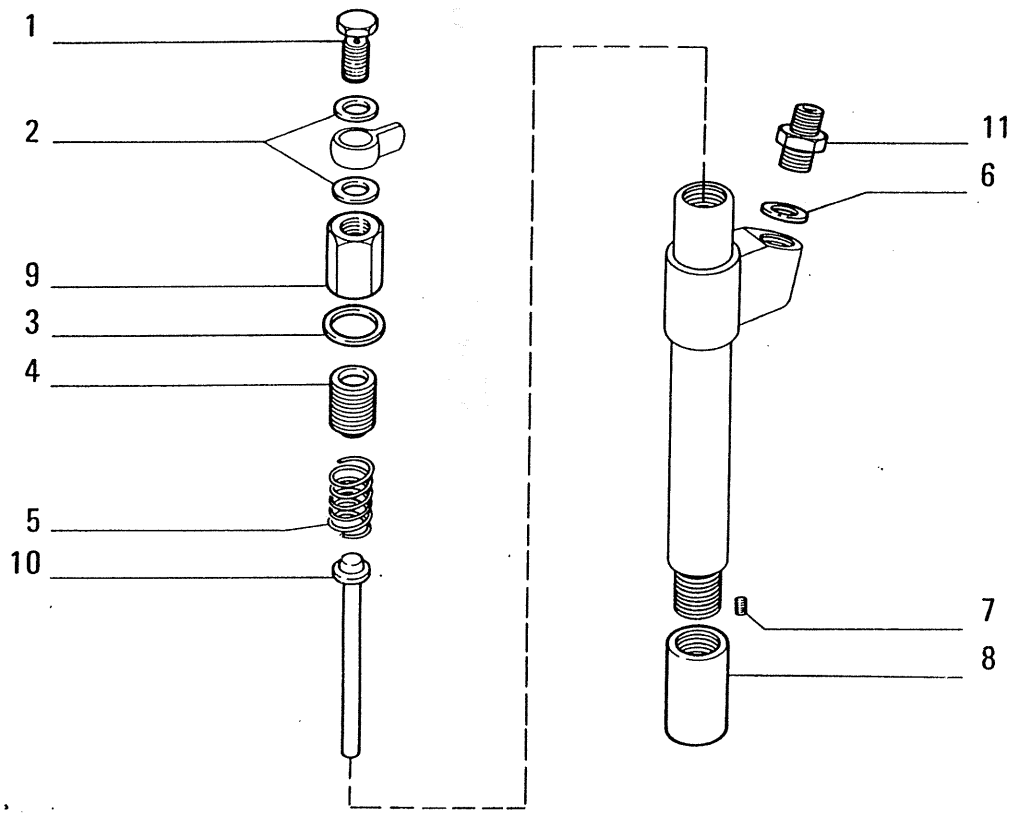

ITEM	PART NUMBER	QTY	TRANS CODE	DESCRIPTION	DESCRIZIONE
1	79038241	1	40V	SCREW	VITE
2	79038242	2	133R	SEAL	ROSETTA DI TENUTA
3	79038244	1	133R	SEAL	ROSETTA DI TENUTA
4	79038245	1	40V	SCREW	VITE
5	79038246	1	100M	SPRING	MOLLA
6	79038248	1	133R	SEAL	ROSETTA DI TENUTA
7	79038250	2	90G	DOWEL	GRANO
8	773813	1	51G	THREADED RING D1478	GHIERA FILETTATA D1478
	79038251	1	51G	THREADED RING C1478	GHIERA FILETTATA C1478
9	79038253	1	10D	NUT	DADO
10	79038254	1	90A	ROD	ASTA
11	79038255	1	20R	FITTING	RACCORDO

C 1478 → Mot.n. 0836
D 1478 Mot.n. 0837 →

05418 USAGE: Units with 8205 Engine

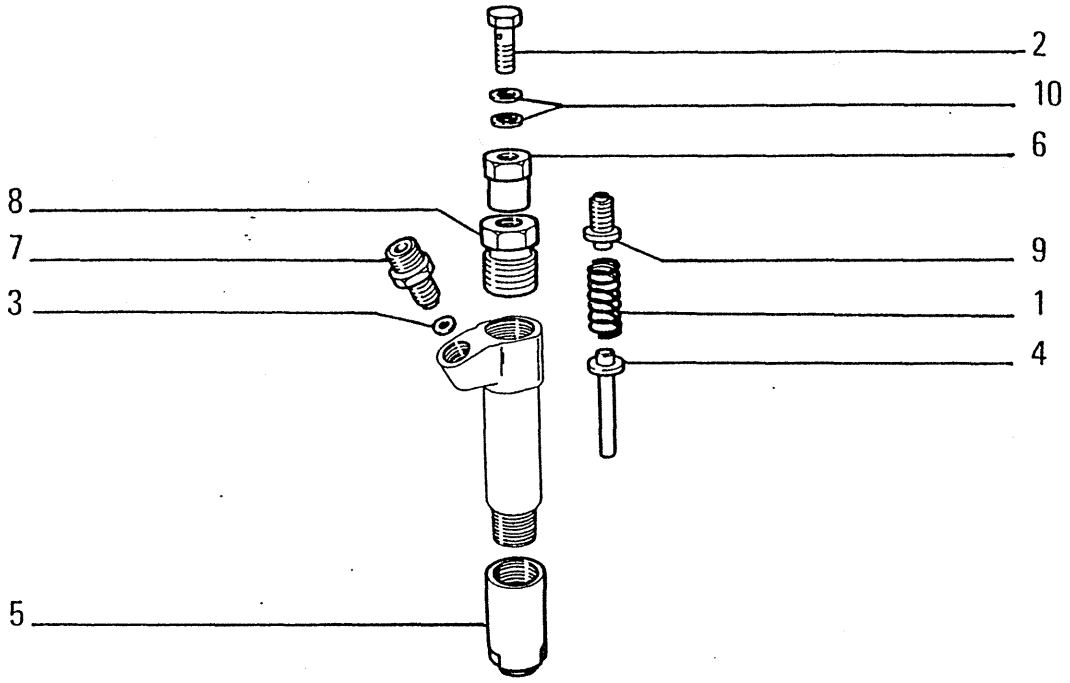

ITEM	PART NUMBER	QTY	TRANS CODE	DESCRIPTION	DESCRIZIONE
1	656829	1	100M	SPRING	MOLLA
2	9009403	1	90B	FILLER PLUG	BOCCHETTONE INTRODUZIONE
3	9009406	1	133R	SEAL	ROSETTA DI TENUTA
4	9930866	1	90A	ROD	ASTA
5	9930867	1	51G	THREADED RING	GHIERA FILETTATA
6	9930868	1	20R	FITTING	RACCORDO
7	9930869	1	20R	FITTING	RACCORDO
8	9930870	1	51G	THREADED RING	GHIERA FILETTATA
9	9930871	1	40V	SCREW	VITE
10	79023949	2	133R	SEAL	ROSETTA DI TENUTA

(03948) C 1478 → mot.n. 0836 USAGE: Units with 8205 Engine

770879

NOZZLE HOLDER – PORTAPOLVERIZZATORE – PORTE-INJECTEUR – DUESENHALTER
PORTAINYECTOR

A2.35

N.T.R. 143 - 30.08.1986

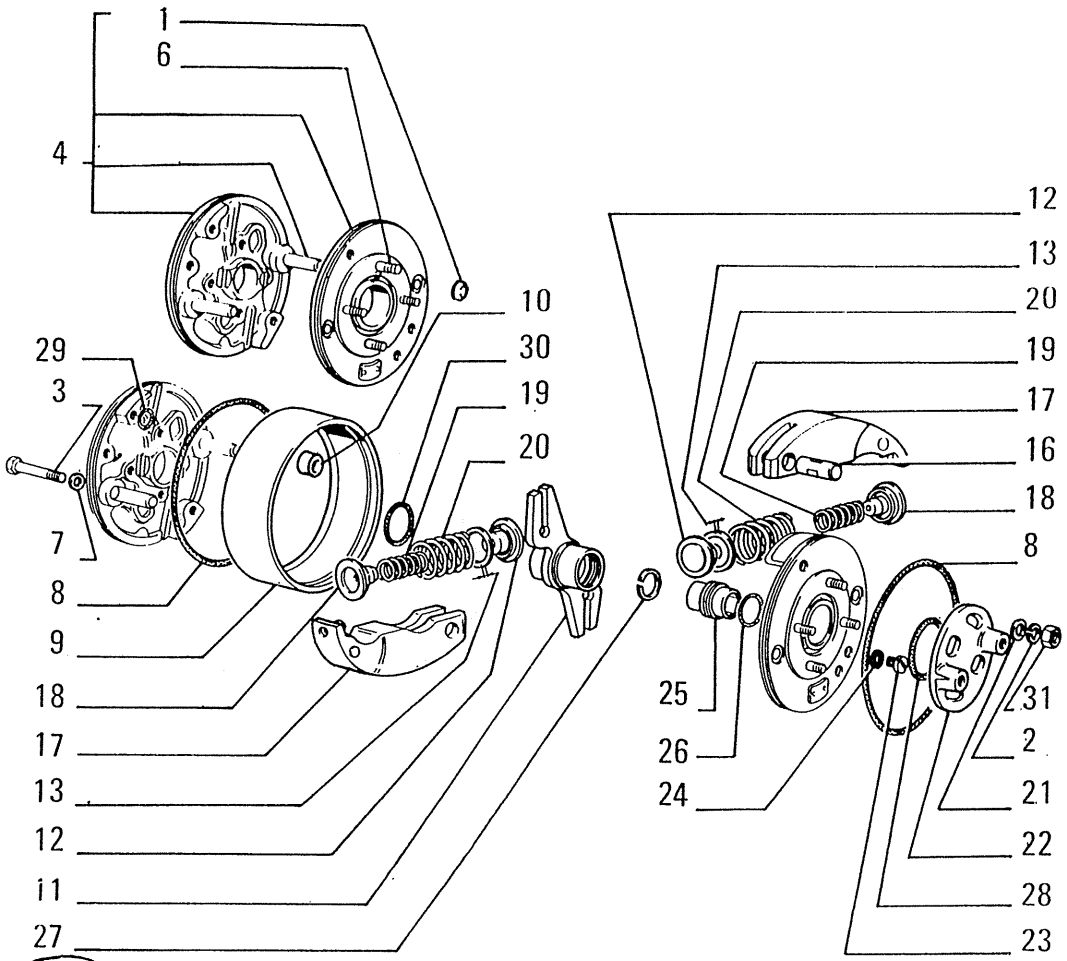

ITEM	PART NUMBER	QTY	TRANS CODE	DESCRIPTION	DESCRIZIONE
27	79039798	1	131R	WASHER	ROSETTA
28	79039799	1	45A	RING	ANELLO
29	14453180	2	158G	O-RING 1,78x12,42	GUARNIZIONE O-R 1,78x12,42
30	14463981	1	158G	O-RING 3,53x36,09	GUARNIZIONE O-R 3,53x36,09
31	16100821	4	10D	NUT 8x1,25x6,5	DADO 8x1,25x6,5

03946 USAGE: Units with 8205 Engine

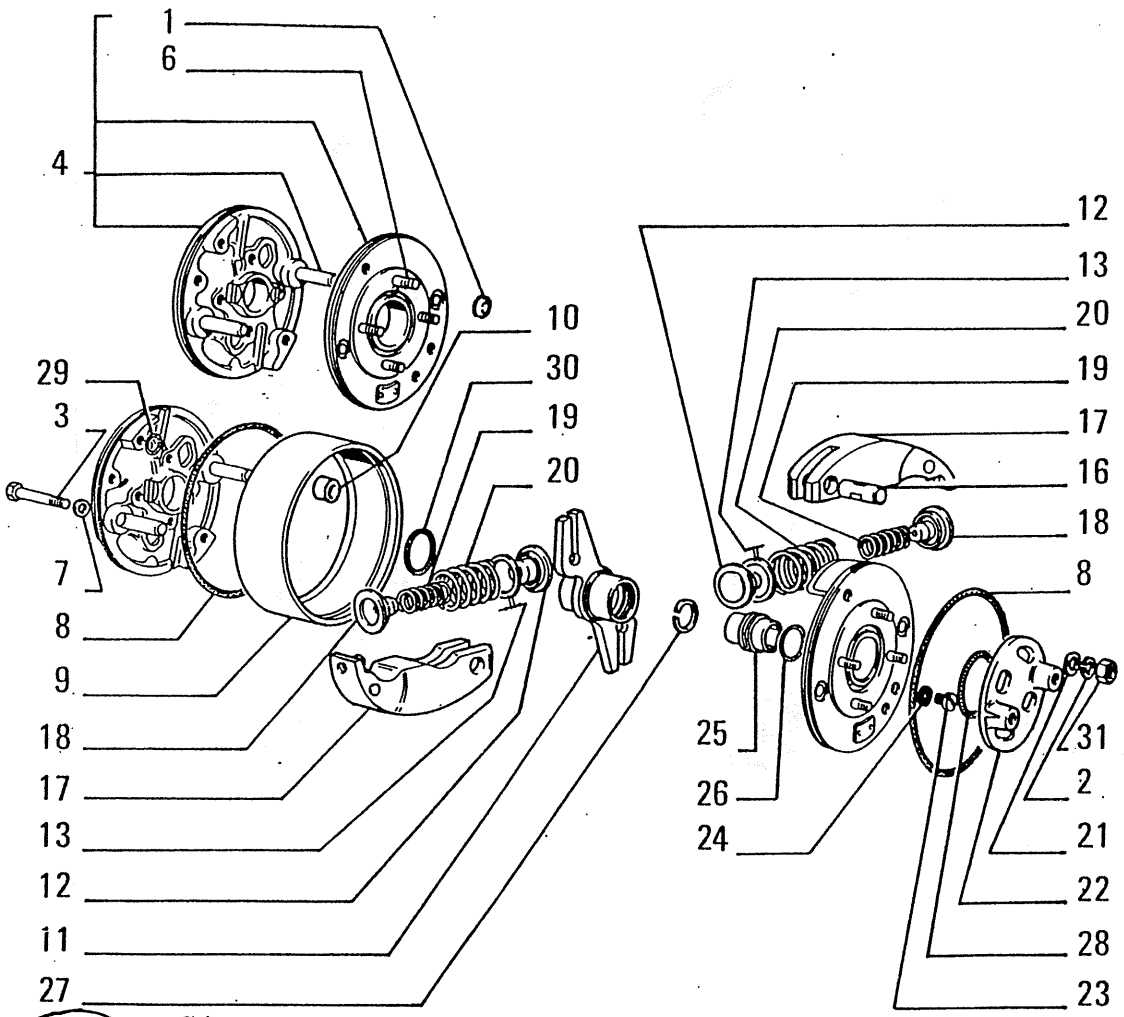

03946 USAGE: Units with 8205 Engine

ITEM	PART NUMBER	QTY	TRANS CODE	DESCRIPTION	DESCRIZIONE
1	10158601	4	50T	PLUG 16x1,5	TAPPO 16x1,5
2	11193871	4	131R	WASHER 8,4x16	ROSETTA 8,4x16
3	14307820	2	40V	SCREW 10x1,25x45	VITE 10x1,25x45
4	79039775	1	300C	BODY - ASSEMBLY	CORPO - COMPLETO
6	00774456	4	210P	STUD D1473	PRIGIONIERO D1473
	79039777	4	210P	STUD C1473	PRIGIONIERO C1473
7	79039778	2	131R	WASHER	ROSETTA
8	79039779	2	158G	O-RING	GUARNIZIONE O-R
9	79039780	1	45A	RING - OUTER	ANELLO - ESTERNO
10	79039781	2	95B	BUSHING	BOCCOLA
11	79039782	1	75G	LINK	GLIFO
12	79039783	2	120P	PLATE - INNER	PIATTELLO - INTERNO
13	79039784		131R	WASHER - THICKNESS 0,15	ROSETTA - SPESSORE 0,15
	79039785		131R	WASHER - THICKNESS 0,20	ROSETTA - SPESSORE 0,20
	79039786		131R	WASHER - THICKNESS 0,50	ROSETTA - SPESSORE 0,50
16	79039787	2	45P	PAD	PATTINO
17	79039788	2	67M	FLYWEIGHT	MASSA CENTRIFUGA
18	79039789	2	120P	PLATE - OUTER	PIATTELLO - ESTERNO
19	79039790	2	100M	SPRING - INNER	MOLLA - INTERNO
20	79039791	2	100M	SPRING - OUTER	MOLLA - ESTERNO
21	79039792	4	131R	WASHER	ROSETTA
22	79039793	1	30M	SLEEVE	MANICOTTO
23	79039794	1	40V	SCREW	VITE
24	79038242	1	131R	WASHER D1473	ROSETTA D1473
	79039795	1	131R	WASHER C1473	ROSETTA C1473
25	79039796	1	50G	RING NUT	GHIERA
26	79039797	1	45A	RING	ANELLO

C 1473 → Mot.n. 1180
D 1473 Mot.n. 1181 →

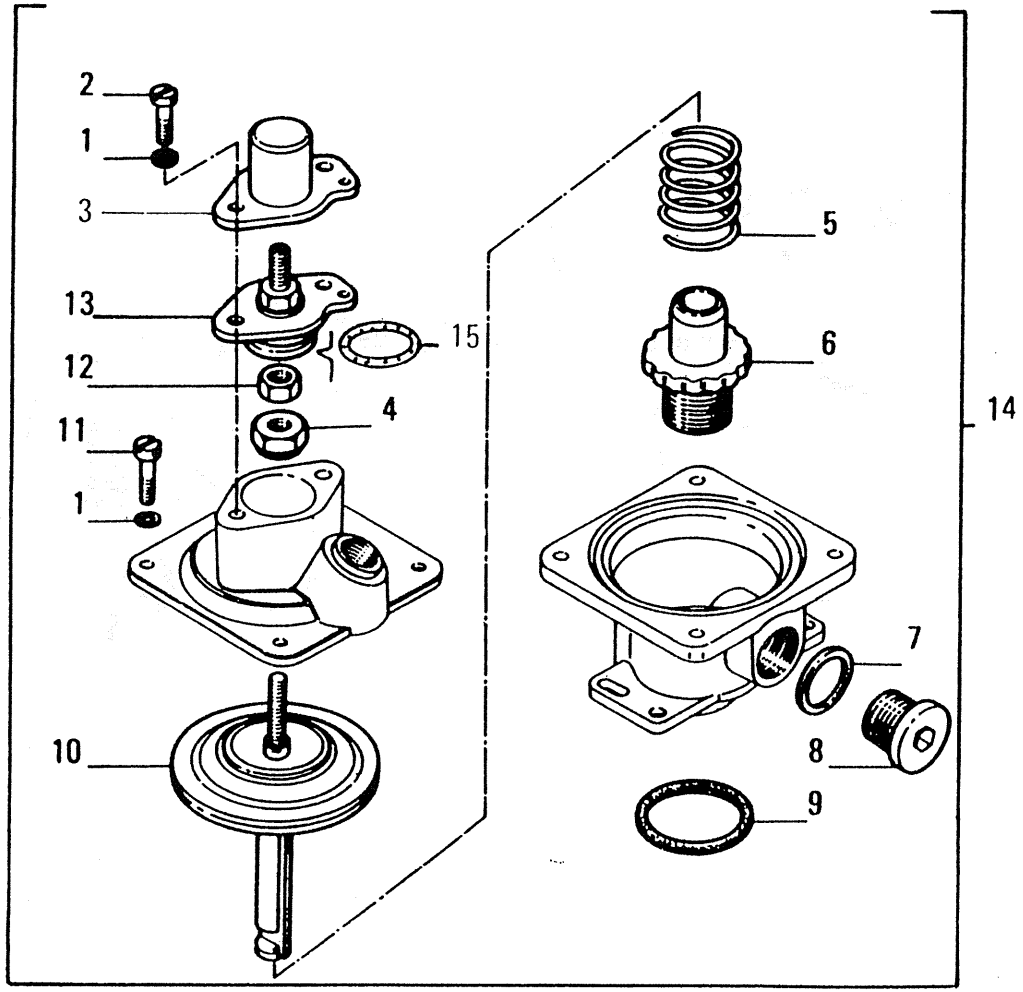

ITEM	PART NUMBER	QTY	TRANS CODE	DESCRIPTION	DESCRIZIONE
1	12035671	6	170R	LOCKWASHER 6,1x1,3	ROSETTA EL. 6,1x1,3
2	773527	2	40V	SCREW	VITE
3	772726	1	65C	BOOT	CAPPUCCIO
4	773577	1	10D	NUT	DADO
5	774401	1	100M	SPRING	MOLLA
6	773566	1	95B	BUSHING	BOCCOLA
7	772057	1	120G	GASKET	GUARNIZIONE PIANA
8	1307838	1	50T	PLUG	TAPPO
9	1306692	1	158G	O-RING	GUARNIZIONE O-R
10	773963	1	75M	DIAPHRAGM	MEMBRANA
11	10376721	4	40V	SCREW 6x1x16	VITE 6x1x16
12	15896221	1	10D	NUT 6x1x5	DADO 6x1x5
13	773964	1	40V	SCREW	VITE
14	774661	1	190A	EXCESS FUEL - ASSEMBLY	ARRICCHITORE - COMPLETO
15	772387	1	158G	O-RING	GUARNIZIONE O-R

USAGE: Units with 8365 Engine

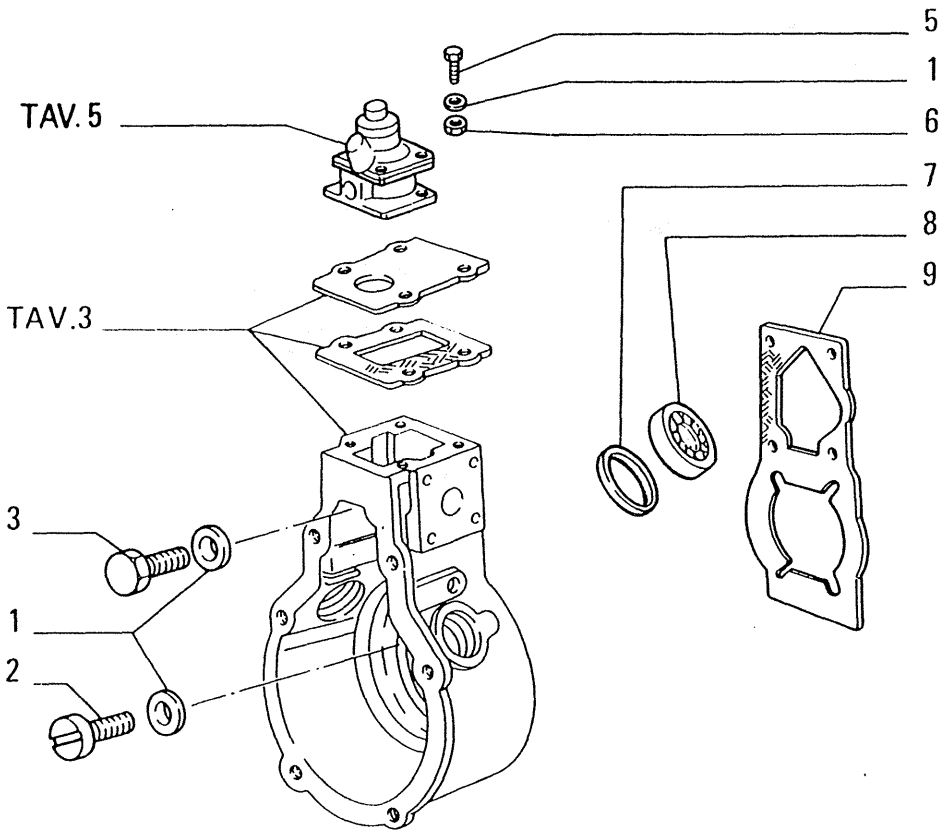

ITEM	PART NUMBER	QTY	TRANS CODE	DESCRIPTION	DESCRIZIONE
1	12035671	12	170R	LOCKWASHER 6,1x1,3	ROSETTA EL. 6,1x1,3
2	10376921	6	40V	SCREW 6x1x20	VITE 6x1x20
3	10902621	2	40V	SCREW 6x1x25	VITE 6x1x25
5	773712	4	40V	SCREW	VITE
6	773699	4	131R	WASHER	ROSETTA
7	772648	2	122G	SEAL	GUARNIZIONE
8	772621	2	50T	PLUG	TAPPO
9	1300955	1	122G	SEAL	GUARNIZIONE

USAGE: Units with 8365 Engine

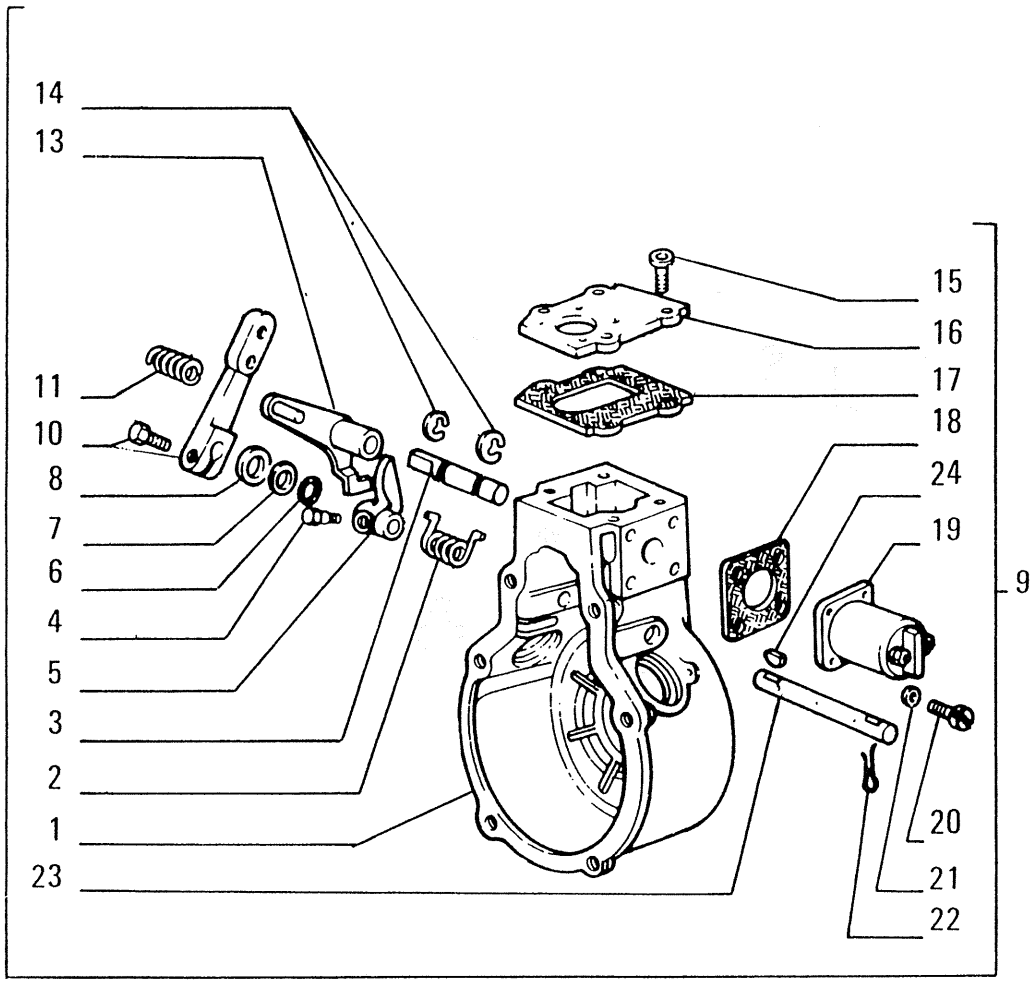

USAGE: Units with 8365 Engine

ITEM	PART NUMBER	QTY	TRANS CODE	DESCRIPTION	DESCRIZIONE
1	773707	1	35S	CASE	SCATOLA
2	773717	1	100M	SPRING	MOLLA
3	773717	1	80P	PIN	PERNO
4	772480	1	40V	SCREW	VITE
5	773714	1	45L	LEVER	LEVA
6	772482	2	158G	O-RING	GUARNIZIONE O-R
7	14499401	2	131R	WASHER 8,4x14	ROSETTA 8,4x14
8	772484		131R	WASHER - THICKNESS 0,30	ROSETTA - SPESSORE 0,30
9	773700	1	35S	CASE - ASSEMBLY	SCATOLA - COMPLETO
10	772486	1	45L	LEVER	LEVA
11	773716	1	100M	SPRING	MOLLA
13	773718	1	45L	LEVER	LEVA
14	11087876	2	45A	RING 6x12	ANELLO 6x12
15	773701	4	40V	SCREW	VITE
16	773689	1	265C	COVER	COPERCHIO
17	773702	1	122G	SEAL	GUARNIZIONE
18	772671	1	122G	SEAL	GUARNIZIONE
19	773719	1	30E	SOLENOID	ELETTROMAGNETE
20	10389421	4	40V	SCREW 5x0,8x12	VITE 5x0,8x12
21	12035471	4	170R	LOCKWASHER 5,1x1	ROSETTA EL. 5,1x1
22	10734201	2	270C	COTTER PIN 1,7x18,5	COPIGLIA 1,7x18,5
23	772477	1	16A	SHAFT	ALBERO
24	1136607	1	60L	KEY	LINGUETTA

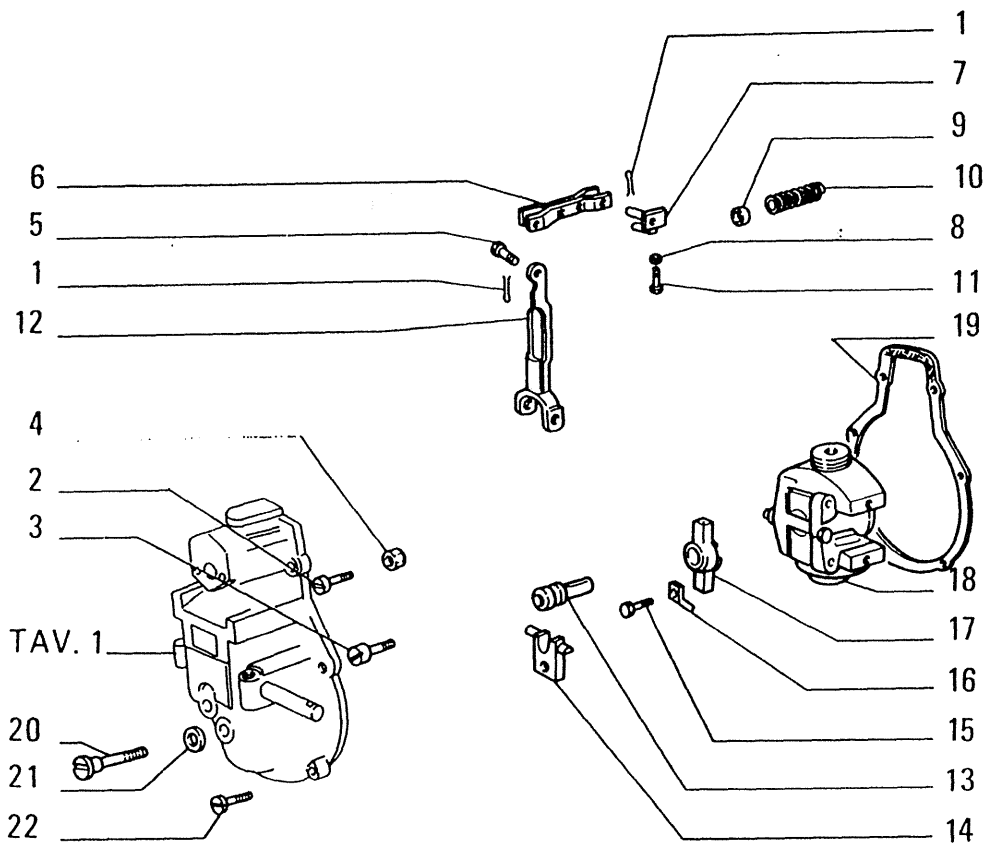

ITEM	PART NUMBER	QTY	TRANS CODE	DESCRIPTION	DESCRIZIONE
1	10795001	2	270C	COTTER PIN 1,3x13,7	COPIGLIA 1,3x13,7
2	772703	1	40V	SCREW	VITE
3	774340	1	40V	SCREW	VITE
4	774339	1	10D	NUT	DADO
5	772568	1	80P	PIN	PERNO
6	773693	1	85F	YOKE	FORCELLA
7	773695	1	45F	CLIP	FERMAGLIO
8	12035471	2	170R	LOCKWASHER 5,1x1	ROSETTA EL. 5,1x1
9	774246	1	120P	PLATE	PIATTELLO
10	774245	1	100M	SPRING	MOLLA
11	10389321	2	40V	SCREW 5x0,8x10	VITE 5x0,8x10
12	772847	1	45L	LEVER	LEVA
13	772852	1	80P	PIN	PERNO
14	772823	1	165S	ARTICULATION	SNODO
15	10902221	2	40V	SCREW 6x1x16	VITE 6x1x16
16	772567	2	110P	PLAQUE	PIASTRINA
17	772566	1	95B	BUSHING	BOCCOLA
18	775137	1	175R	GOVERNOR - SEE SGR. A2.37	REGOLATORE MECCANICO - VEDERE SGR. A2.37
19	772577	1	122G	SEAL	GUARNIZIONE
20	772579	1	40V	SCREW	VITE
21	772332	1	122G	SEAL	GUARNIZIONE
22	10377011	5	40V	SCREW 6x1x25	VITE 6x1x25

USAGE: Units with 8365 Engine

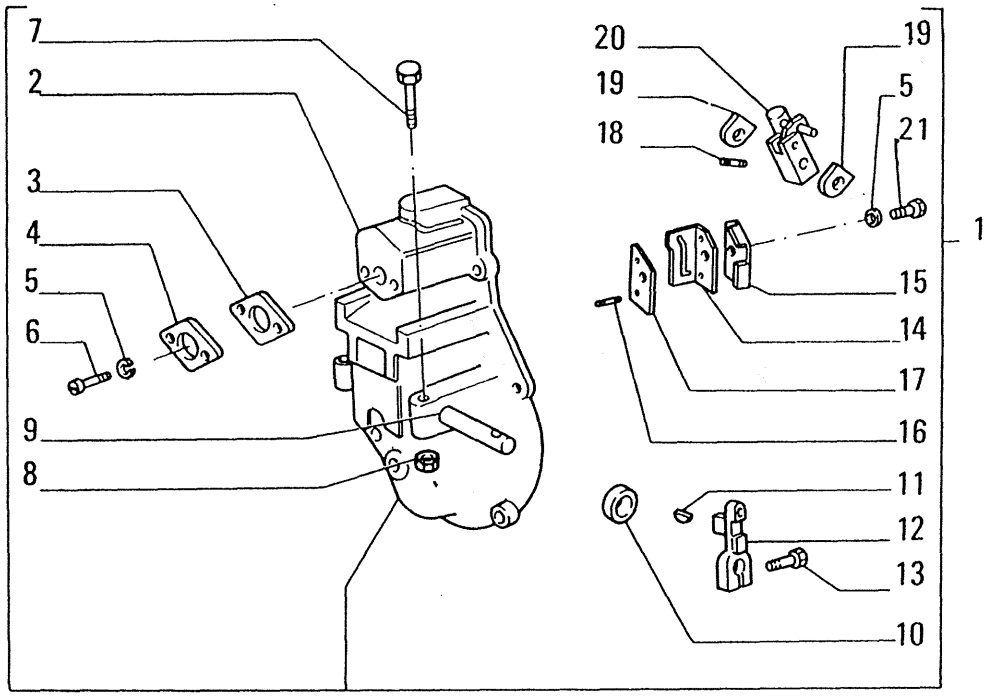

ITEM	PART NUMBER	QTY	TRANS CODE	DESCRIPTION	DESCRIZIONE
1	774660	1	265C	COVER - ASSEMBLY	COPERCHIO - COMPLETO
2	773921	1	265C	COVER	COPERCHIO
3	772649	1	122G	SEAL	GUARNIZIONE
4	773669	1	265C	COVER	COPERCHIO
5	12035671	3	170R	LOCKWASHER 6,1x1,3	ROSETTA EL. 6,1x1,3
6	10376511	2	40V	SCREW 6x1x12	VITE 6x1x12
7	772829	1	40V	SCREW	VITE
8	15896221	1	10D	NUT 6x1x5	DADO 6x1x5
9	1288713	1	16A	SHAFT	ALBERO
10	772618	2	158G	O-RING	GUARNIZIONE O-R
11	10205720	1	60L	KEY 5x3	LINGUETTA 5x3
12	772611	1	45L	LEVER	LEVA
13	10902421	1	40V	SCREW 6x1x20	VITE 6x1x20
14	773471	1	45L	LEVER	LEVA
15	773204	1	110P	PLAQUE	PIASTRINA
16	10333310	2	80P	PIN 4x12	PERNO 4x12
17	772825		110P	PLAQUE - THICKNESS 0,20	PIASTRINA - SPESSORE 0,20
	772826		110P	PLAQUE - THICKNESS 0,30	PIASTRINA - SPESSORE 0,30
	772827		110P	PLAQUE - THICKNESS 0,80	PIASTRINA - SPESSORE 0,80
	772828		110P	PLAQUE - THICKNESS 0,50	PIASTRINA - SPESSORE 0,50
18	11039720	2	200S	PIN 3x20	SPINA 3x20
19	772619	3	110P	PLAQUE	PIASTRINA
20	773634	1	45L	LEVER	LEVA
21	10902521	1	40V	SCREW 6x1x22	VITE 6x1x22

USAGE: Units with 8365 Engine

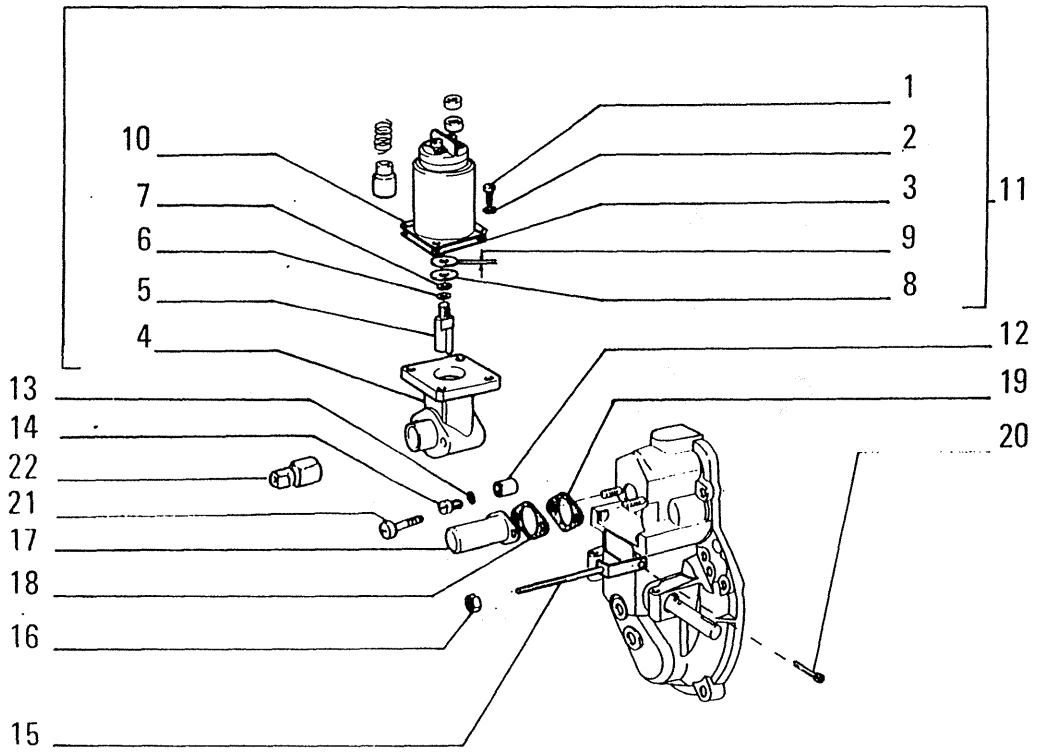

ITEM	PART NUMBER	QTY	TRANS CODE	DESCRIPTION	DESCRIZIONE
1	10389311	4	40V	SCREW 5x0,8x10	VITE 5x0,8x10
2	12035471	4	131R	WASHER 5,1x1	ROSETTA 5,1x1
3	1306677	1	123G	SEAL ASSY	GUARNIZIONE TENUTA FRONTALE
4	79039740	1	300C	BODY	CORPO
5	79023673	1	80P	PIN	PERNO
6	9930414	1	131R	WASHER	ROSETTA
7	12604271	1	131R	WASHER 6,4x11	ROSETTA 6,4x11
8	79023675	1	131R	WASHER	ROSETTA
9	1288472	1	131R	WASHER 0,2 MM	ROSETTA 0,2 MM
	79023676	1	131R	WASHER 0,1 MM	ROSETTA 0,1 MM
	79023678	1	131R	WASHER 0,5 MM	ROSETTA 0,5 MM
	79023679	1	131R	WASHER 1,0 MM	ROSETTA 1,0 MM
10	79023672	1	12M	MAGNETO	MAGNETE
11	79023671	1	30E	SOLENOID - ASSEMBLY	ELETTROMAGNETE - COMPLETO
12	79023685	2	145B	GUIDE BUSHING	BUSSOLA
13	12035671	2	131R	WASHER 6,1x1,3	ROSETTA 6,1x1,3
14	10376411	1	40V	SCREW 6x1x10	VITE 6x1x10
15	79023682	1	142T	TIEROD	TIRANTE
16	15896411	1	10D	NUT 5x0,8x4	DADO 5x0,8x4
17	9930417	1	65C	BOOT	CAPPUCCIO
18	1307609	1	123G	SEAL ASSY	GUARNIZIONE TENUTA FRONTALE
19	1307608	1	123G	SEAL ASSY	GUARNIZIONE TENUTA FRONTALE
20	10795001	3	270C	COTTER PIN 1,3x13,7	COPIGLIA 1,3x13,7
21	79023680	1	40V	SCREW	VITE
22	79023683	1	95B	BUSHING	BOCCOLA

D 1473 Mot.n. 1181 →

USAGE: Units with 8205 Engine

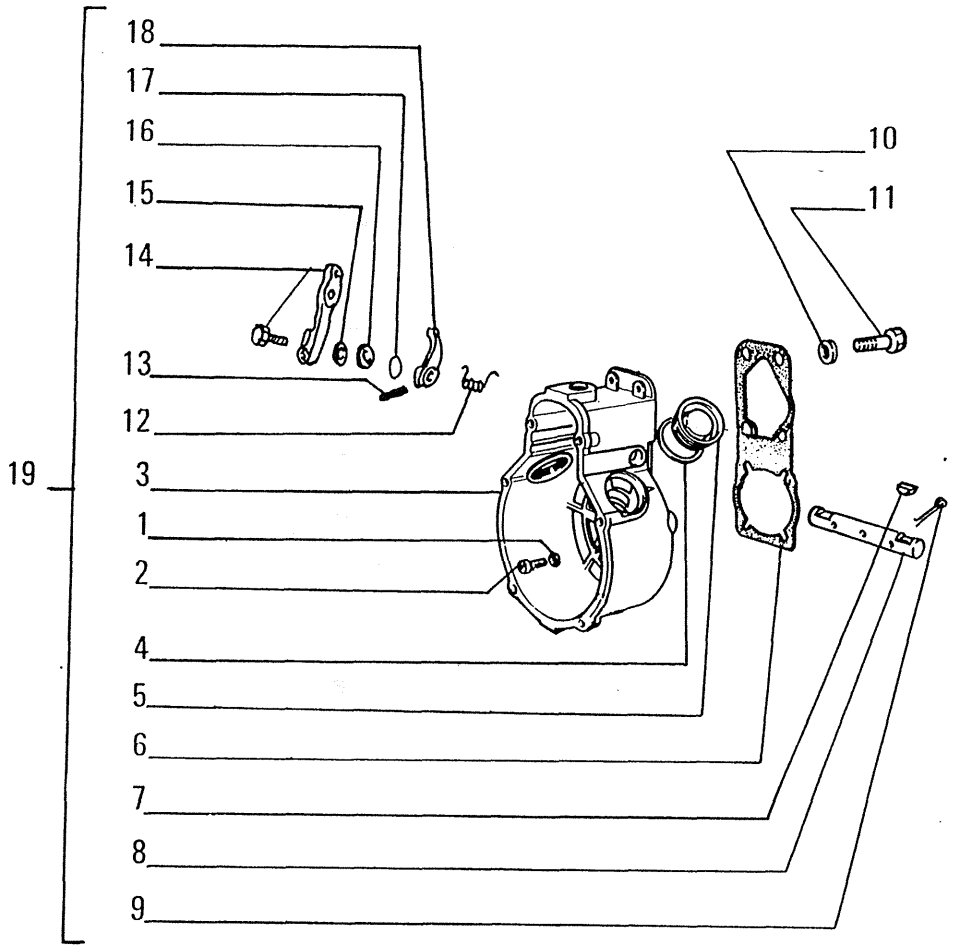

ITEM	PART NUMBER	QTY	TRANS CODE	DESCRIPTION	DESCRIZIONE
1	12035671	8	131R	WASHER 6,1x1,3	ROSETTA 6,1x1,3
2	10376921	8	40V	SCREW 6x1x20	VITE 6x1x20
3	79039762	1	35S	CASE	SCATOLA
4	79023684	2	131R	WASHER	ROSETTA
5	1288626	2	50T	PLUG	TAPPO
6	1300955	1	123G	SEAL ASSY	GUARNIZIONE TENUTA FRONTALE
7	1136607	1	60L	KEY	LINGUETTA
8	79039761	1	11A	SPINDLE	ALBERINO
9	10734201	2	270C	COTTER PIN 1,7x18,5	COPIGLIA 1,7x18,5
10	79038471	1	131R	WASHER	ROSETTA
11	79040931	1	50T	PLUG	TAPPO
12	79039759	1	100M	SPRING	MOLLA
13	79039754	1	40V	SCREW	VITE
14	9982762	1	45L	LEVER	LEVA
15	79039755		131R	WASHER	ROSETTA
16	14499401	2	131R	WASHER 8,4x14	ROSETTA 8,4x14
17	79039757	2	45A	RING	ANELLO
18	79039758	1	45L	LEVER	LEVA
19	79023635	1	35S	CASE - ASSEMBLY	SCATOLA - COMPLETO

D 1473 Mot.n. 1181 ↦ USAGE: Units with 8205 Engine

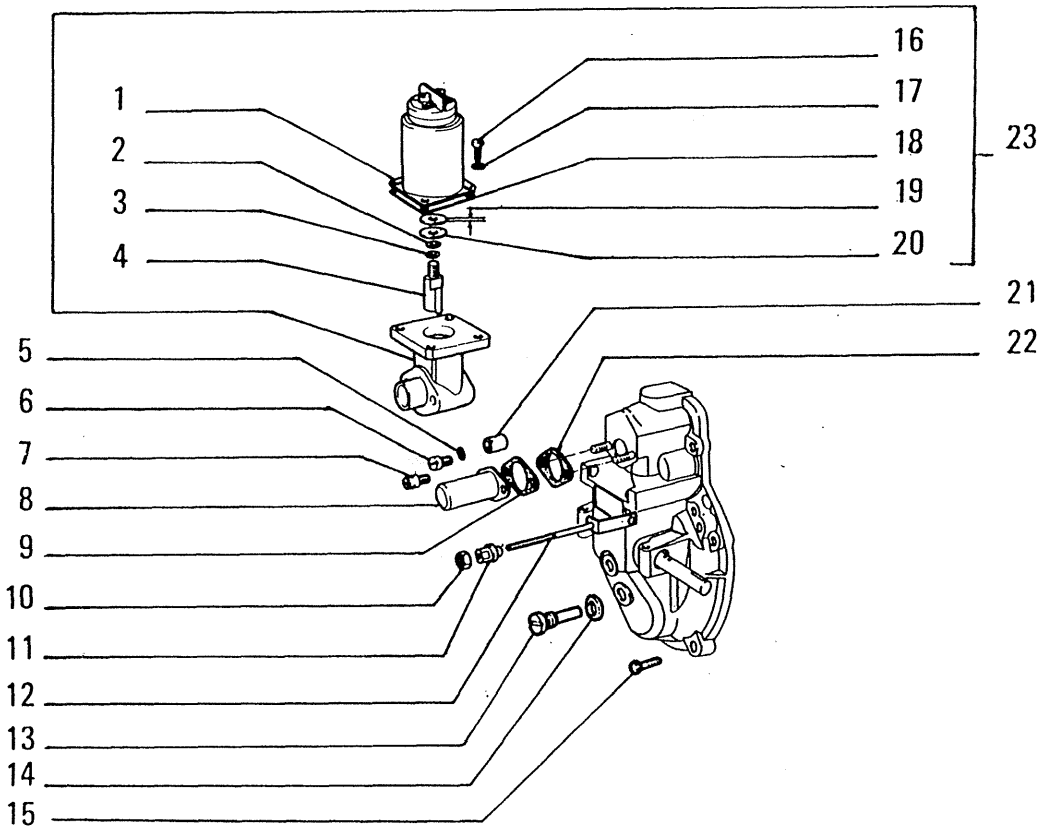

ITEM	PART NUMBER	QTY	TRANS CODE	DESCRIPTION	DESCRIZIONE
19	1288472		198S	SHIM 0,2	SPESSORE 0,2
	79023676		198S	SHIM 0,1	SPESSORE 0,1
	79023677		198S	SHIM 0,2	SPESSORE 0,2
	79023678		198S	SHIM 0,5	SPESSORE 0,5
	79023679		198S	SHIM 1	SPESSORE 1
20	79023675	1	131R	WASHER	ROSETTA
21	79023685	2	145B	GUIDE BUSHING	BUSSOLA
22	1307608	3	123G	SEAL ASSY D1471	GUARNIZIONE TENUTA FRONTALE D1471
	9009127	3	123G	SEAL ASSY C1471	GUARNIZIONE TENUTA FRONTALE C1471
23	79023671	1	30E	SOLENOID - ASSEMBLY	ELETTROMAGNETE - COMPLETO

C 1471 → Tel.n. 051100
D 1471 Tel.n. 051101 →

C 1473 → Mot.n. 1180 USAGE: Units with 8205 Engine

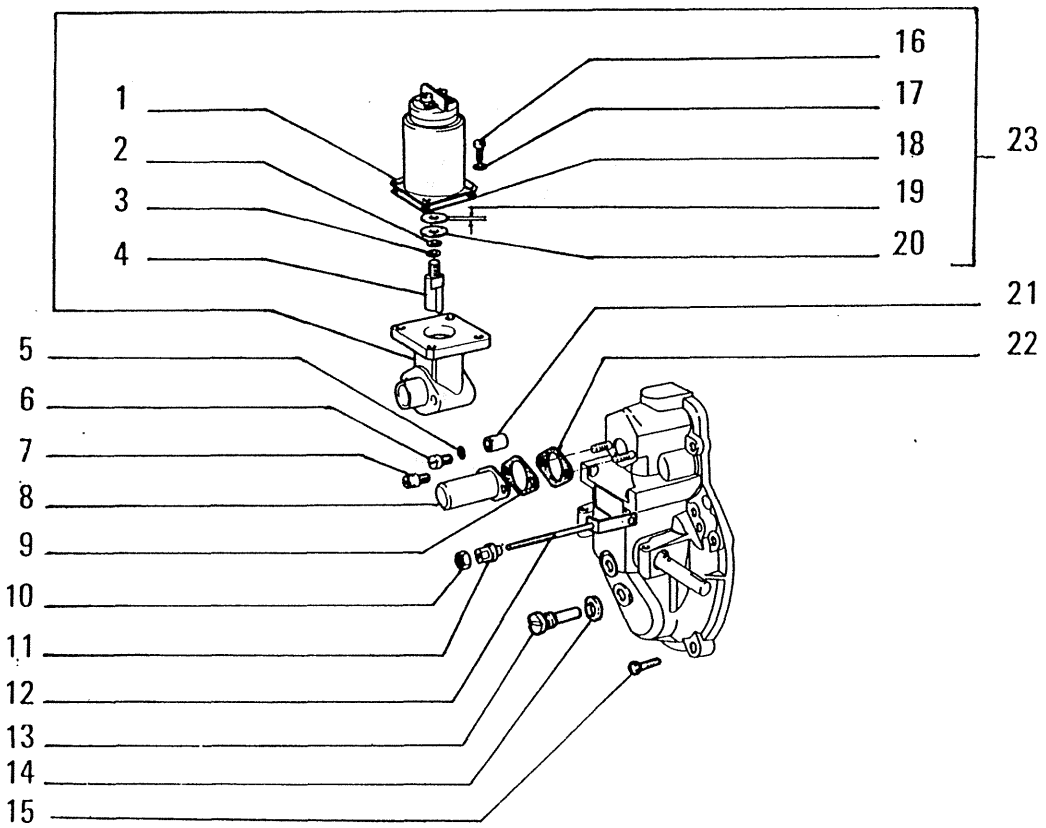

ITEM	PART NUMBER	QTY	TRANS CODE	DESCRIPTION	DESCRIZIONE
1	79023672	1	12M	MAGNETO	MAGNETE
2	12604271	1	131R	WASHER 6,4x11 C1471	ROSETTA 6,4x11 C1471
	79046549	1	131R	WASHER D1471	ROSETTA D1471
3	9930414	1	131R	WASHER	ROSETTA
4	79023673	1	80P	PIN	PERNO
5	10516471	2	132R	LOCKWASHER 6,1x1,8	ROSETTA DI SICUREZZA 6,1x1,8
6	79023668	1	40V	SCREW	VITE
7	79023680	1	40V	SCREW	VITE
8	9930417	1	65C	BOOT	CAPPUCCIO
9	1307609	1	123G	SEAL ASSY D1471	GUARNIZIONE TENUTA FRONTALE D1471
	9009128	1	123G	SEAL ASSY C1471	GUARNIZIONE TENUTA FRONTALE C1471
10	15896411	1	10D	NUT 5x0,8x4 C1471	DADO 5x0,8x4 C1471
11	79023683	1	145B	GUIDE BUSHING	BUSSOLA
12	79023682	1	142T	TIEROD	TIRANTE
13	9001950	1	40V	SCREW	VITE
14	79038381	1	131R	WASHER	ROSETTA
15	10377011	5	40V	SCREW 6x1x25	VITE 6x1x25
16	10389321	4	40V	SCREW 5x0,8x10 D1471	VITE 5x0,8x10 D1471
	79022481	4	40V	SCREW C1471	VITE C1471
17	11195471	4	131R	WASHER 5,1x1,1 D1471	ROSETTA 5,1x1,1 D1471
	79032335	4	132R	LOCKWASHER C1471	ROSETTA DI SICUREZZA C1471
18	2537590	1	123G	SEAL ASSY D1471	GUARNIZIONE TENUTA FRONTALE D1471
	79023674	1	123G	SEAL ASSY C1471	GUARNIZIONE TENUTA FRONTALE C1471

C 1471 → Tel.n. 051100
D 1471 Tel.n. 051101 →

C 1473 → Mot.n. 1180

USAGE: Units with 8205 Engine

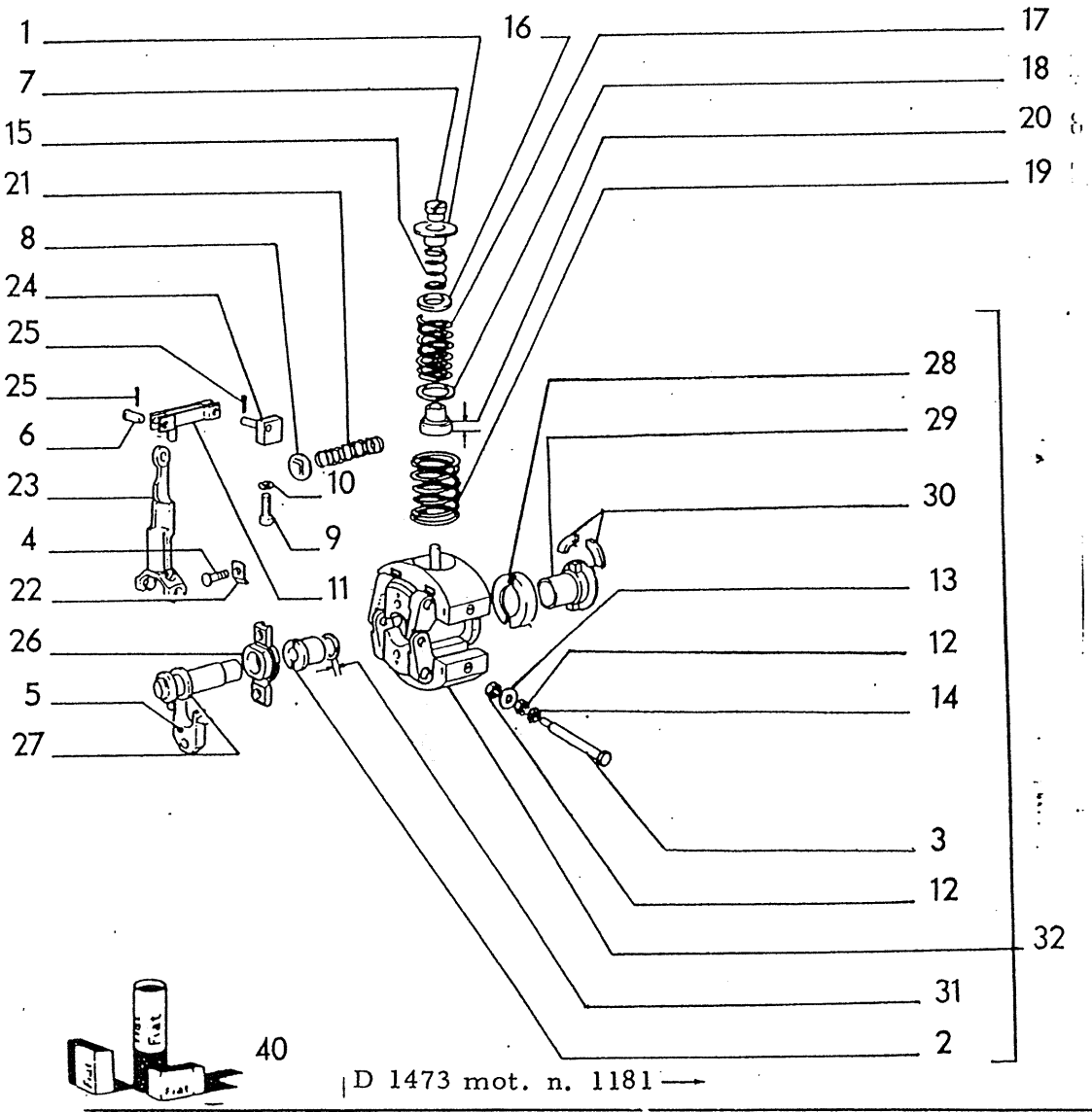

D 1473 mot. n. 1181 →

ITEM	PART NUMBER	QTY	TRANS CODE	DESCRIPTION	DESCRIZIONE
26	79023645	1	95B	BUSHING	BOCCOLA
27	79023669	1	80P	PIN	PERNO
28	79023700	1	60S	CUP	SCODELLINO
29	79039753	1	67G	COUPLING	GIUNTO
30	8122151	4	61T	CUSHION PAD	TASSELLO ELASTICO
31	79023689		198S	SHIM 1,60 MM	SPESSORE 1,60 MM
	79023690		198S	SHIM 1,65 MM	SPESSORE 1,65 MM
	79023691		198S	SHIM 1,70 MM	SPESSORE 1,70 MM
	79023692		198S	SHIM 1,75 MM	SPESSORE 1,75 MM
	79023693		198S	SHIM 1,80 MM	SPESSORE 1,80 MM
	79023694		198S	SHIM 1,85 MM	SPESSORE 1,85 MM
	79023695		198S	SHIM 1,90 MM	SPESSORE 1,90 MM
	79023696		198S	SHIM 1,95 MM	SPESSORE 1,95 MM
	79023697		198S	SHIM 2,00 MM	SPESSORE 2,00 MM
	79023698		198S	SHIM 2,05 MM	SPESSORE 2,05 MM
	79023699		198S	SHIM 2,10 MM	SPESSORE 2,10 MM
32	774370	1	72D	GOVERNOR REGULATING ASSY - ASSEMBLY	DISPOSITIVO DI REGOLAZIONE - COMPLETO
40	774371	K	1K	KIT SEE PAGE 9	KIT VED. PAG.9

USAGE: Units with 8205 Engine ROV425 1000PF220

SPEED GOVERNOR – REGOLATORE DI VELOCITA' – REGULATEUR DE VITESSE – DREHZAHLREGLER – REGULADOR D. VELOCIDAD

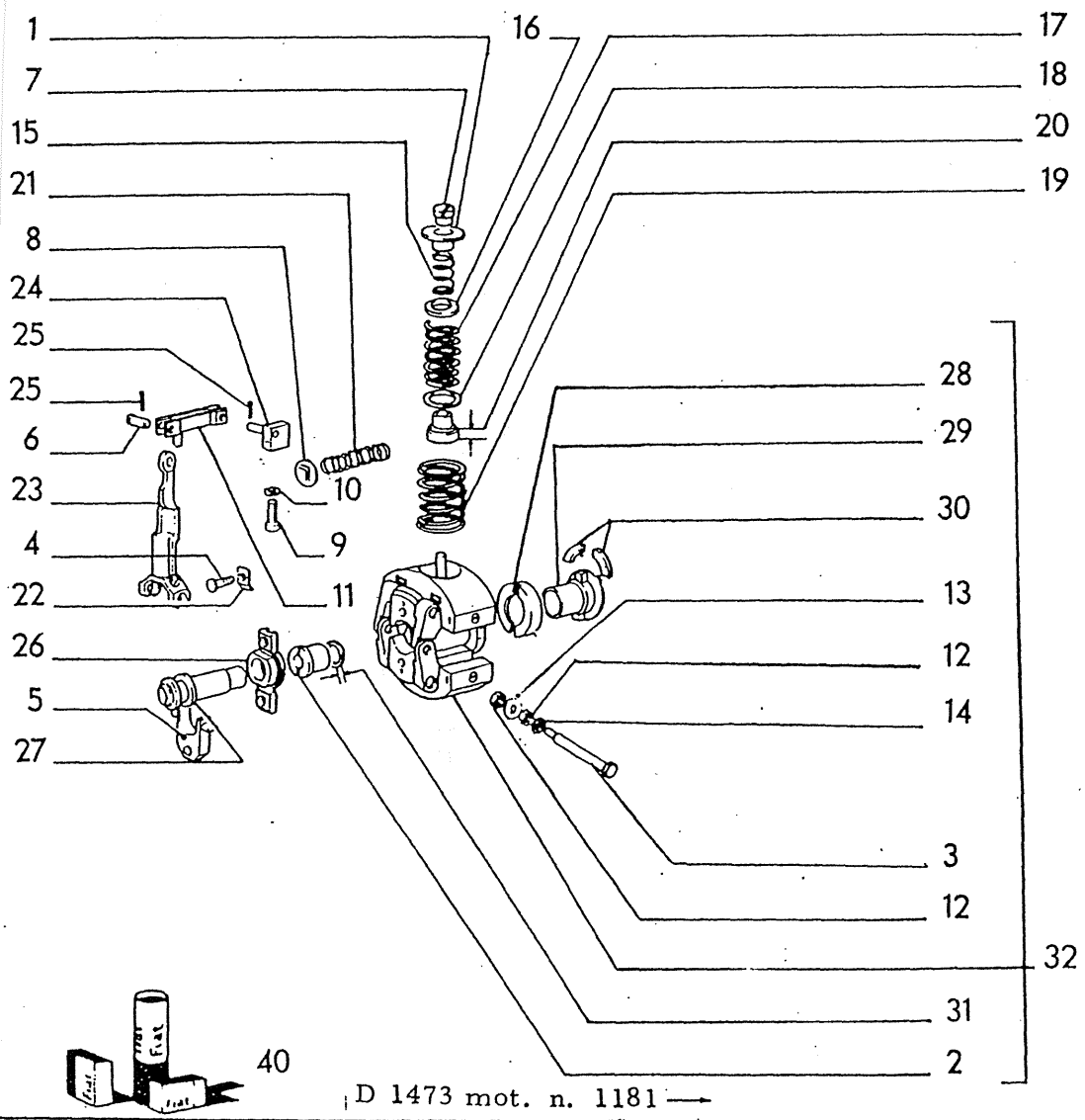

FIATALLIS A2.28/ 1 TAV. 2

ITEM	PART NUMBER	QTY	TRANS CODE	DESCRIPTION	DESCRIZION
1	79035484	2	120P	PLATE	PIATTELLO
2	79039765	1	50G	RING NUT	GHIERA
3	79039763	1	80P	PIN	PERNO
4	10902221	2	40V	SCREW 6x1x16	VITE 6x1x16
5	9009114	1	165S	ARTICULATION	SNODO
6	79039743	1	80P	PIN	PERNO
7	79035483	2	50G	RING NUT	GHIERA
8	79045920	1	50T	PLUG	TAPPO
9	10389321	2	40V	SCREW 5x0,8x10	VITE 5x0,8x10
10	12035471	2	131R	WASHER 5,1x1	ROSETTA 5,1x1
11	79023648	1	85F	YOKE	FORCELLA
12	15896221	3	10D	NUT 6x1x5	DADO 6x1x5
13	79039751	1	131R	WASHER	ROSETTA
14	79039752	1	131R	WASHER	ROSETTA
15	773763	2	100M	SPRING	MOLLA
16	9929609	2	198S	SHIM	SPESSORE
17	79023642	2	100M	SPRING	MOLLA
18	79023644	2	131R	WASHER	ROSETTA
19	774152	2	100M	SPRING	MOLLA
20	79023638	2	120P	PLATE 2,95 MM	PIATTELLO 2,95 MM
	79023639	2	120P	PLATE 3,10 MM	PIATTELLO 3,10 MM
	79023640	2	120P	PLATE 3,25 MM	PIATTELLO 3,25 MM
21	79045921	1	100M	SPRING	MOLLA
22	79023646	2	110P	PLAQUE	PIASTRINA
23	79023670	1	45L	LEVER	LEVA
24	00772746	1	45F	CLIP	FERMAGLIO
25	10795001	3	270C	COTTER PIN 1,3x13,7	COPIGLIA 1,3x13,7

USAGE: Units with 8205 Engine ROV425 1000PF220

SPEED GOVERNOR – REGOLATORE DI VELOCITA' – REGULATEUR DE VITESSE – DREHZAHLREGLER – REGULADOR D. VELOCIDAD

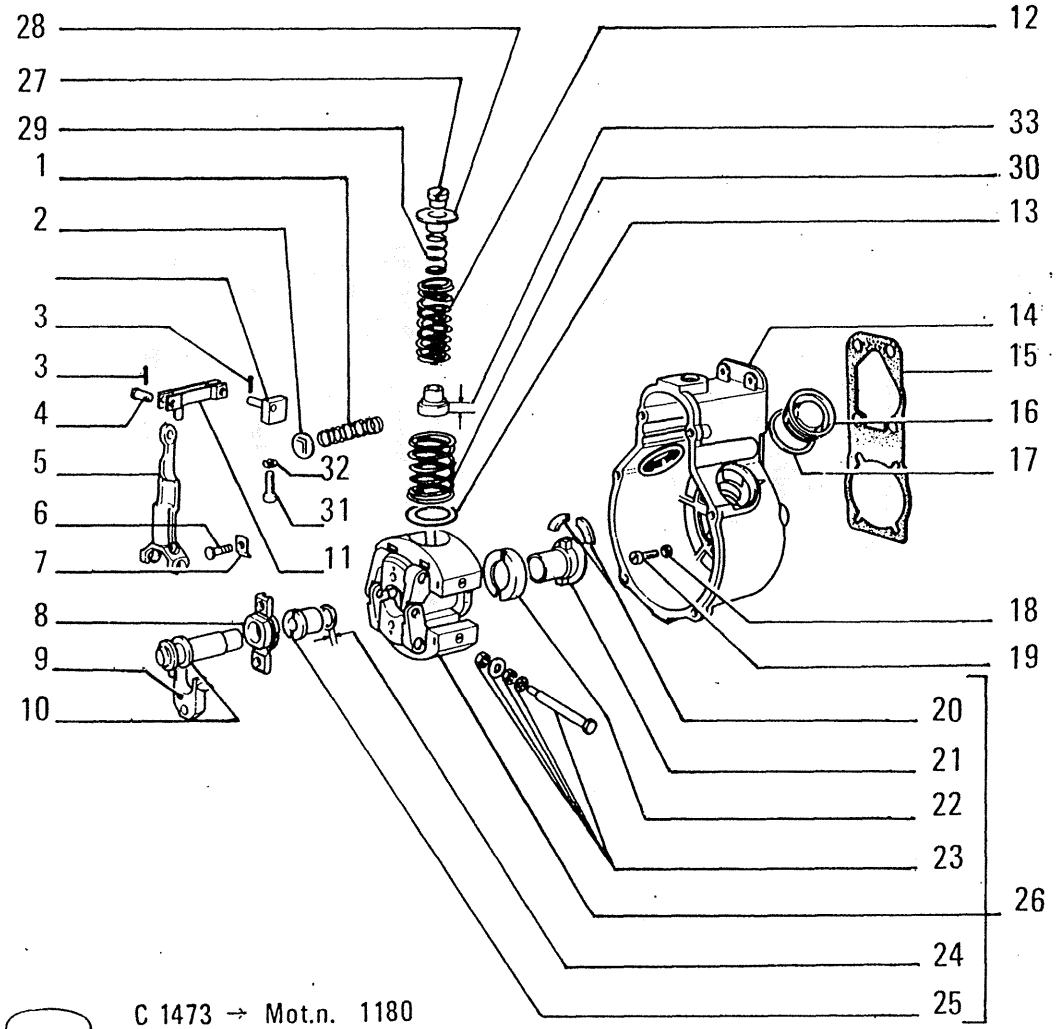

C 1473 → Mot.n. 1180

USAGE: Units with 8205 Engine

ITEM	PART NUMBER	QTY	TRANS CODE	DESCRIPTION	DESCRIZIONE
24	79062785		198S	SHIM 2,05 **D1471**	SPESSORE 2,05 **D1471**
	79062786		198S	SHIM 2,08 **D1471**	SPESSORE 2,08 **D1471**
	79062788		198S	SHIM 2,14 **D1471**	SPESSORE 2,14 **D1471**
25	9001906	1	50G	RING NUT	GHIERA
26	1288953	1	72D	GOVERNOR REGULATING ASSY - ASSEMBLY **D1471**	DISPOSITIVO DI REGOLAZIONE - COMPLETO **D1471**
	79023686	1	72D	GOVERNOR REGULATING ASSY - ASSEMBLY **C1471**	DISPOSITIVO DI REGOLAZIONE - COMPLETO **C1471**
27	79035483	2	10D	NUT	DADO
28	79035484	2	120P	PLATE	PIATTELLO
29	79062768	2	100M	SPRING	MOLLA
30	1288821	2	100M	SPRING	MOLLA
31	9960123	2	40V	SCREW	VITE
32	10571479	2	170R	LOCKWASHER 5,1x1,2	ROSETTA EL. 5,1x1,2
33	79046544	2	120P	PLATE 16,95MM	PIATTELLO 16,95MM
	79046545	2	120P	PLATE 17,10MM	PIATTELLO 17,10MM
	79046546	2	120P	PLATE 17,25MM	PIATTELLO 17,25MM

C 1471 → Tel.n. 051100
D 1471 Tel.n. 051101 →

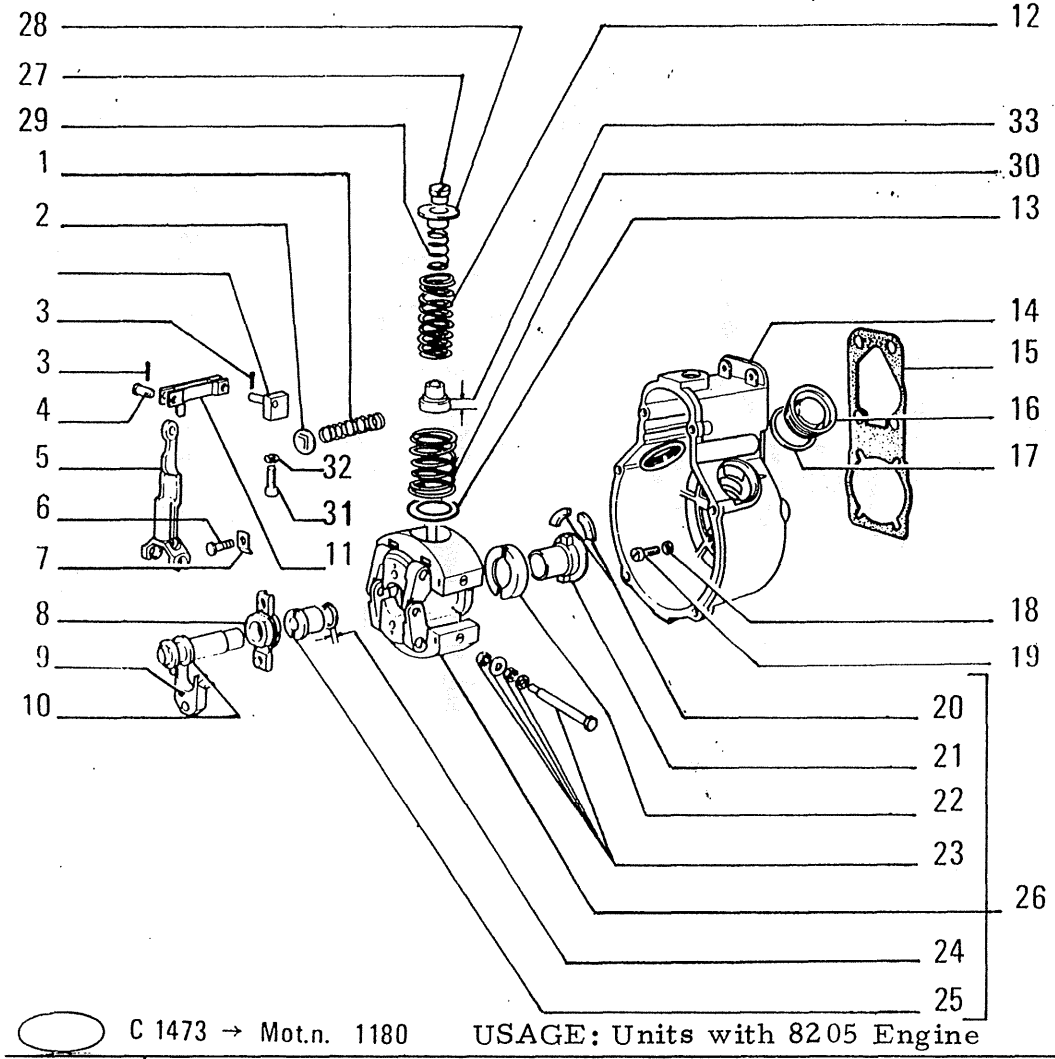

C 1473 → Mot.n. 1180 USAGE: Units with 8205 Engine

ITEM	PART NUMBER	QTY	TRANS CODE	DESCRIPTION	DESCRIZIONE
22	79023700	1	60S	CUP	SCODELLINO
23	9007831	1	80P	PIN	PERNO
24	79023689		198S	SHIM 1,60 **C1471**	SPESSORE 1,60 **C1471**
	79023690		198S	SHIM 1,65 **C1471**	SPESSORE 1,65 **C1471**
	79023691		198S	SHIM 1,70 **C1471**	SPESSORE 1,70 **C1471**
	79023692		198S	SHIM 1,75 **C1471**	SPESSORE 1,75 **C1471**
	79023693		198S	SHIM 1,80 **C1471**	SPESSORE 1,80 **C1471**
	79023694		198S	SHIM 1,85 **C1471**	SPESSORE 1,85 **C1471**
	79023695		198S	SHIM 1,90 **C1471**	SPESSORE 1,90 **C1471**
	79023696		198S	SHIM 1,95 **C1471**	SPESSORE 1,95 **C1471**
	79023697		198S	SHIM 2,00 **C1471**	SPESSORE 2,00 **C1471**
	79023698		198S	SHIM 2,05 **C1471**	SPESSORE 2,05 **C1471**
	79023699		198S	SHIM 2,10	SPESSORE 2,10
	79062771		198S	SHIM 1,63 **D1471**	SPESSORE 1,63 **D1471**
	79062772		198S	SHIM 1,66 **D1471**	SPESSORE 1,66 **D1471**
	79062773		198S	SHIM 1,69 **D1471**	SPESSORE 1,69 **D1471**
	79062774		198S	SHIM 1,72 **D1471**	SPESSORE 1,72 **D1471**
	79062775		198S	SHIM 1,75 **D1471**	SPESSORE 1,75 **D1471**
	79062776		198S	SHIM 1,78 **D1471**	SPESSORE 1,78 **D1471**
	79062777		198S	SHIM 1,81 **D1471**	SPESSORE 1,81 **D1471**
	79062778		198S	SHIM 1,84 **D1471**	SPESSORE 1,84 **D1471**
	79062779		198S	SHIM 1,87 **D1471**	SPESSORE 1,87 **D1471**
	79062780		198S	SHIM 1,90 **D1471**	SPESSORE 1,90 **D1471**
	79062781		198S	SHIM 1,93 **D1471**	SPESSORE 1,93 **D1471**
	79062782		198S	SHIM 1,96 **D1471**	SPESSORE 1,96 **D1471**
	79062783		198S	SHIM 1,99 **D1471**	SPESSORE 1,99 **D1471**
	79062784		198S	SHIM 2,02 **D1471**	SPESSORE 2,02 **D1471**

C 1471 → Tel.n. 051100
D 1471 Tel.n. 051101 →

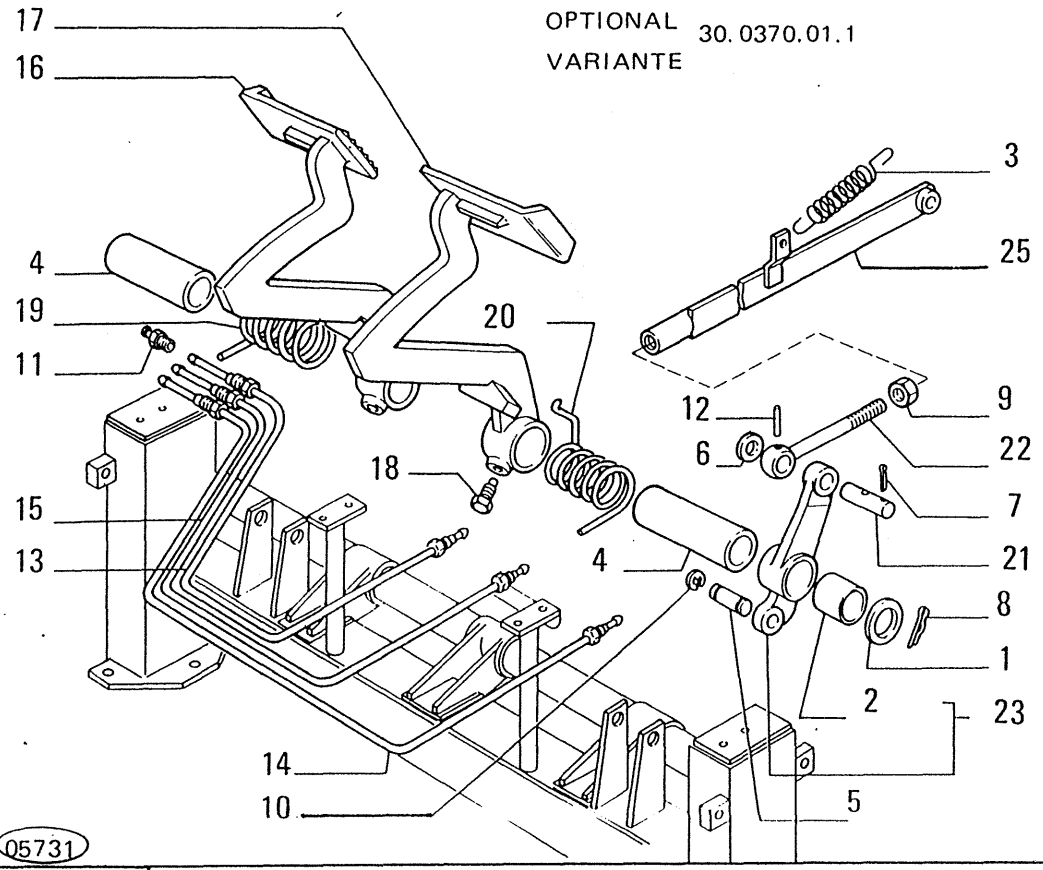

ITEM	PART NUMBER	QTY	TRANS CODE	DESCRIPTION	DESCRIZIONE
1	4951818	2	131R	WASHER	ROSETTA
2	4958508	2	95B	BUSHING	BOCCOLA
3	4967635	2	100M	SPRING	MOLLA
4	4985734	2	75D	SPACER	DISTANZIALE
5	10249510	2	80P	PIN 14x36	PERNO 14x36
6	10520121	6	131R	WASHER 14,4x26	ROSETTA 14,4x26
7	10734601	4	270C	COTTER PIN 2,7x37,6	COPIGLIA 2,7x37,6
8	10735001	2	270C	COTTER PIN 4,4x59	COPIGLIA 4,4x59
9	10791321	2	10D	NUT 14x1,5x8	DADO 14x1,5x8
10	11066275	4	51A	LOCKRING 12,9x1	ANELLO DI SICUREZZA 12,9x1
11	13407211	3	60I	GREASE FITTING 10x1	INGRASSATORE 10x1
12	14164270	2	200S	PIN 4,4x28	SPINA 4,4x28
13	79005073	1	193T	TUBE - RIGHT	TUBO RIGIDO - DESTRO
14	79005075	1	193T	TUBE - LEFT	TUBO RIGIDO - SINISTRO
15	79005077	1	193T	TUBE	TUBO RIGIDO
16	79009676	1	45L	LEVER - RIGHT ASSEMBLY	LEVA - DESTRO COMPLETO
17	79009677	1	45L	LEVER - LEFT ASSEMBLY	LEVA - SINISTRO COMPLETO
18	79011553	2	40V	SCREW	VITE
19	79015261	1	100M	SPRING	MOLLA
20	79015262	1	100M	SPRING	MOLLA
21	79031690	2	80P	PIN	PERNO
22	79031691	2	62E	TIEROD HEAD	ESTREMITÀ DEL TIRANTE
23	79031693	1	45L	LEVER - ASSEMBLY	LEVA - COMPLETO
	79031695	1	45L	LEVER - ASSEMBLY	LEVA - COMPLETO
25	79031696	1	142T	TIEROD - RIGHT	TIRANTE - DESTRO
	79031697	1	142T	TIEROD - LEFT	TIRANTE - SINISTRO

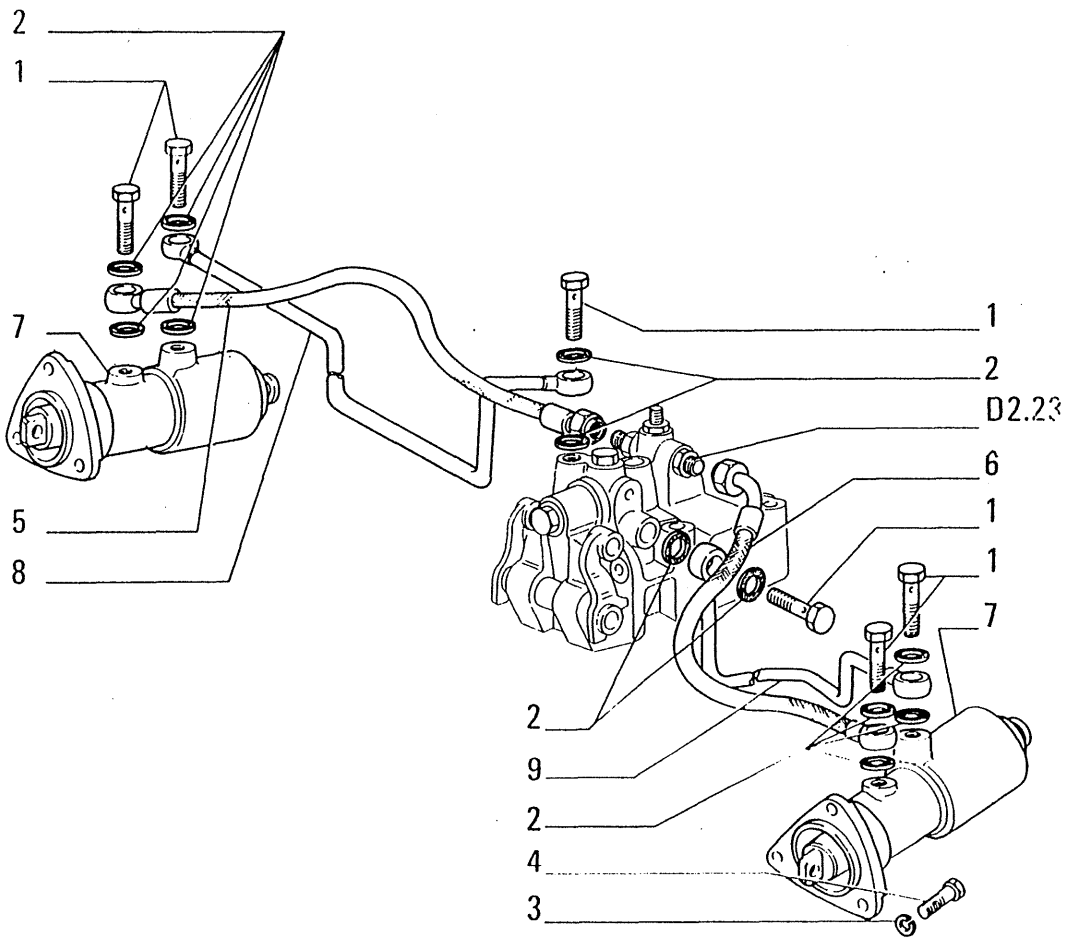

ITEM	PART NUMBER	QTY	TRANS CODE	DESCRIPTION	DESCRIZIONE
1	10184417	6	20R	FITTING 16x1,5x13	RACCORDO 16x1,5x13
2	10257060	12	133R	SEAL 16,2x22	ROSETTA DI TENUTA 16,2x22
3	10571871	6	131R	WASHER 10,2x2,2	ROSETTA 10,2x2,2
4	11306931	6	40V	SCREW 10x1,25x30	VITE 10x1,25x30
5	79013964	1	192T	HOSE ASSY	TUBO FLESS.C/RACCORDI
6	79013965	1	192T	HOSE ASSY	TUBO FLESS.C/RACCORDI
7	79015068	2	125S	BRAKE BOOSTER - ASSEMBLY SEE SGR. C1.08	SERVOFRENO - COMPLETO VEDERE SGR. C1.08
8	79036651	1	193T	TUBE	TUBO RIGIDO
9	79036653	1	193T	TUBE	TUBO RIGIDO

05569

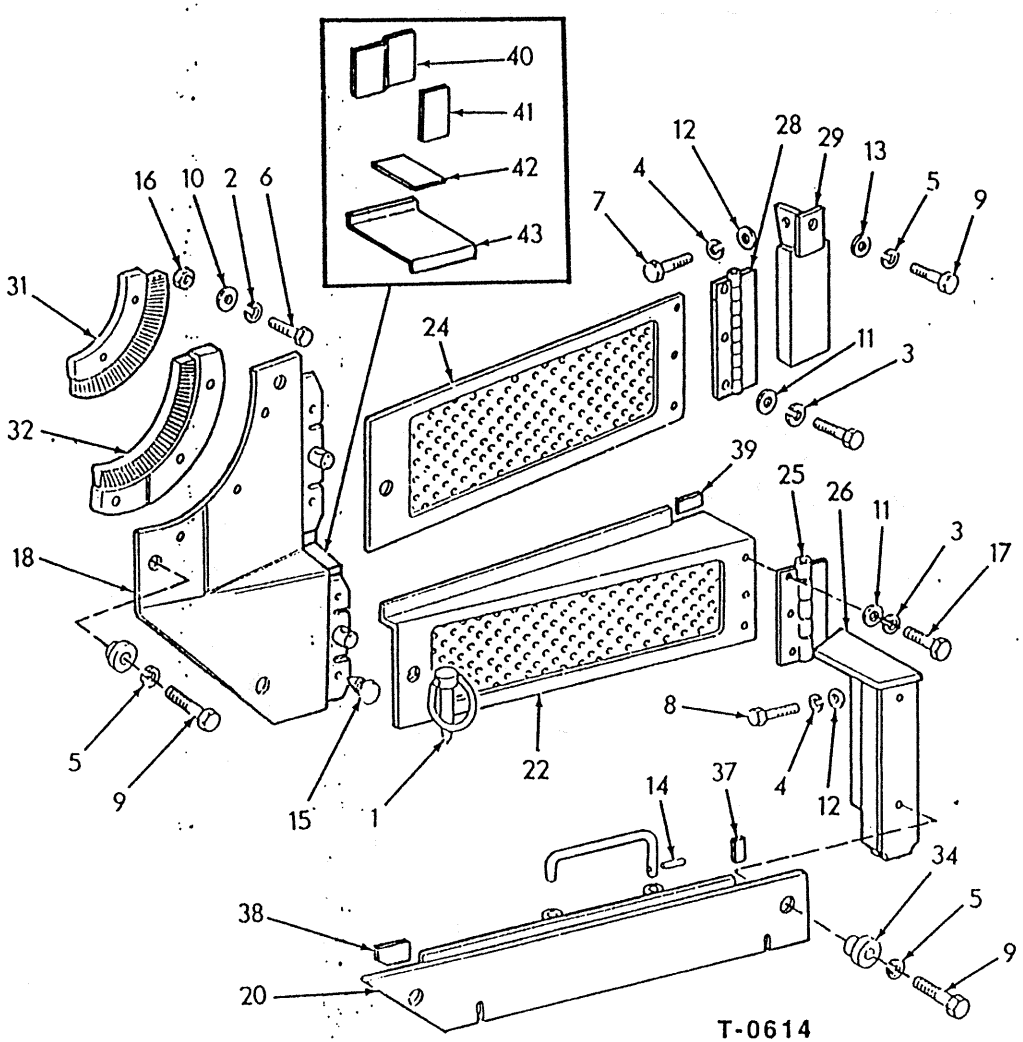

OPTIONAL 30.0836.08.1
05526 VARIANTE

ITEM	PART NUMBER	QTY	TRANS CODE	DESCRIPTION	DESCRIZIONE
24	79031957				SINISTRO
	79037499	1	52F	SIDE PANEL - UPPER RIGHT	FIANCHETTO - SUPERIORE DEST
25	79031971	2	140C	HINGE - LOWER TO BE WELDED 05 (*)	CERNIERA - INFERIORE DA SALDARE 05 (*)
26	79031972	1	115M	PILLAR - LOWER RIGHT ASSEMBLY 05 (*)	MONTANTE - INFERIORE DESTRO COMPLETO 05 (*)
	79031973	1	115M	PILLAR - LOWER LEFT ASSEMBLY 05 (*)	MONTANTE - INFERIORE SINISTF COMPLETO 05 (*)
28	79031995	2	140C	HINGE - UPPER TO BE WELDED 05 (*)	CERNIERA - SUPERIORE DA SALDARE 05 (*)
29	79031996	1	115M	PILLAR - UPPER RIGHT ASSEMBLY 05 (*)	MONTANTE - SUPERIORE DESTR COMPLETO 05 (*)
	79031997	1	115M	PILLAR - UPPER LEFT ASSEMBLY 05 (*)	MONTANTE - SUPERIORE SINIST COMPLETO 05 (*)
					SPAZZOLA - SUPERIORE **C1120**
31	79047162	2	177S	BRUSH - UPPER 05 (*)	SPAZZOLA - SUPERIORE 05 (*) **D1120**
					SPAZZOLA - INFERIORE DESTRO **C1120**
					SPAZZOLA - INFERIORE SINISTR **C1120**
32	79047163	1	177S	BRUSH - LOWER RIGHT 05 (*)	SPAZZOLA - INFERIORE DESTRO 05 (*) **D1120**
	79047164	1	177S	BRUSH - LOWER LEFT 05 (*)	SPAZZOLA - INFERIORE SINISTR 05 (*) **D1120**
34	79032003	10	95B	BUSHING 05 (*)	BOCCOLA 05 (*)

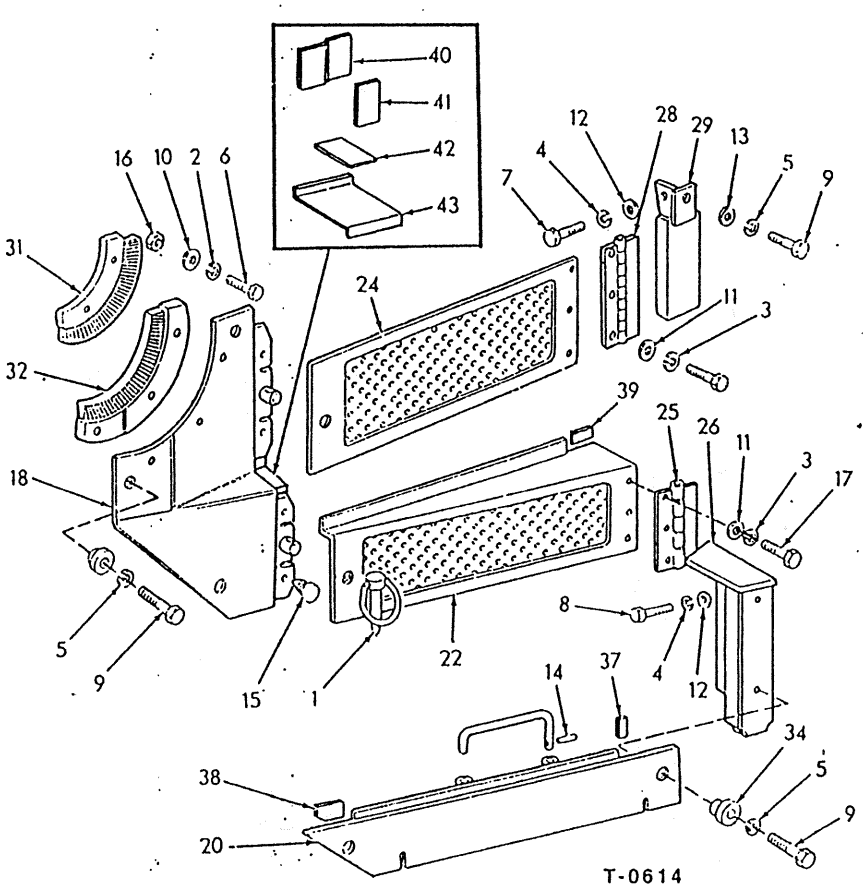

ITEM	PART NO.	QTY.	CODE	DESCRIPTION	DENOMINAZIONE
36	790375392		90A	ROD 05 (*)	ASTA
37	a,b731540832		64L	STRIP	PIASTRINA
38	a,b731540842		64L	STRIP	PIASTRINA
39	a,b731540852		64L	STRIP	PIASTRINA
40	a,b731540872		64L	STRIP	PIASTRINA
41	a,b731540882		64L	STRIP	PIASTRINA
42	a,b731540902		64L	STRIP	PIASTRINA

(*)SPECIAL EQUIPMENT
30.0021.08.1

a.REQUIRES WELDING

b.UNITS EQUIPPED FOR SANITARY LANDFILL OR FORESTRY.

HOOD ASSEMBLY

L101/1

Revised April 1989

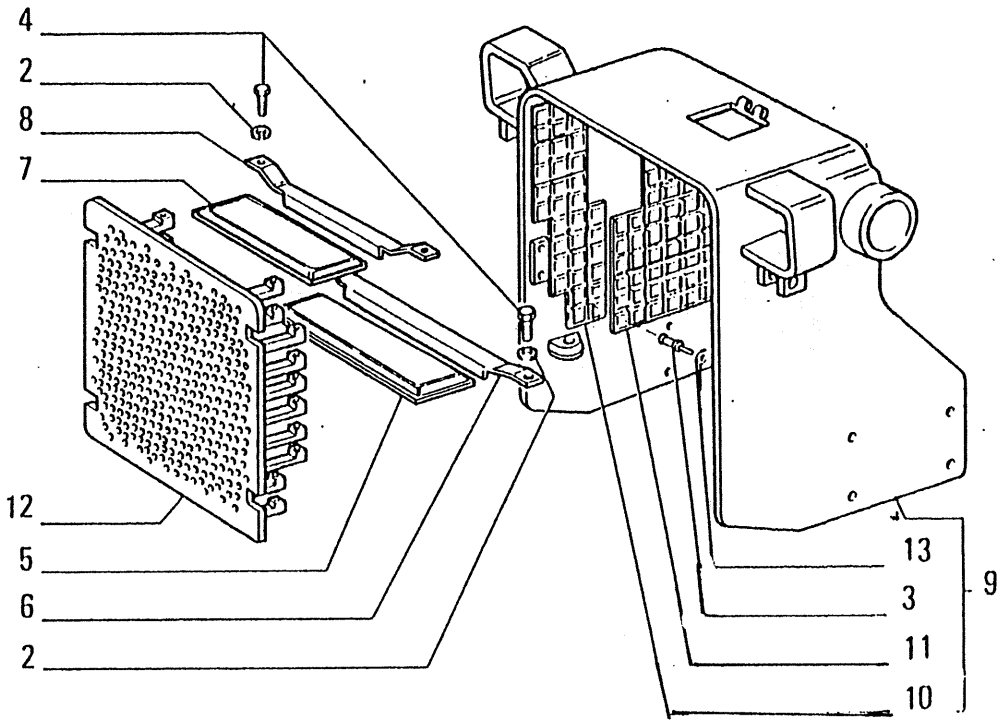

OPTIONAL 30.0022.24.1
VARIANTE

05527

ITEM	PART NUMBER	QTY	TRANS CODE	DESCRIPTION	DESCRIZIONE
2	10516671	20	131R	WASHER 8,1×2,2	ROSETTA 8,1×2,2
3	14641995	44	55R	RIVET 2,3×10,4	RIBATTINO 2,3×10,4
4	16043131	20	40V	SCREW 8×1,25×14	VITE 8×1,25×14
5	79015576	6	136S	SECTOR - FRONT	SETTORE - ANTERIORE
6	79015905	6	180T	CROSS BEAM	TRAVERSA
7	79018014	4	136S	SECTOR - FRONT	SETTORE - ANTERIORE
8	79018020	4	180T	CROSS BEAM	TRAVERSA
9	79038941	1	330C	BOOT - ASSEMBLY	CUFFIA - COMPLETO
10	79038943	2	25P	PANEL - FRONT	PANNELLO - ANTERIORE
11	79038944	2	25P	PANEL - REAR	PANNELLO - POSTERIORE
12	79038945	1	70R	PROTECTION - FRONT	RIPARO - ANTERIORE
13	12642801	44	131R	WASHER 4,15×12,5	ROSETTA 4,15×12,5

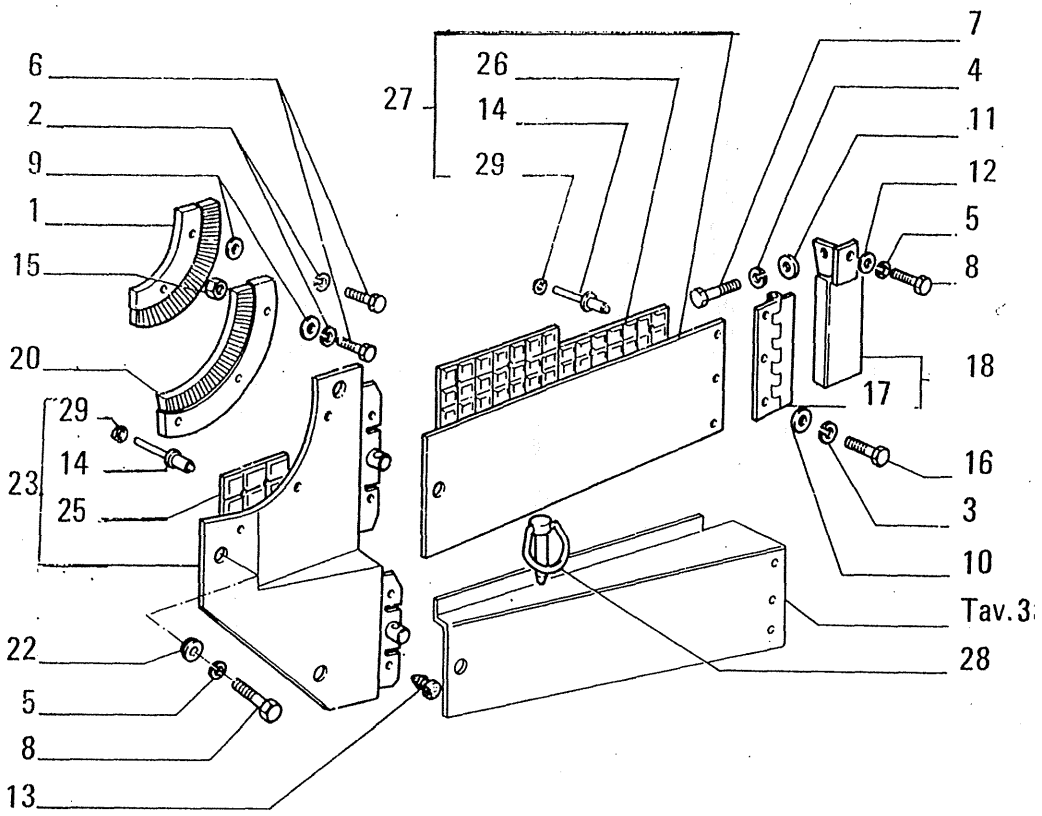

OPTIONAL
VARIANTE 30.0022.24.1

ITEM	PART NUMBER	QTY	TRANS CODE	DESCRIPTION	DESCRIZIONE
					SPAZZOLA - SUPERIORE
1	79047162	2	177S	BRUSH - UPPER	SPAZZOLA - SUPERIORE
2	10571571	10	131R	WASHER 6,1x1,6	ROSETTA 6,1x1,6
3	10571771	6	131R	WASHER 8,1x2	ROSETTA 8,1x2
4	10571871	4	131R	WASHER 10,2x2,2	ROSETTA 10,2x2,2
5	10571971	10	131R	WASHER 12,2x2,5	ROSETTA 12,2x2,5
6	10902631	10	40V	SCREW 6x1x25	VITE 6x1x25
7	11106431	4	40V	SCREW 10x1,5x30	VITE 10x1,5x30
8	11112631	8	40V	SCREW 12x1,75x35	VITE 12x1,75x35
9	12644421	10	131R	WASHER 6,15x15	ROSETTA 6,15x15
10	12646721	6	131R	WASHER 8,15x20	ROSETTA 8,15x20
11	12646821	4	131R	WASHER 10,2x25	ROSETTA 10,2x25
12	12646921	2	131R	WASHER 12,2x28	ROSETTA 12,2x28
13	14567080	2	120B	BUTTON 8,5x14	BOTTONE 01-02-03 8,5x14
					BOTTONE 05 (*) 8,5x14
14	14641995	24	55R	RIVET 2,3x10,4	RIBATTINO 01-02-03 2,3x10,4
					RIBATTINO 05 (*) 2,3x10,4
					RIBATTINO 2,3x12
15	15896221	6	10D	NUT 6x1x5	DADO 6x1x5
16	16043431	6	40V	SCREW 8x1,25x20	VITE 8x1,25x20
17	79031995	2	140C	HINGE - UPPER TO BE WELDED	CERNIERA - SUPERIORE DA SALDARE
18	79031996	1	115M	PILLAR - UPPER ASSEMBLY RIGHT	MONTANTE - SUPERIORE COMPLETO DESTRO

05528

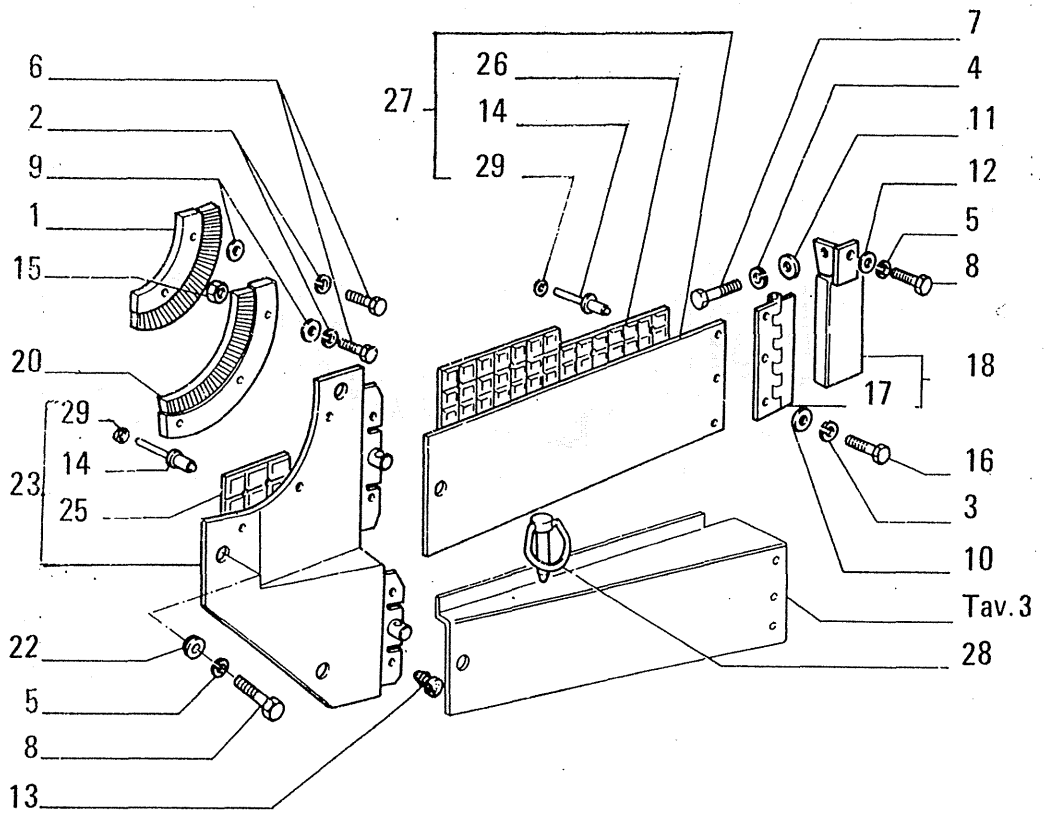

ITEM	PART NUMBER	QTY	TRANS CODE	DESCRIPTION	DESCRIZIONE
18	79031997	1	115M	PILLAR - UPPER ASSEMBLY LEFT	MONTANTE - SUPERIORE COMPLETO SINISTRO
					SPAZZOLA - INFERIORE DESTRO
					SPAZZOLA - INFERIORE SINISTRO
	79047163	1	177S	BRUSH - LOWER RIGHT	SPAZZOLA - INFERIORE DESTRO
	79047164	1	177S	BRUSH - LOWER LEFT	SPAZZOLA - INFERIORE SINISTRO
22	79032003	6	95B	BUSHING	BOCCOLA
23	79038949	1	52F	SIDE PANEL - RIGHT ASSEMBLY	FIANCHETTO - DESTRO COMPLETO
	79038950	1	52F	SIDE PANEL - LEFT ASSEMBLY	FIANCHETTO - SINISTRO COMPLETO
25	79038951	2	25P	PANEL	PANNELLO
26	79039202	2	25P	PANEL	PANNELLO 01 03
					PANNELLO 05 (*)
27	79039204	1	52F	SIDE PANEL - RIGHT ASSEMBLY	FIANCHETTO - DESTRO COMPLETO 01 03
					FIANCHETTO - DESTRO COMPLETO 05 (*)
	79039241	1	52F	SIDE PANEL - LEFT ASSEMBLY	FIANCHETTO - SINISTRO COMPLETO 01-02-03
					FIANCHETTO - SINISTRO COMPLETO 05 (*)
28	4967704	2	200S	PIN	SPINA
29	12642801	24	131R	WASHER 4,15x12,5	ROSETTA 01 -03 4,15x12,5
(*)			469P	FOR SPECIAL EQUIPMENT 30.0021.07.1	PER VARIANTE 30.0021.07.1

OPTIONAL VARIANTE 30.0022.24.1

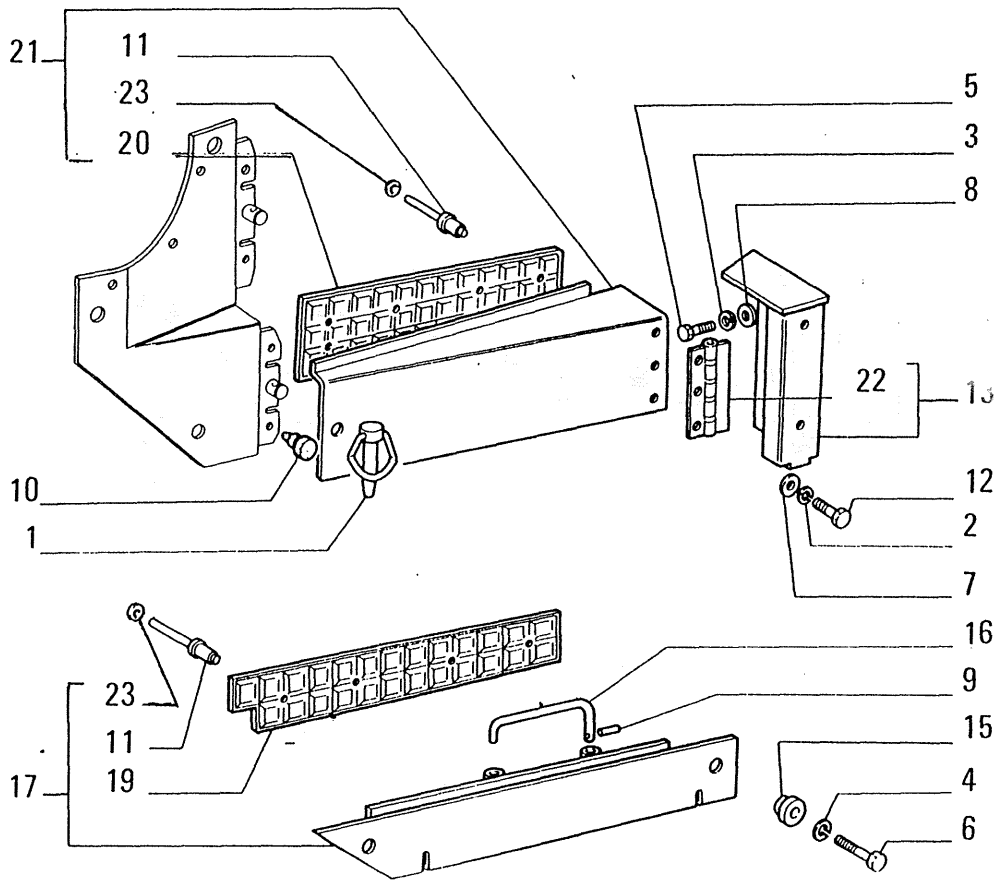

OPTIONAL
VARIANTI

30.0022.24.1

05529

ITEM	PART NUMBER	QTY	TRANS CODE	DESCRIPTION	DESCRIZIONE
1	4967704	2	200S	PIN	SPINA
2	10571771	6	131R	WASHER 8,1x2	ROSETTA 8,1x2
3	10571871	6	131R	WASHER 10,2x2,2	ROSETTA 10,2x2,2
4	10571971	2	131R	WASHER 12,2x2,5	ROSETTA 12,2x2,5
5	11106831	6	40V	SCREW 10x1,5x40	VITE 10x1,5x40
6	11112631	4	40V	SCREW 12x1,75x35	VITE 12x1,75x35
7	12646721	6	131R	WASHER 8,15x20	ROSETTA 8,15x20
8	12646821	6	131R	WASHER 10,2x25	ROSETTA 10,2x25
9	14158470	2	200S	PIN 2,3x10	SPINA 2,3x10
10	14567080	2	120B	BUTTON 8,5x14	BOTTONE 01-02-03 8,5x14
					BOTTONE 05 (*) 8,5x14
11	14641995	24	55R	RIVET 2,3x10,4	RIBATTINO 01-02-03 2,3x10,4
					RIBATTINO 05 (*) 2,3x10,4
					RIBATTINO 2,3x12
12	16043431	6	40V	SCREW 8x1,25x20	VITE 8x1,25x20
13	79031972	1	115M	PILLAR - LOWER ASSEMBLY RIGHT	MONTANTE - INFERIORE COMPLETO DESTRO
	79031973	1	115M	PILLAR - LOWER ASSEMBLY LEFT	MONTANTE - INFERIORE COMPLETO SINISTRO
15	79032003	4	95B	BUSHING	BOCCOLA
16	79037539	2	90A	ROD	ASTA
17	79038954	1	52F	SIDE PANEL - RIGHT ASSEMBLY	FIANCHETTO - DESTRO COMPLETO
	79038955	1	52F	SIDE PANEL - LEFT ASSEMBLY	FIANCHETTO - SINISTRO COMPLETO
19	79039196	2	25P	PANEL	PANNELLO
20	79039197	2	25P	PANEL	PANNELLO 01-02-03
					PANNELLO 05 (*)

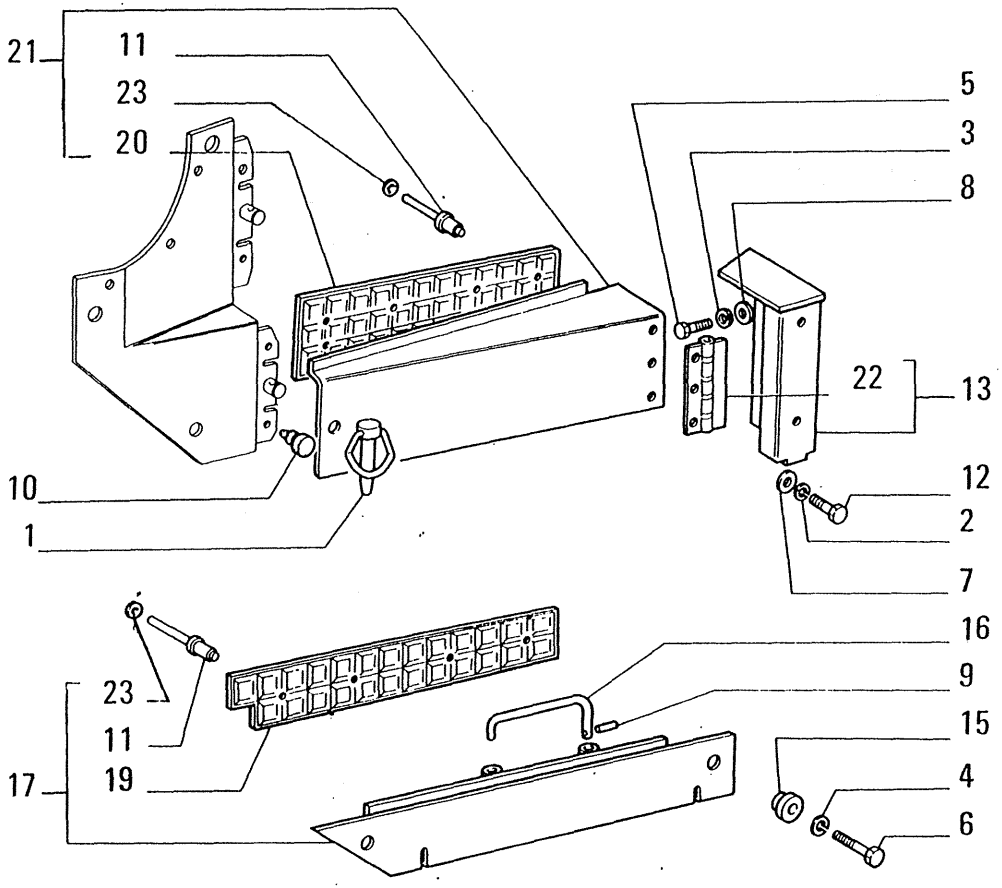

OPTIONAL 30.0022.24.1

VARIANTE

ITEM	PART NUMBER	QTY	TRANS CODE	DESCRIPTION	DESCRIZIONE
21	79039200	1	52F	SIDE PANEL - RIGHT ASSEMBLY	FIANCHETTO - DESTRO COMPLETO 01-02-03
					FIANCHETTO - DESTRO COMPLETO 05 (*)
	79039201	1	52F	SIDE PANEL - LEFT ASSEMBLY	FIANCHETTO - SINISTRO COMPLETO 01-02-03
					FIANCHETTO - SINISTRO COMPLETO 05 (*)
22	79031971	2	140C	HINGE	CERNIERA
23	12642801	24	131R	WASHER 4,15x12,5	ROSETTA -01-02-03 4,15x12,5
					ROSETTA 05 (*) 4,15x12,5
(*)			469P	FOR SPECIAL EQUIPMENT 30.0021.08.1	PER VARIANTE 30.0021.07.1

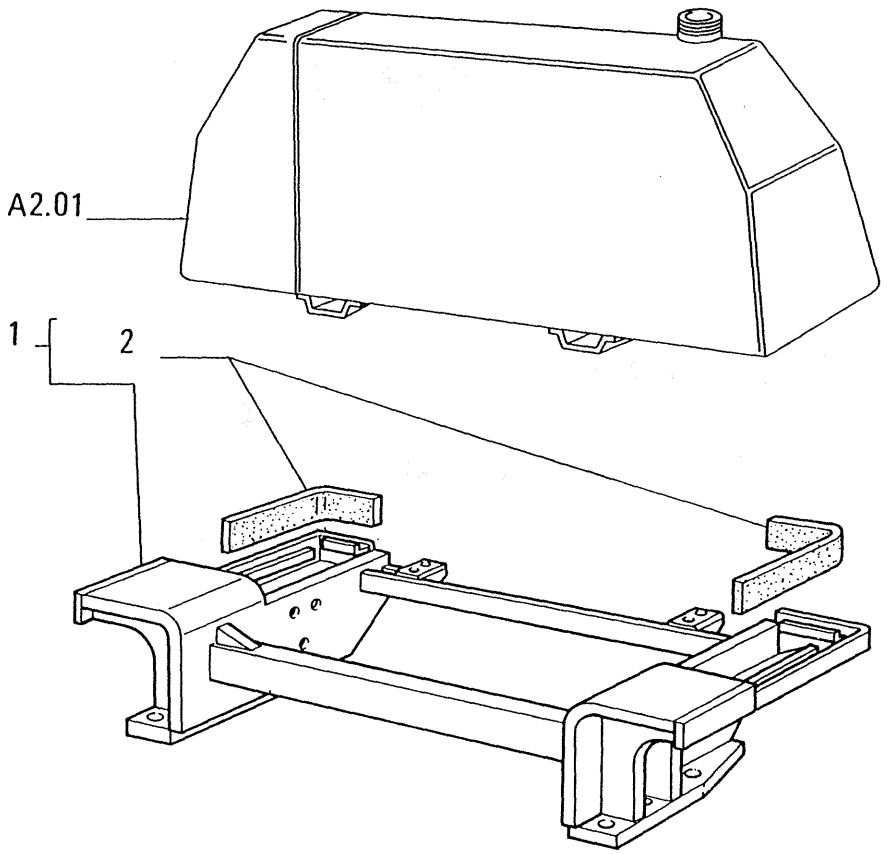

ITEM	PART NUMBER	QTY	TRANS CODE	DESCRIPTION	DESCRIZIONE
1	79039220	1	300S	SUPPORT - ASSEMBLY	SUPPORTO - COMPLETO
2	79039221	2	20N	BAND	NASTRO

OPTIONAL
VARIANTE 30.0022.24.1

05530

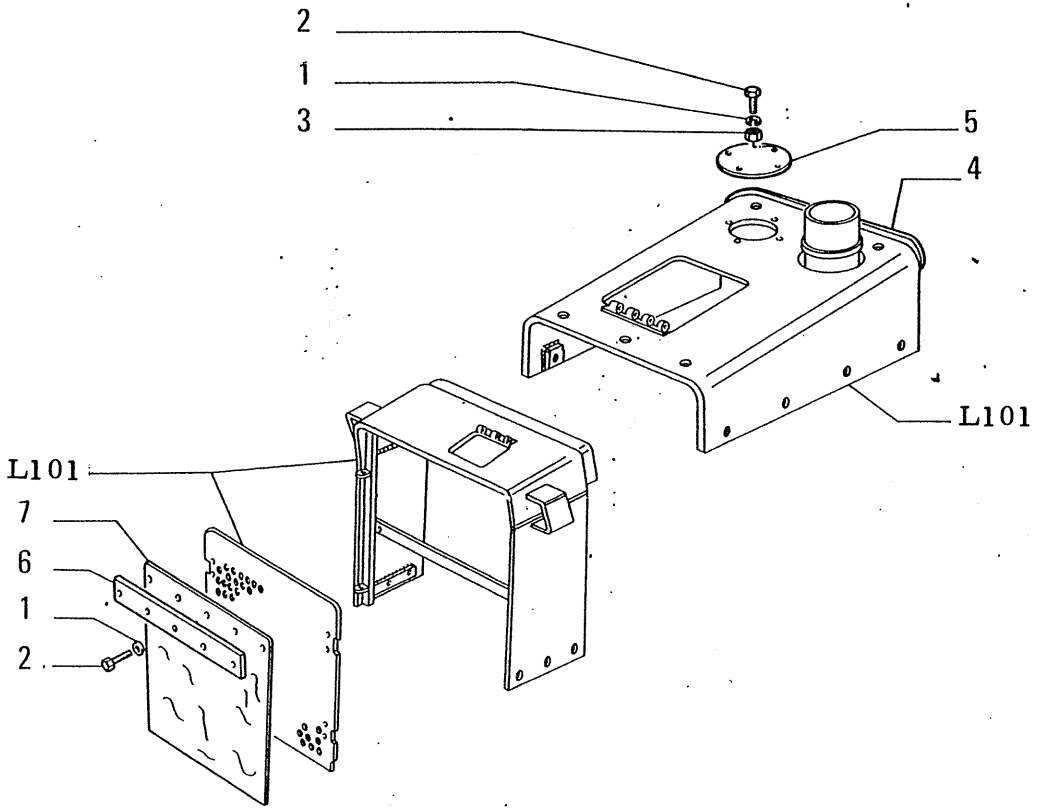

OPTIONAL 30.0021.06.1
VARIANTE 30.0021.07.1

ITEM	PART NUMBER	QTY	TRANS CODE	DESCRIPTION	DESCRIZIONE
1	10571571	11	131R	WASHER 6,1x1,6	ROSETTA 6,1x1,6
2	10902431	11	40V	SCREW 6x1x20	VITE 6x1x20
3	15896221	6	10D	NUT 6x1x5	DADO 6x1x5
4	76013866	1	176C	HOOD	COFANO
5	79044187	1	265C	COVER	COPERCHIO
6	79044809	1	14B	STRAP	BANDELLA
7	76014309	1	88T	CURTAIN	TENDINA

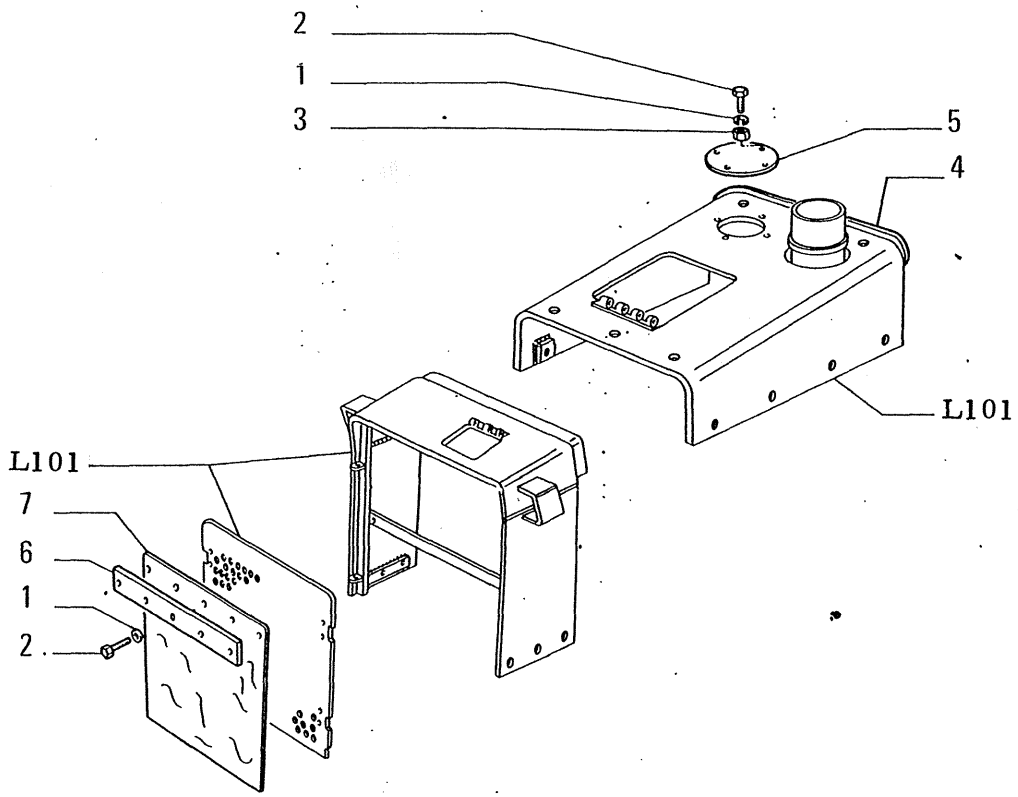

OPTIONAL 30.0021.06.1
VARIANTE 30.0021.07.1

ITEM	PART NUMBER	QTY	TRANS CODE	DESCRIPTION	DESCRIZIONE
1	10571571	11	131R	WASHER 6,1x1,6	ROSETTA 6,1x1,6
2	10902431	11	40V	SCREW 6x1x20	VITE 6x1x20
3	15896221	6	10D	NUT 6x1x5	DADO 6x1x5
4	76013866	1	176C	HOOD	COFANO
5	79044187	1	265C	COVER	COPERCHIO
6	79044809	1	14B	STRAP	BANDELLA
7	76014309	1	88T	CURTAIN	TENDINA

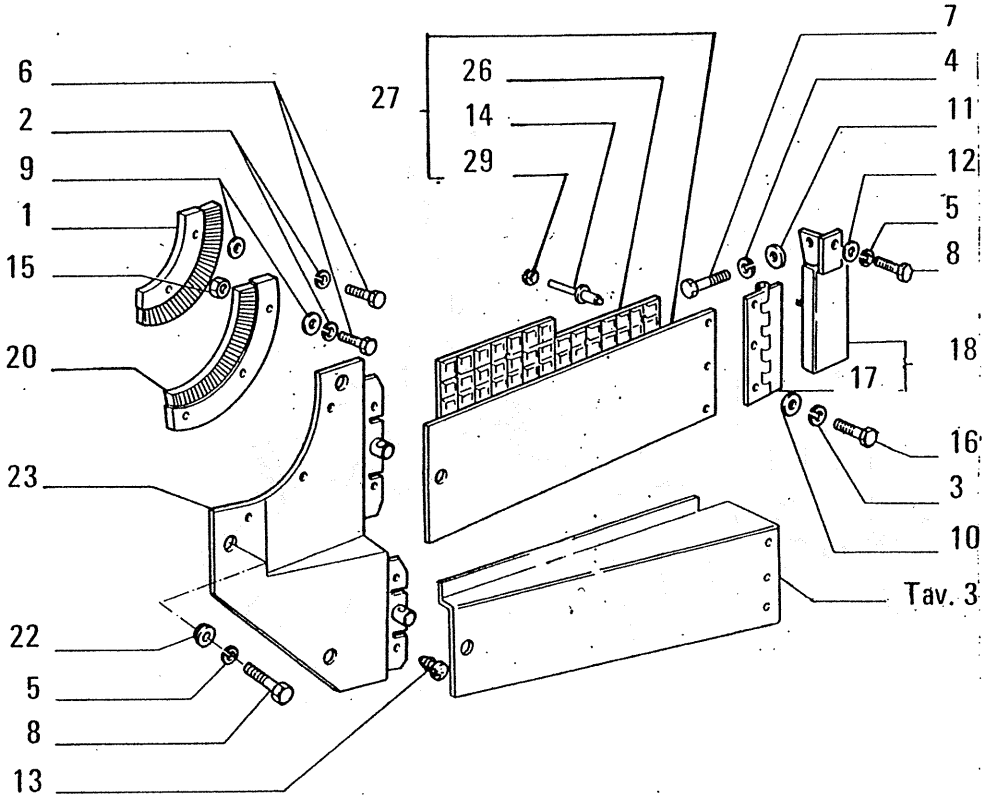

OPTIONAL
VARIANTE 30.0021.06.1

05528

ITEM	PART NUMBER	QTY	TRANS CODE	DESCRIPTION	DESCRIZIONE
1	79047162	2	177S	BRUSH - UPPER	SPAZZOLA - SUPERIORE
2	10571570	10	131R	WASHER 6,1x1,6	ROSETTA 6,1x1,6
3	10571771	3	131R	WASHER 8,1x2	ROSETTA 8,1x2
4	10571871	4	131R	WASHER 10,2x2,2	ROSETTA 10,2x2,2
5	10571971	10	131R	WASHER 12,2x2,5	ROSETTA 12,2x2,5
6	10902631	10	40V	SCREW 6x1x25	VITE 6x1x25
7	11106431	4	40V	SCREW 10x1,5x30	VITE 10x1,5x30
8	11112631	5	40V	SCREW 12x1,75x35	VITE 12x1,75x35
9	12644421	10	131R	WASHER 6,15x15	ROSETTA 6,15x15
10	12646721	3	131R	WASHER 8,15x20	ROSETTA 8,15x20
11	12646821	4	131R	WASHER 10,2x25	ROSETTA 10,2x25
12	12646921	2	131R	WASHER 12,2x28	ROSETTA 12,2x28
13	14567080	4	120B	BUTTON 8,5x14	BOTTONE 8,5x14
14	14641995	10	55R	RIVET 2,3x10,4	RIBATTINO 2,3x10,4
15	15896221	6	10D	NUT 6x1x5	DADO 6x1x5
16	16043431	3	40V	SCREW 8x1,25x20	VITE 8x1,25x20
17	79031995	2	140C	HINGE - UPPER TO BE WELDED	CERNIERA - SUPERIORE DA SALDARE
18	76013952	1	115M	PILLAR - UPPER ASSEMBLY LEFT	MONTANTE - SUPERIORE COMPLE SINISTRO
	79031996	1	115M	PILLAR - UPPER ASSEMBLY RIGHT	MONTANTE - SUPERIORE COMPLI DESTRO
20	79047163	1	177S	BRUSH - LOWER RIGHT	SPAZZOLA - INFERIORE DESTRO
	79047164	1	177S	BRUSH - LOWER LEFT	SPAZZOLA - INFERIORE SINISTRO
22	79032003	6	95B	BUSHING	BOCCOLA
23	76013971	1	52F	SIDE PANEL - LEFT ASSEMBLY	FIANCHETTO - SINISTRO COMPLE
	79031935	1	52F	SIDE PANEL - RIGHT ASSEMBLY	FIANCHETTO - DESTRO COMPLE

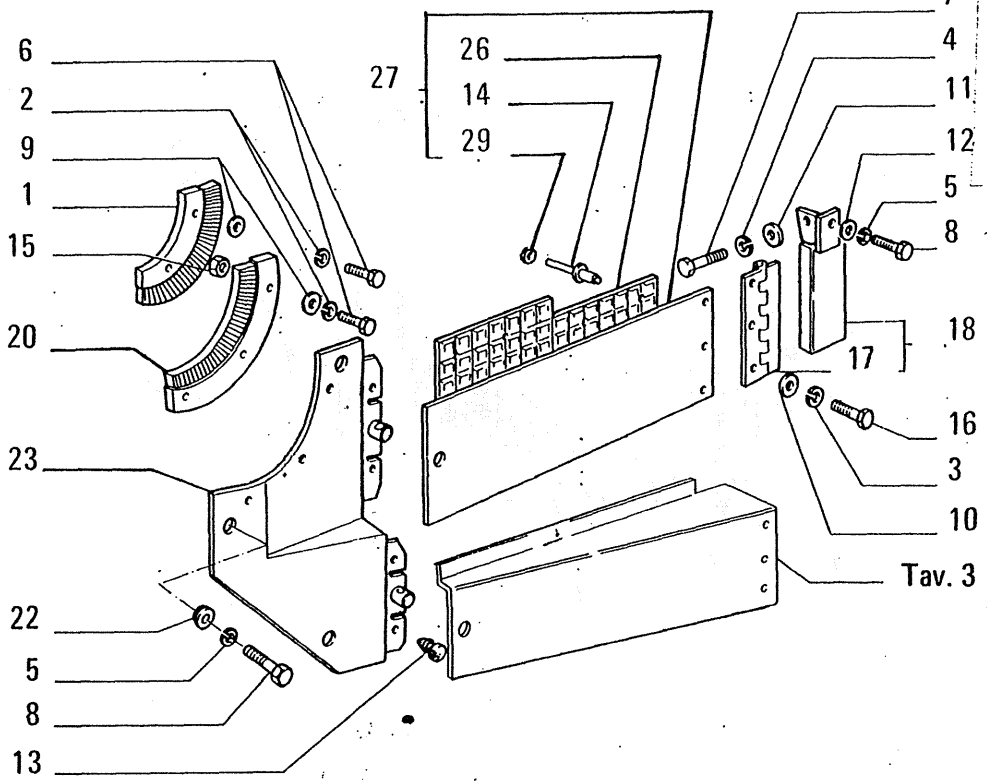

OPTIONAL
VARIANTE 30.0021.06.1

ITEM	PART NUMBER	QTY	TRANS CODE	DESCRIPTION	DESCRIZIONE
26	79039202	1	25P	PANEL	PANNELLO
27	79039204	1	52F	SIDE PANEL - RIGHT ASSEMBLY	FIANCHETTO - DESTRO COMPL
29	12642801	10	131R	WASHER 4,15x12,5	ROSETTA 4,15x12,5

05528

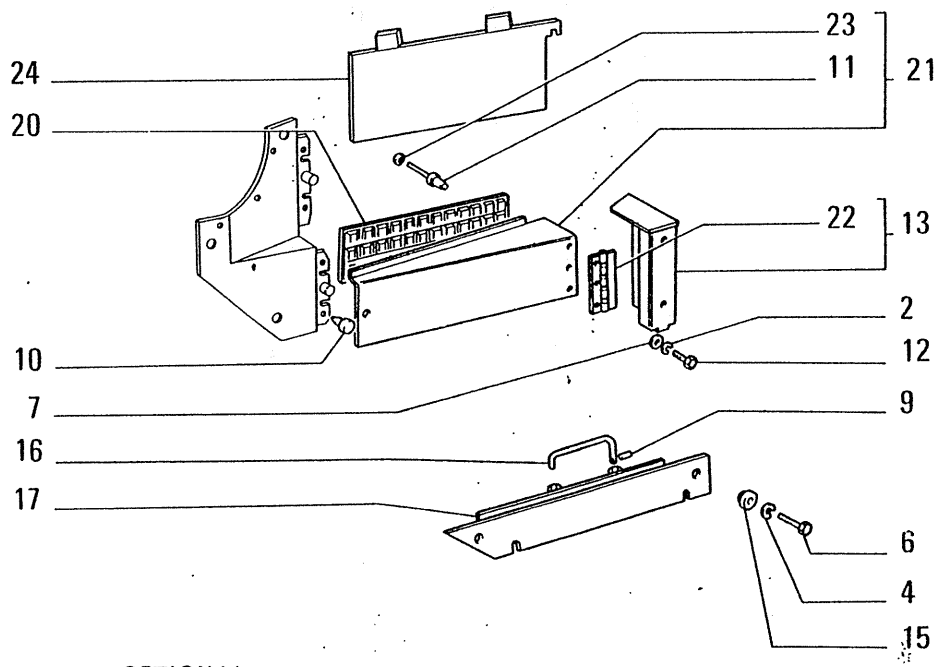

OPTIONAL
VARIANTE 30.0021.06.1

ITEM	PART NUMBER	QTY	TRANS CODE	DESCRIPTION	DESCRIZIONE
2	10571771	3	131R	WASHER 8,1x2	ROSETTA 8,1x2
4	10571971	2	131R	WASHER 12,2x2,5	ROSETTA 12,2x2,5
6	11112631	2	40V	SCREW 12x1,75x35	VITE 12x1,75x35
7	12646721	3	131R	WASHER 8,15x20	ROSETTA 8,15x20
9	14158470	2	200S	PIN 2,3x10	SPINA 2,3x10
10	14567080	2	120B	BUTTON 8,5x14	BOTTONE 8,5x14
11	14641995	8	55R	RIVET 2,3x10,4	RIBATTINO 2,3x10,4
12	16043431	3	40V	SCREW 8x1,25x20	VITE 8x1,25x20
13	79031972	1	115M	PILLAR - LOWER ASSEMBLY RIGHT	MONTANTE - INFERIORE COMPL DESTRO
15	79032003	4	95B	BUSHING	BOCCOLA
16	79037539	2	90A	ROD	ASTA
17	79031946	1	52F	SIDE PANEL - RIGHT ASSEMBLY	FIANCHETTO - DESTRO COMPLI
20	79039197	1	25P	PANEL	PANNELLO
21	79039200	1	52F	SIDE PANEL - RIGHT ASSEMBLY	FIANCHETTO - DESTRO COMPLI
22	79031971	1	140C	HINGE	CERNIERA
23	12642801	8	131R	WASHER 4,15x12,5	ROSETTA 4,15x12,5
24	76013956	1	52F	SIDE PANEL - UPPER LEFT	FIANCHETTO - SUPERIORE SINISTRO

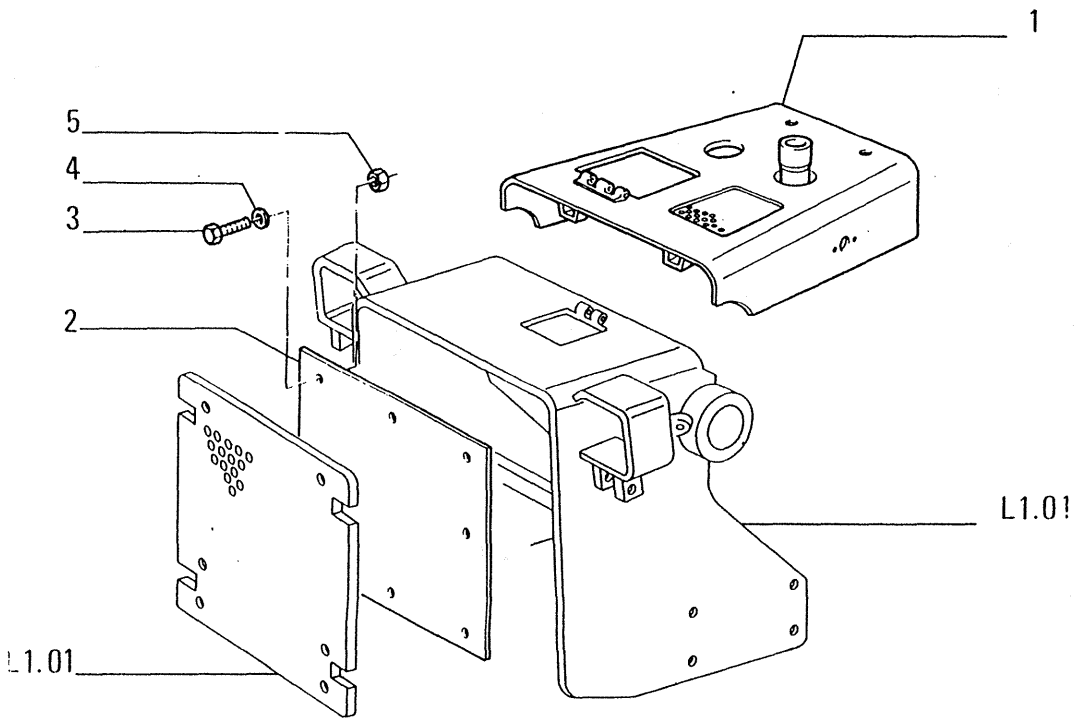

ITEM	PART NUMBER	QTY	TRANS CODE	DESCRIPTION	DESCRIZIONE
1	76016993	1	176C	HOOD - ASSEMBLY	COFANO - COMPLETO
2	73299354	1	88T	CURTAIN	TENDINA
3	70920583	8	40V	SCREW	VITE
4	70677008	8	131R	WASHER	ROSETTA
5	70911028	8	10D	NUT	DADO

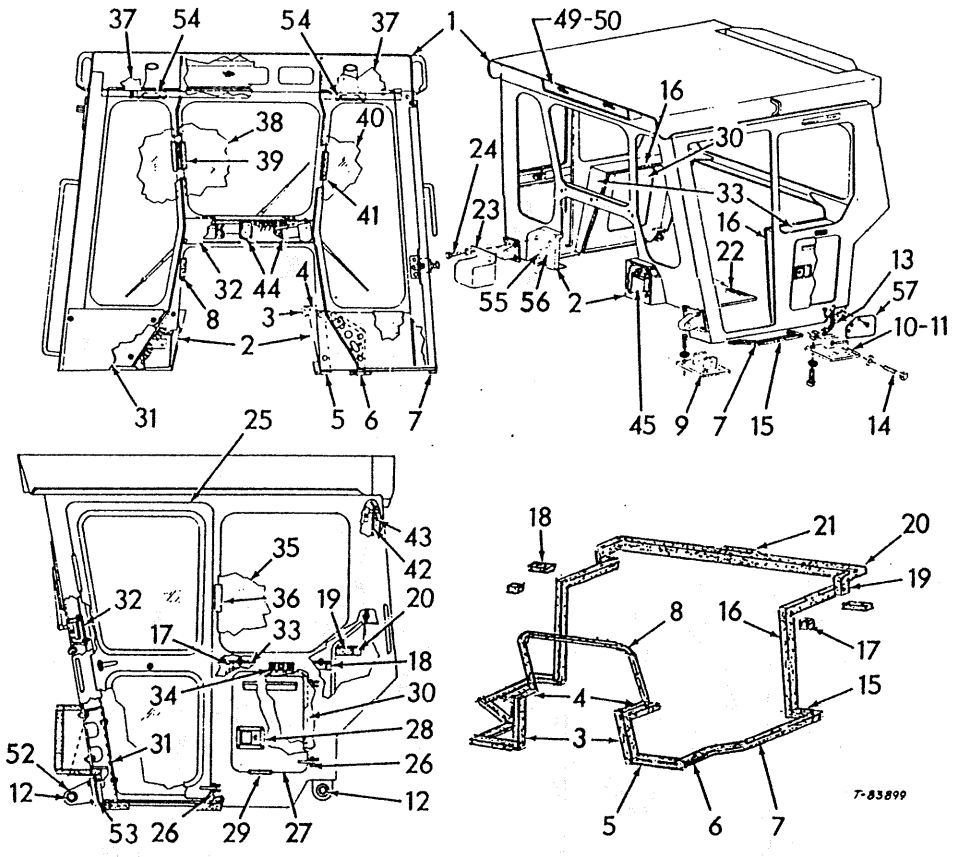

ITEM	PART NO.	QTY.	LEX.	DESCRIPTION	DENOMINAZIONE
1	--------	1	8C	CAB	CABINA
			601C	NOT SERVICED	NON FORNITO DI RICAMB.
2	73137765	1	265C	COVER	COPERCHIO
			600A	LEFT	SINISTRO
	73137766	1	265C	COVER	COPERCHIO
			600B	RIGHT	DESTRO
	70922763	6	40V	CAPSCREW,3/8"NC X 1"	VITE
	70919312	6	132R	LOCKWASHER,3/8"	ROSETTA DI SICUREZZA
	70919383	6	131R	WASHER	ROSETTA
3	--------	2	133R	SEAL(15")	GUARNIZIONE TENUTA
			600V	REFER TO ITEM 46	RIFERIRSI AL PART.
4	--------	4	133R	SEAL(6")	GUARNIZIONE TENUTA
			600V	REFER TO ITEM 46	RIFERIRSI AL PART.
5	--------	2	133R	SEAL(10")	GUARNIZIONE TENUTA
			600V	REFER TO ITEM 46	RIFERIRSI AL PART.
6	--------	2	133R	SEAL(7")	GUARNIZIONE TENUTA
			600V	REFER TO ITEM 46	RIFERIRSI AL PART.
7	--------	2	133R	SEAL(40")	GUARNIZIONE TENUTA
			600V	REFER TO ITEM 46	RIFERIRSI AL PART.
8	73124616	1	133R	SEAL	GUARNIZIONE TENUTA
9	73110865	2	230S	BRACKET, MOUNTING	STAFFETTA FISSAGGIO
			600G	FRONT	ANTERIORE
	11124931	8	40V	CAPSCREW, M20 X 2.5 X 60MM	VITE
	70677012	8	131R	WASHER	ROSETTA
10	73110862	1	230S	BRACKET, MOUNTING	STAFFETTA FISSAGGIO
			600B	RIGHT	DESTRO
			600H	REAR	POSTERIORE
	11124931	4	40V	CAPSCREW, M20 X 2.5 X 60MM	VITE
	70677012	4	131R	WASHER	ROSETTA
11	73110861	1	230S	BRACKET, MOUNTING	STAFFETTA FISSAGGIO
			600A	LEFT	SINISTRO
			600H	REAR	POSTERIORE
	11124931	4	40V	CAPSCREW, M20 X 2.5 X 60MM	VITE
	70677012	4	131R	WASHER	ROSETTA

14C	CAB CABINA CABINE KABINE, FAHRER CABINA	L104	1
		Revised April 1989	

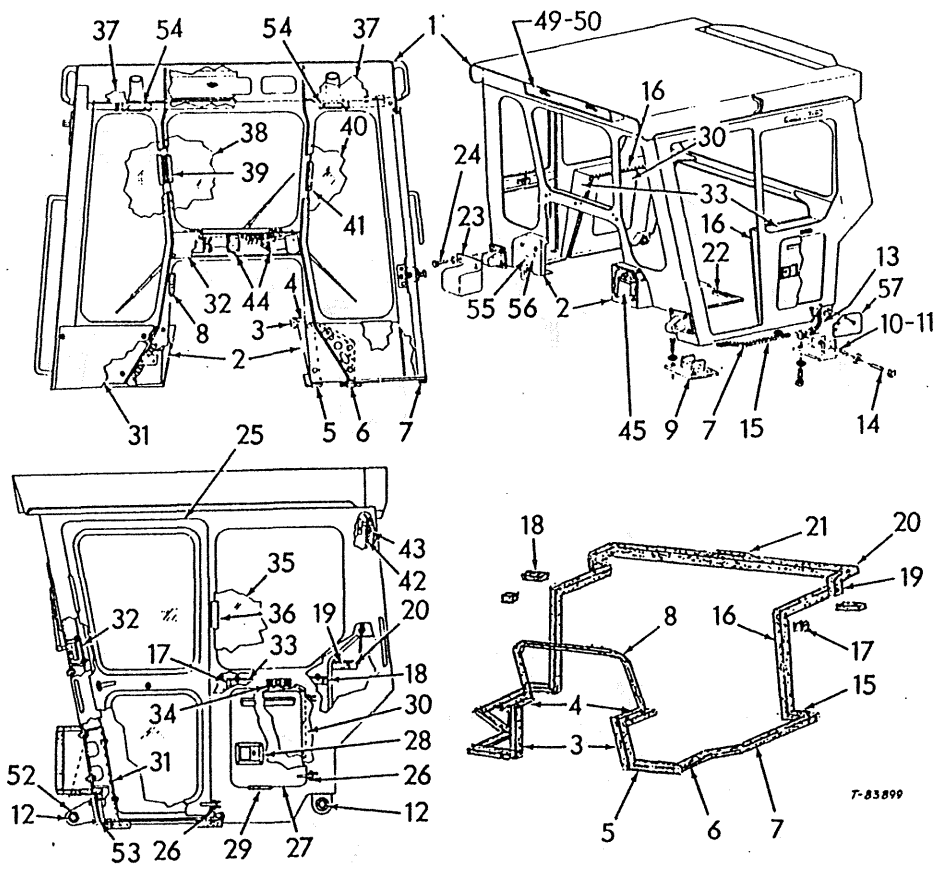

ITEM	PART NO.	QTY.	LEX.	DESCRIPTION	DENOMINAZIONE
12	70685147	4	95B	BUSHING	BOCCOLA
13	73112224	1	14B	STRAP	BANDELLA
	70927219	1	40V	CAPSCREW,3/8"NC X 5/8"	VITE
	70910210	2	131R	WASHER	ROSETTA
14	70921241	4	40V	CAPSCREW,1"NC X 6"	VITE
	70928452	4	131R	WASHER	ROSETTA
	70912241	4	10D	NUT,1"NC	DADO
15	--------	2	133R	SEAL(5")	GUARNIZIONE TENUTA
			600V	REFER TO ITEM 46	RIFERIRSI AL PART.
16	--------	2	133R	SEAL(48")	GUARNIZIONE TENUTA
			600V	REFER TO ITEM 46	RIFERIRSI AL PART.
17	--------	2	133R	SEAL(2")	GUARNIZIONE TENUTA
			600V	REFER TO ITEM 46	RIFERIRSI AL PART.
18	--------	2	133R	SEAL(6")	GUARNIZIONE TENUTA
			600V	REFER TO ITEM 46	RIFERIRSI AL PART.
19	--------	2	133R	SEAL(6")	GUARNIZIONE TENUTA
			600V	REFER TO ITEM 46	RIFERIRSI AL PART.
20	--------	1	133R	SEAL(58")	GUARNIZIONE TENUTA
21	--------	1	133R	SEAL(8")	GUARNIZIONE TENUTA
			600V	REFER TO ITEM.53	RIFERIRSI AL PART.
22	73124253	1	30T	MAT	TAPPETO
23	73137772	1	265C	COVER	COPERCHIO
24	70922763	3	40V	CAPSCREW,3/8"NC X 1"	VITE
	70919312	3	132R	LOCKWASHER,3/8"	ROSETTA DI SICUREZZA
	70919383	3	131R	WASHER	ROSETTA
25	--------	2	180P	DOOR(L109)	PORTA
			600A	LEFT	SINISTRO
			600B	RIGHT	DESTRO
26	70922287	6	40V	CAPSCREW, 3/8"NC X 1-3/4"	VITE
	70696242	6	95B	BUSHING	BOCCOLA
	70919439	6	257C	LOCKNUT,3/8"NC	CONTRODADO
27	73137769	1	180P	DOOR	PORTA
			600L	INCLUDES ITEM(S)28,29	INCLUDE PARTIC.(I)
28	73133867	1	156C	LATCH	CHIAVISTELLO
	70696241	4	42V	SCREW	VITE

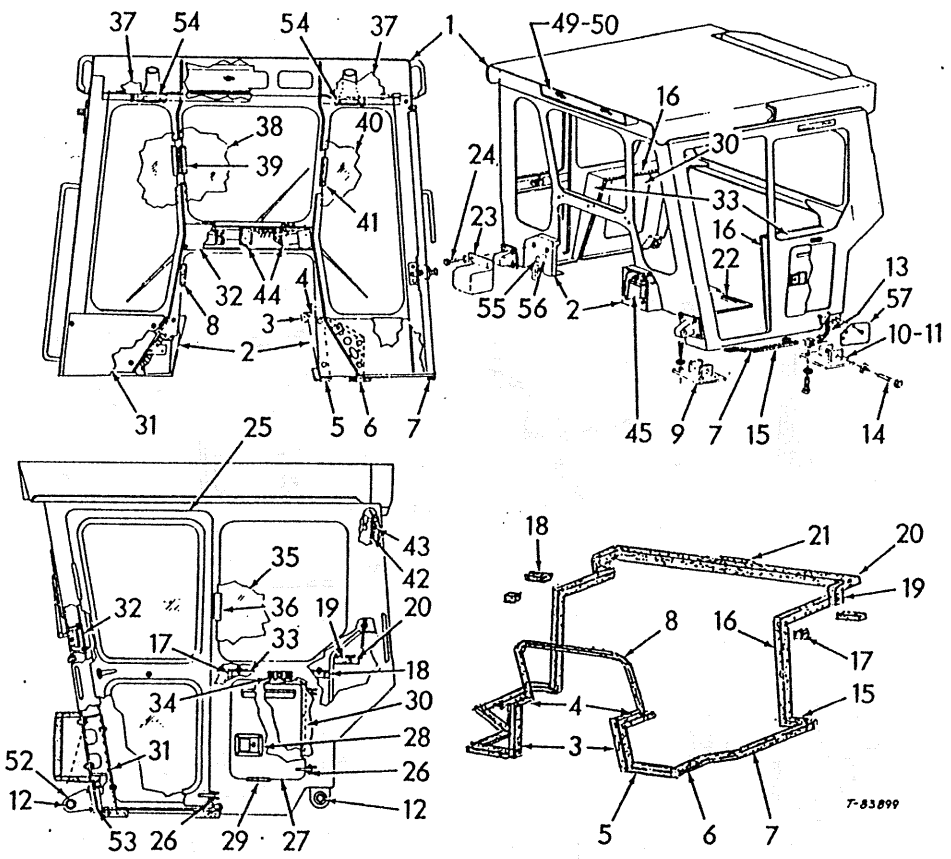

ITEM	PART NO.	QTY.	LEX.	DESCRIPTION	DENOMINAZIONE
29	--------	1	133R	SEAL(56")	GUARNIZIONE TENUTA
			600V	REFER TO ITEM 47	RIFERIRSI AL PART.
30	73137778	1	25P	PANEL	PANNELLO
			600B	RIGHT	DESTRO
	70922300	8	40V	CAPSCREW,3/8"NC X 3/4"	VITE
	70919383	8	131R	WASHER	ROSETTA
31	73124231	1	265C	COVER	COPERCHIO
			600A	LEFT	SINISTRO
	73124232	1	265C	COVER	COPERCHIO
			600B	RIGHT	DESTRO
	70922763	5	40V	CAPSCREW,3/8"NC X 1"	VITE
	70919383	5	131R	WASHER	ROSETTA
32	73124234	1	265C	COVER	COPERCHIO
	70927340	4	40V	CAPSCREW,1/4"NC X 3/4"	VITE
	70911114	4	131R	WASHER	ROSETTA
33	73137763	1	105P	PLATE	PIASTRA
			600A	LEFT	SINISTRO
	73137764	1	105P	PLATE	PIASTRA
			600B	RIGHT	DESTRO
	70922763	6	40V	CAPSCREW,3/8"NC X 1"	VITE
	70919383	6	131R	WASHER	ROSETTA
34	--------	2	156C	LATCH(L109)	CHIAVISTELLO
35	--------	2	38V	GLASS(73131579)(L104(4))	VETRO
36	--------	2	133R	SEAL(118")	GUARNIZIONE TENUTA
			600V	REFER TO ITEM 48	RIFERIRSI AL PART.
37	73124235	1	25P	PANEL	PANNELLO
			600A	LEFT	SINISTRO
			600G	FRONT	ANTERIORE
	73124236	1	25P	PANEL	PANNELLO
			600B	RIGHT	DESTRO
			600G	FRONT	ANTERIORE
	70922763	8	40V	CAPSCREW,3/8"NC X 1"	VITE
	70919312	8	132R	LOCKWASHER,3/8"	ROSETTA DI SICUREZZA
	70919383	8	131R	WASHER	ROSETTA
38	--------	1	38V	GLASS(73131583)(L104(4))	VETRO
39	--------	1	133R	SEAL(110")	GUARNIZIONE TENUTA
			600V	REFER TO ITEM 48	RIFERIRSI AL PART.

14C	CAB CABINA CABINE KABINE, FAHRER CABINA	L104	1
		Revised April 1989	

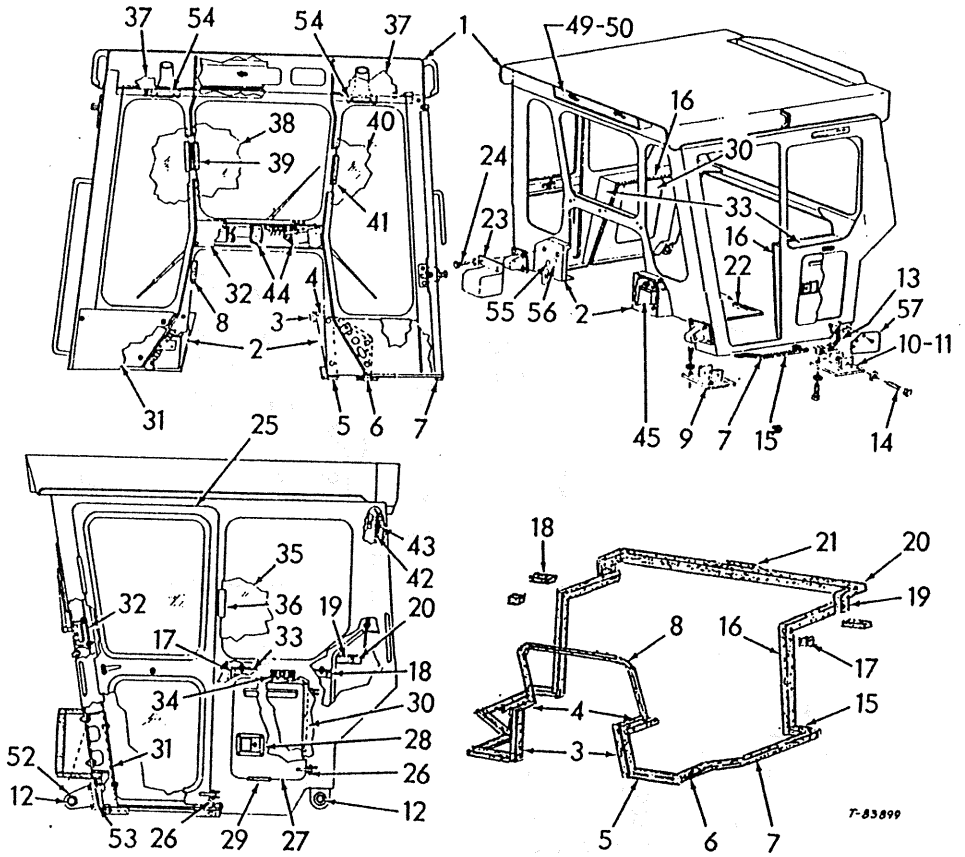

ITEM	PART NO.	QTY.	LEX.	DESCRIPTION	DENOMINAZIONE
40	--------	2	38V	GLASS(73131582)(L104(4))	VETRO
41	--------	2	133R	SEAL(116")	GUARNIZIONE TENUTA
			600V	REFER TO ITEM 48	RIFERIRSI AL PART.
42	--------	1	38V	GLASS(73131578)(L104(4))	VETRO
43	--------	1	133R	SEAL(154")	GUARNIZIONE TENUTA
			600V	REFER TO ITEM 48	RIFERIRSI AL PART.
44	--------	4	93T	WIPER,WINDSHIELD(F505)	TERGICRISTALLO
45	--------	1	131R	WASHER,WINDOW(F505)	ROSETTA
46	73114678	-	133R	SEAL,1" X 1-1/2" X 252	GUARNIZIONE TENUTA
			600P	AS REQUIRED	DEFINITO AL MONTAGGIO
47	73108330	-	133R	SEAL,GLASS	GUARNIZIONE TENUTA
			600P	AS REQUIRED	DEFINITO AL MONTAGGIO
48	73133865	-	133R	SEAL(25')	GUARNIZIONE TENUTA
			600P	AS REQUIRED	DEFINITO AL MONTAGGIO
49	73114664	1	20E	FILTER ELEMENT	ELEMENTO FILTRANTE
50	--------	1	133R	SEAL(68")	GUARNIZIONE TENUTA
			600V	REFER TO ITEM 51	RIFERIRSI AL PART.
51	73114698	-	133R	SEAL,5/32" X 3/4"	GUARNIZIONE TENUTA
			600P	AS REQUIRED	DEFINITO AL MONTAGGIO
52	73124257	1	230S	BRACKET, MOUNTING	STAFFETTA FISSAGGIO
			600A	LEFT	SINISTRO
	73124258	1	230S	BRACKET, MOUNTING	STAFFETTA FISSAGGIO
			600B	RIGHT	DESTRO
	70922744	8	40V	CAPSCREW,3/4"NCX2-1/2"	VITE
	70928358	16	131R	WASHER	ROSETTA
	70911030	8	10D	NUT,3/4"NC	DADO
53	73124233	4	198S	SHIM, ADJUSTMENT	SPESSORE DI REGISTRO
			600P	AS REQUIRED	DEFINITO AL MONTAGGIO
54	73133868	2	91P	LOUVERS	PERSIANA
	70922300	4	40V	CAPSCREW,3/8"NC X 3/4"	VITE
	70919383	4	131R	WASHER	ROSETTA
55	70920558	1	50T	PLUG,1-1/16"	TAPPO
56	70920237	1	50T	PLUG,1-1/2"	TAPPO
57	a73154067	1	105P	PLATE	PIASTRA
	70925003	6	42V	SCREW,1/4"NC X 1/2"	VITE

a.UNITS EQUIPPED FOR SANITARY LANDFILL OR FORESTRY.

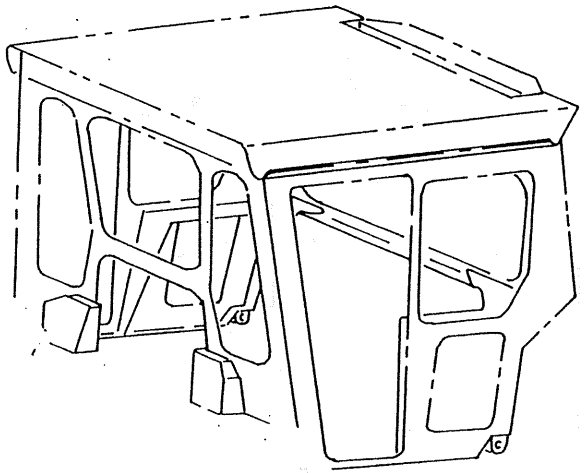

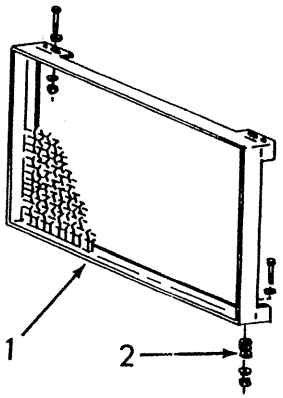

ITEM	PART NO.	QTY.	LEX.	DESCRIPTION	DENOMINAZIONE
1	73140363	1	110S	SCREEN	SEPARATORE
	70920582	6	40V	CAPSCREW, 1/2"NC X 1-1/4"	VITE
	70921556	4	40V	CAPSCREW, 1/2"NC X 1-1/2"	VITE
	70930850	8	131R	WASHER	ROSETTA
	70912441	6	132R	LOCKWASHER,1/2"	ROSETTA DI SICUREZZA
	70928669	2	10D	NUT,1/2"NC	DADO
2	70913432	16	131R	WASHER	ROSETTA
			600P	AS REQUIRED	DEFINITO AL MONTAGGIO

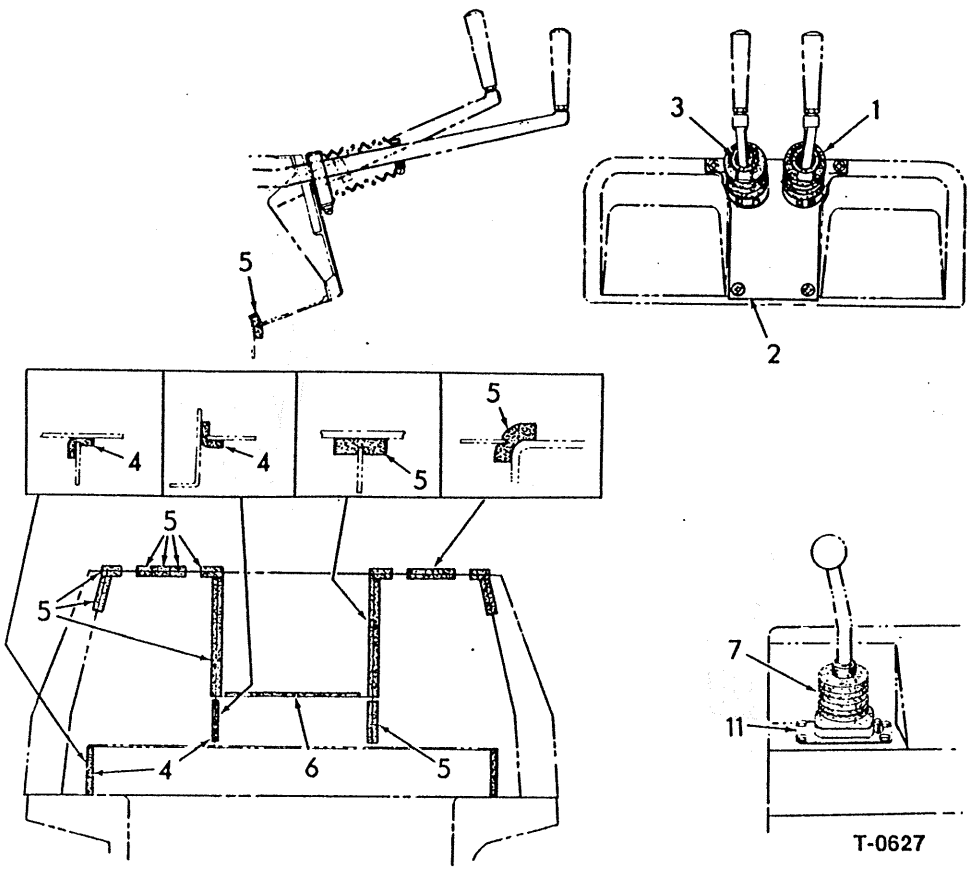

ITEM	PART NO.	QTY.	LEX.	DESCRIPTION	DENOMINAZIONE
1	70623195	2	330C	BOOT,STEERING LEVER	CUFFIA DI PROTEZIONE
	70921912	2	120M	CLAMP,1-1/6" - 2"	MORSETTO COLLARE
	70921914	2	120M	CLAMP,2-5/16" - 3-1/4"	MORSETTO COLLARE
2	73151560	1	105P	PLATE	PIASTRA
3	73130094	4	133R	SEAL,STEERING LEVER	GUARNIZIONE TENUTA
4	--------	-	133R	SEAL(30")	GUARNIZIONE TENUTA
			600V	REFER TO ITEM 8	RIFERIRSI AL PART.
5	--------	-	133R	SEAL(100")	GUARNIZIONE TENUTA
			600V	REFER TO ITEM 9	RIFERIRSI AL PART.
6	--------	-	133R	SEAL(70")	GUARNIZIONE TENUTA
			600V	REFER TO ITEM 10	RIFERIRSI AL PART.
7	70648167	1	330C	BOOT,TRANSMISSION CONTROL LEVER	CUFFIA DI PROTEZIONE
	70921915	1	120M	CLAMP	MORSETTO COLLARE
8	73133938	-	133R	SEAL(25')	GUARNIZIONE TENUTA
			600P	AS REQUIRED	DEFINITO AL MONTAGGIO
9	73133939	-	133R	SEAL(25')	GUARNIZIONE TENUTA
			600P	AS REQUIRED	DEFINITO AL MONTAGGIO
10	73133940	-	133R	SEAL(25')	GUARNIZIONE TENUTA
			600P	AS REQUIRED	DEFINITO AL MONTAGGIO
11	73132473	1	105P	PLATE	PIASTRA
	70928470	4	42V	SCREW,#10-16 X 3/8"	VITE

SEAL GROUP

L104/2

Revised April 1989

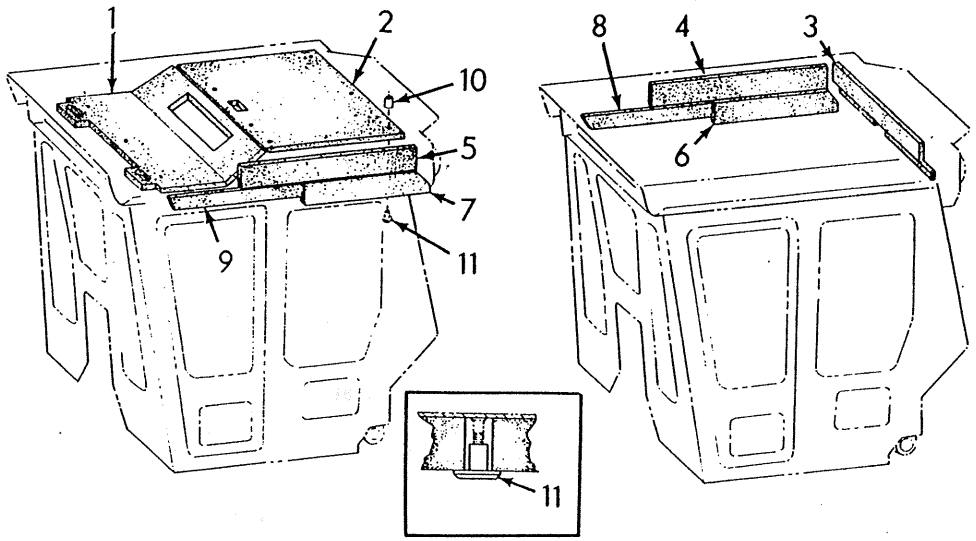

T-82687

ITEM	PART NO.	QTY.	LEX.	DESCRIPTION	DENOMINAZIONE
1	73124242	1	861	INSULATION	ISOLAMENTO
			600G	FRONT	ANTERIORE
2	73124243	1	861	INSULATION	ISOLAMENTO
			600H	REAR	POSTERIORE
3	73124144	1	861	INSULATION	ISOLAMENTO
4	73124245	1	861	INSULATION	ISOLAMENTO
			600B	RIGHT	DESTRO
5	73124246	1	861	INSULATION	ISOLAMENTO
			600A	LEFT	SINISTRO
6	73124247	1	861	INSULATION	ISOLAMENTO
			600B	RIGHT	DESTRO
7	73124248	1	861	INSULATION	ISOLAMENTO
			600A	LEFT	SINISTRO
8	73124249	1	861	INSULATION	ISOLAMENTO
			600B	RIGHT	DESTRO
9	73124250	1	861	INSULATION	ISOLAMENTO
			600A	LEFT	SINISTRO
10	73108357	3	75D	SPACER	DISTANZIALE
			600H	REAR	POSTERIORE
11	73063488	12	120B	BUTTON	BOTTONE

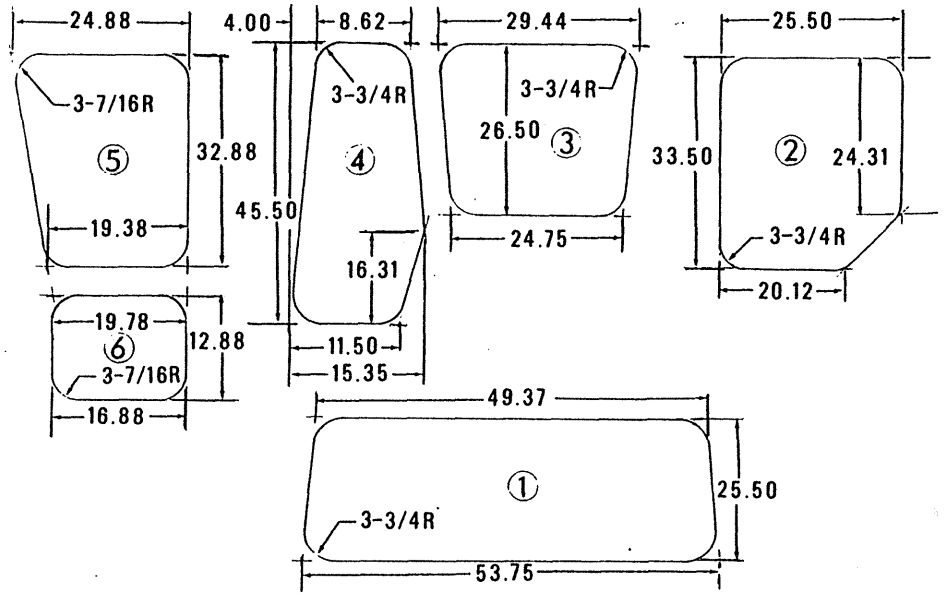

T-84762

T-84762

ITEM	PART NO.	QTY.	LEX.	DESCRIPTION	DENOMINAZIONE
1	--------	1	38V	GLASS,REAR	VETRO
2	--------	2	38V	GLASS,SIDE	VETRO
3	--------	1	38V	GLASS,WINDSHIELD,CENTER	VETRO
4	--------	2	38V	GLASS,WINDSHIELD,SIDE	VETRO
5	--------	1	38V	GLASS,DOOR,UPPER	VETRO
6	--------	1	38V	GLASS,DOOR,LOWER	VETRO

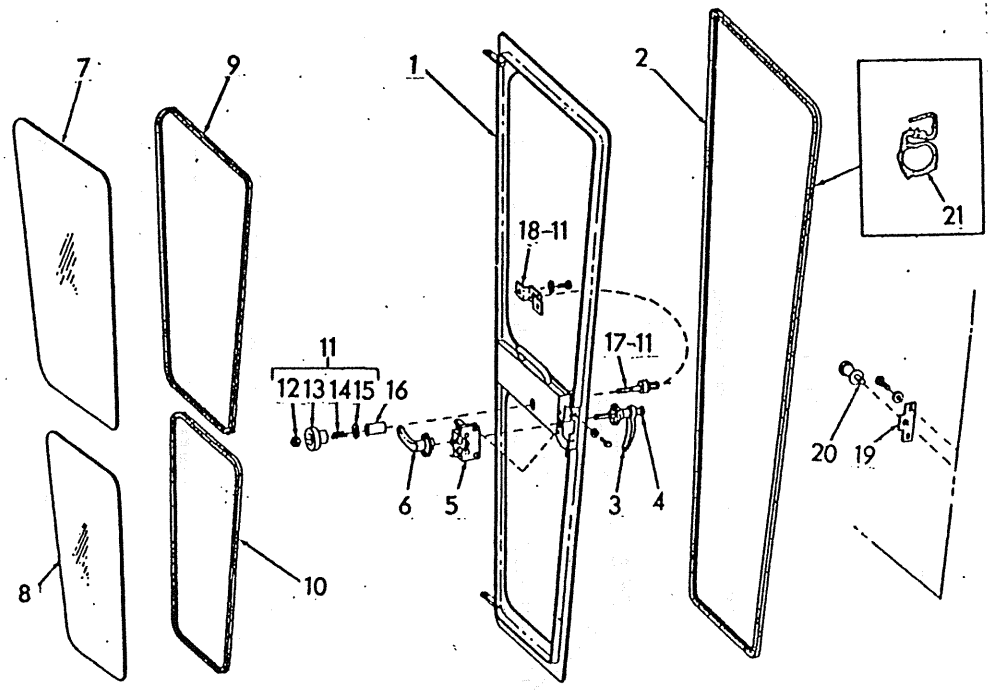

ITEM	PART NO.	QTY.	LEX.	DESCRIPTION	DENOMINAZIONE
-	73137767	1	180P	DOOR	PORTA
			600A	LEFT	SINISTRO
			600L	INCLUDES ITEM(S)1-20	INCLUDE PARTIC.(I)
-	73137768	1	180P	DOOR	PORTA
			600B	RIGHT	DESTRO
			600L	INCLUDES ITEM(S)1-20	INCLUDE PARTIC.(I)
1	--------	1	180P	DOOR	PORTA
			600A	LEFT	SINISTRO
			601C	NOT SERVICED	NON FORNITO DI RICAMB.
	--------	1	180P	DOOR	PORTA
			600B	RIGHT	DESTRO
			601C	NOT SERVICED	NON FORNITO DI RICAMB.
2	--------	2	133R	SEAL,DOOR	GUARNIZIONE TENUTA
			600M	ORDER ITEM(S)21	ORDINARE PARTIC.
3	73077433	2	20M	HANDLE	MANIGLIA
			601D	INCLUDES KEY(S)	INCL. CHIAVE
	70696241	4	42V	SCREW	VITE
4	73075836	1	60L	KEY	LINGUETTA
5	73137761	1	156C	LATCH	CHIAVISTELLO
			600A	LEFT	SINISTRO
			600N	SERVICED AS A UNIT	FORNITO COME COMPLESS.
	73137762	1	156C	LATCH	CHIAVISTELLO
			600B	RIGHT	DESTRO
			600N	SERVICED AS A UNIT	FORNITO COME COMPLESS.
	70927401	8	40V	CAPSCREW,1/4"NC X 1"	VITE
	70919310	8	132R	LOCKWASHER,1/4"	ROSETTA DI SICUREZZA
6	73137770	2	20M	HANDLE	MANIGLIA
	70696241	4	42V	SCREW	VITE
7	--------	2	38V	GLASS(73131580)(L104(4)	VETRO
8	--------	2	38V	GLASS(73131581)(L104(4)	VETRO
9	--------	2	133R	SEAL(110")	GUARNIZIONE TENUTA
			600M	ORDER ITEM(S)22	ORDINARE PARTIC.
10	--------	2	133R	SEAL(60")	GUARNIZIONE TENUTA
			600M	ORDER ITEM(S)22	ORDINARE PARTIC.
11	73137771	2	156C	LATCH	CHIAVISTELLO
			600L	INCLUDES ITEM(S) 12-15,17,18	INCLUDE PARTIC.(I)

01-03 05-06	DOOR ASSEMBLY (ROPS CAB) PORTA (CABINA ROPS) PORTE (CABINE ROPS) TUR (KABINE MIT UBERROLLSCHUTZAUFBAU) PUERTA (CABINA ROPS)	L109

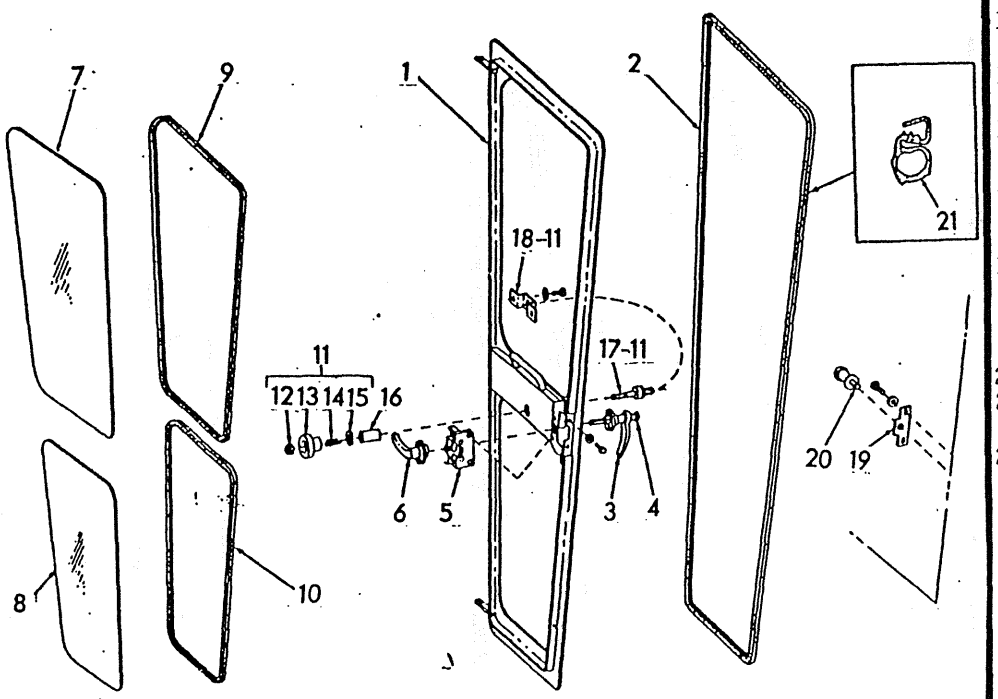

ITEM	PART NO.	QTY.	LEX.	DESCRIPTION	DENOMINAZIONE
12	--------	2	100	NUT	DADO
13	--------	2	150P	KNOB	POMELLO
			600M	ORDER ITEM(S)11	ORDINARE PARTIC.
14	--------	2	100M	SPRING	MOLLA
			600M	ORDER ITEM(S)11	ORDINARE PARTIC.
15	--------	2	131R	WASHER	ROSETTA
			600M	ORDER ITEM(S)11	ORDINARE PARTIC.
16	--------	2	95B	BUSHING	BOCCOLA
			601C	NOT SERVICED	NON FORNITO DI RICAMB.
17	--------	2	80P	PIN	PERNO
			600M	ORDER ITEM(S)11	ORDINARE PARTIC.
18	--------	2	80M	BRACKET	MENSOLA
			600M	ORDER ITEM(S)11	ORDINARE PARTIC.
			600T	REQUIRES WELDING	DA SALDARE
19	73137760	2	105P	PLATE	PIASTRA
	70920582	4	40V	CAPSCREW, 1/2"NC X 1-1/4"	VITE
	70926192	4	131R	WASHER	ROSETTA
20	73137759	2	80P	PIN,LATCH	PERNO
21	73108330	-	133R	SEAL,DOOR,BULK	GUARNIZIONE TENUTA
			600P	AS REQUIRED	DEFINITO AL MONTAGGIO
22	73133864	-	133R	SEAL,GLASS(25')	GUARNIZIONE TENUTA
			600P	AS REQUIRED	DEFINITO AL MONTAGGIO

01-03 05-06	DOOR ASSEMBLY (ROPS CAB) PORTA (CABINA ROPS) PORTE (CABINE ROPS) TÜR (KABINE MIT ÜBERROLLSCHUTZAUFBAU) PUERTA (CABINA ROPS)	L109

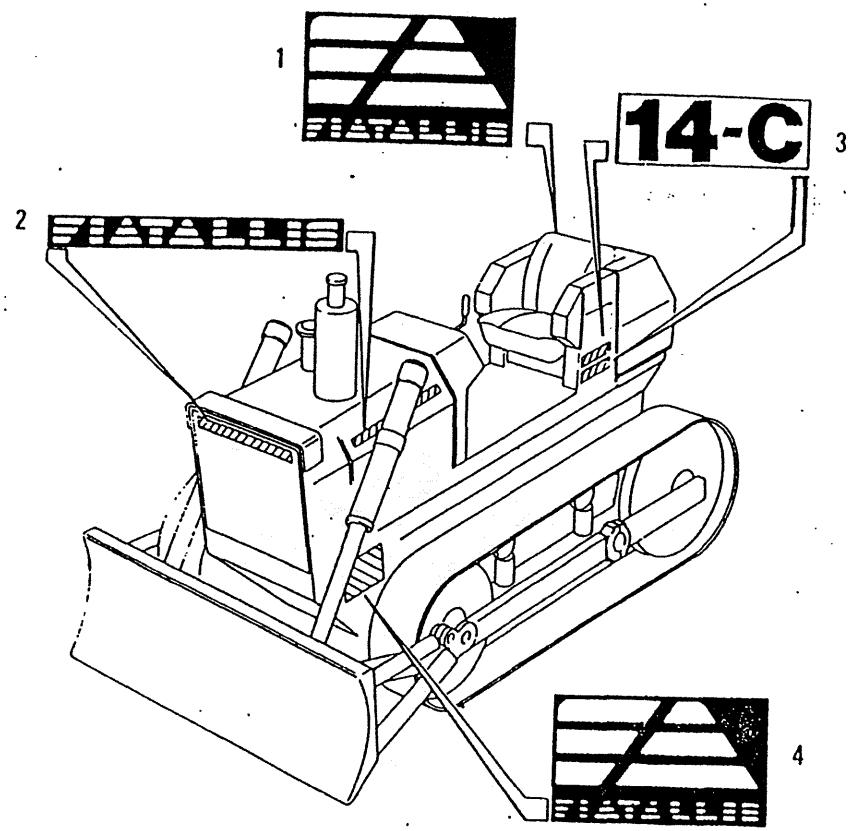

ITEM	PART NO.	QTY.	CODE	DESCRIPTION	DENOMINAZIONE
1	73109808	1	150S	MEDALLION-REAR	SIGLA
2	79041163	3	150S	MEDALLION-SIDE FRONT	SIGLA
3	79010343	2	105P	PLATE,TYPE	PIASTRA
4	79041642	2	150S	MEDALLION-SIDE	SIGLA
5	a73155738	2	8D	DECAL"SANITARY"	DECALCOMANIA
6	a73155736	2	8D	DECAL"LANDFILL"	DECALCOMANIA
7	a73155151	2	8D	DECAL"SPECIAL"	DECALCOMANIA
8a,b	73155838	2	8D	DECAL"TURBO"	DECALCOMANIA
9	a73155737	2	8D	DECAL"FORESTRY"	DECALCOMANIA

a.NOT ILLUSTRATED
NON ILLUSTRATO

b.UNITS WITH 8365 ENG.

MODEL SIGNS
SIGLE MODELLI
MOTIFS
MODELLZEICHEN
EMBLEMAS

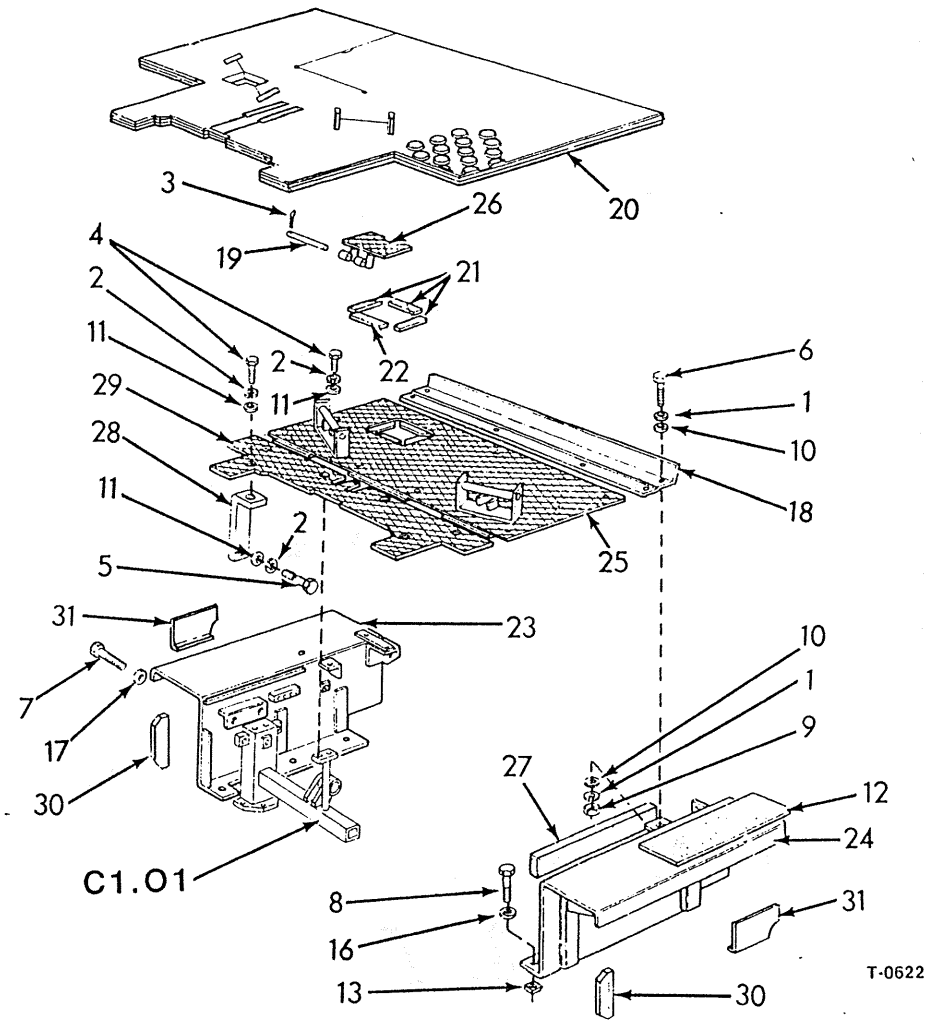

FIATALLIS

L3.04 TAV. 1 PAG.1

ITEM	PART NUMBER	QTY	TRANS CODE	DESCRIPTION	DESCRIZIONE
1	10571871	4	131R	WASHER 01- -03 (1") 10,2x2,2	ROSETTA 01-02-03 (1") 10,2x2,2
2	10571871	19	131R	WASHER 10,2x2,2	ROSETTA 10,2x2,2
3	10734201	2	270C	COTTER PIN 1,7x18,5	COPIGLIA 1,7x18,5
4	11106231	17	40V	SCREW 10x1,5x25	VITE 10x1,5x25
5	11106631	2	40V	SCREW 10x1,5x35	VITE 10x1,5x35
6	11106631	2	40V	SCREW 01 -03 (1") 10x1,5x35	VITE 01-02-03 (1") 10x1,5x35
7	11113731	4	40V	SCREW 12x1,75x75	VITE 12x1,75x75
8	11116031	6	40V	SCREW 14x2x45	VITE 14x2x45
9	11701721	2	10D	NUT 01- -03 (1") 10x1,5x8	DADO 01-02-03 (1") 10x1,5x8
10	12644321	4	131R	WASHER 01- -03 (1") 10,2x35	ROSETTA 01-02-03 (1") 10,2x35
11	12646821	19	131R	WASHER 10,2x25	ROSETTA 10,2x25
12	45015482	4	224P	SHIELD	PROTEZIONE
13	76001299		198S	SHIM 2	SPESSORE 2
	76001300		198S	SHIM 3	SPESSORE 3
	76001301		198S	SHIM 5	SPESSORE 5
16	79005238	6	131R	WASHER	ROSETTA
17	79005242	4	131R	WASHER	ROSETTA
					TRAVERSA
18	79050421	1	180T	CROSS BEAM	TRAVERSA
19	79010160	1	80P	PIN	PERNO
20	76014348	1	25P	PANEL - UPPER (05)(*)	PANNELLO - SUPERIORE (05)(*)
	79014188	1	25P	PANEL - UPPER 01- -03	PANNELLO - SUPERIORE 01-02-03
21	79037635	3	120G	GASKET 01- -03 (1")	GUARNIZIONE PIANA 01-02-03 (1")
22	79037636	1	120G	GASKET 01- -03 (1")	GUARNIZIONE PIANA 01-02-03 (1")
23	79038776	1	31P	FENDER - RIGHT	PARAFANGO - DESTRO

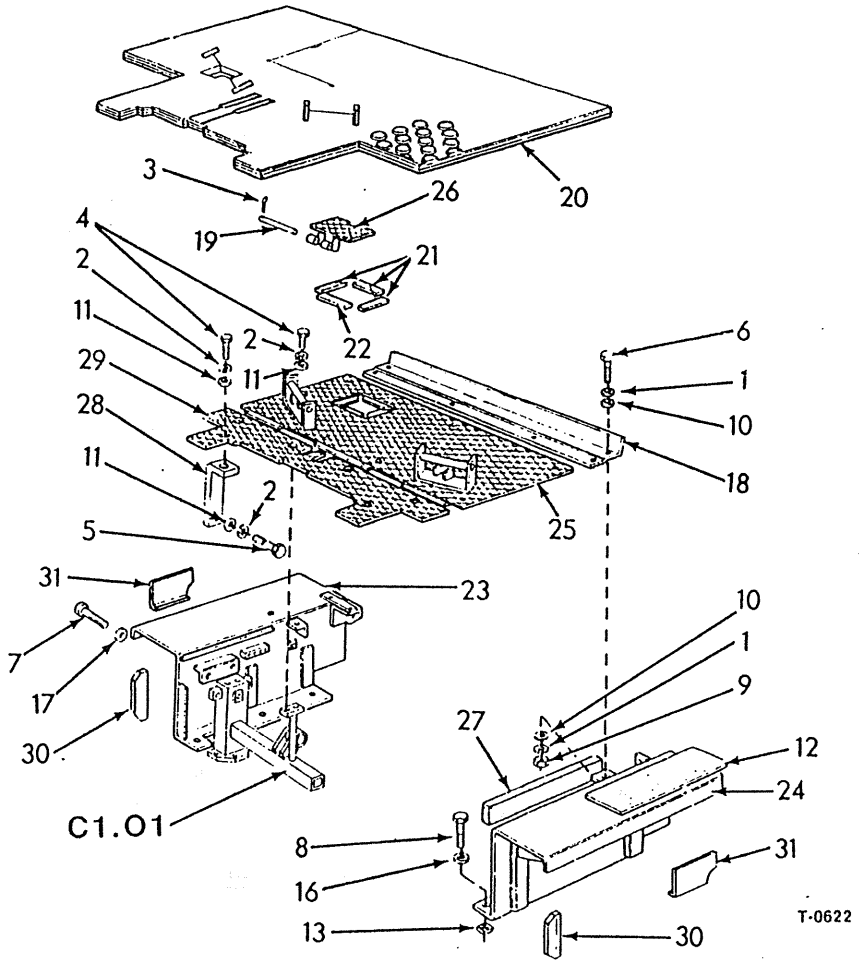

ITEM	PART NO.	QTY.	CODE	DESCRIPTION	DENOMINAZIONE
24	79038778	1	31P	FENDER - LEFT	PARAFANGO
25	79038780	1	105P	PLATE	PIASTRA
26	79040505	1	180P	DOOR	PORTA
27	79040517	2	123G	GASKET - FRONT	GUARNIZIONE DI TENUTA
28	79042222	2	80M	BRACKET	MENSOLA
29	76014307	1	105P	PLATE - FRONT (05)(*)	PIASTRA
	79042401	1	105P	PLATE - FRONT	PIASTRA
30	a73154062	2	105P	PLATE	PIASTRA
			600T	REQUIRES WELDING	DA SALDARE
31	a73154064	1	105P	PLATE	PIASTRA
			600A	LEFT	SINISTRO
			600T	REQUIRES WELDING	DA SALDARE
	a73154065	1	105P	PLATE	PIASTRA
			600B	RIGHT	DESTRO
			600T	REQUIRES WELDING	DA SALDARE

(*)SPECIAL EQUIPMENT
30.0021.08.1

(1*)SPECIAL EQUIPMENT
30.0020.18.1

a.UNITS EQUIPPED FOR SANITARY LANDFILL.

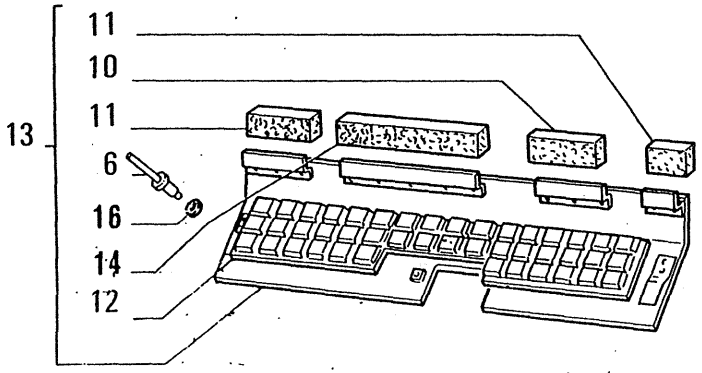

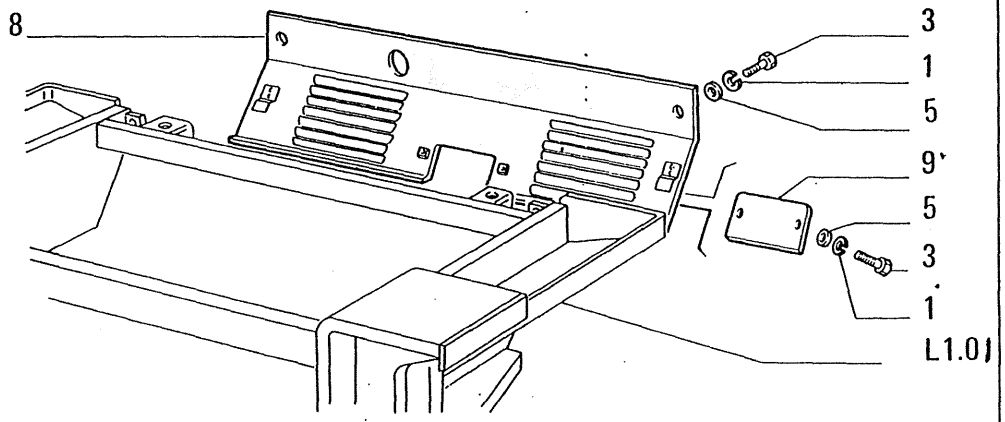

ITEM	PART NUMBER	QTY	TRANS CODE	DESCRIPTION	DESCRIZIONE
1	4957607	2	131R	WASHER (1*)	ROSETTA 01-02-03 (1*)
		2	131R	WASHER (05)(2*)	ROSETTA (05)(2*)
	10571871	4	131R	WASHER 10,2x2,2	ROSETTA 10,2x2,2
					VITE 04 10x1,5x25
3	11106231	4	40V	SCREW 10x1,5x25	VITE 10x1,5x25
	11106431	2	40V	SCREW (1*) 10x1,5x30	VITE 01-02-03 (1*) 10x1,5x30
		2	40V	SCREW (05)(2*) 10x1,5x30	VITE (05)(2*) 10x1,5x30
					ROSETTA 04 10,2x25
5	12646821	4	131R	WASHER 10,2x25	ROSETTA 10,2x25
6	14641995	10	55R	RIVET (*) 2,3x10,4	RIBATTINO 01-02-03 (*) 2,3x10,4
					SPORTELLO 04
8	76000983	1	70R	GUARD - REAR (1*)	RIPARO - POSTERIORE
		1	70R	GUARD - REAR (05)(2*)	RIPARO - POSTERIORE (05)(2*)
	79038773	1	70R	GUARD - REAR	RIPARO - POSTERIORE 01-02-03
9	76001012	1	205S	DOOR (1*)	SPORTELLO 01-02-03 (1*)
		1	205S	DOOR (05)(2*)	SPORTELLO (05)(2*)
	79038775	1	205S	DOOR	SPORTELLO 01-02-03
10	79039208	1	20L	OIL SHIELD (*)	LAMIERINO PARAOLIO 01-02-03 (*)
11	79039209	2	20N	BAND (*)	NASTRO 01-02-03 (*)
12	79039210	1	25P	PANEL (*)	PANNELLO 01-02-03 (*)
13	79039211	1	70R	GUARD - REAR ASSEMBLY	RIPARO - POSTERIORE COMPLET
14	79039242	1	20N	BAND (*)	NASTRO 01-02-03 (*)
					RIPARO - POSTERIORE 04

(05532)

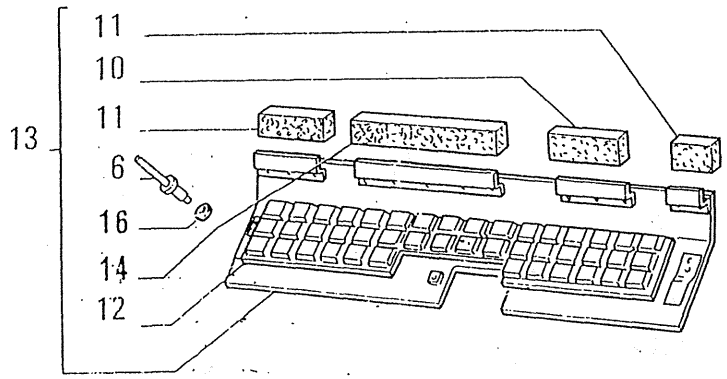

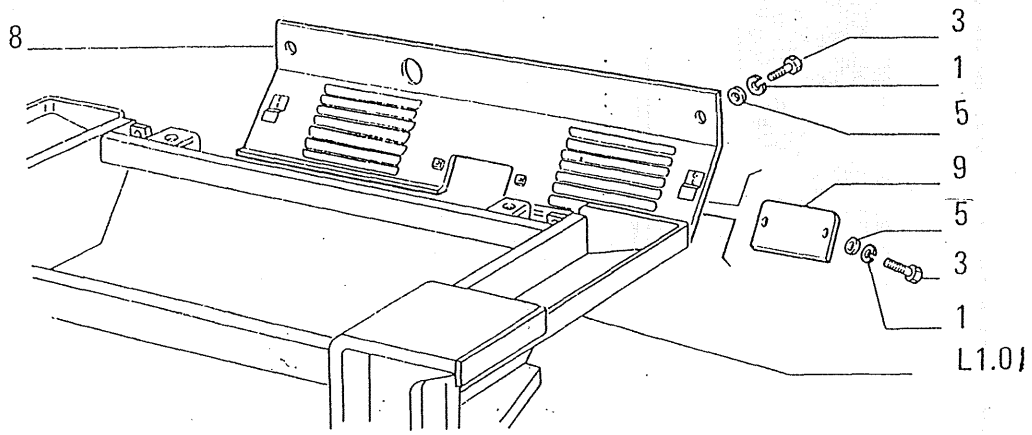

ITEM	PART NUMBER	QTY	TRANS CODE	DESCRIPTION	DESCRIZIONE
16	12642801	10	131R	WASHER (*) 4,15x12,5	ROSETTA 01-02-03 (*) 4,15x12,5
(*)			469P	FOR SPECIAL EQUIPMENT 30.0022.24.1	PER VARIANTE 30.0022.24.1
(1*)			469P	FOR SPECIAL EQUIPMENT 30.0046.05.1	PER VARIANTE 30.0046.05.1
(2*)			469P	FOR SPECIAL EQUIPMENT 30.0870.02.1	PER VARIANTE 30.0870.02.1

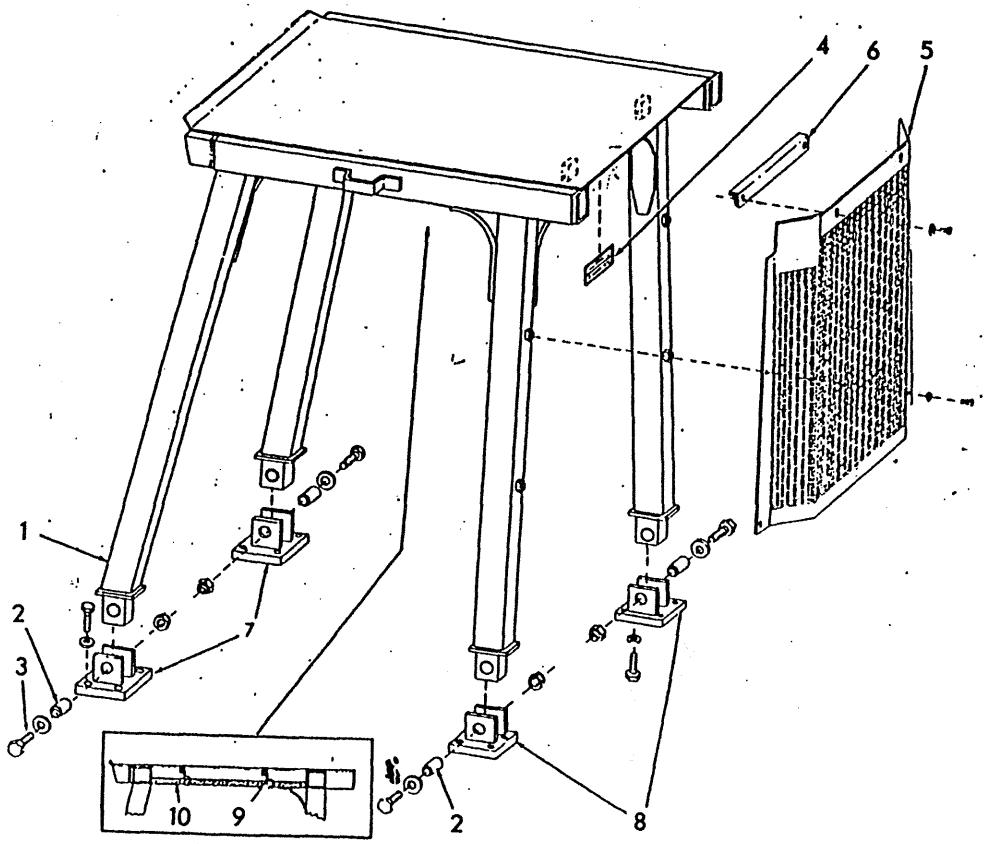

ITEM	PART NO.	QTY.	LEX.	DESCRIPTION	DENOMINAZIONE
1	73110860	1	171	FRAME	INCASTELLATURA
			600L	INCLUDES ITEM(S)2,4	INCLUDE PARTIC.(I)
2	70685147	4	95B	BUSHING	BOCCOLA
3	70921241	4	40V	CAPSCREW,1"NC X 6"	VITE
	70931274	4	131R	WASHER	ROSETTA
	70932944	4	10D	NUT,1"NC	DADO
4	--------	1	8D	DECAL	DECALCOMANIA
5	a73110689	1	110S	SCREEN	SEPARATORE
	b76004810	1	110S	SCREEN	SEPARATORE
			600J	SPECIAL EQUIPMENT	EQUIP. SPECIALE
	70921175	6	40V	CAPSCREW,1/2"NC X 1"	VITE
	70677008	6	131R	WASHER	ROSETTA
	70648180	6	10D	NUT,1/2"NC	DADO
			600T	REQUIRES WELDING	DA SALDARE
6	73110691	1	60A	ANGLE	ANGOLARE
			600T	REQUIRES WELDING	DA SALDARE
			600J	SPECIAL EQUIPMENT	EQUIP. SPECIALE
7	73110865	2	80M	BRACKET	MENSOLA
			600G	FRONT	ANTERIORE
	11124931	8	40V	CAPSCREW	VITE
	70677012	8	131R	WASHER	ROSETTA
8	73110861	1	80M	BRACKET	MENSOLA
			600A	LEFT	SINISTRO
	73110862	1	80M	BRACKET	MENSOLA
			600B	RIGHT	DESTRO
	11124931	8	40V	CAPSCREW	VITE
	70677012	8	131R	WASHER	ROSETTA
9	70697501	2	50C	CHANNEL	CANALE
	70928532	4	40V	CAPSCREW,3/8"NC X 3/4"	VITE
	70677006	4	131R	WASHER	ROSETTA
	70023633	4	61F	WIRE, STEEL	FILO DI ACCIAIO
10	73110713	1	86I	INSULATION	ISOLAMENTO
	73064776	8	123B	FASTENER	BOTTONE A SCATTO

a.PRIOR TO JANUARY, 1986.

b.EFFECTIVE JANUARY, 1986.

CANOPY

L308

Revised April 1989

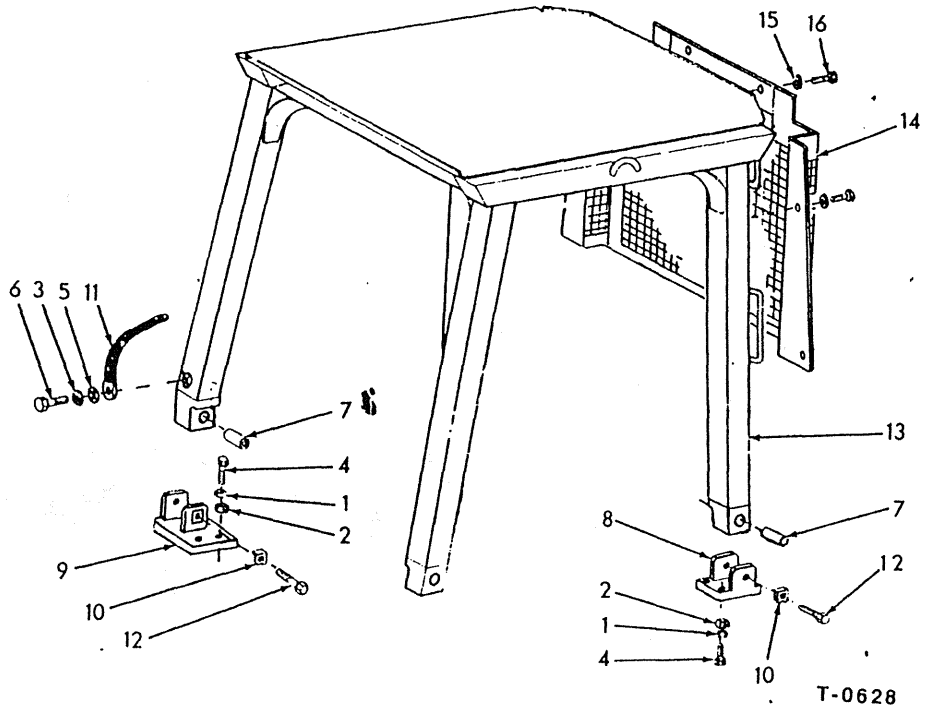

ITEM	PART NO.	QTY.	CODE	DESCRIPTION	DENOMINAZIONE
1	10517471	16	131R	WASHER,20.2X4.5	ROSETTA
2	10520401	16	131R	WASHER,20.4X35	ROSETTA
3	10571871	2	131R	WASHER,10.2X2.2	ROSETTA
4	11124931	16	40V	CAPSCREW,20X2.5X60	VITE
5	12638601	2	131R	WASHER,10.2X18	ROSETTA
6	15970331	2	40V	CAPSCREW,10X1.25X16	VITE
7	76002034	4	95B	BUSHING	BOCCOLA
8	79007994	1	300S	SUPPORT-REAR LEFT	SUPPORTO
	79007997	1	300S	SUPPORT-REAR RIGHT	SUPPORTO
9	79007998	2	300S	SUPPORT-FRONT	SUPPORTO
10	79015264	4	113P	LOCKPLATE	PIASTRINA DI SICUREZZA
11	79017173	1	166T	BRAID, GROUND	TRECCIA DI MASSA
12	79033801	4	40V	CAPSCREW	VITE
13	79033950	1	721	FRAMEWORK	INTELAIATURA
14	73146521	6	110S	SCREEN	SEPARATORE
			600J	SPECIAL EQUIPMENT	EQUIP. SPECIALE
15	70677008	6	131R	WASHER	ROSETTA
16	70921175	6	40V	CAPSCREW,1/2"NC X 1"	VITE

ROPS CANOPY
TETTUCCIO
TOITURE
VERKLEIDUNG
TECHO

L308A

Added April 1989

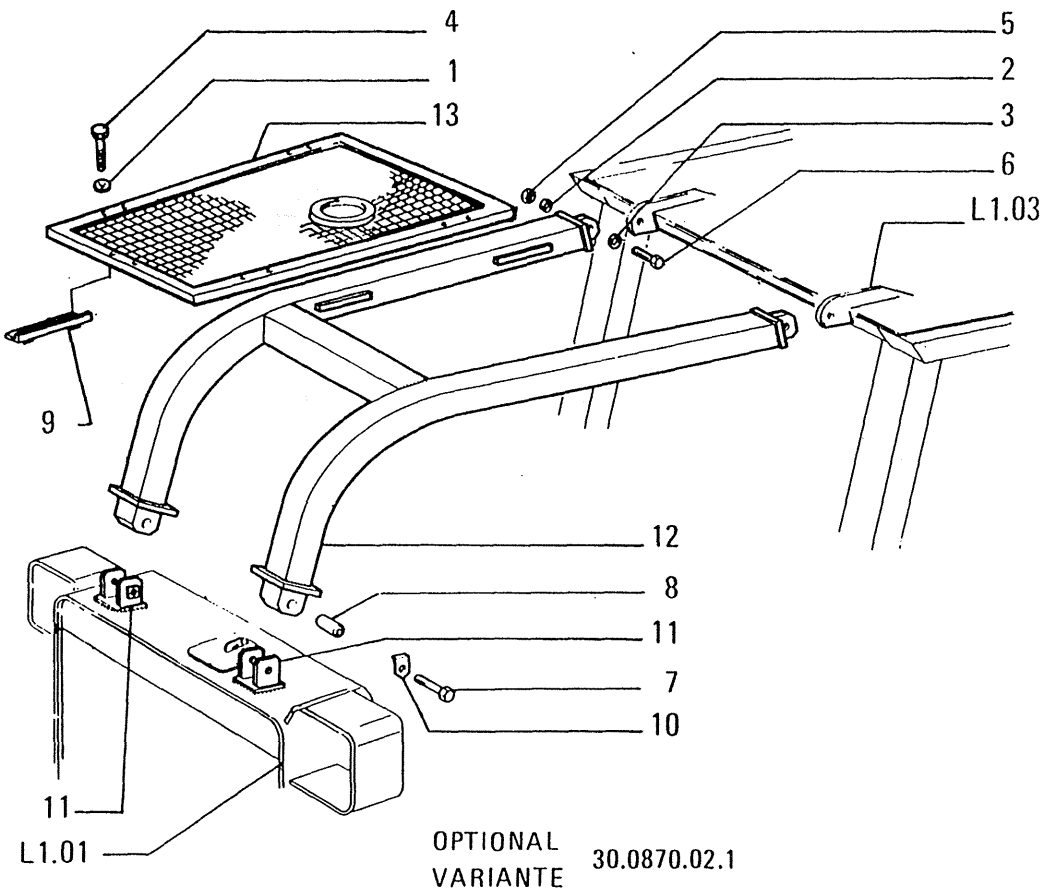

OPTIONAL
VARIANTE 30.0870.02.1

ITEM	PART NUMBER	QTY	TRANS CODE	DESCRIPTION	DESCRIZIONE
1	10516871	10	170R	LOCKWASHER 10x2,5	ROSETTA EL. 10x2,5
2	10517671	2	170R	LOCKWASHER 24,3x5,5	ROSETTA EL. 24,3x5,5
3	10520621	2	131R	WASHER 24,4x42	ROSETTA 24,4x42
4	11107331	10	40V	SCREW 10x1,5x55	VITE 10x1,5x55
5	12164521	2	10D	NUT 24x2x19	DADO 24x2x19
6	15997537	2	40V	SCREW 24x2x90	VITE 24x2x90
7	16163437	2	40V	SCREW 24x3x135	VITE 24x3x135
8	76002034	2	95B	BUSHING	BOCCOLA
9	76001715	5	225S	BRACKET	STAFFA
10	79015264	2	113P	LOCKPLATE	PIASTRINA DI SICUREZZA
11	79017885	2	300S	SUPPORT - TO BE WELDED	SUPPORTO - DA SALDARE
12	76004740	1	72I	FRAME	INTELAIATURA
13	76013858	1	70R	GUARD	RIPARO

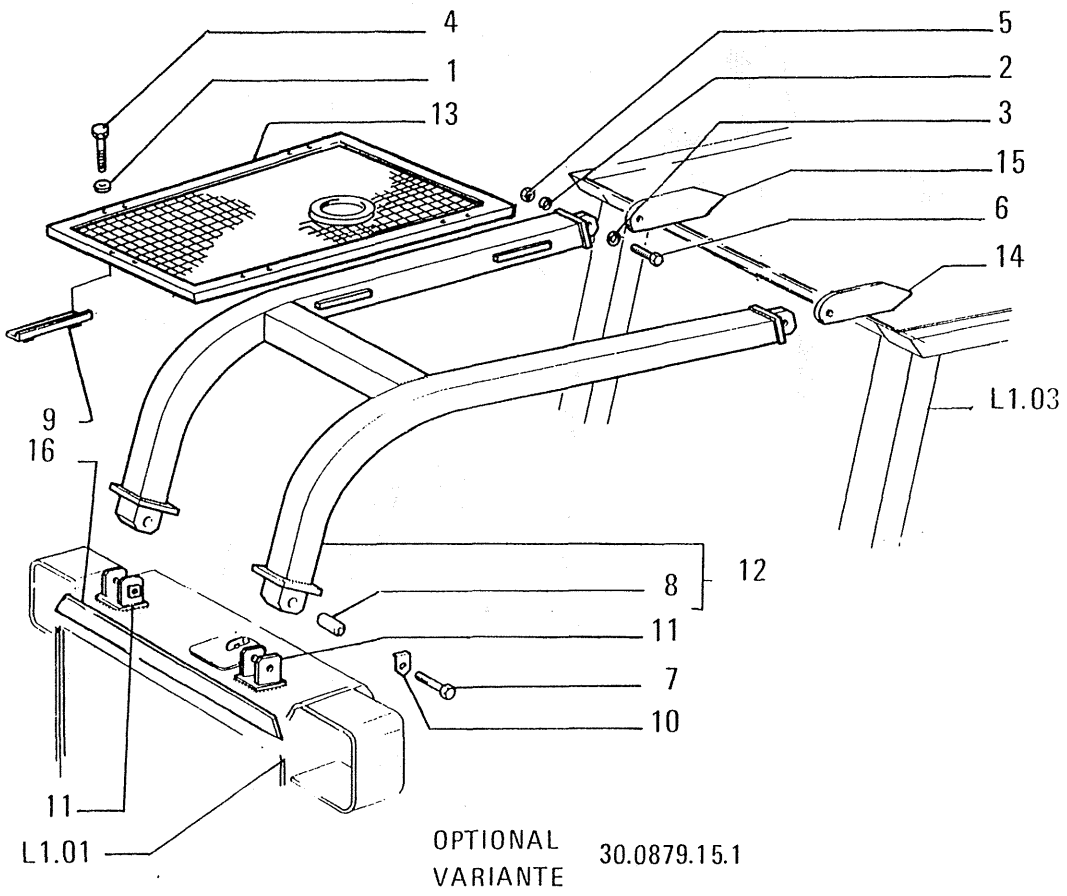

ITEM	PART NUMBER	QTY	TRANS CODE	DESCRIPTION	DESCRIZIONE
1	10516871	10	170R	LOCKWASHER 10x2,5	ROSETTA EL. 10x2,5
2	10517671	2	170R	LOCKWASHER 24,3x5,5	ROSETTA EL. 24,3x5,5
3	10520621	2	131R	WASHER 24,4x42	ROSETTA 24,4x42
4	11107331	10	40V	SCREW 10x1,5x55	VITE 10x1,5x55
5	12164521	2	10D	NUT 24x2x19	DADO 24x2x19
6	15997531	2	40V	SCREW 24x2x90	VITE 24x2x90
7	**16163437**	2	40V	SCREW	VITE
8	76002034	2	95B	BUSHING	BOCCOLA
9	76001715	5	225S	BRACKET	STAFFA
10	79015264	2	113P	LOCKPLATE	PIASTRINA DI SICUREZZA
11	79017885	2	300S	SUPPORT - TO BE WELDED	SUPPORTO - DA SALDARE
12	76000307	1	72I	FRAME	INTELAIATURA
13	76014390	1	70R	GUARD	RIPARO
14	76004728	1	74B	BLOCK - LEFT TO BE WELDED	BLOCCHETTO - SINISTRO DA SALDARE
15	76004729	1	74B	BLOCK - RIGHT TO BE WELDED	BLOCCHETTO - DESTRO DA SALD/
16	76001792	1	60R	REINFORCEMENT - TO BE WELDED	RINFORZO - DA SALDARE

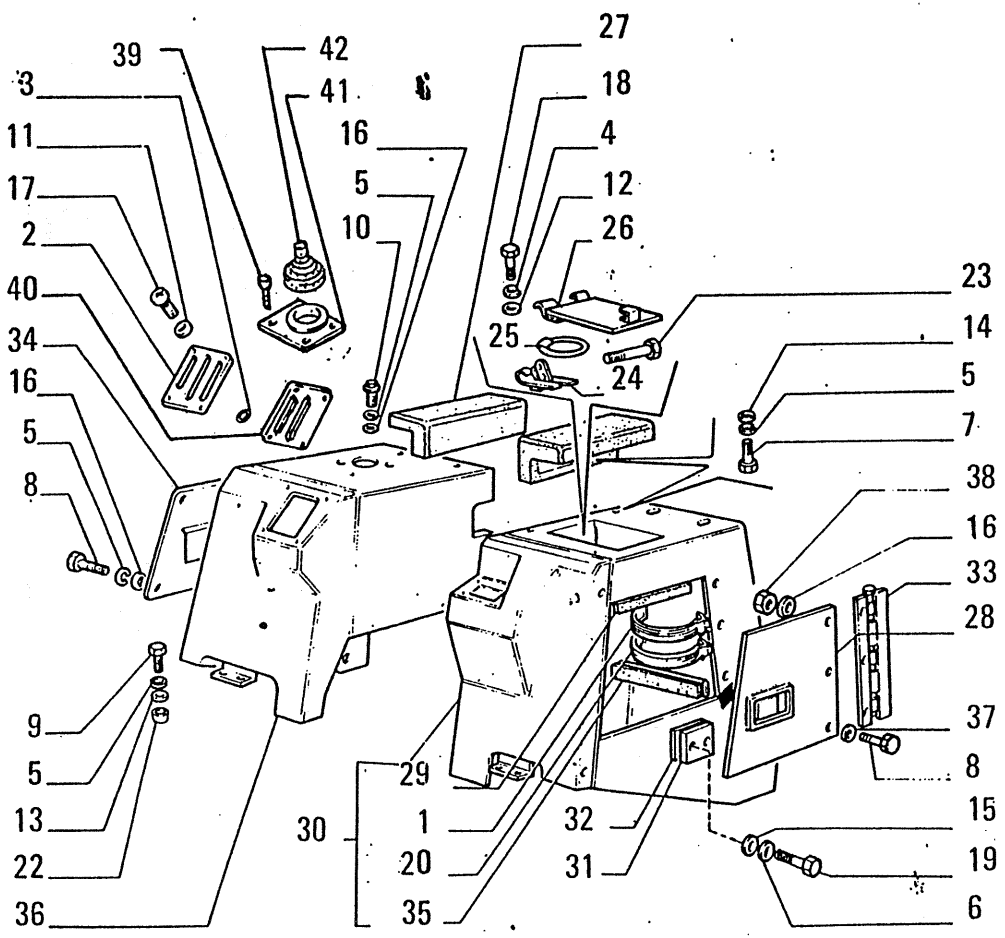

(05782)

ITEM	PART NUMBER	QTY	TRANS CODE	DESCRIPTION	DESCRIZIONE
1	4293094	1	172C	SECURING STRAP	CINGHIA DI FISSAGGIO
					SETTORE DI RIFERIMENTO 04
2	79006255	1	138S	REFERENCE SECTOR	SETTORE DI RIFERIMENTO
					SETTORE DI RIFERIMENTO 02-(
3	10397280	1	45A	RING 10x22	ANELLO 10x22
4	10516671	3	131R	WASHER 8,1x2,2	ROSETTA 8,1x2,2
5	10516871	28	131R	WASHER 10x2,5	ROSETTA 10x2,5
6	10571771	2	131R	WASHER 8,1x2	ROSETTA 8,1x2
7	10902121	8	40V	SCREW 6x1x14	VITE 6x1x14
8	11106031	8	40V	SCREW 10x1,5x20	VITE 10x1,5x20
9	11106231	4	40V	SCREW 10x1,5x25	VITE 10x1,5x25
10	11106431	4	40V	SCREW 10x1,5x30	VITE 10x1,5x30
11	12598371	4	131R	WASHER 8,1x15,8	ROSETTA 8,1x15,8
12	12642021	2	131R	WASHER 8,15x25	ROSETTA 8,15x25
13	12644321	4	131R	WASHER 10,2x35	ROSETTA 10,2x35
14	12644421	8	131R	WASHER 6,15x15	ROSETTA 6,15x15
15	12646721	2	131R	WASHER 8,15x20	ROSETTA 8,15x20
16	12646821	12	131R	WASHER 10,2x25	ROSETTA 10,2x25
17	13279217	4	40V	SCREW 8x1,25x16	VITE 8x1,25x16
18	16043431	2	40V	SCREW 8x1,25x20	VITE 8x1,25x20
19	16043531	2	40V	SCREW 8x1,25x22	VITE 8x1,25x22
20	76003845	1	172C	SECURING STRAP	CINGHIA DI FISSAGGIO
22	79014057	4	75D	SPACER	DISTANZIALE
23	79025535	1	80P	PIN	PERNO
24	79025536	1	140C	HINGE	CERNIERA
25	79025540	1	100M	SPRING	MOLLA
26	79025541	1	205S	DOOR	SPORTELLO

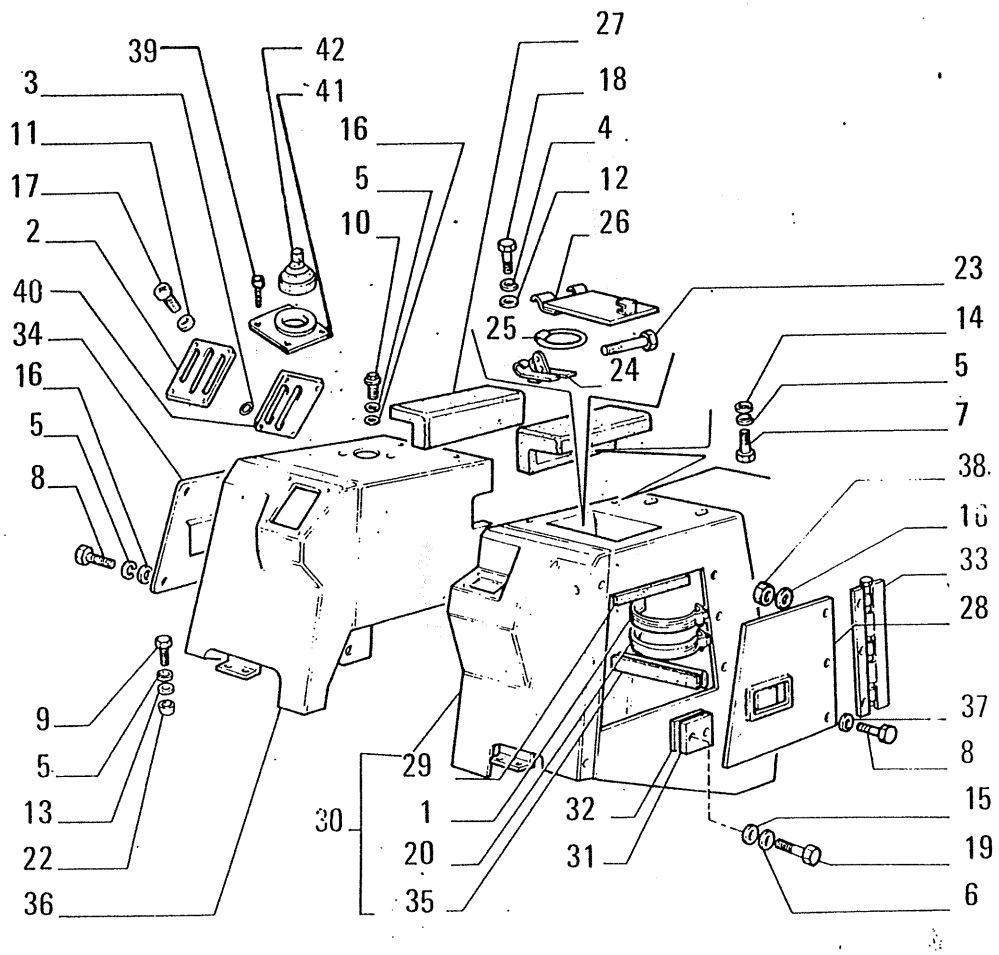

05782

ITEM	PART NUMBER	QTY	TRANS CODE	DESCRIPTION	DESCRIZIONE
27	79027559	2	74A	ARMREST	APPOGGIABRACCIA
28	79033760	1	205S	DOOR	SPORTELLO
29	79034167	1	120G	GASKET	GUARNIZIONE PIANA
30	79034264	1	115M	PILLAR - ASSEMBLY LEFT	MONTANTE - COMPLETO SINIST MONTANTE - SINISTRO 02-04
31	79034465	1	110P	PLAQUE	PIASTRINA
32	79034466		198S	SHIM	SPESSORE
33	79036804	1	140C	HINGE - TO BE WELDED	CERNIERA - DA SALDARE
34	79036868	1	52F	SIDE PANEL - OUTER	FIANCHETTO - ESTERNO
35	79036926	2	120G	GASKET - REAR	GUARNIZIONE PIANA - POSTERI
36	79037020	1	115M	PILLAR - RIGHT	MONTANTE - DESTRO 01-02-03 MONTANTE - DESTRO 04
37	10571871	3	131R	WASHER 10,2x2,2	ROSETTA 10,2x2,2
38	11701711	3	10D	NUT 10x1,5x8	DADO 10x1,5x8
39	15645501	4	40V	SCREW (05)(*) 4,8x16	VITE (05)(*) 4,8x16
40	76014387	1	25P	PANEL (05)(*)	PANNELLO (05)(*)
41	79035794	1	300S	SUPPORT (05)(*)	SUPPORTO (05)(*)
42	79035795	1	334C	DUST BOOT (05)(*)	CUFFIA PARAPOLVERE (05)(*)
(*)			469P	FOR SPECIAL EQUIPMENT 30.0021.08.1	PER VARIANTE 30.0021.06.1

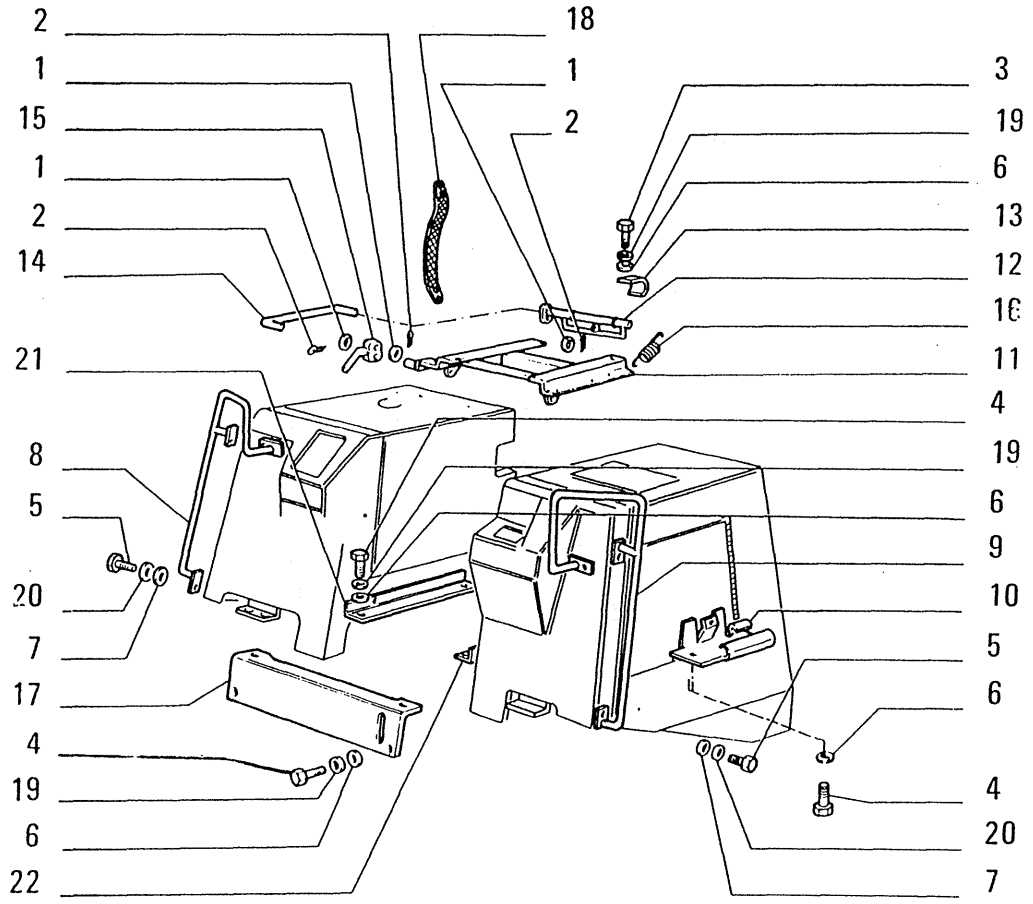

(05599)

ITEM	PART NUMBER	QTY	TRANS CODE	DESCRIPTION	DESCRIZIONE
1	10519621	3	131R	WASHER 8,45x17	ROSETTA 8,45x17
2	10796301	3	270C	COTTER PIN 2,7x21,6	COPIGLIA 2,7x21,6
3	11103031	2	40V	SCREW 10x1,5x18	VITE 10x1,5x18
4	11106031	6	40V	SCREW 10x1,5x20	VITE 10x1,5x20
5	11112231	6	40V	SCREW 12x1,75x22	VITE 12x1,75x22
6	12646821	14	131R	WASHER 10,2x25	ROSETTA 10,2x25
7	12646921	6	131R	WASHER 12,2x28	ROSETTA 12,2x28
8	79006250	1	20M	HANDLE - REAR RIGHT	MANIGLIA - POSTERIORE DESTRO
9	79009070	1	20M	HANDLE - REAR LEFT	MANIGLIA - POSTERIORE SINISTRO
10	79013215	1	70R	GUARD - REAR	RIPARO - POSTERIORE
11	79025399	1	77T	MAIN FRAME	TELAIO TRATTORE
12	79025462	1	30G	HOOK - REAR	GANCIO - POSTERIORE
13	79025467	2	140C	HINGE	CERNIERA
14	79025468	1	142T	TIEROD	TIRANTE
15	79025469	1	45L	LEVER	LEVA
16	79025470	1	100M	SPRING	MOLLA
17	79033629	1	140P	PLANK - FRONT	PLANCIA - ANTERIORE
18	79035976	2	142T	TIEROD (1*)	TIRANTE (1*)
19	10571871	14	131R	WASHER 10,2x2,2	ROSETTA 10,2x2,2
20	10571971	6	131R	WASHER 12,2x2,5	ROSETTA 12,2x2,5
21	79027055	1	60A	ANGLE	ANGOLARE
22	76003577	1	60A	ANGLE	ANGOLARE
(1*)			469P	FOR SPECIAL EQUIPMENT 30.0852.05.1	PER VARIANTE 30.0852.05.1

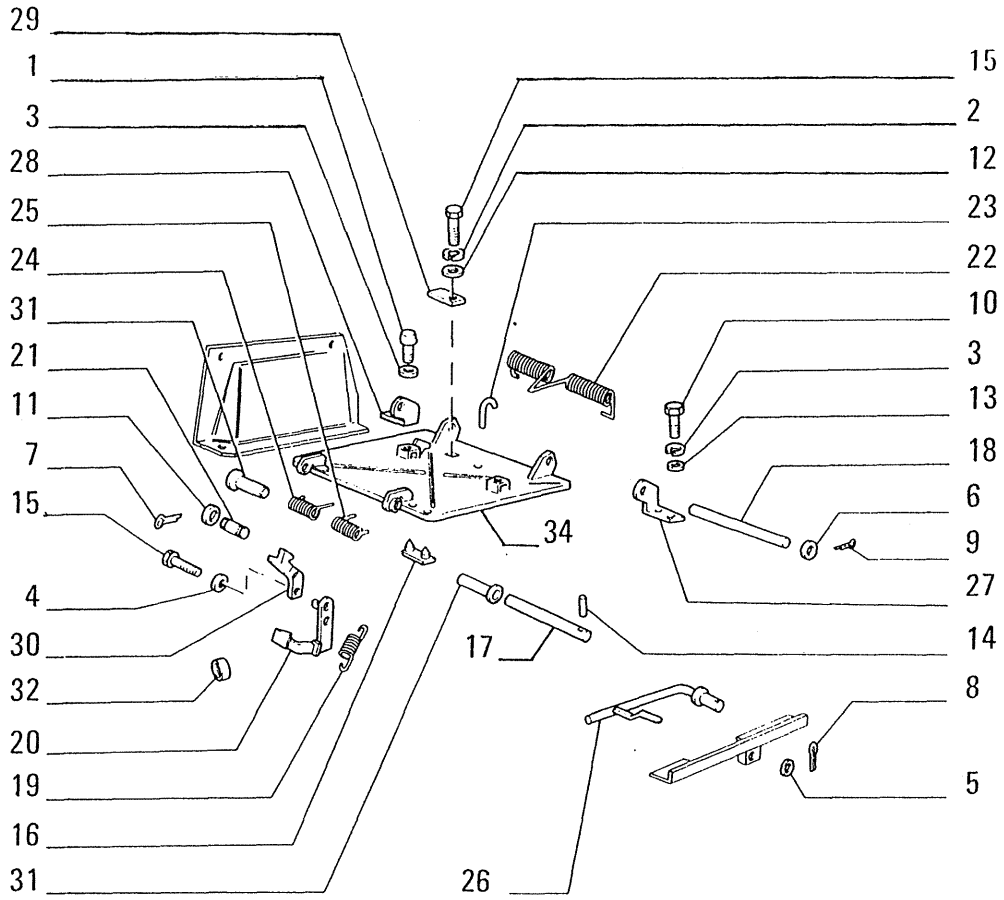

ITEM	PART NUMBER	QTY	TRANS CODE	DESCRIPTION	DESCRIZIONE
1	591420	2	61T	CUSHION PAD	TASSELLO ELASTICO
2	10571771	1	131R	WASHER 8,1x2	ROSETTA 8,1x2
3	10571871	6	131R	WASHER 10,2x2,2	ROSETTA 10,2x2,2
4	10519621	1	131R	WASHER 8,45x17	ROSETTA 8,45x17
5	10520021	1	131R	WASHER 12,2x22	ROSETTA 12,2x22
6	10520221	2	131R	WASHER 16,4x28	ROSETTA 16,4x28
7	10796301	2	270C	COTTER PIN 2,7x21,6	COPIGLIA 2,7x21,6
8	10796401	1	270C	COTTER PIN 2,7x27,6	COPIGLIA 2,7x27,6
9	10797101	2	270C	COTTER PIN 4,4x34	COPIGLIA 4,4x34
10	11106431	4	40V	SCREW 10x1,5x30	VITE 10x1,5x30
11	12638621	2	131R	WASHER 10,2x18	ROSETTA 10,2x18
12	12646721	1	131R	WASHER 8,15x20	ROSETTA 8,15x20
13	12646821	4	131R	WASHER 10,2x25	ROSETTA 10,2x25
14	14164770	1	200S	PIN 4,4x40	SPINA 4,4x40
15	16043631	2	40V	SCREW 8x1,25x25	VITE 8x1,25x25
16	79010401	2	61T	CUSHION PAD	TASSELLO ELASTICO
17	79025453	1	16A	SHAFT	ALBERO
18	79025458	1	16A	SHAFT	ALBERO
19	79025470	1	100M	SPRING	MOLLA
20	79025508	1	70T	PROTECTIVE PANEL	TEGOLO
21	79025548	1	80P	PIN	PERNO
22	79026148	1	100M	SPRING	MOLLA
23	79026149	1	30G	HOOK	GANCIO
24	79027153	1	100M	SPRING - LEFT	MOLLA - SINISTRO
25	79026154	1	100M	SPRING - RIGHT	MOLLA - DESTRO
26	79027056	1	238P	PUSH ROD	PUNTALE
27	79027057	1	225S	BRACKET - LEFT	STAFFA - SINISTRO

05598

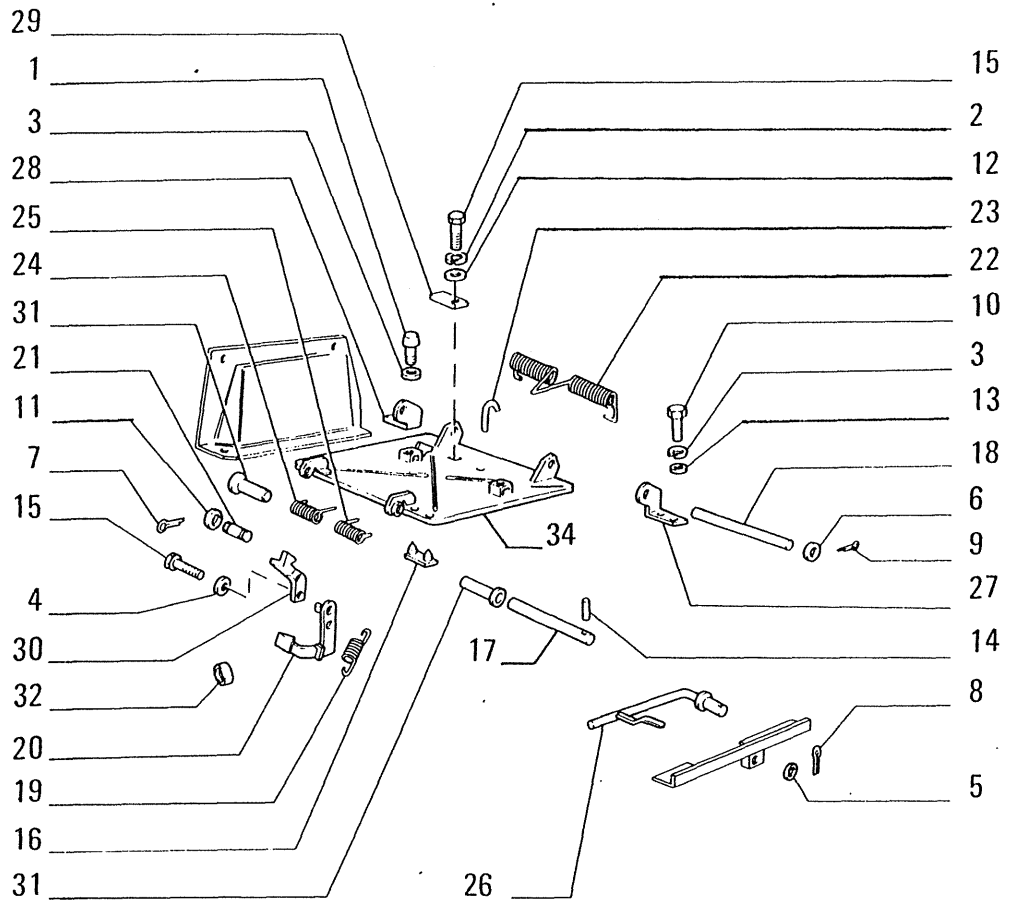

ITEM	PART NUMBER	QTY	TRANS CODE	DESCRIPTION	DESCRIZIONE
28	79027058	1	225S	BRACKET - RIGHT	STAFFA - DESTRO
29	79027428	1	113P	LOCKPLATE	PIASTRINA DI SICUREZZA
30	79028272	1	30G	HOOK - FRONT	GANCIO - ANTERIORE
31	79028347	2	75D	SPACER	DISTANZIALE
32	79035788	2	120G	GASKET (01-02-03)(*)	GUARNIZIONE PIANA (01-02-03)(*)
34	79036971	1	265C	COVER	COPERCHIO
(*)			469P	FOR SPECIAL EQUIPMENT 30.0020.18.1	PER VARIANTE 30.0020.18.1

05598

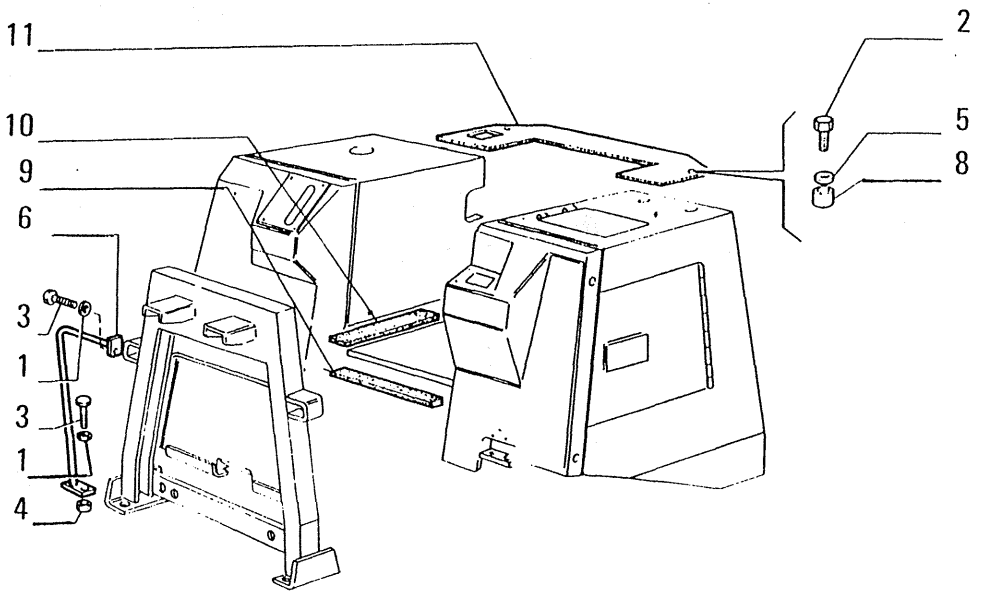

ITEM	PART NUMBER	QTY	TRANS CODE	DESCRIPTION	DESCRIZIONE
1	10516471	4	131R	WASHER 6,1x1,8	ROSETTA 6,1x1,8
2	11107031	4	40V	SCREW (*) 10x1,5x45	VITE (01-02-03)(*) 10x1,5x45
3	11112431	4	40V	SCREW 12x1,75x30	VITE 12x1,75x30
4	11701721	4	10D	NUT 10x1,5x8	DADO 10x1,5x8
5	45017038	4	131R	WASHER (*)	ROSETTA (01-02-03)(*)
6	79017295	1	20M	HANDLE - FRONT SIDE RIGHT	MANIGLIA - ANTERIORE LATERALE DESTRO
	79017297	1	20M	HANDLE - FRONT SIDE LEFT	MANIGLIA - ANTERIORE LATERALE SINISTRO
8	79018837	4	75D	SPACER (*)	DISTANZIALE (01-02-03)(*)
9	79035786	2	120G	GASKET (*)	GUARNIZIONE PIANA (01-02-03)(*)
10	79035787	2	120G	GASKET (*)	GUARNIZIONE PIANA (01-02-03)(*)
11	79040823	1	25P	PANEL (*)	PANNELLO (01-02-03)(*)
(*)			469P	FOR SPECIAL EQUIPMENT 30.0020.18.1	PER VARIANTE 30.0020.18.1

05783

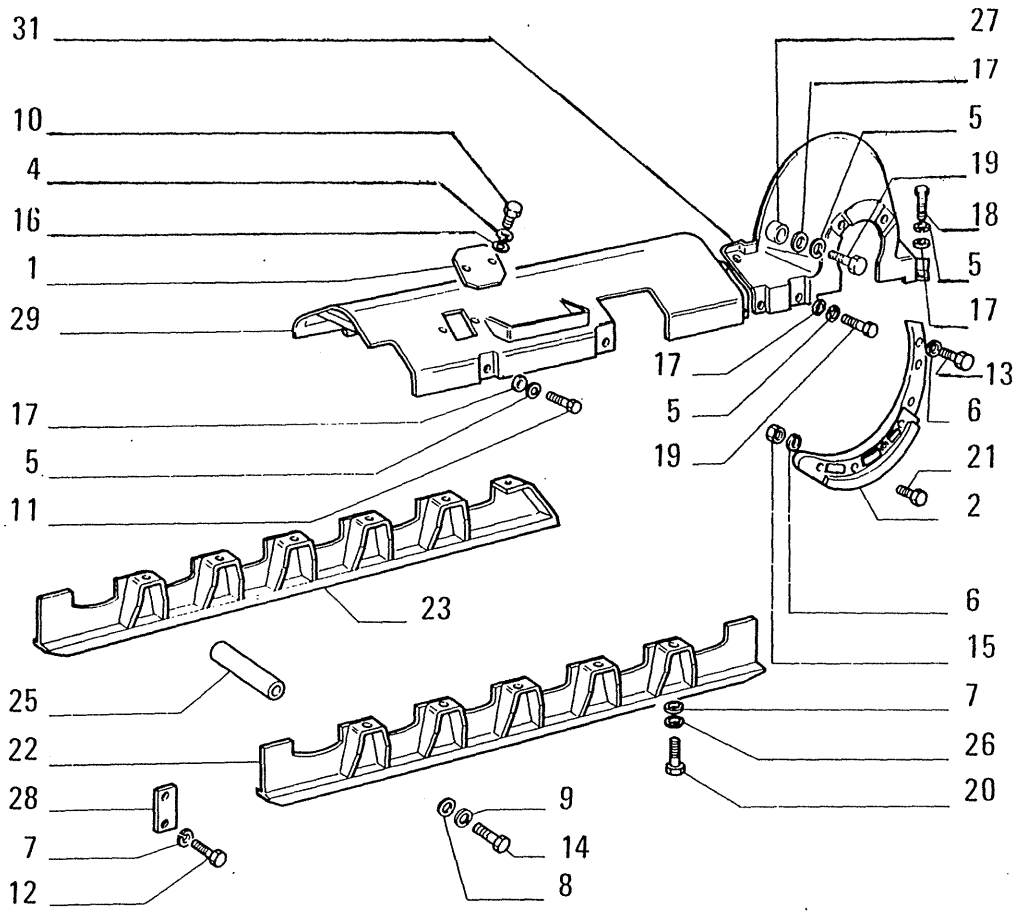

ITLM	PART NUMBER	QTY	TRANS CODE	DESCRIPTION	DESCRIZIONE
1	591246	2	265C	COVER	COPERCHIO
2	4981108	1	70R	GUARD - LEFT	RIPARO - SINISTRO
	4981112	1	70R	GUARD - RIGHT	RIPARO - DESTRO
4	10516871	4	131R	WASHER 10x2,5	ROSETTA 10x2,5
5	10517071	18	131R	WASHER 12,2x3,1	ROSETTA 12,2x3,1
6	10517171	18	131R	WASHER 14,2x3,5	ROSETTA 14,2x3,5
7	10517271	34	131R	WASHER (1*) 16,2x4	ROSETTA (01-02)(05)(1*) 16,2x4
8	10520427	20	131R	WASHER (1*) 20,4x35	ROSETTA (01-02)(05)(1*) 20,4x35
9	10572371	20	131R	WASHER (1*) 20,2x4	ROSETTA (01-02)(05)(1*) 20,2x4
10	11106031	4	40V	SCREW 10x1,5x20	VITE 10x1,5x20
11	11112431	12	40V	SCREW 12x1,75x30	VITE 12x1,75x30
12	11390537	12	40V	SCREW (1*) 16x1,5x40	VITE (01-02)(05)(1*) 16x1,5x40
13	11394331	8	40V	SCREW 14x1,5x40	VITE 14x1,5x40
14	11408637	20	40V	SCREW (1*) 20x1,5x45	VITE (01-02)(05)(1*) 20x1,5x45
15	12164021	18	10D	NUT 14x1,5x11	DADO 14x1,5x11
16	12646821	4	131R	WASHER 10,2x25	ROSETTA 10,2x25
17	12646921	18	131R	WASHER 12,2x28	ROSETTA 12,2x28
18	15540331	2	40V	SCREW 12x1,25x25	VITE 12x1,25x25
19	15541131	4	40V	SCREW 12x1,25x65	VITE 12x1,25x65
20	15840537	22	40V	SCREW (1*) 16x1,5x50	VITE (01-02)(1*) 16x1,5x50
21	15977531	10	40V	SCREW 14x1,5x60	VITE 14x1,5x60
22	76002929	2	70R	GUARD - OUTER (1*)	RIPARO - ESTERNO (01-02)(05)(1*)
23	76002930	1	70R	GUARD - INNER (1*)	RIPARO - INTERNO

05784

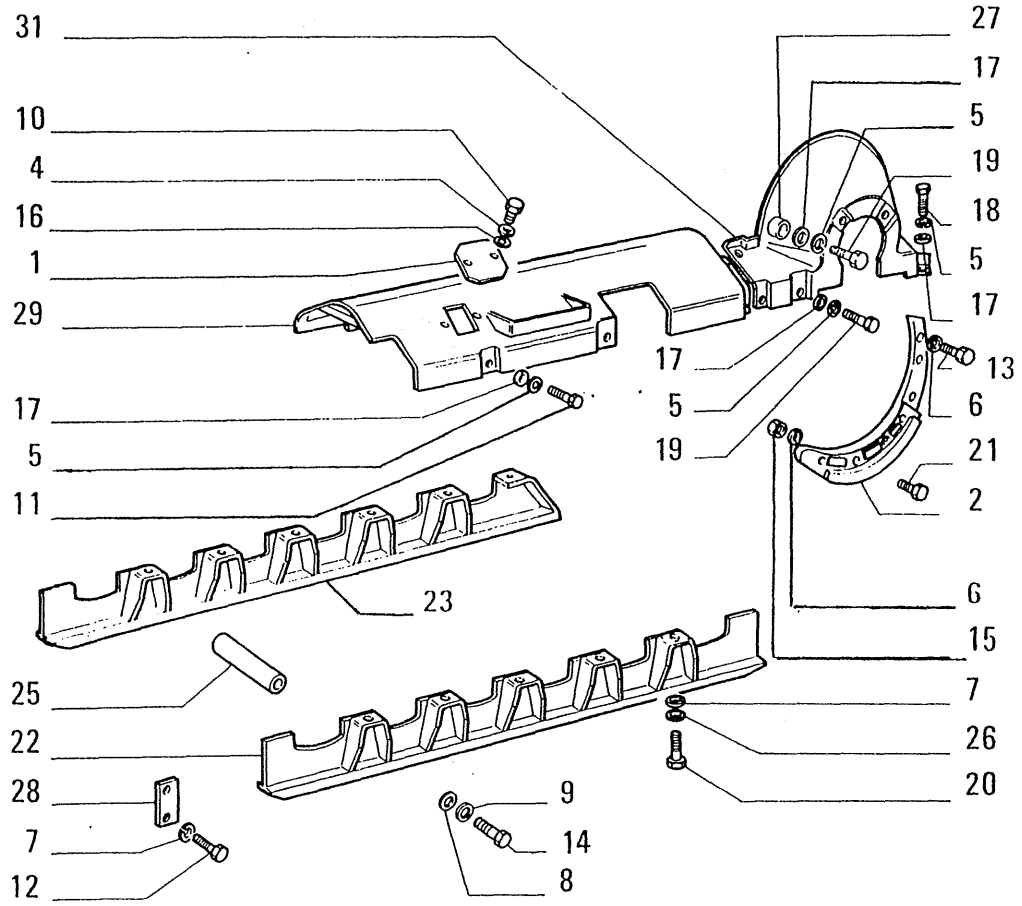

ITEM	PART NUMBER	QTY	TRANS CODE	DESCRIPTION		DESCRIZIONE
23	76002930					(01-02)(05)(1*)
	76002931	1	70R	GUARD - INNER	(1*)	RIPARO - INTERNO
						(01-02)(05)(1*)
25	76004368	10	184C	STUD	(1*)	COLONNETTA (01-02)(05)(1*)
26	79005240	22	131R	WASHER	(1*)	ROSETTA (01-02)(05)(1*)
27	79009345	4	75D	SPACER		DISTANZIALE
28	79009596	6	110P	PLAQUE	(1*)	PIASTRINA (01-02)(05)(1*)
29	79018913	1	70R	GUARD - FRONT RIGHT		RIPARO - ANTERIORE DESTRO
	79018914	1	70R	GUARD - FRONT LEFT		RIPARO - ANTERIORE SINISTRO
31	79020454	1	70R	GUARD - LEFT		RIPARO - SINISTRO
	79020458	1	70R	GUARD - RIGHT		RIPARO - DESTRO
1*)			469P	FOR SPECIAL EQUIPMENT 30.0563.09.1		PER VARIANTE 30.0563.09.1

05784

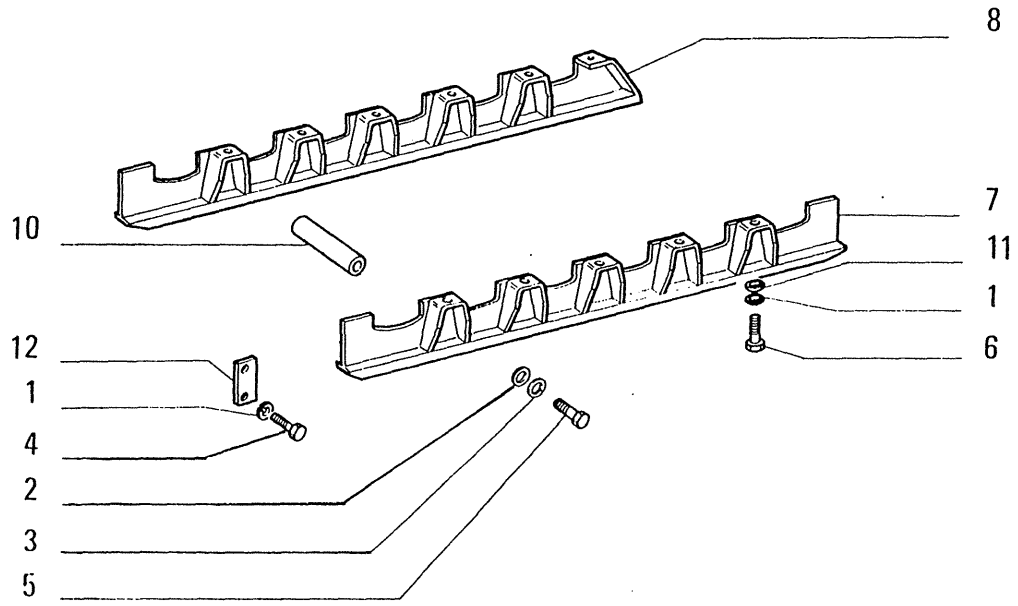

05785

ITEM	PART NUMBER	QTY	TRANS CODE	DESCRIPTION	DESCRIZIONE
1	10517271	38	131R	WASHER (03)(*) 16,2x4	ROSETTA (03)(*) 16,2x4
2	10520427	24	131R	WASHER (03)(*) 20,4x35	ROSETTA (03)(*) 20,4x35
3	10572371	24	131R	WASHER (03)(*) 20,2x4	ROSETTA (03)(*) 20,2x4
4	11390537	12	40V	SCREW (03)(*) 16x1,5x40	VITE (03)(*) 16x1,5x40
5	11408637	2	40V	SCREW (03)(*) 20x1,5x45	VITE (03)(*) 20x1,5x45
6	15840537	26	40V	SCREW (03)(*) 16x1,5x50	VITE (03)(*) 16x1,5x50
7	76002926	2	70R	GUARD - OUTER (03)(*)	RIPARO - ESTERNO (03)(*)
8	76002927	1	70R	GUARD - INNER LEFT (03)(*)	RIPARO - INTERNO SINISTRO (03)(*)
	76002928	1	70R	GUARD - INNER RIGHT (03)(*)	RIPARO - INTERNO DESTRO (03)(*)
10	76004368	12	164C	STUD (03)(*)	COLONNETTA (03)(*)
11	79005240	26	131R	WASHER (03)(*)	ROSETTA (03)(*)
12	79009596	6	110P	PLAQUE (03)(*)	PIASTRINA (03)(*)
(*)			469P	FOR SPECIAL EQUIPMENT 30.0563.08.1	PER VARIANTE 30.0563.08.1

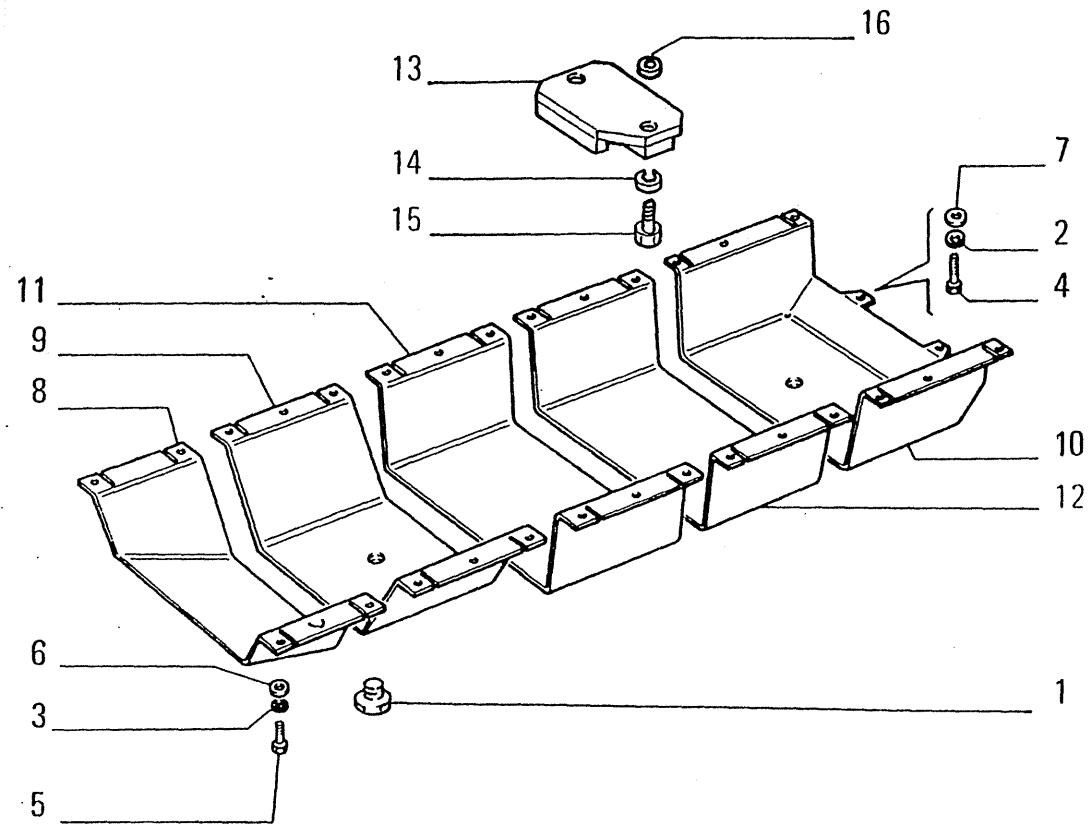

OPTIONAL
VARIANTE 30.0875.18.1

ITEM	PART NUMBER	QTY	TRANS CODE	DESCRIPTION	DESCRIZIONE
1	547737	2	50T	PLUG	TAPPO
2	10572171	2	131R	WASHER 16X3,5 16x3,5	ROSETTA 16X3,5 16x3,5
3	10572271	22	131R	WASHER 18,2X3,5 18,2x3,5	ROSETTA (01-03) 18,2X3,5 18,2x3,5
4	11391531	2	40V	SCREW 16X1,5X45 16x1,5x45	VITE 16X1,5X45 16x1,5x45
5	15984131	22	40V	SCREW 18X1,5X45 18x1,5x45	VITE 18X1,5X45 18x1,5x45
6	79005239	22	131R	WASHER	ROSETTA
7	79005240	2	131R	WASHER	ROSETTA
8	76008986	1	70R	GUARD	RIPARO
9	76008987	1	70R	GUARD	RIPARO
10	76008990	1	70R	GUARD	RIPARO
11	76008988	1	70R	GUARD - LOWER	RIPARO - INFERIORE
12	76008989	1	70R	GUARD - LOWER REAR	RIPARO - INFERIORE POSTERIORE
13	76010852	1	105P	PLATE	PIASTRA
14	14496601	2	131R	WASHER 10,5x21	ROSETTA 10,5x21
15	11106631	2	40V	SCREW 10x1,5x35	VITE 10x1,5x35
16	10571871	2	131R	WASHER 10,2x2,2	ROSETTA 10,2x2,2

05786

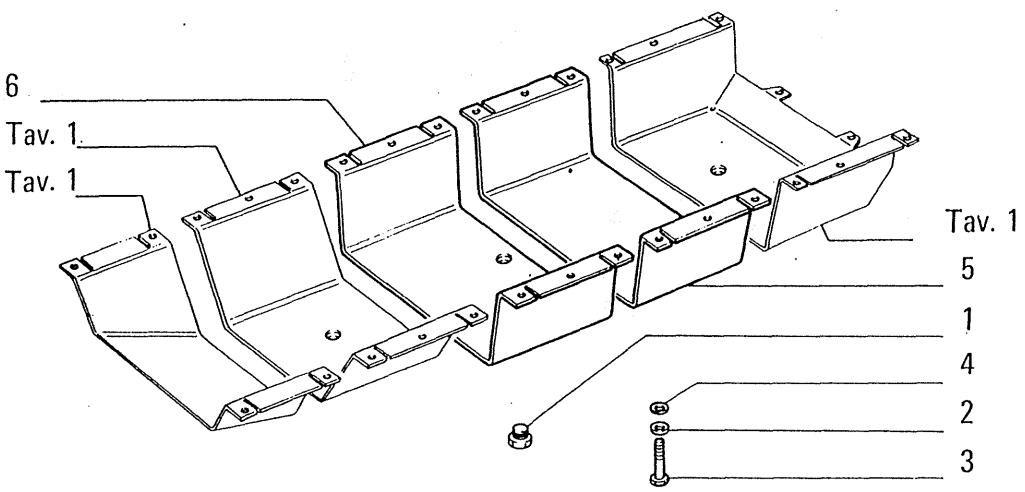

ITEM	PART NUMBER	QTY	TRANS CODE	DESCRIPTION	DESCRIZIONE
1	547737	1	50T	PLUG	TAPPO 01-03-05
2	10572271	8	131R	WASHER 18,2x3,5	ROSETTA 01-03-05 18,2x3,5
3	15984131	8	40V	SCREW 18x1,5x45	VITE 01-03-05 18x1,5x45
4	79005239	8	131R	WASHER	ROSETTA 01-03-05
5	76008985	1	70R	GUARD - LOWER REAR **D1437**	RIPARO - INFERIORE POSTERIORE 01-03-05 **D1437**
	79032830	1	70R	GUARD - LOWER **C1107**	RIPARO - INFERIORE **C1107**
	79046510	1	70R	GUARD - LOWER REAR **D1107**	RIPARO - INFERIORE POSTERIORE 01-03-05 **D1107**
		1	70R	GUARD - LOWER REAR **C1437**	RIPARO - INFERIORE POSTERIORE 01-03 **C1437**
6	76008978	1	70R	GUARD - LOWER **D1437**	RIPARO - INFERIORE 01-02-03-05 **D1437**
	79034326	1	70R	GUARD - LOWER **C1107**	RIPARO - INFERIORE **C1107**
	79046506	1	70R	GUARD - LOWER **D1107**	RIPARO - INFERIORE 01-02-03-05 **D1107**
		1	70R	GUARD - LOWER **C1437**	RIPARO - INFERIORE 01-02-03 **C1437**

C 1107 → Tel.n. 050100 C 1437 → Tel.n. 051297
D 1107 Tel.n. 050101 → D 1437 Tel.n. 051298 →

05787

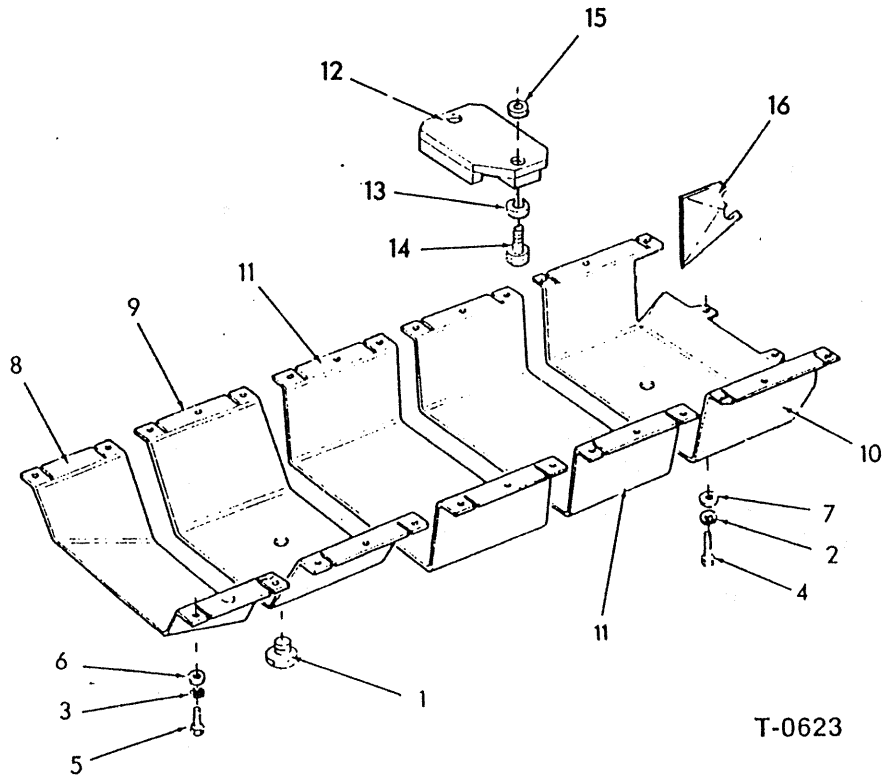

ITEM	PART NO.	QTY.	CODE	DESCRIPTION	DENOMINAZIONE
1	00547737	2	50T	PLUG	TAPPO
2	10572171	2	131R	WASHER	ROSETTA
3	10572271	22	131R	WASHER	ROSETTA
4	11391531	2	40V	CAPSCREW,M16X1.5X45	VITE
5	15984131	22	40V	CAPSCREW,M18X1.5X45	VITE
6	79005239	22	131R	WASHER	ROSETTA
7	79005240	2	131R	WASHER	ROSETTA
8	79046507	1	115G	GUARD	PROTEZIONE
			600X	PRIOR TO UNIT #051298	FINO AL TELAIO.....
	76008979	1	115G	GUARD	PROTEZIONE
			600Y	UNIT NO.051298 AND UP	DAL TELAIO.....
9	79046508	1	115G	GUARD	PROTEZIONE
			600X	PRIOR TO UNIT #051298	FINO AL TELAIO.....
	76008980	1	115G	GUARD	PROTEZIONE
			600Y	UNIT NO.051298 AND UP	DAL TELAIO.....
	a79087395	1	115G	GUARD	PROTEZIONE
10	79046509	1	115G	GUARD	PROTEZIONE
			600X	PRIOR TO UNIT #051298	FINO AL TELAIO.....
	76008981	1	115G	GUARD	PROTEZIONE
			600Y	UNIT NO.051298 AND UP	DAL TELAIO.....
11	79046510	2	115G	GUARD	PROTEZIONE
			600X	PRIOR TO UNIT #051298	FINO AL TELAIO.....
	76008985	2	115G	GUARD	PROTEZIONE
			600Y	UNIT NO.051298 AND UP	DAL TELAIO.....
	a79087394	2	115G	GUARD	PROTEZIONE
12	b76010852	1	105P	PLATE	PIASTRA
13	b14496601	2	131R	WASHER	ROSETTA
14	b11106631	2	40V	CAPSCREW,M10X1.5X35	VITE
15	b10571871	2	131R	WASHER	ROSETTA

a.UNIT WITH 8365 ENG.

b.UNIT NO.051607 & UP

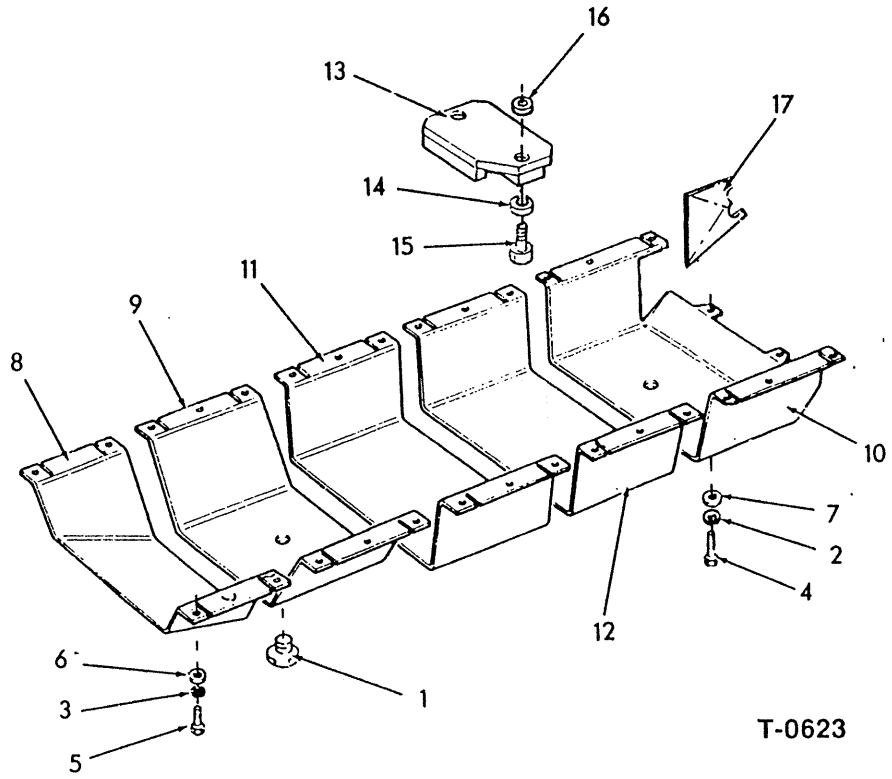

ITEM	PART NO.	QTY.	CODE	DESCRIPTION	DENOMINAZIONE
1	00547737	2	50T	PLUG	TAPPO
2	10572171	2	131R	WASHER,16X3.5	ROSETTA
3	10572271	22	131R	WASHER,18.2X3.5	ROSETTA
4	11391531	2	40V	CAPSCREW,16X1.5X45	VITE
5	15984131	22	40V	CAPSCREW,18X1.5X45	VITE
6	79005239	22	131R	WASHER	ROSETTA
7	79005240	2	131R	WASHER	ROSETTA
8	76008986	1	115G	GUARD	PROTEZIONE
9	76008987	1	115G	GUARD	PROTEZIONE
10	76008990	1	115G	GUARD	PROTEZIONE
11	76008988	1	115G	GUARD - LOWER	PROTEZIONE
12	76008989	1	115G	GUARD - LOWER REAR	PROTEZIONE
13	76010852	1	105P	PLATE	PIASTRA
14	14496601	2	131R	WASHER,10.5X21	ROSETTA
15	11106631	2	40V	CAPSCREW,10X1.5X35	VITE
16	10571871	2	131R	WASHER,10.2X2.2	ROSETTA
17	73154635	1	105P	PLATE	PIASTRA
			600T	REQUIRES WELDING	DA SALDARE

USAGE: UNITS EQUIPPED FOR SANITARY LANDFILL OR FORESTRY.

	BOTTOM GUARDS	L312/1	1
		Revised April 1989	

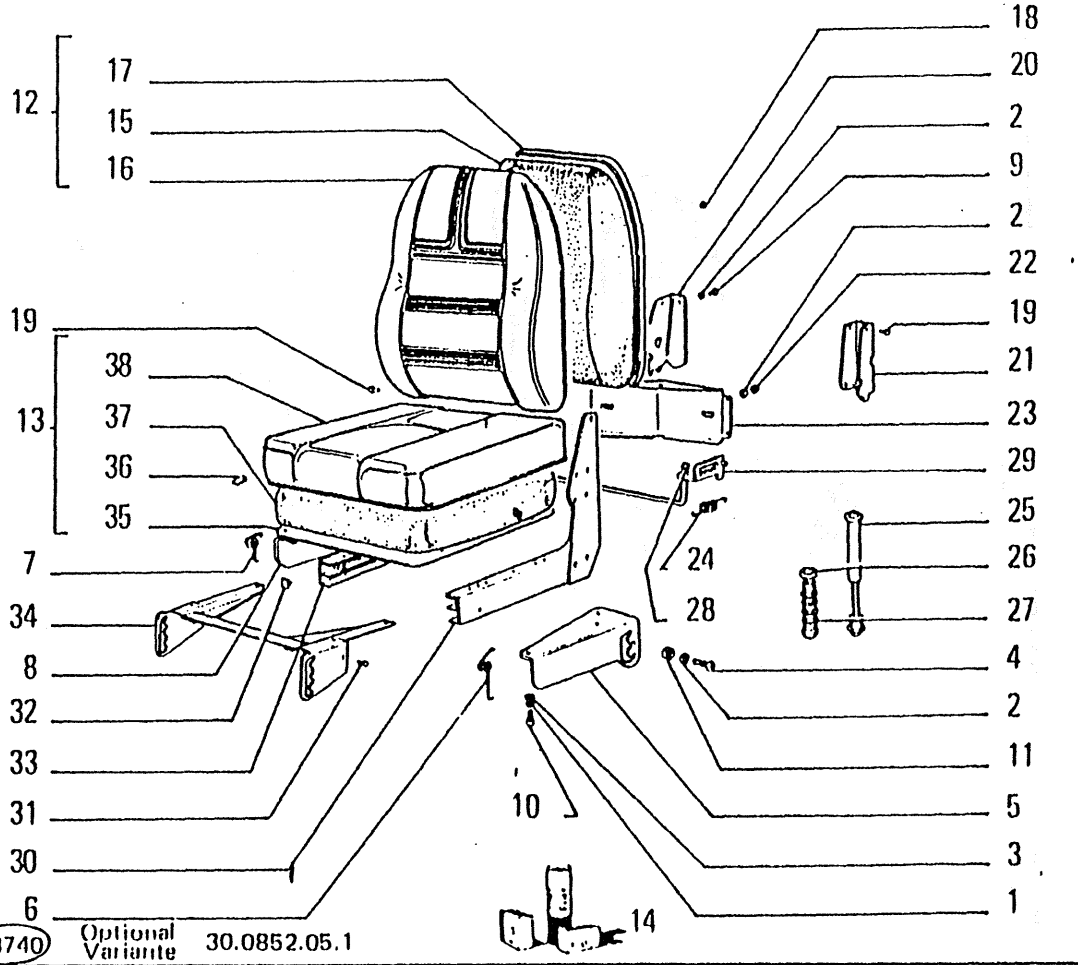

03740 Optional Variante 30.0852.05.1

ITEM	PART NUMBER	QTY	TRANS CODE	DESCRIPTION	DESCRIZIONE
1	70916964	6	131R	WASHER	ROSETTA
2	70917356	10	131R	WASHER	ROSETTA
3	70918011	2	131R	WASHER	ROSETTA
4	79026303	2	40V	SCREW	VITE
5	79026304	1	300S	SUPPORT	SUPPORTO
6	79026305	1	100M	SPRING	MOLLA
7	79026310	1	100M	SPRING	MOLLA
8	79026311	1	300S	SUPPORT	SUPPORTO
9	79026340	4	40V	SCREW	VITE
10	79026341	6	40V	SCREW	VITE
11	79026342	2	10D	NUT	DADO
12	79026565	1	50S	SEAT BACK	SCHIENALE
13	79026566	1	345C	CUSHION	CUSCINO
14	79026567	K	1K	KIT SEE PAGE 9	KIT VED. PAG. 9
15	79026568	1	116R	COVERING	RIVESTIMENTO
16	79026569	1	50S	SEAT BACK	SCHIENALE
17	79026570	1	25P	PANEL	PANNELLO
18	79026571	6	50T	PLUG	TAPPO
19	79026572	2	55R	RIVET	RIBATTINO
20	79026573	1	80M	BRACKET	MENSOLA
21	79026574	1	80M	BRACKET	MENSOLA
22	79026575	4	10D	NUT	DADO
23	79026576	1	25P	PANEL	PANNELLO
24	79026577	2	100M	SPRING	MOLLA
25	79026578	1	36A	SHOCK ABSORBER	AMMORTIZZATORE
26	79026579	1	56A	RETAINING RING	ANELLO DI RITEGNO
27	79026580	1	140G	SHEATH	GUAINA FLESSIBILE

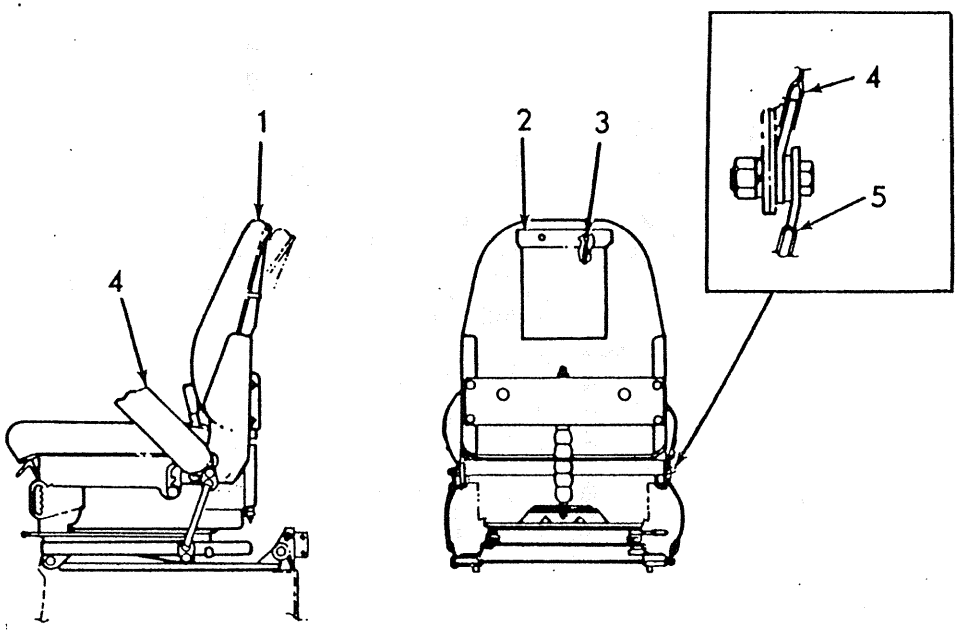

T-84705

ITEM	PART NO.	QTY.	LEX.	DESCRIPTION	DENOMINAZIONE
1	--------	1	80S	SEAT(L604/1)	SEDILE
	16043621	4	40V	CAPSCREW, M8 X 1.25 X 25MM	VITE
	10516671	4	131R	WASHER	ROSETTA
	13605711	4	75D	SPACER	DISTANZIALE
2	73108441	1	501L	POCKET	SACCA
	70920651	2	42V	SCREW,#8 X 1/2"	VITE
3	73108440	1	95C	CHAIN	CATENA
4	73075858	1	182C	SEAT BELT	CINTURA DI SICUREZZA
	70921076	2	40V	CAPSCREW	VITE
	70677006	2	131R	WASHER	ROSETTA
	70910287	2	132R	LOCKWASHER	ROSETTA DI SICUREZZA
	70911026	2	10D	NUT	DADO
5	79035976	2		TETHER	
	11106231	2	40V	CAPSCREW, M10 X 1.5 X 25MM	VITE
	10516871	2	132R	LOCKWASHER	ROSETTA DI SICUREZZA
	70677006	2	131R	WASHER	ROSETTA

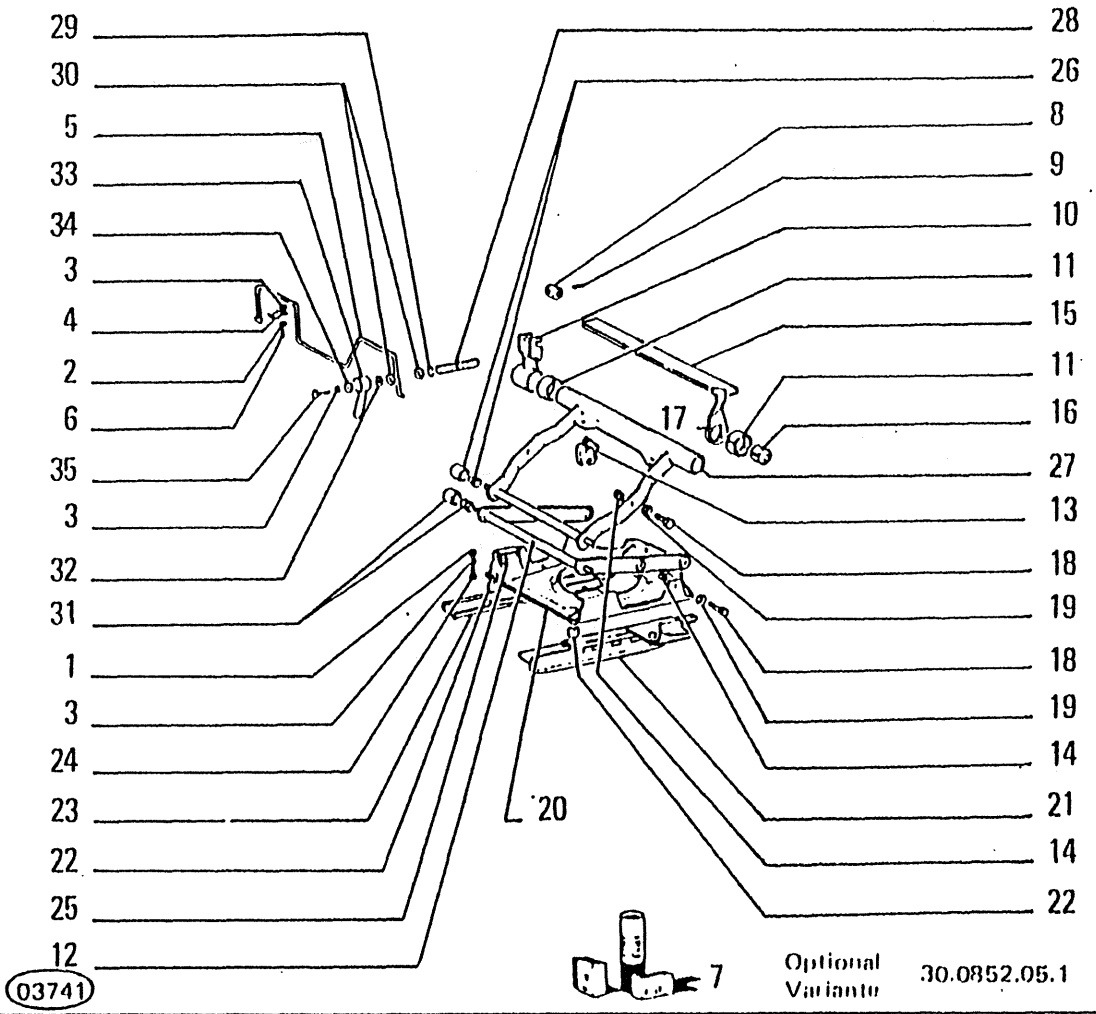

ITEM	PART NUMBER	QTY	TRANS CODE	DESCRIPTION	DESCRIZIONE
1	16100821	4	10D	NUT 8×1.25×6.5	DADO 8×1,25×6.5
2	70916964	2	131R	WASHER	ROSETTA
3	70917356	6	131R	WASHER	ROSETTA
4	79026308	2	230S	RETAINER	STAFFETTA FISSAGGIO
5	79026309	1	45L	LEVER	LEVA
6	79026341	2	40V	SCREW	VITE
7	79026567	K	1K	KIT SEE PAGE 9	KIT VED PAG 9
8	79026585	1	80P	PIN	PERNO
9	79026586	1	80P	PIN	PERNO
10	79026587	1	85F	FORK	FORCELLA
11	79026588	2	341C	BEARING	CUSCINETTO
12	79026589	1	45L	LEVER	LEVA
13	79026590	2	30P	RUBBER BUFFER	PARACOLPI DI GOMMA
14	79026591	4	10D	NUT	DADO
15	79026592	2	180T	CROSS BEAM	TRAVERSA
16	79026593	1	80P	PIN	PERNO
17	79026595	1	225S	BRACKET	STAFFA
18	79026596	4	40V	SCREW	VITE
19	79026597	4	131R	WASHER	ROSETTA
20	79026598	1	80A	STOP	ARRESTO
21	79026599	1	145G	GUIDE	GUIDA
22	79026600	4	75D	SPACER	DISTANZIALE
23	79026601	1	145G	GUIDE	GUIDA
24	79026602	4	40V	SCREW	VITE
25	79026603	2	80A	STOP	ARRESTO
26	79026604	4	341C	BEARING	CUSCINETTO
27	79026605	1	45L	LEVER	LEVA

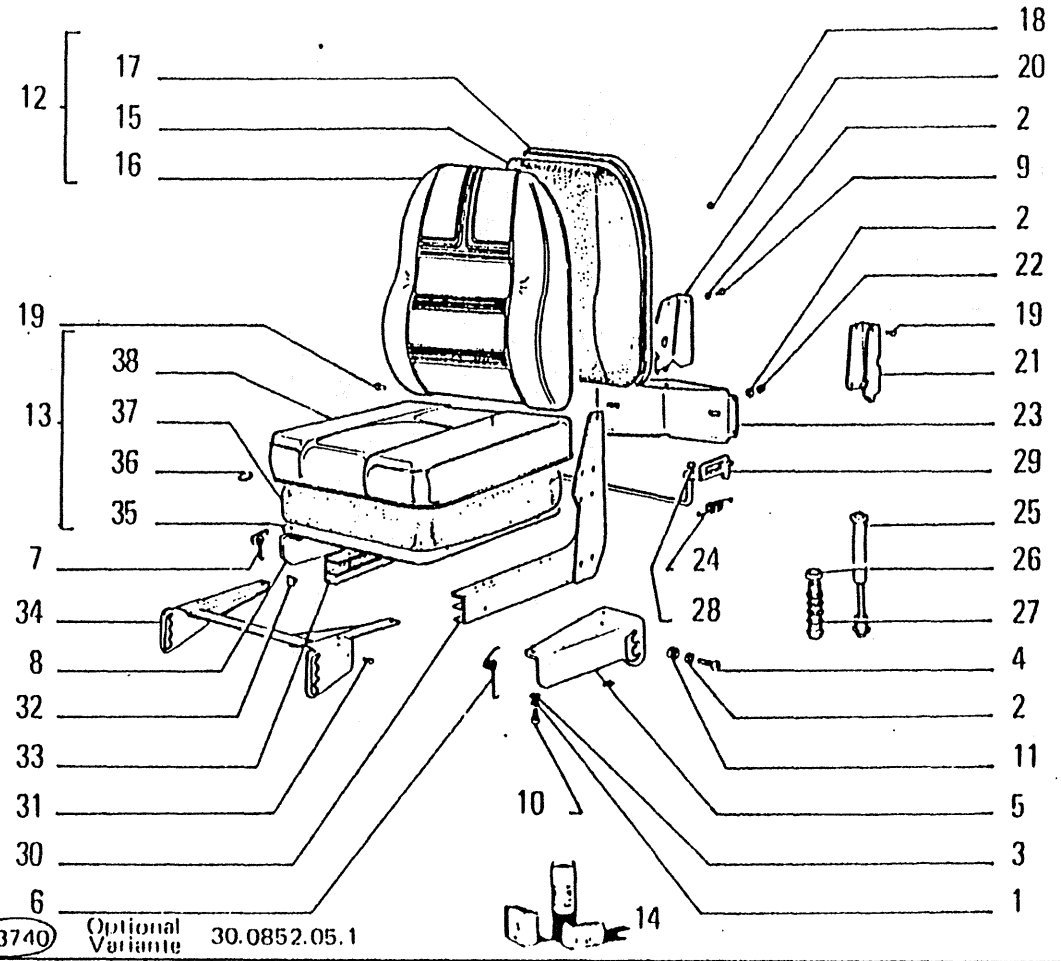

03740 Optional Variante 30.0852.05.1

ITEM	PART NUMBER	QTY	TRANS CODE	DESCRIPTION	DESCRIZIONE
28	79026581	2	65C	INSULATING BOOT	CAPPUCCIO ISOLANTE
29	79026582	1	45L	LEVER	LEVA
30	79026583	1	25P	PANEL	PANNELLO
31	79026584	6	55R	RIVET	RIBATTINO
32	79026603	2	80A	STOP	ARRESTO
33	79026614	1	25P	PANEL	PANNELLO
34	79026615	1	300S	SUPPORT	SUPPORTO
35	79026616	1	80S	SEAT	SEDILE
36	79026617	2	45F	SNAP FASTENER	FERMAGLIO
37	79026618	1	80S	SEAT	SEDILE
38	79026619	1	116R	COVERING	RIVESTIMENTO

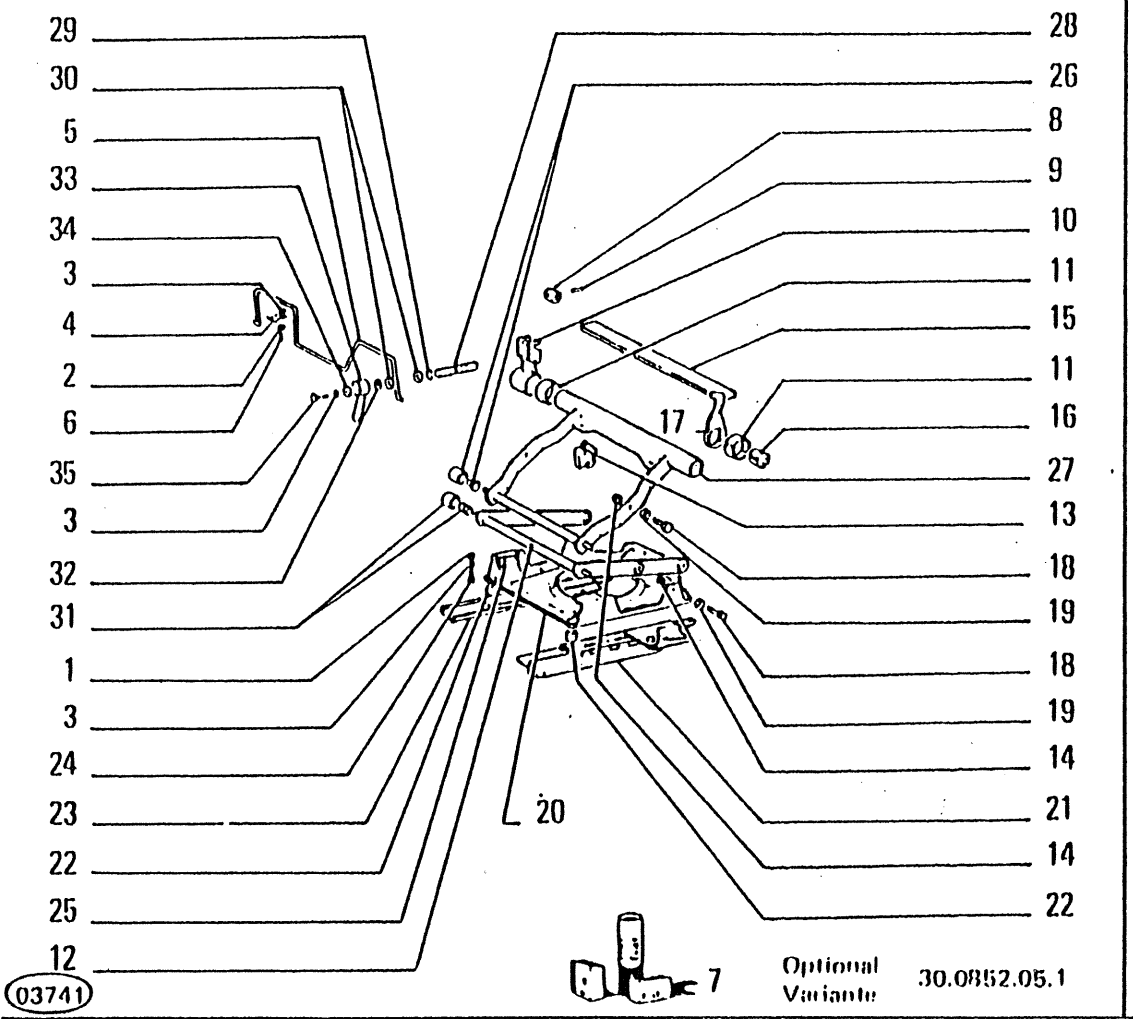

ITEM	PART NUMBER	QTY	TRANS CODE	DESCRIPTION	DESCRIZIONE
28	79026606	1	210P	STUD	PRIGIONIERO
29	79026607	1	51A	LOCKRING	ANELLO DI SICUREZZA
30	79026608	2	131R	WASHER	ROSETTA
31	79026609	1	341C	BEARING	CUSCINETTO
32	79026610	1	131R	WASHER	ROSETTA
33	79026611	1	20M	HANDLE	MANIGLIA
34	79026612	1	75D	SPACER	DISTANZIALE
35	79026613	1	40V	SCREW	VITE

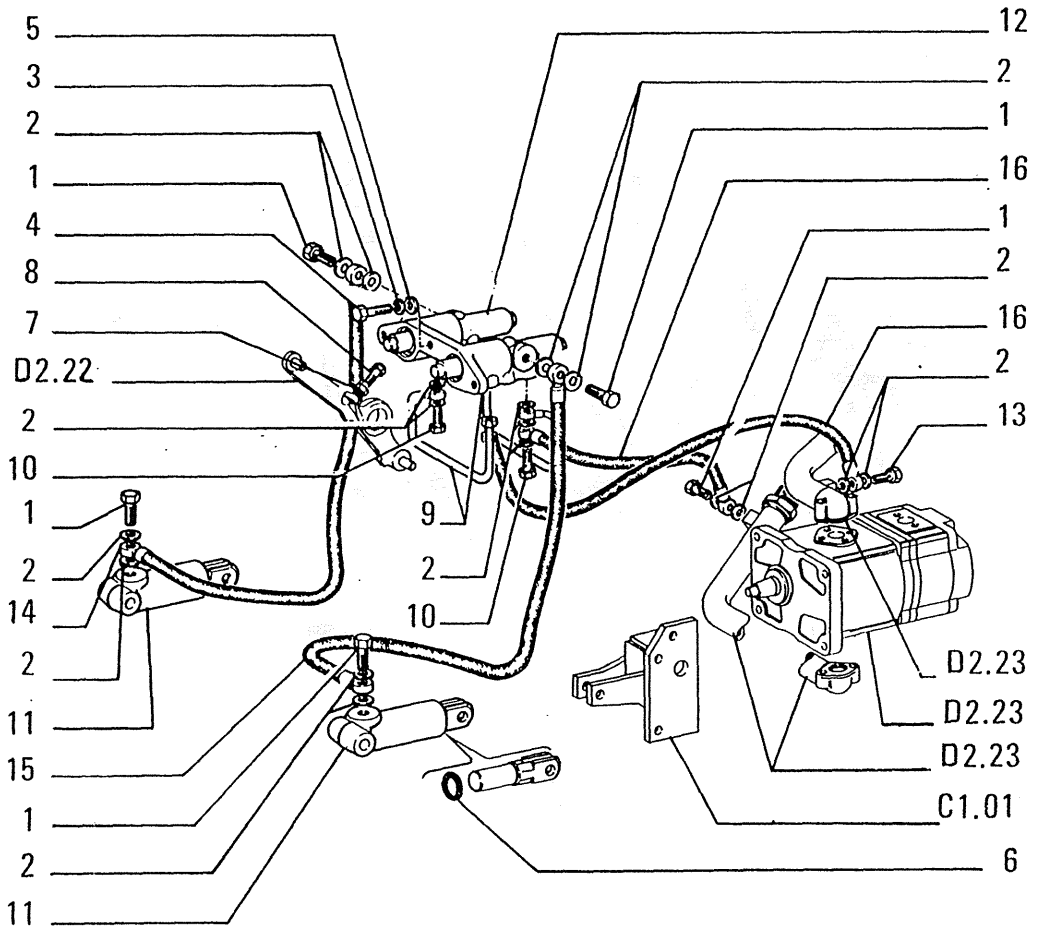

OPTIONAL
VARIANTE

30.0370.01.1

05732

ITEM	PART NUMBER	QTY	TRANS CODE	DESCRIPTION	DESCRIZIONE
1	10184317	5	90B	FILLER PLUG 14x1,5x27	BOCCHETTONE INTRODUZIONE 14x1,5x27
		5	90B	FILLER PLUG (*) 14x1,5x27	BOCCHETTONE INTRODUZIONE (*) 14x1,5x27
2	10282460	18	133R	SEAL 14,2x20	ROSETTA DI TENUTA 14,2x20
		18	133R	SEAL (*) 14,2x20	ROSETTA DI TENUTA (*) 14,2x20
3	10516871	3	131R	WASHER 10x2,5	ROSETTA 10x2,5
		3	131R	WASHER (*) 10x2,5	ROSETTA (*) 10x2,5
4	11106631	3	40V	SCREW 10x1,5x35	VITE 10x1,5x35
		3	40V	SCREW (*) 10x1,5x35	VITE (*) 10x1,5x35
5	12638601	3	131R	WASHER 10,2x18	ROSETTA 10,2x18
		3	131R	WASHER (*) 10,2x18	ROSETTA (*) 10,2x18
6	14463280	2	158G	O-RING 3,53x24,99	GUARNIZIONE O-R 3,53x24,99
		2	158G	O-RING (*) 3,53x24,99	GUARNIZIONE O-R (*) 3,53x24,99
7	16102311	2	10D	NUT 8x1,25x5	DADO 8x1,25x5
		2	10D	NUT (*) 8x1,25x5	DADO (*) 8x1,25x5
8	79012725	2	40V	SCREW	VITE
		2	40V	SCREW (*)	VITE (*)
9	79012727	2	193T	TUBE	TUBO RIGIDO
		2	193T	TUBE (*)	TUBO RIGIDO (*)
10	79012730	2	90B	FILLER PLUG	BOCCHETTONE INTRODUZIONE
		2	90B	FILLER PLUG (*)	BOCCHETTONE INTRODUZIONE (*)
11	79020471	2	164C	CYLINDER - ASSEMBLY	CILINDRO - COMPLETO
		2	164C	CYLINDER (*) COMPL. PL.	CILINDRO (*) COMPL. PL.
12	79030524	1	10V	VALVE - ASSEMBLY SEE SGR. C1.08/1	VALVOLA - COMPLETO VEDERE SGR. C1.08/1
		1	10V	VALVE (*)	VALVOLA (*)

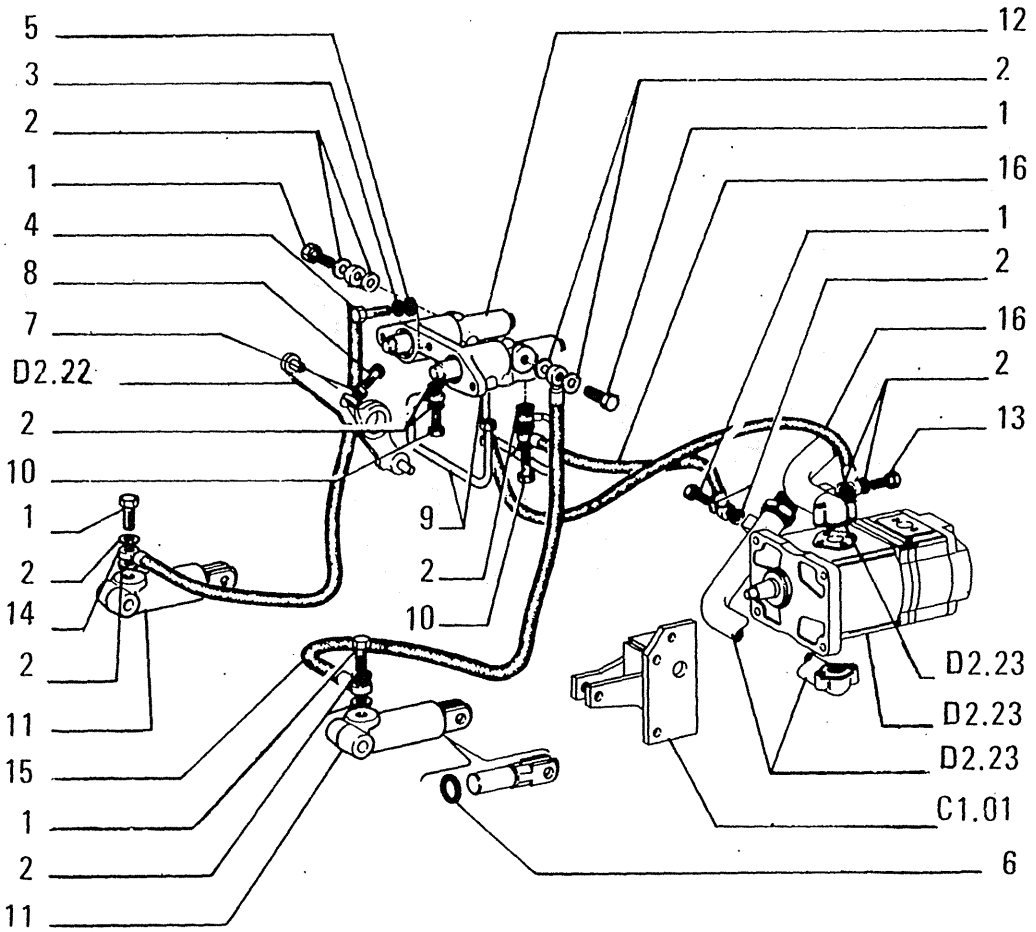

OPTIONAL
VARIANTE 30.0370.01.1

05732

ITEM	PART NUMBER	QTY	TRANS CODE	DESCRIPTION	DESCRIZIONE
13	79030533	1	90B	FILLER PLUG	BOCCHETTONE INTRODUZIONE
		1	90B	FILLER PLUG (*)	BOCCHETTONE INTRODUZIONE (*)
14	79033538	1	193T	TUBE - RIGHT	TUBO RIGIDO - DESTRO
		1	193T	TUBE (*) DS.	TUBO RIGIDO (*) DS.
15	79033539	1	193T	TUBE SN.	TUBO RIGIDO SN.
		1	193T	TUBE (*) SN.	TUBO RIGIDO (*) SN.
16	79033541	2	193T	TUBE	TUBO RIGIDO
		2	193T	TUBE (*)	TUBO RIGIDO (*)
(*)			469P	FOR SPECIAL EQUIPMENT 30.0370.04.1	PER VARIANTE 30.0370.04.1

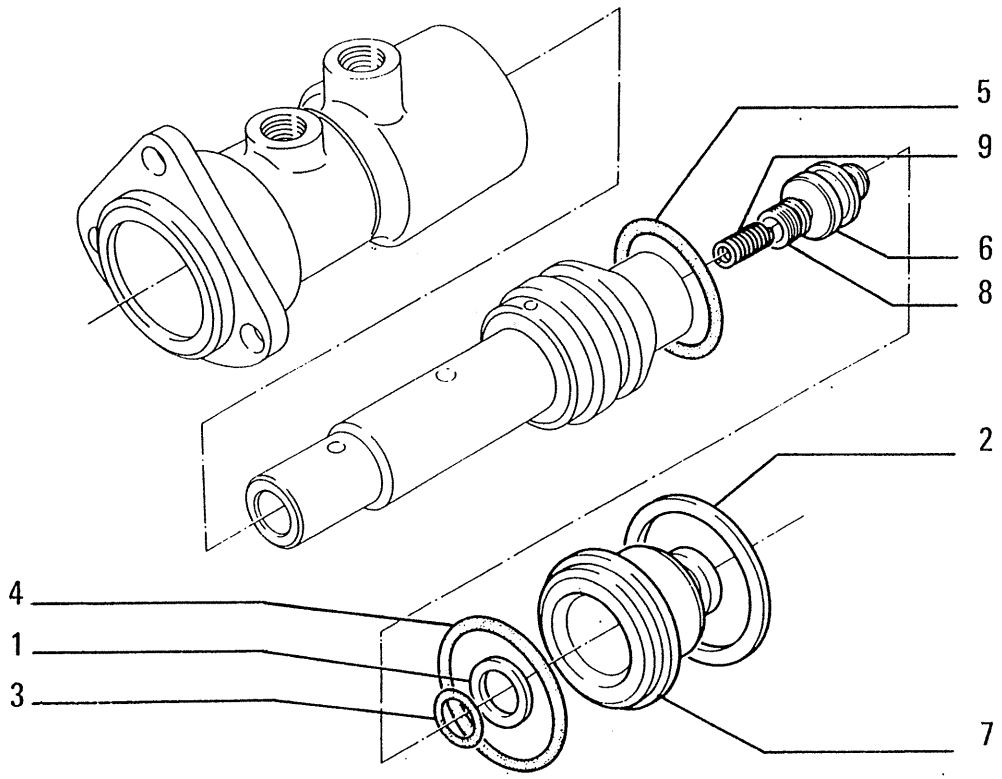

ITEM	PART NUMBER	QTY	TRANS CODE	DESCRIPTION	DESCRIZIONE
1	11058675	1	51A	LOCKRING 30,1x1,2	ANELLO DI SICUREZZA 30,1x1,2
2	11061075	1	51A	LOCKRING 66,2x2	ANELLO DI SICUREZZA 66,2x2
3	14457680	1	158G	O-RING 2,62x21,89	GUARNIZIONE O-R 2,62x21,89
4	14459780	1	158G	O-RING 2,62x55,24	GUARNIZIONE O-R 2,62x55,24
5	14470980	1	158G	O-RING 5,33x40,64	GUARNIZIONE O-R 5,33x40,64
6	79013963	1	50T	PLUG	TAPPO
7	79013985	1	50T	PLUG	TAPPO
8	79014270	1	130P	PLUNGER	PISTONCINO
9	79015095	1	100M	SPRING	MOLLA

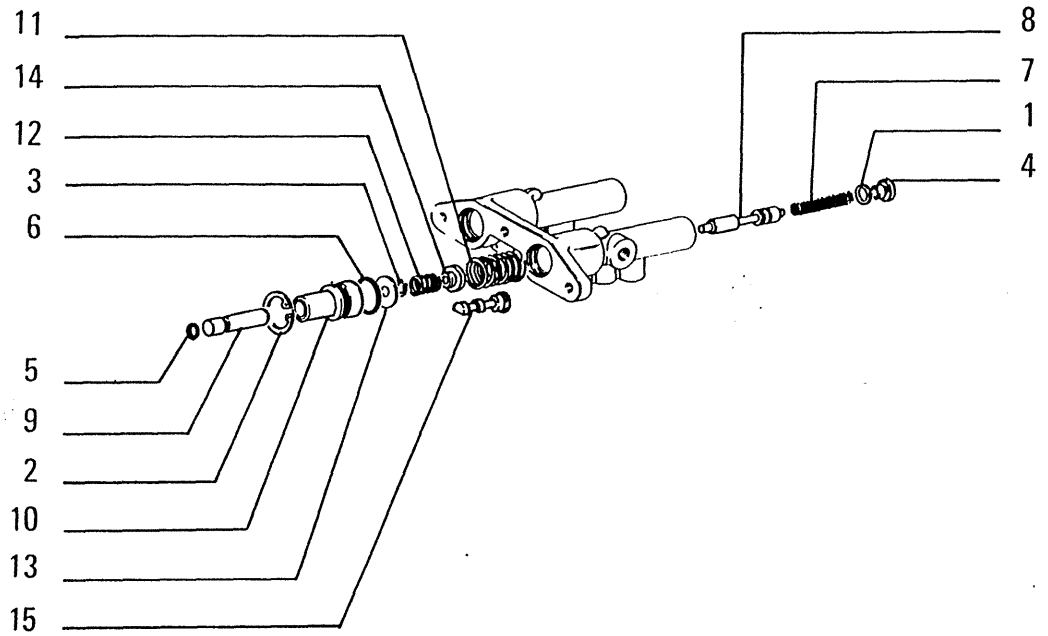

OPTIONAL

30.0370.01.1

05733 VARIANTE

ITEM	PART NUMBER	QTY	TRANS CODE	DESCRIPTION	DESCRIZIONE
1	10260160	2	133R	SEAL 10,2x14	ROSETTA DI TENUTA 10,2x14
		2	133R	SEAL (*) 10,2x14	ROSETTA DI TENUTA (*) 10,2x14
2	11059075	2	51A	LOCKRING 34,4x1,2	ANELLO DI SICUREZZA 34,4x1,2
		2	51A	LOCKRING (*) 34,4x1,2	ANELLO DI SICUREZZA (*) 34,4x1,2
3	11066275	4	51A	LOCKRING 12,9x1	ANELLO DI SICUREZZA 12,9x1
		4	51A	LOCKRING (*) 12,9x1	ANELLO DI SICUREZZA (*) 12,9x1
4	11903171	2	50T	PLUG 10x1,25x7	TAPPO 10x1,25x7
		2	50T	PLUG (*) 10x1,25x7	TAPPO (*) 10x1,25x7
5	14456880	2	158G	O-RING 2,62x9,19	GUARNIZIONE O-R 2,62x9,19
		2	158G	O-RING (*) 2,62x9,19	GUARNIZIONE O-R (*) 2,62x9,19
6	14457880	2	158G	O-RING 2,62x25,07	GUARNIZIONE O-R 2,62x25,07
		2	158G	O-RING (*) 2,62x25,07	GUARNIZIONE O-R (*) 2,62x25,07
7	79012722	2	100M	SPRING	MOLLA
		2	100M	SPRING (*)	MOLLA (*)
8	79030525	2	75F	CARRIER	FLOTTANTE
		2	75F	CARRIER (*)	FLOTTANTE (*)
9	79030526	2	80P	PIN	PERNO
		2	80P	PIN (*)	PERNO (*)
10	79030527	2	69S	SEAT	SEDE
		2	69S	SEAT (*)	SEDE (*)
11	79030528	2	100M	SPRING	MOLLA
		2	100M	SPRING (*)	MOLLA (*)
12	79030529	2	100M	SPRING	MOLLA
		2	100M	SPRING (*)	MOLLA (*)
13	79030530	2	131R	WASHER	ROSETTA
		2	131R	WASHER (*)	ROSETTA (*)

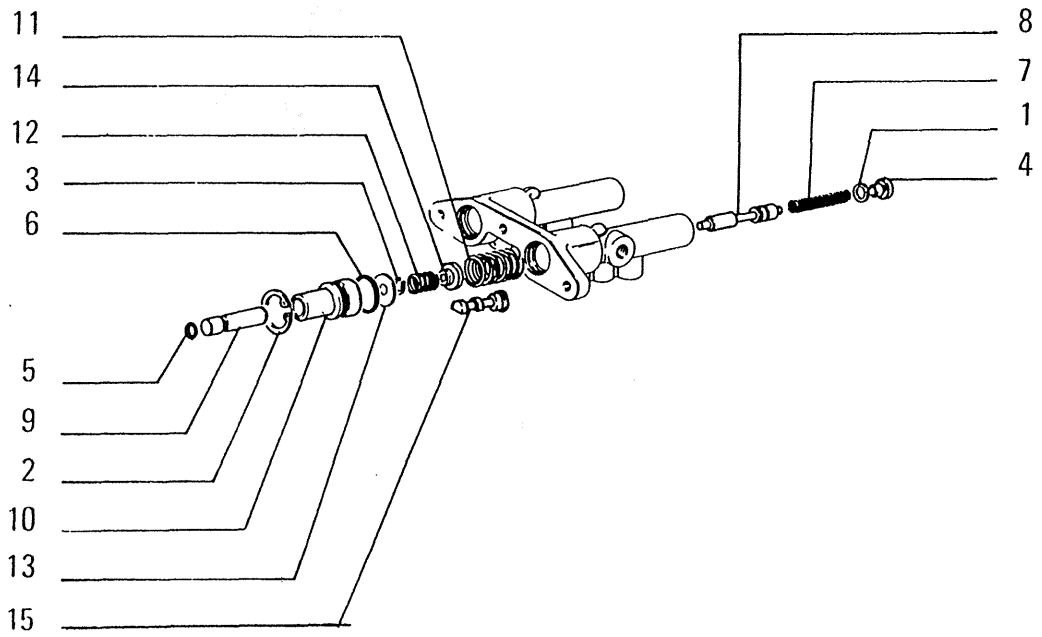

OPTIONAL

05733 VARIANTE 30.0370.01.1

ITEM	PART NUMBER	QTY	TRANS CODE	DESCRIPTION	DESCRIZIONE
14	79030531	2	131R	WASHER	ROSETTA
		2	131R	WASHER (*)	ROSETTA (*)
15	79030532	2	80P	PIN	PERNO
		2	80P	PIN (*)	PERNO (*)
(*)			469P	FOR SPECIAL EQUIPMENT 30.0370.04.1	PER VARIANTE 30.0370.04.1

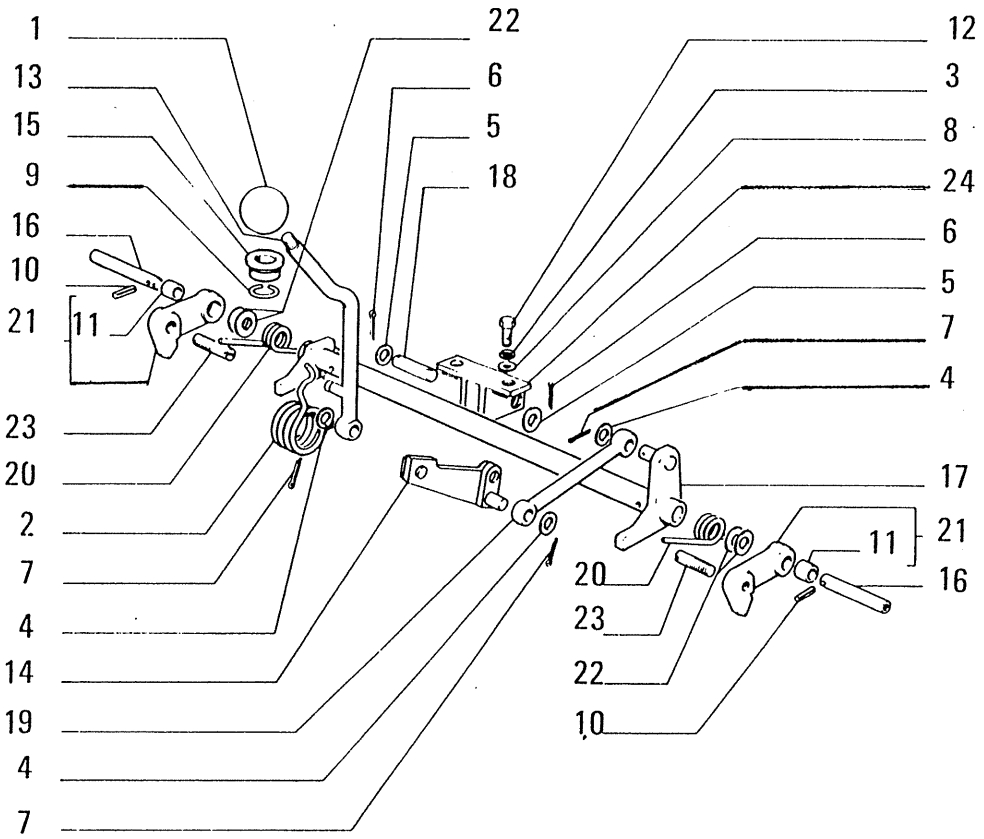

05481

ITEM	PART NUMBER	QTY	TRANS CODE	DESCRIPTION	DESCRIZIONE
1	4985147	1	25I	HANDGRIP	IMPUGNATURA
2	4985332	1	100M	SPRING	MOLLA
3	10516871	2	131R	WASHER 10x2,5	ROSETTA 10x2,5
4	10520021	4	131R	WASHER 12,2x22	ROSETTA 12,2x22
5	10520121	2	131R	WASHER 14,4x26	ROSETTA 14,4x26
6	10734601	2	270C	COTTER PIN 2,7x37,6	COPIGLIA 2,7x37,6
7	10796401	4	270C	COTTER PIN 2,7x27,6	COPIGLIA 2,7x27,6
8	12646821	2	131R	WASHER 10,2x25	ROSETTA 10,2x25
9	13401176	1	51A	LOCKRING 20,2x24,2	ANELLO DI SICUREZZA 20,2x24,2
10	14168070	2	200S	PIN 6,4x22	SPINA 6,4x22
11	14549170	2	95B	BUSHING 16x22	BOCCOLA 16x22
12	15970731	2	40V	SCREW 10x1,25x25	VITE 10x1,25x25
13	76003116	1	45L	LEVER	LEVA
14	76003327	1	45L	LEVER	LEVA
15	76004839	1	153G	SLIDE GUIDE	GUIDA DI SCORRIMENTO
16	79005942	2	80P	PIN	PERNO
17	79005943	1	45L	LEVER	LEVA
18	79005957	1	80P	PIN	PERNO
19	79005958	1	238P	PUSH ROD	PUNTALE
20	79005959	2	100M	SPRING	MOLLA
21	79005962	2	83A	RATCHET	ARPIONE
22	79005965		198S	SHIM	SPESSORE
23	79009980	2	80P	PIN	PERNO
24	79027906	1	300S	SUPPORT	SUPPORTO

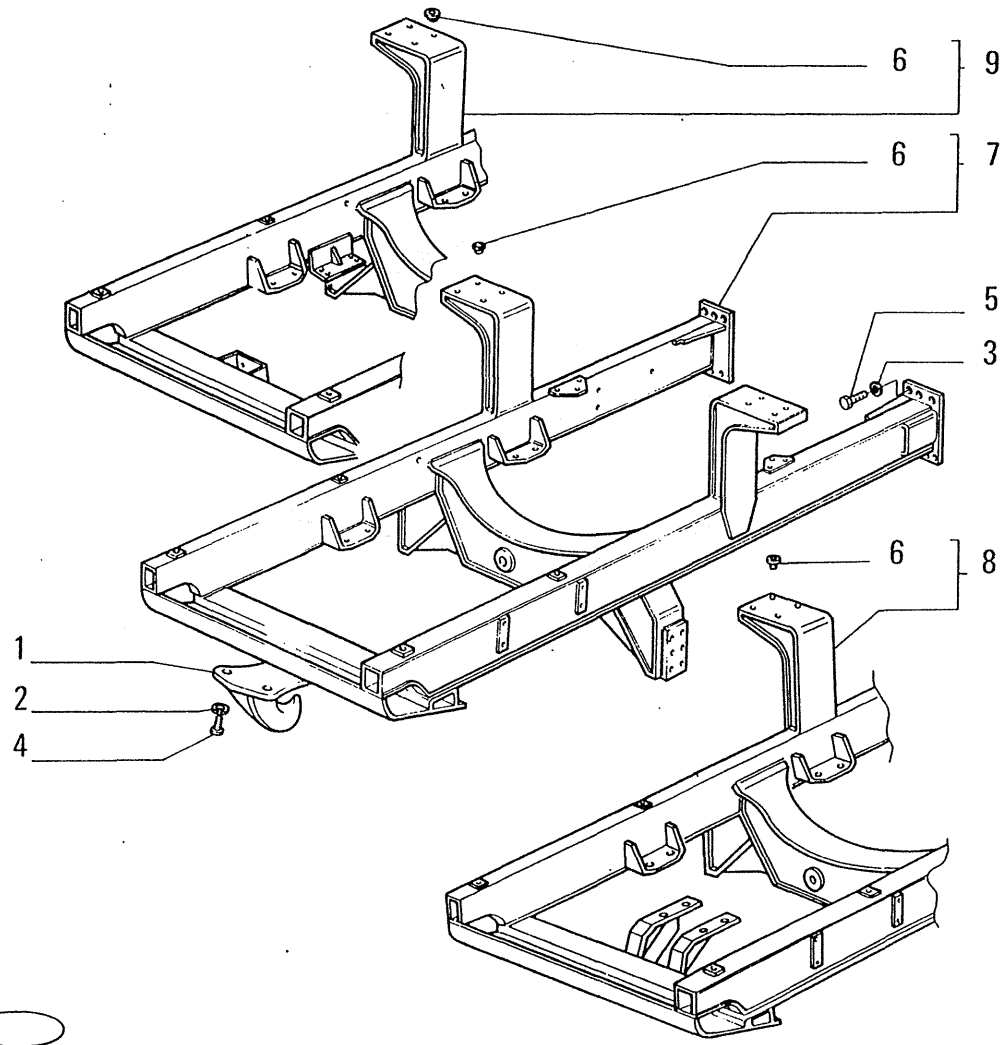

ITEM	PART NUMBER	QTY	TRANS CODE	DESCRIPTION	DESCRIZIONE
1	4966394	1	30G	HOOK ANT.	GANCIO ANT.
2	10572171	4	131R	WASHER 16x3,5	ROSETTA 16x3,5
3	10572571	12	131R	WASHER 24,5x5	ROSETTA 24,5x5
4	15981031	4	40V	SCREW 16x1,5x55	VITE 16x1,5x55
5	15997531	12	40V	SCREW 24x2x90	VITE 24x2x90
6	79014619	8	50T	PLUG	TAPPO
7	76016565	1	77T	MAIN FRAME - ASSEMBLY (06)	TELAIO TRATTORE - COMPLETO (06)
	79032403	1	77T	MAIN FRAME - ASSEMBLY 01-02-03-04	TELAIO TRATTORE - COMPLETO 01-02-03-04
8	76014112	1	77T	MAIN FRAME - ASSEMBLY (05)(*)	TELAIO TRATTORE - COMPLETO (05)(*)
9	76016989	1	77T	MAIN FRAME - ASSEMBLY (1*)	TELAIO TRATTORE - COMPLETO (1*)
(*)			469P	FOR SPECIAL EQUIPMENT 30.0021.08.1	PER VARIANTE 30.0021.07.1
(1*)			469P	FOR SPECIAL EQUIPMENT 30.0021.09.1	PER VARIANTE 30.0021.09.1

(01-03-05) Units prior to 052919
(06) Unit #052919 and up

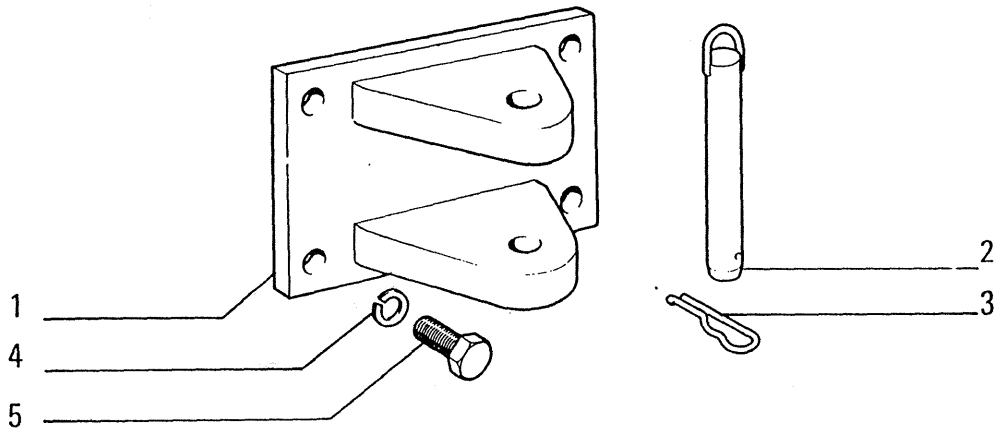

ITEM	PART NUMBER	QTY	TRANS CODE	DESCRIPTION	DESCRIZIONE
1	591308	1	30G	HOOK	GANCIO
2	4955458	1	80P	PIN	PERNO
3	8268534	1	200S	PIN	SPINA
4	10517671	4	131R	WASHER 24,3x5,5	ROSETTA 24,3x5,5
5	15997237	4	40V	SCREW 24x2x65	VITE 24x2x65

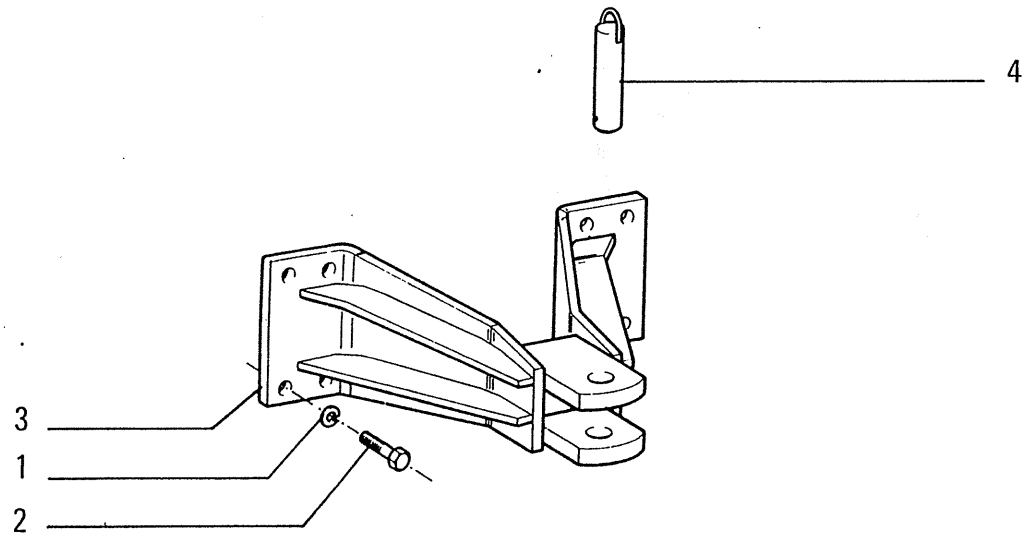

ITEM	PART NUMBER	QTY	TRANS CODE	DESCRIPTION	DESCRIZIONE
1	10517671	4	131R	WASHER 24,3x5,5	ROSETTA 24,3x5,5
2	15997231	4	40V	SCREW 24x2x65	VITE 24x2x65
3	79016694	1	30G	HOOK	GANCIO
4	79016702	1	80P	PIN	PERNO

OPTIONAL 30.0891.01.2

05486 VARIANTE

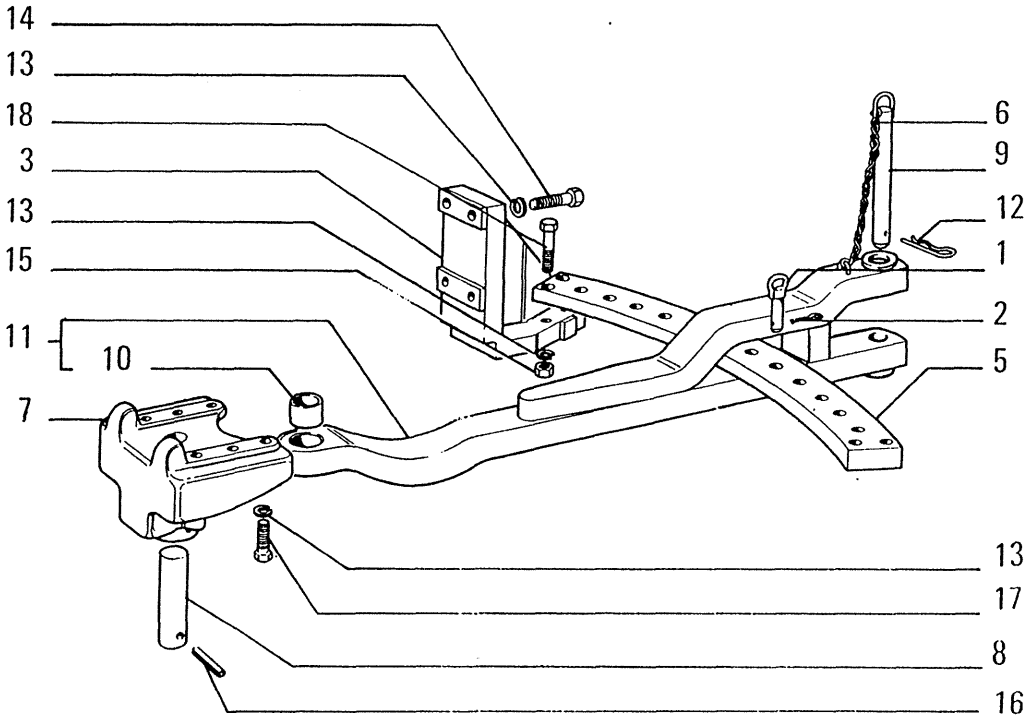

OPTIONAL

30.0890.01.1

05487

VARIANTE

ITEM	PART NUMBER	QTY	TRANS CODE	DESCRIPTION	DESCRIZIONE
1	15629	2	80P	PIN	PERNO
2	567406	2	270C	COTTER PIN	COPIGLIA
3	4955443	1	80M	BRACKET - RIGHT	MENSOLA - DESTRO
	4955449	1	80M	BRACKET - LEFT	MENSOLA - SINISTRO
5	4955451	1	180T	CROSS BEAM	TRAVERSA
6	4955502	1	95C	CHAIN	CATENA
7	4955552	1	300S	SUPPORT	SUPPORTO
8	4955553	1	80P	PIN	PERNO
9	4977809	1	80P	PIN	PERNO
10	4977813	1	95B	BUSHING	BOCCOLA
11	4977820	1	13B	DRAWBAR - ASSEMBLY	BARRA DI TRAINO - COMPLETO
12	8268534	1	200S	PIN	SPINA
13	10517671	18	131R	WASHER 24,3x5,5	ROSETTA 24,3x5,5
14	11398137	8	40V	SCREW 24x2x80	VITE 24x2x80
15	12164527	4	10D	NUT 24x2x19	DADO 24x2x19
16	14173370	1	200S	PIN 10,5x70	SPINA 10,5x70
17	15997137	6	40V	SCREW 24x2x60	VITE 24x2x60
18	15997737	4	40V	SCREW 24x2x110	VITE 24x2x110

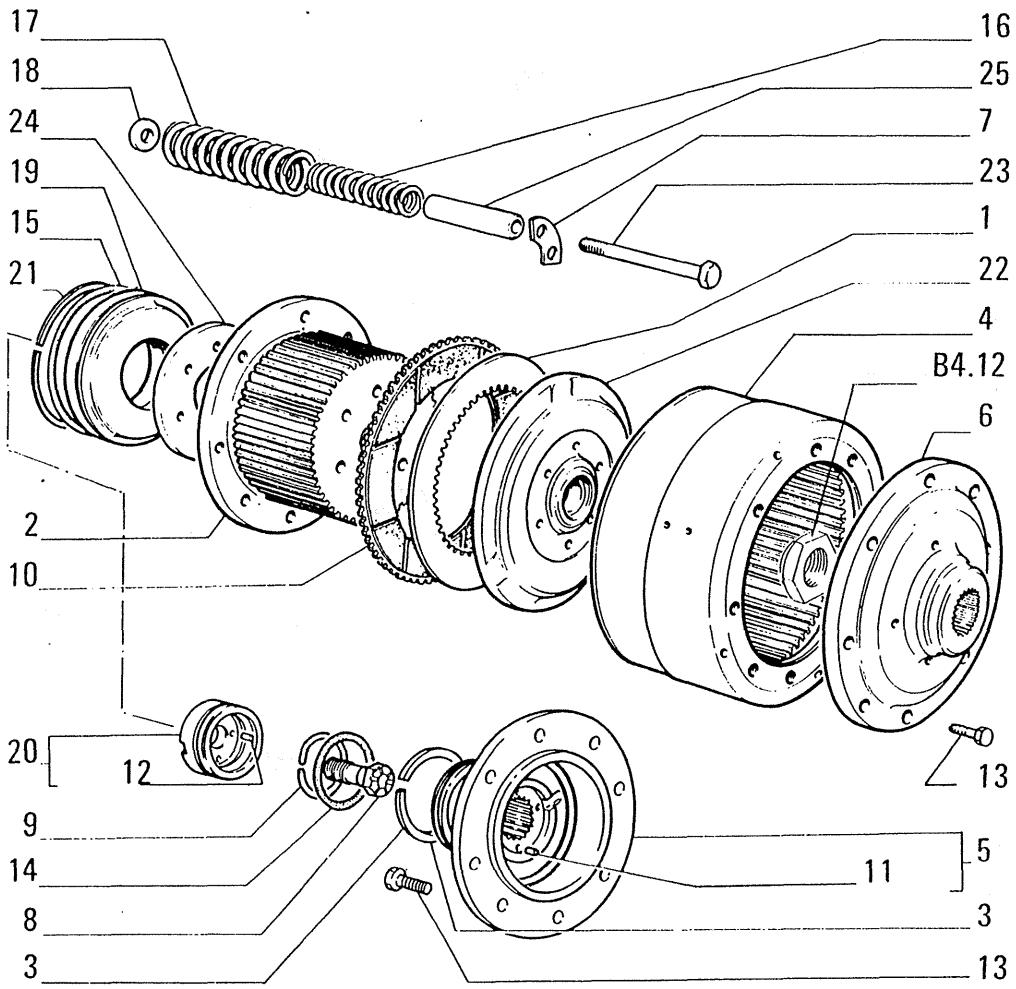

05537

FIATALLIS **D2.20 TAV. 1 PAG.1**

ITEM	PART NUMBER	QTY	TRANS CODE	DESCRIPTION	DESCRIZIONE
1	14687	30	60D	DISC	DISCO
2	586491	2	20T	DRUM	TAMBURO
3	586521	6	51A	LOCKRING **C1446**	ANELLO DI SICUREZZA **C1446**
	79061087	6	51A	LOCKRING **D1446**	ANELLO DI SICUREZZA **D1446**
4	586537	2	20T	DRUM	TAMBURO
5	586614	2	135M	HUB - ASSEMBLY	MOZZO - COMPLETO
6	586741	2	135M	HUB	MOZZO
7	586750	2	113P	LOCKPLATE	PIASTRINA DI SICUREZZA
8	586751	2	40V	SCREW	VITE
9	590390	2	51A	LOCKRING	ANELLO DI SICUREZZA
10	597258	30	60D	DISC	DISCO
11	10336210	2	90G	DOWEL 6x20	GRANO 6x20
12	10839510	2	90G	DOWEL 6x9	GRANO 6x9
13	14257830	32	40V	SCREW 16x1,5x35	VITE 16x1,5x35
14	14465481	2	158G	O-RING 3,53x82,14	GUARNIZIONE O-R 3,53x82,14
15	14467781	2	158G	O-RING 3,53x158,3	GUARNIZIONE O-R 3,53x158,3
16	79006765	12	100M	SPRING - INNER	MOLLA - INTERNO
17	79006766	12	100M	SPRING - OUTER	MOLLA - ESTERNO
18	79012948	12	131R	WASHER	ROSETTA
19	79035722	2	235S	PISTON	STANTUFFO
20	79035724	2	145G	GUIDE - ASSEMBLY	GUIDA - COMPLETO
21	79035725	2	45A	RING	ANELLO
22	79035726	2	52A	PRESSURE PLATE	ANELLO SPINGIDISCO
23	79035727	12	184C	STUD	COLONNETTA
24	79035728	2	45A	RING	ANELLO

C 1446 → Tel.n. 051352
D 1446 Tel.n. 051353 →

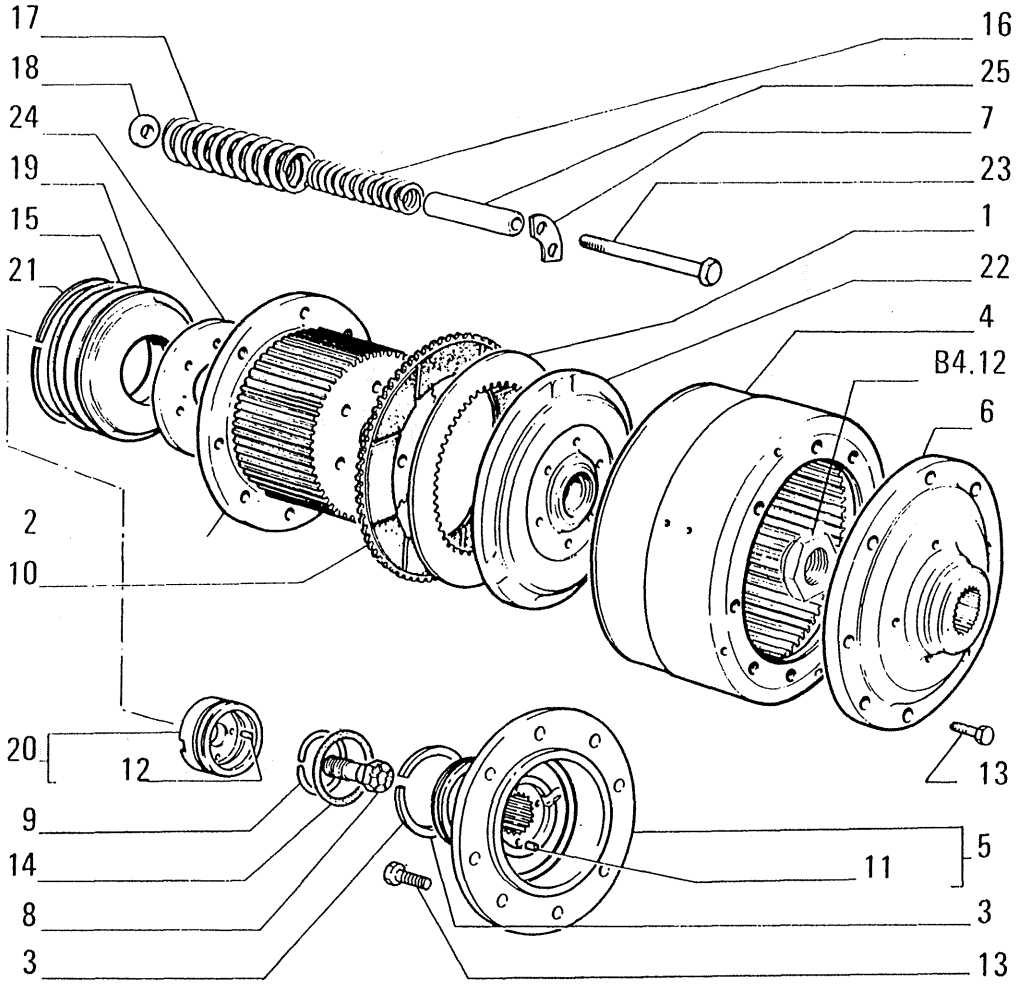

ITEM	PART NUMBER	QTY	TRANS CODE	DESCRIPTION	DESCRIZIONE
25	79035729	12	75D	SPACER	DISTANZIALE

05537

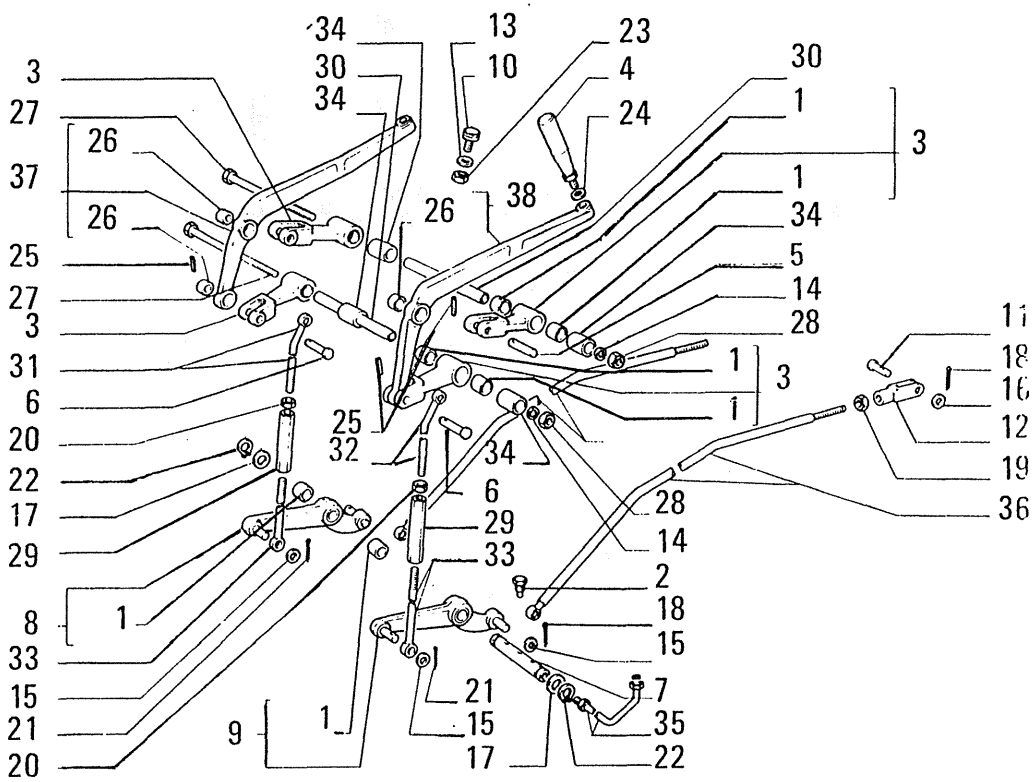

ITEM	PART NUMBER	QTY	TRANS CODE	DESCRIPTION	DESCRIZIONE
1	546575	12	95B	BUSHING	BOCCOLA
		12	95B	BUSHING (*)	BOCCOLA (*)
2	586707	1	40V	SCREW	VITE
		1	40V	SCREW (*)	VITE (*)
3	587394	4	45L	LEVER - ASSEMBLY	LEVA - COMPLETO
		4	45L	LEVER - ASSEMBLY (*)	LEVA - COMPLETO (*)
4	587406	2	25I	HANDGRIP	IMPUGNATURA
		2	25I	HANDGRIP (*)	IMPUGNATURA (*)
5	587408	2	80P	PIN - UPPER	PERNO - SUPERIORE
		2	80P	PIN - UPPER (*)	PERNO - SUPERIORE (*)
6	587409	2	80P	PIN - INNER	PERNO - INTERNO
		2	80P	PIN - LOWER (*)	PERNO - INFERIORE (*)
7	587410	1	16A	SHAFT	ALBERO
		1	16A	SHAFT (*)	ALBERO (*)
8	591413	1	45L	LEVER - ASSEMBLY RIGHT	LEVA - COMPLETO DESTRO
		1	45L	LEVER - ASSEMBLY RIGHT (*)	LEVA - COMPLETO DESTRO (*)
9	591414	1	45L	LEVER - ASSEMBLY LEFT	LEVA - COMPLETO SINISTRO
		1	45L	LEVER - ASSEMBLY LEFT (*)	LEVA - COMPLETO SINISTRO (*)
10	591420	2	60T	BLOCK	TASSELLO
		2	60T	BLOCK (*)	TASSELLO (*)
11	10005010	2	80P	PIN 12x33	PERNO 12x33
		2	80P	PIN (*) 12x33	PERNO (*) 12x33
12	10248471	2	85F	YOKE 12x1,5x12	FORCELLA 12x1,5x12
		2	85F	YOKE (*) 12x1,5x12	FORCELLA (*) 12x1,5x12
13	10516871	2	131R	WASHER 10x2,5	ROSETTA 10x2,5
		2	131R	WASHER (*) 10x2,5	ROSETTA (*) 10x2,5
14	10517071	2	131R	WASHER 12,2x3,1	ROSETTA 12,2x3,1

Q5538

01 - 03
05 - 06

STEERING CLUTCHES RELEASE CONTROL – COMANDO DISINNESTO FRIZIONI DI STERZO – COMMANDE DES EMBRAYAGES DE DIRECTION – AUSRUECK... RICHTUNG DER LENDKREIBKUPPLUNGEN – MANDO EMBRAGUES DE DIRECCION

D2.22 | 1

N.T.R. 169 - 30.07.1988

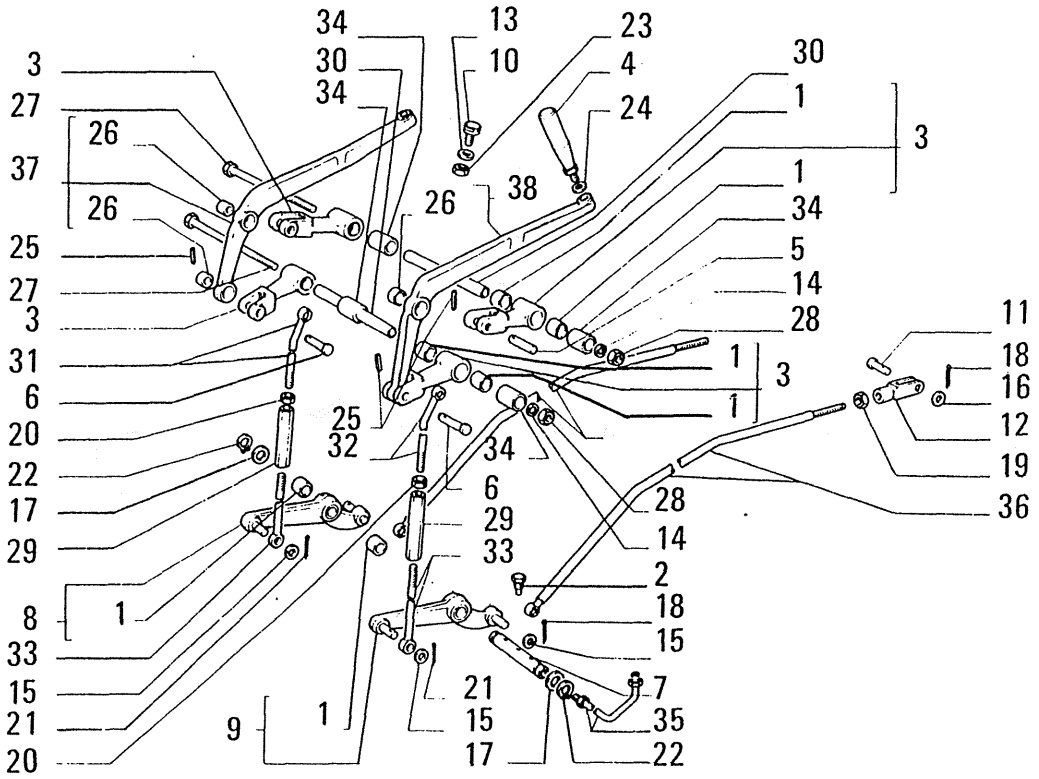

ITEM	PART NUMBER	QTY	TRANS CODE	DESCRIPTION	DESCRIZIONE
14	10517071	2	131R	WASHER (*) 12,2x3,1	ROSETTA (*) 12,2x3,1
15	10520001	4	131R	WASHER 12,2x22	ROSETTA 12,2x22
		4	131R	WASHER (*) 12,2x22	ROSETTA (*) 12,2x22
16	10520021	2	131R	WASHER 12,2x22	ROSETTA 12,2x22
		2	131R	WASHER (*) 12,2x22	ROSETTA (*) 12,2x22
17	10731101	2	131R	WASHER 20,4x35	ROSETTA 20,4x35
		2	131R	WASHER (*) 20,4x35	ROSETTA (*) 20,4x35
18	10733601	2	270C	COTTER PIN 2,7x31,6	COPIGLIA 2,7x31,6
		2	270C	COTTER PIN (*) 2,7x31,6	COPIGLIA (*) 2,7x31,6
19	10791211	2	10D	NUT 12x1,5x7	DADO 12x1,5x7
		2	10D	NUT (*) 12x1,5x7	DADO (*) 12x1,5x7
20	10791221	2	10D	NUT 11x1,25x7	DADO 11x1,25x7
		2	10D	NUT (*) 11x1,25x7	DADO (*) 11x1,25x7
21	10796401	4	270C	COTTER PIN 2,7x27,6	COPIGLIA 2,7x27,6
		4	270C	COTTER PIN (*) 2,7x27,6	COPIGLIA (*) 2,7x27,6
22	11066876	2	51A	LOCKRING 18,5x1,2	ANELLO DI SICUREZZA 18,5x1,2
		2	51A	LOCKRING (*) 18,5x1,2	ANELLO DI SICUREZZA (*) 18,5x1,2
23	12164711	2	10D	NUT 10x1,25x8	DADO 10x1,25x8
		2	10D	NUT (*) 10x1,25x8	DADO (*) 10x1,25x8
24	12605770	2	131R	WASHER 12,2x21,3	ROSETTA 12,2x21,3
		2	131R	WASHER (*) 12,2x21,3	ROSETTA (*) 12,2x21,3
25	14163170	4	200S	PIN 4,4x24	SPINA 4,4x24
		4	200S	PIN (*) 4,4x24	SPINA (*) 4,4x24
26	14543170	4	95B	BUSHING 12x17	BOCCOLA 12x17
		4	95B	BUSHING (*) 12x17	BOCCOLA (*) 12x17
27	15542331	2	40V	SCREW 12x1,25x170	VITE 12x1,25x170

05538

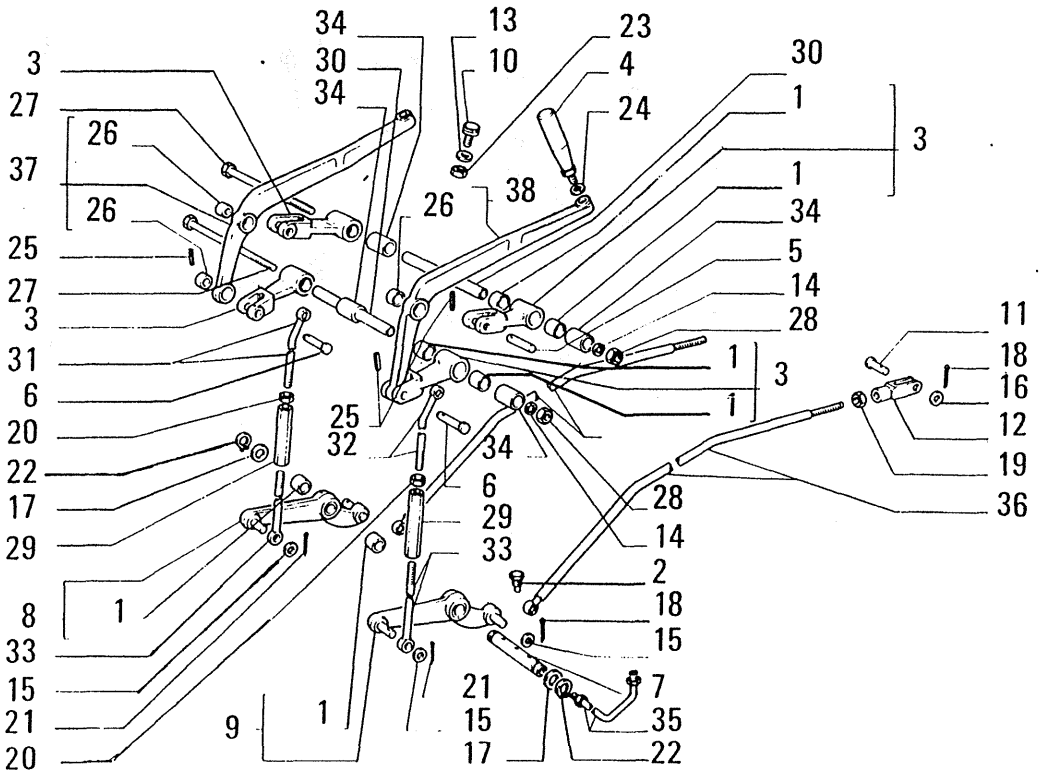

ITEM	PART NUMBER	QTY	TRANS CODE	DESCRIPTION	DESCRIZIONE
27	15542331	2	40V	SCREW (*) 12x1,25x170	VITE (*) 12x1,25x170
28	16103621	2	10D	NUT 12x1,25x7	DADO 12x1,25x7
		2	10D	NUT (*) 12x1,25x7	DADO (*) 12x1,25x7
29	79002642	2	30M	SLEEVE	MANICOTTO
		2	30M	SLEEVE (*)	MANICOTTO (*)
30	79005177	2	16A	SHAFT	ALBERO
		2	16A	SHAFT (*)	ALBERO (*)
31	79005178	1	141T	THREADED TIEROD - UPPER RIGHT	TIRANTE FILETTATO - SUPERIORE DESTRO
		1	141T	THREADED TIEROD - UPPER RIGHT (*)	TIRANTE FILETTATO - SUPERIORE DESTRO (*)
32	79005180	1	141T	THREADED TIEROD - UPPER LEFT	TIRANTE FILETTATO - SUPERIORE SINISTRO
		1	141T	THREADED TIEROD - UPPER LEFT (*)	TIRANTE FILETTATO - SUPERIORE SINISTRO (*)
33	79005182	2	141T	THREADED TIEROD - LOWER	TIRANTE FILETTATO - INFERIORE
		2	141T	THREADED TIEROD - LOWER (*)	TIRANTE FILETTATO - INFERIORE (*)
34	79005188	4	75D	SPACER	DISTANZIALE
		4	75D	SPACER (*)	DISTANZIALE (*)
35	79005212	1	193T	TUBE	TUBO RIGIDO
		1	193T	TUBE (*)	TUBO RIGIDO (*)
36	79009720	2	141T	THREADED TIEROD - REAR	TIRANTE FILETTATO - POSTERIORE
		2	141T	THREADED TIEROD - REAR (*)	TIRANTE FILETTATO - POSTERIORE (*)
37	79019853	1	45L	LEVER - ASSEMBLY RIGHT	LEVA - COMPLETO DESTRO
		1	45L	LEVER - ASSEMBLY RIGHT (*)	LEVA - COMPLETO DESTRO (*)

05538

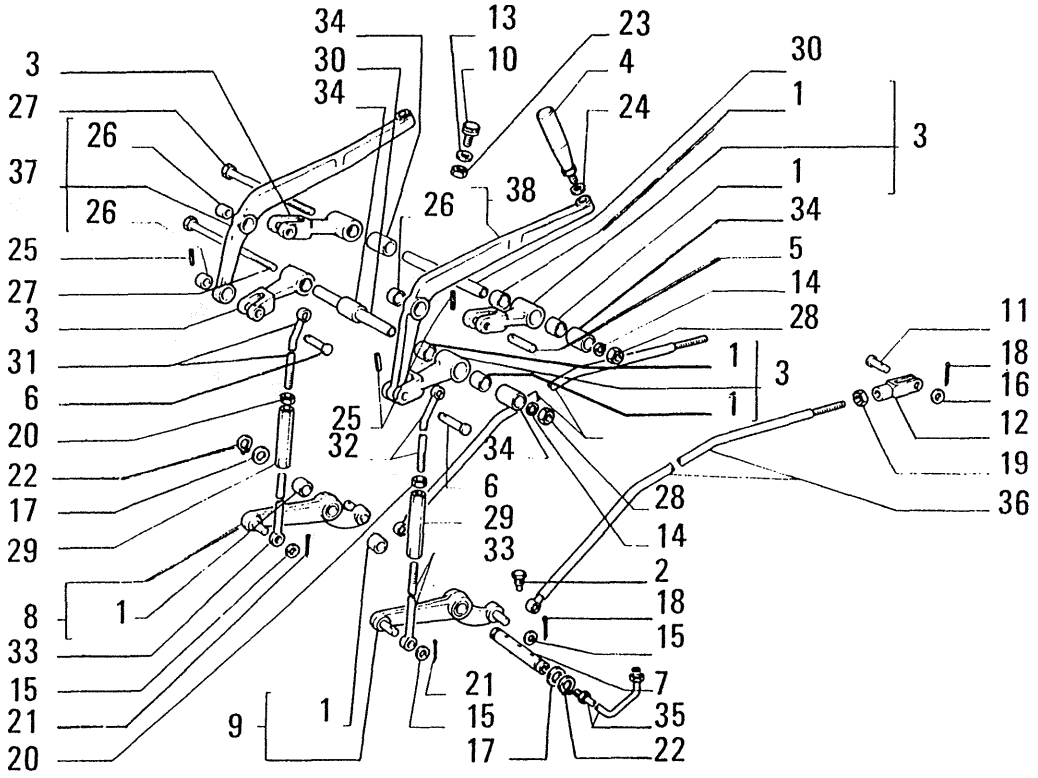

ITEM	PART NUMBER	QTY	TRANS CODE	DESCRIPTION	DESCRIZIONE
38	79019855	1	45L	LEVER - ASSEMBLY LEFT	LEVA - COMPLETO SINISTRO
		1	45L	LEVER - ASSEMBLY LEFT (*)	LEVA - COMPLETO SINISTRO (*)
(*)			469P	FOR SPECIAL EQUIPMENT 30.0370.04.1	PER VARIANTE 30.0370.04.1

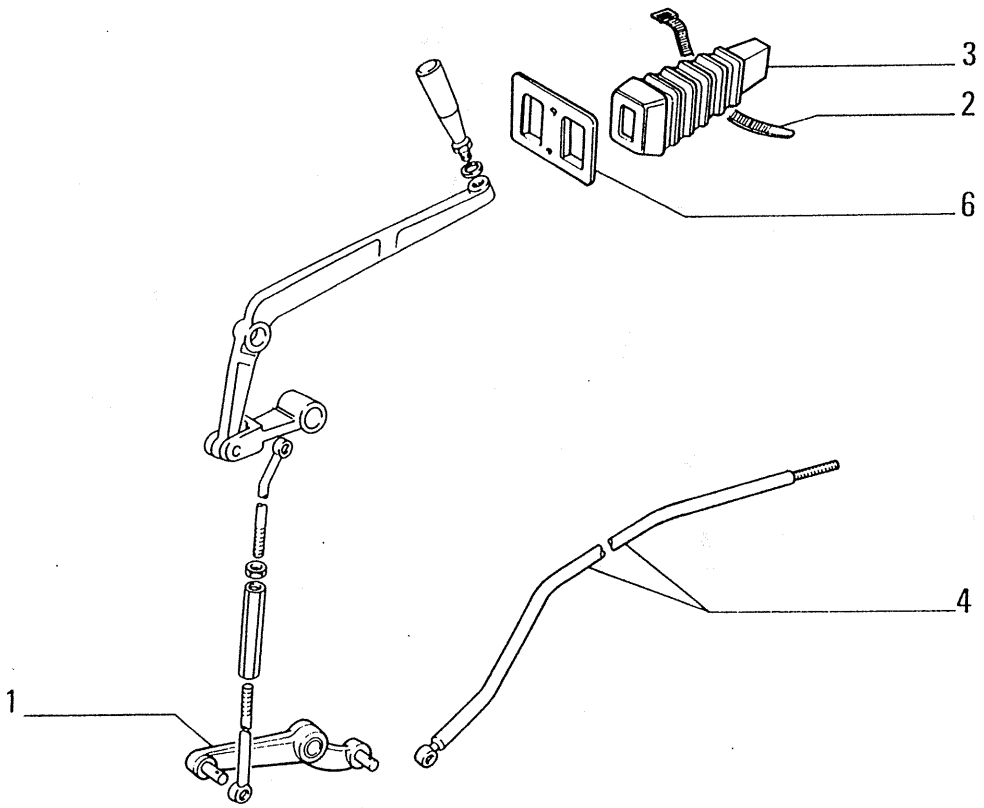

ITEM	PART NUMBER	QTY	TRANS CODE	DESCRIPTION	DESCRIZIONE
1	79012738	2	451	LEVER - ASSEMBLY (1*)	LEVA - COMPLETO (1*)
2	79013422	2	31F	CLAMP (*)	FASCETTA (01-02-03)(*)
3	79030670	2	330C	BOOT (*)	CUFFIA RADIATORE (01-02-03)(*)
4	79031699	1	142T	TIEROD - REAR RIGHT (1*)	TIRANTE - POSTERIORE DESTRO (1*)
	79031718	1	142T	TIEROD - REAR LEFT (1*)	TIRANTE - POSTERIORE SINISTRO (1*)
6	79043015	1	105P	PLATE (*)	PIASTRA (01-02-03)(*)
(*)			469P	FOR SPECIAL EQUIPMENT 30.0020.18.1	PER VARIANTE 30.0020.18.1
(1*)			469P	FOR SPECIAL EQUIPMENT 30.0370.01.1	PER VARIANTE 30.0370.01.1

05736

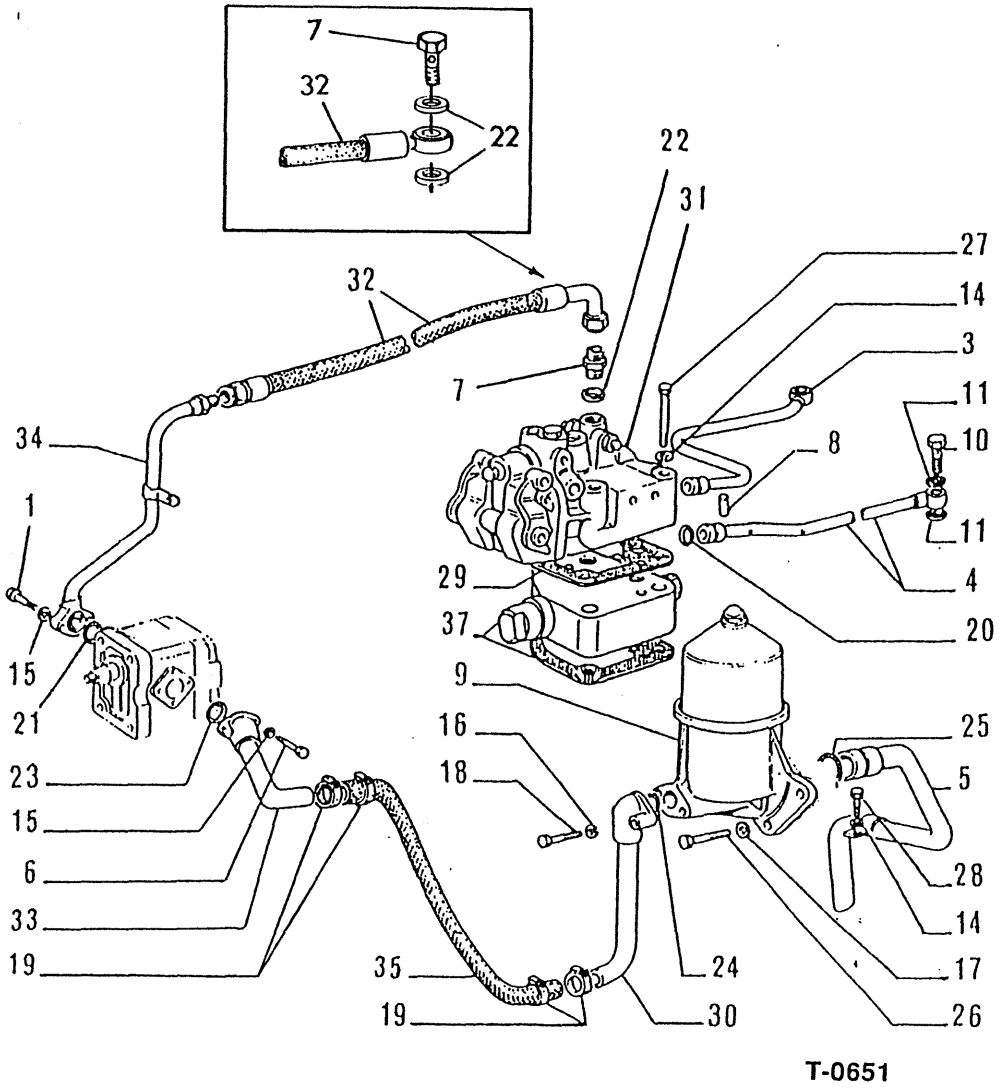

T-0651

FIATALLIS **D2.23 TAV. 1 PAG.1**

ITEM	PART NUMBER	QTY	TRANS CODE	DESCRIPTION	DESCRIZIONE
1	568292	2	40V	SCREW **C1442**	VITE **C1442**
	10902831	2	40V	SCREW 6x1x30 **D1442**	VITE 6x1x30 **D1442**
		2	40V	SCREW (*)(1*) 6x1x30	VITE (*)(1*) 6x1x30
					GUARNIZIONE TENUTA FRONTALE 04
3	587130	1	193T	TUBE	TUBO RIGIDO
4	587131	1	193T	TUBE	TUBO RIGIDO
5	590852	1	193T	TUBE	TUBO RIGIDO
6	591421	2	40V	SCREW **C1442**	VITE **C1442**
	16044131	2	40V	SCREW 8x1,25x45 **D1442**	VITE 8x1,25x45 **D1442**
		2	40V	SCREW (*)(1*) 8x1,25x45	VITE (*)(1*) 8x1,25x45
7	593607	1	20R	FITTING (*)(1*)	RACCORDO
	10182614	1	20R	FITTING (2*)	RACCORDO (*)(1*)
8	4954498	2	80P	PIN	PERNO
9	4996300	1	67F	OIL FILTER - ASSEMBLY SEE SGR. D2.28 **C1096**	FILTRO OLIO - COMPLETO VEDERE SGR. D2.28 01-02-03 **C1096**
					FILTRO OLIO - COMPLETO VEDERE SGR. D228/1 04
	79038351	1	67F	OIL FILTER - ASSEMBLY SEE SGR. D2.28/1 **D1096**	FILTRO OLIO - COMPLETO VEDERE SGR. D2.28/1 **D1096** 01-02-03-05
10	10184317	2	20R	FITTING 14x1,5x27	RACCORDO 14x1,5x27
11	10280060	4	133R	SEAL 14,2x20	ROSETTA DI TENUTA 14,2x20
14	10517071	3	131R	WASHER 04 12,2x3,1	ROSETTA 04 12,2x3,1
15	10571579	2	131R	WASHER (*)(1*) 6,1x1,6	ROSETTA (*)(1*) 6,1x1,6
	10571771	4	131R	WASHER 8,1x2 **C1442**	ROSETTA 8,1x2 **C1442**
	14496501	2	131R	WASHER 8,4x17 **D1442**	ROSETTA 8,4x17 **D1442**

C 1096 → Tel.n. 050180 C 1442 → Tel.n. 051180
D 1096 Tel.n. 050181 → D 1442 Tel.n. 051181 →

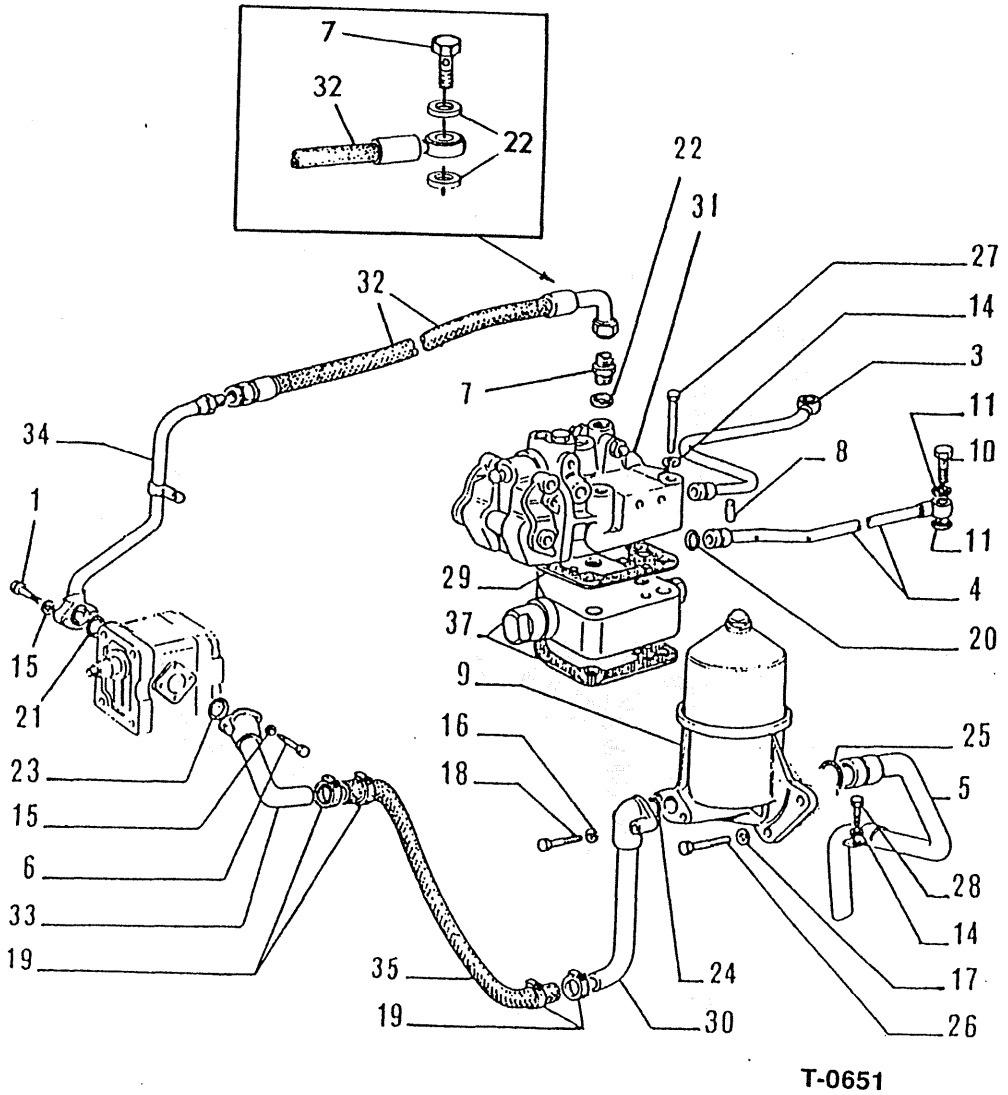

T-0651

ITEM	PART NUMBER	QTY	TRANS CODE	DESCRIPTION	DESCRIZIONE
15	14496501	2	131R	WASHER (*)(1*) 8,4x17	ROSETTA (*)(1*) 8,4x17
16	10571871	3	131R	WASHER 10,2x2,2	ROSETTA 10,2x2,2
		2	131R	WASHER (*)(1*) 10,2x2,2	ROSETTA (*)(1*) 10,2x2,2
17	10571971	3	131R	WASHER 12,2x2,5	ROSETTA 12,2x2,5
18	11234731	2	40V	SCREW 10x1,25x45	VITE 10x1,25x45
		2	40V	SCREW (*)(1*) 10x1,25x45	VITE (*)(1*) 10x1,25x45
19	12173990	4	180C	COLLAR 25/45x12	COLLARE 25/45x12
		4	180C	COLLAR (*)(1*) 25/45x12	COLLARE (*)(1*) 25/45x12
20	14456980	2	158G	O-RING 2,62x10,77 **C1449**	GUARNIZIONE O-R 2,62x10,77 **C1449**
	14457270	2	158G	O-RING **D1449**	GUARNIZIONE O-R **D1449**
21	14457280	1	158G	O-RING 2,62x15,54	GUARNIZIONE O-R 2,62x15,54
		1	158G	O-RING (*)(1*) 2,62x15,54	GUARNIZIONE O-R (*)(1*) 2,62x15,54
22	14457380	1	158G	O-RING (*)(1*)	GUARNIZIONE O-R 2,62x17,12
	10263360	2	123G	GASKET(2*)I 2,62x17,12	GUARNIZIONE O-R (*)(1*) 2,62x17,12
23	14457680	1	158G	O-RING 2,62x21,89	GUARNIZIONE O-R 2,62x21,89
		1	158G	O-RING (*)(1*) 2,62x21,89	GUARNIZIONE O-R (*)(1*) 2,62x21,89
24	14458380	1	158G	O-RING 2,62x32,99	GUARNIZIONE O-R 2,62x32,99
		1	158G	O-RING (*)(1*) 2,62x32,99	GUARNIZIONE O-R (*)(1*) 2,62x32,99
25	14463680	1	158G	O-RING 3,53x31,34	GUARNIZIONE O-R 3,53x31,34
26	15540531	3	40V	SCREW 04 12x1,25x35	VITE 04 12x1,25x35
27	15543331	3	40V	SCREW	VITE
28	15970431	1	40V	SCREW 10x1,25x18	VITE 10x1,25x18

C 1449 → Tel.n. 051442
D 1449 Tel.n. 051443 →

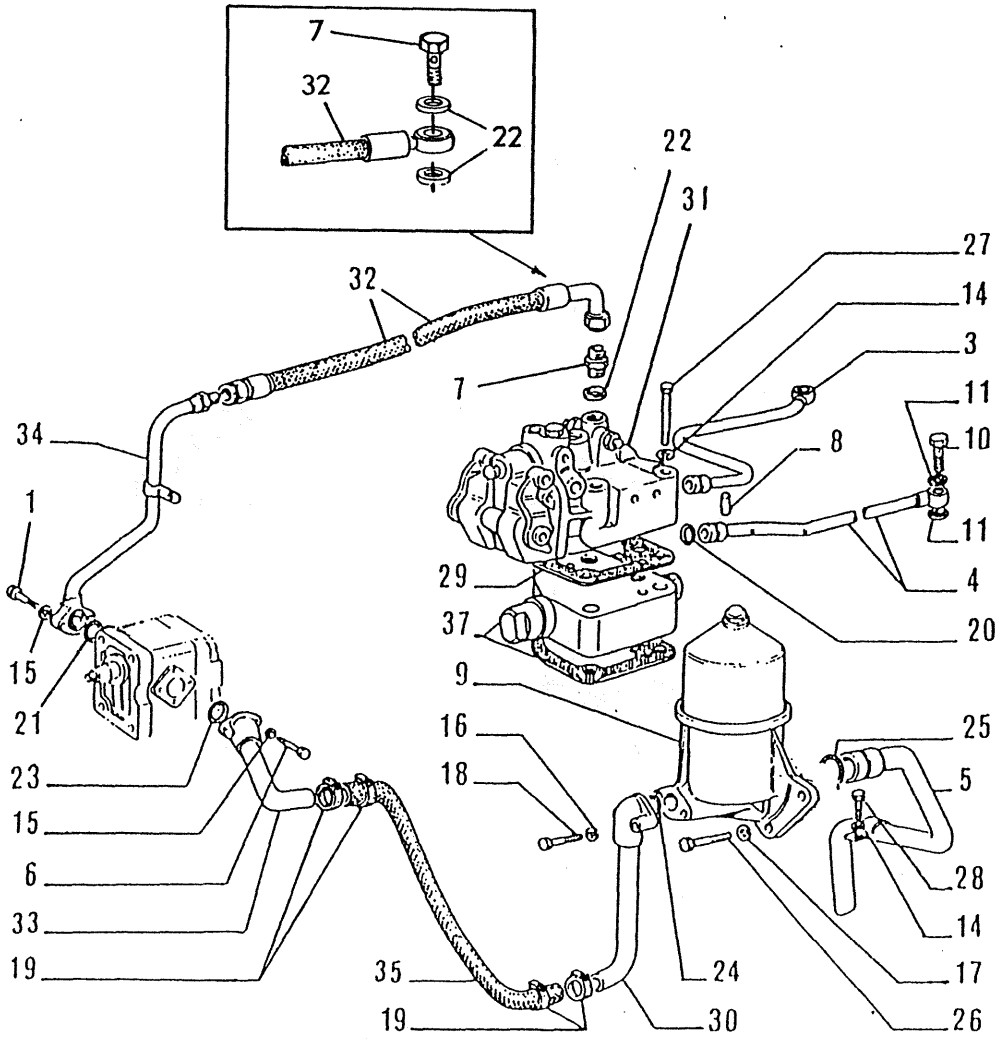

T-0651

ITEM	PART NUMBER	QTY	TRANS CODE	DESCRIPTION	DESCRIZIONE
29	76010291	1	123G	SEAL ASSY **D1449**	GUARNIZIONE TENUTA FRONTALE **D1449**
	79007717	1	123G	SEAL ASSY **C1449**	GUARNIZIONE TENUTA FRONTALE **C1449**
30	79016613	1	193T	TUBE - REAR **C1418**	TUBO RIGIDO - POSTERIORE **C1418**
	79035895	1	193T	TUBE - REAR **D1418**	TUBO RIGIDO - POSTERIORE **D1418**
		1	193T	TUBE (*)(1*)	TUBO RIGIDO (*)(1*)
31	79032451	1	83D	CONTROL VALVE - ASSEMBLY SEE SGR. D2.29	DISTRIBUTORE - COMPLETO VEDERE SGR. D2.29
32	79032931	1	192T	HOSE ASSY (*)(1*)	TUBO FLESS.C/RACCORDI
	76014490	1	192T	HOSE ASSY (2*)	TUBO FLESS.C/RACCORDI (*)(1*)
33	79033542	1	193T	TUBE - FRONT **C1418**	TUBO RIGIDO - ANTERIORE **C1418**
	79045321	1	193T	TUBE - FRONT **D1418**	TUBO RIGIDO - ANTERIORE **D1418**
		1	193T	TUBE (*)(1*)	TUBO RIGIDO (*)(1*)
34	76007870	1	193T	TUBE - FRONT **D1442**	TUBO RIGIDO - ANTERIORE 01-03-05 **D1442**
		1	193T	TUBE (*)(1*)	TUBO RIGIDO (*)(1*) TUBO RIGIDO - ANTERIORE 02-04 **D1442**
	79033543	1	193T	TUBE - FRONT **C1442**	TUBO RIGIDO - ANTERIORE 01-03 **C1442** TUBO RIGIDO - ANTERIORE 02-04

C 1419 → Tel.n. 050343 C 1442 → Tel.n. 051180 C 1449 → Tel.n. 051442
D 1419 Tel.n. 050344 → D 1442 Tel.n. 051181 → D 1449 Tel.n. 051443 →

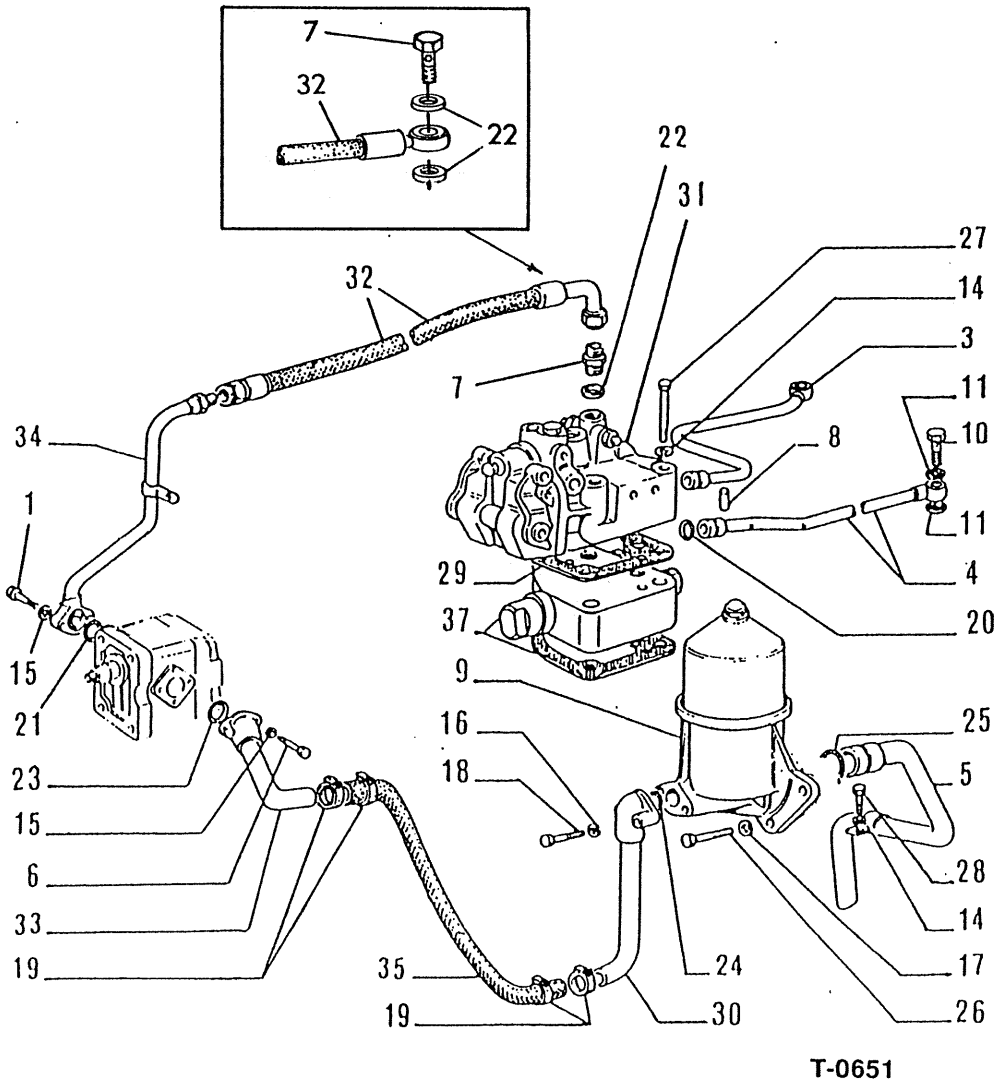

T-0651

ITEM	PART NUMBER	QTY	TRANS CODE	DESCRIPTION	DESCRIZIONE
35	79033997	1	192T	HOSE ASSY	TUBO FLESS.C/RACCORDI
		1	192T	HOSE ASSY (*)(1*)	TUBO FLESS.C/RACCORDI (*)(1*)
37	79041782	1	10V	VALVE - ASSEMBLY SEE SGR. D2.30 **C1945**	VALVOLA - COMPLETO VEDERE SGR. D2.30 **C1945**
	79077036	1	10V	VALVE - ASSEMBLY SEE SGR. D2.30/1 **D1945**	VALVOLA - COMPLETO VEDERE SGR. D2.30/1 **D1945**
(*)			469P	FOR SPECIAL EQUIPMENT 30.0021.09.1 (UNITS WITH 8365 ENGINE)	PER VARIANTE 30.0021.09.1
(1*)			469P	FOR SPECIAL EQUIPMENT 30.0370.04.1	PER VARIANTE 30.0370.04.1
(2*)				FOR SPECIAL EQUIPMENT 30.0021.08.1(UNITS WITH 8205 ENGINES)	

C 1945 → tel. n. 051933
D 1945 tel. n. 051934 →

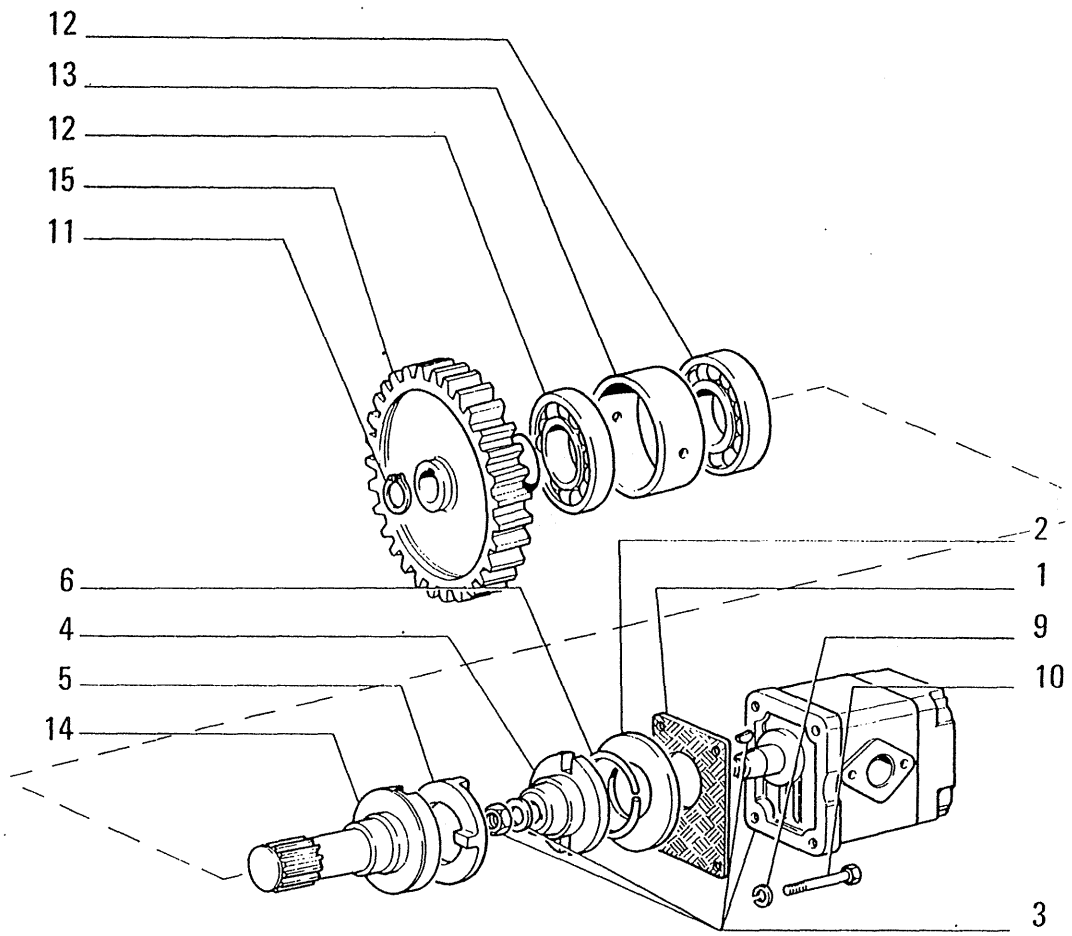

ITEM	PART NUMBER	QTY	TRANS CODE	DESCRIPTION	DESCRIZIONE
1	565153	1	123G	SEAL ASSY	GUARNIZIONE TENUTA FRONTALE
2	565154	1	45A	RING	ANELLO
					POMPA - COMPLETO
					IN ALTERNATIVA (02-04)
					C1442
					VED.SGR. D2.27/1
3	5106240	1	155P	PUMP - ASSEMBLY SEE SGR. D2.27 (01-03) **C1442**	POMPA - COMPLETO VEDERE SGR. D2.27 (01-03) **C1442**
					POMPA - COMPLETO VEDERE SGR. D2.27/1A **D1442** (02-04)
	5120783	1	155P	PUMP - ASSEMBLY SEE SGR. D2.27 (01-03) **D1442**	POMPA - COMPLETO VEDERE SGR. D2.27 (01-03) **D1442**
		1	155P	PUMP - ASSEMBLY SEE SGR. D2.27 (01-03) **C1461**	POMPA - COMPLETO VEDERE SGR. D2.27 (01-03) **C1461**
					POMPA - COMPLETO
					IN ALTERNATIVA VEDERE SGR.D2.27/2 **C1442** (02-04)
	79066184	1	155P	PUMP - ASSEMBLY SEE SGR. D2.27/A (01-03-05-06) **D1461**	POMPA - COMPLETO VEDERE SGR. D2.27/A(01-03) **D1461** (05)
4	591794	1	30M	SLEEVE	MANICOTTO
5	4526899	1	45A	RING	ANELLO
6	4526900	1	51A	LOCKRING	ANELLO DI SICUREZZA
9	10516471	4	131R	WASHER 6,1x1,8	ROSETTA 6,1x1,8

C 1442 → Tel.n. 051180 C 1461 → Tel.n. 051813
D 1442 Tel.n. 051181 → D 1461 Tel.n. 051814 →

05540

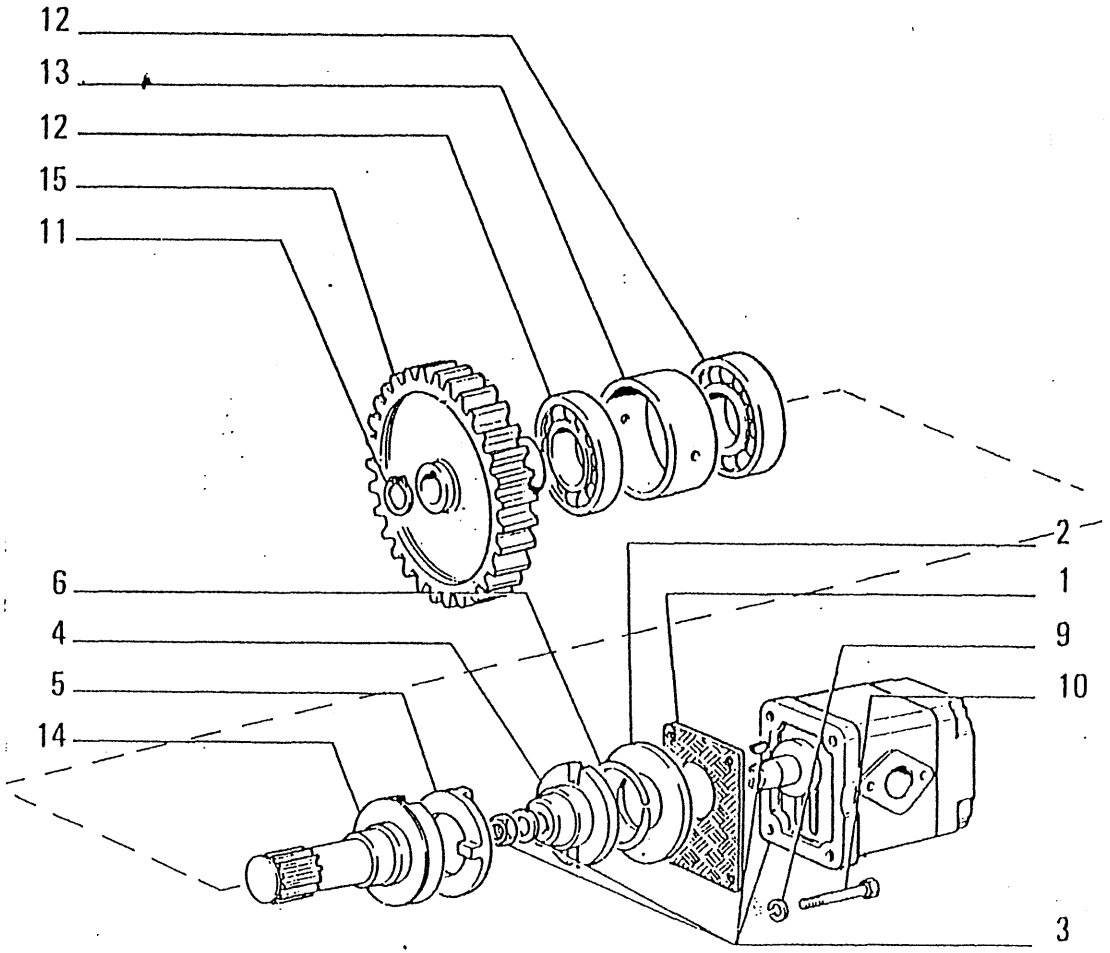

ITEM	PART NUMBER	QTY	TRANS CODE	DESCRIPTION	DESCRIZIONE
10	10903021	4	40V	SCREW 6x1x35	VITE 6x1x35
11	11067476	1	51A	LOCKRING 24,2x1,2	ANELLO DI SICUREZZA 24,2x1,2
12	20685450	2	341C	BEARING 30x62	CUSCINETTO 30x62
13	79009557	1	75D	SPACER	DISTANZIALE
14	79010926	1	16A	SHAFT	ALBERO
15	79010927	1	50I	GEAR	INGRANAGGIO

10

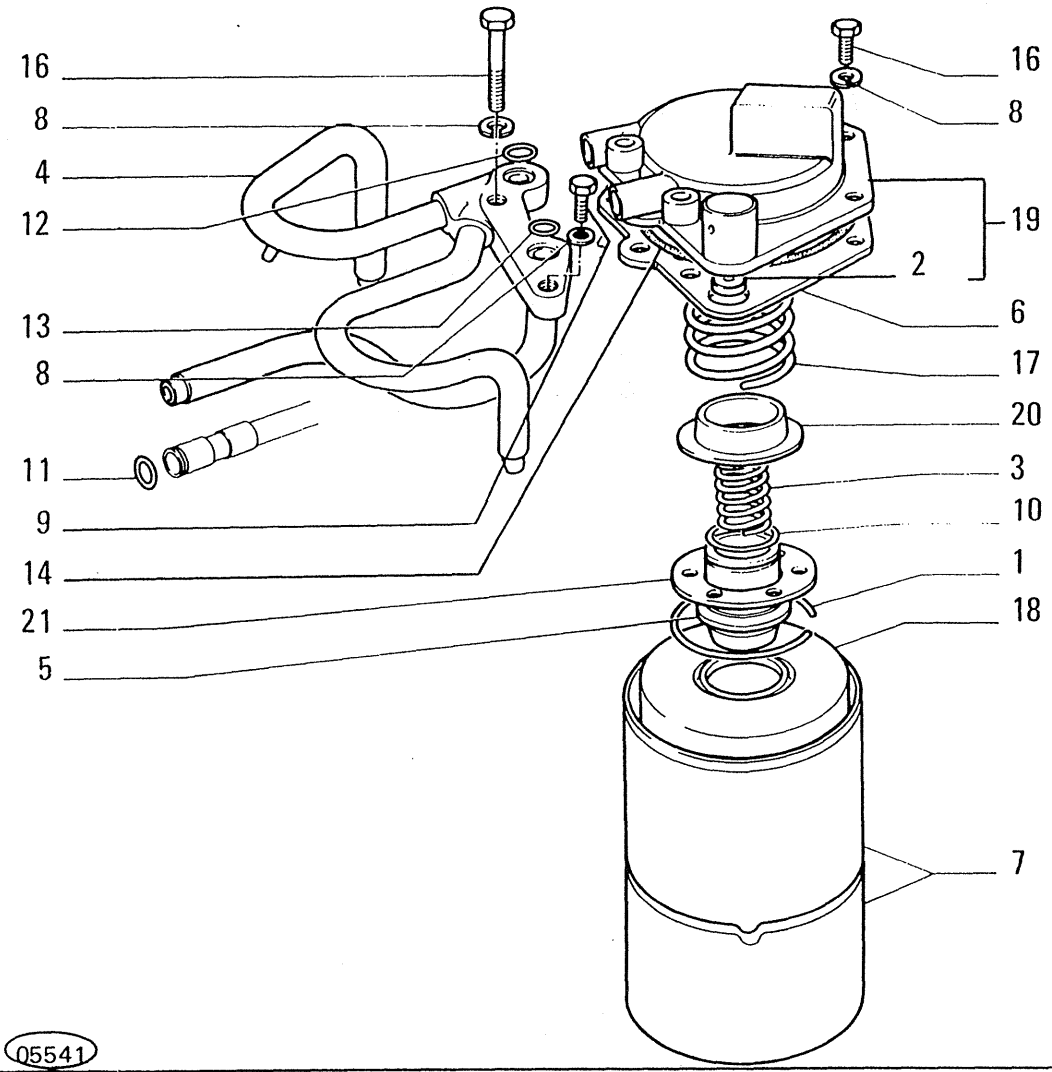

ITEM	PART NUMBER	QTY	TRANS CODE	DESCRIPTION	DESCRIZIONE
1	590390	1	51A	LOCKRING	ANELLO DI SICUREZZA
2	591424	1	50T	PLUG	TAPPO
3	591426	1	100M	SPRING	MOLLA
4	591429	1	190T	LINE	TUBAZIONE
5	591431	1	80F	BOTTOM PLATE	FONDELLO
6	591434	1	123G	SEAL ASSY	GUARNIZIONE TENUTA FRONTALE
7	595609	1	255C	FILTER SHELL	CONTENITORE FILTRO
8	10571871	8	131R	WASHER 10,2x2,2	ROSETTA 10,2x2,2
9	11307031	2	40V	SCREW 10x1,25x40	VITE 10x1,25x40
10	13401876	1	51A	LOCKRING 33x38	ANELLO DI SICUREZZA 33x38
11	14456980	2	158G	O-RING 2,62x10,77	GUARNIZIONE O-R 2,62x10,77
12	14457180	1	158G	O-RING 2,62x13,94	GUARNIZIONE O-R 2,62x13,94
13	14457580	1	158G	O-RING 2,62x20,29	GUARNIZIONE O-R 2,62x20,29
14	14473180	1	158G	O-RING 5,33x110,49	GUARNIZIONE O-R 5,33x110,49
15	15888721	2	40V	SCREW 10x1,25x55	VITE 10x1,25x55
16	15970731	4	40V	SCREW 10x1,25x25	VITE 10x1,25x25
17	79004598	1	100M	SPRING	MOLLA
18	79032093	1	20E	FILTERING ELEMENT	ELEMENTO FILTRANTE
19	79032448	1	265C	COVER - ASSEMBLY	COPERCHIO - COMPLETO
20	79032449	1	75F	CARRIER	FLOTTANTE
21	79032450	1	46A	THRUST RING	ANELLO REGGISPINTA

05541

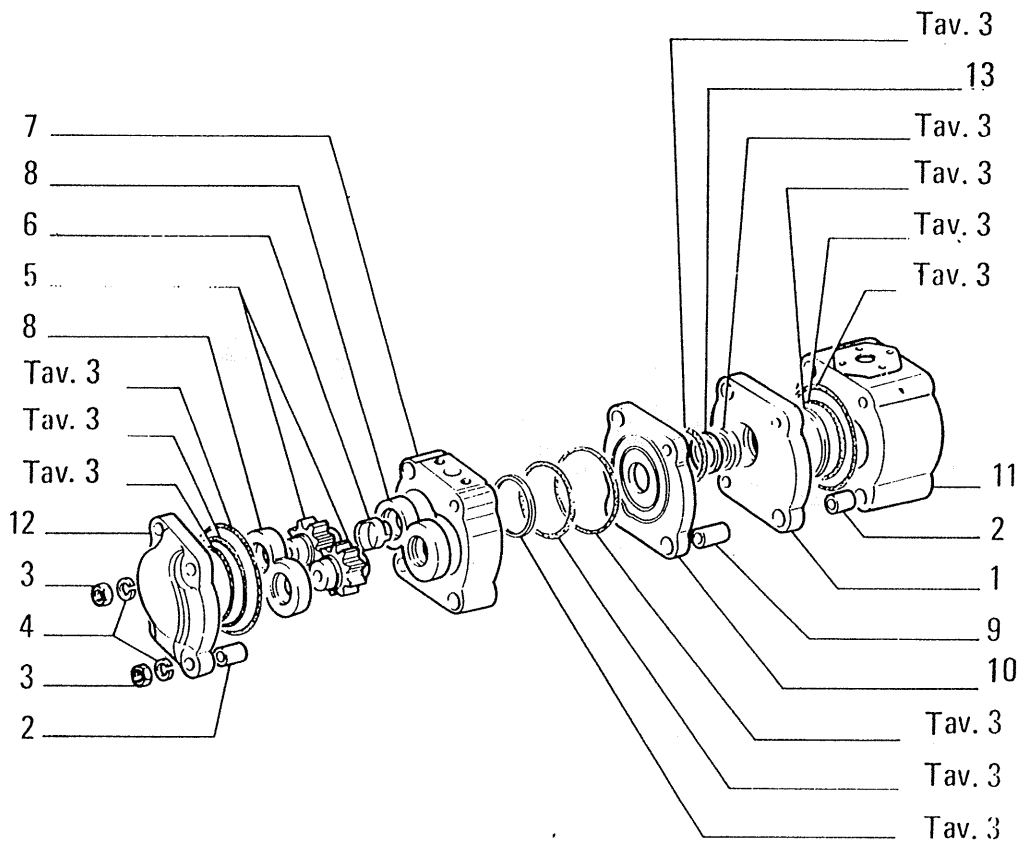

ITEM	PART NUMBER	QTY	TRANS CODE	DESCRIPTION	DESCRIZIONE
1	5106093	1	265C	COVER C1442	COPERCHIO C1442
	5120789	1	265C	COVER D1442	COPERCHIO D1442
2	5120207	4	95B	BUSHING D1442	BOCCOLA D1442
	8273912	4	95B	BUSHING C1442	BOCCOLA C1442
3	8273915	4	10D	NUT C1442	DADO C1442
	12164721	4	10D	NUT 10x1,25x8 D1442	DADO 10x1,25x8 D1442
4	8273916	4	131R	WASHER C1442	ROSETTA C1442
	10571879	4	131R	WASHER 10,2x2,5 D1442	ROSETTA 10,2x2,5 D1442
5	8281025	1	286C	GEAR SET	COPPIA DI INGRANAGGI
6	8281030	1	50N	PAWL	NOTTOLINO
7	5120647	1	300C	BODY D1442	CORPO D1442
	8281033	1	300C	BODY C1442	CORPO C1442
8	8281034	2	300S	SUPPORT	SUPPORTO
9	5120786	2	95B	BUSHING D1442	BOCCOLA D1442
	8281617	2	95B	BUSHING C1442	BOCCOLA C1442
10	5120788	1	265C	COVER D1442	COPERCHIO D1442
	8281620	1	265C	COVER C1442	COPERCHIO C1442
11	5120496	1	300C	BODY D1442	CORPO D1442
	8281789	1	300C	BODY C1442	CORPO C1442
12	5120204	1	265C	COVER - FRONT D1442	COPERCHIO - ANTERIORE D1442
	8283478	1	265C	COVER - FRONT C1442	COPERCHIO - ANTERIORE C1442
13	8294814	1	75D	SPACER	DISTANZIALE

C 1442 → Tel.n. 051180
D 1442 Tel.n. 051181 →

04074

C 1461 → Tel.n. 051813

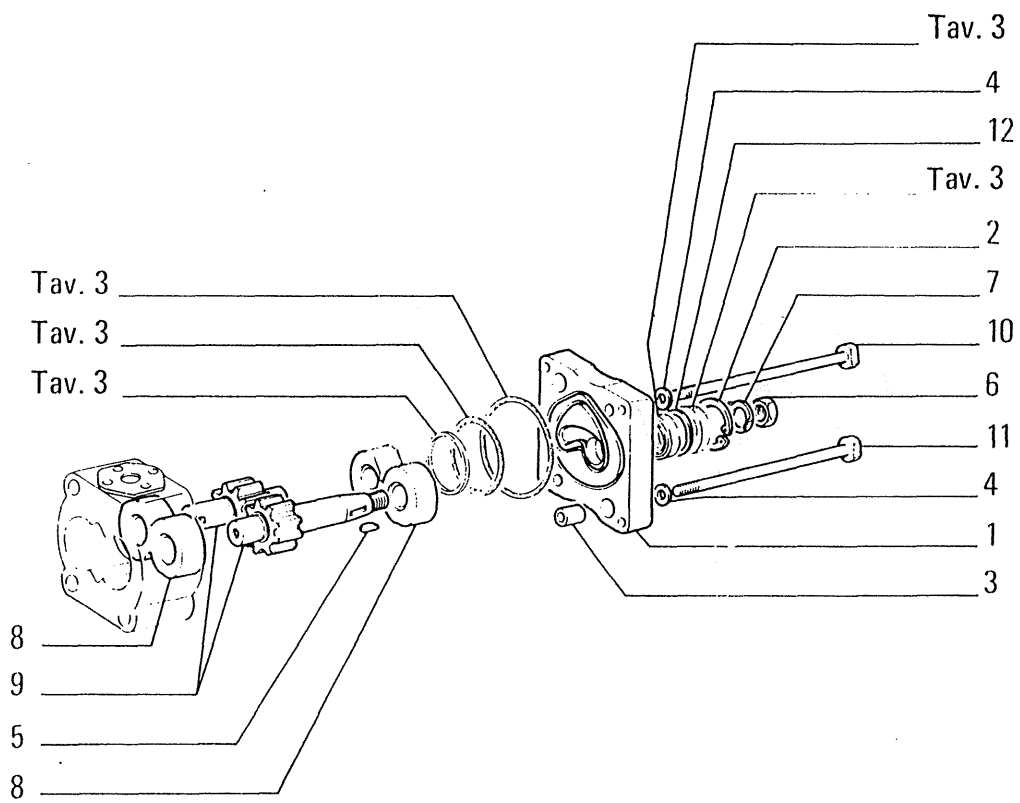

C 1461 → Tel.n. 051813

ITEM	PART NUMBER	QTY	TRANS CODE	DESCRIPTION	DESCRIZIONE
1	5106092	1	265C	COVER C1442	COPERCHIO C1442
	5120785	1	265C	COVER D1442	COPERCHIO D1442
2	8273911	1	51A	LOCKRING	ANELLO DI SICUREZZA
3	5120207	2	95B	BUSHING D1442	BOCCOLA D1442
	8273912	2	95B	BUSHING C1442	BOCCOLA C1442
4	8273917	4	133R	SEAL C1442	ROSETTA DI TENUTA C1442
	10284460	4	131R	WASHER 10,2x16 D1442	ROSETTA 10,2x16 D1442
5	8273918	1	60L	KEY	LINGUETTA
6	8273919	1	10D	NUT	DADO
7	8273920	1	131R	WASHER	ROSETTA
8	8280107	2	300S	SUPPORT C1442	SUPPORTO C1442
	8281034	2	300S	SUPPORT D1442	SUPPORTO D1442
9	8281615	1	286C	GEAR SET	COPPIA DI INGRANAGGI
10	5120787	3	40V	SCREW D1442	VITE D1442
	8281618	3	40V	SCREW C1442	VITE C1442
11	5120787	1	40V	SCREW D1442	VITE D1442
	8281619	1	40V	SCREW C1442	VITE C1442
12	8294905	1	75D	SPACER	DISTANZIALE

C 1442 → Tel.n. 051180
D 1442 Tel.n. 051181 →

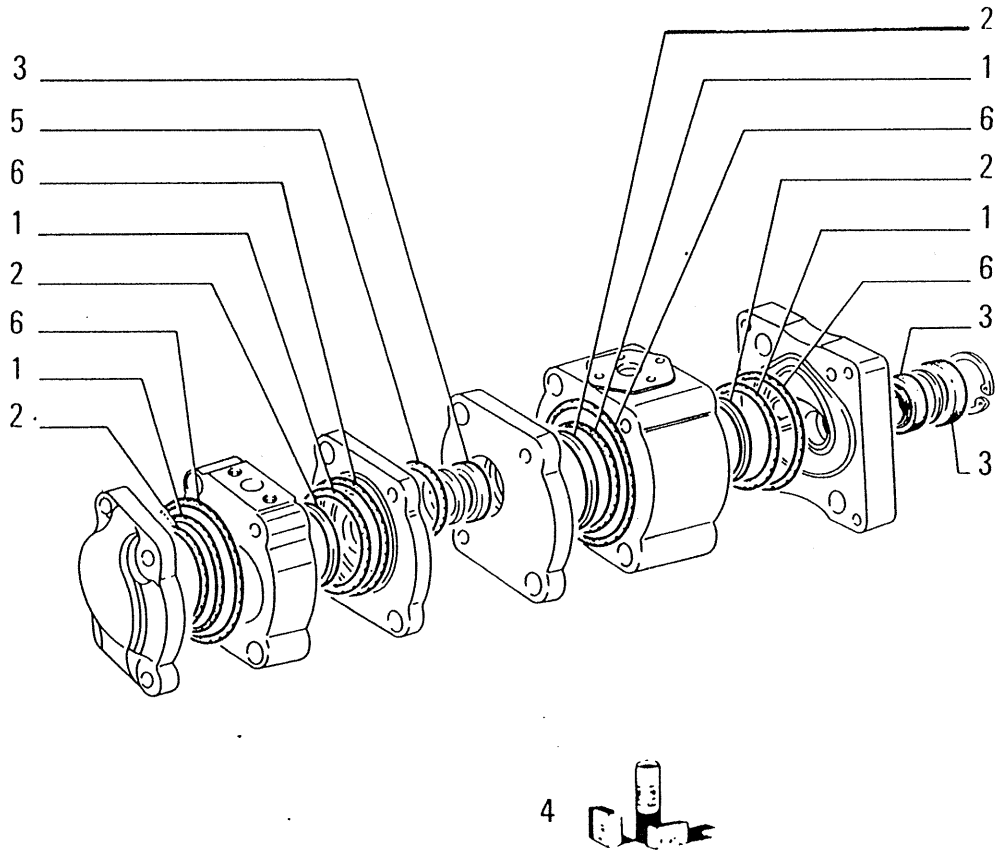

C 1461 → Tel.n. 051813

04076

ITEM	PART NUMBER	QTY	TRANS CODE	DESCRIPTION	DESCRIZIONE
1	8273909	4	158G	O-RING	GUARNIZIONE O-R
2	8281201	4	158G	O-RING	GUARNIZIONE O-R
3	8294816	3	158G	O-RING	GUARNIZIONE O-R
4	8294907	K	1K	KIT SEE PAGE 9	KIT VED. PAG.9
5	14458380	1	158G	O-RING 2,62x32,99	GUARNIZIONE O-R 2,62x32,99
6	14460380	4	158G	O-RING 2,62x64,77	GUARNIZIONE O-R 2,62x64,77

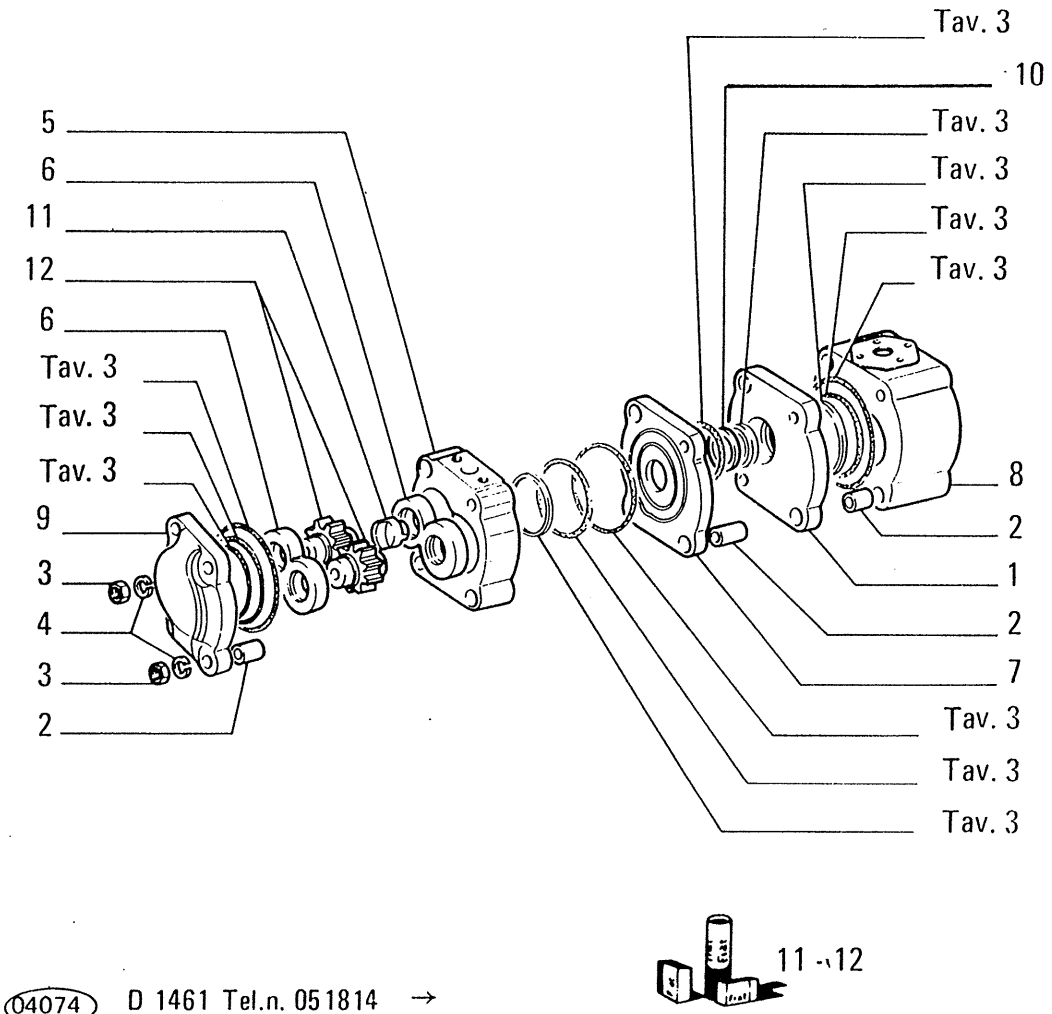

ITEM	PART NUMBER	QTY	TRANS CODE	DESCRIPTION	DESCRIZIONE
1	79069696	1	265C	COVER	COPERCHIO
2	79058573	6	95B	BUSHING	BOCCOLA
3	12164721	4	10D	NUT 10x1,25x8	DADO 10x1,25x8
4	10571879	4	131R	WASHER 10,2x2,5	ROSETTA 10,2x2,5
5	79069961	5	300C	BODY	CORPO
6	79069690	2	300S	SUPPORT	SUPPORTO
7	79069697	1	265C	COVER	COPERCHIO
8	79069960	1	300C	BODY	CORPO
9	79069698	1	265C	COVER	COPERCHIO
10	79069691	1	75D	SPACER	DISTANZIALE
11	79069701	K	2K	KIT	KIT
12	79069703	K	2K	KIT	KIT

04074 D 1461 Tel.n. 051814 →

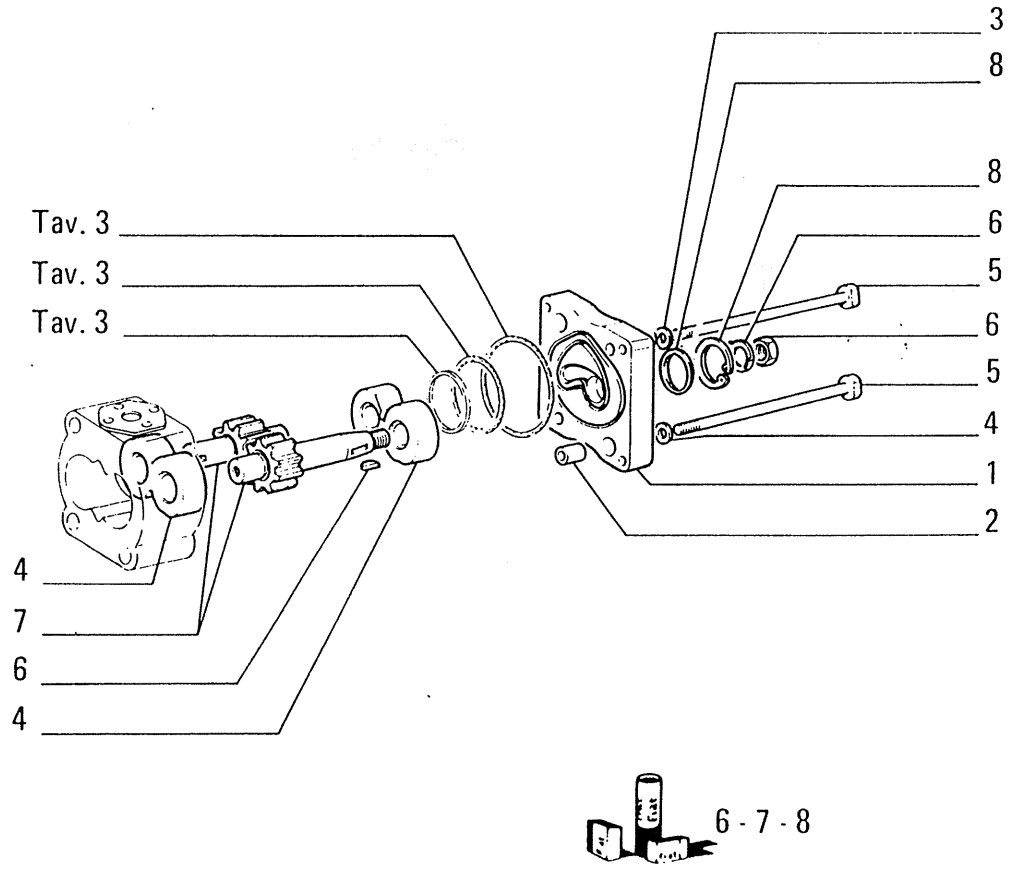

ITEM	PART NUMBER	QTY	TRANS CODE	DESCRIPTION	DESCRIZIONE
1	79069693	1	265C	COVER	COPERCHIO
2	79058573	2	95B	BUSHING	BOCCOLA
3	10298360	4	133R	SEAL 10,2x16	ROSETTA DI TENUTA 10,2x16
4	8299230	2	300S	SUPPORT	SUPPORTO
5	15973134	4	40V	SCREW 10x1,25x180	VITE 10x1,25x180
6	79069704	K	2K	KIT	KIT
7	79069702	K	2K	KIT	KIT
8	79069701	K	2K	KIT	KIT

04075 D 1461 Tel.n. 051814 →

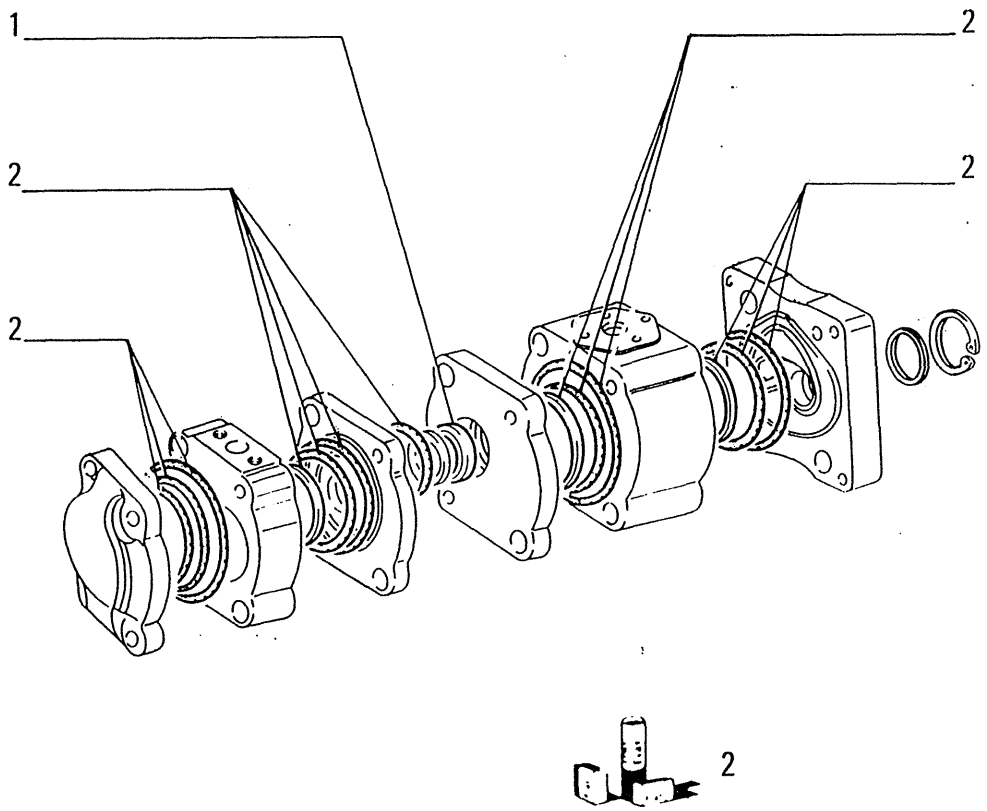

ITEM	PART NUMBER	QTY	TRANS CODE	DESCRIPTION	DESCRIZIONE
1	79069695	1	95B	BUSHING	BOCCOLA
2	79069701	K	2K	KIT	KIT

D 1461 Tel.n. 051814 →

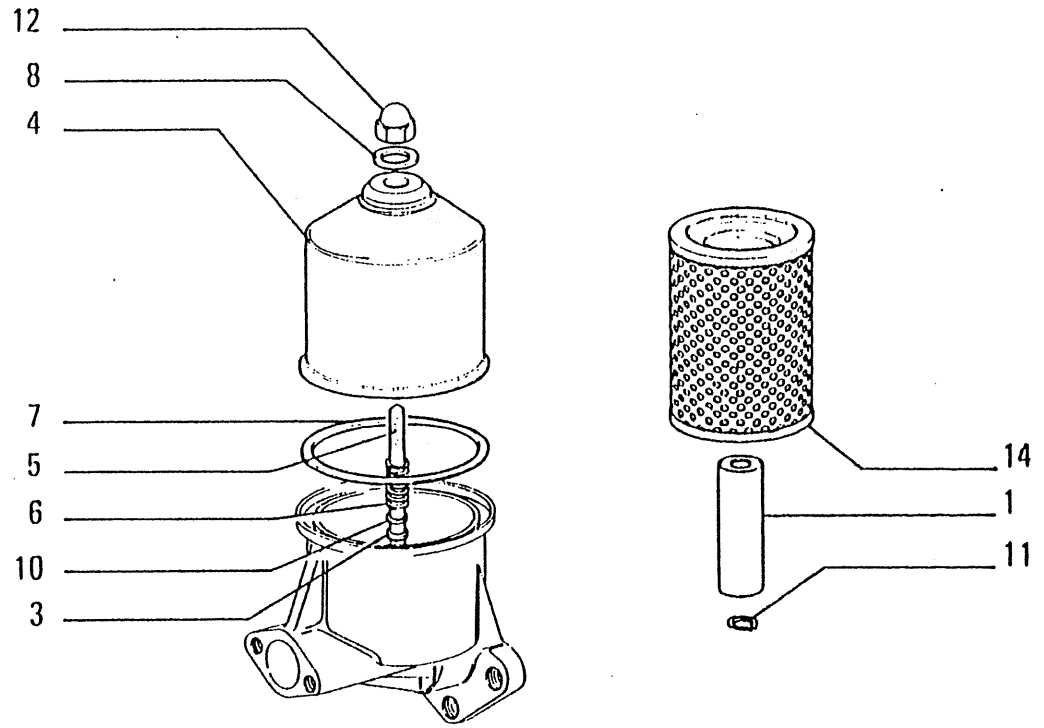

ITEM	PART NUMBER	QTY	TRANS CODE	DESCRIPTION	DESCRIZIONE
1	581492	1	54C	MAGNETIC ROD FILTER	CANDELA MAGNETICA
				UP TO SERIAL NO 050180	FINO AL TELAIO 050180
3	4964396	1	133R	SEAL	ROSETTA DI TENUTA
				UP TO SERIAL NO 050180	FINO AL TELAIO 050180
4	4979711	1	265C	COVER	COPERCHIO
				UP TO SERIAL NO 050180	FINO AL TELAIO 050180
5	4979712	1	40V	SCREW	VITE
				UP TO SERIAL NO 050180	FINO AL TELAIO 050180
6	4979713	1	100M	SPRING	MOLLA
				UP TO SERIAL NO 050180	FINO AL TELAIO 050180
7	4979714	1	133R	SEAL	ROSETTA DI TENUTA
				UP TO SERIAL NO 050180	FINO AL TELAIO 050180
8	10284460	1	133R	SEAL 10.2×16	ROSETTA DI TENUTA 10.2×16
				UP TO SERIAL NO 050180	FINO AL TELAIO 050180
10	12638601	1	131R	WASHER 10.2×18	ROSETTA 10.2×18
				UP TO SERIAL NO 050180	FINO AL TELAIO 050180
11	13404476	1	51A	LOCKRING 9.6×1.2	ANELLO DI SICUREZZA 9.6×1.2
				UP TO SERIAL NO 050180	FINO AL TELAIO 050180
12	14054911	1	10D	NUT 10×1.25×19	DADO 10×1.25×19
				UP TO SERIAL NO 050180	FINO AL TELAIO 050180
14	79032089	1	20E	FILTERING ELEMENT	ELEMENTO FILTRANTE
				UP TO SERIAL NO 050180	FINO AL TELAIO 050180

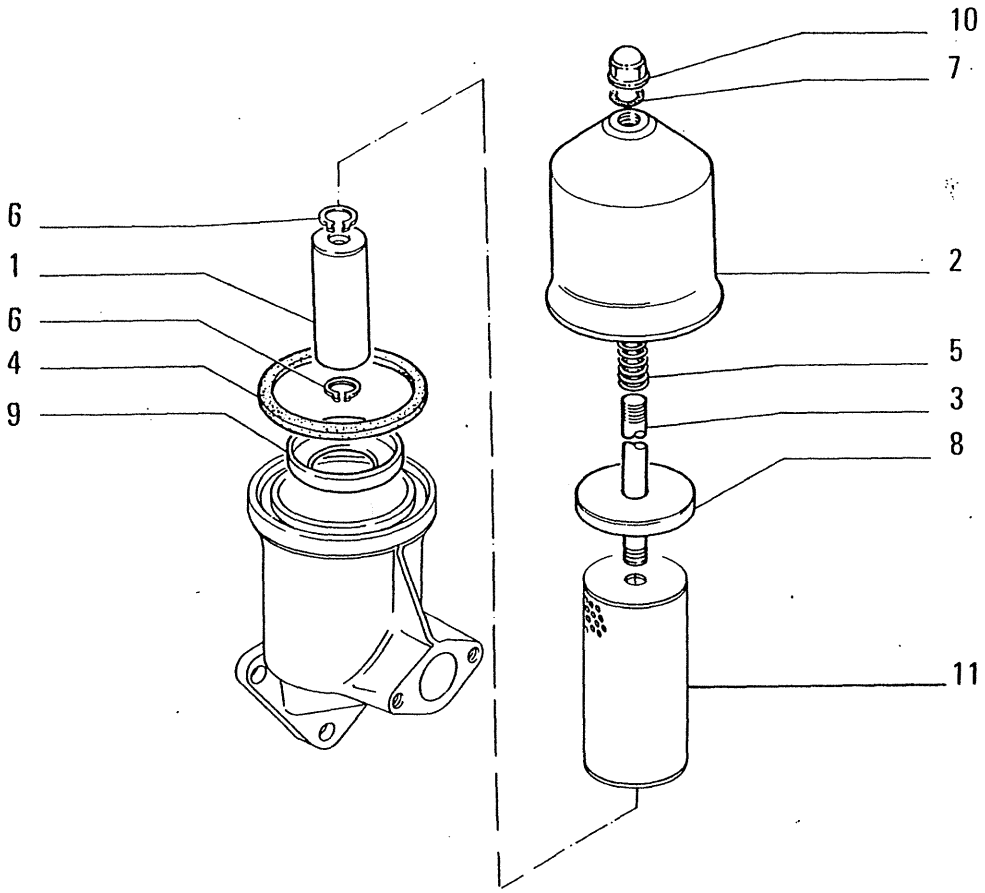

ITEM	PART NUMBER	QTY	TRANS CODE	DESCRIPTION	DESCRIZIONE
1	581492	1	54C	MAGNETIC ROD	CANDELA MAGNETICA
		1	54C	MAGNETIC ROD **D1096**	(01-02-03)(05) **D1096**
2	4979711	1	265C	COVER	COPERCHIO
		1	265C	COVER **D1096**	COPERCHIO (01-02-03)(05) **D1096**
3	4979712	1	40V	SCREW	VITE
		1	40V	SCREW **D1096**	VITE (01-02-03-05) **D1096**
4	4979714	1	123G	SEAL ASSY	GUARNIZIONE TENUTA FRONTALE
		1	123G	SEAL ASSY **D1096**	(01-02-03)(05) **D1096**
5	8288935	1	100M	SPRING	MOLLA
		1	100M	SPRING **D1096**	MOLLA (01-02-03)(05) **D1096**
6	13404476	2	51A	LOCKRING 9,6x1,2	ANELLO DI SICUREZZA 9,6x1,2
		2	51A	LOCKRING 9,6x1,2 **D1096**	ANELLO DI SICUREZZA (01-02-03)(05) 9,6x1,2 **D1096**
7	14457280	1	158G	O-RING 2,62x15,54	GUARNIZIONE O-R 2,62x15,54
		1	158G	O-RING 2,62x15,54 **D1096**	GUARNIZIONE O-R (01-02-03)(05) 2,62x15,54 **D1096**
8	79037671	1	265C	COVER - UPPER	COPERCHIO - SUPERIORE
		1	265C	COVER - UPPER **D1096**	COPERCHIO - SUPERIORE (01-02-03)(05) **D1096**
9	79037672	1	265C	COVER - LOWER	COPERCHIO - INFERIORE
		1	265C	COVER - LOWER	COPERCHIO - INFERIORE

C 1096 → Tel.n. 050180
D 1096 Tel.n. 050181 →

5488

01 - 03
05 - 06

79038351

OIL FILTER – FILTRO OLIO – FILTRE A HUILE – OELFILTER – FILTRO DE ACEITE

D2.28/1

N.T.R. 155 - 30.01.1987

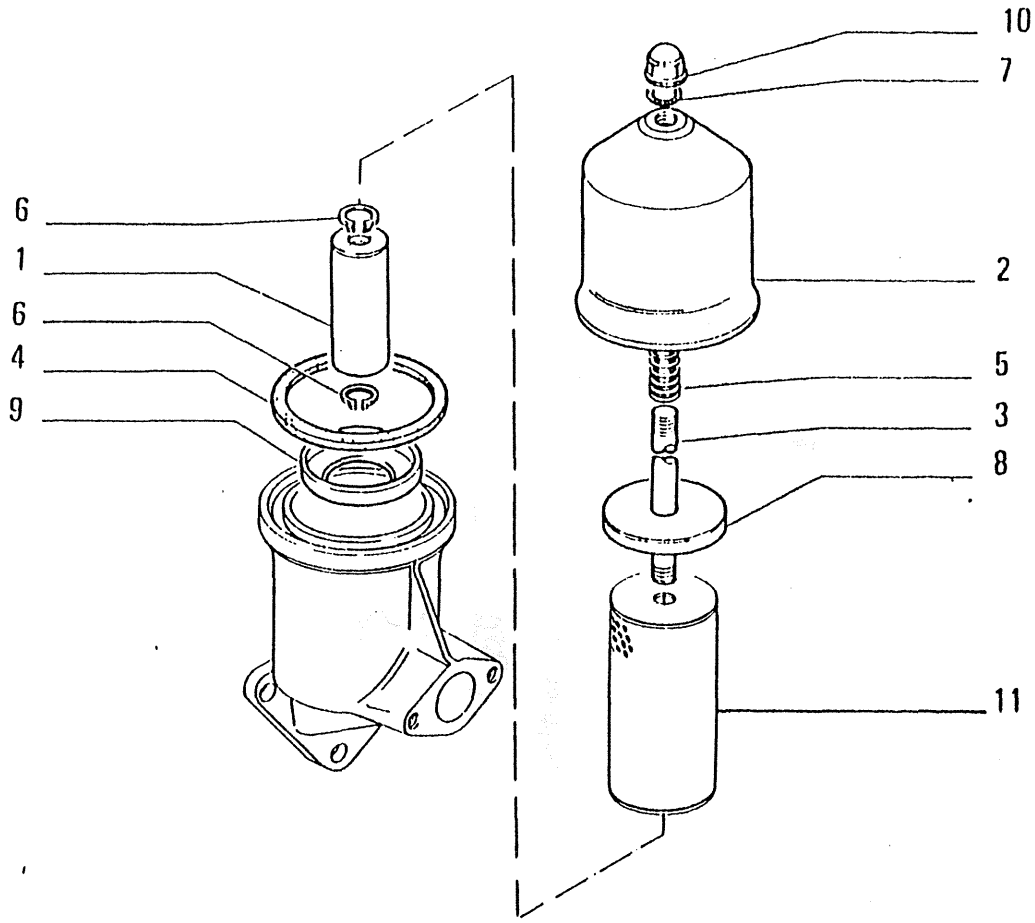

ITEM	PART NUMBER	QTY	TRANS CODE	DESCRIPTION	DESCRIZIONE
9	79037672			**D1096**	(01-02-03)(05) **D1096**
10	79038352	1	10D	NUT	DADO
		1	10D	NUT **D1096**	DADO (01-02-03)(05) **D1096**
11	79037673	1	20E	FILTERING ELEMENT	ELEMENTO FILTRANTE
		1	20E	**D1096**	(01-02-03)(05) **D1096**

D 1096 Tel.n. 050181 →

5488

01 - 03
05 - 06

79038351

OIL FILTER – FILTRO OLIO – FILTRE A HUILE – OELFILTER – FILTRO DE ACEITE

D2.28/1

N.T.R. 155 - 30.01.1987

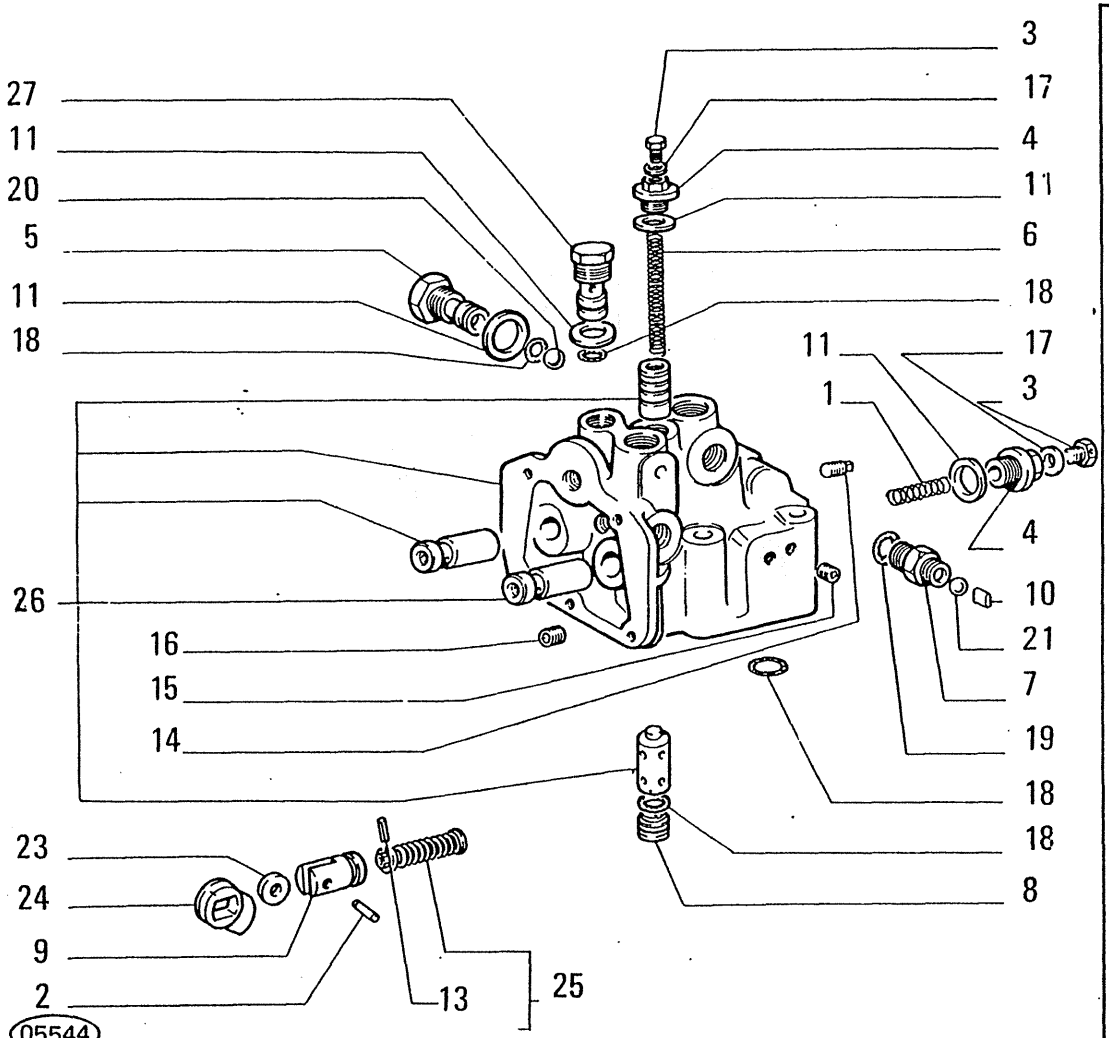

ITEM	PART NUMBER	QTY	TRANS CODE	DESCRIPTION	DESCRIZIONE
1	575874	2	100M	SPRING	MOLLA
2	575888	2	80P	PIN	PERNO
3	581658	3	50T	PLUG C1469	TAPPO C1469
	10300571	3	50T	PLUG 12x1,5x8 D1469	TAPPO 12x1,5x8 D1469
4	581967	3	90B	FILLER PLUG C1469	BOCCHETTONE INTRODUZIONE C1
	76005321	3	90B	FILLER PLUG D1469	BOCCHETTONE INTRODUZIONE D1
		3	90B	FILLER PLUG C1470	BOCCHETTONE INTRODUZIONE C1
	79055900	3	90B	FILLER PLUG D1470	BOCCHETTONE INTRODUZIONE D1
5	587158	2	50T	PLUG	TAPPO
6	591112	1	100M	SPRING	MOLLA
7	591126	2	300C	BODY	CORPO
8	591247	1	50T	PLUG - LOWER	TAPPO - INFERIORE
9	595736	2	240P	TAPPET	PUNTERIA
10	4953884	2	75D	SPACER	DISTANZIALE
11	10257460	7	133R	SEAL 20,2x26	ROSETTA DI TENUTA 20,2x26
12	10296160	2	133R	SEAL 12,2x18	ROSETTA DI TENUTA 12,2x18
13	14157470	2	200S	PIN 1,7x10	SPINA 1,7x10
14	14323911	1	50T	PLUG 10x1,25x14	TAPPO 10x1,25x14
15	14324811	2	50T	PLUG 12x1,5x13	TAPPO 12x1,5x13
16	14324911	2	50T	PLUG 14x1,5x13	TAPPO 14x1,5x13
17	10296160	3	133R	SEAL 12,2x18 D1469	ROSETTA DI TENUTA 12,2x18 D1469
	14330260	3	133R	SEAL 8,2x12 C1469	ROSETTA DI TENUTA 8,2x12 C14
18	14456980	8	158G	O-RING 2,62x10,77	GUARNIZIONE O-R 2,62x10,77
19	14457380	2	158G	O-RING 2,62x17,12	GUARNIZIONE O-R 2,62x17,12
20	20063000	3	140S	BALL 15,082	SFERA 15,082
21	20063390	2	140S	BALL 8,731	SFERA 8,731

C 1469 → Tel.n. 050100 C 1470 → Tel.n. 051596
D 1469 Tel.n. 050101 → D 1470 Tel.n. 051597 →

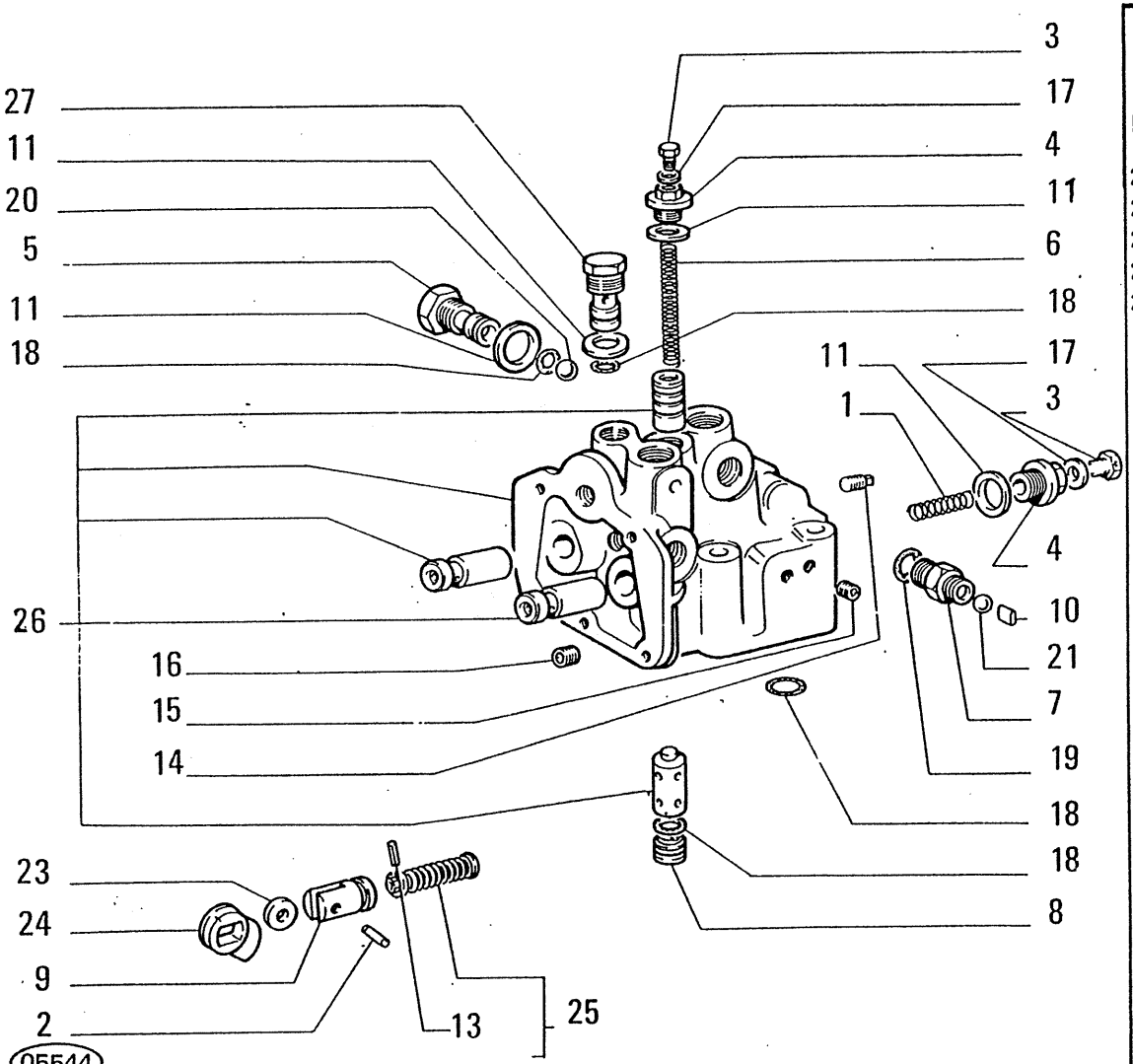

ITEM	PART NUMBER	QTY	TRANS CODE	DESCRIPTION	DESCRIZIONE
23	79004433	2	157R	ROLLER	RULLO
24	79012735	2	10E	ECCENTRIC	ECCENTRICO
25	79030538	2	100M	SPRING - ASSEMBLY	MOLLA - COMPLETO
26	79032445	1	300C	BODY - ASSEMBLY	CORPO - COMPLETO
27	595878	1	50T	PLUG D1469	TAPPO D1469
	79032446	1	50T	PLUG C1469	TAPPO C1469

C 1469 → Tel.n. 050100
D 1469 Tel.n. 050101 →

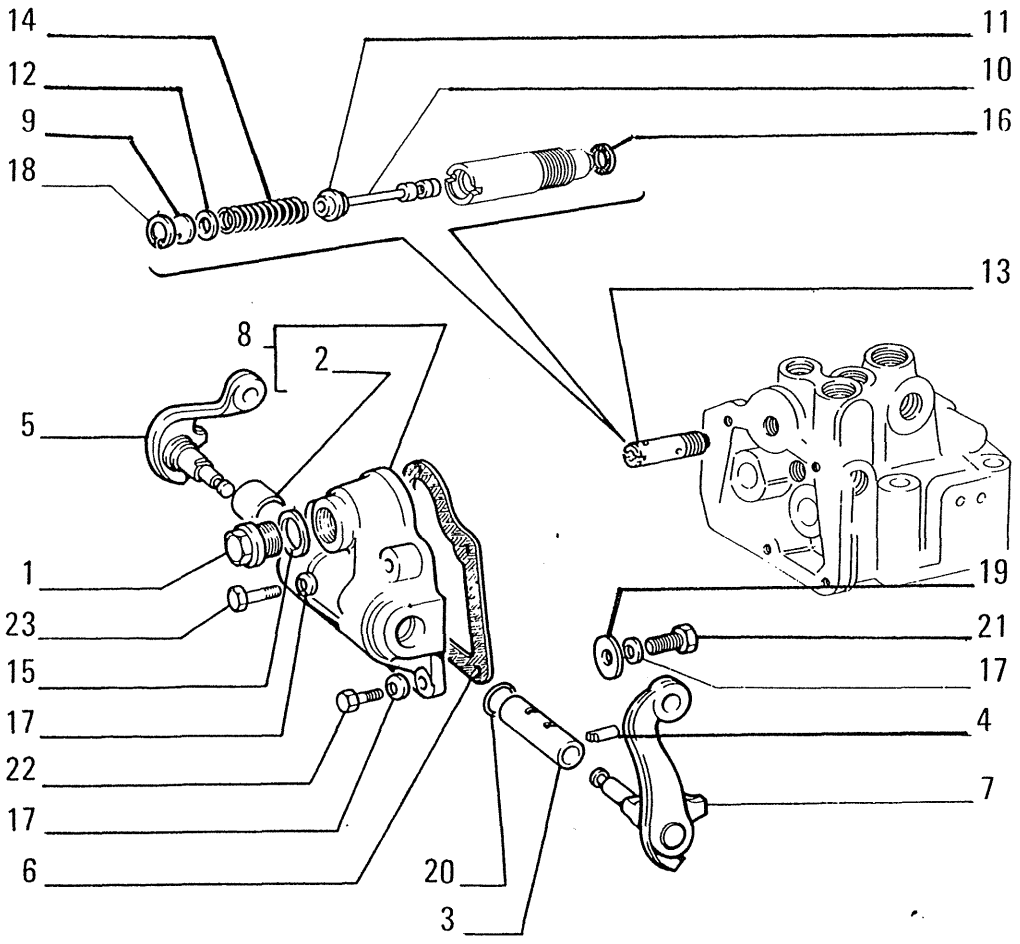

ITEM	PART NUMBER	QTY	TRANS CODE	DESCRIPTION	DESCRIZIONE
1	586166	1	50T	PLUG	TAPPO
2	587138	2	95B	BUSHING	BOCCOLA
3	587141	1	75D	SPACER	DISTANZIALE
4	587142	2	80P	PIN	PERNO
5	587155	1	45L	LEVER - OUTER RIGHT ASSEMBLY	LEVA - ESTERNO DESTRO COMPLETO
6	591115	1	123G	SEAL ASSY	GUARNIZIONE TENUTA FRONTALE
7	591217	1	45L	LEVER - OUTER LEFT ASSEMBLY	LEVA - ESTERNO SINISTRO COMPLETO
8	4951841	1	265C	COVER - ASSEMBLY	COPERCHIO - COMPLETO
9	4972293	1	131R	WASHER	ROSETTA
10	4972430	1	75F	CARRIER	FLOTTANTE
11	4972431	1	60S	CUP	SCODELLINO
12	4972432		131R	WASHER	ROSETTA
13	4972433	1	10V	VALVE - ASSEMBLY **C1956**	VALVOLA - COMPLETO **C1956**
	76013437	1	10V	VALVE **D1956**	VALVOLA **D1956**
14	4976146	1	100M	SPRING **C1956**	MOLLA **C1956**
	79080362	1	100M	SPRING **D1956**	MOLLA **D1956**
15	10257460	1	133R	SEAL 20,2x26	ROSETTA DI TENUTA 20,2x26
16	10262660	1	133R	SEAL 6,2x12	ROSETTA DI TENUTA 6,2x12
17	10571771	6	131R	WASHER 8,1x2	ROSETTA 8,1x2
18	11057176	1	51A	LOCKRING 14,1x1	ANELLO DI SICUREZZA 14,1x1
19	12647001	1	131R	WASHER 8,15x25	ROSETTA 8,15x25
20	14457280	2	158G	O-RING 2,62x15,54	GUARNIZIONE O-R 2,62x15,54
21	16043131	1	40V	SCREW 8x1,25x14	VITE 8x1,25x14
22	16043431	3	40V	SCREW 8x1,25x20	VITE 8x1,25x20
23	16043931	2	40V	SCREW 8x1,25x35	VITE 8x1,25x35

C 1956 → tel. n. 052055
D 1956 tel. n. 052056 →

05545

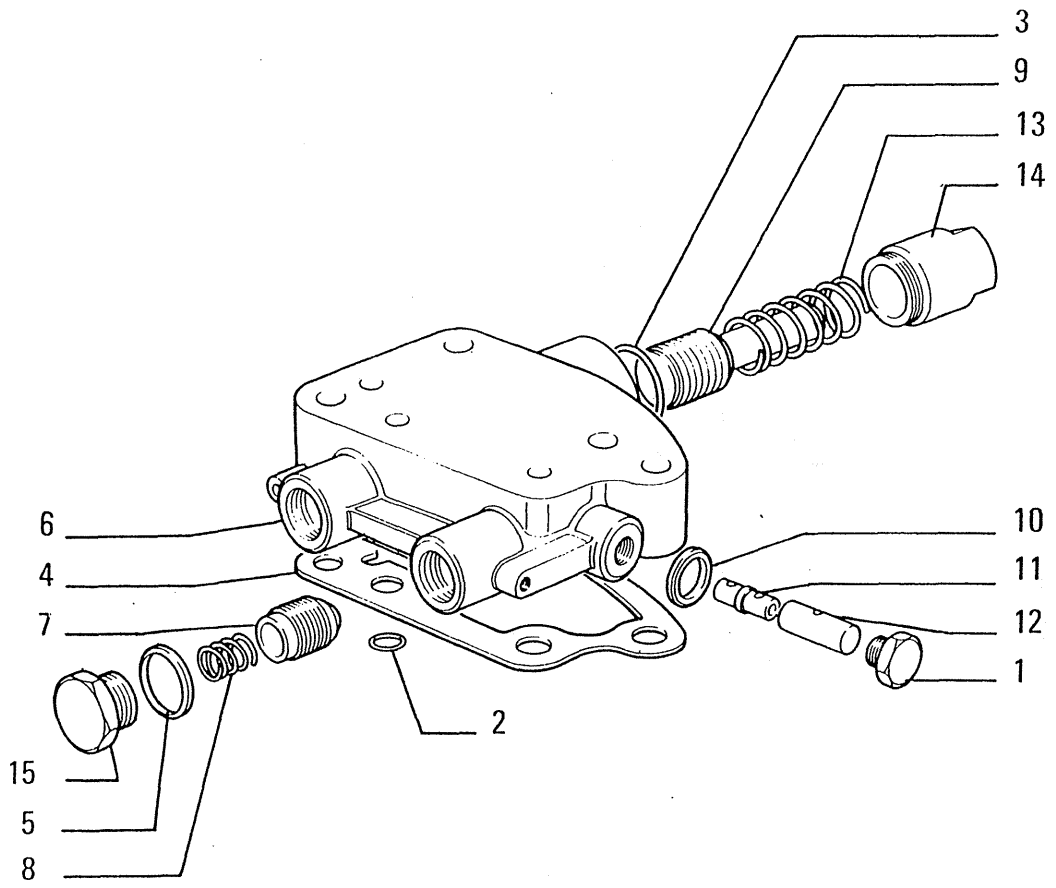

C1945 → tel. n. 051933

ITEM	PART NUMBER	QTY	TRANS CODE	DESCRIPTION	DESCRIZIONE
1	10300611	1	50T	PLUG 14x1,5x9	TAPPO 14x1,5x9
2	14456980	1	158G	O-RING 2,62x10,77 C1449	GUARNIZIONE O-R 2,62x10,77 C1449
	14457280	1	158G	O-RING 2,62x15,54 D1449	GUARNIZIONE O-R 2,62x15,54 D1449
3	14458880	1	158G	O-RING C1449	GUARNIZIONE O-R C1449
	76010291	1	158G	O-RING D1449	GUARNIZIONE O-R D1449
4	79007717	1	123G	SEAL ASSY	GUARNIZIONE TENUTA FRONTALE
5	79028876	2	133R	SEAL	ROSETTA DI TENUTA
6	79035953	1	300C	BODY	CORPO
7	79035954	2	130P	PLUNGER	PISTONCINO
8	79035955	2	100M	SPRING	MOLLA
9	79035956	1	132P	PISTON	PISTONE
10	79035959	1	123G	SEAL ASSY	GUARNIZIONE TENUTA FRONTALE
11	79035960	1	10V	VALVE	VALVOLA
12	79035961	1	75D	SPACER	DISTANZIALE
13	79041783	1	100M	SPRING	MOLLA
14	79041784	1	50T	PLUG	TAPPO
15	79041785	2	50T	PLUG	TAPPO

C 1449 → Tel.n. 051442
D 1449 Tel.n. 051443 →

05490

79041782

01 : 03

STEERING CLUTCH TRIMMER VALVE – VALVOLA MODERATRICE FRIZIONI DI STERZO – VALVE MODERATRICE D'EMBRAYAGES DE DIRECTION – MODULIERVENTIL FUER LENKKUPPLUNGEN – VALVULA MODERADORA DE EMBRAGUES DE DIRECCION

D2.30

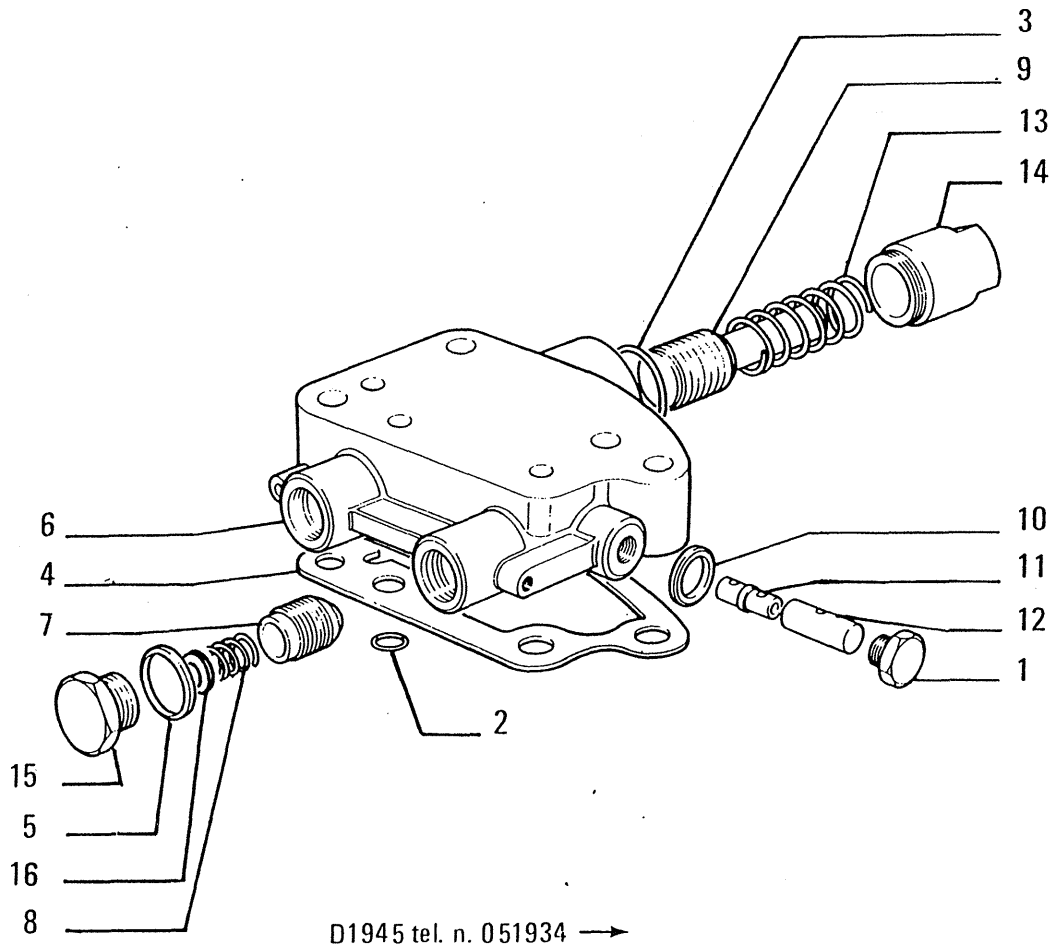

D1945 tel. n. 051934 →

ITEM	PART NUMBER	QTY	TRANS CODE	DESCRIPTION	DESCRIZIONE
1	10300611	1	50T	PLUG 14x1,5x9	TAPPO 14x1,5x9
2	14457280	2	158G	O-RING 2,62x15,54	GUARNIZIONE O-R 2,62x15,54
3	14458880	1	158G	O-RING 2,62x40,94	GUARNIZIONE O-R 2,62x40,94
4	76010291	1	123G	SEAL ASSY	GUARNIZIONE TENUTA FRONTALE
5	79028876	2	120G	GASKET	GUARNIZIONE PIANA
6	79077037	1	300C	BODY	CORPO
7	79035954	2	130P	PLUNGER	PISTONCINO
8	79035955	2	100M	SPRING	MOLLA
9	79035956	1	132P	PISTON	PISTONE
10	79035959	1	120G	GASKET	GUARNIZIONE PIANA
11	79035960	1	10V	VALVE	VALVOLA
12	79035961	1	75D	SPACER	DISTANZIALE
13	79041783	1	100M	SPRING	MOLLA
14	79041784	1	50T	PLUG	TAPPO
15	79070222	2	50T	PLUG	TAPPO
16	79070220		131R	WASHER - THICKNESS 0,3	ROSETTA - SPESSORE 0,3
17	79070221		131R	WASHER - THICKNESS 0,5	ROSETTA - SPESSORE 0,5

79077036

01 · 03
05 · 06

STEERING CLUTCH TRIMMER VALVE – VALVOLA MODERATRICE FRIZIONI DI STERZO – VALVE MODERATRICE D'EMBRAYAGES DE DIRECTION – MODULIERVENTIL FUER LENKKUPPLUNGEN – VALVULA MODERADORA DE EMBRAGUES DE DIRECCION

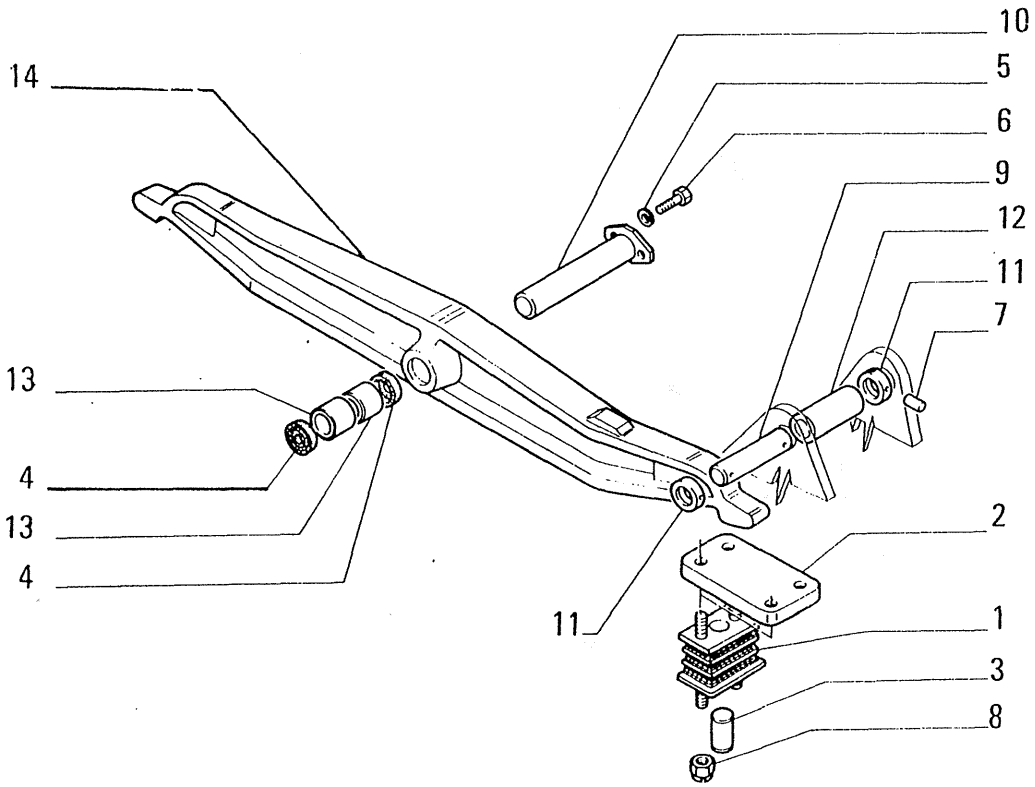

ITEM	PART NUMBER	QTY	TRANS CODE	DESCRIPTION	DESCRIZIONE
1	591148	4	61T	CUSHION PAD	TASSELLO ELASTICO
2	596678	2	105P	PLATE	PIASTRA
3	596679	4	80P	PIN	PERNO
4	8291846	2	158G	O-RING	GUARNIZIONE O-R
5	10571971	2	131R	WASHER 12,2x2,5	ROSETTA 12,2x2,5
6	11112631	2	40V	SCREW 12x1,75x35	VITE 12x1,75x35
7	14601770	4	200S	PIN 5x45	SPINA 5x45
8	16109221	16	10D	NUT 12x1,25x12	DADO 12x1,25x12
9	76002816	2	11A	SPINDLE	ALBERINO
10	76005455	1	80P	PIN	PERNO
11	79004817	4	56A	RETAINING RING	ANELLO DI RITEGNO
12	79005968	2	95B	BUSHING	BOCCOLA
13	76011242	2	95B	BUSHING **D1460**	BOCCOLA **D1460**
	79032314	2	95B	BUSHING **C1460**	BOCCOLA **C1460**
14	79032370	1	180T	CROSS BEAM	TRAVERSA (01-02-04)(05)
	79041641	1	180T	CROSS BEAM (03)	TRAVERSA (03)

C 1460 → Tel.n. 051818
D 1460 Tel.n. 051819 →

(03) Units equipped with 7 track rollers

05699

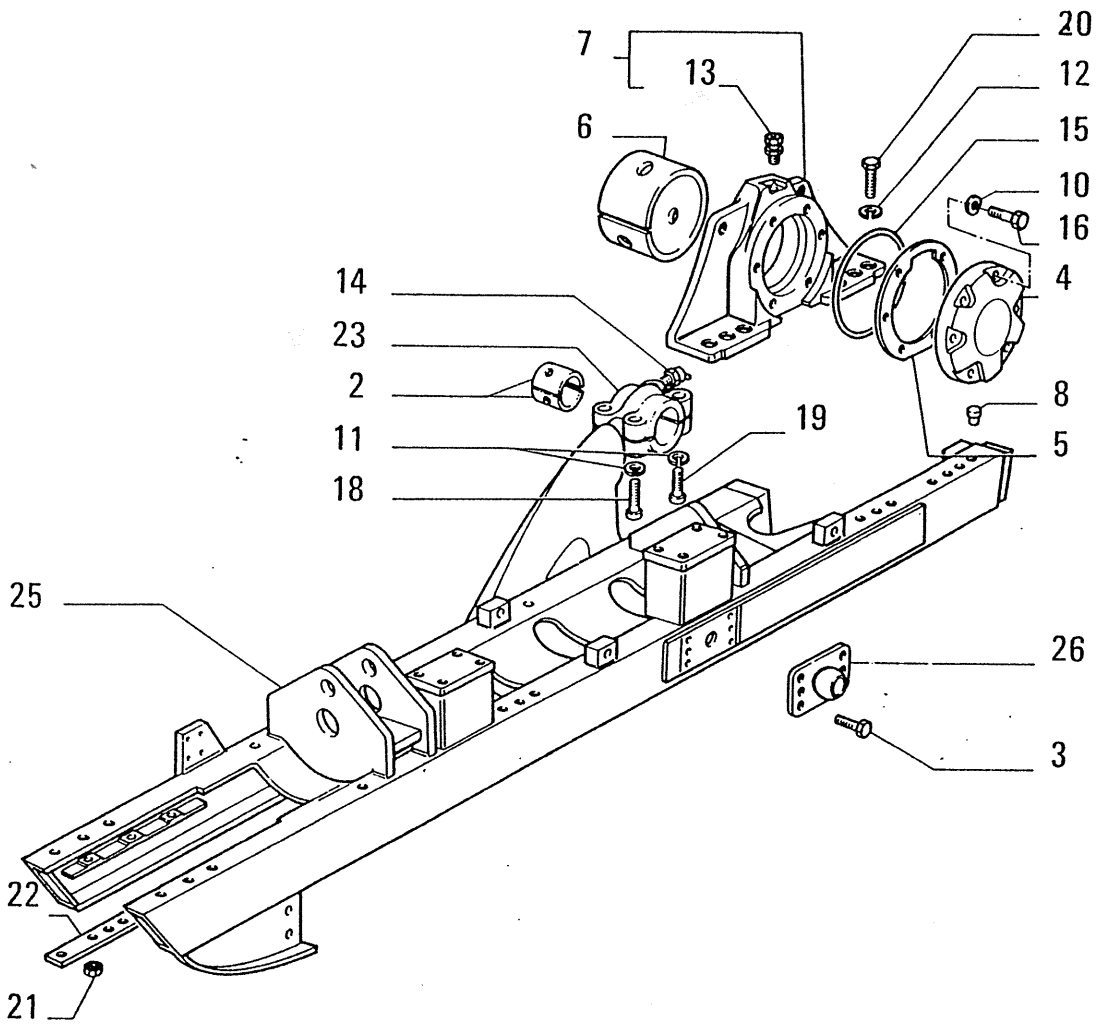

FIATALLIS . _ .

D3.30 TAV. 1 PAG.1

ITEM	PART NUMBER	QTY	TRANS CODE	DESCRIPTION	DESCRIZIONE
					PIASTRINA DI SICUREZZA (04)
2	587626	4	96S	HALF BUSHING	SEMIBOCCOLA
3	588867	12	40V	SCREW	VITE (01-02-03)(*)
4	594317	2	265C	COVER	COPERCHIO
5	594324	2	133R	SEAL	ROSETTA DI TENUTA
6	594343	2	95B	BUSHING	BOCCOLA
7	594666	2	300S	SUPPORT - ASSEMBLY	SUPPORTO - COMPLETO
8	4955605	4	90G	DOWEL	GRANO
					ROSETTA (04) 10,2x2,2
10	10571971	12	131R	WASHER 12,2x2,5	ROSETTA 12,2x2,5
11	10572171	8	131R	WASHER 16x3,5	ROSETTA 16x3,5
12	10572371	8	131R	WASHER 20,2x4	ROSETTA 20,2x4
13	13407211	2	60I	GREASE FITTING 10x1	INGRASSATORE 10x1
14	13407811	2	60I	GREASE FITTING 10x1x45	INGRASSATORE 10x1x45
15	14473580	2	158G	O-RING 5,33x123,19	GUARNIZIONE O-R 5,33x123,19
16	15540431	12	40V	SCREW 12x1,25x30	VITE 12x1,25x30
					VITE (04) 10x1,25x25
18	15981331	4	40V	SCREW 16x1,5x75	VITE 16x1,5x75
19	15981831	4	40V	SCREW 16x1,5x120	VITE 16x1,5x120
20	15988331	8	40V	SCREW 20x1,5x60	VITE 20x1,5x60
21	16105021	12	10D	NUT 12x1,25x14,8	DADO 12x1,25x14,8
22	76004031	4	70L	SIDE RAIL (04)	LONGHERINA (04)
23	79008162	2	64C	CAP	CAPPELLO
25	79032177	1	300C	BODY - RIGHT ASSEMBLY (01-	CORPO - DESTRO COMPLETO (01-02)-05
	79032180	1	300C	BODY - LEFT ASSEMBLY (01-	CORPO - SINISTRO COMPLETO (01-02)-05

(01) Units equipped with 6 track rollers

5700

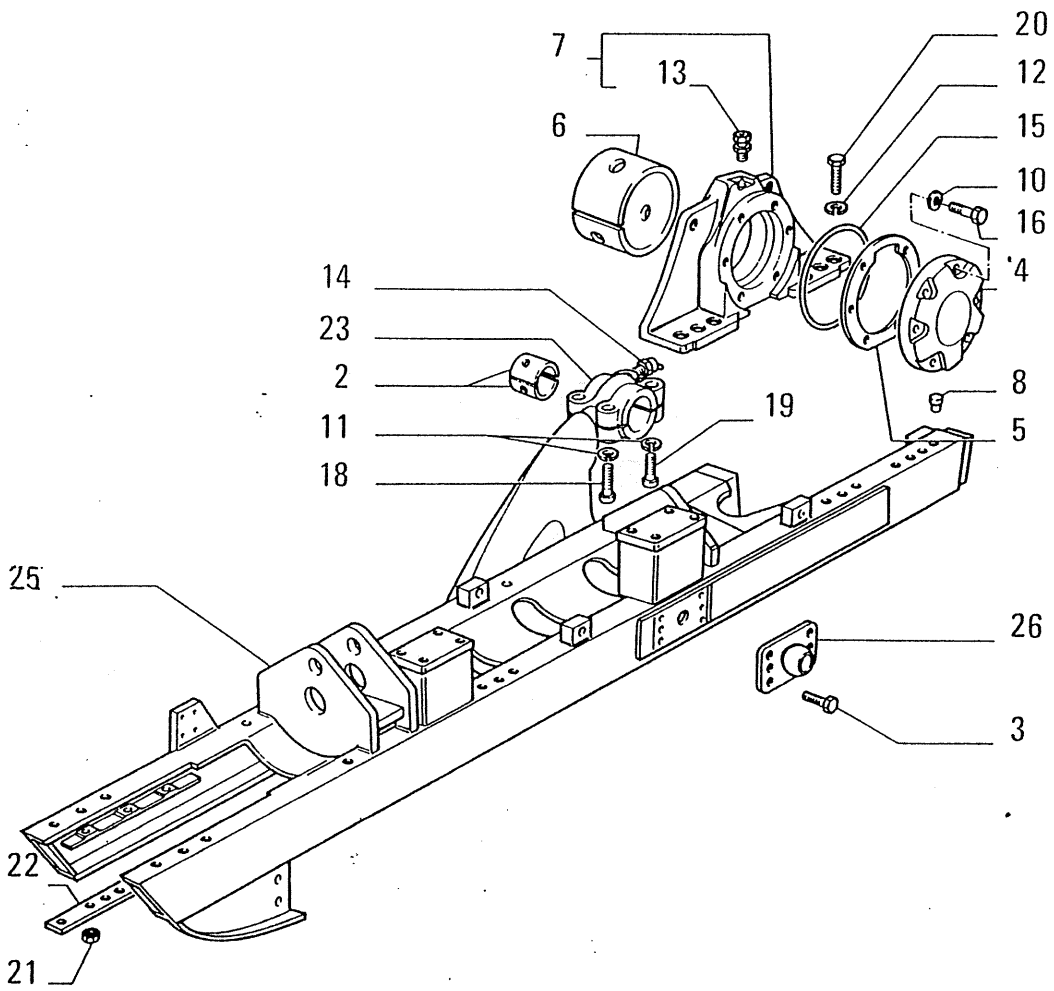

ITEM	PART NUMBER	QTY	TRANS CODE	DESCRIPTION	DESCRIZIONE
25	79041355	1	300C	BODY - LEFT ASSEMBLY (03)	CORPO - SINISTRO COMPLETO (03)
	79041356	1	300C	BODY - RIGHT ASSEMBLY (03)	CORPO - DESTRO COMPLETO (03)
					CORPO - DESTRO COMPLETO (04)
					CORPO - SINISTRO COMPLETO (04)
26	79033189	2	80P	PIN)(*)	PERNO (01-02-03)(*)
(*)			469P	FOR SPECIAL EQUIPMENT 30.1095.08.1	PER VARIANTE 30.1095.08.1

(03) Units equipped with 7 track rollers

05700

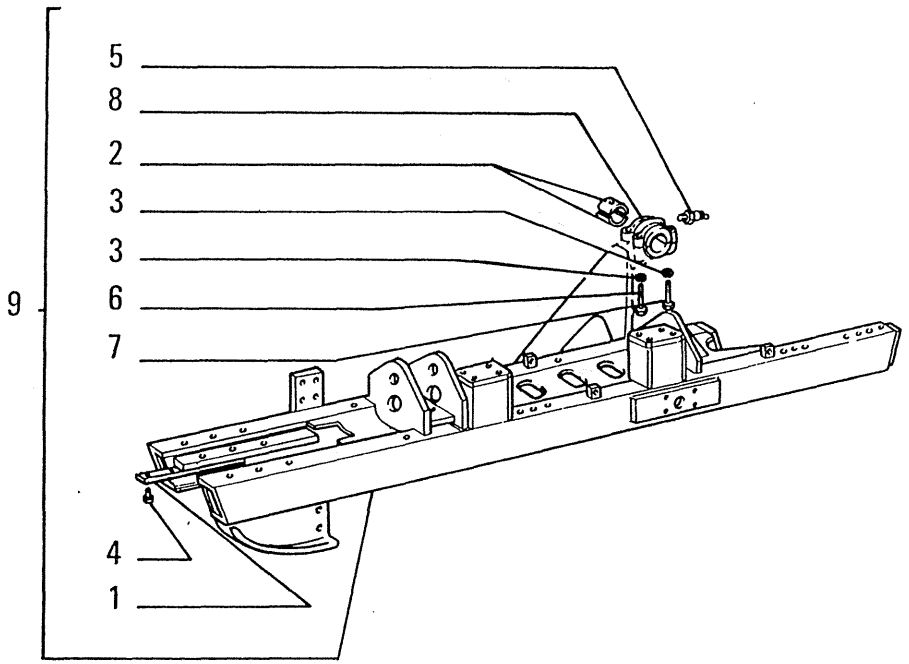

ITEM	PART NUMBER	QTY	TRANS CODE	DESCRIPTION	DESCRIZIONE
1	587083	4	45P	PAD	PATTINO
2	587626	4	96S	HALF BUSHING	SEMIBOCCOLA
3	10517271	8	131R	WASHER 16,2x4	ROSETTA 16,2x4
4	11014400	12	55R	RIVET 10x50	RIBATTINO 10x50
5	13407811	2	60I	GREASE FITTING 10x1x45	INGRASSATORE 10x1x45
6	15981337	4	40V	SCREW 16x1,5x75	VITE 16x1,5x75
7	15981837	4	40V	SCREW 16x1,5x120	VITE 16x1,5x120
8	79008162	2	300S	SUPPORT	SUPPORTO
9	79012800	1	300C	BODY - RIGHT	CORPO - DESTRO
	79012801	1	300C	BODY - LEFT	CORPO - SINISTRO

OPTIONAL
VARIANTE

30.0565.01.1
USAGE: Units equipped with 6 track rollers

05701

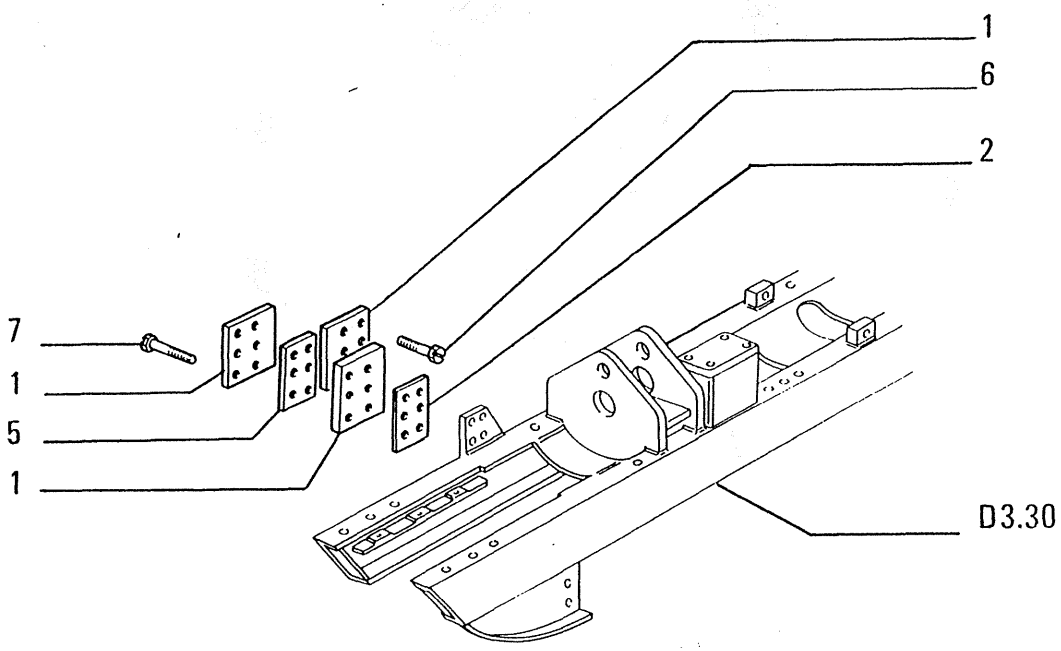

ITEM	PART NUMBER	QTY	TRANS CODE	DESCRIPTION	DESCRIZIONE
1	587643	6	145G	GUIDE	GUIDA
2	593096		198S	SHIM 0,5	SPESSORE 0,5
	593097		198S	SHIM 1,0	SPESSORE 1,0
	593098		198S	SHIM 1,5	SPESSORE 1,5
5	595489	2	75D	SPACER	DISTANZIALE
6	14258030	12	40V	SCREW 16x1,5x45	VITE 16x1,5x45
7	14259030	12	40V	SCREW 16x1,5x90	VITE 16x1,5x90

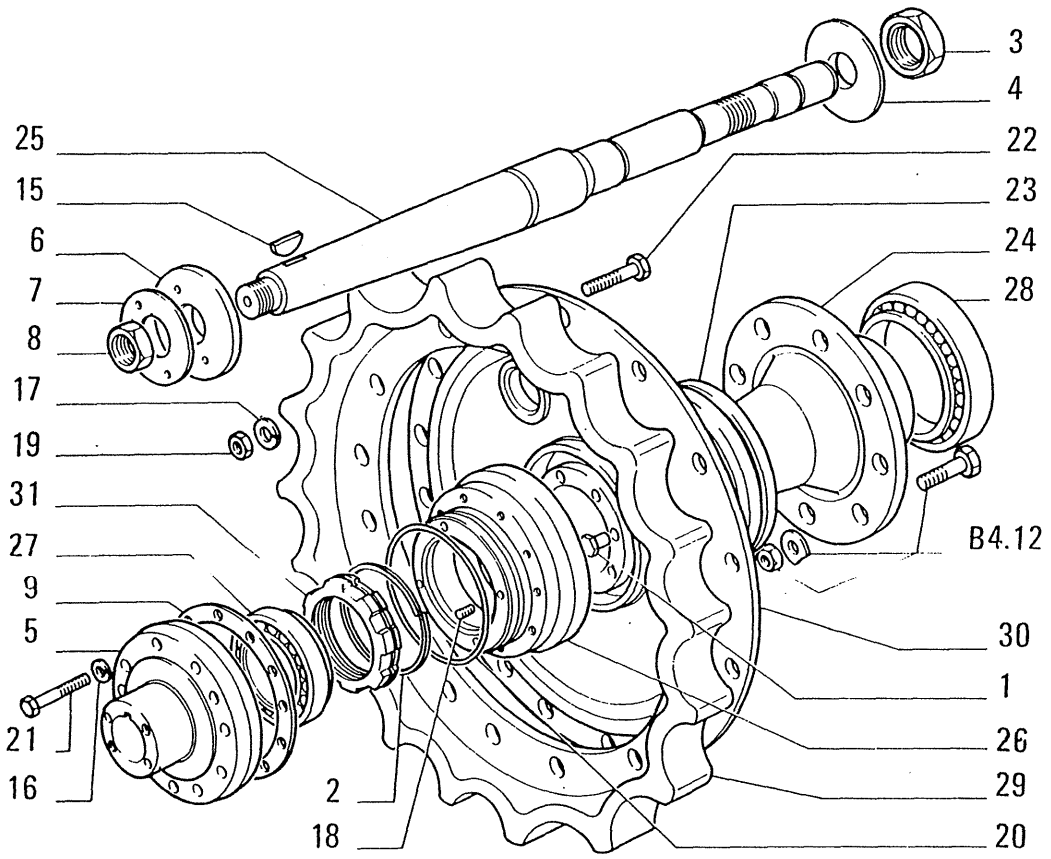

ITEM	PART NUMBER	QTY	TRANS CODE	DESCRIPTION	DESCRIZIONE
1	586743	2	60T	BLOCK	TASSELLO
		2	60T	BLOCK (2*)	TASSELLO (2*)
2	586780	2	51A	LOCKRING	ANELLO DI SICUREZZA
		2	51A	LOCKRING (2*)	ANELLO DI SICUREZZA (2*)
3	586931	2	10D	NUT	DADO
4	586932	2	113P	LOCKPLATE	PIASTRINA DI SICUREZZA
5	594320	2	300S	SUPPORT	SUPPORTO
6	594322	2	131R	WASHER	ROSETTA
7	594323	2	131R	WASHER	ROSETTA
8	594325	2	10D	NUT	DADO
9	594326		198S	SHIM 0,3	SPESSORE 0,3
	594327		198S	SHIM 0,8	SPESSORE 0,8
	594328		198S	SHIM 1	SPESSORE 1
	594329		198S	SHIM 1,2	SPESSORE 1,2
	594330		198S	SHIM 1,4	SPESSORE 1,4
	594331		198S	SHIM 1,5	SPESSORE 1,5
15	10206610	2	60L	KEY 16x10	LINGUETTA 16x10
16	10571971	18	131R	WASHER 12,2x2,5	ROSETTA 12,2x2,5
17	10572471	32	131R	WASHER 22,5x4	ROSETTA 22,5x4
		32	131R	WASHER (2*) 22,5x4	ROSETTA (2*) 22,5x4
18	10837710	4	90G	DOWEL 10x25	GRANO 10x25
19	12164421	32	10D	NUT 22x1,5x18	DADO 22x1,5x18
		32	10D	NUT (2*) 22x1,5x18	DADO (2*) 22x1,5x18
20	14468580	2	158G	O-RING 3,53x209,1	GUARNIZIONE O-R 3,53x209,1
21	15541131	18	40V	SCREW 12x1,25x65	VITE 12x1,25x65
22	15992731	32	40V	SCREW 22x1,5x65	VITE 22x1,5x65
	15997231	32	40V	SCREW (2*) 24x2x65	VITE (2*) 24x2x65

05703

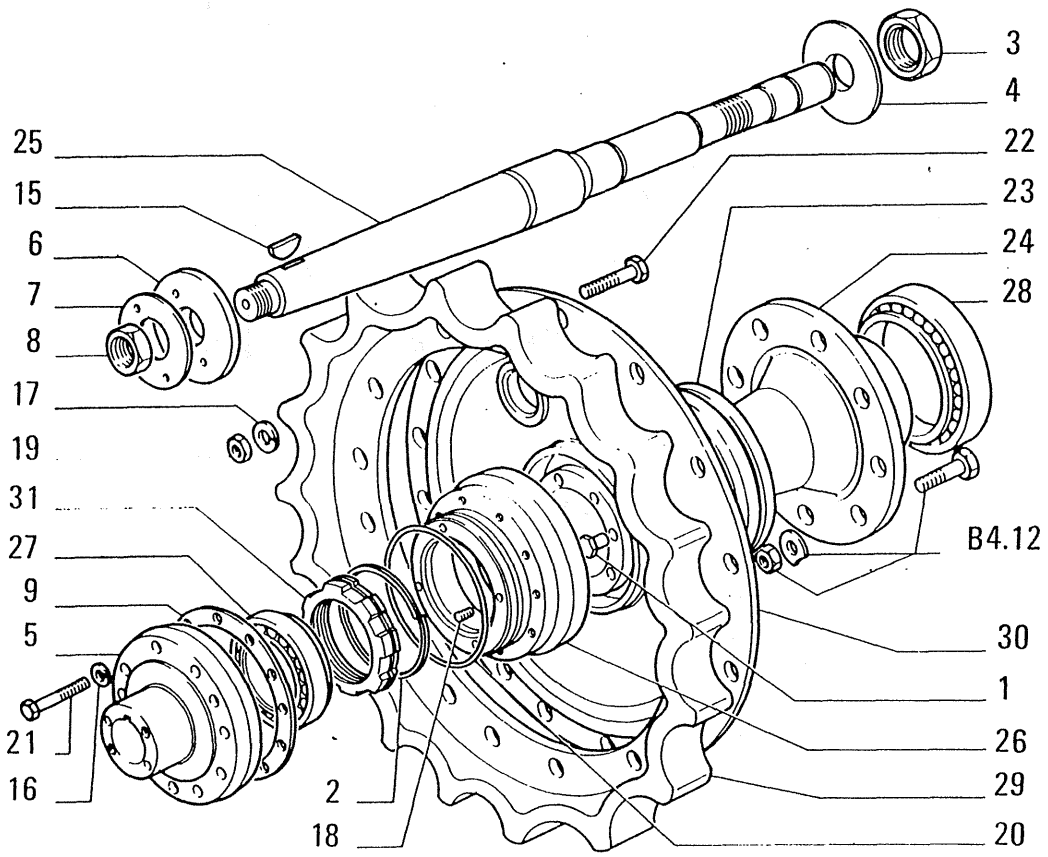

ITEM	PART NUMBER	QTY	TRANS CODE	DESCRIPTION	DESCRIZIONE
23	76003051	4	158G	O-RING	GUARNIZIONE O-R (01)(02)(03)(04)
		4	158G	O-RING (2*)	GUARNIZIONE O-R (2*)
	79044027	4	158G	O-RING (05)(*)	GUARNIZIONE O-R (05)(*)(1*)
24	79031520	2	135M	HUB	MOZZO
25	79031688	2	85A	AXLE	ASSALE
26	79031756	2	39S	BEARING CASE	SCATOLA DEL CUSCINETTO
27	79031757	2	341C	BEARING - OUTER	CUSCINETTO - ESTERNO
28	79031758	2	341C	BEARING - INNER	CUSCINETTO - INTERNO
29	79031759	2	297C	RING GEAR	CORONA DENTATA
		2	297C	RING GEAR (2*)	CORONA DENTATA (2*)
30	79031760	2	135M	HUB	MOZZO
		2	135M	HUB (2*)	MOZZO (2*)
31	79031761	2	51G	THREADED RING	GHIERA FILETTATA
		2	51G	THREADED RING (2*)	GHIERA FILETTATA (2*)
(*)			469P	FOR SPECIAL EQUIPMENT 30.0021.08.1	PER VARIANTE 30.0021.06.1
					PER VARIANTE 30.0021.07.1
(2*)			469P	FOR SPECIAL EQUIPMENT 30.0021.09.1	PER VARIANTE 30.0021.09.1

(05) Winterized units

05703

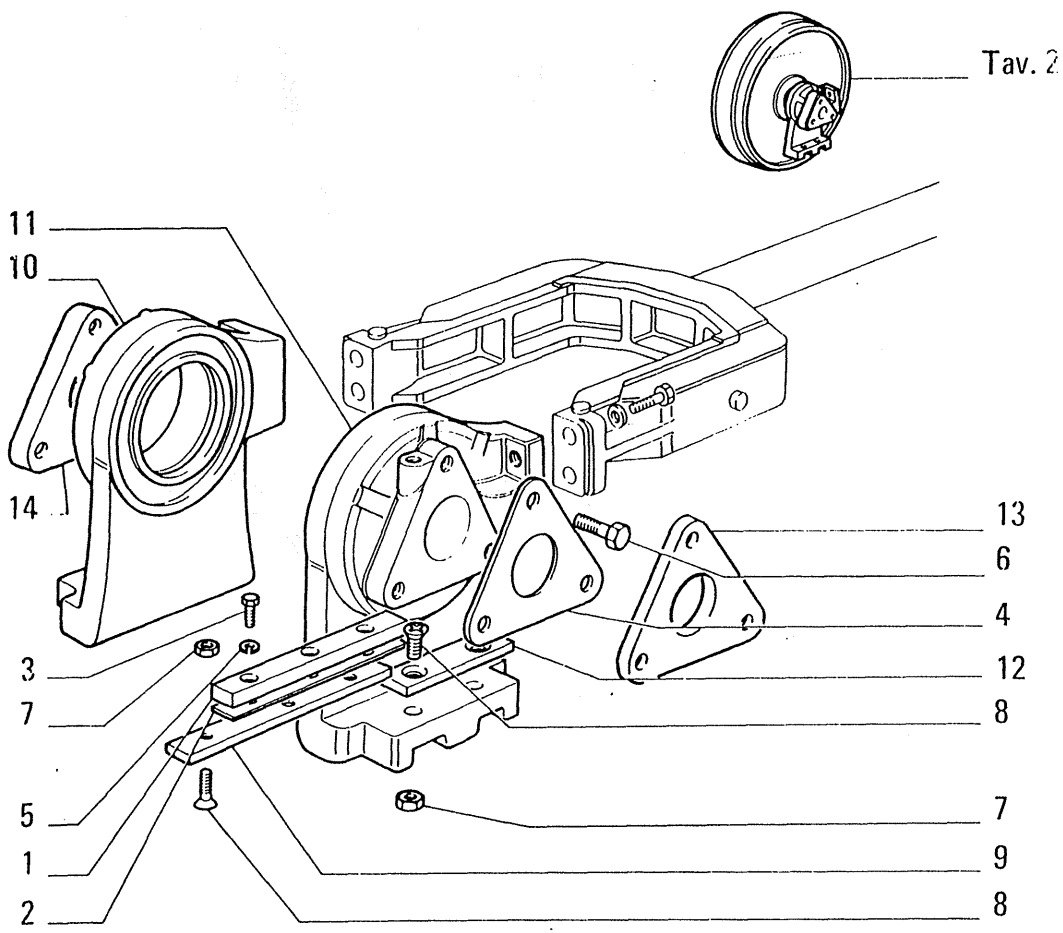

ITEM	PART NUMBER	QTY	TRANS CODE	DESCRIPTION	DESCRIZIONE
1	587019	4	145G	GUIDE	GUIDA
2	587020		198S	SHIM	SPESSORE
3	587089	12	40V	SCREW	VITE
4	4989879		198S	SHIM	SPESSORE
5	12605971	12	131R	WASHER 16,3x25,5	ROSETTA 16,3x25,5
6	14257830	12	40V	SCREW 16x1,5x35	VITE 16x1,5x35
7	16105021	8	10D	NUT 12x1,25x14,8	DADO 12x1,25x14,8
8	79031906	20	40V	SCREW	VITE
9	79031909	4	198S	SHIM	SPESSORE
10	79032029	2	61E	END - RIGHT	ESTREMITÀ - DESTRO
11	79032030	2	61E	END - LEFT	ESTREMITÀ - SINISTRO
12	79032032	4	45P	PAD	PATTINO
13	4989877	2	105P	PLATE - INNER	PIASTRA - INTERNO
14	4989878	2	105P	PLATE - OUTER	PIASTRA - ESTERNO

05704

01 : 03
05 - 06

IDLER WHEEL – TENDICINGOLO – ROUE TENDEUSE – RAUPENKETTENSPANNER – RUEDA GUIADORA

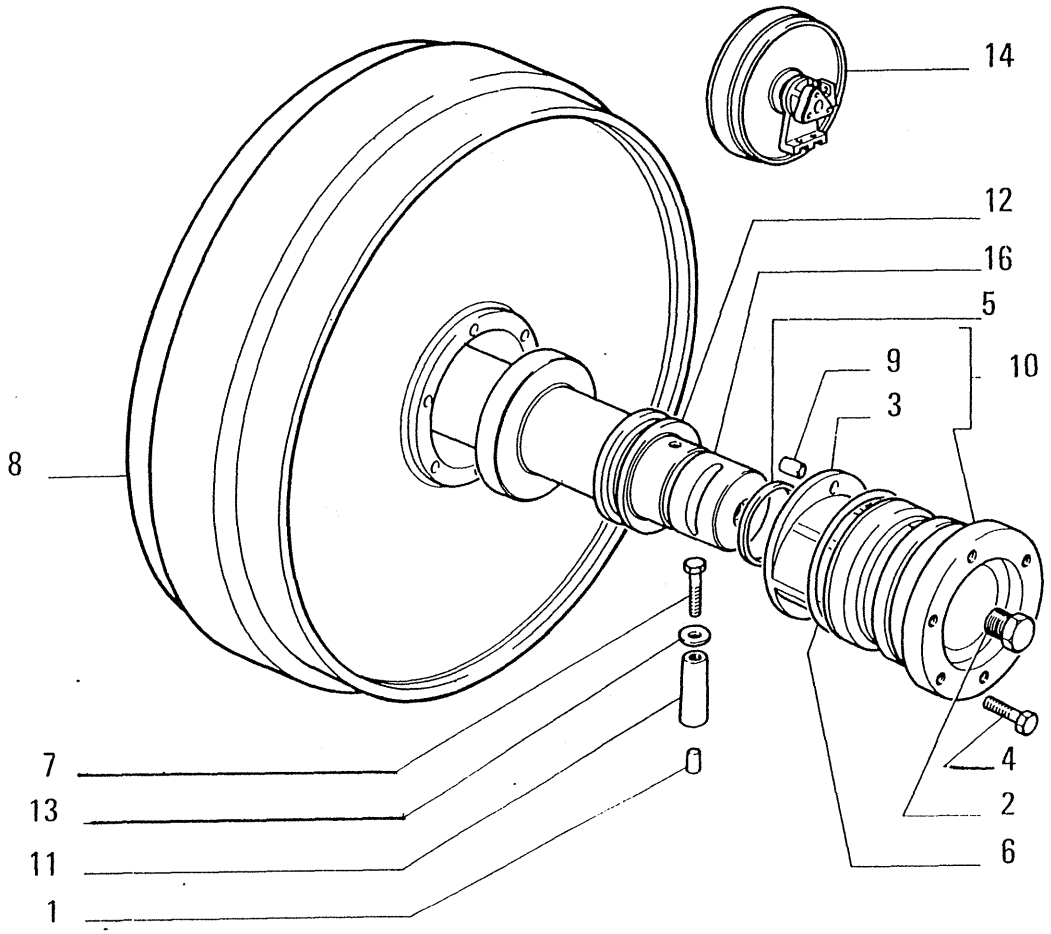

ITEM	PART NUMBER	QTY	TRANS CODE	DESCRIPTION	DESCRIZIONE
1	563024	4	50T	PLUG	TAPPO
2	4982082	2	50T	PLUG	TAPPO
3	4982684	4	95B	BUSHING **C1455**	BOCCOLA **C1455**
	76005866	4	95B	BUSHING **D1455**	BOCCOLA **D1455**
4	14233730	24	40V	SCREW 10x1,25x35	VITE 10x1,25x35
5	14464680	4	158G	O-RING 3,53x56,74	GUARNIZIONE O-R 3,53x56,74
	79044018	4	158G	O-RING (2*)	GUARNIZIONE O-R (2*)
6	14466280	4	158G	O-RING 3,53x107,54	GUARNIZIONE O-R 3,53x107,54
	79044017	4	158G	O-RING (2*)	GUARNIZIONE O-R (2*)
7	15233231	4	40V	SCREW 12x1,25x70	VITE 12x1,25x70
8	76001965	2	166R	TRACK IDLER	RUOTA TENDICINGOLO
9	76003935	8	90G	DOWEL	GRANO
10	76003936	4	35S	CASE - ASSEMBLY **C1455**	SCATOLA - COMPLETO **C1455**
	76005867	4	35S	CASE - ASSEMBLY **D1455**	SCATOLA - COMPLETO **D1455**
11	79005163	4	80P	PIN	PERNO
12	79007453	4	158G	O-RING	GUARNIZIONE O-R (01)(02)(03)(04)
	79044016	4	158G	O-RING (05)(*)	GUARNIZIONE O-R (05)(*)(1*)
		4	122G	SEAL (2*)	GUARNIZIONE (2*)
13	79014970	4	131R	WASHER	ROSETTA
14	76010702	1	166R	TRACK IDLER - RIGHT ASSEMBLY **D1455**	RUOTA TENDICINGOLO - DESTRO COMPLETO (01)(02)(03)(04) **D1455**
	76010703	1	166R	TRACK IDLER - LEFT ASSEMBLY **D1455**	RUOTA TENDICINGOLO - SINISTRO COMPLETO (01)(02)(03)(04) **D1455**
	76013888	1	166R	TRACK IDLER - RIGHT ASSEMBLY (05)(*)	TENDICINGOLO - DESTRO

C 1455 → Tel.n. 051753
D 1455 Tel.n. 051754 →

(05) Winterized units

05705

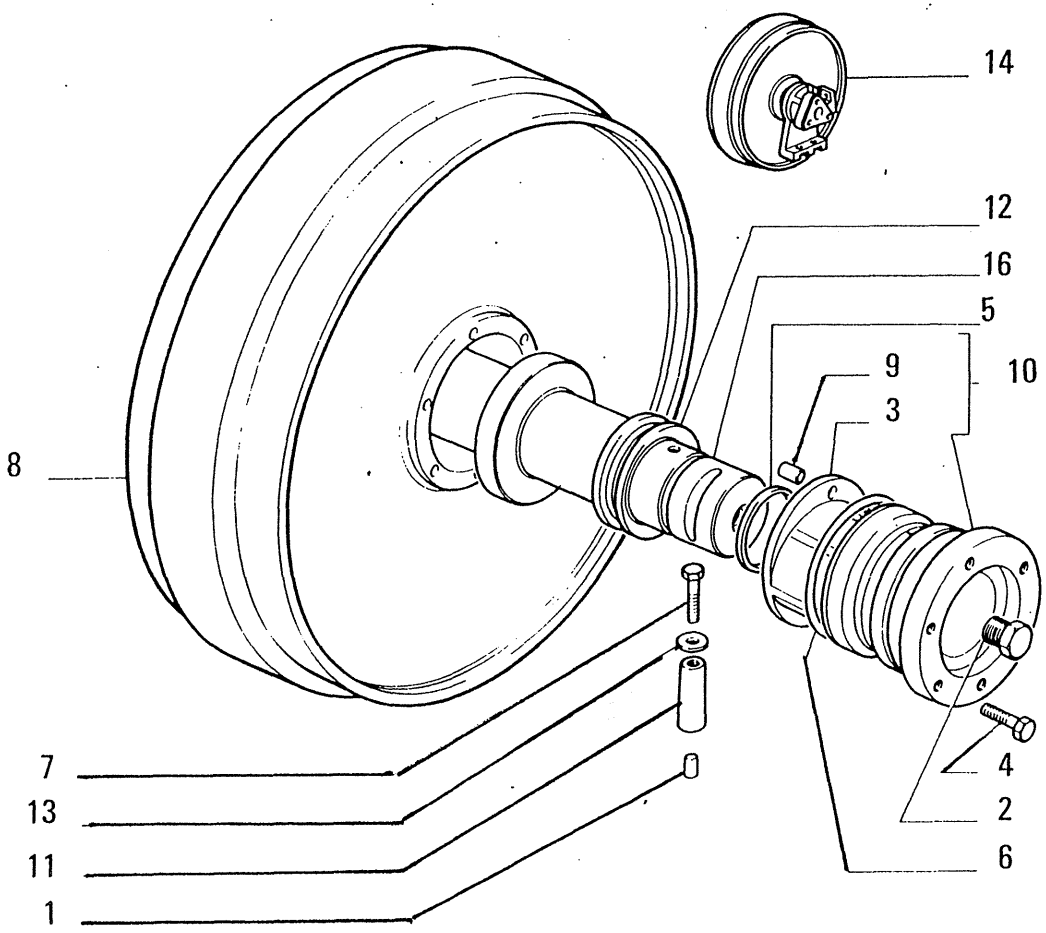

ITEM	PART NUMBER	QTY	TRANS CODE	DESCRIPTION	DESCRIZIONE
14	76013888			(05)(*)	COMPLETO (05)(*)(1*)
	76013889	1	166R	TRACK IDLER - LEFT ASSEMBLY (05)(*)	RUOTA TENDICINGOLO - SINISTRO COMPLETO (05)(*)(1*)
	76016086	1	166R	TRACK IDLER - RIGHT ASSEMBLY (2*)	RUOTA TENDICINGOLO - DESTRO COMPLETO (2*)
	76016087	1	166R	TRACK IDLER - LEFT ASSEMBLY (2*)	RUOTA TENDICINGOLO - SINISTRO COMPLETO (2*)
	79036545	1	166R	TRACK IDLER - RIGHT ASSEMBLY **C1455**	RUOTA TENDICINGOLO - DESTRO COMPLETO **C1455**
	79036546	1	166R	TRACK IDLER - LEFT ASSEMBLY **C1455**	RUOTA TENDICINGOLO - SINISTRO COMPLETO **C1455**
16	79036547	2	71A	AXLE	ASSE
(*)			469P	FOR SPECIAL EQUIPMENT 30.0021.08.1	PER VARIANTE 30.0021.06.1
					PER VARIANTE 30.0021.07.1
(2*)			469P	FOR SPECIAL EQUIPMENT 30.0021.09.1	PER VARIANTE 30.0021.09.1

C 1455 → Tel.n. 051753

(05) Winterized units

05705

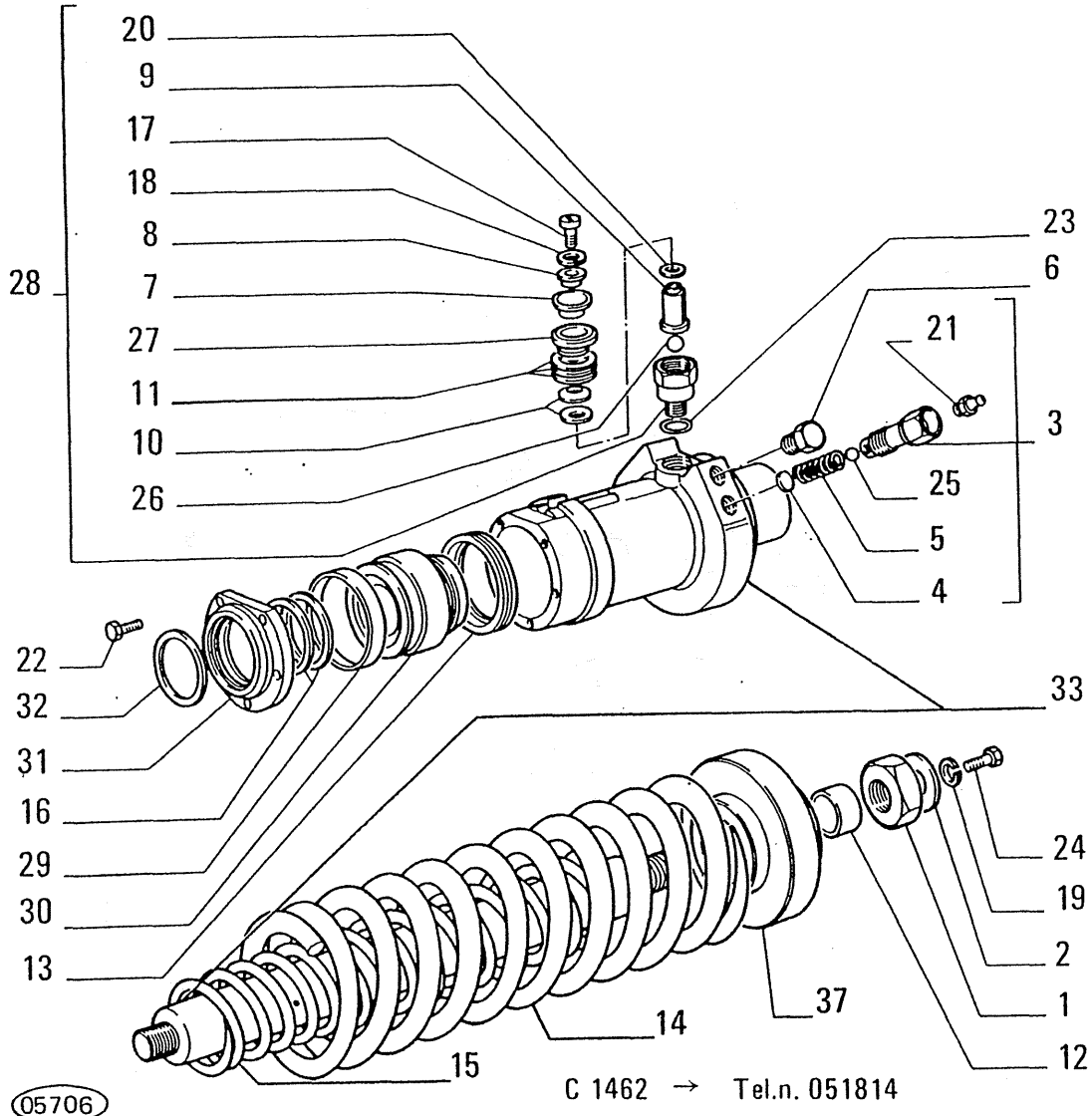

ITEM	PART NUMBER	QTY	TRANS CODE	DESCRIPTION	DESCRIZIONE
1	587255	2	10D	NUT	DADO
2	587256	2	131R	WASHER	ROSETTA
3	587271	2	10V	VALVE - ASSEMBLY C1425	VALVOLA - COMPLETO C1425
	79043802	2	10V	VALVE D1425	VALVOLA D1425
4	587272	2	131R	WASHER	ROSETTA
5	587273	2	100M	SPRING	MOLLA
6	587274	2	50T	PLUG C1425	TAPPO C1425
7	594633	2	70R	GUARD	RIPARO
8	594634	2	131R	WASHER	ROSETTA
9	594637	2	10V	VALVE	VALVOLA
10	594638	16	100M	SPRING	MOLLA
11	594640		198S	SHIM 0,1	SPESSORE 0,1
	79009581		198S	SHIM 0,2	SPESSORE 0,2
	79009582		198S	SHIM 0,5	SPESSORE 0,5
12	594692	2	30M	SLEEVE	MANICOTTO
13	596105	2	158G	O-RING	GUARNIZIONE O-R
14	4951546	2	100M	SPRING	MOLLA
15	4955484	2	100M	SPRING - INNER	MOLLA - INTERNO
16	8288764	4	45A	RING	ANELLO
17	10389511	2	40V	SCREW 5x0,8x14	VITE 5x0,8x14
18	10571471	2	131R	WASHER 5,1x1,2	ROSETTA 5,1x1,2
19	10571871	2	131R	WASHER 10,2x2,2	ROSETTA 10,2x2,2
20	12638101	2	131R	WASHER 5,15x14	ROSETTA 5,15x14
21	13407211	2	60I	GREASE FITTING 10x1	INGRASSATORE 10x1
22	14274530	10	40V	SCREW 12x1,25x30	VITE 12x1,25x30
23	14462980	2	158G	O-RING 3,53x20,22	GUARNIZIONE O-R 3,53x20,22
24	15970731	2	40V	SCREW 10x1,25x25	VITE 10x1,25x25

C 1425 → Tel.n. 060470
D 1425 Tel.n. 050471 →

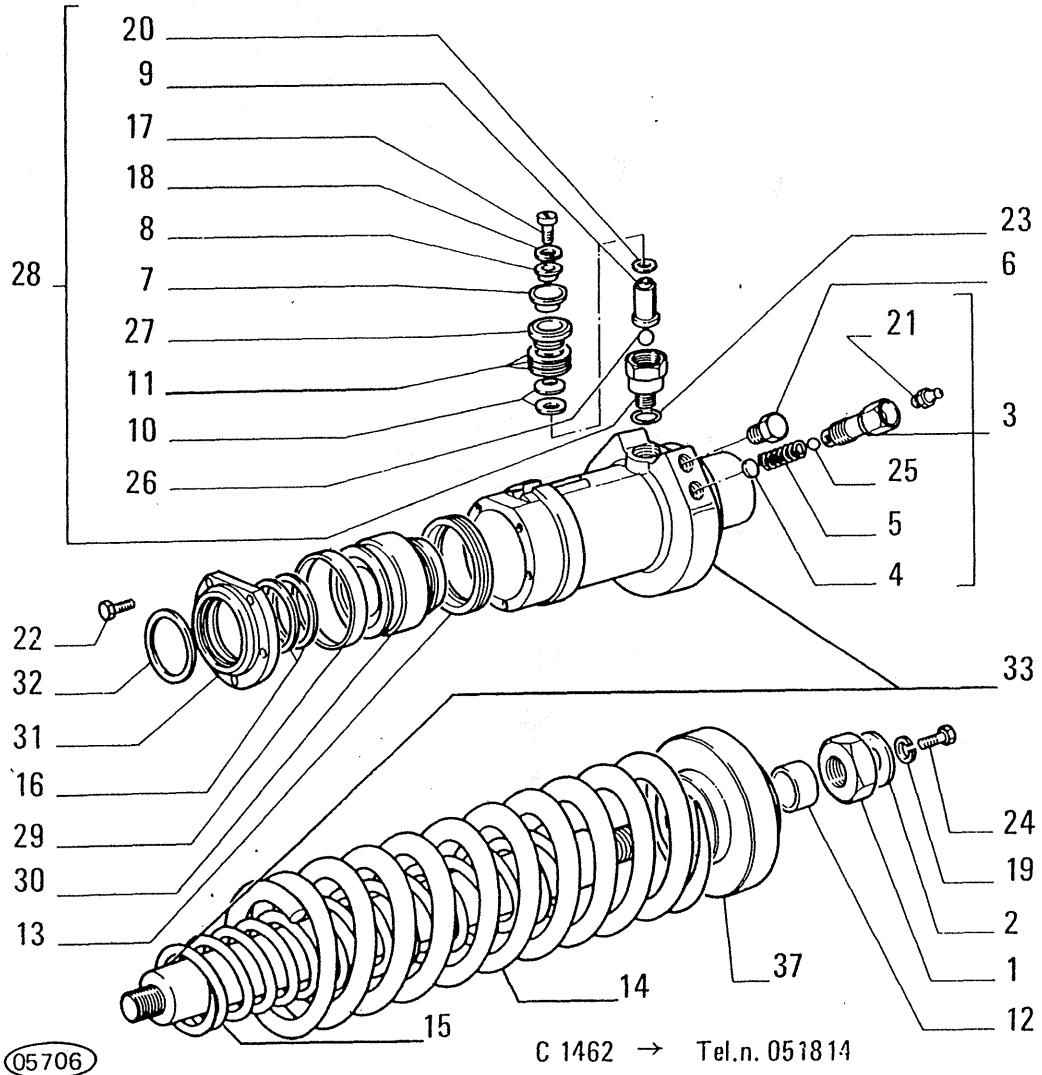

ITEM	PART NUMBER	QTY	TRANS CODE	DESCRIPTION	DESCRIZIONE
25	20063460	2	140S	BALL 7,144	SFERA 7,144
26	20063470	2	140S	BALL 7,938	SFERA 7,938
27	79002121	2	265C	COVER	COPERCHIO
28	79002142	2	10V	VALVE - ASSEMBLY	VALVOLA - COMPLETO
29	79005165	2	45A	RING	ANELLO
30	79005166	2	235S	PISTON	STANTUFFO
31	79005171	2	265C	COVER	COPERCHIO
32	79005172	2	158G	O-RING	GUARNIZIONE O-R
33	79005197	1	164C	CYLINDER - RIGHT C1425	CILINDRO - DESTRO C1425
	79005198	1	164C	CYLINDER - LEFT C1425	CILINDRO - SINISTRO C1425
	79045063	1	164C	CYLINDER - RIGHT D1425	CILINDRO - DESTRO D1425
	79045065	1	164C	CYLINDER - LEFT D1425	CILINDRO - SINISTRO D1425
37	79033919	2	60D	DISC	DISCO

C 1425 → Tel.n. 050470
D 1425 Tel.n. 050471 →

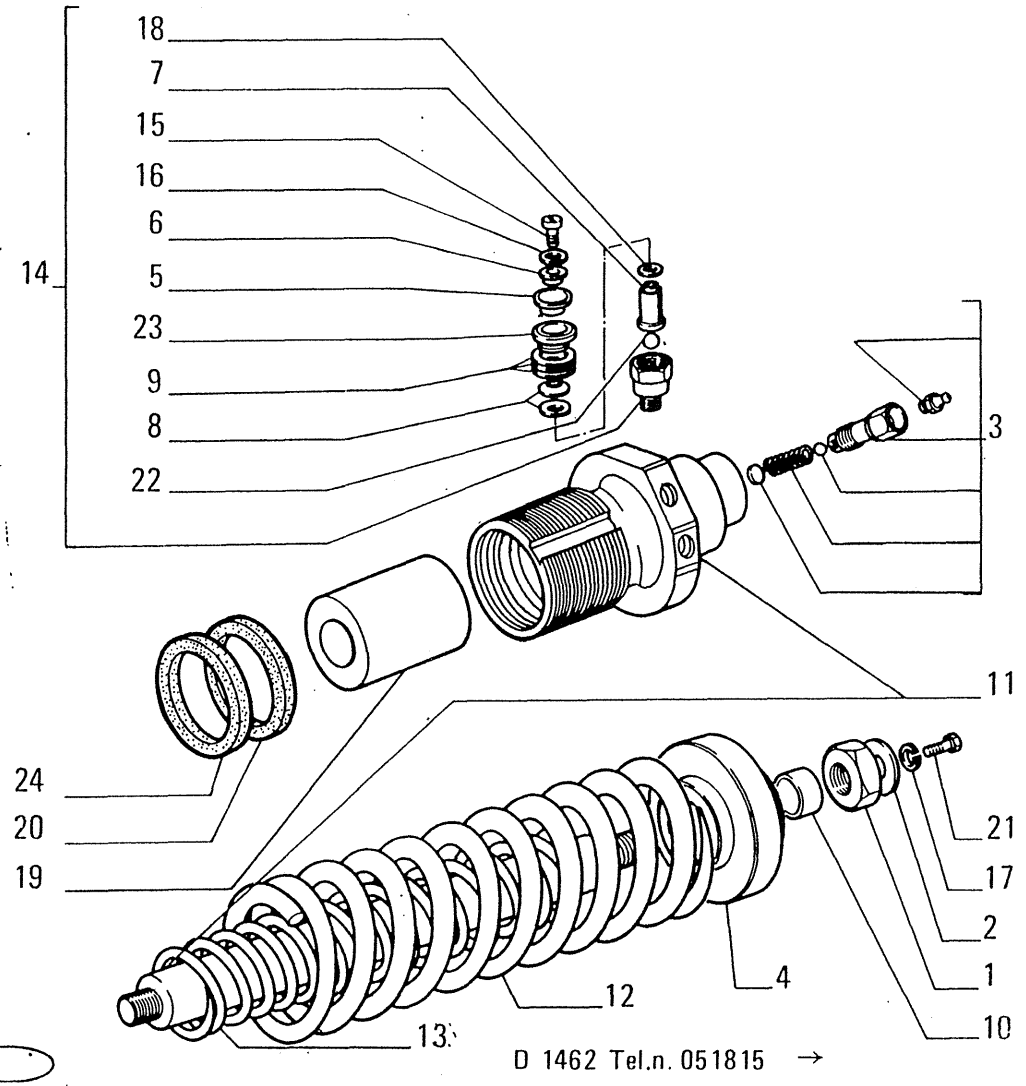

ITEM	PART NUMBER	QTY	TRANS CODE	DESCRIPTION	DESCRIZIONE
1	587255	2	10D	NUT	DADO
2	587256	2	131R	WASHER	ROSETTA
3	79043802	2	10V	VALVE - ASSEMBLY	VALVOLA - COMPLETO
4	587234	2	60D	DISC	DISCO
5	594633	2	70R	GUARD	RIPARO
6	594634	2	131R	WASHER	ROSETTA
7	594637	2	10V	VALVE	VALVOLA
8	594638	16	100M	SPRING	MOLLA
9	594640		198S	SHIM 0,1	SPESSORE 0,1
	79009581		198S	SHIM 0,2	SPESSORE 0,2
	79009582		198S	SHIM 0,5	SPESSORE 0,5
10	594692	2	30M	SLEEVE	MANICOTTO
11	76010251	1	164C	CYLINDER - RIGHT	CILINDRO - DESTRO
	76010253	1	164C	CYLINDER - LEFT	CILINDRO - SINISTRO
12	4951546	2	100M	SPRING - OUTER	MOLLA - ESTERNO
13	76012378	2	100M	SPRING - INNER	MOLLA - INTERNO
14	76009442	2	10V	VALVE - ASSEMBLY	VALVOLA - COMPLETO
15	10389511	2	40V	SCREW 5x0,8x14	VITE 5x0,8x14
16	11195471	2	131R	WASHER 5,1x1,1	ROSETTA 5,1x1,1
17	10571871	2	131R	WASHER 10,2x2,2	ROSETTA 10,2x2,2
18	12638101	2	131R	WASHER 5,15x14	ROSETTA 5,15x14
19	76010253	2	235S	PISTON	STANTUFFO
20	79024057	2	158G	O-RING	GUARNIZIONE O-R
21	15970731	2	40V	SCREW 10x1,25x25	VITE 10x1,25x25
22	20063470	2	140S	BALL 7,938	SFERA 7,938
23	79002121	2	265C	COVER	COPERCHIO
24	79024059	2	158G	O-RING	GUARNIZIONE O-R

D 1462 Tel.n. 051815 →

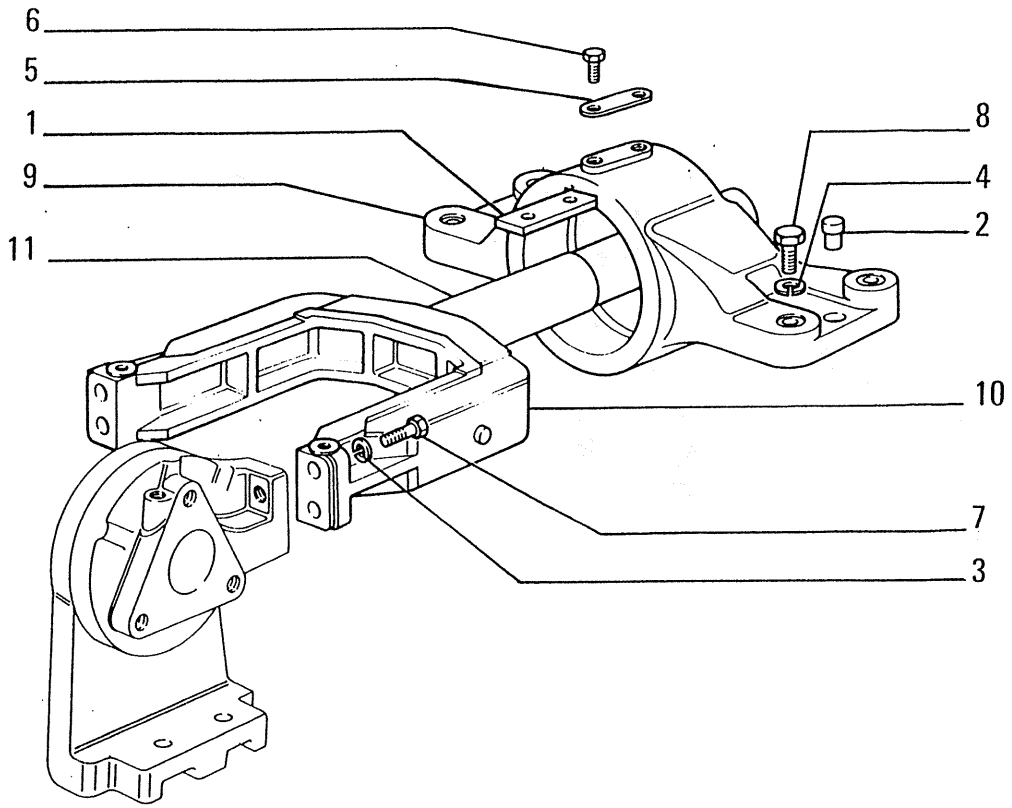

ITEM	PART NUMBER	QTY	TRANS CODE	DESCRIPTION	DESCRIZIONE
1	587246	2	60L	KEY	LINGUETTA
2	589559	4	90G	DOWEL	GRANO
3	10572171	8	131R	WASHER 16x3,5	ROSETTA 16x3,5
4	10572371	8	131R	WASHER 20,2x4	ROSETTA 20,2x4
5	14244710	2	113P	LOCKPLATE 13x55	PIASTRINA DI SICUREZZA 13x55
6	15540631	4	40V	SCREW 12x1,25x40	VITE 12x1,25x40
7	15981031	8	40V	SCREW 16x1,5x55	VITE 16x1,5x55
8	15988731	8	40V	SCREW 20x1,5x80	VITE 20x1,5x80
9	79005191	2	300S	SUPPORT	SUPPORTO
10	4951201	2	300S	SUPPORT **D1462**	SUPPORTO **D1462**
	79036511	2	300S	SUPPORT **C1462**	SUPPORTO (01-02)(04) **C1462**
	79041646	2	300S	SUPPORT (03) **C1462**	SUPPORTO (03) **C1462**
11	76010255	2	90A	ROD (03) **D1462**	ASTA (03) **D1462**
	76010260	2	90A	ROD **D1462**	ASTA (01-02-04)(05) **D1462**

C 1462 → Tel.n. 051814
D 1462 Tel.n. 051815 →
(03) Units equipped with 7 track rollers

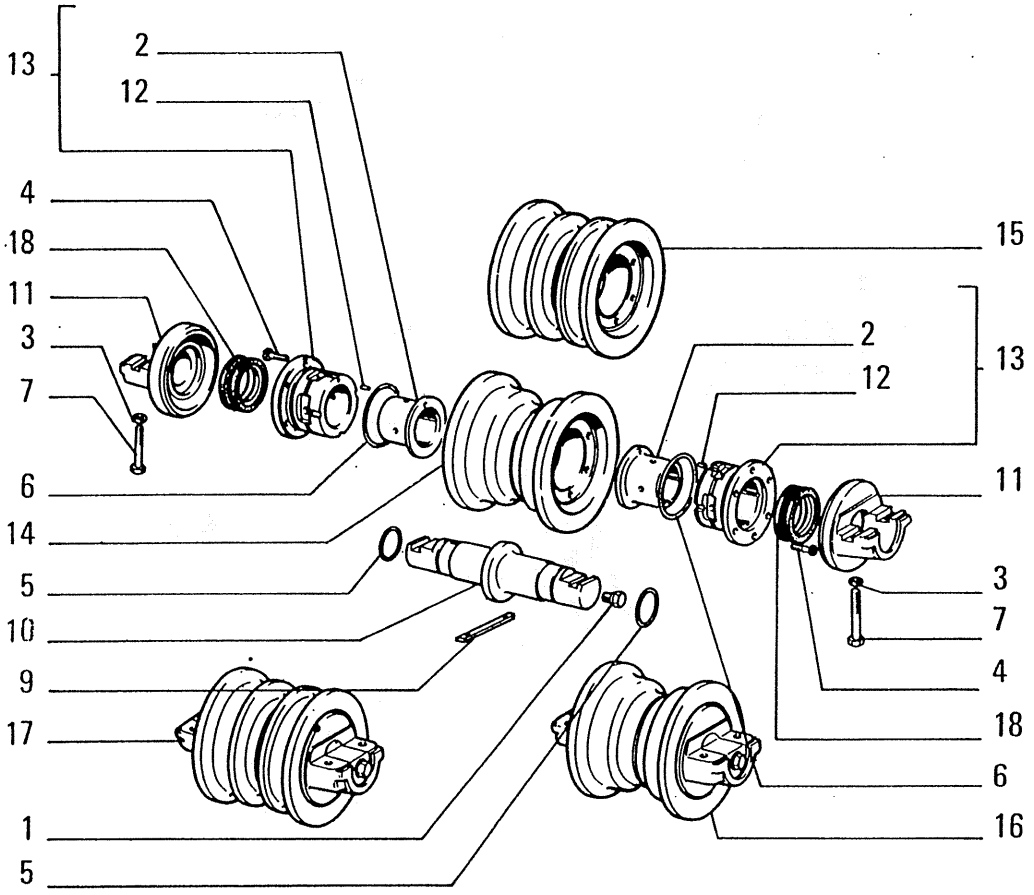

ITEM	PART NUMBER	QTY	TRANS CODE	DESCRIPTION	DESCRIZIONE
1	4982082	12	50T	PLUG	TAPPO
2	4982684	24	95B	BUSHING **C1455**	BOCCOLA **C1455**
	76005866	24	95B	BUSHING **D1455**	BOCCOLA **D1455**
3	10572171	48	131R	WASHER 16x3,5	ROSETTA 16x3,5
4	14233730	144	40V	SCREW 10x1,25x35	VITE 10x1,25x35
5	14464680	24	158G	O-RING 3,53x56,74	GUARNIZIONE O-R 3,53x56,74
	79044018	24	158G	O-RING (2*)	GUARNIZIONE O-R (2*)
6	14466280	24	158G	O-RING 3,53x107,54	GUARNIZIONE O-R 3,53x107,54
	79044017	24	158G	O-RING (2*)	GUARNIZIONE O-R (2*)
7	15981337	48	40V	SCREW (*) 16x1,5x75	VITE (01-02) 16x1,5x75
					VITE (04) 16x1,5x90
9	76001768	24	60L	KEY	LINGUETTA
10	76001769	12	16A	SHAFT	ALBERO
11	76001770	24	300S	SUPPORT	SUPPORTO
12	76003935	48	90G	DOWEL	GRANO
13	76003936	24	35S	CASE - ASSEMBLY **C1455**	SCATOLA - COMPLETO **C1455**
	76005867	24	35S	CASE - ASSEMBLY **D1455**	SCATOLA - COMPLETO **D1455**
14	76004863	8	157R	ROLLER	RULLO
15	76004865	4	157R	ROLLER	RULLO
16	76004872	8	157R	ROLLER - ASSEMBLY **C1455**	RULLO - COMPLETO **C1455**
	76009238	8	157R	ROLLER - ASSEMBLY **D1455**	RULLO - COMPLETO (01)(02)(04) **D1455**
	76013887	8	157R	ROLLER - ASSEMBLY (05)(*)	RULLO - COMPLETO (05)(*)(1*)
	76016085	8	157R	ROLLER - ASSEMBLY (2*)	RULLO - COMPLETO (2*)
17	76004873	4	157R	ROLLER - ASSEMBLY **C1455**	RULLO - COMPLETO **C1455**
	76009237	4	157R	ROLLER - ASSEMBLY **D1455**	RULLO - COMPLETO (01)(02)(04) **D1455**

C 1455 → Tel.n. 051753
D 1455 Tel.n. 051754 →

(05) Winterized Units

USAGE: Units equipped with 6 track rollers

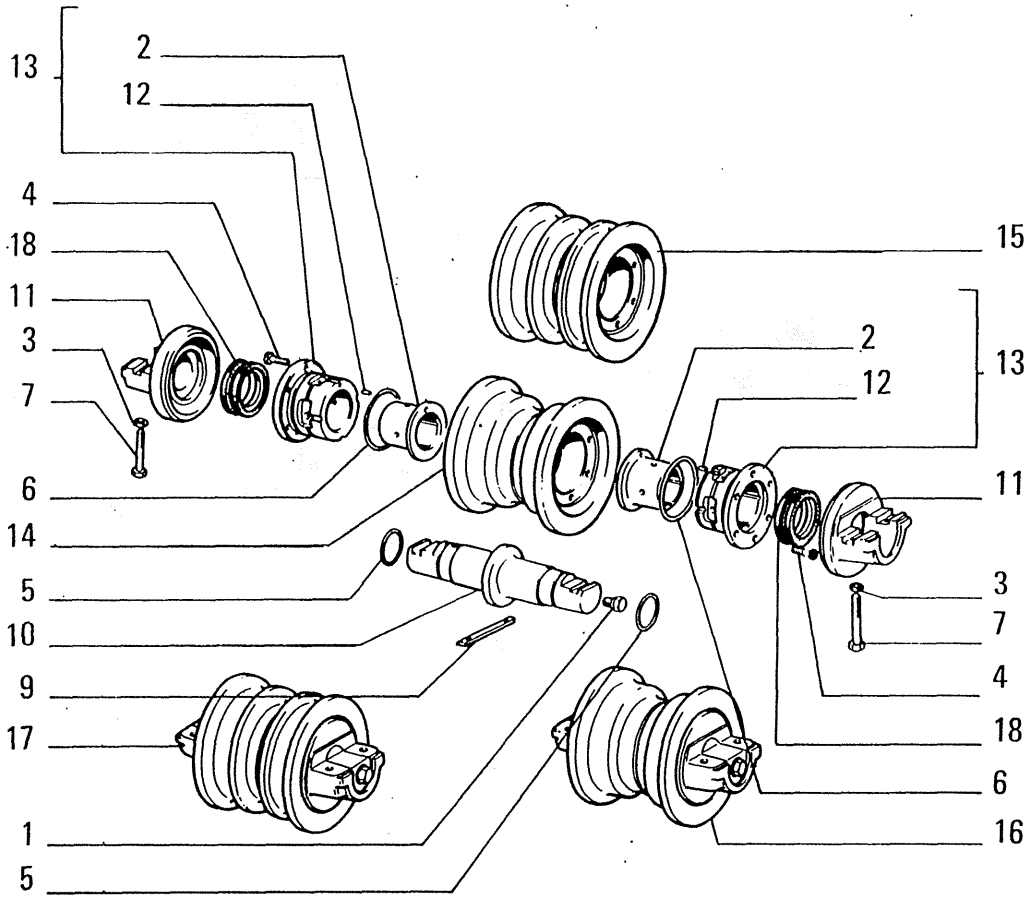

ITEM	PART NUMBER	QTY	TRANS CODE	DESCRIPTION	DESCRIZIONE
17	76013886	4	157R	ROLLER - ASSEMBLY (05)(*)	RULLO - COMPLETO (05)(*)(1*)
	76016084	4	157R	ROLLER - ASSEMBLY (2*)	RULLO - COMPLETO (2*)
18	79007453	24	158G	O-RING (01)	GUARNIZIONE O-R (01)(02)(04)
	79044016	8	158G	O-RING (05)(*)	GUARNIZIONE O-R (05)(*)(1*)
		24	122G	SEAL (2*)	GUARNIZIONE (2*)
(*)			469P	FOR SPECIAL EQUIPMENT 30.0021.08.1	PER VARIANTE 30.0021.06.1
					PER VARIANTE 30.0021.07.1
(2*)			469P	FOR SPECIAL EQUIPMENT 30.0021.09.1	PER VARIANTE 30.0021.09.1

USAGE: Units with 6 track rollers

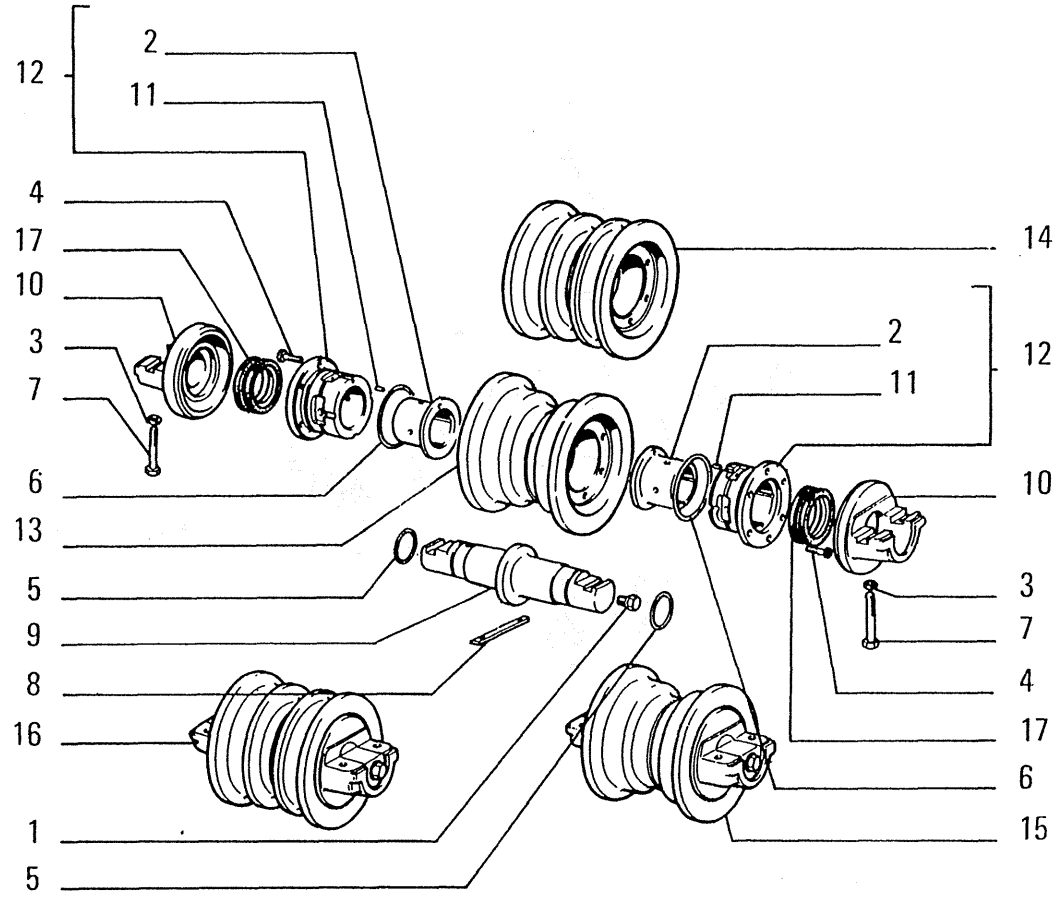

ITEM	PART NUMBER	QTY	TRANS CODE	DESCRIPTION	DESCRIZIONE
1	4982082	14	50T	PLUG	TAPPO
2	4982684	28	95B	BUSHING **C1455**	BOCCOLA **C1455**
	76005866	28	95B	BUSHING **D1455**	BOCCOLA **D1455**
3	10572171	56	131R	WASHER 16x3,5	ROSETTA 16x3,5
4	14233730	168	40V	SCREW 10x1,25x35	VITE 10x1,25x35
5	14464680	28	158G	O-RING 3,53x56,74	GUARNIZIONE O-R 3,53x56,74
	79044018	28	158G	O-RING (*)	GUARNIZIONE O-R (*)
6	14466280	28	158G	O-RING 3,53x107,54	GUARNIZIONE O-R 3,53x107,54
	79044017	28	158G	O-RING (*)	GUARNIZIONE O-R (*)
7	15981337	56	40V	SCREW 16x1,5x75	VITE 16x1,5x75
8	76001768	28	60L	KEY	LINGUETTA
9	76001769	14	16A	SHAFT	ALBERO
10	76001770	28	300S	SUPPORT	SUPPORTO
11	76003935	56	90G	DOWEL	GRANO
12	76003936	28	35S	CASE - ASSEMBLY **C1455**	SCATOLA - COMPLETO **C1455**
	76005867	28	35S	CASE - ASSEMBLY **D1455**	SCATOLA - COMPLETO **D1455**
13	76004863	6	157R	ROLLER	RULLO
14	76004865	8	157R	ROLLER	RULLO
15	76004872	6	157R	ROLLER - ASSEMBLY **C1455**	RULLO - COMPLETO **C1455**
	76009238	6	157R	ROLLER - ASSEMBLY **D1455**	RULLO - COMPLETO **D1455**
	76016085	6	157R	ROLLER - ASSEMBLY (*)	RULLO - COMPLETO (*)
16	76004873	8	157R	ROLLER - ASSEMBLY **C1455**	RULLO - COMPLETO **C1455**
	76009237	8	157R	ROLLER - ASSEMBLY **D1455**	RULLO - COMPLETO **D1455**
	76016084	8	157R	ROLLER - ASSEMBLY (*)	RULLO - COMPLETO (*)
17	79007453	28	158G	O-RING	GUARNIZIONE O-R
	79044016	28	158G	O-RING (*)	GUARNIZIONE O-R (*)
(*)			469P	FOR SPECIAL EQUIPMENT	PER VARIANTE 30.0021.09.1

C 1455 → Tel.n. 051753
D 1455 Tel.n. 051754 →

05709 USAGE: Units equipped with 7 track rollers

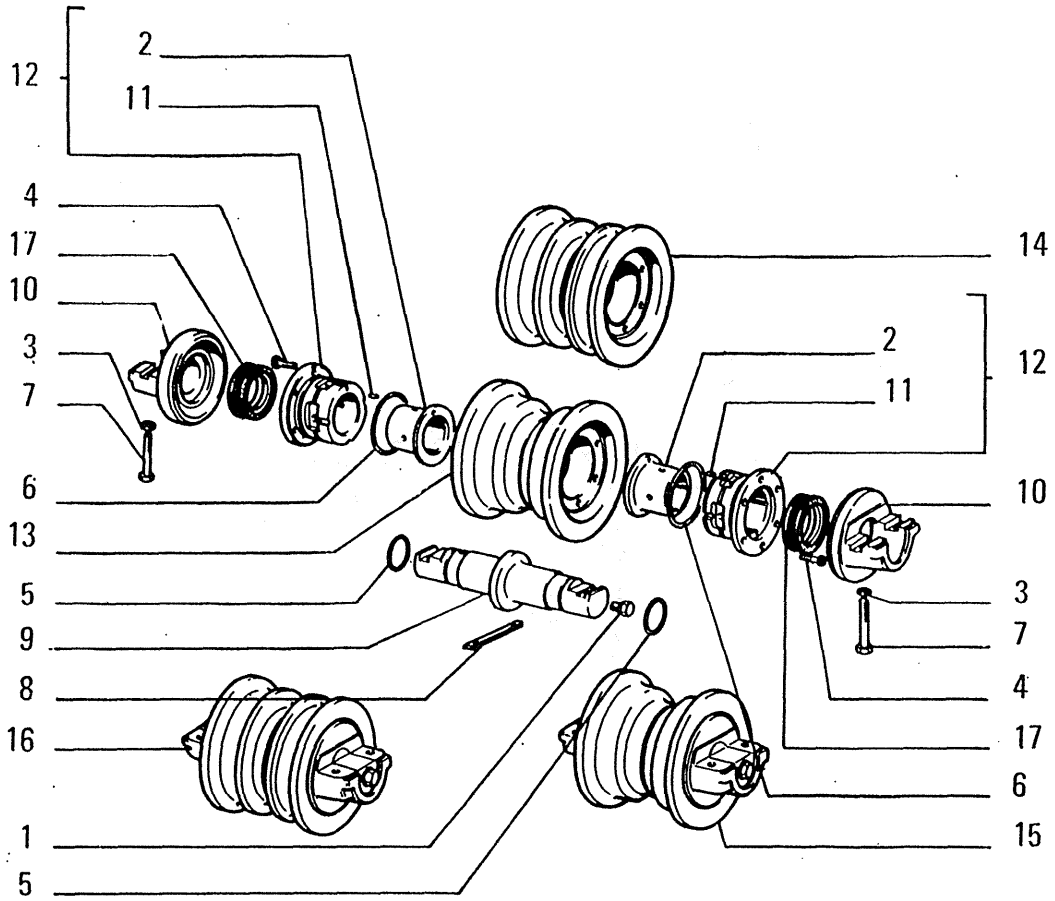

ITEM	PART NUMBER	QTY	TRANS CODE	DESCRIPTION	DESCRIZIONE
(*)			30.0021.09.1		

05709 USAGE: Units equipped with 7 track rollers

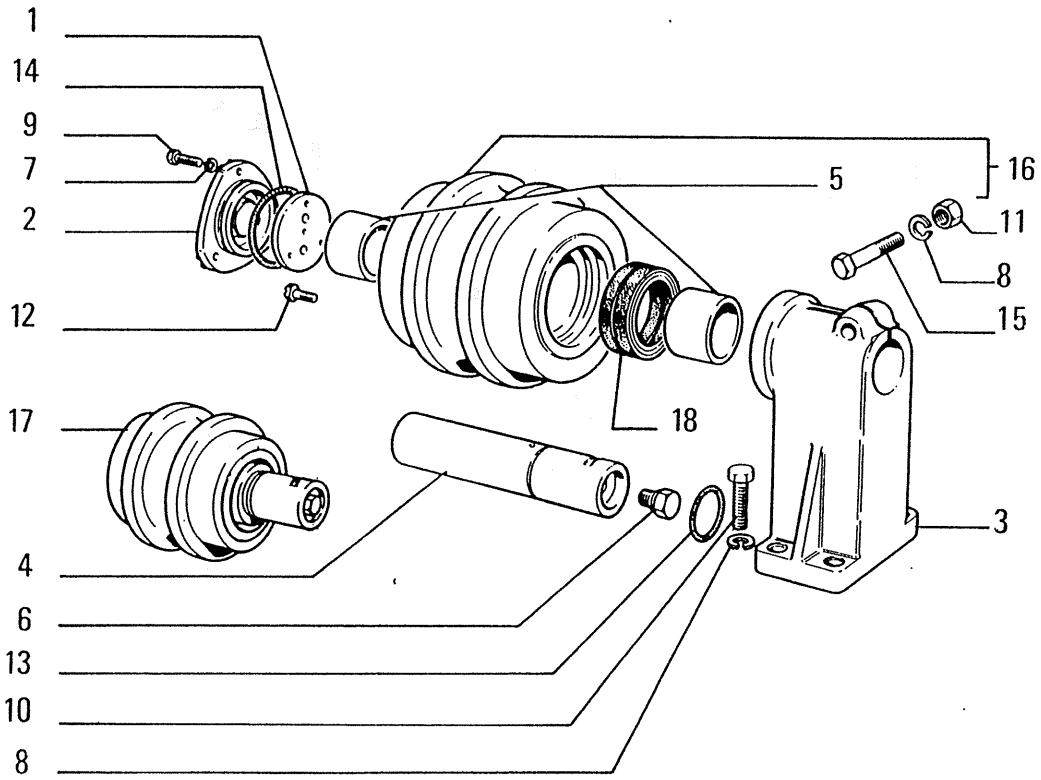

ITEM	PART NUMBER	QTY	TRANS CODE	DESCRIPTION	DESCRIZIONE
1	587003	4	60D	DISC	DISCO
2	587004	4	265C	COVER	COPERCHIO
3	588967	4	300S	SUPPORT	SUPPORTO
4	4963951	4	16A	SHAFT	ALBERO
5	4978830	8	95B	BUSHING	BOCCOLA
6	4982082	4	50T	PLUG	TAPPO
7	10516871	12	131R	WASHER 10x2,5	ROSETTA 10x2,5
8	10517271	20	131R	WASHER 16,2x4	ROSETTA 16,2x4
9	11306931	12	40V	SCREW 10x1,25x30	VITE 10x1,25x30
10	11391537	16	40V	SCREW 16x1,5x45	VITE 16x1,5x45
11	12164127	4	10D	NUT 16x1,5x13	DADO 16x1,5x13
12	14274430	8	40V	SCREW 12x1,25x25	VITE 12x1,25x25
13	14464380	4	158G	O-RING 3,53x47,22	GUARNIZIONE O-R 3,53x47,22
	79044025	4	158G	O-RING (2*)	GUARNIZIONE O-R (2*)
14	14472180	4	158G	O-RING 5,33x78,74	GUARNIZIONE O-R 5,33x78,74
	79044023	4	158G	O-RING (2*)	GUARNIZIONE O-R (2*)
15	15846437	4	40V	SCREW 16x1,5x95	VITE 16x1,5x95
16	76004874	4	157R	ROLLER - ASSEMBLY	RULLO - COMPLETO
17	76004875	4	157R	ROLLER - ASSEMBLY (01)(02)(03)	RULLO - COMPLETO (01)(02)(03)(04)
	76013240	4	157R	ROLLER - ASSEMBLY (05)(*)	RULLO - COMPLETO (05)(*)(1*)
	76016088	4	157R	ROLLER - ASSEMBLY (2*)	RULLO - COMPLETO (2*)
18	79007453	4	158G	O-RING (01)(02)(03)	GUARNIZIONE O-R (01)(02)(03)(04)
	79044016	4	158G	O-RING (05)(*) (2*)	GUARNIZIONE O-R (05)(*)(1*)(2*)
(*)			469P	FOR SPECIAL EQUIPMENT	PER VARIANTE 30.0021.06.1

05710

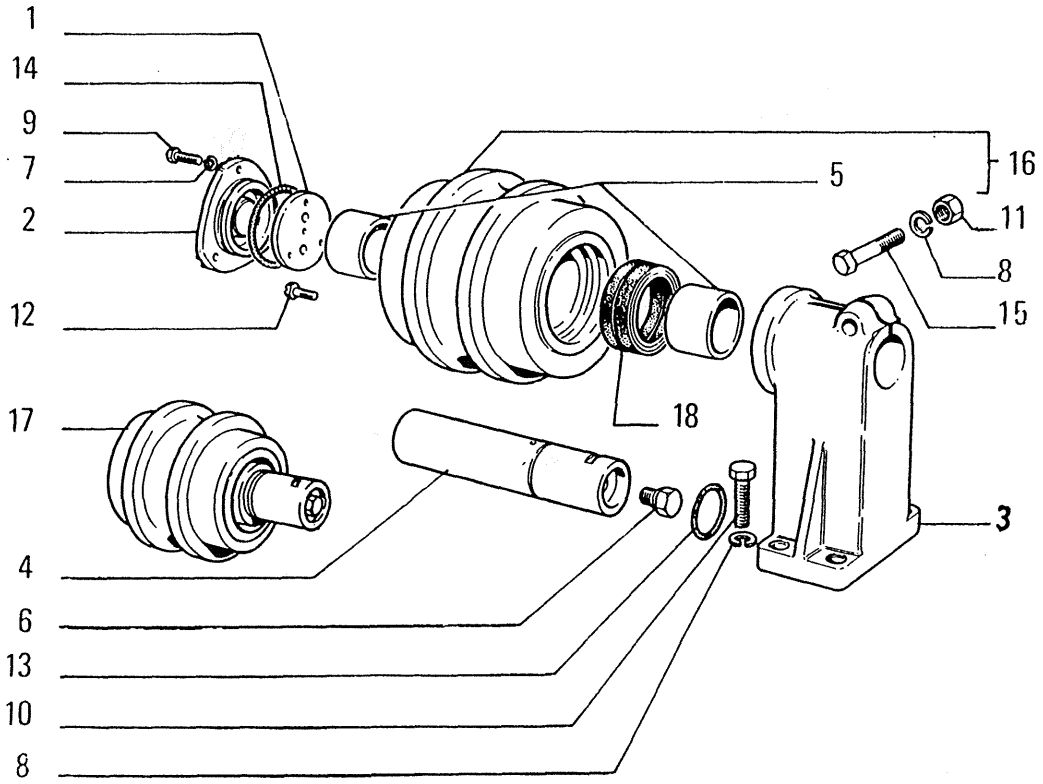

ITEM	PART NUMBER	QTY	TRANS CODE	DESCRIPTION	DESCRIZIONE
(*)			30.0021.08.1		PER VARIANTE 30.0021.07.1
(2*)			469P	FOR SPECIAL EQUIPMENT 30.0021.09.1	PER VARIANTE 30.0021.09.1

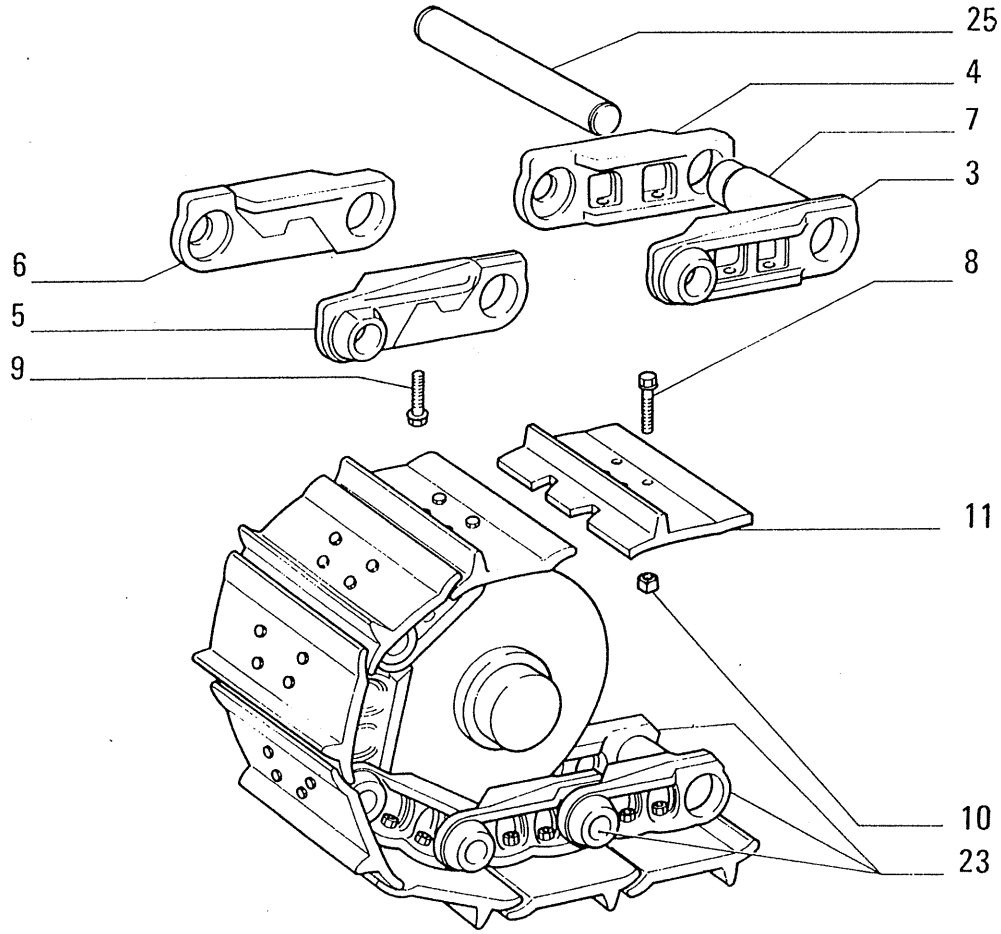

USAGE: Units with 6 track rollers; also winterized units

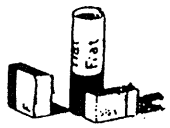

05711

ITEM	PART NUMBER	QTY	TRANS CODE	DESCRIPTION	DESCRIZIONE
3	79035435	76	10M	LINK - RIGHT	MAGLIA - DESTRO
4	79035436	76	10M	LINK - LEFT	MAGLIA - SINISTRO
5	79035809	2	10M	LINK - RIGHT	MAGLIA - DESTRO
6	79035810	2	10M	LINK - LEFT	MAGLIA - SINISTRO
7	79035811	78	95B	BUSHING	BOCCOLA
8	79035814	304	40V	SCREW	VITE
9	79035815	8	40V	SCREW	VITE
10	79035816	304	10D	NUT	DADO
11	79035817	76	295S	SHOE 01	SUOLA 01-02
	79035818	2	295S	SHOE 01	SUOLA 01-02
	79035825	76	295S	SHOE 600 01 (1*)	SUOLA 600 01-02 (1*)
	79035826	2	295S	SHOE 600 01 (1*)	SUOLA 600 01-02 (1*)
	79035828	76	295S	SHOE 550 01 -05 (*)	SUOLA 550 01-02-05 (*)
	79035829	2	295S	SHOE 550 01 -05 (*)	SUOLA 550 01-02-05 (*)
	79035840	76	295S	SHOE 500 MM 01 (2*)	SUOLA 500 MM 01-02 (2*)
	79035841	2	295S	SHOE 500 MM 01 (2*)	SUOLA 500 MM 01-02 (2*)
					SUOLA 04
					SUOLA 04
23	79035918	2	97C	TRACK CHAIN - ASSEMBLY	CATENARIA - COMPLETO
25	79039325	78	80P	PIN	PERNO
26	79045842	K	1K	KIT SEE PAGE 9	KIT VED. PAG.9
(*)			469P	FOR SPECIAL EQUIPMENT 30.0530.09.1	PER VARIANTE 30.0530.09.1
1*)			469P	FOR SPECIAL EQUIPMENT 30.0531.10.1	PER VARIANTE 30.0531.10.1
2*)			469P	FOR SPECIAL EQUIPMENT 30.0535.06.1	PER VARIANTE 30.0535.06.1

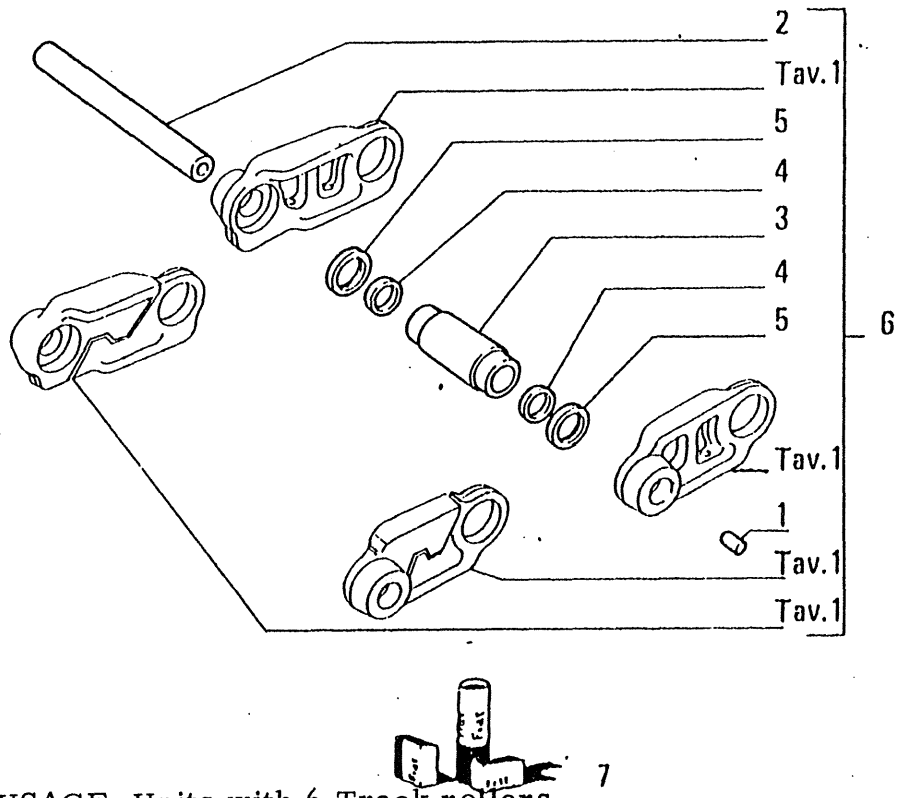

ITEM	PART NUMBER	QTY	TRANS CODE	DESCRIPTION	DESCRIZIONE
1	79035329	78	50T	PLUG (3*)	TAPPO (3*)
2	79035819	78	80P	PIN (3*)	PERNO (3*)
3	79035821	78	95B	BUSHING (3*)	BOCCOLA (3*)
4	79035823	156	75D	SPACER (3*)	DISTANZIALE (3*)
5	79035824	156	55A	O-RING (3*)	ANELLO DI TENUTA (3*)
6	79036670	2	97C	TRACK ASSY. - ASSEMBLY (3*)	CATENARIA - COMPLETO (3*)
7	79048260	K	1K	KIT SEE PAGE 9 (3*)	KIT VED PAG. 9 (3*)
(3*)			469P	FOR SPECIAL EQUIPMENT 30.0505.05 1	PER VARIANTE 30 0505 05 1

(05712) USAGE: Units with 6 Track rollers

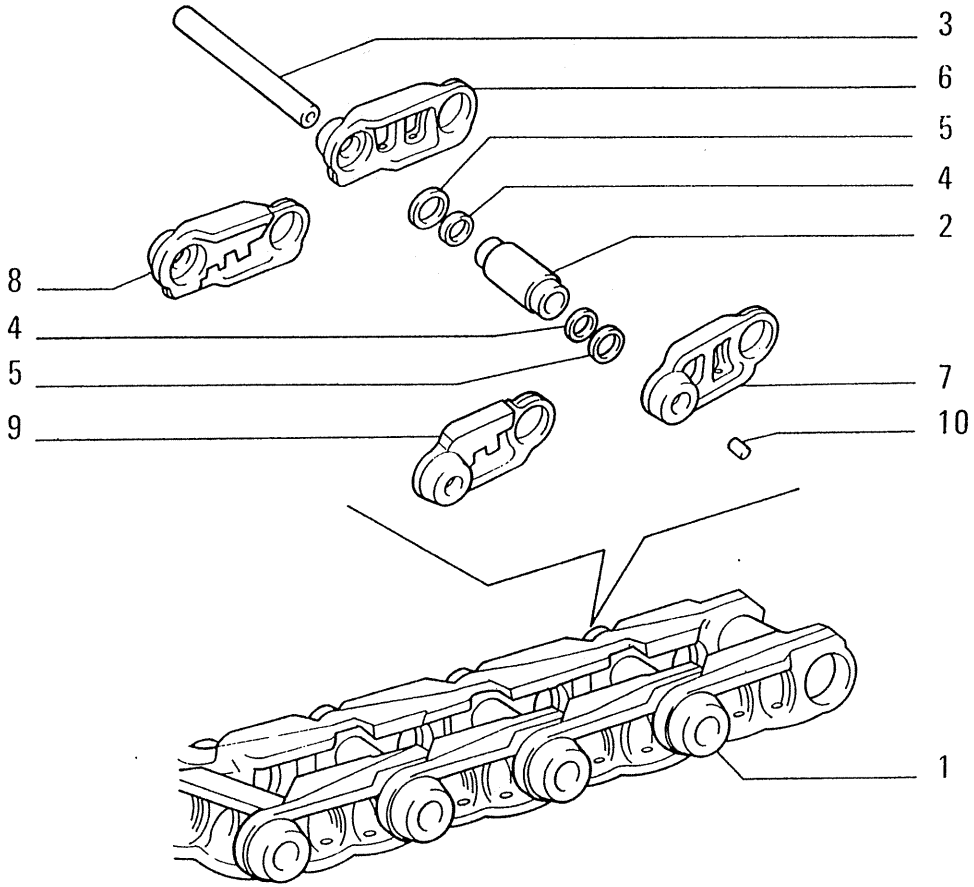

SALT TRACK CHAIN "BERCO" IN ALTER. TAV. 2
CATENARIA LUBRIFICATA "BERCO" IN ALT. TAV. 2

USAGE: Units with 6 track rollers

ITEM	PART NUMBER	QTY	TRANS CODE	DESCRIPTION	DESCRIZIONE
1	79079932	2	97C	TRACK CHAIN - ASSEMBLY (3*)	CATENARIA - COMPLETO (3*)
2	79035821	78	95B	BUSHING (3*)	BOCCOLA (3*)
3	79035819	78	80P	PIN (3*)	PERNO (3*)
4	79035823	156	75D	SPACER (3*)	DISTANZIALE (3*)
5	79082234	156	158G	O-RING (3*)	GUARNIZIONE O-R (3*)
6	79082231	76	10M	LINK - LEFT (3*)	MAGLIA - SINISTRO (3*)
7	79082230	76	10M	LINK - RIGHT (3*)	MAGLIA - DESTRO (3*)
8	79082233	2	10M	LINK - LEFT (3*)	MAGLIA - SINISTRO (3*)
9	79082232	2	10M	LINK - RIGHT (3*)	MAGLIA - DESTRO (3*)
10	79082221	78	50T	PLUG (3*)	TAPPO (3*)
(3*)			469P	FOR SPECIAL EQUIPMENT 30.0505.05.1	PER VARIANTE 30.0505.05.1

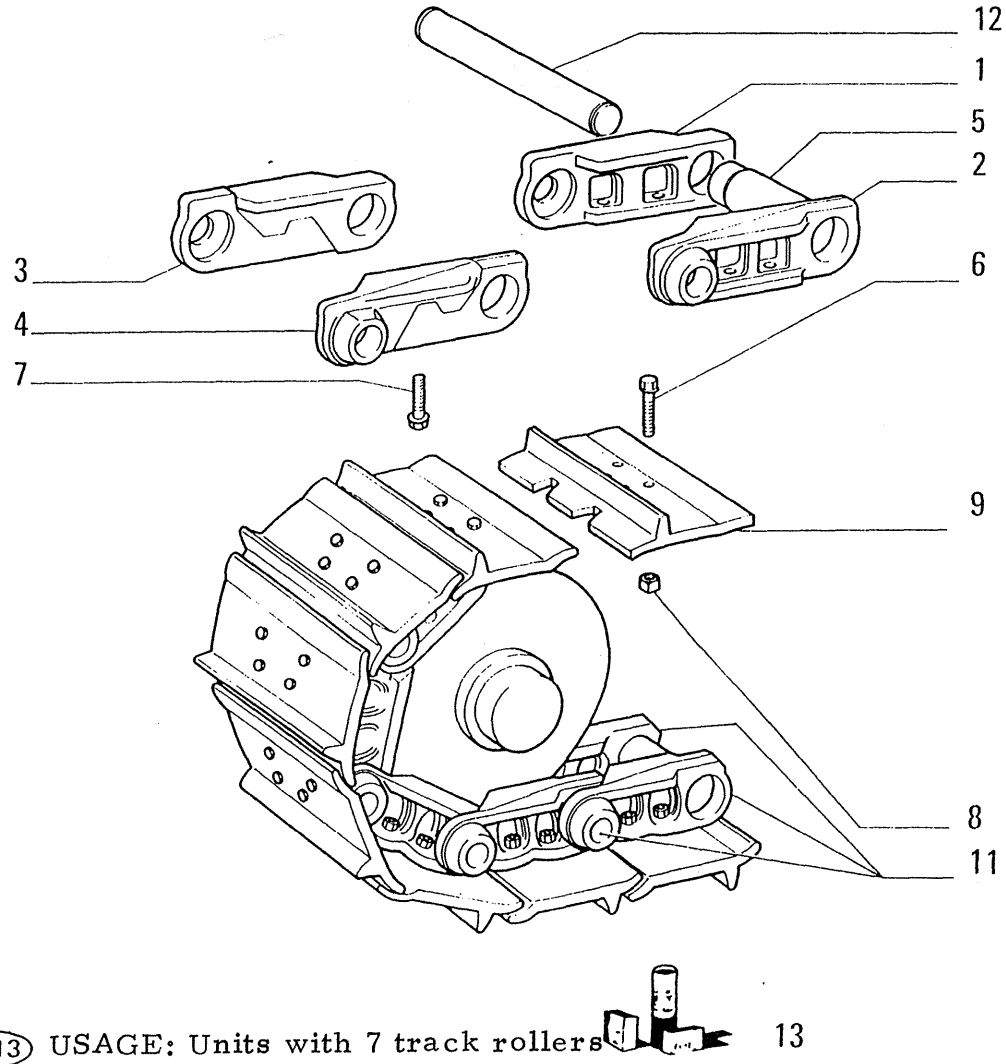

(05713) USAGE: Units with 7 track rollers

ITEM	PART NUMBER	QTY	TRANS CODE	DESCRIPTION	DESCRIZIONE
1	79035435	80	10M	LINK - RIGHT	MAGLIA - DESTRO
2	79035436	80	10M	LINK - LEFT	MAGLIA - SINISTRO
3	79035809	2	10M	LINK - RIGHT	MAGLIA - DESTRO
4	79035810	2	10M	LINK - LEFT	MAGLIA - SINISTRO
5	79035811	82	95B	BUSHING	BOCCOLA
6	79035814	320	40V	SCREW	VITE
7	79035815	8	40V	SCREW	VITE
8	79035816	320	10D	NUT	DADO
9	79035817	80	295S	SHOE 500 MM	SUOLA 500 MM
	79035818	2	295S	SHOE 500 MM	SUOLA 500 MM
	79035825	8	295S	SHOE (600 MM) (1*)	SUOLA (600 MM) (1*)
	79035826	2	295S	SHOE (600 MM) (1*)	SUOLA (600 MM) (1*)
	79035828	80	295S	SHOE (550 MM) (*)	SUOLA (550 MM) (*)
	79035829	2	295S	SHOE (550 MM) (*)	SUOLA (550 MM) (*)
	79035840	80	295S	SHOE (500 MM) (2*)	SUOLA (500 MM) (2*)
	79035841	2	295S	SHOE (500 MM) (2*)	SUOLA (500 MM) (2*)
11	79035917	2	97C	TRACK CHAIN - ASSEMBLY	CATENARIA - COMPLETO
12	79039325	82	80P	PIN	PERNO
13	79045843	K	1K	KIT SEE PAGE 9	KIT VED. PAG.9
(*)			469P	FOR SPECIAL EQUIPMENT 30.0530.11.1	PER VARIANTE 30.0530.11.1
(1*)			469P	FOR SPECIAL EQUIPMENT 30.0531.12.1	PER VARIANTE 30.0531.12.1
(2*)			469P	FOR SPECIAL EQUIPMENT 30.0535.07.2	PER VARIANTE 30.0535.07.2

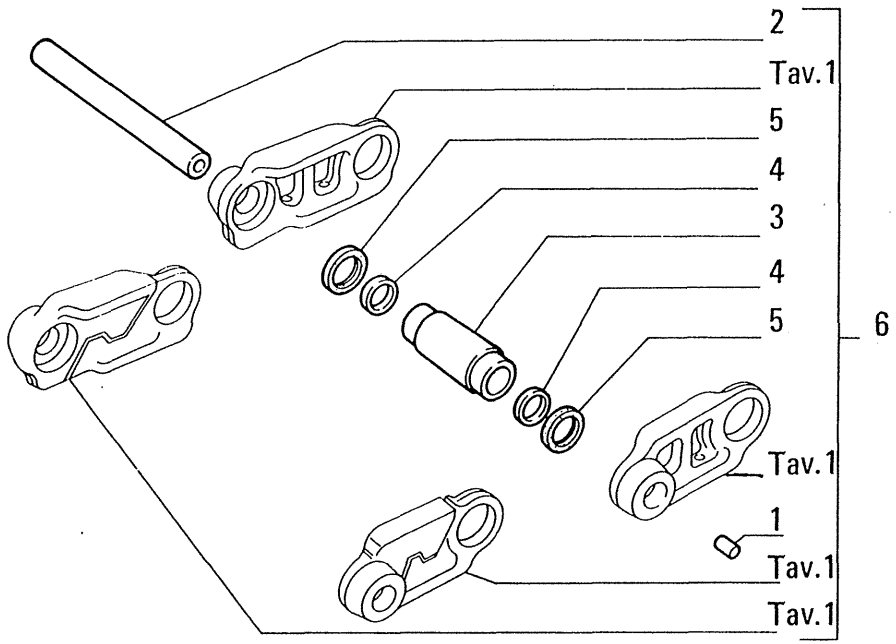

ITEM	PART NUMBER	QTY	TRANS CODE	DESCRIPTION	DESCRIZIONE
1	79035329	82	50T	PLUG (3*)	TAPPO (3*)
2	79035819	82	80P	PIN (3*)	PERNO (3*)
3	79035821	82	95B	BUSHING (3*)	BOCCOLA (3*)
4	79035823	164	75D	SPACER (3*)	DISTANZIALE (3*)
5	79035824	164	158G	O-RING (3*)	GUARNIZIONE O-R (3*)
6	79036671	2	97C	TRACK CHAIN (3*)	CATENARIA (3*)
(3*)			469P	FOR SPECIAL EQUIPMENT 30.0505.04.1	PER VARIANTE 30.0505.04.1

(05712) USAGE: Units with 7 track rollers

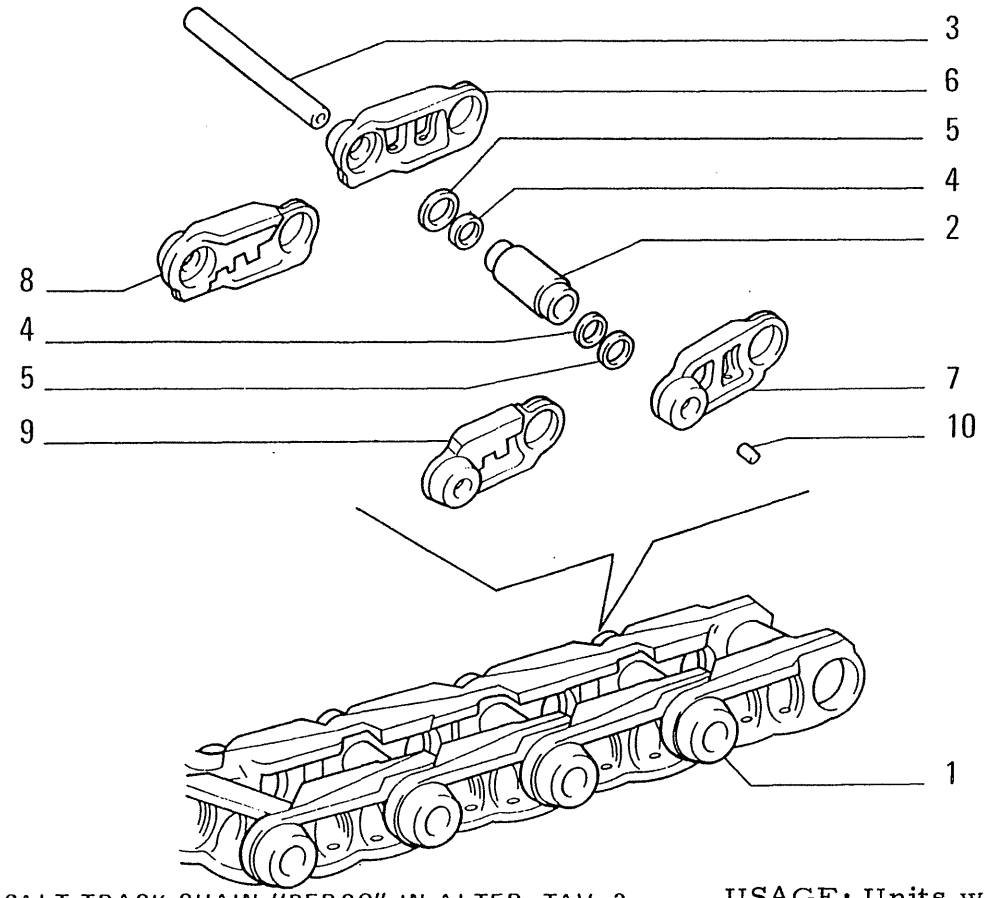

SALT TRACK CHAIN "BERCO" IN ALTER. TAV. 2
CATENARIA LUBRIFICATA "BERCO" IN ALT. TAV. 2

USAGE: Units with 7 track rollers

ITEM	PART NUMBER	QTY	TRANS CODE	DESCRIPTION	DESCRIZIONE
1	79079933	2	97C	TRACK CHAIN - ASSEMBLY (3*)	CATENARIA - COMPLETO (3*)
2	79035821	82	95B	BUSHING (3*)	BOCCOLA (3*)
3	79035819	82	80P	PIN (3*)	PERNO (3*)
4	79035823	164	75D	SPACER (3*)	DISTANZIALE (3*)
5	79082234	164	158G	O-RING (3*)	GUARNIZIONE O-R (3*)
6	79082231	80	10M	LINK - LEFT (3*)	MAGLIA - SINISTRO (3*)
7	79082230	80	10M	LINK - RIGHT (3*)	MAGLIA - DESTRO (3*)
8	79082233	2	10M	LINK - LEFT (3*)	MAGLIA - SINISTRO (3*)
9	79082232	2	10M	LINK - RIGHT (3*)	MAGLIA - DESTRO (3*)
10	79082221	82	50T	PLUG (3*)	TAPPO (3*)
(3*)			469P	FOR SPECIAL EQUIPMENT 30.0505.04.1	PER VARIANTE 30.0505.04.1

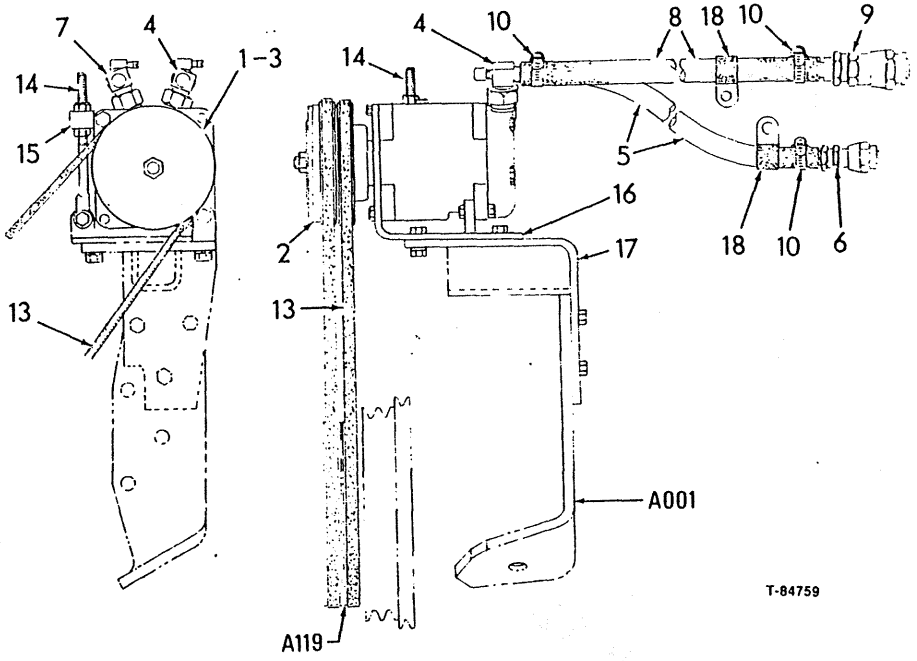

ITEM	PART NO.	QTY.	LEX.	DESCRIPTION	DENOMINAZIONE
1	73145014	1	216C	COMPRESSOR	COMPRESSORE
			600L	INCLUDES INCL.ITEMS 2-4,7,14-16	
	70929011	1	40V	CAPSCREW,3/8"NC X 5"	VITE
	70915891	1	10D	NUT,3/8"NC	DADO
	70922843	3	40V	CAPSCREW, 5/16"NC X 1-1/4"	VITE
	70911025	3	10D	NUT,5/16"	DADO
2	--------	1	230P	PULLEY	PULEGGIA
			600M	ORDER ITEM(S)3	ORDINARE PARTIC.
3	73144817	1	216C	COMPRESSOR	COMPRESSORE
			600N	SERVICED AS A UNIT	FORNITO COME COMPLESS.
4	73144819	1	20R	FITTING	RACCORDO
5	--------	1	192T	HOSE,13/32 I.D.X 91"	TUBO FLESSIBILE
			600M	ORDER ITEM(S)12	ORDINARE PARTIC.
6	73114669	1	20R	FITTING	RACCORDO
7	73144818	1	20R	FITTING	RACCORDO
8	--------	1	192T	HOSE,1/2"I.D.X 91"	TUBO FLESSIBILE
			600M	ORDER ITEM(S)11	ORDINARE PARTIC.
9	73114668	1	20R	FITTING	RACCORDO
10	73107640	4	120M	CLAMP	MORSETTO COLLARE
11	70932510	-	192T	HOSE,1/2"I.D.X 25'	TUBO FLESSIBILE
			600P	AS REQUIRED	DEFINITO AL MONTAGGIO
12	70932509	-	192T	HOSE,13/32"I.D.X 25'	TUBO FLESSIBILE
			600P	AS REQUIRED	DEFINITO AL MONTAGGIO
13	73145058	1	173C	BELT SET(2)	CINGHIA
14	73144814	1	90A	ROD	ASTA
	70911041	2	10D	NUT,3/8"NC	DADO
15	73144813	1	206T	TUBE	TUBO
16	73145013	1	80M	BRACKET	MENSOLA
	70921076	3	40V	CAPSCREW, 3/8"NC X 1-1/4"	VITE
	70910287	3	132R	LOCKWASHER,3/8"	ROSETTA DI SICUREZZA
	70911026	3	10D	NUT,3/8"NC	DADO
17	73145121	1	60A	ANGLE	ANGOLARE
	70921565	3	40V	CAPSCREW, 3/8"NC X 1-1/2"	VITE
	70910287	3	132R	LOCKWASHER,3/8"	ROSETTA DI SICUREZZA
18	70933135	2	120M	CLAMP	MORSETTO COLLARE

USAGE: Unit with 8205 engines

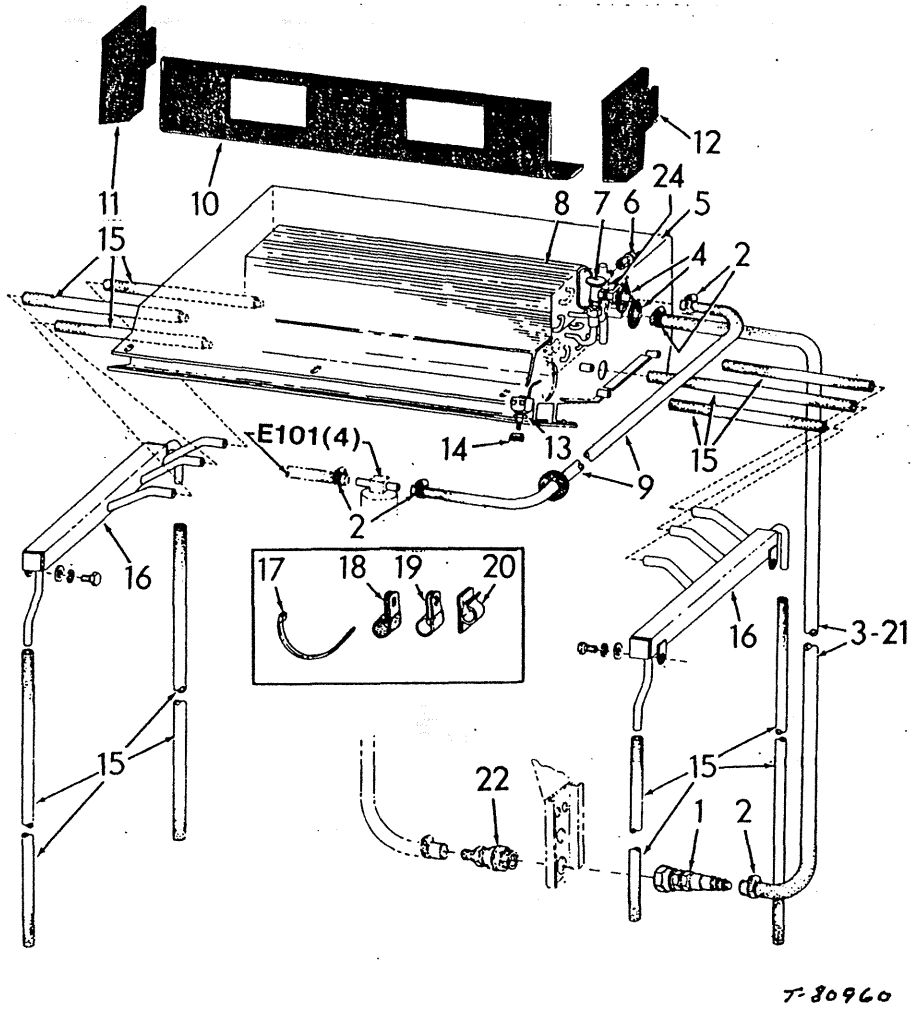

T-80960

ITEM	PART NO.	QTY.	LEX.	DESCRIPTION	DENOMINAZIONE
1	73108410	1	20R	FITTING	RACCORDO
2	73107640	5	120M	CLAMP	MORSETTO COLLARE
3	--------	1	192T	HOSE,1/2"I.D.X 100"	TUBO FLESSIBILE
			600V	REFER TO ITEM 21	RIFERIRSI AL PART.
4	73107282	3	500J	GROMMET	ANELLO
5	--------	1	80C	CASE(E102(1))	CARCASSA
6	73107631	1	189C	CONTROL,LOW PRESSURE	COMANDO
7	73107633	1	10V	VALVE,THERMAL EXPANSION	VALVOLA
8	73114695	1	83B	COIL,EVAPORATOR	BOBINA
9	--------	1	192T	HOSE,5/16"I.D.X 96"	TUBO FLESSIBILE
			600V	REFER TO ITEM 23	RIFERIRSI AL PART.
10	73114694	1	86I	INSULATION,BOTTOM	ISOLAMENTO
11	73114691	1	86I	INSULATION	ISOLAMENTO
			600A	LEFT	SINISTRO
12	73114692	1	86I	INSULATION	ISOLAMENTO
			600B	RIGHT	DESTRO
13	73107635	1	75I	SWITCH,COLD CONTROL	INTERRUTTORE
14	73107623	1	150P	KNOB	POMELLO
15	73114670	-	192T	HOSE,1/2"I.D.X 40'	TUBO FLESSIBILE
			600P	AS REQUIRED	DEFINITO AL MONTAGGIO
			600W	CUT AT ASSEMBLY	TAGLIARE DI MISURA
16	73124255	1	206T	TUBE,CONDENSATE	TUBO
			600A	LEFT	SINISTRO
	73124256	1	206T	TUBE,CONDENSATE	TUBO
			600B	RIGHT	DESTRO
	70922300	4	40V	CAPSCREW,3/8"NC X 3/4"	VITE
	70919383	4	131R	WASHER	ROSETTA
	70919312	4	132R	LOCKWASHER,3/8"	ROSETTA DI SICUREZZA
17	70930871	-	501H	TIE	TIRANTE
			600P	AS REQUIRED	DEFINITO AL MONTAGGIO
18	70929665	24	89G	CLIP	GRAFFETTA
			600P	AS REQUIRED	DEFINITO AL MONTAGGIO
19	73114666	1	89G	CLIP	GRAFFETTA
			600P	AS REQUIRED	DEFINITO AL MONTAGGIO
20	73114671	6	89G	CLIP	GRAFFETTA
			600P	AS REQUIRED	DEFINITO AL MONTAGGIO

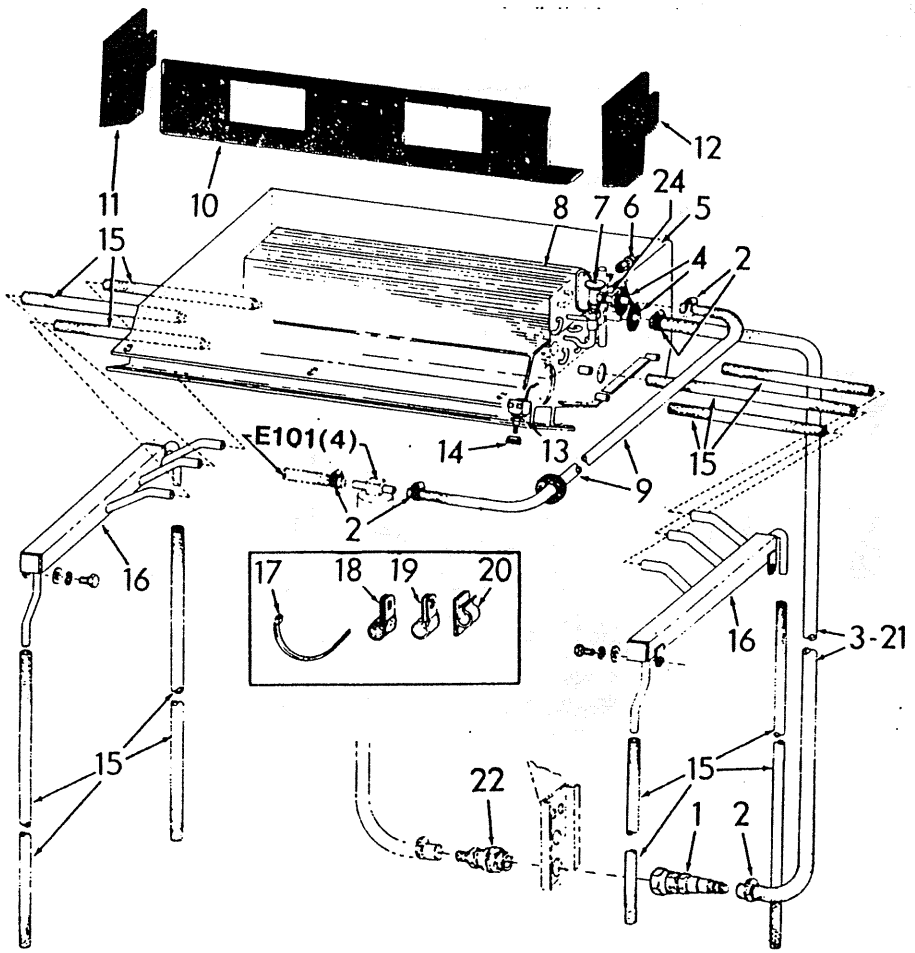

T-80960

ITEM	PART NO.	QTY.	LEX.	DESCRIPTION	DENOMINAZIONE
21	70932510	-	192T	HOSE,1/2"I.D.X 25'	TUBO FLESSIBILE
			600P	AS REQUIRED	DEFINITO AL MONTAGGIO
22	--------	1	67G	COUPLING (E101(2)	GIUNTO
23	70932508	-	192T	HOSE,5/16"I.D. X 25'	TUBO FLESSIBILE
24	--------	1	20R	FITTING,FEMALE	RACCORDO
			601C	NOT SERVICED	NON FORNITO DI RICAMB.
	--------	1	20R	FITTING,MALE	RACCORDO
			601C	NOT SERVICED	NON FORNITO DI RICAMB.
	--------	1	192T	HOSE,INCLUDES FITTING	TUBO FLESSIBILE
			601C	NOT SERVICED	NON FORNITO DI RICAMB.

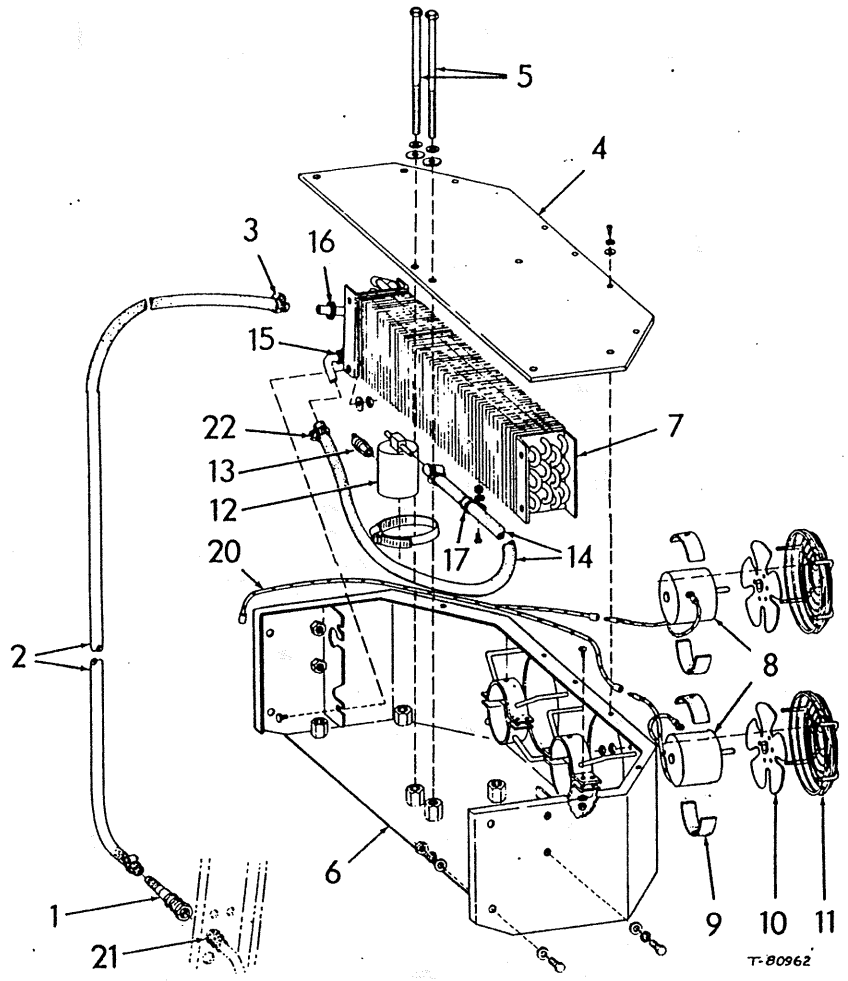

ITEM	PART NO.	QTY.	LEX.	DESCRIPTION	DENOMINAZIONE
1	73108409	1	20R	FITTING	RACCORDO
2	--------	1	192T	HOSE,13/32"I.D. X 144"	TUBO FLESSIBILE
			600V	REFER TO ITEM 18	RIFERIRSI AL PART.
3	73107640	4	120M	CLAMP	MORSETTO COLLARE
4	73114680	1	265C	COVER	COPERCHIO
	70927340	5	40V	CAPSCREW,1/4"NC X 3/4"	VITE
	70919310	5	132R	LOCKWASHER,1/4"	ROSETTA DI SICUREZZA
	70911114	5	131R	WASHER	ROSETTA
5	70932835	7	140B	BOLT,3/8"NC X 7-7/8"	BULLONE
	70919312	7	132R	LOCKWASHER,3/8"	ROSETTA DI SICUREZZA
	70912597	7	131R	WASHER	ROSETTA
6	73114679	1	80C	CASE	CARCASSA
	70922763	8	40V	CAPSCREW,3/8"NC X 1"	VITE
	70919312	8	132R	LOCKWASHER,3/8"	ROSETTA DI SICUREZZA
	70912597	12	131R	WASHER	ROSETTA
	70911026	4	10D	NUT,3/8"NC	DADO
7	73114681	1	83B	COIL,CONDENSER	BOBINA
	70928182	4	40V	CAPSCREW,1/4"NC X 1/2"	VITE
	70911114	4	131R	WASHER	ROSETTA
	70917730	4	10D	NUT,1/4"NC	DADO
8	73121737	2	134M	MOTOR,FAN	MOTORE
			600M	ORDER ITEM(S)20	ORDINARE PARTIC.
	70930494	8	42V	SCREW,#1-32NF X 3/4"	VITE
	70910533	8	132R	LOCKWASHER,#10	ROSETTA DI SICUREZZA
	70917415	8	10D	NUT,#10-32NF	DADO
9	73114682	4	197S	PAD	SPESSORE ELASTICO
10	73107665	2	23P	BLADE	PALETTA
11	73114683	2	115G	GUARD	PROTEZIONE
	70917479	16	10D	NUT,#6-32NC	DADO
12	73114684	1	502E	DRYER	ESSICATORE
	70922200	1	120M	CLAMP,3-5/16" - 4-1/4"	MORSETTO COLLARE
13	73107652	1	189C	CONTROL,HIGH PRESSURE	COMANDO
14	--------	1	192T	HOSE,5/16"I.D.X 34"	TUBO FLESSIBILE
			600V	REFER TO ITEM 19	RIFERIRSI AL PART.
15	70929167	1	500J	GROMMET	ANELLO
16	73107282	1	500J	GROMMET	ANELLO

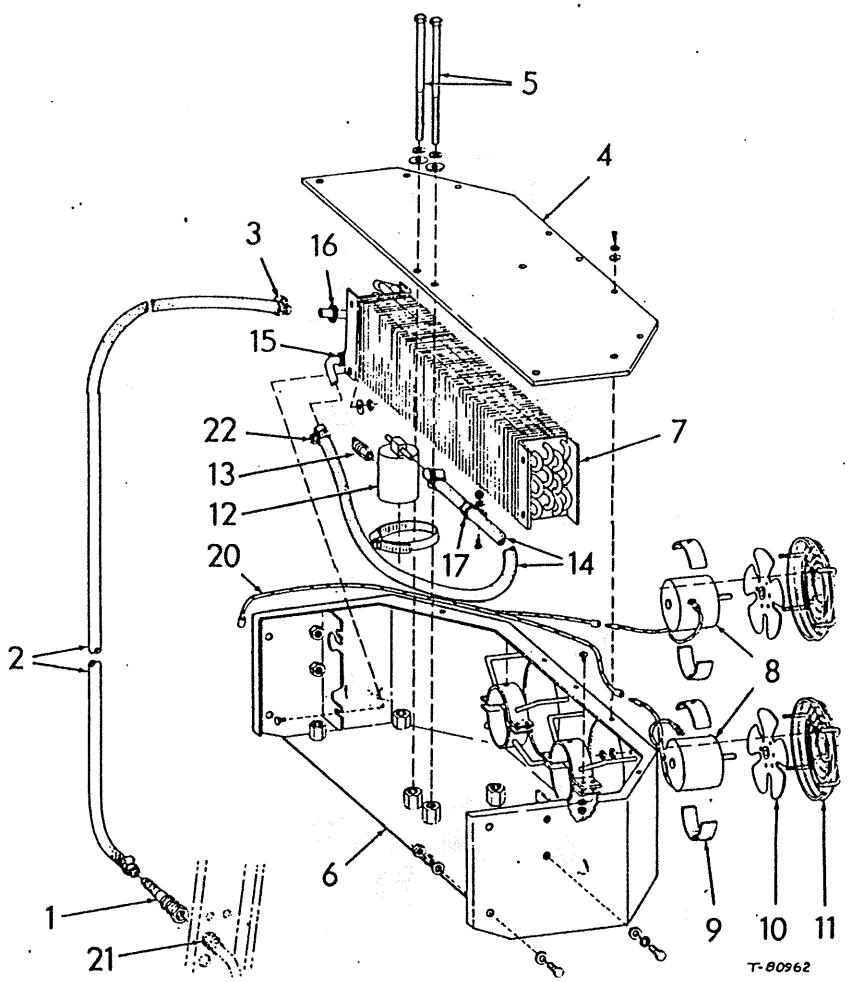

ITEM	PART NO.	QTY.	LEX.	DESCRIPTION	DENOMINAZIONE
17	73114685	2	89G	CLIP	GRAFFETTA
	70930494	2	42V	SCREW,#10-32NF X 3/4"	VITE
	70910533	2	132R	LOCKWASHER,#10	ROSETTA DI SICUREZZA
	70917415	2	10D	NUT,#10-32NF	DADO
18	70932509	-	192T	HOSE;13/32"I.D.X 25'	TUBO FLESSIBILE
			600P	AS REQUIRED	DEFINITO AL MONTAGGIO
19	70932508	-	192T	HOSE,5/16"I.D.X 25'	TUBO FLESSIBILE
			600P	AS REQUIRED	DEFINITO AL MONTAGGIO
20	73122184	1	60F	WIRE	FILO
21	--------	1	67G	COUPLING (E101(2)	GIUNTO
22	73107640	2	120M	CLAMP	MORSETTO COLLARE

NOTE:WIRES ARE NOT SERVICED SEPARATELY. PROCURE LOCALLY.

14C	DRYER & CONDENSER LINES TUBAZIONI ESSICATORE E CONDENSATORE CONDUITES DU SECHEUR ET DU CONDENSEUR TROCKNER- UND VERDICHTERLEITUNGEN TUBERIAS DEL SECADOR Y DEL CONDENSADOR	E101	4
		Revised April 1989	

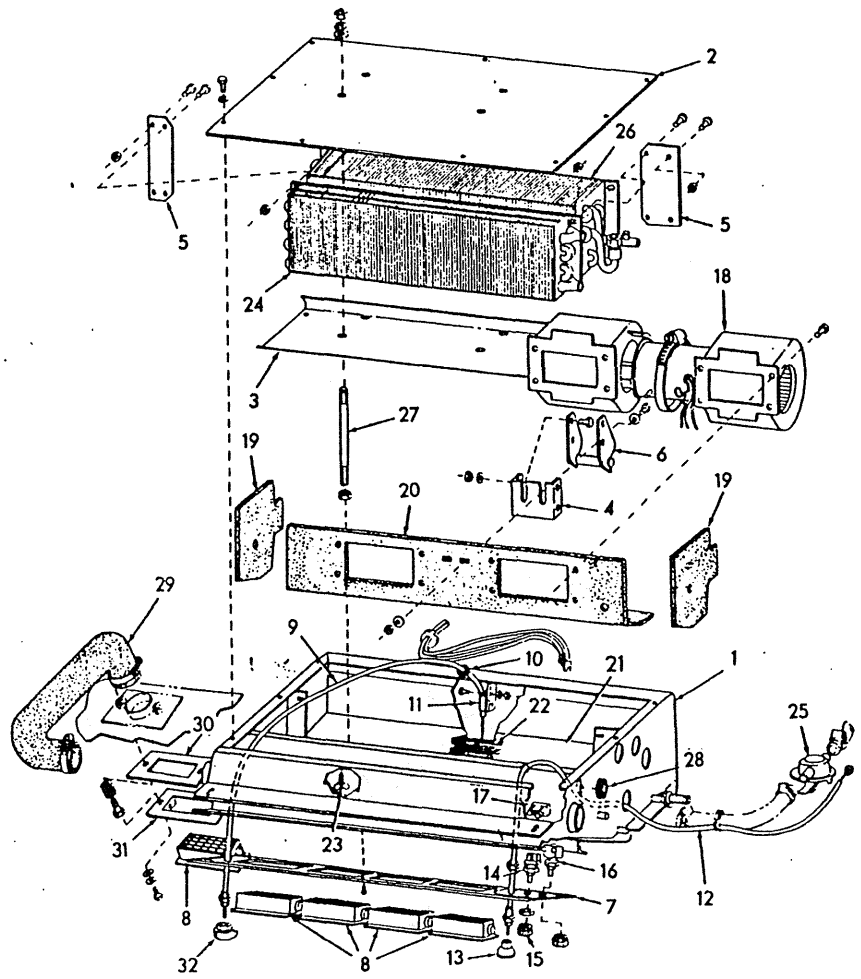

ITEM	PART NO.	QTY.	LEX.	DESCRIPTION	DENOMINAZIONE
1	--------	1	80C	CASE	CARCASSA
			601C	NOT SERVICED	NON FORNITO DI RICAMB.
	73114699	2	265C	COVER,CABS WITHOUT A/C	COPERCHIO
	70927340	4	40V	CAPSCREW,1/2"NC X 3/4"	VITE
	70911114	4	131R	WASHER	ROSETTA
	70917730	4	10D	NUT,1/4"NC	DADO
2	--------	1	265C	COVER	COPERCHIO
			601C	NOT SERVICED	NON FORNITO DI RICAMB.
	70929915	9	42V	SCREW,#10-24NC X 3/4"	VITE
	70910243	9	131R	WASHER	ROSETTA
3	--------	1	19V	PAN,BOTTOM	VASCHETTA
			601C	NOT SERVICED	NON FORNITO DI RICAMB.
4	--------	1	80M	BRACKET	MENSOLA
	70927340	4	40V	CAPSCREW,1/2"NC X 3/4"	VITE
	70911114	4	131R	WASHER	ROSETTA
	70917730	4	10D	NUT,1/4"NC	DADO
5	--------	1	105P	PLATE	PIASTRA
			600A	LEFT	SINISTRO
			601C	NOT SERVICED	NON FORNITO DI RICAMB.
	--------	1	105P	PLATE	PIASTRA
			600B	RIGHT	DESTRO
			601C	NOT SERVICED	NON FORNITO DI RICAMB.
	70927340	4	40V	CAPSCREW,1/2"NC X 3/4"	VITE
	70917730	4	10D	NUT,1/4"NC	DADO
6	--------	1	80M	BRACKET,MOTOR	MENSOLA
			601C	NOT SERVICED	NON FORNITO DI RICAMB.
	70928745	2	40V	CAPSCREW, 1/4"NC X 1-1/4"	VITE
	70911114	4	131R	WASHER	ROSETTA
	70917730	2	10D	NUT,1/4"NC	DADO
7	--------	1	25P	PANEL,CONTROL	PANNELLO
			601C	NOT SERVICED	NON FORNITO DI RICAMB.
	70917452	6	42V	SCREW,#10-32NF X 1/2"	VITE
8	73124704	6	91P	LOUVERS	PERSIANA
9	73142112	1	105F	CABLE,AIR BAFFLE	FUNE
10	73107666	2	500J	GROMMET	ANELLO

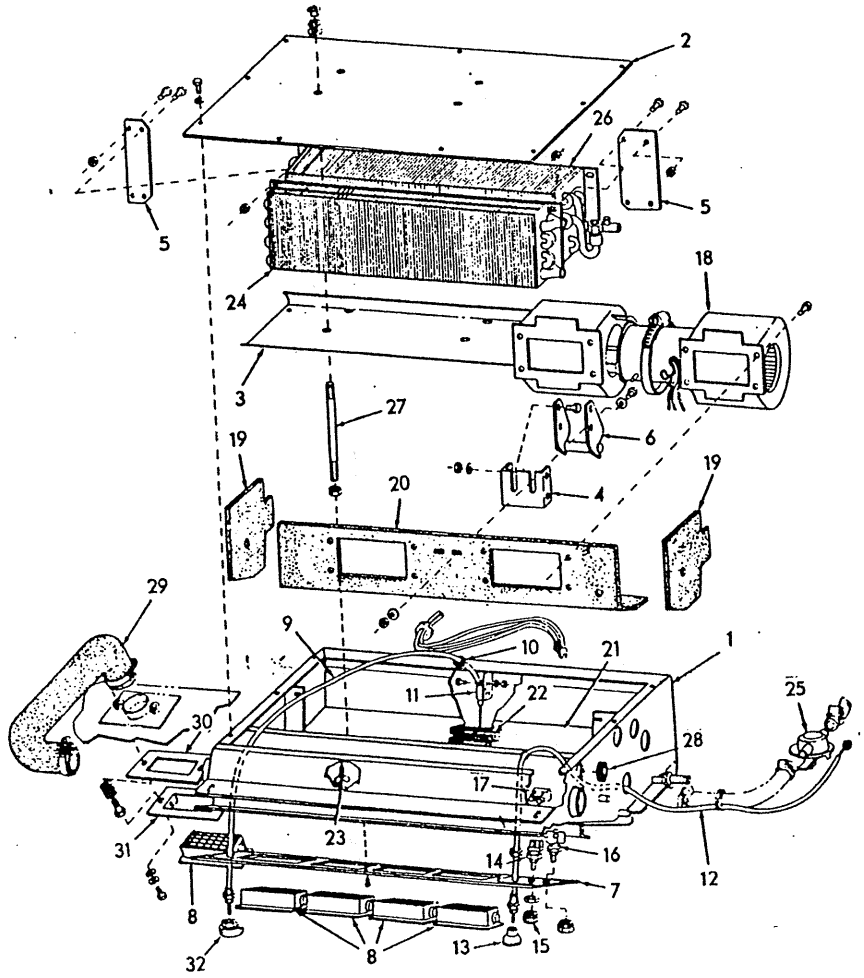

ITEM	PART NO.	QTY.	LEX.	DESCRIPTION	DENOMINAZIONE
11	--------	1	89G	CLIP	GRAFFETTA
			601C	NOT SERVICED	NDN FORNITO DI RICAMB.
	70925369	2	42V	SCREW,#10-32NF X 5/8"	VITE
	70910533	2	132R	LOCKWASHER,#10	ROSETTA DI SICUREZZA
	70917415	2	10D	NUT,#10-32NF	DADO
12	73114687	1	105F	CABLE,HEAT CONTROL	FUNE
13	73114722	1	150P	KNOB	POMELLO
14	73114702	1	75I	SWITCH,BLOWER	INTERRUTTORE
				CABS WITHOUT A/C	
	73107110	1	75I	SWITCH,BLOWER	INTERRUTTORE
				CABS WITH A/C	
	73114668	2	10D	NUT	DADO
15	73107623	2	150P	KNOB,BLOWER	POMELLO
16	73107635	1	75I	SWITCH,COLD CONTROL	INTERRUTTORE
				CABS WITH A/C	
17	73107446	1	165R	BREAKER(20 AMP)	RUTTORE
	70917452	2	42V	SCREW,#10-32NF X 1/2"	VITE
	70910533	2	132R	LOCKWASHER,#10	ROSETTA DI SICUREZZA
	70917415	2	10D	NUT,#10-32NF	DADO
18	--------	1	36V	BLOWER(E102/1)	VENTOLA
	70922200	1	120M	CLAMP,3-5/16" X 4-1/4"	MORSETTO COLLARE
	70929915	8	42V	SCREW,#10-24NC X 3/4"	VITE
19	73114691	1	86I	INSULATION	ISOLAMENTO
			600A	LEFT	SINISTRO
	73114692	1	86I	INSULATION	ISOLAMENTO
			600B	RIGHT	DESTRO
20	73114694	1	86I	INSULATION	ISOLAMENTO
				CABS WITH A/C	
	73114701	1	86I	INSULATION	ISOLAMENTO
				CABS WITHOUT A/C	
21	--------	1	101S	BAFFLE,AIR	DEFLETTORE
	73114698	1	105B	WEATHER-STRIP, RUBBER	BORDINO DI GOMMA
	70922121	3	42V	SCREW,#10-32 X 3/8"	VITE
	70910533	3	132R	LOCKWASHER,#10	ROSETTA DI SICUREZZA
22	--------	1	110S	SCREEN	SEPARATORE
			601C	NOT SERVICED	NON FORNITO DI RICAMB.
23	70927084	2	42V	SCREW,3/8"NC X 1"	VITE

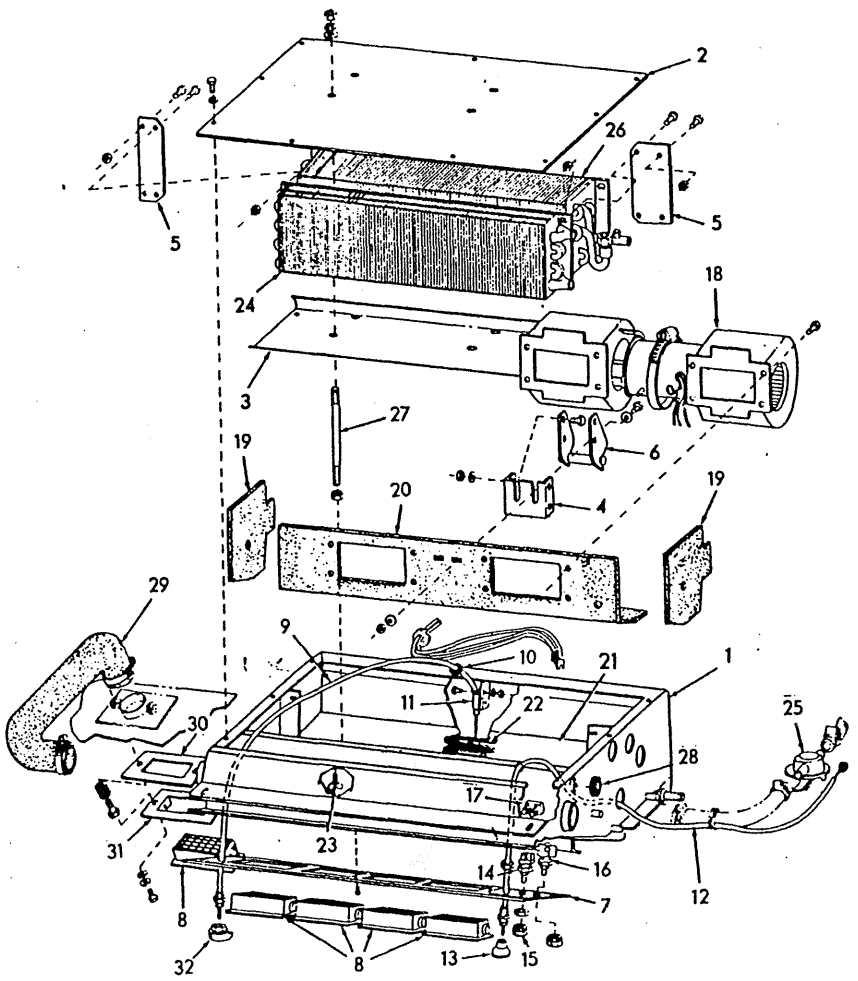

ITEM	PART NO.	QTY.	LEX.	DESCRIPTION	DENOMINAZIONE
24	73107629	1	83B	COIL,HEATER	BOBINA
25	--------	1	10V	VALVE,HEAT CONTROL (E101(2))	VALVOLA
26	--------	1	83B	COIL,EVAPORATOR(E101/2)	BOBINA
27	73114697	4	90A	ROD(USED WITHOUT A/C)	ASTA
	70919312	4	132R	LOCKWASHER,3/8" (USED WITHOUT A/C)	ROSETTA DI SICUREZZA
	70912597	4	131R	WASHER,USED WITHOUT A/C	ROSETTA
	70911026	8	10D	NUT,3/8"NC (USED WITHOUT A/C)	DADO
28	73114696	1	500J	GROMMET	ANELLO
29	--------	2	192T	HOSE	TUBO FLESSIBILE
			601C	NOT SERVICED	NON FORNITO DI RICAMB.
	70921914	4	120M	CLAMP	MORSETTO COLLARE
30	--------	1	105P	PLATE	PIASTRA
			600A	LEFT	SINISTRO
	--------	1	105P	PLATE	PIASTRA
			600B	RIGHT	DESTRO
	73124665	2	140B	BOLT	BULLONE
			600J	SPECIAL EQUIPMENT	EQUIP. SPECIALE
	70912597	8	131R	WASHER	ROSETTA
31	73124664	2	105P	PLATE	PIASTRA
	70928182	4	40V	CAPSCREW,1/4"NC X 1/2"	VITE
	70911114	4	131R	WASHER,1/4"	ROSETTA
	70919310	4	132R	LOCKWASHER,1/4"	ROSETTA DI SICUREZZA
32	73134296	1	150P	KNOB,FRONT VENT	POMELLO
33	73124879	1	65F	FILTER	FILTRO
			601K	NOT ILLUSTRATED	NON ILLUSTRATO

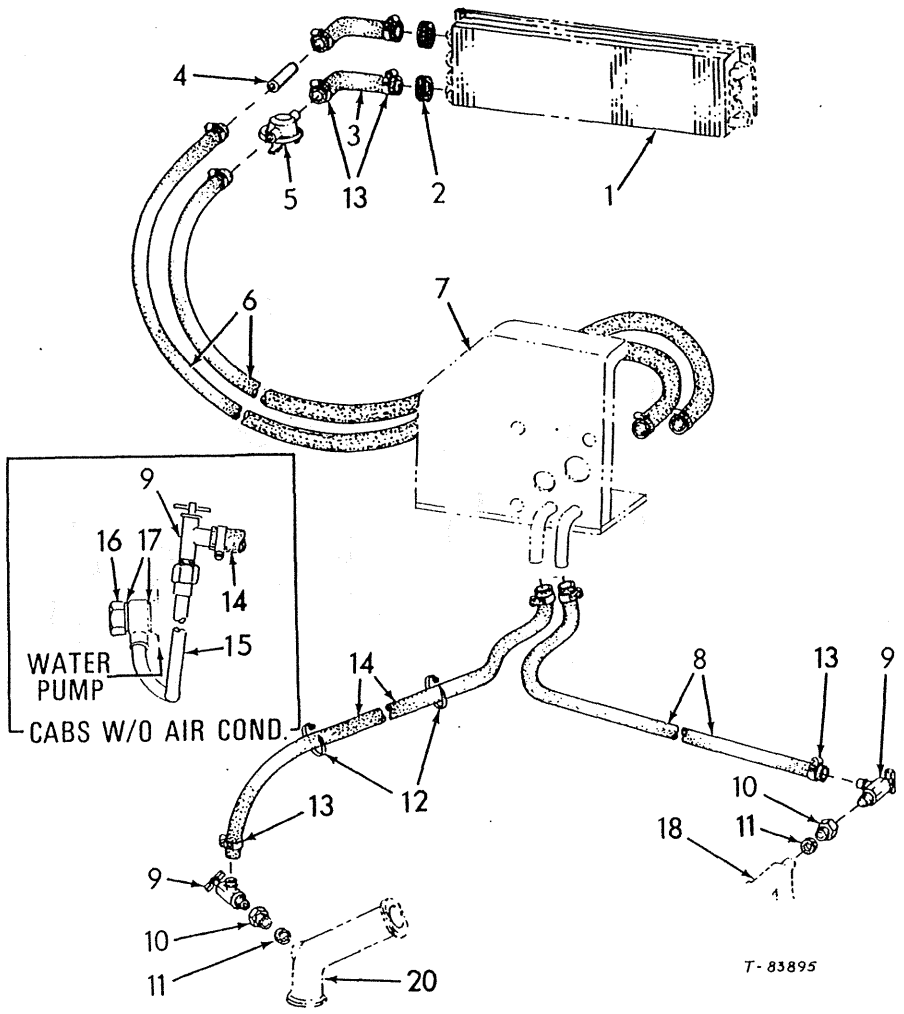

ITEM	PART NO.	QTY.	LEX.	DESCRIPTION	DENOMINAZIONE
1	--------	1	83B	COIL(E102)	BOBINA
2	73107282	2	500J	GROMMET	ANELLO
3	--------	2	192T	HOSE(6")	TUBO FLESSIBILE
			600V	REFER TO ITEM 19	RIFERIRSI AL PART.
4	--------	1	28N	NIPPLE	NIPPLO
			601C	NOT SERVICED	NON FORNITO DI RICAMB.
5	73107263	1	10V	VALVE	VALVOLA
6	--------	2	192T	HOSE(100")	TUBO FLESSIBILE
			600V	REFER TO ITEM 19	RIFERIRSI AL PART.
7	--------	1	265C	COVER(L104(1))	COPERCHIO
8	--------	1	192T	HOSE(72")	TUBO FLESSIBILE
			600V	REFER TO ITEM 19	RIFERIRSI AL PART.
9	70089894	2	10V	VALVE	VALVOLA
10	73074000	1	55T	ADAPTER	ADATTATORE
11	10295385	1	123G	GASKET	GUARNIZIONE DI TENUTA
12	70930871	3	501H	TIE	TIRANTE
13	70922660	12	120M	CLAMP	MORSETTO COLLARE
14	--------	1	192T	HOSE(120")	TUBO FLESSIBILE
			600M	ORDER ITEM(S)19	ORDINARE PARTIC.
15	a04984322	1	206T	TUBE	TUBO
16	a10182617	1	40V	CAPSCREW	VITE
17	a10284585	2	123G	GASKET	GUARNIZIONE DI TENUTA
18	--------	1	188C	MANIFOLD(A402(2))	COLLETTORE
19	73114665	-	192T	HOSE(5/8"I.D. X 30')	TUBO FLESSIBILE
			600P	AS REQUIRED	DEFINITO AL MONTAGGIO
20	--------	1	193T	PIPE(A402(1))	TUBO

a.UNITS WITHOUT AIR CONDITIONING
UNITA SENZA ARIA CONDIZIONATA
ENGINS SANS CLIMATISEUR
MASCHINEN OHNE KLIMAANLAGE
MAQUINAS SIN AIRE ACONDICIONADO

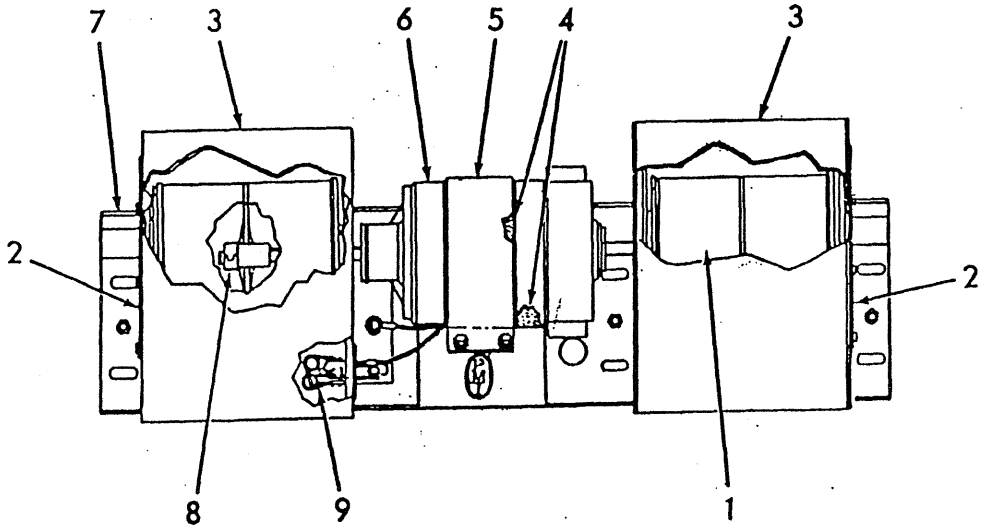

T-84269

ITEM	PART NO.	QTY.	LEX.	DESCRIPTION	DENOMINAZIONE
-	73134316	1	36V	BLOWER	VENTOLA
			600L	INCLUDES ITEM(S)1-9	INCLUDE PARTIC.(I)
	70916964	8	131R	WASHER	ROSETTA
	70928182	8	40V	CAPSCREW,1/4"NC X 1/2"	VITE
1	73144497	2	160R	WHEEL	RUOTA
2	--------	2	45A	RING	ANELLO
3	--------	1	35S	HOUSING	SCATOLA
			600A	LEFT	SINISTRO
	--------	1	35S	HOUSING	SCATOLA
			600B	RIGHT	DESTRO
			600M	ORDER ITEM(S) -	ORDINARE PARTIC.
4	--------	3	197S	PAD	SPESSORE ELASTICO
			600M	ORDER ITEM(S)6	ORDINARE PARTIC.
5	--------	1	22N	STRAP, SECURING	NASTRO DI FISSAGGIO
6	73144502	1	128M	MOTOR, ELECTRIC	MOTORE ELETTRICO
7	--------	1	21B	BASE	BASE
	--------	4	132R	LOCKWASHER,#10	ROSETTA DI SICUREZZA
	--------	4	42V	SCREW,#10-24	VITE
			600M	ORDER ITEM(S) -	ORDINARE PARTIC.
8	73144498	2	89G	CLIP	GRAFFETTA
9	73144501	1	39R	RESISTOR	RESISTORE
	--------	2	132R	LOCKWASHER,#10	ROSETTA DI SICUREZZA
	--------	2	42V	SCREW,#10-24 X 5/8"	VITE

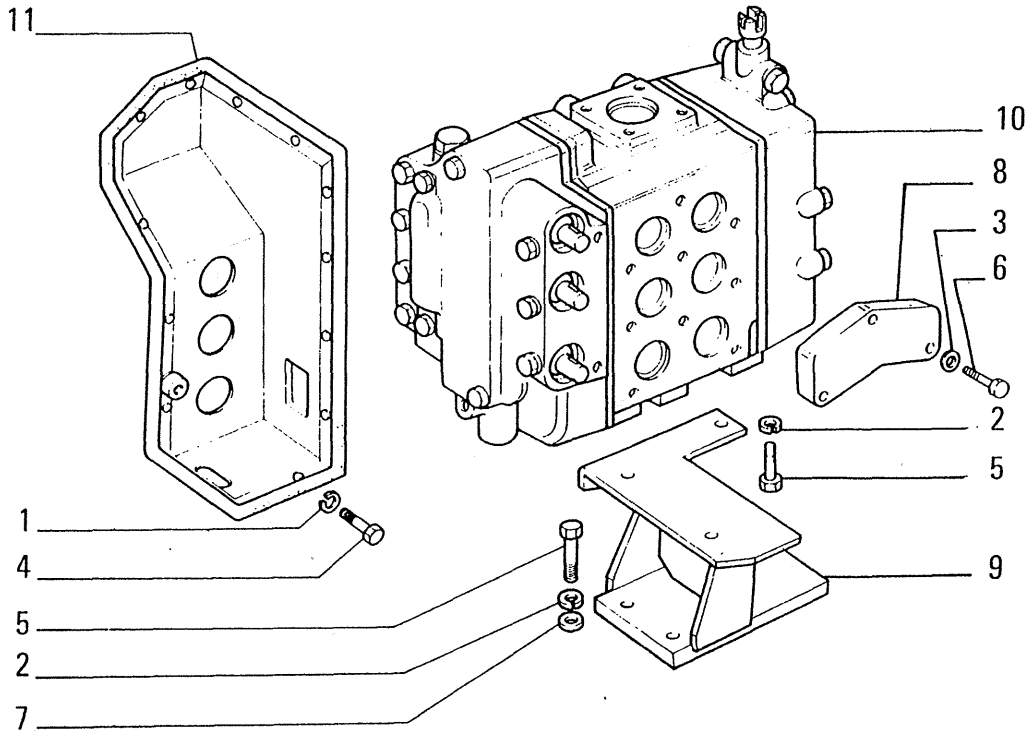

ITEM	PART NUMBER	QTY	TRANS CODE	DESCRIPTION	DESCRIZIONE
1	10516871	2	131R	WASHER 10x2,5	ROSETTA 10x2,5
2	10517071	7	131R	WASHER 12,2x3,1	ROSETTA 12,2x3,1
3	10571971	3	131R	WASHER 12,2x2,5	ROSETTA 12,2x2,5
4	11103031	2	40V	SCREW 10x1,5x18	VITE 10x1,5x18
5	11112431	7	40V	SCREW 12x1,75x30	VITE 12x1,75x30
6	11113031	3	40V	SCREW 12x1,75x45	VITE 12x1,75x45
7	12646921	4	131R	WASHER 12,2x28	ROSETTA 12,2x28
8	79005430	1	70F	FLANGE	FLANGIA
9	79013868	1	300S	SUPPORT	SUPPORTO
10	79038361	1	83D	CONTROL VALVE - ASSEMBLY SEE SGR. E3.31	DISTRIBUTORE - COMPLETO VEDERE SGR. E3.31
11	79039310	1	70R	GUARD	RIPARO

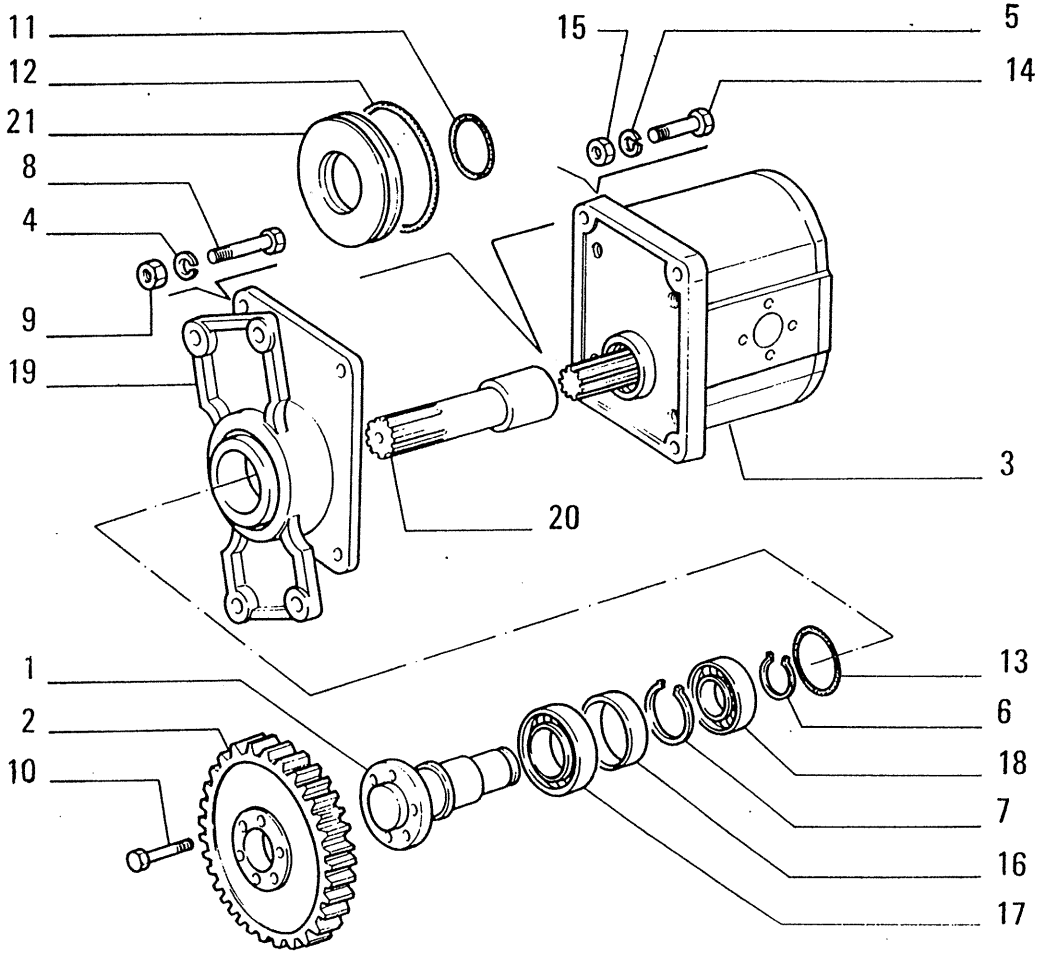

ITEM	PART NUMBER	QTY	TRANS CODE	DESCRIPTION	DESCRIZIONE
1	586979	1	16A	SHAFT	ALBERO
2	4953896	1	50I	GEAR	INGRANAGGIO
3	8293307	1	155P	PUMP - ASSEMBLY IN ALTERNATIVE SEE SGR. E3.29	POMPA - COMPLETO IN ALTERNATIVA VEDERE SGR. E3.29
	79031139	1	155P	PUMP - ASSEMBLY SEE SGR. E3.29/1	POMPA - COMPLETO VEDERE SGR. E3.29/1
4	10517271	4	131R	WASHER 16,2x4	ROSETTA 16,2x4
5	10571971	4	131R	WASHER 12,2x2,5	ROSETTA 12,2x2,5
6	11069076	1	51A	LOCKRING 41,5x1,75	ANELLO DI SICUREZZA 41,5x1,75
7	11069376	1	51A	LOCKRING 45,8x2	ANELLO DI SICUREZZA 45,8x2
8	11800430	4	40V	SCREW 16x1,5x57	VITE 16x1,5x57
9	12164127	4	10D	NUT 16x1,5x13	DADO 16x1,5x13
10	14233430	6	40V	SCREW 10x1,25x25	VITE 10x1,25x25
11	14460280	1	158G	O-RING 2,62x63,17	GUARNIZIONE O-R 2,62x63,17
12	14461680	1	158G	O-RING 2,62x120,32	GUARNIZIONE O-R 2,62x120,32
13	14465280	2	158G	O-RING 3,53x75,79	GUARNIZIONE O-R 3,53x75,79
14	15541031	4	40V	SCREW 12x1,25x60	VITE 12x1,25x60
15	16101521	4	10D	NUT 12x1,25x10	DADO 12x1,25x10
16	24976420	1	45A	RING 50x64,6	ANELLO 50x64,6
17	26797990	1	341C	BEARING 50x90	CUSCINETTO 50x90
18	28042490	1	341C	BEARING 45x75	CUSCINETTO 45x75
19	79005840	1	300S	SUPPORT	SUPPORTO
20	79005842	1	16A	SHAFT	ALBERO
21	79013746	1	45A	RING	ANELLO

05519

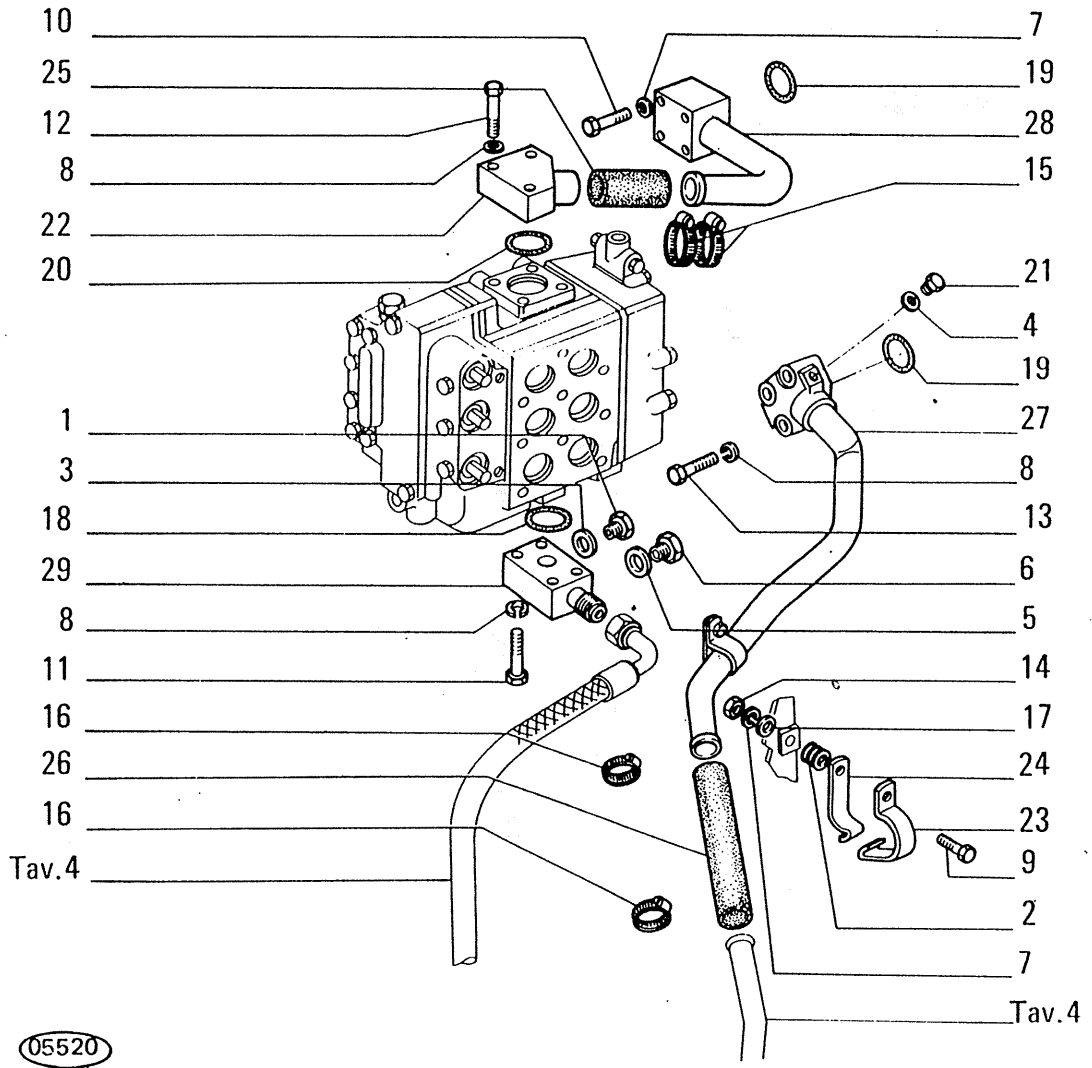

05520

ITEM	PART NUMBER	QTY	TRANS CODE	DESCRIPTION	DESCRIZIONE
1	581658	1	50T	PLUG	TAPPO
2	4967724		198S	SHIM	SPESSORE
3	10260060	1	133R	SEAL 8,2x14	ROSETTA DI TENUTA 8,2x14
4	10282460	1	133R	SEAL 14,2x20	ROSETTA DI TENUTA 14,2x20
5	10296160	1	133R	SEAL 12,2x18	ROSETTA DI TENUTA 12,2x18
6	10300571	1	50T	PLUG 12x1,5x8	TAPPO 12x1,5x8
7	10571871	5	131R	WASHER 10,2x2,2	ROSETTA 10,2x2,2
8	10571971	10	131R	WASHER 12,2x2,5	ROSETTA 12,2x2,5
9	11106631	1	40V	SCREW 10x1,5x35	VITE 10x1,5x35
10	11107731	4	40V	SCREW 10x1,5x75	VITE 10x1,5x75
11	11113731	4	40V	SCREW 12x1,75x75	VITE 12x1,75x75
12	11113831	3	40V	SCREW 12x1,75x80	VITE 12x1,75x80
13	11114631	3	40V	SCREW 12x1,75x120	VITE 12x1,75x120
14	11701721	1	10D	NUT 10x1,5x8	DADO 10x1,5x8
15	12174190	4	180C	COLLAR 40/60x12	COLLARE 40/60x12
16	12174890	4	180C	COLLAR 62/82x14	COLLARE 62/82x14
17	12646821	1	131R	WASHER 10,2x25	ROSETTA 10,2x25
18	14464080	1	158G	O-RING 3,53x37,69	GUARNIZIONE O-R 3,53x37,69
19	14464380	2	158G	O-RING 3,53x47,22	GUARNIZIONE O-R 3,53x47,22
20	14464580	1	158G	O-RING 3,53x53,57	GUARNIZIONE O-R 3,53x53,57
21	15853631	1	50T	PLUG 14x1,5x10	TAPPO 14x1,5x10
22	79007483	1	193T	TUBE	TUBO RIGIDO
23	79007491	1	98S	HALF BRACKET - UPPER	SEMISTAFFA - SUPERIORE
24	79007492	1	98S	HALF BRACKET - LOWER	SEMISTAFFA - INFERIORE
25	79032099	1	30M	SLEEVE	MANICOTTO
26	79034041	1	30M	SLEEVE	MANICOTTO
27	79034585	1	193T	TUBE - REAR C1417	TUBO RIGIDO - POSTERIORE C1417

C 1417 → Tel.n. 050475

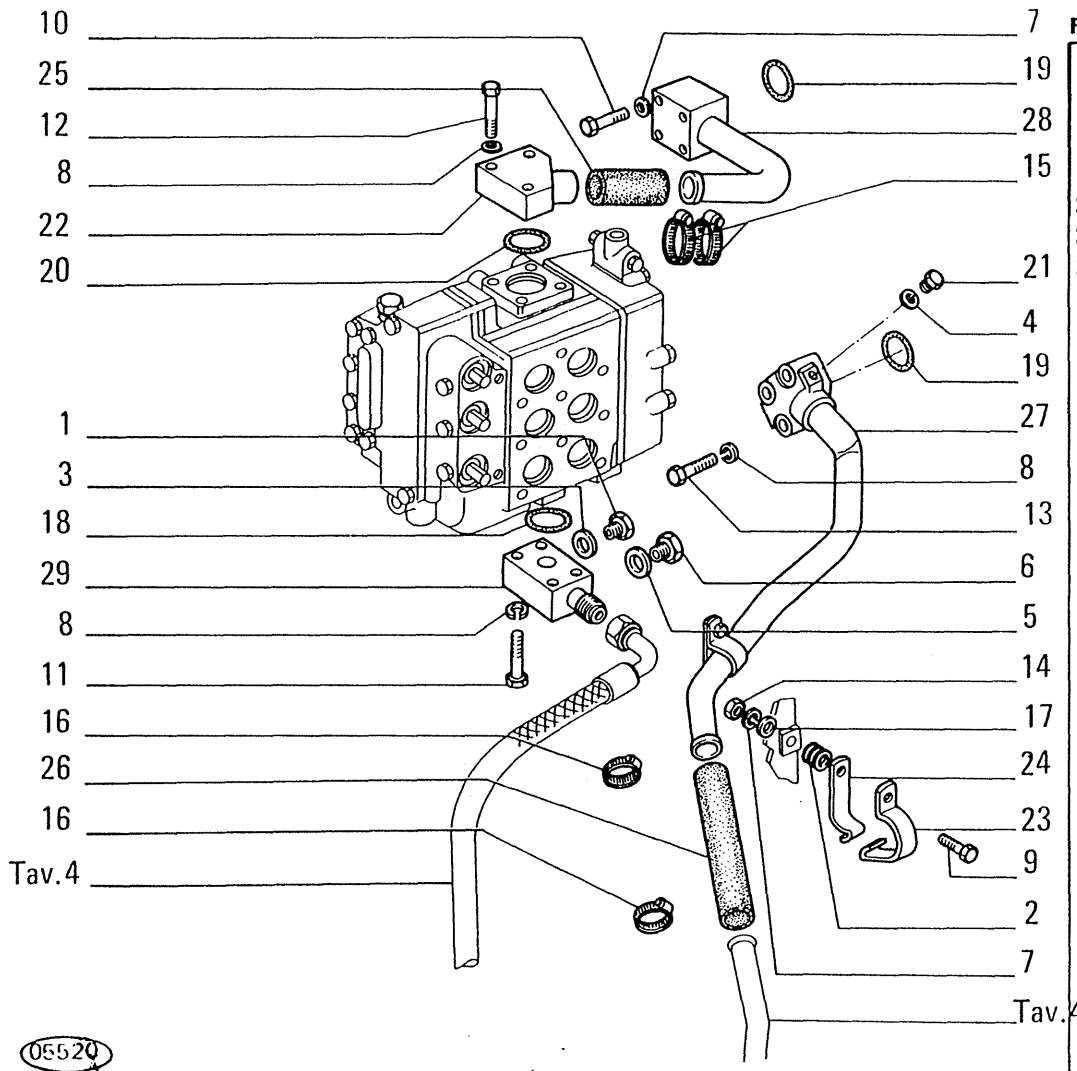

ITEM	PART NUMBER	QTY	TRANS CODE	DESCRIPTION	DESCRIZIONE
27	79045516	1	193T	TUBE - REAR D1417	TUBO RIGIDO - POSTERIORE D1417
28	79039397	1	193T	TUBE	TUBO RIGIDO
29	79040541	1	70F	FLANGE	FLANGIA

D 1417 Tel.n. 050476 →

05520

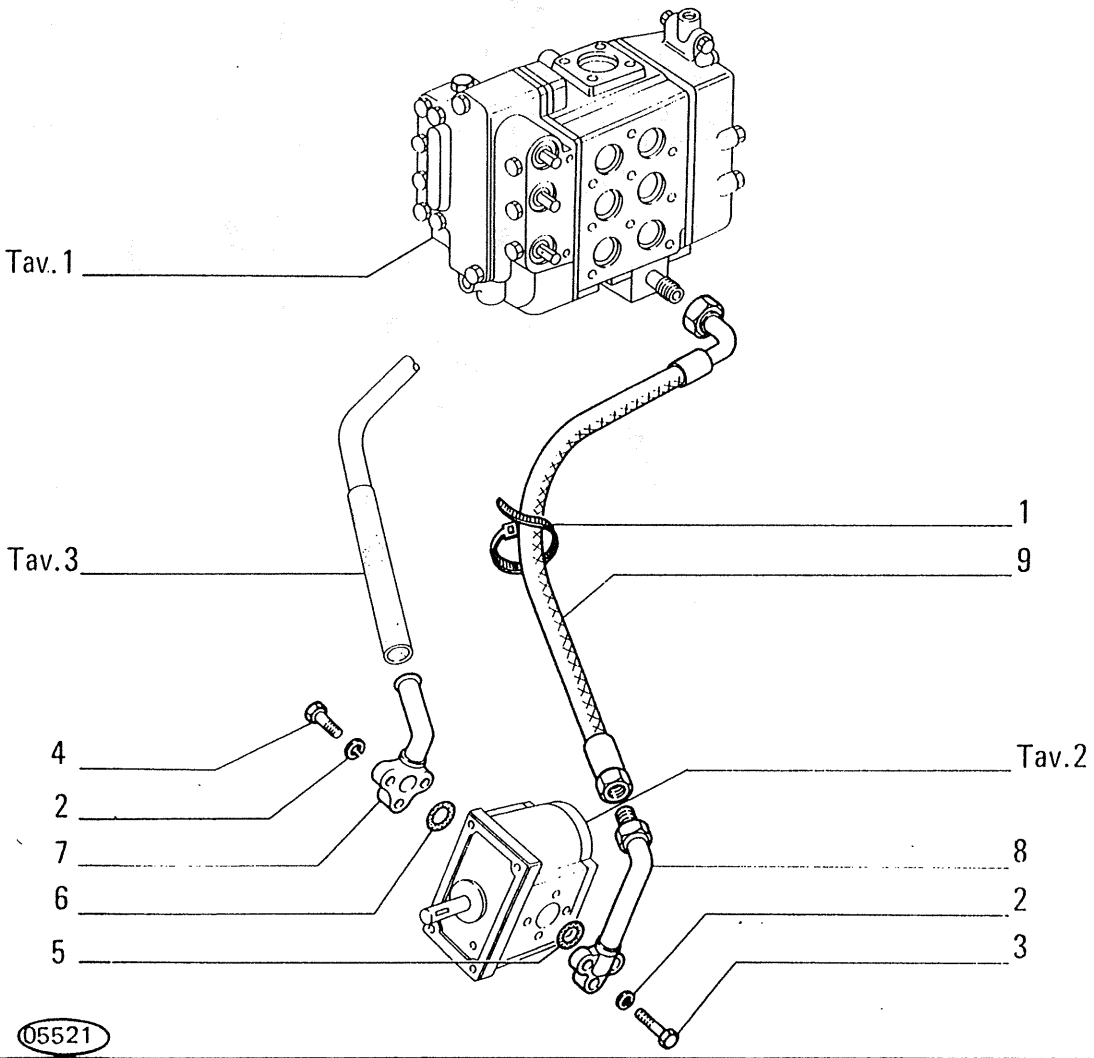

ITEM	PART NUMBER	QTY	TRANS CODE	DESCRIPTION	DESCRIZIONE
1	4982514	2	31F	CLAMP	FASCETTA
2	10571971	6	131R	WASHER 12,2x2,5	ROSETTA 12,2x2,5
3	1113231	3	40V	SCREW	VITE
4	11113731	3	40V	SCREW 12x1,75x75	VITE 12x1,75x75
5	14464080	1	158G	O-RING 3,53x37,69	GUARNIZIONE O-R 3,53x37,69
6	14464380	1	158G	O-RING 3,53x47,22	GUARNIZIONE O-R 3,53x47,22
7	76003179	1	193T	TUBE - FRONT	TUBO RIGIDO - ANTERIORE
8	79040542	1	193T	TUBE - FRONT	TUBO RIGIDO - ANTERIORE
9	79041071	1	192T	HOSE ASSY	TUBO FLESS.C/RACCORDI

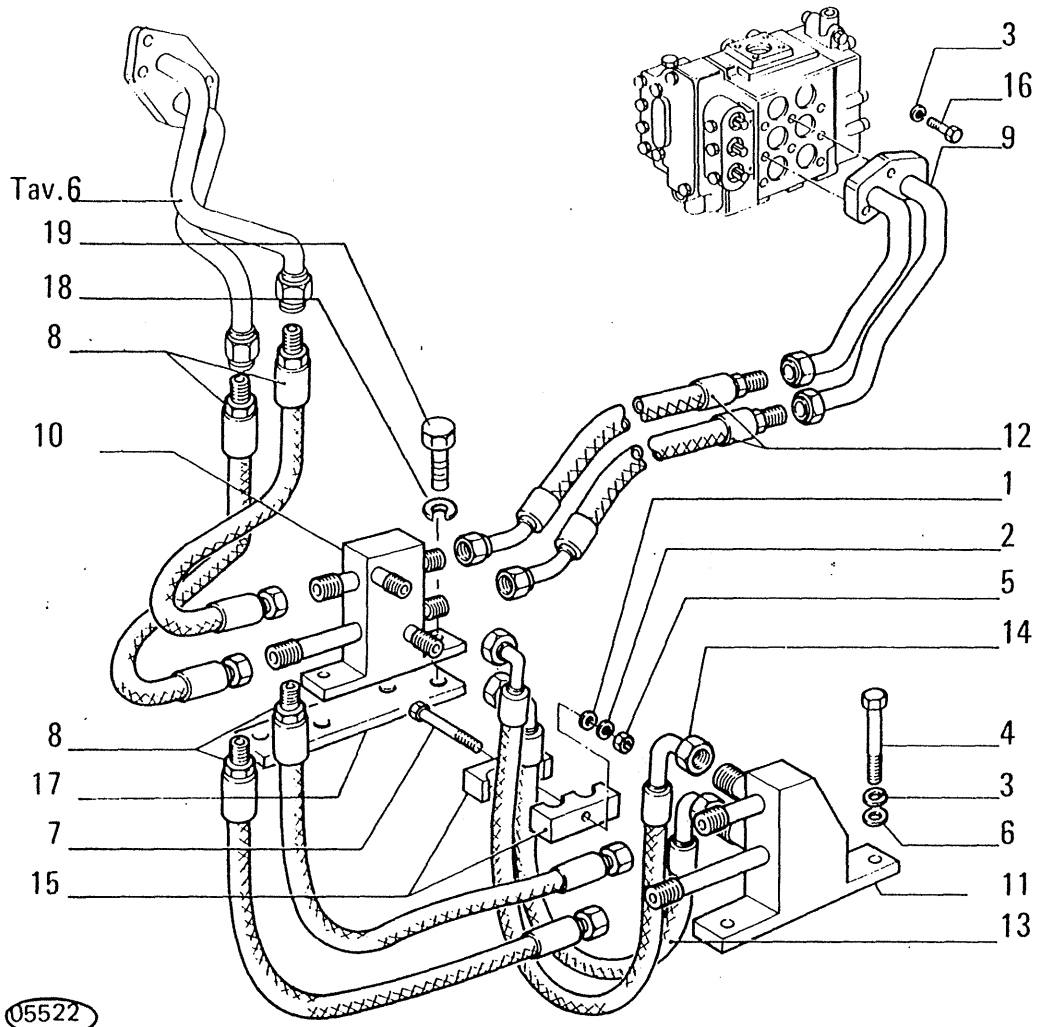

ITEM	PART NUMBER	QTY	TRANS CODE	DESCRIPTION	DESCRIZIONE
1	10519621	1	131R	WASHER 8,45x17	ROSETTA 8,45x17
2	10571771	1	131R	WASHER 8,1x2	ROSETTA 8,1x2
3	10571971	7	131R	WASHER 12,2x2,5	ROSETTA 12,2x2,5
4	11112631	4	40V	SCREW 12x1,75x35	VITE 12x1,75x35
5	11701621	1	10D	NUT 8x1,25x6,5	DADO 8x1,25x6,5
6	12646921	4	131R	WASHER 12,2x28	ROSETTA 12,2x28
7	15213931	1	40V	SCREW 8x1,25x70	VITE 8x1,25x70
8	79041064	4	192T	HOSE ASSY	TUBO FLESS.C/RACCORDI
9	79041175	1	193T	TUBE	TUBO RIGIDO
10	79041183	1	74B	BLOCK - RIGHT	BLOCCHETTO - DESTRO
11	79041186	1	74B	BLOCK - LEFT	BLOCCHETTO - SINISTRO
12	79041190	2	192T	HOSE ASSY - REAR	TUBO FLESS.C/RACCORDI - POSTERIORE
13	79041191	1	192T	HOSE ASSY	TUBO FLESS.C/RACCORDI
14	79041192	1	192T	HOSE ASSY	TUBO FLESS.C/RACCORDI
15	79041839	2	74B	BLOCK	BLOCCHETTO
16	11113031	3	40V	SCREW 12x1,75x45	VITE 12x1,75x45
17	79061043	1	225S	BRACKET (06)	STAFFA (06)
18	10517079	2	170R	LOCKWASHER (06) 12,2x3,1	ROSETTA EL. (06) 12,2x3,1
19	11112431	2	40V	SCREW (06) 12x1,75x30	VITE (06) 12x1,75x30

(06) Units #052919 and up

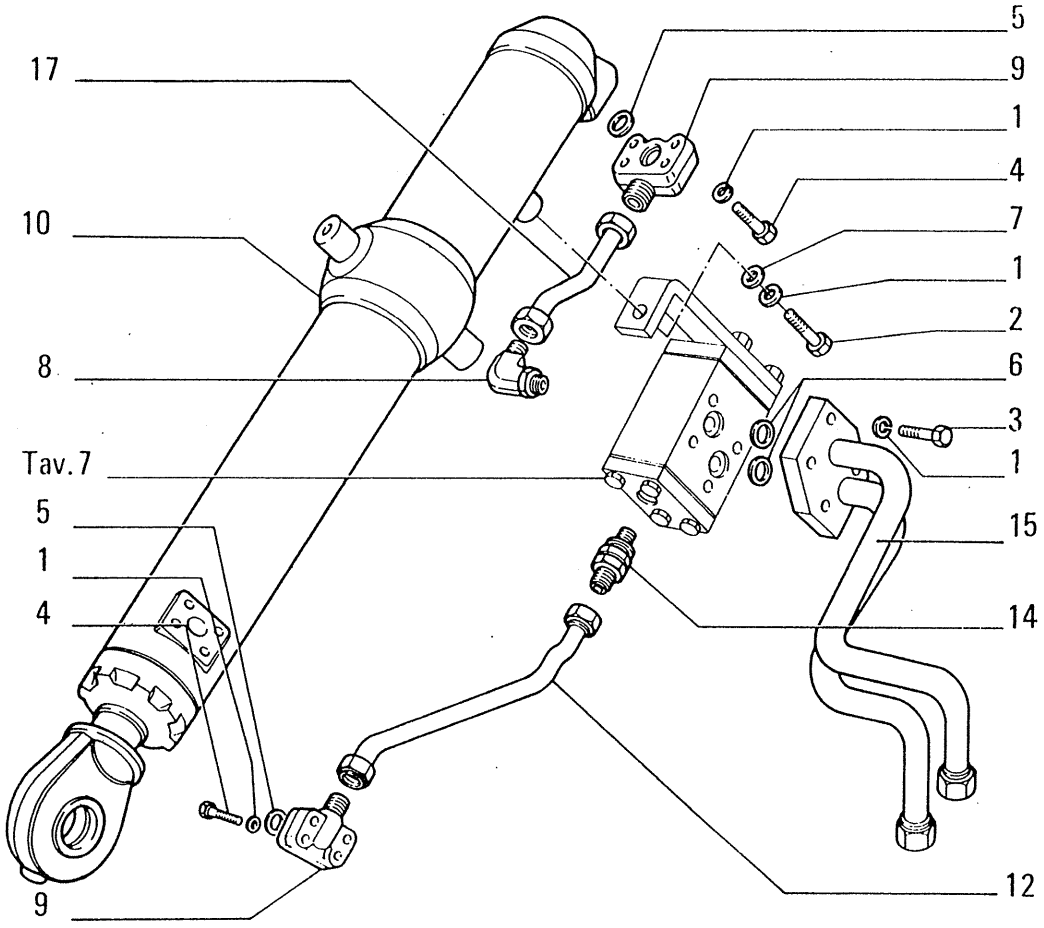

ITEM	PART NUMBER	QTY	TRANS CODE	DESCRIPTION	DESCRIZIONE
1	10571871	26	131R	WASHER 10,2x2,2	ROSETTA 10,2x2,2
2	11106631	2	40V	SCREW 10x1,5x35	VITE 10x1,5x35
3	11106831	8	40V	SCREW 10x1,5x40	VITE 10x1,5x40
4	11107331	16	40V	SCREW 10x1,5x55	VITE 10x1,5x55
5	14463180	4	158G	O-RING 3,53x23,39	GUARNIZIONE O-R 3,53x23,39
6	14463280	4	158G	O-RING 3,53x24,99	GUARNIZIONE O-R 3,53x24,99
7	79005244	2	131R	WASHER	ROSETTA
8	79032592	2	20R	FITTING	RACCORDO
9	79033326	4	20R	FITTING	RACCORDO
10	79016712	1	164C	CYLINDER - LEFT ASSEMBLY SEE SGR. E3.32 **D1969**	CILINDRO - SINISTRO COMPLETO VEDERE SGR. E3.32(01-02) **D1969** (05)
	79016713	1	164C	CYLINDER - RIGHT ASSEMBLY SEE SGR. E3.32 **D1969**	CILINDRO - DESTRO COMPLETO VEDERE SGR. E3.32 **D1969**
	79036659	1	164C	CYLINDER - LEFT ASSEMBLY SEE SGR.E3.32 **C1431**	CILINDRO - SINISTRO COMPLETO VEDERE SGR.E3.32(01-02) **C1431**
	79036660	1	164C	CYLINDER - RIGHT ASSEMBLY SEE SGR.E3.32 **C1431**	CILINDRO - DESTRO COMPLETO VEDERE SGR.E3.32(01-02) **C1431**
	79044372	1	164C	CYLINDER - LEFT ASSEMBLY SEE SGR. E332/4 (03) **C1431**	CILINDRO - SINISTRO COMPLETO VEDERE SGR. E332/4 (03) **C1431**
	79044373	1	164C	CYLINDER - RIGHT ASSEMBLY SEE SGR. E332/4 (03) **C1431**	CILINDRO - DESTRO COMPLETO VEDERE SGR. E332/4 (03)

C 1431 → Tel.n. 051016 D 1969 tel. n. 052847 →

(03) Units with 7 track rollers

(05523)

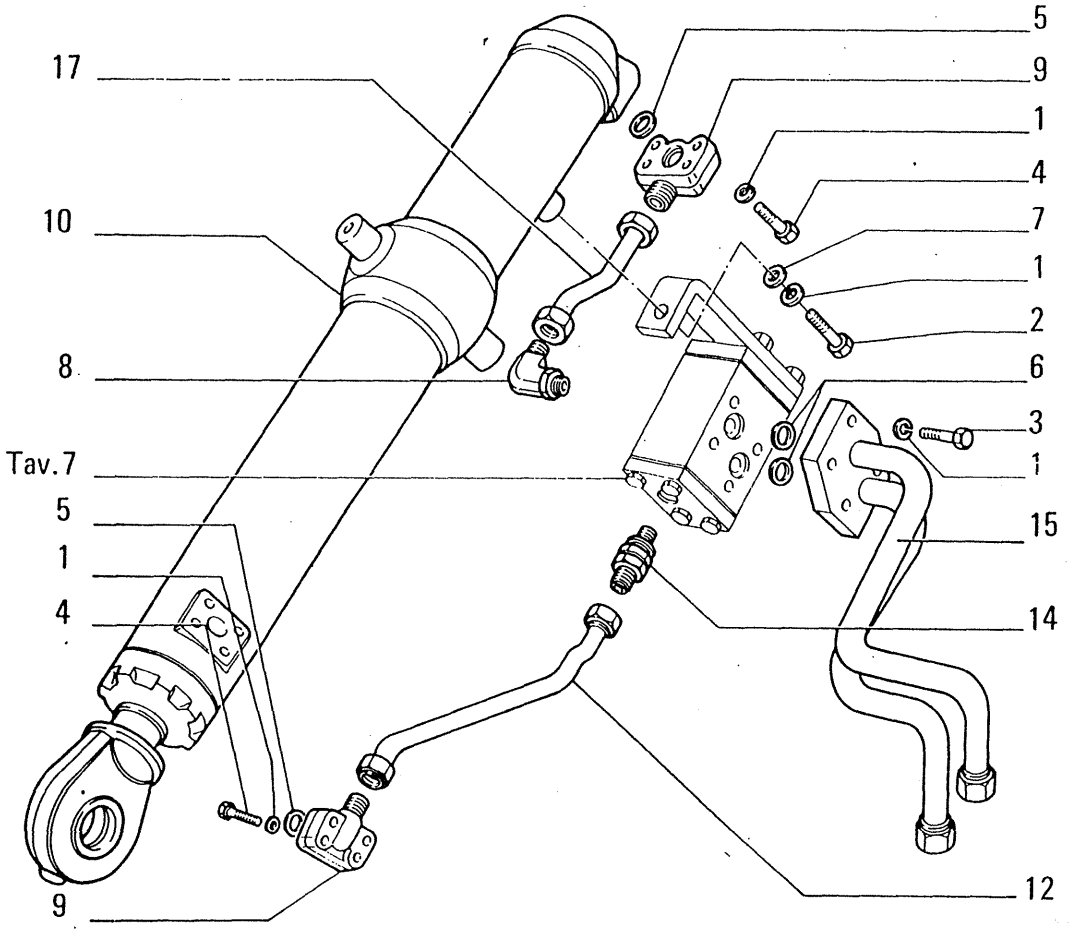

ITEM	PART NUMBER	QTY	TRANS CODE	DESCRIPTION	DESCRIZIONE
10	79044373				**C1431**
	79047919	1	164C	CYLINDER - LEFT ASSEMBLY SEE SGR. E3.32 **C1969**	CILINDRO - SINISTRO COMPLETO VEDERE SGR. E3.32(01-02) **C1969** (05)
	79047920	1	164C	CYLINDER - RIGHT ASSEMBLY SEE SGR. E3.32 **C1969**	CILINDRO - DESTRO COMPLETO VEDERE SGR. E3.32 **C1969**
	79047924	1	164C	CYLINDER - LEFT ASSEMBLY SEE SGR.E3.32/4 (03) **D1431**	CILINDRO - SINISTRO COMPLETO VEDERE SGR.E3.32/4 (03) **D1431**
	79047925	1	164C	CYLINDER - RIGHT ASSEMBLY SEE SGR.E3.32/4 (03) **D1431**	CILINDRO - DESTRO COMPLETO VEDERE SGR.E3.32/4 (03) **D1431**
12	79037334	1	193T	TUBE - FRONT RIGHT	TUBO RIGIDO - ANTERIORE DESTRO (01-02)(05)
	79037339	1	193T	TUBE - FRONT LEFT	TUBO RIGIDO - ANTERIORE SINISTRO (01-02)(05)
	79041632	1	193T	TUBE - FRONT RIGHT (03)	TUBO RIGIDO - ANTERIORE DESTRO (03)
	79041634	1	193T	TUBE - FRONT LEFT (03)	TUBO RIGIDO - ANTERIORE SINISTRO (03)
14	79037345	2	28N	NIPPLE	NIPPLO
15	79041060	1	190T	LINE - RIGHT	TUBAZIONE - DESTRO
	79041061	1	190T	LINE - LEFT	TUBAZIONE - SINISTRO
17	79041150	1	193T	TUBE - REAR RIGHT	TUBO RIGIDO - POSTERIORE DESTRO

D 1431 Tel.n. 051016 → C 1969 → tel. n. 052847

(03) Units with 7 track rollers

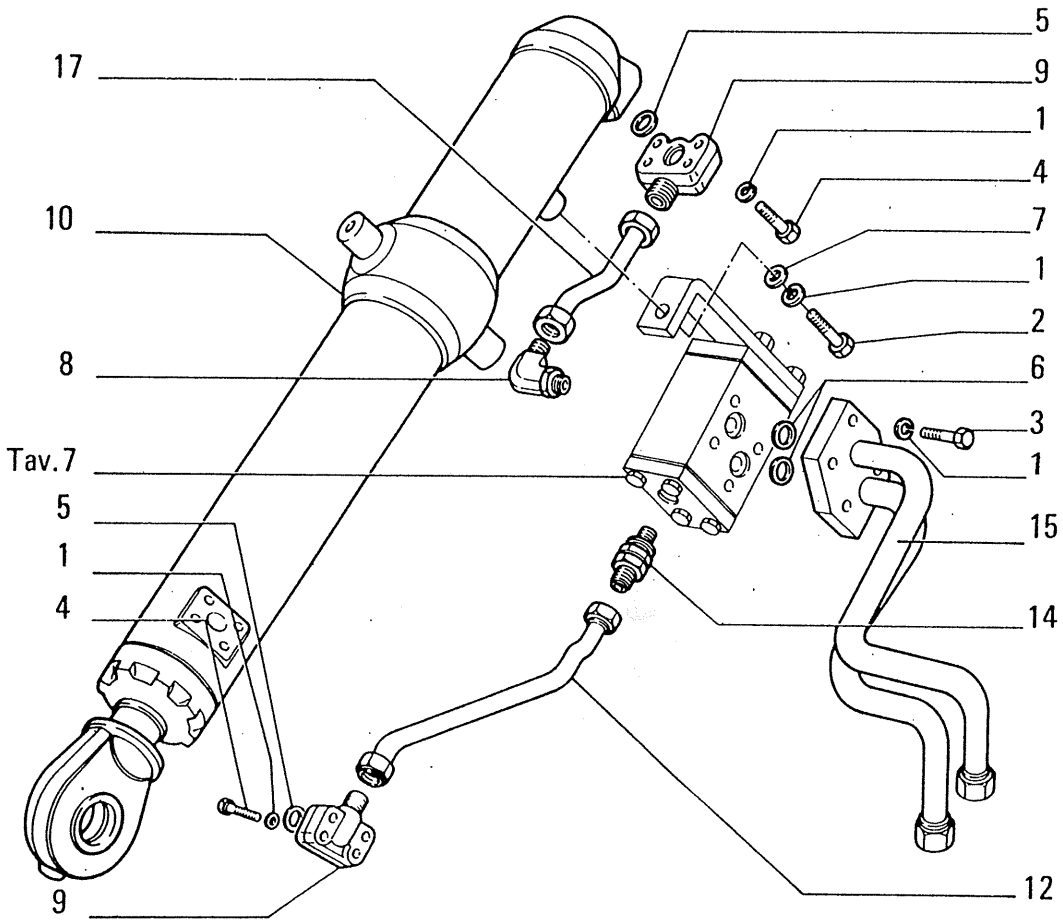

ITEM	PART NUMBER	QTY	TRANS CODE	DESCRIPTION	DESCRIZIONE
17	79041151	1	193T	TUBE - REAR LEFT	TUBO RIGIDO - POSTERIORE SINISTRO

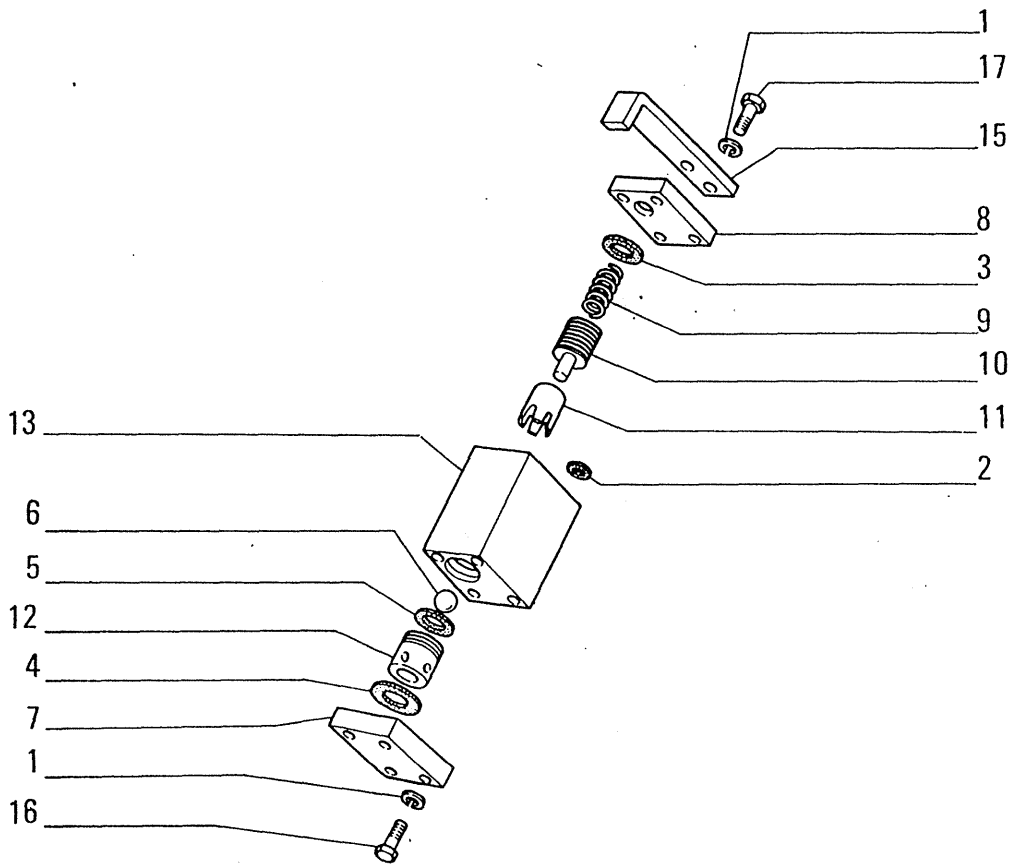

ITEM	PART NUMBER	QTY	TRANS CODE	DESCRIPTION	DESCRIZIONE
1	10571871	16	131R	WASHER 10,2x2,2	ROSETTA 10,2x2,2
2	14456880	2	158G	O-RING 2,62x9,19	GUARNIZIONE O-R 2,62x9,19
3	14458680	2	158G	O-RING 2,62x37,77	GUARNIZIONE O-R 2,62x37,77
4	14459680	2	158G	O-RING 2,62x53,64	GUARNIZIONE O-R 2,62x53,64
5	14463580	2	158G	O-RING 3,53x29,74	GUARNIZIONE O-R 3,53x29,74
6	20062990	2	140S	BALL 25,401	SFERA 25,401
7	79032594	2	70F	FLANGE - FRONT	FLANGIA - ANTERIORE
8	79032595	2	70F	FLANGE - REAR	FLANGIA - POSTERIORE
9	79032598	2	100M	SPRING	MOLLA
10	79032599	2	130P	PLUNGER	PISTONCINO
11	79032600	2	130P	PLUNGER	PISTONCINO
12	79032601	2	69S	SEAT	SEDE
13	79041062	1	300C	BODY - RIGHT	CORPO - DESTRO
	79041063	1	300C	BODY - LEFT	CORPO - SINISTRO
15	79041152	2	225S	BRACKET (01-02)(05)	STAFFA (01-02)(05)
	79041635	2	225S	BRACKET (03)	STAFFA (03)
16	11006631	4	40V	SCREW	VITE
17	11006831	4	40V	SCREW	VITE

(03) Units with 7 track rollers

05524

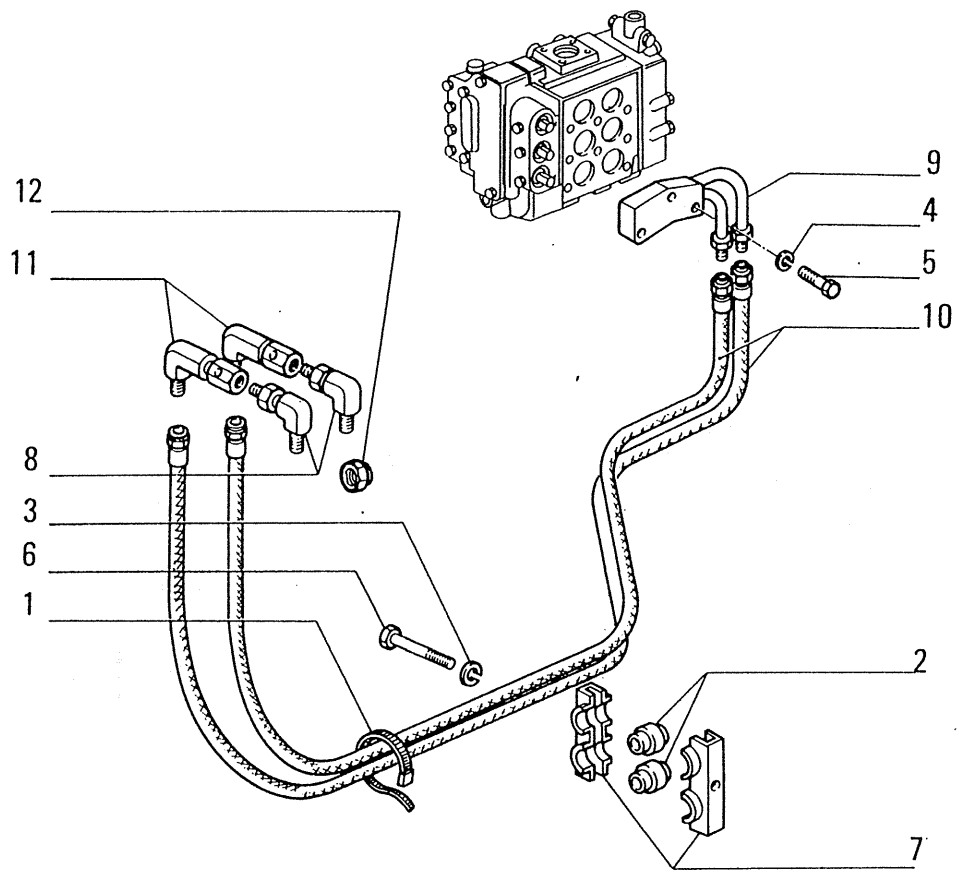

ITEM	PART NUMBER	QTY	TRANS CODE	DESCRIPTION	DESCRIZIONE
1	4982514	2	31F	CLAMP	FASCETTA
2	8295908	2	95B	BUSHING	BOCCOLA
3	10571771	1	131R	WASHER 8,1x2	ROSETTA 8,1x2
4	10571871	3	131R	WASHER 10,2x2,2	ROSETTA 10,2x2,2
5	11113231	3	40V	SCREW 12x1,75x50	VITE 12x1,75x50
6	15213831	1	40V	SCREW 8x1,25x65	VITE 8x1,25x65
7	76001996	2	98S	HALF BRACKET	SEMISTAFFA
8	79040437	2	20R	FITTING **C1934**	RACCORDO **C1934**
	79056754	2	20R	FITTING **D1934**	RACCORDO **D1934**
9	79041610	1	190T	LINE	TUBAZIONE
10	79041613	2	192T	HOSE ASSY	TUBO FLESS.C/RACCORDI
11	79041651	2	20R	FITTING	RACCORDO
12	79045845	2	50T	PLUG **C1119**	TAPPO **C1119**

C 1934 → tel. n. 052012
D 1934 tel. n. 052013 →

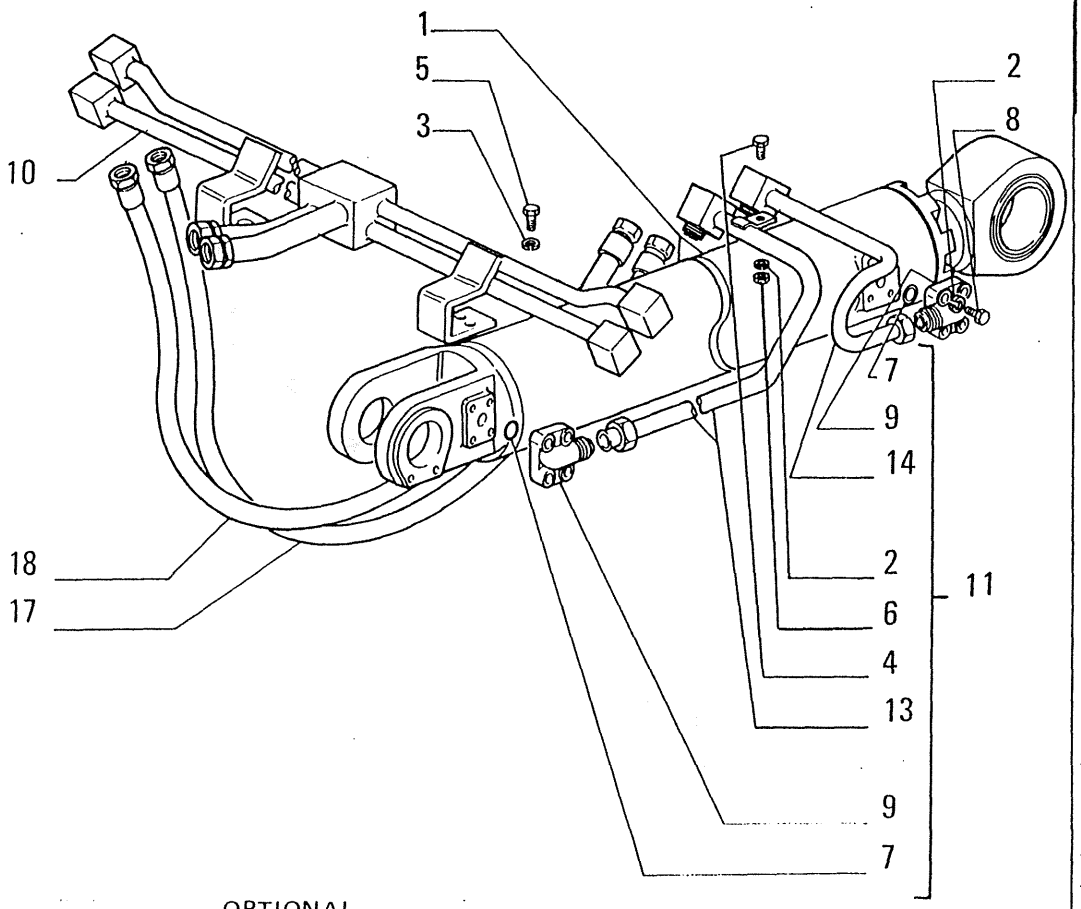

OPTIONAL

VARIANTE 30.0920.13.1

05714

ITEM	PART NUMBER	QTY	TRANS CODE	DESCRIPTION	DESCRIZIONE
1	8299759	2	164C	CYLINDER - ASSEMBLY SEE SGR. E3.32/3 **C1431**	CILINDRO - COMPLETO VEDERE SGR. E3.32/3 **C1431**
	76016711	2	164C	CYLINDER - ASSEMBLY SEE SGR. E3.32/3 **D1969**	CILINDRO - COMPLETO VEDERE SGR. E3.32/3 **D1969**
	79047918	2	164C	CYLINDER - ASSEMBLY SEE SGR. E3.32/3 **C1969**	CILINDRO - COMPLETO VEDERE SGR. E3.32/3 **C1969**
		2	164C	CYLINDER - ASSEMBLY SEE SGR. E332/3 **D1431**	CILINDRO - COMPLETO VEDERE SGR. E332/3 **D1431**
2	10571871	18	131R	WASHER 10,2x2,2	ROSETTA 10,2x2,2
3	10571971	4	131R	WASHER 12,2x2,5	ROSETTA 12,2x2,5
4	11106131	2	40V	SCREW 10x1,5x22	VITE 10x1,5x22
5	11112231	4	40V	SCREW 12x1,75x22	VITE 12x1,75x22
6	11701721	2	10D	NUT 10x1,5x8	DADO 10x1,5x8
7	14463180	4	158G	O-RING 3,53x23,39	GUARNIZIONE O-R 3,53x23,39
8	16160131	16	40V	SCREW	VITE
9	79033326	4	20R	FITTING	RACCORDO
10	79040393	1	190T	LINE	TUBAZIONE
11	79040400	1	190T	LINE - RIGHT ASSEMBLY	TUBAZIONE - DESTRO COMPLETO
	79040401	1	190T	LINE - LEFT ASSEMBLY	TUBAZIONE - SINISTRO COMPLETO
13	79040402	1	193T	TUBE - FRONT RIGHT	TUBO RIGIDO - ANTERIORE DESTRO
	79040404	1	193T	TUBE - FRONT LEFT	TUBO RIGIDO - ANTERIORE SINISTRO
14	79040403	1	193T	TUBE - REAR DS.	TUBO RIGIDO - POSTERIORE DS.
	79040405	1	193T	TUBE - REAR LEFT	TUBO RIGIDO - POSTERIORE SINISTRO
17	79040412	2	192T	HOSE ASSY	TUBO FLESS.C/RACCORDI
18	79040413	2	192T	HOSE ASSY	TUBO FLESS.C/RACCORDI

C 1431 → Tel.n. 051016 C 1969 ⟶ tel. n. 052847

D 1431 Tel.n. 051016 → D 1969 tel. n. 052847 ⟶

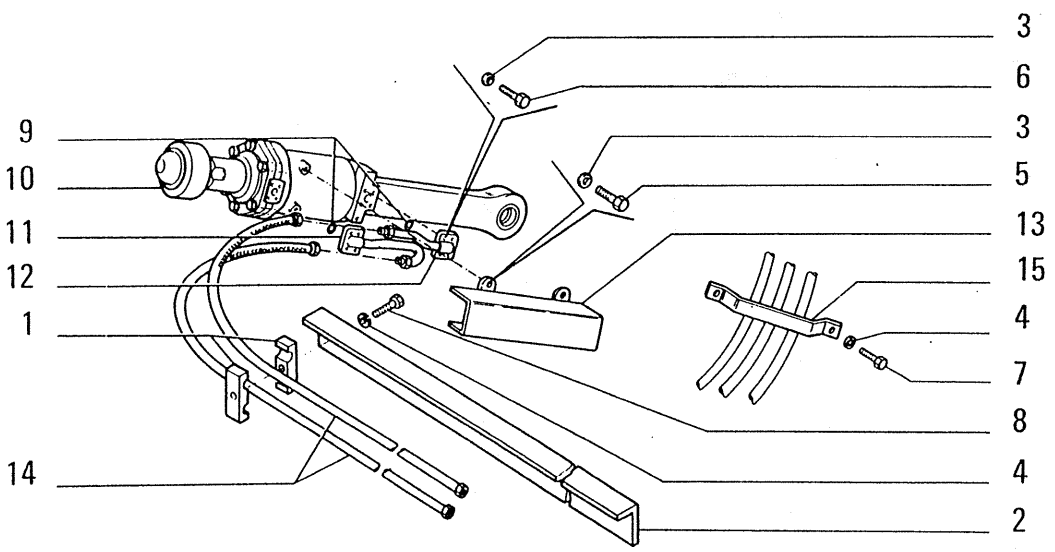

ITEM	PART NUMBER	QTY	TRANS CODE	DESCRIPTION	DESCRIZIONE
1	8284842	4	74B	BLOCK	BLOCCHETTO
2	8296636	1	224P	SHIELD	PROTEZIONE
3	10571871	12	131R	WASHER 10,2x2,2	ROSETTA 10,2x2,2
4	10571971	4	131R	WASHER 12,2x2,5	ROSETTA 12,2x2,5
5	11106031	4	40V	SCREW 10x1,5x20	VITE 10x1,5x20
6	11106631	8	40V	SCREW 10x1,5x35	VITE 10x1,5x35
7	11112431	2	40V	SCREW 12x1,75x30	VITE 12x1,75x30
8	11113431	2	40V	SCREW 12x1,75x60	VITE 12x1,75x60
9	14463580	2	158G	O-RING 3,53x29,74	GUARNIZIONE O-R 3,53x29,74
10	76016716	1	164C	CYLINDER - ASSEMBLY SEE SGR. E3.32/2 **D1969**	CILINDRO - COMPLETO VEDERE SGR. E3.32/2 **D1969**
	79031497	1	164C	CYLINDER - ASSEMBLY SEE SGR. E3.32/2 **C1431**	CILINDRO - COMPLETO VEDERE SGR. E3.32/2 **C1431**
	79047922	1	164C	CYLINDER - ASSEMBLY SEE SGR. E3.32/2 **C1969**	CILINDRO - COMPLETO VEDERE SGR. E3.32/2 **C1969**
		1	164C	CYLINDER - ASSEMBLY SEE SGR E332/2 **D1431**	CILINDRO - COMPLETO VEDERE SGR E332/2 **D1431**
11	79033292	1	190T	LINE - FRONT	TUBAZIONE - ANTERIORE
12	79033293	1	190T	LINE - REAR	TUBAZIONE - POSTERIORE
13	79033299	1	70R	GUARD	RIPARO
14	79033562	2	192T	HOSE ASSY	TUBO FLESS.C/RACCORDI
15	79040822	1	225S	BRACKET	STAFFA

C 1431 → Tel.n. 051016 C 1969 ⟶ tel. n. 052847
D 1431 Tel.n. 051016 → D 1969 tel. n. 052847 ⟶

OPTIONAL

30.1070.10.1

VARIANTE

05715

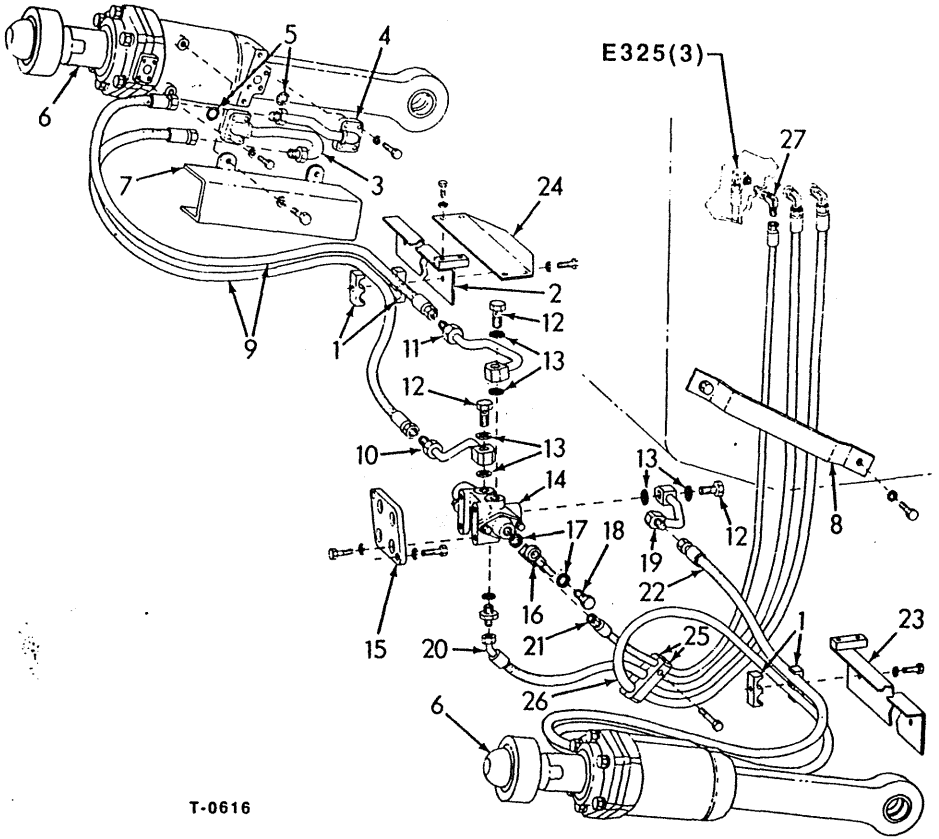

ITEM	PART NO.	QTY.	CODE	DESCRIPTION	DENOMINAZIONE
1	08284842	8	120M	CLAMP	MORSETTO COLLARE
2	79030981	1	115G	GUARD	PROTEZIONE
			600B	RIGHT	DESTRO
	11113431	2	40V	CAPSCREW,M12X1.75X60	VITE
	10571971	2	132R	LOCKWASHER	ROSETTA DI SICUREZZA
3	79033292	2	206T	TUBE	TUBO
	11106631	8	40V	CAPSCREW,M10X1.5X35	VITE
	10571871	8	132R	LOCKWASHER	ROSETTA DI SICUREZZA
4	79033293	2	206T	TUBE	TUBO
	11106631	8	40V	CAPSCREW,M10X1.5X35	VITE
	10571871	8	132R	LOCKWASHER	ROSETTA DI SICUREZZA
5	14463580	4	55A	O-RING	ANELLO DI TENUTA
6	76016716	1	164C	CYLINDER (E332/2)	CILINDRO
			600B	RIGHT	DESTRO
	70616717	1	164C	CYLINDER (E332/2A)	CILINDRO
			600A	LEFT	SINISTRO
7	79033299	2	115G	GUARD	PROTEZIONE
	11160631	8	40V	CAPSCREW,M10X1.5X20	VITE
	10571871	8	132R	LOCKWASHER	ROSETTA DI SICUREZZA
8	79040822	1	80M	BRACKET	MENSOLA
	11112431	2	40V	CAPSCREW,M12X1.75X30	VITE
	10571971	2	132R	LOCKWASHER	ROSETTA DI SICUREZZA
9	79033561	2	192T	HOSE	TUBO FLESSIBILE
10	79033553	1	206T	TUBE	TUBO
11	79033555	1	206T	TUBE	TUBO
12	08299534	3	75B	CONNECTOR	BLOCCHETTO CONNESSIONE
13	45481995	6	123G	GASKET	GUARNIZIONE DI TENUTA
14	79032043	1	27D	VLAVE,DIVERTOR(E331(3))	DEVIATORE
	11106031	4	40V	CAPSCREW,M10X1.5X20	VITE
	10571871	4	132R	LOCKWASHER	ROSETTA DI SICUREZZA
15	79030794	1	105P	PLATE	PIASTRA
	11112631	2	40V	CAPSCREW,M12X1.X35	VITE
	10571971	2	132R	LOCKWASHER	ROSETTA DI SICUREZZA
16	79040816	1	206T	TUBE	TUBO
17	10257460	2	123G	GASKET	GUARNIZIONE DI TENUTA
18	10182617	1	75B	CONNECTOR	BLOCCHETTO CONNESSIONE
19	79033557	1	206T	TUBE	TUBO

JSAGE: UNIT EQUIPPED WITH 2 TILT CYLINDERS.

TILT CYLINDERS & PIPING

E302/2A

Added April 1989

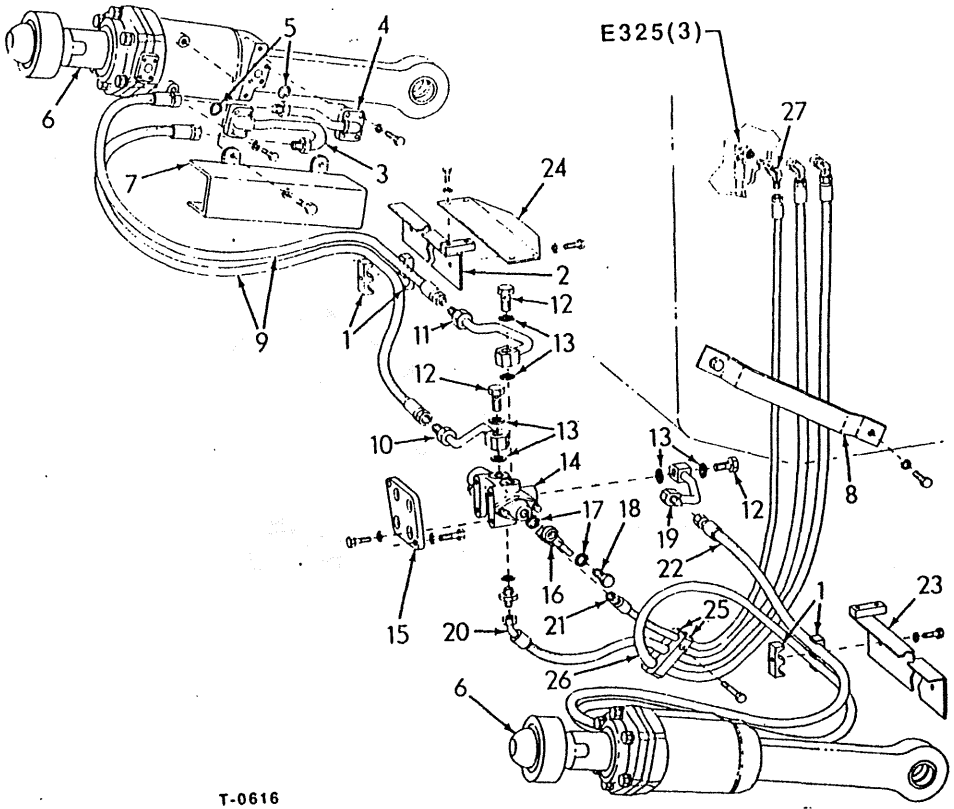

ITEM	PART NO.	QTY.	CODE	DESCRIPTION	DENOMINAZIONE
20	79033563	1	192T	HOSE	TUBO FLESSIBILE
	79040815	1	75B	CONNECTOR	BLOCCHETTO CONNESSIONE
21	79035581	1	192T	HOSE	TUBO FLESSIBILE
22	79035580	1	192T	HOSE	TUBO FLESSIBILE
23	79030846	1	115G	GUARD	PROTEZIONE
	11113431	2	40V	CAPSCREW,M12X1.75X60	VITE
	10571971	2	132R	LOCKWASHER	ROSETTA DI SICUREZZA
24	79045257	1	115G	GUARD	PROTEZIONE
	11106031	4	40V	CAPSCREW,M10X1.5X20	VITE
	10571871	4	132R	LOCKWASHER	ROSETTA DI SICUREZZA
25	79038765	1	120M	CLAMP	MORSETTO COLLARE
	11107331	1	40V	CAPSCREW,M10X55	VITE
	10571871	1	132R	LOCKWASHER	ROSETTA DI SICUREZZA
	11701721	1	10D	NUT,M10	DADO
26	79033562	1	192T	HOSE	TUBO FLESSIBILE
27	79040831	1	85G	ELBOW	GOMITO

JSAGE: UNIT EQUIPPED WITH 2 TILT CYLINDERS.

	TILT CYLIINDERS & PIPING	E302/2A	
		Added April 1989	

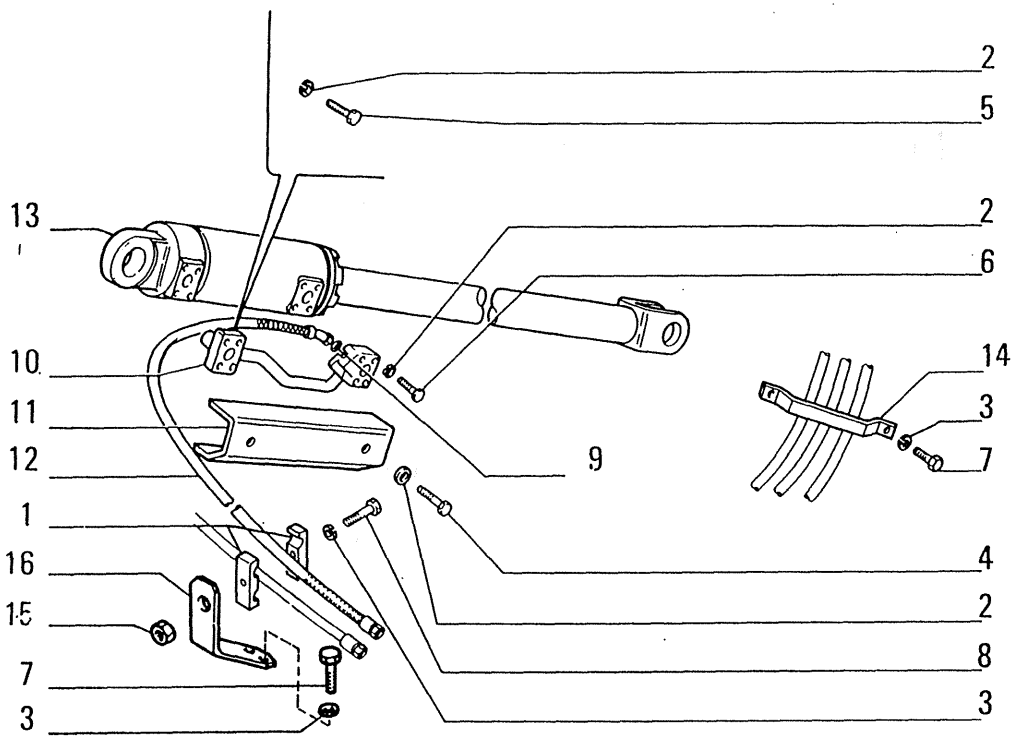

OPTIONAL 30.1124.06.1
VARIANTE

ITEM	PART NUMBER	QTY	TRANS CODE	DESCRIPTION	DESCRIZIONE
1	8284842	6	74B	BLOCK (*)	BLOCCHETTO (*)
2	10571871	10	131R	WASHER (*) 10,2x2,2	ROSETTA (*) 10,2x2,2
3	10571971	7	131R	WASHER (*) 12,2x2,5	ROSETTA (*) 12,2x2,5
4	11106031	2	40V	SCREW (*) 10x1,5x20	VITE (*) 10x1,5x20
5	11107031	4	40V	SCREW (*) 10x1,5x45	VITE (*) 10x1,5x45
6	11107431	4	40V	SCREW (*) 10x1,5x60	VITE (*) 10x1,5x60
7	11112431	4	40V	SCREW (*) 12x1,75x30	VITE (*) 12x1,75x30
8	11113431	3	40V	SCREW (*) 12x1,75x60	VITE (*) 12x1,75x60
9	14463080	2	158G	O-RING (*) 3,53x21,82	GUARNIZIONE O-R (*) 3,53x21,82
10	79034173	1	190T	LINE (*)	TUBAZIONE (*)
11	79034191	1	70R	GUARD (*)	RIPARO (*)
12	79034225	2	192T	HOSE ASSY	TUBO FLESS.C/RACCORDI
	79041834	1	192T	HOSE ASSY (*)	TUBO FLESS.C/RACCORDI (*)
13	76016714	1	164C	CYLINDER - ASSEMBLY SEE SGR. E3.32/1 (*) **D1969**	CILINDRO - COMPLETO VEDERE SGR. E3.32/1 (*) **D1969**
	79037026	1	164C	CYLINDER - ASSEMBLY SEE SGR. E3.32/1 **C1431**	CILINDRO - COMPLETO VEDERE SGR. E3.32/1 **C1431**
	79047921	1	164C	CYLINDER - ASSEMBLY SEE SGR. E3.32/1 (*) **C1969**	CILINDRO - COMPLETO VEDERE SGR. E3.32/1 (*) **C1969**
		1	164C	CYLINDER - ASSEMBLY SEE SGR. E332/1 (*) **D1431**	CILINDRO - COMPLETO VEDERE SGR. E332/1 (*) **D1431**
14	79040822	1	225S	BRACKET (*)	STAFFA (*)
15	11702921	1	10D	NUT (*) 12x1,75x10	DADO (*) 12x1,75x10
16	79045236	1	225S	BRACKET (*)	STAFFA (*)
(*)			469P	FOR SPECIAL EQUIPMENT 30.0564.02.2	PER VARIANTE 30.0564.02.2

C 1431 → Tel.n. 051016 C 1969 ⟶ tel. n. 052847
D 1431 Tel.n. 051016 → D 1969 tel. n. 052847 ⟶

05750

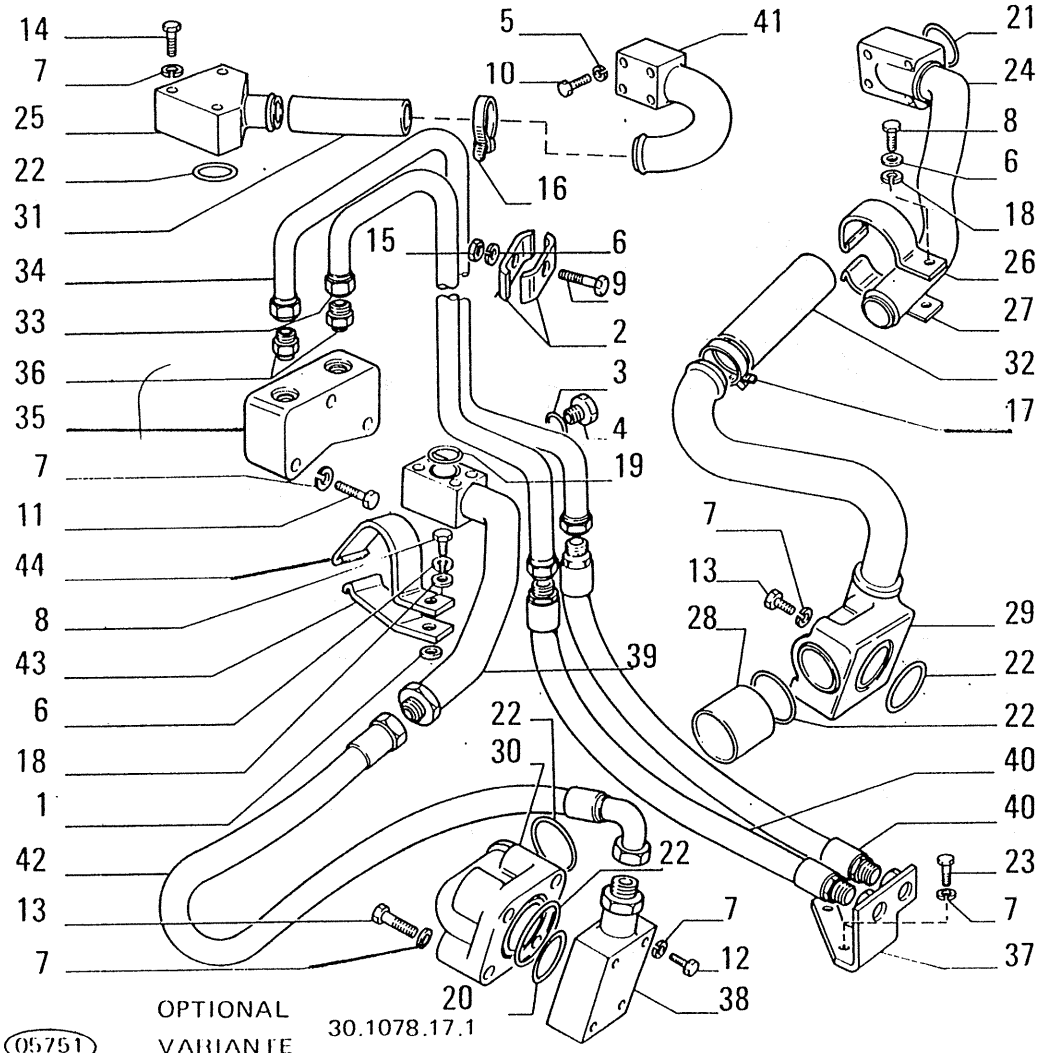

ITEM	PART NUMBER	QTY	TRANS CODE	DESCRIPTION	DESCRIZIONE
1	4967724		131R	WASHER	ROSETTA
2	8292704	2	225S	BRACKET	STAFFA
3	10296160	1	133R	SEAL 12,2x18	ROSETTA DI TENUTA 12,2x18
4	10300571	1	50T	PLUG 12x1,5x8	TAPPO 12x1,5x8
5	10569471	4	131R	WASHER 10,2x2,5	ROSETTA 10,2x2,5
6	10571871	3	131R	WASHER 10,2x2,2	ROSETTA 10,2x2,2
7	10571971	22	131R	WASHER 12,2x2,5	ROSETTA 12,2x2,5
8	11106231	2	40V	SCREW 10x1,5x25	VITE 10x1,5x25
9	11107231	1	40V	SCRLW 10x1,5x50	VITE 10x1,5x50
10	11107731	4	40V	SCREW 10x1,5x75	VITE 10x1,5x75
11	11113431	3	40V	SCREW 12x1,75x60	VITE 12x1,75x60
12	11113631	8	40V	SCREW 12x1,75x70	VITE 12x1,75x70
13	11113731	11	40V	SCREW 12x1,75x75	VITE 12x1,75x75
14	11113831	3	40V	SCREW 12x1,75x80	VITE 12x1,75x80
15	11701721	1	10D	NUT 10x1,5x8	DADO 10x1,5x8
16	12174790	4	180C	COLLAR 47/67x14	COLLARE 47/67x14
17	12174890	4	180C	COLLAR 62/82x14	COLLARE 62/82x14
18	12646821	2	131R	WASHER 10,2x25	ROSETTA 10,2x25
19	14464080	1	158G	O-RING 3,53x37,69	GUARNIZIONE O-R 3,53x37,69
20	14464180	1	158G	O-RING 3,53x40,87	GUARNIZIONE O-R 3,53x40,87
21	14464380	2	158G	O-RING 3,53x47,22	GUARNIZIONE O-R 3,53x47,22
22	14464580	5	158G	O-RING 3,53x53,57	GUARNIZIONE O-R 3,53x53,57
23	15540631	2	40V	SCREW 12x1,25x40	VITE 12x1,25x40
24	76003182	1	193T	TUBE - REAR	TUBO RIGIDO - POSTERIORE
25	79007483	1	193T	TUBE	TUBO RIGIDO
26	79007491	1	98S	HALF BRACKET	SEMISTAFFA
27	79007492	1	98S	HALF BRACKET - LOWER	SEMISTAFFA - INFERIORE

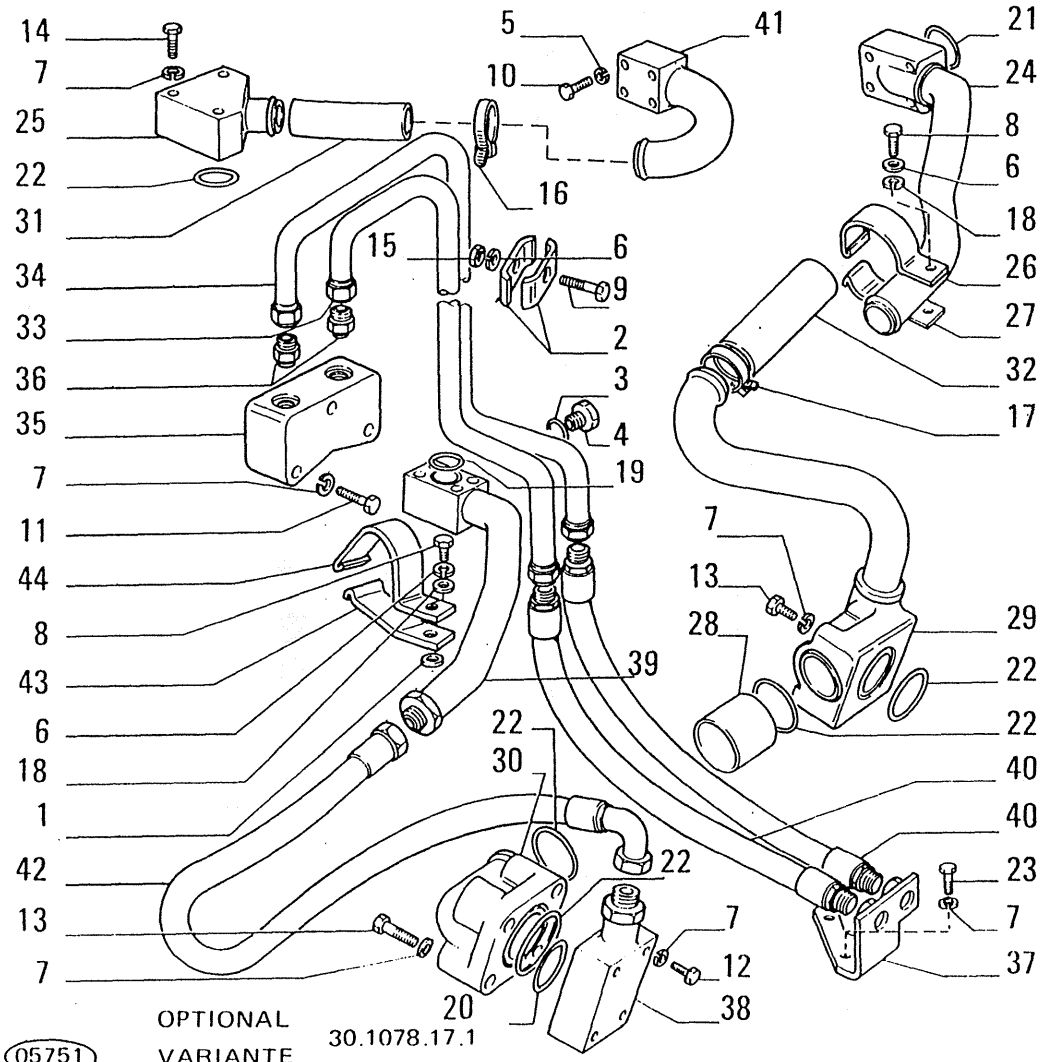

ITEM	PART NUMBER	QTY	TRANS CODE	DESCRIPTION	DESCRIZIONE
28	79008888	1	193T	TUBE	TUBO RIGIDO
29	79012004	1	193T	TUBE - FRONT	TUBO RIGIDO - ANTERIORE
30	79016721	1	20R	FITTING	RACCORDO
31	79032099	1	30M	SLEEVE	MANICOTTO
32	79034040	1	30M	SLEEVE	MANICOTTO
33	79035177	1	193T	TUBE - LOWER	TUBO RIGIDO - INFERIORE
34	79035178	1	193T	TUBE - UPPER	TUBO RIGIDO - SUPERIORE
35	79035179	1	70F	FLANGE	FLANGIA
36	79035180	2	20R	FITTING	RACCORDO
37	79035183	1	225S	BRACKET	STAFFA
38	79036690	1	193T	TUBE - FRONT	TUBO RIGIDO - ANTERIORE
39	79036692	2	193T	TUBE - REAR	TUBO RIGIDO - POSTERIORE
40	79037650	2	192T	HOSE ASSY	TUBO FLESS.C/RACCORDI
41	79039397	1	193T	TUBE	TUBO RIGIDO
42	79040758	1	192T	HOSE ASSY	TUBO FLESS.C/RACCORDI
43	79043575	1	98S	HALF BRACKET - UPPER	SEMISTAFFA - SUPERIORE
44	79043576	1	98S	HALF BRACKET - LOWER	SEMISTAFFA - INFERIORE

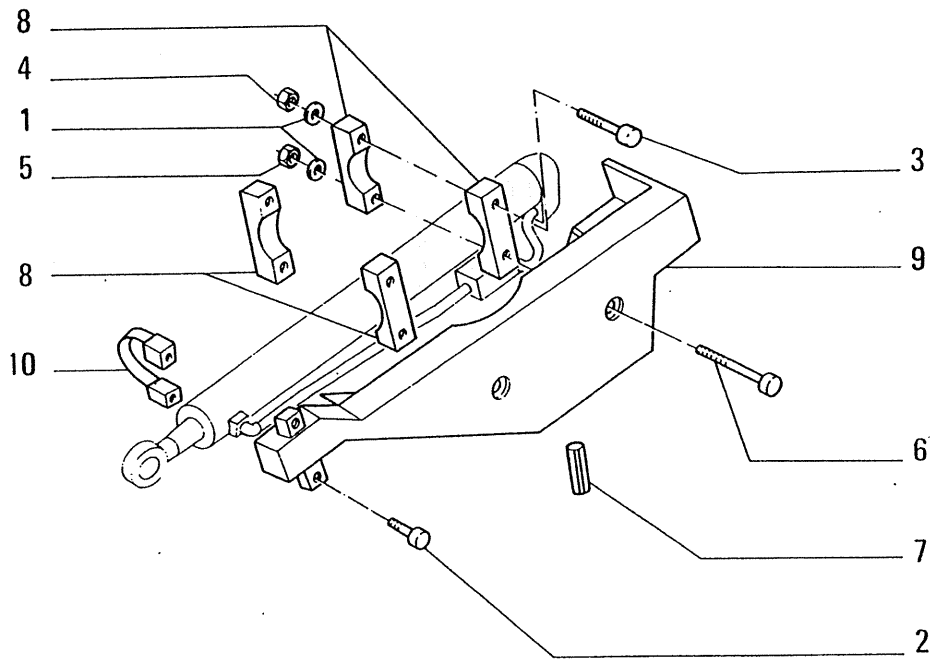

OPTIONAL
VARIANTE 30.0870.02.1

ITEM	PART NUMBER	QTY	TRANS CODE	DESCRIPTION	DESCRIZIONE
1	10517171	12	170R	LOCKWASHER 14,2x3,5	ROSETTA EL. 14,2x3,5
2	11116673	4	40V	SCREW	VITE
3	11118373	4	40V	SCREW	VITE
4	12163221	4	10D	NUT 4x0,7x11	DADO 4x0,7x11
5	12164021	4	10D	NUT 14x1,5x11	DADO 14x1,5x11
6	15979831	4	40V	SCREW	VITE
7	76002172	2	222P	EXTENSION	PROLUNGA
8	76014485	8	225S	BRACKET	STAFFA
9	76013868	1	70R	GUARD - RIGHT	RIPARO - DESTRO
	76013869	1	70R	GUARD - LEFT	RIPARO - SINISTRO
10	76013880	2	225S	BRACKET - FRONT	STAFFA - ANTERIORE

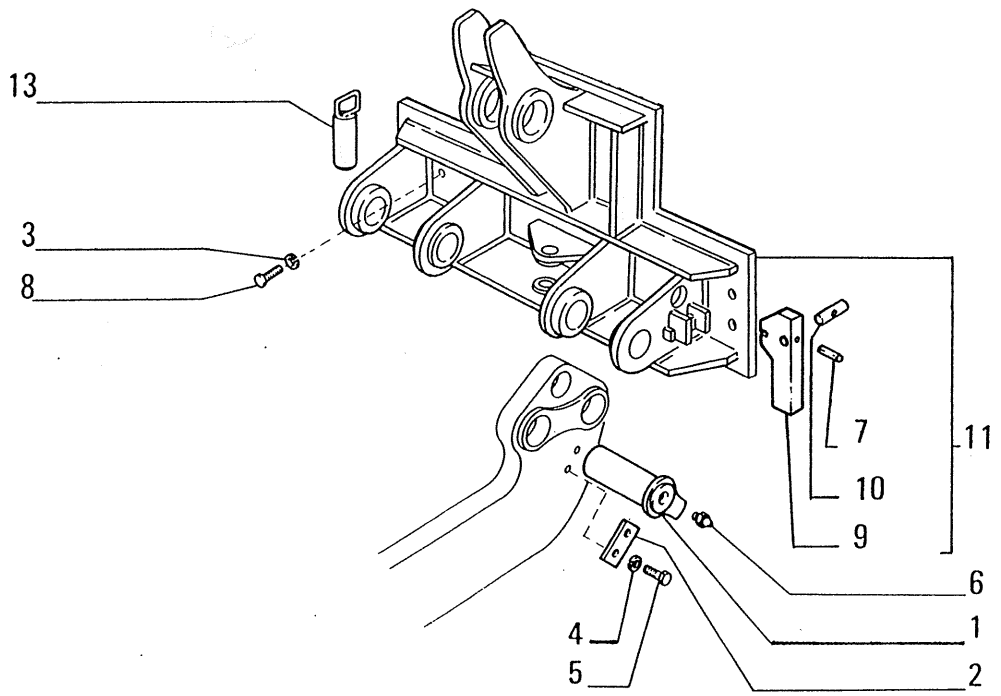

OPTIONAL
VARIANTE 30.0920.13.1

ITEM	PART NUMBER	QTY	TRANS CODE	DESCRIPTION	DESCRIZIONE
1	8299929	2	80P	PIN	PERNO
2	8299995	3	110P	PLAQUE	PIASTRINA
3	10517671	14	131R	WASHER 24,3x5,5	ROSETTA 24,3x5,5
4	10571971	6	131R	WASHER 12,2x2,5	ROSETTA 12,2x2,5
5	11112431	6	40V	SCREW 12x1,75x30	VITE 12x1,75x30
6	13407211	3	60I	GREASE FITTING 10x1	INGRASSATORE 10x1
7	14164470	1	200S	PIN 4,4x32	SPINA 4,4x32
8	15997337	14	40V	SCREW 24x2x70	VITE 24x2x70
9	79024883	1	60T	BLOCK	TASSELLO
10	79024884	1	80P	PIN	PERNO
11	79035675	1	105P	PLATE - ASSEMBLY	PIASTRA - COMPLETO
12	79038167	2	45A	RING	ANELLO
13	79038238	1	80P	PIN	PERNO

05752

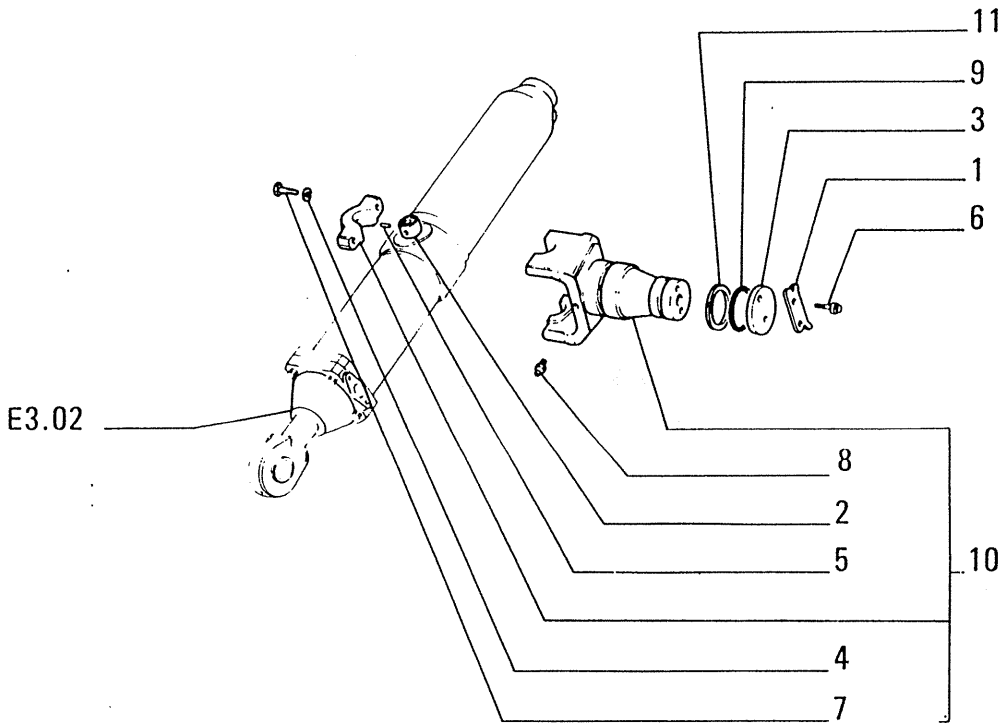

ITEM	PART NUMBER	QTY	TRANS CODE	DESCRIPTION	DESCRIZIONE
1	546819	2	110P	PLAQUE	PIASTRINA
2	8271634	4	95B	BUSHING	BOCCOLA
3	8273605	2	60D	DISC	DISCO
4	10517171	8	131R	WASHER 14,2x3,5	ROSETTA 14,2x3,5
5	10839510	4	90G	DOWEL 6x9	GRANO 6x9
6	11115631	4	40V	SCREW 14x2x35	VITE 14x2x35
7	11116531	8	40V	SCREW 14x2x65	VITE 14x2x65
8	13407211	2	60I	GREASE FITTING 10x1	INGRASSATORE 10x1
9	14465280	2	158G	O-RING 3,53x75,79	GUARNIZIONE O-R 3,53x75,79
10	79032892	2	85F	YOKE - ASSEMBLY	FORCELLA - COMPLETO
11	79033615	2	158G	O-RING	GUARNIZIONE O-R

05753

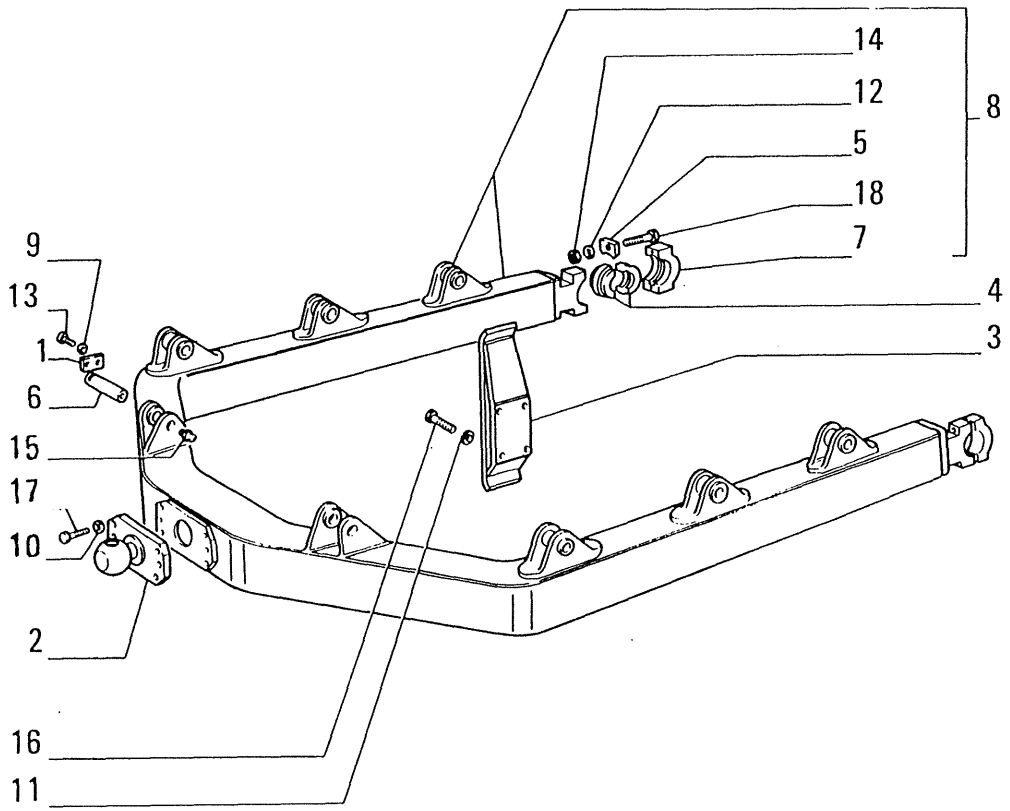

ITEM	PART NUMBER	QTY	TRANS CODE	DESCRIPTION	DESCRIZIONE
1	8270126	2	110P	PLAQUE (*)	PIASTRINA (*)
2	8274616	1	300S	SUPPORT (*)	SUPPORTO (*)
3	8280573	2	45P	PAD (1*)	PATTINO (1*)
4	8280908	2	96S	HALF BUSHING (*)	SEMIBOCCOLA (*)
5	8280915	4	110P	PLAQUE (*)	PIASTRINA (*)
6	8290362	2	80P	PIN (*)	PERNO (*)
7	8296138	2	300S	SUPPORT (*)	SUPPORTO (*)
8	8297154	1	81A	C-FRAME - ASSEMBLY (*)	ARCONE - COMPLETO (*)
9	10517171	4	131R	WASHER (*) 14,2x3,5	ROSETTA (*) 14,2x3,5
10	10517371	6	131R	WASHER (*) 18,2x4,2	ROSETTA (*) 18,2x4,2
11	10517371	8	132R	LOCKWASHER (1*) 18,2x4,2	ROSETTA DI SICUREZZA (1*) 18,2x4,2
12	10517671	4	131R	WASHER (*) 24,3x5,5	ROSETTA (*) 24,3x5,5
13	11115531	4	40V	SCREW (*) 14x2x30	VITE (*) 14x2x30
14	12163727	4	10D	NUT (*) 24x3x19	DADO (*) 24x3x19
15	13407211	2	60I	GREASE FITTING (*) 10x1	INGRASSATORE (*) 10x1
16	15983837	8	40V	SCREW (1*) 18x1,5x35	VITE (1*) 18x1,5x35
17	16047071	6	40V	SCREW (*) 18x2,5x50	VITE (*) 18x2,5x50
18	16047137	4	40V	SCREW (*) 24x2x180	VITE (*) 24x2x180
(*)			469P	FOR SPECIAL EQUIPMENT 30.1001.04.1	PER VARIANTE 30.1001.04.1
(1*)			469P	FOR SPECIAL EQUIPMENT 30.0565.01.1	PER VARIANTE 30.0565.01.1

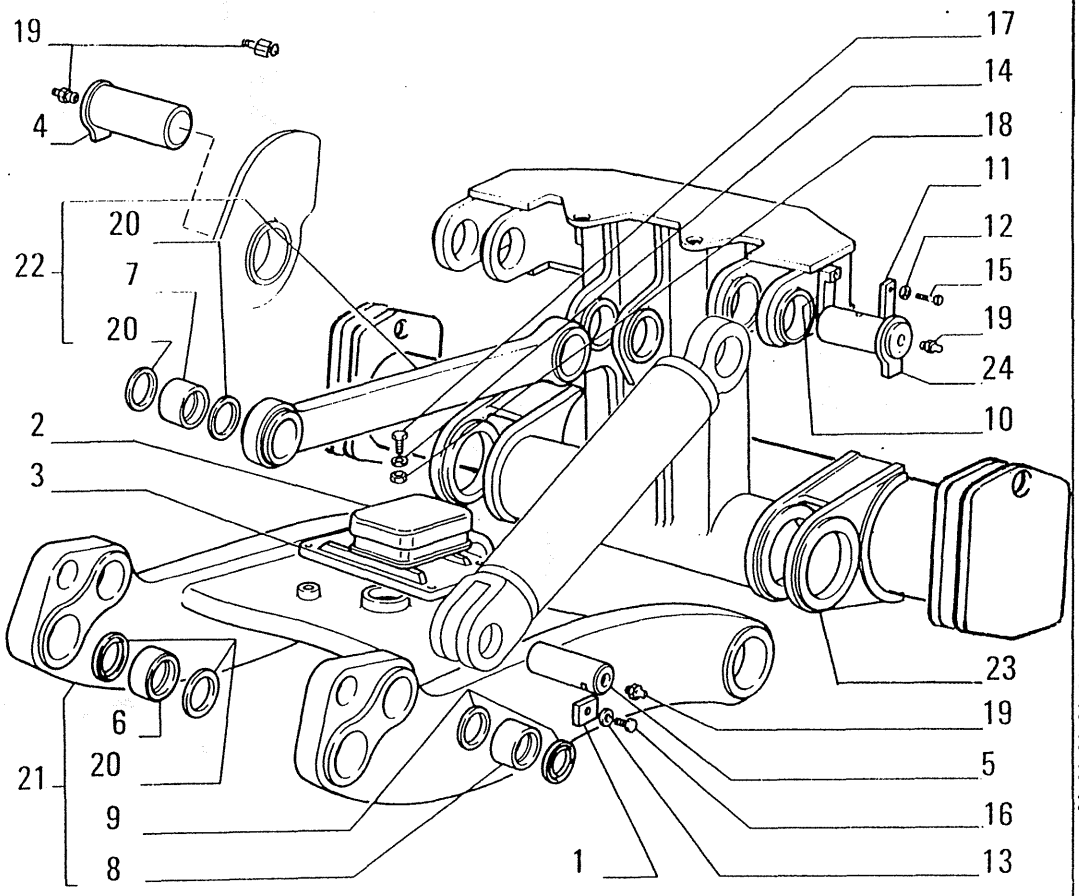

OPTIONAL
VARIANTE

30.0920.13.1

Q5755

ITEM	PART NUMBER	QTY	TRANS CODE	DESCRIPTION	DESCRIZIONE
1	8270126	2	110P	PLAQUE	PIASTRINA
2	8285989	1	60T	BLOCK	TASSELLO
3	8285990	1	110P	PLAQUE	PIASTRINA
4	8299713	4	80P	PIN	PERNO
5	8299715	2	80P	PIN	PERNO
6	8299716	4	95B	BUSHING	BOCCOLA
7	8299718	2	95B	BUSHING	BOCCOLA
8	8299739	2	95B	BUSHING	BOCCOLA
9	8299740	4	158G	O-RING	GUARNIZIONE O-R
10	8299906	5	74B	BLOCK	BLOCCHETTO
11	8299995	6	70F	FLANGE	FLANGIA
12	10517071	10	131R	WASHER 12,2x3,1	ROSETTA 12,2x3,1
13	10572071	4	131R	WASHER 14,2x3	ROSETTA 14,2x3
14	10572171	4	131R	WASHER 16x3,5	ROSETTA 16x3,5
15	11112431	10	40V	SCREW 12x1,75x30	VITE 12x1,75x30
16	11115531	4	40V	SCREW 14x2x30	VITE 14x2x30
17	11118537	4	40V	SCREW 16x2x40	VITE 16x2x40
18	12575121	1	10D	NUT 20x1,5x23	DADO 20x1,5x23
19	13407211	8	60I	GREASE FITTING 10x1	INGRASSATORE 10x1
20	79023900	12	158G	O-RING	GUARNIZIONE O-R
21	79037316	1	77T	MAIN FRAME - ASSEMBLY	TELAIO TRATTORE - COMPLETO
22	79037729	1	244P	STRUT - ASSEMBLY	PUNTONE - COMPLETO
23	79037755	1	77T	MAIN FRAME	TELAIO TRATTORE
24	79038162	2	80P	PIN	PERNO

RIPPER LIFT ARMS – BRACCI SOLLEVAMENTO SCARIFICATORE – BRAS DE LEVAGE DE SCARIFICATEUR – HUBARME FUER AUFREISSER – BRAZOS DE ELEVACIÓN DEL ESCARICADOR

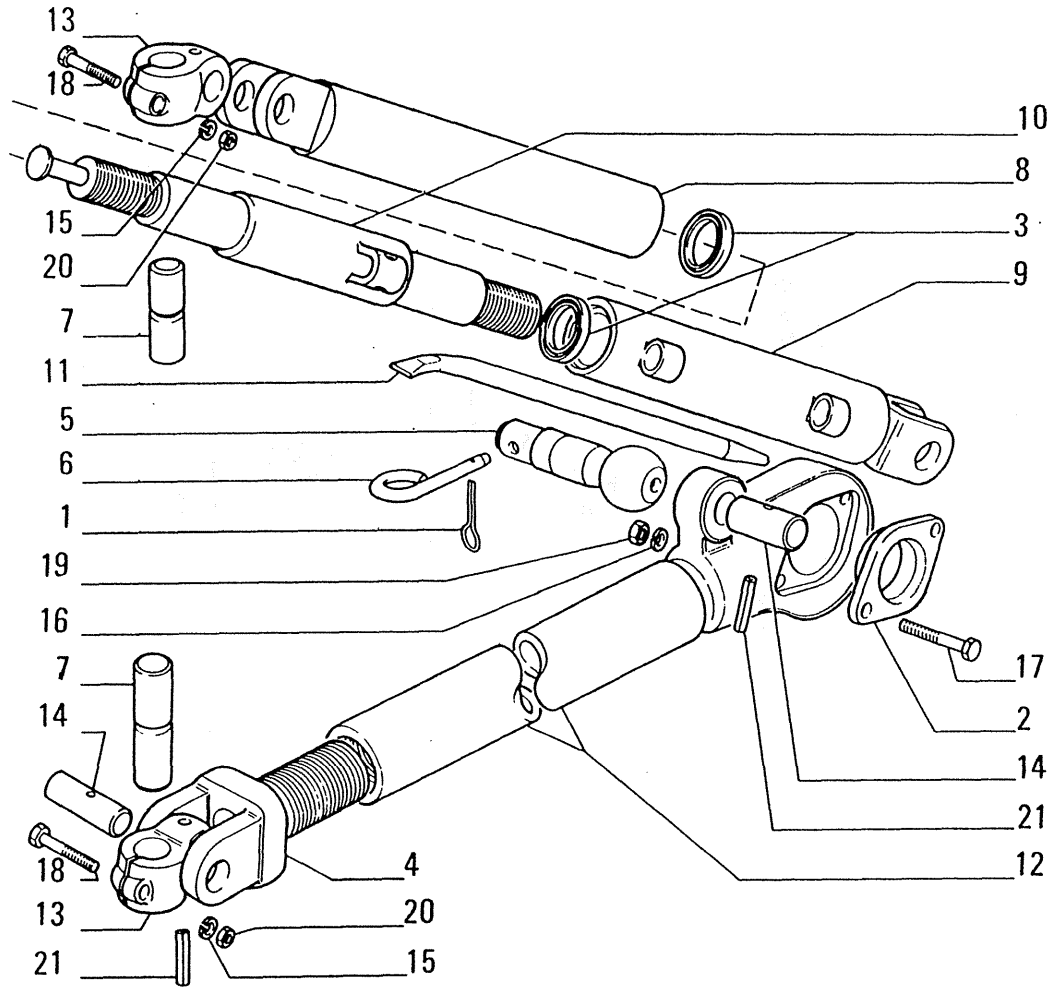

ITEM	PART NUMBER	QTY	TRANS CODE	DESCRIPTION	DESCRIZIONE
1	567406	4	270C	COTTER PIN	COPIGLIA
2	8273262	4	70F	FLANGE	FLANGIA
3	8293408	4	42A	MUDSCRAPER RING	ANELLO RASCHIAFANGO
4	8293413	2	62E	TIEROD HEAD - FRONT	ESTREMITÀ DEL TIRANTE - ANTERIORE
5	8293416	2	80P	PIN	PERNO
6	8293417	2	200S	PIN	SPINA
7	8294275	4	80P	PIN	PERNO
8	8294515	2	62E	TIEROD HEAD - FRONT	ESTREMITÀ DEL TIRANTE - ANTERIORE
9	8294516	2	62E	TIEROD HEAD - REAR	ESTREMITÀ DEL TIRANTE - POSTERIORE
10	8294522	2	141T	THREADED TIEROD	TIRANTE FILETTATO
11	8296559	2	45L	LEVER	LEVA
12	8298162	2	141T	THREADED TIEROD - LOWER	TIRANTE FILETTATO - INFERIORE
13	8298171	4	300S	SUPPORT	SUPPORTO
14	8298172	6	80P	PIN	PERNO
15	10517071	4	131R	WASHER 12,2x3,1	ROSETTA 12,2x3,1
16	10517171	4	131R	WASHER 14,2x3,5	ROSETTA 14,2x3,5
17	11113831	4	40V	SCREW 12x1,75x80	VITE 12x1,75x80
18	11116831	4	40V	SCREW 14x2x80	VITE 14x2x80
19	11702921	4	10D	NUT 12x1,75x10	DADO 12x1,75x10
20	12163221	4	10D	NUT 4x0,7x11	DADO 4x0,7x11
21	13920770	6	200S	PIN 12,5x80	SPINA 12,5x80

DOZER BLADE LIFTING ARMS – BRACCI SOLLEVAMENTO APRIPISTA – BRAS DE LEVAGE DE LAME DOZER – HUBARME FUER PLANIERGERAETE - BRAZOS DE ELEVACIÓN DEL ABRETROCHAS

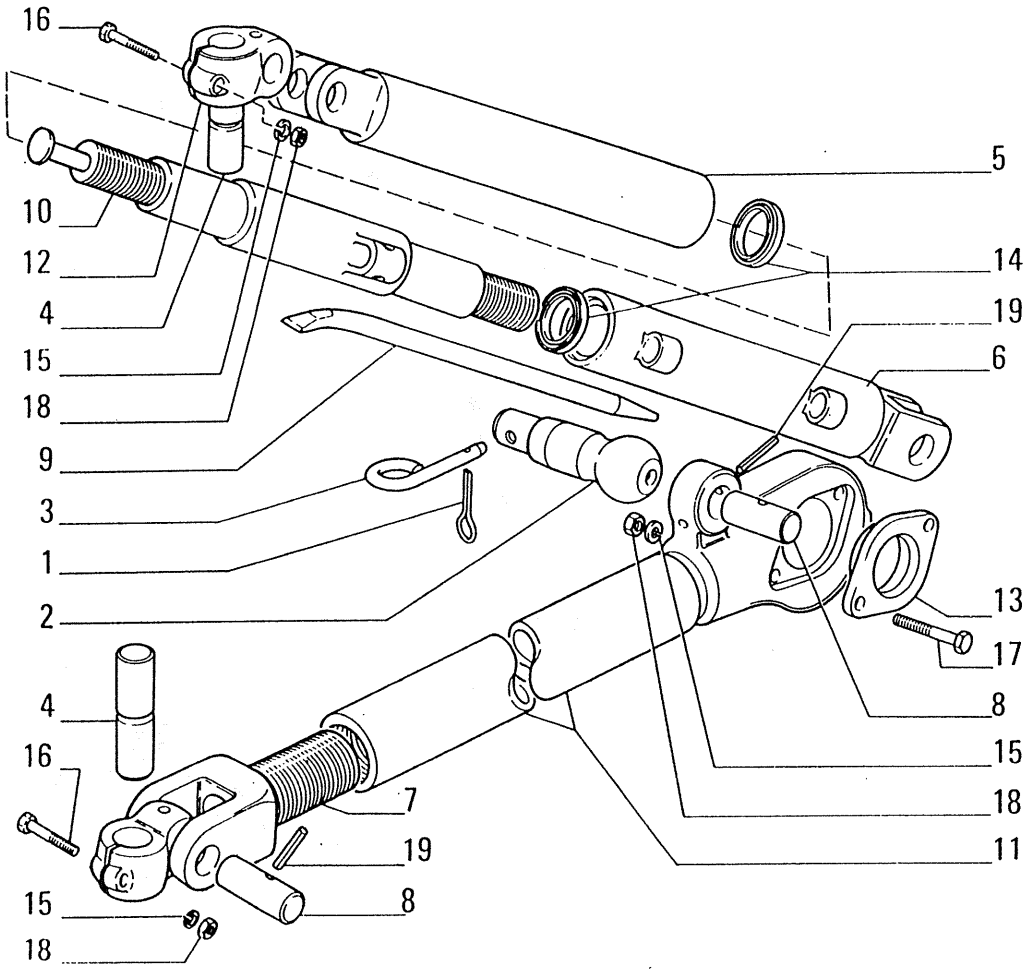

OPTIONAL
VARIANTE

30.1012.02.1

05757

ITEM	PART NUMBER	QTY	TRANS CODE	DESCRIPTION	DESCRIZIONE
1	567406	4	270C	COTTER PIN	COPIGLIA
2	8293416	2	80P	PIN	PERNO
3	8293417	2	200S	PIN	SPINA
4	8294275	4	80P	PIN	PERNO
5	8294704	2	62E	TIEROD HEAD - FRONT	ESTREMITÀ DEL TIRANTE - ANTERIORE
6	8294705	2	62E	TIEROD HEAD - REAR	ESTREMITÀ DEL TIRANTE - POSTERIORE
7	8294716	2	62E	TIEROD HEAD - FRONT	ESTREMITÀ DEL TIRANTE - ANTERIORE
8	8294719	6	80P	PIN	PERNO
9	8296559	2	45L	LEVER	LEVA
10	8297916	2	141T	THREADED TIEROD	TIRANTE FILETTATO
11	8297920	2	142T	TIEROD - LOWER	TIRANTE - INFERIORE
12	8297923	4	300S	SUPPORT	SUPPORTO
13	8297924	4	70F	FLANGE	FLANGIA
14	8298146	2	42A	MUDSCRAPER RING	ANELLO RASCHIAFANGO
15	10517171	8	131R	WASHER 14,2x3,5	ROSETTA 14,2x3,5
16	11116831	4	40V	SCREW 14x2x80	VITE 14x2x80
17	11117031	4	40V	SCREW 14x2x90	VITE 14x2x90
18	12163221	8	10D	NUT 4x0,7x11	DADO 4x0,7x11
19	13921070	6	200S	PIN 12,5x95	SPINA 12,5x95

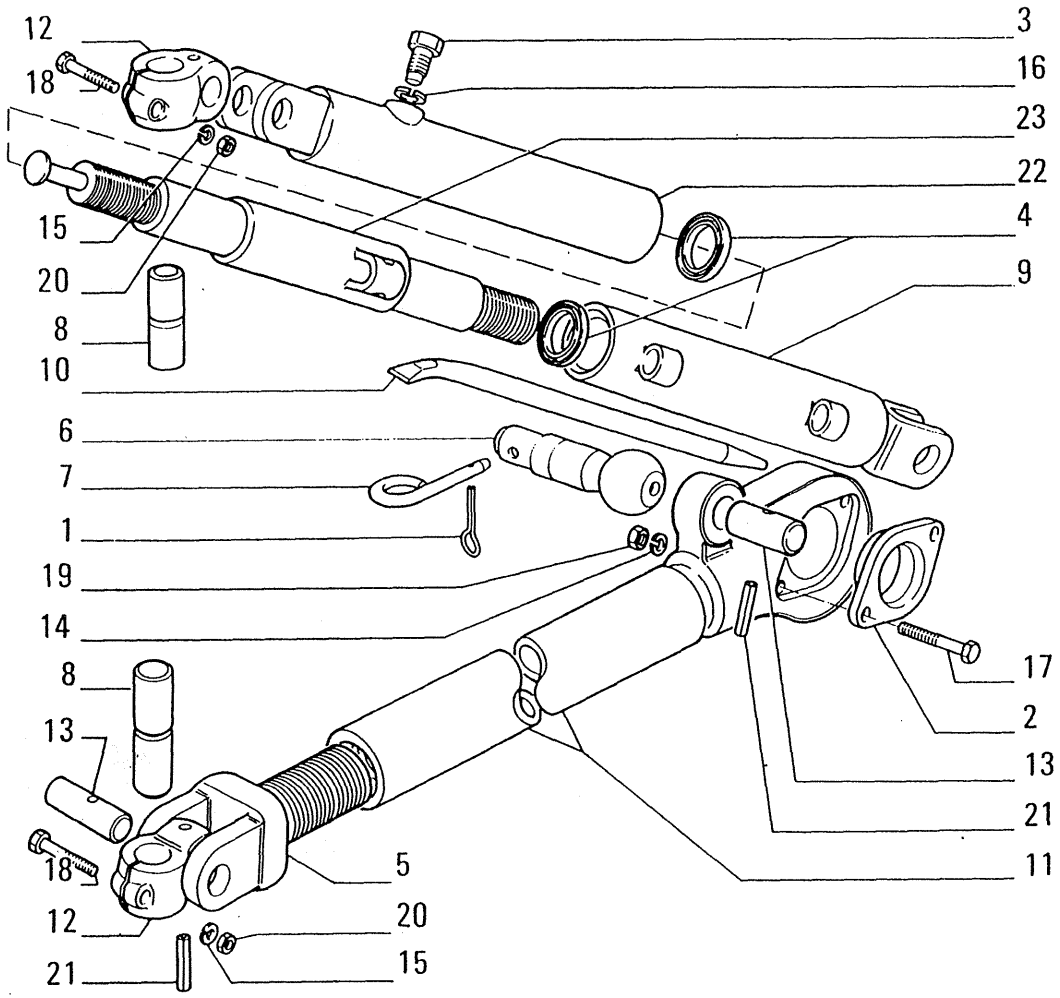

OPTIONAL 30.1124.06.1 · 30.0564.02.2
VARIANTE

Q5758

ITEM	PART NUMBER	QTY	TRANS CODE	DESCRIPTION	DESCRIZIONE
1	567406	3	270C	COTTER PIN	COPIGLIA
2	8273262	4	70F	FLANGE	FLANGIA
3	8273641	1	40V	SCREW	VITE
4	8293408	2	42A	MUDSCRAPER RING	ANELLO RASCHIAFANGO
5	8293413	2	61E	END	ESTREMITÀ
6	8293416	2	80P	PIN	PERNO
7	8293417	2	200S	PIN	SPINA
8	8294275	4	80P	PIN	PERNO
9	8294516	1	61E	END - REAR	ESTREMITÀ - POSTERIORE
10	8296559	1	45L	LEVER	LEVA
11	8298162	2	244P	STRUT - LOWER	PUNTONE - INFERIORE
12	8298171	4	300S	SUPPORT	SUPPORTO
13	8298172	6	80P	PIN	PERNO
14	10571971	4	131R	WASHER 12,2x2,5	ROSETTA 12,2x2,5
15	10572071	4	131R	WASHER 14,2x3	ROSETTA 14,2x3
16	10572371	1	131R	WASHER 20,2x4	ROSETTA 20,2x4
17	11113831	4	40V	SCREW 12x1,75x80	VITE 12x1,75x80
18	11116831	4	40V	SCREW 14x2x80	VITE 14x2x80
19	11702921	4	10D	NUT 12x1,75x10	DADO 12x1,75x10
20	12163221	4	10D	NUT 4x0,7x11	DADO 4x0,7x11
21	13920770	6	200S	PIN 12,5x80	SPINA 12,5x80
22	79037311	1	61E	END - FRONT	ESTREMITÀ - ANTERIORE
23	79037314	1	141T	THREADED TIEROD	TIRANTE FILETTATO

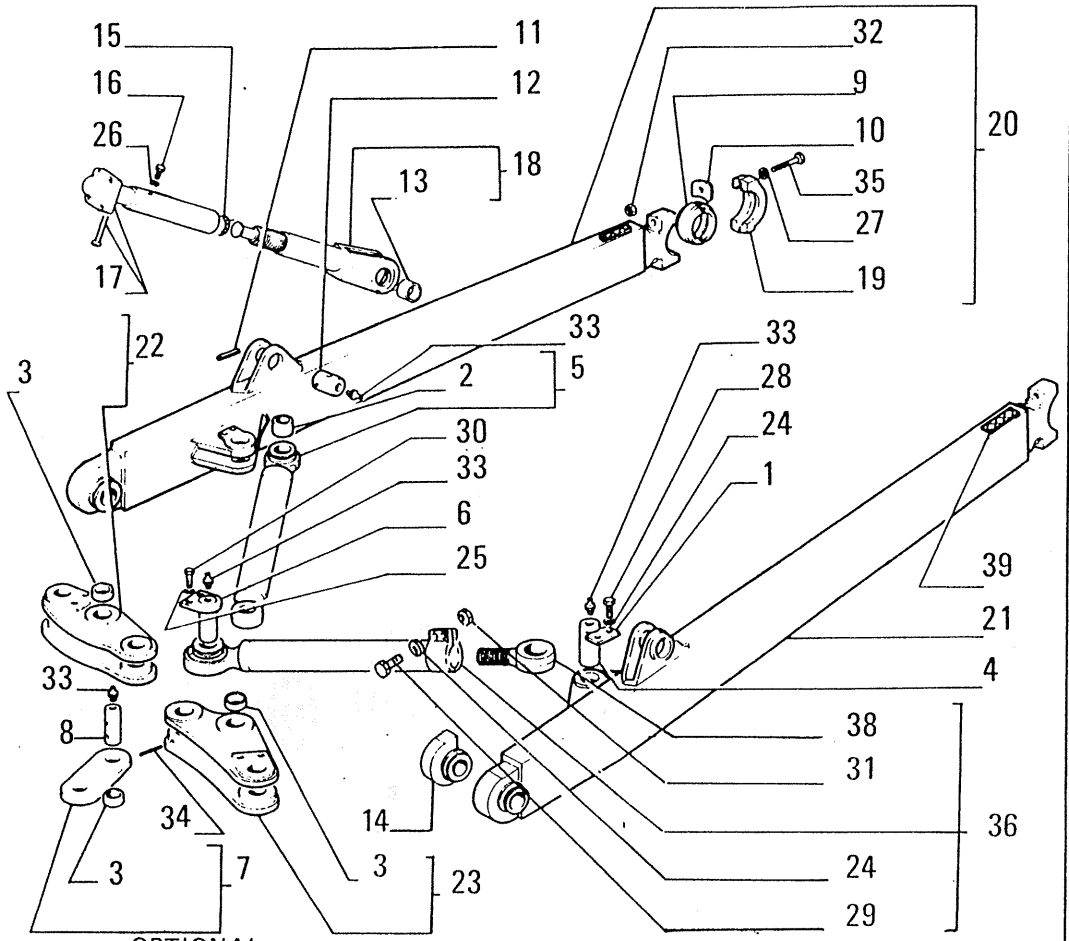

05759

ITEM	PART NUMBER	QTY	TRANS CODE	DESCRIPTION	DESCRIZIONE
1	8270126	2	110P	PLAQUE	PIASTRINA
2	8270259	1	95B	BUSHING	BOCCOLA
3	8270283	6	95B	BUSHING	BOCCOLA
4	8273060	2	80P	PIN	PERNO
5	8280178	1	141T	THREADED TIEROD - ASSEMBLY	TIRANTE FILETTATO - COMPLETO
6	8280182	2	80P	PIN	PERNO
7	8280195	1	50B	LINK - ASSEMBLY	BIELLA - COMPLETO
8	8280196	2	80P	PIN	PERNO
9	8280908	2	96S	HALF BUSHING	SEMIBOCCOLA
10	8280915	4	110P	PLAQUE	PIASTRINA
11	8283375	2	200S	PIN	SPINA
12	8283376	2	80P	PIN	PERNO
13	8283381	1	95B	BUSHING	BOCCOLA
14	8288224	1	300S	SUPPORT	SUPPORTO
15	8291846	1	158G	O-RING	GUARNIZIONE O-R
16	8293816	1	40V	SCREW	VITE
17	8294765	1	141T	THREADED TIEROD - SIDE	TIRANTE FILETTATO - LATERALE
18	8294767	1	141T	THREADED TIEROD - ASSEMBLY	TIRANTE FILETTATO - COMPLETO
19	8296138	2	300S	SUPPORT	SUPPORTO
20	8296145	1	130B	ARM - ASSEMBLY RIGHT	BRACCIO - COMPLETO DESTRO
21	8296146	1	130B	ARM - ASSEMBLY LEFT	BRACCIO - COMPLETO SINISTRO
22	8296188	1	45L	LEVER - ASSEMBLY RIGHT	LEVA - COMPLETO DESTRO
23	8296190	1	45L	LEVER - ASSEMBLY LEFT	LEVA - COMPLETO SINISTRO
24	10517171	6	131R	WASHER 14,2x3,5	ROSETTA 14,2x3,5
25	10517271	4	131R	WASHER 16,2x4	ROSETTA 16,2x4
26	10517471	1	131R	WASHER 20,2x4,5	ROSETTA 20,2x4,5
27	10517671	4	131R	WASHER 24,3x5,5	ROSETTA 24,3x5,5

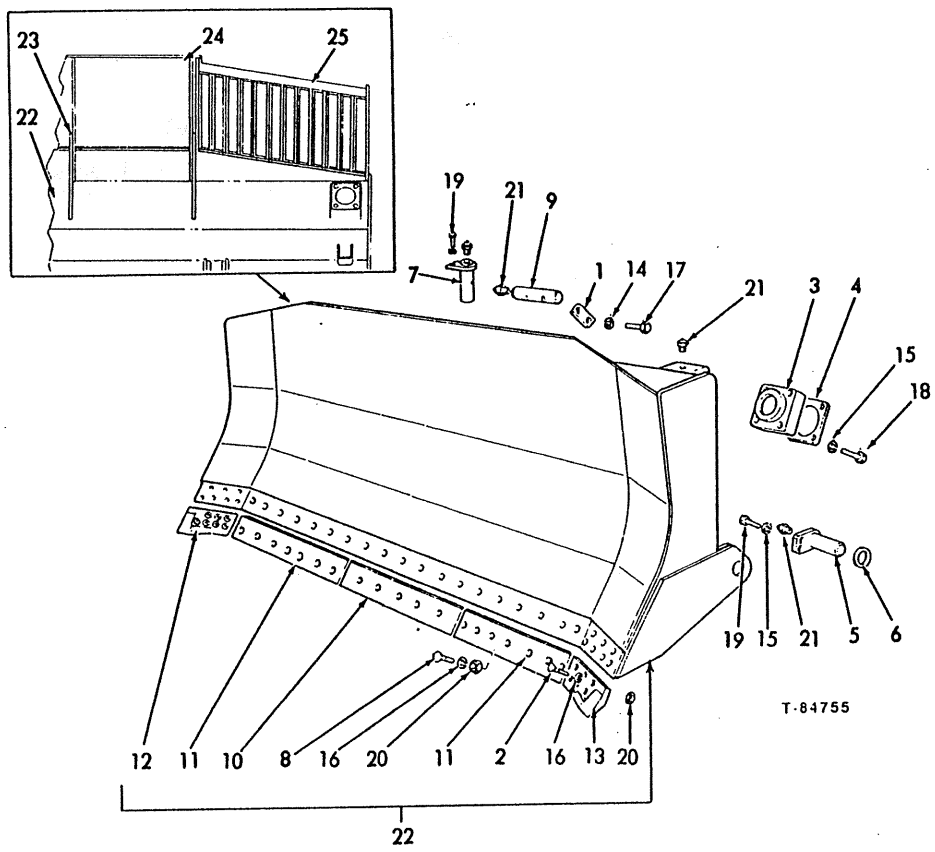

ITEM	PART NO.	QTY.	CODE	DESCRIPTION	DENOMINAZIONE
1	08270126	2	113P	LOCKPLATE	PIASTRINA DI SICUREZZA
2	08273530	12	40V	CAPSCREW	VITE
3	08273635	2	75S	BALL SOCKET	SEDE SFERICA
4	08273637	-	113P	LOCKPLATE	PIASTRINA DI SICUREZZA
5	08280182	2	80P	PIN	PERNO
6	08280206	4	131R	WASHER	ROSETTA
7	08280209	2	80P	PIN	PERNO
8	08282270	16	40V	CAPSCREW	VITE
9	08290702	2	80P	PIN	PERNO
10	08294271	1	18T	KNIFE	TAGLIENTE
11	08294668	2	18T	KNIFE - SIDE	TAGLIENTE
12	08296486	1	18T	KNIFE - SIDE RIGHT	TAGLIENTE
13	08296487	1	18T	KNIFE - SIDE LEFT	TAGLIENTE
14	10517171	4	131R	WASHER,14.2X3.5	ROSETTA
15	10517271	16	131R	WASHER,16.2X4	ROSETTA
16	10517471	28	131R	WASHER,20.2X4.5	ROSETTA
17	11115531	4	40V	CAPSCREW,14X2X30	VITE
18	11120137	8	40V	CAPSCREW,16X2X110	VITE
19	11127537	8	40V	CAPSCREW,16X2X35	VITE
20	12164327	28	10D	NUT,20X1.5X16	DADO
21	13407211	8	601	FITTING, LUBRICATION	INGRASSATORE
22	79043584	1	12L	BLADE, DOZER	LAMA APRIPISTA
23	a73154462	3	105P	PLATE	PIASTRA
			600T	REQUIRES WELDING	DA SALDARE
24	a73154471	1	222P	EXTENSION	PROLUNGA
			600T	REQUIRES WELDING	DA SALDARE
25	a73154480	1	122P	EXTENSION	PIGNONE
			600B	RIGHT	DESTRO
	a73154479	1	122P	EXTENSION	PIGNONE
			600A	LEFT	SINISTRO
			600T	REQUIRES WELDING	DA SALDARE

a.UNITS EQUIPPED FOR SANITARY LANDFILL.

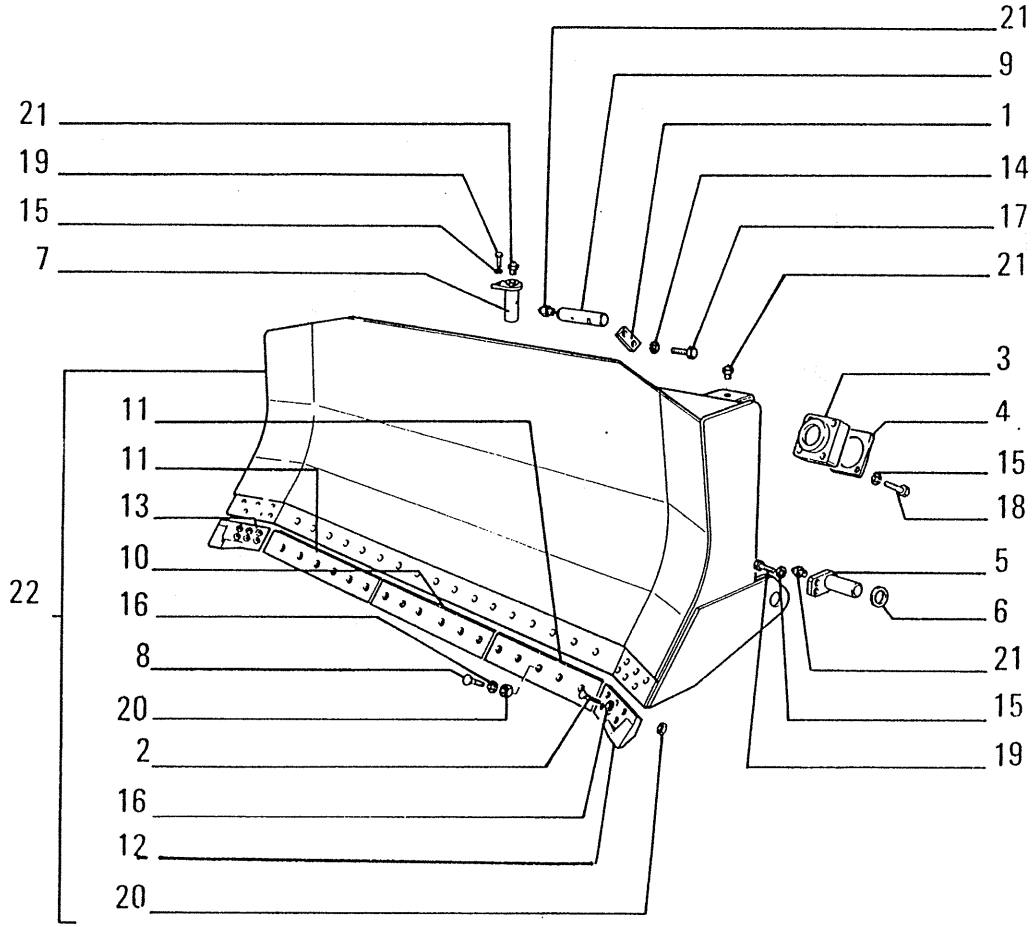

OPTIONAL
VARIANTE

30.1056.05.1

05761

ITEM	PART NUMBER	QTY	TRANS CODE	DESCRIPTION	DESCRIZIONE
1	8270126	2	113P	LOCKPLATE	PIASTRINA DI SICUREZZA
2	8273530	12	40V	SCREW	VITE
3	8273635	2	75S	BALL SOCKET	SEDE SFERICA
4	8273637		113P	LOCKPLATE	PIASTRINA DI SICUREZZA
5	8280182	2	80P	PIN	PERNO
6	8280206	4	131R	WASHER	ROSETTA
7	8280209	2	80P	PIN	PERNO
8	8282270	16	40V	SCREW	VITE
9	8290702	2	80P	PIN	PERNO
10	8294271	1	18T	CUTTING EDGE	TAGLIENTE
11	8294668	2	18T	CUTTING EDGE - SIDE	TAGLIENTE - LATERALE
12	8297645	1	18T	CUTTING EDGE - SIDE LEFT	TAGLIENTE - LATERALE SINISTRO
13	8297646	1	18T	CUTTING EDGE - SIDE RIGHT	TAGLIENTE - LATERALE DESTRO
14	10517171	4	131R	WASHER 14,2x3,5	ROSETTA 14,2x3,5
15	10517271	16	131R	WASHER 16,2x4	ROSETTA 16,2x4
16	10517471	28	131R	WASHER 20,2x4,5	ROSETTA 20,2x4,5
17	11115531	4	40V	SCREW 14x2x30	VITE 14x2x30
18	11120137	8	40V	SCREW 16x2x110	VITE 16x2x110
19	11127537	8	40V	SCREW 16x2x35	VITE 16x2x35
20	12164327	28	10D	NUT 20x1,5x16	DADO 20x1,5x16
21	13407211	6	60I	GREASE FITTING 10x1	INGRASSATORE 10x1
22	79043577	1	12L	DOZER MOLDBOARD - ASSEMBLY	LAMA BULLDOZER - COMPLETO

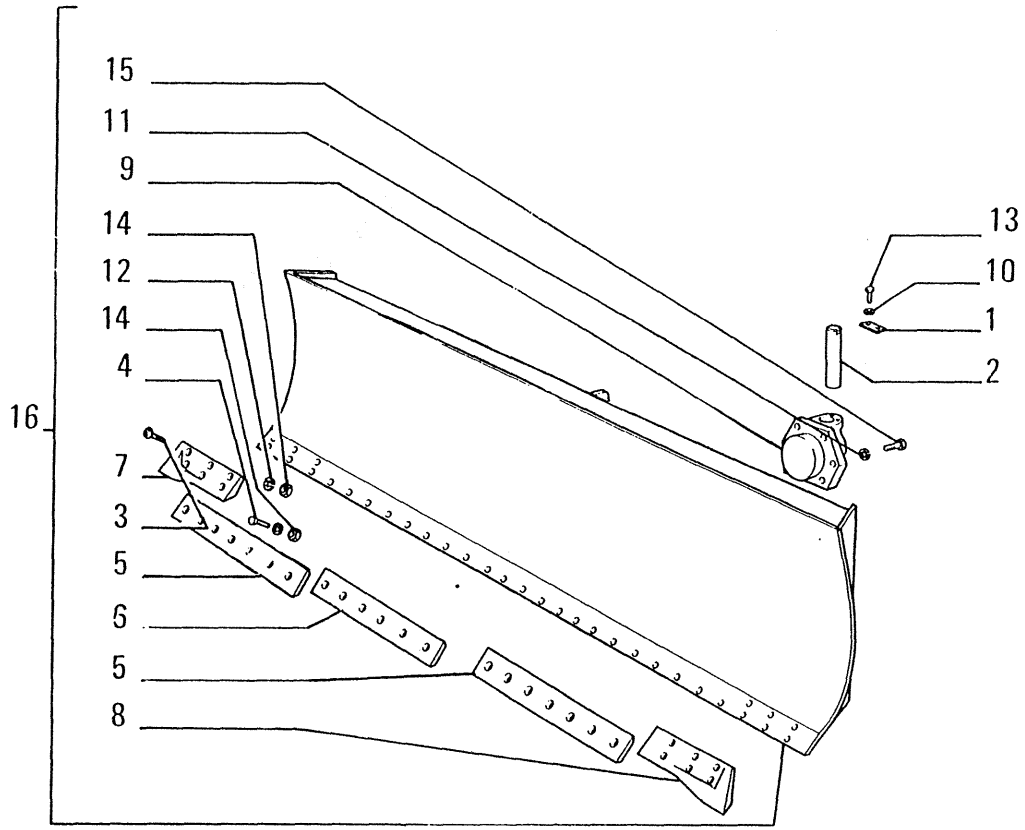

ITEM	PART NUMBER	QTY	TRANS CODE	DESCRIPTION	DESCRIZIONE
1	8270126	1	113P	LOCKPLATE (*)(1*)	PIASTRINA DI SICUREZZA (*)(1*)
2	8273214	1	80P	PIN (*)(1*)	PERNO (*)(1*)
3	8273530	12	40V	SCREW (*)	VITE (*)
4	8282270	20	40V	SCREW (*)	VITE (*)
5	8294269	2	18T	CUTTING EDGE - SIDE (*)	TAGLIENTE - LATERALE (*)
6	8294271	1	18T	CUTTING EDGE (*)	TAGLIENTE (*)
7	8294273	1	18T	CUTTING EDGE - SIDE RIGHT (*)	TAGLIENTE - LATERALE DESTRO (*)
8	8294274	1	18T	CUTTING EDGE - SIDE LEFT (*)	TAGLIENTE - LATERALE SINISTRO (*)
9	8296247	1	75S	BALL SOCKET (*)	SEDE SFERICA (*)
10	10517171	2	131R	WASHER (*)(1*) 14,2x3,5	ROSETTA (*)(1*) 14,2x3,5
11	10517371	6	131R	WASHER (*) 18,2x4,2	ROSETTA (*) 18,2x4,2
12	10517471	32	131R	WASHER (*) 20,2x4,5	ROSETTA (*) 20,2x4,5
13	11115531	2	40V	SCREW (*)(1*) 14x2x30	VITE (*)(1*) 14x2x30
14	12164327	32	10D	NUT (*) 20x1,5x16	DADO (*) 20x1,5x16
15	16162437	6	40V	SCREW (*) 18x2,5x45	VITE (*) 18x2,5x45
16	79043664	1	11L	ANGLE MOLDBOARD - ASSEMBLY (*)	LAMA ANGLEDOZER - COMPLETO (*)
(*)			469P	FOR SPECIAL EQUIPMENT 30.1015.09.1	PER VARIANTE 30.1015.09.1
(1*)			469P	FOR SPECIAL EQUIPMENT 30.1250.03.1	PER VARIANTE 30.1250.03.1

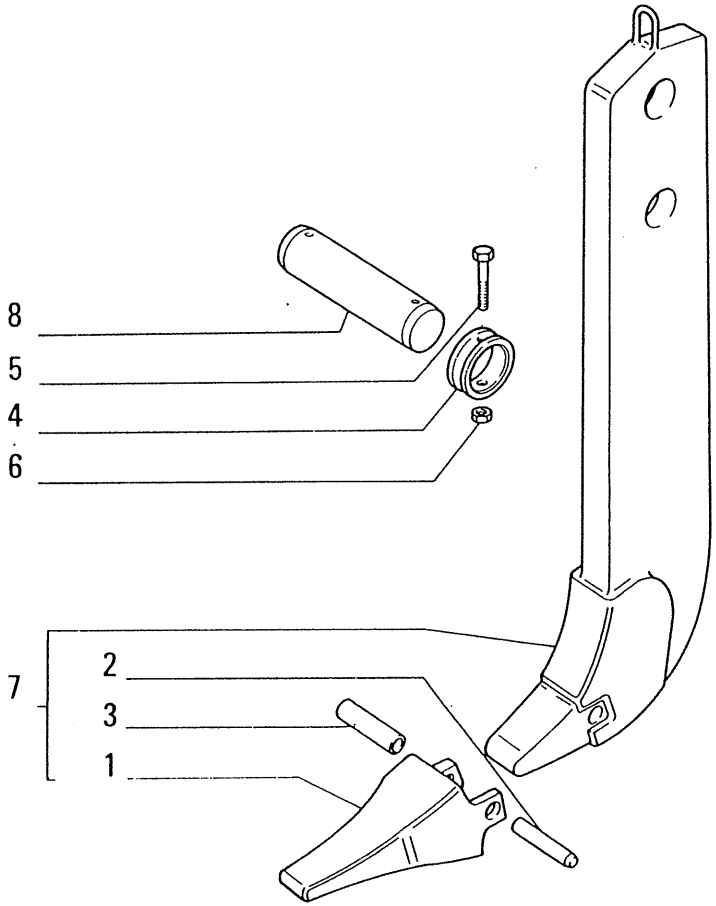

ITEM	PART NUMBER	QTY	TRANS CODE	DESCRIPTION	DESCRIZIONE
1	8281282	1	242P	RIPPER SHANK POINT	PUNTA DENTE RIPPER
2	8281284	1	200S	PIN	SPINA
3	8281285	1	30M	SLEEVE	MANICOTTO
4	8299968	2	45A	RING	ANELLO
5	11114031	2	40V	SCREW 12x1,75x90	VITE 12x1,75x90
6	12577521	2	10D	NUT 12x1,75x14,8	DADO 12x1,75x14,8
7	79038229	1	25D	RIPPER SHANK - ASSEMBLY	DENTE RIPPER - COMPLETO
8	79038232	1	80P	PIN	PERNO

. OPTIONAL
VARIANTE 30.0935.07.1

05763 C 1448 → Tel.n. 051656

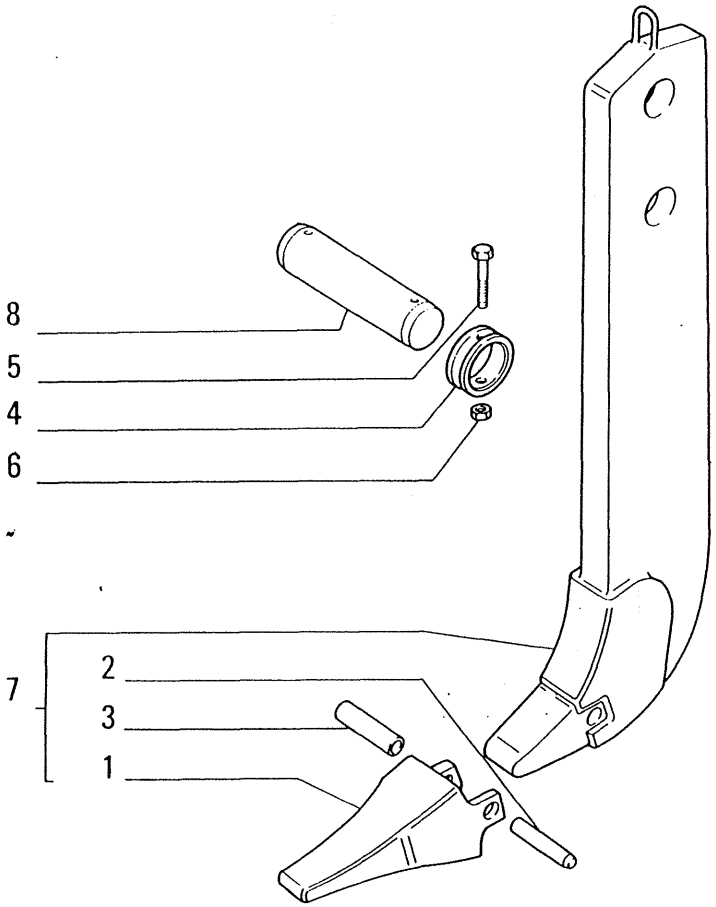

OPTIONAL 30.0920.13.1
VARIANTE

ITEM	PART NUMBER	QTY	TRANS CODE	DESCRIPTION	DESCRIZIONE
1	8281282	1	242P	RIPPER SHANK POINT	PUNTA DENTE RIPPER
2	8281284	1	200S	PIN	SPINA
3	8281285	1	30M	SLEEVE	MANICOTTO
4	8299968	2	45A	RING	ANELLO
5	11114031	2	40V	SCREW 12x1,75x90	VITE 12x1,75x90
6	12577521	2	10D	NUT 12x1,75x14,8	DADO 12x1,75x14,8
7	79058251	1	25D	RIPPER SHANK - ASSEMBLY	DENTE RIPPER - COMPLETO
8	79038232	1	80P	PIN	PERNO

D 1448 Tel.n. 051657 →

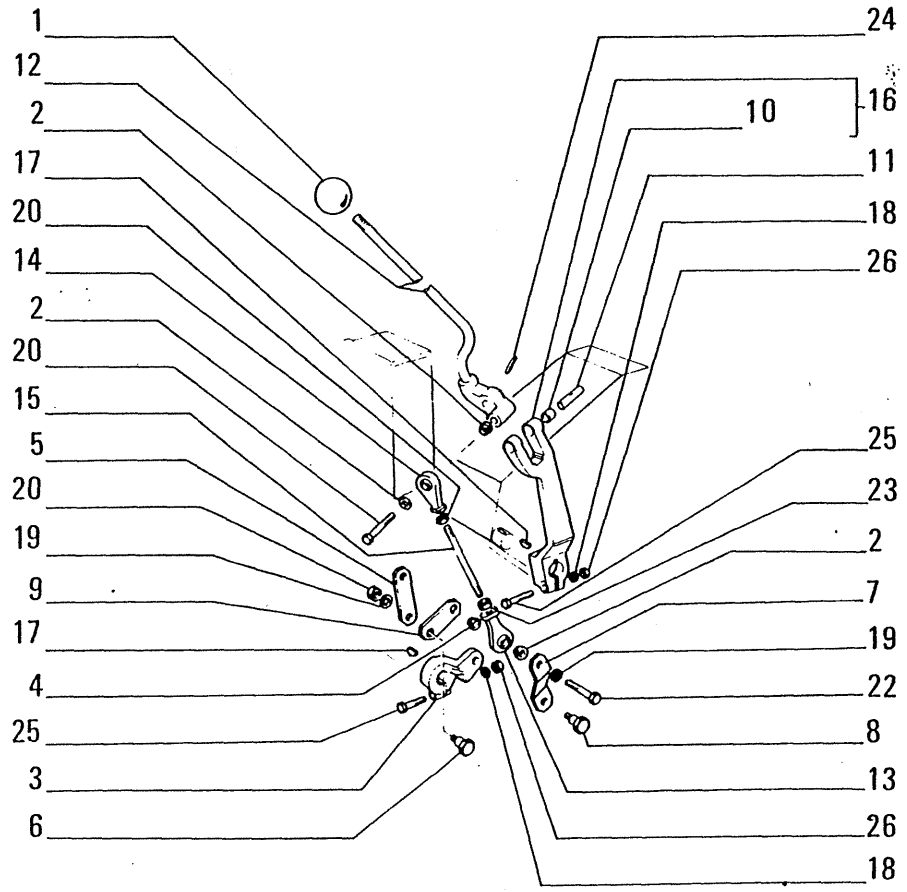

ITEM	PART NUMBER	QTY	TRANS CODE	DESCRIPTION	DESCRIZIONE
1	4985147	1	25I	HANDGRIP	IMPUGNATURA
2	8294287	3	75D	SPACER	DISTANZIALE
3	8296248	1	45L	LEVER	LEVA
4	8296250	1	75D	SPACER	DISTANZIALE
5	8296251	1	60B	SHACKLE	BISCOTTINO
6	8296252	1	40V	SCREW	VITE
7	8296255	1	60B	SHACKLE - INNER	BISCOTTINO - INTERNO
8	8296256	1	40V	SCREW	VITE
9	8296257	1	60B	SHACKLE - OUTER	BISCOTTINO - ESTERNO
10	8296430	2	95B	BUSHING	BOCCOLA
11	8296431	1	80P	PIN	PERNO
12	8296635	1	45L	LEVER	LEVA
13	8298318	1	62E	TIEROD HEAD	ESTREMITÀ DEL TIRANTE
14	8298319	1	62E	TIEROD HEAD	ESTREMITÀ DEL TIRANTE
15	8298461	1	142T	TIEROD	TIRANTE
16	8299252	1	45L	LEVER - ASSEMBLY	LEVA - COMPLETO
17	10205920	2	60L	KEY 9x5	LINGUETTA 9x5
18	10516671	2	131R	WASHER 8,1x2,2	ROSETTA 8,1x2.2
19	10516871	2	131R	WASHER 10x2,5	ROSETTA 10x2.5
20	10788721	2	10D	NUT 10x1,5x6	DADO 10x1,5x6
21	11106831	1	40V	SCREW 10x1,5x40	VITE 10x1,5x40
22	11107031	1	40V	SCREW 10x1,5x45	VITE 10x1,5x45
23	11690921	1	10D	NUT 10x1,5x6	DADO 10x1,5x6
24	13905070	1	200S	PIN 4,2x28	SPINA 4,2x28
25	16044131	2	40V	SCREW 8x1,25x45	VITE 8x1,25x45
26	16100821	2	10D	NUT 8x1,25x6,5	DADO 8x1,25x6,5

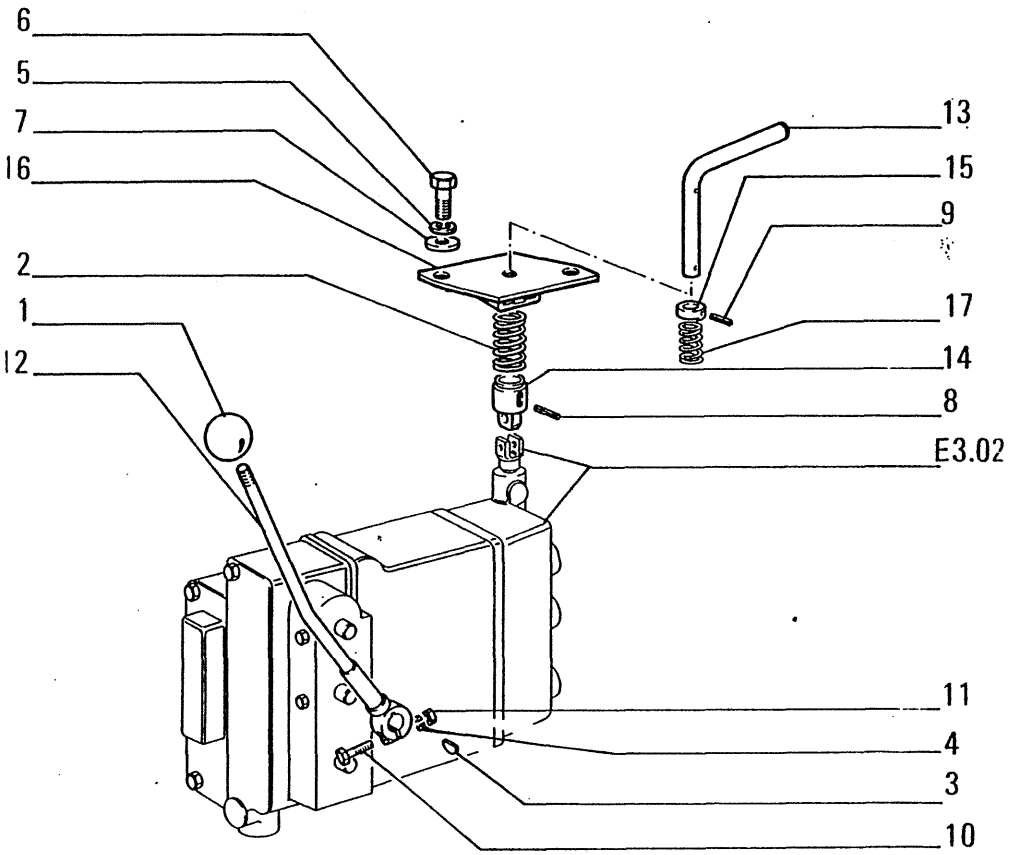

ITEM	PART NUMBER	QTY	TRANS CODE	DESCRIPTION	DESCRIZIONE
1	4985147	1	25I	HANDGRIP (*)	IMPUGNATURA (*)
2	8299095	1	100M	SPRING	MOLLA
3	10205910	1	60L	KEY (*) 9x5	LINGUETTA (*) 9x5
4	10516671	1	131R	WASHER (*) 8,1x2,2	ROSETTA (*) 8,1x2,2
5	10516871	2	131R	WASHER 10x2,5	ROSETTA 10x2,5
6	11106031	2	40V	SCREW 10x1,5x20	VITE 10x1,5x20
7	12646801	2	131R	WASHER 3,3x28	ROSETTA 3,3x28
8	14162270	1	200S	PIN 3,3x28	SPINA 3,3x28
9	14601270	2	200S	PIN 5x28	SPINA 5x28
10	16044131	1	40V	SCREW (*) 8x1,25x45	VITE (*) 8x1,25x45
11	16100821	1	10D	NUT (*) 8x1,25x6,5	DADO (*) 8x1,25x6,5
12	79006532	1	45L	LEVER (*)	LEVA (*)
13	79028262	1	45L	LEVER	LEVA
14	79033126	1	135M	HUB	MOZZO
15	79033661	1	45A	RING	ANELLO
16	79033672	1	30QS	SUPPORT	SUPPORTO
17	79033674	1	100M	SPRING	MOLLA
(*)			469P	FOR SPECIAL EQUIPMENT 30.1078.17.1	PER VARIANTE 30.1078.17.1

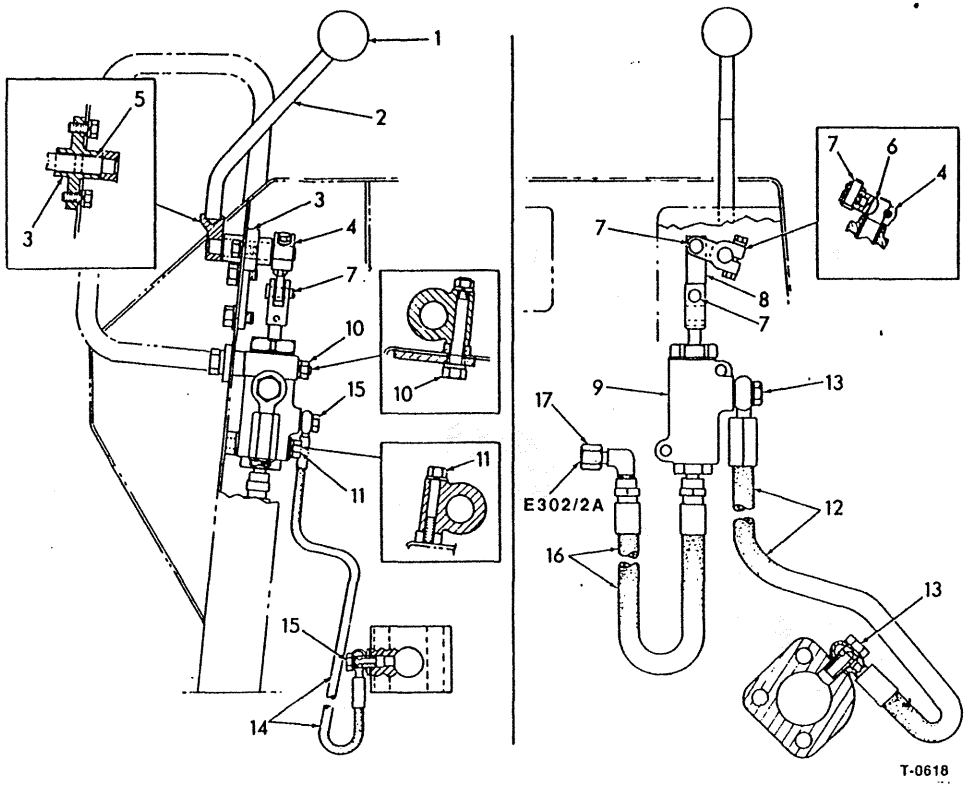

ITEM	PART NO.	QTY.	CODE	DESCRIPTION	DENOMINAZIONE
1	04970504	1	150P	KNOB	POMELLO
2	79030796	1	45L	LEVER	LEVA
3	79030800	1	80M	BRACKET	MENSOLA
			600L	INCLUDES ITEM 5	INCLUDE PARTIC.(1)
	16043331	2	40V	CAPSCREW,M8X18	VITE
	10571771	2	132R	LOCKWASHER	ROSETTA DI SICUREZZA
4	79030799	1	45L	LEVER	LEVA
	10903021	1	40V	CAPSCREW,M6X35	VITE
	10571571	1	132R	LOCKWASHER	ROSETTA DI SICUREZZA
	15896211	1	10D	NUT,M6	DADO
5	79006025	2	95B	BUSHING	BOCCOLA
6	10205720	1	60L	KEY	LINGUETTA
7	10050810	2	80P	PIN	PERNO
	10734201	2	270C	PIN, SPLIT	COPIGLIA
8	79030803	1	75G	LINK	GLIFO
9	79038112	1	10V	VALVE(E331(4))	VALVOLA
10	79030804	1	40V	CAPSCREW	VITE
	14496601	1	131R	WASHER	ROSETTA
	10571771	1	132R	LOCKWASHER	ROSETTA DI SICUREZZA
	16100921	1	10D	NUT	DADO
11	16044331	1	40V	CAPSCREW,M8X55	VITE
	10571771	1	132R	LOCKWASHER	ROSETTA DI SICUREZZA
	14496501	1	131R	WASHER	ROSETTA
12	79030853	1	192T	HOSE	TUBO FLESSIBILE
13	10184317	2	75B	CONNECTOR	BLOCCHETTO CONNESSIONE
	10282460	4	123G	GASKET	GUARNIZIONE DI TENUTA
14	79035674	1	192T	HOSE	TUBO FLESSIBILE
15	79038733	2	75B	CONNECTOR	BLOCCHETTO CONNESSIONE
	10730501	1	131R	WASHER	ROSETTA
	10260160	5	123G	GASKET	GUARNIZIONE DI TENUTA
16	79030855	1	192T	HOSE	TUBO FLESSIBILE
17	79042084	1	85G	ELBOW	GOMITO

USAGE: UNIT EQUIPPED WITH 2 TILT CYLINDERS.

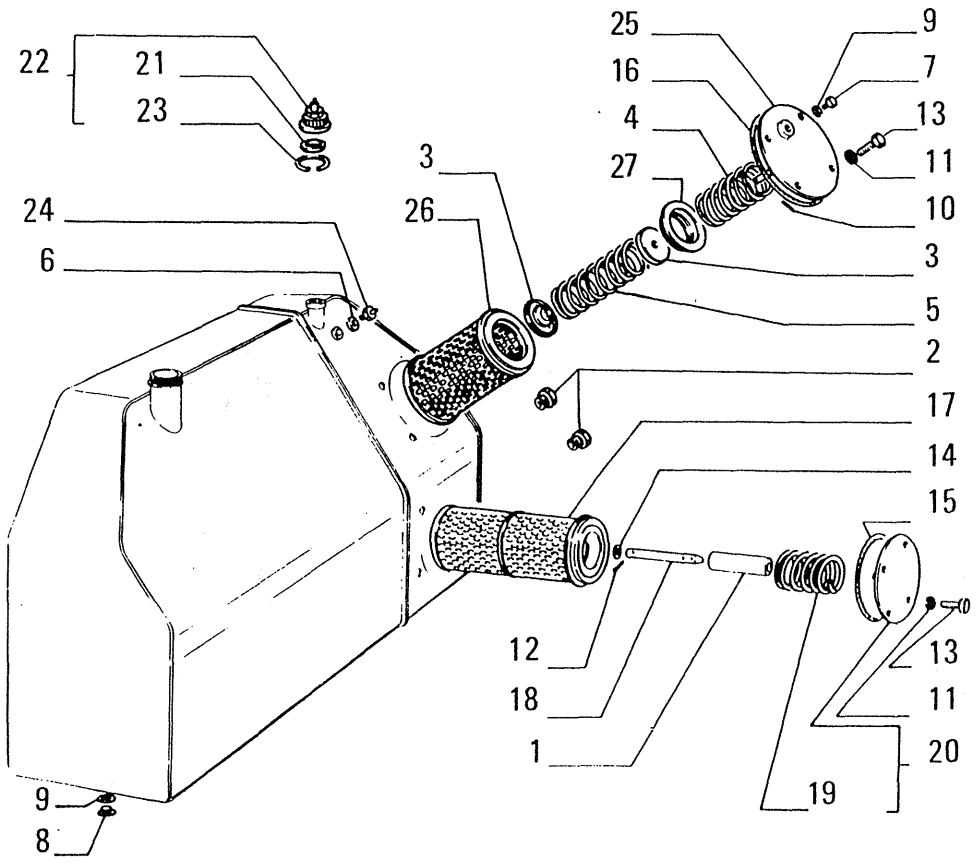

ITEM	PART NUMBER	QTY	TRANS CODE	DESCRIPTION	DESCRIZIONE
1	581492	1	54C	MAGNETIC ROD	CANDELA MAGNETICA
2	4967197	2	31I	LEVEL GAUGE	INDICATORE LIVELLO
3	4992081	2	60S	CUP	SCODELLINO
4	4992083	1	100M	SPRING - UPPER	MOLLA - SUPERIORE
5	4992088	1	100M	SPRING	MOLLA
6	10263460	1	133R	SEAL 22,2x28	ROSETTA DI TENUTA 22,2x28
7	10278301	1	50T	PLUG 28x1,5x11	TAPPO 28x1,5x11
8	10278311	1	50T	PLUG 28x1,5x11	TAPPO 28x1,5x11
9	10296585	2	133R	SEAL 28,3x36	ROSETTA DI TENUTA 28,3x36
10	10332810	1	80P	PIN 3x25	PERNO 3x25
11	10516871	8	131R	WASHER 10x2,5	ROSETTA 10x2,5
12	10796401	2	270C	COTTER PIN 2,7x27,6	COPIGLIA 2,7x27,6
13	11106031	8	40V	SCREW 10x1,5x20	VITE 10x1,5x20
14	12638621	3	131R	WASHER 10,2x18	ROSETTA 10,2x18
15	14466880	1	158G	O-RING 3,53x126,59	GUARNIZIONE O-R 3,53x126,59
16	14467980	1	158G	O-RING 3,53x171	GUARNIZIONE O-R 3,53x171
17	79005774	1	67F	OIL FILTER	FILTRO OLIO
18	79005776	1	90A	ROD	ASTA
19	79006212	1	100M	SPRING	MOLLA
20	79006356	1	265C	COVER - ASSEMBLY	COPERCHIO - COMPLETO
21	79019060	1	45A	RING	ANELLO
22	79019062	1	54T	FILLER CAP - ASSEMBLY	TAPPO INTRODUZIONE - COMPLETO
23	79019065	1	45A	RING	ANELLO
24	79028299	1	10V	VALVE	VALVOLA
25	79033762	1	265C	COVER	COPERCHIO
26	79034440	1	67F	OIL FILTER	FILTRO OLIO
27	79038293	1	80F	BOTTOM PLATE	FONDELLO

05765

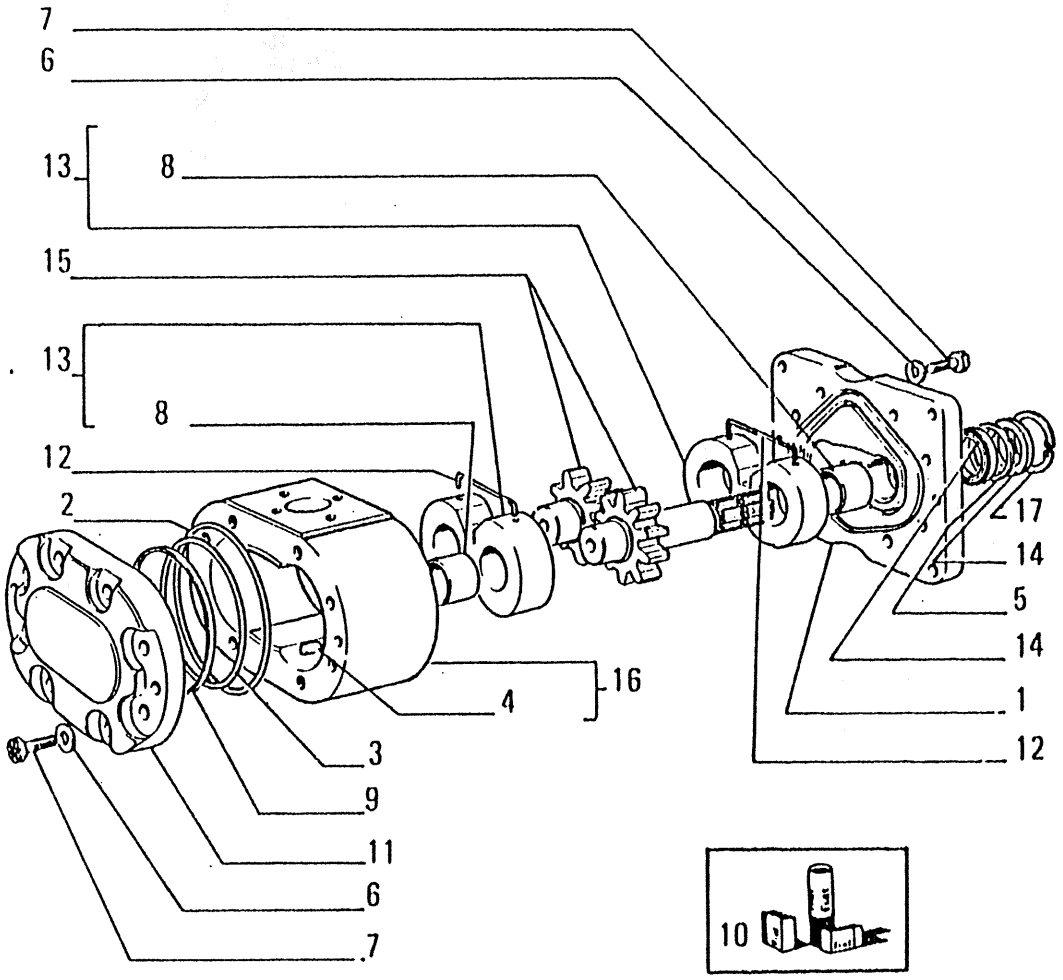

ITEM	PART NUMBER	QTY	TRANS CODE	DESCRIPTION	DESCRIZIONE
1	8272198	1	265C	COVER - REAR	COPERCHIO - POSTERIORE
2	8272206	2	158G	O-RING - OUTER	GUARNIZIONE O-R - ESTERNO
3	8272207	2	158G	O-RING - INNER	GUARNIZIONE O-R - INTERNO
4	8272209	4	90G	DOWEL	GRANO
5	8272966	1	75D	SPACER	DISTANZIALE
6	8272969	16	131R	WASHER	ROSETTA
7	8273107	16	40V	SCREW	VITE
8	8273361	4	95B	BUSHING	BOCCOLA
9	8281199	2	158G	O-RING	GUARNIZIONE O-R
10	8281200	K	1K	KIT SEE PAGE 9	KIT VED. PAG.9
11	8283944	1	265C	COVER - FRONT	COPERCHIO - ANTERIORE
12	8286368	2	45F	CLIP	FERMAGLIO
13	8287209	2	300S	SUPPORT - ASSEMBLY	SUPPORTO - COMPLETO
14	8287883	2	158G	O-RING	GUARNIZIONE O-R
15	8293311	1	286C	GEAR SET	COPPIA DI INGRANAGGI
16	8296845	1	300C	BODY - ASSEMBLY	CORPO - COMPLETO
17	11060576	1	51A	LOCKRING 56,2x2	ANELLO DI SICUREZZA 56,2x2

766

.01 - 03
05 - 06

8293307
PUMP – POMPA – POMPE – PUMPE – BOMBA

E3.29

N.T.R. 155 - 30.01.1987

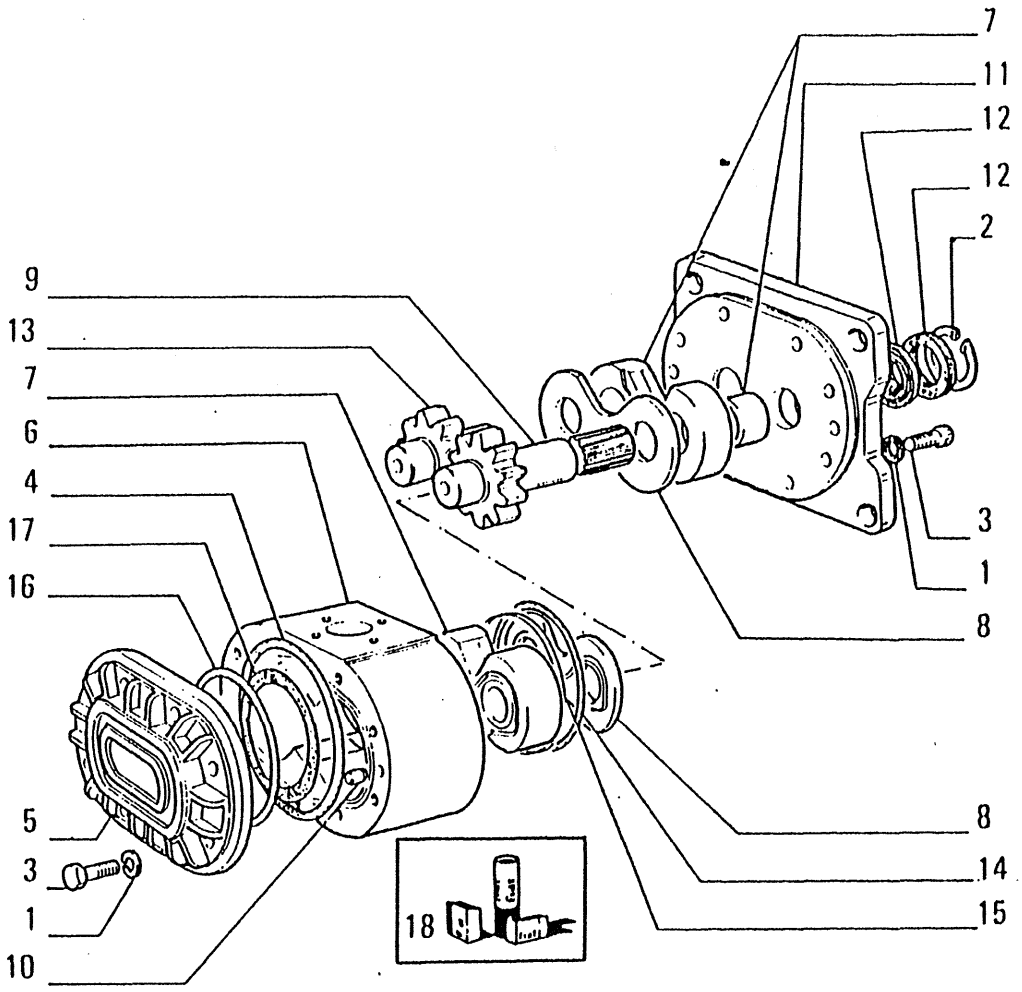

ITEM	PART NUMBER	QTY	TRANS CODE	DESCRIPTION	DESCRIZIONE
1	10571971	16	131R	WASHER 12,2x2,5	ROSETTA 12,2x2,5
2	11060476	1	45A	RING 54,2x2	ANELLO 54,2x2
3	11112821	16	40V	SCREW 12x1,75x40	VITE 12x1,75x40
4	14456481	2	158G	O-RING 1,78x114,02	GUARNIZIONE O-R 1,78x114,02
5	79032706	1	265C	COVER - REAR	COPERCHIO - POSTERIORE
6	79032707	1	300C	BODY	CORPO
7	79032708	2	300S	SUPPORT	SUPPORTO
8	79032709	2	105P	PLATE	PIASTRA
9	79032710	1	50I	GEAR	INGRANAGGIO
10	79032711	4	200S	PIN	SPINA
11	79032712	1	265C	COVER - FRONT	COPERCHIO - ANTERIORE
12	79032713	2	123G	SEAL ASSY	GUARNIZIONE TENUTA FRONTALE
13	79032714	1	50I	GEAR	INGRANAGGIO
14	79032715	2	123G	SEAL ASSY	GUARNIZIONE TENUTA FRONTALE
15	79032716	2	45A	RING	ANELLO
16	79032717	2	123G	SEAL ASSY	GUARNIZIONE TENUTA FRONTALE
17	79032718	2	45A	RING	ANELLO
18	79032739	K	1K	KIT SEE PAGE 9	KIT VED. PAG.9

5767

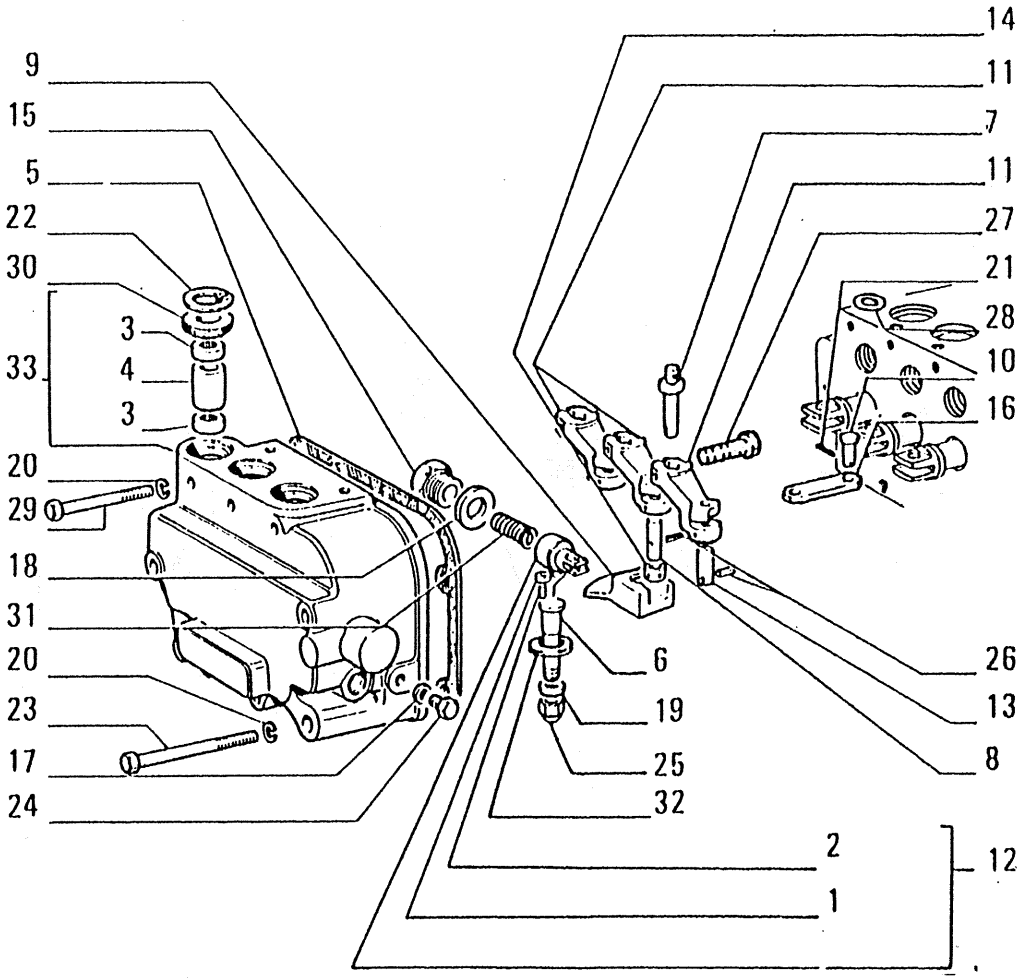

ITEM	PART NUMBER	QTY	TRANS CODE	DESCRIPTION	DESCRIZIONE
1	4989258	1	157R	ROLLER	RULLO
2	4989261	1	80P	PIN	PERNO
3	8287286	6	15G	CAGE	GABBIA
4	8293313	3	75D	SPACER	DISTANZIALE
5	8293314	1	123G	SEAL ASSY	GUARNIZIONE TENUTA FRONTALE
6	8293330	1	80P	PIN	PERNO
7	8293334	3	80P	PIN	PERNO
8	8293337	2	80P	PIN	PERNO
9	8293369	1	10E	ECCENTRIC	ECCENTRICO
10	8295685	3	80P	PIN	PERNO
11	8295690	3	45L	LEVER - INNER	LEVA - INTERNO
12	8295844	1	130P	PLUNGER - ASSEMBLY	PISTONCINO - COMPLETO
13	8295864	1	80P	PIN	PERNO
14	8295865	1	341C	BEARING	CUSCINETTO
15	8296577	1	50T	PLUG	TAPPO
16	8296936	3	60B	SHACKLE	BISCOTTINO
17	10260160	1	133R	SEAL 10,2x14	ROSETTA DI TENUTA 10,2x14
18	10264660	1	133R	SEAL 26,3x32	ROSETTA DI TENUTA 26,3x32
19	10298460	1	133R	SEAL 12,2x18	ROSETTA DI TENUTA 12,2x18
20	10571871	6	131R	WASHER 10,2x2,2	ROSETTA 10,2x2,2
21	10734201	3	270C	COTTER PIN 1,7x18,5	COPIGLIA 1,7x18,5
22	11060176	3	51A	LOCKRING 48,5x1,75	ANELLO DI SICUREZZA 48,5x1,75
23	11288031	1	40V	SCREW 10x1,25x60	VITE 10x1,25x60
24	11903111	1	50T	PLUG 10x1,25x7	TAPPO 10x1,25x7
25	14056211	1	10D	NUT 12x1,25x22	DADO 12x1,25x22
26	14162070	3	200S	PIN 3,3x22	SPINA 3,3x22
27	14238130	3	40V	SCREW 8x1,25x25	VITE 8x1,25x25

3899

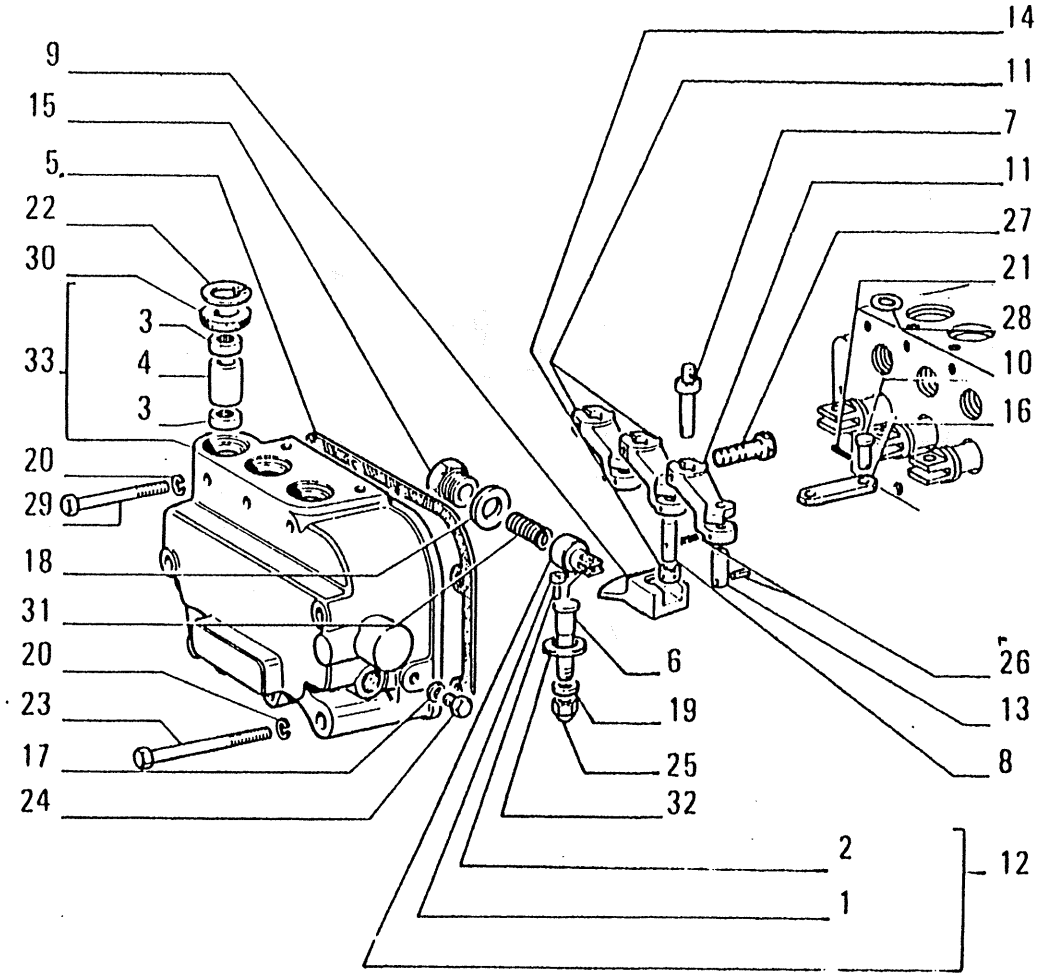

ITEM	PART NUMBER	QTY	TRANS CODE	DESCRIPTION	DESCRIZIONE
28	14463880	6	158G	O-RING 3,53x34,52	GUARNIZIONE O-R 3,53x34,52
29	15972431	5	40V	SCREW 10x1,25x130	VITE 10x1,25x130
30	79032197	3	158G	O-RING	GUARNIZIONE O-R
31	79033190	1	100M	SPRING	MOLLA
32	79037754	1	75D	SPACER	DISTANZIALE
33	79038104	1	265C	COVER - FRONT ASSEMBLY	COPERCHIO - ANTERIORE COMPLETO

899

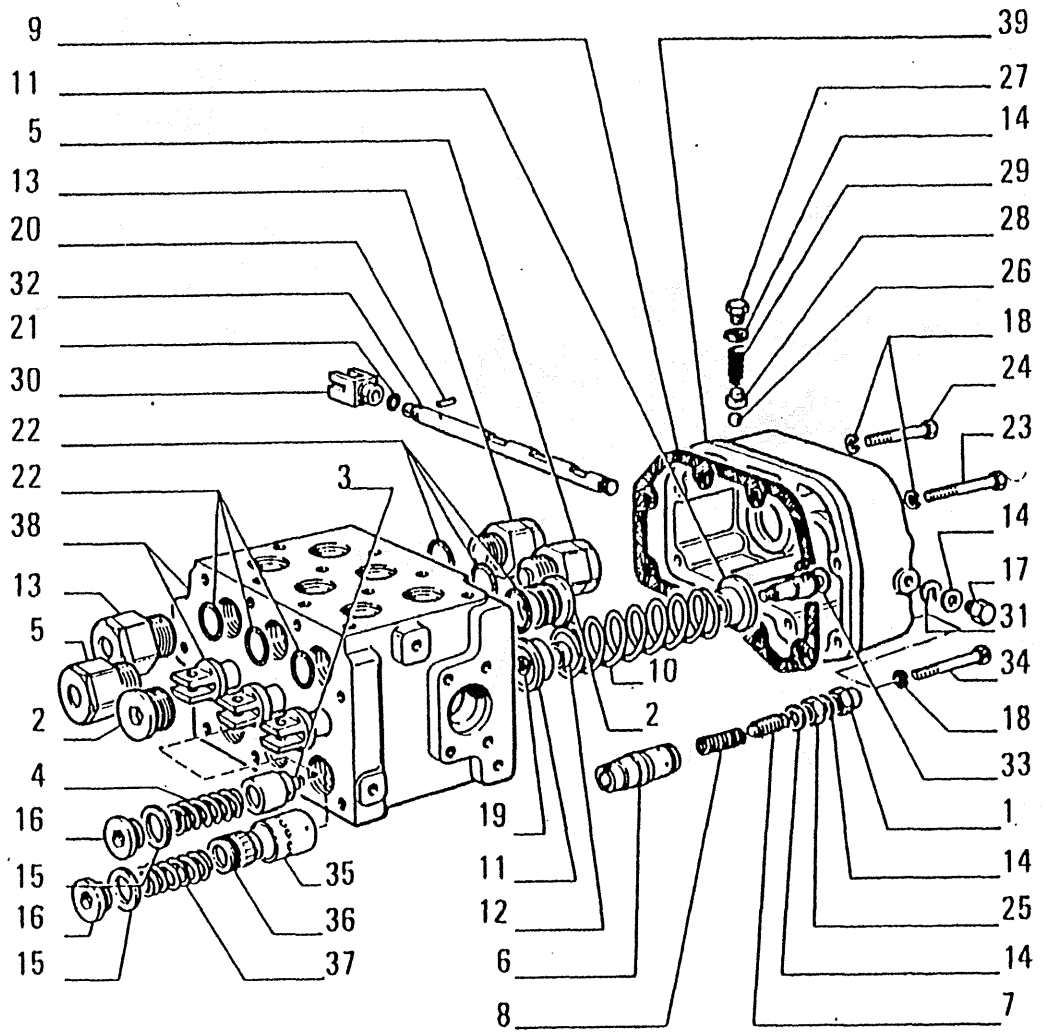

768

ITEM	PART NUMBER	QTY	TRANS CODE	DESCRIPTION	DESCRIZIONE
1	8273439	1	50T	PLUG	TAPPO
2	8280120	2	50T	PLUG	TAPPO
3	8283665	2	10V	VALVE	VALVOLA
4	8283667	2	100M	SPRING	MOLLA
5	8284408	2	10V	VALVE	VALVOLA
6	8287302	1	10V	VALVE	VALVOLA
7	8287304	1	40V	SCREW	VITE
8	8287305	1	100M	SPRING	MOLLA
9	8293315	1	123G	SEAL ASSY	GUARNIZIONE TENUTA FRONTALE
10	8293317	3	100M	SPRING	MOLLA
11	8293320	6	60S	CUP	SCODELLINO
12	8293322	2	75D	SPACER	DISTANZIALE
13	8297918	2	10V	VALVE	VALVOLA
14	10257060	5	133R	SEAL 16,2x22	ROSETTA DI TENUTA 16,2x22
15	10265160	3	133R	SEAL 35,3x41	ROSETTA DI TENUTA 35,3x41
16	10276740	3	50T	PLUG 35x1,5x13	TAPPO 35x1,5x13
17	10300711	1	50T	PLUG 16x1,5x9	TAPPO 16x1,5x9
18	10571871	11	131R	WASHER 10,2x2,2	ROSETTA 10,2x2,2
19	10615771	3	131R	WASHER 10,2x17,8	ROSETTA 10,2x17,8
20	14161970	1	200S	PIN 3,3x20	SPINA 3,3x20
21	14452980	1	158G	O-RING 1,78x9,25	GUARNIZIONE O-R 1,78x9,25
22	14458580	8	158G	O-RING 2,62x36,17	GUARNIZIONE O-R 2,62x36,17
23	15971831	4	40V	SCREW 10x1,25x100	VITE 10x1,25x100
24	15972031	6	40V	SCREW 10x1,25x110	VITE 10x1,25x110
25	16103821	1	10D	NUT 6x1,5x8	DADO 6x1,5x8
26	20063440	2	140S	BALL 5,556	SFERA 5,556
27	79003603	2	50T	PLUG	TAPPO

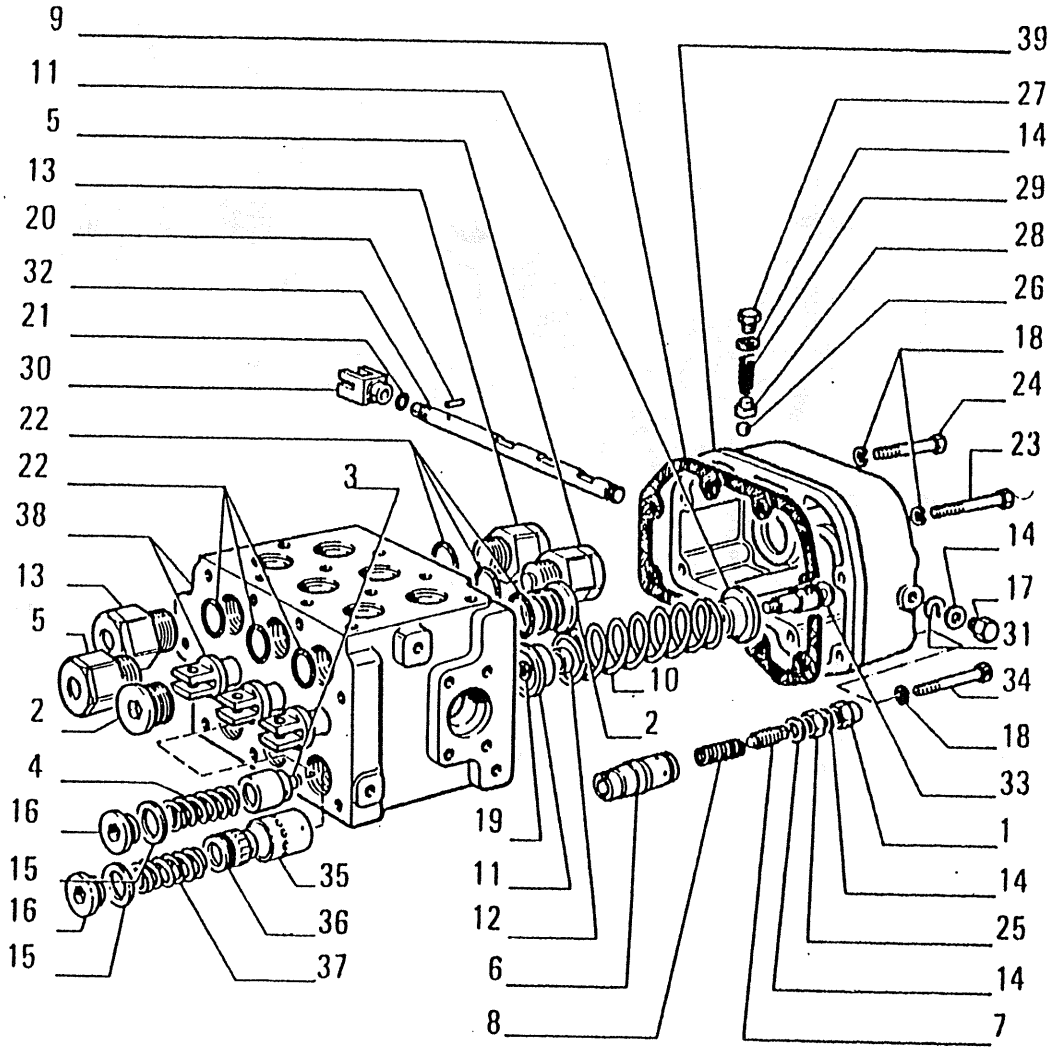

FIATALLIS E3.31 TAV. 2 PAG.2

ITEM	PART NUMBER	QTY	TRANS CODE	DESCRIPTION	DESCRIZIONE
28	79010455	2	80P	PIN	PERNO
29	79011775	2	100M	SPRING	MOLLA
30	79027076	1	85F	YOKE	FORCELLA
31	79027078	1	131R	WASHER	ROSETTA
32	79032658	1	80P	PIN	PERNO
33	79032659	3	40V	SCREW	VITE
34	79032662	1	40V	SCREW	VITE
35	79036899	1	95B	BUSHING	BOCCOLA
36	79036900	1	130P	PLUNGER	PISTONCINO
37	79036901	1	100M	SPRING	MOLLA
38	79036909	1	300C	BODY	CORPO
39	79038223	1	265C	COVER - REAR	COPERCHIO - POSTERIORE

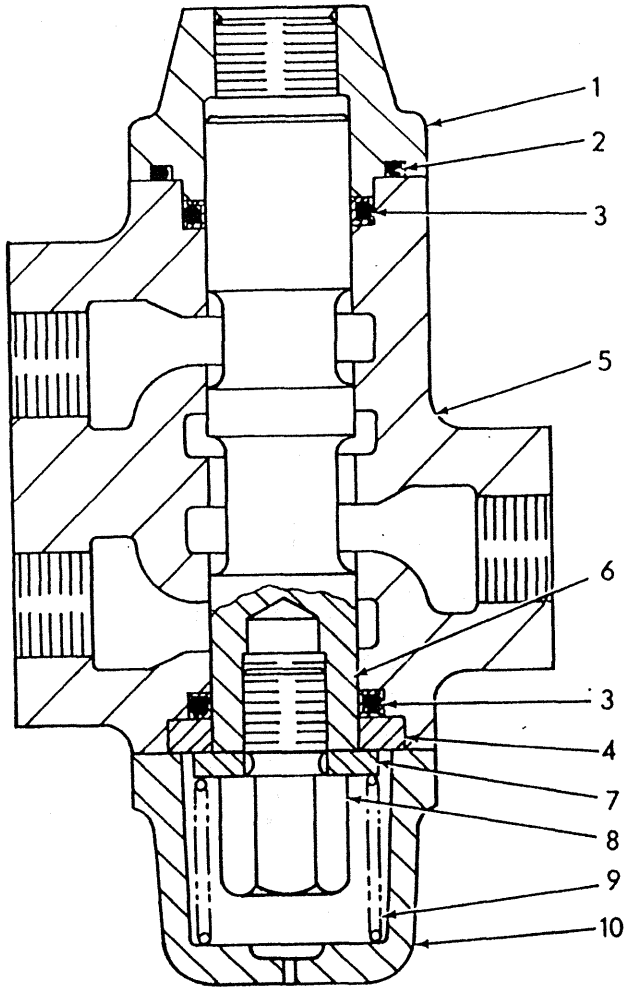

T-0617

ITEM	PART NO.	QTY.	CODE	DESCRIPTION	DENOMINAZIONE
-	79032043	1	10V	VALVE	VALVOLA
			600L	INCLUDES ITEMS 1-10	INCLUDE PARTIC.(1)
1	79030758	1	265C	COVER	COPERCHIO
	16043631	2	40V	CAPSCREW,M8X1X25	VITE
	10571771	2	132R	LOCKWASHER	ROSETTA DI SICUREZZA
2	14458480	1	55A	O-RING	ANELLO DI TENUTA
3	08293266	2	133R	SEAL	GUARNIZIONE TENUTA
4	08284750	1	131R	WASHER	ROSETTA
5	--------	1	35S	HOUSING	SCATOLA
			601C	NOT SERVICED	NON FORNITO DI RICAMB.
6	--------	1	130P	PLUNGER	PISTONCINO
			601C	NOT SERVICED	NON FORNITO DI RICAMB.
7	08284751	1	131R	WASHER	ROSETTA
8	08284807	1	50T	PLUG	TAPPO
9	79045848	1	100M	SPRING	MOLLA
10	08284753	1	265C	COVER	COPERCHIO
	16043631	2	40V	CAPSCREW,M8X1X25	VITE
	10571771	2	132R	LOCKWASHER	ROSETTA DI SICUREZZA

DIVERTER VALVE

E331 | 3

Added April 1989

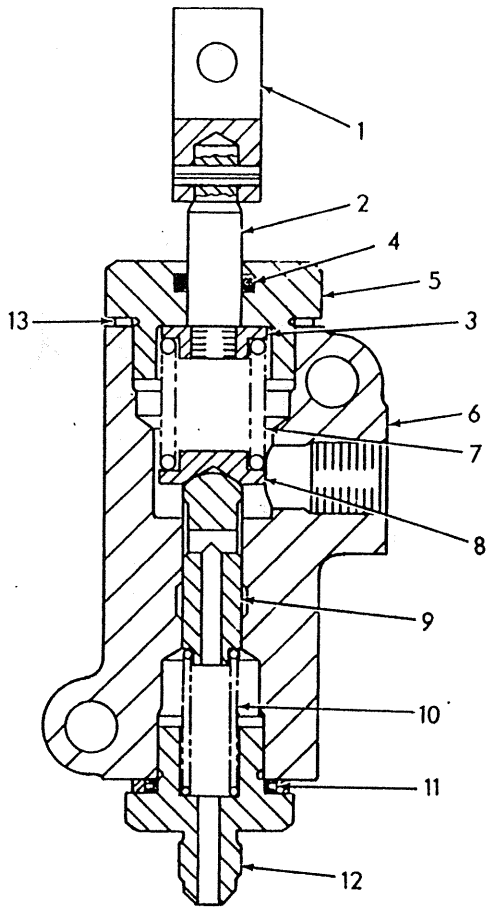

T-0619

ITEM	PART NO.	QTY.	CODE	DESCRIPTION	DENOMINAZIONE
-	79038112	1	10V	VALVE	VALVOLA
			600L	INCLUDES ITEMS 1-13	INCLUDE PARTIC.(1)
1	79038117	1	86F	YOKE	FORCELLA
	14163770	1	270C	PIN, SPLIT	COPIGLIA
2	79038122	1	80P	PIN	PERNO
			600L	INCLUDES ITEM 3	INCLUDE PARTIC.(1)
3	--------	1	60S	CUP	SCODELLINO
			601C	NOT SERVICED	NON FORNITO DI RICAMB.
4	00577567	1	55A	O-RING	ANELLO DI TENUTA
5	79047469	1	20C	CAP	CALOTTA
6	--------	1	35S	HOUSING	SCATOLA
			601C	NOT SERVICED	NON FORNITO DI RICAMB.
7	79026864	1	100M	SPRING	MOLLA
8	79038119	1	60S	CUP	SCODELLINO
9	79038114	1	130P	PLUNGER	PISTONCINO
10	08298365	1	100M	SPRING	MOLLA
11	79028866	1	133R	SEAL	GUARNIZIONE TENUTA
12	79038118	1	75B	CONNECTOR	BLOCCHETTO CONNESSIONE
13	10303460	1	123G	GASKET	GUARNIZIONE DI TENUTA

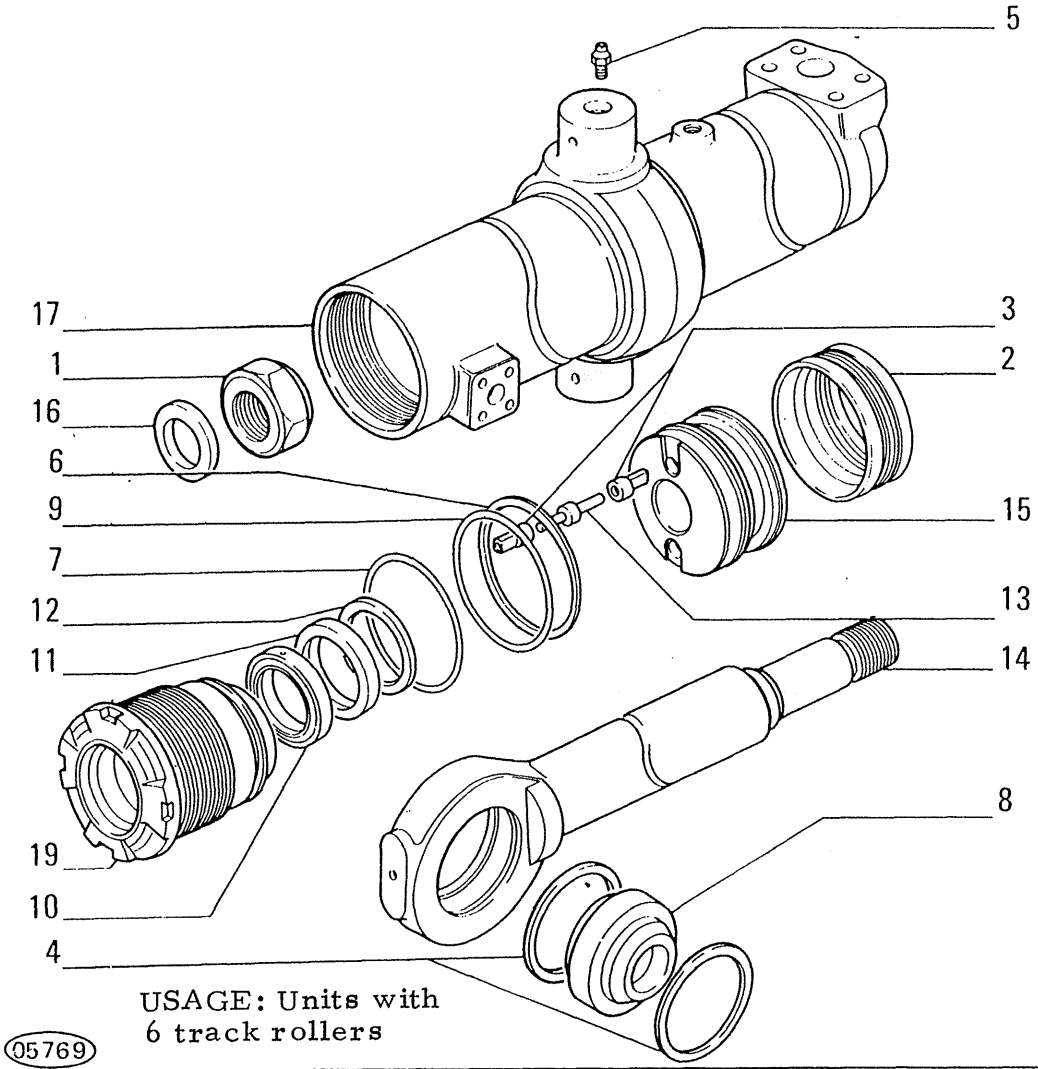

05769

ITEM	PART NUMBER	QTY	TRANS CODE	DESCRIPTION	DESCRIZIONE
1	8281325	1	10D	NUT	DADO
2	8291552	1	158G	O-RING	GUARNIZIONE O-R
3	8298607	4	145G	GUIDE	GUIDA
4	11062976	2	51A	LOCKRING 105,5x3	ANELLO DI SICUREZZA 105,5x3
5	13407211	2	60I	GREASE FITTING 10x1	INGRASSATORE 10x1
6	14465880	1	158G	O-RING 3,53x94,84	GUARNIZIONE O-R 3,53x94,84
7	14466080	1	158G	O-RING 3,53x101,19	GUARNIZIONE O-R 3,53x101,19
8	76004446	1	341C	BEARING	CUSCINETTO
9	79021911	1	45A	RING	ANELLO
10	79021957	1	42A	MUDSCRAPER RING	ANELLO RASCHIAFANGO
11	79021958	1	158G	O-RING	GUARNIZIONE O-R
12	79021959	1	45A	RING	ANELLO
13	79031887	2	10V	VALVE	VALVOLA
14	79036667	2	274S	ROD	STELO
15	79036669	1	235S	PISTON	STANTUFFO
16	79036678	1	131R	WASHER	ROSETTA
17	79036739	1	53C	TUBE - LEFT	CANNA CILINDRO - SINISTRO
	79036740	1	53C	TUBE - RIGHT	CANNA CILINDRO - DESTRO
19	79038365	1	80F	BOTTOM PLATE - FRONT	FONDELLO - ANTERIORE
				C1431	**C1431**
	79047728	1	80F	BOTTOM PLATE - FRONT	FONDELLO - ANTERIORE
				C1969	**C1969**
	79093023	1	80F	BOTTOM PLATE - FRONT	FONDELLO - ANTERIORE
				D1969	**D1969**

C 1431 → Tel.n. 051016

C 1969 → tel. n. 052847

D 1969 tel. n. 052847 →

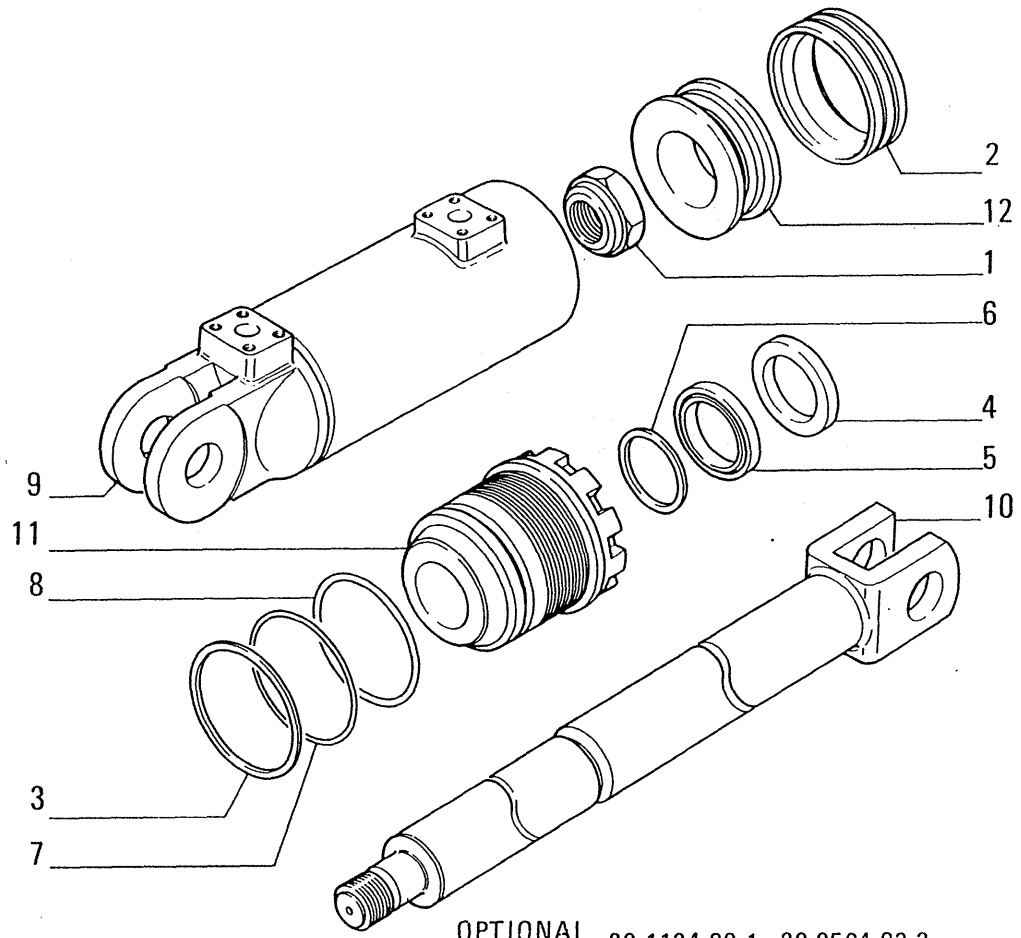

OPTIONAL 30.1124.06.1 - 30.0564.02.2
VARIANTE

ITEM	PART NUMBER	QTY	TRANS CODE	DESCRIPTION	DESCRIZIONE
1	8281824	1	10D	NUT	DADO
2	8291505	1	158G	O-RING	GUARNIZIONE O-R
3	8298055	1	45A	RING	ANELLO
4	8299740	1	50A	OILSCRAPER RING	ANELLO RASCHIAOLIO
5	8299754	1	158G	O-RING	GUARNIZIONE O-R
6	8299755	1	158G	O-RING	GUARNIZIONE O-R
7	14466080	1	158G	O-RING 3,53x101,19	GUARNIZIONE O-R 3,53x101,19
8	14466380	1	158G	O-RING 3,53x110,72	GUARNIZIONE O-R 3,53x110,72
9	79037027	1	53C	TUBE	CANNA CILINDRO
10	79037030	1	274S	ROD	STELO
11	79038723	1	80F	BOTTOM PLATE - FRONT **C1431**	FONDELLO - ANTERIORE **C1431**
	79047729	1	80F	BOTTOM PLATE - FRONT **C1969**	FONDELLO - ANTERIORE **C1969**
	79092232	1	80F	BOTTOM PLATE - FRONT **D1969**	FONDELLO - ANTERIORE **D1969**
12	79038724	1	235S	PISTON	STANTUFFO

C 1431 → Tel.n. 051016 C 1969 ⟶ tel. n. 052847
D 1969 tel. n. 052847 ⟶

05770

01 - 03
04 - 06

TILT CYLINDER – CILINDRO – CYLINDRE – ZYLINDER – CILINDRO

79037026 - 79047921 - 76016714

1

E3.32/1

N.T.R. 169 - 30.07.1988

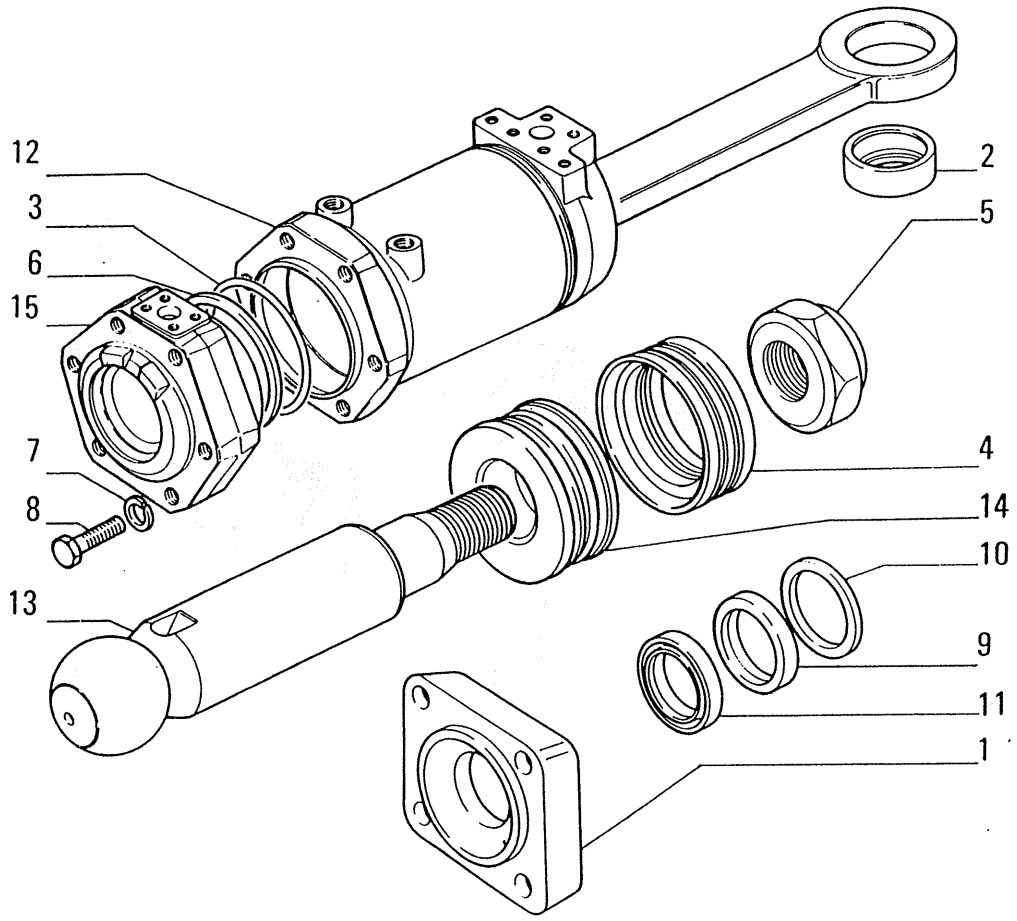

OPTIONAL 30.1070.10.1
VARIANTE

ITEM	PART NUMBER	QTY	TRANS CODE	DESCRIPTION	DESCRIZIONE
1	8273636	1	105P	PLATE	PIASTRA
2	8283381	1	95B	BUSHING	BOCCOLA
3	8292220	1	158G	O-RING	GUARNIZIONE O-R
4	8292221	1	158G	O-RING	GUARNIZIONE O-R
5	8292259	1	10D	NUT	DADO
6	8298072	1	45A	RING	ANELLO
7	10572371	6	131R	WASHER 20,2x4	ROSETTA 20,2x4
8	16050831	6	40V	SCREW 20x2,5x90	VITE 20x2,5x90
9	79024057	1	158G	O-RING	GUARNIZIONE O-R
10	79024058	1	158G	O-RING	GUARNIZIONE O-R
11	79024059	1	42A	MUDSCRAPER RING	ANELLO RASCHIAFANGO
12	79031500	1	53C	TUBE	CANNA CILINDRO
13	79031505	1	274S	ROD	STELO
14	79031518	1	235S	PISTON	STANTUFFO
15	76016673	1	80F	BOTTOM PLATE - FRONT **D1969**	FONDELLO - ANTERIORE **D1969**
	79038308	1	80F	BOTTOM PLATE - FRONT **C1431**	FONDELLO - ANTERIORE **C1431**
	79047727	1	80F	BOTTOM PLATE - FRONT **C1969**	FONDELLO - ANTERIORE **C1969**

C 1431 → Tel.n. 051016

C 1969 ⟶ tel. n. 052847
D 1969 tel. n. 052847 ⟶

Q5771

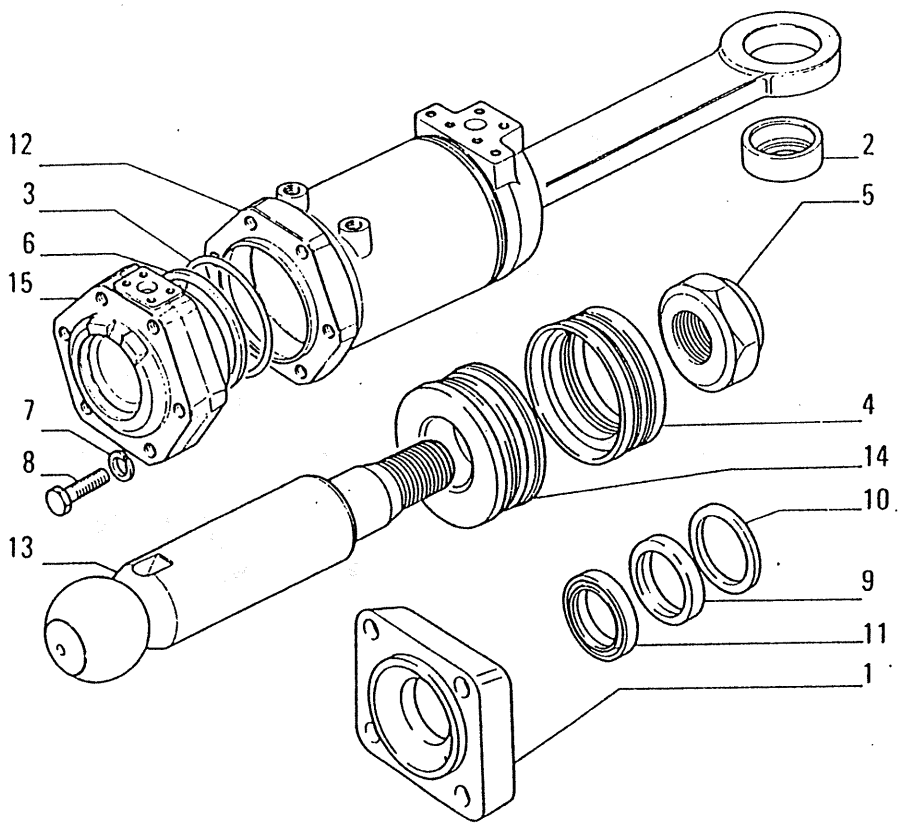

ITEM	PART NO.	QTY.	CODE	DESCRIPTION	DENOMINAZIONE
-	76016717	1	164C	CYLINDER	CILINDRO
			600L	INCLUDES ITEMS 1-15	INCLUDE PARTIC.(1)
1	08273636	1	105P	PLATE	PIASTRA
2	08283381	1	95B	BUSHING	BOCCOLA
3	14467080	1	55A	O-RING	ANELLO DI TENUTA
4	08292367	1	501N	PACKING SET	GUARNIZIONE
5	08292259	1	10D	NUT	DADO
6	08298265	1	45A	RING	ANELLO
7	10572271	6	131R	WASHER, 18	ROSETTA
8	16040031	6	40V	CAPSCREW,18X2.5X90	VITE
9	79065575	1	133R	SEAL	GUARNIZIONE TENUTA
10	79065576	1	133R	SEAL	GUARNIZIONE TENUTA
11	79065577	1	133R	SEAL	GUARNIZIONE TENUTA
12	79031650	1	53C	SLEEVE, CYLINDER	CANNA
				OR	
	79036327	1	53C	SLEEVE, CYLINDER	CANNA
13	79031505	1	274S	ROD, PISTON	STELO
14	79038370	1	235S	PISTON	STANTUFFO
15	76016682	1	501M	HEAD	TESTA

TILT CYLINDER

E332/2A

Added April 1989

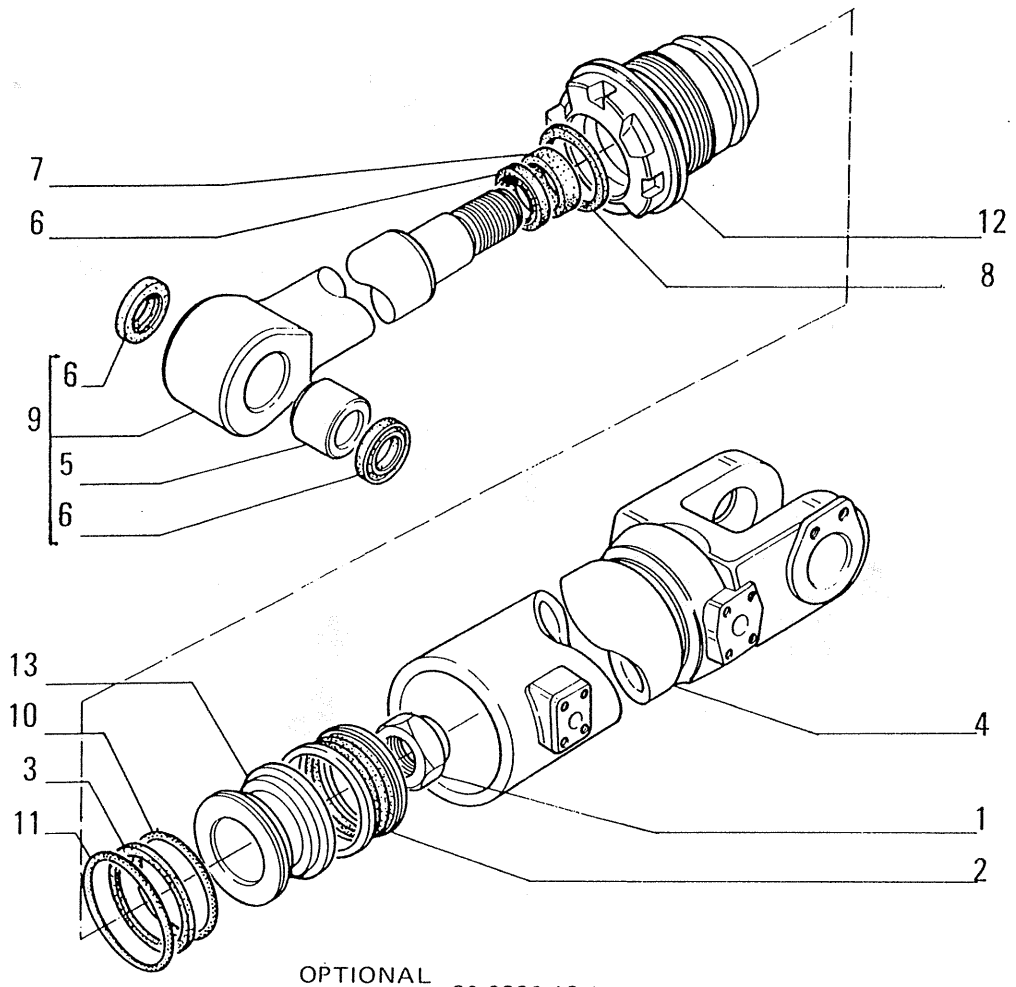

OPTIONAL
VARIANTE 30.0920.13.1

ITEM	PART NUMBER	QTY	TRANS CODE	DESCRIPTION	DESCRIZIONE
1	8281824	1	10D	NUT	DADO
2	8291505	1	158G	O-RING	GUARNIZIONE O-R
3	8298055	1	45A	RING	ANELLO
4	8299723	1	53C	TUBE	CANNA CILINDRO
5	8299739	1	95B	BUSHING	BOCCOLA
6	8299740	3	52A	PRESSURE PLATE	ANELLO SPINGIDISCO
7	8299754	1	158G	O-RING	GUARNIZIONE O-R
8	8299755	1	158G	O-RING	GUARNIZIONE O-R
					STELO - COMPLETO **C1124**
9	79044381	1	274S	ROD - ASSEMBLY	STELO - COMPLETO **D1124**
10	14466080	1	158G	O-RING 3,53x101,19	GUARNIZIONE O-R 3,53x101,19
11	14466380	1	158G	O-RING 3,53x110,72	GUARNIZIONE O-R 3,53x110,72
12	79038723	1	80F	BOTTOM PLATE - FRONT	FONDELLO - ANTERIORE
				C1431	**C1431**
	79047729	1	80F	BOTTOM PLATE - FRONT	FONDELLO - ANTERIORE
				C1969	**C1969**
	79092232	1	80F	BOTTOM PLATE - FRONT	FONDELLO - ANTERIORE
				D1969	**D1969**
13	79038724	1	235S	PISTON	STANTUFFO

C 1431 → Tel.n. 051016 C 1969 —→ tel. n. 052847
D 1969 tel. n. 052847 —→

05772

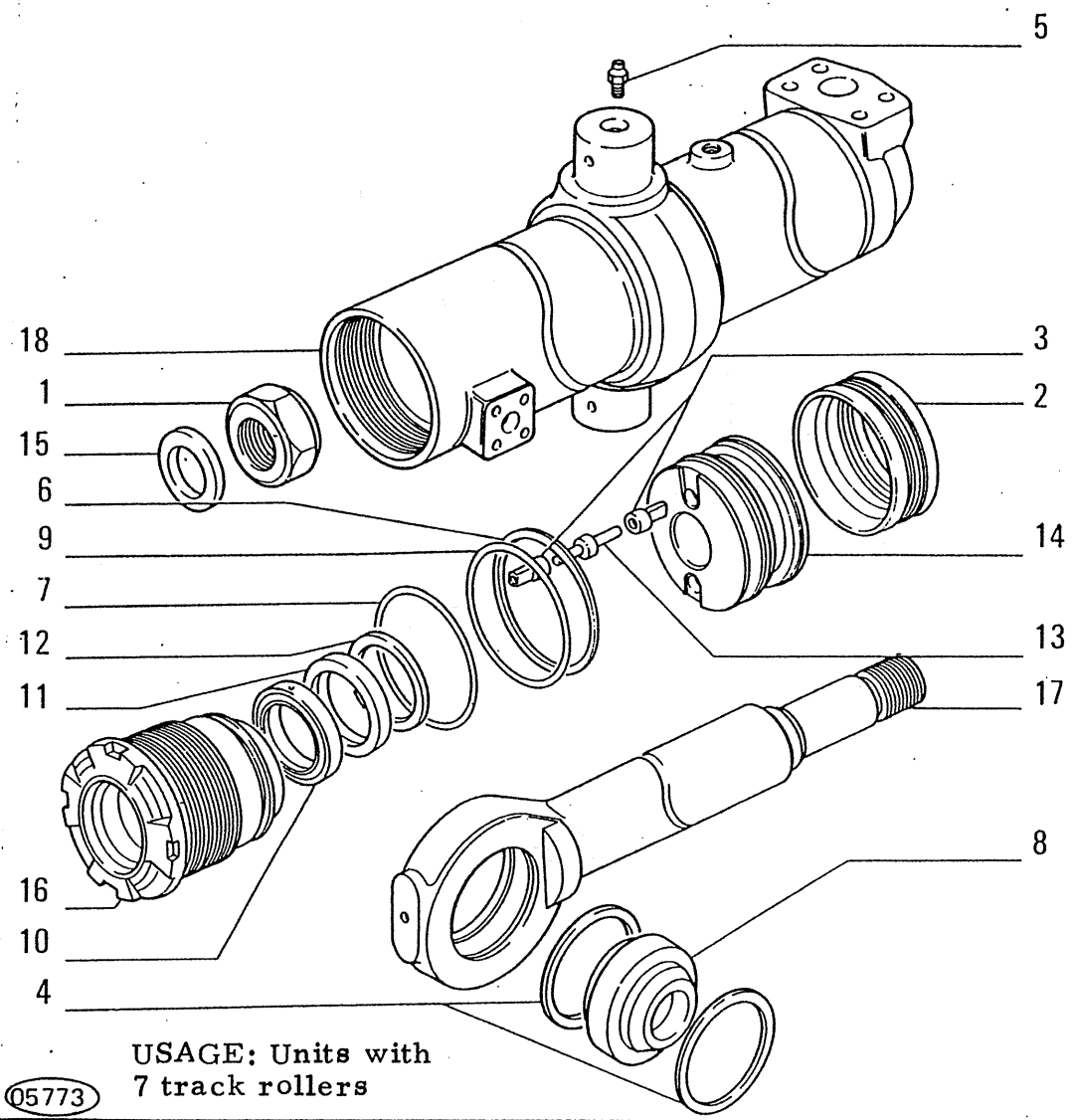

USAGE: Units with 7 track rollers

05773

ITEM	PART NUMBER	QTY	TRANS CODE	DESCRIPTION	DESCRIZIONE
1	8281325	1	10D	NUT	DADO
2	8291552	1	158G	O-RING	GUARNIZIONE O-R
3	8298607	4	145G	GUIDE	GUIDA
4	11062976	2	51A	LOCKRING 105,5x3	ANELLO DI SICUREZZA 105,5x3
5	13407211	2	60I	GREASE FITTING 10x1	INGRASSATORE 10x1
6	14465880	1	158G	O-RING 3,53x94,84	GUARNIZIONE O-R 3,53x94,84
7	14466080	1	158G	O-RING 3,53x101,19	GUARNIZIONE O-R 3,53x101,19
8	76004446	1	341C	BEARING	CUSCINETTO
9	79021911	1	45A	RING	ANELLO
10	79021957	1	42A	MUDSCRAPER RING	ANELLO RASCHIAFANGO
11	79021958	1	158G	O-RING	GUARNIZIONE O-R
12	79021959	1	45A	RING	ANELLO
13	79031887	1	10V	VALVE	VALVOLA
14	79036669	1	235S	PISTON	STANTUFFO
15	79036678	1	131R	WASHER	ROSETTA
16	79038365	1	80F	BOTTOM PLATE - FRONT C1431	FONDELLO - ANTERIORE C1431
	79047728	1	80F	BOTTOM PLATE - FRONT D1431	FONDELLO - ANTERIORE D1431
17	79044374	1	274S	ROD	STELO
18	79044379	1	53C	TUBE - LEFT	CANNA CILINDRO - SINISTRO
	79044380	1	53C	TUBE - RIGHT	CANNA CILINDRO - DESTRO

C 1431 → Tel.n. 051016
D 1431 Tel.n. 051016 →

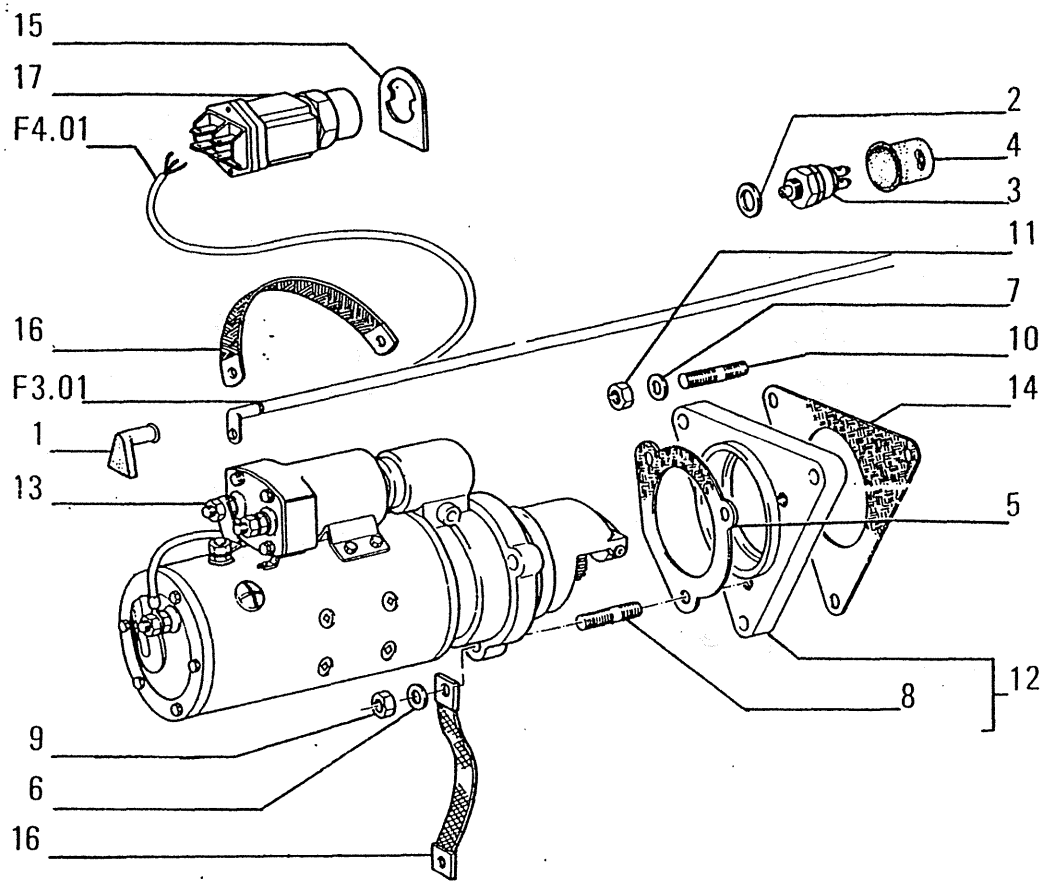

ITEM	PART NUMBER	QTY	TRANS CODE	DESCRIPTION	DESCRIZIONE
1	552699	1	65C	BOOT	CAPPUCCIO (01)(02)(03)(04)
		1	65C	BOOT (05)(*)	CAPPUCCIO (05)(*)
2	595208		131R	WASHER	ROSETTA
3	4073976	1	75I	SWITCH	INTERRUTTORE
4	4073977	1	65C	BOOT	CAPPUCCIO
5	4727245	1	123G	SEAL ASSY	GUARNIZIONE TENUTA FRONTALE
6	10520121	3	131R	WASHER 14,4x26	ROSETTA 14,4x26
7	11198671	3	131R	WASHER 13x24	ROSETTA 13x24
8	11797530	3	210P	STUD 14x1,5x60	PRIGIONIERO 14x1,5x60
9	12164021	3	10D	NUT 14x1,5x11	DADO 14x1,5x11
10	13530421	3	210P	STUD 12x1,25x63	PRIGIONIERO 12x1,25x63
11	16101511	3	10D	NUT 12x1,25x10	DADO 12x1,25x10
12	61694033	1	300S	SUPPORT - ASSEMBLY	SUPPORTO - COMPLETO
13	4780974	1	133M	STARTER MOTOR - ASSEMBLY SEE SGR. F2.05/A **D1474**	MOTORINO AVVIAMENTO - COMPLETO VEDERE SGR. F2.05/A (01) **D1474** (02)(03)(04)
	4783239	1	133M	STARTER MOTOR - ASSEMBLY SEE SGR. F2.05/2 (05) (1*)	MOTORINO AVVIAMENTO - COMPLETO VEDERE SGR. F2.05/2 (05) (1*)(2*)
	61694062	1	133M	STARTER MOTOR - ASSEMBLY SEE SGR. F2.05 **C1474**	MOTORINO AVVIAMENTO - COMPLETO VEDERE SGR. F2.05 **C1474**
	73130196	1	133M	STARTER MOTOR - ASSEMBLY SEE SGR. F2.05/1 (05)(*))))))))))	MOTORINO AVVIAMENTO - COMPLETO VEDERE SGR. F2.05/1 (05)(*))))))))))
14	79016165	1	123G	SEAL ASSY	GUARNIZIONE TENUTA FRONTALE
15	79019490	1	65T	DECAL	TARGA

212 USAGE: Units with 8205 Engine

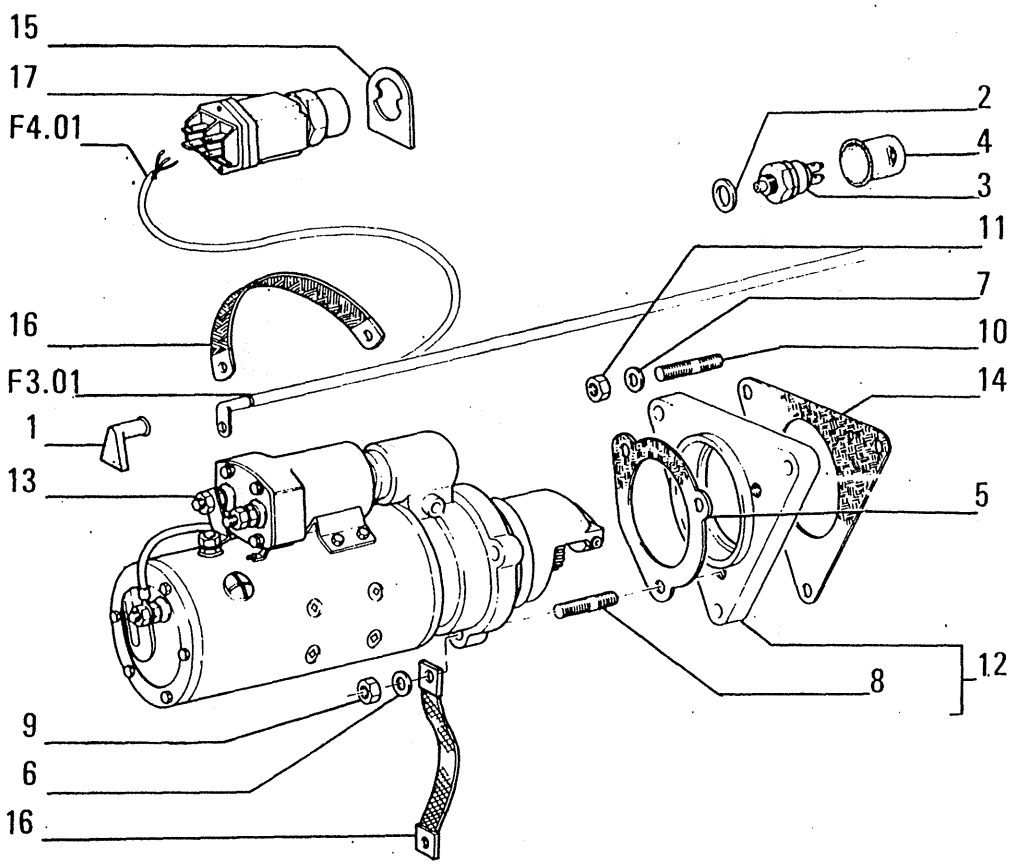

ITEM	PART NUMBER	QTY	TRANS CODE	DESCRIPTION	DESCRIZIONE
16	76013990	2	166T	GROUND BRAID (05)(1*)	TRECCIA DI MASSA (05)(1*)(2*)
	79020354	2	166T	GROUND BRAID	TRECCIA DI MASSA (01)(02)(03)(04)
		2	166T	GROUND BRAID (05)(*)	TRECCIA DI MASSA (05)(*)
17	79027131	1	236P	PUSH BUTTON	PULSANTE
(*)			469P	FOR SPECIAL EQUIPMENT 30.0311.01.1	PER VARIANTE 30.0311.01.1
(1*)			469P	FOR SPECIAL EQUIPMENT 30.0021.08.1	PER VARIANTE 30.0021.06.1
					PER VARIANTE 30.0021.07.1

(05) Winterized units

(05212) USAGE: Units with 8205 Engine

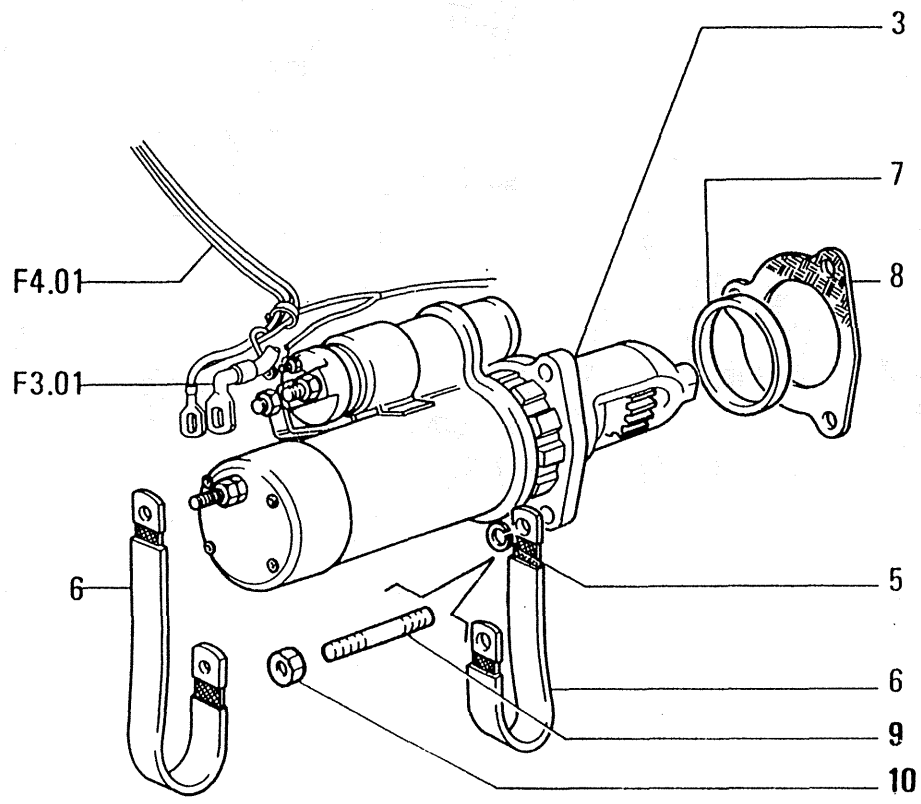

ITEM	PART NUMBER	QTY	TRANS CODE	DESCRIPTION	DESCRIZIONE
3	4816170	1	133M	STARTER MOTOR - ASSEMBLY SEE SGR. F2.05/3	MOTORINO AVVIAMENTO - COMPLETO VEDERE SGR. F2.05/3
5	11194179	3	170R	LOCKWASHER 15x27	ROSETTA EL. 15x27
6	76013990	2	112C	GROUND CABLE (*)	CAVO MASSA (*)
	79020354	2	112C	GROUND CABLE	CAVO MASSA
7	4749164	1	75D	SPACER	DISTANZIALE
8	4734714	1	122G	SEAL	GUARNIZIONE
9	11797524	3	210P	STUD 14x1,5x60	PRIGIONIERO 14x1,5x60
10	12164021	3	10D	NUT 14x1,5x11	DADO 14x1,5x11
(*)			469P	FOR SPECIAL EQUIPMENT 30.0021.09.1	PER VARIANTE 30.0021.09.1

USAGE: Units with 8365 Engine

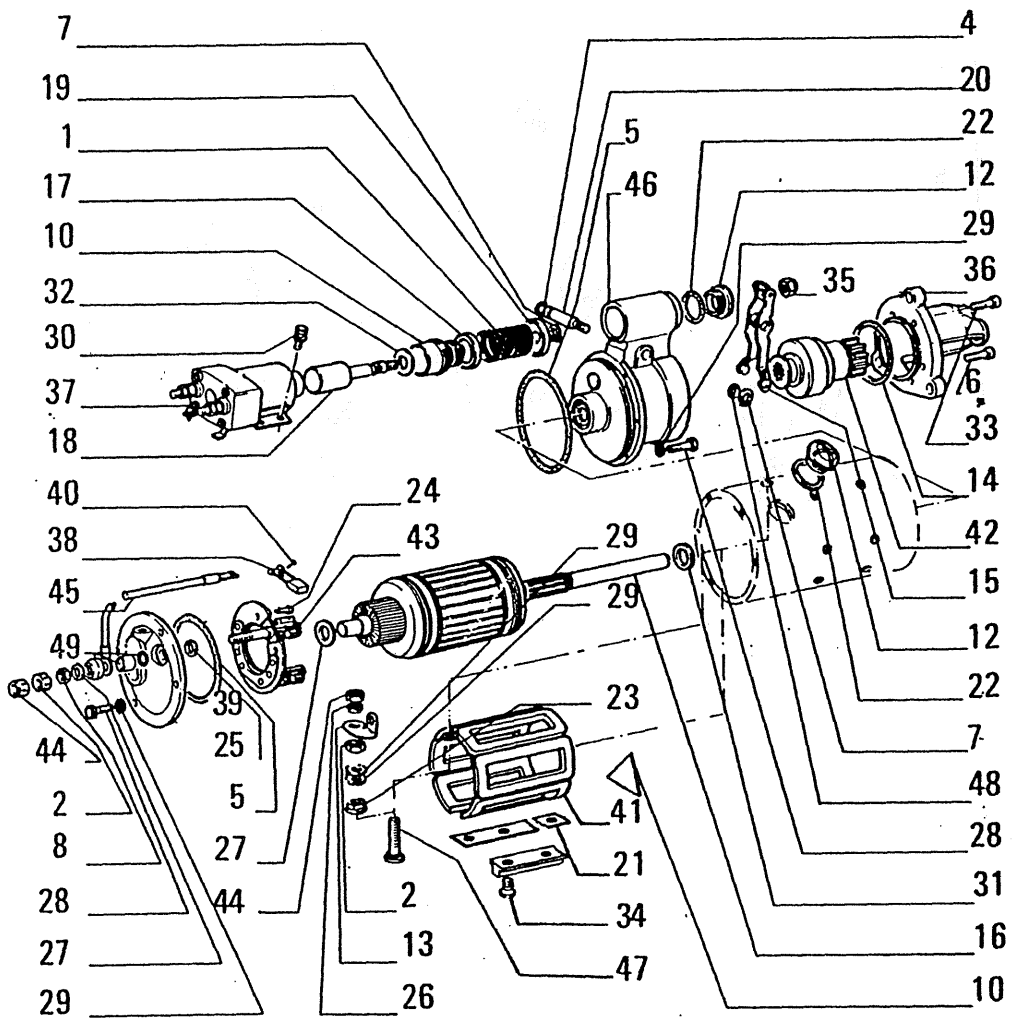

C 1474 → mot.n. 1095

ITEM	PART NUMBER	QTY	TRANS CODE	DESCRIPTION	DESCRIZIONE
1	70649665	1	100M	SPRING	MOLLA
2	70910510	2	10D	NUT	DADO
4	70923560	1	158G	O-RING	GUARNIZIONE O-R
5	70923588	3	158G	O-RING	GUARNIZIONE O-R
6	70924100	5	40V	SCREW	VITE
7	70927726	2	158G	O-RING	GUARNIZIONE O-R
8	73112215	1	131R	WASHER	ROSETTA
9	73116823	1	145B	GUIDE BUSHING	BUSSOLA
10	73116859	2	85I	INSULATOR	ISOLANTE
12	73116869	3	50T	PLUG	TAPPO
13	73116870	1	225S	BRACKET	STAFFA
14	73116871	1	158G	O-RING	GUARNIZIONE O-R
15	73116872	1	45L	LEVER	LEVA
16	73116874	1	40I	ARMATURE	INDOTTO
17	73116888	1	131R	WASHER	ROSETTA
18	73116889	1	60N	CORE	NUCLEO
19	73116890	1	60S	CUP	SCODELLINO
20	73116891	1	16A	SHAFT	ALBERO
21	73116902	1	85I	INSULATOR	ISOLANTE
22	73116906	3	158G	O-RING	GUARNIZIONE O-R
23	73116908	1	96B	GUIDE BUSHING	BOCCOLA DI GUIDA
24	73116949	3	40V	SCREW	VITE
25	73116953	2	131R	WASHER	ROSETTA
26	73116960	2	131R	WASHER	ROSETTA
27	73116961	1	131R	WASHER	ROSETTA
28	73116962	9	40V	SCREW	VITE
29	73116964	2	131R	WASHER	ROSETTA

5213

61694062

STARTER MOTOR – MOTORINO DI AVVIAMENTO – DEMARREUR – ANLASSER – MOTOR DE ARRANQUE

F2.05

N.T.R. 143 - 30.08.198€

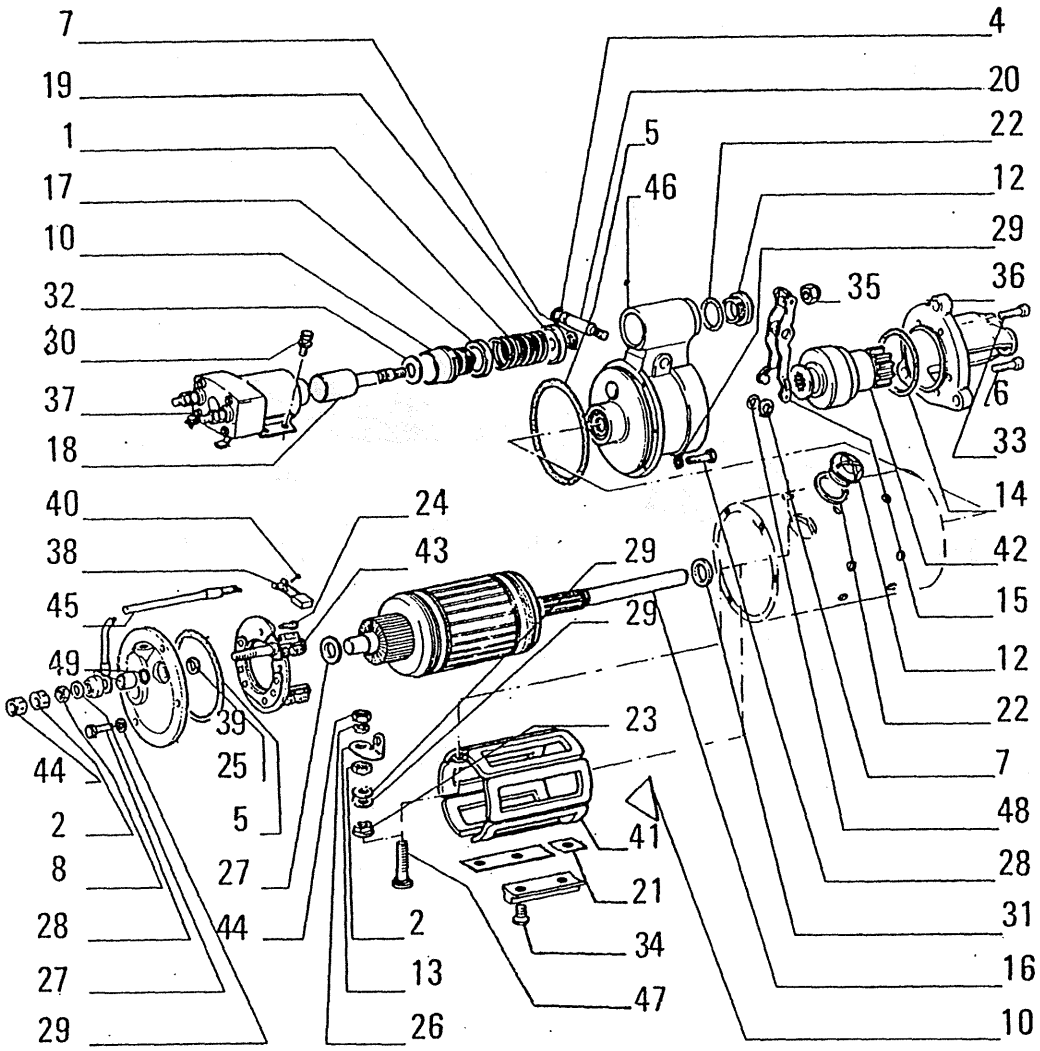

05213

C 1474 → mot.n. 1095

ITEM	PART NUMBER	QTY	TRANS CODE	DESCRIPTION	DESCRIZIONE
30	73116966	4	40V	SCREW	VITE
31	73116970	1	131R	WASHER	ROSETTA
32	73116976	1	131R	WASHER	ROSETTA
33	73116977	1	40V	SCREW	VITE
34	73116986	8	40V	SCREW	VITE
35	73116988	1	10D	NUT	DADO
36	73129765	1	300S	SUPPORT	SUPPORTO
37	73130580	1	75I	SWITCH	INTERRUTTORE
38	73130581	4	177S	BRUSH	SPAZZOLA
39	73130582	1	265C	COVER	COPERCHIO
40	73130585	6	40V	SCREW	VITE
41	73130586	1	83B	COIL	BOBINA
42	73130587	1	67G	COUPLING	GIUNTO
43	73130588	1	197P	BRUSH HOLDER	PORTASPAZZOLA
44	73130590	2	10D	NUT	DADO
45	73130591	1	111C	CABLE	CAVO
46	73130592	1	300S	SUPPORT - REAR	SUPPORTO - POSTERIORE
47	73116894	1	40V	SCREW	VITE
48	70923558	1	158G	O-RING	GUARNIZIONE O-R
49	73116831	1	95B	BUSHING	BOCCOLA

61694062

STARTER MOTOR – MOTORINO DI AVVIAMENTO – DEMARREUR – ANLASSER – MOTOR DE ARRANQUE

F2.05

N.T.R. 143 - 30.08.198

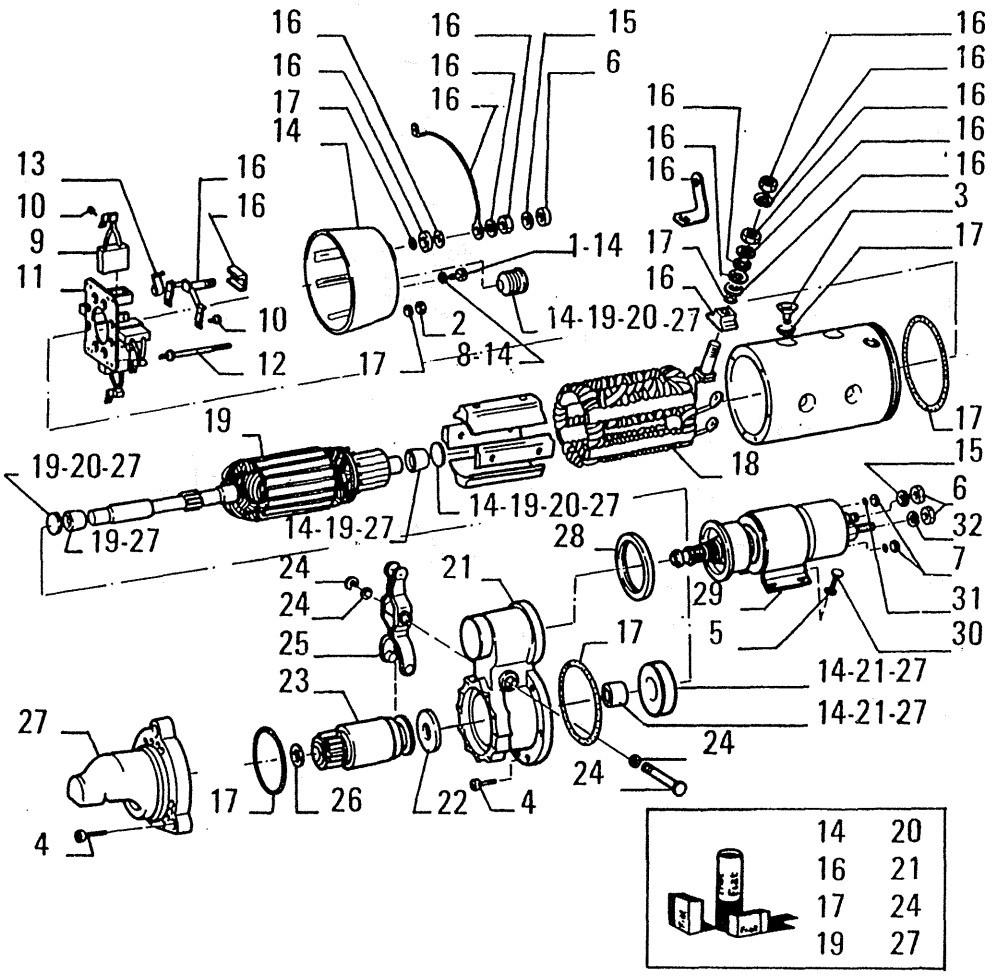

14	20
16	21
17	24
19	27

D 1474 mot.n. 1096 →

ITEM	PART NUMBER	QTY	TRANS CODE	DESCRIPTION	DESCRIZIONE
1	9929739	1	40V	SCREW	VITE
2	12574121	4	10D	NUT 5x0,8x6	DADO 5x0,8x6
3	13305221	8	40V	SCREW	VITE
4	14305431	12	40V	SCREW 6x1x25	VITE 6x1x25
5	14496401	4	131R	WASHER 6,4x12,5	ROSETTA 6,4x12,5
6	16101521	4	10D	NUT 12x1,25x10	DADO 12x1,25x10
7	15896211	2	10D	NUT 6x1x5	DADO 6x1x5
8	79038381	1	45A	RING	ANELLO
9	79058480	4	177S	BRUSH	SPAZZOLA
10	79058481	4	40V	SCREW	VITE
11	79058482	1	197P	BRUSH HOLDER	PORTASPAZZOLA
12	79058483	4	142T	TIEROD	TIRANTE
13	79058484	4	100M	SPRING	MOLLA
14	79058485	K	1K	KIT SEE PAGE 9	KIT VED. PAG.9
15	79058486	2	131R	WASHER	ROSETTA
16	79058487	K	2K	KIT	KIT
17	79058488	K	2K	KIT	KIT
18	79058489	1	83B	COIL	BOBINA
19	79058490	K	2K	KIT	KIT
20	79058491	K	2K	KIT	KIT
21	79058492	K	2K	KIT	KIT
22	79058493	1	131R	WASHER	ROSETTA
23	79058494	1	122P	PINION	PIGNONE
24	79058495	K	2K	KIT	KIT
25	79058496	1	85F	YOKE	FORCELLA
26	79058497	1	131R	WASHER	ROSETTA
27	79058498	K	2K	KIT	KIT

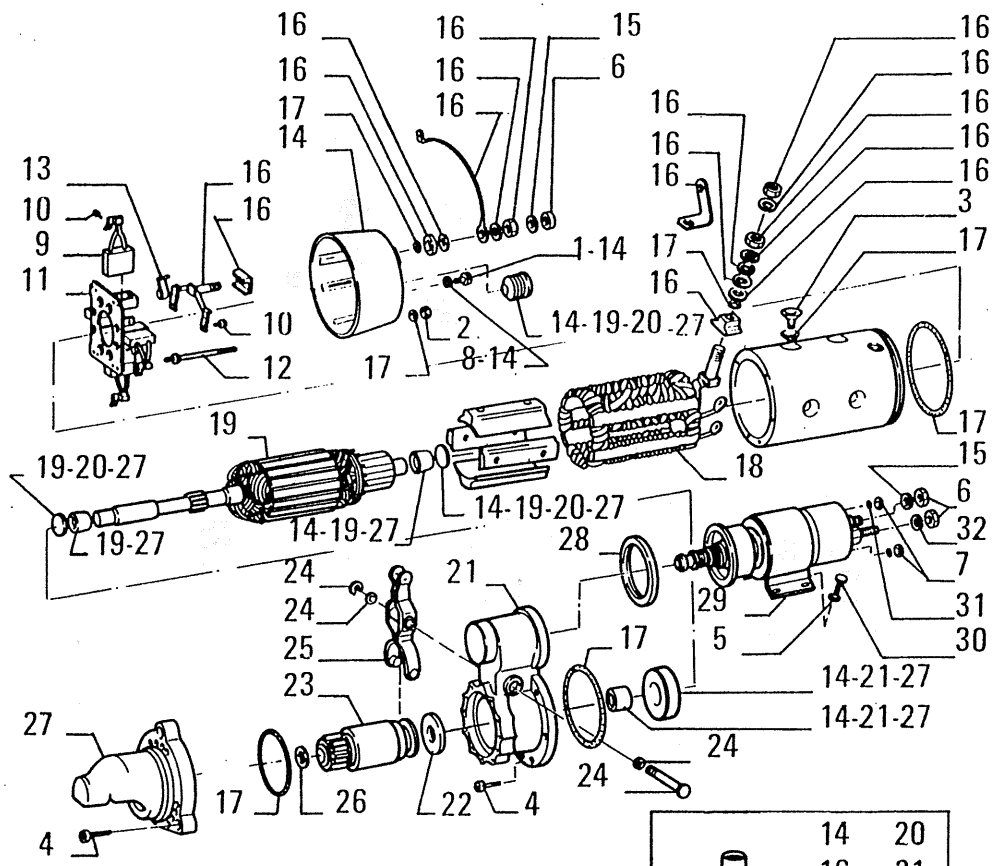

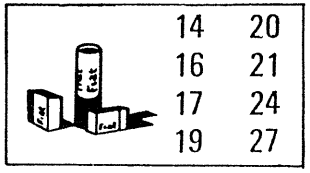

D 1474 mot.n. 1096 →

ITEM	PART NUMBER	QTY	TRANS CODE	DESCRIPTION	DESCRIZIONE
28	79058499	1	45A	RING	ANELLO
29	79058500	1	30E	SOLENOID	ELETTROMAGNETE
30	79058501	4	40V	SCREW	VITE
31	79058502	2	131R	WASHER	ROSETTA
32	79058503	1	131R	WASHER	ROSETTA

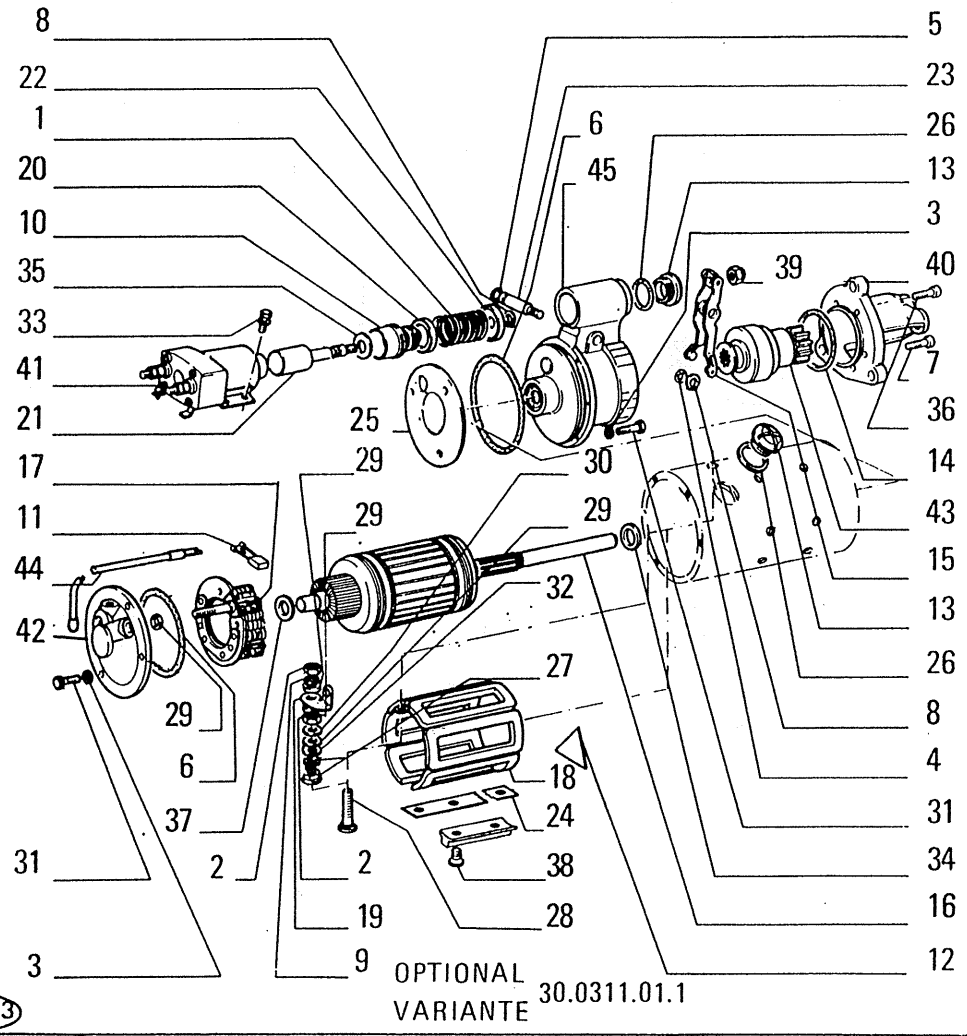

ITEM	PART NUMBER	QTY	TRANS CODE	DESCRIPTION	DESCRIZIONE
1	70649665	1	100M	SPRING	MOLLA
2	70910510	2	10D	NUT	DADO
3	70916964	13	132R	LOCKWASHER	ROSETTA DI SICUREZZA
4	70923558	1	158G	O-RING	GUARNIZIONE O-R
5	70923560	1	158G	O-RING	GUARNIZIONE O-R
6	70923819	2	158G	O-RING	GUARNIZIONE O-R
7	70924100	5	40V	SCREW	VITE
8	70927726	2	45A	RING	ANELLO
9	73112215	1	132R	LOCKWASHER	ROSETTA DI SICUREZZA
10	73116823	1	145B	GUIDE BUSHING	BUSSOLA
11	73116858	12	177S	BRUSH	SPAZZOLA
12	73116859	3	85I	INSULATOR	ISOLANTE
13	73116869	4	50T	PLUG	TAPPO
14	73116871	1	45A	RING	ANELLO
15	73116872	1	45L	LEVER	LEVA
16	73116877	1	40I	ARMATURE	INDOTTO
17	73116879	1	197P	BRUSH HOLDER	PORTASPAZZOLA
18	73116881	1	83B	COIL	BOBINA
19	73116883	1	225S	BRACKET	STAFFA
20	73116888	1	131R	WASHER	ROSETTA
21	73116889	1	60N	CORE	NUCLEO
22	73116890	1	131R	WASHER	ROSETTA
23	73116891	1	16A	SHAFT	ALBERO
24	73116901	1	85I	INSULATOR	ISOLANTE
25	73116905	1	85I	INSULATOR	ISOLANTE
26	73116906	4	45A	RING	ANELLO
27	73116908	5	2K	KIT	KIT

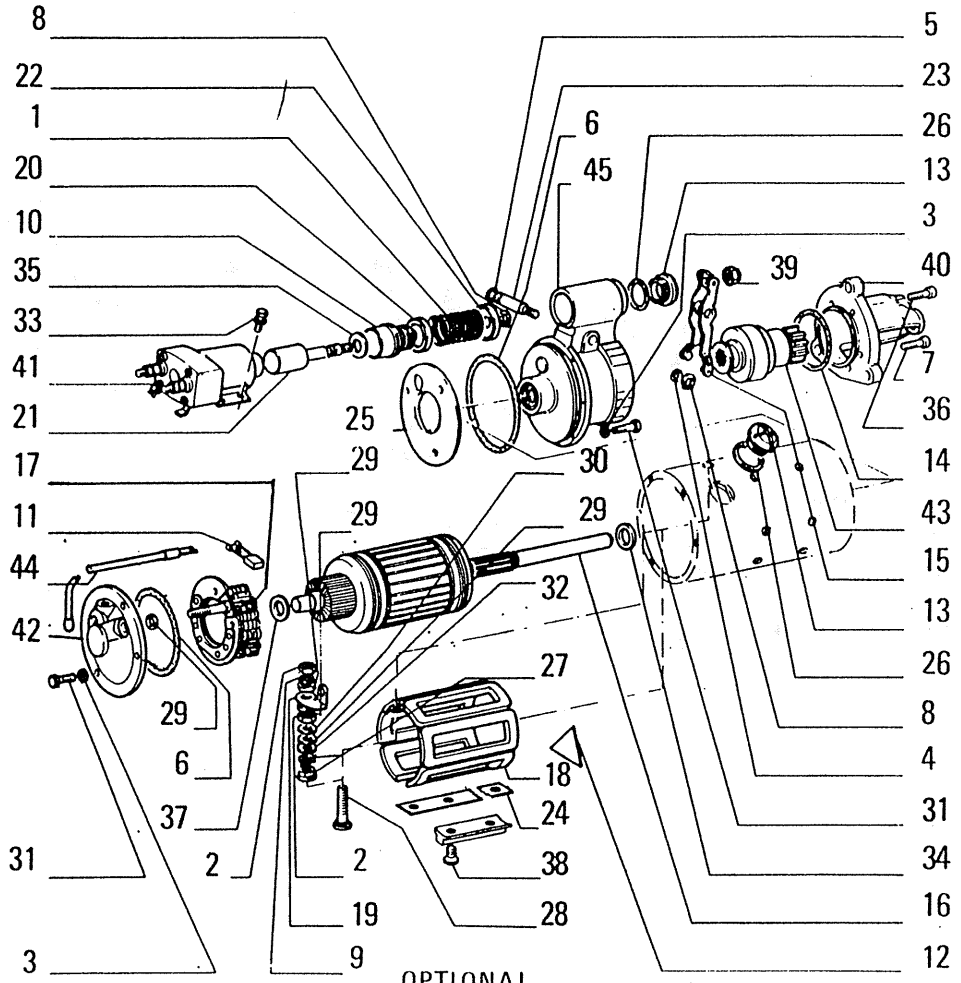

OPTIONAL
VARIANTE 30.0311.01.1

05563

ITEM	PART NUMBER	QTY	TRANS CODE	DESCRIPTION	DESCRIZIONE
28	73116949	3	40V	SCREW	VITE
29	73116953	2	131R	WASHER	ROSETTA
30	73116960	2	131R	WASHER	ROSETTA
31	73116962	13	40V	SCREW	VITE
32	73116964	21	131R	WASHER	ROSETTA
33	73116966	4	40V	SCREW	VITE
34	73116970	1	131R	WASHER	ROSETTA
35	73116976	1	131R	WASHER	ROSETTA
36	73116977	1	40V	SCREW	VITE
37	73116982	1	131R	WASHER	ROSETTA
38	73116986	12	40V	SCREW	VITE
39	73116988	1	10D	NUT	DADO
40	73129765	1	300S	SUPPORT	SUPPORTO
41	73130580	1	75I	SWITCH	INTERRUTTORE
42	73130583	1	265C	COVER	COPERCHIO
43	73130587	1	67G	COUPLING	GIUNTO
44	73130594	1	111C	CABLE	CAVO
45	73130672	1	300S	SUPPORT - REAR	SUPPORTO - POSTERIORE

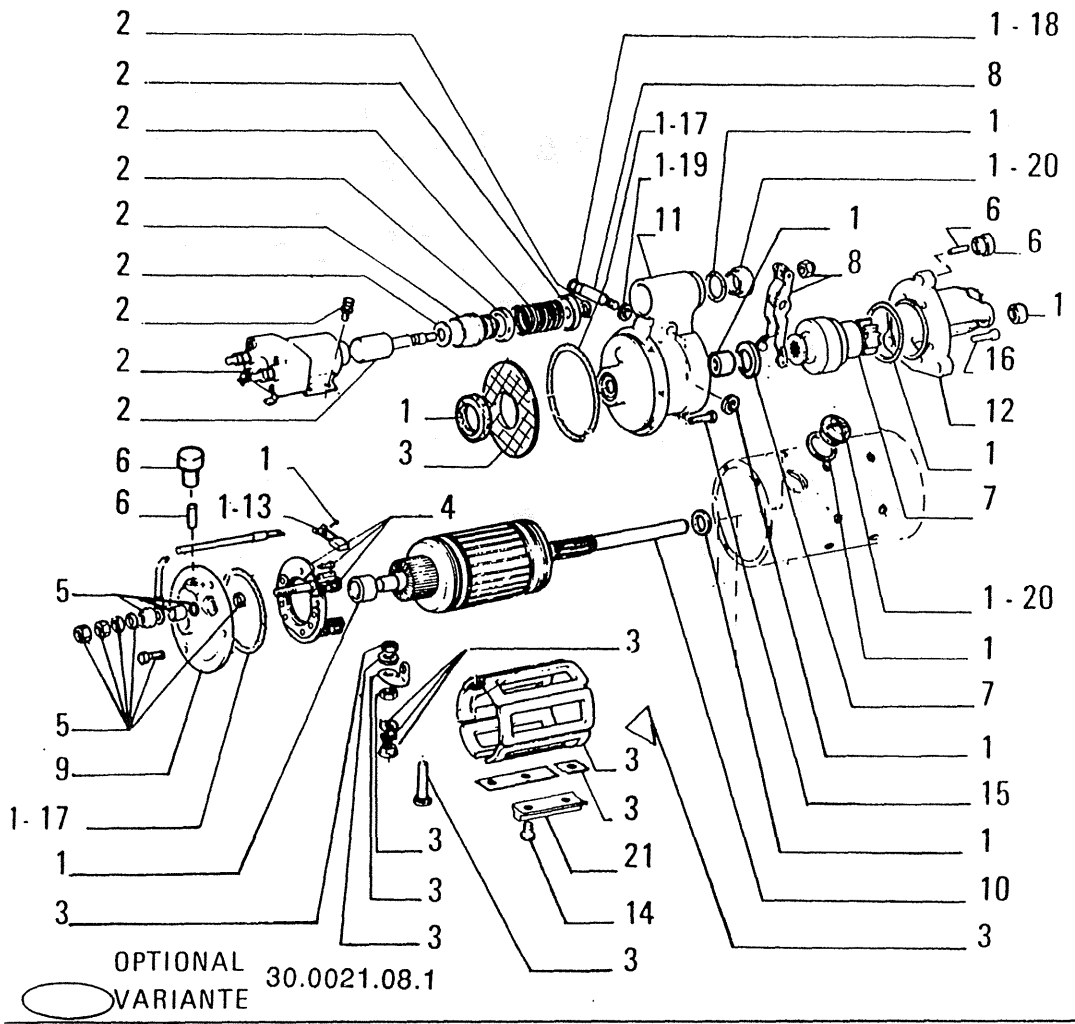

ITEM	PART NUMBER	QTY	TRANS CODE	DESCRIPTION	DESCRIZIONE
1	79068430	K	1K	KIT SEE PAGE 9	KIT VED. PAG.9
2	79068431	K	1K	KIT SEE PAGE 9	KIT VED. PAG.9
3	79068434	K	1K	KIT SEE PAGE 9	KIT VED. PAG.9
4	79068429	1	105P	PLATE - ASSEMBLY	PIASTRA - COMPLETO
5	79068427	K	1K	KIT SEE PAGE 9	KIT VED. PAG.9
6	79068428	K	1K	KIT SEE PAGE 9	KIT VED. PAG.9
7	79068433	K	1K	KIT SEE PAGE 9	KIT VED. PAG.9
8	79068432	K	1K	KIT SEE PAGE 9	KIT VED. PAG.9
9	73130583	1	300C	BODY	CORPO
10	73116877	1	40I	ARMATURE	INDOTTO
11	73130672	1	300C	BODY	CORPO
12	73129765	1	300S	SUPPORT	SUPPORTO
13	79068111	12	177S	BRUSH	SPAZZOLA
14	73116986	12	40V	SCREW	VITE
15	73116962	13	40V	SCREW	VITE
16	70924100	5	40V	SCREW	VITE
	73116977	1	40V	SCREW	VITE
17	70923819	2	158G	O-RING	GUARNIZIONE O-R
18	70923560	1	158G	O-RING	GUARNIZIONE O-R
19	70923558	1	158G	O-RING	GUARNIZIONE O-R
20	73116869	4	50T	PLUG	TAPPO
21	73116846	6	105P	PLATE	PIASTRA

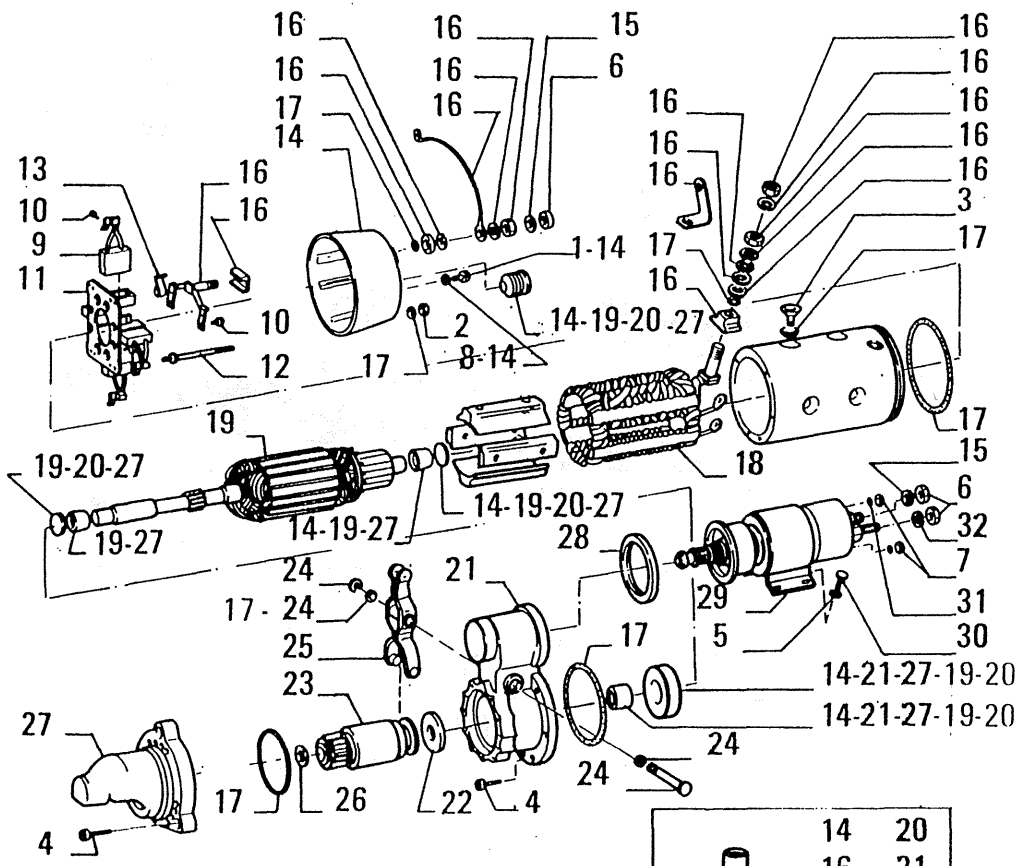

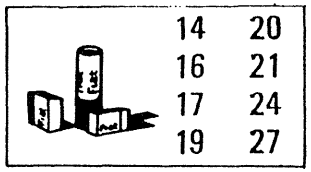

ITEM	PART NUMBER	QTY	TRANS CODE	DESCRIPTION	DESCRIZIONE
1	79032312	1	40V	SCREW	VITE
2	12574121	4	10D	NUT 5x0,8x6	DADO 5x0,8x6
3	13305221	8	40V	SCREW	VITE
4	14305431	12	40V	SCREW 6x1x25	VITE 6x1x25
5	79035485	4	131R	WASHER	ROSETTA
6	16101521	4	10D	NUT 12x1,25x10	DADO 12x1,25x10
7	15896211	2	10D	NUT 6x1x5	DADO 6x1x5
8	79038381	1	45A	RING	ANELLO
9	79058480	4	177S	BRUSH	SPAZZOLA
10	79058481	4	40V	SCREW	VITE
11	79058482	1	197P	BRUSH HOLDER	PORTASPAZZOLA
12	79058483	4	142T	TIEROD	TIRANTE
13	79058484	4	100M	SPRING	MOLLA
14	79058485	K	1K	KIT SEE PAGE 9	KIT VED. PAG.9
15	79058486	2	131R	WASHER	ROSETTA
16	79058487	K	2K	KIT	KIT
17	79058481	K	2K	KIT	KIT
18	79058489	1	83B	COIL	BOBINA
19	79058490	K	2K	KIT	KIT
20	79058491	K	2K	KIT	KIT
21	79058492	K	2K	KIT	KIT
22	79058493	1	131R	WASHER	ROSETTA
23	79063957	1	122P	PINION	PIGNONE
24	79058495	K	2K	KIT	KIT
25	79058496	1	85F	YOKE	FORCELLA
26	79058497	1	131R	WASHER	ROSETTA
27	79058498	K	2K	KIT	KIT

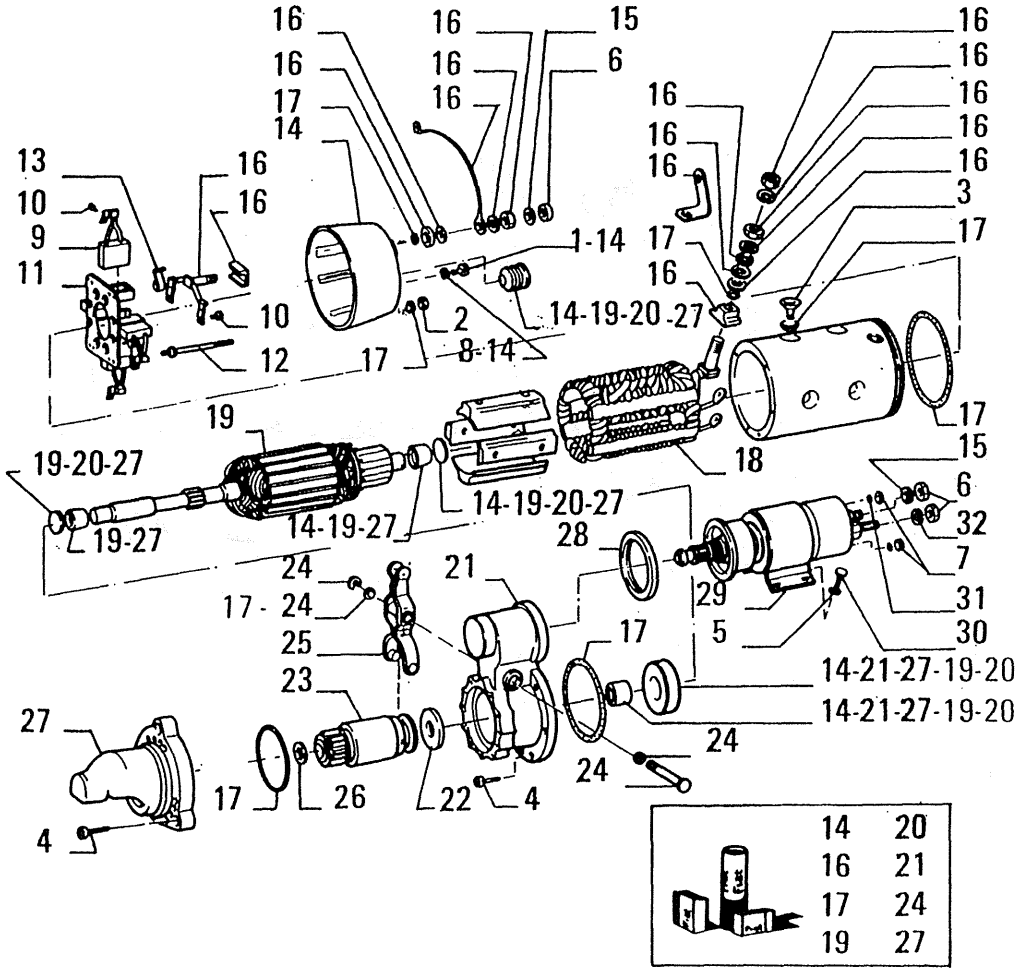

ITEM	PART NUMBER	QTY	TRANS CODE	DESCRIPTION	DESCRIZIONE
28	79058499	1	45A	RING	ANELLO
29	79058500	1	30E	SOLENOID	ELETTROMAGNETE
30	79058501	4	40V	SCREW	VITE
31	10571579	2	131R	WASHER 6,1x1,6	ROSETTA 6,1x1,6
32	79058503	1	131R	WASHER	ROSETTA

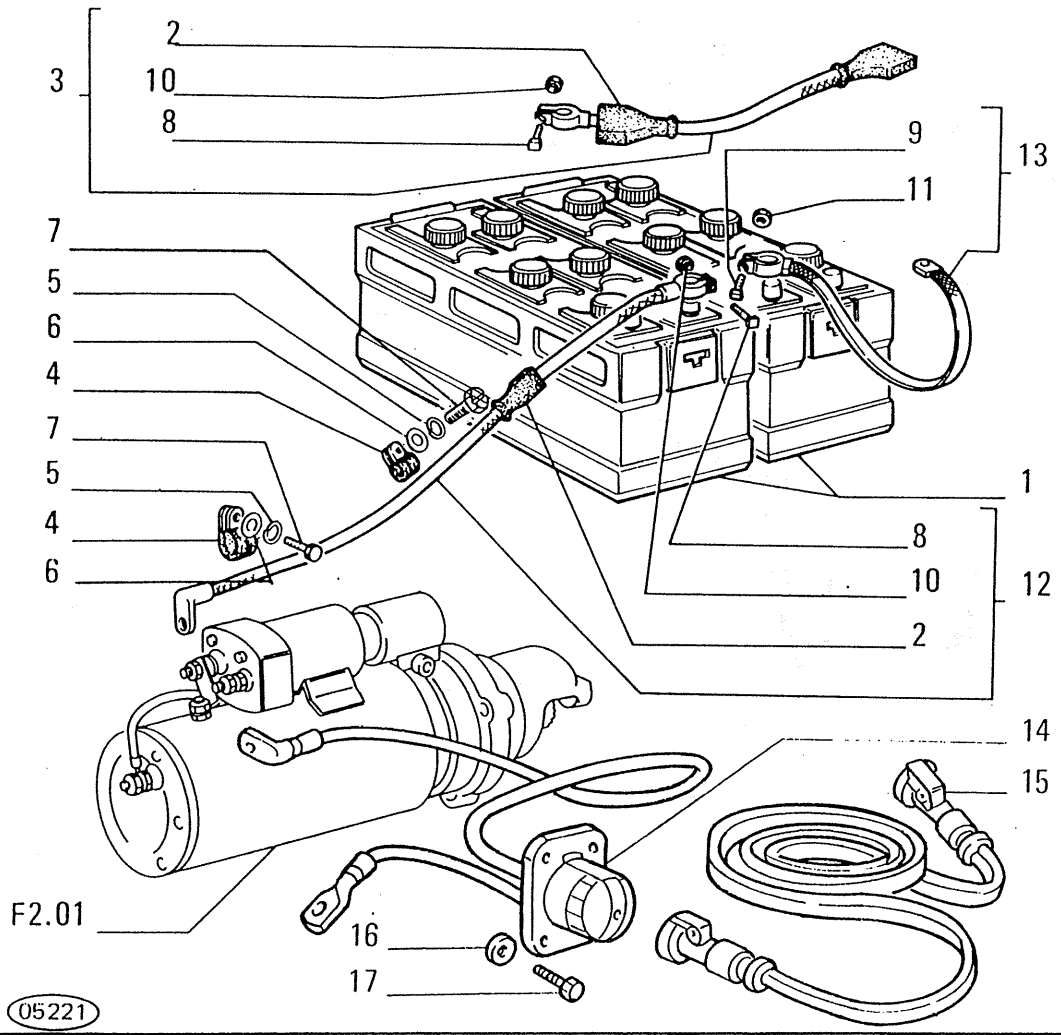

ITEM	PART NUMBER	QTY	TRANS CODE	DESCRIPTION	DESCRIZIONE
1	4751060	2	25B	BATTERY	BATTERIA (01)(02)(03)(04)
	79020444	2	25B	BATTERY (05)(1*)	BATTERIA (05)(1*)
	79062587	2	25B	BATTERY (4*) ALT. T.	BATTERIA (4*) ALT. T.
	79067804	2	25B	BATTERY (4*) ALT. T.	BATTERIA (4*) ALT. T.
2	552699	1	65C	BOOT (05)(2*)	CAPPUCCIO (05)(2*)
	4705975	2	65C	BOOT (05)(2*)	CAPPUCCIO (05)(2*)(3*)
	4950259	3	65C	BOOT	CAPPUCCIO (01)(02)(03)(04)
		3	65C	BOOT (05)(*)	CAPPUCCIO (05)(*)
3	4954336	1	111C	CABLE - ASSEMBLY	CAVO - COMPLETO (01)(02)(03)(04)
	76013923	1	111C	CABLE (4*)	CAVO (4*)
		1	111C	CABLE - ASSEMBLY (05)(2*)	CAVO - COMPLETO (05)(2*)(3*)
	79019513	1	111C	CABLE - ASSEMBLY (05)(*)	CAVO - COMPLETO (05)(*)
4	10450390	2	225S	BRACKET 14x9	STAFFA (01)(02)(03)(04) 14x9
	10450790	2	225S	BRACKET (05)(2*)(3*) 22x9	STAFFA (05)(2*)(3*) 22x9
5	10516871	2	131R	WASHER 10x2,5	ROSETTA 10x2,5
6	10571771	2	131R	WASHER 8,1x2	ROSETTA 8,1x2
7	11103031	2	40V	SCREW 10x1,5x18	VITE 10x1,5x18
8	11945008	3	40V	SCREW 6x1x30	VITE (01)(02)(03)(04) 6x1x30
	11947908	3	40V	SCREW (05)(*)(2*) 8x1,25x35	VITE (05)(*)(2*)(3*) 8x1,25x35
9	11947708	1	40V	SCREW 8x1,25x30	VITE (01)(02)(03)(04) 8x1,25x30
		1	40V	SCREW (05)(*) 8x1,25x30	VITE (05)(*) 8x1,25x30
10	15896218	3	10D	NUT 6x1x5	DADO (01)(02)(03)(04) 6x1x5
	16100818	4	10D	NUT (05)(*)(2*) 8x1,25x6,5	DADO (05)(*)(2*)(3*) 8x1,25x6,5

(05) Winterized units

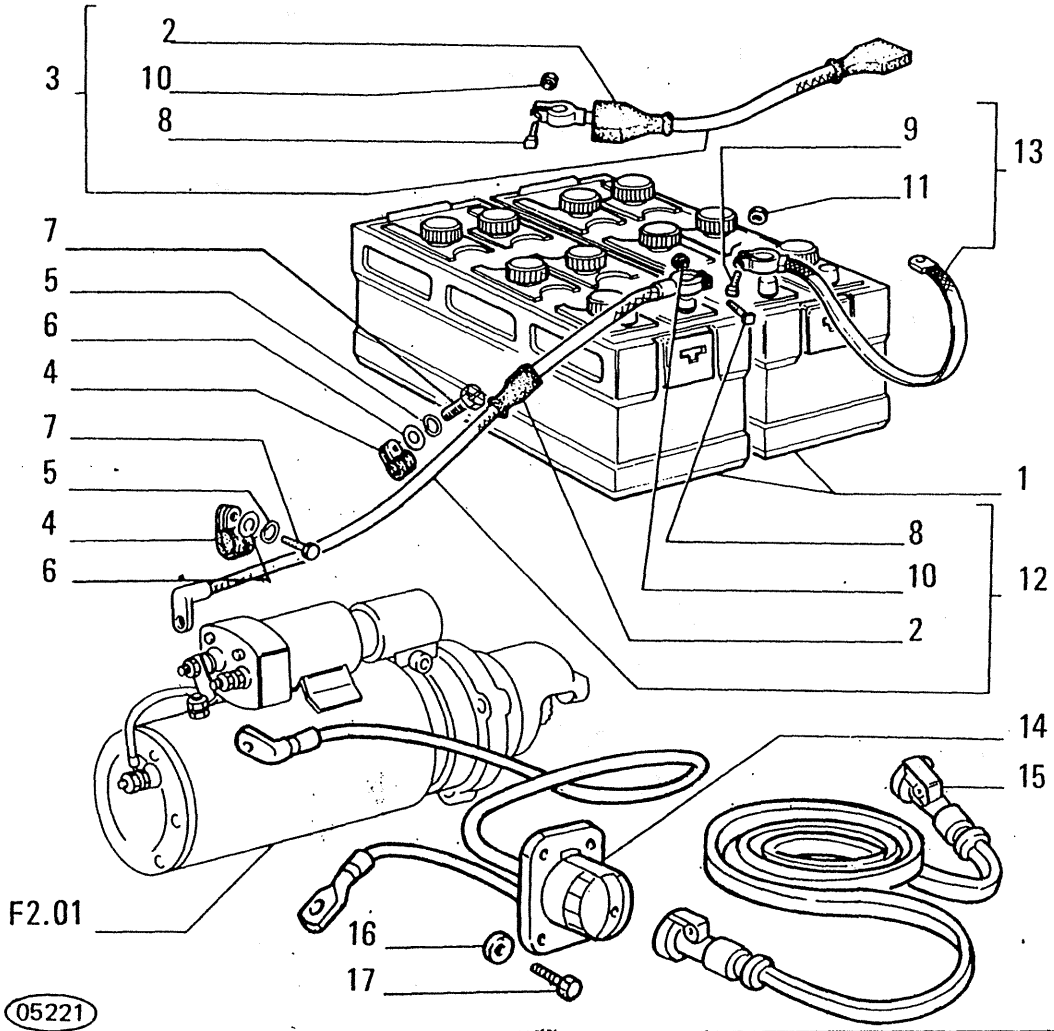

ITEM	PART NUMBER	QTY	TRANS CODE	DESCRIPTION	DESCRIZIONE
11	16100818	1	10D	NUT 8x1,25x6,5	DADO (01)(02)(03)(04) 8x1,25x6,5
		1	10D	NUT (05)(2*) 8x1,25x6,5	DADO (05)(2*)(3*) 8x1,25x6,5
12	76013922	1	111C	CABLE (4*)	CAVO (4*)
		1	111C	CABLE - ASSEMBLY (05)(2*)	CAVO - COMPLETO (05)(2*)(3*)
	79018477	1	111C	CABLE - ASSEMBLY	CAVO - COMPLETO (01)(02)(03)(04)
	79028418	1	111C	CABLE - ASSEMBLY (05)(*)	CAVO - COMPLETO (05)(*)
13	79035908	1	166T	GROUND BRAID - ASSEMBLY	TRECCIA DI MASSA - COMPLETO (01)(02)(03)(04)
		1	166T	GROUND BRAID - ASSEMBLY (05)(*)	TRECCIA DI MASSA - COMPLETO (05)(*)
	79044137	1	166T	GROUND BRAID (05)(2*)	TRECCIA DI MASSA (05)(2*)(3*)
14	79044135	1	205P	RECEPTACLE 05	PRESA DI CORRENTE 05
15	79044134	1	111C	CABLE 05	CAVO 05
16	10571579	4	131R	WASHER 05 6,1x1,6	ROSETTA 05 6,1x1,6
17	10902621	4	40V	SCREW 05 6x1x25	VITE 05 6x1x25
(*)			469P	FOR SPECIAL EQUIPMENT 30.0311.01.1	PER VARIANTE 30.0311.01.1
(1*)			469P	FOR SPECIAL EQUIPMENT 30.0748.09.1	PER VARIANTE 30.0748.09.1
(2*)			469P	FOR SPECIAL EQUIPMENT 30.0021.08.1	PER VARIANTE 30.0021.06.1
					PER VARIANTE 30.0021.07.1
(4*)			469P	FOR SPECIAL EQUIPMENT 30.0021.09.1	PER VARIANTE 30.0021.09.1

(05) Winterized units

05221

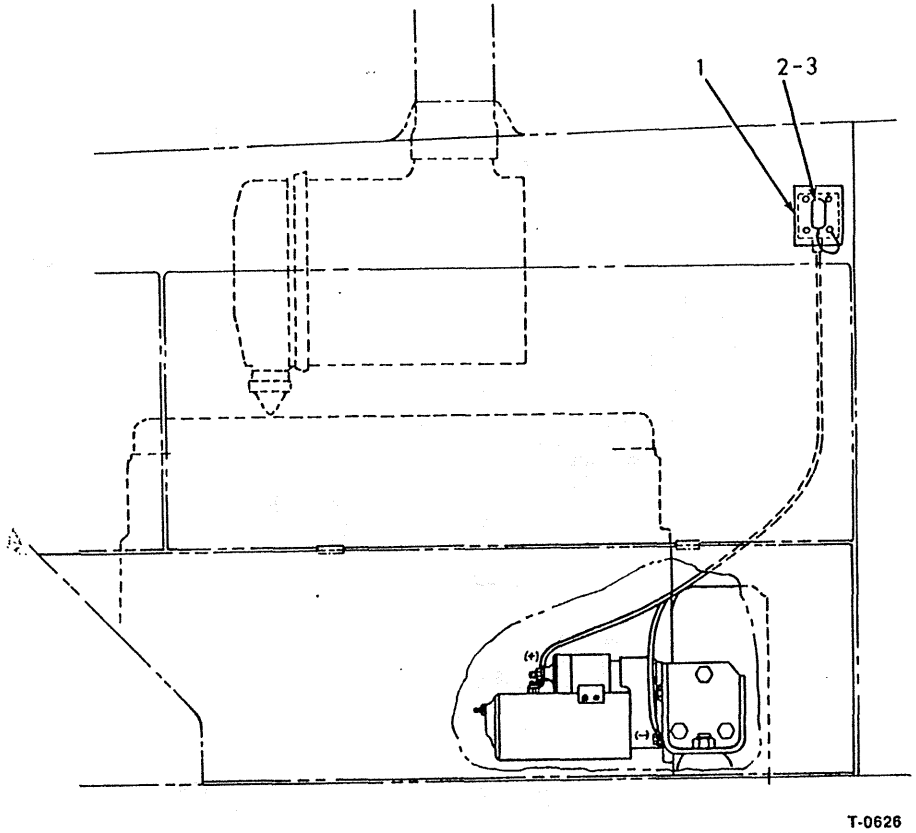

ITEM	PART NO.	QTY.	CODE	DESCRIPTION	DENOMINAZIONE
1	73152733	1	105P	PLATE	PIASTRA
	70922763	4	40V	CAPSCREW,3/8"NCX1	VITE
	70929156	4	131R	WASHER	ROSETTA
	70933623	4	10D	NUT,3/8"NC	DADO
2	73144554	1	205P	RECEPTACLE	PRESA DI CORRENTE
			600L	INCLDUES ITEM 3	INCLUDE PARTIC.(1)
3	73144555	1	20C	CAP	CATTOLA

	STARTING RECEPTACLE	F301	1A
		Added April 1989	

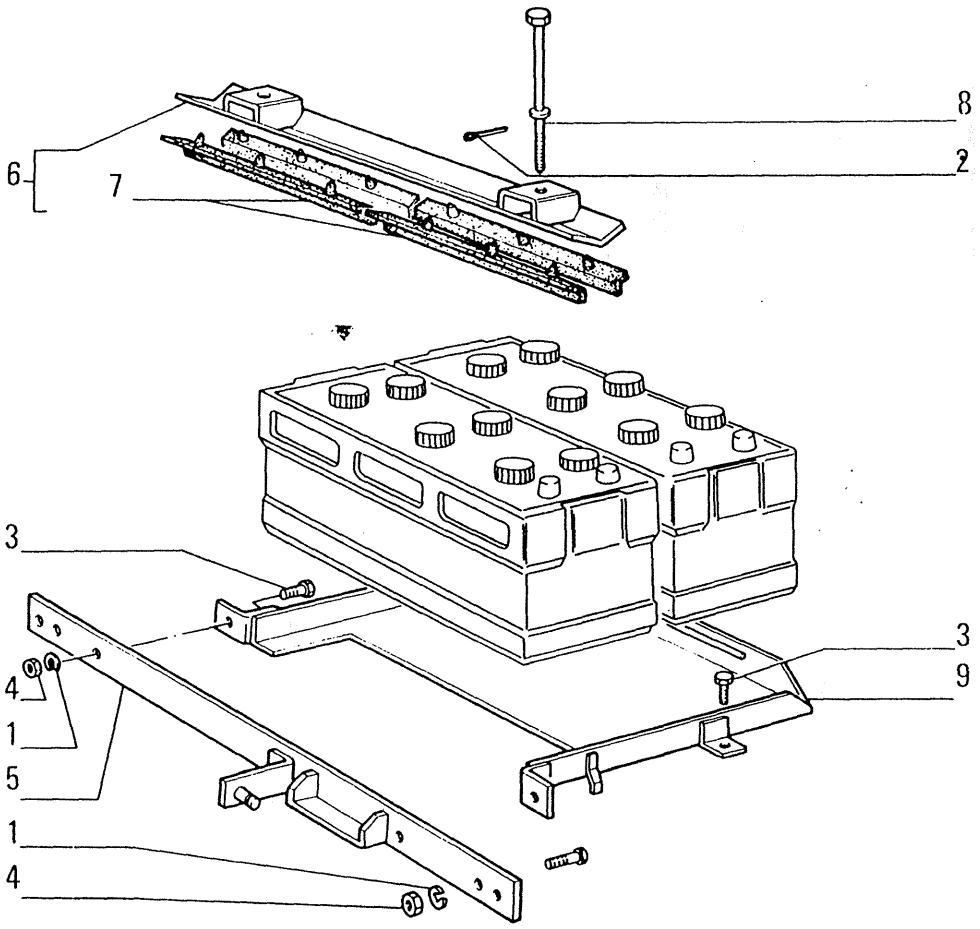

ITEM	PART NUMBER	QTY	TRANS CODE	DESCRIPTION	DESCRIZIONE
1	10520021	14	131R	WASHER 12,2x22	ROSETTA 12,2x22
2	10796401	2	270C	COTTER PIN 2,7x27,6	COPIGLIA 2,7x27,6
3	11112631	8	40V	SCREW 12x1,75x35	VITE 12x1,75x35
4	11702921	6	10D	NUT 12x1,75x10	DADO 12x1,75x10
5	76003332	1	180T	CROSS BEAM - FRONT	TRAVERSA - ANTERIORE
6	76003367	1	225S	BRACKET - ASSEMBLY	STAFFA - COMPLETO (01)(02)(03)(04) STAFFA (05)(*)
7	76004440	4	60T	BLOCK	TASSELLO (01)(02)(03)(04) TASSELLO (05)(*)
8	79029692	2	142T	TIEROD	TIRANTE
9	79031705	1	300S	SUPPORT	SUPPORTO PER VARIANTE 30.0748.09.1

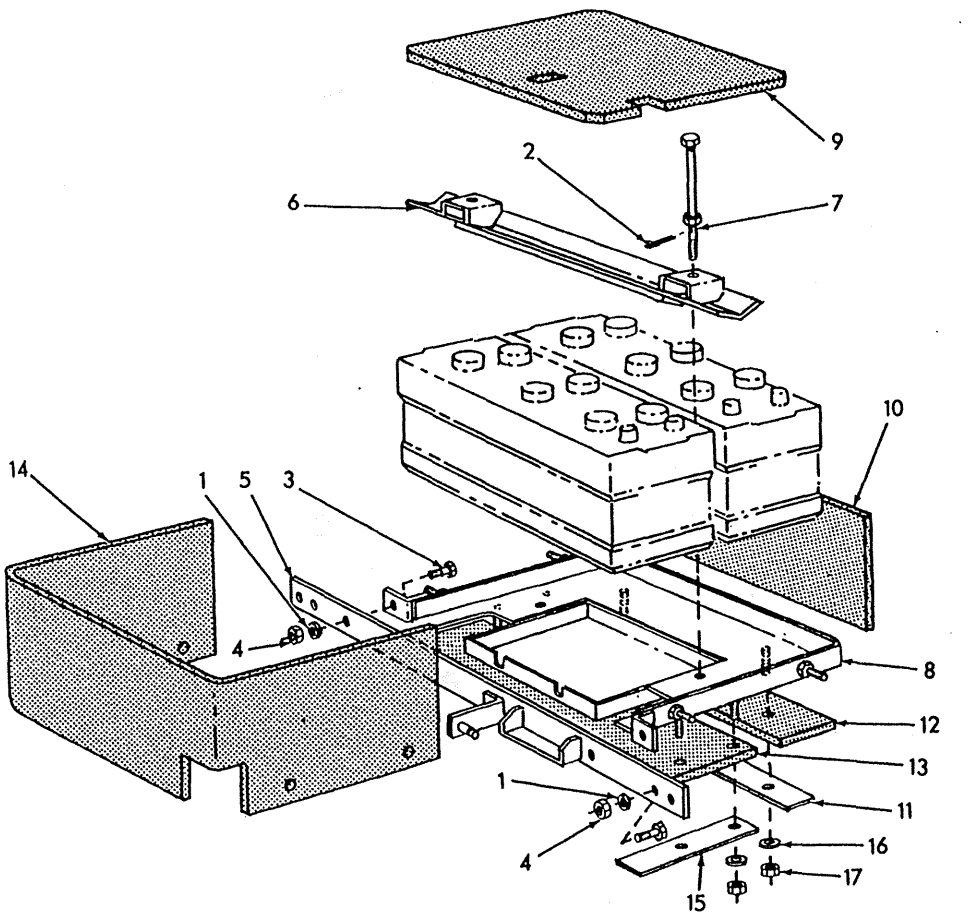

T-0652

ITEM	PART NO.	QTY.	CODE	DESCRIPTION	DENOMINAZIONE
1	10520021	14	131R	WASHER	ROSETTA
2	10796401	2	270C	PIN, SPLIT	COPIGLIA
3	11112631	8	40V	CAPSCREW,12X1.75X35	VITE
4	11702921	6	10D	NUT,12X1.75X10	DADO
5	76003332	1	80M	BRACKET	MENSOLA
6	73299357	1	80M	BRACKET	MENSOLA
7	79029692	2	42V	SCREW	VITE
8	73299360	1	300S	SUPPORT	SUPPORTO
9	73299356	1	861	INSULATION	ISOLAMENTO
10	73299359	1	861	INSULATION	ISOLAMENTO
11	73299363	1	105P	PLATE	PIASTRA
12	73299362	1	861	INSULATION	ISOLAMENTO
13	73299365	1	861	INSULATION	ISOLAMENTO
14	73299355	1	861	INSULATION	ISOLAMENTO
15	73299364	1	105P	PLATE	PIASTRA
16	70929156	10	131R	WASHER	ROSETTA
17	70919439	10	10D	NUT,3/8"NC	DADO

USAGE: UNITS WITH 8205 ENGINE.

	BATTERY MOUNTING	F301	2A
		Added April 1989	

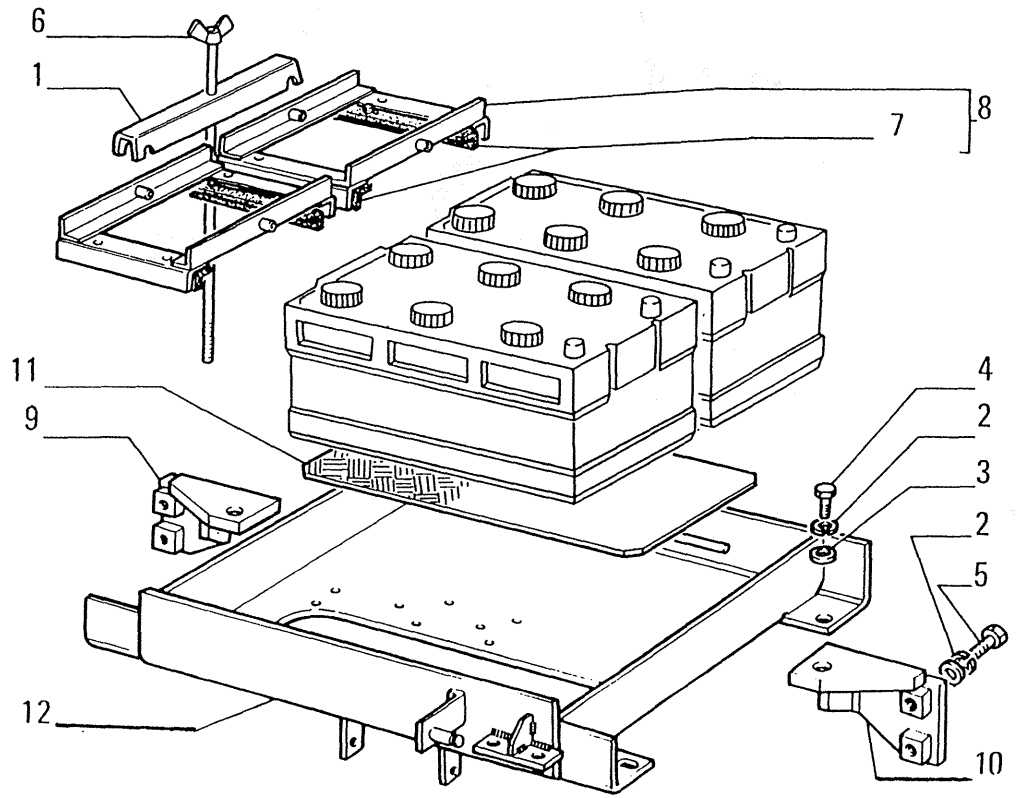

05222

ITEM	PART NUMBER	QTY	TRANS CODE	DESCRIPTION	DESCRIZIONE
1	4974664	2	180T	CROSS BEAM (*)	TRAVERSA (*)
2	10517071	8	131R	WASHER 12,2x3,1	ROSETTA 12,2x3,1
3	10520021	8	131R	WASHER 12,2x22	ROSETTA 12,2x22
4	11112431	4	40V	SCREW 12x1,75x30	VITE 12x1,75x30
5	11112631	4	40V	SCREW 12x1,75x35	VITE 12x1,75x35
6	76003355	2	142T	TIEROD (*)	TIRANTE (*)
7	76004927	4	60T	BLOCK (*)	TASSELLO (*)
8	76004928	2	295C	BEZEL COMPL.(*)	CORNICE COMPL.(*)
9	79009667	1	80M	BRACKET - REAR RIGHT	MENSOLA - POSTERIORE DESTRO
10	79009670	1	80M	BRACKET - REAR LEFT	MENSOLA - POSTERIORE SINISTRO
11	79010787	2	105P	PLATE	PIASTRA
12	79027854	1	300S	SUPPORT	SUPPORTO
(*)			469P	FOR SPECIAL EQUIPMENT 30.0736.02.1	PER VARIANTE 30.0736.02.1

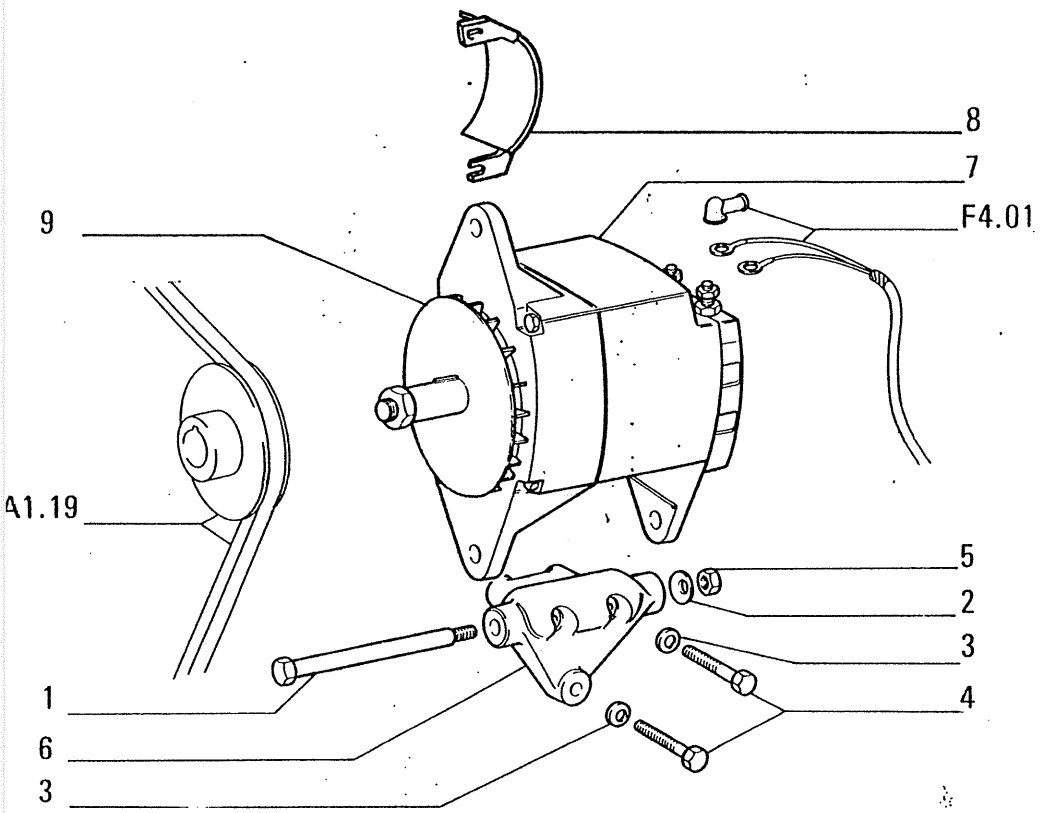

ITEM	PART NUMBER	QTY	TRANS CODE	DESCRIPTION	DESCRIZIONE
1	4744740	1	40V	SCREW **C1426**	VITE **C1426**
	11307031	1	40V	SCREW 10x1,25x40 **D1444**	VITE 10x1,25x40 **D1444**
		1	40V	SCREW 10x1,25x40 **C1475**	VITE 10x1,25x40 **C1475**
	15541821	1	40V	SCREW 12x1,25x120 **D1475**	VITE 12x1,25x120 **D1475**
	70920574	1	40V	SCREW **D1426**	VITE **D1426**
		1	40V	SCREW **C1475**	VITE **C1475**
2	10520020	1	131R	WASHER 12,2x22 **D1475**	ROSETTA 12,2x22 **D1475**
	11198671	1	131R	WASHER 13x24 **C1475**	ROSETTA 13x24 **C1475**
3	12646701	3	131R	WASHER 8,15x20	ROSETTA 8,15x20
4	16043231	3	40V	SCREW 8x1,25x16	VITE 8x1,25x16
5	16101511	1	10D	NUT 12x1,25x10 **C1475**	DADO 12x1,25x10 **C1475**
	61520107	1	10D	NUT **D1475**	DADO **D1475**
6	61589066	1	300S	SUPPORT **C1475**	SUPPORTO **C1475**
	61589095	1	300S	SUPPORT **D1475**	SUPPORTO **D1475**
7	4738772	1	25A	ALTERNATOR - ASSEMBLY SEE SGR. F3.03/A **D1475**	ALTERNATORE - COMPLETO VI SGR. F3.03/A **D1475**
		1	25A	ALTERNATOR - ASSEMBLY SEE SGR. F3.03/A **D1480**	ALTERNATORE - COMPLETO VI SGR. F3.03/A **D1480**
	4757193	1	25A	ALTERNATOR - ASSEMBLY SEE SGR. F3.03/1 (*)(05)((((((((((	ALTERNATORE - COMPLETO VI SGR. F3.03/1 (*)(05)((((((((((
	4808268	1	25A	ALTERNATOR - ASSEMBLY SEE SGR. F3.03/B **D1480**	ALTERNATORE - COMPLETO VI SGR. F3.03/B (01) **D1480** (02)(03)(04)
	73119134	1	25A	ALTERNATOR - ASSEMBLY SEE SGR. F3.03	ALTERNATORE - COMPLETO VI SGR. F3.03
8	76008086	1	70R	GUARD **D1426**	RIPARO **D1426**
		1	70R	GUARD **C1475**	RIPARO **C1475**

C 1426 → Tel.n. 050396 C 1444 → Tel.n. 051056 C 1475 → Mot.n. 1073
D 1426 Tel.n. 050397 → D 1444 Tel.n. 051057 → D 1475 Mot.n. 1074 → D 1480 Mot.n. 1889 →

(05224) USAGE: Units with 8205 Engine

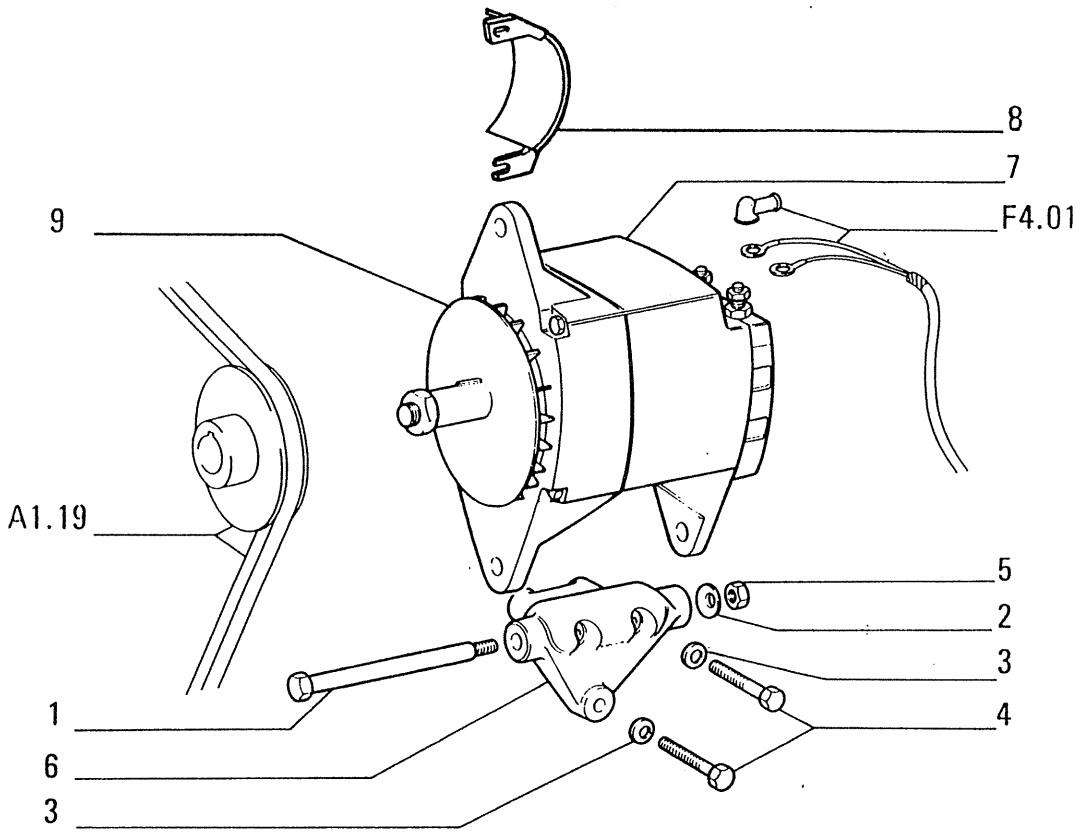

ITEM	PART NUMBER	QTY	TRANS CODE	DESCRIPTION	DESCRIZIONE
8	76010056	1	70R	GUARD **D1444**	RIPARO (01)(02)(03)(04) **D1444**
		1	70R	GUARD **C1459**	RIPARO **C1459**
	76012249	1	70R	GUARD **D1459**	RIPARO **D1459**
	76013366	1	70R	GUARD (*)(05)	RIPARO (*)(05)
9	4470778	1	36V	BLOWER **D1480**	VENTOLA **D1480**
	79035434	1	36V	BLOWER **D1471**	VENTOLA **D1471**
		1	36V	BLOWER **C1480**	VENTOLA **C1480**
(*)			469P	FOR SPECIAL EQUIPMENT 30.0753.08.1	PER VARIANTE 30.0753.08.1

C 1444 → Tel.n. 051056
D 1444 Tel.n. 051057 →
C 1459 → Tel.n. 051797
D 1459 Tel.n. 051798 →
C 1471 → Tel.n. 051100
D 1471 Tel.n. 051101 →
C 1480 → Mot.n. 1888
D 1480 Mot.n. 1889 →

(05) Winterized units

05224 USAGE: Units with 8205 Engine

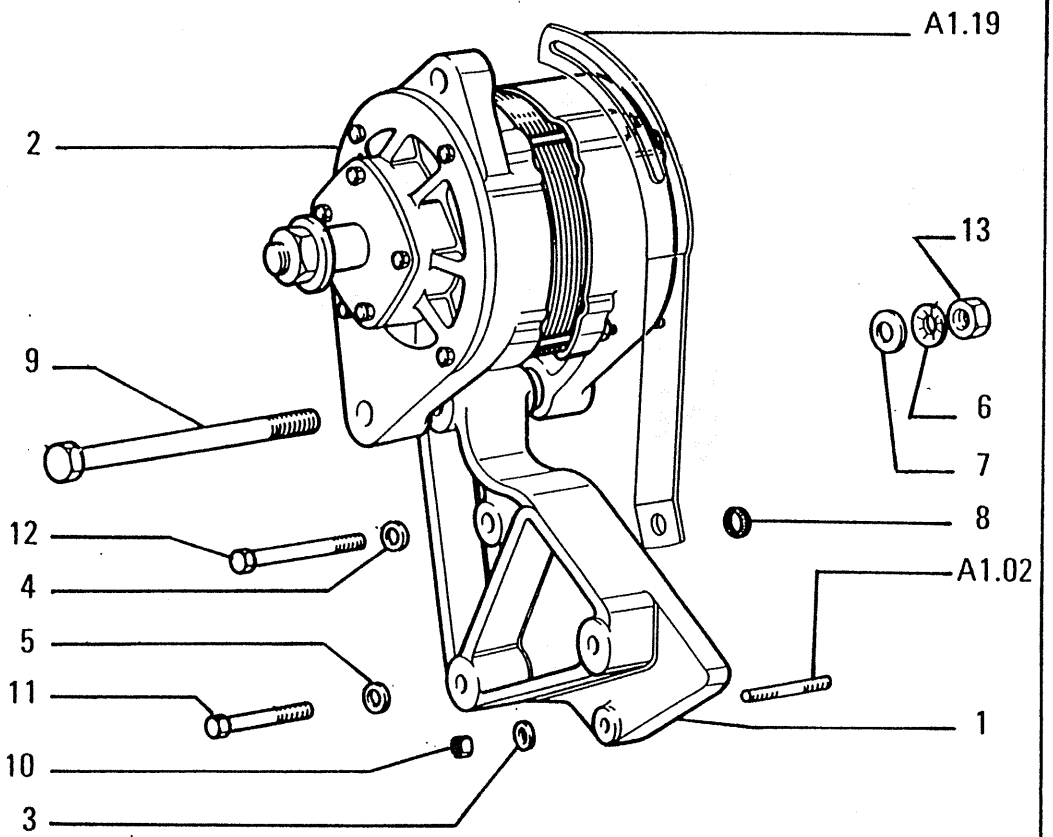

USAGE: Units with 8365 engine

ITEM	PART NUMBER	QTY	TRANS CODE	DESCRIPTION	DESCRIZIONE
1	4722522	1	300S	SUPPORT	SUPPORTO
2	4808268	1	25A	ALTERNATOR - ASSEMBLY SEE SGR. F3.03/B	ALTERNATORE - COMPLETO VEDERE SGR. F3.03/B
3	11197779	1	170R	LOCKWASHER 6,4x12	ROSETTA EL. 6,4x12
4	11198179	1	170R	LOCKWASHER 8,4x22	ROSETTA EL. 8,4x22
5	11198379	2	170R	LOCKWASHER 10,5x20	ROSETTA EL. 10,5x20
6	11198679	1	170R	LOCKWASHER 13x24	ROSETTA EL. 13x24
7	12646901	1	131R	WASHER 12,2x28	ROSETTA 12,2x28
8	14455280	1	158G	O-RING 1,78x56,87	GUARNIZIONE O-R 1,78x56,87
9	15541921	1	40V	SCREW 12x1,25x130	VITE 12x1,25x130
10	15896211	1	10D	NUT 6x1x5	DADO 6x1x5
11	15972724	2	40V	SCREW 10x1,25x32,0	VITE 10x1,25x32,0
12	16044821	1	40V	SCREW 8x1,25x80	VITE 8x1,25x80
13	16101511	1	10D	NUT 12x1,25x10	DADO 12x1,25x10

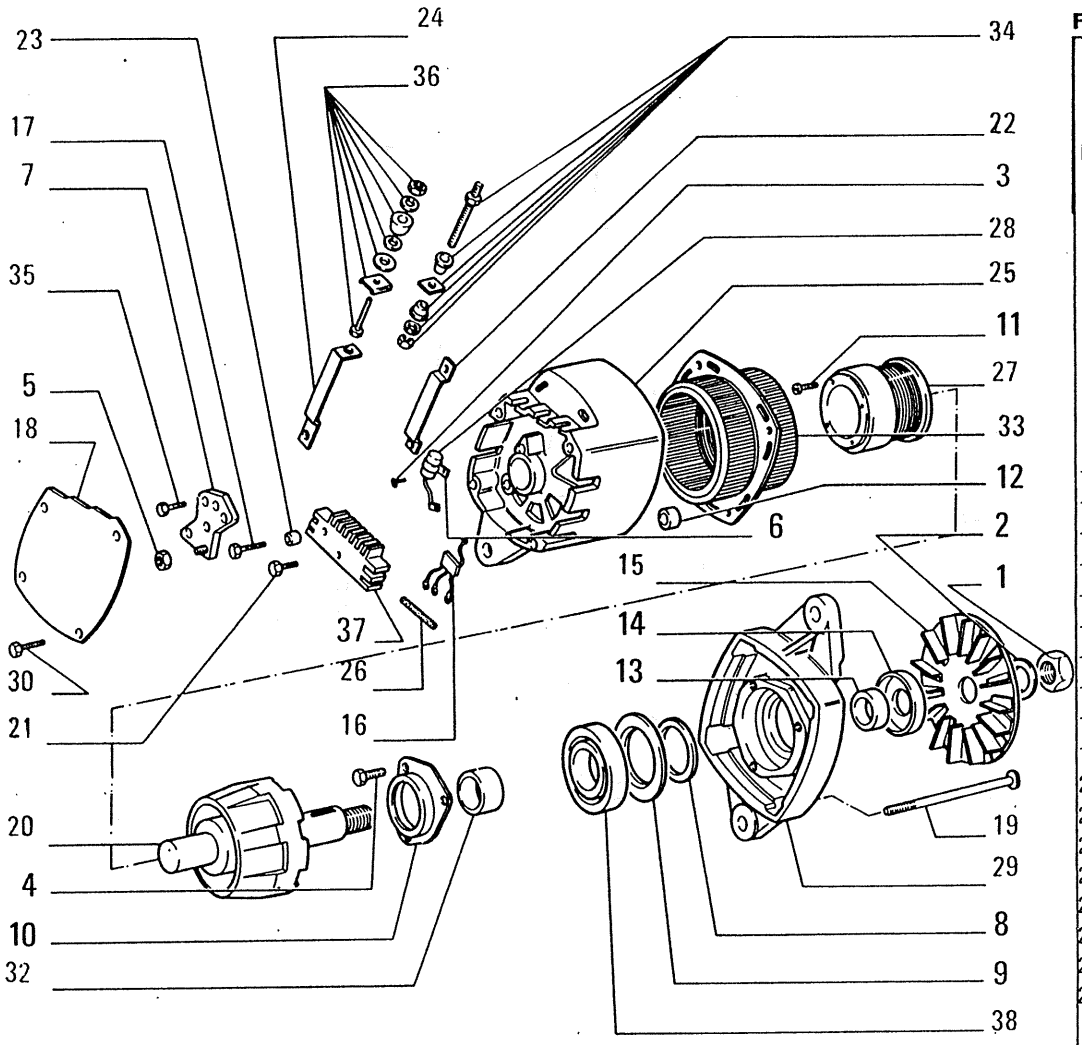

ITEM	PART NUMBER	QTY	TRANS CODE	DESCRIPTION	DESCRIZIONE
1	70189001	1	10D	NUT	DADO
2	70189002	1	131R	WASHER	ROSETTA
3	73117031	3	40V	SCREW	VITE
4	73117032	3	40V	SCREW	VITE
5	73117036	4	10D	NUT	DADO
6	73117038	1	225S	BRACKET	STAFFA
7	73117044	1	32R	RECTIFIER	RADDRIZZATORE
8	73117056	1	131R	WASHER	ROSETTA
9	73117058	1	45A	RING	ANELLO
10	73117073	1	105P	PLATE	PIASTRA
11	73117087	4	40V	SCREW	VITE
12	73117088	1	95B	BUSHING	BOCCOLA
13	73117096	1	180C	COLLAR	COLLARE
14	73117103	1	334C	DUST BOOT	CUFFIA PARAPOLVERE
15	73117119	1	36V	BLOWER	VENTOLA
16	73117126	1	53D	DIODE	DIODO
17	73117731	1	40V	SCREW	VITE
18	73117733	1	265C	COVER	COPERCHIO
19	73117734	4	40V	SCREW	VITE
20	73117735	1	145R	ROTOR	ROTORE
21	73117737	2	40V	SCREW	VITE
22	73117739	1	235C	CONNECTION	CONNESSIONE
23	73117740	1	95B	BUSHING	BOCCOLA
24	73117741	1	235C	CONNECTION	CONNESSIONE
25	73117742	1	300S	SUPPORT	SUPPORTO
26	73117744	1	85I	INSULATOR	ISOLANTE
27	73117746	1	110A	WINDING	AVVOLGIMENTO

03703

73119134

ALTERNATOR – ALTERNATORE – ALTERNATEUR – DREHSTROMLICHTMASCHINE – ALTERNADOR

F3.03

N.T.R. 155 - 30.01.1987

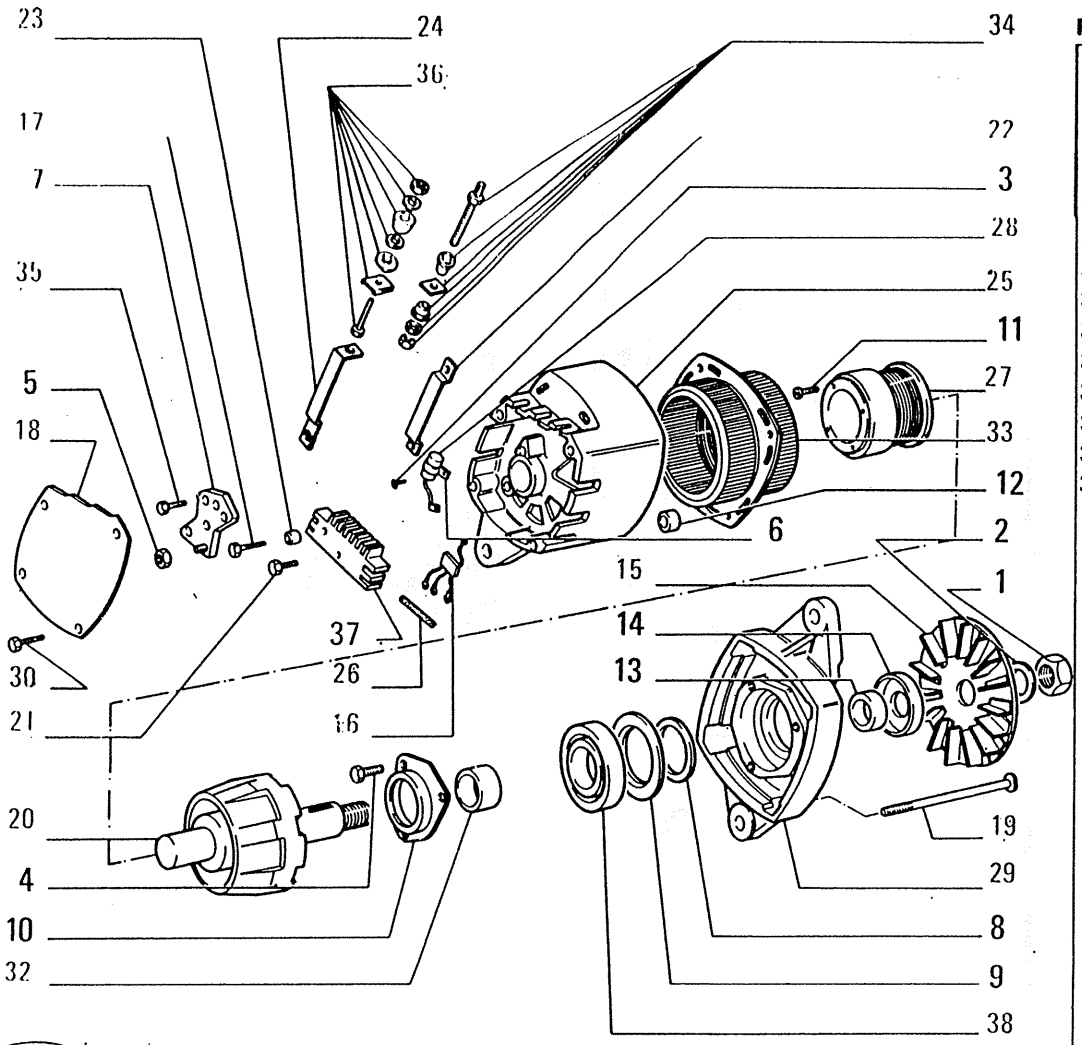

03703

ITEM	PART NUMBER	QTY	TRANS CODE	DESCRIPTION	DESCRIZIONE
28	73117747	1	220C	CONDENSER	CONDENSATORE
29	73117748	1	300S	SUPPORT	SUPPORTO
30	73117750	5	40V	SCRLW	VITE
32	73117752	1	180C	COLLAR	COLLARE
33	73117754	1	271S	STATOR	STATORE
34	73119570	1	250C	CONTACT	CONTATTO
35	73119636	2	40V	SCREW	VITE
36	73119637	1	250C	CONTACT	CONTATTO
37	73131960	1	39R	RESISTOR	RESISTORE
38	73133823	1	341C	BEARING	CUSCINETTO

73119134

ALTERNATOR – ALTERNATORE – ALTERNATEUR – DREHSTROMLICHTMASCHINE – ALTERNADOR

F3.03

N.T.R. 155 - 30.01.1987

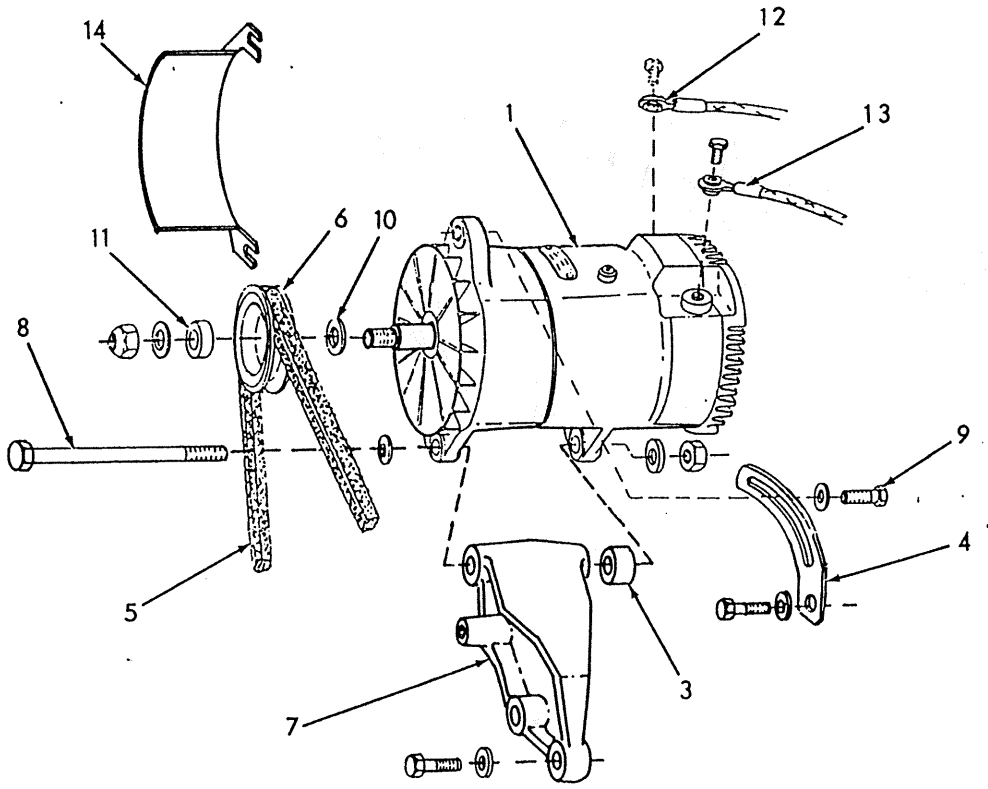

T-0633

ITEM	PART NO.	QTY.	CODE	DESCRIPTION	DENOMINAZIONE
1	73119995	1	25A	ALTERNATOR(F303/2)	ALTERNATORE
3	73154392	1	75D	SPACER	DISTANZIALE
4	73154966	1	80M	BRACKET	MENSOLA
	11306921	1	40V	CAPSCREW,M10X1.25X30	VITE
	11198371	1	131R	WASHER	ROSETTA
	12164711	1	10D	NUT	DADO
5	04728940	1	173C	BELT	CINGHIA
6	73154965	1	230P	PULLEY	PULEGGIA
7	61589095	1	230S	BRACKET, MOUNTING	STAFFETTA FISSAGGIO
	16043231	3	40V	CAPSCREW,M8X1.25X16	VITE
	13646701	3	131R	WASHER,M8	ROSETTA
8	15542221	1	40V	CAPSCREW	VITE
	12646901	2	131R	WASHER	ROSETTA
	15503811	1	10D	NUT	DADO
9	70921175	1	40V	CAPSCREW	VITE
	70677008	1	131R	WASHER	ROSETTA
10	70919392	1	131R	WASHER	ROSETTA
11	73154391	1	75D	SPACER	DISTANZIALE
12	10407644	1	60C	TERMINAL, WIRE	CAPOCORDA
13	79016371	1	60C	TERMINAL, WIRE	CAPOCORDA
14	76008086	1	115G	GUARD	PROTEZIONE

USAGE: WITH 9205 ENGINE. UNITS WITH 50 AMP "DELCO-REMY" #1117254.

	ALTERNATOR & MOUNTING	F303	A
		Added April 1989	

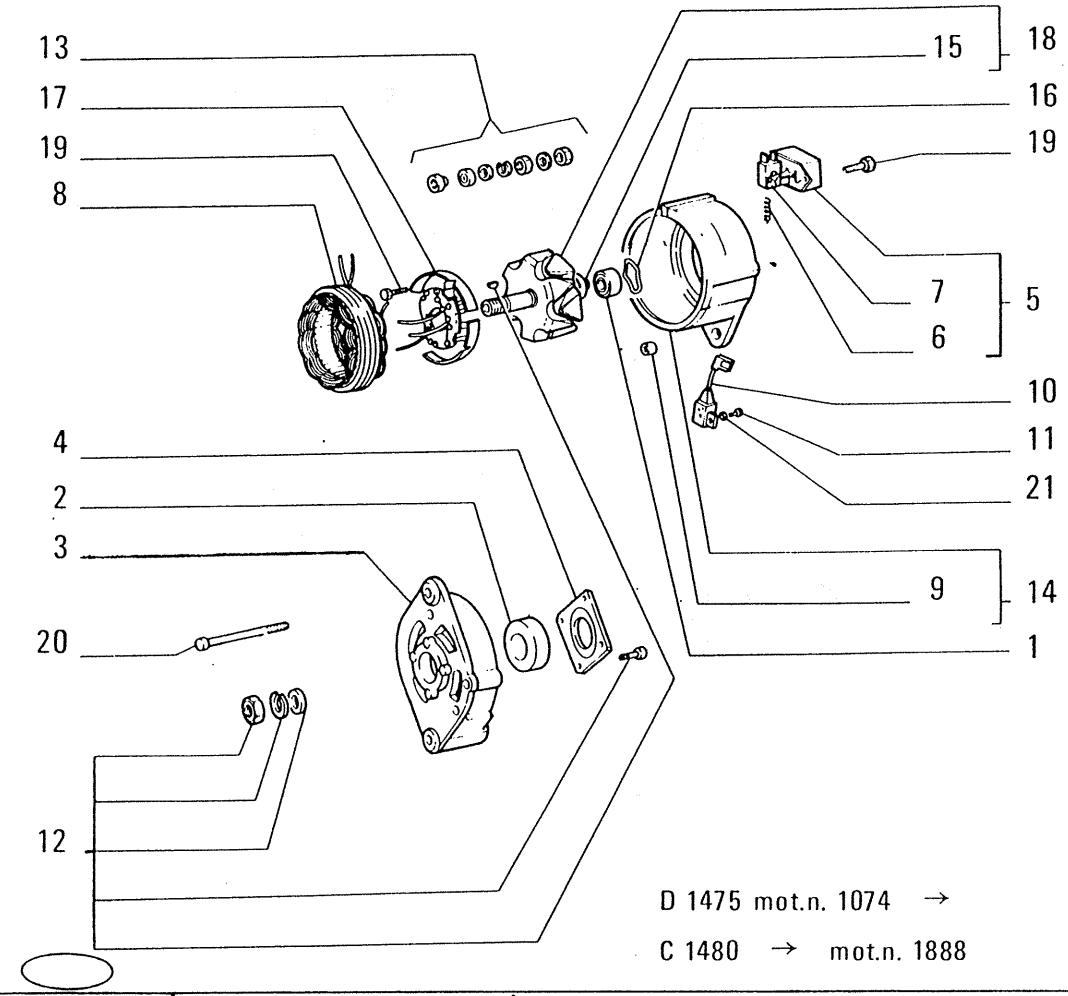

ITEM	PART NUMBER	QTY	TRANS CODE	DESCRIPTION	DESCRIZIONE
1	24941650	1	341C	BEARING 12x32	CUSCINETTO 12x32
2	24941660	1	341C	BEARING 17x47	CUSCINETTO 17x47
3	79022466	1	300S	SUPPORT	SUPPORTO
4	79022468	1	105P	PLATE	PIASTRA
5	79022473	1	31R	VOLTAGE REGULATOR - ASSEMBLY	REGOLATORE DI TENSIONE - COMPLETO
6	79022474	2	100M	SPRING	MOLLA
7	79022475	1	177S	BRUSH	SPAZZOLA
8	79022476	1	271S	STATOR	STATORE
9	79022479	1	95B	BUSHING	BOCCOLA
10	79022480	1	220C	CONDENSER	CONDENSATORE
11	10389321	1	40V	SCREW 5x0,8x10	VITE 5x0,8x10
12	79022484	K	2K	KIT	KIT
13	79022485	1	78B	FASTENING BLOCK	BLOCCHETTO DI FISSAGGIO
14	79025490	1	300S	SUPPORT - ASSEMBLY	SUPPORTO - COMPLETO
15	79025492	1	51A	LOCKRING	ANELLO DI SICUREZZA
16	79025494	1	158G	O-RING	GUARNIZIONE O-R
17	79031725	1	32R	RECTIFIER	RADDRIZZATORE
18	79033580	1	145R	ROTOR - ASSEMBLY	ROTORE - COMPLETO
19	79075883	5	40V	SCREW	VITE
20	79066515	4	40V	SCREW	VITE
21	12604171	1	131R	WASHER 5,3x10	ROSETTA 5,3x10

4738772 (BOSCH)

ALTERNATOR – ALTERNATORE – ALTERNATEUR – DREHSTROMLICHTMASCHINE – ALTERNADOR

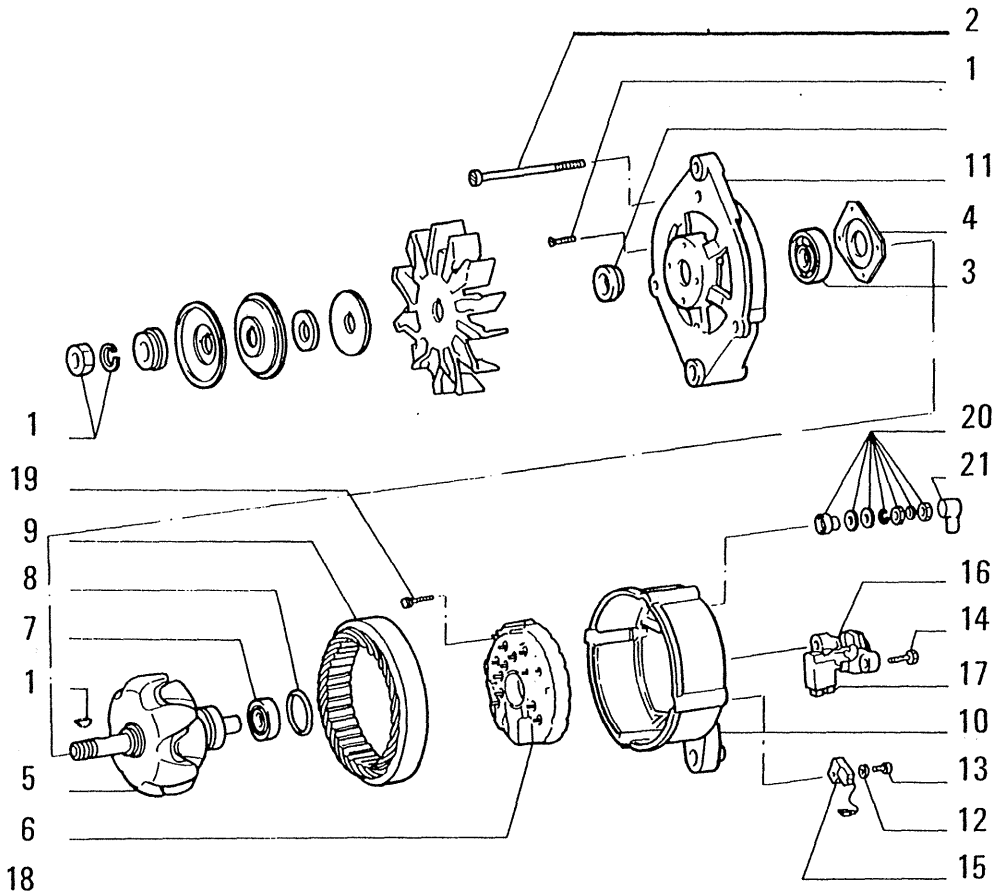

D 1480 Mot.n. 1889 →

ITEM	PART NUMBER	QTY	TRANS CODE	DESCRIPTION	DESCRIZIONE
1	1307188	K	2K	KIT	KIT
2	79066515	4	40V	SCREW	VITE
3	24941660	1	341C	BEARING 17x47	CUSCINETTO 17x47
4	79022468	1	105P	PLATE	PIASTRA
5	79078781	1	145R	ROTOR	ROTORE
6	79078921	1	83B	COIL	BOBINA
7	24941650	1	341C	BEARING 12x32	CUSCINETTO 12x32
8	79025494	1	158G	O-RING	GUARNIZIONE O-R
9	1308399	1	271S	STATOR	STATORE
10	79078922	1	35S	CASE	SCATOLA
11	79022466	1	300S	SUPPORT	SUPPORTO
12	12604171	1	131R	WASHER 5,3x10	ROSETTA 5,3x10
13	79022481	1	40V	SCREW	VITE
14	79033582	2	40V	SCREW	VITE
15	79022480	1	220C	CONDENSER	CONDENSATORE
16	79078923	1	31R	VOLTAGE REGULATOR	REGOLATORE DI TENSIONE
17	79078924	1	177S	BRUSH	SPAZZOLA
18	79078926	1	32R	RECTIFIER	RADDRIZZATORE
19	79074706	3	40V	SCREW	VITE
20	79022485	1	120M	TERMINAL CONNECTOR	MORSETTO ELETTRICO
21	79078925	1	20C	CAP	CALOTTA

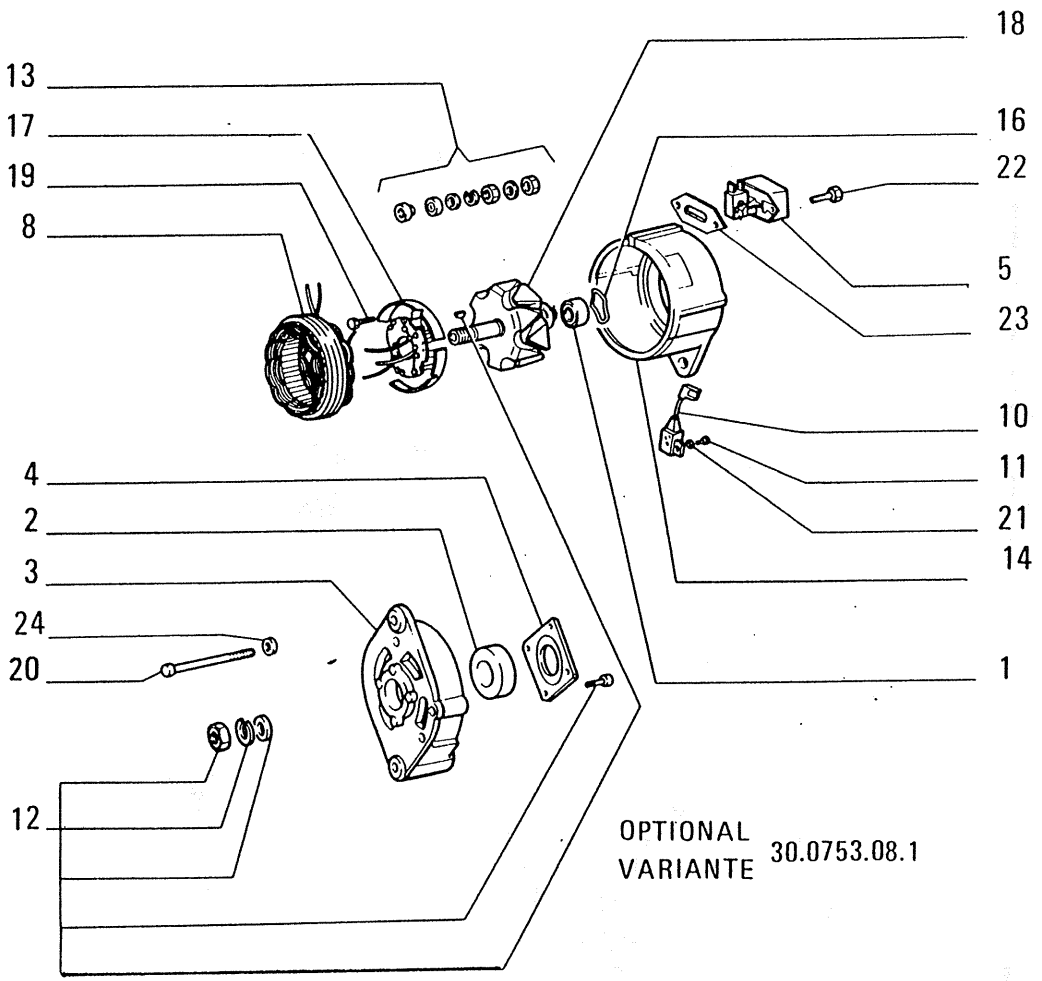

ITEM	PART NUMBER	QTY	TRANS CODE	DESCRIPTION	DESCRIZIONE
1	24941650	1	341C	BEARING 12x32	CUSCINETTO 12x32
2	24941660	1	341C	BEARING 17x47	CUSCINETTO 17x47
3	79074704	1	300S	SUPPORT	SUPPORTO
4	79022468	1	105P	PLATE	PIASTRA
5	79074715	1	169R	REGULATOR	REGOLATORE
8	79074705	1	271S	STATOR	STATORE
10	79074709	1	220C	CONDENSER	CONDENSATORE
11	79074711	1	40V	SCREW	VITE
12	79022484	1	2K	KIT	KIT
13	79074707	1	2K	KIT	KIT
14	79074708	1	300S	SUPPORT	SUPPORTO
16	79025494	1	158G	O-RING	GUARNIZIONE O-R
17	79074712	1	32R	RECTIFIER	RADDRIZZATORE
18	79074713	1	145R	ROTOR	ROTORE
19	79074706	2	40V	SCREW	VITE
20	79074702	4	40V	SCREW	VITE
21	79074710	3	170R	LOCKWASHER	ROSETTA EL.
22	79075883	2	40V	SCREW	VITE
23	79074714	1	122G	SEAL	GUARNIZIONE
24	14497821	4	131R	WASHER	ROSETTA

USAGE: Winterized units

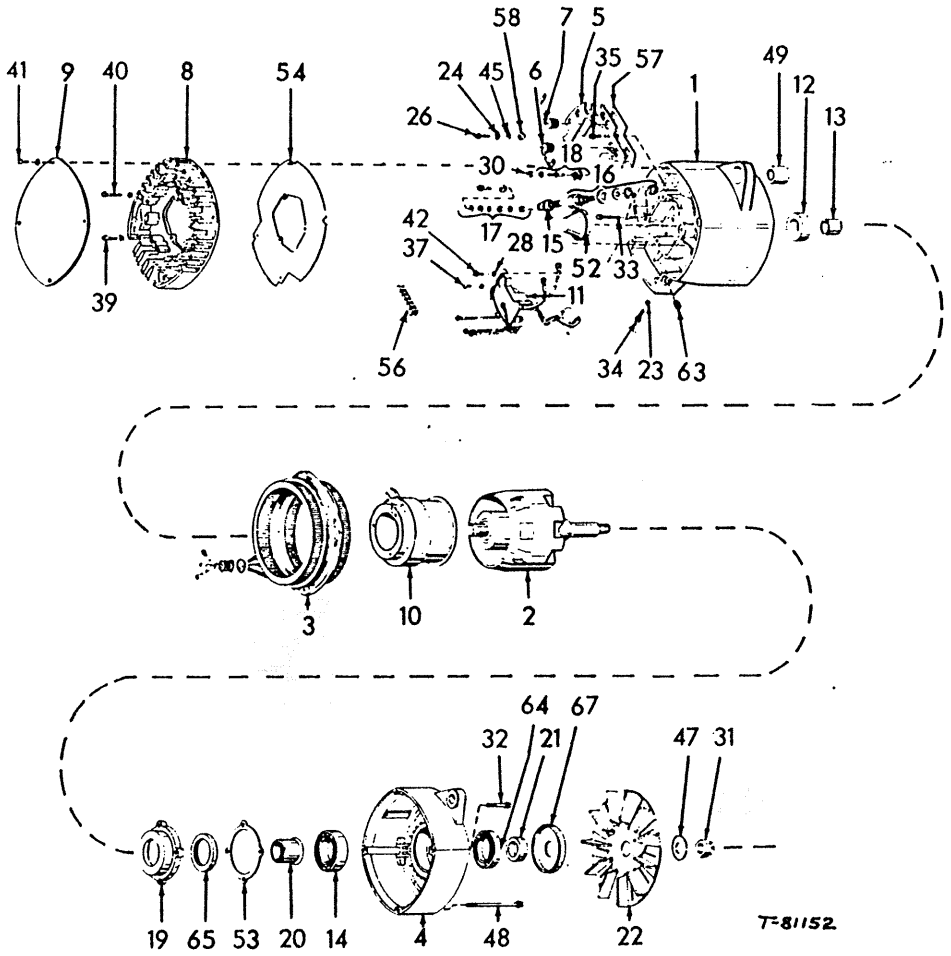

ITEM	PART NO.	QTY.	CODE	DESCRIPTION	DENOMINAZIONE
-	73119995	1	25A	ALTERNATOR (DELCO-REMY 1117254)	ALTERNATORE
			600L	INCLUDES ITEMS 1-67	INCLUDE PARTIC.(I)
1	73117047	1	35S	HOUSING	SCATOLA
			600L	INCLUDES ITEM(S) 6,12,49,52,63	INCLUDE PARTIC.(I)
2	73117085	1	145R	ROTOR	ROTORE
3	73117125	1	271S	STATOR	STATORE
4	73117037	1	171	FRAME	INCASTELLATURA
			600L	INCLUDES ITEM 64	INCLUDE PARTIC.(I)
5	73117127	1	105P	PLATE	PIASTRA
			600L	INCLUDES ITEMS 7,18	INCLUDE PARTIC.(I)
6	73117128	1	53D	DIODE(-)	DIODO
7	73117129	3	53D	DIODE(+)	DIODO
8	73117092	1	265C	COVER	COPERCHIO
9	73117093	1	105P	PLATE	PIASTRA
10	73117105	1	83B	COIL	BOBINA
11	73119993	1	25P	PANEL	PANNELLO
	a73117043	2	131R	WASHER	ROSETTA
12	73117144	1	340C	BEARING	CUSCINETTO
13	73117143	1	129P	RACE	PISTA
14	73117026	1	340C	BEARING	CUSCINETTO
15	73117094	1	210P	STUD	PRIGIONIERO
16	73117131	1	94T	TERMINAL	TERMINALE
17	73119994	1	94T	TERMINAL	TERMINALE
18	73117132	3	210P	STUD	PRIGIONIERO
19	73117114	1	105P	PLATE	PIASTRA
			600L	INCLUDES ITEM 65	INCLUDE PARTIC.(I)
20	73117080	1	180C	COLLAR	COLLARE
21	73117081	1	180C	COLLAR	COLLARE
22	73117107	1	30V	FAN	VENTILATORE
23	70916964	1	132R	LOCKWASHER	ROSETTA DI SICUREZZA
24	70917395	3	132R	LOCKWASHER,#8	ROSETTA DI SICUREZZA
28	70917395	2	132R	LOCKWASHER,#8	ROSETTA DI SICUREZZA
30	70917385	3	10D	NUT,#8-32NC	DADO
31	70189001	1	10D	NUT	DADO
32	73117090	4	42V	SCREW	VITE

ALTERNATOR

F303/2

Added April 1989

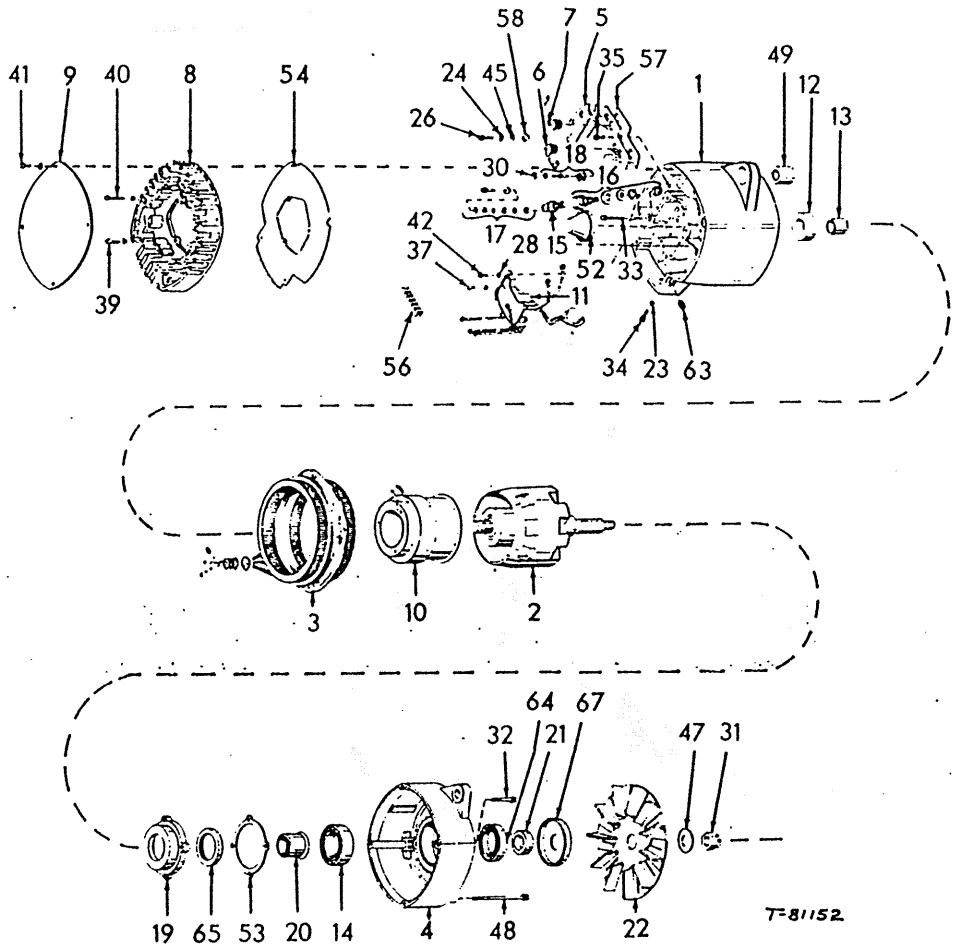

ITEM	PART NO.	QTY.	CODE	DESCRIPTION	DENOMINAZIONE
33	73117087	3	42V	SCREW	VITE
34	73117142	1	42V	SCREW	VITE
35	73117113	1	42V	SCREW	VITE
36	73117113	3	42V	SCREW	VITE
37	73117072	1	44V	SCREW W/WASHER ASSY.	VITE CON ROSETTA
39	73117032	5	44V	SCREW W/WASHER ASSY.	VITE CON ROSETTA
40	73117033	2	44V	SCREW W/WASHER ASSY.	VITE CON ROSETTA
41	73117031	4	44V	SCREW W/WASHER ASSY.	VITE CON ROSETTA
42	73117113	2	42V	SCREW	VITE
45	73117021	3	133R	SEAL	GUARNIZIONE TENUTA
47	70189002	1	31R	REGULATOR, VOLTAGE	REGOLATORE TENSIONE
48	73117089	4	140B	BOLT	BULLONE
49	73117088	1	95B	BUSHING	BOCCOLA
52	73117042	1	50T	PLUG	TAPPO
53	73117079	1	123G	GASKET	GUARNIZIONE DI TENUTA
54	73117112	1	123G	GASKET	GUARNIZIONE DI TENUTA
56	73117091	1	500J	GROMMET	ANELLO
57	73117086	1	105P	PLATE	PIASTRA
58	73117062	4	851	INSULATOR	ISOLANTE
63	70910231	1	50T	PLUG,1/8"NPT	TAPPO
64	73117061	1	133R	SEAL	GUARNIZIONE TENUTA
65	73117061	1	133R	SEAL	GUARNIZIONE TENUTA
67	73117082	1	224P	SHIELD	PROTEZIONE
a	70917395	1	132R	LOCKWASHER,#8	ROSETTA DI SICUREZZA
a	73117036	1	10D	NUT	DADO
a	73117030	1	300S	SUPPORT	SUPPORTO

a.NOT ILLUSTRATED
NON ILLUSTRATO

ALTERNATOR

F303/2

Added April 1989

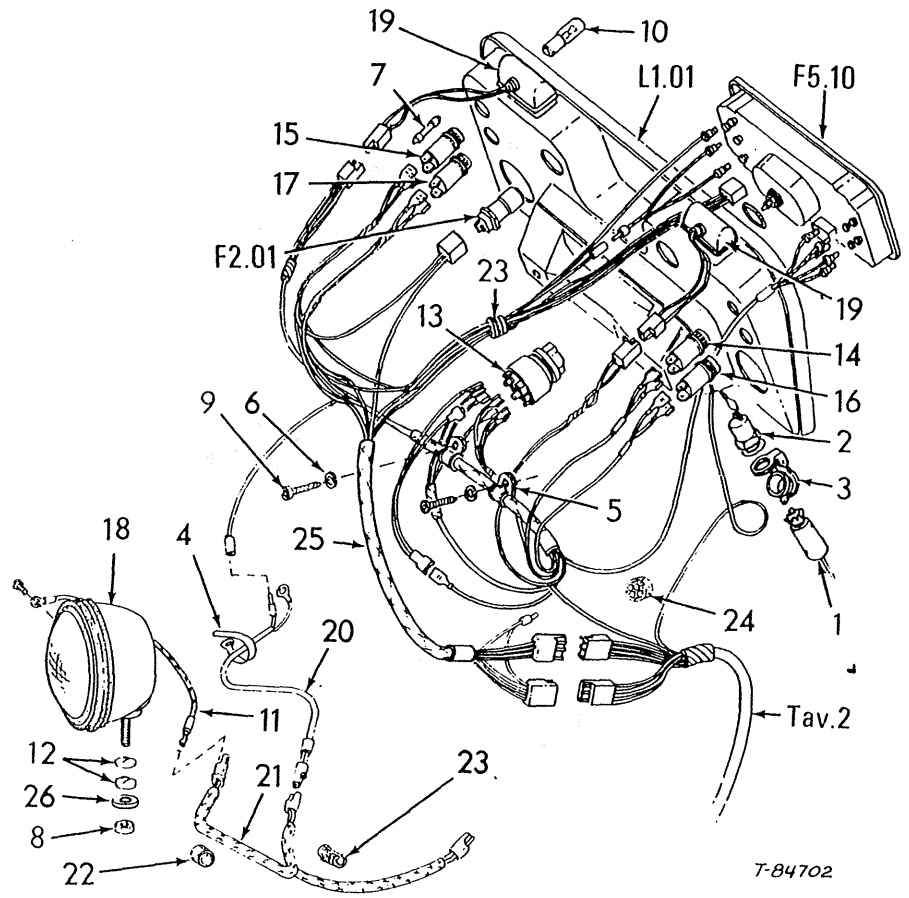

ITEM	PART NO.	QTY.	LEX.	DESCRIPTION	DENOMINAZIONE
1	04182461	1	201S	PLUG, ELECTRICAL	SPINA ELETTRICA
2	04182462	1	205P	RECEPTACLE	PRESA DI CORRENTE
3	04952553	1	265C	COVER	COPERCHIO
4	04982514	3	14B	STRAP	BANDELLA
5	10441590	2	89G	CLIP,16 X 7	GRAFFETTA
6	10571571	2	131R	WASHER,6.1 X 1.6	ROSETTA
7	11052090	4	110F	FUSE,6 X 25	FUSIBILE
8	70919262	2	10D	NUT,1/2"NF	DADO
9	13275811	2	40V	CAPSCREW,6 X 1 X 8	VITE
10	14142490	10	30L	BULB,9.15 X 8.8	LAMPADA
11	73144413	2	111C	CABLE, ELECTRIC	CAVO ELETTRICO
12	76000905	4	74B	BLOCK	BLOCCHETTO
13	79006370	1	75I	SWITCH	INTERRUTTORE
14	79011643	1	188P	HOLDER, FUSE	PORTAFUSIBILE
15	79011645	1	188P	HOLDER, FUSE	PORTAFUSIBILE
16	79011647	1	188P	HOLDER, FUSE	PORTAFUSIBILE
17	79011649	1	188P	HOLDER, FUSE	PORTAFUSIBILE
18	70621429	2	220P	HEADLAMP(F629(1))	PROIETTORE
19	79032398	2	12F	LAMP, INSTRUMENT	LUCE DEL CRUSCOTTO
20	79037370	1	111C	CABLE, ELECTRIC	CAVO ELETTRICO
21	79037382	1	111C	CABLE, ELECTRIC	CAVO ELETTRICO
22	79040713	2	48A	RING, RUBBER	ANELLO DI GOMMA
23	79042643	1	48A	RING, RUBBER	ANELLO DI GOMMA
24	79042644	1	48A	RING, RUBBER	ANELLO DI GOMMA
25	79042823	1	111C	CABLE, ELECTRIC(C1454)	CAVO ELETTRICO
	79053350	1	111C	CABLE, ELECTRIC(D1454)	CAVO ELETTRICO
26	70926192	2	131R	WASHER	ROSETTA

C 1454 → Tel.n. 051636
D 1454 Tel.n. 051637 →

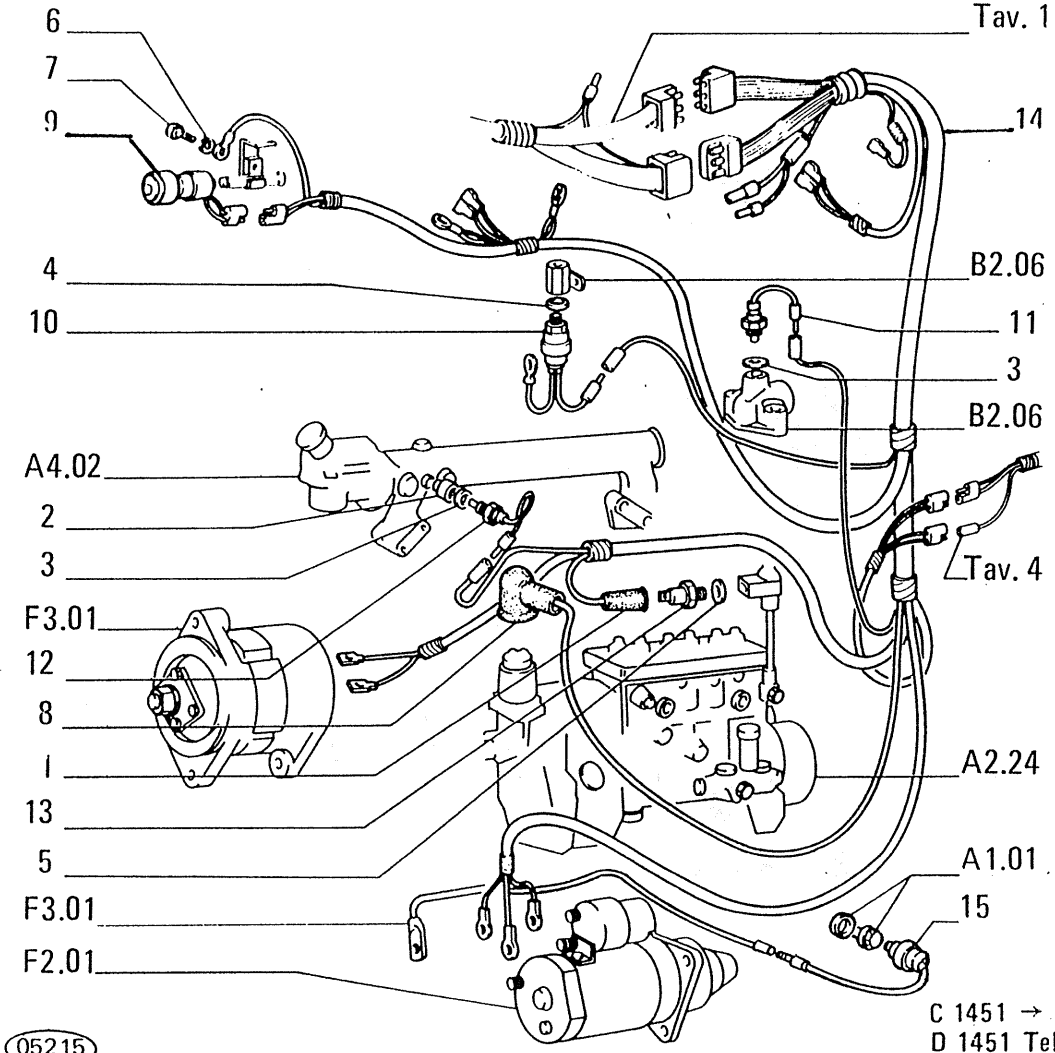

ITEM	PART NUMBER	QTY	TRANS CODE	DESCRIPTION	DESCRIZIONE
1	4151244	1	65C	BOOT	CAPPUCCIO
2	4964475	1	20R	FITTING	RACCORDO
3	10257060	2	133R	SEAL 16,2x22	ROSETTA DI TENUTA 16,2x22
4	10257460	1	133R	SEAL 20,2x26	ROSETTA DI TENUTA 20,2x26
5	10298360	1	133R	SEAL 10,2x16	ROSETTA DI TENUTA 10,2x16
6	10571771	3	131R	WASHER 8,1x2	ROSETTA 8,1x2
7	16043231	2	40V	SCREW 8x1,25x16	VITE 8x1,25x16
8	24912631	1	65C	BOOT	CAPPUCCIO
9	79030400	1	87S	INDICATOR **C1451**	SEGNALATORE **C1451**
	79058644	1	87S	INDICATOR **D1451**	SEGNALATORE **D1451**
10	79033172	1	75I	SWITCH **C1968**	INTERRUTTORE **C1968**
	79076344	1	75I	SWITCH **D1968**	INTERRUTTORE **D1968**
11	79035418	1	160T	SENDING UNIT **C1955**	TRASMETTITORE **C1955**
	79072543	1	160T	SENDING UNIT **D1955**	TRASMETTITORE **D1955**
12	79035419	1	160T	SENDING UNIT **C1935**	TRASMETTITORE **C1935**
	79072544	1	160T	SENDING UNIT **D1935**	TRASMETTITORE **D1935**
13	79039833	1	75I	SWITCH	INTERRUTTORE
14	76007995	1	111C	CABLE	CAVO (01)(02)(03)(04)
				D1454	**D1454**
	76013915	1	111C	CABLE (05)(*)	CAVO (05)(*)
		1	111C	CABLE (1*)	CAVO (1*)
	79042844	1	111C	CABLE **C1454**	CAVO **C1454**
15	79051198	1	160T	SENDING UNIT **D1454**	TRASMETTITORE **D1454**
(*)			469P	FOR SPECIAL EQUIPMENT 30.0021.08.1	PER VARIANTE 30.0021.06.1
(1*)			469P	FOR SPECIAL EQUIPMENT 30.0021.09.1	PER VARIANTE 30.0021.09.1

C 1451 → Tel.n. 051596 C 1454 → Tel.n. 051636 C 1935 → tel. n. 052799
D 1451 Tel.n. 051597 → D 1454 Tel.n. 051637 → D 1935 tel. n. 052800 →
C 1968 → tel. n. 052437 D 1968 tel. n. 052438 → C 1955 → tel. n. 052806
D 1955 tel. n. 052807 →

(05) Winterized units

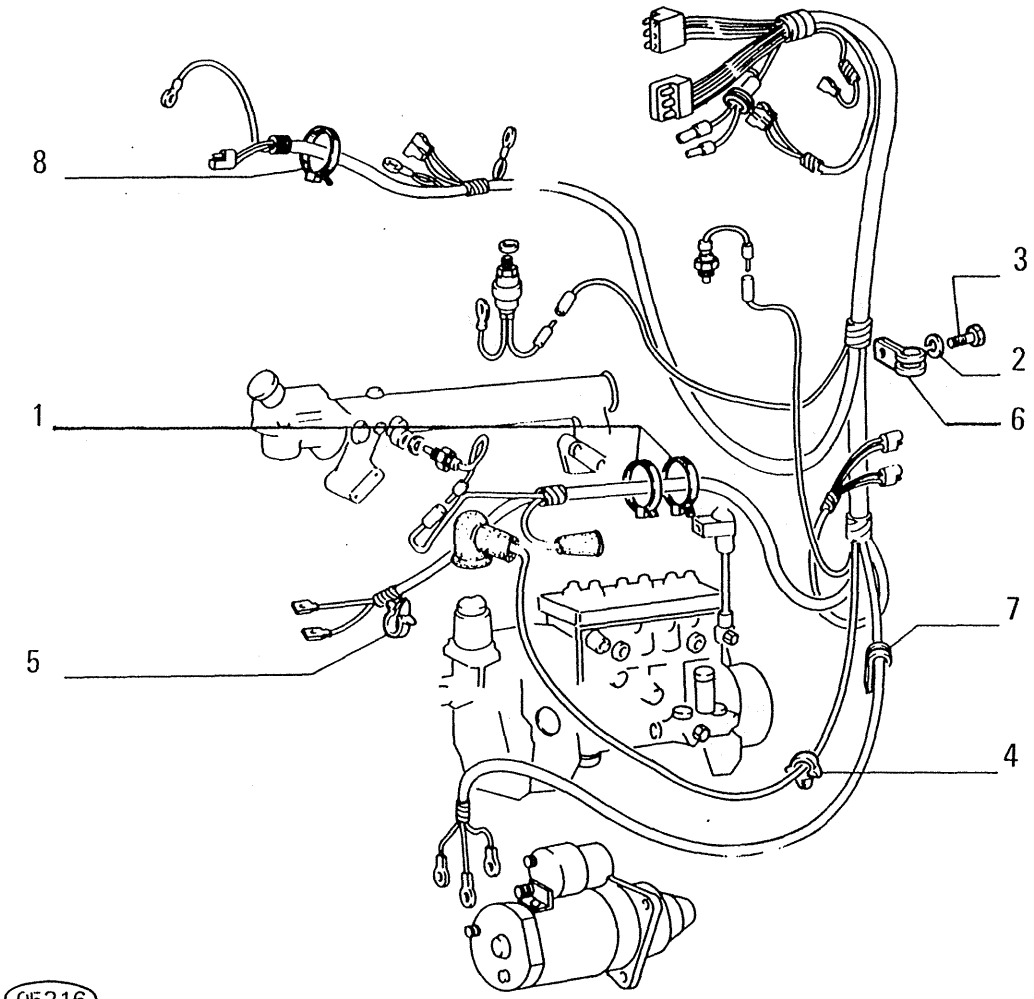

ITEM	PART NUMBER	QTY	TRANS CODE	DESCRIPTION	DESCRIZIONE
1	4982514	3	31F	CLAMP	FASCETTA
2	10571871	1	131R	WASHER 10,2x2,2	ROSETTA 10,2x2,2
3	11103031	1	40V	SCREW 10x1,5x18	VITE 10x1,5x18
4	14569480	4	105M	SPRING FASTENER 10x3,8	MOLLETTA 10x3,8
		4	105M	SPRING FASTENER (05)(*) 10x3,8	MOLLETTA (05)(*) 10x3,8
5	14570280	1	105M	SPRING FASTENER 24x3	MOLLETTA 24x3
		1	105M	SPRING FASTENER (05)(*) 24x3	MOLLETTA (05)(*) 24x3
6	79011406	1	225S	BRACKET	STAFFA
7	79011407	1	225S	BRACKET	STAFFA
8	79013422	3	31F	CLAMP	FASCETTA
(*)			469P	FOR SPECIAL EQUIPMENT 30.0021.08.1	PER VARIANTE 30.0021.06.1

(05) Winterized units

05216

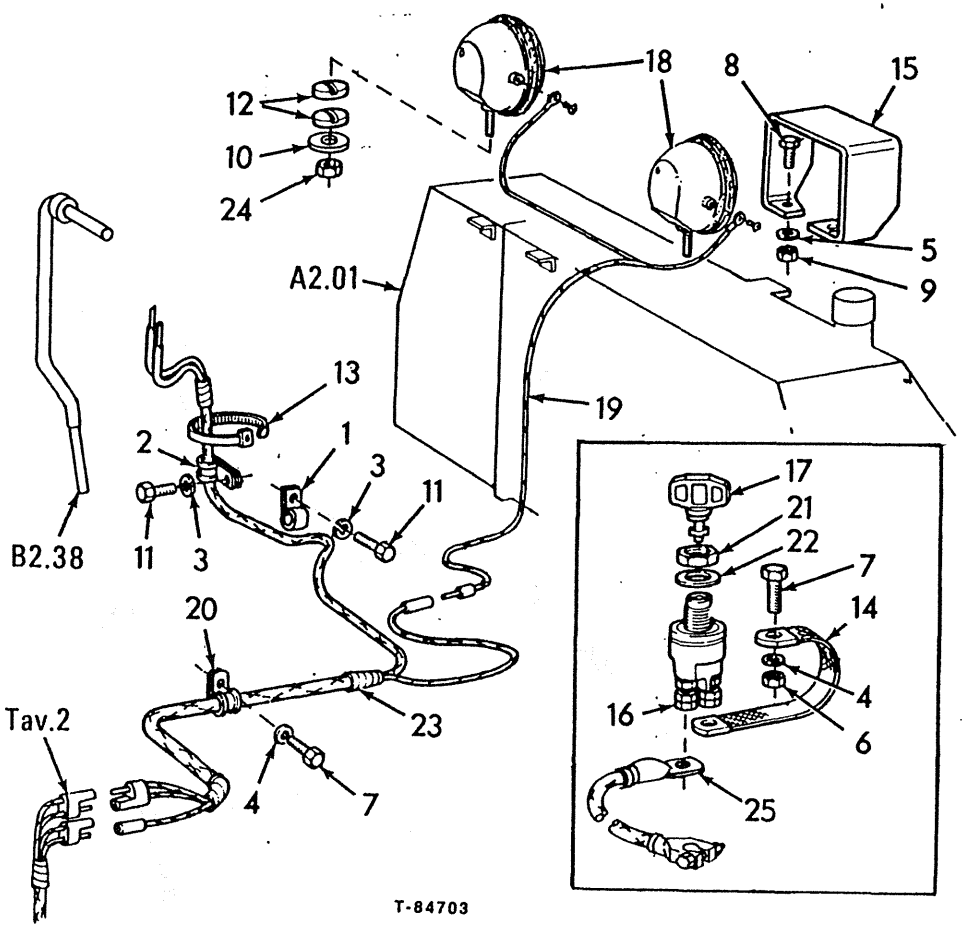

ITEM	PART NO.	QTY.	LEX.	DESCRIPTION	DENOMINAZIONE
1	10450090	2	89G	CLIP,8 X 9	GRAFFETTA
2	10450190	4	89G	CLIP,66 X 9	GRAFFETTA
3	10571771	3	131R	WASHER,8.1 X 2	ROSETTA
4	10571871	2	131R	WASHER,10.2 X 2.2	ROSETTA
5	10571971	4	131R	WASHER,12.2 X 2.5	ROSETTA
6	10788221	1	10D	NUT,10 X 1.5 X 10	DADO
7	11103031	2	40V	CAPSCREW,10 X 1.5 X 18	VITE
8	11112231	4	40V	CAPSCREW,12 X 1.75 X 22	VITE
9	11702921	4	10D	NUT,12 X 1.75 X 10	DADO
10	70926192	2	131R	WASHER	ROSETTA
11	16043031	4	40V	CAPSCREW,8 X 1.25 X 12	VITE
12	76000905	2	74B	BLOCK	BLOCCHETTO
13	79013422	2	31F	STRAP, BINDING	FASCETTA
14	79017173	1	166T	BRAID, GROUND	TRECCIA DI MASSA
	76013989	1	166T	BRAID, GROUND(5)	TRECCIA DI MASSA
15	79019363	2	300S	SUPPORT	SUPPORTO
16	79031355	1	751	SWITCH	INTERRUTTORE
				PRIOR TO UNIT #050332	
	79048326	1	751	SWITCH	INTERRUTTORE
				UNIT #050332 AND UP	
			600L	INCLUDES ITEMS 17,21,22	INCLUDE PARTIC.(1)
17	79032280	1	60L	KEY	LINGUETTA
			600X	PRIOR TO UNIT #050332	FINO AL TELAIO.....
	79073033	1	60L	KEY	LINGUETTA
			600Y	UNIT NO. 050332-UP	DAL TELAIO.....
18	70621429	2	220P	HEADLAMP(F629(1))	PROIETTORE
19	73143936	1	111C	CABLE, ELECTRIC	CAVO ELETTRICO
	79044168	1	111C	CABLE, ELECTRIC(5)	CAVO ELETTRICO
20	79038373	1	80M	BRACKET	MENSOLA
21	79038734	1	10D	NUT	DADO
22	79038735	1	131R	WASHER	ROSETTA
23	79042843	1	111C	CABLE, ELECTRIC	CAVO ELETTRICO
				PRIOR TO UNIT #050251	
	79044711	1	111C	CABLE, ELECTRIC	CAVO ELETTRICO
				UNIT #050251 AND UP	
			600H	REAR	POSTERIORE
	76013914	1	111C	CABLE, ELECTRIC(5)	CAVO ELETTRICO
24	70919262	2	10D	NUT,1/2"NF	DADO
25	79056470	1	111C	CABLE, ELECTRIC	CAVO ELETTRICO

REAR FLOOD LIGHTS

F401 | 4

Revised April 1989

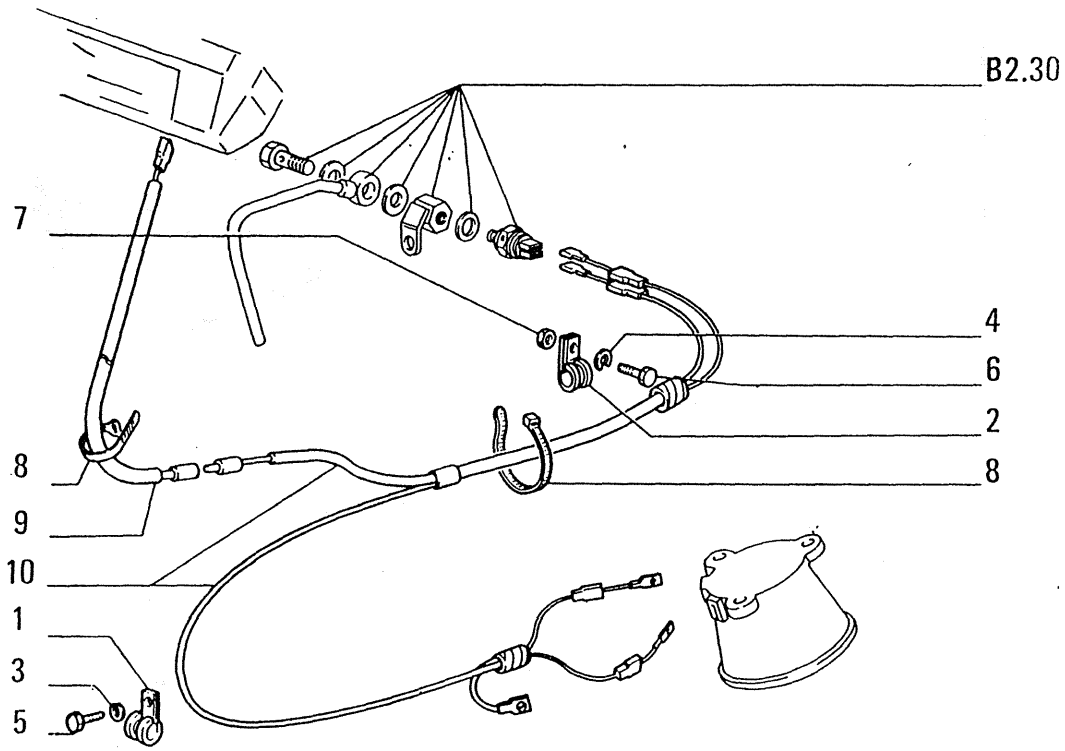

ITEM	PART NUMBER	QTY	TRANS CODE	DESCRIPTION	DESCRIZIONE
1	10449890	1	231S	CLIP (1*) 6x9	STAFFETTA (1*) 6x9
2	10450890	2	225S	BRACKET 24x9	STAFFA 24x9
		2	225S	BRACKET (05)(*) 24x9	STAFFA (05)(*) 24x9
3	10571770	1	131R	WASHER (1*) 8,1x2	ROSETTA (1*) 8,1x2
4	10571717	2	131R	WASHER (05)(*)	ROSETTA (05)(*)
	10571771	2	131R	WASHER 8,1x2	ROSETTA 8,1x2
5	16043031	1	40V	SCREW (1*) 8x1,25x12	VITE (1*) 8x1,25x12
6	16043231	2	40V	SCREW 8x1,25x16	VITE 8x1,25x16
		2	40V	SCREW (05)(*) 8x1,25x16	VITE (05)(*) 8x1,25x16
7	16100821	2	10D	NUT 8x1,25x6,5	DADO 8x1,25x6,5
		2	10D	NUT (05)(*) 8x1,25x6,5	DADO (05)(*) 8x1,25x6,5
8	79013422	8	31F	CLAMP	FASCETTA
9	79038148	1	111C	CABLE (1*)	CAVO (1*)
10	79038149	1	111C	CABLE (1*)	CAVO (1*)
(*)			469P	FOR SPECIAL EQUIPMENT 30.0021.06.1	PER VARIANTE 30.0021.06.1
(1*)			469P	FOR SPECIAL EQUIPMENT 30.0759.09.1	PER VARIANTE 30.0759.09.1

(05) Winterized units

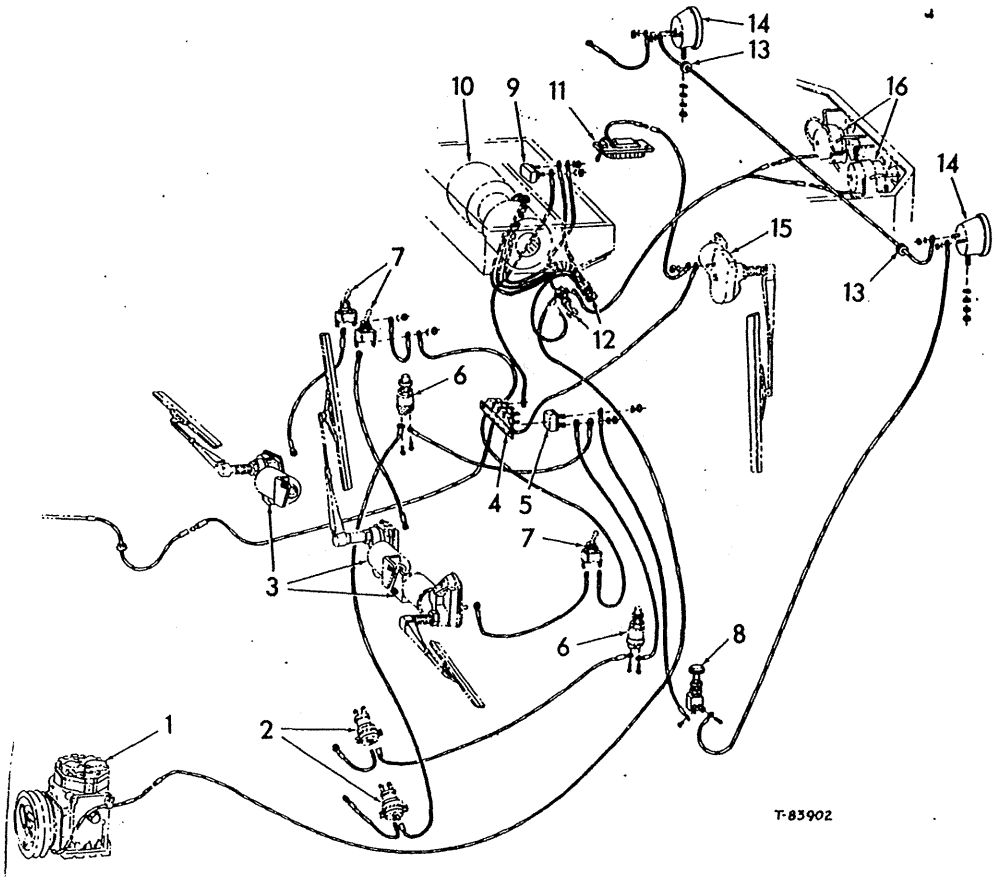

ITEM	PART NO.	QTY.	LEX.	DESCRIPTION	DENOMINAZIONE
-	73137773	1	70I	CABLE HARNESS	INSIEME CAVI
1	--------	1	95F	CLUTCH(G101)	FRIZIONE
2	--------	2	134M	MOTOR(F505)	MOTORE
3	--------	3	93T	WIPER,WINDSHIELD(F505)	TERGICRISTALLO
4	70696279	1	165R	BREAKER	RUTTORE
			600L	INCLUDES ITEM(S)5	INCLUDE PARTIC.(I)
	70928182	2	40V	CAPSCREW,1/4"NC X 1/2"	VITE
	70919310	2	132R	LOCKWASHER,1/4"	ROSETTA DI SICUREZZA
	70911114	2	131R	WASHER	ROSETTA
5	73124643	4	165R	BREAKER	RUTTORE
6	70183714	2	75I	SWITCH,WASHER(F505)	INTERRUTTORE
7	73112915	3	75I	SWITCH,WIPER(F505)	INTERRUTTORE
8	73114689	1	75I	SWITCH,REAR FLOOD LIGHT	INTERRUTTORE
9	--------	1	165R	BREAKER(E102(1))	RUTTORE
10	--------	1	36V	BLOWER(E102(1))	VENTOLA
11	73118599	1	116G	LIGHT ASSY.	GRUPPO OTTICO
	--------	2	55R	RIVET	RIBATTINO
			601C	NOT SERVICED	NON FORNITO DI RICAMB.
12	--------	-	75I	SWITCH,AIR CONDITIONING (E102(1))	INTERRUTTORE
13	73118605	2	500J	GROMMET	ANELLO
14	--------	2	116G	LIGHT ASSY(F629(2))	GRUPPO OTTICO
	76000905	4	75B	CONNECTOR	BLOCCHETTO CONNESSIONE
	70926192	2	131R	WASHER	ROSETTA
	70919262	2	100	NUT,1/2"NF	DADO
15	--------	1	93T	WIPER,WINDSHIELD(F505)	TERGICRISTALLO
16	--------	2	30V	FAN(E101(4))	VENTILATORE

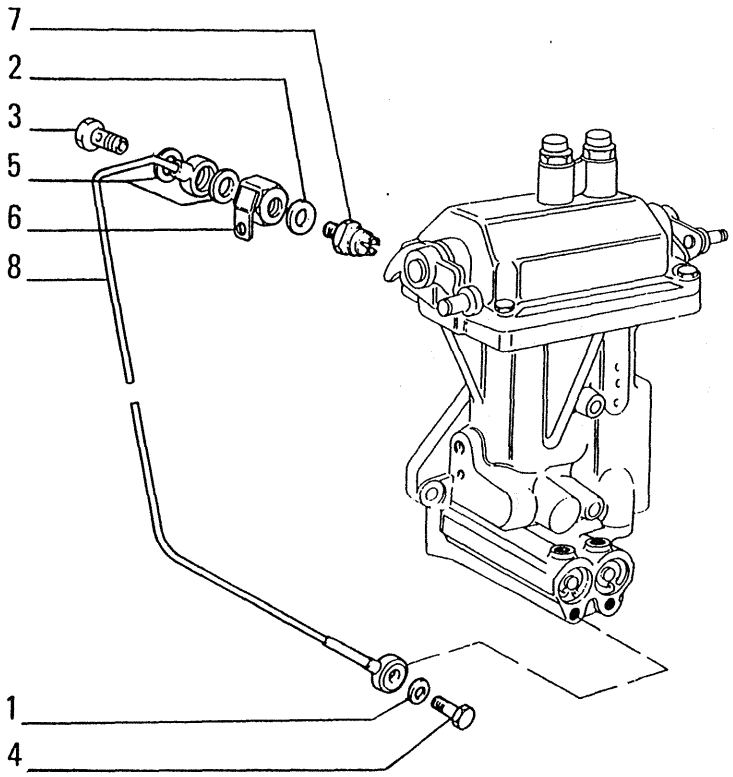

OPTIONAL
VARIANTE 30.0760.09.1

ITEM	PART NUMBER	QTY	TRANS CODE	DESCRIPTION	DESCRIZIONE
1	10260160	1	133R	SEAL 10,2x14	ROSETTA DI TENUTA 10,2x14
2	10296160	1	133R	SEAL 12,2x18	ROSETTA DI TENUTA 12,2x18
3	11903717	1	90B	FILLER PLUG 8x1,25x16	BOCCHETTONE INTRODUZIONE 8x1,25x16
4	11903817	1	90B	FILLER PLUG 10x1,25x19	BOCCHETTONE INTRODUZIONE 10x1,25x19
5	14330260	2	133R	SEAL 8,2x12	ROSETTA DI TENUTA 8,2x12
6	76002365	1	300S	SUPPORT	SUPPORTO
7	79012600	1	75I	SWITCH	INTERRUTTORE
8	79020188	1	193T	TUBE	TUBO RIGIDO

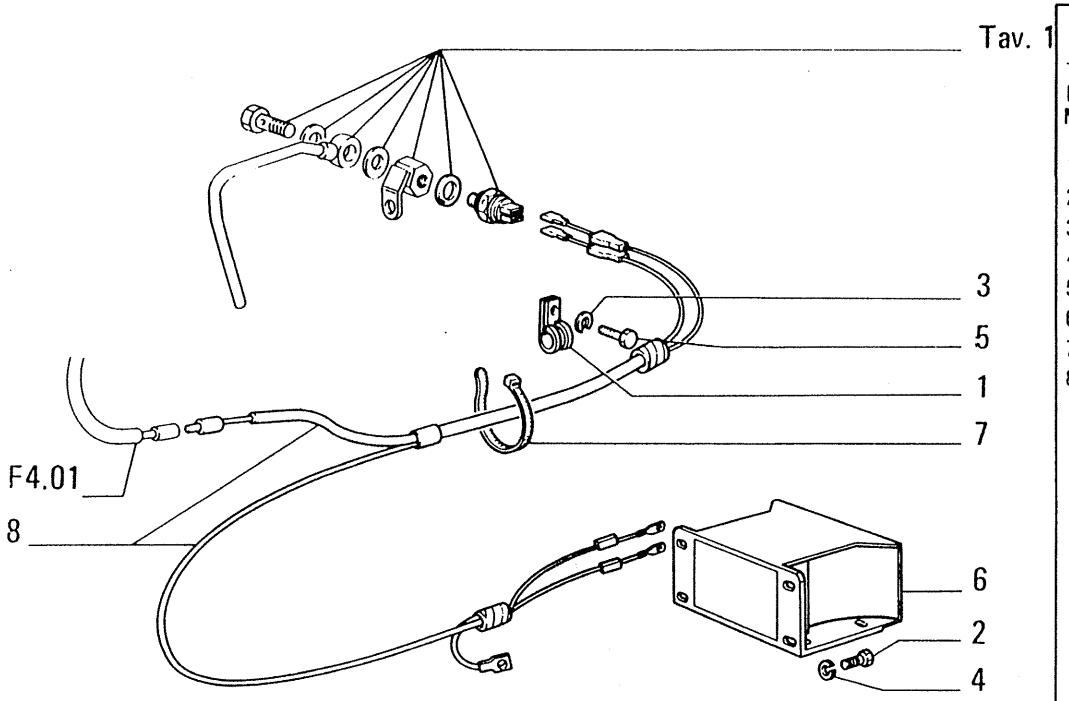

ITEM	PART NUMBER	QTY	TRANS CODE	DESCRIPTION	DESCRIZIONE
1	10449890	1	231S	CLIP 6x9	STAFFETTA 6x9
2	10571571	4	132R	LOCKWASHER 6,1x1,6	ROSETTA DI SICUREZZA 6,1x1,6
3	10571770	1	131R	WASHER 8,1x2	ROSETTA 8,1x2
4	10902421	4	40V	SCREW 6x1x20	VITE 6x1x20
5	16043031	1	40V	SCREW 8x1,25x12	VITE 8x1,25x12
6	73131968	1	105A	HORN	AVVISATORE ACUSTICO
7	79013422	8	31F	CLAMP	FASCETTA
8	79038149	1	111C	CABLE	CAVO

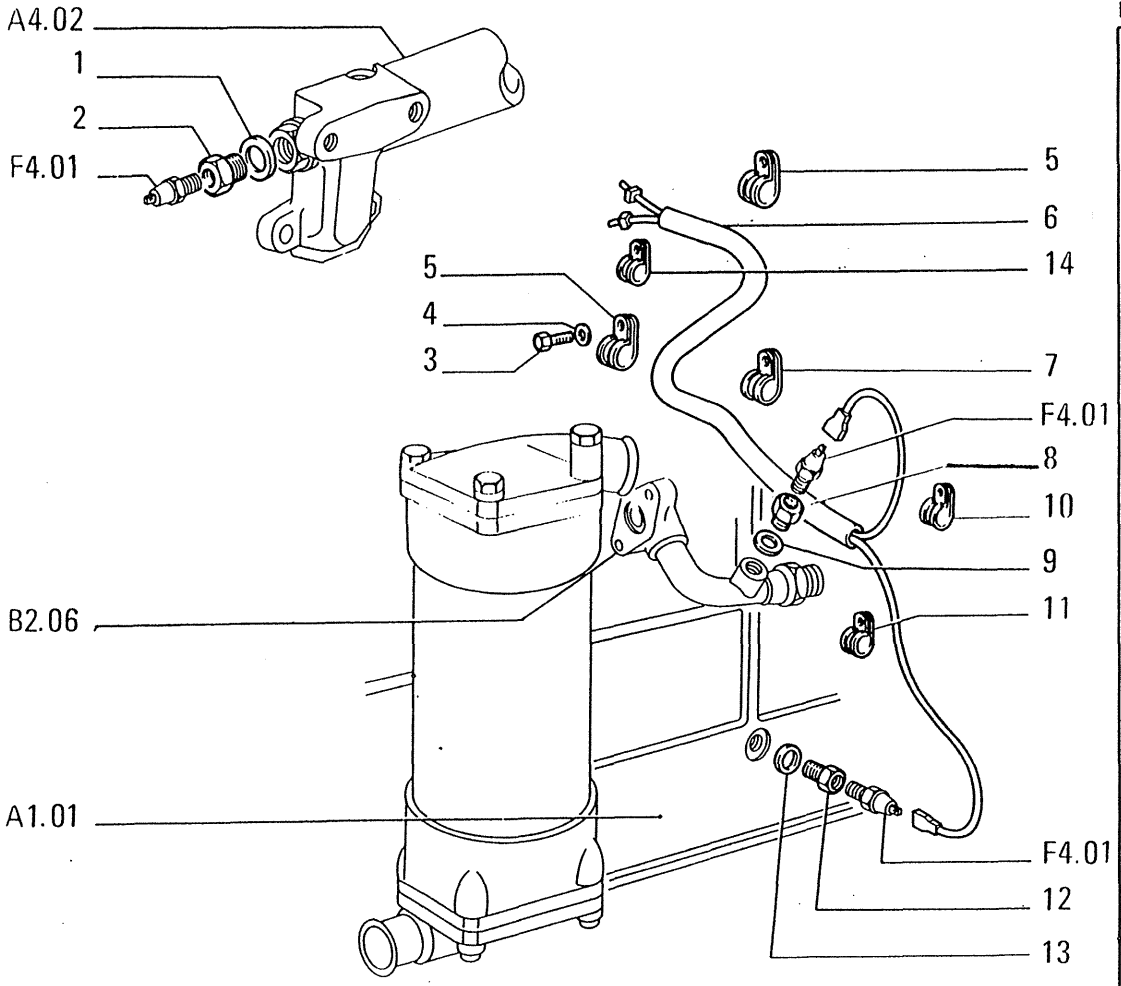

ITEM	PART NUMBER	QTY	TRANS CODE	DESCRIPTION	DESCRIZIONE
1	10279560	1	120G	GASKET 22,2x28	GUARNIZIONE PIANA 22,2x28
2	79030099	1	20R	FITTING	RACCORDO
3	16043331	2	40V	SCREW 8x1,25x18	VITE 8x1,25x18
4	14499431	2	131R	WASHER	ROSETTA
5	10450590	2	225S	BRACKET 18x9	STAFFA 18x9
6	76016652	1	111C	CABLE	CAVO
	76016983	1	111C	CABLE (*)	CAVO (*)
7	10450890	1	225S	BRACKET 24x9	STAFFA 24x9
8	79010554	1	20R	FITTING	RACCORDO
9	10298460	1	120G	GASKET 12,2x18	GUARNIZIONE PIANA 12,2x18
10	10450990	1	225S	BRACKET	STAFFA
11	10441590	1	235S	PISTON 16x7	STANTUFFO 16x7
12	76016653	1	20R	FITTING	RACCORDO
13	10284460	1	120G	GASKET 10,2x16	GUARNIZIONE PIANA 10,2x16
14	79011406	1	225S	BRACKET	STAFFA
(*)			469P	FOR SPECIAL EQUIPMENT 30.0021.09.1	PER VARIANTE 30.0021.09.1

USAGE: Units with 8365 Engine

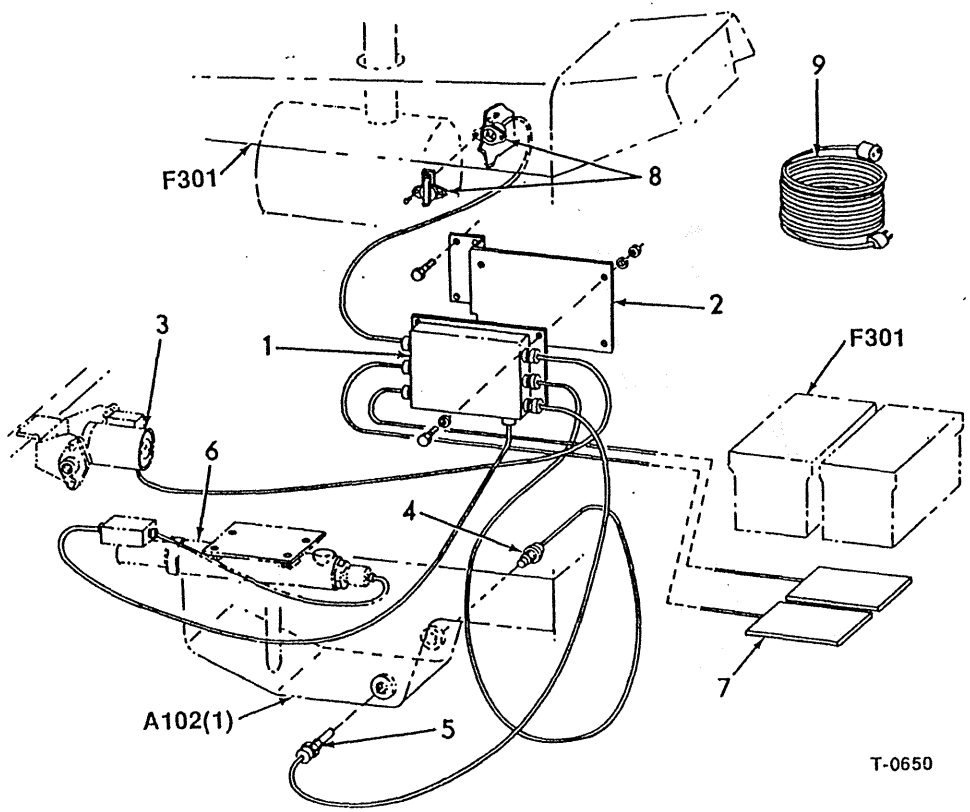

ITEM	PART NO.	QTY.	CODE	DESCRIPTION	DENOMINAZIONE
1	73298449	1	37S	BOX	SCATOLA
	70927401	4	40V	CAPSCREW,1/4"NCX1"	VITE
	70677004	4	131R	WASHER	ROSETTA
	70911024	4	10D	NUT,1/4"NC	DADO
2	73299352	1	80M	BRACKET	MENSOLA
	10902421	4	40V	CAPSCREW,M6X1X20	VITE
3	--------	1	155P	PUMP(A406/1)	POMPA
4	73298457	1	96T	THERMOSTAT	TERMOSTATO
5	73298458	1	105R	HEATER,OIL	RISCALDATORE
6	--------	1	105R	HEATER(A406.1)	RISCALDATORE
7	73298450	2	105R	HEATER,BATTERY	RISCALDATORE
8	73298455	1	205P	RECEPTACLE	PRESA DI CORRENTE
	70917443	3	42V	SCREW,#8-32 X 3/4"	VITE
	11195371	3	132R	LOCKWASHER	ROSETTA DI SICUREZZA
	70917385	3	10D	NUT,#8-32	DADO
9	73298456	1	111C	CABLE, ELECTRIC	CAVO ELETTRICO
10	70925442	12	501H	TIE	TIRANTE
			600P	AS REQUIRED	DEFINITO AL MONTAGGIO
			601K	NOT ILLUSTRATED	NON ILLUSTRATO

USAGE: UNITS WITH 8205 ENGINE.

ENGINE COOLANT & BATTERY HEATER CONTROLS

F401/5

Added April 1989

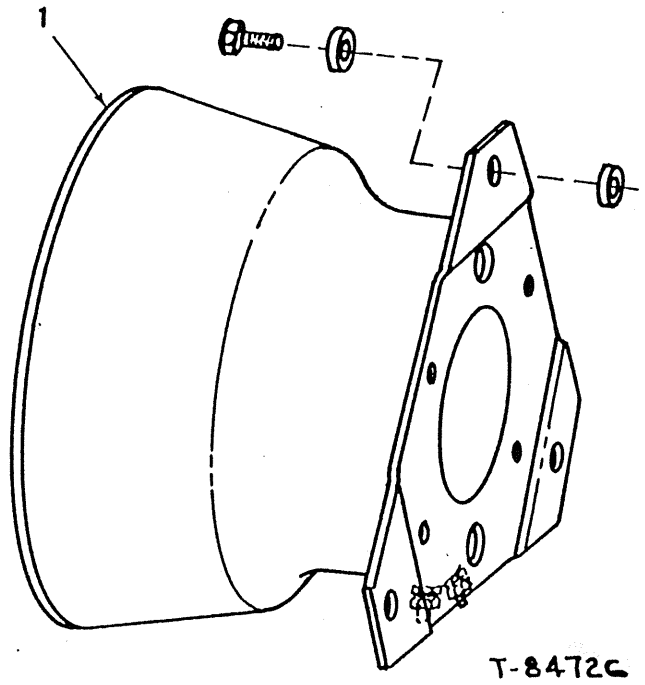

ITEM	PART NO.	QTY.	LEX.	DESCRIPTION	DENOMINAZIONE
1	73122739	1	105A	HORN	AVVISATORE
	10902430	3	40V	CAPSCREW	VITE
	70677004	6	131R	WASHER	ROSETTA

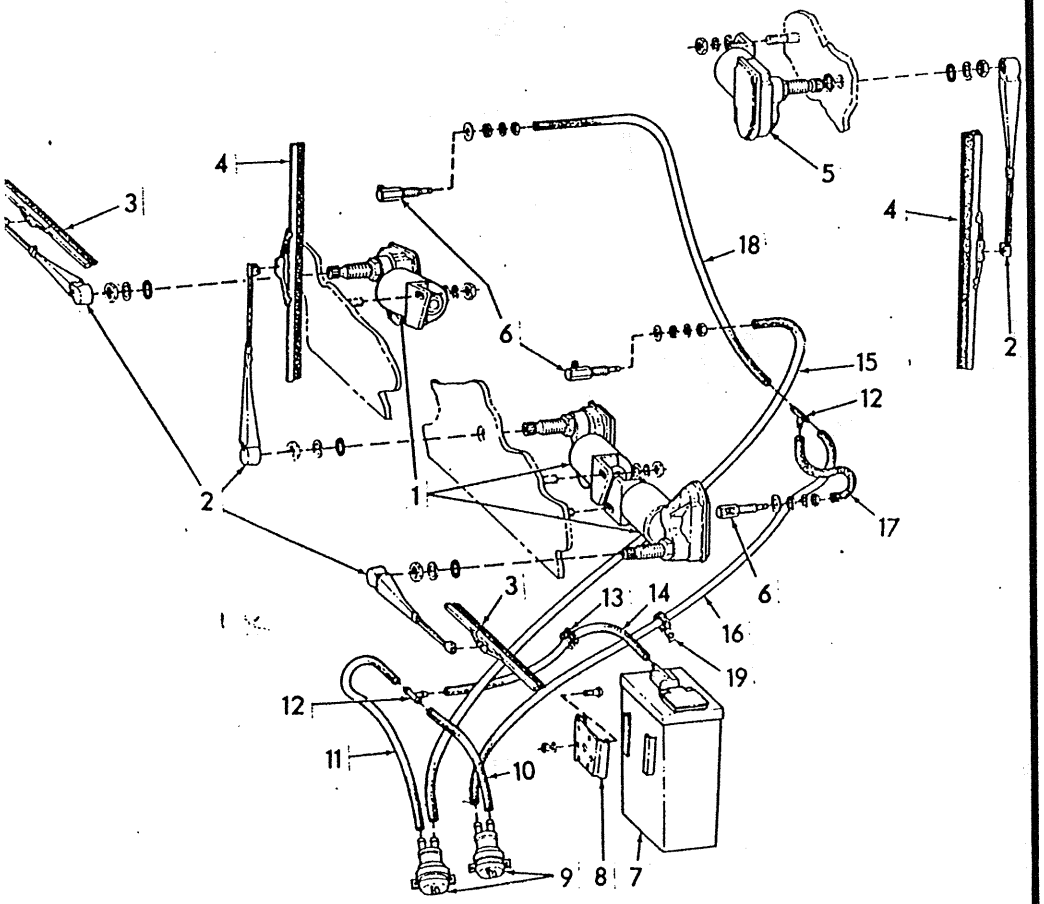

ITEM	PART NO.	QTY.	LEX.	DESCRIPTION	DENOMINAZIONE
1	73124638	3	134M	MOTOR,WINDSHIELD WIPER	MOTORE
	70911114	3	131R	WASHER	ROSETTA
	70919310	3	132R	LOCKWASHER,1/4"	ROSETTA DI SICUREZZA
	70911024	3	10D	NUT,1/4"NC	DADO
2	70665630	4	130B	ARM	BRACCIO
3	73121841	2	23P	BLADE,8"	PALETTA
4	73112299	2	23P	BLADE,14"	PALETTA
5	70696260	1	134M	MOTOR,WIPER,WINDOW	MOTORE
			600H	REAR	POSTERIORE
	70911114	1	131R	WASHER	ROSETTA
	70919310	1	132R	LOCKWASHER,1/4"	ROSETTA DI SICUREZZA
	70911024	1	10D	NUT,1/4"NC	DADO
	70936290	1	10D	NUT,3/8"NF	DADO
6	73121861	3	148P	NOZZLE	POLVERIZZATORE
7	73122995	1	131R	WASHER	ROSETTA
			600N	SERVICED AS A UNIT	FORNITO COME COMPLESS.
8	73124639	1	80M	BRACKET	MENSOLA
	70907722	2	40V	CAPSCREW,1/4"NC X 5/8"	VITE
	70919310	2	132R	LOCKWASHER,1/4"	ROSETTA DI SICUREZZA
	70911024	2	10D	NUT,1/4"NC	DADO
9	73107188	2	155P	PUMP	POMPA
	70930495	4	40V	CAPSCREW,#10-32 X 1"	VITE
	70910243	4	131R	WASHER	ROSETTA
	70910533	4	132R	LOCKWASHER,#10	ROSETTA DI SICUREZZA
	70917415	4	10D	NUT,#10-32	DADO
10	--------	1	192T	HOSE(5")	TUBO FLESSIBILE
			600V	REFER TO ITEM 20	RIFERIRSI AL PART.
11	--------	1	192T	HOSE(7")	TUBO FLESSIBILE
			600V	REFER TO ITEM 20	RIFERIRSI AL PART.
12	73107447	2	16R	TEE	RACCORDO A 3 VIE
13	70936230	1	500J	GROMMET	ANELLO
14	--------	1	192T	HOSE(16")	TUBO FLESSIBILE
			600V	REFER TO ITEM 20	RIFERIRSI AL PART.
15	--------	1	192T	HOSE(26")	TUBO FLESSIBILE
			600V	REFER TO ITEM 20	RIFERIRSI AL PART.
16	--------	1	192T	HOSE(34")	TUBO FLESSIBILE
			600V	REFER TO ITEM 20	RIFERIRSI AL PART.

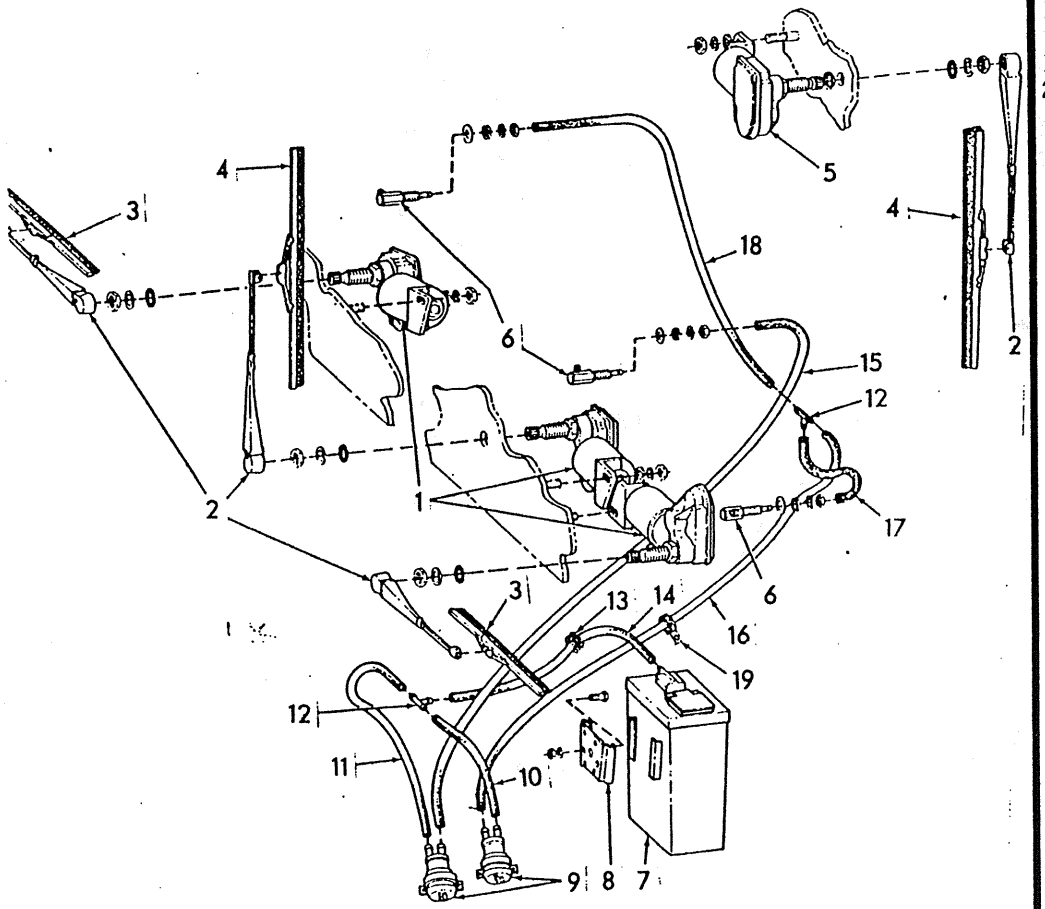

ITEM	PART NO.	QTY.	LEX.	DESCRIPTION	DENOMINAZIONE
17	--------	1	192T	HOSE(8")	TUBO FLESSIBILE
			600V	REFER TO ITEM 20	RIFERIRSI AL PART.
18	--------	1	192T	HOSE(20")	TUBO FLESSIBILE
			600V	REFER TO ITEM 20	RIFERIRSI AL PART.
19	73114671	1	89G	CLIP	GRAFFETTA
20	73112223	-	192T	HOSE,3/16"I.D. X 50'	TUBO FLESSIBILE
			600P	AS REQUIRED	DEFINITO AL MONTAGGIO

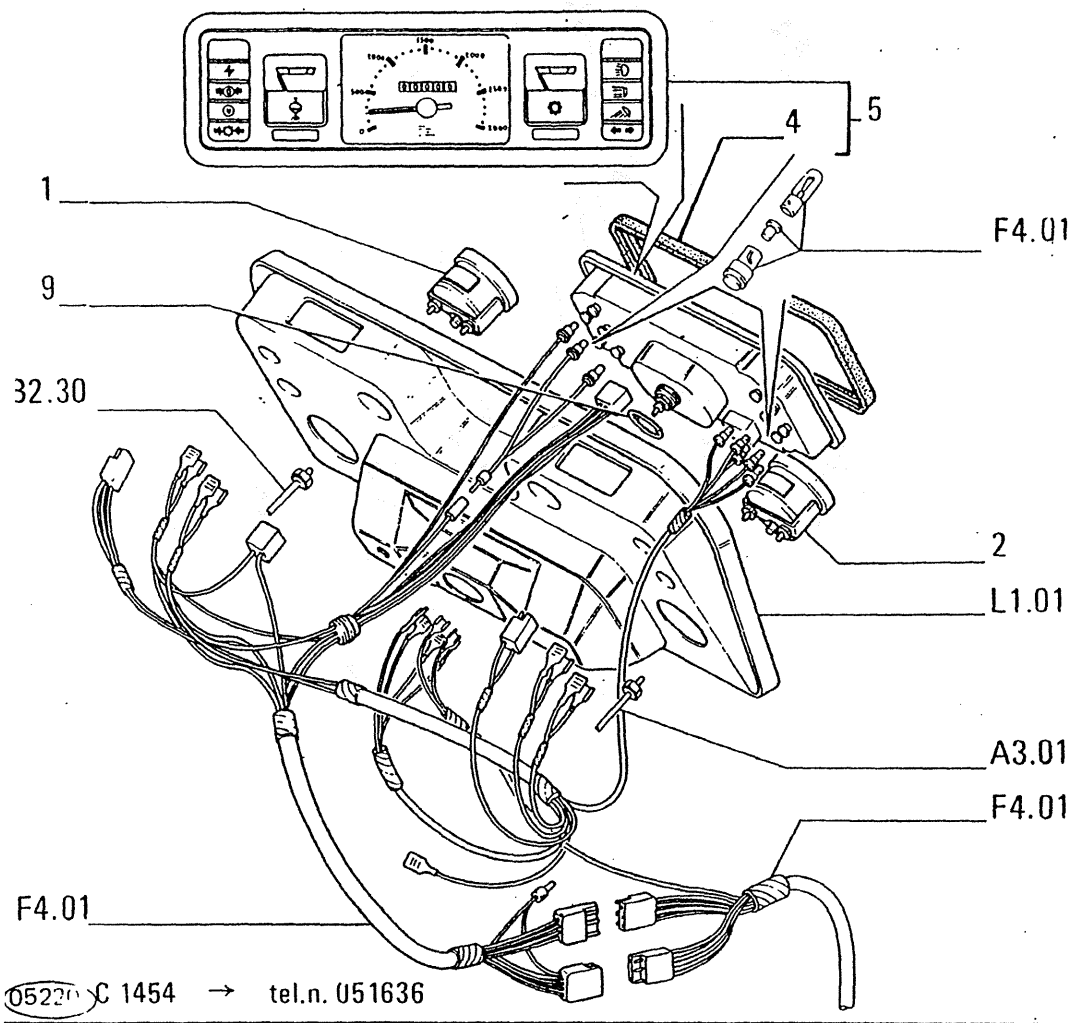

052?0 C 1454 → tel.n. 051636

ITEM	PART NUMBER	QTY	TRANS CODE	DESCRIPTION	DESCRIZIONE
1	79022774	1	42M	OIL PRESSURE GAUGE	MANOMETRO OLIO
2	79028289	1	42M	OIL PRESSURE GAUGE	MANOMETRO OLIO
4	79037810	1	123G	SEAL ASSY C1447	GUARNIZIONE TENUTA FRONTALE C1447
	79054137	1	123G	SEAL ASSY D1447	GUARNIZIONE TENUTA FRONTALE D1447
5	79042633	1	288S	INSTRUMENT CLUSTER - ASSEMBLY C1447	STRUMENTO MULTIPLO - COMPLETO C1447
	79054141	1	288S	INSTRUMENT CLUSTER - ASSEMBLY D1447	STRUMENTO MULTIPLO - COMPLETO D1447
6	79042639	1	95T	TEMPERATURE GAUGE - DELATED	TERMOMETRO - ELIMINATO
7	79042640	1	95T	TEMPERATURE GAUGE - DELATED	TERMOMETRO - ELIMINATO
8	79042641	1	321C	TACHOMETER - DELATED	CRONOGIROMETRO - ELIMINATO
9	14471480	1	158G	O-RING 5,33x56,52 C1447	GUARNIZIONE O-R 5,33x56,52 C1447

C 1447 → Tel.n. 051095
D 1447 Tel.n. 051096 →

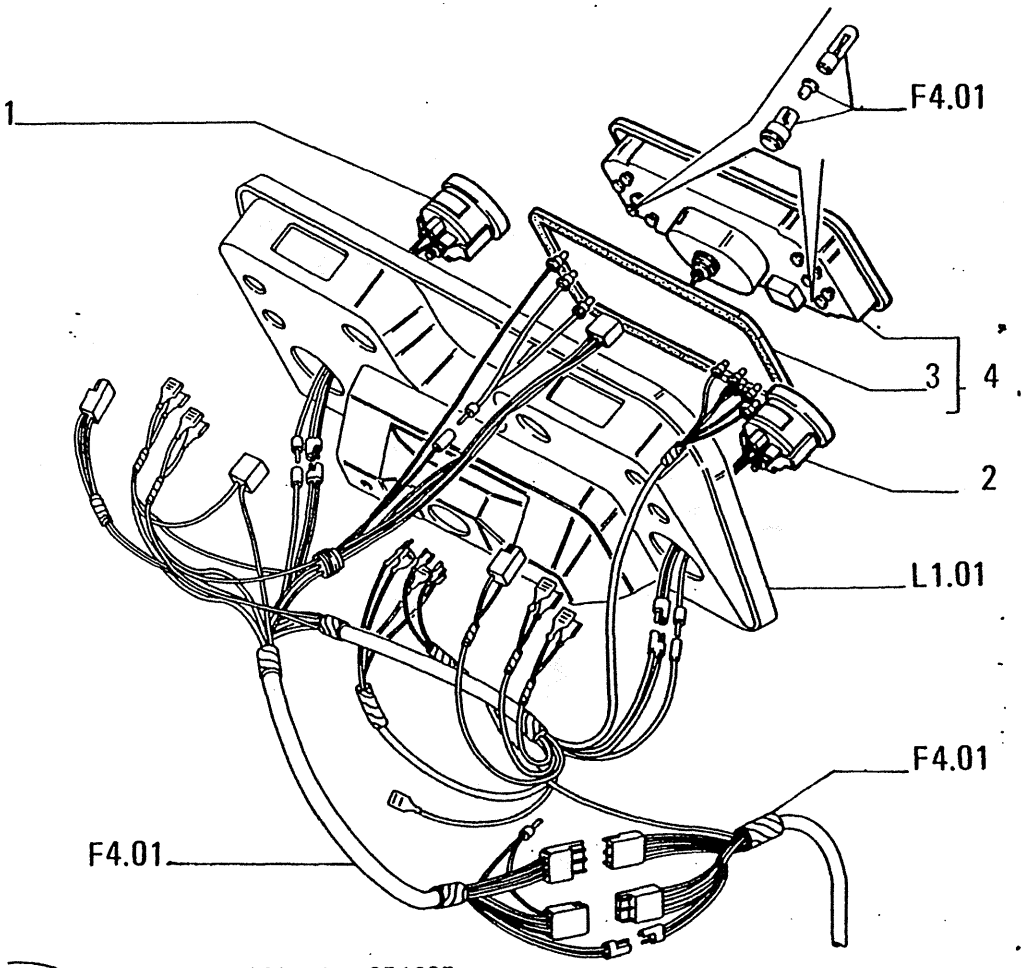

ITEM	PART NUMBER	QTY	TRANS CODE	DESCRIPTION	DESCRIZIONE
1	79051194	1	42M	OIL PRESSURE GAUGE	MANOMETRO OLIO
2	79051200	1	42M	OIL PRESSURE GAUGE	MANOMETRO OLIO
3	79054137	1	123G	SEAL ASSY	GUARNIZIONE TENUTA FRONTALE
4	79054141	1	288S	INSTRUMENT CLUSTER - ASSEMBLY	STRUMENTO MULTIPLO - COMPLETO

D 1454 tel.n. 051637 →

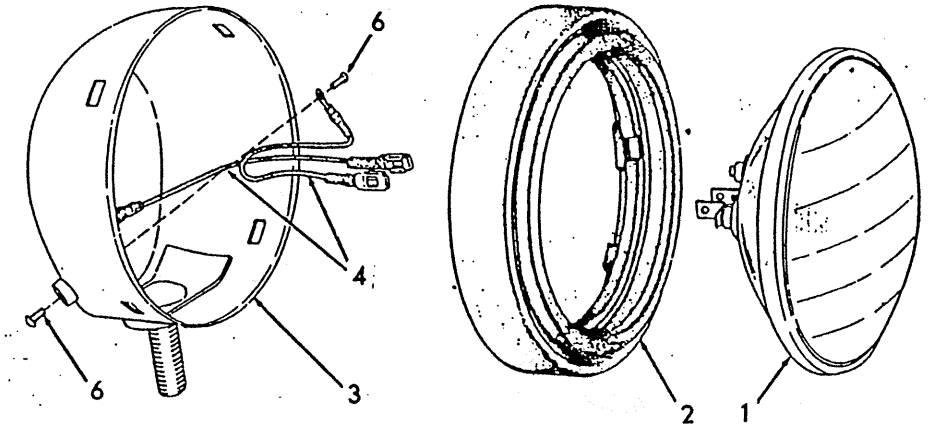

Design "A"

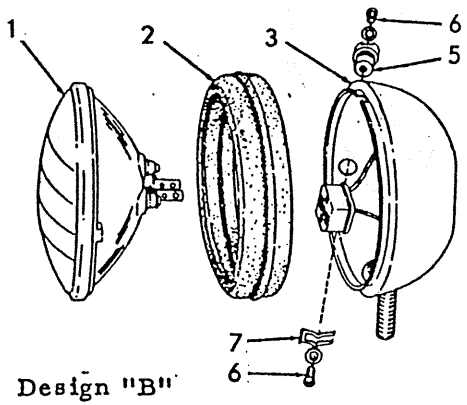

Design "B"

ITEM	PART NO.	QTY.	LEX.	DESCRIPTION	DENOMINAZIONE
-	a70621429	1	116G	LIGHT ASSY(A,B)	GRUPPO OTTICO
			600L	INCLUDES ITEM(S)1-7	INCLUDE PARTIC.(I)
1	70182763	1	9F	LAMP(A,B)	FANALE
2	70621428	1	62S	RETAINER(A)	SCONTRINO SERRATURA
	70638282	1	61S	RETAINER(B)	SCODELLINO DI RITEGNO
3	--------	1	300C	BODY(A)	CORPO
			601C	NOT SERVICED	NON FORNITO DI RICAMB.
	--------	1	300C	BODY(B)	CORPO
			601C	NOT SERVICED	NON FORNITO DI RICAMB.
4	70621724	2	105F	CABLE(A)	FUNE
5	70695694	1	85I	INSULATOR(B)	ISOLANTE
6	70912731	2	42V	SCREW,#8NC X 5/16"(A,B)	VITE
	70912739	2	132R	LOCKWASHER,#8(B)	ROSETTA DI SICUREZZA
7	70048922	1	100M	SPRING(B)	MOLLA

a.LIGHT ASSEMBLY IS AVAILABLE IN TWO DESIGNS. DETERMINE WHICH IS APPLICABLE TO YOUR UNIT AND ORDER PARTS ACCORDINGLY.
DUE TIPI DI FANALERIA SONO DISPONIBILI. DETERMINARE QUALE SIADATTA ALLA VS. UNITA' E ORDINARE LE RELATIVE PARTI.
DEUX TYPES DIFFERENTS D'ECLAIRAGE SONT FOURNIS. DETERMINER LEQUEL DES DEUX APPARTIENT A VOTRE ENGIN POUR FAIRE LA COMMANDE DES PIECES CORRECTES.
BELEUCHTUNGSANLAGE IN ZWEI AUSFUHRUNGEN LIEFERBAR. TEILE MUSSEN ZU IHRER MASCHINE PASSEND AUSGESUCHT UND BESTELLT WERDEN.
DOS TIPOS DISTINTOS DE FAROS ESTAN ENTREGADOS. DETERMINAR CUAL DE LOS DOS TIENE SU MAQUINA PARA HACER EL PEDIDO DE LAS PIEZAS CORRECTAS.

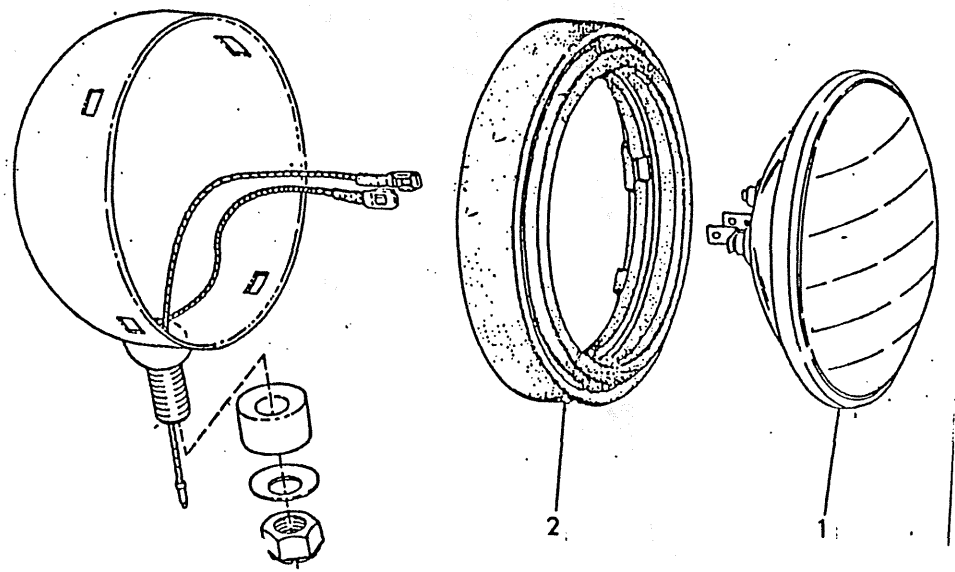

ITEM	PART NO.	QTY.	LEX.	DESCRIPTION	DENOMINAZIONE
-	73114663	2	220P	HEADLAMP	PROIETTORE
			600L	INCLUDES ITEM(S)1,2	INCLUDE PARTIC.(I)
1	70182763	2	502C	BEAM(24V)	TRAVE
2	70621428	2	61S	RETAINER, RUBBER	SCODELLINO DI RITEGNO

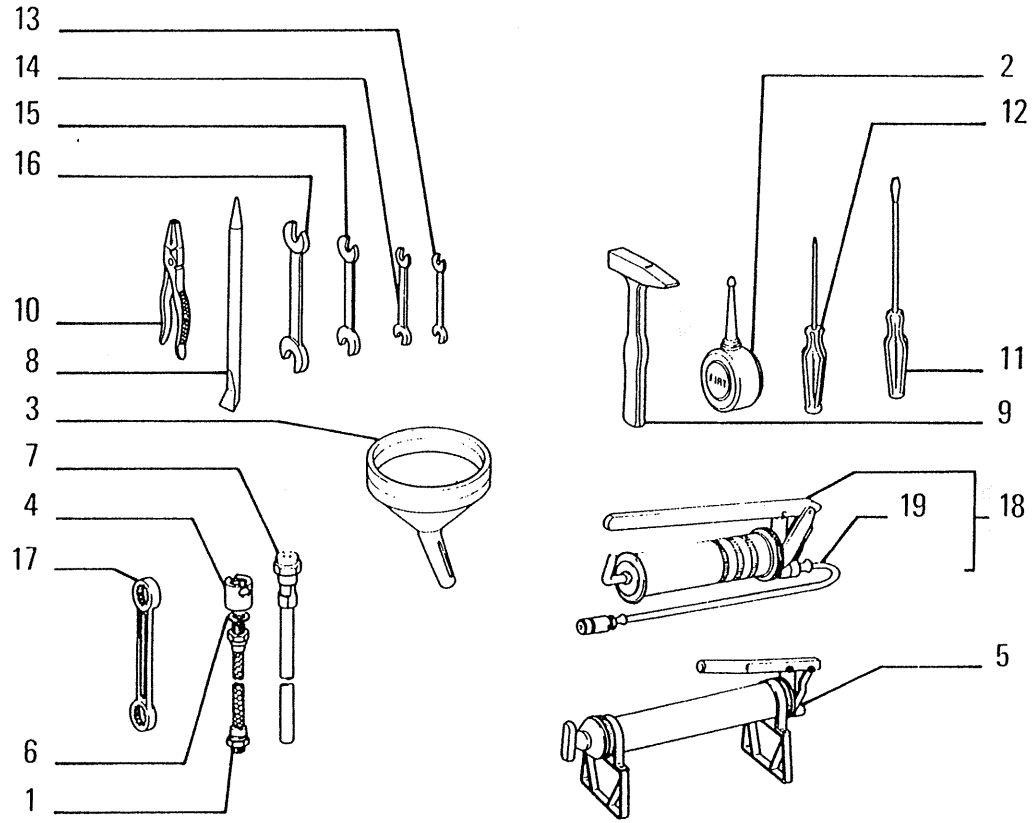

ITEM	PART NUMBER	QTY	TRANS CODE	DESCRIPTION	DESCRIZIONE
1	555486	1	192T	HOSE ASSY	TUBO FLESS.C/RACCORDI
2	591693	1	150	LUBE FITTING	OLIATORE
3	4057844	1	201	FUNNEL	IMBUTO
4	4980622	1	119T	HEAD	TESTA
5	4981746	1	155P	PUMP	POMPA
6	10287380	2	133R	SEAL 12,2x18	ROSETTA DI TENUTA 12,2x18
7	79020961	1	192T	HOSE ASSY	TUBO FLESS.C/RACCORDI
8	79028807	1	45L	LEVER	LEVA
9	79028808	1	51M	HAMMER	MARTELLO
10	79028809	1	125P	PLIERS	PINZA
11	79028810	1	10C	SCREWDRIVER	CACCIAVITE
12	79028811	1	10C	SCREWDRIVER	CACCIAVITE
13	79028812	1	150C	KEY 10-12	CHIAVE 10-12
14	79028813	1	150C	KEY 13-17	CHIAVE 13-17
15	79028814	1	150C	KEY 19-22	CHIAVE 19-22
16	79028815	1	150C	KEY 24-27	CHIAVE 24-27
17	79028816	1	150C	KEY 17-19	CHIAVE 17-19
18	79028979	1	155P	PUMP	POMPA
19	79028981	1	192T	HOSE ASSY	TUBO FLESS.C/RACCORDI

04163 OPTIONAL VARIANTE 30.0995.11.1

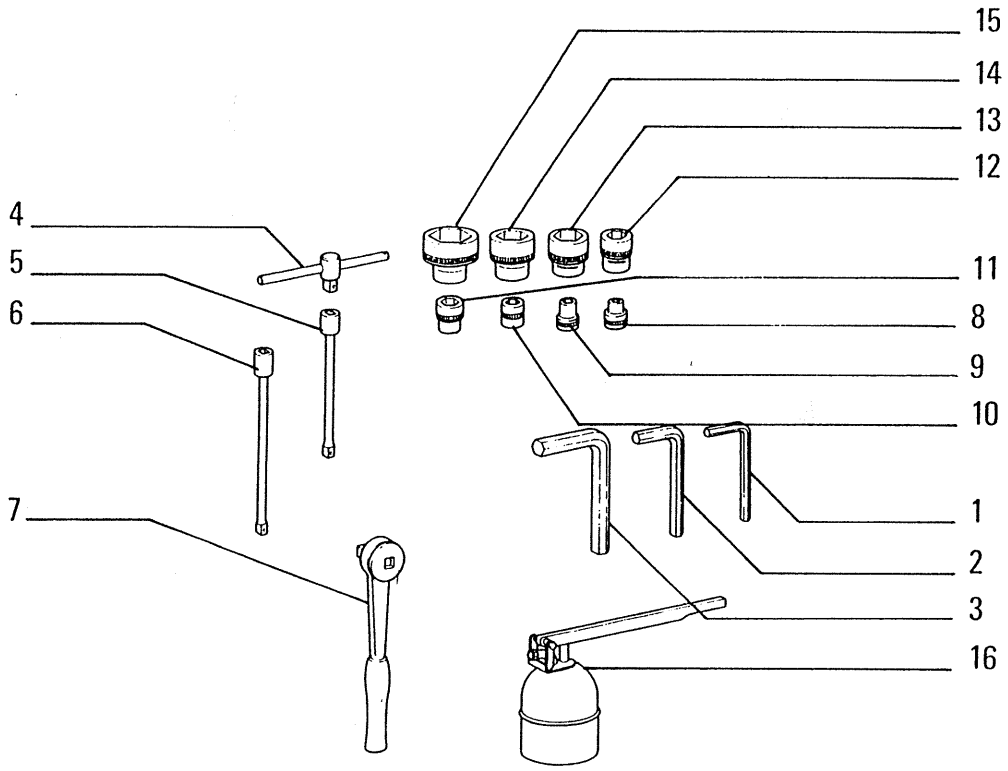

ITEM	PART NUMBER	QTY	TRANS CODE	DESCRIPTION	DESCRIZIONE
1	79028817	1	150C	KEY 8	CHIAVE 8
2	79028818	1	150C	KEY 17	CHIAVE 17
3	79028819	1	150C	KEY 24	CHIAVE 24
4	79028820	1	20M	HANDLE	MANIGLIA
5	79028821	1	222P	EXTENSION	PROLUNGA
6	79028822	1	222P	EXTENSION	PROLUNGA
7	79028823	1	150C	KEY	CHIAVE
8	79028824	1	150C	KEY 10	CHIAVE 10
9	79028825	1	150C	KEY 12	CHIAVE 12
10	79028826	1	150C	KEY 13	CHIAVE 13
11	79028827	1	150C	KEY 18	CHIAVE 18
12	79028828	1	150C	KEY 19	CHIAVE 19
13	79028829	1	150C	KEY 22	CHIAVE 22
14	79028830	1	150C	KEY 24	CHIAVE 24
15	79028831	1	150C	KEY 27	CHIAVE 27
16	79030200	1	155P	PUMP	POMPA

OPTIONAL
VARIANTI 30.0995.11.1

(04164)

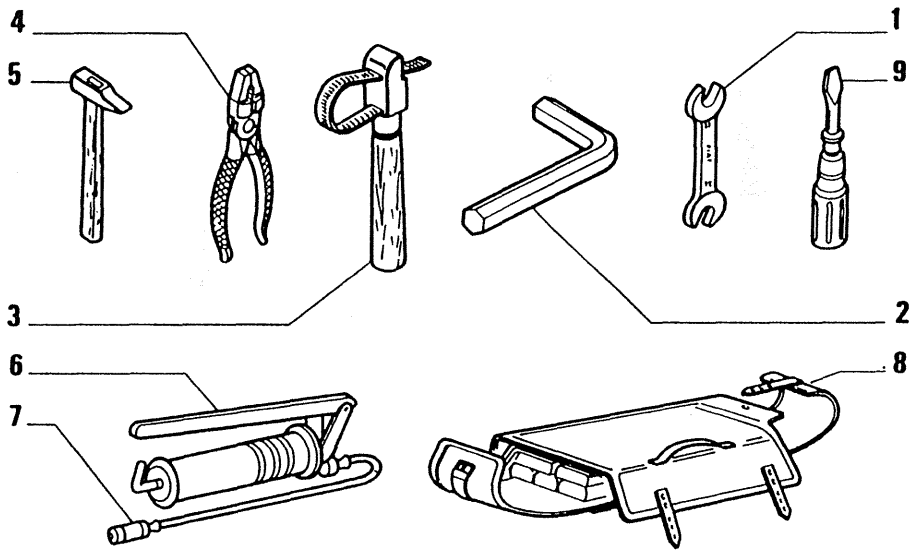

OPTIONAL 30.0995.13.1
VARIANTE

ITEM	PART NUMBER	QTY	TRANS CODE	DESCRIPTION	DESCRIZIONE
1	14522421	1	150C	KEY 13-17 13x17	CHIAVE 13-17 13x17
	14525021	1	150C	KEY 8-10 8x10	CHIAVE 8-10 8x10
	14549579	1	150C	KEY 12-14 12x14	CHIAVE 12-14 12x14
	14549879	1	150C	KEY 19-22 19x22	CHIAVE 19-22 19x22
	14550079	1	150C	KEY 24-27 24x27	CHIAVE 24-27 24x27
2	14625979	1	150C	KEY 12X132 12x132	CHIAVE 12X132 12x132
	14638079	1	150C	KEY 8X105 8x105	CHIAVE 8X105 8x105
	14638179	1	150C	KEY 10X118 10x118	CHIAVE 10X118 10x118
3	71304923	1	150C	KEY	CHIAVE
4	14626671	1	125P	PLIERS 13X190 13x190	PINZA 13X190 13x190
5	14582790	1	51M	HAMMER 118X315 118x315	MARTELLO 118X315 118x315
6	79028977	1	155P	PUMP - IN ALTERNATIVE	POMPA - IN ALTERNATIVA
	79028978	1	155P	PUMP - IN ALTERNATIVE	POMPA - IN ALTERNATIVA
	79028979	1	155P	PUMP - IN ALTERNATIVE	POMPA - IN ALTERNATIVA
	79028980	1	155P	PUMP - IN ALTERNATIVE	POMPA - IN ALTERNATIVA
7	79028981	1	285T	HOSE	TUBO FLESSIBILE
8	79062734	1	150B	BAG	BORSA
9	14626090	1	10C	SCREWDRIVER 6X200 4,5X177 4,5x177	CACCIAVITE 6X200 4,5X177 4,5x177
	14626290	1	10C	SCREWDRIVER 4,5X80 6,5X303 6,5x303	CACCIAVITE 4,5X80 6,5X303 6,5x303

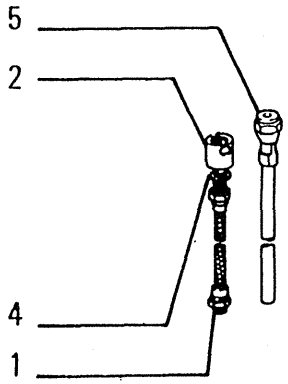

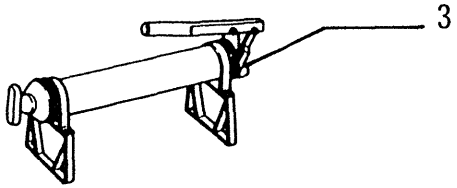

ITEM	PART NUMBER	QTY	TRANS CODE	DESCRIPTION	DESCRIZIONE
1	555486	1	192T	HOSE ASSY	TUBO FLESS.C/RACCORDI
	4983237	1	192T	HOSE ASSY	TUBO FLESS.C/RACCORDI
	79030434	1	192T	HOSE ASSY	TUBO FLESS.C/RACCORDI
2	549537	1	119T	HEAD	TESTA
	4980622	1	119T	HEAD	TESTA
3	582081	1	155P	PUMP - IN ALTERNATIVE	POMPA - IN ALTERNATIVA
	4955390	1	155P	PUMP - IN ALTERNATIVE	POMPA - IN ALTERNATIVA
	4981746	1	155P	PUMP - IN ALTERNATIVE	POMPA - IN ALTERNATIVA
	79030200	1	155P	PUMP - IN ALTERNATIVE	POMPA - IN ALTERNATIVA
4	10287380	2	133R	SEAL 12,2X18 12,2x18	ROSETTA DI TENUTA 12,2X18 12,2x18
5	592437	1	192T	HOSE ASSY	TUBO FLESS.C/RACCORDI

OPTIONAL 30.0995.13.1
VARIANTE

ITEM	PART NUMBER	QTY	TRANS CODE	DESCRIPTION	DESCRIZIONE
1	14585778	1	150C	KEY 36x11	CHIAVE 36x11

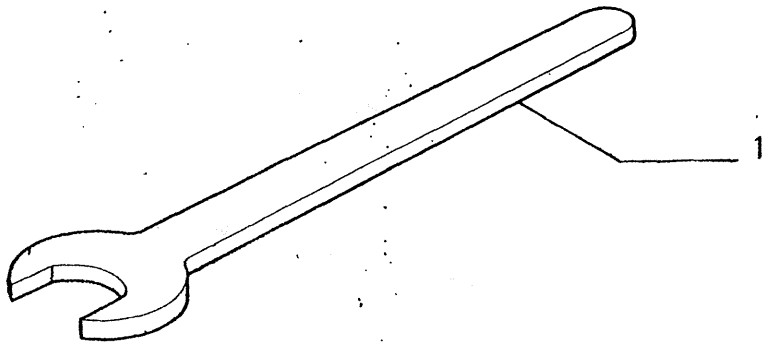

OPTIONAL 30.1001.04:1
VARIANTE 30.1040.03.1

(05774)

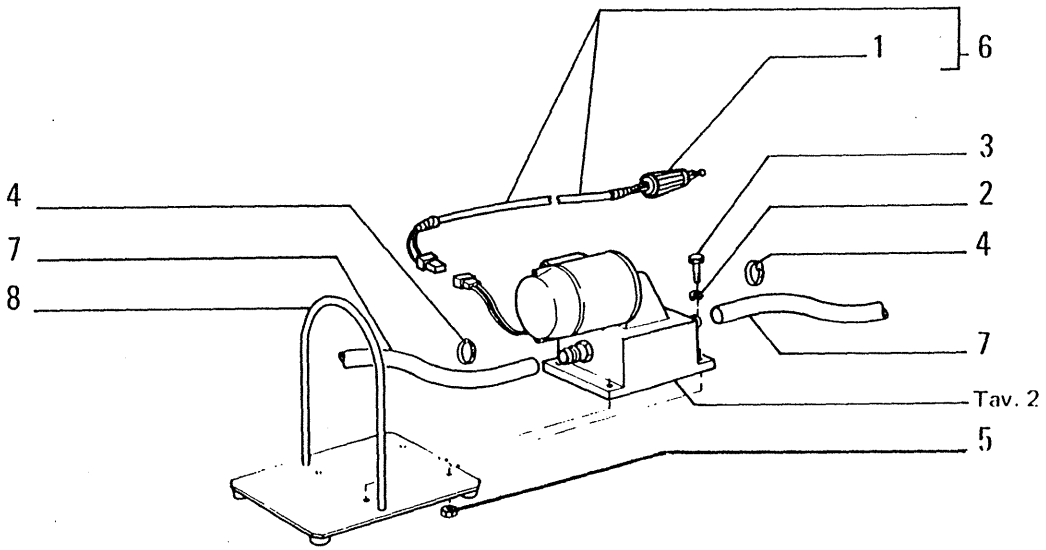

ITEM	PART NUMBER	QTY	TRANS CODE	DESCRIPTION	DESCRIZIONE
1	4182461	1	201S	ELECTRICAL PLUG	SPINA ELETTRICA
2	10516470	4	131R	WASHER 6,1x1,8	ROSETTA 6,1x1,8
3	10902621	4	40V	SCREW 6x1x25	VITE 6x1x25
4	12173890	2	180C	COLLAR 24/36x14	COLLARE 24/36x14
5	15896211	4	10D	NUT 6x1x5	DADO 6x1x5
6	79013586	1	111C	CABLE - ASSEMBLY	CAVO - COMPLETO
7	79013600	2	193T	TUBE	TUBO RIGIDO
8	79013601	1	300S	SUPPORT	SUPPORTO

OPTIONAL
VARIANTE 30.0993.02.1

03714

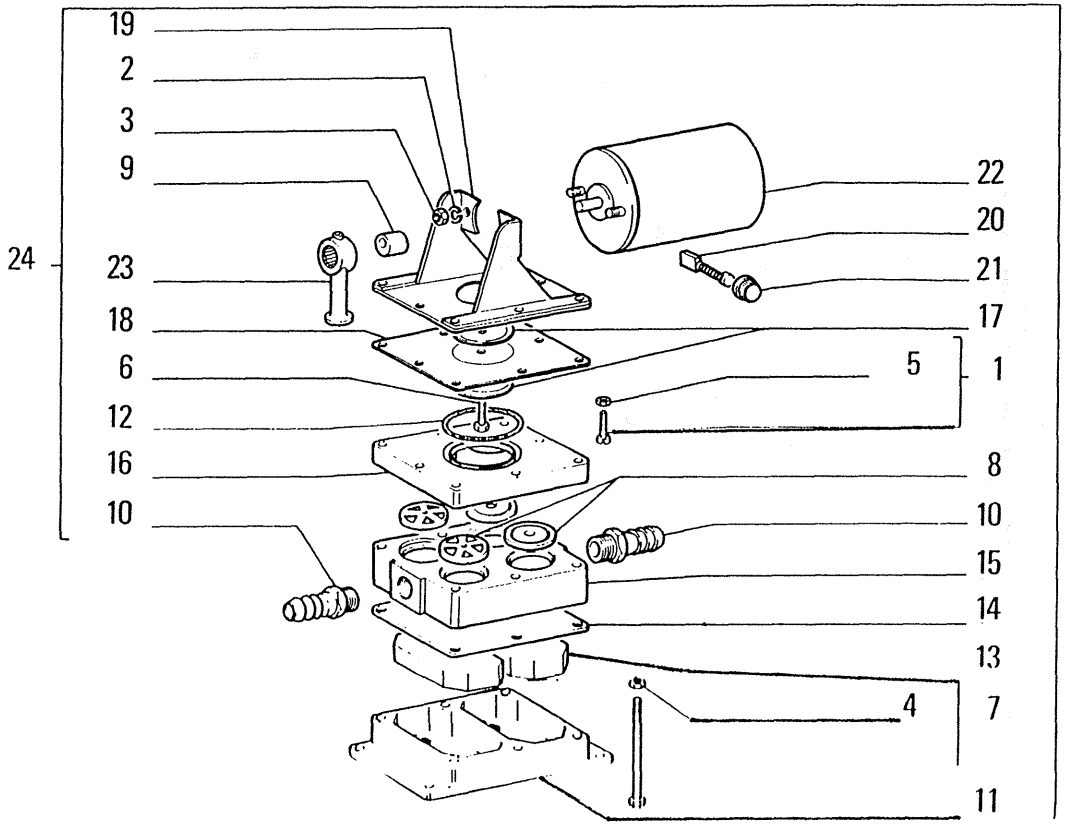

ITEM	PART NUMBER	QTY	TRANS CODE	DESCRIPTION	DESCRIZIONE
1	10352442	2	40V	SCREW COMPL. 4x0,7x25	VITE COMPL. 4x0,7x25
2	10516471	2	131R	WASHER 6,1x1,8	ROSETTA 6,1x1,8
3	10725911	2	10D	NUT 6x1x4	DADO 6x1x4
4	10725940	6	10D	NUT 6x1x4	DADO 6x1x4
5	10794040	2	10D	NUT 4x0,7x3,2	DADO 4x0,7x3,2
6	10979440	1	40V	SCREW 6x1x10	VITE 6x1x10
7	16038540	6	40V	SCREW COMPL. 6x1x100	VITE COMPL. 6x1x100
8	45482314	2	10V	VALVE	VALVOLA
9	71304372	1	10E	ECCENTRIC	ECCENTRICO
10	71304373	2	20R	FITTING	RACCORDO
11	71304374	1	300C	BODY	CORPO
12	71304375	1	158G	O-RING	GUARNIZIONE O-R
13	71304376	2	235S	PISTON	STANTUFFO
14	71304377	1	75M	DIAPHRAGM	MEMBRANA
15	71304378	1	300C	BODY	CORPO
16	71304379	1	300C	BODY	CORPO
17	71304380	2	60D	DISC	DISCO
18	71304381	1	75M	DIAPHRAGM	MEMBRANA
19	71304385	1	300S	SUPPORT	SUPPORTO
20	71304386	2	177S	BRUSH	SPAZZOLA
21	71304387	2	265C	COVER	COPERCHIO
22	71304388	1	137M	ELECTRIC MOTOR	MOTORINO ELETTRICO
23	71304389	1	50B	LINK	BIELLA
24	79013599	1	31E	ELECTROPUMP ASSEMBLY	ELETTROPOMPA COMPLETO

(03715) OPTIONAL VARIANTE 30.0993.02.1

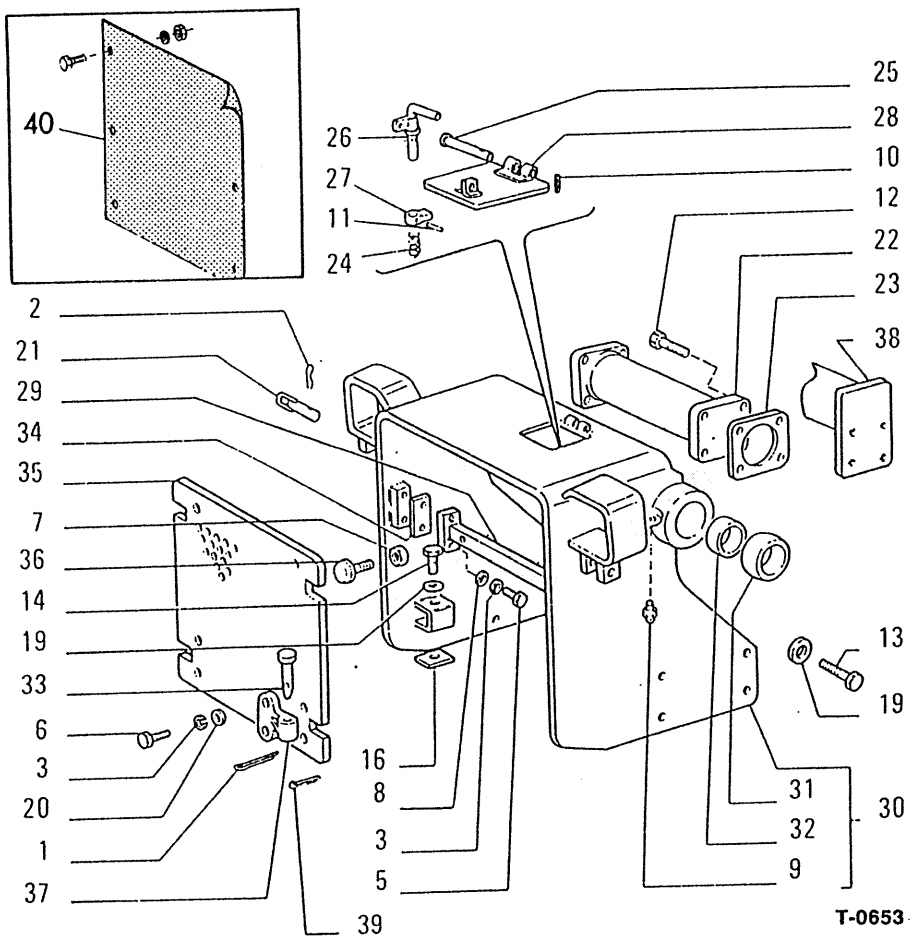

ITEM	PART NO.	QTY.	CODE	DESCRIPTION	DENOMINAZIONE
1	00567406	2	270C	PIN, SPLIT	COPIGLIA
	10798101	2	270C	PIN, SPLIT 5.7X39.4	COPIGLIA
2	00567406	2	270C	PIN, SPLIT	COPIGLIA
3	10571971	12	131R	WASHER,12.2X2.5	ROSETTA
5	11112431	4	40V	CAPSCREW,12X1.75X30 01,03,06	VITE
6	11113231	8	40V	CAPSCREW,12X1.75X50	VITE
7	12164721	1	10D	NUT,10X1.25X8 01,03,06	DADO
8	12646921	4	131R	WASHER,12.2X28 01,03,06	ROSETTA
9	13407211	2	60I	FITTING, LUBRICATION	INGRASSATORE
10	14161770	1	80P	PIN,3.3X16	PERNO
11	14163170	1	80P	PIN,4.4X24	PERNO
12	14258431	8	40V	CAPSCREW,16X1.5X60	VITE
13	15992631	8	40V	CAPSCREW,22X1.5X60	VITE
14	15993631	4	40V	CAPSCREW,22S1.5X110	VITE
16	76001827	-	198S	SHIM,ADJUSTMENT 1	SPESSORE DI REGISTRO
	76001828	-	198S	SHIM,ADJUSTMENT 1.5	SPESSORE DI REGISTRO
	76001829	-	198S	SHIM,ADJUSTMENT 2	SPESSORE DI REGISTRO
19	79005241	12	131R	WASHER	ROSETTA
20	79005242	8	131R	WASHER	ROSETTA
21	79005781	2	80P	PIN 01,03,05,06	PERNO
22	79005784	1	180T	HOLDDOWN	TRAVERSA
23	79005787	-	198S	SHIM, ADJUSTMENT	SPESSORE DI REGISTRO
24	79009016	1	100M	SPRING	MOLLA
25	79021009	1	80P	PIN	PERNO
26	79023984	1	20M	HANDLE	MANIGLIA
27	79023986	1	45L	LEVER	LEVA
28	79024802	1	205S	LID	SPORTELLO
29	79031929	1	180T	HOLDDOWN-FRONT 01,03,06	TRAVERSA
30	79032105	1	330C	BOOT,01,03,05,06	CUFFIA DI PROTEZIONE
31	79032368	2	95B	BUSHING - OUTER	BOCCOLA
32	79032369	2	95B	BUSHING - INNER	BOCCOLA
33	79035385	4	80P	PIN	PERNO
34	79037033	-	198S	SHIM,ADJUSTMENT01,03,06	SPESSORE DI REGISTRO

RADIATOR GUARD

L101 | 1

Revised April 1989

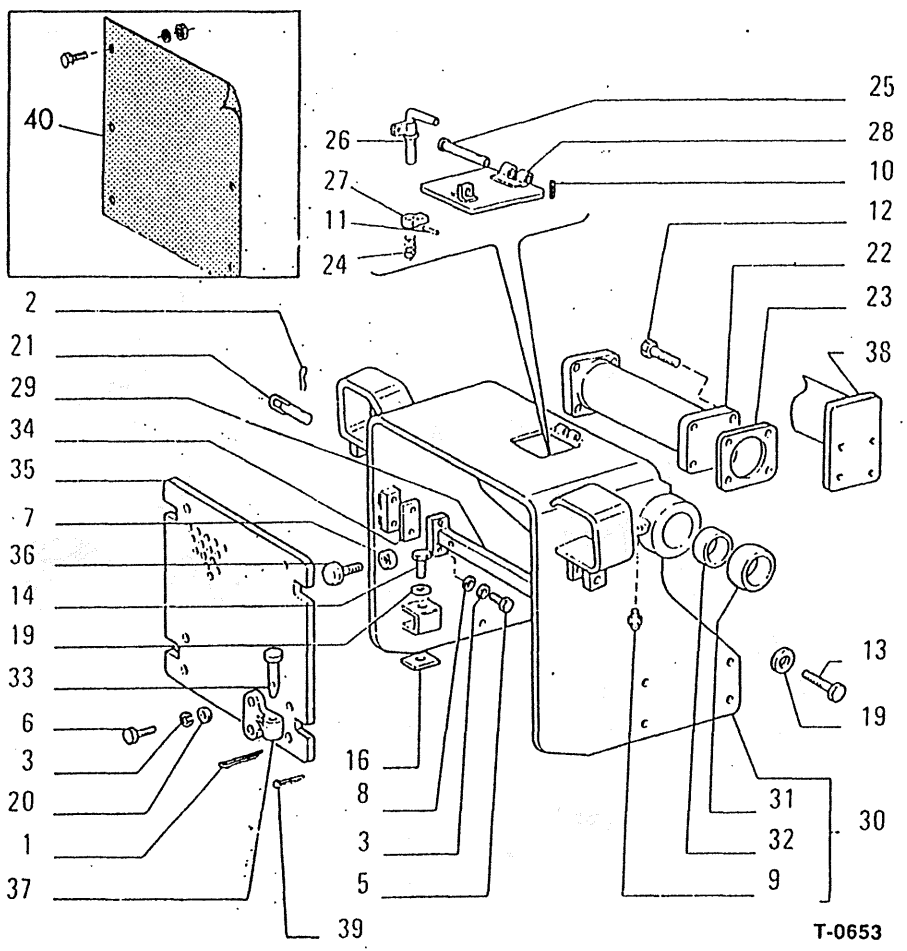

ITEM	PART NO.	QTY.	CODE	DESCRIPTION	DENOMINAZIONE
35	76013847	1	100G	GRILLE, RADIATOR FRONT 05 (*1)	GRIGLIA DEL RADIATORE
	79037279	1	100G	GRILLE, RADIATOR 01,03,06	GRIGLIA DEL RADIATORE
	a79040835	1	100G	GRILLE,RADIATOR(*2)	GRIGLIA DEL RADIATORE
	79062441	1	101G	GRILLE - FRONT (*)	GRIGLIA
36	79037282	1	74B	BLOCK 01,03,06	BLOCCHETTO
37	79037285	4	140C	HINGE	CERNIERA
38	79057760	1	180T	HOLDDOWN 06	TRAVERSA
39	10798101	2	270C	PIN,SPLIT,5.7X39.4 06	COPIGLIA
40	73299354	1	265C	COVER,05 (*2)	COPERCHIO
	70920583	8	40V	CAPSCREW,1/2"NCX1-1/4" 05 (*2)	VITE
	70677008	8	131R	WASHER,05 (*2)	ROSETTA
	70911028	8	10D	NUT,1/2"NC 05 (*2)	DADO

(*)SPECIAL EQUIPMENT
30.0835.04.1
(*1)SPECIAL EQUIPMENT
30.0870.02.1
(*2)SPECIAL EQUIPMENT
30.0021.08.1

a.UNITS EQUIPPED FOR SANITARY LANDFILL.

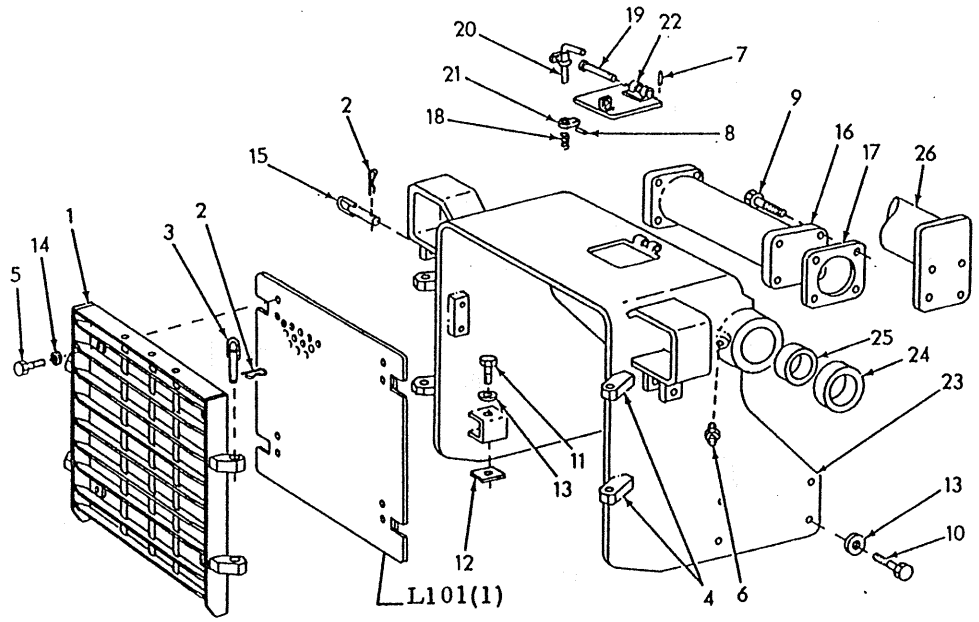

ITEM	PART NO.	QTY.	CODE	DESCRIPTION	DENOMINAZIONE
1	73154869	1	100G	GRILLE, RADIATOR	GRIGLIA DEL RADIATORE
2	00567406	6	270C	PIN, SPLIT	COPIGLIA
3	76001495	4	105P	PLATE	PIASTRA
4	73154868	4	141C	HINGE, FIXED	CERNIERA FISSA
5	1111283.1	4	40V	CAPSCREW,12X1.75X50	VITE
6	13407211	2	601	FITTING, LUBRICATION	INGRASSATORE
7	14161770	1	80P	PIN,3.3X16	PERNO
8	14163170	1	80P	PIN,4.4X24	PERNO
9	14258431	8	40V	CAPSCREW,16X1.5X60	VITE
10	15992631	8	40V	CAPSCREW,22X1.5X60	VITE
11	15993631	4	40V	CAPSCREW,22X1.5X110	VITE
12	76001827	-	198S	SHIM,ADJUSTMENT 1	SPESSORE DI REGISTRO
	76001828	-	198S	SHIM,ADJUSTMENT 1.5	SPESSORE DI REGISTRO
	76001829	-	198S	SHIM,ADJUSTMENT 2	SPESSORE DI REGISTRO
13	79005241	12	131R	WASHER	ROSETTA
14	79005242	4	131R	WASHER	ROSETTA
15	79005781	2	80P	PIN	PERNO
16	79005784	1	180T	HOLDDOWN	TRAVERSA
17	79005787	-	198S	SHIM, ADJUSTMENT	SPESSORE DI REGISTRO
18	79009016	1	100M	SPRING	MOLLA
19	79021009	1	80P	PIN	PERNO
20	79023984	1	20M	HANDLE	MANIGLIA
21	79023986	1	45L	LEVER	LEVA
22	79024802	1	205S	LID	SPORTELLO
23	79032105	1	330C	BOOT 01,03,05,06	CUFFIA DI PROTEZIONE
24	79032368	2	95B	BUSHING - OUTER	BOCCOLA
25	79032369	2	95B	BUSHING - INNER	BOCCOLA
26	79057760	1	180T	HOLDDOWN 06	TRAVERSA
27	10798101	2	270C	PIN,SPLIT,5.7X39.4 06	COPIGLIA

JSAGE: UNITS EQUIPPED FOR FORESTRY OPERATION.

	RADIATOR GUARD	L101	1A
		Added April 1989	

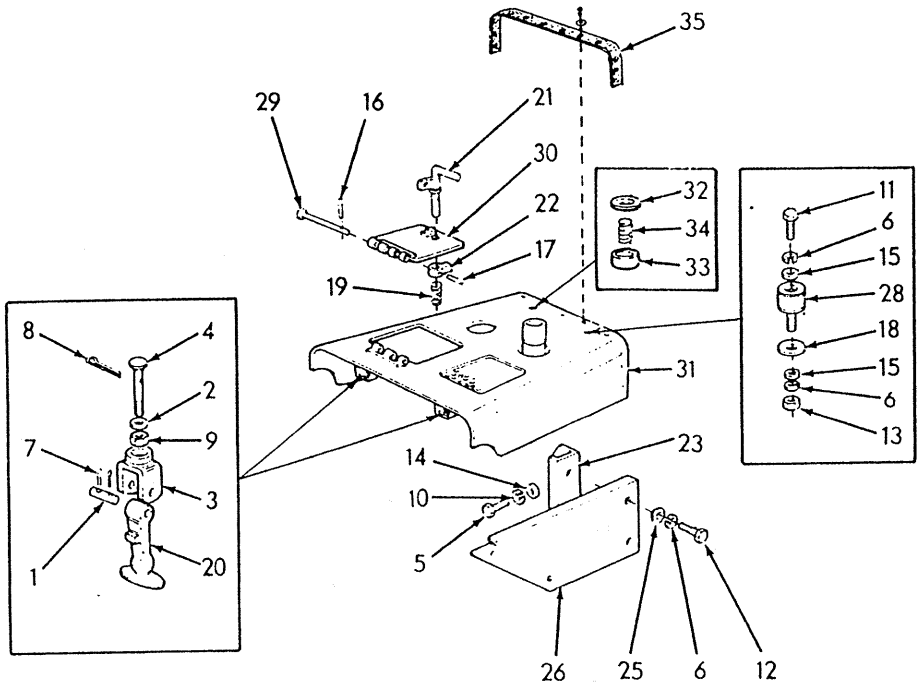

T-0620

ITEM	PART NO.	QTY.	CODE	DESCRIPTION	DENOMINAZIONE
1	04983695	2	80P	PIN	PERNO
2	04983696	2	75D	SPACER	DISTANZIALE
3	04983697	2	86F	YOKE	FORCELLA
4	04983700	2	80P	PIN	PERNO
5	10571871	6	131R	WASHER,10.2X2.2	ROSETTA
	--------	6	131R	WASHER,10.2X2.2(*)	ROSETTA
6	10571971	12	131R	WASHER,12.2X2.5	ROSETTA
	--------	8	131R	WASHER,12.2X2.5(*)	ROSETTA
7	10734201	2	270C	PIN,SPLIT 1.7X18.5	COPIGLIA
8	10734401	2	270C	PIN,SPLIT 1.7X28.5	COPIGLIA
9	10791021	2	10D	NUT,10X1.25X6	DADO
10	11106831	6	40V	CAPSCREW,10X1.5X40	VITE
	--------	6	40V	CAPSCREW,10X1.5X40 (*)	VITE
11	11112231	2	40V	CAPSCREW,12X1.75X22	VITE
12	11112631	8	40V	CAPSCREW,12X1.75X35	VITE
	--------	8	40V	CAPSCREW,12X1.75X35(*)	VITE
13	11702921	2	10D	NUT,12X1.75X10	DADO
14	12646821	6	131R	WASHER,10.2X25	ROSETTA
	--------	6	131R	WASHER,10.2X25(*)	ROSETTA
15	12646921	4	131R	WASHER,12.2X28	ROSETTA
16	14161770	2	80P	PIN,3.3X16	PERNO
17	14163170	2	80P	PIN,4.4X24	PERNO
18	79006219	2	131R	WASHER	ROSETTA
19	79009016	1	100M	SPRING	MOLLA
20	79014117	2	30G	HOOK	GANCIO
21	79023984	1	20M	HANDLE	MANIGLIA
22	79023986	1	45L	LEVER	LEVA
23	79031960	1	60A	ANGLE,LOWER RIGHT,01,03	ANGOLARE
	--------	1	60A	ANGLE,LOWER RIGHT(*)	ANGOLARE
	79031962	1	60A	ANGLE,LOWER LEFT	ANGOLARE
	--------	1	60A	ANGLE,LOWER LEFT(*)	ANGOLARE
25	79032003	8	95B	BUSHING	BOCCOLA
	--------	8	95B	BUSHING(*)	BOCCOLA
26	79032040	1	105P	PLATE,RIGHT SIDE 01,03	PIASTRA
	--------	1	105P	PLATE,RIGHT SIDE(*)	PIASTRA
	79032041	1	105P	PLATE,LEFT SIDE 01,03	PIASTRA
	--------	1	105P	PLATE,LEFT SIDE(*)	PIASTRA

HOOD ASSEMBLY

L101 | 2

Revised April 1989

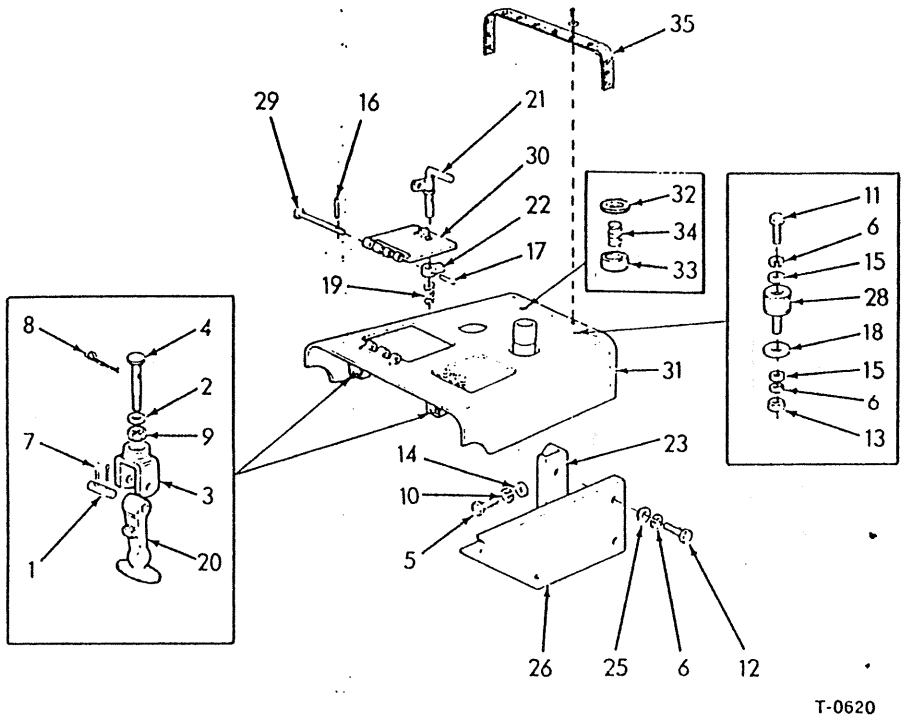

T-0620

ITEM	PART NO.	QTY.	CODE	DESCRIPTION	DENOMINAZIONE
28	79032198	2	74B	BLOCK	BLOCCHETTO
29	79034707	1	80P	PIN	PERNO
30	79037031	1	205S	LID	SPORTELLO
31	79042325	1	177C	HOOD,01,03	COFANO
	76014417	1	177C	HOOD,05(*1)	COFANO
	79087392	1	177C	HOOD,06	COFANO
32	76007578	1	105P	PLATE	PIASTRA
33	76007579	1	105P	PLATE	PIASTRA
34	76007581	1	100M	SPRING	MOLLA
35	a73154063	1	64L	STRIP	PIASTRINA
	70910531	12	131R	WASHER	ROSETTA
	70922470	12	55R	RIVET	RIBATTINO

(*)SPECIAL EQUIPMENT
30.0021.09.1
(*1)SPECIAL EQUIPMENT
30.0021.08.1

a.UNITS EQUIPPED FOR SANITARY LANDFILL OR FORESTRY.

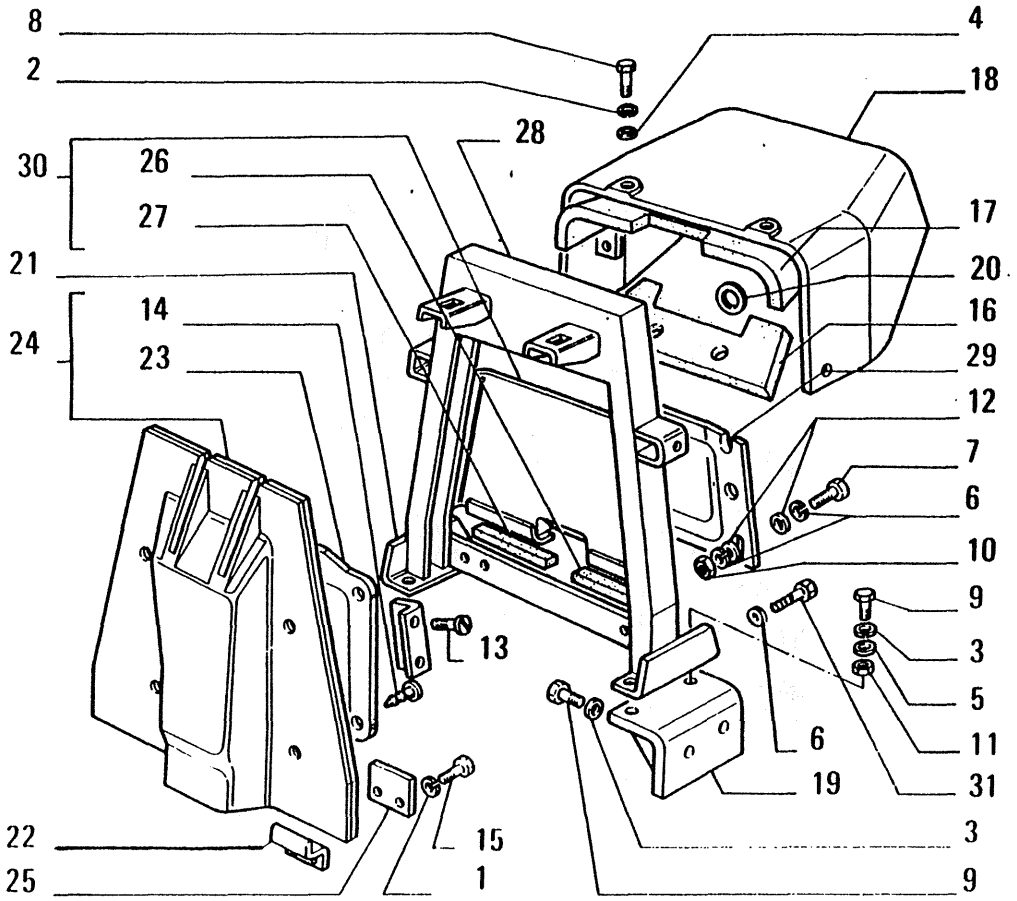

ITEM	PART NUMBER	QTY	TRANS CODE	DESCRIPTION	DESCRIZIONE
1	10516671	4	131R	WASHER 8,1x2,2	ROSETTA 8,1x2,2
2	10517071	4	131R	WASHER 12,2x3,1	ROSETTA 12,2x3,1
3	10517171	8	131R	WASHER 14,2x3,5	ROSETTA 14,2x3,5
4	10520021	4	131R	WASHER 12,2x22	ROSETTA 12,2x22
5	10520101	4	131R	WASHER 14,4x26	ROSETTA 14,4x26
6	10571871	8	131R	WASHER 01- -03 (*) 10,2x2,2	ROSETTA 01-02-03 (*) 10,2x2,2
		4	131R	WASHER (06) 10,2x2,2	ROSETTA (06) 10,2x2,2
7	11106631	4	40V	SCREW 01- -03 (*) 10x1,5x35	VITE 01-02-03 (*) 10x1,5x35
8	11112431	4	40V	SCREW 12x1,75x30	VITE 12x1,75x30
9	11115631	8	40V	SCREW 14x2x35	VITE 14x2x35
10	11701721	4	10D	NUT 01- -03 (*) 10x1,5x8	DADO 01-02-03 (*) 10x1,5x8
11	12163221	4	10D	NUT 4x0,7x11	DADO 4x0,7x11
12	12644321	8	131R	WASHER 01 -03 (*) 10,2x35	ROSETTA 01-02-03 (*) 10,2x35
13	13303511	8	40V	SCREW 8x1,25x20	VITE 8x1,25x20
14	14567280	4	120B	BUTTON 8,5x14	BOTTONE 8,5x14
15	16434631	4	40V	SCREW	VITE
					PANNELLO - INTERNO INFERIORE 01-02-03 **C1101**
16	79045316	1	25P	PANEL - INNER LOWER	PANNELLO - INTERNO INFERIORE **D1101**
17	76002440	1	25P	PANEL - INNER UPPER	PANNELLO - INTERNO SUPERIORI
18	76014254	1	325C	DASHBOARD (05)(2*)	CRUSCOTTO (05)(2*)
	79004949	1	325C	DASHBOARD 04	CRUSCOTTO 04
	79042888	1	325C	DASHBOARD 01- -03	CRUSCOTTO 01-02-03
19	79010023	1	80M	BRACKET - RIGHT	MENSOLA - DESTRO
	79010026	1	80M	BRACKET - LEFT	MENSOLA - SINISTRO
20	10397880	1	45A	RING (05)(2*) 25x42	ANELLO (05)(2*) 25x42

C 1101 → Tel.n. 050101
D 1101 Tel.n. 050102 →

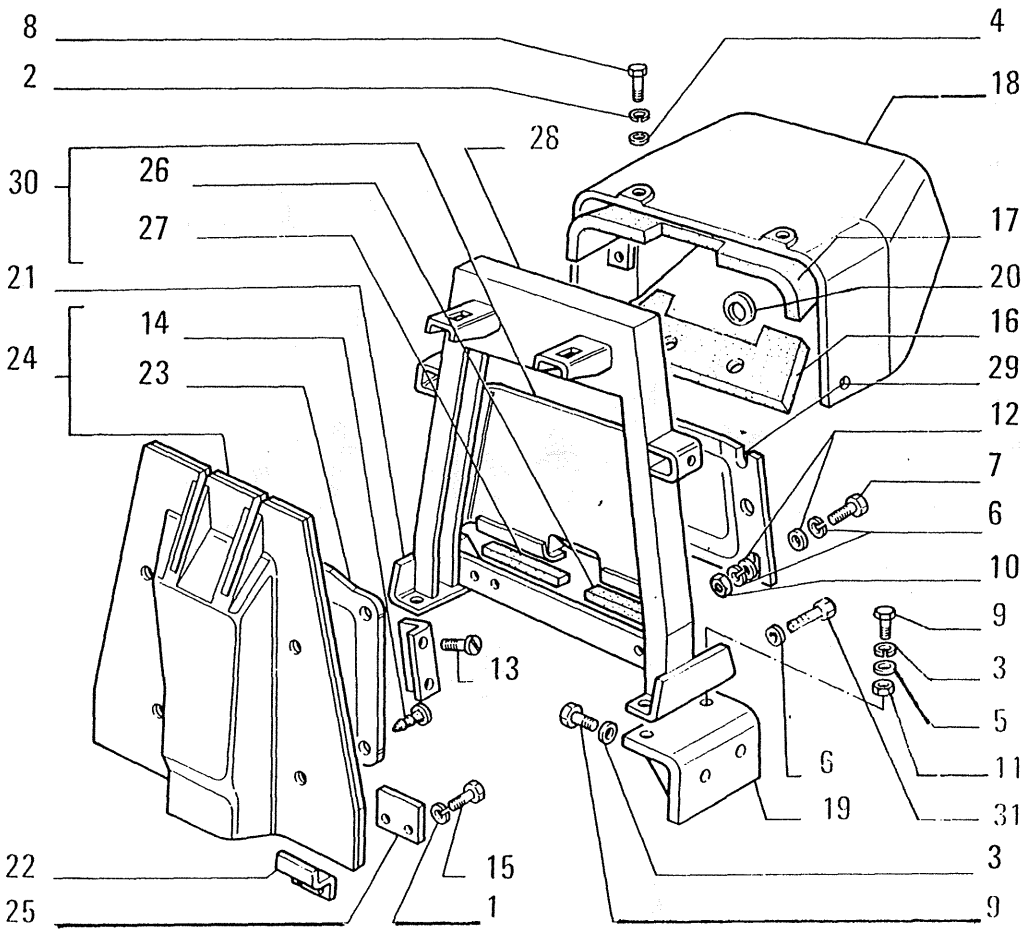

05778

ITEM	PART NUMBER	QTY	TRANS CODE	DESCRIPTION	DESCRIZIONE
21	79013216	4	225S	BRACKET - SIDE	STAFFA - LATERALE
22	79013217	2	225S	BRACKET - LOWER	STAFFA - INFERIORE
23	79013220	1	70R	GUARD	RIPARO
24	79013222	1	33P	WALL - ASSEMBLY (01-02-03-04-05)	PARETE - COMPLETO (01-02-03-04-05)
	98203238	1	33P	WALL - ASSEMBLY (06)	PARETE - COMPLETO (06)
25	79013657	2	75D	SPACER	DISTANZIALE
26	79029428	1	20N	BAND - LEFT	NASTRO - SINISTRO
27	79029429	1	20N	BAND - RIGHT	NASTRO - DESTRO
28	76012358	1	72I	FRAME - REAR ASSEMBLY (05)(2*) **D1966**	INTELAIATURA - POSTERIORE COMPLETO (05)(2*)(3*) **D1966**
	76013924	1	72I	FRAME - REAR ASSEMBLY (05)(2*) **C1966**	INTELAIATURA - POSTERIORE COMPLETO (05)(2*)(3*) **C1966**
	79035513	1	72I	FRAME - REAR ASSEMBLY (01)	INTELAIATURA - POSTERIORE COMPLETO (01)(02)(03)(04)
	79042034	1	72I	FRAME - REAR ASSEMBLY (1*)	INTELAIATURA - POSTERIORE COMPLETO (1*)
	79087393	1	72I	FRAME - ASSEMBLY (06)	INTELAIATURA - COMPLETO (06)
29	79040825	1	25P	PANEL 01-02-03 (*)	PANNELLO 01-02-03 (*)
30	76012278	1	25P	PANEL - ASSEMBLY (06)	PANNELLO - COMPLETO (06)
31	10979231	4	40V	SCREW (06) 10x1,5x16	VITE (06) 10x1,5x16
(*)			469P	FOR SPECIAL EQUIPMENT 30.0020.18.1	PER VARIANTE 30.0020.18.1
(1*)			469P	FOR SPECIAL EQUIPMENT 30.0370.01.1	PER VARIANTE 30.0370.01.1

C 1966 ⟶ tel. n. 052640
D 1966 tel. n. 052641 ⟶

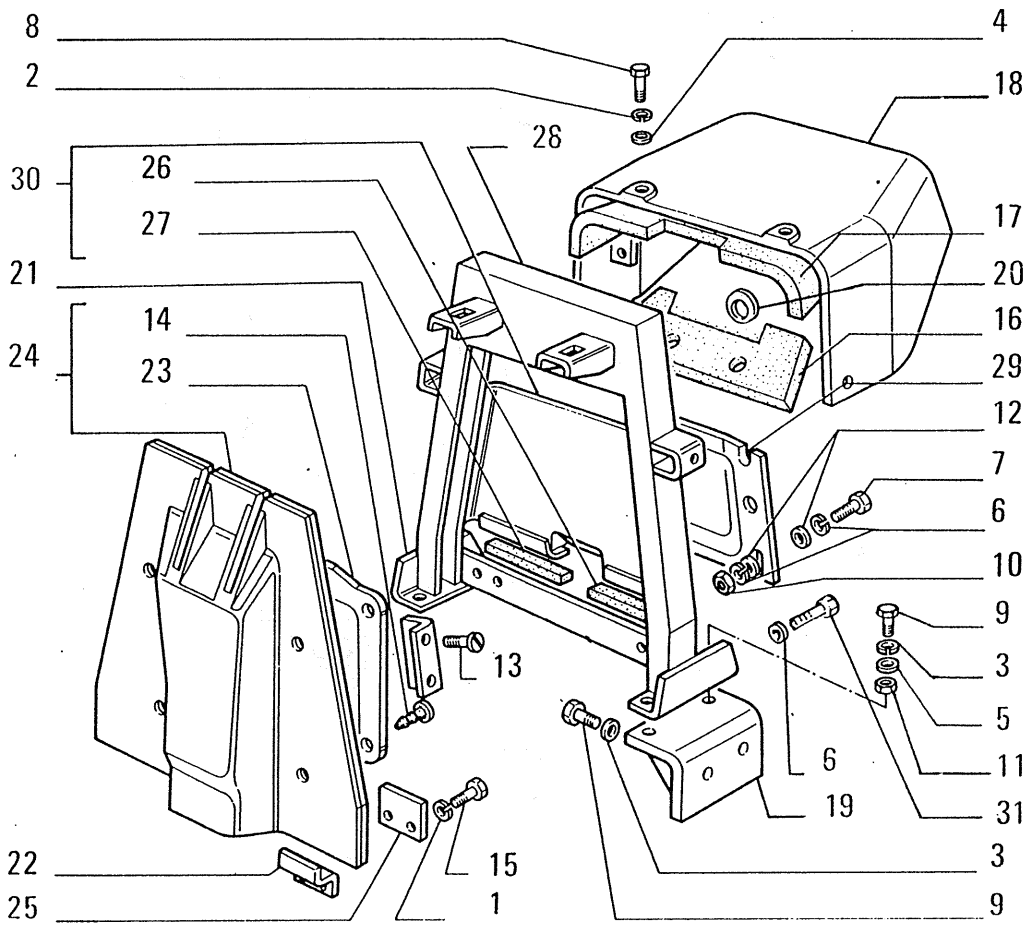

ITEM	PART NUMBER	QTY	TRANS CODE	DESCRIPTION	DESCRIZIONE
(2*)				469P FOR SPECIAL EQUIPMENT 30.0021.08.1	PER VARIANTE 30.0021.06.1
					PER VARIANTE 30.0021.07.1

05778

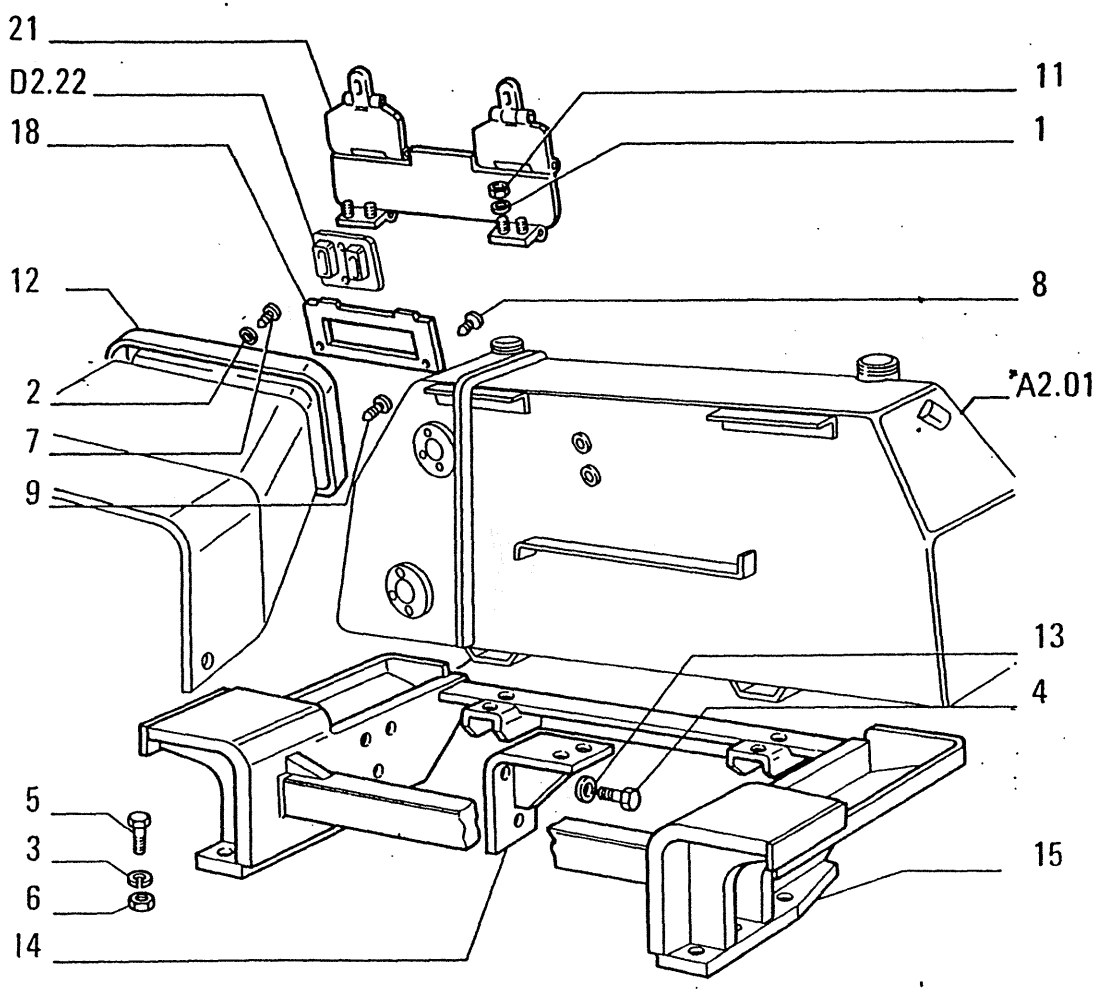

ITEM	PART NUMBER	QTY	TRANS CODE	DESCRIPTION	DESCRIZIONE
1	10516671	4	131R	WASHER (2*) 8,1x2,2	ROSETTA (2*) 8,1x2,2
2	10571571	2	131R	WASHER 6,1x1,6	ROSETTA 6,1x1,6
3	10572571	6	131R	WASHER 24,5x5	ROSETTA 24,5x5
4	11112631	6	40V	SCREW 12x1,75x35	VITE 12x1,75x35
5	11398137	6	40V	SCREW 24x2x80	VITE 24x2x80
6	12164521	6	10D	NUT 24x2x19	DADO 24x2x19
7	13275917	2	40V	SCREW 6x1x10	VITE 6x1x10
8	13297317	2	40V	SCREW 4x0,7x10	VITE 4x0,7x10
9	13301717	6	40V	SCREW 6x1x25	VITE 6x1x25
11	16102321	4	10D	NUT (2*) 8x1,25x5	DADO (2*) 8x1,25x5
12	76003796	1	140P	PLANK (*)	PLANCIA (*)
	79042406	1	140P	PLANK	PLANCIA (01-02-03) PLANCIA (04)
13	79005242	6	131R	WASHER	ROSETTA
14	79009642	2	80M	BRACKET	MENSOLA
15	79033631	1	300S	SUPPORT	SUPPORTO (01-02-03) SUPPORTO (04) TAPPO (04)
18	79042186	1	295C	BEZEL	CORNICE
21	79043102	2	265C	COVER (2*)	COPERCHIO (2*)
(*)			469P	FOR SPECIAL EQUIPMENT 30.0020.18.1	PER VARIANTE 30.0020.18.1
(2*)			469P	FOR SPECIAL EQUIPMENT 30.0843.10.1	PER VARIANTE 30.0843.10.1

C 1447 → Tel.n. 051095

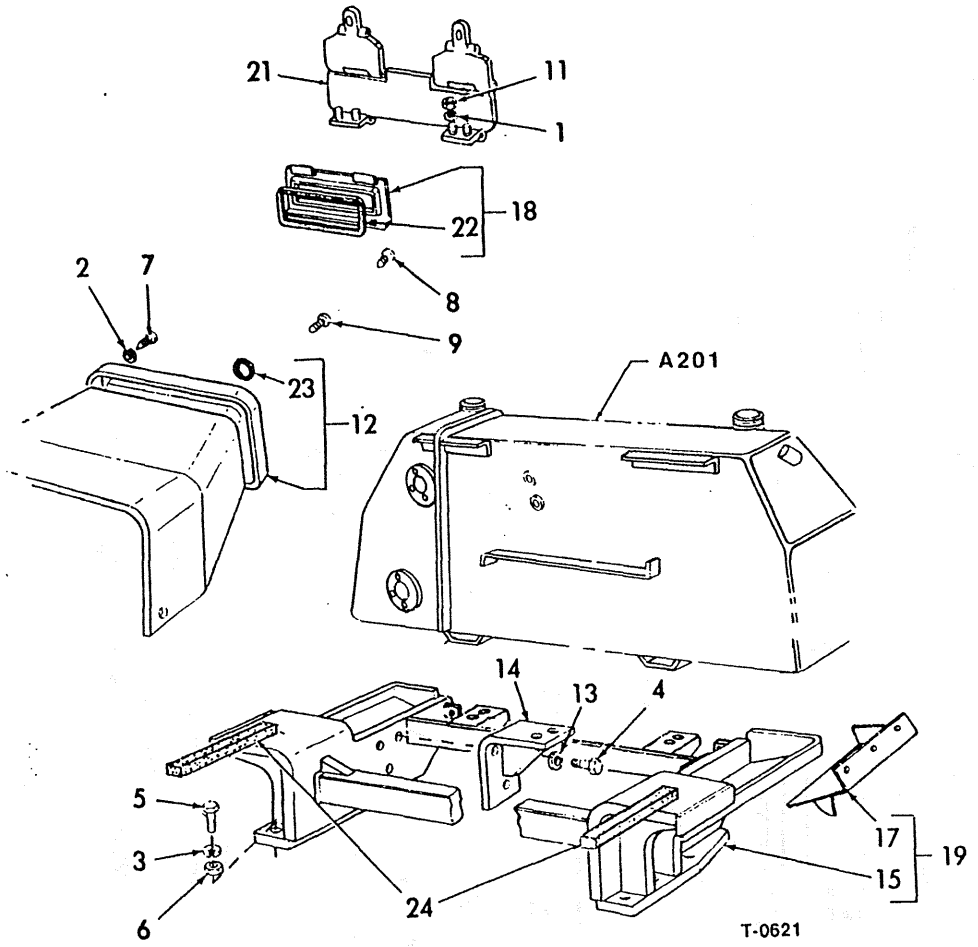

ITEM	PART NO.	QTY.	CODE	DESCRIPTION	DENOMINAZIONE
1	10516671	4	131R	WASHER,8.1X2.2 (*2)	ROSETTA
2	10571571	2	131R	WASHER,6.1X1.6	ROSETTA
3	10572571	6	131R	WASHER,24.5X5	ROSETTA
4	11112631	6	40V	CAPSCREW,12X1.75X35	VITE
5	11398137	6	40V	CAPSCREW,24X2X80	VITE
6	12164521	6	10D	NUT,24X2X19	DADO
7	13275917	2	40V	CAPSCREW,6X1X10	VITE
8	13297317	2	40V	CAPSCREW,4X0.7X10	VITE
9	13301717	8	40V	CAPSCREW,6X1X25(*)	VITE
	--------	6	40V	CAPSCREW,6X1X25	VITE
11	16102321	4	10D	NUT,8X1.25X5 (*2)	DADO
12	76003796	1	133R	SEAL(*)	GUARNIZIONE TENUTA
	79054632	1	133R	SEAL	GUARNIZIONE TENUTA
13	79005242	6	131R	WASHER	ROSETTA
14	79009642	2	80M	BRACKET	MENSOLA
15	79033631	1	300S	SUPPORT	SUPPORTO
	--------	1	300S	SUPPORT 05 (*1)	SUPPORTO
17	76000971	1	300S	SUPPORT-RIGHT,05(*1)	SUPPORTO
	76000972	1	300S	SUPPORT-LEFT,05(*1)	SUPPORTO
18	79054634	1	105P	PLATE	PIASTRA
19	76013885	1	300S	SUPPORT	SUPPORTO
21	79043102	2	265C	COVER(*2)	COPERCHIO
22	79054636	1	133R	SEAL	GUARNIZIONE TENUTA
23	79054635	1	133R	SEAL	GUARNIZIONE TENUTA
24	--------	2	133R	SEAL	GUARNIZIONE TENUTA
			600M	ORDER ITEM 25	ORDINARE PARTIC.
25	73114678	-	133R	SEAL	GUARNIZIONE TENUTA
			600P	AS REQUIRED	DEFINITO AL MONTAGGIO

(*)SPECIAL EQUIPMENT
30.0020.18.1
(*1)SPECIAL EQUIPMENT
30.0870.02.1
(*2)SPECIAL EQUIPMENT
30.0843.10.1

	FUEL AND HYDRAULIC TANK SUPPORT	L101	4A
		Revised April 1989	

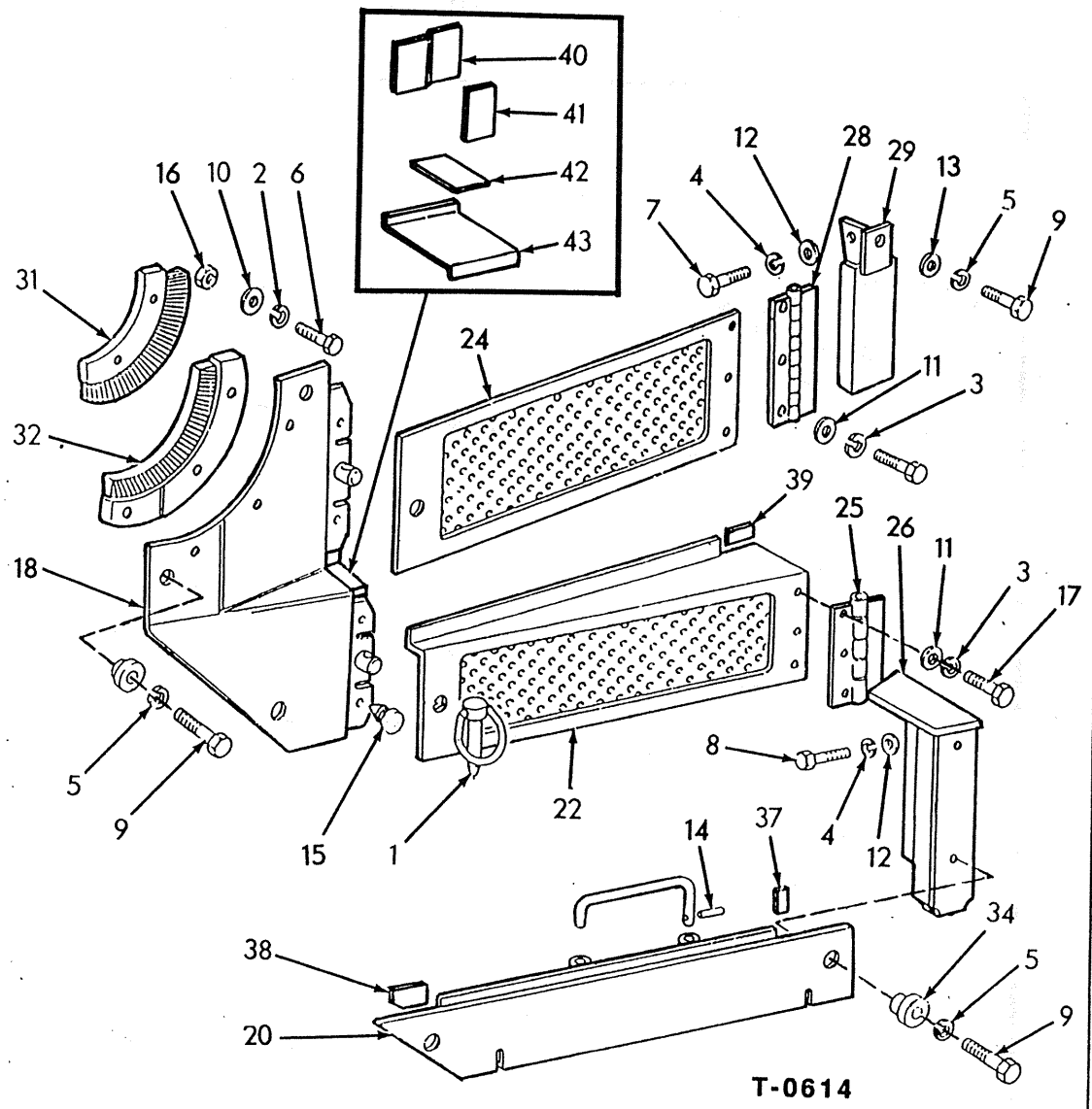

OPTIONAL
05526 VARIANTE 30.0836.08.1

ITEM	PART NUMBER	QTY	TRANS CODE	DESCRIPTION	DESCRIZIONE
1	4967704	4	200S	PIN 05 (*)	SPINA 05 (*)
2	10571571	10	131R	WASHER 05 (*) 6,1x1,6	ROSETTA 05 (*) 6,1x1,6
3	10571771	12	131R	WASHER 05 (*) 8,1x2	ROSETTA 05 (*) 8,1x2
4	10571871	10	131R	WASHER 05 (*) 10,2x2,2	ROSETTA 05 (*) 10,2x2,2
5	10571971	12	131R	WASHER 05 (*) 12,2x2,5	ROSETTA 05 (*) 12,2x2,5
6	10902631	10	40V	SCREW 05 (*) 6x1x25	VITE 05 (*) 6x1x25
7	11106431	4	40V	SCREW 05 (*) 10x1,5x30	VITE 05 (*) 10x1,5x30
8	11106831	6	40V	SCREW 05 (*) 10x1,5x40	VITE 05 (*) 10x1,5x40
9	11112631	12	40V	SCREW 05 (*) 12x1,75x35	VITE 05 (*) 12x1,75x35
10	12644421	10	131R	WASHER 05 (*) 6,15x15	ROSETTA 05 (*) 6,15x15
11	12646721	12	131R	WASHER 05 (*) 8,15x20	ROSETTA 05 (*) 8,15x20
12	12646821	10	131R	WASHER 05 (*) 10,2x25	ROSETTA 05 (*) 10,2x25
13	12646921	2	131R	WASHER 05 (*) 12,2x28	ROSETTA 05 (*) 12,2x28
14	14158470	2	202S	SPRING PIN 05 (*) 2,3x10	SPINA ELASTICA 05 (*) 2,3x10
15	14567080	8	120B	BUTTON 05 (*) 8,5x14	BOTTONE 05 (*) 8,5x14
16	15896221	6	10D	NUT 05 (*) 6x1x5	DADO 05 (*) 6x1x5
17	16043431	12	40V	SCREW 05 (*) 8x1,25x20	VITE 05 (*) 8x1,25x20
18	79031935	1	52F	SIDE PANEL - FRONT RIGHT 05 (	FIANCHETTO - ANTERIORE DESTRO 05 (*)
	79031938	1	52F	SIDE PANEL - FRONT LEFT 05(*)	FIANCHETTO - ANTERIORE SINISTRO 05(*)
20	79031946	1	52F	SIDE PANEL - RIGHT 05 (*)	FIANCHETTO - DESTRO 05 (*)
	79031948	1	52F	SIDE PANEL - LEFT 05 (*)	FIANCHETTO - SINISTRO 05 (*)
22	79031951	1	52F	SIDE PANEL - LOWER RIGHT	FIANCHETTO - INFERIORE DESTRO
	79031953	1	52F	SIDE PANEL - LOWER LEFT	FIANCHETTO - INFERIORE SINISTRO
24	79031957	1	52F	SIDE PANEL - UPPER LEFT	FIANCHETTO - SUPERIORE