CATERPILLAR®

SEBP3328
February 2002

RUTHZIL TRATOR COMERCIAL DE PEÇAS LTDA 11 97083-6812 ROLANDO CITRANGULO

Parts Manual



See "General Information" for New Parts Manual Features.

14H Motor Grader

ASE1-Up (Machine)
3PD1-Up (Engine)
BSS1-Up (Transmission)

Powered By 3176C Engine

Product and Dealer Information

Note: For product identification plate locations, see the section “Product Identification Information” in the Operation and Maintenance Manual.

Delivery Date: _____

Product Information

Model: _____

Product Identification Number: _____

Engine Serial Number: _____

Transmission Serial Number: _____

Generator Serial Number: _____

Attachment Serial Numbers: _____

Attachment Information: _____

Customer Equipment Number: _____

Dealer Equipment Number: _____

Dealer Information

Name: _____ Branch: _____

Address: _____

_____

_____

	Dealer Contact	Phone Number	Hours
Sales:	_____	_____	_____
Parts:	_____	_____	_____
Service:	_____	_____	_____

Informations produit et concessionnaire

Nota: Voir l'emplacement de la plaque signalétique du produit au chapitre "Informations produit" du guide d'utilisation et d'entretien.

Date de livraison: _____

Informations produit

Modèle: _____

Numéro d'identification produit: _____

Numéro de série du moteur: _____

Numéro de série de la boîte de vitesses: _____

Numéro de série de l'alternateur: _____

Numéros de série d'équipement: _____

Informations sur l'équipement: _____

Numéro matériel client: _____

Numéro matériel concessionnaire: _____

Informations concessionnaire

Nom: _____ Agence: _____

Adresse: _____

_____

_____

	Contact concessionnaire	Numéro de téléphone	Heures
Ventes:			
Pièces:			
Service:			

Información del Producto/Distribuidor

Nota: Para saber la ubicación de las placas de identificación del producto, ver la sección “Información sobre identificación del producto” en el Manual de Operación y Mantenimiento.

Fecha de entrega: _____

Información del producto

Modelo: _____

Número de identificación del producto: _____

Número de serie del motor: _____

Número de serie de la transmisión: _____

Número de serie del generador: _____

Números de serie de los accesorios: _____

Información sobre los accesorios: _____

Número del equipo del cliente: _____

Número del equipo del distribuidor: _____

Información del distribuidor

Nombre: _____ Sucursal: _____

Dirección: _____

_____

_____

	Comunicación con el distribuidor	Número de teléfono	Horas
Ventas:	_____	_____	_____
Piezas:	_____	_____	_____
Servicio:	_____	_____	_____

Informações Sobre Produto e Revendedor

Nota: Para localizações da placa de identificação do produto, consulte a seção, “Informações Sobre Identificação do Produto” no Manual de Operação e Manutenção.

Data de Entrega: _____

Informações Sobre o Produto

Modelo: _____

Número de Identificação do Produto: _____

Número de Série do Motor: _____

Número de Série da Transmissão: _____

Número de Série do Gerador: _____

Números de Série de Acessórios: _____

Informações Sobre Acessórios: _____

Número do Equipamento do Cliente: _____

Número do Equipamento do Revendedor: _____

Informações Sobre o Revendedor

Nome: _____ Filial: _____

Endereço: _____

_____

_____

	Contato do Revendedor	Telefone	Horas
Vendas:	_____	_____	_____
Peças:	_____	_____	_____
Serviço:	_____	_____	_____

Produkt- und Händlerinformation

Anmerkung: Für die Lage der Produkt-Identnummer und Seriennummern siehe Abschnitt "Produkt-Identinformation" im Betriebs- und Wartungshandbuch.

Lieferdatum: _____

Produkt-Identinformation

Modell: _____

Produkt-Identnummer: _____

Seriennummer des Motors: _____

Seriennummer des Getriebes: _____

Seriennummer des Generators: _____

Seriennummern der Arbeitsgeräte: _____

Arbeitsgeräteinformation: _____

Kundennummer: _____

Händlernummer: _____

Händlerinformation

Name: _____ Niederlassung: _____

Adresse: _____

_____

_____

	Kontaktperson beim Händler	Telefon	Dienststunden
Verkauf:	_____	_____	_____
Ersatzteile:	_____	_____	_____
Service:	_____	_____	_____

MEMORANDA

TABLE OF CONTENTS

Name	Page
GENERAL INFORMATION	A23
REPAIR ALTERNATIVES	A42
SUPPLEMENTAL COOLANT ADDITIVES	A47
MAINTENANCE PARTS	A52
INDEX	A90
MACHINE ARRANGEMENT	1
CONVERSION AR-CERTIFICATION	1
GENERAL AR	4
SNOW AR-MOTOR GRADER	6
ENGINE ARRANGEMENT	7
ENGINE AR	7
BASIC ENGINE	8
AIR COMPRESSOR GP	8
BELT TENSIONER GP	12
CAMSHAFT GP	14
COVER GP-CYLINDER BLOCK	16
COVER GP-FLYWHEEL HOUSING	18
CRANKSHAFT GP	20
CYLINDER BLOCK AS	22
CYLINDER BLOCK GP	24
CYLINDER HEAD AS	26
CYLINDER HEAD GP	28
DRIVE GP-ACCESSORY	30
FASTENER GP-CYLINDER HEAD	32
FLYWHEEL GP	33
GEAR GP-FRONT	34
HOUSING GP-FLYWHEEL	36
HOUSING GP-FRONT	38
LIFTER GP-VALVE	40
LIFTING GP-ENGINE	41
MOUNTING GP-ENGINE	42
MOUNTING GP-VALVE MECHANISM	43
PAN GP-OIL	44
PANEL GP-SOUND SUPPRESSION	46
PISTON & ROD GP	47
PLUG GP-CYLINDER BLOCK	48
PLUG GP-ENGINE	50
ROCKER ARM GP	52
SEAL GP-CRANKSHAFT	54
SUPPORT GP-ENGINE	55
SUPPRESSION GP-SOUND	56
VALVE MECHANISM GP	58
LUBRICATION SYSTEM	60
BASE GP-OIL FILTER	60
FILLER GP-ENGINE OIL	62
FILTER GP-ENGINE OIL	64
GAUGE GP-OIL LEVEL (DIPSTICK)	66
LINES GP-TURBOCHARGER OIL	67
OIL CHANGE GP-HIGH SPEED	68
PUMP GP-ENGINE OIL	69
COOLING SYSTEM	71
COOLING AR	71
COVER GP-FAN	73
FAN & MOTOR GP	74
HOUSING & REGULATOR GP	76
LINES GP-POWER TRAIN COOLER	78
LINES GP-WATER	80
PUMP GP-WATER	85
RADIATOR GP	87
AIR INLET AND EXHAUST SYSTEM	88
AFTERCOOLER & MOUNTING GP	88
AIR CLEANER GP	90
DUST EJECTOR GP	93
LINES GP-AIR	94
MANIFOLD GP-EXHAUST	98
MANIFOLD GP-INLET	99
MUFFLER GP	100
TURBOCHARGER GP	102
FUEL SYSTEM	104
CONTROL GP-GOVERNOR	104
FILTER GP-FUEL	106
FILTER GP-WATER SEP & FUEL	107
INJECTOR GP-FUEL	108
LINES GP-DRAIN	109
LINES GP-FUEL FILTER	110
LINES GP-FUEL INJECTION	114
PUMP & MTG GP-FUEL TRANSFER	116
PUMP GP-FUEL INJECTION	117
PUMP GP-FUEL PRIMING	118
TANK GP-FUEL	120
VALVE GP-CHECK	126
ELECTRICAL AND STARTING SYSTEM	127
ALARM GP	127
ALTERNATOR GP-CHARGING	128
BATTERY GP	131
CIRCUIT BREAKER GP	133
CONTROL & MTG GP-ENGINE ELEK	135
CONTROL GP-ENGINE ELECTRONIC	136
CONTROL GP-SECONDARY STEERING	137
CONVERTER AR-ELECTRICAL	138
CONVERTER GP-ELECTRICAL	140
COVER GP-MODULE CONNECTOR	143
ELECTRONICS GP-MONITOR	144
HEATER GP-JACKET WATER	145
INSTALLATION GP-WARNING BEACON	147

TABLE OF CONTENTS

Name	Page
JUNCTION BLOCK GP	148
LAMP GP-DOME	149
LAMP GP-FLOOD	150
LAMP GP-HEAD	152
LAMP GP-SIGNAL	158
LAMP GP-WARNING BEACON	160
LIGHTING AR-FLOOD	161
LIGHTING AR-FLOOD & SIGNAL	164
LIGHTING GP-BACKUP	168
LIGHTING GP-FLOOD	170
LIGHTING GP-SIGNAL	190
LIGHTING GP-WARNING	191
MOTOR GP-ELECTRIC	194
RECEPTACLE GP-AUXILIARY START	196
SENSOR GP-GROUND SPEED	197
SENSOR GP-POSITION	198
SENSOR GP-PRESSURE	199
STARTING AID GP-ETHER	204
STARTING MOTOR GP-ELECTRIC	210
SWITCH GP-DISCONNECT	218
SWITCH GP-LIGHT	220
SWITCH GP-MAGNETIC	222
SWITCH GP-WIPER	223
WARNING GP-BACKUP	224
WIRING GP-BLADE CUSHION	225
WIRING GP-CAB	226
WIRING GP-ENGINE	230
WIRING GP-FRONT	234
WIRING GP-REAR	238
WIRING GP-SECONDARY STEERING	250
WIRING GP-SHIFT CONSOLE	252
WIRING GP-STEERING CONSOLE	254
WIRING GP-UNIT INJECTOR	257
POWER TRAIN	258
ADAPTER GP-TRANSMISSION	258
CASE GP-TRANSMISSION	259
CHAIN GP-DRIVE	260
CONTROL GP-CLUTCH	262
CONTROL GP-DIFFERENTIAL LOCK	266
CONTROL GP-TRANSMISSION	268
CONTROL GP-TRANSMISSION HYD	272
COOLER GP-TRANSMISSION OIL	274
COVER GP-SHIPPING	276
DIFFERENTIAL & BEVEL GEAR GP	278
DIFFERENTIAL GP	282
FILLER GP-POWER TRAIN OIL	284
FILTER GP-OIL	285
FINAL DRIVE GP	286
GEAR & CASE GP-TRANSFER	288
LINES GP-POWER TRAIN OIL	294
MOUNTING GP-WHEEL	296
PLANETARY GP-TRANSMISSION	298
PUMP GP-GEAR	304
TANDEM & COVER GP	306
TRANSMISSION AR	307
VALVE & MTG GP-DIFF LOCK	308
VALVE GP-CONTROL	309
VALVE GP-PILOT	310
VALVE GP-RELIEF	312
VALVE GP-SELECTOR & PRESS CONT	314
VALVE GP-SOLENOID	320
VALVE GP-TRANSMISSION CONTROL	322
WHEEL & TIRE AR	324
WHEEL AR	341
FRAME AND BODY	344
AXLE GP-FRONT	344
CASE & FRAME GP	348
COVER GP-PROTECTION	350
ENCLOSURE GP-ENGINE	352
FRAME GP-FRONT	356
GUARD & SUPPORT GP-RADIATOR	358
GUARD GP-BOTTOM	360
GUARD GP-BRAKE LINES	361
GUARD GP-PLATFORM	362
HITCH GP-ARTICULATING	366
HITCH GP-TOWING	368
LINES GP-GREASE	369
LINK GP-STEERING	370
PANEL GP-SOUND SUPPRESSION	371
PROTECTION AR-SNOW PLOW	372
RADIATOR GUARD & SUPPORT GP	374
SHIELD GP-DRIVE SHAFT	376
STEP GP	377
SUPPORT AR-REAR CHASSIS	378
SUPPORT GP-FUEL TANK	379
BRAKING SYSTEM	380
AIR DRYER GP	380
BRAKE GP-SERVICE	388
CONTROL GP-PARKING BRAKE	390
CONTROL GP-SERVICE BRAKE	392
TANK GP-AIR	398
VALVE GP-AIR CONTROL	400
VALVE GP-QUICK-RELEASE	402
VALVE GP-SOLENOID	403
HYDRAULIC SYSTEM	404
ACCUMULATOR & MTG GP-HYDRAULIC	404
ACCUMULATOR AR-BLADE CUSHION	405
ACCUMULATOR GP-BLADE CUSHION	406
CONTROL AR-HYDRAULIC	407
CONTROL GP-CENTERSHIFT LOCK	414
CONTROL GP-STEERING	416

TABLE OF CONTENTS

Name	Page
COOLER & MTG GP-HYDRAULIC OIL	417
CYLINDER & MTG GP-ARTICULATION	418
CYLINDER & MTG GP-BLADE LIFT	419
CYLINDER & MTG GP-BLADE TIP	420
CYLINDER & MTG GP-CENTERSHIFT	421
CYLINDER & MTG GP-SIDESHIFT	422
CYLINDER & MTG GP-STEERING	423
CYLINDER & MTG GP-WHEEL LEAN	424
CYLINDER GP-ARTICULATION	425
CYLINDER GP-BLADE LIFT	426
CYLINDER GP-BLADE TIP	427
CYLINDER GP-CENTERSHIFT	428
CYLINDER GP-RIPPER LIFT	430
CYLINDER GP-SIDESHIFT	431
CYLINDER GP-STEERING	432
CYLINDER GP-WHEEL LEAN	436
DETENT GP-CONTROL VALVE	438
DRIVE GP-CIRCLE	442
DRIVE GP-PUMP	446
EXTENSION GP-CENTERSHIFT	447
LINES GP-ACCUMULATOR	448
LINES GP-HYDRAULIC	450
LINES GP-HYDRAULIC FAN	458
LINES GP-PUMP	462
LINES GP-RIPPER	466
LINES GP-SECONDARY STEERING	470
LINES GP-STEERING	472
LOCK GP-CENTERSHIFT	475
LOCK GP-HYDRAULIC HAND CONTROL	476
MOTOR GP-ELEC HYD PUMP	477
MOTOR GP-GEAR	478
MOTOR GP-GEROTOR	480
PUMP & MTG GP-PISTON	482
PUMP & MTG GP-SECONDARY STEER	484
PUMP GP-ELECTRIC DRIVE	485
PUMP GP-METERING	486
PUMP GP-PISTON	488
ROTATING GP-PUMP	492
STEERING AR-SECONDARY	494
SWIVEL GP	495
TANK GP-HYDRAULIC	496
VALVE & LINKAGE GP	500
VALVE GP-BANK 4	522
VALVE GP-BANK 5	526
VALVE GP-BANK 7	530
VALVE GP-COMBINATION	534
VALVE GP-CONTROL	536
VALVE GP-PRESS & FLOW CMPNSTR	572
VALVE GP-RELIEF	576
VALVE GP-SHUTTLE	584
VALVE GP-SOLENOID	585
VALVE GP-SOLENOID & MANIFOLD	586
IMPLEMENTS	588
CIRCLE GP	588
DRAWBAR GP	590
PLATE GP-PUSH	592
WORK TOOLS	593
BIT GP	593
BLADE GP	595
EDGE GP-CUTTING	596
LIFT GP-BLADE	598
MOUNTING GP-RIPPER	602
MOUNTING GP-SNOW WING	604
RIPPER AR	605
RIPPER GP	606
TOOTH GP-SCARIFIER	608
OPERATOR STATION	609
ACCESSORY GP-CAB	609
AIR CONDITIONER & MOUNTING GP	611
AIR CONDITIONER AR	613
AIR CONDITIONER GP	616
ARMREST GP	624
COMPRESSOR GP-REFRIGERANT	626
CONDENSER & MTG GP-REFRIGERANT	632
CONDENSER GP-REFRIGERANT	634
CONSOLE GP-OPERATOR	636
CONVERSION AR-NON-ROPS	639
DOOR GP	640
DOOR GP-CAB	644
DUCT & CONTROL GP	652
DUCT GP	654
EXTENSION GP-BACKREST	655
FAN GP-CIRCULATING	658
FILTER GP-CAB AIR	664
HAMMER & MOUNTING GP	665
HEATER & MTG GP-CAB	667
HEATER AR-CAB	669
HEATER GP-CAB	672
HOUSING GP-SEAT SUSPENSION	680
INSTALLATION AR-RADIO	683
INSTALLATION GP-RADIO	684
INSTRUMENT AR	686
INSULATION GP-WEATHER	688
LINER GP-CAB	690
LINES GP-AIR CONDITIONER	702
LINES GP-HEATER	706
LITERATURE GP	712
LOUVER GP-CAB	714
MIRROR GP-REAR VIEW	715
MODULE GP-QUAD GAUGE	722
MODULE GP-SPEEDOMETER & TACH	723
MOUNTING GP-ROPS	724
PAN GP-BACKREST	727

TABLE OF CONTENTS

Name	Page	Name	Page
PAN GP-SEAT	728		
PANEL GP-CAB	730		
PANEL GP-INSTRUMENT	732		
PANEL GP-WINDOW	736		
ROPS AR-ENCLOSED	740		
ROPS AR-OPEN	742		
ROPS GP-ENCLOSED	743		
ROPS GP-OPEN	746		
SCREEN GP-SUN	747		
SEAT BELT GP	748		
SEAT GP	750		
SEAT GP-SUSPENSION	754		
SUPPORT GP-SEAT	762		
SUSPENSION GP-SEAT	764		
WASHER GP-WINDOW	768		
WINDOW GP	771		
WIPER AR-WINDOW	776		
WIPER GP-WINDOW	778		
SERVICE EQUIPMENT AND SUPPLIES	789		
PLATE & FILM GP	789		
TOOL BOX GP	798		
PART NUMBER INDEX	B1		

TABLE DES MATIÈRES

Désignation	Page
GÉNÉRALITÉS	A26
OPTIONS DE RÉPARATION	A43
ADDITIFS POUR LIQUIDE DE REFROIDISSEMENT	A48
PIÈCES DE RECHANGE	A58
INDEX	A103
VERSION DE MACHINE	1
VERSION DE TRANSFORMATION - HOMOLOGATION	1
VUE DU MODÈLE	4
VERSION NEIGE - NIVELEUSE	6
MOTEUR COMPLET	7
MOTEUR (VERSION)	7
MOTEUR STANDARD	8
COMPRESSEUR D'AIR (ASS)	8
TENDEUR DE COURROIE (ASS)	12
ARBRE A CAMES (ASS)	14
BLOC-CYLINDRES - COUVERCLE (ASS)	16
COUVERCLE DE CARTER DE VOLANT (ASS)	18
VILEBREQUIN (ASS)	20
BLOC-CYLINDRES (ENS)	22
BLOC-CYLINDRES (ASS)	24
CULASSE (ENS)	26
CULASSE (ASS)	28
ENTRAÎNEMENT AUXILIAIRE (ASS)	30
BOULONNERIE DE LA CULASSE (ASS)	32
VOLANT MOTEUR (ASS)	33
PIGNONNERIE AV (ASS)	34
CARTER DE VOLANT (ASS)	36
CARTER AV (ASS)	38
POUSSOIR DE SOUPAPE (ASS)	40
OEILLETONS DE LEVAGE MOTEUR (ASS)	41
MONTAGE DE MOTEUR (ASS)	42
MONTAGE DE CULBUTERIE (ASS)	43
HUILE MOTEUR - CARTER (ASS)	44
PANNEAU D'INSONORISATION (ASS)	46
PISTON ET BIELLE (ASS)	47
BOUCHON - BLOC-CYLINDRES	48
BOUCHON DE MOTEUR (ASS)	50
AXE DE CULBUTEUR (ASS)	52
JOINT DE VILEBREQUIN (ASS)	54
SUPPORT DE MOTEUR (ASS)	55
INSONORISATION (ASS)	56
CULBUTERIE (ASS)	58
CIRCUIT DE GRAISSAGE	60
SUPPORT DE FILTRE À HUILE (ASS)	60
BOUCHON DE REMPLISSAGE D'HUILE MOTEUR (ASS)	62
FILTRE À HUILE MOTEUR (ASS)	64
JAUGE D'HUILE MOTEUR (BAIONNETTE) (ASS)	66
CANALISATIONS D'HUILE DE TURBOCOMPRESSEUR (ASS)	67
DISPOSITIF DE VIDANGE RAPIDE D'HUILE (ASS)	68
POMPE A HUILE MOTEUR (ASS)	69
CIRCUIT DE REFROIDISSEMENT	71
REFROIDISSEMENT (VERSION)	71
COUVERCLE - VENTILATEUR (ASS)	73
MOTEUR ET VENTILATEUR (ASS)	74
THERMOSTAT ET BOITIER (ASS)	76
CANALISATIONS DE REFROIDIS. DE TRANSMISSION	78
CANALISATIONS D'EAU (ASS)	80
POMPE A EAU (ASS)	85
RADIATEUR (ASS)	87
CIRCUIT D'ADMISSION D'AIR ET D'ÉCHAPPEMENT	88
REFROIDISSEUR D'ADMISSION ET MONTAGE (ASS)	88
FILTRE A AIR (ASS)	90
ÉJECTEUR AUTOMATIQUE DE POUSSIÈRE (ASS)	93
CANALISATIONS D'AIR (ASS)	94
COLLECTEUR D'ÉCHAPPEMENT (ASS)	98
COLLECTEUR D'ADMISSION (ASS)	99
SILENCIEUX (ASS)	100
TURBOCOMPRESSEUR (ASS)	102
CIRCUIT DE CARBURANT	104
COMMANDE DE RÉGULATEUR (ASS)	104
FILTRE A CARBURANT (ASS)	106
FILTRE DE SÉPARATEUR D'EAU ET DE CARBURANT (ASS)	107
INJECTEUR DE CARBURANT (ASS)	108
CANALISATIONS DE VIDANGE (ASS)	109
CANALISATIONS DU FILTRE A CARBURANT (ASS)	110
CANALISATIONS D'INJECTION DE CARBURANT (ASS)	114
POMPE D'ALIMENTATION ET MONTAGE (ASS)	116
POMPE D'INJECTION DE CARBURANT (ASS)	117
POMPE D'AMORÇAGE DE CARBURANT (ASS)	118

TABLE DES MATIÈRES

Désignation	Page
RÉSERVOIR DE CARBURANT (ASS)	120
CLAPET DE RETENUE (ENS)	126
CIRCUIT ÉLECTRIQUE ET DE DÉMARRAGE	127
AVERTISSEUR (ASS)	127
ALTERNATEUR DE CHARGE (ASS)	128
BATTERIE (ASS)	131
DISJONCTEUR (ASS)	133
COMMANDE ET MONTAGE - MOTEUR	135
COMMANDE ELECTRONIQUE DE MOTEUR (ASS)	136
COMMANDE DE DIRECTION SECONDAIRE (ASS)	137
TRANSFORMATION ÉLECTRIQUE (VERSION)	138
TRANSFORMATION ELECTRIQUE (ASS)	140
COUVERCLE DE PRISE DE MODULE (ASS)	143
ÉLECTRONIQUE-MONITEUR (ASS)	144
EAU DES CHEMISES - RECHAUFFEUR (ASS)	145
MONTAGE - GYROPHARE (ASS)	147
BLOC DE BRANCHEMENT (ASS)	148
PLAFONNIER (ASS)	149
LAMPE - PHARE (ASS)	150
PHARE AV (ASS)	152
LAMPE - CLIGNOTANT DE DIRECTION (ASS)	158
LAMPE - GYROPHARE (ASS)	160
ÉCLAIRAGE-PROJECTEURS (VERSION)	161
ÉCLAIRAGE (VERSION)-PROJECTEUR & SIGNAL	164
ECLAIRAGE AR (ASS)	168
ÉCLAIRAGE - PROJECTEURS (ASS)	170
ÉCLAIRAGE CLIGNOTANT	190
ÉCLAIRAGE - AVERTISSEUR (ASS)	191
MOTEUR ELECTRIQUE (ASS)	194
PRISE DE BATTERIE AUXILIAIRE (ASS)	196
CAPTEUR DE VITESSE DE TRANSLATION	197
SONDE - CIRCUIT DE CARBURANT	198
CAPTEUR DE PRESSION (ASS)	199
AUXILIAIRE DE DÉMARRAGE À L'ÉTHER	204
DÉMARREUR ÉLECTRIQUE (ASS)	210
ROBINET DE BATTERIE (ASS)	218
INTERRUPTEUR D'ÉCLAIRAGE (ASS)	220
CONTACTEUR MAGNETIQUE (ASS)	222
INTERRUPTEUR D'ESSUIE-GLACE (ASS)	223
AVERTISSEUR DE RECUL (ASS)	224
CÂBLE D'AMORTISSEUR DE LAME (ASS)	225
CABLAGE DE CABINE (ASS)	226
CABLAGE DE MOTEUR (ASS)	230
CABLAGE AV (ASS)	234
CABLAGE AR (ASS)	238
CABLAGE DE DIRECTION AUXILIAIRE (ASS)	250
CABLAGE DE LA CONSOLE DE CHANGEMENTS DE VITESSE	252
CABLAGE DE LA CONSOLE DE DIRECTION	254
CABLAGE D'INJECTEUR	257
TRANSMISSION	258
ADAPTATEUR - BOÎTE DE VITESSES (ASS)	258
CARTER DE BOITE	259
ENTRAÎNEMENT DE CHAÎNE (ASS)	260
COMMANDE D'EMBRAYAGE (ASS)	262
COMMANDE DE DIFFÉRENTIEL - VERROUILLAGE (ASS)	266
COMMANDE DE BOITE DE VITESSES (ASS)	268
COMMANDE HYDRAULIQUE DE BOÎTE (ASS)	272
REFROIDISSEUR D'HUILE DE BOÎTE (ASS)	274
COUVERCLES D'EXPEDITION (ASS)	276
COURONNE ET DIFFERENTIEL (ASS)	278
DIFFERENTIEL (ASS)	282
GOULOTTE DE REMPLISSAGE D'HUILE DE TRANSMISSION	284
FILTRE A HUILE (ASS)	285
RÉDUCTEURS (ASS)	286
ENGRENAGES DE TRANSFERT ET CARTER (ASS)	288
CANALISATIONS D'HUILE DE TRANSMISSION (ASS)	294
ROUE - GROUPE DE MONTAGE	296
BOÎTE PLANÉTAIRE (ASS)	298
POMPE A ENGRENAGES (ASS)	304
TANDEM ET CARTER (ASS)	306
BOÎTE DE VITESSES (VERSION)	307
SOUPAPE ET MONTAGE DE VERROUILLAGE DE DIF. (ASS)	308
DISTRIBUTEUR (ASS)	309
SOUPAPE PILOTE (ASS)	310
CLAPET DE DECHARGE (ASS)	312
SOUPAPE SELECTRICE ET REGULATRICE DE PRESSION	314

TABLE DES MATIÈRES

Désignation	Page
SOUPAPE - SOLÉNOÏDE (ASS)	320
DISTRIBUTEUR DE BOITE (ASS)	322
ROUE ET PNEU (VERSION)	324
ROUE (VERSION)	341
CHÂSSIS ET BENNE	344
ESSIEU AV (ASS)	344
CHÂSSIS ET CARTER (ASS)	348
COUVERCLE DE PROTECTION (ASS)	350
CARENAGE DE MOTEUR (ASS)	352
CHÂSSIS AV (ASS)	356
PROTÈGE-RADIATEUR ET SUPPORT (ASS)	358
BLINDAGE INFÉRIEUR (ASS)	360
BLINDAGE DES CANALISATIONS DES FREINS	361
PROTECTION DE PLATE-FORME (ASS)	362
ATTELAGE D'ARTICULATION (ASS)	366
ATTELAGE-REMORQUAGE (ASS)	368
CANALISATIONS DE GRAISSAGE (ASS)	369
ARTICULATION DE DIRECTION (ASS)	370
PANNEAU D'INSONORISATION (ASS)	371
CHASSE-NEIGE - PROTECTION (VERSION)	372
PROTEGE-RADIATEUR ET SUPPORT (ASS)	374
ÉCRAN D'ARBRE MOTEUR (ASS)	376
MARCHEPIED (ASS)	377
VERSION DE SUPPORT DE CHÂSSIS ARRIÈRE	378
SUPPORT DU RESERVOIR DE CARBURANT (ASS)	379
CIRCUIT DE FREINAGE	380
DESHYDRATEUR (ASS)	380
FREIN DE MANOEUVRE (ASS)	388
COMMANDE DE FREIN DE STATIONNEMENT (ASS)	390
FREIN DE MANOEUVRE - COMMANDE (ASS)	392
RÉSERVOIR PNEUMATIQUE (ASS)	398
DISTRIBUTEUR D'AIR (ASS)	400
SOUPAPE DE DESSERRAGE RAPIDE (ASS)	402
SOUPAPE - SOLÉNOÏDE (ASS)	403
CIRCUIT HYDRAULIQUE	404
ACCUMULATEUR ET MONTAGE - HYDRAULIQUE (ASS)	404
ACCUMULATEUR - AMORTISSEUR DE LAME (VERSION)	405
ACCUMULATEUR D'AMORTISSEUR DE LAME	406
COMMANDE HYDRAULIQUE (VERSION)	407
COMMANDE DE VERROUILLAGE DE DÉPORT DE FREIN	414
COMMANDE DE DIRECTION (ASS)	416
REFROIDISSEUR D'HUILE HYDRAULIQUE ET MONTAGE (ASS)	417
VÉRIN D'ARTICULATION ET MONTAGE (ASS)	418
VÉRIN DE RELEVAGE DE LAME ET MONTAGE (ASS)	419
VÉRIN D'INCLINAISON DE LAME ET MONTAGE (ASS)	420
VÉRIN DE DÉPORT DE CERCLE ET MONTAGE (ASS)	421
VÉRIN DE DÉPORT DE LAME (ASS)	422
VERIN DE DIRECTION ET MONTAGE (ASS)	423
VÉRIN D'INCLINAISON DE ROUE ET MONTAGE (ASS)	424
VÉRIN D'ARTICULATION (ASS)	425
VÉRIN DE LEVAGE DE LAME (ASS)	426
VÉRIN D'INCIDENCE DE LAME (ASS)	427
VÉRIN DE DÉPORT DE CERCLE (ASS)	428
VERIN DE LEVAGE DE RIPPER (ASS)	430
VÉRIN DE DÉPORT DE LAME (ASS)	431
VERIN DE DIRECTION (ASS)	432
VÉRIN D'INCLINAISON DE ROUE (ASS)	436
DISPOSITIF D'ARRÊT DE DISTRIBUTEUR (ASS)	438
ENTRAÎNEMENT DE CERCLE (ASS)	442
ENTRAÎNEMENT DE POMPE (ASS)	446
RALLONGE DE DÉPORT DE CERCLE (ASS)	447
CANALISATIONS D'ACCUMULATEUR (ASS)	448
CANALISATIONS HYDRAULIQUES (ASS)	450
CANALISATIONS HYDRAULIQUES DE VENTILATEUR (ASS)	458
CANALISATIONS DE POMPE (ASS)	462
CANALISATIONS DU RIPPER (ASS)	466
CANALISATION DE DIRECTION AUXILIAIRE	470
CANALISATIONS DE DIRECTION (ASS)	472
VERROUILLAGE DE DÉPORT DE CERCLE (ASS)	475
VERROUILLAGE DE COMMANDE MANUELLE HYDRAUL. (ASS)	476
MOTEUR ELECTRIQUE DE POMPE HYDRAULIQUE (ASS)	477
MOTEUR À ENGRENAGES (ASS)	478

TABLE DES MATIÈRES

Désignation	Page
MOTEUR HYDRAULIQUE (ASS)	480
POMPE ET MONTAGE - PISTON (ASS)	482
POMPE DE DIRECTION AUXILIAIRE ET MONTAGE (ASS)	484
POMPE - ENTRAÎNEMENT ÉLECTRIQUE (ASS)	485
POMPE DE REGULARISATION DE DEBIT (ASS)	486
POMPE A PISTONS (ASS)	488
GROUPE DE ROTATION DE POMPE	492
DIRECTION AUXILIAIRE (VERSION)	494
GROUPE D'ORIENTATION	495
RÉSERVOIR HYDRAULIQUE (ASS)	496
SOUPAPE ET TIMONERIE (ASS)	500
DISTRIBUTEUR 4 ÉLÉMENTS (ASS)	522
DISTRIBUTEUR 5 ÉLÉMENTS (ASS)	526
DISTRIBUTEUR 7 ÉLÉMENTS (ASS)	530
SOUPAPE DE COMBINAISON (ASS)	534
DISTRIBUTEUR (ASS)	536
SOUPAPE RÉGULATRICE DE PRESSION ET DÉBIT	572
CLAPET DE DECHARGE (ASS)	576
VANNE PILOTE (ASS)	584
SOUPAPE - SOLÉNOÏDE (ASS)	585
SOUPAGE - SOLÉNOIDE ET COLLECTEUR	586
ÉQUIPEMENTS	588
CERCLE (ASS)	588
BARRE D'ATTELAGE (ASS)	590
PLAQUE DE POUSSÉE (ASS)	592
OUTILS DE TRAVAIL	593
EMBOUT (ASS)	593
LAME (ASS)	595
LAME DE COUPE (ASS)	596
LEVAGE - LAME (ASS)	598
MONTAGE DE RIPPER (ASS)	602
MONTAGE D'AILERON CHASSE-NEIGE (ASS)	604
RIPPER (VERSION)	605
RIPPER (ASS)	606
DENT DE SCARIFICATEUR (ASS)	608
POSTE DE CONDUITE	609
VISIÈRE - GROUPE AUXILIAIRE	609
CLIMATISEUR ET MONTAGE (ASS)	611
CLIMATISEUR (VERSION)	613
CLIMATISEUR (ASS)	616
ACCOUDOIR (ASS)	624
COMPRESSEUR DE REFRIGERANT (ASS)	626
CONDENSATEUR ET MONTAGE (RÉFRIGÉRANT)	632
CONDENSEUR DE RÉFRIGÉRANT	634
CONSOLE DE CONDUITE (ASS)	636
VERSION DE TRANSFORMATION - SANS ROPS	639
PORTE (ASS)	640
PORTIÈRE DE CABINE (ASS)	644
CONDUIT ET COMMANDE (ASS)	652
CONDUIT (ASS)	654
RALLONGE DU DOSSIER DE SIEGE	655
VENTILATEUR DE CABINE (ASS)	658
FILTRE À AIR DE CABINE (ASS)	664
MARTEAU ET MONTAGE (ASS)	665
CHAUFFAGE ET MONTAGE - CABINE (ASS)	667
CHAUFFAGE DE CABINE (VERSION)	669
CHAUFFAGE DE CABINE (ASS)	672
SUSPENSION DE SIEGE - CARTER (ASS)	680
MONTAGE DE RADIO (VERSION)	683
MONTAGE DE RADIO (ASS)	684
INSTRUMENTS (VERSION)	686
ISOLATION DE CABINE (ASS)	688
CABINE - REVÊTEMENT (ASS)	690
CANALISATIONS DE CLIMATISEUR (ASS)	702
CANALISATIONS DE CHAUFFAGE (ASS)	706
LITTÉRATURE (ASS)	712
VOLET - CABINE (ASS)	714
RÉTROVISEUR (ASS)	715
MODULE - QUATRE INSTRUMENTS (ASS)	722
MODULE D'INDICATEUR DE VITESSE ET COMPTE-TOURS (ASS)	723
MONTAGE DU TOIT ROPS (ASS)	724
COUVERCLE INFÉRIEUR-DOSSIER (ASS)	727
SIEGE - COUVERCLE INFERIEUR (ASS)	728
TABLEAU DE BORD (ASS)	730
FENÊTRE D'AFFICHAGE - TABLEAU DE BORD (ASS)	736
TOIT ROPS FERME (VERSION)	740
ROPS OUVERTE (VERSION)	742
CABINE ROPS FERMÉE (ASS)	743
TOIT ROPS - OUVERT (ASS)	746
PARE-SOLEIL (ASS)	747
CEINTURE DE SECURITE (ASS)	748
SIÈGE (ASS)	750
SIÈGE AVEC SUSPENSION (ASS)	754
SUPPORT DE SIÈGE (ASS)	762
SIÈGE AVEC SUSPENSION (ASS)	764
LAVE-GLACE - VITRE (ASS)	768
VITRE (ASS)	771
ESSUIE-GLACE (VERSION)	776

TABLE DES MATIÈRES

Désignation	Page	Désignation	Page
ESSUIE-GLACE (ASS)	778		
MATÉRIEL ET FOURNITURES D'ENTRETIEN	789		
PLAQUES SIGNALETIQUES ET AUTOCOLLANTS (ASS)	789		
COFFRE A OUTILS (ASS)	798		
INDEX DE NUMÉROS DE PIÈCES	B1		

CONTENIDO

Nombre	Página
INFORMACIÓN GENERAL	A30
ALTERNATIVAS DE REPARACIÓN	A44
ADITIVOS DE REFRIGERANTE SUPLEMENTARIOS	A49
PIEZAS DE MANTENIMIENTO	A66
INDICE	A117
CONFIGURACIÓN DE MÁQUINA	1
CONFIGURACIÓN DE TRANSFORMACIÓN PARA CERTIFICACIÓN	1
CONFIGURACIÓN GENERAL	4
MOTONIVELADORA PARA LA NIEVE (CONFIG)	6
CONFIGURACIÓN DE MOTOR	7
CONFIGURACIÓN DE MOTORES	7
MOTOR BÁSICO	8
COMPRESOR DE AIRE (GR)	8
TENSOR DE CORREA (GR)	12
ÁRBOL DE LEVAS (GR)	14
TAPA DEL BLOQUE MOTOR (GR)	16
TAPA DE LA CAJA DE VOLANTE (GR)	18
CIGÜEÑAL (GR)	20
BLOQUE MOTOR (CONJ)	22
BLOQUE MOTOR (GR)	24
CULATA DE CILINDROS (CONJ)	26
CULATA DE CILINDROS (GR)	28
ACCESORIOS - IMPULSOR DE (GR)	30
CULATA DE CILINDROS - TORNILLERÍA DE LA (GR)	32
VOLANTE (GR)	33
ENGRANAJE DELANTERO (GR)	34
VOLANTE - CAJA DE (GR)	36
CAJA DELANTERA (GR)	38
VÁLVULA DE LEVANTAMIENTO (GR)	40
CÁNCAMOS DE LEVANTAMIENTO DEL MOTOR (GR)	41
MONTAJE DEL MOTOR (GR)	42
MECANISMO DE LA VÁLVULA - MONTAJE DEL (GR)	43
CÁRTER - COLECTOR DEL (GR)	44
PANEL DE INSONORIZACIÓN (GR)	46
PISTÓN Y BIELA (GR)	47
TAPÓN DEL BLOQUE MOTOR (GR)	48
TAPÓN DEL MOTOR (GR)	50
BALANCÍN (GR)	52
SELLO DE CIGÜEÑAL (GR)	54
MOTOR - SOPORTE DEL (GR)	55
INSONORIZADOR (GR)	56
MECANISMO DE VÁLVULAS (GR)	58
SISTEMA DE LUBRICACIÓN	60
FILTRO DE ACEITE - BASE DEL (GR)	60
TUBO DE LLENADO DE ACEITE (GR)	62
FILTRO DE ACEITE DEL MOTOR (GR)	64
INDICADOR DEL NIVEL DE ACEITE (VARILLA) (GR)	66
TURBOCOMPRESOR - TUBERÍAS DE ACEITE DEL (GR)	67
CAMBIO RÁPIDO DE ACEITE (GR)	68
BOMBA DE ACEITE DEL MOTOR (GR)	69
SISTEMA DE ENFRIAMIENTO	71
CONFIGURACIÓN DE ENFRIAMIENTO	71
TAPA DEL VENTILADOR (GR)	73
MOTOR Y VENTILADOR (GR)	74
REGULADOR Y CAJA (GR)	76
TUBERÍAS DEL ENFRIADOR DEL TREN DE FUERZA (GR)	78
TUBERÍAS DEL AGUA (GR)	80
BOMBA DE AGUA (GR)	85
RADIADOR (GR)	87
SISTEMA DE ADMISIÓN Y ESCAPE DE AIRE	88
GRUPO DE POSTENFRIAMIENTO Y MONTAJE	88
FILTRO DE AIRE (GR)	90
EXPULSOR DE POLVO (GR)	93
AIRE - TUBERÍAS DE (GR)	94
MÚLTIPLE DE ESCAPE (GR)	98
MÚLTIPLE DE ADMISIÓN (GR)	99
SILENCIADOR (GR)	100
TURBOCOMPRESOR (GR)	102
SISTEMA DE COMBUSTIBLE	104
CONTROL DE REGULADOR (GR)	104
FILTRO DE COMBUSTIBLE (GR)	106
FILTRO DE COMBUSTIBLE Y SEPARADOR DE AGUA (GR)	107
INYECTOR DE COMBUSTIBLE (GR)	108
TUBERÍAS DE DRENAJE (GR)	109
TUBERÍAS DEL FILTRO DE COMBUSTIBLE	110
TUBERÍAS DE INYECCIÓN DE COMBUSTIBLE (GR)	114
BOMBA DE TRANSFERENCIA DE COMBUSTIBLE Y MONTAJE (GR)	116
BOMBA DE INYECCIÓN DE COMBUSTIBLE (GR)	117
BOMBA DE CEBADO DE COMBUSTIBLE (GR)	118
COMBUSTIBLE - TANQUE DE (GR)	120
VÁLVULA DE RETENCIÓN (GR)	126

CONTENIDO

Nombre	Página
SISTEMA ELÉCTRICO Y DE ARRANQUE	127
ALARMA (GR)	127
CARGA - ALTERNADOR DE (GR)	128
BATERÍA (GR)	131
DISYUNTOR DE CIRCUITO (GR)	133
CONTROL ELECTRÓNICO DEL MOTOR Y MONTAJE	135
CONTROL ELECTRÓNICO DEL MOTOR (GR)	136
CONTROL DE LA DIRECCION SECUNDARIA (GR)	137
CONVERTIDOR ELÉCTRICO (CONFIG)	138
CONVERTIDOR ELÉCTRICO (GR)	140
TAPA DEL CONECTOR DEL MODULO (GR)	143
ELECTRONICA DE MONITOR (GR)	144
AGUA DE LAS CAMISAS - CALENTADOR DEL (GR)	145
BALIZA DE ADVERTENCIA (GR) - INSTALACIÓN	147
BLOQUE DE EMPALME (GR)	148
LÁMPARA DEL TECHO (GR)	149
REFLECTOR (GR)	150
LÁMPARA DE FARO DELANTERO (GR)	152
LUZ DE SEÑAL DE GIRO (GR)	158
LÁMPARA DE BALIZA DE ADVERTENCIA (GR)	160
REFLECTORES (CONFIG)	161
LUCES DE REFLECTOR Y SEÑAL (CONFIG)	164
LUCES DE RETROCESO (GR)	168
LUCES DE REFLECTOR (GR)	170
LUCES DE GIRO (GR)	190
LUCES DE ADVERTENCIA (GR)	191
MOTOR ELÉCTRICO (GR)	194
ENCHUFE DE ARRANQUE AUXILIAR (GR)	196
SENSOR DE VELOCIDAD DE DESPLAZAMIENTO (GR)	197
DETECTOR DE POSICIÓN (SISTEMA DE COMBUST.) (GR)	198
SENSOR DE PRESIÓN (GR)	199
AUXILIAR DE ARRANQUE CON ÉTER (GR)	204
MOTOR DE ARRANQUE ELÉCTRICO (GR)	210
DISYUNTOR (GR)	218
INTERRUPTOR DE LUZ (GR)	220
INTERRUPTOR MAGNÉTICO (GR)	222
INTERRUPTOR DEL LIMPIADOR (GR)	223
RETROCESO - ALARMA DE (GR)	224
GRUPO DE CABLES, HOJA AMORTIGUADORA	225
CABLES DE LA CABINA (GR)	226
CABLES DEL MOTOR (GR)	230
CABLES DELANTEROS (GR)	234
CABLES POSTERIORES (GR)	238
CABLES DE LA DIRECCIÓN SECUNDARIA	250
CABLES DE LA CONSOLA DE CAMBIOS (GR)	252
CABLES DE LA CONSOLA DE DIRECCIÓN (GR)	254
CABLES DE INYECTOR (GR)	257
TREN DE FUERZA	258
ADAPTADOR DE LA TRANSMISIÓN (GR)	258
CAJA DE LA TRANSMISIÓN (GR)	259
CADENA DE IMPULSIÓN (GR)	260
CONTROL DEL EMBRAGUE (GR)	262
CONTROL DE TRABA DEL DIFERENCIAL (GR)	266
CONTROL DE LA TRANSMISIÓN (GR)	268
CONTROL HIDRÁULICO DE LA TRANSMISIÓN (GR)	272
ENFRIADOR DE ACEITE DE LA TRANSMISIÓN (GR)	274
TAPAS PROTECTORAS DE EMBARQUE (GR)	276
DIFERENCIAL Y CORONA (GR)	278
DIFERENCIAL (GR)	282
TUBO DE LLENADO DE ACEITE DE LA TRANSMISIÓN (GR)	284
FILTRO DE ACEITE (GR)	285
MANDO FINAL (GR)	286
CAJA Y TRANSFERENCIA DEL ENGRANAJE (GR)	288
TUBERÍAS DE ACEITE DEL TREN DE FUERZA (GR)	294
MONTAJE DE RUEDA (GR)	296
TRANSMISIÓN PLANETARIA (GR)	298
BOMBA DE ENGRANAJES (GR)	304
TÁNDEM Y CUBIERTA (GR)	306
TRANSMISION (CONFIG)	307
VÁLVULA DE LA TRABA DEL DIFERENCIAL Y MONTAJE (GR)	308
VÁLVULA DE CONTROL (GR)	309
VÁLVULA PILOTO (GR)	310
VÁLVULA DE ALIVIO (GR)	312
VÁLVULA SELECTORA Y DE CONTROL DE PRESIÓN (GR)	314
VÁLVULA DE SOLENOIDE (GR)	320
VÁLVULA DE CONTROL DE LA TRANSMISIÓN (GR)	322
RUEDA Y LLANTA (CONFIG)	324

CONTENIDO

Nombre	Página
RUEDA (CONFIG)	341
BASTIDOR Y CAJA	344
EJE DELANTERO (GR)	344
CAJA Y BASTIDOR (GR)	348
CUBIERTA PROTECTORA (GR)	350
COMPARTIMIENTO DEL MOTOR (GR)	352
BASTIDOR DELANTERO (GR)	356
PROTECTOR Y SOPORTE DEL RADIADOR (GR)	358
PROTECTOR INFERIOR (GR)	360
PROTECTOR DE LAS TUBERÍAS DE LOS FRENOS (GR)	361
PROTECTOR DE LA PLATAFORMA (GR)	362
ENGANCHE ARTICULADO (GR)	366
ENGANCHE DE REMOLQUE (GR)	368
TUBERÍAS DE ENGRASE (GR)	369
TIRANTE DE DIRECCIÓN (GR)	370
PANEL DE INSONORIZACIÓN (GR)	371
PROTECCIÓN DEL ARADO PARA NIEVE (CONFIG)	372
PROTECTOR Y SOPORTE DEL RADIADOR (GR)	374
PROTECTOR TÉRMICO DEL EJE DE MANDO (GR)	376
ESTRIBO DEL OPERADOR (GR)	377
CONFIGURACIÓN DE SOPORTE DE CHASIS TRASERO	378
SOPORTE DEL TANQUE DE COMBUSTIBLE (GR)	379
SISTEMA DE FRENOS	380
DESHIDRATADOR (GR)	380
FRENO DE SERVICIO (GR)	388
CONTROL DEL FRENO DE ESTACIONAMIENTO	390
FRENO DE SERVICIO - CONTROL (GR)	392
TANQUE DE AIRE (GR)	398
CONTROL DE AIRE-VÁLVULA	400
VALVULA DE DESCONEXION RAPIDA (GR)	402
VÁLVULA DE SOLENOIDE (GR)	403
SISTEMA HIDRÁULICO	404
ACUMULADOR HIDRAULICO Y MONTAJE (GR)	404
ACUMULADOR DE AMORTIGUACIÓN DE LA HOJA (CONFIG)	405
GRUPO DE ACUMULADOR DE AMORTIGUACIÓN DE LA HOJA	406
CONTROL HIDRÁULICO (CONFIG)	407
CONTROL DE TRABA DEL DESPLAZADOR DEL CÍRCULO (GR)	414
CONTROL DE DIRECCIÓN (GR)	416
ENFRIADOR DE ACEITE HIDRÁULICO Y MONTAJE (GR)	417
CILINDRO DE ARTICULACIÓN Y MONTAJE (GR)	418
CILINDRO DE LEVANTAMIENTO DE HOJA Y MONTAJE (GR)	419
CILINDRO DE LA PUNTA DE LA HOJA Y MONTAJE (GR)	420
CILINDRO DE DESPLAZAMIENTO DEL CÍRCULO Y MONTAJE (GR)	421
CILINDRO DE DESPLAZAMIENTO LATERAL Y MONTAJE (GR)	422
CILINDRO DE DIRECCIÓN Y MONTAJE (GR)	423
CILINDRO DE INCLINACIÓN DE RUEDA Y MONTAJE (GR)	424
ARTICULACIÓN DE CILINDRO (GR)	425
CILINDRO DE LEVANTAMIENTO DE LA HOJA (GR)	426
CILINDRO DE INCLINACIÓN DE LA HOJA (GR)	427
CILINDRO DE DESPLAZAMIENTO DEL CÍRCULO (GR)	428
CILINDRO DE LEVANTAMIENTO DEL DESGARRADOR (GR)	430
CILINDRO DE DESPLAZAMIENTO LATERAL (GR)	431
CILINDRO DE DIRECCIÓN (GR)	432
CILINDRO DE INCLINACIÓN DE LAS RUEDAS (GR)	436
TOPE DE VÁLVULA DE CONTROL (GR)	438
MANDO DEL CIRCULO (GR)	442
MANDO DE BOMBA (GR)	446
EXTENSIÓN DEL DESPLAZAMIENTO DEL CÍRCULO (GR)	447
TUBERÍAS DEL ACUMULADOR (GR)	448
TUBERÍAS HIDRÁULICAS (GR)	450
TUBERÍAS HIDRÁULICAS DEL VENTILADOR (GR)	458
BOMBA - TUBERÍAS DE (GR)	462
TUBERÍAS DEL DESGARRADOR (GR)	466
TUBERÍAS DE LA DIRECCIÓN SECUNDARIA (GR)	470
TUBERÍAS DE DIRECCIÓN (GR)	472
TRABA DE DESPLAZAMIENTO DEL CIRCULO (GR)	475
TRABA DE CONTROL HIDRÁULICO MANUAL (GR)	476
MOTOR ELÉCTRICO DE BOMBA HIDRÁULICA (GR)	477
MOTOR DE ENGRANAJES (GR)	478

CONTENIDO

Nombre	Página
MOTOR HIDRÁULICO DE ENGRANAJES (GR)	480
BOMBA Y MONTAJE DEL PISTÓN (GR)	482
BOMBA Y MONTAJE DE LA DIRECCIÓN SECUNDARIA (GR)	484
MANDO ELÉCTRICO - BOMBA DE (GR)	485
DOSIFICACIÓN - BOMBA DE (GR)	486
BOMBA DE PISTONES (GR)	488
GRUPO GIRATORIO DE BOMBA	492
DIRECCIÓN SECUNDARIA (CONFIG)	494
UNIÓN GIRATORIA (GR)	495
TANQUE HIDRÁULICO (GR)	496
VÁLVULA Y VARILLAJE (GR)	500
GRUPO DE 4 VÁLVULAS HIDRÁULICAS	522
BANCADA 5 (GR)	526
VÁLVULAS HIDRÁULICAS - GRUPO DE 7	530
VÁLVULA DE COMBINACIÓN (GR)	534
VÁLVULA DE CONTROL (GR)	536
VÁLVULA COMPENSADORA DE FLUJO Y PRESIÓN (GR)	572
VÁLVULA DE ALIVIO (GR)	576
VÁLVULA DE LANZADERA (GR)	584
VÁLVULA DE SOLENOIDE (GR)	585
VÁLVULA DE SOLENOIDE Y MÚLTIPLE (GR)	586
IMPLEMENTOS	588
CÍRCULO (GR)	588
BARRA DE TIRO (GR)	590
PLANCHA DE EMPUJE (GR)	592
HERRAMIENTAS	593
CANTONERA (GR)	593
HOJA (GR)	595
CUCHILLA (GR)	596
LEVANTAMIENTO - HOJA DE (GR)	598
MONTAJE DEL DESGARRADOR (GR)	602
GRUPO DE MONTAJE DE ALA PARA NIEVE	604
DESGARRADOR (CONFIG)	605
DESGARRADOR (GR)	606
DIENTE DE ESCARIFICADOR (GR)	608
PUESTO DEL OPERADOR	609
ACCESORIOS DE LA CABINA (GR)	609
ACONDICIONADOR DE AIRE Y MONTAJE (GR)	611
ACONDICIONADOR DE AIRE (CONFIG)	613
ACONDICIONADOR DE AIRE (GR)	616
POSABRAZOS (GR)	624
COMPRESOR DE REFRIGERANTE (GR)	626
CONDENSADOR DEL REFRIGERANTE Y MONTAJE (GR)	632
CONDENSADOR DE REFRIGERANTE (GR)	634
CONSOLA DEL OPERADOR (GR)	636
CONJUNTO DE MODIFICACIÓN (SIN ROPS)	639
PUERTA (GR)	640
PUERTA DE CABINA	644
CONDUCTO Y CONTROL (GR)	652
CONDUCTO (GR)	654
EXTENSIÓN DEL RESPALDO (GR)	655
VENTILADOR DE CIRCULACION	658
FILTRO DE AIRE DE LA CABINA (GR)	664
MARTILLO Y MONTAJE (GR)	665
CALEFACCIÓN Y MONTAJE DE LA CABINA (GR)	667
CALEFACCIÓN DE LA CABINA (CONFIG)	669
CALEFACCIÓN DE LA CABINA (GR)	672
CAJA DE LA SUSPENSIÓN DEL ASIENTO (GR)	680
INSTALACIÓN DE RADIO (CONFIG)	683
INSTALACIÓN DE RADIO (GR)	684
INSTRUMENTOS (CONFIG)	686
GRUPO DE AISLAMIENTO DE LA CABINA	688
REVESTIMIENTO DE LA CABINA (GR)	690
TUBERÍAS DE ACONDICIONADOR DE AIRE (GR)	702
TUBERÍAS DE LA CALEFACCIÓN (GR)	706
PUBLICACIONES (GR)	712
PERSIANAS DE LA CABINA (GR)	714
RETROVISOR (GR)	715
MODULO ELECTRÓNICO DE CUATRO INDICADORES (GR)	722
MÓDULO DEL TACÓMETRO Y DEL VELOCÍMETRO (GR)	723
MONTAJE DE LA ESTRUCTURA ROPS (GR)	724
GRUPO DE SOPORTE DEL RESPALDO	727
CUBIERTA INFERIOR DEL ASIENTO DEL OPERADOR (GR)	728
PANEL DE LA CABINA (GR)	730
TABLERO DE INSTRUMENTOS (GR)	732
PANEL DE LA VENTANA (GR)	736
INCLUYE ROPS (CONFIG)	740
ESTRUCTURA ROPS ABIERTA	742
CABINA ROPS CERRADA (GR)	743
ESTRUCTURA ROPS ABIERTA (GR)	746
PERSIANA PARA EL SOL (GR)	747

CONTENIDO

Nombre	Página	Nombre	Página
CINTURÓN DE SEGURIDAD (GR)	748		
ASIENTO (GR)	750		
SUSPENSIÓN - ASIENTO CON (GR)	754		
SOPORTE DEL ASIENTO (GR)	762		
ASIENTO CON SUSPENSIÓN (GR)	764		
LAVAPARABRISAS DE LA VENTANA (GR)	768		
VENTANA (GR)	771		
LIMPIAPARABRISAS (CONFIG)	776		
LIMPIAPARABRISAS DE LA VENTANA (GR)	778		
EQUIPO Y SUMINISTRO DE SERVICIOS	789		
CALCOMANÍAS Y PLACAS DE IDENTIFICACIÓN (GR)	789		
CAJA DE HERRAMIENTAS (GR)	798		
INDICE DE NUMEROS DE PIEZA	B1		

ÍNDICE

Designação	Página
INFORMAÇÃO GERAL	A34
ALTERNATIVAS DE REPARO	A45
ADITIVOS SUPLEMENTARES DO LÍQUIDO ARREFECEDOR	A50
PEÇAS DE MANUTENÇÃO	A74
ÍNDICE	A132
MÁQUINA - ARRANJO	1
GR. DE CONVERSÃO - CERTIFICADO	1
ARRANJO GERAL	4
AR. PARA NEVE - MOTONIVELADORA	6
MOTOR - ARRANJO	7
MOTOR	7
MOTOR BÁSICO	8
COMPRESSOR DE AR	8
TENSOR DA CORREIA	12
EIXO-COMANDO DE VÁLVULA	14
TAMPA - BLOCO DO MOTOR	16
TAMPA - CAIXA DO VOLANTE	18
VIRABREQUIM	20
BLOCO DO MOTOR	22
CABEÇOTE DO MOTOR	26
COMANDO DE ACESSÓRIOS	30
FIXADORES - CABEÇOTE DO MOTOR	32
VOLANTE DO MOTOR	33
ENGRENAGENS DE DISTRIBUIÇÃO	34
CAIXA DO VOLANTE DO MOTOR	36
CAIXA DIANTEIRA	38
TUCHO DA VÁLVULA	40
LEVANTAMENTO DO MOTOR	41
MONTAGEM - MOTOR	42
MONTAGEM - MECANISMO DAS VÁLVULAS	43
CÁRTER DO ÓLEO DO MOTOR	44
PAINEL- REDUÇÃO DE RUÍDO	46
PISTÃO E BIELA	47
BUJÃO DO BLOCO DO CILINDRO	48
BUJÃO DO MOTOR	50
BALANCIM	52
RETENTOR DO VIRABREQUIM	54
SUPORTE DO MOTOR	55
REDUÇÃO DE RUÍDO	56
MECANISMO DAS VÁLVULAS	58
SISTEMA DE LUBRIFICAÇÃO	60
BASE DO FILTRO DE ÓLEO	60
BOCAL DE ENCHIMENTO DE ÓLEO DO MOTOR	62
FILTRO - ÓLEO DO MOTOR	64
INDICADOR - NÍVEL DO ÓLEO (VARETA)	66
TUBOS - ÓLEO DO TURBOALIMENTADOR	67
ÓLEO - ARRANJO PARA TROCA RÁPIDA	68
BOMBA DE ÓLEO - MOTOR	69
SISTEMA DE ARREFECIMENTO	71
ARREFECIMENTO	71
COBERTURA DO VENTILADOR	73
MOTOR E VENTILADOR	74
TERMOSTATO / REGULADOR DE TEMPERATURA	76
TUBOS - ARREFECEDOR DO TREM DE FORÇA	78
TUBOS - ÁGUA	80
BOMBA DE ÁGUA	85
RADIADOR	87
SISTEMA DE ADMISSÃO DE AR E DE ESCAPE	88
PÓS-ARREFECEDOR E MONTAGEM	88
PURIFICADOR DE AR	90
EJETOR DE POEIRA	93
TUBOS - AR	94
COLETOR DE ESCAPE	98
COLETOR DE ADMISSÃO	99
SILENCIADOR	100
TURBOALIMENTADOR	102
SISTEMA DE COMBUSTÍVEL	104
CONTROLE DO GOVERNADOR	104
FILTRO - COMBUSTÍVEL	106
FILTRO DE COMBUSTÍVEL E SEPARADOR DE ÁGUA	107
INJETOR DE COMBUSTÍVEL	108
TUBOS - DRENAGEM	109
TUBOS - FILTRO DO COMBUSTÍVEL	110
TUBOS - INJEÇÃO DO COMBUSTÍVEL	114
BOMBA E MONTAGEM - TRANSFERÊNCIA DE COMBUSTÍVEL	116
BOMBA DE INJEÇÃO DO COMBUSTÍVEL	117
BOMBA DE ESCORVA DO COMBUSTÍVEL	118
TANQUE DE COMBUSTÍVEL	120
VÁLVULA DE RETENÇÃO	126
SISTEMA ELÉTRICO E DE PARTIDA	127
ALARME	127

ÍNDICE

Designação	Página
ALTERNADOR DE CORRENTE	128
BATERIA	131
INTERRUPTOR - CIRCUITO	133
CONTROLE ELETRÔNICO E MONTAGEM - MOTOR	135
CONTROLE ELETRÔNICO - MOTOR	136
CONTROLE DA DIREÇÃO SECUNDÁRIA	137
CONVERSOR ELÉTRICO	138
TAMPA DO CONECTOR DO MÓDULO	143
SISTEMA ELETRÔNICO - MONITOR	144
AQUECEDOR DA ÁGUA DO MOTOR	145
INSTALAÇÃO DO PISCA-PISCA DE ADVERTÊNCIA	147
BLOCO DE JUNÇÃO	148
LÂMPADA - TETO	149
LÂMPADA - FAROL	150
FAROL DIANTEIRO	152
LÂMPADA - SINALIZAÇÃO	158
LUZ GIRATÓRIA DE ALARME	160
SISTEMA DE ILUMINAÇÃO - FARÓIS	161
ILUMINAÇÃO - FAROL E SINALIZAÇÃO	164
ILUMINAÇÃO - MARCHA A RÉ	168
SISTEMA DE ILUMINAÇÃO - FARÓIS	170
ILUMINAÇÃO - SINALIZAÇÃO	190
SISTEMA DE ILUMINAÇÃO - ADVERTÊNCIA	191
MOTOR ELÉTRICO	194
RECEPTÁCULO-PARTIDA AUXILIAR	196
SENSOR - VELOCIDADE ABSOLUTA	197
EMISSOR - POSIÇÃO	198
SENSOR - PRESSÃO	199
AUXILIAR DE PARTIDA A ÉTER	204
MOTOR ELÉTRICO DE PARTIDA	210
CHAVE GERAL	218
INTERRUPTOR - LUZES	220
INTERRUPTOR - MAGNÉTICO	222
INTERRUPTOR - LIMPADOR DO PÁRA-BRISA	223
ALARME DE MARCHA À RÉ	224
FIAÇÃO - AMORTECEDOR DA LÂMINA	225
CABOS/FIOS ELÉTRICOS - CABINE	226
CABOS/FIOS ELÉTRICOS - MOTOR	230
CABOS/FIOS ELÉTRICOS - DIANTEIROS	234
CABOS/FIOS ELÉTRICOS - TRASEIROS	238
CABOS/FIOS ELÉTRICOS - DIREÇÃO SECUNDÁRIA	250
CABOS/FIOS ELÉTRICOS - CONSOLE DA TRANSMISSÃO	252
CABOS/FIOS ELÉTRICOS - CONSOLE DA DIREÇÃO	254
CABOS/FIOS ELÉTRICOS - INJETOR	257
TREM DE FORÇA	258
ADAPTADOR DA TRANSMISSÃO	258
CARCAÇA DA TRANSMISSÃO	259
CORRENTE - COMANDO	260
CONTROLE DA EMBREAGEM	262
CONTROLE DA TRAVA DO DIFERENCIAL	266
CONTROLE DA TRANSMISSÃO	268
CONTROLE HIDRÁULICO DA TRANSMISSÃO	272
ARREFECEDOR DE ÓLEO DA TRANSMISSÃO	274
TAMPA - EMBARQUE	276
DIFERENCIAL E COROA	278
DIFERENCIAL	282
BOCAL DE ENCHIMENTO DE ÓLEO DO TREM DE FORÇA	284
FILTRO - ÓLEO	285
COMANDO FINAL	286
CAIXA DE ENGRENAGEM DE TRANSFERÊNCIA	288
TUBOS - ÓLEO DA TRANSMISSÃO	294
MONTAGEM - RODA	296
ENGRENAGENS PLANETÁRIAS - TRANSMISSÃO	298
BOMBA DE ENGRENAGENS	304
TANDEM E TAMPA	306
TRANSMISSÃO	307
VÁLVULA E MONTAGEM - TRAVA DO DIFERENCIAL	308
VÁLVULA DE CONTROLE	309
VÁLVULA DE CONTROLE PILOTO	310
VÁLVULA DE ALÍVIO	312
VÁLVULA SELETORA E CONTROLE DE PRESSÃO	314
VÁLVULA SOLENÓIDE	320
VÁLVULA DE CONTROLE - TRANSMISSÃO	322
RODA E PNEU	324
RODA	341
CHASSI E CARROCERIA	344
EIXO DIANTEIRO	344
CAIXA E CHASSI	348
TAMPA - PROTEÇÃO	350
COBERTURA DO MOTOR	352
CHASSI DIANTEIRO	356
PROTETOR E SUPORTE DO RADIADOR	358
PROTETOR INFERIOR	360
PROTETOR - TUBOS DO FREIO	361
PROTETOR - PLATAFORMA	362
ENGATE - ARTICULAÇÃO	366

ÍNDICE

Designação	Página
ENGATE DO REBOQUE	368
TUBOS - GRAXA	369
ELO - DIREÇÃO	370
PAINEL- REDUÇÃO DE RUÍDO	371
PROTETOR - REMOVEDOR DE NEVE	372
PROTETOR E SUPORTE DO RADIADOR	374
BLINDAGEM DO EIXO DA TRANSMISSÃO	376
DEGRAU	377
SUPORTE - CHASSI TRASEIRO	378
SUPORTE DO TANQUE DE COMBUSTÍVEL	379
SISTEMA DE FREIO	380
SECADOR DE AR	380
FREIO DE SERVIÇO	388
CONTROLE DO FREIO DE ESTACIONAMENTO	390
CONTROLE DO FREIO DE SERVIÇO	392
TANQUE DE AR	398
VÁLVULA DE CONTROLE DO AR	400
VÁLVULA DE DESACOPLAMENTO RÁPIDO	402
VÁLVULA SOLENÓIDE	403
SISTEMA HIDRÁULICO	404
ACUMULADOR HIDRÁULICO E MONTAGEM	404
ACUMULADOR DO AMORTECEDOR DA LÂMINA	405
ACUMULADOR - AMORTECEDOR DA LÂMINA	406
CONTROLE HIDRÁULICO	407
CONTROLE DO PINO MESTRE DE DESLOCAMENTO LATERAL	414
CONTROLE DE DIREÇÃO	416
ARREFECEDOR DE ÓLEO HIDRÁULICO E MONTAGEM	417
CILINDRO E MONTAGEM - ARTICULAÇÃO	418
CILINDRO E MONTAGEM - LEVANTAMENTO DA LÂMINA	419
CILINDRO E MONTAGEM - TOMBAMENTO DA LÂMINA	420
CILINDRO E MONTAGEM - DESLOCAMENTO DO CÍRCULO	421
CILINDRO E MONTAGEM - DESLOCAMENTO DA LÂMINA	422
CILINDRO DE DIREÇÃO E MONTAGEM	423
CILINDRO E MONTAGEM - INCLINAÇÃO DAS RODAS	424
CILINDRO DE ARTICULAÇÃO	425
CILINDRO DE LEVANTAMENTO DA LÂMINA	426
CILINDRO DE TOMBAMENTO DA LÂMINA	427
CILINDRO DE DESLOCAMENTO LATERAL	428
CILINDRO DE LEVANTAMENTO DO RIPER	430
CILINDRO DE DESLIZAMENTO LONGITUDINAL	431
CILINDRO DA DIREÇÃO	432
CILINDRO DE INCLINAÇÃO LATERAL DAS RODAS	436
RETEM DA VÁLVULA DE CONTROLE	438
MOTOR DE REVERSÃO DO CÍRCULO	442
COMANDO DA BOMBA	446
EXTENSÃO - DESLOCAMENTO LATERAL	447
TUBOS - ACUMULADOR	448
TUBOS - ÓLEO HIDRÁULICO	450
TUBOS - VENTILADOR HIDRÁULICOS	458
TUBOS - BOMBA	462
TUBOS - RIPER	466
TUBOS - DIREÇÃO SECUNDÁRIA	470
TUBOS - DIREÇÃO	472
TRAVA - DESLOCAMENTO LATERAL	475
TRAVA - CONTROLE MANUAL HIDRÁULICO	476
MOTOR ELÉTRICO DA BOMBA HIDRÁULICA	477
MOTOR - ENGRENAGENS	478
MOTOR HIDRÁULICO DO GEROTOR	480
BOMBA E MONTAGEM - PISTÃO	482
BOMBA DA DIREÇÃO SECUNDÁRIA E MONTAGEM	484
BOMBA DE COMANDO ELÉTRICO	485
BOMBA REGULADORA	486
BOMBA DE PISTÃO	488
GRUPO ROTATIVO DA BOMBA	492
DIREÇÃO SECUNDÁRIA	494
ARTICULAÇÃO GIRATÓRIA	495
TANQUE HIDRÁULICO	496
VÁLVULA E ARTICULAÇÕES	500
GRUPO DE VÁLVULAS DE CONTROLE - QUÁDRUPLO	522
GRUPO DE VÁLVULAS DE CONTROLE - CINCO	526
GRUPO DE VÁLVULAS DE CONTROLE - SETE	530
VÁLVULA COMBINADA	534
VÁLVULA DE CONTROLE	536
VÁLVULA DE CONTROLE - PRESSÃO E COMPENSAÇÃO DE FLUXO	572
VÁLVULA DE ALÍVIO	576

ÍNDICE

Designação	Página
VÁLVULA DE SEPARAÇÃO	584
VÁLVULA SOLENÓIDE	585
VÁLVULA - COLETOR E SOLENÓIDE	586
ACESSÓRIOS	588
CÍRCULO	588
BARRA DE TRAÇÃO	590
CHAPA DE EMPUXO	592
FERRAMENTAS DE TRABALHO	593
CANTO DE LÂMINA	593
LÂMINA	595
BORDA CORTANTE	596
LEVANTAMENTO DA LÂMINA	598
MONTAGEM - RIPER	602
MONTAGEM - REMOVEDOR DE NEVE	604
RIPER	605
DENTE DO ESCARIFICADOR	608
ESTAÇÃO DO OPERADOR	609
ACESSÓRIO - CABINE	609
CONDICIONADOR DE AR E MONTAGEM	611
CONDICIONADOR DE AR	613
BRAÇO DO ASSENTO	624
COMPRESSOR DE REFRIGERANTE	626
CONDENSADOR DO REFRIGERANTE E MONTAGEM	632
CONDENSADOR DE REFRIGERANTE	634
CONSOLE DO OPERADOR	636
CONVERSÃO PARA ESTRUTURA NÃO ROPS	639
PORTA	640
PORTA DA CABINE	644
DUCTO E CONTROLE	652
DUCTO	654
EXTENSÃO - ENCOSTO	655
VENTILADOR DE CIRCULAÇÃO DE AR DA CABINE	658
FILTRO - AR DA CABINE	664
MARTELO E MONTAGEM	665
AQUECEDOR DA CABINE E MONTAGEM	667
AQUECEDOR DA CABINE	669
CAIXA - SUSPENSÃO DO ASSENTO	680
INSTALAÇÃO DO RÁDIO - ARRANJO	683
INSTALAÇÃO DO RÁDIO	684
INSTRUMENTOS - ARRANJO	686
ISOLADOR - TEMPO	688
REVESTIMENTO DA CABINE	690
TUBOS - AR CONDICIONADO	702
TUBOS - AQUECEDOR	706
PUBLICAÇÃO	712
PERSIANA	714
ESPELHO RETROVISOR	715
MÓDULO ELETRÔNICO DE QUATRO INDICADORES	722
MÓDULO - VELOCÍMETRO E TACÔMETRO	723
MONTAGEM - ESTRUTURA ROPS	724
FUNDO - ENCOSTO	727
ASSENTO - FUNDO	728
PAINEL - CABINE	730
PAINEL DE INSTRUMENTOS	732
PAINEL - JANELA	736
ESTRUTURA ROPS FECHADA	740
ESTRUTURA ROPS ABERTA	742
ROPS FECHADA	743
ROPS ABERTA	746
TELA PÁRA-SOL	747
CINTO DE SEGURANÇA	748
ASSENTO	750
ASSENTO COM SUSPENSÃO	754
SUPORTE - ASSENTO	762
SUSPENSÃO - ASSENTO	764
LAVADOR DO VIDRO	768
VIDRO	771
LIMPADOR DO VIDRO	776
EQUIPAMENTOS DE SERVIÇO E SUPRIMENTOS	789
PLACA E DECALQUE	789
CAIXA DE FERRAMENTAS	798
ÍNDICE DE NÚMERO DE PEÇA	B1

INHALTSVERZEICHNIS

Bezeichnung	Seite
ALLGEMEINE HINWEISE	A38
REPARATURALTERNATIVEN	A46
KÜHLMITTELZUSATZ	A51
WARTUNGSTEILE	A82
STICHWORTVERZEICHNIS	A145
MASCHINE	1
UMBAUSATZ - ZULASSUNG	1
GRUNDAUSFÜHRUNG	4
SCHNEERÄUMVORRICHTUNG	6
MOTOR	7
MOTORAUSFÜHRUNG	7
MOTOR - GRUNDAUSFÜHRUNG	8
LUFTKOMPRESSOR	8
RIEMENSPANNER	12
NOCKENWELLE	14
MOTORBLOCKDECKEL	16
SCHWUNGRADGEHÄUSEDECKEL	18
KURBELWELLE	20
MOTORBLOCK	22
ZYLINDERKOPF	26
NEBENANTRIEB	30
ZYLINDERKOPF-HALTETEILE	32
SCHWUNGRAD	33
STIRNRAD	34
SCHWUNGRADGEHÄUSE	36
STIRNRADGEHÄUSE	38
HUBVENTIL	40
MOTORHUBÖSE	41
MOTORAUFLAGER	42
VENTILMECHANISMUSAUFHÄNGUNG	43
ÖLWANNE	44
SCHALLDÄMPFUNG	46
PLEUELSTANGE UND KOLBEN	47
ZYLINDERBLOCKSCHRAUBE	48
MOTORSTOPFEN	50
VENTILKIPPHEBEL	52
KURBELWELLENDICHTUNG	54
MOTORAUFHÄNGUNG	55
SCHALLDÄMPFUNG	56
VENTILSTEUERUNG	58
SCHMIERSYSTEM	60
ÖLFILTERSOCKEL	60
MOTORÖLEINFÜLLSTUTZEN	62
ÖLFILTER	64
ÖLMESSSTAB	66
TURBOLADERÖLLEITUNGEN	67
ÖLSCHNELLWECHSELANSCHLUSS	68
SCHMIERPUMPE	69
KÜHLSYSTEM	71
KÜHLSYSTEM	71
LÜFTERABDECKUNG	73
MOTOR UND LÜFTER	74
KÜHLWASSER-TEMPERATURREGLER UND GEHÄUSE	76
ÖLKÜHLERLEITUNGEN (KRAFTÜBERTRAGUNG)	78
KÜHLWASSERLEITUNGEN	80
KÜHLWASSERPUMPE	85
KÜHLER	87
LUFTANSAUG- UND ABGASSYSTEM	88
LADELUFTKÜHLER U. BEFESTIGUNG	88
LUFTREINIGER	90
STAUBAUSWERFER	93
DRUCKLUFTLEITUNGEN	94
AUSPUFFKRÜMMER	98
ANSAUGKRÜMMER	99
SCHALLDÄMPFER	100
TURBOLADER	102
KRAFTSTOFFSYSTEM	104
REGLERSTEUERUNG	104
KRAFTSTOFFILTER	106
WASSERABSCHEIDER- U. KRAFTSTOFFILTER	107
KRAFTSTOFFEINSPRITZDÜSE	108
ABLASSLEITUNGEN	109
KRAFTSTOFFILTERLEITUNGEN	110
KRAFTSTOFFEINSPRITZLEITUNGEN	114
KRAFTSTOFFÖRDERPUMPE UND BEFESTIGUNGSTEILE	116
KRAFTSTOFFEINSPRITZPUMPE	117
KRAFTSTOFF-ENTLÜFTUNGSPUMPE	118
KRAFTSTOFFTANK	120
SPERRVENTIL	126
ELEKTRISCHE ANLAGE UND STARTSYSTEM	127
WARNVORRICHTUNG	127
DREHSTROMGENERATOR	128
BATTERIE	131
UNTERBRECHER	133
STEUERUNGSEINHEIT, ELEKTRON. FÜR MOTOR UND BEFEST.	135
MOTORSTEUERUNG, ELEKTRON.	136
NOTLENKUNGSSTEUERUNG	137
UMFORMER, ELEKTR.	138

INHALTSVERZEICHNIS

Bezeichnung	Seite
ELEKTR. UMFORMER	140
MODULVERBINDER-ABDECKUNG	143
ELEKTRONIK - MONITOR	144
UMLAUFKÜHLWASSERHEIZUNG	145
RUNDUMWARNLEUCHTE - EINBAU-SATZ	147
KLEMMLEISTE	148
FAHRERHAUSBELEUCHTUNG	149
ARBEITSLEUCHTEN	150
FRONTSCHEINWERFER	152
BLINKLEUCHTE	158
RUNDUM-KENNLEUCHTE	160
ARBEITSLEUCHTEN	161
ARBEITS- U. SIGNALBELEUCHTUNG	164
SCHEINWERFER, HINTEN	168
ARBEITSLEUCHTEN	170
BLINKERLEUCHTEN	190
WARNLEUCHTEN	191
MOTOR, ELEKTR.	194
STARTHILFEANSCHLUSS	196
FAHRGESCHWINDIGKEITSSENSOR	197
STELLUNGSSENSOR	198
DRUCKSENSOR	199
ÄTHERSTARTHILFE	204
STARTERMOTOR	210
TRENNSCHALTER	218
LICHTSCHALTER	220
MAGNETSCHALTER	222
SCHEIBENWISCHERSCHALTER	223
RÜCKFAHRWARNHORN	224
VERDRAHTUNG - SCHARDÄMP-FUNG	225
FAHRERHAUSVERDRAHTUNG	226
MOTORVERDRAHTUNG	230
VERDRAHTUNG, VORNE	234
VERDRAHTUNG, HINTEN	238
NOTLENKUNGSVERDRAHTUNG	250
SCHALTKONSOLENVERDRAHTUNG	252
LENKKONSOLENVERDRAHTUNG	254
VERDRAHTUNG (EINSPRITZEIN-HEIT)	257
KRAFTÜBERTRAGUNG	258
GETRIEBEANSCHLUSS	258
GETRIEBEGEHÄUSE	259
ANTRIEBSKETTE	260
KUPPLUNGSGESTÄNGE	262
DIFFERENTIALSPERRENGESTÄN-GE	266
GETRIEBESTEUERUNG	268
GETRIEBEHYDRAULIK	272
GETRIEBEÖLKÜHLER	274
VERSANDDECKEL	276
DIFFERENTIAL UND TELLERRAD	278
DIFFERENTIAL	282
GETRIEBEÖLFÜLLSTUTZEN	284
ÖLFILTER	285
SEITENANTRIEB	286
VERTEILERGETRIEBE UND GEHÄUSE	288
ÖLLEITUNGEN - KRAFTÜBERTRA-GUNG	294
RADAUFHAENGUNG	296
PLANETENGETRIEBE	298
ZAHNRADPUMPE	304
TANDEMGEHÄUSE UND DECKEL	306
GETRIEBE	307
DIFFERENTIALSPERRE - VENTIL UND BEFESTIGUNGSTEILE	308
STEUERVENTIL	309
VORSTEUERVENTIL	310
ÜBERDRUCKVENTIL	312
VENTIL - SCHALT- UND DRUCKSTEUE-RUNG	314
MAGNETVENTIL	320
GETRIEBESTEUERVENTIL	322
RAD UND REIFEN	324
RADSATZ	341
RAHMEN UND AUFBAU	344
VORDERACHSE	344
RAHMEN UND GEHÄUSE	348
SCHUTZABDECKUNG	350
MOTORVERKLEIDUNG	352
VORDERRAHMEN	356
VERKLEIDUNG UND BEFESTIGUNG - KÜHLER	358
PANZERWANNE	360
BREMSLEITUNGSVERKLEIDUNG	361
FAHRERPLATTFORMVERKLEIDUNG	362
KNICKGELENK-ANHÄNGUNG	366
ANHÄNGEVORRICHTUNG	368
SCHMIERLEITUNGEN	369
LENKGESTÄNGE	370
SCHALLDÄMPFUNG	371
SCHNEEPFLUG-SCHUTZVORRICH-TUNG	372
KUEHLERVERKLEIDUNG UND AUFHÄNGUNG	374
ANTRIEBSWELLENSCHUTZ	376
STEIGLEITER	377
AUFHÄNGUNG - HINTERES FAHRWERK	378
KRAFTSTOFFTANKABSTÜTZUNG	379
BREMSSYSTEM	380
LUFTTROCKNER	380
BETRIEBSBREMSE	388
FESTSTELLBREMSGESTÄNGE	390
BREMSGESTÄNGE	392

INHALTSVERZEICHNIS

Bezeichnung	Seite
DRUCKLUFTBEHÄLTER	398
DRUCKLUFT-STEUERVENTIL	400
SCHNELLÖSEVENTIL	402
MAGNETVENTIL	403
HYDRAULIKSYSTEM	404
HYDRAULIKDRUCKSPEICHER U. BEFESTIGUNG	404
SCHARDRUCKSPEICHER	405
DRUCKSPEICHER - SCHARDÄMPFUNG	406
HYDRAULIKSTEUERUNG	407
SCHARDREHWERKSPERRENSTEUERUNG	414
LENKBETÄTIGUNG	416
HYDRAULIKÖLKÜHLERBEFESTIGUNG	417
GELENKZYLINDER UND BEFESTIGUNGSTEILE	418
SCHARHUBZYLINDER UND BEFESTIGUNGSTEILE	419
SCHARKIPPZYLINDER UND BEFESTIGUNGSTEILE	420
SEITENSCHUBZYLINDER UND BEFESTIGUNGSTEILE	421
SEITENSCHIEBERZYLINDER UND BEFESTIGUNGSTEILE	422
LENKZYLINDER UND AUFHÄNGUNG	423
RADSTURZZYLINDER UND BEFESTIGUNGSTEILE	424
KNICKLENKZYLINDER	425
SCHARHUBZYLINDER	426
SCHARNEIGEZYLINDER	427
SEITENSCHUBZYLINDER	428
AUFREISSERHUBZYLINDER	430
SEITENSCHUBZYLINDER	431
LENKZYLINDER	432
RADSTURZZYLINDER	436
STEUERVENTILSPERRE	438
SCHARDREHWERK	442
PUMPENANTRIEB	446
SEITENSCHUBVERLÄNGERUNG	447
DRUCKSPEICHERLEITUNGEN	448
HYDRAULIKLEITUNGEN	450
HYDRAULIKLÜFTERLEITUNGEN	458
HYDRAULIKPUMPE UND LEITUNGEN	462
AUFREISSERLEITUNGEN	466
NOTLENKUNGSLEITUNGEN	470
LENKÖLLEITUNGEN	472
SEITENSCHUBSPERRE	475
HYDRAULIKSPERRE (HANDBEDIENUNG)	476
HYDRAULIKPUMPENMOTOR, ELEKTR.	477
MOTORANTRIEB	478
ZAHNRADANTRIEB	480
KOLBENPUMPE UND BEFESTIGUNG	482
NOTLENKUNGSPUMPE UND BEFESTIGUNGSTEILE	484
PUMPENANTRIEB ELEKTR.	485
ZUMESSPUMPE	486
KOLBENPUMPE	488
KOLBENPUMPENUMLAUFSATZ	492
NOTLENKUNG	494
SCHWENKBLOCK	495
HYDRAULIKTANK	496
VENTIL UND GESTÄNGE	500
VENTILSATZ (4-VENTIL)	522
VENTILSATZ (5-VENTIL)	526
VENTILSATZ (7-VENTIL)	530
SAMMELVENTIL	534
STEUERVENTIL	536
DRUCK- U. STROMAUSGLEICHSVENTIL	572
ÜBERDRUCKVENTIL	576
PENDELVENTIL	584
MAGNETVENTIL	585
VENTILSOLENOID U. -KRÜMMER	586
ARBEITSGERÄTE	588
SCHARDREHWERK	588
ZUGHAKEN	590
SCHUBPLATTE	592
ARBEITSGERÄTE	593
ECKMESSER	593
SCHAR	595
SCHNEIDMESSER	596
SCHILDHUB	598
AUFREISSERBEFESTIGUNG	602
SCHNEEFLÜGEL-BEFESTIGUNG	604
AUFREISSER	605
FRONTAUFREISSERZAHN	608
FAHRERHAUS	609
FAHRERHAUSZUBEHÖR	609
KLIMAANLAGE UND AUFHÄNGUNG	611
KLIMAANLAGE	613
ARMLEHNE	624
KÄLTEMITTELKOMPRESSOR	626
KÄLTEMITTELKONDENSATOR U. BEFESTIGUNGSTEILE	632
KÄLTEMITTELKONDENSATOR	634
STEUERKONSOLE	636
UMBAUSATZ - OHNE ÜBERROLLSCHUTZ	639
FAHRERHAUSTÜR	640
LUFTKANAL UND REGULIERUNG	652
LUFTKANAL	654

INHALTSVERZEICHNIS

Bezeichnung	Seite
RÜCKLEHNENVERLÄNGERUNG	655
UMLAUFLÜFTER	658
FAHRERHAUSLUFTFILTER	664
HAMMER UND BEFESTIGUNG	665
FAHRERHAUSHEIZUNG U. BEFESTIGUNGSTEILE	667
FAHRERHAUSHEIZUNG	669
FAHRERSITZFEDERUNGSGEHÄUSE	680
RADIOEINBAUSATZ	683
ARMATUR	686
WÄRMEISOLIERUNG	688
FAHRERHAUSAUSKLEIDUNG	690
KLIMAANLAGENLEITUNGEN	702
HEIZUNGSLEITUNGEN	706
DOKUMENTATION	712
FAHRERHAUSLUFTSCHLITZE	714
RÜCKSPIEGEL	715
MODUL - VIER ELEKTRON. ANZEIGEN	722
GESCHWINDIGKEITS- U. DREHZAHLMESSERMODUL	723
ÜBERROLLSCHUTZAUFLAGER	724
SCHALE - RÜCKENLEHNE	727
FAHRERSITZVERKLEIDUNG	728
FAHRERHAUSVERKLEIDUNG	730
INSTRUMENTENTAFEL	732
FENSTERVERKLEIDUNG	736
ÜBERROLLSCHUTZKABINE	740
ÜBERROLLSCHUTZDACH	742
ÜBERROLL-SCHUTZKABINE	743
ÜBERROLL-SCHUTZDACH	746
SONNENBLENDE	747
SICHERHEITSGURT	748
FAHRERSITZ	750
SCHWINGSITZ	754
SITZUNTERBAU	762
FAHRERSITZFEDERUNG	764
SCHEIBENWASCHANLAGE	768
FAHRERHAUSFENSTER	771
SCHEIBENWISCHER	776
WARTUNGSAUSRÜSTUNG	789
SCHILD UND AUFKLEBER	789
WERKZEUGKASTEN	798
ERSATZTEILNUMMERNINDEX	B1

1. MACHINE IDENTIFICATION

Caterpillar machines are identified by Product Identification Numbers (PIN). Some components included in a machine may be identified by Serial Numbers (S/N). Typical components that will be serialized include engines, transmissions, bulldozers, and rippers. The machine and engine are further identified by arrangement numbers and in some cases modification numbers. These numbers are shown on the product identification plate(s) and on the master plate in the operator's compartment.

Caterpillar dealers need all of these numbers to determine accurate parts identification.

SIS ***New Feature***

Effective First Quarter 2001 the Caterpillar Product Identification Number (PIN) will change from 8 to 17 characters. In an effort to provide uniform equipment identification, Caterpillar and other construction equipment manufacturers are moving to comply with the latest version of the product identification numbering standard. Non-road machine PINs are defined by ISO 10261. The new PIN format will apply to all Caterpillar machines and generator sets. The PIN plates and frame marking will display the 17 character PIN. The new format will look like the following:

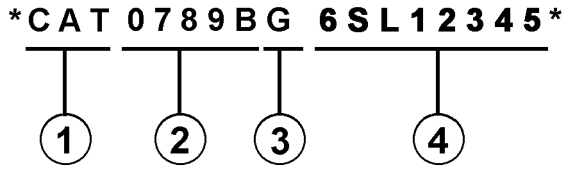

Where:

1. Caterpillar's World Manufacturing Code (characters 1-3)

2. Machine Descriptor (characters 4-8)

3. Check Character (character 9)

4. Machine Indicator Section (MIS) or Product Sequence Number (characters 10-17). These were previously referred to as the Serial Number.

Machines and generator sets produced before First Quarter 2001 will maintain their 8 character PIN format.

Components such as engines, transmissions, axles, etc. and work tools will continue to use an 8 character Serial Number (S/N).

2. ORDERING PARTS

⚠ WARNING

When replacement parts are required for this product Caterpillar recommends using Caterpillar replacement parts or parts with equivalent specifications including, but not limited to, physical dimensions, type, strength and material.

Failure to heed this warning can lead to premature failures, product damage, personal injury or death.

Quality Caterpillar replacement parts are available from Caterpillar dealers throughout the world. Their parts inventories are up to date and include all parts normally required to protect your investment in Caterpillar machines. Dealers may offer repair kits or remanufactured parts to allow selection of the most effective repair alternative for a particular situation. When ordering parts, your order should specify the quantity, part number, part name, and the serial number/product identification number of the machine for which the parts are needed.

3. PARTS MANUAL ORGANIZATION

Product information in this manual is presented as "information elements" that represent all of the components for the specific model. Engine Arrangement and Seat Group are examples of information elements. The information elements are organized alphabetically by part name and secondarily by part number within each major section of the manual.

4. TABLE OF CONTENTS

SIS ***New Feature***

A table of contents (TOC) is found at the beginning of the manual. The TOC lists each section of the manual with a complete list of all information elements organized as they appear in the manual. Page numbers are provided for quick reference to detailed parts identification illustrations and serviceable consist lists.

5. MAINTENANCE PARTS INDEX

The Maintenance Parts Index, located near the beginning of the manual, references most frequently used maintenance part numbers, providing description, quantity, usage and page number. This information is organized alphabetically by part description.

6. INDEX

The index located near the front of the manual is an alphabetical listing of all information elements included in the manual. Page numbers are provided for quick reference to detailed parts identification illustrations and serviceable consist lists.

7. PART NUMBER INDEX

A numerical index listing all part numbers and the corresponding page number(s) appears at the back of the manual.

8. CAPTIONS

Captions located at the top of each page of an information element identify the part number and part name along with additional descriptive information. PIN and S/N information found in each caption should be used to select correct information for a specific machine. Field replacement options, identification of optional attachment components, and where used ("part of") information is also provided.

SIS ***New Feature***

The first line of a caption is shown in larger type font to indicate the beginning of an information element. Captions for additional pages that may be required to illustrate an information element will be shown in standard type font and will include the term *(contd.)* .

9. NON-SERVICED PARTS

SIS ***New Feature***

In some instances it is necessary to display non-serviced parts that are a link to a lower level serviceable consist lists. These non-serviced part numbers are shown in *italic* type indicating that they are not available.

10. PARTS LIST REFERENCE NUMBERS

SIS ***New Feature***

Numbers shown in the Ref No column correspond to numbers used in the associated graphic(s). An alphabetic suffix may be added to a reference number to identify lower level consist items. Numbers shown in the Graphic Ref column refer to the graphic number identifier displayed in the lower left corner of each illustration. The Graphic Ref number may be used in combination with the item Ref No to determine the correct part number. There may be intentional omission of a Ref No in a consist list as information is updated to reflect the latest serviceable part numbers.

11. INDENTED PART NAMES

When a part name is indented in a parts list, it is part of (included in) the group or assembly under which it is indented.

12. ILLUSTRATION REFERENCE LETTERS

When necessary, illustrations contain reference letters (A, B, C etc.) that are intended to track lines and harnesses from one point to another. They are also used to show where to reconnect illustrations that have been separated.

13. ABBREVIATIONS AND SYMBOLS

O.D. – Outside Diameter
I.D. – Inside Diameter
A – Not Part Of This Group
B – Use As Required
C – Change From Previous Type
D – Order By The Meter
E – Order By The Centimeter
F – Not Shown
G – Order By The Inch
I – See Hose Fabrication Guide
M – Metric Part
R – Remfg Part May Be Available
Y – Separate Illustration
Z – Not Serviced Separately

NOTE:

Continuing improvement and advancement of product design may cause changes to your machine which may not be included in this publication. Whenever a question arises regarding your Caterpillar product or this publication, please consult your Caterpillar dealer for the latest available information.

FRAME AND BODY

8E-3299 PLATFORM GP-CAB

PIN 3SK1-09999

SMCS-7253 100090751

NOTE	REF NO	GRAPHIC REF	PART NUMBER	QTY	PART NAME (1 2 3 4 5 6 PRODUCT LEVEL)	SEE PAGE
	1	1	3T-3953	1	PLATE AS	
	2	1	5B-2992	25	BOLT (3/8-16X.750IN)	
	3	1	6P-1075	41	WASHER-HARD (3MM THK)	
	4	1	9P-1444	2	SUPPORT AS-FOOT	
	5	1	9P-2229	19	BOLT (1/2-13X1IN)	
		1	9P-[illegible]4	19	WASHER-HARD (4MM THK)	
	6	1	9E-9136	1	COVER AS-LH	
		1	9F-2979	6	NUT-WELD (3/8-16 THD)	
		1	1P-0188	1	CLIP	
	7	1	7S-3411	4	COVER	
	8	1	6J-0488	18	SCREW-HEAD (3/8-16X.875IN)	
	9	1	9[illegible]4	1	COVER	
		1	9E-9[illegible]7	1	GASKET	
	10	1	9E-3249	1	[illegible]	
		1	9E-3250	1	GASKET	
	11	1	3T-3935	1	HANDHOLD	
	12	1	9E-9078	1	COVER AS	
		1	9F-2979	8	NUT-WELD (3/8-16 THD)	
		1	9E-9079	1	GASKET	
	13	1	7T-0131	1	FLOORPLATE AS	
		1	1F-0748	4	NUT-WELD (1/2-13 THD)	
	14	1	7Y-9087	1	PLUG-BUTTON	
	15	1	7T-0136	1	PLATE AS	
		1	9F-2979	6	NUT-WELD (3/8-16 THD)	
	16	1	7T-9096	1	COVER	
		1	7T-9779	1	GASKET	
	17	1	3T-3981	1	PLATE AS	
	18	1	6T-9364	4	BOLT (1/4-20X.625IN)	
M		1	6T-4205	4	WASHER-HARD (2MM THK)	
	19	1	6L-9484	1	FLOOR MAT	
	20	1	9E-9946	1	MODULE AS-OPERATOR	
	21	1	3T-3934	1	HANDHOLD	
	22	1	9P-8571	2	PLUG	
	23	2	6T-9364	4	BOLT (1/4-20X.625IN)	
M		2	6T-4205	4	WASHER-HARD (2MM THK)	
	24	2	5B-3062	17	BOLT (3/8-16X.750IN)	
	26	2	6F-1075	21	WASHER-HARD (3MM THK)	
	26	2	7T-9126	1	SEAL	
	27	2	7X-9378	2	BOLT (3/4-10X5IN)	
		2	7X-0682	2	WASHER-HARD (6MM THK)	
	28	2	3T-3482	2	PLATE	
	29	2	3T-5290	1	PLATE AS	
		2	7S-0038	8	SPACER	
	30	2	3T-5281	1	SEAL	
	31	2	7S-9017	1	GASKET	
	32	2	7S-9018	1	COVER AS	
		2	2R-2276	2	WASHER	
		2	6P-9028	2	SCREW-KNURLED	
	33	2	9W-3429	1	COVER	
	34	2	9E-9697	1	COVER	
	35	2	9D-3031	8	SCREW-SOCKET HEAD	
	36	2	9W-3142	8	MOUNTING	
	37	2	9W-9027	2	PLATE	
	38	2	7X-0390	2	BOLT (7/8-9X5IN)	
		2	7X-0672	2	WASHER-HARD	
	39	2	4L-9454	4	BOLT (3/8-16X1.0IN)	
	40	2	3T-4788	1	COVER	

FRAME AND BODY

8E-3299 PLATFORM GP-CAB (contd.)

100090751

NOTE	REF NO	GRAPHIC REF	PART NUMBER	QTY	PART NAME (1 2 3 4 5 6 PRODUCT LEVEL)	SEE PAGE
	41	2	8E-3515	1	COVER	
	42	2	7T-0134	1	PLATE	
	43	2	7T-0139	1	GASKET	
	44	2	7S-9724	1	GASKET	
	45	2	7S-9723	1	COVER	
	46	2	6Y-1969	2	PLUG-BUTTON	

M-METRIC PART

FRAME AND BODY

8E-3299 PLATFORM GP-CAB (contd.)

100090751

TOP VIEW

GRAPHIC #1 g00036729

FRAME AND BODY

8E-3299 PLATFORM GP-CAB (contd.)

100090751

SECTION A-A VIEW D-D SECTION G-G

SECTION B-B VIEW E-E SECTION H-H

SECTION C-C SECTION F-F SECTION J-J

GRAPHIC #2 g00105874

1. IDENTIFICATION DE LA MACHINE

Toutes les machines Caterpillar portent un numéro d'identification (PIN). Certains composants des machines peuvent porter des numéros de série (S/N). En général, parmi les composants qui portent des numéros de série il y a les moteurs, les transmissions, les bulldozers et les rippers. En plus, la machine et le moteur peuvent recevoir des numéros de version, et dans certains cas, de modification. Ces numéros figurent sur les plaques de numéro de série et sur la plaque signalétique principale qui se trouve dans le poste de conduite.

Les concessionnaires Caterpillar doivent connaître tous ces numéros pour identifier correctement les pièces.

SIS ***Nouvelle Caractéristique***

À partir du premier trimestre 2001, le numéro d'identification produit (PIN) Caterpillar passe de 8 à 17 caractères. Afin de permettre une identification uniforme des matériels, Caterpillar et d'autres constructeurs de machines de travaux publics s'efforcent de se conformer à la norme la plus récente portant sur les numéros d'identification des produits. Les numéros d'identification (PIN) de machines de chantier sont définis par la norme ISO 10261. Le nouveau format du numéro d'identification est valable pour toutes les machines et tous les groupes électrogènes Caterpillar. Le numéro d'identification produit (PIN) figurant sur la plaque et sur le châssis se composera de 17 caractères. Le nouveau format ressemblera à ceci:

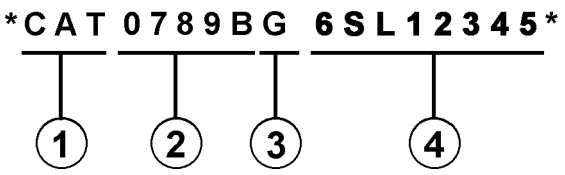

Il se décomposera de la façon suivante:

1. Code international de fabrication de Caterpillar (caractères 1 à 3)

2. Descriptif de la machine (caractères 4 à 8)

3. Contrôle (caractère 9)

4. Indicateur machine (MIS) ou numéro de séquence produit (caractères 10 à 17). Ceux-ci étaient auparavant désignés sous le terme de numéro de série.

Les machines et les groupes électrogènes construits avant le premier trimestre 2001 garderont le format à 8 caractères du numéro d'identification produit (PIN).

Les organes tels que les moteurs, les boîtes de vitesses, les essieux, etc., continueront d'être désignés par un numéro de série (S/N) à 8 caractères.

2. COMMANDE DE PIÈCES

⚠ DANGER

Lorsqu'il faut remplacer des pièces de rechange pour ce produit Caterpillar recommande d'utiliser les pièces de rechange Caterpillar ou les pièces qui ont des spécifications équivalentes dont les dimensions physiques, le type, la force et le matériau. Ces équivalences ne se limitent pas à l'énoncé précédent.

L'inobservation de cette mise en garde peut entraîner des défaillances prématurées, des dommages au produit, des blessures ou même la mort.

Les concessionnaires Caterpillar fournissent dans le monde entier des pièces de rechange de qualité Caterpillar. Leurs stocks de pièces sont constamment réapprovisionnés et comptent toutes les pièces nécessaires pour assurer la bonne marche de vos machines Caterpillar. Certains concessionnaires proposent également des kits de réparation ou des pièces rénovées, ce qui permet de choisir la solution la plus économique dans une situation donnée. Lors des commandes de pièces, mentionner la quantité, le numéro et la désignation des pièces ainsi que le numéro de série ou le numéro d'identification (PIN) de la machine pour laquelle ces pièces sont requises.

3. ORGANISATION DU CATALOGUE DE PIÈCES

Les renseignements sur les produits sont présentés sous forme de "Information element" (élément d'information) représentant tous les composants d'un modèle donné. "Engine Arrangement" (version de moteur) et "Seat Group" (assemblage de siège)" sont des exemples d'éléments d'information. Les éléments d'information sont classés par ordre alphabétique par la désignation standard des pièces et par numéros de pièces dans chaque partie importante du manuel.

4. TABLE DES MATIÈRES

Nouvelle Caractéristique

La table des matières se trouve au début du manuel. La table des matières fournit la liste de tous les chapitres du manuel avec une liste complète de tous les éléments d'information classés par ordre d'apparition dans le manuel. Les numéros de page sont fournis afin que l'utilisateur puisse trouver rapidement les illustrations détaillées concernant l'identification des pièces et les listes des pièces d'entretien.

5. INDEX DES PIÈCES D'ENTRETIEN

La rubrique "Index des pièces d'entretien" qui se trouve au début du manuel renvoie aux pièces d'entretien les plus fréquemment utilisées en précisant la désignation, la quantité, là où la pièce est utilisée et le numéro de page. Ces pièces sont classés par ordre alphabétique.

6. INDEX

L'index qui se trouve vers le début du manuel est une liste alphabétique de tous les éléments d'information du manuel. Les numéros de page sont fournis afin que l'utilisateur puisse trouver rapidement les illustrations détaillées concernant l'identification des pièces et les listes des pièces d'entretien.

7. INDEX DES NUMÉROS DE PIÈCES

Une liste numérique de tous les numéros de pièces et des pages correspondantes se trouve à la fin du manuel.

8. LÉGENDES

Les légendes qui se trouvent en haut de chaque page de chaque élément d'information fournissent le numéro de pièce, la désignation ainsi que des renseignements supplémentaires sur les pièces. Les renseignements concernant les numéros de série (S/N) qui se trouvent dans chaque légende doivent être utilisés pour sélectionner les informations correctes pour un moteur donné. Les informations concernant les options de remplacement sur le chantier, l'identification des composants des équipements offerts en option et les lieux d'application sont aussi fournies.

Nouvelle Caractéristique

Les lettres de la première ligne d'une légende sont présentées en police plus grande afin d'indiquer le début d'une unité d'information. Les légendes qui pourraient être requises pour des pages supplémentaires afin d'illustrer une unité d'information seront présentées en police standard et comprendront le terme (à suivre).

9. PIÈCES NON FOURNIES

Nouvelle Caractéristique

Dans certains cas, il est nécessaire d'indiquer les pièces non fournies qui sont en aval de la liste des pièces d'entretien. Les numéros des pièces non fournies dans la liste des pièces et les légendes seront en italique pour signaler qu'ils ne sont pas disponibles.

10. NUMÉROS DE RÉFÉRENCE DE LA LISTE DES PIÈCES

Nouvelle Caractéristique

Les numéros indiqués dans la colonne des numéros de références correspondent aux numéros utilisés dans les illustrations auxquelles ils sont associés. Un suffixe alphabétique peut être ajouté à un numéro de référence pour identifier la liste des articles en aval. Les numéros indiqués dans la colonne de référence de l'illustration renvoient à l'identification du numéro affiché dans le coin inférieur gauche de chaque illustration. Le numéro de référence de l'illustration pourrait être utilisé avec le numéro de référence de l'article pour déterminer le numéro de pièce correct. Il peut y avoir une omission intentionnelle d'un numéro de référence dans une liste de pièces suite à la mise à jour des informations en vue de refléter les numéros de pièces les plus récentes.

11. DÉSIGNATIONS DE PIÈCES EN RETRAIT

Lorsqu'une désignation de pièce est en retrait, cela veut dire que l'article en regard fait partie de l'ensemble sous lequel il figure.

12. LETTRES DE RÉFÉRENCE DES ILLUSTRATIONS

Quand cela est nécessaire, les illustrations comportent des lettres de référence (A, B, C, etc.) pour montrer le trajet des canalisations et faisceaux de câbles d'un point à l'autre. Elles sont utilisées également pour indiquer où relier les illustrations séparées auparavant.

13. ABRÉVIATIONS ET SYMBOLES

O.D. – Diamètre extérieur
I.D. – Diamètre intérieur
A – Ne fait pas partie de ce groupe
B – Utiliser selon besoin
C – Modification
D – Commander par mètre
E – Commander par centimètre
F – Non représenté
G – Commander par pouce
I – Voir "Hose Fabrication Guide"
M – Pièce métrique
R – Pièce rénovée éventuellement disponible
Y – Illustration séparée
Z – Non fourni séparément

NOTA:

En raison du progrès technique et des améliorations continuelles apportées au matériel, votre machine comporte peut-être des modifications qui n'apparaissent pas dans la présente publication. En cas de doute sur un détail de votre machine Caterpillar ou sur le texte de la présente publication, adressez-vous à votre concessionnaire Caterpillar.

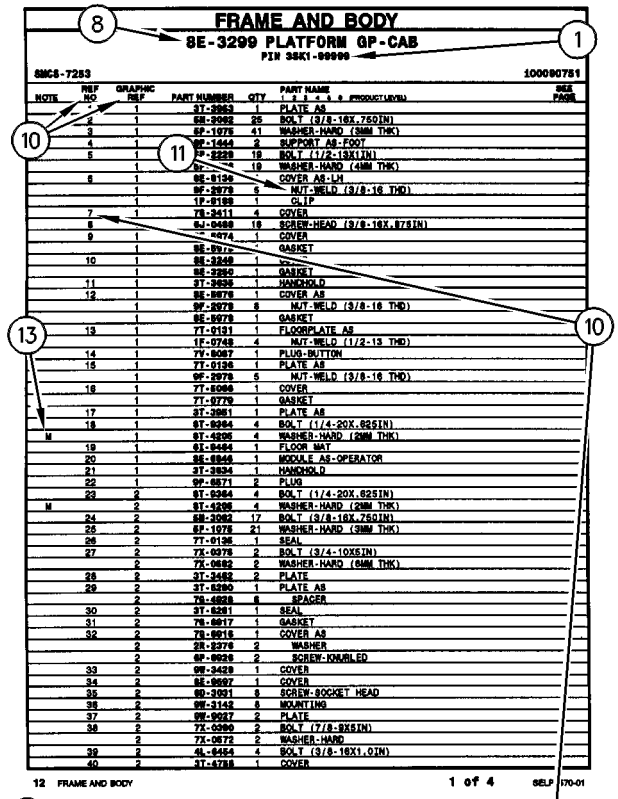

FRAME AND BODY

8E-3299 PLATFORM GP-CAB

PIN 38K1-09999

SMCS-7253 100090751

NOTE	REF NO	GRAPHIC REF	PART NUMBER	QTY	PART NAME (1 2 3 4 5 6 PRODUCT LEVEL)	SEE PAGE
	1	1	3T-2953	1	PLATE AS	
	2	1	5B-2992	25	BOLT (3/8-16X.750IN)	
	3	1	6P-1075	41	WASHER-HARD (3MM THK)	
	4	1	8P-1444	2	SUPPORT AS-FOOT	
	5	1	9P-2229	19	BOLT (1/2-13X1IN)	
		1	9P-[illegible]4	19	WASHER-HARD (4MM THK)	
	6	1	9E-8136	1	COVER AS-LH	
		1	9F-2979	6	NUT-WELD (3/8-16 THD)	
		1	1P-8188	1	CLIP	
	7	1	7S-3411	4	COVER	
	8	1	6J-0488	18	SCREW-HEAD (3/8-16X.875IN)	
	9	1	[illegible]-4474	1	COVER	
		1	9E-8[illegible]7		GASKET	
	10	1	9E-3248	1	[illegible]	
		1	9E-3250	1	GASKET	
	11	1	3T-3835	1	HANDHOLD	
	12	1	9E-8078	1	COVER AS	
		1	9F-2979	8	NUT-WELD (3/8-16 THD)	
		1	9E-8078	1	GASKET	
	13	1	7T-0131	1	FLOORPLATE AS	
		1	1F-0748	4	NUT-WELD (1/2-13 THD)	
	14	1	7Y-8087	1	PLUG-BUTTON	
	15	1	7T-0136	1	PLATE AS	
		1	9F-2979	6	NUT-WELD (3/8-16 THD)	
	16	1	7T-8086	1	COVER	
		1	7T-0779	1	GASKET	
	17	1	3T-3981	1	PLATE AS	
	18	1	6T-9364	4	BOLT (1/4-20X.625IN)	
M		1	6T-4205	4	WASHER-HARD (2MM THK)	
	19	1	6L-8484	1	FLOOR MAT	
	20	1	9E-8946	1	MODULE AS-OPERATOR	
	21	1	3T-3834	1	HANDHOLD	
	22	1	9P-8571	2	PLUG	
	23	2	6T-9364	4	BOLT (1/4-20X.625IN)	
M		2	6T-4205	4	WASHER-HARD (2MM THK)	
	24	2	5B-3062	17	BOLT (3/8-16X.750IN)	
	26	2	6P-1075	21	WASHER-HARD (3MM THK)	
	26	2	7T-0135	1	SEAL	
	27	2	7X-0378	2	BOLT (3/4-10X5IN)	
		2	7X-0682	2	WASHER-HARD (6MM THK)	
	28	2	3T-3482	2	PLATE	
	29	2	3T-8280	1	PLATE AS	
		2	7S-0038	8	SPACER	
	30	2	3T-8281	1	SEAL	
	31	2	7S-0017	1	GASKET	
	32	2	7S-0016	1	COVER AS	
		2	2R-2276	2	WASHER	
		2	6P-0028	2	SCREW-KNURLED	
	33	2	9W-3429	1	COVER	
	34	2	9E-0697	1	COVER	
	35	2	9D-3031	8	SCREW-SOCKET HEAD	
	36	2	9W-3142	8	MOUNTING	
	37	2	9W-9027	2	PLATE	
	38	2	7X-0390	2	BOLT (7/8-9X5IN)	
		2	7X-0672	2	WASHER-HARD	
	39	2	4L-8454	4	BOLT (3/8-16X1.0IN)	
	40	2	3T-4788	1	COVER	

12 FRAME AND BODY 1 of 4 SELP4570-01

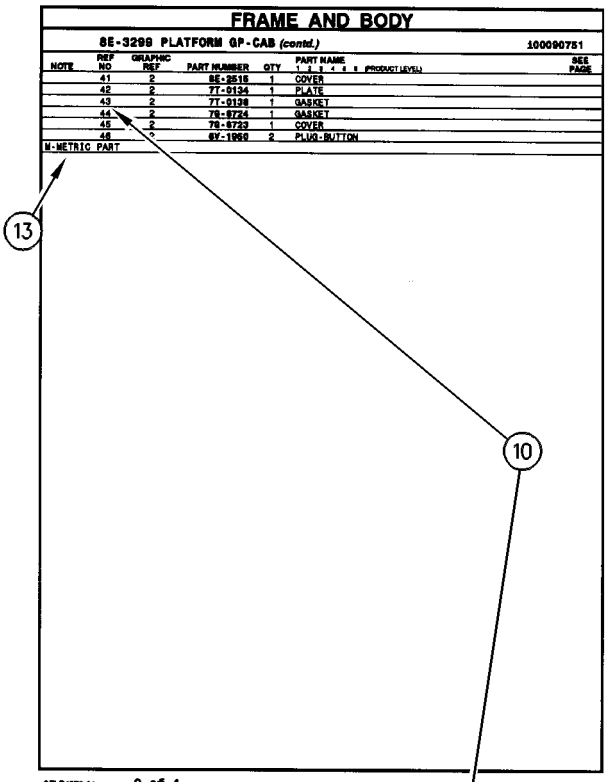

FRAME AND BODY

8E-3299 PLATFORM GP-CAB (contd.) 100090751

NOTE	REF NO	GRAPHIC REF	PART NUMBER	QTY	PART NAME (1 2 3 4 5 6 PRODUCT LEVEL)	SEE PAGE
	41	2	8E-3515	1	COVER	
	42	2	7T-0134	1	PLATE	
	43	2	7T-0139	1	GASKET	
	44	2	7S-0724	1	GASKET	
	45	2	7S-0723	1	COVER	
	46	2	6Y-1969	2	PLUG-BUTTON	

M-METRIC PART

SELP4570-01 2 of 4 FRAME AND BODY 13

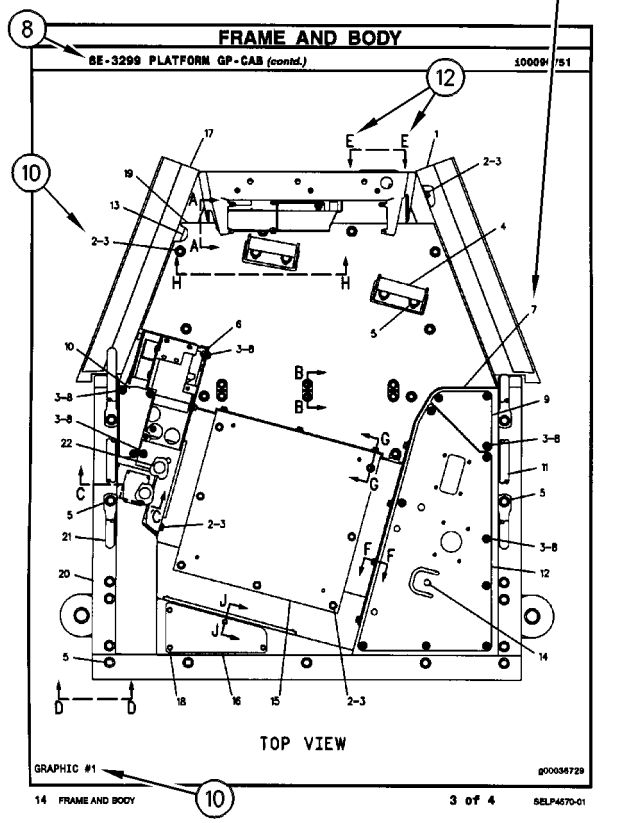

FRAME AND BODY

8E-3299 PLATFORM GP-CAB (contd.) 100090751

GRAPHIC #1 g00036729

TOP VIEW

14 FRAME AND BODY 3 of 4 SELP4570-01

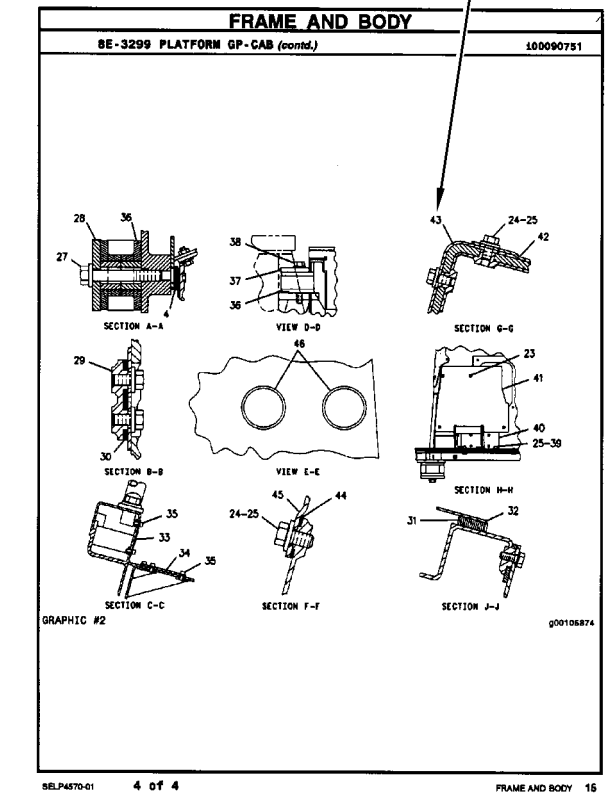

FRAME AND BODY

8E-3299 PLATFORM GP-CAB (contd.) 100090751

SECTION A-A

VIEW D-D

SECTION G-G

SECTION B-B

VIEW E-E

SECTION H-H

SECTION C-C

SECTION F-F

SECTION J-J

GRAPHIC #2 g00105874

SELP4570-01 4 of 4 FRAME AND BODY 15

1. MÁQUINAS

Las máquinas Caterpillar se identifican con Números de Identificación del Producto (PIN). Algunos componentes incluídos en la máquina pueden estar identificados con Números de Serie (N/S). Los componentes que tienen típicamente esta identificación incluyen motores, transmisiones, hojas topadoras y desgarradores. La máquina y el motor se identifican además con Números de Configuración y en algunos casos, Números de Modificación. Estos números están en las placas de identificación del producto o en la placa principal en la cabina del operador.

Los distribuidores Caterpillar necesitan estos números para identificar con exactitud los números de piezas de repuesto.

SIS *Nueva Característica*

A partir del primer trimestre del 2001, el Número de Identificación de Producto (PIN) de Caterpillar cambiará de 8 a 17 caracteres. Para hacer más uniforme el método de identificación de equipos, Caterpillar y otros fabricantes de equipo de construcción han tomado medidas para cumplir con la versión más reciente de la norma de numeración de identificación de productos. Los Números de Identificación de Producto para máquinas que no se operan en carreteras son definidos por la norma ISO 10261. El nuevo formato PIN corresponderá a todas las máquinas y grupos electrógenos Caterpillar. Las placas y los caracteres PIN estampados en el bastidor mostrarán el PIN de 17 caracteres. El nuevo formato tendrá la apariencia siguiente:

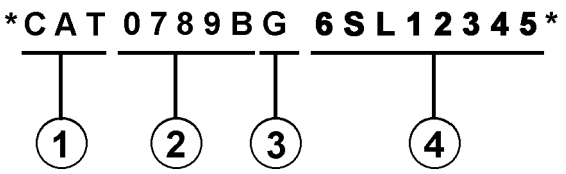

Significado de los caracteres:

1. Código de Fabricación Mundial de Caterpillar (caracteres 1-3)

2. Sección Descriptor de la Máquina (caracteres 4-8)

3. Carácter de Verificación (carácter 9)

4. Sección Indicador de la Máquina (MIS) o Número de Secuencia de Producto (caracteres 10-17). Anteriormente, estos caracteres constituían el Número de Serie.

Las máquinas y grupos electrógenos producidos antes del primer semestre del 2001 mantendrán su formato PIN de 8 caracteres.

Los componentes como motores, transmisiones, ejes, herramientas de trabajo, etc., continuarán usando un Número de Serie (S/N) de 8 caracteres.

2. COMO PEDIR REPUESTOS

⚠ ADVERTENCIA

Cuando se necesiten piezas de repuesto para este producto, Caterpillar recomienda usar piezas de repuesto Caterpillar o piezas que tengan especificaciones equivalentes incluyendo, pero sin estar limitadas a, dimensiones físicas, tipo, fortaleza y material.

El no hacer caso de esta advertencia puede llevar a fallas prematuras, daños al producto y lesiones graves o mortales.

Las piezas de repuesto Caterpillar de calidad están a la disposición de los distribuidores Caterpillar en todo el mundo. Sus existencias actualizadas incluyen todas las piezas normalmente requeridas para proteger su inversión en máquinas Caterpillar. Los distribuidores pueden tener juegos de reparación o piezas remanufacturadas para permitir la selección de la mejor alternativa de reparación en un caso en particular. Al pedir piezas de repuesto, especifique en su pedido la cantidad, el número de pieza, el nombre de la pieza y el número de serie/número de identificación del producto, de la máquina para la cual se necesitan estas piezas.

3. ORGANIZACION DEL MANUAL DE PIEZAS

La información sobre el producto, se presenta en este manual, como "elementos de información" que representan todos los componentes de un modelo específico. Las configuraciones de motores y los grupos de asientos son ejemplos de elementos de información. Los elementos de información están organizados primeramente por nombres de piezas en orden alfabético y en segundo lugar, por el número de pieza dentro de cada sección principal del manual.

4. CONTENIDO

SIS *Nueva Característica*

La página de Contenido se encuentra al principio del manual. El Contenido indica cada sección del manual con una lista completa de todos los elementos de información organizados en el orden que aparecen en el manual. Los números de página proporcionan una referencia rápida a las ilustraciones detalladas de identificación de piezas y a las listas de componentes de repuesto de dichas piezas.

5. ÍNDICE DE PIEZAS DE MANTENIMIENTO

Al principio de este catálogo se encuentra un índice de los números de piezas utilizadas más frecuentemente para el mantenimiento, que incluye descripción, cantidad necesaria, lugar de utilización y número de página. Esta información está organizada alfabéticamente, por descripción de la pieza.

6. ÍNDICE

El Índice, ubicado cerca del principio del manual, es una lista en orden alfabético de todos los elementos de información incluídos en el manual. Los números de página proporcionan una referencia rápida a las ilustraciones detalladas de identificación de piezas y a las listas de componentes de repuesto de dichas piezas.

7. INDICE NUMÉRICO DE PIEZAS

Un índice numérico de piezas con el correspondiente número de página aparece al final de este catálogo.

8. TÍTULOS

Los títulos ubicados en la parte superior de cada página de elementos de información identifican el número y el nombre de la pieza junto con información descriptiva adicional para ayudar al usuario a determinar las piezas necesarias para una máquina en particular. También se suministra información sobre las opciones de reparación en el campo, la identificación de componentes de accesorios optativos y el lugar de ubicación de la pieza ("es parte de").

SIS *Nueva Característica*

La primera línea del título se muestra con un tipo de letra más grande para indicar el comienzo de un elemento de información. Si se requieren páginas adicionales para ilustrar un elemento de información, los títulos se muestran con un tipo de letra normal y la continuación se indica entre paréntesis.

9. PIEZAS QUE NO SE SUMINISTRAN COMO REPUESTO

SIS *Nueva Característica*

En algunos casos es necesario indicar piezas que no se suministran como repuesto pero que pueden estar conectadas a listas de componentes de otras piezas de repuesto. En tal caso, dichas piezas se muestran en cursiva para indicar que no son piezas disponibles.

10. NÚMEROS DE REFERENCIA

SIS *Nueva Característica*

Los números en la columna de No. de Referencia corresponden a los números indicados en la ilustración que pertenece a ese número de pieza. Los números que tienen un sufijo alfabético identifican artículos de las listas de componentes de piezas. Los números en la columna de Referencia de la ilustración se identifican en la esquina inferior izquierda de cada ilustración. Para determinar el número de pieza correcto se puede utilizar tanto el No. de Referencia de la ilustración como el No. de Referencia del artículo. A medida que se actualiza la información para indicar los más recientes números de piezas de repuesto, puede omitirse intencionalmente un No. de Referencia en una lista de componentes de piezas.

11. NOMBRES DE PIEZA SANGRADOS

Cuando el nombre de una pieza está sangrado en una lista, significa que esta pieza forma parte del grupo o conjunto del renglón inmediatamente superior.

12. LETRAS DE REFERENCIA DE ILUSTRACIONES

Las ilustraciones contienen algunas veces letras de referencia (A, B, C etc.) cuyo propósito es seguir el trayecto de líneas y mazos de cables de un punto a otro. También se utilizan para mostrar dónde volver a unir ilustraciones que se habían separado.

13. ABREVIATURAS Y SIMBOLOS

O.D. – Diámetro exterior
I.D. – Diámetro interior
A – No es pieza de este grupo
B – Utilizado según la demanda
C – Indica cambio
D – Se pide por metro
E – Se pide por centímetro
F – No se muestra
G – Se pide por pulgada
I – Ver "Hose Fabrication Guide"
M – Pieza métrica
R – Puede estar disponible como pieza remanufacturada
Y – Ilustración separada
Z – No se suministra por separado

NOTA:

Las contínuas mejoras y adelantos en diseño podrían originar cambios a su máquina que no se incluyen en esta publicación. Cuando tenga alguna pregunta acerca de su producto Caterpillar o de esta publicación, consulte al distribuidor Caterpillar para obtener la información más reciente.

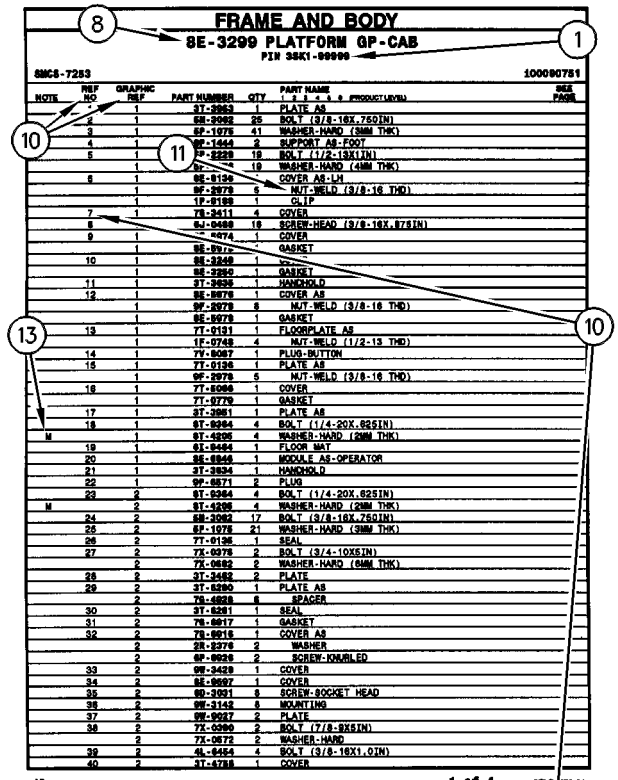

FRAME AND BODY

8E-3299 PLATFORM GP-CAB

PIN 3SK1-09999

SMCS-7253 100090751

NOTE	REF NO	GRAPHIC REF	PART NUMBER	QTY	PART NAME (1 2 3 4 5 6 PRODUCT LEVEL)	SEE PAGE
	1	1	3T-3963	1	PLATE AS	
	2	1	5B-3992	25	BOLT (3/8-16X.750IN)	
	3	1	6P-1075	41	WASHER-HARD (3MM THK)	
	4	1	6P-1444	2	SUPPORT AS-FOOT	
	5	1	6P-2228	19	BOLT (1/2-13X1IN)	
		1	6P-[illegible]4	19	WASHER-HARD (4MM THK)	
	6	1	8E-8136	1	COVER AS-LH	
		1	9F-2978	6	NUT-WELD (3/8-16 THD)	
		1	1P-8188	1	CLIP	
	7	1	7S-3411	4	COVER	
	8	1	6J-0488	18	SCREW-HEAD (3/8-16X.875IN)	
	9	1	[illegible]-4474	1	COVER	
		1	8E-8[illegible]7		GASKET	
	10	1	8E-3248	1	[illegible]	
		1	8E-3250	1	GASKET	
	11	1	3T-3835	1	HANDHOLD	
	12	1	8E-8878	1	COVER AS	
		1	9F-2978	8	NUT-WELD (3/8-16 THD)	
		1	8E-8078	1	GASKET	
	13	1	7T-0131	1	FLOORPLATE AS	
		1	1F-0748	4	NUT-WELD (1/2-13 THD)	
	14	1	7Y-8087	1	PLUG-BUTTON	
	15	1	7T-0136	1	PLATE AS	
		1	9F-2978	6	NUT-WELD (3/8-16 THD)	
	16	1	7T-8086	1	COVER	
		1	7T-8779	1	GASKET	
	17	1	3T-3981	1	PLATE AS	
	18	1	6T-9364	4	BOLT (1/4-20X.625IN)	
M		1	6T-4205	4	WASHER-HARD (2MM THK)	
	19	1	6L-8484	1	FLOOR MAT	
	20	1	9E-8946	1	MODULE AS-OPERATOR	
	21	1	3T-3834	1	HANDHOLD	
	22	1	9P-8571	2	PLUG	
	23	2	6T-9364	4	BOLT (1/4-20X.625IN)	
M		2	6T-4205	4	WASHER-HARD (2MM THK)	
	24	2	5B-3982	17	BOLT (3/8-16X.750IN)	
	26	2	6P-1075	21	WASHER-HARD (3MM THK)	
	26	2	7T-0135	1	SEAL	
	27	2	7X-0378	2	BOLT (3/4-10X5IN)	
		2	7X-0682	2	WASHER-HARD (5MM THK)	
	28	2	3T-3482	2	PLATE	
	29	2	3T-8280	1	PLATE AS	
		2	7S-8038	8	SPACER	
	30	2	3T-8281	1	SEAL	
	31	2	7S-8017	1	GASKET	
	32	2	7S-8018	1	COVER AS	
		2	2R-2276	2	WASHER	
		2	6P-8028	2	SCREW-KNURLED	
	33	2	9W-3429	1	COVER	
	34	2	8E-8697	1	COVER	
	35	2	9D-3031	8	SCREW-SOCKET HEAD	
	36	2	9W-3142	8	MOUNTING	
	37	2	9W-9027	2	PLATE	
	38	2	7X-0390	2	BOLT (7/8-9X5IN)	
		2	7X-0672	2	WASHER-HARD	
	39	2	4L-8454	4	BOLT (3/8-16X1.0IN)	
	40	2	3T-4788	1	COVER	

12 FRAME AND BODY 1 of 4 SELP4570-01

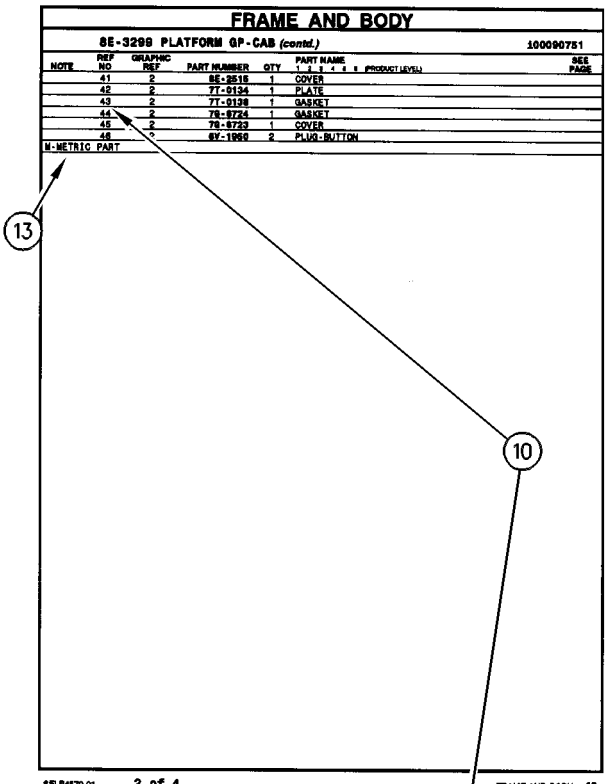

FRAME AND BODY

8E-3299 PLATFORM GP-CAB (contd.)

100090751

NOTE	REF NO	GRAPHIC REF	PART NUMBER	QTY	PART NAME (1 2 3 4 5 6 PRODUCT LEVEL)	SEE PAGE
	41	2	8E-3515	1	COVER	
	42	2	7T-0134	1	PLATE	
	43	2	7T-0139	1	GASKET	
	44	2	7S-8724	1	GASKET	
	45	2	7S-8723	1	COVER	
	46	2	6V-1969	2	PLUG-BUTTON	

M-METRIC PART

SELP4570-01 2 of 4 FRAME AND BODY 13

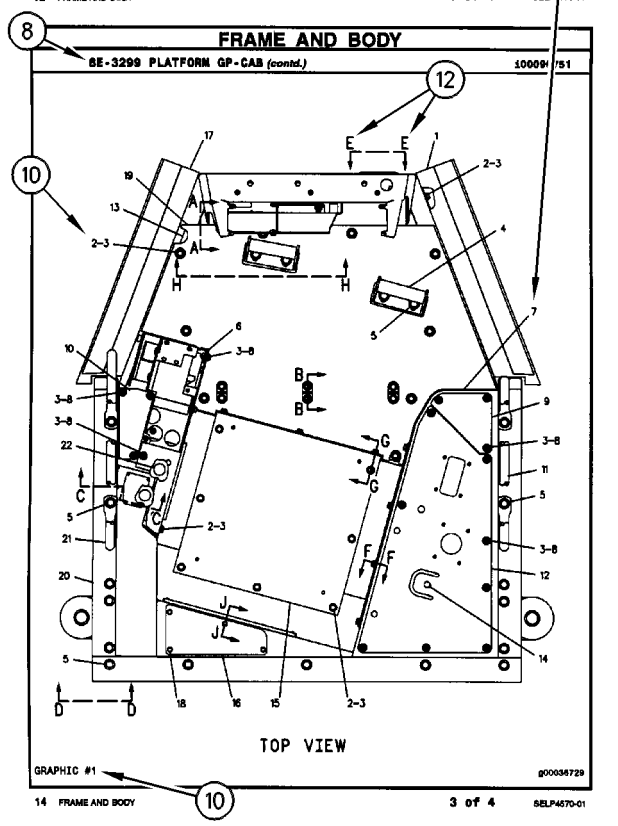

FRAME AND BODY

8E-3299 PLATFORM GP-CAB (contd.)

100090751

TOP VIEW

GRAPHIC #1 g00036729

14 FRAME AND BODY 10 3 of 4 SELP4570-01

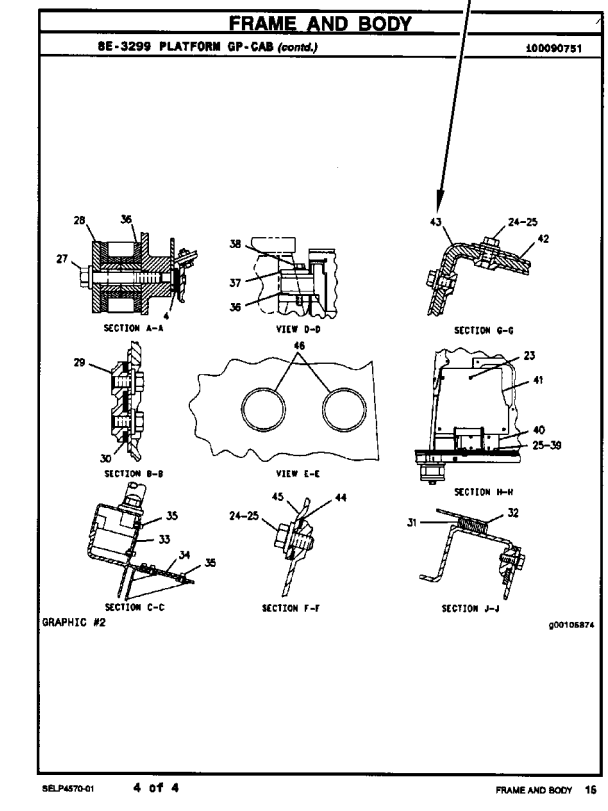

FRAME AND BODY

8E-3299 PLATFORM GP-CAB (contd.)

100090751

SECTION A-A

VIEW D-D

SECTION G-G

SECTION B-B

VIEW E-E

SECTION H-H

SECTION C-C

SECTION F-F

SECTION J-J

GRAPHIC #2 g00105874

SELP4570-01 4 of 4 FRAME AND BODY 15

INFORMAÇÃO GERAL

1. IDENTIFICAÇÃO DA MÁQUINA

As máquinas Caterpillar são identificadas pelos Números de Informação do Produto (PIN). Alguns componentes incluídos numa máquina podem ser identificados por Números de Série (S/N). Componentes típicos que serão enumerados com números de série incluem motores, transmissões, lâminas e ríperes. Além do número de série, a máquina e o motor são ainda identificados por números de arranjo e, em alguns casos, números de modificações. Tais números encontram-se na(s) placa(s) de identificação do produto e na placa mestre no compartimento do operador.

SIS ***Novidades***

A partir do primeiro trimestre de 2001 o Número de Identificação de Produto da Caterpillar (PIN) vai mudar de 8 para 17 caracteres. Esforçando-se para fornecer uma identificação uniforme de equipamentos, a Caterpillar e outros fabricantes de equipamento de construção estão mudando para atender a versão mais atualizada do padrão de identificação de produtos. Os números de PIN para produtos de aplicações não rodoviárias são definidos pela ISO 10261. O novo formato de número PIN será adotado em todas as máquinas e grupos geradores Caterpillar. As placas e as marcações do chassi mostrarão os 17 dígitos de PIN. O novo formato terá a seguinte disposição:

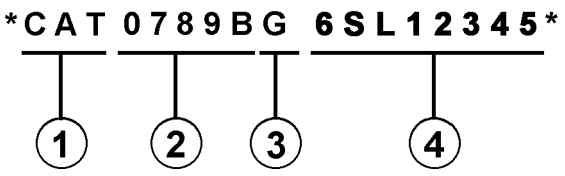

Onde:

1. Código de Fabricação Mundial da Caterpillar (dígitos 1-3)

2. Descrição da Máquina (dígitos 4-8)

3. Dígito de Verificação (dígito 9)

4. Seção de Indicador da Máquina (MIS) ou Número de Seqüência de Produto (dígitos 10-17). Estes eram anteriormente chamados de Número de Série.

Máquinas e grupos geradores produzidos antes do primeiro trimestre de 2001 manterão o formato de 8 caracteres de PIN.

Componentes como motores, transmissões, eixos, ferramentas de trabalho, etc. continuarão a usar Número de Série (S/N) com oito caracteres.

2. COMO OBTER PEÇAS

⚠ CUIDADO

Quando peças de substituição são exigidas para este produto, a Caterpillar recomenda a utilização de peças de substituição Caterpillar ou peças com as especificações equivalentes incluindo, mas não limitadas, à dimensões físicas, tipos, resistência e materiais.

A inobservância desta advertência poderá resultar em falhas prematuras, danos ao produto, ferimentos ou morte.

As Peças de Reposição de Qualidade Caterpillar encontram-se disponíveis nos revendedores Caterpillar no mundo inteiro. Seus estoques de peças são atualizados e incluem todas as peças normalmente necessárias para proteger seu investimento em máquinas Caterpillar. Alguns revendedores podem oferecer jogos de reparo ou peças de troca/remanufaturadas disponíveis como uma opção da alternativa de reparo mais eficaz para uma situação específica. Ao encomendar peças, seu pedido deve especificar a quantidade, o número e o nome da peça e o número de série/número de identificação do produto referentes à máquina para a qual as peças se destinam.

3. ORGANIZAÇÃO DO MANUAL DE PEÇAS

A informação do produto neste manual é apresentada em forma de "elementos de informação" que representam todos os componentes para o modelo específico. Arranjo de Motor e Grupo de Assento são exemplos de elementos de informação. Os elementos de informação são organizados em ordem alfabética por nome de peça ou secundariamente, por número de peça incluído em cada seção principal do manual.

4. LISTA DE CONTEÚDOS

SIS ***Novidades***

A Lista de Conteúdos (TOC) se encontra no princípio do manual. A Lista de Conteúdos (TOC) relaciona em cada seção do manual uma lista completa com todos os elementos de informação organizados conforme aparecem no manual. Números de página são fornecidos para que se tenha referência rápida de ilustrações de peças detalhadas e listas de conteúdos que podem receber serviço de manutenção.

5. ÍNDICE DE PEÇAS DE MANUTENÇÃO

O Índice de Peças de Manutenção, localizado perto do princípio do manual, faz referência aos números de peça de manutenção usados com maior frequência, fornecendo uma descrição, a quantidade, o uso e o número de página. Esta informação é organizada com a descrição da peça em ordem alfabética.

6. ÍNDICE

O Índice localizado perto do princípio do manual, consiste de uma lista em ordem alfabética de todos os elementos de informação incluídos no manual. Números de página são fornecidos para que se tenha referência rápida de ilustrações de peças detalhadas e listas de conteúdos que podem receber serviço de manutenção.

7. ÍNDICE DE NÚMERO DE PEÇA

Um índice numérico relacionando todos os números de peça e a(s) página(s) correspondentes, aparece no final do manual.

8. LEGENDAS

As legendas localizadas na parte de cima de cada página de um elemento de informação identifica o número de peça e o nome da peça, juntamente com informação descritiva adicional. Informações sobre o Número de Informação do Produto (PIN) e o Número de Série (S/N) encontradas em cada legenda devem ser usadas para selecionar a informação correta sobre uma máquina específica. Opções de substituição no campo, identificação de componentes de acessórios opcionais e informações sobre onde são utilizados ("parte de") são também fornecidas.

SIS ***Novidades***

A primeira linha de uma legenda é indicada em tipo maior para indicar o princípio de um elemento de informação. Legendas para páginas adicionais que podem ser necessárias para ilustrar um elemento de informação serão apresentadas em tipo padrão e incluirão o termo *(continua)* .

9. NÃO DISPONÍVEL SEPARADAMENTE

SIS ***Novidades***

Em alguns casos, é necessário mostrar peças não disponíveis separadamente que têm uma ligação com listas de conteúdos de nível inferior que podem receber serviço de manutenção. Os números de peça destes componentes não disponíveis aparecerão em *itálico* , a fim de indicar que não estão disponíveis.

10. NÙMEROS DE REFERÊNCIA À LISTA DE PEÇAS

SIS ***Novidades***

Os números indicados na coluna Ref No (No. de Referência) correspondem-se aos números usados no(s) gráfico(s) correspondente(s). Um sufixo com letras pode ser acrescentado a um número de referência para identificar itens de conteúdo de nível inferior. Os números indicados na coluna Graphic Ref (Referência de Gráfico) referem-se ao identificador de número de gráfico presente no canto esquerdo inferior de cada ilustração. O número de Referência de Gráfico pode ser usado em combinação com o item Ref No para determinar-se o número de peça correto. Poderá haver omissão intencional de um número de referência (Ref No) de uma lista de conteúdos uma vez que as informações são atualizadas para refletir os números de peça mais recentes que podem receber serviço de manutenção.

11. NOMES DE PEÇAS DESALINHADOS

Quando um nome de peça encontra-se desalinhado numa lista de peças, significa que tal item faz parte do (está incluído no) grupo ou conjunto sob o qual está relacionado.

12. LETRAS DE REFERÊNCIA NAS ILUSTRAÇÕES

Quando necessário, as ilustrações contêm letras de referência (A, B, C, etc.) que são utilizadas para seguir tubulações e cabos elétricos de um ponto a outro. Também foram utilizadas para indicar onde se pode reconectar as ilustrações que foram separadas.

13. ABREVIAÇÕES E SÍMBOLOS

O.D. – "Outside Diameter" (Diâmetro Externo)
I.D. – "Inside Diameter" (Diâmetro Interno)
A – Não faz parte deste grupo
B – Use conforme necessário
C – Indica modificação
D – Vendido por metro
E – Vendido por centímetro
F – Não ilustrado
G – Vendido por polegada
I – Consulte o seu revendedor quanto a mangueira
M – Peça métrica
R – Peça remanufaturada pode estar disponível; consulte o seu revendedor Cat
Y – Ilustração separada
Z – Não disponível separadamente

NOTA:

Os contínuos aperfeiçoamentos e avanços no projeto do produto podem ocasionar modificações em sua máquina que talvez ainda não estejam incluídas nesta publicação. Sempre que surgirem dúvidas quanto a um produto Caterpillar ou quanto à presente publicação, consulte o seu revendedor Caterpillar para obter as informações mais recentes disponíveis.

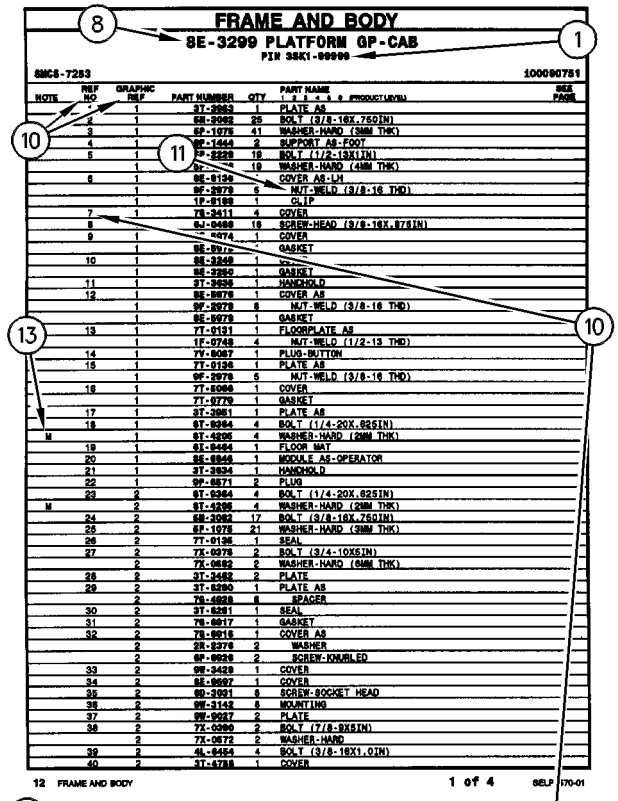

FRAME AND BODY

8E-3299 PLATFORM GP-CAB

PIN 3SK1-09999

SMCS-7253 100090751

NOTE	REF NO	GRAPHIC REF	PART NUMBER	QTY	PART NAME (1 2 3 4 5 6 PRODUCT LEVEL)	SEE PAGE
	1	1	3T-3963	1	PLATE AS	
	2	1	5B-2992	25	BOLT (3/8-16X.750IN)	
	3	1	5P-1075	41	WASHER-HARD (3MM THK)	
	4	1	9P-1444	2	SUPPORT AS-FOOT	
	5	1	9P-2228	19	BOLT (1/2-13X1IN)	
		1	5P-[illegible]4	19	WASHER-HARD (4MM THK)	
	6	1	8E-8136	1	COVER AS-LH	
		1	9F-2978	6	NUT-WELD (3/8-16 THD)	
		1	1P-8188	1	CLIP	
	7	1	7S-3411	4	COVER	
	8	1	6J-0488	18	SCREW-HEAD (3/8-16X.875IN)	
	9	1	[illegible]-4474	1	COVER	
		1	8E-8[illegible]7		GASKET	
	10	1	8E-3248	1	[illegible]	
		1	8E-3250	1	GASKET	
	11	1	3T-3835	1	HANDHOLD	
	12	1	8E-8878	1	COVER AS	
		1	9F-2978	8	NUT-WELD (3/8-16 THD)	
		1	8E-8078	1	GASKET	
	13	1	7T-0131	1	FLOORPLATE AS	
		1	1F-0748	4	NUT-WELD (1/2-13 THD)	
	14	1	7Y-8087	1	PLUG-BUTTON	
	15	1	7T-0136	1	PLATE AS	
		1	9F-2978	6	NUT-WELD (3/8-16 THD)	
	16	1	7T-8086	1	COVER	
		1	7T-0779	1	GASKET	
	17	1	3T-3981	1	PLATE AS	
	18	1	6T-9364	4	BOLT (1/4-20X.625IN)	
M		1	6T-4205	4	WASHER-HARD (2MM THK)	
	19	1	6L-8484	1	FLOOR MAT	
	20	1	9E-8946	1	MODULE AS-OPERATOR	
	21	1	3T-3834	1	HANDHOLD	
	22	1	9P-8571	2	PLUG	
	23	2	6T-9364	4	BOLT (1/4-20X.625IN)	
M		2	6T-4205	4	WASHER-HARD (2MM THK)	
	24	2	5B-3062	17	BOLT (3/8-16X.750IN)	
	25	2	5P-1075	21	WASHER-HARD (3MM THK)	
	26	2	7T-0135	1	SEAL	
	27	2	7X-0378	2	BOLT (3/4-10X5IN)	
		2	7X-0682	2	WASHER-HARD (6MM THK)	
	28	2	3T-3482	2	PLATE	
	29	2	3T-8280	1	PLATE AS	
		2	7S-0038	8	SPACER	
	30	2	3T-8281	1	SEAL	
	31	2	7S-8017	1	GASKET	
	32	2	7S-8016	1	COVER AS	
		2	2R-2276	2	WASHER	
		2	6P-0028	2	SCREW-KNURLED	
	33	2	9W-3429	1	COVER	
	34	2	8E-8697	1	COVER	
	35	2	9D-3031	8	SCREW-SOCKET HEAD	
	36	2	9W-3142	8	MOUNTING	
	37	2	9W-9027	2	PLATE	
	38	2	7X-0390	2	BOLT (7/8-9X5IN)	
		2	7X-0672	2	WASHER-HARD	
	39	2	4L-8454	4	BOLT (3/8-16X1.0IN)	
	40	2	3T-4788	1	COVER	

12 FRAME AND BODY 1 of 4 SELP4570-01

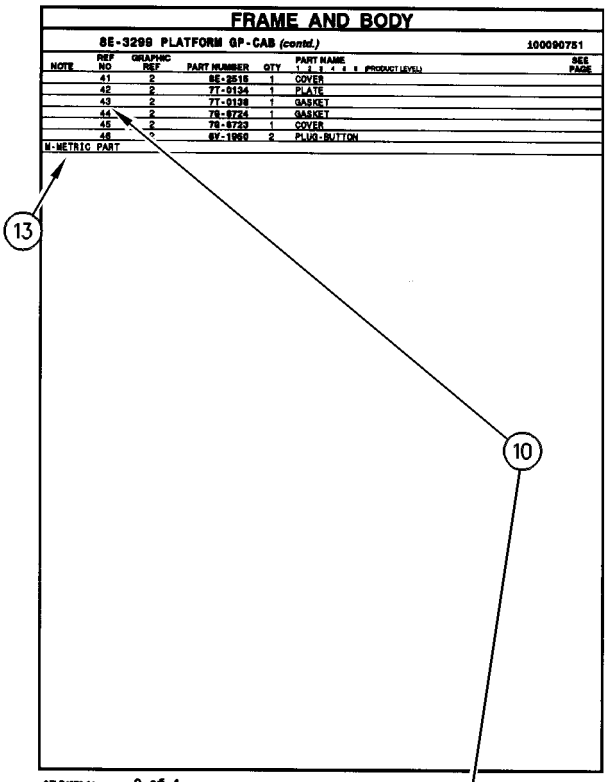

FRAME AND BODY

8E-3299 PLATFORM GP-CAB (contd.)

100090751

NOTE	REF NO	GRAPHIC REF	PART NUMBER	QTY	PART NAME (1 2 3 4 5 6 PRODUCT LEVEL)	SEE PAGE
	41	2	8E-3515	1	COVER	
	42	2	7T-0134	1	PLATE	
	43	2	7T-0139	1	GASKET	
	44	2	7S-0724	1	GASKET	
	45	2	7S-8723	1	COVER	
	46	2	6V-1969	2	PLUG-BUTTON	

M-METRIC PART

SELP4570-01 2 of 4 FRAME AND BODY 13

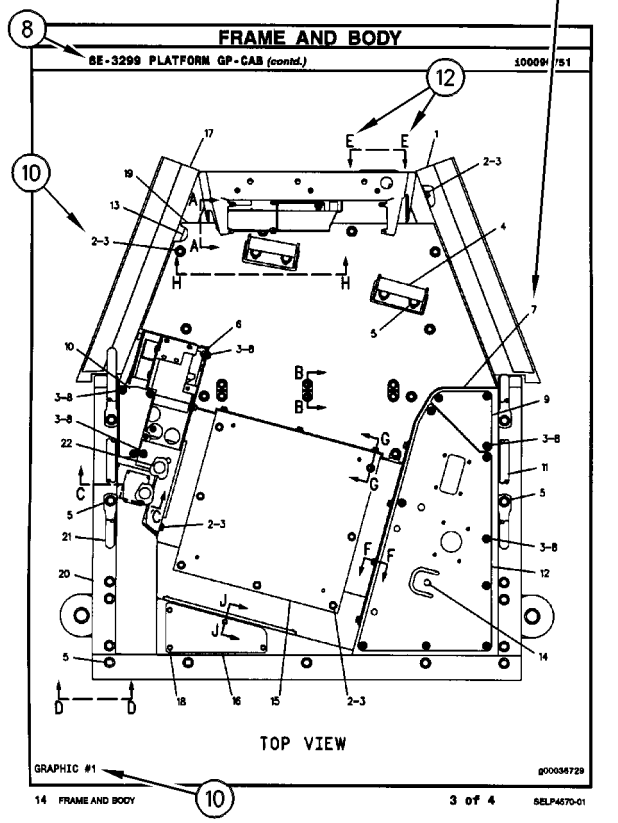

FRAME AND BODY

8E-3299 PLATFORM GP-CAB (contd.)

100090751

TOP VIEW

GRAPHIC #1 g00036729

14 FRAME AND BODY 3 of 4 SELP4570-01

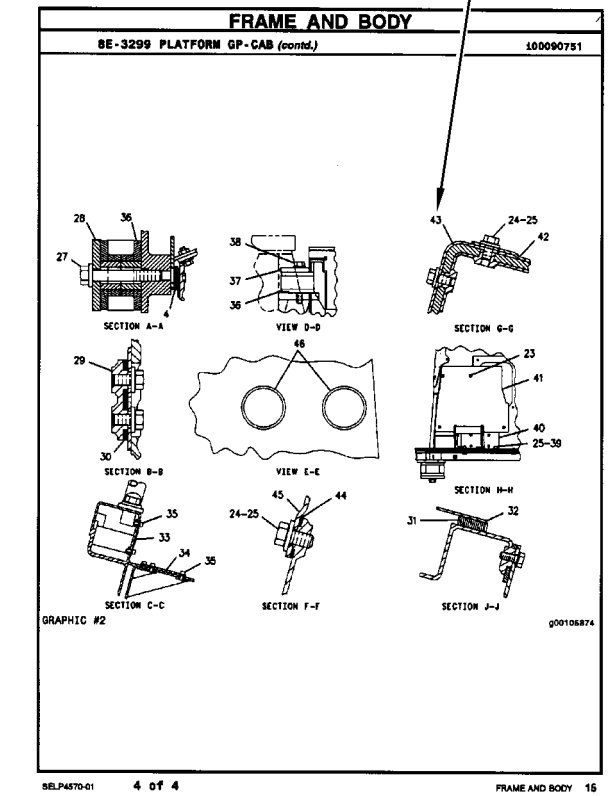

FRAME AND BODY

8E-3299 PLATFORM GP-CAB (contd.)

100090751

SECTION A-A VIEW D-D SECTION G-G

SECTION B-B VIEW E-E SECTION H-H

SECTION C-C SECTION F-F SECTION J-J

GRAPHIC #2 g00105874

SELP4570-01 4 of 4 FRAME AND BODY 15

ALLGEMEINE HINWEISE

1. MASCHINENKENNZEICHNUNG

Caterpillar-Maschinen sind mit PRODUCT IDENTIFICATION NUMBERS (PIN) (Produkt-Identnummern) gekennzeichnet. Einige Baugruppen, z.B. Motoren, Getriebe, Planierschilde und Aufreißer, sind mit SERIAL NUMBERS (S/N) (Seriennummern) gekennzeichnet. An der Maschine und am Motor befinden sich außerdem ARRANGEMENT NUMBERS (Ausrüstungsnummern) sowie in einigen Fällen MODIFICATION NUMBERS (Änderungsnummern). Sie befinden sich auf den PIN-Schildern und auf dem Typenschild im Fahrerhaus.

Bei Ersatzteilbestellungen müssen dem Händler alle diese Nummern zur Verfügung gestellt werden.

SIS ***Neu im Parts Manual***

Vom ersten Quartal 2001 ab wird die Caterpillar Produkt-Identnummer (PIN) von 8 auf 17 Zeichen geändert. Um zur Standardisierung der Produkt-Identnummer beizutragen, sind Caterpillar und andere Baumaschinenhersteller bestrebt, die aktuellste Norm zur Produkt-Identnummerierung einzuführen. Produkt-Identnummern für Baumaschinen sind durch ISO 10261 definiert. Das neue Format der Produkt-Identnummern gilt für alle Caterpillar-Maschinen und -Stromaggregate. Die Produkt-Identschilder und -Identrahmenmarkierung enthalten die aus 17 Zeichen bestehende Identnummer. Das neue Format hat folgende Abschnitte:

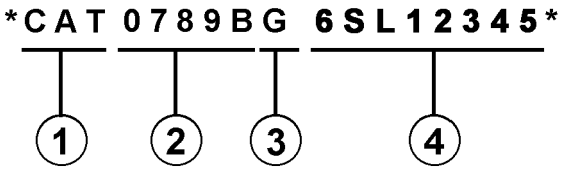

Abschnitte:

1. Caterpillars weltweiter Herstellungscode (Zeichen 1-3)

2. Modell (Zeichen 4-8)

3. Kontrollzeichen (Zeichen 9)

4. Maschinenspezifische Kennung (MIS) oder Produktsequenznummer (Zeichen 10-17). Diese wurde früher als Seriennummer bezeichnet.

Für vor dem ersten Quartal 2001 hergestellte Maschinen und Stromaggregate wird das aus 8 Zeichen bestehende PIN-Format beibehalten.

Bauteile wie z.B. Motoren, Getriebe, Achsen sowie Arbeitsgeräte werden weiterhin eine aus 8 Zeichen bestehende Seriennummer (S/N) aufweisen.

2. BESTELLEN VON ERSATZTEILEN

⚠ WARNUNG

Wenn für diese Maschine Ersatzteile benötigt werden, empfiehlt Caterpillar, ausschließlich Caterpillar-Ersatzteile oder solche zu verwenden, die die gleichen technischen Merkmale hinsichtlich Typ, Festigkeit, Werkzeugeigenschaften und die gleichen Maße aufweisen.

Bei Nichtbeachtung dieser Warnung besteht Verletzungs- oder sogar Lebensgefahr! Ferner kann Nichtbeachtung vorzeitige Ausfälle der Teile und Beschädigung der Maschine zur Folge haben.

Original Caterpillar-Ersatzteile können weltweit bei jedem Caterpillar-Händlern bestellt werden. Die umfangreichen Händlerlager enthalten normalerweise alle Teile, die Sie für Ihre Caterpillar-Maschine benötigen. Einige Händler bieten Reparatursätze, Austausch- oder werküberholte Teile an, so daß Sie eine Auswahl unter verschiedenen Reparaturmöglichkeiten treffen können. Ihre Bestellung muß folgende Angaben enthalten: Anzahl der benötigten Teile, Bestellnummer, Bezeichnung des Teils, Serien-Nr./Produkt-Ident-Nr., Ausrüstungs-Nr. und Änderungs-Nr. der Maschine, für die diese Teile benötigt werden.

3. AUFBAU DES PARTS MANUAL

Die Produktinformationen für alle Komponenten eines bestimmten Modells sind in INFORMATION ELEMENTS (Informationseinheiten) gegliedert. ENGINE ARRANGEMENT (Motorausführung) und SEAT GROUP (Fahrersitz) sind Beispiele für solche Informationseinheiten. Sie sind innerhalb jeder Gruppe alphabetisch, entsprechend der Ersatzteilbezeichnung, und zusätzlich numerisch, entsprechend der Ersatzteilnummer, geordnet.

4. INHALTSVERZEICHNIS

SIS *Neu im Parts Manual*

Das Inhaltsverzeichnis befindet sich am Anfang des Buches. Im Inhaltsverzeichnis werden die einzelnen Abschnitte des Buches aufgeführt. Die Abschnitte enthalten eine vollständige Aufstellung aller Informationseinheiten. Diese sind entsprechend ihrem Erscheinen im Buch geordnet. Das Inhaltsverzeichnis enthält Seitenangaben für Schnellverweise auf detaillierte Abbildungen und Teillisten.

5. INDEX FÜR WARTUNGSTEILE

Der Index für Wartungsteile vorn im Buch enthält die Bestellnummern, Seitenangaben, Mengenangaben und Informationen über den Einsatzbereich für die am häufigsten benötigten Ersatzteile. Die Angaben sind alphabetisch entsprechend der Teilebezeichnung geordnet.

6. INDEX

Der Index vorn im Buch enthält eine alphabetische Liste aller Informationseinheiten. Er enthält Seitenangaben für Schnellverweise auf detaillierte Abbildungen und Teillisten.

7. INDEX FÜR BESTELLNUMMERN

Hinten im Buch befindet sich ein numerischer Index, mit allen Bestellnummern und dem Hinweis auf die Seite, auf der sich die betreffende Abbildung befindet.

8. ÜBERSCHRIFTEN

Die Überschriften, die sich oben auf den Seiten der Informationseinheiten befinden, enthalten Bestellnummern, Ersatzteilbezeichnungen und zusätzliche beschreibende Informationen. Produkt-Ident- und Seriennummern in den Überschriften sollten zur Auswahl der richtigen Informationen für die betreffende Maschine verwendet werden. Die Überschriften enthalten außerdem Informationen über möglichen Außendienstersatz, mögliche Baugerätekomponenten und die Baugruppe, zu der das Teil gehört.

SIS *Neu im Parts Manual*

Die erste Zeile einer Überschrift erscheint in einer größeren Schriftart, um den Anfang einer Informationseinheit zu kennzeichnen. Überschriften für zusätzliche Seiten, die zur Erläuterung einer Informationseinheit notwendig sind, erscheinen in normaler Schriftart und enthalten den Begriff "(contd.)".

9. NICHT EINZELN LIEFERBARE TEILE

SIS *Neu im Parts Manual*

In einigen Fällen ist es notwendig nicht lieferbare Teile, die selbst mit einer eigenen Teilliste im Buch vertreten sind, aufzuführen. Die Bestellnummern dieser nicht einzeln lieferbaren Teile erscheinen kursiv, wodurch angezeigt wird, daß sie nur in Verbindung mit anderen Teilen lieferbar sind.

10. REFERENZNUMMER FÜR ERSATZTEILE

SIS *Neu im Parts Manual*

Die Zahlen, die in der Spalte "Ref No" aufgeführt sind, stimmen mit den Zahlen in den beigefügten Abbildungen überein. Ein Buchstaben-Suffix kann zu einer Referenznummer hinzugefügt werden, um zu kennzeichnen, daß das Teil mit einer eigenen Teilliste im Buch aufgeführt ist. Die in der Spalte "Graphic Ref" angeführten Zahlen verweisen auf die Identifikationsnummer der Abbildung, die sich in der linken unteren Ecke der Abbildung befindet. Diese Nummer kann zusammen mit der Referenznummer des Teils angegeben werden, um die richtige Ersatzteilnummer zu ermitteln. Referenznummern können absichtlich weggelassen werden, da die Nummern der lieferbaren Ersatzteile ständig aktualisiert werden.

11. EINGERÜCKTE BEZEICHNUNGEN

Wenn eine Bezeichnung eingerückt ist, wird dadurch angezeigt, daß das Teil zu einer Baugruppe gehört, unter deren Bezeichnung es eingerückt ist.

12. REFERENZBUCHSTABEN

Falls erforderlich sind in den Abbildungen Referenzbuchstaben enthalten (z.B. A, B, C, usw.), die Leitungen und Kabelbäume von einem Punkt zum anderen verfolgen. Außerdem geben sie die Stelle an, an der getrennte Abbildungen fortgesetzt werden.

13. ABKÜRZUNGEN UND SYMBOLE

O.D. – Außendurchmesser
I.D. – Innendurchmesser
A – kein Teil dieser Gruppe
B – nach Bedarf verwenden
C – Hinweis auf eine Änderung
D – in Meter-Länge bestellen
E – in Zentimeter-Länge bestellen
F – nicht gezeigt
G – in Zoll-Länge bestellen
I – siehe "Hose Fabrication Guide"
M – metrisches Teil
R – werküberholtes Teil unter Umständen lieferbar
Y – separate Abbildung
Z – nicht einzeln lieferbar

ANMERKUNG:

Ständig vorgenommene Verbesserungen und Weiterentwicklungen an Ihrer Maschine können Änderungen verursachen, die in der vorliegenden Ausgabe noch nicht berücksichtigt sind. Fragen zu Ihrer Caterpillar-Maschine oder diesem Ersatzteilbuch beantwortet Ihr Caterpillar-Händler.

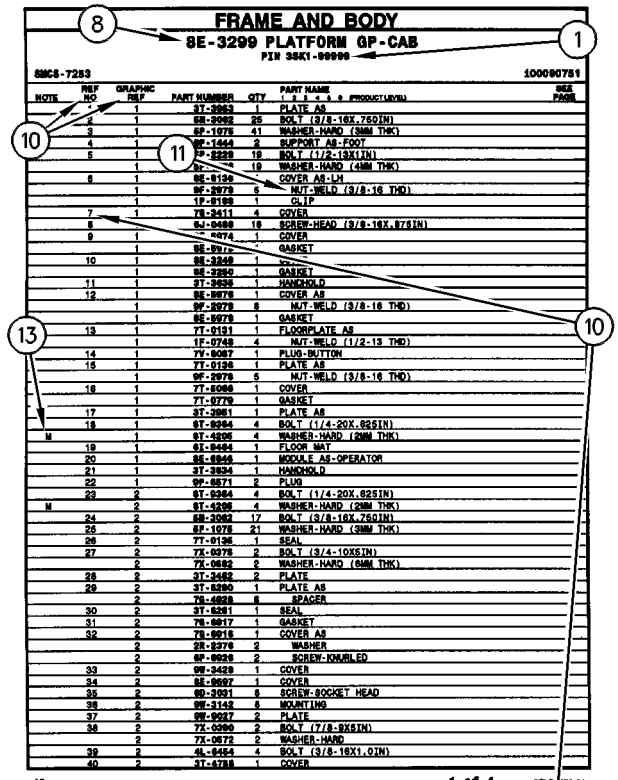

FRAME AND BODY

8E-3299 PLATFORM GP-CAB

PIN 38K1-09999

SMCS-7253 100090751

NOTE	REF NO	GRAPHIC REF	PART NUMBER	QTY	PART NAME (1 2 3 4 5 6 PRODUCT LEVEL)	SEE PAGE
	1	1	3T-3963	1	PLATE AS	
	2	1	5B-2992	25	BOLT (3/8-16X.750IN)	
	3	1	6P-1075	41	WASHER-HARD (3MM THK)	
	4	1	8P-1444	2	SUPPORT AS-FOOT	
	5	1	9P-2229	19	BOLT (1/2-13X1IN)	
		1	9P-[illegible]4	19	WASHER-HARD (4MM THK)	
	6	1	9E-9136	1	COVER AS-LH	
		1	9F-2979	6	NUT-WELD (3/8-16 THD)	
		1	1P-0188	1	CLIP	
	7	1	7S-3411	4	COVER	
	8	1	6J-0488	18	SCREW-HEAD (3/8-16X.875IN)	
	9	1	[illegible]-4474	1	COVER	
		1	9E-9[illegible]7		GASKET	
	10	1	9E-3249	1	[illegible]	
		1	9E-3250	1	GASKET	
	11	1	3T-3935	1	HANDHOLD	
	12	1	9E-9078	1	COVER AS	
		1	9F-2979	8	NUT-WELD (3/8-16 THD)	
		1	9E-9079	1	GASKET	
	13	1	7T-0131	1	FLOORPLATE AS	
		1	1F-0748	4	NUT-WELD (1/2-13 THD)	
	14	1	7Y-9087	1	PLUG-BUTTON	
	15	1	7T-0136	1	PLATE AS	
		1	9F-2979	6	NUT-WELD (3/8-16 THD)	
	16	1	7T-9096	1	COVER	
		1	7T-9779	1	GASKET	
	17	1	3T-3981	1	PLATE AS	
	18	1	6T-9364	4	BOLT (1/4-20X.625IN)	
M		1	6T-4205	4	WASHER-HARD (2MM THK)	
	19	1	6L-9484	1	FLOOR MAT	
	20	1	9E-9946	1	MODULE AS-OPERATOR	
	21	1	3T-3934	1	HANDHOLD	
	22	1	9P-8571	2	PLUG	
	23	2	6T-9364	4	BOLT (1/4-20X.625IN)	
M		2	6T-4205	4	WASHER-HARD (2MM THK)	
	24	2	5B-3062	17	BOLT (3/8-16X.750IN)	
	26	2	6P-1075	21	WASHER-HARD (3MM THK)	
	26	2	7T-0135	1	SEAL	
	27	2	7X-0378	2	BOLT (3/4-10X5IN)	
		2	7X-0682	2	WASHER-HARD (6MM THK)	
	28	2	3T-3482	2	PLATE	
	29	2	3T-5290	1	PLATE AS	
		2	7S-0038	8	SPACER	
	30	2	3T-5281	1	SEAL	
	31	2	7S-9017	1	GASKET	
	32	2	7S-9016	1	COVER AS	
		2	2R-2276	2	WASHER	
		2	6P-9028	2	SCREW-KNURLED	
	33	2	9W-3429	1	COVER	
	34	2	9E-9097	1	COVER	
	35	2	9D-3031	8	SCREW-SOCKET HEAD	
	36	2	9W-3142	8	MOUNTING	
	37	2	9W-9027	2	PLATE	
	38	2	7X-0390	2	BOLT (7/8-9X5IN)	
		2	7X-0672	2	WASHER-HARD	
	39	2	4L-9454	4	BOLT (3/8-16X1.0IN)	
	40	2	3T-4788	1	COVER	

12 FRAME AND BODY 1 of 4 SELP4570-01

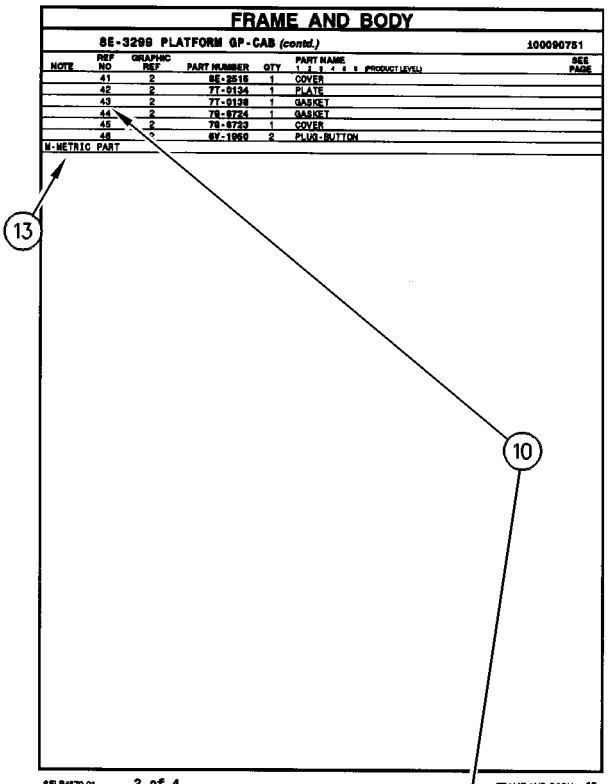

FRAME AND BODY

8E-3299 PLATFORM GP-CAB (contd.) 100090751

NOTE	REF NO	GRAPHIC REF	PART NUMBER	QTY	PART NAME (1 2 3 4 5 6 PRODUCT LEVEL)	SEE PAGE
	41	2	8E-3515	1	COVER	
	42	2	7T-0134	1	PLATE	
	43	2	7T-0139	1	GASKET	
	44	2	7S-9724	1	GASKET	
	45	2	7S-9723	1	COVER	
	46	2	6Y-1969	2	PLUG-BUTTON	

M-METRIC PART

SELP4570-01 2 of 4 FRAME AND BODY 13

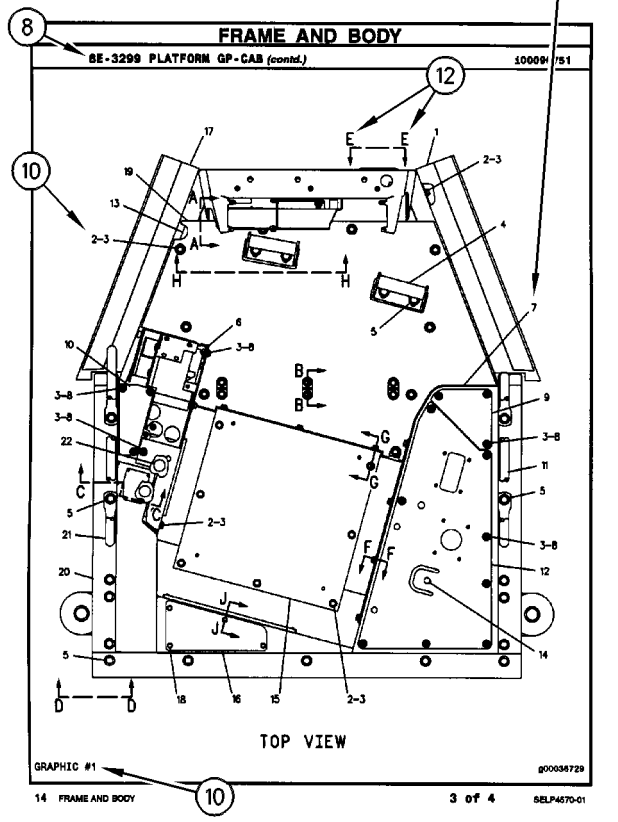

FRAME AND BODY

8E-3299 PLATFORM GP-CAB (contd.) 100090751

TOP VIEW

GRAPHIC #1 g00036729

14 FRAME AND BODY 3 of 4 SELP4570-01

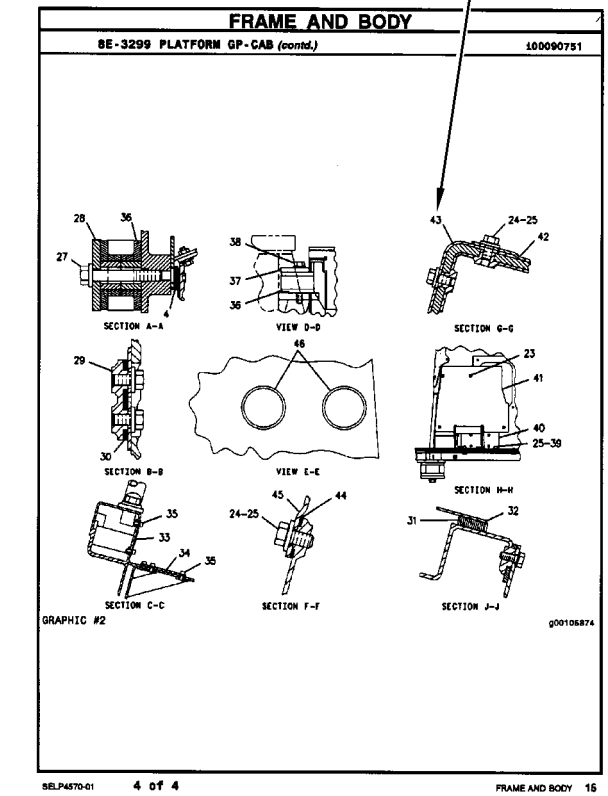

FRAME AND BODY

8E-3299 PLATFORM GP-CAB (contd.) 100090751

SECTION A-A VIEW D-D SECTION G-G

SECTION B-B VIEW E-E SECTION H-H

SECTION C-C SECTION F-F SECTION J-J

GRAPHIC #2 g00105874

SELP4570-01 4 of 4 FRAME AND BODY 15

REMANUFACTURED COMPONENTS

As an option when making repairs consider Caterpillar Remanufactured Components. Components that are available through the Caterpillar Remanufactured Program are identified three ways in the parts book:

- with the letter R in the note field of the parts list
- with an R* at the beginning of the first line of the caption
- with an *R at the end of the first line of the caption

Typical components included in the Remanufacturing Program include:

ALTERNATORS
CONNECTING RODS
CRANKSHAFTS - UNDERSIZE
CRANKSHAFTS - UPGRADE TO NEW
CYLINDER HEADS
ELECTRONIC CONTROL MODULES (ECM)
ELECTRONIC SENSORS
FUEL INJECTORS
FUEL NOZZLES
FUEL PUMPS
GOVERNORS
OIL PUMPS
PISTONS
SHORT BLOCKS
STARTERS
TURBOCHARGERS - COMPLETE
TURBOCHARGER CARTRIDGES
WATER PUMPS

Caterpillar Remanufactured engines for many engine arrangements are also available.

OPTIONS DE RÉPARATION

COMPOSANTS RÉNOVÉS

Comme option de réparation, considérer les composants rénovés Caterpillar. Les composants disponibles dans le cadre du programme Caterpillar de composants rénovés sont identifiés de trois façons dans le catalogue de pièces:

- avec la lettre "R" dans l'espace note de la liste des pièces
- avec R* au début de la première ligne des légendes
- avec *R à la fin de la première ligne des légendes

Les composants suivants figurent parmi les composants typiques du programme de rénovation:

ALTERNATEURS
BIELLES
VILEBREQUINS - SOUS-DIMENSIONNÉS
VILEBREQUINS - REMIS À NEUF
CULASSES
MODULES DE COMMANDE ÉLECTRONIQUE (ECM)
CAPTEURS ÉLECTRONIQUES
INJECTEURS
TÊTES D'INJECTEURS
POMPES À CARBURANT
RÉGULATEURS
POMPES À HUILE
PISTONS
BLOCS EMBIELLÉS
DÉMARREURS
TURBOCOMPRESSEURS - COMPLETS
CARTOUCHES DE TURBOCOMPRESSEUR
POMPES À EAU

Des moteurs rénovés sont aussi disponibles pour plusieurs versions de moteur.

ALTERNATIVAS DE REPARACIÓN

COMPONENTES REMANUFACTURADOS

Al hacer reparaciones, tenga en cuenta la opción de Componentes Remanufacturados Caterpillar. Los componentes que están disponibles por medio del programa de Productos Remanufacturados Caterpillar se identifican de tres maneras en el manual de piezas:

- con la letra R en el espacio de Nota de la lista de piezas
- con una R* al comienzo de la primera línea de la leyenda
- con una *R al final de la primera línea de la leyenda

Los componentes que se incluyen típicamente en el Programa de Productos Remanufacturados son:

ALTERNADORES
BIELAS
CIGÜEÑALES - BAJOMEDIDA
CIGÜEÑALES - REMANUFACTURADOS A NUEVO
CULATAS
MÓDULOS DE CONTROL ELECTRÓNICO (ECM)
SENSORES ELECTRONICOS
INYECTORES
BOQUILLAS
BOMBAS DE COMBUSTIBLE
REGULADORES
BOMBAS DE ACEITE
PISTONES
MONOBLOQUES
MOTORES DE ARRANQUE
TURBOCOMPRESORES - COMPLETOS
NÚCLEOS DE TURBOCOMPRESOR
BOMBAS DE AGUA

También hay disponibles motores Remanufacturados Caterpillar para muchas de las configuraciones de motores.

COMPONENTES REMANUFATURADOS

Considere o uso de Componentes Remanufaturados Caterpillar ao efetuar reparos. Os componentes disponíveis através do Programa de Remanufatura Caterpillar são identificados de três formas no manual de peças:

- com um R na área da nota da lista de peças
- com um R* no princípio da primeira linha da legenda
- com um *R no final da primeira linha da legenda

Os componentes típicos que constam no Programa de Remanufatura incluem:

ALTERNADORES
BIELAS
VIRABREQUINS - SUBMEDIDAS
VIRABREQUINS - ATUALIZAÇÃO
CABEÇOTES
MÓDULOS DE CONTROLE ELETRÔNICO (ECM)
SENSORES ELETRÔNICOS
INJETORES DE COMBUSTÍVEL
BICOS DE ABASTECIMENTO DE COMBUSTÍVEL
BOMBAS DE COMBUSTÍVEL
GOVERNADORES
BOMBAS DE ÓLEO
PISTÕES
BLOCOS BÁSICOS DO MOTOR
MOTORES DE PARTIDA
TURBOALIMENTADORES - COMPLETOS
CARTUCHOS DE TURBOALIMENTADORES
BOMBAS D'ÁGUA

Motores Remanufaturados Caterpillar também encontram-se disponíveis para diversos arranjos de motor.

WERKÜBERHOLTE AT-PRODUKTE

Bei Reparaturen sollten werküberholte AT-Produkte von Caterpillar in Betracht gezogen werden. Die durch das AT-Programm von Caterpillar erhältlichen Teile sind im Parts Book auf drei verschiedene Arten gekennzeichnet:

- mit dem Buchstaben R in der Spalte NOTE der Ersatzteilliste
- mit einem R* am Anfang der ersten Zeile der Überschrift
- mit einem *R am Ende der ersten Zeile der Überschrift

Das AT-Programm umfaßt u.a. folgende Produkte:

DREHSTROMGENERATOREN
PLEUELSTANGEN
KURBELWELLEN - MIT UNTERMASS
KURBELWELLEN - MIT ORIGINALMASS
ZYLINDERKÖPFE
ELEKTRONISCHE STEUEREINHEITEN (EMC)
ELEKTRONISCHE SENSOREN
PUMPENDÜSEN
EINSPRITZDÜSEN
KRAFTSTOFFPUMPEN
DREHZAHLREGLER
ÖLPUMPEN
KOLBEN
TEILMOTOREN
ANLASSER
TURBOLADER - KOMPLETT
TURBOLADERLAUFZEUGE
KÜHLWASSERPUMPEN

Viele Motoren können durch werküberholte AT-Motoren von Caterpillar ersetzt werden.

SUPPLEMENTAL COOLANT ADDITIVES

CUSTOMER BENEFITS:

Protects against cavitation, foam, erosion, corrosion, and scale buildup in cooling systems.

- Provides measured coolant conditioner.

DESCRIPTION:

Additives deplete from the coolant with normal operation. For this reason, Supplemental Coolant Additives (SCA) must be added to all heavy duty coolants at regular intervals. In addition, when not using a fully formulated, pre-charged antifreeze, like Caterpillar's DEAC, an initial charge of SCA must be added to the cooling system. The amount of SCA added to the system is dependent on the capacity of the system.

The SCA for initial fill is provided as a liquid. SCA's for maintenance intervals are available in liquid form and as a spin-on element. (No Spin-on available for 3600 Family of Engines)

NOTE:

The amount of SCA added at initial fill is not the same as the amount added at maintenance intervals.

The coolant additive elements can be used with any ethylene or propylene glycol type antifreeze which meets ASTM D4985 or ASTM D5345 Specifications.

NOTE:

For use with standard heavy duty coolant only, not for use with Extended Life Coolant.

PARTS NEEDED:

Cooling System Capacity		Liquid SCA at Initial Fill	Liquid SCA at Maintenance*	Spin-on SCA Maintenance Element*
Liters	Gallons			
22-30	(6-8)	3P-2044 (1)	6V-3542 (1)	111-2370 (1)
30-38	(8-10)	3P-2044 (1) 6V-3542 (1)	111-2372 (1)	111-2369 (1)
38-49	(10-13)	3P-2044 (1) 8T-1589 (1)	111-2372 (1)	111-2369 (1)
49-64	(13-17)	3P-2044 (2)	8T-1589 (1)	9N-3368 (1)
64-83	(17-22)	3P-2044 (2) 8T-1589 (1)	111-2372 (1) 6V-3542 (1)	111-2371 (1)
83-114	(22-30)	3P-2044 (3) 8T-1589 (1)	3P-2044 (1)	9N-3718 (1)
114-163	(30-43)	3P-2044 (5)	3P-2044 (1) 6V-3542 (1)	111-2371 (2)
163-242	(43-64)	3P-2044 (8)	3P-2044 (2)	9N-3718 (2)

** Normal maintenance period is 250 hrs. See your Operation and Maintenance Manual for complete coolant maintenance instructions.*

( ) Indicates quantity required.

ADDITIFS POUR LIQUIDE DE REFROIDISSEMENT

AVANTAGES POUR LE CLIENT

L'additif protège contre la cavitation, la mousse, l'érosion, la corrosion et l'accumulation de dépôts dans le circuit de refroidissement.

- L'additif complémentaire fournit une quantité mesurée d'additif.

DESCRIPTION:

Les additifs s'épuisent pendant l'utilisation du moteur. C'est pourquoi l'on doit ajouter de l'additif au liquide de refroidissement/antigel pour moteurs diesel à intervalles réguliers. En plus, si l'on n'utilise pas de l'antigel entièrement formulé et pré-chargé comme le liquide de refroidissement/antigel Caterpillar pour moteurs diesel, une quantité initiale d'additif doit être ajoutée au circuit de refroidissement. La quantité d'additif à ajouter au circuit dépend de la contenance du circuit.

L'additif pour le remplissage initial est fourni sous forme liquide. L'additif pour l'entretien ultérieur est disponible sous forme liquide et sous forme d'élément à visser. (Il n'y a pas d'élément à visser pour les moteurs de la famille 3600).

NOTA:

La quantité d'additif à ajouter au remplissage initial diffère de la quantité à ajouter aux intervalles d'entretien.

Les éléments d'additif peuvent être utilisés avec tout antigel de type éthylène ou propylène-glycol conforme à la norme ASTM D4985 ou ASTM D5345.

NOTA:

A utiliser uniquement avec du liquide de refroidissement pour moteurs diesel et non avec le liquide de refroidissement longue durée.

PIÈCES NÉCESSAIRES:

Contenance du circuit de refroidissement		Additif liquide au remplissage initial	Additif liquide aux intervalles d'entretien*	Elément d'additif à visser aux intervalles d'entretien*
Litres	Gallons U.S.			
22-30	(6-8)	3P-2044 (1)	6V-3542 (1)	111-2370 (1)
30-38	(8-10)	3P-2044 (1) 6V-3542 (1)	111-2372 (1)	111-2369 (1)
38-49	(10-13)	3P-2044 (1) 8T-1589 (1)	111-2372 (1)	111-2369 (1)
49-64	(13-17)	3P-2044 (2)	8T-1589 (1)	9N-3368 (1)
64-83	(17-22)	3P-2044 (2) 8T-1589 (1)	111-2372 (1) 6V-3542 (1)	111-2371 (1)
83-114	(22-30)	3P-2044 (3) 8T-1589 (1)	3P-2044 (1)	9N-3718 (1)
114-163	(30-43)	3P-2044 (5)	3P-2044 (1) 6V-3542 (1)	111-2371 (2)
163-242	(43-64)	3P-2044 (8)	3P-2044 (2)	9N-3718 (2)

** L'intervalle d'entretien normal est de 250 heures-service. Voir le Guide d'utilisation et d'entretien pour de plus amples renseignements concernant l'entretien du circuit de refroidissement.*

( ) Indique la quantité exigée.

ADITIVOS DE REFRIGERANTE SUPLEMENTARIOS

VENTAJAS PARA EL USUARIO:

Protegen contra la cavitación, la formación de espuma, la corrosión y la acumulación de escamas en los sistemas de enfriamiento.

- Suministra un acondicionador dosificado de refrigerante.

DESCRIPCIÓN:

Los aditivos en el refrigerante se agotan con la operación normal. Por esta razón, se debe agregar Aditivo de refrigerante suplementario (SCA) a todos los refrigerantes para servicio pesado, a intervalos regulares. Además, cuando no se usa un anticongelante de precarga completo, tal como el DEAC de Caterpillar, es necesario agregar una cantidad de aditivo de refrigerante suplementario inicial al sistema de enfriamiento. La cantidad de aditivo que se debe agregar depende de la capacidad del sistema.

El SCA de llenado inicial es líquido. El que se usa para el mantenimiento está disponible tanto en líquido como en un elemento enroscable. (No hay elemento enroscable disponible para la Familia de Motores 3600).

NOTA:

La cantidad de aditivo de llenado inicial no es la misma que se agrega en los intervalos de mantenimiento.

Los elementos de aditivo de refrigerante se pueden usar con cualquier anticongelante de tipo glicol etilénico o propílico que esté de acuerdo con las especificaciones de las normas ASTM D4985 o ASTM D5345.

NOTA:

Se debe utilizar únicamente con refrigerante estándar para servicio pesado; no se debe usar con Refrigerante de Larga Duración.

PIEZAS NECESARIAS:

Capacidad del Sistema de Enfriamiento		SCA líquido de llenado inicial	SCA líquido de mantenimiento*	Elemento de mantenimiento enroscable*
litros	gal EE.UU.			
22-30	6-8	3P-2044 (1)	6V-3542 (1)	111-2370 (1)
30-38	8-10	3P-2044 (1) 6V-3542 (1)	111-2372 (1)	111-2369 (1)
38-49	10-13	3P-2044 (1) 8T-1589 (1)	111-2372 (1)	111-2369 (1)
49-64	13-17	3P-2044 (2)	8T-1589 (1)	9N-3368 (1)
64-83	17-22	3P-2044 (2) 8T-1589 (1)	111-2372 (1) 6V-3542 (1)	111-2371 (1)
83-114	22-30	3P-2044 (3) 8T-1589 (1)	3P-2044 (1)	9N-3718 (1)
114-163	30-43	3P-2044 (5)	3P-2044 (1) 6V-3542 (1)	111-2371 (2)
163-242	43-64	3P-2044 (8)	3P-2044 (2)	9N-3718 (2)

** El período normal de mantenimiento es de 250 horas. Para ver las instrucciones completas sobre el mantenimiento del refrigerante, consulte el Manual de Operación y Mantenimiento.*

( ) Indica la cantidad necesaria.

ADITIVOS SUPLEMENTARES DO LÍQUIDO ARREFECEDOR

BENEFÍCIOS PARA O CLIENTE:

Protege contra cavitação, espuma, erosão, corrosão e acúmulo de crostas nos sistemas de arrefecimento.

- Fornece uma quantidade pré-determinada de condicionador de arrefecimento.

DESCRIÇÃO:

Com a operação normal, os aditivos se esgotam do líquido arrefecedor. Por isso, Aditivos Suplementares do Líquido Arrefecedor (SCA) devem ser acrescentados a todos os líquidos arrefecedores para serviço pesado em intervalos regulares. Além disso, quando um anticongelante pré-carregado, totalmente formulado não for usado, como o DEAC Caterpillar, uma carga inicial de SCA deve ser acrescentada ao sistema de arrefecimento. A quantidade de SCA acrescentada ao sistema depende da capacidade do sistema.

O SCA para abastecimento inicial é fornecido em forma de líquido. Os aditivos suplementares (SCA) para intervalos de manutenção estão à disposição em forma líquida e como um elemento com roscas. (Exceto os Motores da Família 3600)

NOTA:

A quantidade de SCA adicionada no abastecimento inicial não é a mesma que a acrescentada nos intervalos de manutenção.

Os elementos do aditivo do líquido arrefecedor podem ser usados com qualquer tipo de anticongelante etileno ou propileno que satisfaz as Especificações ASTM D4985 ou ASTM D5345.

NOTA:

Para uso apenas com líquido arrefecedor para serviço pesado padrão, não deve ser usado com Líquido Arrefecedor de Vida Longa.

PEÇAS NECESSÁRIAS:

Capacidade do Sistema de Arrefecimento		Líquido SCA Durante Abastecimento Inicial	Líquido SCA Durante Manutenção*	Elemento de Manutenção de SCA com Roscas*
Litros	Galões			
22-30	6-8	3P-2044 (1)	6V-3542 (1)	111-2370 (1)
30-38	8-10	3P-2044 (1) 6V-3542 (1)	111-2372 (1)	111-2369 (1)
38-49	10-13	3P-2044 (1) 8T-1589 (1)	111-2372 (1)	111-2369 (1)
49-64	13-17	3P-2044 (2)	8T-1589 (1)	9N-3368 (1)
64-83	17-22	3P-2044 (2) 8T-1589 (1)	111-2372 (1) 6V-3542 (1)	111-2371 (1)
83-114	22-30	3P-2044 (3) 8T-1589 (1)	3P-2044 (1)	9N-3718 (1)
114-163	30-43	3P-2044 (5)	3P-2044 (1) 6V-3542 (1)	111-2371 (2)
163-242	43-64	3P-2044 (8)	3P-2044 (2)	9N-3718 (2)

** O período normal de manutenção é de 250 horas. Consulte o Manual de Operação e Manutenção para obter instruções completas quanto à manutenção do líquido arrefecedor.*

( ) Indica a quantidade exigida.

KÜHLMITTELZUSATZ

VORTEILE FÜR DEN KUNDEN:

Schutz gegen Kavitation, Schaumbildung, Erosion, Korrosion und Kesselsteinbildung in Kühlsystemen.

- Richtig dosierter Kühlmittelzusatz

BESCHREIBUNG:

Additive erschöpfen sich während des Motorbetriebs. Deshalb muß allen HD-Kühlmitteln regelmäßig Kühlmittelzusatz beigefügt werden. Wenn bei Erstfüllung kein vollwertiges Fertigkühlmittel, wie das Frostschutz- und Kühlmittel für Dieselmotoren von Caterpiller (DEAC), verwendet wird, muß bei Erstfüllung Kühlmittelzusatz beigefügt werden. Wieviel Kühlmittelzusatz beigefügt werden muß, hängt vom Inhalt des Kühlsystems ab.

Für Erstfüllung ist Kühlmittelzusatz nur in flüssiger Form erhältlich. Für Wartungsintervalle ist Kühlmittelzusatz in flüssiger Form und als Zusatzelement erhältlich. (Für die Motorbaureihe 3600 sind keine Zusatzelemente erhältlich.)

ANMERKUNG:

Die Kühlmittelmenge bei Erstfüllung ist nicht die gleiche Menge, die bei Wartungsintervallen beigefügt werden muß.

Die Kühlmittelzusatzelemente können mit allen Frostschutzmitteln auf Ethylen- oder Propylenglykolbasis verwendet werden, die den Standards nach ASTM D4985 oder ASTM D5345 entsprechen.

ANMERKUNG:

Den Kühlmittelzusatz nicht mit Langzeitkühlmittel (ELC) von Caterpillar verwenden. Der Kühlmittelzusatz ist nur für HD-Kühlmittel bestimmt.

TEILEBEZEICHNUNG:

Kühlsysteminhalt		Kühlmittelzusatz bei Erstfüllung	Flüssiger Kühlmittelzusatz bei Wartung*	Kühlmittelzusatzelement bei Wartung*
Liter	US-Gall.			
22-30	(6-8)	3P-2044 (1)	6V-3542 (1)	111-2370 (1)
30-38	(8-10)	3P-2044 (1) 6V-3542 (1)	111-2372 (1)	111-2369 (1)
38-49	(10-13)	3P-2044 (1) 8T-1589 (1)	111-2372 (1)	111-2369 (1)
49-64	(13-17)	3P-2044 (2)	8T-1589 (1)	9N-3368 (1)
64-83	(17-22)	3P-2044 (2) 8T-1589 (1)	111-2372 (1) 6V-3542 (1)	111-2371 (1)
83-114	(22-30)	3P-2044 (3) 8T-1589 (1)	3P-2044 (1)	9N-3718 (1)
114-163	(30-43)	3P-2044 (5)	3P-2044 (1) 6V-3542 (1)	111-2371 (2)
163-242	(43-64)	3P-2044 (8)	3P-2044 (2)	9N-3718 (2)

** Der normale Wartungsintervall beträgt 250 Betriebsstunden. Für vollständige Anweisungen zur Wartung des Kühlsystems, siehe Betriebs- und Wartungshandbuch.*

( ) Erforderliche Anzahl

MAINTENANCE PARTS

DESCRIPTION	PART NUMBER	QTY	WHERE USED	PAGE
AIR INLET AND EXHAUST SYSTEM				
ELEMENT AS-PRIMARY	6I-0273	1	AIR CLEANER GP	92
ELEMENT AS-SECONDARY	6I-0274	1	AIR CLEANER GP	92
INDICATOR-AIR FILTER SERVICE	8N-2694	1	AIR CLEANER GP	90
BASIC ENGINE				
BREATHER AS (ENGINE)	9Y-4357	1	VALVE MECHANISM GP	58
CAP-DUST	6V-0852	1	PLUG GP-ENGINE	50
GASKET-BASE	109-5309	1	VALVE MECHANISM GP	58
GASKET-BREATHER	9Y-1758	1	VALVE MECHANISM GP	58
HOSE-FUMES DISPOSAL	126-0146	1	AIR COMPRESSOR GP	10
PLUG-DRAIN	5F-0304	1	HOUSING GP-FLYWHEEL	36
SEAL (1M)	5P-5678		MOUNTING GP-VALVE MECHANISM	43
COOLING SYSTEM				
CAP-DUST	6V-0852	2	LINES GP-POWER TRAIN COOLER	78
		1	LINES GP-WATER	82
	8C-3447	1	LINES GP-POWER TRAIN COOLER	78
CAP-RADIATOR	6L-8617	1	RADIATOR GP	87
FILTER ELEMENT AS-FUEL (TRANSMISSION OIL)	2H-7254	1	LINES GP-POWER TRAIN COOLER	78
REGULATOR-WATER TEMPERATURE	7C-3095	1	HOUSING & REGULATOR GP	76
ELECTRICAL AND STARTING SYSTEM				
BATTERY (HEAVY DUTY)(12V)	153-5710	2	BATTERY GP	131
BATTERY (MAINTENANCE FREE)(12 VOLT)	153-5700	2	BATTERY GP	132
BELT-DRIVE (WARNING BEACON)	9X-8139	1	LAMP GP-WARNING BEACON	160
CAP AS-DUST	133-6517	1	HEATER GP-JACKET WATER	145
		1	HEATER GP-JACKET WATER	146
CIRCUIT BREAKER AS (15 AMP) (ENGINE CONTROL)	6T-3643	1	WIRING GP-REAR	243
CIRCUIT BREAKER AS (15 AMP) (HEADLAMP/LIGHTBAR LOW BEAM)	3T-2662	2	LIGHTING GP-FLOOD	178
CIRCUIT BREAKER AS (15 AMP) (HEADLAMPS)	3T-2662	1	CIRCUIT BREAKER GP	133
		1	CIRCUIT BREAKER GP	134
CIRCUIT BREAKER AS (15 AMP) (LIGHTBAR WORKLAMPS)	3T-2662	1	CIRCUIT BREAKER GP	133
CIRCUIT BREAKER AS (80 AMP) (ALTERNATOR)	171-2210	1	WIRING GP-REAR	242
CIRCUIT BREAKER AS (80 AMP) (MAIN)	171-2210	1	WIRING GP-REAR	242
ELEMENT AS-HEATER (240V 1250W)	154-2881	1	HEATER GP-JACKET WATER	146
ELEMENT AS-JACKET WATER HEATER (120V 1250W)	131-8627	1	HEATER GP-JACKET WATER	145
FLASHER AS-ELECTRONIC (12/24 VOLT) (TURN SIGNAL/HAZARD)	108-0358	1	LIGHTING GP-FLOOD	178
		1	LIGHTING GP-FLOOD	182
FLASHER AS-ELECTRONIC (12/24 VOLT) (TURN SIGNALS & HAZARDS)	108-0358	1	LIGHTING GP-FLOOD	186
FUSE (10 AMP) (BACKUP LAMP)	9W-1442	1	LIGHTING GP-BACKUP	168
FUSE (10 AMP) (BLADE CUSHION CONTROL)	9W-1442	1	WIRING GP-BLADE CUSHION	225

MAINTENANCE PARTS

DESCRIPTION	PART NUMBER	QTY	WHERE USED	PAGE
FUSE (10 AMP) (CONTROLLER FOR THE BLADE)	9W-1442	1	WIRING GP-CAB	228
FUSE (10 AMP) (FLOODLAMP RH)	9W-1442	1	LIGHTING GP-FLOOD	174
FUSE (10 AMP) (FRONT FLOODLIGHT)	9W-1442	2	LIGHTING GP-FLOOD	172
FUSE (10 AMP) (FRONT WORK LIGHTS)	9W-1442	1	LIGHTING GP-FLOOD	176
FUSE (10 AMP) (HIGH/LOW BEAM)	9W-1442	1	LIGHTING GP-FLOOD	178
FUSE (10 AMP) (HIGH/LOW BEAM & SIGNAL)	9W-1442	1	LIGHTING GP-FLOOD	186
FUSE (10 AMP) (POWER CONVERTER)	9W-1442	1	CONVERTER GP-ELECTRICAL	142
FUSE (10 AMP) (SECONDARY STEERING)	9W-1442	2	WIRING GP-SECONDARY STEERING	250
FUSE (10 AMP) (STEERING CONSOLE)	9W-1442	11	WIRING GP-STEERING CONSOLE	254
FUSE (10 AMP) (TURN SIGNAL/HAZARD)	9W-1442	1	LIGHTING GP-FLOOD	182
FUSE (10 AMP) (TURN SIGNALS)	9W-1442	1	SWITCH GP-LIGHT	220
FUSE (10 AMP) (WARNING BEACON)	9W-1442	1	INSTALLATION GP-WARNING BEACON	147
		1	LIGHTING GP-WARNING	191
		1	LIGHTING GP-WARNING	192
FUSE (15 AMP) (UPPER/LOWER FRONT WIPERS)	9W-1441	1	WIRING GP-CAB	226
FUSE (30 AMP) (CONVERTER-POWER)	8T-9636	2	CONVERTER GP-ELECTRICAL	141
KEY (BATTERY DISCONNECT)	8H-5306	1	SWITCH GP-DISCONNECT	218
LAMP AS-LH (STOP/TAIL/TURN)	6C-0110	1	WIRING GP-REAR	248
LAMP AS-RH (STOP/TAIL/TURN)	6C-0109	1	WIRING GP-REAR	248
LAMP GP-SIGNAL (LH)	135-0427	1	LIGHTING GP-FLOOD	170
LAMP GP-SIGNAL (RH)	135-0427	1	LIGHTING GP-FLOOD	170
LAMP GP-SIGNAL (STOP/TAIL)	135-0426	2	WIRING GP-REAR	246
LAMP GP-SIGNAL (TURN/PARK)	135-0427	2	LIGHTING GP-SIGNAL	190
LAMP-HEAD (24 VOLT)	9X-3463	1	LAMP GP-HEAD	157
LAMP-HEAD (24 VOLT) (FLOOD)	9X-3463	1	LAMP GP-FLOOD	150
LAMP-HEAD (24 VOLT) (LOW BEAM)	9X-3463	1	LAMP GP-HEAD	156
LAMP (SINGLE FILAMENT) (TURN SIGNAL)	9X-4493	1	LAMP GP-HEAD	152
		1	LAMP GP-HEAD	154
LAMP (WARNING BEACON)	9X-7849	1	LAMP GP-WARNING BEACON	160
LAMP (24 VOLT) (AUXILIARY BACKUP LIGHT)	3E-8825	2	LIGHTING GP-BACKUP	168
LAMP (24 VOLT) (BLADE CUSHION CONT/INDICATOR)	3E-8825	1	WIRING GP-BLADE CUSHION	225
LAMP (24 VOLT) (CENTERSHIFT PIN PULLER SWITCH)	3E-8825	1	WIRING GP-SHIFT CONSOLE	252
LAMP (24 VOLT) (DIFFERENTIAL LOCK SWITCH)	3E-8825	2	WIRING GP-STEERING CONSOLE	254
LAMP (24 VOLT) (DOME)	7N-9943	1	LAMP GP-DOME	149
LAMP (24 VOLT) (ETHER START SWITCH)	3E-8825	1	WIRING GP-STEERING CONSOLE	254
LAMP (24 VOLT) (ETHER STARTING AID INDICATOR)	3E-8825	1	STARTING AID GP-ETHER	209
LAMP (24 VOLT) (FLOODLAMP RH)	3E-8825	1	LIGHTING GP-FLOOD	174
LAMP (24 VOLT) (FRONT FLOODLIGHT)	3E-8825	2	LIGHTING GP-FLOOD	172
LAMP (24 VOLT) (HEADLAMP/TAIL)	3E-8825	2	LIGHTING GP-FLOOD	178
		2	LIGHTING GP-FLOOD	182
		2	LIGHTING GP-FLOOD	186

MAINTENANCE PARTS

DESCRIPTION	PART NUMBER	QTY	WHERE USED	PAGE
LAMP (24 VOLT) (HEADLAMP/TAIL INDICATOR)	3E-8825	2	LIGHTING GP-FLOOD	176
LAMP (24 VOLT) (HEADLAMP/TAIL/INDICATOR)	3E-8825	2	SWITCH GP-LIGHT	220
LAMP (24 VOLT) (HIGH BEAM)	9X-3463	1	LIGHTING GP-FLOOD	170
LAMP (24 VOLT) (HIGH/LOW BEAM)	9X-3465	1	LAMP GP-HEAD	152
LAMP (24 VOLT) (HIGH/LOW BEAM)(RH)	9X-3465	1	LAMP GP-HEAD	154
LAMP (24 VOLT) (LIGHTBAR LOW BEAM)	3E-8825	1	LIGHTING GP-FLOOD	179
		1	LIGHTING GP-FLOOD	182
LAMP (24 VOLT) (LOW BEAM)	9X-3463	1	LIGHTING GP-FLOOD	170
LAMP (24 VOLT) (MOLDBOARD/INDICATOR)	3E-8825	1	WIRING GP-CAB	228
LAMP (24 VOLT) (PANEL LAMP DIMMER SWITCH)	3E-8825	1	WIRING GP-STEERING CONSOLE	254
LAMP (24 VOLT) (RUNNING LAMP)	100-3245	1	LAMP GP-HEAD	154
LAMP (24 VOLT) (RUNNING LIGHTS)	100-3245	1	LAMP GP-HEAD	152
LAMP (24 VOLT) (SECONDARY STEERING INDICATOR)	3E-8825	2	WIRING GP-SECONDARY STEERING	250
LAMP (24 VOLT) (SHIFT CONSOLE)	7N-5876	1	WIRING GP-SHIFT CONSOLE	252
LAMP (24 VOLT) (TAIL LAMP SWITCH)	3E-8825	1	WIRING GP-STEERING CONSOLE	254
LAMP (24 VOLT) (THROTTLE HOLD AUTO/MAN SWITCH)	3E-8825	2	WIRING GP-SHIFT CONSOLE	252
LAMP (24 VOLT) (TURN SIGNAL)	100-3245	1	LAMP GP-HEAD	152
		1	LAMP GP-HEAD	154
LAMP (24 VOLT) (WARNING BEACON)	3E-8825	1	INSTALLATION GP-WARNING BEACON	147
		1	LIGHTING GP-WARNING	191
		1	LIGHTING GP-WARNING	192
LAMP (24 VOLT)(21 WATT)) (STOP/TAIL)	5C-9584	2	WIRING GP-REAR	248
LAMP (24 VOLT)(5 WATT) (TURN)	4V-8116	1	WIRING GP-REAR	248
LENS-AMBER (TURN SIGNAL)	100-3250	1	LAMP GP-HEAD	152
		1	LAMP GP-HEAD	154
LENS-AMBER (WARNING BEACON)	9X-8121	1	LAMP GP-WARNING BEACON	160
LENS AS (FLOODLAMP)	158-0248	1	LAMP GP-FLOOD	150
LENS AS (HEADLAMP)	158-0249	1	LAMP GP-HEAD	157
LENS AS (HEADLAMP)(LOW BEAM)	162-2077	1	LAMP GP-HEAD	156
LENS AS (HEADLIGHT) (HIGH BEAM)	158-0249	1	LIGHTING GP-FLOOD	170
LENS AS (HEADLIGHT) (LOW BEAM)	162-2077	1	LIGHTING GP-FLOOD	170
LENS AS (HIGH/LOW BEAM)	100-3248	1	LAMP GP-HEAD	152
		1	LAMP GP-HEAD	154
LENS AS (TURN SIGNAL)	136-3848	1	LAMP GP-HEAD	152
		1	LAMP GP-HEAD	154
LENS (DOME)	7T-0020	1	LAMP GP-DOME	149
SWITCH AS (AUXILIARY BACKUP LIGHT)	161-1418	1	LIGHTING GP-BACKUP	168
SWITCH AS (THROTTLE HOLD AUTO/MAN)	196-7268	1	WIRING GP-SHIFT CONSOLE	252
FRAME AND BODY				
FITTING-GREASE (1/8-27 THD) (FRONT AXLE)	3B-8489	12	AXLE GP-FRONT	344
FITTING-GREASE (1/8-27 THD) (UPPER/LOWER ARTICULATION PIN)	3B-8489	2	LINES GP-GREASE	369
PLUG-DRAIN (TRANSMISSION CASE)	6B-5262	1	CASE & FRAME GP	348

MAINTENANCE PARTS

DESCRIPTION	PART NUMBER	QTY	WHERE USED	PAGE
FUEL SYSTEM				
BOWL AS-WATER COLLECTION (12 VOLT HEATER)	155-2629	1	FILTER GP-WATER SEP & FUEL	107
BOWL AS-WATER COLLECTION (24 VOLT HEATER)	157-1206	1	FILTER GP-WATER SEP & FUEL	107
ELEMENT-FILTER (FUEL/WATER SEPARATOR) (PRIMARY)	133-5673	1	FILTER GP-WATER SEP & FUEL	107
FILTER AS-FUEL	1R-0762	1	FILTER GP-FUEL	106
HYDRAULIC SYSTEM				
CAP-DUST	6V-0852	1	LINES GP-HYDRAULIC FAN	458
		1	LINES GP-PUMP	462
		1	VALVE GP-COMBINATION	534
CAP-DUST (HYD OIL)	8C-3451	1	LINES GP-STEERING	473
CAP-FILLER (HYDRAULIC OIL TANK)	7H-1447	1	TANK GP-HYDRAULIC	498
FITTING-GREASE (BLADE LIFT)	3B-8485	2	CYLINDER & MTG GP-BLADE LIFT	419
FITTING-GREASE (1/8-27 THD) (WHEEL LEAN)	3B-8489	2	CYLINDER & MTG GP-WHEEL LEAN	424
FITTING-GREASE (1/8-27 THD)(45 DEGREE) (CENTERSHIFT CYLINDER)	3B-8485	2	CYLINDER & MTG GP-CENTERSHIFT	421
GASKET (HYDRAULIC OIL TANK FILLER CAP)	3G-0361	1	TANK GP-HYDRAULIC	498
PADLOCK GP (HYDRAULIC TANK)	5P-8502	1	TANK GP-HYDRAULIC	496
STRAINER (HYDRAULIC OIL FILLER)	9J-3047	1	TANK GP-HYDRAULIC	498
IMPLEMENTS				
FITTING-GREASE (1/8-27 THD) (DRAWBAR)	3B-8489	1	DRAWBAR GP	590
LUBRICATION SYSTEM				
CAP AS	9S-9272	1	OIL CHANGE GP-HIGH SPEED	68
CAP AS-OIL FILLER	5L-2952	1	FILLER GP-ENGINE OIL	62
CAP-DUST	8C-3445	1	FILTER GP-ENGINE OIL	64
FILTER AS-ENGINE OIL	1R-0716	1	FILTER GP-ENGINE OIL	64
OPERATOR STATION				
BELT-RIBBED (AIR CONDITIONER)	174-9690	1	AIR CONDITIONER AR	614
BLADE AS-WIPER (HIGH PROFILE FRONT LOWER)	6V-5853	1	WIPER GP-WINDOW	782
BLADE AS-WIPER (HIGH PROFILE REAR)	6V-5853	1	WIPER GP-WINDOW	786
BLADE AS-WIPER (LOW PROFILE FRONT LOWER)	6V-5853	1	WIPER GP-WINDOW	780
BLADE AS-WIPER (LOW PROFILE REAR)	6V-5849	1	WIPER GP-WINDOW	784
BLADE AS-WIPER (VENT FRONT LOWER)	6V-8255	2	WINDOW GP	771
FILTER-AIR (ROPS REAR PANEL)	7T-7358	1	FILTER GP-CAB AIR	664
FILTER (CAB AIR)	9X-4986	2	FILTER GP-CAB AIR	664
FUSE (10 AMP) (FRONT DEFROSTER)	9W-1442	1	FAN GP-CIRCULATING	662
FUSE (10 AMP) (HEATED MIRROR)	9W-1442	1	MIRROR GP-REAR VIEW	718
FUSE (10 AMP) (INTERMITTANT WIPER)	9W-1442	1	WIPER GP-WINDOW	784

DESCRIPTION	PART NUMBER	QTY	WHERE USED	PAGE
FUSE (10 AMP) (REAR DEFROSTER)	9W-1442	1	FAN GP-CIRCULATING	663
FUSE (10 AMP) (WIPER)	9W-1442	1	WIPER GP-WINDOW	786
FUSE (15 AMP) (AIR CONDITIONER)	8M-8948	1	AIR CONDITIONER & MOUNTING GP	611
	9W-1441	1	AIR CONDITIONER & MOUNTING GP	612
FUSE (15 AMP) (HEATER)	9W-1441	1	HEATER & MTG GP-CAB	667
FUSE (15 AMP) (HEATING & AIR CONDITIONING)	9W-1441	1	HEATER & MTG GP-CAB	668
FUSE (20 AMP) (A/C)	8M-0456	1	AIR CONDITIONER AR	613
INDICATOR AS-AIR PRESSURE (LEFT)	1W-3306	1	PANEL GP-INSTRUMENT	732
INDICATOR AS-AIR PRESSURE (LH BRAKE)	1W-3306	1	PANEL GP-INSTRUMENT	734
INDICATOR AS-AIR PRESSURE (RH BRAKE)	1W-3306	1	PANEL GP-INSTRUMENT	734
INDICATOR AS-AIR PRESSURE (RIGHT)	1W-3306	1	PANEL GP-INSTRUMENT	732
KEY	5P-8500	1	CONVERSION AR-NON-ROPS	639
LAMP (24 VOLT) (A/C & HEATER)	8D-1429	1	HEATER GP-CAB	676
LAMP (24 VOLT) (A/C & HEATER CONTROL PANEL)	8D-1429	1	HEATER GP-CAB	672
LAMP (24 VOLT) (DIFF LOCK INDICATOR)	115-1748	1	PANEL GP-INSTRUMENT	732
LAMP (24 VOLT) (EMS MASTER ACTION INDICATOR)	107-1983	1	PANEL GP-INSTRUMENT	732
		1	PANEL GP-INSTRUMENT	734
LAMP (24 VOLT) (FAN SPEED INDICATOR)	8D-1429	1	AIR CONDITIONER GP	616
LAMP (24 VOLT) (FRONT DEFROSTER)	3E-8825	1	FAN GP-CIRCULATING	662
LAMP (24 VOLT) (HEATED MIRROR INDICATOR)	3E-8825	1	MIRROR GP-REAR VIEW	718
LAMP (24 VOLT) (HIGH BEAM INDICATOR)	115-1748	1	PANEL GP-INSTRUMENT	732
LAMP (24 VOLT) (HVAC PANEL)	8D-1429	1	AIR CONDITIONER GP	620
LAMP (24 VOLT) (INSTRUMENT PANEL)	115-1748	5	PANEL GP-INSTRUMENT	734
LAMP (24 VOLT) (LEFT TURN INDICATOR)	115-1748	1	PANEL GP-INSTRUMENT	732
LAMP (24 VOLT) (LH AIR PRESSURE)(INDICATOR)	7N-5876	1	PANEL GP-INSTRUMENT	732
LAMP (24 VOLT) (QUAD GAGE MODULE)(INDICATOR)	7N-5876	2	PANEL GP-INSTRUMENT	732
LAMP (24 VOLT) (QUAD GAUGE & AIR PRESSURE)	7N-5876	4	PANEL GP-INSTRUMENT	734
LAMP (24 VOLT) (REAR DEFROSTER)	3E-8825	1	FAN GP-CIRCULATING	663
LAMP (24 VOLT) (RH AIR PRESSURE)(INDICATOR)	7N-5876	1	PANEL GP-INSTRUMENT	732
LAMP (24 VOLT) (RIGHT TURN INDICATOR)	115-1748	1	PANEL GP-INSTRUMENT	732
LAMP (24 VOLT) (SPEEDOMETER & TACH)	7N-5876	2	MODULE GP-SPEEDOMETER & TACH	723
LAMP (24 VOLT) (THROTTLE HOLD INDICATOR)	115-1748	1	PANEL GP-INSTRUMENT	732
PADLOCK GP	5P-8502	1	CONVERSION AR-NON-ROPS	639
SEAT BELT GP (RETRACTABLE)	156-1148	1	SEAT GP-SUSPENSION	756
		1	SEAT GP-SUSPENSION	757
		1	SEAT GP-SUSPENSION	759

DESCRIPTION	PART NUMBER	QTY	WHERE USED	PAGE
POWER TRAIN				
BREATHER AS (AIR)	1F-8488	2	TANDEM & COVER GP	306
BREATHER (TRANSMISSION)	9G-5127	1	GEAR & CASE GP-TRANSFER	289
CAP-DUST (DIFFERENTIAL LOCK)	6V-0852	1	CONTROL GP-DIFFERENTIAL LOCK	266
CAP-FILLER (POWER TRAIN OIL)	6G-9333	1	FILLER GP-POWER TRAIN OIL	284
CAP-VALVE (STEM)	9K-7951	1	WHEEL & TIRE AR	324
		1	WHEEL & TIRE AR	325
		1	WHEEL & TIRE AR	326
		1	WHEEL & TIRE AR	327
		1	WHEEL & TIRE AR	328
		1	WHEEL & TIRE AR	329
		1	WHEEL & TIRE AR	330
		1	WHEEL & TIRE AR	331
		1	WHEEL & TIRE AR	332
		1	WHEEL & TIRE AR	333
		1	WHEEL & TIRE AR	334
		1	WHEEL & TIRE AR	335
		1	WHEEL & TIRE AR	336
		1	WHEEL & TIRE AR	337
		1	WHEEL & TIRE AR	338
		1	WHEEL & TIRE AR	339
		1	WHEEL & TIRE AR	340
		1	WHEEL AR	341
		1	WHEEL AR	342
FILTER ELEMENT-HYDRAULIC (POWER TRAIN)	132-8875	1	FILTER GP-OIL	285
FILTER-MAGNETIC (TRANSMISSION)	8S-9129	1	GEAR & CASE GP-TRANSFER	289
PLUG-DRAIN (TRANSFER GEAR CASE)	4T-2069	1	GEAR & CASE GP-TRANSFER	290
SCREEN-SUCTION (TRANSMISSION)	4S-8598	1	GEAR & CASE GP-TRANSFER	289
	8S-9130	1	GEAR & CASE GP-TRANSFER	289
SERVICE EQUIPMENT AND SUPPLIES				
KEY	5P-8500		TOOL BOX GP	798
PADLOCK GP	5P-8502	1	TOOL BOX GP	798
WORK TOOLS				
FITTING-GREASE (1/8-27 THD) (TRUNNION)	3B-8489	3	RIPPER GP	606

PIÈCES DE RECHANGE

DESCRIPTION	NUMÉRO DE PIECÈS	QTÉ	DOMAINE D'APPLICATION	PAGE
CHÂSSIS ET BENNE				
BOUCHON DE VIDANGE (CARTER DE BOITE DE VITESSES)	6B-5262	1	CHÂSSIS ET CARTER (ASS)	348
GRAISSEUR (FILET 1/8-27) (AXE D'ARTICULATION SUPÉRIEUR/INFÉRIEUR)	3B-8489	2	CANALISATIONS DE GRAISSAGE (ASS)	369
GRAISSEUR (FILET 1/8-27) (ESSIEU AVANT)	3B-8489	12	ESSIEU AV (ASS)	344
CIRCUIT D'ADMISSION D'AIR ET D'ÉCHAPPEMENT				
ÉLÉMENT PRINCIPAL (ENS)	6I-0273	1	FILTRE A AIR (ASS)	92
ÉLÉMENT SECONDAIRE (ENS)	6I-0274	1	FILTRE A AIR (ASS)	92
INDICATEUR DE COLMATAGE DE FILTRE A AIR	8N-2694	1	FILTRE A AIR (ASS)	90
CIRCUIT DE CARBURANT				
CUVETTE-ACCUMULATION D'EAU (ENS) (RÉCHAUFFEUR 12 VOLTS)	155-2629	1	FILTRE DE SÉPARATEUR D'EAU ET DE CARBURANT (ASS)	107
CUVETTE-ACCUMULATION D'EAU (ENS) (RÉCHAUFFEUR 24 VOLTS)	157-1206	1	FILTRE DE SÉPARATEUR D'EAU ET DE CARBURANT (ASS)	107
ÉLÉMENT DE FILTRE (CARBURANT/SÉPARATEUR D'EAU) (PRINCIPAL)	133-5673	1	FILTRE DE SÉPARATEUR D'EAU ET DE CARBURANT (ASS)	107
FILTRE A CARBURANT (ENS)	1R-0762	1	FILTRE A CARBURANT (ASS)	106
CIRCUIT DE GRAISSAGE				
BOUCHON DE GOULOTTE DE REMPLISSAGE D'HUILE MOTEUR	5L-2952	1	BOUCHON DE REMPLISSAGE D'HUILE MOTEUR (ASS)	62
CHAPEAU (ENS)	9S-9272	1	DISPOSITIF DE VIDANGE RAPIDE D'HUILE (ASS)	68
FILTRE A HUILE MOTEUR (ENS)	1R-0716	1	FILTRE À HUILE MOTEUR (ASS)	64
PARE-POUSSIERE	8C-3445	1	FILTRE À HUILE MOTEUR (ASS)	64
CIRCUIT DE REFROIDISSEMENT				
CHAPEAU - RADIATEUR	6L-8617	1	RADIATEUR (ASS)	87
ÉLÉMENT DE FILTRE (ENS)-CARBURANT (HUILE DE BOÎTE)	2H-7254	1	CANALISATIONS DE REFROIDIS. DE TRANSMISSION	78
PARE-POUSSIERE	6V-0852	2	CANALISATIONS DE REFROIDIS. DE TRANSMISSION	78
		1	CANALISATIONS D'EAU (ASS)	82
	8C-3447	1	CANALISATIONS DE REFROIDIS. DE TRANSMISSION	78
THERMOSTAT-TEMPÉRATURE D'EAU	7C-3095	1	THERMOSTAT ET BOITIER (ASS)	76
CIRCUIT ÉLECTRIQUE ET DE DÉMARRAGE				
AMPOULE (FILAMENT SIMPLE) (CLIGNOTANT DE DIRECTION)	9X-4493	1	PHARE AV (ASS)	152
		1	PHARE AV (ASS)	154
AMPOULE (GYROPHARE)	9X-7849	1	LAMPE - GYROPHARE (ASS)	160
AMPOULE (24 VOLTS) (BOUCLIER/ INDICATEUR)	3E-8825	1	CABLAGE DE CABINE (ASS)	228
AMPOULE (24 VOLTS) (CLIGNOTANT DE DIRECTION)	100-3245	1	PHARE AV (ASS)	152
		1	PHARE AV (ASS)	154

PIÈCES DE RECHANGE

DESCRIPTION	NUMÉRO DE PIECÈS	QTÉ	DOMAINE D'APPLICATION	PAGE
AMPOULE (24 VOLTS) (CONSOLE DE CHANGEMENT DE VITESSES)	7N-5876	1	CABLAGE DE LA CONSOLE DE CHANGEMENTS DE VITESSE	252
AMPOULE (24 VOLTS) (CONTACTEUR AUTO/MAN DE RETENUE DU PAPILLON DES GAZ)	3E-8825	2	CABLAGE DE LA CONSOLE DE CHANGEMENTS DE VITESSE	252
AMPOULE (24 VOLTS) (CONTACTEUR DE DÉMARRAGE À L'ÉTHER)	3E-8825	1	CABLAGE DE LA CONSOLE DE DIRECTION	254
AMPOULE (24 VOLTS) (CONTACTEUR DE RÉGLAGE D'INTENSITÉ DU TABLEAU)	3E-8825	1	CABLAGE DE LA CONSOLE DE DIRECTION	254
AMPOULE (24 VOLTS) (CONTACTEUR DE VERROUILLAGE DE DIFFÉRENTIEL)	3E-8825	2	CABLAGE DE LA CONSOLE DE DIRECTION	254
AMPOULE (24 VOLTS) (CONTACTEUR D'ÉCLAIRAGE DE FEU ARRIÈRE)	3E-8825	1	CABLAGE DE LA CONSOLE DE DIRECTION	254
AMPOULE (24 VOLTS) (CONTACTEUR D'EXTRACTEUR DE BROCHE DE DÉPORT DE CERCLE)	3E-8825	1	CABLAGE DE LA CONSOLE DE CHANGEMENTS DE VITESSE	252
AMPOULE (24 VOLTS) (ÉCLAIRAGE D'APPOINT AUXILIAIRE)	3E-8825	2	ECLAIRAGE AR (ASS)	168
AMPOULE (24 VOLTS) (FEU DE ROUTE)	100-3245	1	PHARE AV (ASS)	154
AMPOULE (24 VOLTS) (FEUX AVANT FEUX ARRIÈRE)	3E-8825	2	ÉCLAIRAGE - PROJECTEURS (ASS)	178
		2	ÉCLAIRAGE - PROJECTEURS (ASS)	182
		2	ÉCLAIRAGE - PROJECTEURS (ASS)	186
AMPOULE (24 VOLTS) (FEUX DE CROISEMENT)	9X-3463	1	ÉCLAIRAGE - PROJECTEURS (ASS)	170
AMPOULE (24 VOLTS) (FEUX DE ROUTE)	9X-3463	1	ÉCLAIRAGE - PROJECTEURS (ASS)	170
	100-3245	1	PHARE AV (ASS)	152
AMPOULE (24 VOLTS) (FEUX DE ROUTE/DE CROISEMENT)(DROIT)	9X-3465	1	PHARE AV (ASS)	154
AMPOULE (24 VOLTS) (FEUX DE ROUTE/FEUX DE CROISEMENT)	9X-3465	1	PHARE AV (ASS)	152
AMPOULE (24 VOLTS) (GYROPHARE)	3E-8825	1	ÉCLAIRAGE - AVERTISSEUR (ASS)	191
		1	ÉCLAIRAGE - AVERTISSEUR (ASS)	192
		1	MONTAGE - GYROPHARE (ASS)	147
AMPOULE (24 VOLTS) (INDICATEUR/ COMMANDE D'AMORTISSEUR DE LAME)	3E-8825	1	CÂBLE D'AMORTISSEUR DE LAME (ASS)	225
AMPOULE (24 VOLTS) (INTERRUPTEUR D'ÉCLAIRAGE - POTENCE)	3E-8825	1	ÉCLAIRAGE - PROJECTEURS (ASS)	179
		1	ÉCLAIRAGE - PROJECTEURS (ASS)	182
AMPOULE (24 VOLTS) (PHARE/ FEUX ARRIÈRE/ INDICATEUR)	3E-8825	2	INTERRUPTEUR D'ÉCLAIRAGE (ASS)	220
AMPOULE (24 VOLTS) (PLAFONNIER)	7N-9943	1	PLAFONNIER (ASS)	149
AMPOULE (24 VOLTS) (PROJECTEUR AVANT)	3E-8825	2	ÉCLAIRAGE - PROJECTEURS (ASS)	172
AMPOULE (24 VOLTS) (PROJECTEUR DROIT)	3E-8825	1	ÉCLAIRAGE - PROJECTEURS (ASS)	174
AMPOULE (24 VOLTS) (TÉMOIN D'AIDE AU DÉMARRAGE À L'ÉTHER)	3E-8825	1	AUXILIAIRE DE DÉMARRAGE À L'ÉTHER	209
AMPOULE (24 VOLTS) (TÉMOIN DE DIRECTION AUXILIAIRE)	3E-8825	2	CABLAGE DE DIRECTION AUXILIAIRE (ASS)	250

PIÈCES DE RECHANGE

DESCRIPTION	NUMÉRO DE PIECÈS	QTÉ	DOMAINE D'APPLICATION	PAGE
AMPOULE (24 VOLTS) (TÉMOIN DE PHARES/FEUX ARRIÈRE)	3E-8825	2	ÉCLAIRAGE - PROJECTEURS (ASS)	176
AMPOULE (24 VOLTS)(21 WATTS) (FEUX D'ARRÊT/FEUX ARRIÈRE)	5C-9584	2	CABLAGE AR (ASS)	248
AMPOULE (24 VOLTS)(5 WATTS) (CLIGNOTANT)	4V-8116	1	CABLAGE AR (ASS)	248
BATTERIE (GRANDE CAPACITÉ)(12V)	153-5710	2	BATTERIE (ASS)	131
BATTERIE (SANS ENTRETIEN)(12 VOLTS)	153-5700	2	BATTERIE (ASS)	132
CHAPEAU ANTI-POUSSIERE	133-6517	1	EAU DES CHEMISES - RECHAUFFEUR (ASS)	145
		1	EAU DES CHEMISES - RECHAUFFEUR (ASS)	146
CLÉ (COUPE-BATTERIE)	8H-5306	1	ROBINET DE BATTERIE (ASS)	218
CLIGNOTANT ÉLECTRONIQUE (ENS) (12/24 VOLTS) (CLIGNOTANT/ FEUX DE DÉTRESSE)	108-0358	1	ÉCLAIRAGE - PROJECTEURS (ASS)	178
		1	ÉCLAIRAGE - PROJECTEURS (ASS)	182
CLIGNOTANT ÉLECTRONIQUE (ENS) (12/24 VOLTS) (CLIGNOTANTS ET FEUX DE DÉTRESSE)	108-0358	1	ÉCLAIRAGE - PROJECTEURS (ASS)	186
CONTACTEUR (ENS) (ÉCLAIRAGE D'APPOINT AUXILIAIRE)	161-1418	1	ECLAIRAGE AR (ASS)	168
CONTACTEUR (ENS) (RETENUE DU PAPILLON DES GAZ AUTO/MAN)	196-7268	1	CABLAGE DE LA CONSOLE DE CHANGEMENTS DE VITESSE	252
DISJONCTEUR (ENS) (15A) (COMMANDE DU MOTEUR)	6T-3643	1	CABLAGE AR (ASS)	243
DISJONCTEUR (ENS) (15A) (FEUX DE ROUTE/ FEUX DE CROISEMENT À BARRE LUMINEUSE)	3T-2662	2	ÉCLAIRAGE - PROJECTEURS (ASS)	178
DISJONCTEUR (ENS) (15A) (PHARES AVANT)	3T-2662	1	DISJONCTEUR (ASS)	133
		1	DISJONCTEUR (ASS)	134
DISJONCTEUR (ENS) (15A) (PROJECTEURS DE TRAVAIL AVEC BARRE LUMINEUSE)	3T-2662	1	DISJONCTEUR (ASS)	133
DISJONCTEUR (ENS) (80 A) (ALTERNATEUR)	171-2210	1	CABLAGE AR (ASS)	242
DISJONCTEUR (ENS) (80 A) (PRINCIPAL)	171-2210	1	CABLAGE AR (ASS)	242
ÉLÉMENT DE RÉCHAUFFEUR (ENS) (240V 1250W)	154-2881	1	EAU DES CHEMISES - RECHAUFFEUR (ASS)	146
ÉLÉMENT DU RÉCHAUFFEUR D'EAU DES CHEMISES (ENS) (120 V 1250 W)	131-8627	1	EAU DES CHEMISES - RECHAUFFEUR (ASS)	145
ENTRAÎNEMENT POUR COURROIE (GYROPHARE)	9X-8139	1	LAMPE - GYROPHARE (ASS)	160
FUSIBLE (10A) (CLIGNOTANT/ FEUX DE DÉTRESSE)	9W-1442	1	ÉCLAIRAGE - PROJECTEURS (ASS)	182
FUSIBLE (10A) (CLIGNOTANTS)	9W-1442	1	INTERRUPTEUR D'ÉCLAIRAGE (ASS)	220
FUSIBLE (10A) (COMMANDE D'AMORTISSEUR DE LAME)	9W-1442	1	CÂBLE D'AMORTISSEUR DE LAME (ASS)	225
FUSIBLE (10A) (CONSOLE DE DIRECTION)	9W-1442	11	CABLAGE DE LA CONSOLE DE DIRECTION	254

PIÈCES DE RECHANGE

DESCRIPTION	NUMÉRO DE PIECÈS	QTÉ	DOMAINE D'APPLICATION	PAGE
FUSIBLE (10A) (CONTRÔLEUR DE LAME)	9W-1442	1	CABLAGE DE CABINE (ASS)	228
FUSIBLE (10A) (DÉVOLTEUR POUR COURANT)	9W-1442	1	TRANSFORMATION ELECTRIQUE (ASS)	142
FUSIBLE (10A) (DIRECTION AUXILIAIRE)	9W-1442	2	CABLAGE DE DIRECTION AUXILIAIRE (ASS)	250
FUSIBLE (10A) (FEUX DE CROISEMENT/ DE ROUTE ET CLIGNOTANT)	9W-1442	1	ÉCLAIRAGE - PROJECTEURS (ASS)	186
FUSIBLE (10A) (FEUX DE ROUTE/FEUX DE CROISEMENT)	9W-1442	1	ÉCLAIRAGE - PROJECTEURS (ASS)	178
FUSIBLE (10A) (GYROPHARE)	9W-1442	1	ÉCLAIRAGE - AVERTISSEUR (ASS)	191
		1	ÉCLAIRAGE - AVERTISSEUR (ASS)	192
		1	MONTAGE - GYROPHARE (ASS)	147
FUSIBLE (10A) (LAMPE D'APPOINT)	9W-1442	1	ECLAIRAGE AR (ASS)	168
FUSIBLE (10A) (PROJECTEUR AVANT)	9W-1442	2	ÉCLAIRAGE - PROJECTEURS (ASS)	172
FUSIBLE (10A) (PROJECTEUR DROIT)	9W-1442	1	ÉCLAIRAGE - PROJECTEURS (ASS)	174
FUSIBLE (10A) (PROJECTEURS AVANT)	9W-1442	1	ÉCLAIRAGE - PROJECTEURS (ASS)	176
FUSIBLE (15A) (ESSUIE-GLACE AVANT SUPÉRIEUR /INFÉRIEUR)	9W-1441	1	CABLAGE DE CABINE (ASS)	226
FUSIBLE (30A) (CONVERTISSEUR DE PUISSANCE)	8T-9636	2	TRANSFORMATION ELECTRIQUE (ASS)	141
LAMPE - CLIGNOTANT DE DIRECTION (ASS) (CLIGNOTANT/FEUX DE STATIONNEMENT)	135-0427	2	ÉCLAIRAGE CLIGNOTANT	190
LAMPE - CLIGNOTANT DE DIRECTION (ASS) (DROITE)	135-0427	1	ÉCLAIRAGE - PROJECTEURS (ASS)	170
LAMPE - CLIGNOTANT DE DIRECTION (ASS) (FEUX D'ARRÊT/FEUX ARRIÈRE)	135-0426	2	CABLAGE AR (ASS)	246
LAMPE - CLIGNOTANT DE DIRECTION (ASS) (GAUCHE)	135-0427	1	ÉCLAIRAGE - PROJECTEURS (ASS)	170
LAMPE - FEUX AV (24 VOLTS)	9X-3463	1	PHARE AV (ASS)	157
LAMPE - FEUX AV (24 VOLTS) (FEUX DE CROISEMENT)	9X-3463	1	PHARE AV (ASS)	156
LAMPE - FEUX AV (24 VOLTS) (PROJECTEUR)	9X-3463	1	LAMPE - PHARE (ASS)	150
LAMPE-CÔTÉ DROIT (ENS) (STOP/FEU AR/CLIGNOTANT DIRECTION)	6C-0109	1	CABLAGE AR (ASS)	248
LAMPE-CÔTÉ GAUCHE (ENS) (STOP/FEU AR/CLIGNOTANT DIRECTION)	6C-0110	1	CABLAGE AR (ASS)	248
LENTILLE (ENS) (CLIGNOTANT DE DIRECTION)	136-3848	1	PHARE AV (ASS)	152
		1	PHARE AV (ASS)	154
LENTILLE (ENS) (FEUX DE ROUTE/FEUX DE CROISEMENT)	100-3248	1	PHARE AV (ASS)	152
		1	PHARE AV (ASS)	154
LENTILLE (ENS) (PHARE AVANT)	158-0249	1	PHARE AV (ASS)	157
LENTILLE (ENS) (PHARE AVANT) (FEUX DE CROISEMENT)	162-2077	1	ÉCLAIRAGE - PROJECTEURS (ASS)	170
LENTILLE (ENS) (PHARE AVANT) (FEUX DE ROUTE)	158-0249	1	ÉCLAIRAGE - PROJECTEURS (ASS)	170

PIÈCES DE RECHANGE

DESCRIPTION	NUMÉRO DE PIECÈS	QTÉ	DOMAINE D'APPLICATION	PAGE
LENTILLE (ENS) (PHARE AVANT)(FEUX DE CROISEMENT)	162-2077	1	PHARE AV (ASS)	156
LENTILLE (ENS) (PROJECTEUR)	158-0248	1	LAMPE - PHARE (ASS)	150
LENTILLE ORANGE (CLIGNOTANT DE DIRECTION)	100-3250	1	PHARE AV (ASS)	152
		1	PHARE AV (ASS)	154
LENTILLE ORANGE (GYROPHARE)	9X-8121	1	LAMPE - GYROPHARE (ASS)	160
LENTILLE (PLAFONNIER)	7T-0020	1	PLAFONNIER (ASS)	149
CIRCUIT HYDRAULIQUE				
BOUCHON DE GOULOTTE DE REMPLISSAGE (RÉSERVOIR D'HUILE HYDRAULIQUE)	7H-1447	1	RÉSERVOIR HYDRAULIQUE (ASS)	498
CADENAS (ASS) (RÉSERVOIR HYDRAULIQUE)	5P-8502	1	RÉSERVOIR HYDRAULIQUE (ASS)	496
CREPINE (GOULOTTE DE REMPLISSAGE D'HUILE HYDRAULIQUE)	9J-3047	1	RÉSERVOIR HYDRAULIQUE (ASS)	498
GRAISSEUR (FILET 1/8-27) (INCLINAISON DE ROUE)	3B-8489	2	VÉRIN D'INCLINAISON DE ROUE ET MONTAGE (ASS)	424
GRAISSEUR (FILETAGE 1/8-27)(45 DEGRÉS) (VÉRIN DE DÉPORT DE CERCLE)	3B-8485	2	VÉRIN DE DÉPORT DE CERCLE ET MONTAGE (ASS)	421
GRAISSEUR (LEVAGE DE LAME)	3B-8485	2	VÉRIN DE RELEVAGE DE LAME ET MONTAGE (ASS)	419
JOINT PLAT (BOUCHON DE REMPLISSAGE DE RÉSERVOIR À HUILE HYDRAULIQUE)	3G-0361	1	RÉSERVOIR HYDRAULIQUE (ASS)	498
PARE-POUSSIERE	6V-0852	1	CANALISATIONS DE POMPE (ASS)	462
		1	CANALISATIONS HYDRAULIQUES DE VENTILATEUR (ASS)	458
		1	SOUPAPE DE COMBINAISON (ASS)	534
PARE-POUSSIERE (HUILE HYDRAULIQUE)	8C-3451	1	CANALISATIONS DE DIRECTION (ASS)	473
ÉQUIPEMENTS				
GRAISSEUR (FILET 1/8-27) (BARRE D'ATTELAGE)	3B-8489	1	BARRE D'ATTELAGE (ASS)	590
MATÉRIEL ET FOURNITURES D'ENTRETIEN				
CADENAS (ASS)	5P-8502	1	COFFRE A OUTILS (ASS)	798
CLÉ	5P-8500		COFFRE A OUTILS (ASS)	798
MOTEUR STANDARD				
BOUCHON DE VIDANGE	5F-0304	1	CARTER DE VOLANT (ASS)	36
BOURRELET D'ÉTANCHÉITÉ (1M)	5P-5678		MONTAGE DE CULBUTERIE (ASS)	43
FLEXIBLE D'ÉVACUATION DES VAPEURS	126-0146	1	COMPRESSEUR D'AIR (ASS)	10
JOINT DE RENIFLARD	9Y-1758	1	CULBUTERIE (ASS)	58
JOINT DE SUPPORT	109-5309	1	CULBUTERIE (ASS)	58
PARE-POUSSIERE	6V-0852	1	BOUCHON DE MOTEUR (ASS)	50
RENIFLARD (ENS) (MOTEUR)	9Y-4357	1	CULBUTERIE (ASS)	58

PIÈCES DE RECHANGE

DESCRIPTION	NUMÉRO DE PIECÈS	QTÉ	DOMAINE D'APPLICATION	PAGE
OUTILS DE TRAVAIL				
GRAISSEUR (FILET 1/8-27) (TOURILLON)	3B-8489	3	RIPPER (ASS)	606
POSTE DE CONDUITE				
AMPOULE (24 VOLTS) (CLIMATISEUR ET CHAUFFAGE)	8D-1429	1	CHAUFFAGE DE CABINE (ASS)	676
AMPOULE (24 VOLTS) (COMPTEUR DE VITESSE ET COMPTE-TOURS)	7N-5876	2	MODULE D'INDICATEUR DE VITESSE ET COMPTE-TOURS (ASS)	723
AMPOULE (24 VOLTS) (DÉGIVREUR ARRIÈRE)	3E-8825	1	VENTILATEUR DE CABINE (ASS)	663
AMPOULE (24 VOLTS) (DÉGIVREUR AVANT)	3E-8825	1	VENTILATEUR DE CABINE (ASS)	662
AMPOULE (24 VOLTS) (INDICATEUR DE FEUX DE ROUTE)	115-1748	1	TABLEAU DE BORD (ASS)	732
AMPOULE (24 VOLTS) (INDICATEUR DE MIROIR CHAUFFÉ)	3E-8825	1	RÉTROVISEUR (ASS)	718
AMPOULE (24 VOLTS) (MODULE QUATRE INSTRUMENTS)(TÉMOIN)	7N-5876	2	TABLEAU DE BORD (ASS)	732
AMPOULE (24 VOLTS) (PANNEAU HVAC)	8D-1429	1	CLIMATISEUR (ASS)	620
AMPOULE (24 VOLTS) (PRESSION D'AIR DROIT)(TÉMOIN)	7N-5876	1	TABLEAU DE BORD (ASS)	732
AMPOULE (24 VOLTS) (PRESSION D'AIR GAUCHE)(TÉMOIN)	7N-5876	1	TABLEAU DE BORD (ASS)	732
AMPOULE (24 VOLTS) (QUATRE INSTRUMENTS ET PRESSION D'AIR)	7N-5876	4	TABLEAU DE BORD (ASS)	734
AMPOULE (24 VOLTS) (TABLEAU DE BORD)	115-1748	5	TABLEAU DE BORD (ASS)	734
AMPOULE (24 VOLTS) (TABLEAU DE COMMANDE DU RÉCHAUFFEUR ET CLIMATISEUR)	8D-1429	1	CHAUFFAGE DE CABINE (ASS)	672
AMPOULE (24 VOLTS) (TÉMOIN DE BLOCAGE D'ACCÉLÉRATEUR)	115-1748	1	TABLEAU DE BORD (ASS)	732
AMPOULE (24 VOLTS) (TÉMOIN DE CLIGNOTANT DROIT)	115-1748	1	TABLEAU DE BORD (ASS)	732
AMPOULE (24 VOLTS) (TÉMOIN DE CLIGNOTANT GAUCHE)	115-1748	1	TABLEAU DE BORD (ASS)	732
AMPOULE (24 VOLTS) (TÉMOIN DE VERROUILLAGE DE DIFFÉRENTIEL)	115-1748	1	TABLEAU DE BORD (ASS)	732
AMPOULE (24 VOLTS) (TÉMOIN DE VITESSE DE VENTILATEUR)	8D-1429	1	CLIMATISEUR (ASS)	616
AMPOULE (24 VOLTS) (TÉMOIN PRINCIPAL DE MISE EN GARDE EMS)	107-1983	1	TABLEAU DE BORD (ASS)	732
		1	TABLEAU DE BORD (ASS)	734
BALAI D'ESSUIE-GLACE (ENS) (ÉVENT AVANT INFÉRIEUR)	6V-8255	2	VITRE (ASS)	771
BALAI D'ESSUIE-GLACE (ENS) (PROFIL BAS ARRIÈRE)	6V-5849	1	ESSUIE-GLACE (ASS)	784
BALAI D'ESSUIE-GLACE (ENS) (PROFIL BAS AVANT INFÉRIEUR)	6V-5853	1	ESSUIE-GLACE (ASS)	780
BALAI D'ESSUIE-GLACE (ENS) (PROFIL ÉLEVÉ ARRIÈRE)	6V-5853	1	ESSUIE-GLACE (ASS)	786
BALAI D'ESSUIE-GLACE (ENS) (PROFIL ÉLEVÉ AVANT INFÉRIEUR)	6V-5853	1	ESSUIE-GLACE (ASS)	782

PIÈCES DE RECHANGE

DESCRIPTION	NUMÉRO DE PIECÈS	QTÉ	DOMAINE D'APPLICATION	PAGE
CADENAS (ASS)	5P-8502	1	VERSION DE TRANSFORMATION - SANS ROPS	639
CEINTURE DE SECURITE (ASS) (RÉTRACTABLE)	156-1148	1	SIÈGE AVEC SUSPENSION (ASS)	756
		1	SIÈGE AVEC SUSPENSION (ASS)	757
		1	SIÈGE AVEC SUSPENSION (ASS)	759
CLÉ	5P-8500	1	VERSION DE TRANSFORMATION - SANS ROPS	639
COURROIE NERVURÉE (CLIMATISEUR)	174-9690	1	CLIMATISEUR (VERSION)	614
FILTRE À AIR (PANNEAU ARRIÈRE ROPS)	7T-7358	1	FILTRE À AIR DE CABINE (ASS)	664
FILTRE (AÉRATION DE LA CABINE)	9X-4986	2	FILTRE À AIR DE CABINE (ASS)	664
FUSIBLE (10A) (DÉGIVREUR ARRIÈRE)	9W-1442	1	VENTILATEUR DE CABINE (ASS)	663
FUSIBLE (10A) (DÉGIVREUR AVANT)	9W-1442	1	VENTILATEUR DE CABINE (ASS)	662
FUSIBLE (10A) (ESSUIE-GLACE)	9W-1442	1	ESSUIE-GLACE (ASS)	786
FUSIBLE (10A) (ESSUIE-GLACE INTERMITTENT)	9W-1442	1	ESSUIE-GLACE (ASS)	784
FUSIBLE (10A) (MIROIR CHAUFFÉ)	9W-1442	1	RÉTROVISEUR (ASS)	718
FUSIBLE (15A) (CHAUFFAGE ET CLIMATISATION)	9W-1441	1	CHAUFFAGE ET MONTAGE - CABINE (ASS)	668
FUSIBLE (15A) (CLIMATISEUR)	8M-8948	1	CLIMATISEUR ET MONTAGE (ASS)	611
	9W-1441	1	CLIMATISEUR ET MONTAGE (ASS)	612
FUSIBLE (15A) (RÉCHAUFFEUR)	9W-1441	1	CHAUFFAGE ET MONTAGE - CABINE (ASS)	667
FUSIBLE (20 A) (CLIMATISEUR)	8M-0456	1	CLIMATISEUR (VERSION)	613
MANOMÈTRE D'AIR (ENS) (DROIT)	1W-3306	1	TABLEAU DE BORD (ASS)	732
MANOMÈTRE D'AIR (ENS) (FREIN - DROITE)	1W-3306	1	TABLEAU DE BORD (ASS)	734
MANOMÈTRE D'AIR (ENS) (FREIN GAUCHE)	1W-3306	1	TABLEAU DE BORD (ASS)	734
MANOMÈTRE D'AIR (ENS) (GAUCHE)	1W-3306	1	TABLEAU DE BORD (ASS)	732

PIÈCES DE RECHANGE

DESCRIPTION	NUMÉRO DE PIECÈS	QTÉ	DOMAINE D'APPLICATION	PAGE
TRANSMISSION				
BOUCHON DE GOULOTTE DE REMPLISSAGE (HUILE DE TRANSMISSION)	6G-9333	1	GOULOTTE DE REMPLISSAGE D'HUILE DE TRANSMISSION	284
BOUCHON DE VIDANGE (CARTER D'ENGRENAGES DE TRANSFERT)	4T-2069	1	ENGRENAGES DE TRANSFERT ET CARTER (ASS)	290
CHAPEAU DE VALVE (TIGE)	9K-7951	1	ROUE ET PNEU (VERSION)	324
		1	ROUE ET PNEU (VERSION)	325
		1	ROUE ET PNEU (VERSION)	326
		1	ROUE ET PNEU (VERSION)	327
		1	ROUE ET PNEU (VERSION)	328
		1	ROUE ET PNEU (VERSION)	329
		1	ROUE ET PNEU (VERSION)	330
		1	ROUE ET PNEU (VERSION)	331
		1	ROUE ET PNEU (VERSION)	332
		1	ROUE ET PNEU (VERSION)	333
		1	ROUE ET PNEU (VERSION)	334
		1	ROUE ET PNEU (VERSION)	335
		1	ROUE ET PNEU (VERSION)	336
		1	ROUE ET PNEU (VERSION)	337
		1	ROUE ET PNEU (VERSION)	338
		1	ROUE ET PNEU (VERSION)	339
		1	ROUE ET PNEU (VERSION)	340
		1	ROUE (VERSION)	341
		1	ROUE (VERSION)	342
ÉCRAN MAGNÉTIQUE (BOîTE DE VITESSES)	8S-9129	1	ENGRENAGES DE TRANSFERT ET CARTER (ASS)	289
ÉLÉMENT DE FILTRE-HYDRAULIQUE (TRANSMISSION)	132-8875	1	FILTRE A HUILE (ASS)	285
PARE-POUSSIERE (VERROUILLAGE DE DIFFÉRENTIEL)	6V-0852	1	COMMANDE DE DIFFÉRENTIEL - VERROUILLAGE (ASS)	266
RENIFLARD (BOîTE DE VITESSES)	9G-5127	1	ENGRENAGES DE TRANSFERT ET CARTER (ASS)	289
RENIFLARD (ENS) (AIR)	1F-8488	2	TANDEM ET CARTER (ASS)	306
TAMIS D'ASPIRATION (BOîTE DE VITESSES)	4S-8598	1	ENGRENAGES DE TRANSFERT ET CARTER (ASS)	289
	8S-9130	1	ENGRENAGES DE TRANSFERT ET CARTER (ASS)	289

PIEZAS DE MANTENIMIENTO

DESCRIPCION	NUMERO DE PIEZA	CANT	SE UTILIZA EN	PAGINA
BASTIDOR Y CAJA				
CONEXIÓN DE ENGRASE (ROSCA DE 1/8-27) (EJE DELANTERO)	3B-8489	12	EJE DELANTERO (GR)	344
CONEXIÓN DE ENGRASE (ROSCA DE 1/8-27) (PASADOR DE ARTICULACION SUPERIOR/INFERIOR)	3B-8489	2	TUBERÍAS DE ENGRASE (GR)	369
TAPÓN DE DRENAJE (CAJA DE TRANSMISION)	6B-5262	1	CAJA Y BASTIDOR (GR)	348
EQUIPO Y SUMINISTRO DE SERVICIOS				
CANDADO (GR)	5P-8502	1	CAJA DE HERRAMIENTAS (GR)	798
LLAVE	5P-8500		CAJA DE HERRAMIENTAS (GR)	798
HERRAMIENTAS				
CONEXIÓN DE ENGRASE (ROSCA DE 1/8-27) (MUÑON)	3B-8489	3	DESGARRADOR (GR)	606
IMPLEMENTOS				
CONEXIÓN DE ENGRASE (ROSCA DE 1/8-27) (BARRA DE TIRO)	3B-8489	1	BARRA DE TIRO (GR)	590
MOTOR BÁSICO				
EMPAQUETADURA DE BASE	109-5309	1	MECANISMO DE VÁLVULAS (GR)	58
EMPAQUETADURA-RESPIRADERO	9Y-1758	1	MECANISMO DE VÁLVULAS (GR)	58
MANGUERA DE ESCAPE DE GASES	126-0146	1	COMPRESOR DE AIRE (GR)	10
RESPIRADERO (CONJ) (MOTOR)	9Y-4357	1	MECANISMO DE VÁLVULAS (GR)	58
SELLO (1M)	5P-5678		MECANISMO DE LA VÁLVULA - MONTAJE DEL (GR)	43
TAPA CONTRA EL POLVO	6V-0852	1	TAPÓN DEL MOTOR (GR)	50
TAPÓN DE DRENAJE	5F-0304	1	VOLANTE - CAJA DE (GR)	36
PUESTO DEL OPERADOR				
CANDADO (GR)	5P-8502	1	CONJUNTO DE MODIFICACIÓN (SIN ROPS)	639
CINTURÓN DE SEGURIDAD (GR) (RETRACTIL)	156-1148	1	SUSPENSIÓN - ASIENTO CON (GR)	756
		1	SUSPENSIÓN - ASIENTO CON (GR)	757
		1	SUSPENSIÓN - ASIENTO CON (GR)	759
CORREA ACOSTIALLADA (AIRE ACONDICIONADO)	174-9690	1	ACONDICIONADOR DE AIRE (CONFIG)	614
FILTRO (AIRE DE LA CABINA)	9X-4986	2	FILTRO DE AIRE DE LA CABINA (GR)	664
FILTRO DE AIRE (ROPS DEL TABLERO TRASERO)	7T-7358	1	FILTRO DE AIRE DE LA CABINA (GR)	664
FUSIBLE (10 A) (DESCONGELADOR DELANTERO)	9W-1442	1	VENTILADOR DE CIRCULACION	662
FUSIBLE (10 A) (DESCONGELADOR TRASERO)	9W-1442	1	VENTILADOR DE CIRCULACION	663
FUSIBLE (10 A) (LIMPIADOR)	9W-1442	1	LIMPIAPARABRISAS DE LA VENTANA (GR)	786
FUSIBLE (10 A) (LIMPIAPARABRISAS INTERMITENTES)	9W-1442	1	LIMPIAPARABRISAS DE LA VENTANA (GR)	784
FUSIBLE (10 A) (RETROVISOR DELANTERO)	9W-1442	1	RETROVISOR (GR)	718

PIEZAS DE MANTENIMIENTO

DESCRIPCION	NUMERO DE PIEZA	CANT	SE UTILIZA EN	PAGINA
FUSIBLE (15 A) (ACONDICIONADOR DE AIRE Y CALEFACCIÓN)	9W-1441	1	CALEFACCIÓN Y MONTAJE DE LA CABINA (GR)	668
FUSIBLE (15 A) (AIRE ACONDICIONADO)	8M-8948	1	ACONDICIONADOR DE AIRE Y MONTAJE (GR)	611
	9W-1441	1	ACONDICIONADOR DE AIRE Y MONTAJE (GR)	612
FUSIBLE (15 A) (CALEFACTOR)	9W-1441	1	CALEFACCIÓN Y MONTAJE DE LA CABINA (GR)	667
FUSIBLE (20 A) (A/A)	8M-0456	1	ACONDICIONADOR DE AIRE (CONFIG)	613
HOJA DE LIMPIAPARABRISAS (CONJ) (DELANTERO DE ALTO PERFIL)	6V-5853	1	LIMPIAPARABRISAS DE LA VENTANA (GR)	782
HOJA DE LIMPIAPARABRISAS (CONJ) (DELANTERO DE BAJO PERFIL)	6V-5853	1	LIMPIAPARABRISAS DE LA VENTANA (GR)	780
HOJA DE LIMPIAPARABRISAS (CONJ) (RESPIRADERO INFERIOR DELANTERO)	6V-8255	2	VENTANA (GR)	771
HOJA DE LIMPIAPARABRISAS (CONJ) (TRASERO DE ALTO PARFIL)	6V-5853	1	LIMPIAPARABRISAS DE LA VENTANA (GR)	786
HOJA DE LIMPIAPARABRISAS (CONJ) (TRSERO DE BAJO PERFIL)	6V-5849	1	LIMPIAPARABRISAS DE LA VENTANA (GR)	784
INDICADOR DE PRESIÓN DE AIRE (CONJ) (DERECHA)	1W-3306	1	TABLERO DE INSTRUMENTOS (GR)	732
INDICADOR DE PRESIÓN DE AIRE (CONJ) (FRENO DERECHO)	1W-3306	1	TABLERO DE INSTRUMENTOS (GR)	734
INDICADOR DE PRESIÓN DE AIRE (CONJ) (FRENOS DE LA PARTE IZQUIERDA)	1W-3306	1	TABLERO DE INSTRUMENTOS (GR)	734
INDICADOR DE PRESIÓN DE AIRE (CONJ) (IZQUIERDA)	1W-3306	1	TABLERO DE INSTRUMENTOS (GR)	732
LÁMPARA (24 VOLTIOS) (ACONDICIONADOR DE AIRE Y TABLERO DE CONTROL DE CALEFACCIÓN)	8D-1429	1	CALEFACCIÓN DE LA CABINA (GR)	672
LÁMPARA (24 VOLTIOS) (AIRE ACONDICIONADO Y CALEFACCION)	8D-1429	1	CALEFACCIÓN DE LA CABINA (GR)	676
LÁMPARA (24 VOLTIOS) (DESCONGELADOR DELANTERO)	3E-8825	1	VENTILADOR DE CIRCULACION	662
LÁMPARA (24 VOLTIOS) (DESCONGELADOR TRASERO)	3E-8825	1	VENTILADOR DE CIRCULACION	663
LÁMPARA (24 VOLTIOS) (INDICADOR DE ACELERACIÓN SOSTENIDA)	115-1748	1	TABLERO DE INSTRUMENTOS (GR)	732
LÁMPARA (24 VOLTIOS) (INDICADOR DE GIRO A LA DERECHA)	115-1748	1	TABLERO DE INSTRUMENTOS (GR)	732
LÁMPARA (24 VOLTIOS) (INDICADOR DE GIRO A LA IZQUIERDA)	115-1748	1	TABLERO DE INSTRUMENTOS (GR)	732
LÁMPARA (24 VOLTIOS) (INDICADOR DE LUZ ALTA)	115-1748	1	TABLERO DE INSTRUMENTOS (GR)	732
LÁMPARA (24 VOLTIOS) (INDICADOR DE PRESIÓN DE AIRE, MANO DERECHA)	7N-5876	1	TABLERO DE INSTRUMENTOS (GR)	732
LÁMPARA (24 VOLTIOS) (INDICADOR DE PRESIÓN DE AIRE, MANO IZQUIERDA)	7N-5876	1	TABLERO DE INSTRUMENTOS (GR)	732

PIEZAS DE MANTENIMIENTO

DESCRIPCION	NUMERO DE PIEZA	CANT	SE UTILIZA EN	PAGINA
LÁMPARA (24 VOLTIOS) (INDICADOR DE TRABA DEL DIFERENCIAL)	115-1748	1	TABLERO DE INSTRUMENTOS (GR)	732
LÁMPARA (24 VOLTIOS) (INDICADOR DE VELOCIDAD DEL VENTILADOR)	8D-1429	1	ACONDICIONADOR DE AIRE (GR)	616
LÁMPARA (24 VOLTIOS) (LUZ INDIC. DE ACCION MAESTRA DE EMS)	107-1983	1	TABLERO DE INSTRUMENTOS (GR)	732
		1	TABLERO DE INSTRUMENTOS (GR)	734
LÁMPARA (24 VOLTIOS) (MODULO DE CUATRO INDICADORES)	7N-5876	2	TABLERO DE INSTRUMENTOS (GR)	732
LÁMPARA (24 VOLTIOS) (MODULO DE CUATRO MEDIDORES Y PRESIÓN DE AIRE)	7N-5876	4	TABLERO DE INSTRUMENTOS (GR)	734
LÁMPARA (24 VOLTIOS) (RETROVISOR INDICADOR DELANTERO)	3E-8825	1	RETROVISOR (GR)	718
LÁMPARA (24 VOLTIOS) (TABLERO DE AIRE ACONDICIONADO)	8D-1429	1	ACONDICIONADOR DE AIRE (GR)	620
LÁMPARA (24 VOLTIOS) (TABLERO DE INSTRUMENTOS)	115-1748	5	TABLERO DE INSTRUMENTOS (GR)	734
LÁMPARA (24 VOLTIOS) (VELOCÍMETRO, TACÓMETRO)	7N-5876	2	MÓDULO DEL TACÓMETRO Y DEL VELOCÍMETRO (GR)	723
LLAVE	5P-8500	1	CONJUNTO DE MODIFICACIÓN (SIN ROPS)	639
SISTEMA DE ADMISIÓN Y ESCAPE DE AIRE				
ELEMENTO PRIMARIO (CONJ)	6I-0273	1	FILTRO DE AIRE (GR)	92
ELEMENTO SECUNDARIO (CONJ)	6I-0274	1	FILTRO DE AIRE (GR)	92
INDICADOR DE SERVICIO DEL FILTRO DE AIRE	8N-2694	1	FILTRO DE AIRE (GR)	90
SISTEMA DE COMBUSTIBLE				
ELEMENTO DE FILTRO (SEPARADOR DE COMBUSTIBLE/AGUA) (PRIMARIO)	133-5673	1	FILTRO DE COMBUSTIBLE Y SEPARADOR DE AGUA (GR)	107
FILTRO DE COMBUSTIBLE (CONJ)	1R-0762	1	FILTRO DE COMBUSTIBLE (GR)	106
RECIPIENTE DE RECOLECCION DE AGUA (CONJ) (CALENTADOR DE 12 VOLTIOS)	155-2629	1	FILTRO DE COMBUSTIBLE Y SEPARADOR DE AGUA (GR)	107
RECIPIENTE DE RECOLECCION DE AGUA (CONJ) (CALENTADOR DE 24 VOLTIOS)	157-1206	1	FILTRO DE COMBUSTIBLE Y SEPARADOR DE AGUA (GR)	107
SISTEMA DE ENFRIAMIENTO				
ELEMENTO DE FILTRO DE COMBUSTIBLE (CONJ) (ACEITE DE LA TRANSMISIÓN)	2H-7254	1	TUBERÍAS DEL ENFRIADOR DEL TREN DE FUERZA (GR)	78
REGULADOR DE TEMPERATURA DEL AGUA	7C-3095	1	REGULADOR Y CAJA (GR)	76
TAPA CONTRA EL POLVO	6V-0852	1	TUBERÍAS DEL AGUA (GR)	82
		2	TUBERÍAS DEL ENFRIADOR DEL TREN DE FUERZA (GR)	78
	8C-3447	1	TUBERÍAS DEL ENFRIADOR DEL TREN DE FUERZA (GR)	78
TAPA DEL RADIADOR	6L-8617	1	RADIADOR (GR)	87

PIEZAS DE MANTENIMIENTO

DESCRIPCION	NUMERO DE PIEZA	CANT	SE UTILIZA EN	PAGINA
SISTEMA DE LUBRICACIÓN				
FILTRO DE ACEITE DEL MOTOR (CONJ)	1R-0716	1	FILTRO DE ACEITE DEL MOTOR (GR)	64
TAPA CONTRA EL POLVO	8C-3445	1	FILTRO DE ACEITE DEL MOTOR (GR)	64
TAPA DEL TUBO DE LLENADO DE ACEITE (CONJ)	5L-2952	1	TUBO DE LLENADO DE ACEITE (GR)	62
TAPÓN (CONJ)	9S-9272	1	CAMBIO RÁPIDO DE ACEITE (GR)	68
SISTEMA ELÉCTRICO Y DE ARRANQUE				
BATERÍA (LIBRE DE MANTENIMIENTO)(12 VOLTIOS)	153-5700	2	BATERÍA (GR)	132
BATERÍA (SERVICIO PESADO, 12 VOLTIOS)	153-5710	2	BATERÍA (GR)	131
CONJUNTO DE ELEMENTO DE CALEFACCION (240V 1250W)	154-2881	1	AGUA DE LAS CAMISAS - CALENTADOR DEL (GR)	146
CRISTAL (CÚPULA)	7T-0020	1	LÁMPARA DEL TECHO (GR)	149
DESTELLADOR ELECTRONICO (CONJ) (12/24 VOLTIOS) (LUZ DE GIRO/PELIGRO)	108-0358	1	LUCES DE REFLECTOR (GR)	178
		1	LUCES DE REFLECTOR (GR)	182
DESTELLADOR ELECTRONICO (CONJ) (12/24 VOLTIOS) (SEÑAL DE GIROS Y PELIGROS)	108-0358	1	LUCES DE REFLECTOR (GR)	186
DISYUNTOR (CONJ) (15 A) (BARRA DE LUCES BAJAS DELANTERAS)	3T-2662	2	LUCES DE REFLECTOR (GR)	178
DISYUNTOR (CONJ) (15 A) (BARRA DE LUCES DE TRABAJO)	3T-2662	1	DISYUNTOR DE CIRCUITO (GR)	133
DISYUNTOR (CONJ) (15 A) (CONTROL DEL MOTOR)	6T-3643	1	CABLES POSTERIORES (GR)	243
DISYUNTOR (CONJ) (15 A) (FAROS)	3T-2662	1	DISYUNTOR DE CIRCUITO (GR)	133
		1	DISYUNTOR DE CIRCUITO (GR)	134
DISYUNTOR (CONJ) (80 AMP) (ALTERNADOR)	171-2210	1	CABLES POSTERIORES (GR)	242
DISYUNTOR (CONJ) (80 AMP) (PRINCIPAL)	171-2210	1	CABLES POSTERIORES (GR)	242
ELEMENTO DEL CALENTADOR DEL AGUA DE LAS CAMISAS (120VOLTIOS 1250VATIOS)	131-8627	1	AGUA DE LAS CAMISAS - CALENTADOR DEL (GR)	145
FUSIBLE (10 A) (BALIZA GIRATORIA DE ADVERTENCIA)	9W-1442	1	BALIZA DE ADVERTENCIA (GR) - INSTALACIÓN	147
		1	LUCES DE ADVERTENCIA (GR)	191
		1	LUCES DE ADVERTENCIA (GR)	192
FUSIBLE (10 A) (CONSOLA DE DIRECCIÓN)	9W-1442	11	CABLES DE LA CONSOLA DE DIRECCIÓN (GR)	254
FUSIBLE (10 A) (CONTROL DE HOJA AMORTIGUADORA)	9W-1442	1	GRUPO DE CABLES, HOJA AMORTIGUADORA	225
FUSIBLE (10 A) (CONTROLADOR PARA LA HOJA)	9W-1442	1	CABLES DE LA CABINA (GR)	228
FUSIBLE (10 A) (DIRECCIÓN SECUNDARIA)	9W-1442	2	CABLES DE LA DIRECCIÓN SECUNDARIA	250
FUSIBLE (10 A) (LAMPARA DE RETROCESO)	9W-1442	1	LUCES DE RETROCESO (GR)	168
FUSIBLE (10 A) (LUCES DE TRABAJO DELANTERAS)	9W-1442	1	LUCES DE REFLECTOR (GR)	176
FUSIBLE (10 A) (LUZ ALTA/BAJA)	9W-1442	1	LUCES DE REFLECTOR (GR)	178

PIEZAS DE MANTENIMIENTO

DESCRIPCION	NUMERO DE PIEZA	CANT	SE UTILIZA EN	PAGINA
FUSIBLE (10 A) (LUZ ALTA/BAJA Y SEÑAL)	9W-1442	1	LUCES DE REFLECTOR (GR)	186
FUSIBLE (10 A) (LUZ DE GIRO/PELIGRO)	9W-1442	1	LUCES DE REFLECTOR (GR)	182
FUSIBLE (10 A) (REFLECTORES DEL LADO DERECHO)	9W-1442	1	LUCES DE REFLECTOR (GR)	174
FUSIBLE (10 A) (REFLECTORES DELANTEROS)	9W-1442	2	LUCES DE REFLECTOR (GR)	172
FUSIBLE (10 A) (SEÑALES DE GIRO)	9W-1442	1	INTERRUPTOR DE LUZ (GR)	220
FUSIBLE (10 A) (TRANSFORMADOR DE CORRIENTE)	9W-1442	1	CONVERTIDOR ELÉCTRICO (GR)	142
FUSIBLE (15 A) (ESCOBILLAS FRONTALES SUPERIOR/INFERIOR)	9W-1441	1	CABLES DE LA CABINA (GR)	226
FUSIBLE (30 A) (TRANSFORMADOR DE CORRIENTE)	8T-9636	2	CONVERTIDOR ELÉCTRICO (GR)	141
INTERRUPTOR (CONJ) (ACELERACIÓN SOSTENIDA AUTOMÁTICA/MANUAL)	196-7268	1	CABLES DE LA CONSOLA DE CAMBIOS (GR)	252
INTERRUPTOR (CONJ) (LUZ AUXILIAR DE RETROCESO)	161-1418	1	LUCES DE RETROCESO (GR)	168
LÁMPARA (BALIZA GIRATORIA DE ADVERTENCIA)	9X-7849	1	LÁMPARA DE BALIZA DE ADVERTENCIA (GR)	160
LÁMPARA DE FARO DELANTERO (24 VOLTIOS)	9X-3463	1	LÁMPARA DE FARO DELANTERO (GR)	157
LÁMPARA DE FARO DELANTERO (24 VOLTIOS) (LUZ BAJA)	9X-3463	1	LÁMPARA DE FARO DELANTERO (GR)	156
LÁMPARA DE FARO DELANTERO (24 VOLTIOS) (REFLECTOR)	9X-3463	1	REFLECTOR (GR)	150
LAMPARA DERECHA (CONJ) (PARADA/COLA/GIRO)	6C-0109	1	CABLES POSTERIORES (GR)	248
LÁMPARA (FILAMENTO SENCILLO) (SEÑAL DE VIRAJE)	9X-4493	1	LÁMPARA DE FARO DELANTERO (GR)	152
		1	LÁMPARA DE FARO DELANTERO (GR)	154
LAMPARA IZQUIERDA (CONJ) (PARADA/COLA/GIRO)	6C-0110	1	CABLES POSTERIORES (GR)	248
LÁMPARA (24 VOLTIOS) (BALIZA GIRATORIA DE ADVERTENCIA)	3E-8825	1	BALIZA DE ADVERTENCIA (GR) - INSTALACIÓN	147
		1	LUCES DE ADVERTENCIA (GR)	191
		1	LUCES DE ADVERTENCIA (GR)	192
LÁMPARA (24 VOLTIOS) (CONSOLA DE CAMBIOS)	7N-5876	1	CABLES DE LA CONSOLA DE CAMBIOS (GR)	252
LÁMPARA (24 VOLTIOS) (CÚPULA)	7N-9943	1	LÁMPARA DEL TECHO (GR)	149
LÁMPARA (24 VOLTIOS) (FARO DELANTERO/COLA)	3E-8825	2	LUCES DE REFLECTOR (GR)	178
		2	LUCES DE REFLECTOR (GR)	182
		2	LUCES DE REFLECTOR (GR)	186
LÁMPARA (24 VOLTIOS) (HOJA AMORTIGUADORA/INDICADOR)	3E-8825	1	GRUPO DE CABLES, HOJA AMORTIGUADORA	225
LÁMPARA (24 VOLTIOS) (INDICADOR DE ARRANQUE ASISTIDO POR ÉTER)	3E-8825	1	AUXILIAR DE ARRANQUE CON ÉTER (GR)	209
LÁMPARA (24 VOLTIOS) (INDICADOR SECUNDARIO DE DIRECCION)	3E-8825	2	CABLES DE LA DIRECCIÓN SECUNDARIA	250
LÁMPARA (24 VOLTIOS) (INTERRUPTOR ATENUADOR DE LUCES DEL TABLERO)	3E-8825	1	CABLES DE LA CONSOLA DE DIRECCIÓN (GR)	254

PIEZAS DE MANTENIMIENTO

DESCRIPCION	NUMERO DE PIEZA	CANT	SE UTILIZA EN	PAGINA
LÁMPARA (24 VOLTIOS) (INTERRUPTOR DE ACELERACIÓN SOSTENIDA AUTOMÁTICA/MANUAL)	3E-8825	2	CABLES DE LA CONSOLA DE CAMBIOS (GR)	252
LÁMPARA (24 VOLTIOS) (INTERRUPTOR DE ARRANQUE ASISTDO POR ÉTER)	3E-8825	1	CABLES DE LA CONSOLA DE DIRECCIÓN (GR)	254
LÁMPARA (24 VOLTIOS) (INTERRUPTOR DE EXTRACTOR DE PASADORES DE DESPLAZADOR DEL CIRCULO)	3E-8825	1	CABLES DE LA CONSOLA DE CAMBIOS (GR)	252
LÁMPARA (24 VOLTIOS) (INTERRUPTOR DE LUCES TRASERAS)	3E-8825	1	CABLES DE LA CONSOLA DE DIRECCIÓN (GR)	254
LÁMPARA (24 VOLTIOS) (INTERRUPTOR DE TRABA DEL DIFERENCIAL)	3E-8825	2	CABLES DE LA CONSOLA DE DIRECCIÓN (GR)	254
LÁMPARA (24 VOLTIOS) (LÁMPARA DE FUNCIONAMIENTO)	100-3245	1	LÁMPARA DE FARO DELANTERO (GR)	154
LÁMPARA (24 VOLTIOS) (LUCES DE MANO DERECHA, ALTAS/BAJAS)	9X-3465	1	LÁMPARA DE FARO DELANTERO (GR)	154
LÁMPARA (24 VOLTIOS) (LUCES DE TRABAJO)	100-3245	1	LÁMPARA DE FARO DELANTERO (GR)	152
LÁMPARA (24 VOLTIOS) (LUZ ALTA/BAJA)	9X-3465	1	LÁMPARA DE FARO DELANTERO (GR)	152
LÁMPARA (24 VOLTIOS) (LUZ AUXILIAR DE RETROCESO)	3E-8825	2	LUCES DE RETROCESO (GR)	168
LÁMPARA (24 VOLTIOS) (LUZ BAJA)	9X-3463	1	LUCES DE REFLECTOR (GR)	170
LÁMPARA (24 VOLTIOS) (LUZ BAJA DE BARRA DE LUCES)	3E-8825	1	LUCES DE REFLECTOR (GR)	179
		1	LUCES DE REFLECTOR (GR)	182
LÁMPARA (24 VOLTIOS) (LUZ DELANTERA/TRASERA/INDICADOR)	3E-8825	2	INTERRUPTOR DE LUZ (GR)	220
LÁMPARA (24 VOLTIOS) (LUZ INDICADORA DE LAMPARA DELANTERA/TRASERA)	3E-8825	2	LUCES DE REFLECTOR (GR)	176
LÁMPARA (24 VOLTIOS) (REFLECTORES DEL LADO DERECHO)	3E-8825	1	LUCES DE REFLECTOR (GR)	174
LÁMPARA (24 VOLTIOS) (REFLECTORES DELANTEROS)	3E-8825	2	LUCES DE REFLECTOR (GR)	172
LÁMPARA (24 VOLTIOS) (SEÑAL DE VIRAJE)	100-3245	1	LÁMPARA DE FARO DELANTERO (GR)	152
		1	LÁMPARA DE FARO DELANTERO (GR)	154
LÁMPARA (24 VOLTIOS) (VERTEDERA/INDICADOR)	3E-8825	1	CABLES DE LA CABINA (GR)	228
LÁMPARA (24 VOLTIOS) (VIGA ALTA)	9X-3463	1	LUCES DE REFLECTOR (GR)	170
LÁMPARA (24 VOLTIOS, 21 VATIOS) (LUZ DE SEÑAL DE PARADA/COLA)	5C-9584	2	CABLES POSTERIORES (GR)	248
LÁMPARA (24 VOLTIOS, 5 VATIOS) (DE GIRO)	4V-8116	1	CABLES POSTERIORES (GR)	248
LENTE AMBAR (BALIZA GIRATORIA DE ADVERTENCIA)	9X-8121	1	LÁMPARA DE BALIZA DE ADVERTENCIA (GR)	160
LENTE AMBAR (SEÑAL DE VIRAJE)	100-3250	1	LÁMPARA DE FARO DELANTERO (GR)	152
		1	LÁMPARA DE FARO DELANTERO (GR)	154

PIEZAS DE MANTENIMIENTO

DESCRIPCION	NUMERO DE PIEZA	CANT	SE UTILIZA EN	PAGINA
LLAVE (DESCONECTAR BATERIA)	8H-5306	1	DISYUNTOR (GR)	218
LUZ DE SEÑAL DE GIRO (GR) (LADO DERECHO)	135-0427	1	LUCES DE REFLECTOR (GR)	170
LUZ DE SEÑAL DE GIRO (GR) (LADO IZQUIERDO)	135-0427	1	LUCES DE REFLECTOR (GR)	170
LUZ DE SEÑAL DE GIRO (GR) (LUZ DE SEÑAL DE GIRO/ESTACIONAMIENTO)	135-0427	2	LUCES DE GIRO (GR)	190
LUZ DE SEÑAL DE GIRO (GR) (LUZ DE SEÑAL DE PARADA/COLA)	135-0426	2	CABLES POSTERIORES (GR)	246
MANDO DE CORREA (BALIZA GIRATORIA DE ADVERTENCIA)	9X-8139	1	LÁMPARA DE BALIZA DE ADVERTENCIA (GR)	160
TAPA CONTRA EL POLVO (CONJ)	133-6517	1	AGUA DE LAS CAMISAS - CALENTADOR DEL (GR)	145
		1	AGUA DE LAS CAMISAS - CALENTADOR DEL (GR)	146
VIDRIO (CONJ) (FARO DELANTERO - LÁMPARA DE)	158-0249	1	LÁMPARA DE FARO DELANTERO (GR)	157
VIDRIO (CONJ) (FARO DELANTERO) (LUZ BAJA)	162-2077	1	LUCES DE REFLECTOR (GR)	170
VIDRIO (CONJ) (FARO DELANTERO) (VIGA ALTA)	158-0249	1	LUCES DE REFLECTOR (GR)	170
VIDRIO (CONJ) (LAMPARA-LUZ BAJA)	162-2077	1	LÁMPARA DE FARO DELANTERO (GR)	156
VIDRIO (CONJ) (LUZ ALTA/BAJA)	100-3248	1	LÁMPARA DE FARO DELANTERO (GR)	152
		1	LÁMPARA DE FARO DELANTERO (GR)	154
VIDRIO (CONJ) (REFLECTOR)	158-0248	1	REFLECTOR (GR)	150
VIDRIO (CONJ) (SEÑAL DE VIRAJE)	136-3848	1	LÁMPARA DE FARO DELANTERO (GR)	152
		1	LÁMPARA DE FARO DELANTERO (GR)	154
SISTEMA HIDRÁULICO				
CANDADO (GR) (TANQUE HIDRÁULICO)	5P-8502	1	TANQUE HIDRÁULICO (GR)	496
COLADOR (LLENADOR DE ACEITE HIDRAULICO)	9J-3047	1	TANQUE HIDRÁULICO (GR)	498
CONEXIÓN DE ENGRASE (HOJA DE LEVANTAMIENTO)	3B-8485	2	CILINDRO DE LEVANTAMIENTO DE HOJA Y MONTAJE (GR)	419
CONEXIÓN DE ENGRASE (ROSCA DE 1/8-27) (INCLINACION DE RUEDA)	3B-8489	2	CILINDRO DE INCLINACIÓN DE RUEDA Y MONTAJE (GR)	424
CONEXIÓN DE ENGRASE (ROSCA 1/8-27)(45 GRADO) (DESPLAZADOR DEL CILINDRO)	3B-8485	2	CILINDRO DE DESPLAZAMIENTO DEL CÍRCULO Y MONTAJE (GR)	421
EMPAQUETADURA (TAPÓN DE LLENADO DEL TANQUE DE ACEITE HIDRÁULICO)	3G-0361	1	TANQUE HIDRÁULICO (GR)	498
TAPA CONTRA EL POLVO	6V-0852	1	BOMBA - TUBERÍAS DE (GR)	462
		1	TUBERÍAS HIDRÁULICAS DEL VENTILADOR (GR)	458
		1	VÁLVULA DE COMBINACIÓN (GR)	534
TAPA CONTRA EL POLVO (ACEITE HIDRÁULICO)	8C-3451	1	TUBERÍAS DE DIRECCIÓN (GR)	473
TAPA DEL TUBO DE LLENADO (TANQUE DE ACEITE HIDRÁULICO)	7H-1447	1	TANQUE HIDRÁULICO (GR)	498

PIEZAS DE MANTENIMIENTO

DESCRIPCION	NUMERO DE PIEZA	CANT	SE UTILIZA EN	PAGINA
TREN DE FUERZA				
ELEMENTO DE FILTRO HIDRÁULICO (TREN DE FUERZA)	132-8875	1	FILTRO DE ACEITE (GR)	285
FILTRO MAGNÉTICO (TRANSMISION)	8S-9129	1	CAJA Y TRANSFERENCIA DEL ENGRANAJE (GR)	289
REJILLA DE SUCCIÓN (TRANSMISION)	4S-8598	1	CAJA Y TRANSFERENCIA DEL ENGRANAJE (GR)	289
	8S-9130	1	CAJA Y TRANSFERENCIA DEL ENGRANAJE (GR)	289
RESPIRADERO (CONJ) (AIRE)	1F-8488	2	TÁNDEM Y CUBIERTA (GR)	306
RESPIRADERO (TRANSMISION)	9G-5127	1	CAJA Y TRANSFERENCIA DEL ENGRANAJE (GR)	289
TAPA CONTRA EL POLVO (TRABA DE DIFERENCIAL)	6V-0852	1	CONTROL DE TRABA DEL DIFERENCIAL (GR)	266
TAPA DEL TUBO DE LLENADO (ACEITE DEL TREN DE FUERZA)	6G-9333	1	TUBO DE LLENADO DE ACEITE DE LA TRANSMISIÓN (GR)	284
TAPA (VASTAGO)	9K-7951	1	RUEDA (CONFIG)	341
		1	RUEDA (CONFIG)	342
		1	RUEDA Y LLANTA (CONFIG)	324
		1	RUEDA Y LLANTA (CONFIG)	325
		1	RUEDA Y LLANTA (CONFIG)	326
		1	RUEDA Y LLANTA (CONFIG)	327
		1	RUEDA Y LLANTA (CONFIG)	328
		1	RUEDA Y LLANTA (CONFIG)	329
		1	RUEDA Y LLANTA (CONFIG)	330
		1	RUEDA Y LLANTA (CONFIG)	331
		1	RUEDA Y LLANTA (CONFIG)	332
		1	RUEDA Y LLANTA (CONFIG)	333
		1	RUEDA Y LLANTA (CONFIG)	334
		1	RUEDA Y LLANTA (CONFIG)	335
		1	RUEDA Y LLANTA (CONFIG)	336
		1	RUEDA Y LLANTA (CONFIG)	337
		1	RUEDA Y LLANTA (CONFIG)	338
		1	RUEDA Y LLANTA (CONFIG)	339
		1	RUEDA Y LLANTA (CONFIG)	340
TAPÓN DE DRENAJE (CAJA ENGRANAJE Y TRANSMISIÓN)	4T-2069	1	CAJA Y TRANSFERENCIA DEL ENGRANAJE (GR)	290

PEÇAS DE MANUTENÇÃO

DESCRIÇÃO	NÚMERO DE PEÇA	QUANT	UTILIZADA EM	PÁGINA
ACESSÓRIOS				
GRAXEIRA (ROSCA 1/8-27 POL) (BARRA DE TRAÇÃO)	3B-8489	1	BARRA DE TRAÇÃO	590
CHASSI E CARROCERIA				
BUJÃO DO DRENO (CAIXA DE TRANSMISSÃO)	6B-5262	1	CAIXA E CHASSI	348
GRAXEIRA (ROSCA 1/8-27 POL) (EIXO DIANTEIRO)	3B-8489	12	EIXO DIANTEIRO	344
GRAXEIRA (ROSCA 1/8-27 POL) (PINO DE ARTICULAÇÃO SUPERIOR/INFERIOR)	3B-8489	2	TUBOS - GRAXA	369
EQUIPAMENTOS DE SERVIÇO E SUPRIMENTOS				
CADEADO	5P-8502	1	CAIXA DE FERRAMENTAS	798
CHAVE	5P-8500		CAIXA DE FERRAMENTAS	798
ESTAÇÃO DO OPERADOR				
CADEADO	5P-8502	1	CONVERSÃO PARA ESTRUTURA NÃO ROPS	639
CHAVE	5P-8500	1	CONVERSÃO PARA ESTRUTURA NÃO ROPS	639
CINTO DE SEGURANÇA (RETRÁTIL)	156-1148	1	ASSENTO COM SUSPENSÃO	756
		1	ASSENTO COM SUSPENSÃO	757
		1	ASSENTO COM SUSPENSÃO	759
CORREIA-ESTRIADA (AR CONDICIONADO)	174-9690	1	CONDICIONADOR DE AR	614
FILTRO - AR (ROPS - PAINEI TRASEIRO)	7T-7358	1	FILTRO - AR DA CABINE	664
FILTRO (AR DA CABINE)	9X-4986	2	FILTRO - AR DA CABINE	664
FUSÍVEL (10 A) (DESCONGELADOR DIANTEIRO)	9W-1442	1	VENTILADOR DE CIRCULAÇÃO DE AR DA CABINE	662
FUSÍVEL (10 A) (DESCONGELADOR TRASEIRO)	9W-1442	1	VENTILADOR DE CIRCULAÇÃO DE AR DA CABINE	663
FUSÍVEL (10 A) (ESPELHO AQUECIDO)	9W-1442	1	ESPELHO RETROVISOR	718
FUSÍVEL (10 A) (LIMPADOR)	9W-1442	1	LIMPADOR DO VIDRO	786
FUSÍVEL (10 A) (LIMPADOR INTERMITENTE)	9W-1442	1	LIMPADOR DO VIDRO	784
FUSÍVEL (15 A) (AQUECEDOR)	9W-1441	1	AQUECEDOR DA CABINE E MONTAGEM	667
FUSÍVEL (15 A) (AQUECIMENTO E CONDICIONAMENTO DE AR)	9W-1441	1	AQUECEDOR DA CABINE E MONTAGEM	668
FUSÍVEL (15 A) (AR CONDICIONADO)	8M-8948	1	CONDICIONADOR DE AR E MONTAGEM	611
	9W-1441	1	CONDICIONADOR DE AR E MONTAGEM	612
FUSÍVEL (20 A) (AR CONDICIONADO)	8M-0456	1	CONDICIONADOR DE AR	613
LÂMINA DO LIMPADOR DE PÁRA-BRISA (PERFIL ALTO - INFERIOR DIANTEIRO)	6V-5853	1	LIMPADOR DO VIDRO	782
LÂMINA DO LIMPADOR DE PÁRA-BRISA (PERFIL ALTO - TRASEIRO)	6V-5853	1	LIMPADOR DO VIDRO	786
LÂMINA DO LIMPADOR DE PÁRA-BRISA (PERFIL BAIXO - INFERIOR DIANTEIRO)	6V-5853	1	LIMPADOR DO VIDRO	780

PEÇAS DE MANUTENÇÃO

DESCRIÇÃO	NÚMERO DE PEÇA	QUANT	UTILIZADA EM	PÁGINA
LÂMINA DO LIMPADOR DE PÁRA-BRISA (PERFIL BAIXO - TRASEIRO)	6V-5849	1	LIMPADOR DO VIDRO	784
LÂMINA DO LIMPADOR DE PÁRA-BRISA (VENTILADOR INFERIOR DIANTEIRO)	6V-8255	2	VIDRO	771
LÂMPADA (24 V) (AR CONDICIONADO E AQUECEDOR)	8D-1429	1	AQUECEDOR DA CABINE	676
LÂMPADA (24 V) (DESCONGELADOR DIANTEIRO)	3E-8825	1	VENTILADOR DE CIRCULAÇÃO DE AR DA CABINE	662
LÂMPADA (24 V) (DESCONGELADOR TRASEIRO)	3E-8825	1	VENTILADOR DE CIRCULAÇÃO DE AR DA CABINE	663
LÂMPADA (24 V) (INDICADOR DA AÇÃO PRINCIPAL DO EMS)	107-1983	1	PAINEL DE INSTRUMENTOS	732
		1	PAINEL DE INSTRUMENTOS	734
LÂMPADA (24 V) (INDICADOR DA TRAVA DO DIFERENCIAL)	115-1748	1	PAINEL DE INSTRUMENTOS	732
LÂMPADA (24 V) (INDICADOR DE ESPELHO AQUECIDO)	3E-8825	1	ESPELHO RETROVISOR	718
LÂMPADA (24 V) (INDICADOR DE FACHO ALTO)	115-1748	1	PAINEL DE INSTRUMENTOS	732
LÂMPADA (24 V) (INDICADOR DE RETENÇÃO DO ACELERADOR)	115-1748	1	PAINEL DE INSTRUMENTOS	732
LÂMPADA (24 V) (INDICADOR DE VELOCIDADE DO VENTILADOR)	8D-1429	1	CONDICIONADOR DE AR	616
LÂMPADA (24 V) (INDICADOR DE VIRADA À DIREITA)	115-1748	1	PAINEL DE INSTRUMENTOS	732
LÂMPADA (24 V) (INDICADOR DE VIRADA À ESQUERDA)	115-1748	1	PAINEL DE INSTRUMENTOS	732
LÂMPADA (24 V) (MÓDULO DE 4 MEDIDORES)(INDICADOR)	7N-5876	2	PAINEL DE INSTRUMENTOS	732
LÂMPADA (24 V) (PAINEL DE CONTROLE DO AQUECEDOR E AR CONDICIONADO)	8D-1429	1	AQUECEDOR DA CABINE	672
LÂMPADA (24 V) (PAINEL DE INSTRUMENTOS)	115-1748	5	PAINEL DE INSTRUMENTOS	734
LÂMPADA (24 V) (PAINELDE AQUECIMENTO - VENTILADOR - AR CONDICIONADO)	8D-1429	1	CONDICIONADOR DE AR	620
LÂMPADA (24 V) (PRESSÃO DO AR DO LADO DIREITO)(INDICADOR)	7N-5876	1	PAINEL DE INSTRUMENTOS	732
LÂMPADA (24 V) (PRESSÃO DO AR DO LADO ESQUERDO)(INDICADOR)	7N-5876	1	PAINEL DE INSTRUMENTOS	732
LÂMPADA (24 V) (QUATRO INDICADORES E PRESSÃO DO AR)	7N-5876	4	PAINEL DE INSTRUMENTOS	734
LÂMPADA (24 V) (VELOCÍMETRO E TACÔMETRO)	7N-5876	2	MÓDULO - VELOCÍMETRO E TACÔMETRO	723
MANÔMETRO DE AR (DIR.)	1W-3306	1	PAINEL DE INSTRUMENTOS	732
MANÔMETRO DE AR (ESQ.)	1W-3306	1	PAINEL DE INSTRUMENTOS	732
MANÔMETRO DE AR (FREIO - LADO DIREITO)	1W-3306	1	PAINEL DE INSTRUMENTOS	734
MANÔMETRO DE AR (FREIO DO LADO ESQUERDO)	1W-3306	1	PAINEL DE INSTRUMENTOS	734

PEÇAS DE MANUTENÇÃO

DESCRIÇÃO	NÚMERO DE PEÇA	QUANT	UTILIZADA EM	PÁGINA
FERRAMENTAS DE TRABALHO				
GRAXEIRA (ROSCA 1/8-27 POL) (MUNHÃO)	3B-8489	3	RIPER	606
MOTOR BÁSICO				
BUJÃO DO DRENO	5F-0304	1	CAIXA DO VOLANTE DO MOTOR	36
JUNTA-BASE	109-5309	1	MECANISMO DAS VÁLVULAS	58
JUNTA-RESPIRO	9Y-1758	1	MECANISMO DAS VÁLVULAS	58
MANGUEIRA - ELIMINAÇÃO DE VAPORES	126-0146	1	COMPRESSOR DE AR	10
RESPIRO (MOTOR)	9Y-4357	1	MECANISMO DAS VÁLVULAS	58
RETENTOR (1M)	5P-5678		MONTAGEM - MECANISMO DAS VÁLVULAS	43
TAMPA CONTRA POEIRA	6V-0852	1	BUJÃO DO MOTOR	50
SISTEMA DE ADMISSÃO DE AR E DE ESCAPE				
ELEMENTO - PRIMÁRIO	6I-0273	1	PURIFICADOR DE AR	92
ELEMENTO - SECUNDÁRIO	6I-0274	1	PURIFICADOR DE AR	92
INDICADOR - LIMPEZA DO FILTRO DE AR	8N-2694	1	PURIFICADOR DE AR	90
SISTEMA DE ARREFECIMENTO				
ELEMENTO - FILTRO DE COMBUSTÍVEL (ÓLEO DA TRANSMISSÃO)	2H-7254	1	TUBOS - ARREFECEDOR DO TREM DE FORÇA	78
REGULADOR DE TEMPERATURA DA ÁGUA	7C-3095	1	TERMOSTATO / REGULADOR DE TEMPERATURA	76
TAMPA - RADIADOR	6L-8617	1	RADIADOR	87
TAMPA CONTRA POEIRA	6V-0852	1	TUBOS - ÁGUA	82
		2	TUBOS - ARREFECEDOR DO TREM DE FORÇA	78
	8C-3447	1	TUBOS - ARREFECEDOR DO TREM DE FORÇA	78
SISTEMA DE COMBUSTÍVEL				
ELEMENTO - FILTRANTE (SEPARADOR DE ÁGUA E DE COMBUSTÍVEL) (PRIMÁRIO)	133-5673	1	FILTRO DE COMBUSTÍVEL E SEPARADOR DE ÁGUA	107
FILTRO - COMBUSTÍVEL	1R-0762	1	FILTRO - COMBUSTÍVEL	106
RESERVATÓRIO - ARMAZENAGEM DE ÁGUA (AQUECEDOR DE 12 VOLTS)	155-2629	1	FILTRO DE COMBUSTÍVEL E SEPARADOR DE ÁGUA	107
	157-1206	1	FILTRO DE COMBUSTÍVEL E SEPARADOR DE ÁGUA	107
SISTEMA DE LUBRIFICAÇÃO				
FILTRO - ÓLEO DO MOTOR	1R-0716	1	FILTRO - ÓLEO DO MOTOR	64
TAMPA	9S-9272	1	ÓLEO - ARRANJO PARA TROCA RÁPIDA	68
TAMPA - BOCAL DE ENCHIMENTO DE ÓLEO	5L-2952	1	BOCAL DE ENCHIMENTO DE ÓLEO DO MOTOR	62
TAMPA CONTRA POEIRA	8C-3445	1	FILTRO - ÓLEO DO MOTOR	64

PEÇAS DE MANUTENÇÃO

DESCRIÇÃO	NÚMERO DE PEÇA	QUANT	UTILIZADA EM	PÁGINA
SISTEMA ELÉTRICO E DE PARTIDA				
BATERIA (LIVRE DE MANUTENÇÃO)(12 VOLT)	153-5700	2	BATERIA	132
BATERIA (SERVIÇO PESADO)(12V)	153-5710	2	BATERIA	131
CHAVE (DESCONECTAR A BATERIA)	8H-5306	1	CHAVE GERAL	218
CORREIA DE COMANDO (PISCA-PISCA DE ADVERTÊNCIA)	9X-8139	1	LUZ GIRATÓRIA DE ALARME	160
DISJUNTOR AUTOMÁTICO DE CIRCUITO (15 A) (CONTROLE DO MOTOR)	6T-3643	1	CABOS/FIOS ELÉTRICOS - TRASEIROS	243
DISJUNTOR AUTOMÁTICO DE CIRCUITO (15 A) (FARÓIS)	3T-2662	1	INTERRUPTOR - CIRCUITO	133
		1	INTERRUPTOR - CIRCUITO	134
DISJUNTOR AUTOMÁTICO DE CIRCUITO (15 A) (FAROL - FACHO BAIXO DA BARRA DE LUZES)	3T-2662	2	SISTEMA DE ILUMINAÇÃO - FARÓIS	178
DISJUNTOR AUTOMÁTICO DE CIRCUITO (15 A) (LÂMPADAS DE TRABALHO - BARRA)	3T-2662	1	INTERRUPTOR - CIRCUITO	133
DISJUNTOR AUTOMÁTICO DE CIRCUITO (80 A) (ALTERNADOR)	171-2210	1	CABOS/FIOS ELÉTRICOS - TRASEIROS	242
DISJUNTOR AUTOMÁTICO DE CIRCUITO (80 A) (PRINCIPAL)	171-2210	1	CABOS/FIOS ELÉTRICOS - TRASEIROS	242
ELEMENTO - AQUECEDOR DE ÁGUA DA CAMISA (120V 1250 W)	131-8627	1	AQUECEDOR DA ÁGUA DO MOTOR	145
ELEMENTO - AQUECEDOR (240V 1250W)	154-2881	1	AQUECEDOR DA ÁGUA DO MOTOR	146
FAROL DIANTEIRO (24 V)	9X-3463	1	FAROL DIANTEIRO	157
FAROL DIANTEIRO (24 V) (FAROL)	9X-3463	1	LÂMPADA - FAROL	150
FAROL DIANTEIRO (24 V) (FAROL BAIXO)	9X-3463	1	FAROL DIANTEIRO	156
FUSÍVEL (10 A) (CONSOLE DA DIREÇÃO)	9W-1442	11	CABOS/FIOS ELÉTRICOS - CONSOLE DA DIREÇÃO	254
FUSÍVEL (10 A) (CONTROLADOR DA LÂMINA)	9W-1442	1	CABOS/FIOS ELÉTRICOS - CABINE	228
FUSÍVEL (10 A) (CONTROLE DO AMORTECEDOR DA LÂMINA)	9W-1442	1	FIAÇÃO - AMORTECEDOR DA LÂMINA	225
FUSÍVEL (10 A) (CONVERSOR DE ENERGIA)	9W-1442	1	CONVERSOR ELÉTRICO	142
FUSÍVEL (10 A) (DIREÇÃO SECUNDÁRIA)	9W-1442	2	CABOS/FIOS ELÉTRICOS - DIREÇÃO SECUNDÁRIA	250
FUSÍVEL (10 A) (FAIXO ALTO E BAIXO E PISCA)	9W-1442	1	SISTEMA DE ILUMINAÇÃO - FARÓIS	186
FUSÍVEL (10 A) (FAROL DIANTEIRO)	9W-1442	2	SISTEMA DE ILUMINAÇÃO - FARÓIS	172
FUSÍVEL (10 A) (FAROL DO LADO DIREITO)	9W-1442	1	SISTEMA DE ILUMINAÇÃO - FARÓIS	174
FUSÍVEL (10 A) (LUZ ALTA/BAIXA)	9W-1442	1	SISTEMA DE ILUMINAÇÃO - FARÓIS	178
FUSÍVEL (10 A) (LUZ DE MARCHA À RÉ)	9W-1442	1	ILUMINAÇÃO - MARCHA A RÉ	168
FUSÍVEL (10 A) (LUZES DE TRABALHO DIANTEIRAS)	9W-1442	1	SISTEMA DE ILUMINAÇÃO - FARÓIS	176
FUSÍVEL (10 A) (PISCA-PISCA DE ADVERTÊNCIA)	9W-1442	1	INSTALAÇÃO DO PISCA-PISCA DE ADVERTÊNCIA	147
		1	SISTEMA DE ILUMINAÇÃO - ADVERTÊNCIA	191

PEÇAS DE MANUTENÇÃO

DESCRIÇÃO	NÚMERO DE PEÇA	QUANT	UTILIZADA EM	PÁGINA
		1	SISTEMA DE ILUMINAÇÃO - ADVERTÊNCIA	192
FUSÍVEL (10 A) (SETA DE DIREÇÃO - PISCA)	9W-1442	1	SISTEMA DE ILUMINAÇÃO - FARÓIS	182
FUSÍVEL (10 A) (SETAS DE DIREÇÃO)	9W-1442	1	INTERRUPTOR - LUZES	220
FUSÍVEL (15 A) (LIMPADORES DIANTEIROS SUPERIOR E INFERIOR)	9W-1441	1	CABOS/FIOS ELÉTRICOS - CABINE	226
FUSÍVEL (30 A) (CONVERSOR - FORÇA)	8T-9636	2	CONVERSOR ELÉTRICO	141
INTERRUPTOR (LUZ DE MARCHA À RÉ AUXILIAR)	161-1418	1	ILUMINAÇÃO - MARCHA A RÉ	168
INTERRUPTOR (RETENÇÃO DO ACELERADOR AUTOMÁTICA - MANUSL)	196-7268	1	CABOS/FIOS ELÉTRICOS - CONSOLE DA TRANSMISSÃO	252
LÂMPADA - LADO DIREITO (LUZES DO FREIO/LUZES TRASEIRAS/LUZES INDICADORAS DE DIREÇÃO)	6C-0109	1	CABOS/FIOS ELÉTRICOS - TRASEIROS	248
LÂMPADA - LADO ESQUERDO (LUZES DO FREIO/LUZES TRASEIRAS/LUZES INDICADORAS DE DIREÇÃO)	6C-0110	1	CABOS/FIOS ELÉTRICOS - TRASEIROS	248
LÂMPADA - SINALIZAÇÃO (DIREITO)	135-0427	1	SISTEMA DE ILUMINAÇÃO - FARÓIS	170
LÂMPADA - SINALIZAÇÃO (ESQUERDO)	135-0427	1	SISTEMA DE ILUMINAÇÃO - FARÓIS	170
LÂMPADA - SINALIZAÇÃO (PARADA/TRASEIRA)	135-0426	2	CABOS/FIOS ELÉTRICOS - TRASEIROS	246
LÂMPADA - SINALIZAÇÃO (VIRAR/ESTACIONAR)	135-0427	2	ILUMINAÇÃO - SINALIZAÇÃO	190
LÂMPADA (FILAMENTO SIMPLES) (SETA DE DIREÇÃO)	9X-4493	1	FAROL DIANTEIRO	152
		1	FAROL DIANTEIRO	154
LÂMPADA (PISCA-PISCA DE ADVERTÊNCIA)	9X-7849	1	LUZ GIRATÓRIA DE ALARME	160
LÂMPADA (24 V) (ARMAÇÃO DA LÂMINA - INDICADOR)	3E-8825	1	CABOS/FIOS ELÉTRICOS - CABINE	228
LÂMPADA (24 V) (BARRA DE LUZ BAIXA)	3E-8825	1	SISTEMA DE ILUMINAÇÃO - FARÓIS	179
		1	SISTEMA DE ILUMINAÇÃO - FARÓIS	182
LÂMPADA (24 V) (CONSOLE DO EIXO)	7N-5876	1	CABOS/FIOS ELÉTRICOS - CONSOLE DA TRANSMISSÃO	252
LÂMPADA (24 V) (CONTROLE - INDICADOR DE AMORTECIMENTO DE LÂMINA)	3E-8825	1	FIAÇÃO - AMORTECEDOR DA LÂMINA	225
LÂMPADA (24 V) (FACHO ALTO - BAIXO)(LADO DIREITO)	9X-3465	1	FAROL DIANTEIRO	154
LÂMPADA (24 V) (FAROL BAIXO)	9X-3463	1	SISTEMA DE ILUMINAÇÃO - FARÓIS	170
LÂMPADA (24 V) (FAROL DIANTEIRO)	3E-8825	2	SISTEMA DE ILUMINAÇÃO - FARÓIS	172
LÂMPADA (24 V) (FAROL DIANTEIRO - FAROL TRASEIRO - INDICADOR)	3E-8825	2	INTERRUPTOR - LUZES	220
LÂMPADA (24 V) (FAROL DO LADO DIREITO)	3E-8825	1	SISTEMA DE ILUMINAÇÃO - FARÓIS	174
LÂMPADA (24 V) (ILUMINAÇÃO DE OPERAÇÃO)	100-3245	1	FAROL DIANTEIRO	152
LÂMPADA (24 V) (INDICADOR DA DIREÇÃO SECUNDÁRIA)	3E-8825	2	CABOS/FIOS ELÉTRICOS - DIREÇÃO SECUNDÁRIA	250
LÂMPADA (24 V) (INDICADOR DE AUXILIAR DE PARTIDA A ÉTER)	3E-8825	1	AUXILIAR DE PARTIDA A ÉTER	209

PEÇAS DE MANUTENÇÃO

DESCRIÇÃO	NÚMERO DE PEÇA	QUANT	UTILIZADA EM	PÁGINA
LÂMPADA (24 V) (INDICADOR DE FAROL DIANTEIRO/TRASEIRO)	3E-8825	2	SISTEMA DE ILUMINAÇÃO - FARÓIS	176
LÂMPADA (24 V) (INTERRUPTOR AUTOMTICO - MANUAL DE RETENÇÃO DO ACELERADOR)	3E-8825	2	CABOS/FIOS ELÉTRICOS - CONSOLE DA TRANSMISSÃO	252
LÂMPADA (24 V) (INTERRUPTOR DE PARTIDA A ÉTER)	3E-8825	1	CABOS/FIOS ELÉTRICOS - CONSOLE DA DIREÇÃO	254
LÂMPADA (24 V) (INTERRUPTOR DE TRAVA DO DIFERENCIAL)	3E-8825	2	CABOS/FIOS ELÉTRICOS - CONSOLE DA DIREÇÃO	254
LÂMPADA (24 V) (INTERRUPTOR DO FAROL TRASEIRO)	3E-8825	1	CABOS/FIOS ELÉTRICOS - CONSOLE DA DIREÇÃO	254
LÂMPADA (24 V) (INTERRUPTOR DO REDUTOR DE LUMINOSIDADE DAS LÂMPADAS DO PAINEL)	3E-8825	1	CABOS/FIOS ELÉTRICOS - CONSOLE DA DIREÇÃO	254
LÂMPADA (24 V) (INTERRUPTOR DO SACADOR DE PINO DO EIXO CENTRAL)	3E-8825	1	CABOS/FIOS ELÉTRICOS - CONSOLE DA TRANSMISSÃO	252
LÂMPADA (24 V) (LUZ ALTA)	9X-3463	1	SISTEMA DE ILUMINAÇÃO - FARÓIS	170
LÂMPADA (24 V) (LUZ ALTA/BAIXA)	9X-3465	1	FAROL DIANTEIRO	152
LÂMPADA (24 V) (LUZ DE MARCHA À RÉ AUXILIAR)	3E-8825	2	ILUMINAÇÃO - MARCHA A RÉ	168
LÂMPADA (24 V) (LUZ DE OPERAÇÃO)	100-3245	1	FAROL DIANTEIRO	154
LÂMPADA (24 V) (LUZ DIANTEIRA / TRASEIRA)	3E-8825	2	SISTEMA DE ILUMINAÇÃO - FARÓIS	178
		2	SISTEMA DE ILUMINAÇÃO - FARÓIS	182
		2	SISTEMA DE ILUMINAÇÃO - FARÓIS	186
LÂMPADA (24 V) (PISCA-PISCA DE ADVERTÊNCIA)	3E-8825	1	INSTALAÇÃO DO PISCA-PISCA DE ADVERTÊNCIA	147
		1	SISTEMA DE ILUMINAÇÃO - ADVERTÊNCIA	191
		1	SISTEMA DE ILUMINAÇÃO - ADVERTÊNCIA	192
LÂMPADA (24 V) (SETA DE DIREÇÃO)	100-3245	1	FAROL DIANTEIRO	152
		1	FAROL DIANTEIRO	154
LÂMPADA (24 V) (TETO)	7N-9943	1	LÂMPADA - TETO	149
LÂMPADA (24 VOLTS)(21 WATTS) (PARADA/TRASEIRA)	5C-9584	2	CABOS/FIOS ELÉTRICOS - TRASEIROS	248
LÂMPADA (24 VOLTS)(5 WATTS) (VIRADA)	4V-8116	1	CABOS/FIOS ELÉTRICOS - TRASEIROS	248
LENTE ÂMBAR (PISCA-PISCA DE ADVERTÊNCIA)	9X-8121	1	LUZ GIRATÓRIA DE ALARME	160
LENTE ÂMBAR (SETA DE DIREÇÃO)	100-3250	1	FAROL DIANTEIRO	152
		1	FAROL DIANTEIRO	154
LENTE (FAROL)	158-0248	1	LÂMPADA - FAROL	150
LENTE (FAROL DIANTEIRO)	158-0249	1	FAROL DIANTEIRO	157
LENTE (FAROL) (FAIXA BAIXA)	162-2077	1	FAROL DIANTEIRO	156
LENTE (LUZ ALTA/BAIXA)	100-3248	1	FAROL DIANTEIRO	152
		1	FAROL DIANTEIRO	154
LENTE (LUZES DIANTEIRAS) (FAROL BAIXO)	162-2077	1	SISTEMA DE ILUMINAÇÃO - FARÓIS	170
LENTE (LUZES DIANTEIRAS) (LUZ ALTA)	158-0249	1	SISTEMA DE ILUMINAÇÃO - FARÓIS	170
LENTE (SETA DE DIREÇÃO)	136-3848	1	FAROL DIANTEIRO	152
		1	FAROL DIANTEIRO	154

PEÇAS DE MANUTENÇÃO

DESCRIÇÃO	NÚMERO DE PEÇA	QUANT	UTILIZADA EM	PÁGINA
LENTE (TETO)	7T-0020	1	LÂMPADA - TETO	149
PISCA-PISCA ELETRÔNICO (12-24 VOLTS) (PISCA PISCA E PISCA ALERTA)	108-0358	1	SISTEMA DE ILUMINAÇÃO - FARÓIS	186
PISCA-PISCA ELETRÔNICO (12-24 VOLTS) (SETA DE DIREÇÃO - PISCA)	108-0358	1	SISTEMA DE ILUMINAÇÃO - FARÓIS	178
		1	SISTEMA DE ILUMINAÇÃO - FARÓIS	182
TAMPA CONTRA POEIRA	133-6517	1	AQUECEDOR DA ÁGUA DO MOTOR	145
		1	AQUECEDOR DA ÁGUA DO MOTOR	146
SISTEMA HIDRÁULICO				
CADEADO (TANQUE HIDRÁULICO)	5P-8502	1	TANQUE HIDRÁULICO	496
GRAXEIRA (LEVANTAMENTO DA LÂMINA)	3B-8485	2	CILINDRO E MONTAGEM - LEVANTAMENTO DA LÂMINA	419
GRAXEIRA (ROSCA 1/8-27 POL) (INCLINAÇÃO DA RODA)	3B-8489	2	CILINDRO E MONTAGEM - INCLINAÇÃO DAS RODAS	424
GRAXEIRA (ROSCA 1/8-27 45 GRAUS) (CILINDRO DE DESLOCAMENTO LATERAL)	3B-8485	2	CILINDRO E MONTAGEM - DESLOCAMENTO DO CÍRCULO	421
JUNTA (TAMPA DO BOCAL DE ENCHIMENTO DO TANUE DE ÕLEO HIDRÃULICO)	3G-0361	1	TANQUE HIDRÁULICO	498
TAMPA - BOCAL DE ENCHIMENTO (TANQUE DE ÓLEO HIDRÁULICO)	7H-1447	1	TANQUE HIDRÁULICO	498
TAMPA CONTRA POEIRA	6V-0852	1	TUBOS - BOMBA	462
		1	TUBOS - VENTILADOR HIDRÁULICOS	458
		1	VÁLVULA COMBINADA	534
TAMPA CONTRA POEIRA (ÓLEO HIDRÁULICO)	8C-3451	1	TUBOS - DIREÇÃO	473
TELA FILTRANTE (BOCAL DE ENCHIMENTO DO ÓLEO HIDRÁULICO)	9J-3047	1	TANQUE HIDRÁULICO	498

PEÇAS DE MANUTENÇÃO

DESCRIÇÃO	NÚMERO DE PEÇA	QUANT	UTILIZADA EM	PÁGINA
TREM DE FORÇA				
BUJÃO DO DRENO (CAIXA DA ENGRENAGEM DE TRANSFERÊNCIA)	4T-2069	1	CAIXA DE ENGRENAGEM DE TRANSFERÊNCIA	290
FILTRO - ELEMENTO HIDRÁULICO (TREM DE FORÇA)	132-8875	1	FILTRO - ÓLEO	285
FILTRO - MAGNÉTICO (TRANSMISSÃO)	8S-9129	1	CAIXA DE ENGRENAGEM DE TRANSFERÊNCIA	289
RESPIRO (AR)	1F-8488	2	TANDEM E TAMPA	306
RESPIRO (TRANSMISSÃO)	9G-5127	1	CAIXA DE ENGRENAGEM DE TRANSFERÊNCIA	289
TAMPA - BOCAL DE ENCHIMENTO (ÓLEO DO TREM DE FORÇA)	6G-9333	1	BOCAL DE ENCHIMENTO DE ÓLEO DO TREM DE FORÇA	284
TAMPA CONTRA POEIRA (TRAVA DO DIFERENCIAL)	6V-0852	1	CONTROLE DA TRAVA DO DIFERENCIAL	266
TAMPA DA VÁLVULA (HASTE)	9K-7951	1	RODA	341
		1	RODA	342
		1	RODA E PNEU	324
		1	RODA E PNEU	325
		1	RODA E PNEU	326
		1	RODA E PNEU	327
		1	RODA E PNEU	328
		1	RODA E PNEU	329
		1	RODA E PNEU	330
		1	RODA E PNEU	331
		1	RODA E PNEU	332
		1	RODA E PNEU	333
		1	RODA E PNEU	334
		1	RODA E PNEU	335
		1	RODA E PNEU	336
		1	RODA E PNEU	337
		1	RODA E PNEU	338
		1	RODA E PNEU	339
		1	RODA E PNEU	340
TELA DE SUCÇÃO (TRANSMISSÃO)	4S-8598	1	CAIXA DE ENGRENAGEM DE TRANSFERÊNCIA	289
	8S-9130	1	CAIXA DE ENGRENAGEM DE TRANSFERÊNCIA	289

WARTUNGSTEILE

BESCHREIBUNG	ERSATZTEIL-NUMMER	MENGE	VERWENDET IN	SEITE
ARBEITSGERÄTE				
SCHMIERNIPPEL (1/8-27-GEWINDE) (DREHZAPFEN)	3B-8489	3	AUFREISSER	606
SCHMIERNIPPEL (1/8-27-GEWINDE) (ZUGSTANGE)	3B-8489	1	ZUGHAKEN	590
ELEKTRISCHE ANLAGE UND STARTSYSTEM				
ABDECKGLAS (ARBEITSLEUCHTE)	158-0248	1	ARBEITSLEUCHTEN	150
ABDECKGLAS (FAHRERHAUSDACH)	7T-0020	1	FAHRERHAUSBELEUCHTUNG	149
ABDECKGLAS (FAHRTRICHTUNGSANZEIGER)	136-3848	1	FRONTSCHEINWERFER	152
		1	FRONTSCHEINWERFER	154
ABDECKGLAS (FERNLICHT/ABBLENDLICHT)	100-3248	1	FRONTSCHEINWERFER	152
		1	FRONTSCHEINWERFER	154
ABDECKGLAS (FRONTSCHEINWERFER) (ABBLENDLICHT)	162-2077	1	ARBEITSLEUCHTEN	170
ABDECKGLAS (FRONTSCHEINWERFER) (FERNLICHT)	158-0249	1	ARBEITSLEUCHTEN	170
ABDECKGLAS (FRONTSCHEINWERFER)(ABBLENDLICHT)	162-2077	1	FRONTSCHEINWERFER	156
ABDECKGLAS (GELB) (FAHRTRICHTUNGSANZEIGER)	100-3250	1	FRONTSCHEINWERFER	152
		1	FRONTSCHEINWERFER	154
ABDECKGLAS (GELB) (RUNDUM-KENNLEUCHTE)	9X-8121	1	RUNDUM-KENNLEUCHTE	160
ABDECKGLAS (SCHEINWERFER)	158-0249	1	FRONTSCHEINWERFER	157
BATTERIE (HOCHLEISTUNG)(12 V)	153-5710	2	BATTERIE	131
BATTERIE (WARTUNGSFREI)(12 V)	153-5700	2	BATTERIE	132
BLINKLEUCHTE (BREMSLICHT - HECKLEUCHTE)	135-0426	2	VERDRAHTUNG, HINTEN	246
BLINKLEUCHTE (LINKS)	135-0427	1	ARBEITSLEUCHTEN	170
BLINKLEUCHTE (RECHTS)	135-0427	1	ARBEITSLEUCHTEN	170
BLINKLEUCHTE (RICHTUNGSBLINKER - STANDLICHT)	135-0427	2	BLINKERLEUCHTEN	190
ELEKTRON. BLINKER (12/24 V) (RICHTUNGSBLINKER U. WARNLEUCHTEN)	108-0358	1	ARBEITSLEUCHTEN	186
ELEKTRON. BLINKER (12/24 V) (RICHTUNGSBLINKER/WARNLEUCHTE)	108-0358	1	ARBEITSLEUCHTEN	178
		1	ARBEITSLEUCHTEN	182
HEIZUNGSELEMENT (240V 1250W)	154-2881	1	UMLAUFKÜHLWASSERHEIZUNG	146
LAUFBAND UND ANTRIEB (RUNDUM-KENNLEUCHTE)	9X-8139	1	RUNDUM-KENNLEUCHTE	160
LEUCHTE - RECHTS (STOPP/HECK/RICHTUNGSWECHSEL)	6C-0109	1	VERDRAHTUNG, HINTEN	248
LEUCHTE (EINZELGLÜHFADEN) (FAHRTRICHTUNGSANZEIGER)	9X-4493	1	FRONTSCHEINWERFER	152
		1	FRONTSCHEINWERFER	154
LEUCHTE, LINKS (STOPP/HECK/RICHTUNGSWECHSEL)	6C-0110	1	VERDRAHTUNG, HINTEN	248
LEUCHTE (RUNDUM-KENNLEUCHTE)	9X-7849	1	RUNDUM-KENNLEUCHTE	160
LEUCHTE (24 V) (ABBLENDLICHT)	9X-3463	1	ARBEITSLEUCHTEN	170

WARTUNGSTEILE

BESCHREIBUNG	ERSATZTEIL-NUMMER	MENGE	VERWENDET IN	SEITE
LEUCHTE (24 V) (ABBLENDSCHEINWERFER)	3E-8825	1	ARBEITSLEUCHTEN	182
		1	ARBEITSLEUCHTEN	179
LEUCHTE (24 V) (ABSTREIFSCHILD/ANZEIGE)	3E-8825	1	FAHRERHAUSVERDRAHTUNG	228
LEUCHTE (24 V) (ANZEIGE FÜR NOTLENKUNG)	3E-8825	2	NOTLENKUNGSVERDRAHTUNG	250
LEUCHTE (24 V) (ARBEITSSCHEINWERFER, RECHTS)	3E-8825	1	ARBEITSLEUCHTEN	174
LEUCHTE (24 V) (ÄTHERSTARTHILFE U. ANZEIGE)	3E-8825	1	ÄTHERSTARTHILFE	209
LEUCHTE (24 V) (ÄTHERSTARTSCHALTER)	3E-8825	1	LENKKONSOLENVERDRAHTUNG	254
LEUCHTE (24 V) (AUSFALL-SCHUTZ-RÜCKFAHRLEUCHTE)	3E-8825	2	SCHEINWERFER, HINTEN	168
LEUCHTE (24 V) (DIFFERENZIALSPERRSCHALTER)	3E-8825	2	LENKKONSOLENVERDRAHTUNG	254
LEUCHTE (24 V) (FAHRERHAUSDACH)	7N-9943	1	FAHRERHAUSBELEUCHTUNG	149
LEUCHTE (24 V) (FAHRLEUCHTE)	100-3245	1	FRONTSCHEINWERFER	154
LEUCHTE (24 V) (FAHRSCHEINWERFER)	100-3245	1	FRONTSCHEINWERFER	152
LEUCHTE (24 V) (FAHRTRICHTUNGSANZEIGER)	100-3245	1	FRONTSCHEINWERFER	152
		1	FRONTSCHEINWERFER	154
LEUCHTE (24 V) (FERNLICHT)	9X-3463	1	ARBEITSLEUCHTEN	170
LEUCHTE (24 V) (FERNLICHT/ABBLENDLICHT)	9X-3465	1	FRONTSCHEINWERFER	152
LEUCHTE (24 V) (FERNLICHT/AB-BLENDLICHT)(RECHTS)	9X-3465	1	FRONTSCHEINWERFER	154
LEUCHTE (24 V) (FRONTSCHEINWER-FER-/HECKLEUCHTENANZEIGE)	3E-8825	2	ARBEITSLEUCHTEN	176
LEUCHTE (24 V) (FRONTSCHEINWER-FER/HECKLEUCHTE/ANZEIGE)	3E-8825	2	LICHTSCHALTER	220
LEUCHTE (24 V) (GASREGELUNG HALTEN/MAN SCHALTER)	3E-8825	2	SCHALTKONSOLENVERDRAHTUNG	252
LEUCHTE (24 V) (HECKLEUCHTENSCHALTER)	3E-8825	1	LENKKONSOLENVERDRAHTUNG	254
LEUCHTE (24 V) (HECKSCHEINWERFER)	3E-8825	2	ARBEITSLEUCHTEN	178
		2	ARBEITSLEUCHTEN	182
		2	ARBEITSLEUCHTEN	186
LEUCHTE (24 V) (RUNDUM-KENNLEUCHTE)	3E-8825	1	RUNDUMWARNLEUCHTE - EINBAUSATZ	147
		1	WARNLEUCHTEN	191
		1	WARNLEUCHTEN	192
LEUCHTE (24 V) (SCHALTKONSOLE)	7N-5876	1	SCHALTKONSOLENVERDRAHTUNG	252
LEUCHTE (24 V) (SCHARDÄMPFUNGS-STEUERUNG/ANZEIGE)	3E-8825	1	VERDRAHTUNG - SCHARDÄMPFUNG	225
LEUCHTE (24 V) (SCHWENKWERKBOL-ZENZIEHSCHALTER)	3E-8825	1	SCHALTKONSOLENVERDRAHTUNG	252
LEUCHTE (24 V) (TAFELLEUCHTEN-DIMMERSCHALTER)	3E-8825	1	LENKKONSOLENVERDRAHTUNG	254
LEUCHTE (24 V) (VORDERE ARBEITSSCHEINWERFER)	3E-8825	2	ARBEITSLEUCHTEN	172

WARTUNGSTEILE

BESCHREIBUNG	ERSATZTEIL-NUMMER	MENGE	VERWENDET IN	SEITE
LEUCHTE (24 V)(21 W) (BREMSLICHT - HECKLEUCHTE)	5C-9584	2	VERDRAHTUNG, HINTEN	248
		2	VERDRAHTUNG, HINTEN	248
LEUCHTE (24 V)(5 W) (RECHTS- U. LINKSWENDUNG)	4V-8116	1	VERDRAHTUNG, HINTEN	248
		1	VERDRAHTUNG, HINTEN	248
SCHALTER (AUSFALLSCHUTZ-RÜCK-FAHRLEUCHTE)	161-1418	1	SCHEINWERFER, HINTEN	168
SCHALTER (GASREGELUNG HALTEN AUTO/MAN)	196-7268	1	SCHALTKONSOLENVERDRAHTUNG	252
SCHEINWERFER (24 V)	9X-3463	1	FRONTSCHEINWERFER	157
SCHEINWERFER (24 V) (ABBLENDLICHT)	9X-3463	1	FRONTSCHEINWERFER	156
SCHEINWERFER (24 V) (ARBEITSSCHEINWERFER)	9X-3463	1	ARBEITSLEUCHTEN	150
SCHLÜSSEL (HAUPTSCHALTER)	8H-5306	1	TRENNSCHALTER	218
SICHERUNG (10 A) (ARBEITSSCHEINWERFER, RECHTS)	9W-1442	1	ARBEITSLEUCHTEN	174
SICHERUNG (10 A) (BLINKER)	9W-1442	1	LICHTSCHALTER	220
SICHERUNG (10 A) (FERNLICHT/ABBLENDLICHT)	9W-1442	1	ARBEITSLEUCHTEN	178
SICHERUNG (10 A) (FERNLICHT/ABBLENDLICHT U. SIGNAL)	9W-1442	1	ARBEITSLEUCHTEN	186
SICHERUNG (10 A) (LENKUNGSKONSOLE)	9W-1442	11	LENKKONSOLENVERDRAHTUNG	254
SICHERUNG (10 A) (NOTLENKUNG)	9W-1442	2	NOTLENKUNGSVERDRAHTUNG	250
SICHERUNG (10 A) (RICHTUNGSBLINKER/WARNLEUCHTE)	9W-1442	1	ARBEITSLEUCHTEN	182
SICHERUNG (10 A) (RÜCKFAHRLEUCHTE)	9W-1442	1	SCHEINWERFER, HINTEN	168
SICHERUNG (10 A) (RUNDUM-KENNLEUCHTE)	9W-1442	1	RUNDUMWARNLEUCHTE - EINBAUSATZ	147
		1	WARNLEUCHTEN	191
		1	WARNLEUCHTEN	192
SICHERUNG (10 A) (SCHARDÄMPFUNGSSTEUERUNG)	9W-1442	1	VERDRAHTUNG - SCHARDÄMPFUNG	225
SICHERUNG (10 A) (SCHARSTEUERUNG)	9W-1442	1	FAHRERHAUSVERDRAHTUNG	228
SICHERUNG (10 A) (UMFORMER)	9W-1442	1	ELEKTR. UMFORMER	142
SICHERUNG (10 A) (VORDERE ARBEITSSCHEINWERFER)	9W-1442	2	ARBEITSLEUCHTEN	172
		1	ARBEITSLEUCHTEN	176
SICHERUNG (15 A) (UNTERE/OBERE SCHEIBENWISCHER, VORNE)	9W-1441	1	FAHRERHAUSVERDRAHTUNG	226
SICHERUNG (30 A) (UMFORMER)	8T-9636	2	ELEKTR. UMFORMER	141
STAUBKAPPE	133-6517	1	UMLAUFKÜHLWASSERHEIZUNG	145
		1	UMLAUFKÜHLWASSERHEIZUNG	146
UMLAUFKÜHLWASSERHEIZUNGS-ELEMENT (120V 1250W)	131-8627	1	UMLAUFKÜHLWASSERHEIZUNG	145
UNTERBRECHER (15 A) (FRONTSCHEINWERFER)	3T-2662	1	UNTERBRECHER	133
		1	UNTERBRECHER	134

BESCHREIBUNG	ERSATZTEIL-NUMMER	MENGE	VERWENDET IN	SEITE
UNTERBRECHER (15 A) (FRONT-SCHEINWERFER/ABBLENDLICHT)	3T-2662	2	ARBEITSLEUCHTEN	178
UNTERBRECHER (15 A) (LICHTBALKEN - ARBEITSCHEINWERFER)	3T-2662	1	UNTERBRECHER	133
UNTERBRECHER (15 A) (MOTORSTEUERUNG)	6T-3643	1	VERDRAHTUNG, HINTEN	243
UNTERBRECHER (80 A) (DREHSTROMGENERATOR)	171-2210	1	VERDRAHTUNG, HINTEN	242
UNTERBRECHER (80 A) (HAUPTUNTERBRECHER)	171-2210	1	VERDRAHTUNG, HINTEN	242
FAHRERHAUS				
FILTER (FAHRERHAUSLUFT)	9X-4986	2	FAHRERHAUSLUFTFILTER	664
LEUCHTE (24 V) (ANZEIGE FÜR LINKEN RICHTUNGSBLINKER)	115-1748	1	INSTRUMENTENTAFEL	732
LEUCHTE (24 V) (ANZEIGE FÜR LÜFTERGESCHWINDIGKEIT)	8D-1429	1	KLIMAANLAGE	616
LEUCHTE (24 V) (ANZEIGE FÜR RECHTEN RICHTUNGSBLINKER)	115-1748	1	INSTRUMENTENTAFEL	732
LEUCHTE (24 V) (DIFFERENZIALSPERRANZEIGE)	115-1748	1	INSTRUMENTENTAFEL	732
LEUCHTE (24 V) (ENTFROSTER, HINTEN)	3E-8825	1	UMLAUFLÜFTER	663
LEUCHTE (24 V) (FERNLICHTANZEIGE)	115-1748	1	INSTRUMENTENTAFEL	732
LEUCHTE (24 V) (GASREGELUNG - ARRETIERANZEIGE)	115-1748	1	INSTRUMENTENTAFEL	732
LEUCHTE (24 V) (GESCHWINDIGKEITSMESSER U. DREZAHLMESSER)	7N-5876	2	GESCHWINDIGKEITS- U. DREHZAHLMESSERMODUL	723
LEUCHTE (24 V) (HAUPTFUNKTIONSLEUCHTE DES ELEKTRON. ÜBERWACHUNGSSYSTEMS)	107-1983	1	INSTRUMENTENTAFEL	732
		1	INSTRUMENTENTAFEL	734
LEUCHTE (24 V) (HVAC TAFEL)	8D-1429	1	KLIMAANLAGE	620
LEUCHTE (24 V) (INSTRUMENTENTAFEL)	115-1748	5	INSTRUMENTENTAFEL	734
LEUCHTE (24 V) (KLIMAANLAGE U. HEIZUNG)	8D-1429	1	FAHRERHAUSHEIZUNG	676
LEUCHTE (24 V) (KLIMAANLAGE U. HEIZUNG ß SCHALTTAFEL)	8D-1429	1	FAHRERHAUSHEIZUNG	672
LEUCHTE (24 V) (LUFTDRUCK, LINKS)(ANZEIGE)	7N-5876	1	INSTRUMENTENTAFEL	732
LEUCHTE (24 V) (LUFTDRUCK, RECHTS)(ANZEIGE)	7N-5876	1	INSTRUMENTENTAFEL	732
LEUCHTE (24 V) (SPIEGELHEIZUNGSANZEIGE)	3E-8825	1	RÜCKSPIEGEL	718
LEUCHTE (24 V) (VIERINSTRUMEN-TENMODUL-ANZEIGE)	7N-5876	2	INSTRUMENTENTAFEL	732
LEUCHTE (24 V) (VIERINSTRUMENTENMODUL U. LUFTDRUCK)	7N-5876	4	INSTRUMENTENTAFEL	734
LEUCHTE (24 V) (VORDERER ENTFROSTER)	3E-8825	1	UMLAUFLÜFTER	662

WARTUNGSTEILE

BESCHREIBUNG	ERSATZTEIL-NUMMER	MENGE	VERWENDET IN	SEITE
LUFTDRUCKMESSER (BREMSE, RECHTS)	1W-3306	1	INSTRUMENTENTAFEL	734
LUFTDRUCKMESSER (LINKE BREMSE)	1W-3306	1	INSTRUMENTENTAFEL	734
LUFTDRUCKMESSER (LINKS)	1W-3306	1	INSTRUMENTENTAFEL	732
LUFTDRUCKMESSER (RECHTS)	1W-3306	1	INSTRUMENTENTAFEL	732
LUFTFILTER (ÜBERROLLSCHUTZ - HECKPLATTE)	7T-7358	1	FAHRERHAUSLUFTFILTER	664
RIEMEN - GERIPPT (KLIMAANLAGE)	174-9690	1	KLIMAANLAGE	614
SCHEIBENWISCHERBLATT (ENTLÜFTUNG, VORNE, UNTEN)	6V-8255	2	FAHRERHAUSFENSTER	771
SCHEIBENWISCHERBLATT (HOHES PROFIL, HINTEN)	6V-5853	1	SCHEIBENWISCHER	786
SCHEIBENWISCHERBLATT (HOHES PROFIL, VORNE, UNTEN)	6V-5853	1	SCHEIBENWISCHER	782
SCHEIBENWISCHERBLATT (NIEDRIGES PROFIL, HINTEN)	6V-5849	1	SCHEIBENWISCHER	784
SCHEIBENWISCHERBLATT (NIEDRIGES PROFIL, VORNE, UNTEN)	6V-5853	1	SCHEIBENWISCHER	780
SCHLÜSSEL	5P-8500	1	UMBAUSATZ - OHNE ÜBERROLLSCHUTZ	639
SICHERHEITSGURT (AUSZIEHBAR)	156-1148	1	SCHWINGSITZ	756
		1	SCHWINGSITZ	757
		1	SCHWINGSITZ	759
SICHERUNG (10 A) (BEHEIZTER SPIEGEL)	9W-1442	1	RÜCKSPIEGEL	718
SICHERUNG (10 A) (ENTFROSTER, HINTEN)	9W-1442	1	UMLAUFLÜFTER	663
SICHERUNG (10 A) (SCHEIBENWISCHER)	9W-1442	1	SCHEIBENWISCHER	786
SICHERUNG (10 A) (SCHEINWISCHER - INTERVALLSCHALTUNG)	9W-1442	1	SCHEIBENWISCHER	784
SICHERUNG (10 A) (VORDERER ENTFROSTER)	9W-1442	1	UMLAUFLÜFTER	662
SICHERUNG (15 A) (HEIZUNG)	9W-1441	1	FAHRERHAUSHEIZUNG U. BEFESTIGUNGSTEILE	667
SICHERUNG (15 A) (HEIZUNG U. KLIMAANLAGE)	9W-1441	1	FAHRERHAUSHEIZUNG U. BEFESTIGUNGSTEILE	668
SICHERUNG (15 A) (KLIMAANLAGE)	8M-8948	1	KLIMAANLAGE UND AUFHÄNGUNG	611
	9W-1441	1	KLIMAANLAGE UND AUFHÄNGUNG	612
SICHERUNG (20 A) (A/C)	8M-0456	1	KLIMAANLAGE	613
VORHÄNGESCHLOSS	5P-8502	1	UMBAUSATZ - OHNE ÜBERROLLSCHUTZ	639

WARTUNGSTEILE

BESCHREIBUNG	ERSATZTEIL-NUMMER	MENGE	VERWENDET IN	SEITE
HYDRAULIKSYSTEM				
DICHTUNG (HYDRAULIKÖLTANK - EINFÜLLKAPPE)	3G-0361	1	HYDRAULIKTANK	498
EINFÜLLSTUTZENKAPPE (HYDRAULIKÖLTANK)	7H-1447	1	HYDRAULIKTANK	498
SCHMIERNIPPEL (SCHARHUB)	3B-8485	2	SCHARHUBZYLINDER UND BEFESTIGUNGSTEILE	419
SCHMIERNIPPEL (1/8-27-GEWINDE) (RADSTURZ)	3B-8489	2	RADSTURZZYLINDER UND BEFESTIGUNGSTEILE	424
SCHMIERNIPPEL (1/8-27 GEWINDE(45 GRAD) (SCHARSCHWENKWERKZYLINDER)	3B-8485	2	SEITENSCHUBZYLINDER UND BEFESTIGUNGSTEILE	421
SIEB (HYDRAULIKÖLEINFÜLLKAPPE)	9J-3047	1	HYDRAULIKTANK	498
STAUBKAPPE	6V-0852	1	HYDRAULIKLÜFTERLEITUNGEN	458
		1	HYDRAULIKPUMPE UND LEITUNGEN	462
		1	SAMMELVENTIL	534
STAUBKAPPE (HYDRAULIKÖL)	8C-3451	1	LENKÖLLEITUNGEN	473
VORHÄNGESCHLOSS (HYDRAULIKTANK)	5P-8502	1	HYDRAULIKTANK	496
KRAFTSTOFFSYSTEM				
FILTER (KRAFTSTOFF-/WASSERAB-SCHEIDER) (HAUPT)	133-5673	1	WASSERABSCHEIDER- U. KRAFTSTOFFILTER	107
KRAFTSTOFFILTER	1R-0762	1	KRAFTSTOFFILTER	106
WASSERAUFFANGSCHALE (12 V HEIZUNG)	155-2629	1	WASSERABSCHEIDER- U. KRAFTSTOFFILTER	107
WASSERAUFFANGSCHALE (24 V HEIZUNG)	157-1206	1	WASSERABSCHEIDER- U. KRAFTSTOFFILTER	107

WARTUNGSTEILE

BESCHREIBUNG	ERSATZTEIL-NUMMER	MENGE	VERWENDET IN	SEITE
KRAFTÜBERTRAGUNG				
ABLASSSTOPFEN (VERTEILERGETRIEBEGEHÄUSE)	4T-2069	1	VERTEILERGETRIEBE UND GEHÄUSE	290
ANSAUGSIEB (GETRIEBE)	4S-8598	1	VERTEILERGETRIEBE UND GEHÄUSE	289
	8S-9130	1	VERTEILERGETRIEBE UND GEHÄUSE	289
EINFÜLLSTUTZENKAPPE (KRAFTÜBERTRAGUNGSÖL)	6G-9333	1	GETRIEBEÖLFÜLLSTUTZEN	284
ENTLÜFTER (DRUCKLUFT)	1F-8488	2	TANDEMGEHÄUSE UND DECKEL	306
ENTLÜFTER (GETRIEBE)	9G-5127	1	VERTEILERGETRIEBE UND GEHÄUSE	289
FILTERELEMENT - HYDRAULIK (KRAFTÜBERTRAGUNG)	132-8875	1	ÖLFILTER	285
MAGNETFILTER (GETRIEBE)	8S-9129	1	VERTEILERGETRIEBE UND GEHÄUSE	289
STAUBKAPPE (DIFFERENTIALSPERRE)	6V-0852	1	DIFFERENTIALSPERRENGESTÄNGE	266
VENTILKAPPE (SCHAFT)	9K-7951	1	RAD UND REIFEN	324
		1	RAD UND REIFEN	325
		1	RAD UND REIFEN	326
		1	RAD UND REIFEN	327
		1	RAD UND REIFEN	328
		1	RAD UND REIFEN	329
		1	RAD UND REIFEN	330
		1	RAD UND REIFEN	331
		1	RAD UND REIFEN	332
		1	RAD UND REIFEN	333
		1	RAD UND REIFEN	334
		1	RAD UND REIFEN	335
		1	RAD UND REIFEN	336
		1	RAD UND REIFEN	337
		1	RAD UND REIFEN	338
		1	RAD UND REIFEN	339
		1	RAD UND REIFEN	340
		1	RADSATZ	341
		1	RADSATZ	342
KÜHLSYSTEM				
KRAFTSTOFFFILTEREINSATZ (GETRIEBEÖL)	2H-7254	1	ÖLKÜHLERLEITUNGEN (KRAFTÜBERTRAGUNG)	78
KÜHLERKAPPE	6L-8617	1	KÜHLER	87
STAUBKAPPE	6V-0852	1	KÜHLWASSERLEITUNGEN	82
		2	ÖLKÜHLERLEITUNGEN (KRAFTÜBERTRAGUNG)	78
	8C-3447	1	ÖLKÜHLERLEITUNGEN (KRAFTÜBERTRAGUNG)	78
WASSERTEMPERATURREGLER	7C-3095	1	KÜHLWASSER-TEMPERATURREGLER UND GEHÄUSE	76
LUFTANSAUG- UND ABGASSYSTEM				
HAUPTFILTER	6I-0273	1	LUFTREINIGER	92
LUFTFILTER-WARTUNGSANZEIGE	8N-2694	1	LUFTREINIGER	90
SICHERHEITSFILTER	6I-0274	1	LUFTREINIGER	92

WARTUNGSTEILE

BESCHREIBUNG	ERSATZTEIL-NUMMER	MENGE	VERWENDET IN	SEITE
MOTOR - GRUNDAUSFÜHRUNG				
ABLASSSTOPFEN	5F-0304	1	SCHWUNGRADGEHÄUSE	36
DICHTUNG (1M)	5P-5678		VENTILMECHANISMUSAUFHÄNGUNG	43
ENTDUNSTERSCHLAUCH	126-0146	1	LUFTKOMPRESSOR	10
ENTLÜFTER (MOTOR)	9Y-4357	1	VENTILSTEUERUNG	58
ENTLÜFTERDICHTUNG	9Y-1758	1	VENTILSTEUERUNG	58
SOCKELDICHTUNG	109-5309	1	VENTILSTEUERUNG	58
STAUBKAPPE	6V-0852	1	MOTORSTOPFEN	50
RAHMEN UND AUFBAU				
ABLASSSTOPFEN (GETRIEBEGEHÄUSE)	6B-5262	1	RAHMEN UND GEHÄUSE	348
SCHMIERNIPPEL (1/8-27-GEWINDE) (UNTERER/OBERER KNICKGELENKBOLZEN)	3B-8489	2	SCHMIERLEITUNGEN	369
SCHMIERNIPPEL (1/8-27-GEWINDE) (VORDERACHSE)	3B-8489	12	VORDERACHSE	344
SCHMIERSYSTEM				
KAPPE	9S-9272	1	ÖLSCHNELLWECHSELANSCHLUSS	68
ÖLEINFÜLLSTUTZEN	5L-2952	1	MOTORÖLEINFÜLLSTUTZEN	62
ÖLFILTER	1R-0716	1	ÖLFILTER	64
STAUBKAPPE	8C-3445	1	ÖLFILTER	64
WARTUNGSAUSRÜSTUNG				
SCHLÜSSEL	5P-8500		WERKZEUGKASTEN	798
VORHÄNGESCHLOSS	5P-8502	1	WERKZEUGKASTEN	798

INDEX

Name	Page

A

ACCESSORY GP-CAB–15 AMP 610
ACCESSORY GP-CAB–5 AMP 609
ACCUMULATOR & MTG GP-HYDRAULIC 404
ACCUMULATOR AR-BLADE CUSHION 405
ACCUMULATOR GP-BLADE CUSHION 406
ADAPTER GP-TRANSMISSION 258
AFTERCOOLER & MOUNTING GP 88
AIR CLEANER GP 90
92
AIR COMPRESSOR GP 8
10
AIR CONDITIONER & MOUNTING GP 611
AIR CONDITIONER & MOUNTING GP–SNOW 612
AIR CONDITIONER AR 613
AIR CONDITIONER AR–SNOW 614
AIR CONDITIONER GP 616
AIR CONDITIONER GP–SNOW 620
AIR DRYER GP 384
386
AIR DRYER GP–SNOW 380
382
ALARM GP 127
ALTERNATOR GP-CHARGING 128
130
ARMREST GP–LH 624
ARMREST GP–RH 625
ASHTRAY 690
694
ATOMIZER AS-ETHER 209
AXLE GP-FRONT 344

B

BASE GP-OIL FILTER 60
BATTERY GP–HEAVY DUTY 131
BATTERY GP–MAINTENANCE FREE 132
BATTERY (HEAVY DUTY)(12V) 131
BATTERY (MAINTENANCE FREE)(12 VOLT) . . . 132
BELT-DRIVE (WARNING BEACON) 160
BELT-RIBBED (AIR CONDITIONER) 614
BELT TENSIONER GP 12
BIT GP–14 FT–56 STD BITS 593
BIT GP–16 FT–64 STD BITS 594
BLADE AS-WIPER (HIGH PROFILE FRONT LOWER) 782
BLADE AS-WIPER (HIGH PROFILE REAR) 786
BLADE AS-WIPER (LOW PROFILE FRONT LOWER) 780
BLADE AS-WIPER (LOW PROFILE REAR) 784
BLADE AS-WIPER (VENT FRONT LOWER) 771
BLADE GP 595
BOWL AS-WATER COLLECTION (12 VOLT HEATER) 107
BOWL AS-WATER COLLECTION (24 VOLT HEATER) 107
BRAKE GP-SERVICE 388
BREATHER AS (AIR) 306
BREATHER AS (ENGINE) 58
BREATHER (TRANSMISSION) 289

C

CAMSHAFT GP 14
CAP AS 68
CAP AS-DUST 145
146
CAP AS-OIL FILLER 62
CAP-DUST 50
64
78
82
458
462
534
CAP-DUST (DIFFERENTIAL LOCK) 266
CAP-DUST (HYD OIL) 473
CAP-FILLER (HYDRAULIC OIL TANK) 498
CAP-FILLER (POWER TRAIN OIL) 284
CAP GP-FUEL TANK (LOCKABLE) 124
CAP-RADIATOR 87
CAP-VALVE (STEM) 324
325
326
327
328
329
330
331
332
333
334
335
336
337
338
339
340
341
342
CARTRIDGE GP-TURBOCHARGER 103
CASE & FRAME GP 348
CASE GP-TRANSMISSION 259
CHAIN GP-DRIVE 260
CIRCLE GP 588
CIRCUIT BREAKER AS (15 AMP) (ENGINE CONTROL) 243

INDEX

Name	Page
CIRCUIT BREAKER AS (15 AMP) (HEADLAMP/LIGHTBAR LOW BEAM)	178
CIRCUIT BREAKER AS (15 AMP) (HEADLAMPS)	133, 134
CIRCUIT BREAKER AS (15 AMP) (LIGHTBAR WORKLAMPS)	133
CIRCUIT BREAKER AS (80 AMP) (ALTERNATOR)	242
CIRCUIT BREAKER AS (80 AMP) (MAIN)	242
CIRCUIT BREAKER GP–FLOOD	133
CIRCUIT BREAKER GP–HEADLAMPS	134
COMPRESSOR GP-REFRIGERANT	626, 628
COMPRESSOR GP-REFRIGERANT–SNOW	630, 631
CONDENSER & MTG GP-REFRIGERANT	632
CONDENSER GP-REFRIGERANT	634
CONNECTOR GP	472
CONSOLE GP-OPERATOR	636
CONTROL & MTG GP-ENGINE ELEK	135
CONTROL AR-HYDRAULIC	407, 410, 412, 413
CONTROL AR-HYDRAULIC–EU	408, 409, 411
CONTROL GP-CENTERSHIFT LOCK	414
CONTROL GP-CLUTCH	262
CONTROL GP-DIFFERENTIAL LOCK	266
CONTROL GP-ENGINE ELECTRONIC	136
CONTROL GP-GOVERNOR	104
CONTROL GP-MONITOR (CATERPILLAR MONITORING SYSTEM)	732, 734
CONTROL GP-PARKING BRAKE	390
CONTROL GP-SECONDARY STEERING	137
CONTROL GP-SERVICE BRAKE	392
CONTROL GP-STEERING	416
CONTROL GP-TRANSMISSION	268
CONTROL GP-TRANSMISSION HYD	272
CONVERSION AR-CERTIFICATION–A/C–EU	2
CONVERSION AR-CERTIFICATION–HEATER–EU	1
CONVERSION AR-NON-ROPS	639
CONVERTER AR-ELECTRICAL–12 V POWER PORT–15 AMPS	139
CONVERTER AR-ELECTRICAL–12V POWER PORT–5 AMPS	138
CONVERTER GP-ELECTRICAL–RADIO	140
CONVERTER GP-ELECTRICAL–12 V POWER PORT	142
CONVERTER GP-ELECTRICAL–25 AMP	141
CONVERTER GP-ELECTRICAL (24 VOLT TO 12 VOLT)	142
CONVERTER GP-ELECTRICAL (5/7.5 AMP, 24 TO 12 VOLT)	140
COOLANT HEATER LINES	708
COOLER & MTG GP-HYDRAULIC OIL–AIR CONDITIONER	417
COOLER GP-TRANSMISSION OIL	274
COOLING AR	71
COOLING AR–EU	72
COVER GP-CYLINDER BLOCK	16
COVER GP-FAN	73
COVER GP-FLYWHEEL HOUSING	18
COVER GP-MODULE CONNECTOR	143
COVER GP-PROTECTION–PLATFORM–EU	350
COVER GP-SHIPPING–TRANSMISSION	276
CRANKSHAFT GP	20
CYLINDER & MTG GP-ARTICULATION	418
CYLINDER & MTG GP-BLADE LIFT	419
CYLINDER & MTG GP-BLADE TIP	420
CYLINDER & MTG GP-CENTERSHIFT	421
CYLINDER & MTG GP-SIDESHIFT	422
CYLINDER & MTG GP-STEERING	423
CYLINDER & MTG GP-WHEEL LEAN	424
CYLINDER AS-ETHER	204, 206
CYLINDER BLOCK AS	22, 23
CYLINDER BLOCK GP	24
CYLINDER GP-ARTICULATION	425
CYLINDER GP-BLADE LIFT	426
CYLINDER GP-BLADE TIP	427
CYLINDER GP-CENTERSHIFT	428
CYLINDER GP-RIPPER LIFT	430
CYLINDER GP-SIDESHIFT	431
CYLINDER GP-STEERING–LH	434
CYLINDER GP-STEERING–RH	432
CYLINDER GP-WHEEL LEAN	436
CYLINDER HEAD AS	26
CYLINDER HEAD GP	28, 29

D

Name	Page
DETENT GP-CONTROL VALVE	438
DETENT GP-CONTROL VALVE–EU	440
DIFFERENTIAL & BEVEL GEAR GP	278
DIFFERENTIAL GP	282
DOOR GP–HIGH PROFILE–LH	642
DOOR GP–HIGH PROFILE–RH	640
DOOR GP-CAB–HIGH PROFILE	644
DOOR GP-CAB–LOW PROFILE	650
DOOR GP-CAB–LOW PROFILE–LH	648
DOOR GP-CAB–LOW PROFILE–RH	646
DRAWBAR GP	590

INDEX

Name	Page
DRIVE GP-ACCESSORY	30
DRIVE GP-CIRCLE	442
DRIVE GP-PUMP	446
DUCT & CONTROL GP–HEATER/AIR CONDITIONER	652
DUCT & CONTROL GP–SUPPLEMENTAL LOUVERS	653
DUCT GP	654
DUST EJECTOR GP	93

E

EDGE GP-CUTTING–14 FT	596
EDGE GP-CUTTING–8 FT	597
ELBOW GP	448
ELECTRONICS GP-MONITOR–CAT MONITORING SYSTEM	144
ELEMENT AS-HEATER (240V 1250W)	146
ELEMENT AS-JACKET WATER HEATER (120V 1250W)	145
ELEMENT AS-PRIMARY	92
ELEMENT AS-SECONDARY	92
ELEMENT-FILTER (FUEL/WATER SEPARATOR) (PRIMARY)	107
ENCLOSURE GP-ENGINE	352
ENGINE AR	7
EXTENSION GP-BACKREST–CLOTH	655
EXTENSION GP-BACKREST–VINYL	656
EXTENSION GP-CENTERSHIFT	447

F

FAN & MOTOR GP	74
FAN-ALTERNATOR	128
FAN GP-CIRCULATING	658
FAN GP-CIRCULATING–FRONT	660
FAN GP-CIRCULATING–FRONT DEFROSTER	662
FAN GP-CIRCULATING–REAR DEFROSTER	663
FASTENER GP-CYLINDER HEAD	32
FILLER GP-ENGINE OIL	62
FILLER GP-POWER TRAIN OIL	284
FILM-IDENTIFICATION (FUSE) (HIGH/LOW BEAM)	178
FILM-IDENTIFICATION (GROUP & SEQUENCE NO.)	616 634
FILM-INSTRUCTION (ALT EXIT/REMOVE WINDOW)	665 666
FILM-INSTRUCTION (DO NOT DRILL/WELD ROPS)	743 745 746
FILM-INSTRUCTION (SEAT ADJUSTMENT)	764
	766
FILTER-AIR (ROPS REAR PANEL)	664
FILTER AS-ENGINE OIL	64
FILTER AS-FUEL	106
FILTER (CAB AIR)	664
FILTER ELEMENT AS-FUEL (TRANSMISSION OIL)	78
FILTER ELEMENT-HYDRAULIC (POWER TRAIN)	285
FILTER GP-CAB AIR	664
FILTER GP-ENGINE OIL	64
FILTER GP-FUEL	106
FILTER GP-OIL–TRANSMISSION	285
FILTER GP-WATER SEP & FUEL	107
FILTER-MAGNETIC (TRANSMISSION)	289
FINAL DRIVE GP	286
FITTING-GREASE (BLADE LIFT)	419
FITTING-GREASE (1/8-27 THD) (DRAWBAR)	590
FITTING-GREASE (1/8-27 THD) (FRONT AXLE)	344
FITTING-GREASE (1/8-27 THD) (TRUNNION)	606
FITTING-GREASE (1/8-27 THD) (UPPER/LOWER ARTICULATION PIN)	369
FITTING-GREASE (1/8-27 THD) (WHEEL LEAN)	424
FITTING-GREASE (1/8-27 THD)(45 DEGREE) (CENTERSHIFT CYLINDER)	421
FLASHER AS-ELECTRONIC (12/24 VOLT) (TURN SIGNAL/HAZARD)	178 182
FLASHER AS-ELECTRONIC (12/24 VOLT) (TURN SIGNALS & HAZARDS)	186
FLOOR MAT (CAB)	688
FLYWHEEL GP	33
FRAME GP-FRONT	356
FUSE (10 AMP) (BACKUP LAMP)	168
FUSE (10 AMP) (BLADE CUSHION CONTROL)	225
FUSE (10 AMP) (CONTROLLER FOR THE BLADE)	228
FUSE (10 AMP) (FLOODLAMP RH)	174
FUSE (10 AMP) (FRONT DEFROSTER)	662
FUSE (10 AMP) (FRONT FLOODLIGHT)	172
FUSE (10 AMP) (FRONT WORK LIGHTS)	176
FUSE (10 AMP) (HEATED MIRROR)	718
FUSE (10 AMP) (HIGH/LOW BEAM)	178
FUSE (10 AMP) (HIGH/LOW BEAM & SIGNAL)	186
FUSE (10 AMP) (INTERMITTANT WIPER)	784
FUSE (10 AMP) (POWER CONVERTER)	142
FUSE (10 AMP) (REAR DEFROSTER)	663
FUSE (10 AMP) (SECONDARY STEERING)	250
FUSE (10 AMP) (STEERING CONSOLE)	254
FUSE (10 AMP) (TURN SIGNAL/HAZARD)	182
FUSE (10 AMP) (TURN SIGNALS)	220

INDEX

Name	Page
FUSE (10 AMP) (WARNING BEACON)	147, 191, 192
FUSE (10 AMP) (WIPER)	786
FUSE (15 AMP) (AIR CONDITIONER)	611, 612
FUSE (15 AMP) (HEATER)	667
FUSE (15 AMP) (HEATING & AIR CONDITIONING)	668
FUSE (15 AMP) (UPPER/LOWER FRONT WIPERS)	226
FUSE (20 AMP) (A/C)	613
FUSE (30 AMP) (CONVERTER-POWER)	141

G

GASKET-BASE	58
GASKET-BREATHER	58
GASKET (HYDRAULIC OIL TANK FILLER CAP)	498
GAUGE GP-OIL LEVEL (DIPSTICK)	66
GEAR & CASE GP-TRANSFER	288
GEAR GP-FRONT	34
GENERAL AR	4
GUARD & SUPPORT GP-RADIATOR	358
GUARD GP-BOTTOM–EU	360
GUARD GP-BRAKE LINES	361
GUARD GP-PLATFORM–NON-ROPS	364
GUARD GP-PLATFORM–OPEN–HIGH PROFILE	362

H

HAMMER & MOUNTING GP–HIGH PROFILE	666
HAMMER & MOUNTING GP–LOW PROFILE	665
HEATER & MTG GP-CAB–EU	668
HEATER & MTG GP-CAB–LIGHT DUTY	667
HEATER AR-CAB	670
HEATER AR-CAB–EU	669
HEATER GP-CAB–EU	672
HEATER GP-CAB–LIGHT DUTY	676
HEATER GP-JACKET WATER–120 VOLT	145
HEATER GP-JACKET WATER–240 VOLT	146
HITCH GP-ARTICULATING	366
HITCH GP-TOWING	368
HOSE-FUMES DISPOSAL	10
HOUSING & REGULATOR GP	76
HOUSING GP-FLYWHEEL	36
HOUSING GP-FRONT	38
HOUSING GP-SEAT SUSPENSION	680

I

INDICATOR-AIR FILTER SERVICE	90
INDICATOR AS-AIR PRESSURE (LEFT)	732
INDICATOR AS-AIR PRESSURE (LH BRAKE)	734
INDICATOR AS-AIR PRESSURE (RH BRAKE)	734
INDICATOR AS-AIR PRESSURE (RIGHT)	732
INJECTOR GP-FUEL	108
INSTALLATION AR-RADIO	683
INSTALLATION GP-RADIO	684
INSTALLATION GP-WARNING BEACON	147
INSTRUMENT AR–SPEEDOMETER/TACH	686
INSULATION GP-WEATHER–ENCLOSED	688

J

JUNCTION BLOCK AS	148
JUNCTION BLOCK GP	148

K

KEY	639, 798
KEY (BATTERY DISCONNECT)	218
KIT-ADJUSTER	728
KIT-AIR CLEANER CLAMP	92
KIT-BACK TILT	728
KIT-BEARING	681
KIT-BEARING (STARTING MOTOR)	210
KIT-BELT TETHER	764
KIT-BIAS PISTON (HYDRAULIC STEERING)	488
KIT-BLADDER	472
KIT-BRUSH (STARTING MOTOR)	210, 212, 216
KIT-BUMPER	681
KIT-BUSHING (STARTING MOTOR)	212, 216
KIT-CARTRIDGE SEAL	320
KIT-CARTRIDGE SEAL (DIFFERENTIAL LOCK)	308
KIT-CONNECTING PLUG (12 PIN)	174, 176, 178, 182, 186, 226, 228, 230, 234, 238, 239, 252, 254, 362, 364, 718, 732, 734

INDEX

Name	Page
KIT-CONNECTING PLUG (12 PIN) (FRONT/REAR DEFROSTER)	168
KIT-CONNECTING PLUG (2 PIN)	174
	184
	188
	189
	225
	226
	230
	234
	238
	239
	242
	252
	616
	634
	704
	718
KIT-CONNECTING PLUG (2 PIN) (BACK-UP ALARM/RETURN)	246
KIT-CONNECTING PLUG (2 PIN) (BEACON LIGHT)	192
KIT-CONNECTING PLUG (2 PIN) (ETHER START AID)	206
KIT-CONNECTING PLUG (2 PIN) (ETHER STARTING AID)	204
KIT-CONNECTING PLUG (2 PIN) (HEATER - A/C MOTOR)	621
KIT-CONNECTING PLUG (2 PIN) (HIGH/LOW)	704
KIT-CONNECTING PLUG (2 PIN) (LIGHT BAR HEADLAMPS)	176
KIT-CONNECTING PLUG (2 PIN) (LIGHTBAR WORKLAMPS)	178
	182
KIT-CONNECTING PLUG (2 PIN) (MOTOR)	672
	676
KIT-CONNECTING PLUG (2 PIN) (OPERATOR MODE SWITCH)	734
KIT-CONNECTING PLUG (2 PIN) (PANEL LAMPS SWITCH/HORN)	254
KIT-CONNECTING PLUG (2 PIN) (SNOW WING LAMP)	168
	174
	228
KIT-CONNECTING PLUG (2 PIN) (STARTING RELAY)	243
KIT-CONNECTING PLUG (3 PIN)	199
	200
	201
	202
	226
	234
	246
KIT-CONNECTING PLUG (3 PIN) (AWD CONTROL LEVER SENSOR)	254
KIT-CONNECTING PLUG (3 PIN) (LIGHTBAR TURN LAMPS)	176
KIT-CONNECTING PLUG (3 PIN) (SHUTDOWN SWITCH)	239
KIT-CONNECTING PLUG (4 PIN)	239
	243
	252
	254
	718
KIT-CONNECTING PLUG (4 PIN) (AUX BACK-UP LAMP & SWITCH)	228
KIT-CONNECTING PLUG (4 PIN) (AUX BACKUP LAMP SWITCH)	174
KIT-CONNECTING PLUG (4 PIN) (AUXILIARY BACKUP LAMP)	168
KIT-CONNECTING PLUG (4 PIN) (GROUND SPEED SENSOR/POWER/GND)	234
KIT-CONNECTING PLUG (4 PIN) (STARTING AID SOLENOID & RELAY)	243
KIT-CONNECTING PLUG (6 PIN)	186
	226
	234
	243
	252
	734
KIT-CONNECTING PLUG (8 PIN)	174
	226
	228
	234
	718
KIT-CONNECTING PLUG (8 PIN) (FRONT/REAR WIPER/WASHER)	168
KIT-CRANKSHAFT BEARING	8
KIT-CUSHION (BACK REST)	655
KIT-CUSHION (VINYL BACK REST)	656
KIT-CYLINDER HEAD	8
KIT-FASTENER (SEAT)	766
KIT-FOLLOWER	680
	681
KIT-FUEL FILTER & WATER SEP	107
KIT-GOVERNOR OVERHAUL	398
KIT-HAMMER	665
	666
KIT-HARDWARE (STARTING MOTOR)	210
KIT-INDICATOR	681
KIT-INDICATOR (SEAT)	766
KIT-INSULATOR (STARTING MOTOR)	212
	216
KIT-LEVER (STARTING MOTOR)	212
	216
KIT-MAIN BEARING	20
KIT-PISTON (HYDRAULIC STEERING)	488
KIT-RECEPTACLE (12 PIN)	137

INDEX

Name	Page
	174
	176
	178
	182
	186
	226
	228
	234
	243
	246
	248
	252
	254
	362
	364
	718
	732
	734
KIT-RECEPTACLE (12 PIN) (AIR DRYER & BACK-UP ALARM)	243
KIT-RECEPTACLE (12 PIN) (BEACON SWITCH)	168
KIT-RECEPTACLE (12 PIN) (LIGHTBAR WORKLAMPS)	178
	182
KIT-RECEPTACLE (2 PIN)	94
	127
	160
	168
	174
	184
	188
	189
	194
	224
	225
	226
	228
	230
	234
	238
	239
	242
	250
	320
	585
	617
	621
	630
	634
	658
	704
	718
	732
KIT-RECEPTACLE (2 PIN) (AC PRESS SWITCH/CLUTCH SOL)	239
KIT-RECEPTACLE (2 PIN) (CENTERSHIFT SOLENOID VALVES)	414
KIT-RECEPTACLE (2 PIN) (ETHER START)	206
KIT-RECEPTACLE (2 PIN) (ETHER START VALVE)	204
KIT-RECEPTACLE (2 PIN) (HEATER MOTOR)	672
	676
KIT-RECEPTACLE (2 PIN) (IGNITION/RADIO CONVERTER)	141
KIT-RECEPTACLE (2 PIN) (MAIN RELAY)	243
KIT-RECEPTACLE (2 PIN) (PANEL LAMPS)	252
KIT-RECEPTACLE (2 PIN) (SNOW WING LAMP)	174
KIT-RECEPTACLE (2 PIN) (SOLENOID VALVE)	403
KIT-RECEPTACLE (2 PIN) (12V POWER PORT)	609
	610
KIT-RECEPTACLE (3 PIN)	149
	158
	159
	188
	189
	198
	225
	226
	230
	234
	238
	246
	248
	250
	254
KIT-RECEPTACLE (3 PIN) (FAN DRIVE PRESSURE SENSOR)	239
KIT-RECEPTACLE (3 PIN) (TURN/PARK)	170
	190
KIT-RECEPTACLE (4 PIN)	174
	204
	226
	228
	234
	238
	252
	254
	718
KIT-RECEPTACLE (4 PIN) (AUXILIARY BACKUP LAMP)	168
KIT-RECEPTACLE (4 PIN) (BEACON SWITCH)	192
KIT-RECEPTACLE (4 PIN) (ENG CNTL BREAKER & START RELAY)	243

INDEX

Name	Page
KIT-RECEPTACLE (4 PIN) (ETHER START AID)	206
KIT-RECEPTACLE (4 PIN) (GROUND SPEED)	197
KIT-RECEPTACLE (4 PIN) (HEATED MIRROR/MOLDBOARD LAMPS)	168
KIT-RECEPTACLE (6 PIN)	226
	234
	239
	252
	362
	364
	672
	676
	732
	734
	778
KIT-RECEPTACLE (6 PIN) (HEADLAMP)	152
	154
KIT-RECEPTACLE (6 PIN) (HEATER & A/C)	621
KIT-RECEPTACLE (6 PIN) (QUAD GAGE MODULE)	722
KIT-RECEPTACLE (6 PIN) (SPEEDOMETER & TACH)	723
KIT-RECEPTACLE (6 PIN) (WINDOW WIPER MOTOR)	780
	782
KIT-RECEPTACLE (8 PIN)	168
	174
	223
	226
	228
	718
	732
	734
KIT-RECEPTACLE (8 PIN) (FRONT WIPER SWITCHES)	226
KIT-RECEPTACLE (8 PIN) (REAR WIPER SWITCH)	784
	786
KIT-ROD	728
KIT-ROLLER (SEAT)	766
KIT-SEAL (HYDRAULIC FAN)	587
KIT-SEAL (SOLENOID VALVE)	585
KIT-SEAL (STEERING METERING)	486
KIT-SEAT CUSHION	750
	752
KIT-SEAT TILT	728
KIT-SLIDER BLOCK	750
	752
	756
	757
	758
KIT-SPRING	486
	681
KIT-STANDARD RING	8
KIT-STARTING MOTOR PIN	210
KIT-STARTING MOTOR SEAL	210
KIT-SUSPENSION BOOT	764
KIT-SUSPENSION ROLLER	764
KIT-TETHER (SEAT)	766
KIT-TILT PAN	750
	752
KIT-WASHER (STARTING MOTOR)	210
KIT-WIPER BLADE	784
KIT-WIPER BLADE (REAR)	784
KNOB-DAMPER (SEAT)	766

L

Name	Page
LAMP AS-LH (STOP/TAIL/TURN)	248
LAMP AS-RH (STOP/TAIL/TURN)	248
LAMP GP-DOME	149
LAMP GP-FLOOD–MOLDBOARD	150
LAMP GP-HEAD–HIGH BEAM	157
LAMP GP-HEAD–LH	152
LAMP GP-HEAD–LOW BEAM	156
LAMP GP-HEAD–RH	154
LAMP GP-HEAD (24 VOLT) (LOW BEAM)	176
	182
LAMP GP-SIGNAL–STOP/TAIL	158
LAMP GP-SIGNAL–TURN/PARK	159
LAMP GP-SIGNAL (LH)	170
LAMP GP-SIGNAL (RH)	170
LAMP GP-SIGNAL (STOP/TAIL)	246
LAMP GP-SIGNAL (TURN/PARK)	190
LAMP GP-WARNING BEACON	160
LAMP-HEAD (24 VOLT)	157
LAMP-HEAD (24 VOLT) (FLOOD)	150
LAMP-HEAD (24 VOLT) (LOW BEAM)	156
LAMP (SINGLE FILAMENT) (TURN SIGNAL)	152
	154
LAMP (WARNING BEACON)	160
LAMP (24 VOLT) (A/C & HEATER)	676
LAMP (24 VOLT) (A/C & HEATER CONTROL PANEL)	672
LAMP (24 VOLT) (AUXILIARY BACKUP LIGHT)	168
LAMP (24 VOLT) (BLADE CUSHION CONT/INDICATOR)	225
LAMP (24 VOLT) (CENTERSHIFT PIN PULLER SWITCH)	252
LAMP (24 VOLT) (DIFF LOCK INDICATOR)	732
LAMP (24 VOLT) (DIFFERENTIAL LOCK SWITCH)	254
LAMP (24 VOLT) (DOME)	149
LAMP (24 VOLT) (EMS MASTER ACTION INDICATOR)	732
	734
LAMP (24 VOLT) (ETHER START SWITCH)	254

INDEX

Name	Page
LAMP (24 VOLT) (ETHER STARTING AID INDICATOR)	209
LAMP (24 VOLT) (FAN SPEED INDICATOR)	616
LAMP (24 VOLT) (FLOODLAMP RH)	174
LAMP (24 VOLT) (FRONT DEFROSTER)	662
LAMP (24 VOLT) (FRONT FLOODLIGHT)	172
LAMP (24 VOLT) (HEADLAMP/TAIL)	178, 182, 186
LAMP (24 VOLT) (HEADLAMP/TAIL INDICATOR)	176
LAMP (24 VOLT) (HEADLAMP/TAIL/INDICATOR)	220
LAMP (24 VOLT) (HEATED MIRROR INDICATOR)	718
LAMP (24 VOLT) (HIGH BEAM)	170
LAMP (24 VOLT) (HIGH BEAM INDICATOR)	732
LAMP (24 VOLT) (HIGH/LOW BEAM)	152
LAMP (24 VOLT) (HIGH/LOW BEAM)(RH)	154
LAMP (24 VOLT) (HVAC PANEL)	620
LAMP (24 VOLT) (INSTRUMENT PANEL)	734
LAMP (24 VOLT) (LEFT TURN INDICATOR)	732
LAMP (24 VOLT) (LH AIR PRESSURE)(INDICATOR)	732
LAMP (24 VOLT) (LIGHTBAR LOW BEAM)	179, 182
LAMP (24 VOLT) (LOW BEAM)	170
LAMP (24 VOLT) (MOLDBOARD/INDICATOR)	228
LAMP (24 VOLT) (PANEL LAMP DIMMER SWITCH)	254
LAMP (24 VOLT) (QUAD GAGE MODULE)(INDICATOR)	732
LAMP (24 VOLT) (QUAD GAUGE & AIR PRESSURE)	734
LAMP (24 VOLT) (REAR DEFROSTER)	663
LAMP (24 VOLT) (RH AIR PRESSURE)(INDICATOR)	732
LAMP (24 VOLT) (RIGHT TURN INDICATOR)	732
LAMP (24 VOLT) (RUNNING LAMP)	154
LAMP (24 VOLT) (RUNNING LIGHTS)	152
LAMP (24 VOLT) (SECONDARY STEERING INDICATOR)	250
LAMP (24 VOLT) (SHIFT CONSOLE)	252
LAMP (24 VOLT) (SPEEDOMETER & TACH)	723
LAMP (24 VOLT) (TAIL LAMP SWITCH)	254
LAMP (24 VOLT) (THROTTLE HOLD AUTO/MAN SWITCH)	252
LAMP (24 VOLT) (THROTTLE HOLD INDICATOR)	732
LAMP (24 VOLT) (TURN SIGNAL)	152, 154
LAMP (24 VOLT) (WARNING BEACON)	147, 191, 192
LAMP (24 VOLT)(21 WATT)) (STOP/TAIL)	248
LAMP (24 VOLT)(5 WATT) (TURN)	248
LENS-AMBER (TURN SIGNAL)	152, 154
LENS-AMBER (WARNING BEACON)	160
LENS AS (FLOODLAMP)	150
LENS AS (HEADLAMP)	157
LENS AS (HEADLAMP)(LOW BEAM)	156
LENS AS (HEADLIGHT) (HIGH BEAM)	170
LENS AS (HEADLIGHT) (LOW BEAM)	170
LENS AS (HIGH/LOW BEAM)	152, 154
LENS AS (TURN SIGNAL)	152, 154
LENS (DOME)	149
LIFT GP-BLADE	598
LIFTER GP-VALVE	40
LIFTING GP-ENGINE	41
LIGHTER AS (CIGAR)(24 VOLT)	252
LIGHTING AR-FLOOD–FRONT	162
LIGHTING AR-FLOOD–REAR	163
LIGHTING AR-FLOOD–SNOW	161
LIGHTING AR-FLOOD & SIGNAL	164
LIGHTING AR-FLOOD & SIGNAL–BOLSTER	167
LIGHTING AR-FLOOD & SIGNAL–CAB–BOLSTER	165
LIGHTING AR-FLOOD & SIGNAL–CAB–EXTENDED BOLSTER	166
LIGHTING GP-BACKUP	168
LIGHTING GP-FLOOD–BOLSTER	182
LIGHTING GP-FLOOD–BOLSTER –EU	186
LIGHTING GP-FLOOD–BOLSTER–DOUBLE WORKLAMPS	176
LIGHTING GP-FLOOD–CAB	170
LIGHTING GP-FLOOD–CAB–SNOW–RH	174
LIGHTING GP-FLOOD–EXTENDED BOLSTER	178
LIGHTING GP-FLOOD–MOLDBOARD – REAR	189
LIGHTING GP-FLOOD–MOLDBOARD–FRONT	188
LIGHTING GP-FLOOD–SNOW–FRONT	172
LIGHTING GP-FLOOD–SNOW–REAR	184
LIGHTING GP-SIGNAL–REAR TURN LAMPS	190
LIGHTING GP-WARNING–ROTATING W/CAB	191
LIGHTING GP-WARNING–ROTATING W/CAB–OPEN	192
LINER GP-CAB–ENCLOSED–HIGH PROFILE	694
LINER GP-CAB–LOW PROFILE	690
LINER GP-CAB–OPEN–HIGH PROFILE	700
LINES GP-ACCUMULATOR	448
LINES GP-AIR–AFTERCOOLER	96
LINES GP-AIR–EMISSIONS & SOUND	94
LINES GP-AIR–TANK	97
LINES GP-AIR CONDITIONER	702
LINES GP-AIR CONDITIONER–SNOW	704

INDEX

Name	Page
LINES GP-DRAIN–ENGINE OIL	109
LINES GP-FUEL FILTER	110
LINES GP-FUEL INJECTION	114
LINES GP-GREASE	369
LINES GP-HEATER	706
	708
	710
LINES GP-HYDRAULIC–LH	450
LINES GP-HYDRAULIC–PLOW/DOZER LIFT–RH	457
LINES GP-HYDRAULIC–RH	454
LINES GP-HYDRAULIC FAN	458
LINES GP-HYDRAULIC FAN–RADIATOR	460
LINES GP-POWER TRAIN COOLER	78
LINES GP-POWER TRAIN OIL	294
LINES GP-PUMP	462
LINES GP-RIPPER	466
LINES GP-RIPPER–CYLINDER	468
LINES GP-SECONDARY STEERING–EU	470
LINES GP-STEERING	472
LINES GP-TURBOCHARGER OIL	67
LINES GP-WATER–HOUSING & REGULATOR	84
LINES GP-WATER–RADIATOR	82
LINES GP-WATER–REGULATOR	80
LINES GP-WATER–WATER PUMP	81
LINK GP-STEERING	370
LITERATURE GP	712
	713
LOCK GP-CENTERSHIFT	475
LOCK GP-HYDRAULIC HAND CONTROL–EU	476
LOUVER GP-CAB	714

M

Name	Page
MANIFOLD GP-EXHAUST	98
MANIFOLD GP-INLET	99
MIRROR GP-REAR VIEW–INSIDE	715
MIRROR GP-REAR VIEW–INSIDE–DUAL–EU	721
MIRROR GP-REAR VIEW–OUTSIDE–CLOSED ROPS	720
MIRROR GP-REAR VIEW–OUTSIDE–HEATED	718
MIRROR GP-REAR VIEW–SNOW–OUTSIDE–CLOSED ROPS	716
MODULE GP-QUAD GAUGE	722
MODULE GP-SPEEDOMETER & TACH–SNOW	723
MOTOR GP-ELEC HYD PUMP–EU	477
MOTOR GP-ELECTRIC–24 VOLT	195
MOTOR GP-ELECTRIC–27 VOLT–DEFROSTER FAN	194
MOTOR GP-ELECTRIC (AIR CONDITIONER)	634
MOTOR GP-ELECTRIC (27 VOLT)	617
MOTOR GP-ELECTRIC (27 VOLT) (A/C)	621
MOTOR GP-ELECTRIC (27 VOLT) (HEATER)	672
MOTOR GP-ELECTRIC (27 VOLT) (HEATER)(LIGHT DUTY)	676
MOTOR GP-GEAR	478
MOTOR GP-GEROTOR	480
MOUNTING GP-ENGINE	42
MOUNTING GP-RIPPER	602
MOUNTING GP-ROPS–ENCLOSED	724
MOUNTING GP-ROPS–OPEN–HIGH PROFILE	726
MOUNTING GP-SNOW WING	604
MOUNTING GP-VALVE MECHANISM	43
MOUNTING GP-WHEEL	296
MUFFLER GP	100

O

Name	Page
OIL CHANGE GP-HIGH SPEED	68

P

Name	Page
PADLOCK GP	639
	798
PADLOCK GP (HYDRAULIC TANK)	496
PAN GP-BACKREST	727
PAN GP-OIL	44
PAN GP-SEAT	728
PANEL GP-CAB–HIGH PROFILE	731
PANEL GP-CAB–LOW PROFILE	730
PANEL GP-INSTRUMENT	732
PANEL GP-INSTRUMENT–HIGH PROFILE	734
PANEL GP-SOUND SUPPRESSION	46
PANEL GP-SOUND SUPPRESSION–BOTTOM	371
PANEL GP-WINDOW–LH	738
PANEL GP-WINDOW–RH	736
PISTON & ROD GP	47
PLANETARY GP-TRANSMISSION	298
PLATE & FILM GP	790
PLATE & FILM GP–ENGINE	789
PLATE & FILM GP–EU	792
PLATE & FILM GP–FRENCH	794
PLATE & FILM GP–GERMAN	797
PLATE & FILM GP–PORTUGUESE	796
PLATE & FILM GP–SPANISH	795
PLATE & FILM GP–VHP	793
PLATE GP-PUSH	592
PLATE-INSTRUCTION (CRANKCASE DRAIN AND FILL)	68
PLATE-MAIN FRAME (DO NOT DRILL OR WELD)	791
PLATE-WARNING (MACHINE OPERATION)	791
PLUG-DRAIN	36

INDEX

Name	Page
PLUG-DRAIN (TRANSFER GEAR CASE)	290
PLUG-DRAIN (TRANSMISSION CASE)	348
PLUG GP-CYLINDER BLOCK	48
PLUG GP-ENGINE	50
PROTECTION AR-SNOW PLOW–BRAKE	372
PROTECTION AR-SNOW PLOW–FAN	373
PUMP & MTG GP-FUEL TRANSFER	116
PUMP & MTG GP-PISTON	482
PUMP & MTG GP-SECONDARY STEER–EU	484
PUMP-ELECTRIC HYDRAULIC	477
PUMP GP-ELECTRIC DRIVE–EU	485
PUMP GP-ENGINE OIL	69
	70
PUMP GP-FUEL INJECTION	117
PUMP GP-FUEL PRIMING	118
PUMP GP-GEAR–2 SECTION	304
PUMP GP-METERING	486
PUMP GP-PISTON–FAN DRIVE	490
PUMP GP-PISTON–HYDRAULIC STEERING	488
PUMP GP-WATER	85
	86

R

RADIATOR GP	87
RADIATOR GUARD & SUPPORT GP	374
RECEIVER-DRYER GP (REFRIGERANT)	94
RECEPTACLE AS-POWER (12 VOLT)	609
	610
RECEPTACLE GP-AUXILIARY START	196
REGULATOR-WATER TEMPERATURE	76
RIPPER AR	605
RIPPER GP	606
ROCKER ARM GP	52
ROPS AR-ENCLOSED–HIGH PROFILE	740
ROPS AR-ENCLOSED–LOW PROFILE	741
ROPS AR-OPEN–HIGH PROFILE	742
ROPS GP-ENCLOSED–HIGH PROFILE	744
	745
ROPS GP-ENCLOSED–LOW PROFILE	743
ROPS GP-OPEN–HIGH PROFILE	746
ROTATING GP-PUMP	492
ROTATING GP-PUMP–HYDRAULIC FAN	493

S

SCREEN GP-SUN–REAR	747
SCREEN-SUCTION (TRANSMISSION)	289
SEAL GP-CRANKSHAFT	38
SEAL GP-CRANKSHAFT–SINGLE LIP	54
SEAL (1M)	43
SEAT BELT GP–RETRACTABLE	748
SEAT BELT GP (RETRACTABLE)	756
	757
	759
SEAT GP–CLOTH	750
SEAT GP–VINYL	752
SEAT GP-SUSPENSION–CLOTH	754
	756
	758
	760
SEAT GP-SUSPENSION–CLOTH–BACK REST	759
SEAT GP-SUSPENSION–VINYL	755
	757
SENDER AS-POSITION (ARTICULATION)	238
SENSOR GP-GROUND SPEED	197
SENSOR GP-POSITION–THROTTLE	198
SENSOR GP-PRESSURE–FUEL	202
SENSOR GP-PRESSURE–INJECTION ACTUATION	200
SENSOR GP-PRESSURE–RADIATOR	199
SENSOR GP-PRESSURE–TURBO OUTLET	201
SENSOR GP-SPEED (CAMSHAFT)	230
SENSOR GP-TEMPERATURE (COOLANT)	230
SENSOR GP-TEMPERATURE (FUEL)	230
SENSOR GP-TEMPERATURE (INLET MANIFOLD)	230
SHIELD GP-DRIVE SHAFT	376
SNOW AR-MOTOR GRADER	6
SOFTWARE GP-MONITOR	144
SOLENOID AS (24 VOLT) (STARTING MOTOR)	210
STARTING AID GP-ETHER	206
	209
STARTING AID GP-ETHER–SNOW	204
	208
STARTING MOTOR GP-ELECTRIC	210
	212
	214
	216
STEERING AR-SECONDARY–EU	494
STEP GP	377
STRAINER (HYDRAULIC OIL FILLER)	498
SUPPORT AR-REAR CHASSIS	378
SUPPORT GP-ENGINE	55
SUPPORT GP-FUEL TANK	379
SUPPORT GP-SEAT	762
SUPPRESSION GP-SOUND–ENGINE ENCLOSURE–EU	56
SUSPENSION GP-SEAT	764
SUSPENSION GP-SEAT–AIR	766
SWITCH AS (AUXILIARY BACKUP LIGHT)	168
SWITCH AS-BALL (GEAR RANGE)	238
SWITCH AS (BLADE CUSHION CONTROL)	225
SWITCH AS (DIFFERENTIAL LOCK)	254
SWITCH AS (ETHER START)	254
SWITCH AS (ETHER STARTING AID)	209
SWITCH AS (FLOODLAMP RH)	174
SWITCH AS (HEATED MIRROR)	718

INDEX

Name	Page
SWITCH AS (LIGHTBAR LOW BEAM)	179, 182
SWITCH AS-LIMIT (BRAKE/INCHING PEDAL)	254
SWITCH AS (MOLDBOARD LAMPS)	228
SWITCH AS (ON/OFF) (FRONT DEFROSTER)	662
SWITCH AS (ON/OFF) (REAR DEFROSTER)	663
SWITCH AS (PANEL LAMP DIMMER)	254
SWITCH AS-PRESSURE (HIGH/LOW)	94
SWITCH AS-PRESSURE (SECONDARY STEERING)	250
SWITCH AS-PRESSURE (STOP LAMP)	234
SWITCH AS-PUSH BUTTON (OPERATOR MODE)(DIGITAL DISPLAY)	732, 734
SWITCH AS-ROCKER (FLOODLIGHT)	172
SWITCH AS-ROCKER (HEADLAMP/TAIL)	176, 178, 182, 186, 220
SWITCH AS-ROCKER (SECONDARY STEERING)	250
SWITCH AS-ROTARY (BLOWER)	616
SWITCH AS-ROTARY (FAN SPEED)	620, 676
SWITCH AS-ROTARY (HIGH/LOW BEAM)	176, 178, 182, 186
SWITCH AS-ROTARY (TURN SIGNAL)	220
SWITCH AS-ROTARY (24 VOLT) (UPPER/LOWER FRONT WIPERS)	226
SWITCH AS (TAIL LAMP)	254
SWITCH AS-THERMOSTAT	616
SWITCH AS-THERMOSTAT (REFRIGERANT)	620
SWITCH AS (THROTTLE HOLD AUTO/MAN)	252
SWITCH AS (THROTTLE HOLD SET/RESUME)	252
SWITCH AS-TOGGLE (ENGINE SHUTDOWN)	238
SWITCH AS-TURN SIG & WARNING	176, 178, 182, 186, 220
SWITCH AS (WARNING BEACON)	147, 191, 192
SWITCH AS-WIPER (INTERMITTANT)	784
SWITCH AS-WIPER (REAR)	786
SWITCH GP-DISCONNECT–BATTERY	218
SWITCH GP-DISCONNECT (BATTERY)	243
SWITCH GP-LIGHT–TURN	220
SWITCH GP-MAGNETIC–SECONDARY STEERING–SNOW	222
SWITCH GP-MAGNETIC (24V) (STARTING)	242
SWITCH GP-START (KEY)	252
SWITCH GP-WIPER	223
SWIVEL GP	495

T

Name	Page
TANDEM & COVER GP	306
TANK GP-AIR	398
TANK GP-FUEL	120
TANK GP-FUEL–LH	124
TANK GP-FUEL–RH	122
TANK GP-HYDRAULIC	496, 498
TEE GP	448
TOOL BOX GP	798
TOOTH GP-SCARIFIER–3 TEETH	608
TRANSMISSION AR	307
TURBOCHARGER GP	102, 103

V

Name	Page
VALVE & LINKAGE GP–BANK 4–RH–LH–EU	510
VALVE & LINKAGE GP–BANK 4–RH, LH	504
VALVE & LINKAGE GP–BANK 4 RH–BANK 5 LH	502
VALVE & LINKAGE GP–BANK 4 RH–BANK 5 LH–EU	512
VALVE & LINKAGE GP–BANK 5 –LH–RH	500
VALVE & LINKAGE GP–BANK 5–LH–RH–EU	514
VALVE & LINKAGE GP–BANK 5 RH–BANK 7 LH–EU	518
VALVE & LINKAGE GP–BANK 5 RH–BANK 7 LH–WING TILT	506
VALVE & LINKAGE GP–BANK 5 RH–BANK 7 LH–WING TILT FLOAT	520
VALVE & MTG GP-DIFF LOCK	308
VALVE-AIR RELIEF (PRESSURE)	398
VALVE AS-AIR CONDITIONER (HIGH SIDE)	94
VALVE AS-AIR CONDITIONER (LOW SIDE)	94, 704
VALVE AS-ETHER START	204
VALVE AS (SEAT)	766
VALVE-DRAIN (COOLANT)	82
VALVE-DRAIN (COOLING SYSTEM)	358, 374
VALVE GP-AIR CONTROL–PARKING BRAKE	400
VALVE GP-AIR CONTROL–SERVICE BRAKE	401
VALVE GP-BANK 4–LH	522
VALVE GP-BANK 4–LH–EU	524
VALVE GP-BANK 4–RH	523
VALVE GP-BANK 4–RH–EU	525

INDEX

Name	Page
VALVE GP-BANK 5–LH	526
VALVE GP-BANK 5–LH–EU	528
VALVE GP-BANK 5–RH	527
VALVE GP-BANK 5–RH–EU	529
VALVE GP-BANK 7–LH	531
VALVE GP-BANK 7–LH–EU	532
VALVE GP-BANK 7–LH–FLOAT TILT	530
VALVE GP-CHECK	114, 126
VALVE GP-COMBINATION	534
VALVE GP-CONTROL	309
VALVE GP-CONTROL–ARTICULATION	550
VALVE GP-CONTROL–BLADE LIFT	554
VALVE GP-CONTROL–BLADE LIFT–EU	560
VALVE GP-CONTROL–BLADE LIFT–LH	546
VALVE GP-CONTROL–BLADE LIFT–LH–EU	562
VALVE GP-CONTROL–BLADE TILT–LH	540
VALVE GP-CONTROL–CENTERSHIFT	552
VALVE GP-CONTROL–CIRCLE DRIVE	542
VALVE GP-CONTROL–EU–PLOW/DOZER LIFT–RH	558
VALVE GP-CONTROL–EU–RIPPER–LH	556
VALVE GP-CONTROL–EU–WING LIFT–LH	568
VALVE GP-CONTROL–PLOW/DOZER LIFT–LH	570
VALVE GP-CONTROL–PLOW/DOZER LIFT–RH	538
VALVE GP-CONTROL–RIPPER–LH	548
VALVE GP-CONTROL–SIDESHIFT–LH	544
VALVE GP-CONTROL–WHEEL LEAN–RH	536
VALVE GP-CONTROL–WING LIFT–LH	566
VALVE GP-CONTROL–WING TILT–LH	564
VALVE GP-ETHER START	206
VALVE GP-FLUID SAMPLING (HYDRAULIC OIL)	473
VALVE GP-FLUID SAMPLING (TRANSMISSION OIL)	78
VALVE GP-PILOT–SPEED SELECT	310
VALVE GP-PRESS & FLOW CMPNSTR–FAN DRIVE PISTON PUMP	574
VALVE GP-PRESS & FLOW CMPNSTR–HYDRAULIC–STEERING	572
VALVE GP-QUICK-RELEASE–AIR–PARKING BRAKE	402
VALVE GP-RELIEF	576, 577, 579, 580, 581, 582
VALVE GP-RELIEF–EU	583
VALVE GP-RELIEF–MAIN	312
VALVE GP-RELIEF–STEERING HYDRAULIC PRESSURE	578
VALVE GP-RELIEF (MAIN)	534
VALVE GP-SELECTOR & PRESS CONT–DIRECTION	314
VALVE GP-SELECTOR & PRESS CONT–MANUAL MODULATING–DIFFERENTIAL–SPEED	318
VALVE GP-SELECTOR & PRESS CONT–MODULATING REDUCING–SPEED	316
VALVE GP-SHUTTLE	584
VALVE GP-SOLENOID–BLADE CUSHION	585
VALVE GP-SOLENOID–DIFFERENTIAL LOCK	320
VALVE GP-SOLENOID–PARKING BRAKE	403
VALVE GP-SOLENOID & MANIFOLD–BLADE CUSHION	586
VALVE GP-SOLENOID & MANIFOLD–HYDRAULIC FAN	587
VALVE GP-SOLENOID (BLADE CUSHION)	586
VALVE GP-TRANSMISSION CONTROL	322
VALVE MECHANISM GP	58
VALVE-PUMP BYPASS	60

W

Name	Page
WARNING GP-BACKUP	224
WARNING GP-BACKUP (BACK UP)	248
WASHER GP-WINDOW–FRONT	768
WASHER GP-WINDOW–REAR	770
WHEEL & TIRE AR	324, 325, 326, 327, 328, 329, 330, 331, 332, 333, 334, 335, 336, 337, 338, 339, 340
WHEEL AR	341, 342
WINDOW GP–SIDE SLIDING –LOW PROFILE	774
WINDOW GP–SIDE SLIDING–HIGH PROFILE	775
WINDOW GP–SIDE SLIDING HIGH PROFILE	772
WINDOW GP–SIDE SLIDING LOW PROFILE	773
WINDOW GP–VENT–CAB	771
WIPER AR-WINDOW–REAR–HIGH PROFILE	777
WIPER AR-WINDOW–REAR–LOW PROFILE	776
WIPER GP-WINDOW	778

INDEX

Name	Page	Name	Page
WIPER GP-WINDOW–FRONT–HIGH PROFILE	782		
WIPER GP-WINDOW–FRONT–INTERMITTENT	788		
WIPER GP-WINDOW–FRONT–LOW PROFILE	780		
WIPER GP-WINDOW–REAR–HIGH PROFILE	786		
WIPER GP-WINDOW–REAR–LOW PROFILE	784		
WIRING GP-BLADE CUSHION	225		
WIRING GP-CAB	226		
WIRING GP-CAB–MOLDBOARD	228		
WIRING GP-ENGINE	230		
WIRING GP-FRONT	234		
WIRING GP-REAR	238		
WIRING GP-REAR–EU	248		
WIRING GP-REAR–RADIATOR	246		
WIRING GP-REAR–SERVICE CENTER	242		
WIRING GP-SECONDARY STEERING–EU	250		
WIRING GP-SHIFT CONSOLE	252		
WIRING GP-STEERING CONSOLE	254		
WIRING GP-UNIT INJECTOR	257		

INDEX

Désignation	Page

A

ACCOUDOIR (ASS)	624 625
ACCUMULATEUR - AMORTISSEUR DE LAME (VERSION)	405
ACCUMULATEUR D'AMORTISSEUR DE LAME	406
ACCUMULATEUR ET MONTAGE - HYDRAULIQUE (ASS)	404
ADAPTATEUR - BOÎTE DE VITESSES (ASS)	258
ALLUME-CIGARE (ENS) (CIGARE)(24 VOLTS)	252
ALTERNATEUR DE CHARGE (ASS)	130
ALTERNATEUR DE CHARGE (ASS)	128
ALTERNATEUR-VENTILATEUR	128
AMPOULE (FILAMENT SIMPLE) (CLIGNOTANT DE DIRECTION)	152 154
AMPOULE (GYROPHARE)	160
AMPOULE (24 VOLTS) (BOUCLIER/ INDICATEUR)	228
AMPOULE (24 VOLTS) (CLIGNOTANT DE DIRECTION)	152 154
AMPOULE (24 VOLTS) (CLIMATISEUR ET CHAUFFAGE)	676
AMPOULE (24 VOLTS) (COMPTEUR DE VITESSE ET COMPTE-TOURS)	723
AMPOULE (24 VOLTS) (CONSOLE DE CHANGEMENT DE VITESSES)	252
AMPOULE (24 VOLTS) (CONTACTEUR AUTO/MAN DE RETENUE DU PAPILLON DES GAZ)	252
AMPOULE (24 VOLTS) (CONTACTEUR DE DÉMARRAGE À L'ÉTHER)	254
AMPOULE (24 VOLTS) (CONTACTEUR DE RÉGLAGE D'INTENSITÉ DU TABLEAU)	254
AMPOULE (24 VOLTS) (CONTACTEUR DE VERROUILLAGE DE DIFFÉRENTIEL)	254
AMPOULE (24 VOLTS) (CONTACTEUR D'ÉCLAIRAGE DE FEU ARRIÈRE)	254
AMPOULE (24 VOLTS) (CONTACTEUR D'EXTRACTEUR DE BROCHE DE DÉPORT DE CERCLE)	252
AMPOULE (24 VOLTS) (DÉGIVREUR ARRIÈRE)	663
AMPOULE (24 VOLTS) (DÉGIVREUR AVANT)	662
AMPOULE (24 VOLTS) (ÉCLAIRAGE D'APPOINT AUXILIAIRE)	168
AMPOULE (24 VOLTS) (FEU DE ROUTE)	154
AMPOULE (24 VOLTS) (FEUX AVANT FEUX ARRIÈRE)	178 182 186
AMPOULE (24 VOLTS) (FEUX DE CROISEMENT)	170
AMPOULE (24 VOLTS) (FEUX DE ROUTE)	152 170
AMPOULE (24 VOLTS) (FEUX DE ROUTE/DE CROISEMENT)(DROIT)	154
AMPOULE (24 VOLTS) (FEUX DE ROUTE/FEUX DE CROISEMENT)	152
AMPOULE (24 VOLTS) (GYROPHARE)	147 191 192
AMPOULE (24 VOLTS) (INDICATEUR/ COMMANDE D'AMORTISSEUR DE LAME)	225
AMPOULE (24 VOLTS) (INDICATEUR DE FEUX DE ROUTE)	732
AMPOULE (24 VOLTS) (INDICATEUR DE MIROIR CHAUFFÉ)	718
AMPOULE (24 VOLTS) (INTERRUPTEUR D'ÉCLAIRAGE - POTENCE)	179 182
AMPOULE (24 VOLTS) (MODULE QUATRE INSTRUMENTS)(TÉMOIN)	732
AMPOULE (24 VOLTS) (PANNEAU HVAC)	620
AMPOULE (24 VOLTS) (PHARE/ FEUX ARRIÈRE/ INDICATEUR)	220
AMPOULE (24 VOLTS) (PLAFONNIER)	149
AMPOULE (24 VOLTS) (PRESSION D'AIR DROIT)(TÉMOIN)	732
AMPOULE (24 VOLTS) (PRESSION D'AIR GAUCHE)(TÉMOIN)	732
AMPOULE (24 VOLTS) (PROJECTEUR AVANT)	172
AMPOULE (24 VOLTS) (PROJECTEUR DROIT)	174
AMPOULE (24 VOLTS) (QUATRE INSTRUMENTS ET PRESSION D'AIR)	734
AMPOULE (24 VOLTS) (TABLEAU DE BORD)	734
AMPOULE (24 VOLTS) (TABLEAU DE COMMANDE DU RÉCHAUFFEUR ET CLIMATISEUR)	672
AMPOULE (24 VOLTS) (TÉMOIN D'AIDE AU DÉMARRAGE À L'ÉTHER)	209
AMPOULE (24 VOLTS) (TÉMOIN DE BLOCAGE D'ACCÉLÉRATEUR)	732
AMPOULE (24 VOLTS) (TÉMOIN DE CLIGNOTANT DROIT)	732
AMPOULE (24 VOLTS) (TÉMOIN DE CLIGNOTANT GAUCHE)	732
AMPOULE (24 VOLTS) (TÉMOIN DE DIRECTION AUXILIAIRE)	250
AMPOULE (24 VOLTS) (TÉMOIN DE PHARES/FEUX ARRIÈRE)	176
AMPOULE (24 VOLTS) (TÉMOIN DE VERROUILLAGE DE DIFFÉRENTIEL)	732

INDEX

Désignation	Page
AMPOULE (24 VOLTS) (TÉMOIN DE VITESSE DE VENTILATEUR)	616
AMPOULE (24 VOLTS) (TÉMOIN PRINCIPAL DE MISE EN GARDE EMS)	732, 734
AMPOULE (24 VOLTS)(21 WATTS) (FEUX D'ARRÊT/FEUX ARRIÈRE)	248
AMPOULE (24 VOLTS)(5 WATTS) (CLIGNOTANT)	248
ARBRE A CAMES (ASS)	14
ARTICULATION DE DIRECTION (ASS)	370
ATTELAGE D'ARTICULATION (ASS)	366
ATTELAGE-REMORQUAGE (ASS)	368
AUTOCOLLANT D'IDENTIFICATION (ASSEMBLAGE ET NO DE SÉQUENCE)	616, 634
AUTOCOLLANT D'IDENTIFICATION (FUSIBLE) (FEUX DE ROUTE/FEUX DE CROISEMENT)	178
AUXILIAIRE DE DÉMARRAGE À L'ÉTHER	204, 206, 208, 209
AVERTISSEUR (ASS)	127
AVERTISSEUR DE RECUL (ASS)	224
AVERTISSEUR DE RECUL (ASS) (RECUL/APPOINT)	248
AXE DE CULBUTEUR (ASS)	52

B

Désignation	Page
BALAI D'ESSUIE-GLACE (ENS) (ÉVENT AVANT INFÉRIEUR)	771
BALAI D'ESSUIE-GLACE (ENS) (PROFIL BAS ARRIÈRE)	784
BALAI D'ESSUIE-GLACE (ENS) (PROFIL BAS AVANT INFÉRIEUR)	780
BALAI D'ESSUIE-GLACE (ENS) (PROFIL ÉLEVÉ ARRIÈRE)	786
BALAI D'ESSUIE-GLACE (ENS) (PROFIL ÉLEVÉ AVANT INFÉRIEUR)	782
BARRE D'ATTELAGE (ASS)	590
BATTERIE (ASS)	131
BATTERIE (ASS)	132
BATTERIE (GRANDE CAPACITÉ)(12V)	131
BATTERIE (SANS ENTRETIEN)(12 VOLTS)	132
BLINDAGE DES CANALISATIONS DES FREINS	361
BLINDAGE INFÉRIEUR (ASS)	360
BLOC-CYLINDRES - COUVERCLE (ASS)	16
BLOC-CYLINDRES (ASS)	24
BLOC-CYLINDRES (ENS)	22, 23
BLOC DE BRANCHEMENT (ASS)	148
BLOC DE BRANCHEMENT (ENS)	148
BOÎTE DE VITESSES (VERSION)	307
BOÎTE PLANÉTAIRE (ASS)	298
BOUCHON - BLOC-CYLINDRES	48
BOUCHON DE GOULOTTE DE REMPLISSAGE D'HUILE MOTEUR	62
BOUCHON DE GOULOTTE DE REMPLISSAGE (HUILE DE TRANSMISSION)	284
BOUCHON DE GOULOTTE DE REMPLISSAGE (RÉSERVOIR D'HUILE HYDRAULIQUE)	498
BOUCHON DE MOTEUR (ASS)	50
BOUCHON DE REMPLISSAGE D'HUILE MOTEUR (ASS)	62
BOUCHON DE RÉSERVOIR À CARBURANT (ASS) (VERROUILLABLE)	124
BOUCHON DE VIDANGE	36
BOUCHON DE VIDANGE (CARTER DE BOITE DE VITESSES)	348
BOUCHON DE VIDANGE (CARTER D'ENGRENAGES DE TRANSFERT)	290
BOULONNERIE DE LA CULASSE (ASS)	32
BOURRELET D'ÉTANCHÉITÉ (1M)	43
BOUTON D'AMORTISSEUR (SIÈGE)	766

C

Désignation	Page
CABINE - REVÊTEMENT (ASS)	690, 694, 700
CABINE ROPS FERMÉE (ASS)	743, 744, 745
CABLAGE AR (ASS)	238, 242, 246, 248
CABLAGE AV (ASS)	234
CABLAGE DE CABINE (ASS)	226, 228
CABLAGE DE DIRECTION AUXILIAIRE (ASS)	250
CABLAGE DE LA CONSOLE DE CHANGEMENTS DE VITESSE	252
CABLAGE DE LA CONSOLE DE DIRECTION	254
CABLAGE DE MOTEUR (ASS)	230
CABLAGE D'INJECTEUR	257
CÂBLE D'AMORTISSEUR DE LAME (ASS)	225
CADENAS (ASS)	639, 798
CADENAS (ASS) (RÉSERVOIR HYDRAULIQUE)	496
CANALISATION DE DIRECTION AUXILIAIRE	470
CANALISATIONS D'ACCUMULATEUR (ASS)	448
CANALISATIONS D'AIR (ASS)	94
CANALISATIONS D'AIR (ASS)	96, 97
CANALISATIONS DE CHAUFFAGE (ASS)	706

INDEX

Désignation	Page
	708
	710
CANALISATIONS DE CLIMATISEUR (ASS)	702
	704
CANALISATIONS DE DIRECTION (ASS)	472
CANALISATIONS DE GRAISSAGE (ASS)	369
CANALISATIONS DE POMPE (ASS)	462
CANALISATIONS DE RÉCHAUFFEUR DE LIQUIDE DE REFROIDISSEMENT	708
CANALISATIONS DE REFROIDIS. DE TRANSMISSION	78
CANALISATIONS DE VIDANGE (ASS)	109
CANALISATIONS D'EAU (ASS)	84
CANALISATIONS D'EAU (ASS)	80
	81
	82
CANALISATIONS D'HUILE DE TRANSMISSION (ASS)	294
CANALISATIONS D'HUILE DE TURBOCOMPRESSEUR (ASS)	67
CANALISATIONS D'INJECTION DE CARBURANT (ASS)	114
CANALISATIONS DU FILTRE A CARBURANT (ASS)	110
CANALISATIONS DU RIPPER (ASS)	466
	468
CANALISATIONS HYDRAULIQUES (ASS)	450
	454
	457
CANALISATIONS HYDRAULIQUES DE VENTILATEUR (ASS)	458
	460
CAPTEUR DE PRESSION (ASS)	200
	201
	202
CAPTEUR DE PRESSION (ASS)	199
CAPTEUR DE TEMPERATURE (ASS) (ADMISSION-COLLECTEUR)	230
CAPTEUR DE TEMPERATURE (ASS) (CARBURANT)	230
CAPTEUR DE TEMPERATURE (ASS) (LIQUIDE DE REFROIDISSEMENT)	230
CAPTEUR DE VITESSE (ASS) (ARBRE À CAMES)	230
CAPTEUR DE VITESSE DE TRANSLATION	197
CARENAGE DE MOTEUR (ASS)	352
CARTER AV (ASS)	38
CARTER DE BOITE	259
CARTER DE VOLANT (ASS)	36
CEINTURE DE SECURITE (ASS)	748
CEINTURE DE SECURITE (ASS) (RÉTRACTABLE)	756
	757
	759
CENDRIER	690
	694
CERCLE (ASS)	588
CHAPEAU - RADIATEUR	87
CHAPEAU ANTI-POUSSIERE	145
	146
CHAPEAU DE VALVE (TIGE)	324
	325
	326
	327
	328
	329
	330
	331
	332
	333
	334
	335
	336
	337
	338
	339
	340
	341
	342
CHAPEAU (ENS)	68
CHASSE-NEIGE - PROTECTION (VERSION)	372
	373
CHÂSSIS AV (ASS)	356
CHÂSSIS ET CARTER (ASS)	348
CHAUFFAGE DE CABINE (ASS)	672
	676
CHAUFFAGE DE CABINE (VERSION)	669
	670
CHAUFFAGE ET MONTAGE - CABINE (ASS)	667
CHAUFFAGE ET MONTAGE - CABINE (ASS)	668
CLAPET DE DECHARGE (ASS)	312
	576
	577
	578
	579
	580
	581
	582
	583
CLAPET DE DECHARGE (ASS) (PRINCIPAL)	534
CLAPET DE DECHARGE D'AIR (PRESSION)	398
CLAPET DE RETENUE (ENS)	114
	126
CLAPET (ENS) (SIÈGE)	766
CLÉ	639
	798
CLÉ (COUPE-BATTERIE)	218
CLIGNOTANT ÉLECTRONIQUE (ENS) (12/24 VOLTS) (CLIGNOTANT/ FEUX DE DÉTRESSE)	178

INDEX

Désignation	Page
	182
CLIGNOTANT ÉLECTRONIQUE (ENS) (12/24 VOLTS) (CLIGNOTANTS ET FEUX DE DÉTRESSE)	186
CLIMATISEUR (ASS)	616
	620
CLIMATISEUR ET MONTAGE (ASS)	611
	612
CLIMATISEUR (VERSION)	613
	614
COFFRE A OUTILS (ASS)	798
COLLECTEUR D'ADMISSION (ASS)	99
COLLECTEUR D'ÉCHAPPEMENT (ASS)	98
COMMANDE DE BOITE DE VITESSES (ASS)	268
COMMANDE DE DIFFÉRENTIEL - VERROUILLAGE (ASS)	266
COMMANDE DE DIRECTION (ASS)	416
COMMANDE DE DIRECTION SECONDAIRE (ASS)	137
COMMANDE DE FREIN DE STATIONNEMENT (ASS)	390
COMMANDE DE RÉGULATEUR (ASS)	104
COMMANDE DE VERROUILLAGE DE DÉPORT DE FREIN	414
COMMANDE D'EMBRAYAGE (ASS)	262
COMMANDE ELECTRONIQUE DE MOTEUR (ASS)	136
COMMANDE ET MONTAGE - MOTEUR	135
COMMANDE HYDRAULIQUE DE BOÎTE (ASS)	272
COMMANDE HYDRAULIQUE (VERSION)	407
	408
	409
	410
	411
	412
	413
COMPRESSEUR D'AIR (ASS)	8
	10
COMPRESSEUR DE REFRIGERANT (ASS)	626
	628
	630
	631
CONDENSATEUR ET MONTAGE (RÉFRIGÉRANT)	632
CONDENSEUR DE RÉFRIGÉRANT	634
CONDUIT (ASS)	654
CONDUIT ET COMMANDE (ASS)	652
	653
CONNEXION (ASS)	472
CONSOLE DE CONDUITE (ASS)	636
CONTACTEUR DE CLIGNOTANT DE DIRECTION ET AVERTISS.	182
	220
CONTACTEUR DE CLIGNOTANT DE DIRECTION ET AVERTISS.	176
	178
	186
CONTACTEUR (ENS) (COMMANDE D'AMORTISSEUR DE LAME)	225
CONTACTEUR (ENS) (DÉMARRAGE À L'ÉTHER)	209
	254
CONTACTEUR (ENS) (ÉCLAIRAGE D'APPOINT AUXILIAIRE)	168
CONTACTEUR (ENS) (FEU ARRIÈRE)	254
CONTACTEUR (ENS) (GYROPHARE)	147
	191
	192
CONTACTEUR (ENS) (INTERRUPTEUR D'ÉCLAIRAGE - POTENCE)	179
	182
CONTACTEUR (ENS) (INVERSEUR D'ÉCLAIRAGE DU PANNEAU)	254
CONTACTEUR (ENS) (LAMPES DE BOUCLIER)	228
CONTACTEUR (ENS) (MARCHE/ARRÊT) (DÉGIVREUR ARRIÈRE)	663
CONTACTEUR (ENS) (MARCHE/ARRÊT) (DÉGIVREUR AVANT)	662
CONTACTEUR (ENS) (MIROIR CHAUFFÉ)	718
CONTACTEUR (ENS) (PROJECTEUR DROIT)	174
CONTACTEUR (ENS) (RÉGLAGE/ REPRISE RETENUE DU PAPILLON DES GAZ)	252
CONTACTEUR (ENS) (RETENUE DU PAPILLON DES GAZ AUTO/MAN)	252
CONTACTEUR (ENS) (VERROUILLAGE DE DIFFÉRENTIEL)	254
CONTACTEUR MAGNETIQUE (ASS)	222
CONTACTEUR MAGNETIQUE (ASS) (24 V) (DÉMARRAGE)	242
COUDE (ASS)	448
COURONNE ET DIFFERENTIEL (ASS)	278
COURROIE NERVURÉE (CLIMATISEUR)	614
COUVERCLE - VENTILATEUR (ASS)	73
COUVERCLE DE CARTER DE VOLANT (ASS)	18
COUVERCLE DE PRISE DE MODULE (ASS)	143
COUVERCLE DE PROTECTION (ASS)	350
COUVERCLE INFÉRIEUR-DOSSIER (ASS)	727
COUVERCLES D'EXPEDITION (ASS)	276
CREPINE (GOULOTTE DE REMPLISSAGE D'HUILE HYDRAULIQUE)	498
CULASSE (ASS)	28
	29
CULASSE (ENS)	26
CULBUTERIE (ASS)	58

INDEX

Désignation	Page
CUVETTE-ACCUMULATION D'EAU (ENS) (RÉCHAUFFEUR 12 VOLTS)	107
CUVETTE-ACCUMULATION D'EAU (ENS) (RÉCHAUFFEUR 24 VOLTS)	107
CYLINDRE D'ETHER (ENS)	204
	206

D

DÉMARREUR ÉLECTRIQUE (ASS)	214
	216
DÉMARREUR ÉLECTRIQUE (ASS)	212
DÉMARREUR ÉLECTRIQUE (ASS)	210
DENT DE SCARIFICATEUR (ASS)	608
DESHYDRATEUR (ASS)	380
	382
	384
	386
DIFFERENTIEL (ASS)	282
DIRECTION AUXILIAIRE (VERSION)	494
DISJONCTEUR (ASS)	134
DISJONCTEUR (ASS)	133
DISJONCTEUR DE SECURITE (ENS) (PÉDALE DE FREIN/ APPROCHE)	254
DISJONCTEUR (ENS) (15A) (COMMANDE DU MOTEUR)	243
DISJONCTEUR (ENS) (15A) (FEUX DE ROUTE/ FEUX DE CROISEMENT À BARRE LUMINEUSE)	178
DISJONCTEUR (ENS) (15A) (PHARES AVANT)	133
	134
DISJONCTEUR (ENS) (15A) (PROJECTEURS DE TRAVAIL AVEC BARRE LUMINEUSE)	133
DISJONCTEUR (ENS) (80 A) (ALTERNATEUR)	242
DISJONCTEUR (ENS) (80 A) (PRINCIPAL)	242
DISPOSITIF D'ARRÊT DE DISTRIBUTEUR (ASS)	438
	440
DISPOSITIF DE VIDANGE RAPIDE D'HUILE (ASS)	68
DISTRIBUTEUR (ASS)	309
	536
	538
	540
	542
	544
	546
	548
	550
	552
	554
	556
	558
	560
	562
	564
	566
	568
	570
DISTRIBUTEUR D'AIR (ASS)	400
	401
DISTRIBUTEUR DE BOITE (ASS)	322
DISTRIBUTEUR 4 ÉLÉMENTS (ASS)	522
	523
	524
	525
DISTRIBUTEUR 5 ÉLÉMENTS (ASS)	526
	527
	528
	529
DISTRIBUTEUR 7 ÉLÉMENTS (ASS)	530
	531
	532

E

EAU DES CHEMISES - RECHAUFFEUR (ASS)	145
	146
ÉCLAIRAGE - AVERTISSEUR (ASS)	191
	192
ÉCLAIRAGE - PROJECTEURS (ASS)	170
	172
	174
	176
	178
	182
	184
	186
	188
	189
ECLAIRAGE AR (ASS)	168
ÉCLAIRAGE CLIGNOTANT	190
ÉCLAIRAGE-PROJECTEURS (VERSION)	161
	162
	163
ÉCLAIRAGE (VERSION)-PROJECTEUR & SIGNAL	164
	165
	166
	167
ÉCRAN D'ARBRE MOTEUR (ASS)	376
ÉCRAN MAGNÉTIQUE (BOÎTE DE VITESSES)	289
ÉJECTEUR AUTOMATIQUE DE POUSSIÈRE (ASS)	93
ÉLECTRONIQUE-MONITEUR (ASS)	144

INDEX

Désignation	Page
ÉLÉMENT DE FILTRE (CARBURANT/SÉPARATEUR D'EAU) (PRINCIPAL)	107
ÉLÉMENT DE FILTRE (ENS)-CARBURANT (HUILE DE BOÎTE)	78
ÉLÉMENT DE FILTRE-HYDRAULIQUE (TRANSMISSION)	285
ÉLÉMENT DE RÉCHAUFFEUR (ENS) (240V 1250W)	146
ÉLÉMENT DU RÉCHAUFFEUR D'EAU DES CHEMISES (ENS) (120 V 1250 W)	145
ÉLÉMENT PRINCIPAL (ENS)	92
ÉLÉMENT SECONDAIRE (ENS)	92
EMBOUT (ASS)	593 594
ENGRENAGES DE TRANSFERT ET CARTER (ASS)	288
ENTRAÎNEMENT AUXILIAIRE (ASS)	30
ENTRAÎNEMENT DE CERCLE (ASS)	442
ENTRAÎNEMENT DE CHAÎNE (ASS)	260
ENTRAÎNEMENT DE POMPE (ASS)	446
ENTRAÎNEMENT POUR COURROIE (GYROPHARE)	160
ESSIEU AV (ASS)	344
ESSUIE-GLACE (ASS)	778 780 782 784 786 788
ESSUIE-GLACE (VERSION)	776 777

F

FENÊTRE D'AFFICHAGE - TABLEAU DE BORD (ASS)	736 738
FILTRE A AIR (ASS)	90 92
FILTRE À AIR DE CABINE (ASS)	664
FILTRE À AIR (PANNEAU ARRIÈRE ROPS)	664
FILTRE A CARBURANT (ASS)	106
FILTRE A CARBURANT (ENS)	106
FILTRE A HUILE (ASS)	285
FILTRE À HUILE MOTEUR (ASS)	64
FILTRE A HUILE MOTEUR (ENS)	64
FILTRE (AÉRATION DE LA CABINE)	664
FILTRE DE SÉPARATEUR D'EAU ET DE CARBURANT (ASS)	107
FLEXIBLE D'ÉVACUATION DES VAPEURS	10
FREIN DE MANOEUVRE - COMMANDE (ASS)	392
FREIN DE MANOEUVRE (ASS)	388
FUSIBLE (10A) (CLIGNOTANT/ FEUX DE DÉTRESSE)	182
FUSIBLE (10A) (CLIGNOTANTS)	220
FUSIBLE (10A) (COMMANDE D'AMORTISSEUR DE LAME)	225
FUSIBLE (10A) (CONSOLE DE DIRECTION)	254
FUSIBLE (10A) (CONTRÔLEUR DE LAME)	228
FUSIBLE (10A) (DÉGIVREUR ARRIÈRE)	663
FUSIBLE (10A) (DÉGIVREUR AVANT)	662
FUSIBLE (10A) (DÉVOLTEUR POUR COURANT)	142
FUSIBLE (10A) (DIRECTION AUXILIAIRE)	250
FUSIBLE (10A) (ESSUIE-GLACE)	786
FUSIBLE (10A) (ESSUIE-GLACE INTERMITTENT)	784
FUSIBLE (10A) (FEUX DE CROISEMENT/ DE ROUTE ET CLIGNOTANT)	186
FUSIBLE (10A) (FEUX DE ROUTE/FEUX DE CROISEMENT)	178
FUSIBLE (10A) (GYROPHARE)	147 191 192
FUSIBLE (10A) (LAMPE D'APPOINT)	168
FUSIBLE (10A) (MIROIR CHAUFFÉ)	718
FUSIBLE (10A) (PROJECTEUR AVANT)	172
FUSIBLE (10A) (PROJECTEUR DROIT)	174
FUSIBLE (10A) (PROJECTEURS AVANT)	176
FUSIBLE (15A) (CHAUFFAGE ET CLIMATISATION)	668
FUSIBLE (15A) (CLIMATISEUR)	611 612
FUSIBLE (15A) (ESSUIE-GLACE AVANT SUPÉRIEUR /INFÉRIEUR)	226
FUSIBLE (15A) (RÉCHAUFFEUR)	667
FUSIBLE (20 A) (CLIMATISEUR)	613
FUSIBLE (30A) (CONVERTISSEUR DE PUISSANCE)	141

G

GICLEUR-ÉTHER (ENS)	209
GOULOTTE DE REMPLISSAGE D'HUILE DE TRANSMISSION	284
GRAISSEUR (FILET 1/8-27) (AXE D'ARTICULATION SUPÉRIEUR/INFÉRIEUR)	369
GRAISSEUR (FILET 1/8-27) (BARRE D'ATTELAGE)	590
GRAISSEUR (FILET 1/8-27) (ESSIEU AVANT)	344
GRAISSEUR (FILET 1/8-27) (INCLINAISON DE ROUE)	424
GRAISSEUR (FILET 1/8-27) (TOURILLON)	606
GRAISSEUR (FILETAGE 1/8-27)(45 DEGRÉS) (VÉRIN DE DÉPORT DE CERCLE)	421
GRAISSEUR (LEVAGE DE LAME)	419

INDEX

Désignation	Page
GROUPE DE CONTROLE (SYSTÈME DE SURVEILLANCE CATERPILLAR)	732 734
GROUPE DE ROTATION DE POMPE	492 493
GROUPE D'ORIENTATION	495

H

HUILE MOTEUR - CARTER (ASS)	44

I

INDICATEUR DE COLMATAGE DE FILTRE A AIR	90
INJECTEUR DE CARBURANT (ASS)	108
INJECTEUR D'ÉTHER AU DÉMARRAGE (ASS)	206
INSONORISATION (ASS)	56
INSTRUMENTS (VERSION)	686
INTERRUPTEUR - BOUTON-POUSSOIR (ENS) (MODE CONDUCTEUR)(AFFICHAGE NUMÉRIQUE)	732 734
INTERRUPTEUR À BASCULE (ENS) (ARRÊT DU MOTEUR)	238
INTERRUPTEUR BALANCIER (ENS) (DIRECTION AUXILIAIRE)	250
INTERRUPTEUR BALANCIER (ENS) (FEUX AVANT FEUX ARRIÈRE)	176 178 182 186 220
INTERRUPTEUR BALANCIER (ENS) (PROJECTEUR)	172
INTERRUPTEUR DE DÉMARRAGE (ASS) (CLAVETTE)	252
INTERRUPTEUR DE THERMOSTAT (ENS)	616
INTERRUPTEUR DE THERMOSTAT (ENS) (RÉFRIGÉRANT)	620
INTERRUPTEUR D'ÉCLAIRAGE (ASS)	220
INTERRUPTEUR D'ESSUIE-GLACE (ARRIÈRE)	786
INTERRUPTEUR D'ESSUIE-GLACE (ASS)	223
INTERRUPTEUR D'ESSUIE-GLACE (INTERMITTENT)	784
INTERRUPTEUR ROTATIF (ENS) (CLIGNOTANT DE DIRECTION)	220
INTERRUPTEUR ROTATIF (ENS) (FEUX DE ROUTE/FEUX DE CROISEMENT)	176 178 182 186
INTERRUPTEUR ROTATIF (ENS) (SOUFFLANT)	616
INTERRUPTEUR ROTATIF (ENS) (VITESSE DU VENTILATEUR)	620 676
INTERRUPTEUR ROTATIF (ENS) (24 VOLTS) (ESSUIE-GLACE AVANT SUPÉRIEUR /INFÉRIEUR)	226
INTERRUPTEUR SPHÉRIQUE (ENS) (RAPPORT DE VITESSE)	238
ISOLATION DE CABINE (ASS)	688

J

JAUGE D'HUILE MOTEUR (BAIONNETTE) (ASS)	66
JOINT DE RENIFLARD	58
JOINT DE SUPPORT	58
JOINT DE VILEBREQUIN (ASS)	38 54
JOINT PLAT (BOUCHON DE REMPLISSAGE DE RÉSERVOIR À HUILE HYDRAULIQUE)	498

K

KIT - COUSSIN (DOSSIER)	655
KIT - COUSSIN (DOSSIER DE VINYLE)	656
KIT - VÉSICULE	472
KIT D'ATTACHE DE CEINTURE DE SECURITE	764
KIT D'ATTACHE (SIÈGE)	766
KIT DE BAGUE (DÉMARREUR)	212 216
KIT DE BALAI D'ESSUIE-GLACE	784
KIT DE BALAI D'ESSUIE-GLACE (ARRIÈRE)	784
KIT DE BALAIS (DÉMARREUR)	210 212 216
KIT DE BLOC COULISSANT	750 752 756 757 758
KIT DE BOUGIE (12 BROCHES)	174 176 178 182 186 226 228 230 234 238 239 252

INDEX

Désignation	Page
	254
	362
	364
	718
	732
	734
KIT DE BOUGIE (12 BROCHES) (DÉGIVREUR AVANT/ ARRIÈRE)	168
KIT DE BOUGIE (2 BROCHES)	174
	184
	188
	189
	225
	226
	230
	234
	238
	239
	242
	252
	616
	634
	704
	718
KIT DE BOUGIE (2 BROCHES) (AUXILIAIRE DE DÉMARRAGE À L'ÉTHER)	206
KIT DE BOUGIE (2 BROCHES) (AVERTISSEUR DE RECUL/RETOUR)	246
KIT DE BOUGIE (2 BROCHES) (CONTACTEUR D'ÉCLAIRAGE DE TABLEAU/ KLAXON)	254
KIT DE BOUGIE (2 BROCHES) (CONTACTEUR DES MODES CONDUCTEUR)	734
KIT DE BOUGIE (2 BROCHES) (DÉMARRAGE À L'ÉTHER)	204
KIT DE BOUGIE (2 BROCHES) (GYROPHARE)	192
KIT DE BOUGIE (2 BROCHES) (HAUTE/BASSE)	704
KIT DE BOUGIE (2 BROCHES) (LAMPE D'AILERON CHASSE-NEIGE)	168
	174
	228
KIT DE BOUGIE (2 BROCHES) (MOTEUR)	672
	676
KIT DE BOUGIE (2 BROCHES) (PHARES AVANT À BARRE LUMINEUSE)	176
KIT DE BOUGIE (2 BROCHES) (PROJECTEURS DE TRAVAIL AVEC BARRE LUMINEUSE)	178
	182
KIT DE BOUGIE (2 BROCHES) (RÉCHAUFFEUR DE MOTEUR DE CLIMATISEUR)	621
KIT DE BOUGIE (2 BROCHES) (RELAIS DE DÉMARRAGE)	243
KIT DE BOUGIE (3 BROCHES)	199
	200
	201
	202
	226
	234
	246
KIT DE BOUGIE (3 BROCHES) (CAPTEUR DE LEVIER DE COMMANDE DE TRACTION INTÉGRALE)	254
KIT DE BOUGIE (3 BROCHES) (CLIGNOTANTS À BARRE LUMINEUSE)	176
KIT DE BOUGIE (3 BROCHES) (CONTACTEUR D'ARRÊT)	239
KIT DE BOUGIE (4 BROCHES)	239
	243
	252
	254
	718
KIT DE BOUGIE (4 BROCHES) (CAPTEUR DE VITESSE DE TRANSLATION/ PUISSANCE/ TRANSLATION)	234
KIT DE BOUGIE (4 BROCHES) (CONTACTEUR DE LAMPE D'APPOINT AUXILIAIRE)	174
KIT DE BOUGIE (4 BROCHES) (LAMPE D'APPOINT AUXILIAIRE)	168
KIT DE BOUGIE (4 BROCHES) (LAMPE ET CONTACTEUR D'APPOINT AUXILIAIRE)	228
KIT DE BOUGIE (4 BROCHES) (RELAIS ET SOLÉNOÏDE D'AIDE AU DÉMARRAGE)	243
KIT DE BOUGIE (6 BROCHES)	186
	226
	234
	243
	252
	734
KIT DE BOUGIE (8 BROCHES)	174
	226
	228
	234
	718
KIT DE BOUGIE (8 BROCHES) (ESSUIE-GLACE/ LAVE-GLACE AVANT/ ARRIÈRE)	168
KIT DE BOULONNERIE (DÉMARREUR)	210
KIT DE BOULONNERIE (SIÈGE)	766
KIT DE BRIDE DE FIXATION DE FILTRE A AIR	92
KIT DE BROCHE DE DÉMARREUR	210
KIT DE COUSSIN DE SIEGE	750
	752
KIT DE COUSSINET	681
KIT DE COUSSINET DE VILEBREQUIN	8
KIT DE COUSSINET (DÉMARREUR)	210
KIT DE CULASSE	8
KIT DE FILTRE DE SÉPARATEUR D'EAU ET DE CARBURANT	107
KIT DE GAINE	764

INDEX

Désignation	Page
KIT DE JOINT DE CARTOUCHE	320
KIT DE JOINT DE CARTOUCHE (VERROUILLAGE DE DIFFÉRENTIEL)	308
KIT DE JOINT DE DÉMARREUR	210
KIT DE JOINTS (ÉLECTROVANNE)	585
KIT DE JOINTS (RÉGULATION DE DIRECTION)	486
KIT DE JOINTS (VENTILATEUR HYDRAULIQUE)	587
KIT DE LEVIER (DÉMARREUR)	212
	216
KIT DE MARTEAU HYDRAULIQUE	665
	666
KIT DE PALIER PRINCIPAL	20
KIT DE PANNEAU DU DOSSIER DU SIEGE	750
	752
KIT DE PARE-CHOCS	681
KIT DE PISTON (DIRECTION HYDRAULIQUE)	488
KIT DE PISTON EXCENTRIQUE (DIRECTION HYDRAULIQUE)	488
KIT DE POUSSOIR	680
	681
KIT DE PRISE FEMELLE (12 BROCHES)	137
	174
	176
	178
	182
	186
	226
	228
	234
	243
	246
	248
	252
	254
	362
	364
	718
	732
	734
KIT DE PRISE FEMELLE (12 BROCHES) (CONTACTEUR DE GYROPHARE)	168
KIT DE PRISE FEMELLE (12 BROCHES) (DÉSHYDRATEUR ET AVERTISSEUR DE RECUL)	243
KIT DE PRISE FEMELLE (12 BROCHES) (PROJECTEURS DE TRAVAIL AVEC BARRE LUMINEUSE)	178
	182
KIT DE PRISE FEMELLE (2 BROCHES)	94
	127
	160
	168
	174
	184
	188
	189
	194
	224
	225
	226
	228
	230
	234
	238
	239
	242
	250
	320
	585
	617
	621
	630
	634
	658
	704
	718
	732
KIT DE PRISE FEMELLE (2 BROCHES) (CONVERTISSEUR DE RADIO/ALLUMAGE)	141
KIT DE PRISE FEMELLE (2 BROCHES) (DÉMARRAGE À L'ÉTHER)	206
KIT DE PRISE FEMELLE (2 BROCHES) (ÉLECTROVANNE)	403
KIT DE PRISE FEMELLE (2 BROCHES) (ÉLECTROVANNES DE DÉPORT DE CERCLE)	414
KIT DE PRISE FEMELLE (2 BROCHES) (LAMPE D'AILERON CHASSE-NEIGE)	174
KIT DE PRISE FEMELLE (2 BROCHES) (MANOCONTACT DE CLIMATISEUR/SOLÉNOÏDE D'EMBRAYAGE)	239
KIT DE PRISE FEMELLE (2 BROCHES) (MOTEUR DE RÉCHAUFFEUR)	672
	676
KIT DE PRISE FEMELLE (2 BROCHES) (ORIFICE DE PUISSANCE 12V)	609
	610
KIT DE PRISE FEMELLE (2 BROCHES) (RELAIS PRINCIPAL)	243
KIT DE PRISE FEMELLE (2 BROCHES) (SOUPAPE DE DEMARR. A L'ETHER)	204
KIT DE PRISE FEMELLE (2 BROCHES) (TÉMOINS DU TABLEAU DE BORD)	252
KIT DE PRISE FEMELLE (3 BROCHES)	149
	158

INDEX

Désignation	Page
	159
	188
	189
	198
	225
	226
	230
	234
	238
	246
	248
	250
	254
KIT DE PRISE FEMELLE (3 BROCHES) (CAPTEUR DE PRESSION D'ENTRAÎNEMENT DE VENTILATEUR)	239
KIT DE PRISE FEMELLE (3 BROCHES) (CLIGNOTANT/FEUX DE STATIONNEMENT)	170
	190
KIT DE PRISE FEMELLE (4 BROCHES)	174
	204
	226
	228
	234
	238
	252
	254
	718
KIT DE PRISE FEMELLE (4 BROCHES) (AUXILIAIRE DE DÉMARRAGE À L'ÉTHER)	206
KIT DE PRISE FEMELLE (4 BROCHES) (CONTACTEUR DE GYROPHARE)	192
KIT DE PRISE FEMELLE (4 BROCHES) (DISJONCTEUR DE COMMANDE DE MOTEUR ET RELAIS DE DÉMARRAGE)	243
KIT DE PRISE FEMELLE (4 BROCHES) (LAMPE D'APPOINT AUXILIAIRE)	168
KIT DE PRISE FEMELLE (4 BROCHES) (LAMPES DE BOUCLIER/MIROIR CHAUFFÉ)	168
KIT DE PRISE FEMELLE (4 BROCHES) (VITESSE DE TRANSLATION)	197
KIT DE PRISE FEMELLE (6 BROCHES)	226
	234
	239
	252
	362
	364
	672
	676
	732
	734
	778
KIT DE PRISE FEMELLE (6 BROCHES) (CHAUFFAGE ET CLIMATISATION)	621
KIT DE PRISE FEMELLE (6 BROCHES) (COMPTEUR DE VITESSE ET COMPTE-TOURS)	723
KIT DE PRISE FEMELLE (6 BROCHES) (MODULE QUATRE INSTRUMENTS)	722
KIT DE PRISE FEMELLE (6 BROCHES) (MOTEUR D'ESSUIE-GLACE)	780
KIT DE PRISE FEMELLE (6 BROCHES) (MOTEUR D'ESSUIE-GLACE)	782
KIT DE PRISE FEMELLE (6 BROCHES) (PHARE AVANT)	152
	154
KIT DE PRISE FEMELLE (8 BROCHES)	168
	174
	223
	226
	228
	718
	732
	734
KIT DE PRISE FEMELLE (8 BROCHES) (CONTACTEUR D'ESSUIE-GLACE ARRIÈRE)	784
	786
KIT DE PRISE FEMELLE (8 BROCHES) (CONTACTEURS D'ESSUIE-GLACE AVANT)	226
KIT DE REDRESSEMENT	728
KIT DE REGLAGE	728
KIT DE REGLAGE DE SIEGE - INCLINAISON	728
KIT DE RESSORTS	486
	681
KIT DE RONDELLE (DÉMARREUR)	210
KIT DE ROULEAU	764
KIT DE ROULEAU (SIÈGE)	766
KIT DE SEGMENT STANDARD	8
KIT DE TIGE	728
KIT DE VERIFICATION DU REGULATEUR	398
KIT D'INDICATEUR	681
KIT D'INDICATEUR (SIÈGE)	766
KIT D'ISOLANT (DÉMARREUR)	212
	216

L

LAME (ASS)	595
LAME DE COUPE (ASS)	596
	597
LAMPE - CLIGNOTANT DE DIRECTION (ASS)	158
	159

INDEX

Désignation	Page
LAMPE - CLIGNOTANT DE DIRECTION (ASS) (CLIGNOTANT/FEUX DE STATIONNEMENT)	190
LAMPE - CLIGNOTANT DE DIRECTION (ASS) (DROITE)	170
LAMPE - CLIGNOTANT DE DIRECTION (ASS) (FEUX D'ARRÊT/FEUX ARRIÈRE)	246
LAMPE - CLIGNOTANT DE DIRECTION (ASS) (GAUCHE)	170
LAMPE - FEUX AV (24 VOLTS)	157
LAMPE - FEUX AV (24 VOLTS) (FEUX DE CROISEMENT)	156
LAMPE - FEUX AV (24 VOLTS) (PROJECTEUR)	150
LAMPE - GYROPHARE (ASS)	160
LAMPE - PHARE (ASS)	150
LAMPE-CÔTÉ DROIT (ENS) (STOP/FEU AR/CLIGNOTANT DIRECTION)	248
LAMPE-CÔTÉ GAUCHE (ENS) (STOP/FEU AR/CLIGNOTANT DIRECTION)	248
LAVE-GLACE - VITRE (ASS)	768 770
LENTILLE (ENS) (CLIGNOTANT DE DIRECTION)	152 154
LENTILLE (ENS) (FEUX DE ROUTE/FEUX DE CROISEMENT)	152 154
LENTILLE (ENS) (PHARE AVANT)	157
LENTILLE (ENS) (PHARE AVANT) (FEUX DE CROISEMENT)	170
LENTILLE (ENS) (PHARE AVANT) (FEUX DE ROUTE)	170
LENTILLE (ENS) (PHARE AVANT)(FEUX DE CROISEMENT)	156
LENTILLE (ENS) (PROJECTEUR)	150
LENTILLE ORANGE (CLIGNOTANT DE DIRECTION)	152 154
LENTILLE ORANGE (GYROPHARE)	160
LENTILLE (PLAFONNIER)	149
LEVAGE - LAME (ASS)	598
LITTÉRATURE (ASS)	712 713
LOGICIEL-MONITEUR (ASS)	144

M

Désignation	Page
MANOCONTACT (ENS) (DIRECTION AUXILIAIRE)	250
MANOCONTACT (ENS) (FEU D'ARRÊT)	234
MANOCONTACT (ENS) (HAUTE/BASSE)	94
MANOMÈTRE D'AIR (ENS) (DROIT)	732
MANOMÈTRE D'AIR (ENS) (FREIN - DROITE)	734
MANOMÈTRE D'AIR (ENS) (FREIN GAUCHE)	734
MANOMÈTRE D'AIR (ENS) (GAUCHE)	732
MARCHEPIED (ASS)	377
MARTEAU ET MONTAGE (ASS)	665 666
MODULE - QUATRE INSTRUMENTS (ASS)	722
MODULE D'INDICATEUR DE VITESSE ET COMPTE-TOURS (ASS)	723
MONTAGE - GYROPHARE (ASS)	147
MONTAGE D'AILERON CHASSE-NEIGE (ASS)	604
MONTAGE DE CULBUTERIE (ASS)	43
MONTAGE DE MOTEUR (ASS)	42
MONTAGE DE RADIO (ASS)	684
MONTAGE DE RADIO (VERSION)	683
MONTAGE DE RIPPER (ASS)	602
MONTAGE DU TOIT ROPS (ASS)	724 726
MOTEUR À ENGRENAGES (ASS)	478
MOTEUR ELECTRIQUE (ASS)	194 195
MOTEUR ELECTRIQUE (ASS) (CLIMATISEUR)	634
MOTEUR ELECTRIQUE (ASS) (27 VOLTS)	617
MOTEUR ELECTRIQUE (ASS) (27 VOLTS) (CLIMATISEUR)	621
MOTEUR ELECTRIQUE (ASS) (27 VOLTS) (RÉCHAUFFEUR)	672
MOTEUR ELECTRIQUE (ASS) (27 VOLTS) (RÉCHAUFFEUR)(SERVICE LÉGER)	676
MOTEUR ELECTRIQUE DE POMPE HYDRAULIQUE (ASS)	477
MOTEUR ET VENTILATEUR (ASS)	74
MOTEUR HYDRAULIQUE (ASS)	480
MOTEUR (VERSION)	7

O

Désignation	Page
OEILLETONS DE LEVAGE MOTEUR (ASS)	41

P

Désignation	Page
PANNEAU D'INSONORISATION (ASS)	46
PANNEAU D'INSONORISATION (ASS)	371
PARE-POUSSIERE	50 64 78 82 458 462 534
PARE-POUSSIERE (HUILE HYDRAULIQUE)	473
PARE-POUSSIERE (VERROUILLAGE DE DIFFÉRENTIEL)	266
PARE-SOLEIL (ASS)	747
PHARE AV (ASS)	154

INDEX

Désignation	Page
	156
PHARE AV (ASS)	152
	157
PHARE AV (ASS) (24 VOLTS) (FEUX DE CROISEMENT)	176
	182
PIGNONNERIE AV (ASS)	34
PISTON ET BIELLE (ASS)	47
PLAFONNIER (ASS)	149
PLAQUE - AVERTISSEMENT (FONCTIONNEMENT DE LA MACHINE)	791
PLAQUE-CHASSIS PRINCIPAL (NE PAS PERCER NI SOUDER)	791
PLAQUE DE POUSSÉE (ASS)	592
PLAQUE D'INSTRUCTIONS (VIDANGE ET REMPLISSAGE DU CARTER MOTEUR)	68
PLAQUES SIGNALETIQUES ET AUTOCOLLANTS (ASS)	789
	790
	792
	793
	794
	795
	796
	797
POMPE - ENTRAÎNEMENT ÉLECTRIQUE (ASS)	485
POMPE A EAU (ASS)	85
	86
POMPE A ENGRENAGES (ASS)	304
POMPE A HUILE MOTEUR (ASS)	69
	70
POMPE A PISTONS (ASS)	488
	490
POMPE D'ALIMENTATION ET MONTAGE (ASS)	116
POMPE D'AMORÇAGE DE CARBURANT (ASS)	118
POMPE DE DIRECTION AUXILIAIRE ET MONTAGE (ASS)	484
POMPE DE REGULARISATION DE DEBIT (ASS)	486
POMPE D'INJECTION DE CARBURANT (ASS)	117
POMPE ÉLECTRO-HYDRAULIQUE	477
POMPE ET MONTAGE - PISTON (ASS)	482
PORTE (ASS)	640
	642
PORTIÈRE DE CABINE (ASS)	644
	646
	648
	650
POUSSOIR DE SOUPAPE (ASS)	40
PRISE DE BATTERIE AUXILIAIRE (ASS)	196
PRISE DE COURANT (ENS) (12 VOLTS)	609
	610
PROTECTION DE PLATE-FORME (ASS)	362
	364
PROTEGE-RADIATEUR ET SUPPORT (ASS)	374
PROTÈGE-RADIATEUR ET SUPPORT (ASS)	358

R

Désignation	Page
RACCORD EN T (ASS)	448
RADIATEUR (ASS)	87
RALLONGE DE DÉPORT DE CERCLE (ASS)	447
RALLONGE DU DOSSIER DE SIEGE	655
	656
RÉCEPTEUR-DÉSHYDRATEUR (ASS) (RÉFRIGÉRANT)	94
RÉDUCTEURS (ASS)	286
REFROIDISSEMENT (VERSION)	71
	72
REFROIDISSEUR D'ADMISSION ET MONTAGE (ASS)	88
REFROIDISSEUR D'HUILE DE BOÎTE (ASS)	274
REFROIDISSEUR D'HUILE HYDRAULIQUE ET MONTAGE (ASS)	417
RENIFLARD (BOÎTE DE VITESSES)	289
RENIFLARD (ENS) (AIR)	306
RENIFLARD (ENS) (MOTEUR)	58
RÉSERVOIR DE CARBURANT (ASS)	120
	122
	124
RÉSERVOIR HYDRAULIQUE (ASS)	498
RÉSERVOIR HYDRAULIQUE (ASS)	496
RÉSERVOIR PNEUMATIQUE (ASS)	398
RÉTROVISEUR (ASS)	715
	716
	718
	720
	721
RIPPER (ASS)	606
RIPPER (VERSION)	605
ROBINET DE BATTERIE (ASS)	218
ROBINET DE BATTERIE (ASS) (BATTERIE)	243
ROBINET-PRÉLÈVEMENT D'ÉCHANTILLON DE LIQUIDE (ASS) (HUILE DE BOÎTE)	78
ROBINET-PRÉLÈVEMENT D'ÉCHANTILLON DE LIQUIDE (ASS) (HUILE HYDRAULIQUE)	473
ROPS OUVERTE (VERSION)	742
ROTATION DE LA ROUE DU VENTILATEUR SOUFFLANT (ISSUE DE SECOURS/RETIRER VITRE)	665
	666
ROTATION DE LA ROUE DU VENTILATEUR SOUFFLANT (NE PAS PERCER/SOUDER LE CADRE ROPS)	743
	745
	746

INDEX

Désignation	Page
ROTATION DE LA ROUE DU VENTILATEUR SOUFFLANT (RÉGLAGE DU SIÈGE)	764
	766
ROUE - GROUPE DE MONTAGE	296
ROUE ET PNEU (VERSION)	324
	325
	326
	327
	328
	329
	330
	331
	332
	333
	334
	335
	336
	337
	338
	339
	340
ROUE (VERSION)	341
	342

S

SIEGE - COUVERCLE INFERIEUR (ASS)	728
SIÈGE (ASS)	750
	752
SIÈGE AVEC SUSPENSION (ASS)	754
	755
	756
	766
SIÈGE AVEC SUSPENSION (ASS)	757
	758
	759
	760
	764
SILENCIEUX (ASS)	100
SOLÉNOÏDE (ENS) (24 VOLTS) (DÉMARREUR)	210
SONDE - CIRCUIT DE CARBURANT	198
SONDE (ENS)-POSITION (ARTICULATION)	238
SOUPAGE - SOLÉNOIDE ET COLLECTEUR	586
	587
SOUPAPE - CLIMATISEUR (ENS) (COTÉ BAS)	94
	704
SOUPAPE - CLIMATISEUR (ENS) (COTÉ ÉLEVÉ)	94
SOUPAPE - SOLÉNOÏDE (ASS)	320
	403
SOUPAPE - SOLÉNOÏDE (ASS)	585
SOUPAPE - SOLÉNOÏDE (ASS) (AMORTISSEUR DE LAME)	586
SOUPAPE DE COMBINAISON (ASS)	534
SOUPAPE DE DERIVATION-POMPE	60
SOUPAPE DE DESSERRAGE RAPIDE (ASS)	402
SOUPAPE DE VIDANGE (CIRCUIT DE REFROIDISSEMENT)	358
	374
SOUPAPE DE VIDANGE (LIQUIDE DE REFROIDISSEMENT)	82
SOUPAPE-DÉMARRAGE À L'ÉTHER (ENS)	204
SOUPAPE ET MONTAGE DE VERROUILLAGE DE DIF. (ASS)	308
SOUPAPE ET TIMONERIE (ASS)	500
	502
	504
	506
	510
	512
	514
	518
	520
SOUPAPE PILOTE (ASS)	310
SOUPAPE RÉGULATRICE DE PRESSION ET DÉBIT	572
	574
SOUPAPE SELECTRICE ET REGULATRICE DE PRESSION	314
	316
	318
SUPPORT DE FILTRE À HUILE (ASS)	60
SUPPORT DE MOTEUR (ASS)	55
SUPPORT DE SIÈGE (ASS)	762
SUPPORT DU RESERVOIR DE CARBURANT (ASS)	379
SUSPENSION DE SIEGE - CARTER (ASS)	680

T

TABLEAU DE BORD (ASS)	730
	731
	732
	734
TAMIS D'ASPIRATION (BOÎTE DE VITESSES)	289
TANDEM ET CARTER (ASS)	306
TAPIS DE PLANCHER (CABINE)	688
TENDEUR DE COURROIE (ASS)	12
THERMOSTAT ET BOITIER (ASS)	76
THERMOSTAT-TEMPÉRATURE D'EAU	76
TOIT ROPS - OUVERT (ASS)	746
TOIT ROPS FERME (VERSION)	740
	741
TRANSFORMATION ELECTRIQUE (ASS)	141
TRANSFORMATION ELECTRIQUE (ASS)	140
	142
TRANSFORMATION ELECTRIQUE (ASS) (24 VOLTS À 12 VOLTS)	142

INDEX

Désignation	Page
TRANSFORMATION ELECTRIQUE (ASS) (5/7,5A, 24 À 12VOLTS)	140
TRANSFORMATION ÉLECTRIQUE (VERSION)	138
	139
TURBOCOMPRESSEUR - CARTOUCHE (ASS)	103
TURBOCOMPRESSEUR (ASS)	102
	103
VANNE PILOTE (ASS)	584
VENTILATEUR DE CABINE (ASS)	658
VENTILATEUR DE CABINE (ASS)	660
	662
	663
VÉRIN D'ARTICULATION (ASS)	425
VÉRIN D'ARTICULATION ET MONTAGE (ASS)	418
VÉRIN DE DÉPORT DE CERCLE (ASS)	428
VÉRIN DE DÉPORT DE CERCLE ET MONTAGE (ASS)	421
VÉRIN DE DÉPORT DE LAME (ASS)	431
VÉRIN DE DÉPORT DE LAME (ASS)	422
VERIN DE DIRECTION (ASS)	432
	434
VERIN DE DIRECTION ET MONTAGE (ASS)	423
VÉRIN DE LEVAGE DE LAME (ASS)	426
VERIN DE LEVAGE DE RIPPER (ASS)	430
VÉRIN DE RELEVAGE DE LAME ET MONTAGE (ASS)	419
VÉRIN D'INCIDENCE DE LAME (ASS)	427
VÉRIN D'INCLINAISON DE LAME ET MONTAGE (ASS)	420
VÉRIN D'INCLINAISON DE ROUE (ASS)	436
VÉRIN D'INCLINAISON DE ROUE ET MONTAGE (ASS)	424
VERROUILLAGE DE COMMANDE MANUELLE HYDRAUL. (ASS)	476
VERROUILLAGE DE DÉPORT DE CERCLE (ASS)	475
VERSION DE SUPPORT DE CHÂSSIS ARRIÈRE	378
VERSION DE TRANSFORMATION - HOMOLOGATION	1
	2
VERSION DE TRANSFORMATION - SANS ROPS	639
VERSION NEIGE - NIVELEUSE	6
VILEBREQUIN (ASS)	20
VISIÈRE - GROUPE AUXILIAIRE	609
	610
VITRE (ASS)	771
	772
	773
	774
	775
VOLANT MOTEUR (ASS)	33
VOLET - CABINE (ASS)	714
VUE DU MODÈLE	4

V

INDICE

Nombre	Página

A

ACCESORIOS - IMPULSOR DE (GR) 30
ACCESORIOS DE LA CABINA (GR) 609, 610
ACONDICIONADOR DE AIRE (CONFIG) 613
ACONDICIONADOR DE AIRE (CONFIG) 614
ACONDICIONADOR DE AIRE (GR) 616, 620
ACONDICIONADOR DE AIRE Y MONTAJE (GR) 612
ACONDICIONADOR DE AIRE Y MONTAJE (GR) 611
ACUMULADOR DE AMORTIGUACIÓN DE LA HOJA (CONFIG) 405
ACUMULADOR HIDRAULICO Y MONTAJE (GR) 404
ADAPTADOR DE LA TRANSMISIÓN (GR) 258
AGUA DE LAS CAMISAS - CALENTADOR DEL (GR) 145, 146
AIRE - TUBERÍAS DE (GR) 96, 97
AIRE - TUBERÍAS DE (GR) 94
ALARMA (GR) 127
ALFOMBRILLA DEL PISO (CABINA) 688
ÁRBOL DE LEVAS (GR) 14
ARRANQUE - INTERRUPTOR DE (GR) (LLAVE) 252
ARTICULACIÓN DE CILINDRO (GR) 425
ASIENTO CON SUSPENSIÓN (GR) 764, 766
ASIENTO (GR) 750, 752
ATOMIZADOR DE ETER (CONJ) 209
AUXILIAR DE ARRANQUE CON ÉTER (GR) 206, 208, 209
AUXILIAR DE ARRANQUE CON ÉTER (GR) 204

B

BALANCÍN (GR) 52
BALIZA DE ADVERTENCIA (GR) - INSTALACIÓN 147
BANCADA 5 (GR) 526, 527, 528, 529
BARRA DE TIRO (GR) 590
BASTIDOR DELANTERO (GR) 356
BATERÍA (GR) 131
BATERÍA (GR) 132
BATERÍA (LIBRE DE MANTENIMIENTO)(12 VOLTIOS) 132
BATERÍA (SERVICIO PESADO, 12 VOLTIOS) . . . 131
BLOQUE DE EMPALME (CONJ) 148
BLOQUE DE EMPALME (GR) 148
BLOQUE DESLIZANTE-JUEGO 750, 752, 756, 757, 758
BLOQUE MOTOR (CONJ) 22, 23
BLOQUE MOTOR (GR) 24
BOMBA - TUBERÍAS DE (GR) 462
BOMBA DE ACEITE DEL MOTOR (GR) 69, 70
BOMBA DE AGUA (GR) 85, 86
BOMBA DE CEBADO DE COMBUSTIBLE (GR) 118
BOMBA DE ENGRANAJES (GR) 304
BOMBA DE INYECCIÓN DE COMBUSTIBLE (GR) 117
BOMBA DE PISTONES (GR) 488, 490
BOMBA DE TRANSFERENCIA DE COMBUSTIBLE Y MONTAJE (GR) 116
BOMBA HIDRÁULICA ELÉCTRICA 477
BOMBA Y MONTAJE DE LA DIRECCIÓN SECUNDARIA (GR) 484
BOMBA Y MONTAJE DEL PISTÓN (GR) 482

C

CABINA ROPS CERRADA (GR) 744, 745
CABINA ROPS CERRADA (GR) 743
CABLES DE INYECTOR (GR) 257
CABLES DE LA CABINA (GR) 228
CABLES DE LA CABINA (GR) 226
CABLES DE LA CONSOLA DE CAMBIOS (GR) 252
CABLES DE LA CONSOLA DE DIRECCIÓN (GR) 254
CABLES DE LA DIRECCIÓN SECUNDARIA 250
CABLES DEL MOTOR (GR) 230
CABLES DELANTEROS (GR) 234
CABLES POSTERIORES (GR) 238, 242, 246, 248
CADENA DE IMPULSIÓN (GR) 260
CAJA DE HERRAMIENTAS (GR) 798
CAJA DE LA SUSPENSIÓN DEL ASIENTO (GR) 680
CAJA DE LA TRANSMISIÓN (GR) 259
CAJA DELANTERA (GR) 38

INDICE

Nombre	Página
CAJA Y BASTIDOR (GR)	348
CAJA Y TRANSFERENCIA DEL ENGRANAJE (GR)	288
CALCOMANÍA DE ADVERTENCIA (ASIENTO AJUSTABLE)	764 766
CALCOMANÍA DE ADVERTENCIA (NO TALADRE/SUELDE ROPS)	743 745 746
CALCOMANÍA DE ADVERTENCIA (SALIDA ALTERNATIVA/QUITE VENTANA)	665 666
CALCOMANÍA DE IDENTIFICACIÓN (FUSIBLE) (LUZ ALTA/BAJA)	178
CALCOMANÍA DE IDENTIFICACIÓN (NUMERO DE GRUPO Y SECUENCIA)	616 634
CALCOMANÍAS Y PLACAS DE IDENTIFICACIÓN (GR)	789 790 792 793 794 795 796 797
CALEFACCIÓN DE LA CABINA (CONFIG)	669 670
CALEFACCIÓN DE LA CABINA (GR)	672 676
CALEFACCIÓN Y MONTAJE DE LA CABINA (GR)	667
CALEFACCIÓN Y MONTAJE DE LA CABINA (GR)	668
CAMBIO RÁPIDO DE ACEITE (GR)	68
CÁNCAMOS DE LEVANTAMIENTO DEL MOTOR (GR)	41
CANDADO (GR)	639 798
CANDADO (GR) (TANQUE HIDRÁULICO)	496
CANTONERA (GR)	593 594
CARGA - ALTERNADOR DE (GR)	130
CARGA - ALTERNADOR DE (GR)	128
CÁRTER - COLECTOR DEL (GR)	44
CENICERO	690 694
CIGÜEÑAL (GR)	20
CILINDRO DE ARTICULACIÓN Y MONTAJE (GR)	418
CILINDRO DE DESPLAZAMIENTO DEL CÍRCULO (GR)	428
CILINDRO DE DESPLAZAMIENTO DEL CÍRCULO Y MONTAJE (GR)	421
CILINDRO DE DESPLAZAMIENTO LATERAL (GR)	431
CILINDRO DE DESPLAZAMIENTO LATERAL Y MONTAJE (GR)	422
CILINDRO DE DIRECCIÓN (GR)	432 434
CILINDRO DE DIRECCIÓN Y MONTAJE (GR)	423
CILINDRO DE ÉTER (CONJ)	204 206
CILINDRO DE INCLINACIÓN DE LA HOJA (GR)	427
CILINDRO DE INCLINACIÓN DE LAS RUEDAS (GR)	436
CILINDRO DE INCLINACIÓN DE RUEDA Y MONTAJE (GR)	424
CILINDRO DE LA PUNTA DE LA HOJA Y MONTAJE (GR)	420
CILINDRO DE LEVANTAMIENTO DE HOJA Y MONTAJE (GR)	419
CILINDRO DE LEVANTAMIENTO DE LA HOJA (GR)	426
CILINDRO DE LEVANTAMIENTO DEL DESGARRADOR (GR)	430
CINTURÓN DE SEGURIDAD (GR)	748
CINTURÓN DE SEGURIDAD (GR) (RETRACTIL)	756 757 759
CÍRCULO (GR)	588
COLADOR (LLENADOR DE ACEITE HIDRAULICO)	498
COMBUSTIBLE - TANQUE DE (GR)	120 122 124
COMPARTIMIENTO DEL MOTOR (GR)	352
COMPRESOR DE AIRE (GR)	8 10
COMPRESOR DE REFRIGERANTE (GR)	626 628 630 631
CONDENSADOR DE REFRIGERANTE (GR)	634
CONDENSADOR DEL REFRIGERANTE Y MONTAJE (GR)	632
CONDUCTO (GR)	654
CONDUCTO Y CONTROL (GR)	652 653
CONEXIÓN DE ENGRASE (HOJA DE LEVANTAMIENTO)	419
CONEXIÓN DE ENGRASE (ROSCA DE 1/8-27) (BARRA DE TIRO)	590
CONEXIÓN DE ENGRASE (ROSCA DE 1/8-27) (EJE DELANTERO)	344
CONEXIÓN DE ENGRASE (ROSCA DE 1/8-27) (INCLINACION DE RUEDA)	424

INDICE

Nombre	Página
CONEXIÓN DE ENGRASE (ROSCA DE 1/8-27) (MUÑON)	606
CONEXIÓN DE ENGRASE (ROSCA DE 1/8-27) (PASADOR DE ARTICULACION SUPERIOR/INFERIOR)	369
CONEXIÓN DE ENGRASE (ROSCA 1/8-27)(45 GRADO) (DESPLAZADOR DEL CILINDRO)	421
CONFIGURACIÓN DE ENFRIAMIENTO	71
	72
CONFIGURACIÓN DE MOTORES	7
CONFIGURACIÓN DE SOPORTE DE CHASIS TRASERO	378
CONFIGURACIÓN DE TRANSFORMACIÓN PARA CERTIFICACIÓN	1
	2
CONFIGURACIÓN GENERAL	4
CONJUNTO DE ELEMENTO DE CALEFACCION (240V 1250W)	146
CONJUNTO DE MODIFICACIÓN (SIN ROPS)	639
CONJUNTO DE VÁLVULA DEL ACONDICIONADOR DE AIRE (LADO ALTO)	94
CONJUNTO DE VÁLVULA DEL ACONDICIONADOR DE AIRE (LADO BAJO)	94
CONJUNTO DE VÁLVULA DEL ACONDICIONADOR DE AIRE (LADO BAJO)	704
CONSOLA DEL OPERADOR (GR)	636
CONTROL DE AIRE-VÁLVULA	400
	401
CONTROL DE DIRECCIÓN (GR)	416
CONTROL DE LA DIRECCION SECUNDARIA (GR)	137
CONTROL DE LA TRANSMISIÓN (GR)	268
CONTROL DE MONITOR (GR) (SISTEMA MONITOR CATERPILLAR)	732
	734
CONTROL DE REGULADOR (GR)	104
CONTROL DE TRABA DEL DESPLAZADOR DEL CÍRCULO (GR)	414
CONTROL DE TRABA DEL DIFERENCIAL (GR)	266
CONTROL DEL EMBRAGUE (GR)	262
CONTROL DEL FRENO DE ESTACIONAMIENTO	390
CONTROL ELECTRÓNICO DEL MOTOR (GR)	136
CONTROL ELECTRÓNICO DEL MOTOR Y MONTAJE	135
CONTROL HIDRÁULICO (CONFIG)	407
	408
	409
	410
	411
	412
	413
CONTROL HIDRÁULICO DE LA TRANSMISIÓN (GR)	272
CONVERTIDOR ELÉCTRICO (CONFIG)	138
	139
CONVERTIDOR ELÉCTRICO (GR)	141
CONVERTIDOR ELÉCTRICO (GR)	140
	142
CONVERTIDOR ELÉCTRICO (GR) (24 VOLTIOS A 12 VOLTIOS)	142
CONVERTIDOR ELÉCTRICO (GR) (5/7.5 AMPERES, 24 A 12 VOLTIOS)	140
CORREA ACOSTIALLADA (AIRE ACONDICIONADO)	614
CRISTAL (CÚPULA)	149
CUBIERTA INFERIOR DEL ASIENTO DEL OPERADOR (GR)	728
CUBIERTA PROTECTORA (GR)	350
CUCHILLA (GR)	596
	597
CULATA DE CILINDROS - TORNILLERÍA DE LA (GR)	32
CULATA DE CILINDROS (CONJ)	26
CULATA DE CILINDROS (GR)	28
	29

D

DESGARRADOR (CONFIG)	605
DESGARRADOR (GR)	606
DESHIDRATADOR (GR)	380
	382
	384
	386
DESTELLADOR ELECTRONICO (CONJ) (12/24 VOLTIOS) (LUZ DE GIRO/PELIGRO)	178
	182
DESTELLADOR ELECTRONICO (CONJ) (12/24 VOLTIOS) (SEÑAL DE GIROS Y PELIGROS)	186
DETECTOR DE POSICIÓN (SISTEMA DE COMBUST.) (GR)	198
DIENTE DE ESCARIFICADOR (GR)	608
DIFERENCIAL (GR)	282
DIFERENCIAL Y CORONA (GR)	278
DIRECCIÓN SECUNDARIA (CONFIG)	494
DISYUNTOR (CONJ) (15 A) (BARRA DE LUCES BAJAS DELANTERAS)	178
DISYUNTOR (CONJ) (15 A) (BARRA DE LUCES DE TRABAJO)	133
DISYUNTOR (CONJ) (15 A) (CONTROL DEL MOTOR)	243
DISYUNTOR (CONJ) (15 A) (FAROS)	133

INDICE

Nombre	Página
	134
DISYUNTOR (CONJ) (80 AMP) (ALTERNADOR)	242
DISYUNTOR (CONJ) (80 AMP) (PRINCIPAL)	242
DISYUNTOR DE CIRCUITO (GR)	133
DISYUNTOR DE CIRCUITO (GR)	134
DISYUNTOR (GR)	218
DISYUNTOR (GR) (BATERÍA)	243
DOSIFICACIÓN - BOMBA DE (GR)	486

E

EJE DELANTERO (GR)	344
ELECTRONICA DE MONITOR (GR)	144
ELEMENTO DE FILTRO DE COMBUSTIBLE (CONJ) (ACEITE DE LA TRANSMISIÓN)	78
ELEMENTO DE FILTRO HIDRÁULICO (TREN DE FUERZA)	285
ELEMENTO DE FILTRO (SEPARADOR DE COMBUSTIBLE/AGUA) (PRIMARIO)	107
ELEMENTO DEL CALENTADOR DEL AGUA DE LAS CAMISAS (120VOLTIOS 1250VATIOS)	145
ELEMENTO PRIMARIO (CONJ)	92
ELEMENTO SECUNDARIO (CONJ)	92
EMISOR DE POSICION (CONJ) (ARTICULACIÓN)	238
EMPAQUETADURA DE BASE	58
EMPAQUETADURA-RESPIRADERO	58
EMPAQUETADURA (TAPÓN DE LLENADO DEL TANQUE DE ACEITE HIDRÁULICO)	498
ENCENDEDOR (CONJ) (CIGARRO)(24 VOLTIOS)	252
ENCHUFE DE ARRANQUE AUXILIAR (GR)	196
ENFRIADOR DE ACEITE DE LA TRANSMISIÓN (GR)	274
ENFRIADOR DE ACEITE HIDRÁULICO Y MONTAJE (GR)	417
ENGANCHE ARTICULADO (GR)	366
ENGANCHE DE REMOLQUE (GR)	368
ENGRANAJE DELANTERO (GR)	34
ESTRIBO DEL OPERADOR (GR)	377
ESTRUCTURA ROPS ABIERTA	742
ESTRUCTURA ROPS ABIERTA (GR)	746
EXPULSOR DE POLVO (GR)	93
EXTENSIÓN DEL DESPLAZAMIENTO DEL CÍRCULO (GR)	447
EXTENSIÓN DEL RESPALDO (GR)	655
EXTENSIÓN DEL RESPALDO (GR)	656

F

FILTRO (AIRE DE LA CABINA)	664
FILTRO DE ACEITE - BASE DEL (GR)	60
FILTRO DE ACEITE DEL MOTOR (CONJ)	64
FILTRO DE ACEITE DEL MOTOR (GR)	64
FILTRO DE ACEITE (GR)	285
FILTRO DE AIRE DE LA CABINA (GR)	664
FILTRO DE AIRE (GR)	90 92
FILTRO DE AIRE (ROPS DEL TABLERO TRASERO)	664
FILTRO DE COMBUSTIBLE (CONJ)	106
FILTRO DE COMBUSTIBLE (GR)	106
FILTRO DE COMBUSTIBLE Y SEPARADOR DE AGUA (GR)	107
FILTRO MAGNÉTICO (TRANSMISION)	289
FRENO DE SERVICIO - CONTROL (GR)	392
FRENO DE SERVICIO (GR)	388
FUSIBLE (10 A) (BALIZA GIRATORIA DE ADVERTENCIA)	147 191 192
FUSIBLE (10 A) (CONSOLA DE DIRECCIÓN)	254
FUSIBLE (10 A) (CONTROL DE HOJA AMORTIGUADORA)	225
FUSIBLE (10 A) (CONTROLADOR PARA LA HOJA)	228
FUSIBLE (10 A) (DESCONGELADOR DELANTERO)	662
FUSIBLE (10 A) (DESCONGELADOR TRASERO)	663
FUSIBLE (10 A) (DIRECCIÓN SECUNDARIA)	250
FUSIBLE (10 A) (LAMPARA DE RETROCESO)	168
FUSIBLE (10 A) (LIMPIADOR)	786
FUSIBLE (10 A) (LIMPIAPARABRISAS INTERMITENTES)	784
FUSIBLE (10 A) (LUCES DE TRABAJO DELANTERAS)	176
FUSIBLE (10 A) (LUZ ALTA/BAJA)	178
FUSIBLE (10 A) (LUZ ALTA/BAJA Y SEÑAL)	186
FUSIBLE (10 A) (LUZ DE GIRO/PELIGRO)	182
FUSIBLE (10 A) (REFLECTORES DEL LADO DERECHO)	174
FUSIBLE (10 A) (REFLECTORES DELANTEROS)	172
FUSIBLE (10 A) (RETROVISOR DELANTERO)	718
FUSIBLE (10 A) (SEÑALES DE GIRO)	220
FUSIBLE (10 A) (TRANSFORMADOR DE CORRIENTE)	142
FUSIBLE (15 A) (ACONDICIONADOR DE AIRE Y CALEFACCIÓN)	668
FUSIBLE (15 A) (AIRE ACONDICIONADO)	611 612
FUSIBLE (15 A) (CALEFACTOR)	667
FUSIBLE (15 A) (ESCOBILLAS FRONTALES SUPERIOR/INFERIOR)	226
FUSIBLE (20 A) (A/A)	613

INDICE

Nombre	Página
FUSIBLE (30 A) (TRANSFORMADOR DE CORRIENTE)	141

G

Nombre	Página
GRUPO DE ACUMULADOR DE AMORTIGUACIÓN DE LA HOJA	406
GRUPO DE AISLAMIENTO DE LA CABINA	688
GRUPO DE CABLES, HOJA AMORTIGUADORA	225
GRUPO DE CODO	448
GRUPO DE CONEXION	472
GRUPO DE MONTAJE DE ALA PARA NIEVE	604
GRUPO DE POSTENFRIAMIENTO Y MONTAJE	88
GRUPO DE SOPORTE DEL RESPALDO	727
GRUPO DE T	448
GRUPO DE 4 VÁLVULAS HIDRÁULICAS	522 523 524 525
GRUPO GIRATORIO DE BOMBA	492 493

H

Nombre	Página
HOJA DE LIMPIAPARABRISAS (CONJ) (DELANTERO DE ALTO PERFIL)	782
HOJA DE LIMPIAPARABRISAS (CONJ) (DELANTERO DE BAJO PERFIL)	780
HOJA DE LIMPIAPARABRISAS (CONJ) (RESPIRADERO INFERIOR DELANTERO)	771
HOJA DE LIMPIAPARABRISAS (CONJ) (TRASERO DE ALTO PARFIL)	786
HOJA DE LIMPIAPARABRISAS (CONJ) (TRSERO DE BAJO PERFIL)	784
HOJA (GR)	595

I

Nombre	Página
INCLUYE ROPS (CONFIG)	740 741
INDICADOR DE PRESIÓN DE AIRE (CONJ) (DERECHA)	732
INDICADOR DE PRESIÓN DE AIRE (CONJ) (FRENO DERECHO)	734
INDICADOR DE PRESIÓN DE AIRE (CONJ) (FRENOS DE LA PARTE IZQUIERDA)	734
INDICADOR DE PRESIÓN DE AIRE (CONJ) (IZQUIERDA)	732
INDICADOR DE SERVICIO DEL FILTRO DE AIRE	90
INDICADOR DEL NIVEL DE ACEITE (VARILLA) (GR)	66
INSONORIZADOR (GR)	56
INSTALACIÓN DE RADIO (CONFIG)	683
INSTALACIÓN DE RADIO (GR)	684
INSTRUMENTOS (CONFIG)	686
INTERRUPTOR (CONJ) (ACELERACIÓN SOSTENIDA AJUSTE/REANUDAR)	252
INTERRUPTOR (CONJ) (ACELERACIÓN SOSTENIDA AUTOMÁTICA/MANUAL)	252
INTERRUPTOR (CONJ) (ARRANQUE CON ÉTER)	254
INTERRUPTOR (CONJ) (AUXILIAR DE ARRANQUE CON ÉTER)	209
INTERRUPTOR (CONJ) (BALIZA GIRATORIA DE ADVERTENCIA)	147 191 192
INTERRUPTOR (CONJ) (CONTROL DE HOJA AMORTIGUADORA)	225
INTERRUPTOR (CONJ) (ENCENDIDO/APAGADO) (DESCONGELADOR DELANTERO)	662
INTERRUPTOR (CONJ) (ENCENDIDO/APAGADO) (DESCONGELADOR TRASERO)	663
INTERRUPTOR (CONJ) (LUCES DEL VERTEDERO)	228
INTERRUPTOR (CONJ) (LUZ AUXILIAR DE RETROCESO)	168
INTERRUPTOR (CONJ) (LUZ BAJA DE BARRA DE LUCES)	179 182
INTERRUPTOR (CONJ) (LUZ DE COLA)	254
INTERRUPTOR (CONJ) (REDUCTOR DE LUCES DEL TABLERO)	254
INTERRUPTOR (CONJ) (REFLECTORES DEL LADO DERECHO)	174
INTERRUPTOR (CONJ) (RETROVISOR DELANTERO)	718
INTERRUPTOR (CONJ) (TRABA DE DIFERENCIAL)	254
INTERRUPTOR DE BOLA (CONJ) (GAMA DE ENGRANAJE)	238
INTERRUPTOR DE LÍMITE (CONJ) (PEDAL, FRENO/MOVIMIENTO ULTRALENTO)	254
INTERRUPTOR DE LUZ (GR)	220
INTERRUPTOR DE PRESIÓN (CONJ) (ALTO/BAJO)	94
INTERRUPTOR DE PRESIÓN (CONJ) (DIRECCIÓN SECUNDARIA)	250
INTERRUPTOR DE PRESIÓN (CONJ) (LUZ DE PARADA)	234
INTERRUPTOR DE SEÑAL DE GIRO Y ADVERTENCIA (CONJ)	182
INTERRUPTOR DE SEÑAL DE GIRO Y ADVERTENCIA (CONJ)	176 178

INDICE

Nombre	Página
	186
	220
INTERRUPTOR DE VOLQUETE (CONJ) (DIRECCIÓN SECUNDARIA)	250
INTERRUPTOR DE VOLQUETE (CONJ) (FARO DELANTERO/COLA)	176
	178
	182
	186
	220
INTERRUPTOR DE VOLQUETE (CONJ) (PARADA DEL MOTOR)	238
INTERRUPTOR DE VOLQUETE (CONJ) (REFLECTOR)	172
INTERRUPTOR DEL LIMPIADOR (GR)	223
INTERRUPTOR DEL LIMPIAPARABRISAS (CONJ) (INTERMITENTE)	784
INTERRUPTOR DEL LIMPIAPARABRISAS (CONJ) (PARTE TRASERA)	786
INTERRUPTOR DEL TERMOSTATO (CONJ)	616
INTERRUPTOR DEL TERMOSTATO (CONJ) (REFRIGERANTE)	620
INTERRUPTOR MAGNÉTICO (GR)	222
INTERRUPTOR MAGNÉTICO (GR) (24V) (ARRANQUE)	242
INTERRUPTOR PULSADOR (CONJ) (PANTALLA DIGITAL, MODALIDAD DEL OPERADOR)	732
	734
INTERRUPTOR ROTATIVO (CONJ) (LUZ ALTA/BAJA)	176
	178
	182
	186
INTERRUPTOR ROTATIVO (CONJ) (SEÑAL DE VIRAJE)	220
INTERRUPTOR ROTATIVO (CONJ) (VELOCIDAD DEL VENTILADOR)	620
	676
INTERRUPTOR ROTATIVO (CONJ) (VENTILADOR SOPLADOR)	616
INTERRUPTOR ROTATIVO (CONJ) (24 VOLTIOS) (ESCOBILLAS FRONTALES SUPERIOR/INFERIOR)	226
INYECTOR DE COMBUSTIBLE (GR)	108

J

Nombre	Página
JUEGO (AISLADOR) (MOTOR DE ARRANQUE)	212
	216
JUEGO DE ABRAZADERA DEL FILTRO DE AIRE	92
JUEGO DE AJUSTE DEL ASIENTO	728
JUEGO DE AMORTIGUADOR (RESPALDO)	655
JUEGO DE AMORTIGUADOR (RESPALDO DE VINILO)	656
JUEGO DE ANILLO ESTANDAR	8
JUEGO DE ARANDELA (MOTOR DE ARRANQUE)	210
JUEGO DE ATADURA (ASIENTO)	766
JUEGO DE BUJES (MOTOR DE ARRANQUE)	212
	216
JUEGO DE CÁMARA DEL ACUMULADOR	472
JUEGO DE COJÍN DEL ASIENTO	750
	752
JUEGO DE COJINETE PRINCIPAL	20
JUEGO DE COJINETES	681
JUEGO DE COJINETES DE BANCADA	8
JUEGO DE COJINETES (MOTOR DE ARRANQUE)	210
JUEGO DE ENCHUFE (12 CLAVIJAS)	174
	176
	178
	182
	186
	226
	228
	230
	234
	238
	239
	252
	254
	362
	364
	718
	732
	734
JUEGO DE ENCHUFE (12 CLAVIJAS) (DESCONGELADOR DELANTERO/TRASERO)	168
JUEGO DE ENCHUFE (2 CLAVIJAS)	174
	184
	188
	189
	225
	226
	230
	234
	238
	239
	242
	252
	616
	634
	704
	718
JUEGO DE ENCHUFE (2 CLAVIJAS) (ALARMA DE REVERSA/RETORNO)	246

INDICE

Nombre	Página
JUEGO DE ENCHUFE (2 CLAVIJAS) (ALTO/BAJO)	704
JUEGO DE ENCHUFE (2 CLAVIJAS) (AUXILIAR DE ARRANQUE CON ÉTER)	204
JUEGO DE ENCHUFE (2 CLAVIJAS) (AYUDA DE ARRANQUE CON ETER)	206
JUEGO DE ENCHUFE (2 CLAVIJAS) (BALIZA GIRATORIA)	192
JUEGO DE ENCHUFE (2 CLAVIJAS) (BARRA DE FAROS)	176
JUEGO DE ENCHUFE (2 CLAVIJAS) (BARRA DE LUCES DE TRABAJO)	178 182
JUEGO DE ENCHUFE (2 CLAVIJAS) (INTERRUPTOR DE LUCES DE TABLERO/BOCINA)	254
JUEGO DE ENCHUFE (2 CLAVIJAS) (INTERRUPTOR DE MODALIDAD DE OPERADOR)	734
JUEGO DE ENCHUFE (2 CLAVIJAS) (LUZ DE ALA PARA NIEVE)	168 174 228
JUEGO DE ENCHUFE (2 CLAVIJAS) (MOTOR)	672 676
JUEGO DE ENCHUFE (2 CLAVIJAS) (MOTOR DE CALENTADOR-ACOND. DE AIRE)	621
JUEGO DE ENCHUFE (2 CLAVIJAS) (RELE DE ARRANQUE)	243
JUEGO DE ENCHUFE (3 CLAVIJAS)	199 200 201 202 226 234 246
JUEGO DE ENCHUFE (3 CLAVIJAS) (BARRA DE LUCES DE GIRO)	176
JUEGO DE ENCHUFE (3 CLAVIJAS) (INTERRUPTOR DE APAGADO)	239
JUEGO DE ENCHUFE (3 CLAVIJAS) (SENSOR DE CONTROL DE TODAS LAS RUEDAS)	254
JUEGO DE ENCHUFE (4 CLAVIJAS)	239 243 252 254 718
JUEGO DE ENCHUFE (4 CLAVIJAS) (INTERRUPTOR DE LUCES AUXILIARES DE RETROCESO)	174
JUEGO DE ENCHUFE (4 CLAVIJAS) (LUZ AUXILIAR DE RETROCESO)	168
JUEGO DE ENCHUFE (4 CLAVIJAS) (LUZ AUXILIAR DE RETROCESO, INTERRUPTOR)	228
JUEGO DE ENCHUFE (4 CLAVIJAS) (SENSOR VELOCIDAD DE DESPLAZAMIENTO)	234
JUEGO DE ENCHUFE (4 CLAVIJAS) (SOLENOIDE DE ARRANQUE ASISTIDO Y RELÉ)	243
JUEGO DE ENCHUFE (6 CLAVIJAS)	186 226 234 243 252 734
JUEGO DE ENCHUFE (8 CLAVIJAS)	174 226 228 234 718
JUEGO DE ENCHUFE (8 CLAVIJAS) (LIMPIAPARABRISAS DELANTERO/TRASERO)	168
JUEGO DE ESCOBILLAS (MOTOR DE ARRANQUE)	210 212 216
JUEGO DE FILTRO DE COMBUSTIBLE Y SEPARADOR DE AGUA	107
JUEGO DE FUNDA DE LA SUSPENSIÓN DEL ASIENTO	764
JUEGO DE HOJA DE LIMPIAPARABRISAS	784
JUEGO DE HOJA DE LIMPIAPARABRISAS (PARTE TRASERA)	784
JUEGO DE INCLINACIÓN DE ASIENTO	728
JUEGO DE INCLINACIÓN TRASERA	728
JUEGO DE INDICADOR	681
JUEGO DE INDICADOR (ASIENTO)	766
JUEGO DE LA CULATA DE CILINDROS	8
JUEGO DE MARTILLO	665 666
JUEGO DE PALANCA (MOTOR DE ARRANQUE)	212 216
JUEGO DE PANEL DEL RESPALDO DEL ASIENTO	750 752
JUEGO DE PARAGOLPES	681
JUEGO DE PASADOR DEL MOTOR DE ARRANQUE	210
JUEGO DE PISTÓN (DIRECCIÓN HIDRÁULICA)	488
JUEGO DE REACONDICIONAMIENTO DEL REGULADOR	398
JUEGO DE RECEPTÁCULO (12 CLAVIJAS)	137 174

INDICE

Nombre	Página
	176
	178
	182
	186
	226
	228
	234
	243
	246
	248
	252
	254
	362
	364
	718
	732
	734
JUEGO DE RECEPTÁCULO (12 CLAVIJAS) (BARRA DE LUCES DE TRABAJO)	178
	182
JUEGO DE RECEPTÁCULO (12 CLAVIJAS) (INTERRUPTOR DE BALIZA)	168
JUEGO DE RECEPTÁCULO (12 CLAVIJAS) (SECADOR DE AIRE Y ALARMA DE RETROCESO)	243
JUEGO DE RECEPTÁCULO (2 CLAVIJAS)	94
	127
	160
	168
	174
	184
	188
	189
	194
	224
	225
	226
	228
	230
	234
	238
	239
	242
	250
	320
	585
	617
	621
	630
	634
	658
	704
	718
	732
JUEGO DE RECEPTÁCULO (2 CLAVIJAS) (ARRANQUE CON ÉTER)	206
JUEGO DE RECEPTÁCULO (2 CLAVIJAS) (DESPLAZADOR DE CILINDRO DE VÁLVULAS SOLENOIDES)	414
JUEGO DE RECEPTÁCULO (2 CLAVIJAS) (ENCENDIDO/CONVERTIDOR RADIAL)	141
JUEGO DE RECEPTÁCULO (2 CLAVIJAS) (ENTRADA DE CORRIENTE DE 12 VOLTIOS)	609
	610
JUEGO DE RECEPTÁCULO (2 CLAVIJAS) (INTERRUPTOR DE PRESIÓN DE CORRIENTE ALTERNA/ACOPLADOR DEL SOLENOIDE)	239
JUEGO DE RECEPTÁCULO (2 CLAVIJAS) (LUZ DE ALA PARA NIEVE)	174
JUEGO DE RECEPTÁCULO (2 CLAVIJAS) (MOTOR DE CALENTADOR)	672
	676
JUEGO DE RECEPTÁCULO (2 CLAVIJAS) (RELE PRINCIPAL)	243
JUEGO DE RECEPTÁCULO (2 CLAVIJAS) (TABLERO, LUCES)	252
JUEGO DE RECEPTÁCULO (2 CLAVIJAS) (VALVULA DE SOLENOIDE)	403
JUEGO DE RECEPTÁCULO (2 CLAVIJAS) (VÁLVULA PARA ARRANQUE CON ÉTER)	204
JUEGO DE RECEPTÁCULO (3 CLAVIJAS)	149
	158
	159
	188
	189
	198
	225
	226
	230
	234
	238
	246
	248
	250
	254
JUEGO DE RECEPTÁCULO (3 CLAVIJAS) (LUZ DE SEÑAL DE GIRO/ESTACIONAMIENTO)	170
	190
JUEGO DE RECEPTÁCULO (3 CLAVIJAS) (SENSOR DEL MANDO DE PRESIÓN DEL VENTILADOR)	239
JUEGO DE RECEPTÁCULO (4 CLAVIJAS)	174
	204
	226
	228
	234

INDICE

Nombre	Página
	238
	252
	254
	718
JUEGO DE RECEPTÁCULO (4 CLAVIJAS) (AYUDA DE ARRANQUE CON ETER)	206
JUEGO DE RECEPTÁCULO (4 CLAVIJAS) (INTERRUPTOR DE BALIZA)	192
JUEGO DE RECEPTÁCULO (4 CLAVIJAS) (LUCES DE VERTEDERA/RETROVISOR DELANTERO)	168
JUEGO DE RECEPTÁCULO (4 CLAVIJAS) (LUZ AUXILIAR DE RETROCESO)	168
JUEGO DE RECEPTÁCULO (4 CLAVIJAS) (MOTOR, CONTROL DE FRENOS Y RELÉ DE ARRANQUE)	243
JUEGO DE RECEPTÁCULO (4 CLAVIJAS) (VELOCIDAD EFECTIVA)	197
JUEGO DE RECEPTÁCULO (6 CLAVIJAS)	226
	234
	239
	252
	362
	364
	672
	676
	732
	734
	778
JUEGO DE RECEPTÁCULO (6 CLAVIJAS) (CALENTADOR Y ACOND. DE AIRE)	621
JUEGO DE RECEPTÁCULO (6 CLAVIJAS) (FARO DELANTERO - LÁMPARA DE)	152
	154
JUEGO DE RECEPTÁCULO (6 CLAVIJAS) (MODULO DE CUATRO MEDIDORES)	722
JUEGO DE RECEPTÁCULO (6 CLAVIJAS) (MOTOR DE LAVAPARABRISA)	780
	782
JUEGO DE RECEPTÁCULO (6 CLAVIJAS) (VELOCÍMETRO, TACÓMETRO)	723
JUEGO DE RECEPTÁCULO (8 CLAVIJAS)	168
	174
	223
	226
	228
	718
	732
	734
JUEGO DE RECEPTÁCULO (8 CLAVIJAS) (INTERRUPTOR DE LIMPIAPARABRISA TRASERO)	784
	786
JUEGO DE RECEPTÁCULO (8 CLAVIJAS) (INTERRUPTORES DE ESCOBILLAS FRONTALES)	226
JUEGO DE RESORTES	486
	681
JUEGO DE RESTRICCIÓN DEL CINTURÓN	764
JUEGO DE RODILLO	764
JUEGO DE RODILLO (ASIENTO)	766
JUEGO DE SEGUIDOR	680
	681
JUEGO DE SELLO DE CARTUCHO	320
JUEGO DE SELLO DE CARTUCHO (TRABA DE DIFERENCIAL)	308
JUEGO DE SELLO DEL MOTOR DE ARRANQUE	210
JUEGO DE SELLOS (DOSIFICACIÓN DE DIRECCIÓN)	486
JUEGO DE SELLOS (VALVULA DE SOLENOIDE)	585
JUEGO DE SELLOS (VENTILADOR HIDRAULICO)	587
JUEGO DE TORNILLERÍA (ASIENTO)	766
JUEGO DE TORNILLERÍA (MOTOR DE ARRANQUE)	210
JUEGO DE VARILLA	728

L

LÁMPARA (BALIZA GIRATORIA DE ADVERTENCIA)	160
LÁMPARA DE BALIZA DE ADVERTENCIA (GR)	160
LÁMPARA DE FARO DELANTERO (GR)	157
LÁMPARA DE FARO DELANTERO (GR)	152
LÁMPARA DE FARO DELANTERO (GR)	154
	156
LÁMPARA DE FARO DELANTERO (GR) (24 VOLTIOS) (LUZ BAJA)	176
	182
LÁMPARA DE FARO DELANTERO (24 VOLTIOS)	157
LÁMPARA DE FARO DELANTERO (24 VOLTIOS) (LUZ BAJA)	156
LÁMPARA DE FARO DELANTERO (24 VOLTIOS) (REFLECTOR)	150
LÁMPARA DEL TECHO (GR)	149
LAMPARA DERECHA (CONJ) (PARADA/COLA/GIRO)	248
LÁMPARA (FILAMENTO SENCILLO) (SEÑAL DE VIRAJE)	152
	154
LAMPARA IZQUIERDA (CONJ) (PARADA/COLA/GIRO)	248

INDICE

Nombre	Página
LÁMPARA (24 VOLTIOS) (ACONDICIONADOR DE AIRE Y TABLERO DE CONTROL DE CALEFACCIÓN)	672
LÁMPARA (24 VOLTIOS) (AIRE ACONDICIONADO Y CALEFACCION)	676
LÁMPARA (24 VOLTIOS) (BALIZA GIRATORIA DE ADVERTENCIA)	147, 191, 192
LÁMPARA (24 VOLTIOS) (CONSOLA DE CAMBIOS)	252
LÁMPARA (24 VOLTIOS) (CÚPULA)	149
LÁMPARA (24 VOLTIOS) (DESCONGELADOR DELANTERO)	662
LÁMPARA (24 VOLTIOS) (DESCONGELADOR TRASERO)	663
LÁMPARA (24 VOLTIOS) (FARO DELANTERO/COLA)	178, 182, 186
LÁMPARA (24 VOLTIOS) (HOJA AMORTIGUADORA/INDICADOR)	225
LÁMPARA (24 VOLTIOS) (INDICADOR DE ACELERACIÓN SOSTENIDA)	732
LÁMPARA (24 VOLTIOS) (INDICADOR DE ARRANQUE ASISTIDO POR ÉTER)	209
LÁMPARA (24 VOLTIOS) (INDICADOR DE GIRO A LA DERECHA)	732
LÁMPARA (24 VOLTIOS) (INDICADOR DE GIRO A LA IZQUIERDA)	732
LÁMPARA (24 VOLTIOS) (INDICADOR DE LUZ ALTA)	732
LÁMPARA (24 VOLTIOS) (INDICADOR DE PRESIÓN DE AIRE, MANO DERECHA)	732
LÁMPARA (24 VOLTIOS) (INDICADOR DE PRESIÓN DE AIRE, MANO IZQUIERDA)	732
LÁMPARA (24 VOLTIOS) (INDICADOR DE TRABA DEL DIFERENCIAL)	732
LÁMPARA (24 VOLTIOS) (INDICADOR DE VELOCIDAD DEL VENTILADOR)	616
LÁMPARA (24 VOLTIOS) (INDICADOR SECUNDARIO DE DIRECCION)	250
LÁMPARA (24 VOLTIOS) (INTERRUPTOR ATENUADOR DE LUCES DEL TABLERO)	254
LÁMPARA (24 VOLTIOS) (INTERRUPTOR DE ACELERACIÓN SOSTENIDA AUTOMÁTICA/MANUAL)	252
LÁMPARA (24 VOLTIOS) (INTERRUPTOR DE ARRANQUE ASISTDO POR ÉTER)	254
LÁMPARA (24 VOLTIOS) (INTERRUPTOR DE EXTRACTOR DE PASADORES DE DESPLAZADOR DEL CIRCULO)	252
LÁMPARA (24 VOLTIOS) (INTERRUPTOR DE LUCES TRASERAS)	254
LÁMPARA (24 VOLTIOS) (INTERRUPTOR DE TRABA DEL DIFERENCIAL)	254
LÁMPARA (24 VOLTIOS) (LÁMPARA DE FUNCIONAMIENTO)	154
LÁMPARA (24 VOLTIOS) (LUCES DE MANO DERECHA, ALTAS/BAJAS)	154
LÁMPARA (24 VOLTIOS) (LUCES DE TRABAJO)	152
LÁMPARA (24 VOLTIOS) (LUZ ALTA/BAJA)	152
LÁMPARA (24 VOLTIOS) (LUZ AUXILIAR DE RETROCESO)	168
LÁMPARA (24 VOLTIOS) (LUZ BAJA)	170
LÁMPARA (24 VOLTIOS) (LUZ BAJA DE BARRA DE LUCES)	179, 182
LÁMPARA (24 VOLTIOS) (LUZ DELANTERA/TRASERA/INDICADOR)	220
LÁMPARA (24 VOLTIOS) (LUZ INDIC. DE ACCION MAESTRA DE EMS)	732, 734
LÁMPARA (24 VOLTIOS) (LUZ INDICADORA DE LAMPARA DELANTERA/TRASERA)	176
LÁMPARA (24 VOLTIOS) (MODULO DE CUATRO INDICADORES)	732
LÁMPARA (24 VOLTIOS) (MODULO DE CUATRO MEDIDORES Y PRESIÓN DE AIRE)	734
LÁMPARA (24 VOLTIOS) (REFLECTORES DEL LADO DERECHO)	174
LÁMPARA (24 VOLTIOS) (REFLECTORES DELANTEROS)	172
LÁMPARA (24 VOLTIOS) (RETROVISOR INDICADOR DELANTERO)	718
LÁMPARA (24 VOLTIOS) (SEÑAL DE VIRAJE)	152, 154
LÁMPARA (24 VOLTIOS) (TABLERO DE AIRE ACONDICIONADO)	620
LÁMPARA (24 VOLTIOS) (TABLERO DE INSTRUMENTOS)	734
LÁMPARA (24 VOLTIOS) (VELOCÍMETRO, TACÓMETRO)	723
LÁMPARA (24 VOLTIOS) (VERTEDERA/INDICADOR)	228
LÁMPARA (24 VOLTIOS) (VIGA ALTA)	170
LÁMPARA (24 VOLTIOS, 21 VATIOS) (LUZ DE SEÑAL DE PARADA/COLA)	248
LÁMPARA (24 VOLTIOS, 5 VATIOS) (DE GIRO)	248
LAVAPARABRISAS DE LA VENTANA (GR)	768, 770
LENTE AMBAR (BALIZA GIRATORIA DE ADVERTENCIA)	160
LENTE AMBAR (SEÑAL DE VIRAJE)	152, 154
LEVANTAMIENTO - HOJA DE (GR)	598
LIMPIAPARABRISAS (CONFIG)	776

INDICE

Nombre	Página
	777
LIMPIAPARABRISAS DE LA VENTANA (GR)	786
	788
LIMPIAPARABRISAS DE LA VENTANA (GR)	780
LIMPIAPARABRISAS DE LA VENTANA (GR)	778
	782
	784
LLAVE	639
	798
LLAVE (DESCONECTAR BATERIA)	218
LUCES DE ADVERTENCIA (GR)	192
LUCES DE ADVERTENCIA (GR)	191
LUCES DE GIRO (GR)	190
LUCES DE REFLECTOR (GR)	186
	189
LUCES DE REFLECTOR (GR)	170
	172
	174
	176
	178
	182
	184
	188
LUCES DE REFLECTOR Y SEÑAL (CONFIG)	164
	165
	166
	167
LUCES DE RETROCESO (GR)	168
LUZ DE SEÑAL DE GIRO (GR)	158
LUZ DE SEÑAL DE GIRO (GR)	159
LUZ DE SEÑAL DE GIRO (GR) (LADO DERECHO)	170
LUZ DE SEÑAL DE GIRO (GR) (LADO IZQUIERDO)	170
LUZ DE SEÑAL DE GIRO (GR) (LUZ DE SEÑAL DE GIRO/ESTACIONAMIENTO)	190
LUZ DE SEÑAL DE GIRO (GR) (LUZ DE SEÑAL DE PARADA/COLA)	246
MODULO ELECTRÓNICO DE CUATRO INDICADORES (GR)	722
MONTAJE DE LA ESTRUCTURA ROPS (GR)	724
	726
MONTAJE DE RUEDA (GR)	296
MONTAJE DEL DESGARRADOR (GR)	602
MONTAJE DEL MOTOR (GR)	42
MOTONIVELADORA PARA LA NIEVE (CONFIG)	6
MOTOR - SOPORTE DEL (GR)	55
MOTOR DE ARRANQUE ELÉCTRICO (GR)	210
	212
	214
	216
MOTOR DE ENGRANAJES (GR)	478
MOTOR ELÉCTRICO DE BOMBA HIDRÁULICA (GR)	477
MOTOR ELÉCTRICO (GR)	195
MOTOR ELÉCTRICO (GR)	194
MOTOR ELÉCTRICO (GR) (AIRE ACONDICIONADO)	634
MOTOR ELÉCTRICO (GR) (27 VOLTIOS)	617
MOTOR ELÉCTRICO (GR) (27 VOLTIOS) (A/A)	621
MOTOR ELÉCTRICO (GR) (27 VOLTIOS) (CALEFACTOR)	672
MOTOR ELÉCTRICO (GR) (27 VOLTIOS) (CALENTADOR, LUZ DE FUNCIONAMIENTO)	676
MOTOR HIDRÁULICO DE ENGRANAJES (GR)	480
MOTOR Y VENTILADOR (GR)	74
MÚLTIPLE DE ADMISIÓN (GR)	99
MÚLTIPLE DE ESCAPE (GR)	98

N

NÚCLEO DE TURBOCOMPRESOR (GR)	103

M

MANDO DE BOMBA (GR)	446
MANDO DE CORREA (BALIZA GIRATORIA DE ADVERTENCIA)	160
MANDO DEL CIRCULO (GR)	442
MANDO ELÉCTRICO - BOMBA DE (GR)	485
MANDO FINAL (GR)	286
MANGUERA DE ESCAPE DE GASES	10
MARTILLO Y MONTAJE (GR)	665
	666
MECANISMO DE LA VÁLVULA - MONTAJE DEL (GR)	43
MECANISMO DE VÁLVULAS (GR)	58
MÓDULO DEL TACÓMETRO Y DEL VELOCÍMETRO (GR)	723

P

PANEL DE INSONORIZACIÓN (GR)	46
PANEL DE INSONORIZACIÓN (GR)	371
PANEL DE LA CABINA (GR)	730
	731
PANEL DE LA VENTANA (GR)	736
	738
PERILLA DE AMORTIGUADOR (ASIENTO)	766
PERSIANA PARA EL SOL (GR)	747
PERSIANAS DE LA CABINA (GR)	714
PISTÓN Y BIELA (GR)	47
PLACA DE ADVERTENCIA (OPERACION DE LA MAQUINA)	791
PLACA DE BASTIDOR PRINCIPAL (NO TALADRE NI SUELDE)	791

INDICE

Nombre	Página
PLACA DE INSTRUCCIONES (DRENAR Y LLENAR CARTER)	68
PLANCHA DE EMPUJE (GR)	592
POSABRAZOS (GR)	624
	625
PROTECCIÓN DEL ARADO PARA NIEVE (CONFIG)	372
	373
PROTECTOR DE LA PLATAFORMA (GR)	362
	364
PROTECTOR DE LAS TUBERÍAS DE LOS FRENOS (GR)	361
PROTECTOR INFERIOR (GR)	360
PROTECTOR TÉRMICO DEL EJE DE MANDO (GR)	376
PROTECTOR Y SOPORTE DEL RADIADOR (GR)	358
PROTECTOR Y SOPORTE DEL RADIADOR (GR)	374
PUBLICACIONES (GR)	712
	713
PUERTA DE CABINA	644
	646
	648
	650
PUERTA (GR)	640
	642
	716
	718
	720
	721
REVESTIMIENTO DE LA CABINA (GR)	690
	694
	700
RUEDA (CONFIG)	341
	342
RUEDA Y LLANTA (CONFIG)	324
RUEDA Y LLANTA (CONFIG)	325
	326
	327
	328
	329
	330
	331
	332
	333
	334
	335
	336
	337
	338
	339
	340

R

RADIADOR (GR)	87
RECEPTACULO DE POTENCIA (CONJ) (12 VOLTIOS)	609
	610
RECEPTOR-SECADOR (GR) (REFRIGERANTE)	94
RECIPIENTE DE RECOLECCION DE AGUA (CONJ) (CALENTADOR DE 12 VOLTIOS)	107
RECIPIENTE DE RECOLECCION DE AGUA (CONJ) (CALENTADOR DE 24 VOLTIOS)	107
REFLECTOR (GR)	150
REFLECTORES (CONFIG)	161
	162
	163
REGULADOR DE TEMPERATURA DEL AGUA	76
REGULADOR Y CAJA (GR)	76
REJILLA DE SUCCIÓN (TRANSMISION)	289
RESPIRADERO (CONJ) (AIRE)	306
RESPIRADERO (CONJ) (MOTOR)	58
RESPIRADERO (TRANSMISION)	289
RETROCESO - ALARMA DE (GR)	224
RETROCESO - ALARMA DE (GR) (RETROCESO)	248
RETROVISOR (GR)	715

S

SELLO DE CIGÜEÑAL (GR)	38
	54
SELLO (1M)	43
SENSOR DE PRESIÓN (GR)	199
SENSOR DE PRESIÓN (GR)	200
	201
	202
SENSOR DE TEMPERATURA (GR) (COMBUSTIBLE)	230
SENSOR DE TEMPERATURA (GR) (MULTIPLE DE LA ADMISION)	230
SENSOR DE TEMPERATURA (GR) (REFRIGERANTE)	230
SENSOR DE VELOCIDAD DE DESPLAZAMIENTO (GR)	197
SENSOR DE VELOCIDAD (GR) (ARBOL DE LEVAS)	230
SILENCIADOR (GR)	100
SOFTWARE DE MONITOR (GR)	144
SOLENOIDE (CONJ) (24 VOLTIOS) (MOTOR DE ARRANQUE)	210
SOPORTE DEL ASIENTO (GR)	762
SOPORTE DEL TANQUE DE COMBUSTIBLE (GR)	379
SUSPENSIÓN - ASIENTO CON (GR)	757
	758

INDICE

Nombre	Página
	759
	760
SUSPENSIÓN - ASIENTO CON (GR)	754
	755
	756

T

TABLERO DE INSTRUMENTOS (GR)	732
	734
TÁNDEM Y CUBIERTA (GR)	306
TANQUE DE AIRE (GR)	398
TANQUE HIDRÁULICO (GR)	498
TANQUE HIDRÁULICO (GR)	496
TAPA CONTRA EL POLVO	50
	64
	78
	82
	458
	462
	534
TAPA CONTRA EL POLVO (ACEITE HIDRÁULICO)	473
TAPA CONTRA EL POLVO (CONJ)	145
	146
TAPA CONTRA EL POLVO (TRABA DE DIFERENCIAL)	266
TAPA DE LA CAJA DE VOLANTE (GR)	18
TAPA DEL BLOQUE MOTOR (GR)	16
TAPA DEL CONECTOR DEL MODULO (GR)	143
TAPA DEL RADIADOR	87
TAPA DEL TUBO DE LLENADO (ACEITE DEL TREN DE FUERZA)	284
TAPA DEL TUBO DE LLENADO DE ACEITE (CONJ)	62
TAPA DEL TUBO DE LLENADO (TANQUE DE ACEITE HIDRÁULICO)	498
TAPA DEL VENTILADOR (GR)	73
TAPA, TANQUE DE COMBUSTIBLE (GR) (TRABABLE)	124
TAPA (VASTAGO)	324
	325
	326
	327
	328
	329
	330
	331
	332
	333
	334
	335
	336
	337
	338
	339
	340
	341
	342
TAPAS PROTECTORAS DE EMBARQUE (GR)	276
TAPÓN (CONJ)	68
TAPÓN DE DRENAJE	36
TAPÓN DE DRENAJE (CAJA DE TRANSMISION)	348
TAPÓN DE DRENAJE (CAJA ENGRANAJE Y TRANSMISIÓN)	290
TAPÓN DEL BLOQUE MOTOR (GR)	48
TAPÓN DEL MOTOR (GR)	50
TENSOR DE CORREA (GR)	12
TIRANTE DE DIRECCIÓN (GR)	370
TOPE DE VÁLVULA DE CONTROL (GR)	438
	440
TRABA DE CONTROL HIDRÁULICO MANUAL (GR)	476
TRABA DE DESPLAZAMIENTO DEL CIRCULO (GR)	475
TRANSMISION (CONFIG)	307
TRANSMISIÓN PLANETARIA (GR)	298
TUBERÍAS DE ACEITE DEL TREN DE FUERZA (GR)	294
TUBERÍAS DE ACONDICIONADOR DE AIRE (GR)	702
	704
TUBERIAS DE CALEFACCION	708
TUBERÍAS DE DIRECCIÓN (GR)	472
TUBERÍAS DE DRENAJE (GR)	109
TUBERÍAS DE ENGRASE (GR)	369
TUBERÍAS DE INYECCIÓN DE COMBUSTIBLE (GR)	114
TUBERÍAS DE LA CALEFACCIÓN (GR)	706
	708
	710
TUBERÍAS DE LA DIRECCIÓN SECUNDARIA (GR)	470
TUBERÍAS DEL ACUMULADOR (GR)	448
TUBERÍAS DEL AGUA (GR)	80
	81
	82
	84
TUBERÍAS DEL DESGARRADOR (GR)	466
	468
TUBERÍAS DEL ENFRIADOR DEL TREN DE FUERZA (GR)	78
TUBERÍAS DEL FILTRO DE COMBUSTIBLE	110
TUBERÍAS HIDRÁULICAS DEL VENTILADOR (GR)	458
	460
TUBERÍAS HIDRÁULICAS (GR)	450
	454

INDICE

Nombre	Página
	457
TUBO DE LLENADO DE ACEITE DE LA TRANSMISIÓN (GR)	284
TUBO DE LLENADO DE ACEITE (GR)	62
TURBOCOMPRESOR - TUBERÍAS DE ACEITE DEL (GR)	67
TURBOCOMPRESOR (GR)	102
	103

U

UNIÓN GIRATORIA (GR)	495

V

VALVULA-ALIVIO DE AIRE (PRESIÓN)	398
VÁLVULA COMPENSADORA DE FLUJO Y PRESIÓN (GR)	572
	574
VÁLVULA (CONJ) (ASIENTO)	766
VÁLVULA DE ACTIVACIÓN DEL ÉTER	204
VÁLVULA DE ALIVIO (GR)	312
	576
	577
	578
	579
	580
	581
	582
	583
VÁLVULA DE ALIVIO (GR) (PRINCIPAL)	534
VALVULA DE ARRANQUE CON ETER (GR)	206
VÁLVULA DE COMBINACIÓN (GR)	534
VÁLVULA DE CONTROL DE LA TRANSMISIÓN (GR)	322
VÁLVULA DE CONTROL (GR)	309
VÁLVULA DE CONTROL (GR)	536
	538
	540
	542
	544
	546
	548
	550
	552
	554
	556
	558
	560
	562
	564
	566
	568
	570
VALVULA DE DERIVACION DE BOMBA	60
VALVULA DE DESCONEXION RAPIDA (GR)	402
VÁLVULA DE DRENAJE (REFRIGERANTE)	82
VÁLVULA DE DRENAJE (SISTEMA DE ENFRIAMIENTO)	358
	374
VÁLVULA DE LA TRABA DEL DIFERENCIAL Y MONTAJE (GR)	308
VÁLVULA DE LANZADERA (GR)	584
VÁLVULA DE LEVANTAMIENTO (GR)	40
VÁLVULA DE MUESTREO (GR) (ACEITE DE LA TRANSMISIÓN)	78
VÁLVULA DE MUESTREO (GR) (ACEITE HIDRÁULICO)	473
VÁLVULA DE RETENCIÓN (GR)	114
	126
VÁLVULA DE SOLENOIDE (GR)	320
	403
	585
VÁLVULA DE SOLENOIDE (GR) (AMORTIGUADOR DE LA HOJA)	586
VÁLVULA DE SOLENOIDE Y MÚLTIPLE (GR)	586
	587
VÁLVULA PILOTO (GR)	310
VÁLVULA SELECTORA Y DE CONTROL DE PRESIÓN (GR)	314
	316
	318
VÁLVULA Y VARILLAJE (GR)	500
	502
	504
	506
	510
	512
	514
	518
	520
VÁLVULAS HIDRÁULICAS - GRUPO DE 7	530
	531
	532
VENTANA (GR)	771
	772
	773
	774
	775
VENTILADOR DE ALTERNADOR	128
VENTILADOR DE CIRCULACION	658
	660
	662
	663
VIDRIO (CONJ) (FARO DELANTERO - LÁMPARA DE)	157
VIDRIO (CONJ) (FARO DELANTERO) (LUZ BAJA)	170
VIDRIO (CONJ) (FARO DELANTERO) (VIGA ALTA)	170

INDICE

Nombre	Página	Nombre	Página
VIDRIO (CONJ) (LAMPARA-LUZ BAJA)	156		
VIDRIO (CONJ) (LUZ ALTA/BAJA)	152		
	154		
VIDRIO (CONJ) (REFLECTOR)	150		
VIDRIO (CONJ) (SEÑAL DE VIRAJE)	152		
	154		
VOLANTE - CAJA DE (GR)	36		
VOLANTE (GR)	33		

ÍNDICE

Designação	Página

A

ACENDEDOR (CIGARRO)(24 VOLTS) 252
ACESSÓRIO - CABINE 609
610
ACUMULADOR - AMORTECEDOR DA LÂMINA 406
ACUMULADOR DO AMORTECEDOR DA LÂMINA 405
ACUMULADOR HIDRÁULICO E MONTAGEM . . . 404
ADAPTADOR DA TRANSMISSÃO 258
ALARME 127
ALARME DE MARCHA À RÉ 224
ALARME DE MARCHA À RÉ (MARCHA À RÉ) . . . 248
ALTERNADOR DE CORRENTE 128
130
AQUECEDOR DA ÁGUA DO MOTOR 145
146
AQUECEDOR DA CABINE 669
670
672
676
AQUECEDOR DA CABINE E MONTAGEM 667
668
AR. PARA NEVE - MOTONIVELADORA 6
ARRANJO GERAL 4
ARREFECEDOR DE ÓLEO DA TRANSMISSÃO 274
ARREFECEDOR DE ÓLEO HIDRÁULICO E MONTAGEM 417
ARREFECIMENTO 71
72
ARTICULAÇÃO GIRATÓRIA 495
ASSENTO 750
752
ASSENTO - FUNDO 728
ASSENTO COM SUSPENSÃO 754
755
756
757
758
759
760
ATOMIZADOR - ÉTER 209
AUXILIAR DE PARTIDA A ÉTER 204
206
208
209

B

BALANCIM 52
BARRA DE TRAÇÃO 590
BASE DO FILTRO DE ÓLEO 60
BATERIA 131
132
BATERIA (LIVRE DE MANUTENÇÃO)(12 VOLT) 132
BATERIA (SERVIÇO PESADO)(12V) 131
BLINDAGEM DO EIXO DA TRANSMISSÃO 376
BLOCO DE JUNÇÃO 148
BLOCO DO MOTOR 22
23
24
BOCAL DE ENCHIMENTO DE ÓLEO DO MOTOR 62
BOCAL DE ENCHIMENTO DE ÓLEO DO TREM DE FORÇA 284
BOMBA DA DIREÇÃO SECUNDÁRIA E MONTAGEM 484
BOMBA DE ÁGUA 85
86
BOMBA DE COMANDO ELÉTRICO 485
BOMBA DE ENGRENAGENS 304
BOMBA DE ESCORVA DO COMBUSTÍVEL 118
BOMBA DE INJEÇÃO DO COMBUSTÍVEL 117
BOMBA DE ÓLEO - MOTOR 69
70
BOMBA DE PISTÃO 488
490
BOMBA E MONTAGEM - PISTÃO 482
BOMBA E MONTAGEM - TRANSFERÊNCIA DE COMBUSTÍVEL 116
BOMBA ELETROHIDRÁULICA 477
BOMBA REGULADORA 486
BORDA CORTANTE 596
597
BRAÇO DO ASSENTO 624
625
BUJÃO DO BLOCO DO CILINDRO 48
BUJÃO DO DRENO 36
BUJÃO DO DRENO (CAIXA DA ENGRENAGEM DE TRANSFERÊNCIA) 290
BUJÃO DO DRENO (CAIXA DE TRANSMISSÃO) 348
BUJÃO DO MOTOR 50

C

CABEÇOTE DO MOTOR 26
28
29
CABOS/FIOS ELÉTRICOS - CABINE 226
228
CABOS/FIOS ELÉTRICOS - CONSOLE DA DIREÇÃO 254
CABOS/FIOS ELÉTRICOS - CONSOLE DA TRANSMISSÃO 252
CABOS/FIOS ELÉTRICOS - DIANTEIROS 234

ÍNDICE

Designação	Página
CABOS/FIOS ELÉTRICOS - DIREÇÃO SECUNDÁRIA	250
CABOS/FIOS ELÉTRICOS - INJETOR	257
CABOS/FIOS ELÉTRICOS - MOTOR	230
CABOS/FIOS ELÉTRICOS - TRASEIROS	238
	242
	246
	248
CADEADO	639
	798
CADEADO (TANQUE HIDRÁULICO)	496
CAIXA - SUSPENSÃO DO ASSENTO	680
CAIXA DE ENGRENAGEM DE TRANSFERÊNCIA	288
CAIXA DE FERRAMENTAS	798
CAIXA DIANTEIRA	38
CAIXA DO VOLANTE DO MOTOR	36
CAIXA E CHASSI	348
CANTO DE LÂMINA	593
	594
CARCAÇA DA TRANSMISSÃO	259
CÁRTER DO ÓLEO DO MOTOR	44
CARTUCHO DO TURBOALIMENTADOR	103
CHAPA DE EMPUXO	592
CHASSI DIANTEIRO	356
CHAVE	639
	798
CHAVE (DESCONECTAR A BATERIA)	218
CHAVE GERAL	218
CHAVE GERAL (BATERIA)	243
CILINDRO DA DIREÇÃO	432
	434
CILINDRO DE ARTICULAÇÃO	425
CILINDRO DE DESLIZAMENTO LONGITUDINAL	431
CILINDRO DE DESLOCAMENTO LATERAL	428
CILINDRO DE DIREÇÃO E MONTAGEM	423
CILINDRO DE ÉTER	204
	206
CILINDRO DE INCLINAÇÃO LATERAL DAS RODAS	436
CILINDRO DE LEVANTAMENTO DA LÂMINA	426
CILINDRO DE LEVANTAMENTO DO RIPER	430
CILINDRO DE TOMBAMENTO DA LÂMINA	427
CILINDRO E MONTAGEM - ARTICULAÇÃO	418
CILINDRO E MONTAGEM - DESLOCAMENTO DA LÂMINA	422
CILINDRO E MONTAGEM - DESLOCAMENTO DO CÍRCULO	421
CILINDRO E MONTAGEM - INCLINAÇÃO DAS RODAS	424
CILINDRO E MONTAGEM - LEVANTAMENTO DA LÂMINA	419
CILINDRO E MONTAGEM - TOMBAMENTO DA LÂMINA	420
CINTO DE SEGURANÇA	748
CINTO DE SEGURANÇA (RETRÁTIL)	756
	757
	759
CINZEIRO	690
	694
CÍRCULO	588
COBERTURA DO MOTOR	352
COBERTURA DO VENTILADOR	73
COLETOR DE ADMISSÃO	99
COLETOR DE ESCAPE	98
COMANDO DA BOMBA	446
COMANDO DE ACESSÓRIOS	30
COMANDO FINAL	286
COMPRESSOR DE AR	8
	10
COMPRESSOR DE REFRIGERANTE	626
	628
	630
	631
CONDENSADOR DE REFRIGERANTE	634
CONDENSADOR DO REFRIGERANTE E MONTAGEM	632
CONDICIONADOR DE AR	613
	614
	616
	620
CONDICIONADOR DE AR E MONTAGEM	611
	612
CONECTOR	472
CONEXÃO EM T	448
CONSOLE DO OPERADOR	636
CONTROLE DA DIREÇÃO SECUNDÁRIA	137
CONTROLE DA EMBREAGEM	262
CONTROLE DA TRANSMISSÃO	268
CONTROLE DA TRAVA DO DIFERENCIAL	266
CONTROLE DE DIREÇÃO	416
CONTROLE DO FREIO DE ESTACIONAMENTO	390
CONTROLE DO FREIO DE SERVIÇO	392
CONTROLE DO GOVERNADOR	104
CONTROLE DO PAINEL MONITOR (SISTEMA DE MONITORIZAÇÃO CATERPILLAR)	732
	734
CONTROLE DO PINO MESTRE DE DESLOCAMENTO LATERAL	414
CONTROLE ELETRÔNICO - MOTOR	136
CONTROLE ELETRÔNICO E MONTAGEM - MOTOR	135
CONTROLE HIDRÁULICO	407
	408
	409
	410
	411
	412

ÍNDICE

Designação	Página
	413
CONTROLE HIDRÁULICO DA TRANSMISSÃO	272
CONVERSÃO PARA ESTRUTURA NÃO ROPS	639
CONVERSOR ELÉTRICO	138
	139
	140
	141
	142
CONVERSOR ELÉTRICO (24 VOLTS A 12 VOLTS)	142
CONVERSOR ELÉTRICO (5/7.5 AMP, 24 A 12 VOLTS)	140
CORREIA DE COMANDO (PISCA-PISCA DE ADVERTÊNCIA)	160
CORREIA-ESTRIADA (AR CONDICIONADO)	614
CORRENTE - COMANDO	260
COTOVELO	448

D

DECALQUE - IDENTIFICAÇÃO (FUSÍVEL) (LUZ ALTA/BAIXA)	178
DECALQUE - IDENTIFICAÇÃO (NO. DE SEQÜÊNCIA E GRUPO)	616
	634
DECALQUE - INSTRUÇÃO (AJUSTE DO ASSENTO)	764
	766
DECALQUE - INSTRUÇÃO (NÃO FURE OU SOLDE A ESTRUTURA ROPS)	743
	745
	746
DECALQUE - INSTRUÇÃO (VIDRO DE SAÍDA EMERG./REMOVÍVEL)	665
	666
DEGRAU	377
DENTE DO ESCARIFICADOR	608
DIFERENCIAL	282
DIFERENCIAL E COROA	278
DIREÇÃO SECUNDÁRIA	494
DISJUNTOR AUTOMÁTICO DE CIRCUITO (15 A) (CONTROLE DO MOTOR)	243
DISJUNTOR AUTOMÁTICO DE CIRCUITO (15 A) (FARÓIS)	133
	134
DISJUNTOR AUTOMÁTICO DE CIRCUITO (15 A) (FAROL - FACHO BAIXO DA BARRA DE LUZES)	178
DISJUNTOR AUTOMÁTICO DE CIRCUITO (15 A) (LÂMPADAS DE TRABALHO - BARRA)	133
DISJUNTOR AUTOMÁTICO DE CIRCUITO (80 A) (ALTERNADOR)	242
DISJUNTOR AUTOMÁTICO DE CIRCUITO (80 A) (PRINCIPAL)	242
DUCTO	654
DUCTO E CONTROLE	652
	653

E

EIXO-COMANDO DE VÁLVULA	14
EIXO DIANTEIRO	344
EJETOR DE POEIRA	93
ELEMENTO - AQUECEDOR DE ÁGUA DA CAMISA (120V 1250 W)	145
ELEMENTO - AQUECEDOR (240V 1250W)	146
ELEMENTO - FILTRANTE (SEPARADOR DE ÁGUA E DE COMBUSTÍVEL) (PRIMÁRIO)	107
ELEMENTO - FILTRO DE COMBUSTÍVEL (ÓLEO DA TRANSMISSÃO)	78
ELEMENTO - PRIMÁRIO	92
ELEMENTO - SECUNDÁRIO	92
ELO - DIREÇÃO	370
EMISSOR - POSIÇÃO	198
EMISSOR - POSIÇÃO (ARTICULAÇÃO)	238
ENGATE - ARTICULAÇÃO	366
ENGATE DO REBOQUE	368
ENGRENAGENS DE DISTRIBUIÇÃO	34
ENGRENAGENS PLANETÁRIAS - TRANSMISSÃO	298
ESPELHO RETROVISOR	715
	716
	718
	720
	721
ESTRUTURA ROPS ABERTA	742
ESTRUTURA ROPS FECHADA	740
	741
EXTENSÃO - DESLOCAMENTO LATERAL	447
EXTENSÃO - ENCOSTO	655
	656

F

FAROL DIANTEIRO	152
	154
	156
	157
FAROL DIANTEIRO (24 V)	157
FAROL DIANTEIRO (24 V) (FAROL)	150
FAROL DIANTEIRO (24 V) (FAROL BAIXO)	156
	176
	182
FIAÇÃO - AMORTECEDOR DA LÂMINA	225
FILTRO - AR DA CABINE	664
FILTRO - AR (ROPS - PAINEI TRASEIRO)	664
FILTRO - COMBUSTÍVEL	106

ÍNDICE

Designação	Página
FILTRO - ELEMENTO HIDRÁULICO (TREM DE FORÇA)	285
FILTRO - MAGNÉTICO (TRANSMISSÃO)	289
FILTRO - ÓLEO	285
FILTRO - ÓLEO DO MOTOR	64
FILTRO (AR DA CABINE)	664
FILTRO DE COMBUSTÍVEL E SEPARADOR DE ÁGUA	107
FIXADORES - CABEÇOTE DO MOTOR	32
FREIO DE SERVIÇO	388
FUNDO - ENCOSTO	727
FUSÍVEL (10 A) (CONSOLE DA DIREÇÃO)	254
FUSÍVEL (10 A) (CONTROLADOR DA LÂMINA)	228
FUSÍVEL (10 A) (CONTROLE DO AMORTECEDOR DA LÂMINA)	225
FUSÍVEL (10 A) (CONVERSOR DE ENERGIA)	142
FUSÍVEL (10 A) (DESCONGELADOR DIANTEIRO)	662
FUSÍVEL (10 A) (DESCONGELADOR TRASEIRO)	663
FUSÍVEL (10 A) (DIREÇÃO SECUNDÁRIA)	250
FUSÍVEL (10 A) (ESPELHO AQUECIDO)	718
FUSÍVEL (10 A) (FAIXO ALTO E BAIXO E PISCA)	186
FUSÍVEL (10 A) (FAROL DIANTEIRO)	172
FUSÍVEL (10 A) (FAROL DO LADO DIREITO)	174
FUSÍVEL (10 A) (LIMPADOR)	786
FUSÍVEL (10 A) (LIMPADOR INTERMITENTE)	784
FUSÍVEL (10 A) (LUZ ALTA/BAIXA)	178
FUSÍVEL (10 A) (LUZ DE MARCHA À RÉ)	168
FUSÍVEL (10 A) (LUZES DE TRABALHO DIANTEIRAS)	176
FUSÍVEL (10 A) (PISCA-PISCA DE ADVERTÊNCIA)	147 191 192
FUSÍVEL (10 A) (SETA DE DIREÇÃO - PISCA)	182
FUSÍVEL (10 A) (SETAS DE DIREÇÃO)	220
FUSÍVEL (15 A) (AQUECEDOR)	667
FUSÍVEL (15 A) (AQUECIMENTO E CONDICIONAMENTO DE AR)	668
FUSÍVEL (15 A) (AR CONDICIONADO)	611 612
FUSÍVEL (15 A) (LIMPADORES DIANTEIROS SUPERIOR E INFERIOR)	226
FUSÍVEL (20 A) (AR CONDICIONADO)	613
FUSÍVEL (30 A) (CONVERSOR - FORÇA)	141

G

GR. DE CONVERSÃO - CERTIFICADO	1 2
GRAXEIRA (LEVANTAMENTO DA LÂMINA)	419
GRAXEIRA (ROSCA 1/8-27 POL) (BARRA DE TRAÇÃO)	590
GRAXEIRA (ROSCA 1/8-27 POL) (EIXO DIANTEIRO)	344
GRAXEIRA (ROSCA 1/8-27 POL) (INCLINAÇÃO DA RODA)	424
GRAXEIRA (ROSCA 1/8-27 POL) (MUNHÃO)	606
GRAXEIRA (ROSCA 1/8-27 POL) (PINO DE ARTICULAÇÃO SUPERIOR/INFERIOR)	369
GRAXEIRA (ROSCA 1/8-27 45 GRAUS) (CILINDRO DE DESLOCAMENTO LATERAL)	421
GRUPO DE VÁLVULAS DE CONTROLE - CINCO	526 527 528 529
GRUPO DE VÁLVULAS DE CONTROLE - QUÁDRUPLO	522 523 524 525
GRUPO DE VÁLVULAS DE CONTROLE - SETE	530 531 532
GRUPO ROTATIVO DA BOMBA	492 493

I

ILUMINAÇÃO - FAROL E SINALIZAÇÃO	164 165 166 167
ILUMINAÇÃO - MARCHA A RÉ	168
ILUMINAÇÃO - SINALIZAÇÃO	190
INDICADOR - LIMPEZA DO FILTRO DE AR	90
INDICADOR - NÍVEL DO ÓLEO (VARETA)	66
INJETOR DE COMBUSTÍVEL	108
INSTALAÇÃO DO PISCA-PISCA DE ADVERTÊNCIA	147
INSTALAÇÃO DO RÁDIO	684
INSTALAÇÃO DO RÁDIO - ARRANJO	683
INSTRUMENTOS - ARRANJO	686
INTERRUPTOR - BALANCIM (DIREÇÃO SECUNDÁRIA)	250
INTERRUPTOR - BALANCIM (FAROL)	172
INTERRUPTOR - BALANCIM (LUZ DIANTEIRA / TRASEIRA)	176 178 182 186 220

ÍNDICE

Designação	Página
INTERRUPTOR - BALANCIM (PARADA DO MOTOR)	238
INTERRUPTOR - BOTÃO (MODO DO OPERADOR)(VISOR DIGITAL)	732, 734
INTERRUPTOR - CIRCUITO	133, 134
INTERRUPTOR - ESFERA (FAIXA DE ENGRENAGEM)	238
INTERRUPTOR - LIMITADOR (PEDAL DO FREIO - MOVIMENTO GRADUAL)	254
INTERRUPTOR - LIMPADOR DO PÁRA-BRISA	223
INTERRUPTOR - LIMPADOR (INTERMITENTE)	784
INTERRUPTOR - LIMPADOR (TRASEIRO)	786
INTERRUPTOR - LUZES	220
INTERRUPTOR - MAGNÉTICO	222
INTERRUPTOR - MAGNÉTICO (24 V) (PARTIDA)	242
INTERRUPTOR - PARTIDA (CHAVE)	252
INTERRUPTOR - PRESSÃO (ALTO/BAIXO)	94
INTERRUPTOR - PRESSÃO (DIREÇÃO SECUNDÁRIA)	250
INTERRUPTOR - PRESSÃO (LUZ DO FREIO)	234
INTERRUPTOR - ROTATIVO (LUZ ALTA/BAIXA)	176, 178, 182, 186
INTERRUPTOR - ROTATIVO (SETA DE DIREÇÃO)	220
INTERRUPTOR - ROTATIVO (VELOCIDADE DO VENTILADOR)	620, 676
INTERRUPTOR - ROTATIVO (VENTILADOR)	616
INTERRUPTOR - ROTATIVO (24 V) (LIMPADORES DIANTEIROS SUPERIOR E INFERIOR)	226
INTERRUPTOR - SINALIZAÇÃO DE DIREÇÃO / LUZ DE ALERTA	176, 182, 220
INTERRUPTOR - SINALIZAÇÃO DE DIREÇÃO / LUZ DE ALERTA	178, 186
INTERRUPTOR - TERMOSTATO	616
INTERRUPTOR - TERMOSTATO (REFRIGERANTE)	620
INTERRUPTOR (AUXILIAR DE PARTIDA A ÉTER)	209
INTERRUPTOR (BARRA DE LUZ BAIXA)	179, 182
INTERRUPTOR (CONTROLE DO AMORTECEDOR DA LÂMINA)	225
INTERRUPTOR (ESPELHO AQUECIDO)	718
INTERRUPTOR (FAROL DO LADO DIREITO)	174
INTERRUPTOR (LÂMPADAS DA ARMAÇÃO DA LÀMINA)	228
INTERRUPTOR (LIGA/DESLIGA) (DESCONGELADOR DIANTEIRO)	662
INTERRUPTOR (LIGA/DESLIGA) (DESCONGELADOR TRASEIRO)	663
INTERRUPTOR (LUZ DE MARCHA À RÉ AUXILIAR)	168
INTERRUPTOR (LUZ TRASEIRA)	254
INTERRUPTOR (PARTIDA A ÉTER)	254
INTERRUPTOR (PISCA-PISCA DE ADVERTÊNCIA)	147, 191, 192
INTERRUPTOR (REDUTOR DE LUMINOSIDADE DO PAINEL)	254
INTERRUPTOR (REGULAR - CONTINUAR RETENÇÃO DO ACELERADOR)	252
INTERRUPTOR (RETENÇÃO DO ACELERADOR AUTOMÁTICA - MANUSL)	252
INTERRUPTOR (TRAVA DO DIFERENCIAL)	254
ISOLADOR - TEMPO	688

J

JOGO - ACUMULADOR	472
JOGO - MANCAL PRINCIPAL	20
JOGO DE ABRAÇADEIRA DO PURIFICADOR DE AR	92
JOGO DE AJUSTADOR	728
JOGO DE ALAVANCA (MOTOR DE PARTIDA)	212, 216
JOGO DE ALMOFADA DO ASSENTO	750, 752
JOGO DE ALMOFADA (ENCOSTO)	655
JOGO DE ALMOFADA (ENCOSTO DE VINIL)	656
JOGO DE ANEL PADRÃO	8
JOGO DE ARRUELA (MOTOR DE PARTIDA)	210
JOGO DE BLOCO DESLIZADOR	750, 752, 756, 757, 758
JOGO DE BUCHA (MOTOR DE PARTIDA)	212, 216
JOGO DE CABEÇOTE	8
JOGO DE CÁRTER DE INCLINAÇÃO	750, 752
JOGO DE COIFA DE SUSPENSÃO	764
JOGO DE CORDÃO (ASSENTO)	766
JOGO DE ESCOVA (MOTOR DE PARTIDA)	210, 212, 216

ÍNDICE

Designação	Página
JOGO DE FILTRO DE COMBUSTÍVEL E SEPARADOR DE ÁGUA	107
JOGO DE FIXADOR DE CORREIA	764
JOGO DE FIXADORES (ASSENTO)	766
JOGO DE FIXADORES (MOTOR DE PARTIDA)	210
JOGO DE INCLINAÇÃO DO ASSENTO	728
JOGO DE INCLINAÇÃO TRASEIRA	728
JOGO DE INDICADOR	681
JOGO DE INDICADOR (ASSENTO)	766
JOGO DE ISOLADOR (MOTOR DE PARTIDA)	212
	216
JOGO DE LÂMINA DO LIMPADOR DE PÁRA-BRISA	784
JOGO DE LÂMINA DO LIMPADOR DE PÁRA-BRISA (TRASEIRO)	784
JOGO DE MANCAL	681
JOGO DE MANCAL (MOTOR DE PARTIDA)	210
JOGO DE MANCAL PRINCIPAL DO MOTOR	8
JOGO DE MARTELO	665
	666
JOGO DE MOLA	486
	681
JOGO DE PÁRA-CHOQUE	681
JOGO DE PINO DO MOTOR DE PARTIDA	210
JOGO DE PISTÃO (DIREÇÃO HIDRÁULICA)	488
JOGO DE RECEPTÁCULO (12 PINOS)	137
	174
	176
	178
	182
	186
	226
	228
	234
	243
	246
	248
	252
	254
	362
	364
	718
	732
	734
JOGO DE RECEPTÁCULO (12 PINOS) (INTERRUPTOR DA PISCA ALERTA)	168
JOGO DE RECEPTÁCULO (12 PINOS) (LÂMPADAS DE TRABALHO - BARRA)	178
	182
JOGO DE RECEPTÁCULO (12 PINOS) (SECADOR DE AR E ALARME DE MARCHA À RÉ)	243
JOGO DE RECEPTÁCULO (2 PINOS)	94
	127
	160
	168
	174
	184
	188
	189
	194
	224
	225
	226
	228
	230
	234
	238
	239
	242
	250
	320
	585
	617
	621
	630
	634
	658
	704
	718
	732
JOGO DE RECEPTÁCULO (2 PINOS) (CONVERSOR DE IGNIÇÃO - RAIO)	141
JOGO DE RECEPTÁCULO (2 PINOS) (INTERRUPTOR DA PRESSÃO DO AR CONDIONADO - SOLENÓIDE DA EMBREAGEM)	239
JOGO DE RECEPTÁCULO (2 PINOS) (LÂMPADA DO REMOVEDOR DE NEVE)	174
JOGO DE RECEPTÁCULO (2 PINOS) (LÂMPADAS DO PAINEL)	252
JOGO DE RECEPTÁCULO (2 PINOS) (MOTOR DE AQUECEDOR)	672
	676
JOGO DE RECEPTÁCULO (2 PINOS) (PARTIDA A ÉTER)	206
JOGO DE RECEPTÁCULO (2 PINOS) (RELÉ PRINCIPAL)	243
JOGO DE RECEPTÁCULO (2 PINOS) (TOMADA DE FORÇA DE 12 VOLTS)	609
	610
JOGO DE RECEPTÁCULO (2 PINOS) (VÁLVULA DE PARTIDA A ÉTER)	204
JOGO DE RECEPTÁCULO (2 PINOS) (VÁLVULA SOLENÓIDE)	403
JOGO DE RECEPTÁCULO (2 PINOS) (VÁLVULAS DO SOLENÓIDE DE DESLOCAMENTO LATERAL)	414
JOGO DE RECEPTÁCULO (3 PINOS)	149

ÍNDICE

Designação	Página
	158
	159
	188
	189
	198
	225
	226
	230
	234
	238
	246
	248
	250
	254
JOGO DE RECEPTÁCULO (3 PINOS) (SENSOR DE PRESSÃO DO COMANDO DO VENTILADOR)	239
JOGO DE RECEPTÁCULO (3 PINOS) (VIRAR/ESTACIONAR)	170
	190
JOGO DE RECEPTÁCULO (4 PINOS)	174
	204
	226
	228
	234
	238
	252
	254
	718
JOGO DE RECEPTÁCULO (4 PINOS) (AUXILIAR DE PARTIDA A ÉTER)	206
JOGO DE RECEPTÁCULO (4 PINOS) (DISJUNTOR DE CONTROLE DO MOTOR E RLÉ DA PARTRIDA)	243
JOGO DE RECEPTÁCULO (4 PINOS) (ESPELHO AQUECIDO - LÂMPADAS DA ARMAÇÃO DA LÂMINA)	168
JOGO DE RECEPTÁCULO (4 PINOS) (INTERRUPTOR DA PISCA ALERTA)	192
JOGO DE RECEPTÁCULO (4 PINOS) (LÂMPADA DE MARCHA À RÉ AUXILIAR)	168
JOGO DE RECEPTÁCULO (4 PINOS) (VELOCIDADE EFETIVA)	197
JOGO DE RECEPTÁCULO (6 PINOS)	226
	234
	239
	252
	362
	364
	672
	676
	732
	734
	778
JOGO DE RECEPTÁCULO (6 PINOS) (AQUECEDOR & AR CONDITIONADO)	621
JOGO DE RECEPTÁCULO (6 PINOS) (FAROL DIANTEIRO)	152
	154
JOGO DE RECEPTÁCULO (6 PINOS) (MÓDULO DE QUATRO MEDIDORES)	722
JOGO DE RECEPTÁCULO (6 PINOS) (MOTOR DO LIMPADOR DE VIDROS)	780
	782
JOGO DE RECEPTÁCULO (6 PINOS) (VELOCÍMETRO E TACÔMETRO)	723
JOGO DE RECEPTÁCULO (8 PINOS)	168
	174
	223
	226
	228
	718
	732
	734
JOGO DE RECEPTÁCULO (8 PINOS) (INTERRUPTOR DO LIMPADOR TRASEIRO)	784
	786
JOGO DE RECEPTÁCULO (8 PINOS) (INTERRUPTORES DO LIMPADOR DIANTEIRO)	226
JOGO DE RETENTOR (BOMBA REGULADORA DE DIREÇÃO)	486
JOGO DE RETENTOR DO MOTOR DE PARTIDA	210
JOGO DE RETENTOR (VÁLVULA SOLENÓIDE)	585
JOGO DE RETENTOR (VENTILADOR HIDRÁULICO)	587
JOGO DE REVISÃO - GOVERNADOR	398
JOGO DE ROLETE DE SUSPENSÃO	764
JOGO DE ROLO (ASSENTO)	766
JOGO DE SEGUIDOR	680
	681
JOGO DE TOMADA DE CONEXÃO (12 PINOS)	174
	176
	178
	182
	186
	226
	228
	230
	234
	238
	239
	252
	254
	362

ÍNDICE

Designação	Página
	364
	718
	732
	734
JOGO DE TOMADA DE CONEXÃO (12 PINOS) (DESCONGELADOR DIANTEIRO - TRASEIRO)	168
JOGO DE TOMADA DE CONEXÃO (2 PINOS)	174
	184
	188
	189
	225
	226
	230
	234
	238
	239
	242
	252
	616
	634
	704
	718
JOGO DE TOMADA DE CONEXÃO (2 PINOS) (ALARME DE MARCHA À RÉ - RETORNO)	246
JOGO DE TOMADA DE CONEXÃO (2 PINOS) (ALTO/BAIXO)	704
JOGO DE TOMADA DE CONEXÃO (2 PINOS) (AUXILIAR DE PARTIDA A ÉTER)	204
	206
JOGO DE TOMADA DE CONEXÃO (2 PINOS) (INTERRUPTOR DAS LÂMPADAS DO PAINEL - BUZINA)	254
JOGO DE TOMADA DE CONEXÃO (2 PINOS) (INTERRUPTOR DE MODO DE OPERADOR)	734
JOGO DE TOMADA DE CONEXÃO (2 PINOS) (INTERRUPTOR PISCA ALERTA)	192
JOGO DE TOMADA DE CONEXÃO (2 PINOS) (LÂMPADA DO REMOVEDOR DE NEVE)	168
	174
	228
JOGO DE TOMADA DE CONEXÃO (2 PINOS) (LÂMPADAS DE TRABALHO - BARRA)	178
	182
JOGO DE TOMADA DE CONEXÃO (2 PINOS) (LÂMPADAS DIANTEIRAS DA BARRA DE LUZ)	176
JOGO DE TOMADA DE CONEXÃO (2 PINOS) (MOTOR)	672
	676
JOGO DE TOMADA DE CONEXÃO (2 PINOS) (MOTOR DE AQUECEDOR-COND. DE AR)	621
JOGO DE TOMADA DE CONEXÃO (2 PINOS) (RELÉ DE PARTIDA)	243
JOGO DE TOMADA DE CONEXÃO (3 PINOS)	199
	200
	201
	202
	226
	234
	246
JOGO DE TOMADA DE CONEXÃO (3 PINOS) (INTERRUPTOR DE DESLIGAMENTO)	239
JOGO DE TOMADA DE CONEXÃO (3 PINOS) (LÂMPADAS DE VIRADA DA BARRA DE LUZ)	176
JOGO DE TOMADA DE CONEXÃO (3 PINOS) (SENSOR DA ALAVANCA DE CONTROLE DE PERCURSO À FRENTE)	254
JOGO DE TOMADA DE CONEXÃO (4 PINOS)	239
	243
	252
	254
	718
JOGO DE TOMADA DE CONEXÃO (4 PINOS) (INTERRUPTOR DA LÂMPDA DE MARCHA À RÉ AUXILIAR)	174
JOGO DE TOMADA DE CONEXÃO (4 PINOS) (LÂMPADA DE MARCHA À RÉ AUXILIAR)	168
JOGO DE TOMADA DE CONEXÃO (4 PINOS) (LÂMPADA E INTERRUPTOR DE MARCHA À RÉ AUXILIAR)	228
JOGO DE TOMADA DE CONEXÃO (4 PINOS) (SENSOR DE VELOCIDADE NO SOLO - FORÇA ELÉTRICA - NO SOLO)	234
JOGO DE TOMADA DE CONEXÃO (4 PINOS) (SOLENÓIDE E RELÉ DO AUXILAIR DE PARTIDA)	243
JOGO DE TOMADA DE CONEXÃO (6 PINOS)	186
	226
	234
	243
	252
	734
JOGO DE TOMADA DE CONEXÃO (8 PINOS)	174
	226
	228
	234
	718
JOGO DE TOMADA DE CONEXÃO (8 PINOS) (LAVADOR - LIMPADOR DIANTEIRO E TRASEIRO)	168
JOGO-HASTE	728
JOGO-VEDADOR TIPO CARTUCHO	320
JOGO-VEDADOR TIPO CARTUCHO (TRAVA DO DIFERENCIAL)	308
JUNTA-BASE	58
JUNTA-RESPIRO	58

ÍNDICE

Designação	Página
JUNTA (TAMPA DO BOCAL DE ENCHIMENTO DO TANUE DE ÕLEO HIDRÃULICO)	498

L

LÂMINA	595
LÂMINA DO LIMPADOR DE PÁRA-BRISA (PERFIL ALTO - INFERIOR DIANTEIRO)	782
LÂMINA DO LIMPADOR DE PÁRA-BRISA (PERFIL ALTO - TRASEIRO)	786
LÂMINA DO LIMPADOR DE PÁRA-BRISA (PERFIL BAIXO - INFERIOR DIANTEIRO)	780
LÂMINA DO LIMPADOR DE PÁRA-BRISA (PERFIL BAIXO - TRASEIRO)	784
LÂMINA DO LIMPADOR DE PÁRA-BRISA (VENTILADOR INFERIOR DIANTEIRO)	771
LÂMPADA - FAROL	150
LÂMPADA - LADO DIREITO (LUZES DO FREIO/LUZES TRASEIRAS/LUZES INDICADORAS DE DIREÇÃO)	248
LÂMPADA - LADO ESQUERDO (LUZES DO FREIO/LUZES TRASEIRAS/LUZES INDICADORAS DE DIREÇÃO)	248
LÂMPADA - SINALIZAÇÃO	158 159
LÂMPADA - SINALIZAÇÃO (DIREITO)	170
LÂMPADA - SINALIZAÇÃO (ESQUERDO)	170
LÂMPADA - SINALIZAÇÃO (PARADA/TRASEIRA)	246
LÂMPADA - SINALIZAÇÃO (VIRAR/ESTACIONAR)	190
LÂMPADA - TETO	149
LÂMPADA (FILAMENTO SIMPLES) (SETA DE DIREÇÃO)	152 154
LÂMPADA (PISCA-PISCA DE ADVERTÊNCIA)	160
LÂMPADA (24 V) (AR CONDICIONADO E AQUECEDOR)	676
LÂMPADA (24 V) (ARMAÇÃO DA LÂMINA - INDICADOR)	228
LÂMPADA (24 V) (BARRA DE LUZ BAIXA)	179 182
LÂMPADA (24 V) (CONSOLE DO EIXO)	252
LÂMPADA (24 V) (CONTROLE - INDICADOR DE AMORTECIMENTO DE LÂMINA)	225
LÂMPADA (24 V) (DESCONGELADOR DIANTEIRO)	662
LÂMPADA (24 V) (DESCONGELADOR TRASEIRO)	663
LÂMPADA (24 V) (FACHO ALTO - BAIXO)(LADO DIREITO)	154
LÂMPADA (24 V) (FAROL BAIXO)	170
LÂMPADA (24 V) (FAROL DIANTEIRO)	172
LÂMPADA (24 V) (FAROL DIANTEIRO - FAROL TRASEIRO - INDICADOR)	220
LÂMPADA (24 V) (FAROL DO LADO DIREITO)	174
LÂMPADA (24 V) (ILUMINAÇÃO DE OPERAÇÃO)	152
LÂMPADA (24 V) (INDICADOR DA AÇÃO PRINCIPAL DO EMS)	732 734
LÂMPADA (24 V) (INDICADOR DA DIREÇÃO SECUNDÁRIA)	250
LÂMPADA (24 V) (INDICADOR DA TRAVA DO DIFERENCIAL)	732
LÂMPADA (24 V) (INDICADOR DE AUXILIAR DE PARTIDA A ÉTER)	209
LÂMPADA (24 V) (INDICADOR DE ESPELHO AQUECIDO)	718
LÂMPADA (24 V) (INDICADOR DE FACHO ALTO)	732
LÂMPADA (24 V) (INDICADOR DE FAROL DIANTEIRO/TRASEIRO)	176
LÂMPADA (24 V) (INDICADOR DE RETENÇÃO DO ACELERADOR)	732
LÂMPADA (24 V) (INDICADOR DE VELOCIDADE DO VENTILADOR)	616
LÂMPADA (24 V) (INDICADOR DE VIRADA À DIREITA)	732
LÂMPADA (24 V) (INDICADOR DE VIRADA À ESQUERDA)	732
LÂMPADA (24 V) (INTERRUPTOR AUTOMTICO - MANUAL DE RETENÇÃO DO ACELERADOR)	252
LÂMPADA (24 V) (INTERRUPTOR DE PARTIDA A ÉTER)	254
LÂMPADA (24 V) (INTERRUPTOR DE TRAVA DO DIFERENCIAL)	254
LÂMPADA (24 V) (INTERRUPTOR DO FAROL TRASEIRO)	254
LÂMPADA (24 V) (INTERRUPTOR DO REDUTOR DE LUMINOSIDADE DAS LÂMPADAS DO PAINEL)	254
LÂMPADA (24 V) (INTERRUPTOR DO SACADOR DE PINO DO EIXO CENTRAL)	252
LÂMPADA (24 V) (LUZ ALTA)	170
LÂMPADA (24 V) (LUZ ALTA/BAIXA)	152
LÂMPADA (24 V) (LUZ DE MARCHA À RÉ AUXILIAR)	168
LÂMPADA (24 V) (LUZ DE OPERAÇÃO)	154
LÂMPADA (24 V) (LUZ DIANTEIRA / TRASEIRA)	178 182 186
LÂMPADA (24 V) (MÓDULO DE 4 MEDIDORES)(INDICADOR)	732
LÂMPADA (24 V) (PAINEL DE CONTROLE DO AQUECEDOR E AR CONDICIONADO)	672

ÍNDICE

Designação	Página
LÂMPADA (24 V) (PAINEL DE INSTRUMENTOS)	734
LÂMPADA (24 V) (PAINELDE AQUECIMENTO - VENTILADOR - AR CONDICIONADO)	620
LÂMPADA (24 V) (PISCA-PISCA DE ADVERTÊNCIA)	147 191 192
LÂMPADA (24 V) (PRESSÃO DO AR DO LADO DIREITO)(INDICADOR)	732
LÂMPADA (24 V) (PRESSÃO DO AR DO LADO ESQUERDO)(INDICADOR)	732
LÂMPADA (24 V) (QUATRO INDICADORES E PRESSÃO DO AR)	734
LÂMPADA (24 V) (SETA DE DIREÇÃO)	152 154
LÂMPADA (24 V) (TETO)	149
LÂMPADA (24 V) (VELOCÍMETRO E TACÔMETRO)	723
LÂMPADA (24 VOLTS)(21 WATTS) (PARADA/TRASEIRA)	248
LÂMPADA (24 VOLTS)(5 WATTS) (VIRADA)	248
LAVADOR DO VIDRO	768 770
LENTE ÂMBAR (PISCA-PISCA DE ADVERTÊNCIA)	160
LENTE ÂMBAR (SETA DE DIREÇÃO)	152 154
LENTE (FAROL)	150
LENTE (FAROL DIANTEIRO)	157
LENTE (FAROL) (FAIXA BAIXA)	156
LENTE (LUZ ALTA/BAIXA)	152 154
LENTE (LUZES DIANTEIRAS) (FAROL BAIXO)	170
LENTE (LUZES DIANTEIRAS) (LUZ ALTA)	170
LENTE (SETA DE DIREÇÃO)	152 154
LENTE (TETO)	149
LEVANTAMENTO DA LÂMINA	598
LEVANTAMENTO DO MOTOR	41
LIMPADOR DO VIDRO	776 777 778 780 782 784 786 788
LUZ GIRATÓRIA DE ALARME	160

M

Designação	Página
MANGUEIRA - ELIMINAÇÃO DE VAPORES	10
MANÔMETRO DE AR (DIR.)	732
MANÔMETRO DE AR (ESQ.)	732
MANÔMETRO DE AR (FREIO - LADO DIREITO)	734
MANÔMETRO DE AR (FREIO DO LADO ESQUERDO)	734
MARTELO E MONTAGEM	665 666
MECANISMO DAS VÁLVULAS	58
MÓDULO - VELOCÍMETRO E TACÔMETRO	723
MÓDULO ELETRÔNICO DE QUATRO INDICADORES	722
MONITOR - SOFTWARE	144
MONTAGEM - ESTRUTURA ROPS	724 726
MONTAGEM - MECANISMO DAS VÁLVULAS	43
MONTAGEM - MOTOR	42
MONTAGEM - REMOVEDOR DE NEVE	604
MONTAGEM - RIPER	602
MONTAGEM - RODA	296
MOTOR	7
MOTOR - ENGRENAGENS	478
MOTOR DE REVERSÃO DO CÍRCULO	442
MOTOR E VENTILADOR	74
MOTOR ELÉTRICO	194 195
MOTOR ELÉTRICO (AR CONDICIONADO)	634
MOTOR ELÉTRICO DA BOMBA HIDRÁULICA	477
MOTOR ELÉTRICO DE PARTIDA	210 212 214 216
MOTOR ELÉTRICO (27 VOLT)	617
MOTOR ELÉTRICO (27 VOLT) (AQUECEDOR)	672
MOTOR ELÉTRICO (27 VOLT) (AQUECEDOR)(APLICAÇÃO LEVE)	676
MOTOR ELÉTRICO (27 VOLT) (AR CONDICIONADO)	621
MOTOR HIDRÁULICO DO GEROTOR	480

O

Designação	Página
ÓLEO - ARRANJO PARA TROCA RÁPIDA	68

P

Designação	Página
PAINEL - CABINE	730 731
PAINEL - JANELA	736 738
PAINEL- REDUÇÃO DE RUÍDO	46 371
PAINEL DE INSTRUMENTOS	732 734
PERSIANA	714

ÍNDICE

Designação	Página
PISCA-PISCA ELETRÔNICO (12-24 VOLTS) (PISCA PISCA E PISCA ALERTA)	186
PISCA-PISCA ELETRÔNICO (12-24 VOLTS) (SETA DE DIREÇÃO - PISCA)	178
	182
PISTÃO E BIELA	47
PLACA-CHASSI (NÃO FURAR OU SOLDAR)	791
PLACA DE ADVERTÊNCIA (OPERAÇÃO DA MÁQUINA)	791
PLACA DE INSTRUÇÃO (DRENAR E ENCHER CÁRTER)	68
PLACA E DECALQUE	789
	790
	792
	793
	794
	795
	796
	797
PORTA	640
	642
PORTA DA CABINE	644
	646
	648
	650
PÓS-ARREFECEDOR E MONTAGEM	88
PROTETOR - PLATAFORMA	362
	364
PROTETOR - REMOVEDOR DE NEVE	372
	373
PROTETOR - TUBOS DO FREIO	361
PROTETOR E SUPORTE DO RADIADOR	358
	374
PROTETOR INFERIOR	360
PUBLICAÇÃO	712
	713
PURIFICADOR DE AR	90
	92
PUXADOR-AMORTECEDOR (ASSENTO)	766

R

RADIADOR	87
RECEPTÁCULO PARA ENERGIA (12 V)	609
	610
RECEPTÁCULO-PARTIDA AUXILIAR	196
RECEPTOR - SECADOR (REFRIGERANTE)	94
REDUÇÃO DE RUÍDO	56
REGULADOR DE TEMPERATURA DA ÁGUA	76
RESERVATÓRIO - ARMAZENAGEM DE ÁGUA (AQUECEDOR DE 12 VOLTS)	107
RESPIRO (AR)	306
RESPIRO (MOTOR)	58
RESPIRO (TRANSMISSÃO)	289
RETEM DA VÁLVULA DE CONTROLE	438
	440
RETENTOR DO VIRABREQUIM	38
	54
RETENTOR (1M)	43
REVESTIMENTO DA CABINE	690
	694
	700
RIPER	605
	606
RODA	341
	342
RODA E PNEU	324
	325
	326
	327
	328
	329
	330
	331
	332
	333
	334
	335
	336
	337
	338
	339
	340
ROPS ABERTA	746
ROPS FECHADA	743
	744
	745

S

SECADOR DE AR	380
	382
	384
	386
SENSOR - PRESSÃO	199
	200
	201
	202
SENSOR - TEMPERATURA (COLETOR DA ADMISSÃO)	230
SENSOR - TEMPERATURA (COMBUSTÍVEL)	230
SENSOR - TEMPERATURA (LÍQUIDO ARREFECEDOR)	230
SENSOR - VELOCIDADE ABSOLUTA	197
SENSOR DE VELOCIDADE (EIXO-COMANDO DE VÁLVULAS)	230
SILENCIADOR	100
SISTEMA DE ILUMINAÇÃO - ADVERTÊNCIA	191
	192
SISTEMA DE ILUMINAÇÃO - FARÓIS	161

ÍNDICE

Designação	Página
	162
	163
	170
	172
	174
	176
	178
	182
	184
	186
	188
	189
SISTEMA ELETRÔNICO - MONITOR	144
SOLENÓIDE (24 V) (MOTOR DE PARTIDA)	210
SUPORTE - ASSENTO	762
SUPORTE - CHASSI TRASEIRO	378
SUPORTE DO MOTOR	55
SUPORTE DO TANQUE DE COMBUSTÍVEL	379
SUSPENSÃO - ASSENTO	764
	766

T

TAMPA	68
TAMPA - BLOCO DO MOTOR	16
TAMPA - BOCAL DE ENCHIMENTO DE ÓLEO	62
TAMPA - BOCAL DE ENCHIMENTO (ÓLEO DO TREM DE FORÇA)	284
TAMPA - BOCAL DE ENCHIMENTO (TANQUE DE ÓLEO HIDRÁULICO)	498
TAMPA - CAIXA DO VOLANTE	18
TAMPA - EMBARQUE	276
TAMPA - PROTEÇÃO	350
TAMPA - RADIADOR	87
TAMPA - TANQUE DE COMBUSTÍVEL (PODE SER TRANCADO)	124
TAMPA CONTRA POEIRA	50
	64
	78
	82
	145
	146
	458
	462
	534
TAMPA CONTRA POEIRA (ÓLEO HIDRÁULICO)	473
TAMPA CONTRA POEIRA (TRAVA DO DIFERENCIAL)	266
TAMPA DA VÁLVULA (HASTE)	324
	325
	326
	327
	328
	329
	330
	331
	332
	333
	334
	335
	336
	337
	338
	339
	340
	341
	342
TAMPA DO CONECTOR DO MÓDULO	143
TANDEM E TAMPA	306
TANQUE DE AR	398
TANQUE DE COMBUSTÍVEL	120
	122
	124
TANQUE HIDRÁULICO	496
	498
TAPETE (CABINE)	688
TELA DE SUCÇÃO (TRANSMISSÃO)	289
TELA FILTRANTE (BOCAL DE ENCHIMENTO DO ÓLEO HIDRÁULICO)	498
TELA PÁRA-SOL	747
TENSOR DA CORREIA	12
TERMOSTATO / REGULADOR DE TEMPERATURA	76
TRANSMISSÃO	307
TRAVA - CONTROLE MANUAL HIDRÁULICO	476
TRAVA - DESLOCAMENTO LATERAL	475
TUBOS - ACUMULADOR	448
TUBOS - ÁGUA	80
	81
	82
	84
TUBOS - AQUECEDOR	706
	708
	710
TUBOS - AR	94
	96
	97
TUBOS - AR CONDICIONADO	702
	704
TUBOS - ARREFECEDOR DO TREM DE FORÇA	78
TUBOS - BOMBA	462
TUBOS - DIREÇÃO	472
TUBOS - DIREÇÃO SECUNDÁRIA	470
TUBOS - DRENAGEM	109
TUBOS - FILTRO DO COMBUSTÍVEL	110
TUBOS - GRAXA	369
TUBOS - INJEÇÃO DO COMBUSTÍVEL	114
TUBOS - ÓLEO DA TRANSMISSÃO	294

ÍNDICE

Designação	Página
TUBOS - ÓLEO DO TURBOALIMENTADOR	67
TUBOS - ÓLEO HIDRÁULICO	450
	454
	457
TUBOS - RIPER	466
	468
TUBOS - VENTILADOR HIDRÁULICOS	458
	460
TUBOS DO AQUECEDOR	708
TUCHO DA VÁLVULA	40
TURBOALIMENTADOR	102
	103
V	
VÁLVULA - COLETOR E SOLENÓIDE	586
	587
VÁLVULA - CONDICIONADOR DE AR (LADO ALTO)	94
VÁLVULA - CONDICIONADOR DE AR (LADO BAIXO)	94
	704
VÁLVULA - PARTIDA A ÉTER	204
VÁLVULA (ASSENTO)	766
VÁLVULA COMBINADA	534
VÁLVULA DE ALÍVIO	312
	576
	577
	578
	579
	580
	581
	582
	583
VÁLVULA DE ALÍVIO DE AR (PRESSÃO)	398
VÁLVULA DE ALÍVIO (PRINCIPAL)	534
VÁLVULA DE CONTROLE	309
	536
	538
	540
	542
	544
	546
	548
	550
	552
	554
	556
	558
	560
	562
	564
	566
	568
	570
VÁLVULA DE CONTROLE - PRESSÃO E COMPENSAÇÃO DE FLUXO	572
	574
VÁLVULA DE CONTROLE - TRANSMISSÃO	322
VÁLVULA DE CONTROLE DO AR	400
	401
VÁLVULA DE CONTROLE PILOTO	310
VÁLVULA DE DERIVAÇÃO DA BOMBA	60
VÁLVULA DE DESACOPLAMENTO RÁPIDO	402
VÁLVULA DE DRENAGEM (LÍQUIDO ARREFECEDOR)	82
VÁLVULA DE DRENAGEM (SISTEMA DE ARREFECIMENTO)	358
	374
VÁLVULA DE RETENÇÃO	114
	126
VÁLVULA DE SEPARAÇÃO	584
VÁLVULA E ARTICULAÇÕES	500
	502
	504
	506
	510
	512
	514
	518
	520
VÁLVULA E MONTAGEM - TRAVA DO DIFERENCIAL	308
VÁLVULA PARA TIRAR AMOSTRAS DE FLUIDOS (ÓLEO DA TRANSMISSÃO)	78
VÁLVULA PARA TIRAR AMOSTRAS DE FLUIDOS (ÓLEO HIDRÁULICO)	473
VÁLVULA SELETORA E CONTROLE DE PRESSÃO	314
	316
	318
VÁLVULA SOLENÓIDE	320
	403
	585
VÁLVULA SOLENÓIDE (AMORTECEDOR DA LÂMINA)	586
VÁVULA-PARTIDA A ÉTER	206
VENTILADOR - ALTERNADOR	128
VENTILADOR DE CIRCULAÇÃO DE AR DA CABINE	658
	660
	662
	663
VIDRO	771
	772
	773
	774
	775
VIRABREQUIM	20
VOLANTE DO MOTOR	33

STICHWORTVERZEICHNIS

Bezeichnung	Seite
A	
ABDECKGLAS (ARBEITSLEUCHTE)	150
ABDECKGLAS (FAHRERHAUSDACH)	149
ABDECKGLAS (FAHRTRICHTUNGSANZEIGER)	152, 154
ABDECKGLAS (FERNLICHT/ABBLENDLICHT)	152, 154
ABDECKGLAS (FRONTSCHEINWERFER) (ABBLENDLICHT)	170
ABDECKGLAS (FRONTSCHEINWERFER) (FERNLICHT)	170
ABDECKGLAS (FRONTSCHEINWERFER) (ABBLENDLICHT)	156
ABDECKGLAS (GELB) (FAHRTRICHTUNGSANZEIGER)	152, 154
ABDECKGLAS (GELB) (RUNDUMKENNLEUCHTE)	160
ABDECKGLAS (SCHEINWERFER)	157
ABLASSLEITUNGEN	109
ABLASSSTOPFEN	36
ABLASSSTOPFEN (GETRIEBEGEHÄUSE)	348
ABLASSSTOPFEN (VERTEILERGETRIEBEGEHÄUSE)	290
ABLASSVENTIL (KÜHLMITTEL)	82
ABLASSVENTIL (KÜHLSYSTEM)	358, 374
ANHÄNGEVORRICHTUNG	368
ANSAUGKRÜMMER	99
ANSAUGSIEB (GETRIEBE)	289
ANSCHLUSSGRUPPE	472
ANTRIEBSKETTE	260
ANTRIEBSWELLENSCHUTZ	376
ANZEIGEN-EINBAUSATZ	681
ANZEIGEN-EINBAUSATZ (SITZ)	766
ANZUGSLEINE (SITZ)	766
ARBEITS- U. SIGNALBELEUCHTUNG	164, 165, 166, 167
ARBEITSLEUCHTEN	150, 161, 162, 163, 170, 172, 174, 176, 178, 182, 184, 186, 188, 189
ARMATUR	686
ARMLEHNE	624, 625
ASCHENBECHER	690, 694
ÄTHERSPRÜHGERÄT	209
ÄTHERSTARTHILFE	204, 206, 208, 209
ÄTHERSTARTHILFEVENTIL	204
ÄTHERSTARTHILFEZYLINDER	204, 206
ÄTHERSTARTVENTIL	206
AUFHÄNGUNG - HINTERES FAHRWERK	378
AUFREISSER	605, 606
AUFREISSERBEFESTIGUNG	602
AUFREISSERHUBZYLINDER	430
AUFREISSERLEITUNGEN	466, 468
AUSPUFFKRÜMMER	98
B	
BATTERIE	131, 132
BATTERIE (HOCHLEISTUNG)(12 V)	131
BATTERIE (WARTUNGSFREI)(12 V)	132
BEFESTIGUNGSTEILE (STARTERMOTOR)	210
BEILAGSCHEIBEN-SATZ (STARTERMOTOR)	210
BETRIEBSBREMSE	388
BLINKERLEUCHTEN	190
BLINKLEUCHTE	158, 159
BLINKLEUCHTE (BREMSLICHT - HECKLEUCHTE)	246
BLINKLEUCHTE (LINKS)	170
BLINKLEUCHTE (RECHTS)	170
BLINKLEUCHTE (RICHTUNGSBLINKER - STANDLICHT)	190
BREMSGESTÄNGE	392
BREMSLEITUNGSVERKLEIDUNG	361
BUCHSEN-EINBAUSATZ (STARTERMOTOR)	212, 216
BÜRSTEN-EINBAUSATZ (STARTERMOTOR)	212, 216
BÜRSTEN-EINBAUSATZ (STARTERMOTOR)	210
D	
DÄMPFUNGSKNOPF (SITZ)	766

STICHWORTVERZEICHNIS

Bezeichnung	Seite
DICHTUNG (HYDRAULIKÖLTANK - EINFÜLLKAPPE)	498
DICHTUNG (1M)	43
DICHTUNGSSATZ (HYDRAULIKLÜFTER)	587
DICHTUNGSSATZ (LENKZUMESSPUMPE)	486
DICHTUNGSSATZ (SOLENOIDVENTIL)	585
DIFFERENTIAL	282
DIFFERENTIAL UND TELLERRAD	278
DIFFERENTIALSPERRE - VENTIL UND BEFESTIGUNGSTEILE	308
DIFFERENTIALSPERRENGESTÄNGE	266
DOKUMENTATION	712 713
DREHKNOPFSCHALTER (FAHRTRICHTUNGS-ANZEIGER)	220
DREHKNOPFSCHALTER (FERNLICHT/ ABBLENDLICHT)	176 182 186
DREHKNOPFSCHALTER (FERNLICHT/ ABBLENDLICHT)	178
DREHKNOPFSCHALTER (GEBLÄSEGE-SCHWINDIGKEIT)	620 676
DREHKNOPFSCHALTER (LÜFTER)	616
DREHKNOPFSCHALTER (24 V) (UNTERE/OBERE SCHEIBENWISCHER, VORNE)	226
DREHSCHALTER (GANGBEREICH)	238
DREHSTROMGENERATOR	128 130
DREHSTROMGENERATOR-VENTILATOR	128
DREHZAHLSENSOR (NOCKENWELLE)	230
DRUCK- U. STROMAUSGLEICHSVENTIL	572 574
DRUCKKNOPFSCHALTER (BETRIEBSART) (DIGITALDISPLAY)	732 734
DRUCKLUFT-STEUERVENTIL	400 401
DRUCKLUFTBEHÄLTER	398
DRUCKLUFTLEITUNGEN	94 96 97
DRUCKSCHALTER (BREMSLEUCHTE)	234
DRUCKSCHALTER (HOCH/NIEDRIG)	94
DRUCKSCHALTER (NOTLENKUNG)	250
DRUCKSENSOR	199 200 201 202
DRUCKSPEICHER - SCHARDÄMPFUNG	406
DRUCKSPEICHERBLASE-EINBAUSATZ	472
DRUCKSPEICHERLEITUNGEN	448

E

Bezeichnung	Seite
ECKMESSER	593 594
EINBAUSATZ - KRAFTSTOFFILTER UND WASSERABSCHEIDER	107
EINFÜLLSTUTZENKAPPE (HYDRAULIKÖL-TANK)	498
EINFÜLLSTUTZENKAPPE (KRAFTÜBERTRA-GUNGSÖL)	284
EINSATZDICHTUNG	320
EINSATZDICHTUNG (DIFFERENTIALSPER-RE)	308
EINSTELLER-EINBAUSATZ	728
ELEKTR. UMFORMER	140 141 142
ELEKTR. UMFORMER (24 V ZU 12 V)	142
ELEKTR. UMFORMER (5/7.5 A, 24 ZU 12 VOLT)	140
ELEKTRISCHE HYDRAULIKPUMPE	477
ELEKTRON. BLINKER (12/24 V) (RICHTUNGS-BLINKER U. WARNLEUCHTEN)	186
ELEKTRON. BLINKER (12/24 V) (RICHTUNGSBLINKER/WARNLEUCHTE)	178 182
ELEKTRONIK - MONITOR	144
ENDSCHALTER (BREMSE/KRIECHGANGPE-DAL)	254
ENTDUNSTERSCHLAUCH	10
ENTLÜFTER (DRUCKLUFT)	306
ENTLÜFTER (GETRIEBE)	289
ENTLÜFTER (MOTOR)	58
ENTLÜFTERDICHTUNG	58

F

Bezeichnung	Seite
FAHRERHAUSAUSKLEIDUNG	690 694 700
FAHRERHAUSBELEUCHTUNG	149
FAHRERHAUSFENSTER	771 772 773 774 775
FAHRERHAUSHEIZUNG	669 670 672 676
FAHRERHAUSHEIZUNG U. BEFESTIGUNGS-TEILE	667 668
FAHRERHAUSLUFTFILTER	664
FAHRERHAUSLUFTSCHLITZE	714

STICHWORTVERZEICHNIS

Bezeichnung	Seite
FAHRERHAUSTÜR	640, 642, 644, 646, 648, 650
FAHRERHAUSVERDRAHTUNG	226, 228
FAHRERHAUSVERKLEIDUNG	730, 731
FAHRERHAUSZUBEHÖR	609, 610
FAHRERPLATTFORMVERKLEIDUNG	362, 364
FAHRERSITZ	750, 752
FAHRERSITZ, KIPPVORRICHTUNG	728
FAHRERSITZFEDERUNG	764, 766
FAHRERSITZFEDERUNGSGEHÄUSE	680
FAHRERSITZVERKLEIDUNG	728
FAHRGESCHWINDIGKEITSSENSOR	197
FEDER-EINBAUSATZ	486, 681
FEDERUNGS-EINBAUSATZ (MANSCHETTE)	764
FEDERUNGS-EINBAUSATZ (ROLLE)	764
FENSTERVERKLEIDUNG	736, 738
FESTSTELLBREMSGESTÄNGE	390
FILTER (FAHRERHAUSLUFT)	664
FILTER (KRAFTSTOFF-/WASSERABSCHEIDER) (HAUPT)	107
FILTERELEMENT - HYDRAULIK (KRAFTÜBERTRAGUNG)	285
FRONTAUFREISSERZAHN	608
FRONTSCHEINWERFER	152, 154, 156, 157
FRONTSCHEINWERFER (24 V) (ABBLENDLICHT)	176, 182
FUSSMATTE (FAHRERHAUS)	688

G

Bezeichnung	Seite
GELENKZYLINDER UND BEFESTIGUNGSTEILE	418
GESCHWINDIGKEITS- U. DREHZAHLMESSER-MODUL	723
GETRIEBE	307
GETRIEBEANSCHLUSS	258
GETRIEBEGEHÄUSE	259
GETRIEBEHYDRAULIK	272
GETRIEBEÖLFÜLLSTUTZEN	284
GETRIEBEÖLKÜHLER	274
GETRIEBESTEUERUNG	268
GETRIEBESTEUERVENTIL	322
GLEITSCHIENENBLOCK-EINBAUSATZ	750, 752, 756, 757, 758
GRUNDAUSFÜHRUNG	4

H

Bezeichnung	Seite
HALTETEILESATZ (SITZ)	766
HAMMER UND BEFESTIGUNG	665, 666
HAUPTFILTER	92
HAUPTLAGERSATZ	20
HEBEL-EINBAUSATZ (STARTERMOTOR)	212, 216
HEIZUNGSELEMENT (240V 1250W)	146
HEIZUNGSLEITUNGEN	706, 708, 710
HUBVENTIL	40
HYDRAULIKDRUCKSPEICHER U. BEFESTIGUNG	404
HYDRAULIKHAMMER-EINBAUSATZ	665, 666
HYDRAULIKLEITUNGEN	450, 454, 457
HYDRAULIKLÜFTERLEITUNGEN	458, 460
HYDRAULIKÖLKÜHLERBEFESTIGUNG	417
HYDRAULIKPUMPE UND LEITUNGEN	462
HYDRAULIKPUMPENMOTOR, ELEKTR.	477
HYDRAULIKSPERRE (HANDBEDIENUNG)	476
HYDRAULIKSTEUERUNG	407, 408, 409, 410, 411, 412, 413
HYDRAULIKTANK	496, 498

I

Bezeichnung	Seite
IDENTIFIZIERUNGS-AUFKLEBER (GRUPPEN- U. SEQUENZNR.)	634
IDENTIFIZIERUNGS-AUFKLEBER (GRUPPEN- U. SEQUENZNR.)	616

STICHWORTVERZEICHNIS

Bezeichnung	Seite
IDENTIFIZIERUNGS-AUFKLEBER (SICHERUNG) (FERNLICHT/ ABBLENDLICHT)	178
INSTRUKTIONS-AUFKLEBER (AM ÜBERROLLSCHUTZ NICHT BOHREN/ SCHWEISSEN)	743 745 746
INSTRUKTIONS-AUFKLEBER (FÜR SITZVERSTELLUNG)	764 766
INSTRUKTIONS-AUFKLEBER (NOTAUSGANG/ FENSTER ENTFERNEN)	665 666
INSTRUKTONSSCHILD (KURBELGEHÄUSEAB-LASS U. FÜLLUNG)	68
INSTRUMENTENTAFEL	732 734
ISOLATOR-EINBAUSATZ (STARTERMOTOR)	212
ISOLATOR-EINBAUSATZ (STARTERMOTOR)	216

K

KÄLTEMITTELKOMPRESSOR	626 628 630 631
KÄLTEMITTELKONDENSATOR	634
KÄLTEMITTELKONDENSATOR U. BEFESTIGUNGSTEILE	632
KÄLTEMITTELTROCKNER (KÜHLMITTEL)	94
KAPPE	68
KIPPSCHALTER (ARBEITSSCHEINWER-FER)	172
KIPPSCHALTER (HECKSCHEINWERFER)	176 178 182 186 220
KIPPSCHALTER (MOTORABSTELLUNG)	238
KIPPSCHALTER (NOTLENKUNG)	250
KIPPVORRICHTUNG NACH HINTEN, REPARATURSATZ	728
KIPPWANNENSATZ	750 752
KLEMMLEISTE	148
KLIMAANLAGE	613 614 616 620
KLIMAANLAGE UND AUFHÄNGUNG	611 612
KLIMAANLAGENLEITUNGEN	702 704
KLIMAANLAGENVENTIL (OBERE SEITE)	94
KLIMAANLAGENVENTIL (UNTERE SEITE)	94 704
KNICKGELENK-ANHÄNGUNG	366
KNICKLENKZYLINDER	425
KNIESTÜCK	448
KOLBENPUMPE	488 490
KOLBENPUMPE UND BEFESTIGUNG	482
KOLBENPUMPENUMLAUFSATZ	492 493
KOLBENSATZ (HYDRAULIKSTEUERUNG)	488
KRAFTSTOFF-ENTLÜFTUNGSPUMPE	118
KRAFTSTOFFEINSPRITZDÜSE	108
KRAFTSTOFFEINSPRITZLEITUNGEN	114
KRAFTSTOFFEINSPRITZPUMPE	117
KRAFTSTOFFFILTEREINSATZ (GETRIEBE-ÖL)	78
KRAFTSTOFFILTER	106
KRAFTSTOFFILTERLEITUNGEN	110
KRAFTSTOFFÖRDERPUMPE UND BEFESTIGUNGSTEILE	116
KRAFTSTOFFTANK	120 122 124
KRAFTSTOFFTANKABSTÜTZUNG	379
KRAFTSTOFFTANKKAPPE (VER-SCHLIESSBAR)	124
KUEHLERVERKLEIDUNG UND AUFHÄN-GUNG	374
KÜHLER	87
KÜHLERKAPPE	87
KÜHLSYSTEM	71 72
KÜHLWASSER-TEMPERATURREGLER UND GEHÄUSE	76
KÜHLWASSERLEITUNGEN	80 81 82 84
KÜHLWASSERPUMPE	85 86
KUPPLUNGSGESTÄNGE	262
KURBELLAGER-EINBAUSATZ	8
KURBELWELLE	20
KURBELWELLENDICHTUNG	38 54

L

LADELUFTKÜHLER U. BEFESTIGUNG	88
LAGERSATZ	681
LAGERSATZ (STARTERMOTOR)	210
LAUFBAND UND ANTRIEB (RUNDUM-KENNLEUCHTE)	160
LENKBETÄTIGUNG	416

STICHWORTVERZEICHNIS

Bezeichnung	Seite
LENKGESTÄNGE	370
LENKKONSOLENVERDRAHTUNG	254
LENKÖLLEITUNGEN	472
LENKZYLINDER	432
	434
LENKZYLINDER UND AUFHÄNGUNG	423
LEUCHTE - RECHTS (STOPP/HECK/ RICHTUNGSWECHSEL)	248
LEUCHTE (EINZELGLÜHFADEN) (FAHRTRICHTUNGSANZEIGER)	152
	154
LEUCHTE, LINKS (STOPP/HECK/ RICHTUNGSWECHSEL)	248
LEUCHTE (RUNDUM-KENNLEUCHTE)	160
LEUCHTE (24 V) (ABBLENDLICHT)	170
LEUCHTE (24 V) (ABBLENDSCHEINWERFER)	179
	182
LEUCHTE (24 V) (ABSTREIFSCHILD/ ANZEIGE)	228
LEUCHTE (24 V) (ANZEIGE FÜR LINKEN RICHTUNGSBLINKER)	732
LEUCHTE (24 V) (ANZEIGE FÜR LÜFTERGESCHWINDIGKEIT)	616
LEUCHTE (24 V) (ANZEIGE FÜR NOTLENKUNG)	250
LEUCHTE (24 V) (ANZEIGE FÜR RECHTEN RICHTUNGSBLINKER)	732
LEUCHTE (24 V) (ARBEITSSCHEINWERFER, RECHTS)	174
LEUCHTE (24 V) (ÄTHERSTARTHILFE U. ANZEIGE)	209
LEUCHTE (24 V) (ÄTHERSTARTSCHALTER)	254
LEUCHTE (24 V) (AUSFALLSCHUTZ-RÜCKFAHRLEUCHTE)	168
LEUCHTE (24 V) (DIFFERENZIALSPERRANZEIGE)	732
LEUCHTE (24 V) (DIFFERENZIALSPERR-SCHALTER)	254
LEUCHTE (24 V) (ENTFROSTER, HINTEN)	663
LEUCHTE (24 V) (FAHRERHAUSDACH)	149
LEUCHTE (24 V) (FAHRLEUCHTE)	154
LEUCHTE (24 V) (FAHRSCHEINWERFER)	152
LEUCHTE (24 V) (FAHRTRICHTUNGSANZEIGER)	152
	154
LEUCHTE (24 V) (FERNLICHT)	170
LEUCHTE (24 V) (FERNLICHT/ ABBLENDLICHT)	152
LEUCHTE (24 V) (FERNLICHT/ABBLENDLICHT) (RECHTS)	154
LEUCHTE (24 V) (FERNLICHTANZEIGE)	732
LEUCHTE (24 V) (FRONTSCHEINWERFER-/ HECKLEUCHTENANZEIGE)	176
LEUCHTE (24 V) (FRONTSCHEINWERFER/ HECKLEUCHTE/ANZEIGE)	220
LEUCHTE (24 V) (GASREGELUNG - ARRETIERANZEIGE)	732
LEUCHTE (24 V) (GASREGELUNG HALTEN/MAN SCHALTER)	252
LEUCHTE (24 V) (GESCHWINDIGKEITSMESSER U. DREZAHLMESSER)	723
LEUCHTE (24 V) (HAUPTFUNKTIONSLEUCHTE DES ELEKTRON. ÜBERWACHUNGSSYSTEMS)	732
	734
LEUCHTE (24 V) (HECKLEUCHTENSCHALTER)	254
LEUCHTE (24 V) (HECKSCHEINWERFER)	178
	182
	186
LEUCHTE (24 V) (HVAC TAFEL)	620
LEUCHTE (24 V) (INSTRUMENTENTAFEL)	734
LEUCHTE (24 V) (KLIMAANLAGE U. HEIZUNG)	676
LEUCHTE (24 V) (KLIMAANLAGE U. HEIZUNG ß SCHALTTAFEL)	672
LEUCHTE (24 V) (LUFTDRUCK, LINKS)(ANZEIGE)	732
LEUCHTE (24 V) (LUFTDRUCK, RECHTS)(ANZEIGE)	732
LEUCHTE (24 V) (RUNDUM-KENNLEUCHTE)	147
	191
	192
LEUCHTE (24 V) (SCHALTKONSOLE)	252
LEUCHTE (24 V) (SCHARDÄMPFUNGSSTEUERUNG/ANZEIGE)	225
LEUCHTE (24 V) (SCHWENKWERKBOLZENZIEHSCHALTER)	252
LEUCHTE (24 V) (SPIEGELHEIZUNGSANZEIGE)	718
LEUCHTE (24 V) (TAFELLEUCHTENDIMMER-SCHALTER)	254
LEUCHTE (24 V) (VIERINSTRUMENTENMODUL-ANZEIGE)	732
LEUCHTE (24 V) (VIERINSTRUMENTENMODUL U. LUFTDRUCK)	734
LEUCHTE (24 V) (VORDERE ARBEITSSCHEINWERFER)	172
LEUCHTE (24 V) (VORDERER ENTFROSTER)	662
LEUCHTE (24 V)(21 W) (BREMSLICHT - HECKLEUCHTE)	248
LEUCHTE (24 V)(21 W) (BREMSLICHT - HECKLEUCHTE)	248
LEUCHTE (24 V)(5 W) (RECHTS- U. LINKSWENDUNG)	248
LEUCHTE (24 V)(5 W) (RECHTS- U. LINKSWENDUNG)	248

STICHWORTVERZEICHNIS

Bezeichnung	Seite
LICHTSCHALTER	220
LUFTDRUCKBEGRENZUNGSVENTIL (DRUCK)	398
LUFTDRUCKMESSER (BREMSE, RECHTS)	734
LUFTDRUCKMESSER (LINKE BREMSE)	734
LUFTDRUCKMESSER (LINKS)	732
LUFTDRUCKMESSER (RECHTS)	732
LÜFTERABDECKUNG	73
LUFTFILTER (ÜBERROLLSCHUTZ - HECKPLATTE)	664
LUFTFILTER-WARTUNGSANZEIGE	90
LUFTKANAL	654
LUFTKANAL UND REGULIERUNG	652
	653
LUFTKOMPRESSOR	8
	10
LUFTREINIGER	90
	92
LUFTREINIGERKLEMMEN-EINBAUSATZ	92
LUFTTROCKNER	380
	382
	384
	386

M

MAGNETFILTER (GETRIEBE)	289
MAGNETSCHALTER	222
MAGNETSCHALTER (24 V) (START)	242
MAGNETSPULE (24 V) (STARTERMOTOR)	210
MAGNETVENTIL	320
	403
	585
MAGNETVENTIL (SCHARDÄMPFUNG)	586
MODUL - VIER ELEKTRON. ANZEIGEN	722
MODULVERBINDER-ABDECKUNG	143
MONITOR-SOFTWARE	144
MONITORSTEUERUNG (CATERPILLAR ÜBERWACHUNGSSYSTEM)	734
MONITORSTEUERUNG (CATERPILLAR ÜBERWACHUNGSSYSTEM)	732
MOTOR, ELEKTR.	194
	195
MOTOR, ELEKTR. (KLIMAANLAGE)	634
MOTOR, ELEKTR. (27 V)	617
MOTOR, ELEKTR. (27 V) (A/C)	621
MOTOR, ELEKTR. (27 V) (HEIZUNG)	672
MOTOR, ELEKTR. (27 V) (HEIZUNG)(LEICHTE BEANSPRUCHUNG)	676
MOTOR UND LÜFTER	74
MOTORANTRIEB	478
MOTORAUFHÄNGUNG	55
MOTORAUFLAGER	42
MOTORAUSFÜHRUNG	7
MOTORBLOCK	22
	23
	24
MOTORBLOCKDECKEL	16
MOTORHUBÖSE	41
MOTORÖLEINFÜLLSTUTZEN	62
MOTORSTEUERUNG, ELEKTRON.	136
MOTORSTOPFEN	50
MOTORVERDRAHTUNG	230
MOTORVERKLEIDUNG	352

N

NEBENANTRIEB	30
NOCKENWELLE	14
NOTLENKUNG	494
NOTLENKUNGSLEITUNGEN	470
NOTLENKUNGSPUMPE UND BEFESTIGUNGSTEILE	484
NOTLENKUNGSSTEUERUNG	137
NOTLENKUNGSVERDRAHTUNG	250

O

ÖLEINFÜLLSTUTZEN	62
ÖLFILTER	64
	285
ÖLFILTERSOCKEL	60
ÖLKÜHLERLEITUNGEN (KRAFTÜBERTRAGUNG)	78
ÖLLEITUNGEN - KRAFTÜBERTRAGUNG	294
ÖLMESSSTAB	66
ÖLSCHNELLWECHSELANSCHLUSS	68
ÖLWANNE	44

P

PANZERWANNE	360
PENDELVENTIL	584
PLANETENGETRIEBE	298
PLEUELSTANGE UND KOLBEN	47
POLSTEREINBAUSATZ (RÜCKENLEHNE)	655
POLSTEREINBAUSATZ (VINYLRÜCKENLEHNE)	656
PROBEENTNAHMEVENTIL (GETRIEBEÖL)	78
PROBEENTNAHMEVENTIL (HYDRAULIKÖL)	473
PUMPENANTRIEB	446
PUMPENANTRIEB ELEKTR.	485
PUMPENUMGEHUNGSVENTIL	60

R

RAD UND REIFEN	324
	325
	326
	327

STICHWORTVERZEICHNIS

Bezeichnung	Seite
	328
	329
	330
	331
	332
	333
	334
	335
	336
	337
	338
	339
	340
RADAUFHAENGUNG	296
RADIOEINBAUSATZ	683
	684
RADSATZ	341
	342
RADSTURZZYLINDER	436
RADSTURZZYLINDER UND BEFESTIGUNGS-TEILE	424
RAHMEN UND GEHÄUSE	348
REGLEREINBAUSATZ	398
REGLERSTEUERUNG	104
RICHTUNGSBLINKER- UND WARNSCHALTER	176
	178
	182
	186
	220
RIEMEN - GERIPPT (KLIMAANLAGE)	614
RIEMENSPANNER	12
ROLLENSATZ (SITZ)	766
RÜCKFAHRWARNHORN	224
RÜCKFAHRWARNHORN (RÜCKFAHR-ALARM)	248
RÜCKLEHNENVERLÄNGERUNG	655
	656
RÜCKSPIEGEL	715
	716
	718
	720
	721
RUNDUM-KENNLEUCHTE	160
RUNDUMWARNLEUCHTE - EINBAUSATZ	147

S

Bezeichnung	Seite
SAMMELVENTIL	534
SCHALE - RÜCKENLEHNE	727
SCHALLDÄMPFER	100
SCHALLDÄMPFUNG	46
	56
	371
SCHALTER (ABBLENDSCHEINWERFER)	179
SCHALTER (ABBLENDSCHEINWERFER)	182
SCHALTER (ARBEITSSCHEINWERFER, RECHTS)	174
SCHALTER (ÄTHERSTARTHILFE)	209
SCHALTER (ÄTHERSTARTHILFE)	254
SCHALTER (AUSFALLSCHUTZ-RÜCKFAHRLEUCHTE)	168
SCHALTER (BEHEIZTER SPIEGEL)	718
SCHALTER (DIFFERENTIALSPERRE)	254
SCHALTER (EIN/AUS) (ENTFROSTER, HINTEN)	663
SCHALTER (EIN/AUS) (VORDERER ENTFROSTER)	662
SCHALTER (GASREGELUNG HALTEN AUTO/MAN)	252
SCHALTER (GASREGELUNG HALTEN EIMSTELLEN/WIEDERAUFNEHMEN)	252
SCHALTER (HECKLEUCHTE)	254
SCHALTER (RUNDUM-KENNLEUCHTE)	147
	191
SCHALTER (RUNDUM-KENNLEUCHTE)	192
SCHALTER (SCHALTTAFEL-LICHTREGLER)	254
SCHALTER (SCHARDÄMPFUNGSSTEUE-RUNG)	225
SCHALTER (SCHARKÖRPERLEUCHTEN)	228
SCHALTKONSOLENVERDRAHTUNG	252
SCHAR	595
SCHARDREHWERK	442
	588
SCHARDREHWERKSPERRENSTEUERUNG	414
SCHARDRUCKSPEICHER	405
SCHARHUBZYLINDER	426
SCHARHUBZYLINDER UND BEFESTIGUNGS-TEILE	419
SCHARKIPPZYLINDER UND BEFESTIGUNGS-TEILE	420
SCHARNEIGEZYLINDER	427
SCHEIBENWASCHANLAGE	768
	770
SCHEIBENWISCHER	776
	777
	778
	780
	782
	784
	786
	788
SCHEIBENWISCHERBLATT (ENTLÜFTUNG, VORNE, UNTEN)	771
SCHEIBENWISCHERBLATT (HOHES PROFIL, HINTEN)	786
SCHEIBENWISCHERBLATT (HOHES PROFIL, VORNE, UNTEN)	782
SCHEIBENWISCHERBLATT (NIEDRIGES PROFIL, HINTEN)	784

STICHWORTVERZEICHNIS

Bezeichnung	Seite
SCHEIBENWISCHERBLATT (NIEDRIGES PROFIL, VORNE, UNTEN)	780
SCHEIBENWISCHERBLATTSATZ	784
SCHEIBENWISCHERBLATTSATZ (HINTEN)	784
SCHEIBENWISCHERSCHALTER	223
SCHEIBENWISCHERSCHALTER (HINTEN)	786
SCHEIBENWISCHERSCHALTER (INTERVALL)	784
SCHEINWERFER, HINTEN	168
SCHEINWERFER (24 V)	157
SCHEINWERFER (24 V) (ABBLENDLICHT)	156
SCHEINWERFER (24 V) (ARBEITSSCHEIN-WERFER)	150
SCHILD - HAUPTRAHMEN (NICHT BOHREN ODER SCHWEISSEN)	791
SCHILD UND AUFKLEBER	789
	790
	792
	793
	794
	795
	796
	797
SCHILDHUB	598
SCHLÜSSEL	639
	798
SCHLÜSSEL (HAUPTSCHALTER)	218
SCHMIERLEITUNGEN	369
SCHMIERNIPPEL (SCHARHUB)	419
SCHMIERNIPPEL (1/8-27-GEWINDE) (DREHZAPFEN)	606
SCHMIERNIPPEL (1/8-27-GEWINDE) (RADSTURZ)	424
SCHMIERNIPPEL (1/8-27-GEWINDE) (UNTE-RER/OBERER KNICKGELENKBOLZEN)	369
SCHMIERNIPPEL (1/8-27-GEWINDE) (VORDERACHSE)	344
SCHMIERNIPPEL (1/8-27-GEWINDE) (ZUGSTANGE)	590
SCHMIERNIPPEL (1/8-27 GEWINDE(45 GRAD) (SCHARSCHWENKWERKZYLINDER)	421
SCHMIERPUMPE	69
	70
SCHNEEFLÜGEL-BEFESTIGUNG	604
SCHNEEPFLUG-SCHUTZVORRICHTUNG	372
	373
SCHNEERÄUMVORRICHTUNG	6
SCHNEIDMESSER	596
	597
SCHNELLÖSEVENTIL	402
SCHRÄGKOLBEN-EINBAUSATZ (HYDRAULIKSTEUERUNG)	488
SCHUBPLATTE	592
SCHUTZABDECKUNG	350
SCHWENKBLOCK	495
SCHWINGSITZ	754
	755
	756
	757
	758
	759
	760
SCHWUNGRAD	33
SCHWUNGRADGEHÄUSE	36
SCHWUNGRADGEHÄUSEDECKEL	18
SEITENANTRIEB	286
SEITENSCHIEBERZYLINDER UND BEFESTIGUNGSTEILE	422
SEITENSCHUBSPERRE	475
SEITENSCHUBVERLÄNGERUNG	447
SEITENSCHUBZYLINDER	428
	431
SEITENSCHUBZYLINDER UND BEFESTIGUNGSTEILE	421
SENSORANSCHLUSSSATZ (12POLIG)	174
	176
	178
	182
	186
	226
	230
	234
	238
	239
	252
	254
	362
	364
	732
	734
SENSORANSCHLUSSSATZ (12POLIG)	228
SENSORANSCHLUSSSATZ (12POLIG)	718
SENSORANSCHLUSSSATZ (12POLIG) (ENTFROSTER, VORNE/HINTEN)	168
SENSORANSCHLUSSSATZ (2POLIG)	174
	184
	188
	189
	225
	226
	230
	234
	238
	239
	242
	252
	616
	704
SENSORANSCHLUSSSATZ (2POLIG)	634
SENSORANSCHLUSSSATZ (2POLIG)	718

STICHWORTVERZEICHNIS

Bezeichnung	Seite
SENSORANSCHLUSSSATZ (2POLIG) (ÄTHERSTARTHILFE)	204, 206
SENSORANSCHLUSSSATZ (2POLIG) (DREHBLINKLEUCHTE)	192
SENSORANSCHLUSSSATZ (2POLIG) (FAHRereinstellungsmodusschalter)	734
SENSORANSCHLUSSSATZ (2POLIG) (HOCH/NIEDRIG)	704
SENSORANSCHLUSSSATZ (2POLIG) (KONTROLLLEUCHTE - FRONTSCHEINWERFER)	176
SENSORANSCHLUSSSATZ (2POLIG) (LICHTBALKEN - ARBEITSCHEINWERFER)	178
SENSORANSCHLUSSSATZ (2POLIG) (LICHTBALKEN - ARBEITSCHEINWERFER)	182
SENSORANSCHLUSSSATZ (2POLIG) (MOTOR)	672, 676
SENSORANSCHLUSSSATZ (2POLIG) (MOTOR - HEIZUNG/KLIMAANLAGE)	621
SENSORANSCHLUSSSATZ (2POLIG) (RÜCKFAHRALARM/RÜCKKEHR)	246
SENSORANSCHLUSSSATZ (2POLIG) (SCHNEEFLÜGELEUCHTE)	168, 174
SENSORANSCHLUSSSATZ (2POLIG) (SCHNEEFLÜGELEUCHTE)	228
SENSORANSCHLUSSSATZ (2POLIG) (STARTERRELAIS)	243
SENSORANSCHLUSSSATZ (2POLIG) (TAFELLEUCHTENSCHALTER/WARNHOEN)	254
SENSORANSCHLUSSSATZ (3POLIG)	199, 200, 201, 202, 226, 234, 246
SENSORANSCHLUSSSATZ (3POLIG) (ABSTELLSCHALTER)	239
SENSORANSCHLUSSSATZ (3POLIG) (ALLRADANTRIEB - STEUERHEBELSENSOR)	254
SENSORANSCHLUSSSATZ (3POLIG) (KONTROLLLEUCHTE - RICHTUNGSBLINKER)	176
SENSORANSCHLUSSSATZ (4 POLIG)	239, 252, 254
SENSORANSCHLUSSSATZ (4 POLIG)	718
SENSORANSCHLUSSSATZ (4 POLIG)	243
SENSORANSCHLUSSSATZ (4 POLIG) (AUSFALLSCHUTZ-RÜCKFAHRLEUCHTE)	168
SENSORANSCHLUSSSATZ (4 POLIG) (AUSFALLSCHUTZ-RÜCKFAHRLEUCHTE U. SCHALTER)	228
SENSORANSCHLUSSSATZ (4 POLIG) (AUSFALLSCHUTZ-RÜCKFAHRLEUCHTEN-SCHALTER)	174
SENSORANSCHLUSSSATZ (4 POLIG) (FAHRGESCHWINDIGKEITSSENSOR/STROM/MASSE)	234
SENSORANSCHLUSSSATZ (4 POLIG) (STARTHILFE U. SOLENOIDRELAIS)	243
SENSORANSCHLUSSSATZ (6POLIG)	186, 226, 234, 252, 734
SENSORANSCHLUSSSATZ (6POLIG)	243
SENSORANSCHLUSSSATZ (8POLIG)	174, 226, 234
SENSORANSCHLUSSSATZ (8POLIG)	228, 718
SENSORANSCHLUSSSATZ (8POLIG) (SCHEIBENWISCHER, VORNE/HINTEN)	168
SICHERHEITSFILTER	92
SICHERHEITSGURT	748
SICHERHEITSGURT (AUSZIEHBAR)	756, 757, 759
SICHERUNG (10 A) (ARBEITSSCHEINWERFER, RECHTS)	174
SICHERUNG (10 A) (BEHEIZTER SPIEGEL)	718
SICHERUNG (10 A) (BLINKER)	220
SICHERUNG (10 A) (ENTFROSTER, HINTEN)	663
SICHERUNG (10 A) (FERNLICHT/ABBLENDLICHT)	178
SICHERUNG (10 A) (FERNLICHT/ABBLENDLICHT U. SIGNAL)	186
SICHERUNG (10 A) (LENKUNGSKONSOLE)	254
SICHERUNG (10 A) (NOTLENKUNG)	250
SICHERUNG (10 A) (RICHTUNGSBLINKER/WARNLEUCHTE)	182
SICHERUNG (10 A) (RÜCKFAHRLEUCHTE)	168
SICHERUNG (10 A) (RUNDUMKENNLEUCHTE)	147, 191, 192
SICHERUNG (10 A) (SCHARDÄMPFUNGSSTEUERUNG)	225
SICHERUNG (10 A) (SCHARSTEUERUNG)	228
SICHERUNG (10 A) (SCHEIBENWISCHER)	786
SICHERUNG (10 A) (SCHEINWISCHER - INTERVALLSCHALTUNG)	784
SICHERUNG (10 A) (UMFORMER)	142

STICHWORTVERZEICHNIS

Bezeichnung	Seite
SICHERUNG (10 A) (VORDERE ARBEITSSCHEINWERFER)	172, 176
SICHERUNG (10 A) (VORDERER ENTFROSTER)	662
SICHERUNG (15 A) (HEIZUNG)	667
SICHERUNG (15 A) (HEIZUNG U. KLIMAANLAGE)	668
SICHERUNG (15 A) (KLIMAANLAGE)	611, 612
SICHERUNG (15 A) (UNTERE/OBERE SCHEIBENWISCHER, VORNE)	226
SICHERUNG (20 A) (A/C)	613
SICHERUNG (30 A) (UMFORMER)	141
SIEB (HYDRAULIKÖLEINFÜLLKAPPE)	498
SITZGURT-HALTESEIL	764
SITZKISSENEINBAUSATZ	750, 752
SITZUNTERBAU	762
SOCKELDICHTUNG	58
SONNENBLENDE	747
SPERRVENTIL	114, 126
STANDARDRINGSATZ	8
STANGENSATZ	728
STARTERMOTOR	210, 212, 214, 216
STARTERMOTOR-DICHTUNGSSATZ	210
STARTERMOTOR-STIFTEINBAUSATZ	210
STARTHILFEANSCHLUSS	196
STARTSCHALTER (TASTE)	252
STAUBAUSWERFER	93
STAUBKAPPE	50, 64, 78, 82, 145, 146, 458, 462, 534
STAUBKAPPE (DIFFERENTIALSPERRE)	266
STAUBKAPPE (HYDRAULIKÖL)	473
STECKDOSEN - EINBAUSATZ (12POLIG)	137, 176, 178, 182, 186, 254, 718
STECKDOSEN - EINBAUSATZ (12POLIG)	243
STECKDOSEN - EINBAUSATZ (12POLIG)	174, 226
	228, 234, 246, 248, 252, 362, 364, 732, 734
STECKDOSEN - EINBAUSATZ (12POLIG) (LICHTBALKEN - ARBEITSCHEINWERFER)	178, 182
STECKDOSEN - EINBAUSATZ (12POLIG) (LUFTTROCKNER U. RÜCKFAHRALARM)	243
STECKDOSEN - EINBAUSATZ (12POLIG) (RUNDUM-KENNLEUCHTE - SCHALTER)	168
STECKDOSEN - EINBAUSATZ (2POLIG)	94, 127, 160, 168, 174, 184, 188, 189, 194, 224, 225, 226, 230, 234, 238, 239, 250, 320, 585, 634, 658, 718, 732
STECKDOSEN - EINBAUSATZ (2POLIG)	228, 630, 704
STECKDOSEN - EINBAUSATZ (2POLIG)	242
STECKDOSEN - EINBAUSATZ (2POLIG)	617, 621
STECKDOSEN - EINBAUSATZ (2POLIG) (ÄTHERSTARTHILFE)	206
STECKDOSEN - EINBAUSATZ (2POLIG) (ÄTHERSTARTVENTIL)	204
STECKDOSEN - EINBAUSATZ (2POLIG) (HAUPTRELAIS)	243
STECKDOSEN - EINBAUSATZ (2POLIG) (HEIZUNGSMOTOR)	672, 676

STICHWORTVERZEICHNIS

Bezeichnung	Seite
STECKDOSEN - EINBAUSATZ (2POLIG) (KLIMAANLAGENDRUCKSCHALTER/ KUPPLUNGSSOLENOID)	239
STECKDOSEN - EINBAUSATZ (2POLIG) (SCHARSCHWENKWERK-MAGNETVEN-TIL)	414
STECKDOSEN - EINBAUSATZ (2POLIG) (SCHNEEFLÜGELEUCHTE)	174
STECKDOSEN - EINBAUSATZ (2POLIG) (SOLENOIDVENTIL)	403
STECKDOSEN - EINBAUSATZ (2POLIG) (TAFELBELEUCHTUNG)	252
STECKDOSEN - EINBAUSATZ (2POLIG) (UMFORMER - ZÜNDUNG/RADIO)	141
STECKDOSEN - EINBAUSATZ (2POLIG) (12 V STROMANSCHLUSS)	609
	610
STECKDOSEN - EINBAUSATZ (3POLIG)	149
	158
	159
	188
	189
	198
	225
	226
	230
	234
	238
	246
	248
	250
	254
STECKDOSEN - EINBAUSATZ (3POLIG) (LÜFTRANTRIEBSDRUCKSENSOR)	239
STECKDOSEN - EINBAUSATZ (3POLIG) (RICHTUNGSBLINKER - STANDLICHT)	170
	190
STECKDOSEN - EINBAUSATZ (4 POLIG)	204
	252
STECKDOSEN - EINBAUSATZ (4 POLIG)	174
	226
	228
	234
	238
	254
	718
STECKDOSEN - EINBAUSATZ (4 POLIG) (ÄTHERSTARTHILFE)	206
STECKDOSEN - EINBAUSATZ (4 POLIG) (AUS-FALLSCHUTZ-RÜCKFAHRLEUCHTE)	168
STECKDOSEN - EINBAUSATZ (4 POLIG) (FAHRGESCHWINDIGKEIT)	197
STECKDOSEN - EINBAUSATZ (4 POLIG) (MOTORSTEUER-SCHUTZSCHALTER U. STARTERRELAIS)	243
STECKDOSEN - EINBAUSATZ (4 POLIG) (RUNDUM-KENNLEUCHTE - SCHALTER)	192
STECKDOSEN - EINBAUSATZ (4 POLIG) (SPIEGELHEIZUNG/SCHARKÖRPERLEUCH-TEN)	168
STECKDOSEN - EINBAUSATZ (6POLIG)	226
	234
	239
	252
	362
	364
	732
	778
STECKDOSEN - EINBAUSATZ (6POLIG)	672
	676
	734
STECKDOSEN - EINBAUSATZ (6POLIG) (GESCHWINDIGKEITSMESSER U. DREZAHLMESSER)	723
STECKDOSEN - EINBAUSATZ (6POLIG) (HEIZUNG U. KLIMAANLAGE)	621
STECKDOSEN - EINBAUSATZ (6POLIG) (SCHEIBENWISCHERMOTOR)	780
	782
STECKDOSEN - EINBAUSATZ (6POLIG) (SCHEINWERFER)	152
	154
STECKDOSEN - EINBAUSATZ (6POLIG) (VIERFACHINSTRUMENTENGRUPPE)	722
STECKDOSEN - EINBAUSATZ (8POLIG)	168
	174
	223
	226
	228
	718
	732
STECKDOSEN - EINBAUSATZ (8POLIG)	734
STECKDOSEN - EINBAUSATZ (8POLIG) (SCHALTER - HECKSCHEIBENWISCHER)	784
	786
STECKDOSEN - EINBAUSATZ (8POLIG) (SCHALTER FÜR VORDERE SCHEIBENWISCHER)	226
STEIGLEITER	377
STELLUNGSGEBER (KNICKGELENK)	238
STELLUNGSSENSOR	198
STEUERKONSOLE	636
STEUERUNGSEINHEIT, ELEKTRON. FÜR MOTOR UND BEFEST.	135
STEUERVENTIL	309
	536
	538
	540
	542
	544

STICHWORTVERZEICHNIS

Bezeichnung	Seite
	546
	548
	550
	552
	554
	556
	558
	560
	562
	564
	566
	568
	570
STEUERVENTILSPERRE	438
	440
STIRNRAD	34
STIRNRADGEHÄUSE	38
STOSSSTANGEN-EINBAUSATZ	681
STROMANSCHLUSS-STECKDOSE (12 V)	609
STROMANSCHLUSS-STECKDOSE (12 V)	610

T

T-STÜCK	448
TANDEMGEHÄUSE UND DECKEL	306
TEMPERATURSENSOR (EINLASSKRÜMMER)	230
TEMPERATURSENSOR (KRAFTSTOFF)	230
TEMPERATURSENSOR (KÜHLMITTEL)	230
THERMOSTATSCHALTER	616
THERMOSTATSCHALTER (KÜHLMITTEL)	620
TRENNSCHALTER	218
TRENNSCHALTER (BATTERIE)	243
TURBOLADER	102
	103
TURBOLADEREINSATZ	103
TURBOLADERÖLLEITUNGEN	67

U

ÜBERDRUCKVENTIL	312
	576
	577
	578
	579
	580
	581
	582
	583
ÜBERDRUCKVENTIL (HAUPTUNTERBRECHER)	534
ÜBERROLL-SCHUTZDACH	746
ÜBERROLL-SCHUTZKABINE	743
	744
	745
ÜBERROLLSCHUTZAUFLAGER	724
	726
ÜBERROLLSCHUTZDACH	742
ÜBERROLLSCHUTZKABINE	740
	741
UMBAUSATZ - OHNE ÜBERROLLSCHUTZ	639
UMBAUSATZ - ZULASSUNG	1
	2
UMFORMER, ELEKTR.	138
	139
UMLAUFKÜHLWASSERHEIZUNG	145
	146
UMLAUFKÜHLWASSERHEIZUNGS-ELEMENT (120V 1250W)	145
UMLAUFLÜFTER	658
	660
	662
	663
UNTERBRECHER	133
	134
UNTERBRECHER (15 A) (FRONTSCHEINWERFER)	133
	134
UNTERBRECHER (15 A) (FRONTSCHEINWERFER/ABBLENDLICHT)	178
UNTERBRECHER (15 A) (LICHTBALKEN - ARBEITSCHEINWERFER)	133
UNTERBRECHER (15 A) (MOTORSTEUERUNG)	243
UNTERBRECHER (80 A) (DREHSTROMGENERATOR)	242
UNTERBRECHER (80 A) (HAUPTUNTERBRECHER)	242

V

VENTIL - SCHALT- UND DRUCKSTEUERUNG	314
	316
	318
VENTIL (SITZ)	766
VENTIL UND GESTÄNGE	500
	502
	504
	506
	510
	512
	514
	518
	520
VENTILKAPPE (SCHAFT)	324
	325
	326
	327
	328

STICHWORTVERZEICHNIS

Bezeichnung	Seite
	329
	330
	331
	332
	333
	334
	335
	336
	337
	338
	339
	340
	341
	342
VENTILKIPPHEBEL	52
VENTILMECHANISMUSAUFHÄNGUNG	43
VENTILSATZ (4-VENTIL)	522
	523
	524
	525
VENTILSATZ (5-VENTIL)	526
	527
	528
	529
VENTILSATZ (7-VENTIL)	530
	531
	532
VENTILSOLENOID U. -KRÜMMER	586
	587
VENTILSTEUERUNG	58
VENTILSTÖSSELSATZ	680
	681
VERDRAHTUNG - SCHARDÄMPFUNG	225
VERDRAHTUNG (EINSPRITZEINHEIT)	257
VERDRAHTUNG, HINTEN	238
	242
	246
	248
VERDRAHTUNG, VORNE	234
VERKLEIDUNG UND BEFESTIGUNG - KÜHLER	358
VERSANDDECKEL	276
VERTEILERBLOCK	148
VERTEILERGETRIEBE UND GEHÄUSE	288
VORDERACHSE	344
VORDERRAHMEN	356
VORHÄNGESCHLOSS	639
	798
VORHÄNGESCHLOSS (HYDRAULIKTANK)	496
VORSTEUERVENTIL	310

W

Bezeichnung	Seite
WÄRMEISOLIERUNG	688
WARNLEUCHTEN	191
	192
WARNSCHILD (MASCHINENBETRIEB)	791
WARNVORRICHTUNG	127
WASSERABSCHEIDER- U. KRAFTSTOFFILTER	107
WASSERAUFFANGSCHALE (12 V HEIZUNG)	107
WASSERAUFFANGSCHALE (24 V HEIZUNG)	107
WASSERTEMPERATURREGLER	76
WERKZEUGKASTEN	798

Z

Bezeichnung	Seite
ZAHNRADANTRIEB	480
ZAHNRADPUMPE	304
ZIGARETTENANZÜNDER (ZIGARETTENANZ.) (24V)	252
ZUGHAKEN	590
ZUMESSPUMPE	486
ZYLINDERBLOCKSCHRAUBE	48
ZYLINDERKOPF	26
	28
	29
ZYLINDERKOPF-EINBAUSATZ	8
ZYLINDERKOPF-HALTETEILE	32

MEMORANDA

MACHINE ARRANGEMENT

211-1769 CONVERSION AR-CERTIFICATION—HEATER—EU

S/N: ASE1-UP

AN ATTACHMENT

SMCS-7000 **i01670854**

NOTE	PART NUMBER	QTY	PART NAME 1 2 3 4 5 6 (PRODUCT LEVEL)	SEE PAGE
Y	*201-1038*	1	CIRCUIT BREAKER GP (HEAD LAMP)	134
Y	*201-1053*	1	COOLING AR (EU)	72
Y	*126-6933*	1	COVER GP-PROTECTION (PLATFORM) (EU)	350
Y	*192-1434*	1	PLATE & FILM GP (REFLECTOR)	792
Y	*197-6436*	1	PLATE & FILM GP (VHP)	793
Y	*8X-9311*	1	GUARD GP-BOTTOM (EU)	360
Y	*167-8394*	1	HEATER AR-CAB (EU)	669
Y	*185-7968*	1	INSTRUMENT AR (SPEEDOMETER/TACH)	686
Y	*192-0229*	1	LIGHTING GP-FLOOD (BOLSTER/EU)	186
Y	*152-7903*	1	LOCK GP-HYDRAULIC HAND CONTROL (EU)	476
Y	**197-2066**	1	MIRROR GP-REAR VIEW (INSIDE DUAL)	721
Y	*166-3334*	1	STEERING AR-SECONDARY (EU)	494
Y	*178-9527*	1	SUPPRESSION GP-SOUND (ENGINE ENCLOSURE)	56
Y	*177-8784*	1	WIPER GP-WINDOW (FRONT/INTERMITTENT)	788

Y-SEPARATE ILLUSTRATION

MACHINE ARRANGEMENT

211-1770 CONVERSION AR-CERTIFICATION–A/C–EU

S/N: ASE1-UP

AN ATTACHMENT

SMCS-7000 **i01670928**

NOTE	PART NUMBER	QTY	PART NAME 1 2 3 4 5 6 (PRODUCT LEVEL)	SEE PAGE
Y	*201-1053*	1	COOLING AR (EU)	72
Y	*126-6933*	1	COVER GP-PROTECTION (PLATFORM) (EU)	350
Y	*192-1434*	1	PLATE & FILM GP (REFLECTOR)	792
Y	*8X-9311*	1	GUARD GP-BOTTOM (EU)	360
Y	*167-8394*	1	HEATER AR-CAB (EU)	669
Y	*192-0229*	1	LIGHTING GP-FLOOD (BOLSTER)(EU)	186
Y	*152-7903*	1	LOCK GP-HYDRAULIC HAND CONTROL (EU)	476
Y	*166-3334*	1	STEERING AR-SECONDARY (EU)	494
Y	*178-9527*	1	SUPPRESSION GP-SOUND (ENGINE ENCLOSURE)	56

Y-SEPARATE ILLUSTRATION

MEMORANDA

MACHINE ARRANGEMENT

162-5606 GENERAL AR

S/N: ASE1-UP

SMCS-7000 **i01670952**

NOTE	PART NUMBER	QTY	PART NAME 1 2 3 4 5 6 (PRODUCT LEVEL)	SEE PAGE
Y	*9D-9840*	1	ADAPTER GP-TRANSMISSION	258
Y	*159-7364*	1	AIR CLEANER GP	90
Y	*113-9100*	1	AXLE GP-FRONT	344
	178-8481	1	BELT	
Y	*8W-8425*	1	BLADE GP	595
Y	*8D-2180*	1	BRAKE GP-SERVICE	388
Y	*161-1129*	1	CASE & FRAME GP	348
Y	*6G-1750*	1	CHAIN GP-DRIVE	260
Y	*6G-4970*	1	CIRCLE GP	588
Y	*167-8053*	1	CONSOLE GP-OPERATOR	636
Y	*173-7375*	1	CONTROL GP-CENTERSHIFT LOCK	414
Y	*163-0905*	1	CONTROL GP-CLUTCH	262
Y	*173-5306*	1	CONTROL GP-DIFFERENTIAL LOCK	266
Y	*159-5935*	1	CONTROL GP-GOVERNOR	104
Y	*187-4672*	1	CONTROL GP-PARKING BRAKE	390
Y	*171-2865*	1	CONTROL GP-SERVICE BRAKE	392
Y	*7I-4719*	1	CONTROL GP-STEERING	416
Y	*167-9003*	1	CONTROL GP-TRANSMISSION	268
Y	*184-0793*	1	COOLING AR	71
Y	*180-0054*	1	CYLINDER & MTG GP-ARTICULATION	418
Y	*8W-3254*	1	CYLINDER & MTG GP-BLADE LIFT	419
Y	*8W-3255*	1	CYLINDER & MTG GP-BLADE TIP	420
Y	*8W-3256*	1	CYLINDER & MTG GP-CENTERSHIFT	421
Y	*8W-3257*	1	CYLINDER & MTG GP-SIDESHIFT	422
Y	*8W-3253*	1	CYLINDER & MTG GP-STEERING	423
Y	*8W-3252*	1	CYLINDER & MTG GP-WHEEL LEAN	424
Y	*8D-5415*	1	DIFFERENTIAL & BEVEL GEAR GP	278
Y	*6G-4985*	1	DRAWBAR GP	590
Y	*8X-5302*	1	DRIVE GP-CIRCLE	442
Y	*180-3491*	1	DRIVE GP-PUMP	446
Y	*159-7366*	1	DUST EJECTOR GP	93
Y	*161-1121*	1	ENCLOSURE GP-ENGINE	352
Y	*161-1747*	1	ENGINE AR	7
Y	*183-6453*	1	FILLER GP-POWER TRAIN OIL	284
Y	*5T-7157*	1	FINAL DRIVE GP	286
Y	*161-1180*	1	FRAME GP-FRONT	356
Y	*106-4885*	1	HITCH GP-ARTICULATING	366
Y	*168-7961*	1	HITCH GP-TOWING	368
Y	*8D-5970*	1	LIFT GP-BLADE	598
Y	*183-7971*	1	LINES GP-AIR (AFTERCOOLER)	96
Y	*209-7827*	1	LINES GP-AIR (TANK)	97
Y	*183-5504*	1	LINES GP-DRAIN (ENGINE OIL)	109
Y	*184-1476*	1	LINES GP-FUEL FILTER	110
Y	*202-1454*	1	LINES GP-GREASE	369
Y	*188-7253*	1	LINES GP-HYDRAULIC (RH)	454
Y	*188-7252*	1	LINES GP-HYDRAULIC (LH)	450
Y	*175-6980*	1	LINES GP-HYDRAULIC FAN	458
Y	*183-6452*	1	LINES GP-POWER TRAIN COOLER	78
Y	*171-6438*	1	LINES GP-PUMP	462
Y	*171-6446*	1	LINES GP-STEERING	472
Y	*180-3493*	1	LINES GP-WATER (RADIATOR)	82
Y	*6V-1970*	1	LITERATURE GP	713
Y	*8D-6185*	1	LOCK GP-CENTERSHIFT	475
Y	*8X-2795*	1	MIRROR GP-REAR VIEW (INSIDE)	715
Y	*161-2316*	1	MOUNTING GP-ENGINE	42
Y	*142-6205*	1	MOUNTING GP-WHEEL	296
Y	*159-7368*	1	MUFFLER GP	100

162-5606 **GENERAL AR** *(contd.)*

i01670952

NOTE	PART NUMBER	QTY	PART NAME 1 2 3 4 5 6 (PRODUCT LEVEL)	SEE PAGE
Y	*187-3188*	1	PANEL GP-INSTRUMENT	732
Y	**115-5852**	1	PLATE & FILM GP (ENGINE)	789
Y	*171-5837*	1	PLATE & FILM GP	790
Y	*180-5446*	1	PUMP & MTG GP-PISTON	482
Y	*179-3581*	1	ROPS AR-ENCLOSED (ENCLOSED LOW PROFILE)	741
Y	*8Y-4194*	1	SEAT GP-SUSPENSION (CLOTH)	754
Y	*6G-6910*	1	SHIELD GP-DRIVE SHAFT	376
Y	*197-0580*	1	STARTING AID GP-ETHER	209
Y	*8X-1035*	1	STEP GP (BELTED)	377
Y	*183-8482*	1	SUPPORT AR-REAR CHASSIS	378
Y	*196-9991*	1	SUPPORT GP-FUEL TANK	379
Y	*174-4546*	1	SUPPORT GP-SEAT	762
Y	*188-9366*	1	TANDEM & COVER GP	306
Y	*161-1125*	1	TANK GP-FUEL	120
Y	*207-2409*	1	TANK GP-HYDRAULIC	496
Y	*136-4831*	1	TOOL BOX GP	798
Y	**183-6614**	1	TRANSMISSION AR	307
Y	*8X-5490*	1	VALVE & LINKAGE GP	504
Y	*159-5878*	1	WIRING GP-CAB	226
Y	*159-5843*	1	WIRING GP-SHIFT CONSOLE	252
Y	*159-5855*	1	WIRING GP-STEERING CONSOLE	254
Y	*159-5867*	1	WIRING GP-FRONT	234
Y	*161-1928*	1	WIRING GP-REAR	238

Y-SEPARATE ILLUSTRATION

MACHINE ARRANGEMENT

197-5959 SNOW AR-MOTOR GRADER

S/N: ASE1-UP

AN ATTACHMENT

SMCS-7000 **i01670960**

NOTE	PART NUMBER	QTY	PART NAME 1 2 3 4 5 6 (PRODUCT LEVEL)	SEE PAGE
Y	*167-8068*	1	AIR CONDITIONER AR	614
Y	*160-7760*	1	AIR DRYER GP (SNOW)	380
Y	*172-5655*	1	BATTERY GP (HEAVY DUTY)	131
Y	*172-6834*	1	FAN GP-CIRCULATING (FRONT)	662
Y	*172-6835*	1	FAN GP-CIRCULATING (REAR)	663
Y	*197-6436*	1	PLATE & FILM GP (VHP)	793
Y	*131-8126*	1	HEATER GP-JACKET WATER (SNOW)	145
Y	*161-1921*	1	INSTALLATION GP-WARNING BEACON	147
Y	*185-7968*	1	INSTRUMENT AR (SPEEDOMETER TACH)	686
Y	*188-9321*	1	LIGHTING AR-FLOOD (FLOOD)(FRONT & REAR MOUNT)	161
Y	*161-1021*	1	LIGHTING GP-FLOOD (CAB)(SNOW)	174
Y	*123-4358*	1	MIRROR GP-REAR VIEW (CLOSED ROPS)(OUTSIDE)	716
Y	*177-8784*	1	WIPER GP-WINDOW (FRONT)(INTERMITTENT)	788

Y-SEPARATE ILLUSTRATION

ENGINE ARRANGEMENT

161-1747 ENGINE AR

S/N: 3PD1-UP

PART OF 162-5606 GENERAL AR

SMCS-1000 **i01642327**

NOTE	PART NUMBER	QTY	PART NAME 1 2 3 4 5 6 (PRODUCT LEVEL)	SEE PAGE
Y	*174-1639*	1	DRIVE GP-ACCESSORY	30
Y	*133-7031*	1	AIR COMPRESSOR GP	10
Y	*212-0615*	1	ALTERNATOR GP-CHARGING	130
Y	*167-0017*	1	BELT TENSIONER GP	12
Y	*171-3062*	1	CAMSHAFT GP	14
Y	*168-4490*	1	CONTROL & MTG GP-ENGINE ELEK	135
Y	*163-9322*	1	COOLER GP-TRANSMISSION OIL	274
Y	*174-1762*	1	COVER GP-CYLINDER BLOCK	16
Y	*127-5728*	1	COVER GP-FLYWHEEL HOUSING	18
Y	*170-1217*	1	COVER GP-MODULE CONNECTOR	143
Y	*132-3210*	1	CRANKSHAFT GP	20
YR	*115-2982*	1	CYLINDER BLOCK GP	24
Y	*116-1085*	1	CYLINDER HEAD GP	28
	174-1539	1	ELECTRONICS GP-ENGINE RATINGS	
Y	*174-1579*	1	FILLER GP-ENGINE OIL	62
Y	*164-2490*	1	FILTER GP-ENGINE OIL	64
Y	*116-5436*	1	FILTER GP-FUEL	106
Y	*174-1766*	1	FLYWHEEL GP	33
Y	*174-1576*	1	GAUGE GP-OIL LEVEL (DIPSTICK)	66
Y	*117-2750*	1	GEAR GP-FRONT	34
Y	*200-0765*	1	HOUSING GP-FLYWHEEL	36
Y	*133-7075*	1	HOUSING GP-FRONT	38
Y	*117-2748*	1	LIFTING GP-ENGINE	41
Y	*204-0638*	1	LINES GP-FUEL INJECTION	114
Y	*179-9565*	1	LINES GP-TURBOCHARGER OIL	67
Y	*116-5460*	1	LINES GP-WATER	80
Y	*118-2808*	1	LINES GP-WATER	81
Y	*215-2063*	1	LINES GP-WATER	84
Y	*156-3680*	1	MANIFOLD GP-EXHAUST	98
Y	*116-5405*	1	MANIFOLD GP-INLET	99
Y	*179-8725*	1	MOTOR GP-ELECTRIC	195
Y	*116-5408*	1	MOUNTING GP-VALVE MECHANISM	43
Y	*174-1574*	1	PAN GP-OIL	44
Y	*132-3203*	6	PISTON & ROD GP	47
Y	*138-2028*	1	PLUG GP-CYLINDER BLOCK	48
Y	*174-1760*	1	PLUG GP-ENGINE	50
Y	*116-5428*	1	PUMP & MTG GP-FUEL TRANSFER	116
Y	*117-2746*	1	PUMP GP-ENGINE OIL	70
Y	*190-6017*	6	PUMP GP-FUEL INJECTION	117
Y	*116-5438*	1	PUMP GP-FUEL PRIMING	118
Y	*117-2674*	1	PUMP GP-WATER	85
Y	*116-1091*	1	SEAL GP-CRANKSHAFT	54
Y	*174-1625*	1	SUPPORT GP-ENGINE	55
Y	*174-1604*	1	TURBOCHARGER GP	102
Y	*117-2749*	1	VALVE MECHANISM GP	58
Y	*171-1103*	1	WIRING GP-ENGINE	230
Y	*117-2760*	1	WIRING GP-UNIT INJECTOR	257
			GASKET KITS WILL BE PROVIDED WHEN AVAILABLE	

R-REMFG PART MAY BE AVAILABLE
Y-SEPARATE ILLUSTRATION

BASIC ENGINE

131-6679 AIR COMPRESSOR GP*R

S/N: 3PD1-UP

PART OF 133-7031 AIR COMPRESSOR GP

SMCS-1803 **i01509434**

NOTE	REF NO	GRAPHIC REF	PART NUMBER	QTY	PART NAME 1 2 3 4 5 6 (PRODUCT LEVEL)	SEE PAGE
	1	1	**7C-6178**	2	BEARING-REAR	
	2	1	**7E-8928**	1	GASKET-BASE	
	3	1	**3B-4505**	4	LOCKWASHER (.097IN THK)	
	4	1	**4P-3977**	1	GASKET-CYLINDER HEAD	
	5	1	**0S-1617**	12	BOLT (5/16-18X0.75 IN)	
	6	1	**8T-6764**	2	PLUG-PIPE	
	7	1	**4P-3966**	2	PISTON & ROD AS	
	8	1	**8T-6762**	1	PLUG-PIPE	
	9	1	**0L-1352**	6	BOLT (3/8-16X3.25 IN)	
	10	1	**146-0835**	2	STUD-END COVER	
	11	1	**2H-3934**	1	SEAL-O-RING	
	12	1	**103-6216**	1	KEY	
	13	1	**124-5572**	1	VALVE	
	14	1	**130-5997**	1	PLATE-INFORMATION	
					AVAILABLE REPAIR KIT(S):	
			7E-8923	1	KIT-CRANKSHAFT BEARING	
					(INCLUDES SEALS, BEARINGS, INSERTS, GASKETS, AND WASHERS)	
			7E-8925	1	KIT-STANDARD RING	
					(INCLUDES SEALS, BEARINGS, INSERTS, GASKETS, AND WASHERS)	
			7E-8926	1	KIT-CYLINDER HEAD	
					(INCLUDES SEALS, BEARINGS, INSERTS, GASKETS, AND WASHERS)	
			150-5146	1	KIT-UNLOADER	

131-6679 AIR COMPRESSOR GP *(contd.)* **i01509434**

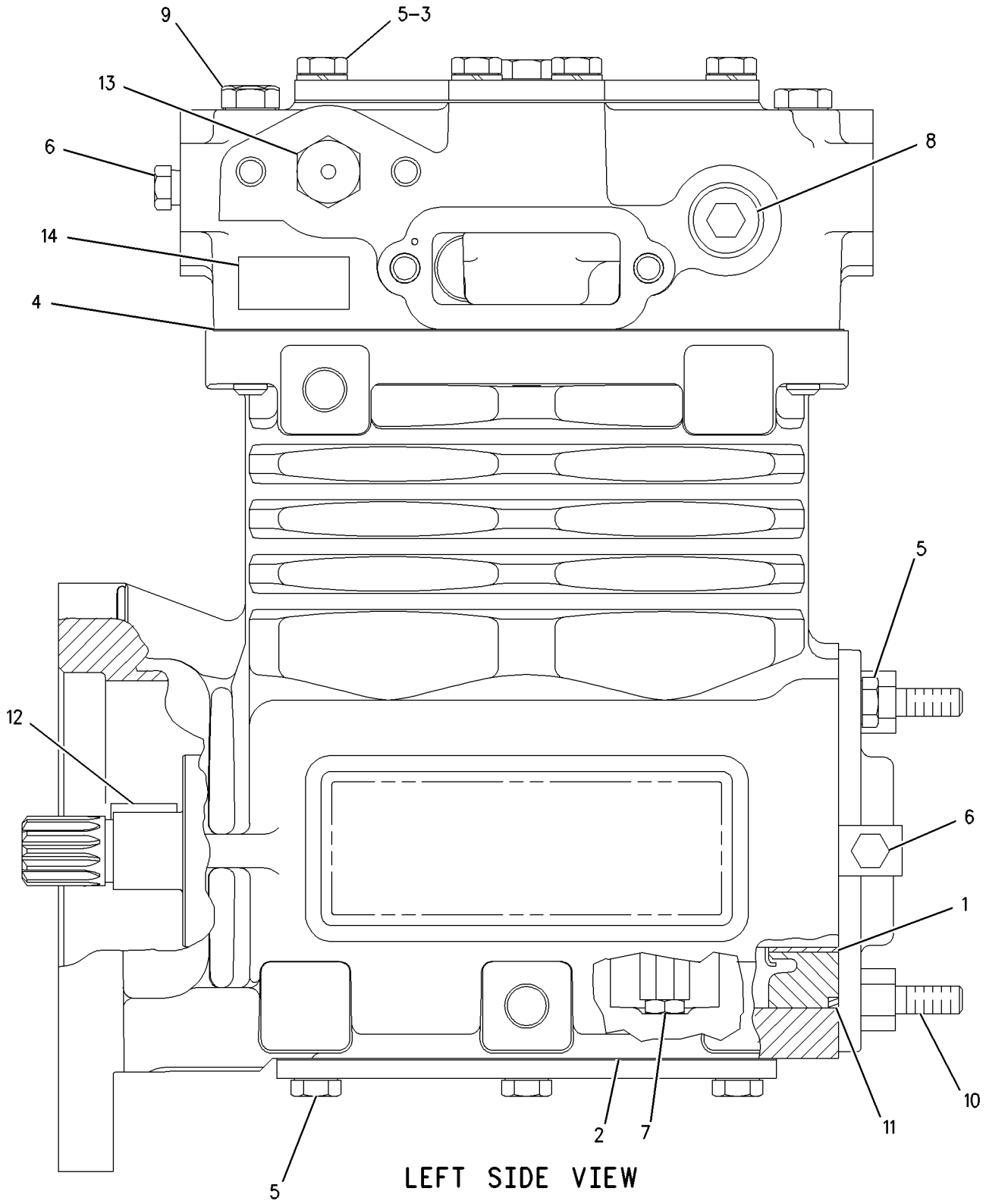

GRAPHIC #1 g00783724

BASIC ENGINE

133-7031 AIR COMPRESSOR GP

S/N: 3PD1-UP

13.2 CFM AT 1250 RPM. TWO CYLINDER, SINGLE STAGE, 1.14:1 RATIO

PART OF 161-1747 ENGINE AR

SMCS-1803 **i01276630**

NOTE	REF NO	GRAPHIC REF	PART NUMBER	QTY	PART NAME 1 2 3 4 5 6 (PRODUCT LEVEL)	SEE PAGE
I	1	1	**1W-0428**	1	HOSE AS	
	2	1	**7W-5499**	1	ELBOW	
M	3	1	**6V-8197**	3	BOLT (M12X1.75X40MM)	
	4	1	**8M-7065**	1	GASKET-AIR INLET	
	5	1	**9M-2904**	1	CLAMP-HOSE	
	6	1	**172-4702**	2	CLAMP	
I	7	1	**9Y-1116**	1	HOSE AS-END	
	8	1	**032-3631**	1	ELBOW	
	9	1	**090-8635**	1	SPACER (5MM THK)	
	10	1	**117-0221**	1	RING-PILOT	
	11	1	**126-0146**	1	HOSE-FUMES DISPOSAL	
	12	1	**128-0331**	1	HOSE	
	13	1	**128-0420**	1	GEAR (42 TEETH)	
	14	1	**129-2181**	1	SEAL-INTEGRAL	
	15	1	**131-2171**	1	CONNECTOR	
YR	16	1	**131-6679**	1	AIR COMPRESSOR GP	8
	17	1	**153-7062**	1	BRACKET	
	18	1	**166-6352**	1	TUBE AS (M10X1.50X25MM)	
	19	1	**005-0658**	1	ELBOW-FLARED	
	19A	1	**6V-5063**	1	SEAL-O-RING (23.47MM ID)	
	20	1	**001-7043**	1	ELBOW (12.7MM ID)	
	21	1	**118-4728**	1	ELBOW	
	22	1	**2B-2695**	2	BOLT (5/16-18X.875 IN)	
	23	1	**2S-2053**	1	CLIP (34.92MM ID)	
	24	1	**3E-4353**	2	WASHER-HARD (3MM THK)	
	25	1	**5P-8245**	3	WASHER-HARD (3MM THK)	
	26	1	**5S-0003**	2	NUT (5/16-18 THD)	
	27	1	**6D-4244**	1	CLIP (22.22MM ID)	
	28	1	**6M-7476**	1	ELBOW (FLARED 45 DEGREE)	
	29	1	**6V-3251**	2	SEAL-O-RING (19.18MM ID)	
M	30	1	**6V-4248**	3	BOLT (M10X1.50X25MM)	
	31	1	**6V-5839**	1	WASHER (2.5MM THK)	
	32	1	**6V-6609**	1	SEAL-O-RING (16.36MM ID)	
M	33	1	**6V-7742**	1	NUT-FULL (M20X2.50 THD)	
	34	1	**8L-6557**	1	CONNECTOR (37 DEGREE FLARED)	
	35	1	**8M-2770**	1	CLIP (12.7MM ID)	
	36	1	**8T-3282**	1	WASHER-HARD (3.5MM THK)	
	37	1	**9M-1974**	2	WASHER-HARD (2MM THK)	
	38	1	**9N-0869**	2	WASHER-HARD (2MM THK)	

I-SEE HOSE FABRICATION GUIDE
M-METRIC PART
R-REMFG PART MAY BE AVAILABLE
Y-SEPARATE ILLUSTRATION

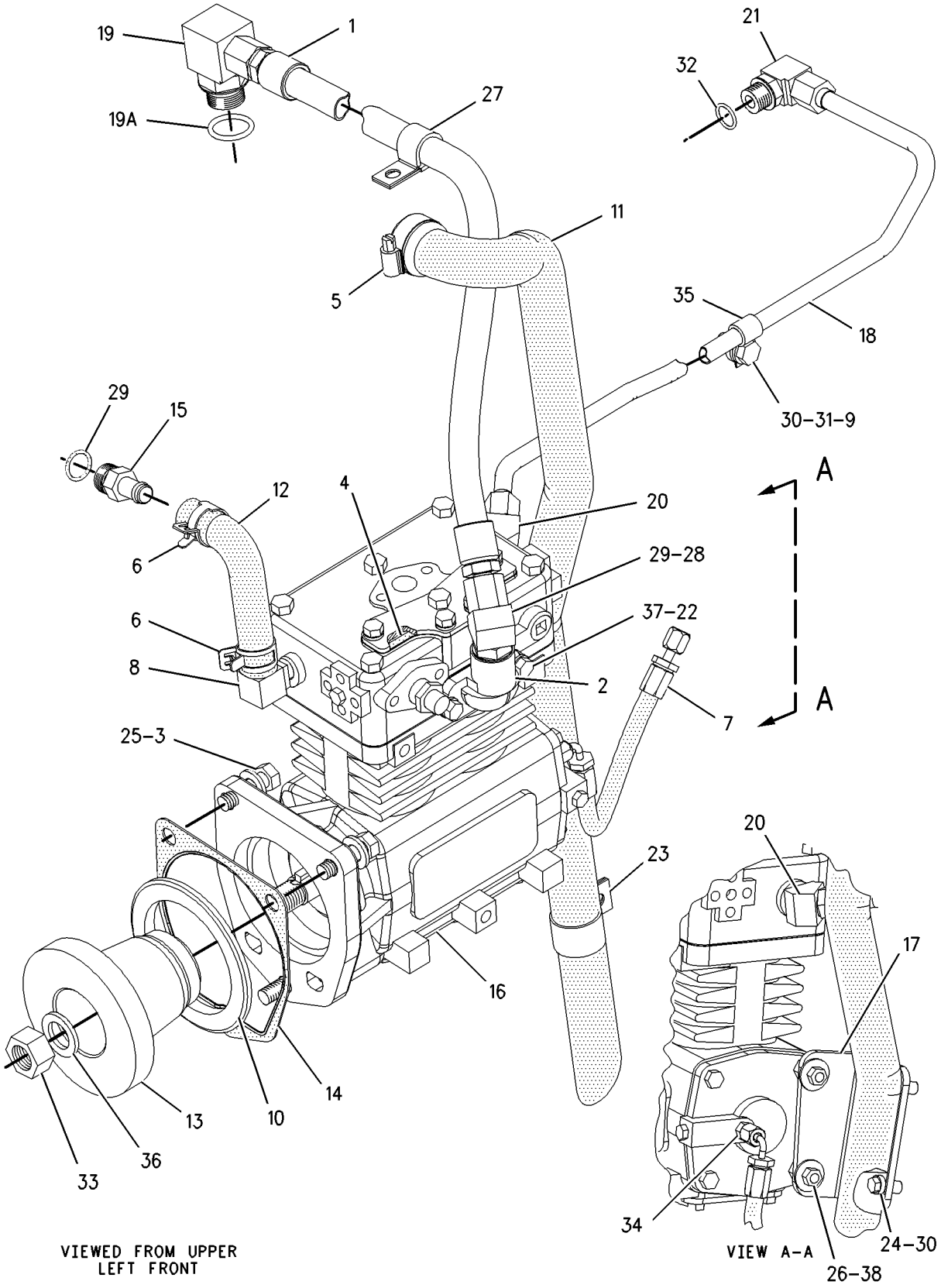

GRAPHIC #1 g00677556

BASIC ENGINE

167-0017 BELT TENSIONER GP

S/N: 3PD1-UP

PART OF 161-1747 ENGINE AR

SMCS-1358 **i01625962**

NOTE	REF NO	GRAPHIC REF	PART NUMBER	QTY	PART NAME 1 2 3 4 5 6 (PRODUCT LEVEL)	SEE PAGE
	1	1	**9Y-5631**	2	SPACER (13X26X89.9MM THK)	
	2	1	**123-0790**	1	PULLEY	
	3	1	**142-2011**	1	PULLEY GP	
	3A	1	**121-7137**	1	SEAL-O-RING	
	3B	1	**144-5611**	1	PULLEY AS-IDLER	
	3C	1	**179-6851**	1	SPACER	
	3D	1	**179-6852**	1	COVER	
M	3E	1	**179-6853**	1	BOLT-HEX HEAD	
	4	1	**173-1498**	1	PULLEY AS-IDLER	
	4A	1	**151-2900**	1	BOLT	
	4B	1	**166-6358**	1	COVER-DUST	
	4C	1	**173-1500**	1	SPACER-IDLER	
	5	1	**178-4875**	1	PLATE	
	6	1	**178-5252**	1	PULLEY AS-IDLER	
	6A	1	**8T-4121**	1	WASHER-HARD (11X21X2.5MM THK)	
M	6B	1	**8T-5005**	1	BOLT (M10X1.50X70MM)	
	6C	1	**121-7137**	1	SEAL-O-RING	
	6D	1	**166-6358**	1	COVER-DUST	
	6E	1	**178-5253**	1	SPACER-IDLER	
M	7	1	**123-0764**	2	STUD (M12X1.75X86.3MM OAL)	
	8	1	**190-0649**	1	TIGHTENER	
	9	1	**5P-8245**	2	WASHER-HARD (13.5X25.5X3MM THK)	
	10	1	**5R-7137**	2	WASHER-SEALING	
	11	1	**6V-5839**	1	WASHER (11X21X2.5MM THK)	
M	12	1	**6V-8004**	2	BOLT (M12X1.75X120MM)	
M	13	1	**6V-8149**	2	NUT (M12X1.75 THD)	
M	14	1	**8T-0643**	1	BOLT (M10X1.50X80MM)	

M-METRIC PART

167-0017 **BELT TENSIONER GP** *(contd.)* **i01625962**

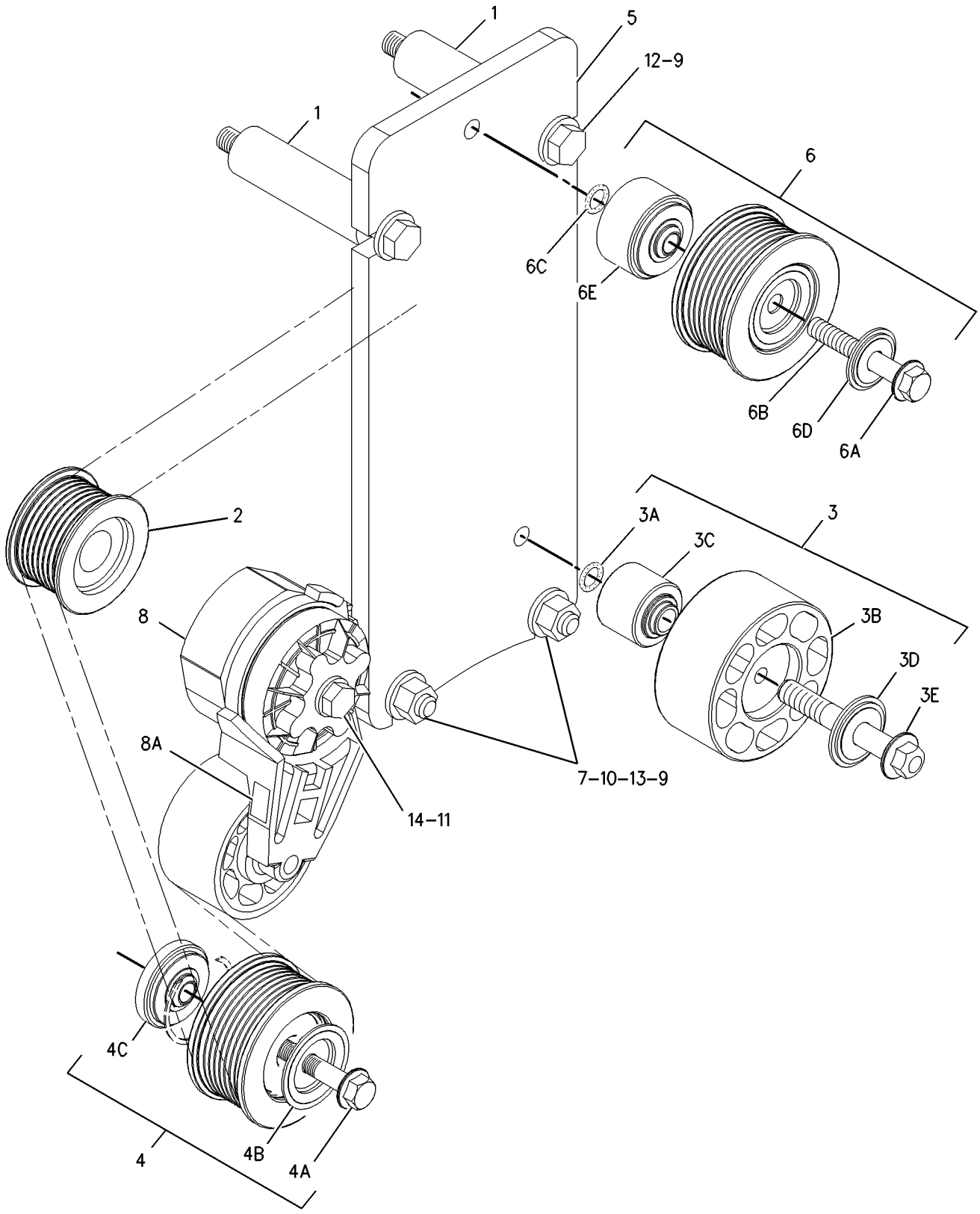

GRAPHIC #1 g00673126

171-3062 CAMSHAFT GP

S/N: 3PD1-UP

PART OF 161-1747 ENGINE AR

SMCS-1210 **i01463616**

NOTE	REF NO	GRAPHIC REF	PART NUMBER	QTY	PART NAME 1 2 3 4 5 6 (PRODUCT LEVEL)	SEE PAGE
M	1	1	**6V-5217**	5	BOLT (M8X1.25X20MM)	
	2	1	**9M-1974**	5	WASHER-HARD (8.8X16X2MM THK)	
	3	1	**178-3643**	1	PIN-THRUST	
	4	1	**133-7068**	1	GASKET-CAMSHAFT COVER	
	5	1	**171-3063**	1	CAMSHAFT AS	
	5A	1	**1B-8705**	1	KEY-WOODRUFF	
	5B	1	**128-0411**	1	JOURNAL	
	5C	1	**133-7100**	1	GEAR-CAMSHAFT DRIVE (96 TEETH)	
	6	1	**4K-9841**	1	WASHER (0.406X0.75X0.064 IN THK)	
	7	1	**118-0459**	1	COVER	

M-METRIC PART

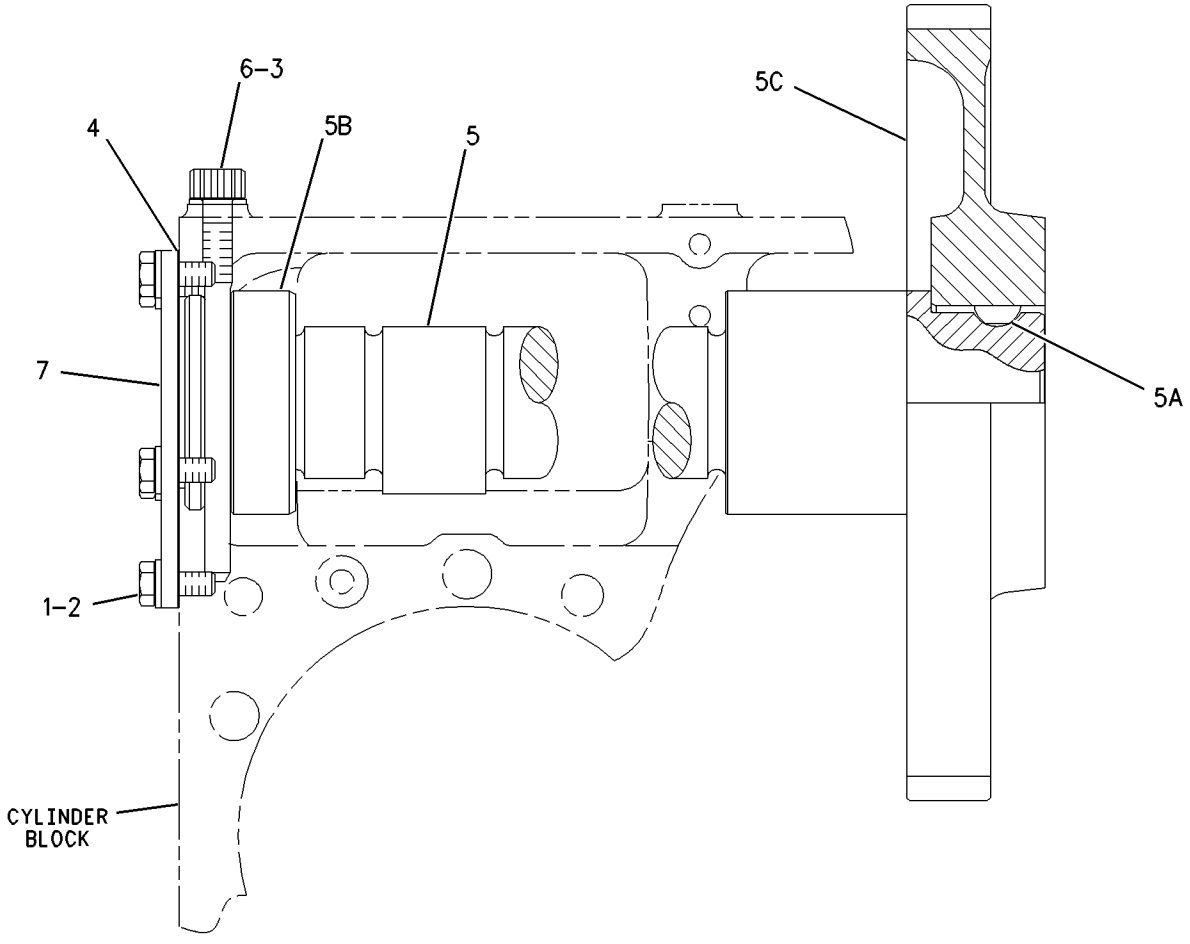

GRAPHIC #1 g00674299

MEMORANDA

174-1762 COVER GP-CYLINDER BLOCK

S/N: 3PD1-UP

PART OF 161-1747 ENGINE AR

SMCS-1201 **i01625947**

NOTE	REF NO	GRAPHIC REF	PART NUMBER	QTY	PART NAME 1 2 3 4 5 6 (PRODUCT LEVEL)	SEE PAGE
	1	1	**3E-4039**	1	CAP	
	2	1	**7C-1445**	3	COVER	
M	3	1	**9X-2097**	2	STUDBOLT (M8X1.25 THD)	
	4	1	**184-2524**	1	BRACKET AS	
M		1	**8T-3490**	1	NUT-WELD (M10X1.5 THD)	
		1	**183-4191**	1	BRACKET	
	5	1	**061-9455**	3	SEAL-O-RING	
	6	1	**1H-7339**	1	SEAL-O-RING	
	7	1	**4P-1650**	1	COVER	
	8	1	**4P-6587**	1	COVER	
M	9	1	**5P-7970**	1	NUT (M8X1.25 THD)	
	10	1	**5S-9134**	1	SEAL-O-RING	
	11	1	**6V-1250**	1	SEAL-O-RING	
M	12	1	**6V-1820**	2	BOLT (M10X1.50X30MM)	
M	13	1	**6V-2317**	1	BOLT (M8X1.25X30MM)	
M	14	1	**6V-5217**	5	BOLT (M8X1.25X20MM)	
	15	1	**6V-5839**	2	WASHER (11X21X2.5MM THK)	
	16	1	**7C-9542**	1	COVER-FILTER BASE	
	17	1	**9M-1974**	10	WASHER-HARD (8.8X16X2MM THK)	

M-METRIC PART

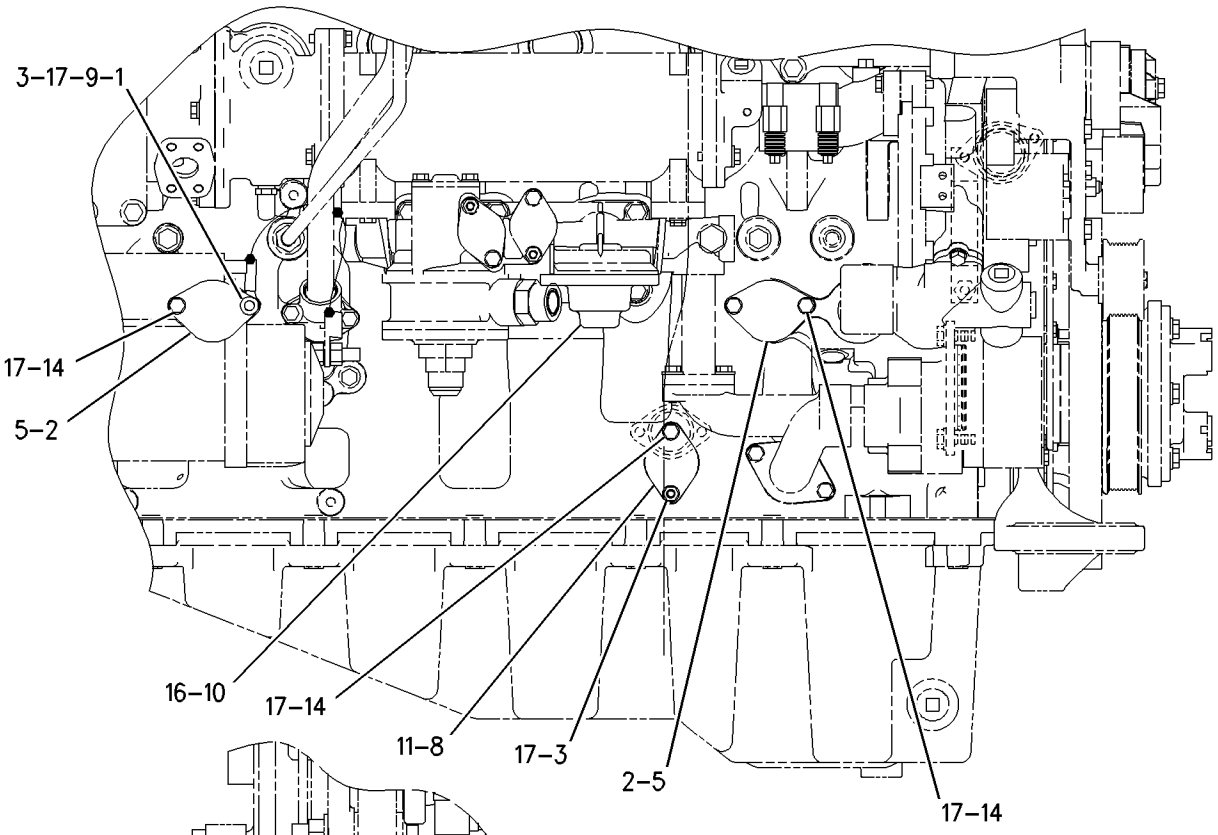

RIGHT SIDE VIEW

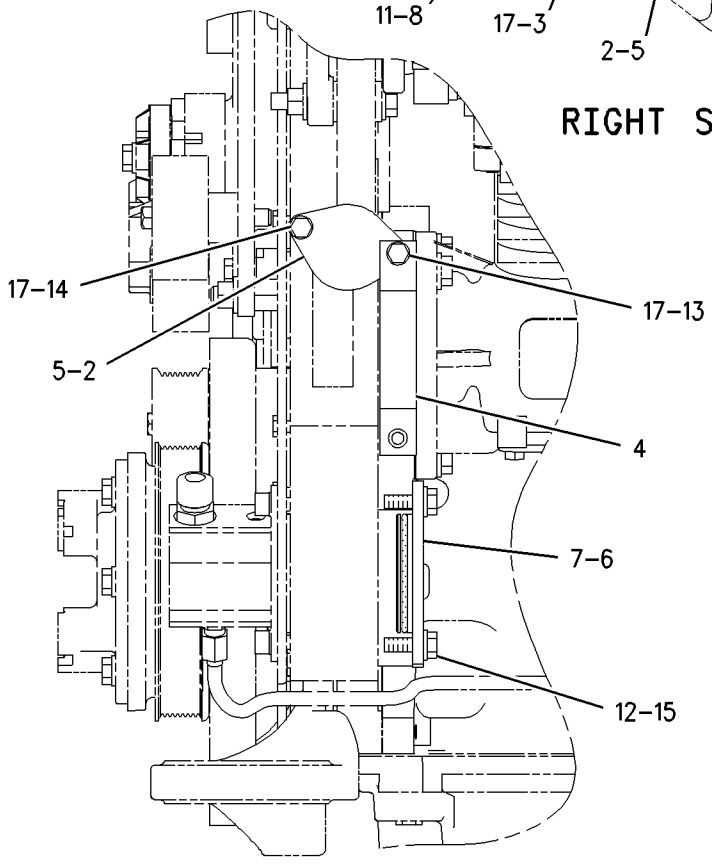

LEFT SIDE VIEW

GRAPHIC #1 g00789291

127-5728 COVER GP-FLYWHEEL HOUSING

S/N: 3PD1-UP
LEFT STARTER BORE
PART OF 161-1747 ENGINE AR

SMCS-1157 **i01509333**

NOTE	REF NO	GRAPHIC REF	PART NUMBER	QTY	PART NAME 1 2 3 4 5 6 (PRODUCT LEVEL)	SEE PAGE
	1	1	**9Y-6089**	1	GASKET	
	2	1	**0S-1589**	3	BOLT (5/8-11X1.75 IN)	
	3	1	**4D-3704**	3	WASHER-HARD (17X30X5MM THK)	
	4	1	**4N-1114**	1	COVER	

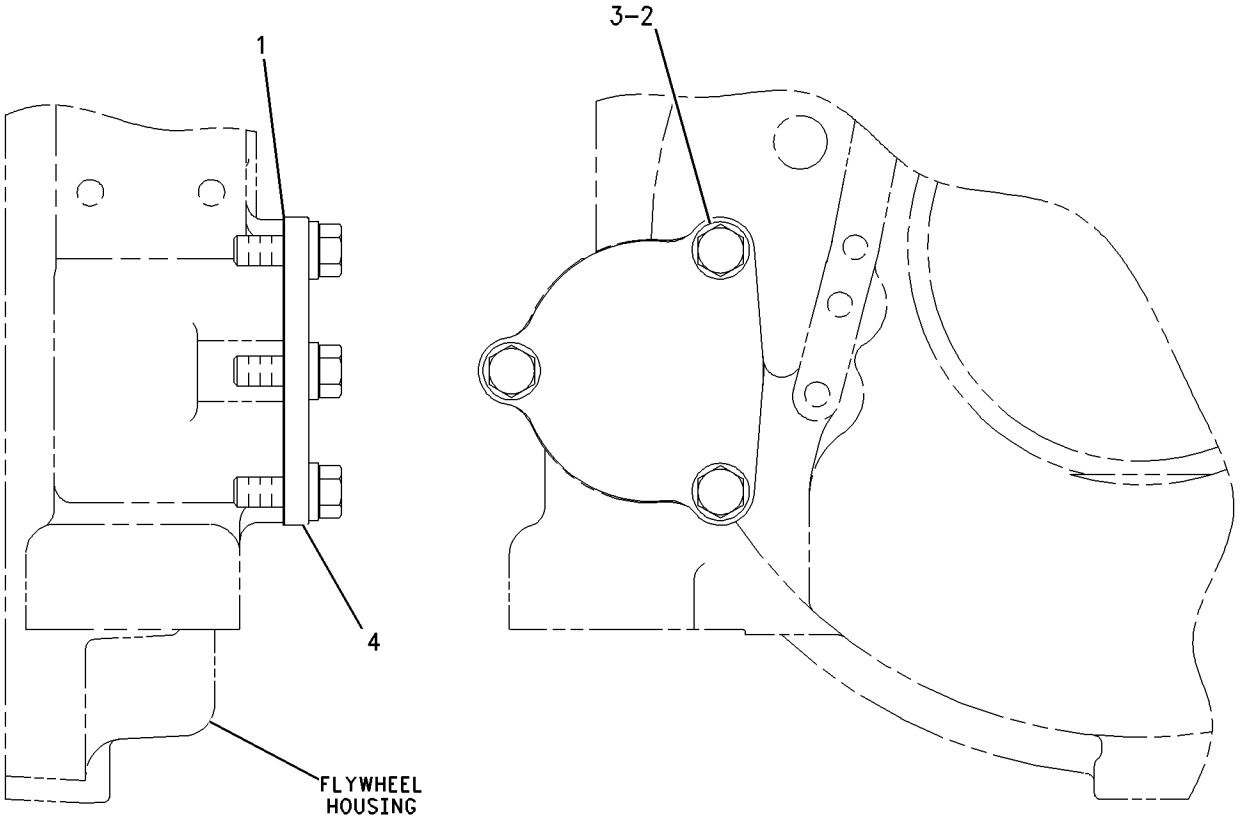

RIGHT SIDE VIEW FRONT VIEW

GRAPHIC #1 g00783561

MEMORANDA

BASIC ENGINE

132-3210 CRANKSHAFT GP

S/N: 3PD1-UP

PART OF 161-1747 ENGINE AR

SMCS-1202, 1203, 1204, 1232 **i01688920**

NOTE	REF NO	GRAPHIC REF	PART NUMBER	QTY	PART NAME 1 2 3 4 5 6 (PRODUCT LEVEL)	SEE PAGE
	1	1	**116-1109**	3	BEARING-MAIN	
A		1	**128-0382**	1	BEARING-MAIN (.51MM U.S.) (.51MM U.S.)	
A		1	**128-0383**	1	BEARING-MAIN (.76MM U.S.) (.76MM U.S.)	
A		1	**128-0384**	1	BEARING-MAIN (.51MM O.S.) (.51MM O.S.)	
A		1	**128-0385**	1	BEARING-MAIN (.51MM U.S. - .51MM O.S.) (.51MM U.S. & O.S.)	
	2	1	**116-1107**	2	PLATE-THRUST	
	3	1	**116-1108**	4	BEARING-MAIN	
A		1	**128-0400**	1	BEARING-MAIN (.51MM U.S.) (.51MM U.S.)	
A		1	**128-0401**	1	BEARING-MAIN (.76MM U.S.) (.76MM U.S.)	
A		1	**128-0402**	1	BEARING-MAIN (.51MM O.S.) (.51MM O.S.)	
A		1	**128-0403**	1	BEARING-MAIN (.51MM U.S. - .51MM O.S.) (.51MM U.S.& O.S.)	
C	4	1	**169-4187**	1	CRANKSHAFT AS	
	5	1	**155-6642**	1	GEAR-CRANKSHAFT (48 TEETH) (48 TEETH)	
F			**9Y-0821**	1	SLEEVE (FRONT SEAL)	
F			**9Y-0810**	1	SLEEVE (REAR SEAL)	
	6	1	**6V-3536**	1	DOWEL	
					AVAILABLE REPAIR KIT(S):	
			196-9521		KIT-MAIN BEARING	
					(INCLUDES STANDARD MAIN BEARINGS AND THRUST PLATES)	

A-NOT PART OF THIS GROUP
C-CHANGE FROM PREVIOUS TYPE
F-NOT SHOWN

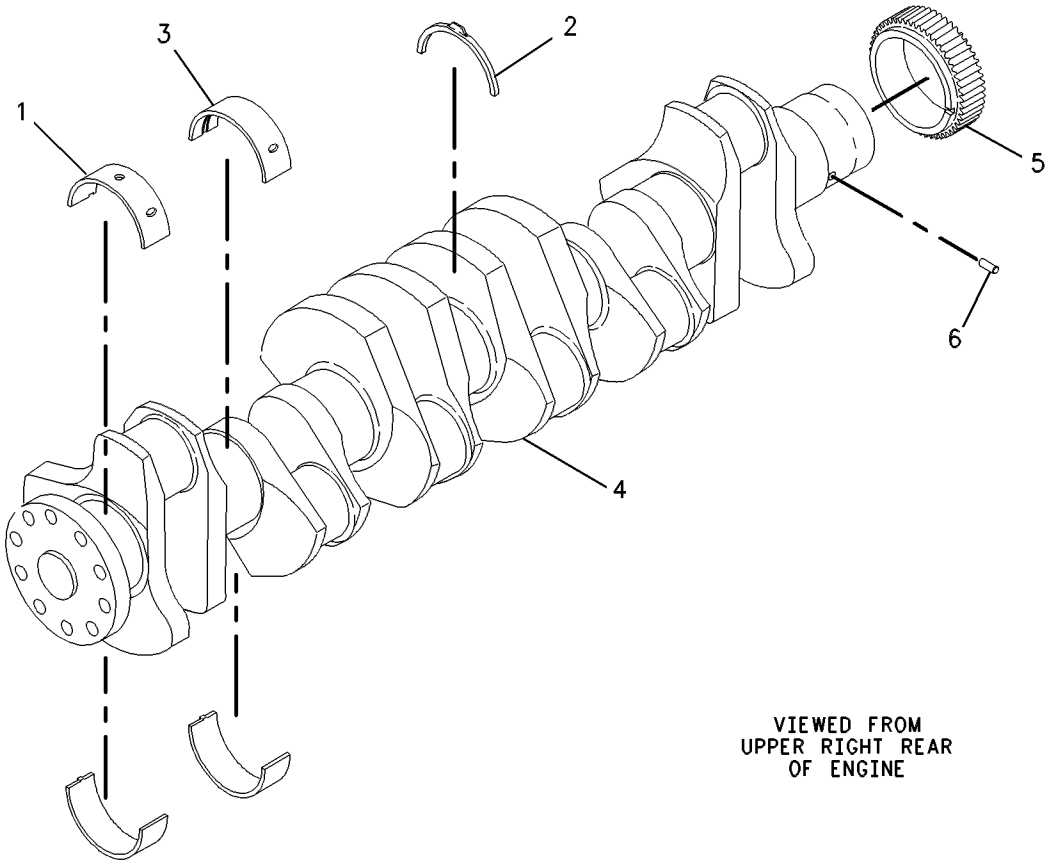

GRAPHIC #1 g00635463

BASIC ENGINE

200-2054 CYLINDER BLOCK AS

S/N: 3PD1-UP

PART OF 204-3450 CYLINDER BLOCK AS

SMCS-1201 **i01579678**

NOTE	REF NO	GRAPHIC REF	PART NUMBER	QTY	PART NAME 1 2 3 4 5 6 (PRODUCT LEVEL)	SEE PAGE
	1	1	**130-0872**	1	BEARING-SLEEVE	
	2	1	**117-0166**	7	CAP-BEARING	
M	3	1	**175-0454**	14	BOLT-HEX HEAD	
	4	1	**5P-8247**	14	WASHER-HARD (17X32X3.5MM THK)	
	5	1	**128-0417**	1	BEARING-SLEEVE	
	6	1	**128-0416**	5	BEARING-SLEEVE	

M-METRIC PART

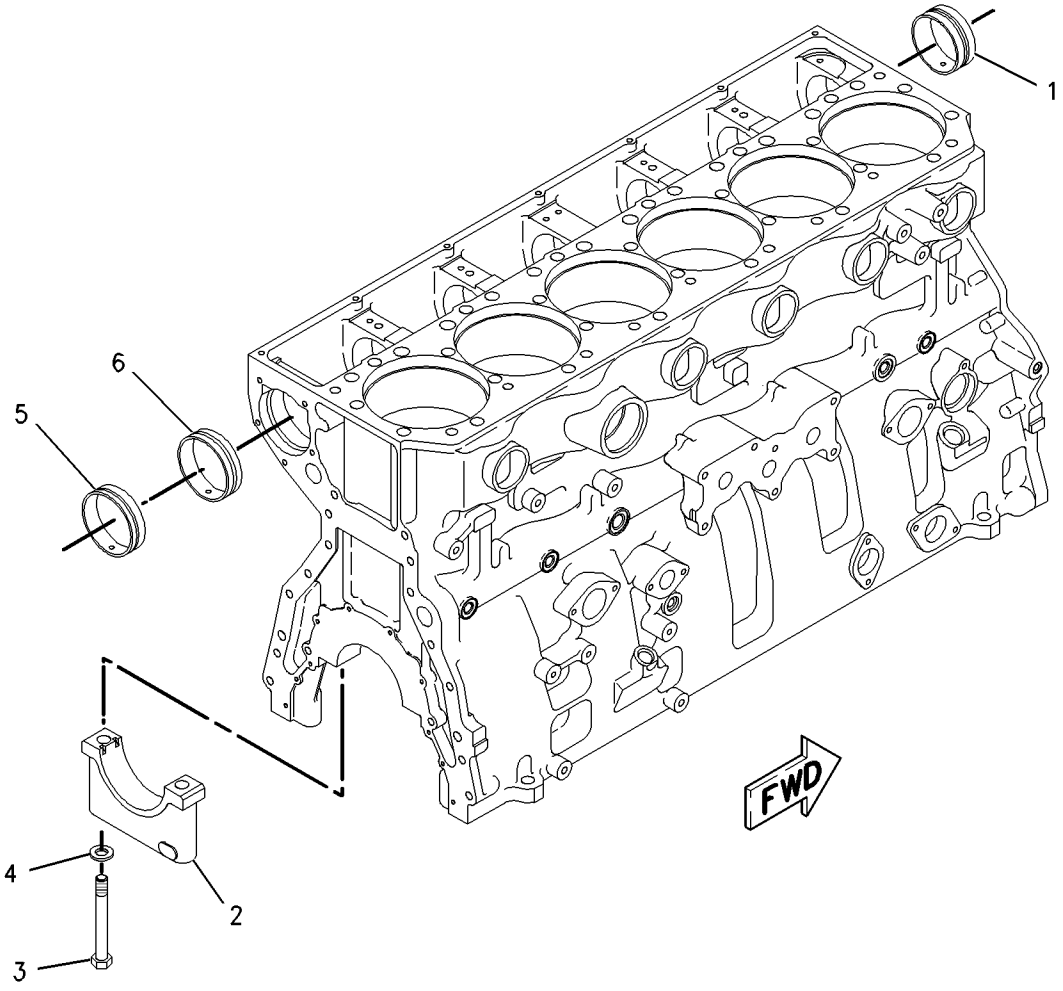

GRAPHIC #1 g00820213

BASIC ENGINE

204-3450 CYLINDER BLOCK AS

S/N: 3PD1-UP

PART OF 115-2982 CYLINDER BLOCK GP

SMCS-1201 **i01689463**

NOTE	REF NO	GRAPHIC REF	PART NUMBER	QTY	PART NAME 1 2 3 4 5 6 (PRODUCT LEVEL)	SEE PAGE
Y	1	1	**200-2054**	1	CYLINDER BLOCK AS	22
	2	1	**148-2125**	6	LINER-CYLINDER	
	3	1	**104-3560**	6	SEAL-LINER	
	4	1	**4F-5695**	6	PLUG-CUP	
					AVAILABLE REPLACEMENT PART(S):	
ABJ			**168-7363**		SHIM (0.22MM THK)	
ABJ			**168-7364**		SHIM (0.25MM THK)	
ABJ			**168-7365**		SHIM (0.28MM THK)	
ABJ			**168-7366**		SHIM (0.50MM THK)	

A-NOT PART OF THIS GROUP
B-USE AS REQUIRED
J-USED TO SET LINER PROTRUSION ON REBUILT MID-SUPPORT LINER ENGINE
Y-SEPARATE ILLUSTRATION

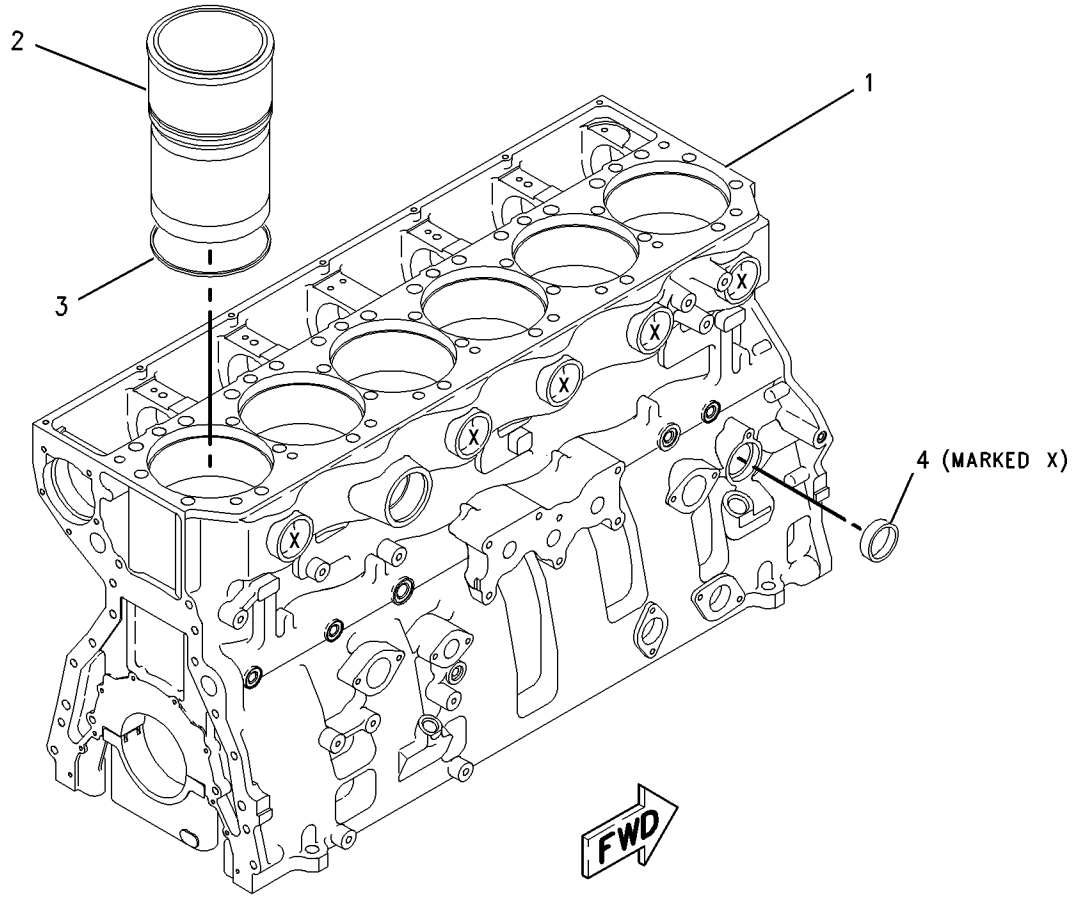

GRAPHIC #1 g00854204

BASIC ENGINE

115-2982 CYLINDER BLOCK GP*R

S/N: 3PD1-UP

PART OF 161-1747 ENGINE AR

SMCS-1201 **i01564699**

NOTE	REF NO	GRAPHIC REF	PART NUMBER	QTY	PART NAME 1 2 3 4 5 6 (PRODUCT LEVEL)	SEE PAGE
CY	1	1	*204-3450*	1	CYLINDER BLOCK AS	23
	2	1	**7N-5683**	6	DOWEL	
	3	1	**7E-4043**	6	JET AS-COOLING	
M	4	1	**8T-0100**	6	BOLT (M8X1.25X60MM)	
	5	1	**3E-4352**	6	WASHER-HARD (8.8X20.5X2.5MM THK)	
	6	1	**6V-3538**	2	DOWEL	
	7	1	**1N-5999**	2	PLUG	
	8	1	**5P-7813**	2	SEAL-O-RING	
	9	1	**9S-8002**	1	PLUG-O-RING	
	10	1	**6V-5048**	1	SEAL-O-RING	
	11	1	**3B-0623**	3	PLUG-CUP	
	12	1	**4G-4972**	6	SEAL-O-RING	

C-CHANGE FROM PREVIOUS TYPE
M-METRIC PART
Y-SEPARATE ILLUSTRATION

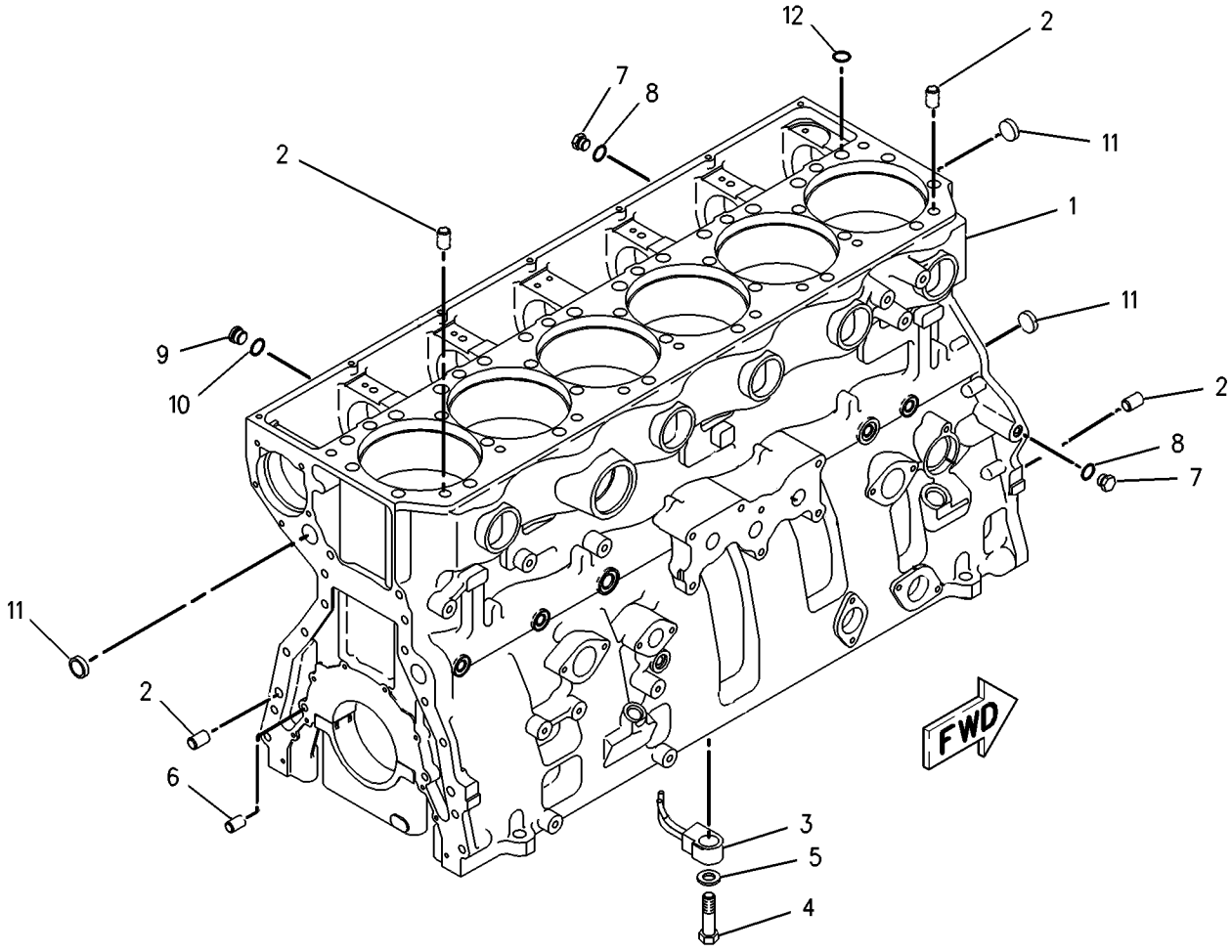

GRAPHIC #1 g00783719

MEMORANDA

BASIC ENGINE

179-9459 CYLINDER HEAD AS

S/N: 3PD1-UP

PART OF 148-2149 CYLINDER HEAD GP

SMCS-1100 **i01336021**

NOTE	REF NO	GRAPHIC REF	PART NUMBER	QTY	PART NAME 1 2 3 4 5 6 (PRODUCT LEVEL)	SEE PAGE
Z	1	1		1	CYLINDER HEAD	
	2	1	**3B-0623**	8	PLUG-CUP (25.73MM OD)	
	3	1	**179-9453**	12	SEAT-VALVE	
	4	1	**138-2006**	12	INSERT-VALVE SEAT	
	5	1	**116-1102**	6	SLEEVE-INJECTOR	
	6	1	**6V-7604**	16	PLUG-CUP	

Z-NOT SERVICED SEPARATELY

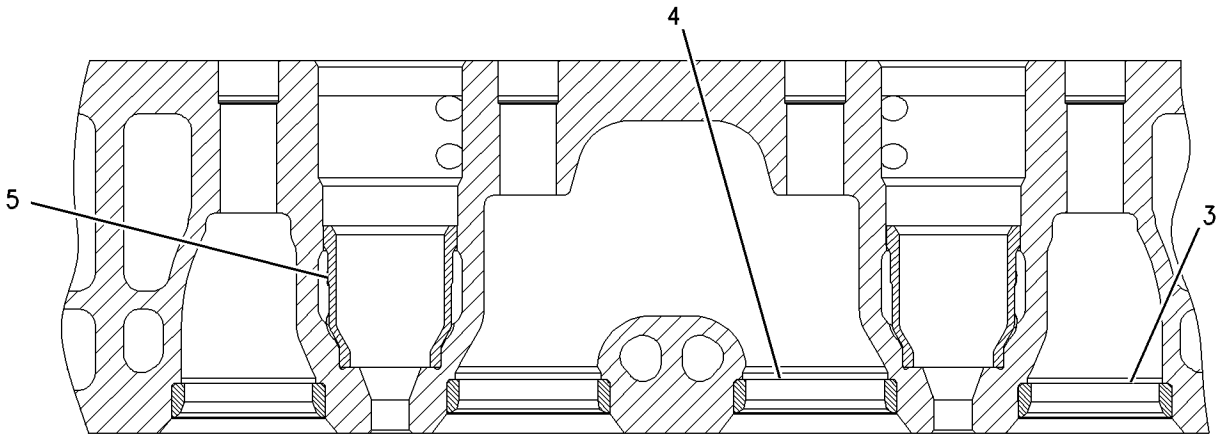

SECTION A-A

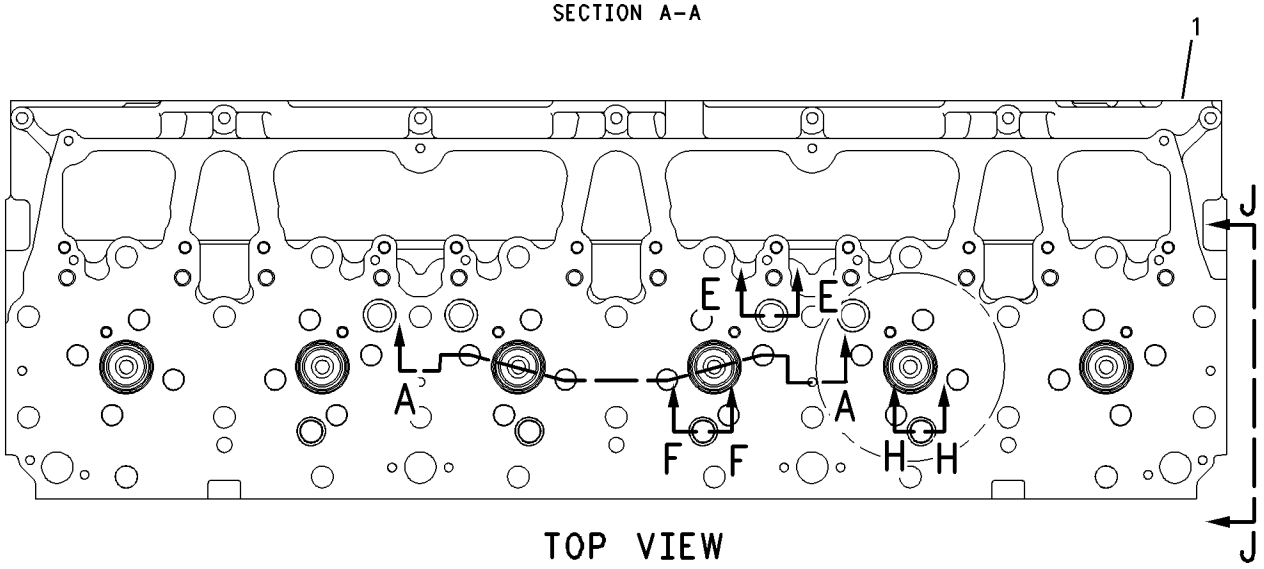

TOP VIEW

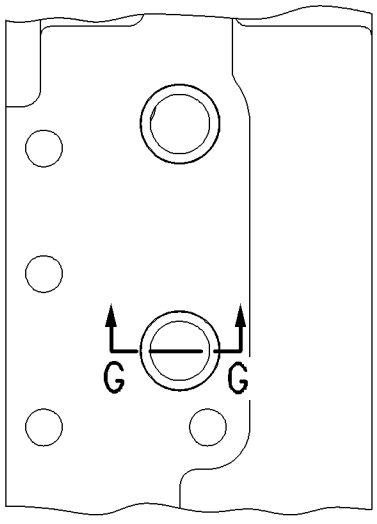

VIEW J-J

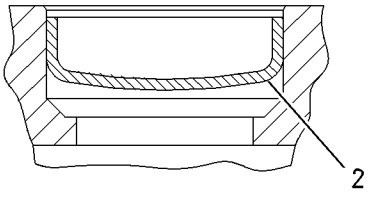

SECTION E-E

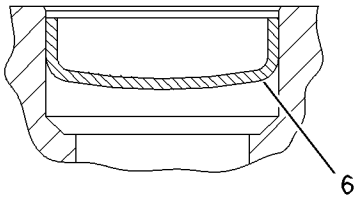

SECTION F-F

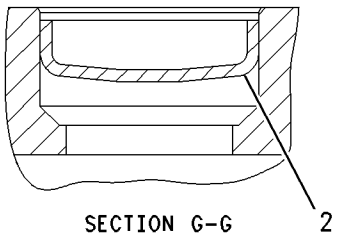

SECTION G-G

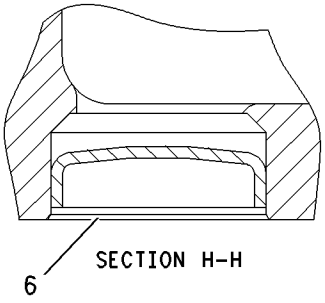

SECTION H-H

GRAPHIC #1 g00706910

BASIC ENGINE

116-1085 CYLINDER HEAD GP

S/N: 3PD1-UP

PART OF 161-1747 ENGINE AR

SMCS-1100 **i01509664**

NOTE	REF NO	GRAPHIC REF	PART NUMBER	QTY	PART NAME 1 2 3 4 5 6 (PRODUCT LEVEL)	SEE PAGE
CYR	1	1	**148-2149**	1	CYLINDER HEAD GP	29
M	2	1	**6V-9607**	7	BOLT (M8X1.25X120MM)	
C	3	1	**187-3307**	1	GASKET AS-CYLINDER	

C-CHANGE FROM PREVIOUS TYPE
M-METRIC PART
R-REMFG PART MAY BE AVAILABLE
Y-SEPARATE ILLUSTRATION

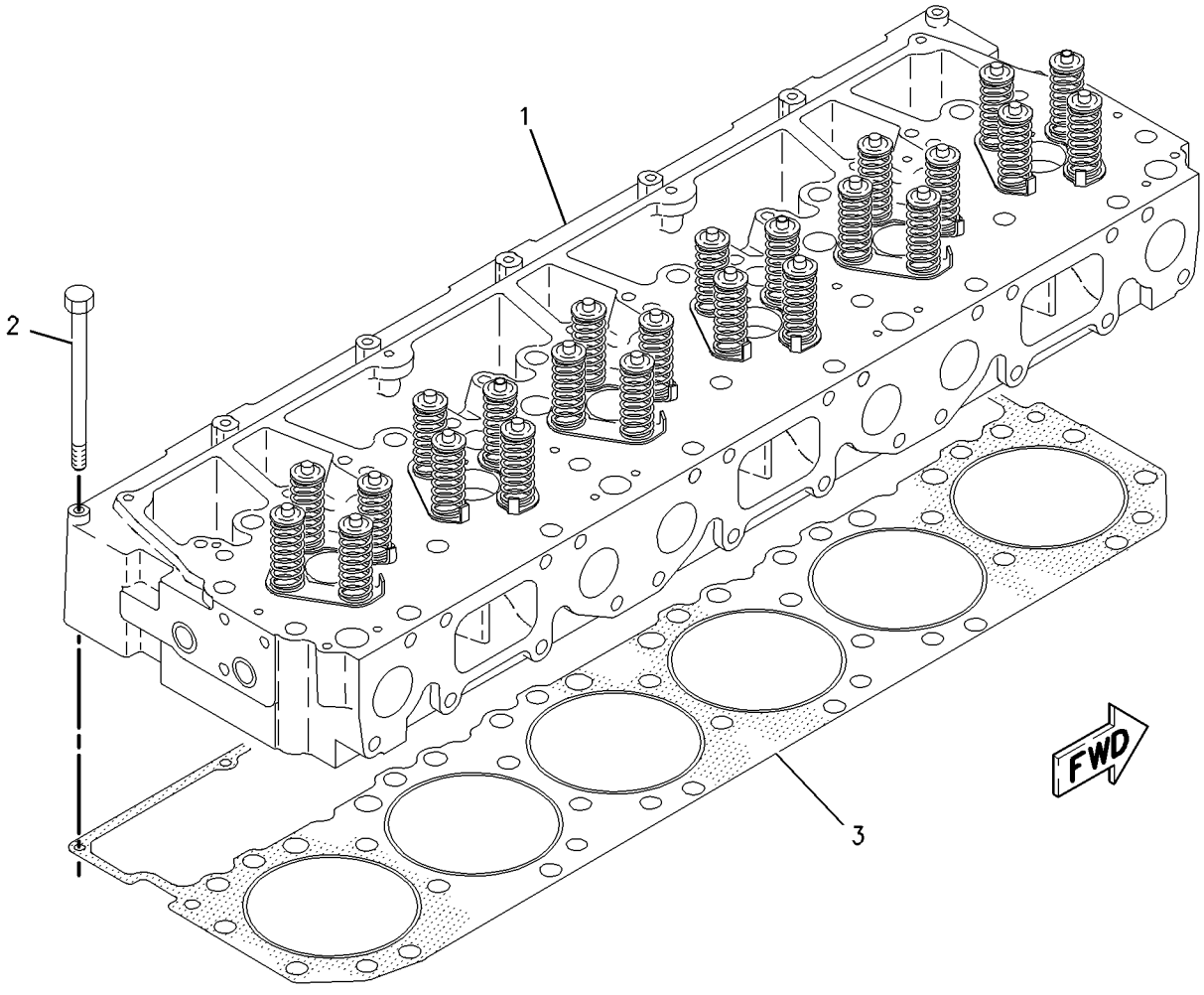

GRAPHIC #1 g00783693

148-2149 CYLINDER HEAD GP*R

S/N: 3PD1-UP

PART OF 116-1085 CYLINDER HEAD GP

SMCS-1100 **i01509679**

NOTE	REF NO	GRAPHIC REF	PART NUMBER	QTY	PART NAME 1 2 3 4 5 6 (PRODUCT LEVEL)	SEE PAGE
Y	1	1	*179-9459*	1	CYLINDER HEAD AS	26
	2	1	**100-8150**	24	GUIDE-VALVE	
	3	1	**6I-1638**	12	BASE-INJECTOR POSITIONING	
	4	1	**2A-4429**	48	LOCK-RETAINER	
	5	1	**133-7029**	12	VALVE-EXHAUST	
	6	1	**7E-9578**	12	VALVE-INLET	
	7	1	**7W-7083**	24	SPRING-VALVE	
	8	1	**7W-7082**	24	SPRING-VALVE	
	9	1	**6I-2663**	24	ROTOCOIL AS	
					(EACH INCLUDES)	
		1	**6I-2662**	1	SHIELD	
		1	**7C-8581**	1	ROTOCOIL AS	

Y-SEPARATE ILLUSTRATION

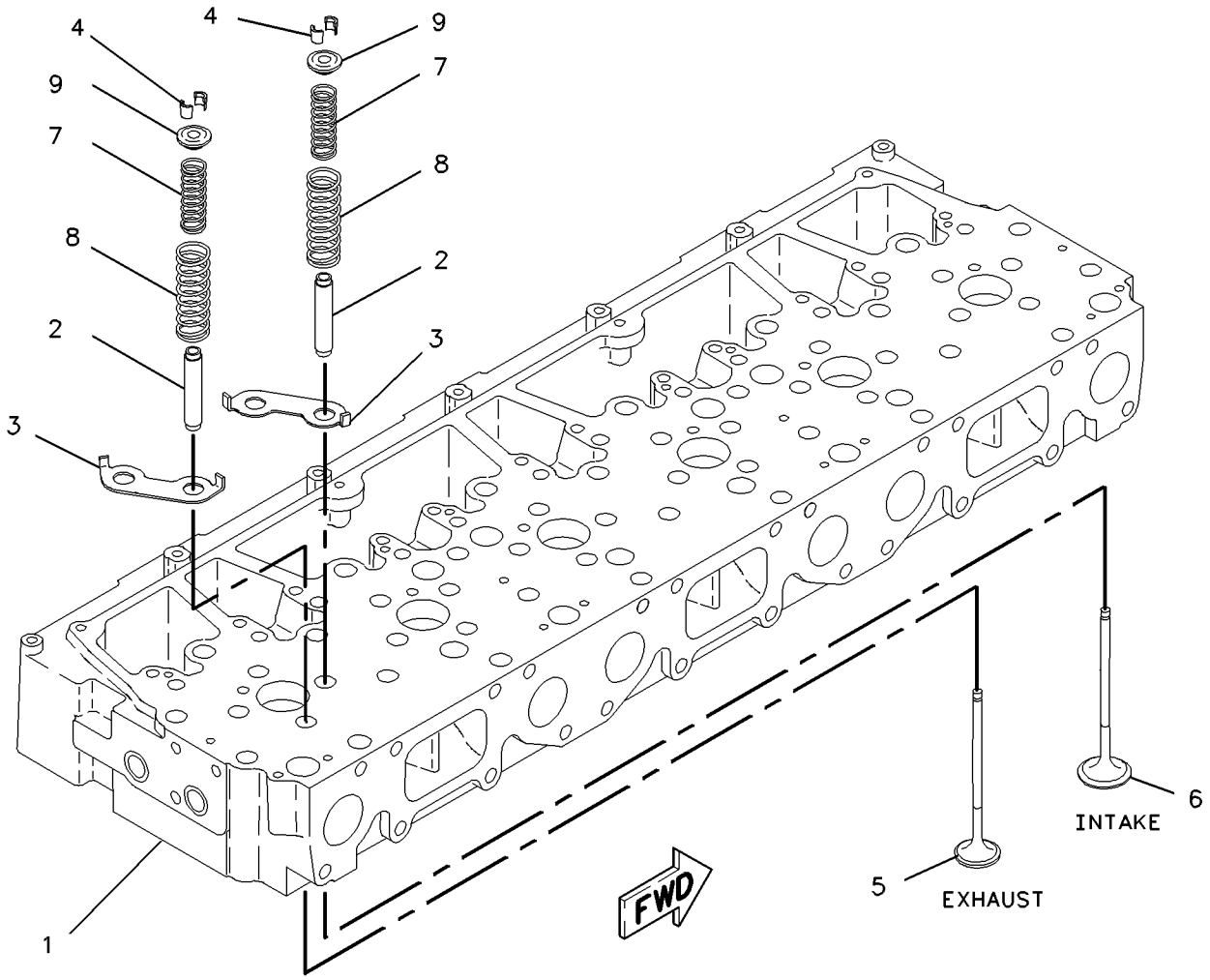

GRAPHIC #1 g00783706

BASIC ENGINE

174-1639 DRIVE GP-ACCESSORY

S/N: 3PD1-UP

PART OF 161-1747 ENGINE AR

SMCS-1207 **i01643507**

NOTE	REF NO	GRAPHIC REF	PART NUMBER	QTY	PART NAME 1 2 3 4 5 6 (PRODUCT LEVEL)	SEE PAGE
	1	1	**167-8125**	1	DAMPER AS	
	2	1	**174-1593**	1	ADAPTER	
	3	1	**174-1640**	1	YOKE	
	4	1	**175-7314**	1	PULLEY	
	5	1	**179-0092**	1	ADAPTER	
M	6	1	**136-4183**	8	BOLT-12 POINT HEAD (M10X1.5X30MM)	
	7	1	**5P-8247**	6	WASHER-HARD (17X32X3.5MM THK)	
	8	1	**6V-5839**	6	WASHER (11X21X2.5MM THK)	
M	9	1	**6V-5842**	6	BOLT (M10X1.50X40MM)	
M	10	1	**8T-0358**	6	BOLT (M16X2.0X90MM)	
	11	1	**9X-2027**	8	WASHER (11X18X2MM THK)	

M-METRIC PART

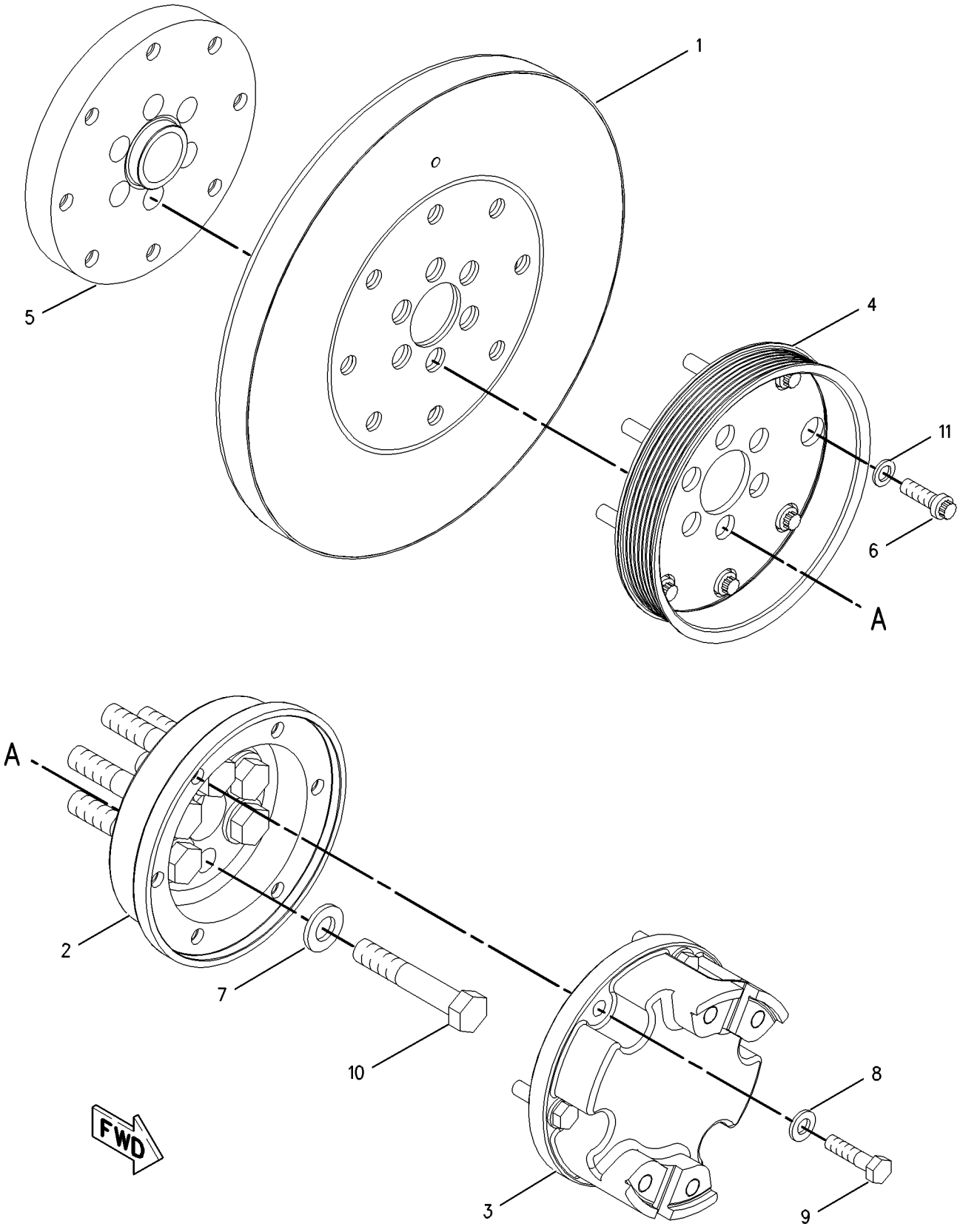

GRAPHIC #1 g00850003

116-1083 FASTENER GP-CYLINDER HEAD

S/N: 3PD1-UP

PART OF 116-5408 MOUNTING GP-VALVE MECHANISM

SMCS-1100 **i01538648**

NOTE	REF NO	GRAPHIC REF	PART NUMBER	QTY	PART NAME 1 2 3 4 5 6 (PRODUCT LEVEL)	SEE PAGE
M	1	1	**129-3184**	26	BOLT-HEX HEAD (M16X2X160MM)	
	2	1	**2S-5658**	26	WASHER-HARD (17X29X3MM THK)	

M-METRIC PART

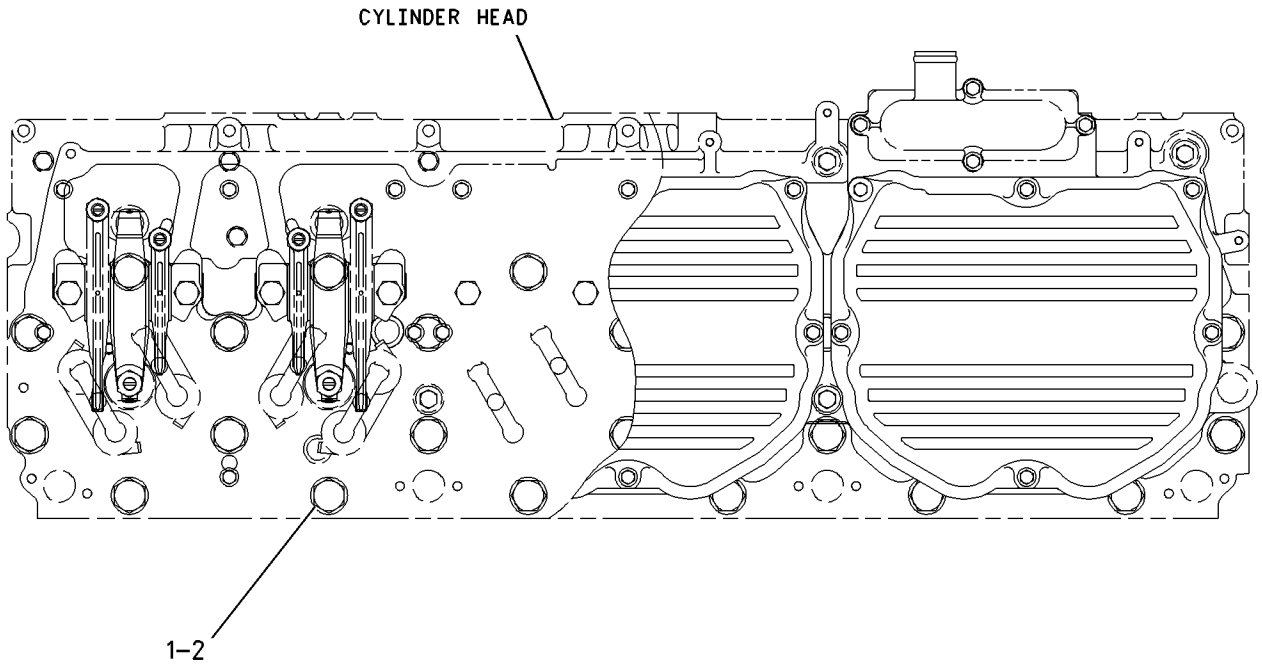

TOP VIEW

GRAPHIC #1 g00799119

BASIC ENGINE

174-1766 FLYWHEEL GP

S/N: 3PD1-UP

PART OF 161-1747 ENGINE AR

SMCS-1156, 1158 **i01643510**

NOTE	REF NO	GRAPHIC REF	PART NUMBER	QTY	PART NAME 1 2 3 4 5 6 (PRODUCT LEVEL)	SEE PAGE
	1	1	**160-8220**	1	FLYWHEEL AS	
		1	**4N-2514**	1	GEAR (113 TEETH)	
	2	1	**5P-8247**	8	WASHER-HARD (17X32X3.5MM THK)	
M	3	1	**6V-5686**	8	BOLT (M16X2X50MM)	

M-METRIC PART

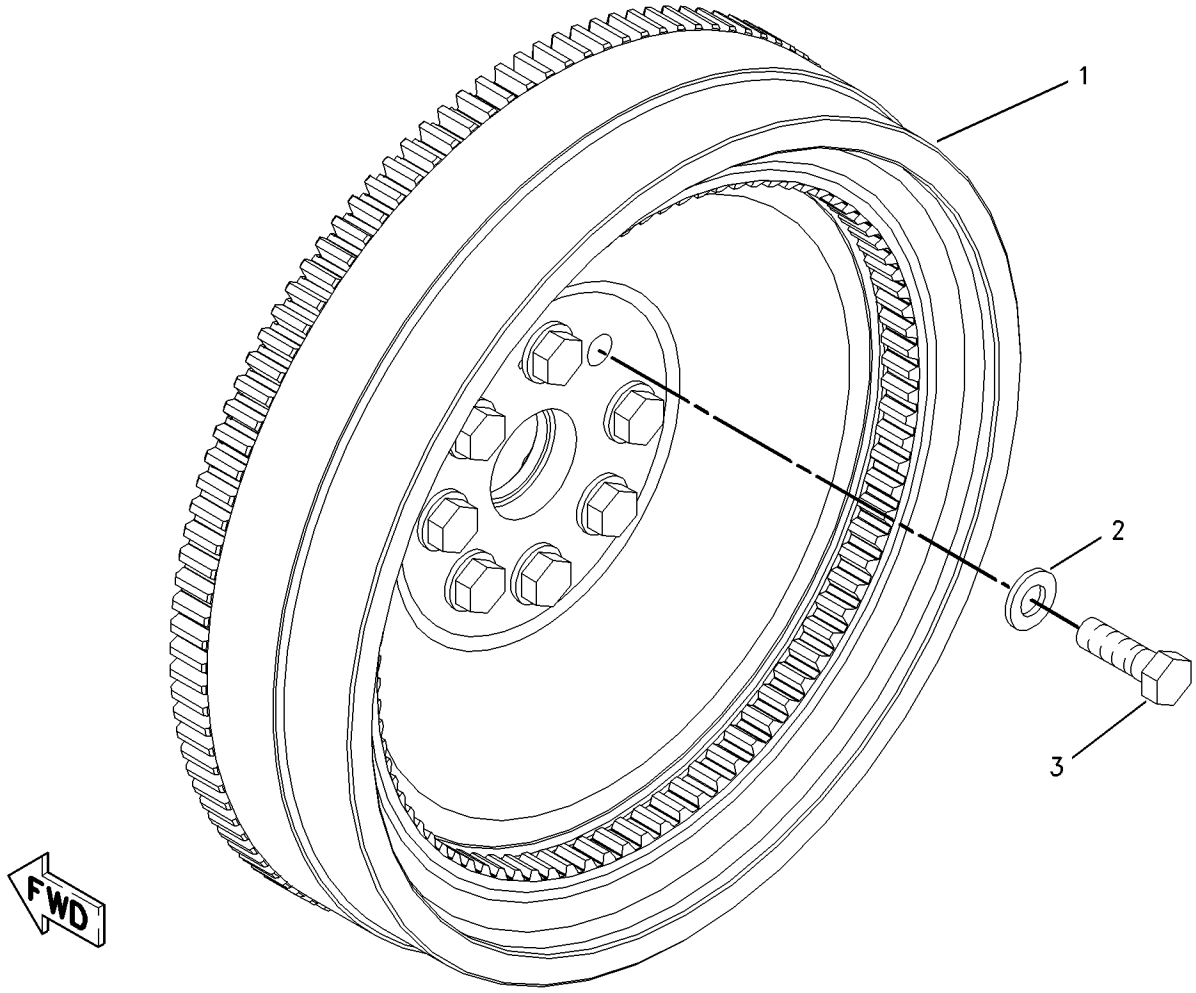

GRAPHIC #1 g00850147

BASIC ENGINE

117-2750 GEAR GP-FRONT

S/N: 3PD1-UP

PART OF 161-1747 ENGINE AR

SMCS-1206 **i01509826**

NOTE	REF NO	GRAPHIC REF	PART NUMBER	QTY	PART NAME 1 2 3 4 5 6 (PRODUCT LEVEL)	SEE PAGE
	1	1	**9Y-3520**	1	GEAR AS (61 TEETH)	
	2	1	**7C-7852**	1	BEARING	
M	3	1	**8T-0281**	2	BOLT (M16X2X80MM)	
	4	1	**7C-7851**	1	SHAFT	
	5	1	**133-7086**	1	GEAR AS-IDLER (71 TEETH)	
	6	1	**133-7083**	1	SHAFT	

M-METRIC PART

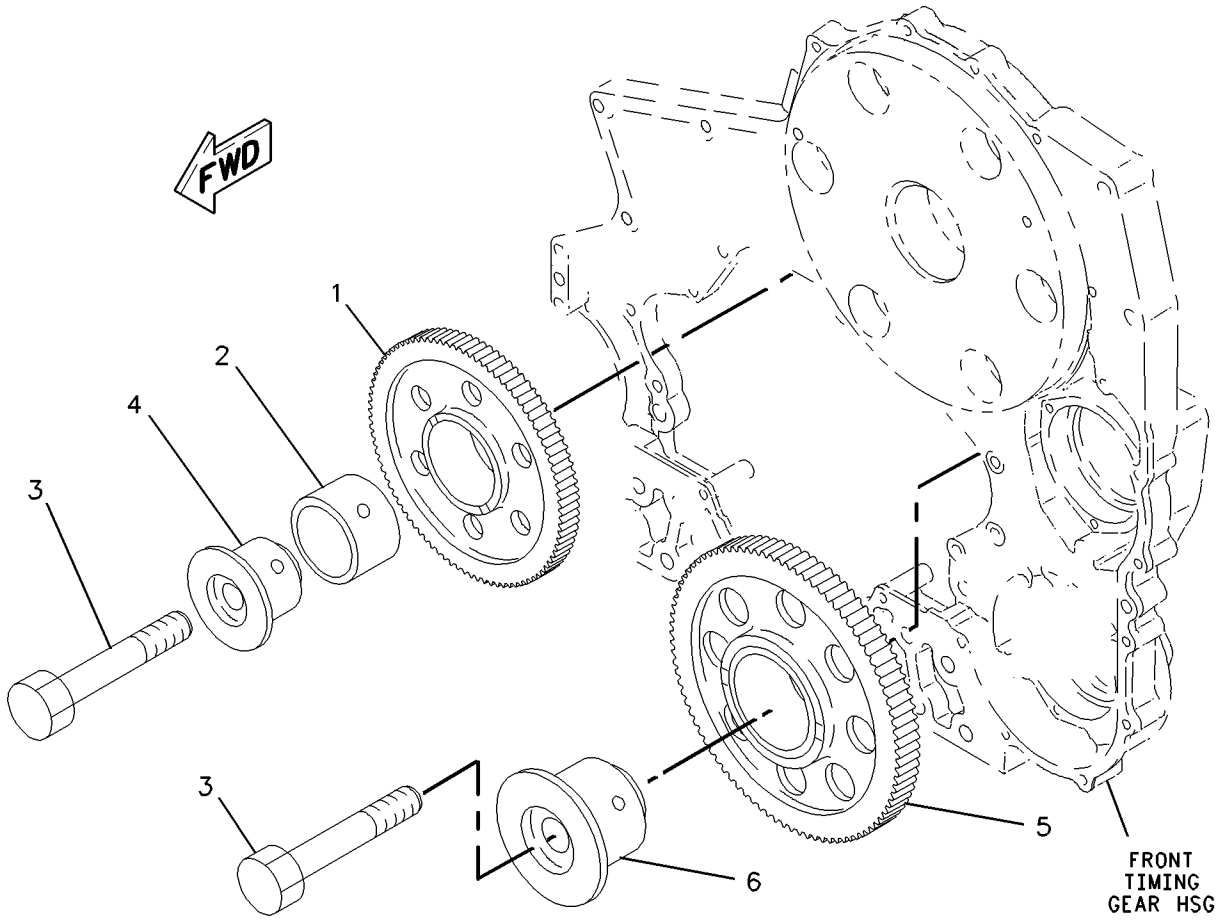

GRAPHIC #1 g00783839

MEMORANDA

200-0765 HOUSING GP-FLYWHEEL

S/N: 3PD1-UP

PART OF 161-1747 ENGINE AR

SMCS-1157 **i01643514**

NOTE	REF NO	GRAPHIC REF	PART NUMBER	QTY	PART NAME 1 2 3 4 5 6 (PRODUCT LEVEL)	SEE PAGE
	1	1	**200-0769**	1	HOUSING-FLYWHEEL	
	2	1	**9S-4185**	2	PLUG	
M	3	1	**6V-8197**	12	BOLT (M12X1.75X40MM)	
	4	1	**5P-8245**	12	WASHER-HARD (13.5X25.5X3MM THK)	
M	5	1	**6V-5219**	2	BOLT (M8X1.25X40MM)	
	6	1	**9M-1974**	2	WASHER-HARD (8.8X16X2MM THK)	
	7	1	**7C-1445**	1	COVER	
	8	1	**3K-8460**	1	PLUG	
	9	1	**5P-7814**	1	SEAL-O-RING	
	10	1	**9S-9334**	1	PLUG	
	11	1	**5P-7701**	1	SEAL-O-RING	
	12	1	**061-9455**	1	SEAL-O-RING	
	13	1	**8L-2786**	2	SEAL-O-RING	
	14	1	**5D-9344**	1	SEAL-O-RING	
B	15	1	**1U-8846**		SEALANT-GASKET	
	16	1	**5F-0304**	1	PLUG-DRAIN	
	17	1	**8T-6763**	1	PLUG-PIPE	
	18	1	**2A-1162**	1	GASKET	

B-USE AS REQUIRED
M-METRIC PART

200-0765 **HOUSING GP-FLYWHEEL** ***(contd.)*** **i01643514**

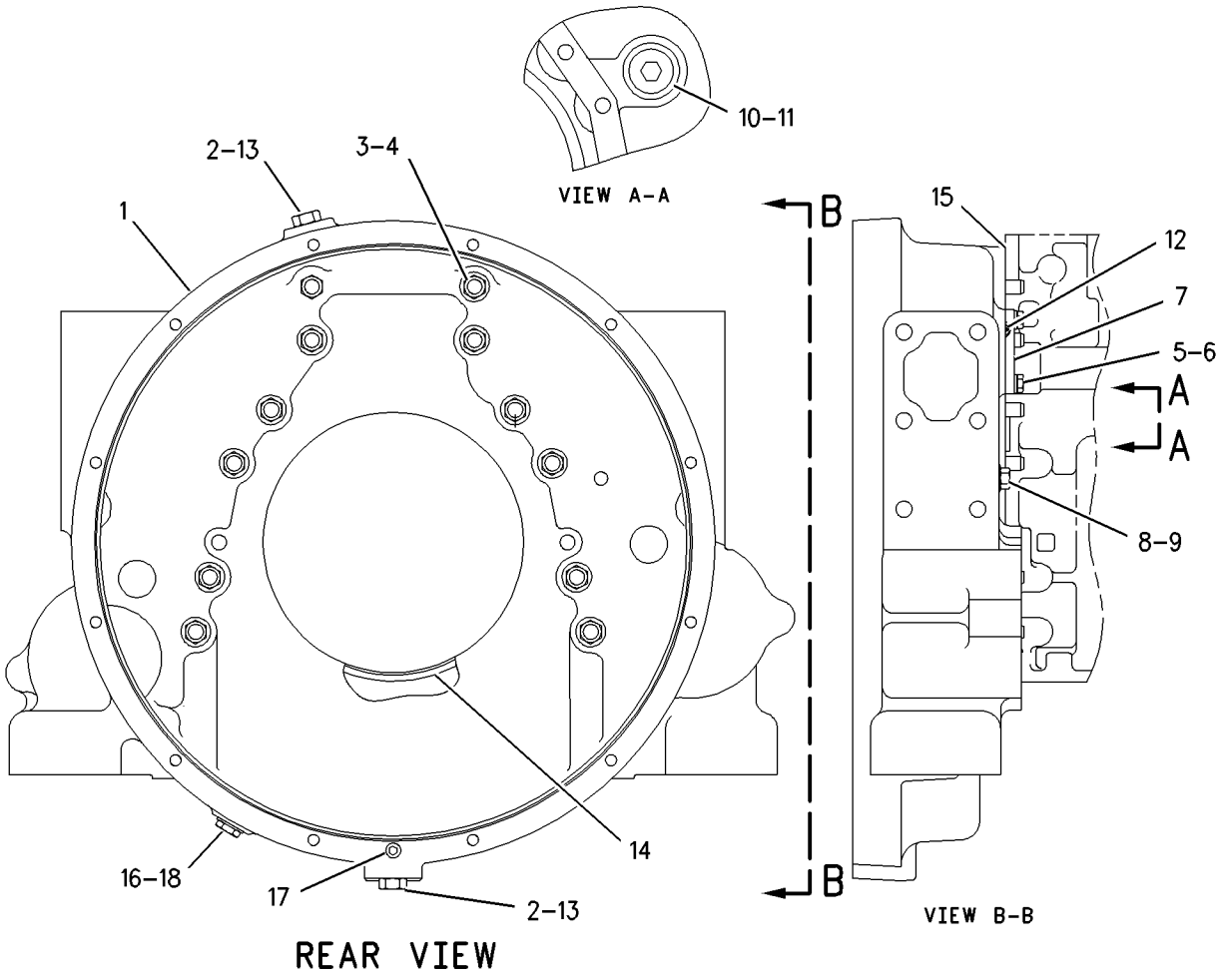

GRAPHIC #1 g00850090

BASIC ENGINE

133-7075 HOUSING GP-FRONT

S/N: 3PD1-UP

PART OF 161-1747 ENGINE AR

SMCS-1151, 1162 **i01659717**

NOTE	REF NO	GRAPHIC REF	PART NUMBER	QTY	PART NAME 1 2 3 4 5 6 (PRODUCT LEVEL)	SEE PAGE
C	1	1	**169-4170**	1	HOUSING AS-FRONT	
	1A	1	**2H-5549**	1	RING-RETAINING	
	1B	1	**8H-9789**	2	BALL BEARING	
	1C	1	**115-9424**	1	GEAR-PUMP DRIVE (34 TEETH)	
	1D	1	**2A-3348**	2	DOWEL	
	1E	1	**6V-3538**	2	DOWEL	
	1F	1	**3H-7654**	2	WASHER-HARD (13.5X22.5X3MM THK)	
M	1G	1	**8T-0343**	2	BOLT-SOCKET HEAD (M12X1.75X55MM)	
M	2	1	**204-0712**	13	BOLT (M8X1.25X30MM)	
					—OR—	
M		1	**6V-5219**	13	BOLT (M8X1.25X40MM)	
	3	1	**9M-1974**	33	WASHER-HARD (8.8X16X2MM THK)	
	4	1	**169-4172**	1	COVER AS	
	5	1	**174-2475**	1	SEAL-INTEGRAL	
	6	1	**211-2822**	1	GASKET	
	7	1	**169-4166**	1	SEAL GP-CRANKSHAFT	
	8	1	**3H-0976**	1	SEAL-O-RING	
	9	1	**5P-0537**	5	WASHER-HARD (7.2X14.5X2MM THK)	
M	10	1	**6V-8225**	5	NUT (M6X1 THD)	
M	11	1	**6V-3940**	19	BOLT (M8X1.25X25MM)	
M	12	1	**3E-8016**	1	BOLT-LOCKING (M8X1.25X25MM)	

C-CHANGE FROM PREVIOUS TYPE
M-METRIC PART

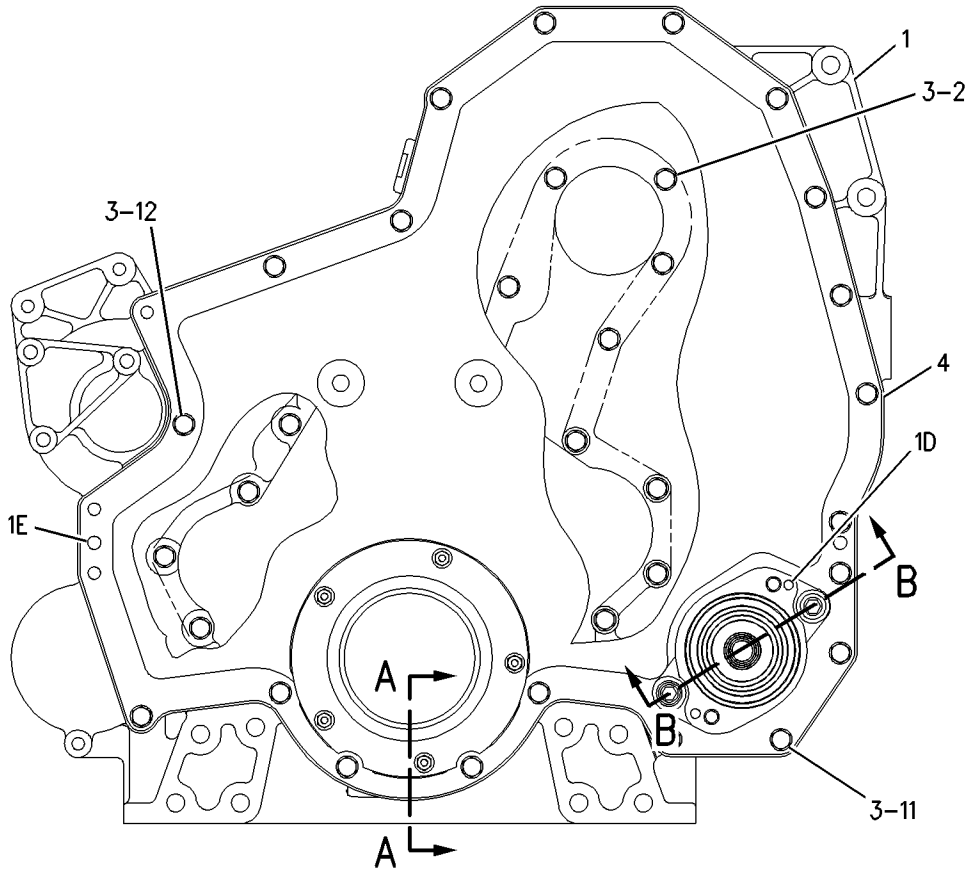

FRONT VIEW

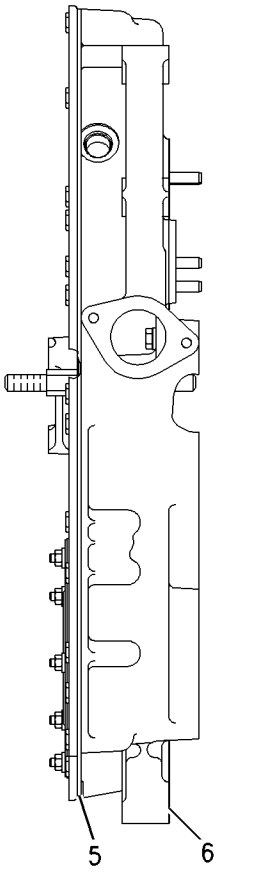

LEFT SIDE VIEW

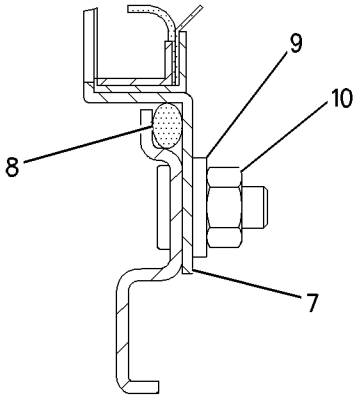

SECTION A-A

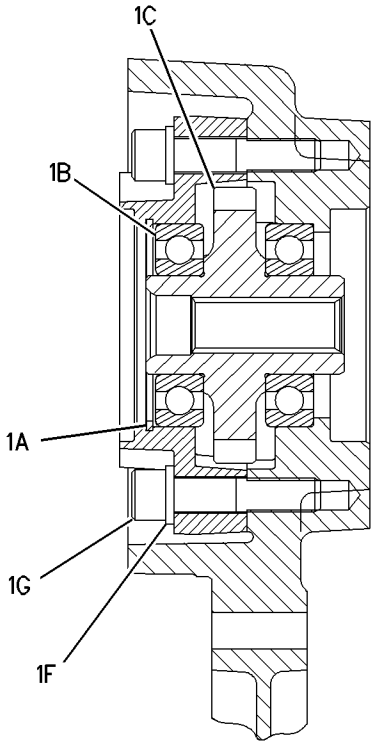

SECTION B-B

GRAPHIC #1 g00797087

148-2063 LIFTER GP-VALVE

S/N: 3PD1-UP

PART OF 117-2749 VALVE MECHANISM GP

SMCS-1209 **i01660857**

NOTE	REF NO	GRAPHIC REF	PART NUMBER	QTY	PART NAME 1 2 3 4 5 6 (PRODUCT LEVEL)	SEE PAGE
	1	1	**179-7269**	6	LIFTER AS-VALVE	
	2	1	**179-7272**	3	LIFTER AS-UNIT INJECTOR	
	3	1	**148-2065**	1	BRACKET AS (OIL SUPPLY)	
	5	1	**115-9391**	1	SHAFT AS-LIFTER	
	6	1	**6I-1661**	1	DOWEL	
	7	1	**0T-0200**	2	PLUG-CUP	
	8	1	**148-2064**	1	BRACKET AS	
	9	1	**6V-3537**	1	DOWEL	

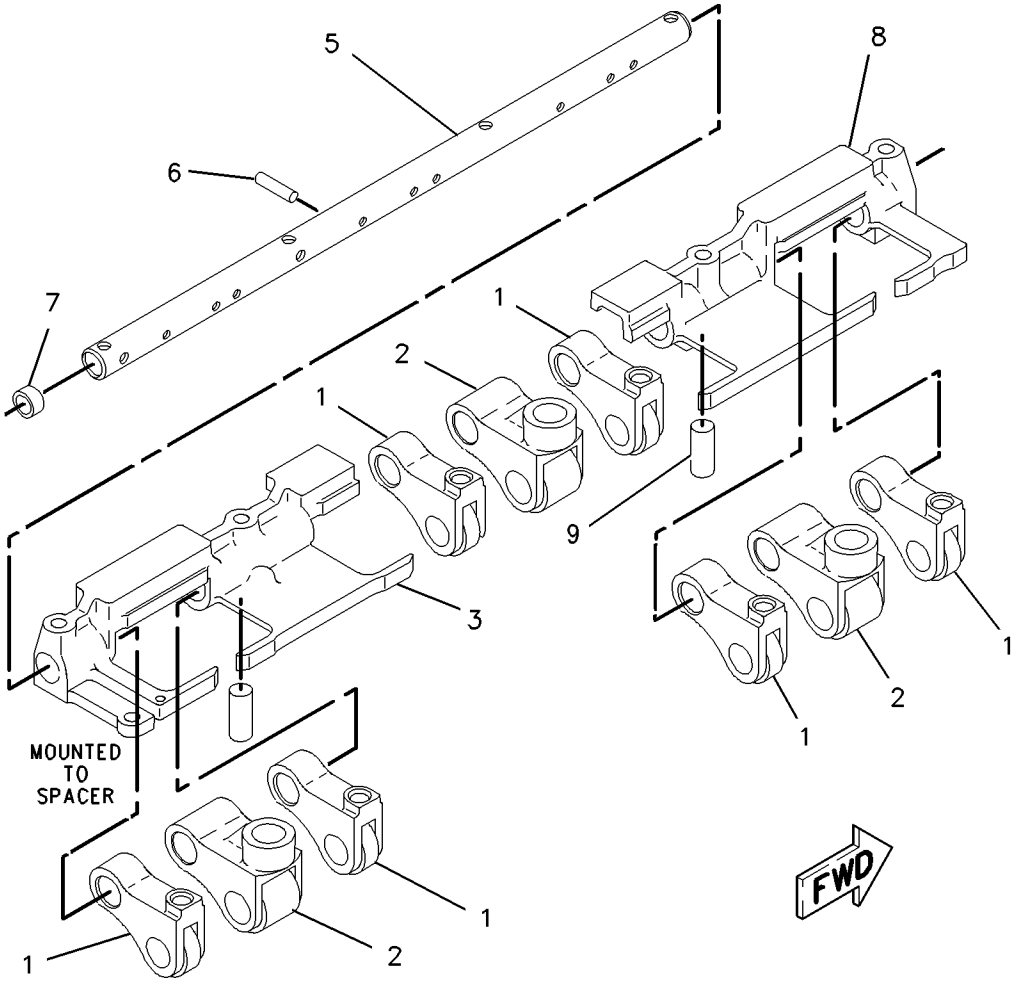

GRAPHIC #1 g00857251

BASIC ENGINE

117-2748 LIFTING GP-ENGINE

S/N: 3PD1-UP
STANDARD
PART OF 161-1747 ENGINE AR

SMCS-1122 **i01688723**

NOTE	REF NO	GRAPHIC REF	PART NUMBER	QTY	PART NAME 1 2 3 4 5 6 (PRODUCT LEVEL)	SEE PAGE
	1	1	**113-9005**	2	PLATE-LIFTING EYE	
M	2	1	**6V-8197**	6	BOLT (M12X1.75X40MM)	
	3	1	**5P-8245**	6	WASHER-HARD (13.5X25.5X3MM THK)	
	4	1	**7C-5736**	2	PLATE-EYE SPACER	

M-METRIC PART

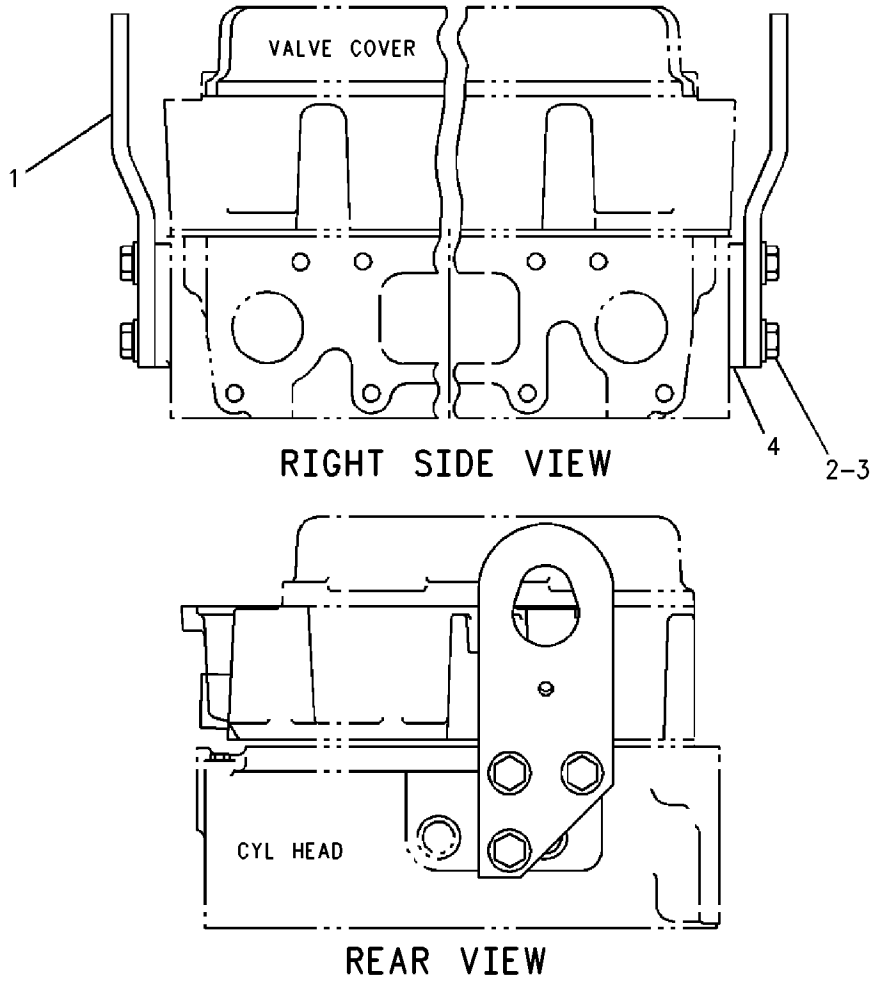

GRAPHIC #1 g00869909

161-2316 MOUNTING GP-ENGINE

S/N: ASE1-UP

PART OF 162-5606 GENERAL AR

SMCS-1152, 1153, 1154 **i01647346**

NOTE	REF NO	GRAPHIC REF	PART NUMBER	QTY	PART NAME 1 2 3 4 5 6 (PRODUCT LEVEL)	SEE PAGE
B	1	1	**184-3266**	16	SHIM (0.8MM THK)	
B	2	1	**184-3267**	16	SHIM (0.4MM THK)	
	3	1	**1D-4638**	2	BOLT (1-8X3.5IN)	
	4	1	**5D-4661**	4	WASHER-HARD (28X52.5X8MM THK)	

B-USE AS REQUIRED

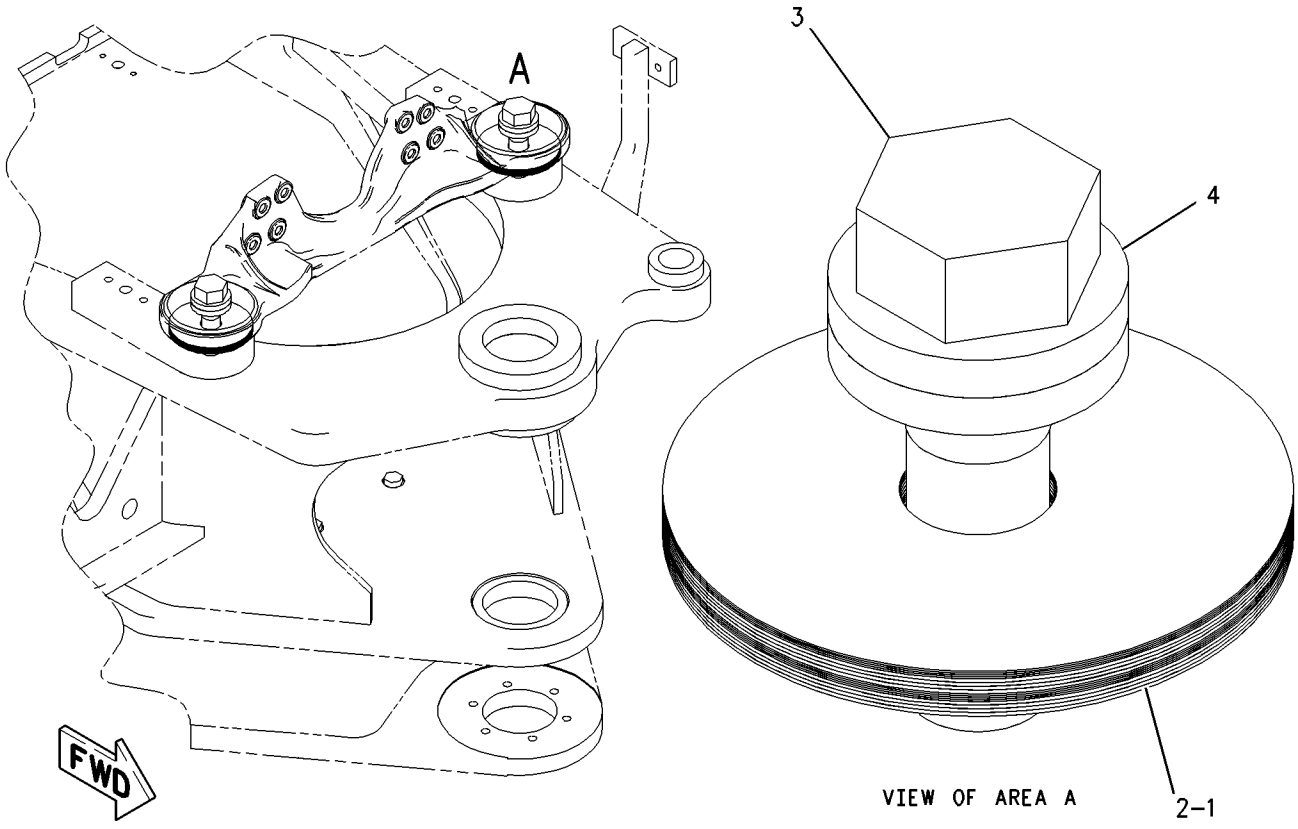

GRAPHIC #1 g00857020

116-5408 MOUNTING GP-VALVE MECHANISM

S/N: 3PD1-UP

PART OF 161-1747 ENGINE AR

FOR USE WITH ENGINES NOT EQUIPPED WITH ENGINE COMPRESSION BRAKE

SMCS-1102, 1107, 1154 **i01666444**

NOTE	REF NO	GRAPHIC REF	PART NUMBER	QTY	PART NAME 1 2 3 4 5 6 (PRODUCT LEVEL)	SEE PAGE
	1	1	**176-4168**	12	BRIDGE AS-VALVE	
Y	2	1	*116-1083*	1	FASTENER GP-CYLINDER HEAD	32
M	3	1	**7X-0909**	12	BOLT (M12X1.75X140MM)	
M	4	1	**6V-2315**	1	BOLT (M6X1X35MM)	
M	5	1	**7X-2533**	17	BOLT (M6X1X35MM)	
		1	**9X-8256**	17	WASHER (6.6X12X2MM THK)	
	6	1	**5P-4115**	1	WASHER-HARD (7.2X19X2MM THK)	
	7	1	**9Y-4580**	3	COVER AS-VALVE MECHANISM	
					(EACH INCLUDES)	
D		1	**5P-5678**		SEAL (1M)	

D-ORDER BY THE METER
M-METRIC PART
Y-SEPARATE ILLUSTRATION

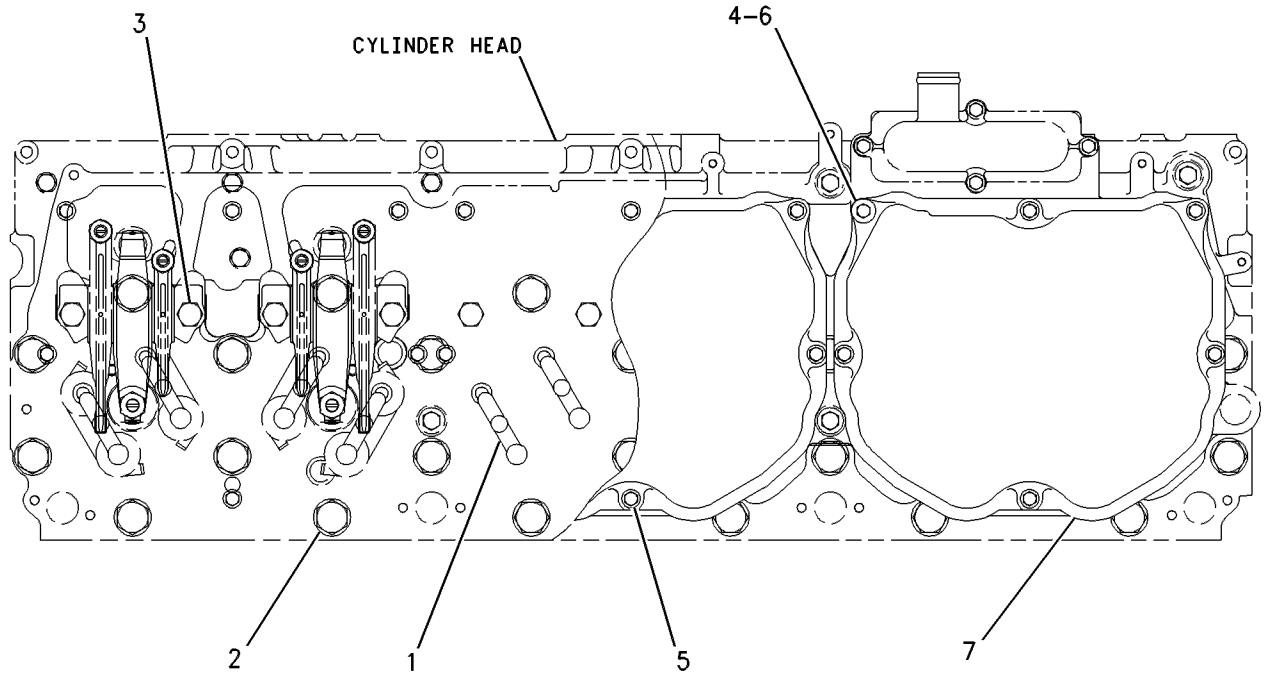

TOP VIEW

GRAPHIC #1 g00568748

BASIC ENGINE

174-1574 PAN GP-OIL

S/N: 3PD1-UP

PART OF 161-1747 ENGINE AR

SMCS-1302 **i01623669**

NOTE	REF NO	GRAPHIC REF	PART NUMBER	QTY	PART NAME 1 2 3 4 5 6 (PRODUCT LEVEL)	SEE PAGE
	1	1	**1V-8230**	2	SPACER (0.53X1X0.57 IN THK)	
	2	1	**197-3616**	1	ADAPTER-DRAIN	
	3	1	**7E-3369**	14	SLEEVE-ISOLATOR	
	4	1	**8N-6854**	1	GASKET-ADAPTER	
	5	1	**109-5308**	1	GASKET-OIL PAN	
	7	1	**174-1575**	1	PAN-OIL	
	8	1	**124-2655**	1	BELL AS-SUCTION	
M	9	1	**3E-8016**	2	BOLT-LOCKING (M8X1.25X25MM)	
	10	1	**5P-8211**	1	SEAL-O-RING	
	11	1	**5P-8245**	2	WASHER-HARD (13.5X25.5X3MM THK)	
	12	1	**6N-8863**	14	WASHER (10.2X32X2.5MM THK)	
M	13	1	**6V-5192**	2	BOLT-SOCKET HEAD (M8X1.25X30MM)	
M	14	1	**6V-5230**	14	BOLT (M10X1.5X60MM)	
M	15	1	**6V-8197**	2	BOLT (M12X1.75X40MM)	
	16	1	**7C-8296**	14	ISOLATOR	
	17	1	**8T-6761**	1	PLUG-PIPE	
	18	1	**9M-1974**	4	WASHER-HARD (8.8X16X2MM THK)	
	19	1	**9S-4183**	1	PLUG	
	20	1	**3D-2824**	1	SEAL-O-RING	

M-METRIC PART

174-1574 **PAN GP-OIL** *(contd.)* **i01623669**

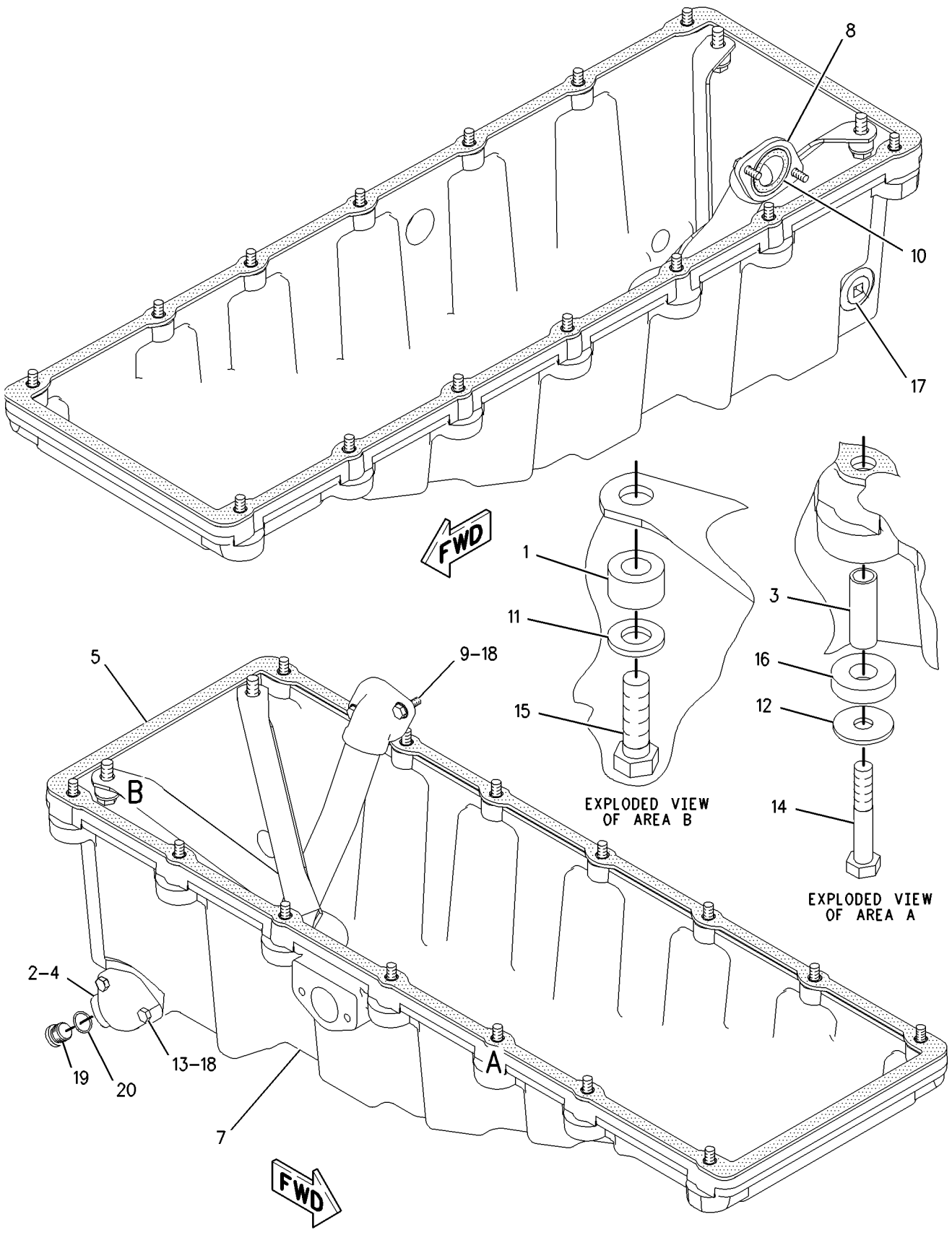

GRAPHIC #1 g00840925

179-6588 PANEL GP-SOUND SUPPRESSION

S/N: ASE1-UP
AN ATTACHMENT

SMCS-1801 **i01631989**

NOTE	REF NO	GRAPHIC REF	PART NUMBER	QTY	PART NAME 1 2 3 4 5 6 (PRODUCT LEVEL)	SEE PAGE
	1	1	**8W-9227**	1	SHIELD	
	2	1	**8W-9228**	1	SHIELD	
	3	1	**4L-6454**	12	BOLT (3/8-16X1 IN)	
	4	1	**8T-4897**	12	WASHER (10.2X35X6MM THK)	

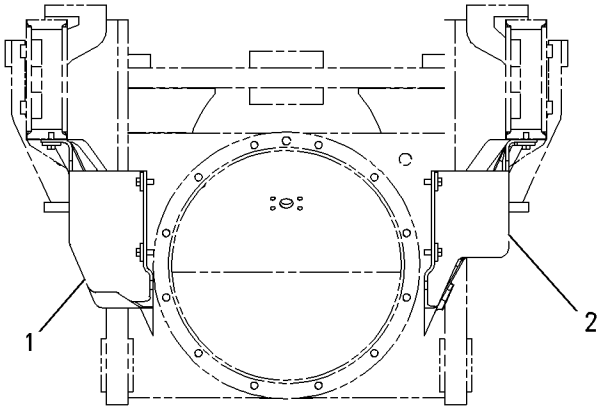

REAR VIEW

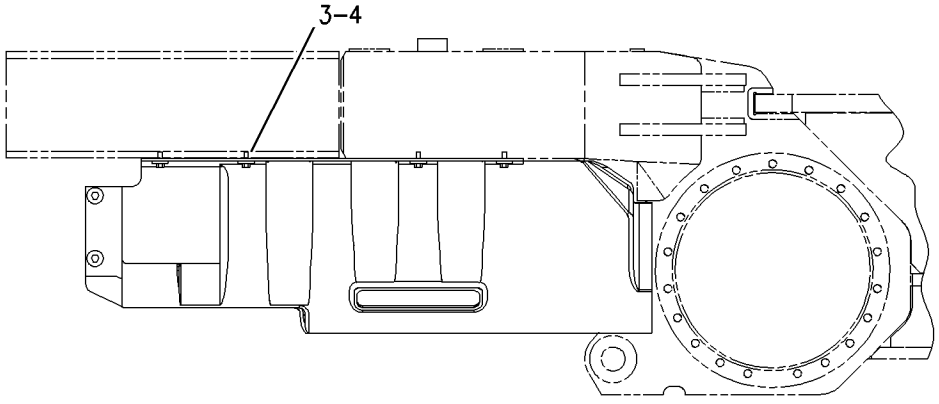

RIGHT SIDE VIEW

GRAPHIC #1 g00846002

132-3203 PISTON & ROD GP

S/N: 3PD1-UP
16:1 RATIO
PART OF 161-1747 ENGINE AR

SMCS-1225 **i01683644**

NOTE	REF NO	GRAPHIC REF	PART NUMBER	QTY	PART NAME 1 2 3 4 5 6 (PRODUCT LEVEL)	SEE PAGE
R	1	1	**133-7098**	1	CROWN AS-PISTON	
	2	1	**6I-2720**	2	PLUG-PIN	
	3	1	**119-3782**	1	BEARING-CONNECTING ROD (STANDARD)	
A		1	**128-0390**	1	BEARING-CONNECTING ROD (.51MM U.S.)	
A		1	**128-0391**	1	BEARING-CONNECTING ROD (.76MM U.S.)	
	4	1	**168-7276**	1	PIN-PISTON	
R	5	1	**155-6629**	1	ROD AS-CONNECTING	
	6	1	**7N-2043**	2	DOWEL	
M	7	1	**7C-8639**	2	BOLT-CONNECTING ROD	
	8	1	**4P-1659**	1	RING-PISTON (OIL)	
	9	1	**101-2042**	1	SKIRT-PISTON	
	10	1	**109-5318**	1	RING-PISTON (TOP)	
	11	1	**109-5319**	1	RING-PISTON (INTERMEDIATE)	

A-NOT PART OF THIS GROUP
M-METRIC PART
R-REMFG PART MAY BE AVAILABLE

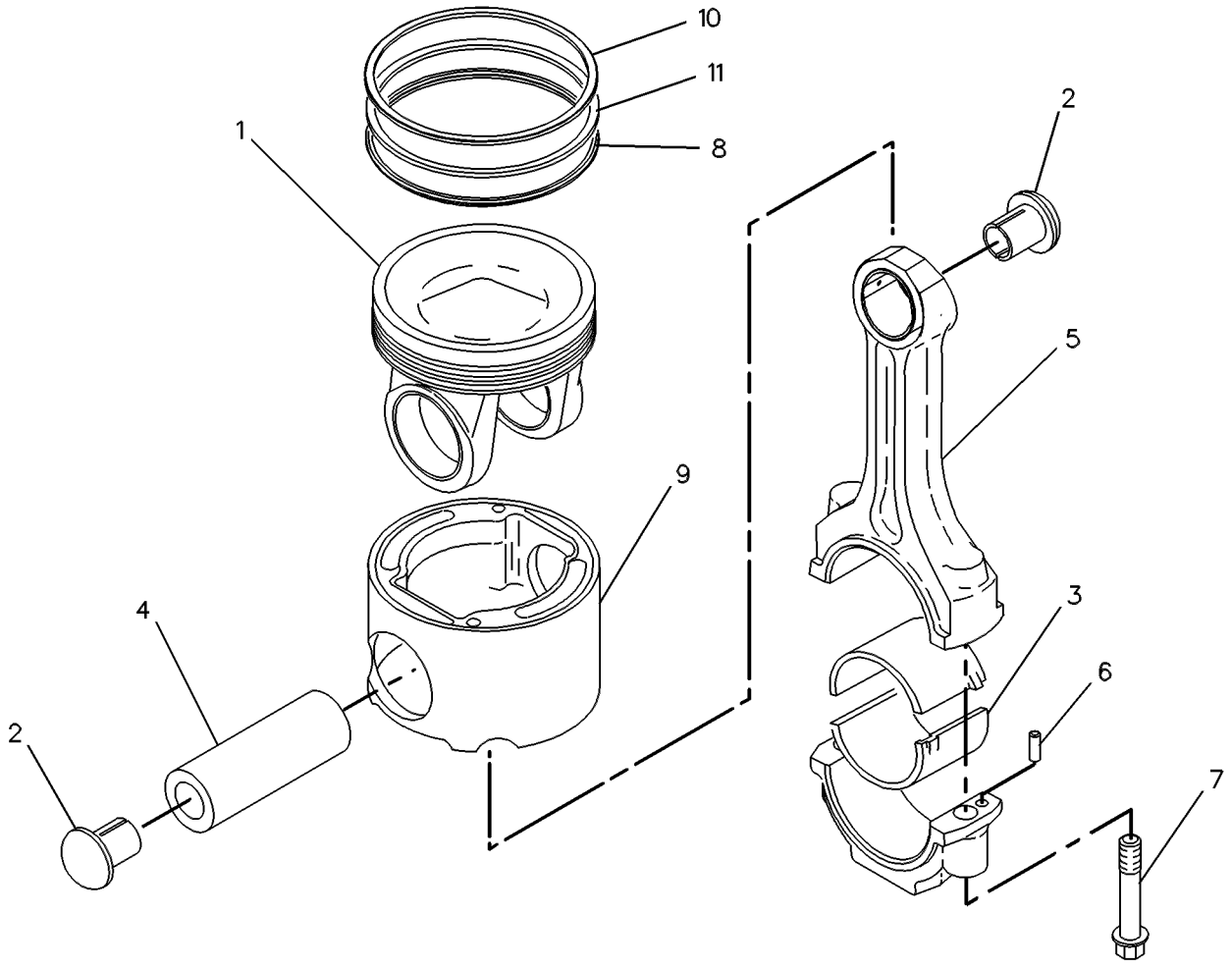

GRAPHIC #1 g00262209

138-2028 PLUG GP-CYLINDER BLOCK

S/N: 3PD1-UP
USE WHEN DIPSTICK IS NOT REQUIRED
PART OF 161-1747 ENGINE AR

SMCS-1201 **i01453738**

NOTE	PART NUMBER	QTY	PART NAME 1 2 3 4 5 6 (PRODUCT LEVEL)	SEE PAGE
	9S-4182	1	PLUG-O-RING (7/16-20 THD)	
	8T-6762	1	PLUG-PIPE (1/4-14NPTF THD)	
	9S-4191	1	PLUG-STRAIGHT THREAD (9/16-18 THD)	
	3J-1907	1	SEAL-O-RING (11.89MM ID)	
	6V-5048	1	SEAL-O-RING (8.92MM ID)	

MEMORANDA

BASIC ENGINE

174-1760 PLUG GP-ENGINE

S/N: 3PD1-UP

PART OF 161-1747 ENGINE AR

SMCS-1000, 1201 **i01514837**

NOTE	REF NO	GRAPHIC REF	PART NUMBER	QTY	PART NAME 1 2 3 4 5 6 (PRODUCT LEVEL)	SEE PAGE
	1	1	**3B-0623**	1	PLUG-CUP	
	2	1	**8C-3446**	1	VALVE AS-FLUID SAMPLING	
	3	1	**116-5435**	1	CONNECTOR	
	4	1	**3J-1907**	2	SEAL-O-RING	
	5	1	**3J-7354**	1	SEAL-O-RING	
	6	1	**3K-0360**	1	SEAL-O-RING	
	7	1	**5P-9617**	1	ADAPTER (9/16-18 THRD)	
	8	1	**6V-0852**	1	CAP-DUST	
	9	1	**6V-4589**	1	SEAL-O-RING	
	10	1	**6V-5049**	3	SEAL-O-RING	
	11	1	**6V-8397**	1	SEAL-O-RING	
	13	1	**9S-4191**	3	PLUG-STRAIGHT THREAD	
	14	1	**9S-8006**	1	PLUG	
	15	1	**9X-6650**	1	CONNECTOR-FLARED	

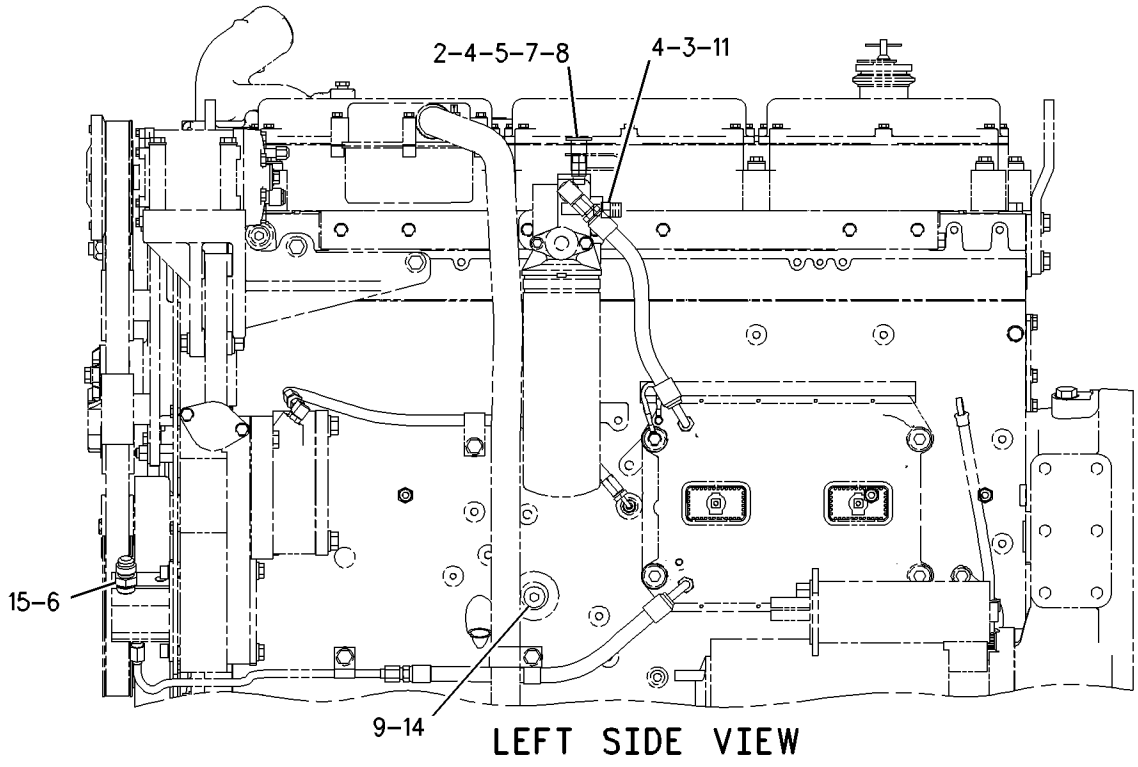

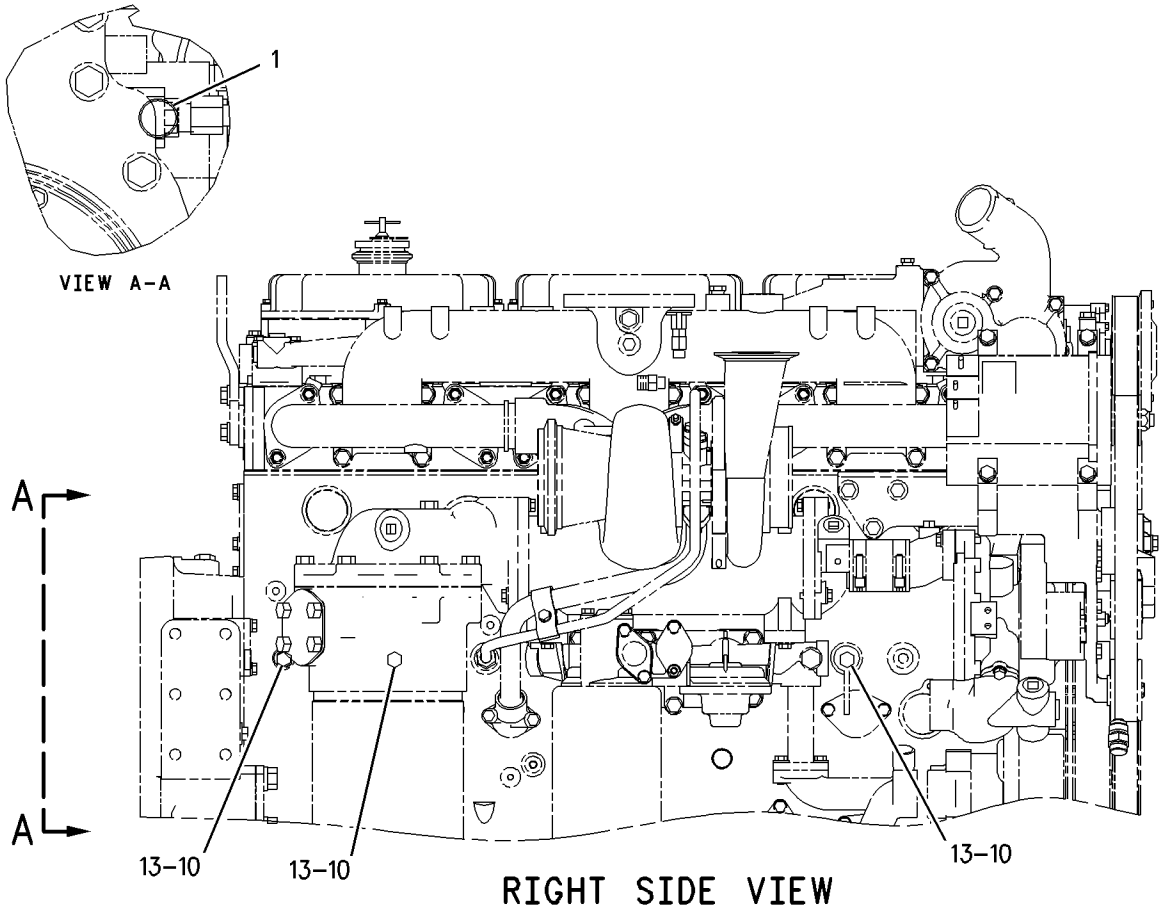

GRAPHIC #1 g00787041

BASIC ENGINE

115-9397 ROCKER ARM GP

S/N: 3PD1-UP

PART OF 117-2749 VALVE MECHANISM GP

SMCS-1102, 1123 **i01514499**

NOTE	REF NO	GRAPHIC REF	PART NUMBER	QTY	PART NAME 1 2 3 4 5 6 (PRODUCT LEVEL)	SEE PAGE
	1	1	**115-9398**	2	ARM-VALVE ROCKER (EXHAUST)	
	2	1	**115-9400**	2	ARM AS (UNIT INJECTION)	
					(EACH INCLUDES)	
		1	**2D-6642**	2	BALL	
		1	**115-9402**	1	BEARING	
	3	1	**115-9399**	2	ARM-VALVE ROCKER (INLET)	
	4	1	**7C-1798**	2	SCREW-ARM ADJUSTMENT	
M	5	1	**8T-0384**	2	NUT (M12X1.5 THD)	
	6	1	**7W-7235**	2	BUTTON	
	7	1	**8L-2777**	2	SEAL-O-RING	
	8	1	**115-9403**	2	SHAFT AS	
					(EACH INCLUDES)	
	9	1	**3S-6605**	1	PLUG-CUP	
	10	1	**096-0014**	1	PIN-SPRING	
	11	1	**185-4461**	2	SUPPORT AS	
					(EACH INCLUDES)	
	12	1	**180-1538**	2	DOWEL	
M	13	1	**183-4365**	4	SCREW-ADJUSTING (M10X1.5 THD)	
M	14	1	**184-2515**	4	NUT-HEX FLANGE (M10X1.5 THD)	

M-METRIC PART

115-9397 **ROCKER ARM GP** ***(contd.)*** **i01514499**

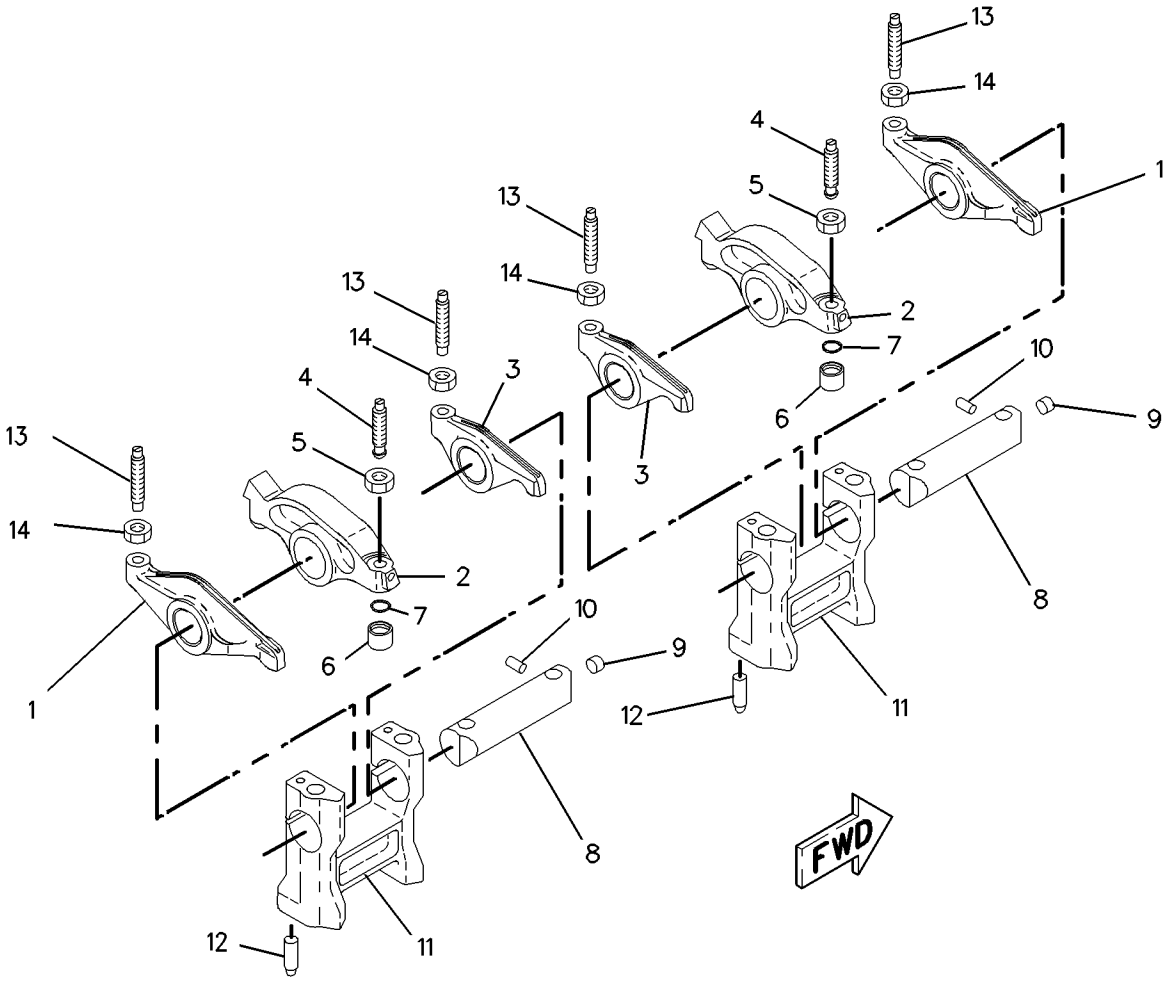

GRAPHIC #1 g00785815

116-1091 SEAL GP-CRANKSHAFT—SINGLE LIP

S/N: 3PD1-UP
PART OF 161-1747 ENGINE AR
FOR USE WITH DRY TRANSMISSIONS

SMCS-1160, 1161 **i01514498**

NOTE	REF NO	GRAPHIC REF	PART NUMBER	QTY	PART NAME 1 2 3 4 5 6 (PRODUCT LEVEL)	SEE PAGE
	1	1	**160-2323**	1	COVER	
M	2	1	**8T-0640**	6	BOLT (M6X1.0X30MM)	
	3	1	**5P-0537**	13	WASHER-HARD (7.2X14.5X2MM THK)	
M	4	1	**9X-2022**	7	BOLT-LOCKING	
	5	1	**7C-1583**	1	GASKET	
	6	1	**107-6280**	1	SEAL-O-RING	
	7	1	**7C-1728**	1	SEAL GP-CRANKSHAFT	

M-METRIC PART

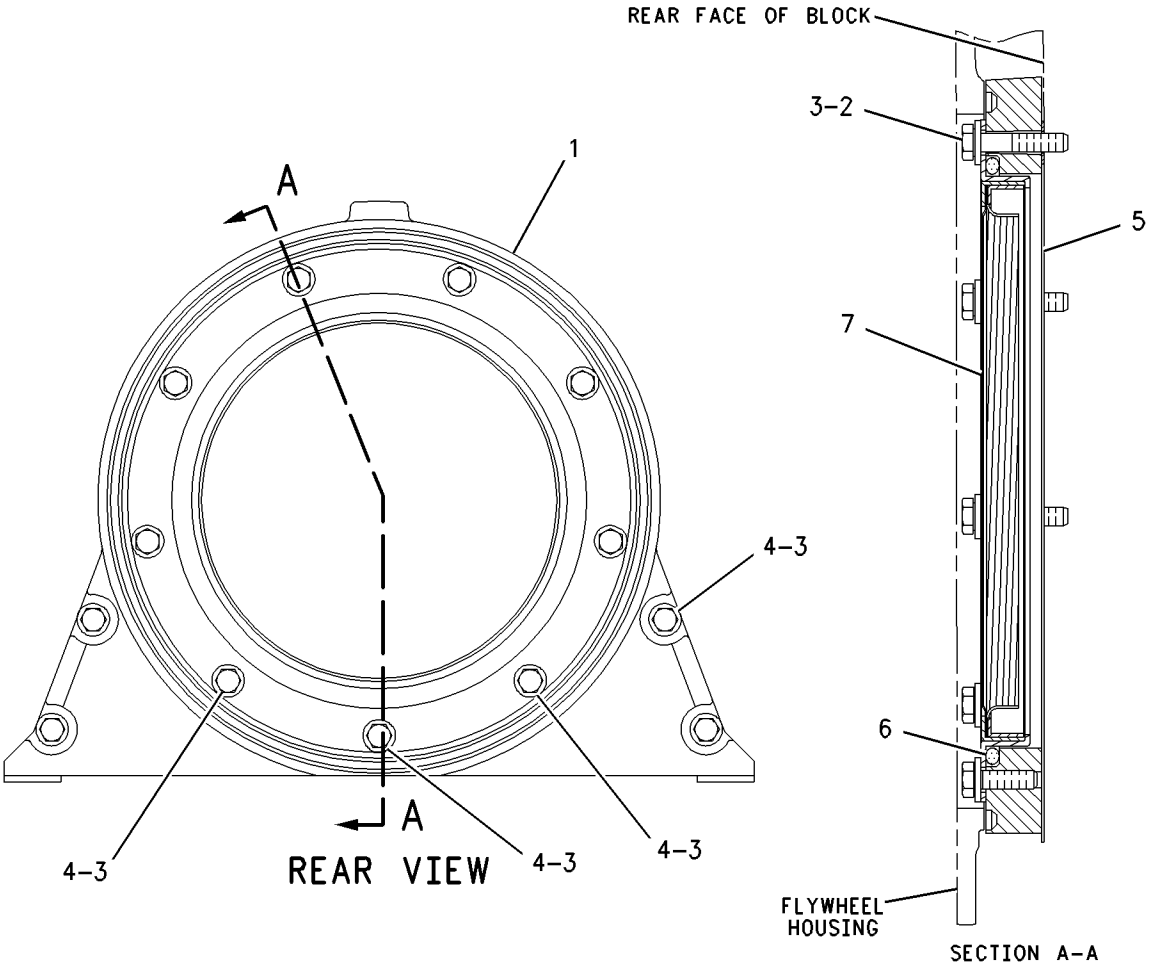

GRAPHIC #1 g00785779

174-1625 SUPPORT GP-ENGINE

S/N: 3PD1-UP

PART OF 161-1747 ENGINE AR

SMCS-1154 **i01643505**

NOTE	REF NO	GRAPHIC REF	PART NUMBER	QTY	PART NAME 1 2 3 4 5 6 (PRODUCT LEVEL)	SEE PAGE
	1	1	**174-1622**	1	SUPPORT	
	2	1	**2M-0849**	8	WASHER-HARD (13.5X25.5X5MM THK)	
M	3	1	**6V-5696**	8	BOLT (M12X1.75X80MM)	

M-METRIC PART

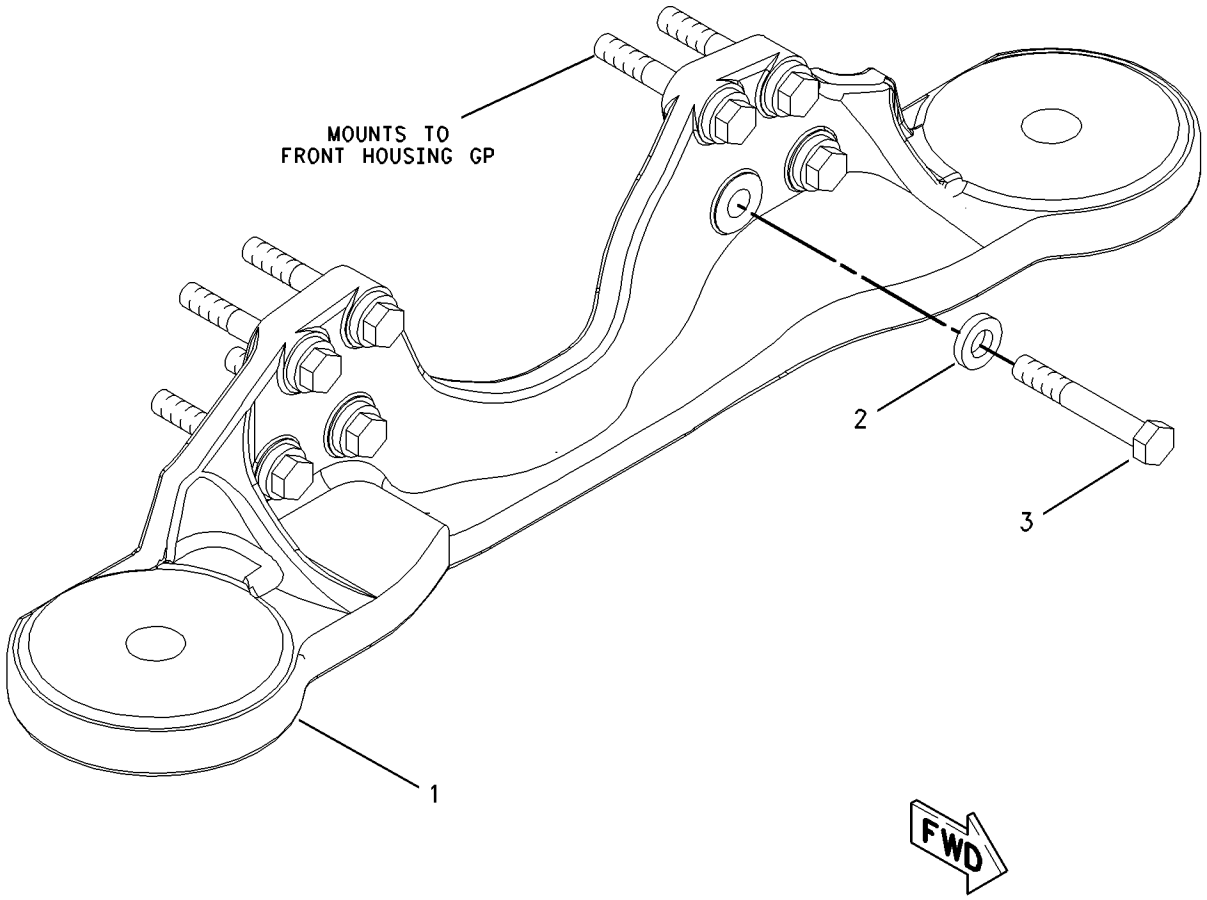

GRAPHIC #1 g00849958

178-9527 SUPPRESSION GP-SOUND–ENGINE ENCLOSURE–EU

S/N: ASE1-UP

PART OF 211-1769, 211-1770 CONVERSION AR-CERTIFICATION

AN ATTACHMENT

SMCS-1801 **i01522756**

NOTE	REF NO	GRAPHIC REF	PART NUMBER	QTY	PART NAME 1 2 3 4 5 6 (PRODUCT LEVEL)	SEE PAGE
	1	1	**183-2302**	1	INSULATION	
	2	1	**183-2303**	1	PANEL-INSULATION	
	3	1	**183-2304**	1	PANEL-INSULATION	
	4	1	**183-2305**	1	PANEL-INSULATION	
	5	1	**183-2306**	2	INSULATION	
	6	1	**199-9955**	2	CLIP	
	7	1	**199-9956**	2	CLIP	

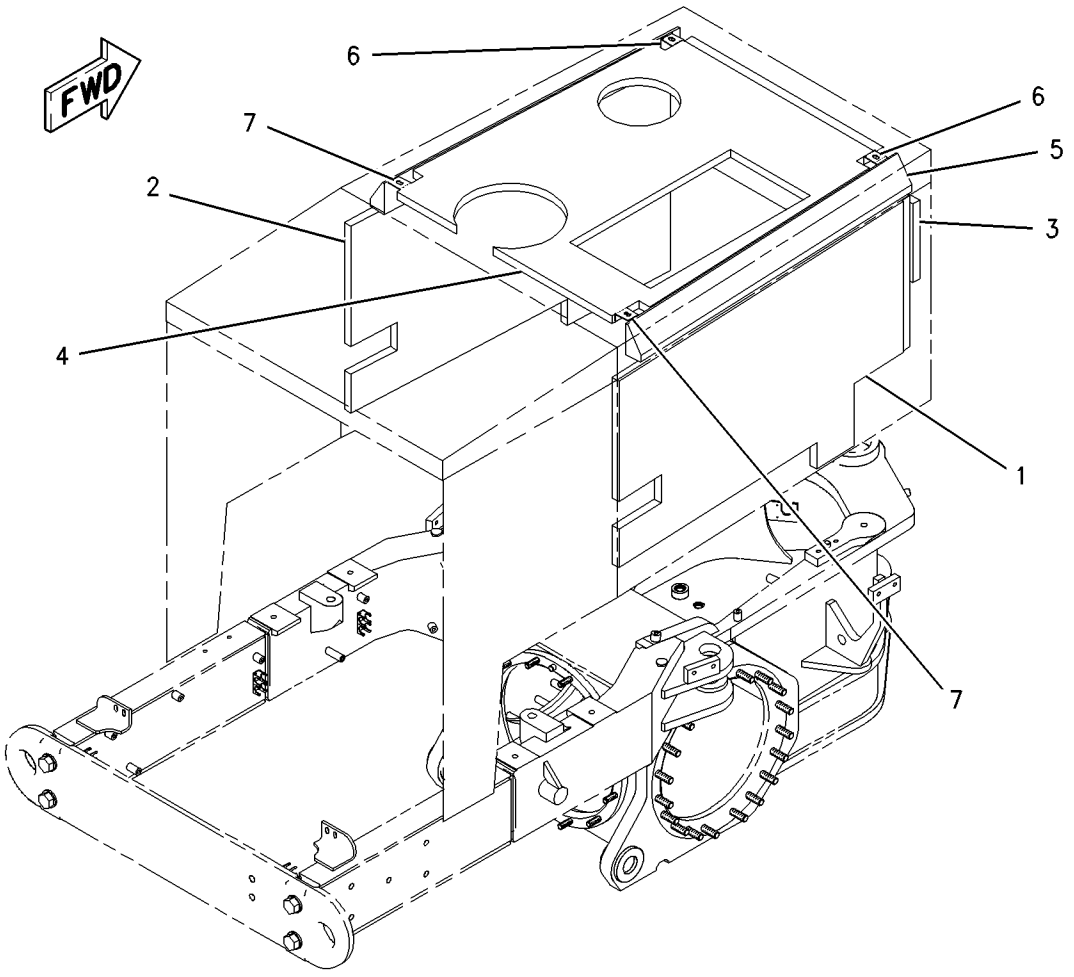

GRAPHIC #1 g00793055

MEMORANDA

117-2749 VALVE MECHANISM GP

S/N: 3PD1-UP

PART OF 161-1747 ENGINE AR

SMCS-1102 **i01640743**

NOTE	REF NO	GRAPHIC REF	PART NUMBER	QTY	PART NAME 1 2 3 4 5 6 (PRODUCT LEVEL)	SEE PAGE
	1	1	**9X-8267**	4	WASHER (6.6X12X2MM THK)	
M	2	1	**8T-0275**	4	BOLT (M6X1.0X50MM)	
	3	1	**3E-4352**	8	WASHER-HARD (8.8X20.5X2.5MM THK)	
M	4	1	**8T-0100**	16	BOLT (M8X1.25X60MM)	
	5	1	**7C-8292**	8	ISOLATOR	
	6	1	**9Y-7215**	8	SLEEVE-ISOLATOR	
	7	1	**9Y-4357**	1	BREATHER AS (ENGINE)	
	8	1	**9Y-1758**	1	GASKET-BREATHER	
	9	1	**102-5842**	1	BASE-VALVE COVER	
	10	1	**109-5309**	1	GASKET-BASE	
Y	11	1	*115-9397*	3	ROCKER ARM GP	52
CY	12	1	*148-2063*	2	LIFTER GP-VALVE	40
	13	1	**104-3567**	12	PUSHROD-VALVE	
	14	1	**104-3568**	6	PUSHROD-INJECTOR	
	15	1	**9M-1974**	9	WASHER-HARD (8.8X16X2MM THK)	
M	16	1	**6V-5217**	1	BOLT (M8X1.25X20MM)	

C-CHANGE FROM PREVIOUS TYPE
M-METRIC PART
Y-SEPARATE ILLUSTRATION

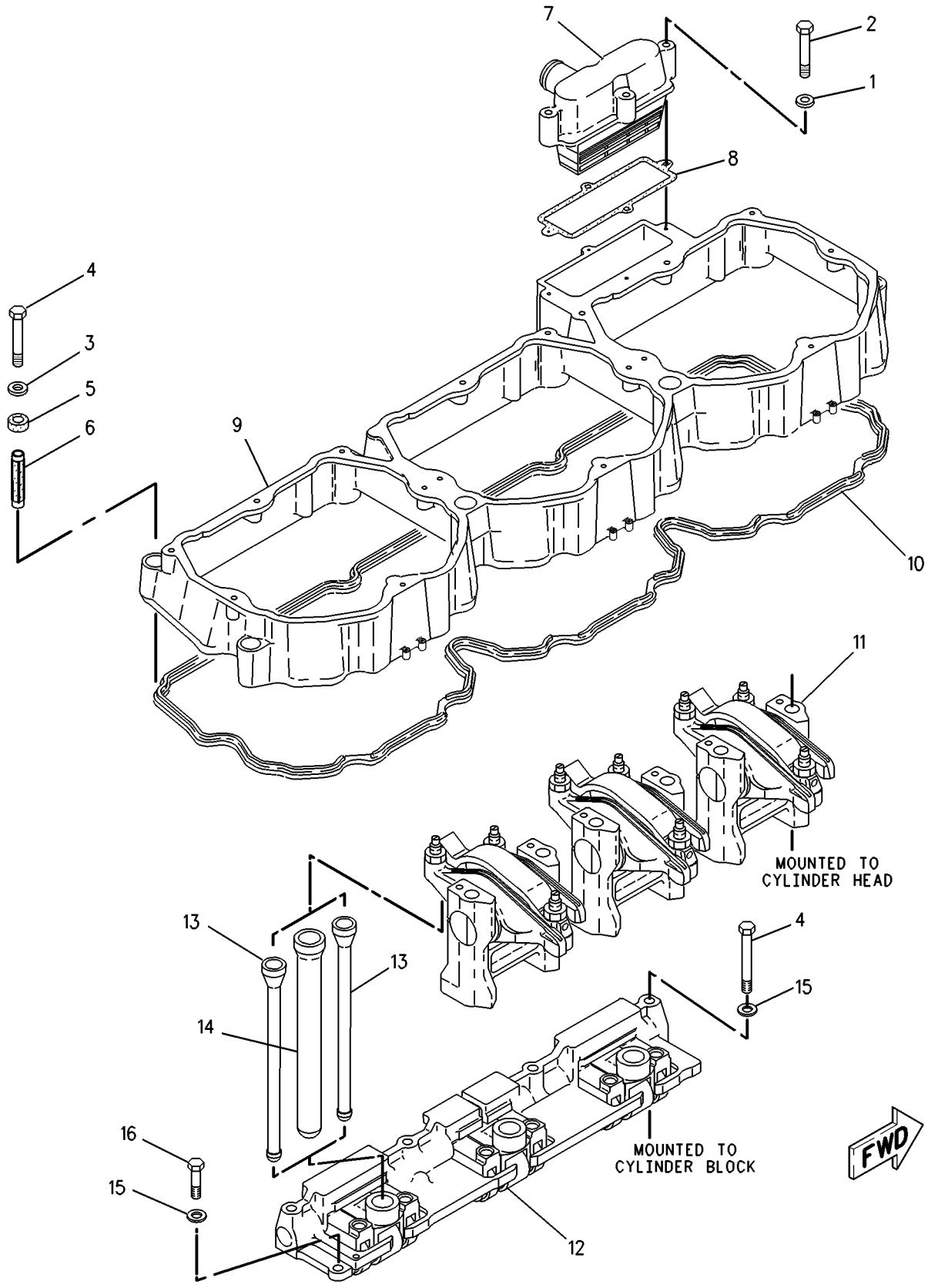

GRAPHIC #1 g00784176

LUBRICATION SYSTEM

166-1329 BASE GP-OIL FILTER

S/N: 3PD1-UP

PART OF 164-2490 FILTER GP-ENGINE OIL

SMCS-1306 **i01552152**

NOTE	REF NO	GRAPHIC REF	PART NUMBER	QTY	PART NAME 1 2 3 4 5 6 (PRODUCT LEVEL)	SEE PAGE
	1	1	**9M-1974**	6	WASHER-HARD (8.8X16X2MM THK)	
	2	1	**166-1328**	1	BASE AS	
	2A	1	**2P-4304**	1	STUD-TAPERLOCK	
	2B	1	**3B-0623**	1	PLUG-CUP	
	2C	1	**3P-1896**	2	PLUG-CUP	
	2D	1	**7W-6390**	1	STUD-FILTER BASE	
	3	1	**6V-4367**	3	SEAL-O-RING	
M	4	1	**6V-3940**	4	BOLT (M8X1.25X25MM)	
	5	1	**7C-2891**	3	COVER	
	6	1	**7C-3954**	1	SPRING AS	
	7	1	**111-2645**	1	VALVE-PUMP BYPASS	
M	8	1	**6V-8359**	1	BOLT (M6X1.0X70MM)	
	9	1	**7C-3083**	1	SEAT-RELIEF VALVE SPRING	
	10	1	**7C-3082**	1	RETAINER	
	11	1	**7C-3081**	1	SPACER (6.88X9.53X50MM THK)	
	12	1	**1A-2170**	1	SPRING-RETAINER	
	13	1	**1P-1367**	2	PLUNGER	
	14	1	**7C-3953**	2	SPRING AS	
	15	1	**9S-4185**	1	PLUG-O-RING	
	16	1	**8L-2786**	1	SEAL-O-RING	
M	17	1	**9X-2097**	2	STUDBOLT (M8X1.25 THD)	

M-METRIC PART

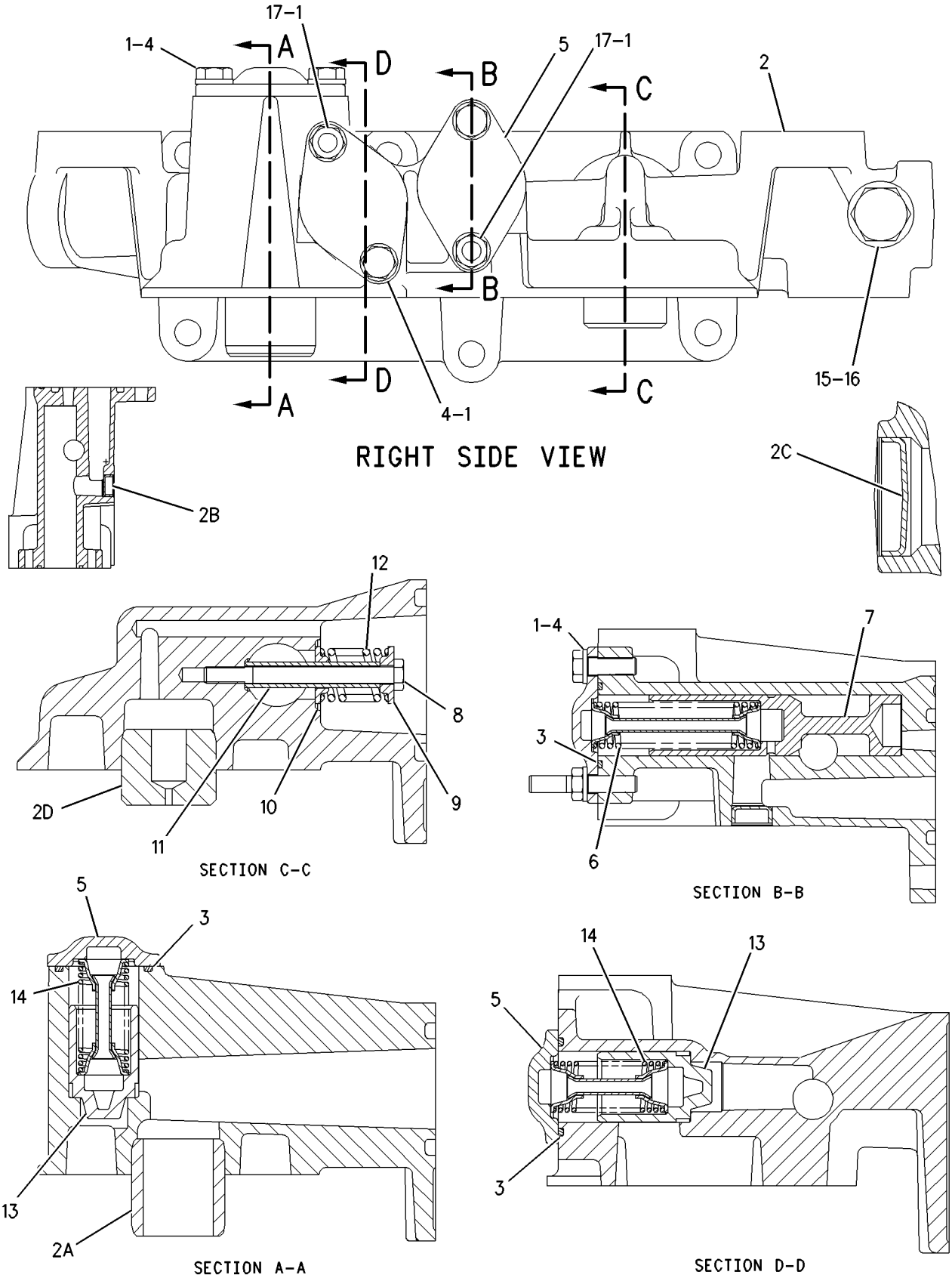

GRAPHIC #1 g00807114

LUBRICATION SYSTEM

174-1579 FILLER GP-ENGINE OIL

S/N: 3PD1-UP

PART OF 161-1747 ENGINE AR

SMCS-1316 **i01514827**

NOTE	REF NO	GRAPHIC REF	PART NUMBER	QTY	PART NAME 1 2 3 4 5 6 (PRODUCT LEVEL)	SEE PAGE
	1	1	**5L-2952**	1	CAP AS-OIL FILLER	
		1	**6L-2609**	1	SEAL-RUBBER	
	2	1	**174-1580**	1	TUBE AS-FILLER	
	3	1	**184-9854**	1	BRACKET AS	
	3A	1	**3T-0049**	1	CLIP	
M	3B	1	**8T-3490**	2	NUT-WELD (M10X1.5 THD)	
	4	1	**4F-7952**	1	SEAL-O-RING	
	5	1	**5P-7854**	1	CLIP	
M	6	1	**6V-3822**	2	BOLT (M10X1.5X35MM)	
	7	1	**6V-5839**	3	WASHER (11X21X2.5MM THK)	
M	8	1	**6V-6317**	1	BOLT (M10X1.5X20MM)	

M-METRIC PART

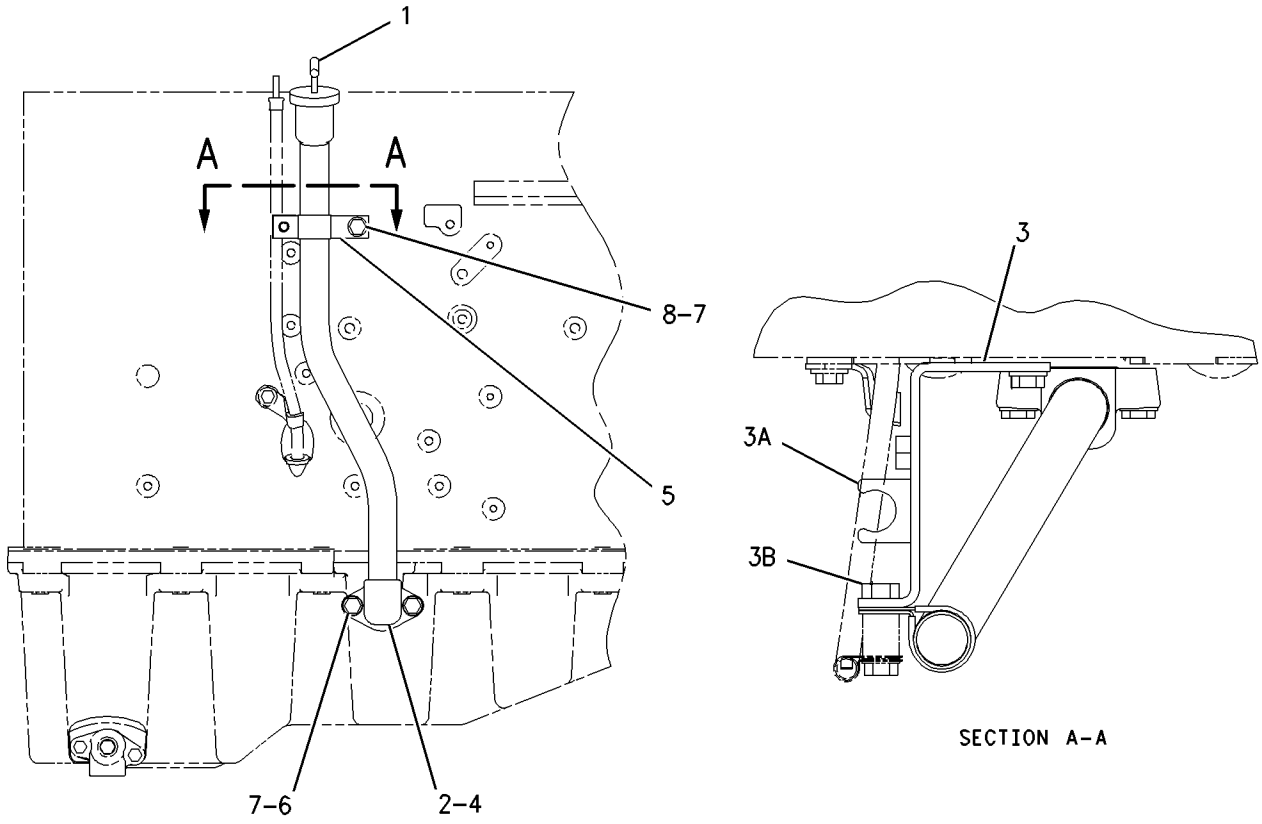

LEFT SIDE VIEW

GRAPHIC #1 g00786384

MEMORANDA

LUBRICATION SYSTEM

164-2490 FILTER GP-ENGINE OIL

S/N: 3PD1-UP

PART OF 161-1747 ENGINE AR

SMCS-1308 **i01623828**

NOTE	REF NO	GRAPHIC REF	PART NUMBER	QTY	PART NAME 1 2 3 4 5 6 (PRODUCT LEVEL)	SEE PAGE
	1	1	**1R-0716**	1	FILTER AS-ENGINE OIL	
	2	1	**3L-8855**	1	SPACER	
	3	1	**8C-3445**	1	CAP-DUST	
	4	1	**102-5828**	1	COVER	
	5	1	**102-5829**	1	ADAPTER	
	6	1	**104-7995**	1	BASE AS-OIL FILTER	
		1	**2P-4304**	1	STUD-TAPERLOCK	
M	7	1	**134-5245**	6	BOLT-HEX HEAD (M10X1.50X30)	
Y	8	1	*166-1329*	1	BASE GP-OIL FILTER	60
	9	1	**177-4311**	1	BRACKET AS	
	10	1	**185-1717**	1	TUBE AS	
	11	1	**185-1718**	1	TUBE AS	
	12	1	**186-3705**	1	ELBOW	
	13	1	**192-6492**	1	CLIP AS	
	14	1	**192-7135**	1	CLIP AS	
M		1	**8T-3490**	4	NUT-WELD (M10X1.5 THD)	
	15	1	**106-9586**	4	SEAL-O-RING	
	16	1	**3J-7354**	1	SEAL-O-RING	
	17	1	**5M-7087**	3	CLAMP-TUBE	
	18	1	**5P-4116**	1	WASHER-HARD (8.8X20.5X2MM THK)	
	19	1	**5P-7701**	4	SEAL-O-RING	
M	20	1	**6V-2317**	2	BOLT (M8X1.25X30MM)	
	21	1	**6V-3831**	2	SEAL-O-RING	
	22	1	**6V-3908**	2	SEAL-O-RING	
M	23	1	**6V-5218**	1	BOLT (M8X1.25X35MM)	
	24	1	**6V-5839**	10	WASHER (11X21X2.5MM THK)	
	25	1	**6V-9005**	2	ELBOW	
	26	1	**6V-9008**	1	ELBOW	
	27	1	**8C-3446**	1	VALVE GP-FLUID SAMPLING	
	28	1	**8C-5230**	1	SEAL-O-RING	
	29	1	**8T-4121**	4	WASHER-HARD (11X21X2.5MM THK)	
M	31	1	**8T-4138**	2	BOLT (M6X1X20MM)	
M	32	1	**8T-4186**	2	BOLT (M10X1.5X40MM)	
M	33	1	**8T-4195**	4	BOLT (M10X1.5X30MM)	
M	34	1	**8T-6466**	2	BOLT (M10X1.50X60MM)	
	35	1	**9M-1974**	2	WASHER-HARD (8.8X16X2MM THK)	
	36	1	**9X-8256**	2	WASHER (6.6X12X2MM THK)	
	37	1	**9C-5344**	1	SPACER (10.5X20X18MM THK)	
	38	1	**6F-6405**	1	SPACER (.44X.75X.37 IN THK)	

M-METRIC PART
Y-SEPARATE ILLUSTRATION

164-2490 **FILTER GP-ENGINE OIL** *(contd.)* **i01623828**

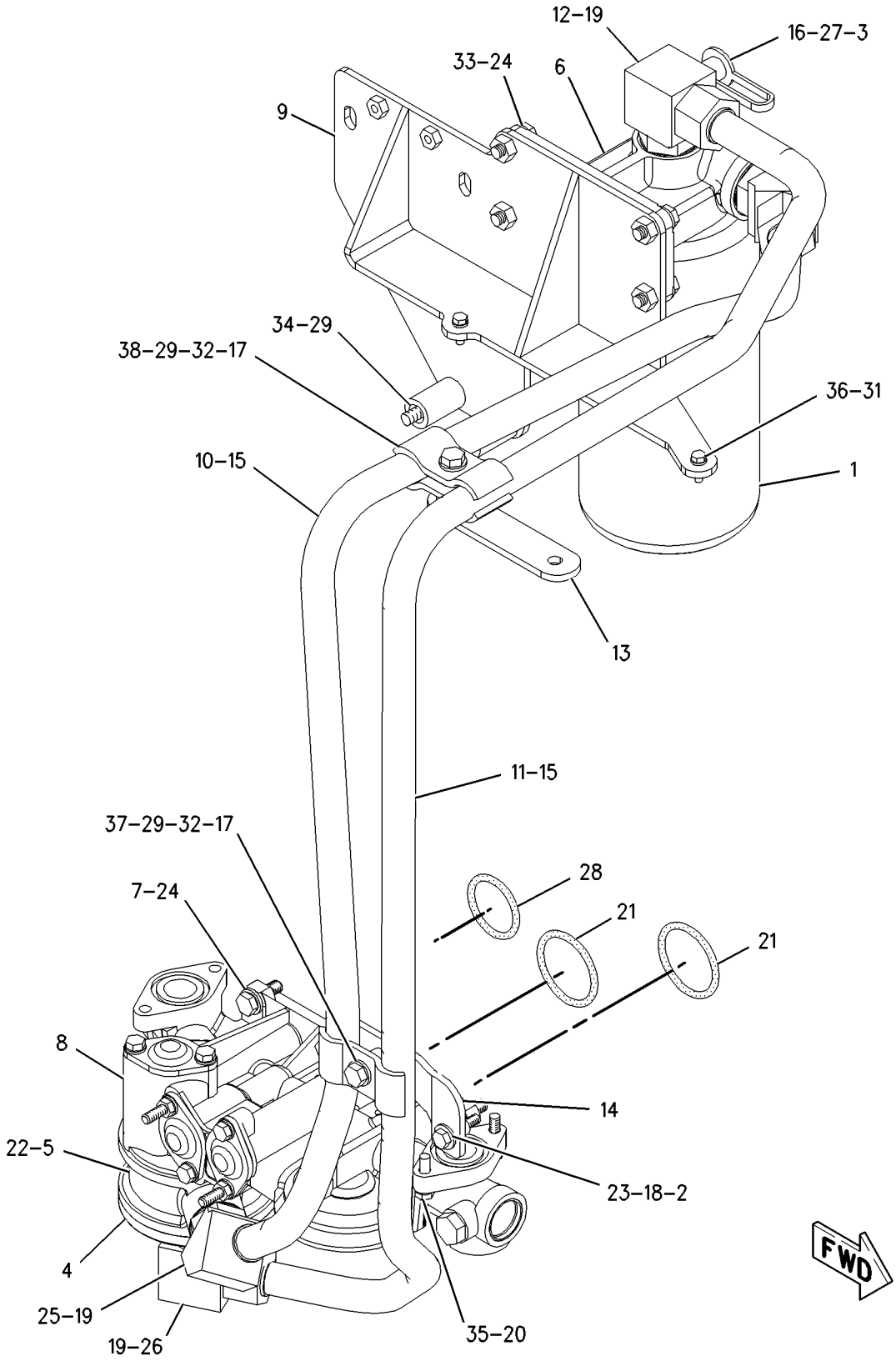

GRAPHIC #1 g00842815

LUBRICATION SYSTEM

174-1576 GAUGE GP-OIL LEVEL (DIPSTICK)

S/N: 3PD1-UP

PART OF 161-1747 ENGINE AR

SMCS-1326 **i01643479**

NOTE	REF NO	GRAPHIC REF	PART NUMBER	QTY	PART NAME 1 2 3 4 5 6 (PRODUCT LEVEL)	SEE PAGE
	1	1	**7C-6921**	1	SPACER (11X20X22.8MM THK)	
	2	1	**209-7309**	3	PLUG	
	3	1	**174-1577**	1	GAUGE AS	
	4	1	**174-1578**	1	TUBE AS-OIL	
	5	1	**3E-4352**	1	WASHER-HARD (8.8X20.5X2.5MM THK)	
	6	1	**3P-0647**	1	SEAL-O-RING	
	7	1	**4B-0418**	1	CLIP	
M	8	1	**6V-5215**	1	BOLT (M8X1.25X16MM)	
	9	1	**6V-5839**	1	WASHER (11X21X2.5MM THK)	
M	10	1	**8T-4185**	1	BOLT (M10X1.5X50MM)	

M-METRIC PART

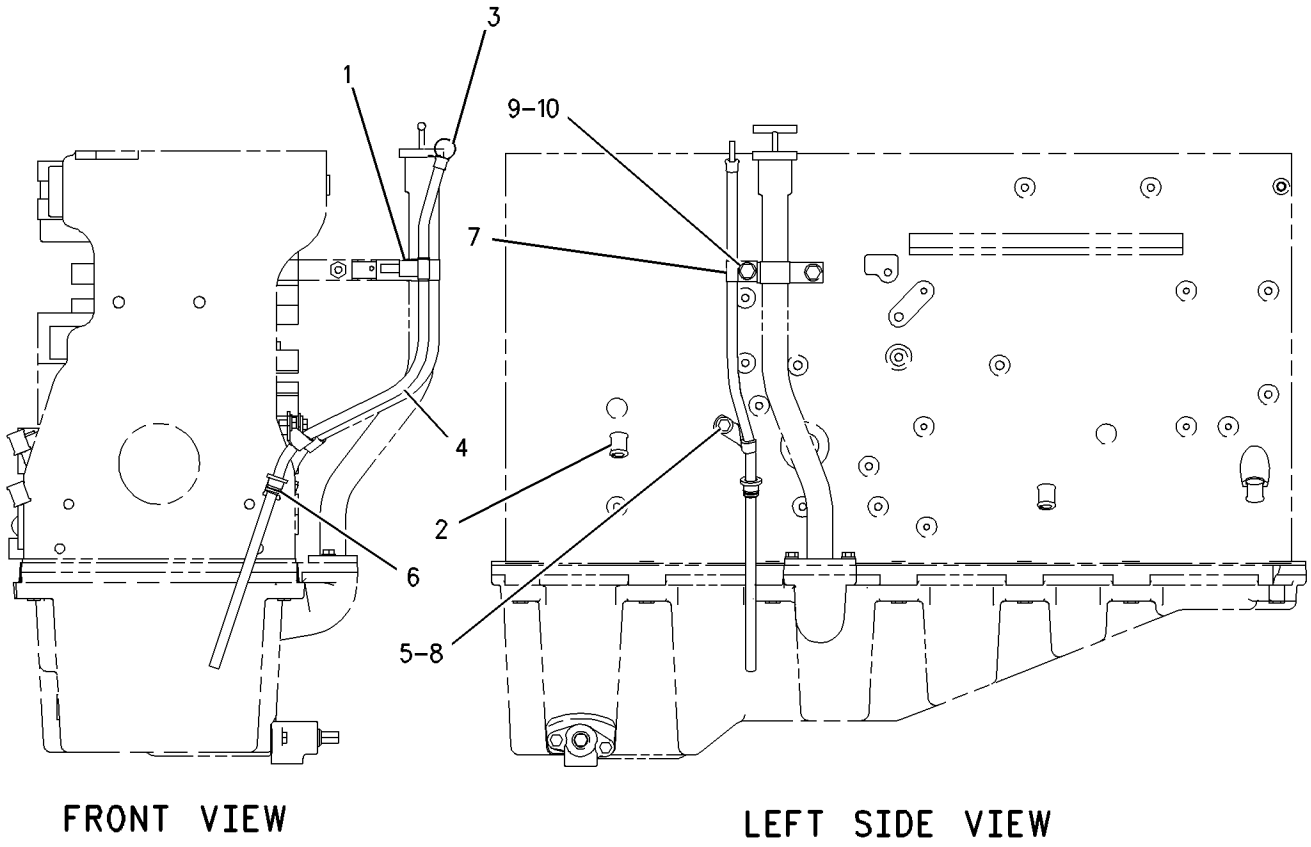

GRAPHIC #1 g00786545

LUBRICATION SYSTEM

179-9565 LINES GP-TURBOCHARGER OIL

S/N: 3PD1-UP

PART OF 161-1747 ENGINE AR

SMCS-1052, 1307 **i01625262**

NOTE	REF NO	GRAPHIC REF	PART NUMBER	QTY	PART NAME 1 2 3 4 5 6 (PRODUCT LEVEL)	SEE PAGE
	1	1	**6N-6033**	2	CLIP	
	2	1	**188-6126**	1	GASKET	
	3	1	**119-2942**	1	ADAPTER	
	4	1	**198-6068**	1	SEAL-INTEGRAL	
	5	1	**179-9563**	1	TUBE AS	
	6	1	**179-9564**	1	TUBE AS	
	7	1	**114-2687**	1	SEAL-O-RING	
M	8	1	**5P-7970**	1	NUT (M8X1.25 THD)	
	9	1	**5P-8066**	1	SEAL-O-RING	
M	10	1	**6V-3940**	1	BOLT (M8X1.25X25MM)	
M	11	1	**6V-5218**	4	BOLT (M8X1.25X35MM)	
	12	1	**8L-2786**	1	SEAL-O-RING	
	13	1	**8M-0505**	1	CONNECTOR	
	14	1	**9M-1974**	6	WASHER-HARD (8.8X16X2MM THK)	
	15	1	**9G-8661**	2	SPACER	
M	16	1	**8T-0276**	2	BOLT (M8X1.25X45MM)	
	17	1	**4K-5824**	2	BOSS	

M-METRIC PART

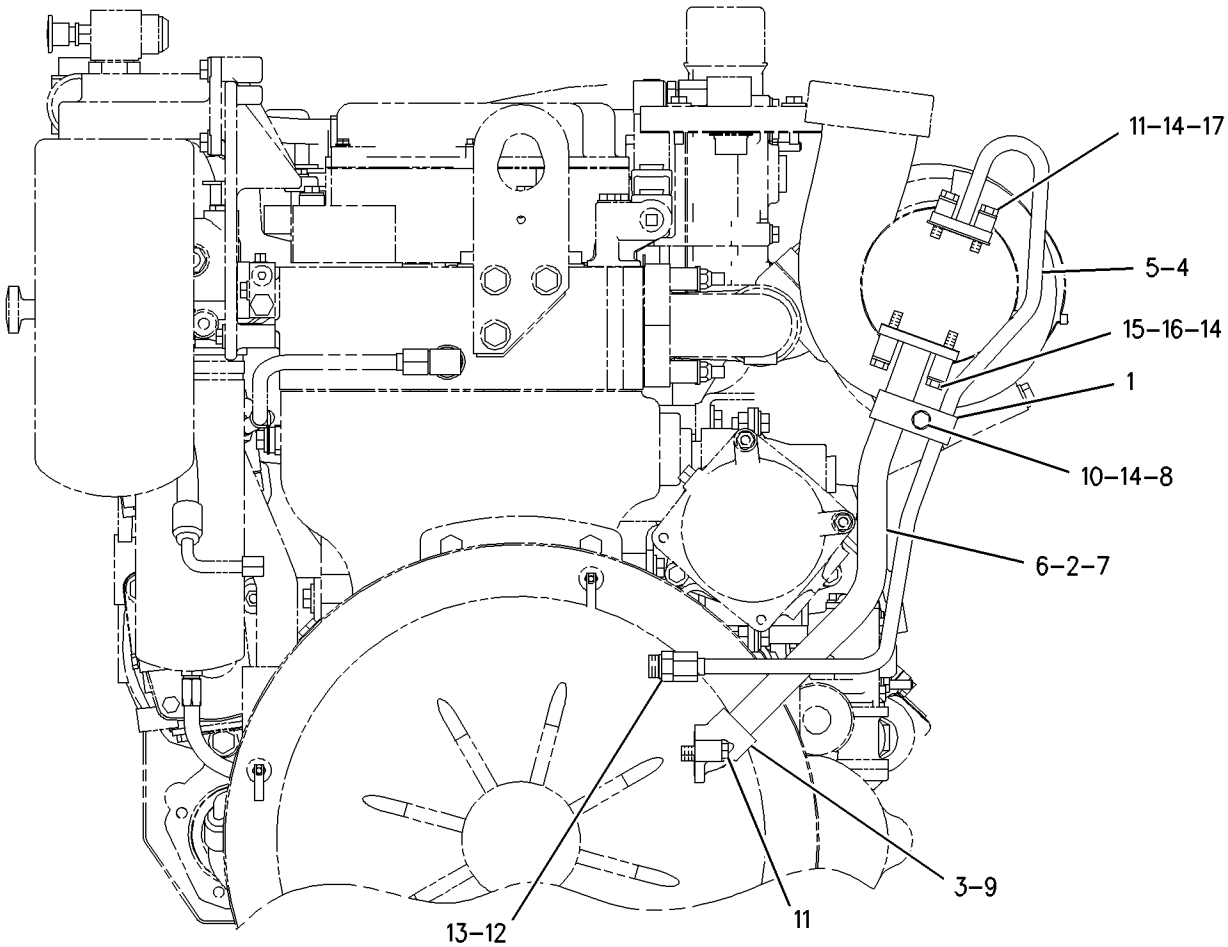

REAR VIEW

GRAPHIC #1 g00829389

LUBRICATION SYSTEM

187-3616 OIL CHANGE GP-HIGH SPEED

S/N: ASE1-UP
AN ATTACHMENT

SMCS-1325 **i01659827**

NOTE	REF NO	GRAPHIC REF	PART NUMBER	QTY	PART NAME 1 2 3 4 5 6 (PRODUCT LEVEL)	SEE PAGE
	1	1	**1P-7919**	1	COUPLER-MALE	
	2	1	**2P-6578**	1	PLATE-INSTRUCTION (CRANKCASE DRAIN AND FILL)	
	3	1	**6K-8420**	1	LOCKNUT	
	4	1	**7B-3028**	4	SCREW-DRIVE (NO 4X3/16 IN)	
	5	1	**9S-9272**	1	CAP AS	
I	6	1	**187-3490**	1	HOSE AS	
	7	1	*148-8327*	1	CONNECTOR GP	
		1	**6V-8637**	1	CONNECTOR-SEAL	
		1	**3D-2824**	1	SEAL-O-RING	
		1	**6V-9746**	1	SEAL-O-RING	

I-SEE HOSE FABRICATION GUIDE

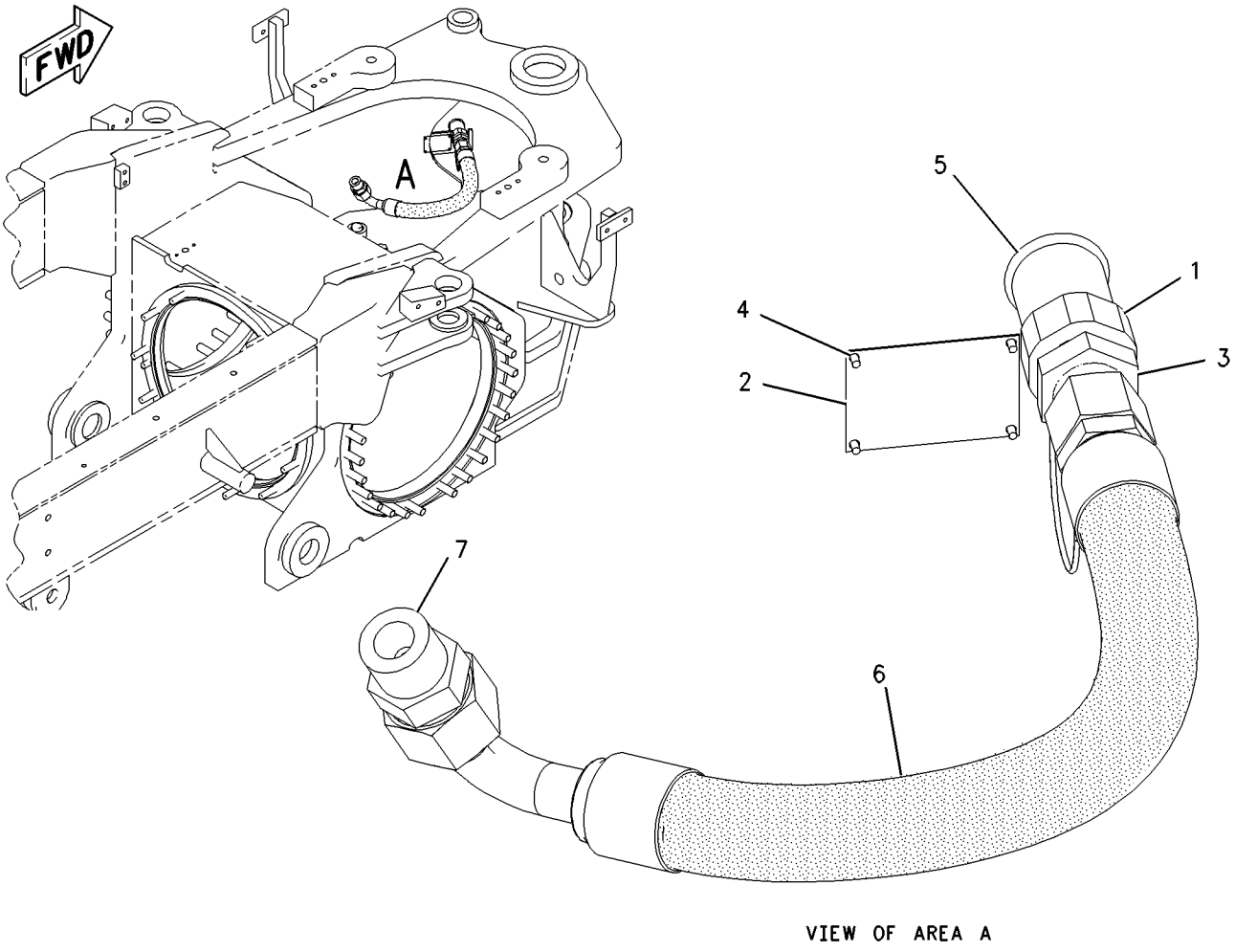

GRAPHIC #1 g00857918

LUBRICATION SYSTEM

9Y-8073 PUMP GP-ENGINE OIL*R

S/N: 3PD1-UP
ONE SECTION GEAR
PART OF 117-2746 PUMP GP-ENGINE OIL

SMCS-1304 **i01454176**

NOTE	REF NO	GRAPHIC REF	PART NUMBER	QTY	PART NAME 1 2 3 4 5 6 (PRODUCT LEVEL)	SEE PAGE
	1	1	**9Y-8076**	1	SHAFT AS-OIL PUMP (8 TEETH)	
	2	1	**6D-7146**	1	SEAL-O-RING	
M	3	1	**6V-2317**	4	BOLT (M8X1.25X30MM)	
	4	1	**9M-1974**	4	WASHER-HARD (8.8X16X2MM THK)	
	5	1	**9Y-8075**	1	SHAFT AS-OIL PUMP (8 TEETH)	

M-METRIC PART

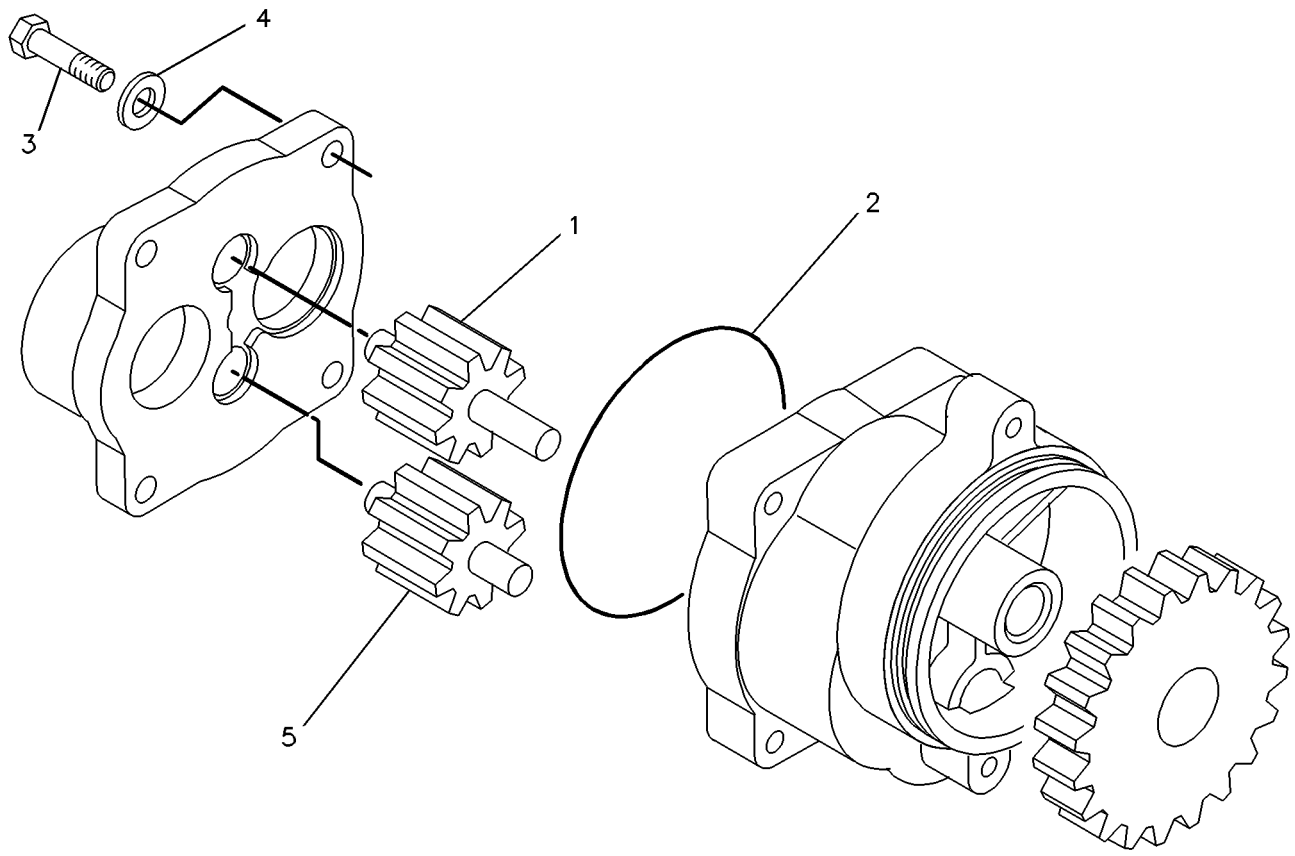

GRAPHIC #1 g00228139

LUBRICATION SYSTEM

117-2746 PUMP GP-ENGINE OIL

S/N: 3PD1-UP

PART OF 161-1747 ENGINE AR

SMCS-1304 **i01454192**

NOTE	REF NO	GRAPHIC REF	PART NUMBER	QTY	PART NAME 1 2 3 4 5 6 (PRODUCT LEVEL)	SEE PAGE
	1	1	**8J-4351**	1	SEAL-O-RING	
	2	1	**9M-1974**	4	WASHER-HARD (8.8X16X2MM THK)	
M	3	1	**3E-8016**	2	BOLT-LOCKING (M8X1.25X25MM)	
M	4	1	**6V-2317**	2	BOLT (M8X1.25X30MM)	
	5	1	**3E-4352**	2	WASHER-HARD (8.8X20.5X2.5MM THK)	
	6	1	**115-3003**	1	TUBE AS	
	7	1	**6V-5134**	3	SEAL-O-RING	
	8	1	**061-8561**	1	SEAL-O-RING	
	9	1	**122-0760**	1	ELBOW-OIL PUMP	
	10	1	**7C-1821**	1	COUPLING	
	11	1	**7C-1822**	1	COUPLING	
	12	1	**5P-8068**	2	SEAL-O-RING	
M	13	1	**6V-5221**	2	BOLT (M8X1.25X80MM)	
	14	1	**6V-3834**	1	SEAL-O-RING	
YR	15	1	**9Y-8073**	1	PUMP GP-ENGINE OIL	69

M-METRIC PART
R-REMFG PART MAY BE AVAILABLE
Y-SEPARATE ILLUSTRATION

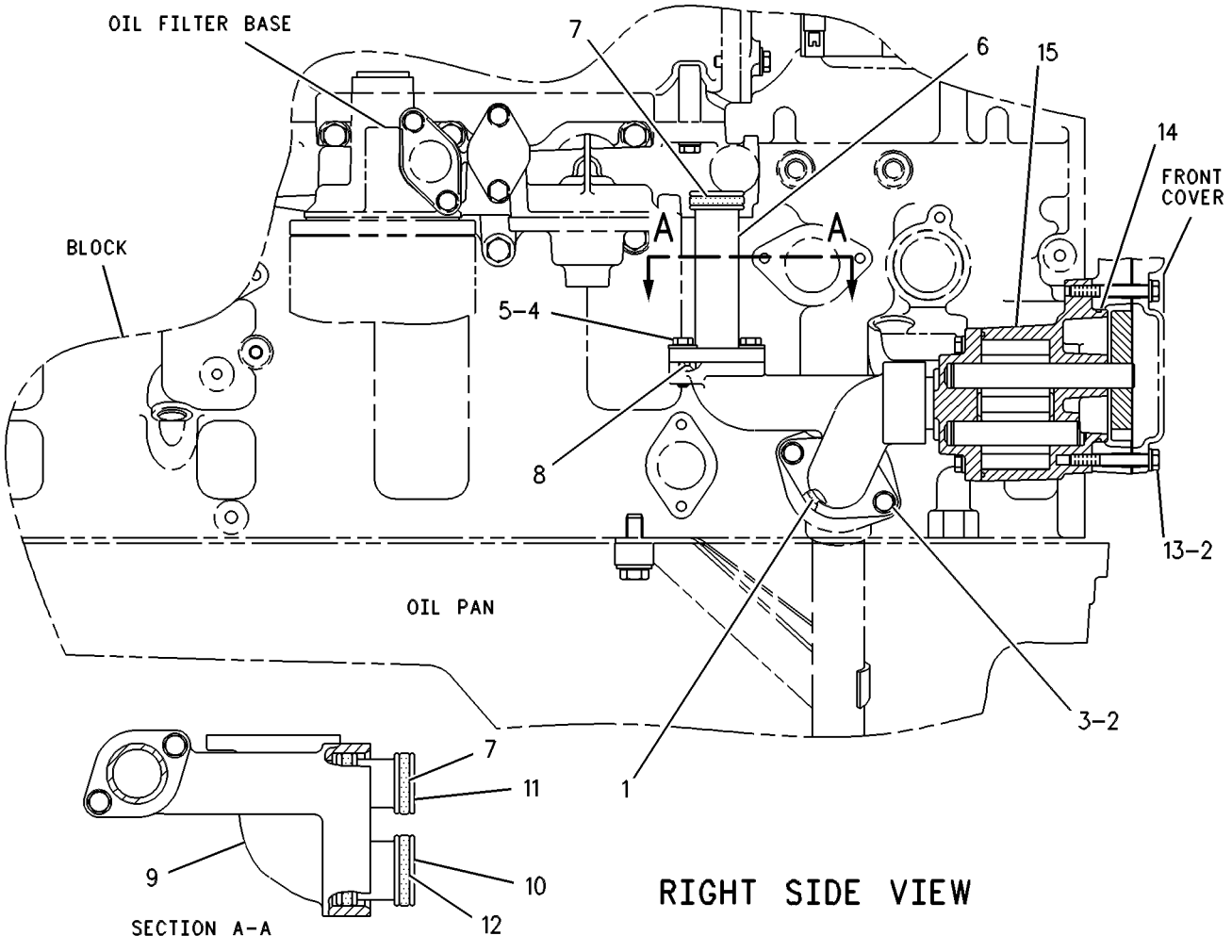

GRAPHIC #1 g00251411

COOLING SYSTEM

184-0793 COOLING AR

S/N: ASE1-UP

PART OF 162-5606 GENERAL AR

SMCS-1350 **i01647329**

NOTE	PART NUMBER	QTY	PART NAME 1 2 3 4 5 6 (PRODUCT LEVEL)	SEE PAGE
Y	*163-0310*	1	AFTERCOOLER & MOUNTING GP	88
Y	*179-3261*	1	FAN & MOTOR GP	74
Y	*197-1448*	1	GUARD & SUPPORT GP-RADIATOR	358
Y	*175-6983*	1	LINES GP-HYDRAULIC FAN	460
Y	**167-3809**	1	RADIATOR GP	87
Y	*194-7982*	1	WIRING GP-REAR	246

Y-SEPARATE ILLUSTRATION

COOLING SYSTEM

201-1053 COOLING AR–EU

S/N: ASE1-UP
PART OF 211-1769, 211-1770 CONVERSION AR-CERTIFICATION
AN ATTACHMENT

SMCS-1350 **i01646116**

NOTE	PART NUMBER	QTY	PART NAME 1 2 3 4 5 6 (PRODUCT LEVEL)	SEE PAGE
Y	*163-0310*	1	AFTERCOOLER & MOUNTING GP	88
Y	*179-3261*	1	FAN & MOTOR GP	74
Y	*197-1448*	1	GUARD & SUPPORT GP-RADIATOR	358
Y	*175-6983*	1	LINES GP-HYDRAULIC FAN	460
Y	**167-3809**	1	RADIATOR GP	87
Y	*200-4983*	1	WIRING GP-REAR	248
Z		1	PLATE AS	
	184-0871	1	PLATE	
M	**6V-4248**	4	BOLT (M10X1.50X25MM)	
M	**8T-4178**	2	BOLT (M10X1.5X90MM)	
M	**2Y-5829**	4	NUT (M10X1.5 THD)	
	199-2711	2	SPACER (7.82X26.67X75MM THK)	
	6V-5839	8	WASHER (11X21X2.5MM THK)	
	8T-4222	2	WASHER-PLATED (11X32X2.5MM THK)	

M-METRIC PART
Y-SEPARATE ILLUSTRATION
Z-NOT SERVICED SEPARATELY

COOLING SYSTEM

140-9810 COVER GP-FAN

S/N: ASE1-UP
PART OF 196-9642 PROTECTION AR-SNOW PLOW
AN ATTACHMENT

SMCS-1360 **i00721454**

NOTE	PART NUMBER	QTY	PART NAME 1 2 3 4 5 6 (PRODUCT LEVEL)	SEE PAGE
	140-9857	1	COVER-FAN	
	9N-1995	12	RIVET-POP	
	127-0606	12	STUD	

COOLING SYSTEM

179-3261 FAN & MOTOR GP

S/N: ASE1-UP
PART OF 184-0793, 201-1053 COOLING AR
ALSO AN ATTACHMENT

SMCS-1356, 1386 **i01613378**

NOTE	REF NO	GRAPHIC REF	PART NUMBER	QTY	PART NAME 1 2 3 4 5 6 (PRODUCT LEVEL)	SEE PAGE
Y	1	1	**168-1899**	1	MOTOR GP-GEAR	478
	2	1	**174-2104**	1	BRACKET AS	
	3	1	**177-5303**	1	SPIDER AS-FAN (6 BLADES)	
	4	1	**178-8993**	1	ADAPTER	
	5	1	**179-2509**	4	BRACKET AS	
					(EACH INCLUDES)	
M		1	**8T-3597**	1	NUT-WELD (M12X1.75 THD)	
M	6	1	**105-3484**	2	BOLT-HEX SOCKET (M10X1.5X25MM)	
	7	1	*153-6237*	2	ELBOW GP	
					(EACH INCLUDES)	
		1	**6V-9004**	1	ELBOW	
		1	**3D-2824**	1	SEAL-O-RING	
		1	**6V-9746**	1	SEAL-O-RING	
	8	1	**5P-1076**	4	WASHER-HARD (13.5X30X4MM THK)	
	9	1	**5P-8245**	1	WASHER-HARD (13.5X25.5X3MM THK)	
	10	1	**6B-6684**	1	NUT-FULL (1/2-20 THD)	
M	11	1	**6V-7687**	4	LOCKNUT (M12X1.75 THD)	
M	12	1	**6V-8336**	4	BOLT (M12X1.75X70MM)	
	13	1	**8T-4121**	8	WASHER-HARD (11X21X2.5MM THK)	
M	14	1	**8T-4183**	4	BOLT (M12X1.75X40MM)	
M	15	1	**8T-4195**	6	BOLT (M10X1.5X30MM)	
	16	1	**8T-4223**	8	WASHER-HARD (13.5X25.5X3MM THK)	

M-METRIC PART
Y-SEPARATE ILLUSTRATION

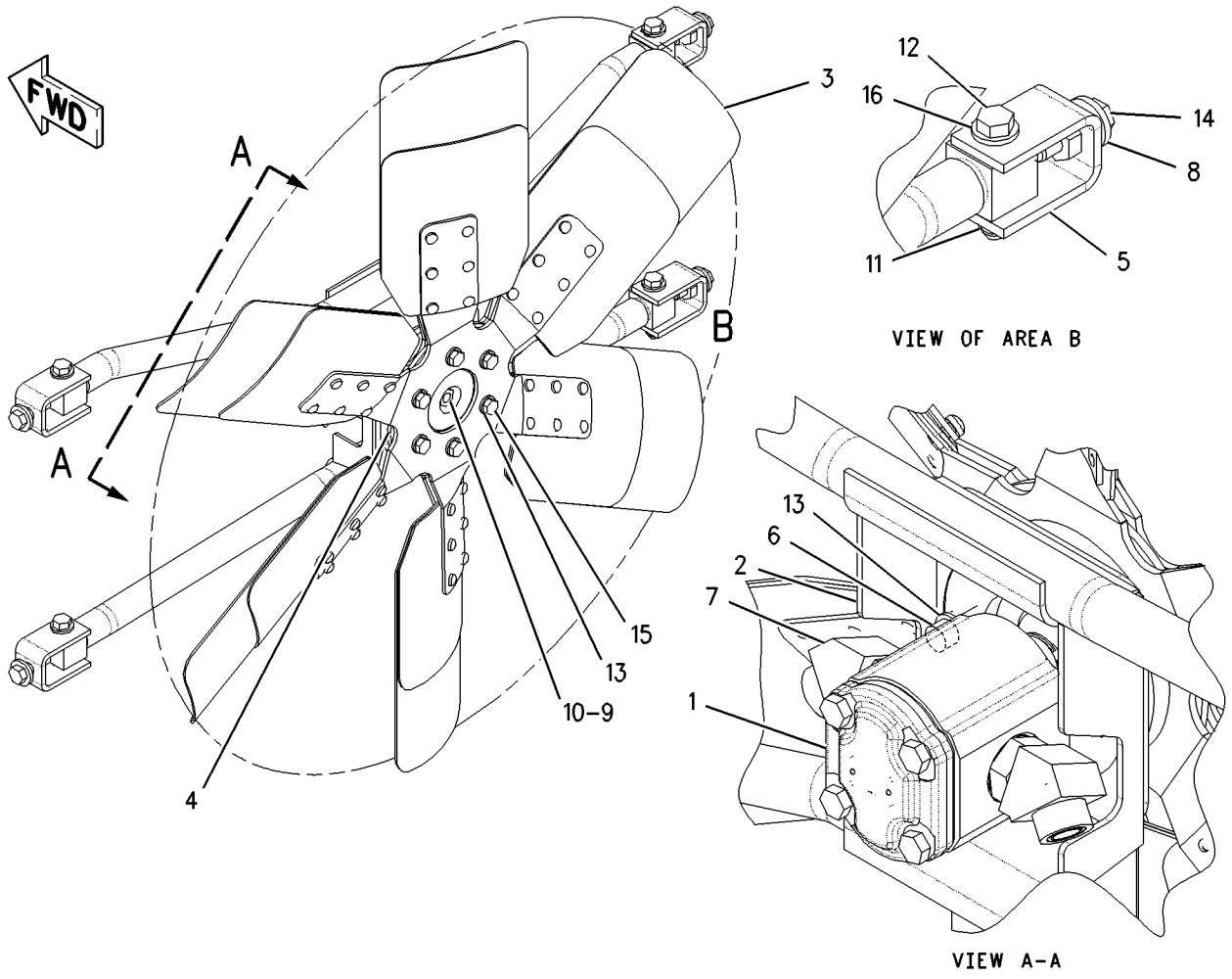

GRAPHIC #1 g00788543

COOLING SYSTEM

215-2062 HOUSING & REGULATOR GP

S/N: 3PD1-UP

PART OF 215-2063 LINES GP-WATER

SMCS-1355, 1393 **i01623369**

NOTE	REF NO	GRAPHIC REF	PART NUMBER	QTY	PART NAME 1 2 3 4 5 6 (PRODUCT LEVEL)	SEE PAGE
	1	1	**4P-9485**	1	MANIFOLD	
	2	1	**7C-3095**	1	REGULATOR-WATER TEMPERATURE	
	3	1	**7E-7912**	1	GASKET	
	4	1	**118-2800**	1	HOUSING AS-REGULATOR	
	4A	1	**3S-9643**	1	SEAL-LIP	
	4B	1	**8T-6757**	1	PLUG-PIPE	
M	5	1	**123-4511**	2	STUD	
	6	1	**7X-7732**	1	PLUG-PIPE	
M	7	1	**8T-0292**	2	BOLT (M8X1.25X90MM)	
	8	1	**8T-6762**	9	PLUG-PIPE	
	9	1	**8T-6766**	1	PLUG-PIPE (1/2-14 NPTF)	
	10	1	**8T-6767**	1	PLUG-PIPE	
	11	1	**9M-1974**	4	WASHER-HARD (8.8X16X2MM THK)	

M-METRIC PART

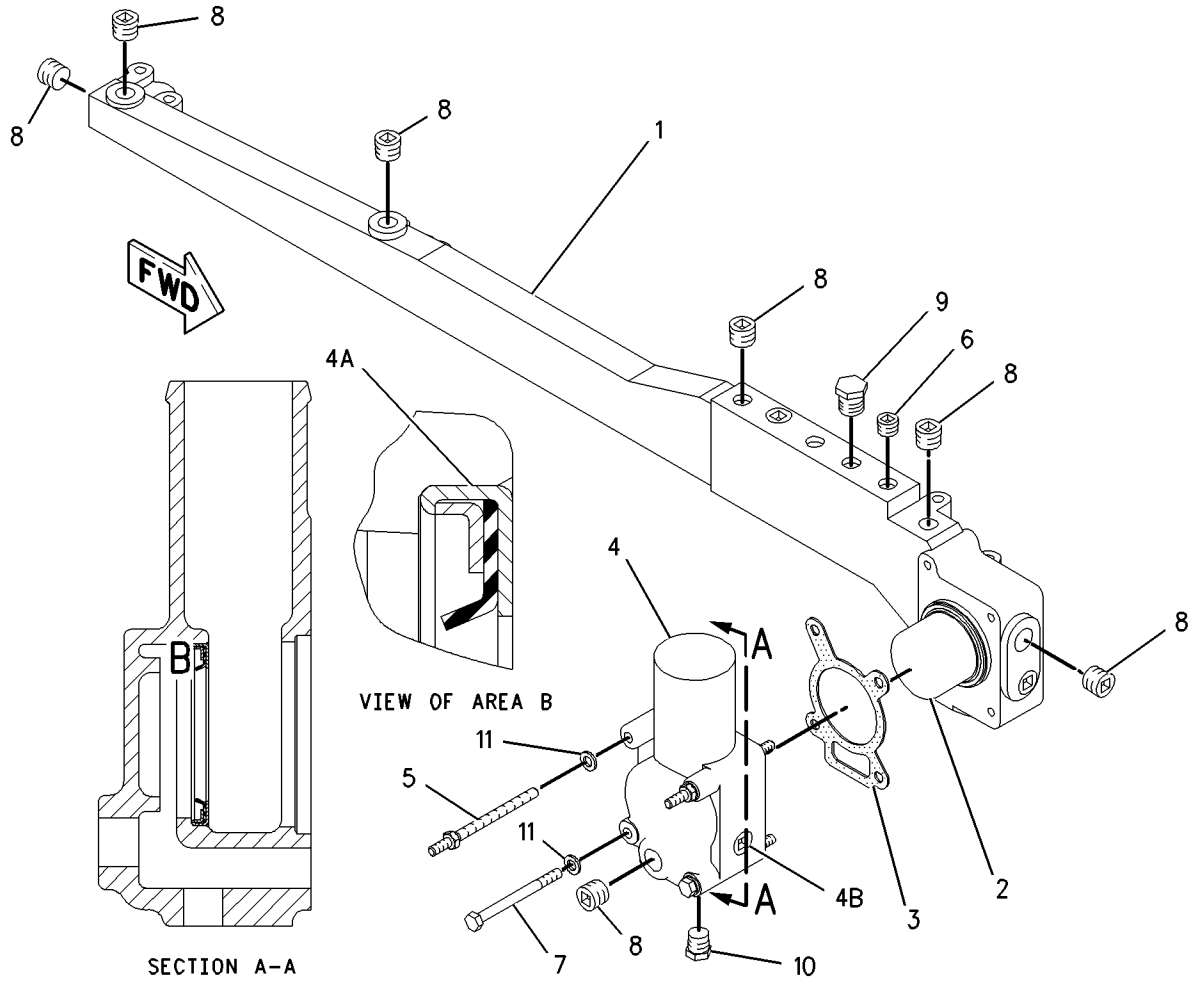

GRAPHIC #1 g00841045

MEMORANDA

COOLING SYSTEM

183-6452 LINES GP-POWER TRAIN COOLER

S/N: ASE1-UP

PART OF 162-5606 GENERAL AR

SMCS-3016 **i01643961**

NOTE	REF NO	GRAPHIC REF	PART NUMBER	QTY	PART NAME 1 2 3 4 5 6 (PRODUCT LEVEL)	SEE PAGE
	1	1	**2H-7254**	1	FILTER ELEMENT AS-FUEL (TRANSMISSION OIL)	
	2	1	**6V-0852**	2	CAP-DUST	
	3	1	**6V-3965**	2	FITTING AS	
		1	**3J-1907**	2	SEAL-O-RING	
	4	1	**8C-3446**	1	VALVE GP-FLUID SAMPLING (TRANSMISSION OIL)	
		1	**3J-7354**	1	SEAL-O-RING	
	5	1	**183-1406**	3	CLIP	
	6	1	**185-4412**	1	HOSE AS	
	7	1	**185-4413**	1	HOSE AS	
	8	1	**196-1323**	1	BRACKET AS	
	9	1	**198-8277**	1	TUBE AS	
	10	1	**0S-1588**	1	BOLT (3/8-16X1.25 IN)	
	11	1	*148-8305*	1	ADAPTER AS	
		1	**5P-9617**	1	ADAPTER	
		1	**3J-1907**	1	SEAL-O-RING	
	12	1	*148-8336*	1	CONNECTOR GP	
		1	**6V-8636**	1	CONNECTOR	
		1	**3J-1907**	1	SEAL-O-RING	
		1	**6V-8397**	1	SEAL-O-RING	
	13	1	*148-8344*	1	CONNECTOR GP	
		1	**6V-9162**	1	CONNECTOR	
		1	**3D-2824**	1	SEAL-O-RING	
		1	**6V-9746**	1	SEAL-O-RING	
	14	1	*148-8362*	1	ELBOW GP	
		1	**8T-6684**	1	ELBOW	
		1	**3D-2824**	1	SEAL-O-RING	
		1	**5K-9090**	1	SEAL-O-RING	
	15	1	*148-8392*	1	ELBOW GP	
		1	**6V-9853**	1	ELBOW-SWIVEL	
		1	**6V-9746**	1	SEAL-O-RING	
	16	1	*150-4050*	1	ELBOW AS	
		1	**8T-0788**	1	ELBOW	
		1	**3J-1907**	1	SEAL-O-RING	
	17	1	*153-6248*	2	ADAPTER GP	
					(EACH INCLUDES)	
		1	**8T-6663**	1	ADAPTER-PORT	
		1	**6V-8397**	1	SEAL-O-RING	
	18	1	**1P-4577**	4	FLANGE-HALF	
	19	1	**4J-0520**	2	SEAL-O-RING	
	20	1	**5C-6266**	1	BOLT (5/8-11X1 IN)	
	21	1	**5M-2894**	1	WASHER-HARD (10.2X18.5X2.5MM THK)	
	22	1	**5S-7382**	8	BOLT (3/8-16X1.375 IN)	
	23	1	**6V-3265**	1	CLIP	
	24	1	**8C-3447**	1	CAP-DUST	
	25	1	**8T-4121**	1	WASHER-HARD (11X21X2.5MM THK)	
	26	1	**8T-4122**	1	WASHER-HARD (17X32X3.5MM THK)	
M	27	1	**8T-4137**	1	BOLT (M10X1.5X20MM)	
	28	1	**8T-4896**	8	WASHER-HARD (10.2X18.5X2.5MM THK)	

M-METRIC PART

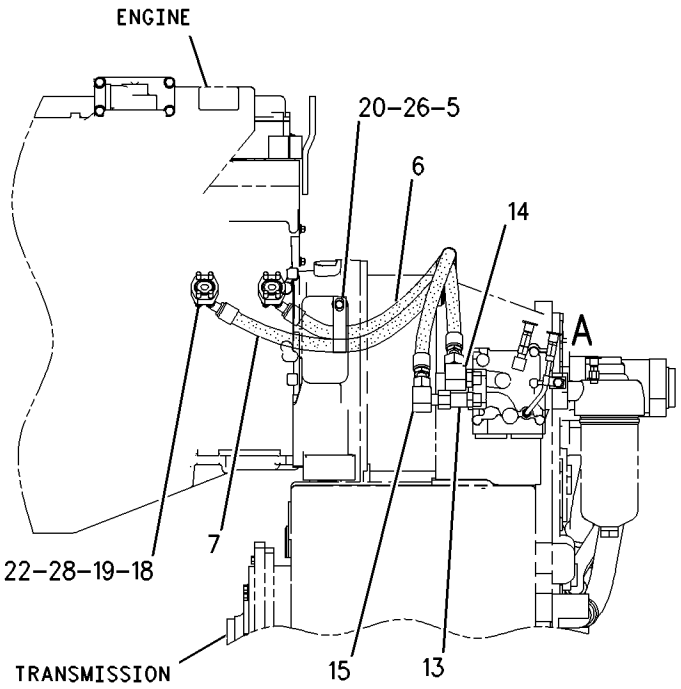

LEFT SIDE VIEW

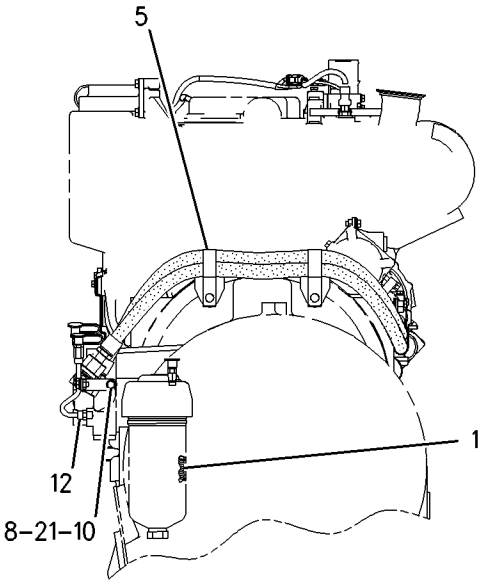

REAR VIEW

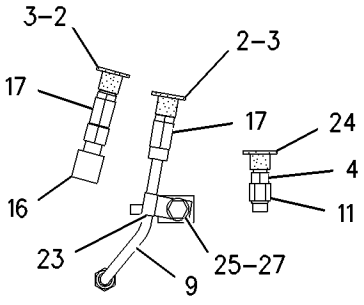

VIEW OF AREA A

GRAPHIC #1 g00852731

116-5460 LINES GP-WATER–REGULATOR

S/N: 3PD1-UP

PROVIDES THERMOSTAT HOUSING TO WATER PUMP BYPASS LINE

PART OF 161-1747 ENGINE AR

SMCS-1355, 1380, 1393 **i00693535**

NOTE	REF NO	GRAPHIC REF	PART NUMBER	QTY	PART NAME 1 2 3 4 5 6 (PRODUCT LEVEL)	SEE PAGE
	1	1	**3E-4352**	2	WASHER-HARD (2.5MM THK)	
M	2	1	**6V-3918**	2	BOLT (M8X1.25X50MM)	
	3	1	**107-5795**	1	TUBE	
	4	1	**7L-6580**	2	SEAL-O-RING	
	5	1	**105-4208**	1	FLANGE	
	6	1	**7E-5555**	1	GASKET	

M-METRIC PART

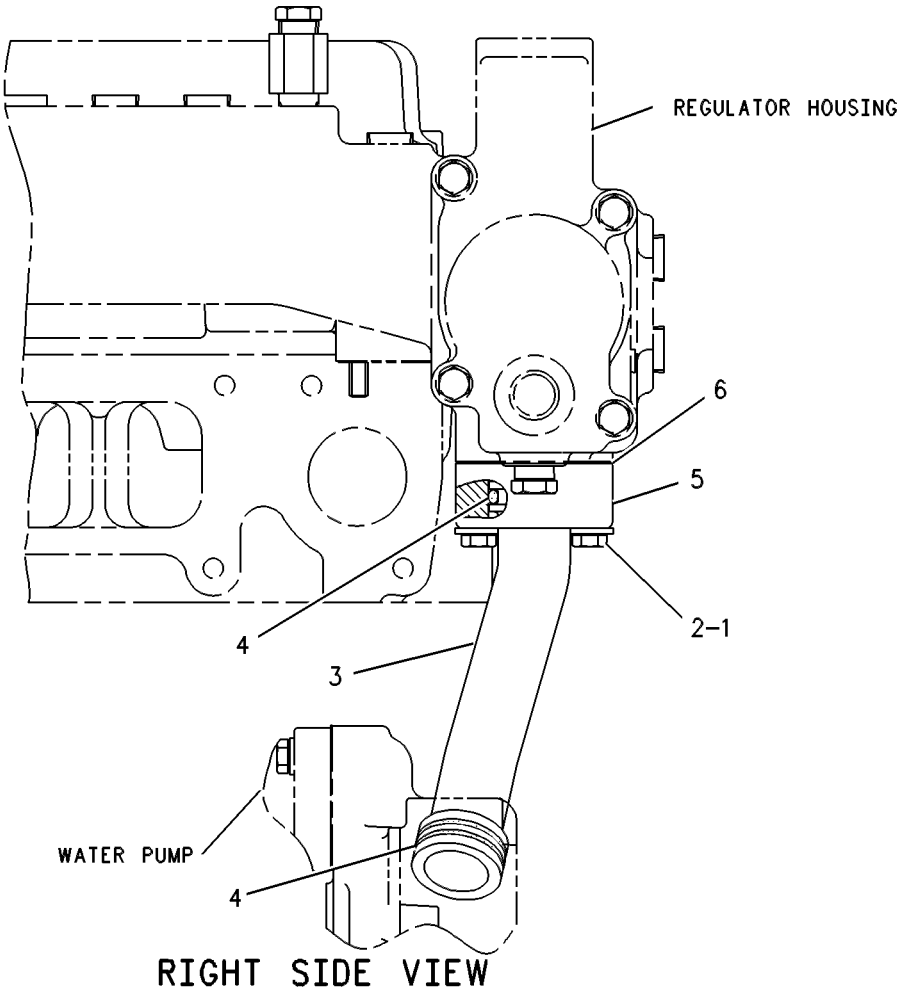

RIGHT SIDE VIEW

GRAPHIC #1 g00251320

118-2808 LINES GP-WATER—WATER PUMP

S/N: 3PD1-UP
2.5 INCH REAR FACING INLET ELBOW
PART OF 161-1747 ENGINE AR

SMCS-1355, 1380, 1393 **i00830174**

NOTE	REF NO	GRAPHIC REF	PART NUMBER	QTY	PART NAME 1 2 3 4 5 6 (PRODUCT LEVEL)	SEE PAGE
	1	1	**101-1635**	1	GASKET	
M	2	1	**6V-3918**	2	BOLT (M8X1.25X50MM)	
	3	1	**9M-1974**	1	WASHER-HARD (2MM THK)	
	4	1	**102-8785**	1	ELBOW-WATER PUMP	
	5	1	**7X-7731**	3	PLUG-PIPE (3/4-14 NPTF THD)	

M-METRIC PART

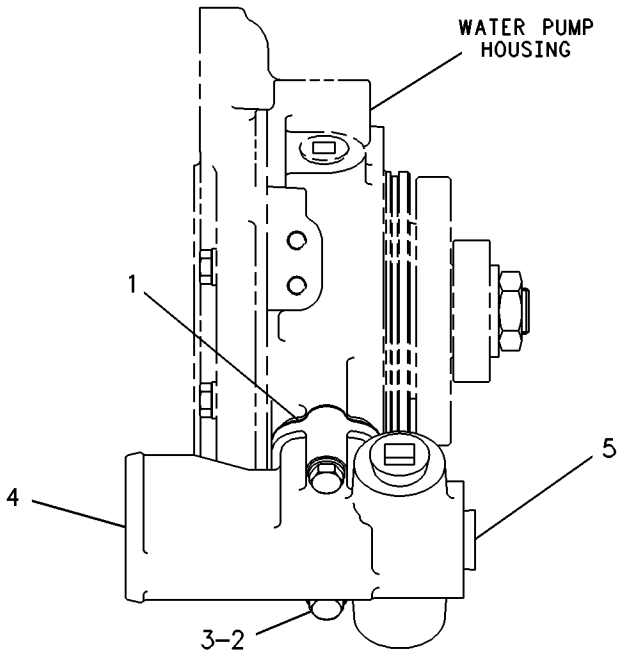

RIGHT SIDE VIEW

GRAPHIC #1 g00232449

COOLING SYSTEM

180-3493 LINES GP-WATER—RADIATOR

S/N: ASE1-UP

PART OF 162-5606 GENERAL AR

SMCS-1355, 1380, 1393 **i01643871**

NOTE	REF NO	GRAPHIC REF	PART NUMBER	QTY	PART NAME 1 2 3 4 5 6 (PRODUCT LEVEL)	SEE PAGE
	1	1	**197-1705**	1	TUBE AS	
	2	1	**1P-7297**	1	VALVE-DRAIN (COOLANT)	
	3	1	**4N-7431**	1	HOSE	
	4	1	**5D-1026**	2	CLAMP-HOSE	
	5	1	**6V-0852**	1	CAP-DUST	
	6	1	**7D-7026**	2	CONNECTOR-HOSE	
	7	1	**7K-1181**	2	STRAP-CABLE	
	8	1	**8N-9071**	1	VALVE AS	
		1	**7N-7688**	1	FERRULE	
		1	**8N-9072**	1	BODY-VALVE	
		1	**9M-5590**	1	BALL	
	9	1	**8T-4984**	8	CLAMP-HOSE	
BE	10	1	**5P-1262**		HOSE	
	11	1	**185-2936**	1	TUBE AS	
	12	1	**185-3205**	1	HOSE	
	13	1	**197-5475**	1	BRACKET AS	
M		1	**8T-3490**	1	NUT-WELD (M10X1.5 THD)	
	14	1	**197-5476**	1	BRACKET AS	
M		1	**8T-3490**	1	NUT-WELD (M10X1.5 THD)	
I	15	1	**212-3266**	1	HOSE AS	
	16	1	**003-9514**	1	COUPLING-PIPE	
	17	1	**154-9025**	1	VALVE-COOLANT SAMPLING	
	18	1	**2N-8037**	1	ELBOW	
	19	1	**3P-9847**	2	CLIP	
	20	1	**5P-4116**	1	WASHER-HARD (8.8X20.5X2MM THK)	
	21	1	**6D-4244**	2	CLIP	
	22	1	**6V-1581**	1	CLIP (SLOT)	
	23	1	**6V-1582**	1	CLIP (TAB)	
	24	1	**7X-0343**	2	BOLT (5/8-11X1.25 IN)	
M	25	1	**7X-2537**	1	BOLT (M8X1.25X35MM)	
	26	1	**8T-4121**	4	WASHER-HARD (11X21X2.5MM THK)	
	27	1	**8T-4122**	2	WASHER-HARD (17X32X3.5MM THK)	
M	28	1	**8T-4137**	4	BOLT (M10X1.5X20MM)	
	29	1	**5P-0767**	55	HOSE	

B-USE AS REQUIRED
E-ORDER BY THE CENTIMETER
I-SEE HOSE FABRICATION GUIDE
M-METRIC PART

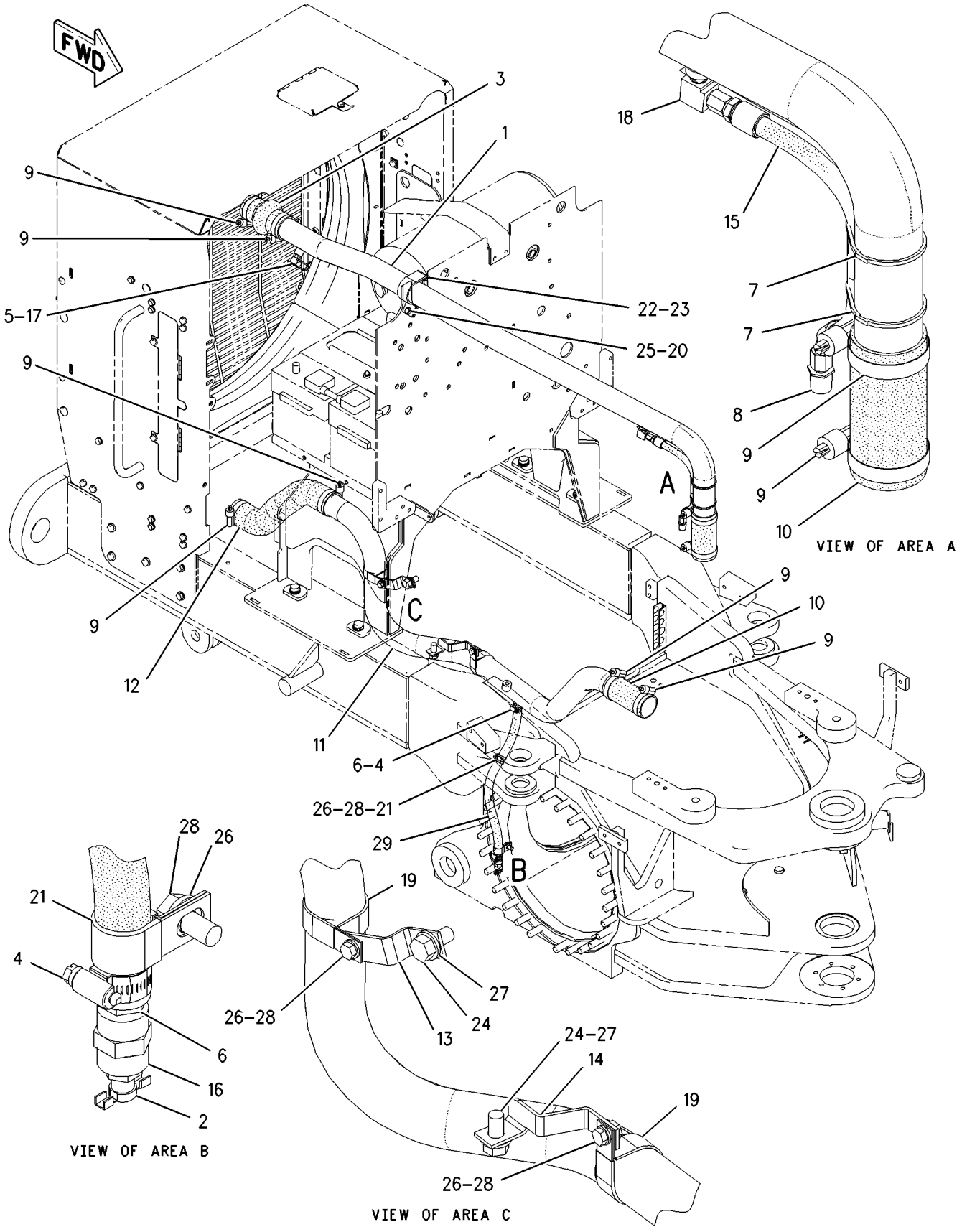

GRAPHIC #1 g00852183

215-2063 LINES GP-WATER—HOUSING & REGULATOR

S/N: 3PD1-UP

PART OF 161-1747 ENGINE AR

SMCS-1355, 1380, 1393 **i01623365**

NOTE	REF NO	GRAPHIC REF	PART NUMBER	QTY	PART NAME 1 2 3 4 5 6 (PRODUCT LEVEL)	SEE PAGE
Y	1	1	*215-2062*	1	HOUSING & REGULATOR GP	76
	2	1	**118-2797**	4	GASKET	
M	3	1	**5P-8347**	7	BOLT (M8X1.25X70MM)	
M	4	1	**6V-3821**	1	BOLT (M8X1.25X110MM)	
	5	1	**9M-1974**	8	WASHER-HARD (8.8X16X2MM THK)	

M-METRIC PART
Y-SEPARATE ILLUSTRATION

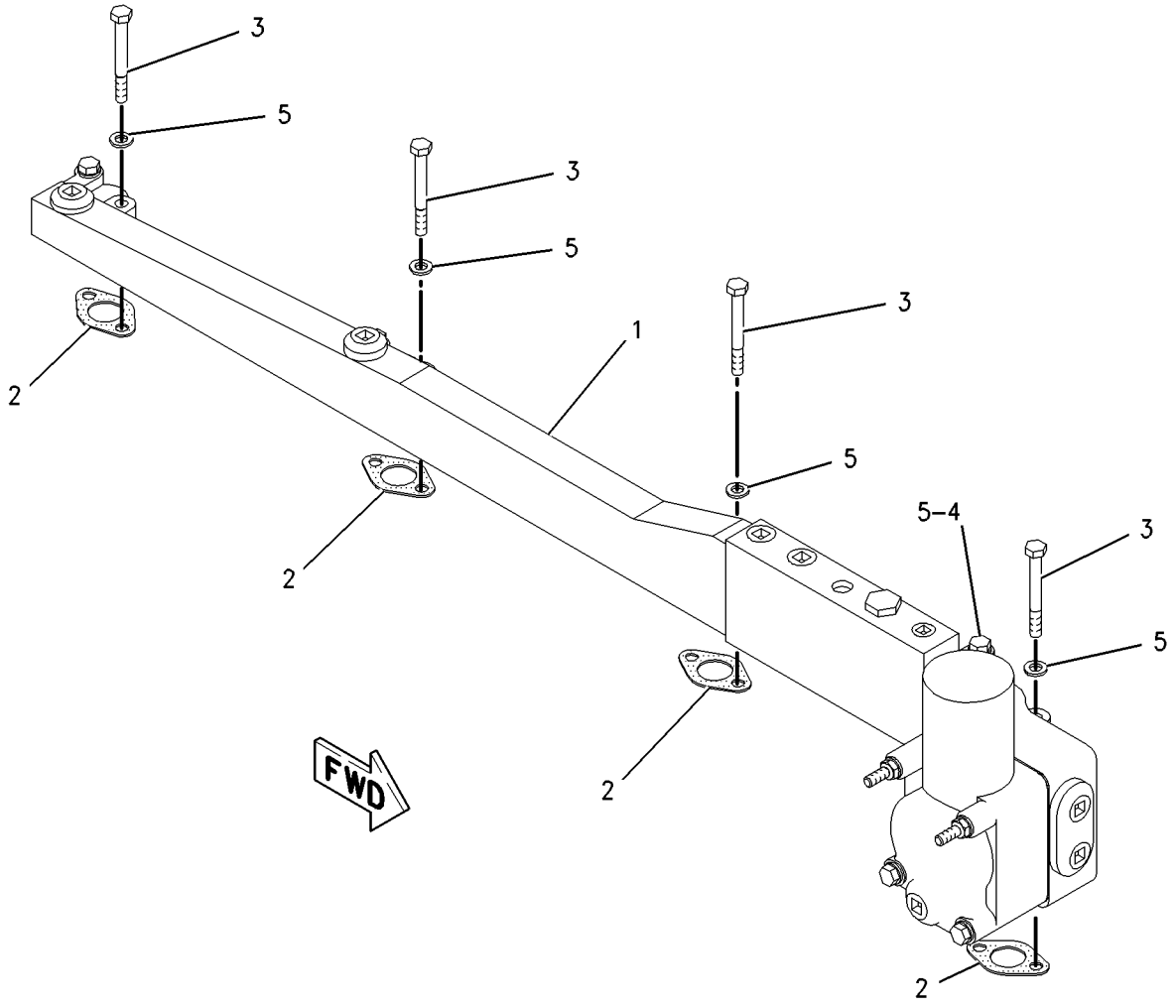

GRAPHIC #1 g00840862

COOLING SYSTEM

117-2674 PUMP GP-WATER

S/N: 3PD1-UP

PART OF 161-1747 ENGINE AR

SMCS-1361 **i01534560**

NOTE	REF NO	GRAPHIC REF	PART NUMBER	QTY	PART NAME 1 2 3 4 5 6 (PRODUCT LEVEL)	SEE PAGE
CYR	1	1	**176-7000**	1	PUMP GP-WATER	86
M	2	1	**6V-5221**	2	BOLT (M8X1.25X80MM)	
	3	1	**9M-1974**	2	WASHER-HARD (8.8X16X2MM THK)	
	4	1	**6V-7350**	1	SEAL-O-RING	

C-CHANGE FROM PREVIOUS TYPE
M-METRIC PART
R-REMFG PART MAY BE AVAILABLE
Y-SEPARATE ILLUSTRATION

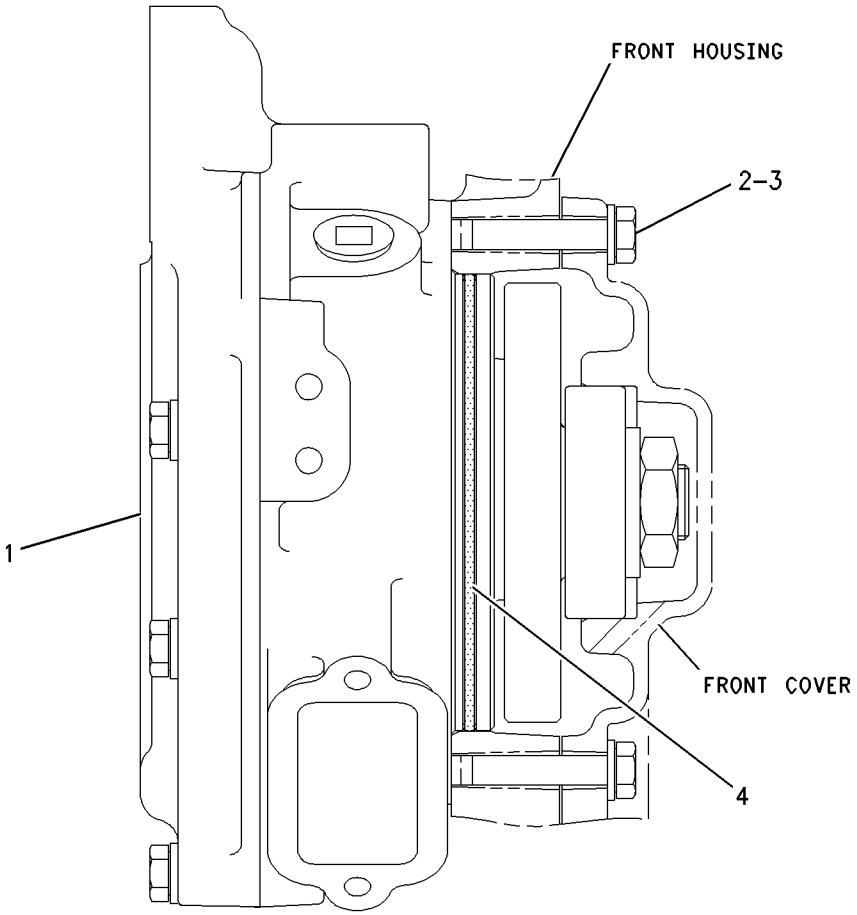

RIGHT SIDE VIEW

GRAPHIC #1 g00796828

COOLING SYSTEM

176-7000 PUMP GP-WATER

S/N: 3PD1-UP

PART OF 117-2674 PUMP GP-WATER

SMCS-1361 **i01351134**

NOTE	REF NO	GRAPHIC REF	PART NUMBER	QTY	PART NAME 1 2 3 4 5 6 (PRODUCT LEVEL)	SEE PAGE
	1	1	**9Y-3513**	1	GEAR (41 TEETH)	
	2	1	**105-4210**	1	GASKET	
	3	1	**147-5088**	1	SEAL AS-WATER PUMP	
	4	1	**176-6994**	1	WASHER	
	5	1	**176-6995**	1	COVER-PUMP	
	6	1	**176-6997**	1	SHAFT	
	7	1	**176-6998**	1	IMPELLER-PUMP	
	8	1	**176-6999**	1	HOUSING AS-PUMP	
	9	1	**1B-3867**	2	BALL BEARING	
M	10	1	**6V-3940**	6	BOLT (M8X1.25X25MM)	
	11	1	**7X-7731**	1	PLUG-PIPE (3/4-14 NPTF THD)	
	12	1	**8C-3100**	1	SEAL-LIP	
	13	1	**8T-6762**	1	PLUG-PIPE (1/2-14 NPTF THD)	
M	14	1	**8T-9515**	1	BOLT-SOCKET HEAD (M10X1.5X40MM)	
	15	1	**8T-9598**	1	RING-RETAINING	
	16	1	**9M-1974**	6	WASHER-HARD (2MM THK)	

M-METRIC PART

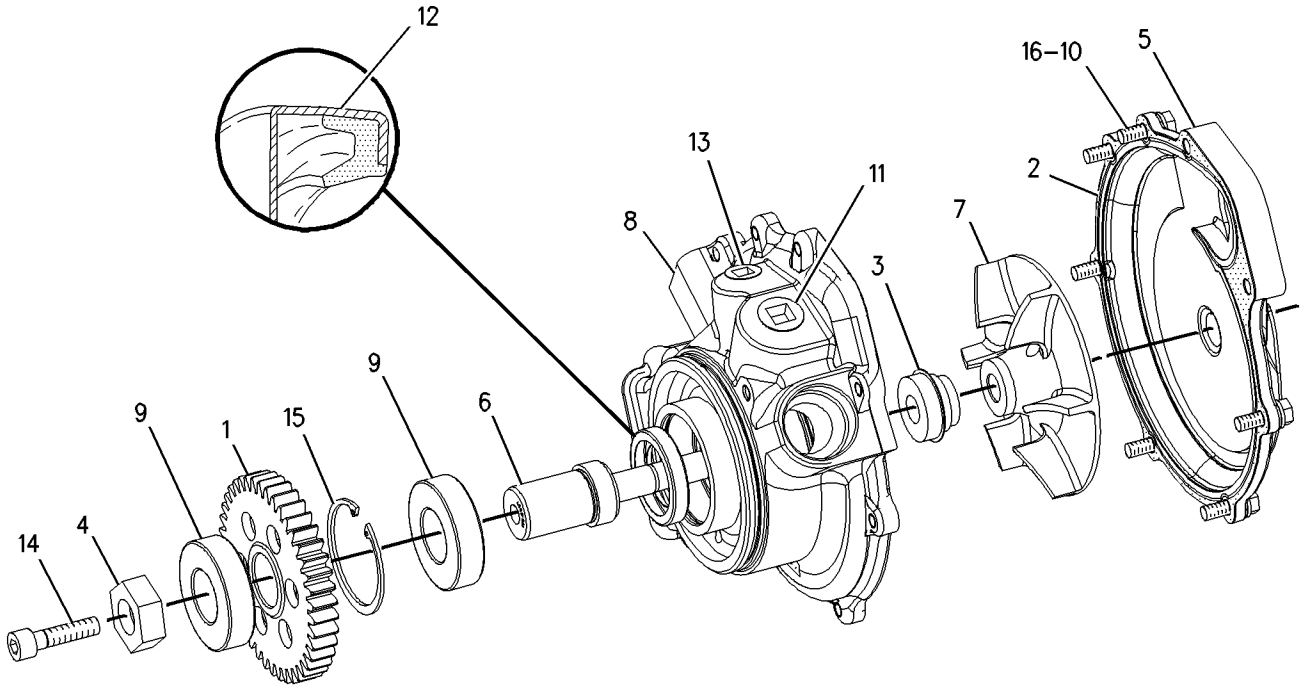

GRAPHIC #1 g00713988

167-3809 RADIATOR GP

S/N: ASE1-UP
PART OF 184-0793, 201-1053 COOLING AR
ALSO AN ATTACHMENT

SMCS-1353 **i01667397**

NOTE	REF NO	GRAPHIC REF	PART NUMBER	QTY	PART NAME 1 2 3 4 5 6 (PRODUCT LEVEL)	SEE PAGE
	1	1	**4H-2633**	4	CLIP	
	2	1	**6L-8617**	1	CAP-RADIATOR	
	3	1	**8N-8846**	1	NECK-FILLER	
	4	1	**9Y-9236**	1	BODY AS-GAUGE	
BG	5	1	**9X-2388**		HOSE	

B-USE AS REQUIRED
G-ORDER BY THE INCH

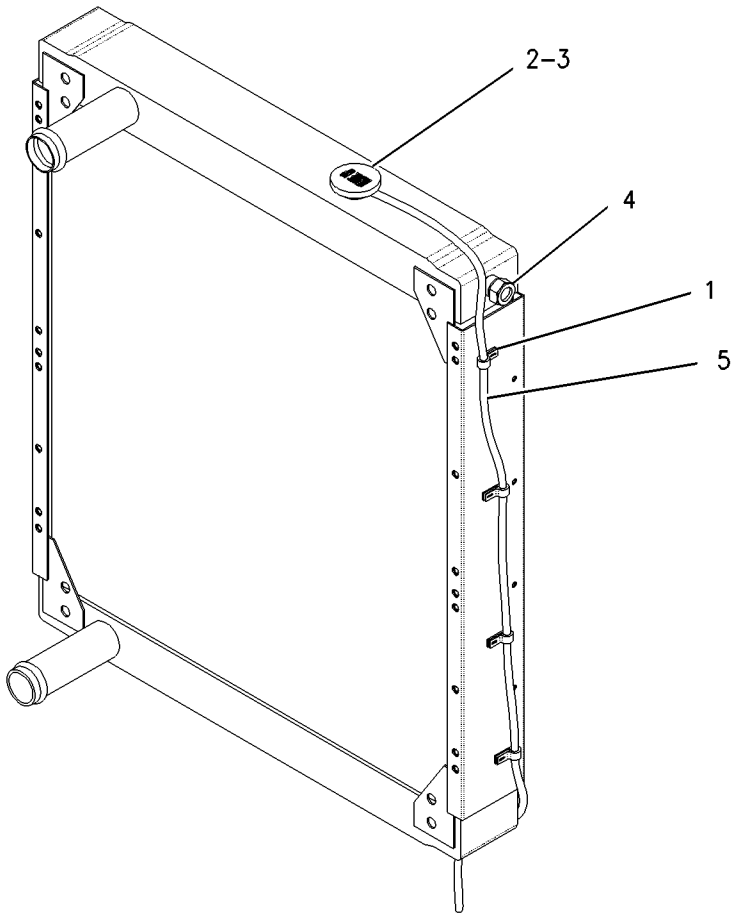

GRAPHIC #1 g00861600

AIR INLET AND EXHAUST SYSTEM

163-0310 AFTERCOOLER & MOUNTING GP

S/N: ASE1-UP
PART OF 184-0793, 201-1053 COOLING AR
ALSO AN ATTACHMENT

SMCS-1063 **i01508078**

NOTE	REF NO	GRAPHIC REF	PART NUMBER	QTY	PART NAME 1 2 3 4 5 6 (PRODUCT LEVEL)	SEE PAGE
	1	1	**167-3911**	1	CORE AS-AFTERCOOLER	
	2	1	**199-2711**	2	SPACER (7.82X26.67X75MM THK)	
	3	1	**4S-9191**	4	WASHER (12X22.5X5MM THK)	
M	4	1	**6V-1820**	4	BOLT (M10X1.50X30MM)	
	5	1	**7X-7729**	2	WASHER (11X25X3MM THK)	
M	6	1	**8T-5436**	2	BOLT (M10X1.50X130MM)	
E	7	1	**123-3827**		SEAL (42CM)	
E	7A	1	**123-3827**		SEAL (42CM)	

E-ORDER BY THE CENTIMETER
M-METRIC PART

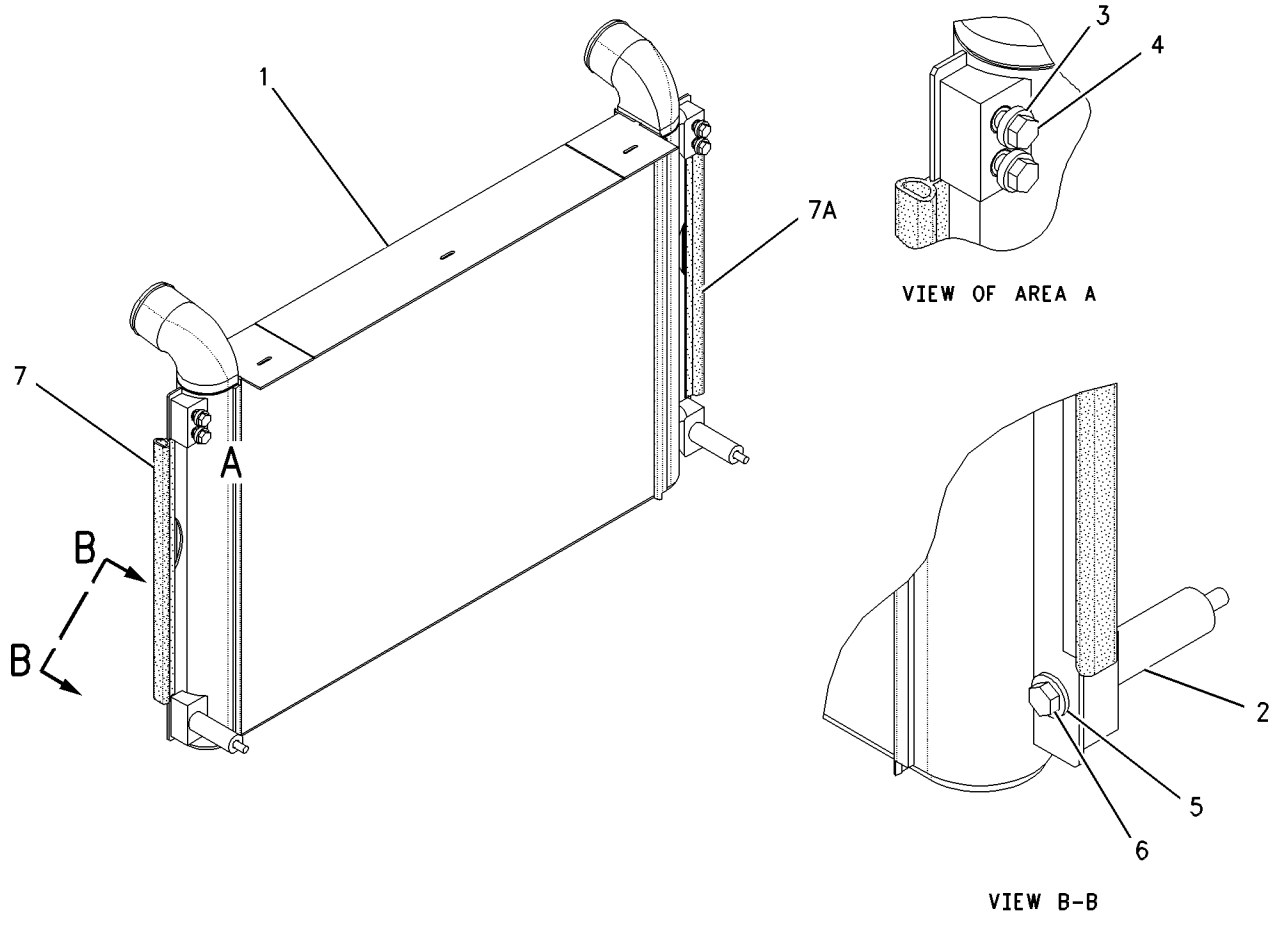

GRAPHIC #1 g00787846

MEMORANDA

AIR INLET AND EXHAUST SYSTEM

159-7364 AIR CLEANER GP

S/N: ASE1-UP

PART OF 162-5606 GENERAL AR

SMCS-1051, 1054, 7452 **i01641988**

NOTE	REF NO	GRAPHIC REF	PART NUMBER	QTY	PART NAME 1 2 3 4 5 6 (PRODUCT LEVEL)	SEE PAGE
	1	1	**8N-2694**	1	INDICATOR-AIR FILTER SERVICE	
	2	1	**9M-0164**	4	CLAMP-HOSE	
	3	1	**154-3998**	2	HOSE	
Y	4	1	**174-1612**	1	AIR CLEANER GP	92
	5	1	**174-1613**	1	BRACKET AS	
M		1	**8T-3490**	2	NUT-WELD (M10X1.5 THD)	
	6	1	**174-1614**	1	TUBE	
	7	1	**193-1758**	1	BRACKET AS	
M		1	**8T-3490**	2	NUT-WELD (M10X1.5 THD)	
	8	1	**194-5140**	1	TUBE AS	
	9	1	**4J-5477**	2	SEAL-O-RING	
	10	1	**5K-5068**	1	FITTING (PIPE HEXAGON)	
	11	1	**7X-0492**	1	ELBOW	
	12	1	**7X-7729**	6	WASHER (11X25X3MM THK)	
	13	1	**8T-4128**	1	ADAPTER	
M	14	1	**8T-4195**	8	BOLT (M10X1.5X30MM)	
M	15	1	**8T-4196**	2	BOLT (M10X1.5X35MM)	
	16	1	**5P-0599**	4	CLAMP	
	17	1	**7S-9396**	1	PRESCREENER AS	
		1	**0S-1591**	1	BOLT (3/8-16X1.5 IN)	
	18	1	**174-1610**	1	HOSE	

M-METRIC PART
Y-SEPARATE ILLUSTRATION

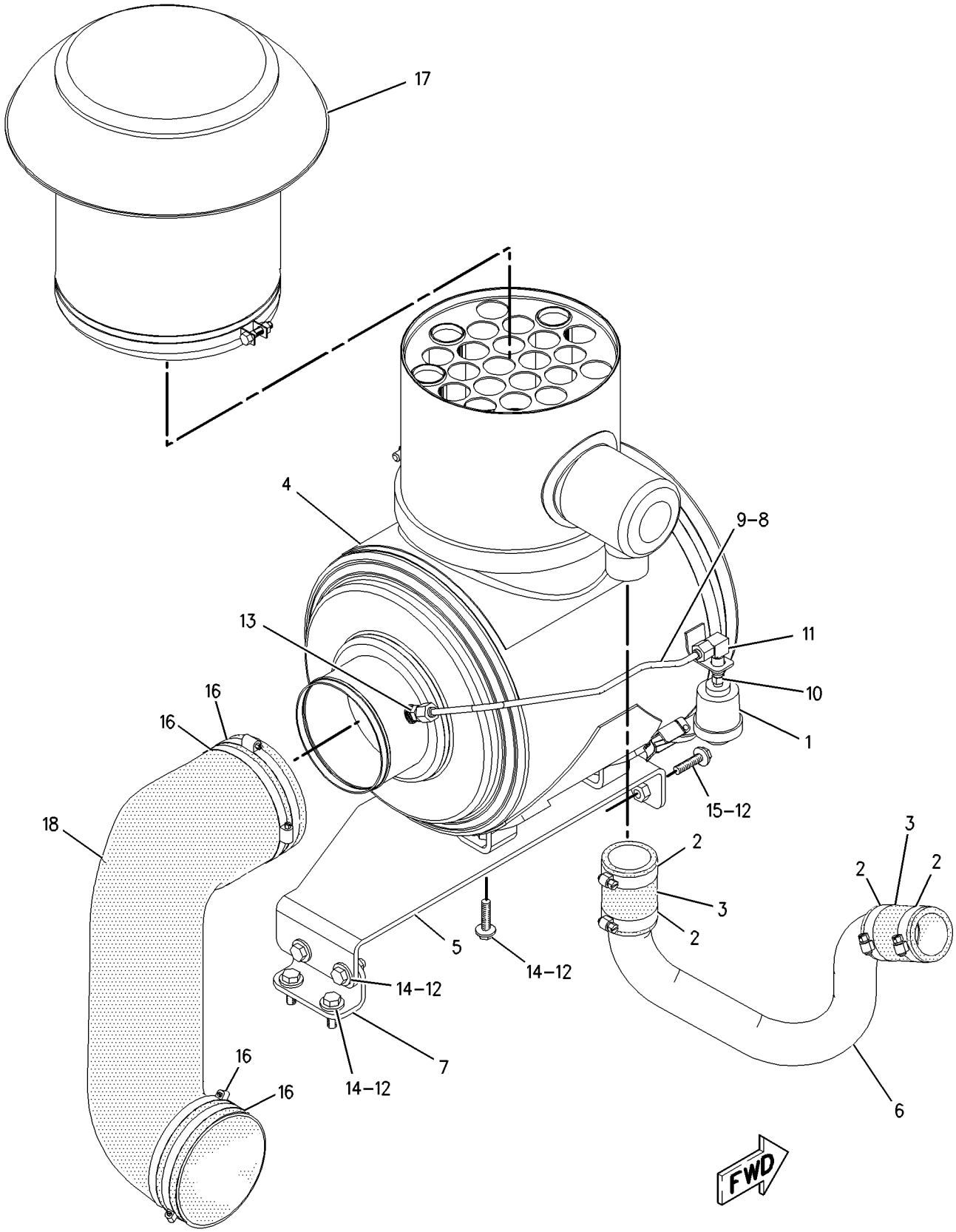

GRAPHIC #1 g00849806

AIR INLET AND EXHAUST SYSTEM

174-1612 AIR CLEANER GP

S/N: ASE1-UP

PART OF 159-7364 AIR CLEANER GP

SMCS-1051, 1054, 7452 **i01535072**

NOTE	REF NO	GRAPHIC REF	PART NUMBER	QTY	PART NAME 1 2 3 4 5 6 (PRODUCT LEVEL)	SEE PAGE
	1	1	**6I-0273**	1	ELEMENT AS-PRIMARY	
	2	1	**6I-0274**	1	ELEMENT AS-SECONDARY	
	3	1	**6I-0275**	1	COVER AS-AIR CLEANER	
		1	**4P-5524**	1	SEAL-O-RING	
		1	**101-2850**	1	FILM-AIR CLEANER (RADIAL SEAL)	
	4	1	**8N-4617**	1	KIT-AIR CLEANER CLAMP	
		1	**1N-4403**	1	CLIP AS	
		1	**9B-2596**	1	RIVET	

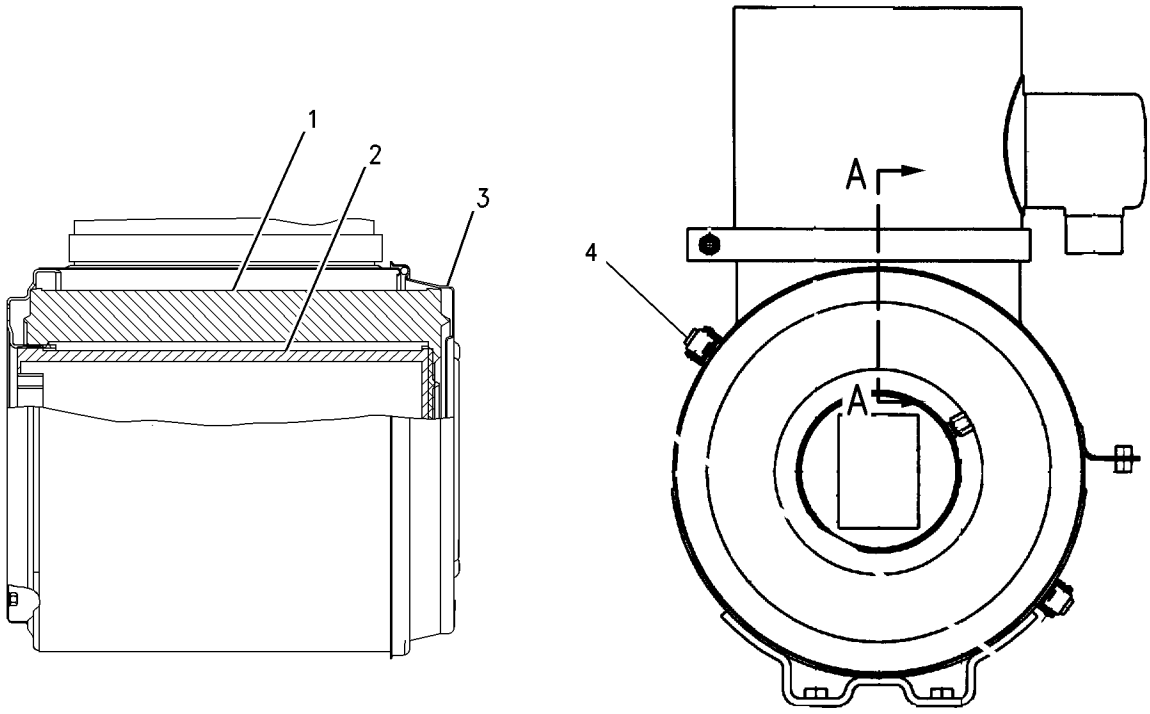

SECTION A-A

GRAPHIC #1 g00797535

AIR INLET AND EXHAUST SYSTEM

159-7366 DUST EJECTOR GP

S/N: ASE1-UP

PART OF 162-5606 GENERAL AR

SMCS-1068 **i01539782**

NOTE	REF NO	GRAPHIC REF	PART NUMBER	QTY	PART NAME 1 2 3 4 5 6 (PRODUCT LEVEL)	SEE PAGE
	1	1	**4P-0659**	1	CLAMP	
	2	1	**7S-9396**	1	PRESCREENER AS (AIR)	
		1	**0S-1591**	1	BOLT (3/8-16X1.5 IN)	
		1	**6V-8801**	1	NUT (3/8-16 THD)	
	3	1	**186-6098**	1	EJECTOR AS	
	4	1	**0T-0065**	1	BOLT (3/8-16X3.5 IN)	
	5	1	**1B-5355**	1	NUT-FULL (3/8-16THD)	
	6	1	**5M-2894**	1	WASHER-HARD (10.2X18.5X2.5MM THK)	

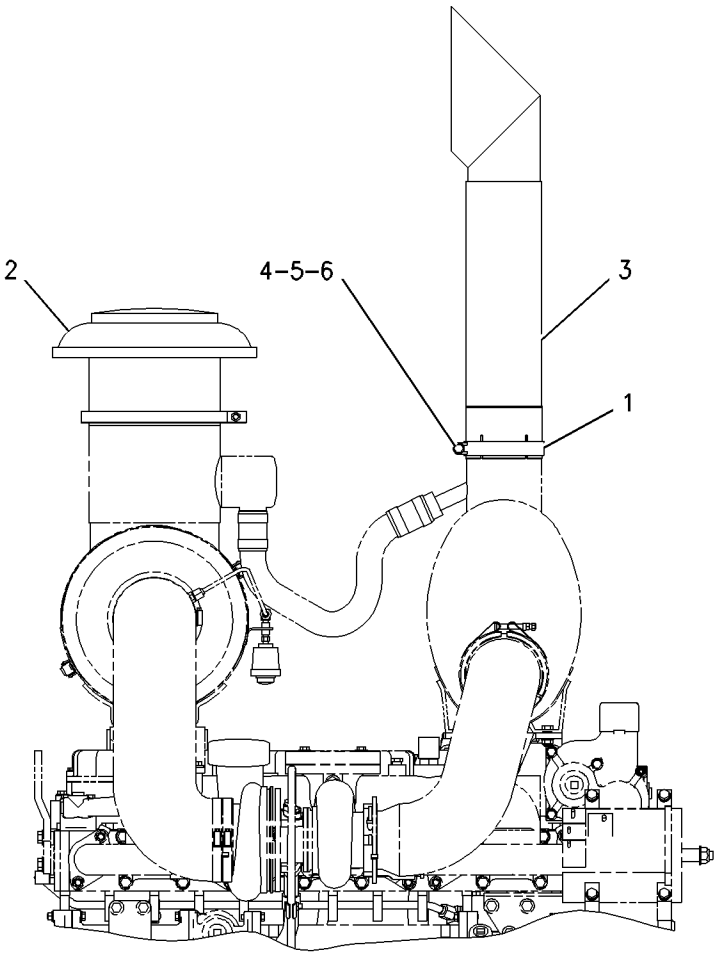

RIGHT SIDE VIEW OF ENGINE

GRAPHIC #1 g00807676

AIR INLET AND EXHAUST SYSTEM

115-8497 LINES GP-AIR—EMISSIONS & SOUND

S/N: ASE1-UP
PART OF 110-9471 AIR CONDITIONER AR
AN ATTACHMENT

SMCS-1071 **i01670982**

NOTE	REF NO	GRAPHIC REF	PART NUMBER	QTY	PART NAME 1 2 3 4 5 6 (PRODUCT LEVEL)	SEE PAGE
	1	1	**9X-7381**	1	SEAL-O-RING	
	2	1	**3E-0443**	1	ACCUMULATOR-REFRIGERANT	
I	3	1	**104-5478**	1	HOSE AS	
	4	1	**9X-7383**	4	SEAL-O-RING	
	5	1	**103-6100**	2	COUPLER AS-QUICK	
	6	1	**3E-3535**	1	RECEIVER-DRYER GP (REFRIGERANT)	
	7	1	**8S-6109**	1	CLIP (SLOT)	
	8	1	**8S-6110**	1	CLIP (TAB)	
	9	1	**9B-7237**	1	BOLT (3/8-16X1.25 IN)	
C	10	1	**5P-1075**	4	WASHER-HARD (10.2X22.5X3MM THK)	
I	11	1	**8X-8796**	1	HOSE AS	
	12	1	**9X-7380**	2	SEAL-O-RING	
	13	1	**114-5334**	1	SWITCH AS-PRESSURE (HIGH/LOW)	
		1	**7N-7779**	1	SOCKET-CONNECTOR	
		1	**7N-7780**	1	PIN-CONNECTOR	
		1	**7N-9737**	1	HOUSING-PLUG	
M	14	1	**085-8091**	1	BOLT (M10X1.5X55MM)	
	15	1	**1P-6356**	1	PLATE	
	16	1	**4S-6668**	2	CLIP	
	17	1	**8T-4896**	4	WASHER-HARD (10.2X18.5X2.5MM THK)	
	18	1	**9X-7382**	1	SEAL-O-RING	
I	19	1	**8X-8797**	1	HOSE AS	
C	20	1	**3E-4054**	1	FITTING AS-AIR CONDITIONER	
C		1	**3E-4051**	1	CAP-SEAL (AIR CONDITIONER)(LOW SIDE)	
C		1	**3E-4057**	1	VALVE AS-AIR CONDITIONER (LOW SIDE)	
	21	1	**9X-7385**	2	SEAL-O-RING	
	22	1	**3E-4067**	1	FITTING AS-COMPRESSOR	
		1	**3E-4052**	1	CAP-SEAL (AIR CONDITIONER)(HIGH SIDE)	
		1	**3E-4058**	1	VALVE AS-AIR CONDITIONER (HIGH SIDE)	
	23	1	**4S-1962**	1	CLIP	
	24	1	**8R-3393**	1	STRAP	
	25	1	**5M-3062**	6	BOLT (3/8-16X0.75 IN)	
	26	1	**128-5924**	1	CLAMP	
	27	1	**033-8248**	2	CLIP	
	28	1	**5P-3948**	2	COUPLING AS-REFRIGERANT	
	29	1	**9X-7378**	1	SEAL-O-RING	
C	30	1	**106-8704**	1	SUPPRESSOR AS-ARC	
C		1	**3E-3365**	1	WEDGE-RECEPTACLE LOCK (2 PIN)	
C		1	**8T-8729**	2	PIN-CONNECTOR	
C	31	1	**9G-9152**	1	CLIP	
					AVAILABLE REPAIR KIT(S):	
C			**102-8802**	1	KIT-RECEPTACLE (2 PIN)	

C-CHANGE FROM PREVIOUS TYPE
I-SEE HOSE FABRICATION GUIDE
M-METRIC PART

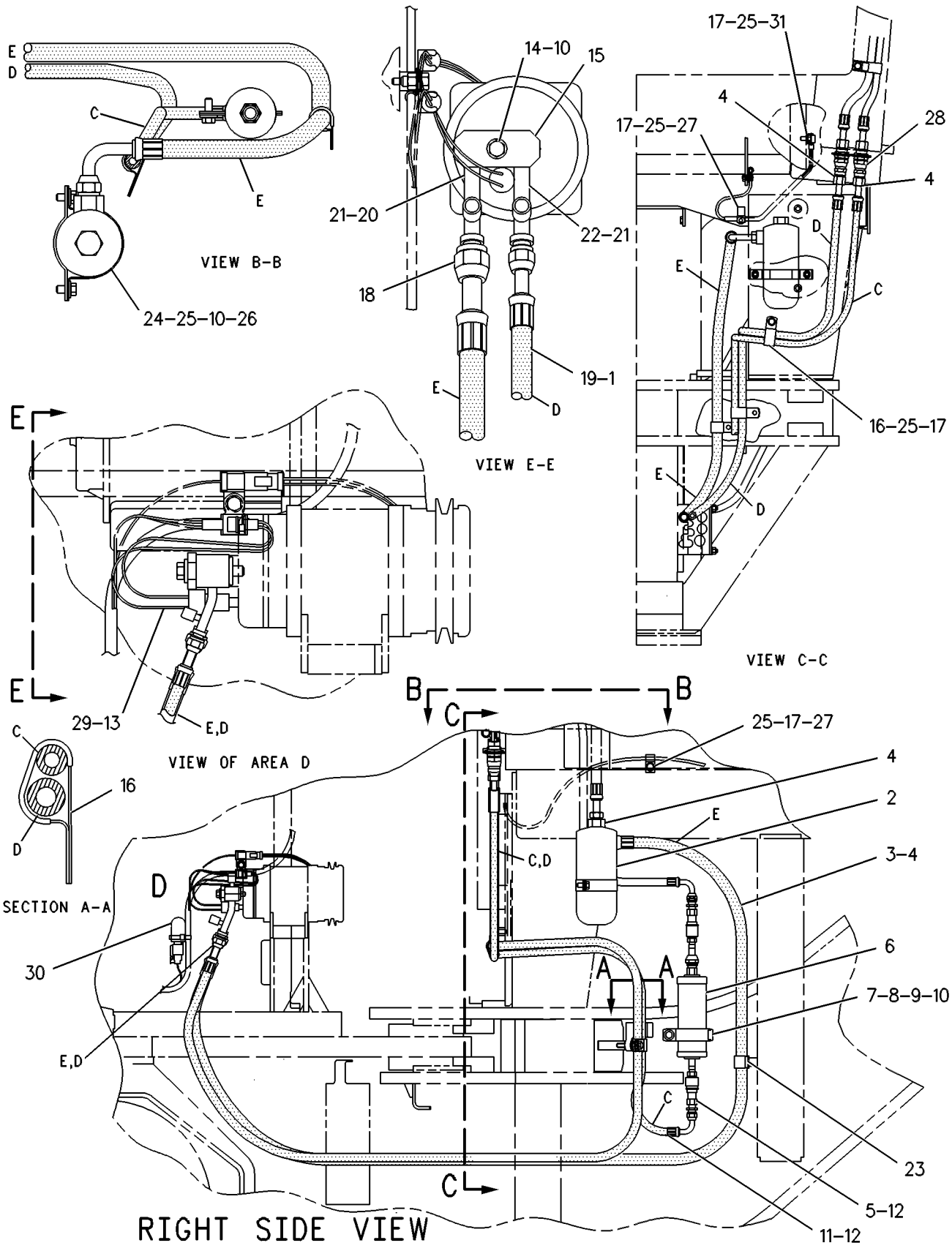

GRAPHIC #1

g00273380

AIR INLET AND EXHAUST SYSTEM

183-7971 LINES GP-AIR–AFTERCOOLER

S/N: ASE1-UP

PART OF 162-5606 GENERAL AR

SMCS-1071 **i01653308**

NOTE	REF NO	GRAPHIC REF	PART NUMBER	QTY	PART NAME 1 2 3 4 5 6 (PRODUCT LEVEL)	SEE PAGE
	1	1	**7C-0752**	1	CLAMP	
	2	1	**7E-8629**	1	HOSE-REDUCER	
	3	1	**177-0581**	3	HOSE	
	4	1	**177-0717**	1	TUBE	
	5	1	**174-1602**	1	ELBOW	
M		1	**6V-2317**	4	BOLT (M8X1.25X30MM)	
		1	**8T-6765**	1	PLUG-PIPE (1/4-18X.56 IN)	
		1	**9M-1974**	4	WASHER-HARD (8.8X16X2MM THK)	
		1	**101-3125**	1	GASKET (AIR INLET MANIFOLD)	
	6	1	**186-3060**	1	TUBE	
	7	1	**191-6303**	1	TUBE-INLET	
	8	1	**208-6055**	7	CLAMP	
	9	1	**208-7448**	1	CLAMP	
	10	1	**7X-7729**	2	WASHER (11X25X3MM THK)	
M	11	1	**8T-4195**	2	BOLT (M10X1.5X30MM)	
	12	1	**9X-2646**	2	CLIP	
	13	1	**9X-2647**	2	CLIP	

M-METRIC PART

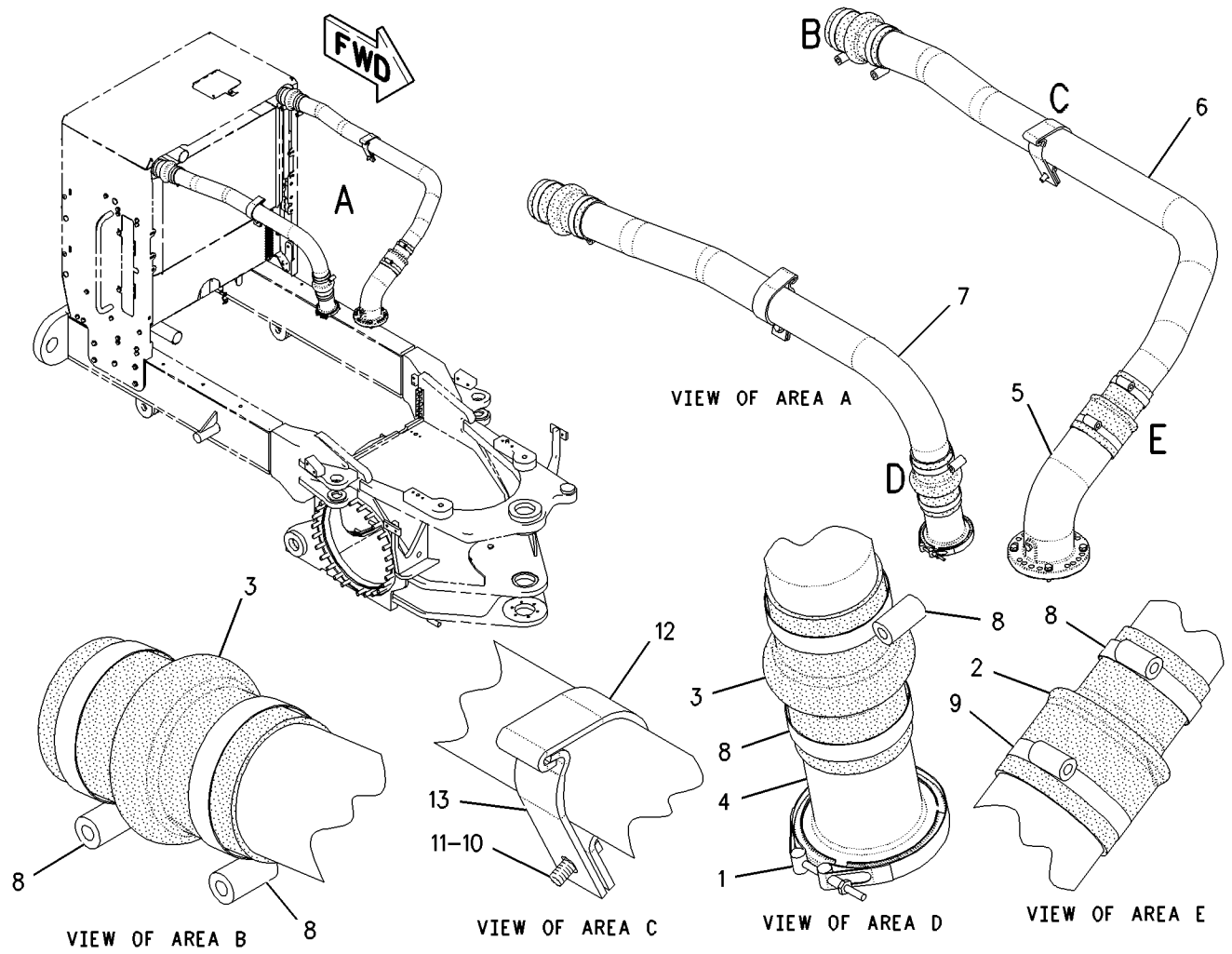

GRAPHIC #1 g00857777

AIR INLET AND EXHAUST SYSTEM

209-7827 LINES GP-AIR–TANK

S/N: ASE1-UP

PART OF 162-5606 GENERAL AR

SMCS-1071 **i01604570**

NOTE	REF NO	GRAPHIC REF	PART NUMBER	QTY	PART NAME 1 2 3 4 5 6 (PRODUCT LEVEL)	SEE PAGE
	1	1	**2H-3940**	1	ELBOW	
	2	1	**8W-1614**	2	CLIP	
	3	1	**8W-8528**	4	SLEEVE	
I	4	1	**8X-5395**	1	HOSE AS	
	5	1	**177-4142**	1	HOSE AS	
	6	1	**3V-0409**	1	SPACER (.423X.675X1.25 IN THK)	
	7	1	**4D-2560**	1	CONNECTOR-PIPE	
	8	1	**8L-5008**	1	ELBOW-PIPE	
	9	1	**8T-4121**	1	WASHER-HARD (11X21X2.5MM THK)	
M	10	1	**8T-4185**	1	BOLT (M10X1.5X50MM)	

I-SEE HOSE FABRICATION GUIDE
M-METRIC PART

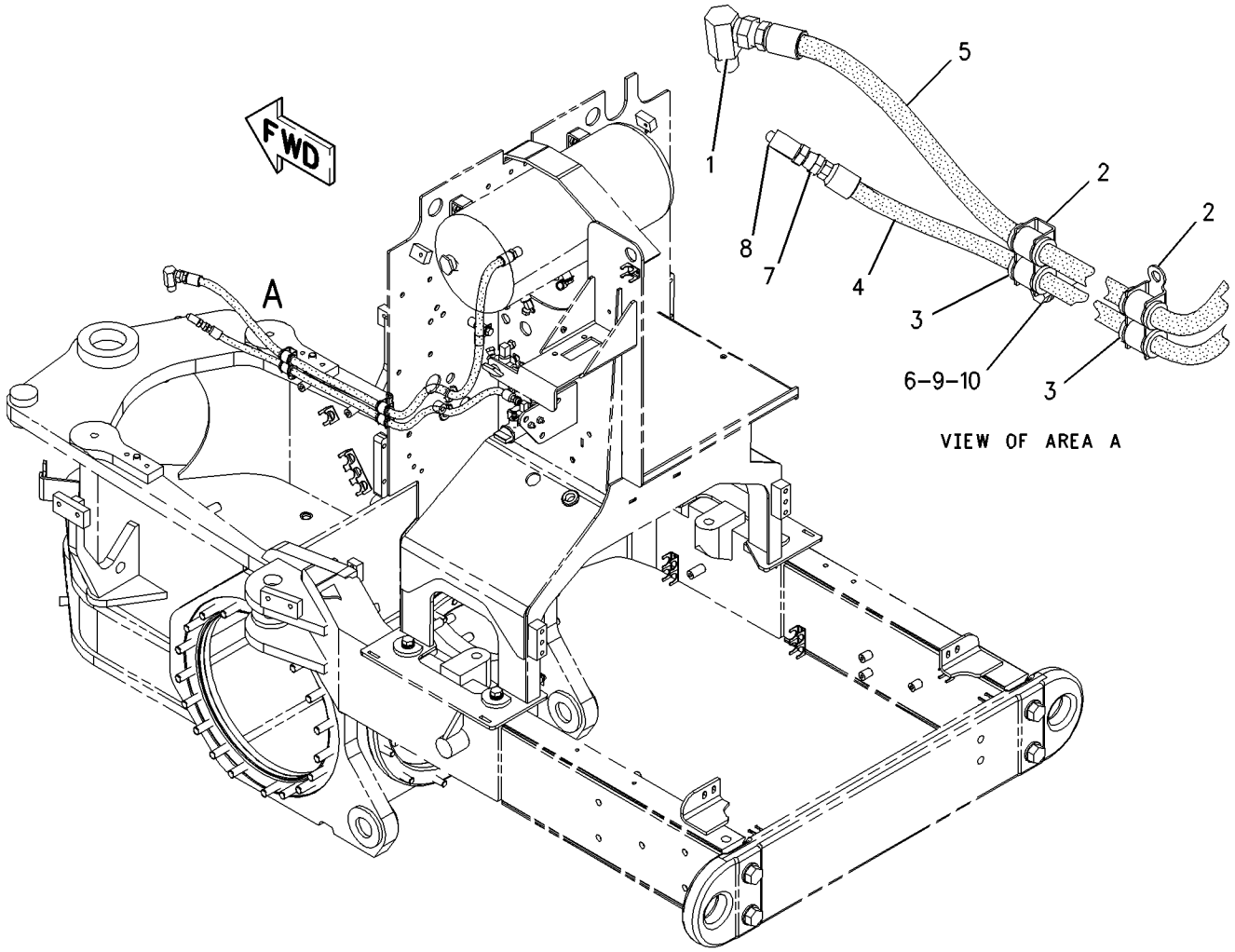

GRAPHIC #1 g00831228

AIR INLET AND EXHAUST SYSTEM

156-3680 MANIFOLD GP-EXHAUST

S/N: 3PD1-UP
FORWARD TURBOCHARGER EXHAUST
PART OF 161-1747 ENGINE AR

SMCS-1059 **i01510946**

NOTE	REF NO	GRAPHIC REF	PART NUMBER	QTY	PART NAME 1 2 3 4 5 6 (PRODUCT LEVEL)	SEE PAGE
	1	1	**4P-8279**	1	MANIFOLD-EXHAUST	
	2	1	**117-0228**	1	MANIFOLD-EXHAUST	
	3	1	**4P-8280**	1	MANIFOLD-EXHAUST	
	4	1	**109-5313**	6	GASKET	
	5	1	**4P-4369**	12	SPACER	
M	6	1	**116-3715**	12	STUD-TAPERLOCK (M10X1.5X85MM)	
M	7	1	**8T-7044**	4	STUD-TAPERLOCK	
M	8	1	**3E-8017**	12	LOCKNUT (M10X1.5)	
	9	1	**6V-5839**	12	WASHER (11X21X2.5MM THK)	

M-METRIC PART

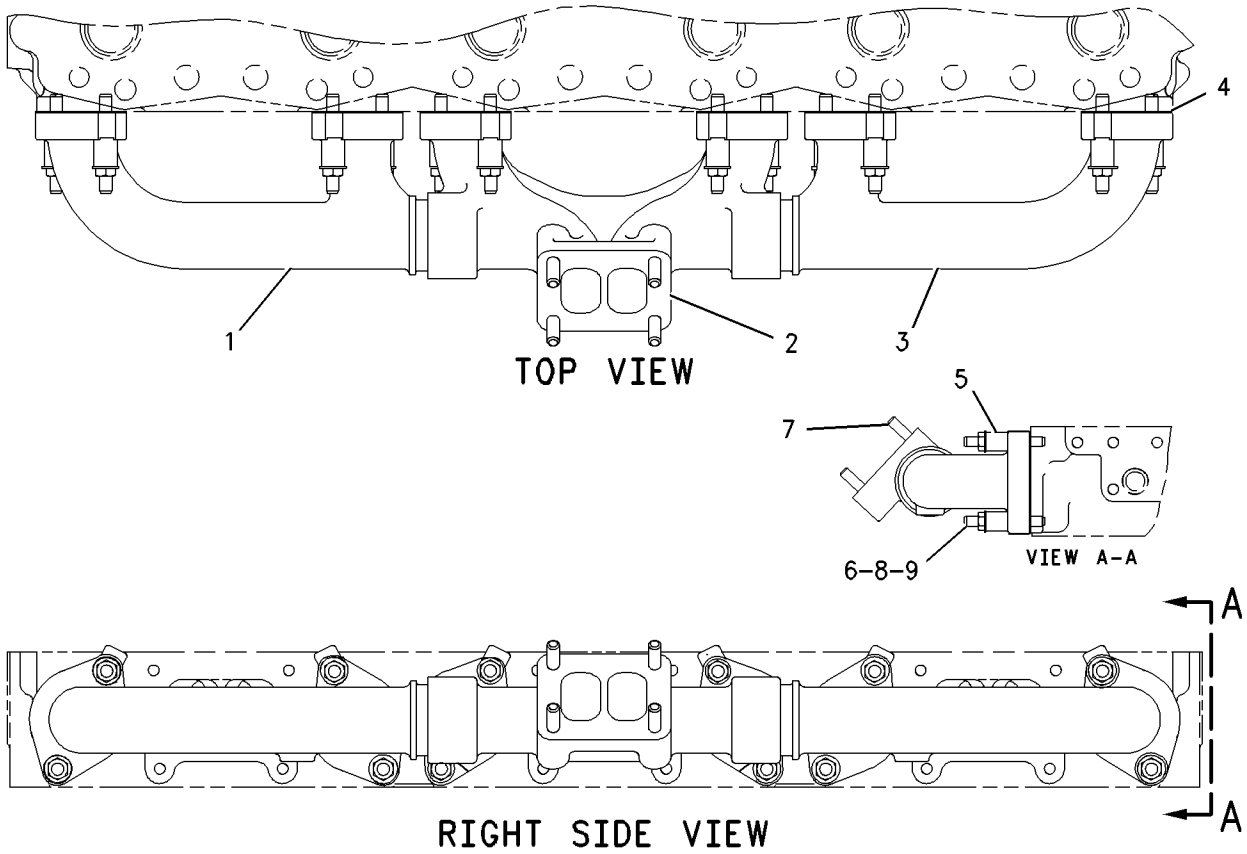

GRAPHIC #1 g00784369

AIR INLET AND EXHAUST SYSTEM

116-5405 MANIFOLD GP-INLET

S/N: 3PD1-UP
STANDARD TOP CENTER INLET
PART OF 161-1747 ENGINE AR

SMCS-1058 **i01534318**

NOTE	REF NO	GRAPHIC REF	PART NUMBER	QTY	PART NAME 1 2 3 4 5 6 (PRODUCT LEVEL)	SEE PAGE
	1	1	**7W-5164**	3	GASKET	
	2	1	**6V-5839**	12	WASHER (11X21X2.5MM THK)	
M	3	1	**6V-7981**	6	BOLT (M10X1.50X70MM)	
M	4	1	**6V-5842**	6	BOLT (M10X1.50X40MM)	
	5	1	**116-5406**	1	MANIFOLD-INLET	
	6	1	**8T-6767**	1	PLUG-PIPE	
	7	1	**8T-6765**	1	PLUG-PIPE	
	8	1	**9S-4191**	1	PLUG-STRAIGHT THREAD	
	9	1	**3J-1907**	1	SEAL-O-RING	

M-METRIC PART

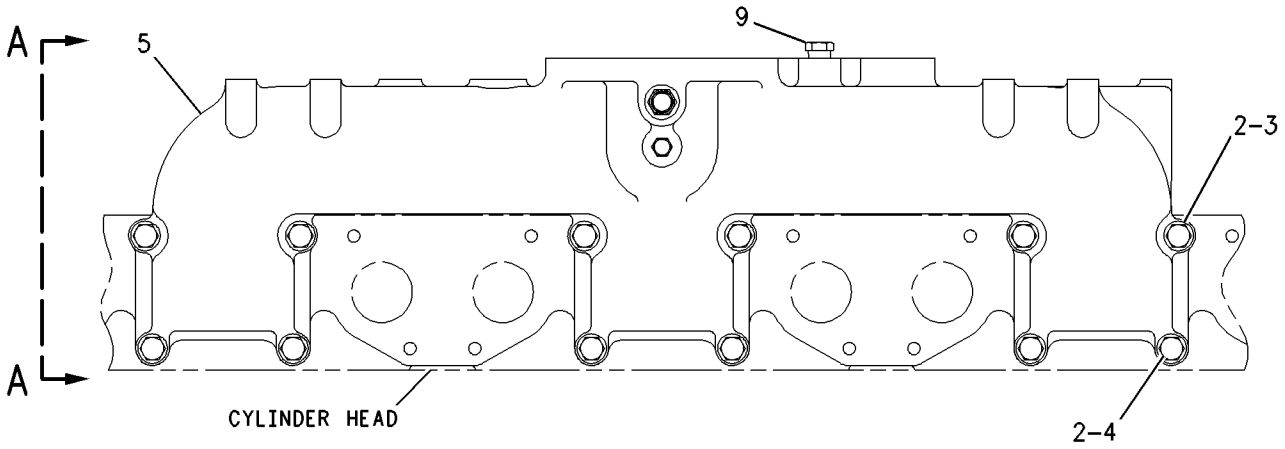

RIGHT SIDE VIEW

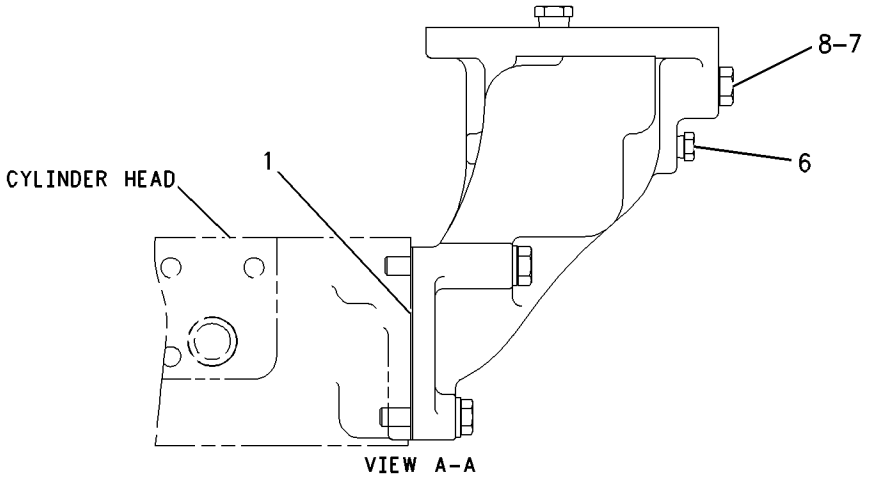

GRAPHIC #1 g00796669

AIR INLET AND EXHAUST SYSTEM

159-7368 MUFFLER GP

S/N: ASE1-UP

PART OF 162-5606 GENERAL AR

SMCS-1062 **i01643466**

NOTE	REF NO	GRAPHIC REF	PART NUMBER	QTY	PART NAME 1 2 3 4 5 6 (PRODUCT LEVEL)	SEE PAGE
	1	1	**1W-2431**	1	CLAMP-BAND	
	2	1	**4P-0659**	1	CLAMP	
	3	1	**141-1480**	1	CLAMP AS	
	4	1	**186-6098**	1	EJECTOR AS	
	5	1	**209-3332**	1	PLATE AS	
	6	1	**209-3334**	1	PLATE AS	
	7	1	**212-6961**	1	MUFFLER AS	
	8	1	**212-6962**	1	PLATE AS	
	9	1	**212-6963**	1	PLATE	
	10	1	**212-7039**	1	SHIELD-HEAT	
	11	1	**213-2264**	1	TUBE AS	
M	12	1	**085-8091**	3	BOLT (M10X1.5X55MM)	
	13	1	**0T-0065**	1	BOLT (3/8-16X3.5 IN)	
	14	1	**198-4777**	4	WASHER-HARD	
	15	1	**1B-5355**	1	NUT-FULL (3/8-16THD)	
	16	1	**5M-2894**	2	WASHER-HARD (10.2X18.5X2.5MM THK)	
	17	1	**7X-7729**	6	WASHER (11X25X3MM THK)	
	18	1	**8T-4121**	3	WASHER-HARD (11X21X2.5MM THK)	
M	19	1	**8T-4195**	6	BOLT (M10X1.5X30MM)	
M	20	1	**8T-4196**	4	BOLT (M10X1.5X35MM)	

M-METRIC PART

159-7368 **MUFFLER GP** ***(contd.)*** **i01643466**

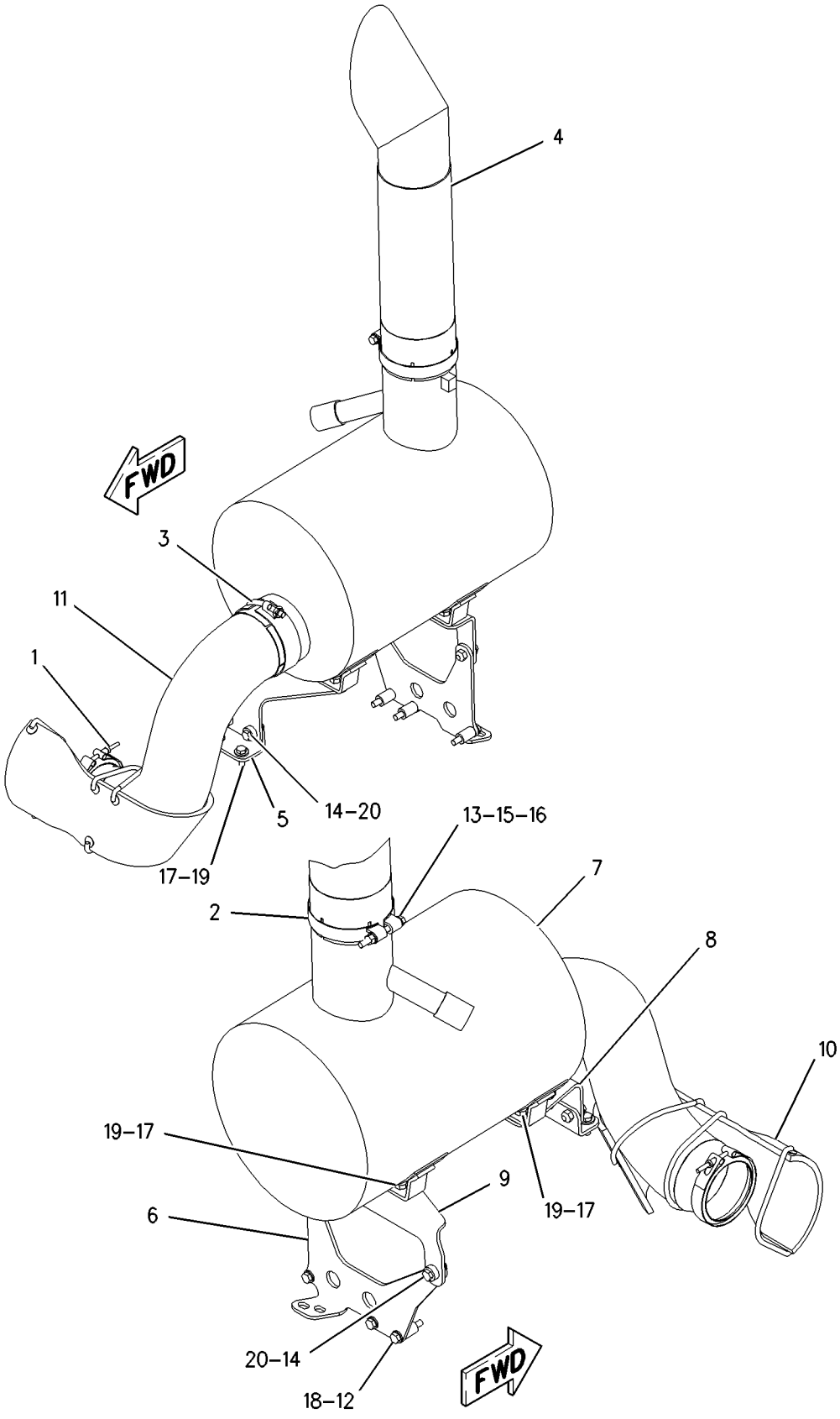

GRAPHIC #1 g00849586

AIR INLET AND EXHAUST SYSTEM

174-1604 TURBOCHARGER GP

S/N: 3PD1-UP

PART OF 161-1747 ENGINE AR

SMCS-1052 **i01514813**

NOTE	REF NO	GRAPHIC REF	PART NUMBER	QTY	PART NAME 1 2 3 4 5 6 (PRODUCT LEVEL)	SEE PAGE
	1	1	**1P-0451**	1	GASKET-TURBOCHARGER	
Y	2	1	**174-1644**	1	TURBOCHARGER GP	103
M	3	1	**3E-8017**	4	LOCKNUT (M10X1.5)	

M-METRIC PART
Y-SEPARATE ILLUSTRATION

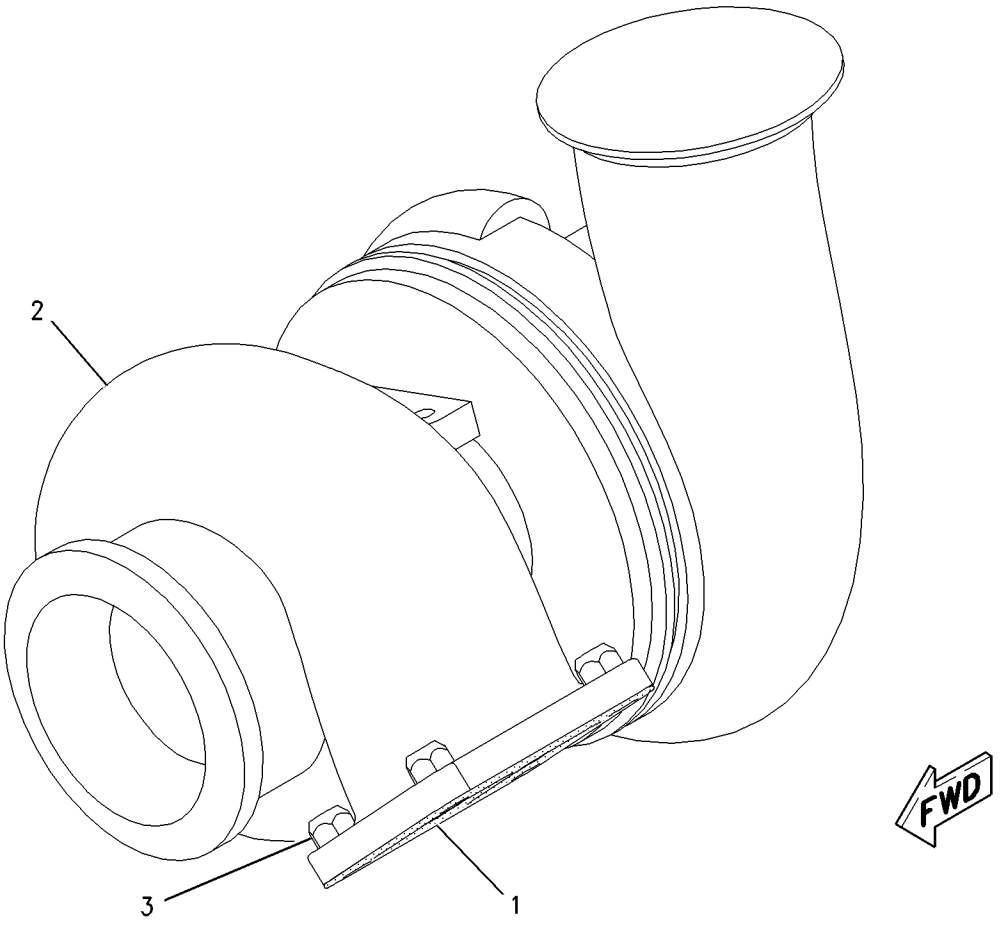

GRAPHIC #1 g00786306

AIR INLET AND EXHAUST SYSTEM

174-1644 TURBOCHARGER GP*R

S/N: 3PD1-UP

PART OF 174-1604 TURBOCHARGER GP

SMCS-1052 **i01643484**

NOTE	REF NO	GRAPHIC REF	PART NUMBER	QTY	PART NAME 1 2 3 4 5 6 (PRODUCT LEVEL)	SEE PAGE
	1	1	**167-9671**	1	CARTRIDGE GP-TURBOCHARGER	
	2	1	**172-6540**	1	COVER-COMPRESSOR	
	3	1	**109-8176**	1	HOUSING-TURBINE	
	4	1	**7C-9532**	1	CLAMP AS (TURBINE)	
	5	1	**7C-9538**	1	CLAMP AS-COMPRESSOR	

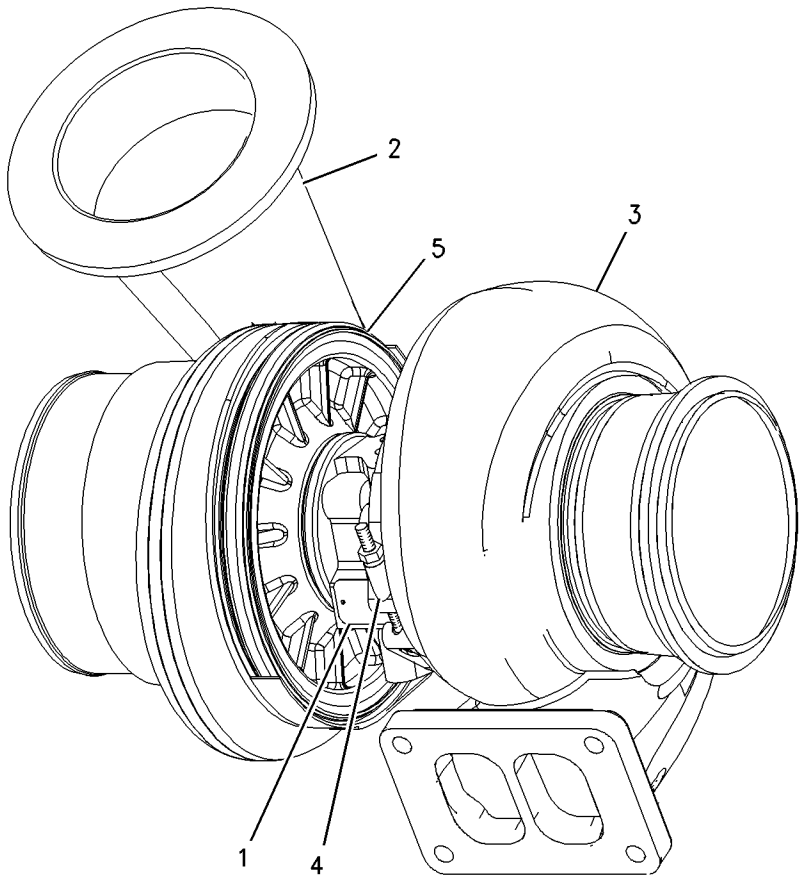

GRAPHIC #1 g00786544

FUEL SYSTEM

159-5935 CONTROL GP-GOVERNOR

S/N: ASE1-UP

PART OF 162-5606 GENERAL AR

SMCS-1265, 1276 **i01625374**

NOTE	REF NO	GRAPHIC REF	PART NUMBER	QTY	PART NAME 1 2 3 4 5 6 (PRODUCT LEVEL)	SEE PAGE
	1	1	**1B-2578**	1	NUT (3/8-16 THD)	
	2	1	**3C-8727**	1	SPRING	
	3	1	**4D-4064**	1	ROD END	
	4	1	**5P-9209**	2	BEARING-ROLLER	
	5	1	**206-3599**	1	LEVER	
	6	1	**7F-0192**	1	BOLT (3/8-16X2 IN)	
	7	1	**7V-0446**	1	CLIP	
	8	1	**207-4927**	1	PEDAL-GOVERNOR CONTROL	
	9	1	**8X-3261**	1	LEVER	
	10	1	**116-5710**	1	GROMMET	
	11	1	**130-5300**	1	CLIP	
Y	12	1	**160-2443**	1	SENSOR GP-POSITION (THROTTLE)	198
	13	1	**161-7062**	1	HOUSING	
	14	1	**162-8218**	1	GASKET	
	15	1	**162-8219**	1	COVER	
	16	1	**168-8683**	1	SHAFT	
	17	1	**169-0921**	1	ROD END (INTERNAL THREAD)	
	18	1	**169-0922**	1	ROD	
	19	1	**172-0165**	1	SHAFT	
	20	1	**172-4211**	1	SPACER (10.5X22X50.8MM THK)	
	21	1	**009-0008**	1	SETSCREW-SOCKET (3/8-16X0.5 IN)	
	22	1	**206-3600**	1	LEVER	
	23	1	**129-3173**	1	BOLT-12 POINT HEAD (3/8-16X31.75MM)	
	24	1	**1B-0676**	1	PIN	
	25	1	**1B-8704**	3	KEY-WOODRUFF	
	26	1	**2N-9421**	2	SPRING-DISC	
	27	1	**5P-1075**	2	WASHER-HARD (10.2X22.5X3MM THK)	
	28	1	**5P-1076**	1	WASHER-HARD (13.5X30X4MM THK)	
	29	1	**5S-7382**	2	BOLT (3/8-16X1.375 IN)	
M	30	1	**6V-2313**	2	BOLT (M5X0.8X30MM)	
	31	1	**6V-8801**	3	NUT (3/8-16 THD)	
	32	1	**8T-0328**	2	WASHER-HARD (5.5X10X1MM THK)	
	33	1	**8T-4121**	3	WASHER-HARD (11X21X2.5MM THK)	
M	34	1	**8T-4133**	2	NUT (M10X1.5 THD)	
M	35	1	**8T-4136**	3	BOLT (M10X1.5X25MM)	
M	36	1	**8T-4182**	2	BOLT (M10X1.5X45MM)	
	37	1	**8T-4226**	1	WASHER-PLATED (10.5X45X3MM THK)	
	38	1	**8T-5390**	1	BOLT (3/8-16X88.9MM)	

M-METRIC PART
Y-SEPARATE ILLUSTRATION

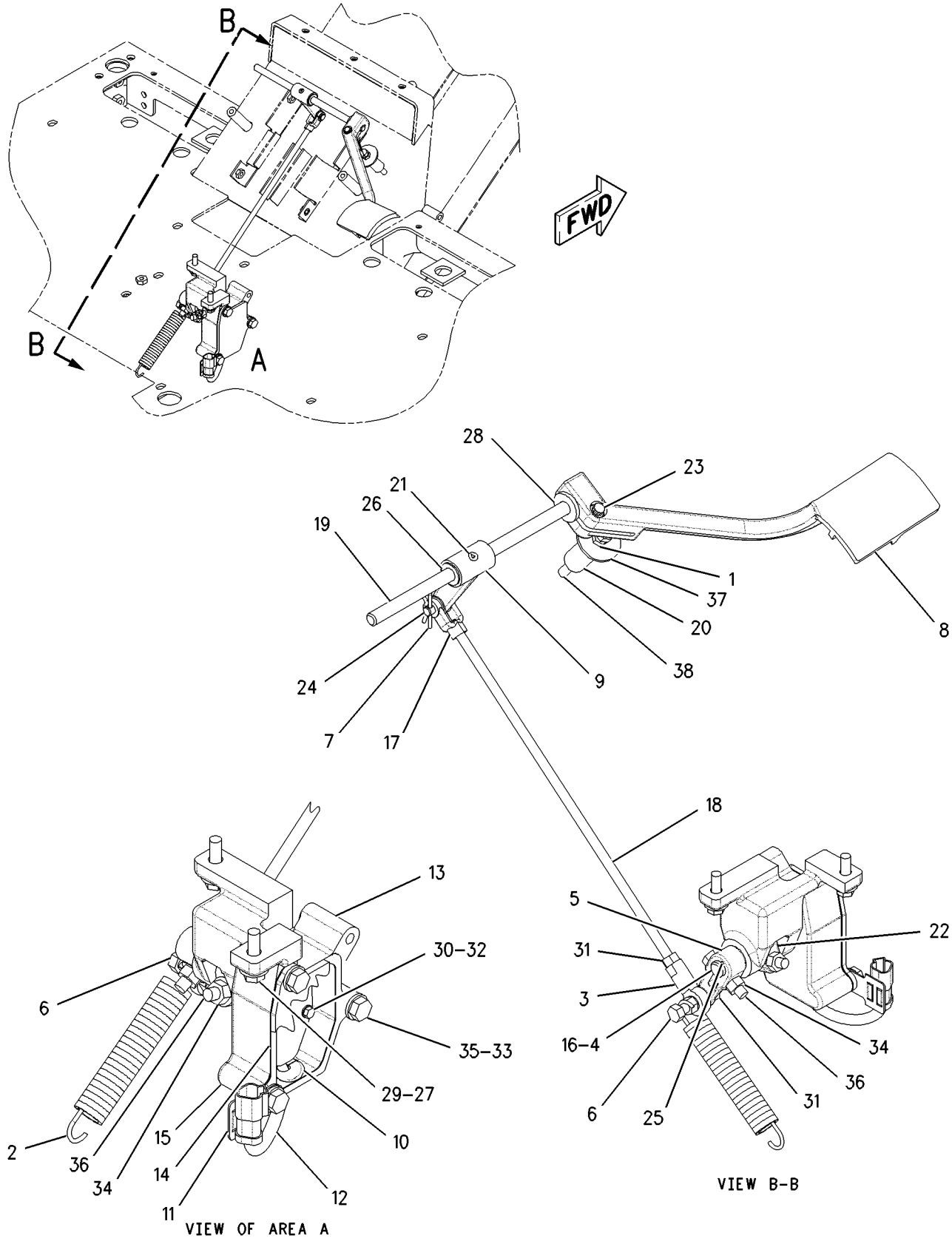

GRAPHIC #1 g00804272

FUEL SYSTEM

116-5436 FILTER GP-FUEL

S/N: 3PD1-UP

PART OF 161-1747 ENGINE AR

SMCS-1261 **i01250482**

NOTE	REF NO	GRAPHIC REF	PART NUMBER	QTY	PART NAME 1 2 3 4 5 6 (PRODUCT LEVEL)	SEE PAGE
	1	1	**1R-0762**	1	FILTER AS-FUEL	

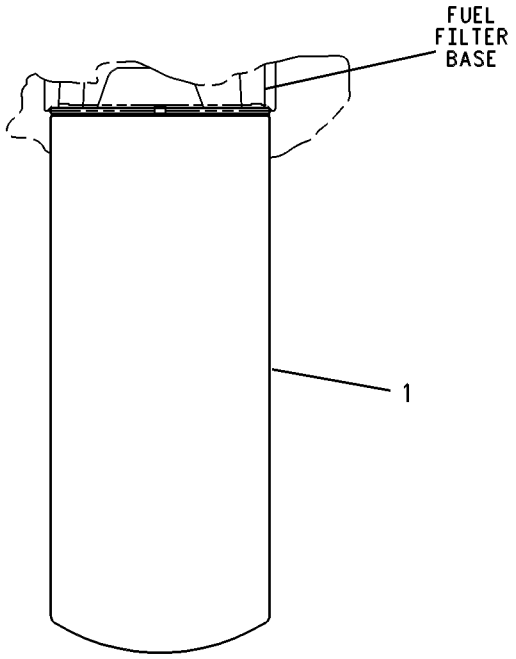

GRAPHIC #1 g00269424

FUEL SYSTEM

133-5671 FILTER GP-WATER SEP & FUEL

S/N: ASE1-UP
PRIMARY
PART OF 184-1476 LINES GP-FUEL FILTER

SMCS-1261, 1263 **i01689982**

NOTE	REF NO	GRAPHIC REF	PART NUMBER	QTY	PART NAME 1 2 3 4 5 6 (PRODUCT LEVEL)	SEE PAGE
	1	1	**137-4367**	1	BASE AS	
	2	1	**133-5673**	1	ELEMENT-FILTER (FUEL/WATER SEPARATOR) (PRIMARY)	
	3	1	**129-0375**	1	BOWL AS-WATER COLLECTION	
					AVAILABLE REPLACEMENT PART(S):	
			141-0284		KIT-FUEL FILTER & WATER SEP	
					(THIS KIT PROVIDES REPLACEMENT SEALS FOR SEALS DAMAGED DURING INSTALLATION OF REPLACEMENT ELEMENT AND/OR BOWL)	
			155-2629	1	BOWL AS-WATER COLLECTION (12 VOLT HEATER)	
			157-1206	1	BOWL AS-WATER COLLECTION (24 VOLT HEATER)	

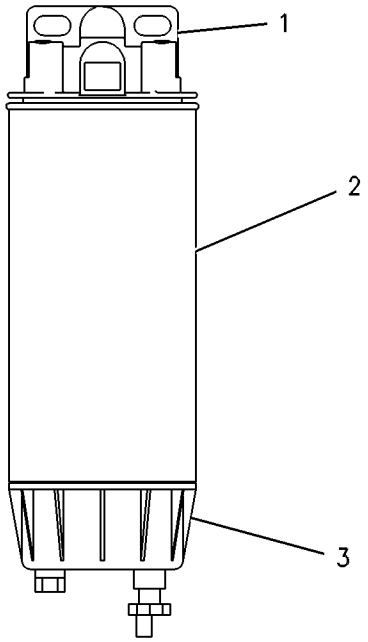

GRAPHIC #1 g00262735

170-5240 INJECTOR GP-FUEL

S/N: 3PD1-UP

PART OF 190-6017 PUMP GP-FUEL INJECTION

SMCS-1290, 1713 **i01345599**

NOTE	REF NO	GRAPHIC REF	PART NUMBER	QTY	PART NAME 1 2 3 4 5 6 (PRODUCT LEVEL)	SEE PAGE
	1	1	**9X-7317**	1	SEAL-O-RING (9.6MM ID)	
	2	1	**9X-7557**	1	SEAL-O-RING (32.92MM ID)	
	3	1	**119-8784**	1	SEAL-O-RING (32.99MM ID)	

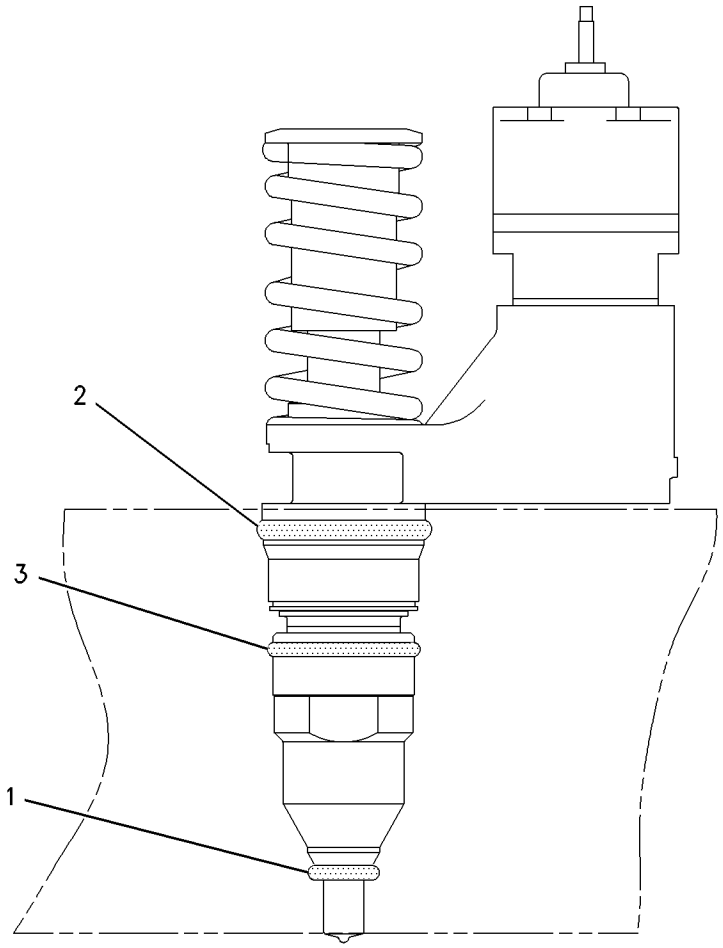

GRAPHIC #1 g00715656

183-5504 LINES GP-DRAIN—ENGINE OIL

S/N: ASE1-UP

PART OF 162-5606 GENERAL AR

SMCS-1274 **i01625675**

NOTE	REF NO	GRAPHIC REF	PART NUMBER	QTY	PART NAME 1 2 3 4 5 6 (PRODUCT LEVEL)	SEE PAGE
	1	1	**7X-7958**	1	CLAMP-HOSE	
	3	1	**206-4669**	1	VALVE-DRAIN	
I	4	1	**198-0151**	1	HOSE AS	
	5	1	*148-8327*	1	CONNECTOR GP	
		1	**6V-8637**	1	CONNECTOR-SEAL	
		1	**3D-2824**	1	SEAL-O-RING	
		1	**6V-9746**	1	SEAL-O-RING	
	6	1	**212-4174**	1	LOCKWASHER	
	8	1	**2S-2053**	1	CLIP	
	9	1	**8T-4121**	1	WASHER-HARD (11X21X2.5MM THK)	
M	10	1	**8T-4137**	1	BOLT (M10X1.5X20MM)	
E	11	1	**146-7453**		HOSE (25.4MM ID)	

E-ORDER BY THE CENTIMETER
I-SEE HOSE FABRICATION GUIDE
M-METRIC PART

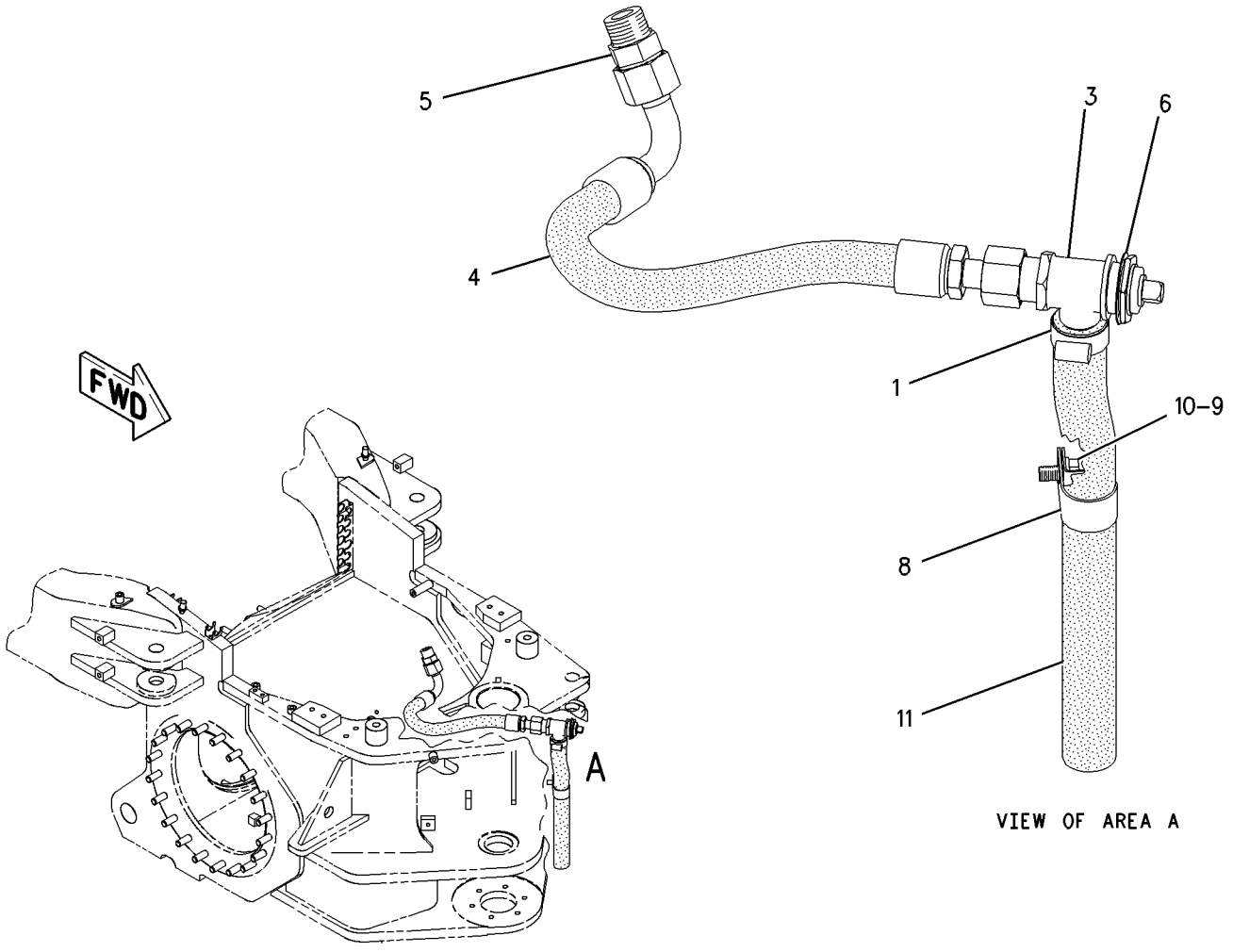

GRAPHIC #1 g00845067

FUEL SYSTEM

184-1476 LINES GP-FUEL FILTER

S/N: ASE1-UP

PART OF 162-5606 GENERAL AR

SMCS-1261, 1274 **i01643537**

NOTE	REF NO	GRAPHIC REF	PART NUMBER	QTY	PART NAME 1 2 3 4 5 6 (PRODUCT LEVEL)	SEE PAGE
	1	2	**1F-7854**	1	SPACER (11.01X19.05X49.21MM THK)	
	2	1	**5P-4961**	1	CLAMP-HOSE	
	3	2	**8W-8527**	1	SLEEVE	
I	4	1	**103-1743**	2	HOSE AS	
Y	5	1	**133-5671**	1	FILTER GP-WATER SEP & FUEL	107
I	6	1	**175-3588**	1	HOSE AS	
	7	2	**177-4292**	1	CLIP AS	
	8	1	**177-4394**	1	CLIP AS	
I	9	2	**183-3072**	1	HOSE AS	
	10	2	**183-4386**	1	TUBE	
I	11	1	**185-6517**	1	HOSE AS	
	12	2	**194-2615**	2	FITTING	
	13	1	**195-0852**	1	HOSE AS	
	14	1	**6V-8634**	1	CONNECTOR	
		1	**3K-0360**	1	SEAL-O-RING	
		1	**6V-8397**	1	SEAL-O-RING	
	15	1	**6V-8639**	1	CONNECTOR	
		1	**3K-0360**	1	SEAL-O-RING	
		1	**6V-8398**	1	SEAL-O-RING	
	16	1,2	**6V-9002**	3	ELBOW	
		1,2	**3K-0360**	3	SEAL-O-RING	
		1,2	**6V-8398**	3	SEAL-O-RING	
	17	1	**6V-8723**	1	ELBOW	
		1	**3K-0360**	1	SEAL-O-RING	
		1	**6V-8397**	1	SEAL-O-RING	
	18	1	**9S-4185**	2	PLUG	
		1	**3K-0360**	2	SEAL-O-RING	
	19	1	**8T-1905**	1	ELBOW	
		1	**3J-1907**	1	SEAL-O-RING	
		1	**6V-8397**	1	SEAL-O-RING	
	20	2	**6V-8731**	1	UNION-FACE SEAL	
		2	**6V-8398**	2	SEAL-O-RING	
	21	1	**8T-0076**	2	CONNECTOR	
		1	**3K-0360**	2	SEAL-O-RING	
		1	**6V-8397**	2	SEAL-O-RING	
	22	2	**8C-6872**	2	CONNECTOR	
		2	**6V-8398**	2	SEAL-O-RING	
	23	1,2	**3S-8665**	5	CLIP	
	24	2	**4B-0418**	1	CLIP	
	25	1	**4D-7735**	1	CLIP	
	26	1	**4K-8864**	1	CLIP	
	27	1	**5P-4116**	2	WASHER-HARD (8.8X20.5X2MM THK)	
	28	1,2	**8T-4121**	9	WASHER-HARD (11X21X2.5MM THK)	
M	29	1,2	**8T-4136**	8	BOLT (M10X1.5X25MM)	
M	30	2	**8T-5005**	1	BOLT (M10X1.50X70MM)	
M	31	1	**8T-7547**	2	BOLT (M8X1.25X30MM)	
E	32	1	**8C-6959**		HOSE (92 CM)	

E-ORDER BY THE CENTIMETER
I-SEE HOSE FABRICATION GUIDE
M-METRIC PART
Y-SEPARATE ILLUSTRATION

184-1476 **LINES GP-FUEL FILTER** *(contd.)* **i01643537**

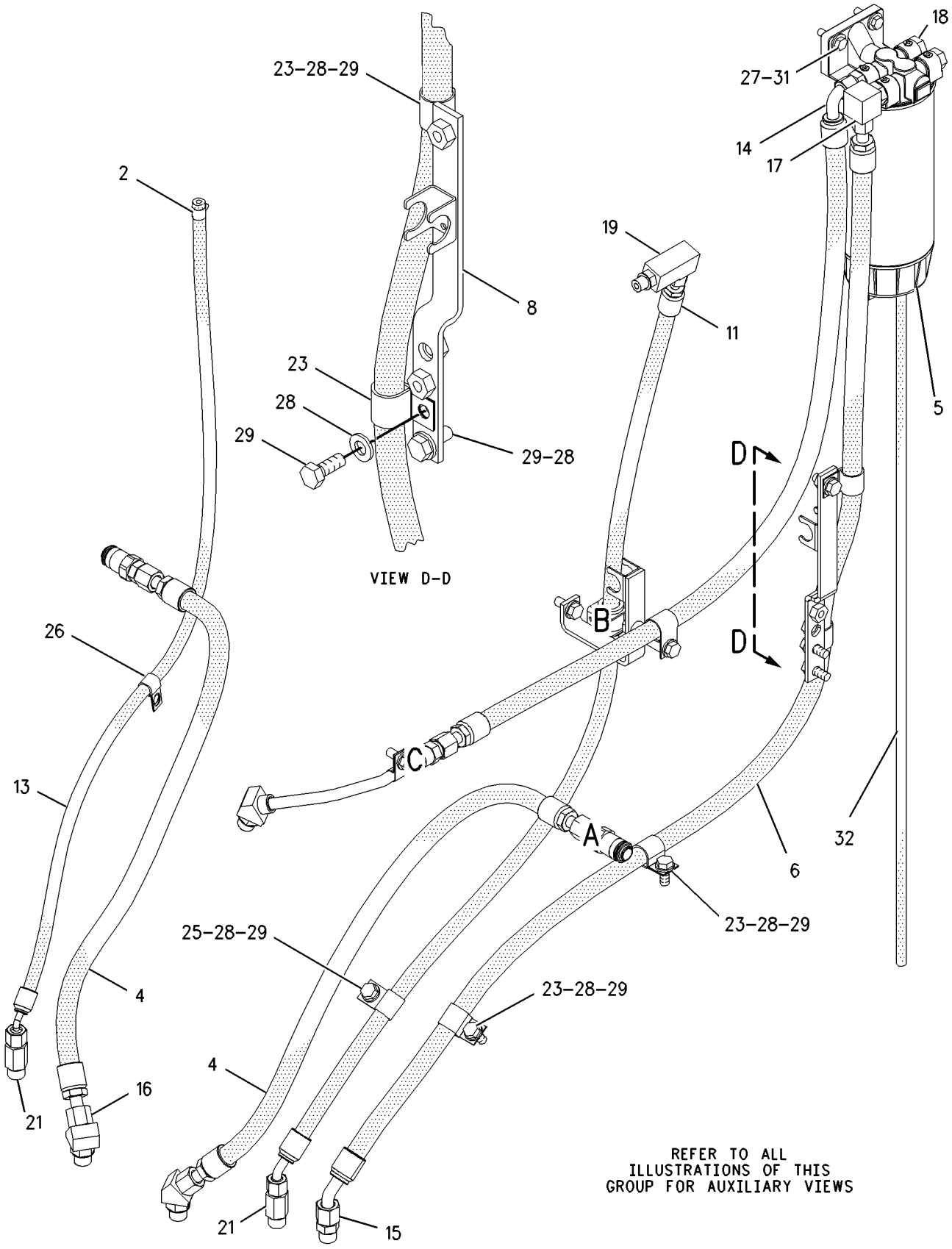

GRAPHIC #1 g00850853

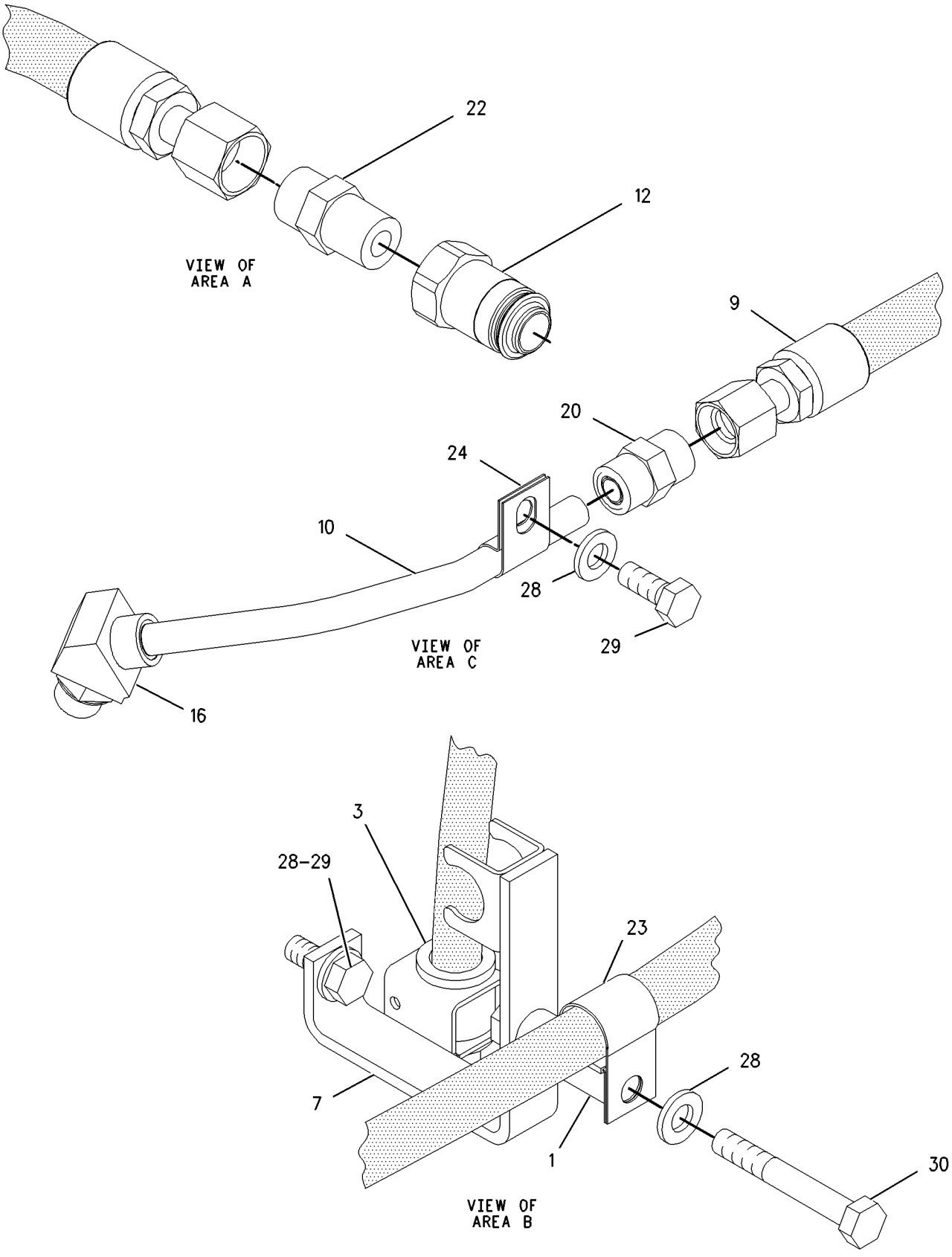

GRAPHIC #2

g00850854

MEMORANDA

FUEL SYSTEM

204-0638 LINES GP-FUEL INJECTION

S/N: 3PD1-UP
HIGH EFFICIENCY
PART OF 161-1747 ENGINE AR

SMCS-1252, 1254 **i01514616**

NOTE	REF NO	GRAPHIC REF	PART NUMBER	QTY	PART NAME 1 2 3 4 5 6 (PRODUCT LEVEL)	SEE PAGE
	1	1	**9C-5344**	1	SPACER (10.5X20X18MM THK)	
I	2	1	**116-5416**	1	HOSE AS	
I	3	1	**116-5418**	1	HOSE AS	
	4	1	**126-0179**	1	MANIFOLD-FUEL	
	5	1	**145-1780**	1	BASE AS	
		1	**9S-4167**	1	STUD-HOLLOW	
Y	6	1	**156-5783**	1	VALVE GP-CHECK	126
	7	1	**030-7947**	1	ELBOW	
	8	1	**3J-1907**	5	SEAL-O-RING	
	9	1	**5P-3456**	6	SEAL-O-RING	
	10	1	**6V-4589**	1	SEAL-O-RING	
M	11	1	**6V-5218**	5	BOLT (M8X1.25X35MM)	
	12	1	**6V-8676**	1	SEAL-O-RING	
	13	1	**8M-2773**	1	CLIP	
M	14	1	**8T-0276**	2	BOLT (M8X1.25X45MM)	
	15	1	**8T-4121**	1	WASHER-HARD (11X21X2.5MM THK)	
M	16	1	**8T-4186**	1	BOLT (M10X1.5X40MM)	
	17	1	**9M-1974**	7	WASHER-HARD (8.8X16X2MM THK)	
	18	1	**9S-4191**	1	PLUG-STRAIGHT THREAD	
	19	1	**9S-8004**	3	PLUG	

I-SEE HOSE FABRICATION GUIDE
M-METRIC PART
Y-SEPARATE ILLUSTRATION

204-0638 **LINES GP-FUEL INJECTION** *(contd.)* **i01514616**

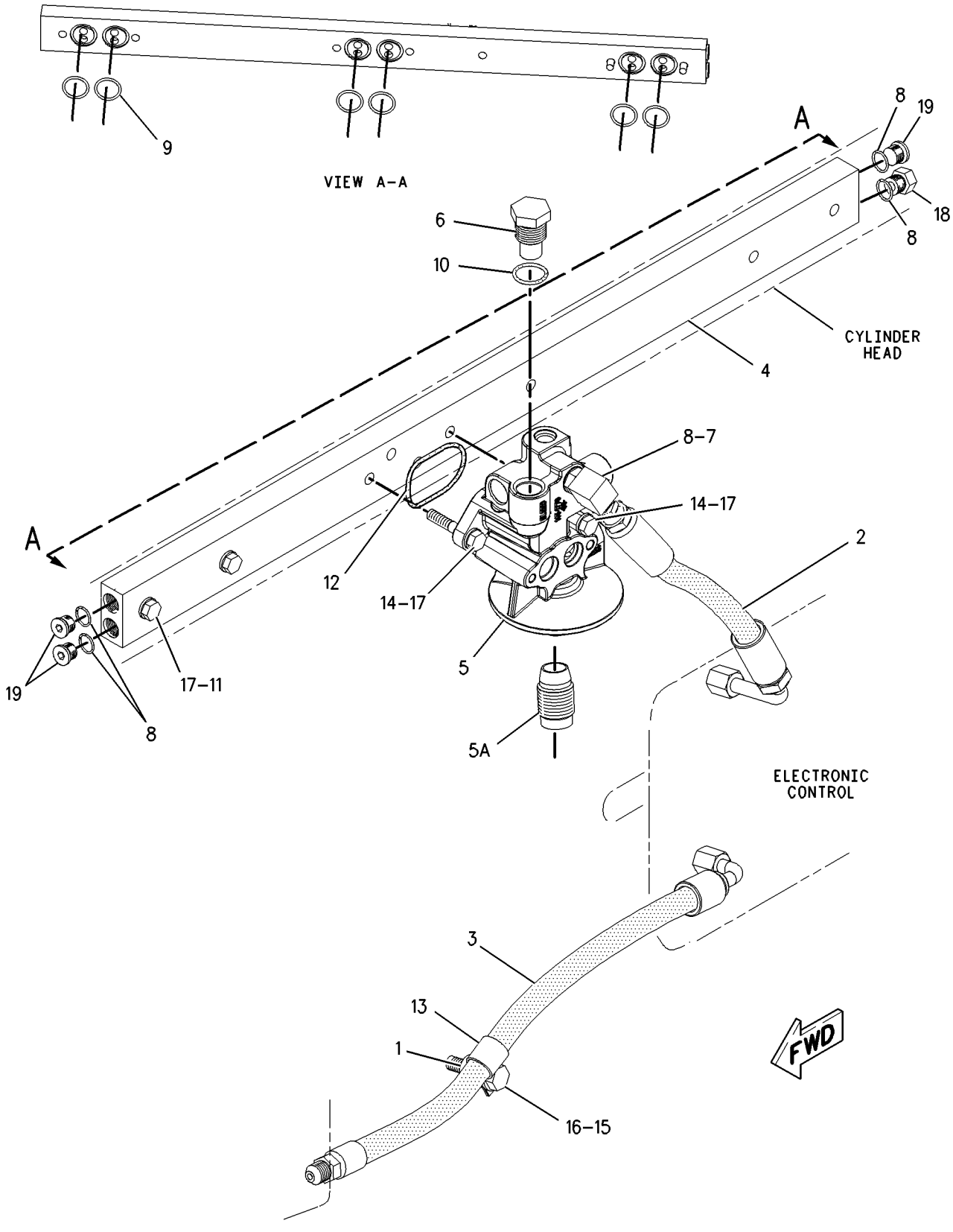

GRAPHIC #1 g00785881

116-5428 PUMP & MTG GP-FUEL TRANSFER

S/N: 3PD1-UP

PART OF 161-1747 ENGINE AR

SMCS-1256 **i01659719**

NOTE	REF NO	GRAPHIC REF	PART NUMBER	QTY	PART NAME 1 2 3 4 5 6 (PRODUCT LEVEL)	SEE PAGE
	1	1	**092-2570**	2	WASHER-SEALING	
C	2	1	**190-3443**	1	PUMP GP-FUEL TRANSFER	
C	3	1	**193-3982**	1	TUBE AS	
	4	1	**2R-6806**	1	CONNECTOR	
	5	1	**3J-1907**	1	SEAL-O-RING	
	6	1	**6D-1004**	1	GASKET	
	7	1	**6V-5839**	1	WASHER (11X21X2.5MM THK)	
M	8	1	**6V-6317**	1	BOLT (M10X1.5X20MM)	
	9	1	**5P-9297**	1	CLIP	
M	10	1	**8T-1159**	2	BOLT-SOCKET HEAD (M10X1.5X25MM)	

C-CHANGE FROM PREVIOUS TYPE
M-METRIC PART

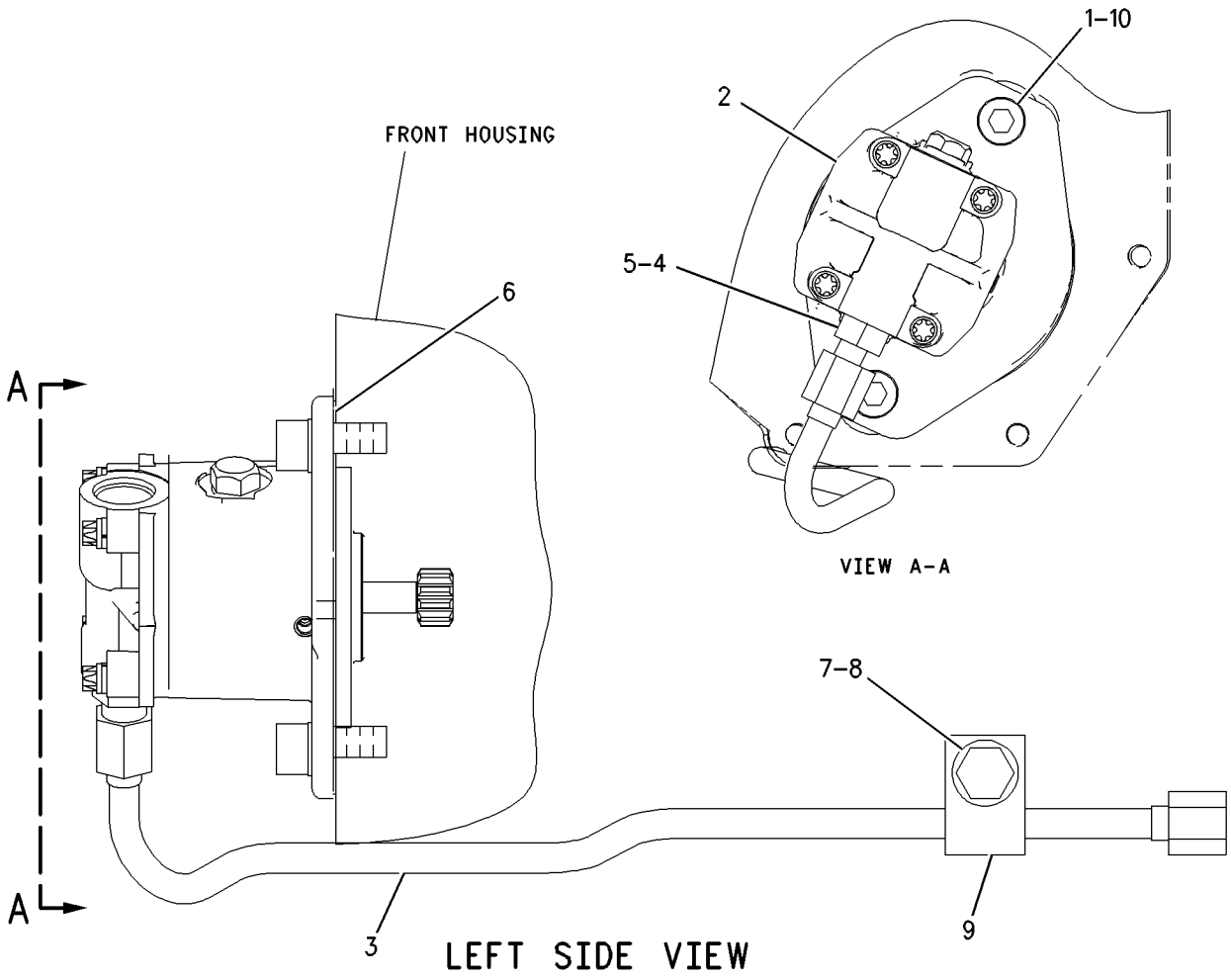

GRAPHIC #1 g00832171

190-6017 PUMP GP-FUEL INJECTION

S/N: 3PD1-UP

PART OF 161-1747 ENGINE AR

SMCS-1251 **i01364047**

NOTE	REF NO	GRAPHIC REF	PART NUMBER	QTY	PART NAME 1 2 3 4 5 6 (PRODUCT LEVEL)	SEE PAGE
M	1	1	**152-3001**	1	BOLT-HEX HEAD	
Y	2	1	**170-5240**	1	INJECTOR GP-FUEL	108
	3	1	**7C-8851**	1	CLAMP-INJECTOR	
	4	1	**4P-8525**	1	SPACER (30MM LG)	

M-METRIC PART
Y-SEPARATE ILLUSTRATION

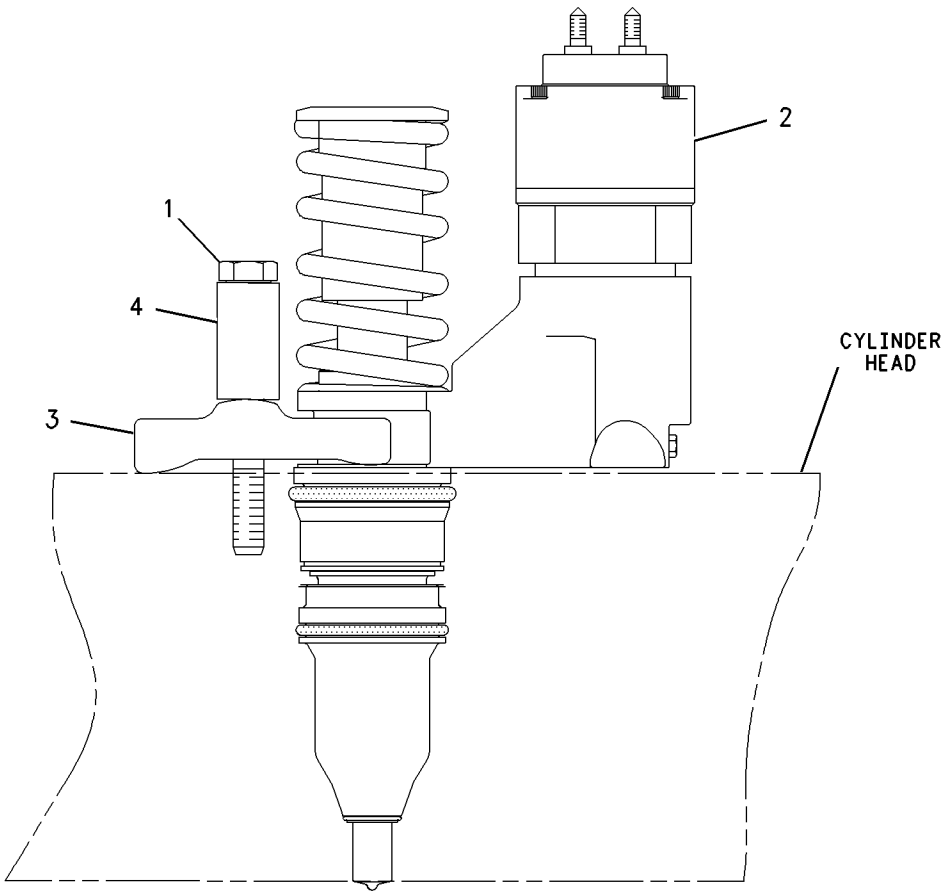

GRAPHIC #1 g00720237

116-5438 PUMP GP-FUEL PRIMING

S/N: 3PD1-UP

PART OF 161-1747 ENGINE AR

SMCS-1258 **i00613468**

NOTE	REF NO	GRAPHIC REF	PART NUMBER	QTY	PART NAME 1 2 3 4 5 6 (PRODUCT LEVEL)	SEE PAGE
	1	1	**7C-4993**	1	ADAPTER-PRIMING PUMP	
	2	1	**1P-0436**	2	GASKET	
M	3	1	**6V-2317**	1	BOLT (M8X1.25X30MM)	
	4	1	**9M-1974**	2	WASHER-HARD (2MM THK)	
M	5	1	**8T-0640**	1	BOLT (M6X1.0X30MM)	
	6	1	**5P-0537**	2	WASHER (2MM THK)	
	7	1	**1B-7182**	1	BOLT (5/16-18X1.25IN)	
	8	1	**9F-6580**	1	BOLT (1/4-20X1.125IN)	
	9	1	**105-2508**	1	PUMP AS-FUEL PRIMING	
		1	**7E-5346**	1	VALVE AS	
		1	**7F-8607**	1	SEAL-O-RING (18.72MM ID)	

M-METRIC PART

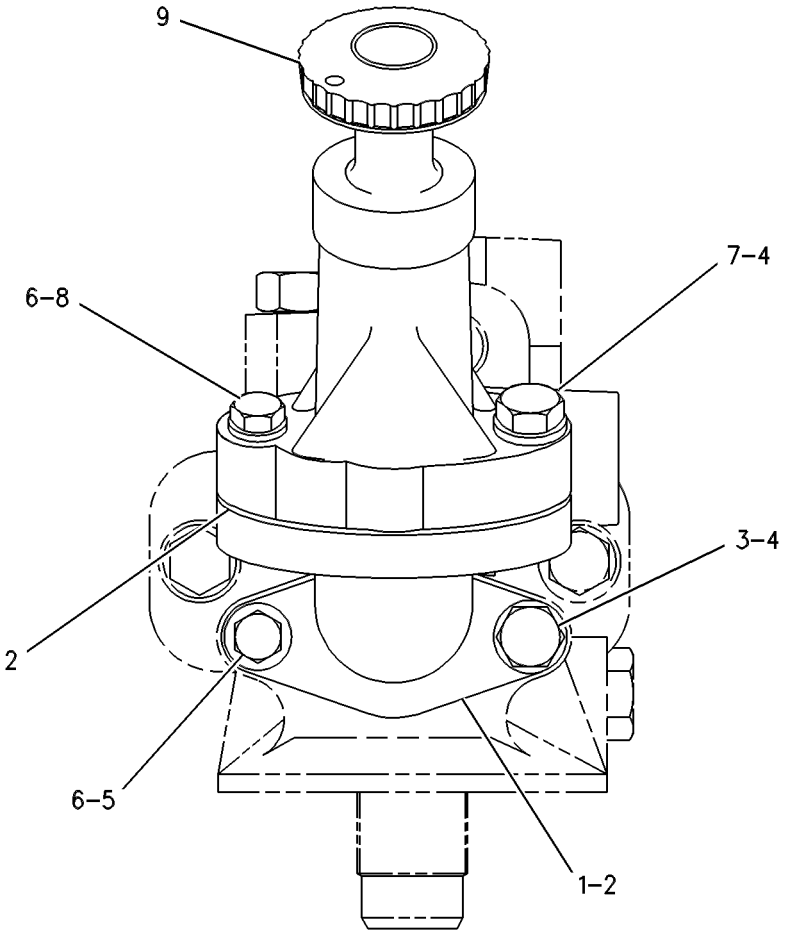

GRAPHIC #1 g00273435

MEMORANDA

161-1125 TANK GP-FUEL

S/N: ASE1-UP

PART OF 162-5606 GENERAL AR

SMCS-1273 **i01654485**

NOTE	REF NO	GRAPHIC REF	PART NUMBER	QTY	PART NAME 1 2 3 4 5 6 (PRODUCT LEVEL)	SEE PAGE
	1	1	**7X-1387**	4	WASHER (10.26X22.22X1.9MM THK)	
	2	1	**8T-4984**	4	CLAMP-HOSE	
	3	1	**8T-6703**	2	CLAMP-HOSE	
	4	1	**113-8457**	2	ROD	
	5	1	**174-5692**	4	SPACER (13.87X21.33X28MM THK)	
Y	6	1	**191-6012**	1	TANK GP-FUEL (RH)	122
Y	7	1	**191-6013**	1	TANK GP-FUEL (LH)	124
	8	1	**197-4637**	1	FITTING	
	9	1	**197-4638**	1	COUPLER	
	10	1	**199-9951**	1	HOSE (RH)	
	11	1	**199-9952**	1	HOSE (LH)	
	12	1	**162-9523**	1	GROMMET	
	13	1	**3B-4615**	4	PIN-COTTER	
	14	1	**5P-1076**	4	WASHER-HARD (13.5X30X4MM THK)	
	15	1	**5P-8439**	2	GROMMET	
	16	1	**6V-1572**	2	CLIP (SLOT)	
	17	1	**6V-1573**	2	CLIP (TAB)	
	18	1	**8T-4121**	1	WASHER-HARD (11X21X2.5MM THK)	
M	19	1	**8T-4195**	1	BOLT (M10X1.5X30MM)	
M	20	1	**8T-4910**	4	BOLT (M12X1.75X60MM)	
E	21	1	**5P-1291**		HOSE (34 CM)	

E-ORDER BY THE CENTIMETER
M-METRIC PART
Y-SEPARATE ILLUSTRATION

161-1125 **TANK GP-FUEL** *(contd.)* **i01654485**

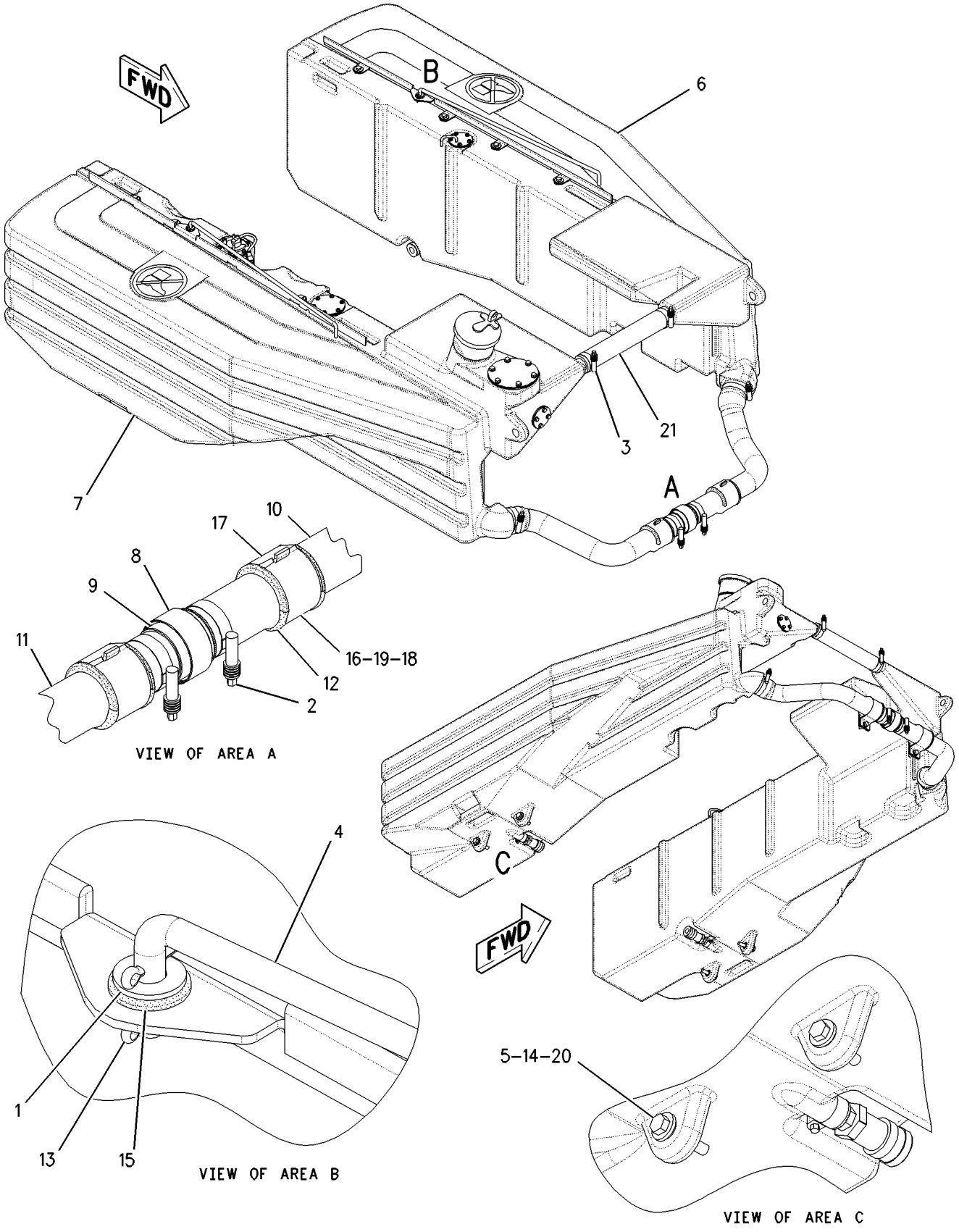

GRAPHIC #1 g00857517

191-6012 TANK GP-FUEL–RH

S/N: ASE1-UP

PART OF 161-1125 TANK GP-FUEL

SMCS-1273 **i01658009**

NOTE	REF NO	GRAPHIC REF	PART NUMBER	QTY	PART NAME 1 2 3 4 5 6 (PRODUCT LEVEL)	SEE PAGE
	1	1	**6V-6959**	5	BOLT-SOCKET HEAD (8-32X0.625IN)	
	2	1	**002-6454**	1	NIPPLE-PIPE	
		1	**110-2445**	1	CLAMP-HOSE	
		1	**190-6535**	1	FILM-WARNING	
		1	**214-6598**	1	FILM (NO-STEP)	
	3	1	**194-2612**	1	COUPLER	
	4	1	**197-1708**	1	VENT AS	
	5	1	**199-9986**	1	BRACKET	
	6	1	**4B-4863**	5	WASHER (4.7X11X1.2MM THK)	
	7	1	**7X-0579**	4	WASHER-HARD (8.8X25.5X2MM THK)	
M	8	1	**8T-4189**	4	BOLT (M8X1.25X20MM)	
	9	1	**9R-7240**	1	GASKET	

M-METRIC PART

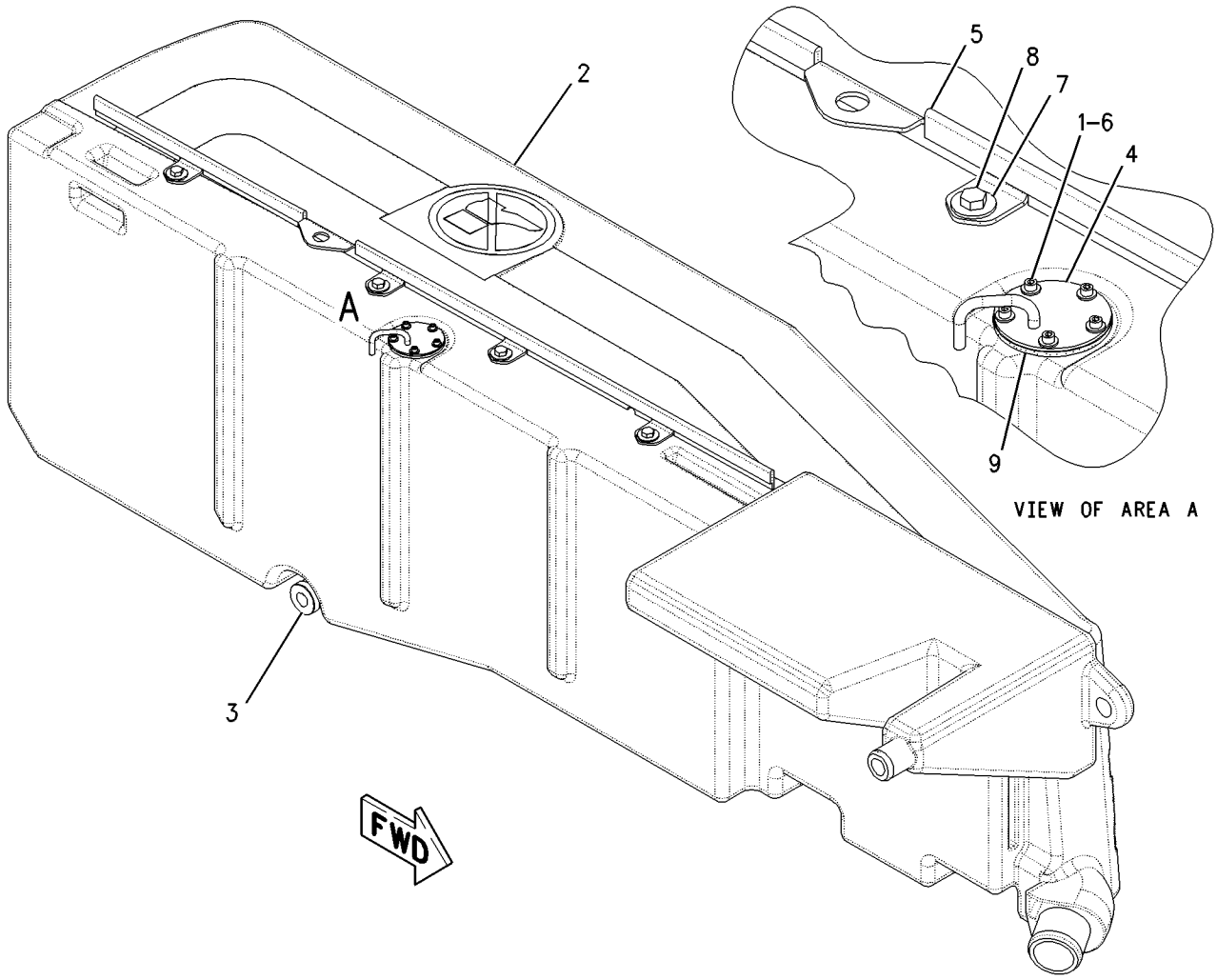

GRAPHIC #1 g00857891

MEMORANDA

FUEL SYSTEM

191-6013 TANK GP-FUEL—LH

S/N: ASE1-UP

PART OF 161-1125 TANK GP-FUEL

SMCS-1273 **i01658008**

NOTE	REF NO	GRAPHIC REF	PART NUMBER	QTY	PART NAME 1 2 3 4 5 6 (PRODUCT LEVEL)	SEE PAGE
	1	1	**6V-6959**	12	BOLT-SOCKET HEAD (8-32X0.625IN)	
	2	1	**164-4858**	1	CAP GP-FUEL TANK (LOCKABLE)	
		1	**9X-8600**	1	SEAL-O-RING	
		1	**190-9775**	1	COVER AS-FILTER	
	3	1	*189-3127*	1	TANK AS-FUEL (LH)	
		1	**002-6454**	1	NIPPLE-PIPE	
		1	**110-2445**	1	CLAMP-HOSE	
		1	**190-6535**	1	FILM-WARNING	
		1	**214-6598**	1	FILM	
	4	1	**194-2612**	1	COUPLER	
	5	1	**199-9907**	1	STRAINER-FUEL	
	6	1	**199-9984**	1	PLATE	
	7	1	**199-9985**	1	PLATE	
	8	1	**199-9987**	1	BRACKET	
	9	1	**203-9807**	1	GASKET	
	10	1	**203-9808**	1	GASKET	
	11	1	**208-0800**	2	GASKET	
	12	1	**212-4626**	1	PLATE	
	13	1	**103-2006**	1	SCREW-PAN HEAD	
	14	1	**173-2018**	1	SENDER AS-FUEL LEVEL	
		1	**194-8535**	1	KIT-SENSOR (FUEL LEVEL)	
					(INCLUDES SENSOR AS, SCREWS, RECEPTACLE KIT, CONNECTOR PINS, & WEDGE)	
	15	1	**194-6523**	1	ADAPTER	
	16	1	**4B-4863**	12	WASHER (4.7X11X1.2MM THK)	
M	17	1	**5C-9553**	4	BOLT (M6X1X16MM)	
	18	1	**7X-0579**	4	WASHER-HARD (8.8X25.5X2MM THK)	
M	19	1	**8T-4189**	10	BOLT (M8X1.25X20MM)	
	20	1	**8T-4224**	6	WASHER-HARD (8.8X16X2MM THK)	
	21	1	**9X-8256**	4	WASHER (6.6X12X2MM THK)	

M-METRIC PART

191-6013 TANK GP-FUEL *(contd.)* i01658008

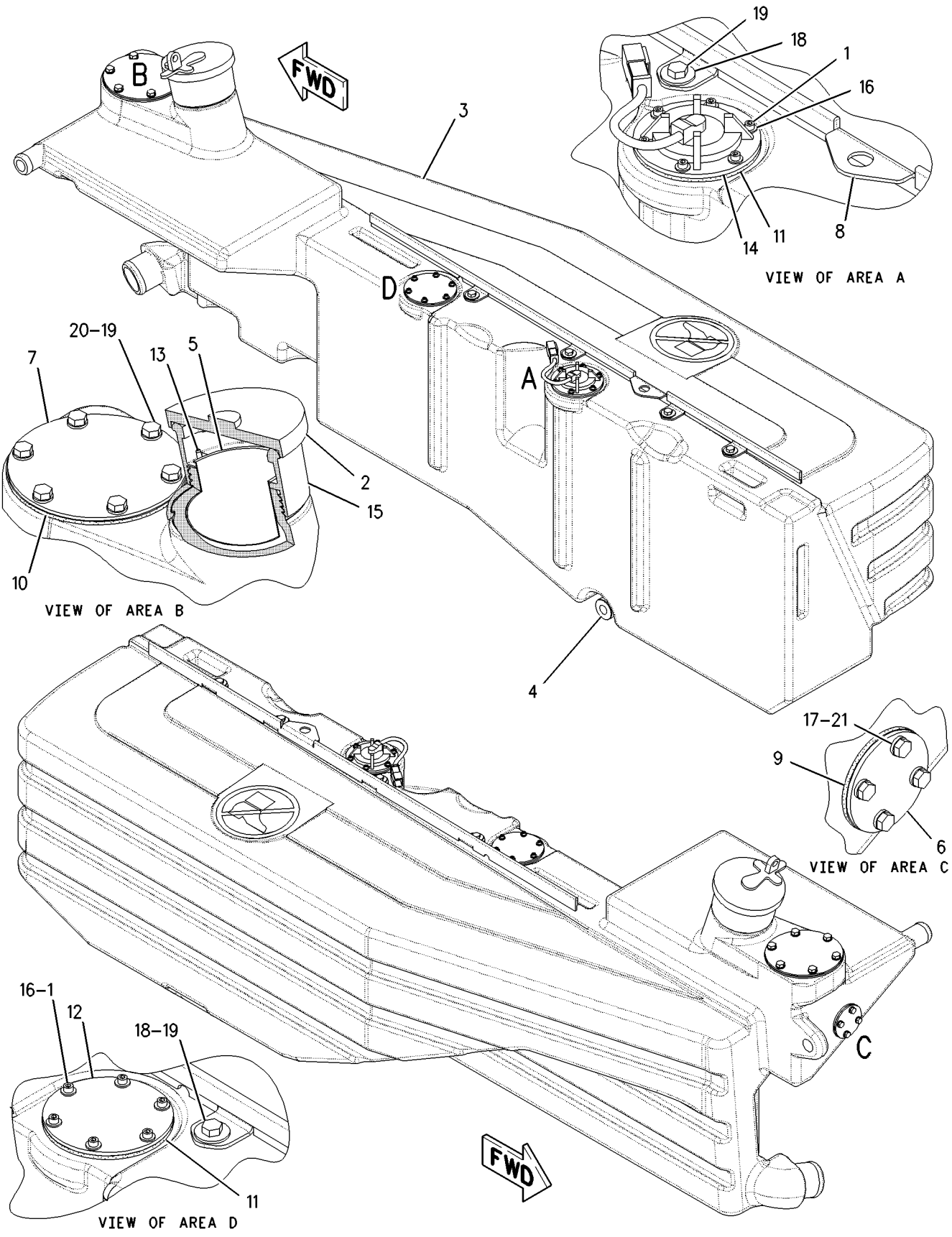

GRAPHIC #1 g00857631

156-5783 VALVE GP-CHECK

S/N: 3PD1-UP

PART OF 204-0638 LINES GP-FUEL INJECTION

SMCS-1250, 1274 **i01672618**

NOTE	REF NO	GRAPHIC REF	PART NUMBER	QTY	PART NAME 1 2 3 4 5 6 (PRODUCT LEVEL)	SEE PAGE
	1	1	**6V-6923**	1	RING-BACKUP (13.16MM ID)	
	2	1	**033-6033**	1	SEAL-O-RING (12.42MM ID)	

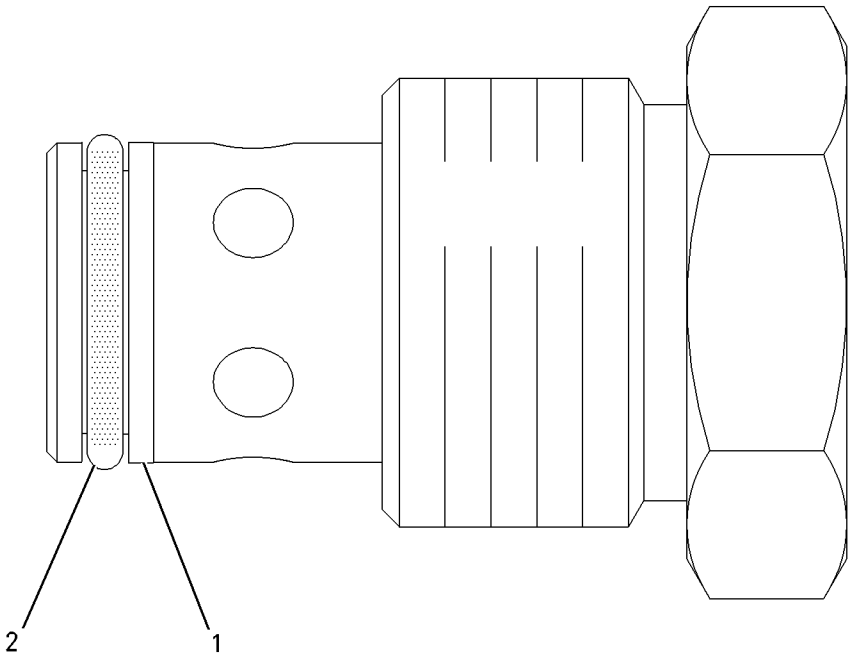

GRAPHIC #1 g00864141

3E-6328 ALARM GP

S/N: ASE1-UP
24 VOLT
PART OF 159-5843 WIRING GP-SHIFT CONSOLE

SMCS-7407 **i01690952**

NOTE	REF NO	GRAPHIC REF	PART NUMBER	QTY	PART NAME 1 2 3 4 5 6 (PRODUCT LEVEL)	SEE PAGE
	1	1	**102-8802**	1	KIT-RECEPTACLE (2 PIN)	
					INCLUDES RECEPTACLE AS & WEDGE	
	2	1	**186-3735**	2	PIN-CONNECTOR	
	3	1	**3E-3365**	1	WEDGE-RECEPTACLE LOCK (2 PIN)	

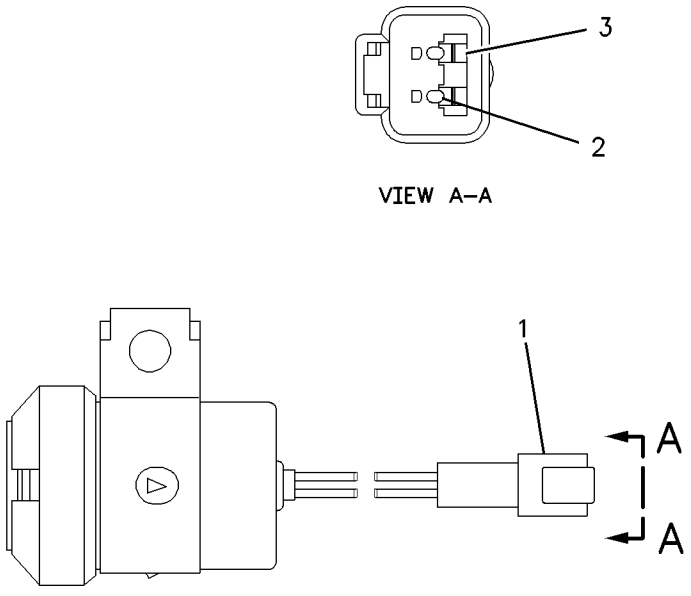

GRAPHIC #1 g00826023

200-2232 ALTERNATOR GP-CHARGING*R

S/N: 3PD1-UP
24 VOLT, 75 AMP
PART OF 212-0615 ALTERNATOR GP-CHARGING

SMCS-1405 **i01532948**

NOTE	REF NO	GRAPHIC REF	PART NUMBER	QTY	PART NAME 1 2 3 4 5 6 (PRODUCT LEVEL)	SEE PAGE
	1	1	**8T-4205**	2	WASHER-HARD (7.2X14.5X2MM THK)	
	2	1	**1H-3244**	2	LOCKWASHER	
	3	1	**6V-8187**	1	NUT (1/4-28 THD)	
	4	1	**5S-7349**	1	BOLT (1/4-20X0.5 IN)	
	5	1	**9L-6770**	1	CAP	
	6	1	**9N-0943**	1	PLUG-BEARING WELL	
	7	1	**5P-3418**	1	BEARING-ROLLER	
	8	1	**5P-3419**	1	RACE-BEARING INNER	
	9	1	**132-1225**	1	RECTIFIER AS-ALTERNATOR	
	10	1	**202-2708**	1	DIODE AS	
	11	1	**3T-6354**	1	REGULATOR AS (24 VOLT)	
	12	1	**3E-5458**	1	CAPACITOR AS-ALTERNATOR	
	13	1	**202-9897**	1	BEARING-SPECIAL BALL	
	14	1	**100-6531**	1	FAN-ALTERNATOR	
	15	1	**187-2034**	1	NUT-FLANGE (5/8-18 THD)	
	16	1	**202-2783**	1	PLATE	
	17	1	**202-7711**	1	HOUSING AS	
	18	1	**202-7713**	1	FRAME AS	
	19	1	**202-8647**	1	STATOR AS	
	20	1	**202-2703**	1	COIL AS	
	21	1	**9S-2390**	1	RETAINER	
	22	1	**9S-2302**	1	ROTOR AS	
	23	1	**4B-2047**	1	NUT (10-24 THD)	
	24	1	**8T-0328**	1	WASHER-HARD (5.5X10X1MM THK)	
	25	1	**8F-1434**	1	LOCKWASHER	
	26	1	**202-2784**	1	KIT-ALTERNATOR TERMINAL	
	27	1	**202-2785**	1	KIT-ALTERNATOR TERMINAL	
	28	1	**202-2786**	1	KIT-ALTERNATOR TERMINAL	
					AVAILABLE REPAIR KIT(S):	
			202-2787		MOUNTING GP-ALTERNATOR	
					(INCLUDES BOLTS, NUTS, PLUGS, SCREWS, LOCKWASHER, CONNECTOR, COLLAR AND BOOT)	

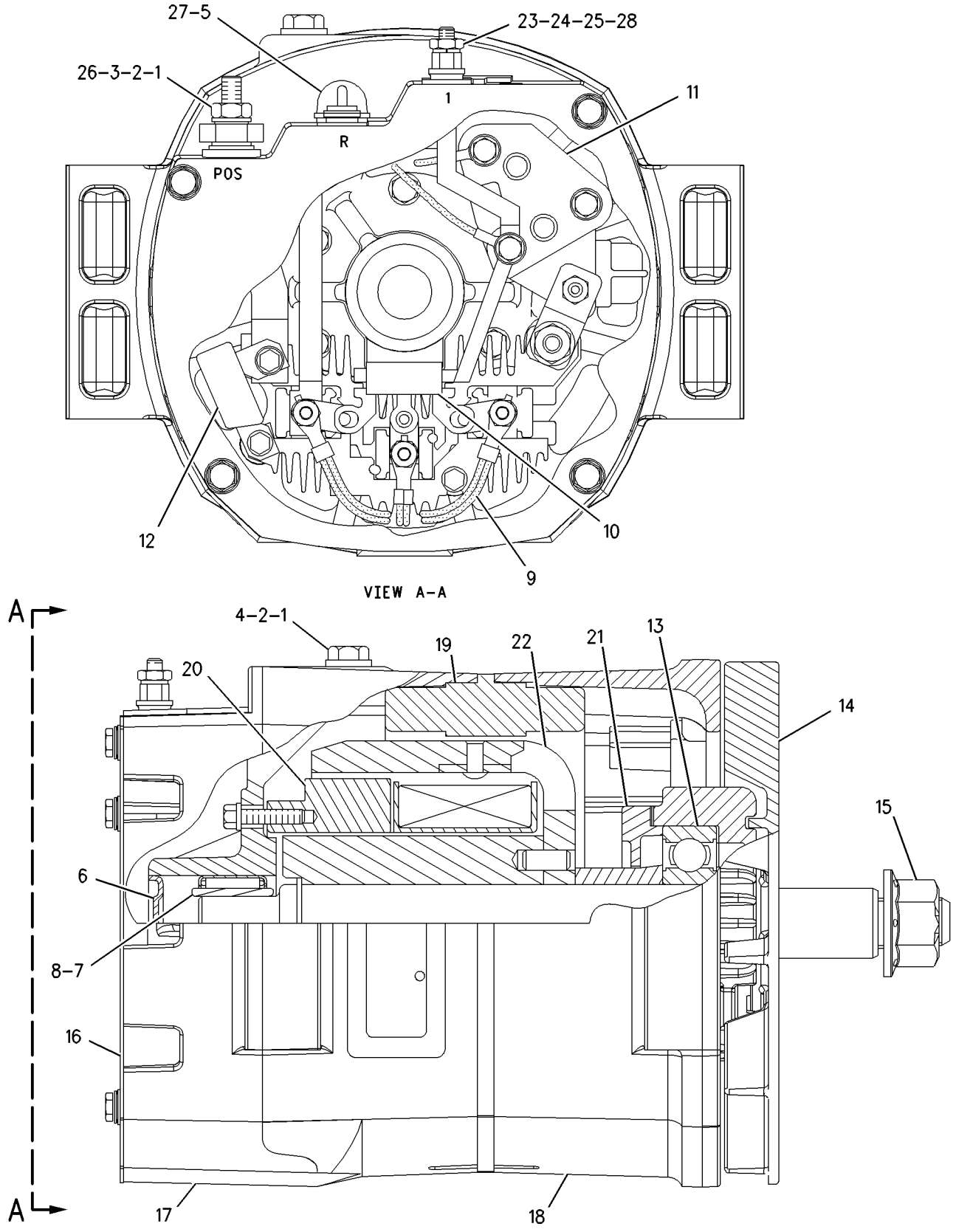

GRAPHIC #1 g00796026

212-0615 ALTERNATOR GP-CHARGING

S/N: 3PD1-UP
24 VOLT, 75 AMPERE
PART OF 161-1747 ENGINE AR

SMCS-1405 **i01623387**

NOTE	REF NO	GRAPHIC REF	PART NUMBER	QTY	PART NAME 1 2 3 4 5 6 (PRODUCT LEVEL)	SEE PAGE
	1	1	**169-4657**	1	BRACKET	
	2	1	**199-9959**	1	GUARD AS	
YR	3	1	**200-2232**	1	ALTERNATOR GP-CHARGING	128
	4	1	**3E-4353**	3	WASHER-HARD (11X25X3MM THK)	
M	5	1	**6V-1820**	5	BOLT (M10X1.50X30MM)	
M	6	1	**8T-0643**	2	BOLT (M10X1.50X80MM)	
	7	1	**8T-4121**	4	WASHER-HARD (11X21X2.5MM THK)	
M	8	1	**8T-4198**	4	BOLT (M10X1.5X100MM)	

M-METRIC PART
R-REMFG PART MAY BE AVAILABLE
Y-SEPARATE ILLUSTRATION

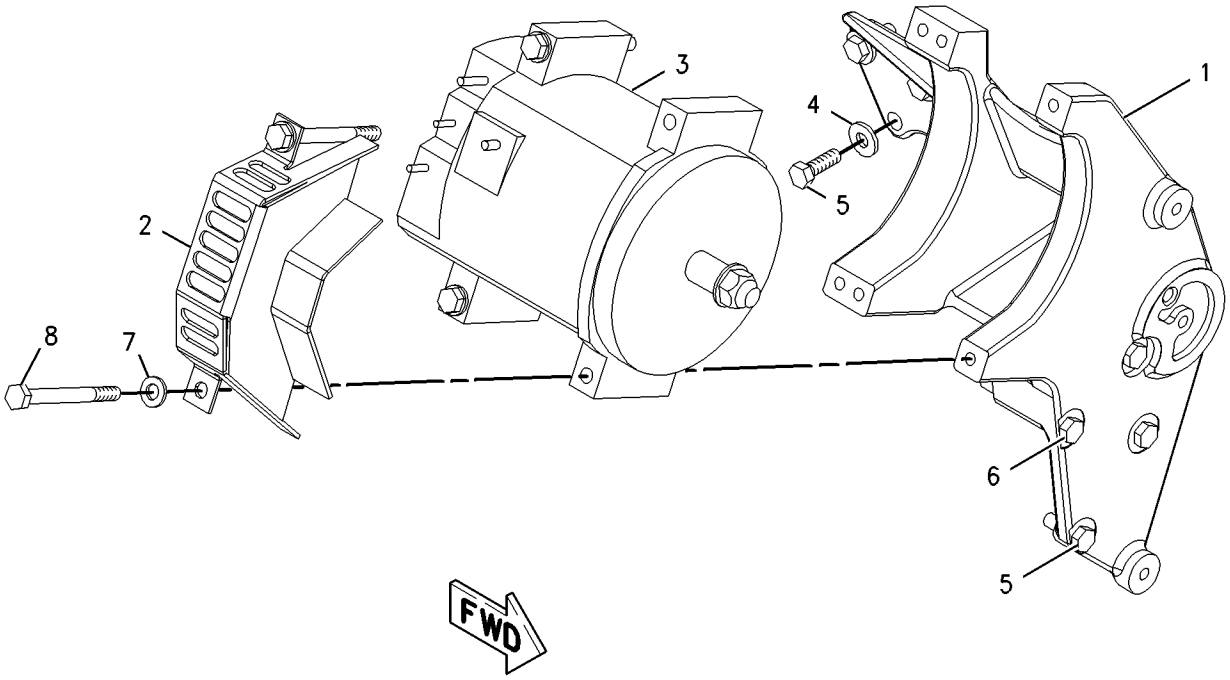

GRAPHIC #1 g00840654

172-5655 BATTERY GP–HEAVY DUTY

S/N: ASE1-UP
PART OF 197-5959 SNOW AR-MOTOR GRADER
AN ATTACHMENT

SMCS-1401 **i01662318**

NOTE	REF NO	GRAPHIC REF	PART NUMBER	QTY	PART NAME 1 2 3 4 5 6 (PRODUCT LEVEL)	SEE PAGE
	1	1	**8V-0622**	1	CABLE AS	
		1	**8C-5917**	1	TERMINAL AS-BATTERY (POSITIVE)	
		1	**1M-6119**	2	BOLT-BATTERY TERMINAL (5/16-18X1.375 IN)	
		1	**1M-6120**	2	NUT-BATTERY TERMINAL (5/16-18 THD)	
E		1	**5P-0761**		CABLE (00GA)(RED) (14CM)	
		1	**8T-9757**	1	TERMINAL AS-BATTERY (NEGATIVE)	
		1	**9G-0003**	1	COVER-TERMINAL (BLACK)	
		1	**9G-0004**	1	COVER-TERMINAL (RED)	
	2	1	**153-5710**	2	BATTERY (HEAVY DUTY)(12V)	
	3	1	**188-3958**	1	BAR	
	4	1	**189-0146**	1	HOLD-DOWN	
M	5	1	**8C-0573**	2	STUD-TAPERLOCK	
M	6	1	**8T-0389**	2	LOCKNUT (M10X1.5 THD)	
	7	1	**8T-4121**	2	WASHER-HARD (11X21X2.5MM THK)	
	8	1	**8T-4122**	2	WASHER-HARD (17X32X3.5MM THK)	

E-ORDER BY THE CENTIMETER
M-METRIC PART

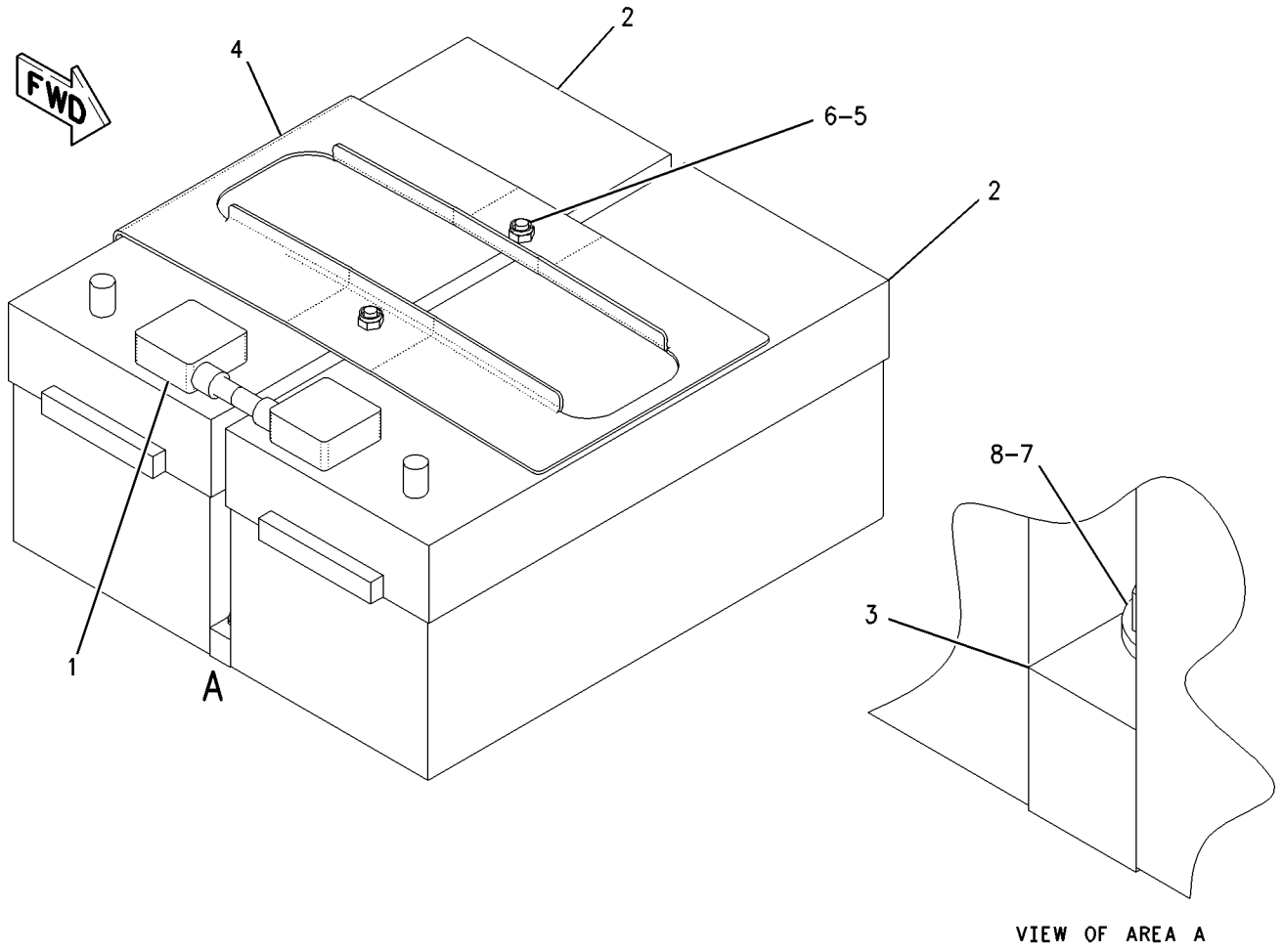

GRAPHIC #1 g00857961

187-8028 BATTERY GP—MAINTENANCE FREE

S/N: ASE1-UP

PART OF 183-8482 SUPPORT AR-REAR CHASSIS

SMCS-1401 **i01515744**

NOTE	REF NO	GRAPHIC REF	PART NUMBER	QTY	PART NAME 1 2 3 4 5 6 (PRODUCT LEVEL)	SEE PAGE
	1	1	**8V-0622**	1	CABLE AS	
		1	**8C-5917**	1	TERMINAL AS-BATTERY (POSITIVE)	
		1	**1M-6119**	2	BOLT-BATTERY TERMINAL (5/16-18X1.375 IN)	
		1	**1M-6120**	2	NUT-BATTERY TERMINAL (5/16-18 THD)	
		1	**8T-9757**	1	TERMINAL AS-BATTERY (NEGATIVE)	
		1	**9G-0003**	1	COVER-TERMINAL (BLACK)	
		1	**8L-8413**	1	STRAP-CABLE	
		1	**9G-0004**	1	COVER-TERMINAL (RED)	
		1	**8L-8413**	1	STRAP-CABLE	
	2	1	**153-5700**	2	BATTERY (MAINTENANCE FREE)(12 VOLT)	
	3	1	**188-3958**	1	BAR	
	4	1	**189-0146**	1	HOLD-DOWN	
M	5	1	**8C-0573**	2	STUD-TAPERLOCK	
M	6	1	**8T-0389**	2	LOCKNUT (M10X1.5 THD)	
	7	1	**8T-4121**	2	WASHER-HARD (11X21X2.5MM THK)	
M	8	1	**8T-4182**	2	BOLT (M10X1.5X45MM)	

M-METRIC PART

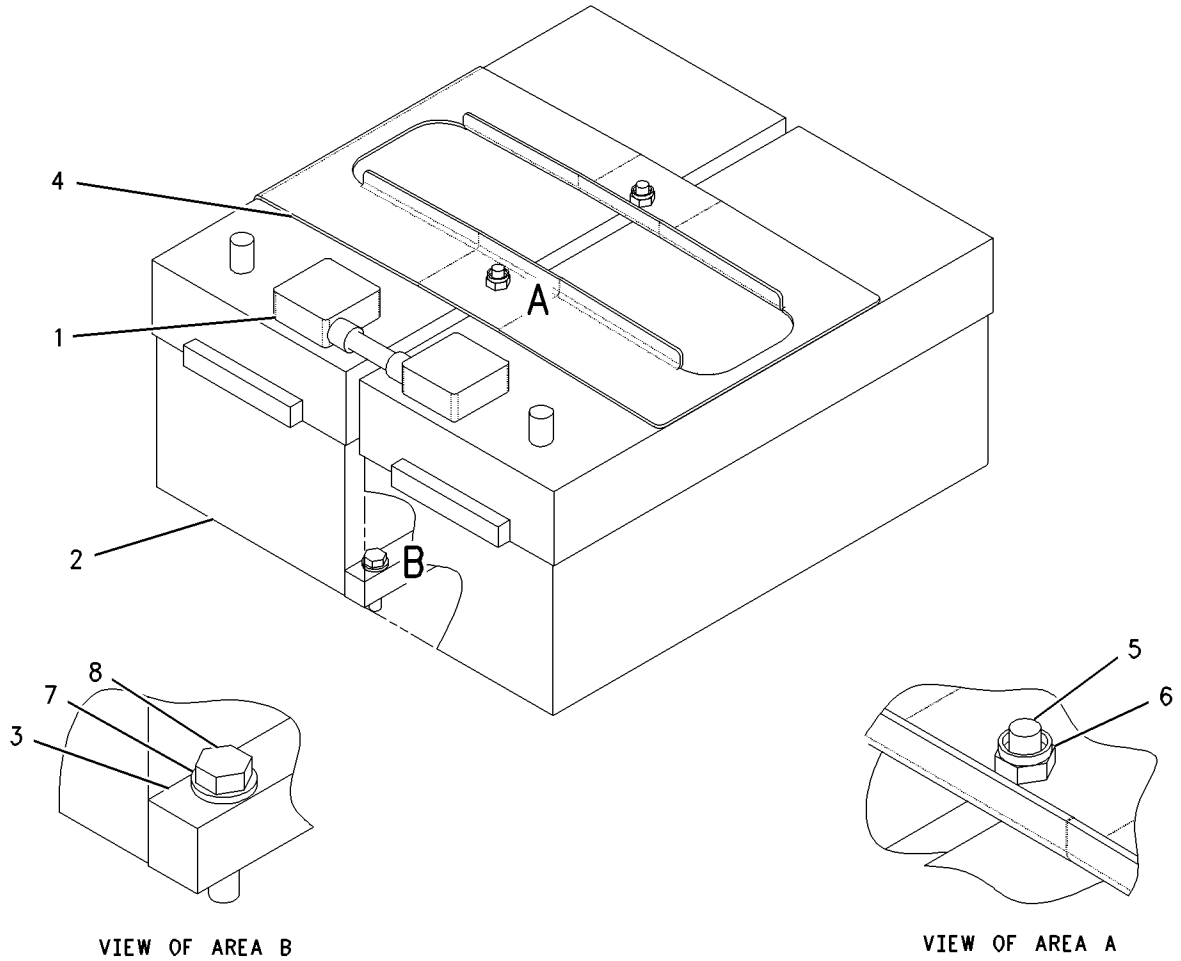

GRAPHIC #1 g00788559

201-1036 CIRCUIT BREAKER GP–FLOOD

S/N: ASE1-UP

PART OF 161-0770, 161-1924, 186-4957 LIGHTING AR-FLOOD & SIGNAL

AN ATTACHMENT

SMCS-1420 **i01626420**

NOTE	REF NO	GRAPHIC REF	PART NUMBER	QTY	PART NAME 1 2 3 4 5 6 (PRODUCT LEVEL)	SEE PAGE
	1	1	**195-2097**	1	WIRE AS	
	2	1	**201-8424**	1	STRAP	
	3	1	**3K-8106**	4	SCREW-MACHINE (8-32 X 1 IN)	
	4	1	**3T-2662**	1	CIRCUIT BREAKER AS (15 AMP) (LIGHTBAR WORKLAMPS)	
	4A	1	**3T-2662**	1	CIRCUIT BREAKER AS (15 AMP) (HEADLAMPS)	
					(EACH CIRCUIT BREAKER AS INCLUDES)	
		1	**6V-8376**	2	SCREW-MACHINE (8-32X0.25 IN)	
		1	**9B-7233**	2	LOCKWASHER (4.37X8.39X.52MM THK)	
	5	1	**9B-7233**	4	LOCKWASHER (4.37X8.39X.52MM THK)	

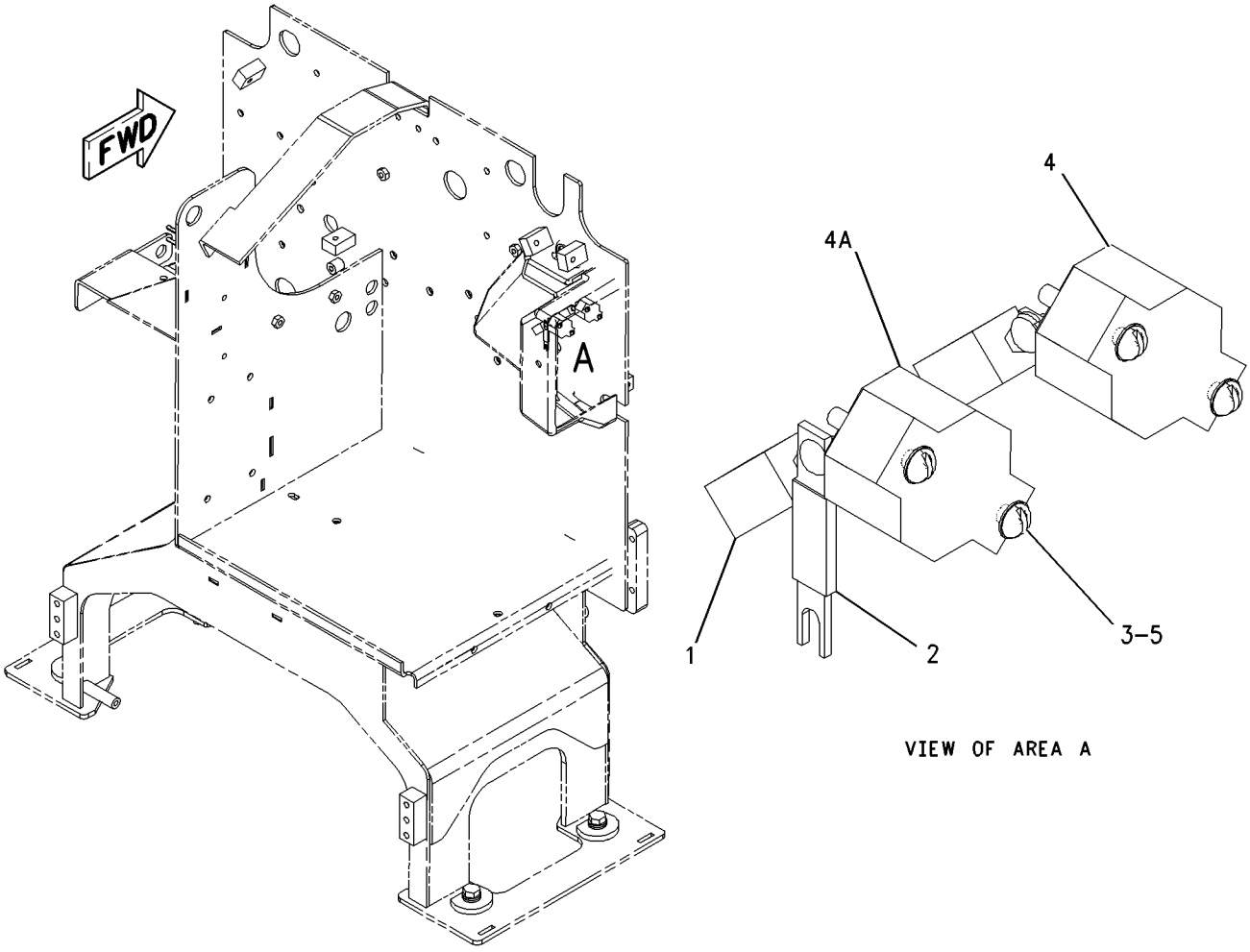

GRAPHIC #1 g00844651

201-1038 CIRCUIT BREAKER GP–HEADLAMPS

S/N: ASE1-UP

PART OF 211-1769 CONVERSION AR-CERTIFICATION, 188-9329 LIGHTING AR-FLOOD & SIGNAL AN ATTACHMENT

SMCS-1420 **i01626425**

NOTE	REF NO	GRAPHIC REF	PART NUMBER	QTY	PART NAME 1 2 3 4 5 6 (PRODUCT LEVEL)	SEE PAGE
	1	1	**201-8424**	1	STRAP	
	2	1	**3K-8106**	2	SCREW-MACHINE (8-32 X 1 IN)	
	3	1	**3T-2662**	1	CIRCUIT BREAKER AS (15 AMP) (HEADLAMPS)	
		1	**6V-8376**	2	SCREW-MACHINE (8-32X0.25 IN)	
		1	**9B-7233**	2	LOCKWASHER (4.37X8.39X.52MM THK)	
	4	1	**9B-7233**	2	LOCKWASHER (4.37X8.39X.52MM THK)	

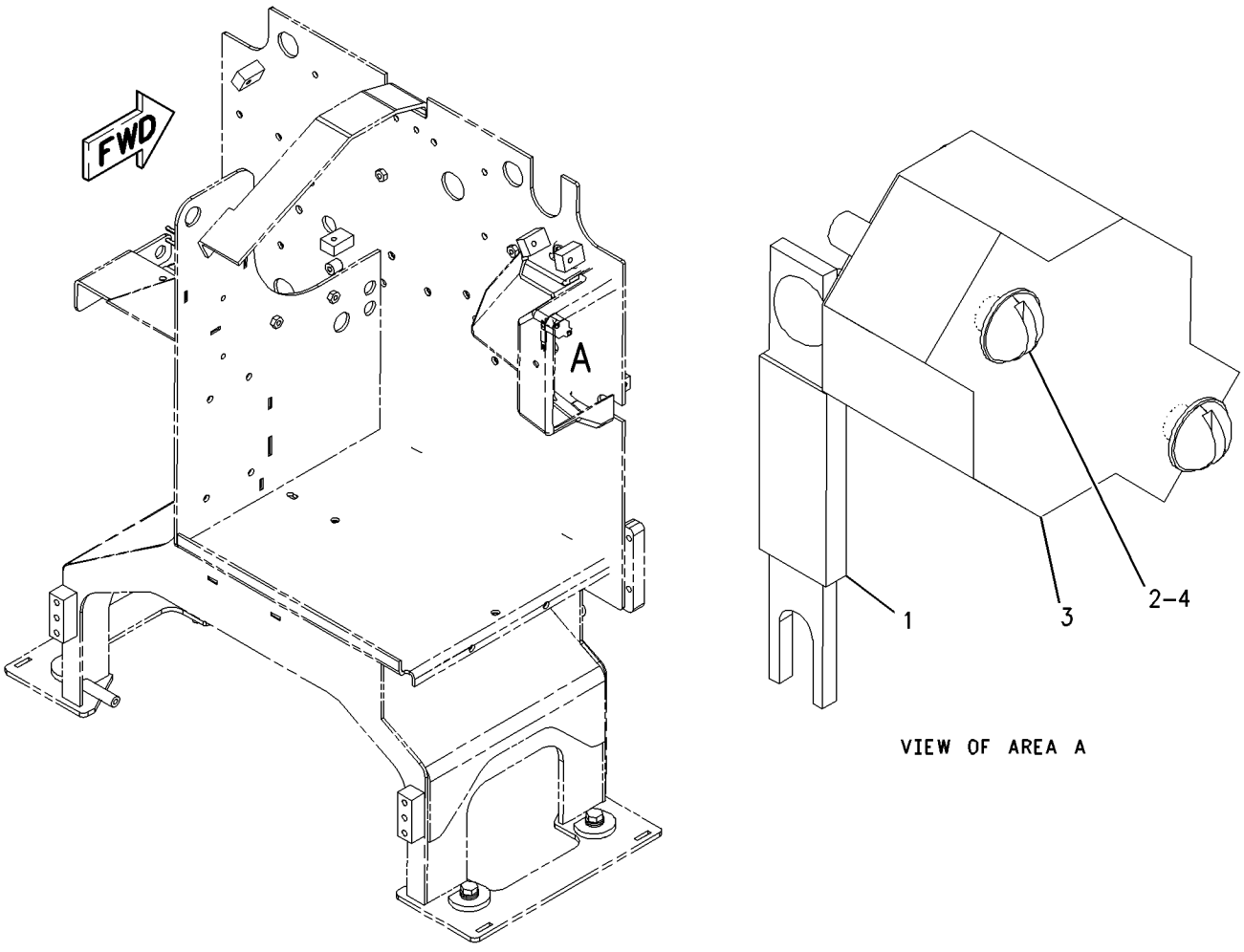

GRAPHIC #1 g00844652

168-4490 CONTROL & MTG GP-ENGINE ELEK

S/N: 3PD1-UP

PART OF 161-1747 ENGINE AR

SMCS-1901 **i01265340**

NOTE	REF NO	GRAPHIC REF	PART NUMBER	QTY	PART NAME 1 2 3 4 5 6 (PRODUCT LEVEL)	SEE PAGE
	1	1	**6I-1418**	2	SPACER (28.7MM THK)	
	2	1	**8T-9655**	8	MOUNT	
	4	1	**168-4594**	2	SPACER	
Y	5	1	*178-3091*	1	CONTROL GP-ENGINE ELECTRONIC	136
M	6	1	**5P-8347**	2	BOLT (M8X1.25X70MM)	
M	7	1	**8T-0276**	2	BOLT (M8X1.25X45MM)	
	8	1	**9M-1974**	1	WASHER-HARD (2MM THK)	
	9	1	**9N-0869**	4	WASHER-HARD (2MM THK)	

M-METRIC PART
Y-SEPARATE ILLUSTRATION

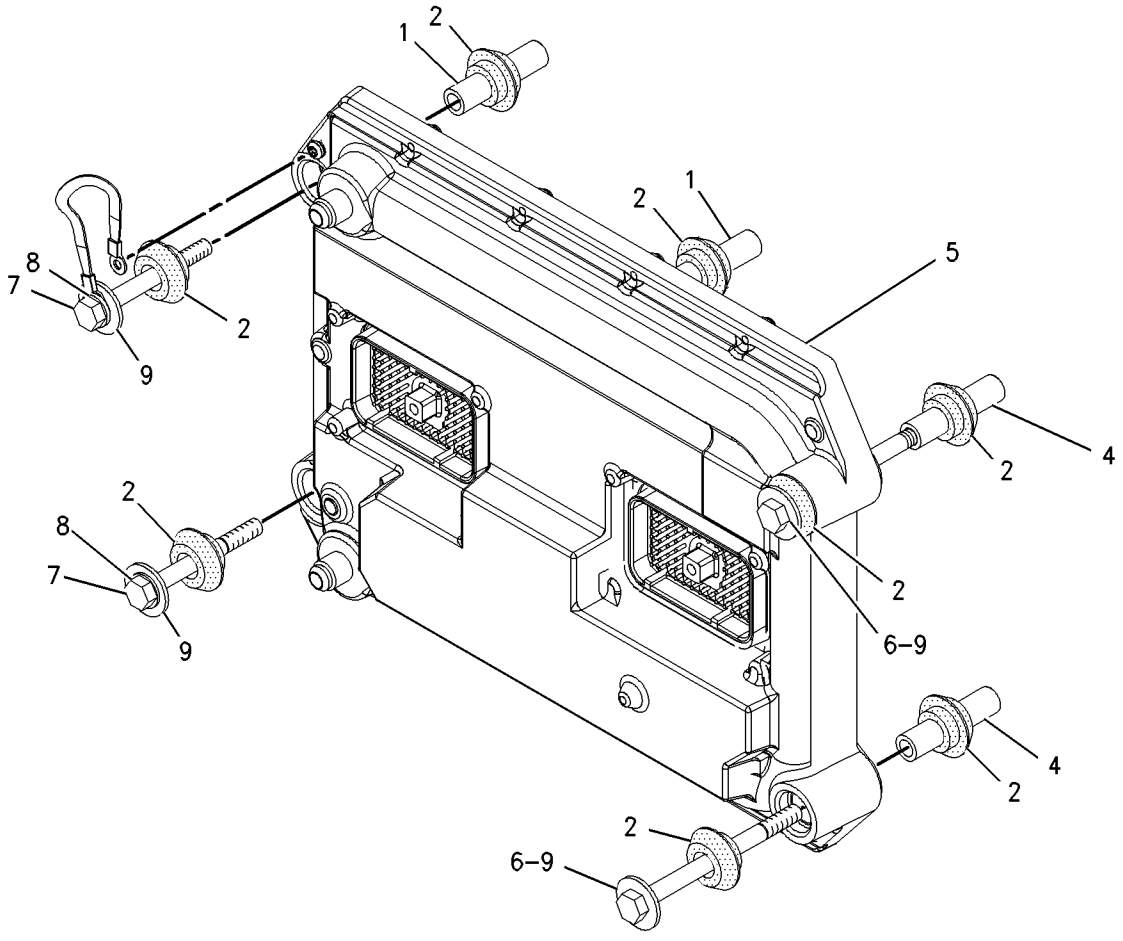

GRAPHIC #1 g00673168

178-3091 CONTROL GP-ENGINE ELECTRONIC

S/N: 3PD1-UP

PART OF 168-4490 CONTROL & MTG GP-ENGINE ELEK

SMCS-1901 **i01265349**

NOTE	REF NO	GRAPHIC REF	PART NUMBER	QTY	PART NAME 1 2 3 4 5 6 (PRODUCT LEVEL)	SEE PAGE
	1	1	**179-9850**	1	CONTROL GP-ENGINE ELECTRONIC	
	2	1	**7X-6315**	1	STRAP-GROUNDING	
	3	1	**134-4126**	1	WASHER (.76MM THK)	
	4	1	**184-2472**	1	SCREW-PAN HEAD	

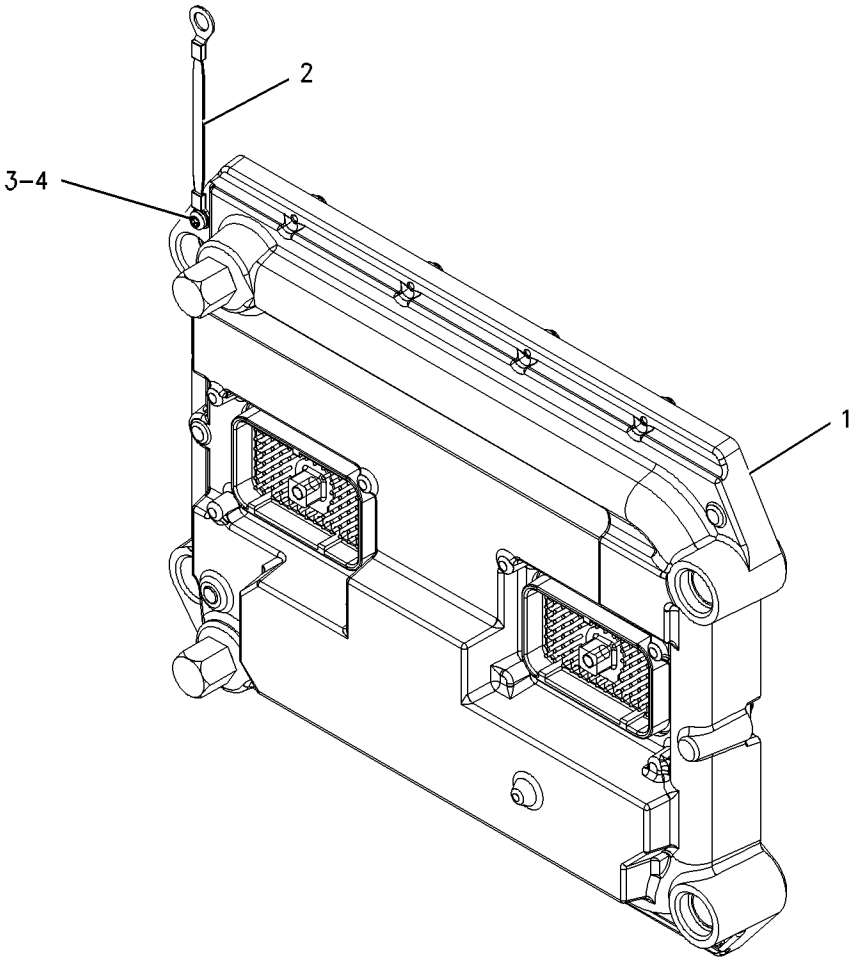

GRAPHIC #1 g00673185

132-6640 CONTROL GP-SECONDARY STEERING

S/N: ASE1-UP
PART OF 184-6044 WIRING GP-SECONDARY STEERING
AN ATTACHMENT

SMCS-4343 **i01265308**

NOTE	REF NO	GRAPHIC REF	PART NUMBER	QTY	PART NAME 1 2 3 4 5 6 (PRODUCT LEVEL)	SEE PAGE
Z	1	1		1	CONTROL AS-STEERING	
	2	1	**102-8801**	1	KIT-RECEPTACLE (12 PIN)	
					(INCLUDES RECEPTACLE AS & WEDGE)	
	3	1	**3E-5180**	1	WEDGE-RECEPTACLE LOCK	
	4	1	**8T-8729**	11	PIN-CONNECTOR	
	5	1	**8T-8737**	1	PLUG-SEAL	
	6	1	**1S-9593**	4	STRAP-CABLE (0.62IN DIA)	

Z-NOT SERVICED SEPARATELY

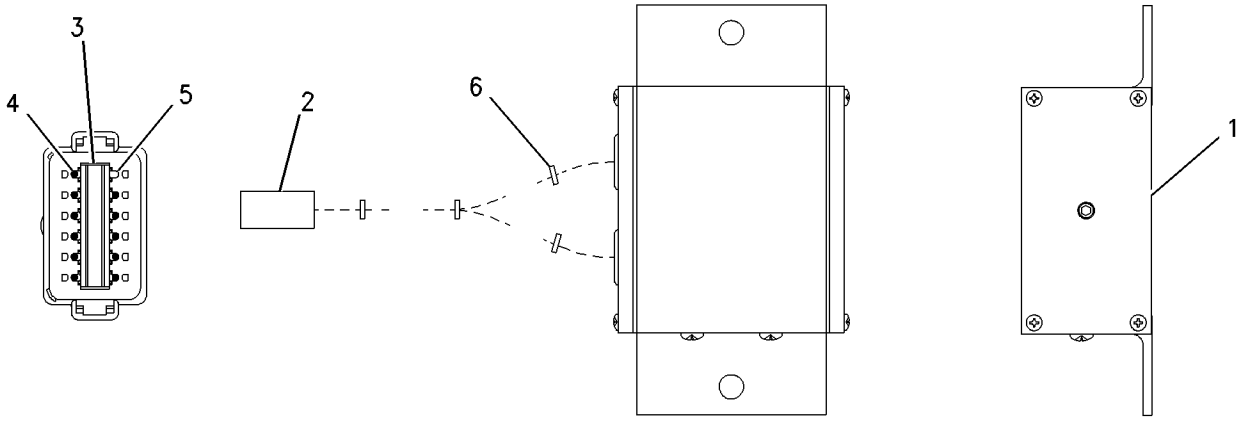

GRAPHIC #1 g00672584

161-0776 CONVERTER AR-ELECTRICAL–12V POWER PORT–5 AMPS

S/N: ASE1-UP

AN ATTACHMENT

SMCS-1421 **i01528380**

NOTE	PART NUMBER	QTY	PART NAME 1 2 3 4 5 6 (PRODUCT LEVEL)	SEE PAGE
Y	*171-7185*	1	ACCESSORY GP-CAB	609
Y	*180-4643*	1	CONVERTER GP-ELECTRICAL	142

Y-SEPARATE ILLUSTRATION

161-0777 CONVERTER AR-ELECTRICAL–12 V POWER PORT–15 AMPS

S/N: ASE1-UP

AN ATTACHMENT

SMCS-1421 **i01528399**

NOTE	PART NUMBER	QTY	PART NAME 1 2 3 4 5 6 (PRODUCT LEVEL)	SEE PAGE
Y	*171-7186*	1	ACCESSORY GP-CAB	610
Y	*180-4643*	1	CONVERTER GP-ELECTRICAL	142

Y-SEPARATE ILLUSTRATION

145-1297 CONVERTER GP-ELECTRICAL–RADIO

S/N: ASE1-UP
PART OF 145-1300 INSTALLATION AR-RADIO
AN ATTACHMENT

SMCS-1421 **i01624176**

NOTE	REF NO	GRAPHIC REF	PART NUMBER	QTY	PART NAME 1 2 3 4 5 6 (PRODUCT LEVEL)	SEE PAGE
	1	1	**8X-1853**	2	SPACER	
C	2	1	**205-4285**	1	CONVERTER GP-ELECTRICAL (5/7.5 AMP, 24 TO 12 VOLT)	
C	3	1	**208-7782**	1	PLATE AS	
C	4	1	**096-6166**	2	WASHER-HARD (4.5X9X1MM THK)	
M	5	1	**8T-0285**	2	SCREW-MACHINE (M4X0.7X12MM)	
	6	1	**8T-2501**	2	BOLT (3/8-16X2 IN)	
C	7	1	**8T-4896**	2	WASHER-HARD (10.2X18.5X2.5MM THK)	

C-CHANGE FROM PREVIOUS TYPE
M-METRIC PART

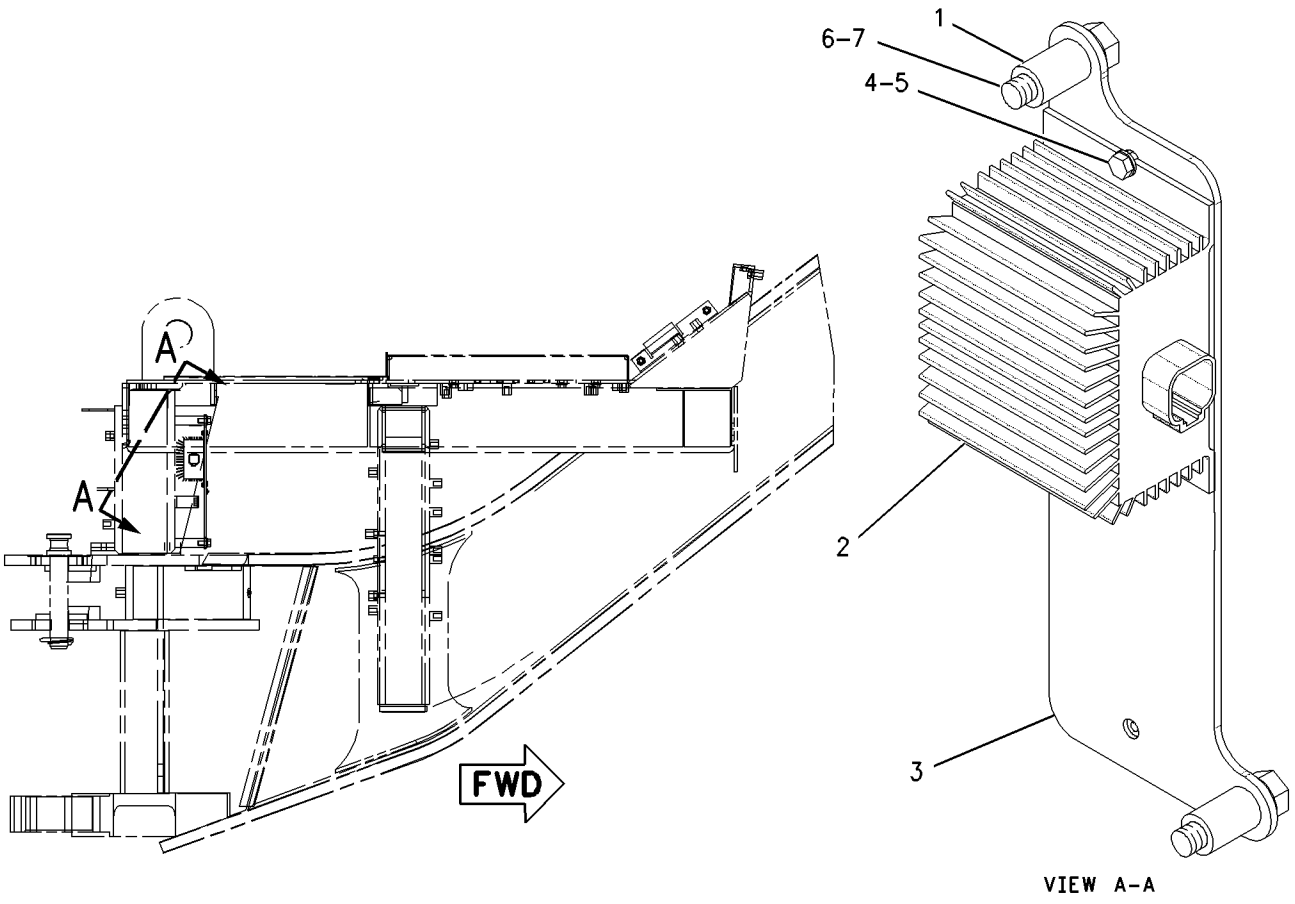

GRAPHIC #1 g00840615

ELECTRICAL AND STARTING SYSTEM

167-8382 CONVERTER GP-ELECTRICAL–25 AMP

S/N: ASE1-UP
AN ATTACHMENT

SMCS-1421 **i01627172**

NOTE	REF NO	GRAPHIC REF	PART NUMBER	QTY	PART NAME 1 2 3 4 5 6 (PRODUCT LEVEL)	SEE PAGE
	1	1	**3E-8646**	1	CONVERTER-POWER (24 VOLT TO 12 VOLT)(25 AMP)	
		1	**8T-9636**	2	FUSE (30 AMP) (CONVERTER-POWER)	
	2	1	**3S-2093**	3	STRAP-CABLE	
	3	1	**168-8233**	1	PLATE	
	4	1	**168-8235**	1	PLATE AS	
	5	1	**169-3523**	1	HARNESS AS-RADIO	
		1	**102-8802**	1	KIT-RECEPTACLE (2 PIN) (IGNITION/RADIO CONVERTER)	
	6	1	**6V-8801**	1	NUT (3/8-16 THD)	
	7	1	**8T-4121**	2	WASHER-HARD (11X21X2.5MM THK)	
M	8	1	**8T-4137**	2	BOLT (M10X1.5X20MM)	
	9	1	**8T-4896**	1	WASHER-HARD (10.2X18.5X2.5MM THK)	
M	10	1	**9X-2042**	2	SCREW-TRUSS HEAD (M6X1X12MM)	
E	11	1	**7X-7877**		STRIP-EDGING (106 CM)	

E-ORDER BY THE CENTIMETER
M-METRIC PART

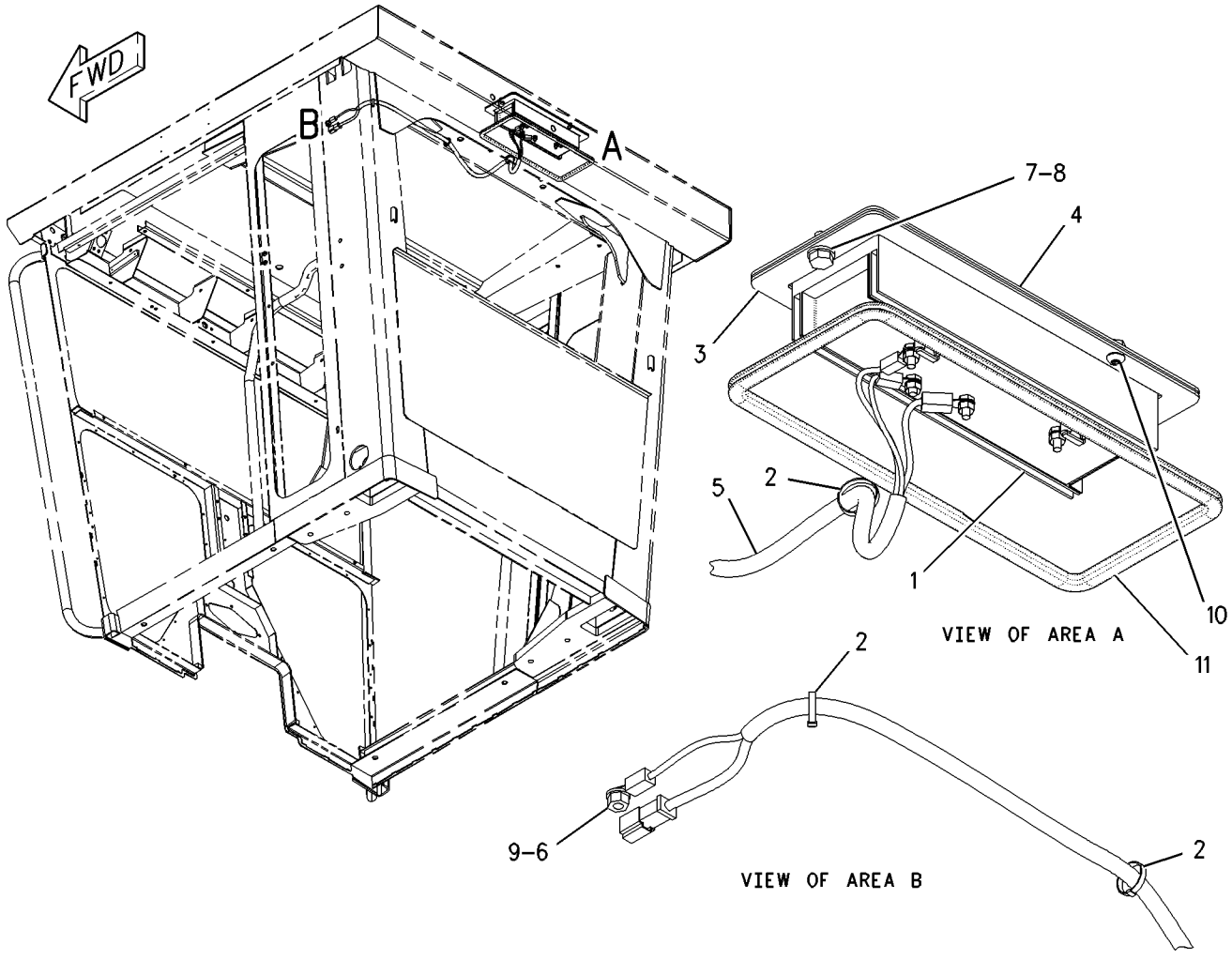

GRAPHIC #1 g00847577

180-4643 CONVERTER GP-ELECTRICAL–12 V POWER PORT

S/N: ASE1-UP

PART OF 161-0776, 161-0777 CONVERTER AR-ELECTRICAL

AN ATTACHMENT

SMCS-1421 **i01627219**

NOTE	REF NO	GRAPHIC REF	PART NUMBER	QTY	PART NAME 1 2 3 4 5 6 (PRODUCT LEVEL)	SEE PAGE
	1	1	**9W-1442**	1	FUSE (10 AMP) (POWER CONVERTER)	
	2	1	**205-4285**	1	CONVERTER GP-ELECTRICAL (24 VOLT TO 12 VOLT)	
	3	1	**208-7782**	2	PLATE AS	
	4	1	**096-6166**	2	WASHER-HARD (4.5X9X1MM THK)	
	5	1	**5M-3062**	2	BOLT (3/8-16X0.75 IN)	
M	6	1	**8T-0285**	2	SCREW-MACHINE (M4X0.7X12MM)	
	7	1	**8T-4896**	2	WASHER-HARD (10.2X18.5X2.5MM THK)	

M-METRIC PART

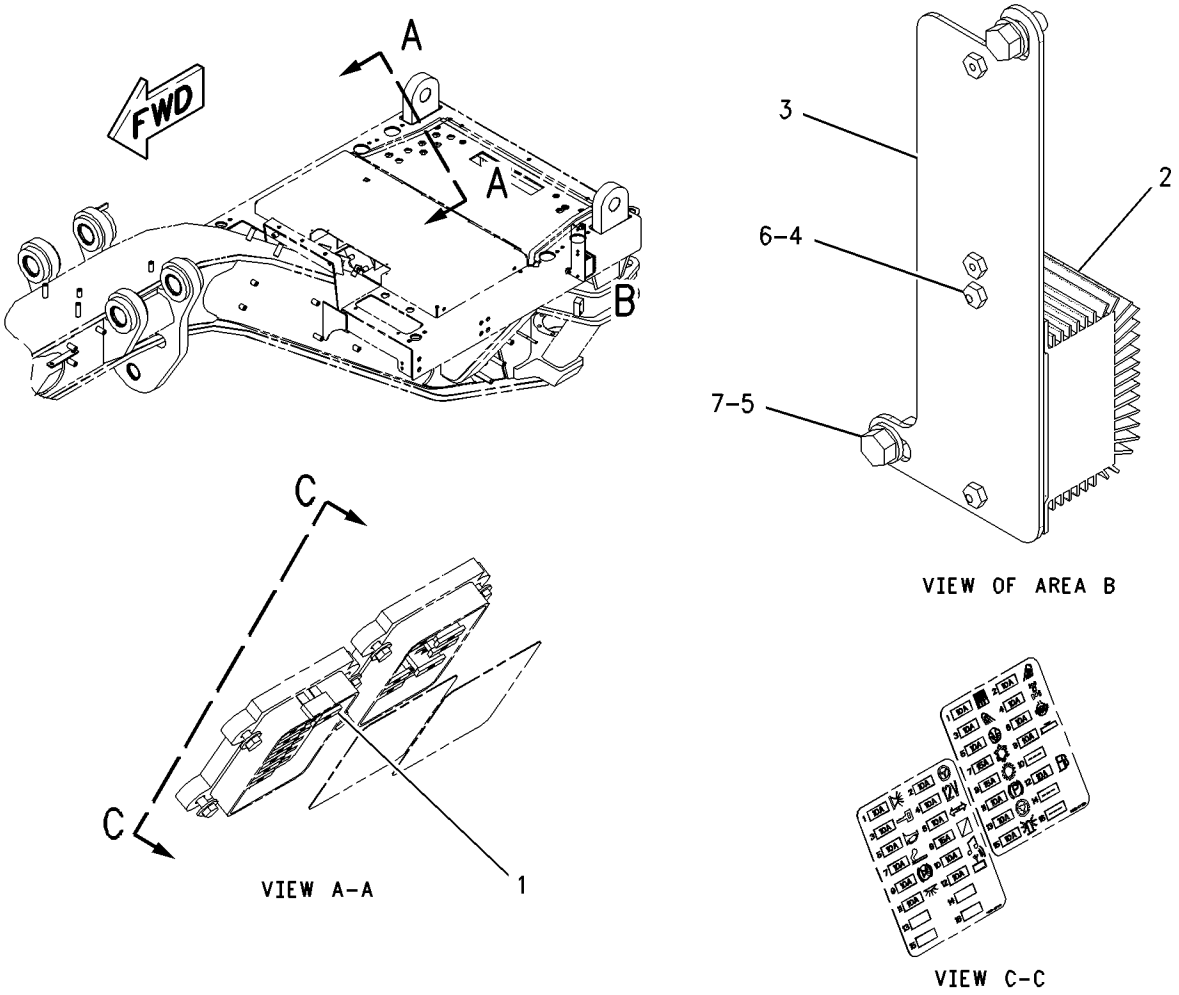

GRAPHIC #1 g00843830

170-1217 COVER GP-MODULE CONNECTOR

S/N: 3PD1-UP

PART OF 161-1747 ENGINE AR

SMCS-1901 **i01132571**

NOTE	REF NO	GRAPHIC REF	PART NUMBER	QTY	PART NAME 1 2 3 4 5 6 (PRODUCT LEVEL)	SEE PAGE
	1	1	**126-1774**	1	CONNECTOR	
	2	1	**3S-2093**	2	STRAP-CABLE	

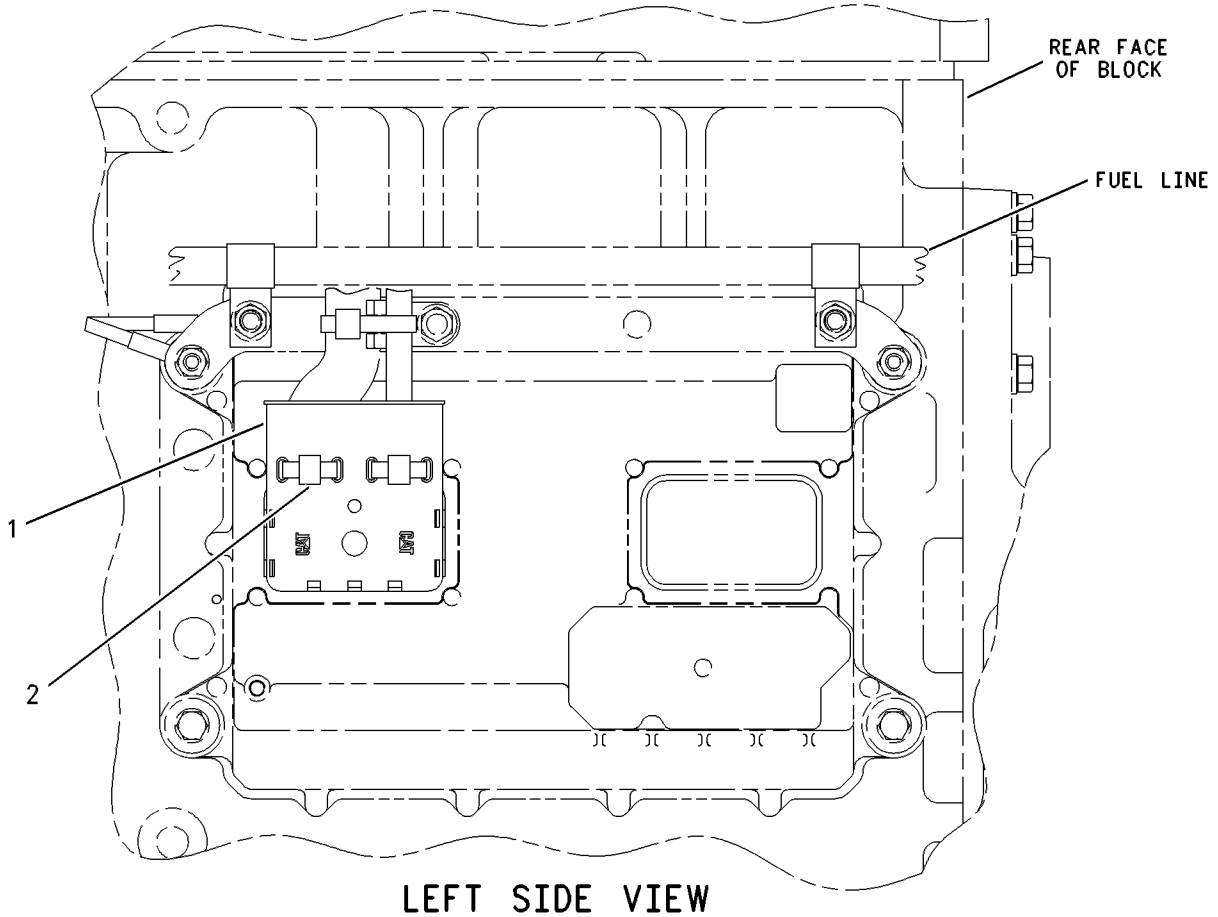

GRAPHIC #1 g00547322

198-7332 ELECTRONICS GP-MONITOR—CAT MONITORING SYSTEM

S/N: ASE1-UP

PART OF 159-5867 WIRING GP-FRONT

SMCS-7490, 7620 **i01510542**

NOTE	PART NUMBER	QTY	PART NAME 1 2 3 4 5 6 (PRODUCT LEVEL)	SEE PAGE
	195-7616	1	SOFTWARE GP-MONITOR (CATERPILLAR MONITORING SYSTEM)	
			—OR—	
	195-7617	1	SERVICE GP-MONITOR (CATERPILLAR MONITORING SYSTEM)	
			(OPTIONAL SERVICE REPLACEMENT)	

131-8126 HEATER GP-JACKET WATER–120 VOLT

S/N: ASE1-UP
PART OF 197-5959 SNOW AR-MOTOR GRADER
AN ATTACHMENT

SMCS-1383 **i01606466**

NOTE	REF NO	GRAPHIC REF	PART NUMBER	QTY	PART NAME 1 2 3 4 5 6 (PRODUCT LEVEL)	SEE PAGE
	1	1	**131-8627**	1	ELEMENT AS-JACKET WATER HEATER (120V 1250W)	
B	2	1	**133-6517**	1	CAP AS-DUST	
	3	1	**7X-6312**	1	CORD AS	

B-USE AS REQUIRED

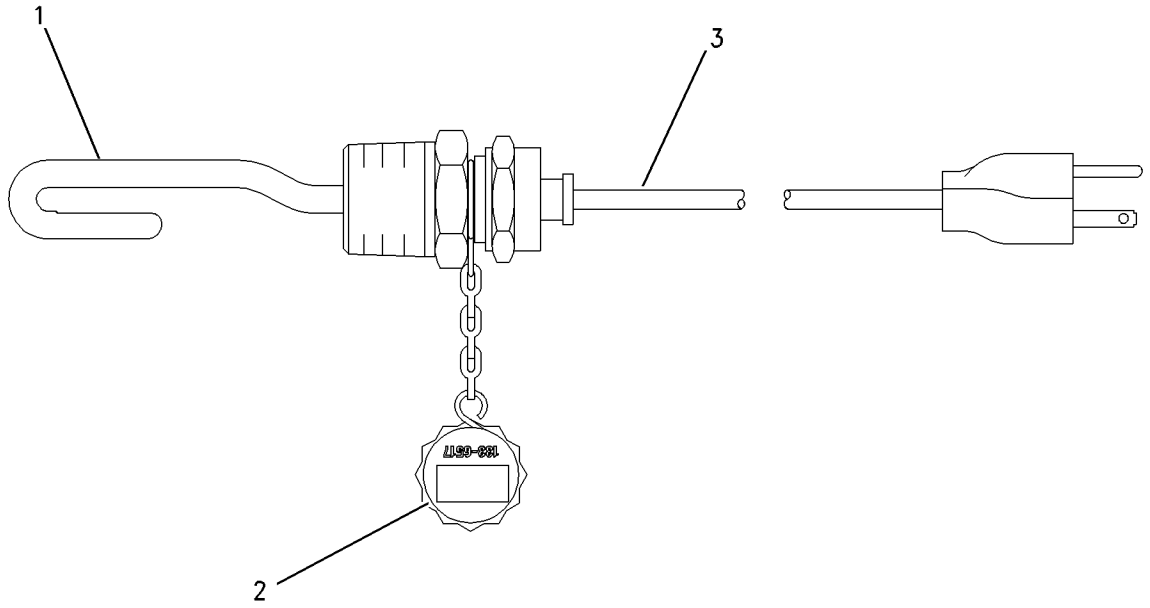

GRAPHIC #1 g00832252

154-7246 HEATER GP-JACKET WATER–240 VOLT

S/N: ASE1-UP
AN ATTACHMENT

SMCS-1383 **i01222538**

NOTE	REF NO	GRAPHIC REF	PART NUMBER	QTY	PART NAME 1 2 3 4 5 6 (PRODUCT LEVEL)	SEE PAGE
	1	1	**154-2881**	1	ELEMENT AS-HEATER (240V 1250W)	
	1A	1	**133-6517**	1	CAP AS-DUST	
	2	1	**127-8609**	1	CORD AS-JACKET WATER HEATER	

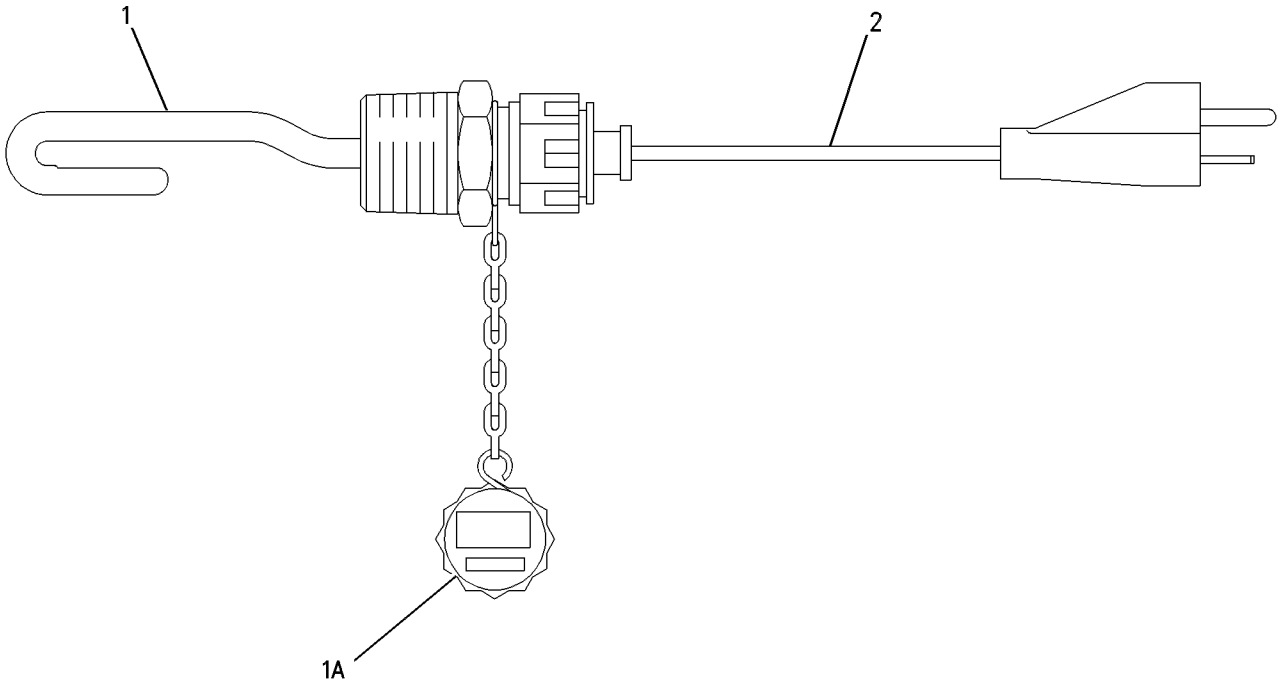

GRAPHIC #1 g00508489

161-1921 INSTALLATION GP-WARNING BEACON

S/N: ASE1-UP
PART OF 197-5959 SNOW AR-MOTOR GRADER
AN ATTACHMENT

SMCS-1408, 1431 **i01624081**

NOTE	REF NO	GRAPHIC REF	PART NUMBER	QTY	PART NAME 1 2 3 4 5 6 (PRODUCT LEVEL)	SEE PAGE
	1	1	**9W-1442**	1	FUSE (10 AMP) (WARNING BEACON)	
	2	1	**107-4932**	1	PLATE AS	
	3	1	**130-5300**	1	CLIP	
	4	1	**5P-8525**	1	GROMMET	
	5	1	**8T-4121**	2	WASHER-HARD (11X21X2.5MM THK)	
M	6	1	**8T-4136**	2	BOLT (M10X1.5X25MM)	
	7	1	**102-9862**	1	SWITCH AS (WARNING BEACON)	
	8	1	**3E-8822**	1	ACTUATOR-ROCKER	
	9	1	**3E-8825**	1	LAMP (24 VOLT) (WARNING BEACON)	

M-METRIC PART

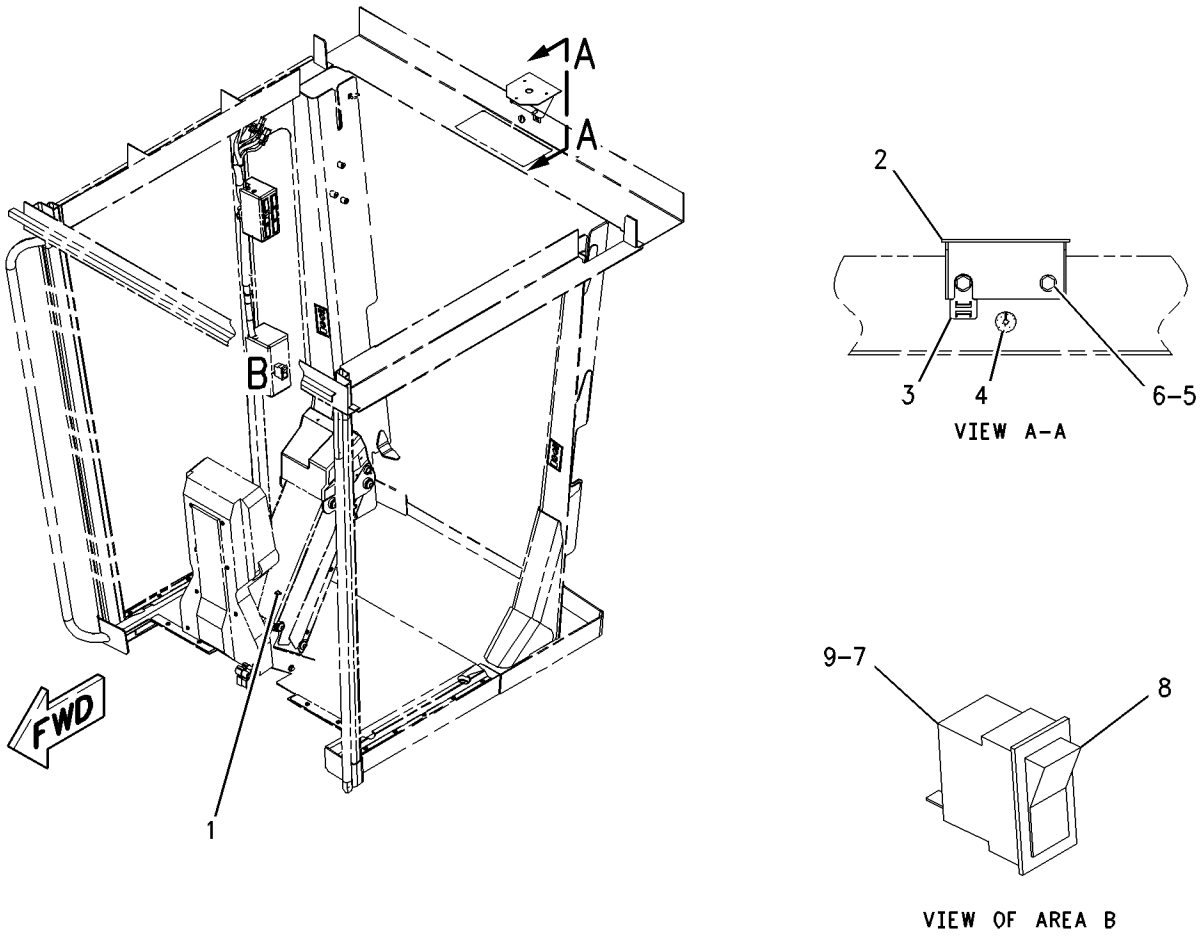

GRAPHIC #1 g00848000

9W-0742 JUNCTION BLOCK GP

S/N: ASE1-UP

PART OF 187-8137 WIRING GP-REAR

SMCS-1408 **i01217383**

NOTE	REF NO	GRAPHIC REF	PART NUMBER	QTY	PART NAME 1 2 3 4 5 6 (PRODUCT LEVEL)	SEE PAGE
	1	1	**8C-6358**	1	JUNCTION BLOCK AS	
	1A	1	**8T-3519**	3	BOLT-BRONZE	
BD	2	1	**6V-2722**		TUBE-SHRINKABLE	
	3	1	**7F-0560**	6	WASHER (2.57MM THK)	
	4	1	**8T-3518**	6	NUT-FULL	

B-USE AS REQUIRED
D-ORDER BY THE METER

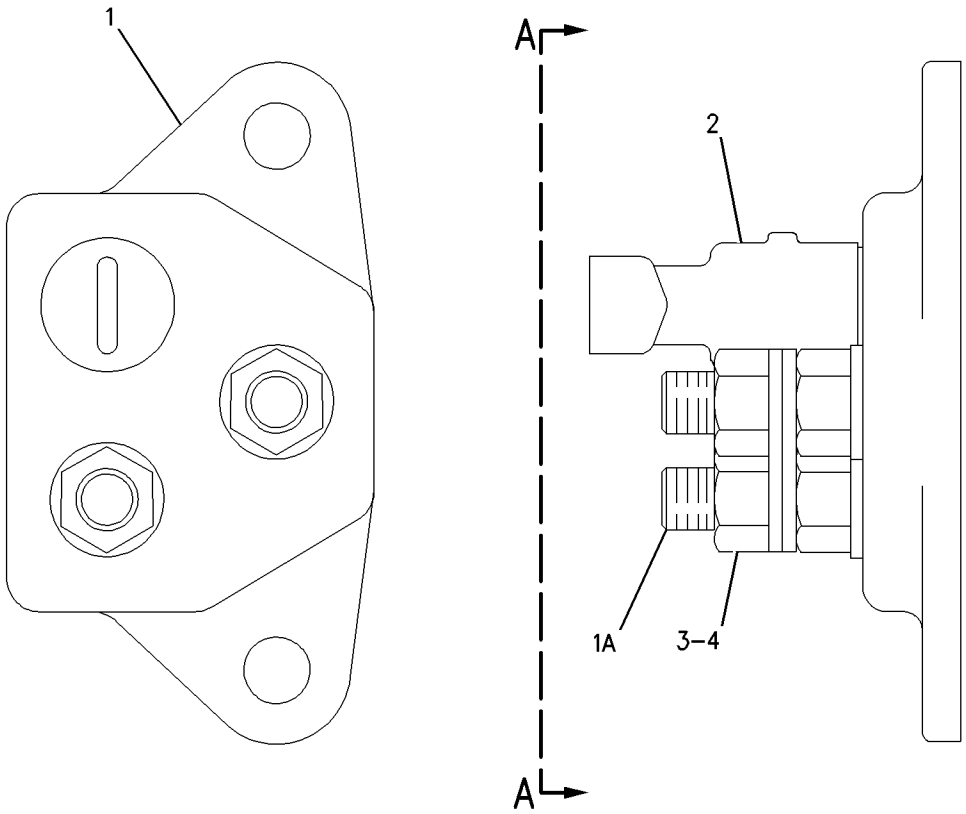

VIEW A-A

GRAPHIC #1 g00650721

3E-6389 LAMP GP-DOME

S/N: ASE1-UP
24 VOLT. WITH SWITCH
PART OF 159-5878 WIRING GP-CAB

SMCS-1433 **i01654414**

NOTE	REF NO	GRAPHIC REF	PART NUMBER	QTY	PART NAME 1 2 3 4 5 6 (PRODUCT LEVEL)	SEE PAGE
	1	1	**7N-9943**	1	LAMP (24 VOLT) (DOME)	
	2	1	**102-8803**	1	KIT-RECEPTACLE (3 PIN)	
					(INCLUDES RECEPTACLE AS & WEDGE)	
	3	1	**3E-3371**	1	WEDGE-RECEPTACLE LOCK (3 PIN)	
	4	1	**8T-8729**	3	PIN-CONNECTOR	
	5	1	**7T-0020**	1	LENS (DOME)	

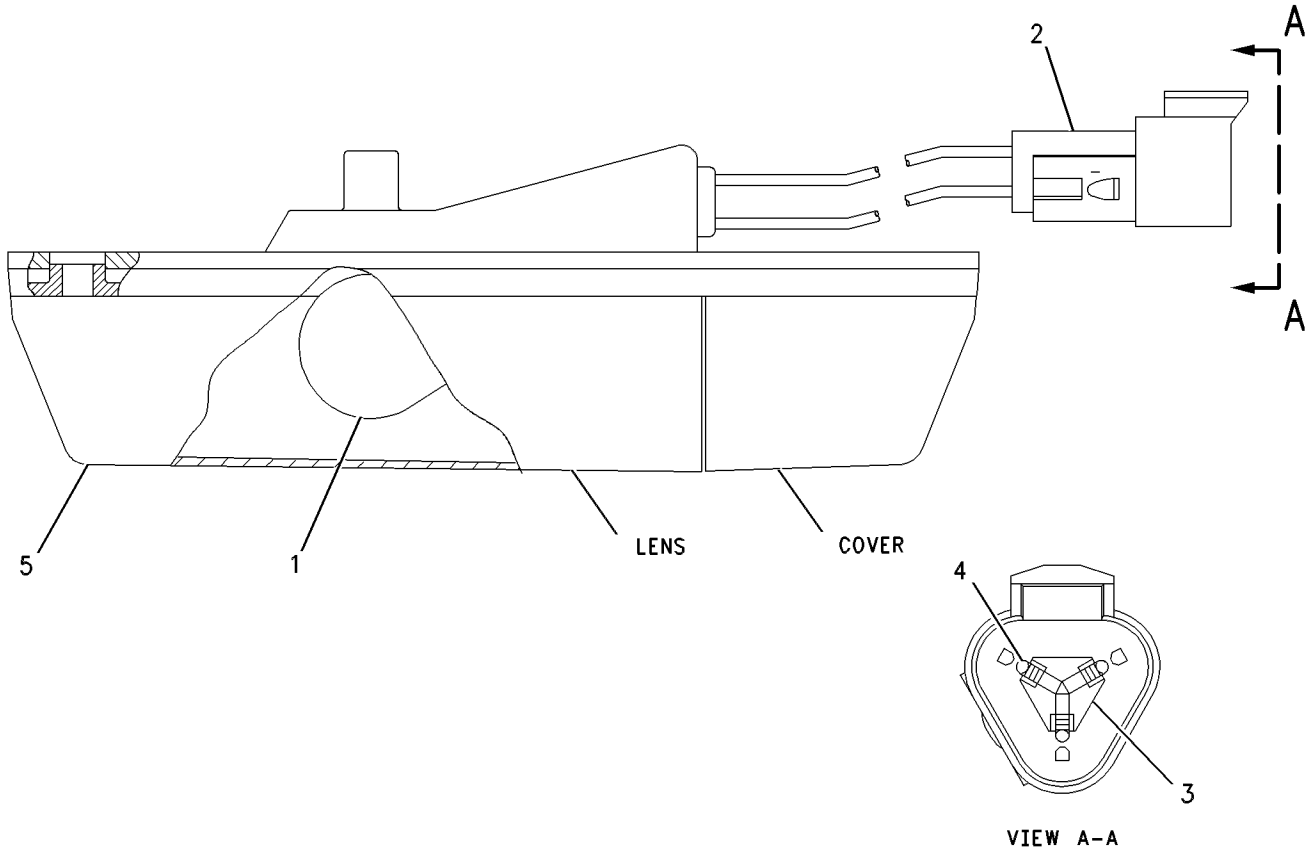

GRAPHIC #1 g00647928

153-2073 LAMP GP-FLOOD–MOLDBOARD

S/N: ASE1-UP
24 VOLT. VERTICAL
PART OF 161-0778, 161-1021, 183-4070, 188-9324, 196-8532, 204-3435 LIGHTING GP-FLOOD
AN ATTACHMENT

SMCS-1434 **i01683129**

NOTE	REF NO	GRAPHIC REF	PART NUMBER	QTY	PART NAME 1 2 3 4 5 6 (PRODUCT LEVEL)	SEE PAGE
	1	1	**9X-3463**	1	LAMP-HEAD (24 VOLT) (FLOOD)	
	2	1	**158-0250**	1	BODY AS-LAMP	
	3	1	**158-0248**	1	LENS AS (FLOODLAMP)	
	4	1	**158-0252**	1	BEZEL	
	5	1	**188-8849**	2	CLAMP	

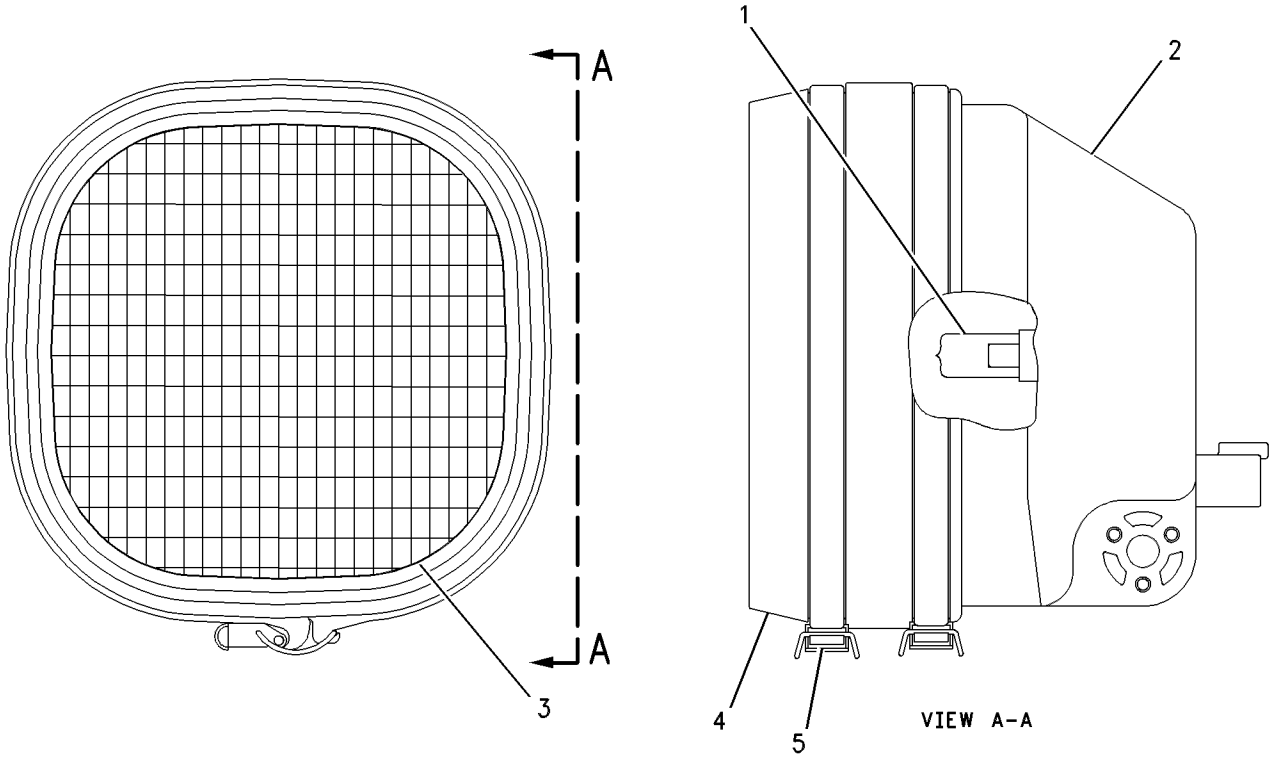

GRAPHIC #1 g00449633

MEMORANDA

105-4849 LAMP GP-HEAD–LH

S/N: ASE1-UP
PART OF 192-0229 LIGHTING GP-FLOOD
AN ATTACHMENT

SMCS-1429 **i01685241**

NOTE	REF NO	GRAPHIC REF	PART NUMBER	QTY	PART NAME 1 2 3 4 5 6 (PRODUCT LEVEL)	SEE PAGE
	1	1	**9X-4244**	4	SCREW	
	2	1	**100-3251**	2	SCREW-LENS	
	3	1	**9X-9865**	1	SEAL	
	4	1	**100-3248**	1	LENS AS (HIGH/LOW BEAM)	
	5	1	**9X-3465**	1	LAMP (24 VOLT) (HIGH/LOW BEAM)	
	6	1	**136-3848**	1	LENS AS (TURN SIGNAL)	
M	7	1	**8T-5005**	1	BOLT (M10X1.50X70MM)	
M	8	1	**8T-0389**	1	LOCKNUT (M10X1.5 THD)	
	9	1	**100-3253**	1	SPACER-SPHERICAL	
	10	1	**100-3254**	1	SPACER-SPHERICAL	
	11	1	**100-3255**	1	WASHER	
	12	1	**102-8805**	1	KIT-RECEPTACLE (6 PIN) (HEADLAMP)	
	13	1	**186-3735**	5	PIN-CONNECTOR	
	14	1	**3E-3383**	1	WEDGE-RECEPTACLE LOCK	
	15	1	**8T-8737**	1	PLUG-SEAL	
	16	1	**100-3245**	1	LAMP (24 VOLT) (RUNNING LIGHTS)	
	16A	1	**100-3245**	1	LAMP (24 VOLT) (TURN SIGNAL)	
	17	1	**9X-4493**	1	LAMP (SINGLE FILAMENT) (TURN SIGNAL)	
	18	1	**100-3250**	1	LENS-AMBER (TURN SIGNAL)	
	19	1	**136-3845**	1	BODY AS-LAMP	

M-METRIC PART

105-4849 LAMP GP-HEAD *(contd.)* **i01685241**

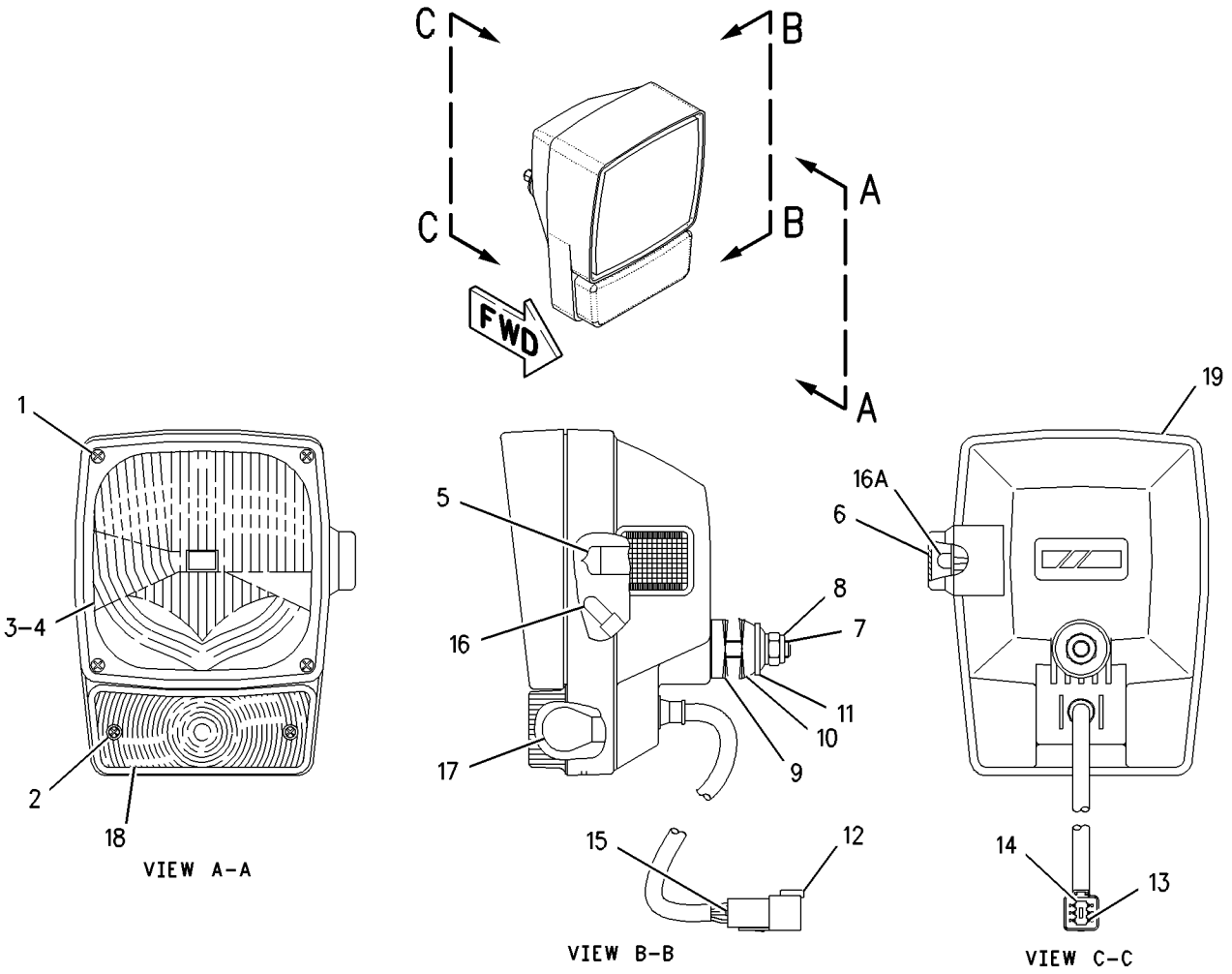

GRAPHIC #1 g00853119

105-4850 LAMP GP-HEAD–RH

S/N: ASE1-UP
PART OF 192-0229 LIGHTING GP-FLOOD
AN ATTACHMENT

SMCS-1429 **i01685262**

NOTE	REF NO	GRAPHIC REF	PART NUMBER	QTY	PART NAME 1 2 3 4 5 6 (PRODUCT LEVEL)	SEE PAGE
	1	1	**9X-4244**	4	SCREW	
	2	1	**100-3251**	2	SCREW-LENS	
	3	1	**9X-9865**	1	SEAL	
	4	1	**100-3248**	1	LENS AS (HIGH/LOW BEAM)	
	5	1	**9X-3465**	1	LAMP (24 VOLT) (HIGH/LOW BEAM)(RH)	
	6	1	**136-3848**	1	LENS AS (TURN SIGNAL)	
M	7	1	**8T-5005**	1	BOLT (M10X1.50X70MM)	
M	8	1	**8T-0389**	1	LOCKNUT (M10X1.5 THD)	
	9	1	**100-3253**	1	SPACER-SPHERICAL	
	10	1	**100-3254**	1	SPACER-SPHERICAL	
	11	1	**100-3255**	1	WASHER	
	12	1	**102-8805**	1	KIT-RECEPTACLE (6 PIN) (HEADLAMP)	
	13	1	**186-3735**	5	PIN-CONNECTOR	
	14	1	**3E-3383**	1	WEDGE-RECEPTACLE LOCK	
	15	1	**8T-8737**	1	PLUG-SEAL	
	16	1	**100-3245**	1	LAMP (24 VOLT) (RUNNING LAMP)	
	16A	1	**100-3245**	1	LAMP (24 VOLT) (TURN SIGNAL)	
	17	1	**9X-4493**	1	LAMP (SINGLE FILAMENT) (TURN SIGNAL)	
	18	1	**100-3250**	1	LENS-AMBER (TURN SIGNAL)	
	19	1	**136-3846**	1	BODY AS-LAMP	

M-METRIC PART

105-4850 LAMP GP-HEAD *(contd.)* **i01685262**

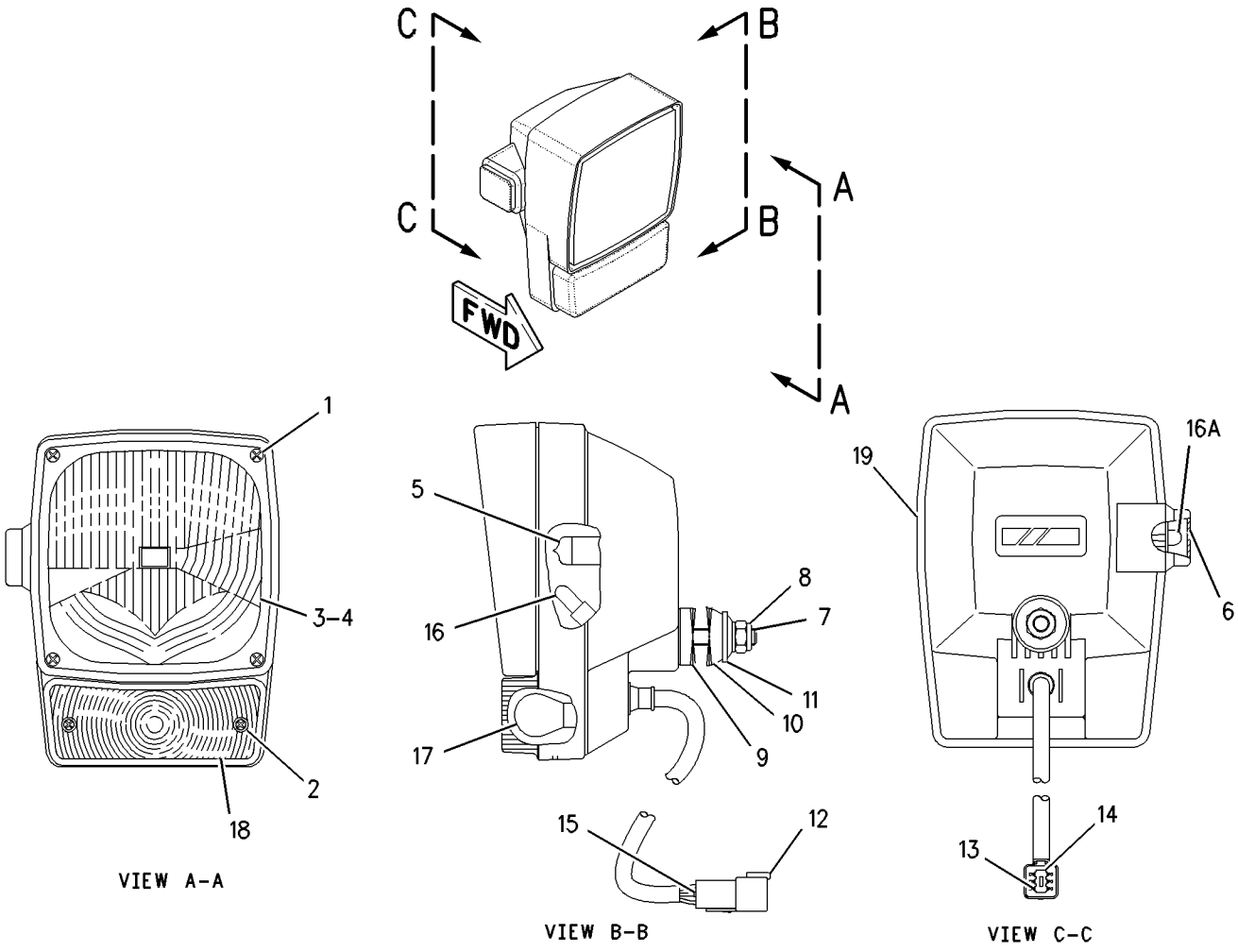

GRAPHIC #1 g00853116

161-3509 LAMP GP-HEAD—LOW BEAM

S/N: ASE1-UP
24 VOLT. VERTICAL
PART OF 161-1922, 185-6660 LIGHTING GP-FLOOD
AN ATTACHMENT

SMCS-1429 **i01683175**

NOTE	REF NO	GRAPHIC REF	PART NUMBER	QTY	PART NAME 1 2 3 4 5 6 (PRODUCT LEVEL)	SEE PAGE
	1	1	**9X-3463**	1	LAMP-HEAD (24 VOLT) (LOW BEAM)	
	2	1	**158-0250**	1	BODY AS-LAMP	
	3	1	**162-2077**	1	LENS AS (HEADLAMP)(LOW BEAM)	
	4	1	**158-0252**	1	BEZEL	
	5	1	**188-8849**	2	CLAMP	

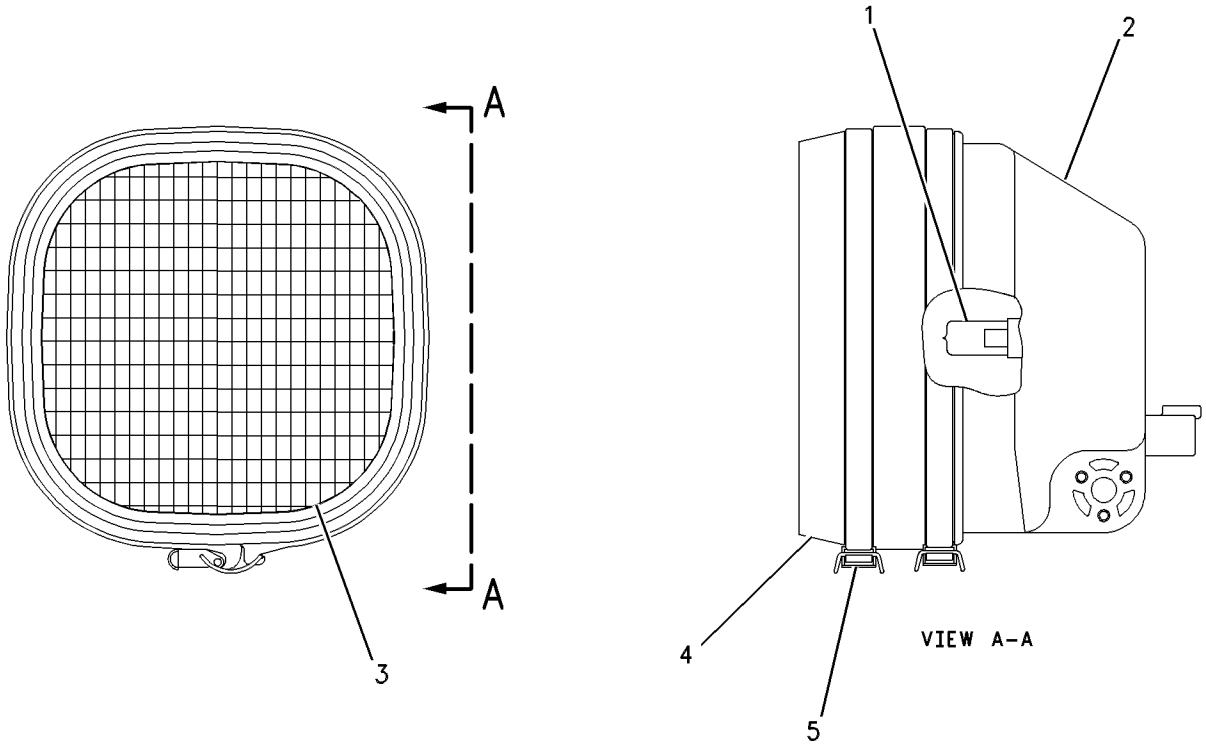

GRAPHIC #1 g00514339

180-1300 LAMP GP-HEAD–HIGH BEAM

S/N: ASE1-UP
PART OF 161-1922 LIGHTING GP-FLOOD
AN ATTACHMENT

SMCS-1429 **i01668455**

NOTE	REF NO	GRAPHIC REF	PART NUMBER	QTY	PART NAME 1 2 3 4 5 6 (PRODUCT LEVEL)	SEE PAGE
	1	1	**9X-3463**	1	LAMP-HEAD (24 VOLT)	
	2	1	**158-0250**	1	BODY AS-LAMP	
	3	1	**158-0249**	1	LENS AS (HEADLAMP)	
	4	1	**158-0252**	1	BEZEL	
	5	1	**188-8849**	2	CLAMP	

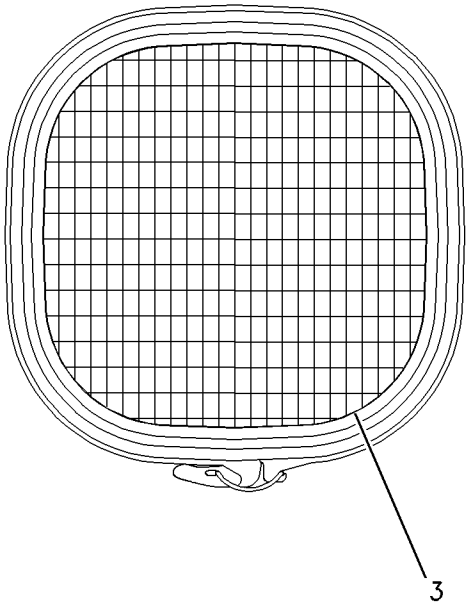

VIEW A-A

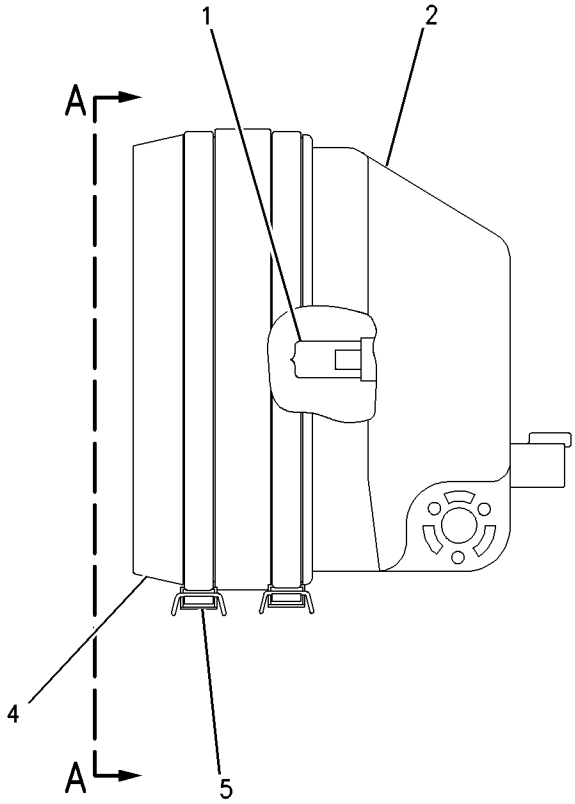

GRAPHIC #1 g00703486

135-0426 LAMP GP-SIGNAL—STOP/TAIL

S/N: ASE1-UP
24 VOLT
PART OF 194-7982 WIRING GP-REAR

SMCS-1430 **i01644640**

NOTE	REF NO	GRAPHIC REF	PART NUMBER	QTY	PART NAME 1 2 3 4 5 6 (PRODUCT LEVEL)	SEE PAGE
	1	1	**102-8803**	1	KIT-RECEPTACLE (3 PIN)	
					(INCLUDES RECEPTACLE AS & WEDGE)	
	2	1	**3E-3371**	1	WEDGE-RECEPTACLE LOCK (3 PIN)	
	3	1	**186-3735**	3	PIN-CONNECTOR	

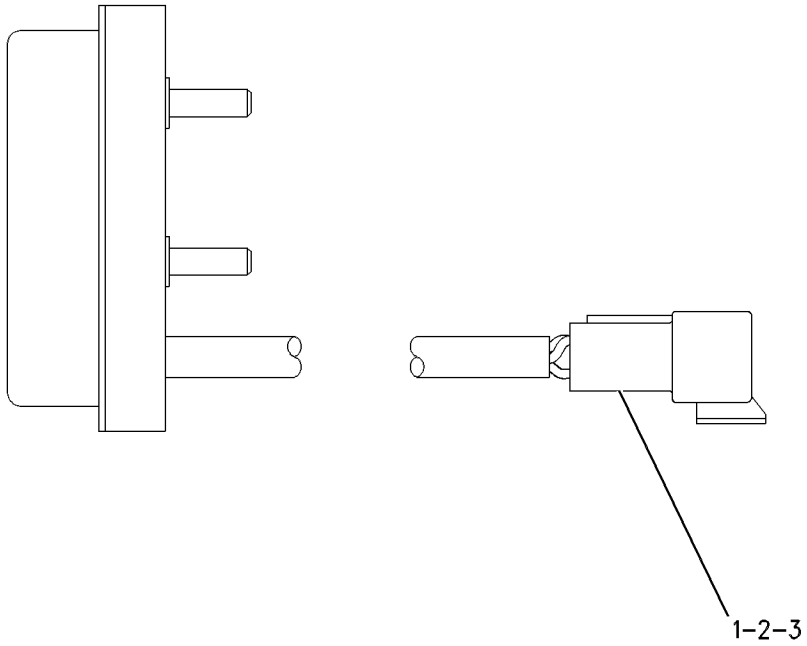

GRAPHIC #1 g00305543

135-0427 LAMP GP-SIGNAL–TURN/PARK

S/N: ASE1-UP
PART OF 161-1922 LIGHTING GP-FLOOD
AN ATTACHMENT

SMCS-1430 **i01668509**

NOTE	REF NO	GRAPHIC REF	PART NUMBER	QTY	PART NAME 1 2 3 4 5 6 (PRODUCT LEVEL)	SEE PAGE
	1	1	**102-8803**	1	KIT-RECEPTACLE (3 PIN)	
					(INCLUDES RECEPTACLE AS & WEDGE)	
	2	1	**3E-3371**	1	WEDGE-RECEPTACLE LOCK (3 PIN)	
	3	1	**186-3735**	3	PIN-CONNECTOR	

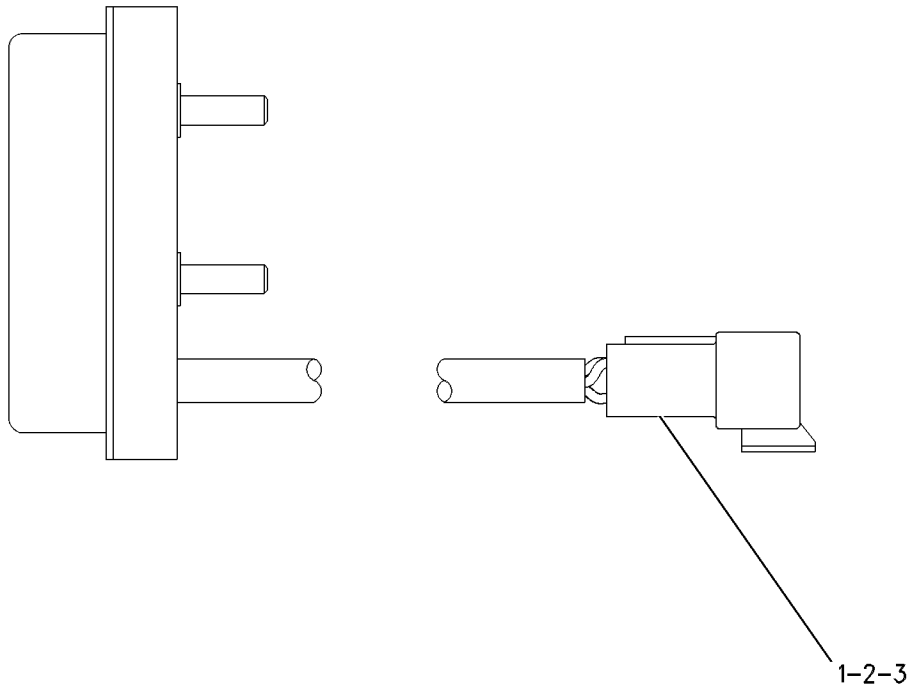

GRAPHIC #1 g00305583

128-6983 LAMP GP-WARNING BEACON

S/N: ASE1-UP
24 VOLT. AMBER , W/O REGULATOR
PART OF 161-0773, 161-0774 LIGHTING GP-WARNING
AN ATTACHMENT

SMCS-1431 **i01455898**

NOTE	REF NO	GRAPHIC REF	PART NUMBER	QTY	PART NAME 1 2 3 4 5 6 (PRODUCT LEVEL)	SEE PAGE
	1	1	**9X-8121**	1	LENS-AMBER (WARNING BEACON)	
	2	1	**9X-7849**	1	LAMP (WARNING BEACON)	
	3	1	**9X-8139**	1	BELT-DRIVE (WARNING BEACON)	
M	4	1	**6V-8225**	3	NUT (M6X1 THD)	
	5	1	**5P-0537**	3	WASHER-HARD (7.2X14.5X2MM THK)	
	6	1	**102-8802**	1	KIT-RECEPTACLE (2 PIN)	
					(INCLUDES RECEPTACLE AS AND WEDGE)	
	7	1	**8T-8729**	2	PIN-CONNECTOR	

M-METRIC PART

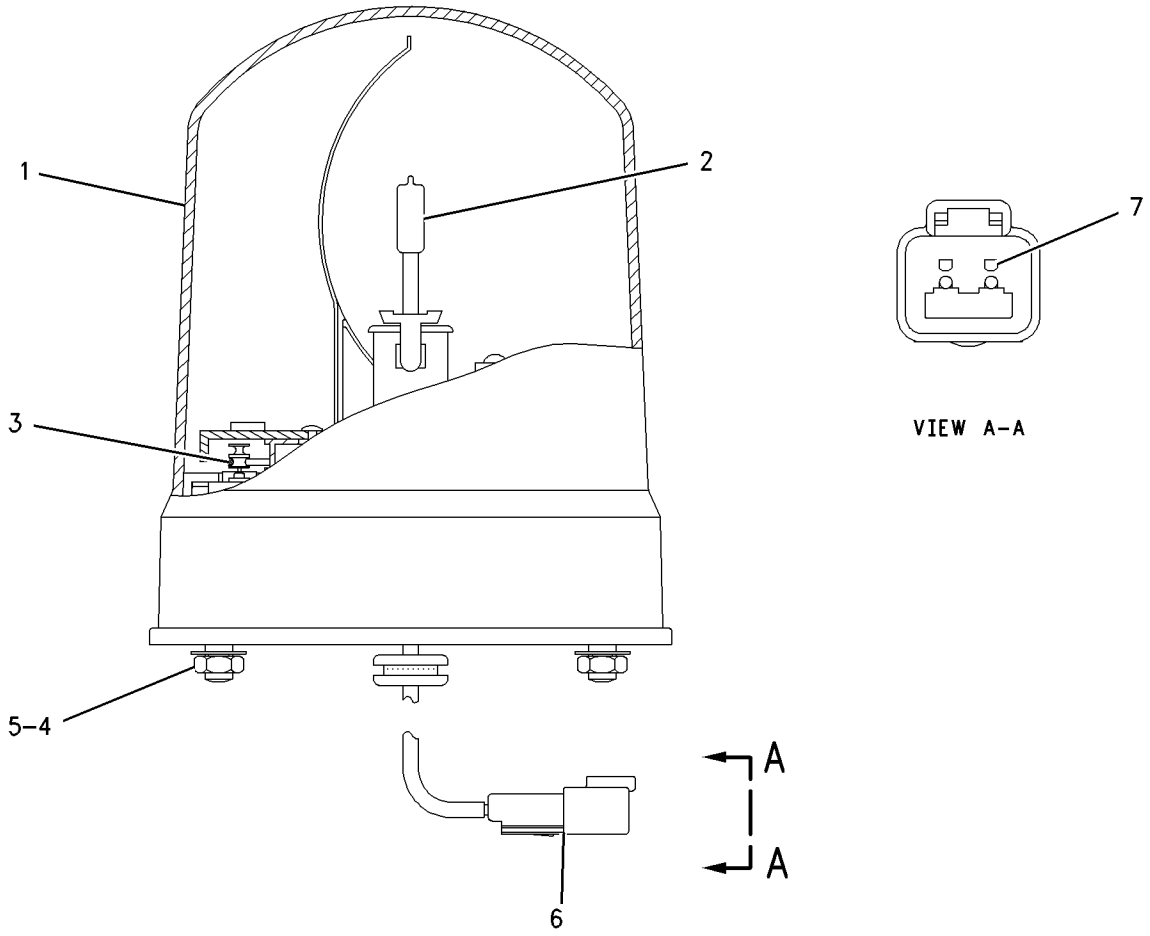

GRAPHIC #1 g00711055

188-9321 LIGHTING AR-FLOOD–SNOW

S/N: ASE1-UP

PART OF 197-5959 SNOW AR-MOTOR GRADER

AN ATTACHMENT

SMCS-1434 **i01654833**

NOTE	PART NUMBER	QTY	PART NAME 1 2 3 4 5 6 (PRODUCT LEVEL)	SEE PAGE
Y	*161-0778*	1	LIGHTING GP-FLOOD (FRONT)	172
Y	*188-9324*	1	LIGHTING GP-FLOOD (REAR)	184

Y-SEPARATE ILLUSTRATION

ELECTRICAL AND STARTING SYSTEM

203-6536 LIGHTING AR-FLOOD–FRONT

S/N: ASE1-UP

AN ATTACHMENT

SMCS-1434 **i01655035**

NOTE	PART NUMBER	QTY	PART NAME 1 2 3 4 5 6 (PRODUCT LEVEL)	SEE PAGE
Y	*196-8532*	1	LIGHTING GP-FLOOD (MOLDBOARD)	188
Y	*203-6551*	1	WIRING GP-CAB (MOLDBOARD)	228

Y-SEPARATE ILLUSTRATION

206-6538 LIGHTING AR-FLOOD–REAR

S/N: ASE1-UP

AN ATTACHMENT

SMCS-1434 **i01646079**

NOTE	PART NUMBER	QTY	PART NAME 1 2 3 4 5 6 (PRODUCT LEVEL)	SEE PAGE
Y	*204-3435*	1	LIGHTING GP-FLOOD (MOLDBOARD)	189
Y	*203-6551*	1	WIRING GP-CAB (MOLDBOARD)	228

Y-SEPARATE ILLUSTRATION

ELECTRICAL AND STARTING SYSTEM

161-0770 LIGHTING AR-FLOOD & SIGNAL

S/N: ASE1-UP

AN ATTACHMENT

SMCS-1430, 1434 **i01652665**

NOTE	PART NUMBER	QTY	PART NAME 1 2 3 4 5 6 (PRODUCT LEVEL)	SEE PAGE
Y	*201-1036*	1	CIRCUIT BREAKER GP (FLOOD)	133
Y	*161-0772*	1	LIGHTING GP-FLOOD (FRONT)	170
Y	*188-9331*	1	LIGHTING GP-SIGNAL (REAR)	190
Y	*161-1018*	1	SWITCH GP-LIGHT (TURN)	220

Y-SEPARATE ILLUSTRATION

161-1924 LIGHTING AR-FLOOD & SIGNAL–CAB–BOLSTER

S/N: ASE1-UP
AN ATTACHMENT

SMCS-1430, 1434 **i01685272**

NOTE	PART NUMBER	QTY	PART NAME 1 2 3 4 5 6 (PRODUCT LEVEL)	SEE PAGE
Y	*201-1036*	1	CIRCUIT BREAKER GP (FLOOD)	133
Y	*161-0772*	1	LIGHTING GP-FLOOD (CAB)	170
Y	*185-6660*	1	LIGHTING GP-FLOOD (BOLSTER)	182
Y	*188-9331*	1	LIGHTING GP-SIGNAL (REAR TURN LAMP)	190

Y-SEPARATE ILLUSTRATION

186-4957 LIGHTING AR-FLOOD & SIGNAL–CAB–
EXTENDED BOLSTER
S/N: ASE1-UP
AN ATTACHMENT

SMCS-1430, 1434 **i01685287**

NOTE	PART NUMBER	QTY	PART NAME 1 2 3 4 5 6 (PRODUCT LEVEL)	SEE PAGE
Y	*201-1036*	1	CIRCUIT BREAKER GP (CAB)	133
Y	*161-0772*	1	LIGHTING GP-FLOOD (CAB)	170
Y	*183-4070*	1	LIGHTING GP-FLOOD (EXTENDED BOLSTER)	178
Y	*188-9331*	1	LIGHTING GP-SIGNAL (REAR TURN LAMP)	190

Y-SEPARATE ILLUSTRATION

ELECTRICAL AND STARTING SYSTEM

188-9329 LIGHTING AR-FLOOD & SIGNAL—BOLSTER

S/N: ASE1-UP

AN ATTACHMENT

SMCS-1430, 1434 **i01645849**

NOTE	PART NUMBER	QTY	PART NAME 1 2 3 4 5 6 (PRODUCT LEVEL)	SEE PAGE
Y	*201-1038*	1	CIRCUIT BREAKER GP (BOLSTER/TURN LIGHTS)	134
Y	*161-1922*	1	LIGHTING GP-FLOOD (BOLSTER)	176
Y	*188-9331*	1	LIGHTING GP-SIGNAL (TURN)	190

Y-SEPARATE ILLUSTRATION

171-7096 LIGHTING GP-BACKUP

S/N: ASE1-UP
AN ATTACHMENT

SMCS-1408 **i01628220**

NOTE	REF NO	GRAPHIC REF	PART NUMBER	QTY	PART NAME 1 2 3 4 5 6 (PRODUCT LEVEL)	SEE PAGE
	1	1	**3E-0109**	5	PLUG-ROCKER SWITCH	
	2	1	**3E-5239**	1	RELAY AS (24 VOLT) (AUXILIARY BACKUP LAMP)	
	3	1	**3S-2093**	5	STRAP-CABLE	
	4	1	**9W-1442**	1	FUSE (10 AMP) (BACKUP LAMP)	
	5	1	**145-3350**	1	PLATE	
	6	1	**153-2147**	1	PLATE	
	7	1	**168-8243**	1	HARNESS AS-PANEL	
		1	**102-8802**	1	KIT-RECEPTACLE (2 PIN)	
		1	**102-8804**	2	KIT-RECEPTACLE (4 PIN) (HEATED MIRROR/MOLDBOARD LAMPS)	
		1	**102-8806**	1	KIT-RECEPTACLE (8 PIN)	
		1	**102-8801**	1	KIT-RECEPTACLE (12 PIN) (BEACON SWITCH)	
		1	**155-2255**	1	KIT-CONNECTING PLUG (12 PIN) (FRONT/REAR DEFROSTER)	
		1	**155-2265**	4	KIT-CONNECTING PLUG (8 PIN) (FRONT/REAR WIPER/WASHER)	
		1	**155-2270**	1	KIT-CONNECTING PLUG (2 PIN) (SNOW WING LAMP)	
		1	**155-2271**	1	KIT-CONNECTING PLUG (4 PIN) (AUXILIARY BACKUP LAMP)	
	8	1	**172-6556**	1	PANEL (UPPER SWITCH)	
	9	1	**178-6267**	1	HARNESS AS-ALARM	
		1	**102-8804**	1	KIT-RECEPTACLE (4 PIN) (AUXILIARY BACKUP LAMP)	
		1	**9X-1054**	1	PLUG AS-CONNECTOR (4 PIN) (AUXILIARY BACKUP LAMP)	
	10	1	**188-3862**	1	BRACKET AS	
	11	1	**161-1418**	1	SWITCH AS (AUXILIARY BACKUP LIGHT)	
		1	**3E-8825**	2	LAMP (24 VOLT) (AUXILIARY BACKUP LIGHT)	
		1	**161-1417**	1	ACTUATOR-ROCKER	
M	12	1	**9X-2043**	7	SCREW-TRUSS HEAD (M6X1X14MM)	
	13	1	**9X-8256**	1	WASHER (6.6X12X2MM THK)	

M-METRIC PART

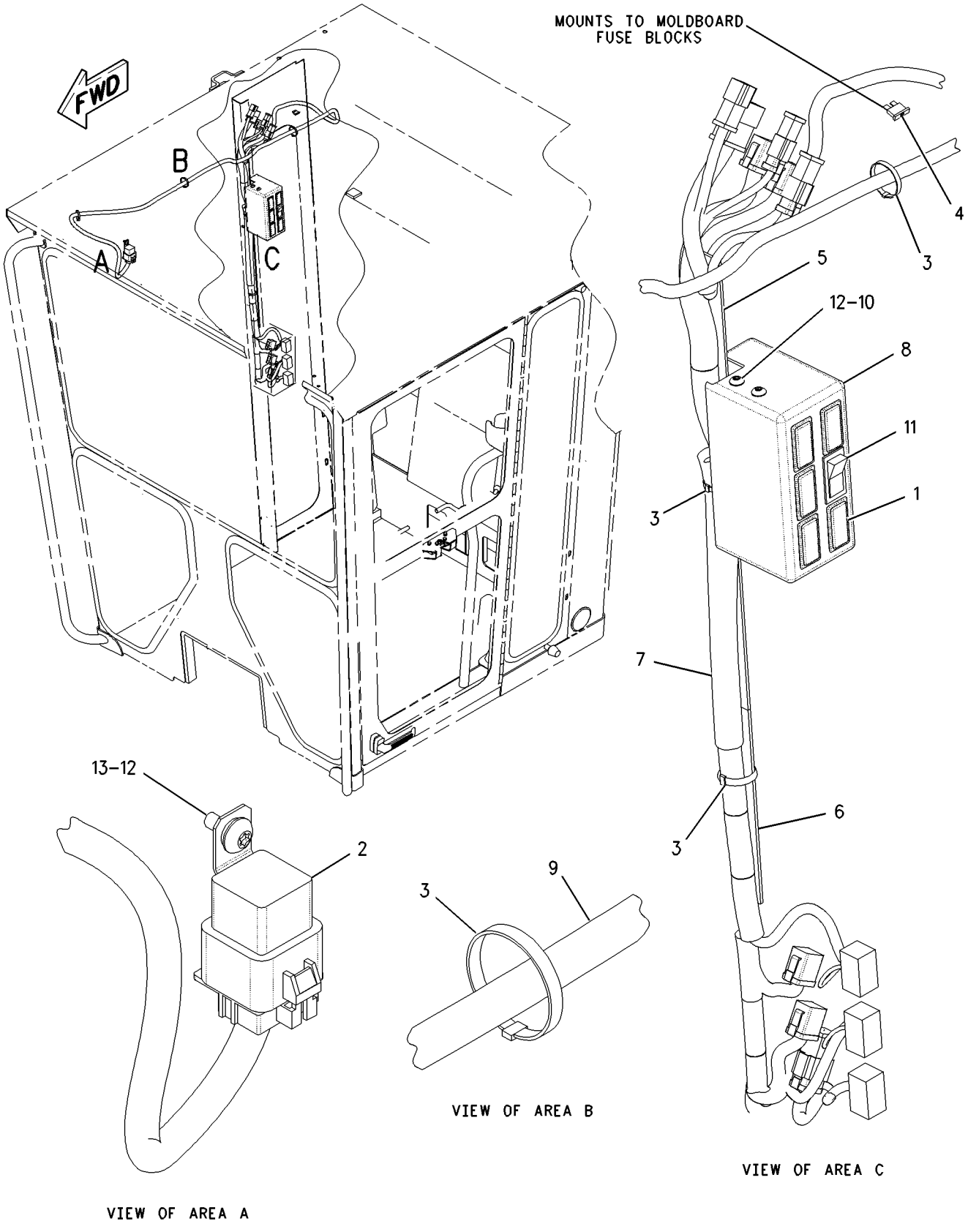

GRAPHIC #1 g00846331

161-0772 LIGHTING GP-FLOOD—CAB

S/N: ASE1-UP

PART OF 161-0770, 161-1924, 186-4957 LIGHTING AR-FLOOD & SIGNAL

AN ATTACHMENT

SMCS-1434 **i01627702**

NOTE	REF NO	GRAPHIC REF	PART NUMBER	QTY	PART NAME 1 2 3 4 5 6 (PRODUCT LEVEL)	SEE PAGE
	1	1	**116-5710**	2	GROMMET	
	2	1	**135-0427**	1	LAMP GP-SIGNAL (LH)	
	2A	1	**135-0427**	1	LAMP GP-SIGNAL (RH)	
					(EACH LAMP GP INCLUDES)	
		1	**102-8803**	1	KIT-RECEPTACLE (3 PIN) (TURN/PARK)	
		1	**3E-3371**	1	WEDGE-RECEPTACLE LOCK (3 PIN)	
		1	**186-3735**	3	PIN-CONNECTOR	
	3	1	**184-0903**	4	BRACKET AS	
					(EACH INCLUDES)	
		1	**183-9606**	1	BRACKET	
M		1	**8T-3490**	1	NUT-WELD (M10X1.5 THD)	
	4	1	**193-7416**	2	PLATE AS	
	5	1	**130-5300**	2	CLIP	
	6	1	**157-0305**	2	LAMP GP-HEAD (HIGH BEAM)	
					(EACH INCLUDES)	
		1	**158-0249**	1	LENS AS (HEADLIGHT) (HIGH BEAM)	
		1	**158-0250**	1	BODY AS-LAMP	
		1	**158-0252**	1	BEZEL	
		1	**9X-3463**	1	LAMP (24 VOLT) (HIGH BEAM)	
		1	**188-8849**	2	CLAMP	
	7	1	**161-0908**	2	LAMP GP-HEAD (LOW BEAM)	
					(EACH INCLUDES)	
		1	**162-2077**	1	LENS AS (HEADLIGHT) (LOW BEAM)	
		1	**158-0250**	1	BODY AS-LAMP	
		1	**158-0252**	1	BEZEL	
		1	**9X-3463**	1	LAMP (24 VOLT) (LOW BEAM)	
		1	**188-8849**	2	CLAMP	
	8	1	**3P-9554**	2	GROMMET	
M	9	1	**5C-2890**	6	NUT (M6X1 THD)	
M	10	1	**5C-7261**	4	NUT (M8X1.25 THD)	
	11	1	**8T-4121**	8	WASHER-HARD (11X21X2.5MM THK)	
M	12	1	**8T-4137**	8	BOLT (M10X1.5X20MM)	
	13	1	**8T-4224**	8	WASHER-HARD (8.8X16X2MM THK)	
M	14	1	**8T-6869**	4	BOLT (M8X1.25X60MM)	
	15	1	**9X-8256**	6	WASHER (6.6X12X2MM THK)	

M-METRIC PART

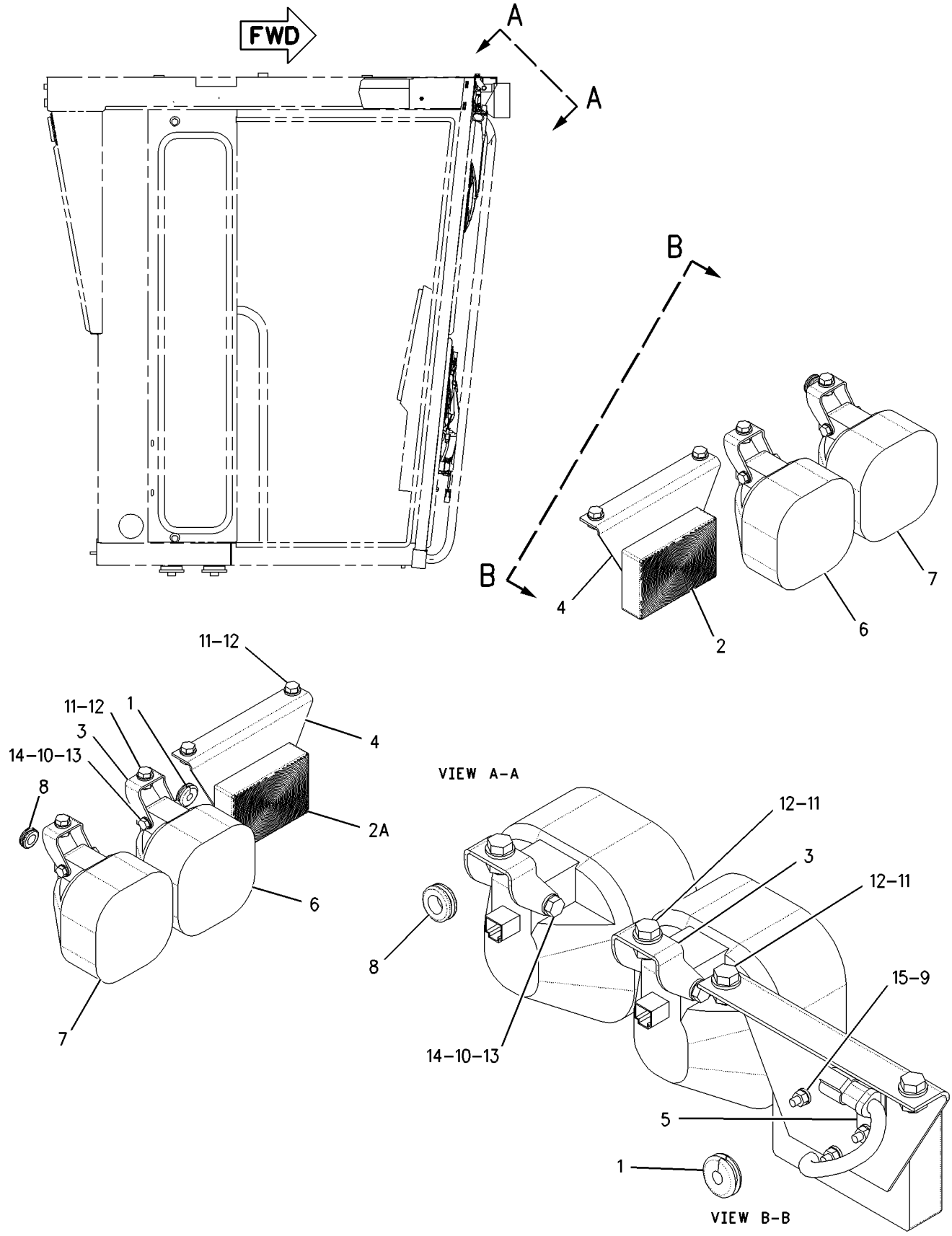

GRAPHIC #1

g00844108

161-0778 LIGHTING GP-FLOOD–SNOW–FRONT

S/N: ASE1-UP
PART OF 188-9321 LIGHTING AR-FLOOD
AN ATTACHMENT

SMCS-1434 **i01624115**

NOTE	REF NO	GRAPHIC REF	PART NUMBER	QTY	PART NAME 1 2 3 4 5 6 (PRODUCT LEVEL)	SEE PAGE
	1	1	**9W-1442**	2	FUSE (10 AMP) (FRONT FLOODLIGHT)	
	2	1	**178-8067**	2	BRACKET AS	
Y	3	1	**153-2073**	2	LAMP GP-FLOOD	150
M	4	1	**5C-7261**	2	NUT (M8X1.25 THD)	
	5	1	**6V-3265**	2	CLIP	
	6	1	**8T-4121**	2	WASHER-HARD (11X21X2.5MM THK)	
M	7	1	**8T-4136**	2	BOLT (M10X1.5X25MM)	
	8	1	**8T-4224**	2	WASHER-HARD (8.8X16X2MM THK)	
M	9	1	**8T-6869**	2	BOLT (M8X1.25X60MM)	
	10	1	**3E-8772**	1	SWITCH AS-ROCKER (FLOODLIGHT)	
		1	**3E-8815**	1	ACTUATOR-ROCKER	
		1	**3E-8825**	2	LAMP (24 VOLT) (FRONT FLOODLIGHT)	

M-METRIC PART
Y-SEPARATE ILLUSTRATION

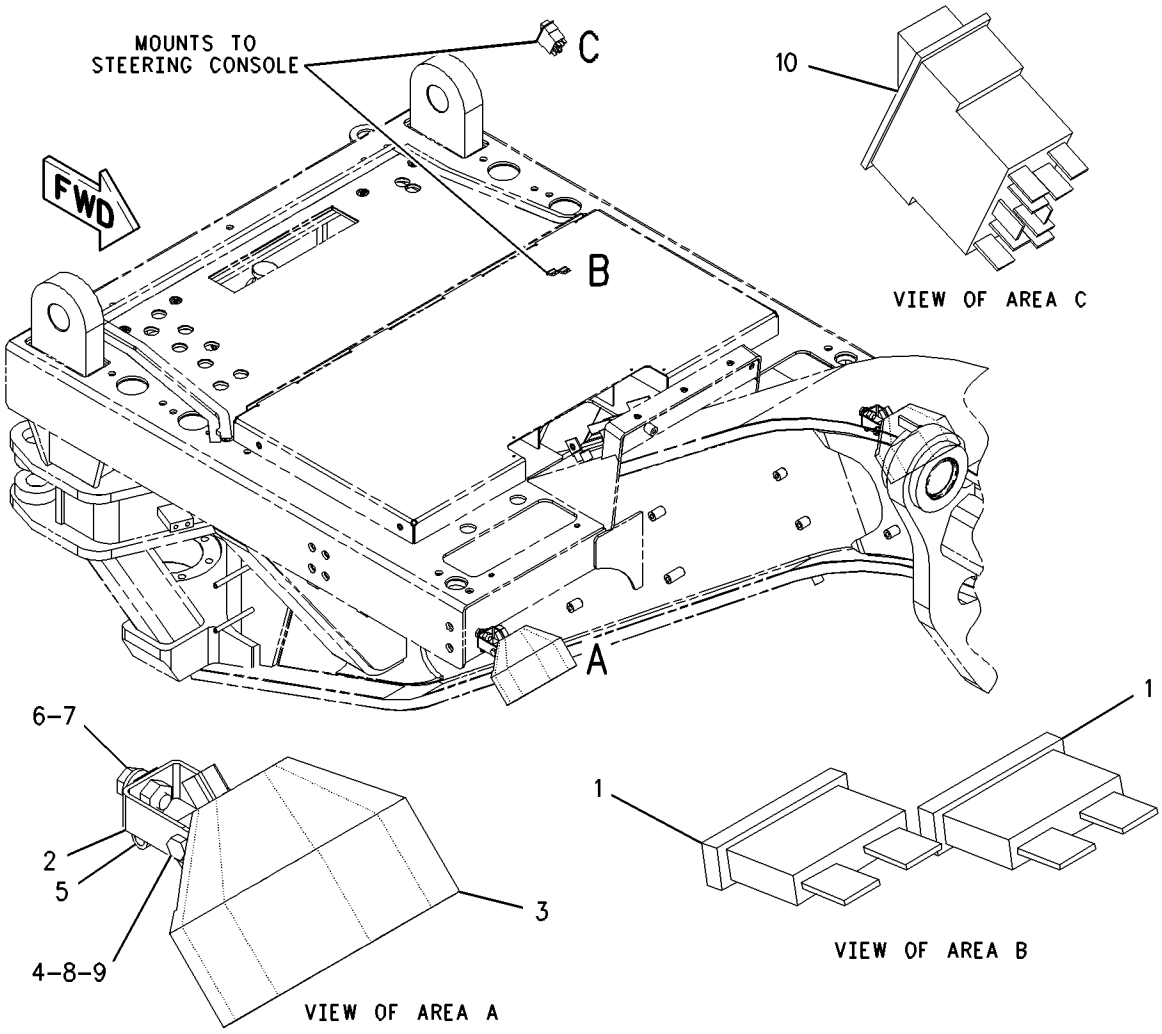

GRAPHIC #1 g00845745

MEMORANDA

161-1021 LIGHTING GP-FLOOD—CAB—SNOW—RH

S/N: ASE1-UP
PART OF 197-5959 SNOW AR-MOTOR GRADER
AN ATTACHMENT

SMCS-1434 **i01624076**

NOTE	REF NO	GRAPHIC REF	PART NUMBER	QTY	PART NAME 1 2 3 4 5 6 (PRODUCT LEVEL)	SEE PAGE
	1	1	**3E-0109**	5	PLUG-ROCKER SWITCH	
C	2	1	**3S-2093**	2	STRAP-CABLE	
	3	1	**9W-1442**	1	FUSE (10 AMP) (FLOODLAMP RH)	
C	4	1	**145-3350**	1	PLATE	
C	5	1	**153-2147**	1	PLATE	
	6	1	**168-8243**	1	HARNESS AS-PANEL	
		1	**102-8802**	4	KIT-RECEPTACLE (2 PIN)	
		1	**102-8804**	4	KIT-RECEPTACLE (4 PIN)	
		1	**102-8806**	1	KIT-RECEPTACLE (8 PIN)	
		1	**102-8801**	1	KIT-RECEPTACLE (12 PIN)	
		1	**155-2255**	1	KIT-CONNECTING PLUG (12 PIN)	
		1	**155-2265**	1	KIT-CONNECTING PLUG (8 PIN)	
		1	**155-2270**	1	KIT-CONNECTING PLUG (2 PIN)	
		1	**155-2271**	1	KIT-CONNECTING PLUG (4 PIN) (AUX BACKUP LAMP SWITCH)	
	7	1	**171-6175**	1	HARNESS AS-FRONT LIGHTING	
		1	**155-2270**	1	KIT-CONNECTING PLUG (2 PIN) (SNOW WING LAMP)	
		1	**102-8802**	1	KIT-RECEPTACLE (2 PIN) (SNOW WING LAMP)	
	8	1	**172-6556**	1	PANEL	
	9	1	**188-3862**	1	BRACKET AS	
	10	1	**190-1680**	1	BRACKET	
	11	1	**3E-8766**	1	SWITCH AS (FLOODLAMP RH)	
		1	**3E-8782**	1	ACTUATOR-ROCKER	
		1	**3E-8825**	1	LAMP (24 VOLT) (FLOODLAMP RH)	
Y	12	1	**153-2073**	1	LAMP GP-FLOOD (RH)	150
	13	1	**5P-6459**	1	GROMMET	
	14	1	**5P-8525**	1	GROMMET	
M	15	1	**6V-9189**	1	LOCKNUT (M8X1.25 THD)	
	16	1	**8T-4224**	1	WASHER-HARD (8.8X16X2MM THK)	
M	17	1	**8T-6869**	1	BOLT (M8X1.25X60MM)	
M	18	1	**9X-2043**	6	SCREW-TRUSS HEAD (M6X1X14MM)	

C-CHANGE FROM PREVIOUS TYPE
M-METRIC PART
Y-SEPARATE ILLUSTRATION

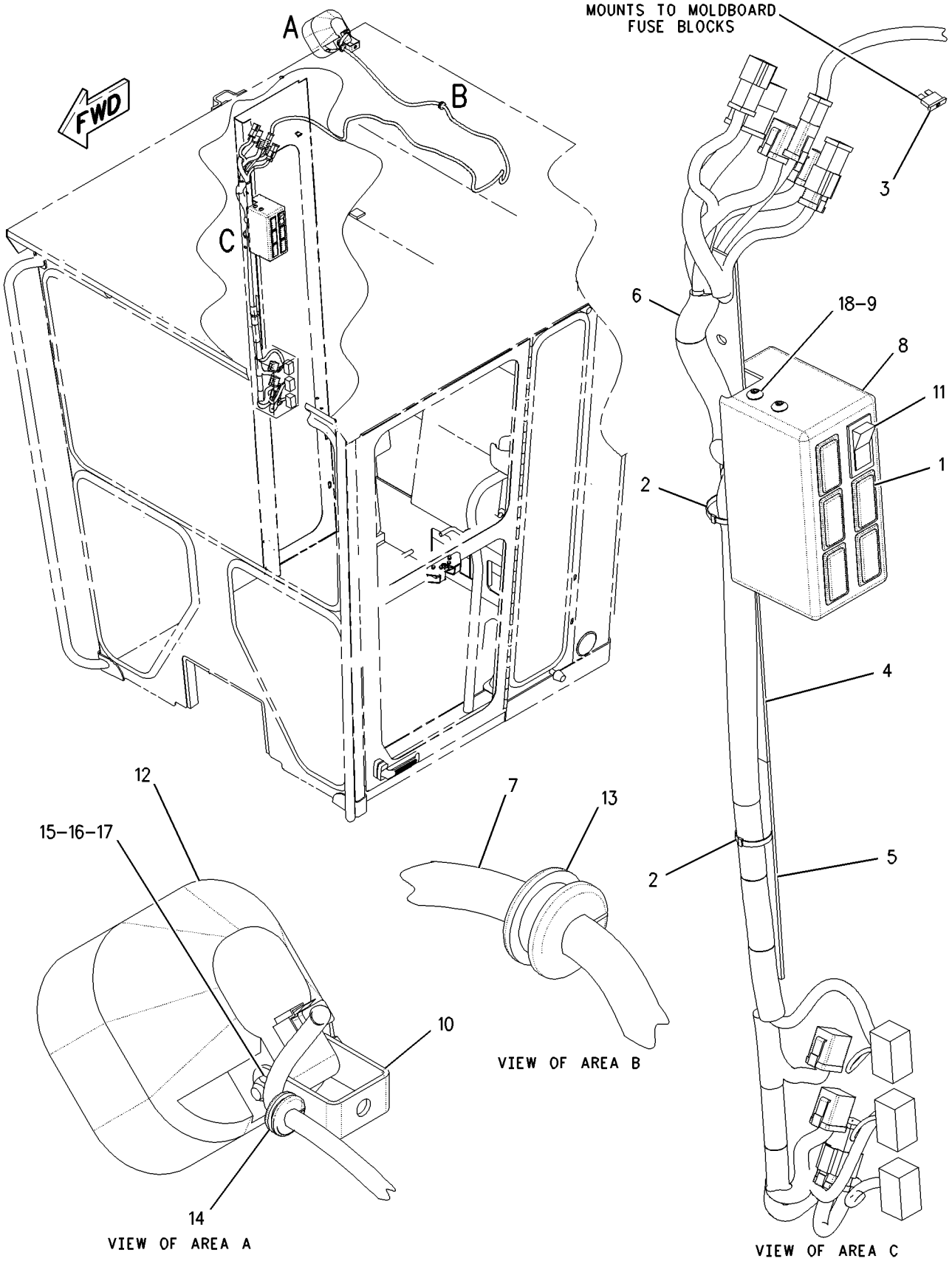

GRAPHIC #1

g00846133

ELECTRICAL AND STARTING SYSTEM

161-1922 LIGHTING GP-FLOOD—BOLSTER—DOUBLE WORKLAMPS

S/N: ASE1-UP

PART OF 188-9329 LIGHTING AR-FLOOD & SIGNAL

AN ATTACHMENT

SMCS-1434 **i01671090**

NOTE	REF NO	GRAPHIC REF	PART NUMBER	QTY	PART NAME 1 2 3 4 5 6 (PRODUCT LEVEL)	SEE PAGE
	1	1	**2G-0617**	4	CLAMP	
	2	1	**2G-0988**	2	CAP	
	3	1	**3K-9520**	3	GROMMET	
	4	1	**3S-2093**	6	STRAP-CABLE	
	5	1	**5T-9313**	1	TUBE	
	6	1	**8X-5153**	1	FILM-FACE (TURN SIGNAL/HAZARD)	
	7	1	**8X-5154**	1	FILM-FACE (HEADLIGHTS HIGH/LOW BEAM)	
	8	1	**9W-1442**	1	FUSE (10 AMP) (FRONT WORK LIGHTS)	
	9	1	**103-1592**	2	PLATE	
	10	1	**108-0358**	1	FLASHER AS-ELECTRONIC (12/24 VOLT)	
Y	11	1	**135-0427**	2	LAMP GP-SIGNAL (24 VOLT) (LIGHT BAR/TURN)	159
	12	1	**137-9410**	4	CLAMP	
	13	1	**173-3064**	1	SWITCH AS-TURN SIG & WARNING	
		1	**5L-7200**	1	SCREW (8-32X0.375 IN)	
		1	**9B-7233**	1	LOCKWASHER	
	14	1	**178-8067**	4	BRACKET AS	
Y	15	1	**180-1300**	2	LAMP GP-HEAD (24 VOLT) (HIGH BEAM)	157
	16	1	**186-2508**	1	HARNESS AS-FRONT CHASSIS	
		1	**155-2255**	1	KIT-CONNECTING PLUG (12 PIN)	
		1	**102-8801**	1	KIT-RECEPTACLE (12 PIN)	
	17	1	**186-4840**	1	HARNESS AS-FRONT LIGHTING	
		1	**155-2260**	2	KIT-CONNECTING PLUG (3 PIN) (LIGHTBAR TURN LAMPS)	
		1	**155-2270**	4	KIT-CONNECTING PLUG (2 PIN) (LIGHT BAR HEADLAMPS)	
		1	**102-8801**	1	KIT-RECEPTACLE (12 PIN)	
	18	1	**103-5678**	1	SWITCH AS-ROTARY (HIGH/LOW BEAM)	
		1	**5L-7200**	1	SCREW (8-32X0.375 IN)	
		1	**9B-7233**	1	LOCKWASHER	
	19	1	**108-3519**	4	CLAMP	
	20	1	**130-5300**	2	CLIP	
Y	21	1	**161-3509**	2	LAMP GP-HEAD (24 VOLT) (LOW BEAM)	156
	22	1	**3E-8772**	1	SWITCH AS-ROCKER (HEADLAMP/TAIL)	
		1	**3E-8825**	2	LAMP (24 VOLT) (HEADLAMP/TAIL INDICATOR)	
		1	**3E-9326**	1	ACTUATOR-ROCKER	
	23	1	**4D-7794**	4	CLIP	
	24	1	**4K-8864**	2	CLIP	
	25	1	**4L-6454**	4	BOLT (3/8-16X1 IN)	
M	26	1	**5C-2890**	8	NUT (M6X1 THD)	
M	27	1	**5C-7261**	4	NUT (M8X1.25 THD)	
	28	1	**5M-3062**	1	BOLT (3/8-16X0.75 IN)	
	29	1	**5S-7379**	4	BOLT (3/8-16X0.875 IN)	
	30	1	**6V-8801**	4	NUT (3/8-16 THD)	
	31	1	**8T-4121**	4	WASHER-HARD (11X21X2.5MM THK)	
M	32	1	**8T-4136**	4	BOLT (M10X1.5X25MM)	
	33	1	**8T-4224**	4	WASHER-HARD (8.8X16X2MM THK)	
	34	1	**8T-4896**	9	WASHER-HARD (10.2X18.5X2.5MM THK)	
M	35	1	**8T-6869**	4	BOLT (M8X1.25X60MM)	
	36	1	**8X-6296**	1	LEVER (TURN SIGNAL)	
	36A	1	**8X-6296**	1	LEVER (HIGH/LOW BEAM)	
	37	1	**9D-6164**	4	BOSS (3/8-16 THD)	
M	38	1	**9X-2043**	2	SCREW-TRUSS HEAD (M6X1X14MM)	
	39	1	**9X-8256**	8	WASHER (6.6X12X2MM THK)	

M-METRIC PART
Y-SEPARATE ILLUSTRATION

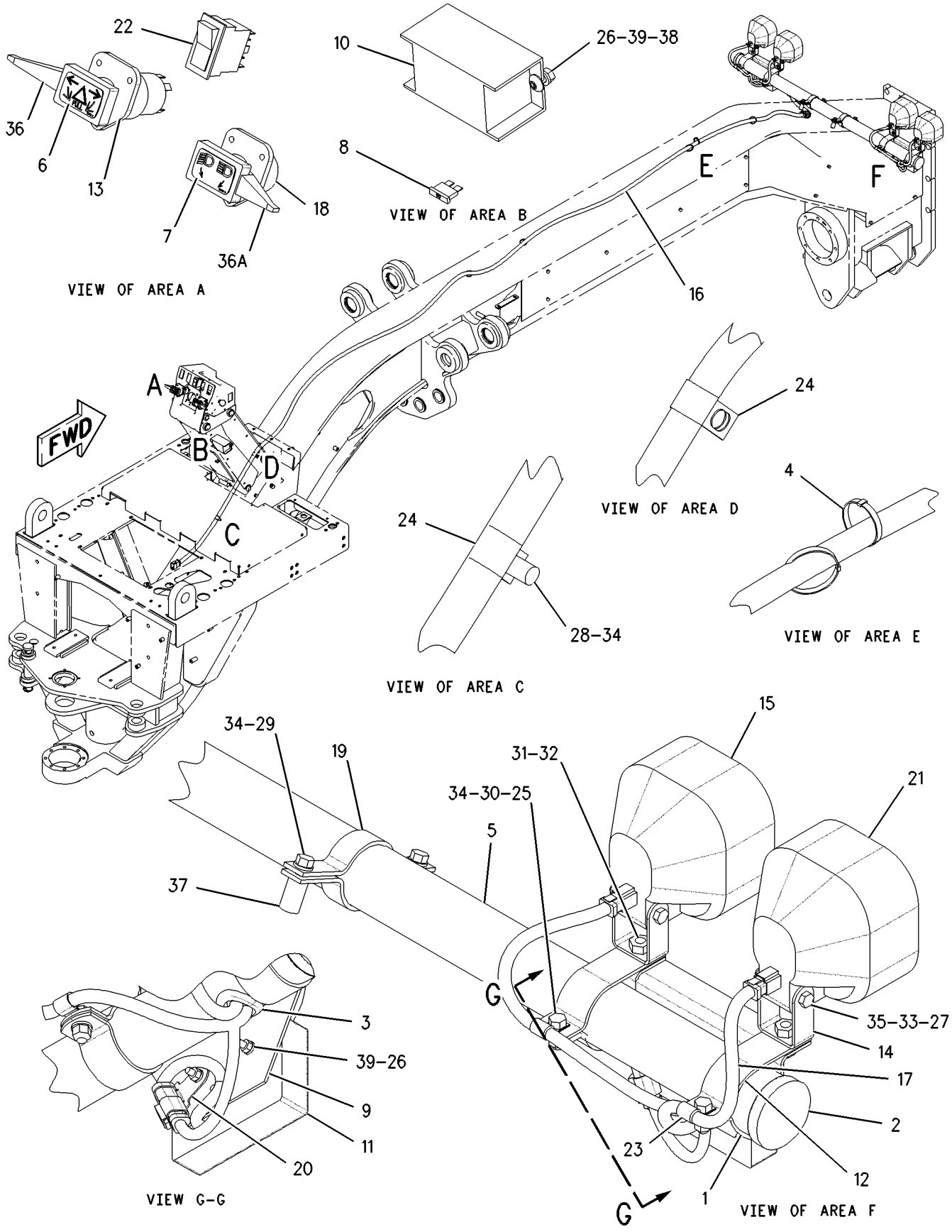

GRAPHIC #1 g00860162

183-4070 LIGHTING GP-FLOOD—EXTENDED BOLSTER

S/N: ASE1-UP

PART OF 186-4957 LIGHTING AR-FLOOD & SIGNAL

AN ATTACHMENT

SMCS-1434 **i01645273**

NOTE	REF NO	GRAPHIC REF	PART NUMBER	QTY	PART NAME 1 2 3 4 5 6 (PRODUCT LEVEL)	SEE PAGE
	1	1	**2G-0617**	2	CLAMP	
	2	1	**2G-0659**	2	BRACKET	
	3	1	**2G-0988**	2	CAP	
	4	1	**3E-9763**	1	FILM-IDENTIFICATION (FUSE) (HIGH/LOW BEAM)	
	6	1	**3K-9520**	3	GROMMET	
	7	1	**3S-2093**	4	STRAP-CABLE	
	8	1	**8X-5153**	1	FILM-FACE (TURN SIGNAL/HAZARD)	
	9	1	**8X-5154**	1	FILM-FACE (HEADLIGHTS HIGH/LOW BEAM)	
	10	1	**9W-1442**	1	FUSE (10 AMP) (HIGH/LOW BEAM)	
	11	1	**108-0358**	1	FLASHER AS-ELECTRONIC (12/24 VOLT) (TURN SIGNAL/HAZARD)	
	12	1	**137-9410**	2	CLAMP	
	13	1	**171-6330**	1	WIRE AS	
	14	1	**171-6332**	1	WIRE AS	
	15	1	**173-3064**	1	SWITCH AS-TURN SIG & WARNING	
		1	**5L-7200**	1	SCREW (8-32X0.375 IN)	
		1	**9B-7233**	1	LOCKWASHER	
	16	1	**178-8067**	2	BRACKET AS	
	17	1	**179-1549**	1	TUBE	
	18	1	**179-1550**	2	CLAMP	
	19	1	**179-8701**	1	HARNESS AS-FRONT LIGHTING	
		1	**102-8801**	1	KIT-RECEPTACLE (12 PIN) (LIGHTBAR WORKLAMPS)	
		1	**155-2270**	2	KIT-CONNECTING PLUG (2 PIN) (LIGHTBAR WORKLAMPS)	
	20	1	**092-9741**	1	GROMMET	
	21	1	**103-5678**	1	SWITCH AS-ROTARY (HIGH/LOW BEAM)	
		1	**5L-7200**	1	SCREW (8-32X0.375 IN)	
		1	**9B-7233**	1	LOCKWASHER	
Y	22	1	**153-2073**	2	LAMP GP-FLOOD (24 VOLT) (VERTICAL) (EXTENDED BOLSTER)	150
	23	1	**186-2508**	1	HARNESS AS-FRONT CHASSIS	
		1	**102-8801**	1	KIT-RECEPTACLE (12 PIN)	
		1	**155-2255**	1	KIT-CONNECTING PLUG (12 PIN)	
	24	1	**3E-8772**	1	SWITCH AS-ROCKER (HEADLAMP/TAIL)	
		1	**3E-8825**	2	LAMP (24 VOLT) (HEADLAMP/TAIL)	
		1	**3E-9326**	1	ACTUATOR-ROCKER	
	25	1	**3T-2662**	2	CIRCUIT BREAKER AS (15 AMP) (HEADLAMP/LIGHTBAR LOW BEAM)	
					(EACH INCLUDES)	
		1	**6V-8376**	2	SCREW-MACHINE (8-32X0.25 IN)	
		1	**9B-7233**	2	LOCKWASHER	
	26	1	**4D-7794**	2	CLIP	
M	27	1	**5C-2890**	2	NUT (M6X1 THD)	
M	28	1	**5C-7261**	2	NUT (M8X1.25 THD)	
	29	1	**5M-3062**	1	BOLT (3/8-16X0.75 IN)	
	30	1	**5P-8394**	4	SCREW-MACHINE (8-32X.75IN)	
	31	1	**8T-4121**	4	WASHER-HARD (11X21X2.5MM THK)	
M	32	1	**8T-4133**	2	NUT (M10X1.5 THD)	
M	33	1	**8T-4136**	4	BOLT (M10X1.5X25MM)	
	34	1	**8T-4223**	4	WASHER-HARD (13.5X25.5X3MM THK)	
	35	1	**8T-4224**	2	WASHER-HARD (8.8X16X2MM THK)	
M	36	1	**8T-4244**	4	NUT (M12X1.75 THD)	
	37	1	**8T-4896**	1	WASHER-HARD (10.2X18.5X2.5MM THK)	
M	38	1	**8T-5412**	4	BOLT (M12X1.75X140MM)	
M	39	1	**8T-6869**	2	BOLT (M8X1.25X60MM)	
	40	1	**8X-6296**	1	LEVER (TURN SIGNAL)	

183-4070 **LIGHTING GP-FLOOD** ***(contd.)*** **i01645273**

NOTE	REF NO	GRAPHIC REF	PART NUMBER	QTY	PART NAME 1 2 3 4 5 6 (PRODUCT LEVEL)	SEE PAGE
	40A	1	**8X-6296**	1	LEVER (HIGH/LOW BEAM)	
	41	1	**9B-7233**	4	LOCKWASHER	
M	42	1	**9X-2043**	2	SCREW-TRUSS HEAD (M6X1X14MM)	
	43	1	**9X-8256**	2	WASHER (6.6X12X2MM THK)	
	44	1	**3E-8764**	1	SWITCH AS (LIGHTBAR LOW BEAM)	
		1	**3E-8814**	1	ACTUATOR-ROCKER	
		1	**3E-8825**	1	LAMP (24 VOLT) (LIGHTBAR LOW BEAM)	

M-METRIC PART
Y-SEPARATE ILLUSTRATION

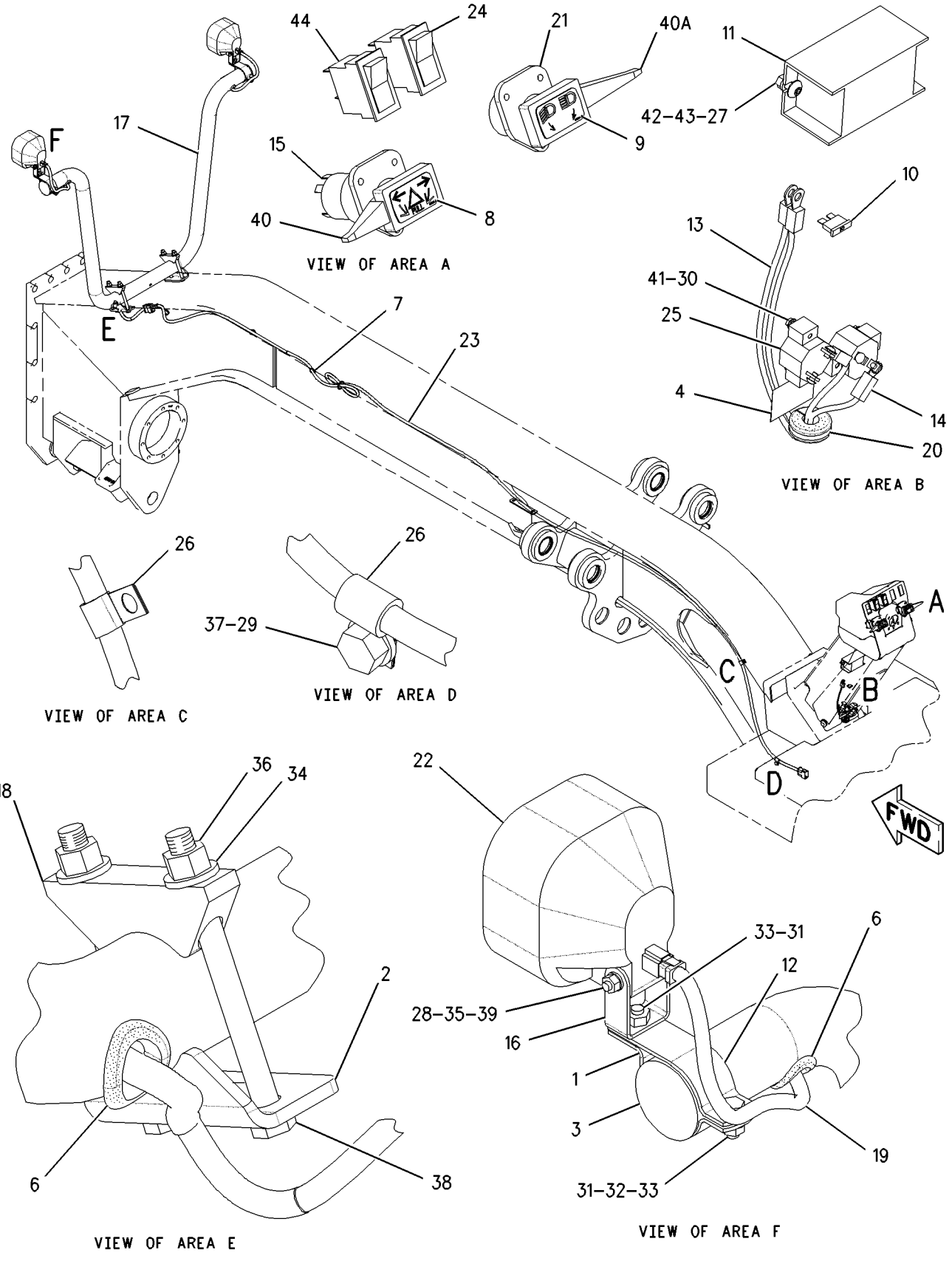

GRAPHIC #1 g00862184

MEMORANDA

ELECTRICAL AND STARTING SYSTEM

185-6660 LIGHTING GP-FLOOD–BOLSTER

S/N: ASE1-UP

PART OF 161-1924 LIGHTING AR-FLOOD & SIGNAL

AN ATTACHMENT

SMCS-1434 **i01660114**

NOTE	REF NO	GRAPHIC REF	PART NUMBER	QTY	PART NAME 1 2 3 4 5 6 (PRODUCT LEVEL)	SEE PAGE
	1	1	**2G-0617**	2	CLAMP	
	2	1	**2G-0988**	2	CAP	
	3	1	**3K-9520**	3	GROMMET	
	4	1	**3S-2093**	6	STRAP-CABLE	
	5	1	**5T-9313**	1	TUBE	
	6	1	**8X-5153**	1	FILM-FACE (TURN SIGNAL/HAZARD)	
	7	1	**8X-5154**	1	FILM-FACE (HEADLIGHTS HIGH/LOW BEAM)	
	8	1	**9W-1442**	1	FUSE (10 AMP) (TURN SIGNAL/HAZARD)	
	9	1	**108-0358**	1	FLASHER AS-ELECTRONIC (12/24 VOLT) (TURN SIGNAL/HAZARD)	
	10	1	**137-9410**	2	CLAMP	
	11	1	**169-3181**	1	HARNESS AS-LIGHTING	
		1	**155-2270**	2	KIT-CONNECTING PLUG (2 PIN) (LIGHTBAR WORKLAMPS)	
		1	**102-8801**	1	KIT-RECEPTACLE (12 PIN) (LIGHTBAR WORKLAMPS)	
	12	1	**173-3064**	1	SWITCH AS-TURN SIG & WARNING	
		1	**5L-7200**	1	SCREW (8-32X0.375 IN)	
		1	**9B-7233**	1	LOCKWASHER	
	13	1	**178-8067**	2	BRACKET AS	
	14	1	**186-2508**	1	HARNESS AS-FRONT CHASSIS	
		1	**102-8801**	1	KIT-RECEPTACLE (12 PIN)	
		1	**155-2255**	1	KIT-CONNECTING PLUG (12 PIN)	
	15	1	**103-5678**	1	SWITCH AS-ROTARY (HIGH/LOW BEAM)	
		1	**5L-7200**	1	SCREW (8-32X0.375 IN)	
		1	**9B-7233**	1	LOCKWASHER	
	16	1	**108-3519**	4	CLAMP	
Y	17	1	**161-3509**	2	LAMP GP-HEAD (24 VOLT) (LOW BEAM)	156
	18	1	**3E-8772**	1	SWITCH AS-ROCKER (HEADLAMP/TAIL)	
		1	**3E-8825**	2	LAMP (24 VOLT) (HEADLAMP/TAIL)	
		1	**3E-9326**	1	ACTUATOR-ROCKER	
	19	1	**4D-7794**	4	CLIP	
	20	1	**4L-6454**	2	BOLT (3/8-16X1 IN)	
M	21	1	**5C-2890**	2	NUT (M6X1 THD)	
M	22	1	**5C-7261**	2	NUT (M8X1.25 THD)	
	23	1	**5M-3062**	1	BOLT (3/8-16X0.75 IN)	
	24	1	**5S-7379**	4	BOLT (3/8-16X0.875 IN)	
	25	1	**6V-8801**	2	NUT (3/8-16 THD)	
	26	1	**8T-4121**	2	WASHER-HARD (11X21X2.5MM THK)	
M	27	1	**8T-4136**	2	BOLT (M10X1.5X25MM)	
	28	1	**8T-4205**	2	WASHER-HARD (7.2X14.5X2MM THK)	
	29	1	**8T-4224**	2	WASHER-HARD (8.8X16X2MM THK)	
	30	1	**8T-4896**	7	WASHER-HARD (10.2X18.5X2.5MM THK)	
M	31	1	**8T-6869**	2	BOLT (M8X1.25X60MM)	
	32	1	**8X-6296**	1	LEVER (TURN SIGNAL)	
	32A	1	**8X-6296**	1	LEVER (HIGH/LOW BEAM)	
	33	1	**9D-6164**	4	BOSS (3/8-16 THD)	
M	34	1	**9X-2043**	2	SCREW-TRUSS HEAD (M6X1X14MM)	
	35	1	**3E-8764**	1	SWITCH AS (LIGHTBAR LOW BEAM)	
		1	**3E-8814**	1	ACTUATOR-ROCKER	
		1	**3E-8825**	1	LAMP (24 VOLT) (LIGHTBAR LOW BEAM)	

M-METRIC PART
Y-SEPARATE ILLUSTRATION

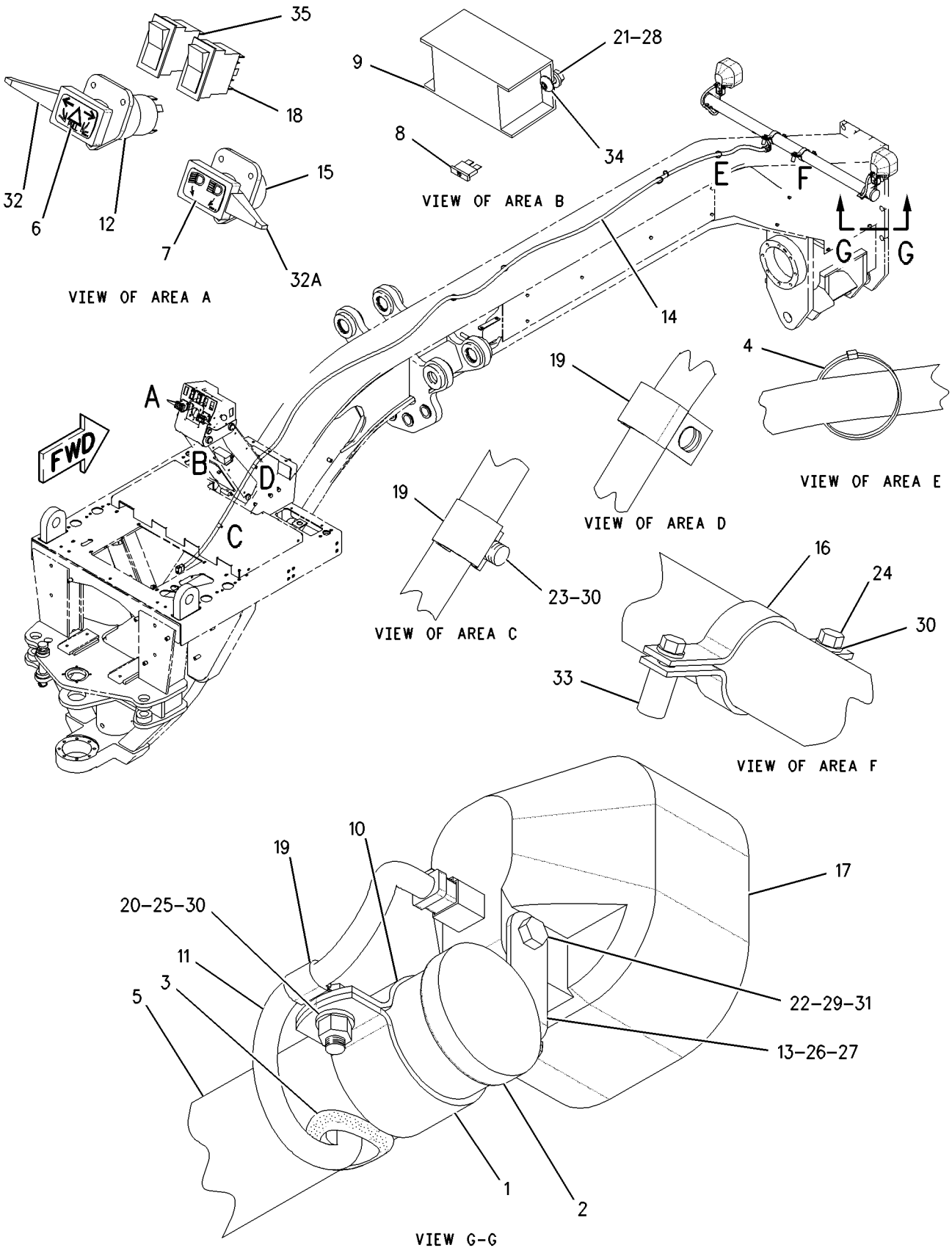

GRAPHIC #1 g00861894

188-9324 LIGHTING GP-FLOOD–SNOW–REAR

S/N: ASE1-UP
PART OF 188-9321 LIGHTING AR-FLOOD
AN ATTACHMENT

SMCS-1434 **i01626367**

NOTE	REF NO	GRAPHIC REF	PART NUMBER	QTY	PART NAME 1 2 3 4 5 6 (PRODUCT LEVEL)	SEE PAGE
	1	1	**9X-9365**	2	BRACKET	
	2	1	**116-5710**	2	GROMMET	
	3	1	**169-3520**	1	HARNESS AS-REAR LIGHTING	
		1	**155-2270**	2	KIT-CONNECTING PLUG (2 PIN)	
		1	**102-8802**	1	KIT-RECEPTACLE (2 PIN)	
	4	1	**178-8067**	2	BRACKET AS	
					(EACH INCLUDES)	
M		1	**8T-3490**	1	NUT-WELD (M10X1.5 THD)	
Y	5	1	**153-2073**	2	LAMP GP-FLOOD (24 VOLT)	150
M	6	1	**5C-7261**	2	NUT (M8X1.25 THD)	
	7	1	**5K-3294**	4	CLIP	
	8	1	**6V-3265**	6	CLIP	
	9	1	**8T-4121**	12	WASHER-HARD (11X21X2.5MM THK)	
M	10	1	**8T-4136**	2	BOLT (M10X1.5X25MM)	
M	11	1	**8T-4137**	10	BOLT (M10X1.5X20MM)	
	12	1	**8T-4224**	4	WASHER-HARD (8.8X16X2MM THK)	
M	13	1	**8T-6869**	2	BOLT (M8X1.25X60MM)	

M-METRIC PART
Y-SEPARATE ILLUSTRATION

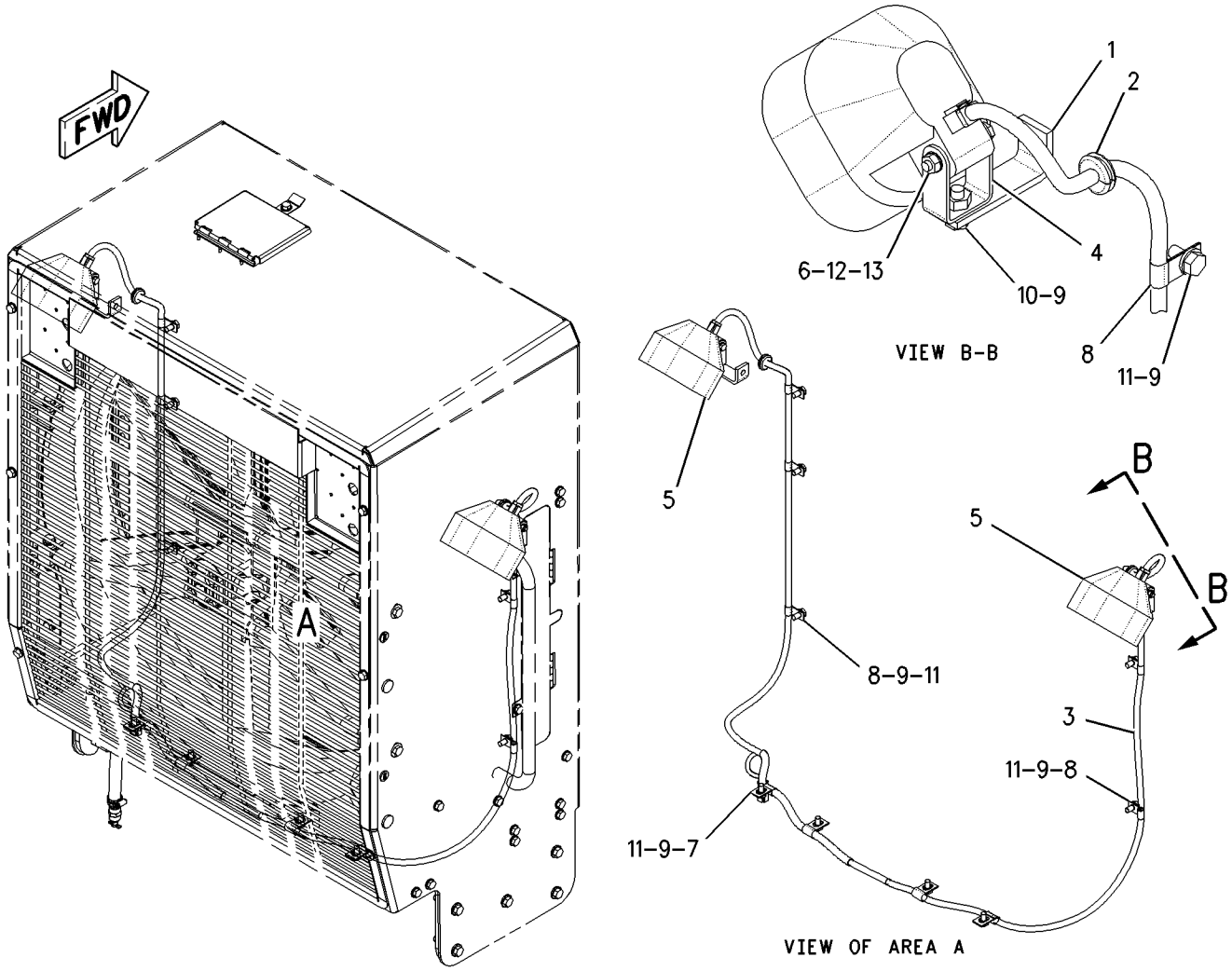

GRAPHIC #1 g00844562

192-0229 LIGHTING GP-FLOOD–BOLSTER –EU

S/N: ASE1-UP

PART OF 211-1769, 211-1770 CONVERSION AR-CERTIFICATION

AN ATTACHMENT

SMCS-1434 **i01646085**

NOTE	REF NO	GRAPHIC REF	PART NUMBER	QTY	PART NAME 1 2 3 4 5 6 (PRODUCT LEVEL)	SEE PAGE
	1	1	**2G-0617**	2	CLAMP	
	2	1	**2G-0988**	2	CAP	
	3	1	**3K-9520**	3	GROMMET	
	4	1	**3S-2093**	5	STRAP-CABLE	
	5	1	**7K-1181**	2	STRAP-CABLE	
	6	1	**8X-5153**	1	FILM-FACE (TURN SIGNAL/HAZARD)	
	7	1	**8X-5154**	1	FILM-FACE (HEADLIGHTS HIGH/LOW BEAM)	
	8	1	**9W-1442**	1	FUSE (10 AMP) (HIGH/LOW BEAM & SIGNAL)	
Y	9	1	**105-4849**	1	LAMP GP-HEAD (LH)	152
Y	10	1	**105-4850**	1	LAMP GP-HEAD (RH)	154
	11	1	**108-0358**	1	FLASHER AS-ELECTRONIC (12/24 VOLT) (TURN SIGNALS & HAZARDS)	
	12	1	**137-9410**	2	CLAMP	
	13	1	**159-3959**	1	TUBE	
	14	1	**173-3064**	1	SWITCH AS-TURN SIG & WARNING	
		1	**5L-7200**	1	SCREW (8-32X0.375 IN)	
		1	**9B-7233**	1	LOCKWASHER	
	15	1	**186-2508**	1	HARNESS AS-FRONT CHASSIS	
		1	**155-2255**	1	KIT-CONNECTING PLUG (12 PIN)	
		1	**102-8801**	1	KIT-RECEPTACLE (12 PIN)	
	16	1	**203-9177**	1	HARNESS AS-FRONT LIGHTING	
		1	**155-2274**	1	KIT-CONNECTING PLUG (6 PIN)	
		1	**102-8801**	1	KIT-RECEPTACLE (12 PIN)	
	17	1	**103-5678**	1	SWITCH AS-ROTARY (HIGH/LOW BEAM)	
		1	**5L-7200**	1	SCREW (8-32X0.375 IN)	
		1	**9B-7233**	1	LOCKWASHER	
	18	1	**108-3519**	4	CLAMP	
	19	1	**3E-8772**	1	SWITCH AS-ROCKER (HEADLAMP/TAIL)	
		1	**3E-8825**	2	LAMP (24 VOLT) (HEADLAMP/TAIL)	
		1	**3E-9326**	1	ACTUATOR-ROCKER	
	20	1	**4L-6454**	2	BOLT (3/8-16X1 IN)	
M	21	1	**5C-2890**	2	NUT (M6X1 THD)	
	22	1	**5M-3062**	1	BOLT (3/8-16X0.75 IN)	
	23	1	**5S-7379**	4	BOLT (3/8-16X0.875 IN)	
	24	1	**6V-8801**	2	NUT (3/8-16 THD)	
	25	1	**8M-2770**	2	CLIP	
	26	1	**8M-2773**	2	CLIP	
	27	1	**8T-4205**	2	WASHER-HARD (7.2X14.5X2MM THK)	
	28	1	**8T-4896**	7	WASHER-HARD (10.2X18.5X2.5MM THK)	
	29	1	**8X-6296**	1	LEVER (TURN SIGNAL)	
	29A	1	**8X-6296**	1	LEVER (HIGH/LOW BEAM)	
	30	1	**9D-6164**	4	BOSS (3/8-16 THD)	
M	31	1	**9X-2043**	2	SCREW-TRUSS HEAD (M6X1X14MM)	

M-METRIC PART
Y-SEPARATE ILLUSTRATION

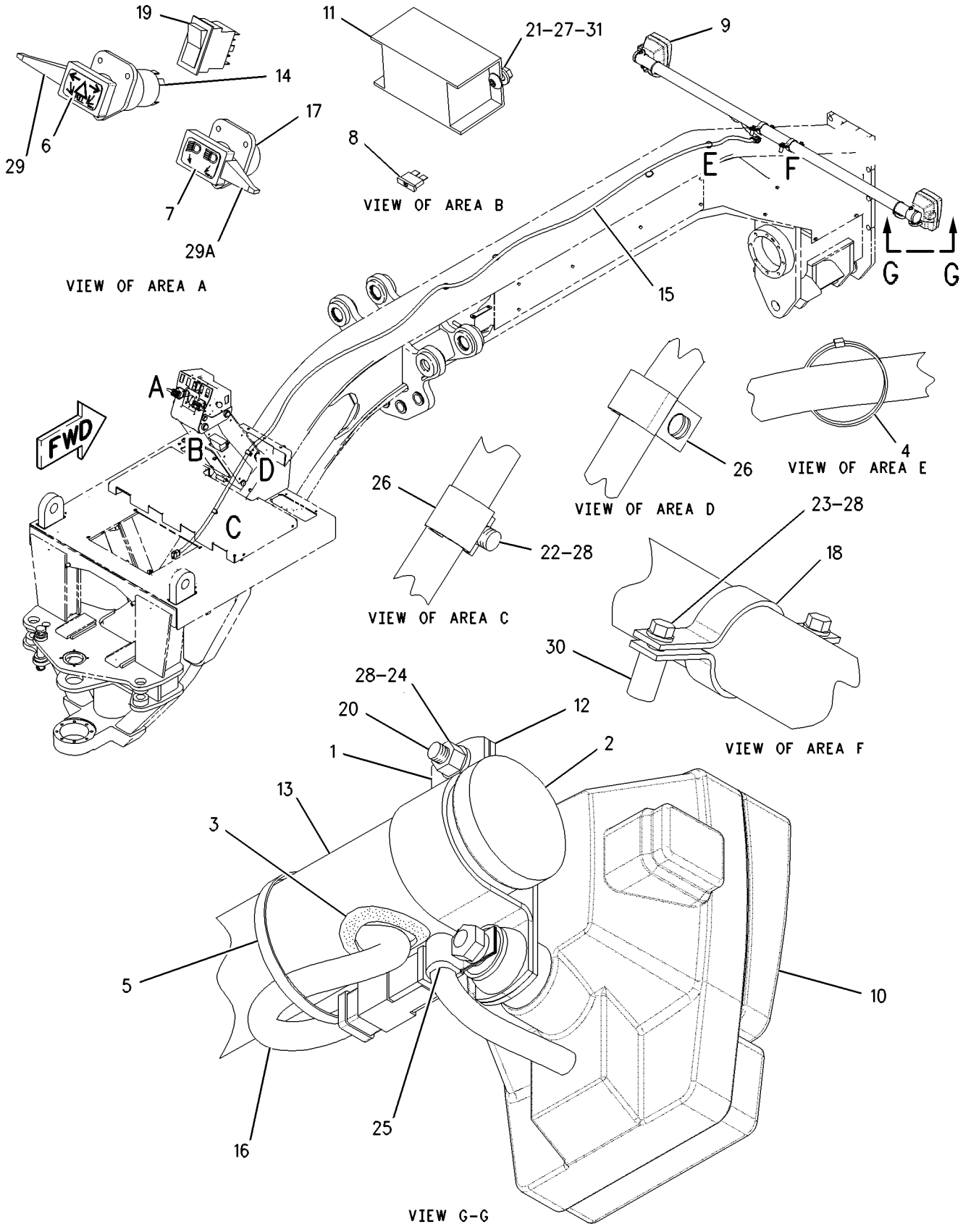

GRAPHIC #1 g00860440

196-8532 LIGHTING GP-FLOOD—MOLDBOARD—FRONT

S/N: ASE1-UP
PART OF 203-6536 LIGHTING AR-FLOOD
AN ATTACHMENT

SMCS-1434 **i01627484**

NOTE	REF NO	GRAPHIC REF	PART NUMBER	QTY	PART NAME 1 2 3 4 5 6 (PRODUCT LEVEL)	SEE PAGE
	1	1	**169-3147**	1	HARNESS AS-CHASSIS	
		1	**155-2270**	4	KIT-CONNECTING PLUG (2 PIN)	
		1	**102-8802**	4	KIT-RECEPTACLE (2 PIN)	
		1	**102-8803**	1	KIT-RECEPTACLE (3 PIN)	
	2	1	**183-9606**	2	BRACKET	
	3	1	**033-8248**	5	CLIP	
Y	4	1	**153-2073**	2	LAMP GP-FLOOD	150
	5	1	**4D-9517**	1	CLIP	
M	6	1	**5C-7261**	2	NUT (M8X1.25 THD)	
	7	1	**5P-8167**	3	BOLT (3/8-16X0.625 IN)	
	8	1	**8M-2770**	1	CLIP	
	9	1	**8T-4224**	2	WASHER-HARD (8.8X16X2MM THK)	
	10	1	**8T-4896**	3	WASHER-HARD (10.2X18.5X2.5MM THK)	
M	11	1	**8T-6869**	2	BOLT (M8X1.25X60MM)	

M-METRIC PART
Y-SEPARATE ILLUSTRATION

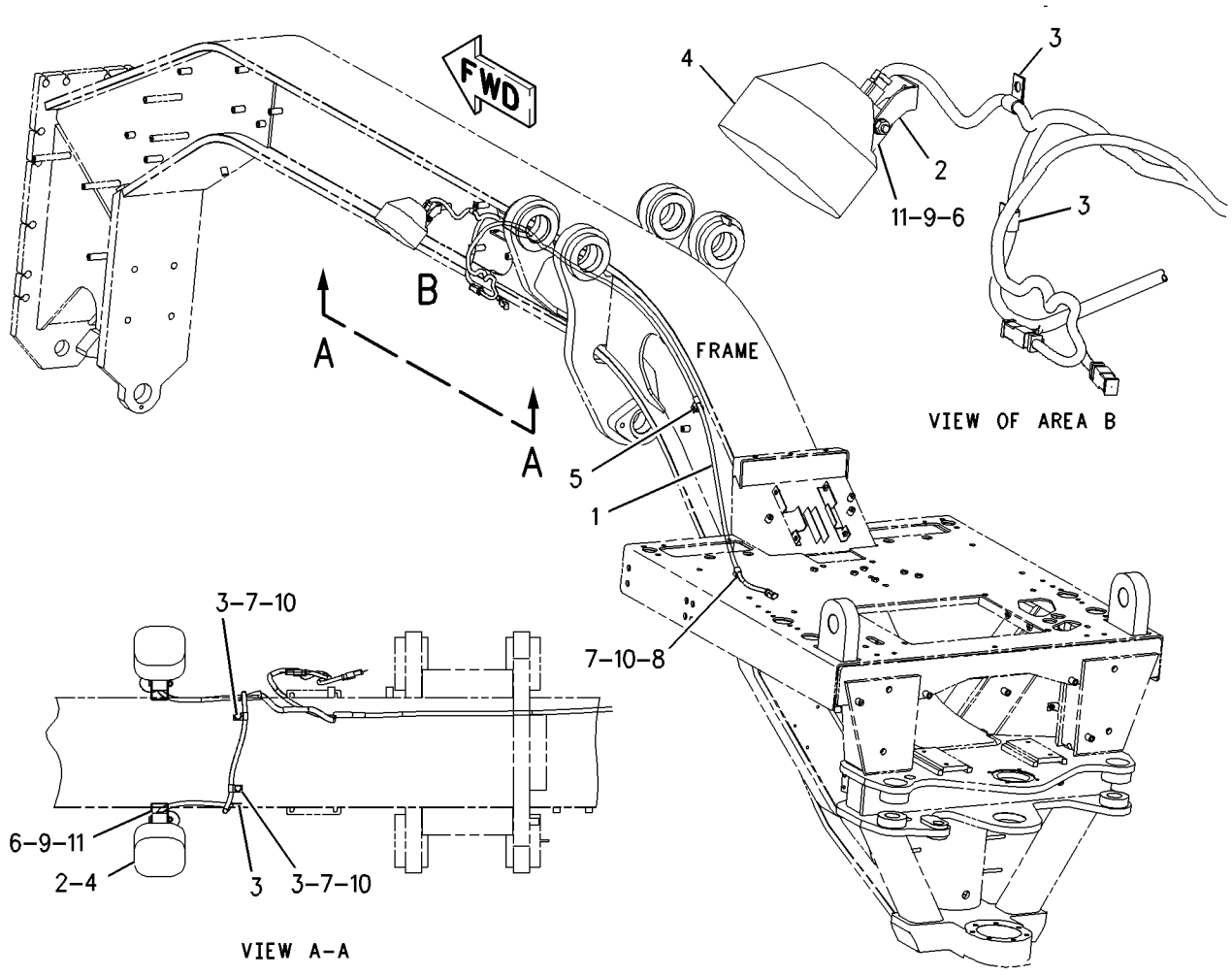

GRAPHIC #1 g00845917

204-3435 LIGHTING GP-FLOOD–MOLDBOARD –REAR

S/N: ASE1-UP
PART OF 206-6538 LIGHTING AR-FLOOD
AN ATTACHMENT

SMCS-1434 **i01646081**

NOTE	REF NO	GRAPHIC REF	PART NUMBER	QTY	PART NAME 1 2 3 4 5 6 (PRODUCT LEVEL)	SEE PAGE
	1	1	**3S-2093**	1	STRAP-CABLE	
	3	1	**183-9606**	2	BRACKET	
	4	1	**187-9087**	1	HARNESS AS-CHASSIS	
		1	**102-8802**	1	KIT-RECEPTACLE (2 PIN)	
		1	**102-8803**	1	KIT-RECEPTACLE (3 PIN)	
		1	**155-2270**	1	KIT-CONNECTING PLUG (2 PIN)	
	5	1	**033-8248**	1	CLIP	
Y	6	1	**153-2073**	2	LAMP GP-FLOOD (MOLDBOARD)	150
	7	1	**186-0357**	2	CLIP	
	8	1	**4D-7794**	4	CLIP	
	9	1	**5M-3062**	2	BOLT (3/8-16X0.75 IN)	
	10	1	**8T-4896**	2	WASHER-HARD (10.2X18.5X2.5MM THK)	

Y-SEPARATE ILLUSTRATION

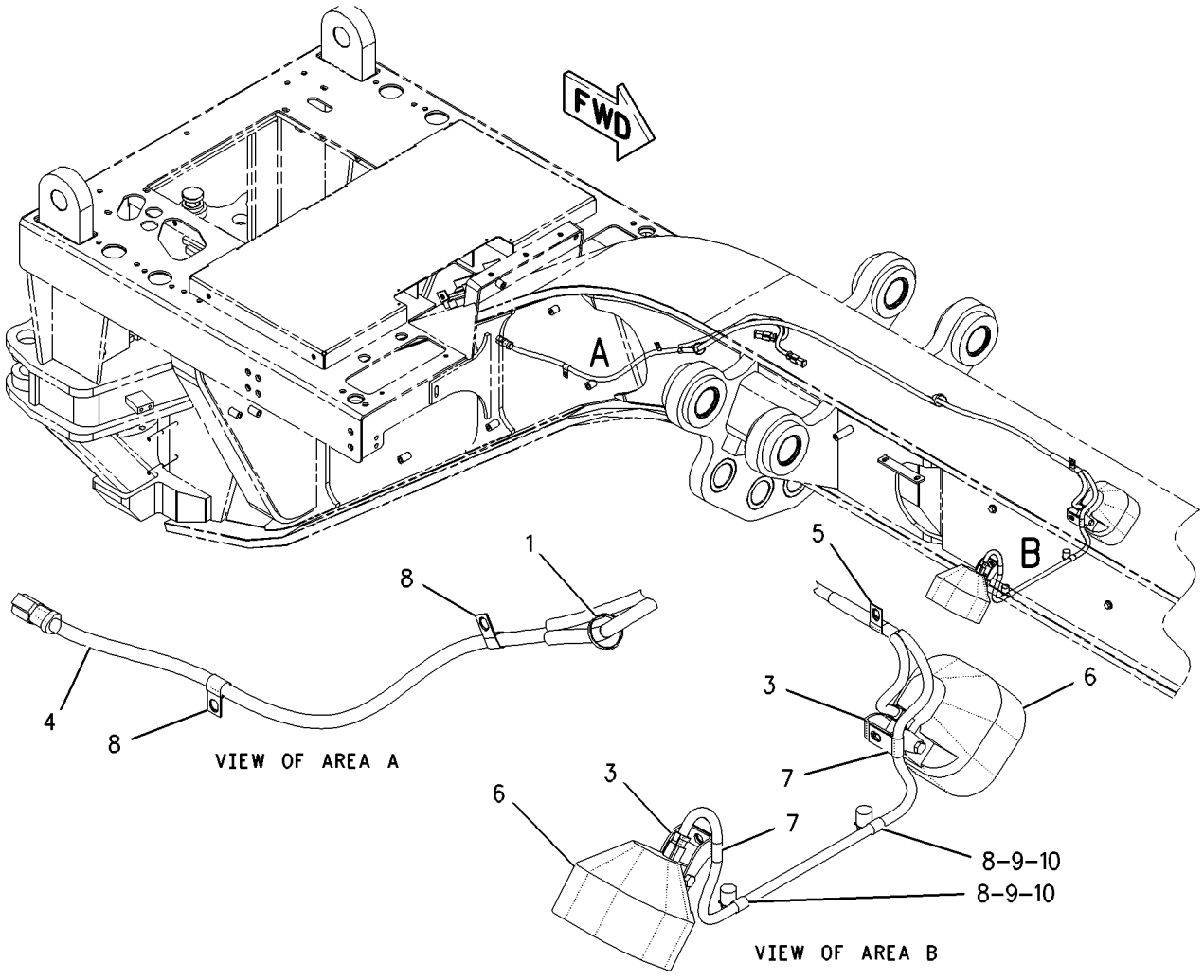

GRAPHIC #1 g00851564

188-9331 LIGHTING GP-SIGNAL–REAR TURN LAMPS

S/N: ASE1-UP

PART OF 161-0770, 161-1924, 186-4957, 188-9329 LIGHTING AR-FLOOD & SIGNAL

AN ATTACHMENT

SMCS-1430 **i01626049**

NOTE	REF NO	GRAPHIC REF	PART NUMBER	QTY	PART NAME 1 2 3 4 5 6 (PRODUCT LEVEL)	SEE PAGE
	1	1	**135-0427**	2	LAMP GP-SIGNAL (TURN/PARK)	
					(EACH INCLUDES)	
		1	**3E-3371**	1	WEDGE-RECEPTACLE LOCK (3 PIN)	
		1	**102-8803**	1	KIT-RECEPTACLE (3 PIN) (TURN/PARK)	
		1	**186-3735**	3	PIN-CONNECTOR	
M	2	1	**5C-2890**	6	NUT (M6X1 THD)	
	3	1	**8T-4224**	6	WASHER-HARD (8.8X16X2MM THK)	

M-METRIC PART

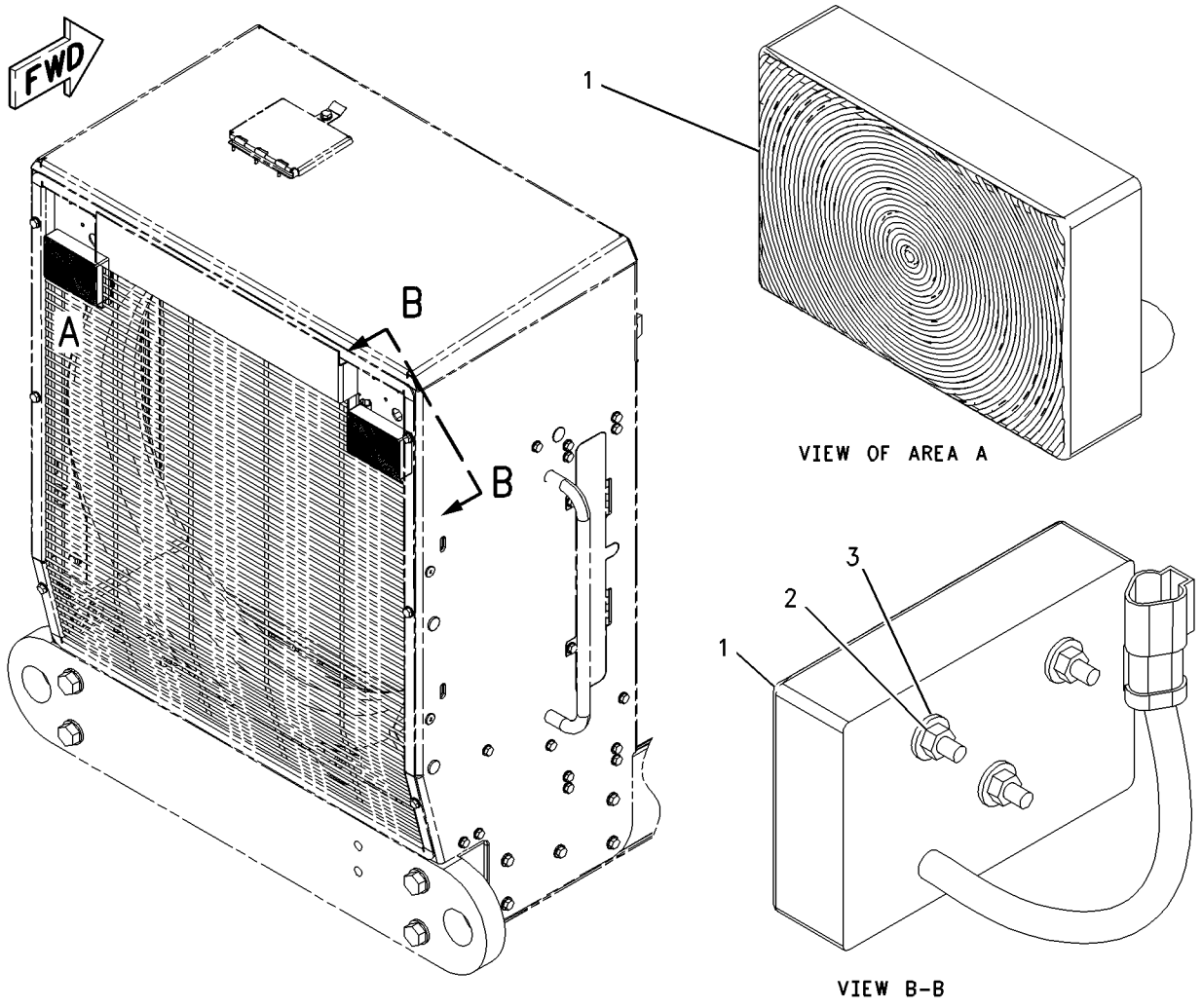

GRAPHIC #1 g00843802

ELECTRICAL AND STARTING SYSTEM

161-0773 LIGHTING GP-WARNING–ROTATING W/CAB

S/N: ASE1-UP
AN ATTACHMENT

SMCS-1429, 1431 **i01623992**

NOTE	REF NO	GRAPHIC REF	PART NUMBER	QTY	PART NAME 1 2 3 4 5 6 (PRODUCT LEVEL)	SEE PAGE
	1	1	**3S-2093**	1	STRAP-CABLE	
	2	1	**9W-1442**	1	FUSE (10 AMP) (WARNING BEACON)	
	3	1	**107-4932**	1	PLATE AS	
Y	4	1	**128-6983**	1	LAMP GP-WARNING BEACON (AMBER)	160
	5	1	**130-5300**	1	CLIP	
	6	1	**5P-8525**	1	GROMMET	
	7	1	**8T-4121**	2	WASHER-HARD (11X21X2.5MM THK)	
M	8	1	**8T-4136**	2	BOLT (M10X1.5X25MM)	
	9	1	**102-9862**	1	SWITCH AS (WARNING BEACON)	
		1	**3E-8822**	1	ACTUATOR-ROCKER	
		1	**3E-8825**	1	LAMP (24 VOLT) (WARNING BEACON)	

M-METRIC PART
Y-SEPARATE ILLUSTRATION

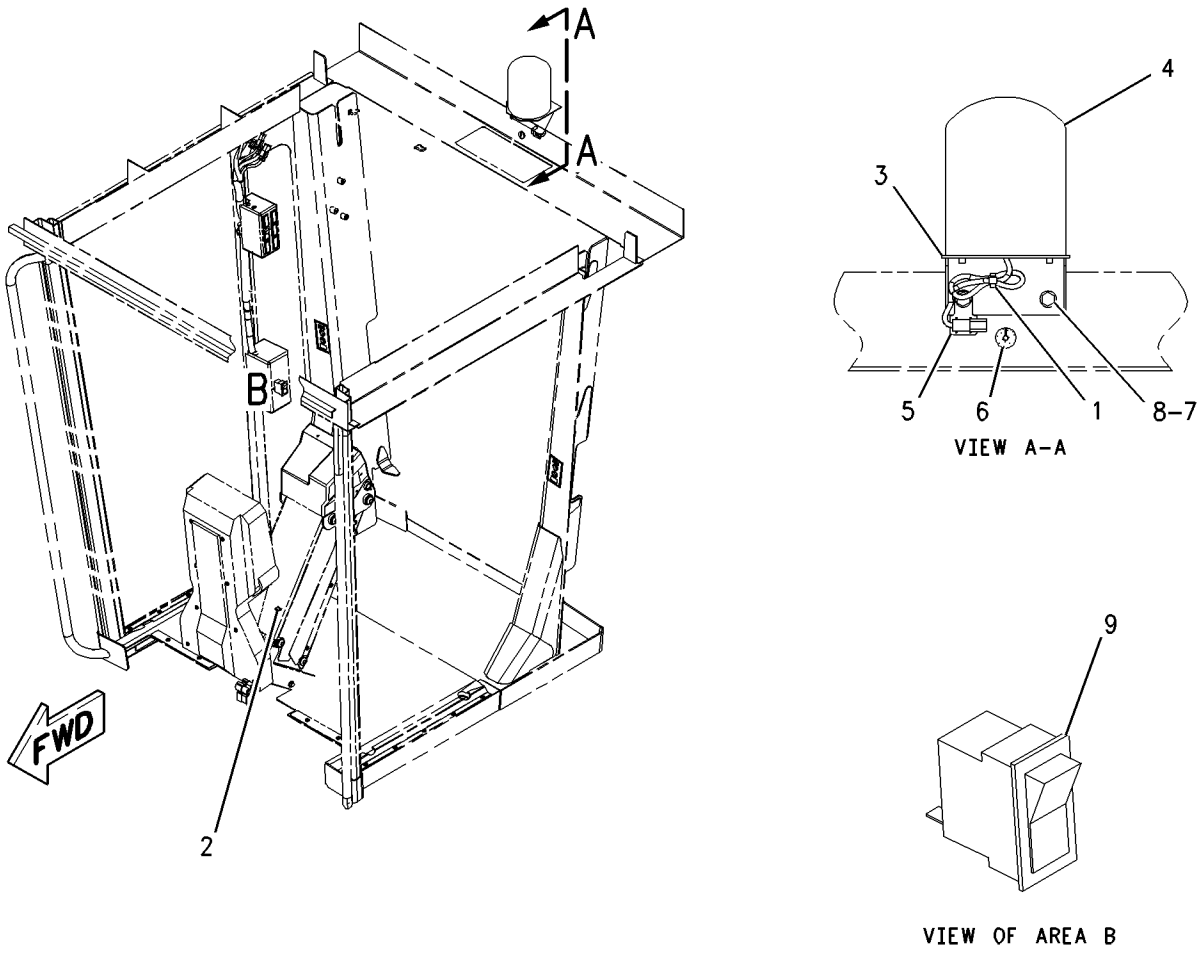

GRAPHIC #1 g00847973

161-0774 LIGHTING GP-WARNING—ROTATING W/CAB—OPEN

S/N: ASE1-UP
AN ATTACHMENT

SMCS-1429, 1431 **i01686253**

NOTE	REF NO	GRAPHIC REF	PART NUMBER	QTY	PART NAME 1 2 3 4 5 6 (PRODUCT LEVEL)	SEE PAGE
	1	1	**3S-2093**	6	STRAP-CABLE	
	2	1	**9W-1442**	1	FUSE (10 AMP) (WARNING BEACON)	
	3	1	**107-4932**	1	PLATE AS	
Y	4	1	**128-6983**	1	LAMP GP-WARNING BEACON (AMBER)	160
	5	1	**169-3230**	1	HARNESS AS-FRONT LIGHTING	
		1	**102-8804**	1	KIT-RECEPTACLE (4 PIN) (BEACON SWITCH)	
		1	**155-2270**	1	KIT-CONNECTING PLUG (2 PIN) (BEACON LIGHT)	
	6	1	**173-1885**	1	COVER	
	7	1	**115-3070**	1	CLIP AS-CONNECT	
	8	1	**130-5300**	1	CLIP	
	9	1	**5P-8525**	1	GROMMET	
	10	1	**8T-4121**	2	WASHER-HARD (11X21X2.5MM THK)	
M	11	1	**8T-4136**	2	BOLT (M10X1.5X25MM)	
	12	1	**9D-8508**	1	GROMMET	
M	13	1	**9X-2043**	2	SCREW-TRUSS HEAD (M6X1X14MM)	
	14	1	**102-9862**	1	SWITCH AS (WARNING BEACON)	
		1	**3E-8822**	1	ACTUATOR-ROCKER	
		1	**3E-8825**	1	LAMP (24 VOLT) (WARNING BEACON)	

M-METRIC PART
Y-SEPARATE ILLUSTRATION

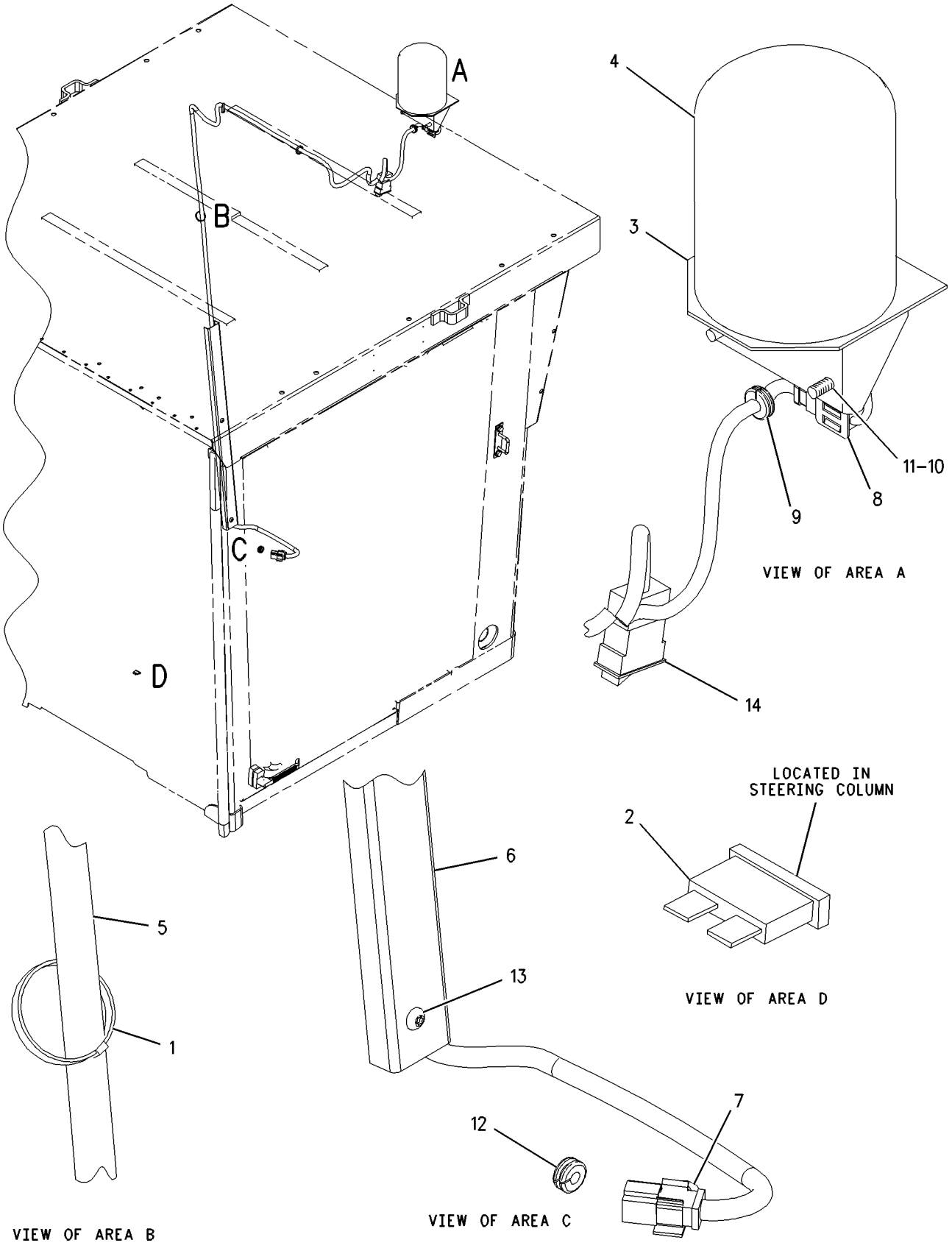

GRAPHIC #1

g00869881

170-5335 MOTOR GP-ELECTRIC–27 VOLT–DEFROSTER FAN

S/N: ASE1-UP
PART OF 170-5334 FAN GP-CIRCULATING
AN ATTACHMENT

SMCS-5927 **i01448257**

NOTE	REF NO	GRAPHIC REF	PART NUMBER	QTY	PART NAME 1 2 3 4 5 6 (PRODUCT LEVEL)	SEE PAGE
	1	1	**102-8802**	1	KIT-RECEPTACLE (2 PIN)	
	2	1	**9W-0852**	2	PIN-CONNECTOR	
	3	1	**3E-3365**	1	WEDGE-RECEPTACLE LOCK (2 PIN)	

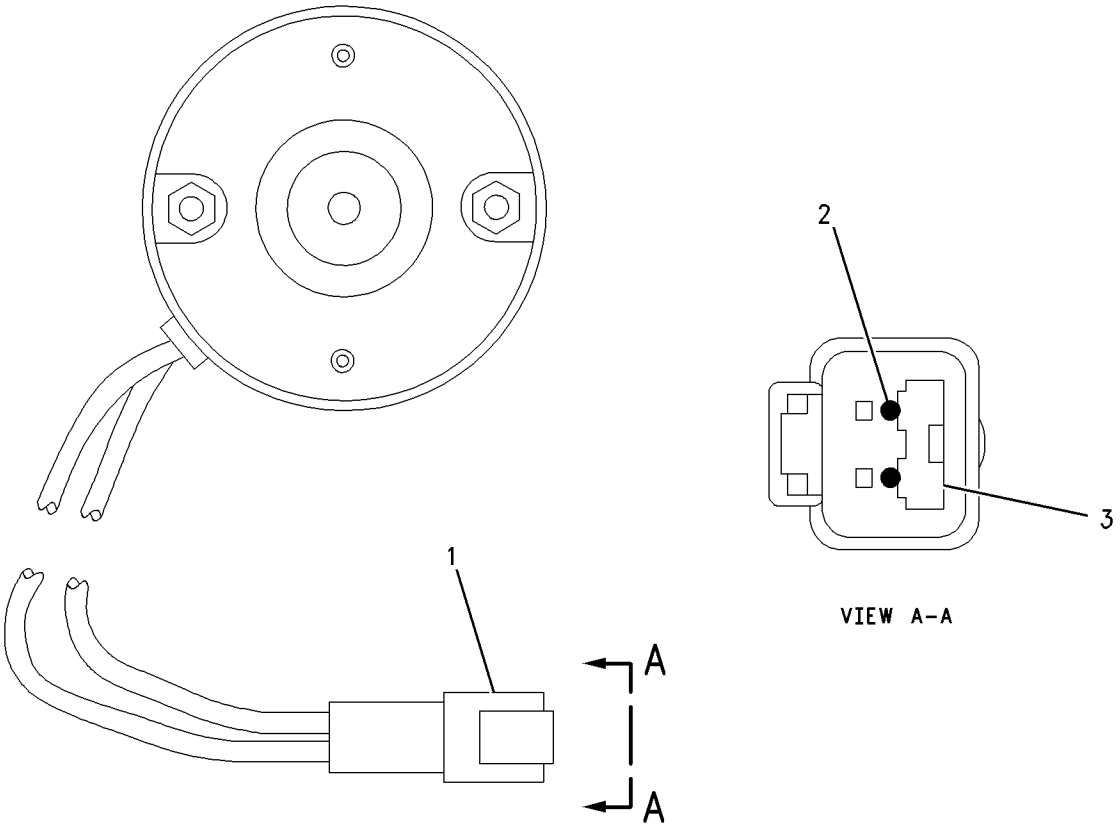

GRAPHIC #1 g00769415

ELECTRICAL AND STARTING SYSTEM

179-8725 MOTOR GP-ELECTRIC–24 VOLT

S/N: 3PD1-UP

PART OF 161-1747 ENGINE AR

SMCS-5927 **i01643499**

NOTE	REF NO	GRAPHIC REF	PART NUMBER	QTY	PART NAME 1 2 3 4 5 6 (PRODUCT LEVEL)	SEE PAGE
	1	1	**4N-1059**	1	GASKET	
Y	2	1	**104-7041**	1	STARTING MOTOR GP-ELECTRIC	212
	3	1	**105-4728**	1	WIRE AS	
	4	1	**8S-2332**	3	BOLT-12 POINT HEAD (5/8-11X1.75 IN)	

Y-SEPARATE ILLUSTRATION

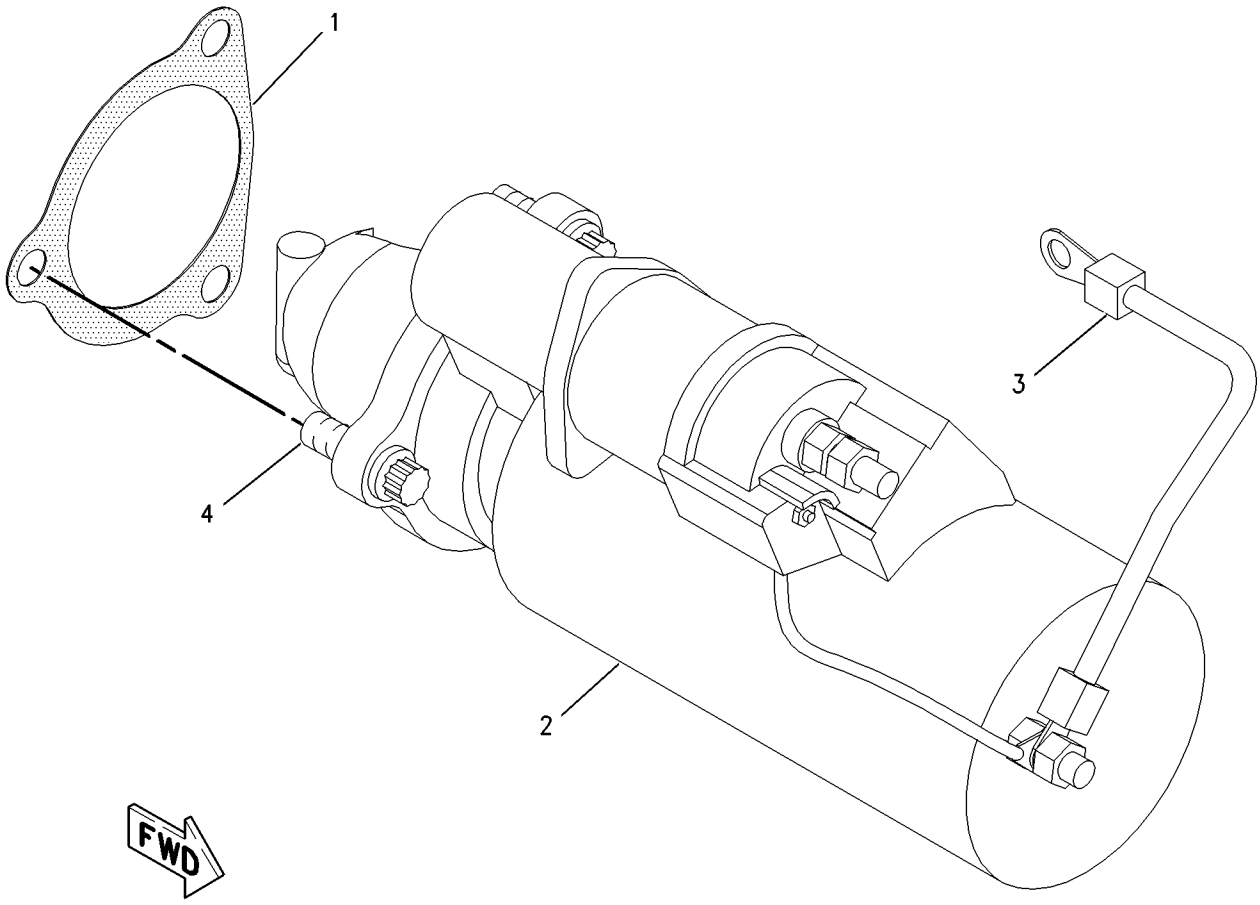

GRAPHIC #1 g00850007

ELECTRICAL AND STARTING SYSTEM

183-6189 RECEPTACLE GP-AUXILIARY START

S/N: ASE1-UP
AN ATTACHMENT

SMCS-1463 **i01631617**

NOTE	REF NO	GRAPHIC REF	PART NUMBER	QTY	PART NAME 1 2 3 4 5 6 (PRODUCT LEVEL)	SEE PAGE
	1	1	**184-4467**	1	RECEPTACLE AS	
		1	**1S-7251**	2	TERMINAL-RING (FOR 1/2 IN BOLT)	
E		1	**5P-0747**		CABLE (00GA)(BLACK) (23CM)	
E		1	**5P-0761**		CABLE (00GA)(RED) (65CM)	
D		1	**6V-2722**	1	TUBE-HEAT SHRINK	
		1	**8N-0869**	1	COVER-TERMINAL (RED)	
	2	1	**4H-2558**	1	GROMMET	
	3	1	**4L-6454**	4	BOLT (3/8-16X1 IN)	
	4	1	**6V-8801**	4	NUT (3/8-16 THD)	
	5	1	**8S-2634**	1	COVER AS	
		1	**2P-2975**	2	SEAL-O-RING	
	6	1	**8T-4896**	4	WASHER-HARD (10.2X18.5X2.5MM THK)	
	7	1	**9M-8406**	1	CLIP	

D-ORDER BY THE METER
E-ORDER BY THE CENTIMETER

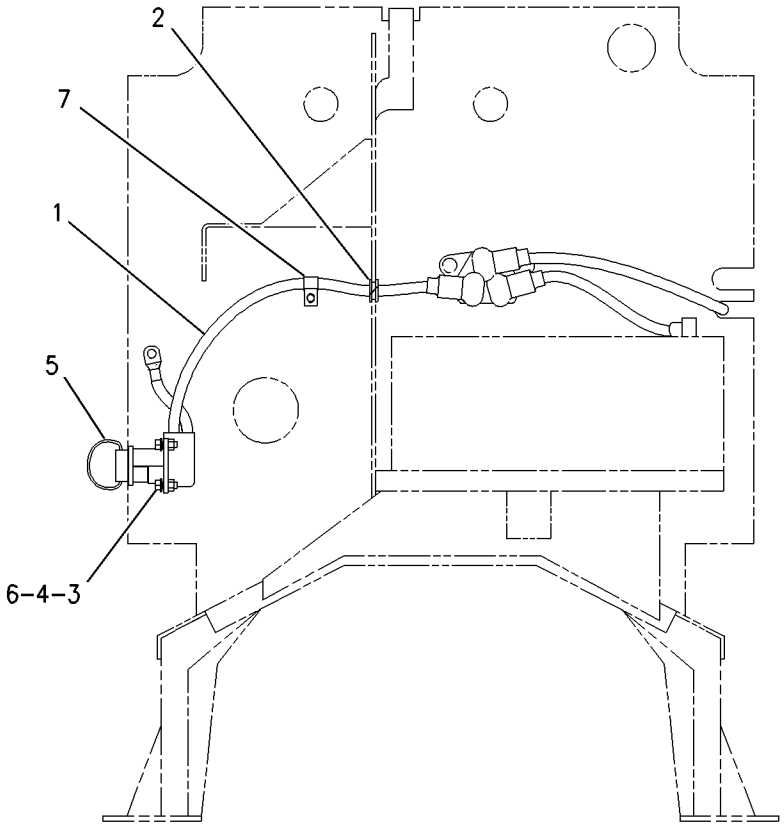

REAR VIEW

GRAPHIC #1 g00846677

185-7967 SENSOR GP-GROUND SPEED

S/N: ASE1-UP
PART OF 185-7968 INSTRUMENT AR
AN ATTACHMENT

SMCS-1408, 7493 **i01645804**

NOTE	REF NO	GRAPHIC REF	PART NUMBER	QTY	PART NAME 1 2 3 4 5 6 (PRODUCT LEVEL)	SEE PAGE
	1	1	*142-4433*	1	SENSOR GP-GROUND SPEED	
		1	**102-8804**	1	KIT-RECEPTACLE (4 PIN) (GROUND SPEED)	
		1	**3E-3377**	1	WEDGE-RECEPTACLE LOCK	
		1	**186-3735**	4	PIN-CONNECTOR	
	2	1	**186-1659**	1	BRACKET AS	
	3	1	**7X-0269**	4	BOLT (1/4-20X4 IN)	
	4	1	**7X-0550**	3	WASHER-HARD (13.5X32X5MM THK)	
	5	1	**8C-4436**	3	BOLT (1/2-13X1.375 IN)	
	6	1	**8T-4205**	4	WASHER-HARD (7.2X14.5X2MM THK)	

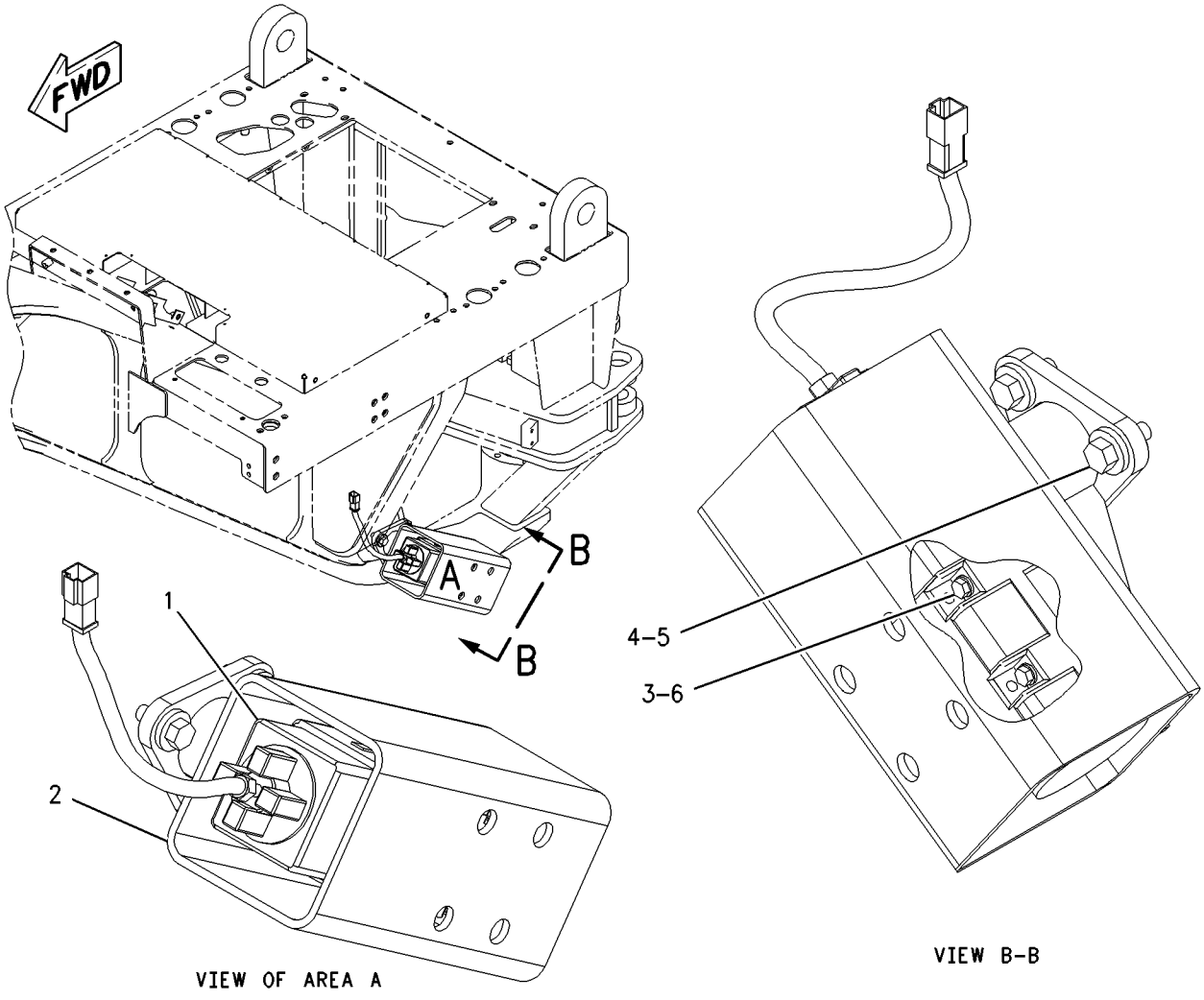

GRAPHIC #1 g00856214

160-2443 SENSOR GP-POSITION–THROTTLE

S/N: ASE1-UP
ROTARY
PART OF 159-5935 CONTROL GP-GOVERNOR

SMCS-1408, 1905 **i01191666**

NOTE	REF NO	GRAPHIC REF	PART NUMBER	QTY	PART NAME 1 2 3 4 5 6 (PRODUCT LEVEL)	SEE PAGE
	1	1	**102-8803**	1	KIT-RECEPTACLE (3 PIN)	
					(INCLUDES RECEPTACLE AS & WEDGE)	
	2	1	**8T-8729**	3	PIN-CONNECTOR	
	3	1	**3E-3371**	1	WEDGE-RECEPTACLE LOCK	

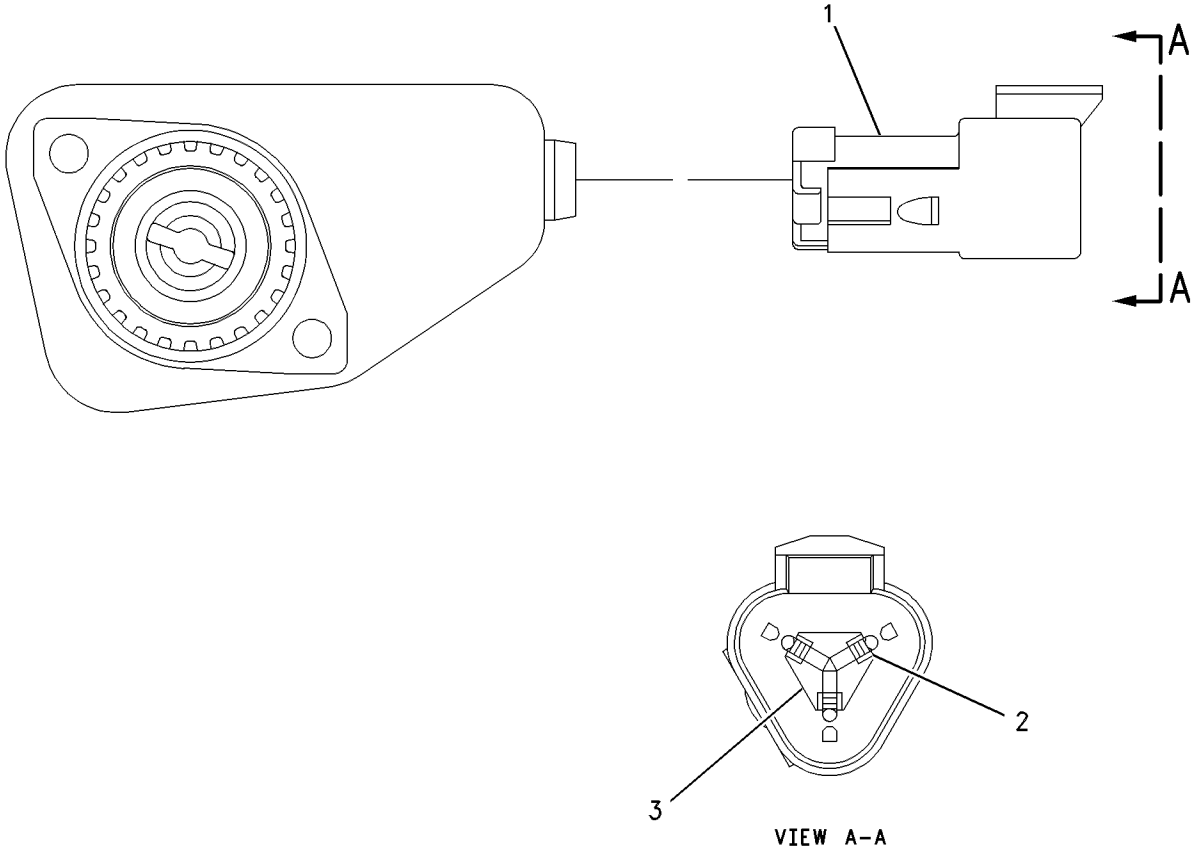

GRAPHIC #1 g00637818

167-1709 SENSOR GP-PRESSURE–RADIATOR

S/N: ASE1-UP
PART OF 175-6983 LINES GP-HYDRAULIC FAN
ALSO AN ATTACHMENT

SMCS-4351, 4352 **i01560203**

NOTE	REF NO	GRAPHIC REF	PART NUMBER	QTY	PART NAME 1 2 3 4 5 6 (PRODUCT LEVEL)	SEE PAGE
BE	1	1	**9X-1813**		SLEEVE	
	2	1	**155-2260**	1	KIT-CONNECTING PLUG (3 PIN)	
					(INCLUDES PLUG AS & WEDGE)	
	3	1	**9X-3402**	3	SOCKET-CONNECTOR	

B-USE AS REQUIRED
E-ORDER BY THE CENTIMETER

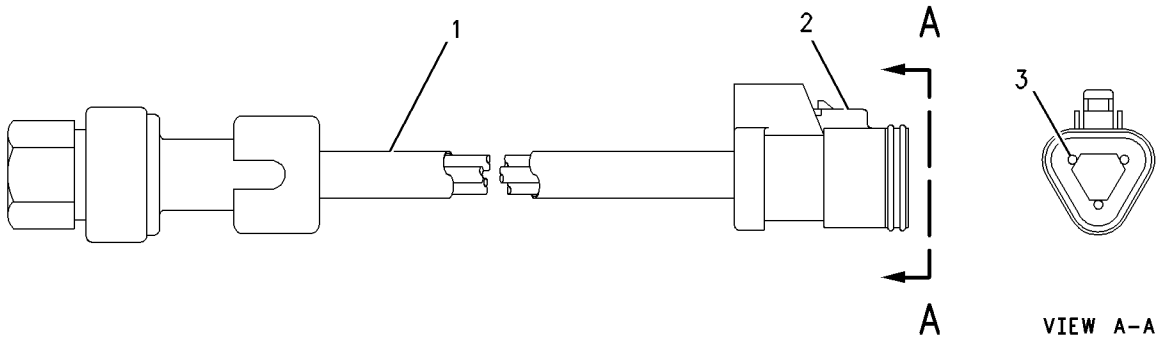

GRAPHIC #1 g00803802

194-6722 SENSOR GP-PRESSURE—INJECTION ACTUATION

S/N: 3PD1-UP

PART OF 171-1103 WIRING GP-ENGINE

SMCS-4351, 4352 **i01678861**

NOTE	REF NO	GRAPHIC REF	PART NUMBER	QTY	PART NAME 1 2 3 4 5 6 (PRODUCT LEVEL)	SEE PAGE
BE	1	1	**9X-1813**		SLEEVE	
	2	1	**155-2260**	1	KIT-CONNECTING PLUG (3 PIN)	
					(INCLUDES PLUG AS & WEDGE)	
	3	1	*180-9340*	3	SOCKET-CONNECTOR	
	4	1	**3E-3368**	1	WEDGE-PLUG LOCK	

B-USE AS REQUIRED
E-ORDER BY THE CENTIMETER

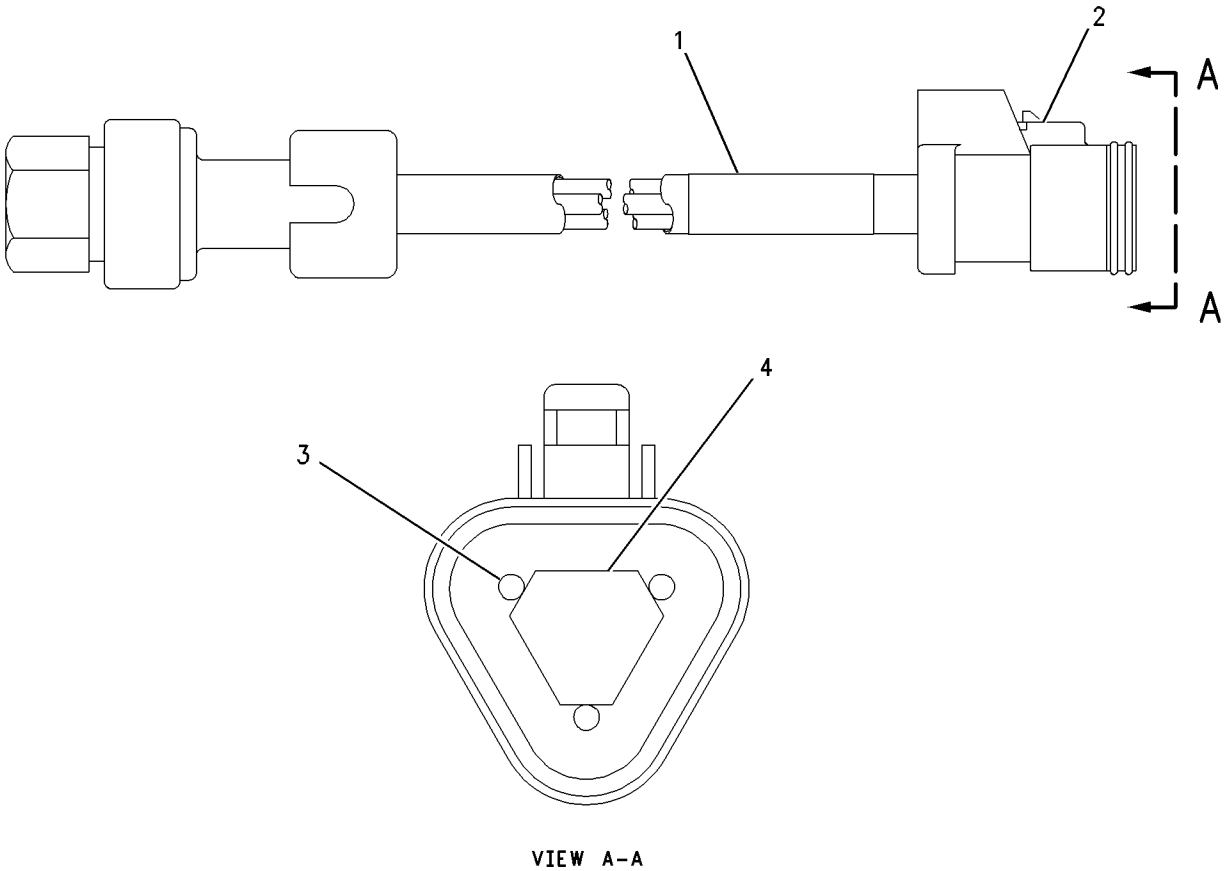

GRAPHIC #1 g00851220

194-6724 SENSOR GP-PRESSURE–TURBO OUTLET

S/N: 3PD1-UP

PART OF 171-1103 WIRING GP-ENGINE

SMCS-4351, 4352 **i01647642**

NOTE	REF NO	GRAPHIC REF	PART NUMBER	QTY	PART NAME 1 2 3 4 5 6 (PRODUCT LEVEL)	SEE PAGE
BE	1	1	**138-3094**		SLEEVE	
	2	1	**155-2260**	1	KIT-CONNECTING PLUG (3 PIN)	
					(INCLUDES PLUG AS & WEDGE)	
	3	1	**180-9340**	3	SOCKET-CONNECTOR	
	4	1	**3E-3368**	1	WEDGE-PLUG LOCK	

B-USE AS REQUIRED
E-ORDER BY THE CENTIMETER

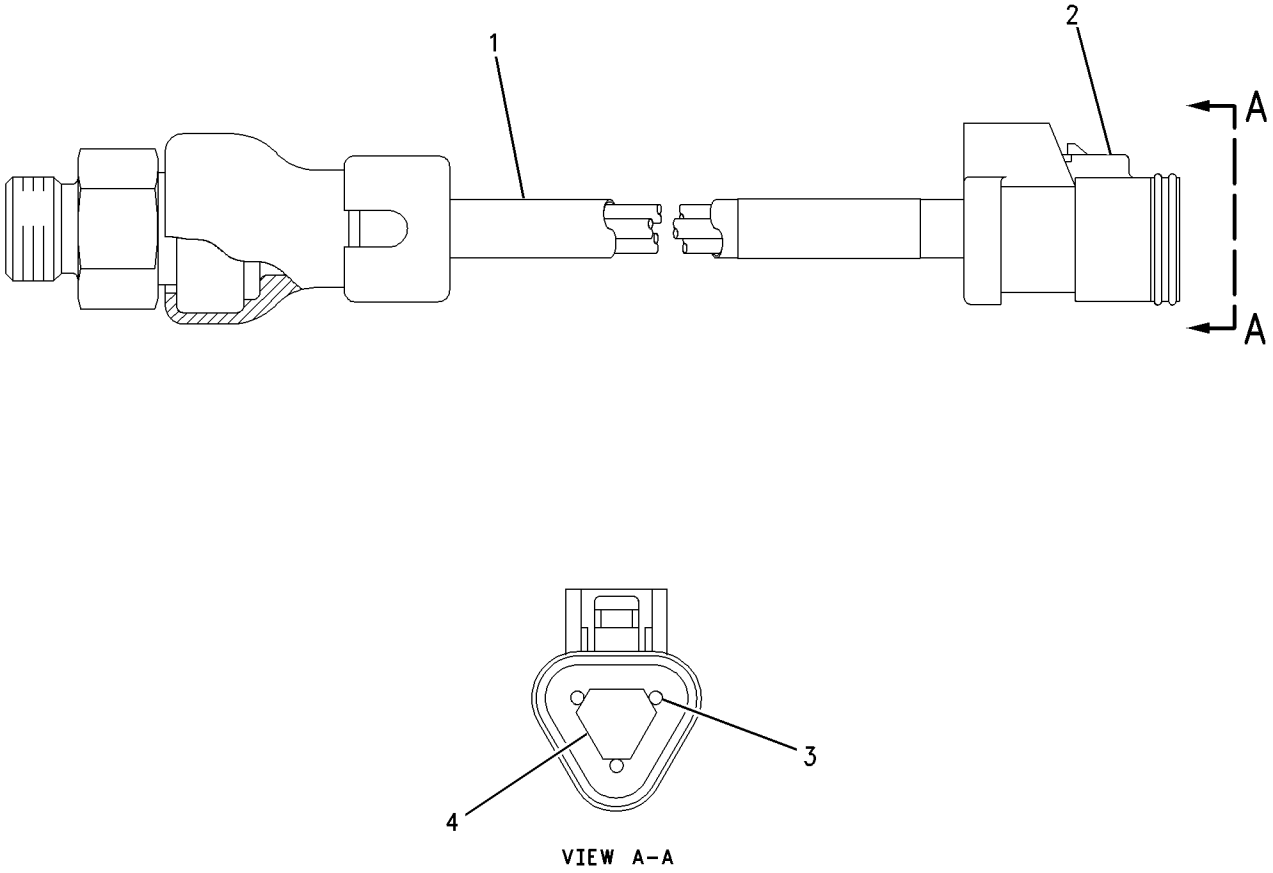

GRAPHIC #1 g00807030

194-6725 SENSOR GP-PRESSURE–FUEL

S/N: 3PD1-UP

PART OF 171-1103 WIRING GP-ENGINE

SMCS-4351, 4352 **i01681912**

NOTE	REF NO	GRAPHIC REF	PART NUMBER	QTY	PART NAME 1 2 3 4 5 6 (PRODUCT LEVEL)	SEE PAGE
BE	1	1	**9X-1813**		SLEEVE (34 CM)	
	2	1	**155-2260**	1	KIT-CONNECTING PLUG (3 PIN)	
					(INCLUDES PLUG AS AND WEDGE)	
	3	1	**180-9340**	3	SOCKET-CONNECTOR	
	4	1	**3E-3368**	1	WEDGE-PLUG LOCK	

B-USE AS REQUIRED
E-ORDER BY THE CENTIMETER

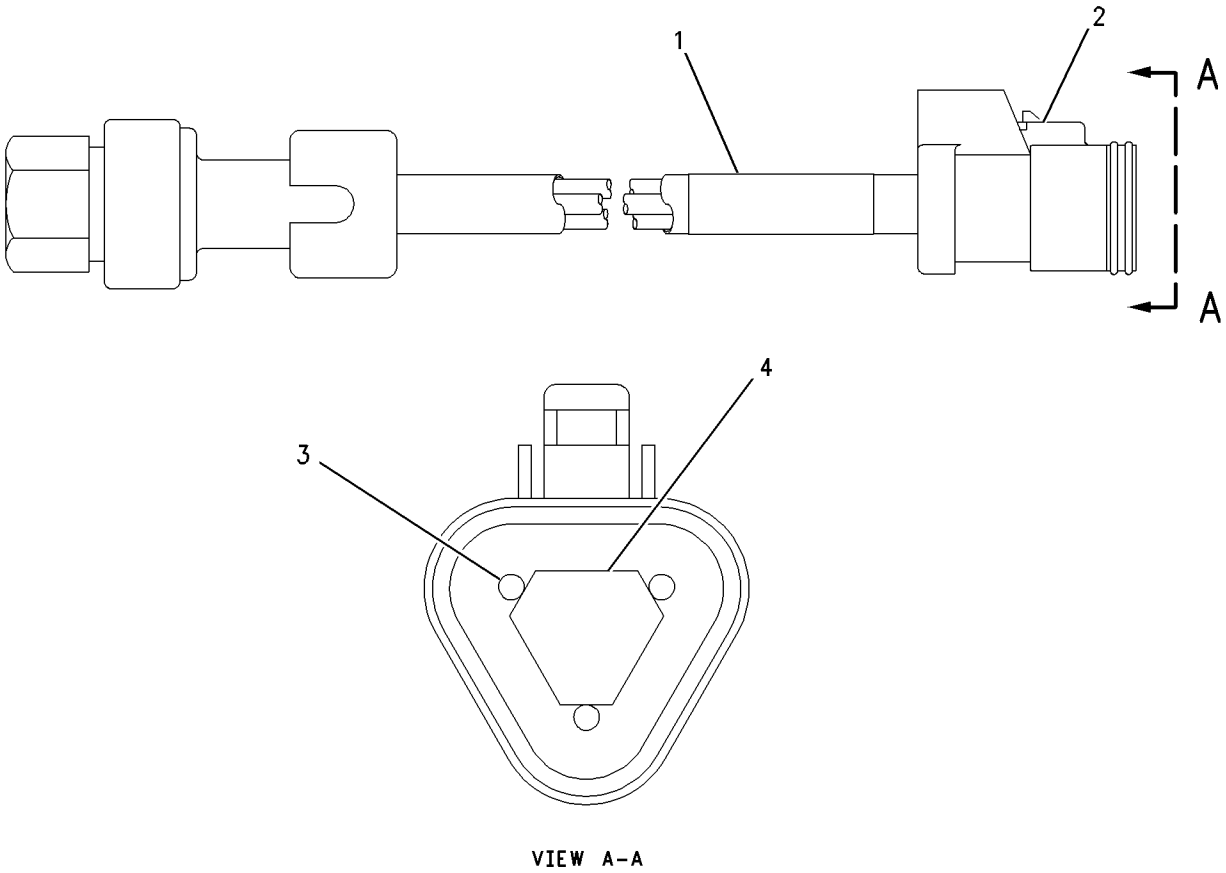

GRAPHIC #1 g00851220

MEMORANDA

173-5304 STARTING AID GP-ETHER–SNOW

S/N: ASE1-UP
PART OF 197-0579 STARTING AID GP-ETHER
AN ATTACHMENT

SMCS-1456 **i01539497**

NOTE	REF NO	GRAPHIC REF	PART NUMBER	QTY	PART NAME 1 2 3 4 5 6 (PRODUCT LEVEL)	SEE PAGE
	1	1	**3E-5239**	1	RELAY AS (24 VOLT)	
	2	1	**3E-6332**	1	VALVE AS-ETHER START	
		1	**3E-3365**	1	WEDGE-RECEPTACLE LOCK (2 PIN)	
		1	**7N-9801**	1	GASKET	
		1	**8T-8729**	2	PIN-CONNECTOR	
		1	**102-8802**	1	KIT-RECEPTACLE (2 PIN) (ETHER START VALVE)	
					(INCLUDES RECEPTACLE AS & WEDGE)	
	3	1	**7N-2059**	1	CLAMP AS-CYLINDER	
	4	1	**174-5636**	1	TUBE AS	
	5	1	**177-9812**	1	HARNESS AS-STARTING AID	
		1	**9X-1054**	1	PLUG AS-CONNECTOR (4 PIN)	
					(INCLUDES PLUG AS & WEDGE)	
		1	**155-2270**	1	KIT-CONNECTING PLUG (2 PIN) (ETHER STARTING AID)	
					(INCLUDES PLUG AS & WEDGE)	
		1	**102-8804**	1	KIT-RECEPTACLE (4 PIN)	
					(INCLUDES RECEPTACLE AS & WEDGE)	
	6	1	**033-8248**	1	CLIP	
	7	1	**130-5300**	1	CLIP	
	8	1	**4D-7794**	1	CLIP	
	9	1	**4H-2558**	1	GROMMET	
	10	1	**6V-2686**	1	CLIP	
	11	1	**8T-4121**	2	WASHER-HARD (11X21X2.5MM THK)	
M	12	1	**8T-4189**	4	BOLT (M8X1.25X20MM)	
M	13	1	**8T-4191**	2	BOLT (M10X1.5X16MM)	
	14	1	**8T-4224**	4	WASHER-HARD (8.8X16X2MM THK)	
A		1	**7N-0296**	1	CYLINDER AS-ETHER	
					(MAY BE PROCURED LOCALLY FROM CAT DEALER)	

A-NOT PART OF THIS GROUP
M-METRIC PART

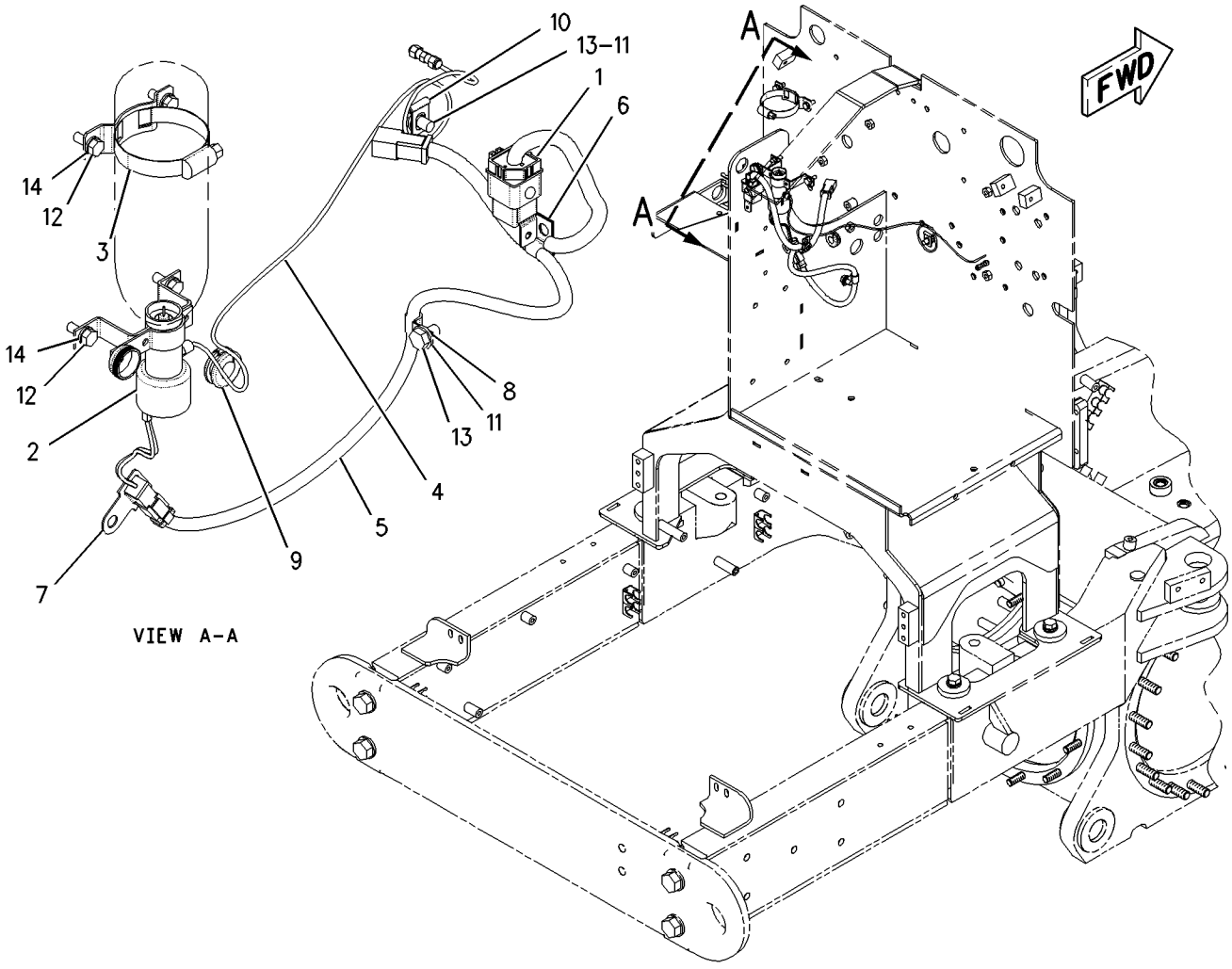

GRAPHIC #1 g00808200

ELECTRICAL AND STARTING SYSTEM

186-1728 STARTING AID GP-ETHER

S/N: ASE1-UP

PART OF 183-8482 SUPPORT AR-REAR CHASSIS

SMCS-1456 **i01671111**

NOTE	REF NO	GRAPHIC REF	PART NUMBER	QTY	PART NAME 1 2 3 4 5 6 (PRODUCT LEVEL)	SEE PAGE
	1	1	**3E-5239**	1	RELAY AS (24 VOLT) (ETHER START AID)	
	2	1	**3E-6332**	1	VALVE GP-ETHER START	
		1	**3E-3365**	1	WEDGE-RECEPTACLE LOCK (2 PIN)	
		1	**7N-9801**	1	GASKET	
		1	**8T-8729**	2	PIN-CONNECTOR	
		1	**102-8802**	1	KIT-RECEPTACLE (2 PIN) (ETHER START)	
	3	1	**3S-2093**	1	STRAP-CABLE	
	4	1	**7N-2059**	1	CLAMP AS-CYLINDER	
	5	1	**177-9812**	1	HARNESS AS-STARTING AID	
		1	**155-2270**	1	KIT-CONNECTING PLUG (2 PIN) (ETHER START AID)	
		1	**102-8804**	1	KIT-RECEPTACLE (4 PIN) (ETHER START AID)	
	6	1	**180-3558**	1	TUBE AS	
	7	1	**033-8248**	1	CLIP	
	8	1	**130-5300**	1	CLIP	
	9	1	**4D-7794**	1	CLIP	
	10	1	**4H-2558**	1	GROMMET	
	11	1	**6V-2686**	2	CLIP	
	12	1	**8T-4121**	3	WASHER-HARD (11X21X2.5MM THK)	
M	13	1	**8T-4137**	2	BOLT (M10X1.5X20MM)	
M	14	1	**8T-4189**	4	BOLT (M8X1.25X20MM)	
M	15	1	**8T-4191**	1	BOLT (M10X1.5X16MM)	
	16	1	**8T-4224**	4	WASHER-HARD (8.8X16X2MM THK)	
A		1	**7N-0296**	1	CYLINDER AS-ETHER	
					(MAY BE PROCURRED LOCALLY FROM CAT DEALER)	

A-NOT PART OF THIS GROUP
M-METRIC PART

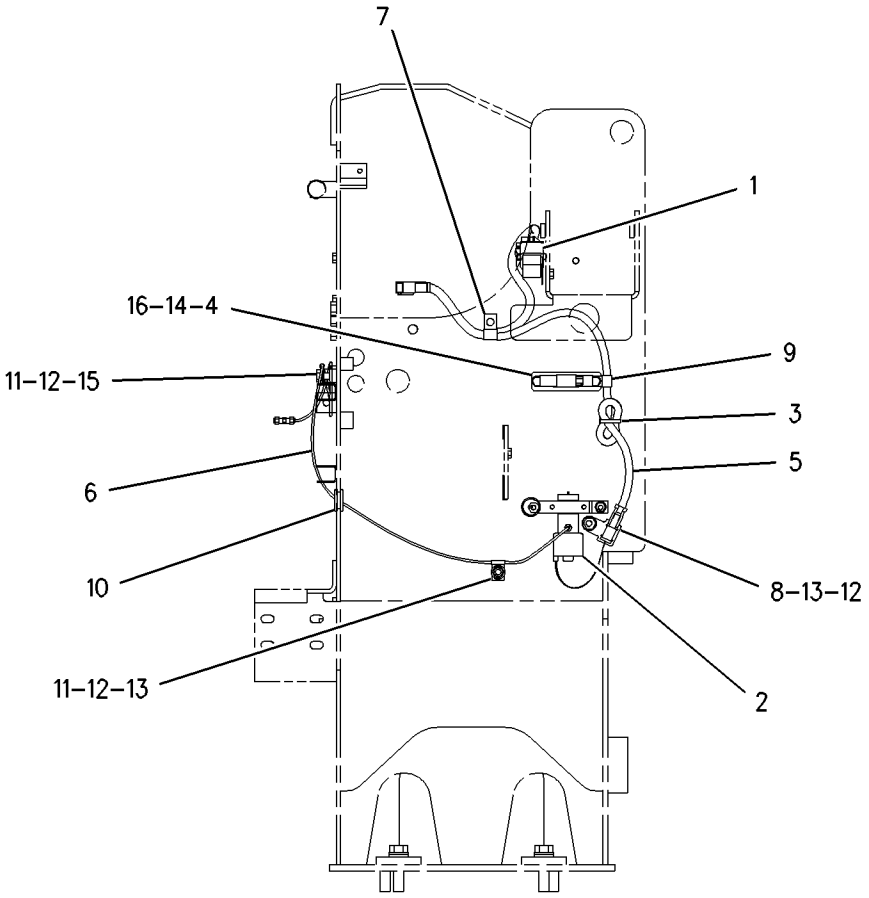

LEFT SIDE VIEW

GRAPHIC #1 g00859477

ELECTRICAL AND STARTING SYSTEM

197-0579 STARTING AID GP-ETHER–SNOW

S/N: ASE1-UP

AN ATTACHMENT

SMCS-1456 **i01671114**

NOTE	PART NUMBER	QTY	PART NAME 1 2 3 4 5 6 (PRODUCT LEVEL)	SEE PAGE
Y	*173-5304*	1	STARTING AID GP-ETHER (SNOW)	204
Y	*197-0580*	1	STARTING AID GP-ETHER	209

Y-SEPARATE ILLUSTRATION

197-0580 STARTING AID GP-ETHER

S/N: ASE1-UP

PART OF 162-5606 GENERAL AR, 197-0579 STARTING AID GP-ETHER

ALSO AN ATTACHMENT

SMCS-1456 **i01650683**

NOTE	REF NO	GRAPHIC REF	PART NUMBER	QTY	PART NAME 1 2 3 4 5 6 (PRODUCT LEVEL)	SEE PAGE
	1	1	**6N-9995**	1	ATOMIZER AS-ETHER	
	2	1	**7N-3725**	2	BRACKET	
	3	1	**175-1367**	2	SPACER (8.8X16X10MM THK)	
	4	1	**176-6391**	1	TUBE	
	5	1	**3E-8768**	1	SWITCH AS (ETHER STARTING AID)	
		1	**3E-8825**	1	LAMP (24 VOLT) (ETHER STARTING AID INDICATOR)	
		1	**3E-8776**	1	ACTUATOR-ROCKER	
	6	1	**6V-2686**	2	CLIP	
M	7	1	**8T-3647**	2	BOLT (M8X1.25X80MM)	
	8	1	**8T-4121**	4	WASHER-HARD (11X21X2.5MM THK)	
M	9	1	**8T-4133**	2	NUT (M10X1.5 THD)	
M	10	1	**8T-4137**	2	BOLT (M10X1.5X20MM)	
	11	1	**8T-4224**	2	WASHER-HARD (8.8X16X2MM THK)	

M-METRIC PART

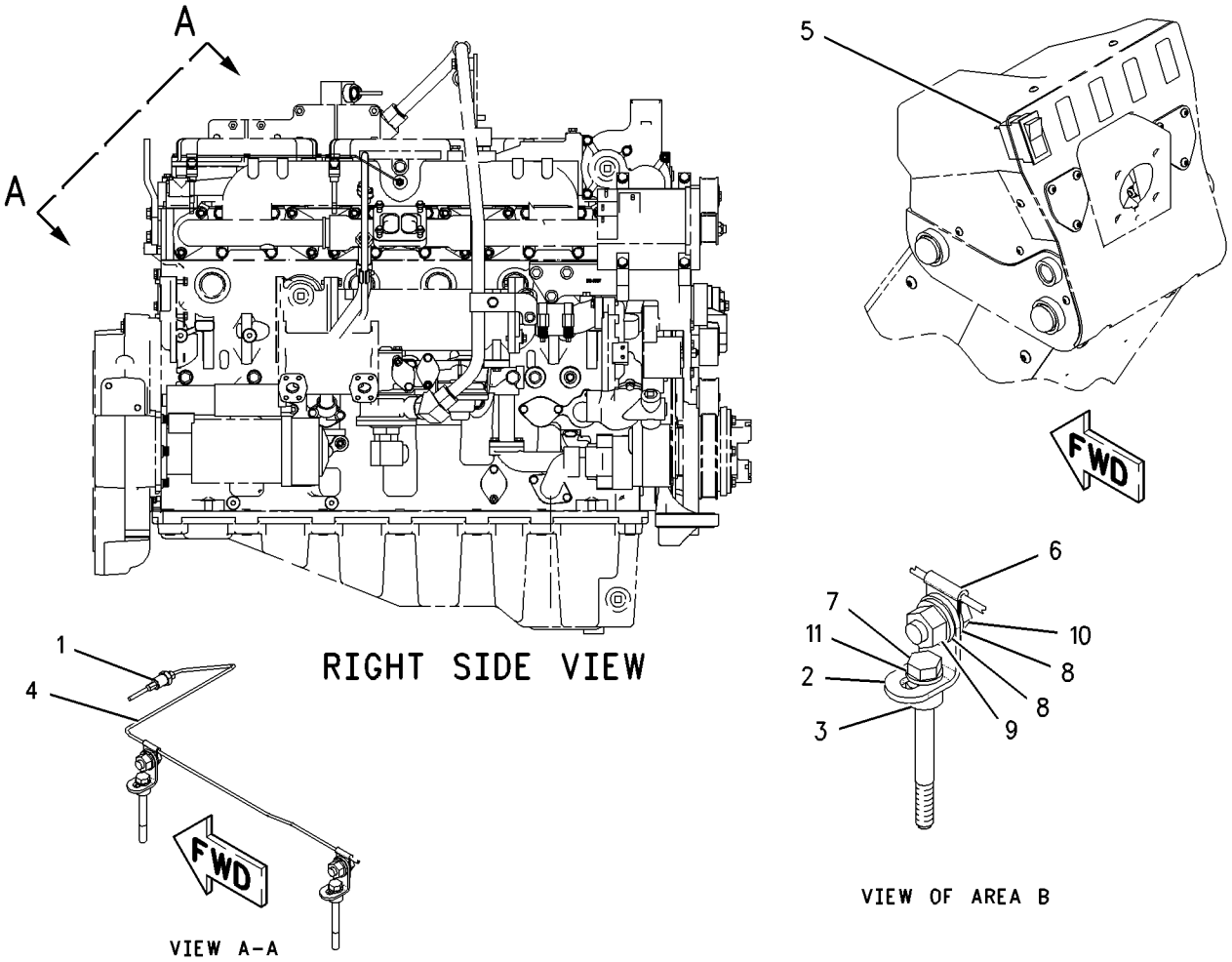

GRAPHIC #1 g00807749

6V-5582 STARTING MOTOR GP-ELECTRIC

S/N: 3PD1-UP

24 VOLT

PART OF 207-1556 STARTING MOTOR GP-ELECTRIC

SMCS-1453 **i01671165**

NOTE	REF NO	GRAPHIC REF	PART NUMBER	QTY	PART NAME 1 2 3 4 5 6 (PRODUCT LEVEL)	SEE PAGE
	1	1	**6V-8188**	3	NUT (1/2-13 THD)	
	2	1	**7X-0562**	3	WASHER-HARD (13.5X19X0.8MM THK)	
	3	1	**4B-2049**	1	NUT (10-32 THD)	
	4	1	**8F-1434**	1	LOCKWASHER	
	5	1	**8T-0328**	1	WASHER-HARD (5.5X10X1MM THK)	
M	6	1	**8T-4133**	1	NUT (M10X1.5 THD)	
	7	1	**8T-4121**	1	WASHER-HARD (11X21X2.5MM THK)	
	8	1	**3E-0142**	1	HOUSING AS	
	9	1	**3E-0141**	1	STOP-STARTING MOTOR	
	10	1	**4N-7521**	1	LOCK RING	
	11	1	**3E-0146**	1	DRIVE AS-STARTING MOTOR	
	12	1	**3E-0144**	1	HOUSING AS	
	13	1	**3E-0140**	1	LEVER AS-STARTER	
	14	1	**3E-0138**	1	ARMATURE AS (24 VOLT)	
	15	1	**3E-0137**	1	HOLDER AS	
	16	1	**3E-0135**	1	SOLENOID AS (24 VOLT) (STARTING MOTOR)	
	17	1	**3E-0125**	1	COVER AS-STARTING MOTOR	
	18	1	**3E-0139**	1	HOUSING AS	
	19	1	**3E-0136**	1	HOUSING AS	
	20	1	**3E-0132**	1	CONNECTOR	
	21	1	**3E-0133**	1	WIRE AS-STARTING MOTOR	
	22	1	**3E-0134**	1	COVER-PLUNGER	
					AVAILABLE REPAIR KIT(S):	
			3E-0128	1	KIT-BRUSH (STARTING MOTOR)	
					(INCLUDES O-RINGS, SCREW, SPRING, & BRUSH)	
			3E-0131	1	KIT-WASHER (STARTING MOTOR)	
					(INCLUDES WASHERS)	
			3E-0127	1	KIT-BEARING (STARTING MOTOR)	
					(INCLUDES BEARINGS)	
			3E-0129	1	KIT-HARDWARE (STARTING MOTOR)	
					(INCLUDES WASHERS, BOLTS, LOCKWASHERS, NUTS, BUSHINGS, & PLATE)	
			3E-0130	1	KIT-STARTING MOTOR SEAL	
					(INCLUDES SEALS & O-RINGS)	
			3E-0145	1	KIT-STARTING MOTOR PIN	
					(INCLUDES O-RINGS, SHAFT, AND RING)	

M-METRIC PART

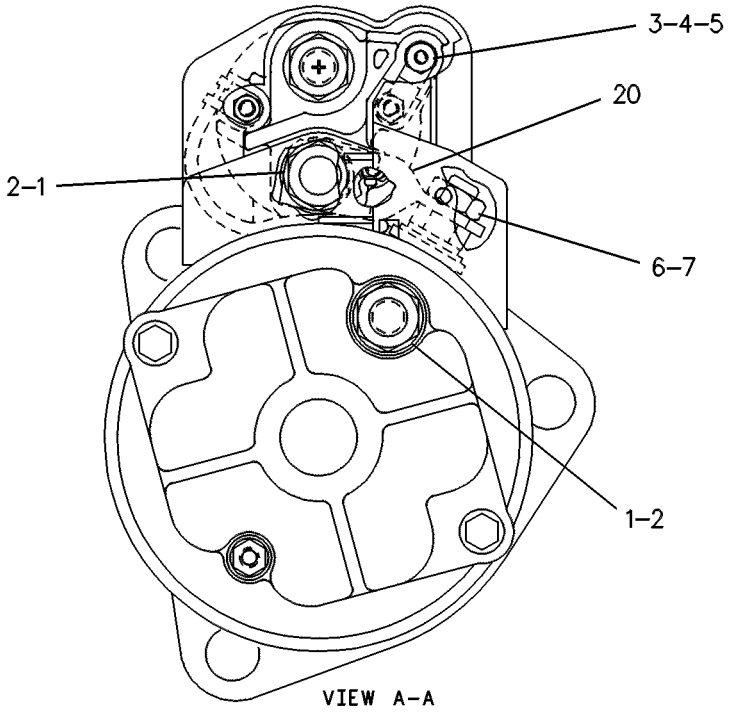

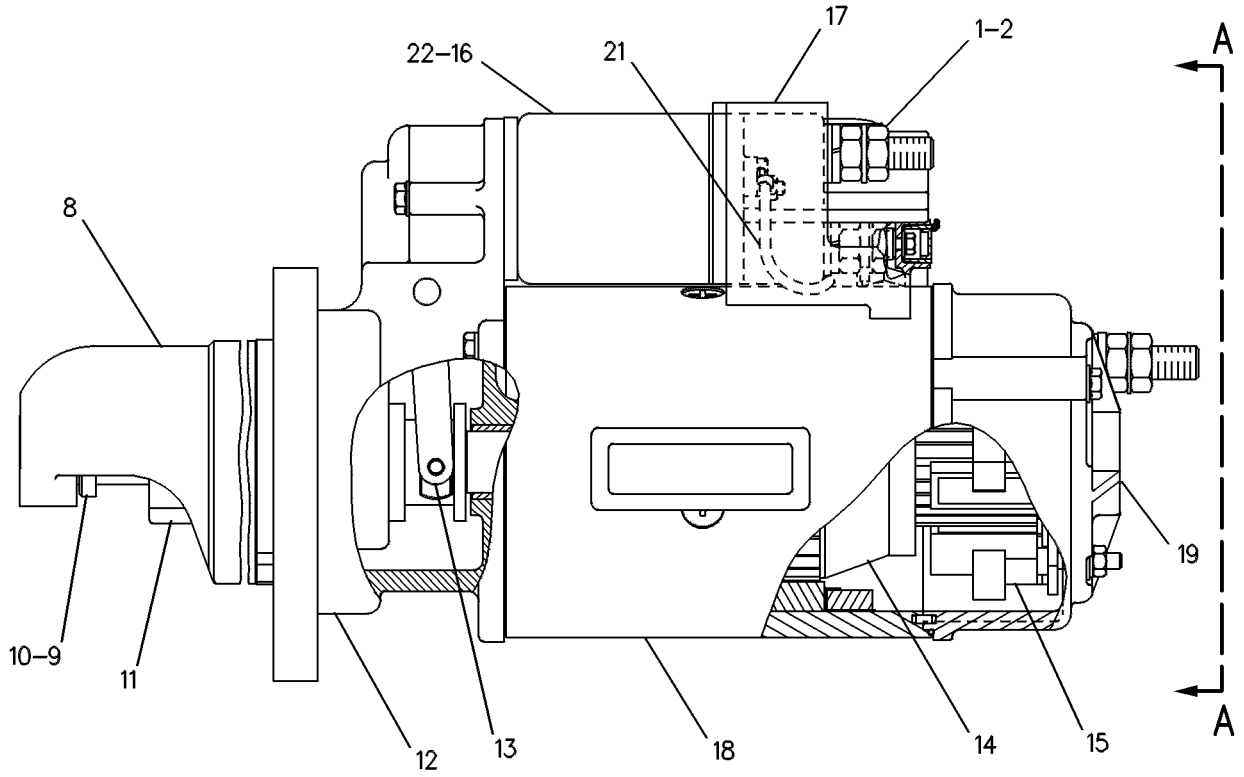

GRAPHIC #1 g00084516

104-7041 STARTING MOTOR GP-ELECTRIC

S/N: 3PD1-UP
24 VOLT
PART OF 179-8725 MOTOR GP-ELECTRIC
FIELD REPLACEMENT ORDER 207-1556—PAGE 214

SMCS-1453 **i01643469**

NOTE	REF NO	GRAPHIC REF	PART NUMBER	QTY	PART NAME 1 2 3 4 5 6 (PRODUCT LEVEL)	SEE PAGE
	1	1	**3T-3434**	6	PLUG	
	2	1	**7T-3279**	1	HOUSING AS	
	3	1	**8T-8566**	1	TERMINAL AS	
	4	1	**6V-8188**	4	NUT (1/2-13 THD)	
	5	1	**7X-0562**	4	WASHER-HARD (13.5X19X0.8MM THK)	
	6	1	**3T-3422**	1	WIRE AS	
	7	1	**7T-3278**	1	HOLDER AS-BRUSH	
	8	1	**7T-3277**	1	COIL AS-FIELD	
	9	1	**7T-3454**	1	INSULATOR	
	10	1	**7T-3271**	1	CONNECTOR	
	11	1	**7T-3451**	1	INSULATOR-TERMINAL	
	12	1	**8T-8569**	1	INSULATOR-TERMINAL	
	13	1	**5S-7349**	4	BOLT (1/4-20X0.5 IN)	
	14	1	**8T-4205**	4	WASHER-HARD (7.2X14.5X2MM THK)	
	15	1	**8H-1141**	4	SHOE-POLE	
	16	1	**3F-0379**	8	SCREW-POLE SHOE (3/8-24 THD)	
	17	1	**7T-3276**	1	ARMATURE AS (24 VOLT)	
	18	1	**3E-7775**	1	HOUSING AS	
	19	1	**4M-1831**	1	PLUG-LEVER HOUSING	
	20	1	**7L-2894**	1	GASKET	
	21	1	**036-9823**	5	BOLT	
	22	1	**6N-3826**	1	DRIVE AS-MOTOR	
	23	1	**7T-3974**	1	HOUSING AS-DRIVE	
	24	1	**7X-3373**	6	BOLT (5/16-18X0.88 IN)	
	25	1	**193-8570**	1	SOLENOID AS	
	26	1	**6V-8378**	3	NUT (10-32 THD)	
	27	1	**8F-1434**	2	LOCKWASHER	
	28	1	**8T-0328**	3	WASHER-HARD (5.5X10X1MM THK)	
	29	1	**8T-9884**	1	KIT-INSULATOR (STARTING MOTOR)	
	30	1	**8C-3655**	1	KIT-BRUSH (STARTING MOTOR)	
	31	1	**7T-3268**	1	KIT-LEVER (STARTING MOTOR)	
	32	1	**9X-4824**	1	COVER-STARTING MOTOR	
					AVAILABLE REPAIR KIT(S):	
			7T-3267	1	KIT-BUSHING (STARTING MOTOR)	

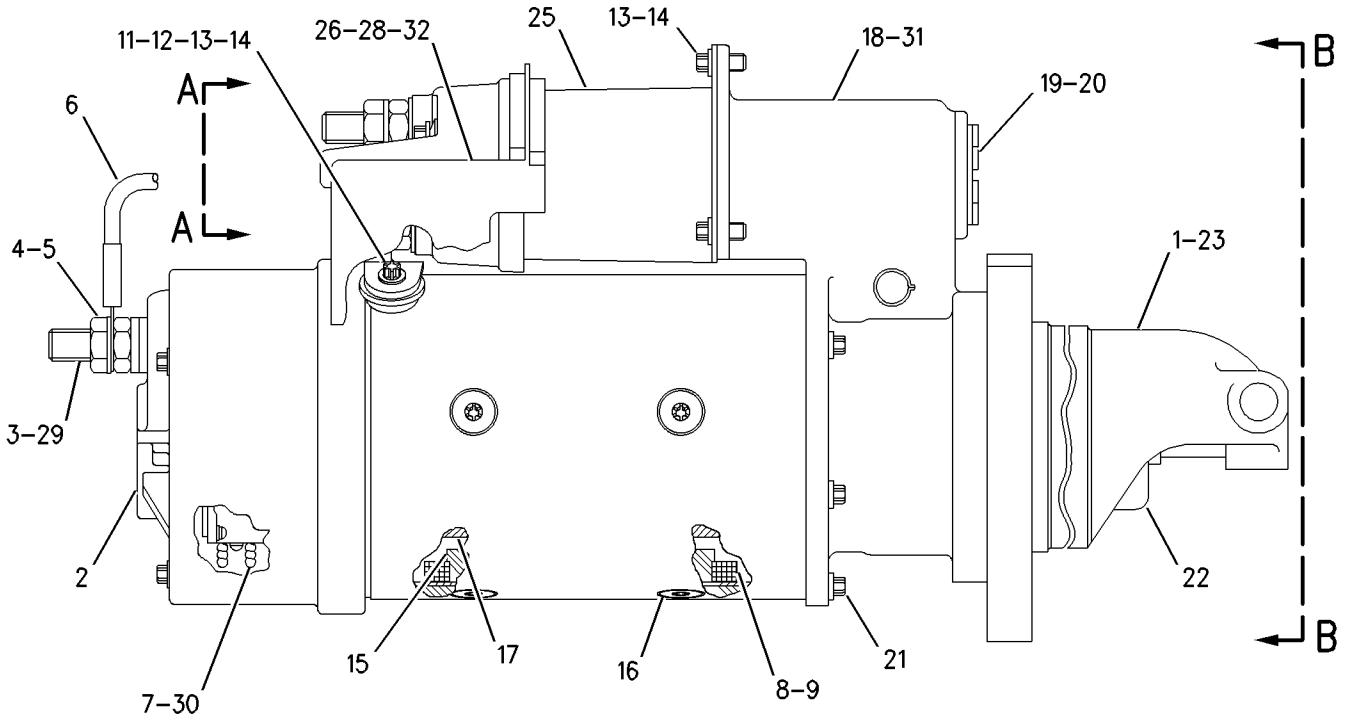

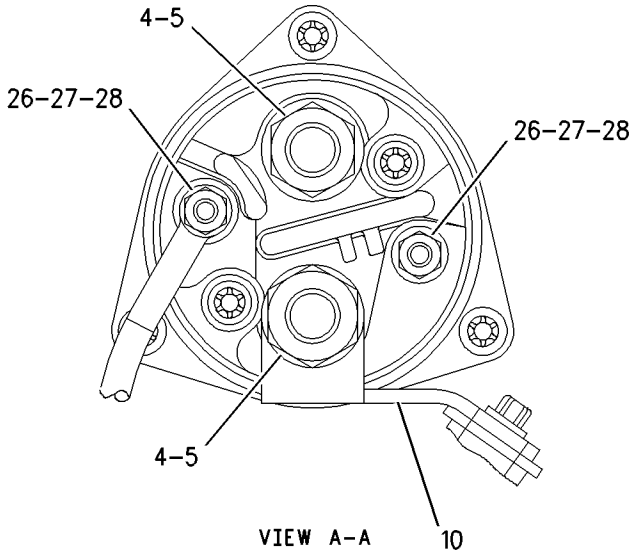

VIEW A-A

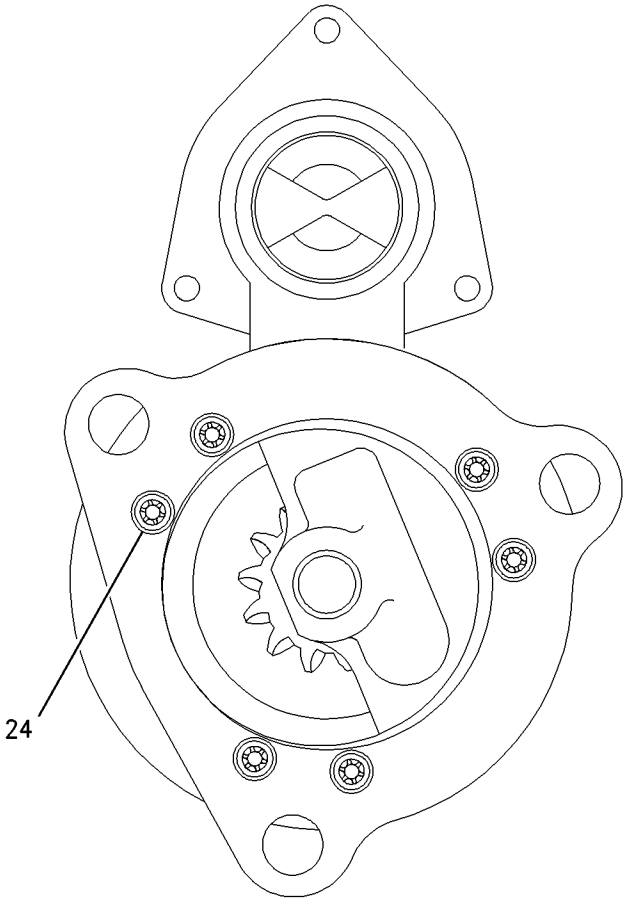

VIEW B-B

GRAPHIC #1

g00849925

ELECTRICAL AND STARTING SYSTEM

207-1556 STARTING MOTOR GP-ELECTRIC

S/N: 3PD1-UP
24 VOLT
FIELD REPLACEMENT FOR 207-1557—PAGE 216

SMCS-1453 **i01592733**

NOTE	PART NUMBER	QTY	PART NAME 1 2 3 4 5 6 (PRODUCT LEVEL)	SEE PAGE
Y	*6V-5582*	1	STARTING MOTOR GP-ELECTRIC	210
			—OR—	
Y	*207-1557*	1	STARTING MOTOR GP-ELECTRIC	216

Y-SEPARATE ILLUSTRATION

MEMORANDA

207-1557 STARTING MOTOR GP-ELECTRIC

S/N: 3PD1-UP
24 VOLT
PART OF 207-1556 STARTING MOTOR GP-ELECTRIC
FIELD REPLACEMENT ORDER 207-1556—PAGE 214

SMCS-1453 **i01592765**

NOTE	REF NO	GRAPHIC REF	PART NUMBER	QTY	PART NAME 1 2 3 4 5 6 (PRODUCT LEVEL)	SEE PAGE
	1	1	**3T-3434**	6	PLUG	
	2	1	**7T-3279**	1	HOUSING AS	
	3	1	**8T-8566**	1	TERMINAL AS	
	4	1	**6V-8188**	4	NUT (1/2-13 THD)	
	5	1	**7X-0562**	4	WASHER-HARD (13.5X19X0.8MM THK)	
	6	1	**3T-3422**	1	WIRE AS	
	7	1	**7T-3278**	1	HOLDER AS-BRUSH	
	8	1	**7T-3277**	1	COIL AS-FIELD	
	9	1	**7T-3454**	1	INSULATOR	
	10	1	**7T-3271**	1	CONNECTOR	
	11	1	**7T-3451**	1	INSULATOR-TERMINAL	
	12	1	**8T-8569**	1	INSULATOR-TERMINAL	
	13	1	**5S-7349**	4	BOLT (1/4-20X0.5 IN)	
	14	1	**8T-4205**	4	WASHER-HARD (7.2X14.5X2MM THK)	
	15	1	**8H-1141**	4	SHOE-POLE	
	16	1	**3F-0379**	8	SCREW-POLE SHOE	
	17	1	**7T-3276**	1	ARMATURE AS (24 VOLT)	
	18	1	**3E-7775**	1	HOUSING AS	
	19	1	**4M-1831**	1	PLUG-LEVER HOUSING	
	20	1	**7L-2894**	1	GASKET	
	21	1	**036-9823**	5	BOLT	
	22	1	**6N-3826**	1	DRIVE AS-MOTOR	
	23	1	**7T-3974**	1	HOUSING AS-DRIVE	
	24	1	**7X-3373**	6	BOLT (5/16-18X0.88 IN)	
	25	1	**193-8570**	1	SOLENOID AS	
	26	1	**6V-8378**	3	NUT (10-32 THD)	
	27	1	**8F-1434**	2	LOCKWASHER	
	28	1	**8T-0328**	3	WASHER-HARD (5.5X10X1MM THK)	
	29	1	**9X-4824**	1	COVER-STARTING MOTOR	
					AVAILABLE REPAIR KIT(S):	
			7T-3268		KIT-LEVER (STARTING MOTOR)	
					(KIT INCLUDES LEVER ASSEMBLIES, SEALS, NUT, GASKET & RETAINER)	
			7T-3267		KIT-BUSHING (STARTING MOTOR)	
					(KIT INCLUDES BUSHINGS, WICKS, CUPS, SEALS, GASKET, SCREW AS., WASHERS, SPACER & NUT)	
			8C-3655		KIT-BRUSH (STARTING MOTOR)	
					(KIT INCLUDES BRUSHES, SPRINGS, SCREWS, SCREW AS. & SEAL)	
			8T-9884		KIT-INSULATOR (STARTING MOTOR)	
					(KIT INCLUDES INSULATORS AND BUSHING)	

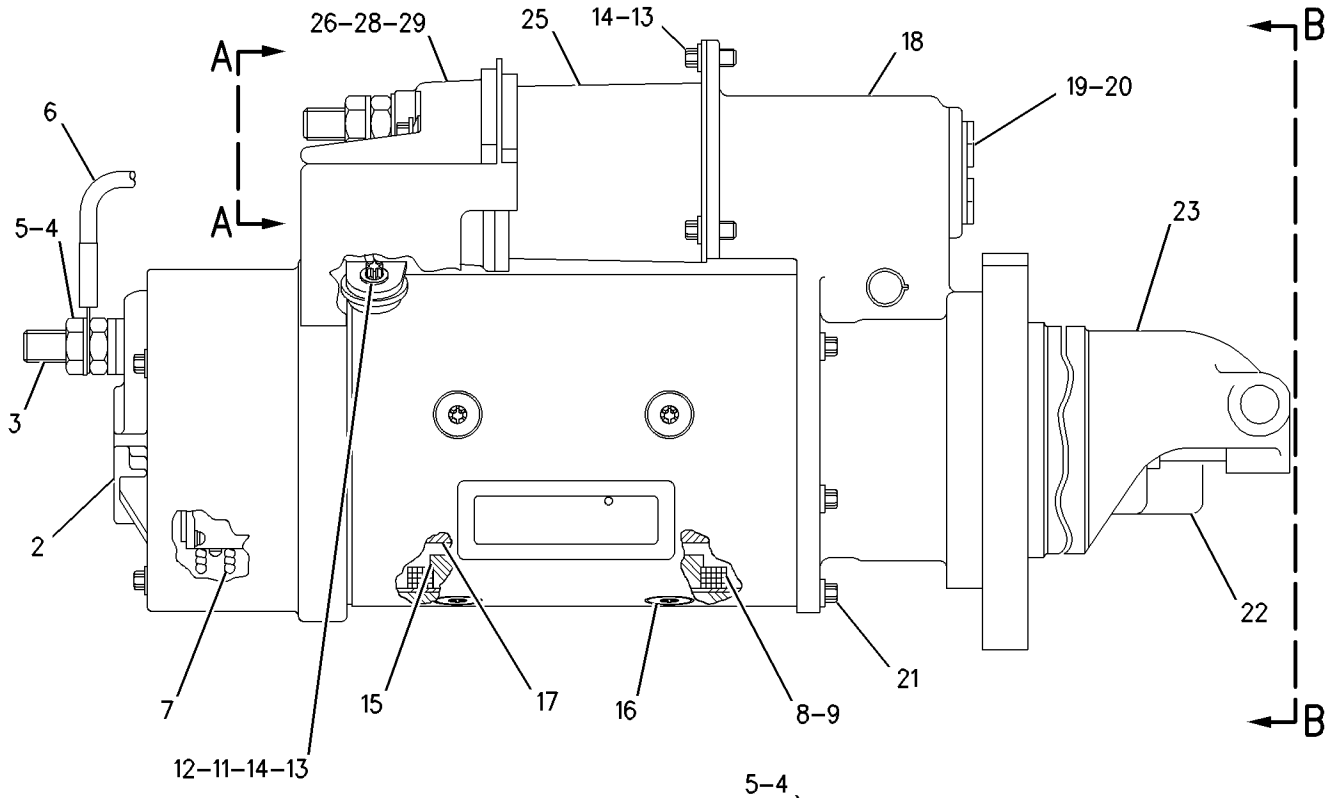

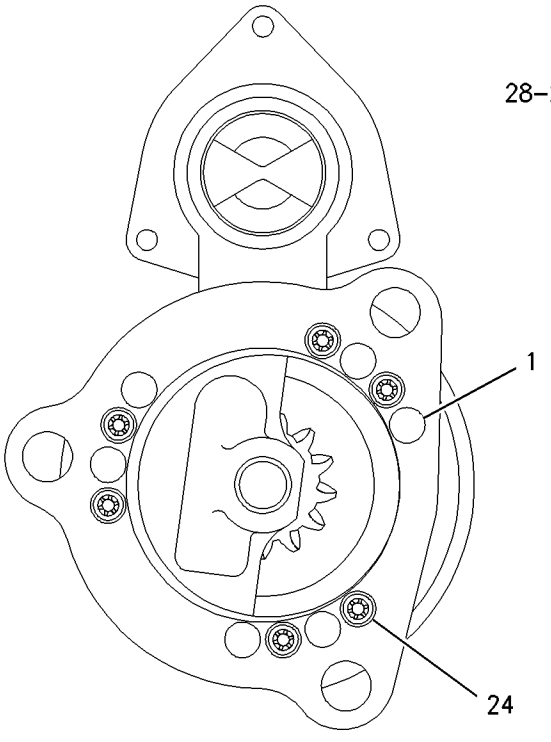

VIEW B–B

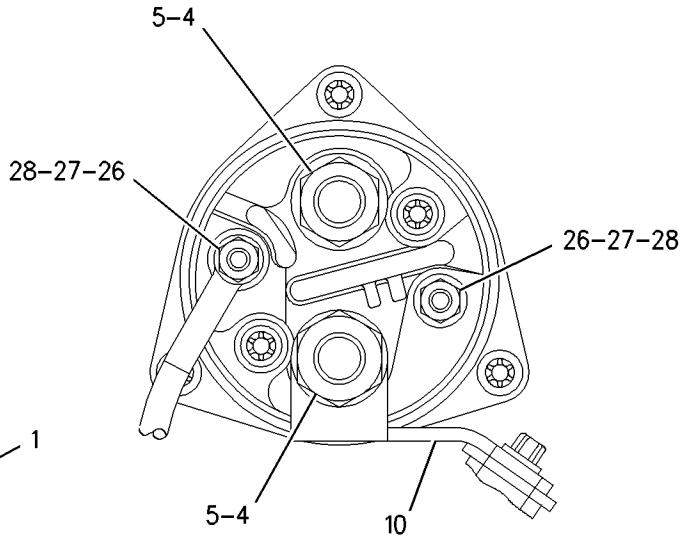

VIEW A–A

GRAPHIC #1 g00826583

7N-0718 SWITCH GP-DISCONNECT–BATTERY

S/N: ASE1-UP

PART OF 187-8137 WIRING GP-REAR

SMCS-1411 **i01636326**

NOTE	REF NO	GRAPHIC REF	PART NUMBER	QTY	PART NAME 1 2 3 4 5 6 (PRODUCT LEVEL)	SEE PAGE
	1	1	**8H-5306**	1	KEY (BATTERY DISCONNECT)	
	2	1	**8H-5303**	1	NUT (3/4-16 THD)	
	3	1	**2H-3922**	2	LOCKWASHER	
	4	1	**9F-5644**	2	LOCKWASHER	
	5	1	**6F-7045**	2	NUT-FULL (3/8X24 THD)	

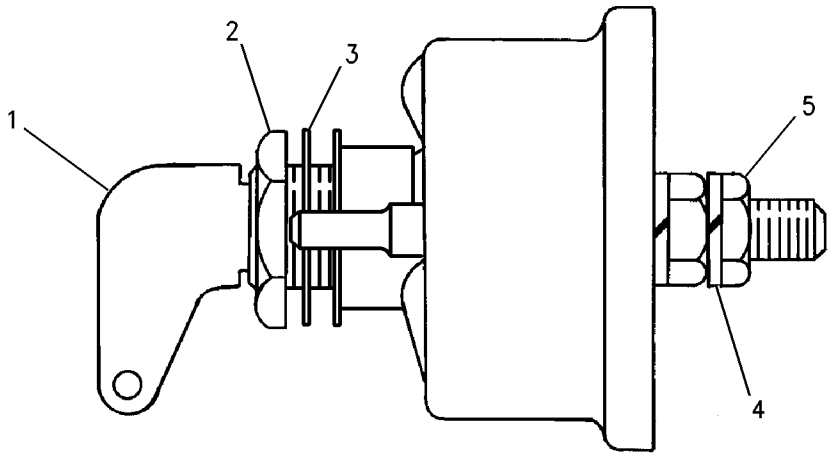

GRAPHIC #1 g00715584

MEMORANDA

161-1018 SWITCH GP-LIGHT–TURN

S/N: ASE1-UP

PART OF 161-0770 LIGHTING AR-FLOOD & SIGNAL

AN ATTACHMENT

SMCS-1429, 1435, 7332 **i01671173**

NOTE	REF NO	GRAPHIC REF	PART NUMBER	QTY	PART NAME 1 2 3 4 5 6 (PRODUCT LEVEL)	SEE PAGE
	1	1	**8X-5153**	1	FILM-FACE (TURN SIGNAL/HAZARD)	
	2	1	**8X-5154**	1	FILM-FACE (HEADLIGHTS HIGH/LOW BEAM)	
	3	1	**9W-1442**	1	FUSE (10 AMP) (TURN SIGNALS)	
	4	1	**103-5678**	1	SWITCH AS-ROTARY (TURN SIGNAL)	
		1	**5L-7200**	1	SCREW (8-32X0.375 IN)	
		1	**9B-7233**	1	LOCKWASHER	
	5	1	**108-0358**	1	FLASHER AS-ELECTRONIC (12/24 VOLT) (TURN SIGNALS/HAZARDS)	
	6	1	**173-3064**	1	SWITCH AS-TURN SIG & WARNING	
		1	**5L-7200**	1	SCREW (8-32X0.375 IN)	
		1	**9B-7233**	1	LOCKWASHER	
	7	1	**3E-8772**	1	SWITCH AS-ROCKER (HEADLAMP/TAIL)	
		1	**3E-8825**	2	LAMP (24 VOLT) (HEADLAMP/TAIL/INDICATOR)	
		1	**3E-9326**	1	ACTUATOR-ROCKER	
M	8	1	**5C-2890**	2	NUT (M6X1 THD)	
	9	1	**8X-6296**	1	LEVER (TURN SIGNAL)	
	9A	1	**8X-6296**	1	LEVER (HIGH/LOW BEAM)	
M	10	1	**9X-2043**	2	SCREW-TRUSS HEAD (M6X1X14MM)	
	11	1	**9X-8256**	2	WASHER (6.6X12X2MM THK)	

M-METRIC PART

161-1018 **SWITCH GP-LIGHT** ***(contd.)*** **i01671173**

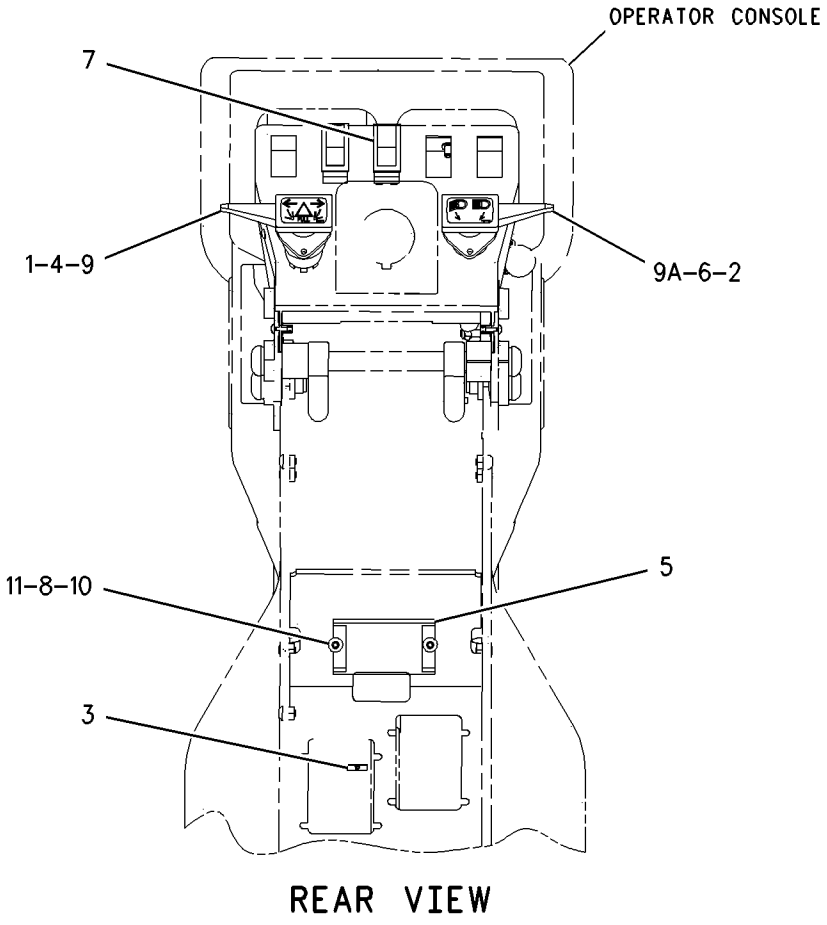

GRAPHIC #1 g00846541

3E-0154 SWITCH GP-MAGNETIC–SECONDARY STEERING–SNOW

S/N: ASE1-UP
24-32 VOLT
PART OF 184-6044 WIRING GP-SECONDARY STEERING
AN ATTACHMENT

SMCS-7499 **i01663034**

NOTE	REF NO	GRAPHIC REF	PART NUMBER	QTY	PART NAME 1 2 3 4 5 6 (PRODUCT LEVEL)	SEE PAGE
	1	1	**7X-0620**	2	WASHER-HARD (5.5X13X1.6MM THK)	
	2	1	**8F-1434**	2	LOCKWASHER	
	3	1	**6V-8378**	2	NUT (10-32 THD)	
	4	1	**6V-8801**	2	NUT (3/8-16 THD)	
	5	1	**7X-0608**	2	WASHER-HARD (10.2X16X2.0MM THK)	
	6	1	**4D-1326**	2	LOCKWASHER	

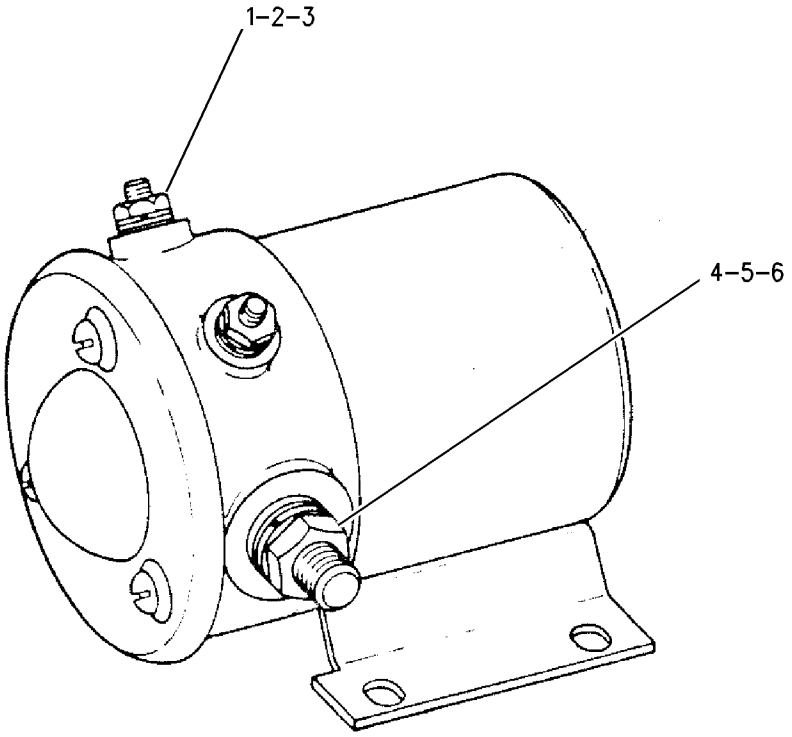

GRAPHIC #1 g00726410

3E-0155 SWITCH GP-WIPER

S/N: ASE1-UP
24 VOLT
PART OF 177-8784 WIPER GP-WINDOW
AN ATTACHMENT

SMCS-7305, 7332 **i01303559**

NOTE	REF NO	GRAPHIC REF	PART NUMBER	QTY	PART NAME 1 2 3 4 5 6 (PRODUCT LEVEL)	SEE PAGE
C	1	1	**102-8806**	1	KIT-RECEPTACLE (8 PIN)	
					(INCLUDES RECEPTACLE AS AND WEDGE)	
	2	1	**7T-9302**	1	KNOB-WIPER SWITCH	
		1	**014-0816**	1	SETSCREW	
	3	1	**8T-8737**	1	PLUG-SEAL	
	4	1	**3E-3389**	1	WEDGE-RECEPTACLE LOCK	
C	5	1	**8T-8729**	3	PIN-CONNECTOR	
	6	1	**6V-8369**	1	NUT (7/16-28 THD)	
	7	1	**2H-3920**	1	LOCKWASHER (11.38MM ID)	
C	8	1	**9W-0852**	4	PIN-CONNECTOR	

C-CHANGE FROM PREVIOUS TYPE

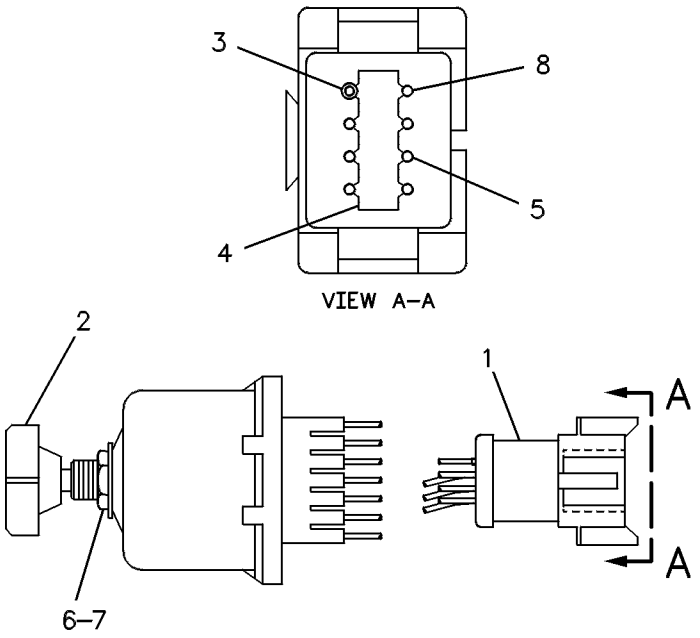

GRAPHIC #1 g00120668

123-6449 WARNING GP-BACKUP

S/N: ASE1-UP
PART OF 194-7982, 200-4983 WIRING GP-REAR
ALSO AN ATTACHMENT

SMCS-7406 **i01612351**

NOTE	REF NO	GRAPHIC REF	PART NUMBER	QTY	PART NAME 1 2 3 4 5 6 (PRODUCT LEVEL)	SEE PAGE
	1	1	**102-8802**	1	KIT-RECEPTACLE (2 PIN)	
					(KIT INCLUDES RECEPTACLE AS AND WEDGE)	
	2	1	**3E-3365**	1	WEDGE-RECEPTACLE LOCK (2 PIN)	
	3	1	**186-3735**	2	PIN-CONNECTOR	
D	4	1	**5P-5677**		WIRE-ELECTRICAL (18 GA) (0.6M)	
E	5	1	**9X-1813**		SLEEVE (28CM)	

D-ORDER BY THE METER
E-ORDER BY THE CENTIMETER

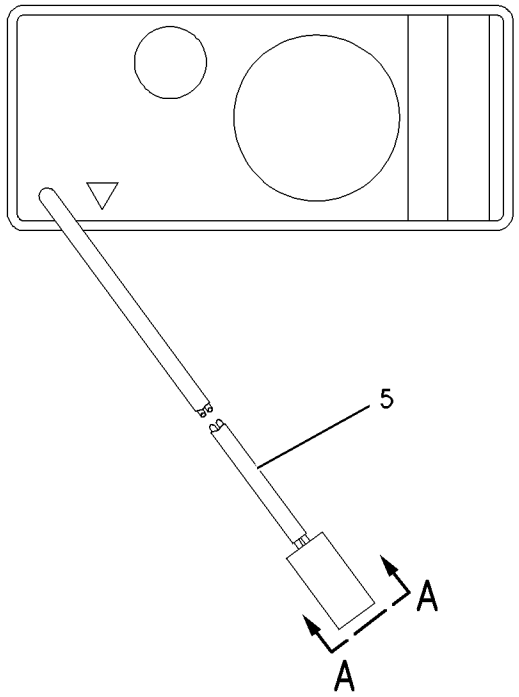

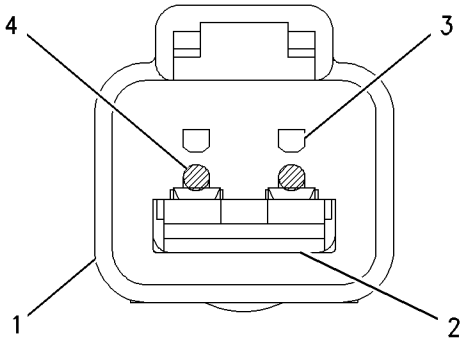

VIEW A-A

GRAPHIC #1 g00677117

161-1930 WIRING GP-BLADE CUSHION

S/N: ASE1-UP
PART OF 166-3369 ACCUMULATOR AR-BLADE CUSHION
AN ATTACHMENT

SMCS-1408 **i01671174**

NOTE	REF NO	GRAPHIC REF	PART NUMBER	QTY	PART NAME 1 2 3 4 5 6 (PRODUCT LEVEL)	SEE PAGE
	1	1	**3S-2093**	1	STRAP-CABLE	
	2	1	**9W-1442**	1	FUSE (10 AMP) (BLADE CUSHION CONTROL)	
	3	1	**130-5300**	2	CLIP	
	4	1	**187-9087**	1	HARNESS AS-CHASSIS	
		1	**102-8802**	4	KIT-RECEPTACLE (2 PIN)	
		1	**102-8803**	1	KIT-RECEPTACLE (3 PIN)	
		1	**155-2270**	4	KIT-CONNECTING PLUG (2 PIN)	
	5	1	**033-8248**	1	CLIP	
	6	1	**4D-7794**	2	CLIP	
	7	1	**4L-6459**	2	BOLT (3/8-16X2.5 IN)	
	8	1	**5M-3062**	1	BOLT (3/8-16X0.75 IN)	
	9	1	**6V-8801**	2	NUT (3/8-16 THD)	
	10	1	**8T-4896**	5	WASHER-HARD (10.2X18.5X2.5MM THK)	
	11	1	**3E-8763**	1	SWITCH AS (BLADE CUSHION CONTROL)	
		1	**3E-8812**	1	ACTUATOR-ROCKER	
		1	**3E-8825**	1	LAMP (24 VOLT) (BLADE CUSHION CONT/INDICATOR)	

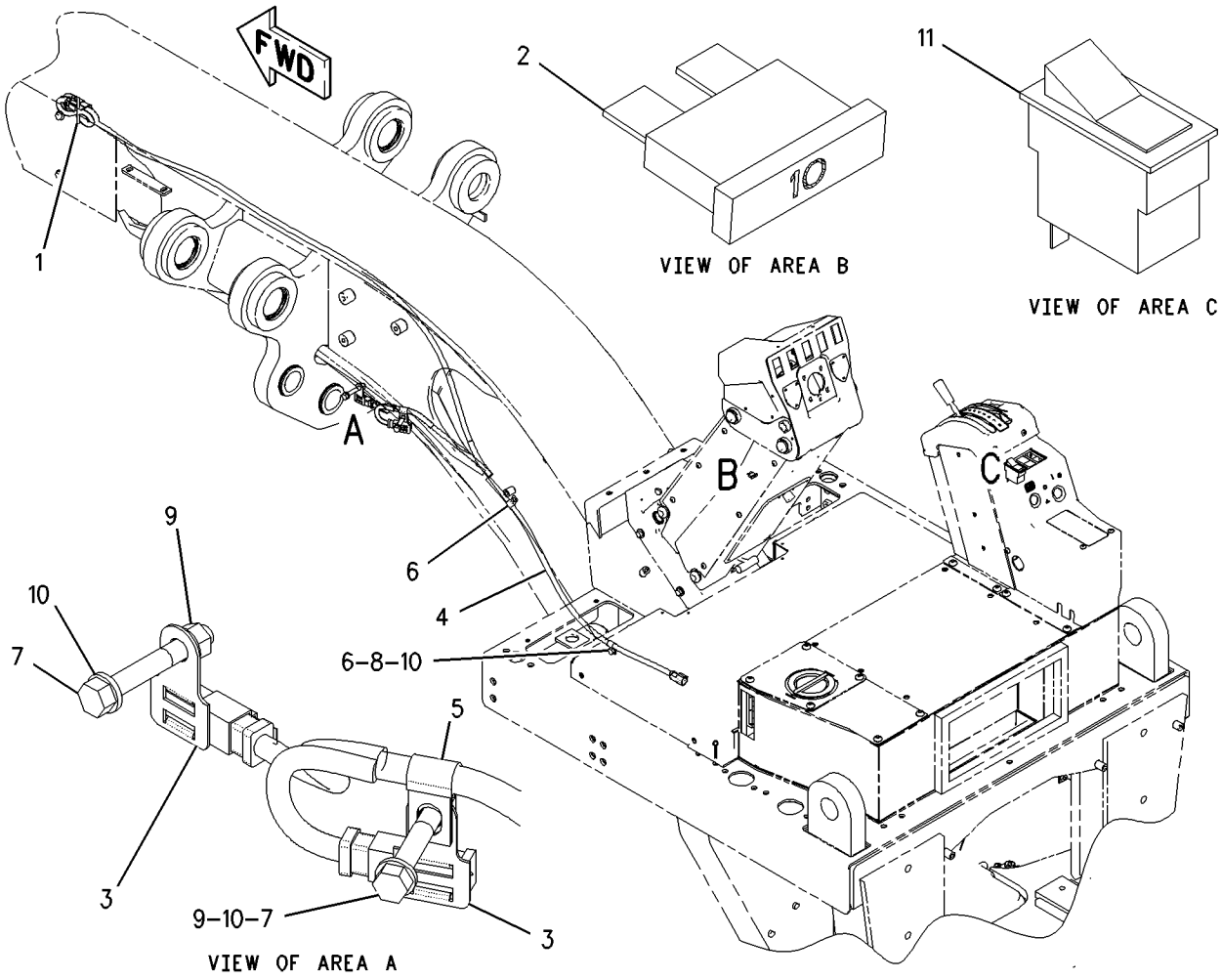

GRAPHIC #1 g00857314

ELECTRICAL AND STARTING SYSTEM

159-5878 WIRING GP-CAB

S/N: ASE1-UP

PART OF 162-5606 GENERAL AR

SMCS-1408, 7301 **i01642725**

NOTE	REF NO	GRAPHIC REF	PART NUMBER	QTY	PART NAME 1 2 3 4 5 6 (PRODUCT LEVEL)	SEE PAGE
	1	1	**3E-0109**	3	PLUG-ROCKER SWITCH	
Y	2	1	**3E-6389**	1	LAMP GP-DOME (24 VOLT, WITH SWITCH)	149
	3	1	**3S-2093**	23	STRAP-CABLE	
	4	1	**4E-4454**	1	PLUG	
	5	1	**6V-6578**	2	RIVET-BLIND	
	6	1	**7T-9302**	2	KNOB (UPPER/LOWER FRONT WIPERS)	
	7	1	**9W-1441**	1	FUSE (15 AMP) (UPPER/LOWER FRONT WIPERS)	
	8	1	**112-6174**	2	SWITCH AS-ROTARY (24 VOLT) (UPPER/LOWER FRONT WIPERS)	
					(EACH INCLUDES)	
		1	**2H-3920**	1	LOCKWASHER	
		1	**3E-3389**	1	WEDGE-RECEPTACLE LOCK	
		1	**6V-8369**	1	NUT (7/16-28 THD)	
		1	**186-3735**	6	PIN-CONNECTOR	
		1	**8T-8737**	2	PLUG-SEAL	
		1	**102-8806**	1	KIT-RECEPTACLE (8 PIN) (FRONT WIPER SWITCHES)	
	9	1	**160-6382**	1	GROMMET	
	10	1	**167-7504**	1	HARNESS AS-CAB	
		1	**102-8806**	1	KIT-RECEPTACLE (8 PIN)	
		1	**102-8801**	1	KIT-RECEPTACLE (12 PIN)	
		1	**155-2255**	1	KIT-CONNECTING PLUG (12 PIN)	
		1	**155-2265**	4	KIT-CONNECTING PLUG (8 PIN)	
	11	1	**167-7505**	1	HARNESS AS-CAB	
		1	**102-8802**	2	KIT-RECEPTACLE (2 PIN)	
		1	**102-8805**	1	KIT-RECEPTACLE (6 PIN)	
		1	**102-8806**	1	KIT-RECEPTACLE (8 PIN)	
		1	**155-2270**	2	KIT-CONNECTING PLUG (2 PIN)	
		1	**155-2274**	1	KIT-CONNECTING PLUG (6 PIN)	
	12	1	**168-8248**	1	HARNESS AS-CAB	
		1	**102-8802**	9	KIT-RECEPTACLE (2 PIN)	
		1	**102-8803**	2	KIT-RECEPTACLE (3 PIN)	
		1	**102-8804**	1	KIT-RECEPTACLE (4 PIN)	
		1	**102-8806**	1	KIT-RECEPTACLE (8 PIN)	
		1	**102-8801**	2	KIT-RECEPTACLE (12 PIN)	
		1	**155-2255**	2	KIT-CONNECTING PLUG (12 PIN)	
		1	**155-2265**	1	KIT-CONNECTING PLUG (8 PIN)	
		1	**155-2260**	3	KIT-CONNECTING PLUG (3 PIN)	
		1	**155-2270**	9	KIT-CONNECTING PLUG (2 PIN)	
		1	**155-2274**	1	KIT-CONNECTING PLUG (6 PIN)	
	13	1	**169-8938**	1	PLATE AS	
	14	1	**172-6555**	1	PANEL	
	15	1	**172-8641**	1	PLATE	
	16	1	**172-9316**	1	FILM-FUSE (LIGHTS, WASHER, WIPER, DEFROST)	
	17	1	**096-6166**	3	WASHER-HARD (4.5X9X1MM THK)	
M	18	1	**5C-8312**	3	NUT (M4X0.7 THD)	
	19	1	**6V-5645**	4	SCREW-MACHINE (10-32X0.87 IN)	
	20	1	**6V-8801**	1	NUT (3/8-16 THD)	
	21	1	**8T-4896**	1	WASHER-HARD (10.2X18.5X2.5MM THK)	
M	22	1	**9X-1046**	3	SCREW (M4X0.7X18MM)	
M	23	1	**9X-2042**	4	SCREW-TRUSS HEAD (M6X1X12MM)	
E	24	1	**7X-7877**		STRIP-EDGING (10CM)	

E-ORDER BY THE CENTIMETER
M-METRIC PART
Y-SEPARATE ILLUSTRATION

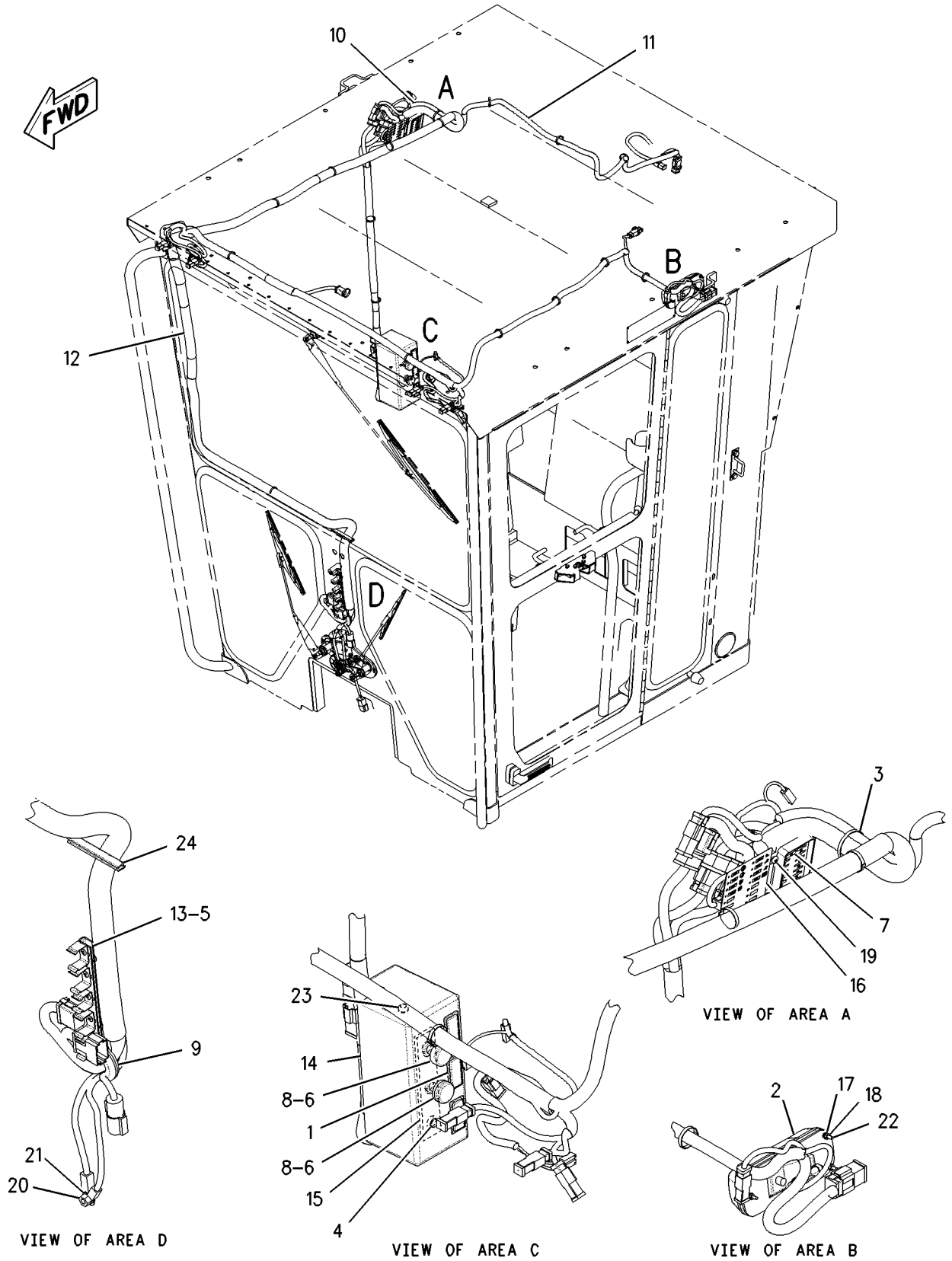

GRAPHIC #1 g00808291

203-6551 WIRING GP-CAB—MOLDBOARD

S/N: ASE1-UP

PART OF 203-6536, 206-6538 LIGHTING AR-FLOOD

AN ATTACHMENT

SMCS-1408, 7301 **i01671179**

NOTE	REF NO	GRAPHIC REF	PART NUMBER	QTY	PART NAME 1 2 3 4 5 6 (PRODUCT LEVEL)	SEE PAGE
	1	1	**3E-0109**	5	PLUG-ROCKER SWITCH	
	2	1	**3S-2093**	2	STRAP-CABLE	
	3	1	**9W-1442**	1	FUSE (10 AMP) (CONTROLLER FOR THE BLADE)	
	4	1	**145-3350**	1	PLATE	
	5	1	**153-2147**	1	PLATE	
	6	1	**168-8243**	1	HARNESS AS-PANEL	
					EACH CONNECTOR KIT INCLUDES CONNECTOR PLUG AS & WEDGE	
		1	**155-2255**	1	KIT-CONNECTING PLUG (12 PIN)	
		1	**155-2265**	4	KIT-CONNECTING PLUG (8 PIN)	
		1	**155-2270**	1	KIT-CONNECTING PLUG (2 PIN) (SNOW WING LAMP)	
		1	**155-2271**	1	KIT-CONNECTING PLUG (4 PIN) (AUX BACK-UP LAMP & SWITCH)	
					EACH RECEPTACLE KIT INCLUDES RECEPTACLE AS & WEDGE	
		1	**102-8802**	1	KIT-RECEPTACLE (2 PIN)	
		1	**102-8804**	2	KIT-RECEPTACLE (4 PIN)	
		1	**102-8806**	1	KIT-RECEPTACLE (8 PIN)	
		1	**102-8801**	1	KIT-RECEPTACLE (12 PIN)	
	7	1	**172-6556**	1	PANEL	
	8	1	**188-3862**	1	BRACKET AS	
	9	1	**3E-8766**	1	SWITCH AS (MOLDBOARD LAMPS)	
		1	**3E-8782**	1	ACTUATOR-ROCKER	
		1	**3E-8825**	1	LAMP (24 VOLT) (MOLDBOARD/INDICATOR)	
M	10	1	**9X-2043**	6	SCREW-TRUSS HEAD (M6X1X14MM)	

M-METRIC PART

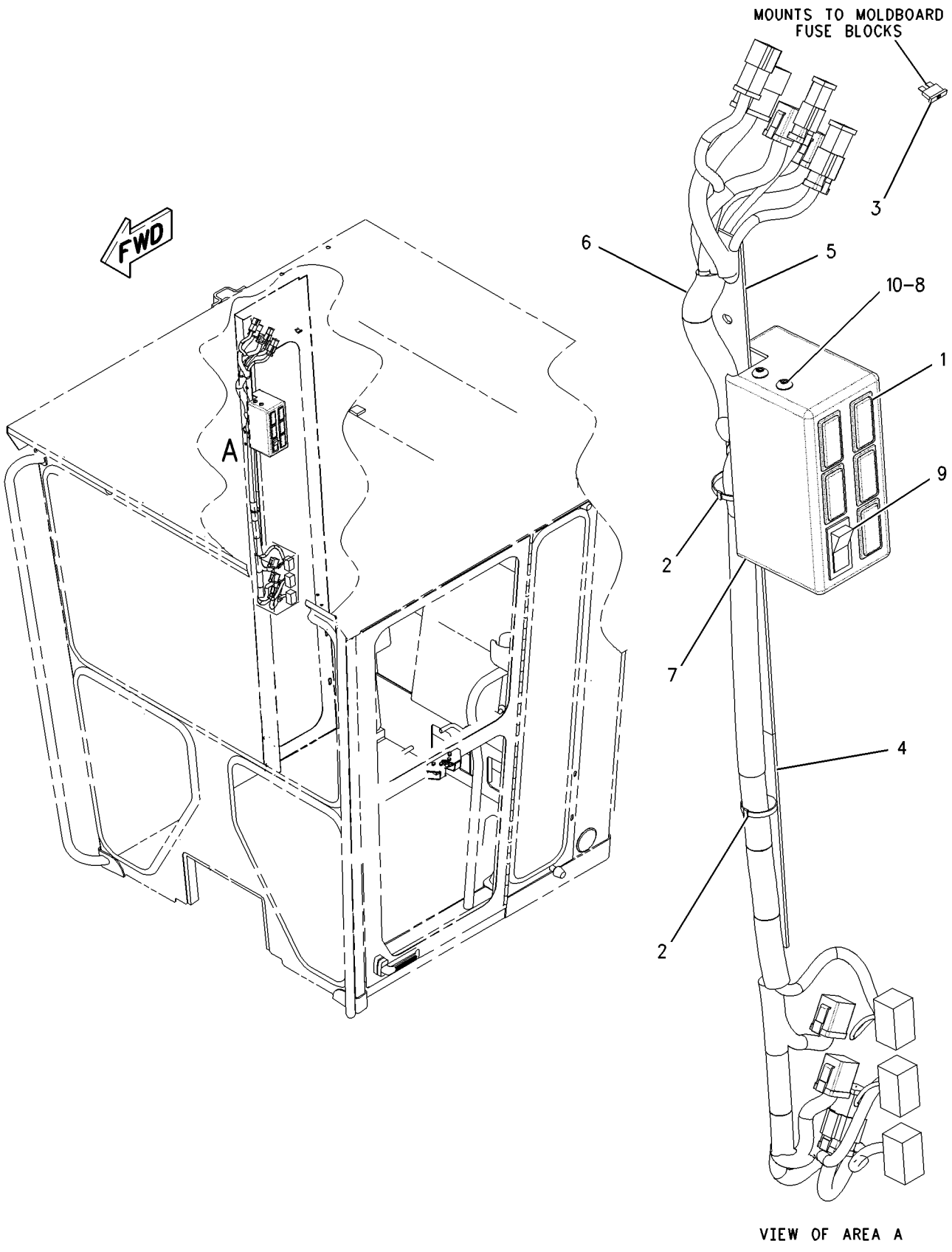

GRAPHIC #1 g00845747

ELECTRICAL AND STARTING SYSTEM

171-1103 WIRING GP-ENGINE

S/N: 3PD1-UP

PART OF 161-1747 ENGINE AR

SMCS-1408 **i01671181**

NOTE	REF NO	GRAPHIC REF	PART NUMBER	QTY	PART NAME 1 2 3 4 5 6 (PRODUCT LEVEL)	SEE PAGE
Y	1	1	**194-6722**	1	SENSOR GP-PRESSURE (ATMOSPHERIC)	200
	2	1,2	**8L-2786**	2	SEAL-O-RING	
	4	1,2	**3S-2093**	10	STRAP-CABLE	
	5	1,2	**4K-8864**	2	CLIP	
M	6	1	**6V-8214**	2	BOLT (M6X1X20MM)	
	7	1	**5P-4115**	2	WASHER-HARD (7.2X19X2MM THK)	
	8	1	**8J-1256**	1	CLIP	
	9	1,2	**4P-8134**	3	CLIP	
	10	2	**164-9609**	1	ELBOW	
	11	2	**171-1108**	1	HARNESS AS-CONTROL (ENGINE ELECTRONIC)	
		2	**155-2270**	7	KIT-CONNECTING PLUG (2 PIN)	
		2	**102-8802**	1	KIT-RECEPTACLE (2 PIN)	
		2	**102-8803**	4	KIT-RECEPTACLE (3 PIN)	
		2	**155-2255**	1	KIT-CONNECTING PLUG (12 PIN)	
Y	12	1	**194-6724**	1	SENSOR GP-PRESSURE (TURBO OUTLET)	201
	13	1	**8M-2770**	1	CLIP	
Y	14	2	**194-6725**	1	SENSOR GP-PRESSURE (FUEL)	202
Y	14A	2	**194-6725**	1	SENSOR GP-PRESSURE (ENGINE OIL)	202
	15	1,2	**6V-5049**	2	SEAL-O-RING	
	16	1	**130-9811**	1	SENSOR GP-TEMPERATURE (COOLANT)	
	16A	1	**130-9811**	1	SENSOR GP-TEMPERATURE (INLET MANIFOLD)	
	16B	2	**130-9811**	1	SENSOR GP-TEMPERATURE (FUEL)	
	17	1,2	**3J-7354**	3	SEAL-O-RING	
	18	1	**3E-7448**	1	CONNECTOR	
	19	1	**6V-6609**	1	SEAL-O-RING	
	20	1	**189-9801**	1	SENSOR GP-SPEED (CAMSHAFT)	
	21	1	**4P-5918**	1	CLIP	
	22	2	**6V-5048**	2	SEAL-O-RING	
M	23	1	**6V-5215**	2	BOLT (M8X1.25X16MM)	
	24	1	**9M-1974**	2	WASHER-HARD (8.8X16X2MM THK)	
M	25	1	**8T-0642**	1	BOLT (M8X1.25X14MM)	
	26	1	**117-1385**	2	SEAL-O-RING	
	27	1	**188-7511**	1	SENSOR GP-SPEED (CRANKSHAFT)	
	28	2	**9S-4191**	1	PLUG	
	29	1	**8M-2771**	1	CLIP	
M	30	1	**6V-8837**	1	BOLT (M6X1X16 MM)	
	31	1	**9X-8267**	1	WASHER (6.6X12X2MM THK)	
M	32	1	**6V-7981**	1	BOLT (M10X1.50X70MM)	
	33	1	**6V-5839**	1	WASHER (11X21X2.5MM THK)	
	34	2	**132-5789**	1	CLIP	
	35	2	**2M-7077**	1	SPACER (.406IN X .62IN X .37IN THK)	
	36	1	**102-8802**	1	KIT-RECEPTACLE (2 PIN)	
	37	2	**9X-0262**	1	ADAPTER	
	38	1	**8T-8737**	2	PLUG-SEAL	
M	39	2	**6V-6317**	1	BOLT (M10X1.5X20MM)	
	40	2	**3E-4353**	1	WASHER-HARD (11X25X3MM THK)	

M-METRIC PART
Y-SEPARATE ILLUSTRATION

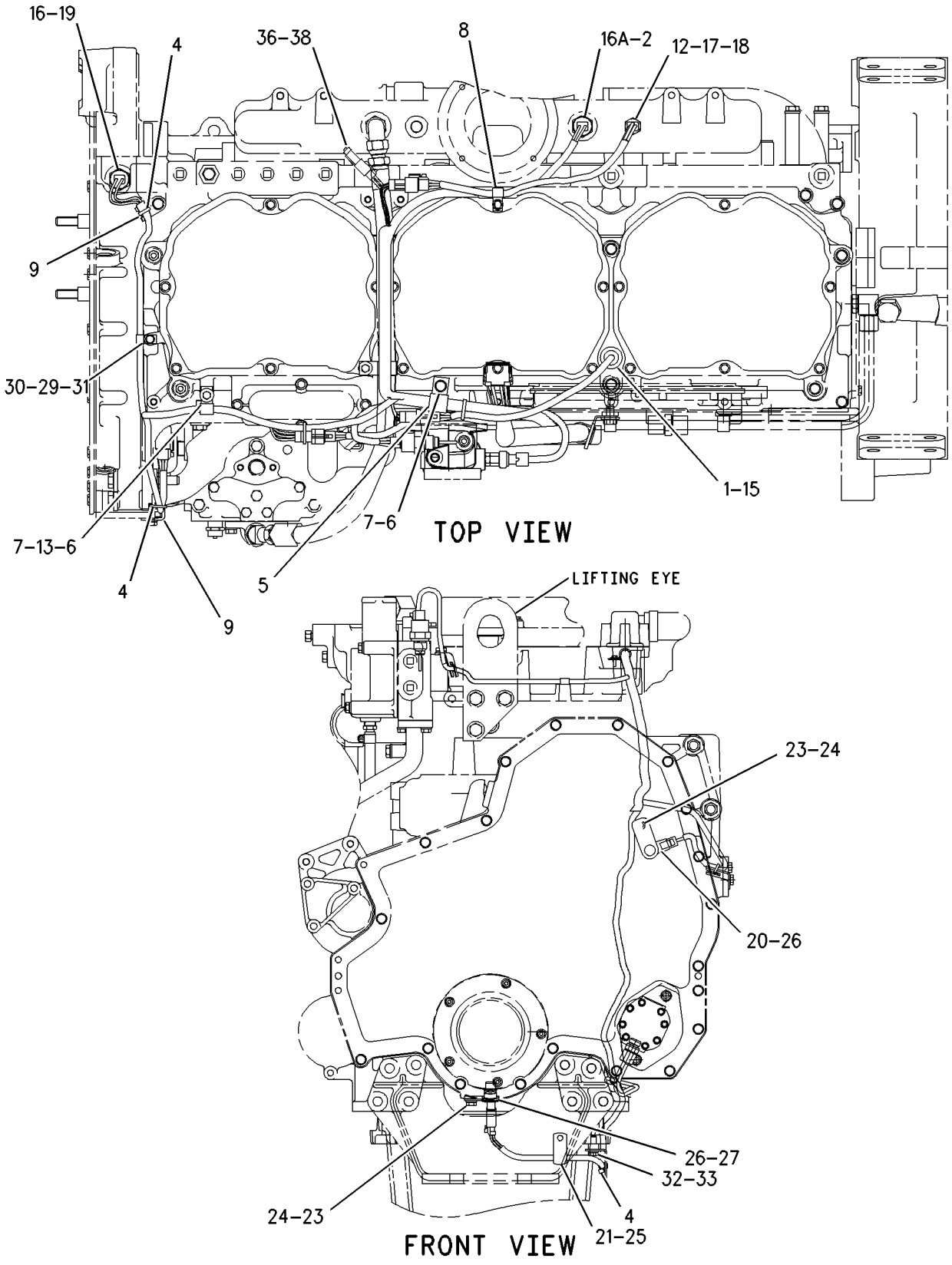

GRAPHIC #1 g00678348

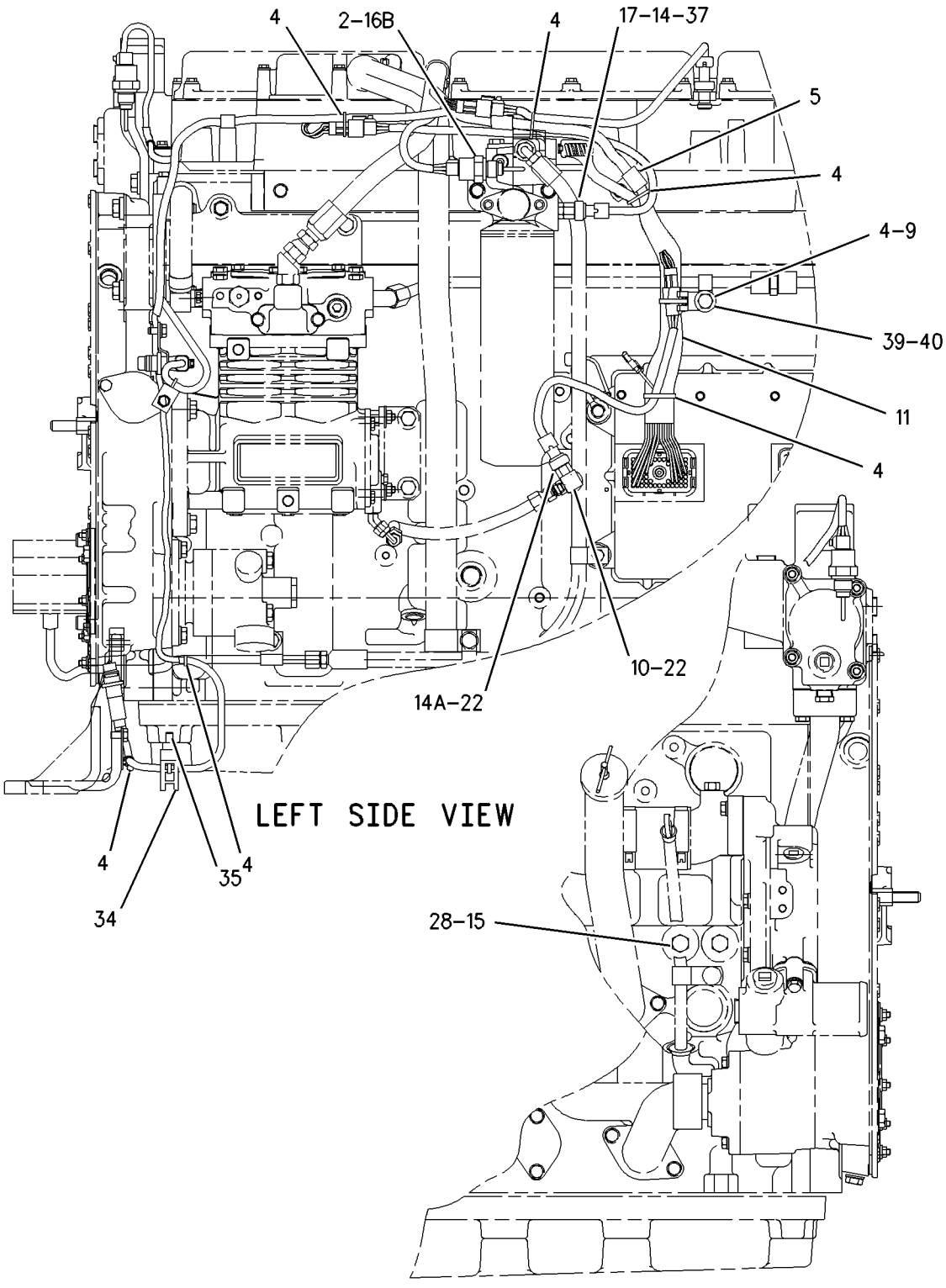

GRAPHIC #2

g00674243

MEMORANDA

ELECTRICAL AND STARTING SYSTEM

159-5867 WIRING GP-FRONT

S/N: ASE1-UP

PART OF 162-5606 GENERAL AR

SMCS-1408 **i01636371**

NOTE	REF NO	GRAPHIC REF	PART NUMBER	QTY	PART NAME 1 2 3 4 5 6 (PRODUCT LEVEL)	SEE PAGE
	1	1	**1S-2342**	1	STRAP AS-GROUND	
	2	1	**3E-2026**	1	SWITCH AS-PRESSURE (STOP LAMP)	
		1	**102-8802**	1	KIT-RECEPTACLE (2 PIN)	
		1	**3E-3365**	1	WEDGE-RECEPTACLE LOCK (2 PIN)	
		1	**186-3735**	1	PIN-CONNECTOR	
	3	1,2	**3S-2093**	12	STRAP-CABLE	
	4	1	**7K-1181**	5	STRAP-CABLE	
	5	1	**9L-1566**	2	SUPPORT-TUBE	
	6	1	**9L-6331**	1	BRACKET	
	7	1,2	**114-9281**	1	SWITCH AS-PRESSURE (AIR BRAKE)	
	7A	1	**114-9281**	1	SWITCH AS-PRESSURE (AIR BRAKE)	
	7B	1	**114-9281**	1	SWITCH AS-PRESSURE (PARKING BRAKE)	
					(EACH SWITCH AS INCLUDES)	
		1,2	**102-8802**	1	KIT-RECEPTACLE (2 PIN)	
		1,2	**3E-3365**	1	WEDGE-RECEPTACLE LOCK (2 PIN)	
		1,2	**186-3735**	1	PIN-CONNECTOR	
	8	1	**131-4135**	1	SWITCH AS-TEMPERATURE (HYDRAULIC OIL TEMPERATURE)	
		1	**102-8802**	1	KIT-RECEPTACLE (2 PIN)	
		1	**3E-3365**	1	WEDGE-RECEPTACLE LOCK (2 PIN)	
		1	**186-3735**	1	PIN-CONNECTOR	
	9	1,2	**169-5414**	6	CLIP	
	10	1	**185-9404**	1	HARNESS AS-PLATFORM	
		1	**155-2255**	6	KIT-CONNECTING PLUG (12 PIN)	
		1	**155-2265**	1	KIT-CONNECTING PLUG (8 PIN)	
		1	**155-2260**	3	KIT-CONNECTING PLUG (3 PIN)	
		1	**155-2270**	12	KIT-CONNECTING PLUG (2 PIN)	
		1	**155-2271**	1	KIT-CONNECTING PLUG (4 PIN) (GROUND SPEED SENSOR/POWER/GND)	
		1	**155-2274**	4	KIT-CONNECTING PLUG (6 PIN)	
		1	**102-8802**	3	KIT-RECEPTACLE (2 PIN)	
		1	**102-8803**	2	KIT-RECEPTACLE (3 PIN)	
		1	**102-8804**	1	KIT-RECEPTACLE (4 PIN)	
		1	**102-8805**	3	KIT-RECEPTACLE (6 PIN)	
		1	**102-8801**	8	KIT-RECEPTACLE (12 PIN)	
		1	**9X-1343**	1	RECEPTACLE AS (40 PIN)	
	11	2	**201-5244**	1	PLATE AS	
	12	2	**096-6166**	4	WASHER-HARD (4.5X9X1MM THK)	
	13	1,2	**130-5300**	8	CLIP	
	14	1	**4D-7388**	3	CLIP	
	15	1	**4D-7794**	9	CLIP	
	16	1	**4K-8864**	1	CLIP	
	17	1,2	**4L-6454**	6	BOLT (3/8-16X1 IN)	
	18	1	**4L-6459**	1	BOLT (3/8-16X2.5 IN)	
	19	1,2	**4P-8134**	2	CLIP	
	20	1	**4S-4455**	1	CLIP	
	21	1,2	**5M-3062**	26	BOLT (3/8-16X0.75 IN)	
	22	1,2	**5P-7854**	2	CLIP	
	23	1	**6D-4244**	2	CLIP	
	24	1	**6V-3265**	2	CLIP	
	25	1,2	**6V-8801**	7	NUT (3/8-16 THD)	
	26	2	**7C-4354**	1	CLIP	
	27	1	**8T-4121**	2	WASHER-HARD (11X21X2.5MM THK)	
M	28	1	**8T-4191**	2	BOLT (M10X1.5X16MM)	
M	29	2	**8T-4647**	4	SCREW-MACHINE (M4X0.7X20MM)	
	30	1,2	**8T-4896**	40	WASHER-HARD (10.2X18.5X2.5MM THK)	

159-5867 **WIRING GP-FRONT** ***(contd.)*** **i01636371**

NOTE	REF NO	GRAPHIC REF	PART NUMBER	QTY	PART NAME 1 2 3 4 5 6 (PRODUCT LEVEL)	SEE PAGE
	31	1,2	**9M-8406**	3	CLIP	
	32	1	**9W-1991**	1	SPACER (13.94X17.14X40MM THK)	
FY			*198-7332*	1	ELECTRONICS GP-MONITOR (CATERPILLAR MONITORING SYSTEM)	144

F-NOT SHOWN
M-METRIC PART
Y-SEPARATE ILLUSTRATION

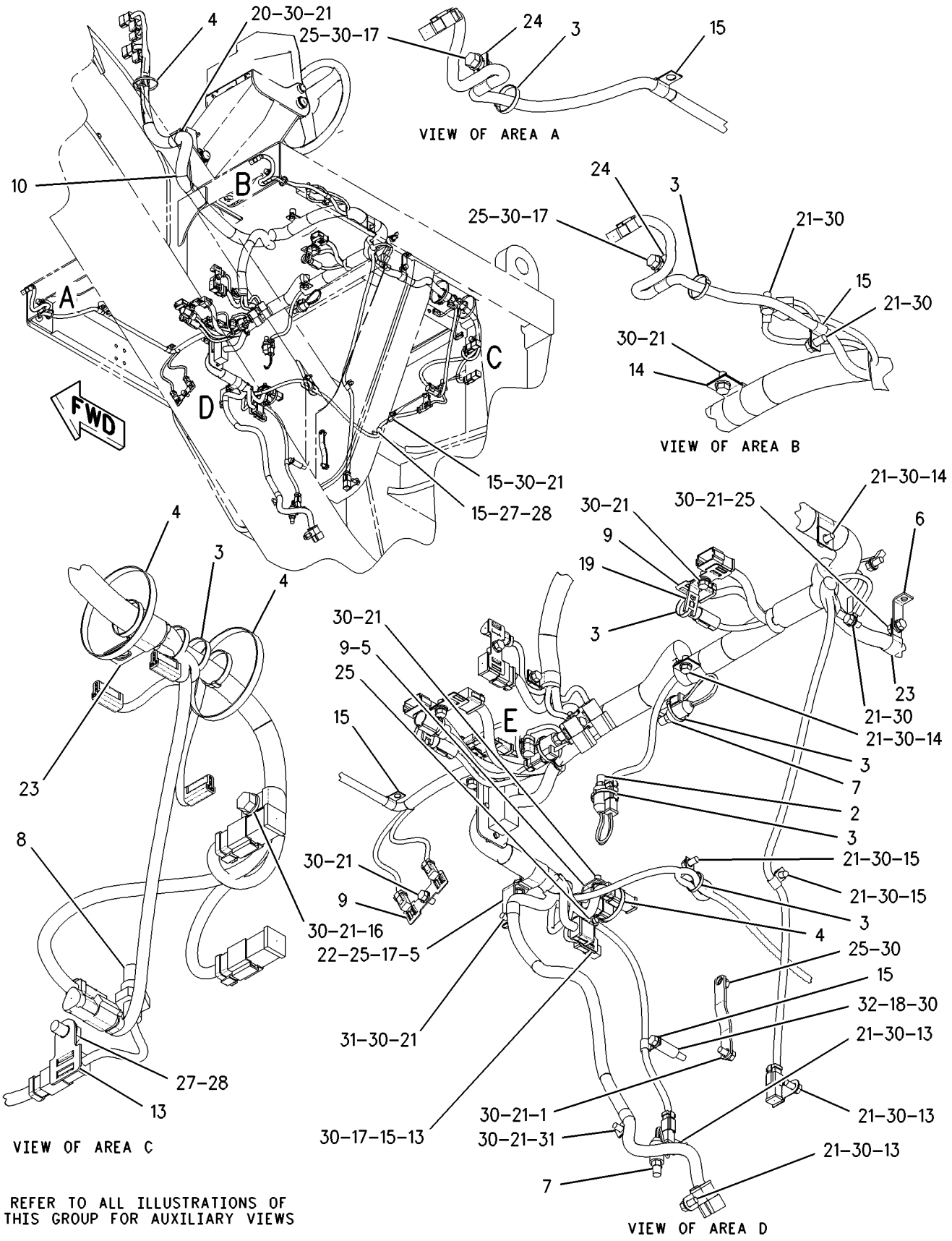

GRAPHIC #1 g00862807

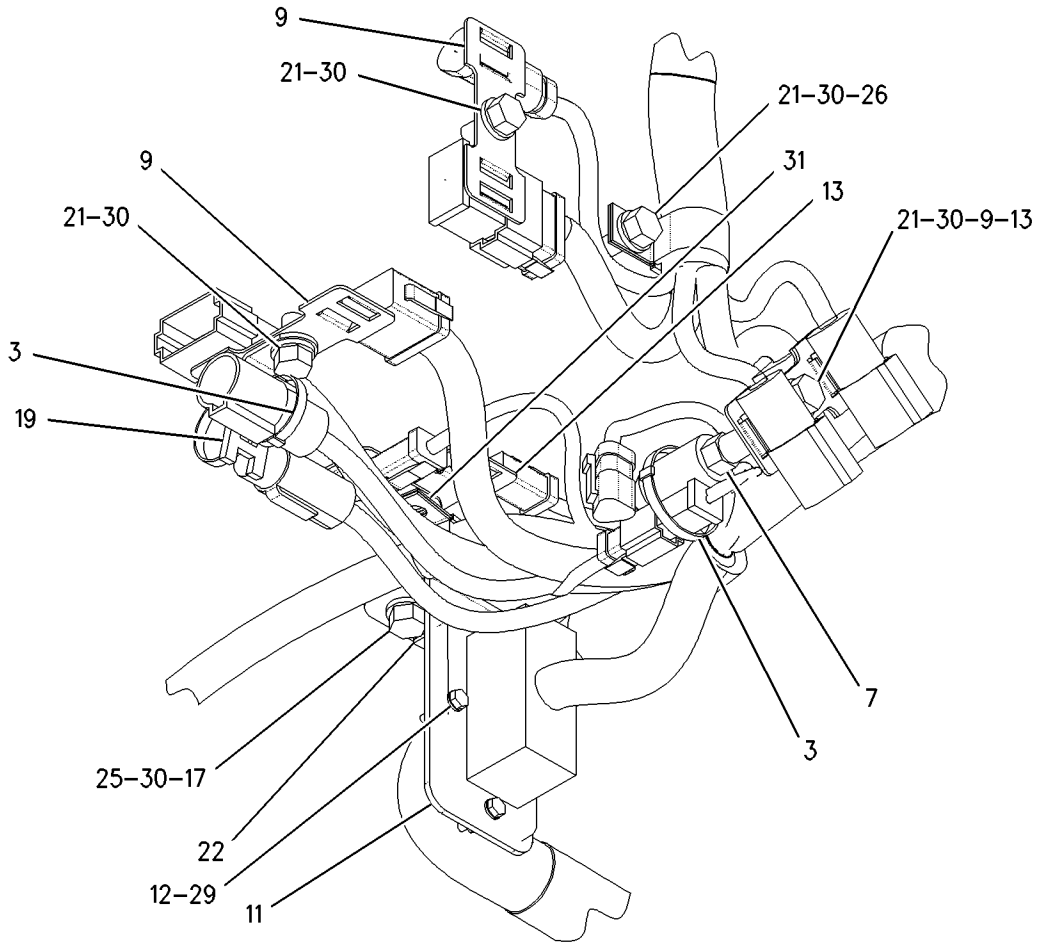

VIEW OF AREA E

GRAPHIC #2 g00862808

ELECTRICAL AND STARTING SYSTEM

161-1928 WIRING GP-REAR

S/N: ASE1-UP

PART OF 162-5606 GENERAL AR

SMCS-1408 **i01636375**

NOTE	REF NO	GRAPHIC REF	PART NUMBER	QTY	PART NAME 1 2 3 4 5 6 (PRODUCT LEVEL)	SEE PAGE
	1	2	**3E-3636**	1	SWITCH AS-BALL (GEAR RANGE)	
		2	**3E-3377**	1	WEDGE-RECEPTACLE LOCK	
		2	**186-3735**	4	PIN-CONNECTOR	
		2	**102-8804**	1	KIT-RECEPTACLE (4 PIN)	
	2	1	**3S-2093**	4	STRAP-CABLE	
	3	2	**5J-4857**	15	SHIM (.01MM THK)	
	4	1	**6S-1061**	1	CABLE AS-BATTERY	
		1	**1S-7251**	2	TERMINAL-RING (FOR 1/2 IN BOLT)	
	5	1	**7G-1060**	1	STRAP AS-GROUND	
	6	1	**8W-3642**	1	CABLE AS	
		1	**1S-7251**	2	TERMINAL-RING (FOR 1/2 IN BOLT)	
E		1	**5P-0747**		CABLE (00GA)(BLACK) (90 CM)	
		1	**9G-8909**	1	COVER-TERMINAL (BLACK)	
	7	1	**8W-8527**	1	SLEEVE	
	8	1	**8W-8528**	4	SLEEVE	
	9	1	**9L-1566**	1	SUPPORT-TUBE	
	10	1	**9L-3059**	1	SUPPORT-TUBE	
	11	2	**9M-4594**	2	SPACER (0.406X0.875X0.75 IN THK)	
	12	2	**9U-2277**	2	CLIP AS	
	13	1	**106-8704**	1	SUPPRESSOR AS-ARC	
		1	**3E-3365**	1	WEDGE-RECEPTACLE LOCK (2 PIN)	
		1	**186-3735**	2	PIN-CONNECTOR	
		1	**102-8802**	1	KIT-RECEPTACLE (2 PIN)	
	14	1	**123-3688**	1	PLATE AS	
		1	**7L-0811**	1	DOWEL	
	15	1	**123-3689**	1	PLATE AS	
		1	**5M-6687**	1	STUD-TAPERLOCK (3/8-16X1.28 IN OAL)	
	16	1	**123-3692**	1	ARM	
	17	1	**125-6807**	1	PLATE	
	18	1	**139-2116**	1	SWITCH AS-TOGGLE (ENGINE SHUTDOWN)	
		1	**3E-3371**	1	WEDGE-RECEPTACLE LOCK (3 PIN)	
		1	**6T-3631**	2	NUT-HEX (15/32-32 THD)	
		1	**6T-3632**	1	LOCKWASHER	
		1	**6T-3633**	1	RING-LOCKING (12.3X18.26X.79MM THK)	
		1	**186-3735**	3	PIN-CONNECTOR	
		1	**102-8803**	1	KIT-RECEPTACLE (3 PIN)	
	20	1	**187-1008**	1	SENDER AS-POSITION (ARTICULATION)	
		1	**3E-3365**	1	WEDGE-RECEPTACLE LOCK (2 PIN)	
B		1	**9X-1813**		SLEEVE	
		1	**102-8802**	1	KIT-RECEPTACLE (2 PIN)	
		1	**186-3735**	5	PIN-CONNECTOR	
	21	2	**187-3178**	1	SWITCH AS-BALL (NEUTRAL START)	
	21A	2	**187-3178**	1	SWITCH AS-BALL (BACK-UP ALARM)	
					(EACH SWITCH AS INCLUDES)	
		2	**3E-3377**	1	WEDGE-RECEPTACLE LOCK	
		2	**102-8804**	1	KIT-RECEPTACLE (4 PIN)	
		2	**144-1636**	4	PIN-CONNECTOR	
	22	1	**187-8546**	1	HARNESS AS-REAR	
		1	**155-2255**	2	KIT-CONNECTING PLUG (12 PIN)	
		1	**155-2270**	5	KIT-CONNECTING PLUG (2 PIN)	
		1	**102-8802**	2	KIT-RECEPTACLE (2 PIN)	
	23	1	**187-9647**	1	HARNESS AS-REAR	
		1	**127-5483**	5	PLUG AS-CONNECTOR (1 PIN)	
		1	**127-5485**	1	PLUG AS-CONNECTOR (1 PIN) (CRANKING MOTOR)	
		1	**155-2255**	1	KIT-CONNECTING PLUG (12 PIN)	
		1	**155-2270**	2	KIT-CONNECTING PLUG (2 PIN)	

161-1928 **WIRING GP-REAR** ***(contd.)*** **i01636375**

NOTE	REF NO	GRAPHIC REF	PART NUMBER	QTY	PART NAME 1 2 3 4 5 6 (PRODUCT LEVEL)	SEE PAGE
		1	**102-8802**	1	KIT-RECEPTACLE (2 PIN)	
		1	**102-8805**	1	KIT-RECEPTACLE (6 PIN)	
	24	1	**188-3586**	1	HARNESS AS-REAR	
		1	**160-7689**	1	PLUG AS-CONNECTOR (70 PIN)	
		1	**155-2255**	2	KIT-CONNECTING PLUG (12 PIN)	
		1	**155-2260**	1	KIT-CONNECTING PLUG (3 PIN) (SHUTDOWN SWITCH)	
		1	**155-2270**	3	KIT-CONNECTING PLUG (2 PIN)	
		1	**155-2271**	3	KIT-CONNECTING PLUG (4 PIN)	
		1	**102-8802**	1	KIT-RECEPTACLE (2 PIN) (AC PRESS SWITCH/CLUTCH SOL)	
		1	**102-8803**	1	KIT-RECEPTACLE (3 PIN) (FAN DRIVE PRESSURE SENSOR)	
		1	**9X-0141**	1	PLUG AS-CONNECTOR (40 PIN)	
	25	1	**109-0361**	1	FILM-INSTRUCTION (ENGINE SHUTDOWN)	
	26	2	**115-3073**	1	CLIP AS-CONNECTING	
		2	**8C-3334**	1	RIVET-TUBULAR	
	27	1,2	**130-5300**	8	CLIP	
	28	1	**130-5301**	2	CLIP	
	29	1	**1S-0996**	2	CLIP	
	30	1	**3E-5169**	1	GUARD-SWITCH	
	31	1,2	**4D-7794**	9	CLIP	
	32	2	**4D-9517**	1	CLIP	
	33	2	**4S-1936**	1	CLIP	
	34	2	**5K-3294**	1	CLIP	
	35	1	**5M-3062**	1	BOLT (3/8-16X0.75 IN)	
	36	2	**5P-4116**	2	WASHER-HARD (8.8X20.5X2MM THK)	
	37	1	**5P-8167**	2	BOLT (3/8-16X0.625 IN)	
	38	1,2	**6D-4244**	6	CLIP	
	39	1,2	**6D-4246**	4	CLIP	
	40	1	**6V-6893**	3	BOLT (6-32X.375 IN)	
	41	1	**6V-8801**	1	NUT (3/8-16 THD)	
	42	1,2	**7C-4354**	3	CLIP	
	43	2	**8C-3121**	1	BOLT (5/16-18X1.50 IN)	
	44	1	**8M-2773**	2	CLIP	
	45	1,2	**8T-4121**	23	WASHER-HARD (11X21X2.5MM THK)	
M	46	1	**8T-4133**	3	NUT (M10X1.5 THD)	
M	47	1,2	**8T-4136**	3	BOLT (M10X1.5X25MM)	
M	48	1,2	**8T-4137**	16	BOLT (M10X1.5X20MM)	
M	49	1	**8T-4179**	3	BOLT (M12X1.75X20MM)	
M	50	1	**8T-4185**	1	BOLT (M10X1.5X50MM)	
M	51	2	**8T-4189**	1	BOLT (M8X1.25X20MM)	
M	52	2	**8T-4196**	1	BOLT (M10X1.5X35MM)	
	53	1	**8T-4205**	2	WASHER-HARD (7.2X14.5X2MM THK)	
	54	1	**8T-4223**	3	WASHER-HARD (13.5X25.5X3MM THK)	
	55	1	**8T-4226**	1	WASHER-PLATED (10.5X45X3MM THK)	
	56	1	**8T-4896**	3	WASHER-HARD (10.2X18.5X2.5MM THK)	
	57	1	**8T-9364**	2	BOLT (1/4-20X0.625 IN)	
	58	1,2	**8W-8909**	5	SLEEVE	
	59	2	**9G-9154**	1	CLIP	
	60	1,2	**9M-8406**	3	CLIP	

B-USE AS REQUIRED
E-ORDER BY THE CENTIMETER
M-METRIC PART

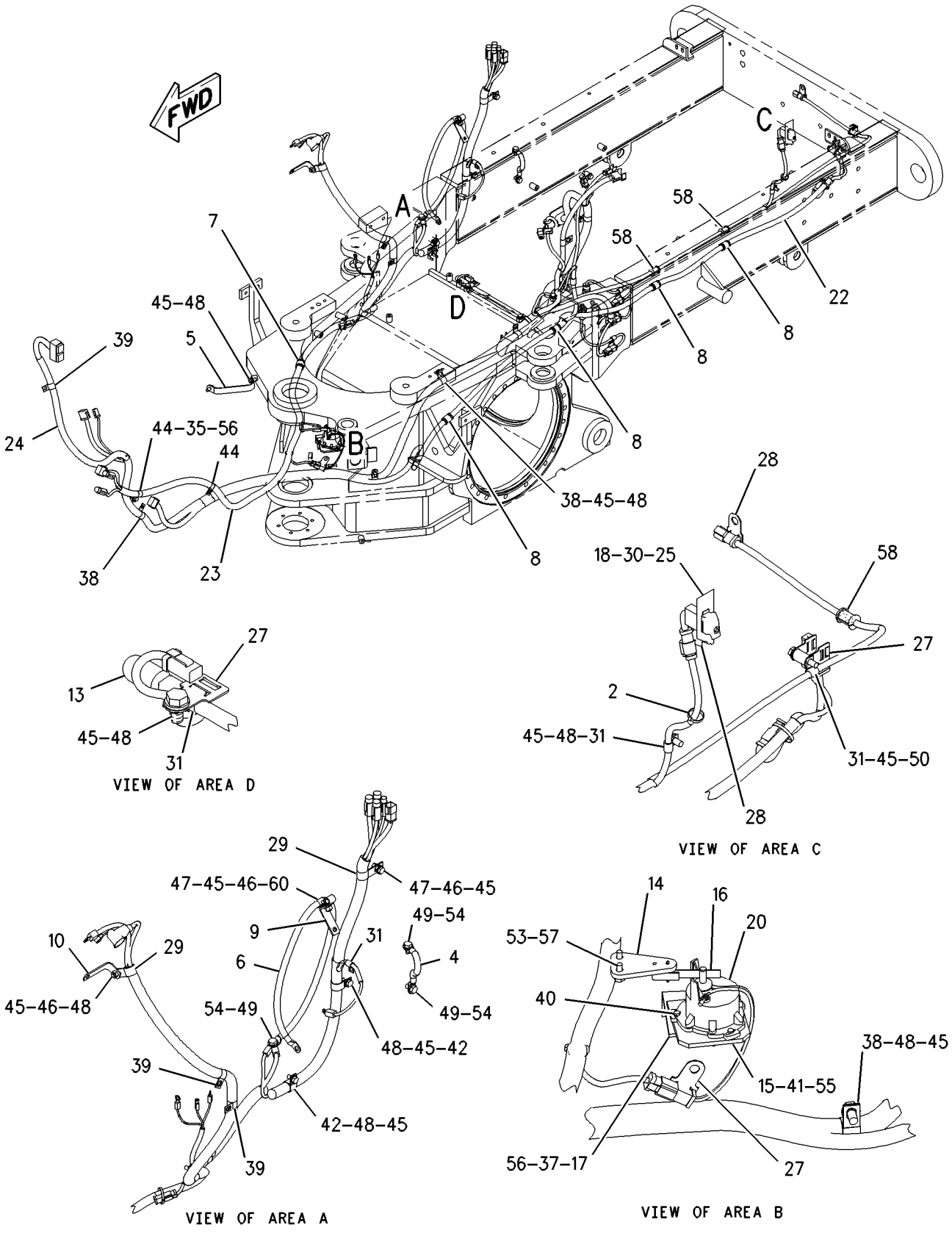

GRAPHIC #1 g00861960

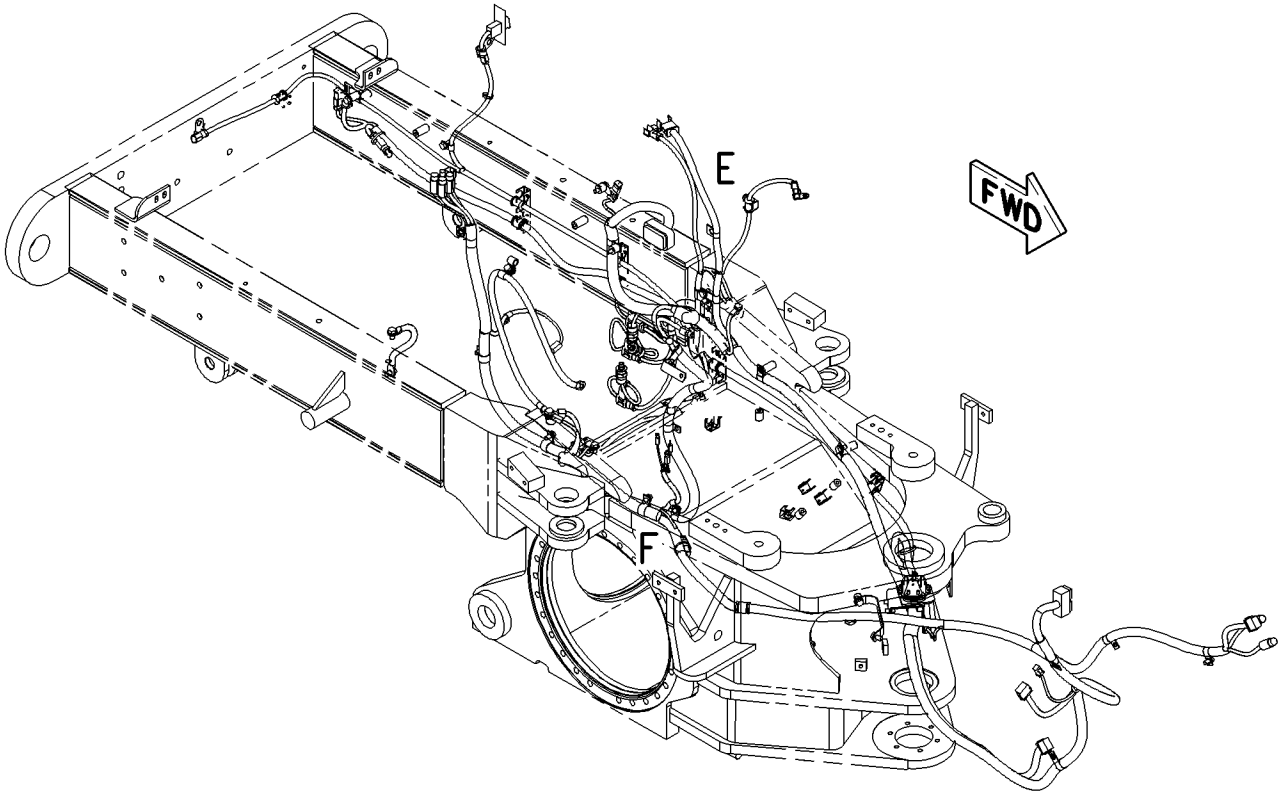

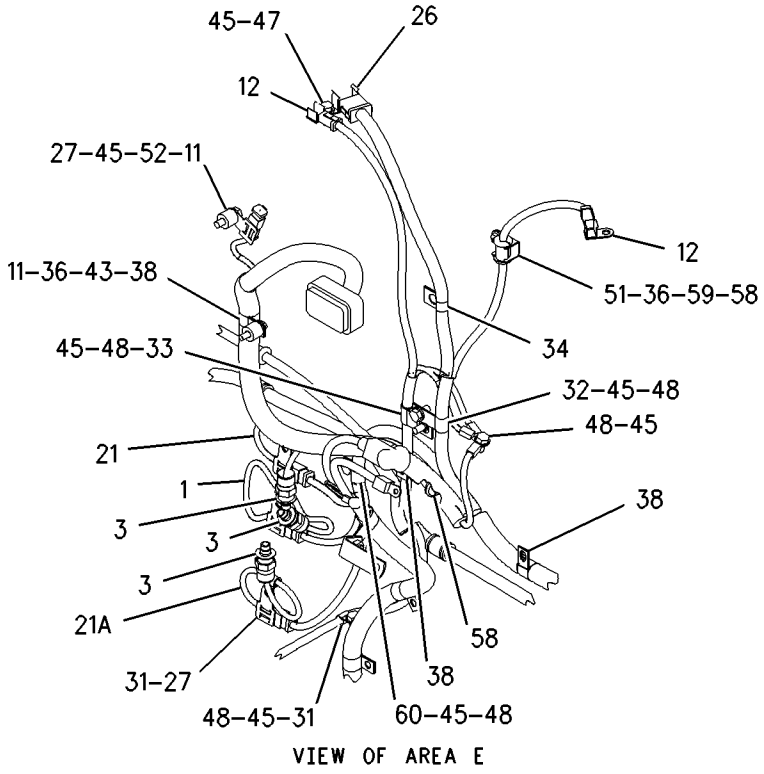

VIEW OF AREA E

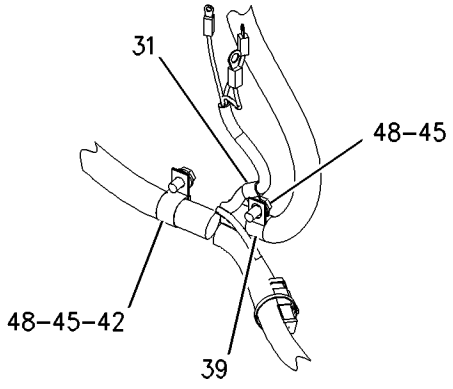

VIEW OF AREA F

GRAPHIC #2

g00861961

ELECTRICAL AND STARTING SYSTEM

187-8137 WIRING GP-REAR—SERVICE CENTER

S/N: ASE1-UP

PART OF 183-8482 SUPPORT AR-REAR CHASSIS

SMCS-1408 **i01644684**

NOTE	REF NO	GRAPHIC REF	PART NUMBER	QTY	PART NAME 1 2 3 4 5 6 (PRODUCT LEVEL)	SEE PAGE
	1	1	**2L-0273**	1	FITTING (RUBBER)	
	2	1	**3E-5239**	1	RELAY AS (24 VOLT) (MAIN)	
	4	1	**3S-2093**	2	STRAP-CABLE	
	6	1	**7K-4743**	2	SPACER-FLANGED	
	7	1	**7V-9275**	1	STRAP	
	8	1	**9L-1566**	1	SUPPORT-TUBE	
	9	1	**112-4428**	1	CABLE AS	
		1	**1S-7251**	1	TERMINAL-RING (FOR 1/2 IN BOLT)	
		1	**1S-7252**	1	TERMINAL-RING (FOR 3/8 IN BOLT)	
E		1	**5P-0747**		CABLE (00GA)(BLACK) (27 CM)	
	10	1	**115-5593**	1	CABLE AS	
		1	**1S-7252**	1	TERMINAL-RING (FOR 3/8 IN BOLT)	
E		1	**5P-0747**		CABLE (00GA)(BLACK) (119 CM)	
		1	**7N-5274**	1	COVER-TERMINAL (BLACK)	
		1	**3S-6050**	1	TERMINAL AS-BATTERY (NEGATIVE)	
	11	1	**118-3534**	1	SWITCH GP-MAGNETIC (24V) (STARTING)	
		1	**102-8802**	1	KIT-RECEPTACLE (2 PIN)	
		1	**3E-3365**	1	WEDGE-RECEPTACLE LOCK (2 PIN)	
M		1	**5C-2890**	2	NUT (M6X1 THD)	
		1	**186-3735**	2	PIN-CONNECTOR	
		1	**9X-1813**		SLEEVE (16 CM)	
	13	1	**167-0138**	1	SWITCH GP-MAGNETIC (MAIN RELAY)	
		1	**4F-2294**	2	NUT-JAM (5/16-24 THD)	
		1	**6V-8186**	2	NUT-FULL (5/16-24 THD)	
		1	**186-3736**	2	SOCKET-CONNECTOR	
		1	**155-2261**	1	WEDGE-PLUG LOCK (2 PIN)	
		1	**155-2270**	1	KIT-CONNECTING PLUG (2 PIN)	
	14	1	**169-5414**	1	CLIP	
	15	1	**171-2210**	1	CIRCUIT BREAKER AS (80 AMP) (MAIN)	
	15A	1	**171-2210**	1	CIRCUIT BREAKER AS (80 AMP) (ALTERNATOR)	
					(EACH ASSEMBLY INCLUDES)	
		1	**1H-3244**	2	LOCKWASHER	
		1	**6V-8187**	2	NUT (1/4-28 THD)	
		1	**8T-4205**	2	WASHER-HARD (7.2X14.5X2MM THK)	
	16	1	**177-8802**	2	CABLE AS	
					(EACH INCLUDES)	
		1	**1S-7251**	1	TERMINAL-RING (FOR 1/2 IN BOLT)	
E		1	**5P-0761**		CABLE (00GA)(RED) (32CM)	
		1	**8N-0869**	1	COVER-TERMINAL (RED)	
		1	**8N-1725**	1	COVER-TERMINAL (RED)	
		1	**3S-6049**	1	TERMINAL AS-BATTERY (POSITIVE)	
		1	**1M-6119**	1	BOLT-BATTERY TERMINAL (5/16-18X1.375 IN)	
		1	**1M-6120**	1	NUT-BATTERY TERMINAL (5/16-18 THD)	
	17	1	**177-9813**	1	CABLE AS	
		1	**2L-8050**	1	TERMINAL (6 GA, 6.35MM/.25IN SCREW)	
		1	**8N-1546**	1	PIN-CONNECTOR	
		1	**127-5484**	1	RECEPTACLE AS (1 PIN)	
	18	1	**177-9814**	1	CABLE AS	
		1	**9G-4343**	1	TERMINAL-CRIMP	
D		1	**6V-2369**		WIRE (4 GA)(BLACK) (.4 M)	
		1	**8N-1548**	1	PIN-CONNECTOR	
		1	**127-5484**	1	RECEPTACLE AS (1 PIN)	
	19	1	**178-0160**	1	WIRE AS	
	20	1	**178-0162**	1	CABLE AS	
D		1	**5P-5689**		WIRE (8 GA) (.2 M)	
		1	**2L-8050**	2	TERMINAL (6 GA, 6.35MM/.25IN SCREW)	

187-8137 **WIRING GP-REAR** ***(contd.)*** **i01644684**

NOTE	REF NO	GRAPHIC REF	PART NUMBER	QTY	PART NAME 1 2 3 4 5 6 (PRODUCT LEVEL)	SEE PAGE
	21	1	**178-0555**	1	CABLE AS	
		1	**9G-4343**	1	TERMINAL-CRIMP	
		1	**5P-3454**	1	TERMINAL-CRIMP (FOR 5/16IN BOLT)	
D		1	**6V-2369**		WIRE (4 GA)(BLACK) (.2 M)	
	22	1	**180-6153**	1	PLATE	
	23	1	**187-8359**	1	HARNESS AS-REAR	
		1	**127-5484**	1	RECEPTACLE AS (1 PIN) (BREAKER)	
		1	**127-5486**	1	RECEPTACLE AS (1 PIN) (STARTING RELAY)	
		1	**155-2270**	1	KIT-CONNECTING PLUG (2 PIN) (STARTING RELAY)	
		1	**155-2271**	1	KIT-CONNECTING PLUG (4 PIN)	
		1	**155-2274**	1	KIT-CONNECTING PLUG (6 PIN)	
		1	**102-8802**	1	KIT-RECEPTACLE (2 PIN) (MAIN RELAY)	
	24	1	**187-8370**	1	HARNESS AS-REAR	
		1	**9X-1054**	1	PLUG AS-CONNECTOR (4 PIN) (BACK-UP ALARM RELAY)	
		1	**155-2271**	1	KIT-CONNECTING PLUG (4 PIN) (STARTING AID SOLENOID & RELAY)	
		1	**102-8801**	1	KIT-RECEPTACLE (12 PIN) (AIR DRYER & BACK-UP ALARM)	
		1	**102-8804**	1	KIT-RECEPTACLE (4 PIN) (ENG CNTL BREAKER & START RELAY)	
		1	**102-8801**	1	KIT-RECEPTACLE (12 PIN)	
	26	1	**194-1854**	1	COVER	
	27	1	**194-1855**	1	PLATE AS	
	28	1	**195-4990**	1	WIRE AS	
	29	1	**200-8817**	1	CABLE AS	
		1	**1S-7251**	2	TERMINAL-RING (FOR 1/2 IN BOLT)	
E		1	**5P-0761**		CABLE (00GA)(RED) (119 CM)	
		1	**8N-0869**	2	COVER-TERMINAL (RED)	
	30	1	**033-8248**	1	CLIP	
	31	1	**130-5300**	2	CLIP	
	32	1	**132-6938**	1	PLATE	
	33	1	**157-2528**	1	SPACER (7X16X20MM THK)	
	34	1	**174-5907**	6	CLIP	
	35	1	**1S-0994**	2	CLIP	
	36	1	**1S-1015**	1	CLIP	
	37	1	**1V-6688**	1	GROMMET	
	38	1	**2Y-5429**	1	GROMMET	
	39	1	**3K-8106**	2	SCREW-MACHINE (8-32 X 1 IN)	
	40	1	**4B-4274**	4	WASHER (5.5X13X1.2MM THK)	
	41	1	**4B-4863**	2	WASHER (4.7X11X1.2MM THK)	
	42	1	**4D-7794**	3	CLIP	
	43	1	**4D-8948**	1	CLIP	
	44	1	**4H-2558**	1	GROMMET	
M	45	1	**5C-9553**	4	BOLT (M6X1X16MM)	
	46	1	**5L-4507**	4	SCREW-MACHINE (10-32X0.875 IN)	
	47	1	**6D-3479**	1	CLIP	
	48	1	**6K-8178**	2	CLIP	
	49	1	**6T-3643**	1	CIRCUIT BREAKER AS (15 AMP) (ENGINE CONTROL)	
		1	**6V-8376**	2	SCREW-MACHINE (8-32X0.25 IN)	
		1	**9B-7233**	2	LOCKWASHER	
Y	50	1	**7N-0718**	1	SWITCH GP-DISCONNECT (BATTERY)	218
	51	1	**7N-3718**	1	CLIP	
M	52	1	**7X-2533**	1	BOLT (M6X1X35MM)	
	53	1	**7Y-8169**	1	GROMMET	
	54	1	**8M-2770**	2	CLIP	
	55	1	**8M-2772**	1	CLIP	
M	56	1	**8T-0293**	1	BOLT (M12X1.75X20MM)	
	57	1	**8T-4121**	24	WASHER-HARD (11X21X2.5MM THK)	
M	58	1	**8T-4133**	1	NUT (M10X1.5 THD)	
M	59	1	**8T-4136**	13	BOLT (M10X1.5X25MM)	

187-8137 **WIRING GP-REAR** ***(contd.)*** **i01644684**

NOTE	REF NO	GRAPHIC REF	PART NUMBER	QTY	PART NAME 1 2 3 4 5 6 (PRODUCT LEVEL)	SEE PAGE
M	60	1	**8T-4137**	10	BOLT (M10X1.5X20MM)	
M	61	1	**8T-4189**	2	BOLT (M8X1.25X20MM)	
M	62	1	**8T-4191**	2	BOLT (M10X1.5X16MM)	
	63	1	**8T-4205**	4	WASHER-HARD (7.2X14.5X2MM THK)	
	64	1	**8T-4223**	1	WASHER-HARD (13.5X25.5X3MM THK)	
	65	1	**8T-4224**	2	WASHER-HARD (8.8X16X2MM THK)	
Y	66	1	**9W-0742**	1	JUNCTION BLOCK GP	148
	67	1	**9X-8256**	1	WASHER (6.6X12X2MM THK)	

D-ORDER BY THE METER
E-ORDER BY THE CENTIMETER
M-METRIC PART
Y-SEPARATE ILLUSTRATION

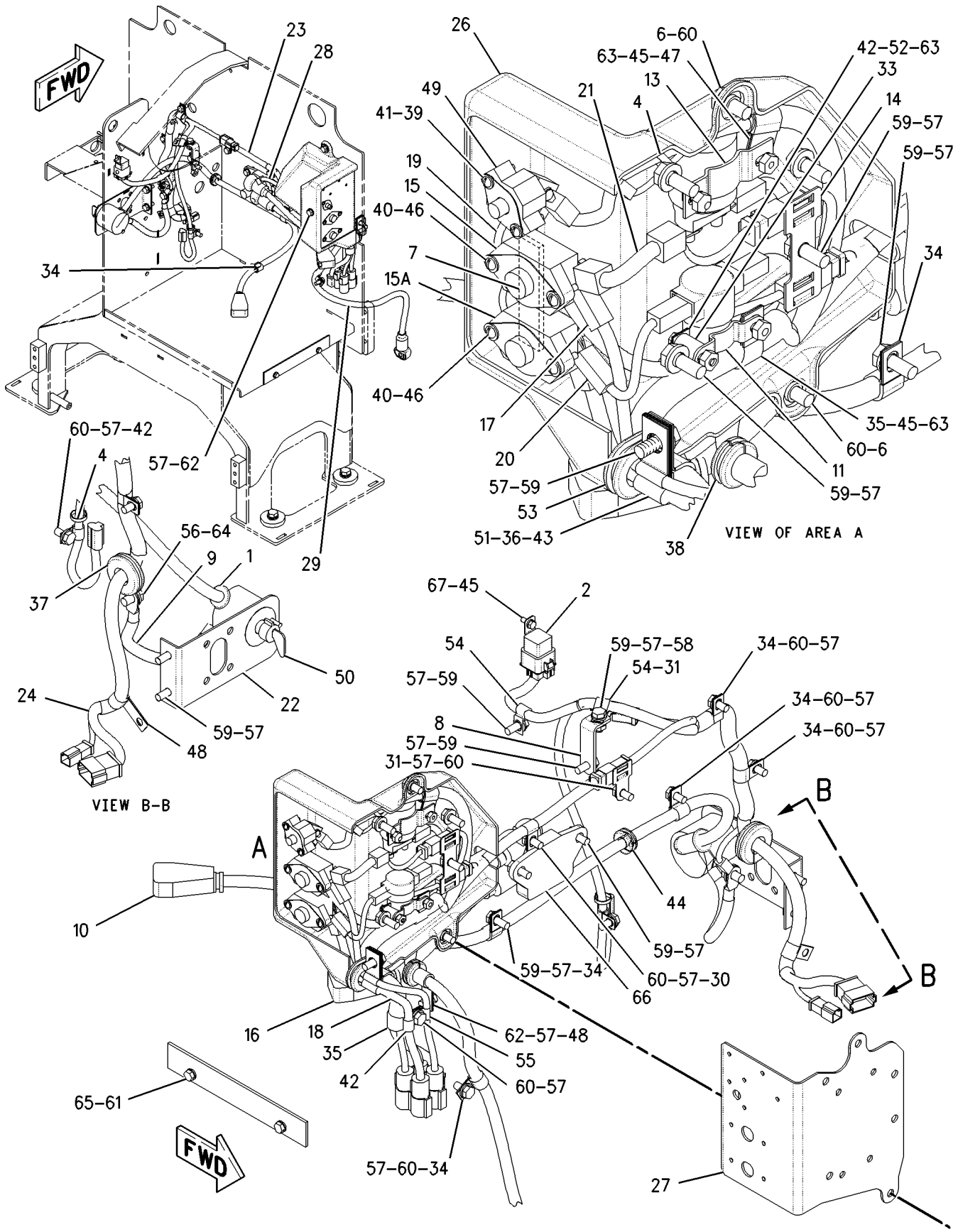

GRAPHIC #1

g00856521

194-7982 WIRING GP-REAR–RADIATOR

S/N: ASE1-UP

PART OF 184-0793 COOLING AR

SMCS-1408 **i01663183**

NOTE	REF NO	GRAPHIC REF	PART NUMBER	QTY	PART NAME 1 2 3 4 5 6 (PRODUCT LEVEL)	SEE PAGE
	1	1	**3S-2093**	10	STRAP-CABLE	
	2	1	**203-8471**	1	HARNESS AS-REAR CHASSIS	
		1	**102-8803**	2	KIT-RECEPTACLE (3 PIN)	
		1	**102-8801**	1	KIT-RECEPTACLE (12 PIN)	
		1	**155-2260**	4	KIT-CONNECTING PLUG (3 PIN)	
		1	**155-2270**	1	KIT-CONNECTING PLUG (2 PIN) (BACK-UP ALARM/RETURN)	
Y	3	1	**123-6449**	1	WARNING GP-BACKUP (BACK-UP)	224
	4	1	**130-5300**	5	CLIP	
Y	5	1	**135-0426**	2	LAMP GP-SIGNAL (STOP/TAIL)	158
M	6	1	**5C-2890**	8	NUT (M6X1 THD)	
M	7	1	**5C-9553**	2	BOLT (M6X1X16MM)	
	8	1	**7N-3718**	1	CLIP	
	9	1	**8T-4121**	2	WASHER-HARD (11X21X2.5MM THK)	
M	10	1	**8T-4198**	2	BOLT (M10X1.5X100MM)	
	11	1	**8T-4224**	10	WASHER-HARD (8.8X16X2MM THK)	

M-METRIC PART
Y-SEPARATE ILLUSTRATION

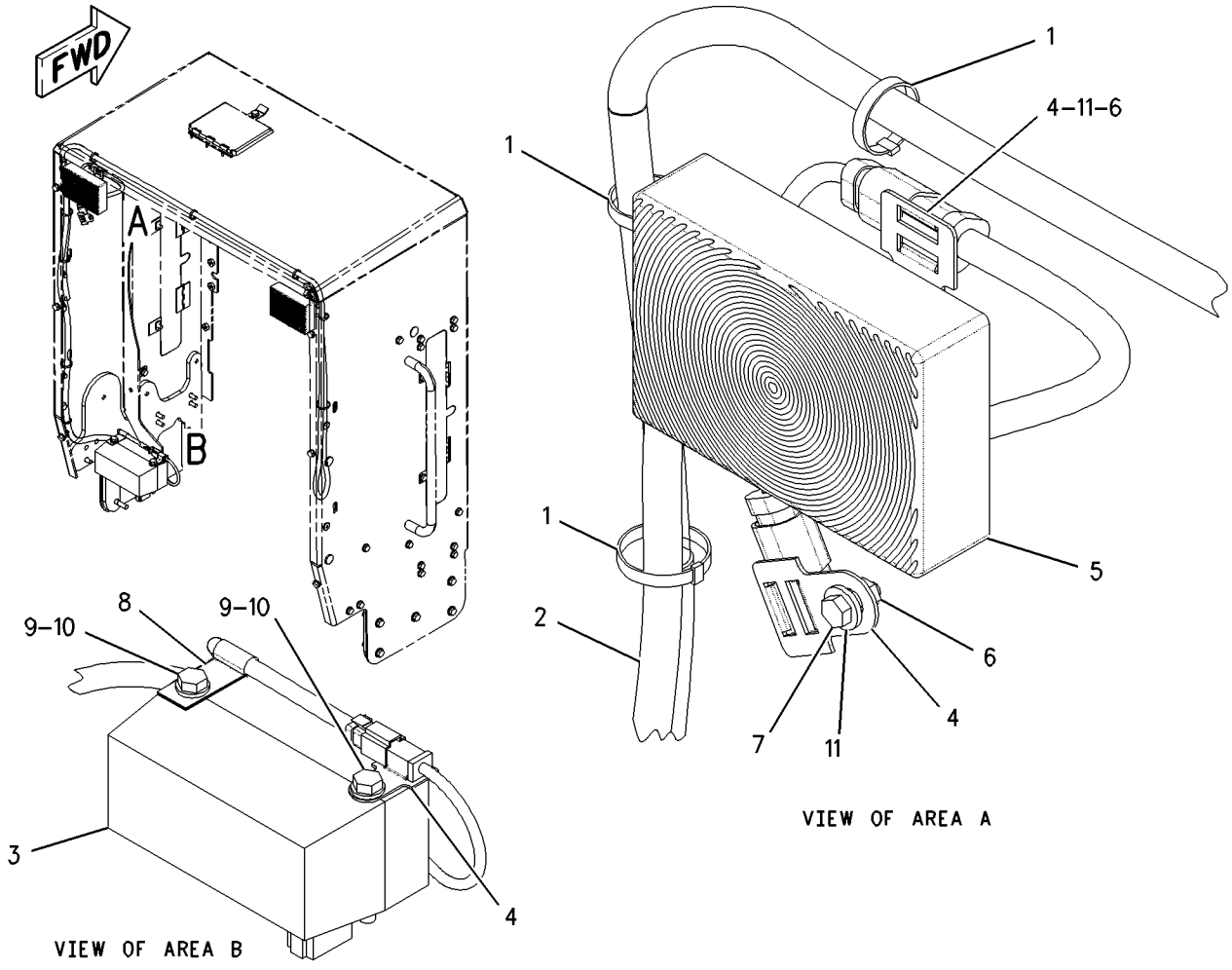

GRAPHIC #1 g00851385

MEMORANDA

200-4983 WIRING GP-REAR–EU

S/N: ASE1-UP
PART OF 201-1053 COOLING AR
AN ATTACHMENT

SMCS-1408 **i01646123**

NOTE	REF NO	GRAPHIC REF	PART NUMBER	QTY	PART NAME 1 2 3 4 5 6 (PRODUCT LEVEL)	SEE PAGE
	1	1	**3S-2093**	13	STRAP-CABLE	
	2	1	*5C-9930*	1	LAMP GP (STOP/TAIL/TURN)	
		1	**6C-0109**	1	LAMP AS-RH (STOP/TAIL/TURN)	
		1	**5C-9584**	2	LAMP (24 VOLT)(21 WATT)) (STOP/TAIL)	
		1	**4V-8116**	1	LAMP (24 VOLT)(5 WATT) (TURN)	
	3	1	*5C-9931*	1	LAMP GP (STOP/TAIL/TURN)	
		1	**6C-0110**	1	LAMP AS-LH (STOP/TAIL/TURN)	
		1	**5C-9584**	2	LAMP (24 VOLT)(21 WATT)) (STOP/TAIL)	
		1	**4V-8116**	1	LAMP (24 VOLT)(5 WATT) (TURN)	
	4	1	**6C-5233**	1	BRACKET AS-RH	
M		1	**8T-3490**	2	NUT-WELD (M10X1.5 THD)	
	5	1	**6C-5234**	1	BRACKET AS-LH	
M		1	**8T-3490**	2	NUT-WELD (M10X1.5 THD)	
	6	1	**7X-2393**	4	BUMPER-CONICAL	
	7	1	**9S-1316**	2	SPRING	
	8	1	**112-5555**	2	ROD	
	9	1	**156-0283**	2	WASHER-HARD (8.4X35X2.5MM THK)	
	10	1	**160-1744**	2	BRACKET	
	11	1	**162-2933**	1	ARM AS-RH	
	12	1	**162-2934**	1	ARM AS-LH	
	13	1	**203-8471**	1	HARNESS AS-REAR CHASSIS	
		1	**102-8803**	2	KIT-RECEPTACLE (3 PIN)	
		1	**102-8801**	1	KIT-RECEPTACLE (12 PIN)	
	14	1	**208-7933**	2	PLATE	
	15	1	**208-7934**	1	HARNESS AS-REAR LIGHTING	
		1	**102-8803**	2	KIT-RECEPTACLE (3 PIN)	
	16	1	**208-7936**	1	HARNESS AS-REAR LIGHTING	
		1	**102-8803**	2	KIT-RECEPTACLE (3 PIN)	
Y	17	1	**123-6449**	1	WARNING GP-BACKUP (BACK UP)	224
	18	1	**130-5300**	5	CLIP	
	19	1	**2V-3216**	2	CLIP	
	20	1	**3B-5301**	2	PIN-COTTER	
	21	1	**3D-5279**	2	GROMMET	
M	22	1	**5C-2890**	6	NUT (M6X1 THD)	
M	23	1	**5C-7261**	4	NUT (M8X1.25 THD)	
	24	1	**5P-1076**	4	WASHER-HARD (13.5X30X4MM THK)	
	25	1	**7N-3718**	1	CLIP	
	26	1	**8D-5641**	4	BEARING	
	27	1	**8T-4121**	10	WASHER-HARD (11X21X2.5MM THK)	
	28	1	**8T-4122**	4	WASHER-HARD (17X32X3.5MM THK)	
M	29	1	**8T-4133**	2	NUT (M10X1.5 THD)	
M	30	1	**8T-4136**	6	BOLT (M10X1.5X25MM)	
M	31	1	**8T-4139**	4	BOLT (M12X1.75X30MM)	
M	32	1	**8T-4171**	2	BOLT (M6X1X12MM)	
M	33	1	**8T-4173**	2	BOLT (M16X2.0X110MM)	
M	34	1	**8T-4198**	2	BOLT (M10X1.5X100MM)	
	35	1	**8T-4205**	6	WASHER-HARD (7.2X14.5X2MM THK)	
	36	1	**8T-4223**	2	WASHER-HARD (13.5X25.5X3MM THK)	
	37	1	**8T-4224**	4	WASHER-HARD (8.8X16X2MM THK)	
M	38	1	**8T-4778**	2	LOCKNUT (M16X2 THD)	

M-METRIC PART
Y-SEPARATE ILLUSTRATION

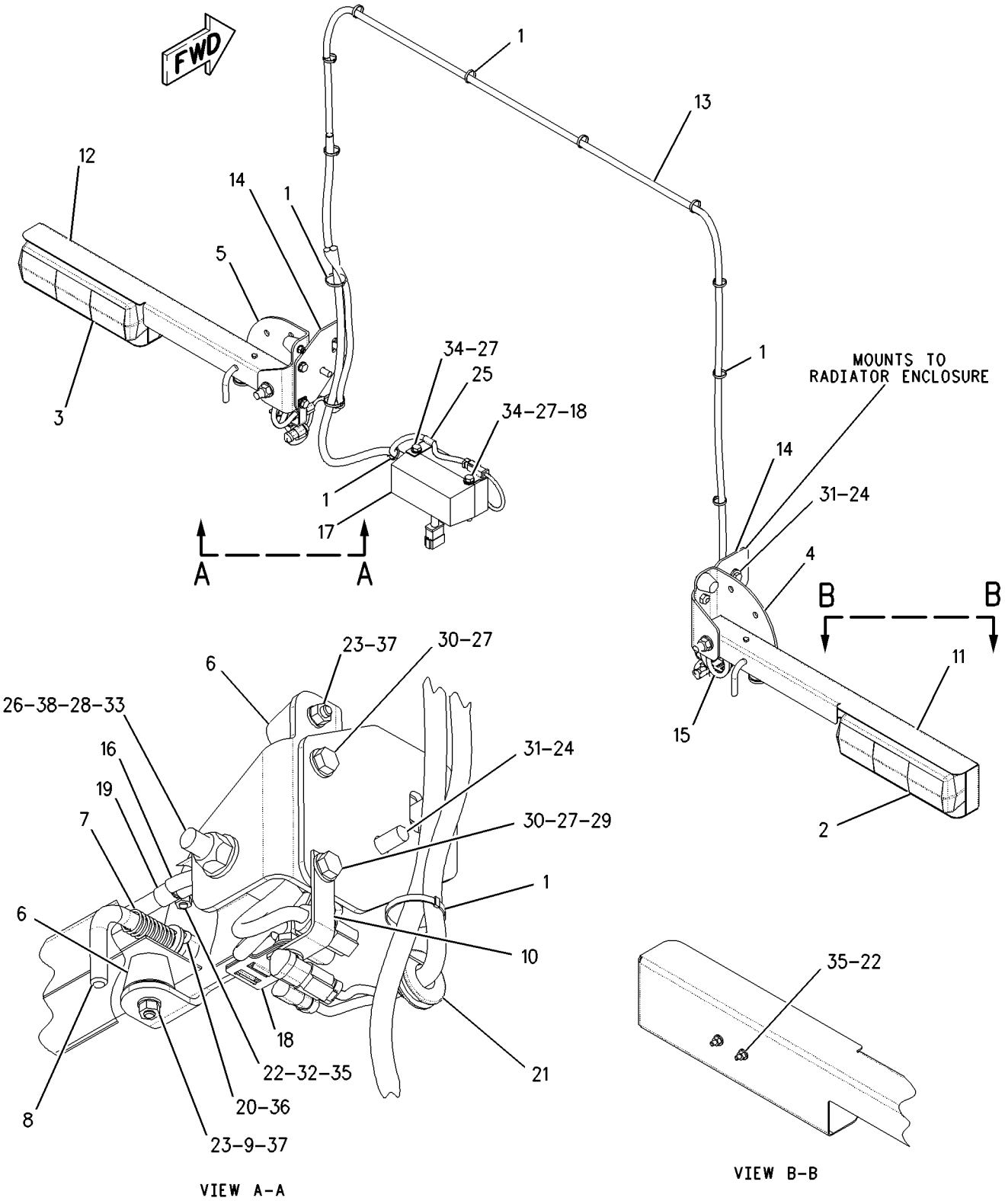

GRAPHIC #1 g00854575

ELECTRICAL AND STARTING SYSTEM

184-6044 WIRING GP-SECONDARY STEERING–EU

S/N: ASE1-UP
PART OF 166-3334 STEERING AR-SECONDARY
AN ATTACHMENT

SMCS-1408, 4334 **i01671187**

NOTE	REF NO	GRAPHIC REF	PART NUMBER	QTY	PART NAME 1 2 3 4 5 6 (PRODUCT LEVEL)	SEE PAGE
	1	1	**2L-0273**	1	FITTING (RUBBER)	
	2	1	**3E-6450**	1	SWITCH AS-PRESSURE (SECONDARY STEERING)	
		1	**102-8803**	1	KIT-RECEPTACLE (3 PIN)	
		1	**186-3735**	3	PIN-CONNECTOR	
		1	**3E-3371**	1	WEDGE-RECEPTACLE LOCK (3 PIN)	
	3	1	**3E-7842**	1	CONNECTOR AS	
		1	**102-8802**	1	KIT-RECEPTACLE (2 PIN)	
		1	**3E-3365**	1	WEDGE-RECEPTACLE LOCK (2 PIN)	
		1	**186-3735**	1	PIN-CONNECTOR	
	4	1	**3S-2093**	1	STRAP-CABLE	
	5	1	**9L-1566**	1	SUPPORT-TUBE	
	6	1	**9W-1442**	2	FUSE (10 AMP) (SECONDARY STEERING)	
	7	1	**9W-9320**	1	ANGLE	
Y	8	1	**132-6640**	1	CONTROL GP-SECONDARY STEERING	137
	9	1	**134-3355**	1	STRAP AS	
	10	1	**140-8864**	1	CABLE AS	
		1	**1S-7252**	2	TERMINAL-RING (FOR 3/8 IN BOLT)	
	11	1	**153-9480**	1	ANGLE AS	
		1	**1F-0750**	1	NUT-WELD (3/8-16 THD)	
	12	1	**188-2682**	1	CABLE AS	
		1	**1S-7252**	2	TERMINAL-RING (FOR 3/8 IN BOLT)	
		1	**8N-0869**	2	COVER-TERMINAL (RED)	
	13	1	**188-2683**	1	CABLE AS	
		1	**8N-0869**	1	COVER-TERMINAL (RED)	
		1	**9X-9825**	1	TERMINAL-CABLE	
		1	**1S-7252**	1	TERMINAL-RING (FOR 3/8 IN BOLT)	
	14	1	*194-2903*	1	ELBOW AS	
		1	**8T-0119**	1	ELBOW	
		1	**3K-0360**	1	SEAL-O-RING	
	15	1	**195-0434**	1	BRACKET	
	16	1	**197-1459**	1	PLATE	
	17	1	**130-5300**	2	CLIP	
Y	18	1	**3E-0154**	1	SWITCH GP-MAGNETIC (SECONDARY STEERING)	222
	19	1	**3K-0360**	1	SEAL-O-RING	
M	20	1	**5C-2890**	2	NUT (M6X1 THD)	
	21	1	**5M-3062**	3	BOLT (3/8-16X0.75 IN)	
	22	1	**6V-1322**	4	BOLT (1/4-20X0.375 IN)	
	23	1	**6V-8801**	3	NUT (3/8-16 THD)	
	24	1	**8T-4121**	6	WASHER-HARD (11X21X2.5MM THK)	
M	25	1	**8T-4133**	1	NUT (M10X1.5 THD)	
M	26	1	**8T-4136**	1	BOLT (M10X1.5X25MM)	
M	27	1	**8T-4137**	4	BOLT (M10X1.5X20MM)	
	28	1	**8T-4205**	4	WASHER-HARD (7.2X14.5X2MM THK)	
	29	1	**8T-4896**	6	WASHER-HARD (10.2X18.5X2.5MM THK)	
	30	1	**8X-5489**	1	SLEEVE	
	31	1	**9M-8406**	3	CLIP	
M	32	1	**9X-2045**	2	SCREW-TRUSS HEAD (M6X1X20MM)	
	33	1	**9X-8256**	2	WASHER (6.6X12X2MM THK)	
	34	1	**9X-9633**	1	SWITCH AS-ROCKER (SECONDARY STEERING)	
		1	**3E-8816**	1	ACTUATOR-ROCKER	
		1	**3E-8825**	2	LAMP (24 VOLT) (SECONDARY STEERING INDICATOR)	

M-METRIC PART
Y-SEPARATE ILLUSTRATION

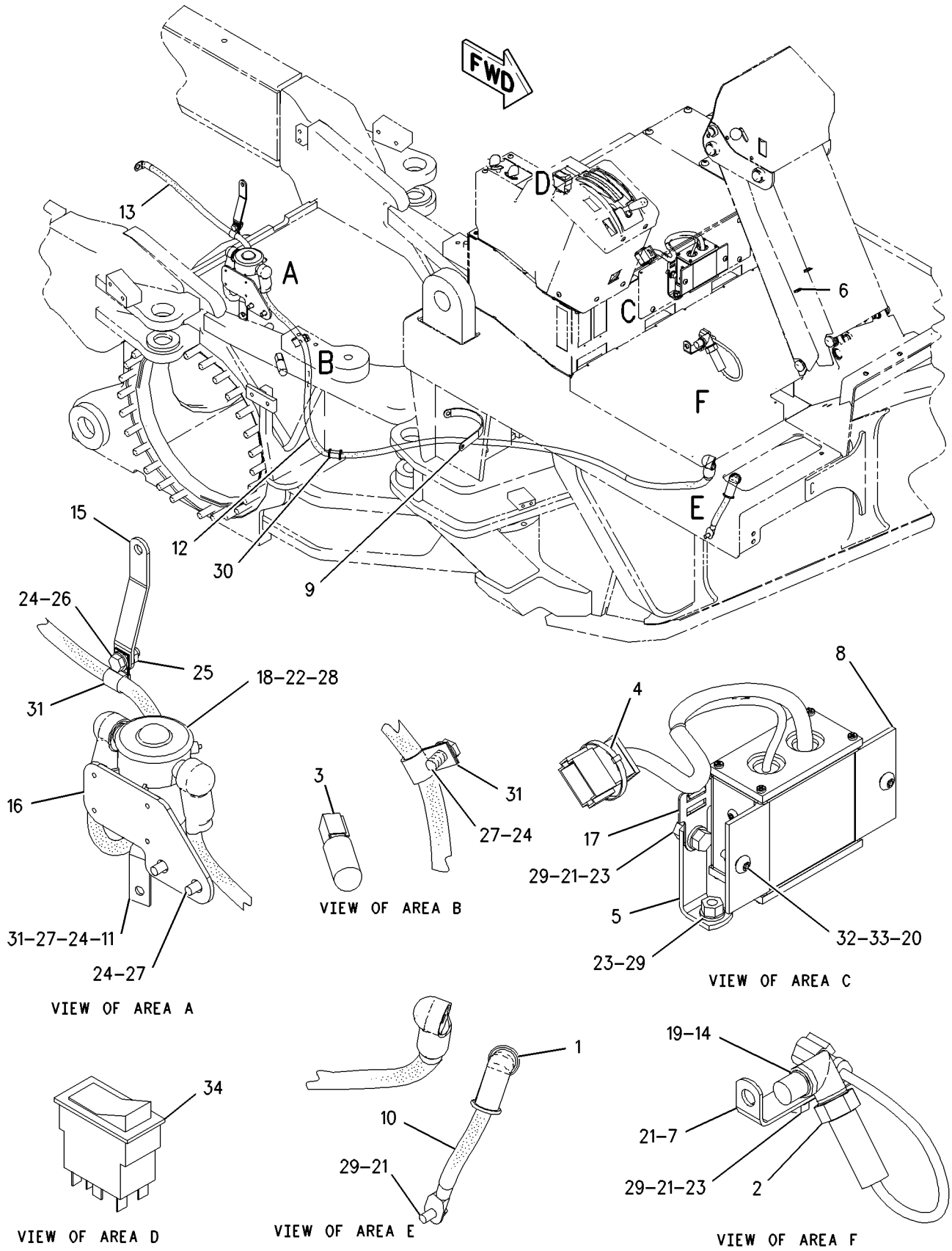

GRAPHIC #1

g00854218

159-5843 WIRING GP-SHIFT CONSOLE

S/N: ASE1-UP

PART OF 162-5606 GENERAL AR

SMCS-1408, 1435 **i01636358**

NOTE	REF NO	GRAPHIC REF	PART NUMBER	QTY	PART NAME 1 2 3 4 5 6 (PRODUCT LEVEL)	SEE PAGE
	1	1	**3E-0109**	1	PLUG-ROCKER SWITCH (SUPPLEMENTAL STEERING)	
	1A	1	**3E-0109**	1	PLUG-ROCKER SWITCH (BLADE CUSHION)	
Y	2	1	**3E-6328**	1	ALARM GP (EMS ACTION)	127
	3	1	**3S-2093**	5	STRAP-CABLE	
	4	1	**7N-5876**	1	LAMP (24 VOLT) (SHIFT CONSOLE)	
	5	1	**8C-6354**	1	CAP-RECEPTACLE	
	6	1	**9L-6331**	1	BRACKET	
	7	1	**110-7887**	1	SWITCH GP-START (KEY)	
	9	1	**169-5414**	2	CLIP	
	10	1	**196-7268**	1	SWITCH AS (THROTTLE HOLD AUTO/MAN)	
		1	**183-2136**	1	ACTUATOR-ROCKER	
		1	**3E-8825**	2	LAMP (24 VOLT) (THROTTLE HOLD AUTO/MAN SWITCH)	
	11	1	**190-0370**	1	SWITCH AS (THROTTLE HOLD SET/RESUME)	
		1	**187-9380**	1	ACTUATOR-ROCKER	
	12	1	**188-1995**	1	HARNESS AS-CONSOLE	
		1	**199-8382**	1	RECEPTACLE AS	
		1	**155-2255**	2	KIT-CONNECTING PLUG (12 PIN)	
		1	**155-2270**	2	KIT-CONNECTING PLUG (2 PIN)	
		1	**155-2271**	2	KIT-CONNECTING PLUG (4 PIN)	
		1	**155-2274**	1	KIT-CONNECTING PLUG (6 PIN)	
		1	**102-8804**	1	KIT-RECEPTACLE (4 PIN)	
		1	**102-8805**	1	KIT-RECEPTACLE (6 PIN)	
		1	**102-8801**	1	KIT-RECEPTACLE (12 PIN)	
		1	**3E-7996**	3	PLUG-CONNECTOR (6 PIN) (6 PIN)	
	13	1	**188-1996**	1	HARNESS AS-CONSOLE	
		1	**102-8802**	1	KIT-RECEPTACLE (2 PIN) (PANEL LAMPS)	
		1	**102-8801**	1	KIT-RECEPTACLE (12 PIN)	
		1	**3E-7996**	2	PLUG-CONNECTOR (6 PIN)	
		1	**9W-1951**	1	RECEPTACLE-CONNECTOR (9 PIN) (SERVICE TOOL/CAT DATA LINK)	
	14	1	**130-5300**	1	CLIP	
	15	1	**1S-0994**	2	CLIP	
	16	1	**2V-8259**	2	GROMMET	
	17	1	**3E-8860**	1	SWITCH AS (CENTERSHIFT PIN PULLER)	
		1	**3E-8817**	1	ACTUATOR-ROCKER	
		1	**3E-8825**	1	LAMP (24 VOLT) (CENTERSHIFT PIN PULLER SWITCH)	
	18	1	**4D-7794**	1	CLIP	
	19	1	**4P-7581**	1	CLIP	
	20	1	**5M-3062**	3	BOLT (3/8-16X0.75 IN)	
	21	1	**5S-4246**	4	LOCKWASHER	
	22	1	**6B-4540**	4	NUT (4-40 THD)	
	23	1	**6V-2480**	4	SCREW (4-40X0.5 IN)	
	24	1	**7G-7053**	1	GROMMET	
	25	1	**8M-2770**	1	CLIP	
	26	1	**8T-4121**	4	WASHER-HARD (11X21X2.5MM THK)	
M	27	1	**8T-4133**	1	NUT (M10X1.5 THD)	
M	28	1	**8T-4137**	2	BOLT (M10X1.5X20MM)	
	29	1	**8T-4896**	3	WASHER-HARD (10.2X18.5X2.5MM THK)	
	30	1	**8T-9471**	1	GROMMET	
	31	1	**9W-0335**	1	LIGHTER AS (CIGAR)(24 VOLT)	
M	32	1	**9X-2040**	1	SCREW-TRUSS HEAD (M10X1.5X25MM)	

M-METRIC PART
Y-SEPARATE ILLUSTRATION

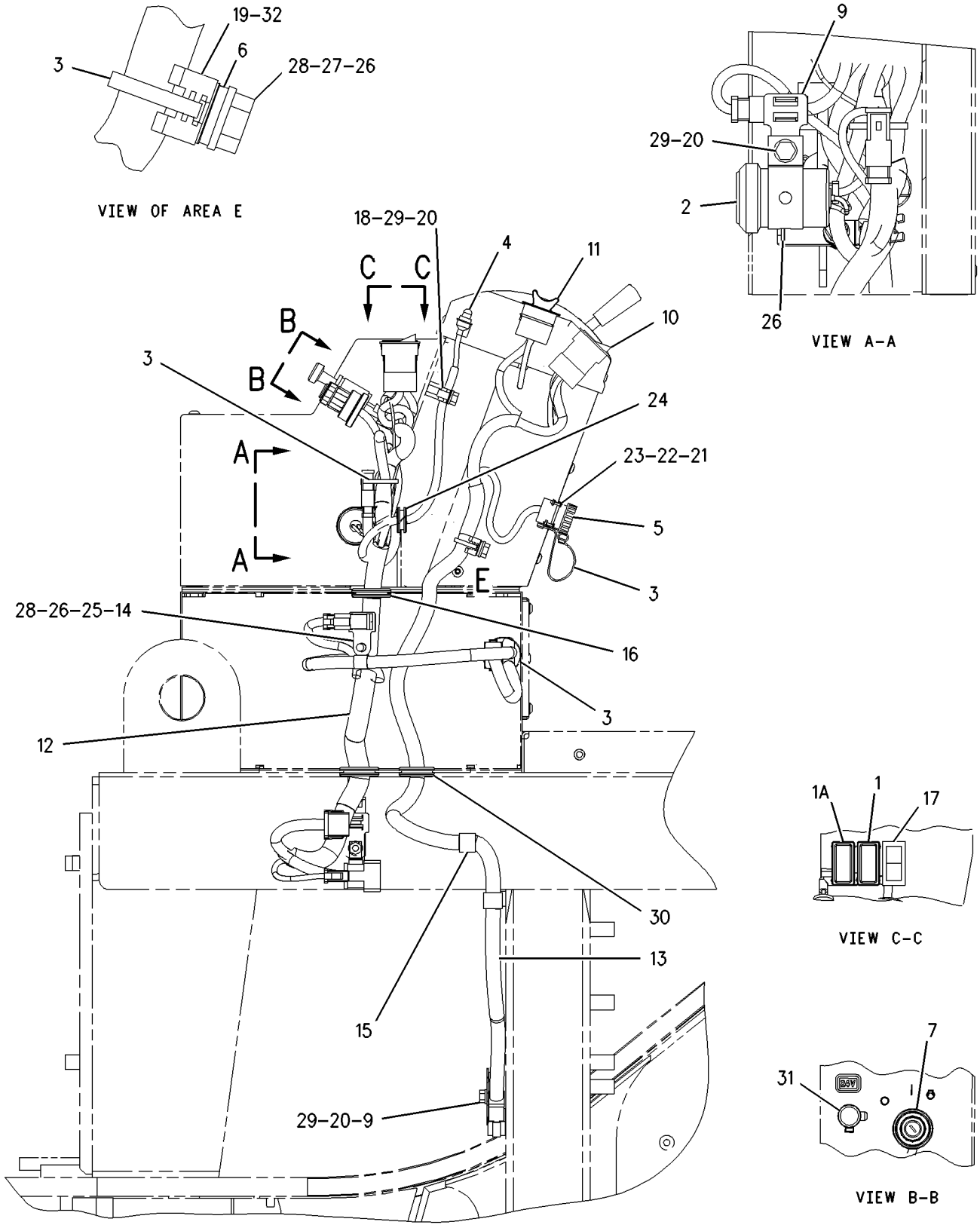

GRAPHIC #1 g00861859

ELECTRICAL AND STARTING SYSTEM

159-5855 WIRING GP-STEERING CONSOLE

S/N: ASE1-UP

PART OF 162-5606 GENERAL AR

SMCS-4334 **i01636363**

NOTE	REF NO	GRAPHIC REF	PART NUMBER	QTY	PART NAME 1 2 3 4 5 6 (PRODUCT LEVEL)	SEE PAGE
	1	1	**3E-0109**	1	PLUG-ROCKER SWITCH (LIGHT BAR LOW BEAM)	
	1A	1	**3E-0109**	1	PLUG-ROCKER SWITCH (FLOODLAMP)	
	2	1	**3E-6477**	1	RELAY AS (24 VOLT) (TAIL/PANEL LAMPS)	
	3	1	**3S-2093**	8	STRAP-CABLE	
	4	1	**9W-1442**	11	FUSE (10 AMP) (STEERING CONSOLE)	
	5	1	**102-9383**	1	PLATE	
	6	1	**112-6175**	1	SWITCH AS-LIMIT (BRAKE/INCHING PEDAL)	
		1	**3V-8376**	3	TUBE	
		1	**9B-7233**	3	LOCKWASHER	
	7	1	**169-3283**	1	HARNESS AS-CONSOLE	
		1	**102-8801**	2	KIT-RECEPTACLE (12 PIN)	
		1	**102-8803**	1	KIT-RECEPTACLE (3 PIN)	
		1	**102-8804**	1	KIT-RECEPTACLE (4 PIN)	
		1	**127-5483**	1	PLUG AS-CONNECTOR (1 PIN)	
		1	**127-5484**	2	RECEPTACLE AS (1 PIN)	
		1	**155-2255**	2	KIT-CONNECTING PLUG (12 PIN)	
		1	**155-2260**	1	KIT-CONNECTING PLUG (3 PIN) (AWD CONTROL LEVER SENSOR)	
		1	**155-2270**	2	KIT-CONNECTING PLUG (2 PIN) (PANEL LAMPS SWITCH/HORN)	
		1	**155-2271**	1	KIT-CONNECTING PLUG (4 PIN)	
	8	1	**180-4028**	1	BRACKET	
	9	1	**180-7033**	1	COVER	
	10	1	**186-1714**	1	FILM-FUSE (LH)	
	11	1	**188-6361**	1	FILM-FUSE (RH)	
	12	1	**194-4181**	1	RESISTOR AS	
		1	**096-5962**	2	WASHER-HARD (3.4X7X0.8MM THK)	
	13	1	**130-5300**	1	CLIP	
	14	1	**139-2120**	1	SWITCH AS (DIFFERENTIAL LOCK)	
		1	**123-5861**	1	ACTUATOR-ROCKER	
		1	**3E-8825**	2	LAMP (24 VOLT) (DIFFERENTIAL LOCK SWITCH)	
M	15	1	**151-4957**	2	BOLT-SOCKET HEAD (M3X0.5X25MM)	
M	16	1	**3C-6969**	2	NUT (M3X0.5 THD)	
	17	1	**3E-8768**	1	SWITCH AS (ETHER START)	
		1	**3E-8776**	1	ACTUATOR-ROCKER	
		1	**3E-8825**	1	LAMP (24 VOLT) (ETHER START SWITCH)	
	18	1	**3E-9324**	1	SWITCH AS (PANEL LAMP DIMMER)	
		1	**3E-8783**	1	ACTUATOR-ROCKER	
		1	**3E-8825**	1	LAMP (24 VOLT) (PANEL LAMP DIMMER SWITCH)	
	19	1	**3E-8763**	1	SWITCH AS (TAIL LAMP)	
		1	**3E-9323**	1	ACTUATOR-ROCKER	
		1	**3E-8825**	1	LAMP (24 VOLT) (TAIL LAMP SWITCH)	
	20	1	**3L-8187**	2	LOCKWASHER	
	21	1	**4B-1280**	3	SCREW-MACHINE (1/4-20X.5 IN)	
	22	1	**4B-2047**	1	NUT (10-24 THD)	
	23	1	**4B-4274**	8	WASHER (5.5X13X1.2MM THK)	
	24	1	**4D-1212**	1	GROMMET	
	25	1	**6D-4244**	2	CLIP	
	26	1	**6J-0488**	1	SCREW-BUTTON HEAD (3/8-16X0.875 IN)	
	27	1	**6V-8185**	3	NUT (1/4-20 THD)	
	28	1	**6V-8801**	1	NUT (3/8-16 THD)	
	29	1	**8C-7507**	1	LOCKWASHER	
	30	1	**8J-1256**	1	CLIP	
	31	1	**8L-6521**	8	BOLT (10-32X0.5IN)	
	32	1	**8T-1688**	1	SCREW-MACHINE (10-24 X 12.70MM)	
	33	1	**8T-4205**	3	WASHER-HARD (7.2X14.5X2MM THK)	

159-5855 **WIRING GP-STEERING CONSOLE** ***(contd.)*** **i01636363**

NOTE	REF NO	GRAPHIC REF	PART NUMBER	QTY	PART NAME 1 2 3 4 5 6 (PRODUCT LEVEL)	SEE PAGE
	34	1	**8T-4896**	1	WASHER-HARD (10.2X18.5X2.5MM THK)	
M	35	1	**9X-1046**	4	SCREW (M4X0.7X18MM)	
M	36	1	**9X-2042**	1	SCREW-TRUSS HEAD (M6X1X12MM)	

M-METRIC PART

159-5855 **WIRING GP-STEERING CONSOLE** ***(contd.)*** **i01636363**

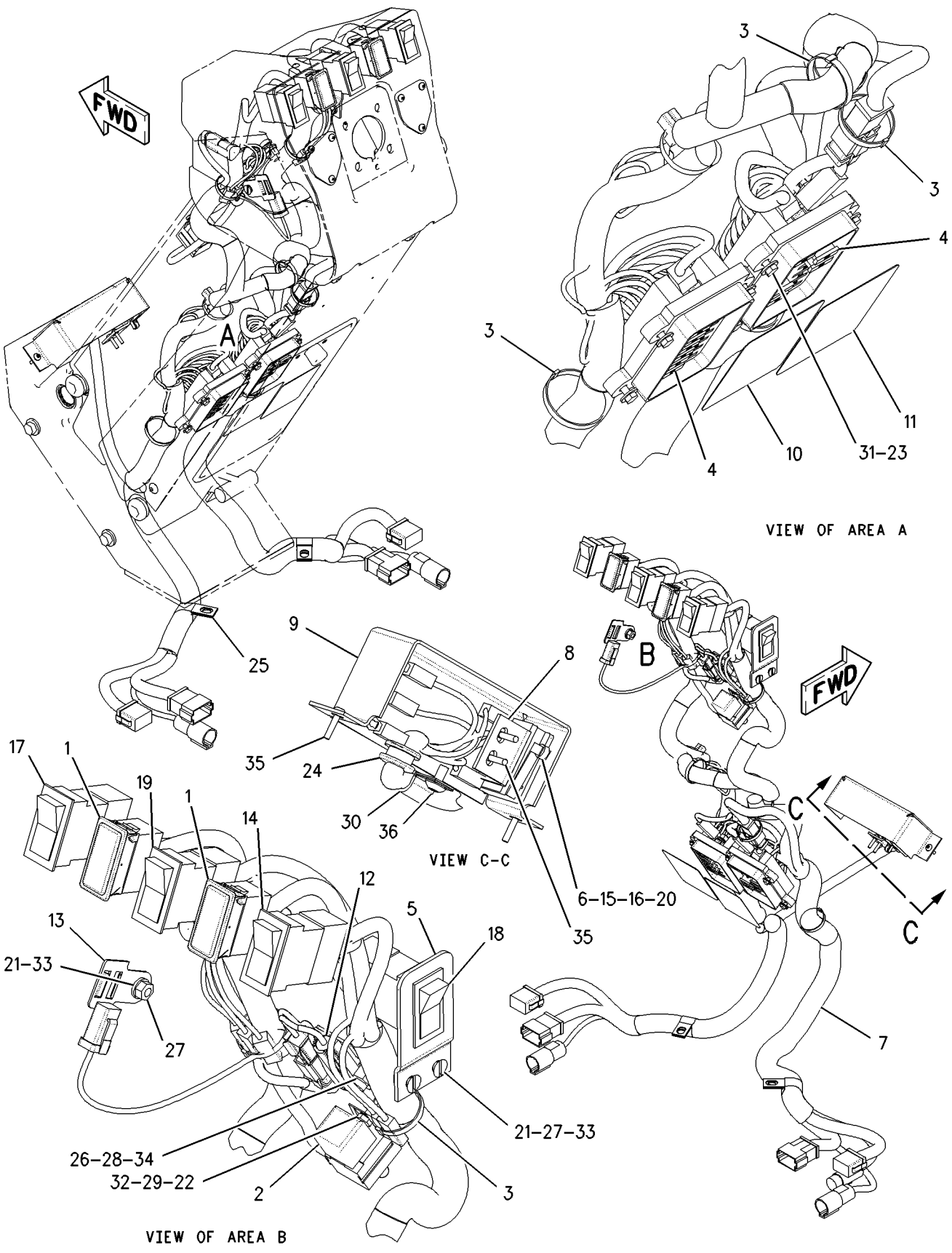

GRAPHIC #1 g00853267

117-2760 WIRING GP-UNIT INJECTOR

S/N: 3PD1-UP

PART OF 161-1747 ENGINE AR

SMCS-1408 **i01595626**

NOTE	REF NO	GRAPHIC REF	PART NUMBER	QTY	PART NAME 1 2 3 4 5 6 (PRODUCT LEVEL)	SEE PAGE
	1	1	**4P-9537**	1	HARNESS AS-WIRING (UNIT INJECTOR)	
	2	1	**2V-3216**	4	CLIP	
	3	1	**7X-2468**	3	CLIP	
	4	1	**7E-6508**	6	CAP AS	
M	5	1	**6V-8214**	9	BOLT (M6X20MM)	
	6	1	**5P-0537**	9	WASHER-HARD (7.2X14.5X2MM THK)	

M-METRIC PART

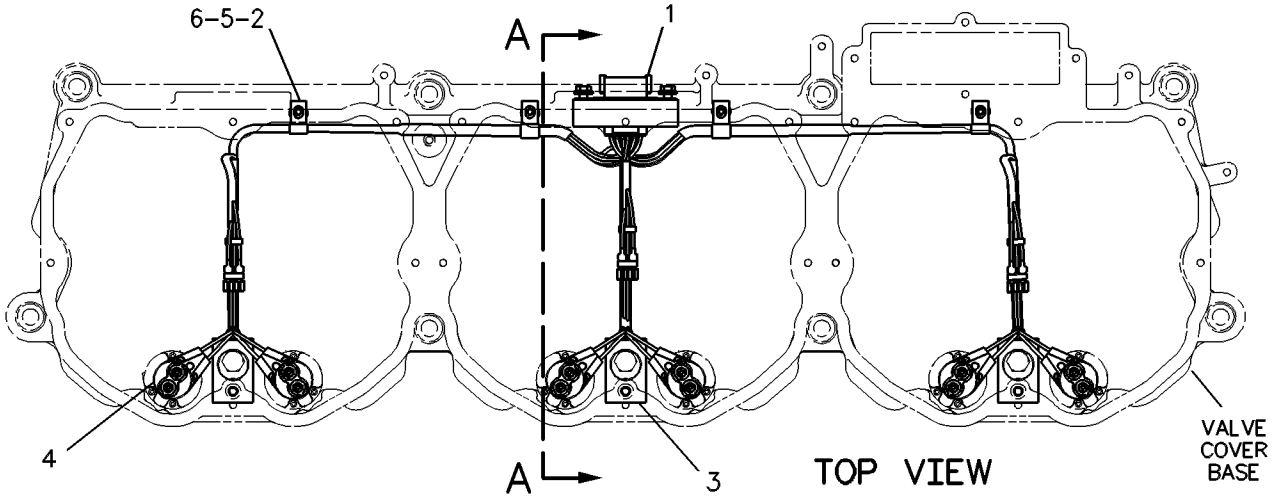

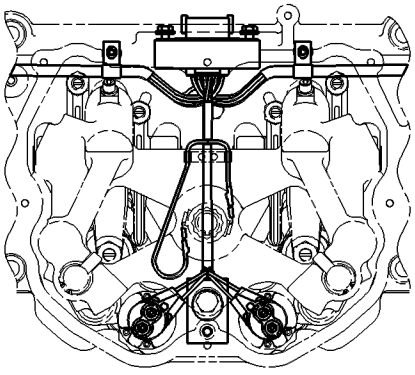

WIRING CONNECTIONS SHOWN FOR USE WITH ENGINE RETARDER

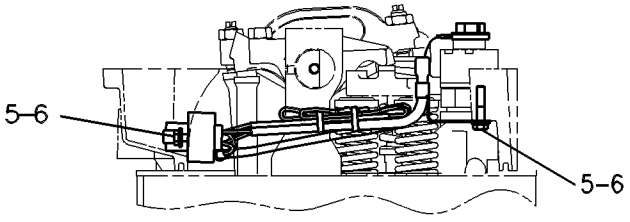

VIEW A-A

GRAPHIC #1 g00399410

9D-9840 ADAPTER GP-TRANSMISSION

S/N: ASE1-UP

PART OF 162-5606 GENERAL AR

SMCS-3252 **i01371592**

NOTE	REF NO	GRAPHIC REF	PART NUMBER	QTY	PART NAME 1 2 3 4 5 6 (PRODUCT LEVEL)	SEE PAGE
	2	1	**3B-4507**	11	LOCKWASHER (7/16)	
	3	1	**2P-4443**	1	COUPLING-FLYWHEEL	
	4	1	**4S-5824**	1	RETAINER	
	5	1	**0S-1579**	1	BOLT (1/2-20X2IN)	
	6	1	**8F-6711**	1	SEAL-O-RING (56.74MM ID)	
C	7	1	**9H-0846**	1	SEAL-O-RING (494.66MM ID)	
	8	1	**0T-0768**	11	BOLT (7/16-14X1.75IN)	

C-CHANGE FROM PREVIOUS TYPE

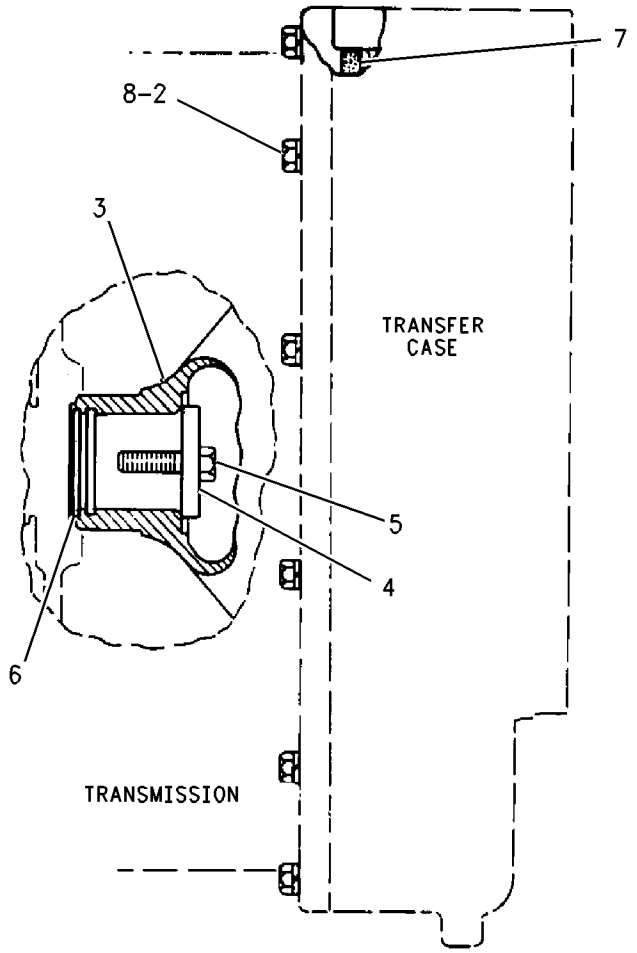

GRAPHIC #1 g00726998

POWER TRAIN

2P-6899 CASE GP-TRANSMISSION

S/N: BSS1-UP

PART OF 186-4873 GEAR & CASE GP-TRANSFER

SMCS-3064 **i00922425**

NOTE	REF NO	GRAPHIC REF	PART NUMBER	QTY	PART NAME 1 2 3 4 5 6 (PRODUCT LEVEL)	SEE PAGE
	1	1	**3P-0229**	2	SLEEVE	
	2	1	**2P-6928**	1	TUBE	
	3	1	**0L-2061**	2	DOWEL (9.4 X 22 MM)	
	4	1	**9M-4007**	2	DOWEL (12.5 X 23.8 MM)	
	5	1	**2P-6897**	1	TUBE	
	6	1	**1P-8594**	4	SLEEVE	
	7	1	**4K-0149**	1	PLUG-CUP	
	8	1	**2P-5720**	1	TUBE	
	9	1	**2P-5721**	1	TUBE	
	10	1	**2P-5719**	1	TUBE	
C	11	1	**6T-3118**	1	TUBE	
	12	1	**2P-5780**	2	SLEEVE	
	13	1	**2P-6929**	1	TUBE	
	14	1	**2P-6898**	1	TUBE	

C-CHANGE FROM PREVIOUS TYPE

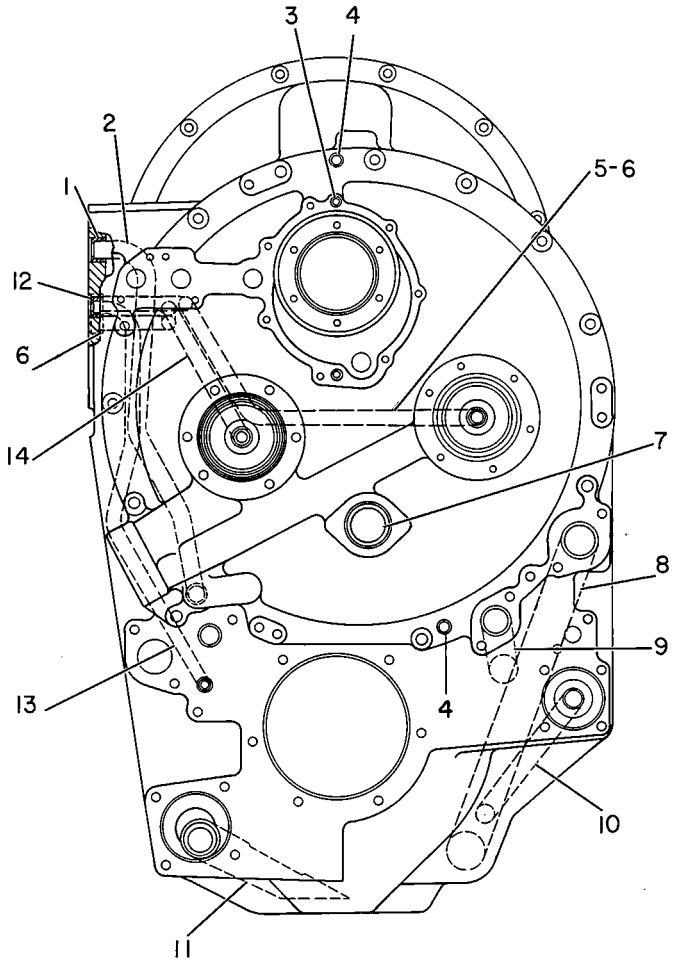

GRAPHIC #1 g00108217

6G-1750 CHAIN GP-DRIVE

S/N: ASE1-UP

PART OF 162-5606 GENERAL AR

SMCS-3261, 4063 **i00130982**

NOTE	REF NO	GRAPHIC REF	PART NUMBER	QTY	PART NAME 1 2 3 4 5 6 (PRODUCT LEVEL)	SEE PAGE
	1	1	**6G-1670**	4	CHAIN GP	
					(EACH INCLUDES)	
	2	1	**6G-1667**	1	LINK-CONNECTING	
					AVAILABLE REPAIR KIT(S):	
			6G-5874	1	KIT-COTTER PIN	

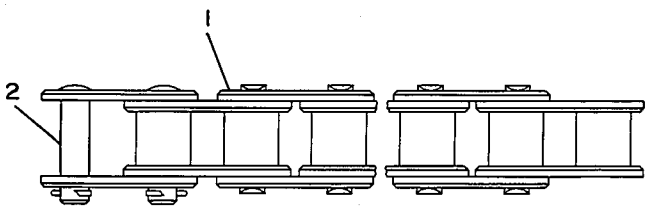

GRAPHIC #1 g00108248

MEMORANDA

163-0905 CONTROL GP-CLUTCH

S/N: ASE1-UP

PART OF 162-5606 GENERAL AR

SMCS-5157 **i01645656**

NOTE	REF NO	GRAPHIC REF	PART NUMBER	QTY	PART NAME 1 2 3 4 5 6 (PRODUCT LEVEL)	SEE PAGE
	1	1	**1B-2578**	1	NUT (3/8-16 THD)	
	2	1	**1D-1313**	1	SPRING	
	3	1	**1F-4622**	2	BEARING AS-NEEDLE	
	4	1	**4D-4895**	1	LEVER	
	5	1	**4J-2667**	1	BEARING AS-NEEDLE	
	6	1	**5P-7704**	1	ROD END	
	7	1	**6P-5442**	2	PLUG	
	8	1	**6V-8187**	2	NUT (1/4-28 THD)	
	9	1	**7D-9212**	1	SPRING	
	10	1	**7K-2135**	1	BEARING-ROLLER	
	11	2	**7V-0446**	2	CLIP	
	12	1	**8D-5293**	2	RING	
	13	1	**8D-5294**	1	RING	
	14	1	**8D-9969**	1	COVER	
	15	1	**8D-9973**	1	HOUSING	
	16	1	**8D-9974**	1	GASKET	
	17	1	**8X-3805**	1	SHAFT	
	18	1	**8X-3988**	1	COUPLING	
	19	1	**9D-0145**	1	LEVER	
	20	1	**9J-8783**	1	SHIM (.508MM THK)	
	21	1	**117-5061**	1	CABLE AS	
	22	2	**161-7065**	1	BRACKET AS	
	23	2	**169-0921**	1	ROD END (INTERNAL THREAD)	
	24	2	**169-0922**	1	ROD	
	25	1	**172-4211**	1	SPACER (10.5X22X50.8MM THK)	
	26	2	**180-7147**	1	LEVER	
	27	1	**188-1321**	1	BRACKET AS	
	28	1	**207-4922**	1	PEDAL-CLUTCH	
	29	1	**129-3173**	1	BOLT-12 POINT HEAD (3/8-16X31.75MM)	
	30	2	**1B-0676**	1	PIN	
	31	1	**1B-8704**	2	KEY-WOODRUFF	
	32	1	**3D-2992**	1	SEAL	
	33	1	**3D-4004**	1	SEAL-QUAD RING	
	34	1	**3K-8280**	1	PIN-CLEVIS	
	35	2	**4J-8922**	1	ROD END	
	36	1,2	**4L-6454**	8	BOLT (3/8-16X1 IN)	
	37	1	**5P-1075**	9	WASHER-HARD (10.2X22.5X3MM THK)	
	38	2	**5S-7383**	1	BOLT (3/8-16X1.75 IN)	
	39	2	**6V-8183**	1	NUT-FULL (3/8-24 THD)	
	40	2	**6V-8801**	1	NUT (3/8-16 THD)	
	41	1	**7X-0291**	3	BOLT (3/8-16X3.75 IN)	
	42	1	**8D-5295**	1	PIN	
	43	1	**8T-4122**	2	WASHER-HARD (17X32X3.5MM THK)	
M	44	1	**8T-4133**	4	NUT (M10X1.5 THD)	
M	45	1	**8T-4195**	2	BOLT (M10X1.5X30MM)	
	46	1	**8T-4224**	1	WASHER-HARD (8.8X16X2MM THK)	
	47	1	**8T-4226**	1	WASHER-PLATED (10.5X45X3MM THK)	
	48	2	**8T-4896**	3	WASHER-HARD (10.2X18.5X2.5MM THK)	
	49	1	**8T-5390**	1	BOLT (3/8-16X88.9MM)	
	50	1	**8T-9043**	1	BOLT (5/16-18X.875 IN)	
	51	1	**8W-8909**	3	SLEEVE	
	52	1	**9B-7237**	1	BOLT (3/8-16X1.25 IN)	
	53	1	**9D-5506**	1	ROD END	
	54	1	**9S-1354**	3	NUT (5/8-18 THD)	

M-METRIC PART

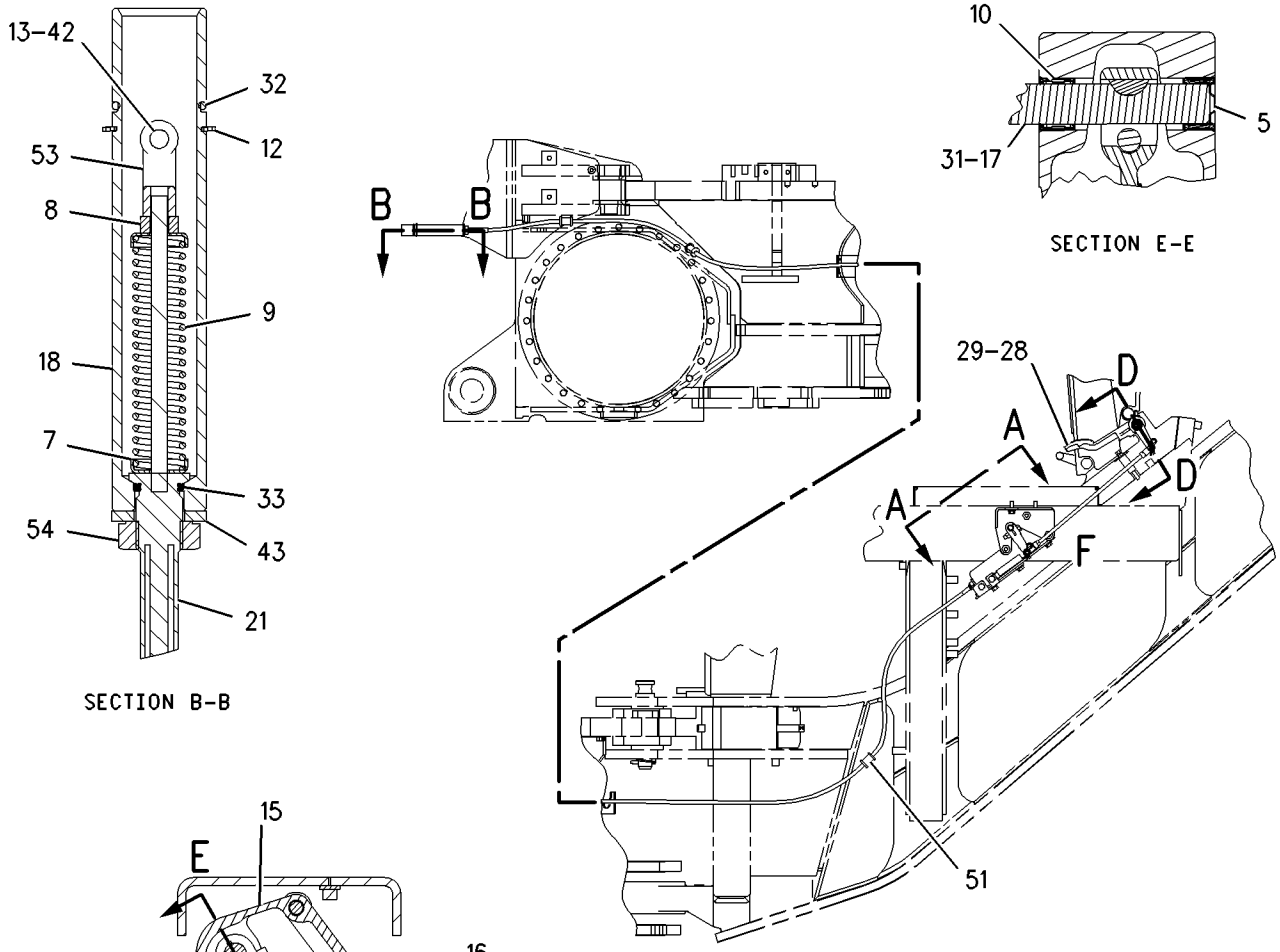

GRAPHIC #1

g00859001

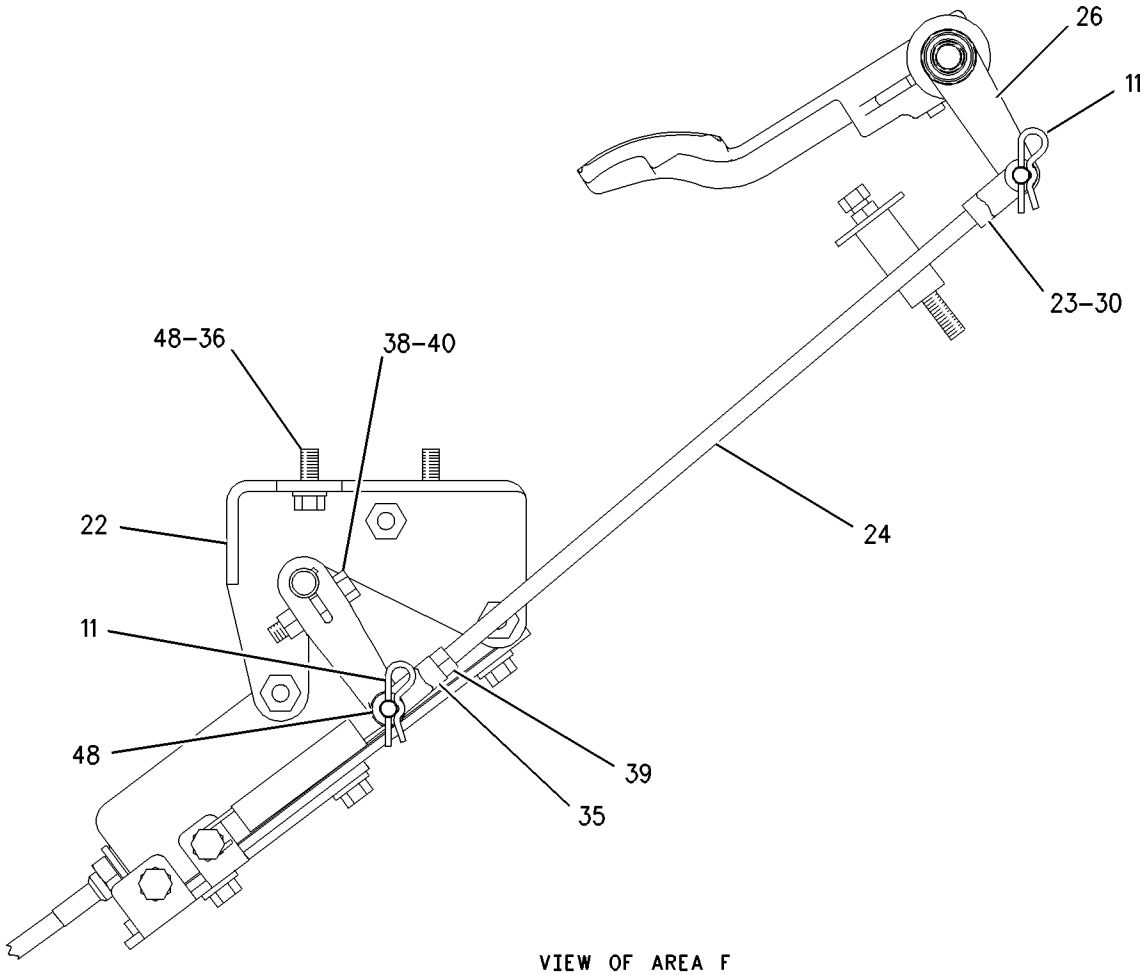

VIEW OF AREA F

GRAPHIC #2 g00859003

MEMORANDA

173-5306 CONTROL GP-DIFFERENTIAL LOCK

S/N: ASE1-UP

PART OF 162-5606 GENERAL AR

SMCS-3264 **i01643799**

NOTE	REF NO	GRAPHIC REF	PART NUMBER	QTY	PART NAME 1 2 3 4 5 6 (PRODUCT LEVEL)	SEE PAGE
I	1	1	**130-5372**	1	HOSE AS	
	2	1	*164-5567*	1	FITTING GP	
		1	**6V-3965**	1	FITTING AS	
		1	**3J-1907**	1	SEAL-O-RING	
Y	3	1	**174-3705**	1	VALVE & MTG GP-DIFF LOCK	308
	4	1	*148-8325*	1	CONNECTOR GP	
		1	**6V-8641**	1	CONNECTOR	
		1	**3J-1907**	1	SEAL-O-RING	
		1	**4J-5477**	1	SEAL-O-RING	
	5	1	*148-8369*	1	ELBOW GP	
		1	**6V-8628**	1	ELBOW	
		1	**3J-7354**	1	SEAL-O-RING	
		1	**4J-5477**	1	SEAL-O-RING	
	6	1	*150-4047*	1	ADAPTER GP	
		1	**8T-2353**	1	ADAPTER-STRAIGHT THREAD	
		1	**3J-7354**	1	SEAL-O-RING	
	7	1	**6V-0852**	1	CAP-DUST (DIFFERENTIAL LOCK)	
	8	1	**8M-4438**	2	SEAL-O-RING	
	9	1	**8T-2501**	2	BOLT (3/8-16X2 IN)	
	10	1	**8T-4896**	2	WASHER-HARD (10.2X18.5X2.5MM THK)	
	11	1	**9M-8406**	1	CLIP	

I-SEE HOSE FABRICATION GUIDE
Y-SEPARATE ILLUSTRATION

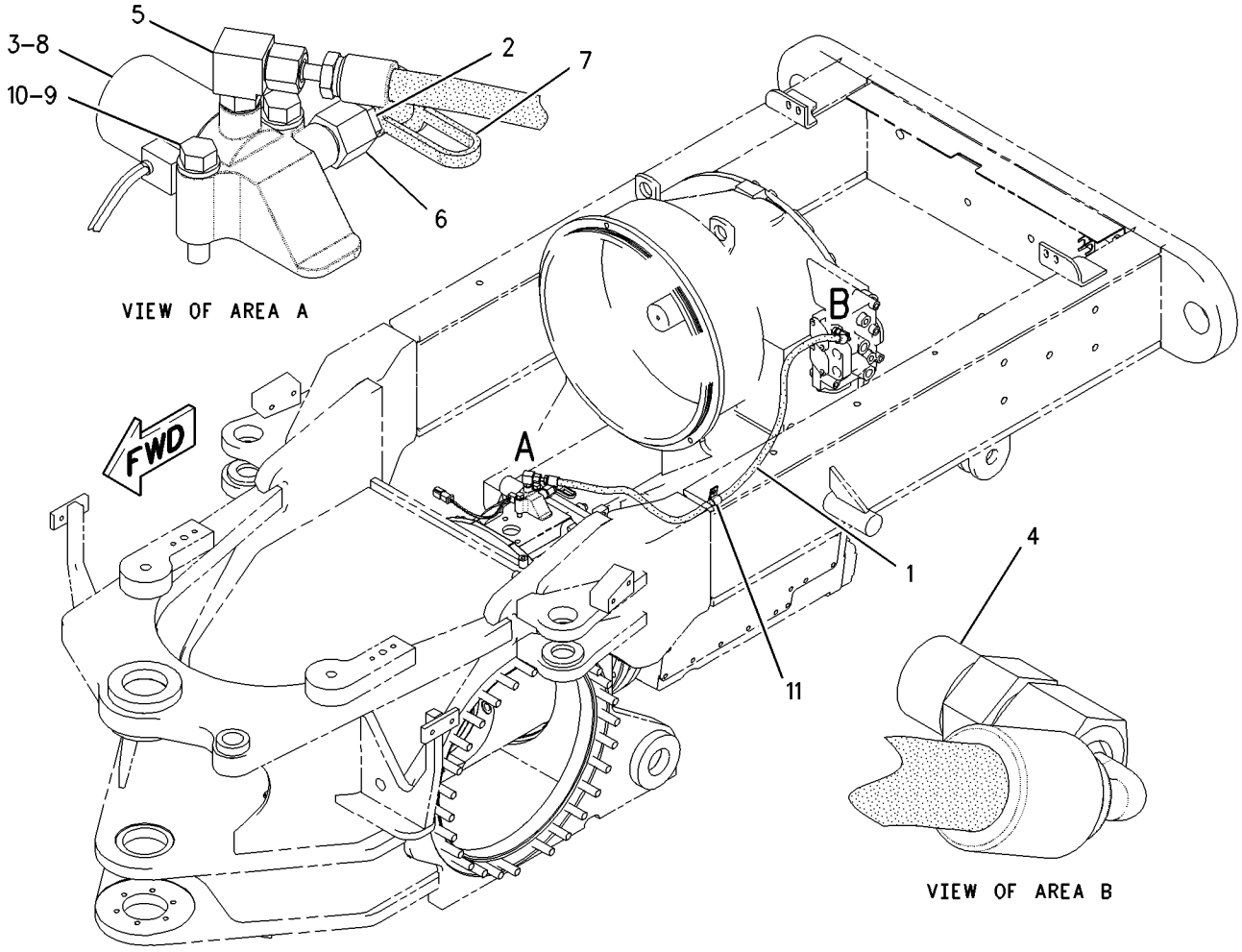

GRAPHIC #1 g00852849

167-9003 CONTROL GP-TRANSMISSION

S/N: ASE1-UP

PART OF 162-5606 GENERAL AR

SMCS-3065 **i01671190**

NOTE	REF NO	GRAPHIC REF	PART NUMBER	QTY	PART NAME 1 2 3 4 5 6 (PRODUCT LEVEL)	SEE PAGE
	1	2	**1F-4622**	2	BEARING AS-NEEDLE	
	2	2	**1U-2761**	1	BOLT (3/8-16X2.36 IN)	
	3	2	**2A-7090**	1	COUPLING AS	
	4	2	**2P-9858**	4	BEARING-ROLLER	
	5	2	**3N-9371**	1	SPRING	
	6	2	**4T-7520**	1	SPRING	
	7	2	**6L-7751**	2	ROD END (1/4-28 THD)	
	8	2	**6V-8187**	5	NUT (1/4-28 THD)	
	9	2	**7M-0706**	1	KNOB (GEARSHIFT)	
	10	2	**8D-5291**	1	CABLE AS	
	11	2	**8D-5293**	4	RING	
	12	1	**8W-1614**	1	CLIP	
	13	2	**8X-3244**	1	COVER	
	14	2	**8X-3247**	2	GASKET	
	15	2	**8X-3248**	1	SHAFT AS	
		2	**7N-5352**	1	DOWEL	
	16	2	**8X-3249**	1	SHAFT AS	
	17	2	**8X-3252**	1	LEVER	
	18	2	**8X-3406**	1	LEVER	
	19	2	**8X-4879**	1	BRACKET AS	
M		2	**6V-9632**	1	NUT-WELD (M6X1 THD)	
	20	2	**8X-6328**	1	RETAINER	
	21	2	**8X-6618**	1	LEVER	
	22	2	**8X-6619**	1	COVER	
	23	2	**8X-7277**	1	BUSHING	
	24	1	**8X-8096**	1	FILM (COVER)	
	25	2	**8X-8352**	1	ROD AS	
		2	**7H-3641**	1	END-ROD (5/16-24 THD)	
		2	**7X-3376**	1	NUT-FULL (5/16-24 THD)	
		2	**8X-8361**	1	END-ROD (5/16-24 THD)	
	26	2	**8X-8353**	1	YOKE	
	27	2	**9K-4848**	6	WASHER-THRUST	
	28	2	**9L-2303**	1	SPRING	
	29	1	**9X-9911**	1	CABLE AS	
	30	2	**098-1290**	1	RING-RETAINING	
	31	2	**109-1004**	1	BRACKET AS	
M		2	**6V-9632**	1	NUT-WELD (M6X1 THD)	
	32	1	**119-5030**	1	RETAINER	
	33	2	**133-6047**	1	PLUNGER	
	34	2	**133-6090**	1	ROD AS	
	35	2	**143-9290**	1	PLATE AS	
	36	1	**169-2620**	1	GATE AS	
	37	2	**171-2121**	1	COVER	
	38	2	**172-7105**	1	FILM-PANEL (TRANSMISSION/PARK)	
	39	2	**172-7106**	1	FILM-PANEL (GEAR POSITION)	
	40	2	**185-2274**	1	FILM-PANEL (ENGINE HIGH IDLE HOLD)	
	41	2	**185-2287**	1	FILM-PANEL (ENGINE LOW IDLE HOLD)	
	42	2	**187-0975**	1	COVER	
	43	2	**188-3541**	1	COUPLING AS	
	44	2	**188-3543**	1	YOKE	
	45	2	**211-4772**	1	HOUSING	
	46	1	**213-2061**	1	PLATE AS	
	47	2	**1B-8704**	2	KEY-WOODRUFF	
	48	2	**1H-3337**	2	BOLT (1/4-20X0.875 IN)	
	49	2	**3D-2992**	2	SEAL	
	50	2	**3D-4004**	2	SEAL-QUAD RING	

167-9003 **CONTROL GP-TRANSMISSION** *(contd.)* **i01671190**

NOTE	REF NO	GRAPHIC REF	PART NUMBER	QTY	PART NAME 1 2 3 4 5 6 (PRODUCT LEVEL)	SEE PAGE
	51	1	**4L-6454**	2	BOLT (3/8-16X1 IN)	
	52	2	**4M-5282**	2	BOLT (1/4-20X1.50 IN)	
	53	1	**5M-3062**	1	BOLT (3/8-16X0.75 IN)	
	54	1,2	**5P-1075**	4	WASHER-HARD (10.2X22.5X3MM THK)	
	55	2	**5P-4115**	3	WASHER-HARD (7.2X19X2MM THK)	
	56	2	**5P-8247**	4	WASHER-HARD (17X32X3.5MM THK)	
	57	2	**6V-5782**	1	BOLT (5/16-18X1.125 IN)	
	58	2	**6V-8185**	2	NUT (1/4-20 THD)	
	59	2	**6V-8189**	1	NUT (5/16-18 THD)	
	60	2	**6V-8801**	1	NUT (3/8-16 THD)	
	61	2	**8D-5641**	4	BEARING	
	62	2	**8T-4205**	2	WASHER-HARD (7.2X14.5X2MM THK)	
	63	2	**8T-4224**	1	WASHER-HARD (8.8X16X2MM THK)	
	64	2	**8T-4896**	1	WASHER-HARD (10.2X18.5X2.5MM THK)	
	65	2	**8T-7566**	2	PIN-SPRING	
	66	1	**8T-9471**	2	GROMMET	
	67	1	**8W-8909**	4	SLEEVE	
	68	2	**9H-2910**	2	PIN	
	69	2	**9S-1354**	6	NUT (5/8-18 THD)	
M	70	2	**9X-2041**	18	SCREW-TRUSS HEAD (M10X1.5X20MM)	
M	71	2	**9X-2042**	1	SCREW-TRUSS HEAD (M6X1X12MM)	
M	72	1,2	**9X-2043**	11	SCREW-TRUSS HEAD (M6X1X14MM)	
M	73	1,2	**9X-2045**	4	SCREW-TRUSS HEAD (M6X1X20MM)	
D	74	2	**5P-5924**		SEAL (.2 M)	

D-ORDER BY THE METER
M-METRIC PART

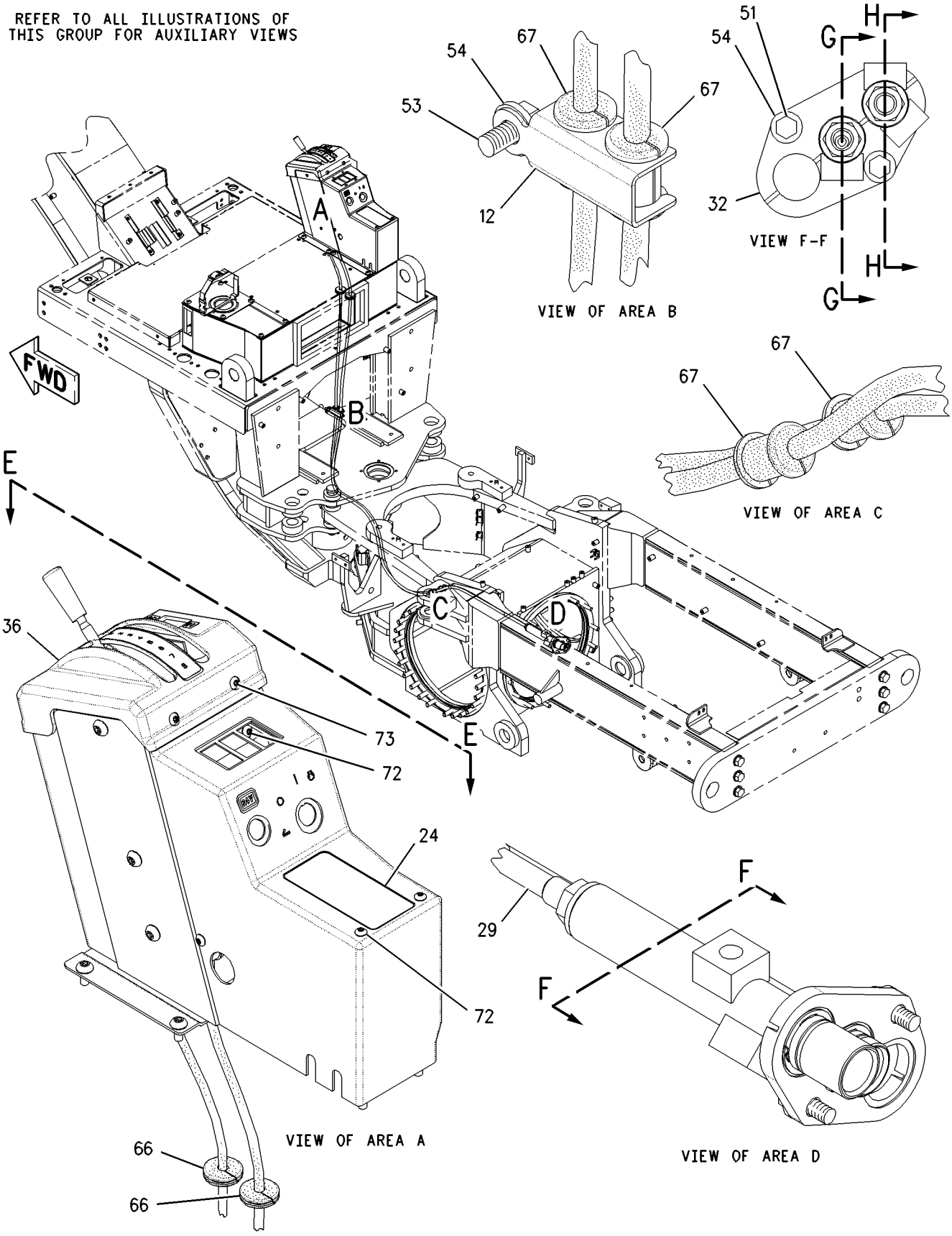

GRAPHIC #1 g00850669

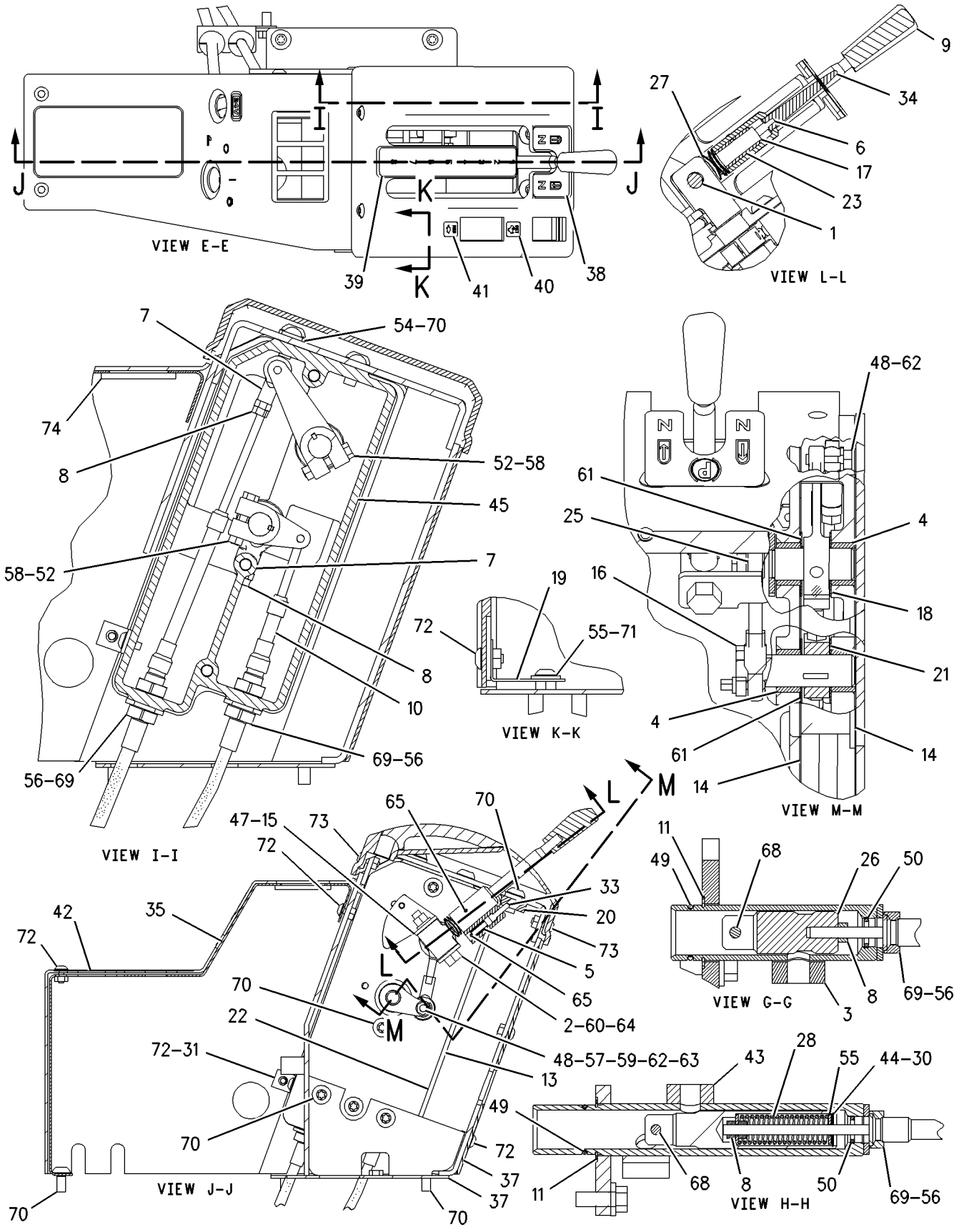

GRAPHIC #2

g00850670

8E-4132 CONTROL GP-TRANSMISSION HYD

S/N: BSS1-UP

PART OF 183-6614 TRANSMISSION AR

SMCS-3073, 3167 **i01671196**

NOTE	REF NO	GRAPHIC REF	PART NUMBER	QTY	PART NAME 1 2 3 4 5 6 (PRODUCT LEVEL)	SEE PAGE
Y	1	1	**115-1375**	1	VALVE GP-RELIEF (MAIN)	312
	2	1	**0L-1352**	4	BOLT (3/8-16X3.25 IN)	
	3	1	**3B-4506**	4	LOCKWASHER	
	4	1	**2J-0157**	2	SEAL-O-RING	
	5	1	**2H-3932**	3	SEAL-O-RING	
	6	1	**3H-0107**	1	SEAL-O-RING	
	7	1	**6F-6673**	1	SEAL-O-RING	
Y	8	1	*8E-4131*	1	VALVE GP-TRANSMISSION CONTROL	322
	9	1	**5F-6044**	2	BOLT (3/8-16X9 IN)	
	10	1	**4F-0411**	2	BOLT (3/8-16X6.5 IN)	
	11	1	**5M-2894**	4	WASHER-HARD (10.2X18.5X2.5MM THK)	
	12	1	**3J-1907**	2	SEAL-O-RING	
	13	1	**3P-2777**	1	PLATE	
	14	1	**3P-2781**	1	PLATE	
	15	1	**1T-0416**	1	BOLT (5/16-18X0.75 IN)	
	16	1	**6P-5096**	2	LINK-EXTENSION	
	17	1	**2P-7045**	1	SLEEVE	
	18	1	**2P-7044**	1	SLEEVE	
	19	1	**2P-4549**	2	SLEEVE	
	20	1	**8M-4389**	8	SEAL-O-RING	
	21	1	**9S-4191**	2	PLUG	

Y-SEPARATE ILLUSTRATION

8E-4132 **CONTROL GP-TRANSMISSION HYD** *(contd.)* **i01671196**

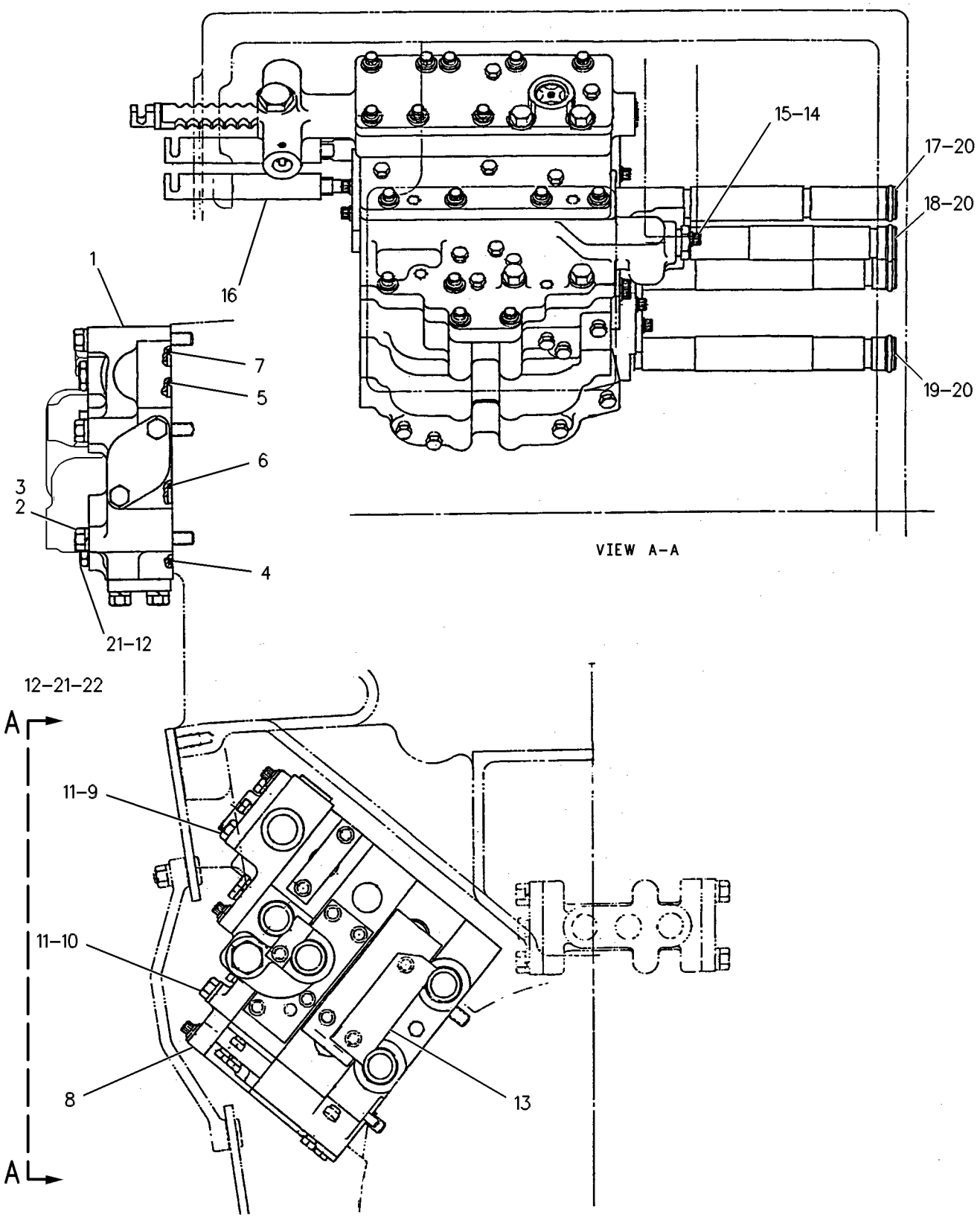

GRAPHIC #1 g00109585

163-9322 COOLER GP-TRANSMISSION OIL

S/N: 3PD1-UP

PART OF 161-1747 ENGINE AR

SMCS-1375 **i01625999**

NOTE	REF NO	GRAPHIC REF	PART NUMBER	QTY	PART NAME 1 2 3 4 5 6 (PRODUCT LEVEL)	SEE PAGE
	1	1	**8T-4984**	2	CLAMP-HOSE	
	2	1	**100-8525**	1	GASKET	
R	3	1	**115-4517**	1	CORE AS-ENGINE OIL COOLER	
	4	1	**122-0763**	1	ELBOW	
	5	1	**124-5043**	1	COUPLING	
M	6	1	**131-0353**	2	STUD	
	7	1	**131-6645**	1	HOSE	
	8	1	**155-7970**	1	BONNET-OIL COOLER	
	9	1	**174-1637**	1	ELBOW	
	10	1	**175-7453**	1	CORE AS	
	11	1	**209-1743**	1	BRACKET	
	12	1	**209-7389**	1	BONNET	
	13	1	**061-7540**	2	SEAL-O-RING	
	14	1	**117-3036**	2	SEAL-O-RING	
	15	1	**129-2861**	2	GASKET	
	16	1	**2N-0475**	2	SEAL-O-RING	
	17	1	**3E-4352**	4	WASHER-HARD (8.8X20.5X2.5MM THK)	
	18	1	**5P-4116**	4	WASHER-HARD (8.8X20.5X2MM THK)	
M	19	1	**5P-7970**	4	NUT (M8X1.25 THD)	
	20	1	**5P-8245**	2	WASHER-HARD (13.5X25.5X3MM THK)	
M	21	1	**6V-2317**	10	BOLT (M8X1.25X30MM)	
M	22	1	**6V-3918**	2	BOLT (M8X1.25X50MM)	
M	23	1	**6V-5218**	6	BOLT (M8X1.25X35MM)	
	24	1	**6V-9027**	1	SEAL-O-RING	
	25	1	**7X-7731**	1	PLUG-PIPE	
M	26	1	**6A-5591**	2	BOLT (M12X1.75X25MM)	
	27	1	**8T-6761**	1	PLUG-PIPE	
	28	1	**8T-6767**	1	PLUG-PIPE	
	29	1	**9M-1974**	16	WASHER-HARD (8.8X16X2MM THK)	
	30	1	**9S-4182**	2	PLUG-O-RING	

M-METRIC PART
R-REMFG PART MAY BE AVAILABLE

163-9322 **COOLER GP-TRANSMISSION OIL** ***(contd.)*** **i01625999**

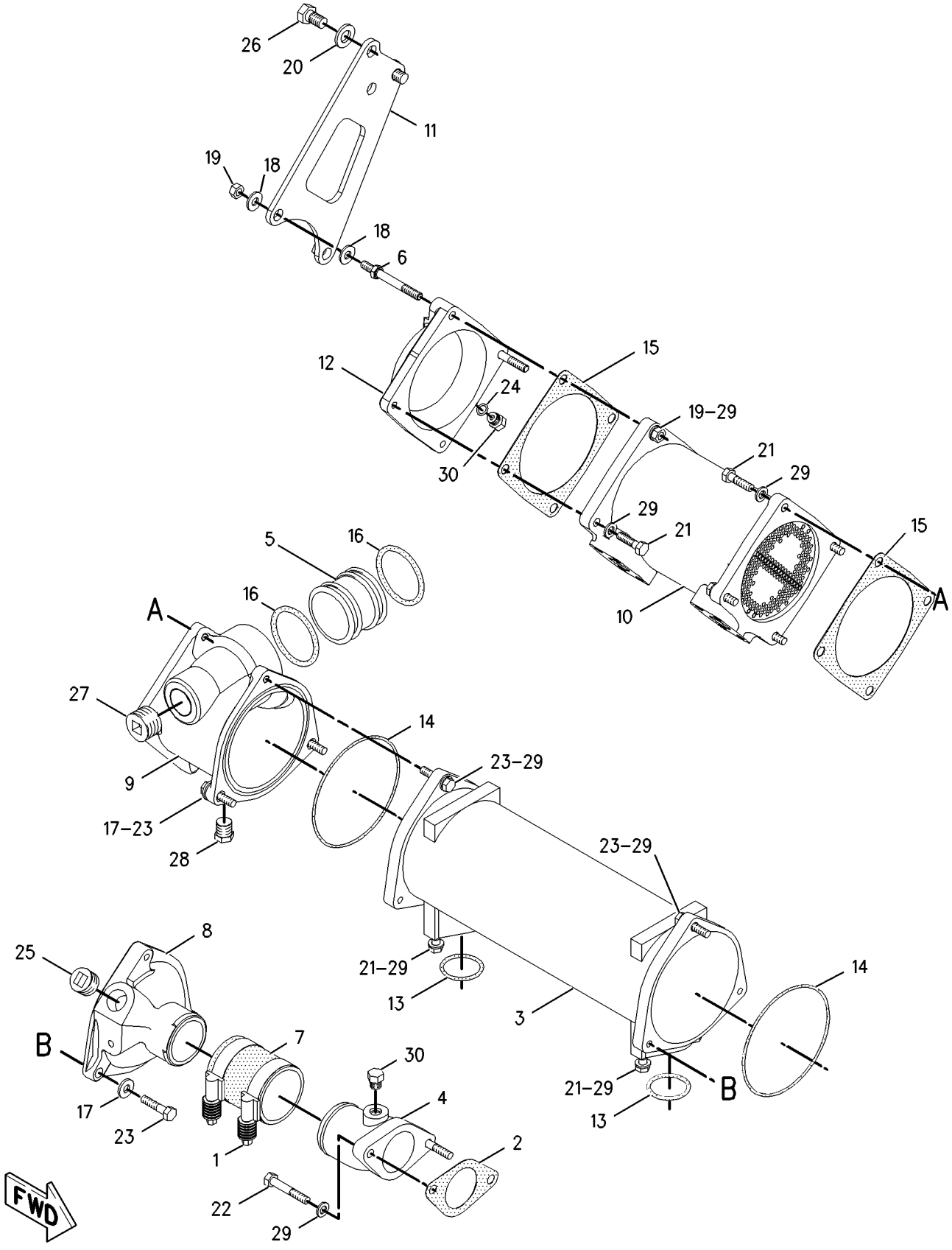

GRAPHIC #1 g00834518

190-9842 COVER GP-SHIPPING—TRANSMISSION

S/N: BSS1-UP

PART OF 183-6614 TRANSMISSION AR

SMCS-3030, 3064, 3188 **i01458647**

NOTE	REF NO	GRAPHIC REF	PART NUMBER	QTY	PART NAME 1 2 3 4 5 6 (PRODUCT LEVEL)	SEE PAGE
	1	1	**117-2927**	1	COVER-SHIPPING	
	2	1	**0T-0573**	6	BOLT (3/8-16X2.75 IN)	
	3	1	**9S-8752**	6	NUT-FULL (3/8-16 THD)	
	4	1	**3P-5640**	2	GASKET	
	5	1	**3P-5639**	1	COVER	
	6	1	**0S-0509**	2	BOLT (3/8-16X0.75 IN)	
	7	1	**5M-2894**	2	WASHER-HARD (10.2X18.5X2.5MM THK)	
	8	1	**9S-4183**	2	PLUG	
	9	1	**3D-2824**	2	SEAL-O-RING	
	10	1	**190-9841**	1	COVER-SHIPPING	
	11	1	**1D-4585**	7	BOLT (5/8-11X3.25 IN)	
	12	1	**4B-4281**	7	WASHER (16.8X33X2.5MM THK)	
	13	1	**1D-4720**	7	NUT (5/8-11 THD)	
	14	1	**3P-7731**	1	COVER	
	15	1	**0T-0102**	2	BOLT (3/8-16X0.625 IN)	
	16	1	**6V-5839**	8	WASHER (11X21X2.5MM THK)	
	17	1	**4D-1577**	1	SEAL-O-RING	
	18	1	**9H-0846**	1	SEAL-O-RING	
	19	1	**7F-8268**	1	SEAL-O-RING	
	20	1	**4F-8946**	1	SEAL-O-RING	
	21	1	**4F-7952**	1	SEAL-O-RING	
	22	1	**3J-1907**	2	SEAL-O-RING	
	23	1	**9S-4191**	2	PLUG-STRAIGHT THREAD	

190-9842 **COVER GP-SHIPPING** *(contd.)* **i01458647**

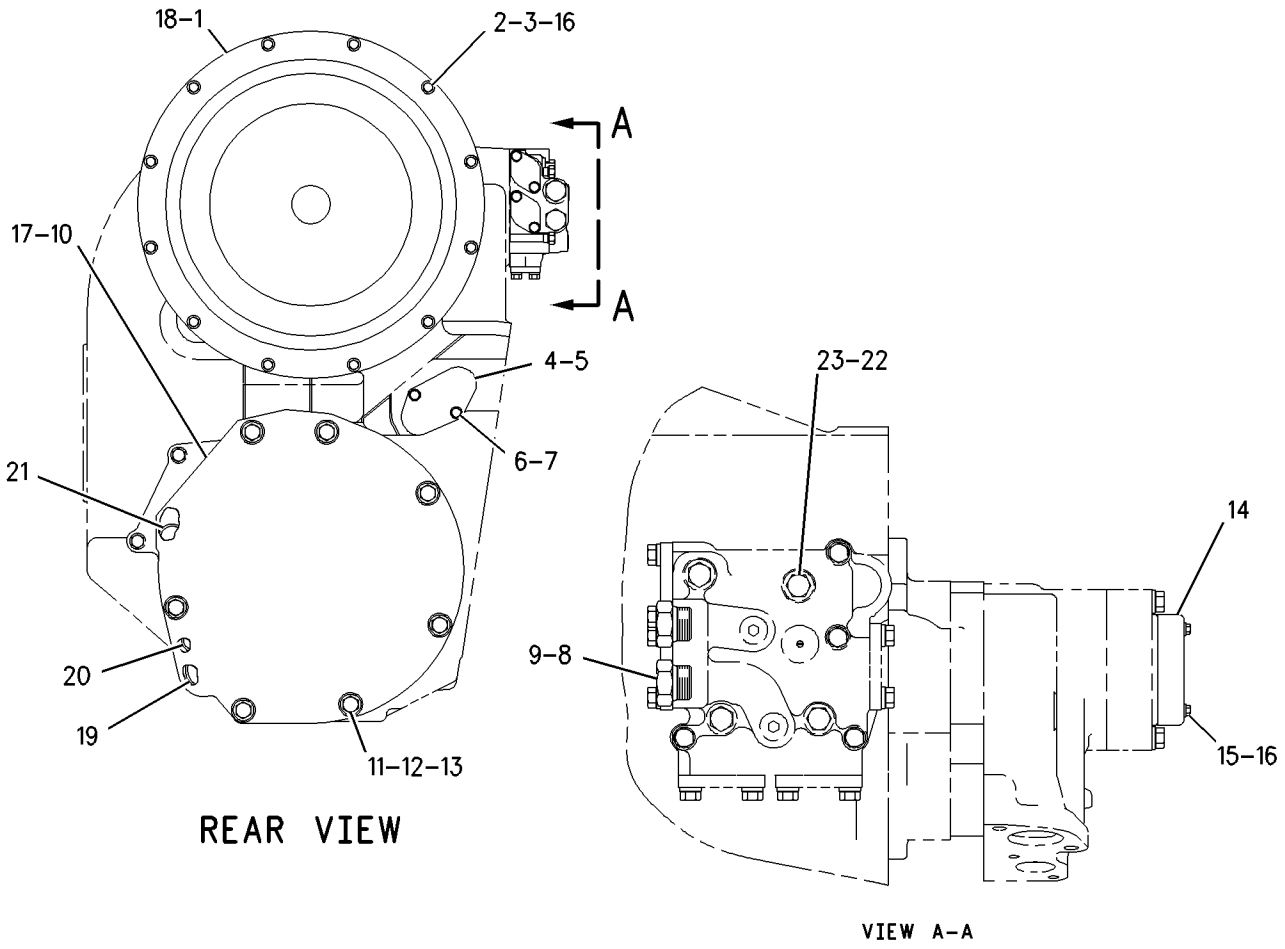

GRAPHIC #1 g00772068

POWER TRAIN

8D-5415 DIFFERENTIAL & BEVEL GEAR GP

S/N: ASE1-UP

PART OF 162-5606 GENERAL AR

SMCS-3256, 3258 **i00905518**

NOTE	REF NO	GRAPHIC REF	PART NUMBER	QTY	PART NAME 1 2 3 4 5 6 (PRODUCT LEVEL)	SEE PAGE
	1	1	**4D-1577**	1	SEAL-O-RING (380.59MM ID)	
	2	1	**8D-5379**	1	RING	
	3	1	**2S-1914**	1	SEAL-RING (.487MM ID)	
		1	**9D-8799**	1	RING	
	4	1	**8D-5106**	1	CAGE AS	
	5	1	**2D-6642**	1	BALL	
	6	1	**6G-4704**	1	NUT	
	7	1	**5P-3723**	1	CONE-ROLLER BEARING	
		1	**6D-7690**	1	CUP-ROLLER BEARING	
	8	1	**8D-4038**	2	LOCK	
	9	1	**6G-6273**	2	RING-SEAL	
Y	10	1	*8D-5405*	1	DIFFERENTIAL GP	282
	11	1	**6K-7917**	2	BOLT-LOCKING (1/2-13X1.00IN)	
	12	1	**5P-8245**	2	WASHER (3MM THK)	
	13	1	**3F-1523**	1	DOWEL	
	14	1	**030-0060**	1	CUP-ROLLER BEARING	
		1	**030-0061**	1	CONE-ROLLER BEARING	
	15	1	**6G-4703**	1	NUT	
	16	1	**8D-3946**	1	CAGE	
	17	1	**2R-0098**	1	SEAL-O-RING	
	18	1	**4K-0367**	11	NUT (5/8-11 THD)	
		1	**2S-5658**	11	WASHER-HARD (3.0MM THK)	
	19	1	**7F-8268**	1	SEAL-O-RING (53.57MM ID)	
		1	**4F-8946**	1	SEAL-O-RING (26.57MM ID)	
		1	**4F-7952**	1	SEAL-O-RING (37.7MM ID)	
	20	2	**8D-9309**	1	CARRIER AS-DIFFERENTIAL	
C		2	**2G-1314**	1	SLEEVE	
C	21	2	**2G-3988**	1	TUBE	
C	22	2	**0S-1756**	4	BOLT (3/4-10X4.25IN)	
	23	2	**8D-5384**	1	TUBE	
	24	2	**3D-8439**	10	STUD	
C	25	2	**5P-8248**	4	WASHER-HARD (3.5MM THK)	
	26	2	**8D-5434**	1	PLATE AS	
	27	2	**0L-1351**	2	BOLT	
		2	**8M-7640**	2	LOCK	
					—OR—	
C		2	**030-8535**	2	BOLT-LOCKING (3/8-16X.875IN)	
C		2	**5M-2894**	2	WASHER (2.5MM THK)	
	28	2	**109-5679**	1	PINION-BEVEL	
	29	2	**1J-2860**	1	CUP-ROLLER BEARING	
		2	**1J-4757**	1	CONE-BEARING	
	30	2	**6K-4186**	1	SEAL-LIP	
	31	2	**030-0060**	1	CUP-ROLLER BEARING	
		2	**030-0061**	1	CONE-ROLLER BEARING	
	32	2	**6B-5262**	1	PLUG-DRAIN	
C		2	**2A-3398**	1	GASKET	
	33	2	**4F-7507**	1	SEAL-O-RING	
	34	2	**4K-0367**	10	NUT (5/8-11 THD)	
C		2	**2S-5658**	10	WASHER-HARD (3.0MM THK)	
	35	2	**5F-7404**	1	LOCKNUT-BEARING	
		2	**5F-7403**	1	LOCK-NUT	
		2	**8D-5396**	1	WASHER	

C-CHANGE FROM PREVIOUS TYPE
Y-SEPARATE ILLUSTRATION

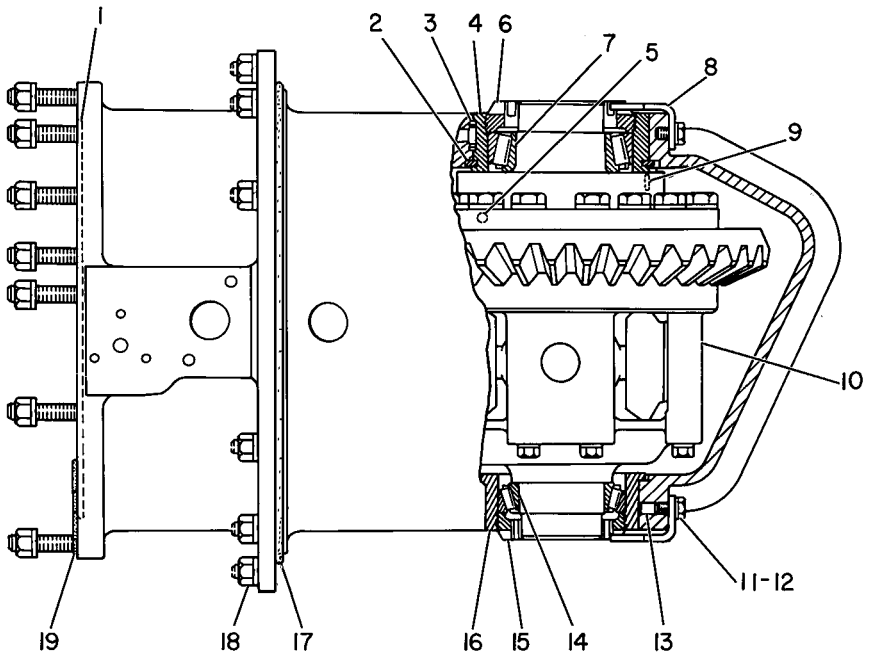

GRAPHIC #1 g00108460

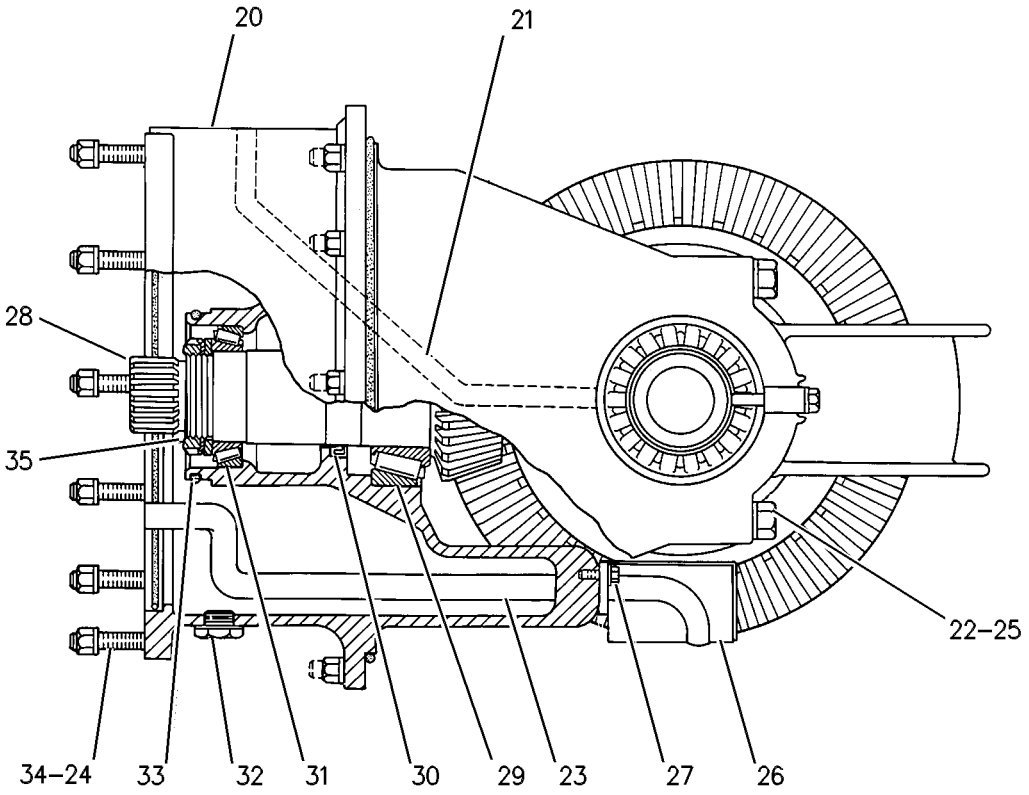

GRAPHIC #2 g00331455

MEMORANDA

8D-5405 DIFFERENTIAL GP

S/N: ASE1-UP

PART OF 8D-5415 DIFFERENTIAL & BEVEL GEAR GP

SMCS-3258 **i00128551**

NOTE	REF NO	GRAPHIC REF	PART NUMBER	QTY	PART NAME 1 2 3 4 5 6 (PRODUCT LEVEL)	SEE PAGE
	1	1	**8D-9482**	1	GEAR (24 TEETH)	
	2	1	**8D-5378**	2	WASHER	
	3	1	**111-8208**	1	SPIDER	
	4	1	**8D-5362**	4	WASHER	
	5	1	**8D-4282**	1	DISC	
	6	1	**8D-2116**	1	GEAR (63 TEETH)	
	7	1	**8D-5377**	1	HOUSING AS	
		1	**2D-6642**	1	BALL	
	8	1	**3D-6509**	2	DOWEL	
	9	1	**7D-8225**	1	SEAL-RING	
	10	1	**8D-4291**	1	PISTON	
	11	1	**7D-8226**	1	SEAL-RING	
C	12	1	**7D-8185**	9	DISC	
C	13	1	**6Y-7954**	8	DISC-FRICTION	
	14	1	**8D-9479**	1	GEAR (24 TEETH)	
	15	1	**1D-4609**	18	BOLT (3/4-10X3IN)	
		1	**2S-0115**	18	WASHER-HARD (5MM THK)	
	16	1	**8D-9480**	4	PINION AS	
					(EACH INCLUDES)	
	17	1	**8D-5343**	1	BEARING	
	18	1	**8D-4942**	1	HOUSING AS	
	19	1	**1D-4569**	8	BOLT (1/2-13X4.25IN)	
		1	**2M-0849**	8	WASHER (5MM THK)	
	20	1	**3D-6509**	6	DOWEL	

C-CHANGE FROM PREVIOUS TYPE

8D-5405 DIFFERENTIAL GP *(contd.)* **i00128551**

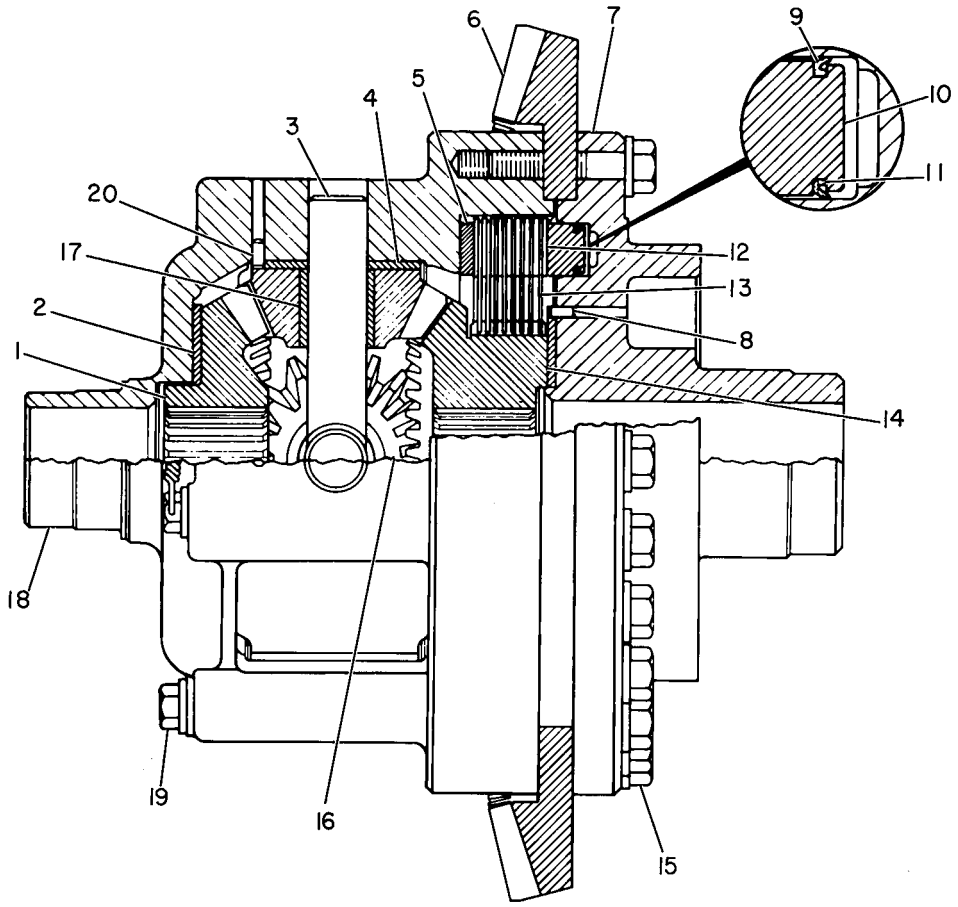

GRAPHIC #1 g00108158

183-6453 FILLER GP-POWER TRAIN OIL

S/N: ASE1-UP

PART OF 162-5606 GENERAL AR

SMCS-3005, 3081 **i01659826**

NOTE	REF NO	GRAPHIC REF	PART NUMBER	QTY	PART NAME 1 2 3 4 5 6 (PRODUCT LEVEL)	SEE PAGE
	1	1	**6G-9333**	1	CAP-FILLER (POWER TRAIN OIL)	
	2	1	**185-0159**	1	TUBE AS	
	3	1	**185-0160**	1	TUBE AS	
	4	1	**188-3115**	1	GAUGE AS (POWER TRAIN OIL)	
	5	1	**2M-5407**	1	GASKET	
	6	1	**5P-8167**	1	BOLT (3/8-16X0.625 IN)	
	7	1	**6V-1322**	1	BOLT (1/4-20X0.375 IN)	
	8	1	**7B-7501**	1	CLIP	
	9	1	**7F-8268**	1	SEAL-O-RING	
	10	1	**7X-3327**	2	BOLT-LOCKING (1/2-13X1.25 IN)	
	11	1	**8T-4205**	1	WASHER-HARD (7.2X14.5X2MM THK)	
	12	1	**8T-4223**	2	WASHER-HARD (13.5X25.5X3MM THK)	
	13	1	**8T-4224**	2	WASHER-HARD (8.8X16X2MM THK)	
	14	1	**8T-4896**	1	WASHER-HARD (10.2X18.5X2.5MM THK)	
M	15	1	**8T-5093**	2	BOLT-LOCKING (M8X1.25X25MM)	

M-METRIC PART

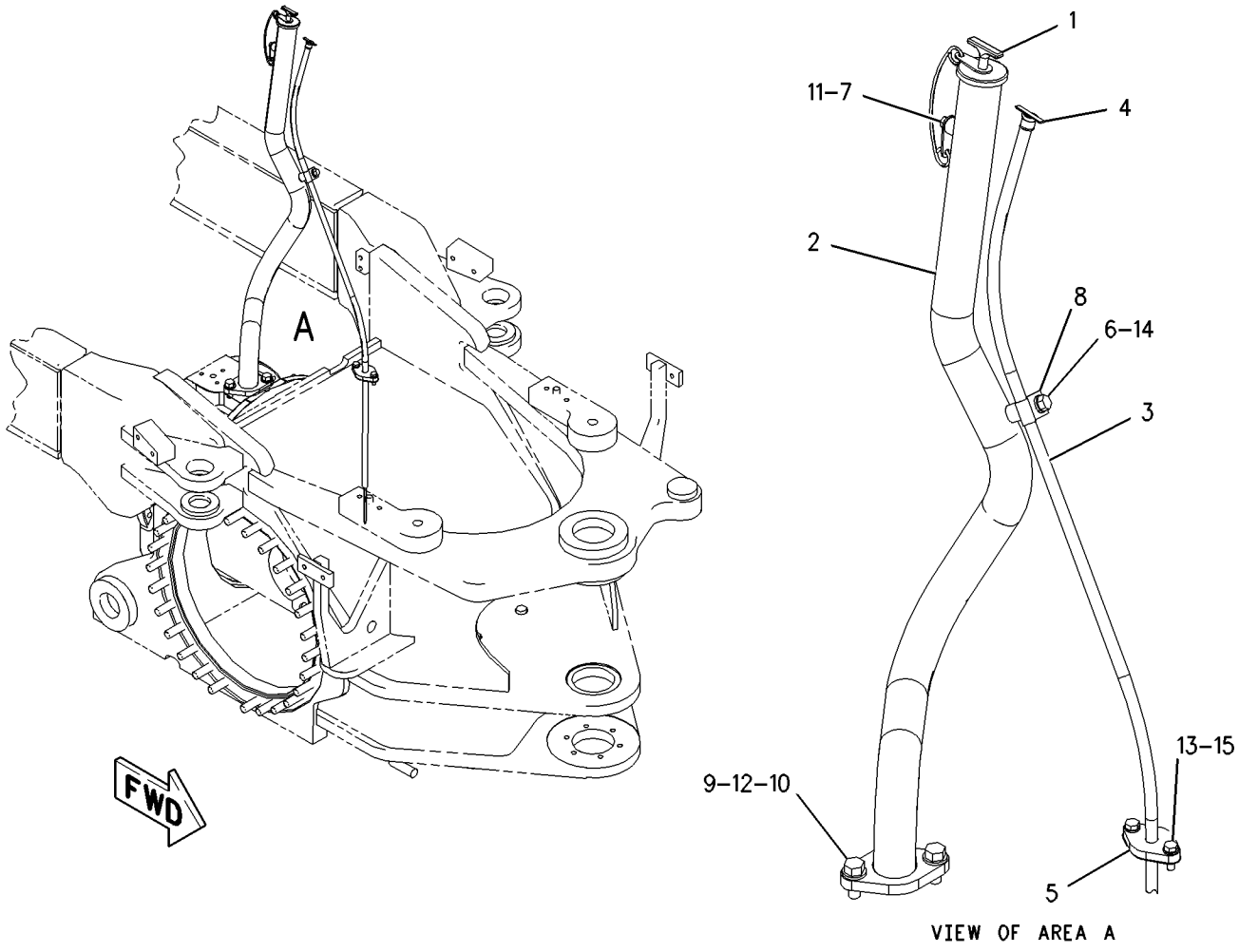

GRAPHIC #1 g00857972

172-4662 FILTER GP-OIL–TRANSMISSION

S/N: BSS1-UP

PART OF 183-6614 TRANSMISSION AR

SMCS-3067 **i01286302**

NOTE	REF NO	GRAPHIC REF	PART NUMBER	QTY	PART NAME 1 2 3 4 5 6 (PRODUCT LEVEL)	SEE PAGE
	1	1	**3T-0688**	1	SPOOL	
	2	1	**9M-1986**	1	SPRING	
	3	1	**9S-8008**	1	PLUG-O-RING (1 1/16-12 THD)	
	4	1	**9S-8004**	1	PLUG-O-RING (9/16-18 THD)	
	8	1	**9S-4191**	1	PLUG-O-RING (9/16-18 THD)	
	9	1	**3J-1907**	2	SEAL-O-RING (11.89MM ID)	
	10	1	**6P-2090**	1	BASE-TMSN OIL FILTER	
	11	1	**2S-8439**	1	SEAL-O-RING (123.19MM ID)	
	12	1	**3P-0887**	1	HOUSING AS	
	13	1	**132-8875**	1	FILTER ELEMENT-HYDRAULIC (POWER TRAIN)	
	14	1	**7S-6745**	1	RETAINER	
	15	1	**3S-8652**	1	SPRING (3.80IN)	
	16	1	**2J-6356**	1	RING-RETAINING	
	18	1	**3D-2824**	1	SEAL-O-RING (23.47MM ID)	

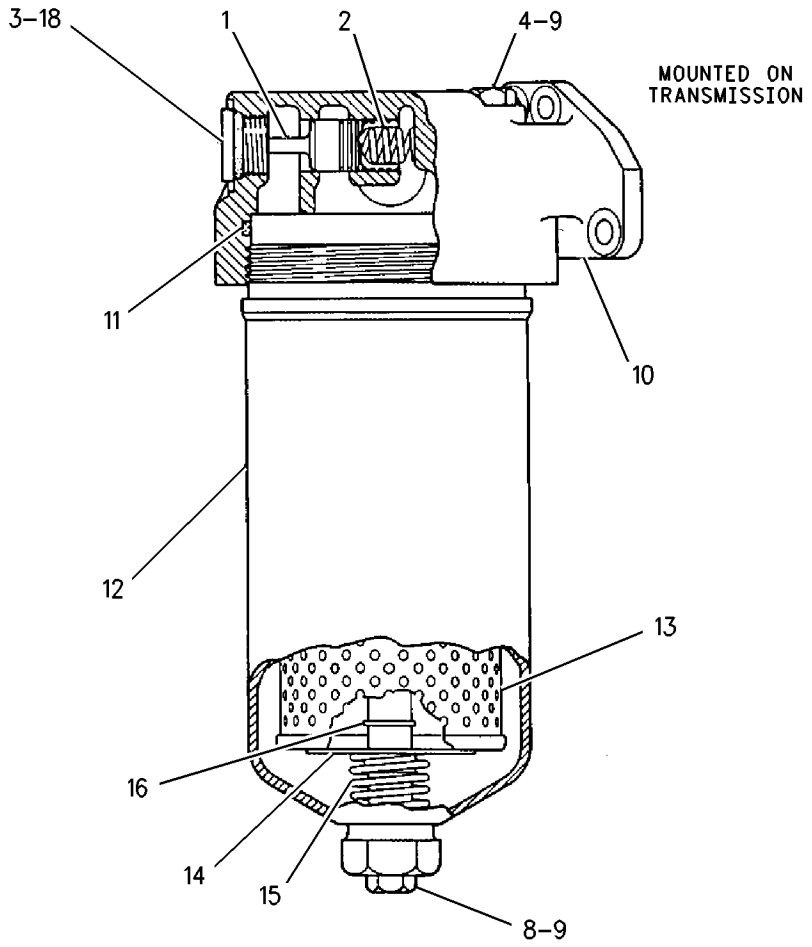

GRAPHIC #1 g00685517

POWER TRAIN

5T-7157 FINAL DRIVE GP

S/N: ASE1-UP

PART OF 162-5606 GENERAL AR

SMCS-4050 **i01329735**

NOTE	REF NO	GRAPHIC REF	PART NUMBER	QTY	PART NAME 1 2 3 4 5 6 (PRODUCT LEVEL)	SEE PAGE
	1	1	**9D-0701**	2	SHAFT AS-DRIVE	
	2	1	**8D-2531**	1	BEARING	
	3	1	**2L-0043**	2	RING-RETAINING	
	4	1	**8D-2532**	2	CARRIER-PLANETARY	
	5	1	**7D-0035**	8	PLATE	
C	6	1	**5M-2894**	38	WASHER-HARD (2.5MM THK)	
C	7	1	**030-8535**	16	BOLT-LOCKING (3/8-16X.875 IN)	
	8	1	**2R-0098**	2	SEAL-O-RING	
	9	1	**8D-2667**	2	WASHER	
	10	1	**6G-3207**	4	WASHER-THRUST	
	11	1	**8D-2528**	2	SHAFT-DRIVE	
	12	1	**5P-8248**	54	WASHER-HARD (3.5MM THK)	
	13	1	**2J-3506**	54	NUT-FULL (3/4-10 THD)	
	14	1	**8W-8332**	2	SPROCKET	
	15	1	**0S-1571**	10	BOLT (3/8-16X1.75 IN)	
	16	1	**8D-2452**	2	GEAR-SUN (18 TEETH)	
	17	1	**8D-2534**	2	NUT	
	18	1	**8F-6711**	2	SEAL-O-RING (56.74MM ID)	
	19	1	**8D-8231**	2	RETAINER	
	20	1	**3F-1396**	2	CONE-ROLLER BEARING	
	21	1	**8S-9076**	4	CUP-BEARING	
	22	1	**4D-3704**	32	WASHER-HARD (5MM THK)	
	23	1	**0S-1625**	32	BOLT (5/8-11X2.5IN)	
	24	1	**6G-1958**	2	RETAINER	
	25	1	**9L-5650**	2	SEAL-O-RING	
	26	1	**5T-7134**	4	RING-WEAR	
	27	1	**5T-7126**	2	HOUSING	
	28	1	**3L-3313**	2	SEAL-LIP (107.95MM ID)	
	29	1	**8S-9075**	2	CONE-BEARING	
	30	1	**6V-8384**	2	SEAL-LIP (409.58MM ID)	
	31	1	**5T-7130**	2	HOUSING	
	32	1	**8D-2519**	6	SHAFT-PLANETARY	
	33	1	**8D-2461**	2	GEAR-RING (72 TEETH)	
	34	1	**8D-2459**	6	GEAR-PLANETARY (26 TEETH)	
	35	1	**1P-3958**	12	ROLLER AS-SPECIAL	
C	36	1	**5D-0353**	12	BOLT-LOCKING (3/8-16X1 IN)	
	37	1	**8X-8377**	12	WASHER (47.57X8.55X2.92MM THK)	
	38	1	**7D-0028**	6	RETAINER	
C	39	1	**2S-0115**	56	WASHER-HARD (5MM THK)	
C	40	1	**8W-8333**	2	SPROCKET	
B	41	1	**6G-3213**	2	SHIM PACK (EACH INCLUDES 10 SHIMS)	
	42	1	**9F-2247**	2	PLUG-PIPE (1/8-27 NPTF)	
C	43	1	**8T-6469**	56	BOLT-LOCKING	

QUANTITIES SHOWN ARE THOSE REQUIRED FOR BOTH LH AND RH SIDES
B-USE AS REQUIRED
C-CHANGE FROM PREVIOUS TYPE

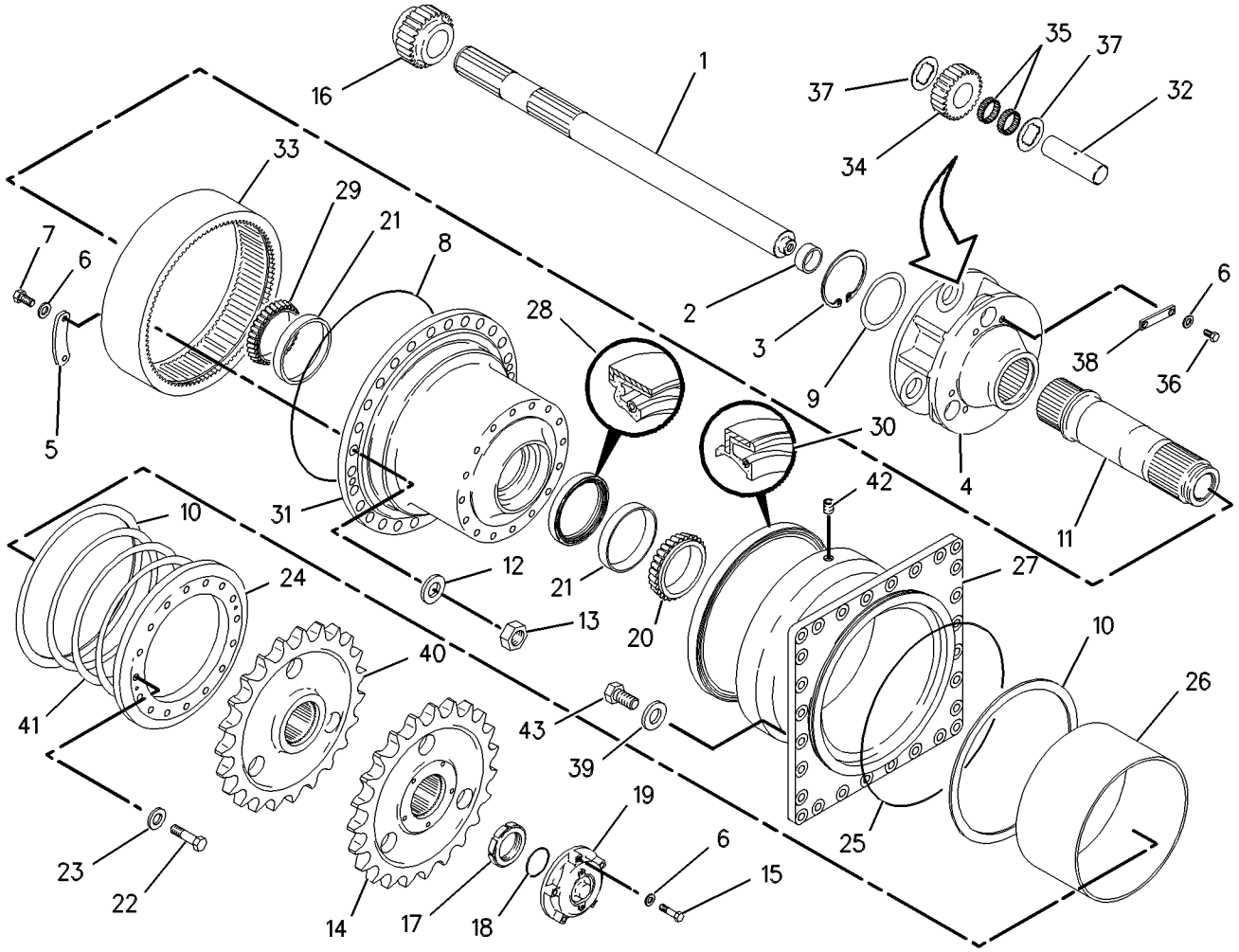

GRAPHIC #1 g00567425

POWER TRAIN

186-4873 GEAR & CASE GP-TRANSFER

S/N: BSS1-UP

PART OF 183-6614 TRANSMISSION AR

SMCS-3159 **i01645993**

NOTE	REF NO	GRAPHIC REF	PART NUMBER	QTY	PART NAME 1 2 3 4 5 6 (PRODUCT LEVEL)	SEE PAGE
	1	2	**9S-4191**	1	PLUG	
	2	2	**3J-1907**	1	SEAL-O-RING	
	3	1	**0S-1585**	7	BOLT (1/2-13X1.50 IN)	
	4	1	**1D-4719**	11	NUT-FULL (1/2-13 THD)	
	5	2	**2P-4423**	1	CAGE-BEARING	
Y	6	2	**2P-6899**	1	CASE GP-TRANSMISSION	259
	7	2	**4S-5824**	1	RETAINER	
	8	3	**6Y-1149**	1	GEAR-TRANSFER (74 TEETH)	
	9	2	**1P-2636**	1	CUP-BEARING	
	10	2	**1P-2662**	1	CONE-BEARING	
	11	2,3	**7K-5449**	5	CONE-BEARING	
	12	2,3	**7K-5448**	5	CUP-BEARING	
	13	2	**3D-8422**	1	SEAL-O-RING	
	14	2,3	**1A-2029**	18	BOLT (3/8-16X1.125 IN)	
	15	1,2,3	**5M-2894**	64	WASHER-HARD (10.2X18.5X2.5MM THK)	
	16	2	**3P-3440**	1	COUPLING AS	
		2	**1T-0068**	2	PIN-SPRING	
	17	2	**1F-6726**	1	TUBE-OIL	
B	18	2	**3P-0322**	1	SHIM PACK (INCLUDES 12 SHIMS)	
	19	1	**0S-1587**	7	BOLT (1/2-13X1.75 IN)	
	20	1	**2M-0849**	30	WASHER-HARD (13.5X25.5X5MM THK)	
	21	2,3	**8E-1204**	12	DISC-FRICTION	
	22	2,3	**3P-2855**	12	PLATE-CLUTCH	
	23	2,3	**3P-2856**	2	PLATE-CLUTCH PRESSURE	
	24	2,3	**3P-2852**	2	CLUTCH-HUB	
	25	2,3	**1P-9261**	2	SEAL-RING	
	26	2,3	**3D-9125**	2	CONE-BEARING	
	27	2,3	**3D-9126**	2	CUP	
	28	2,3	**9S-4185**	2	PLUG	
	29	2,3	**3K-0360**	2	SEAL-O-RING (16.36MM ID)	
	30	2,3	**1H-6227**	2	SEAL-O-RING	
	31	2,3	**4M-0189**	2	SEAL-O-RING	
	32	2,3	**3P-3287**	2	CAGE-BEARING	
B	33	2,3	**2P-4468**	2	SHIM PACK (INCLUDES 12 SHIMS)	
	34	2,3	**2P-7033**	2	SPACER-BEARING	
	35	2,3	**2P-7032**	2	SPACER-BEARING	
	36	2,3	**1K-6986**	2	RING-RETAINING	
	37	2,3	**186-4874**	2	PISTON-CLUTCH	
	38	2,3	**186-4875**	2	PLATE-PISTON	
	39	2,3	**6T-9196**	2	SEAL	
	40	2,3	**5H-8848**	2	SEAL-O-RING	
	41	2	**0L-2315**	1	BOLT (1/2-20X3.5 IN)	
	42	2	**4F-9653**	1	SEAL-O-RING	
	43	2,3	**9U-8876**	2	DRUM AS	
	44	2	**165-0002**	1	BEARING AS	
	45	2	**4F-9029**	1	SEAL	
	46	2	**3P-1656**	1	MANIFOLD	
	47	2	**3H-0107**	3	SEAL-O-RING	
	48	1	**9S-1366**	1	BOLT (1/2-13X2.5 IN)	
	49	2	**9F-1399**	1	SEAL-O-RING	
	50	2	**3K-2559**	1	RING-RETAINING	
	51	2	**9U-8661**	1	GEAR-TRANSFER (64 TEETH)	
	52	2,3	**8P-0492**	5	RING-SEAL	
	53	2	**6I-8286**	2	CUP-BEARING	
	54	2	**2P-7034**	1	SPACER-BEARING	
	55	2	**2P-7035**	1	SPACER-BEARING	

186-4873 GEAR & CASE GP-TRANSFER *(contd.)* i01645993

NOTE	REF NO	GRAPHIC REF	PART NUMBER	QTY	PART NAME 1 2 3 4 5 6 (PRODUCT LEVEL)	SEE PAGE
	56	2	**7D-8636**	2	CONE-BEARING	
	57	2	**6Y-0576**	1	SUPPORT AS	
		2	**2D-8426**	2	STUD-TAPERLOCK	
		2	**5M-1932**	9	STUD-TAPERLOCK (1/2-13X2.2 IN OAL)	
		2	**6Y-0306**	1	BEARING-SLEEVE	
		2	**9P-4857**	1	CARRIER-RING	
	58	2	**6W-4750**	1	LOCKNUT-STAKE	
	59	2	**6W-4749**	1	WASHER (75.5X106X5MM THK)	
	60	2	**9U-8660**	1	GEAR-IDLER (41 TEETH)	
	61	2	**8M-0903**	1	RING-RETAINING	
	62	2	**3P-2865**	1	SHAFT AS-IDLER	
		2	**8M-6521**	1	DOWEL	
	63	2,3	**2P-5820**	2	SEAL-O-RING	
	64	2,3	**2P-4534**	2	RING-SEAL	
	65	2,3	**3P-7019**	4	SEAL-METAL	
	66	2,3	**9P-4857**	5	CARRIER-RING	
	67	2,3	**1L-8497**	2	RING-SNAP	
	68	2,3	**3P-2854**	2	SHAFT AS-CLUTCH	
					(EACH INCLUDES)	
		2,3	**1S-9292**	2	DOWEL	
		2,3	**3P-7009**	1	PLUG-CUP	
		2,3	**8H-9208**	1	DOWEL	
	69	2,3	**7J-8893**	2	CONE-BEARING	
	70	2,3	**7J-8894**	2	CUP-BEARING	
	71	2,3	**0S-1595**	16	BOLT (1/2-13X1.25 IN)	
	72	2,3	**4M-5893**	12	SPRING	
	73	2	**6Y-1148**	1	GEAR-TRANSFER (82 TEETH)	
	74	2	**6Y-1152**	1	GEAR (42 TEETH)	
	75	1	**1P-8654**	2	EYE-LIFTING	
	76	1	**0S-1589**	2	BOLT (5/8-11X1.75 IN)	
	77	1	**4D-3704**	2	WASHER-HARD (17X30X5MM THK)	
	78	1	**9G-5127**	1	BREATHER (TRANSMISSION)	
	79	1	**3B-6553**	1	ELBOW	
	80	1,3	**2H-3932**	5	SEAL-O-RING	
	81	1	**9S-8009**	3	PLUG	
	82	1	**4K-1388**	3	SEAL-O-RING	
	83	1	**3P-3251**	1	COVER-INSPECTION	
	84	1	**3P-3252**	1	GASKET	
	85	1	**6V-8801**	12	NUT (3/8-16 THD)	
	86	1	**6T-1235**	1	GASKET	
	87	1	**6T-1233**	1	COVER AS	
	88	1	**0S-1594**	30	BOLT (3/8-16X1 IN)	
	89	3	**4S-8603**	1	TUBE AS (MAGNETIC SCREEN)	
	90	3	**4S-8598**	1	SCREEN-SUCTION (TRANSMISSION)	
	91	3	**3P-7160**	1	COVER AS	
		3	**7B-3028**	2	SCREW-DRIVE (NO 4X3/16 IN)	
		3	**7S-2962**	1	WASHER-SPRING (52.3X82.5X9.1MM THK)	
	92	1	**0S-1590**	4	BOLT (3/8-16X2 IN)	
	93	3	**2N-0931**	1	GASKET	
	94	1	**3S-7781**	1	GASKET	
	95	1	**8S-9130**	1	SCREEN-SUCTION (TRANSMISSION)	
	96	1	**8S-9129**	1	FILTER-MAGNETIC (TRANSMISSION)	
	97	1	**4H-5440**	1	COVER-PUMP INLET	
	98	1	**4F-7952**	1	SEAL-O-RING	
	99	1	**7F-8268**	1	SEAL-O-RING	
	100	3	**2N-7609**	1	BEARING-ROLLER (25.4 MM OD)	
	101	3	**103-5962**	1	BEARING AS-NEEDLE	
	102	3	**3P-3424**	1	SHAFT-GOVERNOR CONTROL	
	103	3	**3P-3427**	1	LEVER	

186-4873 GEAR & CASE GP-TRANSFER *(contd.)* i01645993

NOTE	REF NO	GRAPHIC REF	PART NUMBER	QTY	PART NAME 1 2 3 4 5 6 (PRODUCT LEVEL)	SEE PAGE
	104	3	**3P-3426**	1	LEVER	
	105	3	**3K-4897**	2	PIN-SPRING	
	106	3	**4T-2069**	1	PLUG-DRAIN (TRANSFER GEAR CASE)	
	107	2,3	**6P-1736**	2	WASHER (55X76X2.75MM THK)	
	108	2,3	**164-9618**	2	LOCKNUT-BEARING	
	109	1	**1A-1460**	4	BOLT (1/2-13X2 IN)	
	110	1	**0S-1621**	2	BOLT (1/2-13X1 IN)	
	111	1	**5P-8245**	2	WASHER-HARD (13.5X25.5X3MM THK)	
	112	1	**208-5155**	1	PLATE AS	
	113	1	**208-5159**	1	PLATE AS	
	114	1	**208-5157**	1	PLATE AS	

B-USE AS REQUIRED
Y-SEPARATE ILLUSTRATION

186-4873 GEAR & CASE GP-TRANSFER *(contd.)* i01645993

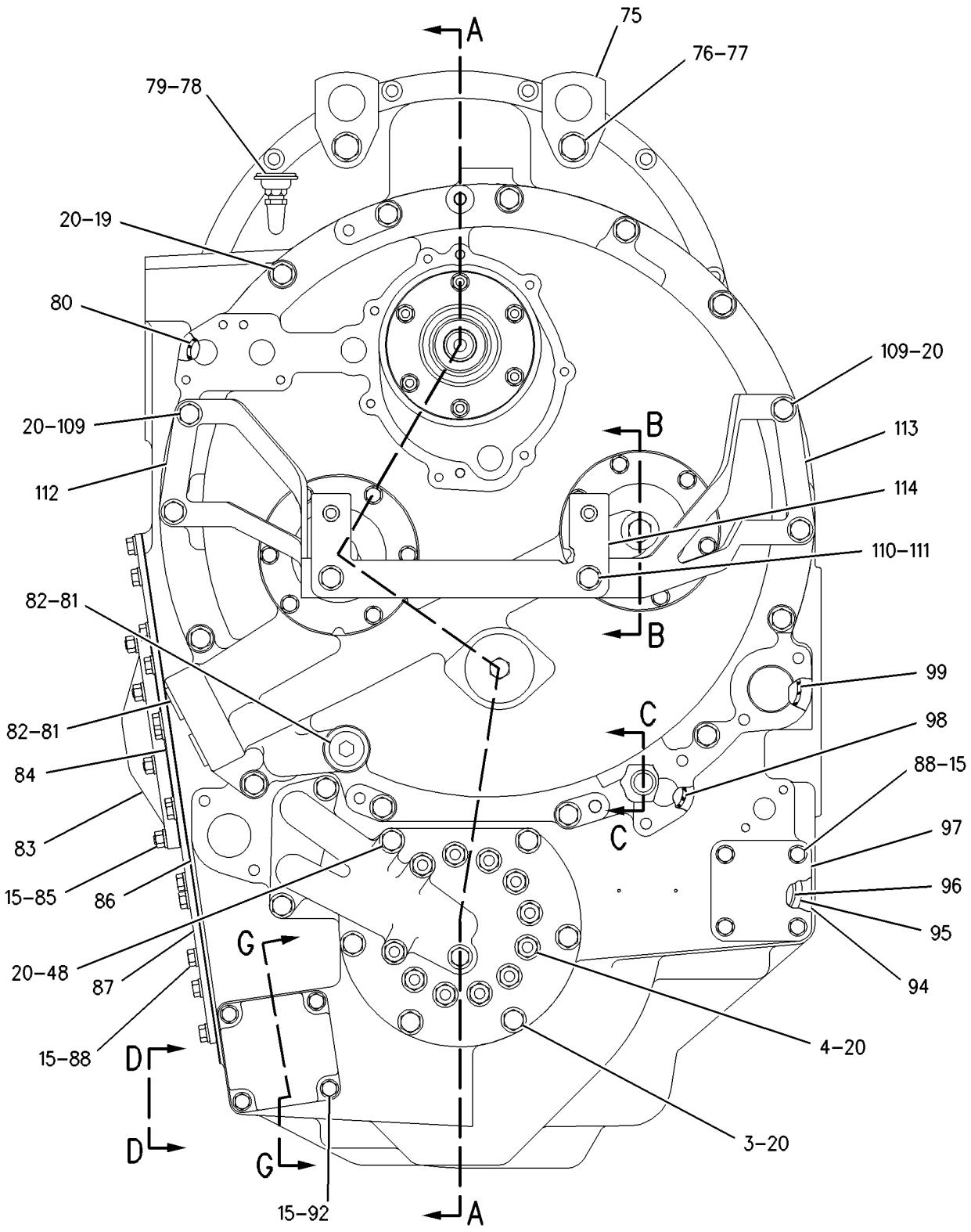

REFER TO ALL ILLUSTRATIONS OF THIS GROUP FOR AUXILIARY VIEWS

GRAPHIC #1 g00861317

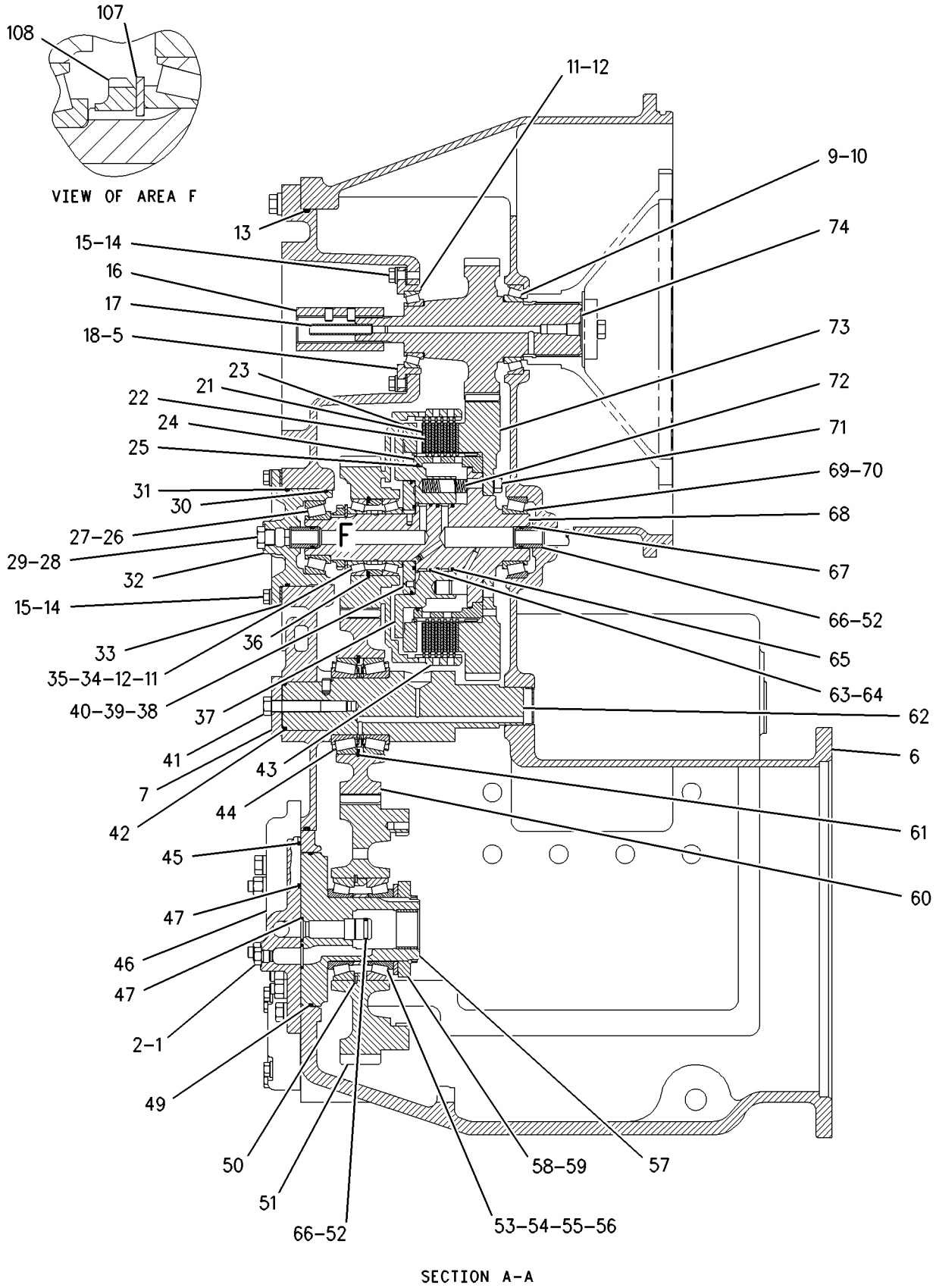

SECTION A-A

GRAPHIC #2 g00861320

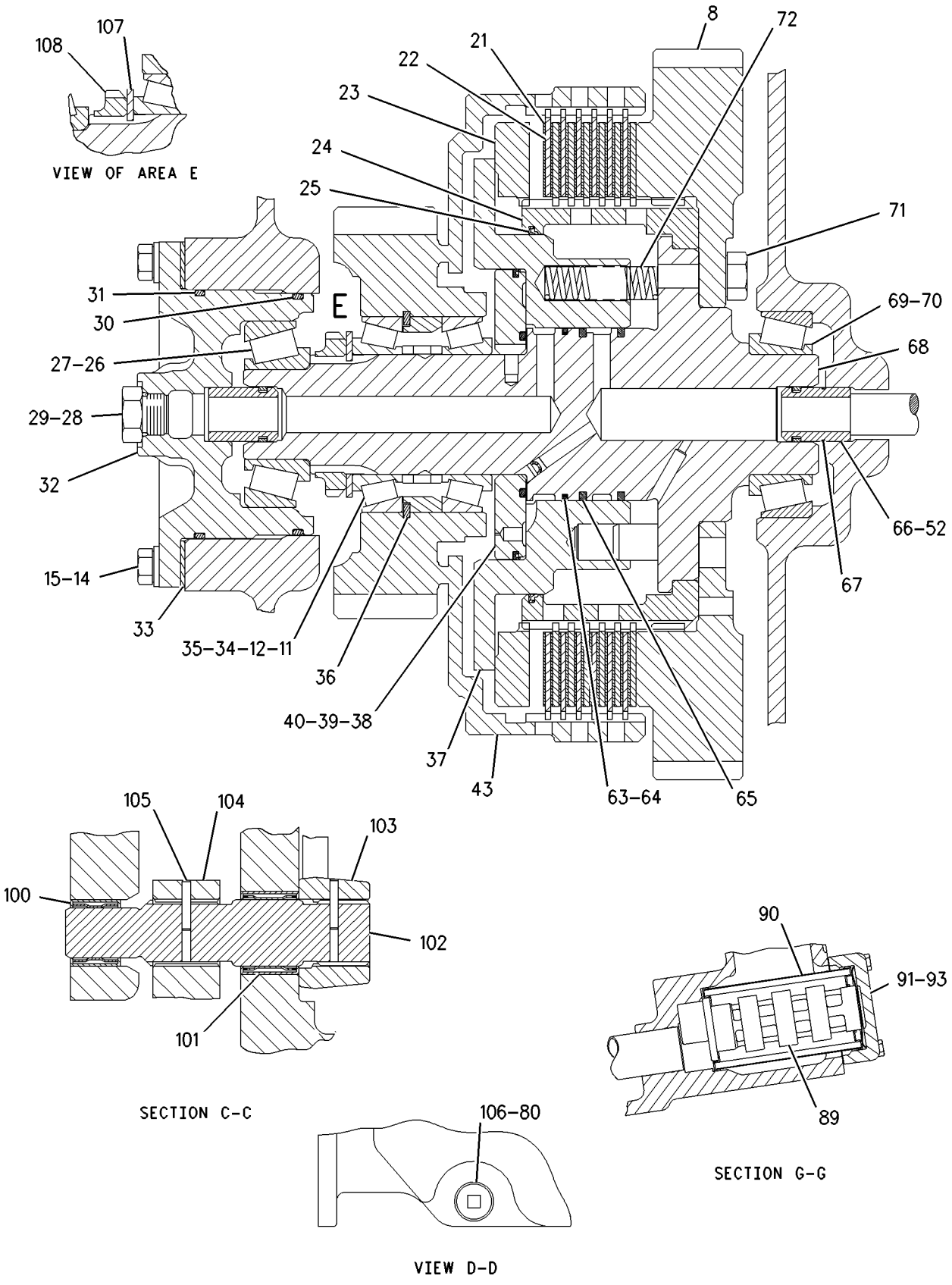

GRAPHIC #3 g00861321

6I-9851 LINES GP-POWER TRAIN OIL

S/N: BSS1-UP

PART OF 183-6614 TRANSMISSION AR

SMCS-3016 **i00128466**

NOTE	REF NO	GRAPHIC REF	PART NUMBER	QTY	PART NAME 1 2 3 4 5 6 (PRODUCT LEVEL)	SEE PAGE
	1	1	**0S-1587**	4	BOLT (1/2-13X1.75IN)	
	2	1	**5P-8245**	10	WASHER (3MM THK)	
	3	1	**5F-8000**	2	SEAL-O-RING (50.39MM ID)	
	4	1	**6I-9108**	1	TUBE AS	
	5	1	**5H-2767**	1	SEAL-O-RING	
	6	1	**0S-1588**	2	BOLT (3/8-16X1.25IN)	
	7	1	**5M-2894**	17	WASHER (2.5MM THK)	
	8	1	**6I-9107**	1	TUBE AS	
	9	1	**0V-0375**	2	BOLT (1/2-13X3.25IN)	
	10	1	**7F-8267**	1	SEAL-O-RING (47.2MM ID)	
	11	1	**0S-1590**	2	BOLT (3/8-16X2IN)	
	12	1	**6F-6673**	4	SEAL-O-RING (31.34MM ID)	
	13	1	**4F-7952**	2	SEAL-O-RING (37.7MM ID)	
	14	1	**7B-3235**	2	BOLT (1/2-13X1.375IN)	
	15	1	**2P-7069**	1	TUBE AS	
	16	1	**1A-2029**	7	BOLT (3/8-16X1.125IN)	
	17	1	**0S-1573**	2	BOLT (1/2-13X4IN)	
	18	1	**8P-1257**	1	TUBE AS	
	19	1	**0S-1594**	4	BOLT (3/8-16X1IN)	
	20	1	**7F-8268**	1	SEAL-O-RING (53.57MM ID)	
	21	1	**7F-3425**	2	BOLT (3/8-16X5.75IN)	
	22	1	**3P-0884**	1	GASKET-TRANSMISSION PUMP	

6I-9851 **LINES GP-POWER TRAIN OIL** ***(contd.)*** **i00128466**

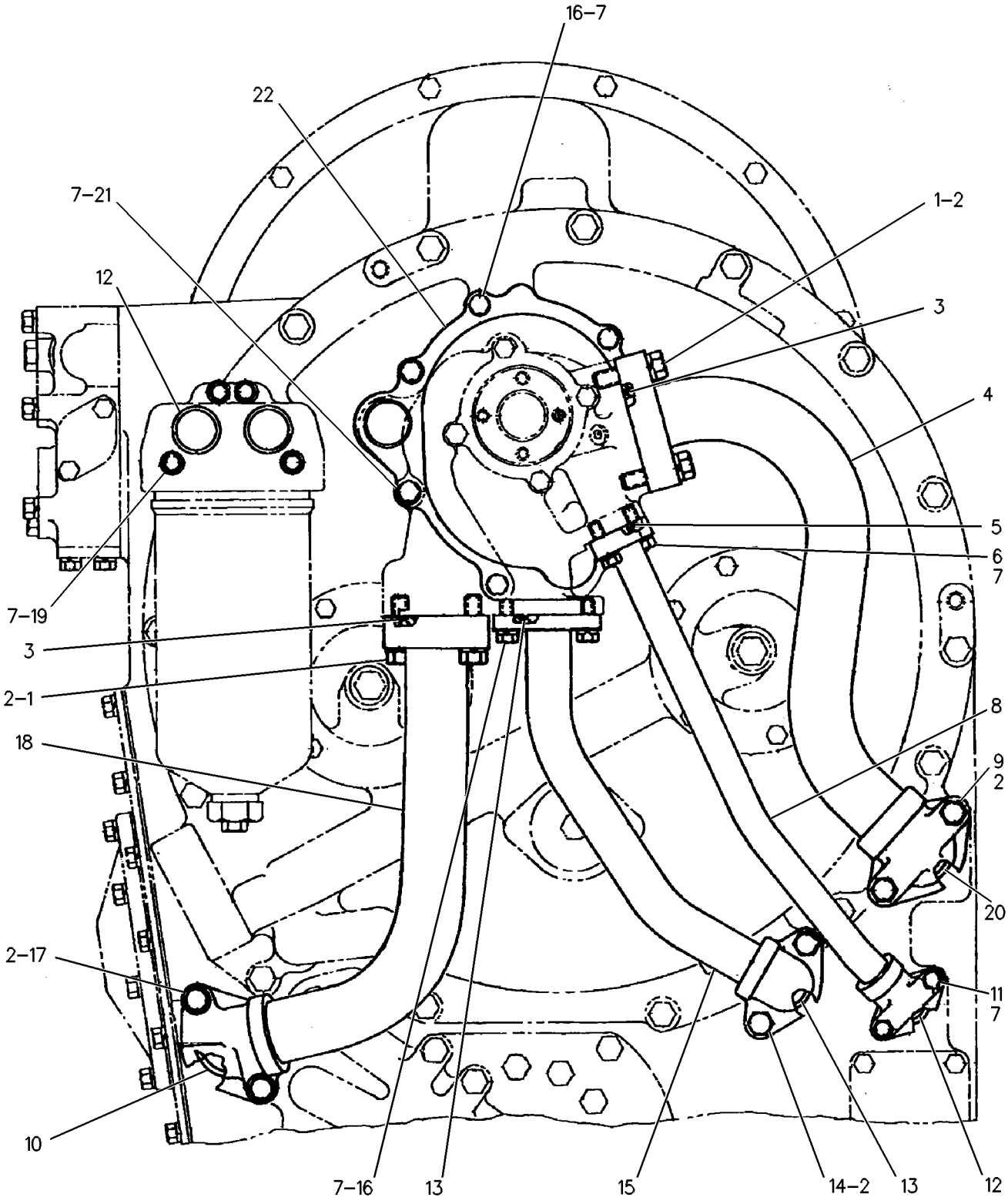

GRAPHIC #1 g00108980

142-6205 MOUNTING GP-WHEEL

S/N: ASE1-UP

PART OF 162-5606 GENERAL AR

SMCS-4201 **i00826475**

NOTE	PART NUMBER	QTY	PART NAME 1 2 3 4 5 6 (PRODUCT LEVEL)	SEE PAGE
	3J-8281	60	BOLT (1 1/8-7X2IN)	
	3S-1349	60	WASHER (6.0MM THK)	

MEMORANDA

POWER TRAIN

2P-5800 PLANETARY GP-TRANSMISSION

S/N: BSS1-UP

PART OF 183-6614 TRANSMISSION AR

SMCS-3160 **i01038485**

NOTE	REF NO	GRAPHIC REF	PART NUMBER	QTY	PART NAME 1 2 3 4 5 6 (PRODUCT LEVEL)	SEE PAGE
	1	1	**2P-4426**	3	SHAFT AS-PLANETARY	
					(EACH INCLUDES)	
		1	**2A-3746**	1	PLUG-CUP	
	2	1	**4M-3915**	6	BEARING-CAGED	
	3	1	**2P-1098**	1	RETAINER	
	4	1	**1K-6995**	2	LOCKRING	
C	5	1	**6Y-0578**	1	SHAFT AS	
	6	1	**3P-1603**	1	TUBE	
	7	1	**6V-1720**	1	PLATE-SERIAL NUMBER (TRANSMISSION S/N)	
		1	**7B-3028**	2	SCREW-DRIVE (#4X3/16IN)	
	8	1	**3P-0896**	1	RING-RETAINING	
	9	1	**2P-4522**	1	GEAR-SUN (33 TEETH)	
	10	1	**5M-5018**	14	BEARING-ROLLER (43.218 MM OD X 25.273)	
	11	1	**2P-4429**	3	SHAFT AS-PLANETARY	
					(EACH INCLUDES)	
		1	**2A-3746**	1	PLUG-CUP	
	12	1	**3S-2708**	10	PIN-SPRING	
	13	1	**3P-0862**	1	CARRIER-INPUT	
	14	1	**2P-4431**	1	GEAR-RING (84 TEETH)	
	15	1	**8E-8304**	14	DISC-THRUST	
	16	1	**7G-3455**	3	GEAR-PLANETARY (24 TEETH)	
	17	1	**2P-4542**	1	SPACER	
	18	1	**2K-5986**	10	PIN-SPRING	
	19	1	**5M-2055**	16	BEARING-CAGED	
	20	1	**7G-3454**	8	GEAR (17 TEETH)	
	21	1	**4S-8670**	8	SHAFT-PLANETARY	
	22	1	**8E-8297**	16	DISC-THRUST	
	23	1	**2P-4523**	1	GEAR-SUN (47 TEETH)	
	24	1	**2P-4433**	2	GEAR-RING (81 TEETH)	
	25	1	**3P-1609**	1	CARRIER-PLANETARY	
	26	1	**3P-0895**	1	BALL BEARING	
	27	1	**030-8535**	8	BOLT-LOCKING (3/8-16X.875IN)	
	28	1	**3P-0888**	1	CAGE-BEARING	
	29	1	**9F-8477**	1	RING-METAL SEAL	
C	30	1	**6Y-0580**	1	CARRIER-PLANETARY	
	31	1	**5P-7602**	1	BALL BEARING	
	32	1	**2P-1097**	1	RETAINER	
		1	**8H-8830**	1	RING-RETAINING	
	33	1	**3P-1600**	1	CAGE AS	
		1	**4S-8537**	1	DOWEL	
	34	1	**3P-1666**	1	GEAR-SUN (47 TEETH)	
	35	1	**2P-5694**	1	CAGE-BEARING	
	36	2	**2P-4435**	1	PLATE	
	37	2	**3P-6880**	1	HOUSING AS-CLUTCH	
		2	**5M-7937**	4	DOWEL	
	38	2	**3P-2373**	2	HOUSING AS-CLUTCH	
					(EACH INCLUDES)	
		2	**5M-7937**	4	DOWEL	
	39	2	**2P-4363**	1	HOUSING-CLUTCH	
	40	2	**9M-4355**	12	DAMPER-BOLT	
	41	2	**6Y-2027**	15	DISC-FRICTION	
R	42	2	**8P-1656**	14	PLATE-CLUTCH	
	43	2	**3P-1652**	1	HOUSING AS	
		2	**5F-4250**	2	PIN (50.96MM 2.16IN LG)	
		2	**5H-8985**	10	PIN-SPRING (12.7MM .50IN LG)	
	44	2	**4M-1641**	4	DOWEL-REACTION	

2P-5800 PLANETARY GP-TRANSMISSION *(contd.)* i01038485

NOTE	REF NO	GRAPHIC REF	PART NUMBER	QTY	PART NAME 1 2 3 4 5 6 (PRODUCT LEVEL)	SEE PAGE
	45	2	**3P-1651**	1	PISTON AS	
		2	**5H-8985**	10	PIN-SPRING	
	46	2	**3P-1601**	4	PLUNGER	
	47	2	**2B-2254**	4	SPRING	
	48	2	**7T-9647**	1	PISTON-CLUTCH	
	49	2	**3P-2692**	1	CAGE-BEARING	
	50	2	**0T-0055**	30	BOLT (3/8-16X4.25IN)	
		2	**5M-2894**	30	WASHER (2.5MM THK)	
	51	2	**3P-1626**	1	HUB AS-CLUTCH	
	52	2	**3P-0817**	5	SPRING-DISC	
	53	2	**3P-0814**	1	RING-SEAL	
	54	2	**9S-4368**	1	RING-RETAINING	
	55	2	**3P-0815**	1	SEAL-O-RING	
		2	**3P-0800**	1	RING-SEAL	
	56	2	**3P-2672**	1	BALL BEARING	
	57	2	**9H-3452**	1	RING-RETAINING	
C	58	2	**1T-0414**	6	BOLT-12 POINT HEAD (5/16-18X1)	
C		2	**9M-1974**	6	WASHER-HARD (2MM THK)	
C	59	2	**6Y-0303**	1	CAGE AS-BEARING	
C	60	2	**6Y-0306**	1	BEARING-SLEEVE (45.961 MM OD X 25.4 MM)	
C	61	2	**6Y-0583**	1	FLANGE AS	
	62	2	**8S-3426**	1	DOWEL	
C	63	2	**1P-9252**	1	RING-SEAL	
	64	2	**3P-5955**	5	DISC-FRICTION	
	65	3	**3B-1915**	10	BOLT (3/8-16X1.375IN)	
		3	**5M-2894**	10	WASHER (2.5MM THK)	
	66	3	**2P-5860**	12	BOLT (1/2-13X20.375IN)	
		3	**2M-0849**	12	WASHER (5MM THK)	
	67	3	**3P-1691**	1	HOUSING AS	
	68	3	**2K-6921**	4	DOWEL (57MM OAL)	
	69	3	**3F-3442**	1	DOWEL (49MM OAL)	
	70	3	**0S-1588**	2	BOLT (3/8X1.25)	
	71	3	**6D-0692**	1	SEAL-O-RING (367.89MM ID)	
	72	3	**6Y-5914**	6	DISC-FRICTION	
	73	3	**3P-0801**	6	PLATE-CLUTCH	
C	74	3	**6Y-0579**	1	COUPLING	
	75	3	**3P-0860**	20	INSERT	
	76	3	**5F-6199**	10	BALL	
	77	3	**1M-8651**	1	RING-RETAINING	
	78	3	**7M-1199**	10	SPRING	
	79	3	**7G-3453**	4	GEAR-PLANETARY (28 TEETH)	
	80	3	**3P-0894**	4	SHAFT AS-PLANETARY	
					(EACH INCLUDES)	
		3	**3S-0036**	1	PLUG-CORE	
	81	3	**3P-1616**	1	GEAR-RING (82 TEETH)	
	82	3	**2P-4511**	5	RING-SEAL	
	83	3	**9M-6166**	1	RING-RETAINING	
	84	3	**1M-3151**	5	DOWEL-REACTION	
	85	3	**3P-0898**	1	BALL BEARING	
	86	3	**5M-7878**	1	RING-SNAP	
	87	3	**3P-7042**	1	HOUSING-CLUTCH	
	88	3	**4M-9592**	40	SPRING	
	89	3	**3P-7041**	1	GEAR-RING (81 TEETH)	
	90	3	**1P-9216**	5	RING-SEAL	
	91	3	**2P-4510**	5	PISTON-CLUTCH	
	92	3	**1M-3150**	10	DOWEL-REACTION	
	93	3	**7G-3456**	3	GEAR-PLANETARY (31 TEETH)	
	94	3	**8E-8307**	6	DISC-THRUST	
	95	3	**3S-8029**	3	RETAINER	

2P-5800 **PLANETARY GP-TRANSMISSION** *(contd.)* **i01038485**

NOTE	REF NO	GRAPHIC REF	PART NUMBER	QTY	PART NAME 1 2 3 4 5 6 (PRODUCT LEVEL)	SEE PAGE
		3	**0T-0102**	6	BOLT (3/8-16X0.625IN)	
		3	**2S-0607**	3	LOCK-NUT	
	96	3	**7F-8268**	1	SEAL-O-RING (53.57MM ID)	
	97	3	**4F-8946**	1	SEAL-O-RING (26.57MM ID)	
	98	3	**4F-7952**	1	SEAL-O-RING (37.7MM ID)	

C-CHANGE FROM PREVIOUS TYPE
R-REMFG PART MAY BE AVAILABLE

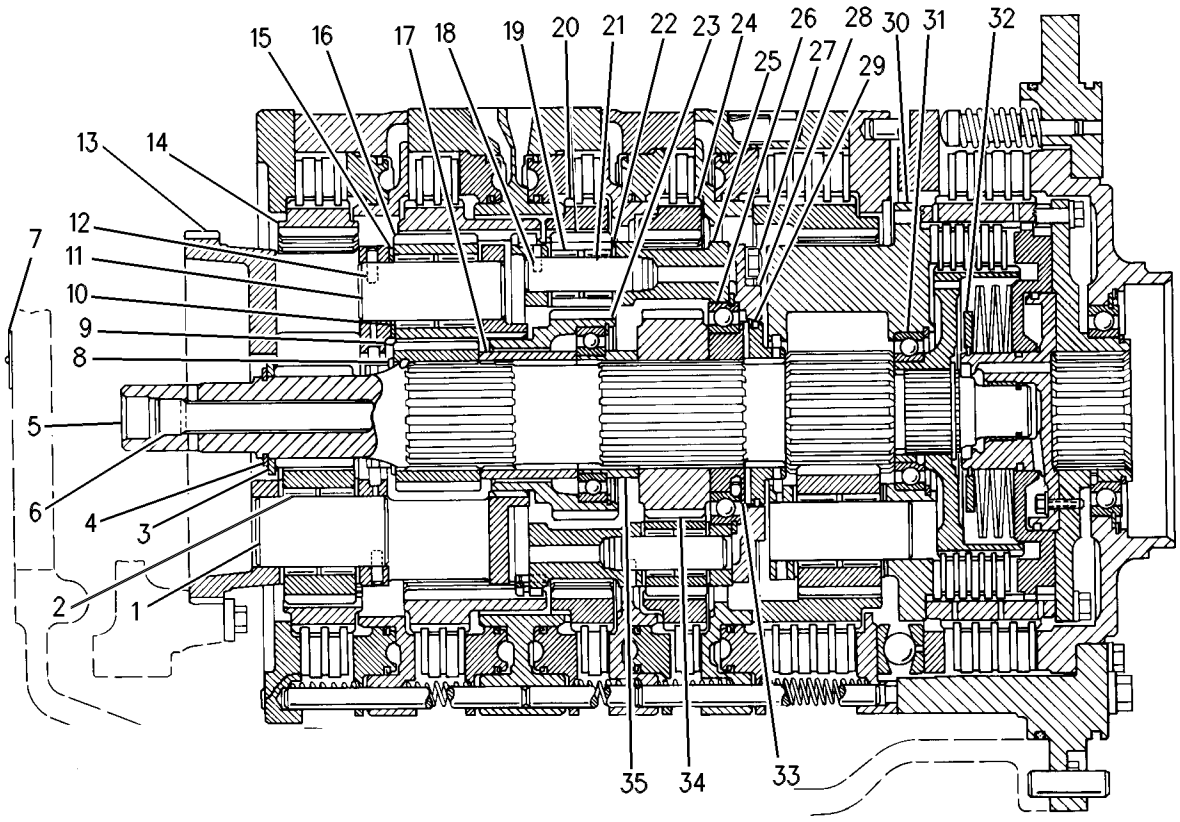

GRAPHIC #1 g00459436

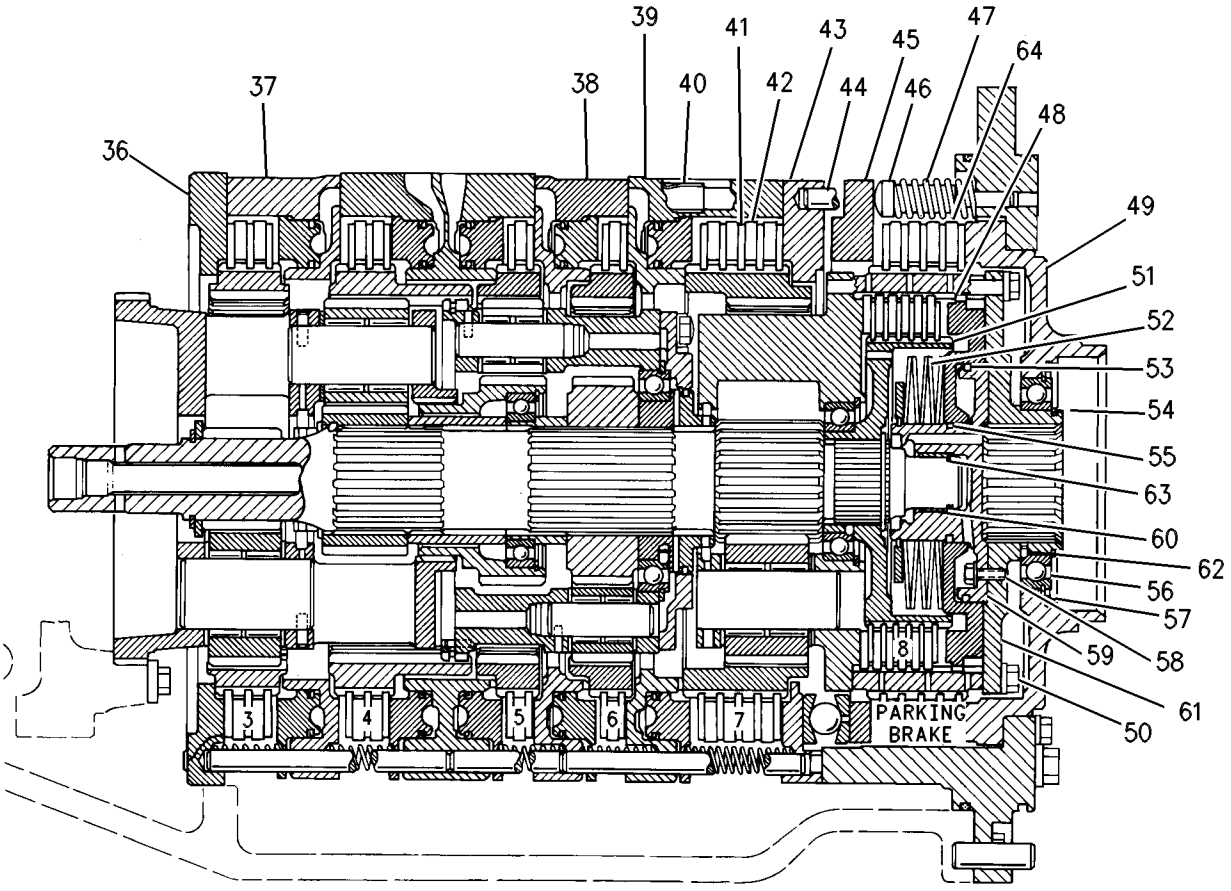

GRAPHIC #2

g00459618

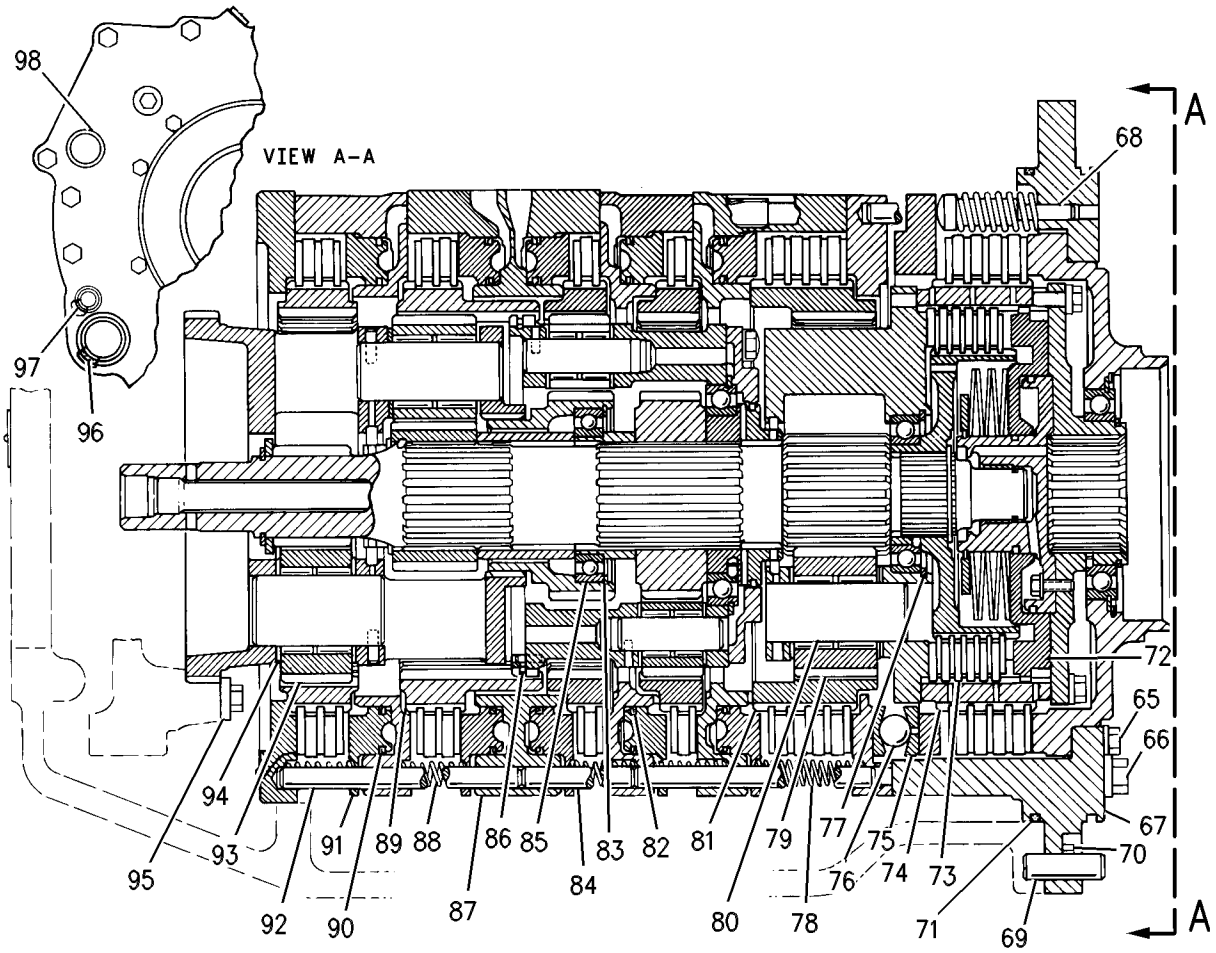

GRAPHIC #3 g00459628

MEMORANDA

178-9178 PUMP GP-GEAR–2 SECTION

S/N: BSS1-UP

PART OF 183-6614 TRANSMISSION AR

SMCS-3066 **i01671204**

NOTE	REF NO	GRAPHIC REF	PART NUMBER	QTY	PART NAME 1 2 3 4 5 6 (PRODUCT LEVEL)	SEE PAGE
	1	1	**2P-5771**	1	COVER AS-OIL PUMP	
	2	1	**3S-0004**	6	WASHER (0.406X0.728X0.09 IN THK)	
	4	1	**8E-8847**	1	BODY AS-OIL PUMP	
		1	**8M-8489**	2	DOWEL	
	5	1	**8E-8850**	1	GEAR AS-OIL PUMP (8 TEETH)	
		1	**2B-9373**	1	KEY-WOODRUFF	
	6	1	**8E-8904**	2	GEAR (8 TEETH)	
	7	1	**9S-1018**	4	WASHER (9.73X19.05X.84MM THK)	
	8	1	**178-9175**	1	COVER	
	9	1	**178-9176**	1	GEAR AS-OIL PUMP (8 TEETH)	
		1	**2B-9373**	1	KEY-WOODRUFF	
	10	1	**179-1319**	1	MANIFOLD AS	
		1	**8M-8489**	2	DOWEL	
	12	1	**0S-1594**	4	BOLT (3/8-16X1 IN)	
	13	1	**0S-1608**	4	BOLT (3/8-16X3.75 IN)	
	14	1	**1B-8736**	1	KEY-WOODRUFF	
	15	1	**1H-7339**	1	SEAL-O-RING	
	16	1	**2D-8009**	2	SEAL-O-RING	
	17	1	**5M-2894**	4	WASHER-HARD (10.2X18.5X2.5MM THK)	
	18	1	**8S-9191**	2	BOLT (3/8-16X4 IN)	

178-9178 PUMP GP-GEAR ***(contd.)*** **i01671204**

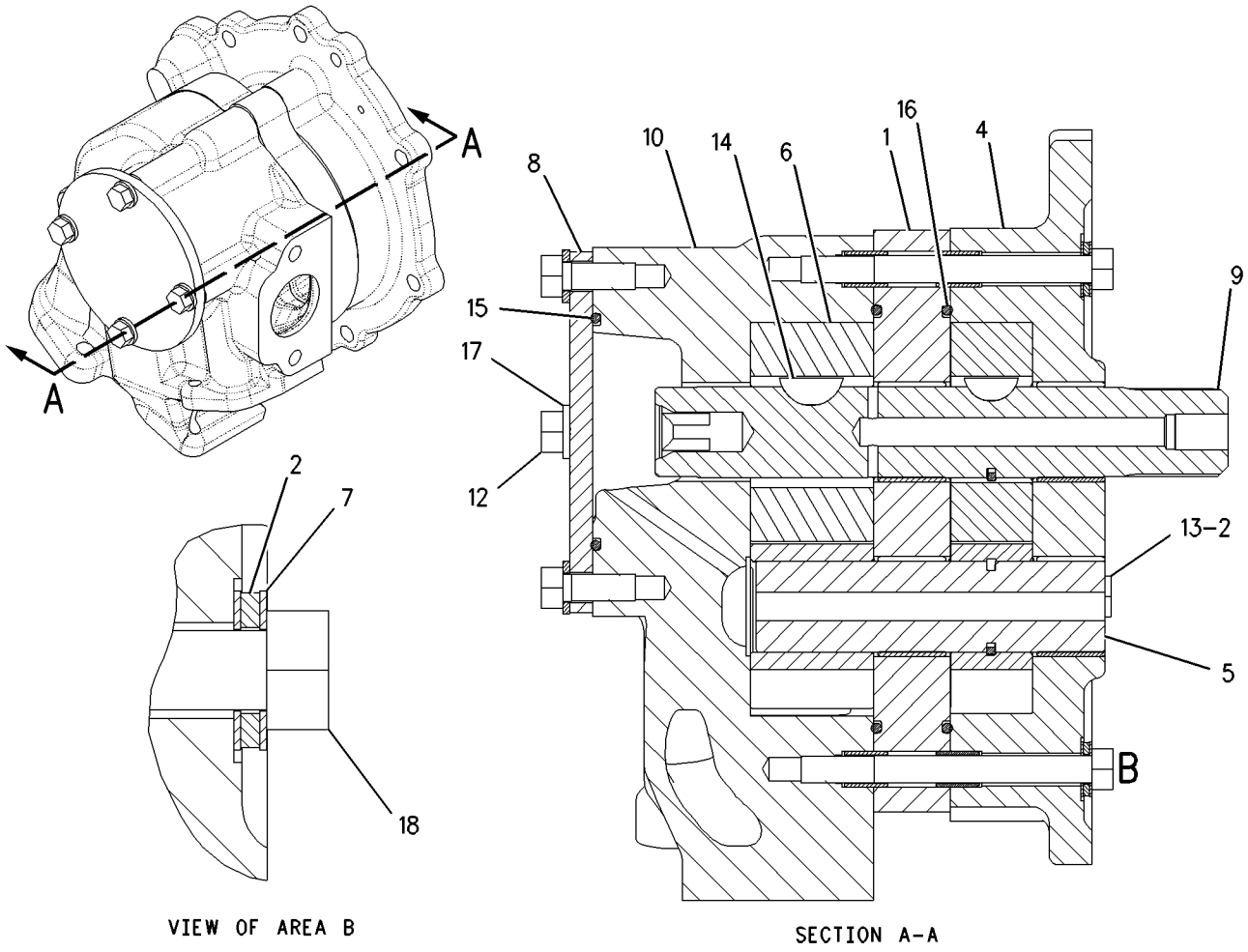

GRAPHIC #1 g00851659

POWER TRAIN

188-9366 TANDEM & COVER GP

S/N: ASE1-UP

PART OF 162-5606 GENERAL AR

SMCS-4062, 4064 **i01648909**

NOTE	REF NO	GRAPHIC REF	PART NUMBER	QTY	PART NAME 1 2 3 4 5 6 (PRODUCT LEVEL)	SEE PAGE
	1	1	**1F-8488**	2	BREATHER AS (AIR)	
	2	1	**2G-9793**	4	GASKET	
	3	1	**2G-9794**	8	GASKET	
	4	1	**8D-1802**	8	COVER (CHAIN SERVICE)	
	5	1	**8D-1993**	4	COVER (CHAIN SERVICE)	
	6	1	**8T-6468**	48	BOLT (1/2-13X1 IN)	
	7	1	**002-6453**	2	ELBOW-PIPE	
	8	1	**103-2236**	2	COVER (FINAL DRIVE)	
	9	1	**188-9367**	1	HOUSING AS (RH)	
	10	1	**188-9368**	1	HOUSING AS (LH)	
	11	1	**2G-9792**	2	GASKET	
	12	1	**2M-9780**	2	SEAL-O-RING	
	13	1	**3K-0360**	2	SEAL-O-RING	
	14	1	**5P-8245**	32	WASHER-HARD (13.5X25.5X3MM THK)	
	15	1	**6B-5072**	2	BUSHING-TERMINAL	
	16	1	**6E-5047**	2	PLUG (DRAIN)	
	17	1	**9S-4190**	2	PLUG (OIL CHECK)	

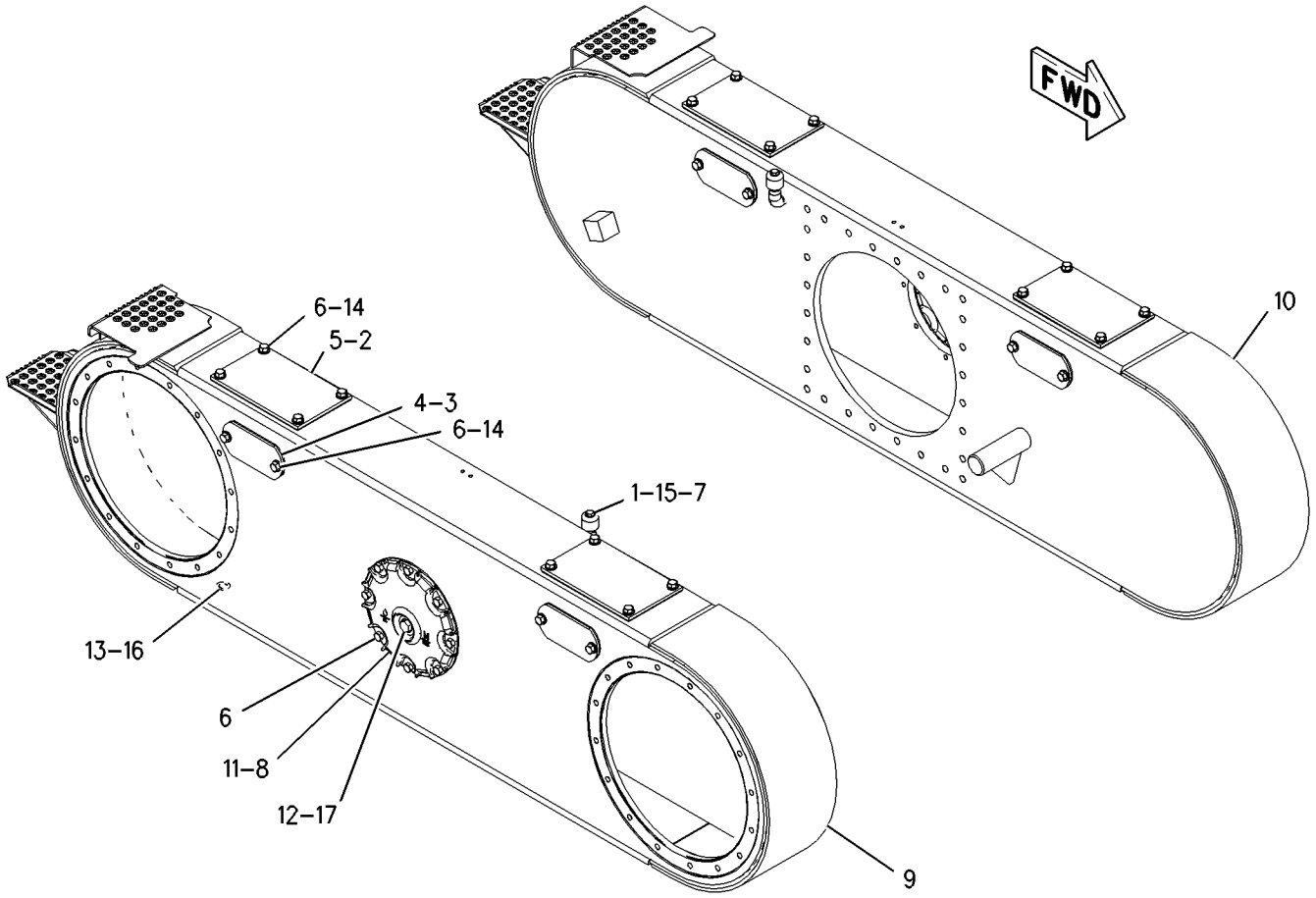

GRAPHIC #1 g00856186

183-6614 TRANSMISSION AR

S/N: BSS1-UP

PART OF 162-5606 GENERAL AR

SMCS-3030 **i01666516**

NOTE	PART NUMBER	QTY	PART NAME 1 2 3 4 5 6 (PRODUCT LEVEL)	SEE PAGE
Y	*8E-4132*	1	CONTROL GP-TRANSMISSION HYD	272
Y	*190-9842*	1	COVER GP-SHIPPING	276
Y	**172-4662**	1	FILTER GP-OIL (POWER TRAIN)	285
Y	**186-4873**	1	GEAR & CASE GP-TRANSFER	288
Y	*6I-9851*	1	LINES GP-POWER TRAIN OIL	294
Y	*2P-5800*	1	PLANETARY GP-TRANSMISSION	298
Y	**178-9178**	1	PUMP GP-GEAR	304

Y-SEPARATE ILLUSTRATION

174-3705 VALVE & MTG GP-DIFF LOCK

S/N: ASE1-UP

PART OF 173-5306 CONTROL GP-DIFFERENTIAL LOCK

SMCS-3272 **i01539220**

NOTE	REF NO	GRAPHIC REF	PART NUMBER	QTY	PART NAME 1 2 3 4 5 6 (PRODUCT LEVEL)	SEE PAGE
	1	1	**6G-5979**	1	KIT-CARTRIDGE SEAL (DIFFERENTIAL LOCK)	
					(INCLUDES O-RINGS)	
Y	2	1	**154-3064**	1	VALVE GP-SOLENOID (DIFFERENTIAL LOCK)	320
	3	1	**148-2516**	1	MANIFOLD	

Y-SEPARATE ILLUSTRATION

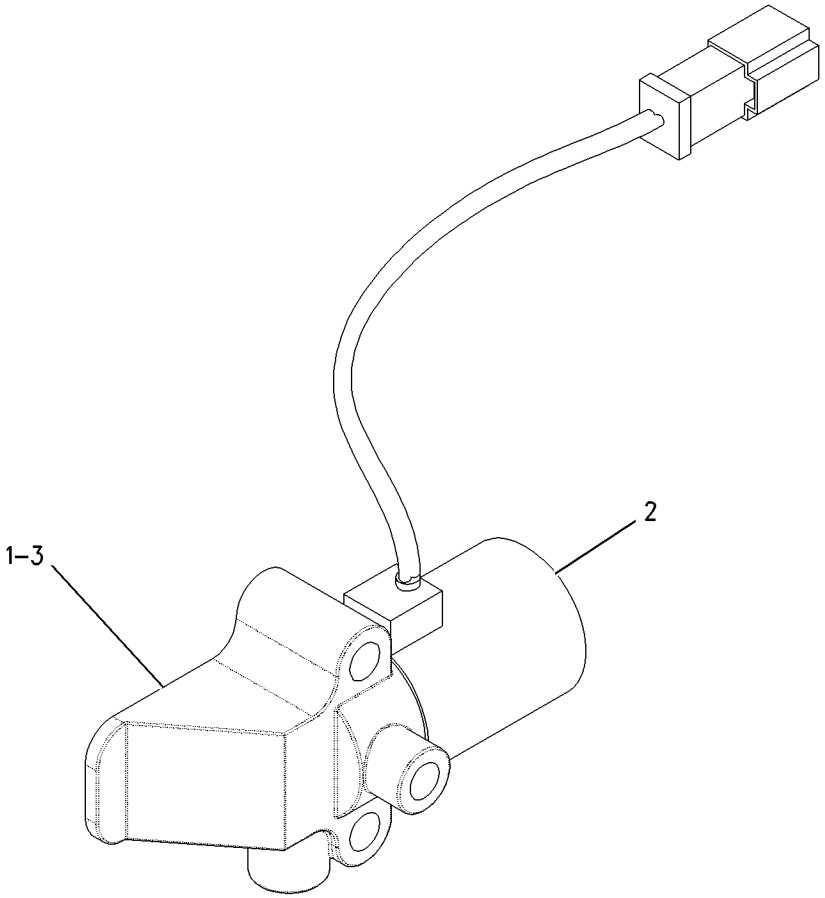

GRAPHIC #1 g00806911

2P-4548 VALVE GP-CONTROL

S/N: BSS1-UP

PART OF 115-1375 VALVE GP-RELIEF

SMCS-3073, 3167 **i00130731**

NOTE	REF NO	GRAPHIC REF	PART NUMBER	QTY	PART NAME 1 2 3 4 5 6 (PRODUCT LEVEL)	SEE PAGE
	1	1	**3P-7686**	1	COLLAR-VALVE SEAT	
	2	1	**9L-0672**	1	VALVE-CHECK	
	3	1	**3P-7685**	1	SPRING	
	4	1	**3P-8006**	1	RETAINER	
	5	1	**1P-5274**	1	PIN-VALVE SPRING	
	6	1	**3H-1156**	1	PIN	

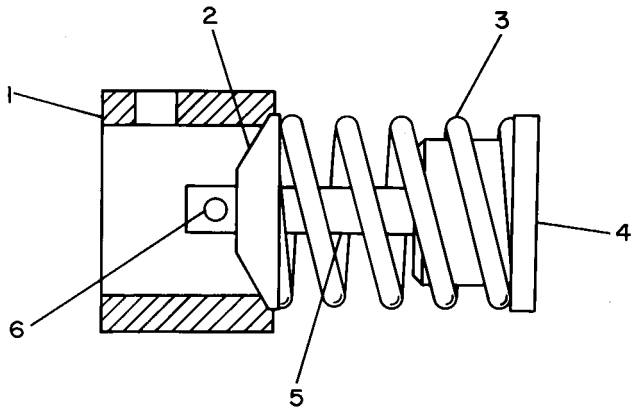

GRAPHIC #1 g00108154

8E-4130 VALVE GP-PILOT–SPEED SELECT

S/N: BSS1-UP

PART OF 8E-4131 VALVE GP-TRANSMISSION CONTROL

SMCS-5059, 5462 **i00128639**

NOTE	REF NO	GRAPHIC REF	PART NUMBER	QTY	PART NAME 1 2 3 4 5 6 (PRODUCT LEVEL)	SEE PAGE
	1	1	**3P-8067**	1	BODY AS	
		1	**8M-8489**	2	DOWEL (12.54MM DIA)	
	2	1	**8E-4129**	1	SPOOL AS-SELECTOR	
	3	1	**3K-0360**	1	SEAL-O-RING (16.36MM ID)	
	4	1	**3P-4362**	1	STOP	
	5	1	**2H-6265**	1	PIN-ROLL	
	6	1	**7S-4607**	2	DETENT AS	

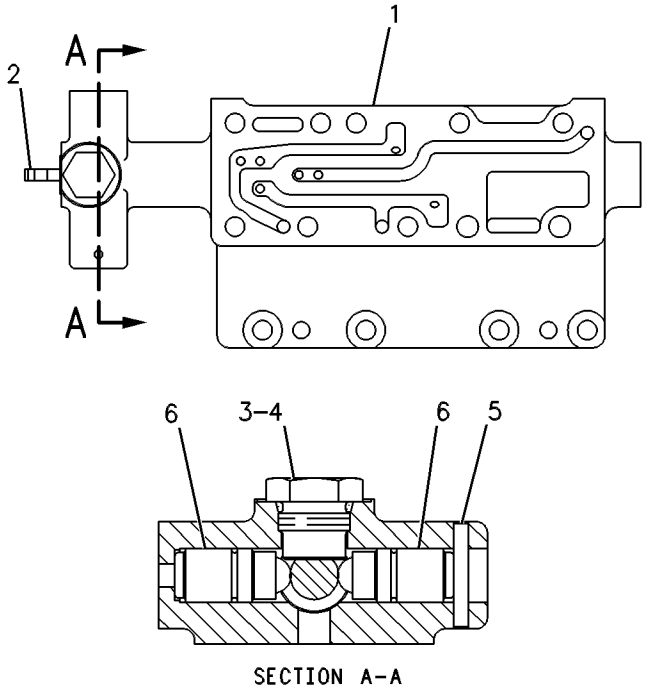

GRAPHIC #1 g00108966

MEMORANDA

115-1375 VALVE GP-RELIEF–MAIN

S/N: BSS1-UP

PART OF 8E-4132 CONTROL GP-TRANSMISSION HYD

SMCS-3133 **i01667170**

NOTE	REF NO	GRAPHIC REF	PART NUMBER	QTY	PART NAME 1 2 3 4 5 6 (PRODUCT LEVEL)	SEE PAGE
	1	1	**110-6924**	1	BODY-RELIEF VALVE	
	2	1	**1P-0562**	1	VALVE AS-RELIEF (TRANSMISSION PUMP)	
		1	**1L-3162**	1	RING-RETAINING	
		1	**4S-5982**	1	VALVE-RELIEF	
		1	**5M-9548**	1	SPRING	
		1	**8M-2537**	1	RETAINER	
		1	**9M-4313**	1	POPPET	
B	3	1	**7M-1396**	1	SPACER (1.6 MM THK)	
B	4	1	**7M-1397**	1	SPACER (3.18X19.05X0.9MM THK)	
B	5	1	**5M-3492**	4	SPACER (3.18X19.05X0.25MM THK)	
	6	1	**2P-5677**	1	SPRING (OUTER)	
	7	1	**8P-2893**	1	SPRING (MIDDLE)	
	8	1	**2S-1413**	1	SPRING (INNER)	
	9	1	**3H-1461**	2	SEAL-O-RING	
Y	10	1	**2P-4548**	1	VALVE GP-CONTROL (LUBRICATION RELIEF)	309
Y	10A	1	**2P-4548**	1	VALVE GP-CONTROL (OIL COOLER BYPASS)	309
	11	1	**6F-6673**	3	SEAL-O-RING	
	12	1	**9S-4191**	2	PLUG	
	13	1	**3J-1907**	2	SEAL-O-RING	
	14	1	**6P-4917**	2	PIN	
	15	1	**1A-2029**	10	BOLT (3/8-16X1.125 IN)	
		1	**3B-4506**	10	LOCKWASHER	
	16	1	**2M-1656**	5	COVER	
	17	1	**9S-8005**	2	PLUG	

B-USE AS REQUIRED
Y-SEPARATE ILLUSTRATION

115-1375 VALVE GP-RELIEF *(contd.)* **i01667170**

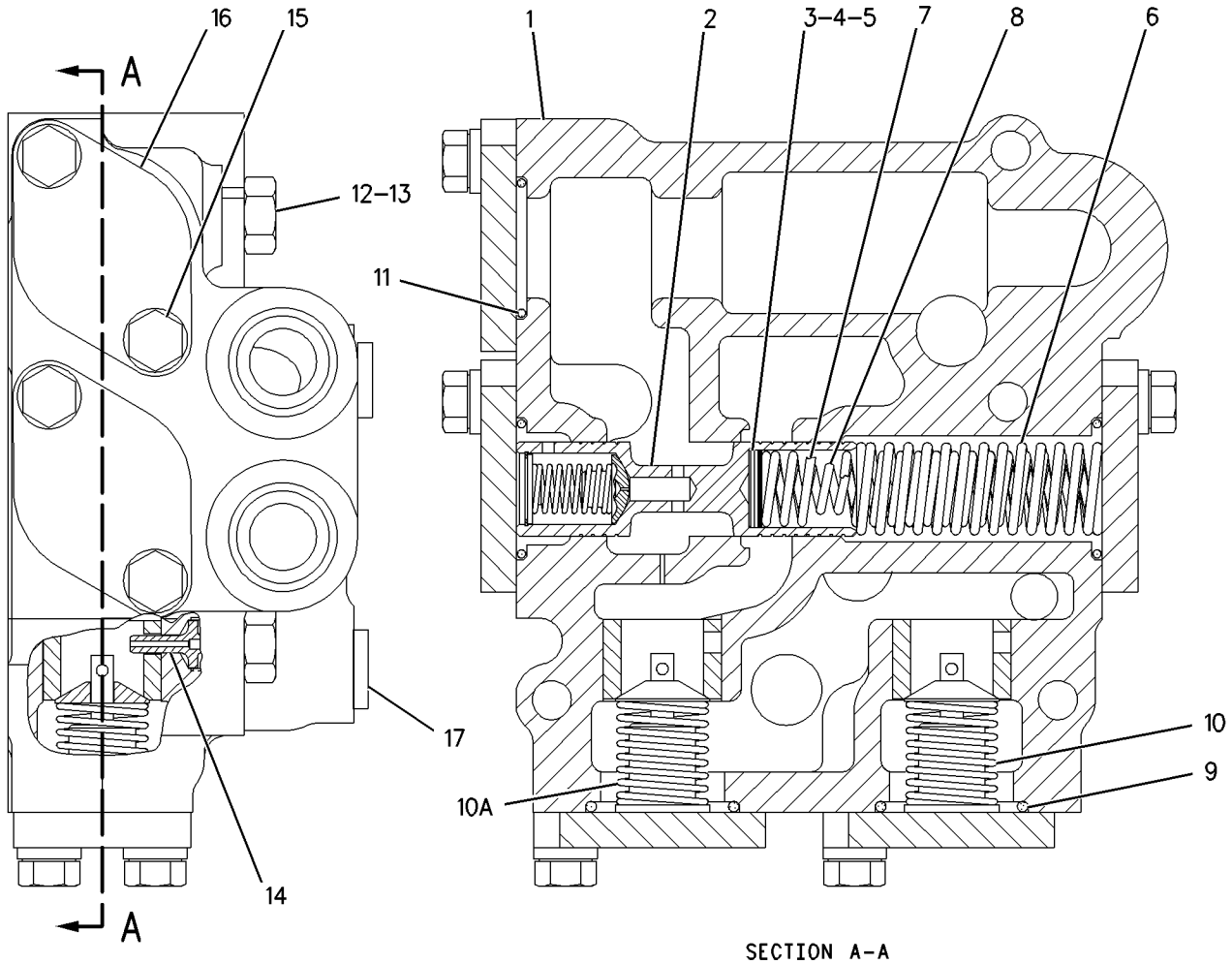

GRAPHIC #1 g00863512

2P-5814 VALVE GP-SELECTOR & PRESS CONT–DIRECTION

S/N: BSS1-UP

PART OF 8E-4131 VALVE GP-TRANSMISSION CONTROL

SMCS-3083 **i00130761**

NOTE	REF NO	GRAPHIC REF	PART NUMBER	QTY	PART NAME 1 2 3 4 5 6 (PRODUCT LEVEL)	SEE PAGE
	1	1	**1P-9685**	1	SPOOL	
	2	1	**5S-7906**	1	STOP	
	3	1	**8H-5244**	1	DOWEL	
	4	1	**2P-4529**	1	SPOOL-REDUCING	
	5	1	**1T-0416**	4	BOLT (5/16-18X.75IN)	
	6	1	**2P-5700**	1	SPRING (OUTER)	
	7	1	**2P-5701**	1	SPRING (INNER)	
	8	1	**2P-5803**	1	PLATE	
C	9	1	**2B-0858**	1	PLUG-PIPE (1/2-14 NPTF)	
	10	1	**4B-9782**	1	BALL	
	11	1	**3P-2706**	1	PLATE	

C-CHANGE FROM PREVIOUS TYPE

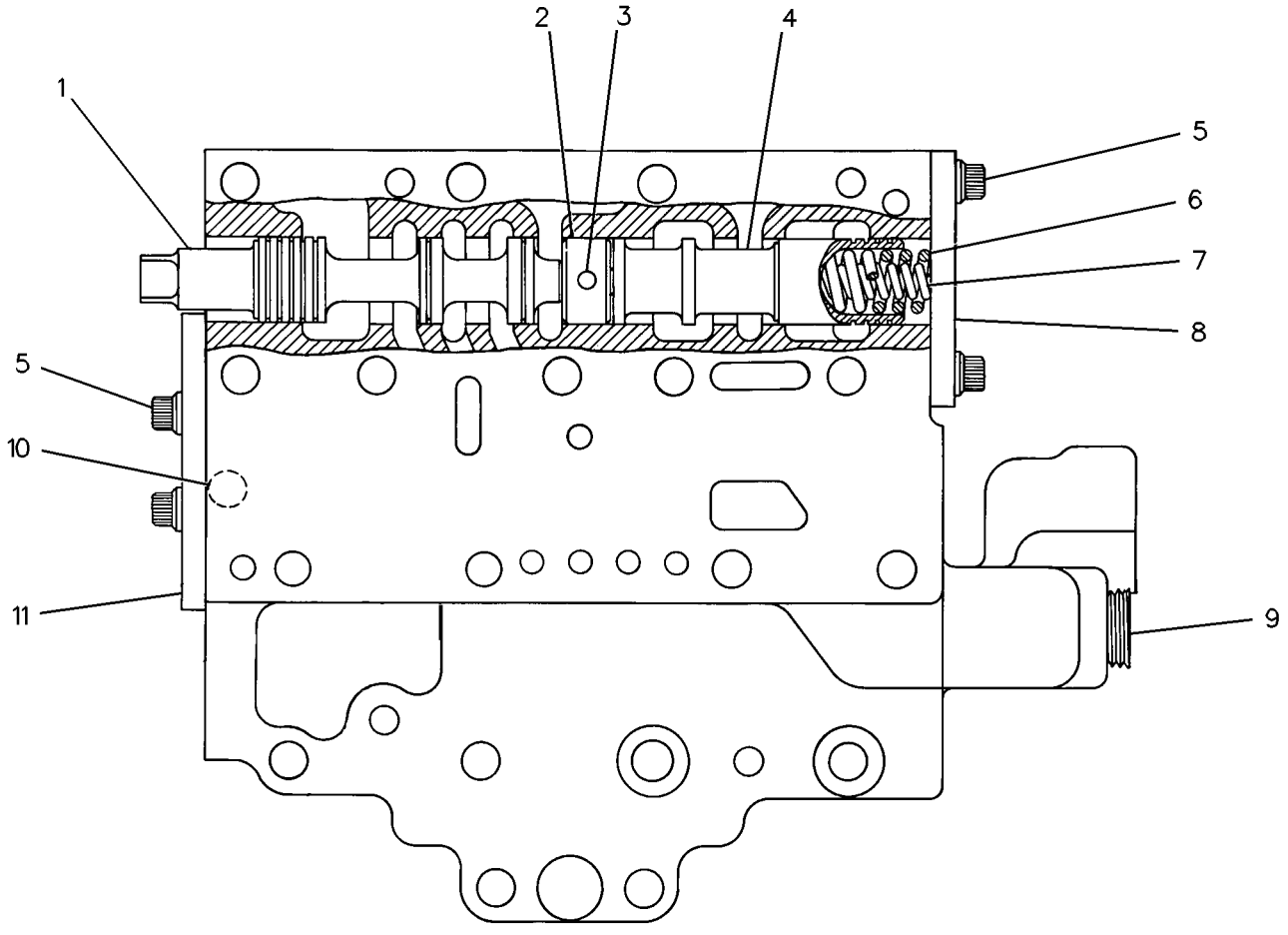

GRAPHIC #1 g00108451

MEMORANDA

2P-5816 VALVE GP-SELECTOR & PRESS CONT–
MODULATING REDUCING–SPEED
S/N: BSS1-UP
PART OF 8E-4131 VALVE GP-TRANSMISSION CONTROL

SMCS-3083 **i00914299**

NOTE	REF NO	GRAPHIC REF	PART NUMBER	QTY	PART NAME 1 2 3 4 5 6 (PRODUCT LEVEL)	SEE PAGE
	1	1	**2P-4500**	1	SPRING (OUTER)	
	2	1	**2P-4397**	1	SPACER	
	3	1	**2P-4498**	1	SPRING (INNER)	
B	4	1	**7M-1396**	1	SPACER ((1.6 MM)THK)	
B		1	**7M-1397**	1	SPACER (.92MM THK)	
B		1	**5M-3492**	4	SPACER (.25MM THK)	
C	5	1	**6P-4700**	1	SPOOL AS	
		1	**5M-8009**	1	PIN-SPRING	
	6	1	**1S-2121**	1	PLUNGER-DAMPING	
	7	1	**4M-2381**	1	SPRING	
	8	1	**1S-1636**	1	RETAINER	
		1	**1S-1638**	1	RING-RETAINING	
	9	1	**5M-2504**	1	SLUG	
	10	1	**2P-9186**	2	WASHER	
	11	1	**3P-1798**	1	COVER	
	12	1	**1L-3769**	1	RING-RETAINING	
	13	1	**6F-6673**	1	SEAL-O-RING (31.34MM ID)	
	14	1	**6L-4783**	1	BOLT-12 POINT HEAD	
	15	1	**8H-5244**	1	DOWEL	
	16	1	**5S-7906**	1	STOP	
	17	1	**2P-4486**	2	SPOOL-SELECTOR	
	18	1	**2P-4501**	3	SPRING	
	19	1	**2P-4502**	1	COVER	
	20	1	**2P-4372**	1	SPOOL-SELECTOR	
	21	1	**3D-4245**	2	SEAL-O-RING (25.07MM ID)	
	22	1	**1T-0416**	5	BOLT (5/16-18X.75IN)	
	23	1	**2P-4396**	1	PISTON-LOAD	

B-USE AS REQUIRED
C-CHANGE FROM PREVIOUS TYPE

2P-5816 VALVE GP-SELECTOR & PRESS CONT *(contd.)* i00914299

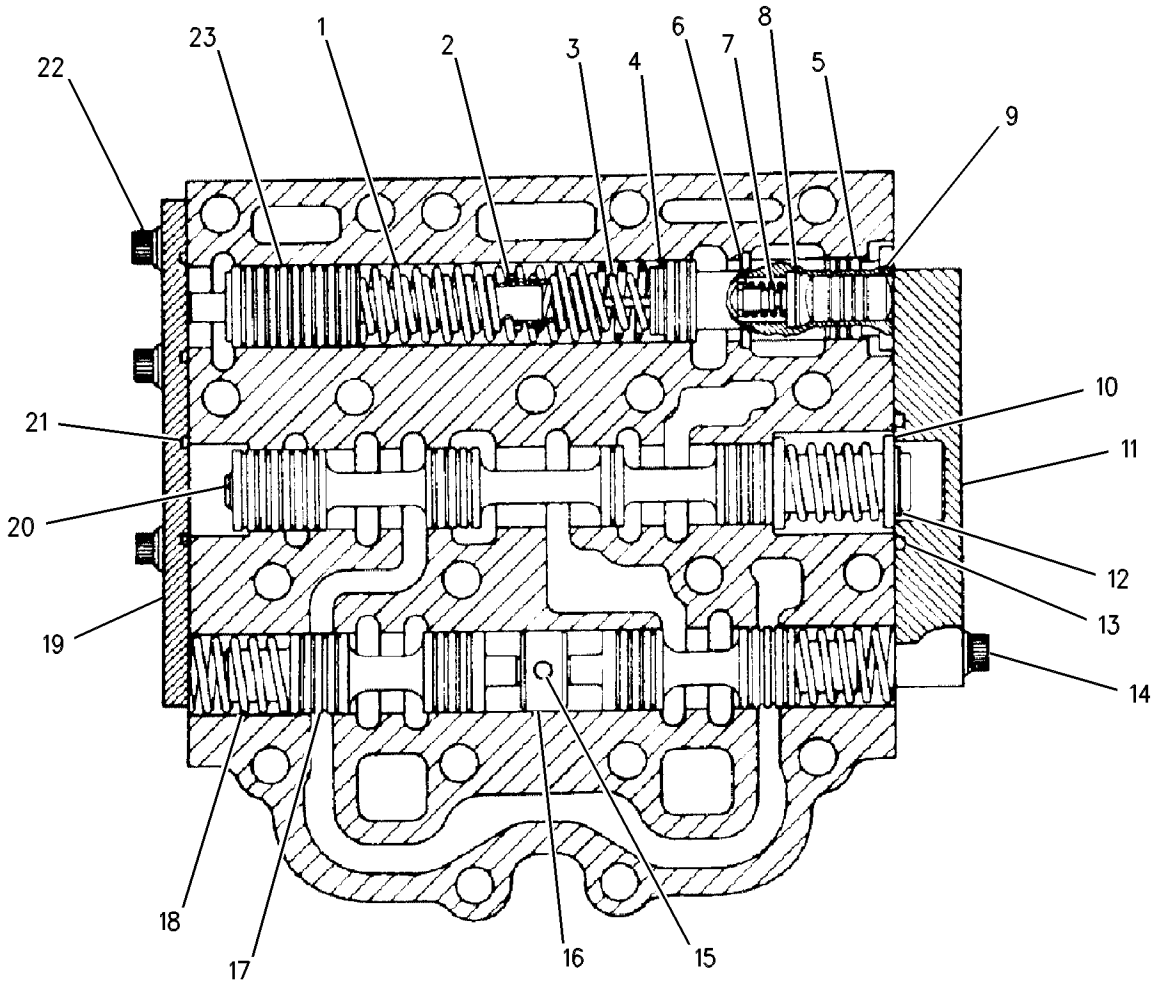

GRAPHIC #1 g00467859

8P-1100 VALVE GP-SELECTOR & PRESS CONT–

MANUAL MODULATING–DIFFERENTIAL–SPEED

S/N: BSS1-UP

PART OF 8E-4131 VALVE GP-TRANSMISSION CONTROL

SMCS-3083 **i00128451**

NOTE	REF NO	GRAPHIC REF	PART NUMBER	QTY	PART NAME 1 2 3 4 5 6 (PRODUCT LEVEL)	SEE PAGE
	1	1	**3P-8042**	1	SPRING	
C	2	1	**3T-2542**	1	SLEEVE	
C	3	1	**9P-8120**	1	SPRING (OUTER)	
		1	**3P-6881**	1	SPRING (INNER)	
	4	1	**8P-1096**	1	PISTON-MODULATING	
	5	1	**2M-1168**	1	SLUG-VALVE	
	6	1	**3S-9951**	1	WASHER-STOP	
	7	1	**3P-6669**	1	SPRING	
	8	1	**8H-5244**	2	DOWEL	
C	9	1	**3H-1118**	1	PIN-SPRING	
	10	1	**3P-7834**	1	STOP AS	
		1	**2P-4484**	1	STOP	
	11	1	**4B-9880**	1	BALL	
	12	1	**2P-4506**	1	PLUG	
		1	**2H-3932**	1	SEAL (28.17MM ID)	
	13	1	**2P-4507**	1	COVER	
	14	1	**1T-0416**	7	BOLT (5/16-18X.75IN)	
C	15	1	**5M-6214**	2	PLUG-PIPE (1/8-27 THD)	
	16	1	**3S-9949**	1	SPRING	
	17	1	**5S-7906**	1	STOP	
	18	1	**2P-4486**	2	SPOOL-SELECTOR	
	19	1	**2P-4501**	2	SPRING	
	20	1	**2P-4504**	1	COVER	
	21	1	**3D-4245**	1	SEAL-O-RING (25.07MM ID)	
	22	1	**1P-0561**	1	SPOOL-DIFFERENTIAL	
C	23	1	**3T-2543**	1	SPOOL-MODULATION	
	24	1	**8P-1098**	1	BODY AS-VALVE	
	25	1	**8M-8489**	4	DOWEL (12.54MM DIA)	
	26	1	**6P-3223**	8	DAMPER-BOLT	

C-CHANGE FROM PREVIOUS TYPE

8P-1100 VALVE GP-SELECTOR & PRESS CONT *(contd.)* i00128451

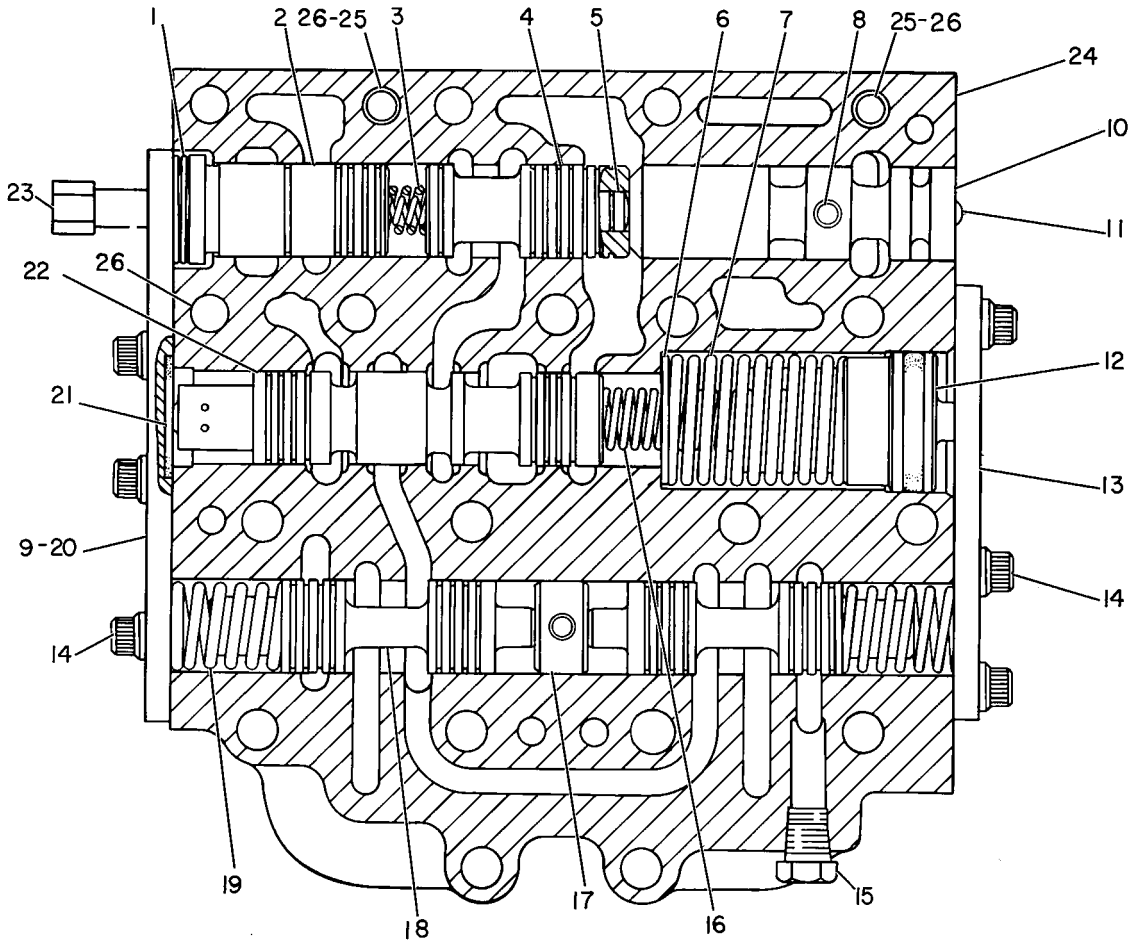

GRAPHIC #1 g00108199

154-3064 VALVE GP-SOLENOID—DIFFERENTIAL LOCK

S/N: ASE1-UP

24V DC

PART OF 174-3705 VALVE & MTG GP-DIFF LOCK

SMCS-5479 **i01539342**

NOTE	REF NO	GRAPHIC REF	PART NUMBER	QTY	PART NAME 1 2 3 4 5 6 (PRODUCT LEVEL)	SEE PAGE
	1	1	**111-0343**	1	LOCKNUT	
	2	1	**8C-9987**	1	WASHER (8.3X28X2.5MM THK)	
	3	1	**141-6787**	1	COIL AS	
		1	**1S-9593**	2	STRAP-CABLE	
		1	**102-8802**	1	KIT-RECEPTACLE (2 PIN)	
					(INCLUDES RECEPTACLE AS & WEDGE)	
		1	**3E-3365**	1	WEDGE-RECEPTACLE LOCK (2 PIN)	
		1	**186-3735**	2	PIN-CONNECTOR	
	4	1	**142-0350**	1	CARTRIDGE AS	
		1	**8C-9987**	1	WASHER (8.3X28X2.5MM THK)	
		1	**111-0343**	1	LOCKNUT	
					AVAILABLE REPAIR KIT(S):	
			6G-5979	1	KIT-CARTRIDGE SEAL	

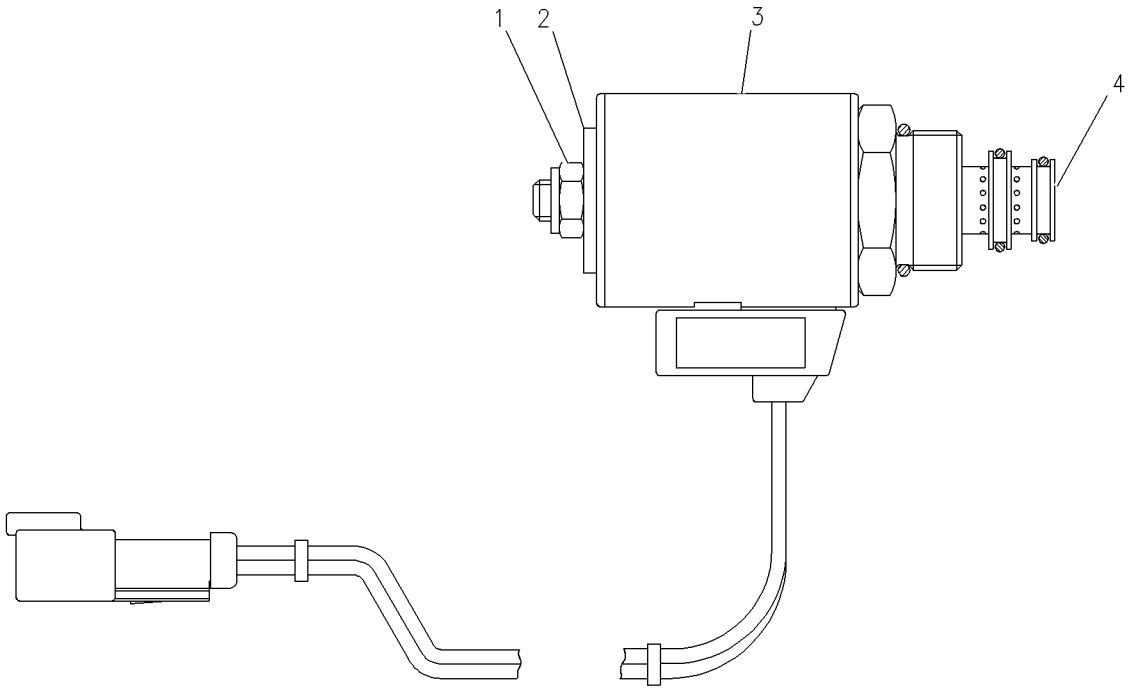

GRAPHIC #1 g00807151

MEMORANDA

8E-4131 VALVE GP-TRANSMISSION CONTROL

S/N: BSS1-UP

PART OF 8E-4132 CONTROL GP-TRANSMISSION HYD

SMCS-3073 **i01670112**

NOTE	REF NO	GRAPHIC REF	PART NUMBER	QTY	PART NAME 1 2 3 4 5 6 (PRODUCT LEVEL)	SEE PAGE
	1	1	**3P-2870**	1	MANIFOLD AS	
		1	**8M-8489**	2	DOWEL	
		1	**9M-6803**	2	DOWEL (20.5MM)	
Y	2	1	**2P-5816**	1	VALVE GP-SELECTOR & PRESS CONT (MODULATING REDUCING/SPEED)	316
Y	3	1	**8P-1100**	1	VALVE GP-SELECTOR & PRESS CONT (MAN MODULATING/DIFFERENTIAL/SP)	318
Y	4	1	**2P-5814**	1	VALVE GP-SELECTOR & PRESS CONT (DIRECTION)	314
Y	5	1	**8E-4130**	1	VALVE GP-PILOT (SPEED SELECT)	310
	6	1	**3P-0208**	8	BOLT-12 POINT HEAD (5/16-18X8 IN)	
	7	1	**9M-4289**	4	BOLT-12 POINT HEAD (5/16-18X5 IN)	
	8	1	**4S-5845**	4	BOLT-12 POINT HEAD (5/16-18X6.5 IN)	
	9	1	**9M-1974**	16	WASHER-HARD (8.8X16X2MM THK)	
	10	1	**3P-0864**	1	COVER AS	
		1	**3J-6956**	1	SPRING	
		1	**3P-0866**	1	POPPET	
		1	**3P-0867**	1	RETAINER	
		1	**4D-1322**	1	RING-RETAINING	
		1	**9F-2247**	1	PLUG-PIPE	
	11	1	**0A-4664**	1	CLIP	

Y-SEPARATE ILLUSTRATION

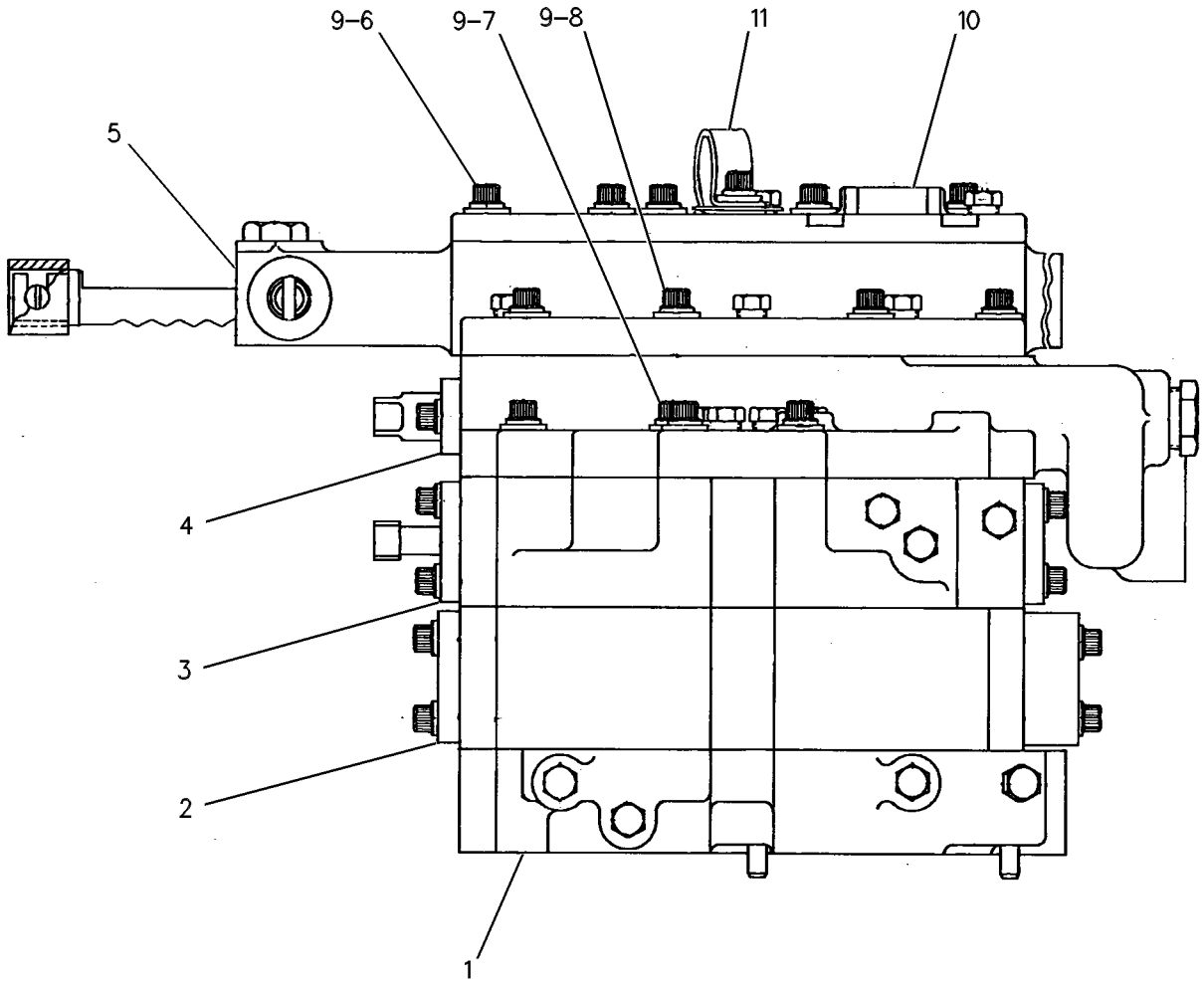

GRAPHIC #1 g00108967

151-0360 WHEEL & TIRE AR

S/N: ASE1-UP
(10X24)
AN ATTACHMENT

SMCS-4200 **i01685205**

NOTE	PART NUMBER	QTY	PART NAME 1 2 3 4 5 6 (PRODUCT LEVEL)	SEE PAGE
	142-6397	6	WHEEL & TIRE GP	
			(EACH INCLUDES)	
	2D-2565	1	SEAL-O-RING	
	142-6133	1	TIRE (16.00X24 12PR G-2/L-2)	
	5T-5119	1	VALVE GP-TIRE	
	5T-5120	1	STEM AS	
	6F-3930	1	CORE-VALVE	
	9K-7951	1	CAP-VALVE (STEM)	
	7D-5252	1	SPUD AS	
	2D-2508	1	GROMMET	
	2D-2509	1	LOCKNUT	
	142-6231	1	WHEEL GP	
	8W-9566	1	FLANGE AS	
	2D-2654	1	RING-LOCK	
	185-0050	1	RIM AS	

POWER TRAIN

151-0390 WHEEL & TIRE AR

S/N: ASE1-UP
(10X24)
AN ATTACHMENT

SMCS-4200 **i01685290**

NOTE	PART NUMBER	QTY	PART NAME 1 2 3 4 5 6 (PRODUCT LEVEL)	SEE PAGE
	142-6398	6	WHEEL & TIRE GP	
			(EACH INCLUDES)	
	2D-2565	1	SEAL-O-RING	
	142-6134	1	TIRE (16.00-24 12PR G-2)	
	5T-5119	1	VALVE GP-TIRE	
	5T-5120	1	STEM AS	
	6F-3930	1	CORE-VALVE	
	9K-7951	1	CAP-VALVE (STEM)	
	7D-5252	1	SPUD AS	
	2D-2508	1	GROMMET	
	2D-2509	1	LOCKNUT	
	142-6231	1	WHEEL GP	
	8W-9566	1	FLANGE AS	
	2D-2654	1	RING-LOCK	
	185-0050	1	RIM AS	

152-3927 WHEEL & TIRE AR

S/N: ASE1-UP
(10X24)
AN ATTACHMENT

SMCS-4200 **i01685302**

NOTE	PART NUMBER	QTY	PART NAME 1 2 3 4 5 6 (PRODUCT LEVEL)	SEE PAGE
	142-6401	6	WHEEL & TIRE GP	
			(EACH INCLUDES)	
	2D-2565	1	SEAL-O-RING	
	7I-4609	1	TIRE (16.00 R24 TG RL2F * G2)	
	5T-5119	1	VALVE GP-TIRE	
	5T-5120	1	STEM AS	
	6F-3930	1	CORE-VALVE	
	9K-7951	1	CAP-VALVE (STEM)	
	7D-5252	1	SPUD AS	
	2D-2508	1	GROMMET	
	2D-2509	1	LOCKNUT	
	142-6231	1	WHEEL GP	
	8W-9566	1	FLANGE AS	
	2D-2654	1	RING-LOCK	
	185-0050	1	RIM AS	

POWER TRAIN

152-3928 WHEEL & TIRE AR

S/N: ASE1-UP
(10X24)
AN ATTACHMENT

SMCS-4200 **i01685323**

NOTE	PART NUMBER	QTY	PART NAME 1 2 3 4 5 6 (PRODUCT LEVEL)	SEE PAGE
	142-6402	6	WHEEL & TIRE GP	
			(EACH INCLUDES)	
	2D-2565	1	SEAL-O-RING	
	153-7645	1	TIRE (16.0 R24 * XGLA2)	
	5T-5119	1	VALVE GP-TIRE	
	7D-5252	1	SPUD AS	
	2D-2508	1	GROMMET	
	2D-2509	1	LOCKNUT	
	5T-5120	1	STEM AS	
	9K-7951	1	CAP-VALVE (STEM)	
	6F-3930	1	CORE-VALVE	
	142-6231	1	WHEEL GP	
	8W-9566	1	FLANGE AS	
	2D-2654	1	RING-LOCK	
	185-0050	1	RIM AS	

152-3929 WHEEL & TIRE AR

S/N: ASE1-UP
(10X24)
AN ATTACHMENT

SMCS-4200 **i01685750**

NOTE	PART NUMBER	QTY	PART NAME 1 2 3 4 5 6 (PRODUCT LEVEL)	SEE PAGE
	142-6403	6	WHEEL & TIRE GP	
			(EACH INCLUDES)	
	2D-2565	1	SEAL-O-RING	
	8X-8452	1	TIRE (16.00 R24 * E.G.L-2/3)	
	5T-5119	1	VALVE GP-TIRE	
	7D-5252	1	SPUD AS	
	2D-2508	1	GROMMET	
	2D-2509	1	LOCKNUT	
	5T-5120	1	STEM AS	
	9K-7951	1	CAP-VALVE (STEM)	
	6F-3930	1	CORE-VALVE	
	142-6231	1	WHEEL GP	
	8W-9566	1	FLANGE AS	
	2D-2654	1	RING-LOCK	
	185-0050	1	RIM AS	

152-3938 WHEEL & TIRE AR

S/N: ASE1-UP
(10X24)
AN ATTACHMENT

SMCS-4200 **i01685767**

NOTE	PART NUMBER	QTY	PART NAME 1 2 3 4 5 6 (PRODUCT LEVEL)	SEE PAGE
	152-3933	6	WHEEL & TIRE GP	
			(EACH INCLUDES)	
	2D-2565	1	SEAL-O-RING	
	148-5653	1	TIRE (16.00 R24 * G-2)	
	5T-5119	1	VALVE GP-TIRE	
	7D-5252	1	SPUD AS	
	2D-2508	1	GROMMET	
	2D-2509		LOCKNUT	
	5T-5120	1	STEM AS	
	9K-7951	1	CAP-VALVE (STEM)	
	6F-3930	1	CORE-VALVE	
	142-6231	1	WHEEL GP	
	8W-9566	1	FLANGE AS	
	2D-2654	1	RING-LOCK	
	185-0050	1	RIM AS	

152-3940 WHEEL & TIRE AR

S/N: ASE1-UP
(17X25)
AN ATTACHMENT

SMCS-4200 **i01685807**

NOTE	PART NUMBER	QTY	PART NAME 1 2 3 4 5 6 (PRODUCT LEVEL)	SEE PAGE
	142-6405	6	WHEEL & TIRE GP	
			(EACH INCLUDES)	
	8W-3686	1	SEAL-O-RING	
	128-5164	1	TIRE (20.5X25 12PR L-2)	
	2G-6595	1	VALVE GP-TIRE	
	9K-7951	1	CAP-VALVE (STEM)	
	6F-3930	1	CORE-VALVE	
	7D-5252	1	SPUD AS	
	2D-2508	1	GROMMET	
	2D-2509	1	LOCKNUT	
	142-6232	1	WHEEL GP	
	179-5774	1	FLANGE AS	
	4K-4881	1	RING-LOCK	
	195-1122	1	RIM AS	

152-3941 WHEEL & TIRE AR

S/N: ASE1-UP
(17X25)
AN ATTACHMENT

SMCS-4200 **i01685909**

NOTE	PART NUMBER	QTY	PART NAME 1 2 3 4 5 6 (PRODUCT LEVEL)	SEE PAGE
	142-6406	6	WHEEL & TIRE GP	
			(EACH INCLUDES)	
	8W-3686	1	SEAL-O-RING	
	128-5162	1	TIRE (20.5X25 12PR L-2)	
	2G-6595	1	VALVE GP-TIRE	
	9K-7951	1	CAP-VALVE (STEM)	
	6F-3930	1	CORE-VALVE	
	7D-5252	1	SPUD AS	
	2D-2508	1	GROMMET	
	2D-2509	1	LOCKNUT	
	142-6232	1	WHEEL GP	
	179-5774	1	FLANGE AS	
	4K-4881	1	RING-LOCK	
	195-1122	1	RIM AS	

152-3942 WHEEL & TIRE AR

S/N: ASE1-UP
(17X25)
AN ATTACHMENT

SMCS-4200 **i01685918**

NOTE	PART NUMBER	QTY	PART NAME 1 2 3 4 5 6 (PRODUCT LEVEL)	SEE PAGE
	142-6407	6	WHEEL & TIRE GP	
			(EACH INCLUDES)	
	8W-3686	1	SEAL-O-RING	
	128-5163	1	TIRE (20.5X25 12PR L-2)	
	2G-6595	1	VALVE GP-TIRE	
	9K-7951	1	CAP-VALVE (STEM)	
	6F-3930	1	CORE-VALVE	
	7D-5252	1	SPUD AS	
	2D-2508	1	GROMMET	
	2D-2509	1	LOCKNUT	
	142-6232	1	WHEEL GP	
	179-5774	1	FLANGE AS	
	4K-4881	1	RING-LOCK	
	195-1122	1	RIM AS	

POWER TRAIN

152-3943 WHEEL & TIRE AR

S/N: ASE1-UP
(17X25)
AN ATTACHMENT

SMCS-4200 **i01685922**

NOTE	PART NUMBER	QTY	PART NAME 1 2 3 4 5 6 (PRODUCT LEVEL)	SEE PAGE
	142-6408	6	WHEEL & TIRE GP	
			(EACH INCLUDES)	
	8W-3686	1	SEAL-O-RING	
	128-5167	1	TIRE (20.5X25 12PR L-3)	
	2G-6595	1	VALVE GP-TIRE	
	9K-7951	1	CAP-VALVE (STEM)	
	6F-3930	1	CORE-VALVE	
	7D-5252	1	SPUD AS	
	2D-2508	1	GROMMET	
	2D-2509	1	LOCKNUT	
	142-6232	1	WHEEL GP	
	179-5774	1	FLANGE AS	
	4K-4881	1	RING-LOCK	
	195-1122	1	RIM AS	

152-3944 WHEEL & TIRE AR

S/N: ASE1-UP
(17 X 25)
AN ATTACHMENT

SMCS-4200 **i01685926**

NOTE	PART NUMBER	QTY	PART NAME 1 2 3 4 5 6 (PRODUCT LEVEL)	SEE PAGE
	142-6409	6	WHEEL & TIRE GP	
			(EACH INCLUDES)	
	8W-3686	1	SEAL-O-RING	
	128-5165	1	TIRE (20.5X25 12PR L-3)	
	2G-6595	1	VALVE GP-TIRE	
	9K-7951	1	CAP-VALVE (STEM)	
	6F-3930	1	CORE-VALVE	
	7D-5252	1	SPUD AS	
	2D-2508	1	GROMMET	
	2D-2509	1	LOCKNUT	
	142-6232	1	WHEEL GP	
	179-5774	1	FLANGE AS	
	4K-4881	1	RING-LOCK	
	195-1122	1	RIM AS	

POWER TRAIN

152-3945 WHEEL & TIRE AR

S/N: ASE1-UP
(17X25)
AN ATTACHMENT

SMCS-4200 **i01685932**

NOTE	PART NUMBER	QTY	PART NAME 1 2 3 4 5 6 (PRODUCT LEVEL)	SEE PAGE
	142-6410	6	WHEEL & TIRE GP	
			(EACH INCLUDES)	
	8W-3686	1	SEAL-O-RING	
	128-5166	1	TIRE (20.5X25 12PR L-3)	
	2G-6595	1	VALVE GP-TIRE	
	9K-7951	1	CAP-VALVE (STEM)	
	6F-3930		CORE-VALVE	
	7D-5252	1	SPUD AS	
	2D-2508	1	GROMMET	
	2D-2509	1	LOCKNUT	
	142-6232	1	WHEEL GP	
	179-5774	1	FLANGE AS	
	4K-4881	1	RING-LOCK	
	195-1122	1	RIM AS	

152-3946 WHEEL & TIRE AR

S/N: ASE1-UP
(17X25)
AN ATTACHMENT

SMCS-4200 **i01685946**

NOTE	PART NUMBER	QTY	PART NAME 1 2 3 4 5 6 (PRODUCT LEVEL)	SEE PAGE
	142-6411	6	WHEEL & TIRE GP	
			(EACH INCLUDES)	
	8W-3686	1	SEAL-O-RING	
	6C-3247	1	TIRE (20.5 R25*L-3)	
	2G-6595	1	VALVE GP-TIRE	
	6F-3930	1	CORE-VALVE	
	9K-7951	1	CAP-VALVE (STEM)	
	7D-5252	1	SPUD AS	
	2D-2508	1	GROMMET	
	2D-2509	1	LOCKNUT	
	142-6232	1	WHEEL GP	
	179-5774	1	FLANGE AS	
	4K-4881	1	RING-LOCK	
	195-1122	1	RIM AS	

POWER TRAIN

152-3947 WHEEL & TIRE AR

S/N: ASE1-UP
(17X25)
AN ATTACHMENT

SMCS-4200 **i01685957**

NOTE	PART NUMBER	QTY	PART NAME 1 2 3 4 5 6 (PRODUCT LEVEL)	SEE PAGE
	142-6412	6	WHEEL & TIRE GP	
			(EACH INCLUDES)	
	8W-3686	1	SEAL-O-RING	
	6C-7367	1	TIRE (20.5XR25 * GP-2B)	
	2G-6595	1	VALVE GP-TIRE	
	6F-3930	1	CORE-VALVE	
	9K-7951	1	CAP-VALVE (STEM)	
	7D-5252	1	SPUD AS	
	2D-2508	1	GROMMET	
	2D-2509	1	LOCKNUT	
	142-6232	1	WHEEL GP	
	179-5774	1	FLANGE AS	
	4K-4881	1	RING-LOCK	
	195-1122	1	RIM AS	

152-3949 WHEEL & TIRE AR

S/N: ASE1-UP
(17X25)
AN ATTACHMENT

SMCS-4200 **i01685965**

NOTE	PART NUMBER	QTY	PART NAME 1 2 3 4 5 6 (PRODUCT LEVEL)	SEE PAGE
	142-6414	6	WHEEL & TIRE GP	
			(EACH INCLUDES)	
	8W-3686	1	SEAL-O-RING	
	115-7957	1	TIRE (20.5XR25 * XLDD2)	
	2G-6595	1	VALVE GP-TIRE	
	6F-3930	1	CORE-VALVE	
	9K-7951	1	CAP-VALVE (STEM)	
	7D-5252	1	SPUD AS	
	2D-2508	1	GROMMET	
	2D-2509	1	LOCKNUT	
	142-6232	1	WHEEL GP	
	179-5774	1	FLANGE AS	
	4K-4881	1	RING-LOCK	
	195-1122	1	RIM AS	

152-3950 WHEEL & TIRE AR

S/N: ASE1-UP
(17X25)
AN ATTACHMENT

SMCS-4200 **i01685969**

NOTE	PART NUMBER	QTY	PART NAME 1 2 3 4 5 6 (PRODUCT LEVEL)	SEE PAGE
	142-6415	6	WHEEL & TIRE GP	
			(EACH INCLUDES)	
	8W-3686	1	SEAL-O-RING	
	138-7828	1	TIRE (20.5XR25 *E/G/L-2/3)	
	2G-6595	1	VALVE GP-TIRE	
	6F-3930	1	CORE-VALVE	
	9K-7951	1	CAP-VALVE (STEM)	
	7D-5252	1	SPUD AS	
	2D-2508	1	GROMMET	
	2D-2509	1	LOCKNUT	
	142-6232	1	WHEEL GP	
	179-5774	1	FLANGE AS	
	4K-4881	1	RING-LOCK	
	195-1122	1	RIM AS	

184-6026 WHEEL & TIRE AR

S/N: ASE1-UP
(17X25)
AN ATTACHMENT

SMCS-4200 **i01685973**

NOTE	PART NUMBER	QTY	PART NAME 1 2 3 4 5 6 (PRODUCT LEVEL)	SEE PAGE
	184-6027	6	WHEEL & TIRE GP	
			(EACH INCLUDES)	
	8W-3686	1	SEAL-O-RING	
	184-5465	1	TIRE (20.5XR25 * XSNOPLUS)	
	2G-6595	1	VALVE GP-TIRE	
	9K-7951	1	CAP-VALVE (STEM)	
	6F-3930	1	CORE-VALVE	
	7D-5252	1	SPUD AS	
	2D-2508	1	GROMMET	
	2D-2509	1	LOCKNUT	
	142-6232	1	WHEEL GP	
	179-5774	1	FLANGE AS	
	4K-4881	1	RING-LOCK	
	195-1122	1	RIM AS	

POWER TRAIN

148-2412 WHEEL AR

S/N: ASE1-UP
10 X 24
AN ATTACHMENT

SMCS-4208 **i01689112**

NOTE	PART NUMBER	QTY	PART NAME 1 2 3 4 5 6 (PRODUCT LEVEL)	SEE PAGE
	148-2407	6	WHEEL GP	
	2D-2565	1	SEAL-O-RING	
	5T-5119	1	VALVE GP-TIRE	
	5T-5120	1	STEM AS	
	6F-3930	1	CORE-VALVE	
	9K-7951	1	CAP-VALVE (STEM)	
	7D-5252	1	SPUD AS	
	2D-2508	1	GROMMET	
	2D-2509	1	LOCKNUT	
	142-6231	1	WHEEL GP	
	8W-9566	1	FLANGE AS	
	2D-2654	1	RING-LOCK	
	185-0050	1	RIM AS	

148-2432 WHEEL AR

S/N: ASE1-UP
17 X 25
AN ATTACHMENT

SMCS-4208 **i01689116**

NOTE	PART NUMBER	QTY	PART NAME 1 2 3 4 5 6 (PRODUCT LEVEL)	SEE PAGE
	148-2431	6	WHEEL GP	
	8W-3686	1	SEAL-O-RING	
	2G-6595	1	VALVE GP-TIRE	
	6F-3930	1	CORE-VALVE	
	9K-7951	1	CAP-VALVE (STEM)	
	7D-5252	1	SPUD AS	
	2D-2508	1	GROMMET	
	2D-2509	1	LOCKNUT	
	142-6232	1	WHEEL GP	
	179-5774	1	FLANGE AS	
	4K-4881	1	RING-LOCK	
	195-1122	1	RIM AS	

MEMORANDA

FRAME AND BODY

113-9100 AXLE GP-FRONT

S/N: ASE1-UP

PART OF 162-5606 GENERAL AR

SMCS-4305, 4313, 5225 **i01663195**

NOTE	REF NO	GRAPHIC REF	PART NUMBER	QTY	PART NAME 1 2 3 4 5 6 (PRODUCT LEVEL)	SEE PAGE
	1	1	**2G-5667**	2	RETAINER	
	2	1	**5D-0353**	4	BOLT-LOCKING (3/8-16X1 IN)	
	3	1	**0S-1592**	2	BOLT (5/8-11X1.25IN)	
	4	1	**4D-3704**	2	WASHER-HARD (17X30X5MM THK)	
	5	1	**5P-8842**	4	SEAL-LIP	
	6	1	**9X-8893**	2	BOLT (7/8-9X88.9IN)	
	7	1	**2J-3505**	2	NUT-FULL (7/8-9 THD)	
	8	1	**8W-6477**	1	AXLE AS	
		1	**2G-8639**	4	BEARING-SLEEVE (33.3MM OS)	
		1	**2G-8793**	4	BEARING-SLEEVE (33.2MM OS)	
	9	1	**113-9098**	1	PIN	
	10	1	**5P-8845**	4	SEAL-LIP	
	11	1	**2G-5672**	2	WASHER (1.6MM THK)	
	12	1	**2G-5671**	2	WASHER (2.531X4.75X.188 IN THK)	
	13	1	**7X-0332**	2	BOLT (1/2-13X4.5 IN)	
	14	1	**1K-6872**	2	LOCKNUT (1/2-13 THD)	
	15	1	**7X-7731**	2	PLUG-PIPE (3/4-14 NPTF THD)	
CY	16	1	*141-6140*	1	LINK GP-STEERING	370
	17	1	**113-9099**	1	PIN	
	18	1	**2G-8671**	1	BAR AS-LEAN	
		1	**2G-8631**	2	BEARING-SLEEVE	
	19	1	**8W-4655**	1	HOUSING-SPINDLE	
	20	1	**2G-8630**	2	PIN	
	21	1	**5S-7379**	4	BOLT (3/8-16X0.875 IN)	
	22	1	**5P-1075**	4	WASHER-HARD (10.2X22.5X3MM THK)	
	23	1	**2G-8767**	4	WASHER (10.5X60X3MM THK)	
	24	1	**5P-8843**	4	SEAL-LIP	
	25	1	**3B-8489**	12	FITTING-GREASE (1/8-27 THD) (FRONT AXLE)	
	26	1	**2G-8741**	4	RING-METAL SEAL	
	27	1	**2H-3740**	4	BOLT (3/4-16X1.25IN)	
	28	1	**2G-8742**	2	WASHER-HARD (20X65X5MM THK)	
	29	1	**0V-0375**	6	BOLT (1/2-13X3.25 IN)	
	30	1	**8W-4654**	1	HOUSING-SPINDLE	
R	31	1	**5K-1078**	2	SEAL GP-DUO-CONE	
	32	1	**147-3401**	2	SPINDLE	
B	33	1	**2G-3867**	6	SHIM (.005MM THK)	
	34	1	**1P-4693**	2	CUP-BEARING	
	35	1	**1P-4694**	2	CONE-BEARING	
	36	1	**1P-3935**	2	CONE-BEARING	
	37	1	**1P-3934**	2	CUP-BEARING	
	38	1	**8D-3615**	2	RETAINER	
	39	1	**8F-9516**	2	SEAL-O-RING	
	40	1	**5T-0907**	2	COVER	
	41	1	**8W-5293**	4	PIN	
	42	1	**5P-8890**	2	SEAL-LIP	
	43	1	**9H-1031**	2	WASHER-HARD (24X41.5X6MM THK)	
	44	1	**8D-3614**	2	LOCK	
	45	1	**8W-5518**	1	ARM AS-LH	
		1	**2G-7387**	1	BEARING-SLEEVE (40.9MM OS)	
		1	**2G-7388**	1	BEARING-SLEEVE (43.3MM OS)	
		1	**8W-6496**	1	PIN	
	46	1	**8W-5519**	1	ARM AS-RH	
		1	**2G-7387**	1	BEARING-SLEEVE (40.9MM OS)	
		1	**2G-7388**	1	BEARING-SLEEVE (43.3MM OS)	
		1	**8W-6495**	1	PIN	
	47	1	**8D-8931**	2	WASHER (1.56X2.25X.032 IN THK)	

113-9100 **AXLE GP-FRONT** *(contd.)* **i01663195**

NOTE	REF NO	GRAPHIC REF	PART NUMBER	QTY	PART NAME 1 2 3 4 5 6 (PRODUCT LEVEL)	SEE PAGE
	48	1	**3B-4629**	2	PIN-COTTER	
	49	1	**2G-8626**	2	WASHER-THRUST (2.02X3.635X.155 IN THK)	
	50	1	**2G-8615**	4	WASHER-THRUST (2.015X3.625X.110 IN THK)	
	51	1	**9M-2092**	4	SEAL-O-RING	
	52	1	**2G-8777**	4	SEAL	

B-USE AS REQUIRED
C-CHANGE FROM PREVIOUS TYPE
R-REMFG PART MAY BE AVAILABLE
Y-SEPARATE ILLUSTRATION

113-9100 **AXLE GP-FRONT** ***(contd.)*** **i01663195**

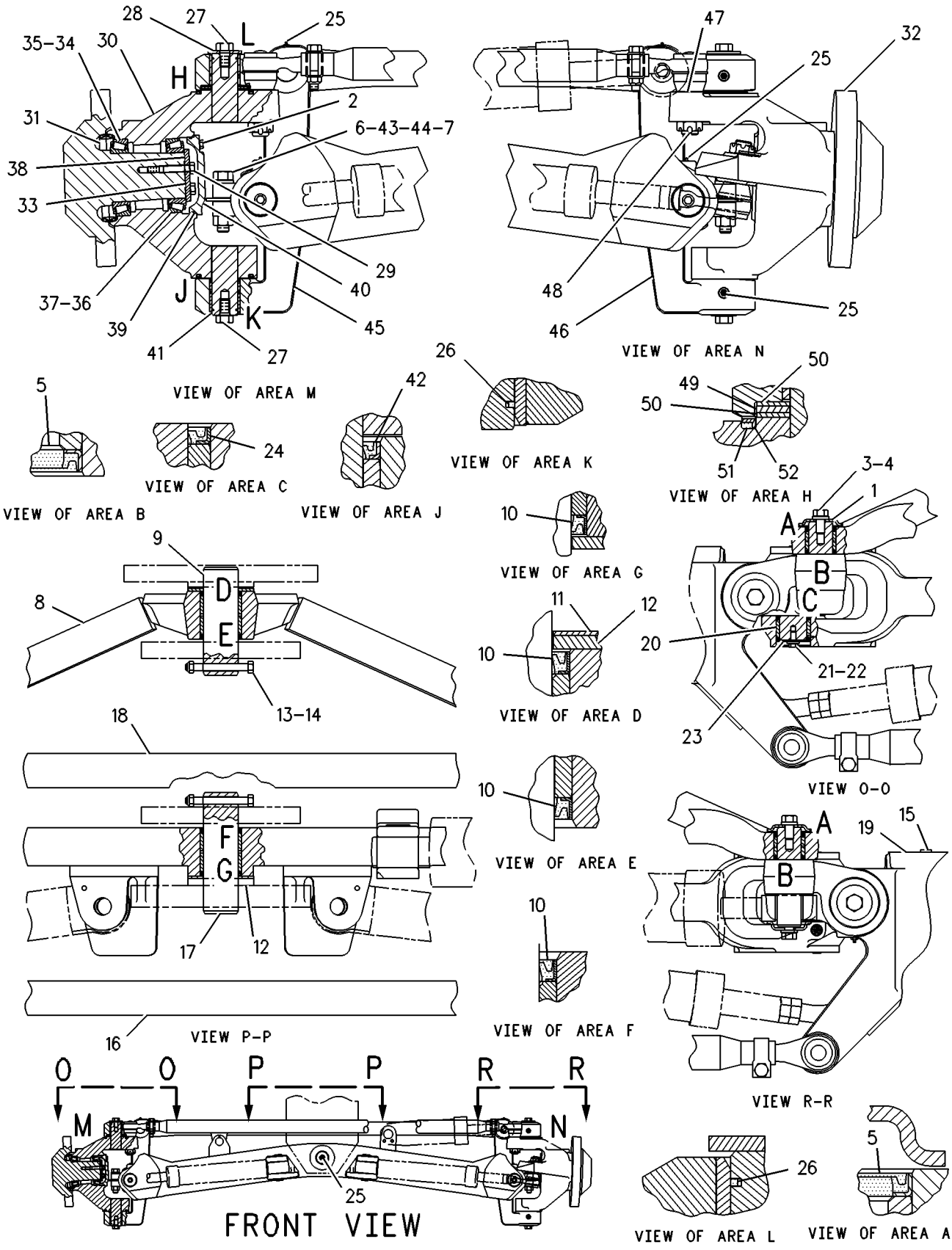

GRAPHIC #1 g00109050

MEMORANDA

161-1129 CASE & FRAME GP

S/N: ASE1-UP

PART OF 162-5606 GENERAL AR

SMCS-7051 **i01648616**

NOTE	REF NO	GRAPHIC REF	PART NUMBER	QTY	PART NAME 1 2 3 4 5 6 (PRODUCT LEVEL)	SEE PAGE
	1	1	**2A-3398**	1	GASKET	
	2	1	**6B-5262**	1	PLUG-DRAIN (TRANSMISSION CASE)	
	3	1	**171-6957**	1	CASE & FRAME AS	
	4	1	**186-1729**	1	STRIP	
	5	1	**2D-5238**	12	STUD-TAPERLOCK (5/8X11X2.6 IN OAL)	
	6	1	**2R-1600**	54	STUD-TAPERLOCK (3/4-10X2.84 IN OAL)	
	7	1	**4D-8148**	3	DOWEL	
	8	1	**7X-0399**	6	BOLT (1-8X1.25 IN)	
M	9	1	**8T-4179**	3	BOLT (M12X1.75X20MM)	
	10	1	**8T-4223**	3	WASHER-HARD (13.5X25.5X3MM THK)	
	11	1	**8T-5361**	6	WASHER-HARD (28X49X5MM THK)	

M-METRIC PART

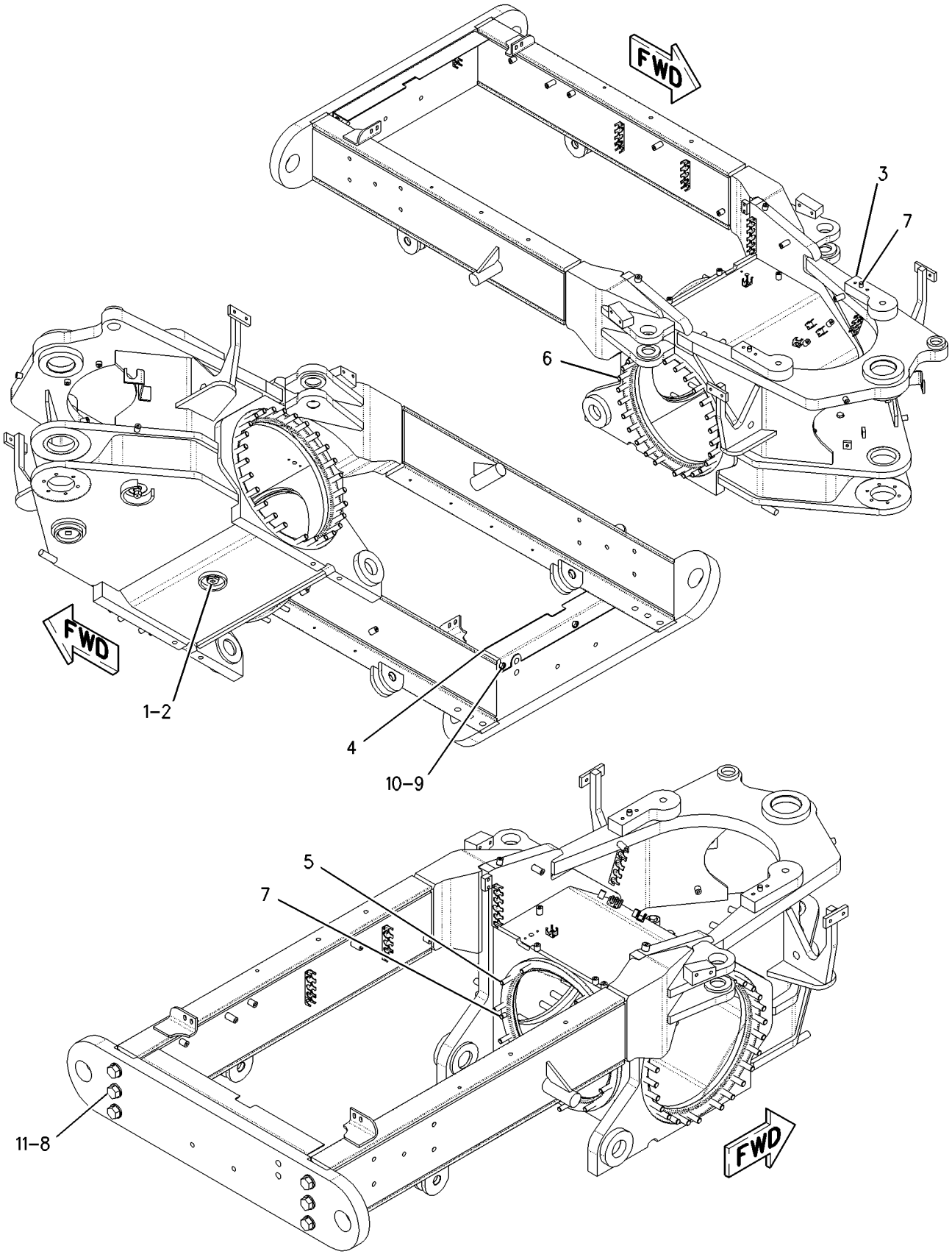

GRAPHIC #1 g00856331

126-6933 COVER GP-PROTECTION–PLATFORM–EU

S/N: ASE1-UP

PART OF 211-1769, 211-1770 CONVERSION AR-CERTIFICATION

AN ATTACHMENT

SMCS-795C **i01624121**

NOTE	REF NO	GRAPHIC REF	PART NUMBER	QTY	PART NAME 1 2 3 4 5 6 (PRODUCT LEVEL)	SEE PAGE
	1	1	**1W-3011**	1	SPACER (10.5X22X73.5MM THK)	
	2	1	**7E-1226**	2	BRACKET	
	3	1	**126-6929**	1	COVER-LH	
	4	1	**126-6930**	1	COVER-RH	
	5	1	**129-5049**	4	BRACKET AS	
	6	1	**201-7603**	2	PLATE-WARNING (NO CLEARANCE)	
	7	1	**1F-5339**	4	LUG (3/8-16 THD)	
	8	1	**4L-6454**	4	BOLT (3/8-16X1 IN)	
	9	1	**5M-3062**	4	BOLT (3/8-16X0.75 IN)	
	10	1	**5P-1075**	15	WASHER-HARD (10.2X22.5X3MM THK)	
	11	1	**6D-4244**	2	CLIP	
	12	1	**6V-8801**	2	NUT (3/8-16 THD)	
	13	1	**7X-0291**	1	BOLT (3/8-16X3.75 IN)	
	14	1	**8T-8915**	4	BOLT (3/8-16X3.25 IN)	
	15	1	**9D-5659**	2	BOSS (3/8-16 THD)	

126-6933 **COVER GP-PROTECTION** *(contd.)* **i01624121**

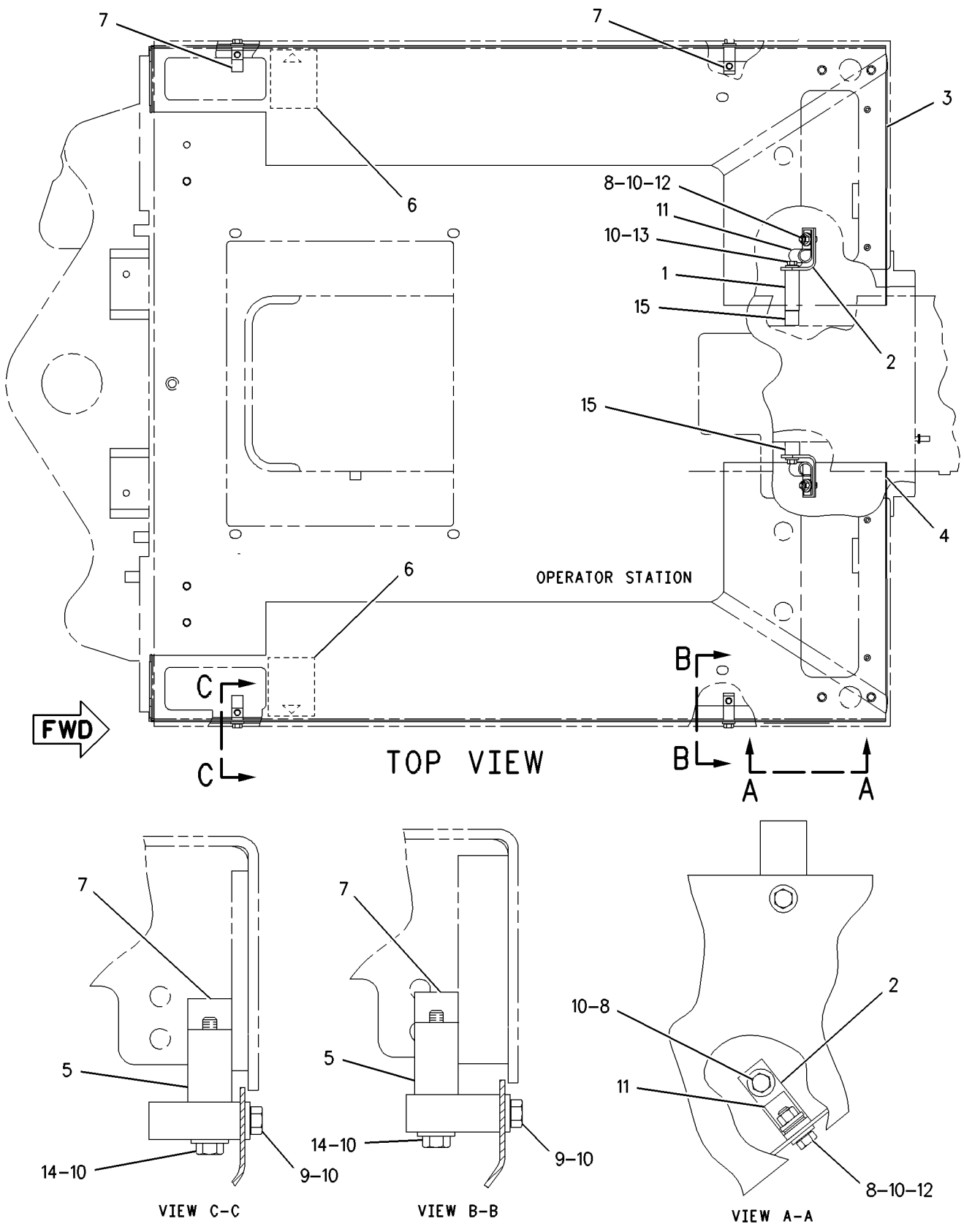

GRAPHIC #1 g00840576

FRAME AND BODY

161-1121 ENCLOSURE GP-ENGINE

S/N: ASE1-UP

PART OF 162-5606 GENERAL AR

SMCS-7263 **i01660620**

NOTE	REF NO	GRAPHIC REF	PART NUMBER	QTY	PART NAME 1 2 3 4 5 6 (PRODUCT LEVEL)	SEE PAGE
	1	2	**3P-9900**	2	WASHER (10.5X30X3MM THK)	
	2	2	**4B-4909**	2	SPRING	
	3	2	**132-4354**	2	SPACER (10.5X19X26.5MM THK)	
	4	2	**139-2944**	2	ROD	
	5	1	**175-5480**	1	HOOD AS	
	6	2	**176-2918**	1	PILLAR AS (RH)	
	7	1	**176-2922**	1	PILLAR AS (LH)	
	8	1	**176-5760**	1	DOOR AS (RH)	
		1	**178-0131**	1	HINGE	
	9	1	**176-5765**	1	DOOR AS (LH)	
		1	**178-0131**	1	HINGE	
	10	2	**176-5767**	2	CATCH AS	
	11	1	**176-5770**	1	PANEL AS	
	12	1	**176-5775**	1	PANEL AS	
	13	2	**177-2932**	2	CATCH AS	
	14	1	**177-4118**	2	HANDHOLD	
	15	1	**177-4119**	2	HANDHOLD	
	16	1	**177-4120**	2	HANDHOLD	
	17	2	**187-0976**	2	PLATE	
	18	2	**192-5629**	4	LATCH AS (ENGINE ACCESS)	
					(EACH INCLUDES)	
		2	**126-7168**	1	LOCK AS	
		2	**7F-9223**	1	LOCKWASHER	
		2	**8T-5004**	1	SCREW-MACHINE (1/4-28X0.375 IN)	
	19	2	**192-5638**	4	PAWL	
B	20	2	**194-4939**	2	SHIM (5 MM)	
	21	1	**194-6158**	1	COVER AS	
	22	2	**199-9983**	2	GRAB IRON AS	
	23	1	**212-3590**	1	PLATE	
	24	1	**212-3591**	1	PLATE	
	25	1	**212-9510**	1	DASH AS	
	26	2	**212-9511**	1	PLATE AS	
	27	1	**212-9947**	1	PANEL AS	
	28	1	**212-9948**	1	PANEL AS	
M	29	2	**127-4038**	16	SCREW-MACHINE (M6X1X16MM)	
M	30	2	**129-3178**	16	LOCKNUT (M6X1 THD)	
	31	2	**2K-5986**	2	PIN-SPRING	
	32	2	**5P-1076**	12	WASHER-HARD (13.5X30X4MM THK)	
	33	2	**7X-0632**	4	WASHER-HARD	
	34	2	**7X-7729**	62	WASHER (11X25X3MM THK)	
	35	2	**8T-4121**	2	WASHER-HARD (11X21X2.5MM THK)	
M	36	2	**8T-4133**	8	NUT (M10X1.5 THD)	
M	37	2	**8T-4136**	53	BOLT (M10X1.5X25MM)	
M	38	2	**8T-4139**	10	BOLT (M12X1.75X30MM)	
M	39	2	**8T-4179**	2	BOLT (M12X1.75X20MM)	
M	40	2	**8T-4182**	2	BOLT (M10X1.5X45MM)	
M	41	2	**8T-4195**	13	BOLT (M10X1.5X30MM)	
M	42	2	**8T-4196**	2	BOLT (M10X1.5X35MM)	
	43	2	**8T-4994**	2	WASHER-HARD (20X36.5X3.5MM THK)	
	44	2	**9X-8256**	16	WASHER (6.6X12X2MM THK)	
D	45	2	**5P-5923**		SEAL	

B-USE AS REQUIRED
D-ORDER BY THE METER
M-METRIC PART

161-1121 **ENCLOSURE GP-ENGINE** ***(contd.)*** **i01660620**

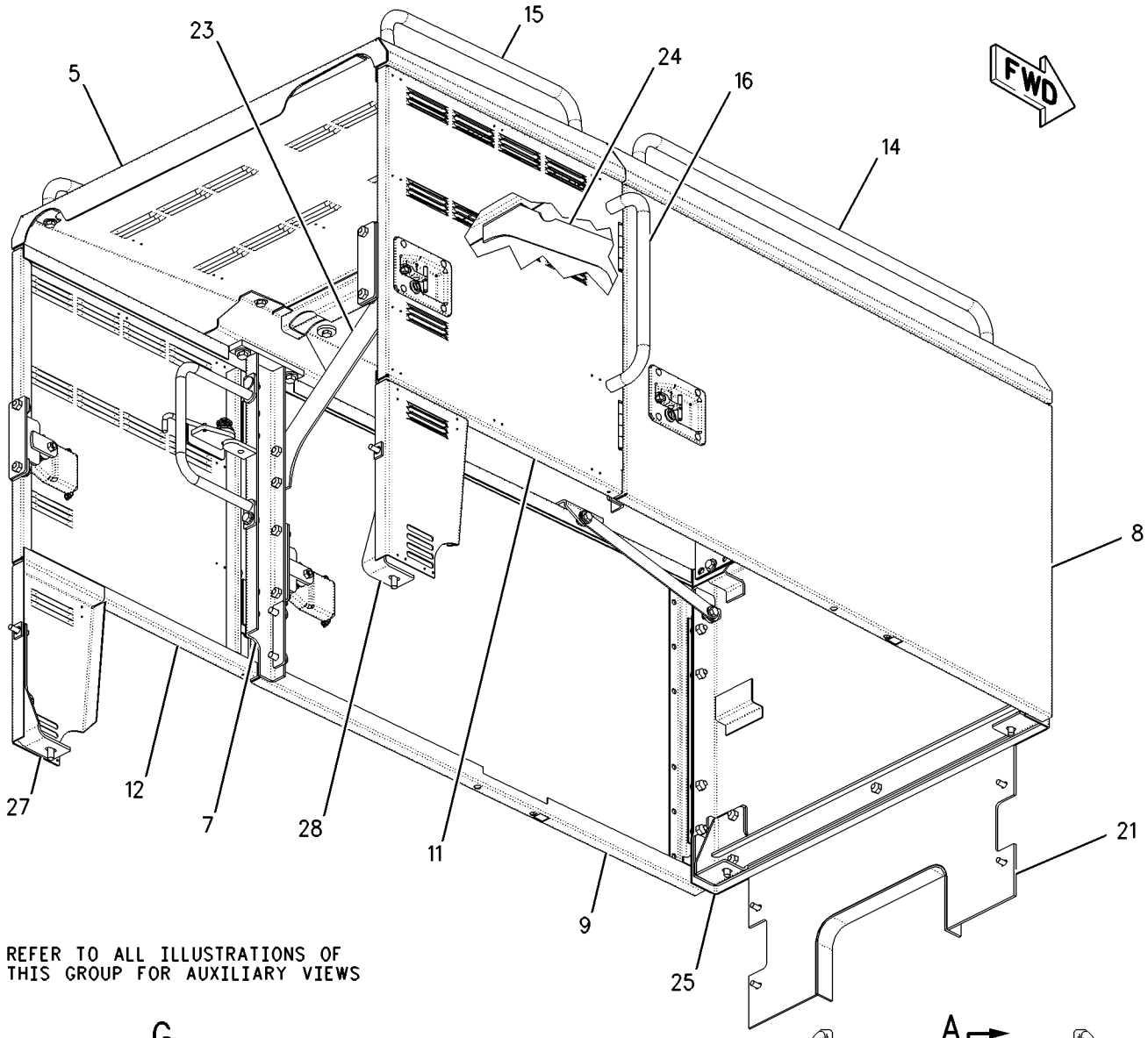

REFER TO ALL ILLUSTRATIONS OF
THIS GROUP FOR AUXILIARY VIEWS

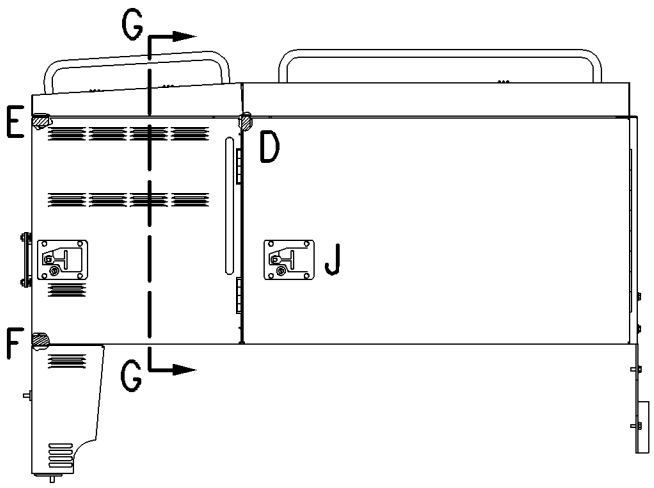

RIGHT SIDE VIEW

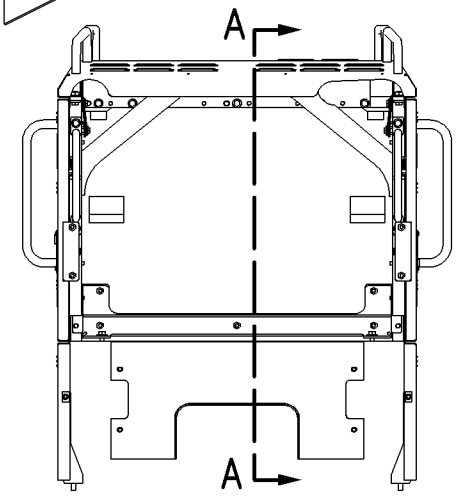

REAR VIEW

GRAPHIC #1

g00860867

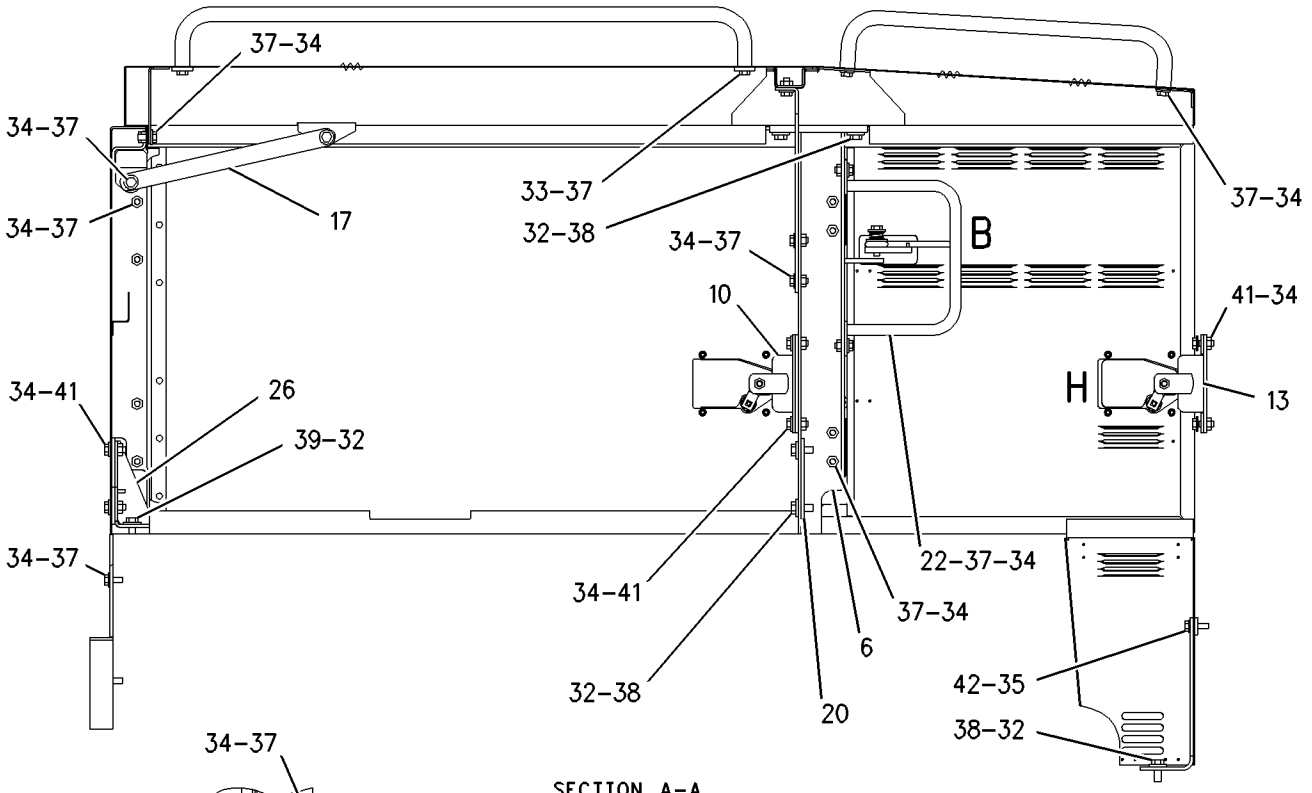

SECTION A-A

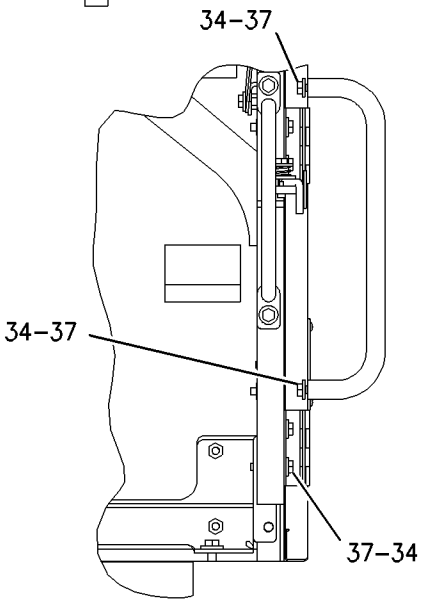

SECTION G-G

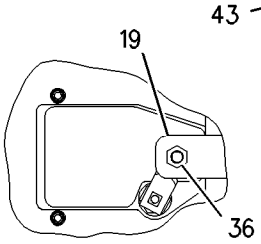

VIEW OF AREA H

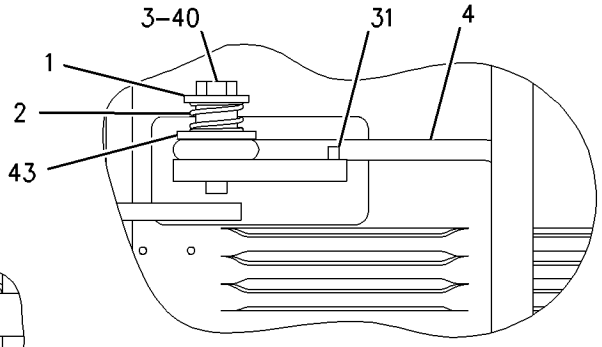

VIEW OF AREA B

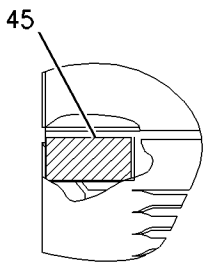

VIEW OF AREA E

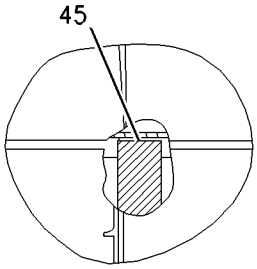

VIEW OF AREA D

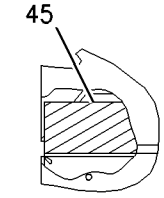

VIEW OF AREA F

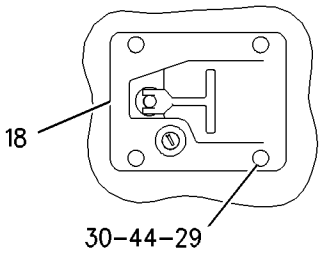

VIEW OF AREA J

GRAPHIC #2

g00860868

MEMORANDA

161-1180 FRAME GP-FRONT

S/N: ASE1-UP

PART OF 162-5606 GENERAL AR

SMCS-7050, 7051 **i01644502**

NOTE	REF NO	GRAPHIC REF	PART NUMBER	QTY	PART NAME 1 2 3 4 5 6 (PRODUCT LEVEL)	SEE PAGE
	1	1	**8D-3791**	1	PIN	
	2	1	**8X-3200**	1	PLATE AS	
		1	**1F-0750**	4	NUT-WELD (3/8-16 THD)	
		1	**7D-1151**	1	BLOCK	
	3	1	**9D-0244**	5	BUSHING-TERMINAL	
	4	1	**110-7002**	1	COVER-RH	
	5	1	**110-7003**	1	COVER-LH	
	6	1	**112-4785**	2	COVER	
	7	1	**163-4239**	1	FRAME AS	
	8	1	**207-7112**	1	PIN	
	9	1	**4L-6454**	7	BOLT (3/8-16X1 IN)	
	10	1	**5M-3062**	22	BOLT (3/8-16X0.75 IN)	
	11	1	**5P-1075**	29	WASHER-HARD (10.2X22.5X3MM THK)	
	12	1	**5P-8167**	3	BOLT (3/8)	
	13	1	**8D-9159**	4	BEARING-SLEEVE	
	14	1	**9D-6589**	8	SEAL-LIP	

161-1180 **FRAME GP-FRONT** ***(contd.)*** **i01644502**

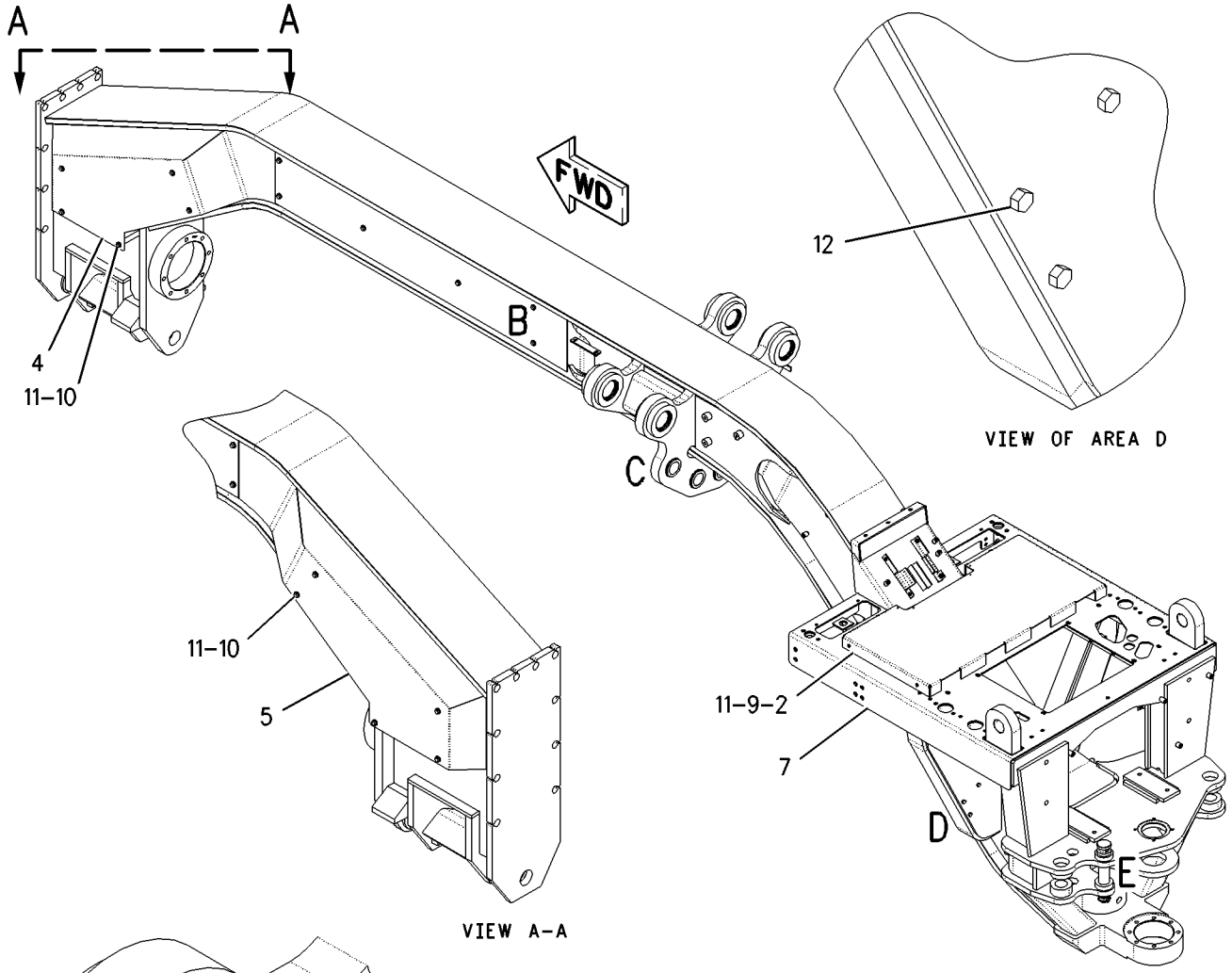

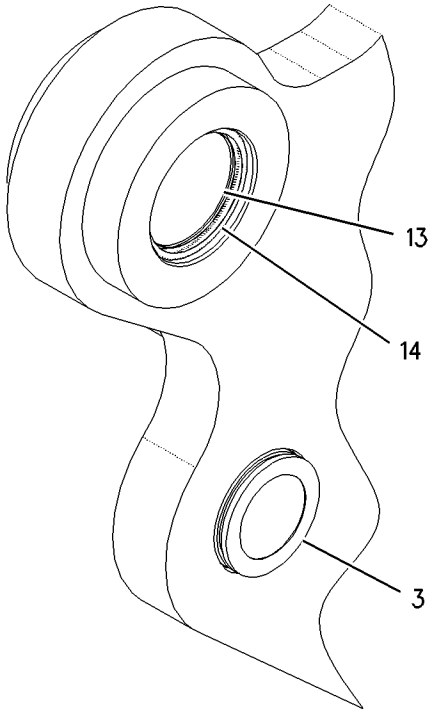

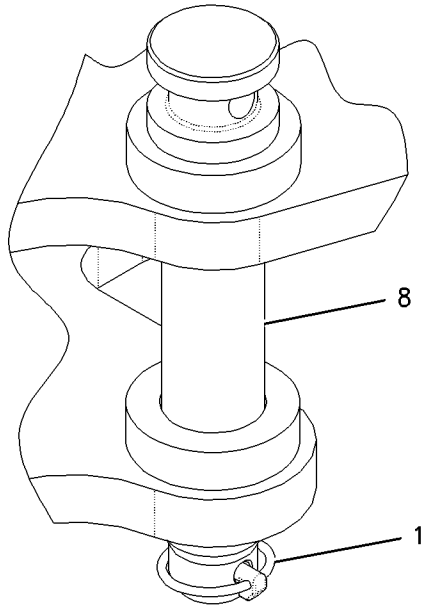

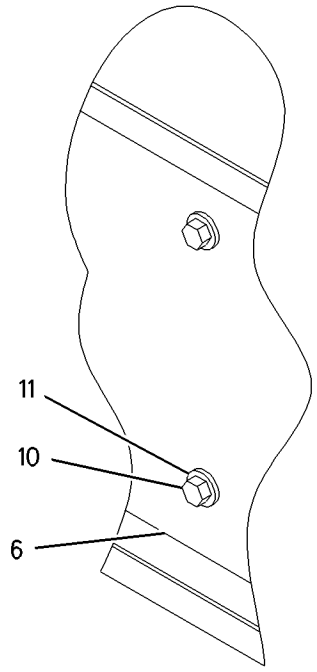

GRAPHIC #1

g00851591

FRAME AND BODY

197-1448 GUARD & SUPPORT GP-RADIATOR

S/N: ASE1-UP
PART OF 184-0793, 201-1053 COOLING AR
ALSO AN ATTACHMENT

SMCS-7155 **i01662236**

NOTE	REF NO	GRAPHIC REF	PART NUMBER	QTY	PART NAME 1 2 3 4 5 6 (PRODUCT LEVEL)	SEE PAGE
	1	1	**1P-7297**	1	VALVE-DRAIN (COOLING SYSTEM)	
	2	1	**5D-1026**	2	CLAMP-HOSE	
	3	1	**7D-7026**	2	CONNECTOR-HOSE	
	4	1	**166-0939**	1	SHROUD AS-FAN	
	5	1	**173-3882**	2	PLATE	
	6	1	**173-3924**	2	BAFFLE	
	7	1	**173-3942**	1	GUARD	
	8	1	**174-2863**	2	MOUNT AS (LH)	
					(EACH INCLUDES)	
		1	**8F-6437**	1	WASHER (13.5X50.8X4.76MM THK)	
		1	**8T-4223**	1	WASHER-HARD (13.5X25.5X3MM THK)	
M		1	**8T-4244**	1	NUT (M12X1.75 THD)	
M		1	**8T-6868**	1	BOLT (M12X1.75X80MM)	
		1	**183-6933**	1	BRACKET	
		1	**194-4863**	1	BRACKET	
	9	1	**177-4119**	2	HANDHOLD	
	11	1	**183-7913**	1	PLATE AS	
	12	1	**197-1444**	1	SUPPORT AS	
	13	1	**199-2756**	2	MOUNT AS (RH)	
					(EACH INCLUDES)	
		1	**8F-6437**	1	WASHER (13.5X50.8X4.76MM THK)	
		1	**8T-4223**	1	WASHER-HARD (13.5X25.5X3MM THK)	
M		1	**8T-4244**	1	NUT (M12X1.75 THD)	
M		1	**8T-6868**	1	BOLT (M12X1.75X80MM)	
		1	**183-6933**	1	BRACKET	
		1	**198-9942**	1	BRACKET	
	14	1	**214-6867**	2	PLATE	
	15	1	**003-9514**	1	COUPLING-PIPE	
	16	1	**4S-9191**	8	WASHER (12X22.5X5MM THK)	
M	17	1	**6V-1820**	8	BOLT (M10X1.50X30MM)	
M	18	1	**6V-8214**	12	BOLT (M6X1X20MM)	
	19	1	**7X-7729**	6	WASHER (11X25X3MM THK)	
	20	1	**8T-4121**	47	WASHER-HARD (11X21X2.5MM THK)	
M	21	1	**8T-4136**	37	BOLT (M10X1.5X25MM)	
M	22	1	**8T-4186**	8	BOLT (M10X1.5X40MM)	
M	23	1	**8T-4195**	4	BOLT (M10X1.5X30MM)	
M	24	1	**8T-4196**	4	BOLT (M10X1.5X35MM)	
	25	1	**8T-4223**	10	WASHER-HARD (13.5X25.5X3MM THK)	
M	26	1	**8T-4910**	10	BOLT (M12X1.75X60MM)	
	27	1	**9D-3767**	2	PLUG-BUTTON	
	28	1	**9X-8267**	12	WASHER (6.6X12X2MM THK)	
E	29	1	**5P-0767**		HOSE (48CM)	
E	30	1	**123-3827**		SEAL (100.8CM)	
E	31	1	**204-9840**		SEAL (98CM)	
E	31A	1	**204-9840**		SEAL (98CM)	
E	32	1	**7X-7877**		STRIP-EDGING (16CM)	

E-ORDER BY THE CENTIMETER
M-METRIC PART

197-1448 **GUARD & SUPPORT GP-RADIATOR** *(contd.)* **i01662236**

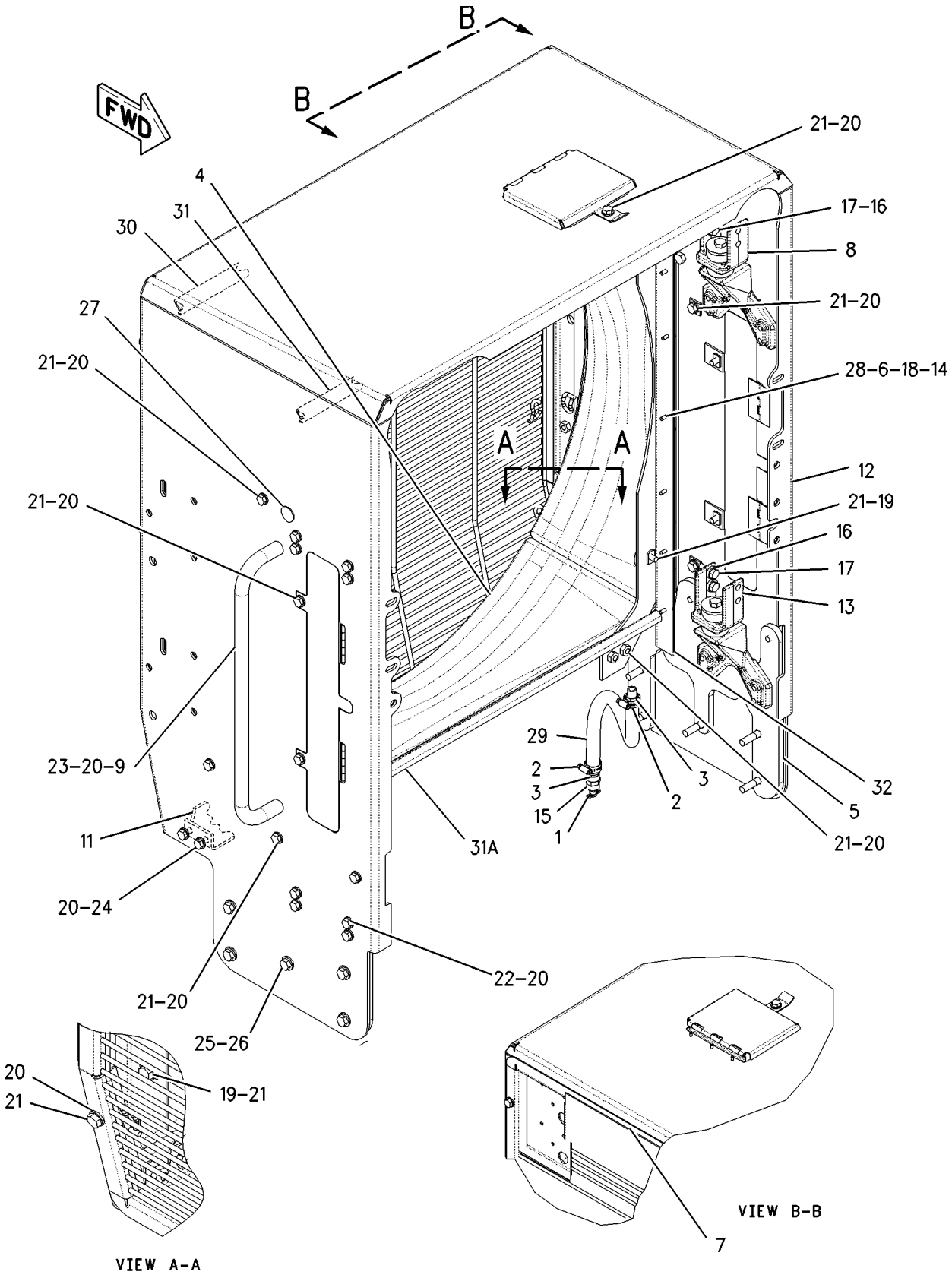

GRAPHIC #1 g00857852

8X-9311 GUARD GP-BOTTOM–EU

S/N: ASE1-UP
PART OF 211-1769, 211-1770 CONVERSION AR-CERTIFICATION
AN ATTACHMENT

SMCS-7153 **i00128649**

NOTE	REF NO	GRAPHIC REF	PART NUMBER	QTY	PART NAME 1 2 3 4 5 6 (PRODUCT LEVEL)	SEE PAGE
	1	1	**8X-9539**	1	GUARD AS	
	2	1	**7D-7496**	2	PIN AS	
	3	1	**3S-1349**	2	WASHER (6.0MM THK)	
	4	1	**8K-0530**	2	PIN-CABLE SOCKET	
	5	1	**8W-6626**	2	CAP	
	6	1	**0L-1178**	4	BOLT (3/4-10X2IN)	
	7	1	**5P-6652**	4	WASHER (6.0MM THK)	

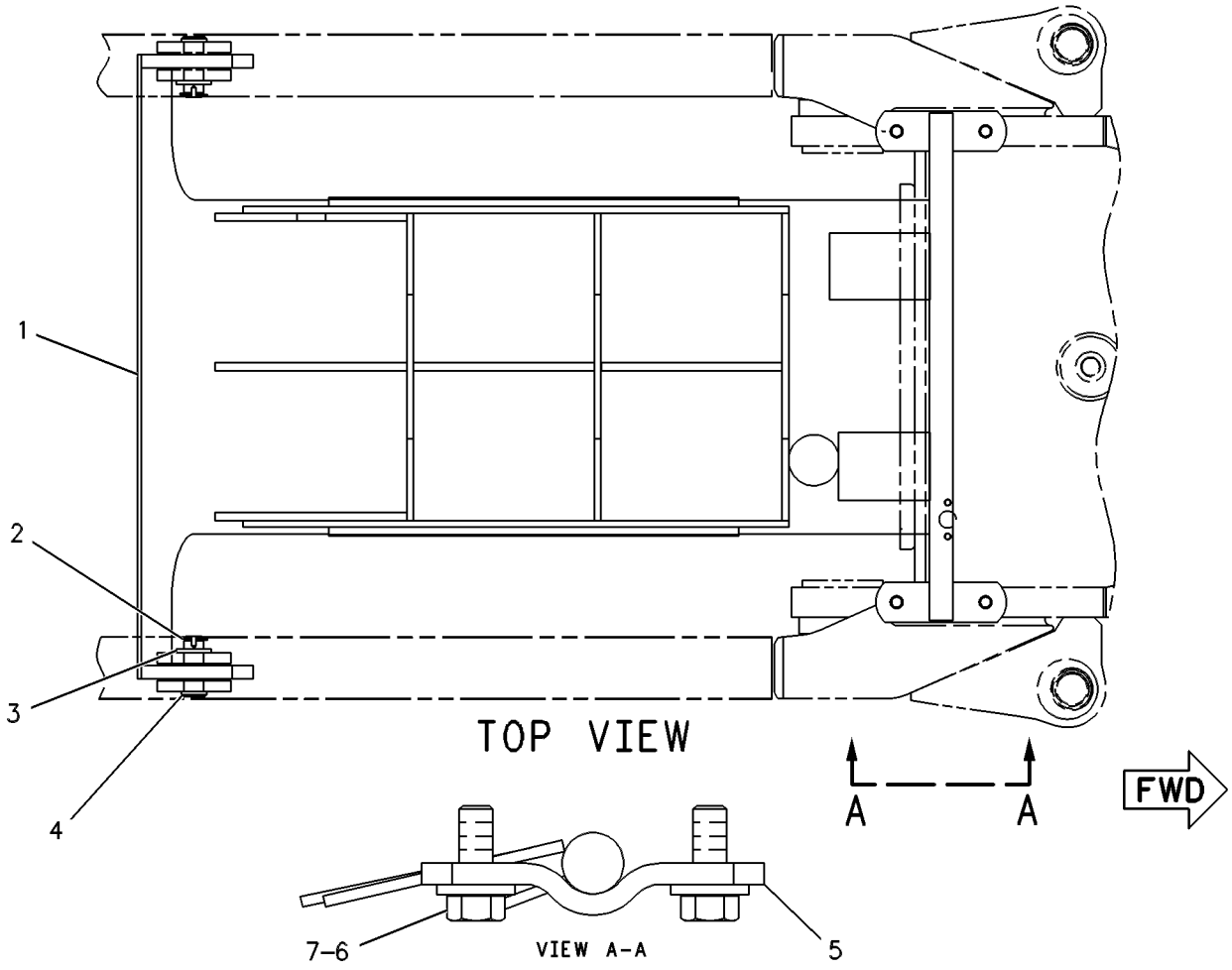

GRAPHIC #1 g00109042

188-9369 GUARD GP-BRAKE LINES

S/N: ASE1-UP
PART OF 179-6143 PROTECTION AR-SNOW PLOW
AN ATTACHMENT

SMCS-7166 **i01660161**

NOTE	REF NO	GRAPHIC REF	PART NUMBER	QTY	PART NAME 1 2 3 4 5 6 (PRODUCT LEVEL)	SEE PAGE
	1	1	**188-9370**	1	TANDEM AS (RH)	
		1	**9R-2672**	7	BOSS (M10X20MM)	
		1	**188-9367**	1	HOUSING AS	
	2	1	**188-9371**	1	TANDEM AS (LH)	
		1	**9R-2672**	7	BOSS (M10X20MM)	
		1	**188-9368**	1	HOUSING AS	
	3	1	**201-0727**	2	PLATE	
	4	1	**201-0728**	2	PLATE	
	5	1	**8T-4121**	14	WASHER-HARD (11X21X2.5MM THK)	
M	6	1	**8T-4137**	14	BOLT (M10X1.5X20MM)	

M-METRIC PART

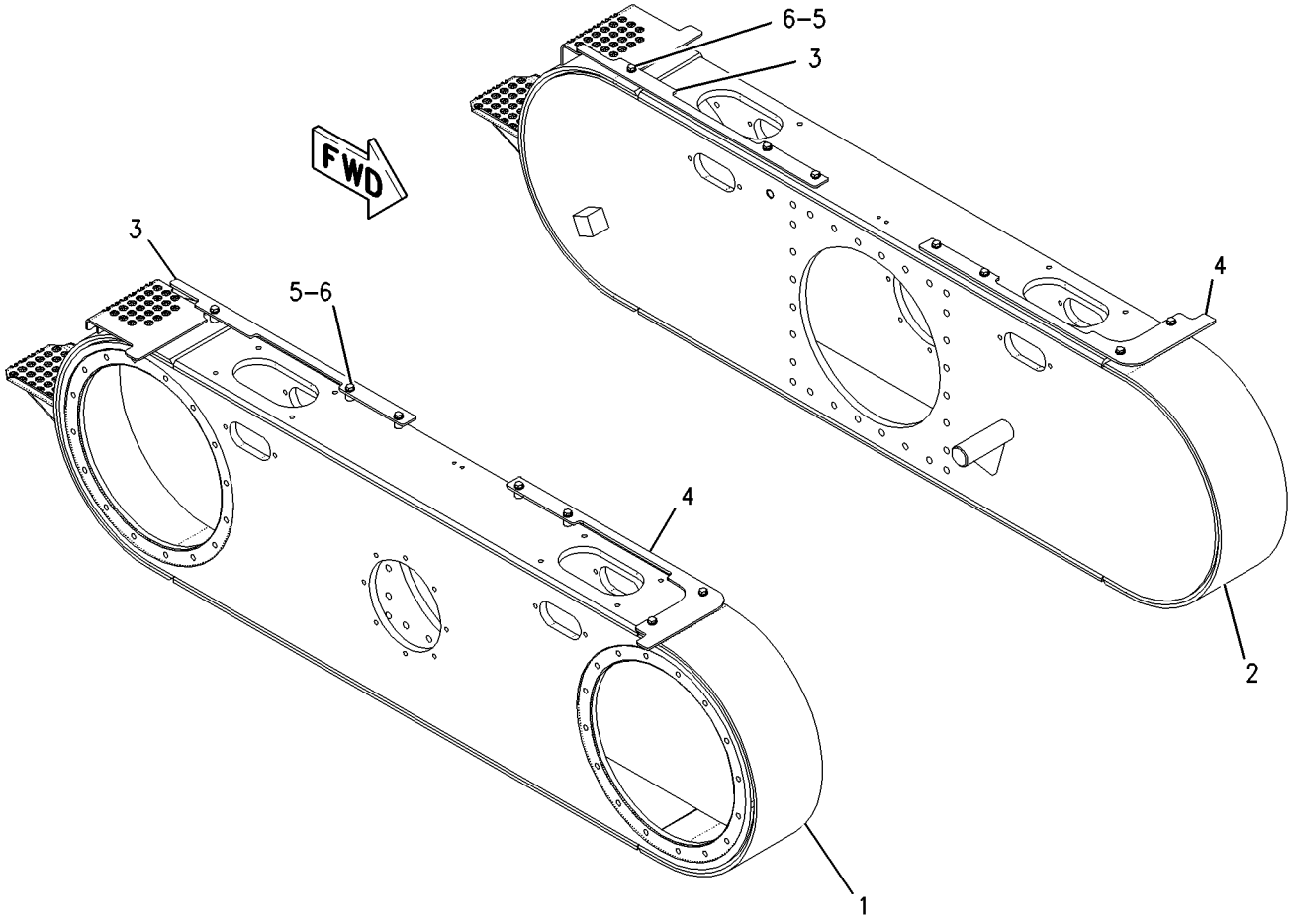

GRAPHIC #1 g00858300

166-7064 GUARD GP-PLATFORM—OPEN—HIGH PROFILE

S/N: ASE1-UP
PART OF 203-6642 ROPS AR-OPEN
AN ATTACHMENT

SMCS-7253, 7256 **i01628032**

NOTE	REF NO	GRAPHIC REF	PART NUMBER	QTY	PART NAME 1 2 3 4 5 6 (PRODUCT LEVEL)	SEE PAGE
	1	1	**7G-7920**	1	PLUG-SEAL	
	2	1	**7K-1181**	1	STRAP-CABLE	
	3	1	**8T-8737**	30	PLUG-SEAL	
	4	1	**8X-2226**	2	PLATE	
	5	1	**8X-2913**	2	COVER AS	
	6	1	**8X-6475**	2	PLATE	
	7	1	**8X-8505**	2	PLATE	
	9	1	**160-6382**	1	GROMMET	
	10	1	**169-5414**	1	CLIP	
	11	1	**198-8588**	1	PANEL	
	12	1	**200-3967**	1	PANEL AS	
	13	1	**115-3072**	1	CLIP AS-CONNECTOR	
	14	1	**127-5484**	1	RECEPTACLE AS (1 PIN)	
	15	1	**155-2255**	1	KIT-CONNECTING PLUG (12 PIN)	
	16	1	**102-8805**	1	KIT-RECEPTACLE (6 PIN)	
	17	1	**102-8801**	1	KIT-RECEPTACLE (12 PIN)	
	18	1	**3P-3839**	1	GROMMET	
	19	1	**4L-6454**	3	BOLT (3/8-16X1 IN)	
	20	1	**4M-5281**	4	BOLT (1/4-20X.750 IN)	
	21	1	**5P-1075**	3	WASHER-HARD (10.2X22.5X3MM THK)	
	22	1	**5P-4115**	4	WASHER-HARD (7.2X19X2MM THK)	
	23	1	**5P-9085**	2	CLIP	
	24	1	**6V-2687**	4	SCREW-PAN HEAD (10-24X1IN)	
	25	1	**8T-4121**	2	WASHER-HARD (11X21X2.5MM THK)	
M	26	1	**8T-4137**	2	BOLT (M10X1.5X20MM)	
M	27	1	**9X-2043**	22	SCREW-TRUSS HEAD (M6X1X14MM)	

M-METRIC PART

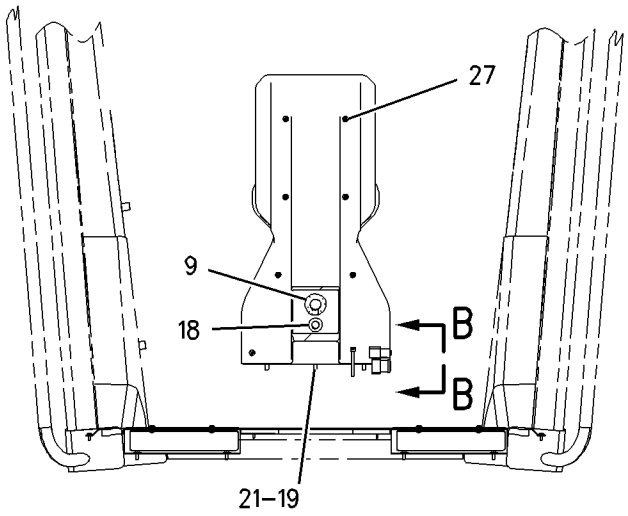

FRONT VIEW

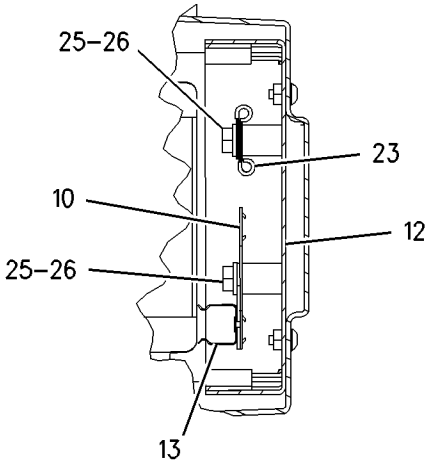

SECTION A-A

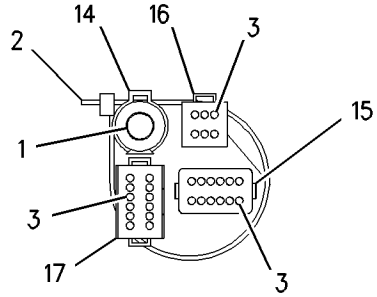

VIEW B-B

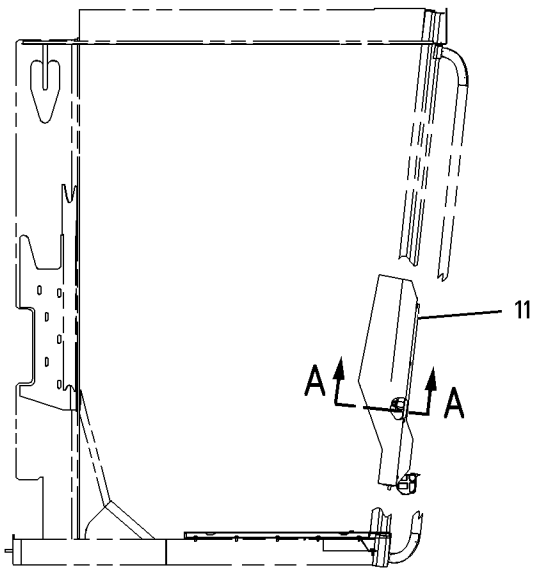

RIGHT SIDE VIEW

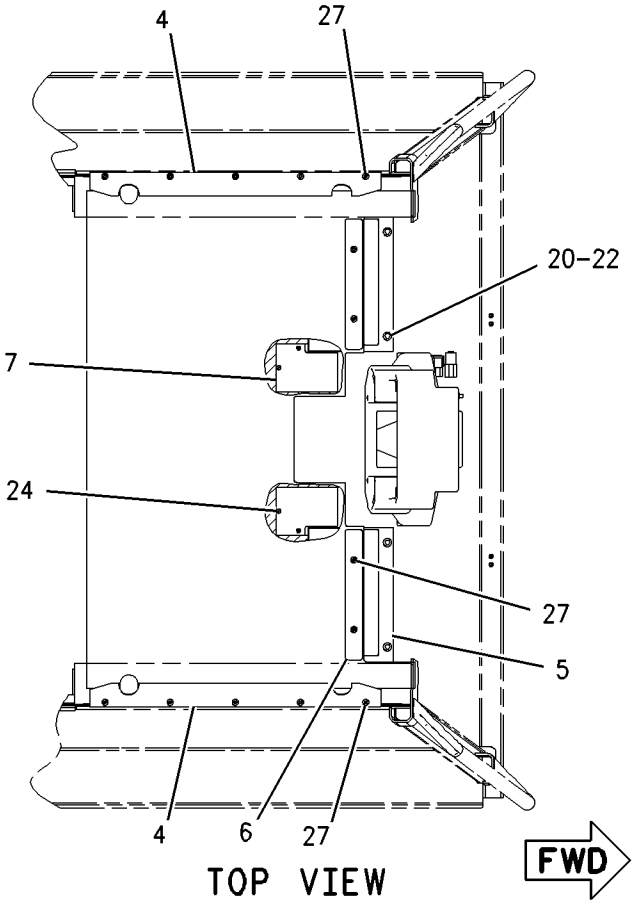

TOP VIEW

GRAPHIC #1

g00846264

166-7065 GUARD GP-PLATFORM—NON-ROPS

S/N: ASE1-UP

PART OF 203-6643 CONVERSION AR-NON-ROPS

AN ATTACHMENT

SMCS-7253, 7256 **i01671234**

NOTE	REF NO	GRAPHIC REF	PART NUMBER	QTY	PART NAME 1 2 3 4 5 6 (PRODUCT LEVEL)	SEE PAGE
	1	1	**7G-7920**	1	PLUG-SEAL	
	2	1	**7K-1181**	1	STRAP-CABLE	
	3	1	**8T-8737**	30	PLUG-SEAL	
	4	1	**8W-3902**	1	SUPPORT AS	
	5	1	**8X-2913**	2	COVER AS	
					(EACH INCLUDES)	
M		1	**6V-9632**	2	NUT-WELD (M6X1 THD)	
	6	1	**8X-6419**	1	FLOOR MAT	
	7	1	**8X-6475**	2	PLATE	
	8	1	**8X-8505**	2	PLATE	
	9	1	**8X-9464**	2	STEP AS	
	10	1	**135-3894**	1	PIPE AS	
	11	1	**160-6382**	1	GROMMET	
	12	1	**169-5414**	1	CLIP	
	13	1	**198-8588**	1	PANEL	
	14	1	**200-3967**	1	PANEL AS	
	15	1	**115-3072**	1	CLIP AS-CONNECTOR	
	16	1	**127-5484**	1	RECEPTACLE AS (1 PIN)	
	17	1	**155-2255**	1	KIT-CONNECTING PLUG (12 PIN)	
	18	1	**102-8805**	1	KIT-RECEPTACLE (6 PIN)	
	19	1	**102-8801**	1	KIT-RECEPTACLE (12 PIN)	
	20	1	**3P-3839**	1	GROMMET	
	21	1	**4L-6454**	7	BOLT (3/8-16X1 IN)	
	22	1	**4M-5281**	4	BOLT (1/4-20X.750 IN)	
	23	1	**5P-1075**	7	WASHER-HARD (10.2X22.5X3MM THK)	
	24	1	**5P-2566**	8	BOLT (1/2-13X1.5 IN)	
	25	1	**5P-4115**	4	WASHER-HARD (7.2X19X2MM THK)	
	26	1	**5P-9085**	2	CLIP	
	27	1	**6V-2687**	4	SCREW-PAN HEAD (10-24X1IN)	
	28	1	**6V-8188**	4	NUT (1/2-13 THD)	
	29	1	**7X-0328**	4	BOLT (1/2-13X3.50 IN)	
	30	1	**8T-4121**	2	WASHER-HARD (11X21X2.5MM THK)	
M	31	1	**8T-4137**	2	BOLT (M10X1.5X20MM)	
	32	1	**8T-4223**	16	WASHER-HARD (13.5X25.5X3MM THK)	
M	33	1	**9X-2043**	12	SCREW-TRUSS HEAD (M6X1X14MM)	

M-METRIC PART

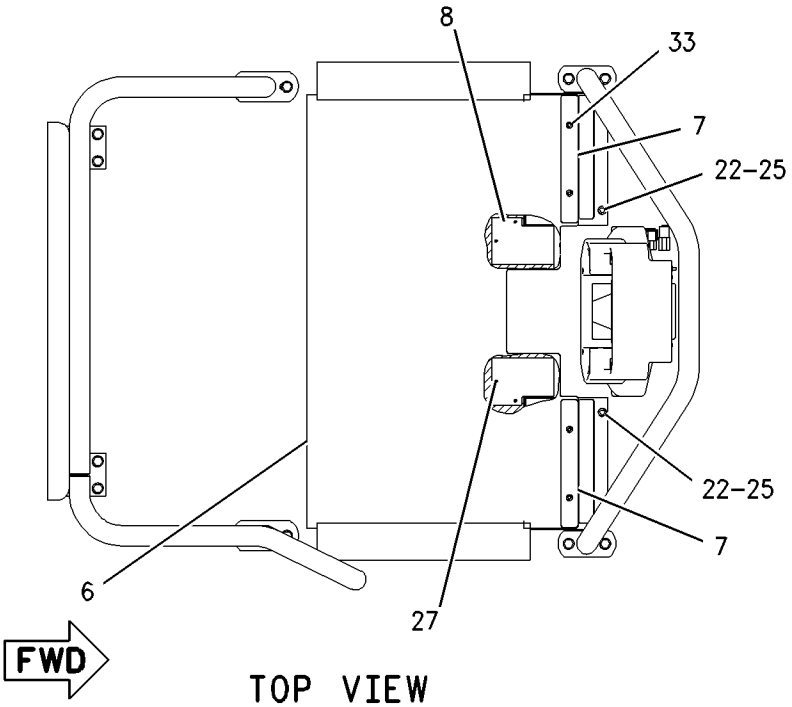

TOP VIEW

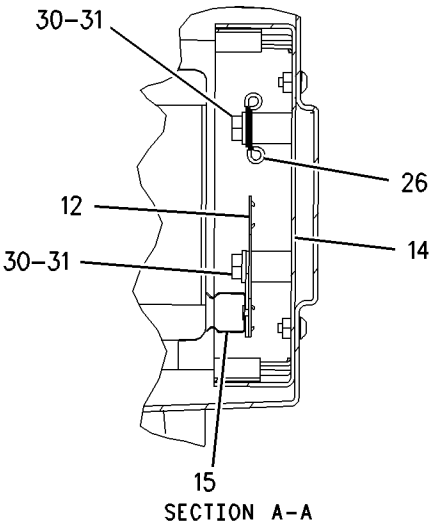

SECTION A-A

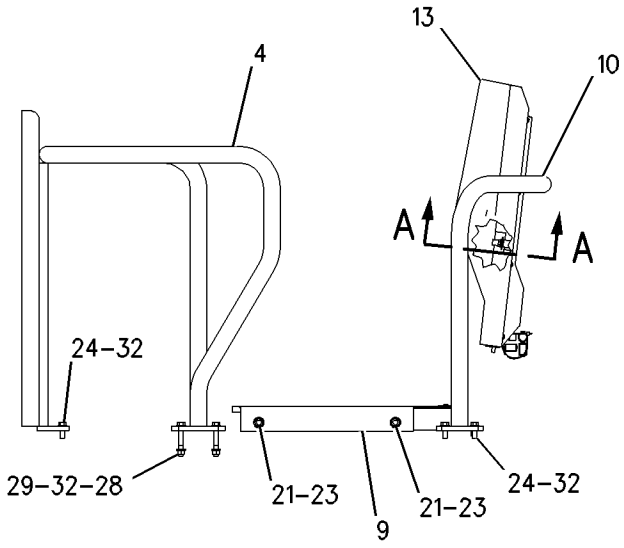

RIGHT SIDE VIEW

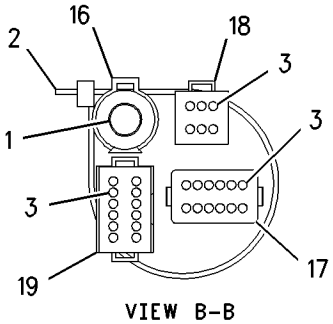

VIEW B-B

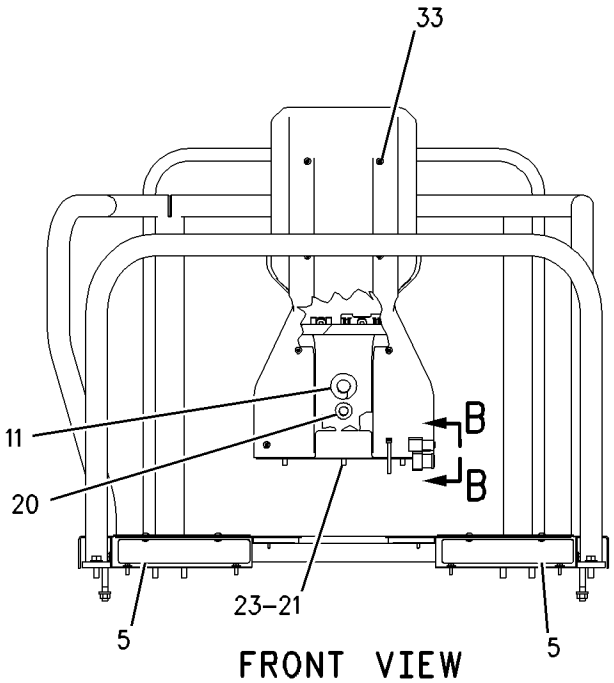

FRONT VIEW

GRAPHIC #1

g00847815

106-4885 HITCH GP-ARTICULATING

S/N: ASE1-UP

PART OF 162-5606 GENERAL AR

SMCS-7057, 7100 **i00842353**

NOTE	REF NO	GRAPHIC REF	PART NUMBER	QTY	PART NAME 1 2 3 4 5 6 (PRODUCT LEVEL)	SEE PAGE
	1	1	**4K-8659**	1	BEARING-SLEEVE	
	2	1	**4K-7463**	2	SEAL-LIP	
	3	1	**0S-1587**	2	BOLT (1/2-13X1.75IN)	
	4	1	**5P-8245**	20	WASHER (3MM THK)	
	5	1	**6G-0417**	1	COVER	
	6	1	**9X-8873**	4	BOLT (1/2-13X2.25IN)	
	7	1	**2V-4332**	1	COLLAR	
	8	1	**4K-8734**	1	BEARING	
	9	1	**124-3241**	1	PIN	
	10	1	**4K-6558**	1	PIN-LOWER	
	11	1	**4K-6780**	1	SPACER	
B	12	1	**4K-7465**	1	SHIM PACK (INCL 19 SHIMS)	
	13	1	**4K-7467**	1	BEARING AS-ROLLER	
B	14	1	**4K-7464**	1	SHIM PACK (INCL 19 SHIMS)	
	15	1	**0S-1585**	6	BOLT (1/2-13X1.50IN)	
	16	1	**5P-8247**	4	WASHER-HARD (3.5MM THK)	
	17	1	**0S-1589**	4	BOLT (5/8-11X1.75IN)	
	18	1	**4V-0015**	1	PLATE-LOCKING	
	19	1	**4K-6781**	1	SPACER	
	20	1	**4K-6760**	1	CAP-LOWER	
	21	1	**4K-7461**	1	SEAL-LIP	
	22	1	**4K-6761**	1	CAP-UPPER	
	23	1	**2B-2006**	8	BOLT (1/2-13X4.75IN)	
	24	1	**4K-7462**	1	SEAL-LIP	

B-USE AS REQUIRED

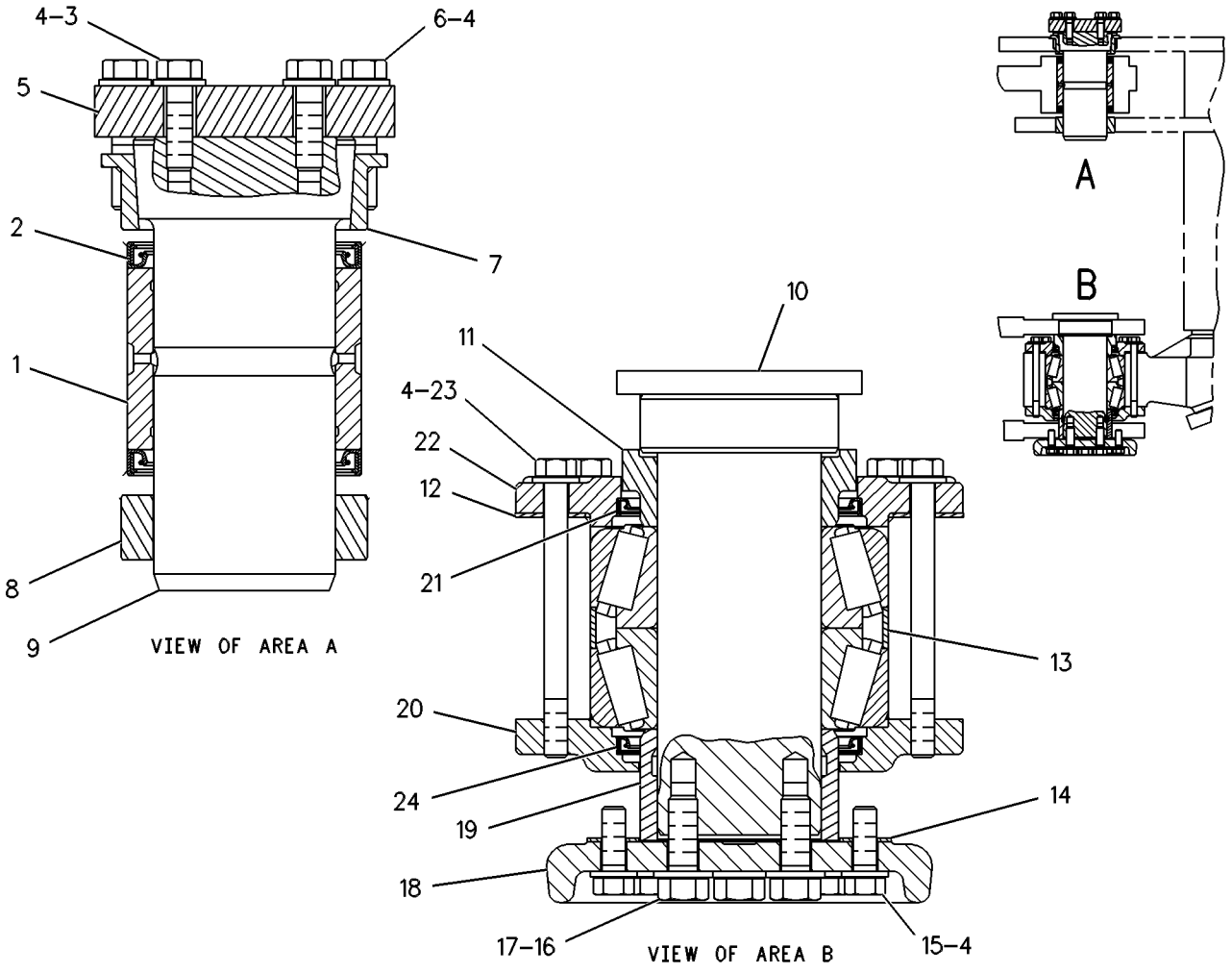

GRAPHIC #1 g00109051

FRAME AND BODY

168-7961 HITCH GP-TOWING

S/N: ASE1-UP

PART OF 162-5606 GENERAL AR

SMCS-7100, 7103 **i01648634**

NOTE	REF NO	GRAPHIC REF	PART NUMBER	QTY	PART NAME 1 2 3 4 5 6 (PRODUCT LEVEL)	SEE PAGE
	1	1	**185-9542**	1	HITCH AS	
	2	1	**1A-8063**	2	BOLT (3/4-10X2.5 IN)	
	3	1	**5P-8248**	2	WASHER-HARD (20X36.5X3.5MM THK)	
	4	1	**5P-8250**	6	WASHER (28X49X5MM THK)	
	5	1	**8S-9093**	6	BOLT (1-8X2.25IN)	

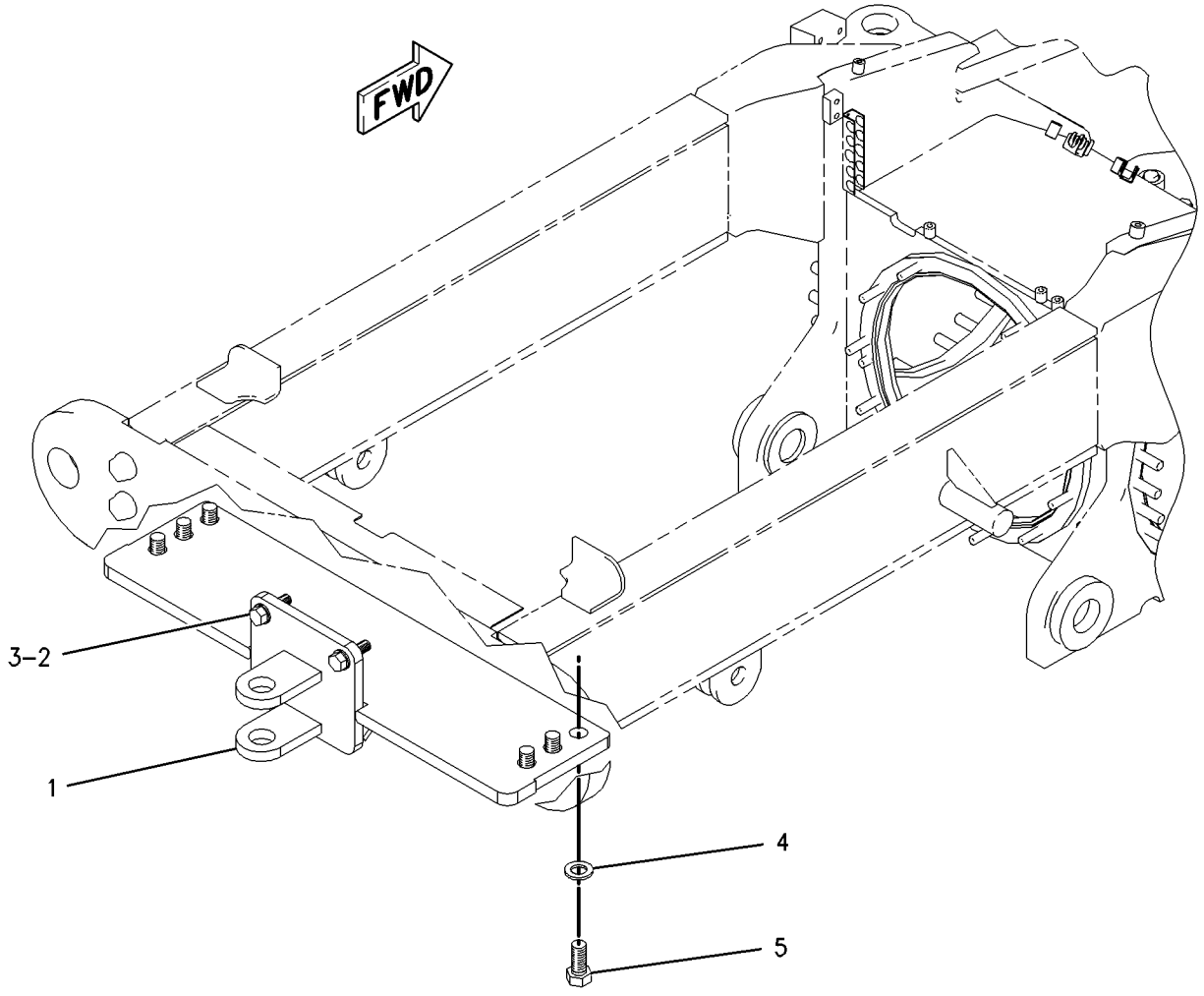

GRAPHIC #1 g00858627

FRAME AND BODY

202-1454 LINES GP-GREASE

S/N: ASE1-UP

PART OF 162-5606 GENERAL AR

SMCS-7510 **i01649045**

NOTE	REF NO	GRAPHIC REF	PART NUMBER	QTY	PART NAME 1 2 3 4 5 6 (PRODUCT LEVEL)	SEE PAGE
	1	1	**3B-6769**	2	ELBOW	
	2	1	**3B-8489**	2	FITTING-GREASE (1/8-27 THD) (UPPER/LOWER ARTICULATION PIN)	
I	3	1	**3G-6659**	1	HOSE AS	
	4	1	**8W-4342**	1	HOSE AS	
	5	1	**3B-7733**	1	FITTING	
	6	1	**4D-7794**	1	CLIP	
	7	1	**5H-7826**	1	NIPPLE-PIPE	

I-SEE HOSE FABRICATION GUIDE

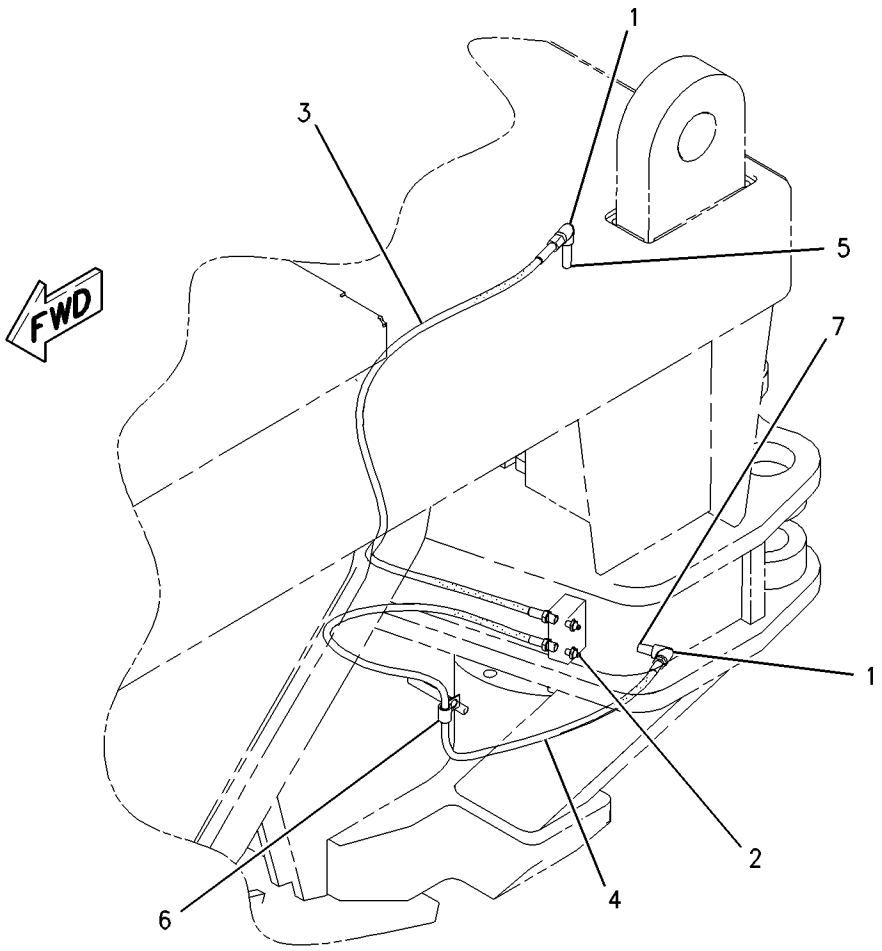

GRAPHIC #1 g00858534

141-6140 LINK GP-STEERING

S/N: ASE1-UP

PART OF 113-9100 AXLE GP-FRONT

SMCS-4305 **i00823295**

NOTE	REF NO	GRAPHIC REF	PART NUMBER	QTY	PART NAME 1 2 3 4 5 6 (PRODUCT LEVEL)	SEE PAGE
	1	1	**141-6137**	1	SOCKET GP-TIE ROD	
		1	**1D-0906**	1	NUT-SLOTTED	
	2	1	**141-6141**	2	CLAMP	
	3	1	**1B-4367**	2	BOLT (5/8-11X3IN)	
	4	1	**3K-2889**	2	LOCKNUT (5/8-11 THD)	
	5	1	**141-6142**	1	ROD	
	6	1	**141-6136**	1	TIE ROD GP	
		1	**1D-0906**	1	NUT-SLOTTED	

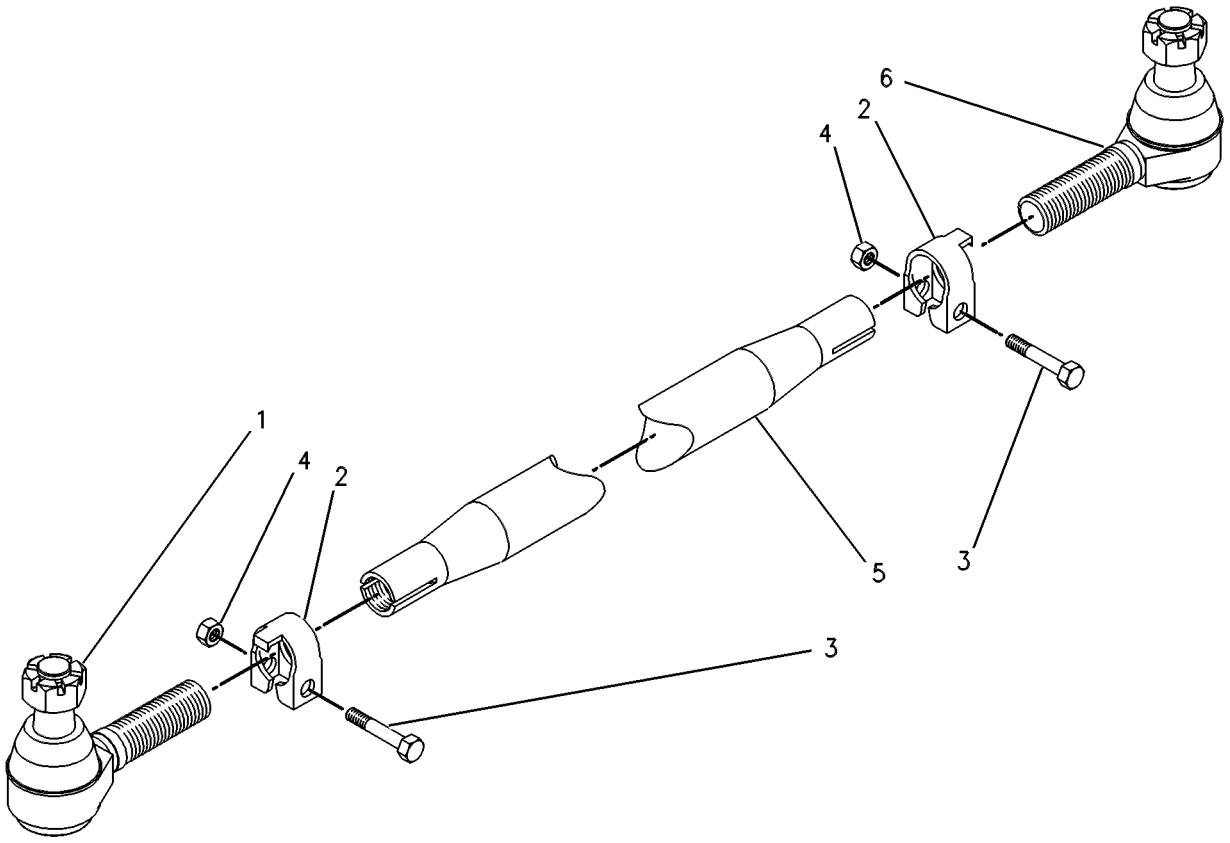

GRAPHIC #1 g00279024

161-1128 PANEL GP-SOUND SUPPRESSION–BOTTOM

S/N: ASE1-UP
AN ATTACHMENT

SMCS-7076, 7261 **i01657525**

NOTE	REF NO	GRAPHIC REF	PART NUMBER	QTY	PART NAME 1 2 3 4 5 6 (PRODUCT LEVEL)	SEE PAGE
	1	1	**8X-9545**	1	SHIELD (RH)	
	2	1	**8X-9546**	1	SHIELD (LH)	
	3	1	**4L-6454**	8	BOLT (3/8-16X1 IN)	
	4	1	**8T-4897**	8	WASHER (10.2X35X6MM THK)	

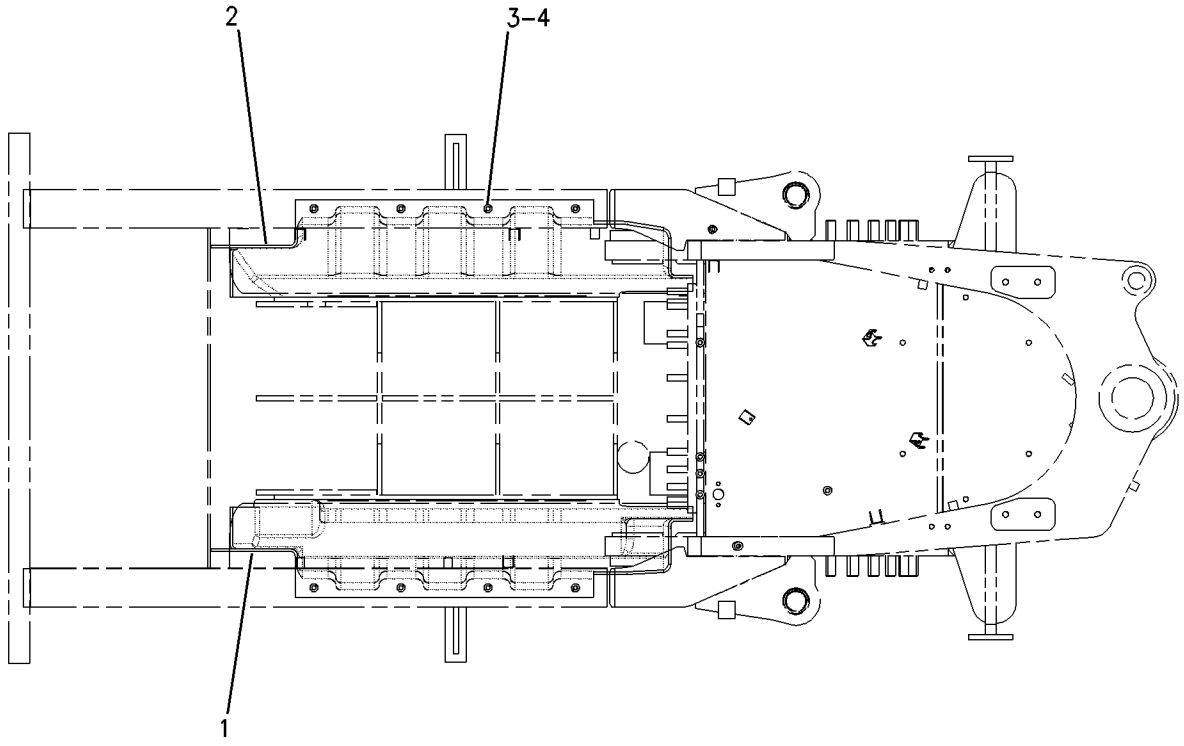

GRAPHIC #1 g00858970

179-6143 PROTECTION AR-SNOW PLOW–BRAKE

S/N: ASE1-UP

AN ATTACHMENT

SMCS-6159 **i01659805**

NOTE	PART NUMBER	QTY	PART NAME 1 2 3 4 5 6 (PRODUCT LEVEL)	SEE PAGE
Y	*188-9369*	1	GUARD GP-BRAKE LINES	361

Y-SEPARATE ILLUSTRATION

196-9642 PROTECTION AR-SNOW PLOW–FAN

S/N: ASE1-UP

AN ATTACHMENT

SMCS-6159 **i01586682**

NOTE	PART NUMBER	QTY	PART NAME 1 2 3 4 5 6 (PRODUCT LEVEL)	SEE PAGE
	101-5113	1	ADAPTER	
	141-4702	1	COVER AS-AIR CLEANER	
Y	*140-9810*	1	COVER GP-FAN	73
	147-9666	1	FAN AS-REVERSE	

Y-SEPARATE ILLUSTRATION

FRAME AND BODY

159-5438 RADIATOR GUARD & SUPPORT GP

S/N: ASE1-UP

AN ATTACHMENT

SMCS-7155, 7272 **i01624713**

NOTE	REF NO	GRAPHIC REF	PART NUMBER	QTY	PART NAME 1 2 3 4 5 6 (PRODUCT LEVEL)	SEE PAGE
	1	1	**1P-7297**	1	VALVE-DRAIN (COOLING SYSTEM)	
	2	1	**5D-1026**	2	CLAMP-HOSE	
	3	1	**5J-9105**	12	WASHER (.25X.78X.075IN THK)	
	4	1	**7D-7026**	2	CONNECTOR-HOSE	
	5	1	**166-0939**	1	SHROUD AS-FAN	
	6	1	**173-3882**	2	PLATE	
	7	1	**173-3924**	2	BAFFLE	
	8	1	**173-3942**	1	GUARD	
		1	**7T-1099**	2	LINK	
	9	1	**174-2863**	2	MOUNT AS (LH)	
					(EACH INCLUDES)	
		1	**8F-6437**	1	WASHER (13.5X50.8X4.76MM THK)	
		1	**8T-4223**	1	WASHER-HARD (13.5X25.5X3MM THK)	
M		1	**8T-4244**	1	NUT (M12X1.75 THD)	
M		1	**8T-6868**	1	BOLT (M12X1.75X80MM)	
		1	**183-6933**	1	BRACKET	
	10	1	**177-4119**	2	HANDHOLD	
	11	1	**183-7913**	1	PLATE AS	
M		1	**8T-3490**	8	NUT-WELD (M10X1.5 THD)	
		1	**9R-2613**	2	BOSS (M10X1.5X25MM)	
	12	1	**166-0940**	1	SUPPORT AS	
M		1	**8T-3490**	17	NUT-WELD (M10X1.5 THD)	
		1	**9M-5732**	3	RIVET-POP	
	13	1	**199-2756**	2	MOUNT AS (RH)	
					(EACH INCLUDES)	
		1	**8F-6437**	1	WASHER (13.5X50.8X4.76MM THK)	
		1	**8T-4223**	1	WASHER-HARD (13.5X25.5X3MM THK)	
M		1	**8T-4244**	1	NUT (M12X1.75 THD)	
M		1	**8T-6868**	1	BOLT (M12X1.75X80MM)	
		1	**183-6933**	1	BRACKET	
		1	**198-9942**	1	BRACKET	
	14	1	**003-9514**	1	COUPLING-PIPE	
	15	1	**4S-9191**	8	WASHER (12X22.5X5MM THK)	
M	16	1	**6V-1820**	8	BOLT (M10X1.50X30MM)	
M	17	1	**6V-8214**	12	BOLT (M6X1X20MM)	
	18	1	**8T-4121**	53	WASHER-HARD (11X21X2.5MM THK)	
M	19	1	**8T-4136**	37	BOLT (M10X1.5X25MM)	
M	20	1	**8T-4186**	8	BOLT (M10X1.5X40MM)	
M	21	1	**8T-4195**	4	BOLT (M10X1.5X30MM)	
M	22	1	**8T-4196**	4	BOLT (M10X1.5X35MM)	
	23	1	**8T-4223**	10	WASHER-HARD (13.5X25.5X3MM THK)	
M	24	1	**8T-4910**	10	BOLT (M12X1.75X60MM)	
	25	1	**9D-3767**	2	PLUG-BUTTON	
	26	1	**5P-0767**		HOSE (48CM)	
	27	1	**123-3827**		SEAL (100.8CM)	
	28	1	**204-9840**		SEAL (98CM)	
	28A	1	**204-9840**		SEAL (98CM)	

M-METRIC PART

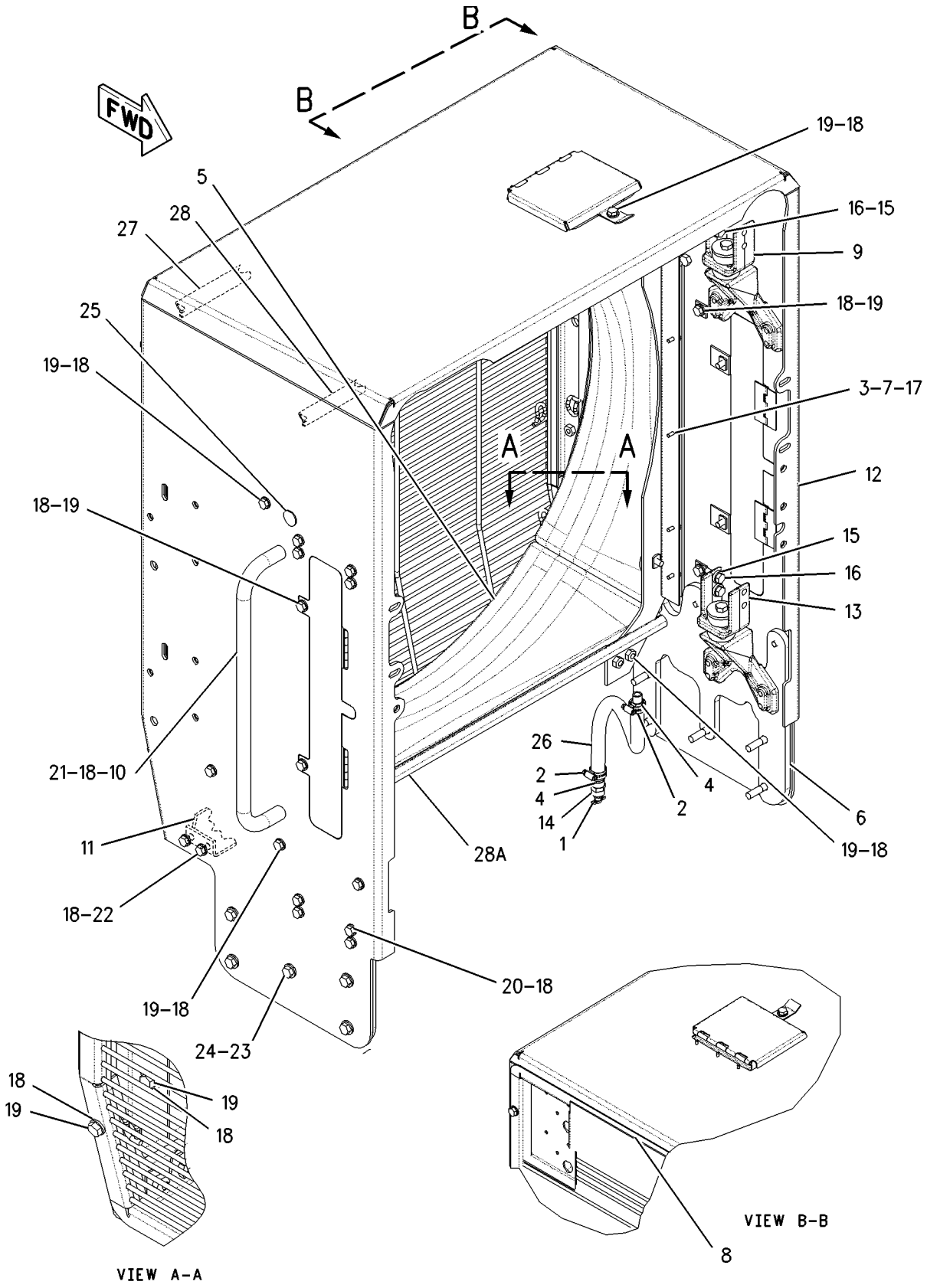

GRAPHIC #1 g00841343

6G-6910 SHIELD GP-DRIVE SHAFT

S/N: ASE1-UP

PART OF 162-5606 GENERAL AR

SMCS-3253, 7153 **i00128463**

NOTE	REF NO	GRAPHIC REF	PART NUMBER	QTY	PART NAME 1 2 3 4 5 6 (PRODUCT LEVEL)	SEE PAGE
	1	1	**8T-9383**	4	BOLT (1/2-13X0.75IN)	
	2	1	**5P-1076**	8	WASHER-HARD (4MM THK)	
	3	1	**6G-4323**	1	SHIELD AS (RH)	
		1	**6G-4322**	1	SHIELD AS (LH)	
	4	1	**8C-4436**	4	BOLT (1/2-13X1.375IN)	

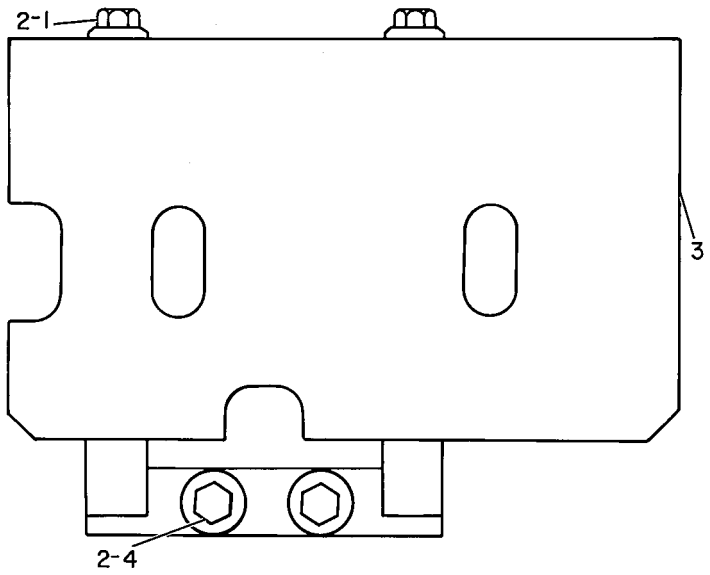

GRAPHIC #1 g00108201

FRAME AND BODY

8X-1035 STEP GP

S/N: ASE1-UP
BELTED
PART OF 162-5606 GENERAL AR

SMCS-7254 **i01514693**

NOTE	REF NO	GRAPHIC REF	PART NUMBER	QTY	PART NAME 1 2 3 4 5 6 (PRODUCT LEVEL)	SEE PAGE
	1	1	**8W-7386**	2	STEP AS	
					(EACH INCLUDES)	
		1	**4V-9803**	2	PLATE	
	2	1	**198-7380**	2	STEP AS	
					(EACH INCLUDES)	
		1	**4V-9803**	2	PLATE	
	3	1	**123-3699**	2	PLATE (LH)	
	4	1	**4V-9809**	4	STEP AS	
					(EACH INCLUDES)	
		1	**4V-9803**	2	PLATE	
	5	1	**1D-4691**	24	BOLT-CARRIAGE (1/2-13X2.5 IN)	
	6	1	**5P-1076**	8	WASHER-HARD (13.5X30X4MM THK)	
	7	1	**1K-6872**	32	LOCKNUT (1/2-13 THD)	
	8	1	**4V-9804**	12	PLATE	
	9	1	**1D-4689**	8	BOLT (1/2-13X1.75IN)	
	10	1	**123-3698**	2	PLATE (RH)	
	11	1	**141-4043**	4	BELT	
	12	1	**8T-4223**	32	WASHER-HARD (13.5X25.5X3MM THK)	
	13	1	**8T-8919**	8	BOLT (1/2-13X1.75 IN)	

QUANTITIES SHOWN ARE THOSE REQUIRED FOR BOTH LH AND RH SIDES

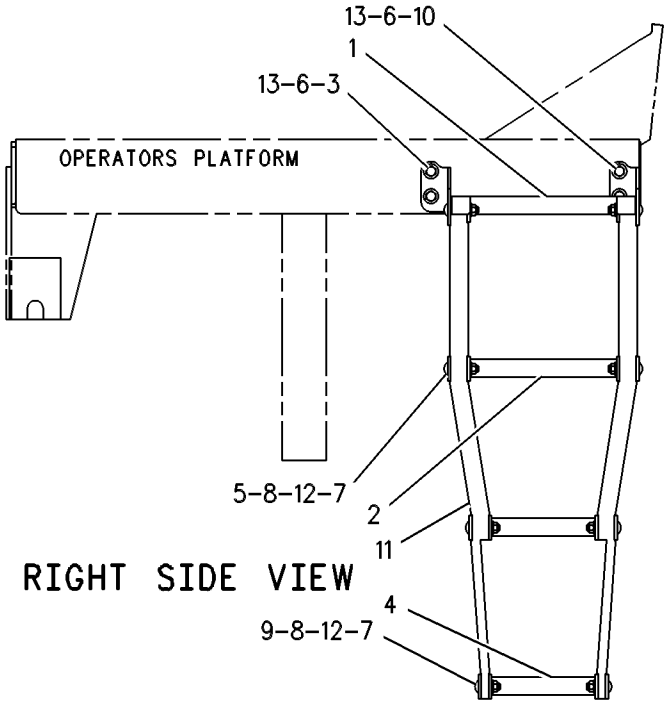

RIGHT SIDE VIEW

GRAPHIC #1 g00109604

183-8482 SUPPORT AR-REAR CHASSIS

S/N: ASE1-UP

PART OF 162-5606 GENERAL AR

SMCS-7509 **i01671239**

NOTE	REF NO	GRAPHIC REF	PART NUMBER	QTY	PART NAME 1 2 3 4 5 6 (PRODUCT LEVEL)	SEE PAGE
	1	1	**184-5160**	1	PLATFORM AS	
M		1	**8T-4140**	8	BOLT (M16X2X60MM)	
		1	**9X-8257**	16	WASHER (17.5X30X3.5MM THK)	
Y	2	1	*169-7224*	1	TANK GP-AIR	398
Y	3	1	*186-1728*	1	STARTING AID GP-ETHER	206
Y	4	1	*187-8028*	1	BATTERY GP	132
Y	5	1	*187-8137*	1	WIRING GP-REAR (SERVICE CENTER)	242

M-METRIC PART
Y-SEPARATE ILLUSTRATION

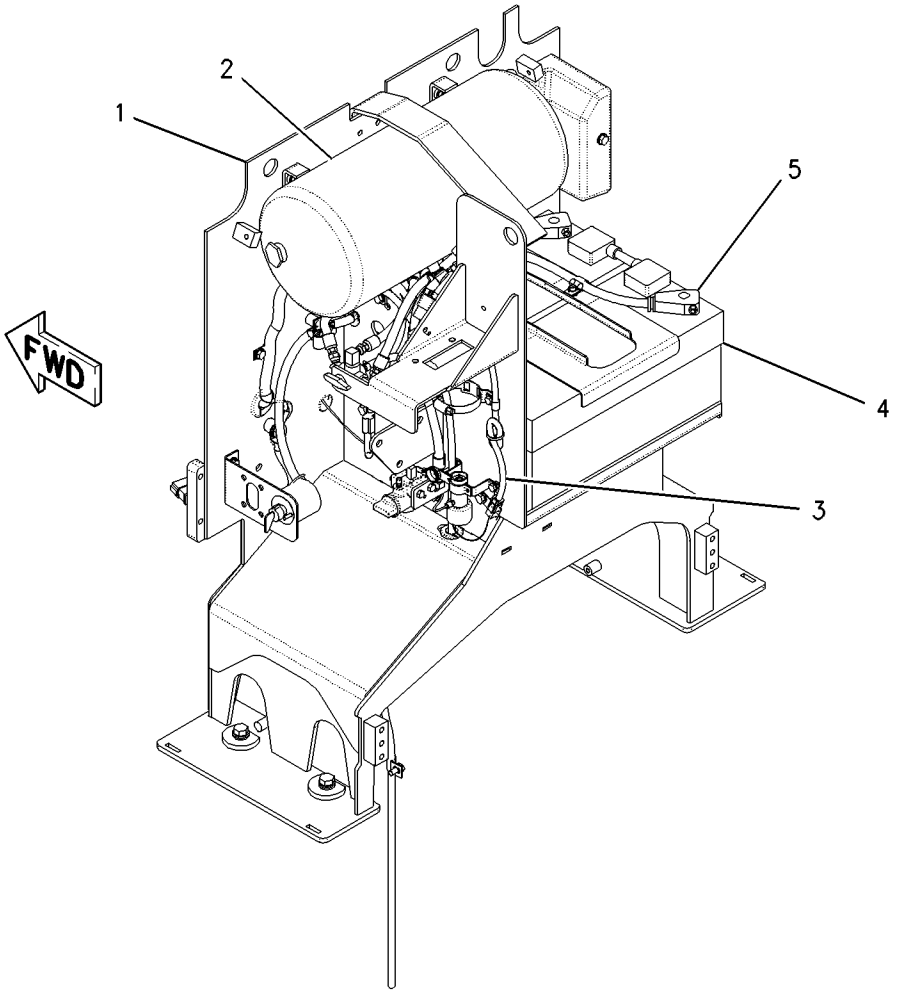

GRAPHIC #1 g00857246

FRAME AND BODY

196-9991 SUPPORT GP-FUEL TANK

S/N: ASE1-UP

PART OF 162-5606 GENERAL AR

SMCS-1273 **i01646106**

NOTE	REF NO	GRAPHIC REF	PART NUMBER	QTY	PART NAME 1 2 3 4 5 6 (PRODUCT LEVEL)	SEE PAGE
	1	1	**193-9147**	2	BRACKET (BOTH RH & LH)	
	2	1	**194-4679**	1	BRACKET (RH)	
	3	1	**196-9295**	1	BRACKET AS (LH)	
	4	1	**199-9968**	2	BRACKET AS (BOTH RH & LH)	
	5	1	**204-9017**	1	SUPPORT AS (RH)	
	6	1	**204-9018**	1	SUPPORT AS (LH)	
M	7	1	**8T-4139**	14	BOLT (M12X1.75X30MM)	
	8	1	**8T-4223**	26	WASHER-HARD (13.5X25.5X3MM THK)	
M	9	1	**8T-4956**	12	BOLT (M12X1.75X35MM)	

M-METRIC PART

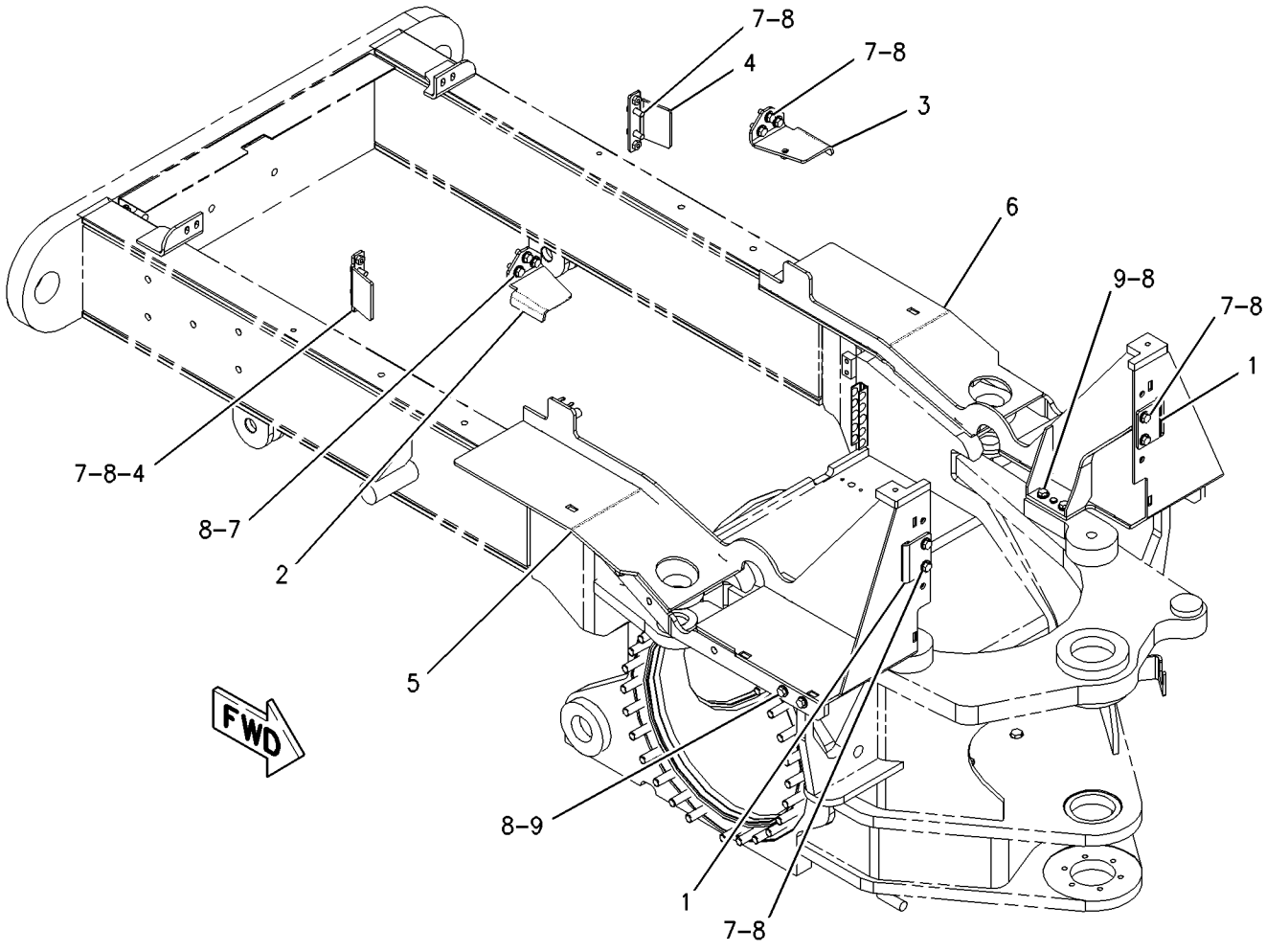

GRAPHIC #1 g00852200

BRAKING SYSTEM

160-7760 AIR DRYER GP–SNOW

S/N: ASE1-UP
PART OF 197-5959 SNOW AR-MOTOR GRADER
AN ATTACHMENT

SMCS-4285 **i01650433**

NOTE	REF NO	GRAPHIC REF	PART NUMBER	QTY	PART NAME 1 2 3 4 5 6 (PRODUCT LEVEL)	SEE PAGE
	1	1	**178-4626**	1	HOSE AS	
Y	2	1	*208-0014*	1	AIR DRYER GP (SNOW)	382

Y-SEPARATE ILLUSTRATION

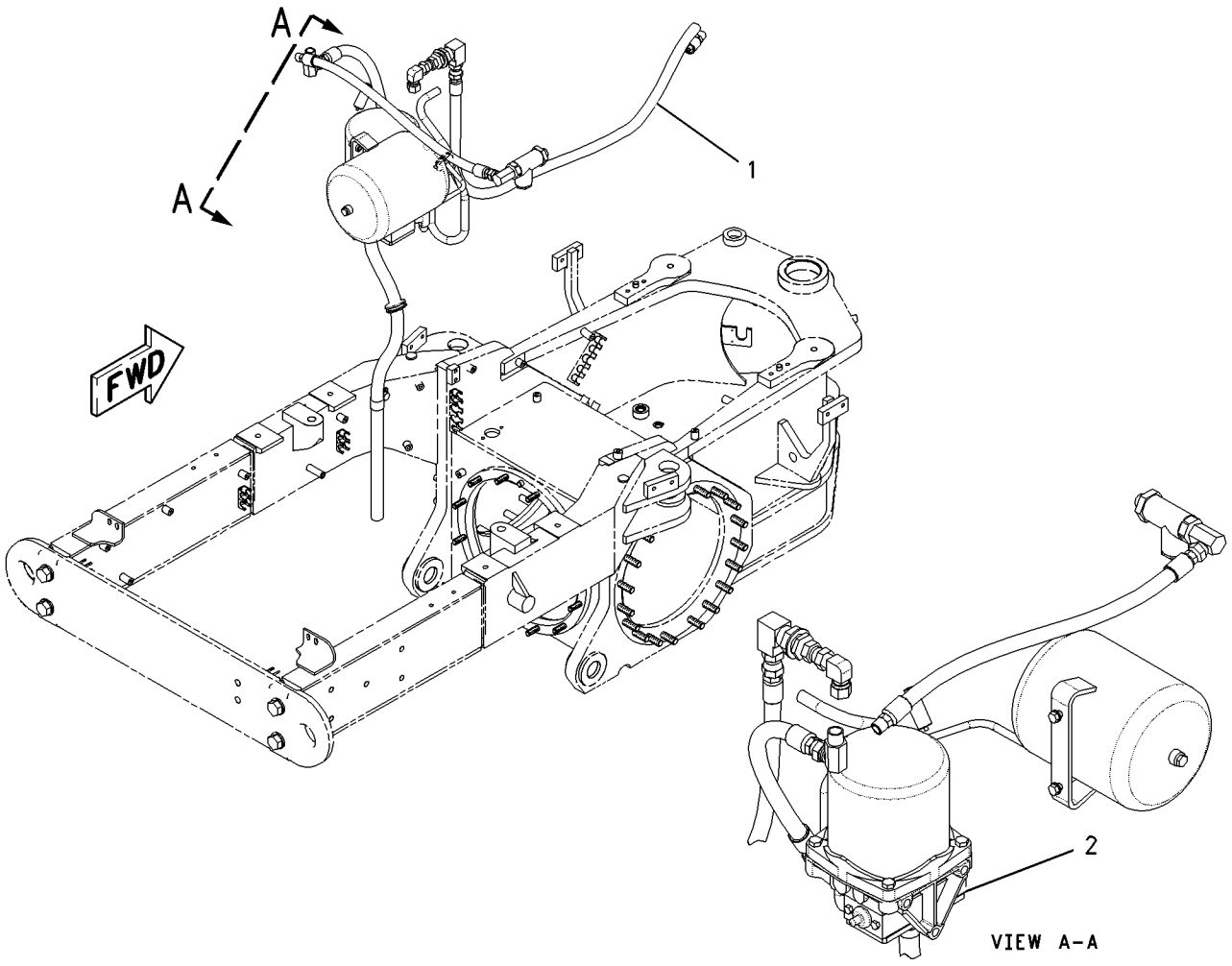

GRAPHIC #1 g00843128

MEMORANDA

208-0014 AIR DRYER GP–SNOW

S/N: ASE1-UP
PART OF 160-7760 AIR DRYER GP
AN ATTACHMENT

SMCS-4285 **i01627189**

NOTE	REF NO	GRAPHIC REF	PART NUMBER	QTY	PART NAME 1 2 3 4 5 6 (PRODUCT LEVEL)	SEE PAGE
	1	1	**0A-3721**	1	CLIP	
	2	1	**5P-4401**	1	CONNECTOR-AIR BRAKE	
	3	1	**5P-4424**	1	ELBOW-AIR BRAKE	
	4	1	**5P-4426**	3	ELBOW-AIR BRAKE	
	5	1	**6V-2610**	1	FITTING	
	6	1	**175-0403**	1	TUBE	
	7	1	**177-0279**	1	HOSE AS	
	8	1	**191-3645**	1	RESERVOIR	
	9	1	**208-1512**	1	TUBE AS	
	10	1	**208-1535**	1	TUBE	
	11	1	**215-3005**	1	DRYER GP-AIR	
	12	1	**5M-6213**	1	PLUG-PIPE	
	13	1	**6K-8178**	1	CLIP	
	14	1	**6P-6641**	1	GROMMET	
	15	1	**7D-0215**	1	CONNECTOR-PIPE	
	16	1	**7D-4903**	1	ADAPTER	
	17	1	**7J-8611**	1	ELBOW	
	18	1	**8T-4121**	2	WASHER-HARD (11X21X2.5MM THK)	
M	19	1	**8T-4137**	2	BOLT (M10X1.5X20MM)	
M	20	1	**8T-4189**	2	BOLT (M8X1.25X20MM)	
	21	1	**8T-4224**	2	WASHER-HARD (8.8X16X2MM THK)	
E	22	1	**8I-1362**		HOSE (BULK) (130CM)	

E-ORDER BY THE CENTIMETER
M-METRIC PART

208-0014 **AIR DRYER GP** *(contd.)* **i01627189**

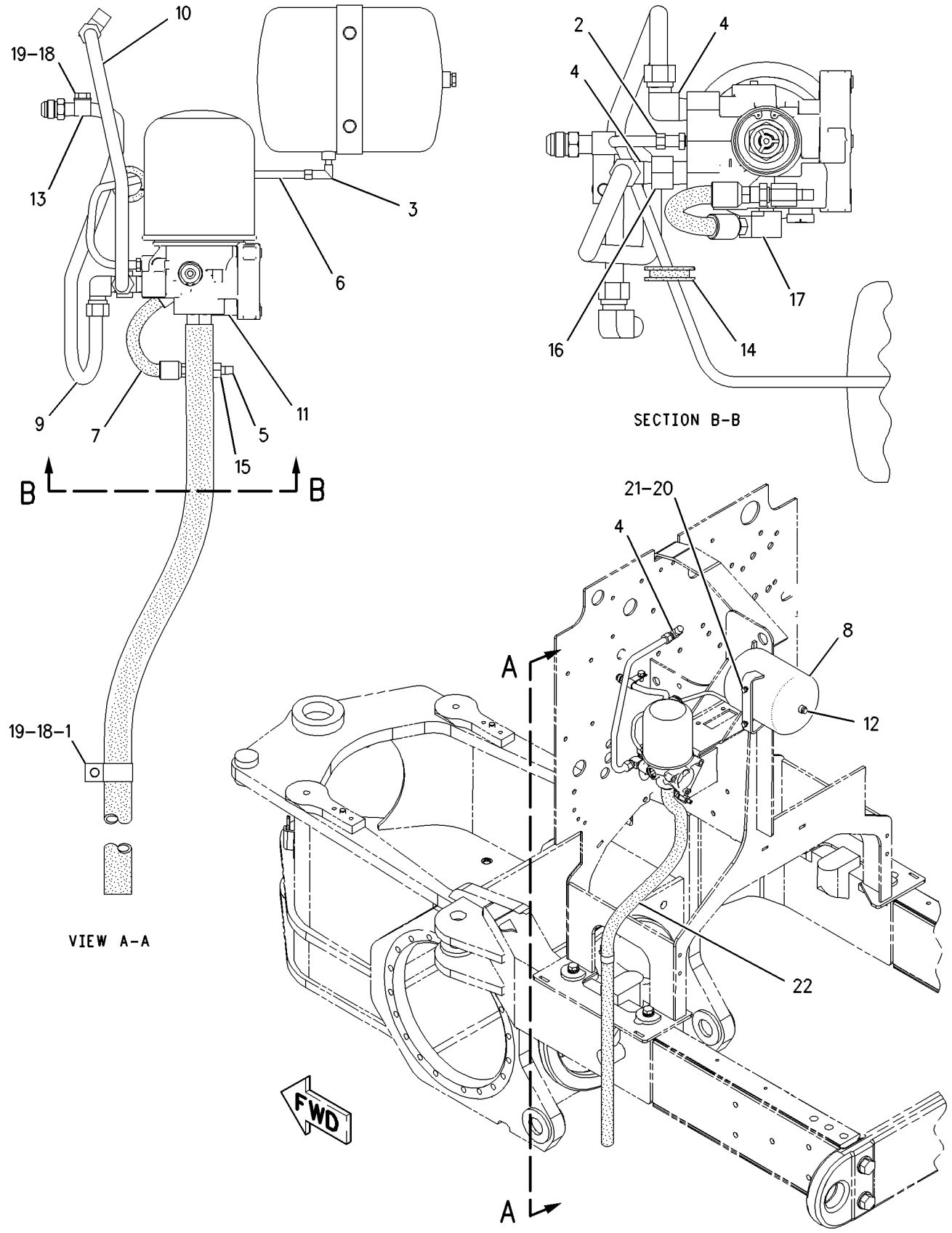

GRAPHIC #1 g00848044

BRAKING SYSTEM

215-3646 AIR DRYER GP

S/N: ASE1-UP
PART OF 215-3647 AIR DRYER GP
AN ATTACHMENT

SMCS-4285 **i01638476**

NOTE	REF NO	GRAPHIC REF	PART NUMBER	QTY	PART NAME 1 2 3 4 5 6 (PRODUCT LEVEL)	SEE PAGE
	1	1	**0A-3721**	1	CLIP	
	2	1	**2H-3940**	2	ELBOW	
I	3	1	**5D-7688**	1	HOSE AS	
	4	1	**5P-4401**	1	CONNECTOR-AIR BRAKE	
	5	1	**5P-4424**	1	ELBOW-AIR BRAKE	
	6	1	**5P-4426**	1	ELBOW-AIR BRAKE	
	7	1	**6V-2610**	1	FITTING	
	8	1	**175-0403**	1	TUBE	
	9	1	**177-0279**	1	HOSE AS	
	10	1	**191-3645**	1	RESERVOIR	
	11	1	**208-1512**	1	TUBE AS	
	12	1	**215-3005**	1	DRYER GP-AIR	
	13	1	**5M-6213**	1	PLUG-PIPE	
	14	1	**6K-8178**	1	CLIP	
	15	1	**6P-6641**	1	GROMMET	
	16	1	**7D-0215**	1	CONNECTOR-PIPE	
	17	1	**7D-4903**	1	ADAPTER	
	18	1	**7J-8611**	1	ELBOW	
	19	1	**8T-4121**	2	WASHER-HARD (11X21X2.5MM THK)	
M	20	1	**8T-4137**	2	BOLT (M10X1.5X20MM)	
M	21	1	**8T-4189**	2	BOLT (M8X1.25X20MM)	
	22	1	**8T-4224**	2	WASHER-HARD (8.8X16X2MM THK)	
E	23	1	**8I-1362**		HOSE (BULK) (130 CM)	

E-ORDER BY THE CENTIMETER
I-SEE HOSE FABRICATION GUIDE
M-METRIC PART

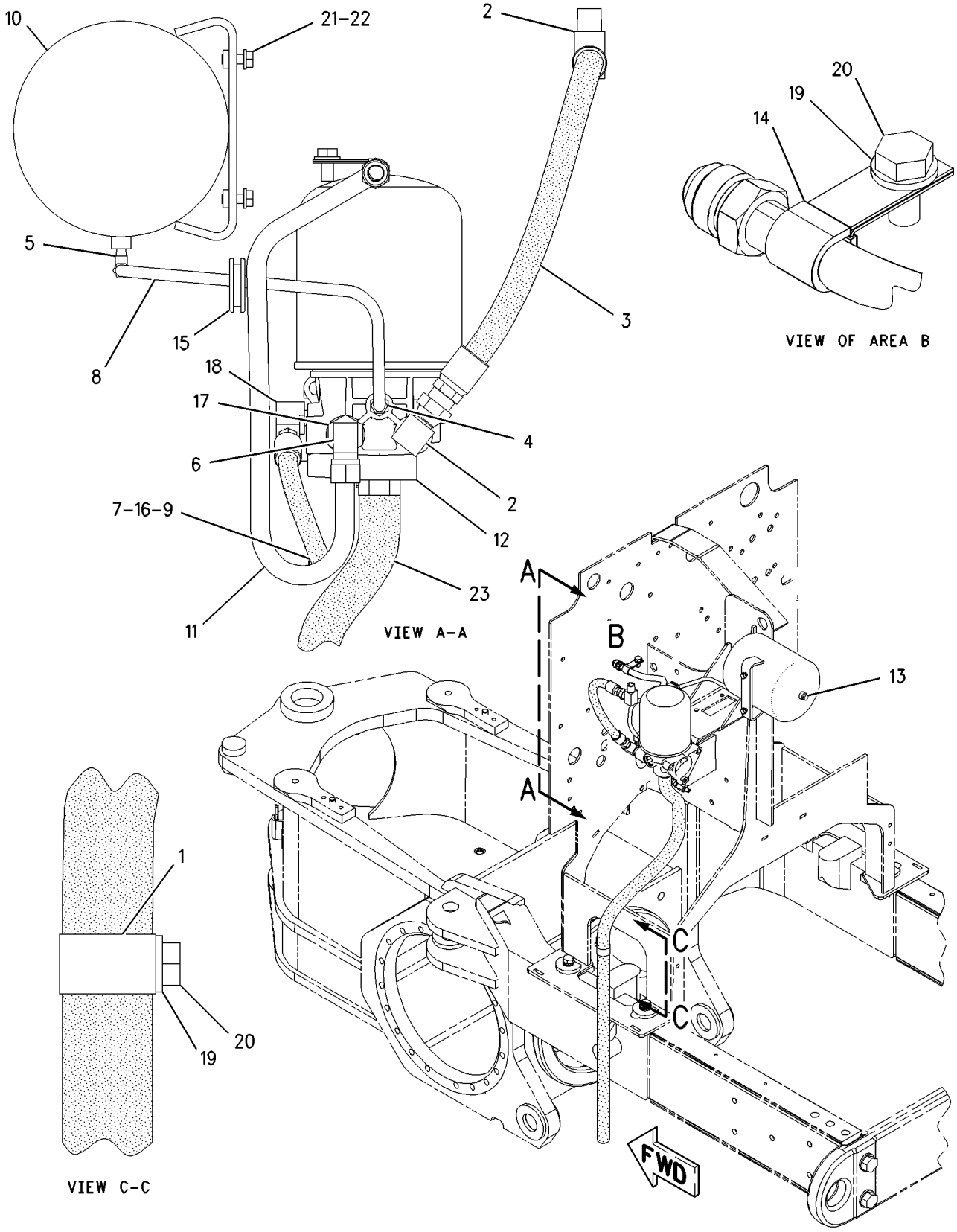

GRAPHIC #1

g00848330

BRAKING SYSTEM

215-3647 AIR DRYER GP

S/N: ASE1-UP
AN ATTACHMENT

SMCS-4285 **i01638475**

NOTE	REF NO	GRAPHIC REF	PART NUMBER	QTY	PART NAME 1 2 3 4 5 6 (PRODUCT LEVEL)	SEE PAGE
	1	1	**178-4626**	1	HOSE AS	
Y	2	1	*215-3646*	1	AIR DRYER GP	384

Y-SEPARATE ILLUSTRATION

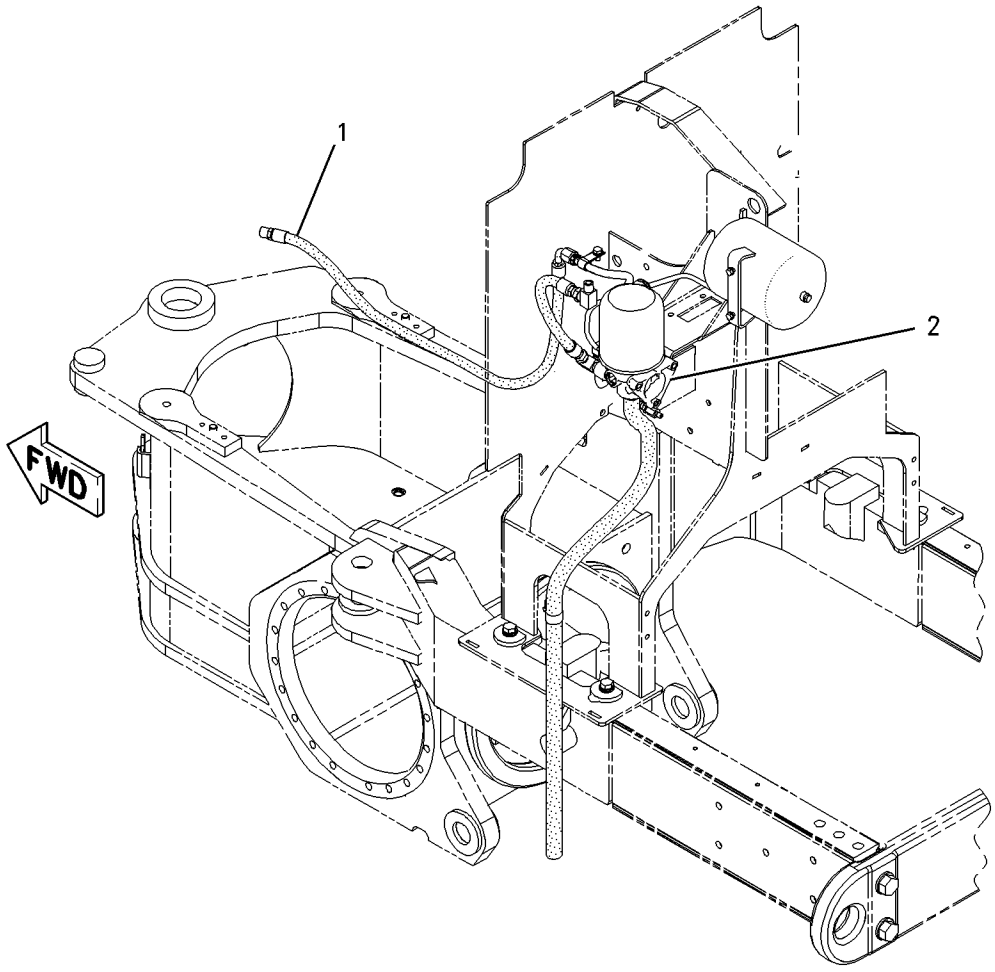

GRAPHIC #1 g00848391

MEMORANDA

BRAKING SYSTEM

8D-2180 BRAKE GP-SERVICE

S/N: ASE1-UP

PART OF 162-5606 GENERAL AR

SMCS-4251 **i00774457**

NOTE	REF NO	GRAPHIC REF	PART NUMBER	QTY	PART NAME 1 2 3 4 5 6 (PRODUCT LEVEL)	SEE PAGE
	1	1	**8W-8334**	2	SPROCKET (FRONT MTG)	
	2	1	**1P-4693**	8	CUP-ROLLER BEARING	
	3	1	**5P-3490**	4	CONE-ROLLER BEARING	
	4	1	**3J-5390**	4	PLUG (3/8-18 THD)	
	5	1	**5P-6712**	12	BOLT-LOCKING	
	6	1	**2G-1074**	4	RETAINER	
B	7	1	**6J-1882**	20	SHIM (.013CM .005IN THK)	
B		1	**8D-6541**	20	SHIM (.018CM .007IN THK)	
B		1	**6J-1881**	16	SHIM (.051CM .02IN THK)	
	8	1	**8T-6473**	8	BOLT-LOCKING	
	9	1	**8W-8334**	2	SPROCKET (REAR MTG)	
	10	1	**2G-8576**	4	HUB-BRAKE	
	11	1	**6Y-7917**	24	DISC-FRICTION	
	12	1	**6M-5218**	4	SEAL-O-RING (440.69MM ID)	
	13	1	**0S-1566**	16	BOLT (5/8-11X1.5IN)	
	14	1	**4D-3704**	80	WASHER-HARD (5MM THK)	
	15	1	**8D-1648**	28	DISC	
	16	1	**8D-1642**	4	SEAL-D-RING	
	17	1	**6G-6264**	4	PISTON	
	18	1	**9J-5498**	24	SPRING	
	19	1	**8D-1643**	4	SEAL-D-RING	
	20	1	**6G-0905**	24	BOLT	
		1	**4B-4279**	24	WASHER	
	21	1	**4B-7270**	4	CONE-BEARING	
	22	1	**9D-1586**	4	SPACER	
	23	1	**9W-6645**	4	SEAL GP-DUO-CONE	
					(EACH INCLUDES)	
		1	**5K-5129**	2	RING-SEALING	
	24	1	**4S-5924**	4	SEAL-O-RING (430.66MM ID)	
	25	1	**147-3311**	4	SPINDLE-WHEEL	
	26	1	**8W-8167**	4	HOUSING	
	27	1	**8T-6472**	56	BOLT-LOCKING	
	28	1	**8D-2125**	4	COVER	

B-USE AS REQUIRED

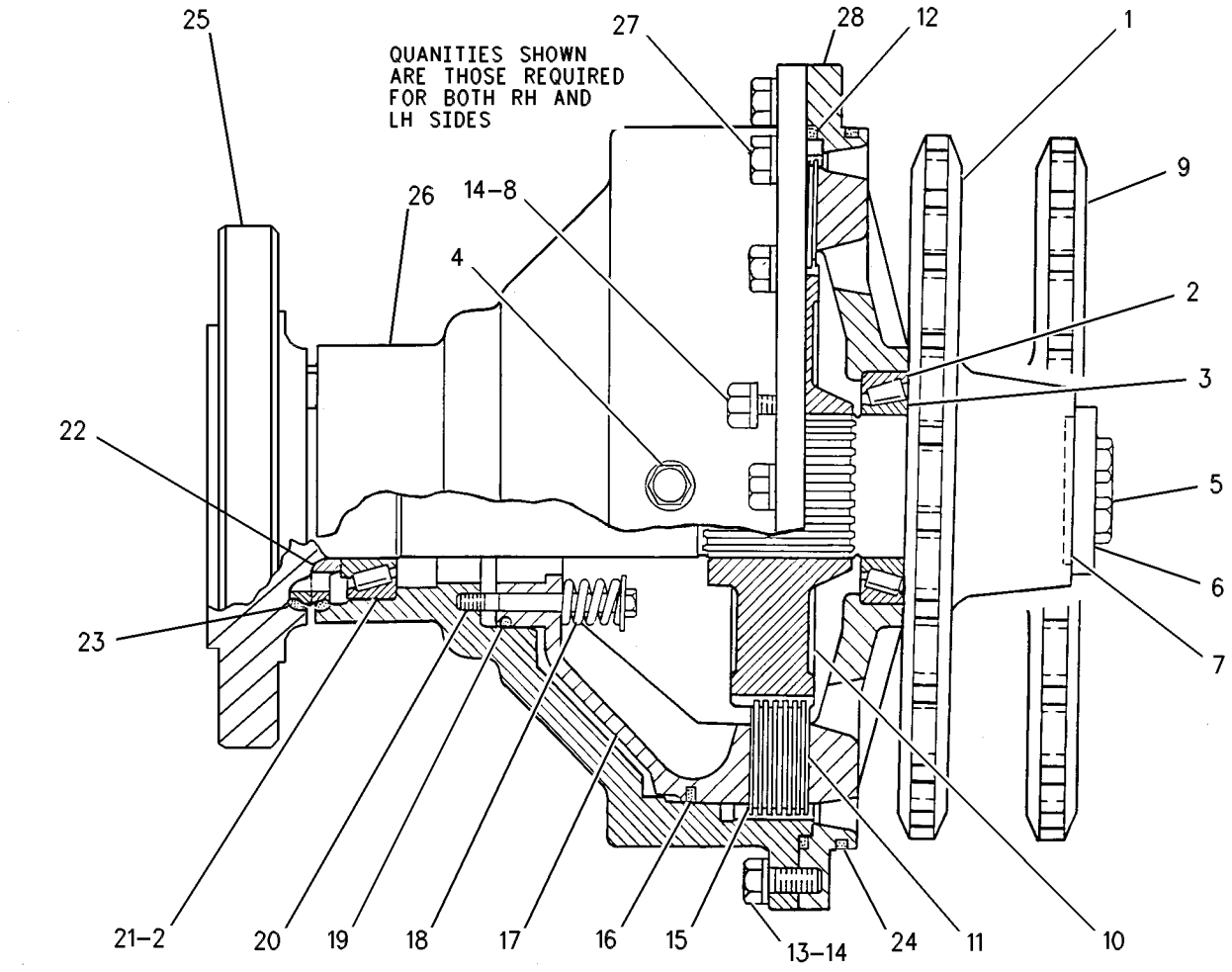

GRAPHIC #1 g00358696

BRAKING SYSTEM

187-4672 CONTROL GP-PARKING BRAKE

S/N: ASE1-UP

PART OF 162-5606 GENERAL AR

SMCS-4282, 4284 **i01648719**

NOTE	REF NO	GRAPHIC REF	PART NUMBER	QTY	PART NAME 1 2 3 4 5 6 (PRODUCT LEVEL)	SEE PAGE
	1	1	**2G-3765**	1	SPRING	
I	2	1	**3D-8942**	1	HOSE AS	
I	3	1	**4S-7529**	1	HOSE AS	
Y	4	1	**5D-0470**	1	VALVE GP-QUICK-RELEASE (PARKING BRAKE)	402
Y	5	1	**5D-4382**	1	VALVE GP-AIR CONTROL (PARKING BRAKE)	400
	6	1	**5K-0292**	1	ROD END	
	7	1	**5K-2408**	2	FITTING	
	8	1	**5T-8285**	1	JUNCTION BLOCK	
	9	1	**6B-6683**	2	NUT (5/8-18 THD)	
	10	1	**6D-1432**	1	VALVE-CHECK (PARKING BRAKE)	
I	11	1	**6D-9853**	1	HOSE AS	
	12	1	**6G-2636**	1	BRACKET	
I	13	1	**7D-4922**	1	HOSE AS	
	14	1	**7D-9708**	2	BOLT-SHOULDER	
	15	1	**7X-4736**	1	GROMMET	
	16	1	**8W-8528**	3	SLEEVE	
	17	1	**8X-5160**	1	GROMMET	
	18	1	**111-4921**	1	PLATE AS	
	19	1	**111-4922**	1	PLATE	
	20	1	**188-8735**	1	ACTUATOR GP-BRAKE	
		1	**8K-8467**	1	SPRING	
		1	**8T-1363**	1	FILM-WARNING (HIGH COMPRESSED SPRING)	
		1	**113-7916**	1	KIT-SEAL	
Y	21	1	**188-9250**	1	VALVE GP-SOLENOID (PARKING BRAKE)	403
	22	1	**0S-1625**	2	BOLT (5/8-11X2.5IN)	
	23	1	**3B-4617**	1	PIN-COTTER	
	24	1	**3B-8822**	1	ELBOW	
	25	1	**4D-6585**	1	ELBOW-PIPE	
	26	1	**4J-3914**	1	ELBOW (EXTERNAL PIPE)	
	27	1	**4K-0367**	2	NUT-FULL (5/8-11 THD)	
	28	1	**4K-1540**	1	PIN-CLEVIS	
	29	1	**4S-7606**	2	ELBOW	
	30	1	**5H-4778**	4	ELBOW	
	31	1	**5M-6213**	2	PLUG-PIPE	
	32	1	**5P-1075**	2	WASHER-HARD (10.2X22.5X3MM THK)	
	33	1	**5P-8247**	4	WASHER-HARD (17X32X3.5MM THK)	
	34	1	**8T-2502**	2	BOLT (3/8-16X1.125 IN)	
	35	1	**8T-4121**	2	WASHER-HARD (11X21X2.5MM THK)	
M	36	1	**8T-4199**	2	BOLT (M8X1.25X12MM)	
	37	1	**8T-4224**	6	WASHER-HARD (8.8X16X2MM THK)	
	38	1	**8T-4896**	2	WASHER-HARD (10.2X18.5X2.5MM THK)	
M	39	1	**8T-4908**	2	BOLT (M8X1.25X25MM)	
	40	1	**9G-9154**	1	CLIP	
	41	1	**9S-1354**	1	NUT (5/8-18 THD)	

I-SEE HOSE FABRICATION GUIDE
M-METRIC PART
Y-SEPARATE ILLUSTRATION

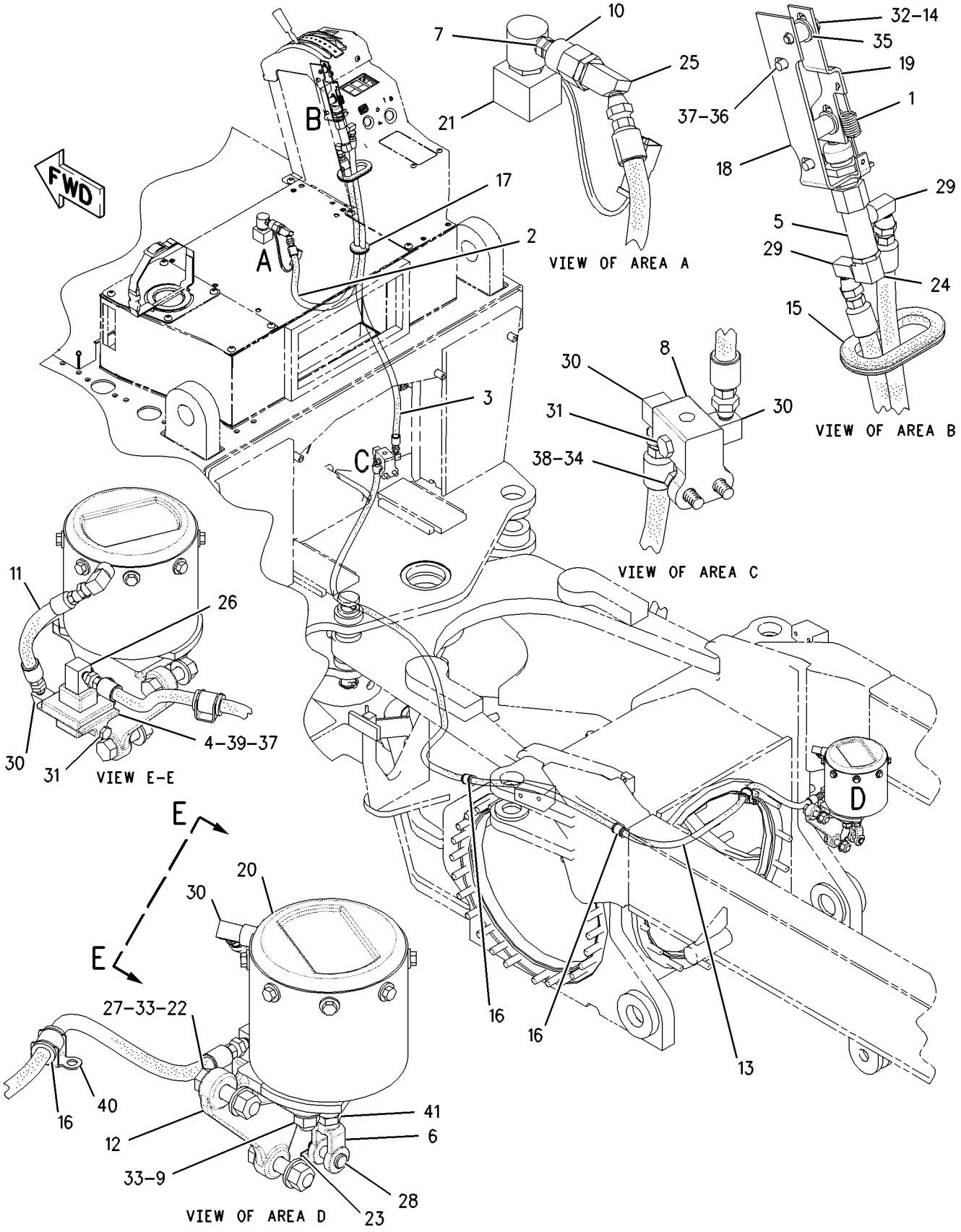

GRAPHIC #1 g00856921

BRAKING SYSTEM

171-2865 CONTROL GP-SERVICE BRAKE

S/N: ASE1-UP

PART OF 162-5606 GENERAL AR

SMCS-4265, 4269 **i01672682**

NOTE	REF NO	GRAPHIC REF	PART NUMBER	QTY	PART NAME 1 2 3 4 5 6 (PRODUCT LEVEL)	SEE PAGE
	1	3	**1B-2578**	1	NUT (3/8-16 THD)	
	2	3	**1F-1651**	1	TEE-PIPE	
	3	3	**1F-4622**	2	BEARING AS-NEEDLE	
	4	2,3	**2L-3331**	4	CONNECTOR-PIPE	
	5	1	**3S-2093**	1	STRAP-CABLE	
	6	1	**3S-2713**	1	NUT-FULL (3/8-24 THD)	
	7	2,4	**3T-0050**	3	CLIP	
BE	8	3	**5P-0721**		HOSE	
		1	**2D-6386**	2	COUPLING	
	9	2	**5K-9238**	4	CONNECTOR-FLARED	
	10	4	**6K-6826**	4	ELBOW	
	11	3	**6W-5817**	1	SPRING	
	12	3	**7V-0446**	2	CLIP	
	13	2	**8D-7026**	4	GUARD-BRAKE TUBE	
	14	3	**8L-6005**	3	TEE-PIPE	
	15	1,2,4	**8W-8527**	17	SLEEVE	
	16	1	**8W-8532**	1	CLIP	
	17	1	**8W-8903**	1	CLIP	
Y	18	1	**8X-2650**	1	VALVE GP-AIR CONTROL (SERVICE BRAKE)	401
	19	1	**8X-2680**	1	BRACKET AS	
	20	1	**8X-7603**	2	HOSE AS	
	21	3	**9J-8783**	1	SHIM (.508MM THK)	
	22	2	**9S-1302**	2	WASHER (27.0X44.45X2.5MM THK)	
	23	2	**9S-7706**	2	ELBOW-FLARED	
	24	2	**9X-8606**	8	CLIP	
	25	4	**110-3326**	1	PLATE AS	
		4	**3S-0391**	1	BOSS (3/8-16 IN)	
		4	**8X-8450**	1	PLATE	
	26	4	**112-6329**	1	BRACKET AS	
		4	**1F-0750**	2	NUT-WELD (3/8-16 THD)	
	27	4	**128-6944**	1	PLATE AS	
		4	**8X-8451**	1	PLATE	
	28	2	**159-1013**	1	HOSE AS	
	29	3	**169-0921**	1	ROD END (INTERNAL THREAD)	
	30	3	**172-4211**	1	SPACER (10.5X22X50.8MM THK)	
	31	2	**176-2945**	2	FITTING-BULKHEAD	
	32	3	**177-1713**	1	ROD	
	33	3	**180-4027**	1	CAM	
	34	3	**180-7147**	1	LEVER	
	35	3	**185-1122**	1	BRACKET	
	36	1,4	**187-0745**	4	CLAMP	
	37	3	**187-4642**	1	HOSE AS	
	38	3	**187-4645**	1	HOSE AS	
	39	3	**188-1636**	1	HOSE AS	
	40	1,4	**191-3031**	2	CLAMP	
	41	1,4	**191-3032**	2	CLAMP	
	42	1,4	**191-3033**	2	CLAMP	
	43	2	**198-5438**	2	BLOCK	
	44	2	**204-8730**	1	TUBE AS	
	45	2	**204-8731**	1	TUBE AS	
	46	2	**204-8732**	1	TUBE AS	
	47	2	**204-8733**	1	TUBE AS	
	48	2	**204-8734**	1	TUBE AS	
	49	2	**204-8735**	1	TUBE AS	
	50	3	**207-4924**	1	PEDAL-BRAKE	
	51	3	**129-3173**	1	BOLT-12 POINT HEAD (3/8-16X31.75MM)	

171-2865 CONTROL GP-SERVICE BRAKE *(contd.)* i01672682

NOTE	REF NO	GRAPHIC REF	PART NUMBER	QTY	PART NAME 1 2 3 4 5 6 (PRODUCT LEVEL)	SEE PAGE
	52	3	**1B-0676**	1	PIN	
	53	3	**1H-7724**	3	BUSHING-REDUCER	
	54	3	**3B-7721**	1	BUSHING-REDUCER	
	55	1,4	**3K-6060**	8	LOCKNUT (3/8-16 THD)	
	56	3	**3K-8280**	1	PIN-CLEVIS	
	57	3	**4B-6060**	1	SETSCREW-SOCKET (1/4-20X.375 IN)	
	58	3	**4D-0577**	2	ELBOW	
	59	2	**4D-0582**	4	ELBOW	
	60	3	**4J-3914**	1	ELBOW	
	61	3	**4J-8922**	1	ROD END	
	62	1	**4L-6454**	4	BOLT (3/8-16X1 IN)	
M	63	3	**5C-2890**	2	NUT (M6X1 THD)	
	64	4	**5M-3062**	2	BOLT (3/8-16X0.75 IN)	
	65	1	**5P-1075**	2	WASHER-HARD (10.2X22.5X3MM THK)	
	66	3	**6V-4245**	1	ELBOW	
	67	3	**6V-8189**	3	NUT (5/16-18 THD)	
	68	1,4	**6V-8801**	4	NUT (3/8-16 THD)	
	69	3	**6V-8918**	3	BOLT (5/16-18X1.25 IN)	
I	70	2	**7D-3668**	2	HOSE AS	
	71	3	**7J-8611**	1	ELBOW	
	72	2,3	**7M-7410**	6	PLUG (3/8-18 NPTF)	
	73	2,4	**8T-4121**	5	WASHER-HARD (11X21X2.5MM THK)	
M	74	3	**8T-4138**	1	BOLT (M6X1X20MM)	
M	75	4	**8T-4191**	4	BOLT (M10X1.5X16MM)	
M	76	2	**8T-4195**	1	BOLT (M10X1.5X30MM)	
	77	3	**8T-4224**	5	WASHER-HARD (8.8X16X2MM THK)	
	78	3	**8T-4226**	1	WASHER-PLATED (10.5X45X3MM THK)	
	79	1,2,3,4	**8T-4896**	21	WASHER-HARD (10.2X18.5X2.5MM THK)	
	80	3	**8T-5390**	1	BOLT (3/8-16X88.9MM)	
	81	2	**8T-9056**	4	BOLT (3/8-16X1.25 IN)	
	82	1	**8X-8450**	1	PLATE	
	83	1	**8X-8451**	1	PLATE	
E	84	3	**5P-0767**		HOSE (60CM)	

B-USE AS REQUIRED
E-ORDER BY THE CENTIMETER
I-SEE HOSE FABRICATION GUIDE
M-METRIC PART
Y-SEPARATE ILLUSTRATION

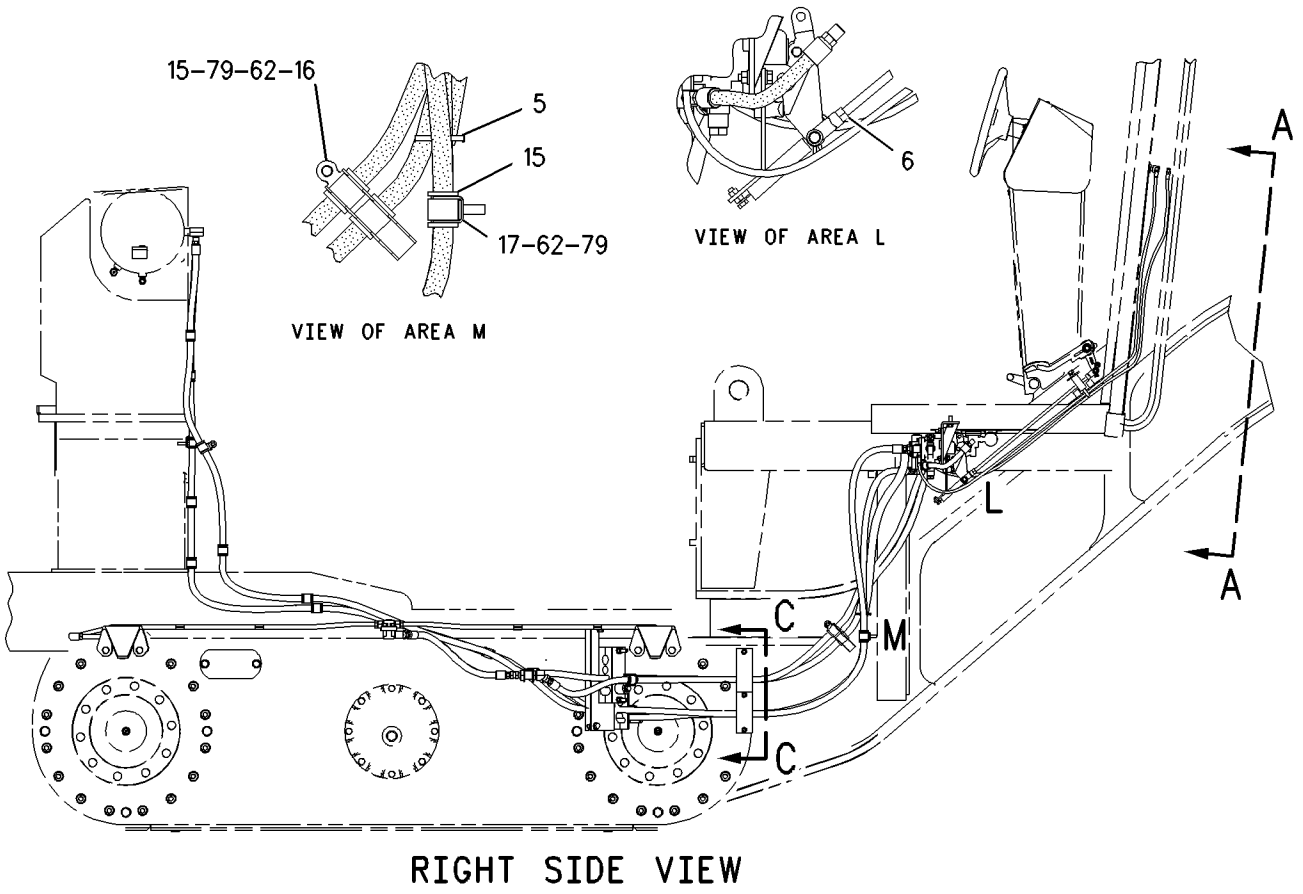

RIGHT SIDE VIEW

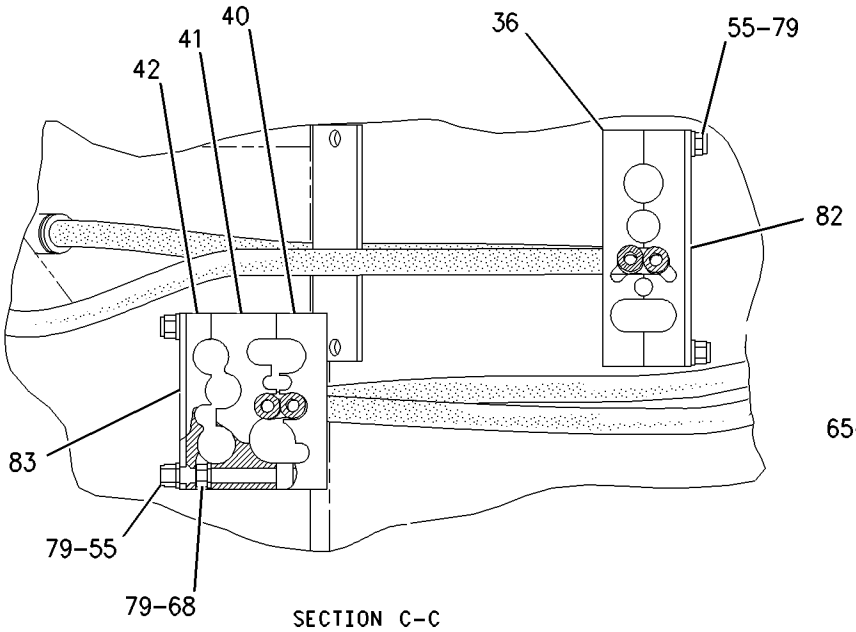

SECTION C–C

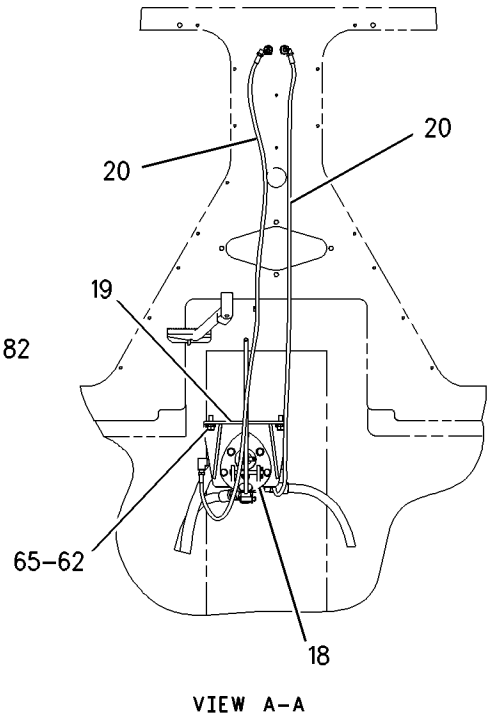

VIEW A–A

GRAPHIC #1 g00860271

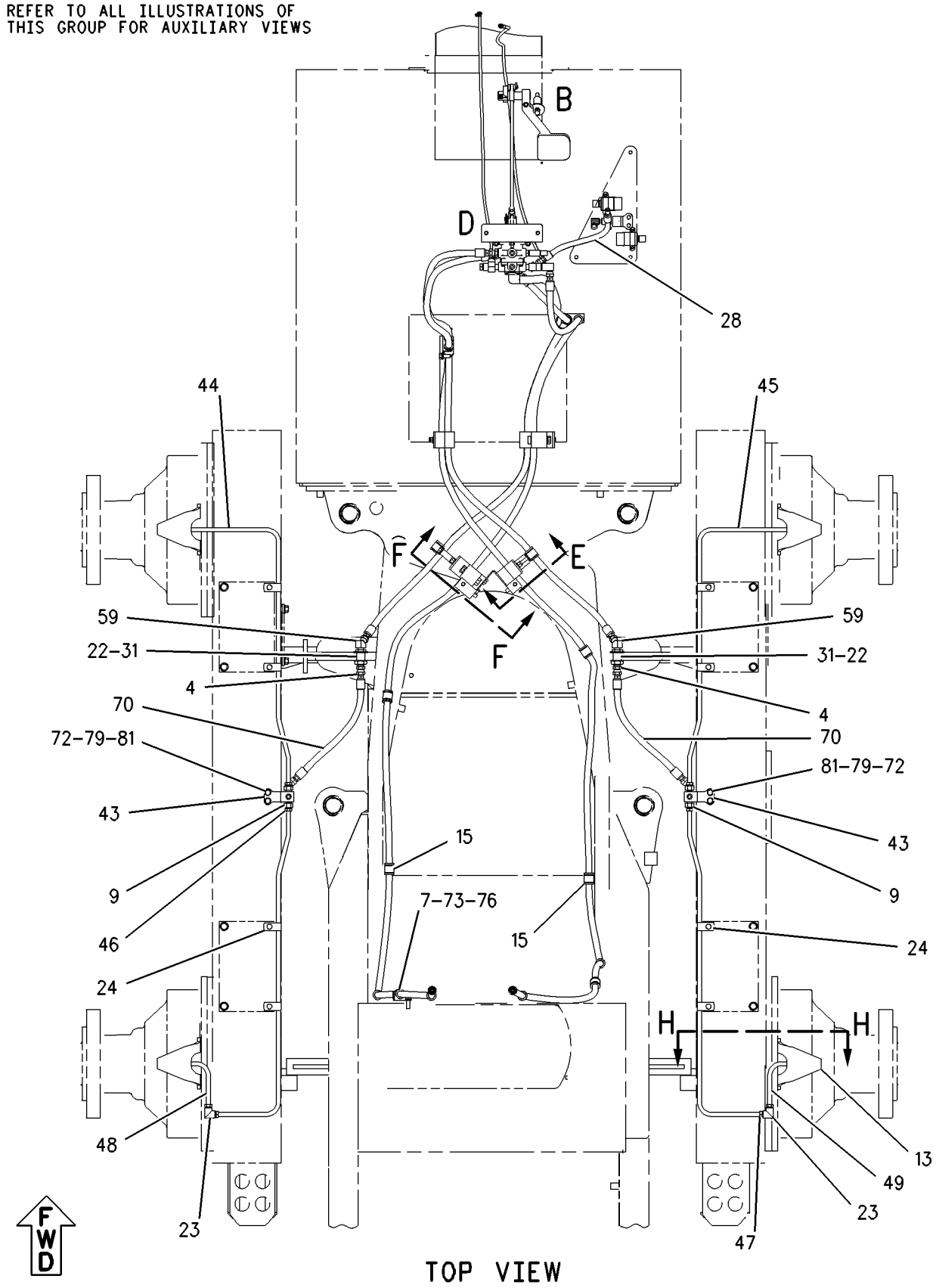

GRAPHIC #2

g00860272

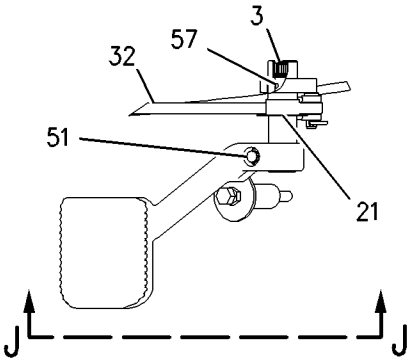

VIEW OF AREA B

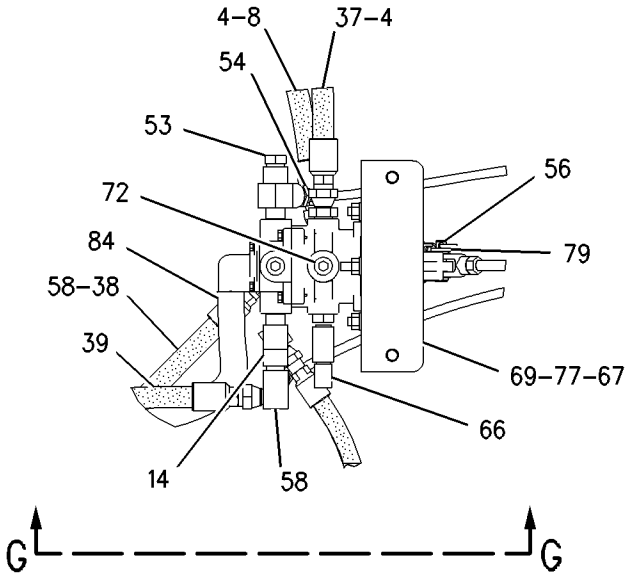

VIEW OF AREA D

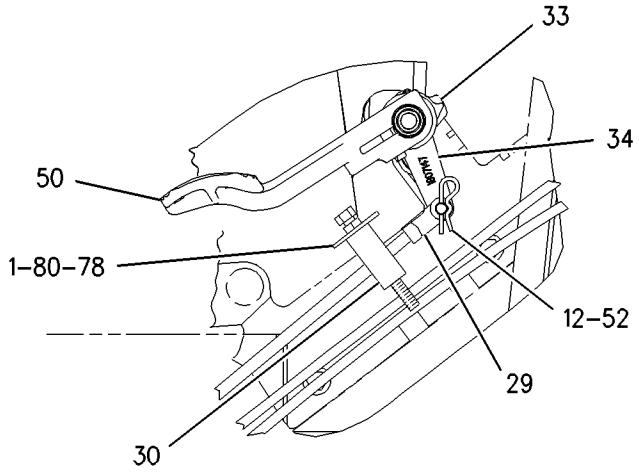

VIEW J-J

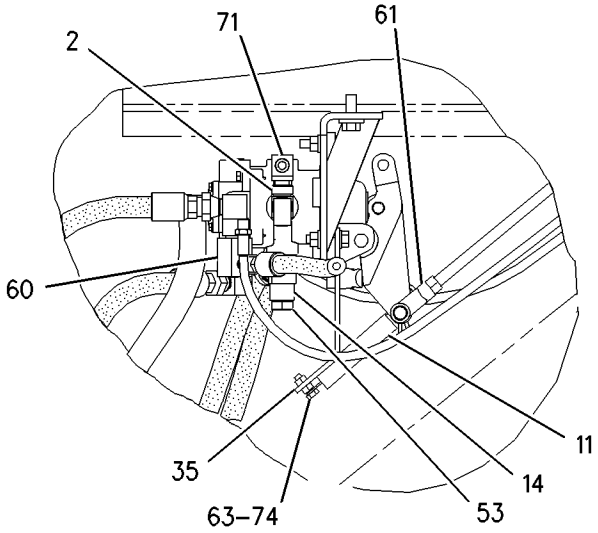

VIEW G-G

GRAPHIC #3 g00860273

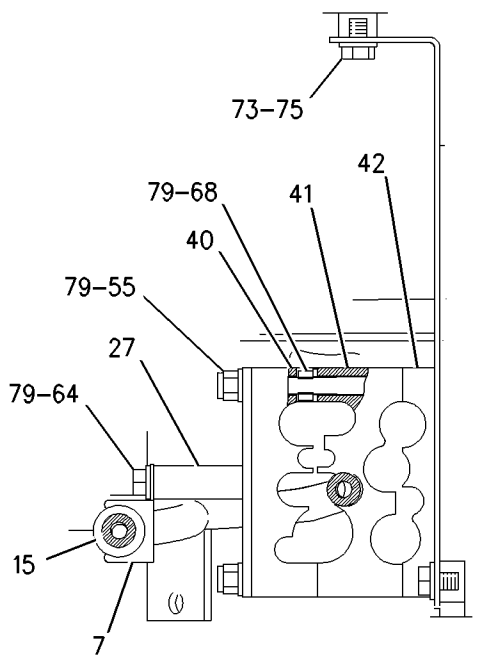

VIEW F-F

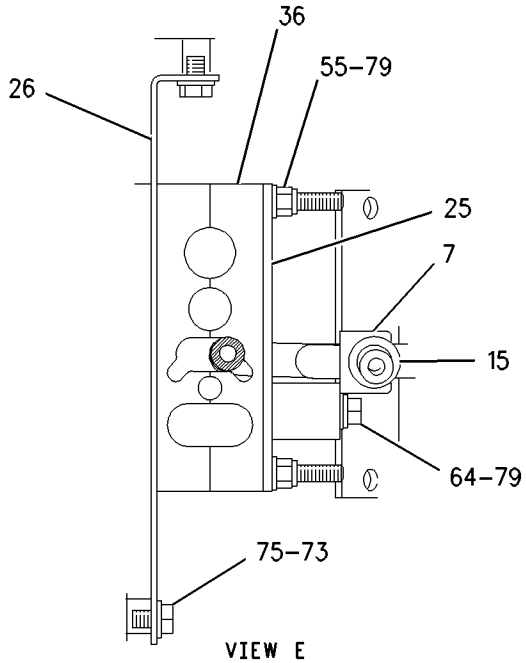

VIEW E

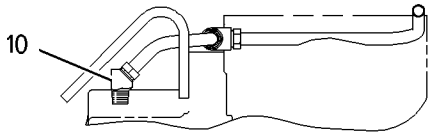

VIEW H-H

GRAPHIC #4 g00860274

BRAKING SYSTEM

169-7224 TANK GP-AIR

S/N: ASE1-UP

PART OF 183-8482 SUPPORT AR-REAR CHASSIS

SMCS-4272 **i01654546**

NOTE	REF NO	GRAPHIC REF	PART NUMBER	QTY	PART NAME 1 2 3 4 5 6 (PRODUCT LEVEL)	SEE PAGE
	1	1	**1P-4278**	1	CLAMP-HOSE	
	2	1	**1P-9328**	1	FITTING	
	3	1	**2G-1034**	1	VALVE-AIR RELIEF (PRESSURE)	
	4	1	**2H-3940**	1	ELBOW	
	5	1	**3D-8913**	2	ELBOW	
I	6	1	**4S-7560**	1	HOSE AS	
	7	1	**5F-5434**	1	VALVE AS-RELIEF (PRESSURE)	
	8	1	**090-9019**	2	PLUG-PIPE	
	10	1	**160-6543**	1	HOSE AS	
	11	1	**177-0279**	1	HOSE AS	
	12	1	**191-2314**	1	HOSE AS	
	13	1	**205-7187**	1	GOVERNOR AS	
		1	**2S-2923**	1	COVER-GOVERNOR	
		1	**9M-0402**	1	KIT-GOVERNOR OVERHAUL	
	14	1	**208-0520**	1	VALVE-DRAIN (WATER & SEDIMENT)	
	15	1	**213-9337**	1	TANK-AIR	
	16	1	**1M-4543**	3	GROMMET	
	17	1	**3D-7587**	1	ELBOW	
	18	1	**4D-7735**	1	CLIP	
	19	1	**4S-7606**	3	ELBOW	
	20	1	**5H-4778**	2	ELBOW	
	21	1	**5P-9299**	2	CLIP	
	22	1	**7J-8611**	3	ELBOW	
	23	1	**8T-4121**	9	WASHER-HARD (11X21X2.5MM THK)	
M	24	1	**8T-4137**	6	BOLT (M10X1.5X20MM)	
M	25	1	**8T-4185**	2	BOLT (M10X1.5X50MM)	
M	26	1	**8T-4191**	1	BOLT (M10X1.5X16MM)	
	27	1	**8T-6757**	4	PLUG-PIPE (1/8IN NPTF)	
M	28	1	**8T-6974**	2	BOLT (M6X1X80MM)	
	29	1	**9M-8406**	2	CLIP	
	30	1	**9X-8256**	2	WASHER (6.6X12X2MM THK)	
E	31	1	**5P-1465**		HOSE (152 CM)	

E-ORDER BY THE CENTIMETER
I-SEE HOSE FABRICATION GUIDE
M-METRIC PART

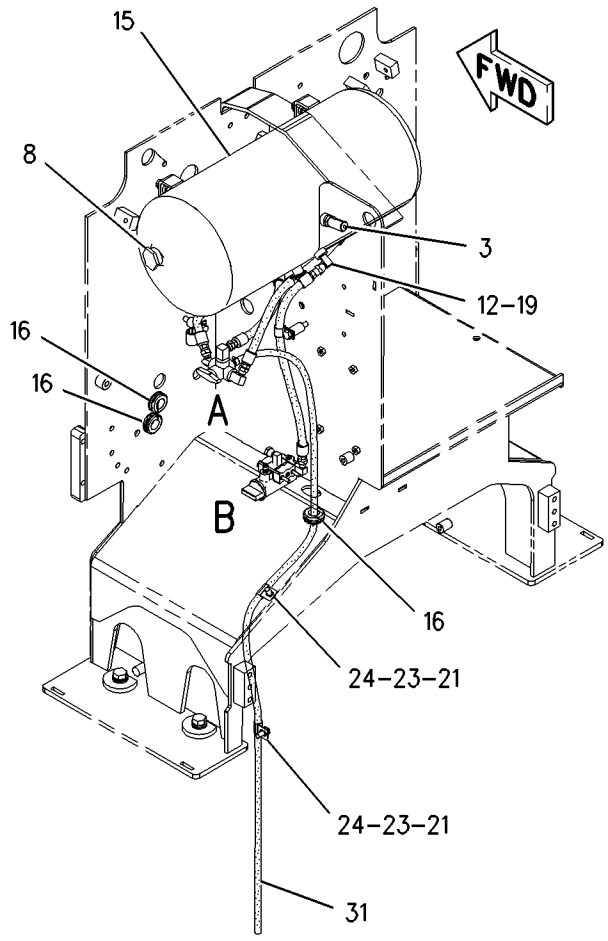

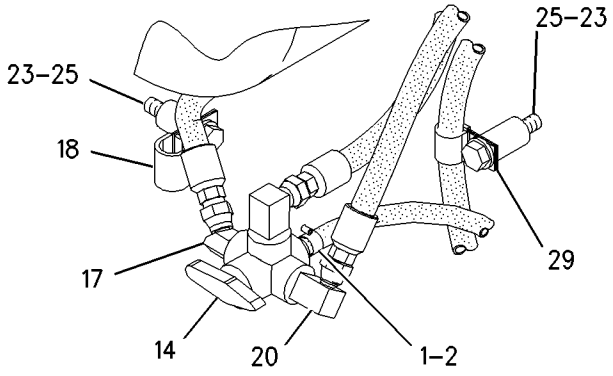

VIEW OF AREA A

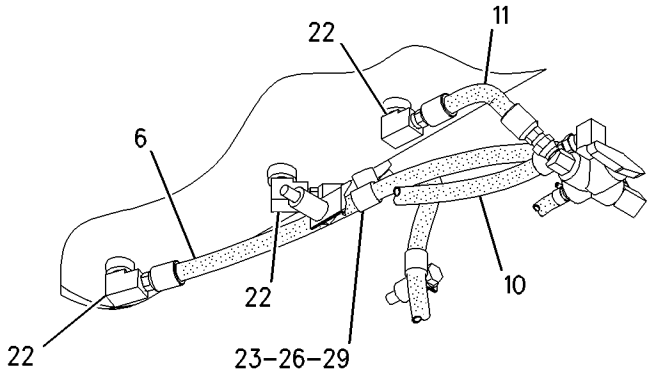

VIEW OF AREA C

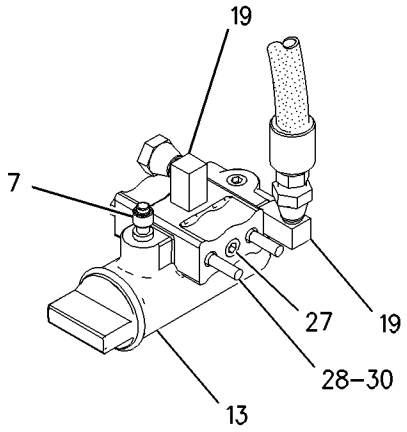

VIEW OF AREA B

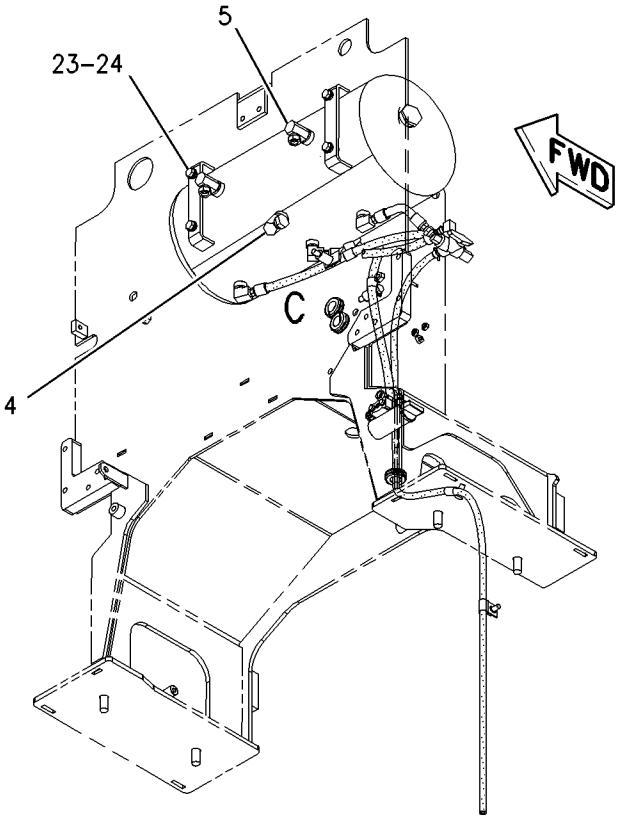

GRAPHIC #1

g00860919

BRAKING SYSTEM

5D-4382 VALVE GP-AIR CONTROL—PARKING BRAKE

S/N: ASE1-UP

PART OF 187-4672 CONTROL GP-PARKING BRAKE

SMCS-4280, 4282 **i00124531**

NOTE	REF NO	GRAPHIC REF	PART NUMBER	QTY	PART NAME 1 2 3 4 5 6 (PRODUCT LEVEL)	SEE PAGE
	1	1	**5D-7778**	1	BOOT	
	2	1	**6H-9691**	1	SEAL-O-RING (2.9MM ID)	
	3	1	**4J-8524**	1	BODY	
	4	1	**4J-3957**	1	SPRING	
	5	1	**4D-1138**	1	VALVE-INLET	
	6	1	**4J-8527**	1	STEM	
	7	1	**1H-1023**	1	SEAL-O-RING (9.25MM ID)	
	8	1	**4D-1135**	1	SEAT-SPRING	

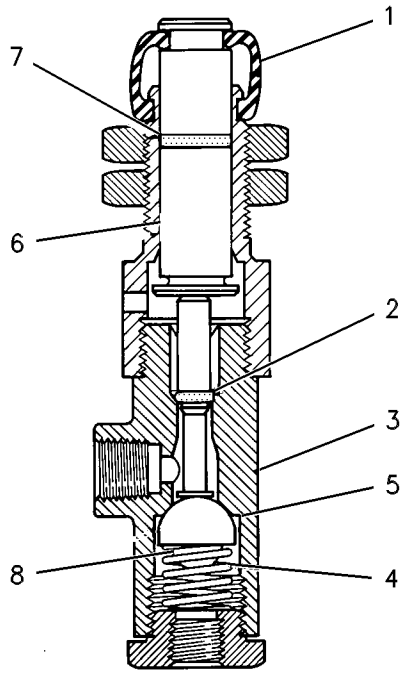

GRAPHIC #1 g00108912

8X-2650 VALVE GP-AIR CONTROL—SERVICE BRAKE

S/N: ASE1-UP

PART OF 171-2865 CONTROL GP-SERVICE BRAKE

SMCS-4280, 4282 **i01299133**

NOTE	REF NO	GRAPHIC REF	PART NUMBER	QTY	PART NAME 1 2 3 4 5 6 (PRODUCT LEVEL)	SEE PAGE
	1	1	**8X-2646**	1	LEVER AS	
	2	1	**9D-8121**	1	ROLLER	
	3	1	**3B-4607**	1	COTTER	
		1	**7B-9323**	1	PIN	
	4	1	**5D-3636**	1	BOOT	
	5	1	**2R-0719**	1	PLUNGER	
	6	1	**125-5321**	3	BOLT	
	7	1	**2R-0694**	1	PLATE-BRAKE VALVE	
	8	1	**2R-0724**	1	BUTTON-STOP	
	9	1	**2D-6006**	1	PIN	
	10	1	**3B-4610**	1	COTTER	
	11	1	**8W-5651**	1	VALVE GP-CONTROL	
		1	**5D-0768**	1	SPRING	
					AVAILABLE REPAIR KIT(S):	
			2G-6285	1	KIT-AIR CONTROL VALVE	
					(INCLUDES SPRINGS, INLET & EXHAUST VALVES, O-RINGS, BOOT,SCREW, LOCKNUT & FILTER)	

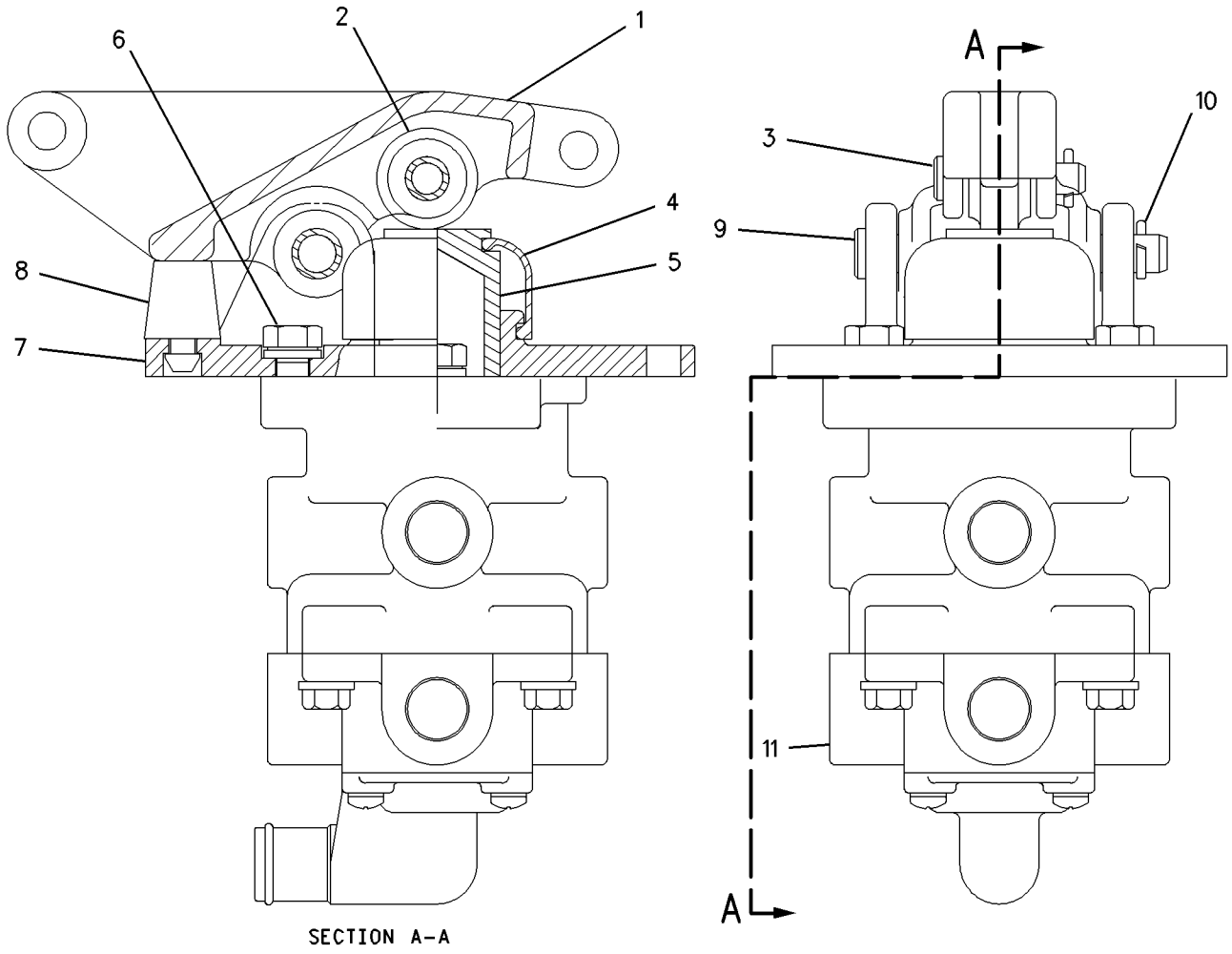

GRAPHIC #1 g00688575

5D-0470 VALVE GP-QUICK-RELEASE–AIR–PARKING BRAKE

S/N: ASE1-UP

PART OF 187-4672 CONTROL GP-PARKING BRAKE

SMCS-4283 **i00095730**

NOTE	REF NO	GRAPHIC REF	PART NUMBER	QTY	PART NAME 1 2 3 4 5 6 (PRODUCT LEVEL)	SEE PAGE
	1	1	**114-6537**	1	VALVE-QUICK-RELEASE	

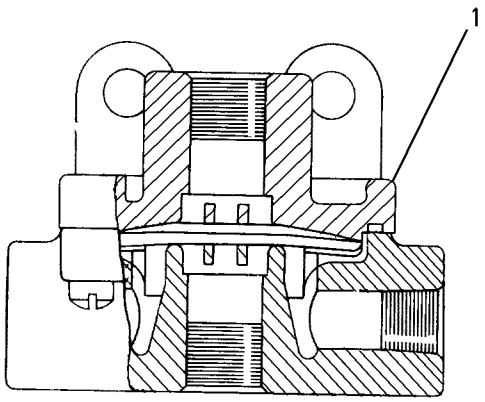

GRAPHIC #1 g00086598

188-9250 VALVE GP-SOLENOID—PARKING BRAKE

S/N: ASE1-UP
24 VOLT
PART OF 187-4672 CONTROL GP-PARKING BRAKE

SMCS-5479 **i01587306**

NOTE	REF NO	GRAPHIC REF	PART NUMBER	QTY	PART NAME 1 2 3 4 5 6 (PRODUCT LEVEL)	SEE PAGE
	1	1	**102-8802**	1	KIT-RECEPTACLE (2 PIN) (SOLENOID VALVE)	
					(KIT INCLUDES RECEPTACLE AS & WEDGE)	
		1	**3E-3365**	1	WEDGE-RECEPTACLE LOCK (2 PIN)	
		1	**186-3735**	2	PIN-CONNECTOR	

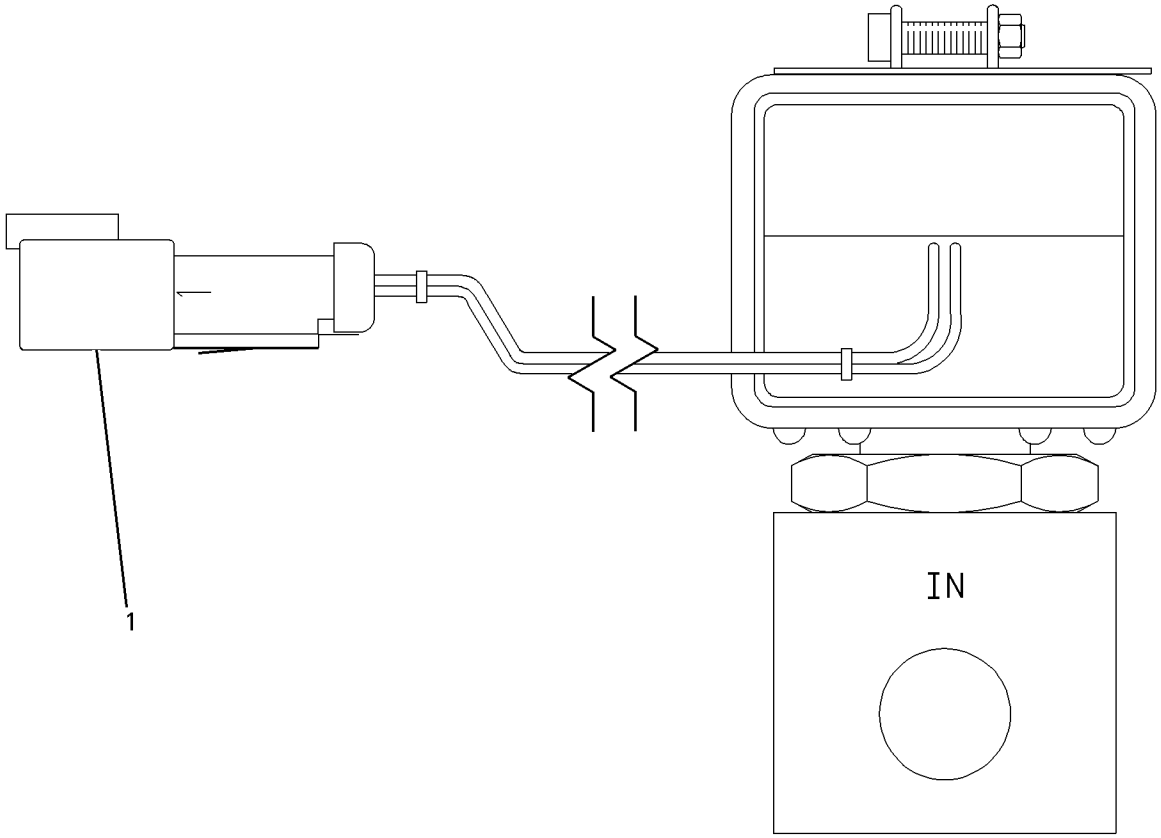

GRAPHIC #1 g00825932

HYDRAULIC SYSTEM

166-3367 ACCUMULATOR & MTG GP-HYDRAULIC

S/N: ASE1-UP
PART OF 166-3369 ACCUMULATOR AR-BLADE CUSHION
AN ATTACHMENT

SMCS-5077 **i01653144**

NOTE	REF NO	GRAPHIC REF	PART NUMBER	QTY	PART NAME 1 2 3 4 5 6 (PRODUCT LEVEL)	SEE PAGE
	1	1	**4N-5091**	2	SPACER (.53X1X3.375 IN THK)	
	2	1	**9B-0347**	3	SPACER (.531X1.25X.625 IN THK)	
Y	3	1	*160-9413*	2	ACCUMULATOR GP-BLADE CUSHION	406
	4	1	**162-7449**	2	CLAMP	
	5	1	**183-4008**	1	PLATE AS	
	6	1	**5P-1076**	3	WASHER-HARD (13.5X30X4MM THK)	
	7	1	**7X-0333**	2	BOLT (1/2-13X4.75 IN)	
	8	1	**8T-4223**	2	WASHER-HARD (13.5X25.5X3MM THK)	
	9	1	**8T-4835**	3	BOLT (1/2-13X2 IN)	

Y-SEPARATE ILLUSTRATION

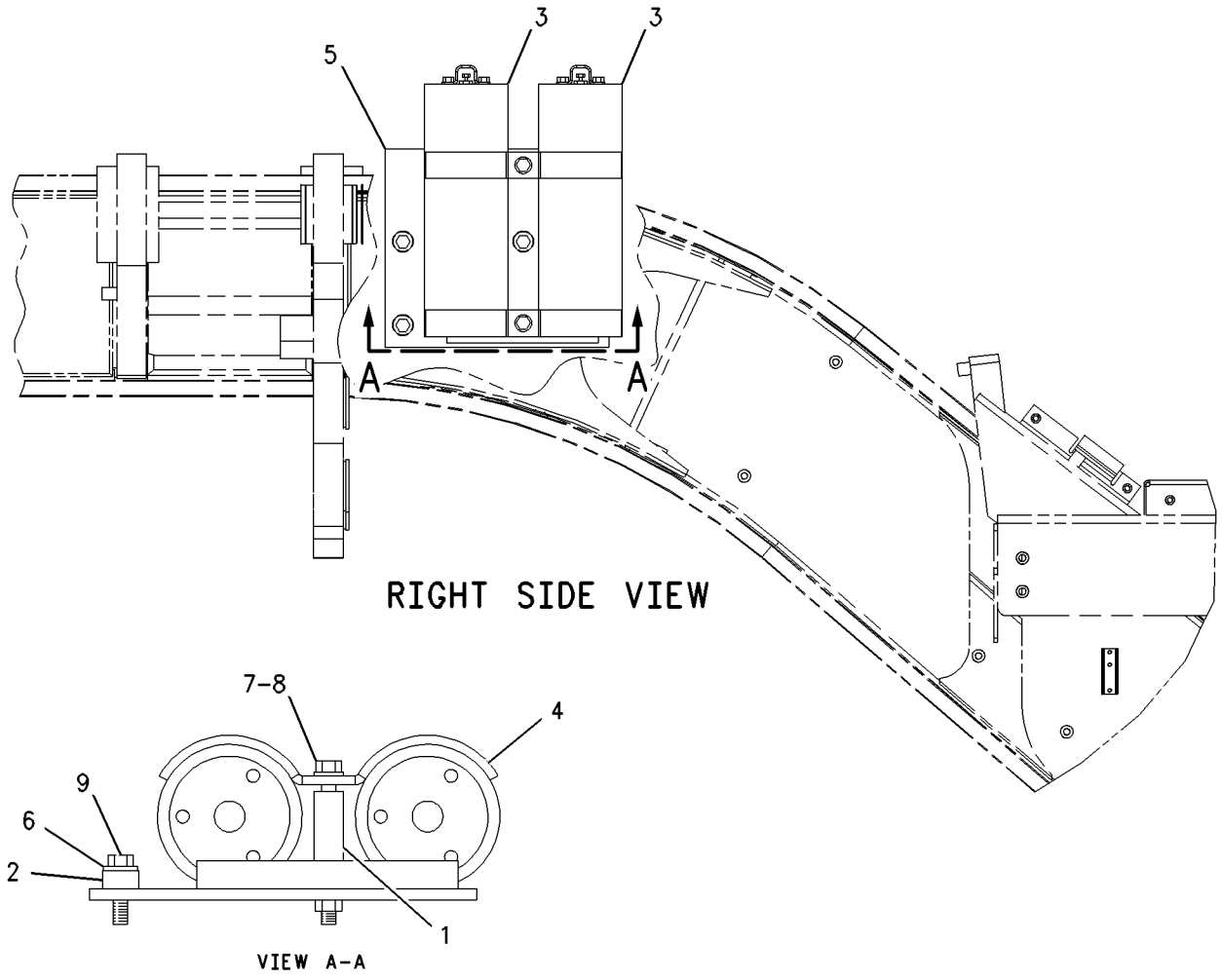

GRAPHIC #1 g00858693

HYDRAULIC SYSTEM

166-3369 ACCUMULATOR AR-BLADE CUSHION

S/N: ASE1-UP
AN ATTACHMENT

SMCS-5077, 5081 **i01653147**

NOTE	PART NUMBER	QTY	PART NAME 1 2 3 4 5 6 (PRODUCT LEVEL)	SEE PAGE
Y	*166-3367*	1	ACCUMULATOR & MTG GP-HYDRAULIC	404
Y	*166-3368*	1	LINES GP-ACCUMULATOR	448
Y	*161-1930*	1	WIRING GP-BLADE CUSHION	225

Y-SEPARATE ILLUSTRATION

160-9413 ACCUMULATOR GP-BLADE CUSHION

S/N: ASE1-UP
PART OF 166-3367 ACCUMULATOR & MTG GP-HYDRAULIC
FIELD REPLACEMENT ORDER 179-9399 ACCUMULATOR GP
AN ATTACHMENT

SMCS-5077 **i01674511**

NOTE	REF NO	GRAPHIC REF	PART NUMBER	QTY	PART NAME 1 2 3 4 5 6 (PRODUCT LEVEL)	SEE PAGE
	1	1	**135-7123**	1	PISTON	
	2	1	**170-0493**	1	KIT-SEAL (INCLUDES SEALS)	
	3	1	**188-9390**	1	VALVE AS (ACCUMULATOR)	
	4	1	**111-9110**	1	PROTECTOR-GAS VALVE	
	5	1	**1J-9671**	1	SEAL-O-RING	
	6	1	**5M-3062**	2	BOLT (3/8-16X0.75 IN)	
	7	1	**170-0503**	1	NAMEPLATE	

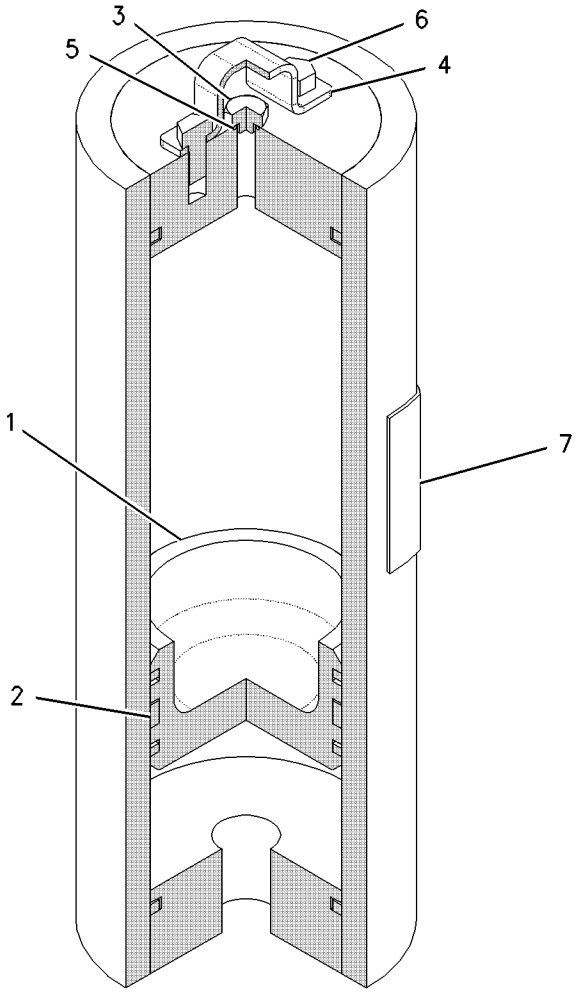

GRAPHIC #1 g00858287

HYDRAULIC SYSTEM

166-3407 CONTROL AR-HYDRAULIC

S/N: ASE1-UP
AN ATTACHMENT

SMCS-5050 **i01689824**

NOTE	PART NUMBER	QTY	PART NAME 1 2 3 4 5 6 (PRODUCT LEVEL)	SEE PAGE
Y	*166-3408*	1	LINES GP-RIPPER	466
Y	*7I-4871*	1	VALVE & LINKAGE GP (BANK 4 RH, BANK 5 LH)	502

Y-SEPARATE ILLUSTRATION

HYDRAULIC SYSTEM

187-4947 CONTROL AR-HYDRAULIC—EU

S/N: ASE1-UP

AN ATTACHMENT

SMCS-5050 **i01689521**

NOTE	PART NUMBER	QTY	PART NAME 1 2 3 4 5 6 (PRODUCT LEVEL)	SEE PAGE
Y	*166-3408*	1	LINES GP-RIPPER	466
Y	*124-4197*	1	VALVE & LINKAGE GP (BANK 4 RH, BANK 5 LH, EU)	512

Y-SEPARATE ILLUSTRATION

HYDRAULIC SYSTEM

187-4948 CONTROL AR-HYDRAULIC–EU

S/N: ASE1-UP
AN ATTACHMENT

SMCS-5050 **i01689522**

NOTE	PART NUMBER	QTY	PART NAME 1 2 3 4 5 6 (PRODUCT LEVEL)	SEE PAGE
Y	*166-3408*	1	LINES GP-RIPPER	466
Y	*124-4200*	1	VALVE & LINKAGE GP (BANK 5 RH, BANK 7 LH)	518

Y-SEPARATE ILLUSTRATION

HYDRAULIC SYSTEM

187-4949 CONTROL AR-HYDRAULIC

S/N: ASE1-UP

AN ATTACHMENT

SMCS-5050 **i01689523**

NOTE	PART NUMBER	QTY	PART NAME 1 2 3 4 5 6 (PRODUCT LEVEL)	SEE PAGE
Y	*166-3408*	1	LINES GP-RIPPER	466
Y	*7I-4870*	1	VALVE & LINKAGE GP (BANK 5 LH, RH)	500

Y-SEPARATE ILLUSTRATION

HYDRAULIC SYSTEM

187-4950 CONTROL AR-HYDRAULIC–EU

S/N: ASE1-UP

AN ATTACHMENT

SMCS-5050 **i01689526**

NOTE	PART NUMBER	QTY	PART NAME 1 2 3 4 5 6 (PRODUCT LEVEL)	SEE PAGE
Y	*166-3408*	1	LINES GP-RIPPER	466
Y	*124-4198*	1	VALVE & LINKAGE GP (BANK 5 LH, RH, EU)	514

Y-SEPARATE ILLUSTRATION

HYDRAULIC SYSTEM

187-4952 CONTROL AR-HYDRAULIC

S/N: ASE1-UP

AN ATTACHMENT

SMCS-5050 **i01689531**

NOTE	PART NUMBER	QTY	PART NAME 1 2 3 4 5 6 (PRODUCT LEVEL)	SEE PAGE
Y	*166-3408*	1	LINES GP-RIPPER	466
Y	*107-9662*	1	VALVE & LINKAGE GP (BANK 5 RH, BANK 7 LH,WING TILT)	506

Y-SEPARATE ILLUSTRATION

HYDRAULIC SYSTEM

192-4972 CONTROL AR-HYDRAULIC

S/N: ASE1-UP
AN ATTACHMENT

SMCS-5050 **i01689534**

NOTE	PART NUMBER	QTY	PART NAME 1 2 3 4 5 6 (PRODUCT LEVEL)	SEE PAGE
Y	*166-3408*	1	LINES GP-RIPPER	466
Y	*144-4004*	1	VALVE & LINKAGE GP (BANK 5 RH, BANK 7 LH-W/T FLOAT)	520

Y-SEPARATE ILLUSTRATION

HYDRAULIC SYSTEM

173-7375 CONTROL GP-CENTERSHIFT LOCK

S/N: ASE1-UP

PART OF 162-5606 GENERAL AR

SMCS-5221 **i01645769**

NOTE	REF NO	GRAPHIC REF	PART NUMBER	QTY	PART NAME 1 2 3 4 5 6 (PRODUCT LEVEL)	SEE PAGE
	1	1	**1F-1651**	1	TEE-PIPE	
	2	1	**3S-2093**	2	STRAP-CABLE	
	3	1	**5K-2408**	2	FITTING	
	4	1	**5P-4478**	1	ADAPTER	
	5	1	**5T-8285**	1	JUNCTION BLOCK	
I	6	1	**6J-7929**	2	HOSE AS	
	7	1	**145-0457**	1	PLATE	
	8	1	**188-2461**	2	VALVE GP-SOLENOID (CENTERSHIFT)	
					(EACH INCLUDES)	
		1	**1S-9593**	2	STRAP-CABLE	
		1	**186-3735**	2	PIN-CONNECTOR	
		1	**102-8802**	1	KIT-RECEPTACLE (2 PIN) (CENTERSHIFT SOLENOID VALVES)	
	9	1	**2N-3479**	4	SCREW (10-24X0.5 IN)	
	10	1	**4B-2047**	4	NUT (10-24 THD)	
	11	1	**4B-4274**	8	WASHER (5.5X13X1.2MM THK)	
	12	1	**4H-6147**	1	CONNECTOR	
	13	1	**4L-6454**	1	BOLT (3/8-16X1 IN)	
	14	1	**4M-0061**	3	BOLT (5/16-18X0.750 IN)	
	15	1	**5H-4778**	5	ELBOW	
	16	1	**5K-8451**	5	CLIP	
	17	1	**5M-3062**	3	BOLT (3/8-16X0.75 IN)	
	18	1	**5P-4116**	3	WASHER-HARD (8.8X20.5X2MM THK)	
	19	1	**6V-8801**	1	NUT (3/8-16 THD)	
	20	1	**7J-8611**	1	ELBOW	
	21	1	**8T-4896**	4	WASHER-HARD (10.2X18.5X2.5MM THK)	

I-SEE HOSE FABRICATION GUIDE

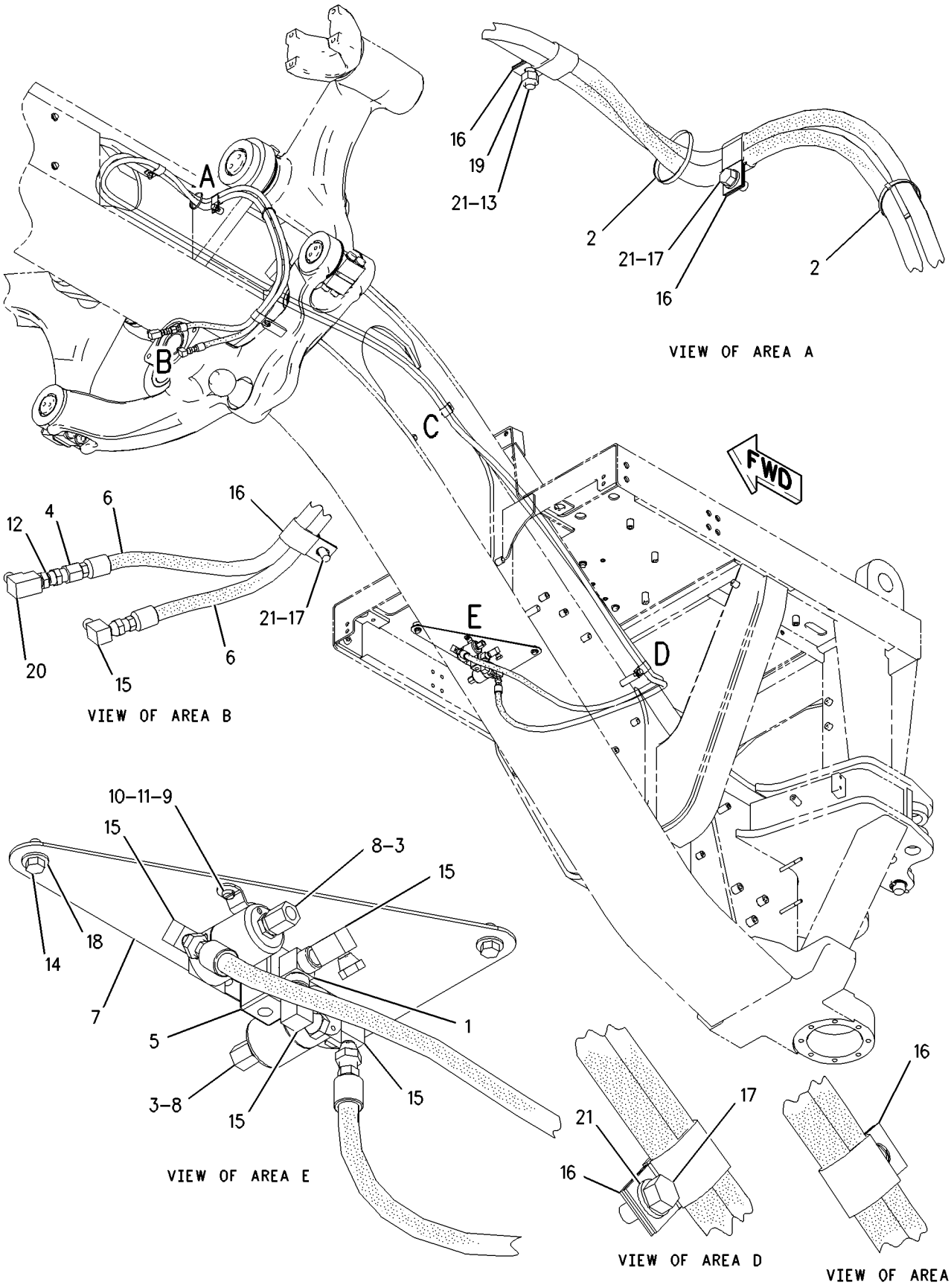

GRAPHIC #1

g00851885

HYDRAULIC SYSTEM

7I-4719 CONTROL GP-STEERING

S/N: ASE1-UP

PART OF 162-5606 GENERAL AR

SMCS-4309, 4310, 4343 **i00604719**

NOTE	REF NO	GRAPHIC REF	PART NUMBER	QTY	PART NAME 1 2 3 4 5 6 (PRODUCT LEVEL)	SEE PAGE
Y	1	1	*111-0490*	1	PUMP GP-METERING	486
	2	1	**092-3200**	1	STEERING WHEEL	
	3	1	**144-6695**	1	NUT	
	4	1	**6V-7692**	4	BOLT-12 POINT HEAD	

Y-SEPARATE ILLUSTRATION

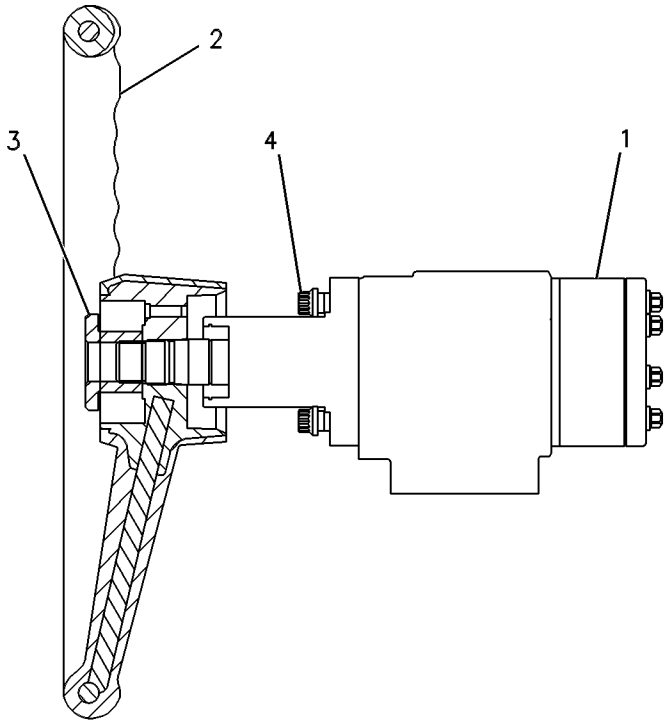

GRAPHIC #1 g00109040

197-7659 COOLER & MTG GP-HYDRAULIC OIL–AIR CONDITIONER

S/N: ASE1-UP
PART OF 167-8068 AIR CONDITIONER AR
AN ATTACHMENT

SMCS-1374 **i01664108**

NOTE	REF NO	GRAPHIC REF	PART NUMBER	QTY	PART NAME 1 2 3 4 5 6 (PRODUCT LEVEL)	SEE PAGE
	1	1	**199-9014**	1	CORE AS-AIR CONDITIONER	
M	2	1	**6V-4248**	4	BOLT (M10X1.50X25MM)	
	3	1	**6V-5839**	4	WASHER (11X21X2.5MM THK)	

M-METRIC PART

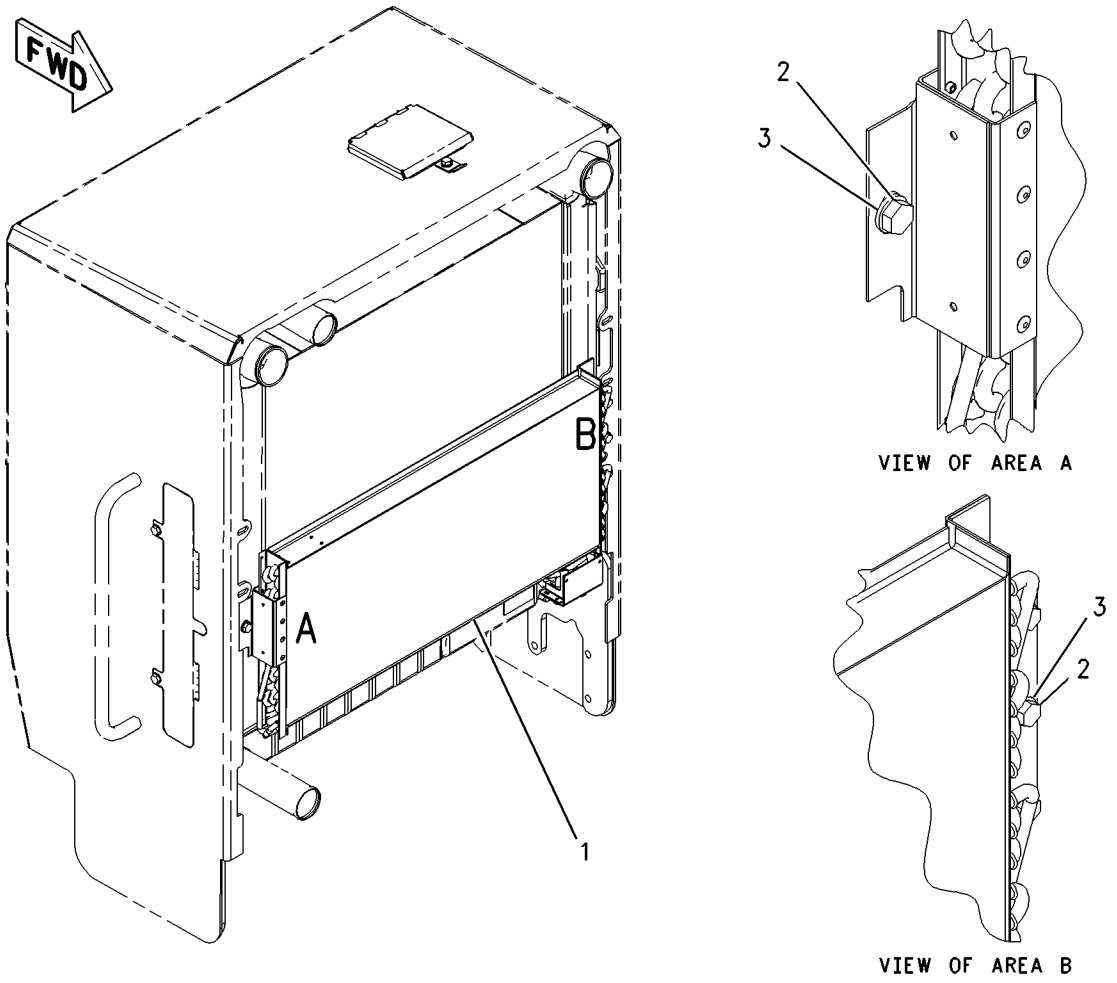

GRAPHIC #1 g00861756

HYDRAULIC SYSTEM

180-0054 CYLINDER & MTG GP-ARTICULATION

S/N: ASE1-UP

PART OF 162-5606 GENERAL AR

SMCS-5265 **i01649000**

NOTE	REF NO	GRAPHIC REF	PART NUMBER	QTY	PART NAME 1 2 3 4 5 6 (PRODUCT LEVEL)	SEE PAGE
	1	1	**1A-1135**	2	BOLT (5/8-11X2 IN)	
	2	1	**1A-8537**	2	BOLT (5/8-11X2.75IN)	
	3	1	**2K-4160**	14	WASHER	
	4	1	**7K-6117**	4	WASHER (.656X2.5X.5 IN THK)	
	5	1	**8D-4673**	4	PIN-CYLINDER	
	6	1	**9D-6583**	8	SEAL-LIP	
Y	7	1	**184-6804**	2	CYLINDER GP-ARTICULATION	425
	8	1	**5P-8247**	4	WASHER-HARD (17X32X3.5MM THK)	
	9	1	**8D-7685**	4	BEARING	

Y-SEPARATE ILLUSTRATION

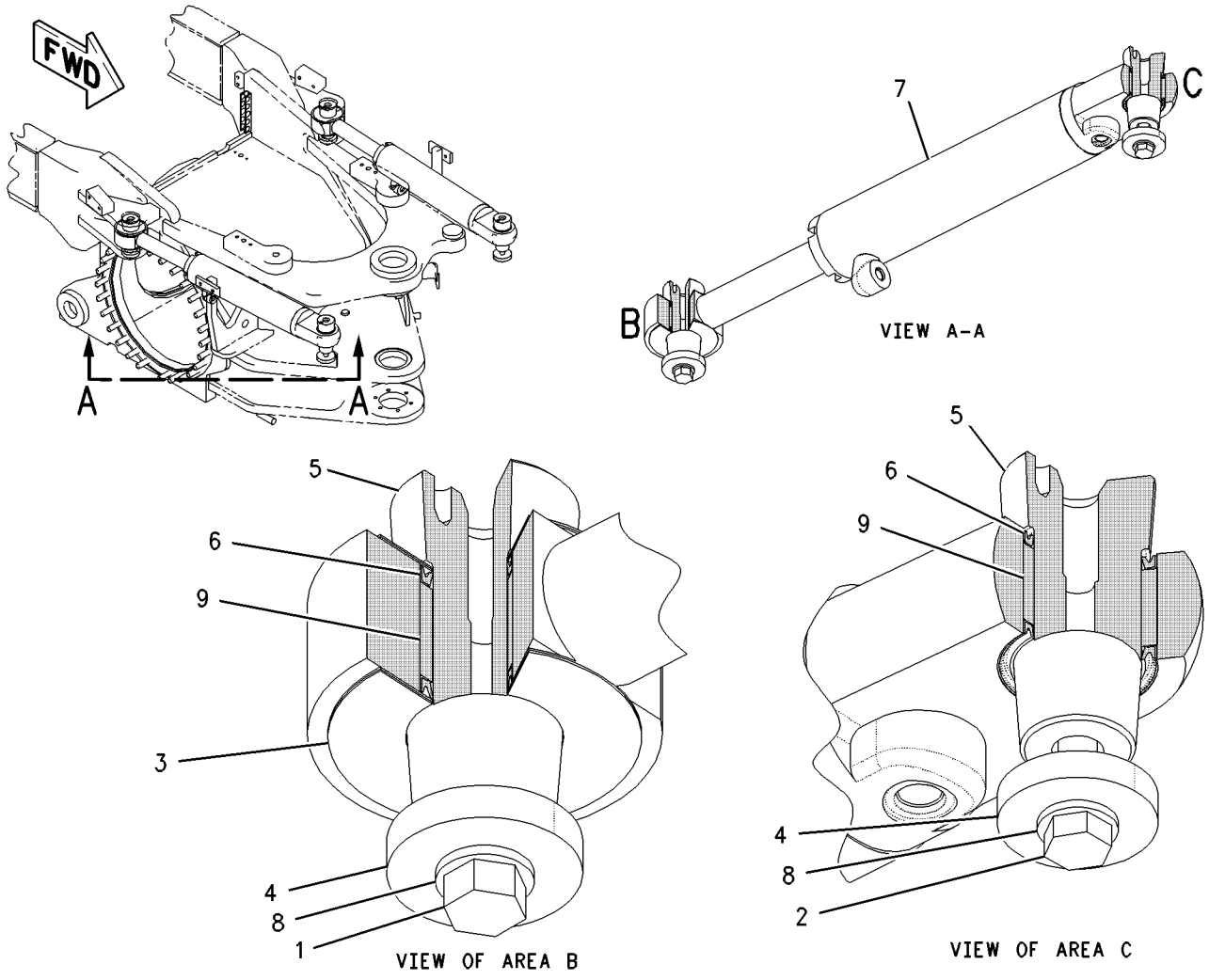

GRAPHIC #1 g00857847

8W-3254 CYLINDER & MTG GP-BLADE LIFT

S/N: ASE1-UP

PART OF 162-5606 GENERAL AR

SMCS-5102 **i01584105**

NOTE	REF NO	GRAPHIC REF	PART NUMBER	QTY	PART NAME 1 2 3 4 5 6 (PRODUCT LEVEL)	SEE PAGE
	1	1	**1D-4590**	8	BOLT (5/8-11X4.75IN)	
		1	**4D-3704**	8	WASHER-HARD (17X30X5MM THK)	
	2	1	**8D-4114**	4	CAP AS	
					(EACH INCLUDES)	
	3	1	**8D-4496**	1	BEARING	
B	4	1	**2G-9104**	8	SHIM (0.5MM THK)	
	5	1	**9D-2252**	4	INSERT	
	6	1	**2G-9099**	2	CAP	
	7	1	**1D-4629**	4	BOLT (7/8-9X3.5IN)	
		1	**5P-8249**	4	WASHER-HARD (24X41.5X4MM THK)	
Y	8	1	**175-2603**	2	CYLINDER GP-BLADE LIFT	426
	9	1	**3B-8485**	2	FITTING-GREASE (BLADE LIFT)	

B-USE AS REQUIRED
Y-SEPARATE ILLUSTRATION

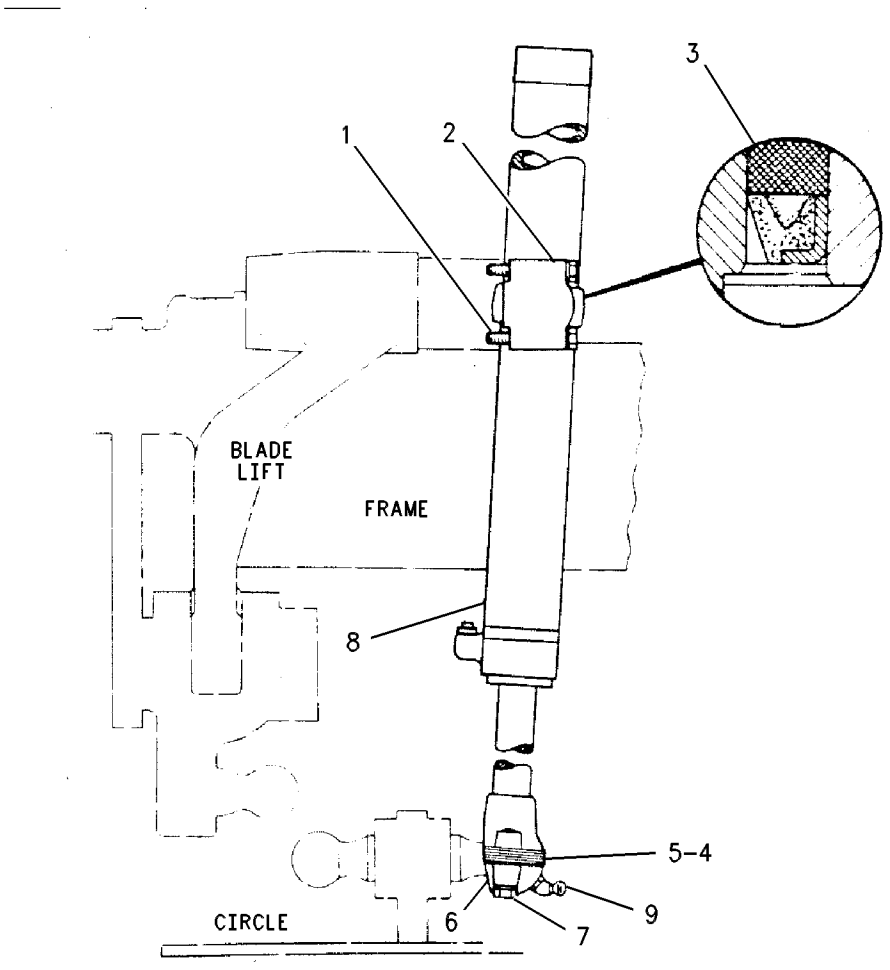

GRAPHIC #1 g00519272

8W-3255 CYLINDER & MTG GP-BLADE TIP

S/N: ASE1-UP

PART OF 162-5606 GENERAL AR

SMCS-5106 **i00128464**

NOTE	REF NO	GRAPHIC REF	PART NUMBER	QTY	PART NAME 1 2 3 4 5 6 (PRODUCT LEVEL)	SEE PAGE
	1	1	**5P-2228**	2	BOLT (1/2-13X1IN)	
		1	**8T-4223**	2	WASHER-HARD (3MM THK)	
CY	2	1	**9T-8944**	1	CYLINDER GP-BLADE TIP	427
	3	1	**8W-8513**	1	PIN AS	
		1	**8W-8511**	1	PLATE	
	4	1	**8W-8512**	1	PIN AS	
		1	**8W-8511**	1	PLATE	

C-CHANGE FROM PREVIOUS TYPE
Y-SEPARATE ILLUSTRATION

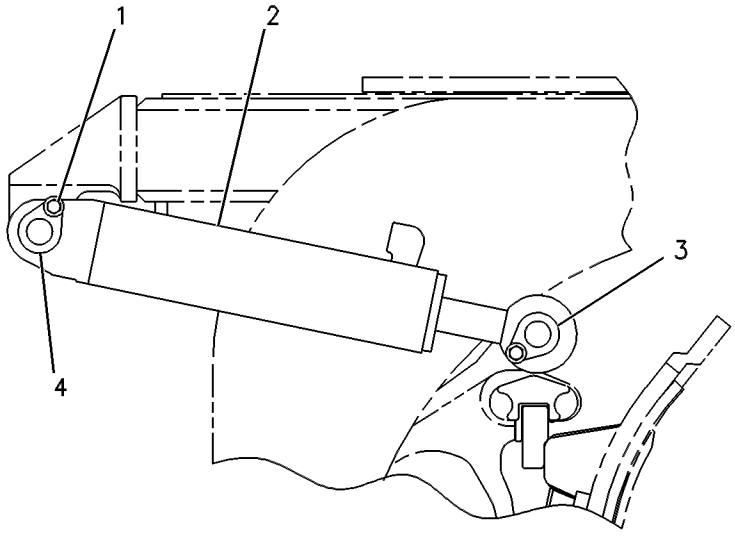

RIGHT SIDE VIEW

GRAPHIC #1 g00108929

HYDRAULIC SYSTEM

8W-3256 CYLINDER & MTG GP-CENTERSHIFT

S/N: ASE1-UP

PART OF 162-5606 GENERAL AR

SMCS-5223 **i01655584**

NOTE	REF NO	GRAPHIC REF	PART NUMBER	QTY	PART NAME 1 2 3 4 5 6 (PRODUCT LEVEL)	SEE PAGE
	1	1	**1D-4629**	4	BOLT (7/8-9X3.5IN)	
	2	1	**2G-9099**	2	CAP	
B	3	1	**2G-9104**	8	SHIM (0.5MM THK)	
	4	1	**3B-8485**	2	FITTING-GREASE (1/8-27 THD)(45 DEGREE) (CENTERSHIFT CYLINDER)	
	5	1	**9D-2252**	4	INSERT	
CY	6	1	**209-5773**	1	CYLINDER GP-CENTERSHIFT	428
	7	1	**5P-8249**	4	WASHER-HARD (24X41.5X4MM THK)	

B-USE AS REQUIRED
C-CHANGE FROM PREVIOUS TYPE
Y-SEPARATE ILLUSTRATION

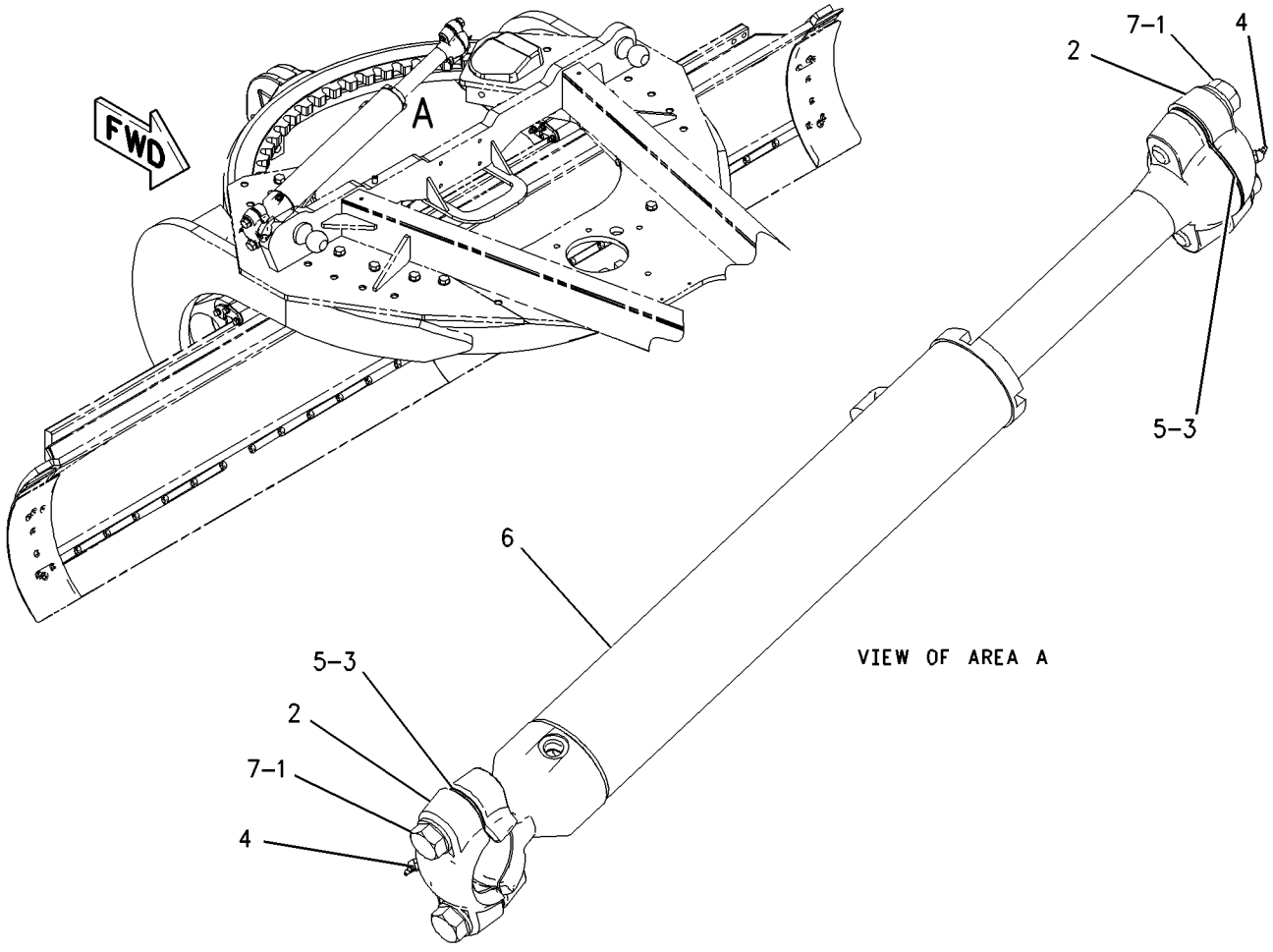

GRAPHIC #1 g00856714

HYDRAULIC SYSTEM

8W-3257 CYLINDER & MTG GP-SIDESHIFT

S/N: ASE1-UP

PART OF 162-5606 GENERAL AR

SMCS-5229 **i00128470**

NOTE	REF NO	GRAPHIC REF	PART NUMBER	QTY	PART NAME 1 2 3 4 5 6 (PRODUCT LEVEL)	SEE PAGE
	1	1	**1H-4478**	1	PIN	
Y	2	1	**9T-3206**	1	CYLINDER GP-SIDESHIFT	431
	3	1	**2B-0947**	1	BOLT (1/2-13X2.25IN)	
	4	1	**1K-6872**	1	LOCKNUT (1/2-13 THD)	
	5	1	**5T-8417**	1	PIN	
	6	1	**3B-4647**	1	PIN-COTTER	
	7	1	**1D-4626**	4	BOLT (7/8-9X2.75IN)	
		1	**5P-8249**	4	WASHER (4.0MM THK)	
	8	1	**6G-4832**	1	BRACKET	

Y-SEPARATE ILLUSTRATION

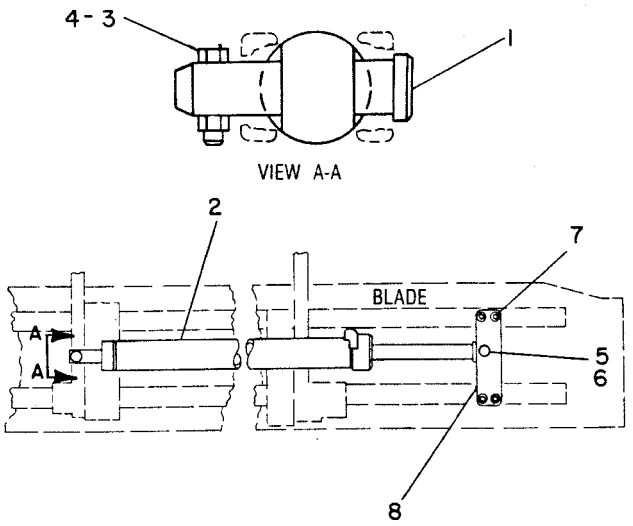

GRAPHIC #1 g00108284

8W-3253 CYLINDER & MTG GP-STEERING

S/N: ASE1-UP

PART OF 162-5606 GENERAL AR

SMCS-4303 **i01571979**

NOTE	REF NO	GRAPHIC REF	PART NUMBER	QTY	PART NAME 1 2 3 4 5 6 (PRODUCT LEVEL)	SEE PAGE
	1	1	**9B-7237**	2	BOLT (3/8-16X1.25 IN)	
		1	**8T-4896**	2	WASHER-HARD (10.2X18.5X2.5MM THK)	
Y	2	1	**165-2496**	1	CYLINDER GP-STEERING (LH)	434
Y		1	**165-2495**	1	CYLINDER GP-STEERING (RH)	432
	3	1	**8D-8931**	2	WASHER	
	4	1	**3B-4629**	2	PIN-COTTER	
	5	1	**141-6136**	2	TIE ROD GP	
					(EACH INCLUDES)	
	6	1	**1D-0906**	1	NUT-SLOTTED	
	7	1	**199-7819**	1	SEAL-BOOT	
	8	1	**6F-7058**	2	NUT-HEX (1 1/4-12 THD)	
	9	1	**8D-3993**	4	SPACER (1.26X1.50X.53 IN THK)	
	10	1	**8D-3997**	2	PIN AS	

Y-SEPARATE ILLUSTRATION

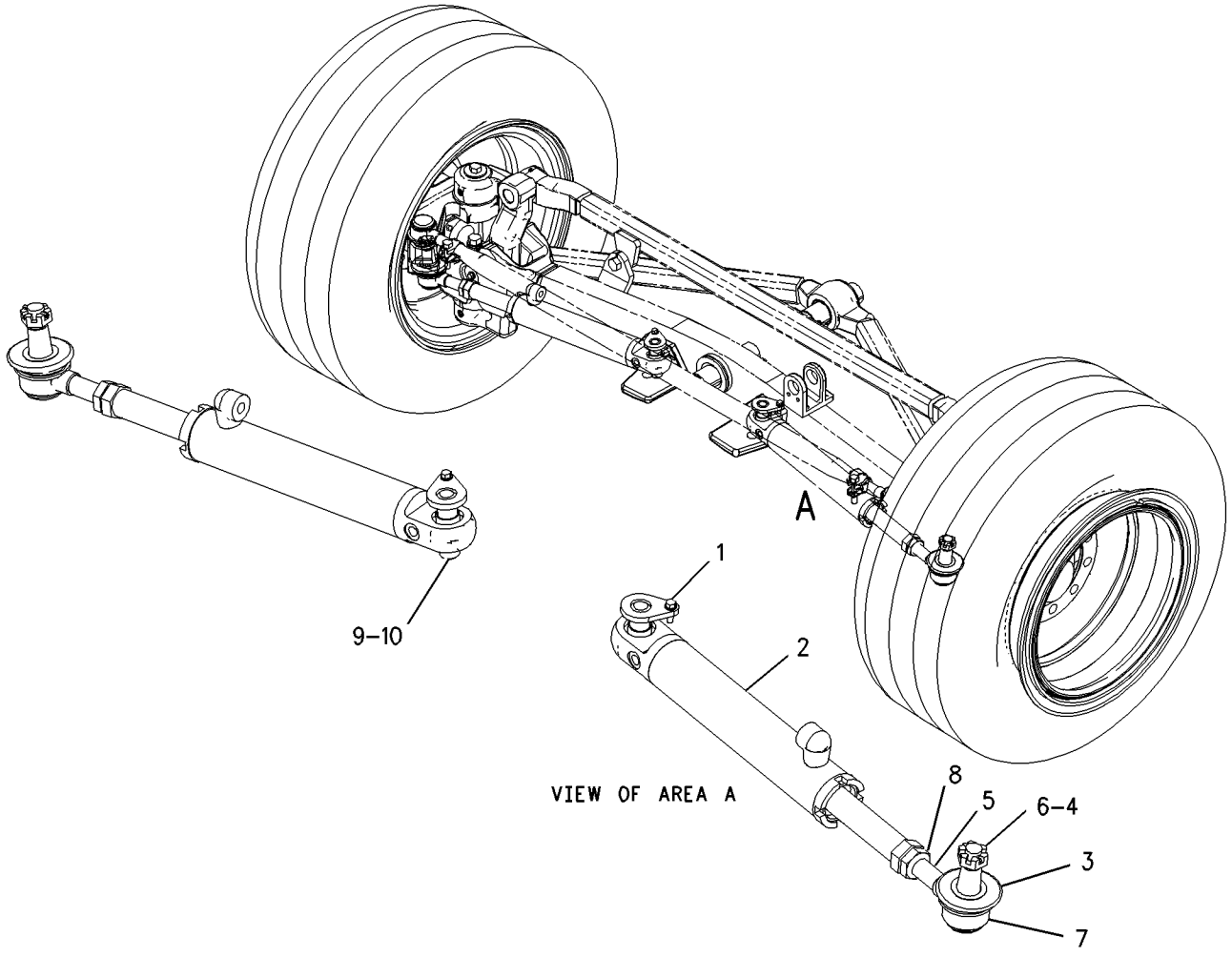

GRAPHIC #1 g00820439

8W-3252 CYLINDER & MTG GP-WHEEL LEAN

S/N: ASE1-UP

PART OF 162-5606 GENERAL AR

SMCS-5211 **i01663262**

NOTE	REF NO	GRAPHIC REF	PART NUMBER	QTY	PART NAME 1 2 3 4 5 6 (PRODUCT LEVEL)	SEE PAGE
Y	1	1	**121-9243**	1	CYLINDER GP-WHEEL LEAN	436
	2	1	**2G-5667**	1	RETAINER	
	3	1	**5P-8842**	4	SEAL-LIP	
	4	1	**3B-8489**	2	FITTING-GREASE (1/8-27 THD) (WHEEL LEAN)	
	5	1	**0S-1592**	1	BOLT (5/8-11X1.25IN)	
		1	**4D-3704**	1	WASHER-HARD (17X30X5MM THK)	
	6	1	**2G-8609**	1	PIN	
	7	1	**6G-7187**	1	LOCK	
	8	1	**6H-1717**	2	BOLT (1/2-13X1.125 IN)	
		1	**5P-8245**	2	WASHER-HARD (13.5X25.5X3MM THK)	

Y-SEPARATE ILLUSTRATION

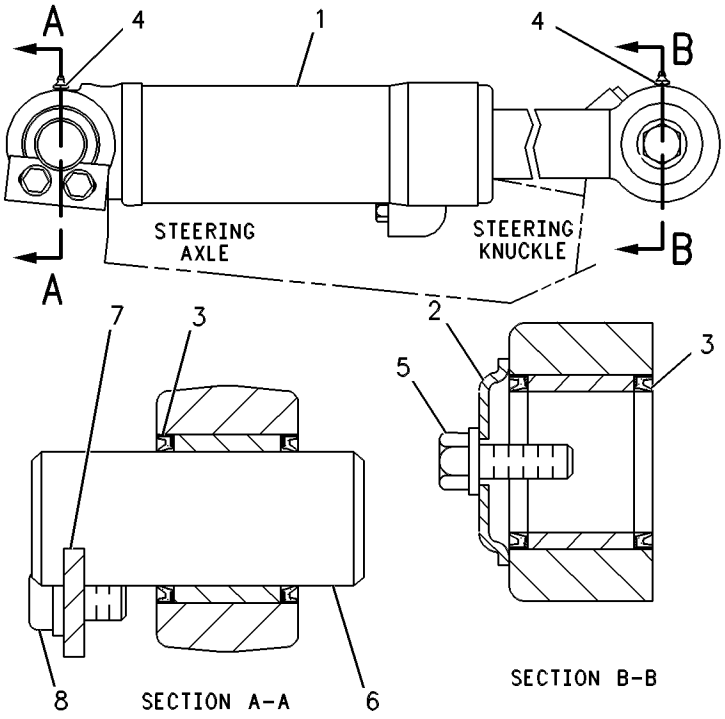

GRAPHIC #1 g00109072

184-6804 CYLINDER GP-ARTICULATION

S/N: ASE1-UP
88.9 MM BORE X 329.3 MM STROKE
PART OF 180-0054 CYLINDER & MTG GP-ARTICULATION

SMCS-5265 **i01648999**

NOTE	REF NO	GRAPHIC REF	PART NUMBER	QTY	PART NAME 1 2 3 4 5 6 (PRODUCT LEVEL)	SEE PAGE
	1	1	**6E-4581**	1	PISTON	
R	2	1	**6E-4725**	1	CYLINDER AS	
	3	1	**6E-4974**	1	HEAD	
	4	1	**184-6805**	1	ROD AS	
	5	1	**167-2195**	1	SEAL AS-BUFFER	
	6	1	**167-2304**	1	SEAL-U-CUP	
	7	1	**167-2457**	1	SEAL-WIPER	
M	8	1	**173-9683**	1	BOLT-HEX HEAD (M30X3.5X90MM)	
	9	1	**175-7898**	1	SEAL-O-RING	
	10	1	**4J-9224**	1	RING-BACKUP	
	11	1	**4T-5613**	1	RING-WEAR	
	12	1	**4T-8054**	1	SEAL AS	
	13	1	**7J-9885**	1	RING-WEAR	
	14	1	**9X-8399**	1	WASHER (33X56X6MM THK)	

M-METRIC PART
R-REMFG PART MAY BE AVAILABLE

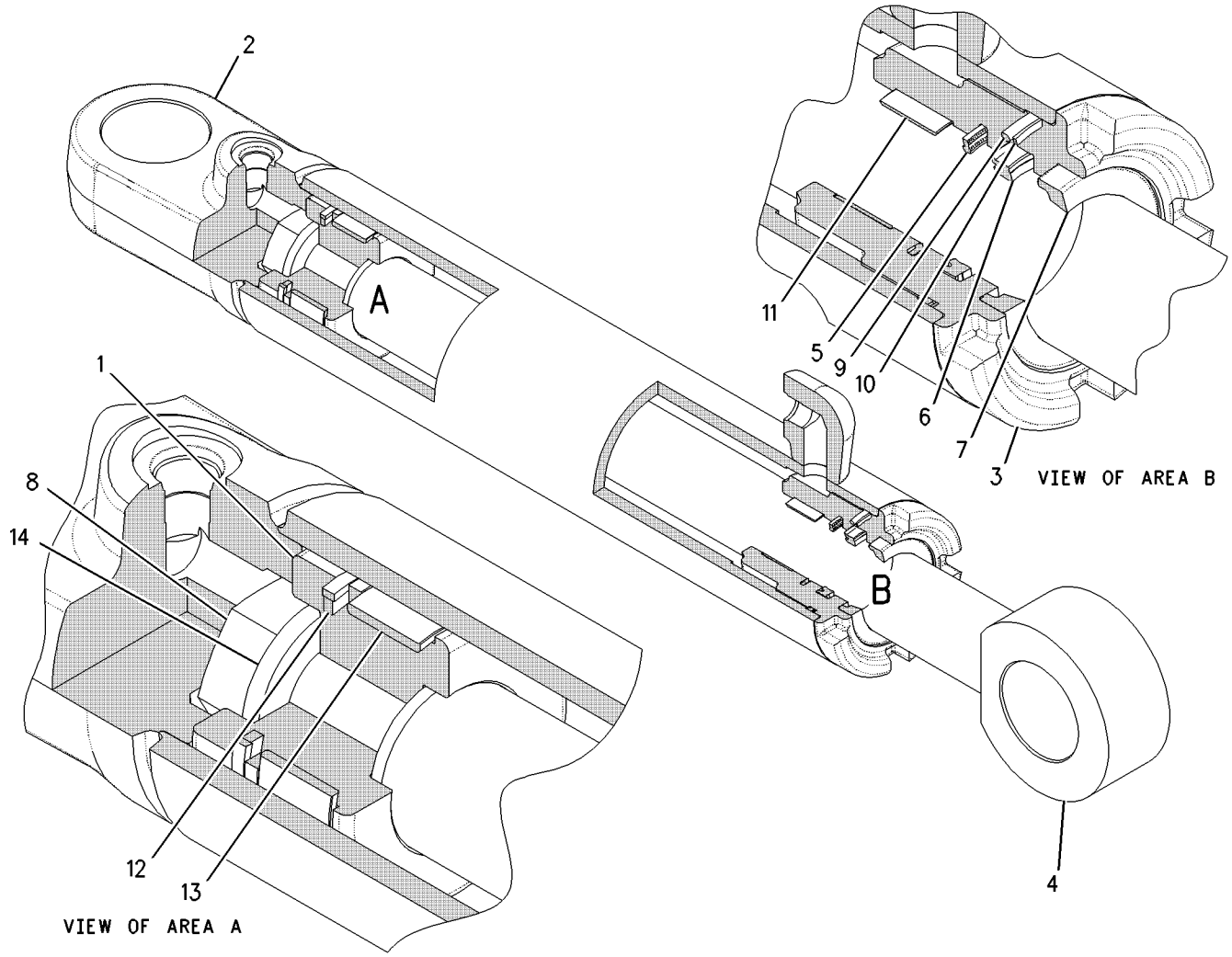

GRAPHIC #1 g00859020

HYDRAULIC SYSTEM

175-2603 CYLINDER GP-BLADE LIFT

S/N: ASE1-UP
88.9 MM BORE X 1041.5 MM STROKE
PART OF 8W-3254 CYLINDER & MTG GP-BLADE LIFT

SMCS-5102 **i01584110**

NOTE	REF NO	GRAPHIC REF	PART NUMBER	QTY	PART NAME 1 2 3 4 5 6 (PRODUCT LEVEL)	SEE PAGE
	1	1	**6E-4975**	1	HEAD	
		1	**167-2459**	1	SEAL-WIPER	
	2	1	**9T-8043**	1	PISTON	
	3	1	**175-2606**	1	CYLINDER AS	
		1	**8J-6018**	2	BEARING-SLEEVE	
	4	1	**175-2942**	1	ROD AS	
	5	1	**167-2200**	1	SEAL AS	
	6	1	**167-2307**	1	SEAL-U-CUP	
	7	1	**167-2459**	1	SEAL-WIPER	
M	8	1	**173-9683**	1	BOLT-HEX HEAD (M30X3.5X90MM)	
	9	1	**175-7898**	1	SEAL-O-RING	
	10	1	**4J-9224**	1	RING-BACKUP	
	11	1	**4T-8054**	1	SEAL AS	
	12	1	**7J-9885**	1	RING-WEAR	
	13	1	**8T-4958**	1	RING-WEAR	
	14	1	**9X-8399**	1	WASHER (33X56X6MM THK)	

M-METRIC PART

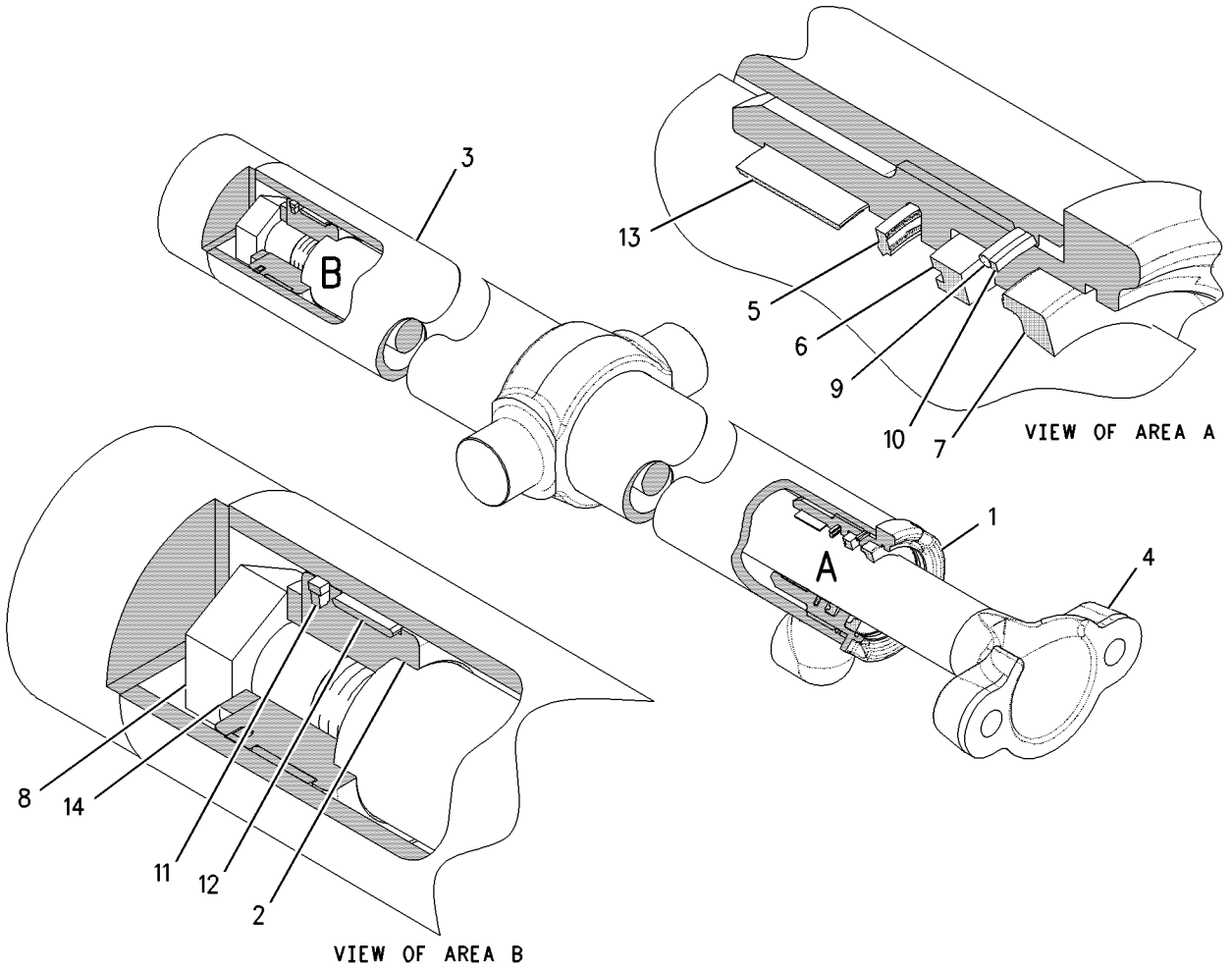

GRAPHIC #1 g00828958

HYDRAULIC SYSTEM

9T-8944 CYLINDER GP-BLADE TIP

S/N: ASE1-UP
101.6 MM BORE X 355.5 MM STROKE
PART OF 8W-3255 CYLINDER & MTG GP-BLADE TIP

SMCS-5106 **i01434224**

NOTE	REF NO	GRAPHIC REF	PART NUMBER	QTY	PART NAME 1 2 3 4 5 6 (PRODUCT LEVEL)	SEE PAGE
	1	1	**9T-8943**	1	CYLINDER AS	
		1	**4D-0298**	1	BEARING	
M	2	1	**173-9683**	1	BOLT-HEX HEAD (M30X3.5X90MM)	
	3	1	**3S-7023**	1	WASHER (34X57X6MM THK)	
	4	1	**9T-3133**	1	PISTON	
	5	1	**5J-5402**	1	SEAL AS	
	6	1	**6J-2797**	1	RING-WEAR	
R	7	1	**6E-1049**	1	ROD AS	
		1	**4D-0298**	1	BEARING	
	8	1	**4T-5613**	1	RING-WEAR	
	9	1	**167-2195**	1	SEAL AS-BUFFER	
	10	1	**167-2304**	1	SEAL-U-CUP	
	11	1	**167-2457**	1	SEAL-WIPER	
	12	1	**175-7900**	1	SEAL-O-RING	
	13	1	**2K-6830**	1	RING-BACKUP	
	14	1	**6E-0775**	1	HEAD	

M-METRIC PART
R-REMFG PART MAY BE AVAILABLE

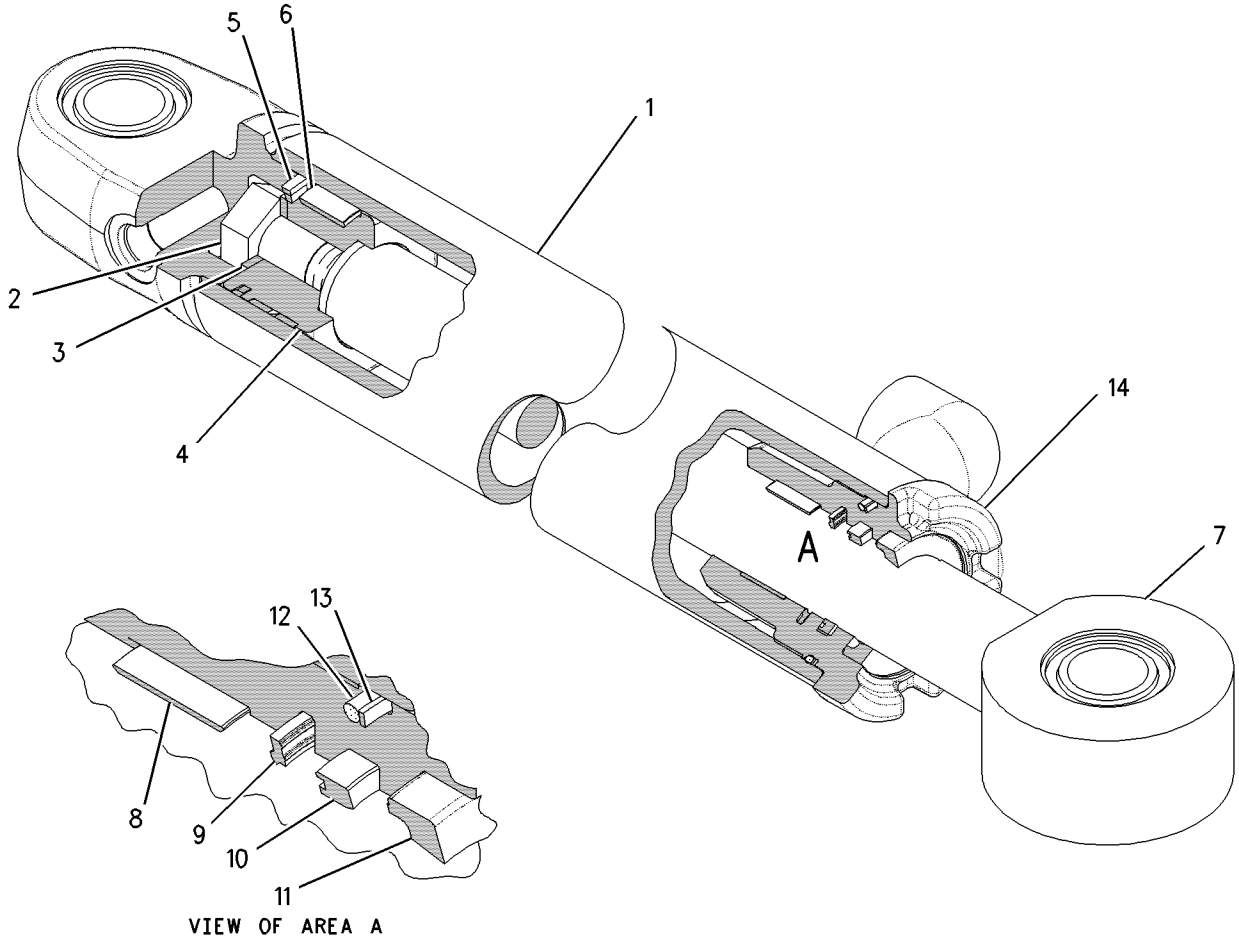

GRAPHIC #1 g00785755

HYDRAULIC SYSTEM

209-5773 CYLINDER GP-CENTERSHIFT

S/N: ASE1-UP

88.9 MM BORE X 471.5 MM STROKE

PART OF 8W-3256 CYLINDER & MTG GP-CENTERSHIFT

SMCS-5223 **i01646020**

NOTE	REF NO	GRAPHIC REF	PART NUMBER	QTY	PART NAME 1 2 3 4 5 6 (PRODUCT LEVEL)	SEE PAGE
	1	1	**6E-4975**	1	HEAD	
	2	1	**9T-8043**	1	PISTON	
	3	1	**157-4693**	1	ROD AS	
	4	1	**209-5774**	1	CYLINDER AS	
	5	1	**167-2200**	1	SEAL AS	
	6	1	**167-2307**	1	SEAL-U-CUP	
	7	1	**167-2459**	1	SEAL-WIPER	
M	8	1	**173-9683**	1	BOLT-HEX HEAD (M30X3.5X90MM)	
	9	1	**175-7898**	1	SEAL-O-RING	
	10	1	**4J-9224**	1	RING-BACKUP	
	11	1	**4T-8054**	1	SEAL AS	
	12	1	**7J-9885**	1	RING-WEAR	
	13	1	**8T-4958**	1	RING-WEAR	
	14	1	**9X-8399**	1	WASHER (33X56X6MM THK)	

M-METRIC PART

209-5773 CYLINDER GP-CENTERSHIFT ***(contd.)*** **i01646020**

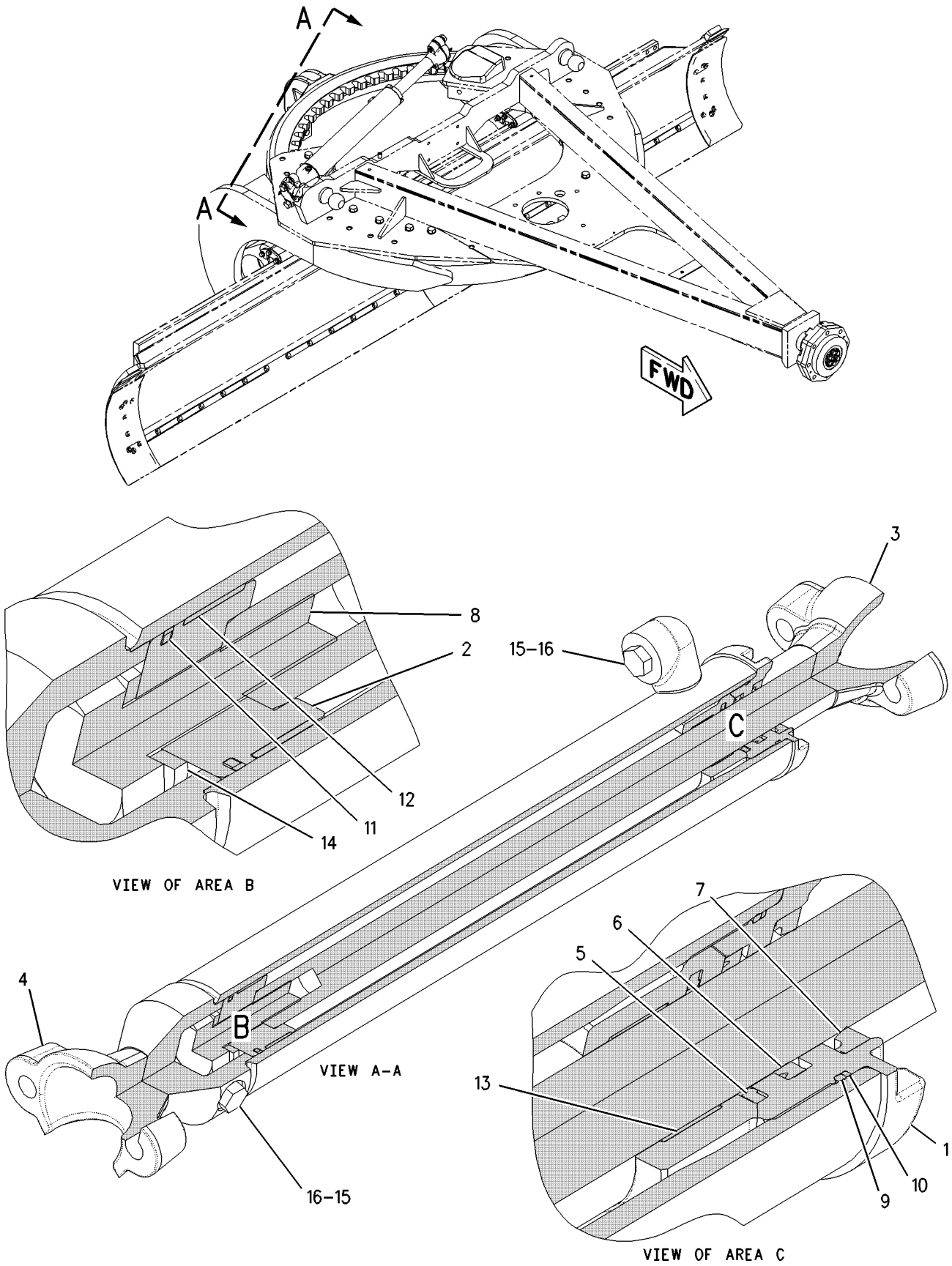

GRAPHIC #1

g00856703

113-5264 CYLINDER GP-RIPPER LIFT

S/N: ASE1-UP
127.0 MM BORE X 495.0 MM STROKE
PART OF 187-9051 RIPPER AR
AN ATTACHMENT

SMCS-5352 **i01401718**

NOTE	REF NO	GRAPHIC REF	PART NUMBER	QTY	PART NAME 1 2 3 4 5 6 (PRODUCT LEVEL)	SEE PAGE
	1	1	**114-4776**	1	CYLINDER AS	
	2	1	**4K-3128**	2	BEARING-SLEEVE	
	3	1	**4J-4630**	1	RING-WEAR	
	4	1	**9X-7264**	1	SEAL AS	
	5	1	**6E-2314**	1	PISTON	
	6	1	**175-7904**	1	SEAL-O-RING (126.59MM ID)	
	7	1	**2K-4096**	1	RING	
	8	1	**121-3395**	1	HEAD	
	9	1	**114-4781**	1	ROD AS	
	10	1	**2K-4507**	1	BEARING-SLEEVE	
	11	1	**167-2463**	1	SEAL-WIPER	
	12	1	**167-2312**	1	SEAL-U-CUP	
	13	1	**167-2201**	1	SEAL AS-BUFFER	
	14	1	**8T-0785**	1	RING-WEAR	
	15	1	**5J-5731**	1	LOCKNUT	

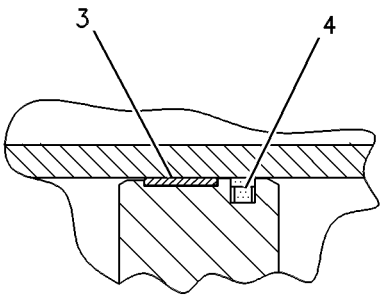

VIEW OF AREA B

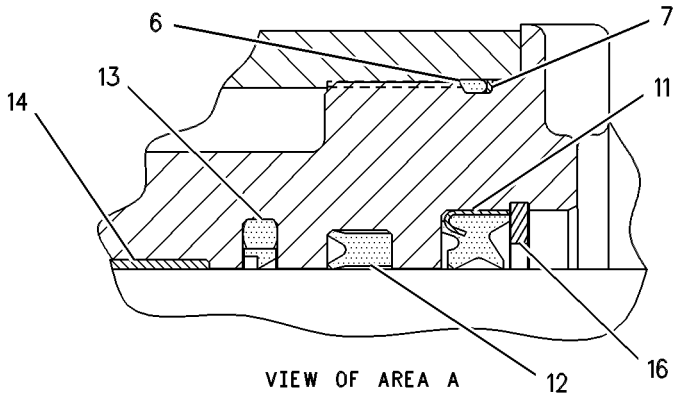

VIEW OF AREA A

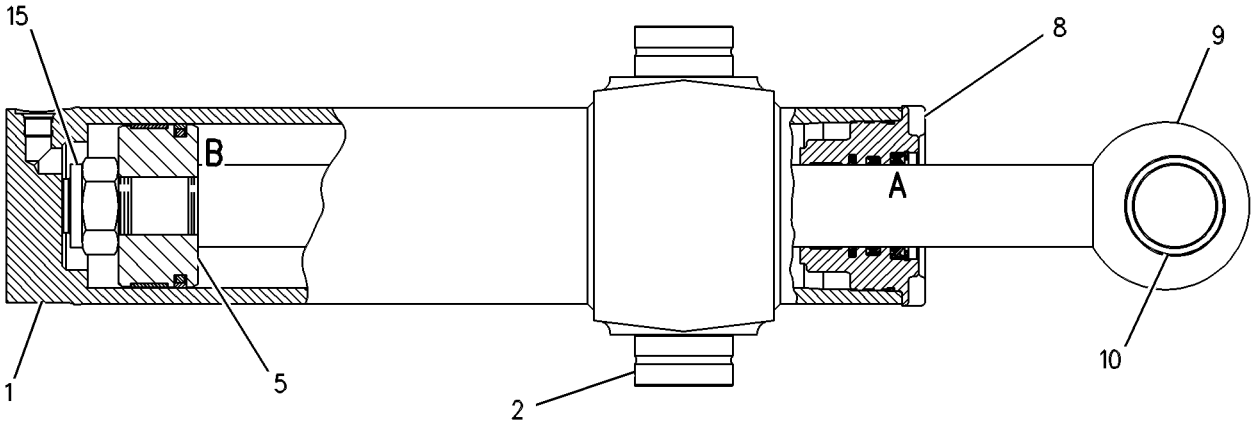

GRAPHIC #1 g00108942

9T-3206 CYLINDER GP-SIDESHIFT

S/N: ASE1-UP
101.6MM BORE X 1531.9MM STROKE
PART OF 8W-3257 CYLINDER & MTG GP-SIDESHIFT

SMCS-5229 **i01434258**

NOTE	REF NO	GRAPHIC REF	PART NUMBER	QTY	PART NAME 1 2 3 4 5 6 (PRODUCT LEVEL)	SEE PAGE
CR	1	1	**6E-1047**	1	ROD AS	
	2	1	**9T-3051**	1	PISTON	
	3	1	**172-9981**	1	HEAD	
R	4	1	**175-7882**	1	CYLINDER AS	
C	5	1	**167-2201**	1	SEAL AS-BUFFER	
	6	1	**167-2312**	1	SEAL-U-CUP	
C	7	1	**167-2463**	1	SEAL-WIPER	
CM	8	1	**173-9683**	1	BOLT-HEX HEAD (M30X3.5X90MM)	
	9	1	**175-7900**	1	SEAL-O-RING	
	10	1	**2K-6830**	1	RING-BACKUP	
	11	1	**5J-5402**	1	SEAL AS	
	12	1	**6J-2797**	1	RING-WEAR	
	13	1	**8T-0785**	1	RING-WEAR	
C	14	1	**9X-8399**	1	WASHER (33X56X6MM THK)	

C-CHANGE FROM PREVIOUS TYPE
M-METRIC PART
R-REMFG PART MAY BE AVAILABLE

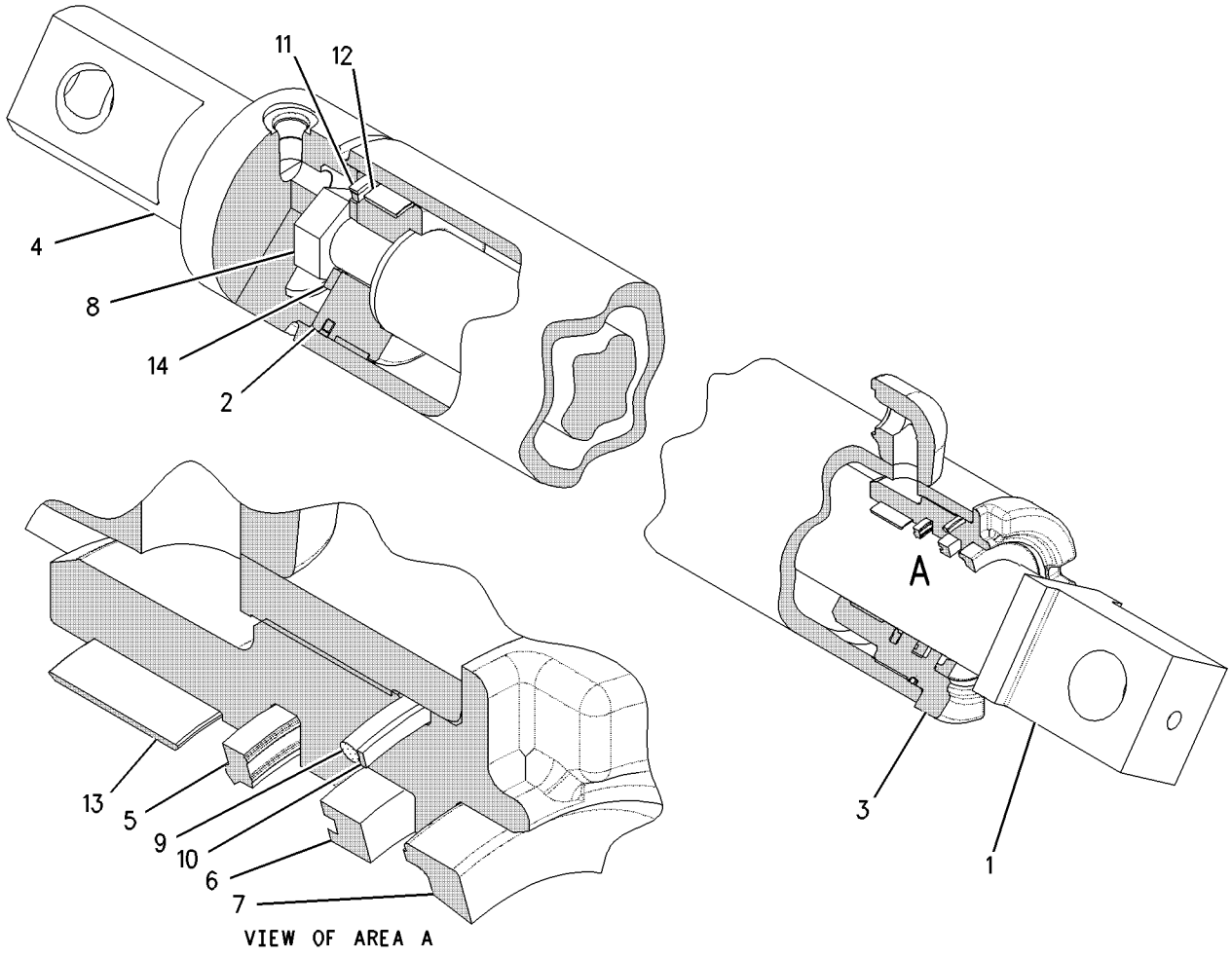

GRAPHIC #1 g00758263

165-2495 CYLINDER GP-STEERING–RH

S/N: ASE1-UP
63.5 MM BORE X 291.6 MM STROKE
PART OF 8W-3253 CYLINDER & MTG GP-STEERING

SMCS-4303 **i01571984**

NOTE	REF NO	GRAPHIC REF	PART NUMBER	QTY	PART NAME 1 2 3 4 5 6 (PRODUCT LEVEL)	SEE PAGE
	1	1	**9T-2803**	1	PISTON	
	2	1	**151-5349**	1	HEAD	
	3	1	**170-0414**	1	ROD AS	
	4	1	**167-2191**	1	SEAL AS-BUFFER	
	5	1	**167-2300**	1	SEAL-U-CUP	
	6	1	**167-2452**	1	SEAL-WIPER	
	7	1	**170-4847**	1	CYLINDER AS	
		1	**1N-5999**	1	PLUG	
		1	**7J-0204**	1	SEAL-O-RING	
		1	**142-0308**	1	ELBOW	
		1	**2D-8652**	1	BEARING	
M	8	1	**173-9685**	1	BOLT-HEX HEAD (M20X2.5X70MM)	
	9	1	**175-7895**	1	SEAL-O-RING	
	10	1	**1N-5999**	2	PLUG	
	11	1	**4J-9225**	1	RING-BACKUP	
	12	1	**4T-6907**	1	RING-WEAR	
	13	1	**7J-0204**	2	SEAL-O-RING	
	14	1	**8J-6212**	1	RING-WEAR	
	15	1	**8J-6213**	1	SEAL AS	
	16	1	**8T-3282**	1	WASHER-HARD (22X35X3.5MM THK)	

M-METRIC PART

165-2495 CYLINDER GP-STEERING *(contd.)* **i01571984**

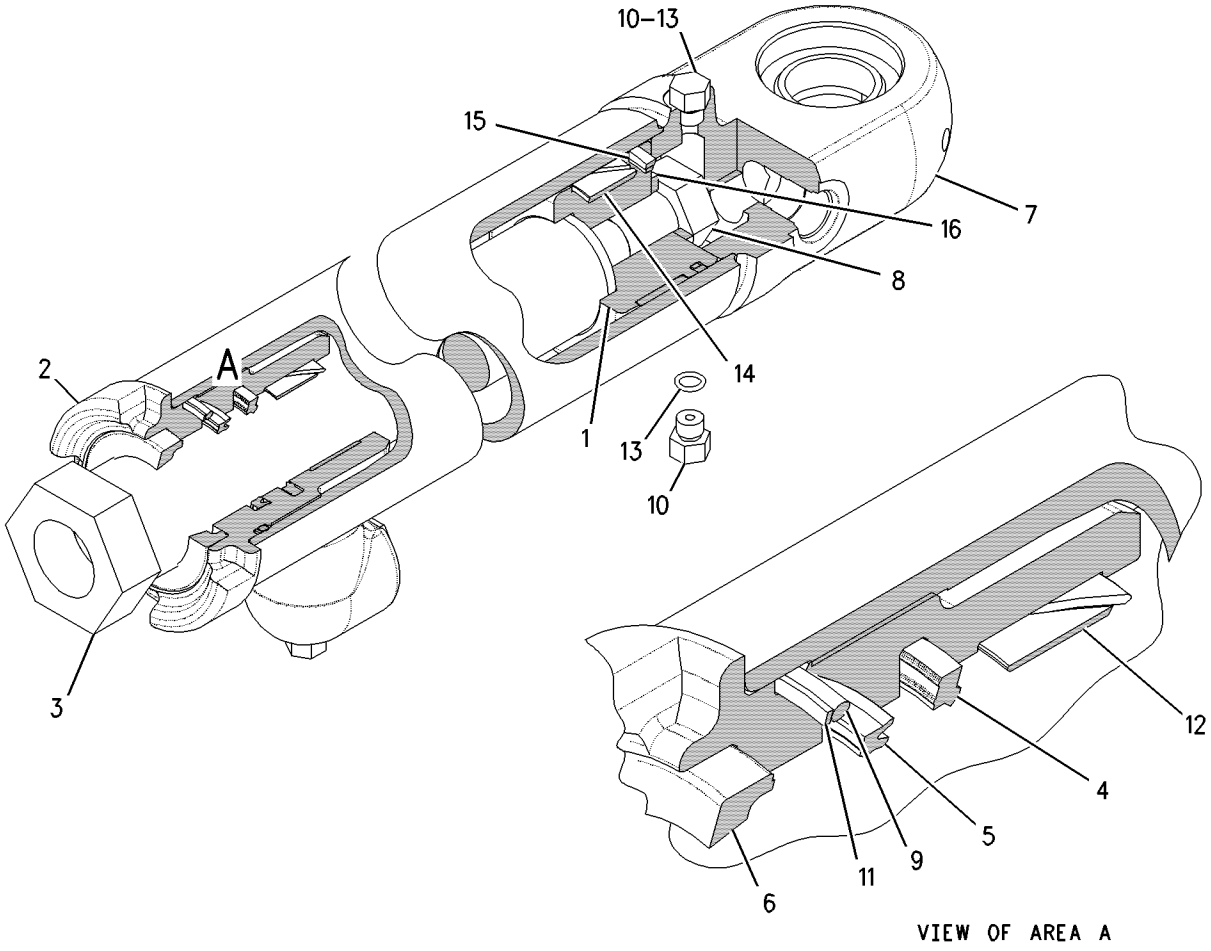

GRAPHIC #1 g00817972

165-2496 CYLINDER GP-STEERING—LH

S/N: ASE1-UP

63.5 MM BORE X 291.6 MM STROKE

PART OF 8W-3253 CYLINDER & MTG GP-STEERING

SMCS-4303 **i01574036**

NOTE	REF NO	GRAPHIC REF	PART NUMBER	QTY	PART NAME 1 2 3 4 5 6 (PRODUCT LEVEL)	SEE PAGE
	1	1	**9T-2803**	1	PISTON	
	2	1	**151-5349**	1	HEAD	
	3	1	**170-0412**	1	CYLINDER AS	
		1	**1N-5999**	1	PLUG	
		1	**7J-0204**	1	SEAL-O-RING	
		1	**142-0308**	1	ELBOW	
		1	**2D-8652**	1	BEARING	
	4	1	**170-0414**	1	ROD AS	
	5	1	**167-2191**	1	SEAL AS-BUFFER	
	6	1	**167-2300**	1	SEAL-U-CUP	
	7	1	**167-2452**	1	SEAL-WIPER	
M	8	1	**173-9685**	1	BOLT-HEX HEAD (M20X2.5X70MM)	
	9	1	**175-7895**	1	SEAL-O-RING	
	10	1	**1N-5999**	2	PLUG	
	11	1	**4J-9225**	1	RING-BACKUP	
	12	1	**4T-6907**	1	RING-WEAR	
	13	1	**7J-0204**	2	SEAL-O-RING	
	14	1	**8J-6212**	1	RING-WEAR	
	15	1	**8J-6213**	1	SEAL AS	
	16	1	**8T-3282**	1	WASHER-HARD (22X35X3.5MM THK)	

M-METRIC PART

165-2496 CYLINDER GP-STEERING *(contd.)* i01574036

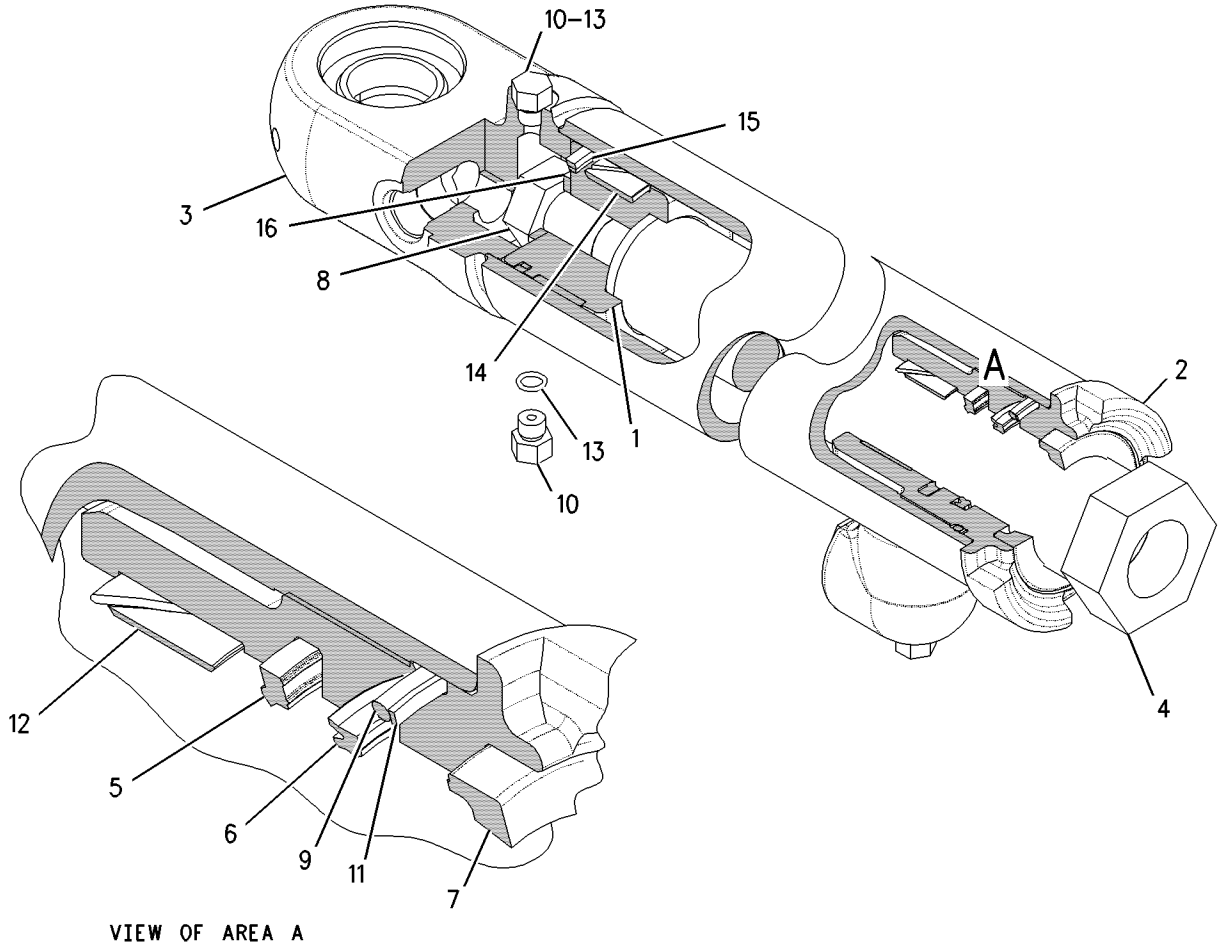

GRAPHIC #1 g00817999

HYDRAULIC SYSTEM

121-9243 CYLINDER GP-WHEEL LEAN

S/N: ASE1-UP

88.9 MM BORE X 149.0 MM STROKE

PART OF 8W-3252 CYLINDER & MTG GP-WHEEL LEAN

SMCS-5211 **i01458627**

NOTE	REF NO	GRAPHIC REF	PART NUMBER	QTY	PART NAME 1 2 3 4 5 6 (PRODUCT LEVEL)	SEE PAGE
	1	1	**123-1076**	1	CYLINDER AS	
		1	**2G-8631**	1	BEARING-SLEEVE	
M	2	1	**173-9683**	1	BOLT-HEX HEAD (M30X3.5X90MM)	
	3	1	**9X-8399**	1	WASHER (33X56X6MM THK)	
	4	1	**4T-8054**	1	SEAL AS	
					(INCLUDES EXPANDER RING & SEAL)	
	5	1	**7J-9885**	1	RING-WEAR	
	6	1	**9T-9040**	1	PISTON	
	7	1	**175-7898**	1	SEAL-O-RING	
	8	1	**4J-9224**	1	RING-BACKUP	
	9	1	**6E-4974**	1	HEAD	
	10	1	**121-9246**	1	ROD AS	
		1	**2G-8631**	1	BEARING-SLEEVE	
	11	1	**167-2457**	1	SEAL-WIPER	
	12	1	**167-2304**	1	SEAL-U-CUP	
	13	1	**167-2195**	1	SEAL AS-BUFFER	
					(INCLUDES BUFFER SEAL & BACKUP RING)	
	14	1	**4T-5613**	1	RING-WEAR	

M-METRIC PART

121-9243 CYLINDER GP-WHEEL LEAN *(contd.)* i01458627

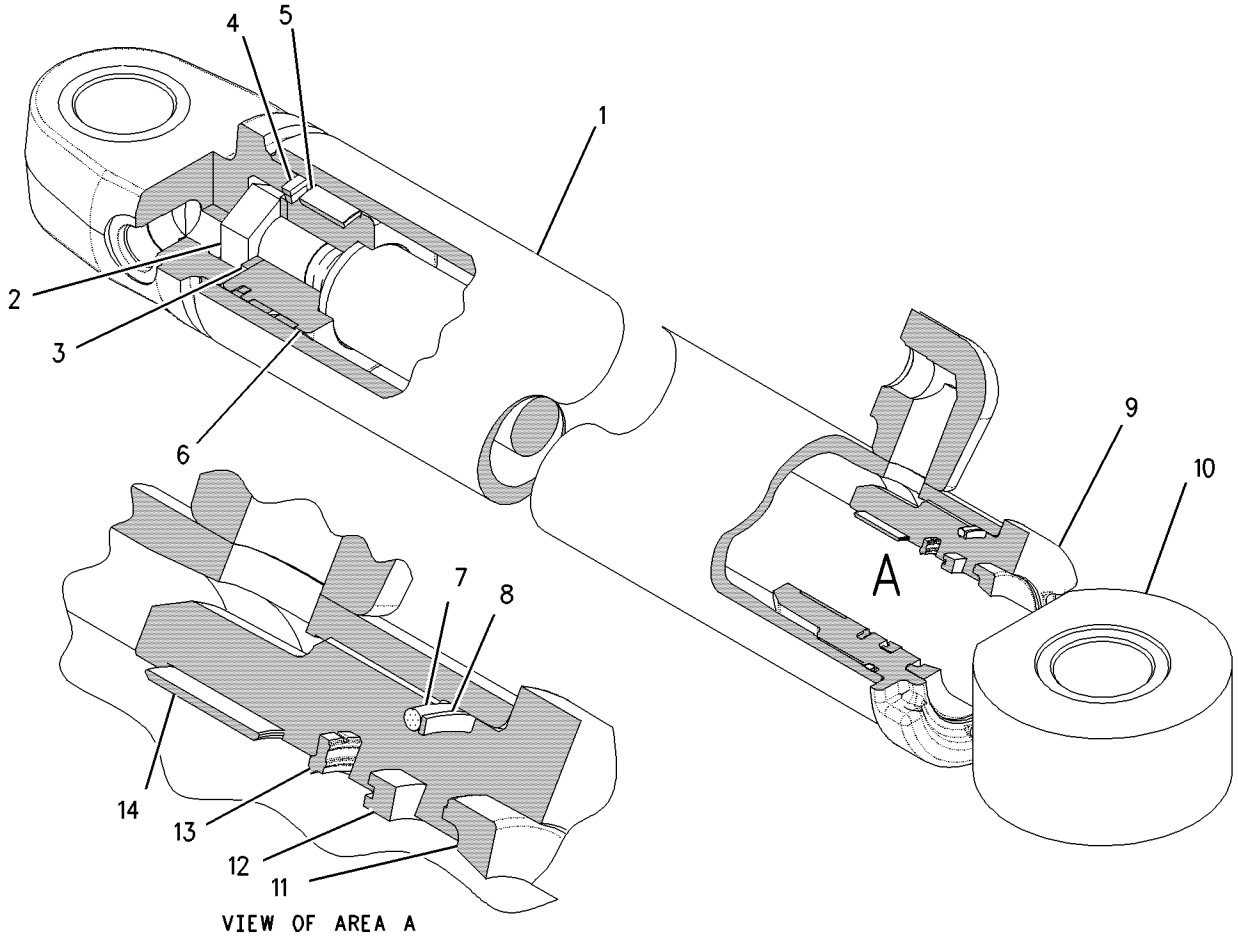

GRAPHIC #1 g00785833

108-4916 DETENT GP-CONTROL VALVE

S/N: ASE1-UP

PART OF 107-0547, 107-0557, 107-0564, 153-8907 VALVE GP-CONTROL

ALSO AN ATTACHMENT

SMCS-5051 **i00124386**

NOTE	REF NO	GRAPHIC REF	PART NUMBER	QTY	PART NAME 1 2 3 4 5 6 (PRODUCT LEVEL)	SEE PAGE
	1	1	**101-1974**	1	RETAINER	
	2	1	**101-1975**	1	RETAINER	
	3	1	**102-7423**	1	SPRING	
	4	1	**5B-9318**	6	BALL	

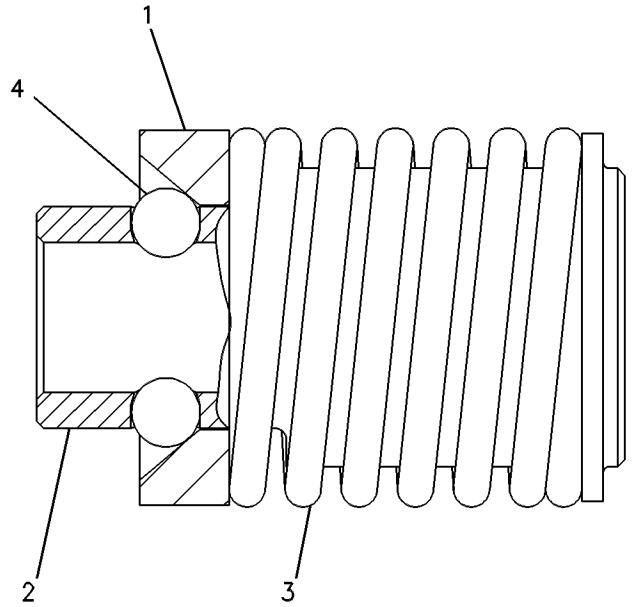

GRAPHIC #1 g00108519

MEMORANDA

HYDRAULIC SYSTEM

130-3535 DETENT GP-CONTROL VALVE–EU

S/N: ASE1-UP

PART OF 130-3111, 130-3112, 130-3113 VALVE GP-CONTROL

AN ATTACHMENT

SMCS-5051 **i01533102**

NOTE	REF NO	GRAPHIC REF	PART NUMBER	QTY	PART NAME 1 2 3 4 5 6 (PRODUCT LEVEL)	SEE PAGE
M	1	1	**7X-2540**	2	BOLT (M8X1.25X120MM)	
	2	1	**8T-4224**	2	WASHER-HARD (8.8X16X2MM THK)	
	3	1	**6V-5722**	2	SEAL-O-RING	
	4	1	**4J-7533**	2	SEAL-O-RING	
	5	1	**9S-8001**	2	PLUG	
	6	1	**124-2890**	1	HOUSING	
	7	1	**9S-8006**	1	PLUG	
	8	1	**2M-9780**	1	SEAL-O-RING	
	9	1	**124-2887**	1	PISTON	
	10	1	**124-2889**	1	STOP	
	11	1	**5B-9318**	6	BALL	
	12	1	**101-1974**	1	RETAINER	
	13	1	**124-2888**	1	RETAINER	
	14	1	**124-2891**	1	SPACER	
	15	1	**2K-8199**	2	SEAL-O-RING	
	16	1	**128-8643**	1	SPRING	
	17	1	**128-8644**	1	SPRING	

M-METRIC PART

130-3535 DETENT GP-CONTROL VALVE *(contd.)* i01533102

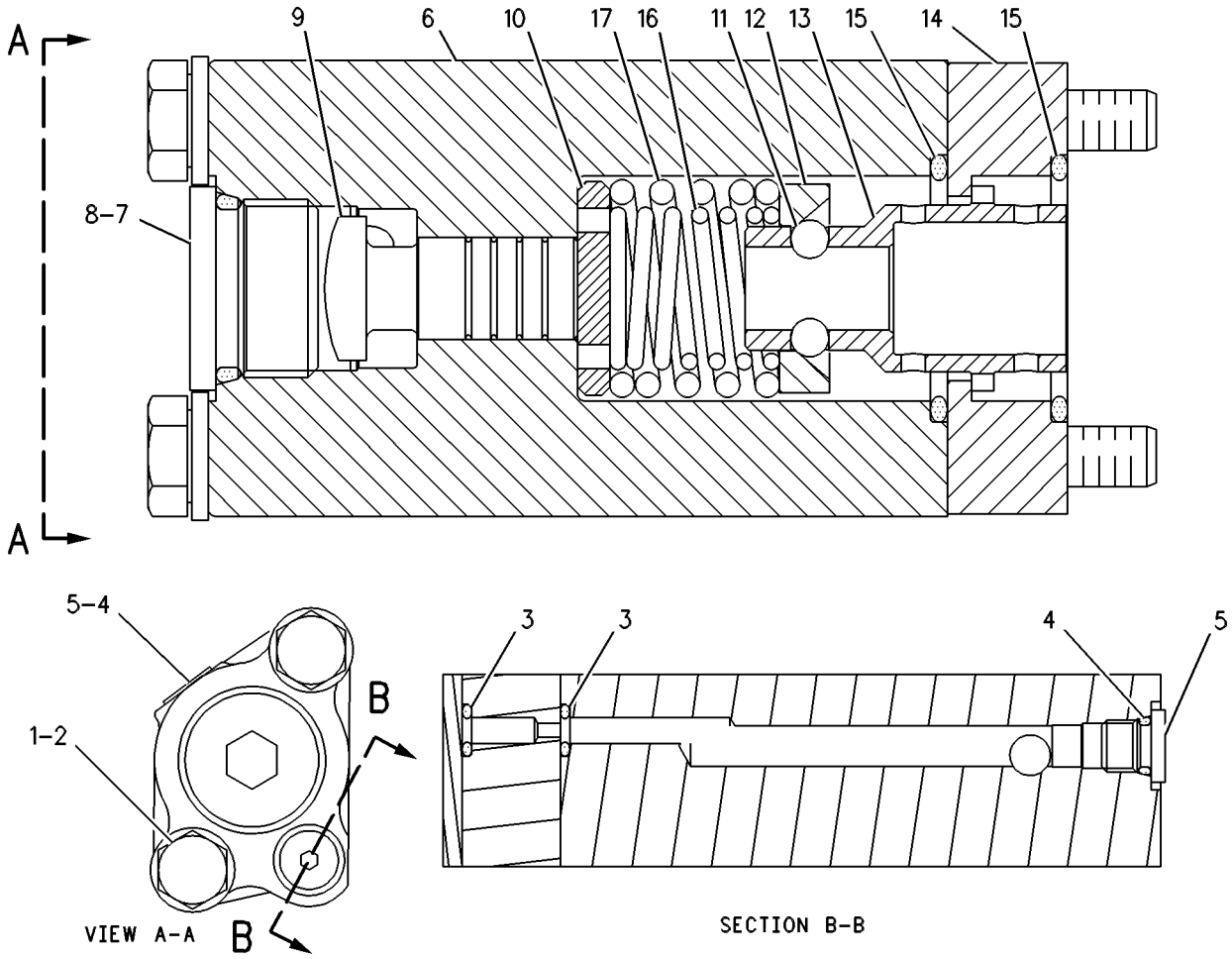

GRAPHIC #1 g00109431

HYDRAULIC SYSTEM

8X-5302 DRIVE GP-CIRCLE

S/N: ASE1-UP

PART OF 162-5606 GENERAL AR

SMCS-5207 **i01095980**

NOTE	REF NO	GRAPHIC REF	PART NUMBER	QTY	PART NAME 1 2 3 4 5 6 (PRODUCT LEVEL)	SEE PAGE
	1	1	**1H-7339**	1	SEAL-O-RING (75.79MM ID)	
	2	1	**9D-1491**	1	COUPLING	
	3	1	**6G-6238**	1	COVER AS	
		1	**6G-5537**	1	BEARING	
	4	1	**1D-4627**	2	BOLT (7/8-9X3IN)	
		1	**4D-6419**	2	WASHER-HARD	
	5	1	**5S-7379**	4	BOLT (3/8-16X.875IN)	
		1	**8T-4896**	4	WASHER-HARD (2.5MM THK)	
	6	1	**2H-9247**	1	SEAL-O-RING (132.94MM ID)	
	7	1	**1B-5174**	1	PLUG-PIPE (3/4-14 NPTF)	
	8	1	**8W-8146**	1	WORM-CIRCLE DRIVE	
	9	1	**1B-4038**	2	CUP-ROLLER BEARING	
		1	**1B-4046**	2	CONE-BEARING	
	10	1	**8T-0336**	1	FITTING-RELIEF	
	11	1	**2B-7410**	1	PLUG-PIPE	
B	12	1	**7D-8983**	10	SHIM (.127MM THK)	
B		1	**7D-8984**	6	SHIM (.178MM THK)	
	13	1	**2G-6695**	1	BRACKET	
	14	1	**6G-5538**	1	COVER	
		1	**6G-5539**	1	GASKET	
	15	1	**4H-6996**	1	PIN-SPRING	
	16	1	**0S-1585**	4	BOLT (1/2-13X1.50IN)	
	17	1	**5P-8245**	5	WASHER (3MM THK)	
	18	1	**5K-8454**	1	BOLT (1/2-13X1.12IN)	
Y	19	2	*9T-5977*	1	MOTOR GP-GEROTOR	480
	20	2	**1D-4719**	4	NUT-FULL (1/2-13 THD)	
	21	2	**5P-8245**	14	WASHER (3MM THK)	
	22	2	**6H-1717**	7	BOLT (1/2-13X1.125IN)	
	23	2	**6G-5548**	1	SPACER (39.25 MM THK)	
	24	2	**6G-6122**	1	SPRING-DISC	
B	25	2	**6G-5543**	6	SHIM (0.13MM THK)	
B		2	**6G-5544**	11	SHIM (0.25MM THK)	
	26	2	**2D-6533**	1	SEAL-O-RING (304.39MM ID)	
	27	2	**8X-5303**	1	GEAR-WORM	
	28	2	**1A-1415**	1	NUT	
		2	**2G-0339**	1	LOCK-NUT	
		2	**9D-5943**	1	SPACER	
	29	2	**2G-5876**	1	HOUSING-DRIVE	
	30	2	**9D-5942**	1	BEARING-SLEEVE	
	31	2	**0S-1585**	3	BOLT (1/2-13X1.50IN)	
	32	2	**4D-7246**	4	STUD-TAPERLOCK	
	33	2	**2D-8154**	4	STUD	
	34	2	**9D-5941**	2	WASHER-THRUST	
	35	2	**9W-6645**	1	SEAL GP-DUO-CONE (STANDARD)	
					—OR—	
		2	**9W-6646**	1	SEAL GP-DUO-CONE (HIGH TEMP)	
	36	2	**4F-7390**	1	SEAL-O-RING (53.34MM ID)	
	37	2	**6G-6245**	1	SHAFT-DRIVE PINION	
	38	2	**2J-3506**	4	NUT-FULL (3/4-10 THD)	
		2	**5P-8248**	4	WASHER-HARD (3.5MM THK)	
	39	2	**6G-5542**	2	SPACER (8.8 MM THK)	
	40	2	**8X-5304**	1	PINION-CIRCLE	
	41	2	**6Y-7953**	9	DISC-FRICTION	
		2	**2G-0478**	8	DISC	
	42	2	**6G-5547**	1	PLATE	

B-USE AS REQUIRED
Y-SEPARATE ILLUSTRATION

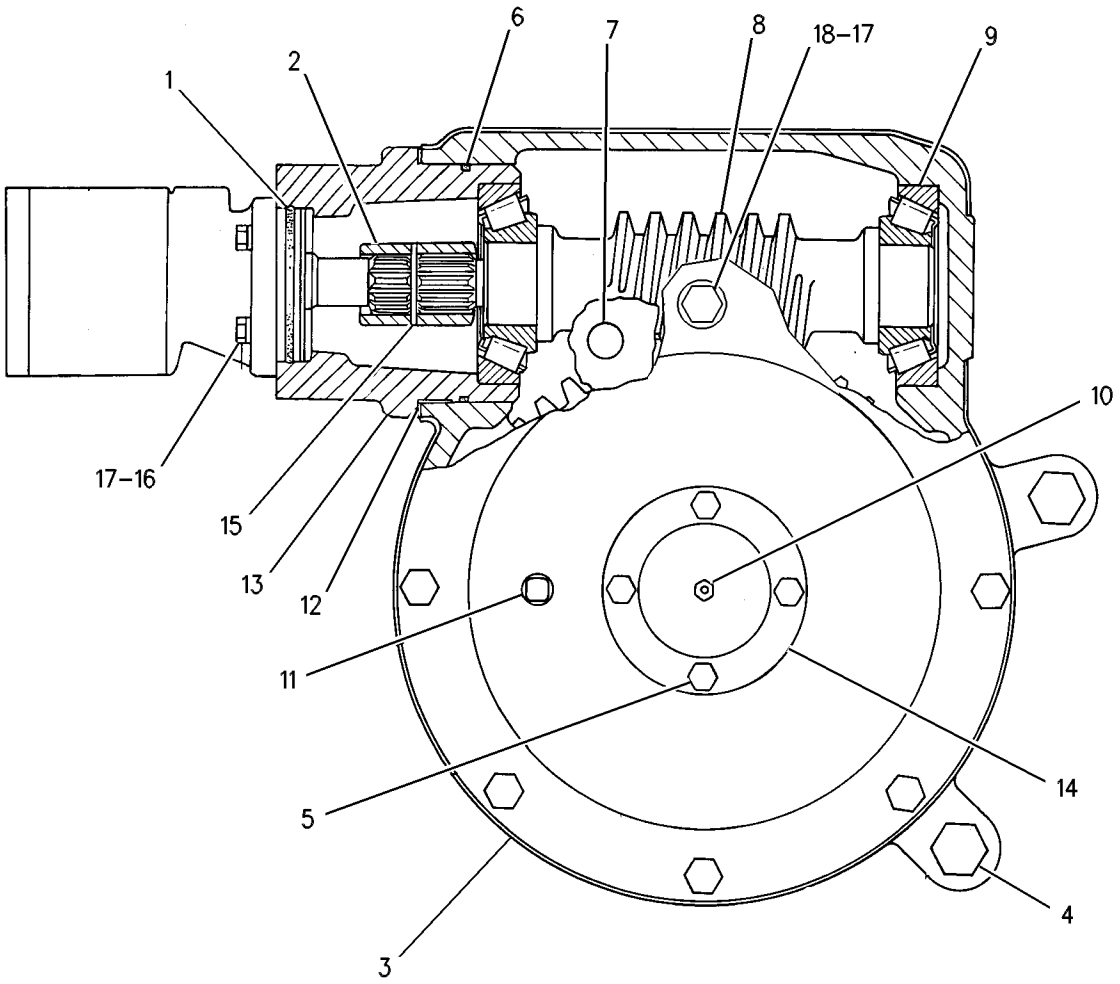

GRAPHIC #1 g00575638

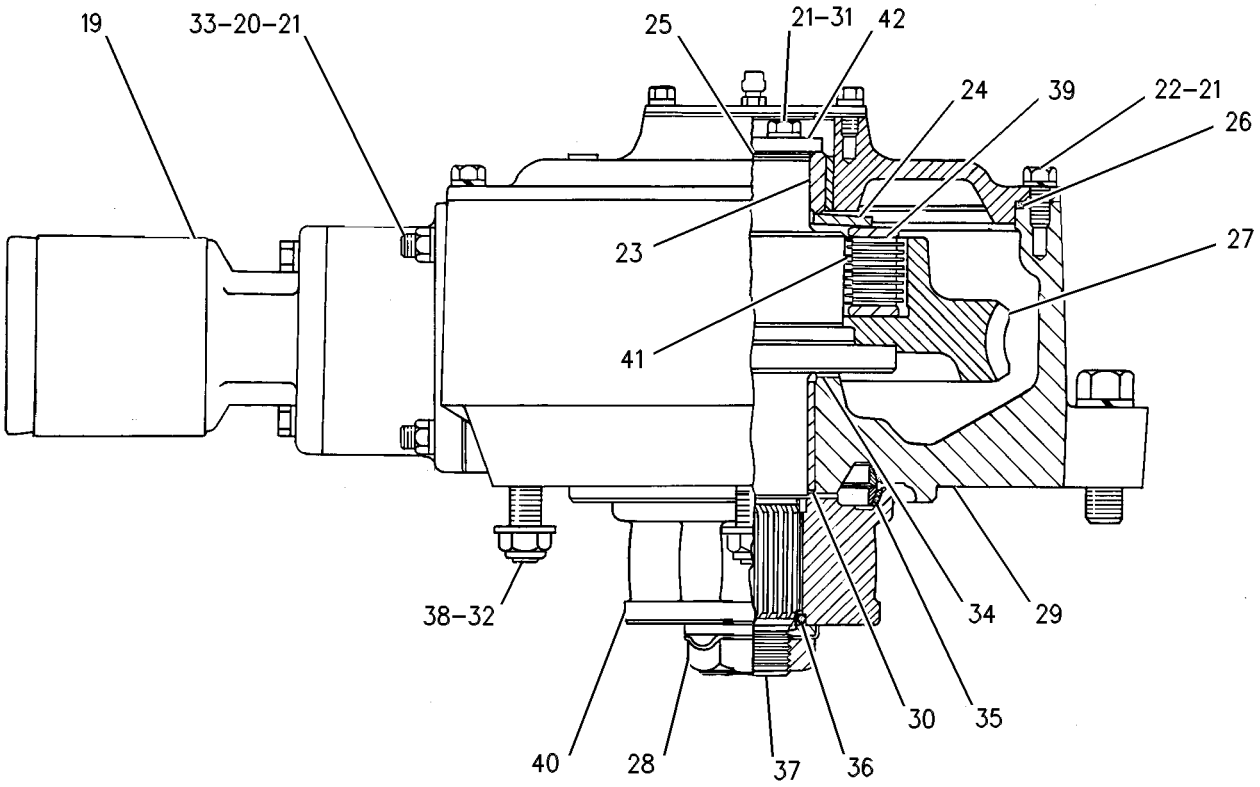

GRAPHIC #2 g00329739

HYDRAULIC SYSTEM

180-3491 DRIVE GP-PUMP

S/N: ASE1-UP

PART OF 162-5606 GENERAL AR

SMCS-3108 **i01654489**

NOTE	REF NO	GRAPHIC REF	PART NUMBER	QTY	PART NAME 1 2 3 4 5 6 (PRODUCT LEVEL)	SEE PAGE
	1	1	**8D-4578**	1	YOKE	
	2	1	*187-1499*	1	SLIP JOINT GP	
		1	**187-1597**	1	YOKE AS	
	2A	1	**9P-0356**	2	SPIDER & BEARING AS	
	2B	1	**0S-0484**	8	BOLT (1/2-20X2.25 IN)	
	3	1	**021-9791**	1	NUT-JAM	
	4	1	**0S-0484**	4	BOLT (1/2-20X2.25 IN)	
	5	1	**1B-8741**	1	KEY-WOODRUFF	
	6	1	**2B-0947**	4	BOLT (1/2-13X2.25 IN)	
	7	1	**3S-1349**	1	WASHER-HARD (31X52.5X6MM THK)	
	8	1	**5P-7213**	8	WASHER-HARD (13.5X20.5X2MM THK)	

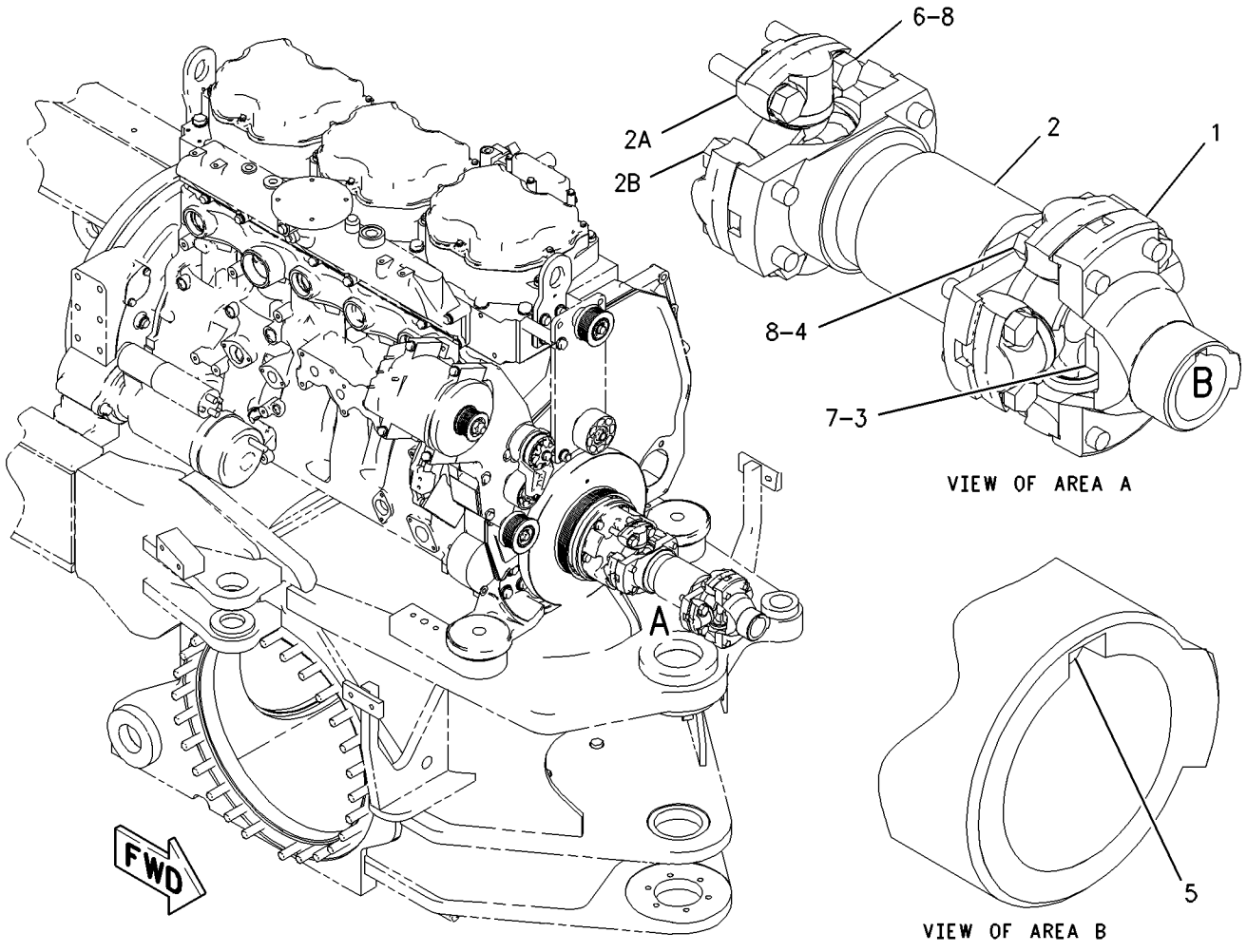

GRAPHIC #1 g00855449

6G-1545 EXTENSION GP-CENTERSHIFT

S/N: ASE1-UP
AN ATTACHMENT

SMCS-5221 **i00130962**

NOTE	REF NO	GRAPHIC REF	PART NUMBER	QTY	PART NAME 1 2 3 4 5 6 (PRODUCT LEVEL)	SEE PAGE
	1	1	**1D-4630**	2	BOLT (7/8-9X4IN)	
		1	**3B-4514**	2	LOCKWASHER	
		1	**8D-7305**	2	COLLAR	
	2	1	**6G-0865**	1	PLATE-NOTICE (CAUTION)	
	3	1	**4B-4158**	4	SCREW (DRIVE)	
	4	1	**4J-8622**	1	BOLT (7/8-9X4.75IN)	
		1	**9H-1031**	2	WASHER-HARD (6.0MM THK)	
		1	**1B-4332**	1	NUT-FULL (7/8-9 THD)	
	5	1	**2G-9104**	2	SHIM	

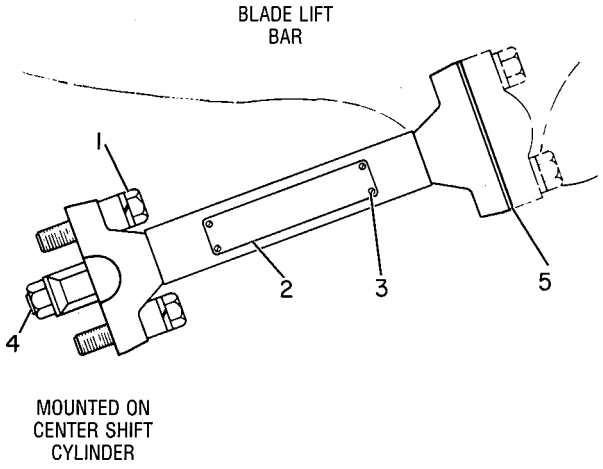

GRAPHIC #1 g00108159

HYDRAULIC SYSTEM

166-3368 LINES GP-ACCUMULATOR

S/N: ASE1-UP
PART OF 166-3369 ACCUMULATOR AR-BLADE CUSHION
AN ATTACHMENT

SMCS-5057 **i01672696**

NOTE	REF NO	GRAPHIC REF	PART NUMBER	QTY	PART NAME 1 2 3 4 5 6 (PRODUCT LEVEL)	SEE PAGE
I	1	1	**5T-9808**	1	HOSE AS	
Y	2	1	**112-2240**	2	VALVE GP-SOLENOID & MANIFOLD (BLADE CUSHION)	586
I	3	1	**114-2882**	1	HOSE AS	
I	4	1	**114-2890**	1	HOSE AS	
I	5	1	**119-2107**	1	HOSE AS	
	6	1	*171-6466*	2	UNION AS	
					(EACH INCLUDES)	
		1	**5P-9810**	1	UNION	
		1	**3D-2824**	2	SEAL-O-RING	
	7	1	*148-8312*	2	ADAPTER AS	
					(EACH INCLUDES)	
		1	**3T-4965**	1	ADAPTER-O-RING	
		1	**3D-2824**	1	SEAL-O-RING	
	8	1	*148-8347*	2	ELBOW GP	
					(EACH INCLUDES)	
		1	**3D-2824**	1	SEAL-O-RING	
		1	**6V-9007**	1	ELBOW	
		1	**6V-9746**	1	SEAL-O-RING	
	9	1	*148-8418*	2	REDUCER GP	
					(EACH INCLUDES)	
		1	**6V-8942**	1	REDUCER-O-RING (FACE)	
		1	**6V-8398**	1	SEAL-O-RING	
	10	1	*153-6259*	1	TEE GP	
		1	**6V-8777**	1	TEE-FACE SEAL	
		1	**3D-2824**	1	SEAL-O-RING	
		1	**6V-9746**	2	SEAL-O-RING	
	11	1	*164-5574*	1	TEE GP	
		1	**6V-8784**	1	TEE-FACE SEAL	
		1	**3D-2824**	1	SEAL-O-RING	
		1	**6V-9746**	2	SEAL-O-RING	
	12	1	**5P-7854**	4	CLIP	
	13	1	**5S-7379**	1	BOLT (3/8-16X0.875 IN)	
	14	1	**6V-8556**	2	NUT (1 3/16-12 THD)	
	15	1	**8T-4896**	1	WASHER-HARD (10.2X18.5X2.5MM THK)	

I-SEE HOSE FABRICATION GUIDE
Y-SEPARATE ILLUSTRATION

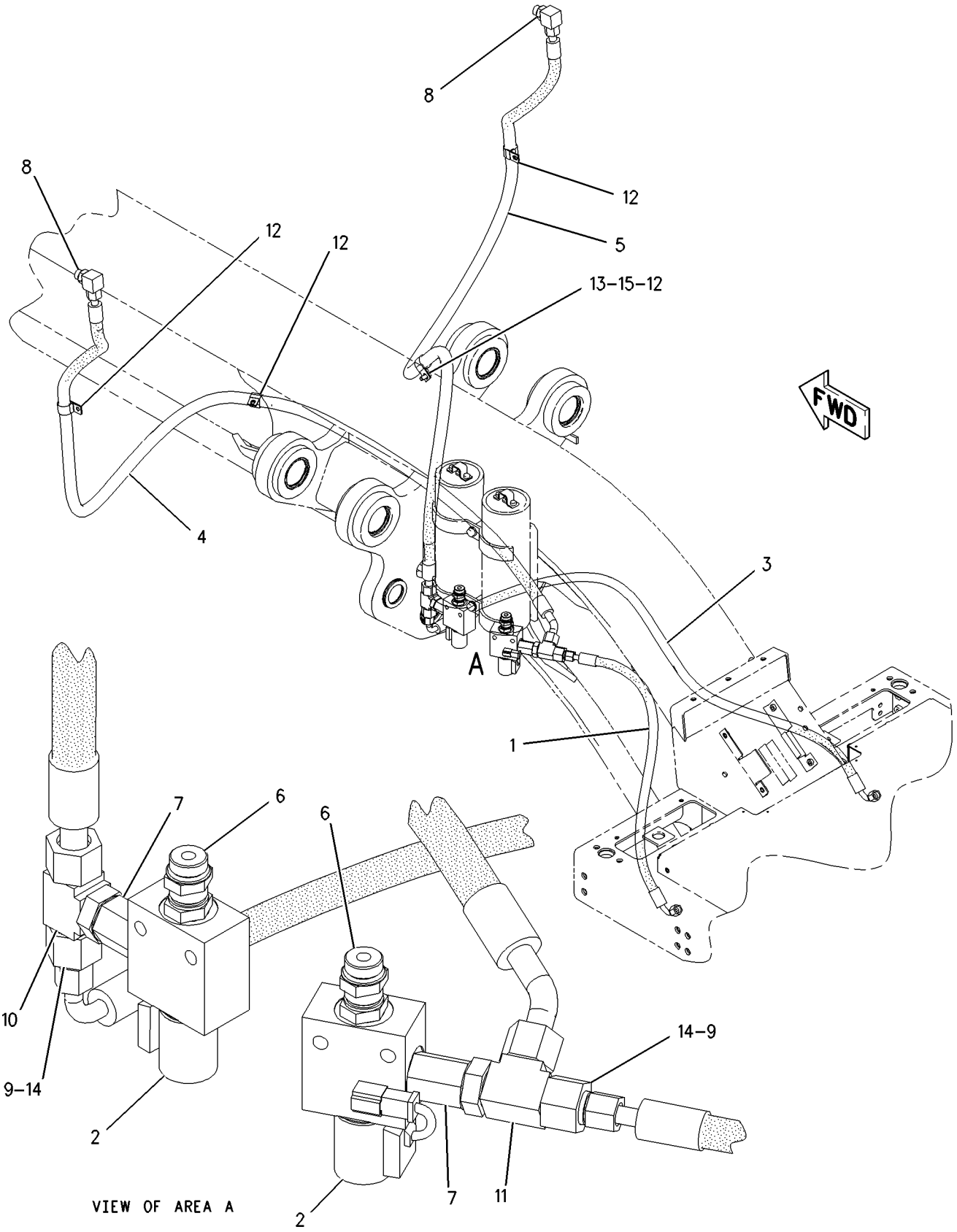

GRAPHIC #1 g00858888

HYDRAULIC SYSTEM

188-7252 LINES GP-HYDRAULIC–LH

S/N: ASE1-UP

PART OF 162-5606 GENERAL AR

SMCS-5057 **i01648740**

NOTE	REF NO	GRAPHIC REF	PART NUMBER	QTY	PART NAME 1 2 3 4 5 6 (PRODUCT LEVEL)	SEE PAGE
	1	1,2	**2B-0941**	3	SPACER (10.5X19X19MM THK)	
	2	1,2	**5D-2645**	4	CLAMP	
I	3	1	**5T-9686**	2	HOSE AS	
I	4	1	**5T-9739**	2	HOSE AS	
	5	1	**8W-3044**	1	CLAMP	
	6	1	**8W-3045**	3	CLAMP	
	7	2	**8W-3989**	2	CLAMP	
	8	2	**8W-3990**	2	CLAMP	
	9	2	**8W-3991**	2	JUNCTION BLOCK	
I	10	1	**8W-4053**	2	HOSE AS	
	11	1	**8W-6334**	1	CLAMP	
	12	1	**8X-5425**	1	GUIDE AS-HOSE	
		1	**8D-3508**	2	BOSS (3/8-16 THD)	
	13	1,2	**9D-0953**	2	SPACER (.406X.75X.88 IN THK)	
I	14	2	**9R-9232**	1	HOSE AS	
	15	1,2	**108-1610**	5	CLAMP	
I	16	2	**119-7998**	1	HOSE AS	
I	17	2	**119-7999**	2	HOSE AS	
I	18	2	**119-8000**	2	HOSE AS	
I	19	2	**119-8001**	2	HOSE AS	
	20	2	*164-5608*	3	CONNECTOR GP	
					(EACH INCLUDES)	
		2	**8T-1687**	1	CONNECTOR	
		2	**3K-0360**	1	SEAL-O-RING (16.36MM ID)	
		2	**6V-8398**	1	SEAL-O-RING	
Y	21	1	**173-1011**	1	SWIVEL GP	495
	22	1,2	*148-8318*	5	CONNECTOR GP	
					(EACH INCLUDES)	
		1,2	**6V-8634**	1	CONNECTOR	
		1,2	**3K-0360**	1	SEAL-O-RING (16.36MM ID)	
		1,2	**6V-8397**	1	SEAL-O-RING	
	23	1,2	*148-8340*	6	CONNECTOR GP	
					(EACH INCLUDES)	
		1,2	**6V-8639**	1	CONNECTOR	
		1,2	**3K-0360**	1	SEAL-O-RING (16.36MM ID)	
		1,2	**6V-8398**	1	SEAL-O-RING	
	24	1	*148-8354*	3	ELBOW GP	
					(EACH INCLUDES)	
		1	**6V-9002**	1	ELBOW	
		1	**3K-0360**	1	SEAL-O-RING (16.36MM ID)	
		1	**6V-8398**	1	SEAL-O-RING	
	25	1	*148-8358*	2	ELBOW AS	
					(EACH INCLUDES)	
		1	**6V-8624**	1	ELBOW	
		1	**2M-9780**	1	SEAL-O-RING	
		1	**6V-8398**	1	SEAL-O-RING	
	26	1	*148-8364*	1	ELBOW GP	
		1	**6V-8625**	1	ELBOW	
		1	**3K-0360**	1	SEAL-O-RING (16.36MM ID)	
		1	**6V-8398**	1	SEAL-O-RING	
	27	1	*148-8374*	5	ELBOW GP	
					(EACH INCLUDES)	
		1	**6V-8723**	1	ELBOW	
		1	**3K-0360**	1	SEAL-O-RING (16.36MM ID)	
		1	**6V-8397**	1	SEAL-O-RING	
	28	1	*148-8381*	1	ELBOW GP	

188-7252 **LINES GP-HYDRAULIC** *(contd.)* **i01648740**

NOTE	REF NO	GRAPHIC REF	PART NUMBER	QTY	PART NAME 1 2 3 4 5 6 (PRODUCT LEVEL)	SEE PAGE
		1	**8T-5429**	1	ELBOW	
		1	**3D-2824**	1	SEAL-O-RING	
		1	**6V-8398**	1	SEAL-O-RING	
	29	2	*148-8383*	2	ELBOW AS	
					(EACH INCLUDES)	
		2	**8T-1683**	1	ELBOW	
		2	**3K-0360**	1	SEAL-O-RING (16.36MM ID)	
		2	**6V-8397**	1	SEAL-O-RING	
	30	1	**1S-0994**	8	CLIP	
	31	1	**2H-9889**	1	BOLT (3/8-16X2.375 IN)	
	32	1	**3B-4628**	2	PIN-COTTER	
	33	1	**5M-3062**	2	BOLT (3/8-16X0.75 IN)	
	34	1	**5S-7379**	9	BOLT (3/8-16X0.875 IN)	
	35	1	**6D-4244**	4	CLIP	
	36	1,2	**6V-8801**	8	NUT (3/8-16 THD)	
	37	1	**7W-5672**	1	PIPE	
	38	1	**7X-0289**	1	BOLT (3/8-16X1.875 IN)	
	39	1	**7X-0326**	4	BOLT (1/2-13X3 IN)	
	40	1	**8D-9092**	1	PIN	
	41	2	**8T-2501**	2	BOLT (3/8-16X2 IN)	
	42	1	**8T-2502**	2	BOLT (3/8-16X1.125 IN)	
	43	1	**8T-4223**	4	WASHER-HARD (13.5X25.5X3MM THK)	
	44	1,2	**8T-4896**	28	WASHER-HARD (10.2X18.5X2.5MM THK)	
	45	1	**8T-4994**	2	WASHER-HARD (20X36.5X3.5MM THK)	
	46	1,2	**8T-7008**	4	BOLT (3/8-16X3 IN)	
	47	1	**9B-7237**	1	BOLT (3/8-16X1.25 IN)	

I-SEE HOSE FABRICATION GUIDE
Y-SEPARATE ILLUSTRATION

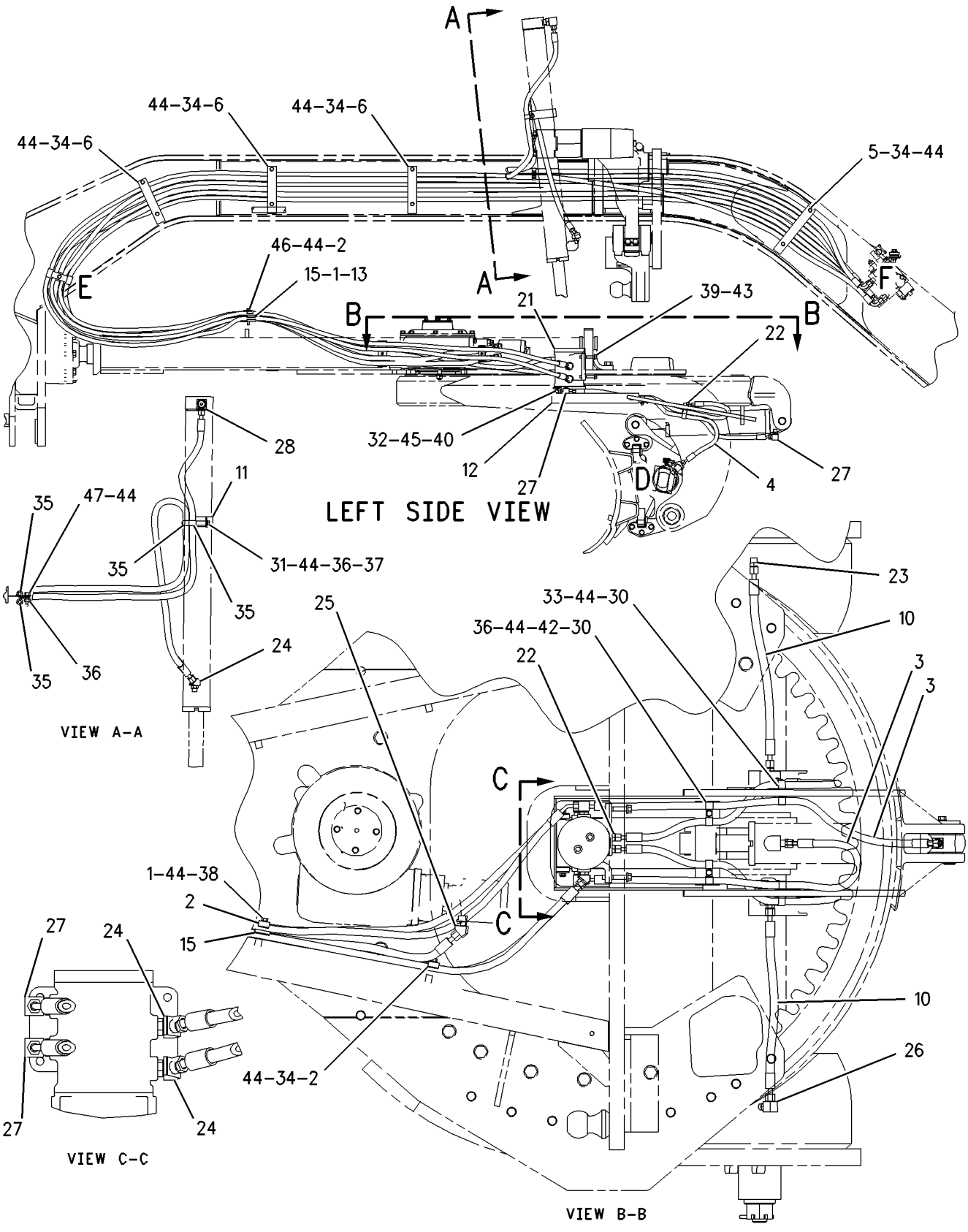

GRAPHIC #1 g00861656

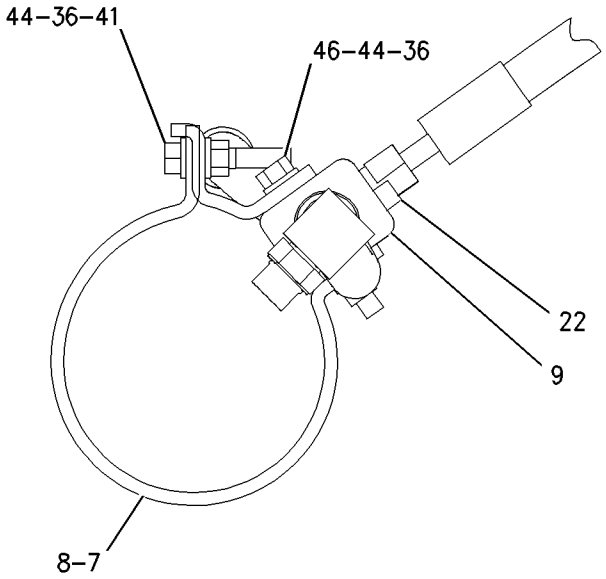

VIEW OF AREA D

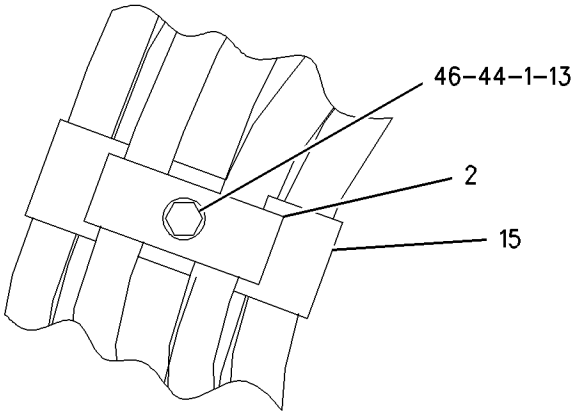

VIEW OF AREA E

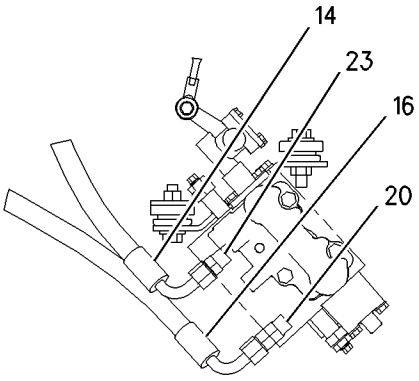

VIEW OF AREA F
(FOURTH VALVE FROM FRAME)

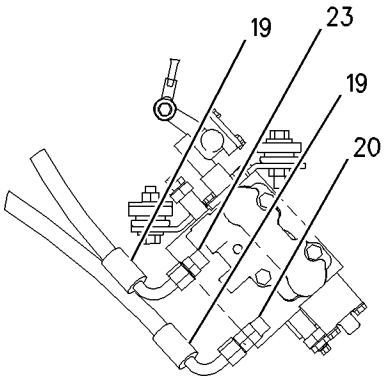

VIEW OF AREA F
(THIRD VALVE FROM FRAME)

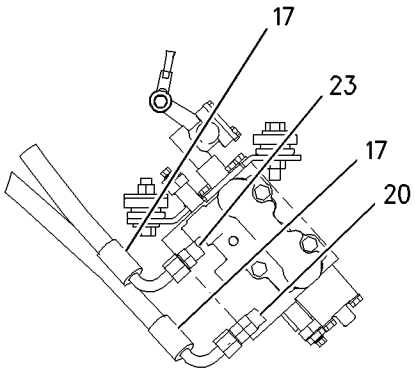

VIEW OF AREA F
(SECOND VALVE FROM FRAME)

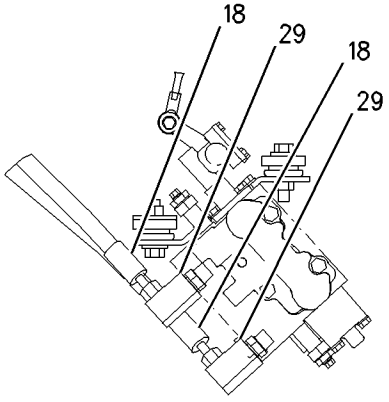

VIEW OF AREA F
(FIRST VALVE FROM FRAME)

GRAPHIC #2

g00861659

HYDRAULIC SYSTEM

188-7253 LINES GP-HYDRAULIC–RH

S/N: ASE1-UP

PART OF 162-5606 GENERAL AR

SMCS-5057 **i01638377**

NOTE	REF NO	GRAPHIC REF	PART NUMBER	QTY	PART NAME 1 2 3 4 5 6 (PRODUCT LEVEL)	SEE PAGE
	1	1	**2B-0941**	1	SPACER (10.5X19X19MM THK)	
	2	1	**3S-2093**	1	STRAP-CABLE	
	3	1	**4J-5468**	2	CLAMP	
	4	1	**5D-2645**	3	CLAMP	
	5	1	**5D-4988**	3	CLAMP	
	6	1	**5P-0599**	1	CLAMP	
I	7	1	**8W-0220**	1	HOSE AS	
	8	1	**8W-3044**	1	CLAMP	
	9	1	**8W-3045**	3	CLAMP	
I	10	1	**8W-4516**	1	HOSE AS	
	11	1	**8W-6334**	1	CLAMP	
	12	1	**9D-0953**	2	SPACER (.406X.75X.88 IN THK)	
	13	1	**9R-8870**	1	BLOCK	
I	14	1	**9R-9232**	1	HOSE AS	
I	15	1	**107-8142**	1	HOSE AS	
	16	1	**108-1610**	2	CLAMP	
I	17	1	**119-7995**	1	HOSE AS	
I	18	1	**119-7996**	1	HOSE AS	
I	19	1	**119-7997**	1	HOSE AS	
I	20	1	**119-7998**	1	HOSE AS	
	21	1	*164-5605*	2	CONNECTOR AS	
					(EACH INCLUDES)	
		1	**8T-0076**	1	CONNECTOR	
		1	**3K-0360**	1	SEAL-O-RING (16.36MM ID)	
		1	**6V-8397**	1	SEAL-O-RING	
	22	1	*164-5608*	3	CONNECTOR GP	
					(EACH INCLUDES)	
		1	**8T-1687**	1	CONNECTOR	
		1	**3K-0360**	1	SEAL-O-RING (16.36MM ID)	
		1	**6V-8398**	1	SEAL-O-RING	
I	23	1	**167-0960**	1	HOSE AS	
I	24	1	**194-4226**	1	HOSE AS	
	25	1	*148-8318*	2	CONNECTOR GP	
					(EACH INCLUDES)	
		1	**6V-8634**	1	CONNECTOR	
		1	**3K-0360**	1	SEAL-O-RING (16.36MM ID)	
		1	**6V-8397**	1	SEAL-O-RING	
	26	1	*148-8340*	3	CONNECTOR GP	
					(EACH INCLUDES)	
		1	**6V-8639**	1	CONNECTOR	
		1	**3K-0360**	1	SEAL-O-RING (16.36MM ID)	
		1	**6V-8398**	1	SEAL-O-RING	
	27	1	*148-8346*	1	ELBOW GP	
		1	**8T-1686**	1	ELBOW	
		1	**3K-0360**	1	SEAL-O-RING (16.36MM ID)	
		1	**6V-8398**	1	SEAL-O-RING	
	28	1	*148-8354*	3	ELBOW GP	
					(EACH INCLUDES)	
		1	**6V-9002**	1	ELBOW	
		1	**3K-0360**	1	SEAL-O-RING (16.36MM ID)	
		1	**6V-8398**	1	SEAL-O-RING	
	29	1	*148-8364*	1	ELBOW GP	
		1	**6V-8625**	1	ELBOW	
		1	**3K-0360**	1	SEAL-O-RING (16.36MM ID)	
		1	**6V-8398**	1	SEAL-O-RING	
	30	1	*148-8374*	1	ELBOW GP	

188-7253 **LINES GP-HYDRAULIC** *(contd.)* **i01638377**

NOTE	REF NO	GRAPHIC REF	PART NUMBER	QTY	PART NAME 1 2 3 4 5 6 (PRODUCT LEVEL)	SEE PAGE
		1	**6V-8723**	1	ELBOW	
		1	**3K-0360**	1	SEAL-O-RING (16.36MM ID)	
		1	**6V-8397**	1	SEAL-O-RING	
	31	1	*148-8381*	1	ELBOW GP	
		1	**8T-5429**	1	ELBOW	
		1	**3D-2824**	1	SEAL-O-RING	
		1	**6V-8398**	1	SEAL-O-RING	
	32	1	*148-8383*	1	ELBOW AS	
		1	**8T-1683**	1	ELBOW	
		1	**3K-0360**	1	SEAL-O-RING (16.36MM ID)	
		1	**6V-8397**	1	SEAL-O-RING	
	33	1	*148-8433*	2	TEE GP	
					(EACH INCLUDES)	
		1	**6V-9836**	1	TEE-SWIVEL	
		1	**6V-8397**	2	SEAL-O-RING	
	34	1	**2H-9889**	1	BOLT (3/8-16X2.375 IN)	
	35	1	**3K-9957**	2	CLAMP	
	36	1	**5S-7379**	13	BOLT (3/8-16X0.875 IN)	
	37	1	**6D-4244**	4	CLIP	
	38	1	**6D-4247**	1	CLIP (SLOT)	
	39	1	**6V-8801**	2	NUT (3/8-16 THD)	
	40	1	**7W-5672**	1	PIPE	
	41	1	**7X-0288**	1	BOLT (3/8-16X1.625 IN)	
	42	1	**7X-0289**	2	BOLT (3/8-16X1.875 IN)	
	43	1	**8C-4436**	1	BOLT (1/2-13X1.375 IN)	
	44	1	**8T-4223**	1	WASHER-HARD (13.5X25.5X3MM THK)	
	45	1	**8T-4896**	20	WASHER-HARD (10.2X18.5X2.5MM THK)	
	46	1	**9B-7237**	1	BOLT (3/8-16X1.25 IN)	

I-SEE HOSE FABRICATION GUIDE

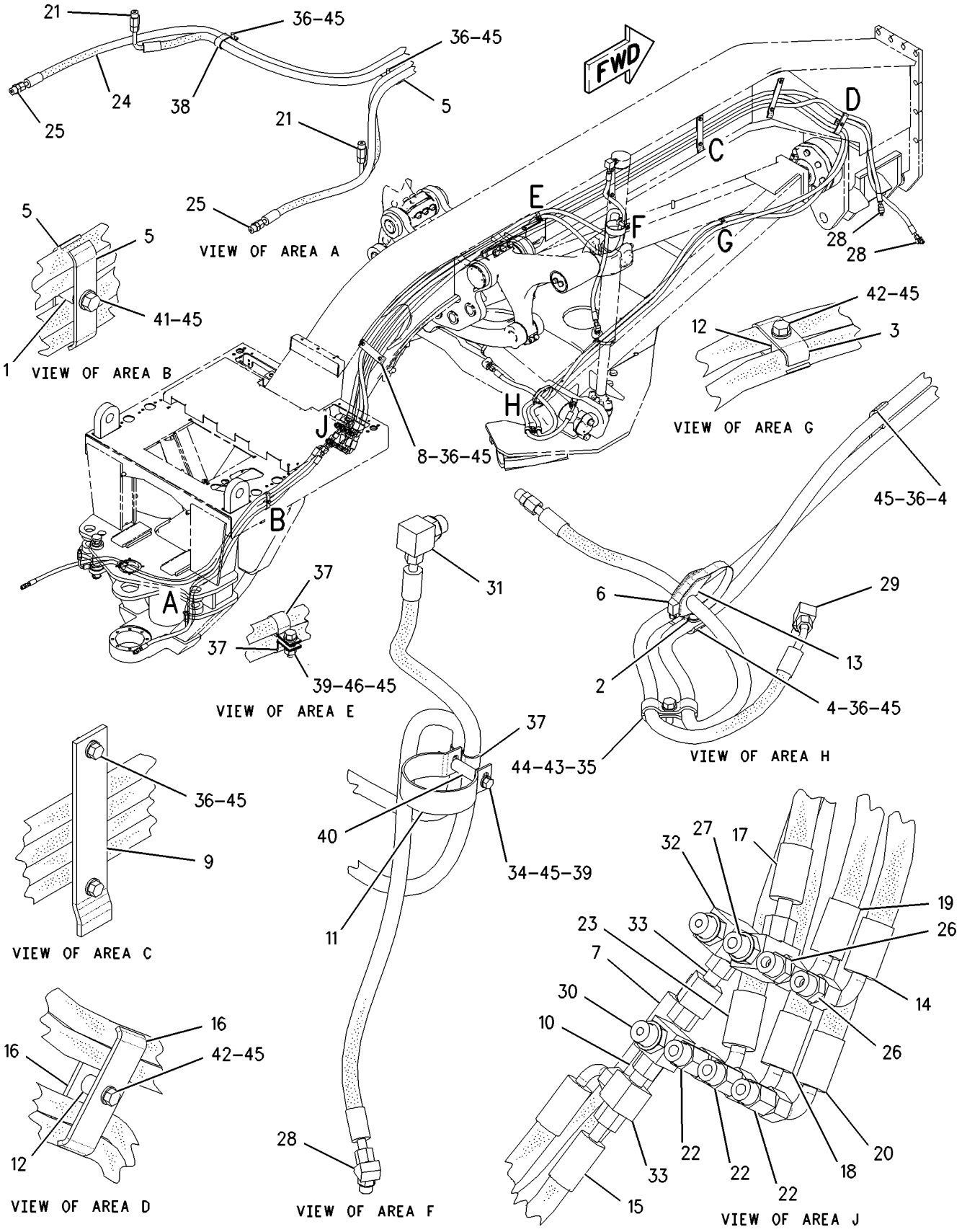

GRAPHIC #1

g00861308

192-3266 LINES GP-HYDRAULIC—PLOW/DOZER LIFT—RH

S/N: ASE1-UP
AN ATTACHMENT

SMCS-5057 **i01660171**

NOTE	REF NO	GRAPHIC REF	PART NUMBER	QTY	PART NAME 1 2 3 4 5 6 (PRODUCT LEVEL)	SEE PAGE
I	1	1	**114-0026**	1	HOSE AS	
I	2	1	**129-1240**	1	HOSE AS	
	3	1	*148-8318*	1	CONNECTOR GP	
		1	**6V-8634**	1	CONNECTOR	
		1	**3K-0360**	1	SEAL-O-RING	
		1	**6V-8397**	1	SEAL-O-RING	
	4	1	*164-5605*	1	CONNECTOR AS	
		1	**8T-0076**	1	CONNECTOR	
		1	**3K-0360**	1	SEAL-O-RING	
		1	**6V-8397**	1	SEAL-O-RING	
	5	1	**1S-0994**	1	CLIP	

I-SEE HOSE FABRICATION GUIDE

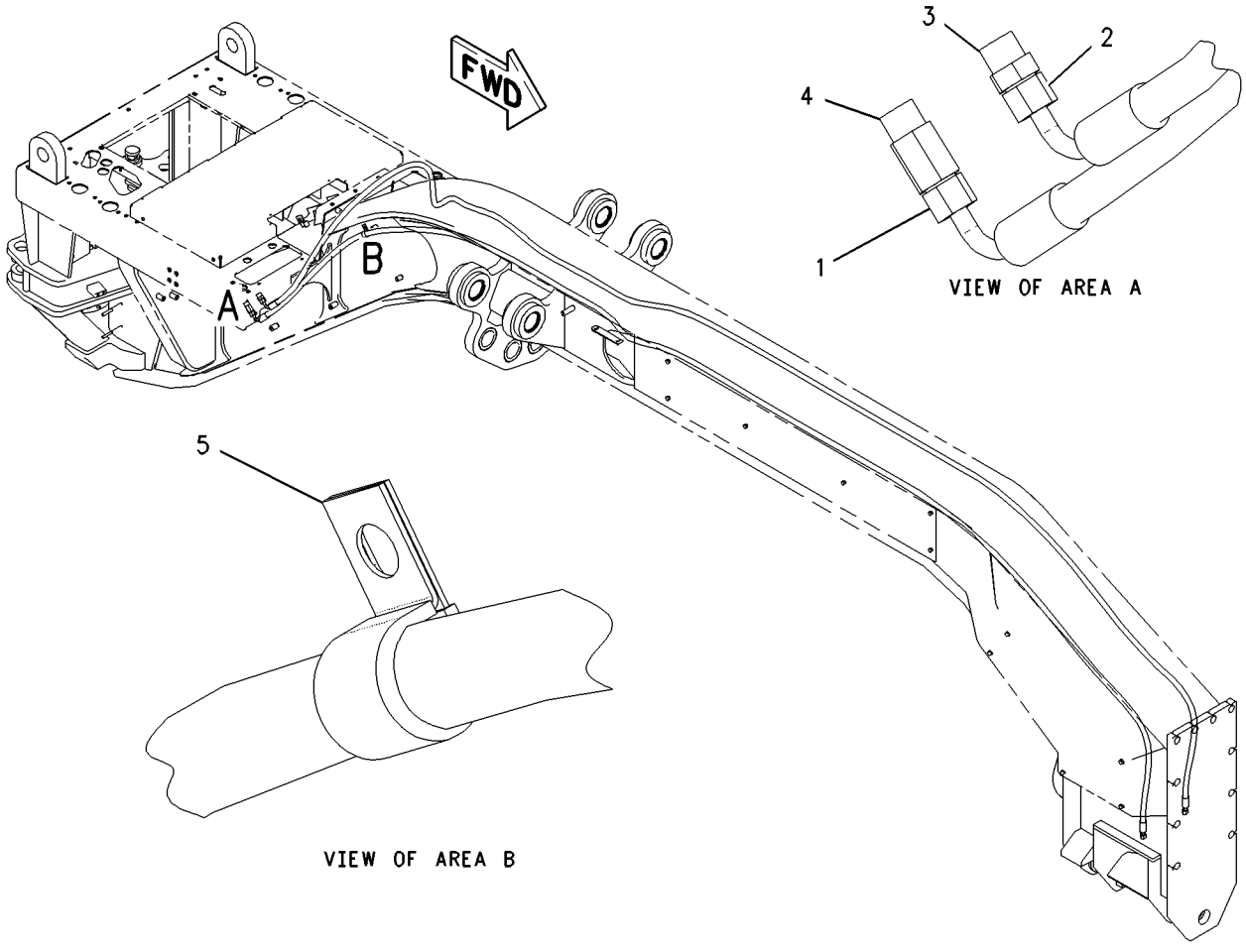

GRAPHIC #1 g00858165

HYDRAULIC SYSTEM

175-6980 LINES GP-HYDRAULIC FAN

S/N: ASE1-UP

PART OF 162-5606 GENERAL AR

SMCS-1359, 1386, 1387, 5057 **i01648921**

NOTE	REF NO	GRAPHIC REF	PART NUMBER	QTY	PART NAME 1 2 3 4 5 6 (PRODUCT LEVEL)	SEE PAGE
I	1	1	**2U-9766**	1	HOSE AS	
	2	1	**6V-0852**	1	CAP-DUST	
	3	1	**9G-7101**	1	SPACER (10.5X20X30MM THK)	
	4	1	*148-8440*	1	TEE GP-ORFS	
		1	**8C-0569**	1	TEE-O-RING	
		1	**3D-2824**	1	SEAL-O-RING	
		1	**6V-9746**	1	SEAL-O-RING	
	5	1	*150-4027*	1	FITTING GP	
		1	**3E-2310**	1	TEE	
		1	**3J-1907**	1	SEAL-O-RING	
		1	**6V-8397**	1	SEAL-O-RING (9.27MM ID)	
	6	1	*164-5567*	1	FITTING GP (QUICK DISCONNECT)	
		1	**6V-3965**	1	FITTING AS	
		1	**3J-1907**	1	SEAL-O-RING	
I	7	1	**165-4632**	1	HOSE AS	
I	8	1	**185-8648**	1	HOSE AS	
I	9	1	**185-8649**	1	HOSE AS	
I	10	1	**186-2863**	1	HOSE AS	
Y	11	1	**193-5765**	1	VALVE GP-SOLENOID & MANIFOLD (HYDRAULIC FAN)	587
	12	1	*148-8313*	1	ADAPTER GP	
		1	**5P-6944**	1	ADAPTER-STRAIGHT THREAD	
		1	**3K-0360**	1	SEAL-O-RING (16.36MM ID)	
	13	1	*148-8325*	1	CONNECTOR GP	
		1	**6V-8641**	1	CONNECTOR	
		1	**3J-1907**	1	SEAL-O-RING	
		1	**4J-5477**	1	SEAL-O-RING	
	14	1	**148-8353**	1	ELBOW GP	
		1	**6V-9001**	1	ELBOW	
		1	**3J-1907**	1	SEAL-O-RING	
		1	**6V-8397**	1	SEAL-O-RING (9.27MM ID)	
	15	1	*148-8361*	1	ELBOW GP	
		1	**6V-9200**	1	ELBOW	
		1	**3J-7354**	1	SEAL-O-RING	
		1	**6V-8397**	1	SEAL-O-RING (9.27MM ID)	
	16	1	*148-8368*	1	ELBOW GP	
		1	**6V-8627**	1	ELBOW	
		1	**3J-1907**	1	SEAL-O-RING	
		1	**4J-5477**	1	SEAL-O-RING	
	17	1	*148-8378*	1	ELBOW GP	
		1	**6V-8724**	1	ELBOW	
		1	**3J-1907**	1	SEAL-O-RING	
		1	**6V-8397**	1	SEAL-O-RING (9.27MM ID)	
	18	1	**4D-7735**	1	CLIP	
	19	1	**5M-3062**	1	BOLT (3/8-16X0.75 IN)	
	20	1	**5P-7854**	4	CLIP	
	21	1	**5S-7379**	1	BOLT (3/8-16X0.875 IN)	
	22	1	**6V-1889**	6	CLIP	
	23	1	**8M-2773**	1	CLIP	
	24	1	**8T-4121**	11	WASHER-HARD (11X21X2.5MM THK)	
M	25	1	**8T-4137**	8	BOLT (M10X1.5X20MM)	
M	26	1	**8T-4185**	3	BOLT (M10X1.5X50MM)	
	27	1	**8T-4896**	2	WASHER-HARD (10.2X18.5X2.5MM THK)	

I-SEE HOSE FABRICATION GUIDE
M-METRIC PART
Y-SEPARATE ILLUSTRATION

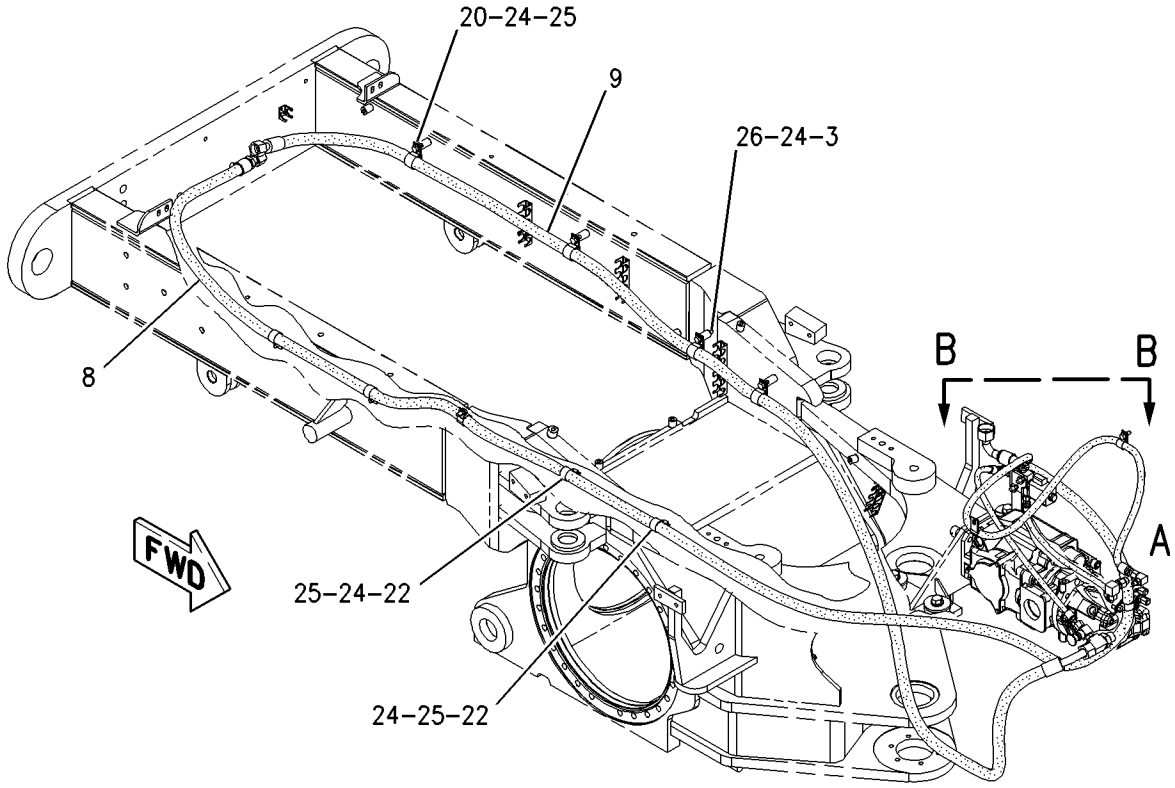

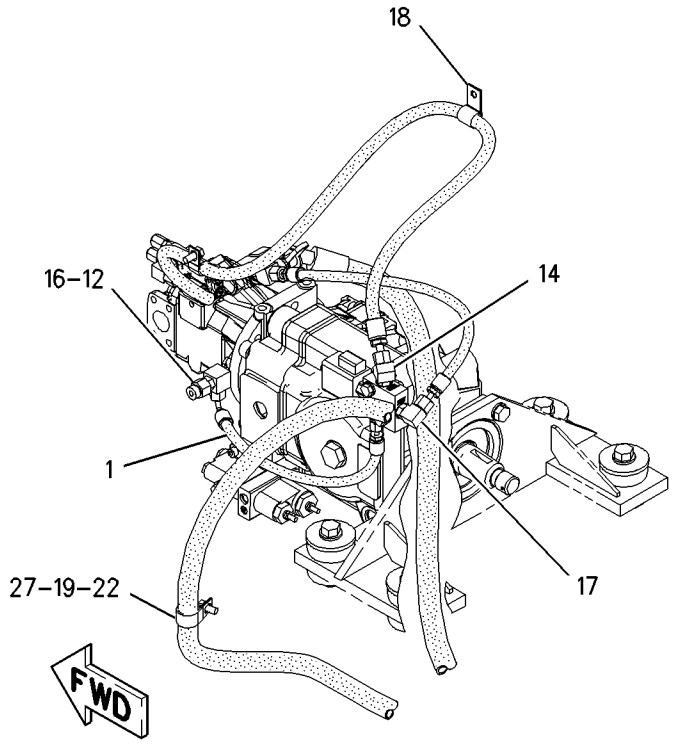

VIEW B-B

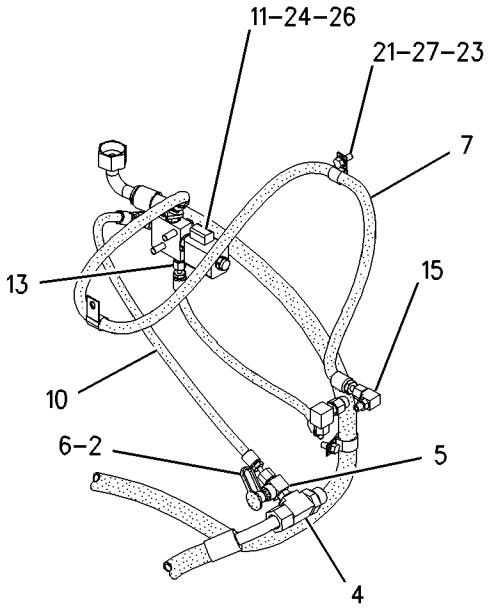

VIEW OF AREA A

GRAPHIC #1 g00860709

HYDRAULIC SYSTEM

175-6983 LINES GP-HYDRAULIC FAN–RADIATOR

S/N: ASE1-UP
PART OF 184-0793, 201-1053 COOLING AR
ALSO AN ATTACHMENT

SMCS-1359, 1386, 1387, 5057 **i01638383**

NOTE	REF NO	GRAPHIC REF	PART NUMBER	QTY	PART NAME 1 2 3 4 5 6 (PRODUCT LEVEL)	SEE PAGE
I	1	1	**4E-9628**	2	HOSE AS	
Y	2	1	**167-1709**	1	SENSOR GP-PRESSURE (RADIATOR)	199
	3	1	**175-0447**	1	VALVE AS-CHECK (RADIATOR)	
	4	1	**175-7049**	1	BODY	
		1	*148-8327*	1	CONNECTOR GP	
	5	1	**6V-8637**	1	CONNECTOR-SEAL	
		1	**3D-2824**	1	SEAL-O-RING	
		1	**6V-9746**	1	SEAL-O-RING	
	6	1	*148-8347*	1	ELBOW GP	
		1	**6V-9007**	1	ELBOW	
		1	**3D-2824**	1	SEAL-O-RING	
		1	**6V-9746**	1	SEAL-O-RING	
	7	1	*148-8392*	1	ELBOW GP	
		1	**6V-9853**	1	ELBOW-SWIVEL	
		1	**6V-9746**	1	SEAL-O-RING	
	8	1	*148-8449*	1	TEE GP-SWIVEL	
		1	**6V-9839**	1	TEE-SWIVEL	
		1	**6V-9746**	2	SEAL-O-RING	
M	9	1	**5C-9553**	3	BOLT (M6X1X16MM)	
	10	1	**7J-0204**	1	SEAL-O-RING	
	11	1	**9X-8256**	3	WASHER (6.6X12X2MM THK)	

I-SEE HOSE FABRICATION GUIDE
M-METRIC PART
Y-SEPARATE ILLUSTRATION

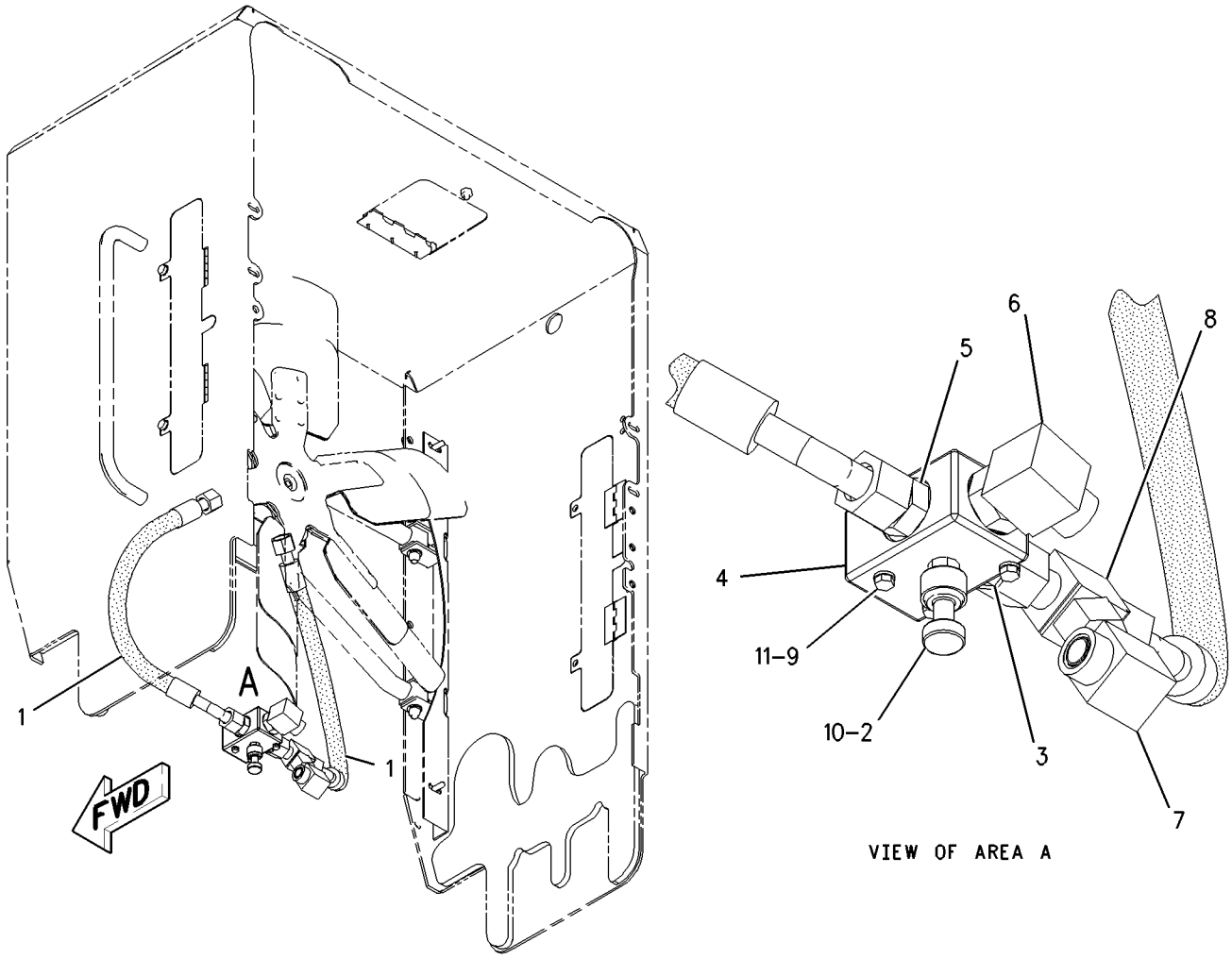

GRAPHIC #1 g00854131

HYDRAULIC SYSTEM

171-6438 LINES GP-PUMP

S/N: ASE1-UP

PART OF 162-5606 GENERAL AR

SMCS-5057 **i01648644**

NOTE	REF NO	GRAPHIC REF	PART NUMBER	QTY	PART NAME 1 2 3 4 5 6 (PRODUCT LEVEL)	SEE PAGE
	1	1	**5P-1295**	2	HOSE	
	2	1	**5P-4868**	4	CLAMP (HOSE)	
	3	2	**6E-1926**	1	ADAPTER	
	4	2	**6V-0852**	1	CAP-DUST	
I	5	1	**8W-2624**	1	HOSE AS	
I	6	1	**8W-3166**	1	HOSE AS	
I	7	1	**8W-8956**	1	HOSE AS	
I	8	2	**8X-7973**	1	HOSE AS	
I	9	2	**8X-7974**	1	HOSE AS	
	10	1	**8X-8812**	1	ELBOW	
	11	1	**9M-0164**	4	CLAMP-HOSE	
Y	12	2	**9T-5957**	1	VALVE GP-COMBINATION (STEERING)	534
	13	1	*106-8715*	1	ELBOW GP	
		1	**8C-8400**	1	ELBOW	
		1	**3D-2824**	1	SEAL-O-RING	
		1	**6V-9746**	1	SEAL-O-RING	
I	14	1	**112-9434**	1	HOSE AS	
	15	1	**113-9533**	2	HOSE	
I	16	2	**116-3211**	1	HOSE AS	
	17	2	**132-3065**	1	TUBE AS	
I	18	1	**160-7703**	1	HOSE AS	
	19	2	*164-5567*	1	FITTING GP (QUICK DISCONNECT)	
		2	**3J-1907**	1	SEAL-O-RING	
	20	2	*165-7014*	1	FITTING GP	
		2	**8C-3309**	1	TEE	
		2	**3J-1907**	1	SEAL-O-RING	
		2	**4J-5477**	1	SEAL-O-RING	
	21	1	**185-1712**	1	TUBE AS	
	22	1	**185-9815**	1	TUBE	
	23	1	**186-2722**	1	TUBE	
I	24	1	**186-2784**	1	HOSE AS	
M	25	1	**085-8091**	4	BOLT (M10X1.5X55MM)	
	26	2	*148-8316*	2	CONNECTOR GP	
					(EACH INCLUDES)	
		2	**6V-8647**	1	CONNECTOR	
		2	**3J-7354**	1	SEAL-O-RING	
		2	**4J-5477**	1	SEAL-O-RING	
	27	1	*148-8323*	1	CONNECTOR GP	
		1	**6V-9875**	1	CONNECTOR	
		1	**2S-4078**	1	SEAL-O-RING	
		1	**5K-9090**	1	SEAL-O-RING	
	28	1,2	*148-8347*	5	ELBOW GP	
					(EACH INCLUDES)	
		1,2	**6V-9007**	1	ELBOW	
		1,2	**3D-2824**	1	SEAL-O-RING	
		1,2	**6V-9746**	1	SEAL-O-RING	
	29	1	*148-8363*	1	ELBOW GP	
		1	**6V-9876**	1	ELBOW	
		1	**3K-0360**	1	SEAL-O-RING (16.36MM ID)	
		1	**6V-8397**	1	SEAL-O-RING	
	30	1	*148-8368*	2	ELBOW GP	
					(EACH INCLUDES)	
		1	**6V-8627**	1	ELBOW	
		1	**3J-1907**	1	SEAL-O-RING	
		1	**4J-5477**	1	SEAL-O-RING	
	31	1	*148-8417*	1	REDUCER AS	

171-6438 **LINES GP-PUMP** ***(contd.)*** **i01648644**

NOTE	REF NO	GRAPHIC REF	PART NUMBER	QTY	PART NAME 1 2 3 4 5 6 (PRODUCT LEVEL)	SEE PAGE
		1	**6V-8941**	1	REDUCER	
		1	**6V-8397**	1	SEAL-O-RING	
	32	1	*148-8429*	2	FITTING GP	
					(EACH INCLUDES)	
		1	**6V-9840**	1	TEE-SWIVEL	
		1	**5K-9090**	2	SEAL-O-RING	
	33	2	*150-5968*	1	TEE GP	
		2	**6V-9835**	1	TEE	
		2	**4J-5477**	2	SEAL-O-RING	
	34	1	*153-6237*	2	ELBOW GP	
					(EACH INCLUDES)	
		1	**6V-9004**	1	ELBOW	
		1	**3D-2824**	1	SEAL-O-RING	
		1	**6V-9746**	1	SEAL-O-RING	
	35	1	*153-6259*	1	TEE GP	
		1	**6V-8777**	1	TEE-FACE SEAL	
		1	**3D-2824**	1	SEAL-O-RING	
		1	**6V-9746**	2	SEAL-O-RING	
	36	1	**1P-3705**	1	SEAL-RECTANGULAR	
	37	2	**4J-0521**	2	SEAL-O-RING	
	38	1	**5H-8848**	1	SEAL-O-RING	
M	39	2	**6V-5696**	1	BOLT (M12X1.75X80MM)	
	40	1	**6V-8556**	1	NUT (1 3/16-12 THD)	
M	41	2	**8T-0646**	3	BOLT (M12X1.75X110MM)	
M	42	2	**8T-3957**	1	BOLT-HEX SOCKET (M12X1.75X30MM)	
	43	1	**8T-4121**	4	WASHER-HARD (11X21X2.5MM THK)	
	44	2	**8T-4223**	4	WASHER-HARD (13.5X25.5X3MM THK)	
M	45	1	**8T-4956**	4	BOLT (M12X1.75X35MM)	

I-SEE HOSE FABRICATION GUIDE
M-METRIC PART
Y-SEPARATE ILLUSTRATION

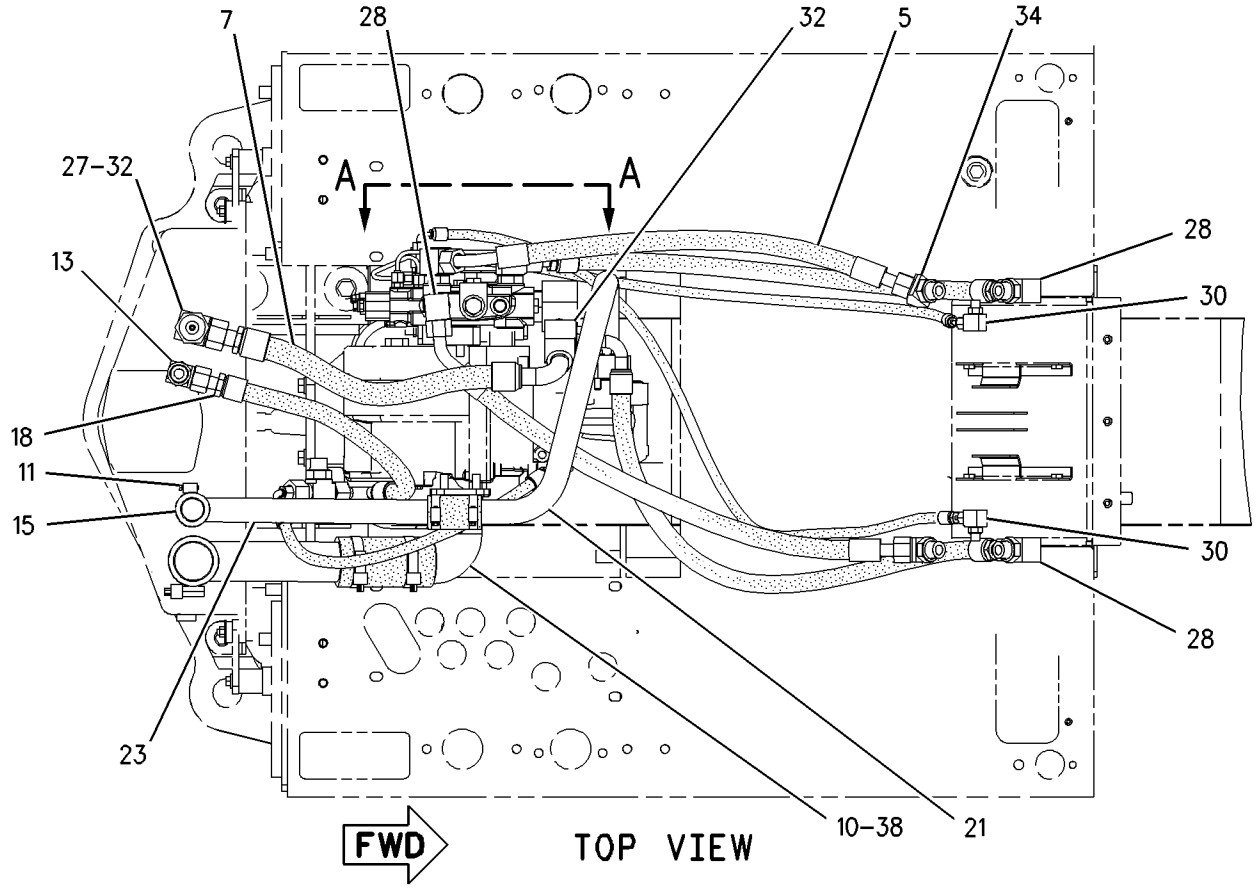

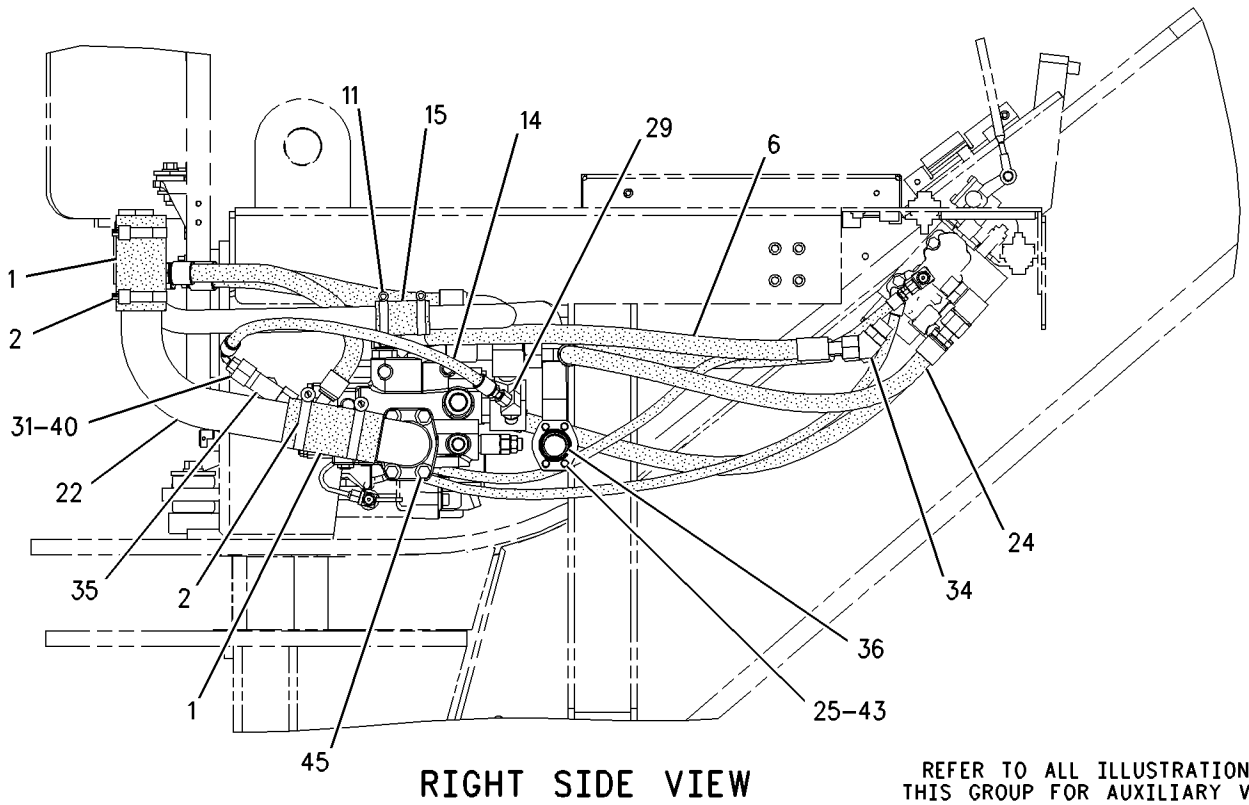

REFER TO ALL ILLUSTRATIONS OF THIS GROUP FOR AUXILIARY VIEWS

GRAPHIC #1

g00861590

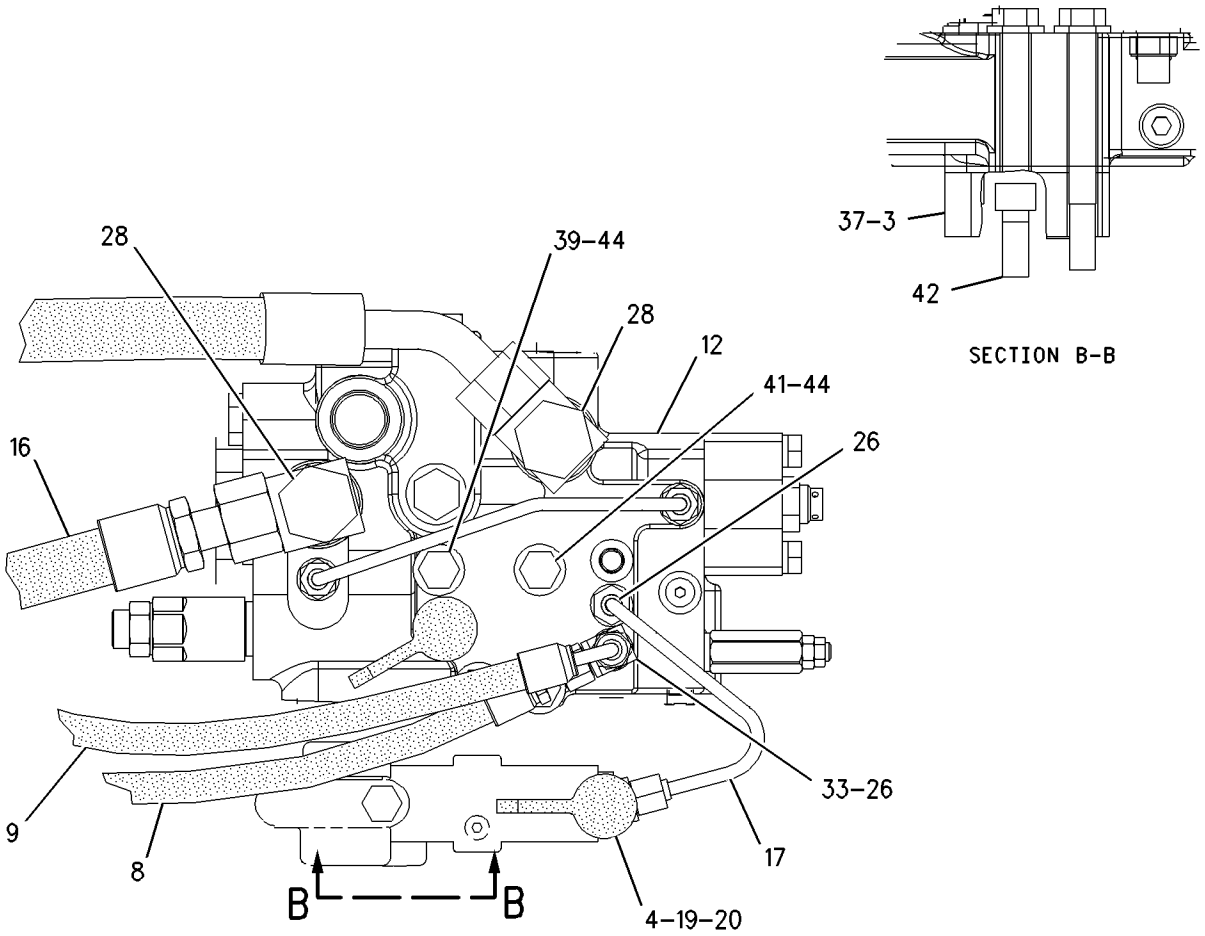

GRAPHIC #2

g00861594

HYDRAULIC SYSTEM

166-3408 LINES GP-RIPPER

S/N: ASE1-UP

PART OF 166-3407, 187-4947, 187-4948, 187-4949, 187-4950, 187-4952, 192-4972

CONTROL AR-HYDRAULIC

AN ATTACHMENT

SMCS-5057 **i01645123**

NOTE	REF NO	GRAPHIC REF	PART NUMBER	QTY	PART NAME 1 2 3 4 5 6 (PRODUCT LEVEL)	SEE PAGE
	1	1	*185-6645*	2	UNION AS	
					(EACH INCLUDES)	
		1	**185-6644**	1	UNION	
		1	**6V-8398**	2	SEAL-O-RING	
I	2	1	**186-4154**	2	HOSE AS	
	4	1	*148-8346*	1	ELBOW GP	
		1	**8T-1686**	1	ELBOW	
		1	**3K-0360**	1	SEAL-O-RING	
		1	**6V-8398**	1	SEAL-O-RING	
	5	1	*148-8364*	1	ELBOW GP	
		1	**6V-8625**	1	ELBOW	
		1	**3K-0360**	1	SEAL-O-RING	
		1	**6V-8398**	1	SEAL-O-RING	
	6	1	**5M-3062**	1	BOLT (3/8-16X0.75 IN)	
	7	1	**6D-1641**	4	CLIP	
	8	1	**6D-4244**	2	CLIP	
	9	1	**6V-9169**	2	NUT-BULKHEAD (13/16-16 THD)	
	10	1	**8T-4896**	1	WASHER-HARD (10.2X18.5X2.5MM THK)	

I-SEE HOSE FABRICATION GUIDE

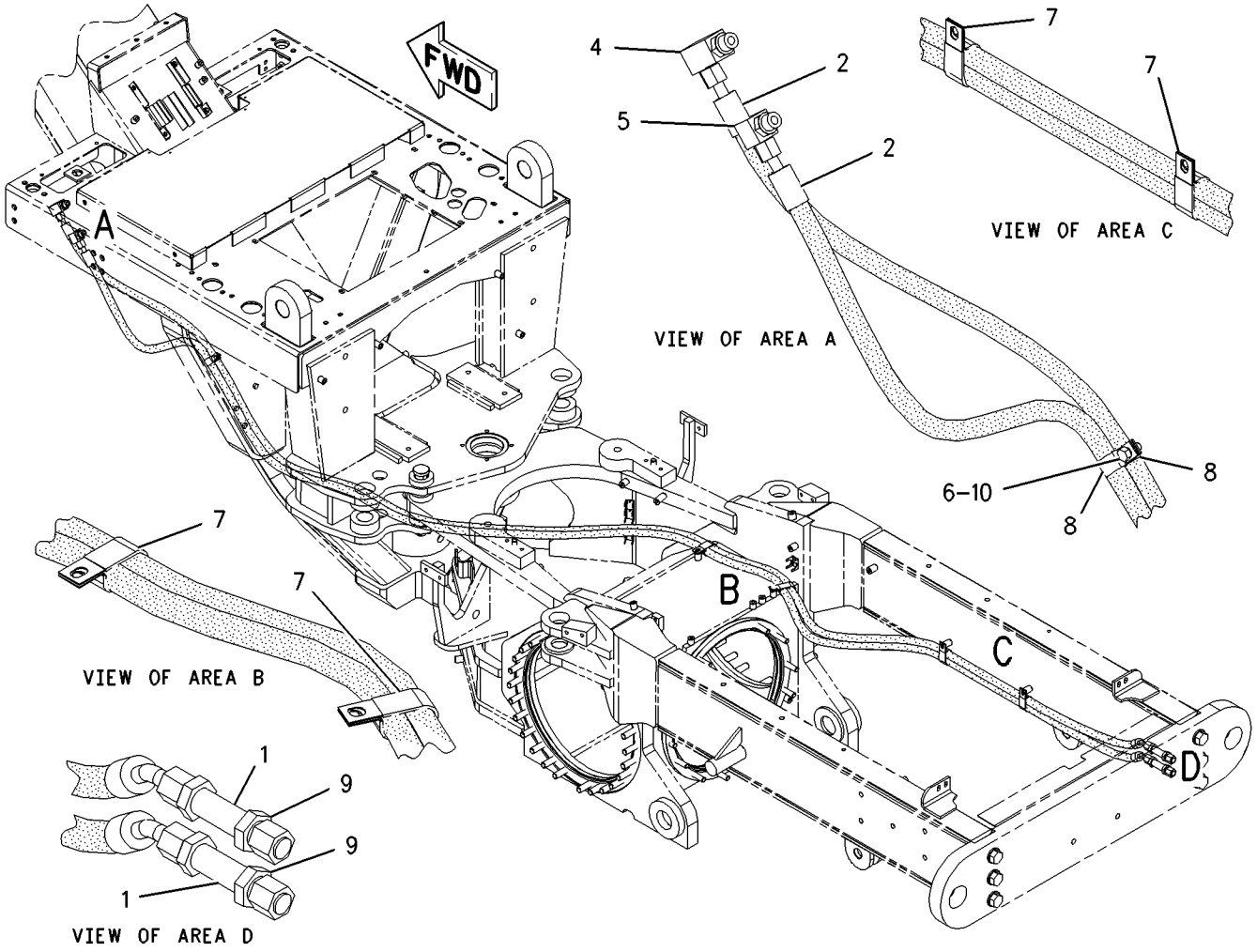

GRAPHIC #1 g00851412

187-9062 LINES GP-RIPPER–CYLINDER

S/N: ASE1-UP
PART OF 187-9051 RIPPER AR
AN ATTACHMENT

SMCS-5057 **i01660156**

NOTE	REF NO	GRAPHIC REF	PART NUMBER	QTY	PART NAME 1 2 3 4 5 6 (PRODUCT LEVEL)	SEE PAGE
I	1	1	**128-5209**	1	HOSE AS	
I	2	1	**180-0368**	1	HOSE AS	
	3	1	**2M-9780**	2	SEAL-O-RING	
	4	1	**5P-7464**	1	CLIP (SLOT)	
	5	1	**5P-7465**	1	CLIP (TAB)	
	6	1	**6V-1249**	1	GROMMET	
	7	1	**6V-8398**	4	SEAL-O-RING	
	8	1	**6V-8721**	2	ELBOW	

I-SEE HOSE FABRICATION GUIDE

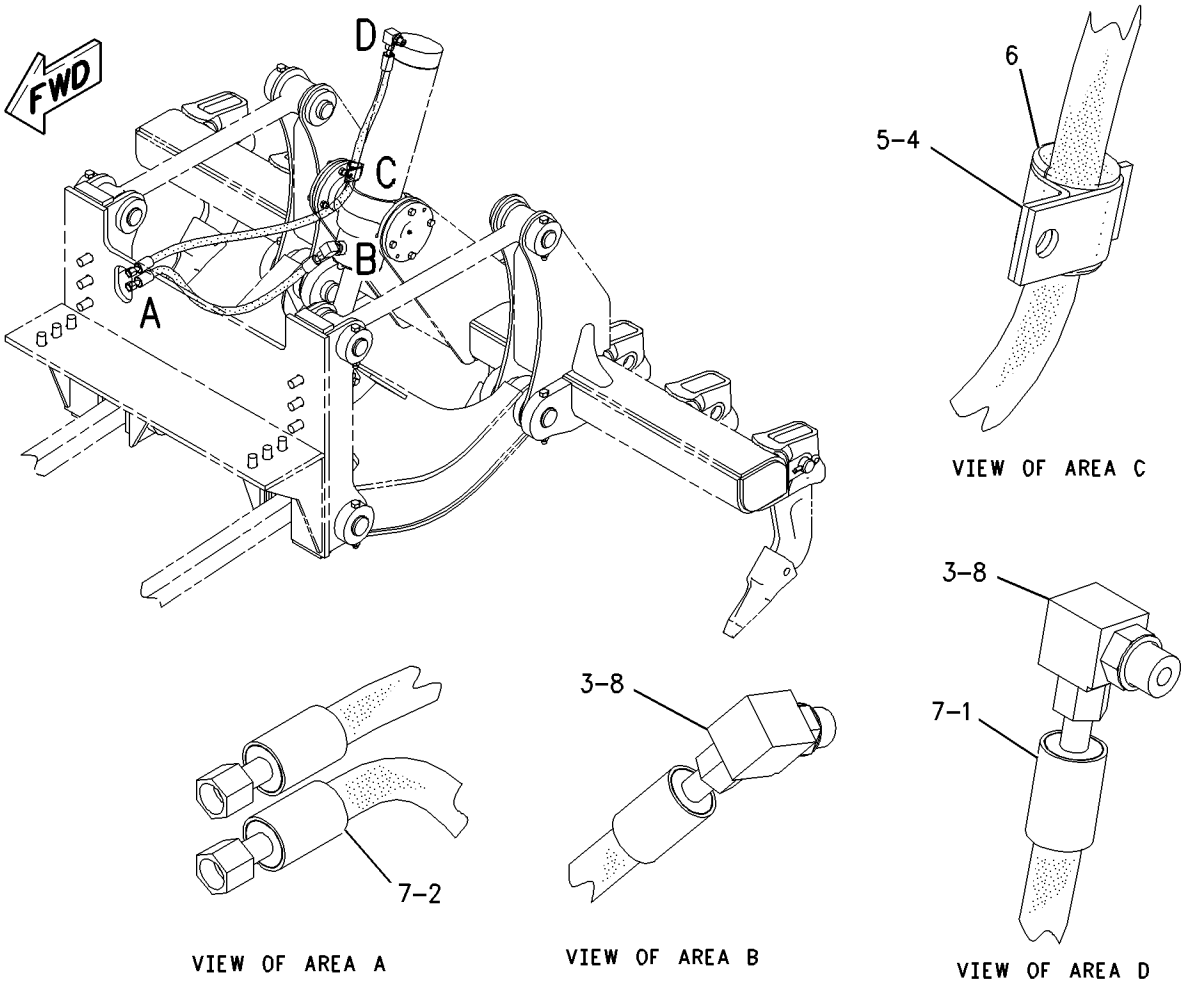

GRAPHIC #1 g00858211

MEMORANDA

HYDRAULIC SYSTEM

166-3333 LINES GP-SECONDARY STEERING—EU

S/N: ASE1-UP
PART OF 166-3334 STEERING AR-SECONDARY
AN ATTACHMENT

SMCS-4304 **i01645712**

NOTE	REF NO	GRAPHIC REF	PART NUMBER	QTY	PART NAME 1 2 3 4 5 6 (PRODUCT LEVEL)	SEE PAGE
	1	1	**5B-8978**	1	TEE	
	2	1	**9T-1013**	1	VALVE AS-CHECK	
		1	**3K-0360**	1	SEAL-O-RING	
		1	**6V-8398**	1	SEAL-O-RING	
	3	1	**9T-8071**	1	VALVE GP-RELIEF	
I	4	1	**108-0712**	1	HOSE AS	
I	5	1	**108-0713**	1	HOSE AS	
I	6	1	**116-7089**	1	HOSE AS	
	7	1	**9T-6146**	1	VALVE GP-CHECK	
		1	**3J-7354**	1	SEAL-O-RING	
		1	**4J-5477**	1	SEAL-O-RING	
	8	1	*171-6728*	1	ELBOW GP	
		1	**8T-0249**	1	ELBOW-SWIVEL	
		1	**3K-0360**	1	SEAL-O-RING	
	9	1	*185-2271*	1	CONNECTOR AS	
		1	**8T-9023**	1	CONNECTOR	
		1	**3D-2824**	1	SEAL-O-RING	
		1	**6V-9746**	1	SEAL-O-RING	
	10	1	*196-2036*	1	TEE AS	
		1	**9X-2492**	1	TEE-O-RING	
		1	**3K-0360**	1	SEAL-O-RING	
		1	**6V-8398**	1	SEAL-O-RING	
	11	1	*148-8307*	1	ADAPTER GP	
		1	**5P-8874**	1	ADAPTER	
		1	**3J-1907**	1	SEAL-O-RING	
	12	1	*148-8322*	1	CONNECTOR GP	
		1	**6V-8640**	1	CONNECTOR-SEAL	
		1	**2M-9780**	1	SEAL-O-RING	
		1	**6V-9746**	1	SEAL-O-RING	
	13	1	*148-8340*	1	CONNECTOR GP	
		1	**6V-8639**	1	CONNECTOR	
		1	**3K-0360**	1	SEAL-O-RING	
		1	**6V-8398**	1	SEAL-O-RING	
	14	1	*148-8351*	1	ELBOW GP	
		1	**6V-9849**	1	ELBOW-SWIVEL	
		1	**4J-5477**	1	SEAL-O-RING	
	15	1	*148-8364*	1	ELBOW GP	
		1	**6V-8625**	1	ELBOW	
		1	**6V-8398**	1	SEAL-O-RING	
		1	**3K-0360**	1	SEAL-O-RING	
	16	1	*150-4037*	1	TEE GP	
		1	**6V-9844**	1	TEE-SWIVEL	
		1	**6V-8398**	2	SEAL-O-RING	

I-SEE HOSE FABRICATION GUIDE

166-3333 **LINES GP-SECONDARY STEERING** *(contd.)* **i01645712**

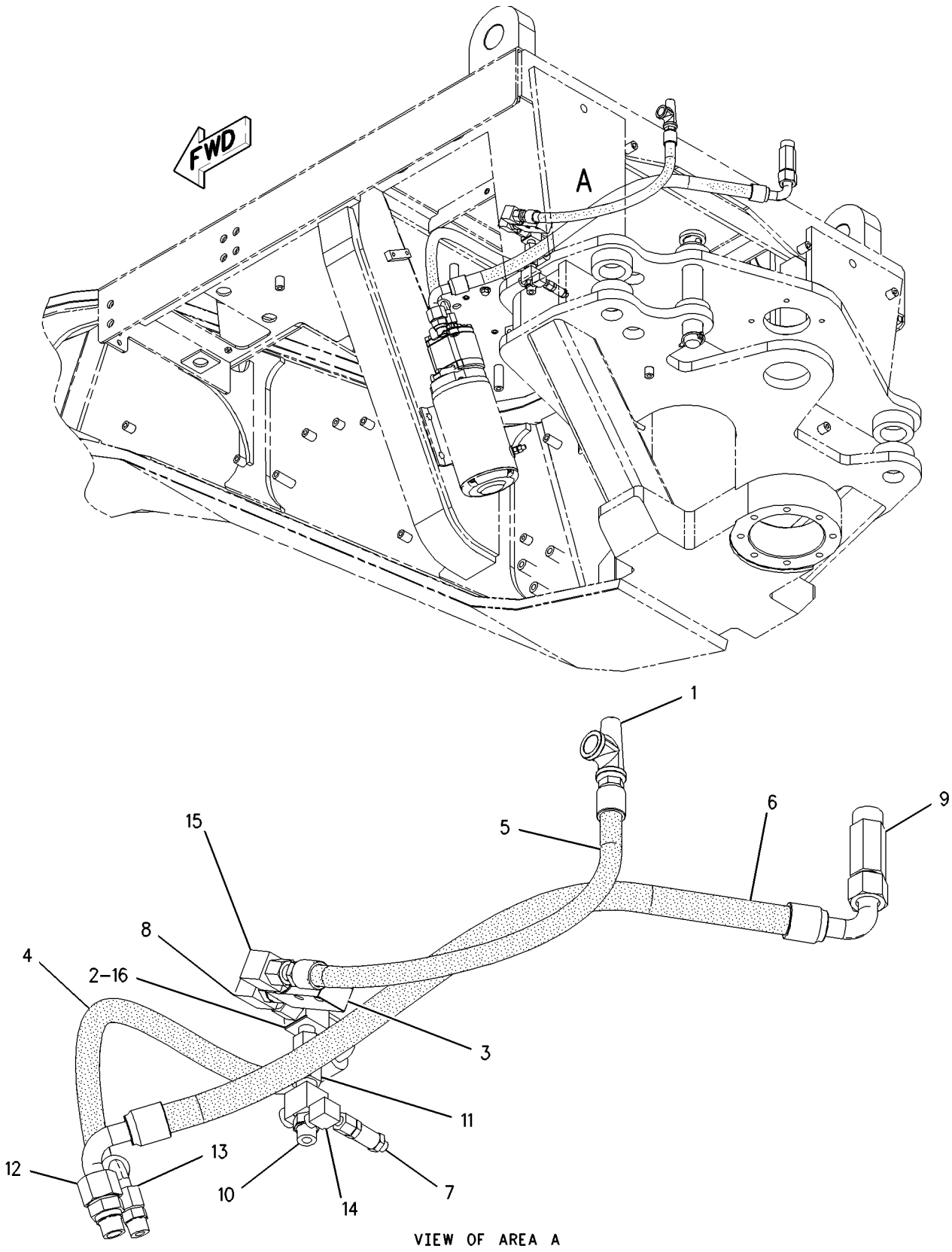

GRAPHIC #1 g00851177

HYDRAULIC SYSTEM

171-6446 LINES GP-STEERING

S/N: ASE1-UP

PART OF 162-5606 GENERAL AR

SMCS-4304 **i01690322**

NOTE	REF NO	GRAPHIC REF	PART NUMBER	QTY	PART NAME 1 2 3 4 5 6 (PRODUCT LEVEL)	SEE PAGE
	1	1	**3S-2093**	2	STRAP-CABLE	
I	2	1	**4E-2392**	1	HOSE AS	
I	3	1	**7I-5405**	2	HOSE AS	
	4	1	**7K-1181**	2	STRAP-CABLE	
I	5	1	**8W-6429**	2	HOSE AS	
I	6	1	**8X-7975**	1	HOSE AS	
Y	7	1	**9T-6129**	1	VALVE GP-RELIEF (STEERING HYDRAULIC PRESSURE)	578
I	8	1	**9W-0749**	2	HOSE AS	
I	9	1	**108-0702**	1	HOSE AS	
I	10	1	**113-7149**	2	HOSE AS	
	11	1	*130-4926*	1	ACCUMULATOR AS	
		1	**130-7084**	1	KIT-BLADDER	
		1	**188-9390**	1	VALVE AS (STEERING)	
		1	**192-4984**	1	GROMMET	
	12	1	**136-6330**	1	SEAL	
	13	1	**136-6331**	2	SEAL	
	14	1	*148-8311*	1	ADAPTER GP	
		1	**8T-1715**	1	ADAPTER-STRAIGHT THREAD	
		1	**3K-0360**	1	SEAL-O-RING	
	15	1	*148-8312*	1	ADAPTER AS	
		1	**3D-2824**	1	SEAL-O-RING	
		1	**3T-4965**	1	ADAPTER-O-RING	
	16	1	*171-6466*	1	UNION AS	
		1	**3D-2824**	1	SEAL-O-RING	
		1	**5P-9810**	1	UNION	
	17	1	*171-6467*	2	UNION AS	
					(EACH INCLUDES)	
		1	**8T-5082**	1	UNION	
		1	**6V-8398**	1	SEAL-O-RING	
		1	**6V-9746**	1	SEAL-O-RING	
	18	1	*172-5761*	1	TEE AS	
		1	**126-8306**	1	TEE-O-RING	
		1	**3K-0360**	1	SEAL-O-RING	
		1	**6V-8398**	1	SEAL-O-RING	
	19	1	*148-8305*	1	ADAPTER AS	
		1	**5P-9617**	1	ADAPTER	
		1	**3J-1907**	1	SEAL-O-RING	
	20	1	*148-8316*	2	CONNECTOR GP	
					(EACH INCLUDES)	
		1	**6V-8647**	1	CONNECTOR	
		1	**3J-7354**	1	SEAL-O-RING	
		1	**4J-5477**	1	SEAL-O-RING	
	21	1	*148-8324*	2	CONNECTOR GP	
					(EACH INCLUDES)	
		1	**6V-9874**	1	CONNECTOR-SEAL	
		1	**3K-0360**	1	SEAL-O-RING	
		1	**6V-9746**	1	SEAL-O-RING	
	22	1	*148-8340*	8	CONNECTOR GP	
					(EACH INCLUDES)	
		1	**6V-8639**	1	CONNECTOR	
		1	**3K-0360**	1	SEAL-O-RING	
		1	**6V-8398**	1	SEAL-O-RING	
	23	1	*148-8351*	1	ELBOW GP	
		1	**6V-9849**	1	ELBOW-SWIVEL	
		1	**4J-5477**	1	SEAL-O-RING	

171-6446 **LINES GP-STEERING** ***(contd.)*** **i01690322**

NOTE	REF NO	GRAPHIC REF	PART NUMBER	QTY	PART NAME 1 2 3 4 5 6 (PRODUCT LEVEL)	SEE PAGE
	24	1	*148-8364*	5	ELBOW GP	
					(EACH INCLUDES)	
		1	**6V-8625**	1	ELBOW	
		1	**3K-0360**	1	SEAL-O-RING	
		1	**6V-8398**	1	SEAL-O-RING	
	25	1	**4L-6454**	1	BOLT (3/8-16X1 IN)	
	26	1	**4S-4455**	3	CLIP	
	27	1	**5P-7854**	1	CLIP	
	28	1	**5S-7379**	4	BOLT (3/8-16X0.875 IN)	
	29	1	**6D-4244**	3	CLIP	
	30	1	**6V-1228**	2	CLIP	
	31	1	**6V-8801**	1	NUT (3/8-16 THD)	
	32	1	**7X-0290**	3	BOLT (3/8-16X3.50 IN)	
	33	1	**8C-3446**	2	VALVE GP-FLUID SAMPLING (HYDRAULIC OIL)	
	34	1	**8C-3451**	1	CAP-DUST (HYD OIL)	
	35	1	**8T-4896**	9	WASHER-HARD (10.2X18.5X2.5MM THK)	

I-SEE HOSE FABRICATION GUIDE
Y-SEPARATE ILLUSTRATION

171-6446 **LINES GP-STEERING** *(contd.)* **i01690322**

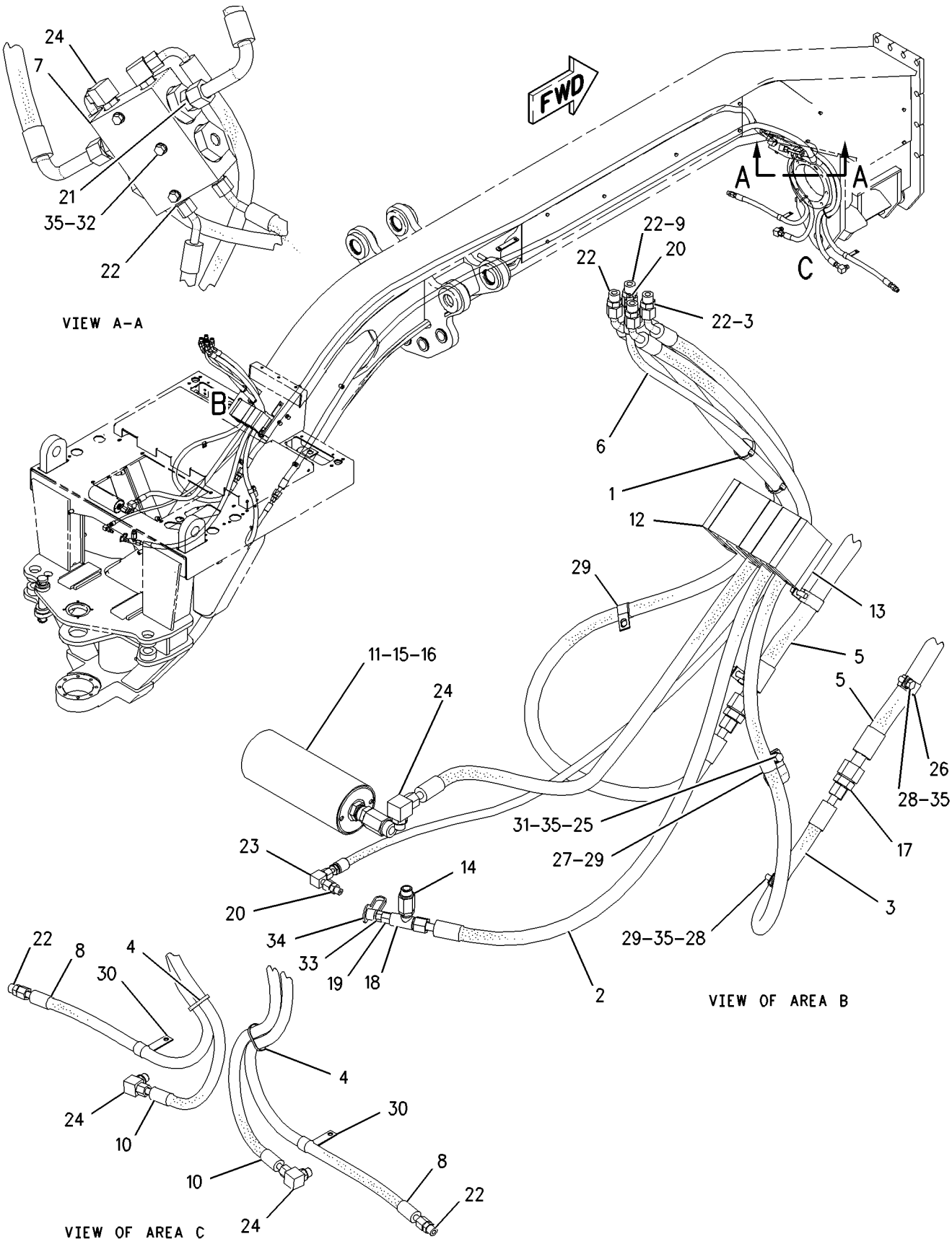

GRAPHIC #1 g00870721

HYDRAULIC SYSTEM

8D-6185 LOCK GP-CENTERSHIFT

S/N: ASE1-UP

PART OF 162-5606 GENERAL AR

SMCS-5221 **i00128597**

NOTE	REF NO	GRAPHIC REF	PART NUMBER	QTY	PART NAME 1 2 3 4 5 6 (PRODUCT LEVEL)	SEE PAGE
	1	1	**8D-5061**	1	PIN	
	2	1	**3K-4025**	2	SEAL-O-RING	
	3	1	**9D-0386**	1	PISTON	
	4	1	**9D-0384**	1	SEAL	
	5	1	**1P-9005**	1	SEAL-O-RING	
	6	1	**9D-5044**	1	HOUSING	
	7	1	**9D-5048**	1	CAP	
	8	1	**5H-3252**	1	SEAL-O-RING (145.64MM ID)	
	9	1	**9D-5047**	2	WASHER-THRUST (1.9MM .075IN THICK)	
		1	**9D-5046**	1	WASHER (2.39MM .094IN THICK)	
	10	1	**9D-4075**	1	SPRING	
	11	1	**9D-5043**	1	HOUSING	
	12	1	**8T-6763**	1	PLUG	
	13	1	**0S-1594**	2	BOLT (3/8-16X1IN)	
		1	**0T-0329**	1	LOCKNUT	
	14	1	**5P-1895**	2	BOLT	
	15	1	**7F-8267**	1	SEAL-O-RING (47.2MM ID)	
	16	1	**8D-5063**	2	SEAL	
	17	1	**3B-4510**	2	LOCKWASHER	
					-OR-	
C		1	**2S-5658**	2	WASHER-HARD (3.0MM THK)	

C-CHANGE FROM PREVIOUS TYPE

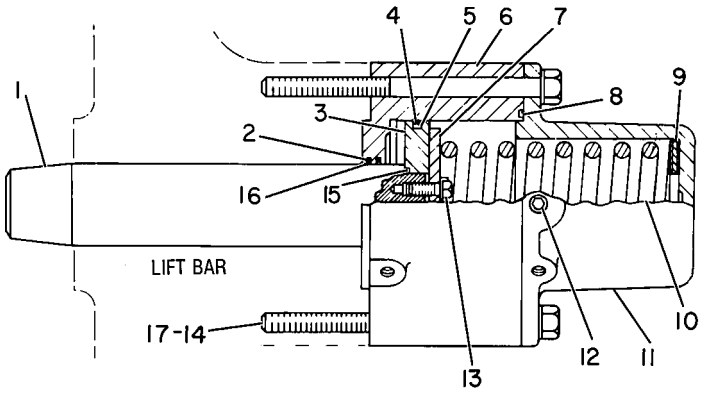

GRAPHIC #1 g00108184

152-7903 LOCK GP-HYDRAULIC HAND CONTROL–EU

S/N: ASE1-UP

PART OF 211-1769, 211-1770 CONVERSION AR-CERTIFICATION

AN ATTACHMENT

SMCS-5001 **i00792261**

NOTE	REF NO	GRAPHIC REF	PART NUMBER	QTY	PART NAME 1 2 3 4 5 6 (PRODUCT LEVEL)	SEE PAGE
	1	1	**107-5014**	4	KNOB	
	2	1	**152-5430**	4	BLOCK	
B	3	1	**152-5431**	12	COLLAR	
	4	1	**152-5436**	2	PLATE AS	
					(EACH INCLUDES)	
		1	**3W-6485**	2	SPRING	
BM	5	1	**096-3218**	12	SETSCREW-SOCKET	
M	6	1	**9X-2043**	4	SCREW-TRUSS HEAD (M6X1X14MM)	
BD	7	1	**5P-5969**		SEAL (.5 M)	

B-USE AS REQUIRED
D-ORDER BY THE METER
M-METRIC PART

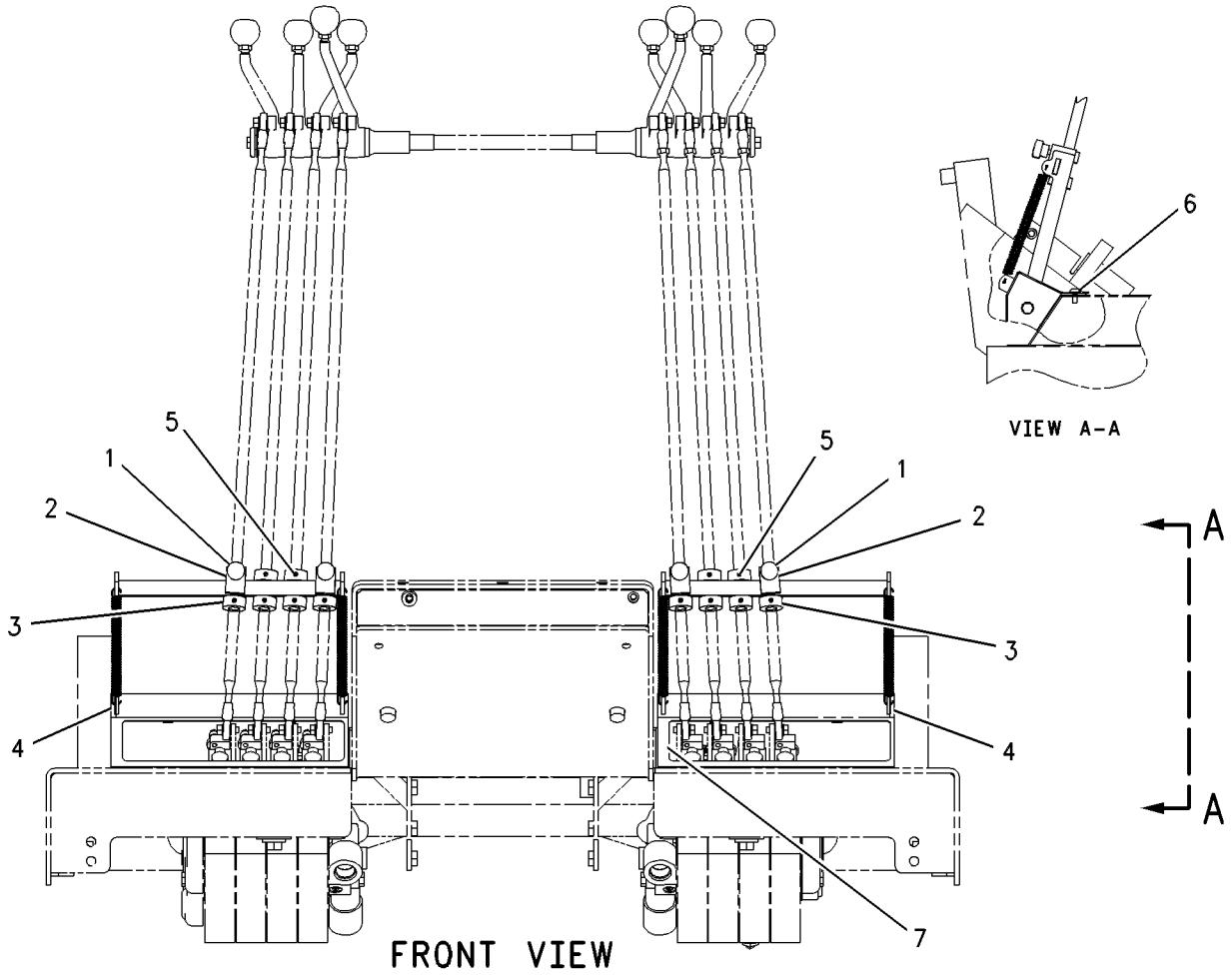

GRAPHIC #1 g00377492

117-3915 MOTOR GP-ELEC HYD PUMP–EU

S/N: ASE1-UP
24 VOLT
PART OF 123-8915 PUMP GP-ELECTRIC DRIVE
AN ATTACHMENT

SMCS-4324, 4325 **i01441397**

NOTE	REF NO	GRAPHIC REF	PART NUMBER	QTY	PART NAME 1 2 3 4 5 6 (PRODUCT LEVEL)	SEE PAGE
	1	1	**6V-8801**	2	NUT (3/8-16 THD)	
	2	1	**7X-0608**	2	WASHER-HARD (10.2X16X2.0MM THK)	

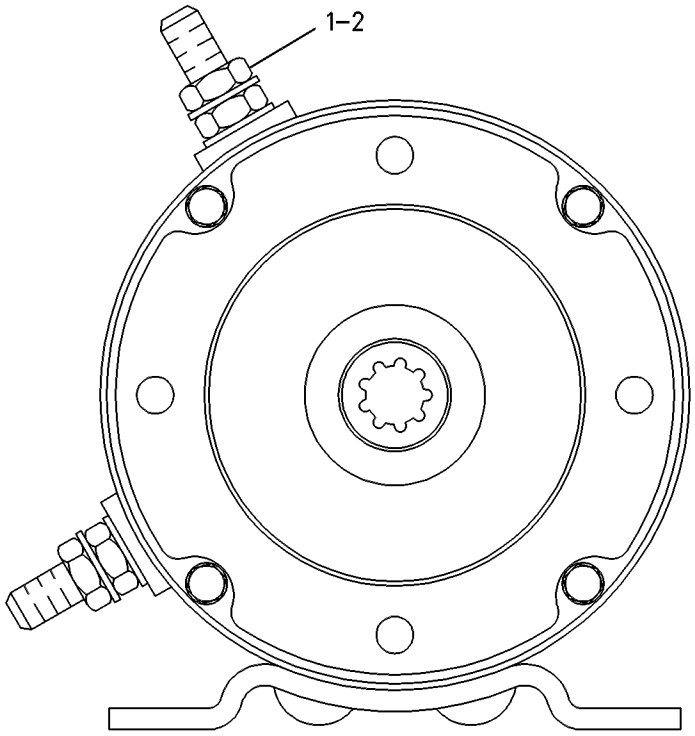

GRAPHIC #1 g00085784

HYDRAULIC SYSTEM

168-1899 MOTOR GP-GEAR

S/N: ASE1-UP
PART OF 179-3261 FAN & MOTOR GP
ALSO AN ATTACHMENT

SMCS-1386, 5061 **i01529617**

NOTE	REF NO	GRAPHIC REF	PART NUMBER	QTY	PART NAME 1 2 3 4 5 6 (PRODUCT LEVEL)	SEE PAGE
	1	1	**6B-6684**	1	NUT-FULL (1/2-20 THD)	
	2	1	**5P-8245**	1	WASHER-HARD (13.5X25.5X3MM THK)	
J	3	1	**176-0209**	1	SEAL-LIP TYPE	
J	4	1	**8J-6273**	1	RING-RETAINING	
J	5	1	**177-4255**	1	SEAL-SHAFT	
	6	1	**199-4321**	1	FLANGE	
	7	1	**099-3095**	4	DOWEL	
J	8	1	**4W-7356**	2	SEAL	
	9	1	**199-4322**	1	COVER	
	10	1	**199-4317**	4	BOLT	
AJ	11	1	**199-4320**	1	KIT-SEAL	
					(INCLUDES SEALS & RINGS)	

A-NOT PART OF THIS GROUP
J-KITS MARKED J SERVICES PARTS MARKED J

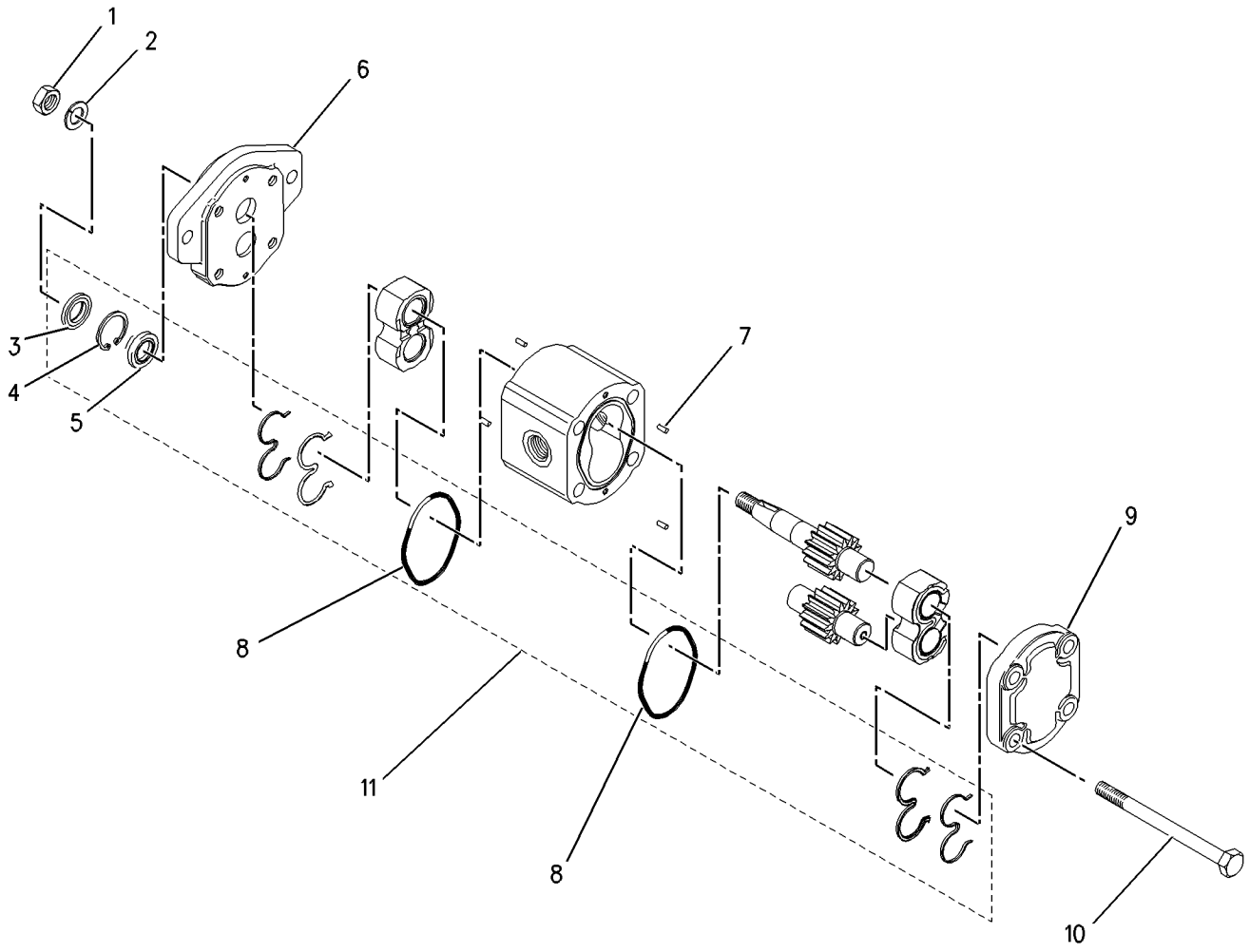

GRAPHIC #1 g00796609

MEMORANDA

HYDRAULIC SYSTEM

9T-5977 MOTOR GP-GEROTOR

S/N: ASE1-UP

PART OF 8X-5302 DRIVE GP-CIRCLE

SMCS-5082 **i00128173**

NOTE	REF NO	GRAPHIC REF	PART NUMBER	QTY	PART NAME 1 2 3 4 5 6 (PRODUCT LEVEL)	SEE PAGE
	1	1	**7X-4733**	1	SEAL-LIP	
	2	1	**9T-8070**	1	HOUSING AS	
	3	1	**6Y-2934**	1	BEARING-ROLLER	
	4	1	**6Y-2933**	2	RACE	
	5	1	**6Y-2932**	1	BEARING-THRUST	
	6	1	**8T-1698**	1	BEARING-NEEDLE	
	7	1	**9T-9071**	1	SHIM	
	8	1	**9T-8058**	1	BACKUP	
	9	1	**9T-8059**	1	SEAL	
	10	1	**9T-8057**	1	SHAFT-GOVERNOR CONTROL	
	11	1	**6Y-2935**	1	BEARING	
	12	1	**9T-8053**	5	SEAL	
	13	1	**9T-8055**	1	LINK	
	14	1	**9T-8061**	1	PLATE	
	15	1	**9T-8062**	1	ROTOR SET	
	16	1	**9T-8065**	1	MANIFOLD	
	17	1	**9J-4963**	1	RING	
	18	1	**9T-8069**	1	PLATE AS	
	19	1	**9T-8067**	1	COVER	
	20	1	**9T-8052**	7	BOLT	
					AVAILABLE REPAIR KIT(S):	
			9T-9072	1	KIT-SEAL	

9T-5977 MOTOR GP-GEROTOR *(contd.)* i00128173

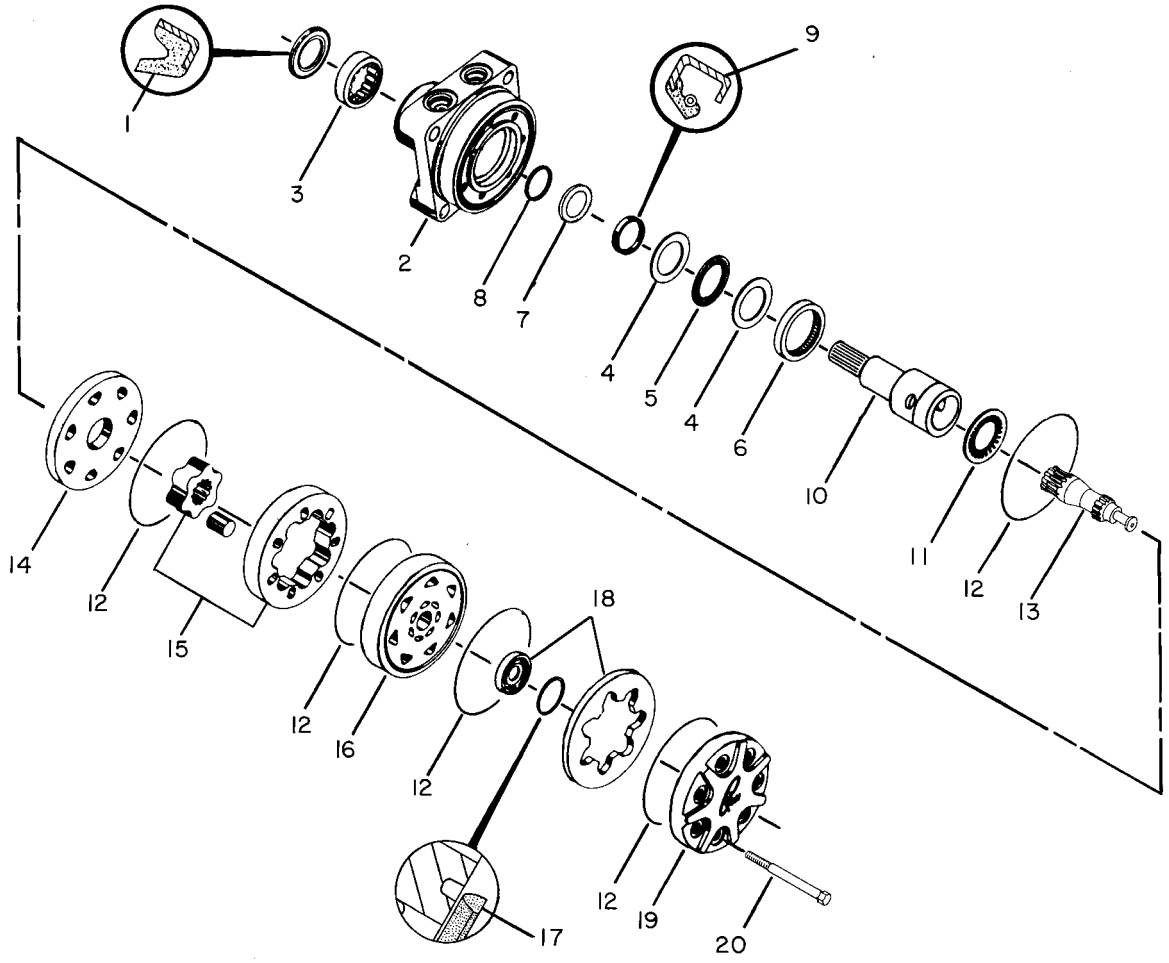

GRAPHIC #1 g00082184

HYDRAULIC SYSTEM

180-5446 PUMP & MTG GP-PISTON

S/N: ASE1-UP

PART OF 162-5606 GENERAL AR

SMCS-5070 **i01643825**

NOTE	REF NO	GRAPHIC REF	PART NUMBER	QTY	PART NAME 1 2 3 4 5 6 (PRODUCT LEVEL)	SEE PAGE
	1	1	**7Y-3058**	4	PLATE	
B	2	1	**8W-6591**	6	SHIM (.7 MM THK)	
	3	1	**8W-6598**	4	MOUNTING AS	
Y	4	1	**177-7517**	1	PUMP GP-PISTON (HYDRAULIC STEERING)	488
Y	5	1	**184-7448**	1	PUMP GP-PISTON (FAN DRIVE)	490
	6	1	**187-2018**	1	PLATE AS	
	7	1	**201-8328**	1	COUPLING	
	8	1	**5P-8245**	2	WASHER-HARD (13.5X25.5X3MM THK)	
	9	1	**6D-7146**	1	SEAL-O-RING	
M	10	1	**6V-8675**	2	BOLT (M12X1.75X35MM)	
	11	1	**6V-8765**	4	WASHER-HARD (15X26X3MM THK)	
	12	1	**7X-0350**	4	BOLT (5/8-11X3.50 IN)	
M	13	1	**8C-3425**	4	BOLT (M14X2X35MM)	
	14	1	**8T-4122**	4	WASHER-HARD (17X32X3.5MM THK)	

B-USE AS REQUIRED
M-METRIC PART
Y-SEPARATE ILLUSTRATION

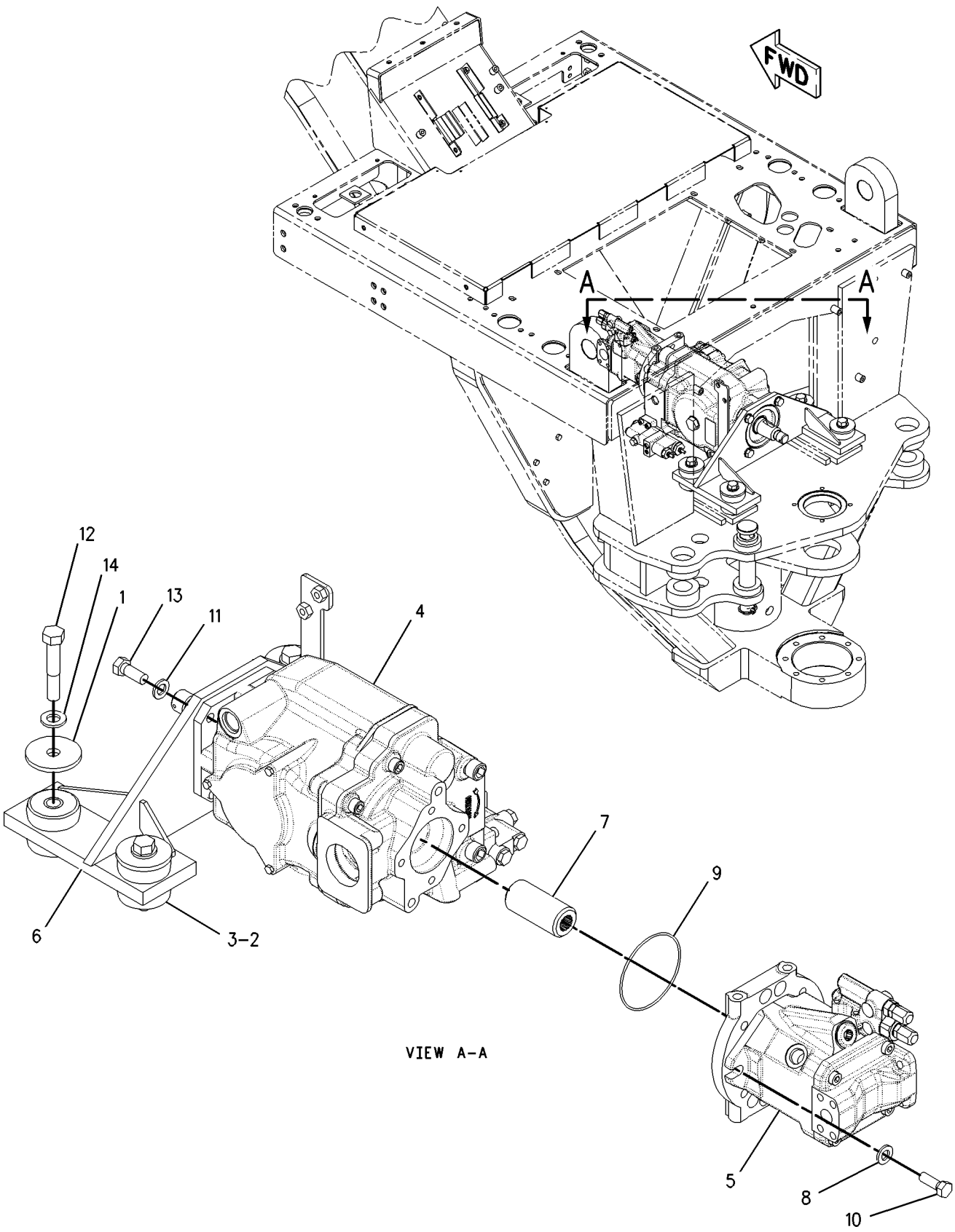

GRAPHIC #1

g00851093

HYDRAULIC SYSTEM

7I-4756 PUMP & MTG GP-SECONDARY STEER–EU

S/N: ASE1-UP
PART OF 166-3334 STEERING AR-SECONDARY
AN ATTACHMENT

SMCS-4324 **i00128435**

NOTE	REF NO	GRAPHIC REF	PART NUMBER	QTY	PART NAME 1 2 3 4 5 6 (PRODUCT LEVEL)	SEE PAGE
Y	1	1	**123-8915**	1	PUMP GP-ELECTRIC DRIVE	485

Y-SEPARATE ILLUSTRATION

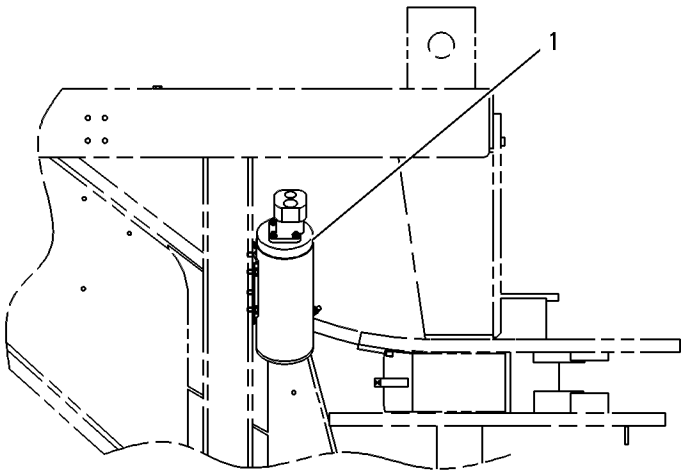

LEFT SIDE VIEW

GRAPHIC #1 g00109081

123-8915 PUMP GP-ELECTRIC DRIVE–EU

S/N: ASE1-UP
PART OF 7I-4756 PUMP & MTG GP-SECONDARY STEER
AN ATTACHMENT

SMCS-4324 **i01233451**

NOTE	REF NO	GRAPHIC REF	PART NUMBER	QTY	PART NAME 1 2 3 4 5 6 (PRODUCT LEVEL)	SEE PAGE
Y	1	1	**117-3915**	1	MOTOR GP-ELEC HYD PUMP	477
	2	1	**1A-2209**	2	BOLT (3/8-24X1.25IN)	
	3	1	**5Y-0254**	2	LOCKWASHER	
	4	1	**123-8914**	1	PUMP	

Y-SEPARATE ILLUSTRATION

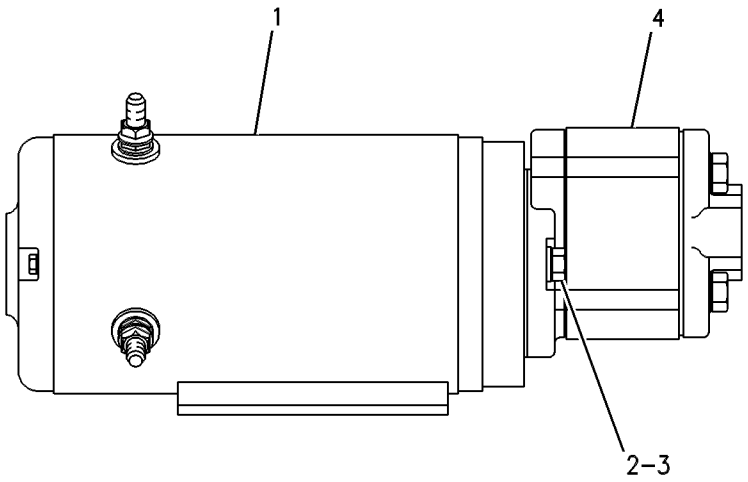

GRAPHIC #1 g00085788

HYDRAULIC SYSTEM

111-0490 PUMP GP-METERING

S/N: ASE1-UP

PART OF 7I-4719 CONTROL GP-STEERING

SMCS-4312 **i00606986**

NOTE	REF NO	GRAPHIC REF	PART NUMBER	QTY	PART NAME 1 2 3 4 5 6 (PRODUCT LEVEL)	SEE PAGE
	1	1	**6E-5885**	1	SHAFT-GOVERNOR CONTROL	
	2	1	**9J-2935**	1	RING-RETAINING	
	3	1	**065-1153**	1	RING-SNAP	
	4	1	**9U-9693**	1	BALL BEARING	
	5	1	**6E-5887**	1	RETAINER	
	6	1	**6E-5884**	1	HOUSING	
	7	1	**6S-7826**	1	RETAINER-BALL	
	8	1	**6S-7827**	1	BALL	
	9	1	**5F-9144**	1	SEAL-O-RING (7.65MM ID)	
	10	1	**3G-6907**	1	SEAT	
	11	1	**1H-1023**	1	SEAL-O-RING (9.25MM ID)	
	12	1	**3G-6906**	1	SCREW (9/16-18XO.559IN)	
	13	1	**102-2804**	1	SEAL	
	14	1	**3G-6891**	2	RACE	
	15	1	**9T-8560**	1	KIT-SPRING	
	16	1	**7J-6839**	1	DRIVE-CONTROL END	
	17	1	**065-1176**	1	SPACER-DRIVE GEAR	
	18	1	**114-5164**	7	BOLT	
	19	1	**114-5180**	1	CAP	
	20	1	**9T-8431**	1	GEROTOR AS	
	21	1	**114-5190**	1	SPACER (4.04MM THK)	
	22	1	**9J-5686**	3	SEAL-O-RING (72.75MM ID)	
	23	1	**7J-8009**	1	PIN (0.25 ODX1.62IN OAL)	
	24	1	**5L-1100**	1	BEARING-THRUST	
	25	1	**7F-8267**	1	SEAL-O-RING (47.2MM ID)	
	26	1	**9J-5442**	1	RING-RETAINING (INTERNAL)(2.279IN OD)	
	27	1	**9J-8076**	1	BUSHING-TERMINAL	
	28	1	**8F-5340**	1	SEAL-LIP (25.4MM ID)	
	29	1	**114-5132**	1	VALVE AS-CHECK	
					AVAILABLE REPAIR KIT(S):	
F			**118-4660**	1	KIT-SEAL (STEERING METERING)	

F-NOT SHOWN

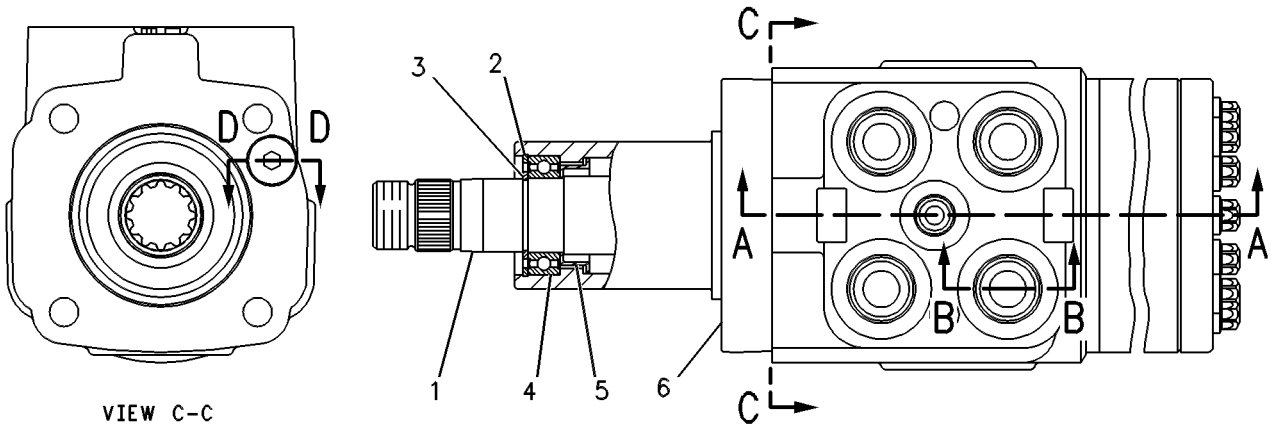

VIEW C-C

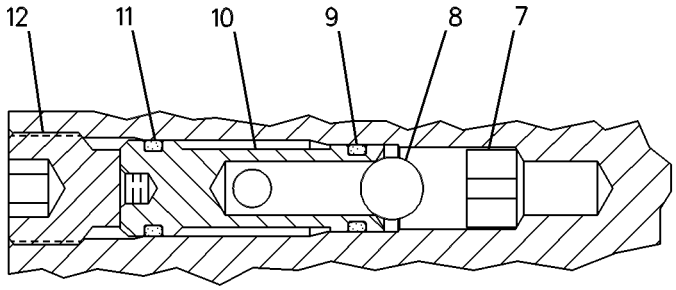

SECTION D-D

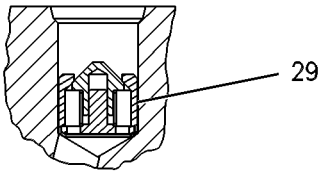

SECTION B-B

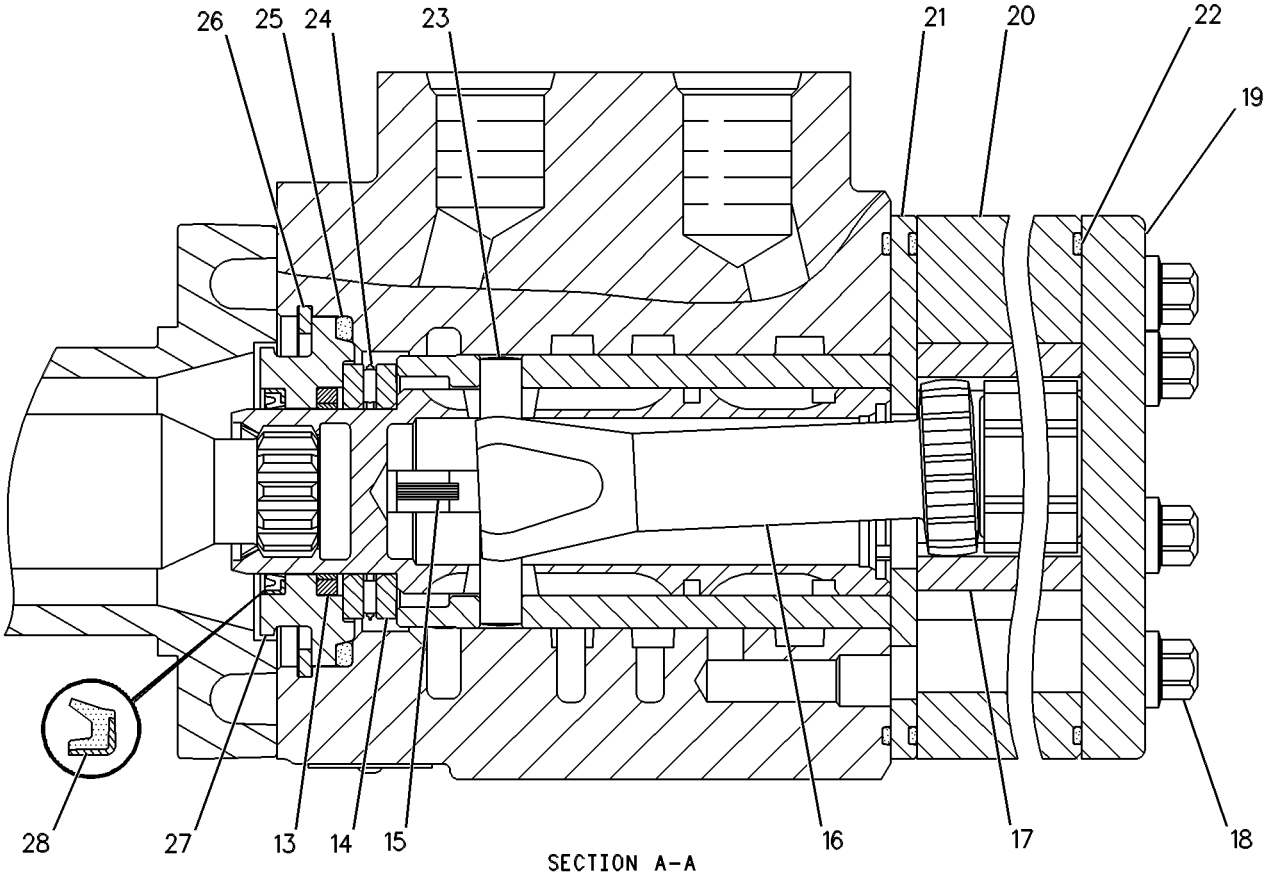

SECTION A-A

GRAPHIC #1

g00250672

HYDRAULIC SYSTEM

177-7517 PUMP GP-PISTON—HYDRAULIC STEERING

S/N: ASE1-UP

PART OF 180-5446 PUMP & MTG GP-PISTON

SMCS-5070 **i01684542**

NOTE	REF NO	GRAPHIC REF	PART NUMBER	QTY	PART NAME 1 2 3 4 5 6 (PRODUCT LEVEL)	SEE PAGE
	1	1	**199-1472**	1	SHAFT	
	2	1	**6E-4237**	1	BEARING	
	3	1	**6E-4224**	1	PLUG-SWASHPLATE	
	4	1	**033-6036**	1	SEAL-O-RING	
	5	1	**9S-4183**	1	PLUG	
	6	1	**9T-1699**	1	SPRING	
	7	1	**9T-1710**	1	POPPET	
	8	1	**9T-1636**	1	SEAT	
	9	1	**6E-4227**	1	COVER	
M	10	1	**6V-8837**	3	BOLT (M6X1X16 MM)	
	11	1	**4F-4097**	1	SEAL-O-RING	
	12	1	**6E-4236**	1	BEARING	
M	13	1	**3E-4302**	2	SCREW-FLAT HEAD (M4X0.7X10MM)	
	14	1	**109-3204**	3	SEAL-O-RING	
	15	1	**095-0888**	2	PIN-SPRING	
M	16	1	**095-0673**	4	BOLT-SOCKET HEAD (M12X1.75X60MM)	
M	17	1	**095-0705**	2	BOLT-SOCKET HEAD (M16X2X100MM)	
Y	18	1	**104-3122**	1	VALVE GP-PRESS & FLOW CMPNSTR (HYDRAULIC STEERING)	572
	19	1	**103-5689**	1	HOUSING-PUMP	
M	20	1	**6V-8337**	4	BOLT-SOCKET HEAD (M8X1.25X35MM)	
	21	1	**3D-2824**	1	SEAL-O-RING	
	22	1	**7K-8876**	1	CUP-BEARING	
	23	1	**6E-4213**	1	KIT-BIAS PISTON (HYDRAULIC STEERING)	
	24	1	**6E-4214**	1	SPRING-BIAS	
Y	25	1	**6E-4216**	1	ROTATING GP-PUMP (HYDRAULIC STEERING)	492
	26	1	**6E-4225**	1	GASKET	
	27	1	**7L-9061**	2	SEAL-O-RING	
	28	1	**3E-7417**	2	PLUG (M10X1 THD)	
	29	1	**8T-7876**	2	SEAL-O-RING	
	30	1	**6E-4234**	1	PLATE-VALVE-LH	
	31	1	**005-0471**	1	CONE-BEARING	
	32	1	**005-0469**	1	CUP-BEARING	
B	33	1	**103-6282**	1	SHIM PACK (INCLUDES 17 SHIMS)	
	34	1	**9T-1652**	1	PIN	
	35	1	**6E-4215**	1	KIT-PISTON (HYDRAULIC STEERING)	
	36	1	**184-1527**	1	SWASHPLATE GP	
		1	**1H-3937**	2	PIN	
		1	**167-1801**	2	STOP-SWASHPLATE	
	37	1	**6L-8797**	1	RING-RETAINING	
	38	1	**9X-7547**	1	SEAL-LIP	
	39	1	**7K-8877**	1	CONE-BEARING	
	40	1	**103-5691**	1	HEAD-PUMP	
	41	1	**108-4818**	1	SHIELD-SEAL	
	42	1	**8C-3089**	1	SEAL-O-RING	
M	43	1	**8T-8441**	2	BOLT-SOCKET HEAD (M12X1.75X25MM)	
	44	1	**114-9110**	1	ADAPTER-DRIVE	

B-USE AS REQUIRED
M-METRIC PART
Y-SEPARATE ILLUSTRATION

177-7517 PUMP GP-PISTON *(contd.)* **i01684542**

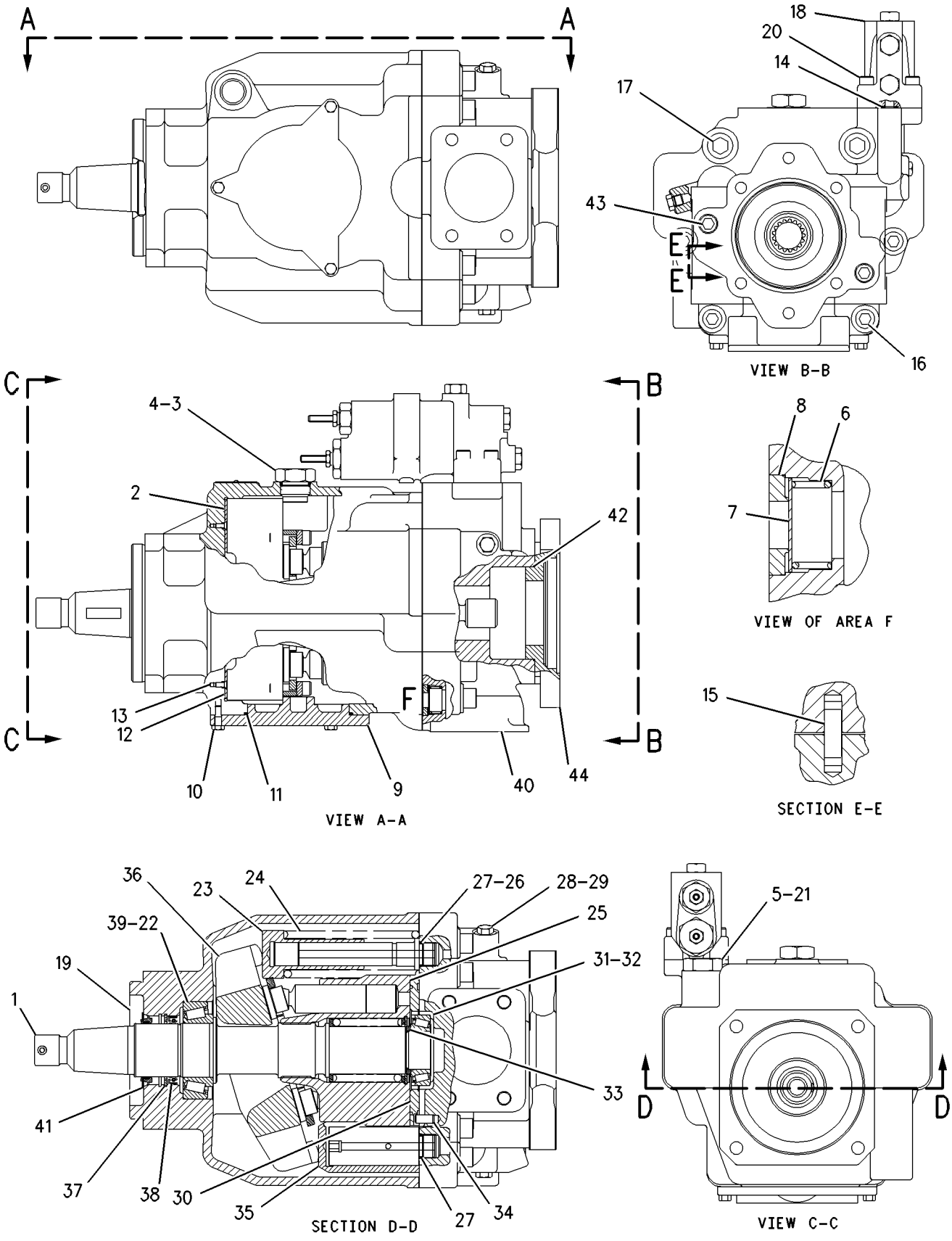

GRAPHIC #1 g00852341

HYDRAULIC SYSTEM

184-7448 PUMP GP-PISTON–FAN DRIVE

S/N: ASE1-UP

PART OF 180-5446 PUMP & MTG GP-PISTON

SMCS-5070 **i01643846**

NOTE	REF NO	GRAPHIC REF	PART NUMBER	QTY	PART NAME 1 2 3 4 5 6 (PRODUCT LEVEL)	SEE PAGE
Y	1	1	**194-9453**	1	ROTATING GP-PUMP	493
	2	1	**168-7861**	1	PISTON-CONTROL	
	3	1	**194-9461**	1	ROD-PISTON	
	4	1	**194-9471**	1	SWASHPLATE	
	5	1	**191-7581**	1	SHAFT	
	6	1	**168-7863**	1	PLUG-CONTROL	
	7	1	**194-9472**	1	SPRING	
	8	1	**191-7582**	1	SHIM (2.5MM THK)	
	9	1	**194-9473**	1	RING	
	10	1	**155-9125**	1	BEARING	
	11	1	**191-7583**	1	BEARING	
	12	1	**194-9474**	2	BEARING-CRADLE	
	13	1	**155-9127**	1	SEAL	
	14	1	**133-6578**	1	SEAL-O-RING	
	15	1	**8T-7525**	1	SEAL-O-RING	
	16	1	**168-3504**	1	SEAL	
	17	1	**8T-9597**	1	RING-RETAINING	
M	18	1	**8T-9515**	4	BOLT-SOCKET HEAD (M10X1.5X40MM)	
	19	1	**9S-8005**	1	PLUG	
	20	1	**136-8423**	1	PLUG-BREAK OFF	
	21	1	**099-3047**	1	DOWEL	
	22	1	**3K-0360**	1	SEAL-O-RING	
Y	23	1	**168-2210**	1	VALVE GP-PRESS & FLOW CMPNSTR (FAN DRIVE PISTON PUMP)	574

M-METRIC PART
Y-SEPARATE ILLUSTRATION

184-7448 PUMP GP-PISTON ***(contd.)*** **i01643846**

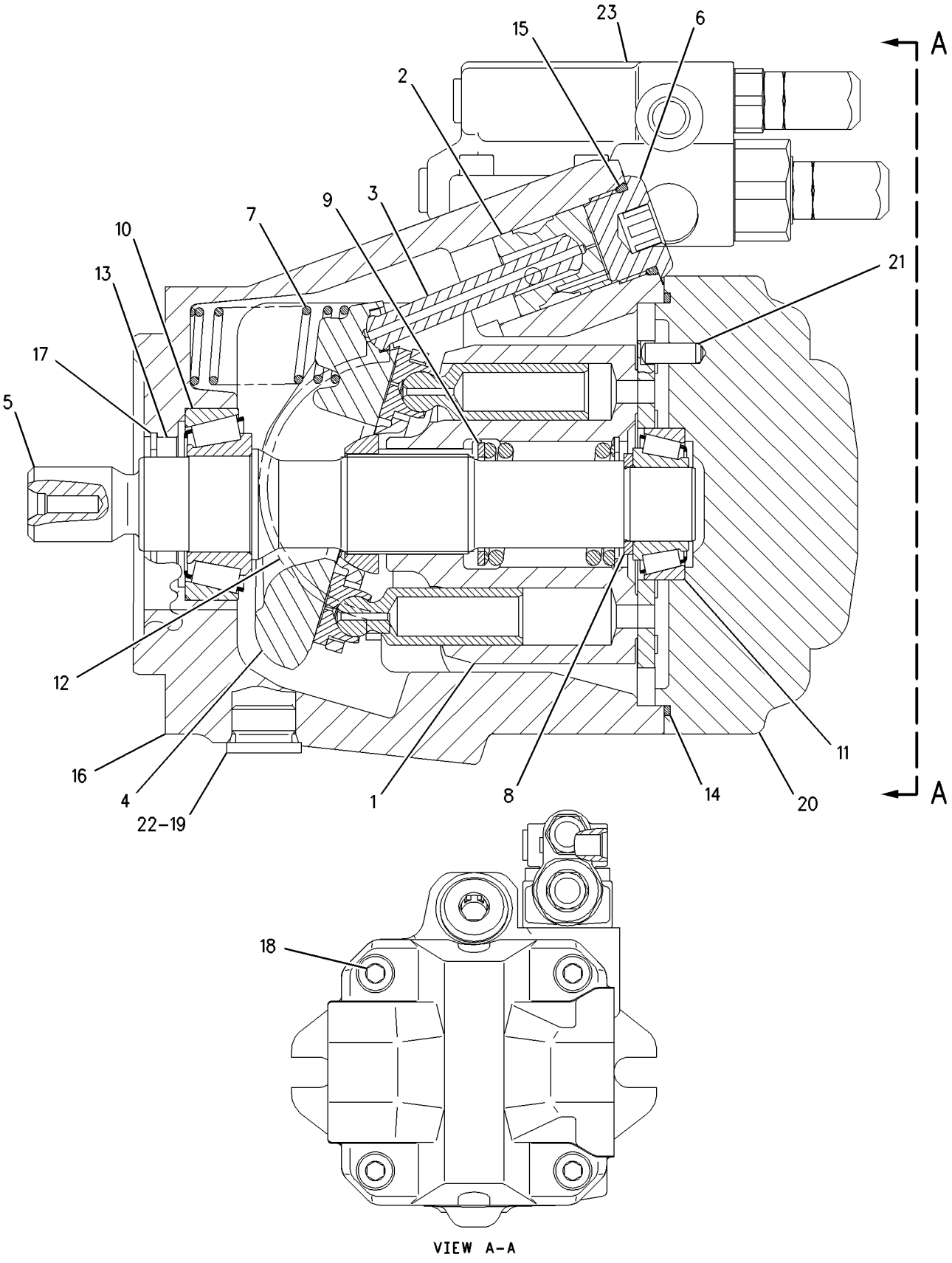

GRAPHIC #1 g00852379

6E-4216 ROTATING GP-PUMP

S/N: ASE1-UP

PART OF 177-7517 PUMP GP-PISTON

SMCS-5070 **i00110729**

NOTE	REF NO	GRAPHIC REF	PART NUMBER	QTY	PART NAME 1 2 3 4 5 6 (PRODUCT LEVEL)	SEE PAGE
	1	1	**9T-4906**	1	RING-RETAINING	
	2	1	**6E-4219**	1	GUIDE	
M	3	1	**6V-5192**	4	BOLT-SOCKET HEAD (M8X1.25X30MM)	
	4	1	**6E-4218**	2	PLATE-SPACER	
	5	1	**6E-4217**	2	PLATE-LIMITER	
	6	1	**9T-8452**	9	PISTON	
	7	1	**9T-8445**	1	GUIDE	
	8	1	**9T-8446**	1	SPRING	
	9	1	**9T-8448**	1	BARREL	
	10	1	**9T-8450**	1	PLATE-RETAINING	

M-METRIC PART

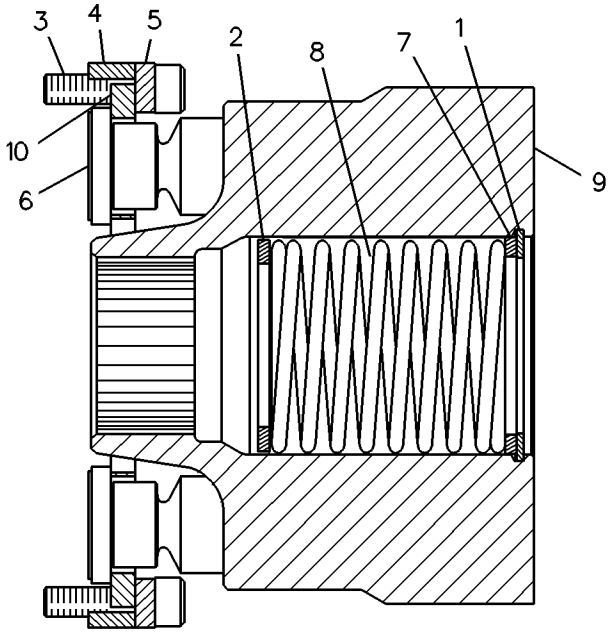

GRAPHIC #1 g00083062

194-9453 ROTATING GP-PUMP—HYDRAULIC FAN

S/N: ASE1-UP

PART OF 184-7448 PUMP GP-PISTON

SMCS-5070 **i01472512**

NOTE	REF NO	GRAPHIC REF	PART NUMBER	QTY	PART NAME 1 2 3 4 5 6 (PRODUCT LEVEL)	SEE PAGE
	1	1	**155-9112**	9	PISTON AS	
	2	1	**155-9136**	1	BARREL	
	3	1	**155-9115**	1	PLATE	
	4	1	**155-9116**	1	GUIDE-BALL	
	5	1	**155-9117**	1	SPRING	
	6	1	**194-9479**	3	PIN	
	7	1	**194-9480**	1	RING-RETAINING	
	8	1	**194-9481**	1	DISC-THRUST	
	9	1	**194-9478**	1	PLATE-PORT	

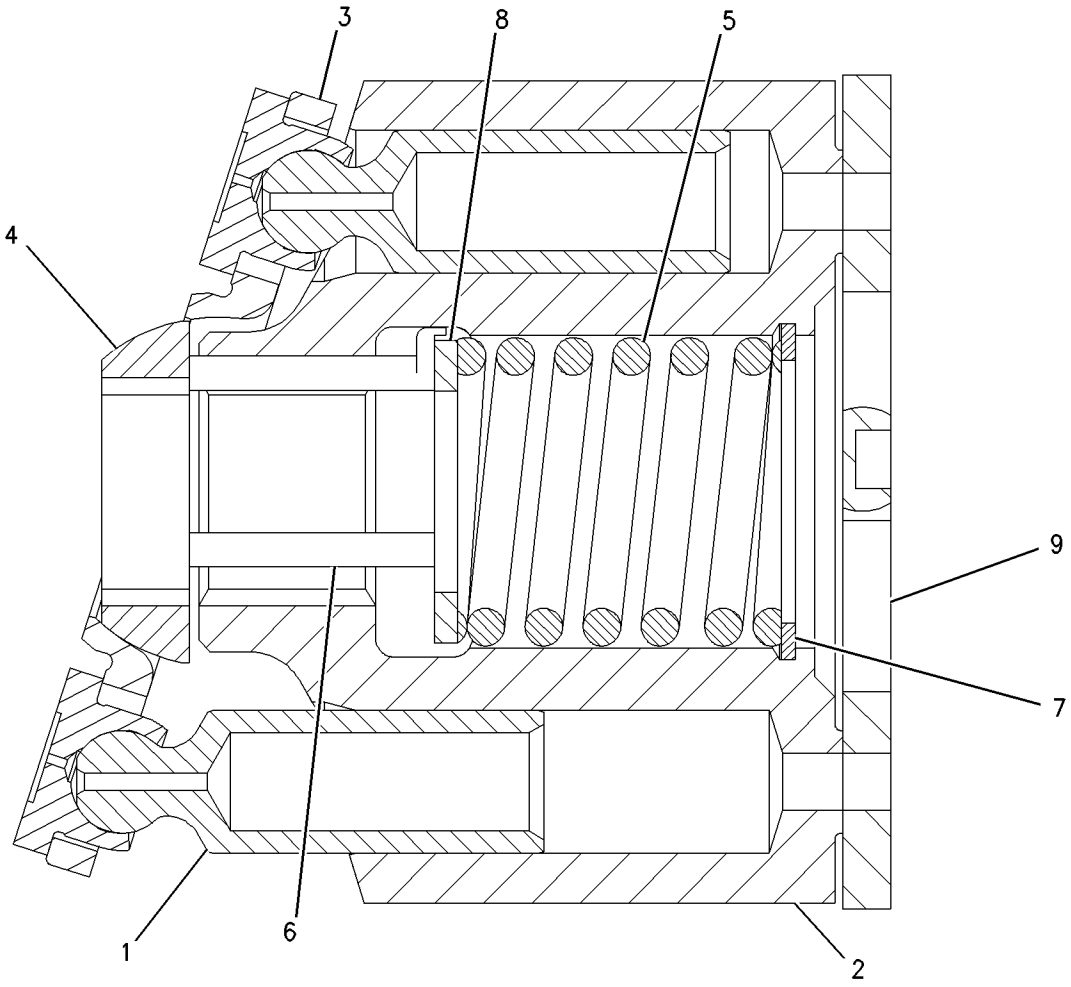

GRAPHIC #1 g00768329

HYDRAULIC SYSTEM

166-3334 STEERING AR-SECONDARY—EU

S/N: ASE1-UP

PART OF 211-1769, 211-1770 CONVERSION AR-CERTIFICATION

AN ATTACHMENT

SMCS-4300 **i01684549**

NOTE	PART NUMBER	QTY	PART NAME 1 2 3 4 5 6 (PRODUCT LEVEL)	SEE PAGE
Y	*166-3333*	1	LINES GP-SECONDARY STEERING	470
Y	*7I-4756*	1	PUMP & MTG GP-SECONDARY STEER	484
Y	*184-6044*	1	WIRING GP-SECONDARY STEERING	250

Y-SEPARATE ILLUSTRATION

HYDRAULIC SYSTEM

173-1011 SWIVEL GP

S/N: ASE1-UP

PART OF 188-7252 LINES GP-HYDRAULIC

SMCS-5060 **i01337016**

NOTE	REF NO	GRAPHIC REF	PART NUMBER	QTY	PART NAME 1 2 3 4 5 6 (PRODUCT LEVEL)	SEE PAGE
	1	1	**173-1009**	1	RETAINER	
	2	1	**8J-2331**	7	SEAL	
	3	1	**2H-3928**	7	SEAL-O-RING (107.54MM ID)	
	4	1	**173-1007**	2	SEAL	
	5	1	**9T-5603**	1	BODY	
	6	1	**4J-9964**	2	SEAL	
	7	1	**8T-4223**	4	WASHER-HARD (3MM THK)	
	8	1	**5P-2566**	6	BOLT (1/2-13X1.50 IN)	
	9	1	**3H-0107**	4	SEAL-O-RING (21.82MM ID)	
	10	1	**8J-0377**	1	COVER	
	11	1	**173-1008**	1	ROTOR	
B	12	1	**5J-1246**	6	SHIM (.13MM THK)	

B-USE AS REQUIRED

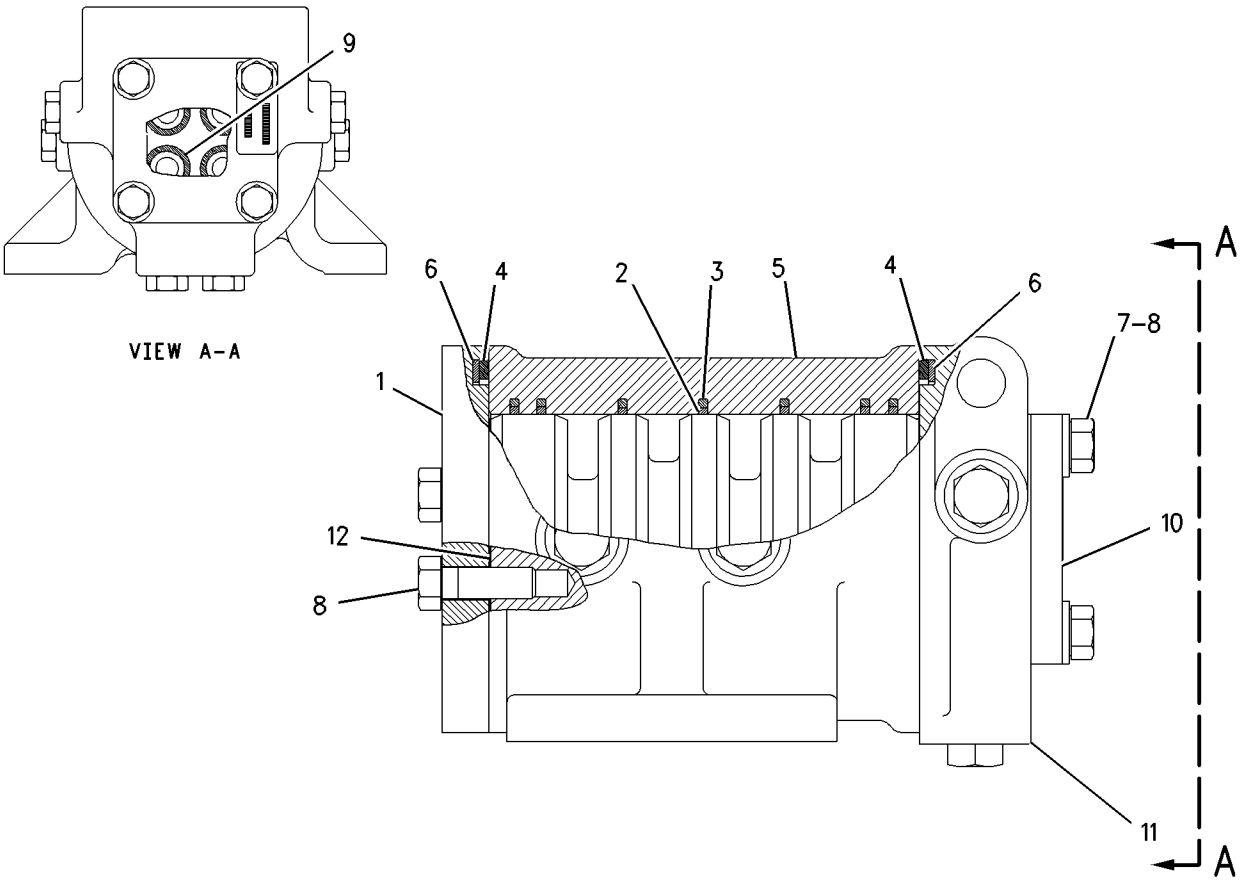

GRAPHIC #1 g00710910

HYDRAULIC SYSTEM

207-2409 TANK GP-HYDRAULIC

S/N: ASE1-UP

PART OF 162-5606 GENERAL AR

SMCS-4332, 5056, 5068 **i01672773**

NOTE	REF NO	GRAPHIC REF	PART NUMBER	QTY	PART NAME 1 2 3 4 5 6 (PRODUCT LEVEL)	SEE PAGE
	1	1	**5P-8502**	1	PADLOCK GP (HYDRAULIC TANK)	
		1	**5P-8500**	1	KEY	
		1	**8Y-6364**	1	SLEEVE	
Y	2	1	*207-2410*	1	TANK GP-HYDRAULIC	498
	3	1	**4D-7794**	3	CLIP	
	4	1	**8T-4121**	3	WASHER-HARD (11X21X2.5MM THK)	
M	5	1	**8T-4191**	3	BOLT (M10X1.5X16MM)	
	6	1	**8T-4223**	4	WASHER-HARD (13.5X25.5X3MM THK)	
	7	1	**8T-4835**	4	BOLT (1/2-13X2 IN)	

M-METRIC PART
Y-SEPARATE ILLUSTRATION

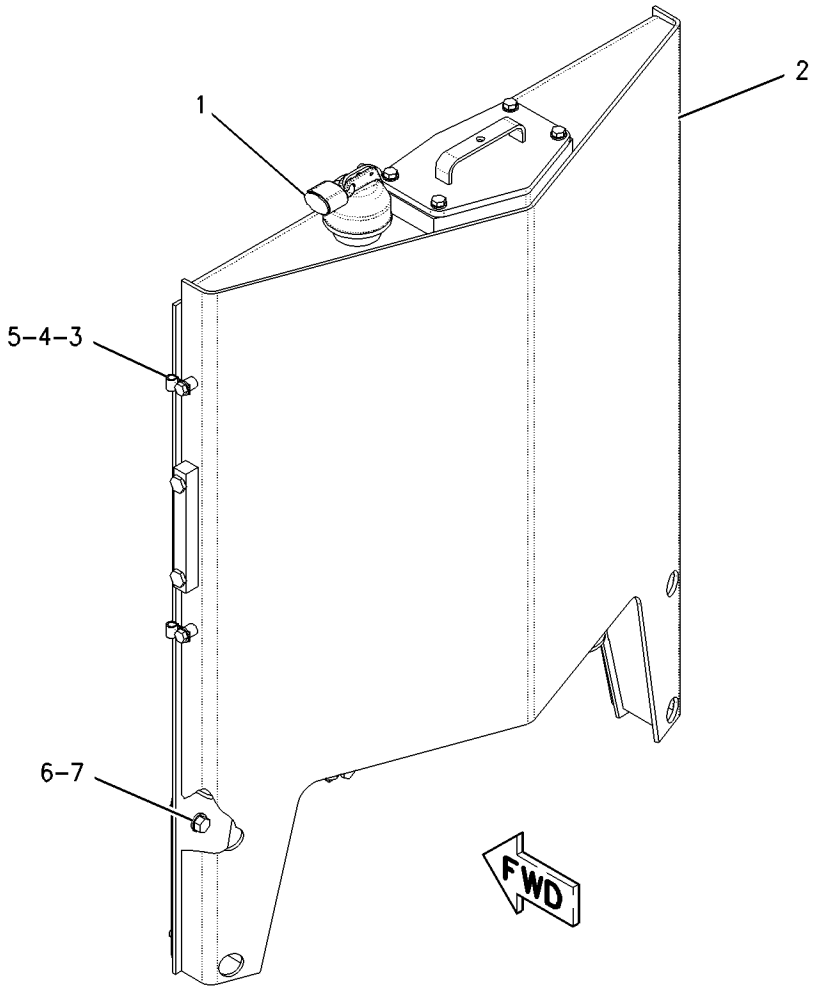

GRAPHIC #1 g00857379

MEMORANDA

HYDRAULIC SYSTEM

207-2410 TANK GP-HYDRAULIC

S/N: ASE1-UP

PART OF 207-2409 TANK GP-HYDRAULIC

SMCS-4332, 5056, 5068 **i01645491**

NOTE	REF NO	GRAPHIC REF	PART NUMBER	QTY	PART NAME 1 2 3 4 5 6 (PRODUCT LEVEL)	SEE PAGE
	1	1	**1L-4349**	1	SPRING	
	2	1	**1R-0774**	1	ELEMENT AS (HYDRAULIC REVERSE FLOW)	
	3	1	**2S-5100**	1	VALVE AS-NEEDLE (TANK DRAIN)	
	4	1	**3F-1547**	1	SEAL-O-RING	
	5	1	**3G-3498**	1	FLANGE	
	6	1	**4M-6921**	1	WASHER-SPRING	
	7	1	**5D-1911**	1	COVER-HYDRAULIC CAP	
	8	1	**6E-2266**	1	ROD-THREADED	
	9	1	**9J-1979**	1	RETAINER AS	
	10	1	**9J-1985**	1	TUBE AS	
	11	1	**9J-1988**	1	VALVE (FILTER BYPASS)	
	12	1	**9J-3047**	1	STRAINER (HYDRAULIC OIL FILLER)	
	13	1	**9M-7394**	1	LEVER (HYDRAULIC OIL FILLER CAP LOCK)	
	14	1	**141-9661**	1	SPACER (20X128X6MM THK)	
	15	1	**207-2411**	1	TANK AS-HYDRAULIC	
	16	1	**208-9611**	1	CAP AS	
		1	**3R-0451**	1	BOSS (3/8-16 THD)	
	17	1	**217-2661**	1	GAUGE-SIGHT (HYDRAULIC OIL)	
	18	1	**086-0507**	1	PIN	
	19	1	**1L-5072**	1	DOWEL	
	20	1	**2D-4202**	1	PLATE	
	21	1	**2J-7761**	1	RING-RETAINING	
	22	1	**2K-4973**	1	LOCKNUT (3/8-16 THD)	
	23	1	**3G-0361**	1	GASKET (HYDRAULIC OIL TANK FILLER CAP)	
	24	1	**5K-9107**	2	BOLT-LOCKING (3/8-16X0.75 IN)	
	25	1	**7D-1195**	1	SEAL-O-RING	
	26	1	**7H-1447**	1	CAP-FILLER (HYDRAULIC OIL TANK)	
	27	1	**8T-2275**	1	BALL	
	28	1	**8T-4121**	4	WASHER-HARD (11X21X2.5MM THK)	
M	29	1	**8T-4195**	4	BOLT (M10X1.5X30MM)	
	30	1	**9H-6454**	1	GASKET (HYDRAULIC OIL TANK FILLER CAP)	
	31	1	**9S-8752**	1	NUT-FULL (3/8-16 THD)	

M-METRIC PART

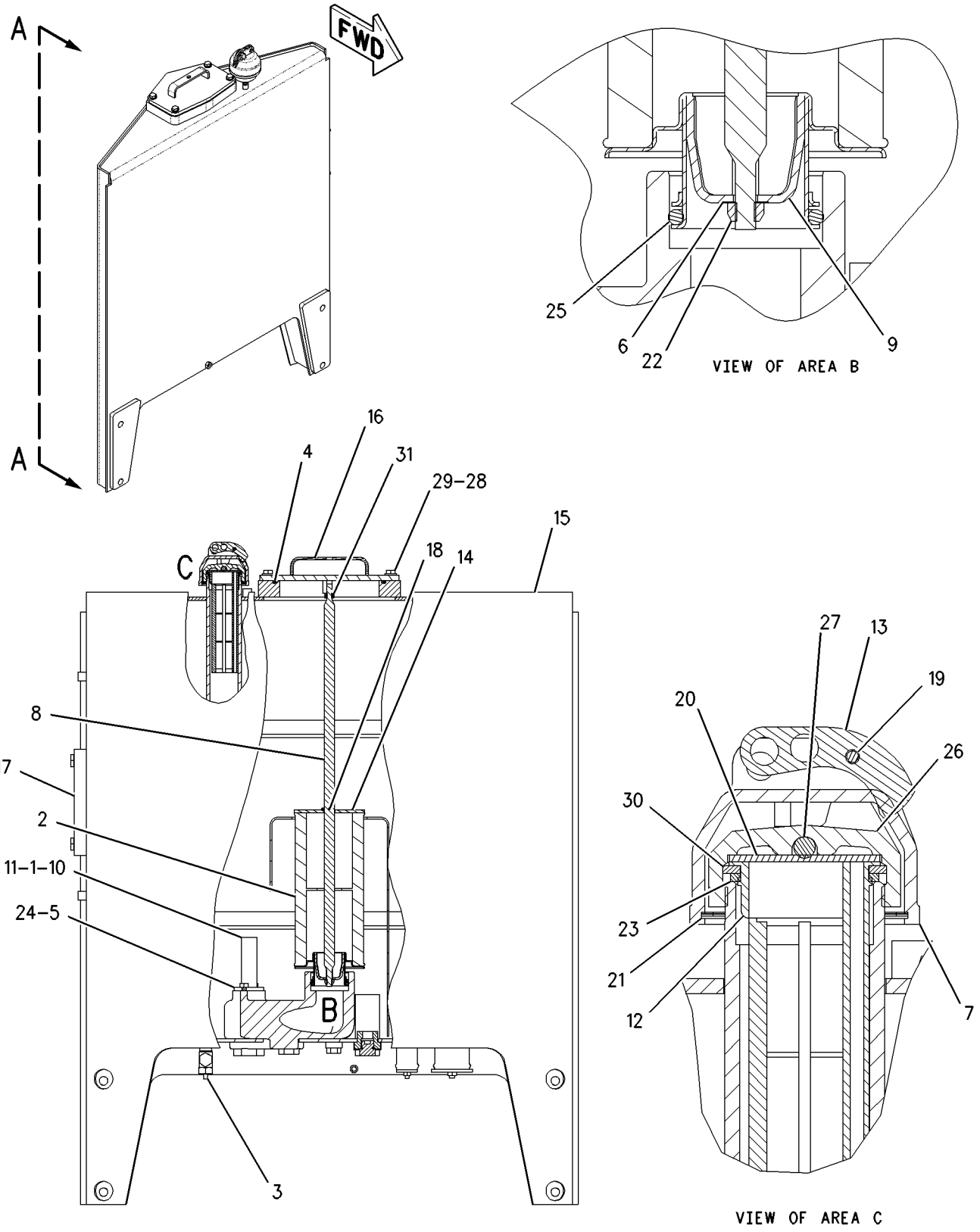

GRAPHIC #1 g00862073

HYDRAULIC SYSTEM

7I-4870 VALVE & LINKAGE GP–BANK 5 –LH–RH

S/N: ASE1-UP

PART OF 187-4949 CONTROL AR-HYDRAULIC

AN ATTACHMENT

SMCS-5051, 5063 **i01684553**

NOTE	REF NO	GRAPHIC REF	PART NUMBER	QTY	PART NAME 1 2 3 4 5 6 (PRODUCT LEVEL)	SEE PAGE
Y	1	1	**104-8675**	1	VALVE GP-BANK 5 (RH)	527
Y	2	1	**104-8654**	1	VALVE GP-BANK 5 (LH)	526
	3	1	**8X-5499**	2	RETAINER	
	4	1	**101-2457**	2	LEVER	
	5	1	**8D-5634**	2	LEVER	
	6	1	**4L-6459**	1	BOLT (3/8-16X2.5 IN)	
	7	1	**8W-0456**	1	SHAFT-GOVERNOR CONTROL	
	8	1	**8X-4277**	10	ROD AS	
					(EACH INCLUDES)	
		1	**6V-8186**	2	NUT-FULL (5/16-24 THD)	
		1	**7H-3641**	2	END-ROD (5/16-24 THD)	
		1	**8X-4276**	1	ROD	
	9	1	**8D-5633**	2	LEVER	
	10	1	**101-2458**	2	LEVER	
	11	1	**137-4515**	2	BUSHING	
	12	1	**8D-5640**	12	BEARING	
B	13	1	**8D-5636**	4	SHIM (.254MM THK)	
B	14	1	**8D-5637**	4	SHIM (.762MM THK)	
	15	1	**6L-1962**	10	NUT-JAM (3/8-24THD)	
	16	1	**8T-9043**	20	BOLT (5/16-18X.875 IN)	
	17	1	**3F-9556**	20	LOCKWASHER	
	18	1	**9B-7237**	1	BOLT (3/8-16X1.25 IN)	
	19	1	**8D-5641**	10	BEARING	
	20	1	**2G-6757**	1	KNOB-BLADE LIFT	
M	21	1	**8T-4136**	4	BOLT (M10X1.5X25MM)	
	22	1	**2G-6749**	1	KNOB-SIDESHIFT	
	23	1	**2G-6747**	1	KNOB-BLADE TIP	
	24	1	**8D-5632**	2	LEVER	
	25	1	**2G-6751**	1	KNOB-CIRCLE DRIVE	
	26	1	**2G-6748**	1	KNOB-BLADE LIFT	
	27	1	**2G-6756**	1	KNOB-WHEEL LEAN	
	28	1	**2G-6752**	1	KNOB-ARTICULATION	
	29	1	**2G-6755**	1	KNOB-CENTERSHIFT	
	30	1	**5P-1075**	2	WASHER-HARD (10.2X22.5X3MM THK)	
	31	1	**9M-1853**	6	MOUNTING	
	32	1	**5P-1076**	6	WASHER-HARD (13.5X30X4MM THK)	
	33	1	**104-7740**	1	PLATE AS-LH	
		1	**1F-0748**	2	NUT-WELD (1/2-13 THD)	
	34	1	**104-7419**	1	PLATE AS-RH	
		1	**1F-0748**	2	NUT-WELD (1/2-13 THD)	
	35	1	**104-7429**	2	PLATE	
	36	1	**137-4516**	1	SHAFT	
	37	1	**2G-6740**	1	KNOB-RIPPER	
	38	1	**2G-6754**	1	KNOB (PLOW/DOZER LIFT)	
	39	1	**6V-8188**	2	NUT (1/2-13 THD)	
M	40	1	**8T-4195**	4	BOLT (M10X1.5X30MM)	
	41	1	**8F-6437**	6	WASHER (13.5X50.8X4.76MM THK)	
	42	1	**5P-2424**	6	BOLT (1/2-13X2.25 IN)	
	43	1	**6B-0933**	4	SPACER (10.31X19.05X6.35MM THK)	
	44	1	**8T-4121**	8	WASHER-HARD (11X21X2.5MM THK)	

B-USE AS REQUIRED
M-METRIC PART
Y-SEPARATE ILLUSTRATION

7I-4870 **VALVE & LINKAGE GP** *(contd.)* **i01684553**

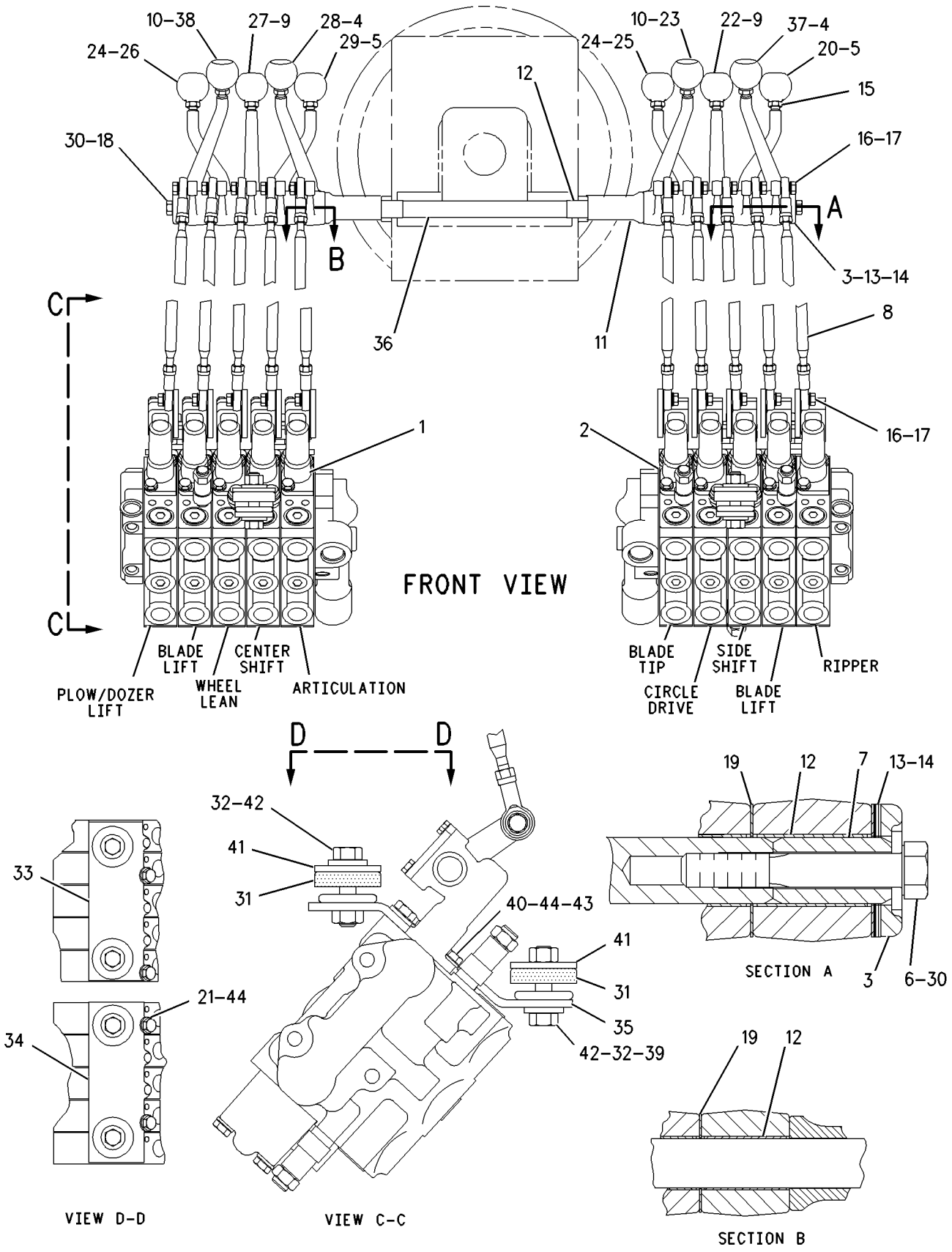

GRAPHIC #1 g00858641

HYDRAULIC SYSTEM

7I-4871 VALVE & LINKAGE GP—BANK 4 RH—BANK 5 LH

S/N: ASE1-UP
PART OF 166-3407 CONTROL AR-HYDRAULIC
AN ATTACHMENT

SMCS-5051, 5063 **i01684555**

NOTE	REF NO	GRAPHIC REF	PART NUMBER	QTY	PART NAME 1 2 3 4 5 6 (PRODUCT LEVEL)	SEE PAGE
Y	1	1	**104-8674**	1	VALVE GP-BANK 4 (RH)	523
Y	2	1	**104-8654**	1	VALVE GP-BANK 5 (LH)	526
	3	1	**8X-5499**	2	RETAINER	
	4	1	**101-2457**	2	LEVER	
	5	1	**8D-5634**	2	LEVER	
	6	1	**8X-4277**	9	ROD AS	
					(EACH INCLUDES)	
		1	**6V-8186**	2	NUT-FULL (5/16-24 THD)	
		1	**7H-3641**	2	END-ROD (5/16-24 THD)	
		1	**8X-4276**	1	ROD	
	7	1	**8D-5633**	2	LEVER	
	8	1	**101-2458**	1	LEVER	
	9	1	**137-4515**	2	BUSHING	
	10	1	**8D-5640**	11	BEARING	
B	11	1	**8D-5636**	4	SHIM (.254MM THK)	
B	12	1	**8D-5637**	4	SHIM (.762MM THK)	
	13	1	**6L-1962**	9	NUT-JAM (3/8-24THD)	
	14	1	**8T-9043**	18	BOLT (5/16-18X.875 IN)	
	15	1	**3F-9556**	18	LOCKWASHER	
	16	1	**9B-7237**	2	BOLT (3/8-16X1.25 IN)	
	17	1	**8D-5641**	9	BEARING	
	18	1	**2G-6757**	1	KNOB-BLADE LIFT	
M	19	1	**8T-4136**	4	BOLT (M10X1.5X25MM)	
	20	1	**2G-6749**	1	KNOB-SIDESHIFT	
	21	1	**2G-6747**	1	KNOB-BLADE TIP	
	22	1	**8D-5632**	2	LEVER	
	23	1	**2G-6751**	1	KNOB-CIRCLE DRIVE	
	24	1	**2G-6748**	1	KNOB-BLADE LIFT	
	25	1	**2G-6756**	1	KNOB-WHEEL LEAN	
	26	1	**2G-6752**	1	KNOB-ARTICULATION	
	27	1	**2G-6755**	1	KNOB-CENTERSHIFT	
	28	1	**5P-1075**	2	WASHER-HARD (10.2X22.5X3MM THK)	
	29	1	**9M-1853**	6	MOUNTING	
	30	1	**5P-1076**	6	WASHER-HARD (13.5X30X4MM THK)	
	31	1	**104-7740**	1	PLATE AS-LH	
		1	**1F-0748**	4	NUT-WELD (1/2-13 THD)	
	32	1	**104-7419**	1	PLATE AS-RH	
		1	**1F-0748**	4	NUT-WELD (1/2-13 THD)	
	33	1	**104-7429**	2	PLATE	
	34	1	**137-4516**	1	SHAFT	
	35	1	**2G-6740**	1	KNOB-RIPPER	
	36	1	**6B-0933**	4	SPACER (10.31X19.05X6.35MM THK)	
	37	1	**5P-2424**	6	BOLT (1/2-13X2.25 IN)	
	38	1	**6V-8188**	2	NUT (1/2-13 THD)	
M	39	1	**8T-4195**	4	BOLT (M10X1.5X30MM)	
	40	1	**8F-6437**	6	WASHER (13.5X50.8X4.76MM THK)	
	41	1	**8T-4121**	8	WASHER-HARD (11X21X2.5MM THK)	

B-USE AS REQUIRED
M-METRIC PART
Y-SEPARATE ILLUSTRATION

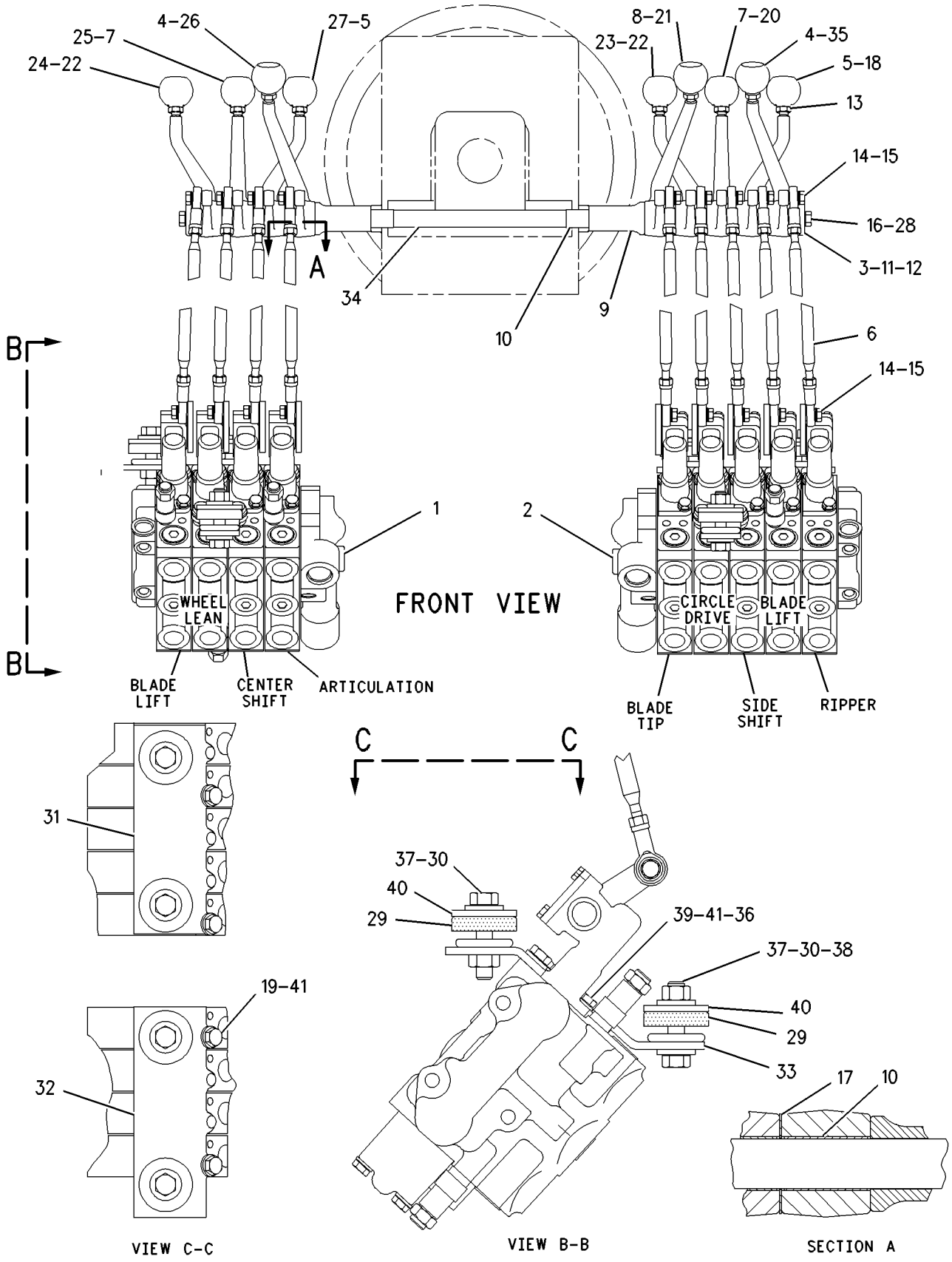

GRAPHIC #1 g00864271

HYDRAULIC SYSTEM

8X-5490 VALVE & LINKAGE GP–BANK 4–RH, LH

S/N: ASE1-UP

PART OF 162-5606 GENERAL AR

SMCS-5051, 5063 **i01672782**

NOTE	REF NO	GRAPHIC REF	PART NUMBER	QTY	PART NAME 1 2 3 4 5 6 (PRODUCT LEVEL)	SEE PAGE
Y	1	1	**104-8674**	1	VALVE GP-BANK 4 (RH)	523
Y	2	1	**104-8653**	1	VALVE GP-BANK 4 (LH)	522
	3	1	**8X-5498**	2	RETAINER	
	4	1	**101-2457**	1	LEVER	
	5	1	**8D-5634**	2	LEVER	
	6	1	**8F-6437**	6	WASHER (13.5X50.8X4.76MM THK)	
M	7	1	**8T-4195**	4	BOLT (M10X1.5X30MM)	
	8	1	**8X-4277**	8	ROD AS	
		1	**6V-8186**	2	NUT-FULL (5/16-24 THD)	
		1	**7H-3641**	2	END-ROD (5/16-24 THD)	
	9	1	**8D-5633**	2	LEVER	
	10	1	**101-2458**	1	LEVER	
	11	1	**137-4515**	2	BUSHING	
	12	1	**8D-5640**	10	BEARING	
B	13	1	**8D-5636**	4	SHIM (.254MM THK)	
B	14	1	**8D-5637**	4	SHIM (.762MM THK)	
	15	1	**6L-1962**	8	NUT-JAM (3/8-24THD)	
	16	1	**8T-9043**	16	BOLT (5/16-18X.875 IN)	
	17	1	**3F-9556**	16	LOCKWASHER	
	18	1	**9B-7237**	2	BOLT (3/8-16X1.25 IN)	
	19	1	**8D-5641**	8	BEARING	
	20	1	**2G-6757**	1	KNOB-BLADE LIFT	
M	21	1	**8T-4136**	4	BOLT (M10X1.5X25MM)	
	22	1	**2G-6749**	1	KNOB-SIDESHIFT	
	23	1	**2G-6747**	1	KNOB-BLADE TIP	
	24	1	**8D-5632**	2	LEVER	
	25	1	**2G-6751**	1	KNOB-CIRCLE DRIVE	
	26	1	**2G-6748**	1	KNOB-BLADE LIFT	
	27	1	**2G-6756**	1	KNOB-WHEEL LEAN	
	28	1	**2G-6752**	1	KNOB-ARTICULATION	
	29	1	**2G-6755**	1	KNOB-CENTERSHIFT	
	30	1	**5P-1075**	2	WASHER-HARD (10.2X22.5X3MM THK)	
	31	1	**9M-1853**	6	MOUNTING	
	32	1	**6V-8188**	2	NUT (1/2-13 THD)	
	33	1	**5P-2424**	6	BOLT (1/2-13X2.25 IN)	
	34	1	**6B-0933**	4	SPACER (10.31X19.05X6.35MM THK)	
	35	1	**8T-4121**	8	WASHER-HARD (11X21X2.5MM THK)	
	36	1	**5P-1076**	6	WASHER-HARD (13.5X30X4MM THK)	
	37	1	**137-4516**	1	SHAFT	
	38	1	**104-7740**	1	PLATE AS-LH	
		1	**1F-0748**	4	NUT-WELD (1/2-13 THD)	
	39	1	**104-7419**	1	PLATE AS-RH	
		1	**1F-0748**	4	NUT-WELD (1/2-13 THD)	
	40	1	**104-7429**	2	PLATE	

B-USE AS REQUIRED
M-METRIC PART
Y-SEPARATE ILLUSTRATION

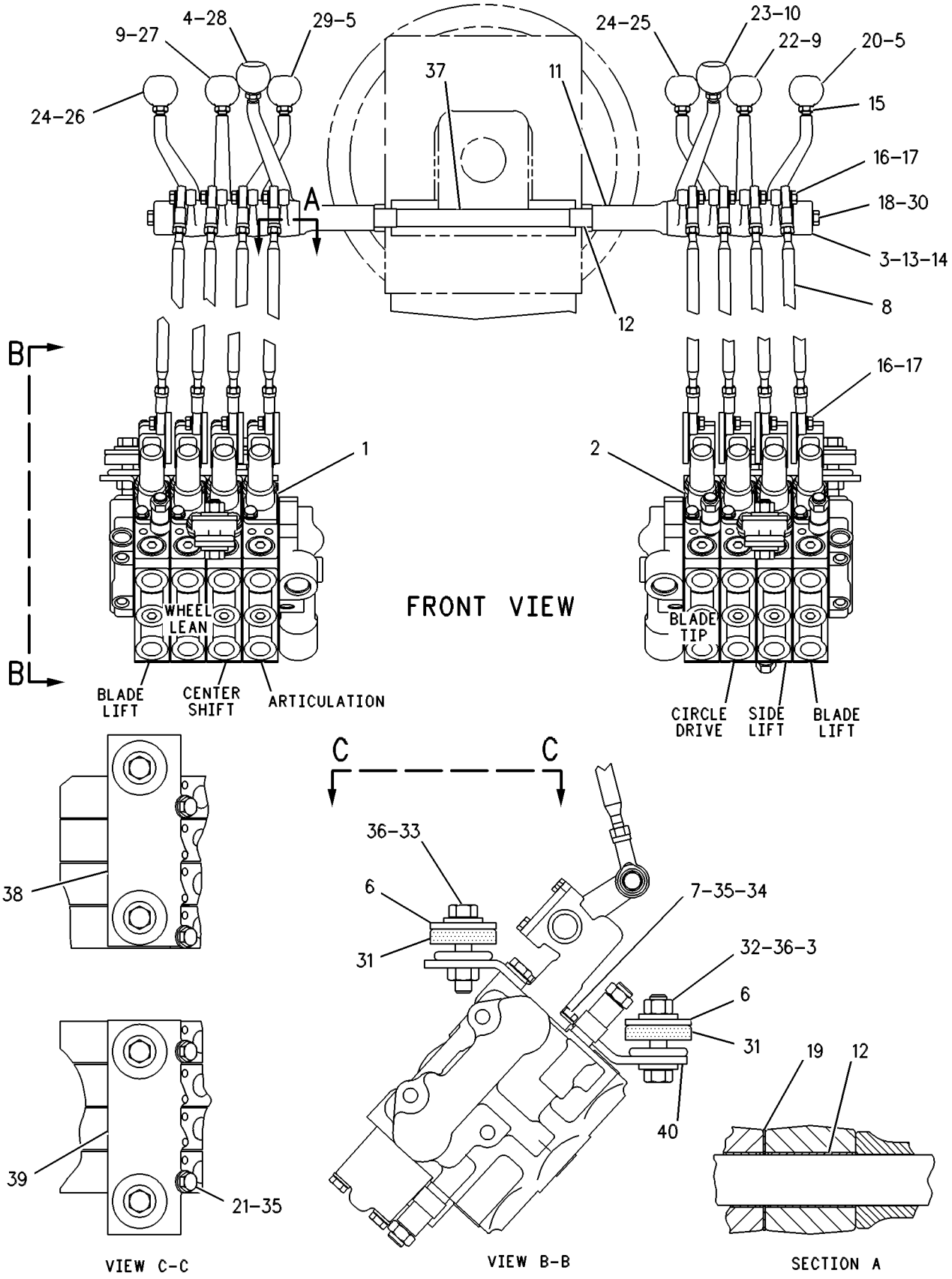

GRAPHIC #1 g00109710

HYDRAULIC SYSTEM

107-9662 VALVE & LINKAGE GP—BANK 5 RH—BANK 7 LH—WING TILT

S/N: ASE1-UP

PART OF 187-4952 CONTROL AR-HYDRAULIC

AN ATTACHMENT

SMCS-5051, 5063 **i01684557**

NOTE	REF NO	GRAPHIC REF	PART NUMBER	QTY	PART NAME 1 2 3 4 5 6 (PRODUCT LEVEL)	SEE PAGE
Y	1	1	**104-8675**	1	VALVE GP-BANK 5 (RH)	527
Y	2	1	**104-8656**	1	VALVE GP-BANK 7 (LH)	531
	3	1	**8X-5499**	2	RETAINER	
	4	1	**101-2457**	1	LEVER (ARTICULATION)	
	5	1	**8D-5634**	1	LEVER (CENTER SHIFT)	
	6	1	**2G-7107**	1	KNOB-WING LIFT	
	7	1	**8F-6437**	6	WASHER (13.5X50.8X4.76MM THK)	
	8	1	**8X-4276**	12	ROD	
		1	**6V-8186**	24	NUT-FULL (5/16-24 THD)	
		1	**7H-3641**	24	END-ROD (5/16-24 THD)	
	9	1	**8D-5633**	1	LEVER (WHEEL LEAN)	
	10	1	**101-2458**	1	LEVER (BLADE TIP)	
	11	1	**137-4515**	2	BUSHING	
	12	1	**8D-5640**	14	BEARING	
B	13	1	**8D-5636**	4	SHIM (.254MM THK)	
B	14	1	**8D-5637**	4	SHIM (.762MM THK)	
	15	1	**6L-1962**	12	NUT-JAM (3/8-24THD)	
	16	1	**8T-9043**	24	BOLT (5/16-18X.875 IN)	
	17	1	**3F-9556**	24	LOCKWASHER	
	18	1	**4L-6459**	1	BOLT (3/8-16X2.5 IN)	
	19	1	**8D-5641**	12	BEARING	
	20	1	**2G-6757**	1	KNOB-BLADE LIFT	
M	21	1	**8T-4136**	4	BOLT (M10X1.5X25MM)	
	22	1	**2G-6749**	1	KNOB-SIDESHIFT	
	23	1	**2G-6747**	1	KNOB-BLADE TIP	
	24	1	**8D-5632**	1	LEVER (CIRCLE DRIVE)	
	25	1	**2G-6751**	1	KNOB-CIRCLE DRIVE	
	26	1	**2G-6748**	1	KNOB-BLADE LIFT	
	27	1	**2G-6756**	1	KNOB-WHEEL LEAN	
	28	1	**2G-6752**	1	KNOB-ARTICULATION	
	29	1	**2G-6755**	1	KNOB-CENTERSHIFT	
	30	1	**5P-1075**	2	WASHER-HARD (10.2X22.5X3MM THK)	
	31	1	**9M-1853**	6	MOUNTING	
	32	1	**8W-0456**	3	SHAFT-GOVERNOR CONTROL	
	33	1	**7X-0291**	1	BOLT (3/8-16X3.75 IN)	
	34	1	**2G-7108**	1	KNOB-WING TILT	
	35	1	**103-1597**	1	LEVER (WING TILT)	
	36	1	**5P-1076**	6	WASHER-HARD (13.5X30X4MM THK)	
	37	1	**2G-6740**	1	KNOB-RIPPER	
	38	1	**104-7740**	1	PLATE AS-LH	
		1	**1F-0748**	2	NUT-WELD (1/2-13 THD)	
	39	1	**104-7419**	1	PLATE AS-RH	
		1	**1F-0748**	2	NUT-WELD (1/2-13 THD)	
	40	1	**2G-6754**	1	KNOB (PLOW/DOZER LIFT)	
M	41	1	**8T-4195**	4	BOLT (M10X1.5X30MM)	
	42	1	**6V-8188**	2	NUT (1/2-13 THD)	
	43	1	**104-7429**	2	PLATE	
	44	1	**137-4516**	1	SHAFT	
	45	1	**8T-4121**	8	WASHER-HARD (11X21X2.5MM THK)	
	46	1	**6B-0933**	4	SPACER (10.31X19.05X6.35MM THK)	
	47	1	**5P-2424**	6	BOLT (1/2-13X2.25 IN)	
	48	1	**8D-5633**	1	LEVER (SIDESHIFT)	
	49	1	**101-2458**	1	LEVER (PLOW DOZER)	
	50	1	**101-2458**	1	LEVER (WING LIFT)	
	51	1	**101-2457**	1	LEVER (RIPPER)	

107-9662 **VALVE & LINKAGE GP** ***(contd.)*** **i01684557**

NOTE	REF NO	GRAPHIC REF	PART NUMBER	QTY	PART NAME 1 2 3 4 5 6 (PRODUCT LEVEL)	SEE PAGE
	52	1	**8D-5634**	1	LEVER (LH)(BLADE LIFT)	
	53	1	**8D-5632**	1	LEVER (RH)(BLADE LIFT)	

B-USE AS REQUIRED
M-METRIC PART
Y-SEPARATE ILLUSTRATION

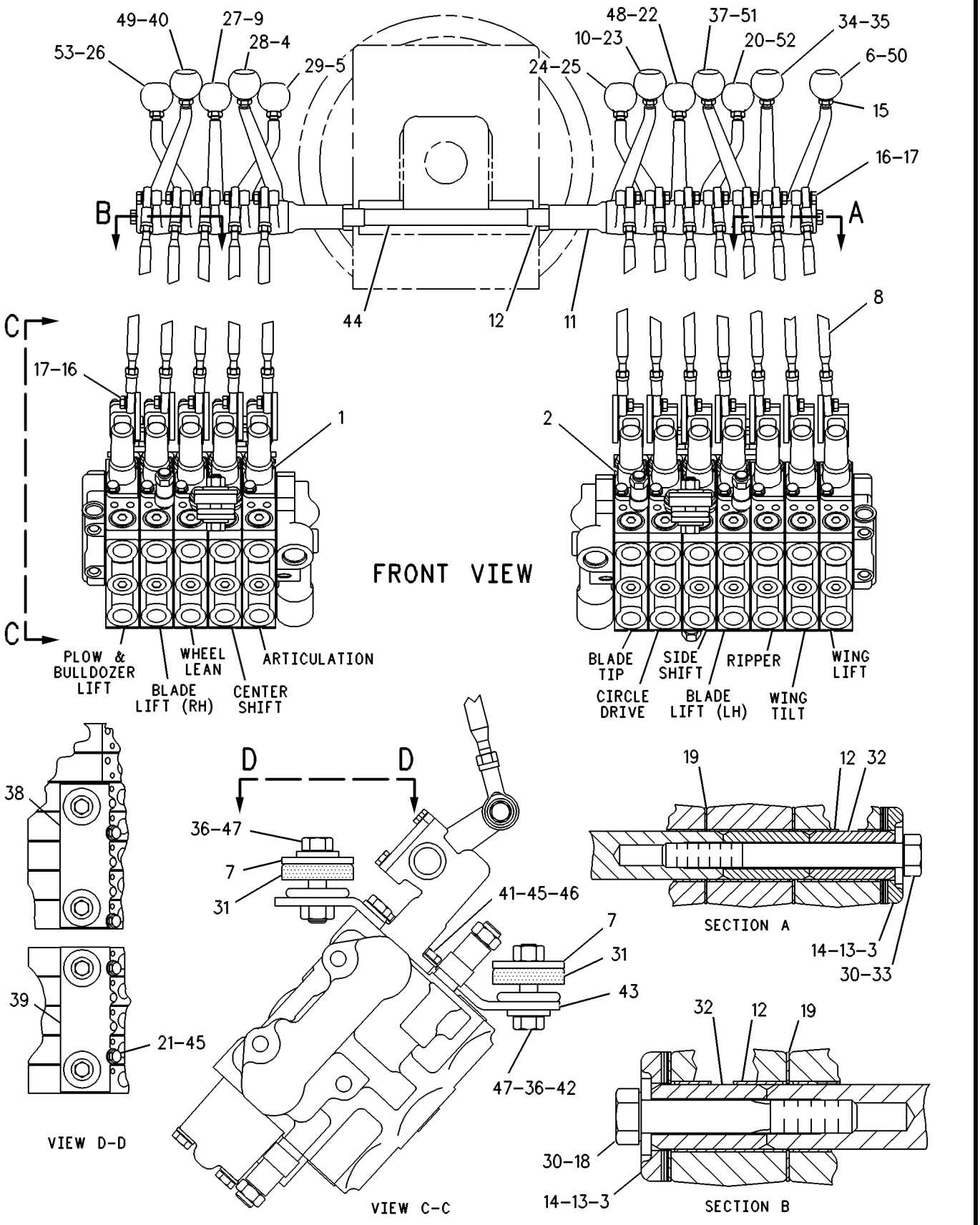

GRAPHIC #1

g00109751

MEMORANDA

HYDRAULIC SYSTEM

124-4196 VALVE & LINKAGE GP–BANK 4–RH–LH–EU

S/N: ASE1-UP
AN ATTACHMENT

SMCS-5051, 5063 **i01663619**

NOTE	REF NO	GRAPHIC REF	PART NUMBER	QTY	PART NAME 1 2 3 4 5 6 (PRODUCT LEVEL)	SEE PAGE
YC	1	1	**130-3128**	1	VALVE GP-BANK 4 (RH)	525
YC	2	1	**130-3125**	1	VALVE GP-BANK 4 (LH)	524
	3	1	**8X-5498**	2	RETAINER	
	4	1	**101-2457**	1	LEVER (ARTICULATION)	
	5	1	**8D-5634**	1	LEVER (CENTER SHIFT)	
	6	1	**7H-3641**	16	END-ROD (5/16-24 THD)	
		1	**6V-8186**	16	NUT-FULL (5/16-24 THD)	
		1	**8X-4276**	8	ROD	
	7	1	**8D-5633**	1	LEVER (SIDE SHIFT)	
	8	1	**101-2458**	1	LEVER (BLADE TIP)	
	9	1	**137-4515**	2	BUSHING	
	10	1	**8D-5640**	10	BEARING	
B	11	1	**8D-5636**	4	SHIM (.254MM THK)	
B	12	1	**8D-5637**	4	SHIM (.762MM THK)	
	13	1	**6L-1962**	8	NUT-JAM (3/8-24THD)	
	14	1	**8T-9043**	16	BOLT (5/16-18X.875 IN)	
	15	1	**3F-9556**	16	LOCKWASHER	
	16	1	**9B-7237**	2	BOLT (3/8-16X1.25 IN)	
	17	1	**8D-5641**	8	BEARING	
	18	1	**2G-6757**	1	KNOB-BLADE LIFT	
M	19	1	**8T-4136**	4	BOLT (M10X1.5X25MM)	
	20	1	**2G-6749**	1	KNOB-SIDESHIFT	
	21	1	**2G-6747**	1	KNOB-BLADE TIP	
	22	1	**8D-5632**	1	LEVER (CIRCLE DRIVE)	
	23	1	**2G-6751**	1	KNOB-CIRCLE DRIVE	
	24	1	**2G-6748**	1	KNOB-BLADE LIFT	
	25	1	**2G-6756**	1	KNOB-WHEEL LEAN	
	26	1	**2G-6752**	1	KNOB-ARTICULATION	
	27	1	**2G-6755**	1	KNOB-CENTERSHIFT	
	28	1	**5P-1075**	2	WASHER-HARD (10.2X22.5X3MM THK)	
	29	1	**9M-1853**	6	MOUNTING	
	30	1	**5P-1076**	6	WASHER-HARD (13.5X30X4MM THK)	
	31	1	**104-7740**	1	PLATE AS-LH	
	32	1	**104-7419**	1	PLATE AS-RH	
					(EACH PLATE AS INCLUDES)	
		1	**1F-0748**	2	NUT-WELD (1/2-13 THD)	
	33	1	**104-7429**	2	PLATE	
	34	1	**137-4516**	1	SHAFT	
	35	1	**8T-4121**	8	WASHER-HARD (11X21X2.5MM THK)	
	36	1	**6B-0933**	4	SPACER (10.31X19.05X6.35MM THK)	
	37	1	**5P-2424**	6	BOLT (1/2-13X2.25 IN)	
	38	1	**6V-8188**	2	NUT (1/2-13 THD)	
M	39	1	**8T-4195**	4	BOLT (M10X1.5X30MM)	
	40	1	**8F-6437**	6	WASHER (13.5X50.8X4.76MM THK)	
	41	1	**8D-5633**	1	LEVER (SIDE SHIFT)	
	42	1	**8D-5634**	1	LEVER (BLADE LIFT-LH)	
	43	1	**8D-5632**	1	LEVER (BLADE LIFT-RH)	

B-USE AS REQUIRED
C-CHANGE FROM PREVIOUS TYPE
M-METRIC PART
Y-SEPARATE ILLUSTRATION

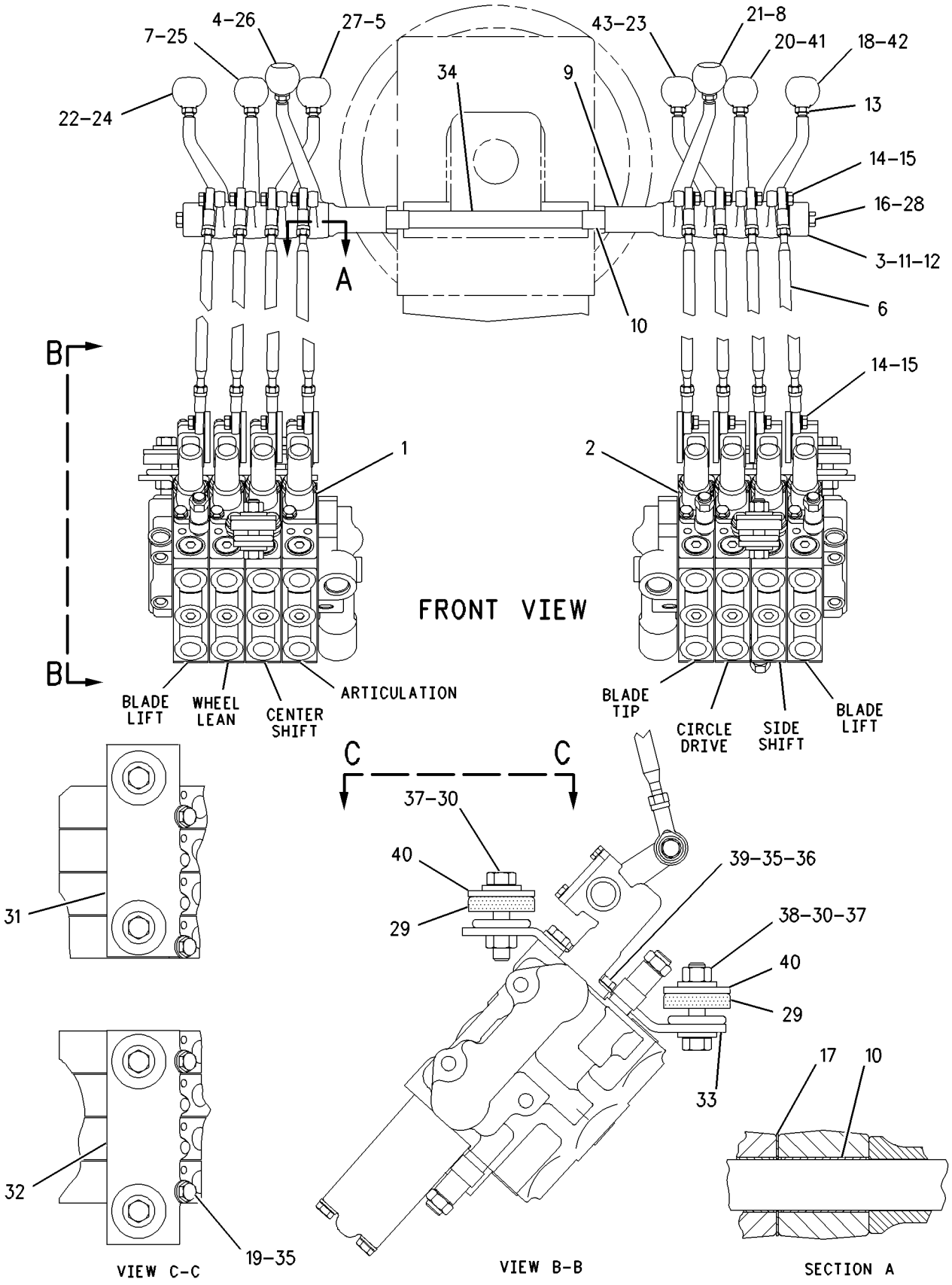

GRAPHIC #1 g00858902

HYDRAULIC SYSTEM

124-4197 VALVE & LINKAGE GP—BANK 4 RH—BANK 5 LH—EU

S/N: ASE1-UP

PART OF 187-4947 CONTROL AR-HYDRAULIC

AN ATTACHMENT

SMCS-5051, 5063 **i01684559**

NOTE	REF NO	GRAPHIC REF	PART NUMBER	QTY	PART NAME 1 2 3 4 5 6 (PRODUCT LEVEL)	SEE PAGE
YC	1	1	**130-3128**	1	VALVE GP-BANK 4 (RH)	525
YC	2	1	**130-3126**	1	VALVE GP-BANK 5 (LH)	528
	3	1	**8X-5499**	2	RETAINER	
	4	1	**101-2457**	1	LEVER (RIPPER)	
	5	1	**8D-5634**	1	LEVER (BLADE LIFT)	
	6	1	**6V-8186**	18	NUT-FULL (5/16-24 THD)	
	7	1	**7H-3641**	18	END-ROD (5/16-24 THD)	
	8	1	**8X-4276**	9	ROD	
	9	1	**137-4515**	2	BUSHING	
	10	1	**8D-5640**	11	BEARING	
B	11	1	**8D-5636**	4	SHIM (.254MM THK)	
B	12	1	**8D-5637**	4	SHIM (.762MM THK)	
	13	1	**6L-1962**	9	NUT-JAM (3/8-24THD)	
	14	1	**8T-9043**	18	BOLT (5/16-18X.875 IN)	
	15	1	**3F-9556**	18	LOCKWASHER	
	16	1	**9B-7237**	2	BOLT (3/8-16X1.25 IN)	
	17	1	**8D-5641**	9	BEARING	
	18	1	**2G-6757**	1	KNOB-BLADE LIFT	
M	19	1	**8T-4136**	4	BOLT (M10X1.5X25MM)	
	20	1	**2G-6749**	1	KNOB-SIDESHIFT	
	21	1	**2G-6747**	1	KNOB-BLADE TIP	
	22	1	**8D-5632**	1	LEVER (CIRCLE DRIVE)	
	23	1	**2G-6751**	1	KNOB-CIRCLE DRIVE	
	24	1	**2G-6748**	1	KNOB-BLADE LIFT	
	25	1	**2G-6756**	1	KNOB-WHEEL LEAN	
	26	1	**2G-6752**	1	KNOB-ARTICULATION	
	27	1	**2G-6755**	1	KNOB-CENTERSHIFT	
	28	1	**5P-1075**	2	WASHER-HARD (10.2X22.5X3MM THK)	
	29	1	**9M-1853**	6	MOUNTING	
	30	1	**5P-1076**	6	WASHER-HARD (13.5X30X4MM THK)	
	31	1	**104-7740**	1	PLATE AS-LH	
	32	1	**104-7419**	1	PLATE AS-RH	
					(EA PLATE AS INCLUDES)	
		1	**1F-0748**	2	NUT-WELD (1/2-13 THD)	
	33	1	**104-7429**	2	PLATE	
	34	1	**137-4516**	1	SHAFT	
	35	1	**2G-6740**	1	KNOB-RIPPER	
	36	1	**6B-0933**	4	SPACER (10.31X19.05X6.35MM THK)	
	37	1	**5P-2424**	6	BOLT (1/2-13X2.25 IN)	
	38	1	**6V-8188**	2	NUT (1/2-13 THD)	
M	39	1	**8T-4195**	4	BOLT (M10X1.5X30MM)	
	40	1	**8F-6437**	6	WASHER (13.5X50.8X4.76MM THK)	
	41	1	**8T-4121**	8	WASHER-HARD (11X21X2.5MM THK)	
	42	1	**101-2457**	1	LEVER (ARTICULATION)	
	43	1	**8D-5634**	1	LEVER (CENTER SHIFT)	
	44	1	**8D-5633**	1	LEVER (WHEEL LEAN)	
	45	1	**8D-5632**	1	LEVER (BLADE LIFT)	
	46	1	**8D-5633**	1	LEVER (SIDE SHIFT)	
	47	1	**101-2458**	1	LEVER (BLADE TIP)	

B-USE AS REQUIRED
C-CHANGE FROM PREVIOUS TYPE
M-METRIC PART
Y-SEPARATE ILLUSTRATION

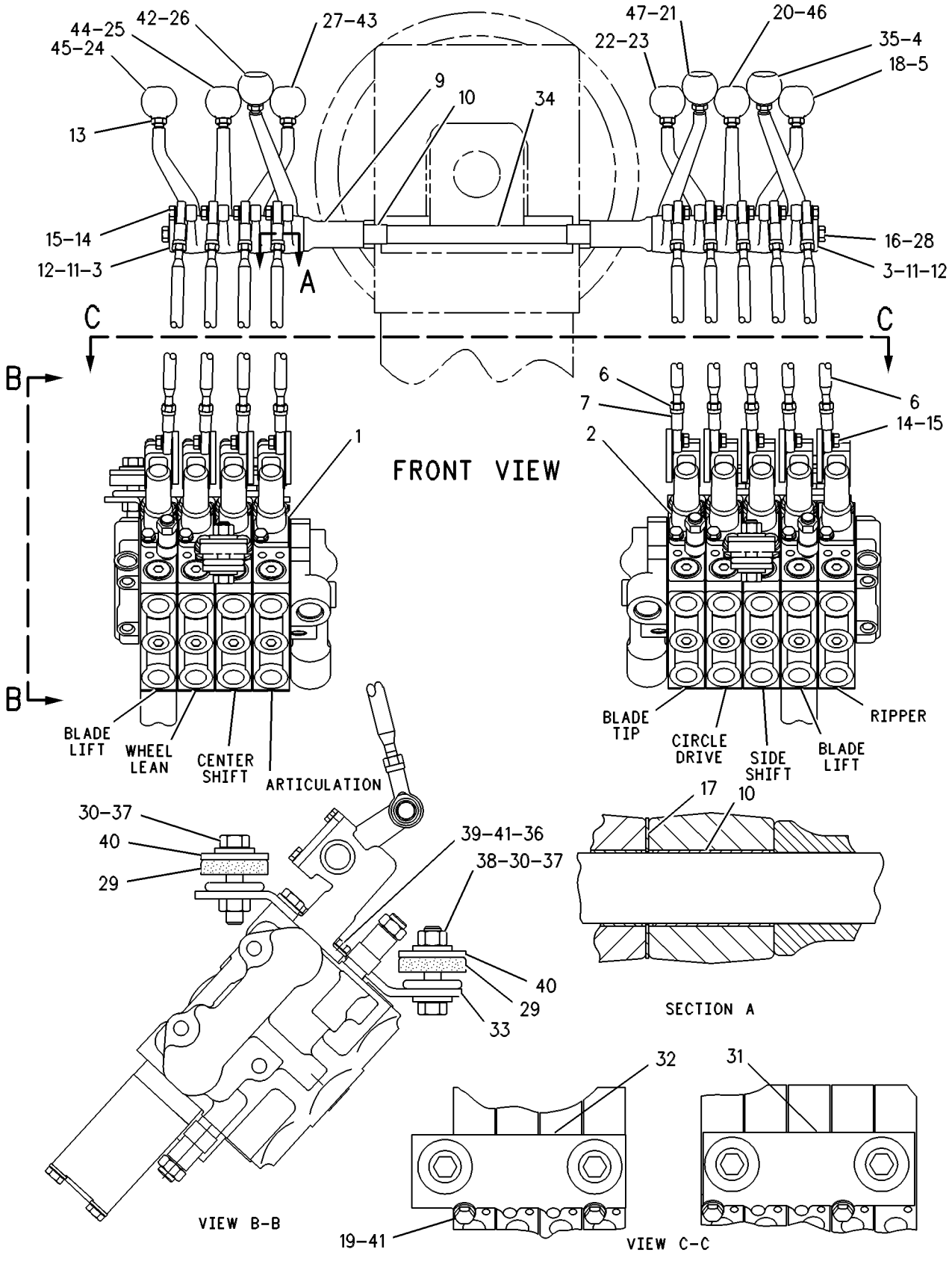

GRAPHIC #1 g00109678

HYDRAULIC SYSTEM

124-4198 VALVE & LINKAGE GP–BANK 5–LH–RH–EU

S/N: ASE1-UP

PART OF 187-4950 CONTROL AR-HYDRAULIC

AN ATTACHMENT

SMCS-5051, 5063 **i01684561**

NOTE	REF NO	GRAPHIC REF	PART NUMBER	QTY	PART NAME 1 2 3 4 5 6 (PRODUCT LEVEL)	SEE PAGE
CY	1	1	**130-3132**	1	VALVE GP-BANK 5 (RH)	529
CY	2	1	**130-3126**	1	VALVE GP-BANK 5 (LH)	528
	3	1	**8X-5499**	2	RETAINER	
	4	1	**101-2457**	1	LEVER (RIPPER)	
	5	1	**8D-5634**	1	LEVER (BLADE LIFT)	
	6	1	**4L-6459**	1	BOLT (3/8-16X2.5 IN)	
	7	1	**8W-0456**	1	SHAFT-GOVERNOR CONTROL	
	8	1	**8X-4276**	10	ROD	
		1	**6V-8186**	20	NUT-FULL (5/16-24 THD)	
		1	**7H-3641**	20	END-ROD (5/16-24 THD)	
	9	1	**8D-5633**	1	LEVER (SIDE SHIFT)	
	10	1	**101-2458**	1	LEVER (BLADE TIP)	
	11	1	**137-4515**	2	BUSHING	
	12	1	**8D-5640**	12	BEARING	
B	13	1	**8D-5636**	4	SHIM (.254MM THK)	
B	14	1	**8D-5637**	4	SHIM (.762MM THK)	
	15	1	**6L-1962**	10	NUT-JAM (3/8-24THD)	
	16	1	**8T-9043**	20	BOLT (5/16-18X.875 IN)	
	17	1	**3F-9556**	20	LOCKWASHER	
	18	1	**9B-7237**	1	BOLT (3/8-16X1.25 IN)	
	19	1	**8D-5641**	10	BEARING	
	20	1	**2G-6757**	1	KNOB-BLADE LIFT	
M	21	1	**8T-4136**	4	BOLT (M10X1.5X25MM)	
	22	1	**2G-6749**	1	KNOB-SIDESHIFT	
	23	1	**2G-6747**	1	KNOB-BLADE TIP	
	24	1	**8D-5632**	1	LEVER (CIRCLE DRIVE)	
	25	1	**2G-6751**	1	KNOB-CIRCLE DRIVE	
	26	1	**2G-6748**	1	KNOB-BLADE LIFT	
	27	1	**2G-6756**	1	KNOB-WHEEL LEAN	
	28	1	**2G-6752**	1	KNOB-ARTICULATION	
	29	1	**2G-6755**	1	KNOB-CENTERSHIFT	
	30	1	**5P-1075**	2	WASHER-HARD (10.2X22.5X3MM THK)	
	31	1	**9M-1853**	6	MOUNTING	
	32	1	**5P-1076**	6	WASHER-HARD (13.5X30X4MM THK)	
	33	1	**104-7740**	1	PLATE AS-LH	
	34	1	**104-7419**	1	PLATE AS-RH	
					(EA PLATE AS INCLS)	
		1	**1F-0748**	2	NUT-WELD (1/2-13 THD)	
	35	1	**104-7429**	2	PLATE	
	36	1	**137-4516**	1	SHAFT	
	37	1	**2G-6740**	1	KNOB-RIPPER	
	38	1	**2G-6754**	1	KNOB (PLOW/DOZER LIFT)	
	39	1	**6V-8188**	2	NUT (1/2-13 THD)	
M	40	1	**8T-4195**	4	BOLT (M10X1.5X30MM)	
	41	1	**8F-6437**	6	WASHER (13.5X50.8X4.76MM THK)	
	42	1	**5P-2424**	6	BOLT (1/2-13X2.25 IN)	
	43	1	**6B-0933**	4	SPACER (10.31X19.05X6.35MM THK)	
	44	1	**8T-4121**	8	WASHER-HARD (11X21X2.5MM THK)	
	45	1	**101-2457**	1	LEVER (ARTICULATION)	
	46	1	**8D-5634**	1	LEVER (CENTER SHIFT)	
	47	1	**8D-5633**	1	LEVER (WHEEL LEAN)	
	48	1	**101-2458**	1	LEVER (PLOW/DOZER LIFT)	
	49	1	**8D-5632**	1	LEVER (BLADE LIFT)	

B-USE AS REQUIRED
C-CHANGE FROM PREVIOUS TYPE
M-METRIC PART
Y-SEPARATE ILLUSTRATION

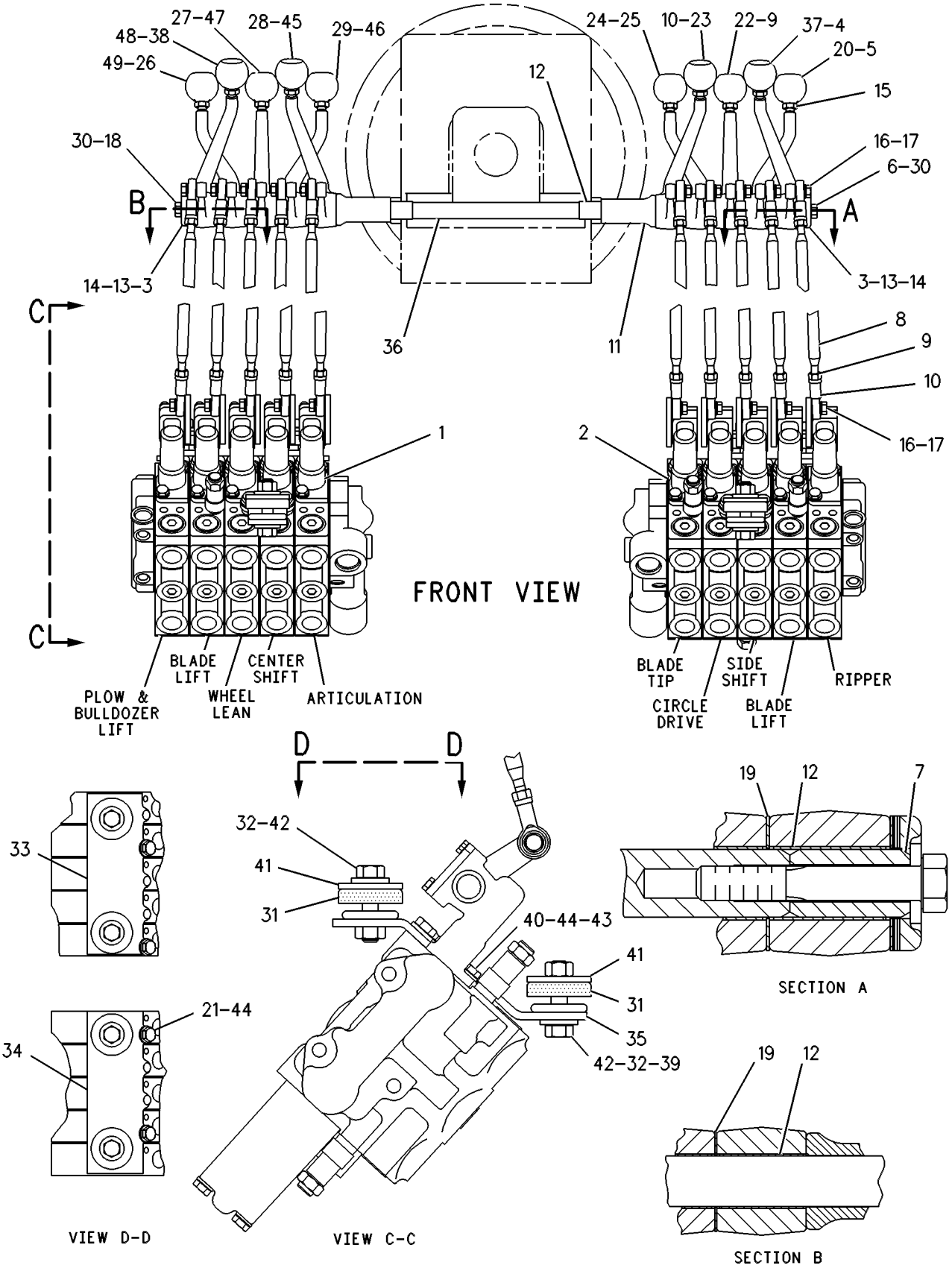

GRAPHIC #1 g00109634

MEMORANDA

HYDRAULIC SYSTEM

124-4200 VALVE & LINKAGE GP—BANK 5 RH—BANK 7 LH—EU

S/N: ASE1-UP
PART OF 187-4948 CONTROL AR-HYDRAULIC
AN ATTACHMENT

SMCS-5051, 5063 **i01684563**

NOTE	REF NO	GRAPHIC REF	PART NUMBER	QTY	PART NAME 1 2 3 4 5 6 (PRODUCT LEVEL)	SEE PAGE
CY	1	1	**130-3132**	1	VALVE GP-BANK 5 (RH)	529
CY	2	1	**130-3127**	1	VALVE GP-BANK 7 (LH)	532
	3	1	**8X-5499**	2	RETAINER	
	4	1	**101-2457**	2	LEVER (ARTICULATION)	
	5	1	**8D-5634**	2	LEVER (CENTER SHIFT)	
	6	1	**2G-7107**	1	KNOB-WING LIFT	
	7	1	**8X-4276**	12	ROD	
		1	**6V-8186**	24	NUT-FULL (5/16-24 THD)	
		1	**7H-3641**	24	END-ROD (5/16-24 THD)	
	8	1	**8D-5633**	2	LEVER (SIDESHIFT)	
	9	1	**101-2458**	3	LEVER (PLOW DOZER)	
	10	1	**137-4515**	2	BUSHING	
	11	1	**8D-5640**	14	BEARING	
B	12	1	**8D-5636**	4	SHIM (.254MM THK)	
B	13	1	**8D-5637**	4	SHIM (.762MM THK)	
	14	1	**6L-1962**	12	NUT-JAM (3/8-24THD)	
	15	1	**8T-9043**	24	BOLT (5/16-18X.875 IN)	
	16	1	**3F-9556**	24	LOCKWASHER	
	17	1	**4L-6459**	1	BOLT (3/8-16X2.5 IN)	
	18	1	**8D-5641**	12	BEARING	
	19	1	**2G-6757**	1	KNOB-BLADE LIFT	
M	20	1	**8T-4136**	4	BOLT (M10X1.5X25MM)	
	21	1	**2G-6749**	1	KNOB-SIDESHIFT	
	22	1	**2G-6747**	1	KNOB-BLADE TIP	
	23	1	**8D-5632**	2	LEVER (CIRCLE DRIVE)	
	24	1	**2G-6751**	1	KNOB-CIRCLE DRIVE	
	25	1	**2G-6748**	1	KNOB-BLADE LIFT	
	26	1	**2G-6756**	1	KNOB-WHEEL LEAN	
	27	1	**2G-6752**	1	KNOB-ARTICULATION	
	28	1	**2G-6755**	1	KNOB-CENTERSHIFT	
	29	1	**5P-1075**	2	WASHER-HARD (10.2X22.5X3MM THK)	
	30	1	**9M-1853**	6	MOUNTING	
	31	1	**5P-1076**	6	WASHER-HARD (13.5X30X4MM THK)	
	32	1	**104-7740**	1	PLATE AS-LH	
	33	1	**104-7419**	1	PLATE AS-RH	
					(EACH PLATE AS INCLUDES)	
		1	**1F-0748**	4	NUT-WELD (1/2-13 THD)	
	34	1	**104-7429**	2	PLATE	
	35	1	**137-4516**	1	SHAFT	
	36	1	**8T-4121**	8	WASHER-HARD (11X21X2.5MM THK)	
	37	1	**6B-0933**	4	SPACER (10.31X19.05X6.35MM THK)	
	38	1	**5P-2424**	6	BOLT (1/2-13X2.25 IN)	
	39	1	**6V-8188**	2	NUT (1/2-13 THD)	
M	40	1	**8T-4195**	4	BOLT (M10X1.5X30MM)	
	41	1	**2G-6754**	1	KNOB (PLOW/DOZER LIFT)	
	42	1	**2G-6740**	1	KNOB-RIPPER	
	43	1	**103-1597**	1	LEVER (WING TILT)	
	44	1	**2G-7108**	1	KNOB-WING TILT	
	45	1	**7X-0291**	1	BOLT (3/8-16X3.75 IN)	
	46	1	**8W-0456**	3	SHAFT-GOVERNOR CONTROL	
	47	1	**8F-6437**	6	WASHER (13.5X50.8X4.76MM THK)	

B-USE AS REQUIRED
C-CHANGE FROM PREVIOUS TYPE
M-METRIC PART
Y-SEPARATE ILLUSTRATION

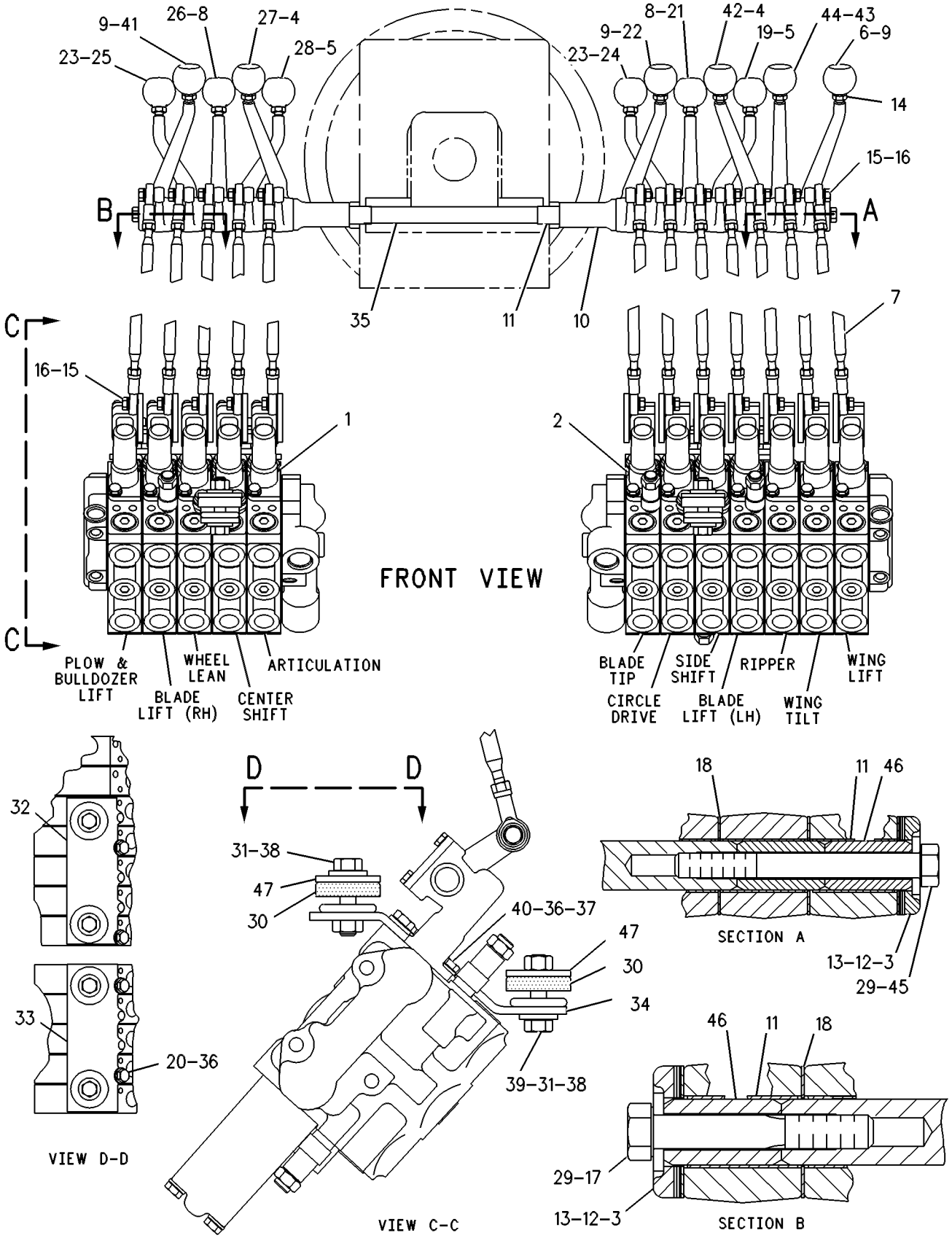

GRAPHIC #1 g00109635

HYDRAULIC SYSTEM

144-4004 VALVE & LINKAGE GP–BANK 5 RH–BANK 7 LH–WING TILT FLOAT

S/N: ASE1-UP

PART OF 192-4972 CONTROL AR-HYDRAULIC

AN ATTACHMENT

SMCS-5051, 5063 **i01685310**

NOTE	REF NO	GRAPHIC REF	PART NUMBER	QTY	PART NAME 1 2 3 4 5 6 (PRODUCT LEVEL)	SEE PAGE
Y	1	1	**104-8675**	1	VALVE GP-BANK 5 (RH)	527
Y	2	1	**4Z-6358**	1	VALVE GP-BANK 7 (LH)	530
	3	1	**8X-5499**	2	RETAINER	
	4	1	**101-2457**	2	LEVER	
	5	1	**8D-5634**	2	LEVER	
	6	1	**2G-7107**	1	KNOB-WING LIFT	
	7	1	**8X-4276**	12	ROD	
		1	**6V-8186**	24	NUT-FULL (5/16-24 THD)	
		1	**7H-3641**	24	END-ROD (5/16-24 THD)	
	8	1	**8D-5633**	2	LEVER	
	9	1	**101-2458**	3	LEVER	
	10	1	**137-4515**	2	BUSHING	
	11	1	**8D-5640**	14	BEARING	
B	12	1	**8D-5636**	4	SHIM (.254MM THK)	
B	13	1	**8D-5637**	4	SHIM (.762MM THK)	
	14	1	**6L-1962**	12	NUT-JAM (3/8-24THD)	
	15	1	**8T-9043**	24	BOLT (5/16-18X.875 IN)	
	16	1	**3F-9556**	24	LOCKWASHER	
	17	1	**4L-6459**	1	BOLT (3/8-16X2.5 IN)	
	18	1	**8D-5641**	12	BEARING	
	19	1	**2G-6757**	1	KNOB-BLADE LIFT	
M	20	1	**8T-4136**	4	BOLT (M10X1.5X25MM)	
	21	1	**2G-6749**	1	KNOB-SIDESHIFT	
	22	1	**2G-6747**	1	KNOB-BLADE TIP	
	23	1	**8D-5632**	2	LEVER	
	24	1	**2G-6751**	1	KNOB-CIRCLE DRIVE	
	25	1	**2G-6748**	1	KNOB-BLADE LIFT	
	26	1	**2G-6756**	1	KNOB-WHEEL LEAN	
	27	1	**2G-6752**	1	KNOB-ARTICULATION	
	28	1	**2G-6755**	1	KNOB-CENTERSHIFT	
	29	1	**5P-1075**	2	WASHER-HARD (10.2X22.5X3MM THK)	
	30	1	**9M-1853**	6	MOUNTING	
	31	1	**5P-1076**	6	WASHER-HARD (13.5X30X4MM THK)	
	32	1	**104-7740**	1	PLATE AS-LH	
		1	**1F-0748**	4	NUT-WELD (1/2-13 THD)	
	33	1	**104-7419**	1	PLATE AS-RH	
		1	**1F-0748**	4	NUT-WELD (1/2-13 THD)	
	34	1	**104-7429**	2	PLATE	
	35	1	**137-4516**	1	SHAFT	
	36	1	**8T-4121**	8	WASHER-HARD (11X21X2.5MM THK)	
	37	1	**6B-0933**	4	SPACER (10.31X19.05X6.35MM THK)	
	38	1	**5P-2424**	6	BOLT (1/2-13X2.25 IN)	
	39	1	**6V-8188**	2	NUT (1/2-13 THD)	
M	40	1	**8T-4195**	4	BOLT (M10X1.5X30MM)	
	41	1	**2G-6754**	1	KNOB (PLOW/DOZER LIFT)	
	42	1	**2G-6740**	1	KNOB-RIPPER	
	43	1	**103-1597**	1	LEVER	
	44	1	**2G-7108**	1	KNOB-WING TILT	
	45	1	**7X-0291**	1	BOLT (3/8-16X3.75 IN)	
	46	1	**8W-0456**	3	SHAFT-GOVERNOR CONTROL	
	47	1	**8F-6437**	6	WASHER (13.5X50.8X4.76MM THK)	

B-USE AS REQUIRED
M-METRIC PART
Y-SEPARATE ILLUSTRATION

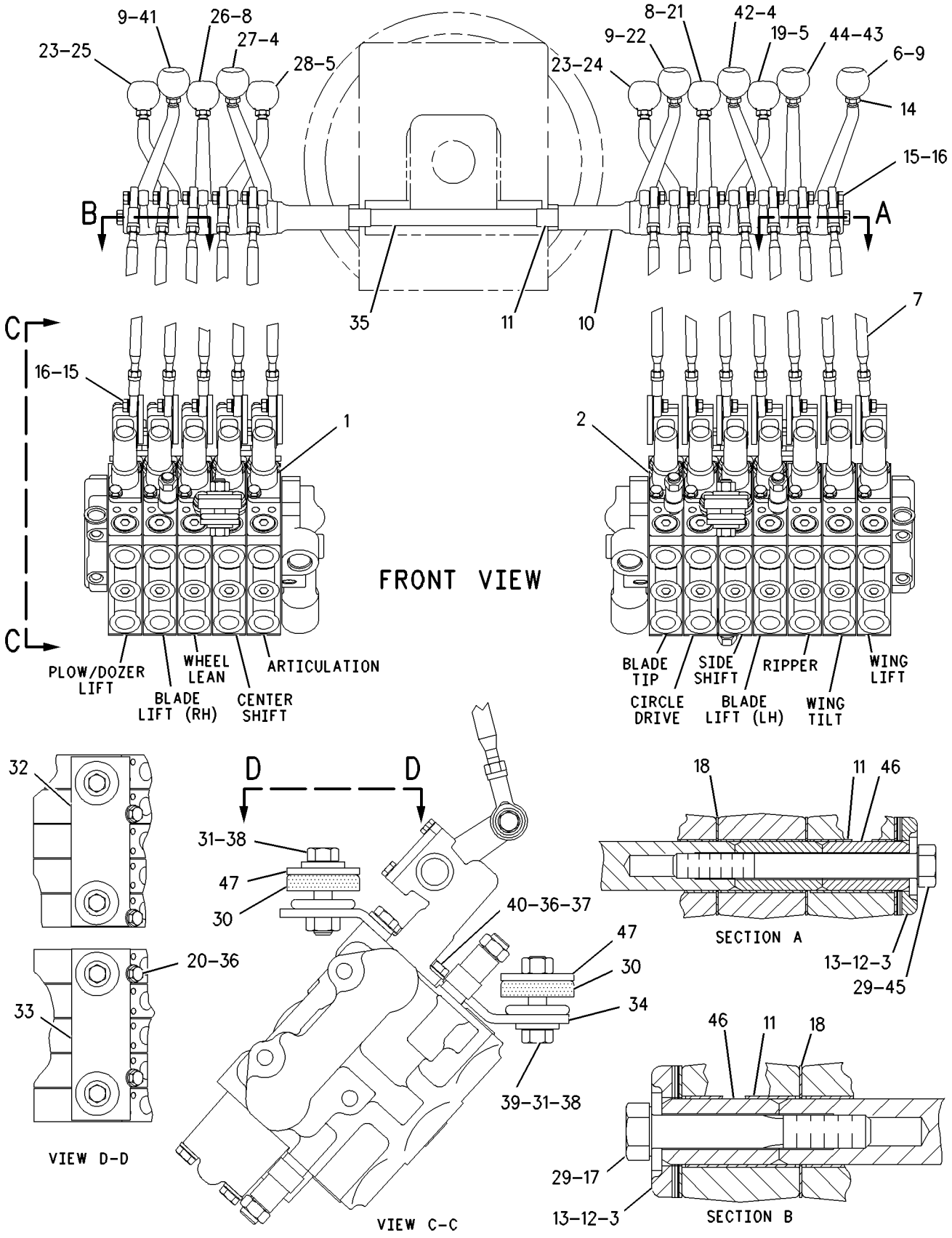

GRAPHIC #1

g00857639

HYDRAULIC SYSTEM

104-8653 VALVE GP-BANK 4–LH

S/N: ASE1-UP

PART OF 8X-5490 VALVE & LINKAGE GP

SMCS-5051 **i00842425**

NOTE	REF NO	GRAPHIC REF	PART NUMBER	QTY	PART NAME 1 2 3 4 5 6 (PRODUCT LEVEL)	SEE PAGE
M	1	1	**7X-2546**	2	BOLT (M10X1.50X180MM)	
M	2	1	**137-6720**	1	BOLT-HEX HEAD	
	3	1	**102-8385**	1	MANIFOLD	
	4	1	**101-0509**	5	PLATE-SEAL	
Y	5	1	**107-0554**	1	VALVE GP-CONTROL (BLADE TILT)	540
Y	6	1	**107-0555**	1	VALVE GP-CONTROL (CIRCLE DRIVE)	542
Y	7	1	**107-0556**	1	VALVE GP-CONTROL (SIDE SHIFT)	544
Y	8	1	**107-0557**	1	VALVE GP-CONTROL (BLADE LIFT)	546
	9	1	**101-9346**	1	COVER	
M	10	1	**8T-4186**	3	BOLT (M10X1.50X40MM)	
	11	1	**4J-7533**	1	SEAL-O-RING (6.07MM ID)	
	12	1	**9S-4180**	1	PLUG-O-RING (5/16-24 THD)	

M-METRIC PART
Y-SEPARATE ILLUSTRATION

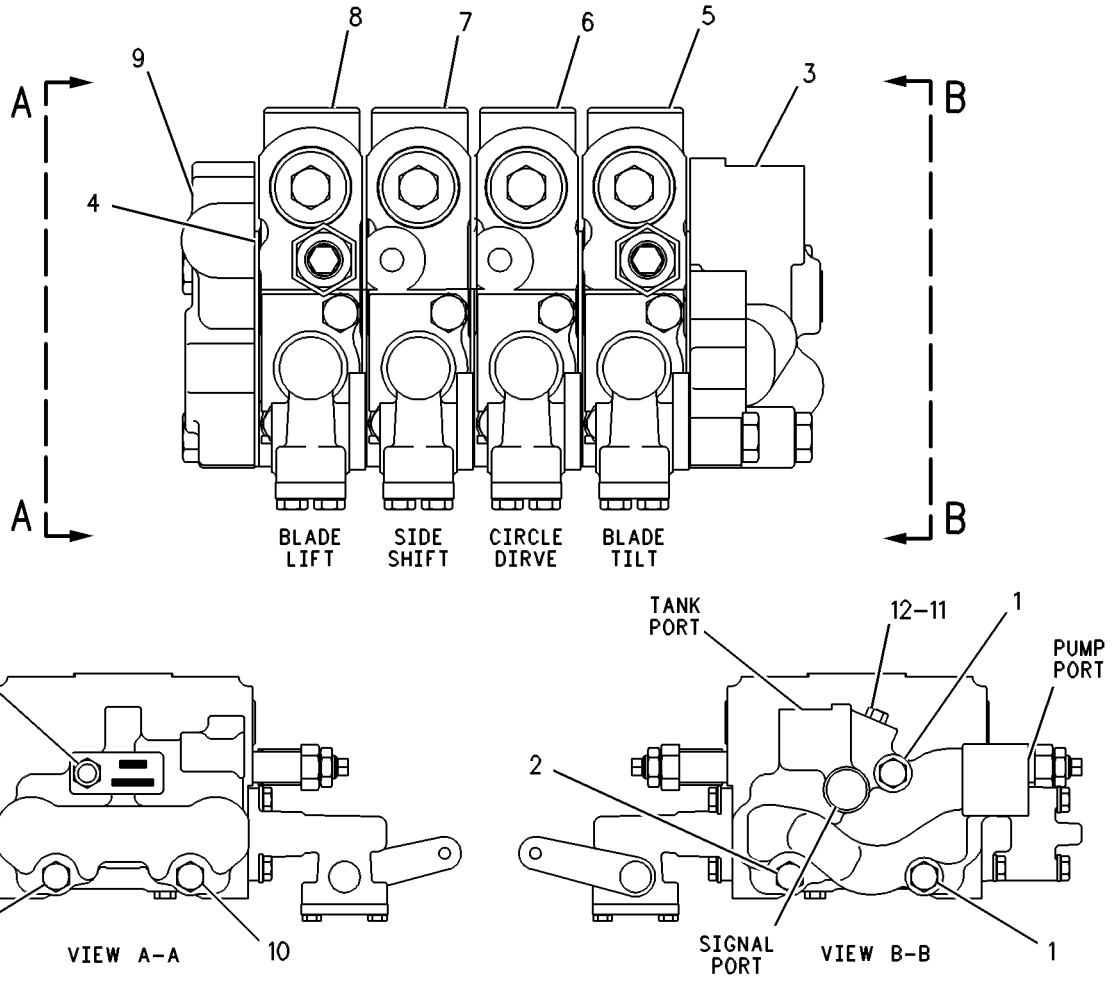

GRAPHIC #1 g00108844

104-8674 VALVE GP-BANK 4–RH

S/N: ASE1-UP
PART OF 7I-4871, 8X-5490 VALVE & LINKAGE GP
ALSO AN ATTACHMENT

SMCS-5051 **i00842427**

NOTE	REF NO	GRAPHIC REF	PART NUMBER	QTY	PART NAME 1 2 3 4 5 6 (PRODUCT LEVEL)	SEE PAGE
M	1	1	**7X-2546**	2	BOLT (M10X1.50X180MM)	
M	2	1	**137-6720**	1	BOLT-HEX HEAD	
	3	1	**102-6238**	1	MANIFOLD	
	4	1	**101-0509**	5	PLATE-SEAL	
Y	5	1	**107-0560**	1	VALVE GP-CONTROL (ARTICULATION)	550
Y	6	1	**107-0561**	1	VALVE GP-CONTROL (CENTER SHIFT)	552
Y	7	1	**6E-3030**	1	VALVE GP-CONTROL (WHEEL LEAN)	536
Y	8	1	**107-0564**	1	VALVE GP-CONTROL (BLADE LIFT)	554
	9	1	**101-9346**	1	COVER	
M	10	1	**8T-4186**	3	BOLT (M10X1.50X40MM)	
	11	1	**4J-7533**	1	SEAL-O-RING (6.07MM ID)	
	12	1	**9S-4180**	3	PLUG-O-RING (5/16-24 THD)	

M-METRIC PART
Y-SEPARATE ILLUSTRATION

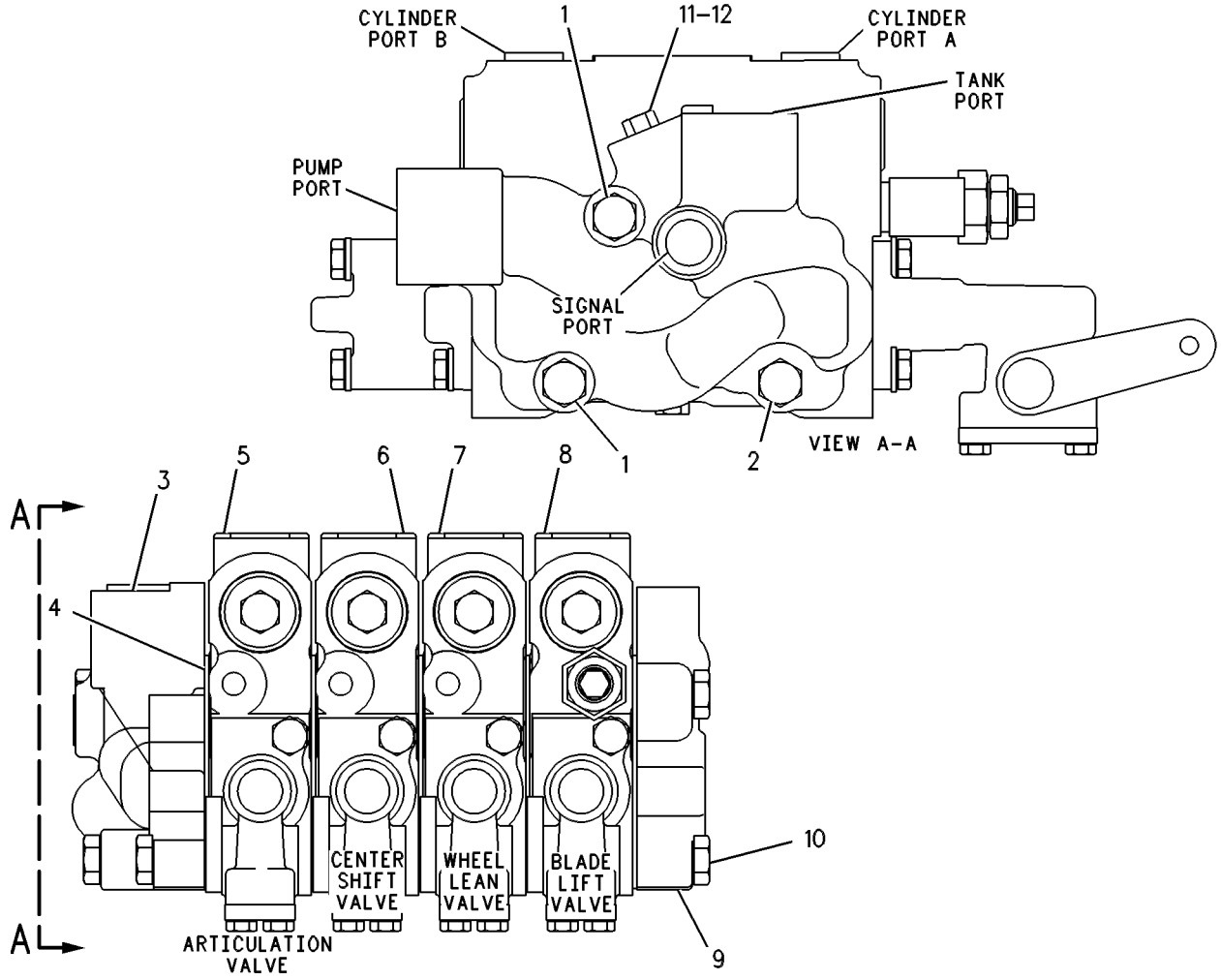

GRAPHIC #1 g00108906

HYDRAULIC SYSTEM

130-3125 VALVE GP-BANK 4–LH–EU

S/N: ASE1-UP
PART OF 124-4196 VALVE & LINKAGE GP
AN ATTACHMENT

SMCS-5051 **i00842431**

NOTE	REF NO	GRAPHIC REF	PART NUMBER	QTY	PART NAME 1 2 3 4 5 6 (PRODUCT LEVEL)	SEE PAGE
M	1	1	**7X-2546**	2	BOLT (M10X1.50X180MM)	
M	2	1	**137-6720**	1	BOLT-HEX HEAD	
	3	1	**102-8385**	1	MANIFOLD	
	4	1	**101-0509**	5	PLATE-SEAL	
Y	5	1	**107-0554**	1	VALVE GP-CONTROL (BLADE TILT)	540
Y	6	1	**107-0555**	1	VALVE GP-CONTROL (CIRCLE DRIVE)	542
Y	7	1	**107-0556**	1	VALVE GP-CONTROL (SIDE SHIFT)	544
	8	1	**4J-7533**	1	SEAL-O-RING (6.07MM ID)	
	9	1	**101-9346**	1	COVER	
M	10	1	**8T-4186**	3	BOLT (M10X1.50X40MM)	
Y	11	1	**130-3113**	1	VALVE GP-CONTROL (BLADE LIFT)	562
	12	1	**9S-4180**	1	PLUG-O-RING (5/16-24 THD)	

M-METRIC PART
Y-SEPARATE ILLUSTRATION

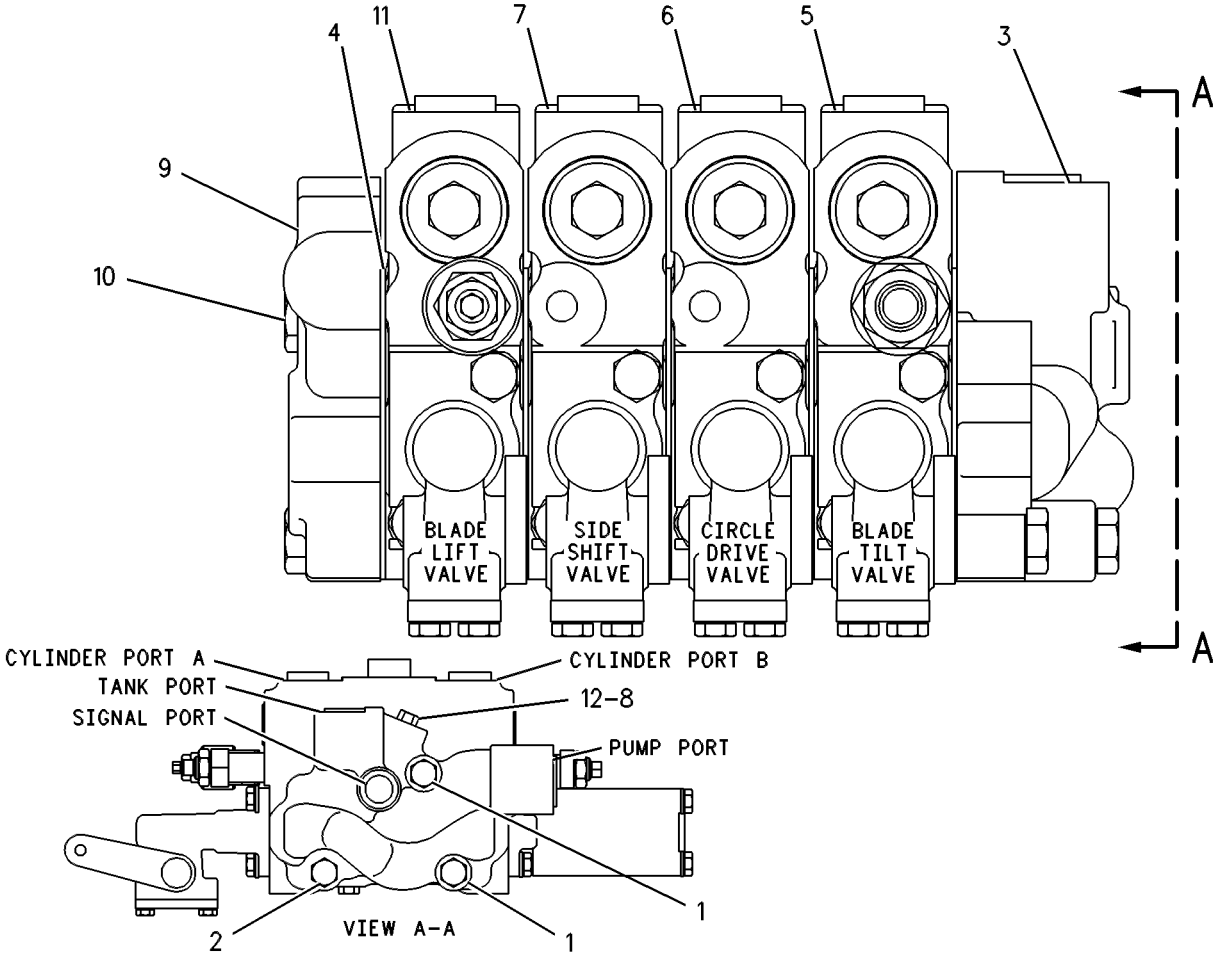

GRAPHIC #1 g00109694

130-3128 VALVE GP-BANK 4–RH–EU

S/N: ASE1-UP
PART OF 124-4196, 124-4197 VALVE & LINKAGE GP
AN ATTACHMENT

SMCS-5051 **i01684570**

NOTE	REF NO	GRAPHIC REF	PART NUMBER	QTY	PART NAME 1 2 3 4 5 6 (PRODUCT LEVEL)	SEE PAGE
M	1	1	**7X-2546**	2	BOLT (M10X1.50X180MM)	
M	2	1	**137-6720**	1	BOLT-HEX HEAD (M10X1.50X160MM)	
	3	1	**102-6238**	1	MANIFOLD	
	4	1	**101-0509**	5	PLATE-SEAL	
Y	5	1	**107-0560**	1	VALVE GP-CONTROL (ARTICULATION)	550
Y	6	1	**107-0561**	1	VALVE GP-CONTROL (CENTER SHIFT)	552
Y	7	1	**6E-3030**	1	VALVE GP-CONTROL (WHEEL LEAN)	536
	8	1	**4J-7533**	1	SEAL-O-RING	
	9	1	**101-9346**	1	COVER	
M	10	1	**8T-4186**	3	BOLT (M10X1.5X40MM)	
Y	11	1	**130-3112**	1	VALVE GP-CONTROL (BLADE LIFT)	560
	12	1	**9S-4180**	1	PLUG	

M-METRIC PART
Y-SEPARATE ILLUSTRATION

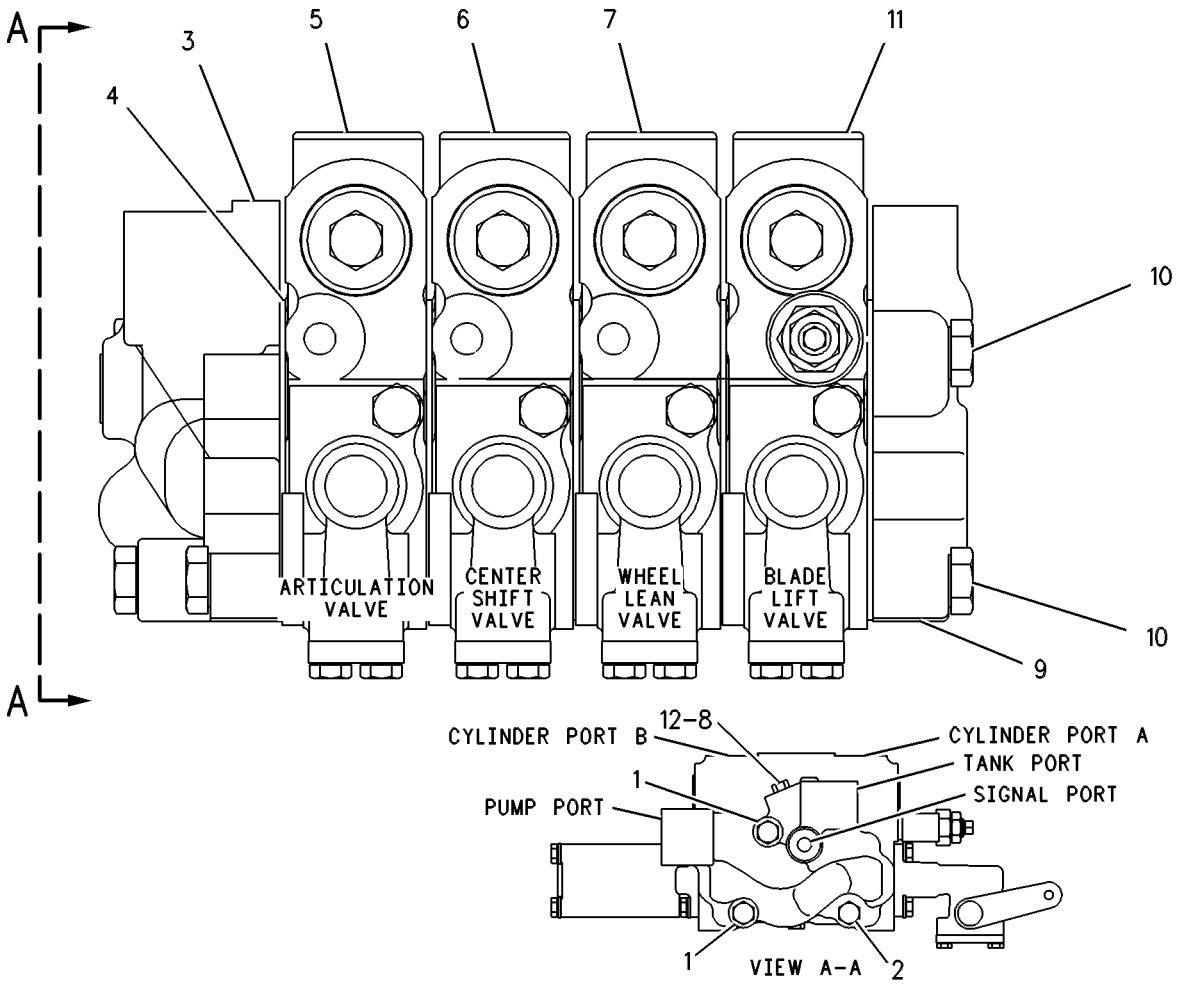

GRAPHIC #1 g00109473

HYDRAULIC SYSTEM

104-8654 VALVE GP-BANK 5–LH

S/N: ASE1-UP
PART OF 7I-4870, 7I-4871 VALVE & LINKAGE GP
AN ATTACHMENT

SMCS-5051 **i01684573**

NOTE	REF NO	GRAPHIC REF	PART NUMBER	QTY	PART NAME 1 2 3 4 5 6 (PRODUCT LEVEL)	SEE PAGE
M	1	1	**7X-2546**	2	BOLT (M10X1.50X180MM)	
M	2	1	**137-6720**	1	BOLT-HEX HEAD (M10X1.50X160MM)	
	3	1	**102-8385**	1	MANIFOLD	
	4	1	**101-0509**	6	PLATE-SEAL	
Y	5	1	**107-0554**	1	VALVE GP-CONTROL (BLADE TILT)	540
Y	6	1	**107-0555**	1	VALVE GP-CONTROL (CIRCLE DRIVE)	542
Y	7	1	**107-0556**	1	VALVE GP-CONTROL (SIDE SHIFT)	544
Y	8	1	**107-0557**	1	VALVE GP-CONTROL (BLADE LIFT)	546
Y	9	1	**107-0559**	1	VALVE GP-CONTROL (RIPPER)	548
	10	1	**101-9346**	1	COVER	
M	11	1	**137-6719**	3	BOLT-HEX HEAD (M10X1.50X80MM)	
	12	1	**4J-7533**	1	SEAL-O-RING	
	13	1	**9S-4180**	1	PLUG	

M-METRIC PART
Y-SEPARATE ILLUSTRATION

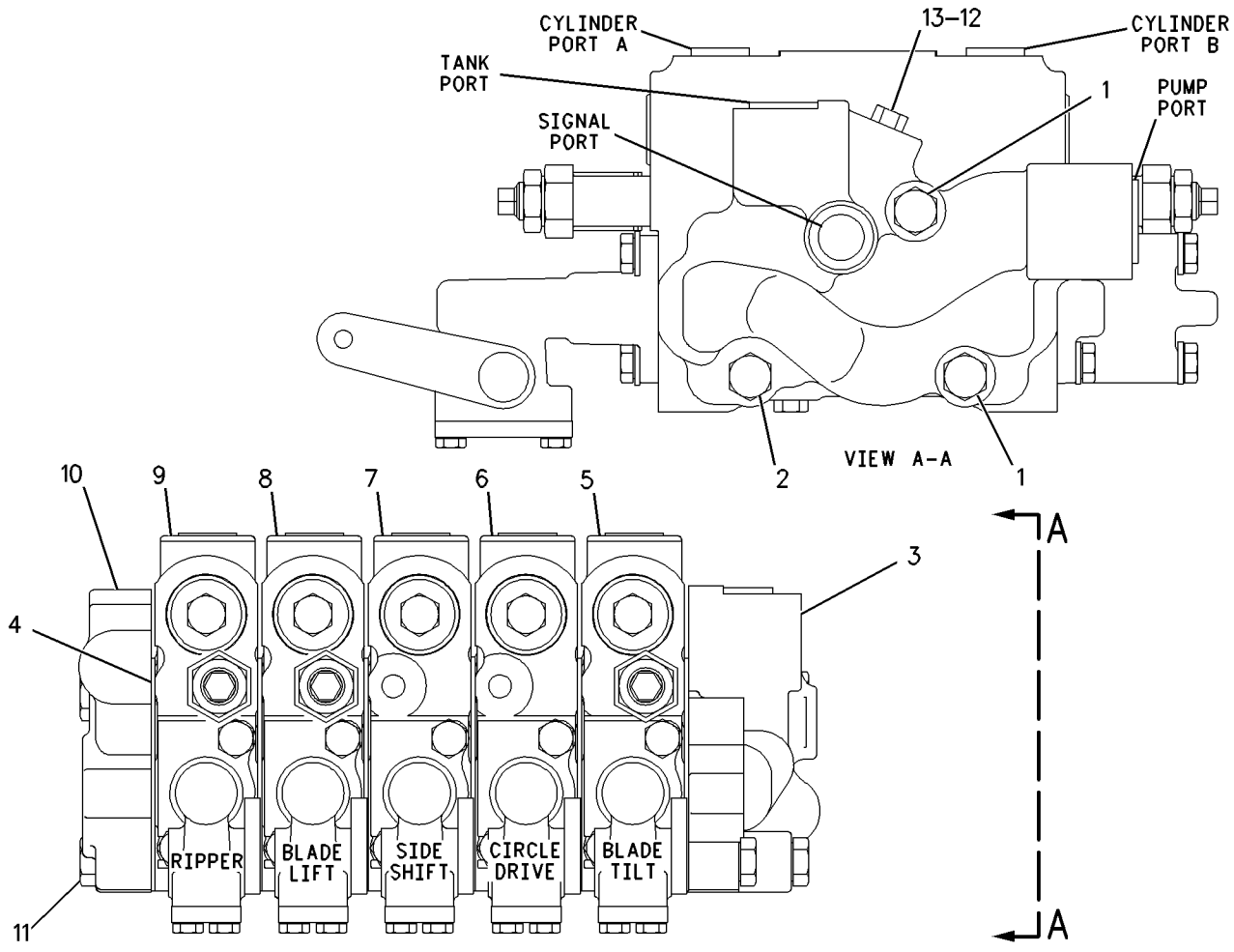

GRAPHIC #1 g00858941

104-8675 VALVE GP-BANK 5–RH

S/N: ASE1-UP
PART OF 107-9662, 144-4004, 7I-4870 VALVE & LINKAGE GP
AN ATTACHMENT

SMCS-5051 **i01672890**

NOTE	REF NO	GRAPHIC REF	PART NUMBER	QTY	PART NAME 1 2 3 4 5 6 (PRODUCT LEVEL)	SEE PAGE
M	1	1	**7X-2546**	2	BOLT (M10X1.50X180MM)	
M	2	1	**137-6720**	1	BOLT-HEX HEAD (M10X1.50X160MM)	
	3	1	**102-6238**	1	MANIFOLD	
	4	1	**101-0509**	6	PLATE-SEAL	
Y	5	1	**107-0560**	1	VALVE GP-CONTROL (ARTICULATION)	550
Y	6	1	**107-0561**	1	VALVE GP-CONTROL (CENTER SHIFT)	552
Y	7	1	**6E-3030**	1	VALVE GP-CONTROL (WHEEL LEAN)	536
Y	8	1	**107-0564**	1	VALVE GP-CONTROL (BLADE LIFT)	554
Y	9	1	**107-0547**	1	VALVE GP-CONTROL (PLOW/DOZER LIFT)	538
	10	1	**101-9346**	1	COVER	
M	11	1	**137-6719**	3	BOLT-HEX HEAD (M10X1.50X80MM)	
	12	1	**9S-4180**	1	PLUG	
	13	1	**4J-7533**	1	SEAL-O-RING	

M-METRIC PART
Y-SEPARATE ILLUSTRATION

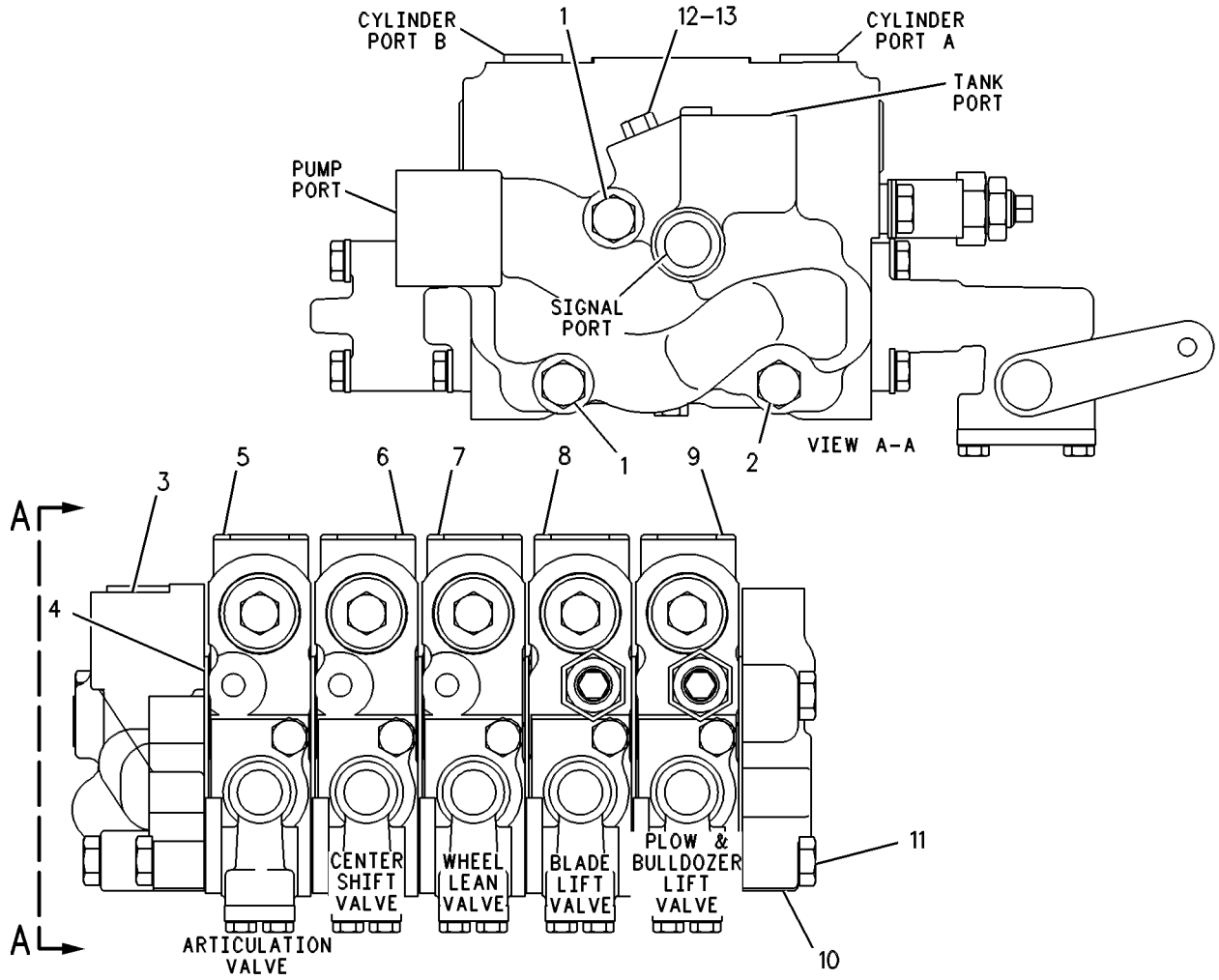

GRAPHIC #1 g00108933

HYDRAULIC SYSTEM

130-3126 VALVE GP-BANK 5–LH–EU

S/N: ASE1-UP
PART OF 124-4197, 124-4198 VALVE & LINKAGE GP
AN ATTACHMENT

SMCS-5051 **i01672906**

NOTE	REF NO	GRAPHIC REF	PART NUMBER	QTY	PART NAME 1 2 3 4 5 6 (PRODUCT LEVEL)	SEE PAGE
M	1	1	**7X-2546**	2	BOLT (M10X1.50X180MM)	
M	2	1	**137-6720**	1	BOLT-HEX HEAD (M10X1.50X160MM)	
	3	1	**102-8385**	1	MANIFOLD	
	4	1	**101-0509**	6	PLATE-SEAL	
Y	5	1	**107-0554**	1	VALVE GP-CONTROL (BLADE TILT)	540
Y	6	1	**107-0555**	1	VALVE GP-CONTROL (CIRCLE DRIVE)	542
Y	7	1	**107-0556**	1	VALVE GP-CONTROL (SIDE SHIFT)	544
	8	1	**4J-7533**	1	SEAL-O-RING	
Y	9	1	**124-3455**	1	VALVE GP-CONTROL (RIPPER)	556
	10	1	**101-9346**	1	COVER	
M	11	1	**137-6719**	3	BOLT-HEX HEAD (M10X1.50X80MM)	
Y	12	1	**130-3113**	1	VALVE GP-CONTROL (BLADE LIFT)	562
	13	1	**9S-4180**	1	PLUG	

M-METRIC PART
Y-SEPARATE ILLUSTRATION

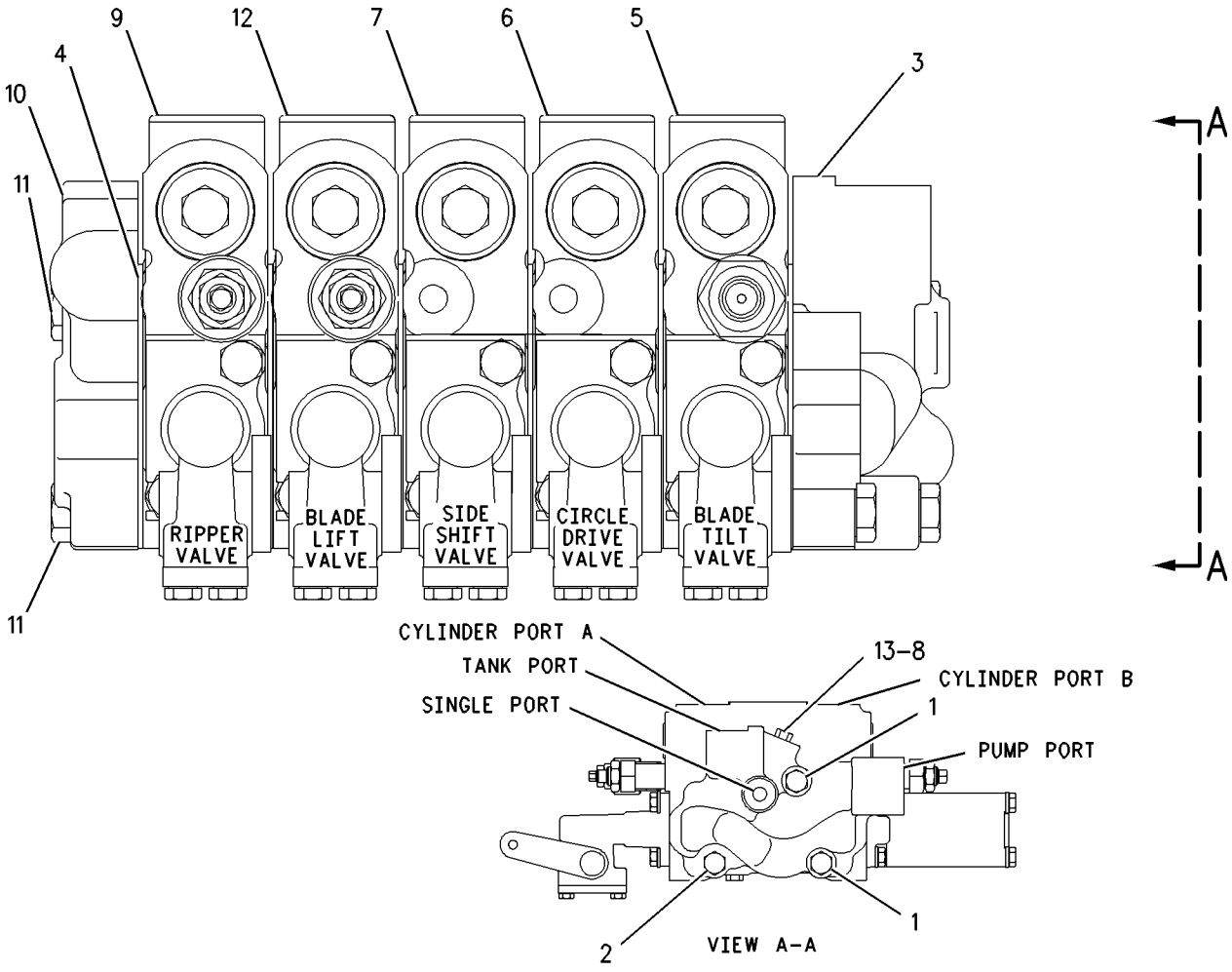

GRAPHIC #1 g00864287

130-3132 VALVE GP-BANK 5–RH–EU

S/N: ASE1-UP
PART OF 124-4198, 124-4200 VALVE & LINKAGE GP
AN ATTACHMENT

SMCS-5051 **i01673041**

NOTE	REF NO	GRAPHIC REF	PART NUMBER	QTY	PART NAME 1 2 3 4 5 6 (PRODUCT LEVEL)	SEE PAGE
M	1	1	**7X-2546**	2	BOLT (M10X1.50X180MM)	
M	2	1	**137-6720**	1	BOLT-HEX HEAD (M10X1.50X160MM)	
	3	1	**102-6238**	1	MANIFOLD	
	4	1	**101-0509**	6	PLATE-SEAL	
Y	5	1	**107-0560**	1	VALVE GP-CONTROL (ARTICULATION)	550
Y	6	1	**107-0561**	1	VALVE GP-CONTROL (CENTERSHIFT)	552
Y	7	1	**6E-3030**	1	VALVE GP-CONTROL (WHEEL LEAN)	536
Y	8	1	**130-3111**	1	VALVE GP-CONTROL (PLOW/DOZER LIFT)	558
Y	9	1	**130-3112**	1	VALVE GP-CONTROL (BLADE LIFT)	560
	10	1	**101-9346**	1	COVER	
M	11	1	**137-6719**	3	BOLT-HEX HEAD (M10X1.50X80MM)	
	12	1	**9S-4180**	1	PLUG	
	13	1	**4J-7533**	1	SEAL-O-RING	

M-METRIC PART
Y-SEPARATE ILLUSTRATION

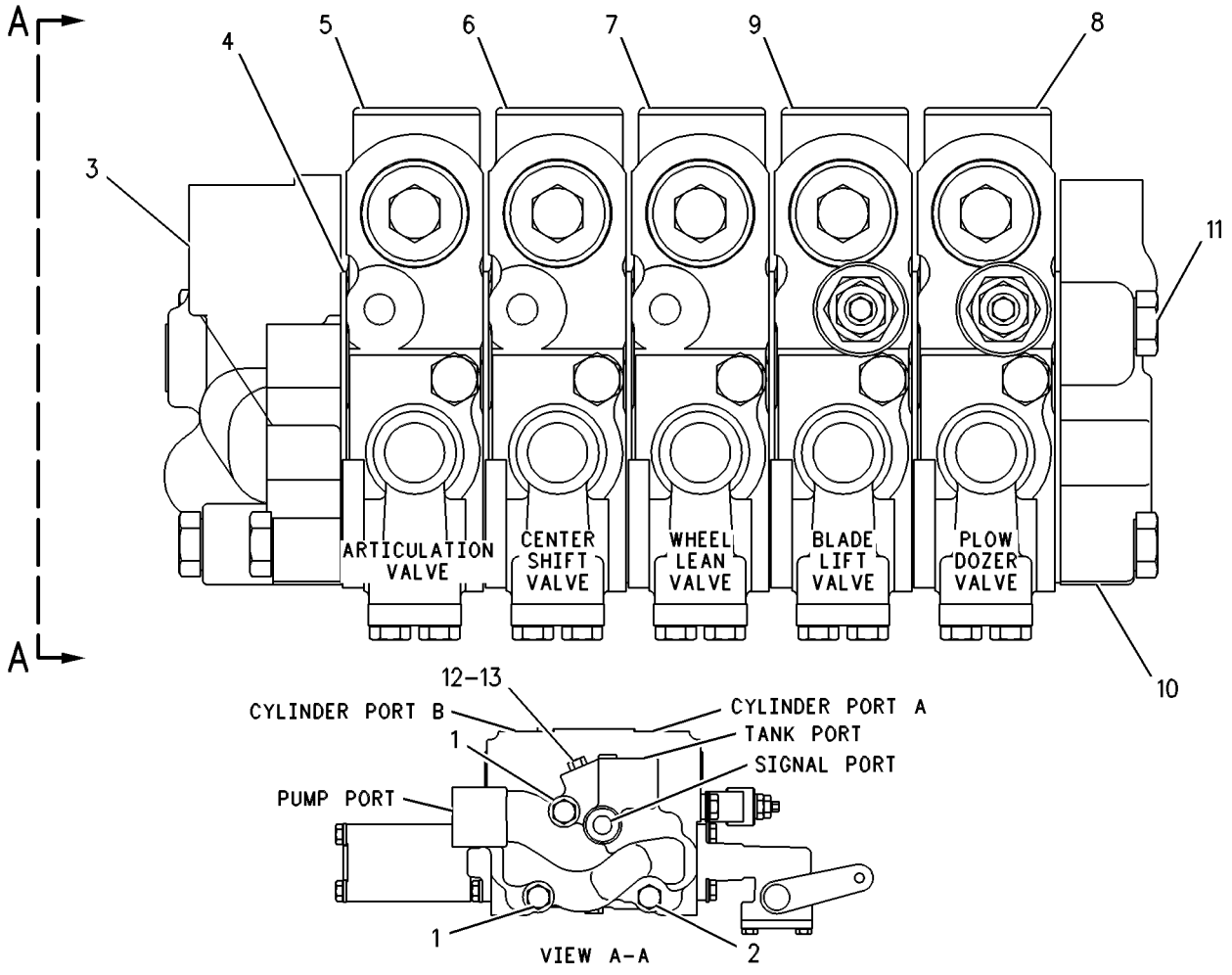

GRAPHIC #1 g00109475

HYDRAULIC SYSTEM

4Z-6358 VALVE GP-BANK 7–LH–FLOAT TILT

S/N: ASE1-UP
PART OF 144-4004 VALVE & LINKAGE GP
AN ATTACHMENT

SMCS-5051 **i01684577**

NOTE	REF NO	GRAPHIC REF	PART NUMBER	QTY	PART NAME 1 2 3 4 5 6 (PRODUCT LEVEL)	SEE PAGE
M	1	1	**7X-2546**	2	BOLT (M10X1.50X180MM)	
M	2	1	**137-6720**	4	BOLT-HEX HEAD (M10X1.50X160MM)	
	3	1	**102-8385**	1	MANIFOLD	
	4	1	**101-0509**	8	PLATE-SEAL	
Y	5	1	**107-0554**	1	VALVE GP-CONTROL (BLADE TILT)	540
Y	6	1	**107-0555**	1	VALVE GP-CONTROL (CIRCLE DRIVE)	542
Y	7	1	**107-0556**	1	VALVE GP-CONTROL (SIDE SHIFT)	544
Y	8	1	**107-0557**	1	VALVE GP-CONTROL (BLADE LIFT)	546
Y	9	1	**107-0559**	1	VALVE GP-CONTROL (RIPPER)	548
Y	10	1	**153-8907**	1	VALVE GP-CONTROL (PLOW/DOZER)(WING TILT))	570
Y	11	1	**137-8106**	1	VALVE GP-CONTROL (WING LIFT)	566
	12	1	**101-9346**	1	COVER	
	13	1	**4J-7533**	1	SEAL-O-RING	
	14	1	**9S-4180**	1	PLUG	

M-METRIC PART
Y-SEPARATE ILLUSTRATION

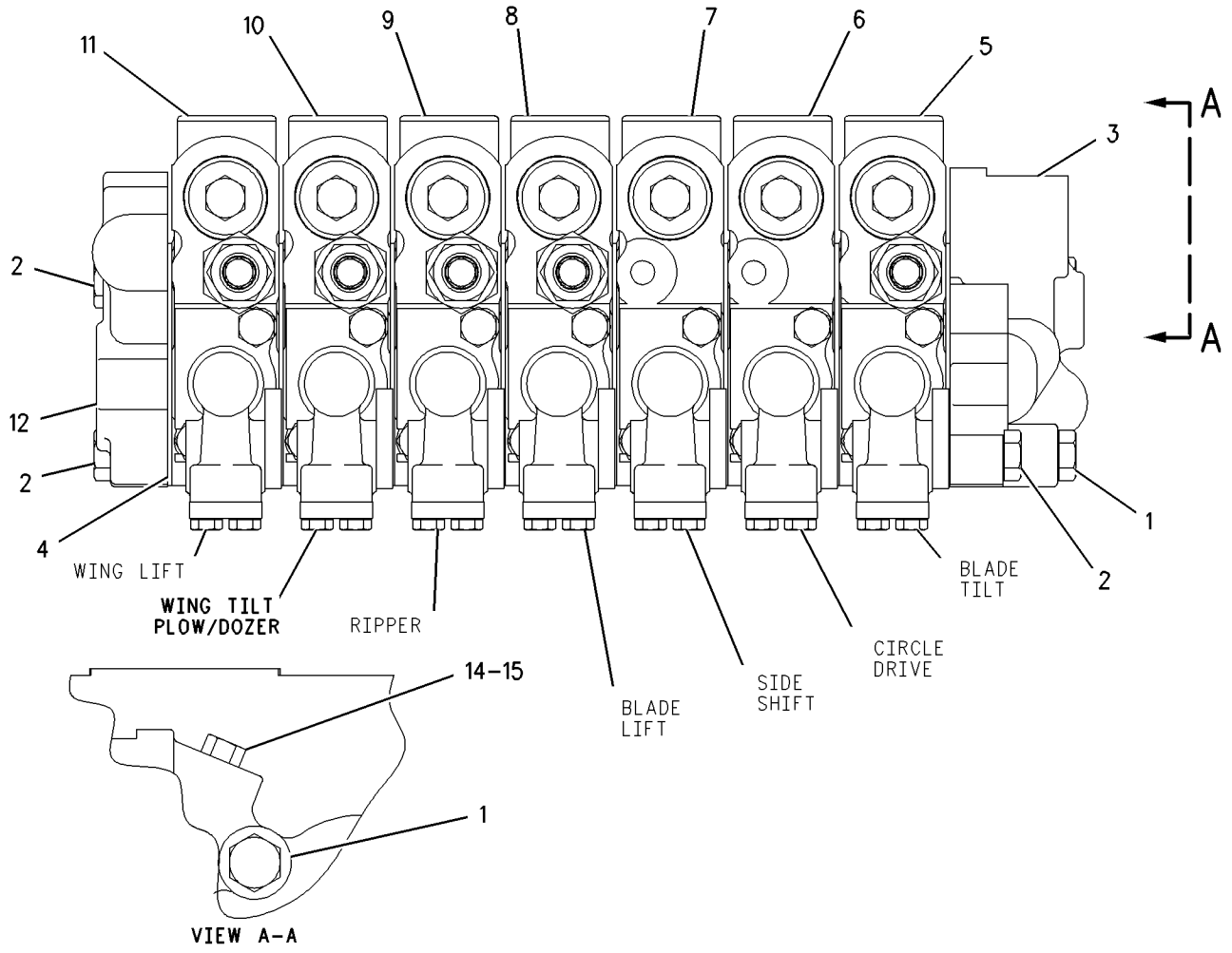

GRAPHIC #1 g00868591

104-8656 VALVE GP-BANK 7–LH

S/N: ASE1-UP
PART OF 107-9662 VALVE & LINKAGE GP
AN ATTACHMENT

SMCS-5051 **i00842140**

NOTE	REF NO	GRAPHIC REF	PART NUMBER	QTY	PART NAME 1 2 3 4 5 6 (PRODUCT LEVEL)	SEE PAGE
M	1	1	**7X-2546**	2	BOLT (M10X1.50X180MM)	
CM	2	1	**137-6720**	4	BOLT-HEX HEAD	
	3	1	**102-8385**	1	MANIFOLD	
	4	1	**101-0509**	8	PLATE-SEAL	
Y	5	1	**107-0554**	1	VALVE GP-CONTROL (BLADE TIP)	540
Y	6	1	**107-0555**	1	VALVE GP-CONTROL (CIRCLE DRIVE)	542
Y	7	1	**107-0556**	1	VALVE GP-CONTROL (SIDE SHIFT)	544
Y	8	1	**107-0557**	1	VALVE GP-CONTROL (BLADE LIFT)	546
Y	9	1	**107-0559**	1	VALVE GP-CONTROL (RIPPER)	548
CY	10	1	**137-8104**	1	VALVE GP-CONTROL (WING TILT)	564
CY	11	1	**137-8106**	1	VALVE GP-CONTROL (WING LIFT)	566
	12	1	**101-9346**	1	COVER	
	13	1	**4J-7533**	1	SEAL-O-RING (6.07MM ID)	
	14	1	**9S-4180**	1	PLUG-O-RING (5/16-24 THD)	

C-CHANGE FROM PREVIOUS TYPE
M-METRIC PART
Y-SEPARATE ILLUSTRATION

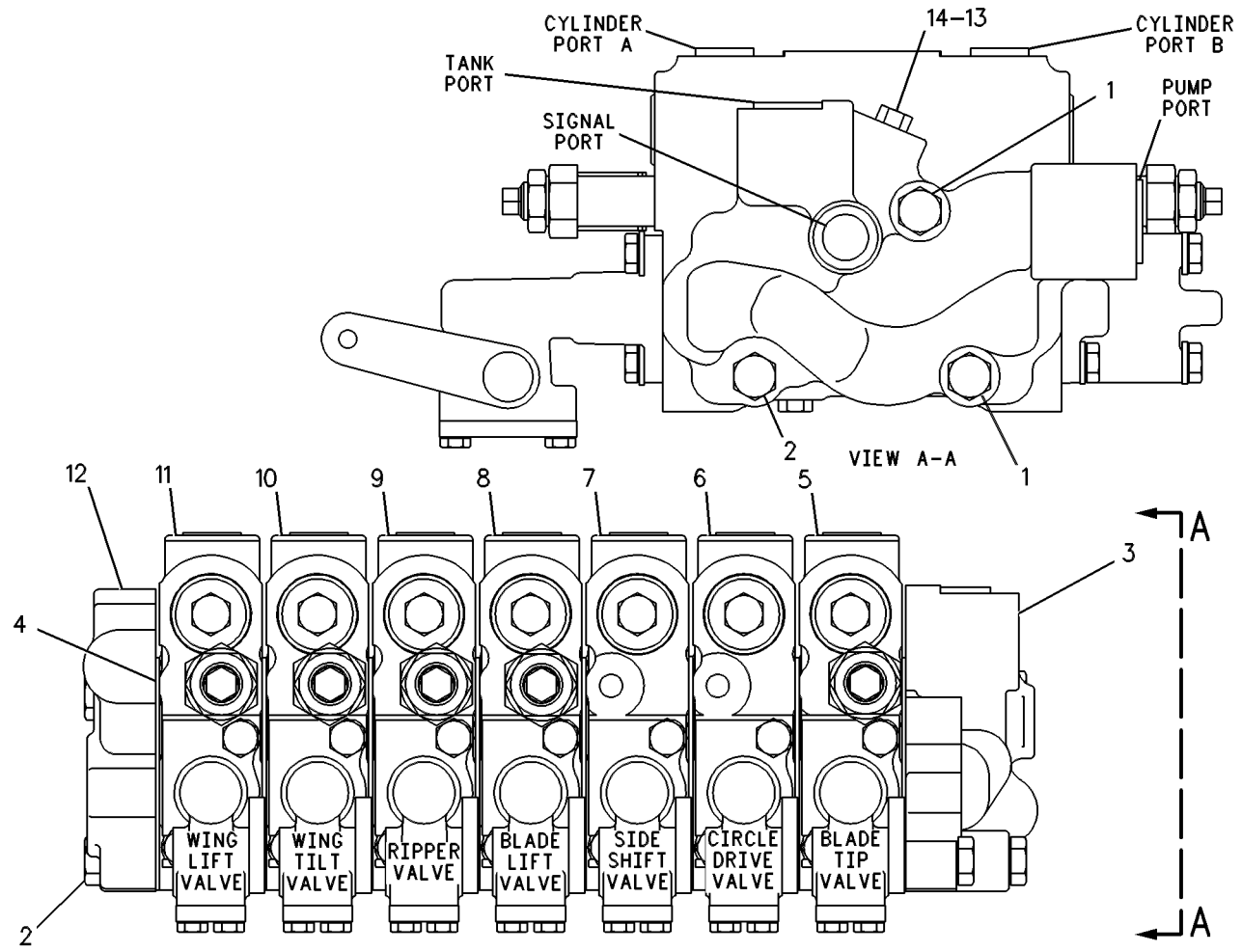

GRAPHIC #1 g00272451

HYDRAULIC SYSTEM

130-3127 VALVE GP-BANK 7—LH—EU

S/N: ASE1-UP
PART OF 124-4200 VALVE & LINKAGE GP
AN ATTACHMENT

SMCS-5051 **i01673085**

NOTE	REF NO	GRAPHIC REF	PART NUMBER	QTY	PART NAME 1 2 3 4 5 6 (PRODUCT LEVEL)	SEE PAGE
M	1	1	**7X-2546**	2	BOLT (M10X1.50X180MM)	
CM	2	1	**137-6720**	4	BOLT-HEX HEAD (M10X1.50X160MM)	
	3	1	**102-8385**	1	MANIFOLD	
	4	1	**101-0509**	8	PLATE-SEAL	
Y	5	1	**107-0554**	1	VALVE GP-CONTROL (BLADE TILT)	540
Y	6	1	**107-0555**	1	VALVE GP-CONTROL (CIRCLE DRIVE)	542
Y	7	1	**107-0556**	1	VALVE GP-CONTROL (SIDE SHIFT)	544
	8	1	**4J-7533**	1	SEAL-O-RING	
Y	9	1	**124-3455**	1	VALVE GP-CONTROL (RIPPER)	556
CY	10	1	**137-8104**	1	VALVE GP-CONTROL (WING TILT)	564
CY	11	1	**150-6649**	1	VALVE GP-CONTROL (WING LIFT)	568
	12	1	**101-9346**	1	COVER	
Y	13	1	**130-3113**	1	VALVE GP-CONTROL (BLADE LIFT)	562
	14	1	**9S-4180**	1	PLUG	

C-CHANGE FROM PREVIOUS TYPE
M-METRIC PART
Y-SEPARATE ILLUSTRATION

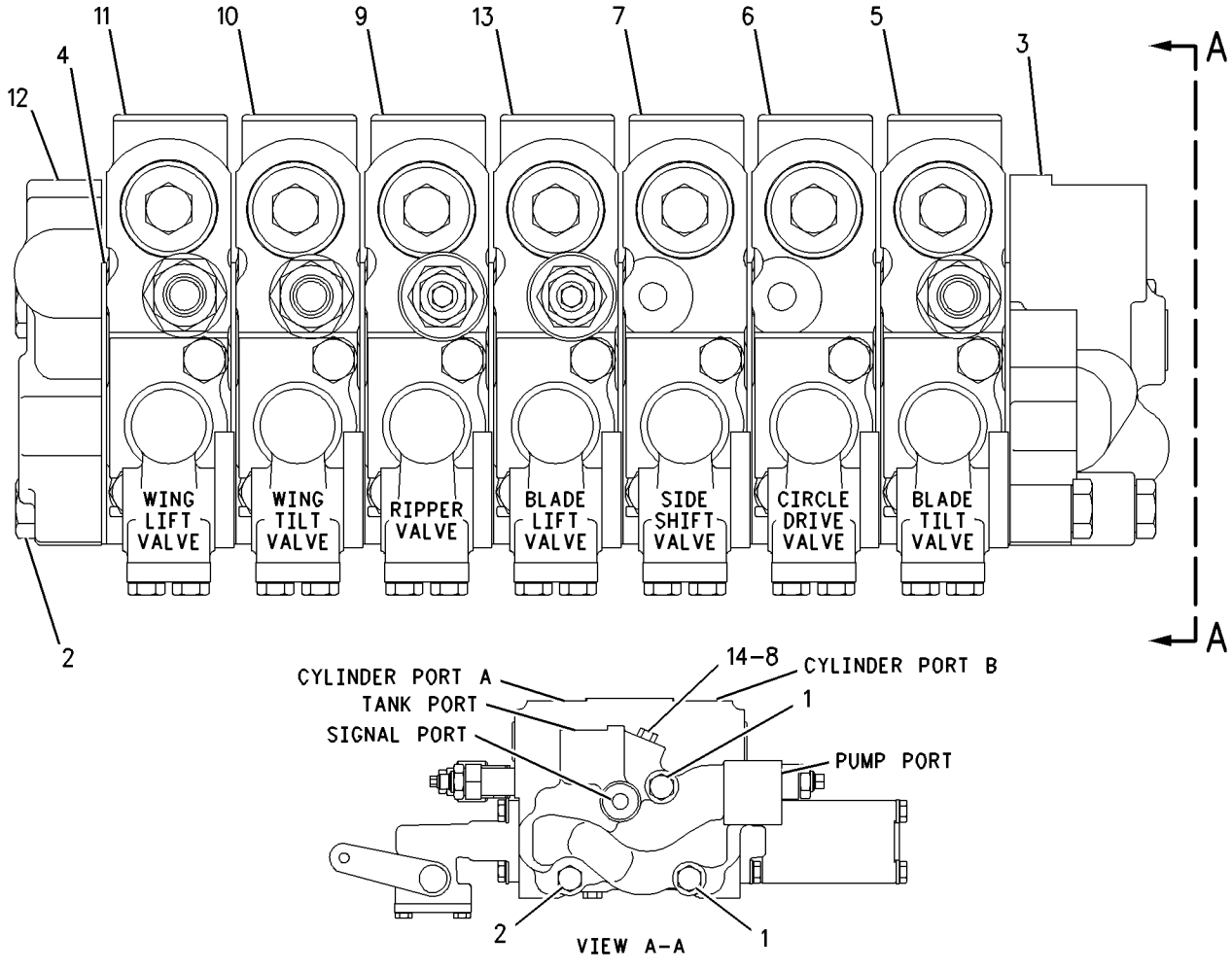

GRAPHIC #1 g00864353

MEMORANDA

HYDRAULIC SYSTEM

9T-5957 VALVE GP-COMBINATION

S/N: ASE1-UP

PART OF 171-6438 LINES GP-PUMP

SMCS-5064 **i01691152**

NOTE	REF NO	GRAPHIC REF	PART NUMBER	QTY	PART NAME 1 2 3 4 5 6 (PRODUCT LEVEL)	SEE PAGE
C	1	1	**9T-5935**	1	BODY	
Y	2	1	**100-6021**	1	VALVE GP-RELIEF (STEERING)	579
C	3	1	**9S-8003**	1	PLUG (1/2-20 THD)	
	4	1	**3T-8236**	1	SPRING	
M	5	1	**6V-5230**	2	BOLT (M10X1.5X60MM)	
	6	1	**6V-3965**	1	FITTING AS (QUICK DISCONNECT)	
	7	1	**3J-1907**	1	SEAL-O-RING	
	8	1	**6V-8647**	2	CONNECTOR	
C	9	1	**3J-7354**	3	SEAL-O-RING	
	10	1	**6E-1923**	1	TUBE AS	
	11	1	**4J-5477**	2	SEAL-O-RING	
Y	12	1	**4T-4935**	1	VALVE GP-RELIEF (MAIN)	576
	13	1	**8T-8987**	1	ELBOW-O-RING	
	14	1	**2M-9780**	1	SEAL-O-RING	
	15	1	**1H-0337**	1	VALVE	
	16	1	**9F-6705**	1	SPRING	
	17	1	**9S-4189**	1	PLUG	
	18	1	**6E-1924**	1	SPRING (OUTER)	
	19	1	**6E-1925**	1	SPRING (INNER)	
	20	1	**5M-2057**	1	SEAL-O-RING	
	21	1	**8M-3175**	2	WASHER-HARD (10.2X16X3MM THK)	
	22	1	**6V-0852**	1	CAP-DUST	
Y	23	1	**6E-4703**	1	VALVE GP-RELIEF (IMPLEMENT SIGNAL)	577
C	24	1	**3K-0360**	1	SEAL-O-RING	
C	25	1	**9S-8001**	2	PLUG	
C	26	1	**4J-7533**	2	SEAL-O-RING	
Y	27	1	**4T-1860**	1	VALVE GP-SHUTTLE (RESOLVER) (SIGNAL)	584
	30	1	**2S-4078**	1	SEAL-O-RING	
	31	1	**9S-8009**	1	PLUG	
	32	1	**4K-1388**	1	SEAL-O-RING	
C	33	1	**6V-8398**	1	SEAL-O-RING	
C	34	1	**7X-4776**	2	RING-BACKUP	
C	35	1	**9S-8002**	1	PLUG	
C	36	1	**131-8350**	1	VALVE GP-COMBINATION (IMPLEMENT SIGNAL)	
C	37	1	**3P-9498**	1	PLUG-ORIFICE	
C	38	1	**9T-5934**	1	VALVE	
C	39	1	**8J-6815**	2	PLUG-ORIFICE	
C	40	1	**1J-9671**	1	SEAL-O-RING	

C-CHANGE FROM PREVIOUS TYPE
M-METRIC PART
Y-SEPARATE ILLUSTRATION

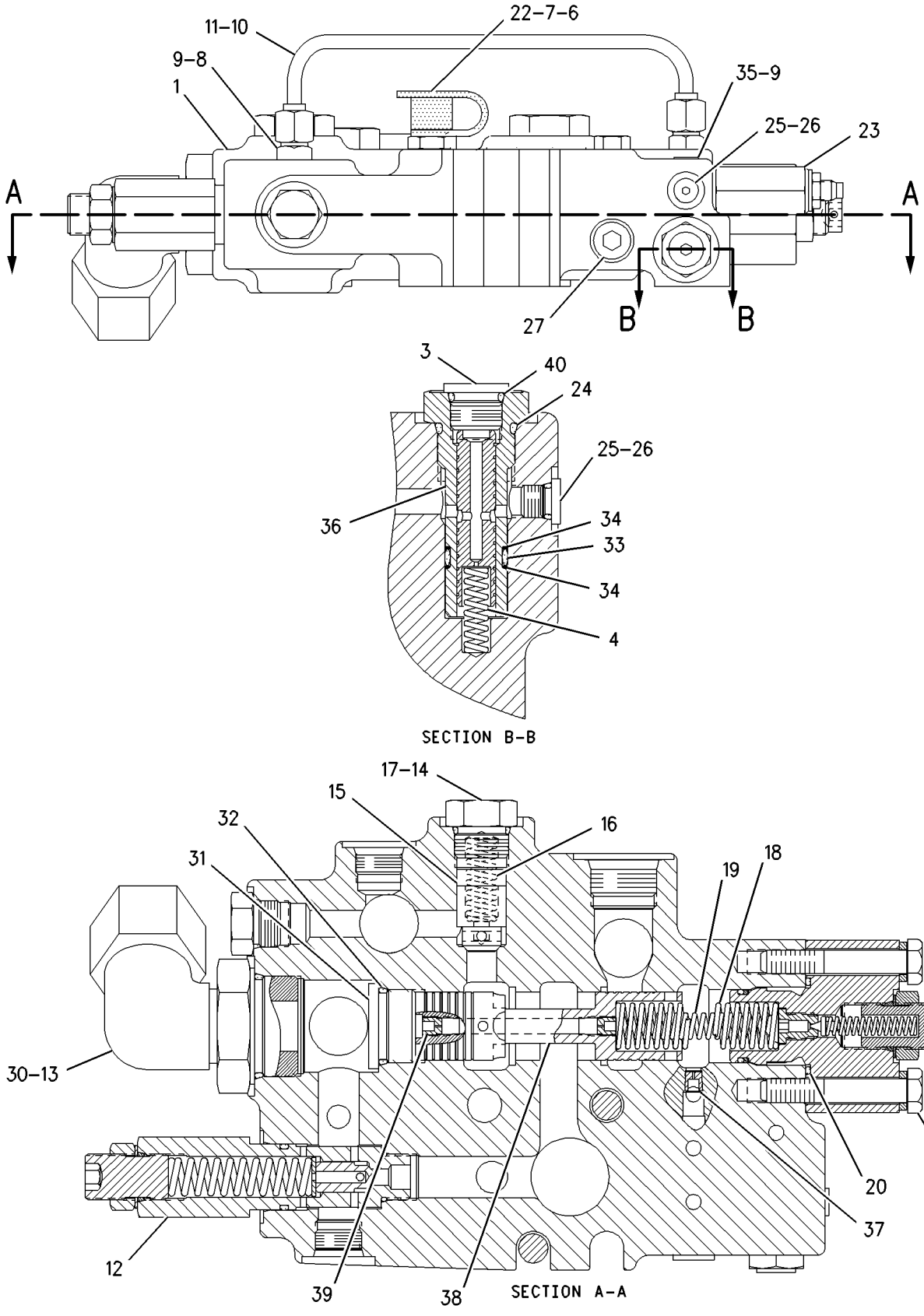

GRAPHIC #1 g00818981

HYDRAULIC SYSTEM

6E-3030 VALVE GP-CONTROL—WHEEL LEAN—RH

S/N: ASE1-UP

PART OF 104-8674, 130-3128 VALVE GP-BANK 4, 104-8675, 130-3132 VALVE GP-BANK 5

ALSO AN ATTACHMENT

SMCS-5051 **i01534180**

NOTE	REF NO	GRAPHIC REF	PART NUMBER	QTY	PART NAME 1 2 3 4 5 6 (PRODUCT LEVEL)	SEE PAGE
	1	1	**6E-3044**	1	BODY	
	2	1	**101-1154**	1	STEM	
	3	1	**101-1978**	1	COVER	
	4	1	**2K-8199**	2	SEAL-O-RING	
M	5	1	**8T-4189**	4	BOLT (M8X1.25X20MM)	
	6	1	**8T-4224**	4	WASHER-HARD (8.8X16X2MM THK)	
	7	1	**101-1984**	1	BODY	
	8	1	**102-7412**	1	SPRING	
	9	1	**101-1973**	4	RETAINER	
	10	1	**101-1971**	1	LEVER	
	11	1	**101-1970**	1	LEVER AS	
	12	1	**8M-4437**	2	SEAL-O-RING	
	13	1	**101-1983**	2	RING-BACKUP (14.65MM ID)	
	14	1	**4D-9986**	1	SEAL-O-RING	
	15	1	**101-2480**	1	COVER	
M	16	1	**8T-4138**	2	BOLT (M6X1X20MM)	
	17	1	**5B-9318**	1	BALL	
	18	1	**6E-3007**	1	SPRING	
	19	1	**6E-4502**	1	PLUG	
	20	1	**4J-7533**	1	SEAL-O-RING	
	21	1	**6E-3019**	1	VALVE	
	22	1	**6E-5153**	1	SPRING	
	23	1	**108-2187**	1	PLUG-PIPE	
	24	1	**9S-8005**	1	PLUG	
	25	1	**3K-0360**	3	SEAL-O-RING	
	26	1	**106-3659**	1	PISTON	
	27	1	**6E-3013**	2	SEAT	
	28	1	**106-3658**	2	VALVE	
	29	1	**9J-0403**	2	SPRING	
	30	1	**9J-0404**	2	PLUG	
	31	1	**7J-9933**	2	SEAL-O-RING	
	32	1	**111-8233**	1	SPRING	

M-METRIC PART

6E-3030 VALVE GP-CONTROL *(contd.)* i01534180

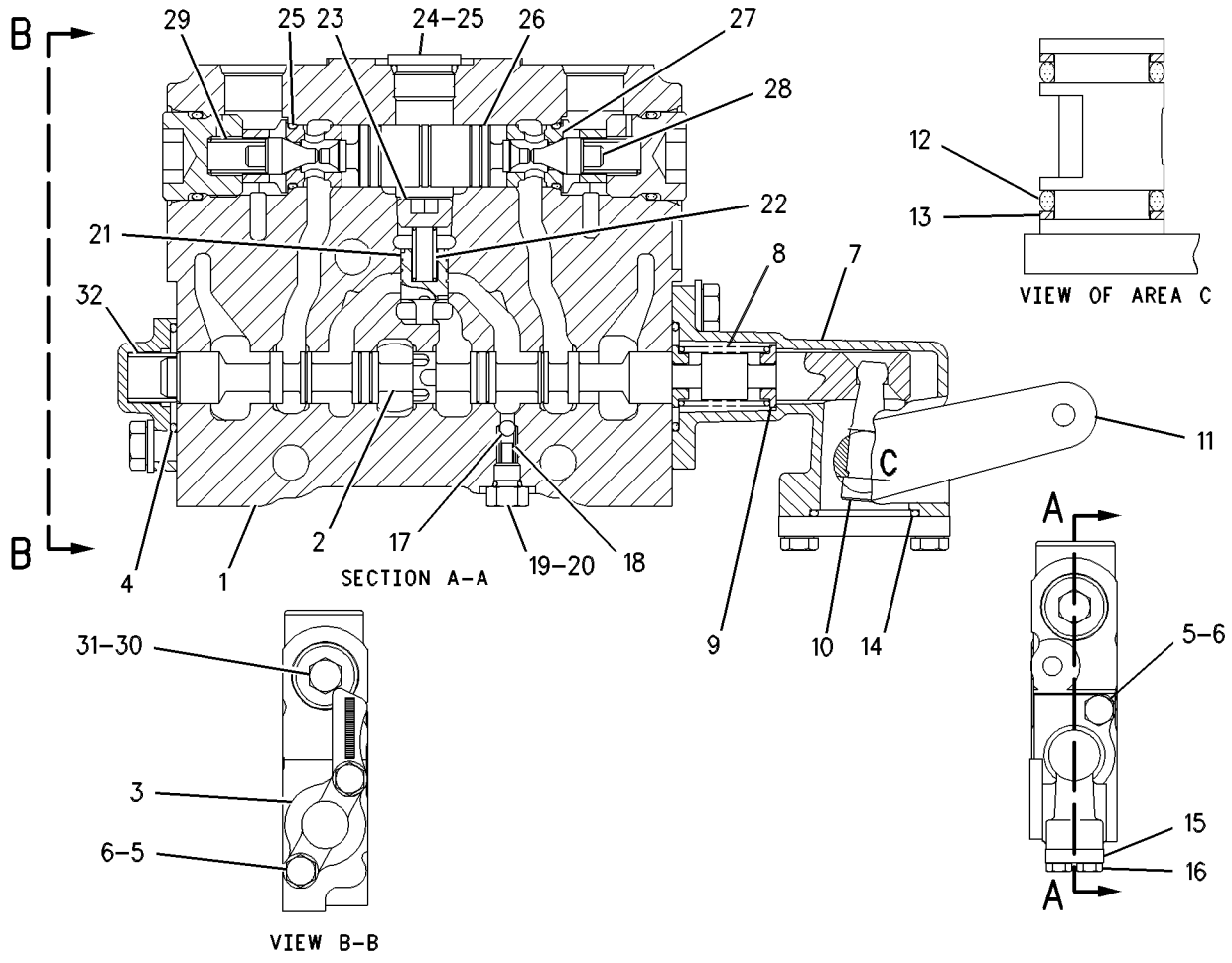

GRAPHIC #1 g00484418

HYDRAULIC SYSTEM

107-0547 VALVE GP-CONTROL—PLOW/DOZER LIFT—RH

S/N: ASE1-UP
PART OF 104-8675 VALVE GP-BANK 5
AN ATTACHMENT

SMCS-5051 **i01652543**

NOTE	REF NO	GRAPHIC REF	PART NUMBER	QTY	PART NAME 1 2 3 4 5 6 (PRODUCT LEVEL)	SEE PAGE
	1	1	**6E-3059**	1	BODY	
	2	1	**101-1147**	1	STEM	
	3	1	**101-1980**	1	HOUSING	
	4	1	**101-1972**	1	DETENT	
Y	5	1	**108-4916**	1	DETENT GP-CONTROL VALVE (PLOW/DOZER LIFT)	438
	6	1	**5B-9318**	1	BALL	
M	7	1	**8T-6869**	2	BOLT (M8X1.25X60MM)	
	8	1	**2K-8199**	2	SEAL-O-RING	
M	9	1	**8T-4189**	2	BOLT (M8X1.25X20MM)	
	10	1	**8T-4224**	4	WASHER-HARD (8.8X16X2MM THK)	
	11	1	**101-1984**	1	BODY	
	12	1	**102-7412**	1	SPRING	
	13	1	**101-1973**	4	RETAINER	
	14	1	**101-1971**	1	LEVER	
	15	1	**101-1970**	1	LEVER AS	
	16	1	**8M-4437**	2	SEAL-O-RING	
	17	1	**101-1983**	2	RING-BACKUP (14.65MM ID)	
	18	1	**4D-9986**	1	SEAL-O-RING	
	19	1	**101-2480**	1	COVER	
M	20	1	**8T-4138**	2	BOLT (M6X1X20MM)	
	21	1	**6E-3007**	1	SPRING	
	22	1	**6E-4502**	1	PLUG	
	23	1	**4J-7533**	1	SEAL-O-RING	
	24	1	**6E-3019**	1	VALVE	
	25	1	**6E-5153**	1	SPRING	
	26	1	**108-2187**	1	PLUG-PIPE	
	27	1	**9S-8005**	1	PLUG	
	28	1	**3K-0360**	3	SEAL-O-RING	
	29	1	**106-3660**	2	PISTON	
	30	1	**6E-3013**	2	SEAT	
	31	1	**106-3658**	2	VALVE	
	32	1	**9J-0403**	2	SPRING	
	33	1	**9J-0404**	2	PLUG	
	34	1	**7J-9933**	2	SEAL-O-RING	
YC	35	1	**139-8474**	1	VALVE GP-RELIEF (PLOW/DOZER LIFT)	581
	36	1	**111-8234**	1	SPRING	

C-CHANGE FROM PREVIOUS TYPE
M-METRIC PART
Y-SEPARATE ILLUSTRATION

107-0547 VALVE GP-CONTROL *(contd.)* **i01652543**

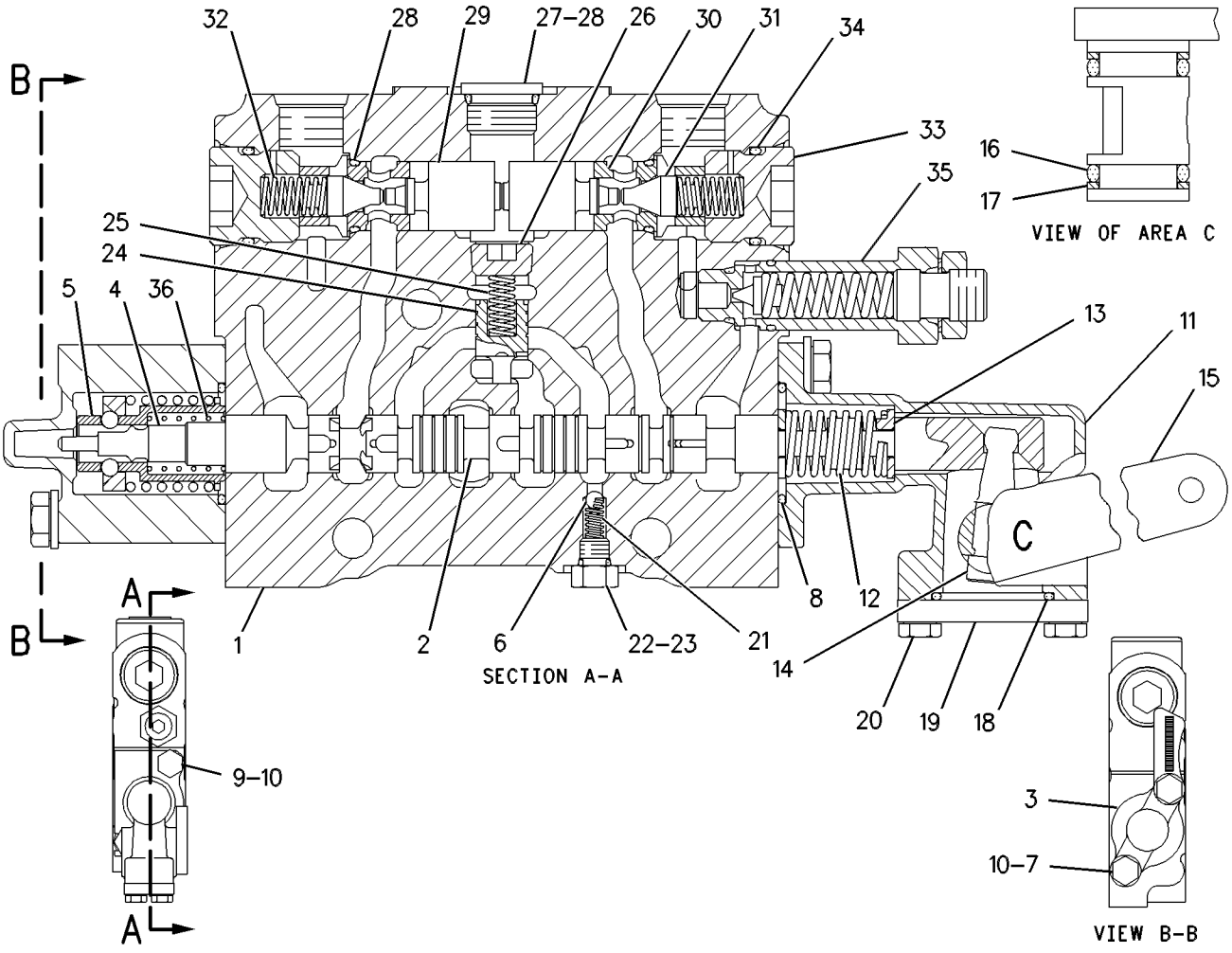

GRAPHIC #1 g00484520

HYDRAULIC SYSTEM

107-0554 VALVE GP-CONTROL–BLADE TILT–LH

S/N: ASE1-UP

PART OF 104-8653, 130-3125 VALVE GP-BANK 4, 104-8654, 130-3126 VALVE GP-BANK 5, 104-8656, 130-3127, 4Z-6358 VALVE GP-BANK 7

ALSO AN ATTACHMENT

SMCS-5051 **i01673109**

NOTE	REF NO	GRAPHIC REF	PART NUMBER	QTY	PART NAME 1 2 3 4 5 6 (PRODUCT LEVEL)	SEE PAGE
	1	1	**6E-4599**	1	BODY	
	2	1	**102-4569**	1	STEM	
	3	1	**101-1978**	1	COVER	
	4	1	**2K-8199**	2	SEAL-O-RING	
M	5	1	**8T-4189**	4	BOLT (M8X1.25X20MM)	
	6	1	**8T-4224**	4	WASHER-HARD (8.8X16X2MM THK)	
	7	1	**101-1984**	1	BODY	
	8	1	**7J-9933**	2	SEAL-O-RING	
CY	9	1	**139-8472**	1	VALVE GP-RELIEF (BLADE TILT)	580
	10	1	**111-8233**	1	SPRING	
	11	1	**102-7412**	1	SPRING	
	12	1	**101-1973**	4	RETAINER	
	13	1	**101-1971**	1	LEVER	
	14	1	**101-1982**	1	LEVER AS	
	15	1	**8M-4437**	2	SEAL-O-RING	
	16	1	**101-1983**	2	RING-BACKUP (14.65MM ID)	
	17	1	**4D-9986**	1	SEAL-O-RING	
	18	1	**101-2480**	1	COVER	
M	19	1	**8T-4138**	2	BOLT (M6X1X20MM)	
	20	1	**5B-9318**	1	BALL	
	21	1	**6E-3007**	1	SPRING	
	22	1	**6E-4502**	1	PLUG	
	23	1	**4J-7533**	1	SEAL-O-RING	
	24	1	**6E-3019**	1	VALVE	
	25	1	**6E-5153**	1	SPRING	
	26	1	**108-2187**	1	PLUG-PIPE	
	27	1	**9J-0403**	2	SPRING	
	28	1	**9J-0404**	2	PLUG	
	29	1	**9S-8005**	1	PLUG	
	30	1	**3K-0360**	3	SEAL-O-RING	
	31	1	**106-3659**	1	PISTON	
	32	1	**6E-3013**	2	SEAT	
	33	1	**106-3658**	2	VALVE	

C-CHANGE FROM PREVIOUS TYPE
M-METRIC PART
Y-SEPARATE ILLUSTRATION

107-0554 VALVE GP-CONTROL *(contd.)* i01673109

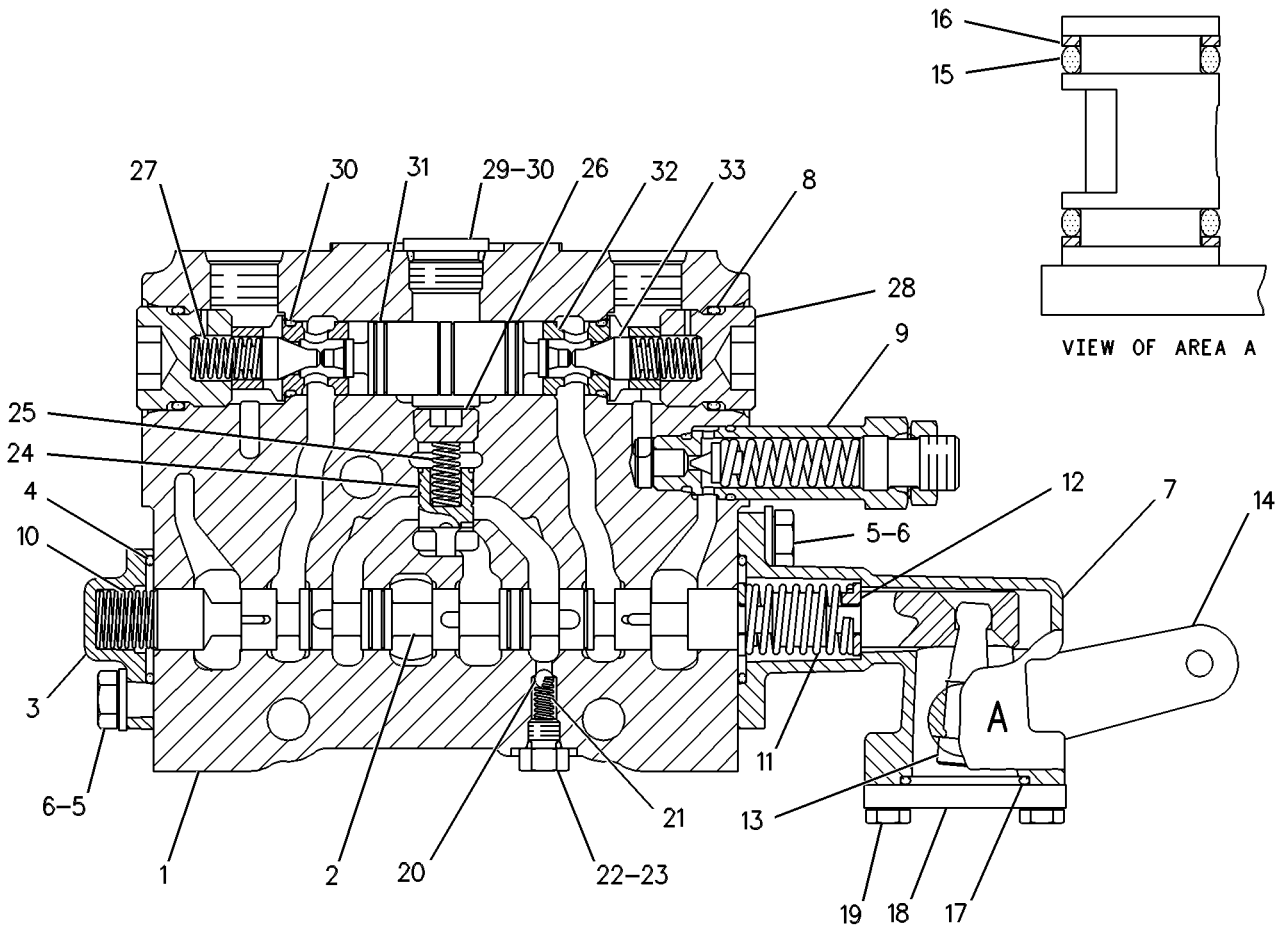

GRAPHIC #1 g00109623

HYDRAULIC SYSTEM

107-0555 VALVE GP-CONTROL—CIRCLE DRIVE

S/N: ASE1-UP

PART OF 104-8653, 130-3125 VALVE GP-BANK 4, 104-8654, 130-3126 VALVE GP-BANK 5, 104-8656, 130-3127, 4Z-6358 VALVE GP-BANK 7

ALSO AN ATTACHMENT

SMCS-5051 **i00128789**

NOTE	REF NO	GRAPHIC REF	PART NUMBER	QTY	PART NAME 1 2 3 4 5 6 (PRODUCT LEVEL)	SEE PAGE
	1	1	**6E-3044**	1	BODY	
	2	1	**102-4573**	1	STEM	
	3	1	**101-1978**	1	COVER	
	4	1	**2K-8199**	2	SEAL-O-RING (28.24MM ID)	
M	5	1	**8T-4189**	4	BOLT (M8X1.25X20MM)	
	6	1	**8T-4224**	4	WASHER-HARD (2MM THK)	
	7	1	**101-1984**	1	BODY	
	8	1	**102-7412**	1	SPRING	
	9	1	**101-1973**	4	RETAINER	
	10	1	**101-1971**	1	LEVER	
	11	1	**101-1982**	1	LEVER AS	
	12	1	**8M-4437**	2	SEAL-O-RING	
	13	1	**101-1983**	2	RING-BACKUP	
	14	1	**4D-9986**	1	SEAL-O-RING (23.47MM ID)	
	15	1	**101-2480**	1	COVER	
M	16	1	**8T-4138**	2	BOLT (M6X1.0X20MM)	
	17	1	**5B-9318**	1	BALL	
	18	1	**6E-3007**	1	SPRING	
	19	1	**6E-4502**	1	PLUG	
	20	1	**4J-7533**	1	SEAL-O-RING (6.07MM ID)	
	21	1	**6E-3019**	1	VALVE	
	22	1	**6E-5153**	1	SPRING	
	23	1	**108-2187**	1	PLUG-PIPE	
	24	1	**9S-8005**	1	PLUG-O-RING (3/4-16 THD)	
	25	1	**3K-0360**	3	SEAL-O-RING (16.36MM ID)	
	26	1	**106-3659**	1	PISTON	
	27	1	**6E-3013**	2	SEAT	
	28	1	**106-3658**	2	VALVE	
	29	1	**9J-0403**	2	SPRING	
	30	1	**9J-0404**	2	PLUG	
	31	1	**7J-9933**	2	SEAL-O-RING (21.89MM ID)	
	32	1	**111-8233**	1	SPRING	

M-METRIC PART

107-0555 VALVE GP-CONTROL *(contd.)* **i00128789**

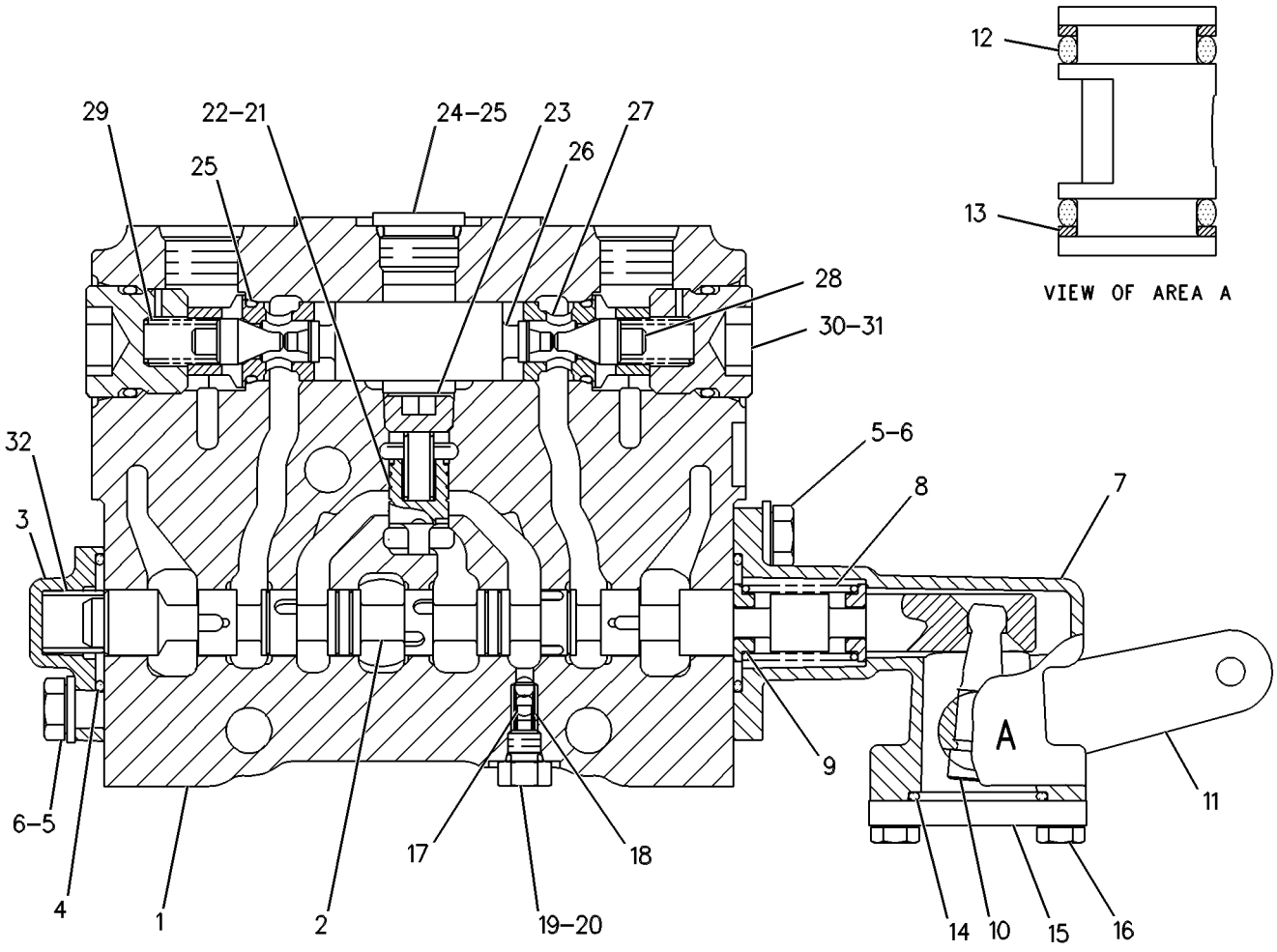

GRAPHIC #1 g00108944

HYDRAULIC SYSTEM

107-0556 VALVE GP-CONTROL—SIDESHIFT—LH

S/N: ASE1-UP

PART OF 104-8653, 130-3125 VALVE GP-BANK 4, 104-8654, 130-3126 VALVE GP-BANK 5, 104-8656, 130-3127, 4Z-6358 VALVE GP-BANK 7

ALSO AN ATTACHMENT

SMCS-5051 **i01684624**

NOTE	REF NO	GRAPHIC REF	PART NUMBER	QTY	PART NAME 1 2 3 4 5 6 (PRODUCT LEVEL)	SEE PAGE
	1	1	**6E-3058**	1	BODY	
	2	1	**102-4571**	1	STEM	
	3	1	**101-1978**	1	COVER	
	4	1	**2K-8199**	2	SEAL-O-RING	
M	5	1	**8T-4189**	4	BOLT (M8X1.25X20MM)	
	6	1	**8T-4224**	4	WASHER-HARD (8.8X16X2MM THK)	
	7	1	*101-1984*	1	BODY	
	8	1	**7J-9933**	2	SEAL-O-RING	
CY	9	1	**139-8472**	1	VALVE GP-RELIEF	580
	10	1	**111-8233**	1	SPRING	
	11	1	**102-7412**	1	SPRING	
	12	1	**101-1973**	4	RETAINER	
	13	1	**101-1971**	1	LEVER	
	14	1	**101-1982**	1	LEVER AS	
	15	1	**8M-4437**	2	SEAL-O-RING	
	16	1	**101-1983**	2	RING-BACKUP (14.65MM ID)	
	17	1	**4D-9986**	1	SEAL-O-RING	
	18	1	**101-2480**	1	COVER	
M	19	1	**8T-4138**	2	BOLT (M6X1X20MM)	
	20	1	**5B-9318**	1	BALL	
	21	1	**6E-3007**	1	SPRING	
	22	1	**6E-4502**	1	PLUG	
	23	1	**4J-7533**	1	SEAL-O-RING	
	24	1	**6E-3019**	1	VALVE (COMPENSATOR)	
	25	1	**6E-5153**	1	SPRING	
	26	1	**108-2187**	1	PLUG-PIPE	
	27	1	**9J-0403**	2	SPRING	
	28	1	**9J-0404**	2	PLUG	
	29	1	**9S-8005**	1	PLUG	
	30	1	**3K-0360**	3	SEAL-O-RING	
	31	1	**106-3659**	1	PISTON	
	32	1	**6E-3013**	2	SEAT	
	33	1	**106-3658**	2	VALVE (LOCK POPPET)	

C-CHANGE FROM PREVIOUS TYPE
M-METRIC PART
Y-SEPARATE ILLUSTRATION

107-0556 VALVE GP-CONTROL *(contd.)* i01684624

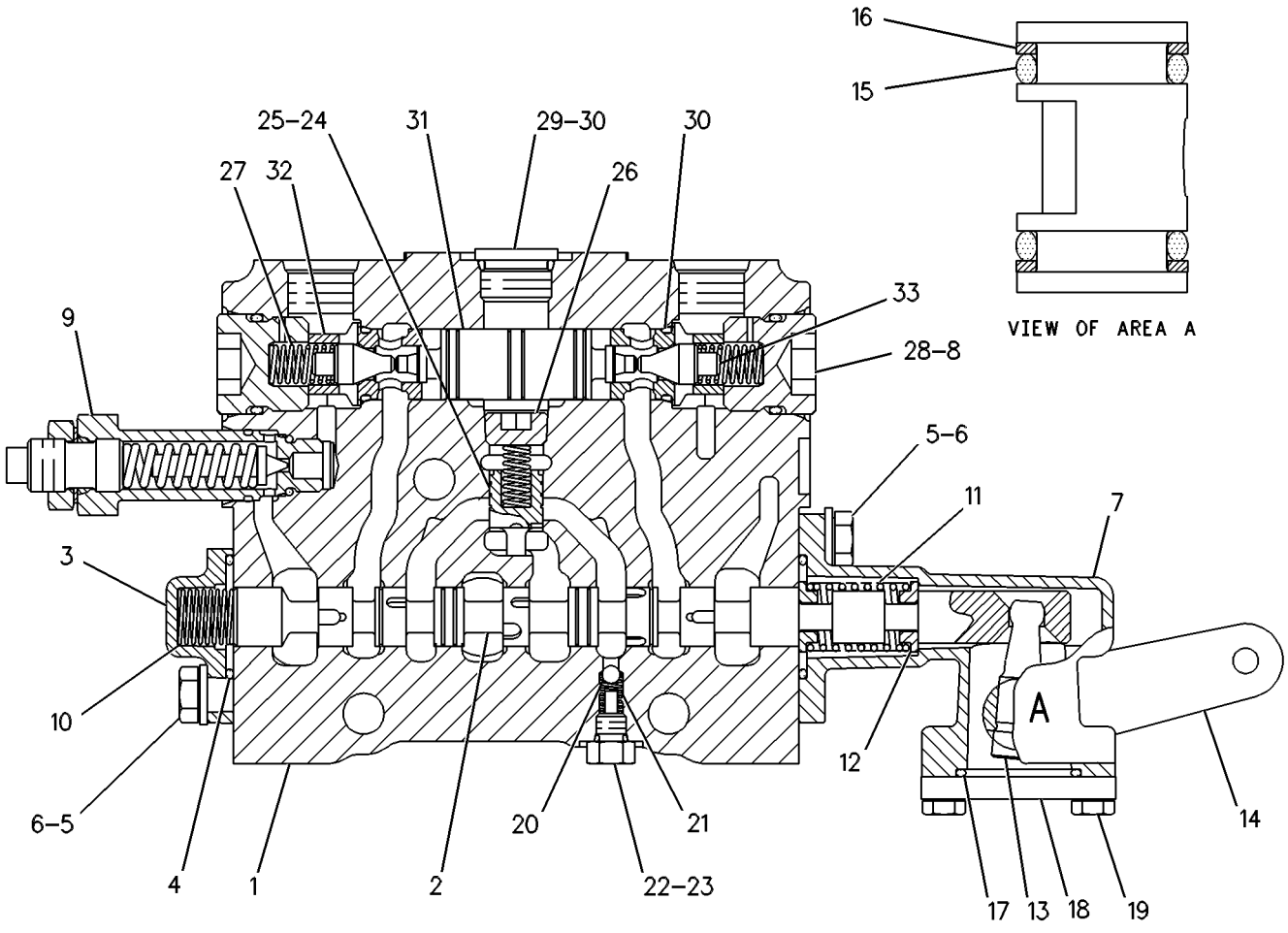

GRAPHIC #1 g00272702

HYDRAULIC SYSTEM

107-0557 VALVE GP-CONTROL–BLADE LIFT–LH

S/N: ASE1-UP

PART OF 104-8653 VALVE GP-BANK 4, 104-8654 VALVE GP-BANK 5, 104-8656, 4Z-6358 VALVE GP-BANK 7

ALSO AN ATTACHMENT

SMCS-5051 **i01685339**

NOTE	REF NO	GRAPHIC REF	PART NUMBER	QTY	PART NAME 1 2 3 4 5 6 (PRODUCT LEVEL)	SEE PAGE
	1	1	**6E-3043**	1	BODY	
	2	1	**102-4575**	1	STEM	
	3	1	**101-1980**	1	HOUSING	
	4	1	**101-1972**	1	DETENT	
Y	5	1	**108-4916**	1	DETENT GP-CONTROL VALVE (BLADE LIFT)	438
	6	1	**5B-9318**	1	BALL	
M	7	1	**8T-6869**	2	BOLT (M8X1.25X60MM)	
	8	1	**2K-8199**	2	SEAL-O-RING	
M	9	1	**8T-4189**	2	BOLT (M8X1.25X20MM)	
	10	1	**8T-4224**	4	WASHER-HARD (8.8X16X2MM THK)	
	11	1	**101-1984**	1	BODY	
	12	1	**102-7412**	1	SPRING	
	13	1	**101-1973**	4	RETAINER	
	14	1	**101-1971**	1	LEVER	
	15	1	**101-1982**	1	LEVER AS	
	16	1	**8M-4437**	2	SEAL-O-RING	
	17	1	**101-1983**	2	RING-BACKUP (14.65MM ID)	
	18	1	**4D-9986**	1	SEAL-O-RING	
	19	1	**101-2480**	1	COVER	
M	20	1	**8T-4138**	2	BOLT (M6X1X20MM)	
	21	1	**6E-3007**	1	SPRING	
	22	1	**6E-4502**	1	PLUG	
	23	1	**4J-7533**	1	SEAL-O-RING	
	24	1	**6E-3019**	1	VALVE (COMPENSATOR)	
	25	1	**6E-5153**	1	SPRING	
	26	1	**108-2187**	1	PLUG-PIPE	
	27	1	**9S-8005**	1	PLUG	
	28	1	**3K-0360**	3	SEAL-O-RING	
	29	1	**106-3660**	2	PISTON	
	30	1	**6E-3013**	2	SEAT	
	31	1	**106-3658**	2	VALVE (POPPET)	
	32	1	**9J-0403**	2	SPRING	
	33	1	**9J-0404**	2	PLUG	
	34	1	**7J-9933**	2	SEAL-O-RING	
CY	35	1	**139-8474**	1	VALVE GP-RELIEF	581
	36	1	**111-8234**	1	SPRING	

C-CHANGE FROM PREVIOUS TYPE
M-METRIC PART
Y-SEPARATE ILLUSTRATION

107-0557 VALVE GP-CONTROL *(contd.)* i01685339

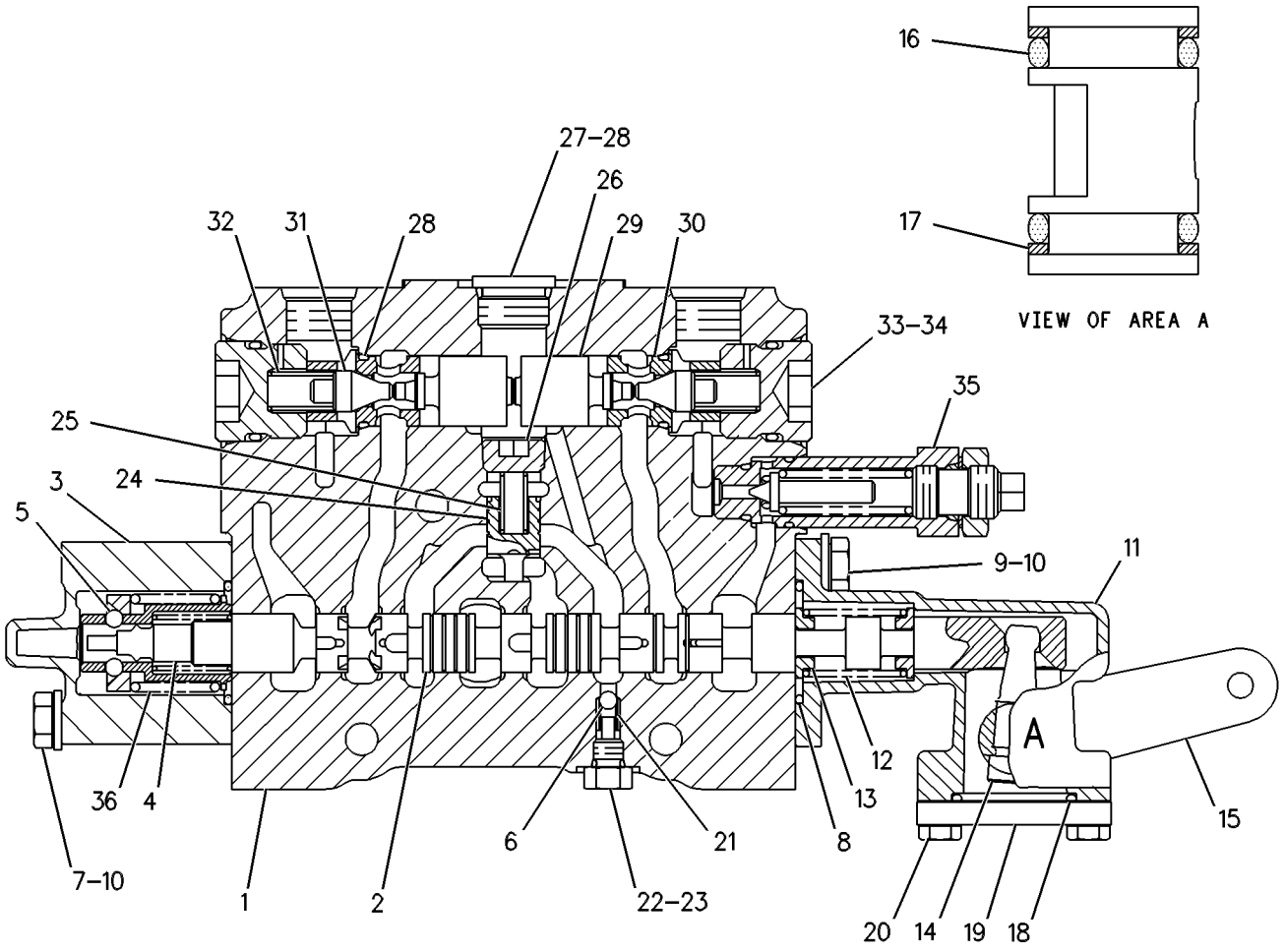

GRAPHIC #1 g00108915

HYDRAULIC SYSTEM

107-0559 VALVE GP-CONTROL–RIPPER–LH

S/N: ASE1-UP

PART OF 104-8654 VALVE GP-BANK 5, 104-8656, 4Z-6358 VALVE GP-BANK 7

AN ATTACHMENT

SMCS-5051 **i01685346**

NOTE	REF NO	GRAPHIC REF	PART NUMBER	QTY	PART NAME 1 2 3 4 5 6 (PRODUCT LEVEL)	SEE PAGE
	1	1	**6E-4599**	1	BODY	
	2	1	**102-4572**	1	STEM	
	3	1	**101-1978**	1	COVER	
	4	1	**2K-8199**	2	SEAL-O-RING	
M	5	1	**8T-4189**	4	BOLT (M8X1.25X20MM)	
	6	1	**8T-4224**	4	WASHER-HARD (8.8X16X2MM THK)	
	7	1	**101-1984**	1	BODY	
	8	1	**7J-9933**	2	SEAL-O-RING	
CY	9	1	**139-8472**	1	VALVE GP-RELIEF	580
	10	1	**111-8233**	1	SPRING	
	11	1	**102-7412**	1	SPRING	
	12	1	**101-1973**	4	RETAINER	
	13	1	**101-1971**	1	LEVER	
	14	1	**101-1982**	1	LEVER AS	
	15	1	**8M-4437**	2	SEAL-O-RING	
	16	1	**101-1983**	2	RING-BACKUP (14.65MM ID)	
	17	1	**4D-9986**	1	SEAL-O-RING	
	18	1	**101-2480**	1	COVER	
M	19	1	**8T-4138**	2	BOLT (M6X1X20MM)	
	20	1	**5B-9318**	1	BALL	
	21	1	**6E-3007**	1	SPRING	
	22	1	**6E-4502**	1	PLUG	
	23	1	**4J-7533**	1	SEAL-O-RING	
	24	1	**6E-3019**	1	VALVE (COMPENSATOR)	
	25	1	**6E-5153**	1	SPRING	
	26	1	**108-2187**	1	PLUG-PIPE	
	27	1	**9J-0403**	2	SPRING	
	28	1	**9J-0404**	2	PLUG	
	29	1	**9S-8005**	1	PLUG	
	30	1	**3K-0360**	3	SEAL-O-RING	
C	31	1	**106-3659**	1	PISTON	
	32	1	**6E-3013**	2	SEAT	
	33	1	**106-3658**	2	VALVE (POPPET)	

C-CHANGE FROM PREVIOUS TYPE
M-METRIC PART
Y-SEPARATE ILLUSTRATION

107-0559 VALVE GP-CONTROL *(contd.)* **i01685346**

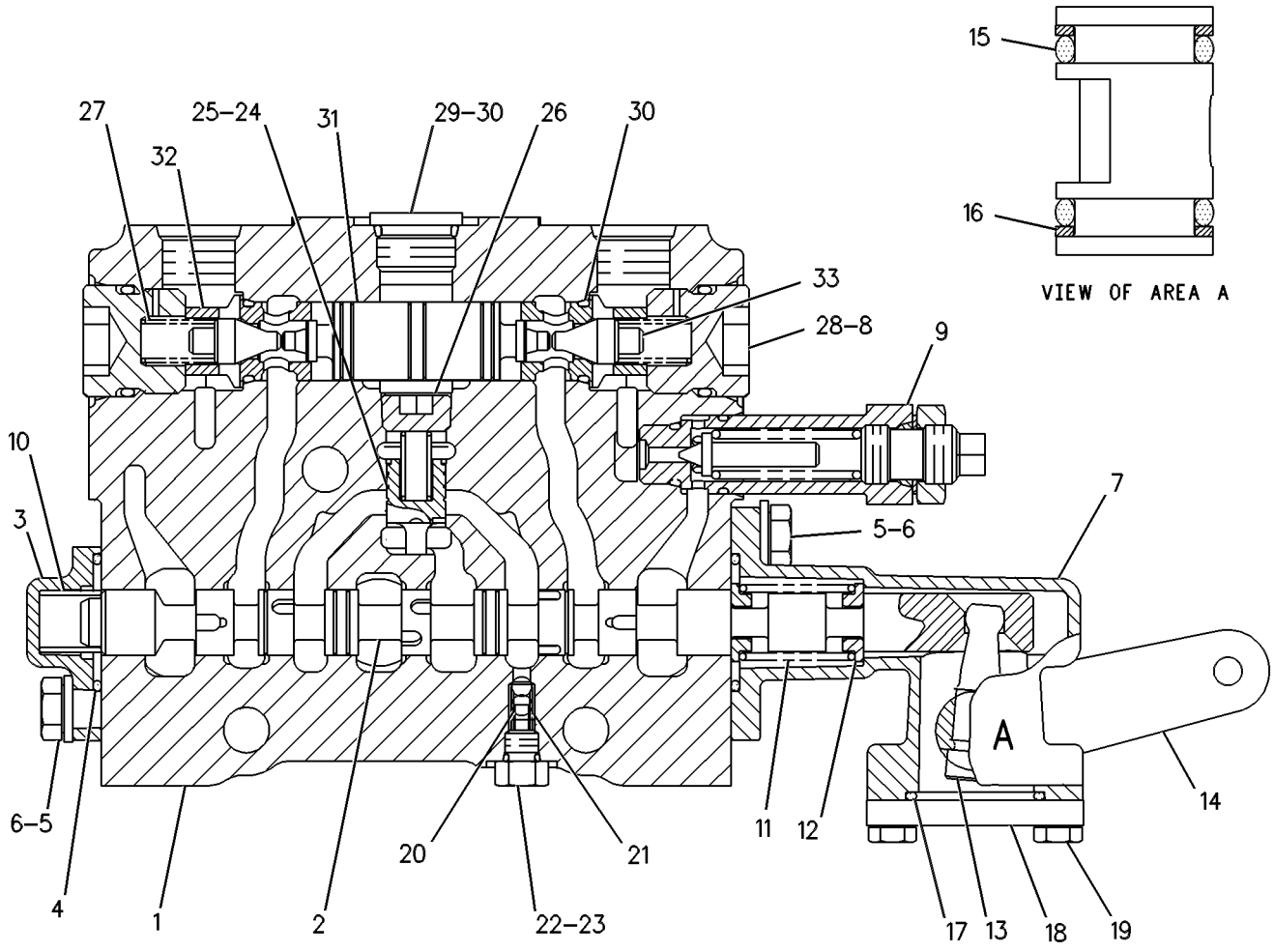

GRAPHIC #1 g00272675

HYDRAULIC SYSTEM

107-0560 VALVE GP-CONTROL—ARTICULATION

S/N: ASE1-UP

PART OF 104-8674, 130-3128 VALVE GP-BANK 4, 104-8675, 130-3132 VALVE GP-BANK 5

ALSO AN ATTACHMENT

SMCS-5051 **i01685350**

NOTE	REF NO	GRAPHIC REF	PART NUMBER	QTY	PART NAME 1 2 3 4 5 6 (PRODUCT LEVEL)	SEE PAGE
	1	1	**6E-3044**	1	BODY	
	2	1	**102-4574**	1	STEM	
	3	1	**101-1978**	1	COVER	
	4	1	**2K-8199**	2	SEAL-O-RING	
M	5	1	**8T-4189**	4	BOLT (M8X1.25X20MM)	
	6	1	**8T-4224**	4	WASHER-HARD (8.8X16X2MM THK)	
	7	1	**101-1984**	1	BODY	
	8	1	**102-7412**	1	SPRING	
	9	1	**101-1973**	4	RETAINER	
	10	1	**101-1971**	1	LEVER	
	11	1	**101-1970**	1	LEVER AS	
	12	1	**8M-4437**	2	SEAL-O-RING	
	13	1	**101-1983**	2	RING-BACKUP (14.65MM ID)	
	14	1	**4D-9986**	1	SEAL-O-RING	
	15	1	**101-2480**	1	COVER	
M	16	1	**8T-4138**	2	BOLT (M6X1X20MM)	
	17	1	**5B-9318**	1	BALL	
	18	1	**6E-3007**	1	SPRING	
	19	1	**6E-4502**	1	PLUG	
	20	1	**4J-7533**	1	SEAL-O-RING	
	21	1	**6E-3019**	1	VALVE (COMPENSATOR)	
	22	1	**6E-5153**	1	SPRING	
	23	1	**108-2187**	1	PLUG-PIPE	
	24	1	**9S-8005**	1	PLUG	
	25	1	**3K-0360**	3	SEAL-O-RING	
	26	1	**106-3659**	1	PISTON	
	27	1	**6E-3013**	2	SEAT	
	28	1	**106-3658**	2	VALVE (POPPET)	
	29	1	**9J-0403**	2	SPRING	
	30	1	**9J-0404**	2	PLUG	
	31	1	**111-8233**	1	SPRING	
	32	1	**7J-9933**	2	SEAL-O-RING	

M-METRIC PART

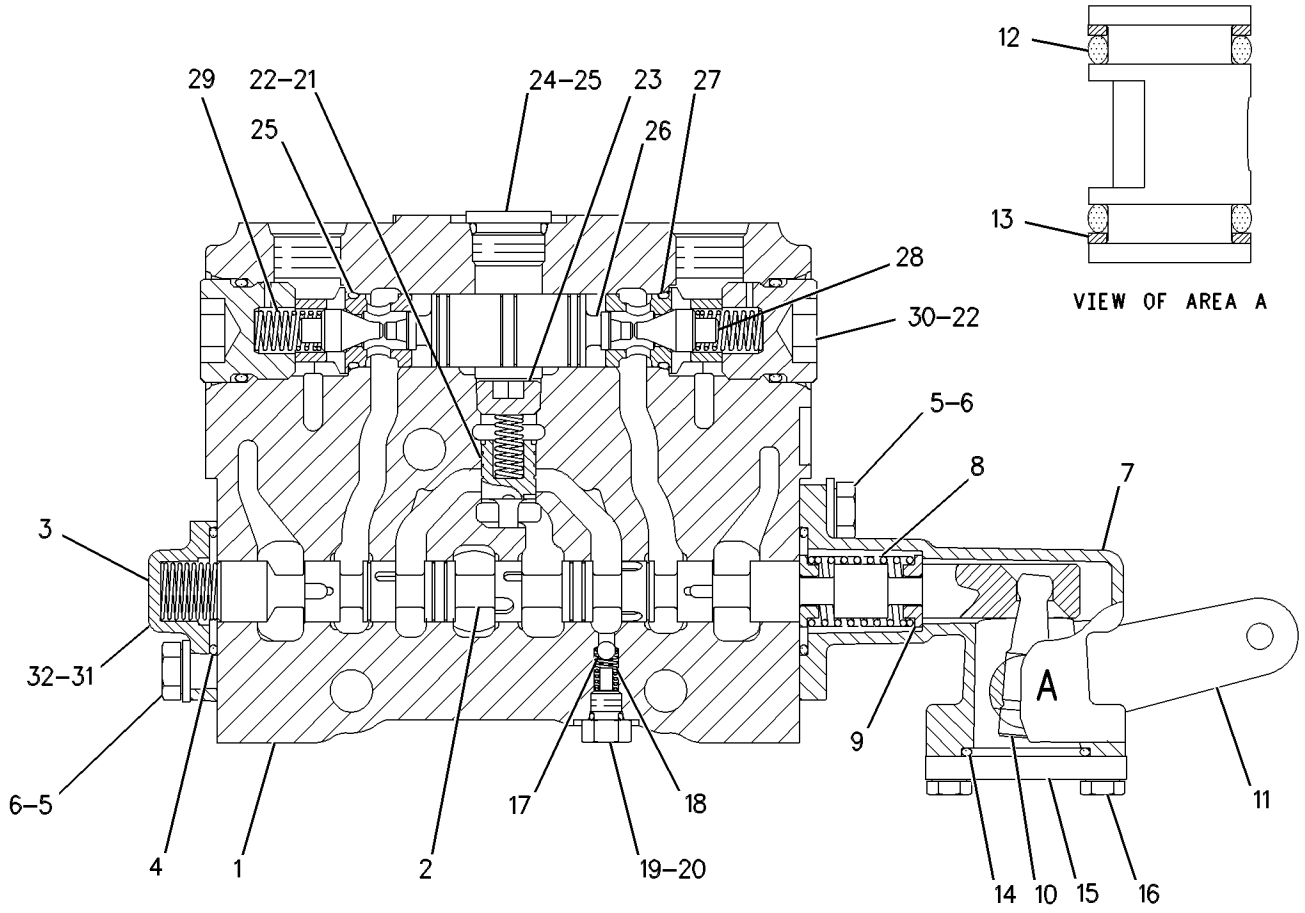

GRAPHIC #1 g00293777

HYDRAULIC SYSTEM

107-0561 VALVE GP-CONTROL–CENTERSHIFT

S/N: ASE1-UP

PART OF 104-8674, 130-3128 VALVE GP-BANK 4, 104-8675, 130-3132 VALVE GP-BANK 5

ALSO AN ATTACHMENT

SMCS-5051 **i01685353**

NOTE	REF NO	GRAPHIC REF	PART NUMBER	QTY	PART NAME 1 2 3 4 5 6 (PRODUCT LEVEL)	SEE PAGE
	1	1	**6E-3044**	1	BODY	
	2	1	**106-7995**	1	STEM	
	3	1	**101-1978**	1	COVER	
	4	1	**2K-8199**	2	SEAL-O-RING	
M	5	1	**8T-4189**	4	BOLT (M8X1.25X20MM)	
	6	1	**8T-4224**	4	WASHER-HARD (8.8X16X2MM THK)	
	7	1	**101-1984**	1	BODY	
	8	1	**102-7412**	1	SPRING	
	9	1	**101-1973**	4	RETAINER	
	10	1	**101-1971**	1	LEVER	
	11	1	**101-1970**	1	LEVER AS	
	12	1	**8M-4437**	2	SEAL-O-RING	
	13	1	**101-1983**	2	RING-BACKUP (14.65MM ID)	
	14	1	**4D-9986**	1	SEAL-O-RING	
	15	1	**101-2480**	1	COVER	
M	16	1	**8T-4138**	2	BOLT (M6X1X20MM)	
	17	1	**5B-9318**	1	BALL	
	18	1	**6E-3007**	1	SPRING	
	19	1	**6E-4502**	1	PLUG	
	20	1	**4J-7533**	1	SEAL-O-RING	
	21	1	**6E-3019**	1	VALVE (COMPENSATOR)	
	22	1	**6E-5153**	1	SPRING	
	23	1	**108-2187**	1	PLUG-PIPE	
	24	1	**9S-8005**	1	PLUG	
	25	1	**3K-0360**	3	SEAL-O-RING	
	26	1	**106-3659**	1	PISTON	
	27	1	**6E-3013**	2	SEAT	
	28	1	**106-3658**	2	VALVE (POPPET)	
	29	1	**9J-0403**	2	SPRING	
	30	1	**9J-0404**	2	PLUG	
	31	1	**111-8233**	1	SPRING	
	32	1	**7J-9933**	2	SEAL-O-RING	

M-METRIC PART

107-0561 VALVE GP-CONTROL *(contd.)* i01685353

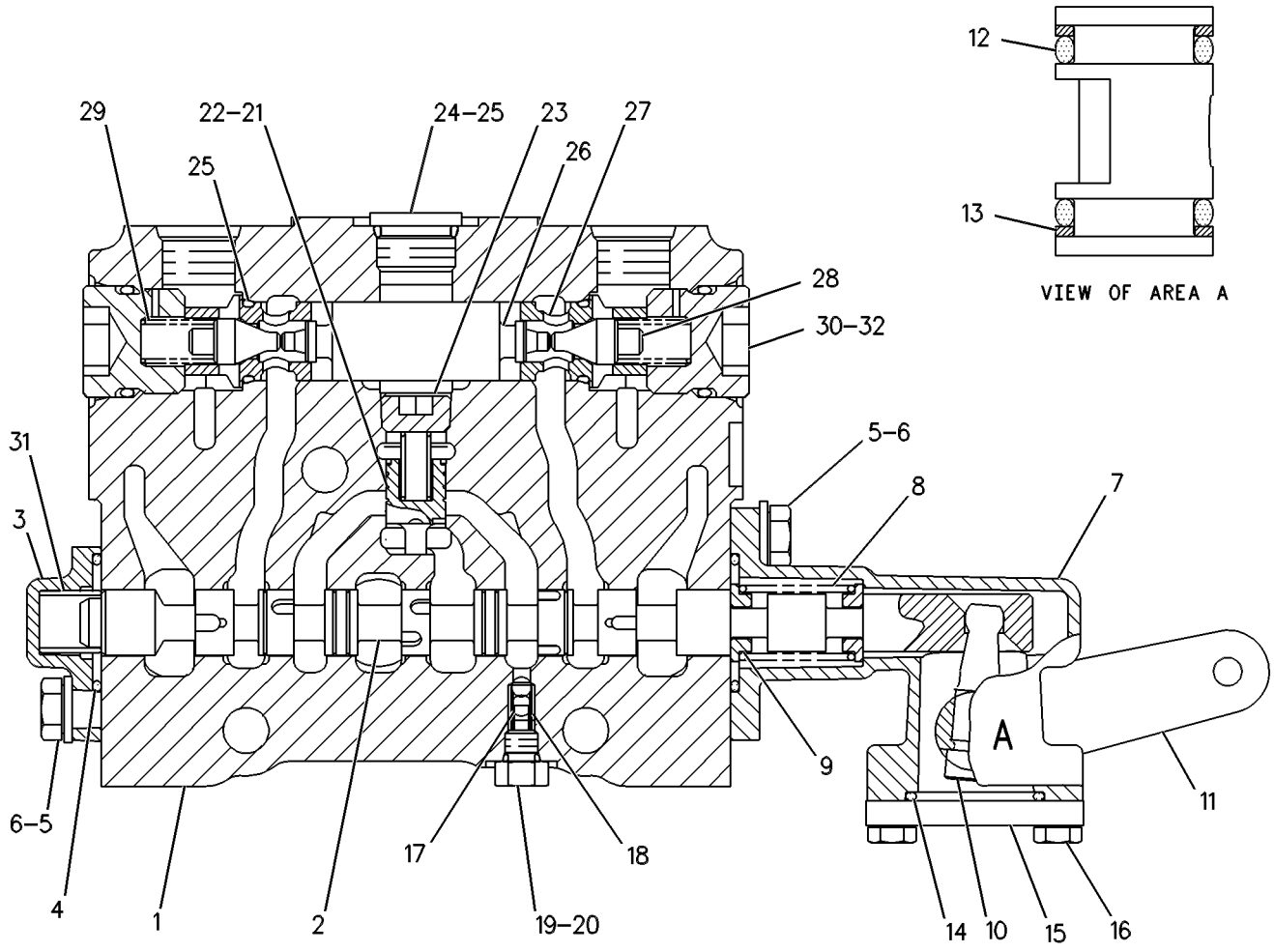

GRAPHIC #1 g00108927

HYDRAULIC SYSTEM

107-0564 VALVE GP-CONTROL—BLADE LIFT

S/N: ASE1-UP

PART OF 104-8674 VALVE GP-BANK 4, 104-8675 VALVE GP-BANK 5

ALSO AN ATTACHMENT

SMCS-5051 **i01673319**

NOTE	REF NO	GRAPHIC REF	PART NUMBER	QTY	PART NAME 1 2 3 4 5 6 (PRODUCT LEVEL)	SEE PAGE
	1	1	**6E-3043**	1	BODY	
	2	1	**102-4575**	1	STEM	
	3	1	**101-1980**	1	HOUSING	
	4	1	**101-1972**	1	DETENT	
Y	5	1	**108-4916**	1	DETENT GP-CONTROL VALVE (BLADE LIFT)	438
	6	1	**5B-9318**	1	BALL	
M	7	1	**8T-6869**	2	BOLT (M8X1.25X60MM)	
	8	1	**2K-8199**	2	SEAL-O-RING	
M	9	1	**8T-4189**	2	BOLT (M8X1.25X20MM)	
	10	1	**8T-4224**	4	WASHER-HARD (8.8X16X2MM THK)	
	11	1	**101-1984**	1	BODY	
	12	1	**102-7412**	1	SPRING	
	13	1	**101-1973**	4	RETAINER	
	14	1	**101-1971**	1	LEVER	
	15	1	**101-1970**	1	LEVER AS	
	16	1	**8M-4437**	2	SEAL-O-RING	
	17	1	**101-1983**	2	RING-BACKUP (14.65MM ID)	
	18	1	**4D-9986**	1	SEAL-O-RING	
	19	1	**101-2480**	1	COVER	
M	20	1	**8T-4138**	2	BOLT (M6X1X20MM)	
	21	1	**6E-3007**	1	SPRING	
	22	1	**6E-4502**	1	PLUG	
	23	1	**4J-7533**	1	SEAL-O-RING	
	24	1	**6E-3019**	1	VALVE (SEQUENCE)	
	25	1	**6E-5153**	1	SPRING	
	26	1	**108-2187**	1	PLUG-PIPE	
	27	1	**9S-8005**	1	PLUG	
	28	1	**3K-0360**	3	SEAL-O-RING	
	29	1	**106-3660**	2	PISTON	
	30	1	**6E-3013**	2	SEAT	
	31	1	**106-3658**	2	VALVE (POPPET)	
	32	1	**9J-0403**	2	SPRING	
	33	1	**9J-0404**	2	PLUG	
	34	1	**7J-9933**	2	SEAL-O-RING	
CY	35	1	**139-8474**	1	VALVE GP-RELIEF (BLADE LIFT)	581
	36	1	**111-8234**	1	SPRING	

C-CHANGE FROM PREVIOUS TYPE
M-METRIC PART
Y-SEPARATE ILLUSTRATION

107-0564 VALVE GP-CONTROL *(contd.)* i01673319

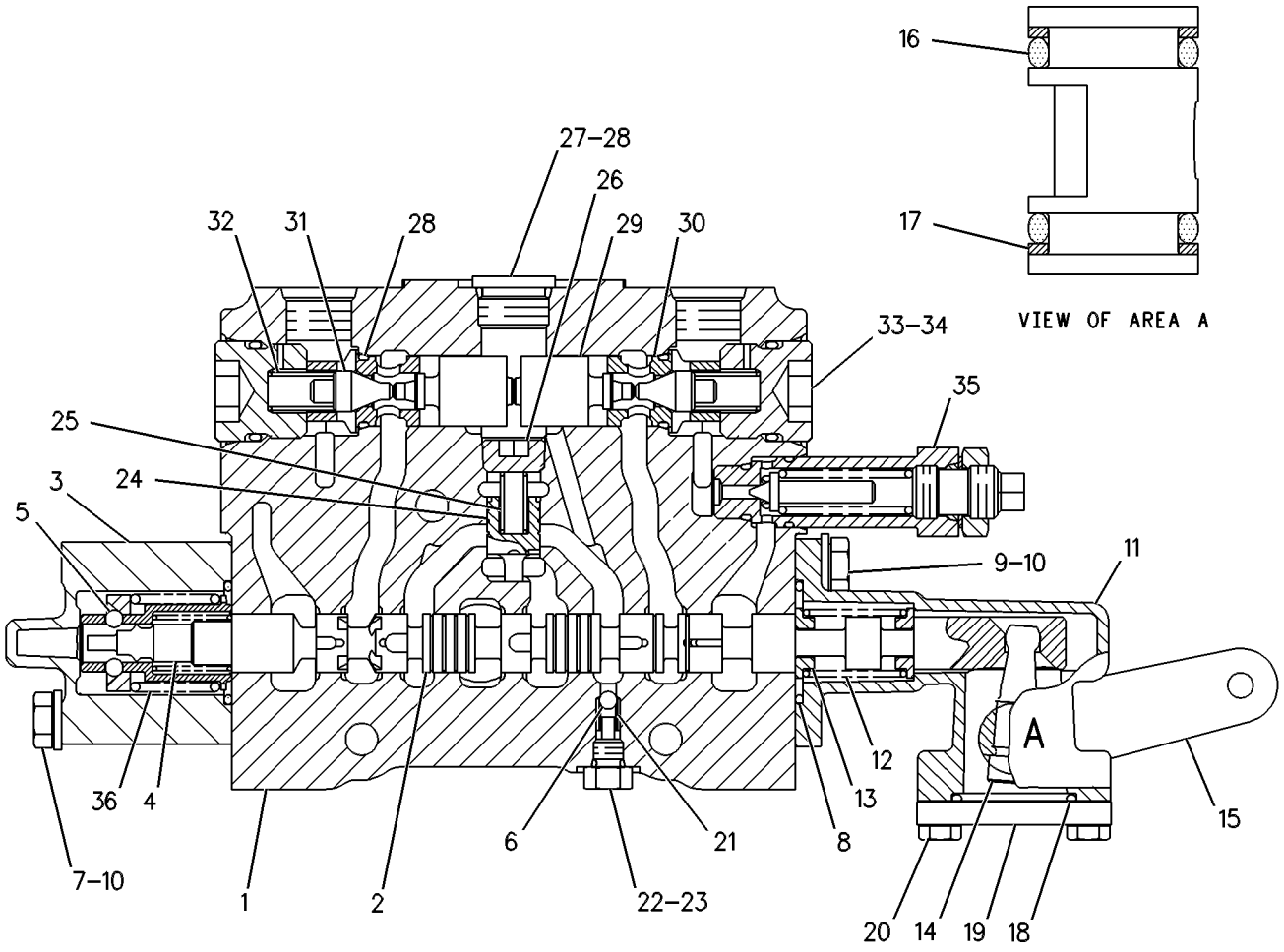

GRAPHIC #1 g00108915

HYDRAULIC SYSTEM

124-3455 VALVE GP-CONTROL–EU–RIPPER–LH

S/N: ASE1-UP

PART OF 130-3126 VALVE GP-BANK 5, 130-3127 VALVE GP-BANK 7

AN ATTACHMENT

SMCS-5051 **i01685360**

NOTE	REF NO	GRAPHIC REF	PART NUMBER	QTY	PART NAME 1 2 3 4 5 6 (PRODUCT LEVEL)	SEE PAGE
	1	1	**6E-4599**	1	BODY	
	2	1	**102-4572**	1	STEM	
	3	1	**101-1978**	1	COVER	
	4	1	**2K-8199**	2	SEAL-O-RING	
M	5	1	**8T-4189**	4	BOLT (M8X1.25X20MM)	
	6	1	**8T-4224**	4	WASHER-HARD (8.8X16X2MM THK)	
	7	1	**101-1984**	1	BODY	
	8	1	**7J-9933**	2	SEAL-O-RING	
CY	9	1	**139-8476**	1	VALVE GP-RELIEF	582
	10	1	**111-8233**	1	SPRING	
	11	1	**102-7412**	1	SPRING	
	12	1	**101-1973**	4	RETAINER	
	13	1	**101-1971**	1	LEVER	
	14	1	**101-1982**	1	LEVER AS	
	15	1	**8M-4437**	2	SEAL-O-RING	
	16	1	**101-1983**	2	RING-BACKUP (14.65MM ID)	
	17	1	**4D-9986**	1	SEAL-O-RING	
	18	1	**101-2480**	1	COVER	
M	19	1	**8T-4138**	2	BOLT (M6X1X20MM)	
	20	1	**5B-9318**	1	BALL	
	21	1	**6E-3007**	1	SPRING	
	22	1	**6E-4502**	1	PLUG	
	23	1	**4J-7533**	1	SEAL-O-RING	
	24	1	**6E-3019**	1	VALVE (COMPENSATOR)	
	25	1	**6E-5153**	1	SPRING	
	26	1	**108-2187**	1	PLUG-PIPE	
	27	1	**9J-0403**	2	SPRING	
	28	1	**9J-0404**	2	PLUG	
	29	1	**9S-8005**	1	PLUG	
	30	1	**3K-0360**	3	SEAL-O-RING	
	31	1	**106-3659**	1	PISTON	
	32	1	**6E-3013**	2	SEAT	
	33	1	**106-3658**	2	VALVE (POPPET)	

C-CHANGE FROM PREVIOUS TYPE
M-METRIC PART
Y-SEPARATE ILLUSTRATION

124-3455 VALVE GP-CONTROL *(contd.)* i01685360

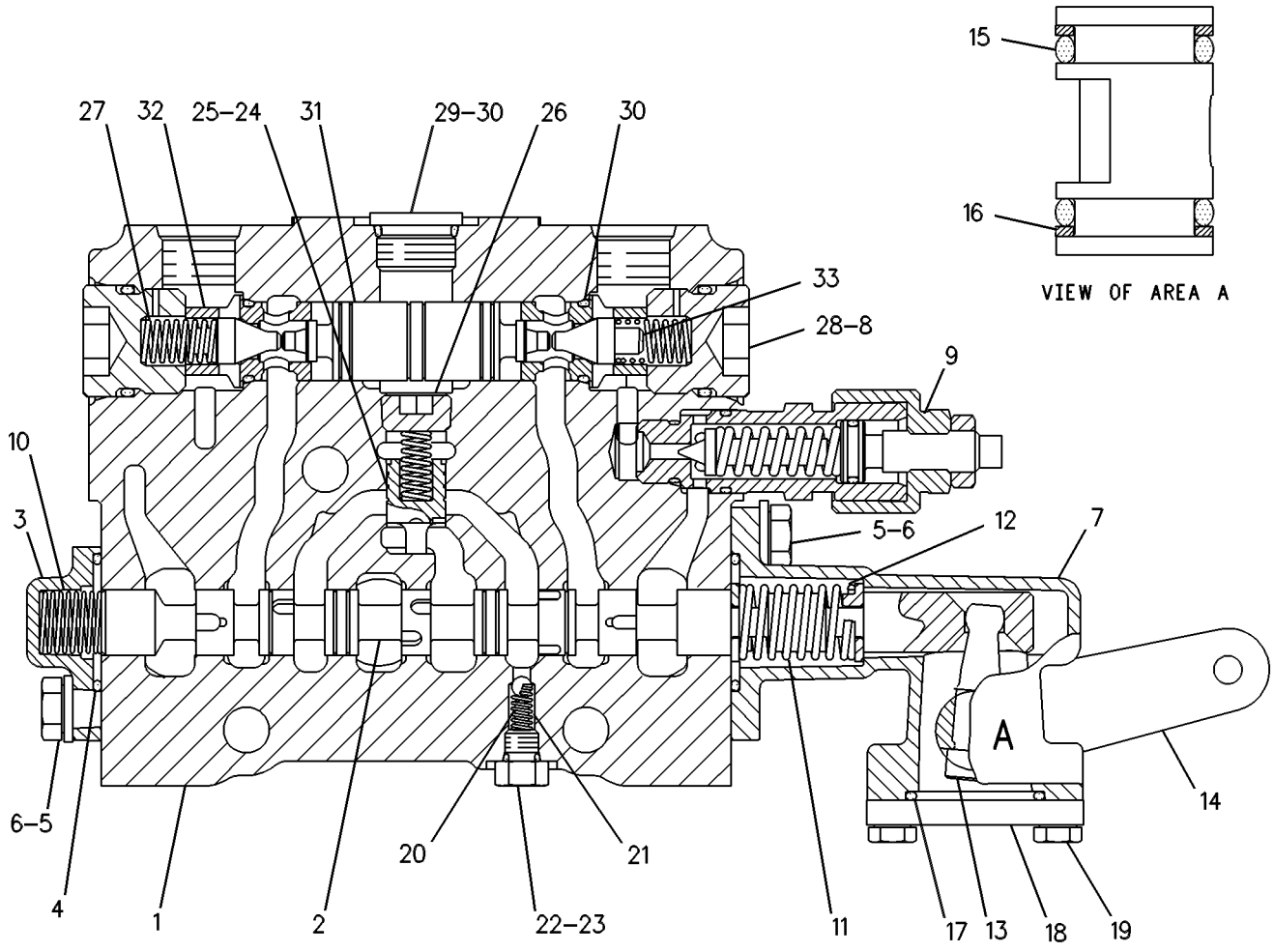

GRAPHIC #1 g00273406

HYDRAULIC SYSTEM

130-3111 VALVE GP-CONTROL—EU—PLOW/DOZER LIFT—RH

S/N: ASE1-UP

PART OF 130-3132 VALVE GP-BANK 5

AN ATTACHMENT

SMCS-5051 **i01685361**

NOTE	REF NO	GRAPHIC REF	PART NUMBER	QTY	PART NAME 1 2 3 4 5 6 (PRODUCT LEVEL)	SEE PAGE
	1	1	**128-8646**	1	BODY	
	2	1	**101-1147**	1	STEM	
	3	1	**9S-4180**	1	PLUG	
	4	1	**101-1972**	1	DETENT	
Y	5	1	**130-3535**	1	DETENT GP-CONTROL VALVE	440
	6	1	**5B-9318**	1	BALL	
	7	1	**2K-8199**	1	SEAL-O-RING	
M	8	1	**8T-4189**	2	BOLT (M8X1.25X20MM)	
	9	1	**8T-4224**	2	WASHER-HARD (8.8X16X2MM THK)	
	10	1	**101-1984**	1	BODY	
	11	1	**102-7412**	1	SPRING	
	12	1	**101-1973**	4	RETAINER	
	13	1	**101-1971**	1	LEVER	
	14	1	**101-1970**	1	LEVER AS	
	15	1	**8M-4437**	2	SEAL-O-RING	
	16	1	**101-1983**	2	RING-BACKUP (14.65MM ID)	
	17	1	**4D-9986**	1	SEAL-O-RING	
	18	1	**101-2480**	1	COVER	
M	19	1	**8T-4138**	2	BOLT (M6X1X20MM)	
	20	1	**6E-3007**	1	SPRING	
	21	1	**6E-4502**	1	PLUG	
	22	1	**4J-7533**	2	SEAL-O-RING	
	23	1	**6E-3019**	1	VALVE (COMPENSATOR)	
	24	1	**6E-5153**	1	SPRING	
	25	1	**108-2187**	1	PLUG-PIPE	
	26	1	**9S-8005**	1	PLUG	
	27	1	**3K-0360**	3	SEAL-O-RING	
	28	1	**106-3660**	2	PISTON	
	29	1	**6E-3013**	2	SEAT	
	30	1	**106-3658**	2	VALVE (POPPET)	
	31	1	**9J-0403**	2	SPRING	
	32	1	**9J-0404**	2	PLUG	
	33	1	**7J-9933**	2	SEAL-O-RING	
Y	34	1	**139-8477**	1	VALVE GP-RELIEF	583
	35	1	**111-8234**	1	SPRING	

M-METRIC PART
Y-SEPARATE ILLUSTRATION

130-3111 VALVE GP-CONTROL *(contd.)* i01685361

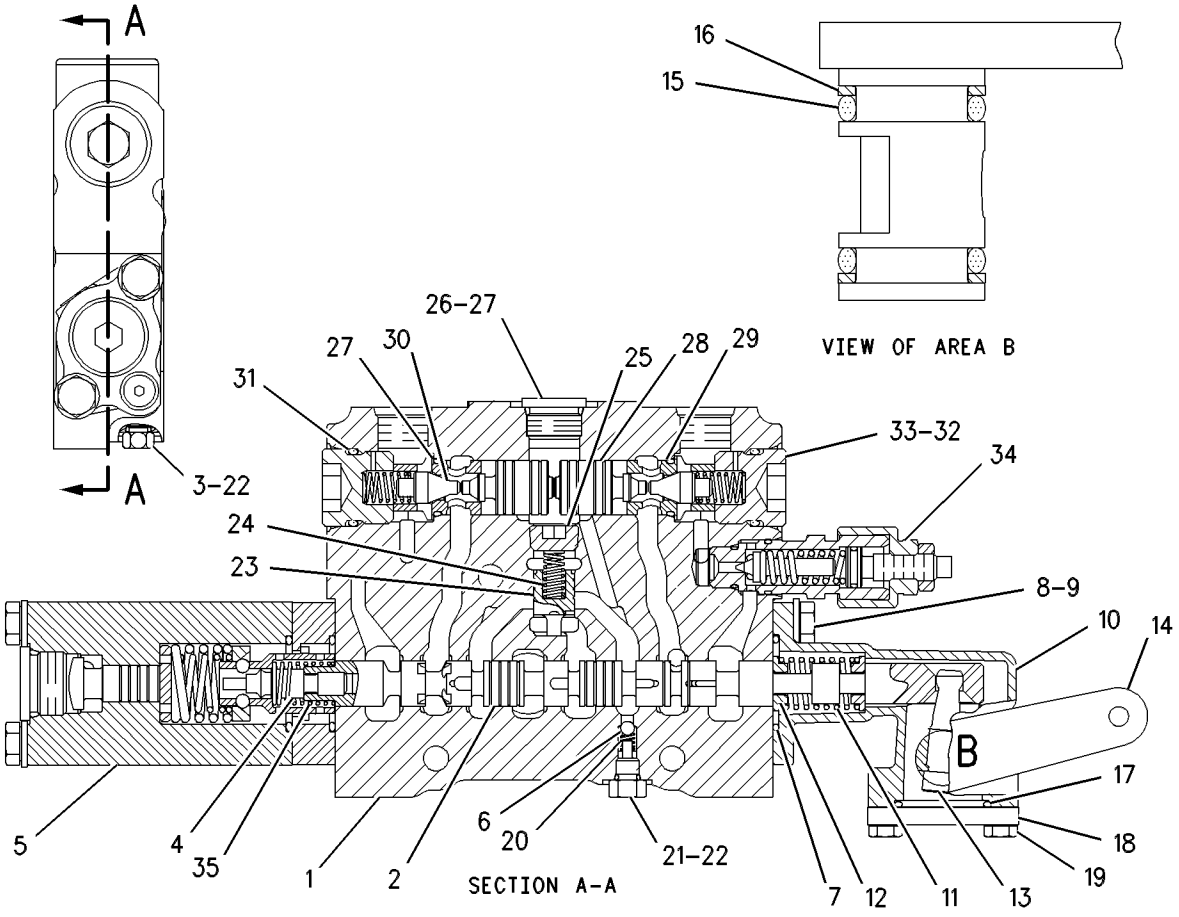

GRAPHIC #1 g00313583

HYDRAULIC SYSTEM

130-3112 VALVE GP-CONTROL–BLADE LIFT–EU

S/N: ASE1-UP

PART OF 130-3128 VALVE GP-BANK 4, 130-3132 VALVE GP-BANK 5

AN ATTACHMENT

SMCS-5051 **i00710874**

NOTE	REF NO	GRAPHIC REF	PART NUMBER	QTY	PART NAME 1 2 3 4 5 6 (PRODUCT LEVEL)	SEE PAGE
	1	1	**128-8645**	1	BODY	
	2	1	**102-4575**	1	STEM	
	3	1	**9S-4180**	1	PLUG-O-RING (5/16-24 THD)	
	4	1	**101-1972**	1	DETENT	
Y	5	1	**130-3535**	1	DETENT GP-CONTROL VALVE	440
	6	1	**5B-9318**	1	BALL (4.76MM)	
	7	1	**2K-8199**	1	SEAL-O-RING (28.24MM ID)	
M	8	1	**8T-4189**	2	BOLT (M8X1.25X20MM)	
	9	1	**8T-4224**	2	WASHER-HARD (2MM THK)	
	10	1	**101-1984**	1	BODY	
	11	1	**102-7412**	1	SPRING	
	12	1	**101-1973**	4	RETAINER	
	13	1	**101-1971**	1	LEVER	
	14	1	**101-1970**	1	LEVER AS	
	15	1	**8M-4437**	2	SEAL-O-RING	
	16	1	**101-1983**	2	RING-BACKUP	
	17	1	**4D-9986**	1	SEAL-O-RING (23.47MM ID)	
	18	1	**101-2480**	1	COVER	
M	19	1	**8T-4138**	2	BOLT (M6X1.0X20MM)	
	20	1	**6E-3007**	1	SPRING	
	21	1	**6E-4502**	1	PLUG	
	22	1	**4J-7533**	2	SEAL-O-RING (6.07MM ID)	
	23	1	**6E-3019**	1	VALVE	
	24	1	**6E-5153**	1	SPRING	
	25	1	**108-2187**	1	PLUG-PIPE	
	26	1	**9S-8005**	1	PLUG-O-RING (3/4-16 THD)	
	27	1	**3K-0360**	3	SEAL-O-RING (16.36MM ID)	
	28	1	**106-3660**	2	PISTON	
	29	1	**6E-3013**	2	SEAT	
	30	1	**106-3658**	2	VALVE	
	31	1	**9J-0403**	2	SPRING	
	32	1	**9J-0404**	2	PLUG	
	33	1	**7J-9933**	2	SEAL-O-RING (21.89MM ID)	
CY	34	1	**139-8477**	1	VALVE GP-RELIEF	583
	35	1	**111-8234**	1	SPRING	

C-CHANGE FROM PREVIOUS TYPE
M-METRIC PART
Y-SEPARATE ILLUSTRATION

130-3112 VALVE GP-CONTROL *(contd.)* i00710874

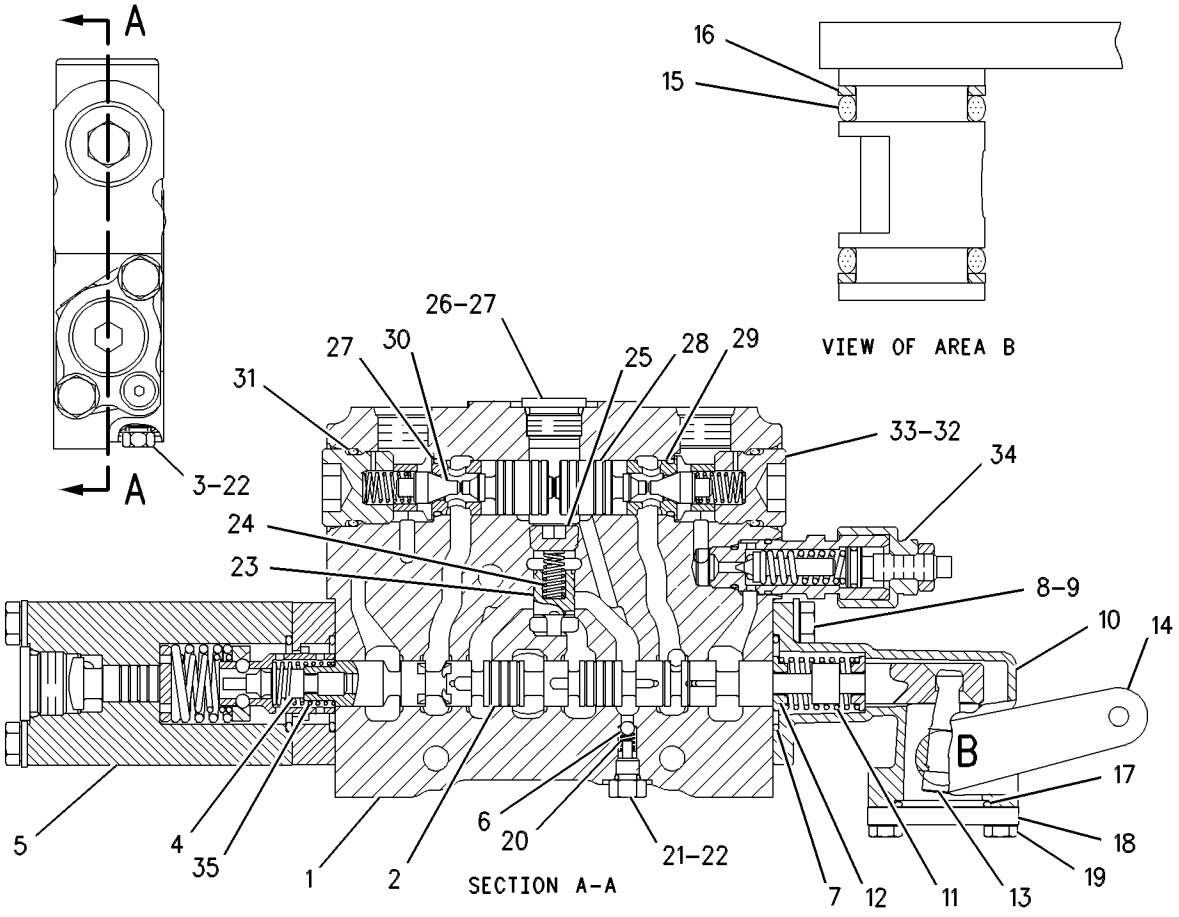

GRAPHIC #1 g00313743

HYDRAULIC SYSTEM

130-3113 VALVE GP-CONTROL–BLADE LIFT–LH–EU

S/N: ASE1-UP

PART OF 130-3125 VALVE GP-BANK 4, 130-3126 VALVE GP-BANK 5, 130-3127 VALVE GP-BANK 7

AN ATTACHMENT

SMCS-5051 **i00711164**

NOTE	REF NO	GRAPHIC REF	PART NUMBER	QTY	PART NAME 1 2 3 4 5 6 (PRODUCT LEVEL)	SEE PAGE
	1	1	**128-8645**	1	BODY	
	2	1	**102-4575**	1	STEM	
	3	1	**9S-4180**	1	PLUG-O-RING (5/16-24 THD)	
	4	1	**101-1972**	1	DETENT	
Y	5	1	**130-3535**	1	DETENT GP-CONTROL VALVE	440
	6	1	**5B-9318**	1	BALL (4.76MM)	
	7	1	**2K-8199**	1	SEAL-O-RING (28.24MM ID)	
M	8	1	**8T-4189**	2	BOLT (M8X1.25X20MM)	
	9	1	**8T-4224**	2	WASHER-HARD (2MM THK)	
	10	1	**101-1984**	1	BODY	
	11	1	**102-7412**	1	SPRING	
	12	1	**101-1973**	4	RETAINER	
	13	1	**101-1971**	1	LEVER	
	14	1	**101-1982**	1	LEVER AS	
	15	1	**8M-4437**	2	SEAL-O-RING	
	16	1	**101-1983**	2	RING-BACKUP	
	17	1	**4D-9986**	1	SEAL-O-RING (23.47MM ID)	
	18	1	**101-2480**	1	COVER	
M	19	1	**8T-4138**	2	BOLT (M6X1.0X20MM)	
	20	1	**6E-3007**	1	SPRING	
	21	1	**6E-4502**	1	PLUG	
	22	1	**4J-7533**	2	SEAL-O-RING (6.07MM ID)	
	23	1	**6E-3019**	1	VALVE	
	24	1	**6E-5153**	1	SPRING	
	25	1	**108-2187**	1	PLUG-PIPE	
	26	1	**9S-8005**	1	PLUG-O-RING (3/4-16 THD)	
	27	1	**3K-0360**	3	SEAL-O-RING (16.36MM ID)	
	28	1	**106-3660**	2	PISTON	
	29	1	**6E-3013**	2	SEAT	
	30	1	**106-3658**	2	VALVE	
	31	1	**9J-0403**	2	SPRING	
	32	1	**9J-0404**	2	PLUG	
	33	1	**7J-9933**	2	SEAL-O-RING (21.89MM ID)	
CY	34	1	**139-8477**	1	VALVE GP-RELIEF	583
	35	1	**111-8234**	1	SPRING	

C-CHANGE FROM PREVIOUS TYPE
M-METRIC PART
Y-SEPARATE ILLUSTRATION

130-3113 VALVE GP-CONTROL *(contd.)* i00711164

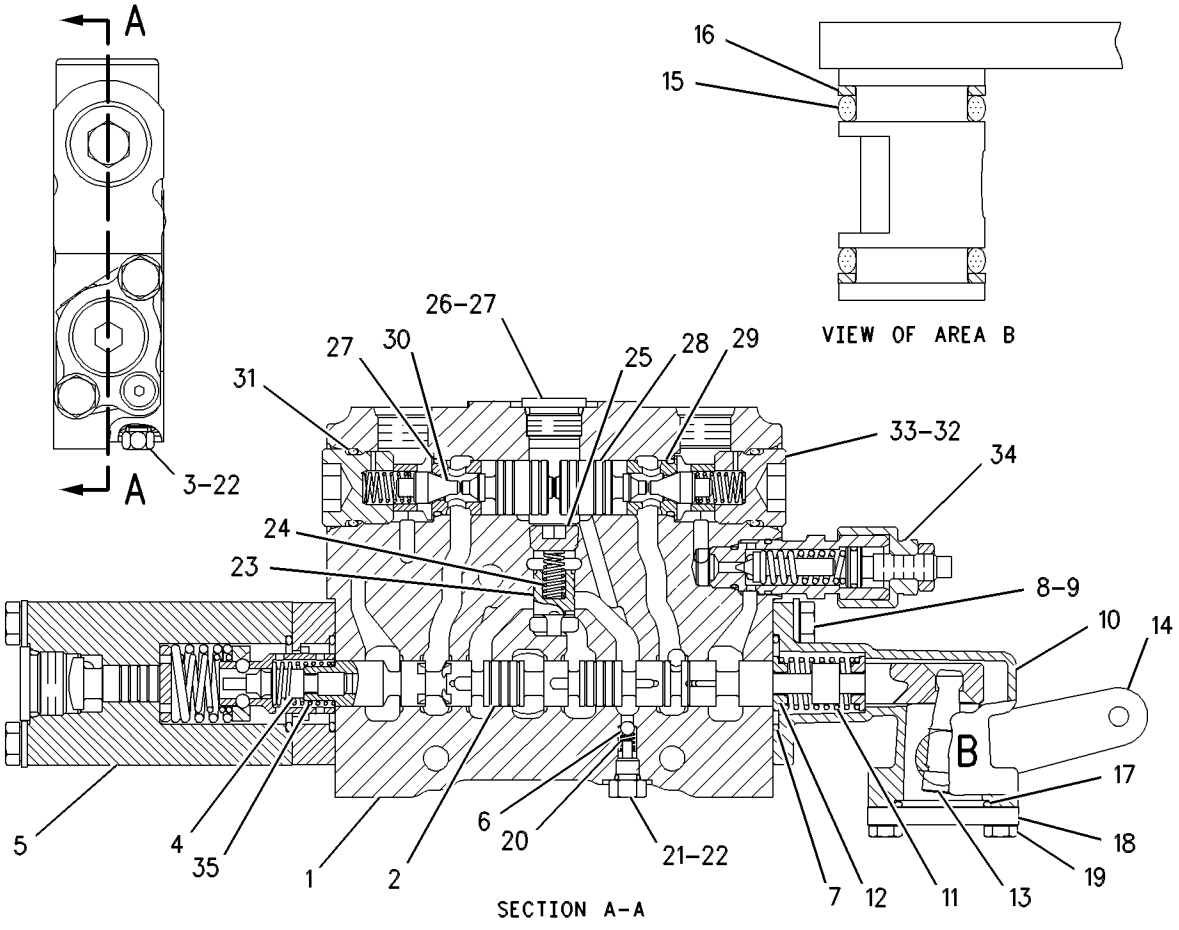

GRAPHIC #1 g00316148

HYDRAULIC SYSTEM

137-8104 VALVE GP-CONTROL—WING TILT—LH

S/N: ASE1-UP

PART OF 104-8656, 130-3127 VALVE GP-BANK 7

AN ATTACHMENT

SMCS-5051 **i01455640**

NOTE	REF NO	GRAPHIC REF	PART NUMBER	QTY	PART NAME 1 2 3 4 5 6 (PRODUCT LEVEL)	SEE PAGE
	1	1	**111-8233**	1	SPRING	
	2	1	**102-4577**	1	STEM	
	3	1	**101-1978**	1	COVER	
	4	1	**2K-8199**	2	SEAL-O-RING	
M	5	1	**8T-4189**	4	BOLT (M8X1.25X20MM)	
	6	1	**8T-4224**	4	WASHER-HARD (8.8X16X2MM THK)	
	7	1	**101-1984**	1	BODY	
	8	1	**7J-9933**	2	SEAL-O-RING	
	9	1	**106-3659**	1	PISTON	
	10	1	**4D-2297**	1	SEAL-O-RING	
	11	1	**102-7412**	1	SPRING	
	12	1	**101-1973**	4	RETAINER	
	13	1	**101-1971**	1	LEVER	
	14	1	**101-1982**	1	LEVER AS	
	15	1	**8M-4437**	2	SEAL-O-RING (13.94MM ID)	
	16	1	**101-1983**	2	RING-BACKUP (14.65MM ID)	
	17	1	**4D-9986**	1	SEAL-O-RING	
	18	1	**101-2480**	1	COVER	
M	19	1	**8T-4138**	2	BOLT (M6X1X20MM)	
	20	1	**5B-9318**	1	BALL	
	21	1	**6E-3007**	1	SPRING	
	22	1	**6E-4502**	1	PLUG	
	23	1	**4J-7533**	1	SEAL-O-RING	
	24	1	**6E-3019**	1	VALVE	
	25	1	**6E-5153**	1	SPRING	
	26	1	**108-2187**	1	PLUG-PIPE	
	27	1	**9J-0404**	2	PLUG	
	28	1	**9S-8005**	1	PLUG	
	29	1	**3K-0360**	3	SEAL-O-RING	
Y	30	1	**139-8472**	2	VALVE GP-RELIEF (WING TILT)	580
	31	1	**6E-3013**	2	SEAT	
	32	1	**9J-0403**	2	SPRING	
	33	1	**106-3658**	2	VALVE	

M-METRIC PART
Y-SEPARATE ILLUSTRATION

137-8104 VALVE GP-CONTROL *(contd.)* i01455640

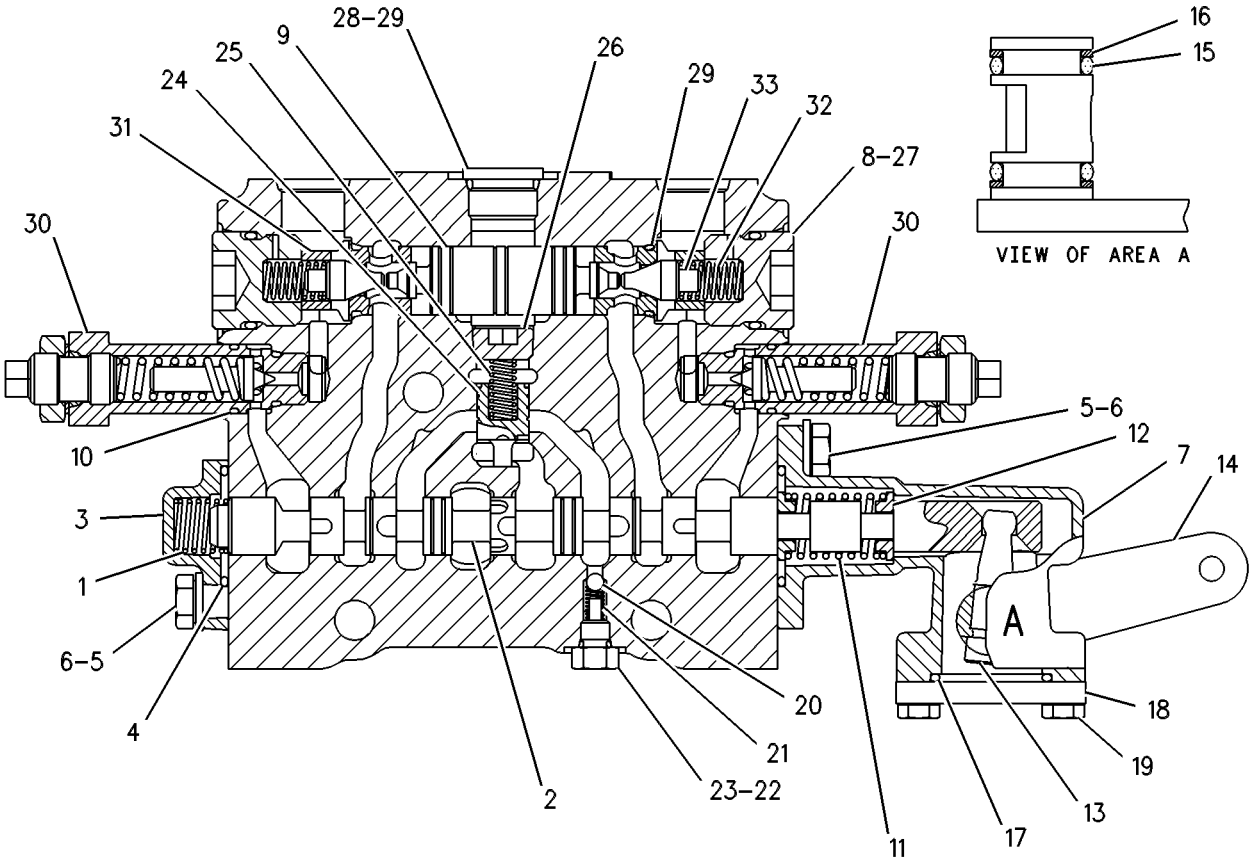

GRAPHIC #1 g00278865

HYDRAULIC SYSTEM

137-8106 VALVE GP-CONTROL—WING LIFT—LH

S/N: ASE1-UP

PART OF 104-8656, 4Z-6358 VALVE GP-BANK 7

AN ATTACHMENT

SMCS-5051 **i01652578**

NOTE	REF NO	GRAPHIC REF	PART NUMBER	QTY	PART NAME 1 2 3 4 5 6 (PRODUCT LEVEL)	SEE PAGE
	1	1	**6E-3013**	2	SEAT	
	2	1	**102-4578**	1	STEM	
	3	1	**101-1978**	1	COVER	
	4	1	**2K-8199**	2	SEAL-O-RING	
M	5	1	**8T-4189**	4	BOLT (M8X1.25X20MM)	
	6	1	**8T-4224**	4	WASHER-HARD (8.8X16X2MM THK)	
	7	1	**101-1984**	1	BODY	
	8	1	**7J-9933**	2	SEAL-O-RING	
	9	1	**106-3659**	1	PISTON	
	10	1	**111-8233**	1	SPRING	
	11	1	**102-7412**	1	SPRING	
	12	1	**101-1973**	4	RETAINER	
	13	1	**101-1971**	1	LEVER	
	14	1	**101-1982**	1	LEVER AS	
	15	1	**8M-4437**	2	SEAL-O-RING	
	16	1	**101-1983**	2	RING-BACKUP (14.65MM ID)	
	17	1	**4D-9986**	1	SEAL-O-RING	
	18	1	**101-2480**	1	COVER	
M	19	1	**8T-4138**	2	BOLT (M6X1X20MM)	
	20	1	**5B-9318**	1	BALL	
	21	1	**6E-3007**	1	SPRING	
	22	1	**6E-4502**	1	PLUG	
	23	1	**4J-7533**	1	SEAL-O-RING	
	24	1	**6E-3019**	1	VALVE	
	25	1	**6E-5153**	1	SPRING	
	26	1	**108-2187**	1	PLUG-PIPE	
	27	1	**9J-0404**	2	PLUG	
	28	1	**9S-8005**	1	PLUG	
	29	1	**3K-0360**	3	SEAL-O-RING	
Y	30	1	**139-8472**	2	VALVE GP-RELIEF (WING LIFT)	580
	31	1	**106-3658**	2	VALVE	
	32	1	**9J-0403**	2	SPRING	

M-METRIC PART
Y-SEPARATE ILLUSTRATION

137-8106 VALVE GP-CONTROL *(contd.)* i01652578

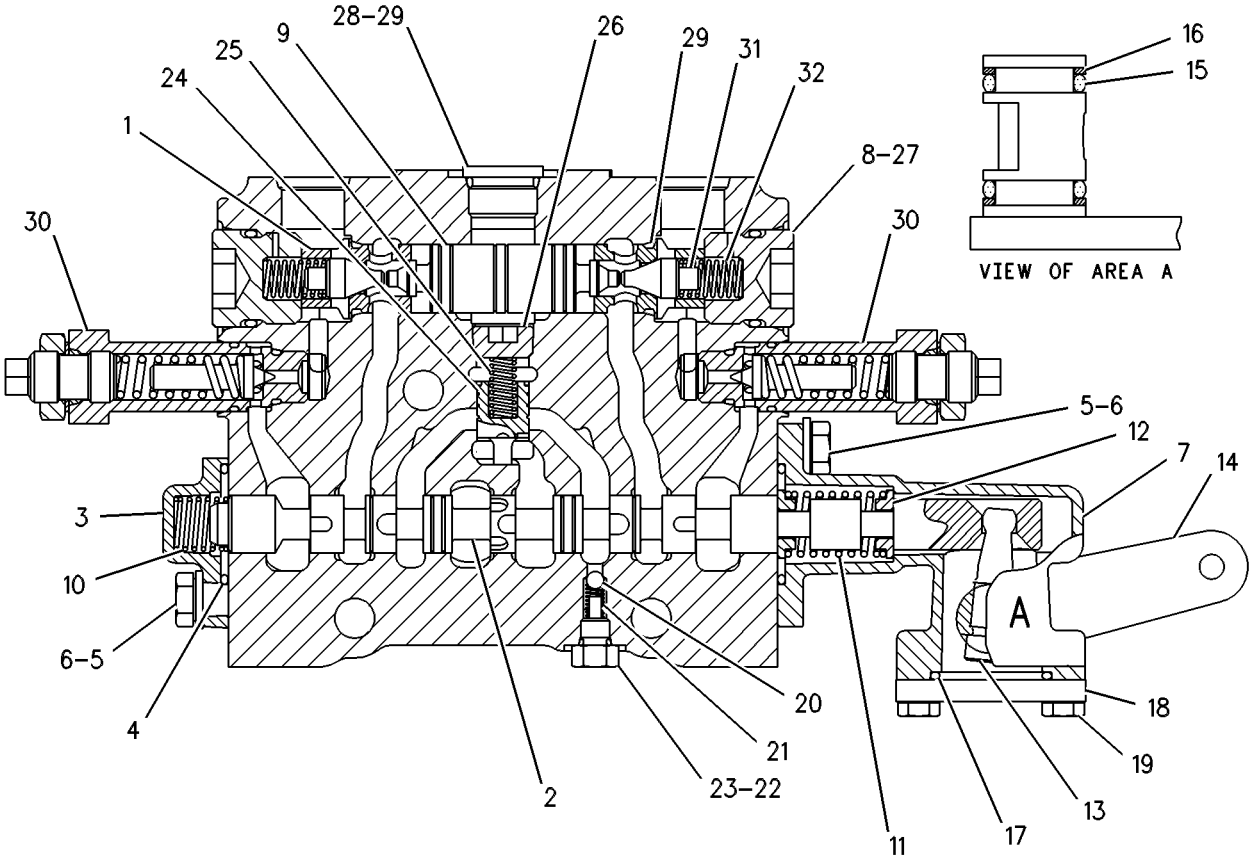

GRAPHIC #1 g00278867

HYDRAULIC SYSTEM

150-6649 VALVE GP-CONTROL—EU—WING LIFT—LH

S/N: ASE1-UP

PART OF 130-3127 VALVE GP-BANK 7

AN ATTACHMENT

SMCS-5051 **i01652583**

NOTE	REF NO	GRAPHIC REF	PART NUMBER	QTY	PART NAME 1 2 3 4 5 6 (PRODUCT LEVEL)	SEE PAGE
	1	1	**137-8107**	1	BODY	
	2	1	**102-4578**	1	STEM	
	3	1	**101-1978**	1	COVER	
	4	1	**2K-8199**	2	SEAL-O-RING	
M	5	1	**8T-4189**	4	BOLT (M8X1.25X20MM)	
	6	1	**8T-4224**	4	WASHER-HARD (8.8X16X2MM THK)	
	7	1	**101-1984**	1	BODY	
	8	1	**7J-9933**	2	SEAL-O-RING	
	9	1	**106-3659**	1	PISTON	
	11	1	**102-7412**	1	SPRING	
	12	1	**101-1973**	4	RETAINER	
	13	1	**101-1971**	1	LEVER	
	14	1	**101-1982**	1	LEVER AS	
	15	1	**8M-4437**	2	SEAL-O-RING	
	16	1	**101-1983**	2	RING-BACKUP (14.65MM ID)	
	17	1	**4D-9986**	1	SEAL-O-RING	
	18	1	**101-2480**	1	COVER	
M	19	1	**8T-4138**	2	BOLT (M6X1X20MM)	
	20	1	**5B-9318**	1	BALL	
	21	1	**6E-3007**	1	SPRING	
	22	1	**6E-4502**	1	PLUG	
	23	1	**4J-7533**	1	SEAL-O-RING	
	24	1	**6E-3019**	1	VALVE	
	25	1	**6E-5153**	1	SPRING	
	26	1	**108-2187**	1	PLUG-PIPE	
	27	1	**9J-0404**	2	PLUG	
	28	1	**9S-8005**	1	PLUG	
	29	1	**3K-0360**	3	SEAL-O-RING	
	30	1	**6E-3013**	2	SEAT	
	31	1	**111-8233**	1	SPRING	
	32	1	**9J-0403**	2	SPRING	
	33	1	**106-3658**	2	VALVE	
Y	34	1	**139-8476**	2	VALVE GP-RELIEF (WING LIFT) (LH)	582

M-METRIC PART
Y-SEPARATE ILLUSTRATION

150-6649 VALVE GP-CONTROL *(contd.)* i01652583

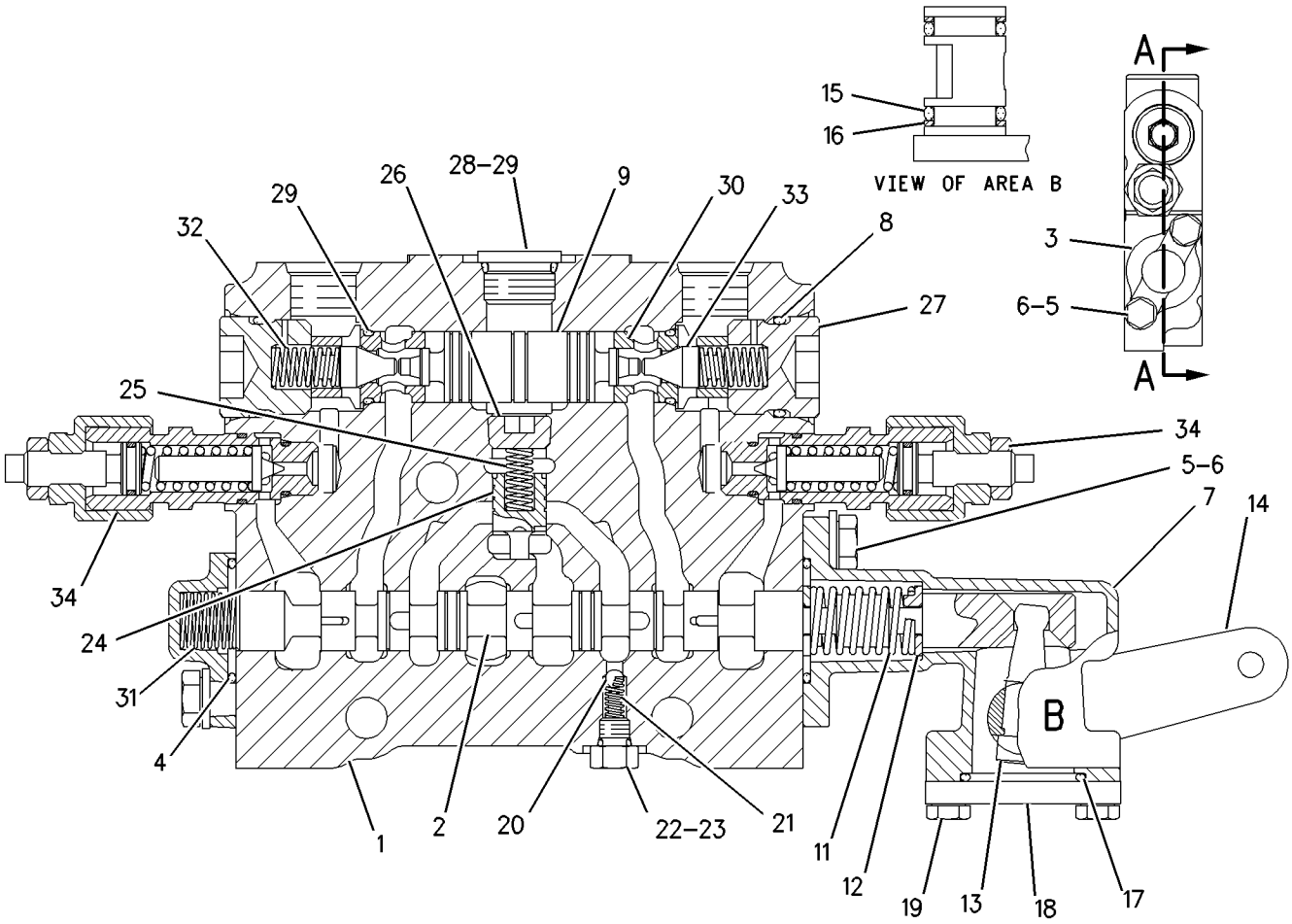

SECTION A-A

GRAPHIC #1 g00853203

HYDRAULIC SYSTEM

153-8907 VALVE GP-CONTROL—PLOW/DOZER LIFT—LH

S/N: ASE1-UP

PART OF 4Z-6358 VALVE GP-BANK 7

AN ATTACHMENT

SMCS-5051 **i01673445**

NOTE	REF NO	GRAPHIC REF	PART NUMBER	QTY	PART NAME 1 2 3 4 5 6 (PRODUCT LEVEL)	SEE PAGE
	1	1	**6E-3059**	1	BODY	
	2	1	**101-1147**	1	STEM	
	3	1	**101-1980**	1	HOUSING	
	4	1	**101-1972**	1	DETENT	
Y	5	1	**108-4916**	1	DETENT GP-CONTROL VALVE (PLOW/DOZER LIFT)	438
	6	1	**5B-9318**	1	BALL	
M	7	1	**8T-6869**	2	BOLT (M8X1.25X60MM)	
	8	1	**2K-8199**	2	SEAL-O-RING	
M	9	1	**8T-4189**	2	BOLT (M8X1.25X20MM)	
	10	1	**8T-4224**	4	WASHER-HARD (8.8X16X2MM THK)	
	11	1	**101-1984**	1	BODY	
	12	1	**102-7412**	1	SPRING	
	13	1	**101-1973**	4	RETAINER	
	14	1	**101-1971**	1	LEVER	
	16	1	**8M-4437**	2	SEAL-O-RING	
	17	1	**101-1983**	2	RING-BACKUP (14.65MM ID)	
	18	1	**4D-9986**	1	SEAL-O-RING	
	19	1	**101-2480**	1	COVER	
M	20	1	**8T-4138**	2	BOLT (M6X1X20MM)	
	21	1	**6E-3007**	1	SPRING	
	22	1	**6E-4502**	1	PLUG	
	23	1	**4J-7533**	1	SEAL-O-RING	
	24	1	**6E-3019**	1	VALVE	
	25	1	**6E-5153**	1	SPRING	
	26	1	**108-2187**	1	PLUG-PIPE	
	27	1	**9S-8005**	1	PLUG	
	28	1	**3K-0360**	3	SEAL-O-RING	
	29	1	**106-3660**	2	PISTON	
	30	1	**6E-3013**	2	SEAT	
	31	1	**106-3658**	2	VALVE	
	32	1	**9J-0403**	2	SPRING	
	33	1	**9J-0404**	2	PLUG	
	34	1	**7J-9933**	2	SEAL-O-RING	
Y	35	1	**139-8474**	1	VALVE GP-RELIEF (PLOW/DOZER LIFT) (LH)	581
	36	1	**101-1982**	1	LEVER AS	
	37	1	**111-8234**	1	SPRING	

M-METRIC PART
Y-SEPARATE ILLUSTRATION

153-8907 VALVE GP-CONTROL *(contd.)* i01673445

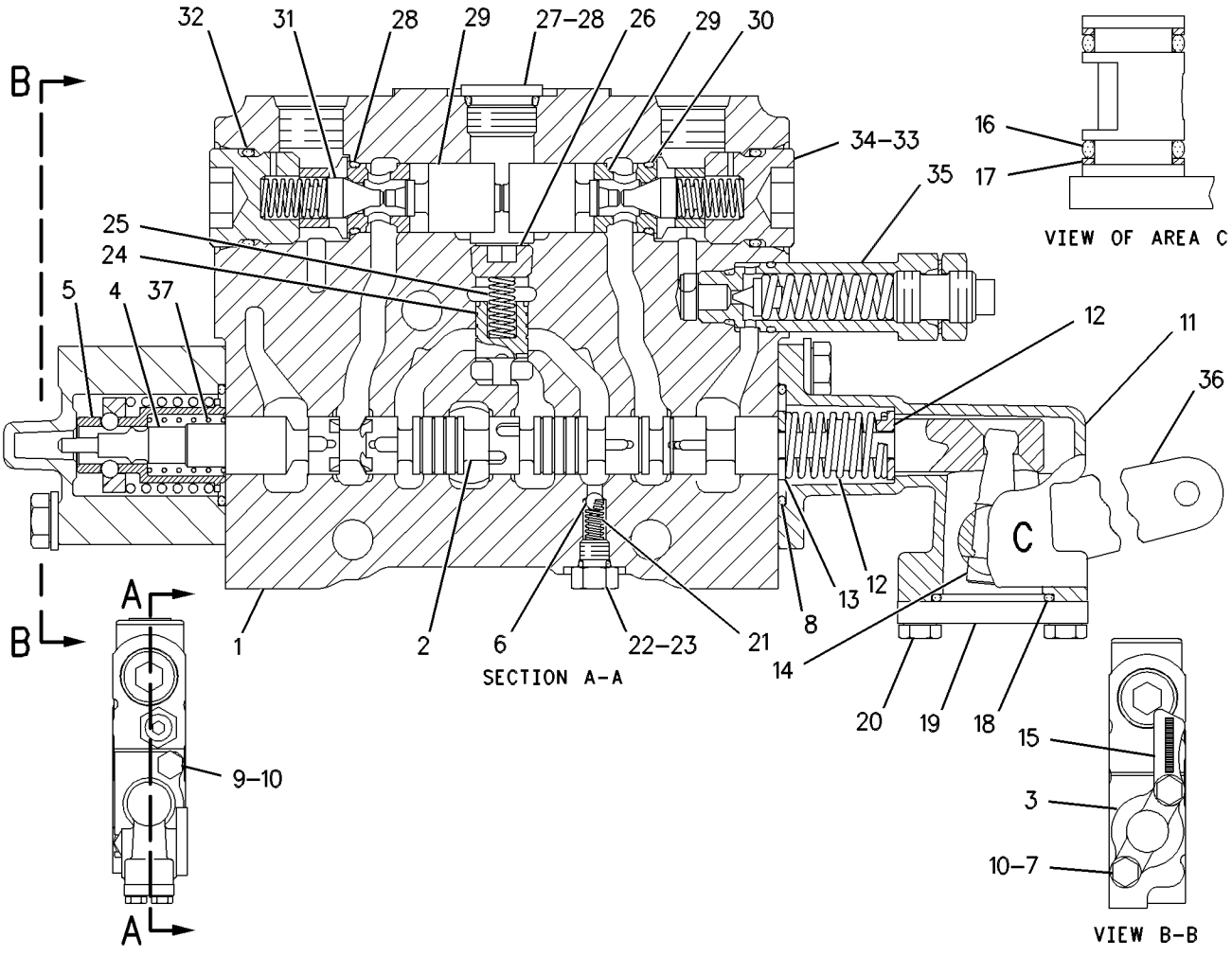

GRAPHIC #1 g00452260

104-3122 VALVE GP-PRESS & FLOW CMPNSTR–HYDRAULIC–STEERING

S/N: ASE1-UP

PART OF 177-7517 PUMP GP-PISTON

SMCS-5086 **i00111552**

NOTE	REF NO	GRAPHIC REF	PART NUMBER	QTY	PART NAME 1 2 3 4 5 6 (PRODUCT LEVEL)	SEE PAGE
	1	1	**108-4814**	1	BODY-COMPENSATOR	
	2	1	**9S-4191**	1	PLUG-O-RING (9/16-18 THD)	
	3	1	**3J-1907**	3	SEAL-O-RING (11.89MM ID)	
	4	1	**108-4815**	1	SPOOL-MARGIN	
	5	1	**9T-2186**	2	PLUG	
	6	1	**6E-4239**	1	SPOOL-CUTOFF	
	7	1	**6E-4230**	2	SPRING-GUIDE	
	8	1	**6E-4228**	1	SPRING-CUTOFF	
	9	1	**6E-6140**	1	PLUG-COMPENSATOR	
	10	1	**033-6036**	1	SEAL-O-RING (23.47MM ID)	
	11	1	**6E-6141**	2	LOCKNUT-SEALING	
M	12	1	**129-7632**	2	SCREW-ADJUSTMENT	
	13	1	**6E-6142**	1	PLUG-MARGIN	
	14	1	**033-6027**	1	SEAL-O-RING (19.18MM ID)	
	15	1	**9T-7750**	1	SPRING	
	16	1	**108-4816**	1	PIN-SPRING STOP	
	17	1	**9T-1857**	2	GUIDE	
	18	1	**6E-6420**	1	VALVE-NEEDLE	
	19	1	**6E-6419**	1	RING	
	20	1	**9X-7680**	1	SEAL-O-RING	

M-METRIC PART

104-3122 VALVE GP-PRESS & FLOW CMPNSTR *(contd.)* i00111552

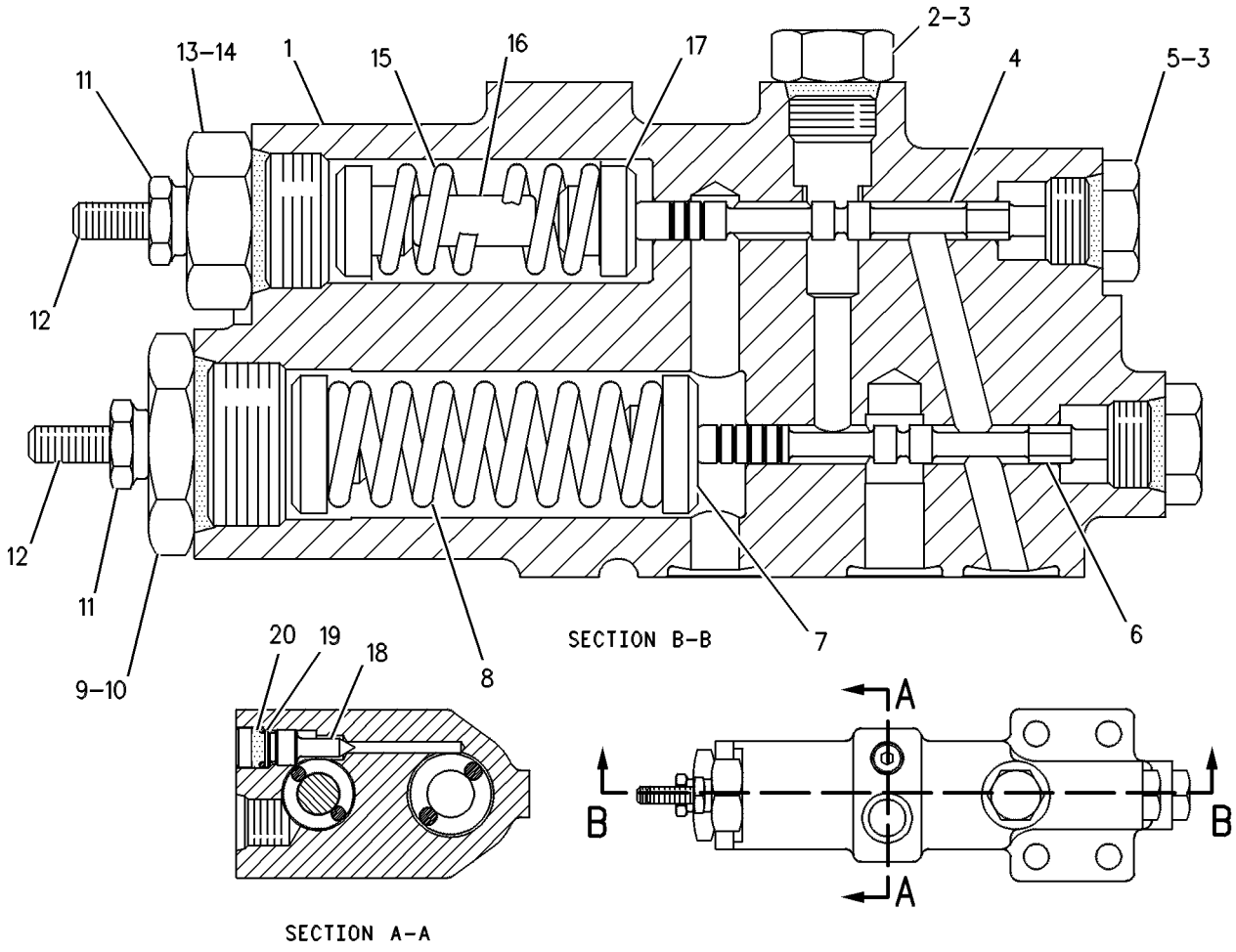

GRAPHIC #1 g00084774

HYDRAULIC SYSTEM

168-2210 VALVE GP-PRESS & FLOW CMPNSTR–

FAN DRIVE PISTON PUMP

S/N: ASE1-UP

PART OF 184-7448 PUMP GP-PISTON

SMCS-5086 **i01690979**

NOTE	REF NO	GRAPHIC REF	PART NUMBER	QTY	PART NAME 1 2 3 4 5 6 (PRODUCT LEVEL)	SEE PAGE
	1	1	**6E-6527**	2	PLUG (HYDRAULIC OIL)	
	2	1	**6E-6528**	6	SEAL	
	3	1	**9S-8002**	1	PLUG	
	4	1	**9X-7680**	3	SEAL-O-RING (7.65MM ID)	
	5	1	**5P-9262**	1	SEAL-O-RING	
	6	1	**105-2145**	1	VALVE-ORIFICE	
	7	1	**6E-3268**	1	RETAINER-SPRING	
	8	1	**6E-3269**	1	RETAINER-SPRING	
M	9	1	**8T-8442**	4	BOLT-SOCKET HEAD (M6X1X30MM)	
	10	1	**6E-3273**	1	SEAT	
	11	1	**033-6043**	1	SEAL-O-RING	
	12	1	**6E-6536**	1	PLUG (HYDRAULIC OIL)	
M	13	1	**6E-6537**	2	SCREW-ADJUSTMENT (M8X1X28MM)	
M	14	1	**6E-6538**	2	NUT-ADJUSTMENT (M8X1 THD)	
M	15	1	**6E-6539**	2	NUT-CAP (M8X1 THD)	
	16	1	**6E-6540**	1	PLUG	
	17	1	**6V-8352**	1	SEAL-O-RING	
	18	1	**6E-3272**	1	SEAT	
	19	1	**6E-3274**	1	SPRING	
	20	1	**6E-3275**	1	SPRING	
	21	1	**3J-7354**	1	SEAL-O-RING	
M	22	1	**096-3218**	1	SETSCREW-SOCKET (M4X0.4X6MM)	
	23	1	**193-1036**	1	SPRING	
	24	1	**6E-3276**	1	SPRING	
	25	1	**201-0780**	1	ORIFICE	

M-METRIC PART

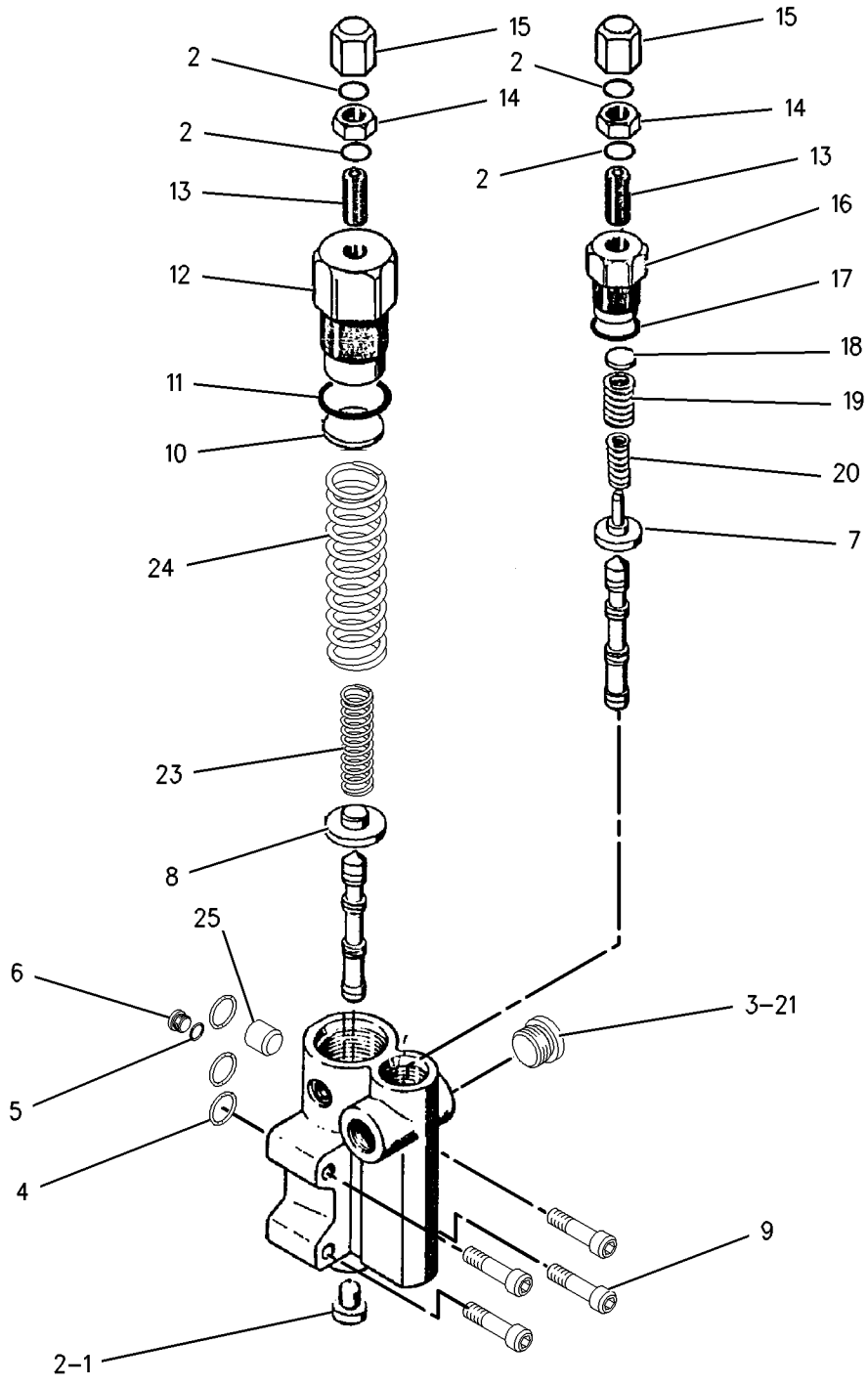

GRAPHIC #1

g00870976

HYDRAULIC SYSTEM

4T-4935 VALVE GP-RELIEF

S/N: ASE1-UP
DIRECT OPERATED
PART OF 9T-5957 VALVE GP-COMBINATION

SMCS-4322, 5069, 5117 **i00111654**

NOTE	REF NO	GRAPHIC REF	PART NUMBER	QTY	PART NAME 1 2 3 4 5 6 (PRODUCT LEVEL)	SEE PAGE
	1	1	**6E-1835**	1	RETAINER AS	
	2	1	**9X-6395**	1	NUT-ORFS (3/4-16 THD)	
	3	1	**7J-9933**	1	SEAL-O-RING (21.89MM ID)	
	4	1	**4T-7571**	1	PLATE	
	5	1	**6J-6439**	1	VALVE	
	6	1	**3K-0360**	2	SEAL-O-RING (16.36MM ID)	
	7	1	**4T-4942**	1	SPRING	

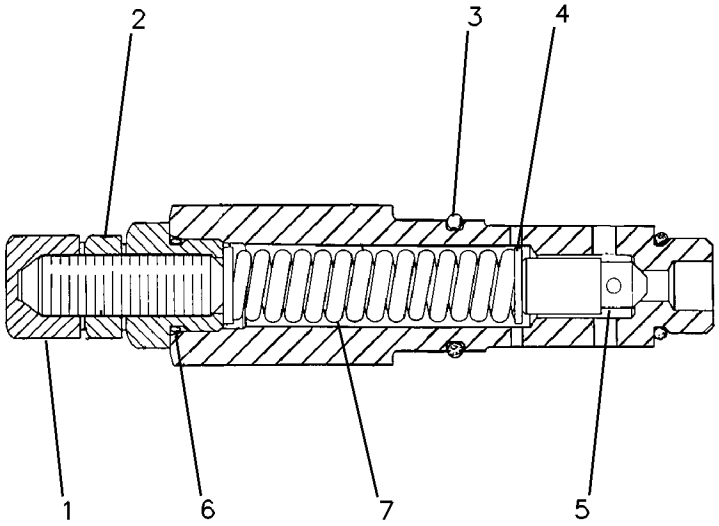

GRAPHIC #1 g00082648

6E-4703 VALVE GP-RELIEF

S/N: ASE1-UP
DIRECT OPERATED
PART OF 9T-5957 VALVE GP-COMBINATION

SMCS-4322, 5069, 5117 **i00111661**

NOTE	REF NO	GRAPHIC REF	PART NUMBER	QTY	PART NAME 1 2 3 4 5 6 (PRODUCT LEVEL)	SEE PAGE
	1	1	**4D-2297**	1	SEAL-O-RING (15.60MM ID)	
	2	1	**3J-1907**	1	SEAL-O-RING (11.89MM ID)	
	3	1	**3G-3726**	1	NUT	

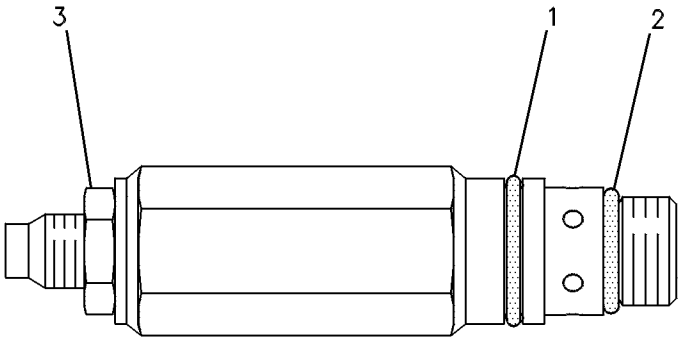

GRAPHIC #1 g00084814

9T-6129 VALVE GP-RELIEF–STEERING HYDRAULIC PRESSURE

S/N: ASE1-UP

PART OF 171-6446 LINES GP-STEERING

SMCS-4322, 5069, 5117 **i00128177**

NOTE	REF NO	GRAPHIC REF	PART NUMBER	QTY	PART NAME 1 2 3 4 5 6 (PRODUCT LEVEL)	SEE PAGE
	1	1	**4T-9337**	1	BODY-RELIEF	
	2	1	**5P-3903**	2	ADAPTER-O-RING	
	3	1	**4T-9336**	2	SEAT	
	4	1	**3G-7444**	2	VALVE (CROSSOVER STEERING)	
	5	1	**5J-9631**	2	SPRING	
	6	1	**9S-8005**	2	PLUG-O-RING (3/4-16 THD)	
		1	**3K-0360**	2	SEAL-O-RING (16.36MM ID)	
	7	1	**1N-6002**	4	SEAL-O-RING	
	8	1	**4J-0521**	2	SEAL-O-RING (34.52MM ID)	
B	9	1	**3G-8592**	2	SHIM (.13MM THK)	
B		1	**5J-4857**	34	SHIM (.01MM THK)	

B-USE AS REQUIRED

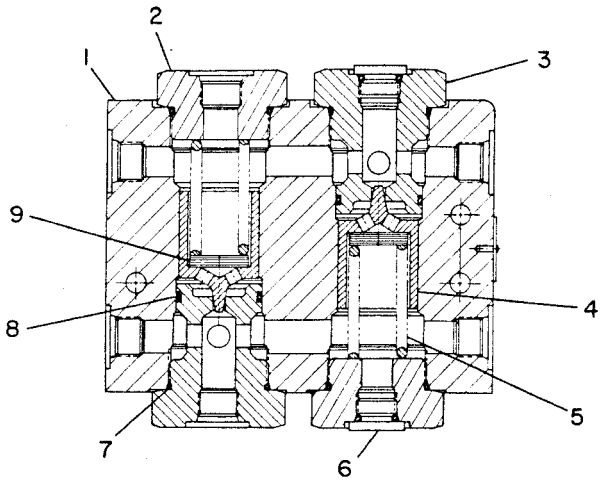

GRAPHIC #1 g00108261

HYDRAULIC SYSTEM

100-6021 VALVE GP-RELIEF

S/N: ASE1-UP

PART OF 9T-5957 VALVE GP-COMBINATION

SMCS-4322, 5069, 5117 **i00124270**

NOTE	REF NO	GRAPHIC REF	PART NUMBER	QTY	PART NAME 1 2 3 4 5 6 (PRODUCT LEVEL)	SEE PAGE
	1	1	**123-6661**	1	HOUSING	
	2	1	**4T-5074**	1	RING-BACKUP	
	3	1	**6V-5556**	1	SEAL-O-RING (25.07MM ID)	
	4	1	**4T-4509**	1	SEAT	
	5	1	**108-5157**	1	VALVE	
	6	1	**4T-1700**	1	SPRING	
	7	1	**3K-0360**	1	SEAL-O-RING (16.36MM ID)	
	8	1	**9X-6395**	1	NUT-ORFS (3/4-16 THD)	
	9	1	**6E-5200**	1	RETAINER AS	
	10	1	**3J-7354**	1	SEAL-O-RING (8.92MM ID)	

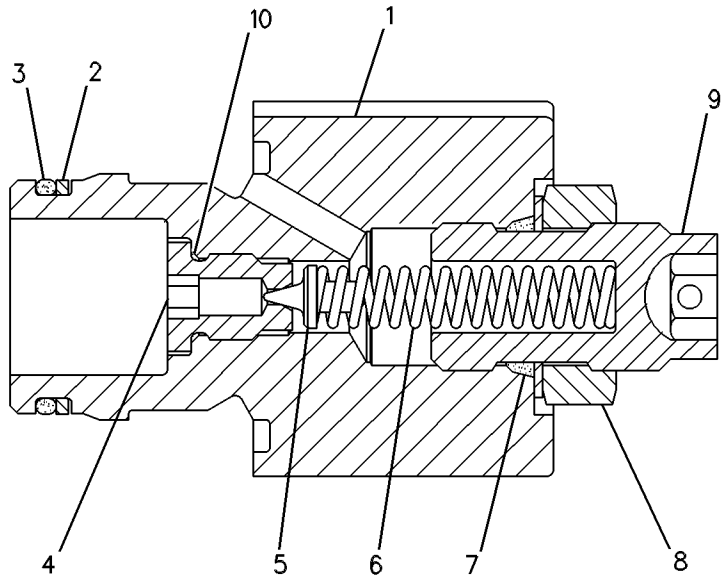

GRAPHIC #1 g00108818

HYDRAULIC SYSTEM

139-8472 VALVE GP-RELIEF

S/N: ASE1-UP

PART OF 107-0554, 107-0556, 107-0559, 137-8104, 137-8106 VALVE GP-CONTROL

ALSO AN ATTACHMENT

SMCS-4322, 5069, 5117 **i01685370**

NOTE	REF NO	GRAPHIC REF	PART NUMBER	QTY	PART NAME 1 2 3 4 5 6 (PRODUCT LEVEL)	SEE PAGE
	1	1	**114-6635**	1	RETAINER AS	
	2	1	**2P-1279**	1	LOCKNUT (9/16-18 THD)	
	3	1	**3J-1907**	2	SEAL-O-RING	
	4	1	**2J-6089**	1	SPRING	
Z	5	1		1	BODY	
	6	1	**131-8777**	1	VALVE	
	7	1	**4D-2297**	1	SEAL-O-RING	
	8	1	**2A-3211**	1	WASHER (5.5X12.3X.8MM THK)	

Z-NOT SERVICED SEPARATELY

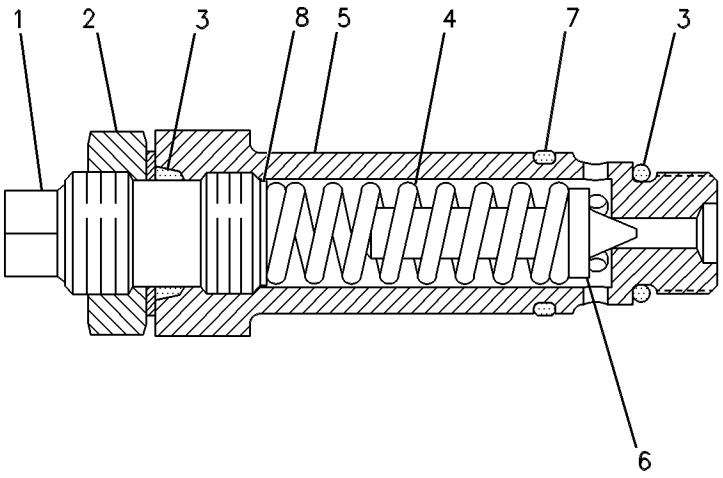

GRAPHIC #1 g00109400

HYDRAULIC SYSTEM

139-8474 VALVE GP-RELIEF

S/N: ASE1-UP

PART OF 107-0547, 107-0557, 107-0564, 153-8907 VALVE GP-CONTROL

ALSO AN ATTACHMENT

SMCS-4322, 5069, 5117 **i00111651**

NOTE	REF NO	GRAPHIC REF	PART NUMBER	QTY	PART NAME 1 2 3 4 5 6 (PRODUCT LEVEL)	SEE PAGE
	1	1	**114-6635**	1	RETAINER AS	
	2	1	**2P-1279**	1	LOCKNUT (9/16-18 THD)	
	3	1	**3J-1907**	2	SEAL-O-RING (11.89MM ID)	
	4	1	**2J-6089**	1	SPRING	
	5	1	**2A-3211**	1	WASHER	
	6	1	**131-8777**	1	VALVE	
	7	1	**4D-2297**	1	SEAL-O-RING (15.60MM ID)	

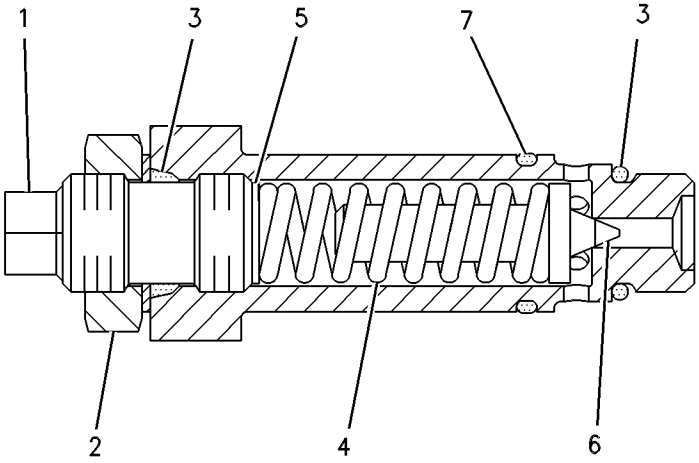

GRAPHIC #1 g00089282

139-8476 VALVE GP-RELIEF

S/N: ASE1-UP
DIRECT OPERATED
PART OF 124-3455, 150-6649 VALVE GP-CONTROL
AN ATTACHMENT

SMCS-4322, 5069, 5117 **i00127110**

NOTE	REF NO	GRAPHIC REF	PART NUMBER	QTY	PART NAME 1 2 3 4 5 6 (PRODUCT LEVEL)	SEE PAGE
	1	1	**5B-9079**	1	NUT-JAM (3/8-24 THD)	
	2	1	**9T-2659**	1	SPRING	
	3	1	**3J-1907**	1	SEAL-O-RING (11.89MM ID)	
	4	1	**6M-5062**	1	SEAL-O-RING (10.82MM ID)	
	5	1	**4D-2297**	1	SEAL-O-RING (15.60MM ID)	
	6	1	**131-8777**	1	VALVE	

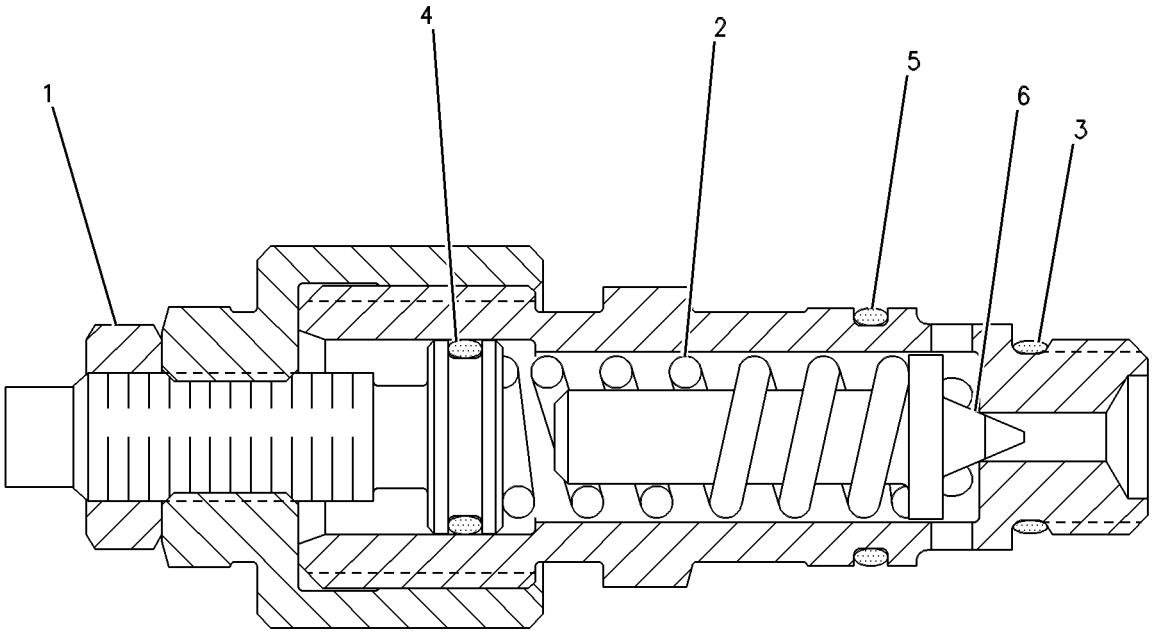

GRAPHIC #1 g00109725

139-8477 VALVE GP-RELIEF–EU

S/N: ASE1-UP
DIRECT OPERATED
PART OF 130-3111, 130-3112, 130-3113 VALVE GP-CONTROL
AN ATTACHMENT

SMCS-4322, 5069, 5117 **i00127119**

NOTE	REF NO	GRAPHIC REF	PART NUMBER	QTY	PART NAME 1 2 3 4 5 6 (PRODUCT LEVEL)	SEE PAGE
	1	1	**5B-9079**	1	NUT-JAM (3/8-24 THD)	
	2	1	**9T-2659**	1	SPRING	
	3	1	**3J-1907**	1	SEAL-O-RING (11.89MM ID)	
	4	1	**6M-5062**	1	SEAL-O-RING (10.82MM ID)	
	5	1	**4D-2297**	1	SEAL-O-RING (15.60MM ID)	
	6	1	**131-8777**	1	VALVE	

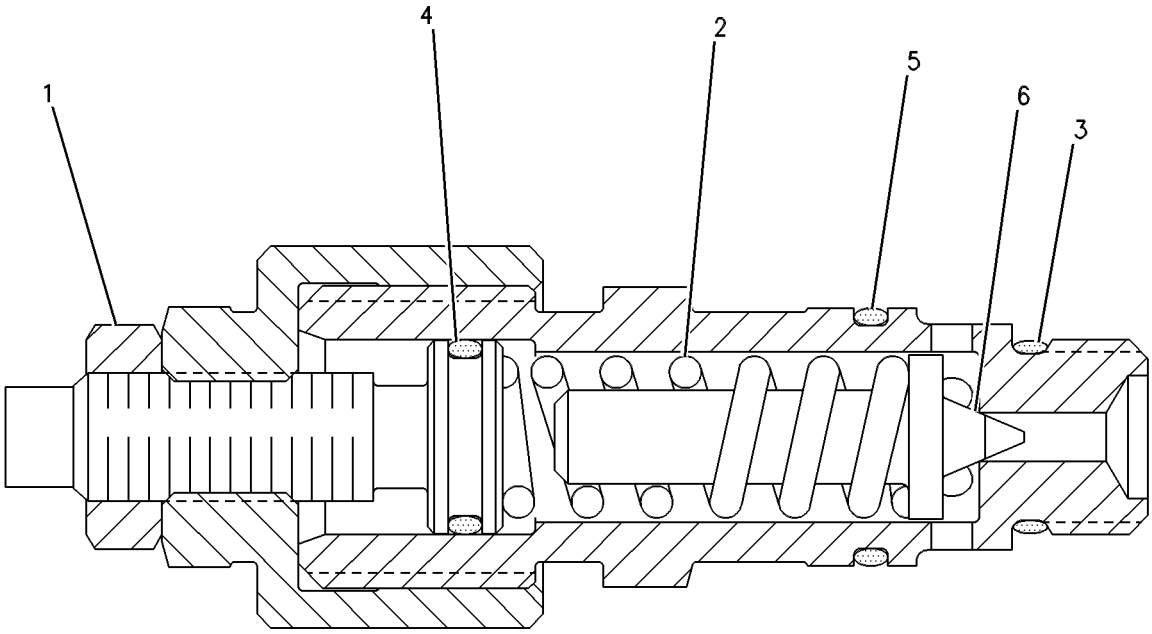

GRAPHIC #1 g00109725

HYDRAULIC SYSTEM

4T-1860 VALVE GP-SHUTTLE

S/N: ASE1-UP

PART OF 9T-5957 VALVE GP-COMBINATION

SMCS-5079 **i01624620**

NOTE	REF NO	GRAPHIC REF	PART NUMBER	QTY	PART NAME 1 2 3 4 5 6 (PRODUCT LEVEL)	SEE PAGE
Z	1	1		1	SEAT	
	2	1	**1M-6718**	1	BALL	
Z	3	1		1	VALVE	
	4	1	**8C-3085**	1	SEAL-O-RING	
	5	1	**6V-5586**	1	SEAL-O-RING	
	6	1	**3J-1907**	1	SEAL-O-RING	
	7	1	**4T-5070**	2	RING-BACKUP	
	8	1	**4T-5071**	2	RING-BACKUP	

Z-NOT SERVICED SEPARATELY

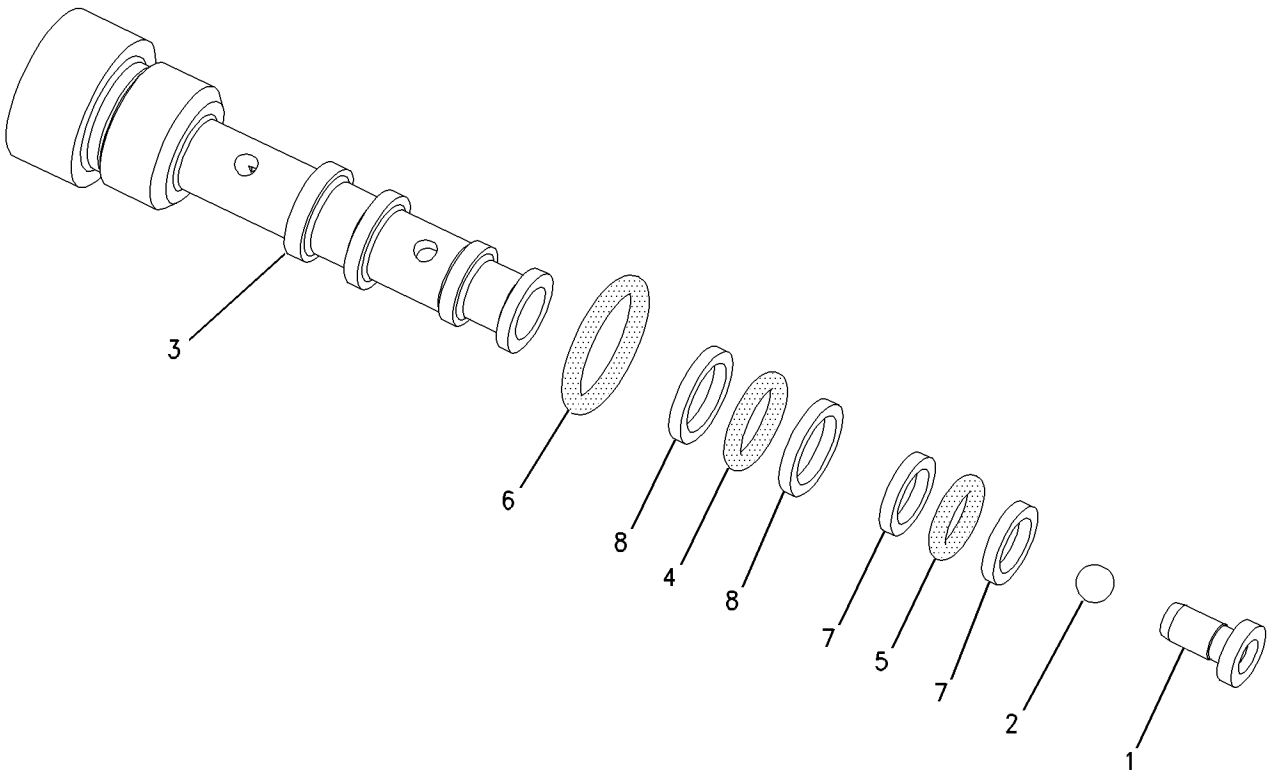

GRAPHIC #1 g00775006

149-2610 VALVE GP-SOLENOID—BLADE CUSHION

S/N: ASE1-UP
24 VOLT
PART OF 112-2240 VALVE GP-SOLENOID & MANIFOLD
AN ATTACHMENT

SMCS-5479 **i01682234**

NOTE	REF NO	GRAPHIC REF	PART NUMBER	QTY	PART NAME 1 2 3 4 5 6 (PRODUCT LEVEL)	SEE PAGE
	1	1	**149-2611**	1	CARTRIDGE AS	
		1	**8C-9987**	1	WASHER (8.3X28X2.5MM THK)	
	2	1	**111-0343**	1	LOCKNUT (5/16-18 THD)	
	3	1	**189-0189**	1	COIL AS	
		1	**1S-9593**	2	STRAP-CABLE	
		1	**3E-3365**	1	WEDGE-RECEPTACLE LOCK (2 PIN)	
		1	**8T-8729**	2	PIN-CONNECTOR	
		1	**102-8802**	2	KIT-RECEPTACLE (2 PIN)	
					(EACH INCLUDES RECEPTACLE AS AND WEDGE)	
	4	1	**8C-9987**	1	WASHER (8.3X28X2.5MM THK)	
		1	**111-0343**	1	LOCKNUT (5/16-18 THD)	
					AVAILABLE REPAIR KIT(S):	
			3G-8175	1	KIT-SEAL (SOLENOID VALVE)	
					(INCLUDES O-RINGS & BACK-UP RINGS)	

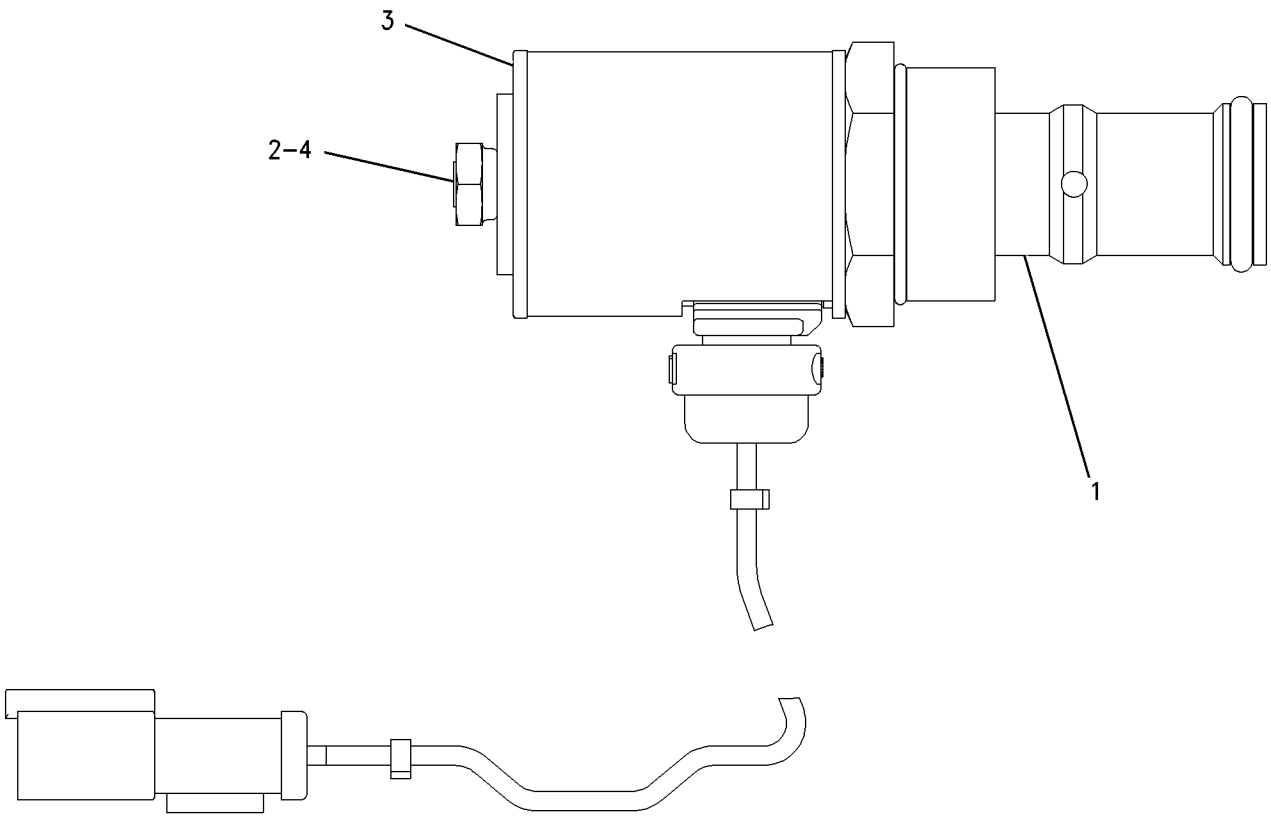

GRAPHIC #1 g00835681

112-2240 VALVE GP-SOLENOID & MANIFOLD–BLADE CUSHION

S/N: ASE1-UP
PART OF 166-3368 LINES GP-ACCUMULATOR
AN ATTACHMENT

SMCS-5264, 5479 **i01651335**

NOTE	REF NO	GRAPHIC REF	PART NUMBER	QTY	PART NAME 1 2 3 4 5 6 (PRODUCT LEVEL)	SEE PAGE
Y	1	1	**149-2610**	1	VALVE GP-SOLENOID (BLADE CUSHION)	585
	2	1	**8C-6162**	1	MANIFOLD	

Y-SEPARATE ILLUSTRATION

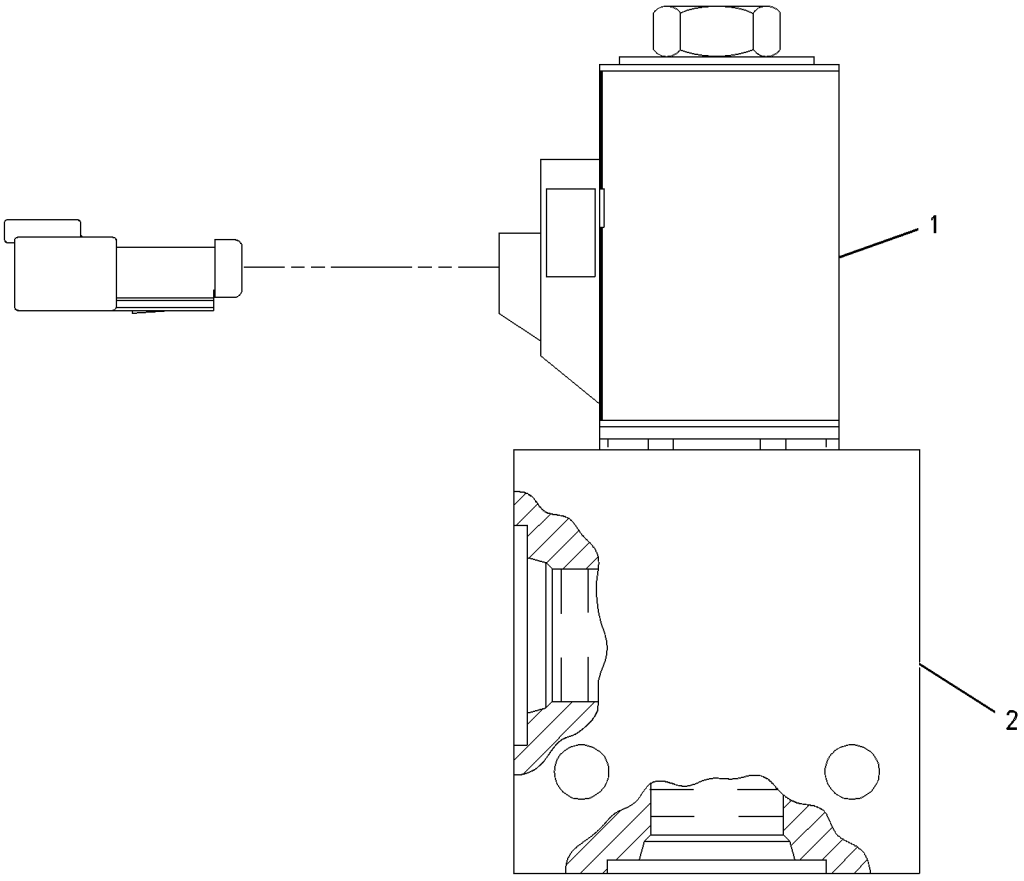

GRAPHIC #1 g00469610

193-5765 VALVE GP-SOLENOID & MANIFOLD–HYDRAULIC FAN

S/N: ASE1-UP

PART OF 175-6980 LINES GP-HYDRAULIC FAN

SMCS-5264, 5479 **i01643814**

NOTE	REF NO	GRAPHIC REF	PART NUMBER	QTY	PART NAME 1 2 3 4 5 6 (PRODUCT LEVEL)	SEE PAGE
	1	1	**3E-3584**	1	MANIFOLD	
	2	1	**183-7595**	1	VALVE GP-SOLENOID (HYDRAULIC FAN)	
					AVAILABLE REPAIR KIT(S):	
			100-4318	1	KIT-SEAL (HYDRAULIC FAN)	
					'(INCLUDES SEALS AND A RING)	

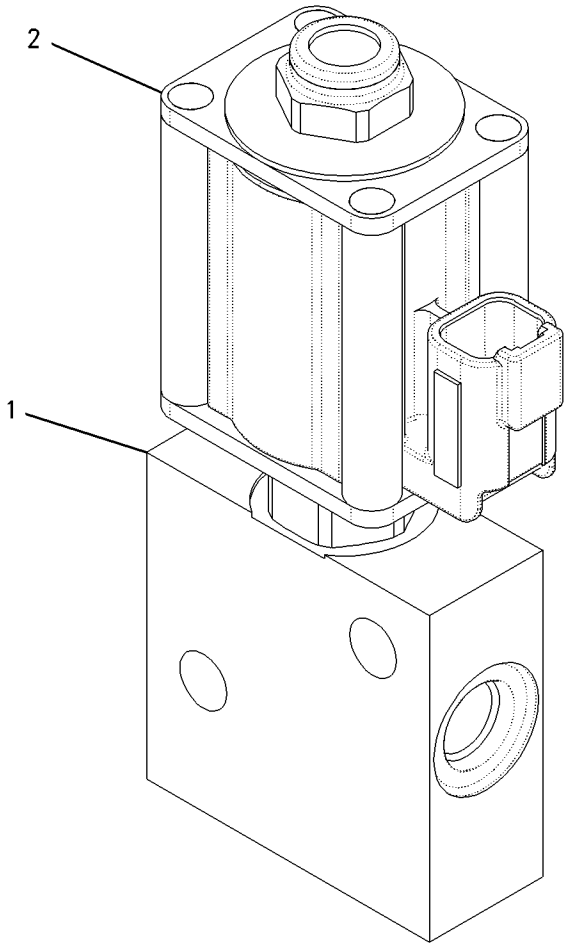

GRAPHIC #1 g00857952

6G-4970 CIRCLE GP

S/N: ASE1-UP

PART OF 162-5606 GENERAL AR

SMCS-6152, 6154, 6155 **i01042170**

NOTE	REF NO	GRAPHIC REF	PART NUMBER	QTY	PART NAME 1 2 3 4 5 6 (PRODUCT LEVEL)	SEE PAGE
C	1	1	**8X-5429**	1	CIRCLE & BEAM AS	
	2	1	**8X-5313**	1	BEAM-BLADE	
	3	1	**8X-4892**	1	BRACKET	
	4	1	**8X-5312**	1	BEAM-BLADE	
	5	1	**6G-4911**	2	BOSS	
	6	1	**8X-5428**	2	BLOCK	
	7	1	**6G-4831**	2	SHAFT	
	8	1	**6J-5773**	4	WASHER	
	9	1	**5F-3715**	4	NUT	
	10	1	**3B-5320**	4	COTTER	
	11	1	**8W-4167**	8	BEARING-SLEEVE	
B	12	1	**5V-0354**	2	WASHER (3MM THK)	
B	13	1	**2G-2945**	4	SHIM (.77MM)	
B	14	1	**2G-2946**	4	SHIM (1.52MM THK)	
	15	1	**104-7238**	8	PLATE	
	16	1	**5T-8365**	4	STRIP-WEAR	
	17	1	**5T-2354**	1	BRACKET AS	
	18	1	**9S-1374**	12	BOLT (1/2-13X8IN)	
	19	1	**1K-6872**	12	LOCKNUT (1/2-13 THD)	
		1	**2M-0849**	24	WASHER (5MM THK)	
	20	1	**7P-7705**	4	WASHER	

B-USE AS REQUIRED
C-CHANGE FROM PREVIOUS TYPE

6G-4970 **CIRCLE GP** *(contd.)* **i01042170**

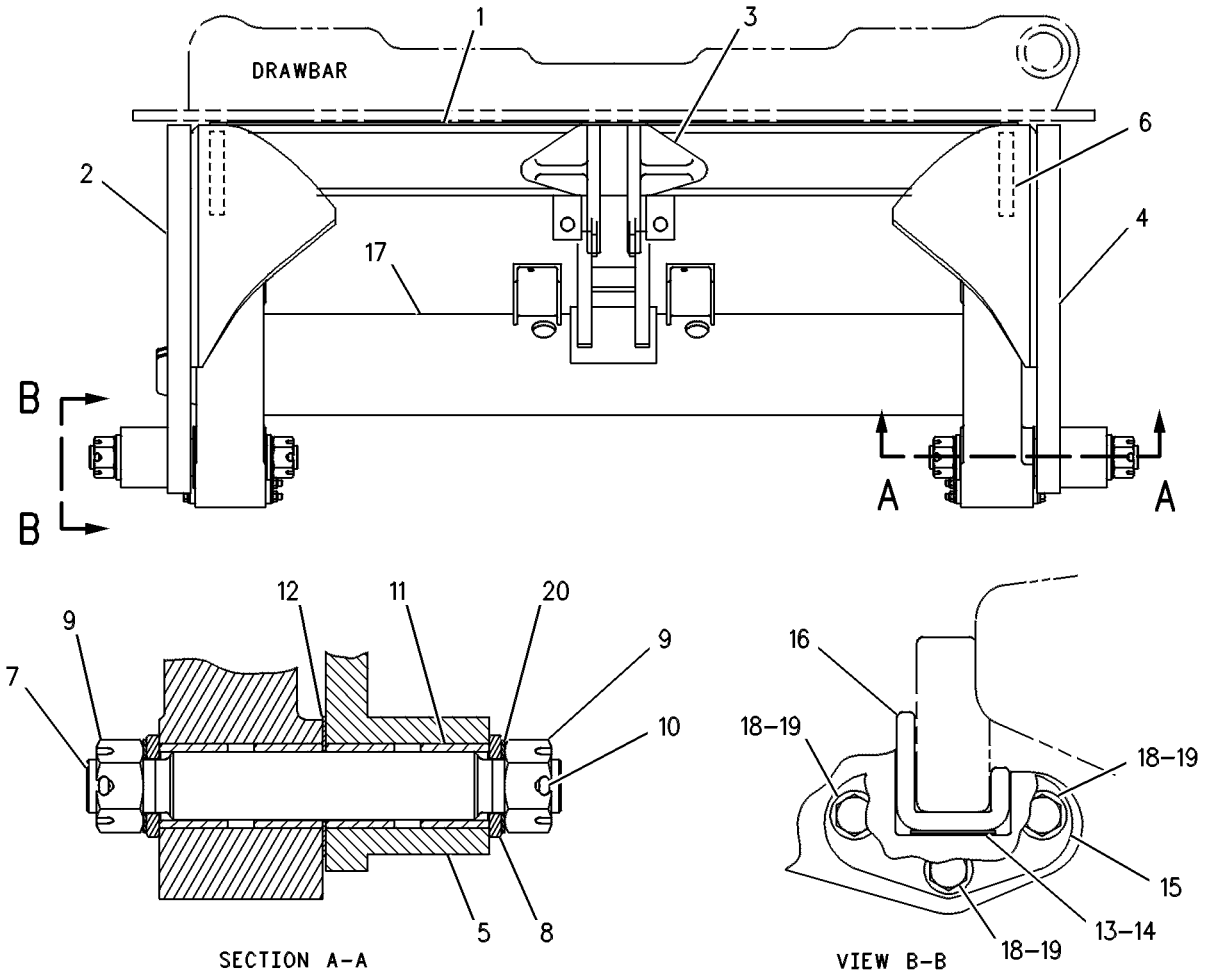

GRAPHIC #1 g00108662

IMPLEMENTS

6G-4985 DRAWBAR GP

S/N: ASE1-UP

PART OF 162-5606 GENERAL AR

SMCS-6153 **i01663343**

NOTE	REF NO	GRAPHIC REF	PART NUMBER	QTY	PART NAME 1 2 3 4 5 6 (PRODUCT LEVEL)	SEE PAGE
C	1	1	**8X-5317**	1	DRAWBAR & YOKE AS	
	2	1	**2G-9042**	1	SHAFT AS	
	3	1	**6J-9944**	1	LUG (1/2-13 THD)	
	4	1	**5D-2643**	5	LUG (3/8-16 THD)	
	5	1	**2S-4615**	2	BOSS	
	6	1	**8X-9943**	3	BALLSTUD	
B	7	1	**8D-4813**	3	SHIM (.25MM THK) (0.25MM THK)	
	8	1	**9S-8892**	6	BOLT-12 POINT HEAD	
	9	1	**1L-8793**	2	BOLT-SOCKET HEAD	
	10	1	**6G-4680**	1	ADAPTER	
C	11	1	**0S-1627**	8	BOLT (3/4-10X4.5IN)	
	12	1	**5P-8248**	8	WASHER-HARD (20X36.5X3.5MM THK)	
	13	1	**6G-4173**	6	SHOE-CIRCLE GUIDE	
	14	1	**4D-8318**	12	SETSCREW-SQUARE HEAD	
	15	1	**1D-6306**	12	NUT (1-8 THD)	
B	16	1	**6G-4642**	90	SHIM (0.8MM THK)	
B	17	1	**6G-4643**	24	SHIM (0.25MM THK)	
	18	1	**128-9655**	6	STRIP-WEAR	
	19	1	**128-9654**	10	STRIP-WEAR	
C	20	1	**6J-1536**	12	BOLT (7/8-9X6.5 IN)	
	21	1	**5P-8249**	13	WASHER-HARD (24X41.5X4MM THK)	
C	22	1	**2J-3505**	13	NUT-FULL (7/8-9 THD)	
	23	1	**5D-4281**	18	WASHER	
	24	1	**3B-8489**	1	FITTING-GREASE (1/8-27 THD) (DRAWBAR)	
	25	1	**1D-4634**	5	BOLT (7/8-9X5.5 IN)	
	26	1	**1D-5976**	1	BOLT (7/8-9X7IN)	
	27	1	**6G-4896**	1	BALL	
	28	1	**6G-4681**	1	CAP	
B	29	1	**8D-4811**	2	SHIM (1.52MM THK)	
B	30	1	**8D-4812**	3	SHIM (.76MM THK)	
B	31	1	**153-7410**	1	SHIM (.12MM THK)	

B-USE AS REQUIRED
C-CHANGE FROM PREVIOUS TYPE

6G-4985 **DRAWBAR GP** ***(contd.)*** **i01663343**

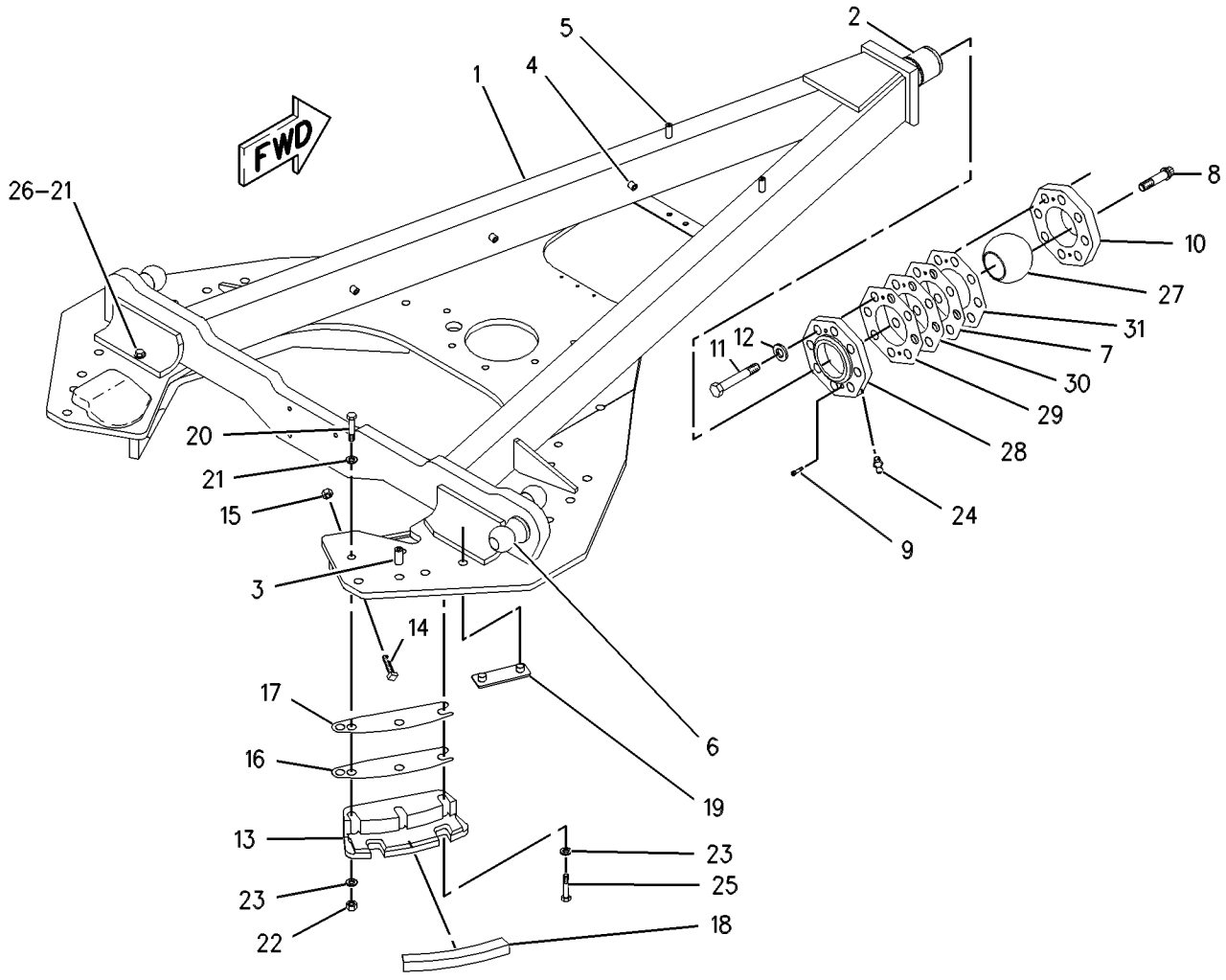

GRAPHIC #1 g00375553

8X-6420 PLATE GP-PUSH

S/N: ASE1-UP
AN ATTACHMENT

SMCS-6077 **i00128595**

NOTE	REF NO	GRAPHIC REF	PART NUMBER	QTY	PART NAME 1 2 3 4 5 6 (PRODUCT LEVEL)	SEE PAGE
	1	1	**8X-6450**	1	PLATE AS-PUSH	
		1	**5J-7333**	2	HOOK	
	2	1	**2A-1420**	8	BOLT (1-8X4.75IN)	
	3	1	**3V-5305**	16	SPACER	
	4	1	**2J-3507**	8	NUT-FULL (1-8 THD)	

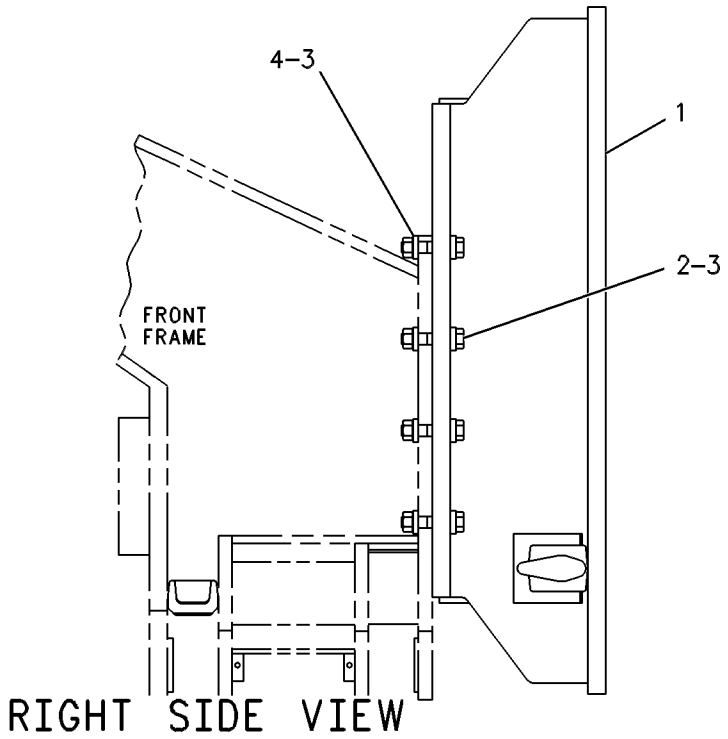

GRAPHIC #1 g00109046

107-3427 BIT GP–14 FT–56 STD BITS

S/N: ASE1-UP

AN ATTACHMENT

SMCS-6804 **i01401654**

NOTE	REF NO	GRAPHIC REF	PART NUMBER	QTY	PART NAME 1 2 3 4 5 6 (PRODUCT LEVEL)	SEE PAGE
	1	1	**6Y-4339**	56	BIT AS	
					(EACH INCLUDES)	
		1	**068-4860**	1	RING-RETAINING	
	2	1	**159-0314**	2	ADAPTER (OUTER)	
	3	1	**159-0313**	2	ADAPTER (INNER)	
	4	1	**5J-4773**	8	BOLT-PLOW (3/4-10X2.5 IN)	

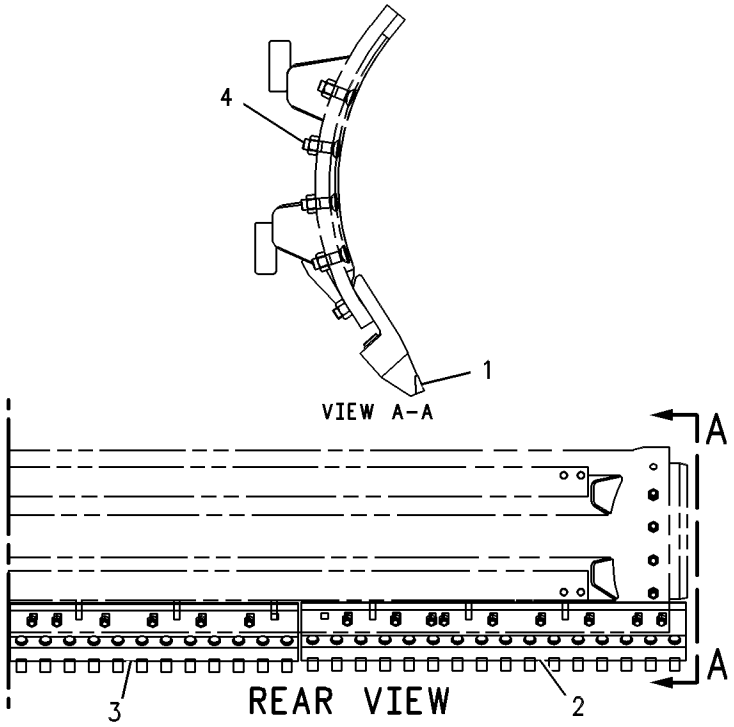

GRAPHIC #1 g00109038

107-3428 BIT GP–16 FT–64 STD BITS

S/N: ASE1-UP

AN ATTACHMENT

SMCS-6804 **i01401661**

NOTE	REF NO	GRAPHIC REF	PART NUMBER	QTY	PART NAME 1 2 3 4 5 6 (PRODUCT LEVEL)	SEE PAGE
	1	1	**6Y-4339**	64	BIT AS	
		1	**068-4860**	1	RING-RETAINING	
	2	1	**159-0314**	4	ADAPTER	
	3	1	**5J-4773**	8	BOLT-PLOW (3/4-10X2.5 IN)	

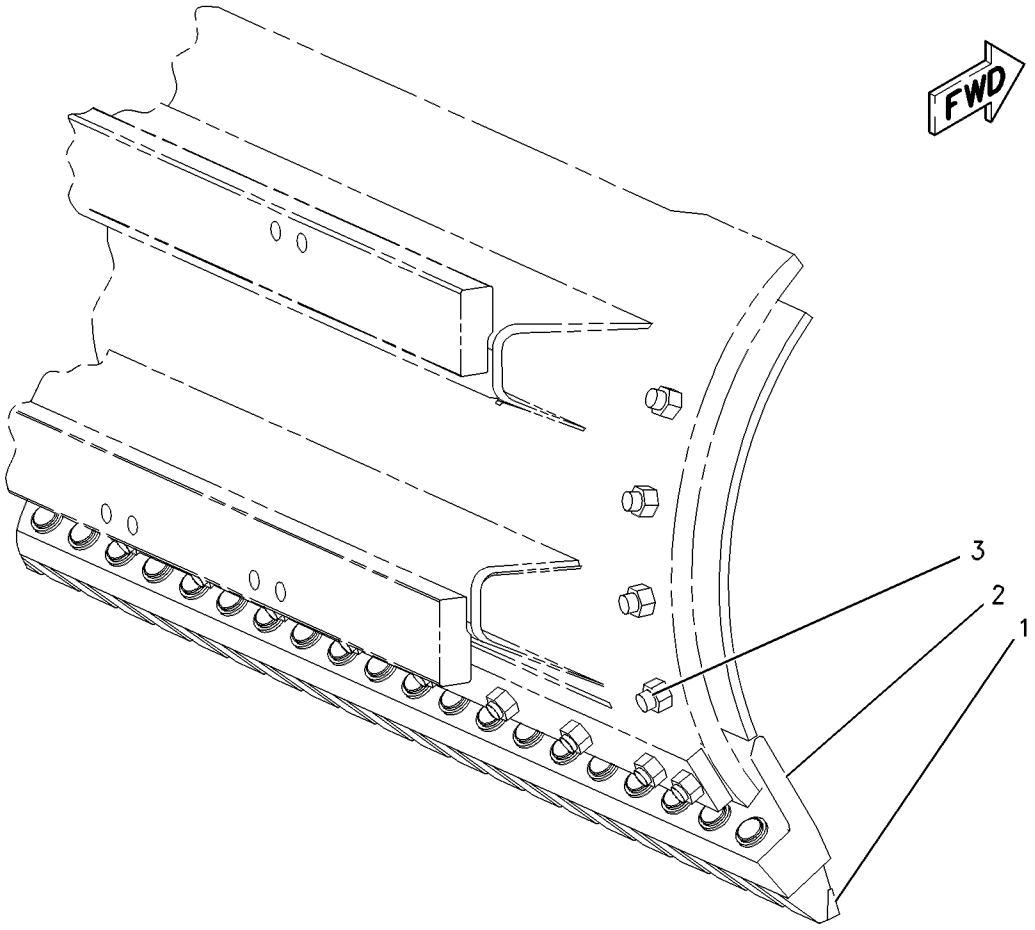

GRAPHIC #1 g00375532

WORK TOOLS

8W-8425 BLADE GP

S/N: ASE1-UP

PART OF 162-5606 GENERAL AR

SMCS-6151 **i00128478**

NOTE	REF NO	GRAPHIC REF	PART NUMBER	QTY	PART NAME 1 2 3 4 5 6 (PRODUCT LEVEL)	SEE PAGE
C	1	1	**8E-5529**	2	BIT-END	
	2	1	**5J-4773**	28	BOLT-PLOW (3/4-10X2.5IN)	
	3	1	**2J-3506**	38	NUT-FULL (3/4-10 THD)	
	4	1	**8W-8089**	1	MOLDBOARD AS	
	5	1	**7D-1158**	2	EDGE-CUTTING	
	6	1	**1J-6762**	10	BOLT-PLOW	
	7	1	**6Y-2805**	2	BIT-END	

C-CHANGE FROM PREVIOUS TYPE

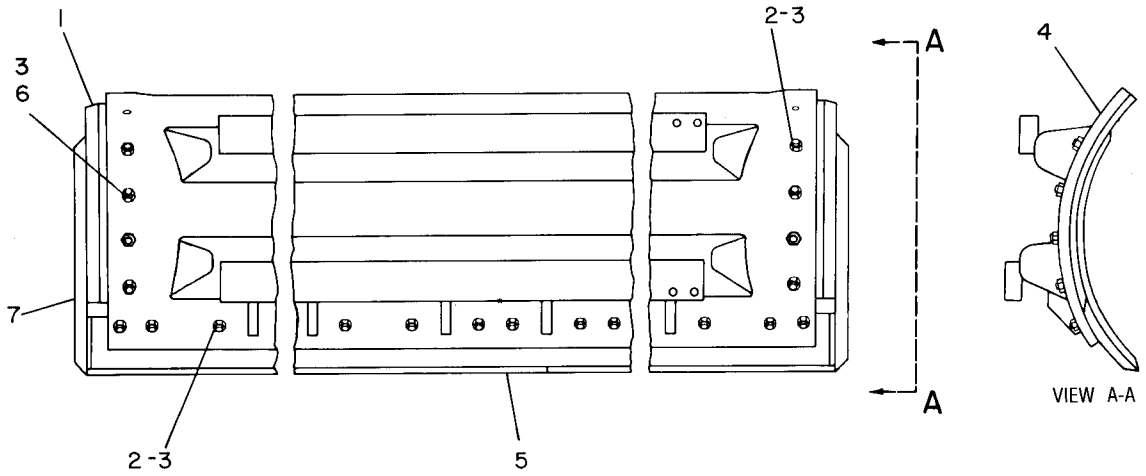

GRAPHIC #1 g00108350

WORK TOOLS

9D-2170 EDGE GP-CUTTING–14 FT

S/N: ASE1-UP

AN ATTACHMENT

SMCS-6801 **i00128679**

NOTE	PART NUMBER	QTY	PART NAME 1 2 3 4 5 6 (PRODUCT LEVEL)	SEE PAGE
	6Y-2803	2	BIT-END	

WORK TOOLS

107-3424 EDGE GP-CUTTING–8 FT

S/N: ASE1-UP

AN ATTACHMENT

SMCS-6801 **i00793347**

NOTE	PART NUMBER	QTY	PART NAME 1 2 3 4 5 6 (PRODUCT LEVEL)	SEE PAGE
	5J-4773	10	BOLT-PLOW (3/4-10X2.5IN)	
	4T-2236	4	EDGE-CUTTING	

WORK TOOLS

8D-5970 LIFT GP-BLADE

S/N: ASE1-UP

PART OF 162-5606 GENERAL AR

SMCS-6151 **i01673482**

NOTE	REF NO	GRAPHIC REF	PART NUMBER	QTY	PART NAME 1 2 3 4 5 6 (PRODUCT LEVEL)	SEE PAGE
	1	1	**9D-3583**	2	LOCK	
C	2	1	**1D-4614**	6	BOLT (3/4-10X5IN)	
C		1	**5P-8248**	12	WASHER-HARD (20X36.5X3.5MM THK)	
C		1	**2J-3506**	6	NUT-FULL (3/4-10 THD)	
	3	1	**1A-1135**	4	BOLT (5/8-11X2 IN)	
	4	1	**5P-8247**	12	WASHER-HARD (17X32X3.5MM THK)	
	5	1	**8D-4302**	2	LOCK	
	6	1	**1A-5405**	4	BOLT (5/8-11X5IN)	
	7	1	**4K-0367**	4	NUT-FULL (5/8-11 THD)	
C	8	1	**8W-5955**	1	ARM AS (LH)	
		1	**8D-4137**	1	BEARING-SLEEVE	
		1	**8D-4138**	1	BEARING-SLEEVE	
	9	2	**9S-1366**	1	BOLT (1/2-13X2.5 IN)	
		2	**2M-0849**	1	WASHER-HARD (13.5X25.5X5MM THK)	
	10	2	**2G-3985**	1	PLATE	
	11	2	**8D-4332**	2	PIN	
	12	2	**8D-4316**	4	WASHER-THRUST (61.93X133.35X2.39MM THK)	
		2	**8D-4317**	10	WASHER-THRUST (60.73X133.35X1.22MM THK)	
		2	**8D-4321**	10	WASHER-THRUST (60.73X133.35X.76 MM THK)	
	13	2	**9D-6586**	1	SEAL-LIP	
	14	2	**9D-1117**	1	BAR AS	
	15	2	**9D-3334**	1	RING-RETAINING	
	16	2	**9D-3312**	2	BEARING-SLEEVE	
	17	2	**6G-3529**	1	STUD-BALL	
	18	2	**8D-9652**	4	BEARING	
	19	2	**3P-1461**	8	SEAL-LIP	
	20	2	**8D-4235**	2	PIN	
	21	2	**8D-4336**	8	WASHER-THRUST (3.02X5.75X.08MM THK)	
		2	**8D-4337**	4	WASHER-THRUST (77.77X146.05X2.39MM THK)	
	22	2	**2G-5585**	2	YOKE AS	
					(EACH INCLUDES)	
	23	2	**2G-5584**	1	RING	
	24	2	**8D-3308**	2	SEAL (PLASTIC)	
		2	**5H-5672**	2	SEAL-O-RING (RUBBER)	
	25	2	**8D-4204**	2	WASHER-THRUST (96.82X131.78X2.39MM THK)	
		2	**8D-4203**	4	WASHER-THRUST (3.77X5.25X.08MM THK)	
C	26	2	**8W-5954**	1	ARM AS (RH)	
	27	2	**8D-4138**	1	BEARING-SLEEVE	
	28	2	**8D-4137**	1	BEARING-SLEEVE	
	29	2	**8D-4207**	2	WASHER-THRUST (80.98X119.08X2.39MM THK)	
		2	**8D-4208**	4	WASHER-THRUST (3.14X4.72X.08MM THK)	
	30	2	**8D-4217**	2	SEAL (PLASTIC)	
		2	**1J-2859**	2	SEAL-O-RING (RUBBER)	
	31	2	**8D-4198**	2	RETAINER	
B	32	2	**8D-4223**	8	SHIM (.127MM)	
B		2	**8D-4224**	6	SHIM (.254MM)	
B		2	**8D-4225**	2	SHIM (.508MM)	

B-USE AS REQUIRED
C-CHANGE FROM PREVIOUS TYPE

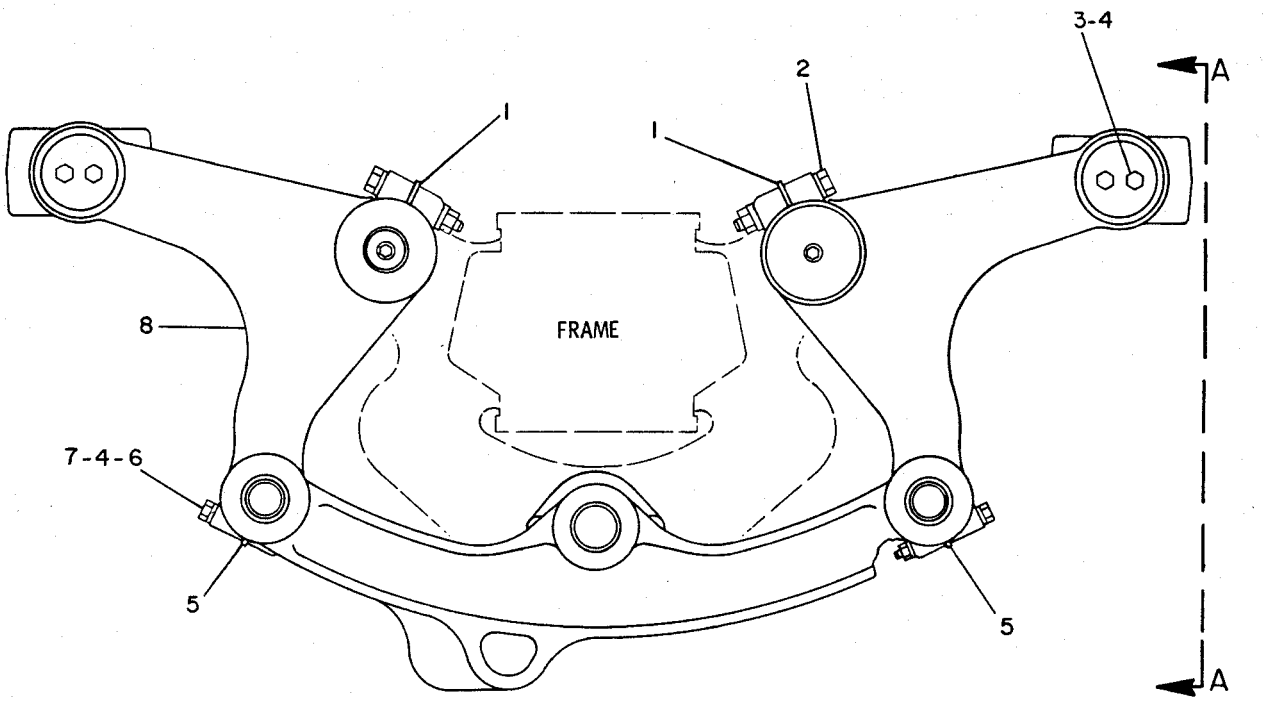

REAR VIEW

REFER TO ALL ILLUSTRATIONS OF THIS GROUP FOR AUXILIARY VIEWS

GRAPHIC #1

g00108327

8D-5970 **LIFT GP-BLADE** *(contd.)* **i01673482**

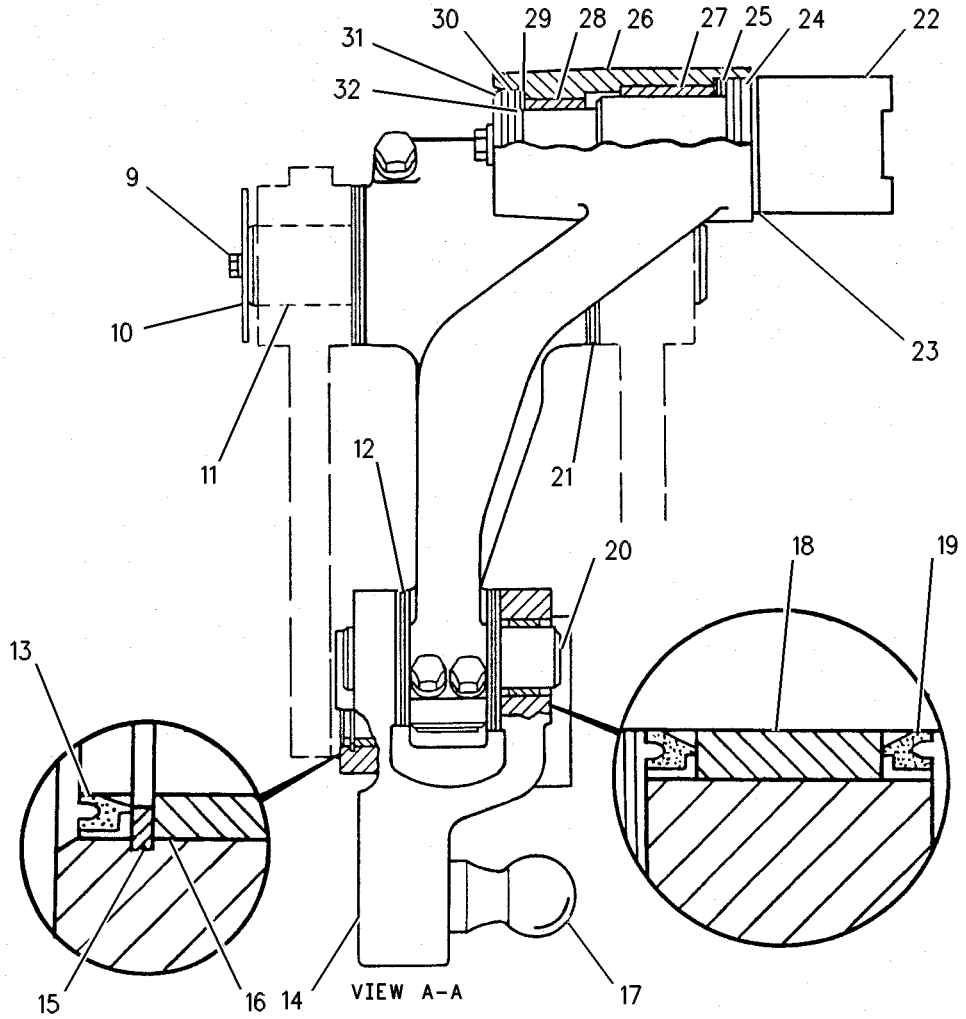

GRAPHIC #2 g00329740

MEMORANDA

WORK TOOLS

187-9058 MOUNTING GP-RIPPER

S/N: ASE1-UP
PART OF 187-9051 RIPPER AR
AN ATTACHMENT

SMCS-6165, 6324 **i01660129**

NOTE	REF NO	GRAPHIC REF	PART NUMBER	QTY	PART NAME 1 2 3 4 5 6 (PRODUCT LEVEL)	SEE PAGE
	1	1	**6W-9168**	2	BOSS	
	2	1	**7X-0576**	6	WASHER-HARD (28X44.5X6MM THK)	
	3	1	**8J-9092**	2	PIN	
	4	1	**8J-9608**	2	PIN	
	5	1	**120-9870**	2	LINK AS	
					(EACH INCLUDES)	
		1	**1J-2315**	1	BOSS	
	6	1	**120-9875**	2	CAM AS	
	7	1	**188-9013**	1	PLATE AS	
		1	**1J-2315**	4	BOSS	
	8	1	**1K-6872**	2	LOCKNUT (1/2-13 THD)	
	9	1	**3K-2889**	4	LOCKNUT (5/8-11 THD)	
	10	1	**6K-0715**	2	PIN	
	11	1	**7X-0338**	2	BOLT (1/2-13X6 IN)	
	12	1	**7X-0358**	2	BOLT (5/8-11X5.50IN)	
	13	1	**7X-0359**	2	BOLT (5/8-11X6IN)	
	14	1	**7X-0403**	6	BOLT (1-8X2.25 IN)	
	15	1	**7X-0404**	6	BOLT (1-8X2.50IN)	
	16	1	**8T-5361**	6	WASHER-HARD (28X49X5MM THK)	

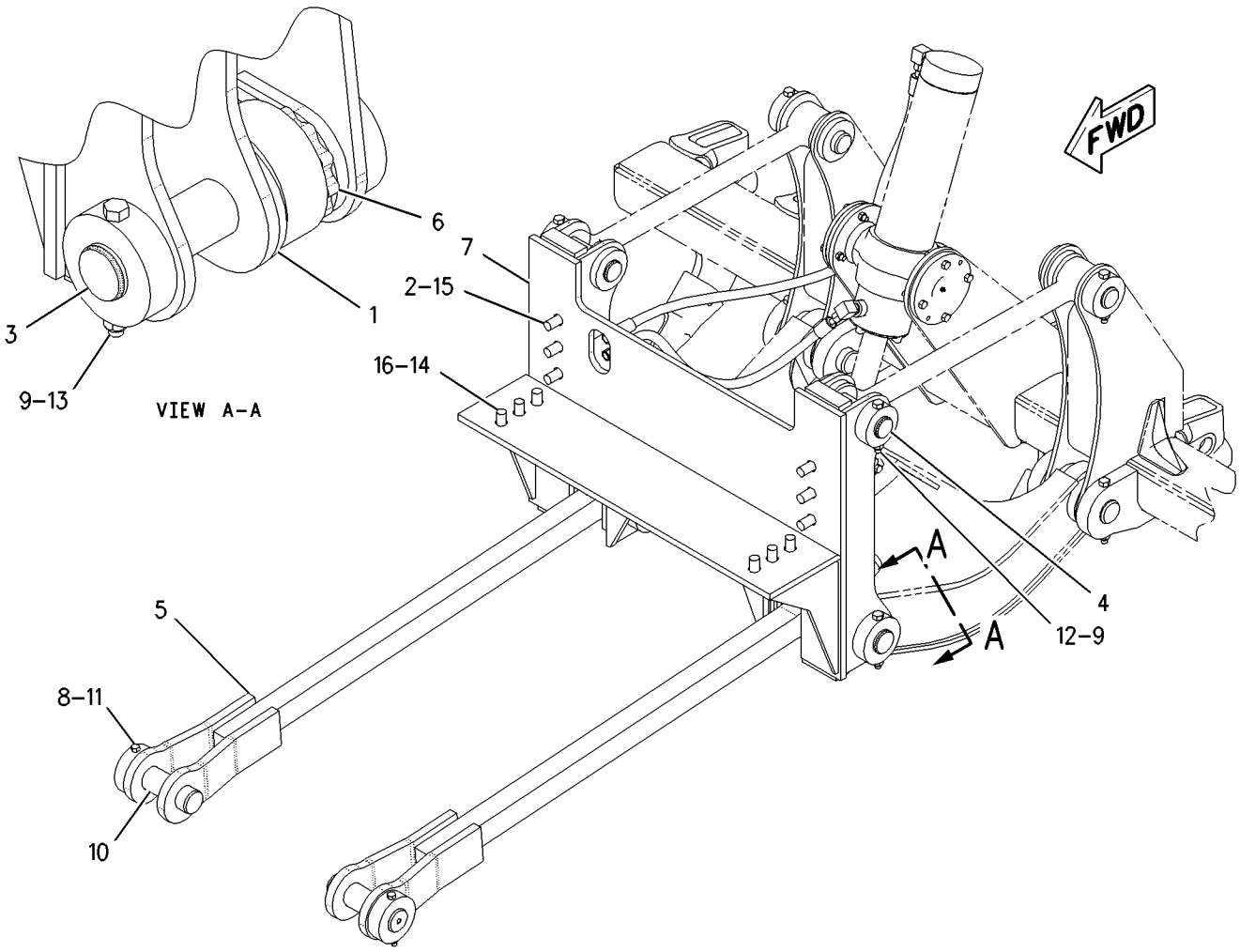

GRAPHIC #1 g00858248

WORK TOOLS

180-1680 MOUNTING GP-SNOW WING

S/N: ASE1-UP

AN ATTACHMENT

SMCS-6158 **i01663555**

NOTE	PART NUMBER	QTY	PART NAME 1 2 3 4 5 6 (PRODUCT LEVEL)	SEE PAGE
			(NO SERVICED PARTS)	

WORK TOOLS

187-9051 RIPPER AR

S/N: ASE1-UP
AN ATTACHMENT

SMCS-6325 **i01685809**

NOTE	REF NO	GRAPHIC REF	PART NUMBER	QTY	PART NAME 1 2 3 4 5 6 (PRODUCT LEVEL)	SEE PAGE
Y	1	1	*8J-6575*	1	RIPPER GP	606
Y	2	1	**113-5264**	1	CYLINDER GP-RIPPER LIFT	430
Y	3	1	*187-9058*	1	MOUNTING GP-RIPPER	602
Y	4	1	*187-9062*	1	LINES GP-RIPPER (CYLINDER)	468
FY		1	*2P-8540*	1	LITERATURE GP	712

F-NOT SHOWN
Y-SEPARATE ILLUSTRATION

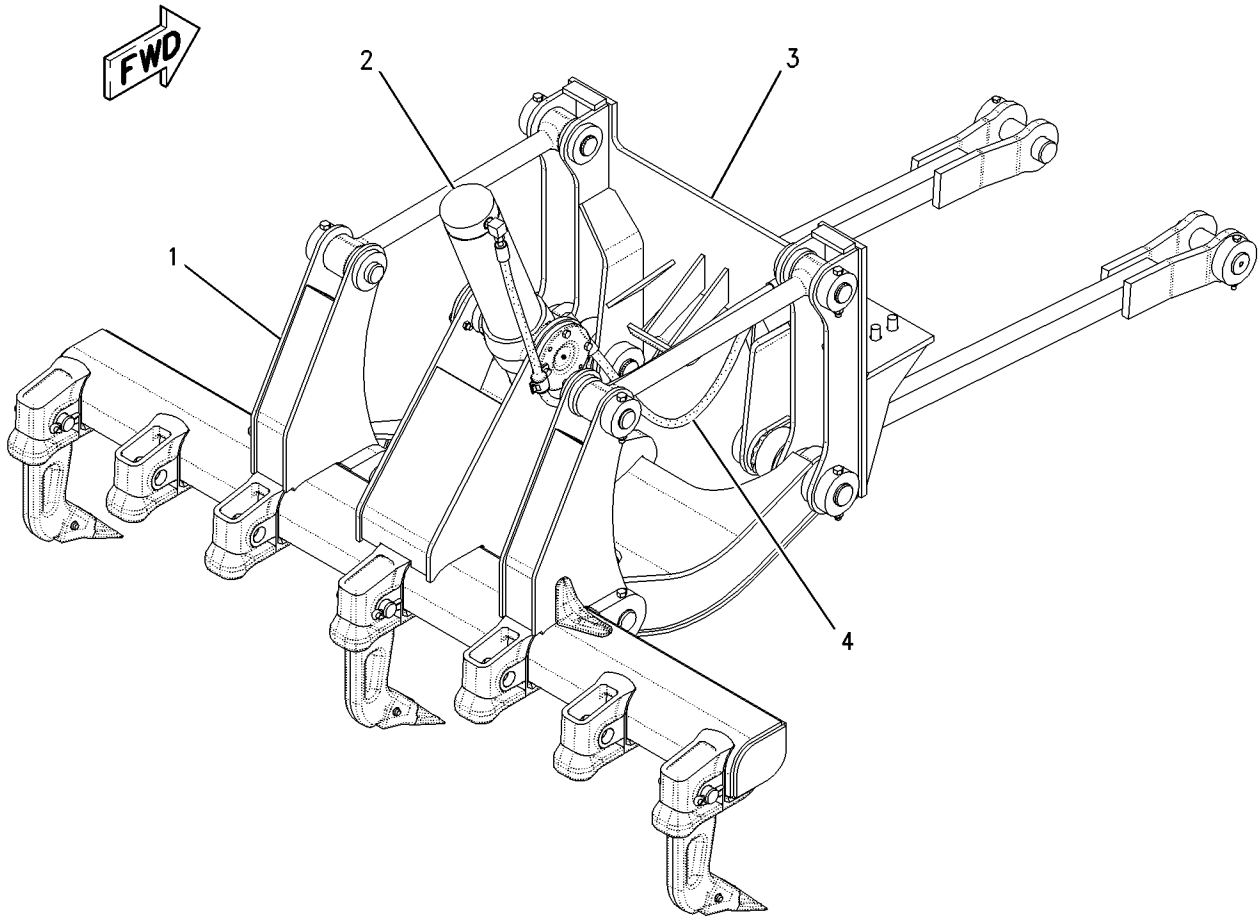

GRAPHIC #1 g00858188

WORK TOOLS

8J-6575 RIPPER GP

S/N: ASE1-UP
PART OF 187-9051 RIPPER AR
AN ATTACHMENT

SMCS-6325 **i01673496**

NOTE	REF NO	GRAPHIC REF	PART NUMBER	QTY	PART NAME 1 2 3 4 5 6 (PRODUCT LEVEL)	SEE PAGE
	1	1	**8J-6572**	1	CARRIAGE AS	
	2	1	**2K-4315**	4	BOSS	
	3	1	**5K-8330**	7	HOLDER-TOOTH	
	4	1	**2K-4309**	1	REINFORCEMENT-RH	
		1	**2K-4310**	1	REINFORCEMENT-LH	
	5	1	**9J-0268**	1	LINK AS-LOWER	
	6	1	**3G-2580**	4	BEARING	
Y	7	1	*8J-1434*	3	TOOTH GP-SCARIFIER	608
	8	1	**1D-4593**	2	BOLT (5/8-11X5.5 IN)	
	9	1	**3K-2889**	4	LOCKNUT (5/8-11 THD)	
	10	1	**8J-9608**	2	PIN	
	11	1	**4K-3004**	2	BEARING-TRUNNION SUPPLEMENTARY	
	12	1	**3B-8489**	3	FITTING-GREASE (1/8-27 THD) (TRUNNION)	
C	13	1	**9S-1366**	8	BOLT (1/2-13X2.5 IN)	
C	14	1	**1K-6872**	8	LOCKNUT (1/2-13 THD)	
	15	1	**9J-0269**	2	LINK AS	
					(EACH INCLUDES)	
C	16	1	**3G-2582**	2	BEARING	
C	17	1	**9D-6584**	8	SEAL-LIP	
	18	1	**1D-4599**	2	BOLT (5/8-11X7 IN)	
C	19	1	**3K-8510**	1	PIN	
	20	1	**2K-0703**	1	BAR	
	21	1	**0S-1585**	2	BOLT (1/2-13X1.50 IN)	
					-OR-	
C		1	**0S-1621**	2	BOLT (1/2-13X1 IN)	
	22	1	**8J-9607**	2	PIN	
C	23	1	**9D-6585**	8	SEAL-LIP	

C-CHANGE FROM PREVIOUS TYPE
Y-SEPARATE ILLUSTRATION

8J-6575 **RIPPER GP** *(contd.)* **i01673496**

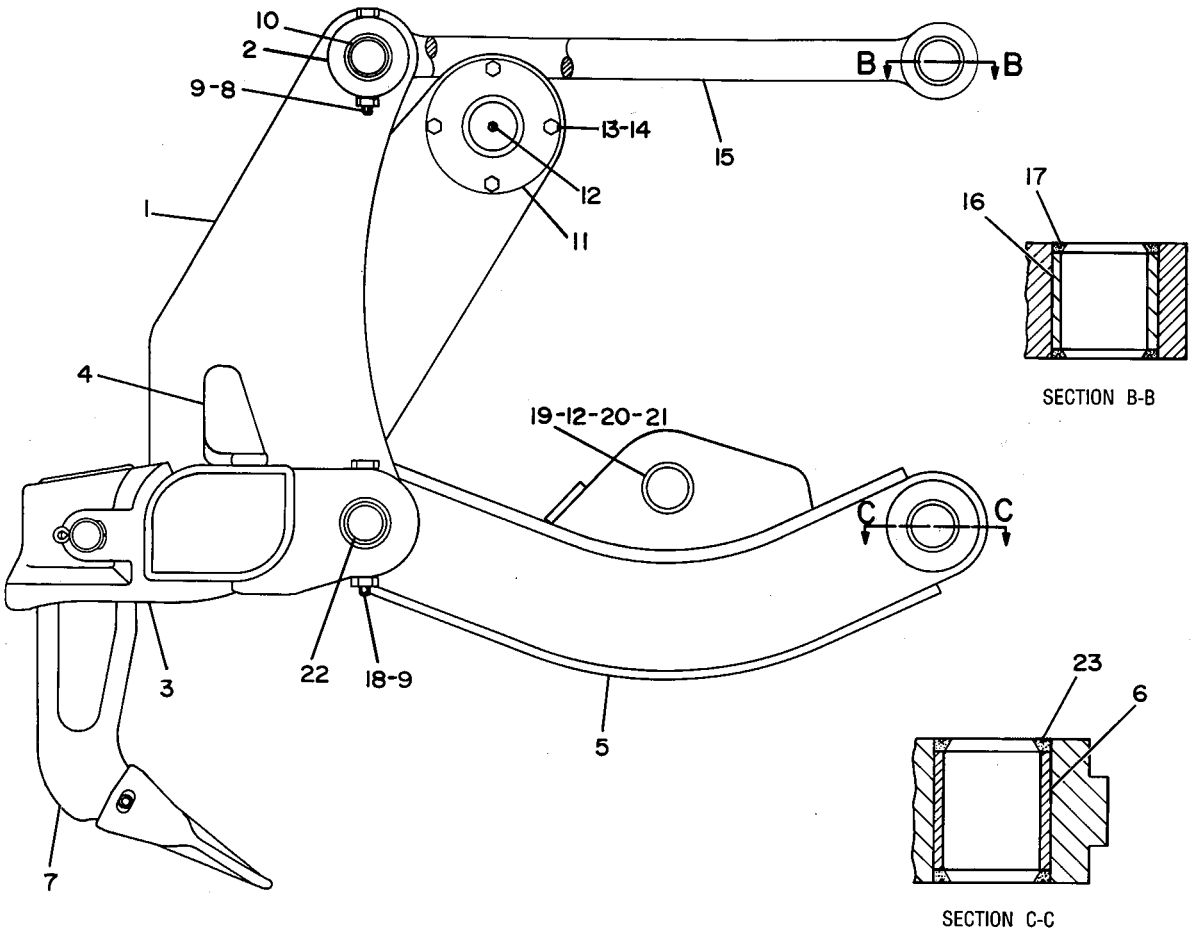

GRAPHIC #1 g00108249

WORK TOOLS

8J-1434 TOOTH GP-SCARIFIER–3 TEETH

S/N: ASE1-UP
PART OF 8J-6575 RIPPER GP
AN ATTACHMENT

SMCS-6807 **i01181216**

NOTE	REF NO	GRAPHIC REF	PART NUMBER	QTY	PART NAME 1 2 3 4 5 6 (PRODUCT LEVEL)	SEE PAGE
	1	1	**3B-5325**	1	COTTER (PIN)	
C	2	1	**2K-6413**	1	PIN	
C	3	1	**9J-6586**	1	SHANK	
	4	1	**136-8308**	1	PIN	
	5	1	**6Y-0309**	1	TIP-RIPPER (PENETRATION)	
	6	1	**114-0359**	1	RETAINER AS-G.E.T.	

C-CHANGE FROM PREVIOUS TYPE

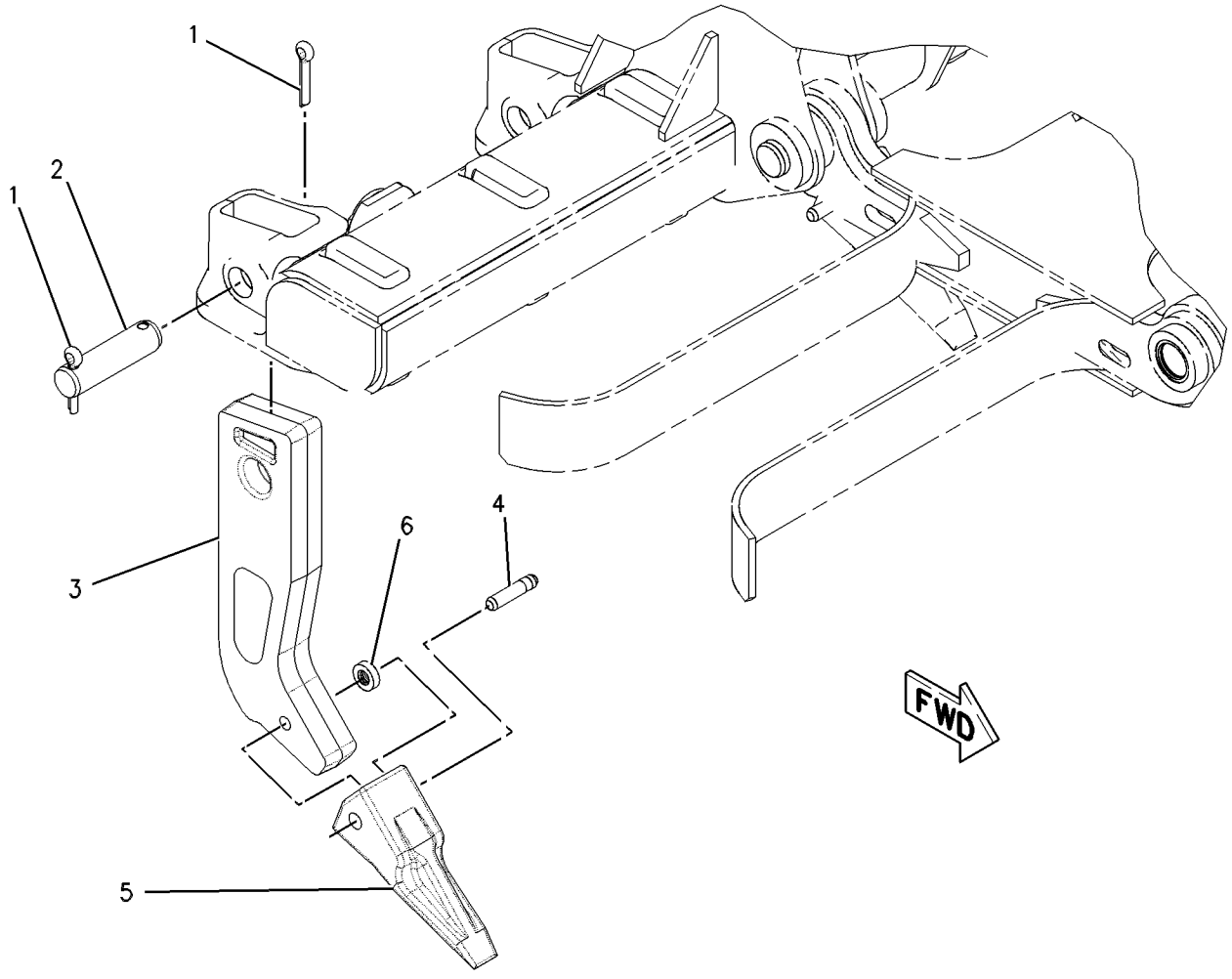

GRAPHIC #1 g00632727

OPERATOR STATION

171-7185 ACCESSORY GP-CAB–5 AMP

S/N: ASE1-UP
12V POWER PORT
PART OF 161-0776 CONVERTER AR-ELECTRICAL
AN ATTACHMENT

SMCS-1408, 1421 **i01539470**

NOTE	REF NO	GRAPHIC REF	PART NUMBER	QTY	PART NAME 1 2 3 4 5 6 (PRODUCT LEVEL)	SEE PAGE
	1	1	**117-2311**	1	RECEPTACLE AS-POWER (12 VOLT)	
	2	1	**138-7065**	1	PLATE	
	3	1	**169-3264**	1	HARNESS AS-CAB	
		1	**102-8802**	1	KIT-RECEPTACLE (2 PIN) (12V POWER PORT)	
					(INCLUDES RECEPTACLE AS & WEDGE)	
M	4	1	**129-3178**	2	LOCKNUT (M6X1 THD)	
	5	1	**6P-0205**	2	SPACER (.269X.405X.656 IN THK)	
	6	1	**9X-8256**	2	WASHER (6.6X12X2MM THK)	

M-METRIC PART

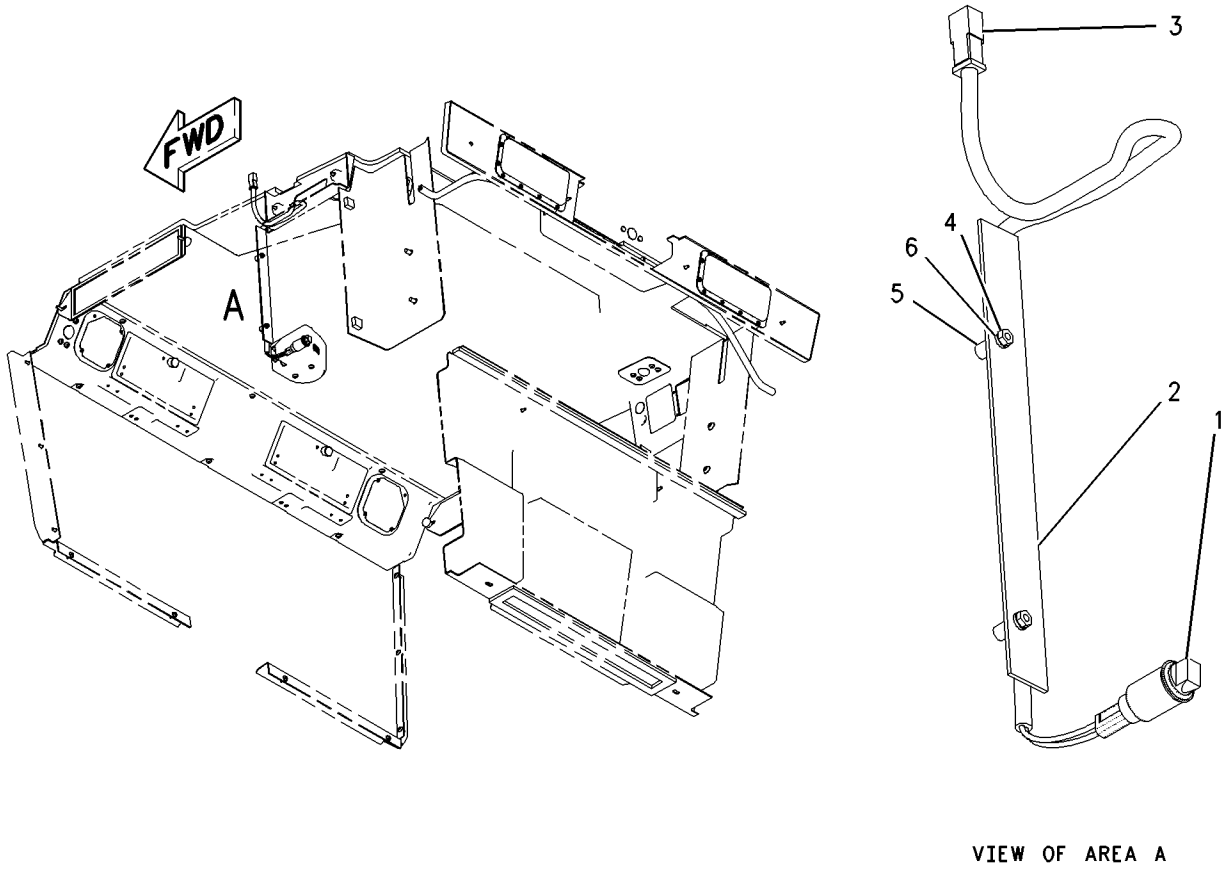

GRAPHIC #1 g00808417

OPERATOR STATION

171-7186 ACCESSORY GP-CAB–15 AMP

S/N: ASE1-UP
12V POWER PORT
PART OF 161-0777 CONVERTER AR-ELECTRICAL
AN ATTACHMENT

SMCS-1408, 1421 **i01539482**

NOTE	REF NO	GRAPHIC REF	PART NUMBER	QTY	PART NAME 1 2 3 4 5 6 (PRODUCT LEVEL)	SEE PAGE
	1	1	**117-2311**	1	RECEPTACLE AS-POWER (12 VOLT)	
	2	1	**169-3264**	1	HARNESS AS-CAB	
		1	**102-8802**	1	KIT-RECEPTACLE (2 PIN) (12V POWER PORT)	
M	3	1	**129-3178**	2	LOCKNUT (M6X1 THD)	
	4	1	**139-1153**	1	PLATE	
	5	1	**6P-0205**	2	SPACER (.269X.405X.656 IN THK)	
	6	1	**9X-8256**	2	WASHER (6.6X12X2MM THK)	

M-METRIC PART

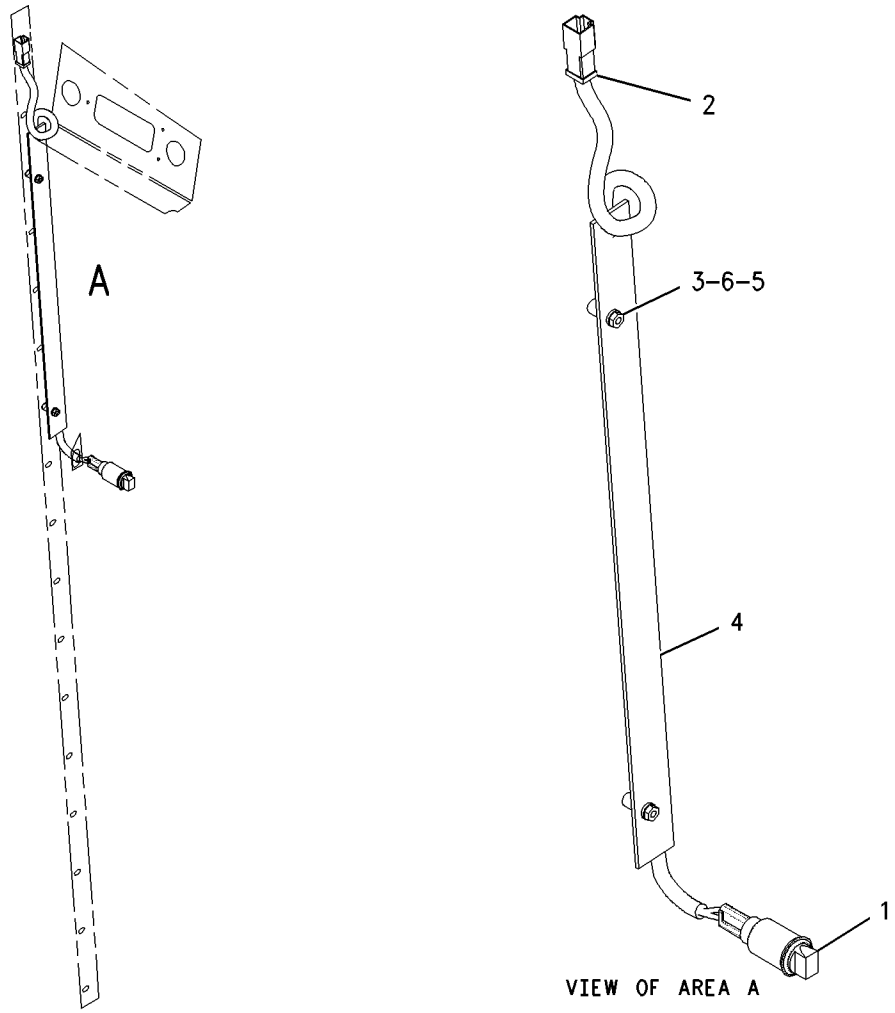

GRAPHIC #1 g00807680

OPERATOR STATION

8W-7646 AIR CONDITIONER & MOUNTING GP

S/N: ASE1-UP
PART OF 110-9471 AIR CONDITIONER AR
AN ATTACHMENT

SMCS-7320 **i01663350**

NOTE	PART NUMBER	QTY	PART NAME 1 2 3 4 5 6 (PRODUCT LEVEL)	SEE PAGE
Y	*8C-9788*	1	AIR CONDITIONER GP	616
	8M-8948	1	FUSE (15 AMP) (AIR CONDITIONER)	
	123-0871	1	PAD	
	123-0872	1	PAD	

Y-SEPARATE ILLUSTRATION

OPERATOR STATION

173-5313 AIR CONDITIONER & MOUNTING GP—SNOW

S/N: ASE1-UP
PART OF 167-8068 AIR CONDITIONER AR
AN ATTACHMENT

SMCS-7320 **i01528899**

NOTE	PART NUMBER	QTY	PART NAME 1 2 3 4 5 6 (PRODUCT LEVEL)	SEE PAGE
Y	**174-4548**	1	AIR CONDITIONER GP	620
	5M-3062	1	BOLT (3/8-16X0.75 IN)	
	8M-2773	2	CLIP	
	9W-1441	1	FUSE (15 AMP) (AIR CONDITIONER)	
	123-0872	1	PAD	
	191-5236	1	PAD	
	8T-4896	1	WASHER-HARD (10.2X18.5X2.5MM THK)	

Y-SEPARATE ILLUSTRATION

OPERATOR STATION

110-9471 AIR CONDITIONER AR

S/N: ASE1-UP
AN ATTACHMENT

SMCS-7320 **i01673511**

NOTE	PART NUMBER	QTY	PART NAME 1 2 3 4 5 6 (PRODUCT LEVEL)	SEE PAGE
Y	*8W-7646*	1	AIR CONDITIONER & MOUNTING GP	611
Y	*7E-9710*	1	COMPRESSOR GP-REFRIGERANT	628
Y	*8X-7992*	1	CONDENSER & MTG GP-REFRIGERANT	632
Y	*8W-7653*	1	DUCT & CONTROL GP	652
Y	*7I-5015*	1	DUCT GP	654
Y	**8X-2925**	1	FILTER GP-CAB AIR	664
Y	*115-8497*	1	LINES GP-AIR	94
Y	*8X-7993*	1	LINES GP-AIR CONDITIONER	702
Y	*8X-5310*	1	LINES GP-HEATER	706
	146-8952	1	FILM-IDENTIFICATION (FUSE) (A/C)	
	8M-0456	1	FUSE (20 AMP) (A/C)	

Y-SEPARATE ILLUSTRATION

OPERATOR STATION

167-8068 AIR CONDITIONER AR—SNOW

S/N: ASE1-UP

PART OF 197-5959 SNOW AR-MOTOR GRADER

AN ATTACHMENT

SMCS-7320 **i01673517**

NOTE	PART NUMBER	QTY	PART NAME 1 2 3 4 5 6 (PRODUCT LEVEL)	SEE PAGE
Y	*173-5313*	1	AIR CONDITIONER & MOUNTING GP (SNOW)	612
	174-9690	1	BELT-RIBBED (AIR CONDITIONER)	
Y	*197-4568*	1	COMPRESSOR GP-REFRIGERANT	631
Y	*197-7659*	1	COOLER & MTG GP-HYDRAULIC OIL	417
Y	*177-7891*	1	DUCT & CONTROL GP	653
Y	*7I-5015*	1	DUCT GP	654
Y	**8X-2925**	1	FILTER GP-CAB AIR	664
Y	*177-7876*	1	LINES GP-AIR CONDITIONER	704
Y	*177-7875*	1	LINES GP-HEATER	710

Y-SEPARATE ILLUSTRATION

MEMORANDA

OPERATOR STATION

8C-9788 AIR CONDITIONER GP

S/N: ASE1-UP

PART OF 8W-7646 AIR CONDITIONER & MOUNTING GP

AN ATTACHMENT

SMCS-7320 **i01673522**

NOTE	REF NO	GRAPHIC REF	PART NUMBER	QTY	PART NAME 1 2 3 4 5 6 (PRODUCT LEVEL)	SEE PAGE
	1	1	**3T-3197**	1	GROMMET	
	2	1	**9X-7382**	1	SEAL-O-RING	
	3	1	**3T-3198**	1	GROMMET	
	4	1	**9X-7381**	1	SEAL-O-RING	
	5	1	**9X-9654**	1	COIL AS-HEATER	
	6	1	**125-0438**	1	GASKET	
E	7	1,2	**9X-2126**		SEAL (160CM)	
	8	1	**9X-9653**	1	COIL AS-EVAPORATOR	
	9	1	**124-3138**	1	SEAL	
BD	10	1	**5P-5637**		SEAL	
	11	1	**8X-5540**	1	COVER	
	12	1	**124-1432**	1	HOUSING AS	
		1	**7T-1099**	1	LINK	
		1	**8P-5141**	2	PLATE-ORIFICE	
M	13	1	**134-8273**	2	SCREW-FLAT HEAD (M10X1.5 THD)	
	14	1	**8P-5141**	2	PLATE-ORIFICE	
	15	1	**123-4618**	1	COVER	
	16	1	**113-4251**	1	PLATE	
M	17	1	**9X-2040**	2	SCREW-TRUSS HEAD (M10X1.5X25MM)	
	18	1	**5P-1075**	13	WASHER-HARD (10.2X22.5X3MM THK)	
M	19	1	**5C-2890**	6	NUT (M6X1 THD)	
	20	1	**123-4701**	1	SEAL	
	21	1	**106-5840**	1	COVER	
	22	1	**6V-8801**	13	NUT (3/8-16 THD)	
M	23	1	**9X-2045**	6	SCREW-TRUSS HEAD (M6X1X20MM)	
	24	1	**124-1429**	1	HARNESS AS-HEATER & AIR COND	
		1	**155-2270**	1	KIT-CONNECTING PLUG (2 PIN)	
					(INCLUDES WEDGE & PLUG AS)	
	25	1	**9M-8406**	1	CLIP	
	26	1,2	**8T-4205**	16	WASHER-HARD (7.2X14.5X2MM THK)	
M	27	1,2	**9X-2041**	5	SCREW-TRUSS HEAD (M10X1.5X20MM)	
	28	1	**3E-5464**	1	SWITCH AS-THERMOSTAT	
	29	1	**8T-6631**	2	SCREW-MACHINE (8-32X0.5 IN)	
	30	1	**3B-4501**	2	LOCKWASHER	
I	31	2	**8X-7153**	1	HOSE AS	
I	32	2	**8X-7152**	1	HOSE AS	
	33	2	**6P-3236**	1	SWITCH AS-ROTARY (BLOWER)	
		2	**6V-8362**	5	SCREW-MACHINE (8-32X0.31 IN)	
		2	**9B-7233**	5	LOCKWASHER	
	34	2	**2P-4339**	1	NUT-JAM (7/16-20 THD)	
	35	2	**2V-0099**	2	KNOB (TEMP/FAN)	
	36	2	**3E-3890**	1	FILM-CONTROL (AC/HEATER)	
	37	2	**8D-1429**	1	LAMP (24 VOLT) (FAN SPEED INDICATOR)	
	38	2	**124-9006**	1	SHAFT	
	39	2	**6T-5345**	1	BUSHING-TERMINAL	
	40	2	**124-9007**	1	SHAFT AS	
M	41	2	**8T-4138**	2	BOLT (M6X1X20MM)	
	42	2	**125-0440**	1	PLATE	
	43	2	**5P-5672**	4	SEAL	
	44	1	**8X-5538**	1	COVER AS	
M		1	**8T-3490**	4	NUT-WELD (M10X1.5 THD)	
	45	1	**8C-3756**	1	FILM-IDENTIFICATION (GROUP & SEQUENCE NO.)	
	46	1	**8E-7791**	1	STRAP	
	47	1	**7G-4824**	1	STRAP	
	48	1	**104-2091**	8	SCREW-FLAT HEAD (6-20X0.5 IN)	

8C-9788 **AIR CONDITIONER GP** ***(contd.)*** **i01673522**

NOTE	REF NO	GRAPHIC REF	PART NUMBER	QTY	PART NAME 1 2 3 4 5 6 (PRODUCT LEVEL)	SEE PAGE
	49	1	**114-2702**	1	SUPPORT AS	
M		1	**4C-8449**	6	INSERT (M6X1X9MM)	
		1	**5H-0255**	1	BOSS (1/2-13X1.0IN OAL)	
		1	**5P-1075**	8	WASHER-HARD (10.2X22.5X3MM THK)	
		1	**4M-0200**	13	STUD-WELD (3/8-16X1.609 IN OAL)	
M		1	**6V-9632**	8	NUT-WELD (M6X1 THD)	
		1	**7T-1099**	1	LINK	
M		1	**8T-3490**	13	NUT-WELD (M10X1.5 THD)	
		1	**9G-9155**	1	CLIP	
	50	1	**110-6393**	1	PLATE-INSTRUCTION (AIR CONDITIONER)	
	51	1	**142-4940**	1	PLATE AS	
	52	1	**8Y-6388**	4	LOUVER AS	
	53	1	**3S-2093**	3	STRAP-CABLE	
M	54	2	**6V-7728**	1	BOLT (M6X1.0X45MM)	
	55	2	**9G-1950**	1	RESISTOR	
	56	2	**3E-0400**	2	WHEEL-BLOWER	
	57	2	**6V-1668**	2	WASHER (6.5X29.1X3MM THK)	
M	58	2	**141-9784**	1	BOLT-HEX HEAD (M6X190MM)	
	59	2	**8C-4586**	2	CLAMP	
	60	2	**174-1494**	1	MOTOR GP-ELECTRIC (27 VOLT)	
		2	**102-8802**	1	KIT-RECEPTACLE (2 PIN)	
					(INCLUDES RECEPTACLE AS & WEDGE)	
		2	**9W-0852**	2	PIN-CONNECTOR	
		2	**3E-3365**	1	WEDGE-RECEPTACLE LOCK (2 PIN)	
	61	2	**130-5300**	1	CLIP	
M	62	2	**8T-4171**	2	BOLT (M6X1X12MM)	
	63	2	**124-1433**	1	VALVE AS-WATER	
	64	2	**124-1431**	1	BRACKET	
	65	2	**9X-2185**	4	SCREW (8-15X0.44 IN)	
	66	2	**129-4935**	1	SEAL	
	67	2	**7X-0591**	2	WASHER-HARD (17X29X3MM THK)	
	68	2	**107-7090**	1	PLATE	
	69	2	**5P-9135**	1	GROMMET	
	70	2	**9X-8256**	2	WASHER (6.6X12X2MM THK)	
M	71	2	**5C-9553**	2	BOLT (M6X1X16MM)	
	72	2	**3H-2900**	1	GROMMET	
	73	2	**8X-5536**	1	COVER	
E	74	1,2	**136-1953**		HOSE (42CM)	
	75	1,2	**9X-2488**	6	CLAMP-HOSE	
M	76	2	**129-3178**	4	LOCKNUT (M6X1 THD)	
	77	2	**124-3137**	1	BRACKET	
D	78	2	**5P-5908**		SEAL (.2M)	
D	79	1	**5P-6129**		TUBE (1.8M)	
	80	1	**7T-9793**	2	VALVE (CHECK) (CONDENSATION)	

B-USE AS REQUIRED
D-ORDER BY THE METER
E-ORDER BY THE CENTIMETER
I-SEE HOSE FABRICATION GUIDE
M-METRIC PART

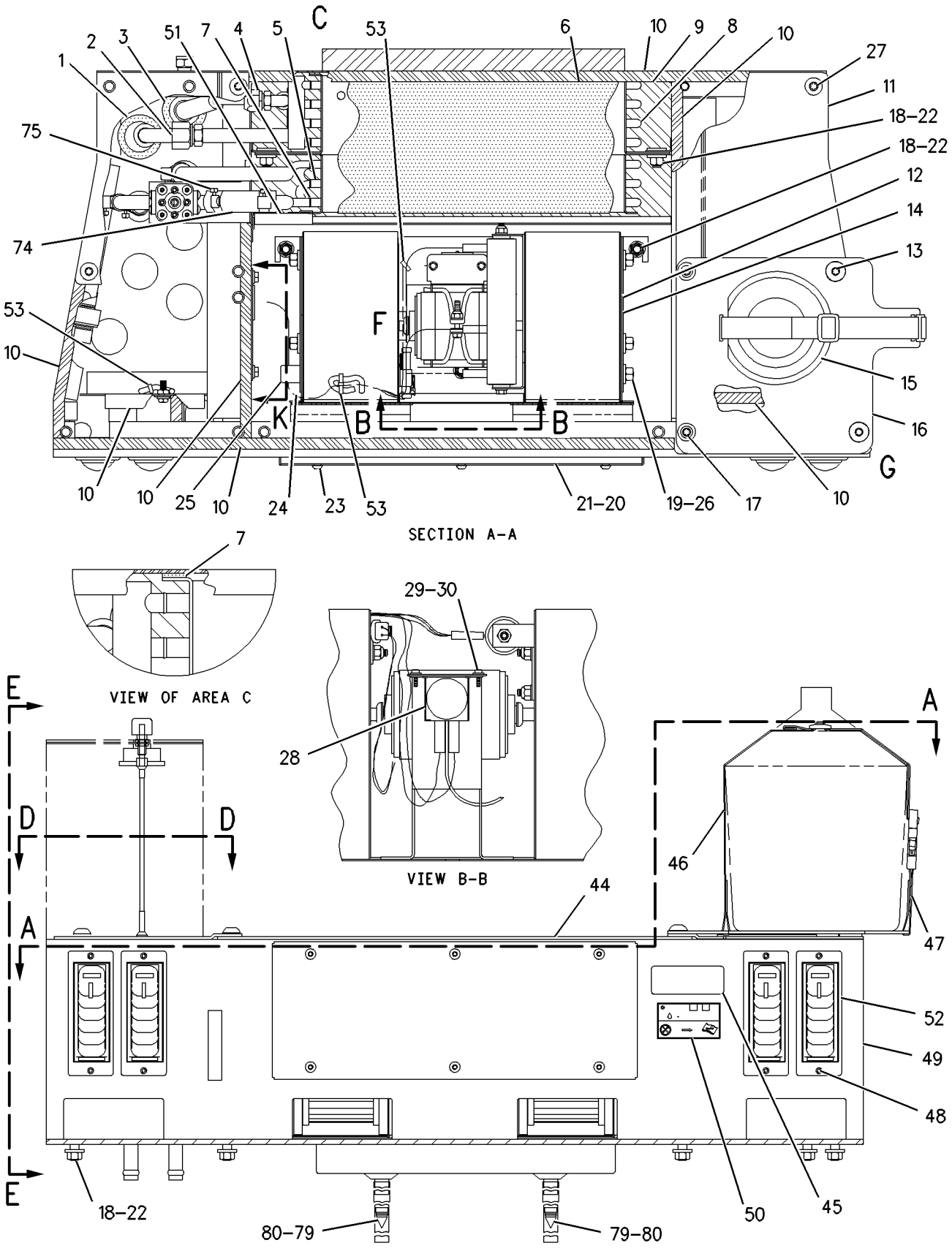

GRAPHIC #1 g00752076

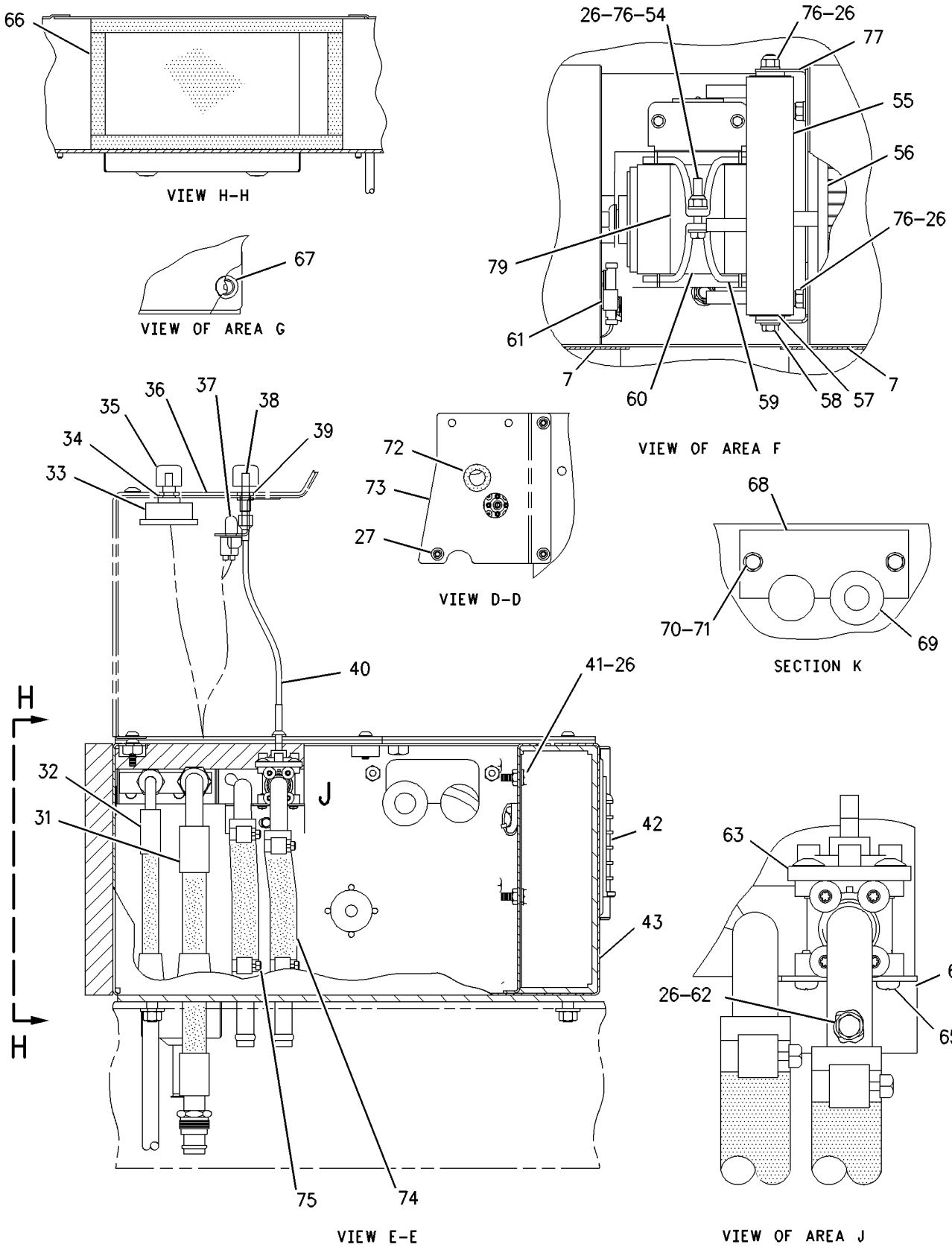

GRAPHIC #2

g00752077

OPERATOR STATION

174-4548 AIR CONDITIONER GP–SNOW

S/N: ASE1-UP
PART OF 173-5313 AIR CONDITIONER & MOUNTING GP
AN ATTACHMENT

SMCS-7320 **i01673527**

NOTE	REF NO	GRAPHIC REF	PART NUMBER	QTY	PART NAME 1 2 3 4 5 6 (PRODUCT LEVEL)	SEE PAGE
	1	1	**2P-4339**	1	NUT-JAM (7/16-20 THD)	
	2	1	**2V-0099**	1	KNOB (FAN SPEED)	
	2A	1	**2V-0099**	1	KNOB (TEMPERATURE CONTROL)	
	3	1	**3E-0400**	2	WHEEL-BLOWER	
	4	1	**3E-3890**	1	FILM-CONTROL (HEATER & A/C)	
	5	1	**3E-5464**	1	SWITCH AS-THERMOSTAT (REFRIGERANT)	
	6	1	**3S-2093**	2	STRAP-CABLE	
	7	1	**3T-3197**	1	GROMMET	
	8	1	**3T-3198**	1	GROMMET	
	9	2	**5P-7803**	2	PLUG-BUTTON	
	10	1	**6P-3236**	1	SWITCH AS-ROTARY (FAN SPEED)	
		1	**6V-8362**	5	SCREW-MACHINE (8-32X0.31 IN)	
		1	**9B-7233**	5	LOCKWASHER	
	11	1	**6T-5345**	1	BUSHING-TERMINAL	
	12	1	**6T-6708**	2	WASHER (7X28.6X4.1MM THK)	
	13	1	**204-4376**	1	CAP-PROTECTIVE	
	14	1	**7G-4824**	1	STRAP	
	15	1	**7T-9793**	2	VALVE (CHECK) (EVAPORATOR DRAIN)	
	17	1	**8C-4586**	2	CLAMP	
		1	**8C-5223**	2	PLUG-SEAL	
	18	1	**8D-1429**	1	LAMP (24 VOLT) (HVAC PANEL)	
	19	1	**8E-7791**	1	STRAP	
	20	1	**8P-5141**	2	PLATE-ORIFICE	
	21	1	**8X-5536**	1	COVER	
	22	2	**8X-5538**	1	COVER AS	
M		1	**8T-3490**	4	NUT-WELD (M10X1.5 THD)	
	23	1	**8X-5540**	1	COVER	
I	24	1	**8X-7152**	1	HOSE AS	
		1	**5F-9144**	1	SEAL-O-RING	
		1	**6M-5062**	1	SEAL-O-RING	
		1	**7X-1804**	1	COUPLING (90 DEGREES)	
		1	**7X-1805**	1	COUPLING (90 DEGREE)	
I	25	1	**8X-7153**	1	HOSE AS	
		1	**1S-8947**	1	SEAL-O-RING	
		1	**5L-4758**	1	SEAL-O-RING	
		1	**7X-1807**	1	COUPLING (90 DEGREE)	
		1	**9X-4006**	1	COUPLING-STRAIGHT	
	26	2	**8Y-6388**	4	LOUVER AS	
	27	1	**9G-1950**	1	RESISTOR	
	28	1	**9X-2185**	4	SCREW (8-15X0.44 IN)	
	29	1	**9X-2488**	6	CLAMP-HOSE	
	30	1	**9X-9653**	1	COIL AS-EVAPORATOR	
	31	1	**9X-9654**	1	COIL AS-HEATER	
	32	2	**110-6393**	1	PLATE-INSTRUCTION (AIR CONDITIONER)	
	33	1	**123-4618**	1	COVER	
	34	2	**123-4701**	1	SEAL	
	35	1	**124-1431**	1	BRACKET	
	36	1	**124-1432**	1	HOUSING AS	
		1	**7T-1099**	1	LINK	
		1	**8P-5141**	2	PLATE-ORIFICE	
	37	1	**124-3137**	1	BRACKET	
	38	1	**124-3138**	1	SEAL	
	39	1	**124-9006**	1	SHAFT	
	40	1	**124-9007**	1	SHAFT AS	
		1	**4L-5966**	2	SETSCREW (NO 10X.19 IN)	

174-4548 AIR CONDITIONER GP *(contd.)* i01673527

NOTE	REF NO	GRAPHIC REF	PART NUMBER	QTY	PART NAME 1 2 3 4 5 6 (PRODUCT LEVEL)	SEE PAGE
	41	1	**125-0438**	1	GASKET	
	42	1	**129-4935**	1	SEAL	
	43	1	**142-4940**	1	PLATE AS	
	44	1	**174-1494**	1	MOTOR GP-ELECTRIC (27 VOLT) (A/C)	
		1	**3E-3365**	1	WEDGE-RECEPTACLE LOCK (2 PIN)	
		1	**9W-0852**	2	PIN-CONNECTOR	
		1	**102-8802**	1	KIT-RECEPTACLE (2 PIN)	
	45	2	**174-4492**	1	COVER	
	46	1	**174-4971**	1	SUPPORT AS	
	47	1	**174-6353**	1	PLATE	
	48	1	**176-5507**	1	PAD	
	49	1	**177-7858**	1	HARNESS AS-HEATER & AIR COND	
		1	**155-2270**	1	KIT-CONNECTING PLUG (2 PIN) (HEATER - A/C MOTOR)	
		1	**102-8805**	1	KIT-RECEPTACLE (6 PIN) (HEATER & A/C)	
	50	2	**191-0027**	1	PAD	
	51	2	**104-2091**	8	SCREW-FLAT HEAD (6-20X0.5 IN)	
	52	1	**206-5154**	1	VALVE AS (AIR CONDITIONER)	
M	53	1	**129-3178**	4	LOCKNUT (M6X1 THD)	
	54	1	**130-5300**	1	CLIP	
M	55	1	**141-9784**	1	BOLT-HEX HEAD (M6X190MM)	
	56	1	**3B-4501**	2	LOCKWASHER	
	57	1	**3H-2900**	1	GROMMET	
M	58	1	**5C-2890**	7	NUT (M6X1 THD)	
	59	1,2	**5P-1075**	13	WASHER-HARD (10.2X22.5X3MM THK)	
	60	1	**5P-9135**	1	GROMMET	
	61	1	**6V-1668**	2	WASHER (6.5X29.1X3MM THK)	
M	62	1	**6V-7728**	1	BOLT (M6X1.0X45MM)	
	63	1,2	**6V-8801**	13	NUT (3/8-16 THD)	
	64	1	**7X-0591**	2	WASHER-HARD (17X29X3MM THK)	
M	65	1	**8T-4171**	2	BOLT (M6X1X12MM)	
	66	1	**8T-4205**	15	WASHER-HARD (7.2X14.5X2MM THK)	
	67	1	**8T-6631**	2	SCREW-MACHINE (8-32X0.5 IN)	
	68	1	**9M-8406**	1	CLIP	
M	69	1	**9X-2040**	4	SCREW-TRUSS HEAD (M10X1.5X25MM)	
M	70	1	**9X-2041**	5	SCREW-TRUSS HEAD (M10X1.5X20MM)	
M	71	2	**9X-2045**	6	SCREW-TRUSS HEAD (M6X1X20MM)	
	72	1	**9X-7381**	1	SEAL-O-RING	
	73	1	**9X-7382**	1	SEAL-O-RING	
E	74	1	**136-1953**		HOSE (8CM)	
E	74A	1	**136-1953**		HOSE (17CM)	
E	74B	1	**136-1953**		HOSE (17CM)	
BD	75	1	**5P-5908**		SEAL	
BD	76	1	**5P-5637**		SEAL	
BE	77	1	**9X-2126**		SEAL	
D	78	1	**5P-6129**		TUBE (.9M)	
D	78A	1	**5P-6129**		TUBE (.9M)	

B-USE AS REQUIRED
D-ORDER BY THE METER
E-ORDER BY THE CENTIMETER
I-SEE HOSE FABRICATION GUIDE
M-METRIC PART

174-4548 AIR CONDITIONER GP *(contd.)* i01673527

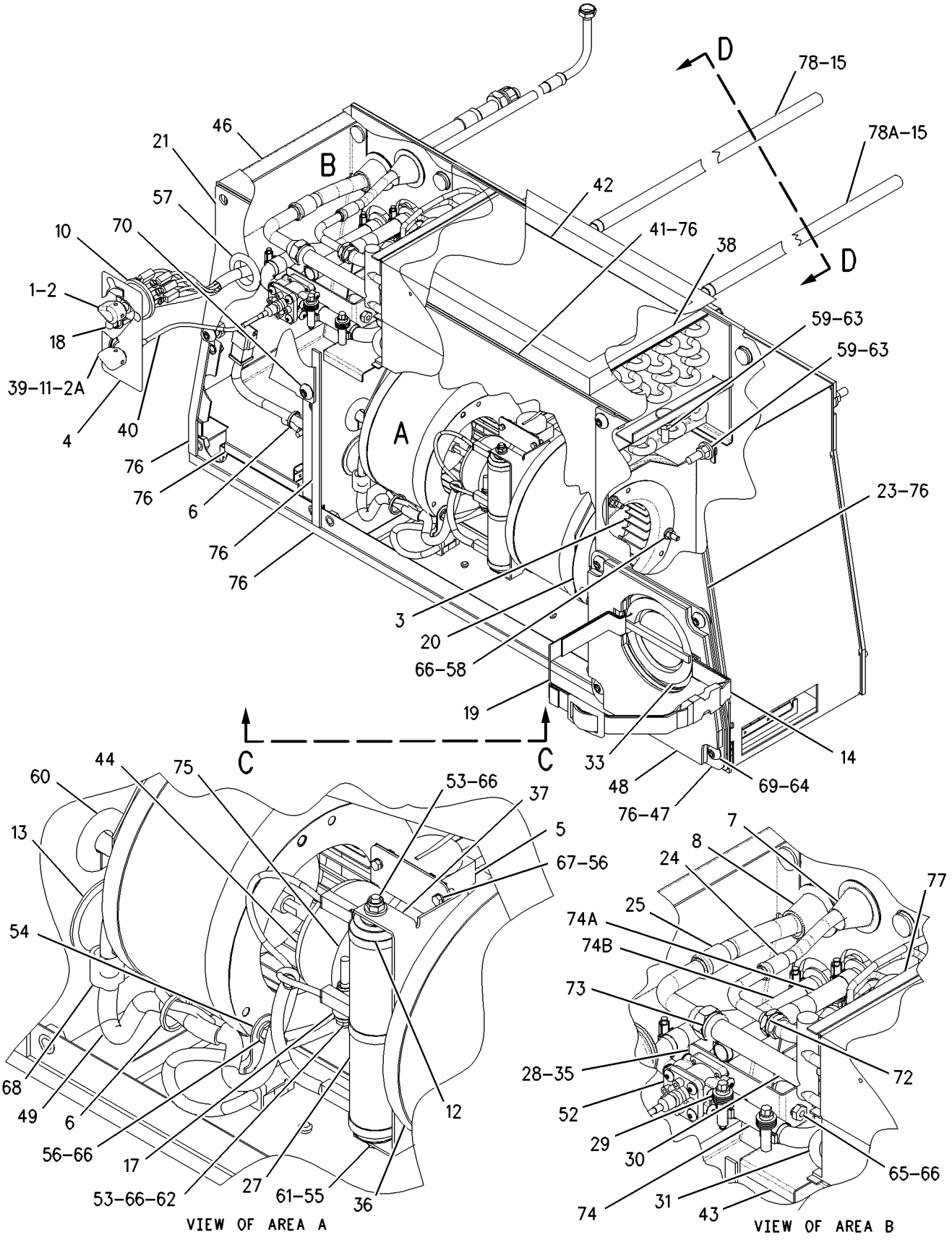

GRAPHIC #1 g00808923

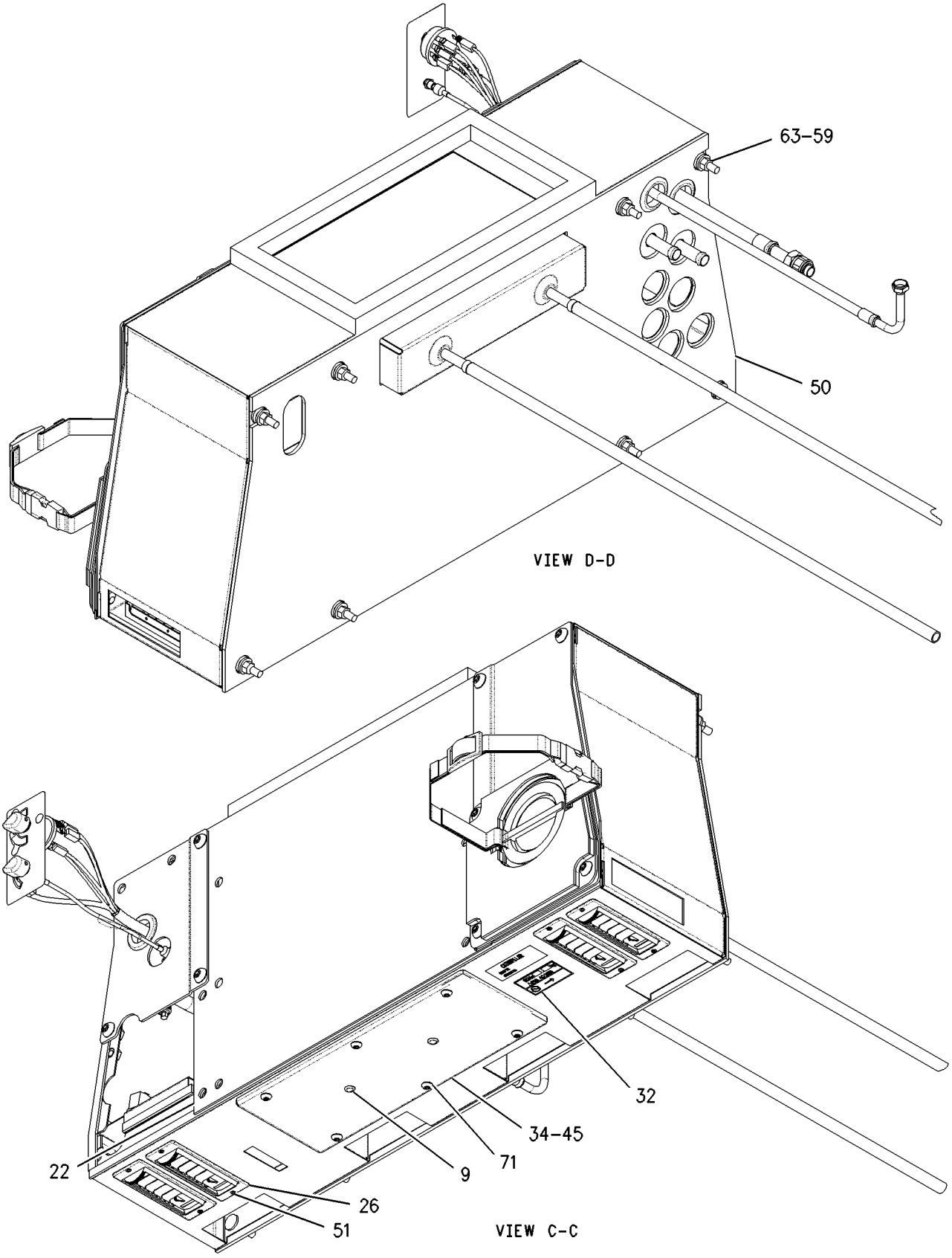

GRAPHIC #2 g00852793

OPERATOR STATION

113-4242 ARMREST GP–LH

S/N: ASE1-UP

PART OF 112-9104, 112-9105, 155-5958 SEAT GP-SUSPENSION

ALSO AN ATTACHMENT

SMCS-7307 **i01456961**

NOTE	REF NO	GRAPHIC REF	PART NUMBER	QTY	PART NAME 1 2 3 4 5 6 (PRODUCT LEVEL)	SEE PAGE
	1	1	**9V-7447**	1	PAD AS	
		1	**9F-2978**	1	NUT-WELD (3/8-16 THD)	
	2	1	**113-4240**	1	BRACKET AS-LH	
	3	1	**7X-0456**	1	BOLT (7/16-14X4.5 IN)	
	4	1	**0S-1594**	1	BOLT (3/8-16X1 IN)	
	5	1	**5V-1498**	1	LOCKNUT	
	6	1	**2K-4973**	1	LOCKNUT	
	7	1	**5S-7383**	1	BOLT (3/8-16X1.75 IN)	
	8	1	**8Y-6277**	2	SPACER (10.5X28.6X10MM THK)	
	9	1	**2K-6061**	1	SCREW-MACHINE (3/8-16X1.5 IN)	
	10	1	**8Y-6051**	1	SPACER (11.19X14.21X14.24MM THK)	
	11	1	**7X-1387**	1	WASHER (10.26X22.22X1.9MM THK)	

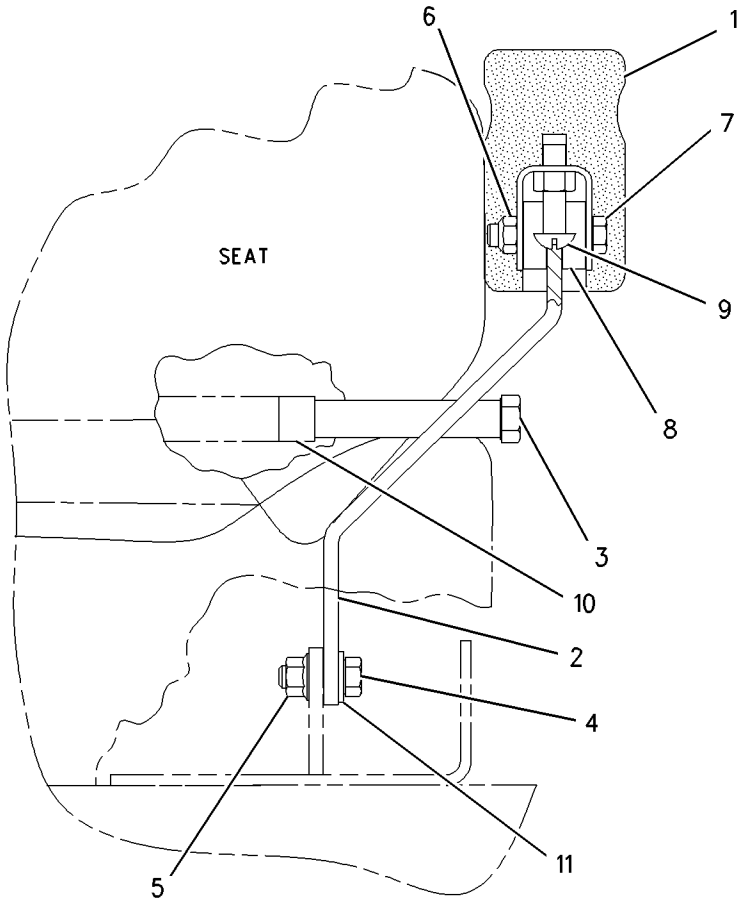

FRONT VIEW

GRAPHIC #1 g00763265

OPERATOR STATION

113-4245 ARMREST GP–RH

S/N: ASE1-UP

PART OF 112-9104, 112-9105, 155-5958 SEAT GP-SUSPENSION

ALSO AN ATTACHMENT

SMCS-7307 **i01498591**

NOTE	REF NO	GRAPHIC REF	PART NUMBER	QTY	PART NAME 1 2 3 4 5 6 (PRODUCT LEVEL)	SEE PAGE
	1	1	**9V-7447**	1	PAD AS	
		1	**9F-2978**	1	NUT-WELD (3/8-16 THD)	
	2	1	**113-4243**	1	BRACKET AS-RH	
	3	1	**7X-0456**	1	BOLT (7/16-14X4.5 IN)	
	4	1	**0S-1594**	1	BOLT (3/8-16X1 IN)	
	5	1	**5V-1498**	1	LOCKNUT	
	6	1	**5S-7383**	1	BOLT (3/8-16X1.75 IN)	
	7	1	**2K-4973**	1	LOCKNUT (3/8-16 THD)	
	8	1	**8Y-6277**	2	SPACER (10.5X28.6X10MM THK)	
	9	1	**2K-6061**	1	SCREW-MACHINE (3/8-16X1.5 IN)	
	10	1	**8Y-6051**	1	SPACER (11.19X14.21X14.24MM THK)	
	11	1	**7X-1387**	1	WASHER (10.26X22.22X1.9MM THK)	

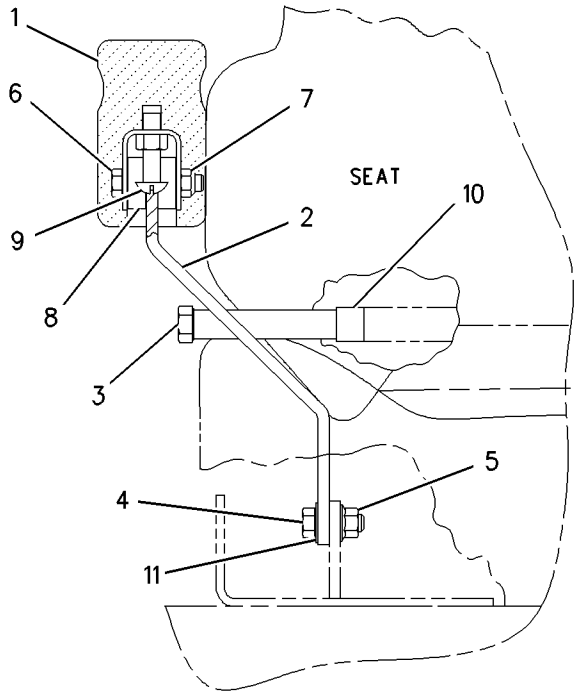

FRONT VIEW

GRAPHIC #1 g00777656

OPERATOR STATION

3E-1906 COMPRESSOR GP-REFRIGERANT

S/N: ASE1-UP

PART OF 7E-9710 COMPRESSOR GP-REFRIGERANT

AN ATTACHMENT

SMCS-1802 **i01350675**

NOTE	REF NO	GRAPHIC REF	PART NUMBER	QTY	PART NAME 1 2 3 4 5 6 (PRODUCT LEVEL)	SEE PAGE
C	1	1	**7T-4532**	1	PLUG AS	
C	2	1	**9X-7385**	2	SEAL-O-RING (20.22MM ID)	

C-CHANGE FROM PREVIOUS TYPE

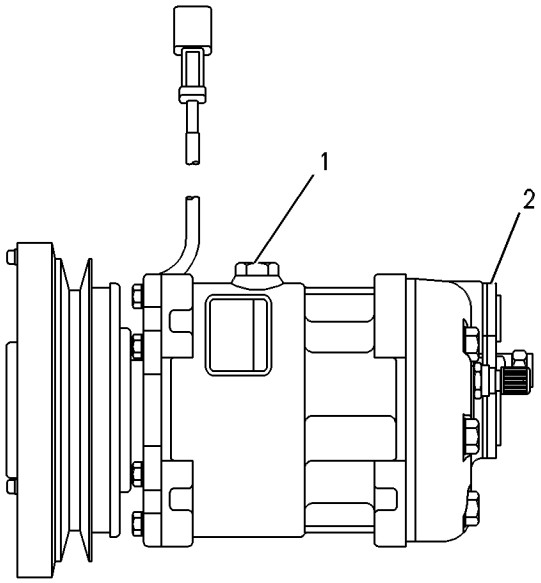

GRAPHIC #1 g00273360

MEMORANDA

OPERATOR STATION

7E-9710 COMPRESSOR GP-REFRIGERANT

S/N: ASE1-UP
PART OF 110-9471 AIR CONDITIONER AR
AN ATTACHMENT

SMCS-1802 **i00604652**

NOTE	REF NO	GRAPHIC REF	PART NUMBER	QTY	PART NAME 1 2 3 4 5 6 (PRODUCT LEVEL)	SEE PAGE
CY	1	1	**3E-1906**	1	COMPRESSOR GP-REFRIGERANT	626
	2	1	**4P-2945**	1	BRACKET	
	3	1	**5S-7383**	2	BOLT (3/8-16X1.75IN)	
	4	1	**8T-9389**	1	BOLT (1/2-13X2.75IN)	
	5	1	**6V-8188**	2	NUT (1/2-13 THD)	
	6	1	**7X-0337**	1	BOLT (1/2-13X5.75IN)	
	7	1	**8T-4223**	3	WASHER-HARD (3MM THK)	
	8	1	**106-4127**	2	BRACKET	
	9	1	**4L-9337**	6	BOLT (3/8-16X1.50IN)	
	10	1	**8T-4896**	13	WASHER-HARD (2.5MM THK)	
	11	1	**6V-8801**	6	NUT (3/8-16 THD)	
	12	1	**1K-4649**	1	SPACER	
	13	1	**9F-8885**	1	SPACER	
	14	1	**7X-0326**	1	BOLT (1/2-13X3IN)	
	15	1	**7W-4978**	1	NUT AS	
	16	1	**8T-2502**	1	BOLT (3/8-16X1.13IN)	
	17	1	**7W-4975**	1	STRAP	
	18	1	**7C-8434**	1	BRACKET	
	19	1	**4N-7335**	1	V-BELT	

C-CHANGE FROM PREVIOUS TYPE
Y-SEPARATE ILLUSTRATION

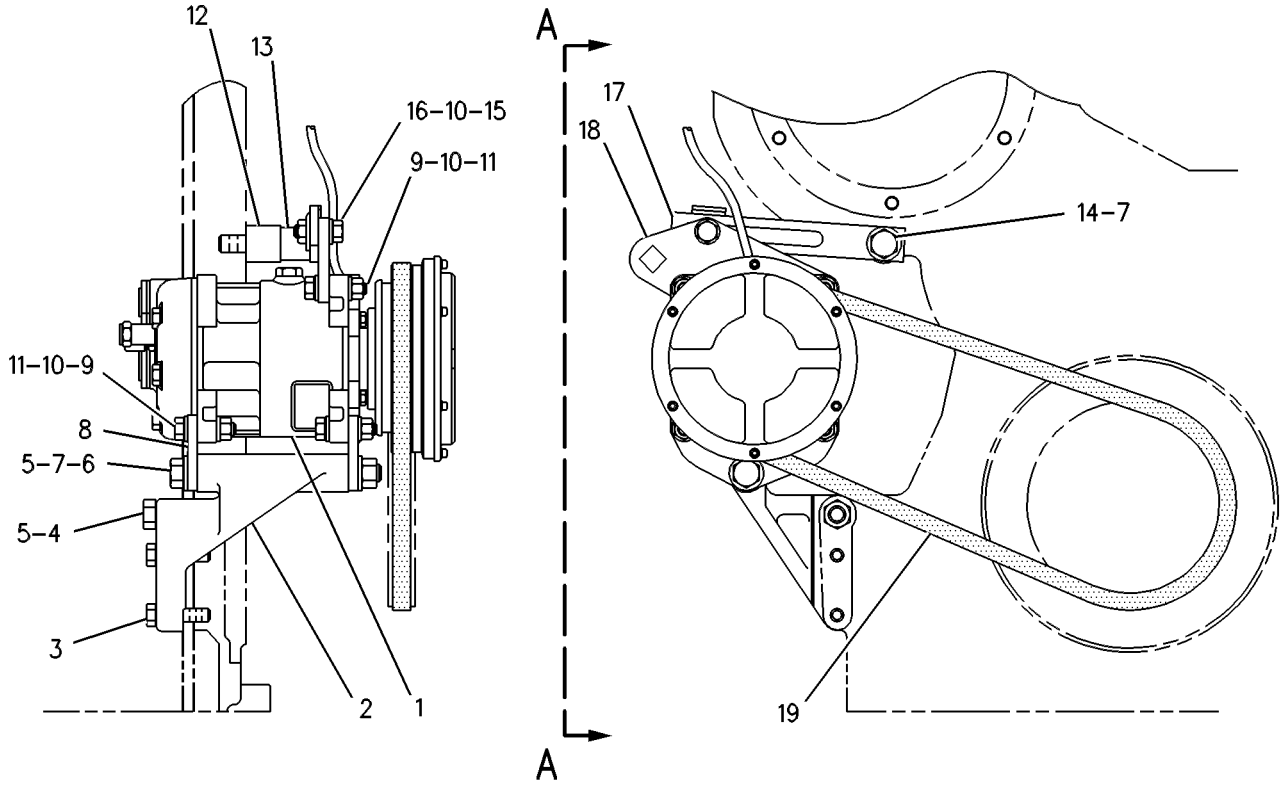

VIEW A-A

FRONT VIEW

GRAPHIC #1

g00109078

OPERATOR STATION

163-0872 COMPRESSOR GP-REFRIGERANT—SNOW

S/N: ASE1-UP

PART OF 197-4568 COMPRESSOR GP-REFRIGERANT

AN ATTACHMENT

SMCS-1802 **i01546092**

NOTE	REF NO	GRAPHIC REF	PART NUMBER	QTY	PART NAME 1 2 3 4 5 6 (PRODUCT LEVEL)	SEE PAGE
	1	1	**102-8802**	1	KIT-RECEPTACLE (2 PIN)	
					(INCLUDES RECEPTACLE AS AND WEDGE)	
	2	1	**114-3469**	1	VALVE AS-REFRIGERANT RELIEF	
		1	**9X-7378**	1	SEAL-O-RING	
	3	1	**7T-4532**	1	PLUG AS	
	4	1	**9X-7385**	2	SEAL-O-RING	

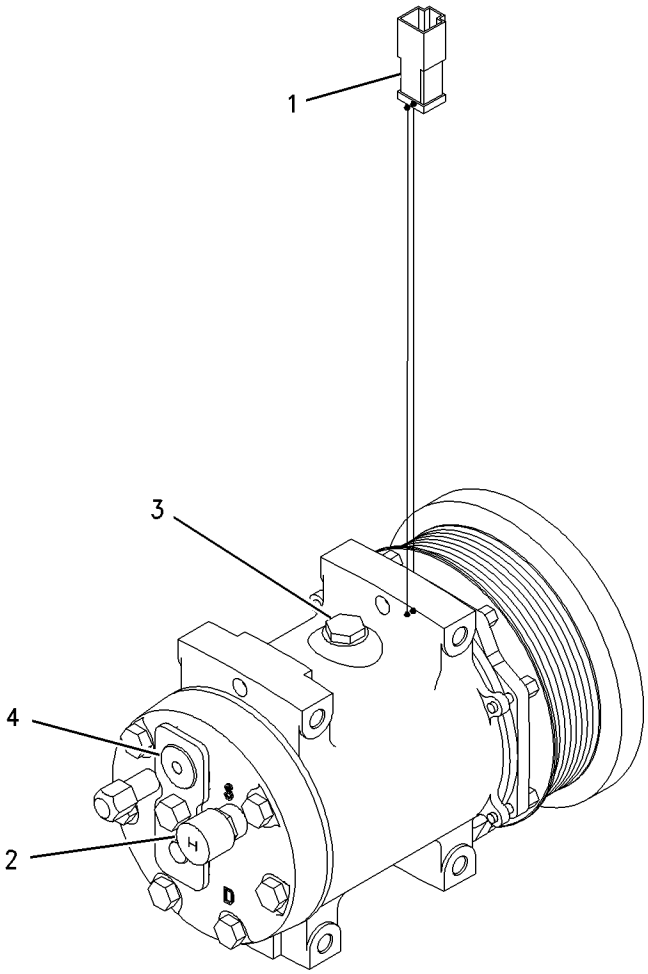

GRAPHIC #1 g00673316

197-4568 COMPRESSOR GP-REFRIGERANT–SNOW

S/N: ASE1-UP
PART OF 167-8068 AIR CONDITIONER AR
AN ATTACHMENT

SMCS-1802 **i01613661**

NOTE	REF NO	GRAPHIC REF	PART NUMBER	QTY	PART NAME 1 2 3 4 5 6 (PRODUCT LEVEL)	SEE PAGE
Y	1	1	**163-0872**	1	COMPRESSOR GP-REFRIGERANT	630
	2	1	**194-5141**	1	GUARD	
	3	1	**197-4569**	1	BRACKET-MOUNTING	
M	4	1	**6V-5696**	2	BOLT (M12X1.75X80MM)	
M	5	1	**7X-2538**	4	BOLT (M8X1.25X100MM)	
	6	1	**7X-7729**	2	WASHER (11X25X3MM THK)	
M	7	1	**8T-4136**	2	BOLT (M10X1.5X25MM)	
	8	1	**8T-4223**	4	WASHER-HARD (13.5X25.5X3MM THK)	
	9	1	**8T-4224**	4	WASHER-HARD (8.8X16X2MM THK)	
M	10	1	**8T-4244**	2	NUT (M12X1.75 THD)	

M-METRIC PART
Y-SEPARATE ILLUSTRATION

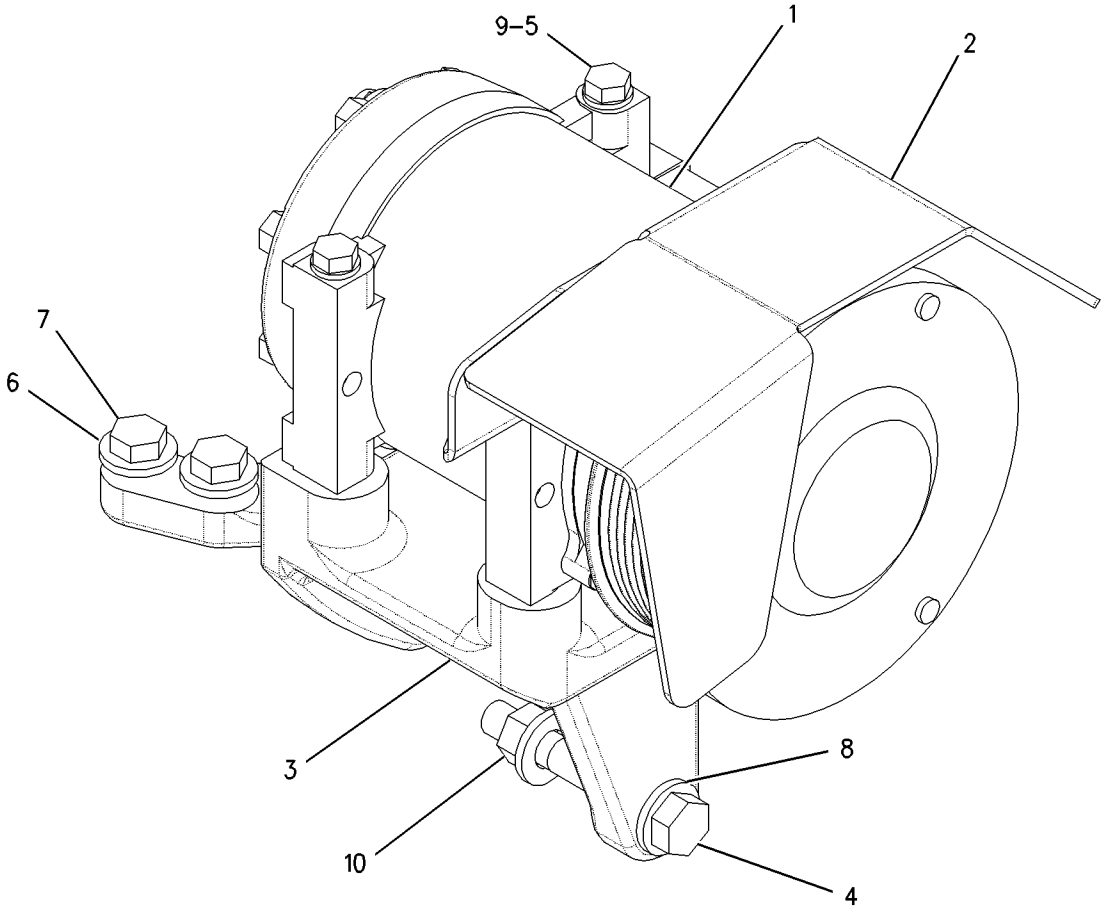

GRAPHIC #1 g00807671

OPERATOR STATION

8X-7992 CONDENSER & MTG GP-REFRIGERANT

S/N: ASE1-UP
PART OF 110-9471 AIR CONDITIONER AR
AN ATTACHMENT

SMCS-1805 **i01348716**

NOTE	REF NO	GRAPHIC REF	PART NUMBER	QTY	PART NAME 1 2 3 4 5 6 (PRODUCT LEVEL)	SEE PAGE
Y	1	1	**103-8519**	1	CONDENSER GP-REFRIGERANT	634
	2	1	**8X-7999**	1	PLATE	
	3	1	**5M-3062**	1	BOLT (3/8-16X.75 IN)	
	4	1	**8T-4896**	1	WASHER-HARD (10.2X18.5X2.5MM THK)	
	5	1	**9G-9152**	1	CLIP (10.5MM ID)	
	6	1	**6V-8801**	1	NUT (3/8-16 THD)	
	7	1	**5P-2228**	4	BOLT (1/2-13X1.0 IN)	
	8	1	**8T-4223**	4	WASHER-HARD (3MM THK)	
	9	1	**4V-4548**	2	BOSS	
	10	1	**7I-4941**	1	PLATE	
	11	1	**6D-3402**	2	BLOCK	
	12	1	**9F-2978**	2	NUT-WELD (3/8-16 THD)	

Y-SEPARATE ILLUSTRATION

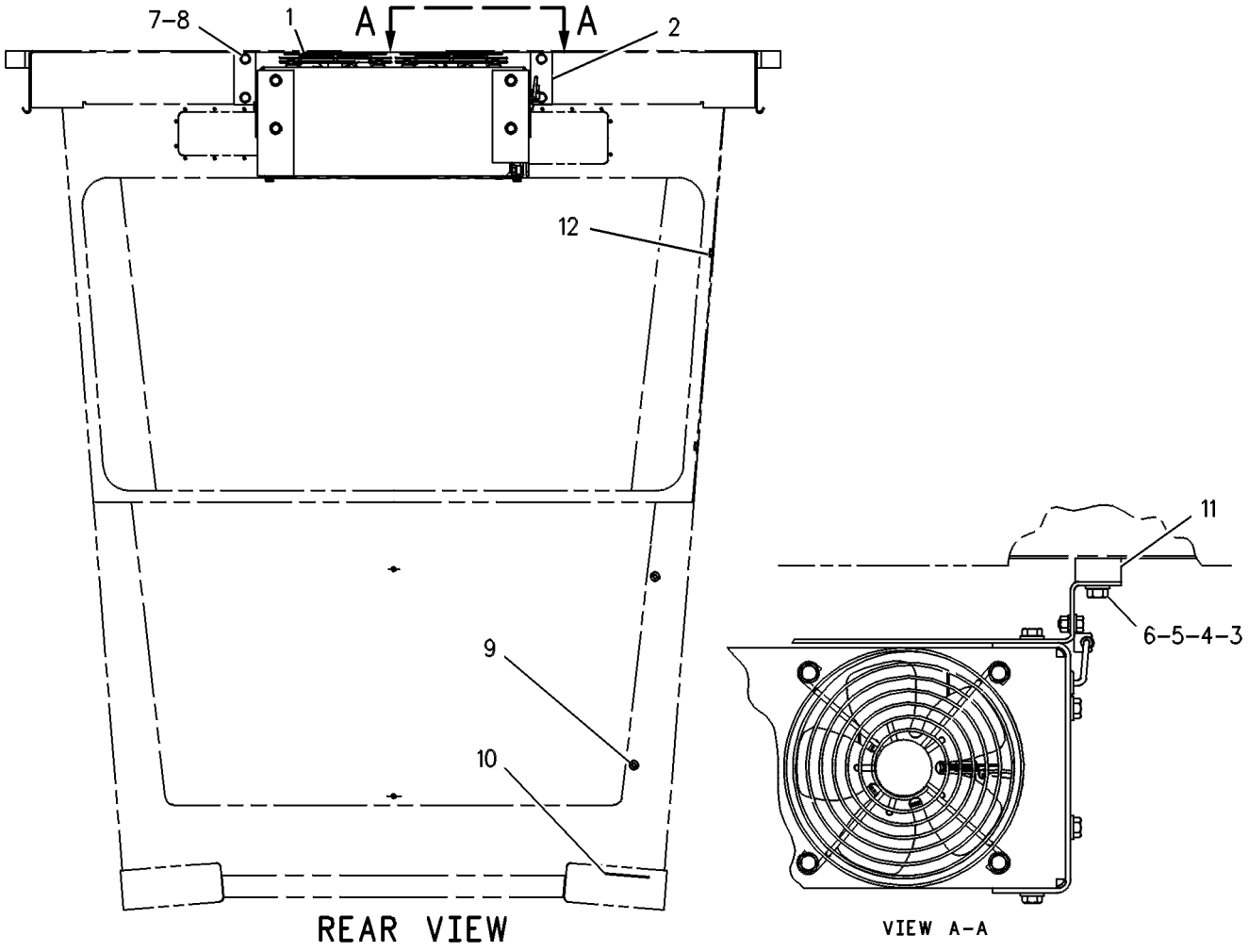

GRAPHIC #1 g00108744

MEMORANDA

OPERATOR STATION

103-8519 CONDENSER GP-REFRIGERANT

S/N: ASE1-UP

PART OF 8X-7992 CONDENSER & MTG GP-REFRIGERANT

AN ATTACHMENT

SMCS-1805 **i01597936**

NOTE	REF NO	GRAPHIC REF	PART NUMBER	QTY	PART NAME 1 2 3 4 5 6 (PRODUCT LEVEL)	SEE PAGE
	2	1	**3E-5239**	1	RELAY AS (24 VOLT) (AIR CONDITIONER)	
	3	1	**3S-2093**	7	STRAP-CABLE	
	4	1	**7T-5856**	4	CLAMP	
	5	1	**174-1495**	2	MOTOR GP-ELECTRIC (AIR CONDITIONER)	
					(EACH INCLUDES)	
		1	**3E-3365**	1	WEDGE-RECEPTACLE LOCK (2 PIN)	
		1	**9W-0852**	1	PIN-CONNECTOR	
		1	**102-8802**	1	KIT-RECEPTACLE (2 PIN)	
	6	1	**8C-3756**	1	FILM-IDENTIFICATION (GROUP & SEQUENCE NO.)	
	7	1	**8P-6363**	1	PLUG	
	8	1	**204-9531**	1	COIL-CONDENSER	
	9	1	**204-9532**	1	CASE AS	
	10	1	**9X-3452**	2	GUARD AS-FAN	
	11	1	**204-9530**	4	TUBE	
	13	1	**142-8620**	2	FAN AS	
	14	1	**168-7932**	1	HARNESS AS-HEATER & AIR COND	
		1	**9X-1054**	1	PLUG AS-CONNECTOR (4 PIN)	
		1	**155-2270**	3	KIT-CONNECTING PLUG (2 PIN)	
M	15	1	**5C-2890**	1	NUT (M6X1 THD)	
	16	1	**5P-1075**	8	WASHER-HARD (10.2X22.5X3MM THK)	
	17	1	**5P-8441**	1	GROMMET	
	18	1	**5P-9085**	2	CLIP	
	19	1	**7X-0578**	8	WASHER-HARD (10.2X32X2.5MM THK)	
M	20	1	**8T-4133**	4	NUT (M10X1.5 THD)	
M	21	1	**8T-4137**	8	BOLT (M10X1.5X20MM)	
M	22	1	**8T-4192**	12	BOLT (M12X1.75X25MM)	
M	23	1	**8T-6685**	4	BOLT (M10X1.50X110MM)	
	24	1	**8T-4205**	1	WASHER-HARD (7.2X14.5X2MM THK)	
	25	1	**8T-4223**	12	WASHER-HARD (13.5X25.5X3MM THK)	
	26	1	**9X-7373**	1	GROMMET	
BD	27	1	**5P-5672**		SEAL	
BD	28	1	**5P-5924**		SEAL	
	29	1	**201-5688**	1	WIRE AS	
	30	1	**203-2070**	8	MOUNT	

B-USE AS REQUIRED
D-ORDER BY THE METER
M-METRIC PART

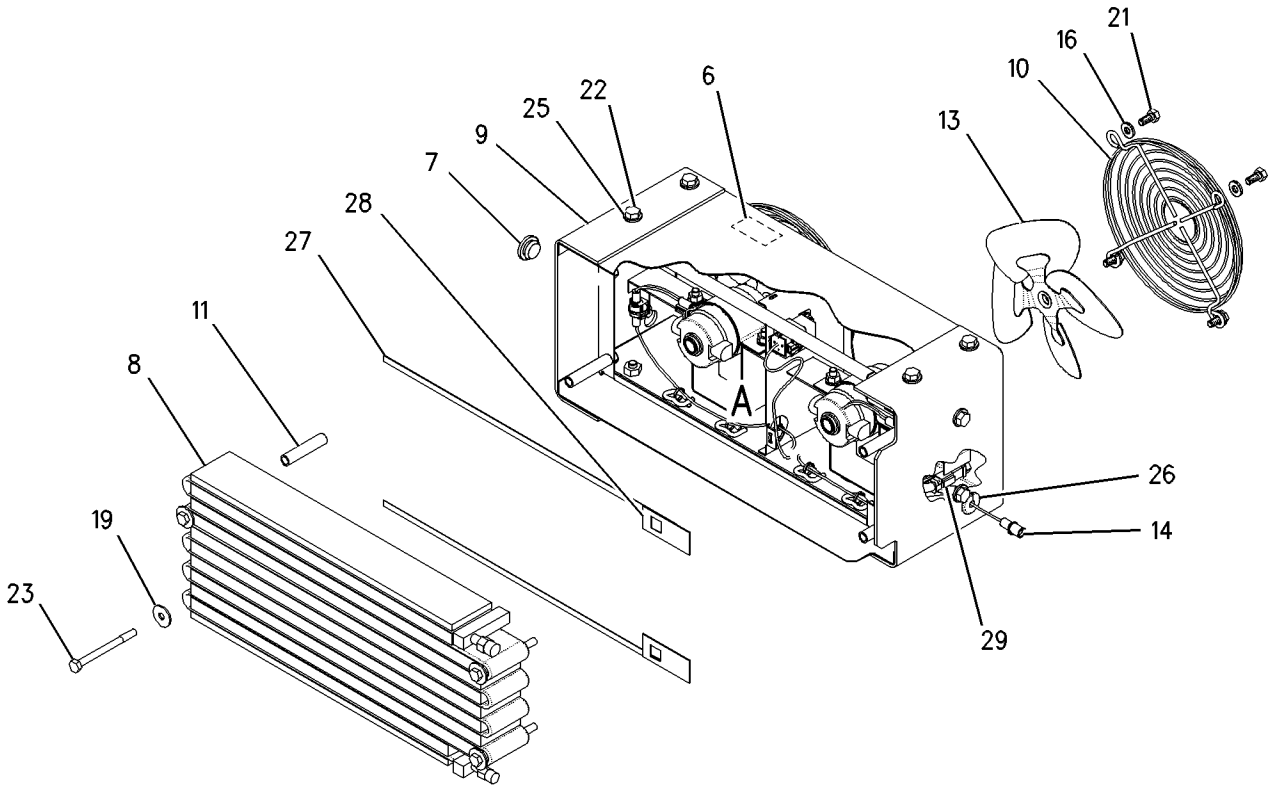

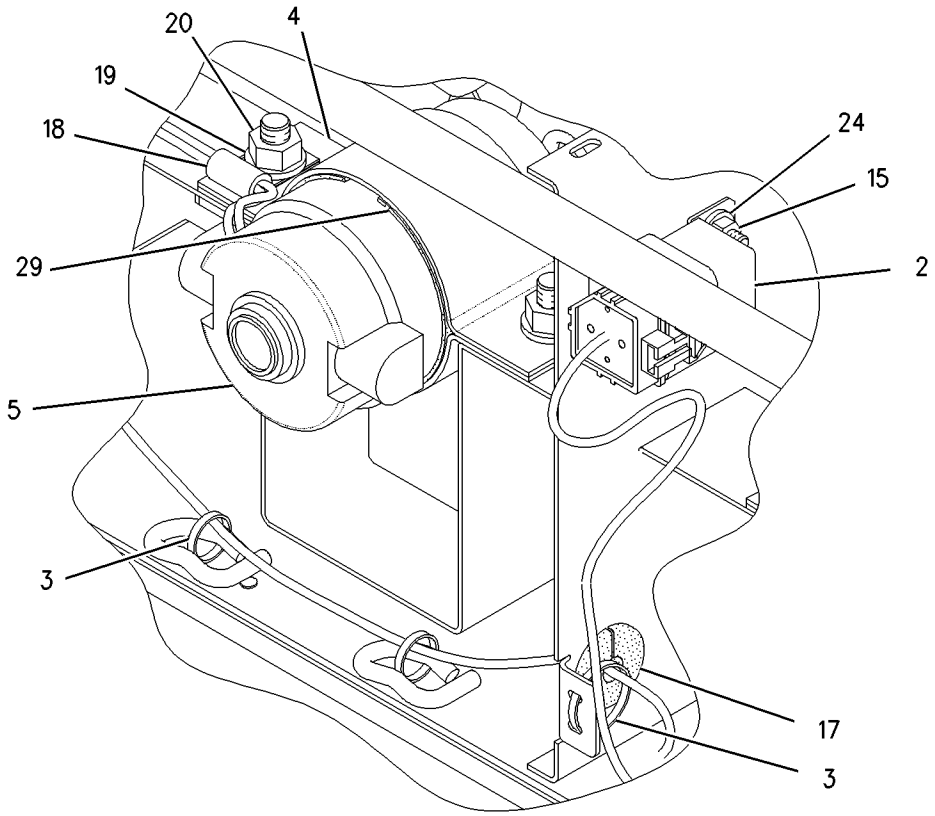

VIEW OF AREA A

GRAPHIC #1 g00826124

OPERATOR STATION

167-8053 CONSOLE GP-OPERATOR

S/N: ASE1-UP

PART OF 162-5606 GENERAL AR

SMCS-5258 **i01673537**

NOTE	REF NO	GRAPHIC REF	PART NUMBER	QTY	PART NAME 1 2 3 4 5 6 (PRODUCT LEVEL)	SEE PAGE
	1	1	**2A-6908**	1	CYLINDER	
	2	1	**2G-8572**	8	WASHER-SPECIAL (10X27.81X2.54MM THK)	
	3	1	**2G-8573**	8	CAP	
	4	1	**2K-5830**	2	BEARING AS-NEEDLE	
	5	1	**3B-4607**	2	PIN-COTTER	
	6	1	**3E-9865**	1	LOCKNUT (1/4-20 THD)	
	7	1	**3Y-2806**	1	SPRING	
	8	1	**4B-4314**	1	RIVET	
	9	1	**206-4097**	8	FASTENER	
	10	1	**6G-2914**	1	LATCH	
	11	1	**6G-8814**	2	BRACKET	
	12	1	**7I-4890**	1	PLATE AS	
	13	1	**8C-3442**	1	SPRING-COIL	
	14	1	**8D-5641**	14	BEARING	
	15	1	**8D-7960**	2	PLATE	
	16	1	**8L-7905**	2	RIVET-POP	
M	17	1	**8T-9006**	2	BOLT-SOCKET HEAD (M3X.5X20MM)	
	18	1	**8X-1904**	1	SPACER (20X35X26MM THK)	
	19	1	**8X-1908**	1	PANEL	
	20	1	**8X-1911**	1	PANEL	
	21	1	**8X-1913**	6	SPACER-FLANGED	
	22	1	**8X-1914**	1	SHAFT	
	23	1	**8X-1915**	1	SPACER (10.31X25.4X35MM THK)	
	24	1	**8X-1921**	1	HOOD	
	25	1	**8X-2160**	1	LEVER	
	26	1	**8X-2161**	1	LEVER (STEERING COLUMN TILT CONTROL)	
	27	1	**8X-2893**	10	NUT (M4X0.7 THD)	
	28	1	**8X-3789**	1	PANEL	
	29	1	**8X-3951**	1	PANEL	
	30	1	**8X-3965**	1	RATCHET	
	31	1	**8X-5123**	1	RETAINER	
	32	1	**206-9651**	2	PLATE	
	33	1	**031-2666**	1	ROD	
	34	1	**034-1994**	1	PIN	
	35	1	**110-6241**	1	BRACKET	
	36	1	**177-7448**	1	CHANNEL AS	
M		1	**6V-9632**	6	NUT-WELD (M6X1 THD)	
		1	**7T-1099**	6	LINK	
		1	**177-7449**	1	PLATE	
	37	1	**183-1425**	1	BASE	
	38	1	**204-6488**	1	CHANNEL AS	
M		1	**6V-9632**	6	NUT-WELD (M6X1 THD)	
		1	**7T-1099**	3	LINK	
	39	1	**2A-7184**	2	PLATE	
	40	1	**030-8535**	1	BOLT-LOCKING (3/8-16X0.875 IN)	
	41	1	**096-6166**	6	WASHER-HARD (4.5X9X1MM THK)	
	42	1	**2K-7979**	13	BEARING-SLEEVE	
	43	1	**3E-8043**	4	SCREW (3/8-16X.75 IN)	
	44	1	**3F-7514**	4	PIN	
	45	1	**3K-6060**	6	LOCKNUT (3/8-16 THD)	
M	46	1	**5C-8312**	6	NUT (M4X0.7 THD)	
	47	1	**5M-8500**	1	KNOB (STEERING WHEEL TILT CONTROL)	
	48	1	**5P-1075**	8	WASHER-HARD (10.2X22.5X3MM THK)	
	49	1	**5P-8167**	2	BOLT (3/8-16X0.625 IN)	
	50	1	**5S-7379**	4	BOLT (3/8-16X0.875 IN)	
	51	1	**5S-7383**	6	BOLT (3/8-16X1.75 IN)	

167-8053 **CONSOLE GP-OPERATOR** *(contd.)*

i01673537

NOTE	REF NO	GRAPHIC REF	PART NUMBER	QTY	PART NAME 1 2 3 4 5 6 (PRODUCT LEVEL)	SEE PAGE
	52	1	**6V-8183**	1	NUT-FULL (3/8-24 THD)	
	53	1	**8T-1174**	4	SEAL-LIP	
	54	1	**8T-2561**	11	WASHER-HARD (10.5X28.5X5MM THK)	
M	55	1	**8T-4133**	1	NUT (M10X1.5 THD)	
	56	1	**8X-1907**	1	SHAFT	
	57	1	**9M-5590**	1	BALL	
M	58	1	**9X-1046**	16	SCREW (M4X0.7X18MM)	
M	59	1	**9X-2042**	12	SCREW-TRUSS HEAD (M6X1X12MM)	
BD	60	1	**5P-5637**		SEAL	
BD	61	1	**5P-5639**		SEAL	

B-USE AS REQUIRED
D-ORDER BY THE METER
M-METRIC PART

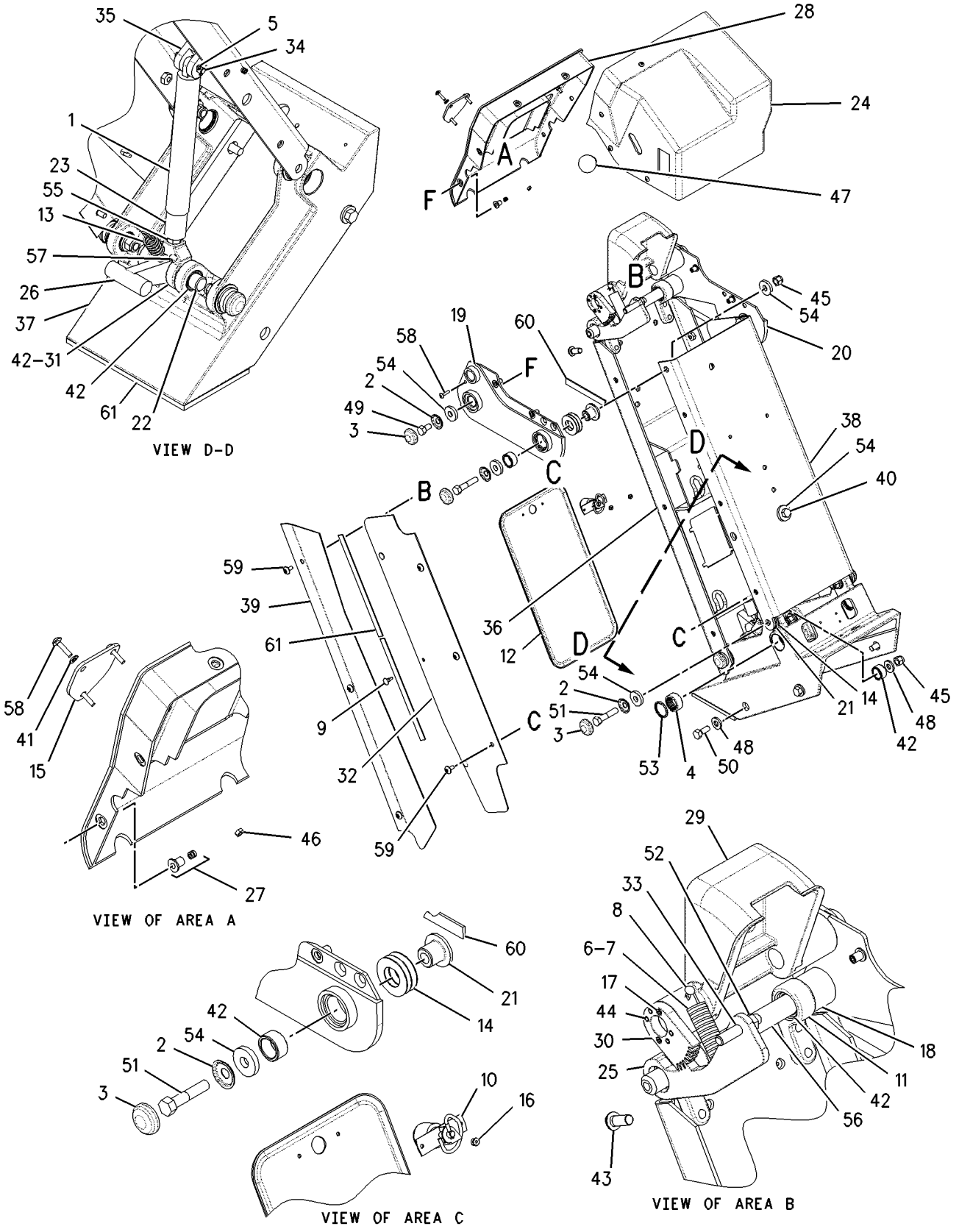

GRAPHIC #1 g00831269

OPERATOR STATION

203-6643 CONVERSION AR-NON-ROPS

S/N: ASE1-UP
AN ATTACHMENT

SMCS-7323 **i01646163**

NOTE	PART NUMBER	QTY	PART NAME 1 2 3 4 5 6 (PRODUCT LEVEL)	SEE PAGE
Y	*166-7065*	1	GUARD GP-PLATFORM (NON-ROPS)	364
	5P-8502	1	PADLOCK GP	
	5P-8500	1	KEY	
	8Y-6364	1	SLEEVE	
Y	*197-7155*	1	PANEL GP-INSTRUMENT (NON-ROPS)	734
	5P-8197	1	PLATE-WARNING (DO NOT OPERATE)	
	9D-3767	1	PLUG-BUTTON	
Y	*8Y-4951*	1	SEAT GP-SUSPENSION (VINYL)	755

Y-SEPARATE ILLUSTRATION

OPERATOR STATION

8X-4317 DOOR GP—HIGH PROFILE—RH

S/N: ASE1-UP
PART OF 8X-4413 DOOR GP-CAB
AN ATTACHMENT

SMCS-7308 **i01650199**

NOTE	REF NO	GRAPHIC REF	PART NUMBER	QTY	PART NAME 1 2 3 4 5 6 (PRODUCT LEVEL)	SEE PAGE
	1	1	**199-2677**	1	LINK	
	2	1	**1H-3338**	1	LOCKWASHER	
	3	1	**5T-7486**	1	RETAINER-SPRING	
	4	1	**6D-6581**	14	RIVET-POP	
	5	1	**6V-2773**	2	PLUG	
	6	1	**6V-7636**	4	PIN AS-SPRING	
	7	1	**8X-3806**	1	HINGE	
	8	1	**8X-4243**	1	COVER-RH	
	9	1	**8X-4262**	1	COVER-RH	
	10	1	**8X-3938**	1	GLASS (UPPER)	
	11	1	**8X-4448**	1	GLASS (LOWER)	
	12	1	**8Y-4398**	1	LINK-CONNECTING	
	13	1	**8Y-4400**	1	LATCH AS-DOOR	
	14	1	**8Y-4401**	1	HANDLE AS (INSIDE)	
	15	1	**8Y-4619**	1	HANDLE AS (OUTSIDE)	
	16	1	**8Y-4620**	1	LINK-CONNECTING	
J	17	1	**8Y-4801**	1	LOCK AS-CYLINDER	
M	18	1	**9X-2546**	4	BOLT (M6X1X20MM)	
	19	1	**107-9641**	1	PLATE AS	
	20	1	**108-5950**	1	LATCH AS-RH	
	21	1	**108-5952**	1	LINK-TAG-RH	
	22	1	**114-9190**	1	SEAL	
	23	1	**128-0037**	1	KNOB-BALL	
	24	1	**199-2712**	1	HANDLE	
	25	1	**199-2739**	1	DOOR AS (RH) (HIGH PROFILE)	
M		1	**6V-9632**	8	NUT-WELD (M6X1 THD)	
M		1	**8T-3490**	2	NUT-WELD (M10X1.5 THD)	
	26	1	**8T-4121**	2	WASHER-HARD (11X21X2.5MM THK)	
M	27	1	**8T-4137**	2	BOLT (M10X1.5X20MM)	
M	28	1	**8T-4181**	10	BOLT (M6X1X20MM)	
	29	1	**8X-4245**	1	BOSS (M6X18MM)	
M	30	1	**9X-2042**	7	SCREW-TRUSS HEAD (M6X1X12MM)	
	31	1	**9X-8256**	6	WASHER (6.6X12X2MM THK)	
D	32	1	**069-5688**		SEAL (2.84M)	
D	32A	1	**069-5688**		SEAL (2.7M)	

D-ORDER BY THE METER
J-REQUIRES 5P8500 KEY
M-METRIC PART

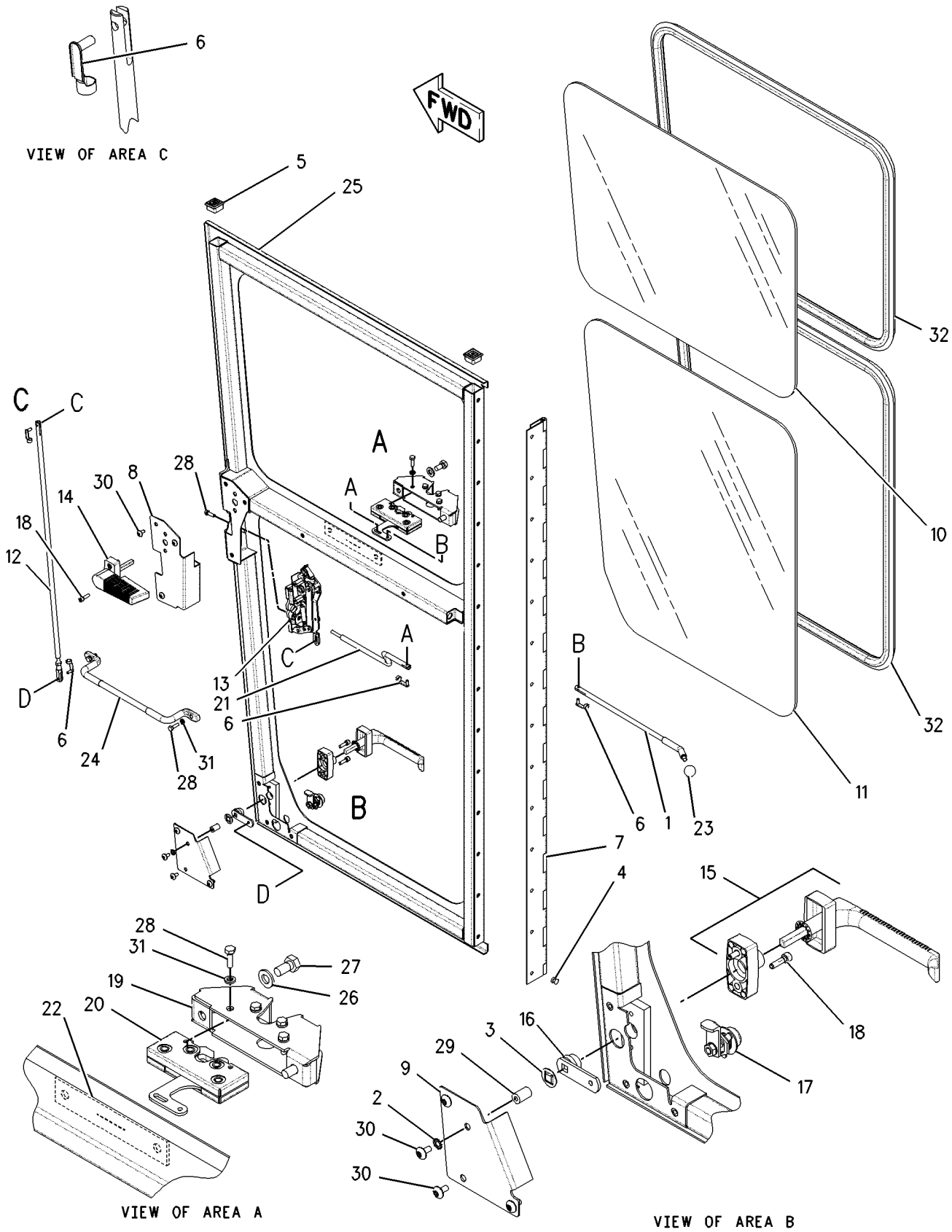

GRAPHIC #1 g00772926

OPERATOR STATION

8X-4318 DOOR GP—HIGH PROFILE—LH

S/N: ASE1-UP
PART OF 8X-4413 DOOR GP-CAB
AN ATTACHMENT

SMCS-7308 **i01650202**

NOTE	REF NO	GRAPHIC REF	PART NUMBER	QTY	PART NAME 1 2 3 4 5 6 (PRODUCT LEVEL)	SEE PAGE
	1	1	**199-2677**	1	LINK	
	2	1	**1H-3338**	1	LOCKWASHER	
	3	1	**5T-7486**	1	RETAINER-SPRING	
	4	1	**6D-6581**	14	RIVET-POP	
	5	1	**6V-2773**	2	PLUG	
	6	1	**6V-7636**	4	PIN AS-SPRING	
	7	1	**8X-3806**	1	HINGE	
	8	1	**8X-4244**	1	COVER-LH	
	9	1	**8X-4263**	1	COVER-LH	
	10	1	**8X-3938**	1	GLASS (UPPER)	
	11	1	**8X-4448**	1	GLASS (LOWER)	
	12	1	**8Y-4398**	1	LINK-CONNECTING	
	13	1	**8Y-4399**	1	LATCH AS-DOOR	
	14	1	**8Y-4401**	1	HANDLE AS (INSIDE)	
	15	1	**8Y-4619**	1	HANDLE AS (OUTSIDE)	
	16	1	**8Y-4620**	1	LINK-CONNECTING	
J	17	1	**8Y-4801**	1	LOCK AS-CYLINDER	
M	18	1	**9X-2546**	4	BOLT (M6X1X20MM)	
	19	1	**107-9641**	1	PLATE AS	
	20	1	**108-5949**	1	LATCH AS-LH	
	21	1	**108-5951**	1	LINK-TAG-LH	
	22	1	**114-9190**	1	SEAL	
	23	1	**128-0037**	1	KNOB-BALL	
	24	1	**199-2712**	1	HANDLE	
	25	1	**199-2740**	1	DOOR AS (LH) (HIGH PROFILE)	
M		1	**6V-9632**	8	NUT-WELD (M6X1 THD)	
M		1	**8T-3490**	2	NUT-WELD (M10X1.5 THD)	
	26	1	**8T-4121**	2	WASHER-HARD (11X21X2.5MM THK)	
M	27	1	**8T-4137**	2	BOLT (M10X1.5X20MM)	
M	28	1	**8T-4181**	10	BOLT (M6X1X20MM)	
	29	1	**8X-4245**	1	BOSS (M6X18MM)	
M	30	1	**9X-2042**	7	SCREW-TRUSS HEAD (M6X1X12MM)	
	31	1	**9X-8256**	6	WASHER (6.6X12X2MM THK)	
D	32	1	**069-5688**		SEAL (2.84M)	
D	32A	1	**069-5688**		SEAL (2.7M)	

D-ORDER BY THE METER
J-REQUIRES 5P8500 KEY
M-METRIC PART

8X-4318 DOOR GP *(contd.)*

i01650202

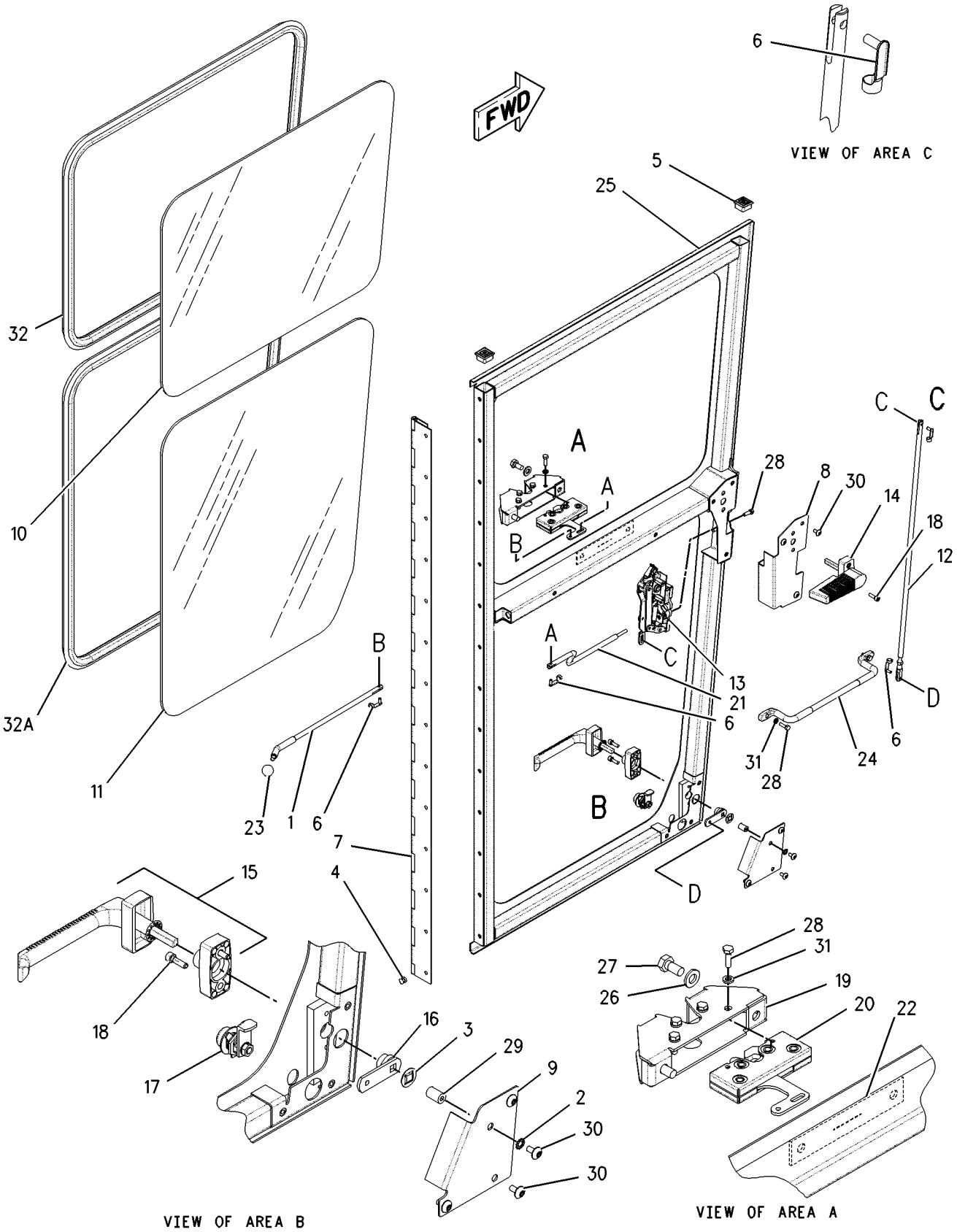

GRAPHIC #1

g00772891

OPERATOR STATION

8X-4413 DOOR GP-CAB—HIGH PROFILE

S/N: ASE1-UP
PART OF 177-8779 ROPS GP-ENCLOSED
AN ATTACHMENT

SMCS-7308 **i01650205**

NOTE	REF NO	GRAPHIC REF	PART NUMBER	QTY	PART NAME 1 2 3 4 5 6 (PRODUCT LEVEL)	SEE PAGE
Y	1	1	**8X-4317**	1	DOOR GP (RH) (HIGH PROFILE)	640
Y	2	1	**8X-4318**	1	DOOR GP (LH) (HIGH PROFILE)	642
M	3	1	**138-4054**	5	SCREW-FLAT HEAD (M6X1X45MM)	
M	4	1	**129-3178**	32	LOCKNUT (M6X1 THD)	
	5	1	**9X-8256**	32	WASHER (6.6X12X2MM THK)	
BD	6	1	**6V-5163**		SEAL	
BD	7	1	**5P-5969**		SEAL	
B	8	1	**4J-3915**	8	SHIM (1.52MM THK)	
	9	1	**6V-5158**	2	STRIKER AS-BODY	
	10	1	**154-8292**	1	SEAL (LH)	
M	11	1	**8C-8454**	27	SCREW-MACHINE (M6X1X20MM)	
	12	1	**107-6813**	2	PLATE AS	
	13	1	**8T-4121**	4	WASHER-HARD (11X21X2.5MM THK)	
M	14	1	**8T-4195**	4	BOLT (M10X1.5X30MM)	
M	15	1	**8T-4133**	4	NUT (M10X1.5 THD)	
	16	1	**106-6553**	4	BUMPER-CONICAL	
	17	1	**124-8843**	2	PLATE AS	
	18	1	**5M-3062**	4	BOLT (3/8-16X0.75 IN)	
	19	1	**5P-1075**	4	WASHER-HARD (10.2X22.5X3MM THK)	
M	20	1	**9X-2045**	4	SCREW-TRUSS HEAD (M6X1X20MM)	
	21	1	**126-4966**	2	PLATE	
	22	1	**154-8293**	1	SEAL (RH)	

B-USE AS REQUIRED
D-ORDER BY THE METER
M-METRIC PART
Y-SEPARATE ILLUSTRATION

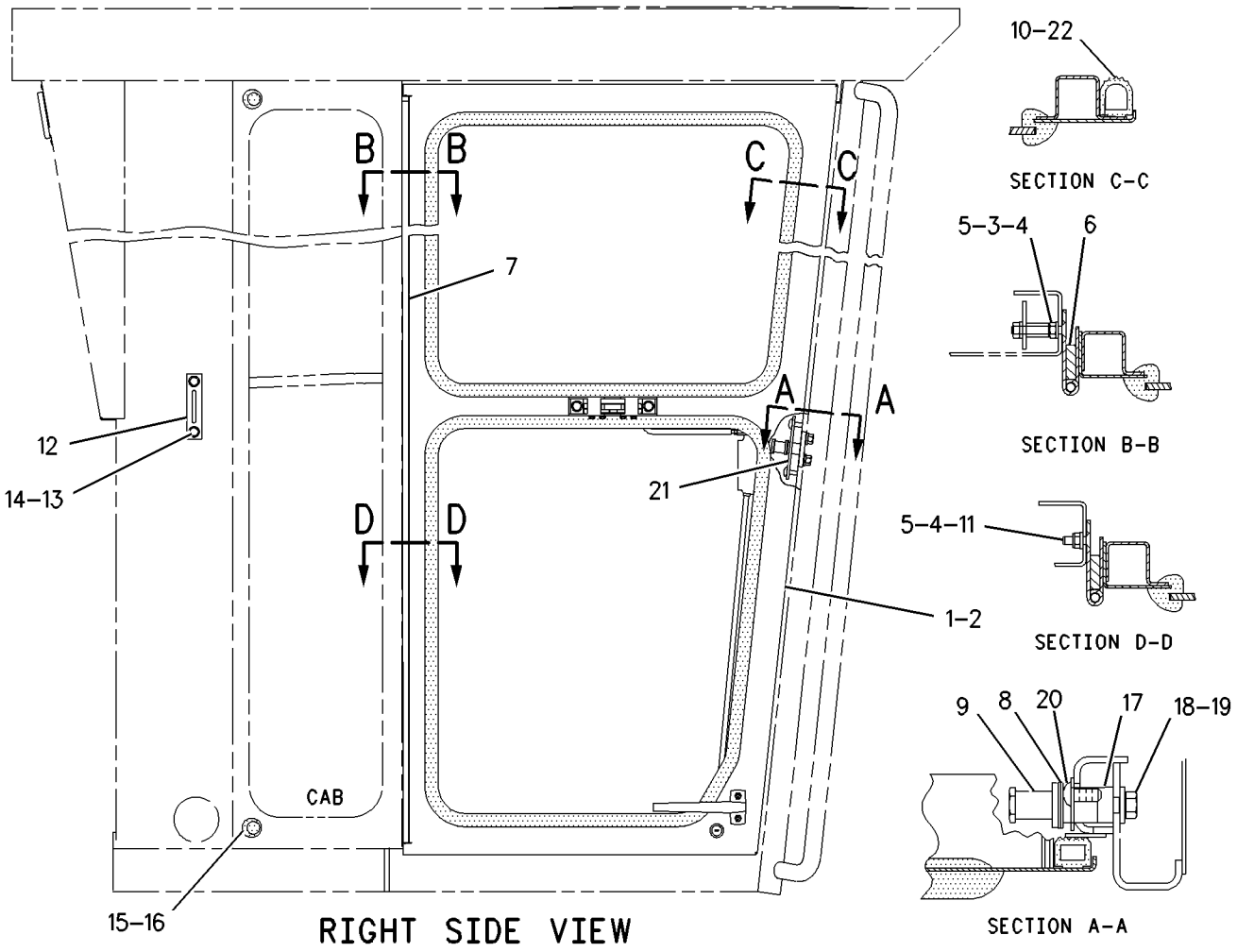

GRAPHIC #1

g00652299

OPERATOR STATION

8X-4525 DOOR GP-CAB—LOW PROFILE—RH

S/N: ASE1-UP

PART OF 8X-4527 DOOR GP-CAB

SMCS-7308 **i01628465**

NOTE	REF NO	GRAPHIC REF	PART NUMBER	QTY	PART NAME 1 2 3 4 5 6 (PRODUCT LEVEL)	SEE PAGE
	1	1	**199-2677**	1	LINK (RELEASE)	
	2	1	**1H-3338**	1	LOCKWASHER	
	3	1	**5T-7486**	1	RETAINER-SPRING	
	4	1	**6D-6581**	14	RIVET-POP	
	5	1	**6V-2773**	2	PLUG	
	6	1	**6V-7636**	4	PIN AS-SPRING	
	7	1	**8X-4066**	1	HINGE	
	8	1	**8X-4243**	1	COVER-RH	
	9	1	**8X-4262**	1	COVER-RH	
	10	1	**8X-4446**	1	GLASS (UPPER)	
	11	1	**8X-4448**	1	GLASS (LOWER)	
	12	1	**8Y-4398**	1	LINK-CONNECTING	
	13	1	**8Y-4400**	1	LATCH AS-DOOR	
	14	1	**8Y-4401**	1	HANDLE AS (INSIDE)	
	15	1	**8Y-4619**	1	HANDLE AS (OUTSIDE)	
	16	1	**8Y-4620**	1	LINK-CONNECTING	
J	17	1	**8Y-4801**	1	LOCK AS-CYLINDER	
M	18	1	**9X-2546**	4	BOLT (M6X1X20MM)	
	19	1	**107-9641**	1	PLATE AS	
	20	1	**108-5950**	1	LATCH AS-RH	
	21	1	**108-5952**	1	LINK-TAG-RH	
	22	1	**114-9190**	1	SEAL	
	23	1	**128-0037**	1	KNOB-BALL	
	24	1	**199-2712**	1	HANDLE (GRAB)	
	25	1	**199-2737**	1	DOOR AS (RH)	
M		1	**6V-9632**	8	NUT-WELD (M6X1 THD)	
M		1	**8T-3490**	2	NUT-WELD (M10X1.5 THD)	
	26	1	**8T-4121**	2	WASHER-HARD (11X21X2.5MM THK)	
M	27	1	**8T-4137**	2	BOLT (M10X1.5X20MM)	
M	28	1	**8T-4181**	10	BOLT (M6X1X20MM)	
	29	1	**8X-4245**	1	BOSS (M6X18MM)	
M	30	1	**9X-2042**	7	SCREW-TRUSS HEAD (M6X1X12MM)	
	31	1	**9X-8256**	6	WASHER (6.6X12X2MM THK)	
D	32	1	**069-5688**		SEAL (2.8M)	
D	32A	1	**069-5688**		SEAL (2.4M)	

D-ORDER BY THE METER
J-REQUIRES 5P8500 KEY
M-METRIC PART

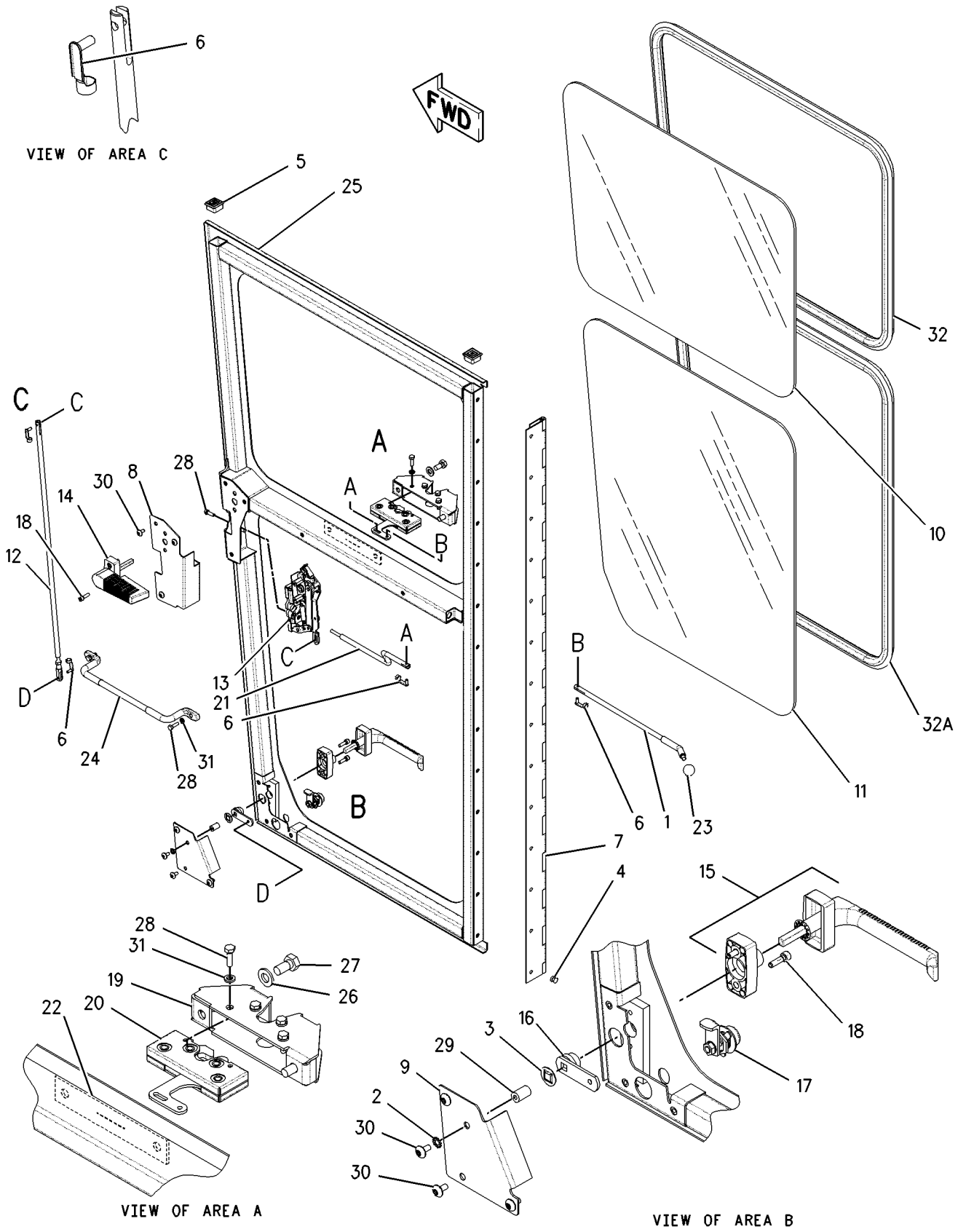

GRAPHIC #1 g00843971

OPERATOR STATION

8X-4526 DOOR GP-CAB—LOW PROFILE—LH

S/N: ASE1-UP

PART OF 8X-4527 DOOR GP-CAB

SMCS-7308 **i01628464**

NOTE	REF NO	GRAPHIC REF	PART NUMBER	QTY	PART NAME 1 2 3 4 5 6 (PRODUCT LEVEL)	SEE PAGE
	1	1	**199-2677**	1	LINK (RELEASE)	
	2	1	**1H-3338**	1	LOCKWASHER	
	3	1	**5T-7486**	1	RETAINER-SPRING	
	4	1	**6D-6581**	14	RIVET-POP	
	5	1	**6V-2773**	2	PLUG	
	6	1	**6V-7636**	4	PIN AS-SPRING	
	7	1	**8X-4066**	1	HINGE	
	8	1	**8X-4244**	1	COVER-LH	
	9	1	**8X-4263**	1	COVER-LH	
	10	1	**8X-4446**	1	GLASS (UPPER)	
	11	1	**8X-4448**	1	GLASS (LOWER)	
	12	1	**8Y-4398**	1	LINK-CONNECTING	
	13	1	**8Y-4399**	1	LATCH AS-DOOR	
	14	1	**8Y-4401**	1	HANDLE AS (INSIDE)	
	15	1	**8Y-4619**	1	HANDLE AS (OUTSIDE)	
	16	1	**8Y-4620**	1	LINK-CONNECTING	
J	17	1	**8Y-4801**	1	LOCK AS-CYLINDER	
M	18	1	**9X-2546**	4	BOLT (M6X1X20MM)	
	19	1	**107-9641**	1	PLATE AS	
	20	1	**108-5949**	1	LATCH AS-LH	
	21	1	**108-5951**	1	LINK-TAG-LH	
	22	1	**114-9190**	1	SEAL	
	23	1	**128-0037**	1	KNOB-BALL	
	24	1	**199-2712**	1	HANDLE (GRAB)	
	25	1	**199-2738**	1	DOOR AS (LH)	
M		1	**6V-9632**	8	NUT-WELD (M6X1 THD)	
M		1	**8T-3490**	2	NUT-WELD (M10X1.5 THD)	
	26	1	**8T-4121**	2	WASHER-HARD (11X21X2.5MM THK)	
M	27	1	**8T-4137**	2	BOLT (M10X1.5X20MM)	
M	28	1	**8T-4181**	10	BOLT (M6X1X20MM)	
	29	1	**8X-4245**	1	BOSS (M6X18MM)	
M	30	1	**9X-2042**	7	SCREW-TRUSS HEAD (M6X1X12MM)	
	31	1	**9X-8256**	6	WASHER (6.6X12X2MM THK)	
D	32	1	**069-5688**		SEAL (2.4M)	
D	32A	1	**069-5688**		SEAL (2.8M)	

D-ORDER BY THE METER
J-REQUIRES 5P8500 KEY
M-METRIC PART

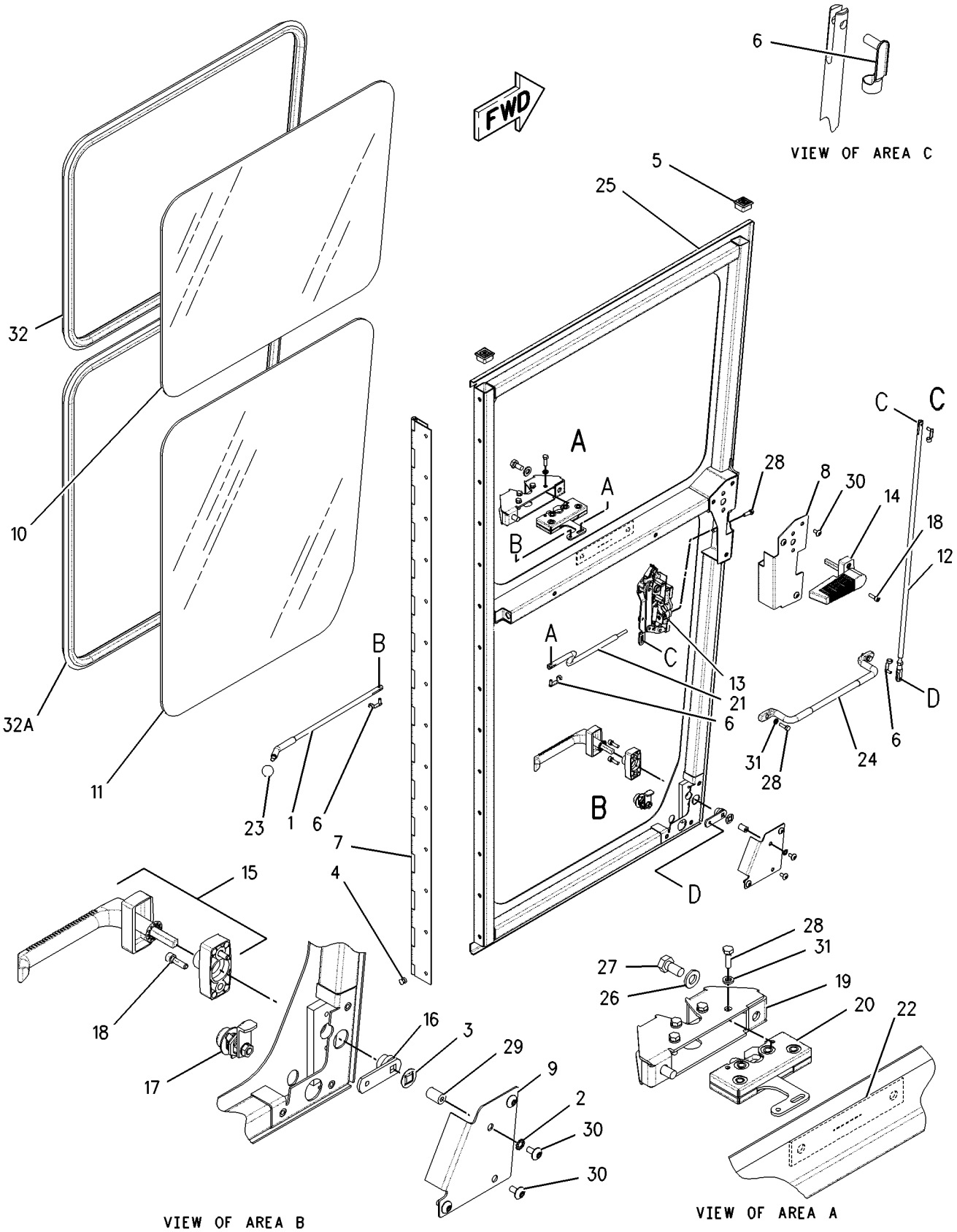

GRAPHIC #1 g00772891

OPERATOR STATION

8X-4527 DOOR GP-CAB—LOW PROFILE

S/N: ASE1-UP

PART OF 172-5377 ROPS GP-ENCLOSED

SMCS-7308 **i01650212**

NOTE	REF NO	GRAPHIC REF	PART NUMBER	QTY	PART NAME 1 2 3 4 5 6 (PRODUCT LEVEL)	SEE PAGE
Y	1	1	*8X-4526*	1	DOOR GP-CAB (LH) (LOW PROFILE)	648
Y	2	1	*8X-4525*	1	DOOR GP-CAB (RH) (LOW PROFILE)	646
M	3	1	**138-4054**	5	SCREW-FLAT HEAD (M6X1X45MM)	
M	4	1	**129-3178**	28	LOCKNUT (M6X1 THD)	
	5	1	**9X-8256**	28	WASHER (6.6X12X2MM THK)	
BD	6	1	**6V-5163**		SEAL	
	7	1	**124-8843**	2	PLATE AS	
B	8	1	**4J-3915**	8	SHIM (1.52MM THK)	
	9	1	**6V-5158**	2	STRIKER AS-BODY	
	10	1	**154-8290**	1	SEAL (LH)	
M	11	1	**8C-8454**	23	SCREW-MACHINE (M6X1X20MM)	
	12	1	**107-6813**	2	PLATE AS	
	13	1	**8T-4121**	4	WASHER-HARD (11X21X2.5MM THK)	
M	14	1	**8T-4195**	4	BOLT (M10X1.5X30MM)	
M	15	1	**8T-4133**	4	NUT (M10X1.5 THD)	
	16	1	**106-6553**	4	BUMPER-CONICAL	
BD	17	1	**5P-5969**		SEAL	
	18	1	**5M-3062**	4	BOLT (3/8-16X0.75 IN)	
	19	1	**5P-1075**	4	WASHER-HARD (10.2X22.5X3MM THK)	
M	20	1	**9X-2045**	4	SCREW-TRUSS HEAD (M6X1X20MM)	
	21	1	**126-4966**	2	PLATE	
	22	1	**154-8291**	1	SEAL (RH)	

B-USE AS REQUIRED
D-ORDER BY THE METER
M-METRIC PART
Y-SEPARATE ILLUSTRATION

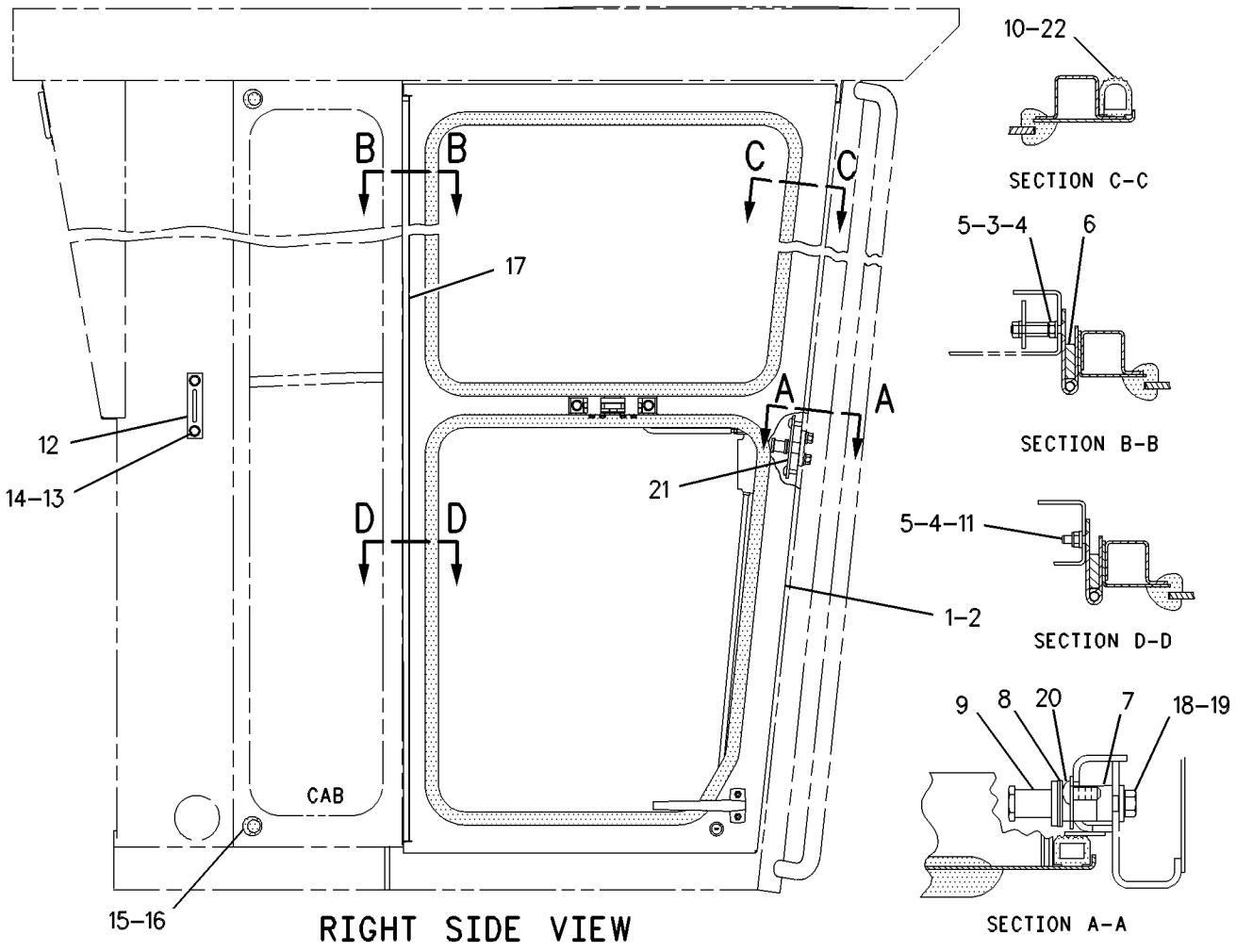

GRAPHIC #1 g00479308

OPERATOR STATION

8W-7653 DUCT & CONTROL GP—HEATER/AIR CONDITIONER

S/N: ASE1-UP
PART OF 110-9471 AIR CONDITIONER AR
AN ATTACHMENT

SMCS-7337 **i01453420**

NOTE	REF NO	GRAPHIC REF	PART NUMBER	QTY	PART NAME 1 2 3 4 5 6 (PRODUCT LEVEL)	SEE PAGE
C	1	1	**139-3595**	1	PANEL AS	
		1	**7K-4201**	2	NUT-SPEED	
		1	**8S-7566**	4	RIVET-POP	
C	2	1	**8Y-6388**	6	LOUVER AS	
M	3	1	**9X-2043**	2	SCREW-TRUSS HEAD (M6X1X14MM)	

C-CHANGE FROM PREVIOUS TYPE
M-METRIC PART

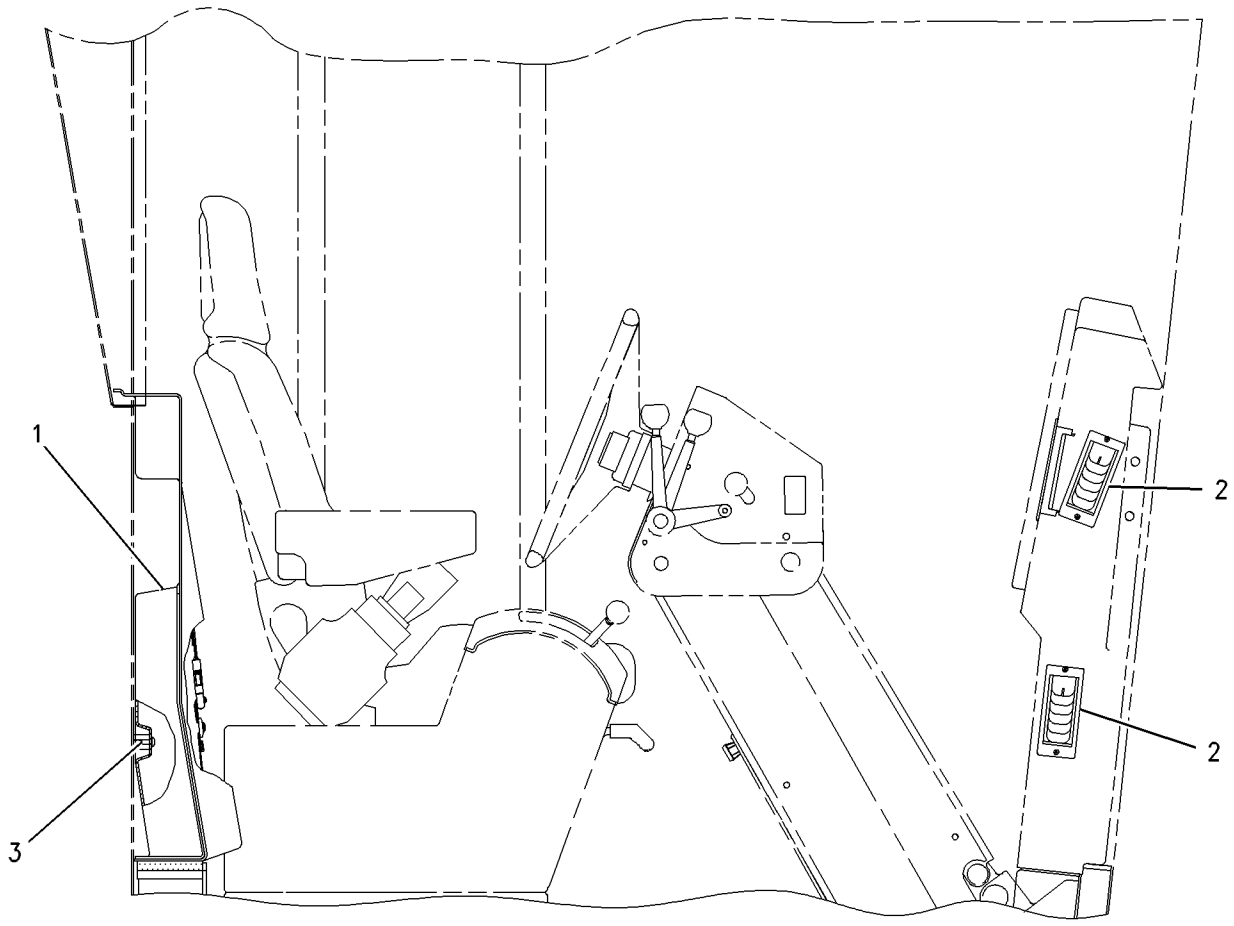

RIGHT SIDE VIEW

GRAPHIC #1 g00760333

OPERATOR STATION

177-7891 DUCT & CONTROL GP–SUPPLEMENTAL LOUVERS

S/N: ASE1-UP

PART OF 167-8068 AIR CONDITIONER AR, 167-8394 HEATER AR-CAB

AN ATTACHMENT

SMCS-7337 **i01528329**

NOTE	REF NO	GRAPHIC REF	PART NUMBER	QTY	PART NAME 1 2 3 4 5 6 (PRODUCT LEVEL)	SEE PAGE
	1	1	**8Y-6388**	6	LOUVER AS	
	2	1	**139-3595**	1	PANEL AS	
		1	**7K-4201**	2	NUT-SPEED	
		1	**8S-7566**	4	RIVET-POP	
	3	1	**164-8474**	2	LOUVER AS	
M	4	1	**9X-2043**	2	SCREW-TRUSS HEAD (M6X1X14MM)	

M-METRIC PART

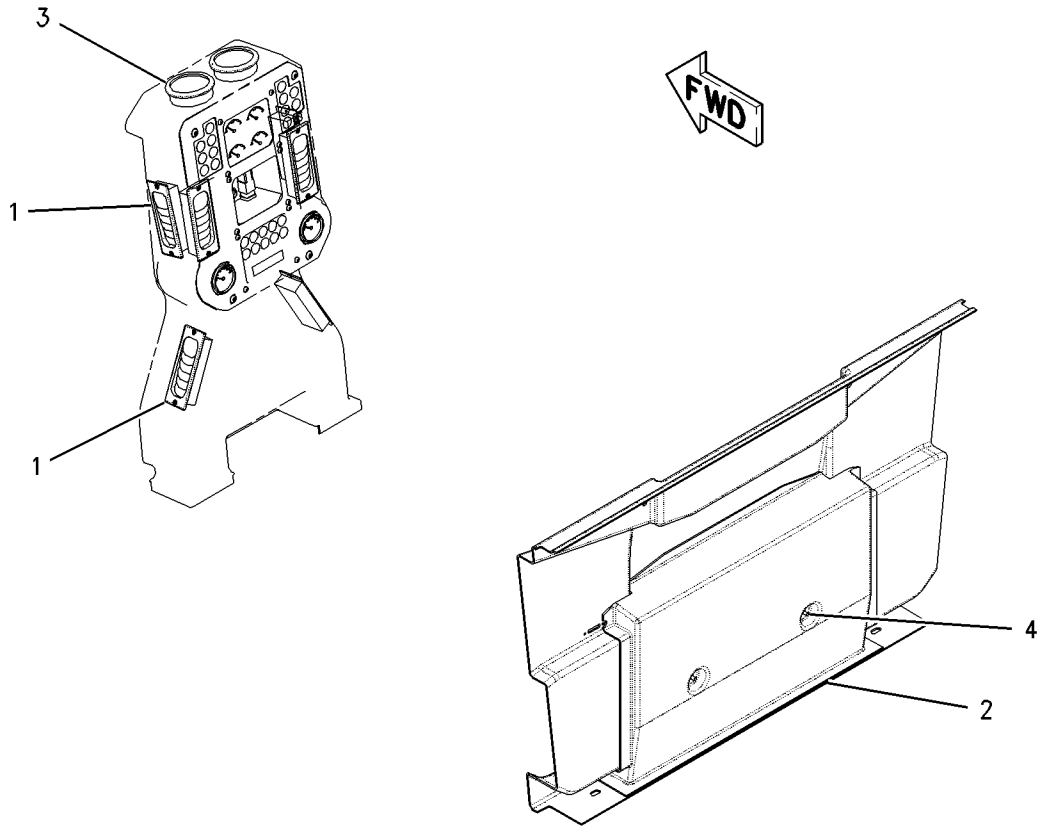

GRAPHIC #1 g00796998

OPERATOR STATION

7I-5015 DUCT GP

S/N: ASE1-UP

PART OF 110-9471, 167-8068 AIR CONDITIONER AR, 167-8394 HEATER AR-CAB

AN ATTACHMENT

i00127489

NOTE	REF NO	GRAPHIC REF	PART NUMBER	QTY	PART NAME 1 2 3 4 5 6 (PRODUCT LEVEL)	SEE PAGE
	1	1	**104-2091**	8	SCREW-FLAT HEAD (NO.6-20X0.5IN)	
	2	1	**106-4496**	6	BRACKET AS	
					(EACH INCLUDES)	
M	3	1	**6V-9632**	1	NUT-WELD (M6X1 THD)	
	4	1	**8X-5102**	2	SEAL	
	5	1	**8Y-6388**	4	LOUVER AS	
	6	1	**122-8155**	1	DUCT	
	7	1	**122-8154**	1	DUCT	
M	8	1	**9X-2043**	8	SCREW-TRUSS HEAD (M6X1X14MM)	
	9	1	**8T-4205**	2	WASHER-HARD (2MM THK)	
M	10	1	**5C-2890**	2	NUT (M6X1.00 THD)	

M-METRIC PART

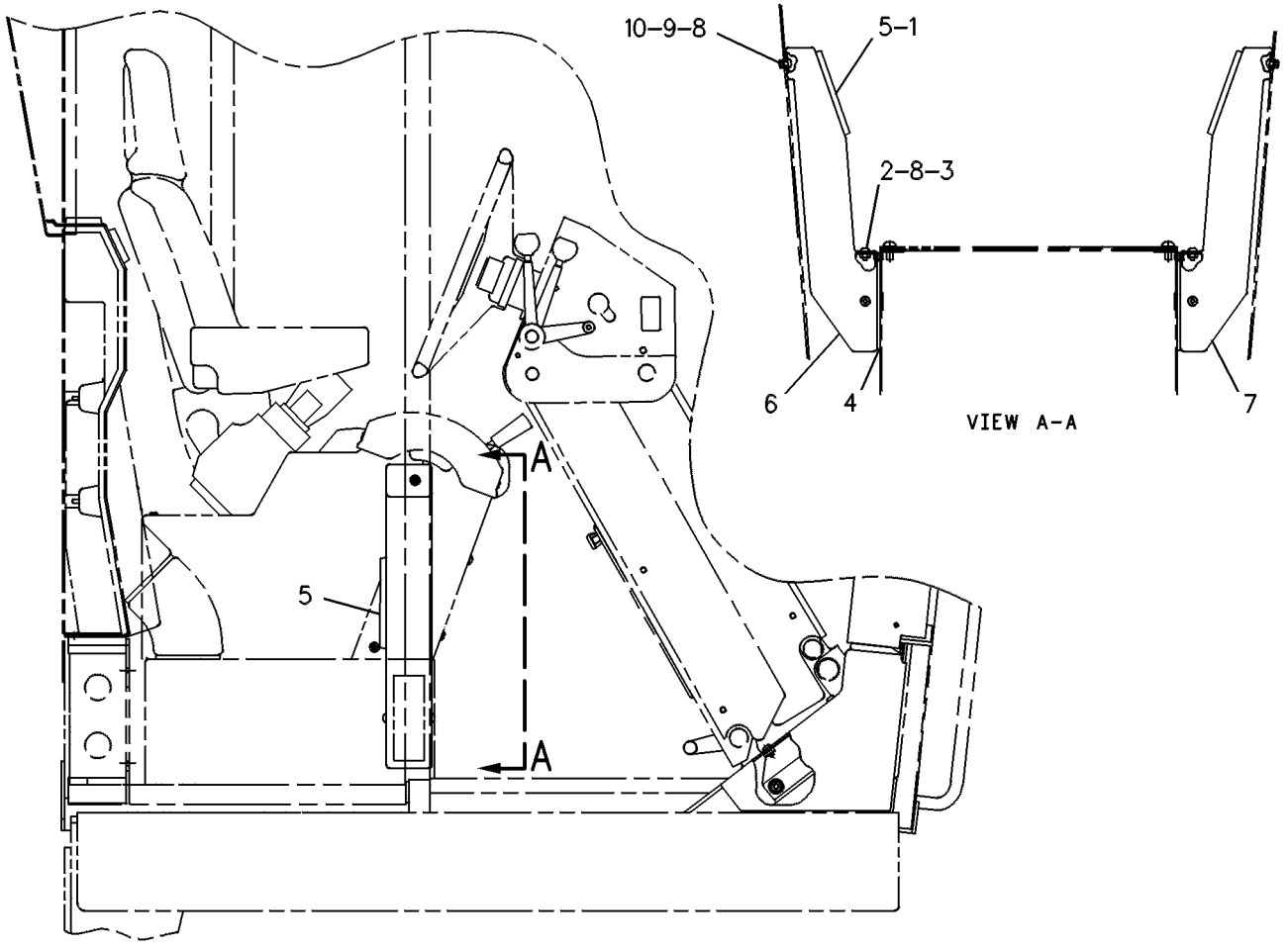

RIGHT SIDE VIEW

GRAPHIC #1

g00108768

8Y-5874 EXTENSION GP-BACKREST—CLOTH

S/N: ASE1-UP

PART OF 112-9104, 155-5958 SEAT GP-SUSPENSION

ALSO AN ATTACHMENT

SMCS-7312 **i01574121**

NOTE	REF NO	GRAPHIC REF	PART NUMBER	QTY	PART NAME 1 2 3 4 5 6 (PRODUCT LEVEL)	SEE PAGE
	1	1	**8Y-5877**	1	PAN AS-EXTENSION	
J	2	1	**8Y-5947**	2	FASTENER	
JZ	3	1		1	CUSHION AS	
					AVAILABLE REPAIR KIT(S):	
J			**8Y-5943**	1	KIT-CUSHION (BACK REST)	

J-KIT MARKED J INCLUDES PART(S) MARKED J
Z-NOT SERVICED SEPARATELY

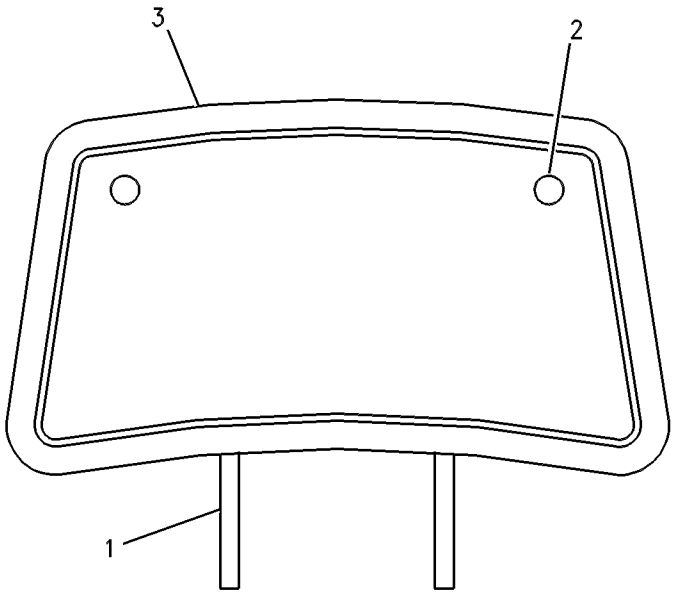

GRAPHIC #1 g00524121

OPERATOR STATION

8Y-5959 EXTENSION GP-BACKREST—VINYL

S/N: ASE1-UP
PART OF 112-9105 SEAT GP-SUSPENSION
AN ATTACHMENT

SMCS-7312 **i01395711**

NOTE	REF NO	GRAPHIC REF	PART NUMBER	QTY	PART NAME 1 2 3 4 5 6 (PRODUCT LEVEL)	SEE PAGE
	1	1	**8Y-5877**	1	PAN AS-EXTENSION	
J	2	1	**8Y-5947**	2	FASTENER	
JZ	3	1		1	CUSHION AS	
					AVAILABLE REPAIR KIT(S):	
J			**8Y-5960**	1	KIT-CUSHION (VINYL BACK REST)	

J-KIT MARKED J INCLUDES PARTS MARKED J
Z-NOT SERVICED SEPARATELY

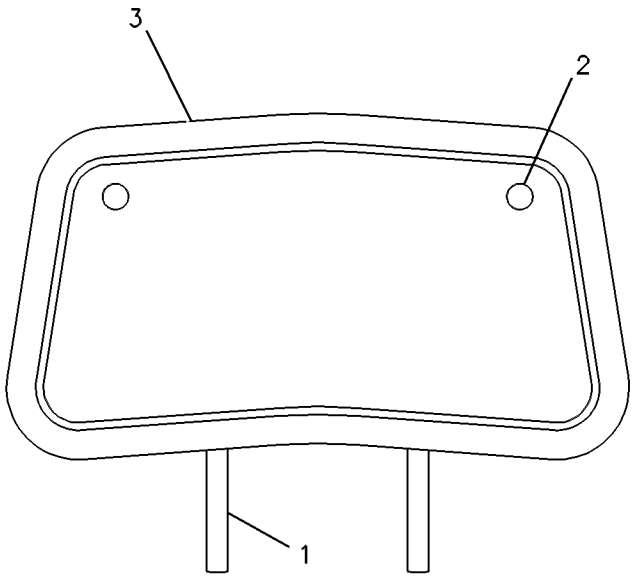

GRAPHIC #1 g00326278

MEMORANDA

OPERATOR STATION

170-4820 FAN GP-CIRCULATING

S/N: ASE1-UP
24 VOLT
PART OF 172-6835 FAN GP-CIRCULATING
AN ATTACHMENT

SMCS-7316 **i01625715**

NOTE	REF NO	GRAPHIC REF	PART NUMBER	QTY	PART NAME 1 2 3 4 5 6 (PRODUCT LEVEL)	SEE PAGE
	1	1	**3D-8747**	1	BRACKET	
	2	1	**3D-8748**	1	FAN AS	
	3	1	**3D-8749**	1	GUARD	
	4	1	**3T-6774**	1	GROMMET	
	5	1	**9X-9689**	1	BASE-FAN	
	6	1	**170-5335**	1	MOTOR GP-ELECTRIC	
		1	**3E-3365**	1	WEDGE-RECEPTACLE LOCK (2 PIN)	
		1	**9W-0852**	2	PIN-CONNECTOR	
		1	**102-8802**	1	KIT-RECEPTACLE (2 PIN)	
	7	1	**1B-2713**	1	BOLT (1/4-20X1.75IN)	
	8	1	**1M-1230**	2	NUT & LOCK AS (10/32 THD)	
	9	1	**2D-6235**	1	LOCKNUT (1/4-20 THD)	
	10	1	**3D-8752**	1	LOCKNUT (5/16-24 THD)	
	11	1	**5P-0537**	4	WASHER-HARD (7.2X14.5X2MM THK)	
	12	1	**6G-5987**	1	BRACKET	
	13	1	**7L-8316**	1	SETSCREW-SOCKET (10-32X.25IN)	
	14	1	**7T-0582**	1	BOLT	
	15	1	**9M-1974**	2	WASHER-HARD (8.8X16X2MM THK)	

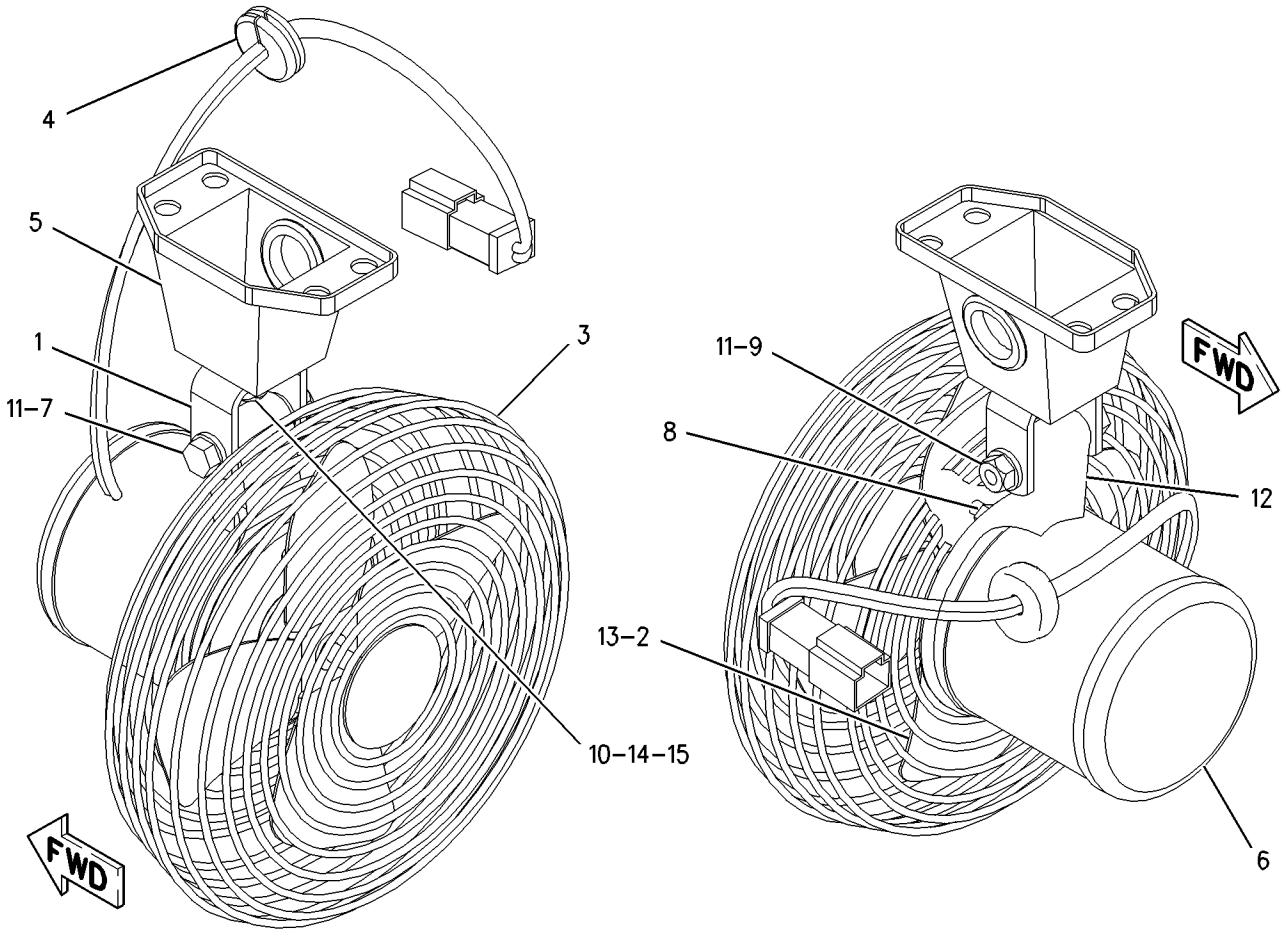

GRAPHIC #1 g00843653

OPERATOR STATION

170-5334 FAN GP-CIRCULATING—FRONT

S/N: ASE1-UP
24-VOLT
PART OF 172-6834 FAN GP-CIRCULATING
AN ATTACHMENT

SMCS-7316 **i01660892**

NOTE	REF NO	GRAPHIC REF	PART NUMBER	QTY	PART NAME 1 2 3 4 5 6 (PRODUCT LEVEL)	SEE PAGE
	1	1	**3D-8747**	1	BRACKET	
	2	1	**3D-8748**	1	FAN AS	
	3	1	**3D-8749**	1	GUARD	
	4	1	**3T-6774**	1	GROMMET	
	5	1	**9X-9689**	1	BASE-FAN	
	6	1	**135-1979**	1	BRACKET	
Y	7	1	**170-5335**	1	MOTOR GP-ELECTRIC (DEFROSTER FAN)	194
	8	1	**031-4155**	1	LOCKNUT (5/16-18 THD)	
	9	1	**1B-2713**	1	BOLT (1/4-20X1.75IN)	
	10	1	**1M-1230**	2	NUT & LOCK AS	
	11	1	**2D-6235**	1	LOCKNUT (1/4-20 THD)	
	12	1	**3D-8752**	1	LOCKNUT (5/16-24 THD)	
	13	1	**4M-0061**	1	BOLT (5/16-18X0.750 IN)	
	14	1	**5P-0537**	4	WASHER-HARD (7.2X14.5X2MM THK)	
	15	1	**6G-5987**	1	BRACKET	
	16	1	**7L-8316**	1	SETSCREW-SOCKET (10-32X.25IN)	
	17	1	**7T-0582**	1	BOLT	
	18	1	**9M-1974**	3	WASHER-HARD (8.8X16X2MM THK)	
	19	1	**9T-5241**	2	WASHER (9.53X18X1MM THK)	

Y-SEPARATE ILLUSTRATION

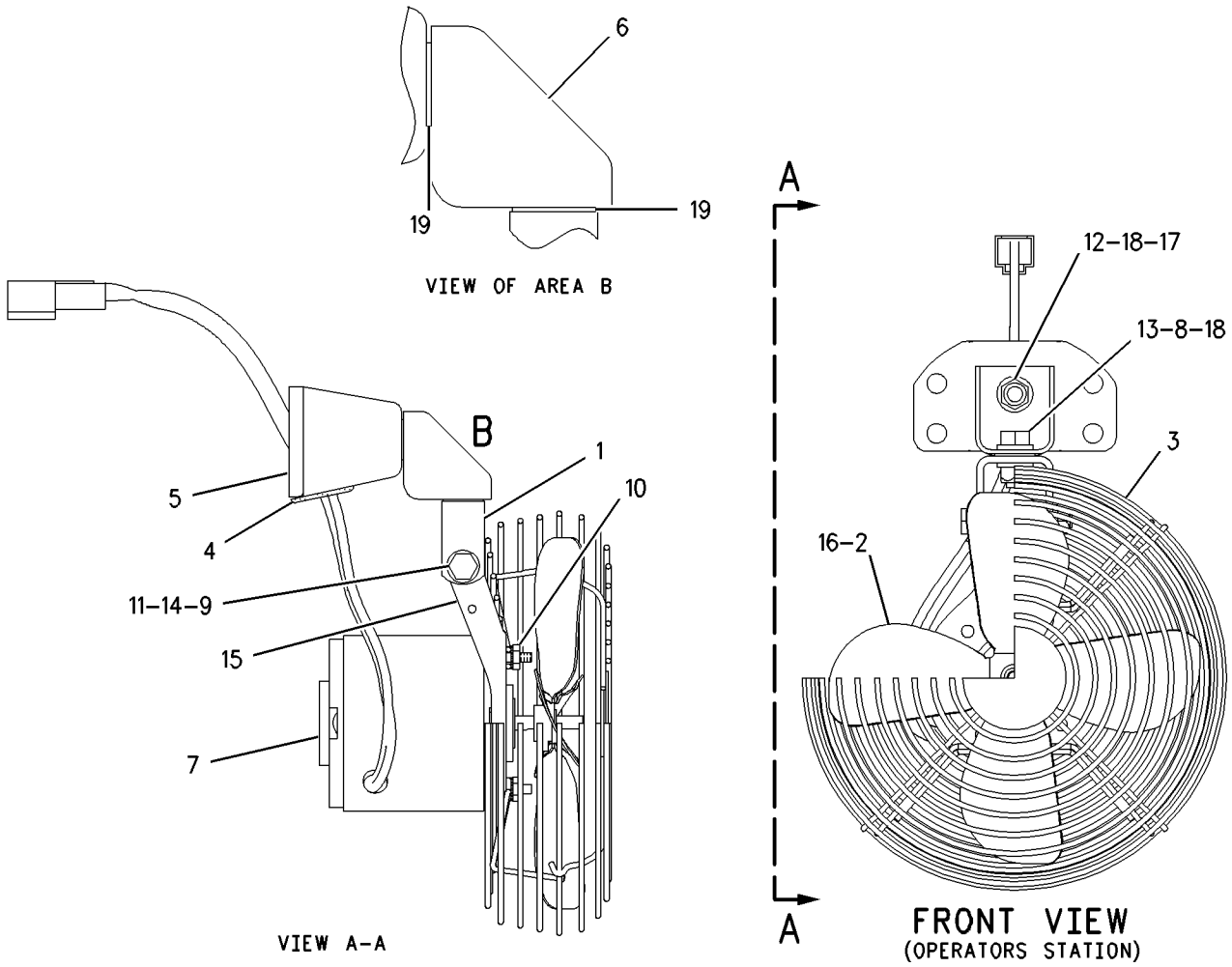

GRAPHIC #1 g00761361

OPERATOR STATION

172-6834 FAN GP-CIRCULATING–FRONT DEFROSTER

S/N: ASE1-UP
PART OF 197-5959 SNOW AR-MOTOR GRADER
AN ATTACHMENT

SMCS-7316 **i01623796**

NOTE	REF NO	GRAPHIC REF	PART NUMBER	QTY	PART NAME 1 2 3 4 5 6 (PRODUCT LEVEL)	SEE PAGE
	1	1	**7T-4003**	1	RESISTOR	
	2	1	**9W-1442**	1	FUSE (10 AMP) (FRONT DEFROSTER)	
Y	3	1	*170-5334*	1	FAN GP-CIRCULATING (FRONT)	660
M	4	1	**9X-1046**	2	SCREW (M4X0.7X18MM)	
	5	1	**3E-9330**	1	SWITCH AS (ON/OFF) (FRONT DEFROSTER)	
		1	**3E-8821**	1	ACTUATOR-ROCKER	
		1	**3E-8825**	1	LAMP (24 VOLT) (FRONT DEFROSTER)	

M-METRIC PART
Y-SEPARATE ILLUSTRATION

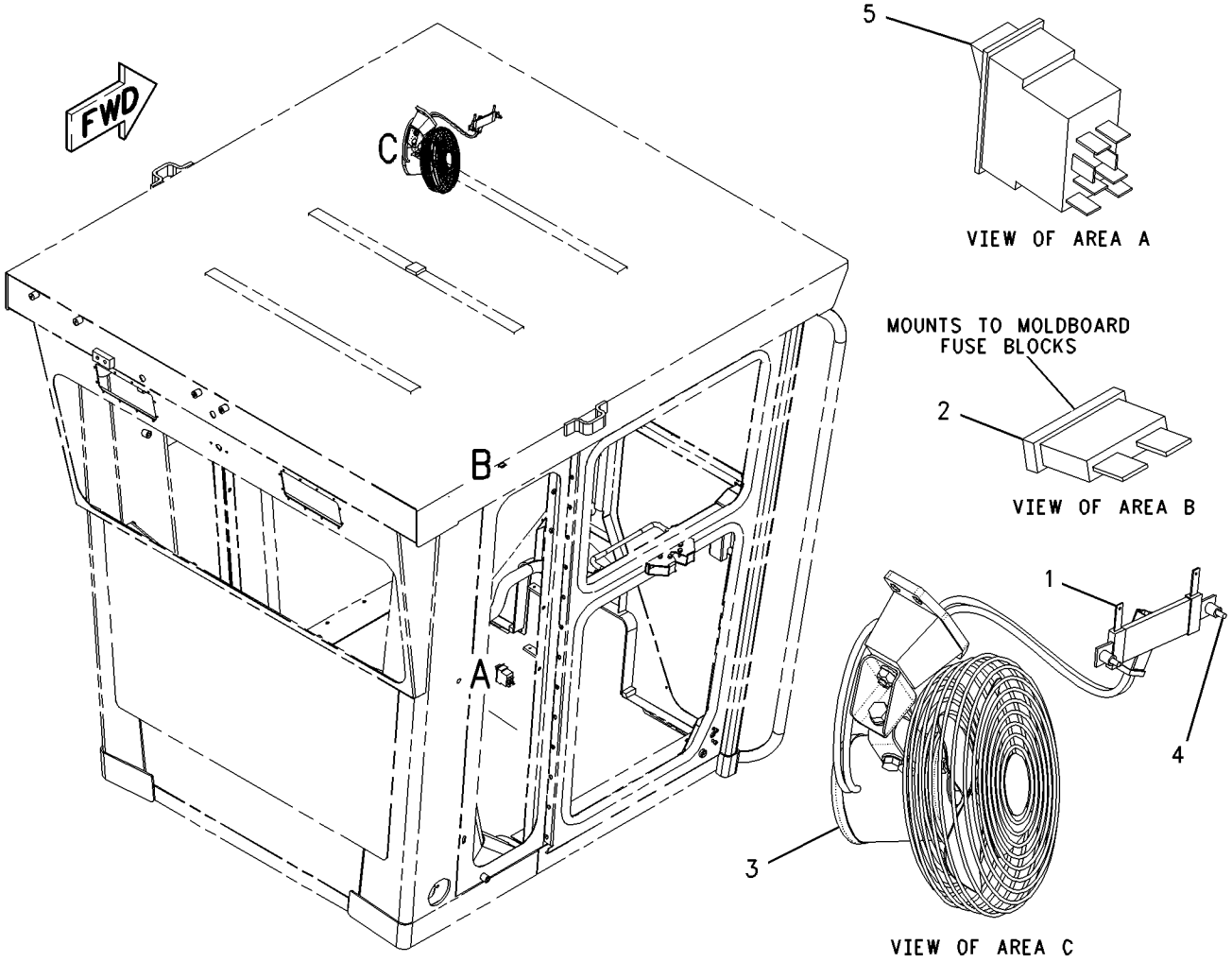

GRAPHIC #1 g00846757

OPERATOR STATION

172-6835 FAN GP-CIRCULATING–REAR DEFROSTER

S/N: ASE1-UP
PART OF 197-5959 SNOW AR-MOTOR GRADER
AN ATTACHMENT

SMCS-7316 **i01623806**

NOTE	REF NO	GRAPHIC REF	PART NUMBER	QTY	PART NAME 1 2 3 4 5 6 (PRODUCT LEVEL)	SEE PAGE
	1	1	**7T-4003**	1	RESISTOR	
	2	1	**9W-1442**	1	FUSE (10 AMP) (REAR DEFROSTER)	
Y	3	1	*170-4820*	1	FAN GP-CIRCULATING (REAR)	658
	4	1	**5P-8525**	1	GROMMET	
M	5	1	**9X-1046**	2	SCREW (M4X0.7X18MM)	
M	6	1	**9X-2045**	4	SCREW-TRUSS HEAD (M6X1X20MM)	
	7	1	**3E-9330**	1	SWITCH AS (ON/OFF) (REAR DEFROSTER)	
		1	**3E-8821**	1	ACTUATOR-ROCKER	
		1	**3E-8825**	1	LAMP (24 VOLT) (REAR DEFROSTER)	

M-METRIC PART
Y-SEPARATE ILLUSTRATION

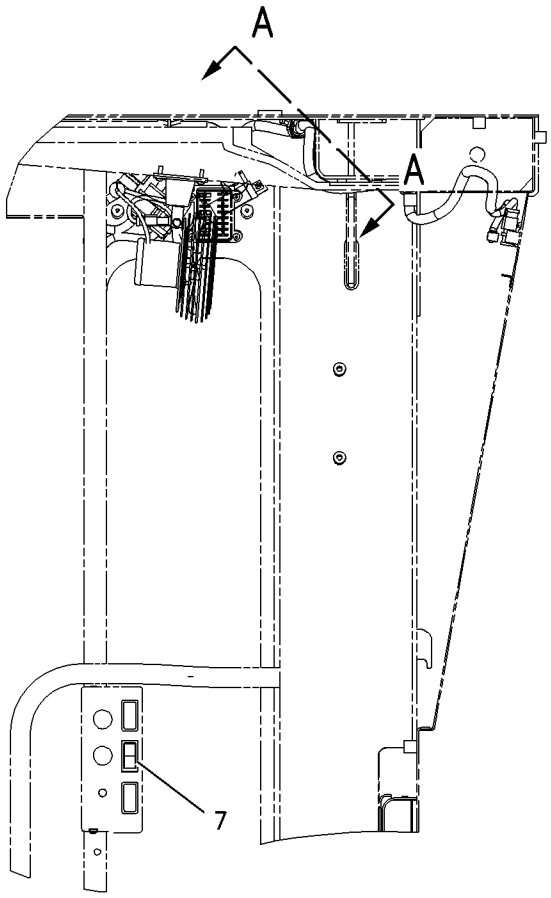

LEFT SIDE VIEW

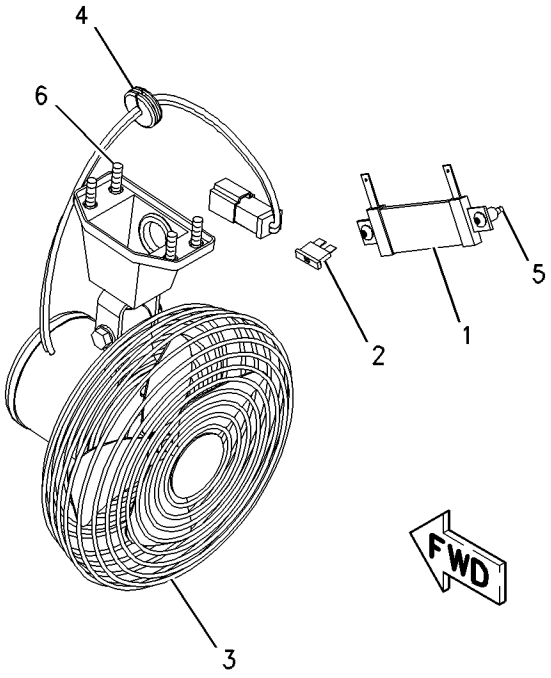

VIEW A-A

GRAPHIC #1 g00846366

OPERATOR STATION

8X-2925 FILTER GP-CAB AIR

S/N: ASE1-UP

PART OF 110-9471, 167-8068 AIR CONDITIONER AR, 167-8394 HEATER AR-CAB

AN ATTACHMENT

SMCS-7342 **i01655352**

NOTE	PART NUMBER	QTY	PART NAME 1 2 3 4 5 6 (PRODUCT LEVEL)	SEE PAGE
	9X-4986	2	FILTER (CAB AIR)	
			(UPPER LH & RH ROPS SIDE PANEL)	
	7T-7358	1	FILTER-AIR (ROPS REAR PANEL)	
	9X-8122	1	PLATE AS	
			(FILTER TO PANEL AS)	
	8R-1778	1	COVER-FILTER	
	133-7613	2	SCREW-BAILHEAD	
	131-5492	2	RETAINER-CAPTIVE	
	112-9555	4	SPRING-FILTER	
			(SNAP INTO UPPER LH & RH ROPS SIDE PANEL)	

OPERATOR STATION

199-2585 HAMMER & MOUNTING GP—LOW PROFILE

S/N: ASE1-UP
AN ATTACHMENT

SMCS-0606, 7310 **i01631741**

NOTE	REF NO	GRAPHIC REF	PART NUMBER	QTY	PART NAME 1 2 3 4 5 6 (PRODUCT LEVEL)	SEE PAGE
	1	1	**8Y-6379**	1	KIT-HAMMER	
					(INCLUDES BRACKET AND HAMMER)	
	2	1	**100-5612**	1	FILM-INSTRUCTION (ALT EXIT/REMOVE WINDOW)	
M	3	1	**155-4098**	4	SCREW-BUTTON HEAD	
	4	1	**199-2586**	1	COVER AS	
BD	5	1	**6V-0505**		SEAL	

B-USE AS REQUIRED
D-ORDER BY THE METER
M-METRIC PART

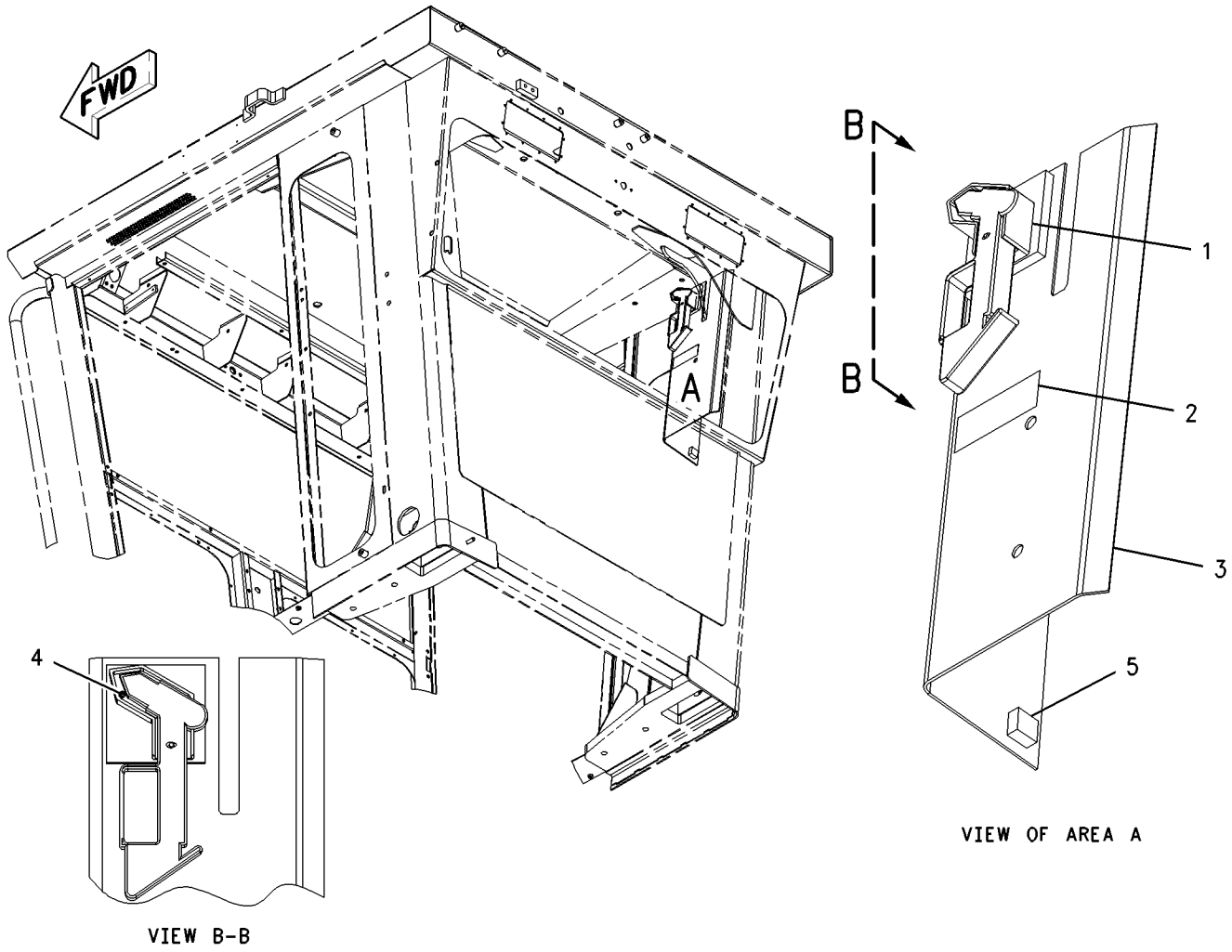

GRAPHIC #1 g00847012

OPERATOR STATION

200-7934 HAMMER & MOUNTING GP—HIGH PROFILE

S/N: ASE1-UP
AN ATTACHMENT

SMCS-0606, 7310 **i01631763**

NOTE	REF NO	GRAPHIC REF	PART NUMBER	QTY	PART NAME 1 2 3 4 5 6 (PRODUCT LEVEL)	SEE PAGE
	1	1	**8Y-6379**	1	KIT-HAMMER	
					(INCLUDES BRACKET AND HAMMER)	
	2	1	**100-5612**	1	FILM-INSTRUCTION (ALT EXIT/REMOVE WINDOW)	
	3	1	**200-7933**	1	COVER AS	
M	4	1	**155-4098**	4	SCREW-BUTTON HEAD	
BD	5	1	**6V-0505**	1	SEAL	

B-USE AS REQUIRED
D-ORDER BY THE METER
M-METRIC PART

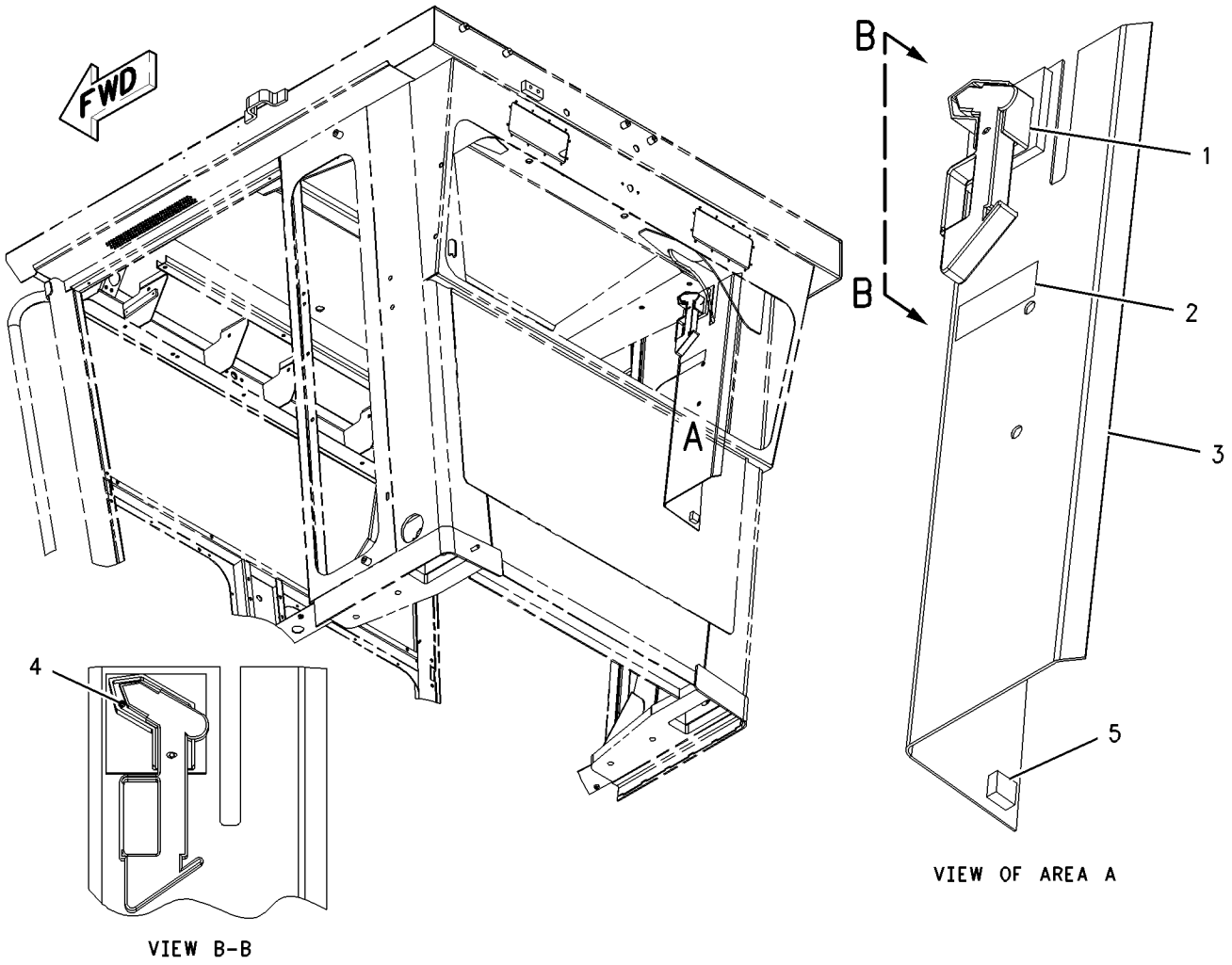

GRAPHIC #1 g00846940

OPERATOR STATION

173-5360 HEATER & MTG GP-CAB—LIGHT DUTY

S/N: ASE1-UP

PART OF 167-8422 HEATER AR-CAB

AN ATTACHMENT

SMCS-7304 **i01650239**

NOTE	PART NUMBER	QTY	PART NAME 1 2 3 4 5 6 (PRODUCT LEVEL)	SEE PAGE
	9W-1441	1	FUSE (15 AMP) (HEATER)	
Y	*174-4547*	1	HEATER GP-CAB (LIGHT DUTY)	676

Y-SEPARATE ILLUSTRATION

OPERATOR STATION

174-4552 HEATER & MTG GP-CAB—EU

S/N: ASE1-UP
PART OF 167-8394 HEATER AR-CAB
AN ATTACHMENT

SMCS-7304 **i01650242**

NOTE	PART NUMBER	QTY	PART NAME 1 2 3 4 5 6 (PRODUCT LEVEL)	SEE PAGE
	9W-1441	1	FUSE (15 AMP) (HEATING & AIR CONDITIONING)	
Y	**173-5322**	1	HEATER GP-CAB (EU)	672
	123-0872	1	PAD	
	191-5236	1	PAD	

Y-SEPARATE ILLUSTRATION

OPERATOR STATION

167-8394 HEATER AR-CAB—EU

S/N: ASE1-UP
PART OF 211-1769, 211-1770 CONVERSION AR-CERTIFICATION
AN ATTACHMENT

SMCS-7304 **i01653103**

NOTE	PART NUMBER	QTY	PART NAME 1 2 3 4 5 6 (PRODUCT LEVEL)	SEE PAGE
Y	*177-7891*	1	DUCT & CONTROL GP	653
Y	*7I-5015*	1	DUCT GP	654
Y	**8X-2925**	1	FILTER GP-CAB AIR	664
Y	*174-4552*	1	HEATER & MTG GP-CAB	668
Y	*177-7875*	1	LINES GP-HEATER	710

Y-SEPARATE ILLUSTRATION

OPERATOR STATION

167-8422 HEATER AR-CAB

S/N: ASE1-UP

AN ATTACHMENT

SMCS-7304 **i01645236**

NOTE	PART NUMBER	QTY	PART NAME 1 2 3 4 5 6 (PRODUCT LEVEL)	SEE PAGE
Y	*173-5360*	1	HEATER & MTG GP-CAB	667
Y	*167-8396*	1	LINES GP-HEATER	708
Y	*178-8603*	1	LOUVER GP-CAB	714

Y-SEPARATE ILLUSTRATION

MEMORANDA

OPERATOR STATION

173-5322 HEATER GP-CAB—EU

S/N: ASE1-UP
PART OF 174-4552 HEATER & MTG GP-CAB
AN ATTACHMENT

SMCS-7304 **i01673587**

NOTE	REF NO	GRAPHIC REF	PART NUMBER	QTY	PART NAME 1 2 3 4 5 6 (PRODUCT LEVEL)	SEE PAGE
	1	2	**2P-4339**	1	NUT-JAM (7/16-20 THD)	
	2	2	**2V-0099**	1	KNOB (TEMPERATURE CONTROL)	
	2A	2	**2V-0099**	1	KNOB (FAN SPEED)	
	3	2	**3E-0400**	2	WHEEL-BLOWER	
	4	2	**3E-3890**	1	FILM-CONTROL (FAN SPEED/TEMP)	
	5	1	**3S-2093**	2	STRAP-CABLE	
	6	1	**5P-7803**	2	PLUG-BUTTON	
	7	2	**5P-9135**	1	GROMMET	
	8	2	**5P-3236**	1	CONE-BEARING	
	9	2	**6T-5345**	1	BUSHING-TERMINAL	
	10	2	**6T-6708**	2	WASHER (7X28.6X4.1MM THK)	
	11	1	**7G-4824**	1	STRAP	
Z	12	1		1	FILM-IDENTIFICATION (GROUP & SEQUENCE NO.)	
	13	2	**8C-4586**	2	CLAMP	
	14	2	**8D-1429**	1	LAMP (24 VOLT) (A/C & HEATER CONTROL PANEL)	
	15	1	**8E-7791**	1	STRAP	
	16	1	**8P-5141**	2	PLATE-ORIFICE	
	17	2	**8X-5536**	1	COVER	
	18	1	**8X-5538**	1	COVER AS	
M		1	**8T-3490**	4	NUT-WELD (M10X1.5 THD)	
	19	1	**8X-5540**	1	COVER	
	20	1	**8Y-6388**	4	LOUVER AS	
	21	2	**9G-1950**	1	RESISTOR	
	22	2	**9X-2185**	4	SCREW (8-15X0.44 IN)	
	23	1,2	**9X-2488**	6	CLAMP-HOSE	
	24	1	**9X-9654**	1	COIL AS-HEATER	
	25	1	**123-4618**	1	COVER	
	26	1	**123-4701**	1	SEAL	
	27	2	**124-1431**	1	BRACKET	
	28	1	**124-1432**	1	HOUSING AS	
		1	**7T-1099**	1	LINK	
		1	**8P-5141**	2	PLATE-ORIFICE	
	29	2	**124-3137**	1	BRACKET	
	30	1	**124-3138**	1	SEAL	
	31	2	**124-9006**	1	SHAFT	
	32	2	**124-9007**	1	SHAFT AS	
		2	**4L-5966**	2	SETSCREW (NO 10X.19 IN)	
	33	1	**125-0439**	1	GASKET	
	34	1	**125-0442**	1	PLATE	
	35	2	**129-4935**	1	SEAL	
	36	1	**142-4940**	1	PLATE AS	
	37	2	**174-1494**	1	MOTOR GP-ELECTRIC (27 VOLT) (HEATER)	
		2	**3E-3365**	1	WEDGE-RECEPTACLE LOCK (2 PIN)	
		2	**9W-0852**	2	PIN-CONNECTOR	
		2	**102-8802**	1	KIT-RECEPTACLE (2 PIN) (HEATER MOTOR)	
	38	1	**174-4492**	1	COVER	
	39	1	**174-4971**	1	SUPPORT AS	
	40	1	**174-6353**	1	PLATE	
	41	1	**176-5507**	1	PAD	
	42	1	**177-7858**	1	HARNESS AS-HEATER & AIR COND	
		1	**155-2270**	1	KIT-CONNECTING PLUG (2 PIN) (MOTOR)	
		1	**102-8805**	1	KIT-RECEPTACLE (6 PIN)	
	43	1	**191-0027**	1	PAD	
	44	2	**204-4376**	1	CAP-PROTECTIVE	
	45	2	**206-5154**	1	VALVE AS (HEATER WATER)	

173-5322 HEATER GP-CAB *(contd.)* i01673587

NOTE	REF NO	GRAPHIC REF	PART NUMBER	QTY	PART NAME 1 2 3 4 5 6 (PRODUCT LEVEL)	SEE PAGE
	46	1	**104-2091**	8	SCREW-FLAT HEAD (6-20X0.5 IN)	
M	47	2	**129-3178**	4	LOCKNUT (M6X1 THD)	
	48	2	**130-5300**	1	CLIP	
M	49	2	**141-9784**	1	BOLT-HEX HEAD (M6X190MM)	
	50	2	**3H-2900**	1	GROMMET	
M	51	1,2	**5C-2890**	7	NUT (M6X1 THD)	
	52	1	**5P-1075**	13	WASHER-HARD (10.2X22.5X3MM THK)	
	53	2	**6V-1668**	2	WASHER (6.5X29.1X3MM THK)	
M	54	2	**6V-7728**	1	BOLT (M6X1.0X45MM)	
	55	1	**6V-8801**	13	NUT (3/8-16 THD)	
	56	1	**7X-0591**	2	WASHER-HARD (17X29X3MM THK)	
M	57	2	**8T-4171**	2	BOLT (M6X1X12MM)	
	58	1,2	**8T-4205**	15	WASHER-HARD (7.2X14.5X2MM THK)	
	59	1	**9M-8406**	1	CLIP	
M	60	1	**9X-2040**	4	SCREW-TRUSS HEAD (M10X1.5X25MM)	
M	61	1,2	**9X-2041**	5	SCREW-TRUSS HEAD (M10X1.5X20MM)	
M	62	1	**9X-2045**	6	SCREW-TRUSS HEAD (M6X1X20MM)	
E	63	1	**136-1953**		HOSE (8 CM)	
E	63A	2	**136-1953**		HOSE (17 CM)	
	63B	2	**136-1953**		HOSE (17 CM)	
BD	64	2	**5P-5908**		SEAL	
BD	65	1	**5P-5637**		SEAL	
E	66	1	**9X-2126**		SEAL (2.05 CM)	
E	66A	1	**9X-2126**		SEAL (2.05 CM)	
E	66B	1	**9X-2126**		SEAL (3.30 CM)	
E	66C	1	**9X-2126**		SEAL (2.05 CM)	
E	66D	2	**9X-2126**		SEAL (2.84 CM)	
E	66E	2	**9X-2126**		SEAL (2.84 CM)	

B-USE AS REQUIRED
D-ORDER BY THE METER
E-ORDER BY THE CENTIMETER
M-METRIC PART
Z-NOT SERVICED SEPARATELY

173-5322 HEATER GP-CAB *(contd.)*

i01673587

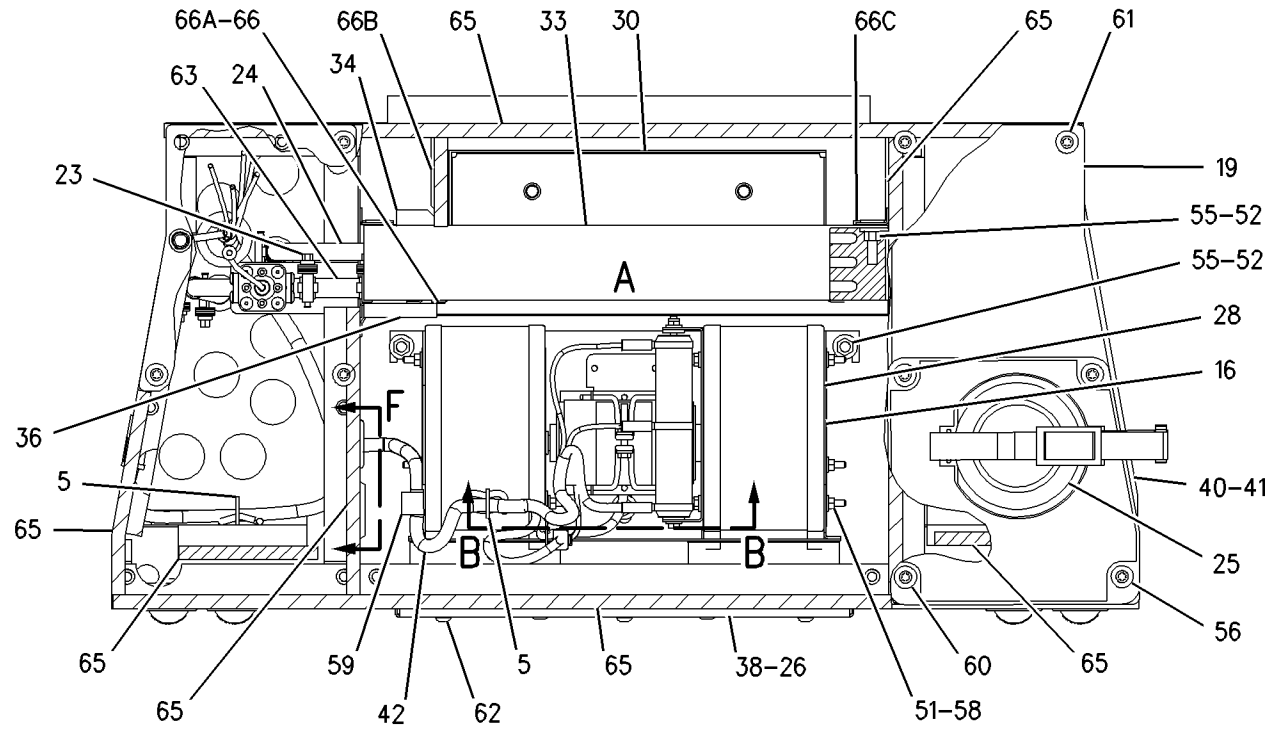

TOP VIEW

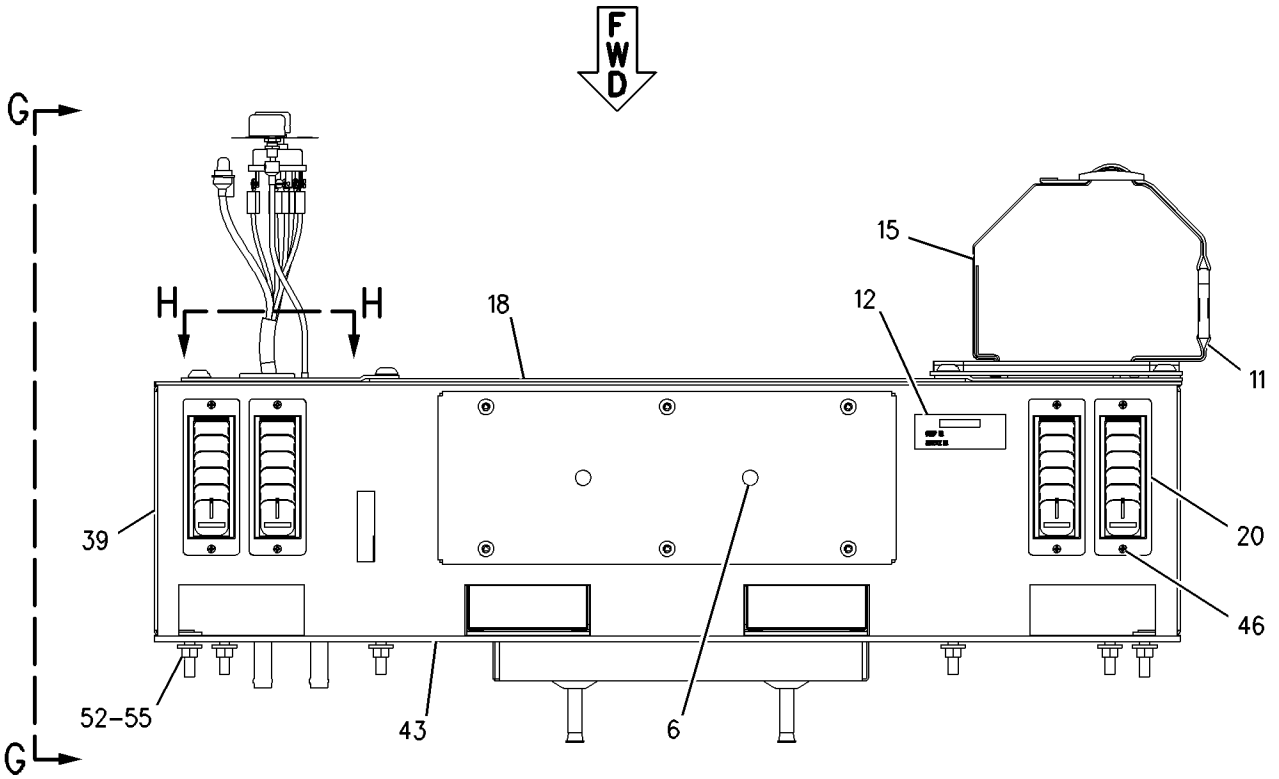

FRONT VIEW

REFER TO ALL ILLUSTRATIONS OF THIS GROUP FOR AUXILIARY VIEWS

GRAPHIC #1

g00845627

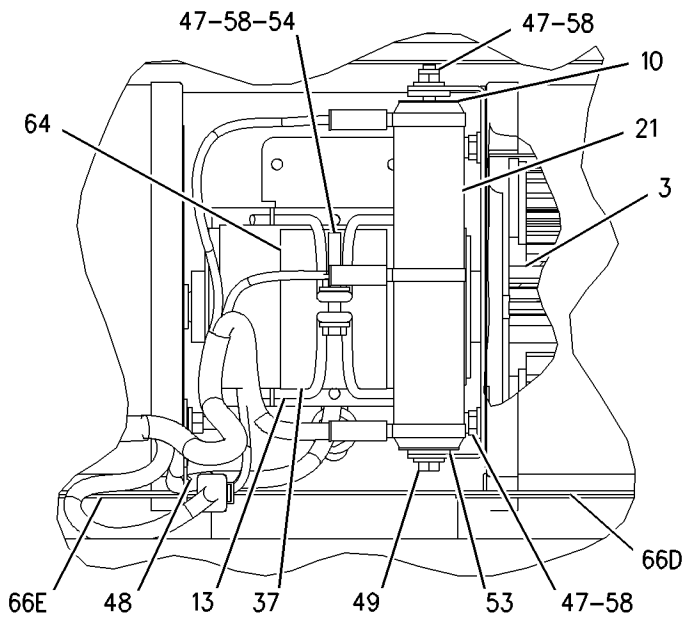

VIEW OF AREA A

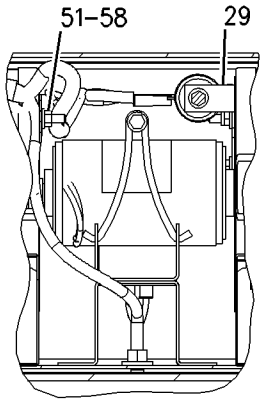

SECTION B-B

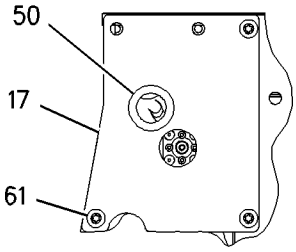

SECTION H-H

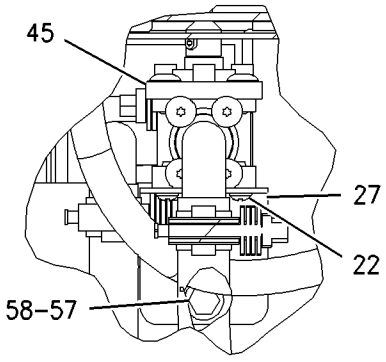

VIEW OF AREA C

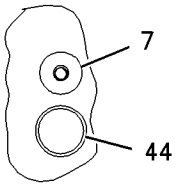

SECTION F

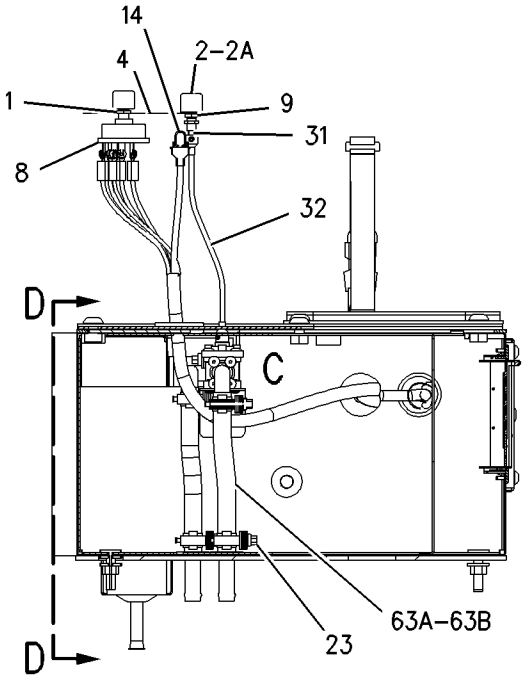

VIEW G-G

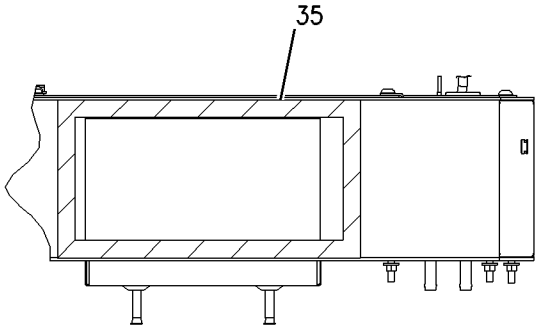

SECTION D-D

GRAPHIC #2

g00845628

OPERATOR STATION

174-4547 HEATER GP-CAB—LIGHT DUTY

S/N: ASE1-UP

PART OF 173-5360 HEATER & MTG GP-CAB

AN ATTACHMENT

SMCS-7304 **i01673588**

NOTE	REF NO	GRAPHIC REF	PART NUMBER	QTY	PART NAME 1 2 3 4 5 6 (PRODUCT LEVEL)	SEE PAGE
	1	2	**2P-4339**	1	NUT-JAM (7/16-20 THD)	
	2	2	**2V-0099**	1	KNOB (FAN SPEED)	
	2A	2	**2V-0099**	1	KNOB (TEMPERATURE)	
	3	2	**3E-0400**	2	WHEEL-BLOWER	
	4	2	**3E-3890**	1	FILM-CONTROL (A-C/HEATER)	
	5	2	**3H-2900**	1	GROMMET	
	6	1	**3S-2093**	1	STRAP-CABLE	
	7	1	**5P-7803**	2	PLUG-BUTTON	
	8	2	**5P-9135**	1	GROMMET	
	9	2	**6P-3236**	1	SWITCH AS-ROTARY (FAN SPEED)	
	10	2	**6T-5345**	1	BUSHING-TERMINAL	
	11	2	**6T-6708**	2	WASHER (7X28.6X4.1MM THK)	
	12	1	**7G-4824**	1	STRAP	
Z	13	1		1	FILM-IDENTIFICATION (GROUP & SEQUENCE NO.)	
	14	2	**8C-4586**	2	CLAMP	
	15	1	**8D-1429**	1	LAMP (24 VOLT) (A/C & HEATER)	
	16	1	**8E-7791**	1	STRAP	
	17	1	**8P-5141**	2	PLATE-ORIFICE	
	18	2	**8X-5536**	1	COVER	
	19	1	**8X-5538**	1	COVER AS	
M		1	**8T-3490**	4	NUT-WELD (M10X1.5 THD)	
	20	1	**8X-5540**	1	COVER	
	21	2	**9G-1950**	1	RESISTOR	
M	22	1,2	**9X-2041**	5	SCREW-TRUSS HEAD (M10X1.5X20MM)	
	23	2	**9X-2185**	4	SCREW (8-15X0.44 IN)	
	24	1,2	**9X-2488**	6	CLAMP-HOSE	
	25	1	**9X-9654**	1	COIL AS-HEATER	
	26	1	**123-4618**	1	COVER	
	27	1	**123-4701**	1	SEAL	
	28	2	**124-1431**	1	BRACKET	
	29	1	**124-1432**	1	HOUSING AS	
		1	**7T-1099**	1	LINK	
		1	**8P-5141**	2	PLATE-ORIFICE	
	30	2	**124-3137**	1	BRACKET	
	31	1	**124-3138**	1	SEAL	
	32	2	**124-9006**	1	SHAFT	
	33	2	**124-9007**	1	SHAFT AS	
		2	**4L-5966**	2	SETSCREW (NO 10X.19 IN)	
	34	1	**125-0439**	1	GASKET	
	35	1	**125-0442**	1	PLATE	
	36	2	**129-4935**	1	SEAL	
	37	2	**130-5300**	1	CLIP	
	38	1	**142-4940**	1	PLATE AS	
	39	2	**174-1494**	1	MOTOR GP-ELECTRIC (27 VOLT) (HEATER)(LIGHT DUTY)	
		2	**3E-3365**	1	WEDGE-RECEPTACLE LOCK (2 PIN)	
		2	**9W-0852**	2	PIN-CONNECTOR	
		2	**102-8802**	1	KIT-RECEPTACLE (2 PIN) (HEATER MOTOR)	
	40	1	**174-4492**	1	COVER	
	41	1	**174-6051**	1	SUPPORT AS	
	42	1	**174-6353**	1	PLATE	
	43	1	**176-5507**	1	PAD	
	44	1	**177-7858**	1	HARNESS AS-HEATER & AIR COND	
		1	**155-2270**	1	KIT-CONNECTING PLUG (2 PIN) (MOTOR)	
		1	**102-8805**	1	KIT-RECEPTACLE (6 PIN)	
	45	1	**191-0027**	1	PAD	

174-4547 **HEATER GP-CAB** *(contd.)*

i01673588

NOTE	REF NO	GRAPHIC REF	PART NUMBER	QTY	PART NAME 1 2 3 4 5 6 (PRODUCT LEVEL)	SEE PAGE
	46	2	**204-4376**	1	CAP-PROTECTIVE	
	47	2	**206-5154**	1	VALVE AS (HEATER)	
M	48	2	**129-3178**	4	LOCKNUT (M6X1 THD)	
M	49	2	**141-9784**	1	BOLT-HEX HEAD (M6X190MM)	
M	50	1,2	**5C-2890**	7	NUT (M6X1 THD)	
	51	1	**5P-1075**	13	WASHER-HARD (10.2X22.5X3MM THK)	
	52	2	**6V-1668**	2	WASHER (6.5X29.1X3MM THK)	
M	53	2	**6V-7728**	1	BOLT (M6X1.0X45MM)	
	54	1	**6V-8801**	13	NUT (3/8-16 THD)	
	55	2	**7X-0591**	2	WASHER-HARD (17X29X3MM THK)	
M	56	2	**8T-4171**	2	BOLT (M6X1X12MM)	
	57	1,2	**8T-4205**	15	WASHER-HARD (7.2X14.5X2MM THK)	
	58	1	**9M-8406**	1	CLIP	
M	59	1	**9X-2040**	4	SCREW-TRUSS HEAD (M10X1.5X25MM)	
M	60	1	**9X-2045**	6	SCREW-TRUSS HEAD (M6X1X20MM)	
E	61	1	**136-1953**		HOSE (8 CM)	
E	61A	2	**136-1953**		HOSE (17 CM)	
E	61B	2	**136-1953**		HOSE (17 CM)	
BD	62	2	**5P-5908**		SEAL	
D	63	1	**9X-2126**		SEAL (3.3 M)	
BD	64	1,2	**5P-5637**		SEAL	

B-USE AS REQUIRED
D-ORDER BY THE METER
E-ORDER BY THE CENTIMETER
M-METRIC PART
Z-NOT SERVICED SEPARATELY

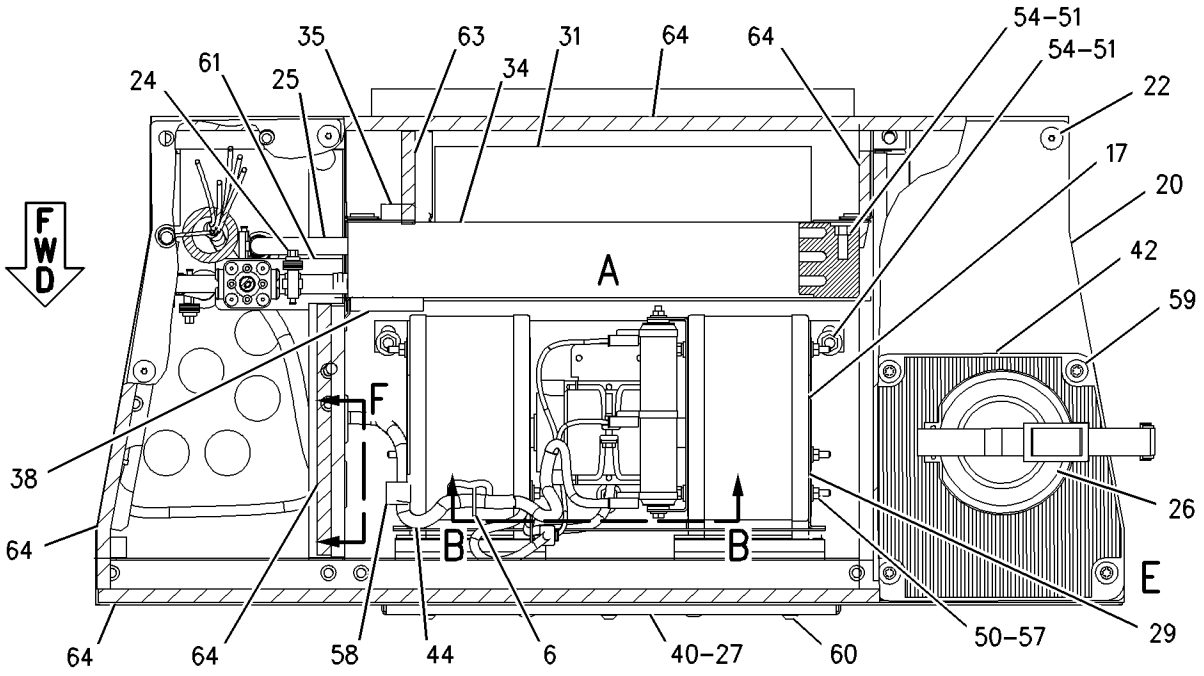

TOP VIEW

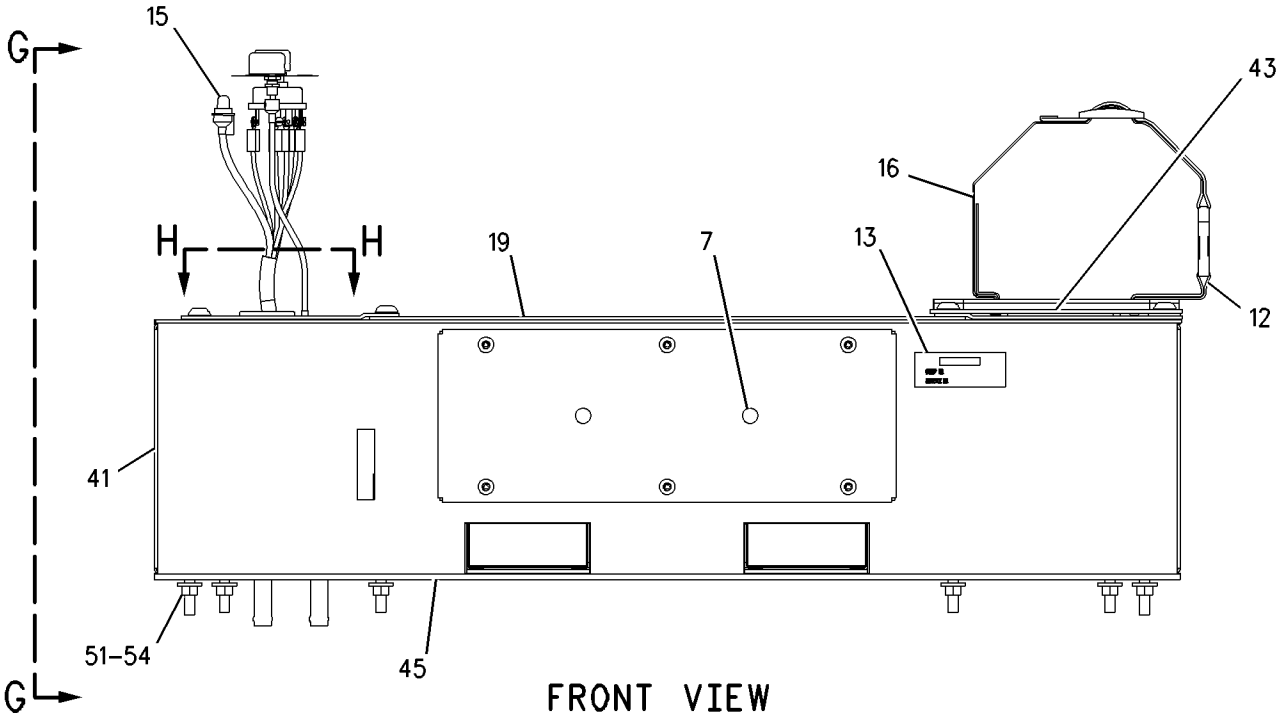

FRONT VIEW

REFER TO ALL ILLUSTRATIONS OF
THIS GROUP FOR AUXILIARY VIEWS

GRAPHIC #1

g00846288

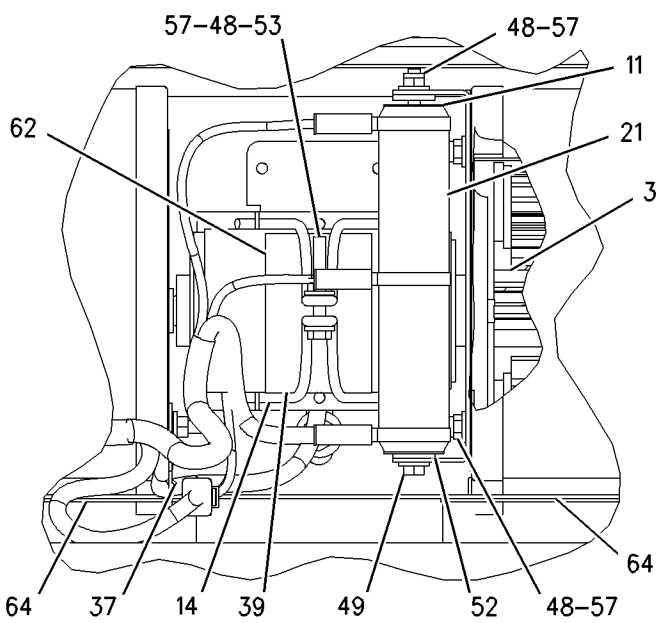

VIEW OF AREA A

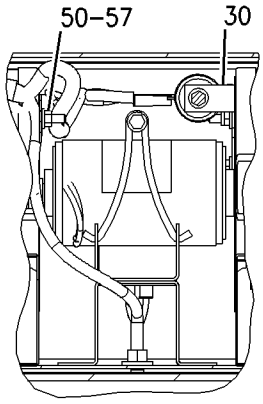

SECTION B–B

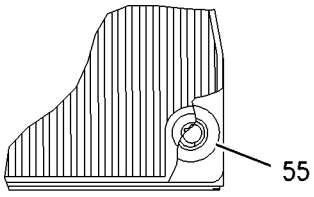

VIEW OF AREA E

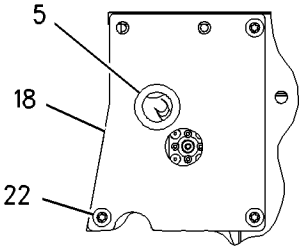

SECTION H–H

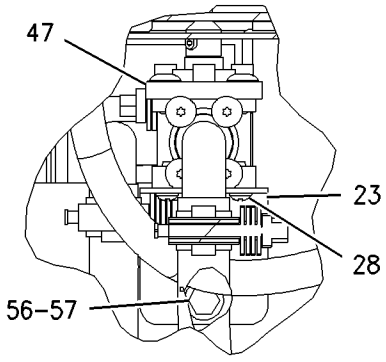

VIEW OF AREA C

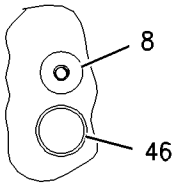

SECTION F

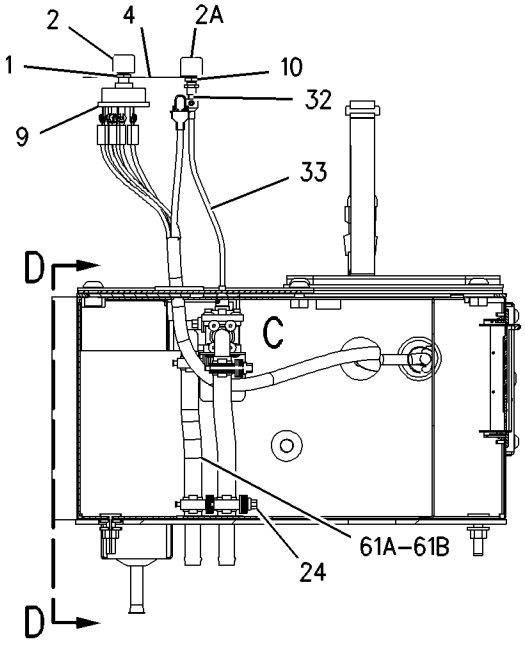

VIEW G–G

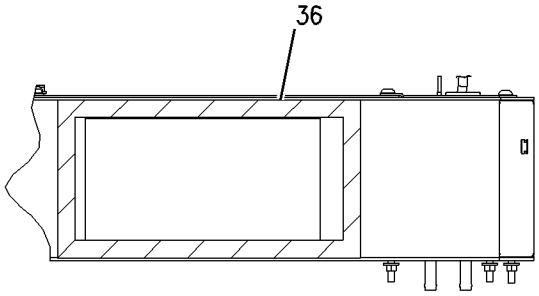

SECTION D–D

GRAPHIC #2

g00846290

OPERATOR STATION

113-5808 HOUSING GP-SEAT SUSPENSION

S/N: ASE1-UP

PART OF 113-5800 SUSPENSION GP-SEAT

ALSO AN ATTACHMENT

SMCS-7321, 7324 **i01556453**

NOTE	REF NO	GRAPHIC REF	PART NUMBER	QTY	PART NAME 1 2 3 4 5 6 (PRODUCT LEVEL)	SEE PAGE
	1	1	**161-5967**	1	SHAFT	
	2	1	**8Y-6066**	1	SPRING	
	3	1	**8Y-6069**	1	ADJUSTER AS	
	4	1	**8Y-6068**	1	NUT (3/8 X 16 THD)	
	5	1	**113-5801**	1	HOUSING AS-UPPER	
	6	1	**8Y-6047**	2	PIN	
	7	1	**2M-7819**	4	RING-RETAINING	
	8	1	**8Y-6041**	1	ARM AS	
	9	1	**8Y-6045**	1	CAM	
	10	1	**8Y-6046**	1	PIN	
	11	1	**8S-7803**	4	RING-RETAINING	
	12	1	**095-0878**	1	PIN-SPRING	
	13	1	**7M-7219**	1	BEARING-THRUST	
	14	1	**4N-2927**	2	RACE-THRUST BEARING	
	15	1	**1Y-7927**	1	PIN	
	16	1	**8Y-6060**	2	ROLLER	
	17	1	**5V-0770**	2	BOLT-CARRIAGE	
		1	**2D-6235**	2	LOCKNUT (1/4-20 THD)	
	18	1	**113-5806**	1	ROD	
	19	1	**8Y-6063**	1	LINK-ACTUATOR-LH	
	20	1	**131-5167**	1	KNOB AS-WEIGHT	
		1	**4V-7875**	1	HANDLE	
		1	**6V-3259**	1	PIN-SPRING	
		1	**149-7226**	1	SCREW-PAN HEAD	
	21	1	**8Y-6062**	1	LINK-ACTUATOR-RH	
	22	1	**113-5805**	1	KEY	
	23	1	**4B-5059**	6	WASHER (29.5X15X2.5MM THK)	
	24	1	**8Y-6064**	2	ROLLER-SLIDER	
	25	1	**7V-5191**	2	SPACER (28X10X7.1MM THK)	
	26	1	**5D-4822**	2	RING-RETAINING	
	27	1	**5P-8445**	4	RING-RETAINING	
	28	1	**3D-2975**	2	RING-RETAINING	
	29	1	**5V-1474**	1	SCREW-FORMING (10-16X0.625 IN)	
	30	1	**113-5807**	1	KNOB	
	31	1	**8Y-6067**	1	SPACER (10.54MM THK)	
	32	1	**131-4242**	1	BOLT (3/8-16X5.18 IN) (SPECIAL)	
	33	1	**8L-8413**	2	STRAP-CABLE	
JZ	34	1		1	PIN	
JZ	35	1		1	FOLLOWER-CAM	
UZ	36	1		2	SPRING	
UZ	37	1		2	BUSHING	
NZ	38	1		2	ROD	
NZ	39	1		2	SPRING	
NZ	40	1		2	SPACER	
NZ	41	1		2	BUSHING-GUIDE	
QZ	42	1		1	TAPE-INDICATOR	
QZ	43	1		1	GUIDE	
TZ	44	1		1	FOLLOWER-CAM	
TZ	45	1		1	PIN	
SZ	46	1		3	BUMPER	
LZ		1		2	ROLLER AS	
LZ		1		1	ROLLER AS	
					AVAILABLE REPAIR KIT(S):	
J			**108-4087**	1	KIT-FOLLOWER	

113-5808 HOUSING GP-SEAT SUSPENSION *(contd.)* i01556453

NOTE	REF NO	GRAPHIC REF	PART NUMBER	QTY	PART NAME 1 2 3 4 5 6 (PRODUCT LEVEL)	SEE PAGE
L			**108-4103**	1	KIT-BEARING	
U			**8Y-6859**	1	KIT-SPRING	
N			**8Y-6860**	1	KIT-SPRING	
Q			**100-3224**	1	KIT-INDICATOR	
T			**108-4086**	1	KIT-FOLLOWER	
S			**100-5179**	1	KIT-BUMPER	

J-KIT MARKED J INCLUDES PART(S) MARKED J
L-KIT MARKED L INCLUDES PART(S) MARKED L
N-KIT MARKED N INCLUDES PART(S) MARKED N
Q-KIT MARKED Q INCLUDES PART(S) MARKED Q
S-KIT MARKED S INCLUDES PART(S) MARKED S
T-KIT MARKED T INCLUDES PART(S) MARKED T
U-KIT MARKED U INCLUDES PART(S) MARKED U
Z-NOT SERVICED SEPARATELY

113-5808 HOUSING GP-SEAT SUSPENSION *(contd.)* i01556453

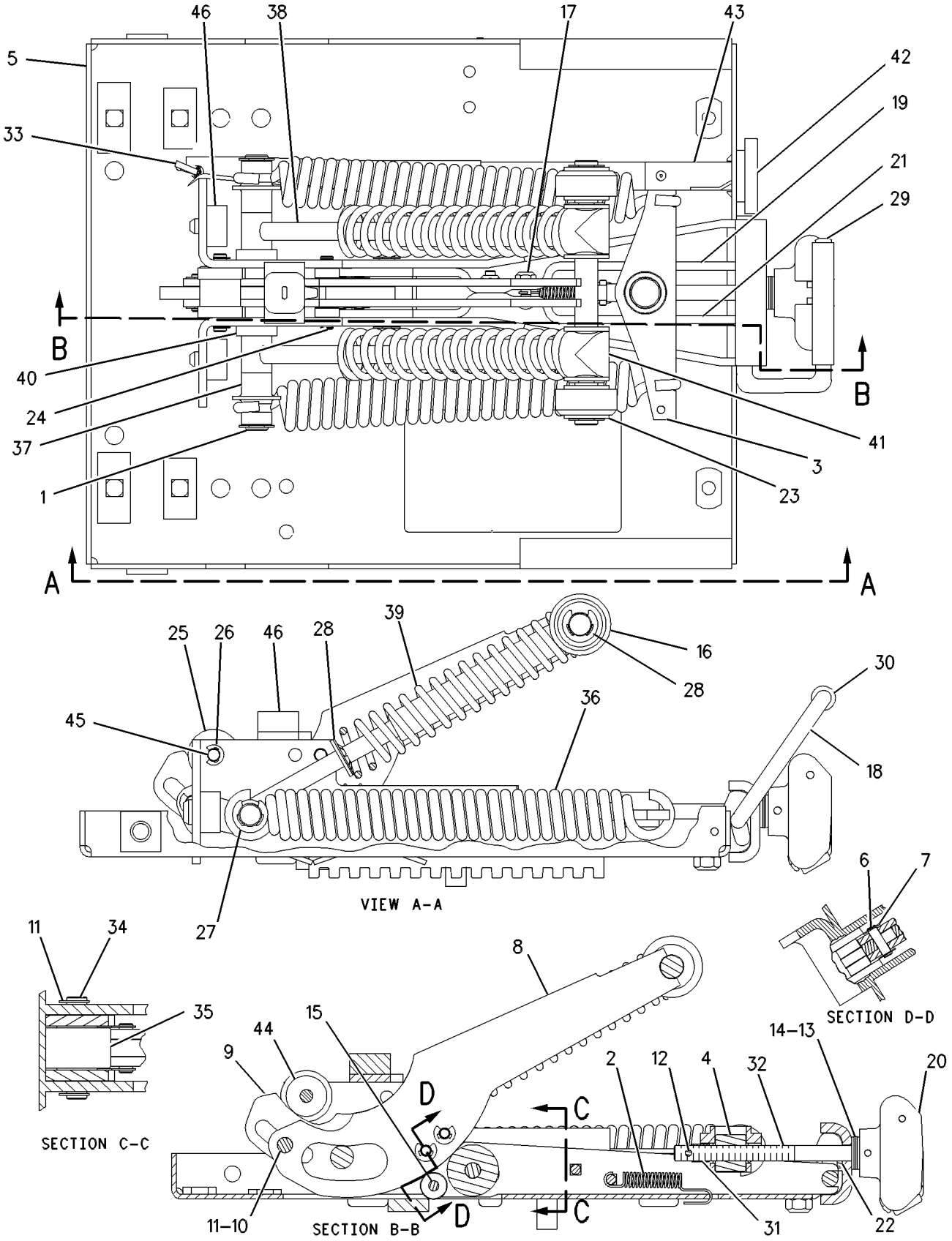

GRAPHIC #1 g00569661

OPERATOR STATION

145-1300 INSTALLATION AR-RADIO

S/N: ASE1-UP

AN ATTACHMENT

SMCS-7338 **i01650262**

NOTE	PART NUMBER	QTY	PART NAME 1 2 3 4 5 6 (PRODUCT LEVEL)	SEE PAGE
Y	*145-1297*	1	CONVERTER GP-ELECTRICAL (RADIO)	140
Y	*130-9432*	1	INSTALLATION GP-RADIO	684

Y-SEPARATE ILLUSTRATION

OPERATOR STATION

130-9432 INSTALLATION GP-RADIO

S/N: ASE1-UP

PART OF 145-1300 INSTALLATION AR-RADIO

AN ATTACHMENT

SMCS-7338 **i01449561**

NOTE	REF NO	GRAPHIC REF	PART NUMBER	QTY	PART NAME 1 2 3 4 5 6 (PRODUCT LEVEL)	SEE PAGE
	1	1	**2G-8767**	1	WASHER (10.5X60X3MM THK)	
	2	1	**9U-8263**	1	COVER	
	3	1	**2A-6684**	1	BRACKET	
	4	1	**3S-2093**	2	STRAP-CABLE	
	5	1	**6T-7695**	2	SPEAKER AS-RADIO	
	6	1	**8E-1118**	1	ANTENNA AS	
	7	1	**8X-9884**	1	BRACKET AS	
	8	1	**9W-3073**	1	CABLE AS-COAXIAL	
	9	1	**5P-8525**	1	GROMMET	
	10	1	**6V-5834**	3	SCREW-HEAD (10-14X0.75IN)	
	11	1	**8T-4121**	2	WASHER-HARD (11X21X2.5MM THK)	
M	12	1	**8T-4137**	2	BOLT (M10X1.5X20MM)	

M-METRIC PART

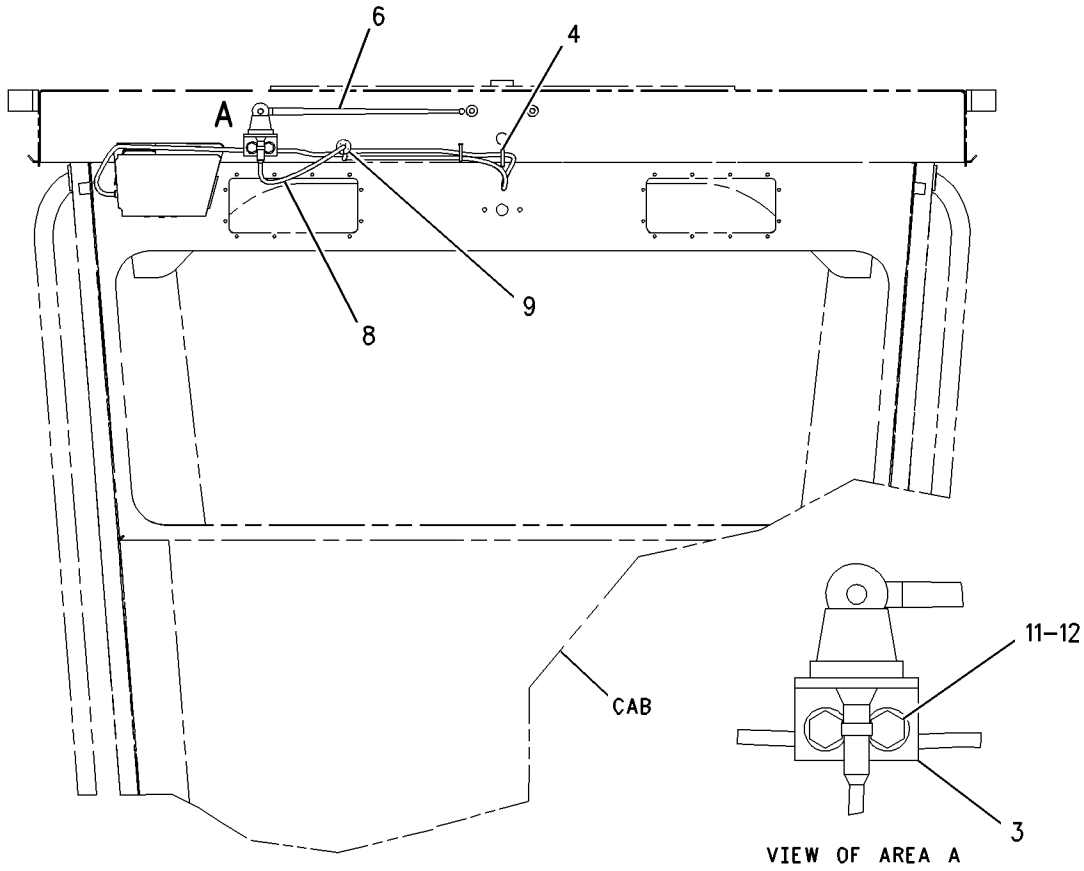

REAR VIEW

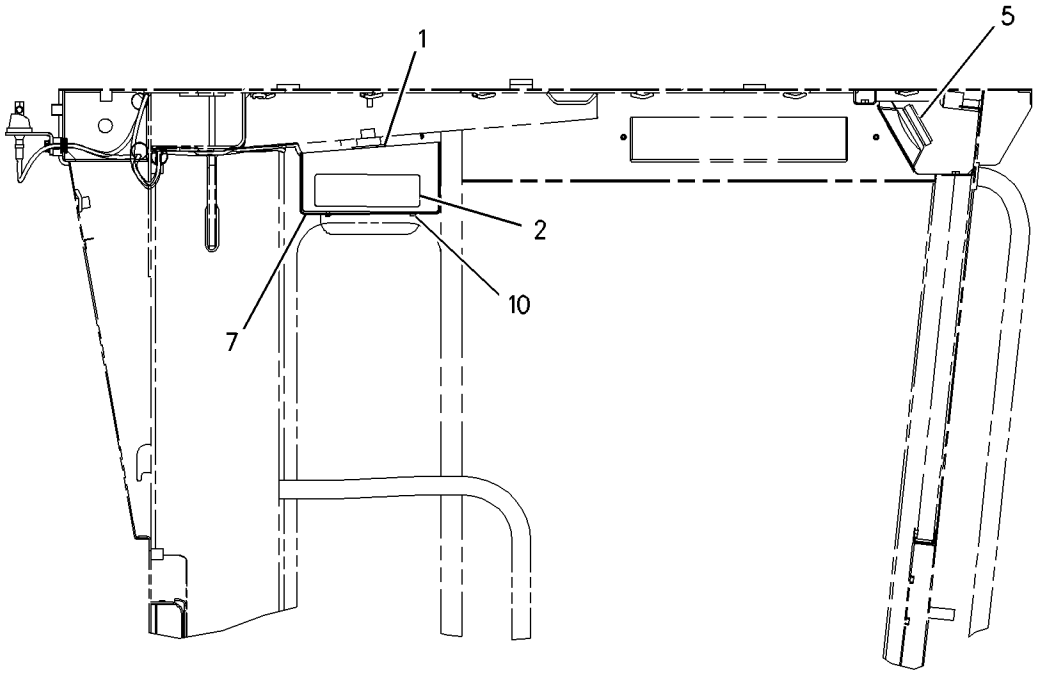

RIGHT SIDE VIEW

GRAPHIC #1 g00760152

OPERATOR STATION

185-7968 INSTRUMENT AR–SPEEDOMETER/TACH

S/N: ASE1-UP

PART OF 211-1769 CONVERSION AR-CERTIFICATION, 197-5959 SNOW AR-MOTOR GRADER AN ATTACHMENT

SMCS-7450, 7451 **i01645803**

NOTE	PART NUMBER	QTY	PART NAME 1 2 3 4 5 6 (PRODUCT LEVEL)	SEE PAGE
Y	*177-9741*	1	MODULE GP-SPEEDOMETER & TACH	723
Y	*185-7967*	1	SENSOR GP-GROUND SPEED	197

Y-SEPARATE ILLUSTRATION

MEMORANDA

OPERATOR STATION

172-5378 INSULATION GP-WEATHER—ENCLOSED

S/N: ASE1-UP

PART OF 161-1141, 179-3581 ROPS AR-ENCLOSED

ALSO AN ATTACHMENT

SMCS-7329 **i01690096**

NOTE	REF NO	GRAPHIC REF	PART NUMBER	QTY	PART NAME 1 2 3 4 5 6 (PRODUCT LEVEL)	SEE PAGE
	1	1	**8X-2226**	2	PLATE	
	2	1	**8X-2913**	2	COVER AS	
					(EACH INCLUDES)	
M		1	**6V-9632**	2	NUT-WELD (M6X1 THD)	
B	3	1	**8X-8055**	6	PLUG	
	4	1	**8X-8351**	2	PLATE AS	
	5	1	**8W-6061**	1	FLOOR MAT (CAB)	
	6	1	**171-6165**	2	DUCT	
	7	1	**178-4190**	2	SEAL	
	8	1	**179-2138**	2	SEAL	
	9	1	**179-2139**	1	FOAM	
	10	1	**179-2140**	1	FOAM	
	11	1	**4M-5281**	4	BOLT (1/4-20X.750 IN)	
	12	1	**5P-4115**	4	WASHER-HARD (7.2X19X2MM THK)	
M	13	1	**9X-2043**	14	SCREW-TRUSS HEAD (M6X1X14MM)	
BD	14	1	**5P-6882**		SEAL	
BD	15	1	**5P-5969**		SEAL	

B-USE AS REQUIRED
D-ORDER BY THE METER
M-METRIC PART

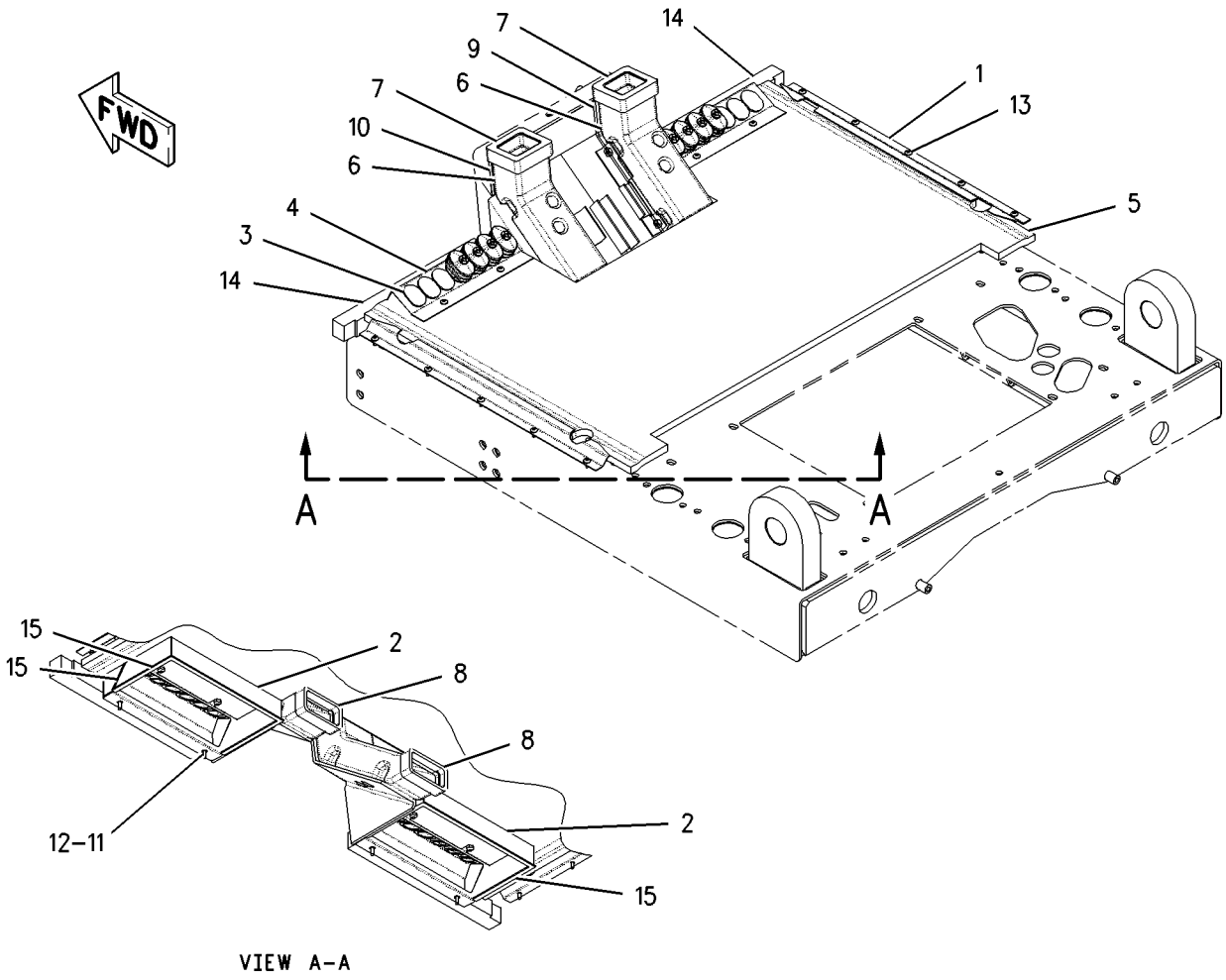

VIEW A–A

GRAPHIC #1 g00870521

OPERATOR STATION

172-5376 LINER GP-CAB—LOW PROFILE

S/N: ASE1-UP

PART OF 172-5377 ROPS GP-ENCLOSED

SMCS-7329 **i01605699**

NOTE	REF NO	GRAPHIC REF	PART NUMBER	QTY	PART NAME 1 2 3 4 5 6 (PRODUCT LEVEL)	SEE PAGE
	1	1	**2G-8572**	2	WASHER-SPECIAL (10X27.81X2.54MM THK)	
	2	1	**2G-8573**	2	CAP	
	3	1	**2G-8767**	1	WASHER (10.5X60X3MM THK)	
	4	1	**3G-3265**	24	RIVET	
	5	1	**5P-5454**	1	ASHTRAY	
	6	1	**5P-5824**	1	HOLDER-ASH TRAY	
	7	1	**5P-7803**	8	PLUG-BUTTON	
	8	1	**6G-2395**	2	DOOR GP	
					(EACH INCLUDES)	
		1	**6G-7222**	2	ROLLER	
	9	1	**6G-2396**	2	GASKET	
	10	1	**6G-2751**	4	HINGE	
	11	1	**6G-2914**	2	LATCH	
	12	1	**6K-3273**	4	RIVET-POP	
	13	1	**6P-0205**	3	SPACER (.269X.405X.656 IN THK)	
	14	1	**6V-3928**	7	PLUG-BUTTON	
	15	1	**6V-8928**	1	HOOK-COAT	
	16	1	**7G-4824**	1	STRAP	
	17	1	**8E-7791**	1	STRAP	
	18	1	**8F-0492**	1	SPACER (.531X1.125X.625 IN THK)	
	19	1	**8T-5401**	2	PLUG-BUTTON	
	20	1	**8X-5414**	1	PLATE	
	21	1	**8X-6998**	1	INSULATION	
	22	1	**8X-7845**	2	COVER	
	23	1	**9N-1995**	20	RIVET-POP	
	24	1	**101-3055**	2	COVER-SPEAKER	
	25	1	**107-5014**	4	KNOB	
	26	1	**109-2804**	2	DOOR	
	27	1	**115-6807**	1	PLATE	
	28	1	**115-9923**	1	COVER-LH	
	29	1	**122-8677**	1	PANEL	
	30	1	**122-8795**	2	PLATE	
	31	1	**137-6783**	1	HOLDER	
	32	1	**137-8065**	1	COVER	
	33	1	**138-7026**	1	PLATE	
	34	1	**138-9910**	1	PLATE AS	
M		1	**6V-9632**	2	NUT-WELD (M6X1 THD)	
	35	1	**139-1117**	1	PLATE	
	36	1	**139-3593**	1	PANEL	
	37	1	**172-1239**	1	COVER (RH)	
	38	1	**174-4141**	1	PANEL	
	39	1	**179-2173**	1	COVER (RH)	
	40	1	**179-2177**	1	COVER AS (LH)	
	41	1	**197-8611**	1	COVER (RH)	
	42	1	**197-8624**	1	COVER (LH)	
	43	1	**197-8627**	1	COVER (RH)	
	44	1	**197-8628**	1	COVER (LH)	
	45	1	**200-8623**	8	NUT-RETAINER	
	46	1	**103-6263**	8	SCREW-MACHINE (M4X40X25.4MM)	
M	47	1	**129-3178**	3	LOCKNUT (M6X1 THD)	
	48	1	**131-6009**	2	PIN	
	49	1	**5P-4115**	2	WASHER-HARD (7.2X19X2MM THK)	
	50	1	**6V-0292**	1	PLUG	
	51	1	**8T-4121**	1	WASHER-HARD (11X21X2.5MM THK)	
	52	1	**144-4107**	2	FASTENER	
M	53	1	**8T-4182**	2	BOLT (M10X1.5X45MM)	

172-5376 **LINER GP-CAB** ***(contd.)*** **i01605699**

NOTE	REF NO	GRAPHIC REF	PART NUMBER	QTY	PART NAME 1 2 3 4 5 6 (PRODUCT LEVEL)	SEE PAGE
M	54	1	**8T-4195**	1	BOLT (M10X1.5X30MM)	
	55	1	**9R-2620**	1	PLUG	
M	56	1	**9X-2041**	4	SCREW-TRUSS HEAD (M10X1.5X20MM)	
M	57	1	**9X-2043**	33	SCREW-TRUSS HEAD (M6X1X14MM)	
M	58	1	**9X-2045**	6	SCREW-TRUSS HEAD (M6X1X20MM)	
M	59	1	**9X-2046**	4	SCREW-TRUSS HEAD (M6X1X35MM)	
	60	1	**9X-8256**	3	WASHER (6.6X12X2MM THK)	
BD	61	1	**8T-3426**		CHANNEL-TRIM	
BD	62	1	**6V-0505**		SEAL	
BD	63	1	**5P-5969**		SEAL	
BD	64	1	**6V-5163**		SEAL	

B-USE AS REQUIRED
D-ORDER BY THE METER
M-METRIC PART

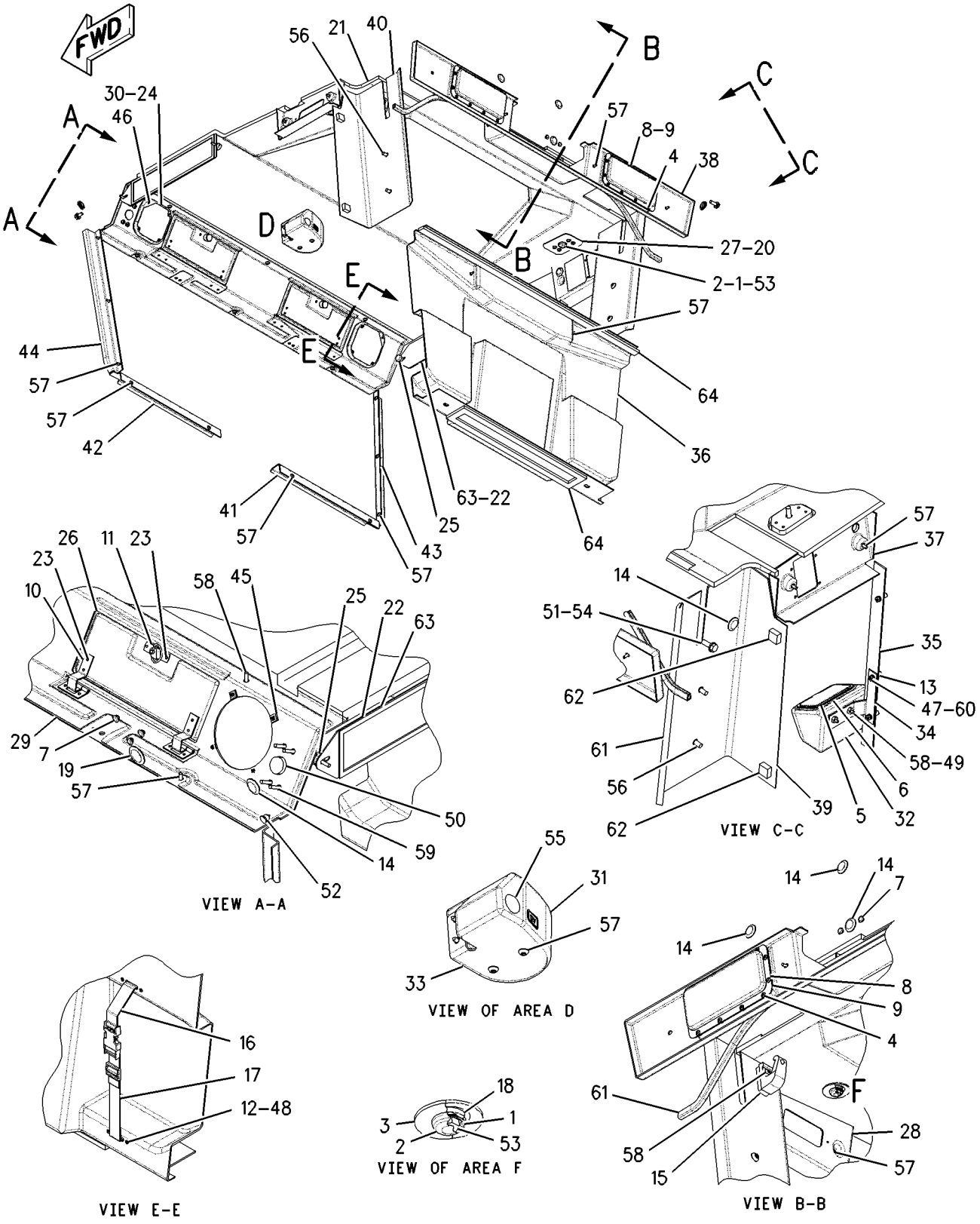

GRAPHIC #1 g00831632

MEMORANDA

OPERATOR STATION

177-8781 LINER GP-CAB—ENCLOSED—HIGH PROFILE

S/N: ASE1-UP

PART OF 177-8779 ROPS GP-ENCLOSED

AN ATTACHMENT

SMCS-7329 **i01631238**

NOTE	REF NO	GRAPHIC REF	PART NUMBER	QTY	PART NAME 1 2 3 4 5 6 (PRODUCT LEVEL)	SEE PAGE
	1	2	**2G-8572**	2	WASHER-SPECIAL (10X27.81X2.54MM THK)	
	2	2	**2G-8573**	2	CAP	
	3	2	**2G-8767**	1	WASHER (10.5X60X3MM THK)	
	4	2	**3G-3265**	24	RIVET	
	5	3	**5P-5454**	1	ASHTRAY	
	6	3	**5P-5824**	1	HOLDER-ASH TRAY	
	7	2	**5P-7803**	2	PLUG-BUTTON	
	8	1	**6G-2395**	2	DOOR GP	
	9	1	**6G-2396**	2	GASKET	
	10	1	**6G-2751**	4	HINGE	
	11	1	**6G-2914**	2	LATCH	
	12	3	**6K-3273**	4	RIVET-POP	
	13	1	**6P-0205**	3	SPACER (.269X.405X.656 IN THK)	
	14	1,2	**6V-3928**	7	PLUG-BUTTON	
	15	2	**6V-8928**	1	HOOK-COAT	
	16	3	**7G-4824**	1	STRAP	
	17	3	**8E-7791**	1	STRAP	
	18	2	**8F-0492**	1	SPACER (.531X1.125X.625 IN THK)	
	19	2	**8T-5401**	2	PLUG-BUTTON	
	20	2	**8X-5414**	1	PLATE	
	21	1	**8X-6999**	1	INSULATION	
	22	1	**8X-7845**	2	COVER	
	23	3	**9N-1995**	20	RIVET-POP	
	24	3	**101-3055**	2	COVER-SPEAKER	
	25	1	**107-5014**	4	KNOB (AIR FILTER)	
	26	3	**109-2804**	2	DOOR	
	27	2	**115-6807**	1	PLATE	
	28	1	**115-9923**	1	COVER-LH	
	29	1	**118-2558**	1	PANEL	
	30	3	**122-8795**	2	PLATE	
	31	3	**137-6783**	1	HOLDER	
	32	3	**137-8065**	1	COVER	
	33	3	**138-7026**	1	PLATE	
	34	3	**138-9910**	1	PLATE AS	
	35	1	**139-1118**	1	PLATE	
	36	1	**139-3593**	1	PANEL	
	37	2	**144-4107**	2	FASTENER	
	38	1	**172-1239**	1	COVER (RH)	
	39	1	**174-4140**	1	PANEL	
	41	1	**179-2179**	1	PLATE AS	
	42	1	**197-8611**	1	COVER (RH)	
	43	1	**197-8624**	1	COVER (LH)	
	44	2	**197-8629**	1	COVER (RH)	
	45	2	**197-8630**	1	COVER (LH)	
	46	2	**200-8623**	8	NUT-RETAINER	
	47	3	**103-9425**	8	SCREW-MACHINE (8-32X1 IN)	
M	48	1	**129-3178**	3	LOCKNUT (M6X1 THD)	
	49	3	**131-6009**	2	PIN	
	50	3	**5P-4115**	2	WASHER-HARD (7.2X19X2MM THK)	
	51	1,3	**6V-0292**	1	PLUG	
	52	1	**8T-4121**	1	WASHER-HARD (11X21X2.5MM THK)	
M	53	3	**8T-4182**	2	BOLT (M10X1.5X45MM)	
M	54	1	**8T-4195**	1	BOLT (M10X1.5X30MM)	
	55	3	**9R-2620**	1	PLUG	
M	56	2	**9X-2041**	4	SCREW-TRUSS HEAD (M10X1.5X20MM)	

177-8781 **LINER GP-CAB** ***(contd.)*** **i01631238**

NOTE	REF NO	GRAPHIC REF	PART NUMBER	QTY	PART NAME 1 2 3 4 5 6 (PRODUCT LEVEL)	SEE PAGE
M	57	1,3	**9X-2043**	33	SCREW-TRUSS HEAD (M6X1X14MM)	
M	58	1,2,3	**9X-2045**	6	SCREW-TRUSS HEAD (M6X1X20MM)	
M	59	3	**9X-2046**	4	SCREW-TRUSS HEAD (M6X1X35MM)	
	60	1	**9X-8256**	3	WASHER (6.6X12X2MM THK)	
BD	61	2	**8T-3426**		CHANNEL-TRIM	
BD	62	2	**6V-0505**		SEAL	
BD	63	1	**5P-5969**		SEAL	
B	64	1,2	**6V-5163**		SEAL	

B-USE AS REQUIRED
D-ORDER BY THE METER
M-METRIC PART

177-8781 **LINER GP-CAB** *(contd.)* **i01631238**

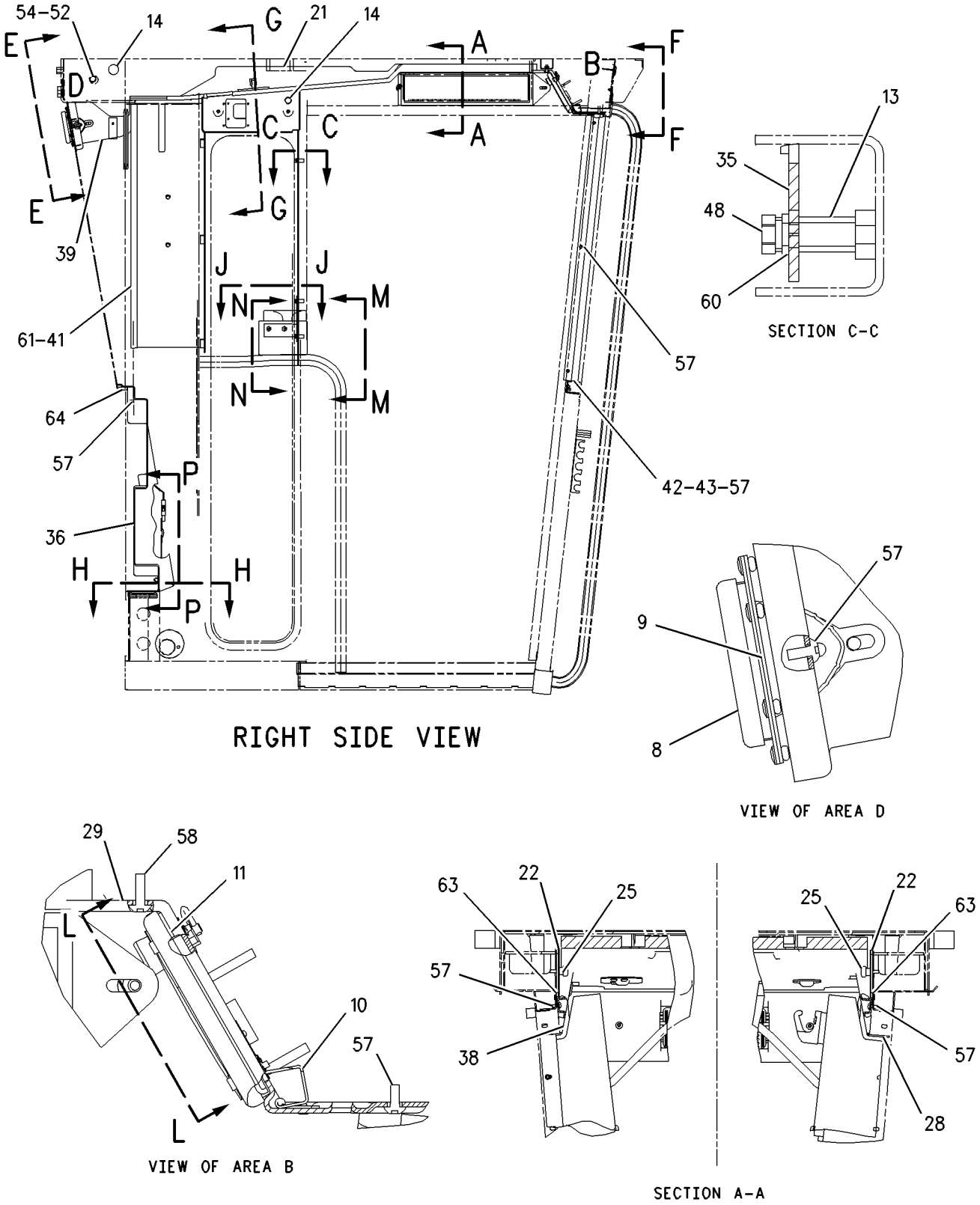

GRAPHIC #1 g00846120

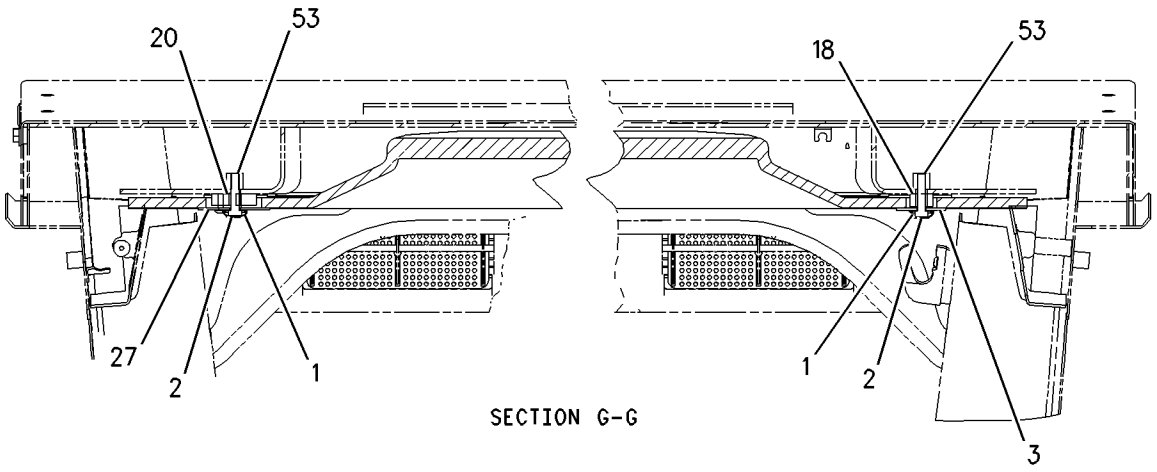

SECTION G-G

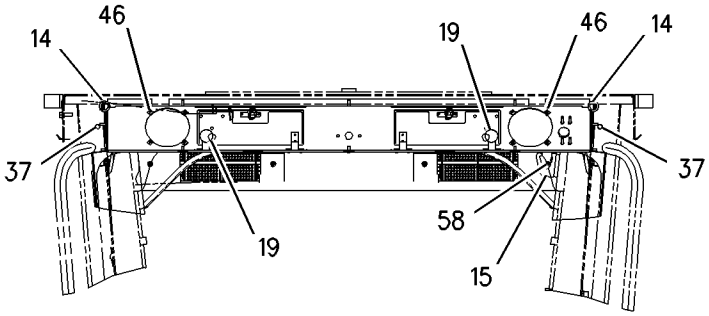

VIEW F-F

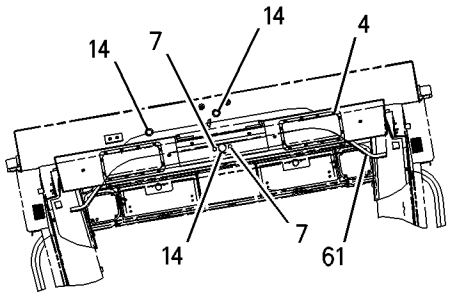

VIEW E-E

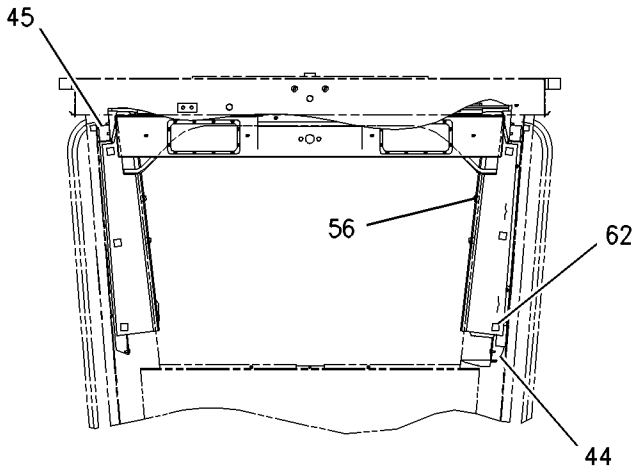

REAR VIEW

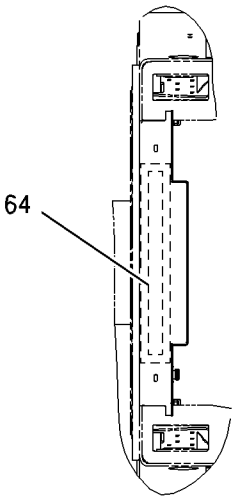

SECTION H-H

REFER TO ALL ILLUSTRATIONS OF
THIS GROUP FOR AUXILIARY VIEWS

GRAPHIC #2 g00846121

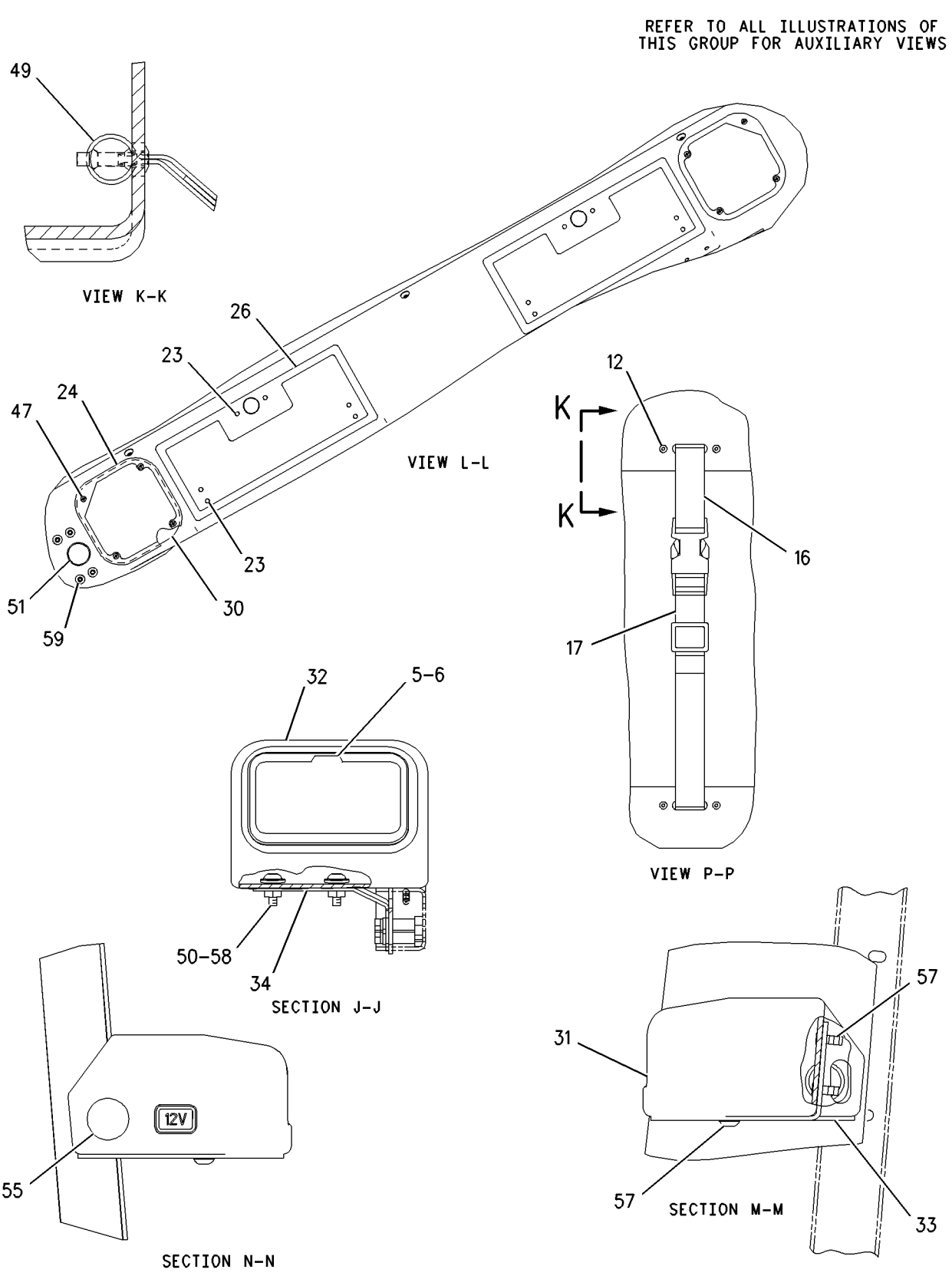

GRAPHIC #3 g00846122

MEMORANDA

OPERATOR STATION

191-8695 LINER GP-CAB—OPEN—HIGH PROFILE

S/N: ASE1-UP
PART OF 173-2751 ROPS GP-OPEN
AN ATTACHMENT

SMCS-7329 **i01628027**

NOTE	REF NO	GRAPHIC REF	PART NUMBER	QTY	PART NAME 1 2 3 4 5 6 (PRODUCT LEVEL)	SEE PAGE
	1	1	**2G-8572**	2	WASHER-SPECIAL (10X27.81X2.54MM THK)	
	2	1	**2G-8573**	2	CAP	
	3	1	**2G-8767**	1	WASHER (10.5X60X3MM THK)	
	4	1	**3E-0109**	1	PLUG-ROCKER SWITCH	
	5	1	**3G-3265**	24	RIVET	
	6	1	**3V-4694**	1	PLUG-BUTTON	
	7	1	**5P-7803**	2	PLUG-BUTTON	
	8	1	**6G-2395**	2	DOOR GP	
	9	1	**6G-2396**	2	GASKET	
	10	1	**6K-3273**	4	RIVET-POP	
	11	1	**6V-3928**	4	PLUG-BUTTON	
	12	1	**6V-8928**	1	HOOK-COAT	
	13	1	**7G-4824**	1	STRAP	
	15	1	**8E-7791**	1	STRAP	
	16	1	**8F-0492**	1	SPACER (.531X1.125X.625 IN THK)	
	17	1	**8X-5414**	1	PLATE	
	18	1	**8X-6999**	1	INSULATION	
	19	1	**115-6807**	1	PLATE	
	20	1	**117-8810**	1	INSULATION	
	21	1	**139-3593**	1	PANEL	
	22	1	**145-7214**	1	BLOCK	
	23	1	**145-7217**	1	PLATE AS	
	24	1	**156-8352**	1	HOLDER	
	25	1	**179-2176**	1	COVER	
	26	1	**179-2179**	1	PLATE AS	
	27	1	**201-5894**	1	PANEL	
	28	1	**131-6009**	2	PIN	
	29	1	**8T-4121**	3	WASHER-HARD (11X21X2.5MM THK)	
M	30	1	**8T-4182**	4	BOLT (M10X1.5X45MM)	
M	31	1	**8T-4195**	1	BOLT (M10X1.5X30MM)	
M	32	1	**9X-2041**	4	SCREW-TRUSS HEAD (M10X1.5X20MM)	
M	33	1	**9X-2043**	13	SCREW-TRUSS HEAD (M6X1X14MM)	
M	34	1	**9X-2045**	1	SCREW-TRUSS HEAD (M6X1X20MM)	
BD	35	1	**8T-3426**		CHANNEL-TRIM	
BD	36	1	**6V-0505**		SEAL	
	37	1	**6V-5164**		SEAL (2.7M)	

B-USE AS REQUIRED
D-ORDER BY THE METER
M-METRIC PART

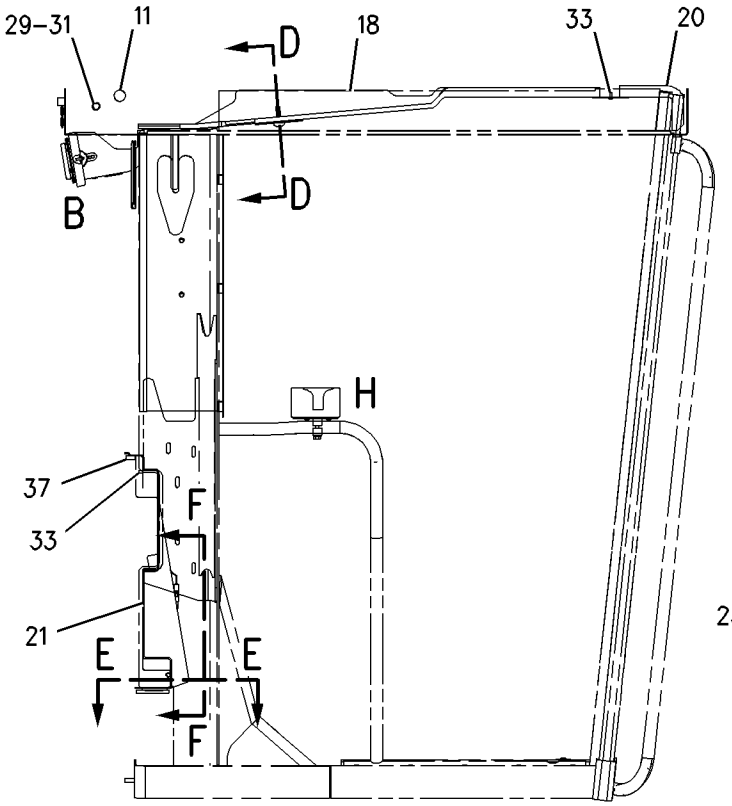

RIGHT SIDE VIEW

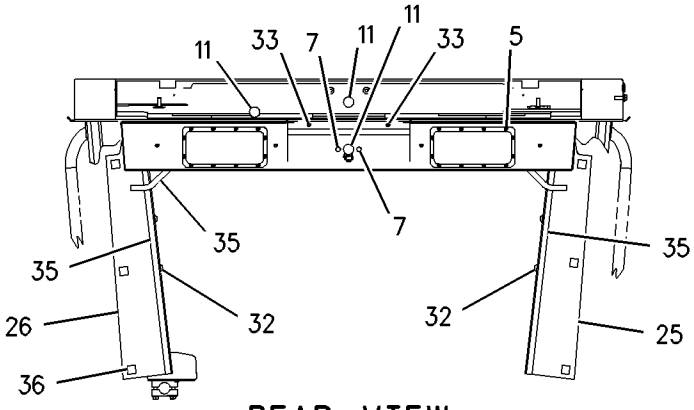

REAR VIEW

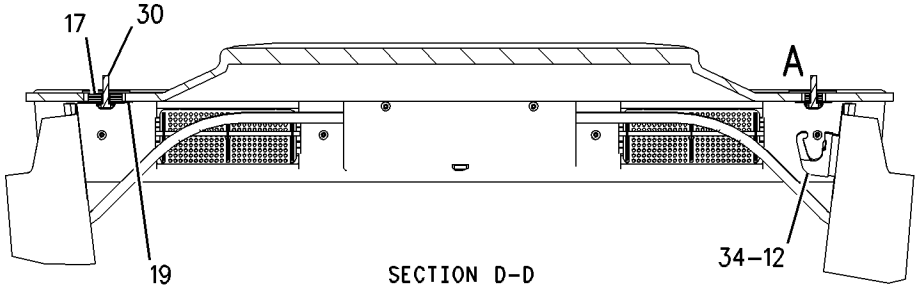

SECTION D-D

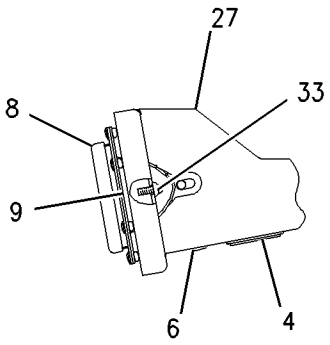

VIEW OF AREA B

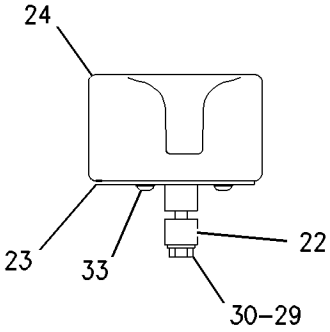

VIEW OF AREA H

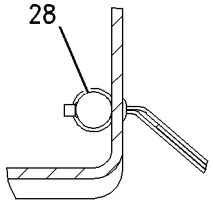

VIEW G-G

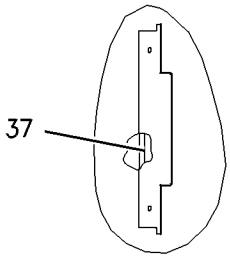

VIEW E-E

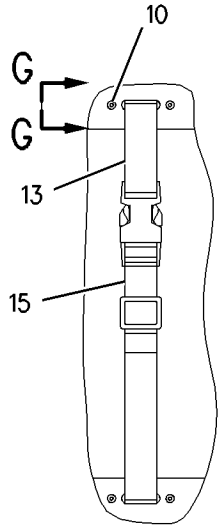

VIEW F-F

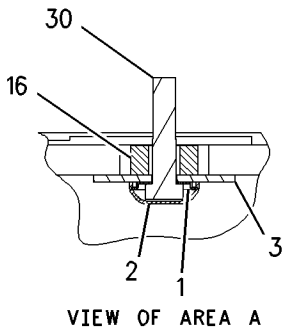

VIEW OF AREA A

GRAPHIC #1

g00847812

OPERATOR STATION

8X-7993 LINES GP-AIR CONDITIONER

S/N: ASE1-UP
PART OF 110-9471 AIR CONDITIONER AR
AN ATTACHMENT

SMCS-1808, 7320 **i01618402**

NOTE	REF NO	GRAPHIC REF	PART NUMBER	QTY	PART NAME 1 2 3 4 5 6 (PRODUCT LEVEL)	SEE PAGE
JI	1	1	**8X-7997**	1	HOSE AS	
BG		1	**9X-2388**		HOSE	
		1	**7X-1806**	1	COUPLING (90 DEGREE)	
		1	**7X-1816**	1	COUPLING-STRAIGHT	
		1	**9X-7381**	1	SEAL-O-RING	
		1	**9X-7383**	1	SEAL-O-RING	
	2	1	**9X-7381**	1	SEAL-O-RING	
	3	1	**3S-2093**	2	STRAP-CABLE	
	4	1	**9X-7383**	2	SEAL-O-RING	
	5	1	**9X-7380**	1	SEAL-O-RING	
J	6	1	**156-8644**	1	COVER-AIR CONDITIONER LINES	
	7	1	**8T-4896**	4	WASHER-HARD (10.2X18.5X2.5MM THK)	
JI	9	1	**8X-7998**	1	HOSE AS	
BG		1	**9X-2388**		HOSE	
		1	**7X-1809**	1	COUPLING (45 DEGREE)	
		1	**7X-1815**	1	COUPLING-STRAIGHT (7/8-20 THD)	
		1	**9X-7380**	1	SEAL-O-RING	
		1	**9X-7383**	1	SEAL-O-RING	
	10	1	**8X-9091**	1	HARNESS AS-AIR CONDITIONER (CONDENSER)	
	11	1	**5M-3062**	4	BOLT (3/8-16X0.75 IN)	
L	12	1	**156-8646**	1	COVER-AIR CONDITIONER LINES	
	13	1	**7K-3176**	2	COUPLING AS	
	14	1	**2H-3924**	2	LOCKWASHER	
	15	1	**7K-3304**	2	NUT-JAM (1-20 THD)	
LI	16	1	**8X-7996**	1	HOSE AS	
BG		1	**9X-2388**		HOSE	
		1	**7X-1809**	1	COUPLING (45 DEGREE)	
		1	**7X-1815**	1	COUPLING-STRAIGHT (7/8-20 THD)	
		1	**9X-7380**	1	SEAL-O-RING	
		1	**9X-7383**	1	SEAL-O-RING	
LI	17	1	**8X-7995**	1	HOSE AS	
BG		1	**9X-2389**		HOSE	
		1	**7X-1806**	1	COUPLING (90 DEGREE)	
		1	**7X-1816**	1	COUPLING-STRAIGHT	
		1	**9X-7381**	1	SEAL-O-RING	
		1	**9X-7383**	1	SEAL-O-RING	
	18	1	**156-8650**	1	COVER-AIR CONDITIONER LINES	

B-USE AS REQUIRED
G-ORDER BY THE INCH
I-SEE HOSE FABRICATION GUIDE
J-FOR USE WITH LOW PROFILE CABS
L-FOR USE WITH HIGH PROFILE CABS

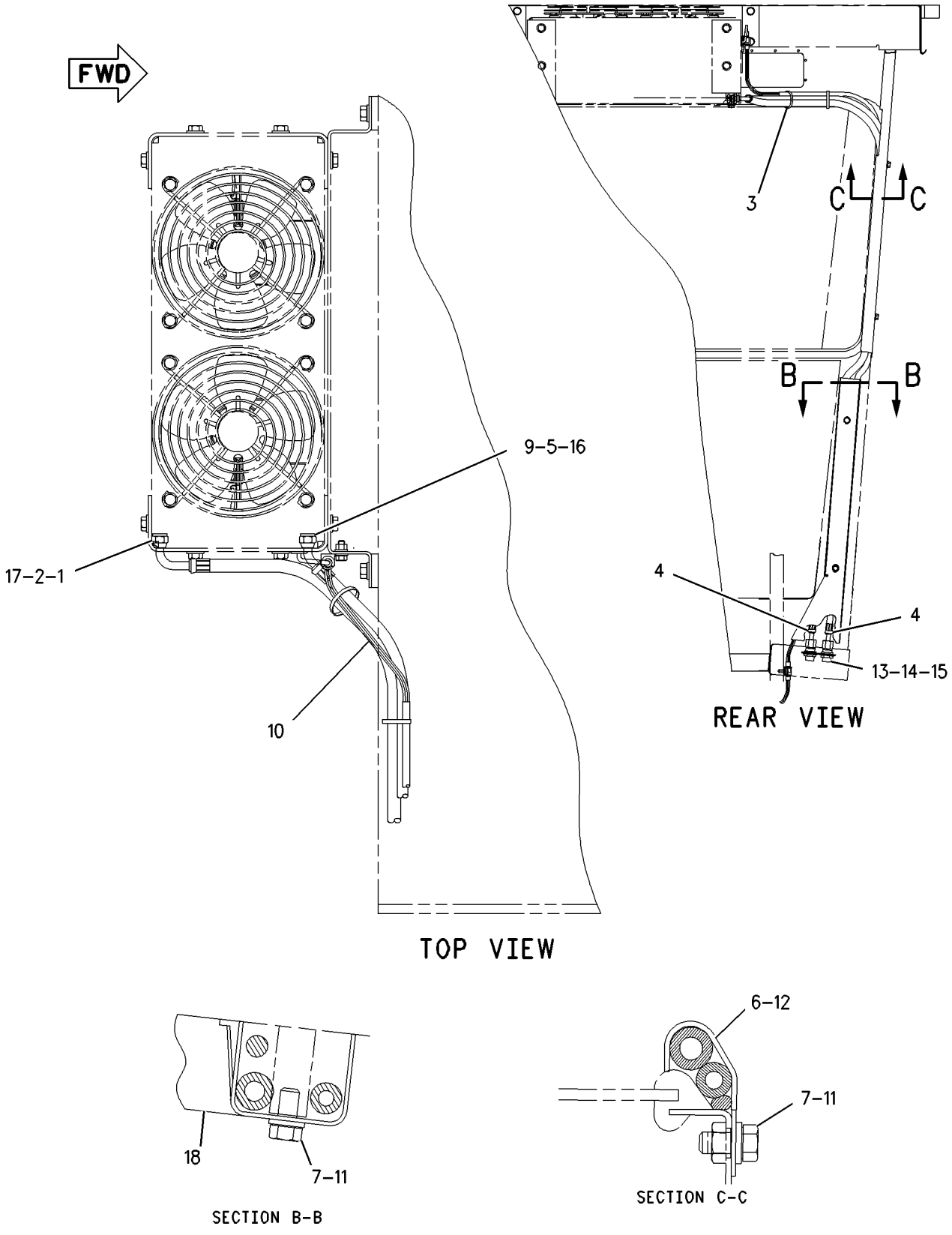

GRAPHIC #1

g00859991

OPERATOR STATION

177-7876 LINES GP-AIR CONDITIONER—SNOW

S/N: ASE1-UP
PART OF 167-8068 AIR CONDITIONER AR
AN ATTACHMENT

SMCS-1808, 7320 **i01659792**

NOTE	REF NO	GRAPHIC REF	PART NUMBER	QTY	PART NAME 1 2 3 4 5 6 (PRODUCT LEVEL)	SEE PAGE
	1	1	**1P-6356**	1	PLATE	
	2	1	**175-7162**	1	RECEIVER-DRYER GP (AIR CONDITIONER)	
		1	**7X-2049**	1	TUBE AS-REFRIGERANT ORIFICE	
	3	1	**3S-2093**	3	STRAP-CABLE	
	4	1	**8W-8527**	5	SLEEVE (23MM I.D.)	
	5	1	**8W-8528**	4	SLEEVE (20MM I.D.)	
	6	1	**103-6100**	2	COUPLER AS-QUICK	
					(EACH INCLUDES)	
		1	**9X-7382**	2	SEAL-O-RING	
	7	1	**106-8704**	1	SUPPRESSOR AS-ARC	
		1	**102-8802**	1	KIT-RECEPTACLE (2 PIN)	
		1	**3E-3365**	1	WEDGE-RECEPTACLE LOCK (2 PIN)	
		1	**186-3735**	2	PIN-CONNECTOR	
	8	1	**180-5462**	1	SWITCH AS-PRESSURE	
		1	**155-2270**	1	KIT-CONNECTING PLUG (2 PIN) (HIGH/LOW)	
		1	**186-3736**	2	SOCKET-CONNECTOR	
	9	1	**188-0576**	1	HARNESS AS-HEATER & AIR COND	
		1	**102-8802**	1	KIT-RECEPTACLE (2 PIN)	
		1	**155-2270**	3	KIT-CONNECTING PLUG (2 PIN)	
I	10	1	**188-7493**	1	HOSE AS	
I	11	1	**188-7494**	1	HOSE AS	
	12	1	**197-6218**	1	ACCUMULATOR	
I	13	1	**198-9872**	1	HOSE AS	
	14	1	**213-4558**	1	TUBE AS	
	15	1	**214-1102**	1	FITTING AS	
		1	**3E-4051**	1	CAP-SEAL (AIR CONDITIONER)(LOW SIDE)	
		1	**3E-4057**	1	VALVE AS-AIR CONDITIONER (LOW SIDE)	
M	16	1	**085-8091**	1	BOLT (M10X1.5X55MM)	
	17	1	**128-5924**	1	CLAMP	
	18	1	**132-5789**	2	CLIP	
	19	1	**4D-7794**	2	CLIP	
	20	1	**4S-1962**	2	CLIP	
	21	1	**5M-3062**	2	BOLT (3/8-16X0.75 IN)	
	22	1	**5P-1075**	4	WASHER-HARD (10.2X22.5X3MM THK)	
	23	1	**6K-8178**	1	CLIP	
	24	1	**8R-3393**	1	STRAP	
	25	1	**8S-6109**	1	CLIP (SLOT)	
	26	1	**8S-6110**	1	CLIP (TAB)	
	27	1	**8T-4121**	1	WASHER-HARD (11X21X2.5MM THK)	
M	28	1	**8T-4137**	1	BOLT (M10X1.5X20MM)	
	29	1	**9B-7237**	1	BOLT (3/8-16X1.25 IN)	
	30	1	**9X-7378**	1	SEAL-O-RING	
	31	1	**9X-7380**	3	SEAL-O-RING	
	32	1	**9X-7381**	2	SEAL-O-RING	
	33	1	**9X-7382**	1	SEAL-O-RING	
	34	1	**9X-7383**	2	SEAL-O-RING	
	35	1	**9X-7385**	2	SEAL-O-RING	

I-SEE HOSE FABRICATION GUIDE
M-METRIC PART

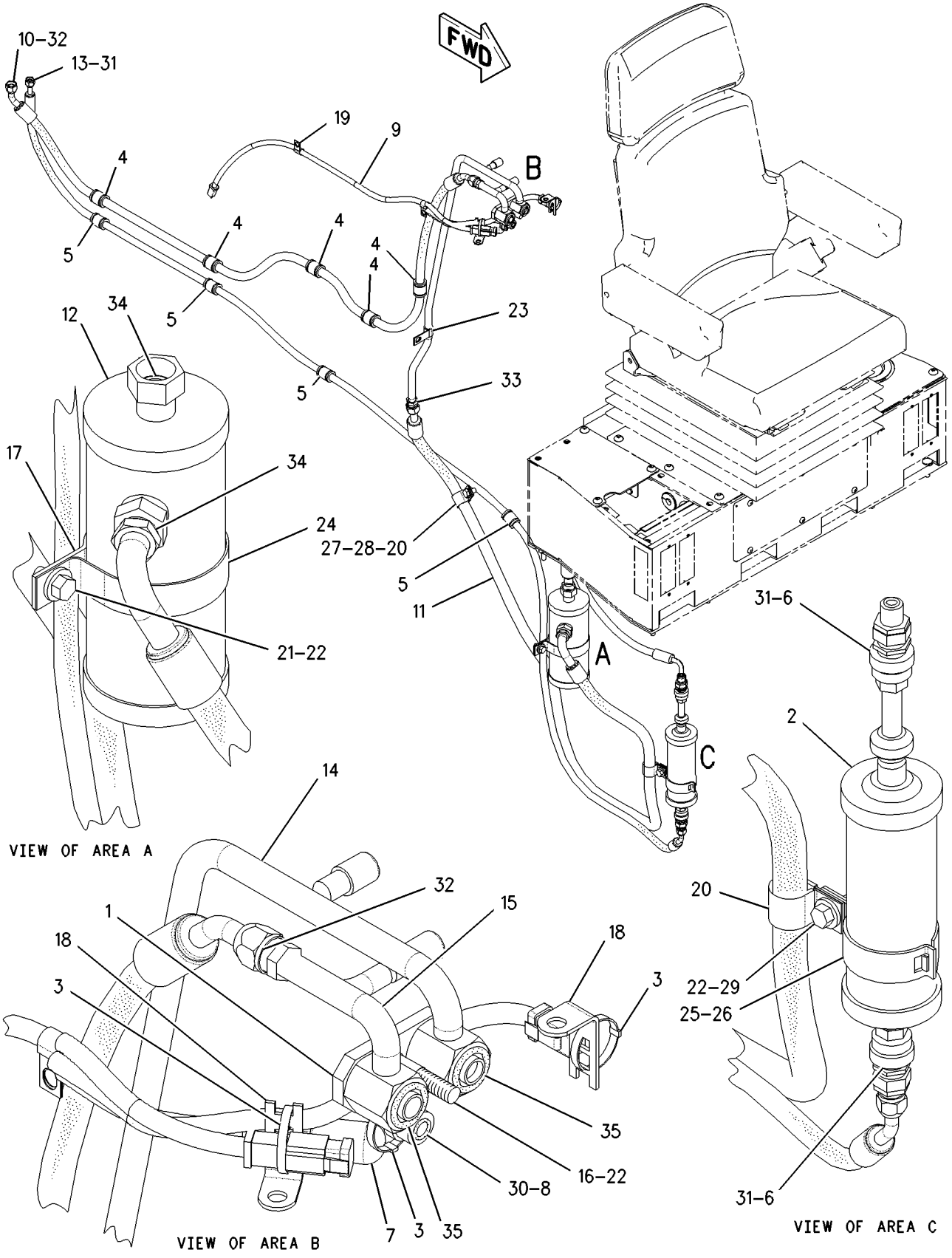

GRAPHIC #1 g00859419

OPERATOR STATION

8X-5310 LINES GP-HEATER

S/N: ASE1-UP
PART OF 110-9471 AIR CONDITIONER AR
AN ATTACHMENT

SMCS-7304 **i00130944**

NOTE	REF NO	GRAPHIC REF	PART NUMBER	QTY	PART NAME 1 2 3 4 5 6 (PRODUCT LEVEL)	SEE PAGE
E	1	1	**6V-5651**		HOSE (290 CM)	
	2	1	**6B-4661**	2	BUSHING-REDUCER	
	3	1	**6B-9081**	1	BUSHING-TERMINAL	
	4	1	**9M-5501**	2	ELBOW-STREET	
	5	1	**7F-6289**	1	ELBOW	
	6	1	**5D-1026**	4	CLAMP-HOSE	
	7	1	**5M-3062**	3	BOLT (3/8-16X.750IN)	
	8	1	**8T-4896**	3	WASHER-HARD (2.5MM THK)	
	9	1	**6D-1641**	1	CLIP (25.0MM ID)	
	10	1	**4S-1962**	2	CLIP (25.4MM ID)	
	11	1	**9L-1566**	1	SUPPORT-TUBE	
	12	1	**6V-8801**	1	NUT (3/8-16 THD)	
	13	1	**7D-7026**	1	CONNECTOR-HOSE	
	14	1	**2Y-2881**	1	BUTTON	
E	15	1	**6V-5651**		HOSE (345 CM)	

E-ORDER BY THE CENTIMETER

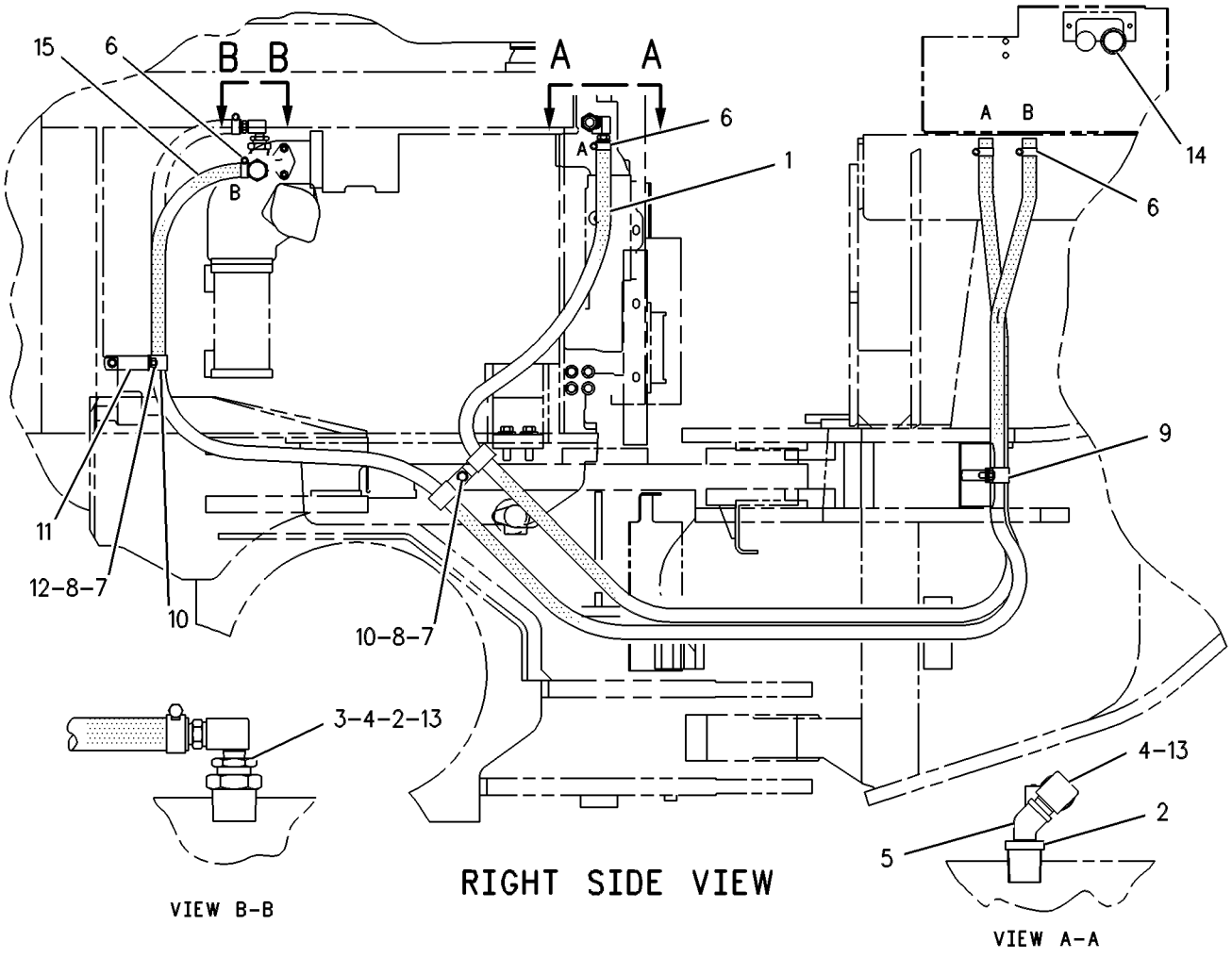

GRAPHIC #1 g00109043

MEMORANDA

OPERATOR STATION

167-8396 LINES GP-HEATER

S/N: ASE1-UP
PART OF 167-8422 HEATER AR-CAB
AN ATTACHMENT

SMCS-7304 **i01626993**

NOTE	REF NO	GRAPHIC REF	PART NUMBER	QTY	PART NAME 1 2 3 4 5 6 (PRODUCT LEVEL)	SEE PAGE
	1	1	**3K-7928**	1	ELBOW	
	2	1	**5D-1026**	4	CLAMP-HOSE	
	3	1	**6K-8079**	1	CONNECTOR-FLARED	
	4	1	**6L-9952**	1	ADAPTER-THREAD	
	5	1	**132-9496**	1	VALVE-BALL	
	6	1	*170-0967*	1	ELBOW AS	
		1	**5P-4906**	1	ELBOW-O-RING	
		1	**3K-0360**	1	SEAL-O-RING	
	7	1	**199-1018**	1	TUBE AS	
	8	1	**199-1019**	1	BRACKET AS	
	9	1	**170-1564**	1	CONNECTOR-FLARED	
	10	1	**2M-9780**	1	SEAL-O-RING	
	11	1	**3D-2824**	1	SEAL-O-RING	
	12	1	**4B-9302**	1	CLIP	
	13	1	**4S-1962**	2	CLIP	
	14	1	**6D-1641**	2	CLIP	
M	15	1	**6V-6889**	2	NUT (M8X1.25 THD)	
	16	1	**6V-7420**	1	ADAPTER-STRAIGHT THREAD	
	17	1	**8T-4121**	3	WASHER-HARD (11X21X2.5MM THK)	
M	18	1	**8T-4136**	2	BOLT (M10X1.5X25MM)	
M	19	1	**8T-4191**	1	BOLT (M10X1.5X16MM)	
	20	1	**9M-1974**	2	WASHER-HARD (8.8X16X2MM THK)	
E	21	1	**5P-0767**		HOSE (268.2 CM)	
E	21A	1	**5P-0767**		HOSE (247.8 CM)	

E-ORDER BY THE CENTIMETER
M-METRIC PART

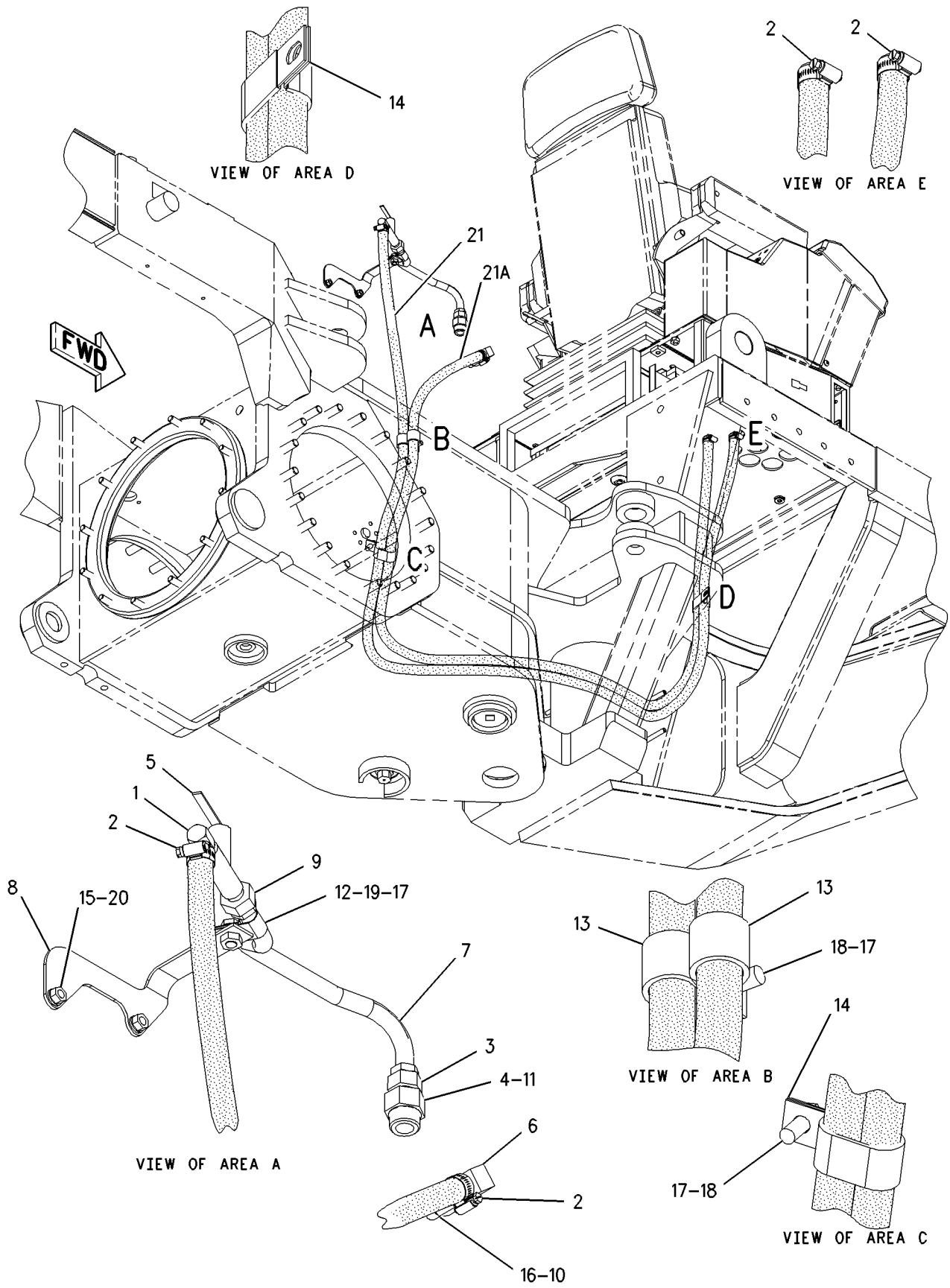

GRAPHIC #1

g00848455

OPERATOR STATION

177-7875 LINES GP-HEATER

S/N: ASE1-UP

PART OF 167-8068 AIR CONDITIONER AR, 167-8394 HEATER AR-CAB AN ATTACHMENT

SMCS-7304 **i01659699**

NOTE	REF NO	GRAPHIC REF	PART NUMBER	QTY	PART NAME 1 2 3 4 5 6 (PRODUCT LEVEL)	SEE PAGE
	1	1	**1P-5411**	1	SLEEVE	
	2	1	**4W-7627**	1	SPACER (11X19X37MM THK)	
	3	1	**5D-1026**	4	CLAMP-HOSE	
	4	1	**5P-1064**	1	CONNECTOR	
	5	1	**6K-8079**	1	CONNECTOR-FLARED	
	6	1	**7D-7026**	1	CONNECTOR-HOSE	
	7	1	**132-9496**	1	VALVE-BALL	
	8	1	**185-3632**	1	TUBE AS	
	9	1	**197-5475**	1	BRACKET AS	
	10	1	**170-1564**	1	CONNECTOR-FLARED	
	11	1	**1K-3113**	1	PIPE	
	12	1	**3E-4352**	1	WASHER-HARD (8.8X20.5X2.5MM THK)	
	13	1	**4B-9302**	1	CLIP	
	14	1	**4S-1962**	3	CLIP	
	15	1	**6D-1641**	1	CLIP	
	16	1	**8T-4121**	4	WASHER-HARD (11X21X2.5MM THK)	
M	17	1	**8T-4137**	1	BOLT (M10X1.5X20MM)	
M	18	1	**8T-4195**	1	BOLT (M10X1.5X30MM)	
M	19	1	**8T-5436**	1	BOLT (M10X1.50X130MM)	
M	20	1	**8T-6466**	1	BOLT (M10X1.50X60MM)	
M	21	1	**8T-6870**	1	BOLT (M8X1.25X70MM)	
E	22	1	**5P-0767**		HOSE (520CM)	

E-ORDER BY THE CENTIMETER
M-METRIC PART

177-7875 **LINES GP-HEATER** *(contd.)* **i01659699**

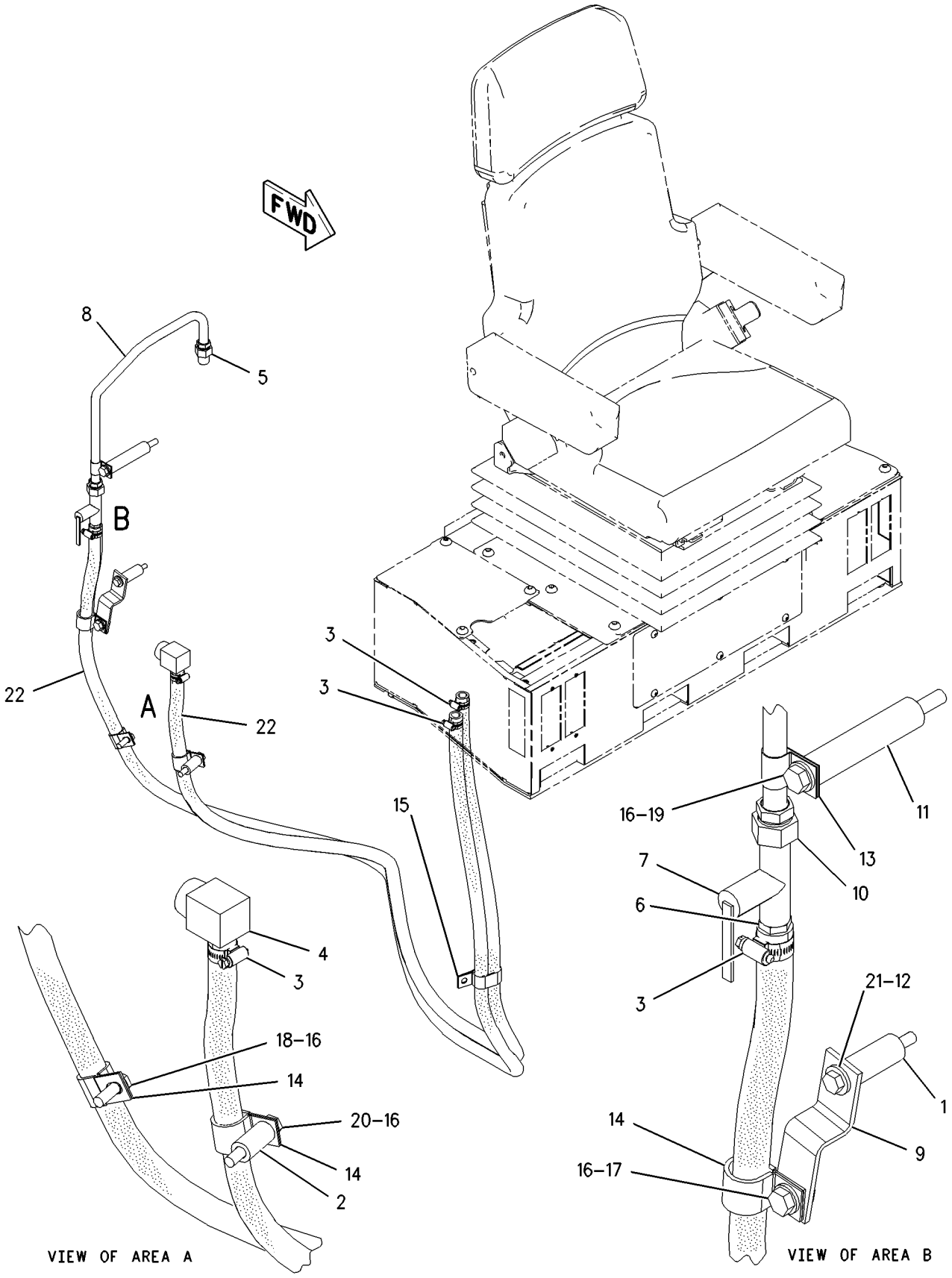

GRAPHIC #1 g00859116

OPERATOR STATION

2P-8540 LITERATURE GP

S/N: ASE1-UP
PART OF 187-9051 RIPPER AR
AN ATTACHMENT

SMCS-0375 **i01634125**

NOTE	PART NUMBER	QTY	PART NAME 1 2 3 4 5 6 (PRODUCT LEVEL)	SEE PAGE
	7F-3400	1	BAG-POLYETHYLENE	

OPERATOR STATION

6V-1970 LITERATURE GP

S/N: ASE1-UP

PART OF 162-5606 GENERAL AR

SMCS-0375 **i01682285**

NOTE	PART NUMBER	QTY	PART NAME 1 2 3 4 5 6 (PRODUCT LEVEL)	SEE PAGE
	5P-8500	2	KEY	
	5P-7958	1	SLEEVE-CABLE SPLICE	

OPERATOR STATION

178-8603 LOUVER GP-CAB

S/N: ASE1-UP

PART OF 167-8422 HEATER AR-CAB

AN ATTACHMENT

SMCS-7301 **i01625992**

NOTE	PART NUMBER	QTY	PART NAME 1 2 3 4 5 6 (PRODUCT LEVEL)	SEE PAGE
	8Y-6388	6	LOUVER AS	
	151-5715	2	LOUVER AS	
	126-1135	2	PLATE	
	126-1136	2	PLATE	
	6V-2687	4	SCREW-PAN HEAD (10-24X1IN)	
B	**5P-5969**		SEAL	

B-USE AS REQUIRED

OPERATOR STATION

8X-2795 MIRROR GP-REAR VIEW—INSIDE

S/N: ASE1-UP

PART OF 162-5606 GENERAL AR

SMCS-7319 **i00111633**

NOTE	REF NO	GRAPHIC REF	PART NUMBER	QTY	PART NAME 1 2 3 4 5 6 (PRODUCT LEVEL)	SEE PAGE
	1	1	**8Y-4512**	1	MIRROR	
	2	1	**2G-8241**	2	CLAMP	
M	3	1	**9X-2046**	4	SCREW-TRUSS HEAD (M6X1X35MM)	
	4	1	**2G-8572**	2	WASHER (2.54MM THK)	
	5	1	**2G-8573**	2	CAP	
	6	1	**2G-8242**	2	ARM	
	7	1	**5P-1075**	2	WASHER-HARD (3MM THK)	
	8	1	**8H-1728**	2	NUT-ACORN	
	9	1	**5S-7379**	2	BOLT (3/8-16X.875IN)	
	10	1	**1P-2378**	2	CAP	

M-METRIC PART

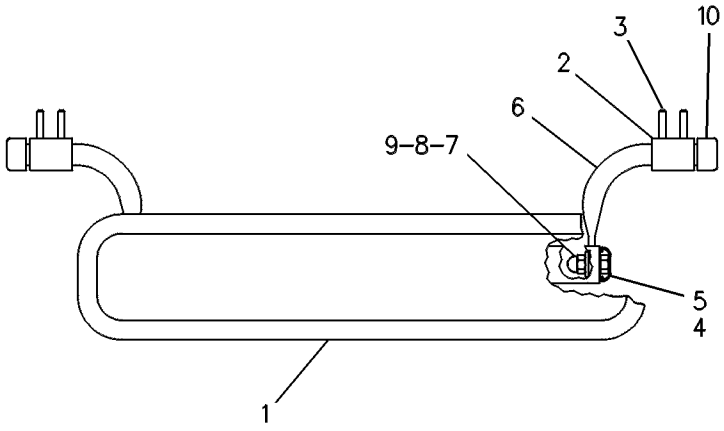

GRAPHIC #1 g00084778

OPERATOR STATION

123-4358 MIRROR GP-REAR VIEW–SNOW–OUTSIDE–CLOSED ROPS

S/N: ASE1-UP
PART OF 197-5959 SNOW AR-MOTOR GRADER
AN ATTACHMENT

SMCS-7319 **i00112158**

NOTE	REF NO	GRAPHIC REF	PART NUMBER	QTY	PART NAME 1 2 3 4 5 6 (PRODUCT LEVEL)	SEE PAGE
M	1	1	**8T-4133**	8	NUT (M10X1.50 THD)	
M	2	1	**8T-4137**	8	BOLT (M10X1.50X20MM)	
	3	1	**8T-4121**	24	WASHER (2.5MM THK)	
	4	1	**6G-8831**	4	CLAMP	
	5	1	**5P-6871**	2	MIRROR	
	6	1	**113-8218**	2	ARM	
	7	1	**123-4586**	4	BLOCK	
	8	1	**123-4587**	4	BRACKET	
M	9	1	**8T-4182**	8	BOLT (M10X1.5X45MM)	
M	10	1	**8T-4186**	4	BOLT (M10X1.50X40MM)	
M	11	1	**6V-7744**	4	LOCKNUT (M10X1.50 THD)	
	12	1	**9C-5928**	8	SPACER	

M-METRIC PART

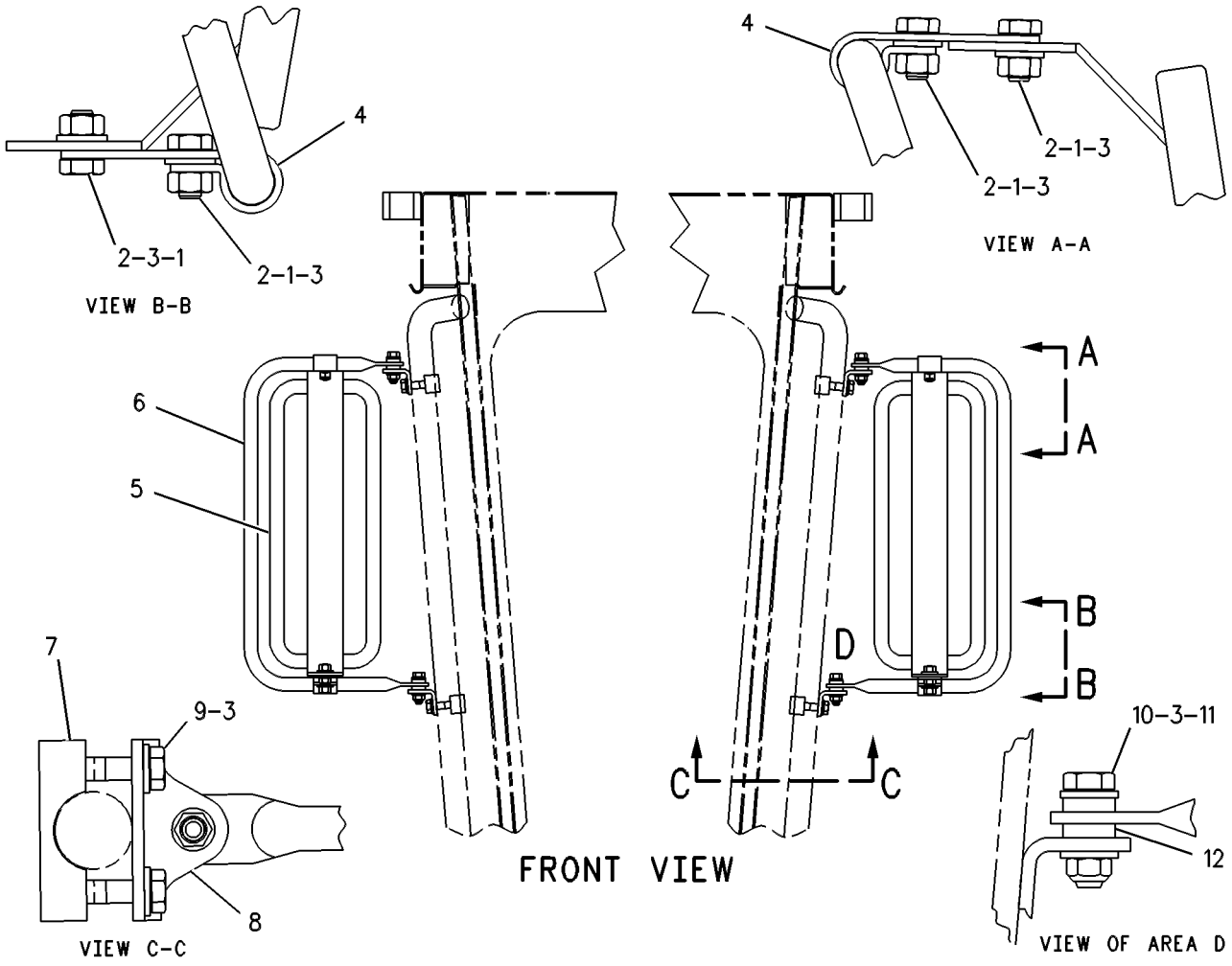

GRAPHIC #1 g00087918

MEMORANDA

OPERATOR STATION

191-9413 MIRROR GP-REAR VIEW—OUTSIDE—HEATED

S/N: ASE1-UP

AN ATTACHMENT

SMCS-7319 **i01650295**

NOTE	REF NO	GRAPHIC REF	PART NUMBER	QTY	PART NAME 1 2 3 4 5 6 (PRODUCT LEVEL)	SEE PAGE
	1	1	**3E-0109**	5	PLUG-ROCKER SWITCH	
	2	1	**3S-2093**	8	STRAP-CABLE	
	3	1	**9W-1442**	1	FUSE (10 AMP) (HEATED MIRROR)	
	4	1	**113-8218**	2	ARM	
	5	1	**123-4586**	4	BLOCK	
	6	1	**123-4587**	4	BRACKET	
	7	1	**145-3350**	1	PLATE	
	8	1	**153-2147**	1	PLATE	
	9	1	**168-8243**	1	HARNESS AS-PANEL	
		1	**155-2271**	1	KIT-CONNECTING PLUG (4 PIN)	
		1	**155-2270**	1	KIT-CONNECTING PLUG (2 PIN)	
		1	**155-2265**	4	KIT-CONNECTING PLUG (8 PIN)	
		1	**155-2255**	1	KIT-CONNECTING PLUG (12 PIN)	
		1	**102-8801**	1	KIT-RECEPTACLE (12 PIN)	
		1	**102-8806**	1	KIT-RECEPTACLE (8 PIN)	
		1	**102-8804**	2	KIT-RECEPTACLE (4 PIN)	
		1	**102-8802**	1	KIT-RECEPTACLE (2 PIN)	
	10	1	**172-6556**	1	PANEL	
	11	1	**188-3862**	1	BRACKET AS	
J	12	1	**110-0015**	1	MIRROR AS	
J		1	**3E-3365**	1	WEDGE-RECEPTACLE LOCK (2 PIN)	
J		1	**9G-3695**	2	PLUG (GROMMET SEALING)	
J		1	**102-8802**	1	KIT-RECEPTACLE (2 PIN)	
	13	1	**3E-8766**	1	SWITCH AS (HEATED MIRROR)	
		1	**3E-8825**	1	LAMP (24 VOLT) (HEATED MIRROR INDICATOR)	
		1	**123-5857**	1	ACTUATOR-ROCKER	
	14	1	**130-5300**	2	CLIP	
	15	1	**3P-9554**	2	GROMMET	
	16	1	**6G-8831**	4	CLAMP	
M	17	1	**6V-7744**	4	LOCKNUT (M10X1.5 THD)	
	18	1	**8T-4121**	27	WASHER-HARD (11X21X2.5MM THK)	
M	19	1	**8T-4133**	8	NUT (M10X1.5 THD)	
M	20	1	**8T-4137**	8	BOLT (M10X1.5X20MM)	
M	21	1	**8T-4182**	8	BOLT (M10X1.5X45MM)	
M	22	1	**8T-4186**	4	BOLT (M10X1.5X40MM)	
M	23	1	**8T-4191**	2	BOLT (M10X1.5X16MM)	
	24	1	**9C-5928**	4	SPACER (5.15MM LG X 19.0 DIA)	
M	25	1	**9X-2043**	6	SCREW-TRUSS HEAD (M6X1X14MM)	

J-PARTS MARKED J ARE NEEDED FOR BOTH RH & LH MIRROR ASSEMBLIES
M-METRIC PART

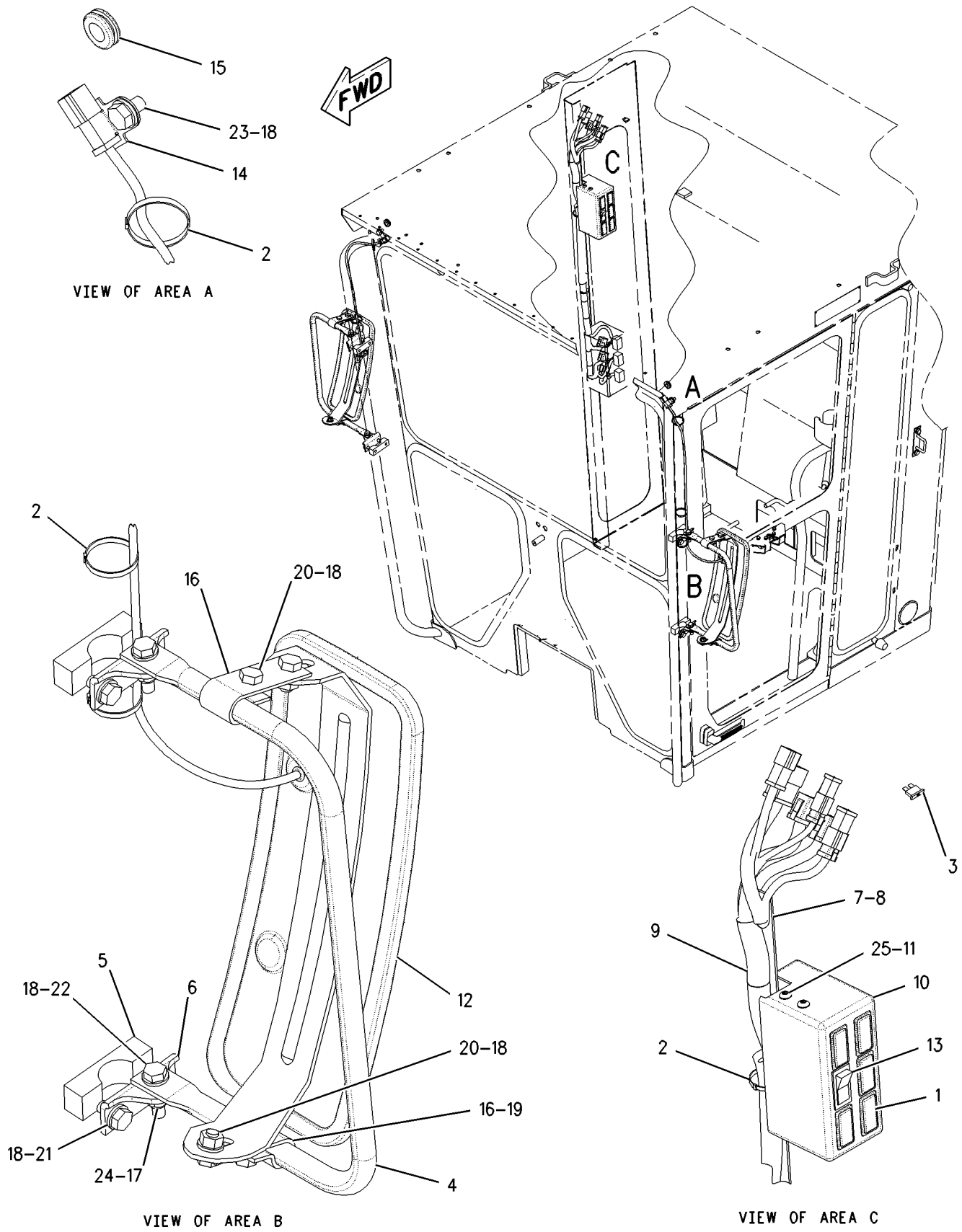

GRAPHIC #1

g00847641

OPERATOR STATION

197-2064 MIRROR GP-REAR VIEW—OUTSIDE—CLOSED ROPS

S/N: ASE1-UP

AN ATTACHMENT

SMCS-7319 **i01620179**

NOTE	PART NUMBER	QTY	PART NAME 1 2 3 4 5 6 (PRODUCT LEVEL)	SEE PAGE
	113-8218	2	ARM	
	123-4586	4	BLOCK	
M	**8T-4137**	8	BOLT (M10X1.5X20MM)	
M	**8T-4182**	8	BOLT (M10X1.5X45MM)	
M	**8T-4186**	4	BOLT (M10X1.5X40MM)	
	123-4587	4	BRACKET	
	6G-8831	4	CLAMP	
M	**6V-7744**	4	LOCKNUT (M10X1.5 THD)	
	197-2055	2	MIRROR AS	
M	**8T-4133**	8	NUT (M10X1.5 THD)	
	9C-5928	8	SPACER (5.15MM LG X 19.0 DIA)	
	8T-4121	24	WASHER-HARD (11X21X2.5MM THK)	

M-METRIC PART

OPERATOR STATION

197-2066 MIRROR GP-REAR VIEW—INSIDE—DUAL—EU

S/N: ASE1-UP

PART OF 211-1769 CONVERSION AR-CERTIFICATION

AN ATTACHMENT

SMCS-7319 **i01522748**

NOTE	PART NUMBER	QTY	PART NAME 1 2 3 4 5 6 (PRODUCT LEVEL)	SEE PAGE
	2G-8241	2	CLAMP	
	197-2054	2	MIRROR AS	
M	**9X-2046**	4	SCREW-TRUSS HEAD (M6X1X35MM)	

M-METRIC PART

OPERATOR STATION

180-9285 MODULE GP-QUAD GAUGE

S/N: ASE1-UP

PART OF 187-3188, 197-7155 PANEL GP-INSTRUMENT

ALSO AN ATTACHMENT

SMCS-7451, 7490 **i01531331**

NOTE	REF NO	GRAPHIC REF	PART NUMBER	QTY	PART NAME 1 2 3 4 5 6 (PRODUCT LEVEL)	SEE PAGE
	1	1	**102-8805**	1	KIT-RECEPTACLE (6 PIN) (QUAD GAGE MODULE)	
					(INCLUDES RECEPTACLE AS & WEDGE)	
	2	1	**3E-3383**	1	WEDGE-RECEPTACLE LOCK	

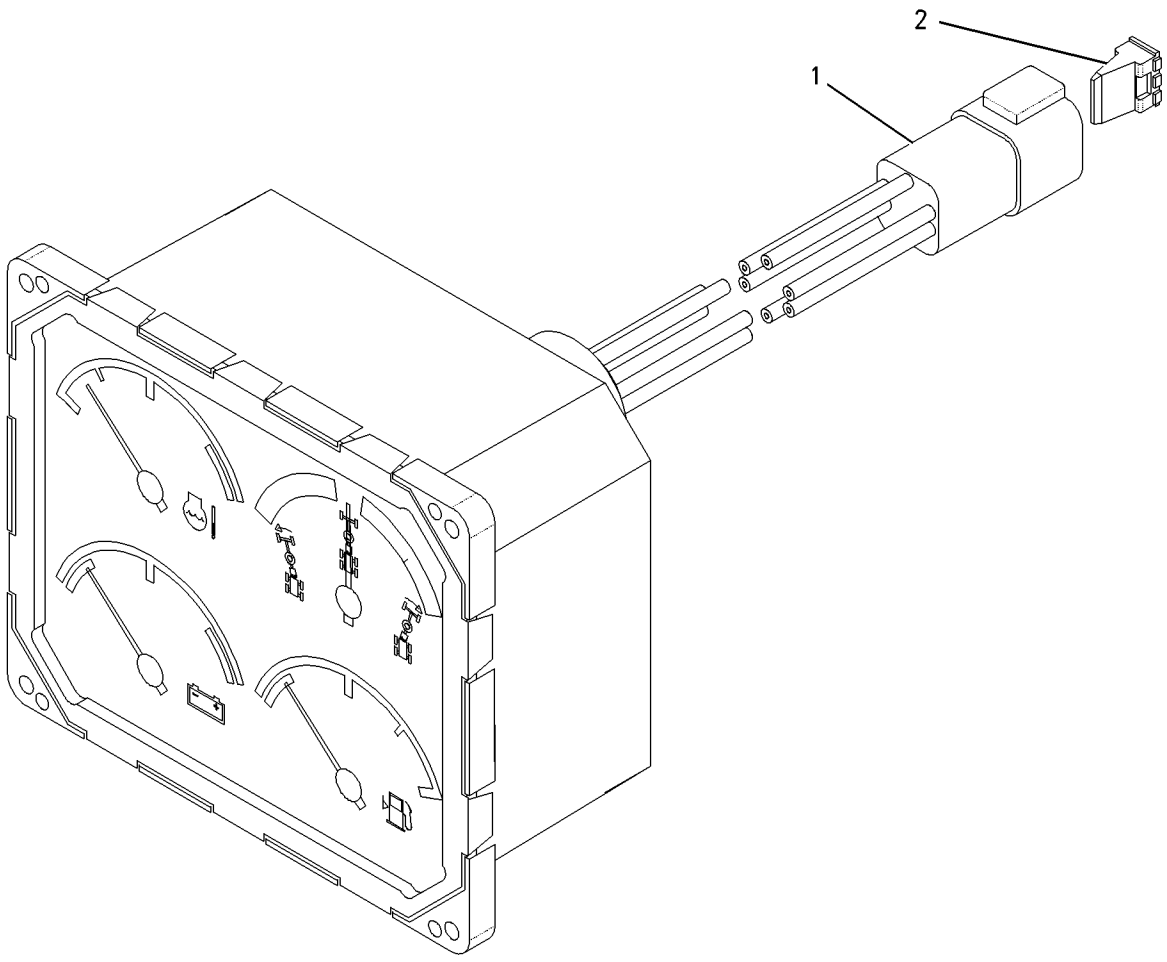

GRAPHIC #1 g00796031

OPERATOR STATION

177-9741 MODULE GP-SPEEDOMETER & TACH–SNOW

S/N: ASE1-UP
PART OF 185-7968 INSTRUMENT AR
AN ATTACHMENT

SMCS-7451, 7462, 7463, 7490 **i01624033**

NOTE	REF NO	GRAPHIC REF	PART NUMBER	QTY	PART NAME 1 2 3 4 5 6 (PRODUCT LEVEL)	SEE PAGE
	1	1	**7N-5876**	2	LAMP (24 VOLT) (SPEEDOMETER & TACH)	
	2	1	**190-3482**	1	MODULE GP-SPEEDOMETER & TACH	
		1	**3E-3383**	1	WEDGE-RECEPTACLE LOCK	
		1	**8T-8729**	6	PIN-CONNECTOR	
		1	**102-8805**	1	KIT-RECEPTACLE (6 PIN) (SPEEDOMETER & TACH)	

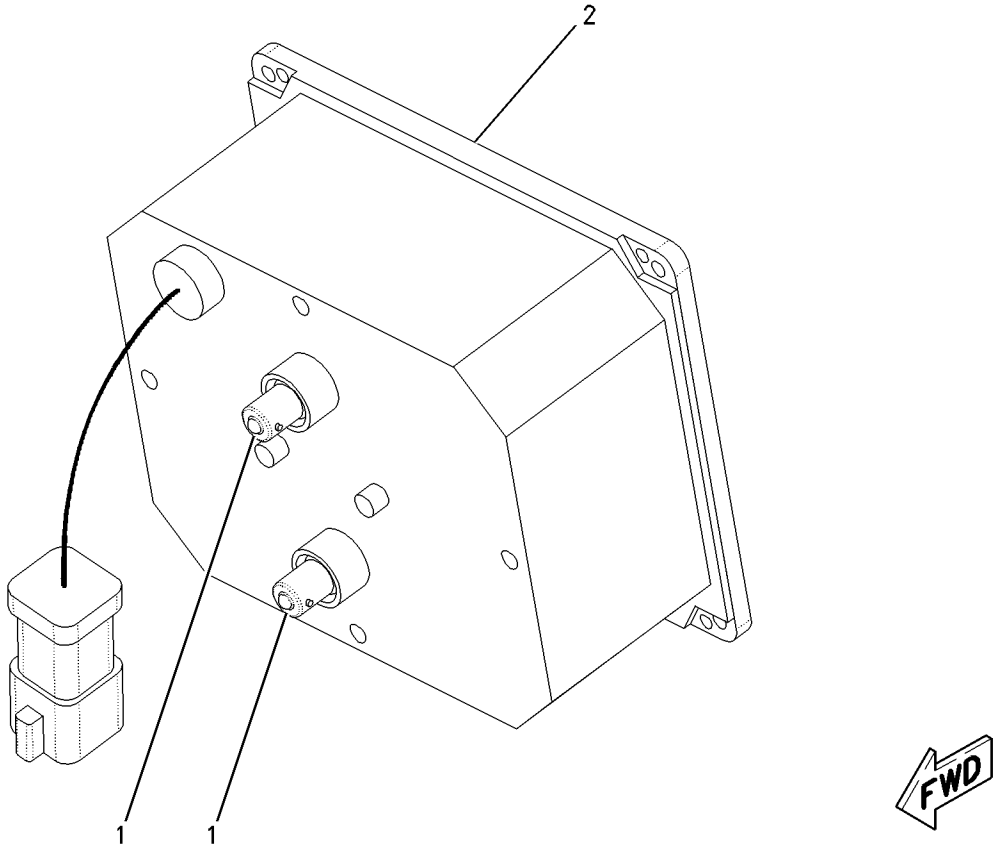

GRAPHIC #1 g00845776

OPERATOR STATION

2A-6985 MOUNTING GP-ROPS—ENCLOSED

S/N: ASE1-UP

PART OF 172-5377, 177-8779 ROPS GP-ENCLOSED

ALSO AN ATTACHMENT

SMCS-7266 **i01437207**

NOTE	REF NO	GRAPHIC REF	PART NUMBER	QTY	PART NAME 1 2 3 4 5 6 (PRODUCT LEVEL)	SEE PAGE
	1	1	**3E-4048**	2	CAP-PLUG	
	2	1	**103-5515**	1	PAD-RH	
	3	1	**103-5516**	1	PAD-LH	
	4	1	**103-4953**	4	MOUNTING	
	5	1	**7X-0375**	4	BOLT (3/4-10X5 IN)	
	6	1	**8X-0674**	4	WASHER (22X100X10MM THK)	
	7	1	**038-3987**	2	WASHER (16.75X50.8X4.76MM THK)	
	8	1	**4K-0367**	2	NUT-FULL (5/8-11 THD)	
	9	1	**7X-0354**	2	BOLT (5/8-11X4.50IN)	
	10	1	**8T-4122**	4	WASHER-HARD (17X32X3.5MM THK)	
	11	1	**8X-6131**	2	SEAL	
	12	1	**164-2465**	2	PAD	
	13	1	**9D-1589**	2	MOUNTING	
	14	1	**2G-7098**	2	PAD	
	15	1	**2G-7097**	1	PAD	
	16	1	**103-4771**	2	PIN AS	
	17	1	**030-8535**	2	BOLT-LOCKING (3/8-16X0.875 IN)	
	18	1	**8T-4896**	2	WASHER-HARD (10.2X18.5X2.5MM THK)	
B	19	1	**166-1999**	2	SHIM (2.28MM THK)	
BE	20	1	**123-6806**		SEAL	
B	21	1	**166-1997**	2	SHIM (1.2MM THK)	

B-USE AS REQUIRED
E-ORDER BY THE CENTIMETER

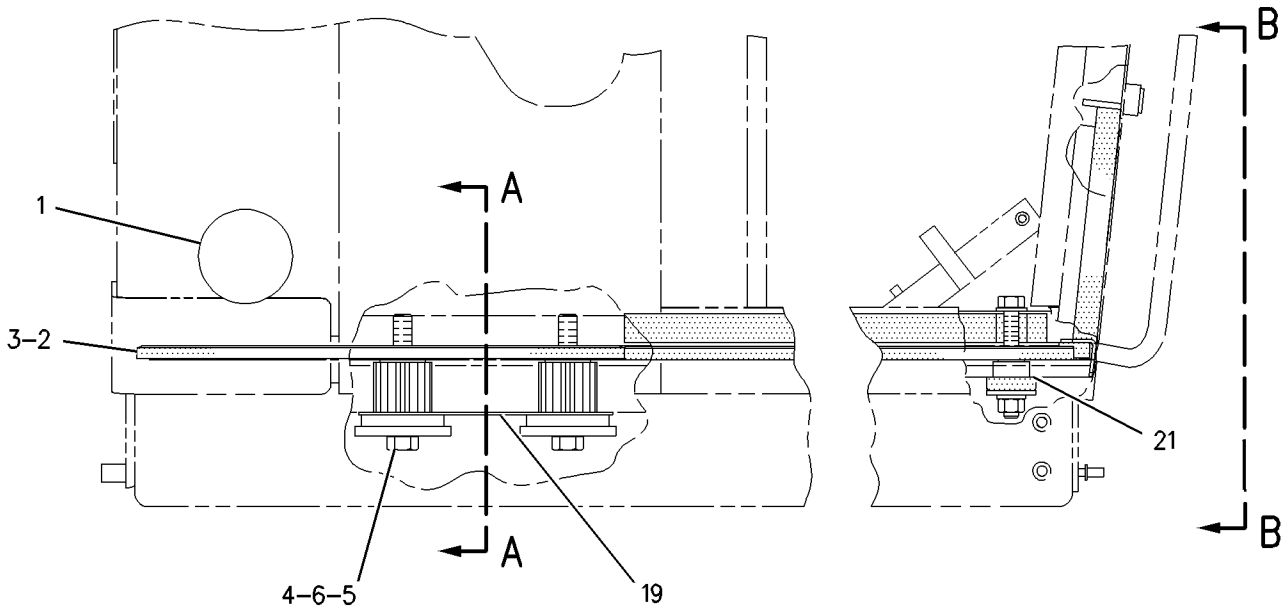

RIGHT SIDE VIEW

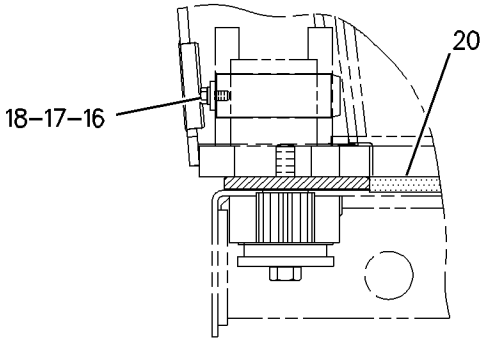

VIEW A-A

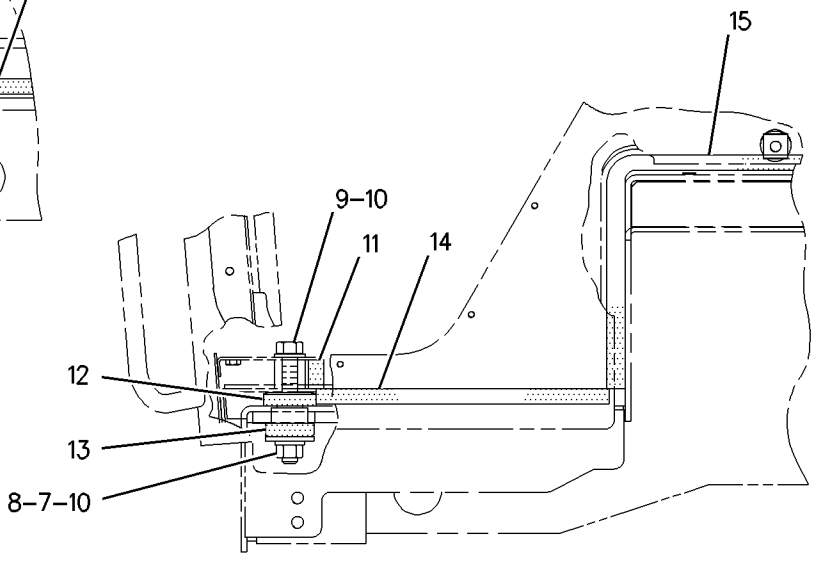

VIEW B-B

GRAPHIC #1 g00760192

OPERATOR STATION

191-8692 MOUNTING GP-ROPS—OPEN—HIGH PROFILE

S/N: ASE1-UP
PART OF 173-2751 ROPS GP-OPEN
AN ATTACHMENT

SMCS-7266 **i01628024**

NOTE	REF NO	GRAPHIC REF	PART NUMBER	QTY	PART NAME 1 2 3 4 5 6 (PRODUCT LEVEL)	SEE PAGE
	1	1	**3E-4048**	2	CAP-PLUG	
	2	1	**8T-4122**	4	WASHER-HARD (17X32X3.5MM THK)	
	3	1	**9D-1589**	2	MOUNTING	
	4	1	**103-4771**	2	PIN AS	
	5	1	**103-4953**	4	MOUNTING	
	6	1	**103-5515**	1	PAD-RH	
	7	1	**103-5516**	1	PAD-LH	
	8	1	**164-2465**	2	PAD	
	9	1	**166-1997**	2	SHIM (1.2MM THK)	
	10	1	**166-1999**	2	SHIM (2.28MM THK)	
	11	1	**030-8535**	2	BOLT-LOCKING (3/8-16X0.875 IN)	
	12	1	**3V-9244**	2	WASHER (16.5X50X5MM THK)	
	13	1	**4K-0367**	2	NUT-FULL (5/8-11 THD)	
	14	1	**7X-0354**	2	BOLT (5/8-11X4.50IN)	
	15	1	**7X-0375**	4	BOLT (3/4-10X5 IN)	
	16	1	**8T-4896**	2	WASHER-HARD (10.2X18.5X2.5MM THK)	
	17	1	**8X-0674**	4	WASHER (22X100X10MM THK)	

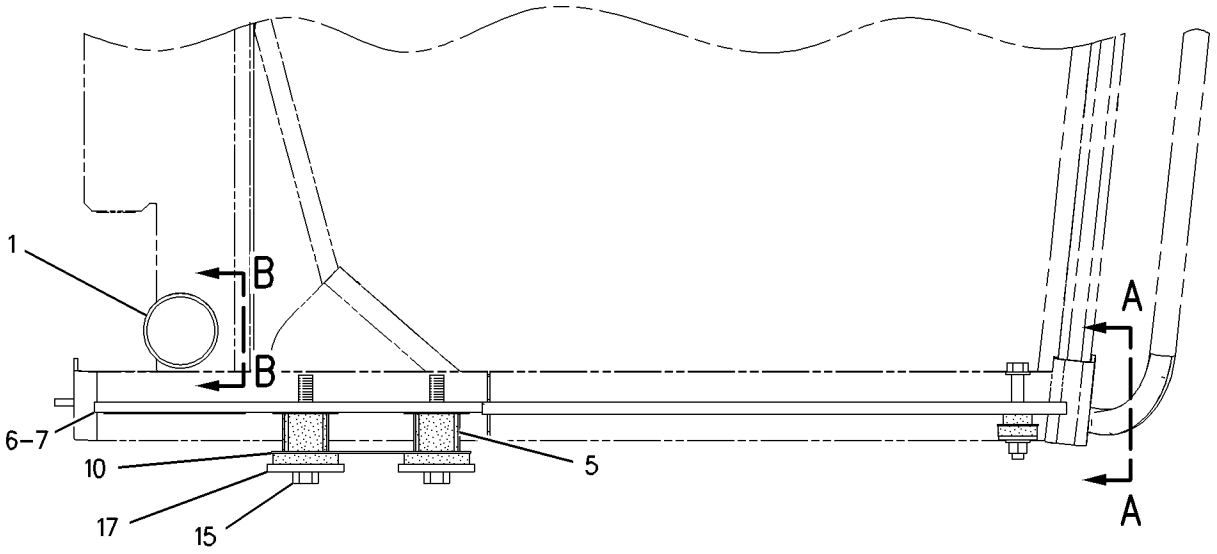

RIGHT SIDE VIEW

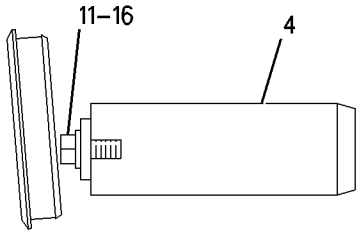

VIEW B-B

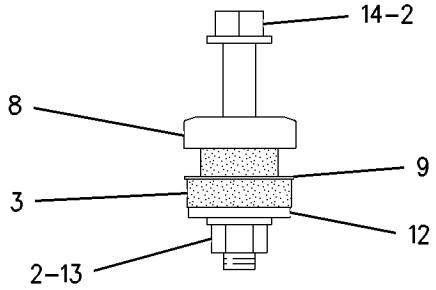

VIEW A-A

GRAPHIC #1 g00846778

OPERATOR STATION

108-8421 PAN GP-BACKREST

S/N: ASE1-UP
PART OF 114-1183 SEAT GP
ALSO AN ATTACHMENT

SMCS-7312 **i01677942**

NOTE	REF NO	GRAPHIC REF	PART NUMBER	QTY	PART NAME 1 2 3 4 5 6 (PRODUCT LEVEL)	SEE PAGE
	1	1	**9M-5733**	2	RIVET-POP (4.78MM DIA)	
	2	1	**8Y-6006**	1	LID AS	
	3	1	**8Y-6010**	1	LANYARD	
	4	1	**4S-8287**	8	RIVET-POP (6MM DIA)	
	5	1	**8Y-5972**	1	LATCH	
	6	1	**108-8423**	1	SHAFT AS-LUMBAR	
	7	1	**3E-4336**	1	STUD-BALL	
	8	1	**3E-4335**	1	CLIP	
	9	1	**2F-7306**	1	SCREW-MACHINE (6-32X.25 IN)	
	10	1	**8F-1462**	1	WASHER-PLATED	
BE	11	1	**3E-6575**		SEAL	
	12	1	**108-8424**	1	PAN-LUMBAR	
	13	1	**8Y-5903**	2	CAM	
	14	1	**3E-4362**	2	PIN-SPRING	

B-USE AS REQUIRED
E-ORDER BY THE CENTIMETER

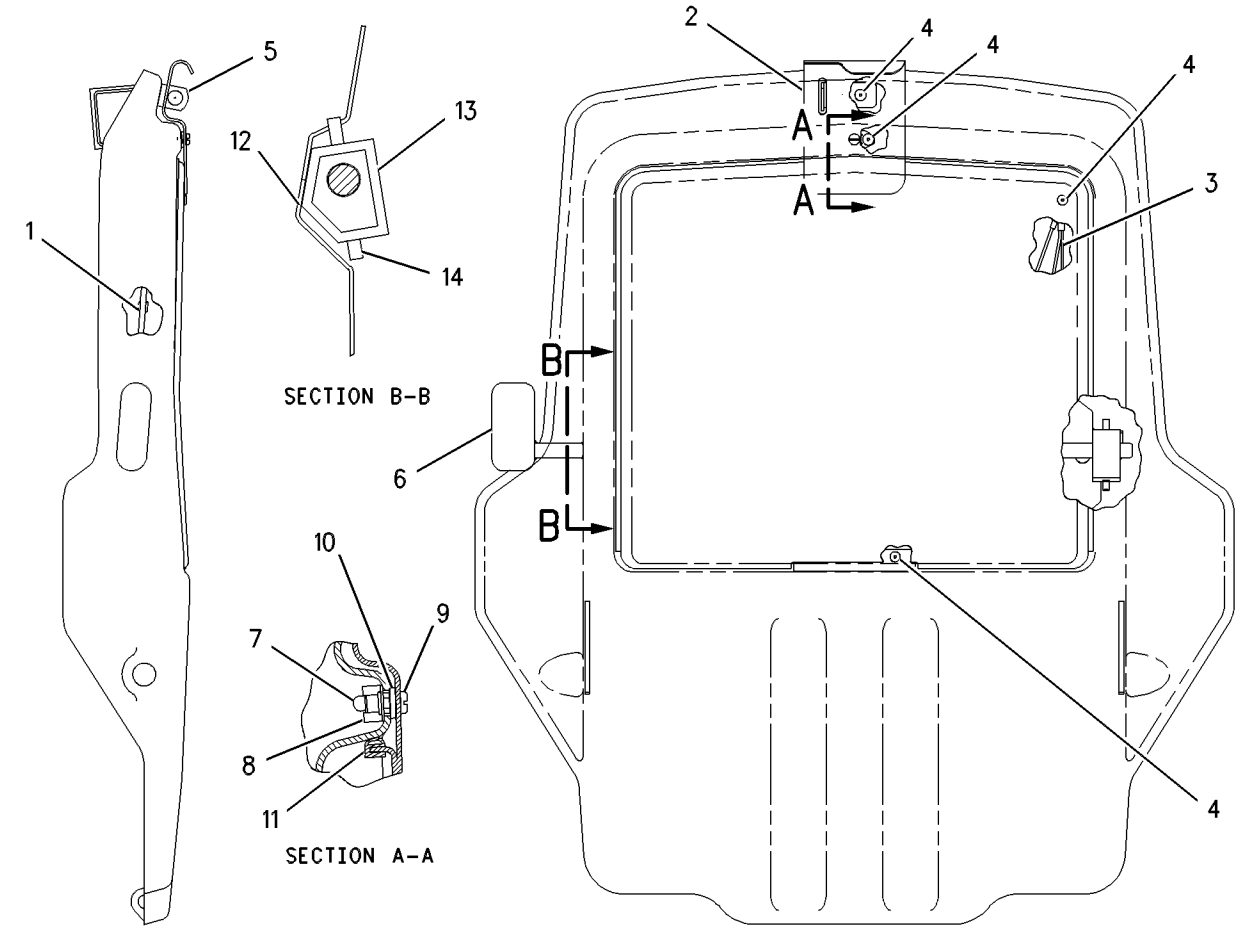

GRAPHIC #1 g00383446

OPERATOR STATION

113-5810 PAN GP-SEAT

S/N: ASE1-UP
PART OF 114-1183, 114-1185 SEAT GP
ALSO AN ATTACHMENT

SMCS-7312 **i01536202**

NOTE	REF NO	GRAPHIC REF	PART NUMBER	QTY	PART NAME 1 2 3 4 5 6 (PRODUCT LEVEL)	SEE PAGE
	1	1	**113-5809**	1	PAN AS-SEAT	
ZJ	2	1		1	ROD AS	
ZJNH	3	1		3	SPRING	
	4	1	**3K-4897**	10	PIN-SPRING	
ZH	5	1		1	ROD	
ZN	6	1		1	ROD AS	
	7	1	**9M-5733**	1	RIVET-POP (4.78MM DIA)	
	8	1	**114-1083**	1	KNOB-BACK TILT	
ZP	9	1		1	CABLE AS	
	10	1	**009-3681**	2	RING-RETAINING	
ZP	11	1		1	PIN	
ZP	12	1		1	ADJUSTER AS	
	13	1	**114-1082**	1	KNOB-SLIDE	
	14	1	**114-1081**	1	KNOB-SEAT TILT	
	15	1	**114-1070**	1	BRACKET	
					AVAILABLE REPAIR KIT(S):	
J			**114-1068**	1	KIT-SEAT TILT	
N			**114-1067**	1	KIT-BACK TILT	
P			**8Y-5999**	1	KIT-ADJUSTER	
H			**114-1069**	1	KIT-ROD	

H-KITS MARKED H SERVICES PARTS MARKED H
J-KITS MARKED H SERVICES PARTS MARKED J
N-KITS MARKED H SERVICES PARTS MARKED N
P-KITS MARKED H SERVICES PARTS MARKED P
Z-NOT SERVICED SEPARATELY

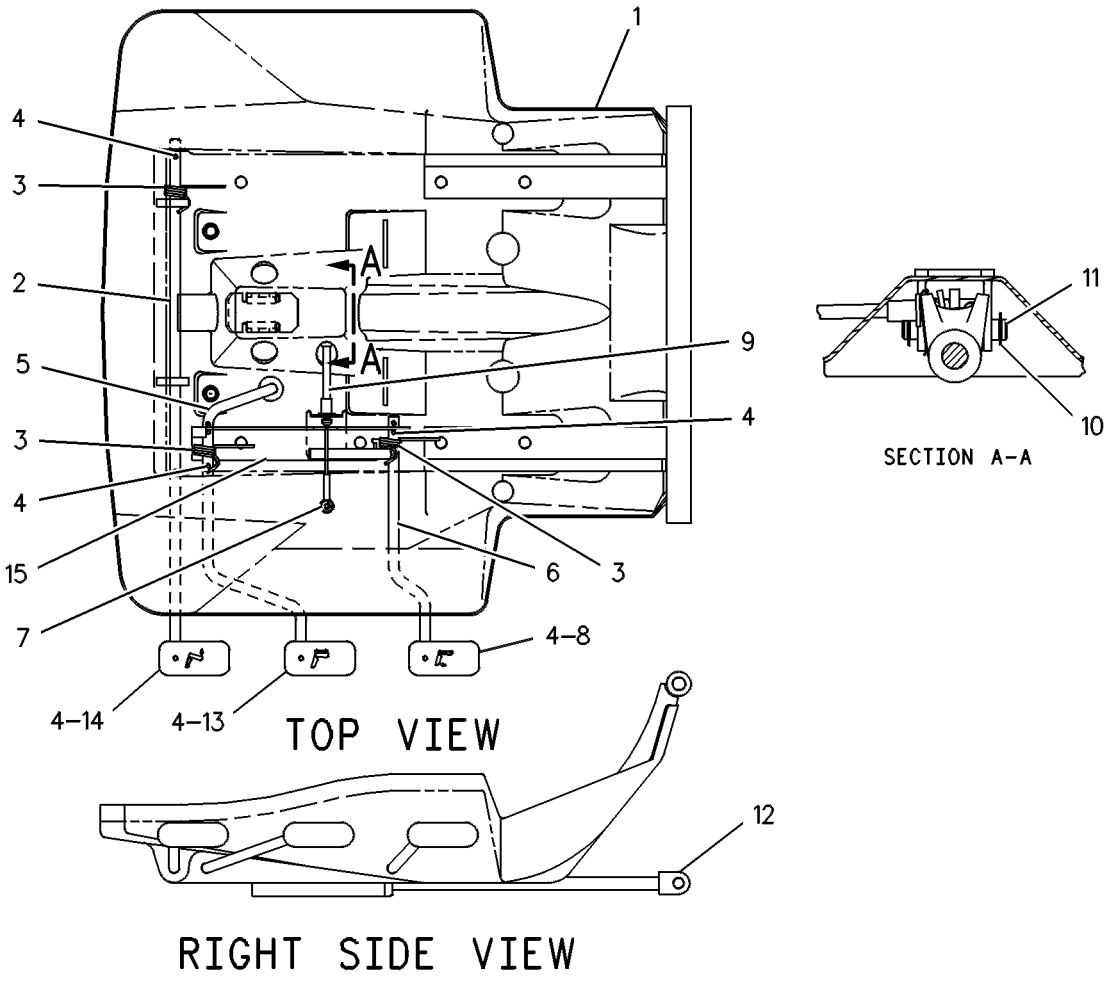

GRAPHIC #1 g00108701

OPERATOR STATION

8X-2375 PANEL GP-CAB—LOW PROFILE

S/N: ASE1-UP

PART OF 172-5377 ROPS GP-ENCLOSED

SMCS-7301 **i01364405**

NOTE	REF NO	GRAPHIC REF	PART NUMBER	QTY	PART NAME 1 2 3 4 5 6 (PRODUCT LEVEL)	SEE PAGE
	1	1	**8X-5456**	1	GLASS-FRONT	
	2	1	**102-9381**	1	GLASS-REAR	
	3	1	**118-2557**	2	GLASS (SIDE)	
	4	1	**149-3409**	2	GLASS	
	5	1	**166-2829**	1	FILM (SUN VISOR)	
D	6	1	**5P-5768**		SEAL (10.5M)	
	7	1	**3E-9413**		SEAL (913CM)	

D-ORDER BY THE METER

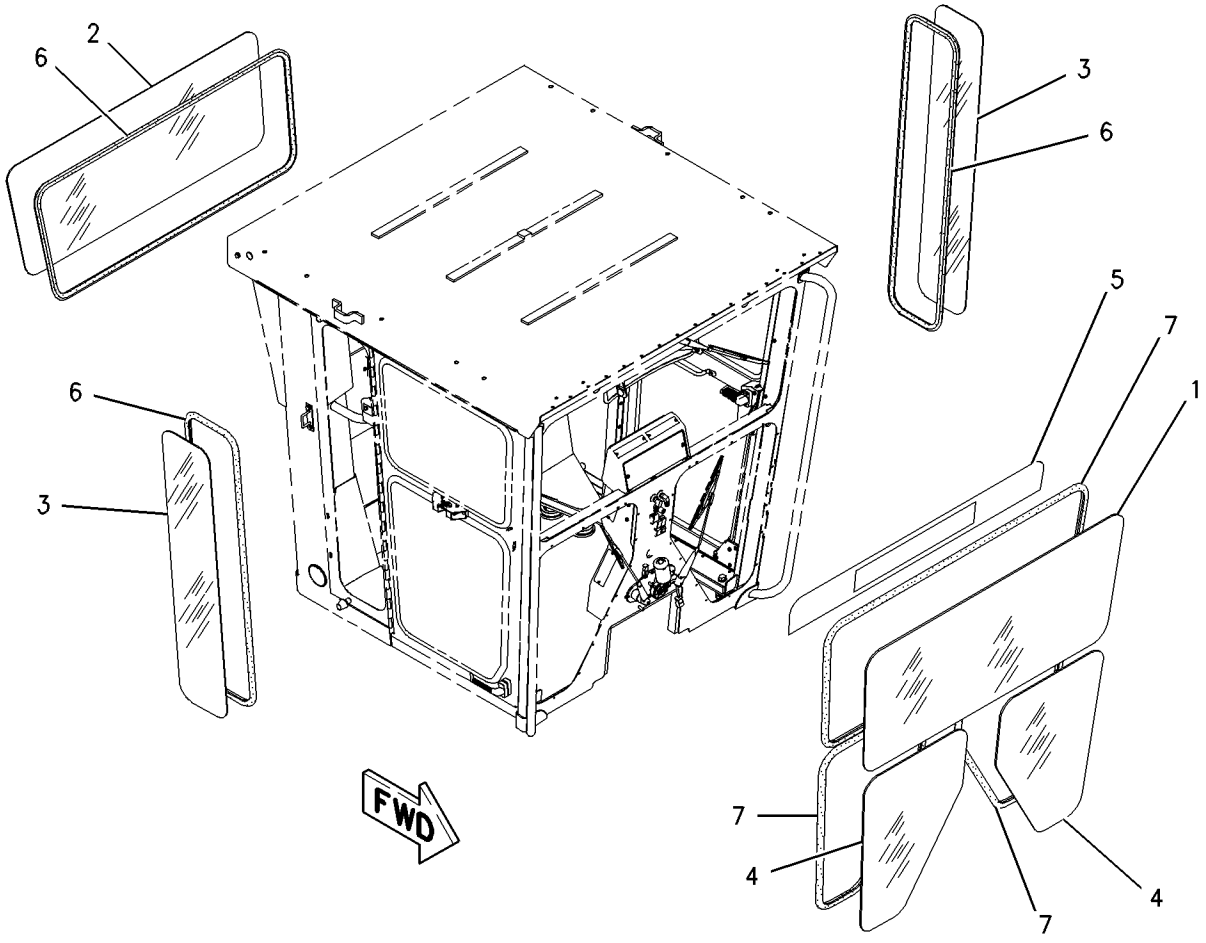

GRAPHIC #1 g00720880

OPERATOR STATION

8X-2385 PANEL GP-CAB—HIGH PROFILE

S/N: ASE1-UP
PART OF 177-8779 ROPS GP-ENCLOSED
AN ATTACHMENT

SMCS-7301 **i01556466**

NOTE	REF NO	GRAPHIC REF	PART NUMBER	QTY	PART NAME 1 2 3 4 5 6 (PRODUCT LEVEL)	SEE PAGE
	1	1	**115-6806**	2	GLASS (SIDE)	
	2	1	**8X-2228**	1	GLASS-FRONT	
BD	3	1	**5P-5768**		SEAL	
	4	1	**102-9372**	1	GLASS-REAR	
	5	1	**149-3409**	2	GLASS	
BE	6	1	**3E-9413**		SEAL	
	7	1	**166-2830**	1	FILM (SUN VISOR)	

B-USE AS REQUIRED
D-ORDER BY THE METER
E-ORDER BY THE CENTIMETER

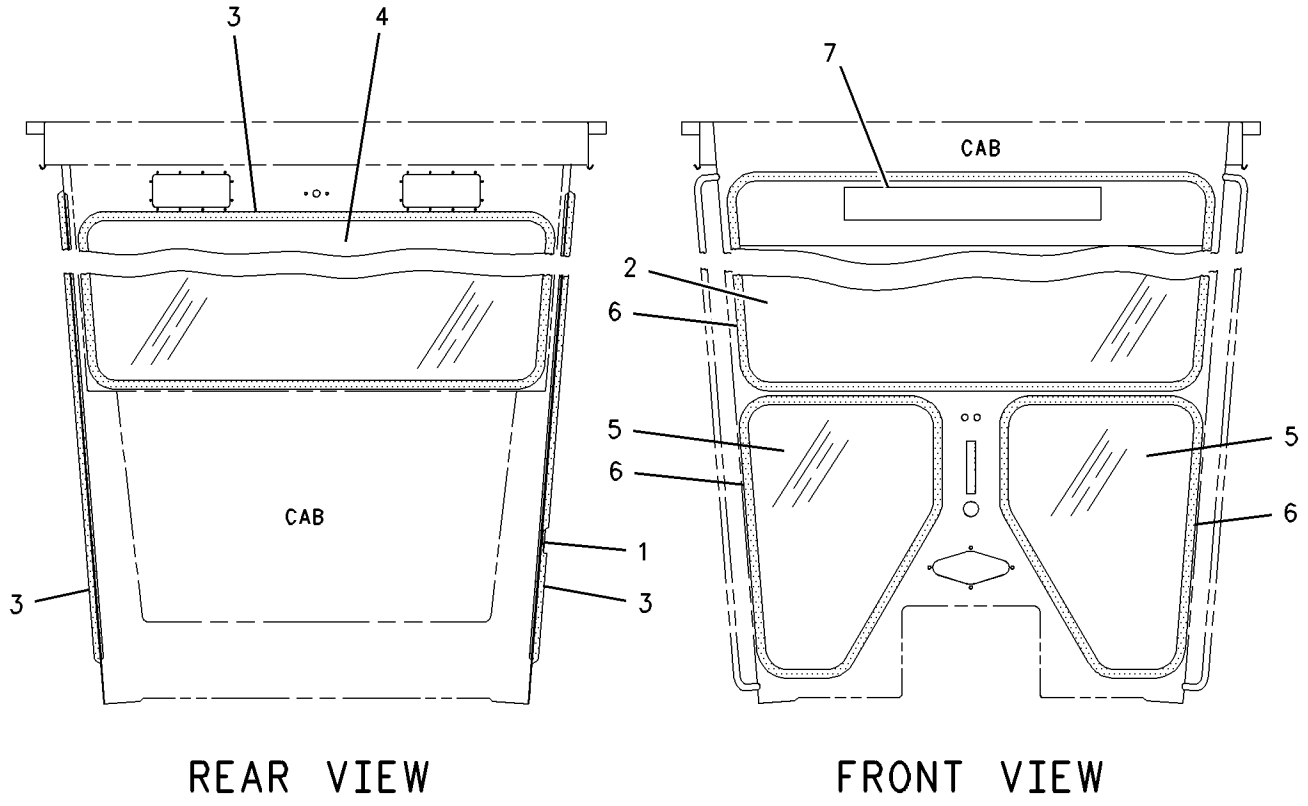

GRAPHIC #1 g00711066

OPERATOR STATION

187-3188 PANEL GP-INSTRUMENT

S/N: ASE1-UP

PART OF 162-5606 GENERAL AR

SMCS-7450, 7451 **i01673601**

NOTE	REF NO	GRAPHIC REF	PART NUMBER	QTY	PART NAME 1 2 3 4 5 6 (PRODUCT LEVEL)	SEE PAGE
	1	1	**1W-3306**	1	INDICATOR AS-AIR PRESSURE (LEFT)	
	1A	1	**1W-3306**	1	INDICATOR AS-AIR PRESSURE (RIGHT)	
					(EACH INDICATOR ASSEMBLY INCLUDES)	
		1	**4B-2049**	2	NUT (10-32 THD)	
		1	**8F-1434**	2	LOCKWASHER	
	2	1	**5D-0269**	2	ELBOW	
	3	1	**5K-7577**	2	HOSE AS	
	4	1	**7N-5876**	2	LAMP (24 VOLT) (QUAD GAGE MODULE)(INDICATOR)	
	4A	1	**7N-5876**	1	LAMP (24 VOLT) (LH AIR PRESSURE)(INDICATOR)	
	4B	1	**7N-5876**	1	LAMP (24 VOLT) (RH AIR PRESSURE)(INDICATOR)	
	5	1	**9M-8662**	2	COUPLING	
	6	1	**9X-9688**	1	SWITCH AS-PUSH BUTTON (OPERATOR MODE)(DIGITAL DISPLAY)	
		1	**102-8802**	1	KIT-RECEPTACLE (2 PIN)	
		1	**3K-0835**	1	NUT (5/8-24 THD)	
		1	**6F-0253**	1	LOCKWASHER	
		1	**8T-8748**	1	ADAPTER-MOUNT	
		1	**186-3735**	2	PIN-CONNECTOR	
		1	**3E-3365**	1	WEDGE-RECEPTACLE LOCK (2 PIN)	
	7	1	**107-1983**	1	LAMP (24 VOLT) (EMS MASTER ACTION INDICATOR)	
	8	1	**115-1748**	1	LAMP (24 VOLT) (LEFT TURN INDICATOR)	
	8A	1	**115-1748**	1	LAMP (24 VOLT) (RIGHT TURN INDICATOR)	
	8B	1	**115-1748**	1	LAMP (24 VOLT) (DIFF LOCK INDICATOR)	
	8C	1	**115-1748**	1	LAMP (24 VOLT) (HIGH BEAM INDICATOR)	
	8D	1	**115-1748**	1	LAMP (24 VOLT) (THROTTLE HOLD INDICATOR)	
	9	1	**117-9966**	2	PLUG	
	10	1	**122-7045**	6	COVER	
	11	1	**122-8146**	2	PLATE AS	
M		1	**6V-9632**	2	NUT-WELD (M6X1 THD)	
	12	1	**175-1343**	1	PANEL	
Y	13	1	**180-9285**	1	MODULE GP-QUAD GAUGE	722
	14	1	**184-4322**	1	FILM-MONITOR (MAIN DISPLAY MODULE)	
	15	1	**185-6362**	1	PAD	
	16	1	**187-6269**		HARNESS AS-MONITOR	
		1	**155-2255**	1	KIT-CONNECTING PLUG (12 PIN)	
		1	**102-8805**	1	KIT-RECEPTACLE (6 PIN)	
		1	**102-8806**	1	KIT-RECEPTACLE (8 PIN)	
		1	**102-8806**	1	KIT-RECEPTACLE (8 PIN)	
		1	**102-8801**	1	KIT-RECEPTACLE (12 PIN)	
		1	**8T-9834**	1	PLUG AS-CONNECTOR (40 PIN)	
	17	1	**196-0180**	1	PANEL	
	18	1	**196-4150**	1	PANEL	
	19	1	**197-5964**	1	FILM-PANEL (LH)	
	20	1	**197-5966**	1	FILM-PANEL (RH)	
	21	1	**160-6567**	1	CONTROL GP-MONITOR (CATERPILLAR MONITORING SYSTEM)	
	22	1	**202-1138**	4	ELBOW	
	23	1	**104-2091**	12	SCREW-FLAT HEAD (6-20X0.5 IN)	
	24	1	**2H-3922**	4	LOCKWASHER	
M	25	1	**3E-8020**	10	SCREW-TRUSS HEAD (M6X1X25MM)	
M	26	1	**7Y-7388**	12	SCREW-BUTTON HEAD (M5X0.8X12MM)	
M	27	1	**9X-2043**	4	SCREW-TRUSS HEAD (M6X1X14MM)	

M-METRIC PART
Y-SEPARATE ILLUSTRATION

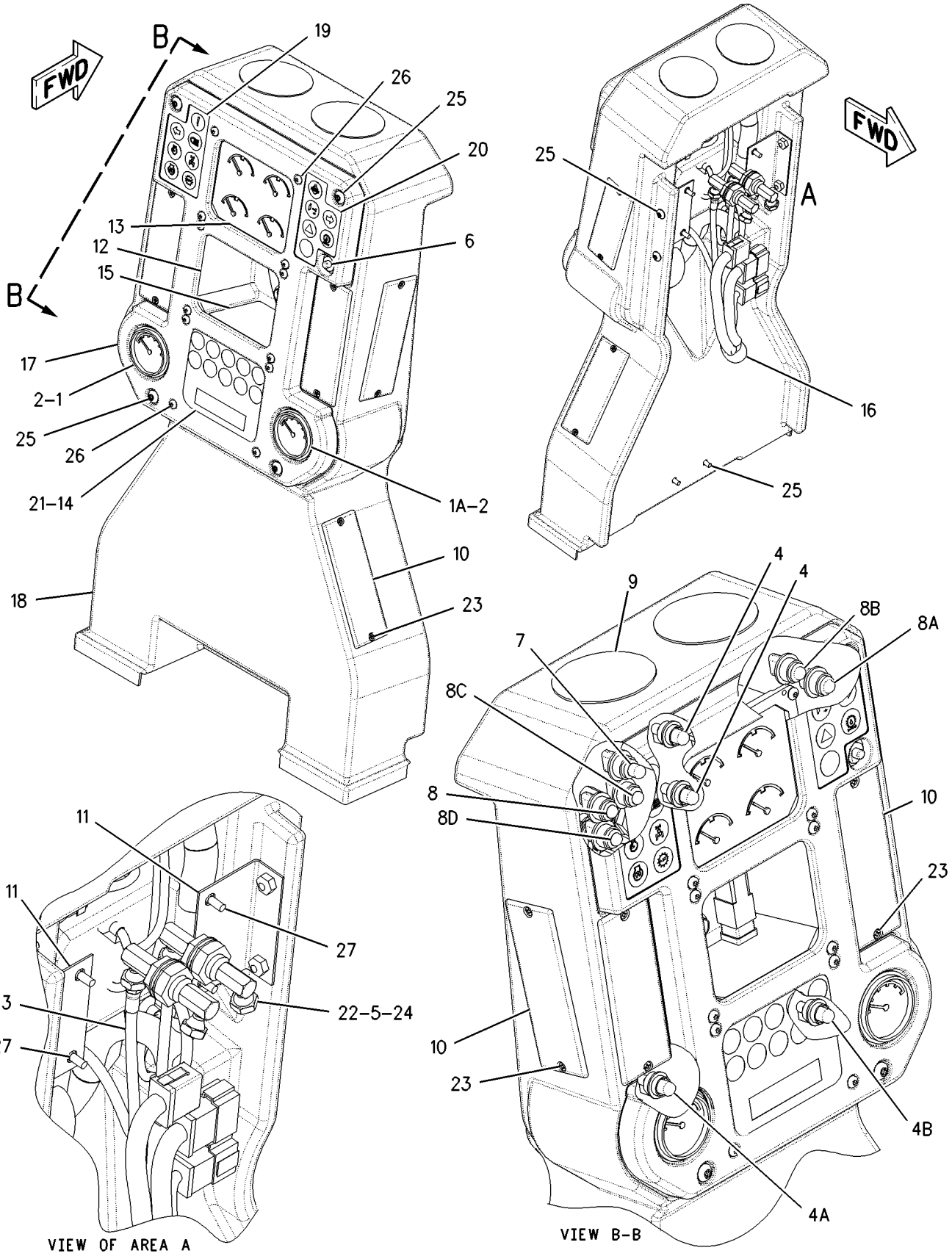

GRAPHIC #1

g00852702

OPERATOR STATION

197-7155 PANEL GP-INSTRUMENT—HIGH PROFILE

S/N: ASE1-UP

PART OF 203-6643 CONVERSION AR-NON-ROPS, 203-6642 ROPS AR-OPEN AN ATTACHMENT

SMCS-7450, 7451 **i01673942**

NOTE	REF NO	GRAPHIC REF	PART NUMBER	QTY	PART NAME 1 2 3 4 5 6 (PRODUCT LEVEL)	SEE PAGE
	1	1	**1W-3306**	1	INDICATOR AS-AIR PRESSURE (LH BRAKE)	
	1A	1	**1W-3306**	1	INDICATOR AS-AIR PRESSURE (RH BRAKE)	
	2	1	**5D-0269**	2	ELBOW	
	3	1	**7N-5876**	4	LAMP (24 VOLT) (QUAD GAUGE & AIR PRESSURE)	
	4	1	**9X-9688**	1	SWITCH AS-PUSH BUTTON (OPERATOR MODE)(DIGITAL DISPLAY)	
	5	1	**107-1983**	1	LAMP (24 VOLT) (EMS MASTER ACTION INDICATOR)	
	6	1	**115-1748**	5	LAMP (24 VOLT) (INSTRUMENT PANEL)	
	7	1	**175-1343**	1	PANEL	
Y	8	1	**180-9285**	1	MODULE GP-QUAD GAUGE	722
	9	1	**184-4322**	1	FILM-MONITOR	
	10	1	**187-6269**	1	HARNESS AS-MONITOR	
		1	**155-2255**	1	KIT-CONNECTING PLUG (12 PIN)	
		1	**155-2270**	1	KIT-CONNECTING PLUG (2 PIN) (OPERATOR MODE SWITCH)	
		1	**155-2274**	2	KIT-CONNECTING PLUG (6 PIN)	
		1	**102-8805**	1	KIT-RECEPTACLE (6 PIN)	
		1	**102-8806**	1	KIT-RECEPTACLE (8 PIN)	
		1	**102-8801**	1	KIT-RECEPTACLE (12 PIN)	
		1	**8T-9834**	1	PLUG AS-CONNECTOR (40 PIN)	
	11	1	**196-0180**	1	PANEL	
	12	1	**197-5964**	1	FILM-PANEL (LH)	
	13	1	**197-5966**	1	FILM-PANEL (RH)	
	14	1	**160-6567**	1	CONTROL GP-MONITOR (CATERPILLAR MONITORING SYSTEM)	
M	15	1	**3E-8020**	4	SCREW-TRUSS HEAD (M6X1X25MM)	
M	16	1	**7Y-7388**	12	SCREW-BUTTON HEAD (M5X0.8X12MM)	

M-METRIC PART
Y-SEPARATE ILLUSTRATION

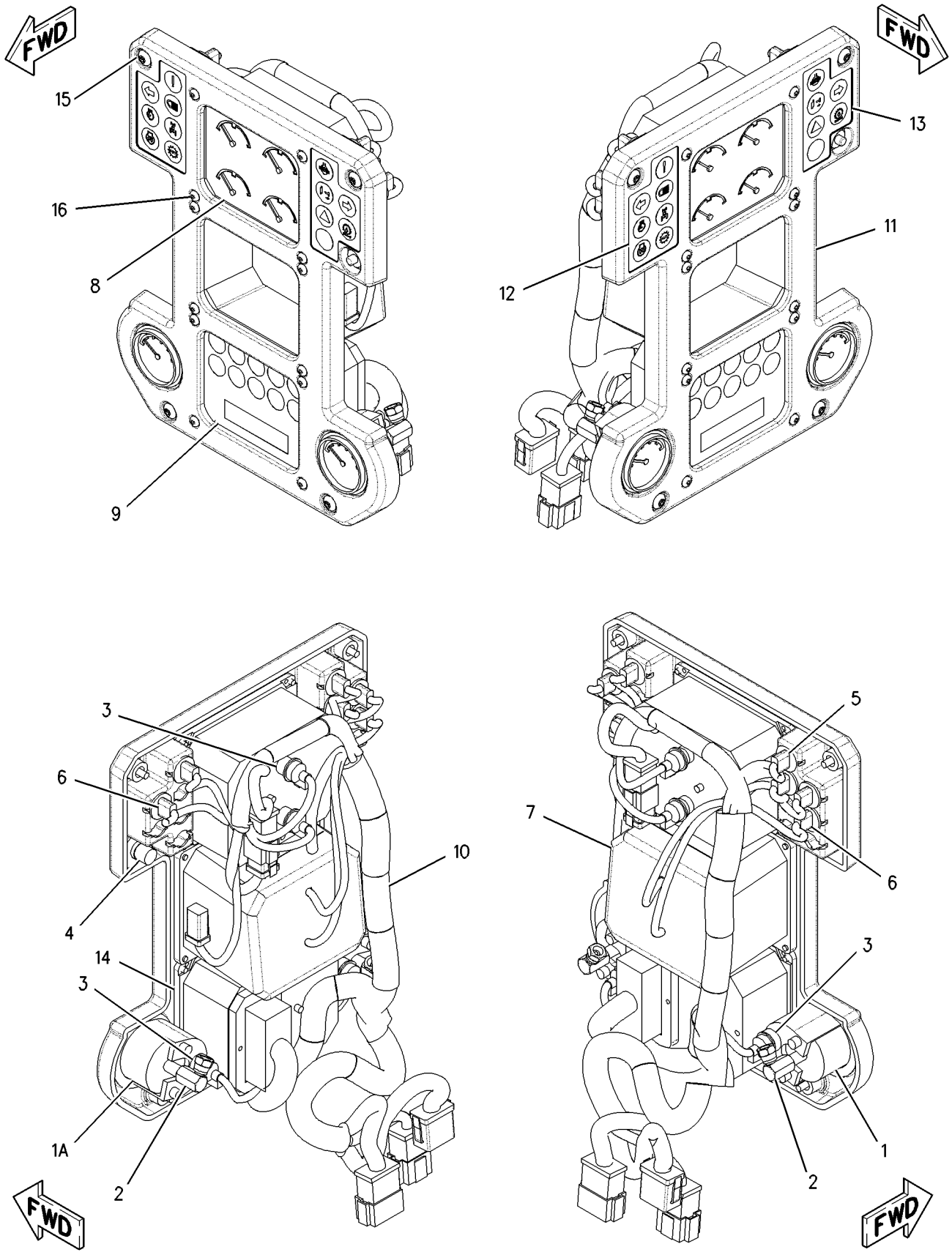

GRAPHIC #1

g00859596

OPERATOR STATION

150-5106 PANEL GP-WINDOW—RH

S/N: ASE1-UP
PART OF 126-0961 WINDOW GP
AN ATTACHMENT

SMCS-7310 **i01031178**

NOTE	REF NO	GRAPHIC REF	PART NUMBER	QTY	PART NAME 1 2 3 4 5 6 (PRODUCT LEVEL)	SEE PAGE
	1	1	**5T-1958**	1	IDLER AS-RH	
		1	**5T-3144**	1	PIVOT AS-IDLER	
		1	**5T-3146**	1	KIT-IDLER HOUSING-RH	
					(INCLUDES HOUSING, BEARING, & WASHER)	
	2	1	**1H-3340**	12	BOLT	
	3	1	**8W-1028**	1	HINGE AS-RH	
	4	1	**126-1167**	1	BOLT	
	5	1	**126-0228**	1	CATCH-STOP	
	6	1	**5T-1969**	1	HANDLE	
	7	1	**1H-8456**	2	SCREW-MACHINE (10/24X1.0 IN)	
BD	8	1	**5P-5680**		SEAL	
	9	1	**150-5105**	1	GLASS	
	10	1	**126-1539**	1	HANDLE-PULL	
	11	1	**5T-1964**	1	SEAL	
BE	12	1	**7X-7661**		TAPE	
	13	1	**126-0208**	1	SPACER	
	14	1	**126-0209**	1	PLATE	
	15	1	**126-0210**	1	PLATE	
	16	1	**5T-1972**	14	INSERT-SCREW	
M	17	1	**8T-0352**	3	BOLT	
	18	1	**8T-0328**	6	WASHER-HARD (1MM THK)	
M	19	1	**7Y-5226**	3	NUT (M5X0.8MM THD)	

B-USE AS REQUIRED
D-ORDER BY THE METER
E-ORDER BY THE CENTIMETER
M-METRIC PART

150-5106 PANEL GP-WINDOW *(contd.)* **i01031178**

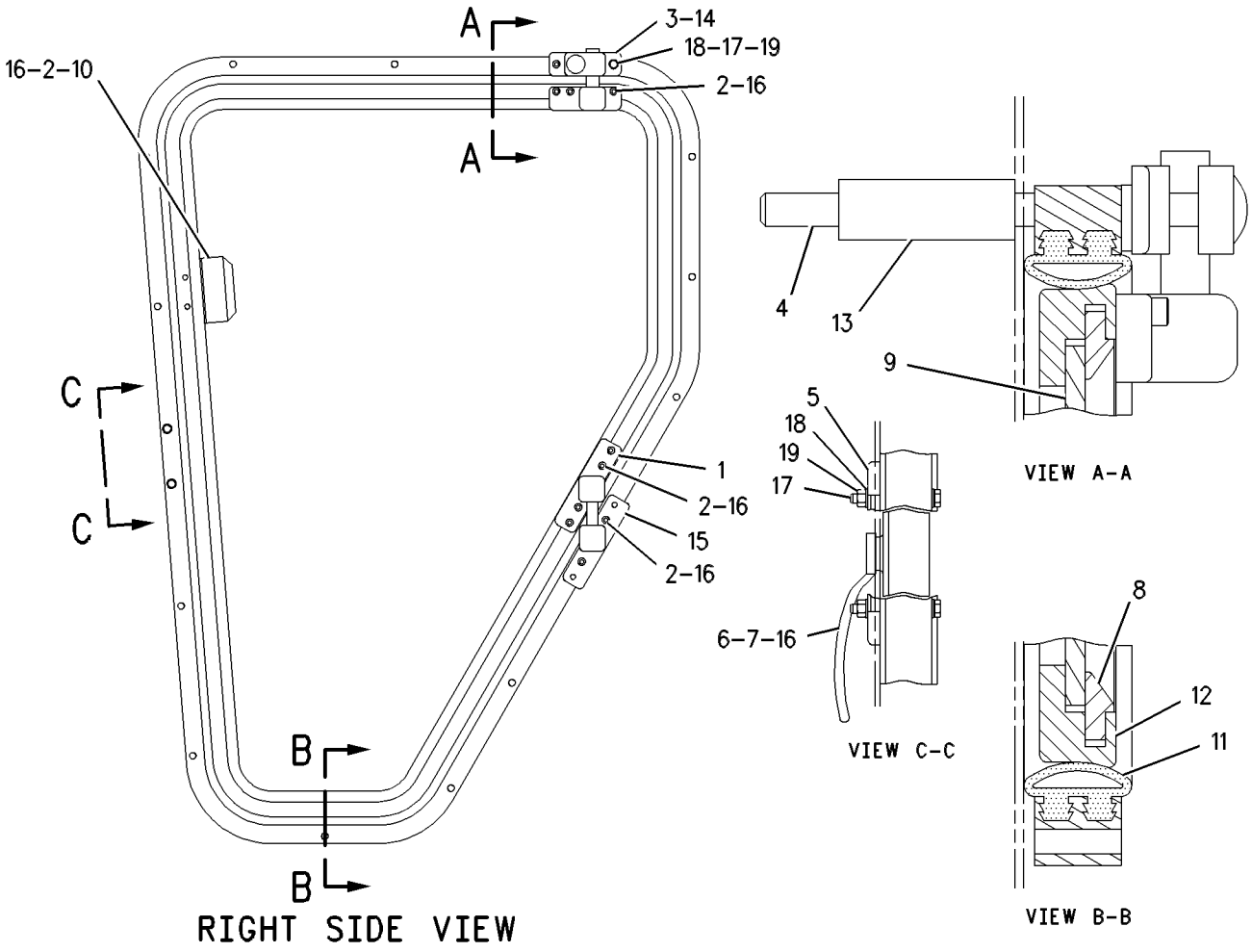

GRAPHIC #1

g00291495

OPERATOR STATION

150-5107 PANEL GP-WINDOW–LH

S/N: ASE1-UP
PART OF 126-0961 WINDOW GP
AN ATTACHMENT

SMCS-7310 **i01031170**

NOTE	REF NO	GRAPHIC REF	PART NUMBER	QTY	PART NAME 1 2 3 4 5 6 (PRODUCT LEVEL)	SEE PAGE
	1	1	**5T-1959**	1	IDLER AS-LH	
		1	**5T-3145**	1	PIVOT AS-IDLER	
	2	1	**1H-3340**	12	BOLT	
	3	1	**8W-1029**	1	HINGE AS-LH	
	4	1	**126-1167**	1	BOLT	
	5	1	**126-0228**	1	CATCH-STOP	
	6	1	**6G-2959**	1	HANDLE	
	7	1	**1H-8456**	2	SCREW-MACHINE (10/24X1.0 IN)	
BD	8	1	**5P-5680**		SEAL	
	9	1	**150-5105**	1	GLASS	
	10	1	**126-1539**	1	HANDLE-PULL	
	11	1	**5T-1964**	1	SEAL	
BE	12	1	**7X-7661**		TAPE	
	13	1	**126-0208**	1	SPACER	
	14	1	**126-0209**	1	PLATE	
	15	1	**126-0210**	1	PLATE	
	16	1	**5T-1972**	14	INSERT-SCREW	
M	17	1	**8T-0352**	3	BOLT	
	18	1	**8T-0328**	6	WASHER-HARD (1MM THK)	
M	19	1	**7Y-5226**	3	NUT (M5X0.8MM THD)	
					AVAILABLE REPAIR KIT(S):	
			5T-3147		KIT-IDLER HOUSING-LH	
					(INCLUDES HOUSING,BEARING, & WASHER)	

B-USE AS REQUIRED
D-ORDER BY THE METER
E-ORDER BY THE CENTIMETER
M-METRIC PART

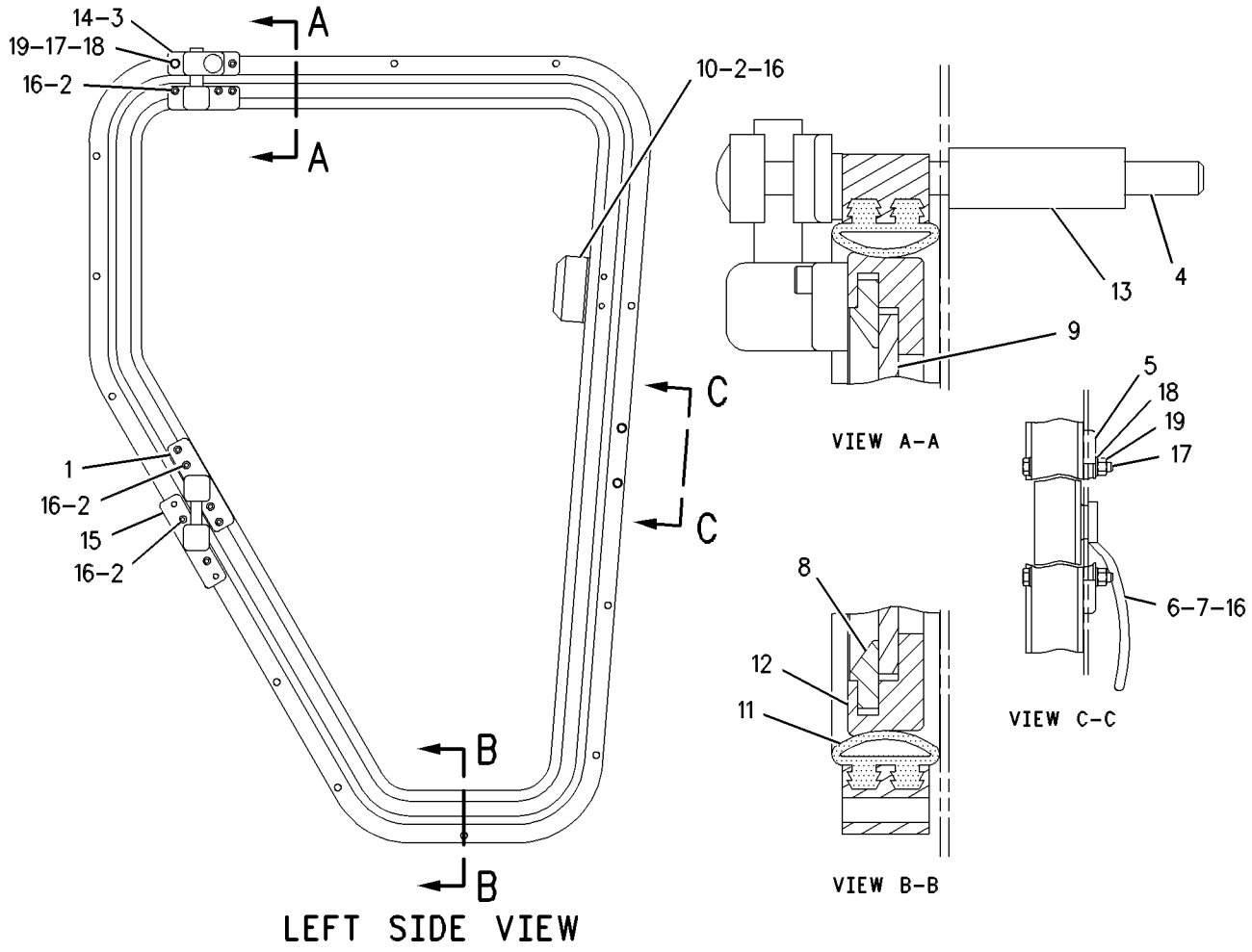

GRAPHIC #1

g00291496

OPERATOR STATION

161-1141 ROPS AR-ENCLOSED—HIGH PROFILE

S/N: ASE1-UP

AN ATTACHMENT

SMCS-7323 **i01685396**

NOTE	PART NUMBER	QTY	PART NAME 1 2 3 4 5 6 (PRODUCT LEVEL)	SEE PAGE
Y	*172-5378*	1	INSULATION GP-WEATHER	688
Y	*177-8779*	1	ROPS GP-ENCLOSED (HIGH PROFILE)	745
Y	*8X-9675*	1	WASHER GP-WINDOW	768

Y-SEPARATE ILLUSTRATION

OPERATOR STATION

179-3581 ROPS AR-ENCLOSED—LOW PROFILE

S/N: ASE1-UP

PART OF 162-5606 GENERAL AR

SMCS-7323 **i01685400**

NOTE	PART NUMBER	QTY	PART NAME 1 2 3 4 5 6 (PRODUCT LEVEL)	SEE PAGE
Y	*172-5378*	1	INSULATION GP-WEATHER	688
Y	*172-5377*	1	ROPS GP-ENCLOSED (LOW PROFILE)	743
Y	*8X-9675*	1	WASHER GP-WINDOW	768

Y-SEPARATE ILLUSTRATION

OPERATOR STATION

203-6642 ROPS AR-OPEN—HIGH PROFILE

S/N: ASE1-UP

AN ATTACHMENT

SMCS-7323 **i01685406**

NOTE	PART NUMBER	QTY	PART NAME 1 2 3 4 5 6 (PRODUCT LEVEL)	SEE PAGE
Y	*166-7064*	1	GUARD GP-PLATFORM (HIGH PROFILE)	362
Y	*197-7155*	1	PANEL GP-INSTRUMENT (HIGH PROFILE)	734
Y	*173-2751*	1	ROPS GP-OPEN (HIGH PROFILE)	746
Y	*8Y-4951*	1	SEAT GP-SUSPENSION (VINYL)	755
	5P-8502	1	PADLOCK GP	
	5P-8500	1	KEY	
	5P-8197	1	PLATE-WARNING (DO NOT OPERATE)	
	9D-3767	1	PLUG-BUTTON	

Y-SEPARATE ILLUSTRATION

OPERATOR STATION

172-5377 ROPS GP-ENCLOSED—LOW PROFILE

S/N: ASE1-UP

PART OF 179-3581 ROPS AR-ENCLOSED

SMCS-7325 **i01650416**

NOTE	PART NUMBER	QTY	PART NAME 1 2 3 4 5 6 (PRODUCT LEVEL)	SEE PAGE
Y	*8X-4527*	1	DOOR GP-CAB (LOW PROFILE)	650
	159-3759	2	FILM-INSTRUCTION (DO NOT DRILL/WELD ROPS)	
Y	*172-5376*	1	LINER GP-CAB (LOW PROFILE)	690
Y	*2A-6985*	1	MOUNTING GP-ROPS (ENCLOSED)	724
Y	*8X-2375*	1	PANEL GP-CAB (LOW PROFILE)	730
	173-6754	1	ROPS GP-ENCLOSED	
Y	**172-6830**	1	WIPER GP-WINDOW (LOW PROFILE)	780

Y-SEPARATE ILLUSTRATION

OPERATOR STATION

173-6756 ROPS GP-ENCLOSED—HIGH PROFILE

S/N: ASE1-UP

PART OF 177-8779 ROPS GP-ENCLOSED

AN ATTACHMENT

SMCS-7325 **i01630738**

NOTE	PART NUMBER	QTY	PART NAME 1 2 3 4 5 6 (PRODUCT LEVEL)	SEE PAGE
			(NO SERVICED PARTS)	

OPERATOR STATION

177-8779 ROPS GP-ENCLOSED—HIGH PROFILE

S/N: ASE1-UP

PART OF 161-1141 ROPS AR-ENCLOSED

AN ATTACHMENT

SMCS-7325 **i01655306**

NOTE	PART NUMBER	QTY	PART NAME 1 2 3 4 5 6 (PRODUCT LEVEL)	SEE PAGE
Y	*8X-4413*	1	DOOR GP-CAB (HIGH PROFILE)	644
	159-3759	2	FILM-INSTRUCTION (DO NOT DRILL/WELD ROPS)	
Y	*177-8781*	1	LINER GP-CAB (ENCLOSED HIGH PROFILE)	694
Y	*2A-6985*	1	MOUNTING GP-ROPS (ENCLOSED)	724
Y	*8X-2385*	1	PANEL GP-CAB (HIGH PROFILE)	731
Y	**173-6756**	1	ROPS GP-ENCLOSED (HIGH PROFILE)	744
Y	*172-6831*	1	WIPER GP-WINDOW (HIGH PROFILE)	782

Y-SEPARATE ILLUSTRATION

OPERATOR STATION

173-2751 ROPS GP-OPEN—HIGH PROFILE

S/N: ASE1-UP
PART OF 203-6642 ROPS AR-OPEN
AN ATTACHMENT

SMCS-7323, 7325 **i01685418**

NOTE	REF NO	GRAPHIC REF	PART NUMBER	QTY	PART NAME 1 2 3 4 5 6 (PRODUCT LEVEL)	SEE PAGE
	1	1	**159-3759**	2	FILM-INSTRUCTION (DO NOT DRILL/WELD ROPS)	
	2	1	**117-4698**	1	ROPS GP	
Y	4	1	*191-8692*	1	MOUNTING GP-ROPS (HIGH PROFILE)	726
Y	5	1	*191-8695*	1	LINER GP-CAB (HIGH PROFILE)	700
	6	1	*194-3845*	1	WINDOW GP	
BD		1	**5P-5768**		SEAL	
		1	**102-9372**	1	GLASS (HIGH PROFILE)	

B-USE AS REQUIRED
D-ORDER BY THE METER
Y-SEPARATE ILLUSTRATION

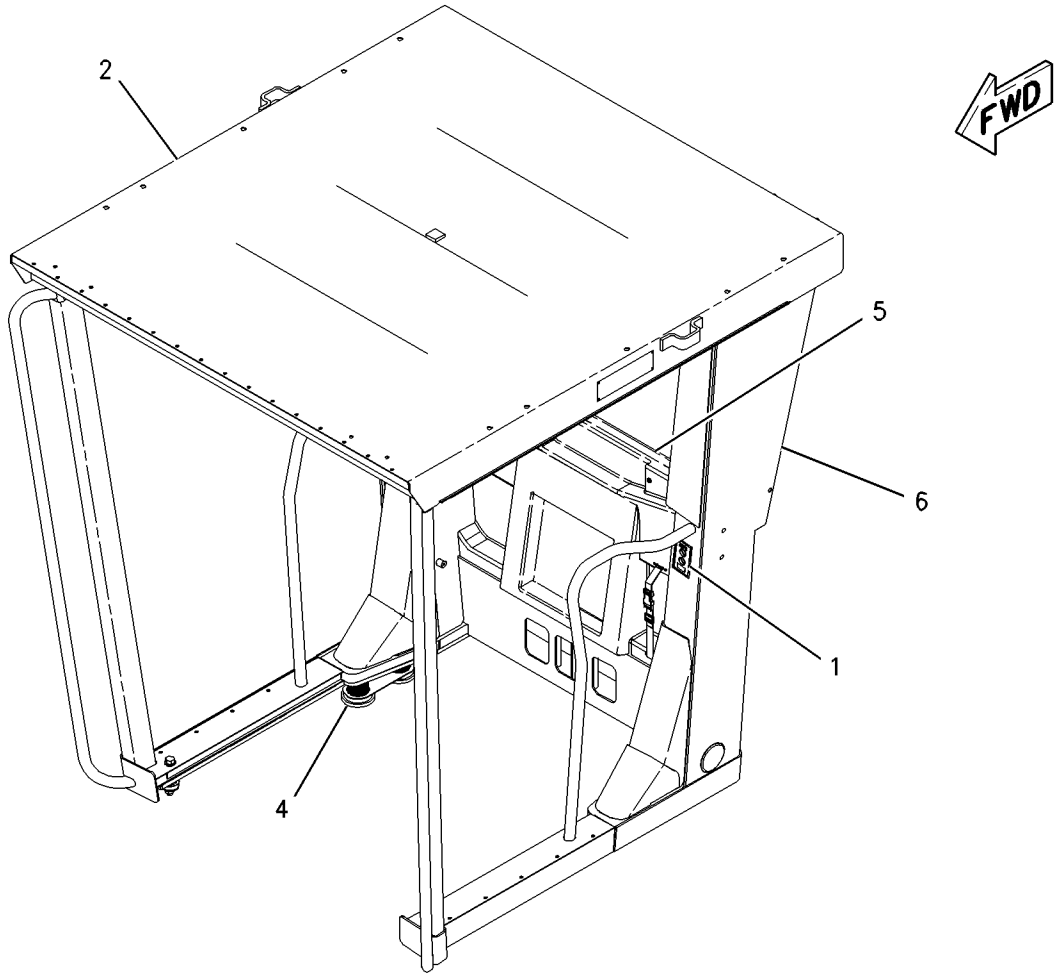

GRAPHIC #1 g00846632

OPERATOR STATION

139-4612 SCREEN GP-SUN–REAR

S/N: ASE1-UP
AN ATTACHMENT

SMCS-7165 **i00699988**

NOTE	REF NO	GRAPHIC REF	PART NUMBER	QTY	PART NAME 1 2 3 4 5 6 (PRODUCT LEVEL)	SEE PAGE
	1	1	**137-5503**	1	SCREEN GP-SUN	
	2	1	**139-4605**	1	PLATE AS	
M		1	**6V-9632**	4	NUT-WELD (M6X1 THD)	
M	3	1	**5C-9553**	4	BOLT (M6X1.0X16MM)	
	4	1	**9X-8256**	4	WASHER (2MM THK)	

M-METRIC PART

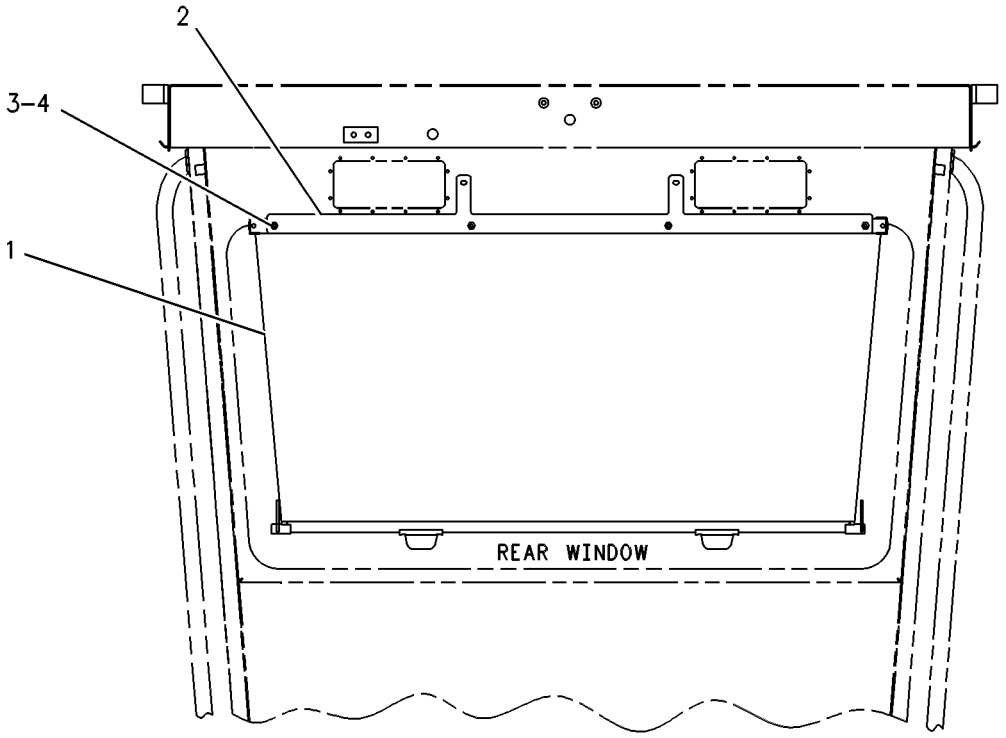

REAR VIEW

GRAPHIC #1 g00301584

OPERATOR STATION

156-1148 SEAT BELT GP–RETRACTABLE

S/N: ASE1-UP

PART OF 112-9104, 112-9105, 155-5958 SEAT GP-SUSPENSION

ALSO AN ATTACHMENT

SMCS-7327 **i01674134**

NOTE	REF NO	GRAPHIC REF	PART NUMBER	QTY	PART NAME 1 2 3 4 5 6 (PRODUCT LEVEL)	SEE PAGE
	1	1	**1L-9080**	1	BOLT (7/16-20X1.5 IN)	
	2	1	**8T-5360**	1	WASHER (12X22.5X2.5MM THK)	
	3	1	**1A-4350**	1	BOLT (7/16-20X1.75 IN)	
	4	1	**4D-6432**	1	LOCKNUT (7/16-20 THD)	

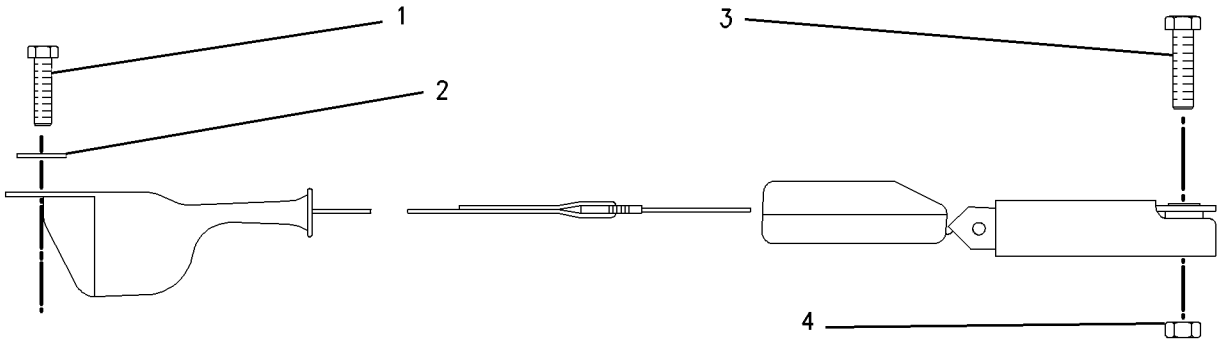

GRAPHIC #1 g00760019

MEMORANDA

OPERATOR STATION

114-1183 SEAT GP–CLOTH

S/N: ASE1-UP
PART OF 112-9104, 155-5958 SEAT GP-SUSPENSION
ALSO AN ATTACHMENT

SMCS-7312 **i01661717**

NOTE	REF NO	GRAPHIC REF	PART NUMBER	QTY	PART NAME 1 2 3 4 5 6 (PRODUCT LEVEL)	SEE PAGE
Y	1	1	**108-8421**	1	PAN GP-BACKREST	727
Y	2	1	*113-5810*	1	PAN GP-SEAT	728
	3	1	**8Y-5891**	1	KIT-SEAT CUSHION	
	4	1	**108-8426**	1	CUSHION AS-BACK	
	5	1	**8Y-6933**	1	KIT-TILT PAN	
	6	1	**8Y-5929**	1	PLATE AS-SLIDE	
		1	**4K-9097**	7	NUT-WELD (5/16-18 THD)	
	7	1	**8Y-5932**	1	LATCH AS	
	8	1	**8Y-5936**	1	SPRING	
	9	1	**095-0878**	1	PIN-SPRING	
	10	1	**8Y-5937**	1	BRACKET AS-RH	
	11	1	**8Y-5938**	1	BRACKET AS-LH	
		1	**4D-6432**	1	LOCKNUT (7/16-20 THD)	
B	12	1	**7U-4898**	6	SCREW (3/8-16X0.75 IN)	
	13	1	**2K-4973**	6	LOCKNUT (3/8-16 THD)	
	14	1	**095-1314**	1	PIN-CLEVIS	
	15	1	**9L-7469**	3	LOCK PIN	
	16	1	**8Y-5947**	4	FASTENER	
	17	1	**8Y-6833**	1	SPRING (RH)	
	18	1	**8Y-6834**	1	SPRING (LH)	
	19	1	**1C-0569**	3	BOLT (5/16-18X0.5 IN)	
	20	1	**2B-2695**	4	BOLT (5/16-18X0.875 IN)	
	21	1	**8Y-5928**	2	SPRING	
	22	1	**8Y-5981**	2	BUSHING-BACKREST	
	23	1	**7B-7525**	2	BOLT-SOCKET HEAD (7/16-14X1.25 IN)	
	24	1	**8Y-6051**	2	SPACER (11.19X14.21X14.24MM THK)	
					AVAILABLE REPAIR KIT(S):	
			149-4745	1	KIT-SLIDER BLOCK	

B-USE AS REQUIRED
Y-SEPARATE ILLUSTRATION

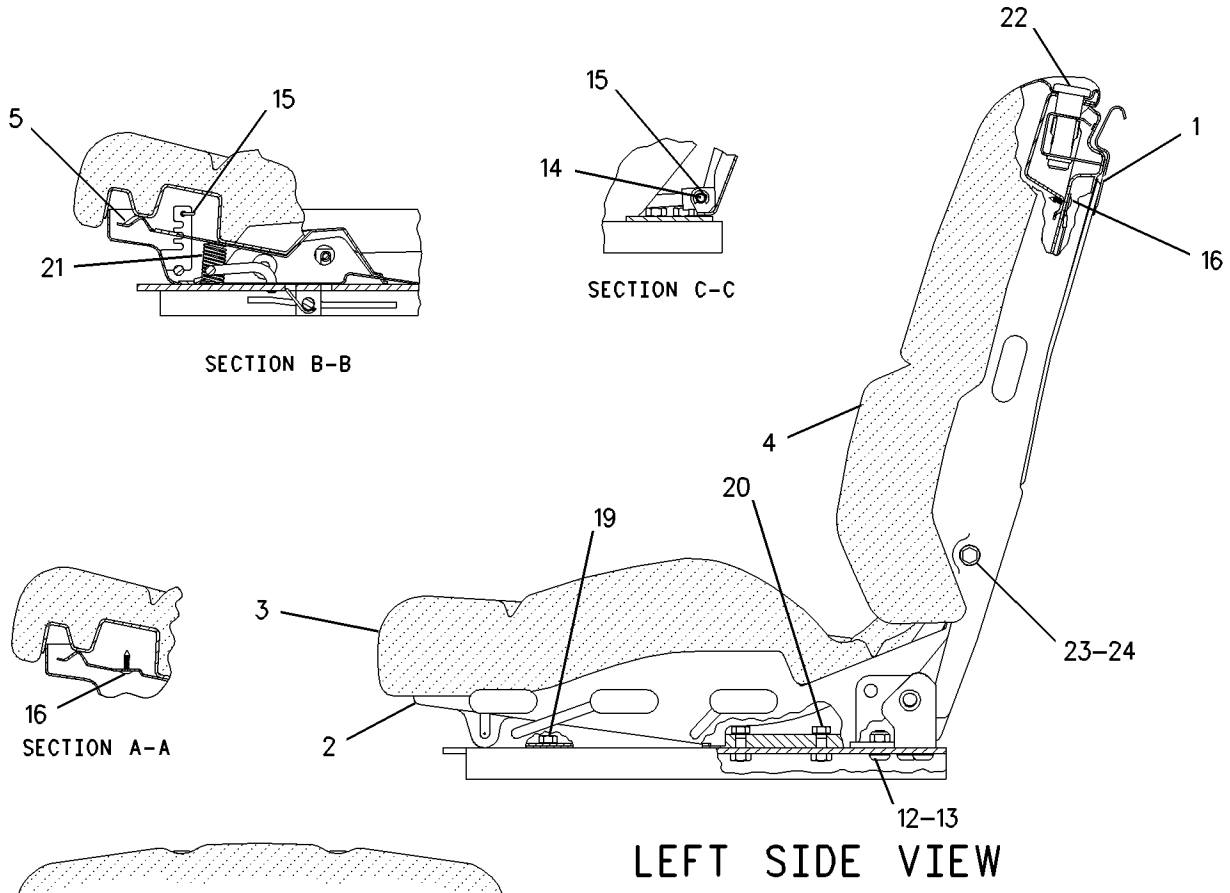

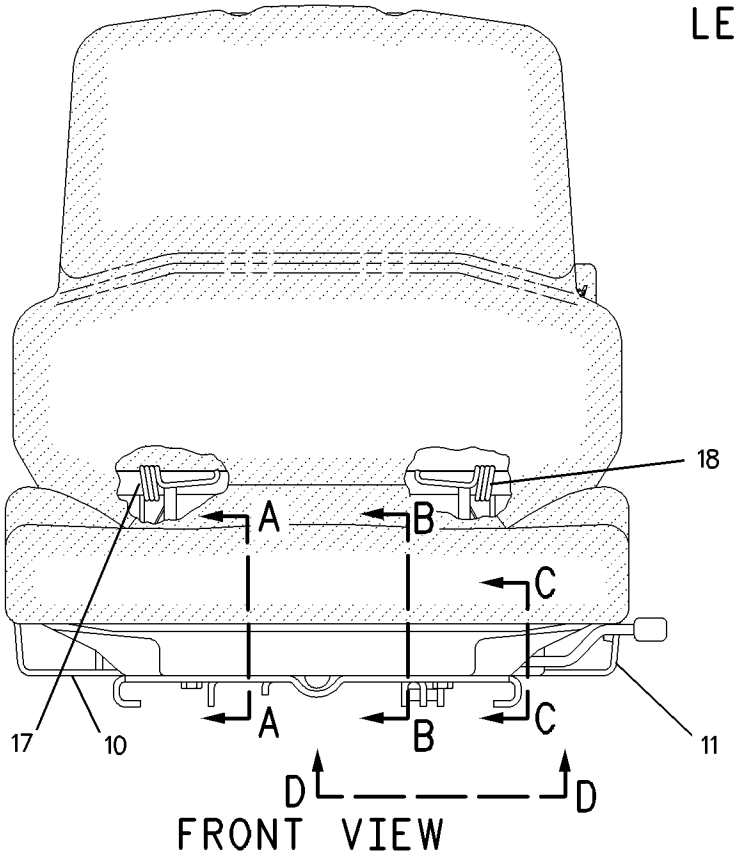

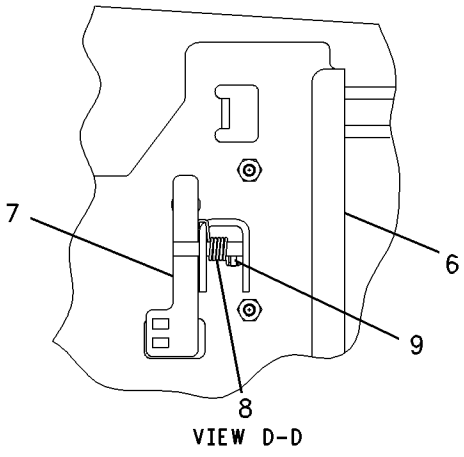

GRAPHIC #1 g00857723

OPERATOR STATION

114-1185 SEAT GP—VINYL

S/N: ASE1-UP
PART OF 112-9105 SEAT GP-SUSPENSION
AN ATTACHMENT

SMCS-7312 **i00793599**

NOTE	REF NO	GRAPHIC REF	PART NUMBER	QTY	PART NAME 1 2 3 4 5 6 (PRODUCT LEVEL)	SEE PAGE
	1	1	**9L-7469**	2	LOCKPIN	
Y	2	1	*113-5810*	1	PAN GP-SEAT	728
	3	1	**9M-5733**	2	RIVET-POP (4.78MM DIA)	
	4	1	**108-8425**	1	CUSHION AS-BACK	
	5	1	**8Y-6051**	2	SPACER (14.24MM THK)	
	6	1	**8Y-5929**	1	PLATE AS-SLIDE	
		1	**4K-9097**	7	NUT-WELD (5/16-18 THD)	
	7	1	**8Y-5932**	1	LATCH AS	
	8	1	**8Y-5936**	1	SPRING	
	9	1	**095-0878**	1	PIN-SPRING	
	10	1	**8Y-5937**	1	BRACKET AS-RH	
	11	1	**8Y-5938**	1	BRACKET AS-LH	
		1	**4D-6432**	1	LOCKNUT (7/16-20 THD)	
	12	1	**7U-4898**	6	SCREW (3/8-16X0.75IN)	
	13	1	**2K-4973**	6	LOCKNUT (3/8-16 THD)	
	14	1	**8Y-5979**	1	PIN	
	15	1	**009-3681**	2	RING-RETAINING	
	16	1	**8Y-5947**	4	FASTENER	
	17	1	**8Y-6833**	1	SPRING-RH	
	18	1	**8Y-6834**	1	SPRING-LH	
	19	1	**1C-0569**	3	BOLT (5/16-18X.5IN)	
	20	1	**2B-2695**	4	BOLT (5/16-18X.875IN)	
	21	1	**8Y-5928**	2	SPRING	
	22	1	**8Y-5981**	2	BUSHING-BACKREST	
	23	1	**7B-7525**	2	BOLT-SOCKET HEAD (7/16-14X1.25IN)	
	24	1	**108-8421**	1	PAN AS-BACK	
	25	1	**3E-4362**	2	PIN-SPRING	
	26	1	**8Y-6006**	1	LID AS	
	27	1	**8Y-6010**	1	LANYARD	
	28	1	**4S-8287**	8	RIVET-POP (6MM DIA)	
	29	1	**8Y-5972**	1	LATCH	
	30	1	**108-8423**	1	SHAFT AS-LUMBAR	
	31	1	**3E-4336**	1	STUD-BALL	
	32	1	**3E-4335**	1	CLIP	
	33	1	**2F-7306**	1	SCREW-MACHINE (6-32X.25IN)	
	34	1	**8F-1462**	1	WASHER-PLATED	
EB	35	1	**3E-6575**		SEAL	
	36	1	**108-8424**	1	PAN-LUMBAR	
	37	1	**8Y-5903**	2	CAM	
					AVAILABLE REPAIR KIT(S):	
			8Y-6933		KIT-TILT PAN	
					(INCLUDES FASTENERS AND PINS)	
			8Y-5957		KIT-SEAT CUSHION	
					(INCLUDES VINYL CUSHION& FASTENERS)	
			149-4745		KIT-SLIDER BLOCK	
					(INCLUDES BOLT)	

B-USE AS REQUIRED
E-ORDER BY THE CENTIMETER
Y-SEPARATE ILLUSTRATION

114-1185 SEAT GP *(contd.)* **i00793599**

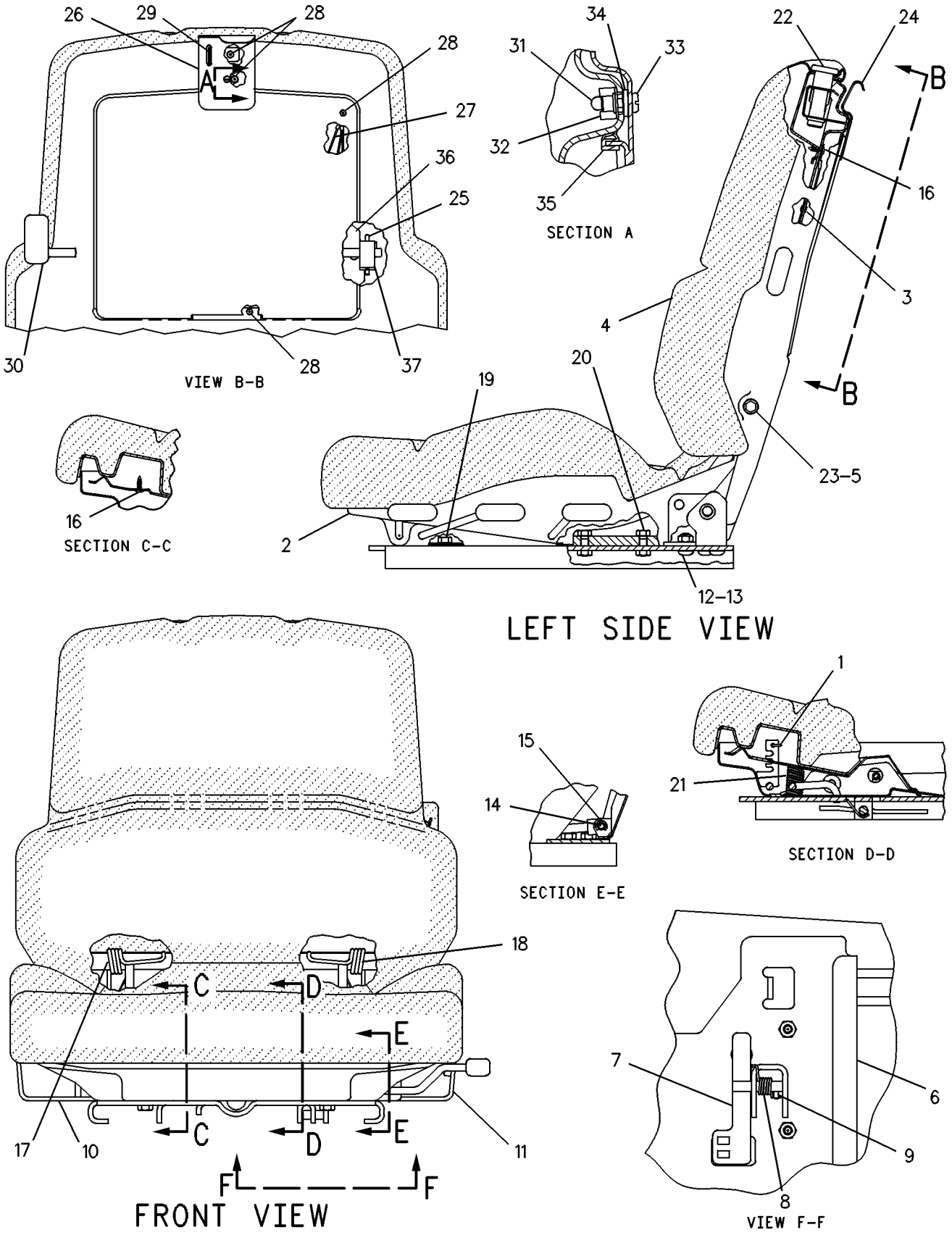

GRAPHIC #1 g00108693

OPERATOR STATION

8Y-4194 SEAT GP-SUSPENSION—CLOTH

S/N: ASE1-UP

PART OF 162-5606 GENERAL AR

SMCS-7312 **i01650457**

NOTE	PART NUMBER	QTY	PART NAME 1 2 3 4 5 6 (PRODUCT LEVEL)	SEE PAGE
M	**9X-2041**	6	SCREW-TRUSS HEAD (M10X1.5X20MM)	
Y	**112-9104**	1	SEAT GP-SUSPENSION (CLOTH LUMBAR)	756

M-METRIC PART
Y-SEPARATE ILLUSTRATION

OPERATOR STATION

8Y-4951 SEAT GP-SUSPENSION—VINYL

S/N: ASE1-UP

PART OF 203-6643 CONVERSION AR-NON-ROPS, 203-6642 ROPS AR-OPEN

AN ATTACHMENT

SMCS-7312 **i01685421**

NOTE	PART NUMBER	QTY	PART NAME 1 2 3 4 5 6 (PRODUCT LEVEL)	SEE PAGE
M	**9X-2041**	6	SCREW-TRUSS HEAD (M10X1.5X20MM)	
Y	**112-9105**	1	SEAT GP-SUSPENSION (VINYL)	757

M-METRIC PART
Y-SEPARATE ILLUSTRATION

OPERATOR STATION

112-9104 SEAT GP-SUSPENSION—CLOTH

S/N: ASE1-UP

PART OF 8Y-4194 SEAT GP-SUSPENSION

SMCS-7312 **i01685771**

NOTE	REF NO	GRAPHIC REF	PART NUMBER	QTY	PART NAME 1 2 3 4 5 6 (PRODUCT LEVEL)	SEE PAGE
Y	1	1	**8Y-5874**	1	EXTENSION GP-BACKREST (CLOTH)	655
Y	2	1	**114-1183**	1	SEAT GP (CLOTH)	750
Y	3	1	**113-4245**	1	ARMREST GP (RH)	625
Y	4	1	**113-4242**	1	ARMREST GP (LH)	624
Y	5	1	**113-5800**	1	SUSPENSION GP-SEAT	764
CY	6	1	**156-1148**	1	SEAT BELT GP (RETRACTABLE)	748
	7	1	**4F-4879**	1	BOLT (3/8-16X.5 IN)	
					AVAILABLE REPAIR KIT(S):	
			149-4745	1	KIT-SLIDER BLOCK	
					(INCLUDES BLOCKS AND BOLT)	

C-CHANGE FROM PREVIOUS TYPE
Y-SEPARATE ILLUSTRATION

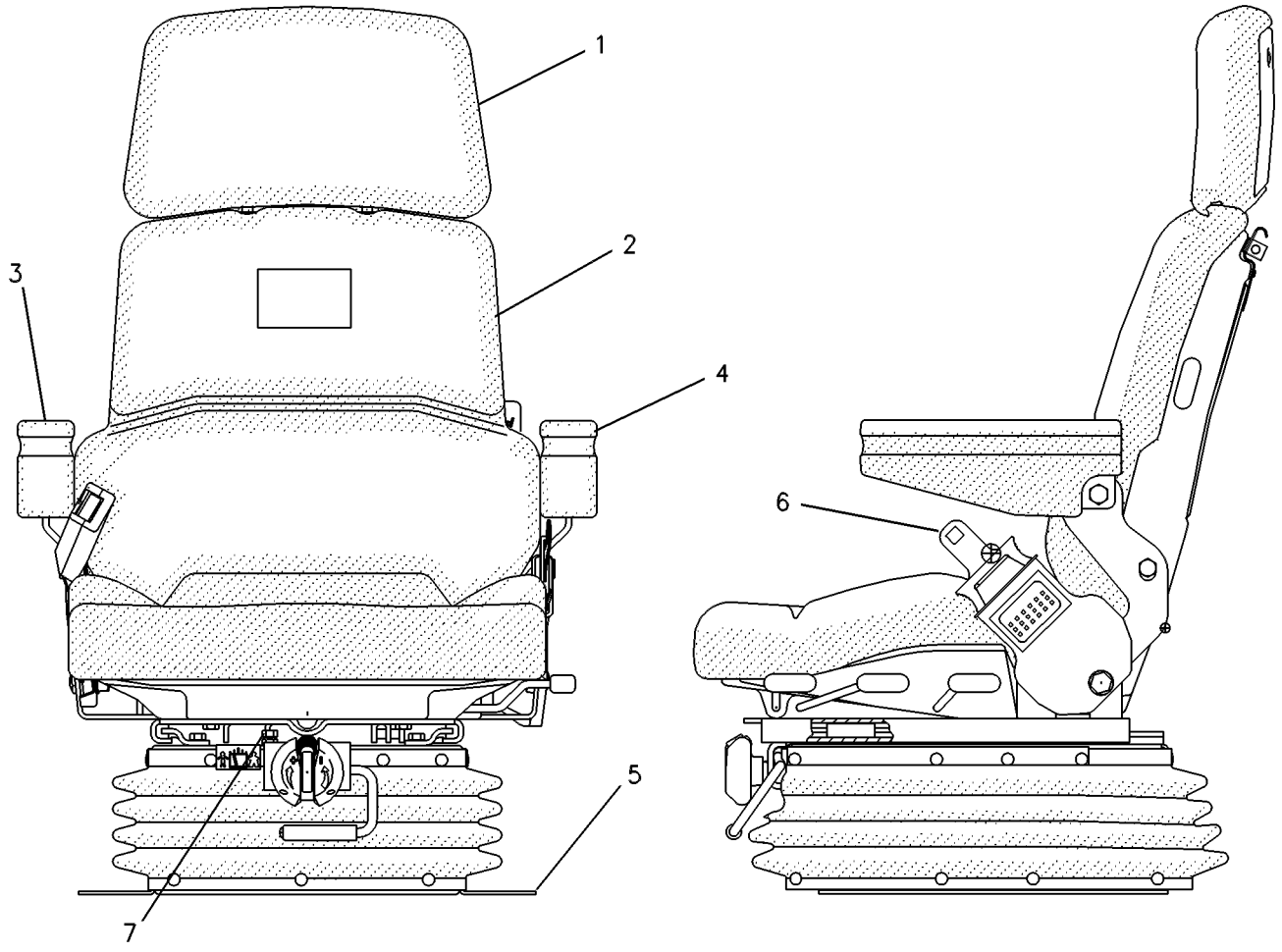

GRAPHIC #1 g00109695

OPERATOR STATION

112-9105 SEAT GP-SUSPENSION–VINYL

S/N: ASE1-UP
PART OF 8Y-4951 SEAT GP-SUSPENSION
AN ATTACHMENT

SMCS-7312 **i01685782**

NOTE	REF NO	GRAPHIC REF	PART NUMBER	QTY	PART NAME 1 2 3 4 5 6 (PRODUCT LEVEL)	SEE PAGE
Y	1	1	**8Y-5959**	1	EXTENSION GP-BACKREST (VINYL)	656
Y	2	1	**114-1185**	1	SEAT GP (VINYL)	752
Y	3	1	**113-4245**	1	ARMREST GP (RH)	625
Y	4	1	**113-4242**	1	ARMREST GP (LH)	624
Y	5	1	**113-5800**	1	SUSPENSION GP-SEAT	764
Y	6	1	**156-1148**	1	SEAT BELT GP (RETRACTABLE)	748
	7	1	**4F-4879**	1	BOLT (3/8-16X.5 IN)	
	8	1	**149-4745**	1	KIT-SLIDER BLOCK	

Y-SEPARATE ILLUSTRATION

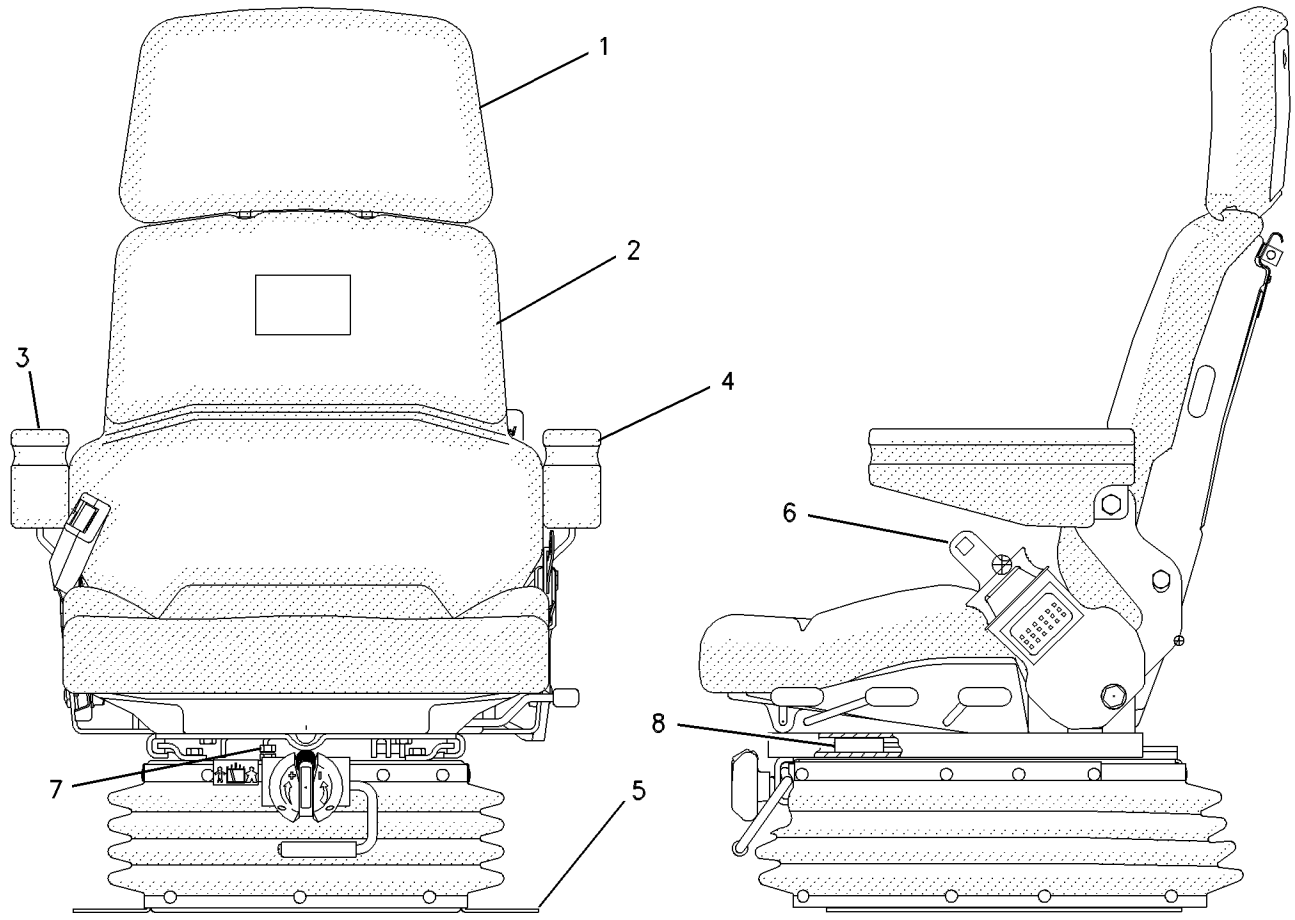

GRAPHIC #1 g00505321

OPERATOR STATION

154-5732 SEAT GP-SUSPENSION–CLOTH

S/N: ASE1-UP
PART OF 156-7778 SEAT GP-SUSPENSION
AN ATTACHMENT

SMCS-7312 **i01655332**

NOTE	REF NO	GRAPHIC REF	PART NUMBER	QTY	PART NAME 1 2 3 4 5 6 (PRODUCT LEVEL)	SEE PAGE
Y	1	1	**155-5959**	1	SUSPENSION GP-SEAT (CLOTH) (AIR)	766
Y	2	1	**155-5958**	1	SEAT GP-SUSPENSION (CLOTH) (AIR)	759
	3	1	**4F-4879**	1	BOLT (3/8-16X.5 IN)	
					AVAILABLE REPAIR KIT(S):	
			166-7225	1	KIT-SLIDER BLOCK	

Y-SEPARATE ILLUSTRATION

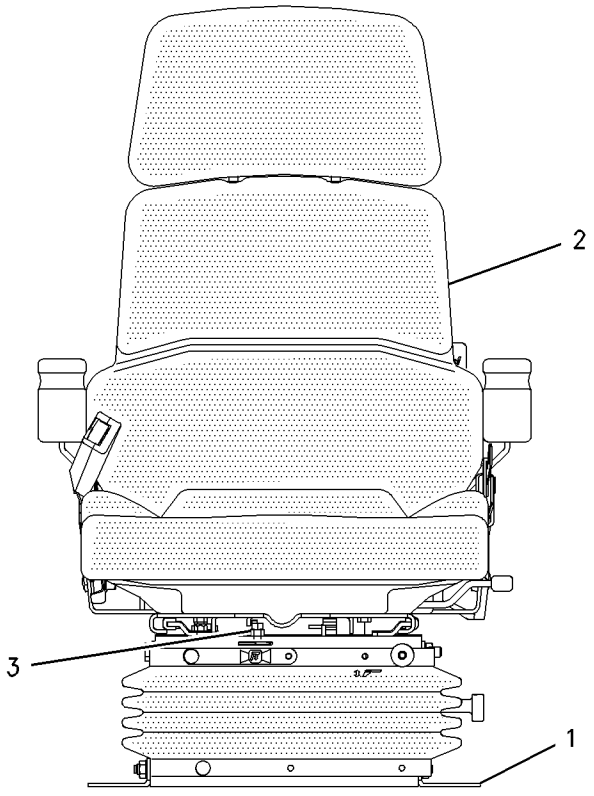

GRAPHIC #1 g00809050

155-5958 SEAT GP-SUSPENSION—CLOTH—BACK REST

S/N: ASE1-UP
PART OF 154-5732 SEAT GP-SUSPENSION
AN ATTACHMENT

SMCS-7312 **i01655334**

NOTE	REF NO	GRAPHIC REF	PART NUMBER	QTY	PART NAME 1 2 3 4 5 6 (PRODUCT LEVEL)	SEE PAGE
Y	1	1	**8Y-5874**	1	EXTENSION GP-BACKREST (CLOTH) (AIR)	655
Y	2	1	**114-1183**	1	SEAT GP (CLOTH)	750
Y	3	1	**113-4242**	1	ARMREST GP (LH)	624
Y	4	1	**113-4245**	1	ARMREST GP (RH)	625
Y	5	1	**156-1148**	1	SEAT BELT GP (RETRACTABLE)	748

Y-SEPARATE ILLUSTRATION

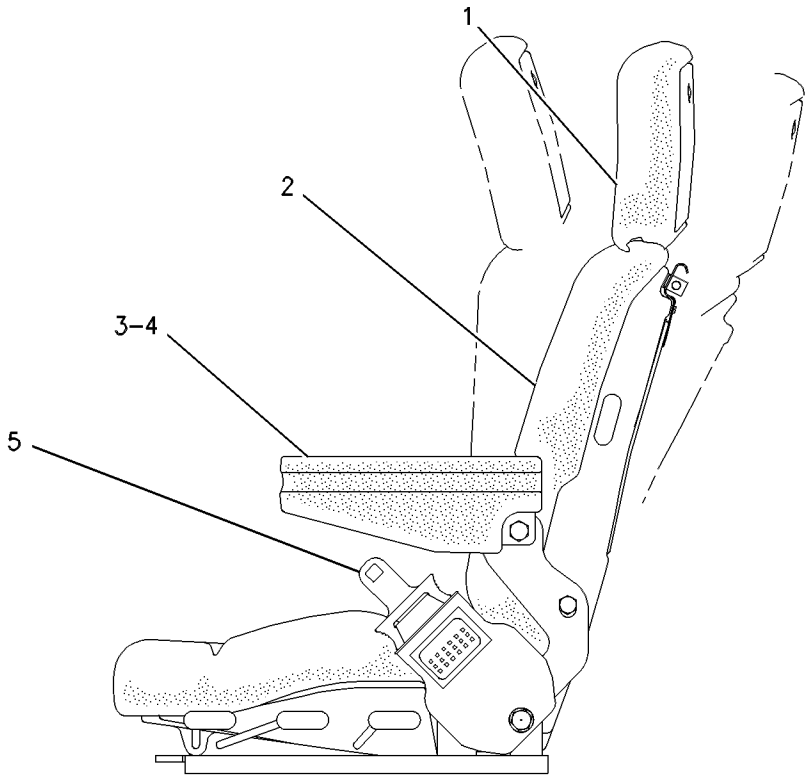

GRAPHIC #1 g00513814

OPERATOR STATION

156-7778 SEAT GP-SUSPENSION—CLOTH

S/N: ASE1-UP
AN ATTACHMENT

SMCS-7312 **i01161448**

NOTE	REF NO	GRAPHIC REF	PART NUMBER	QTY	PART NAME 1 2 3 4 5 6 (PRODUCT LEVEL)	SEE PAGE
B	1	1	**1F-1651**	1	TEE-PIPE	
	2	1	**2R-1922**	1	CONNECTOR	
	3	1	**3D-9253**	1	CONNECTOR-PIPE	
	4	1	**3G-7875**	1	HOSE AS	
	5	1	**3S-2093**	3	STRAP-CABLE	
	6	1	**5D-0269**	1	ELBOW	
	7	1	**5K-2408**	1	NIPPLE-HEX	
	8	1	**091-0081**	1	SPACER (10.0MM THK)	
Y	9	1	*154-5732*	1	SEAT GP-SUSPENSION	758
	10	1	**157-6129**	1	GROMMET	
	11	1	**160-2353**	1	HOSE AS	
	12	1	**161-2444**	1	VALVE AS	
	13	1	**161-2445**	1	VALVE AS-FILTER	
	14	1	**4D-7794**	1	CLIP (10.0MM ID)	
	15	1	**5H-8936**	1	ADAPTER	
B	16	1	**7J-8611**	1	ELBOW (1/4-18 NPTF)	
M	17	1	**9X-2039**	1	SCREW-TRUSS HEAD (M10X1.5X35MM)	
M	18	1	**9X-2041**	6	SCREW-TRUSS HEAD (M10X1.5X20MM)	

B-USE AS REQUIRED
M-METRIC PART
Y-SEPARATE ILLUSTRATION

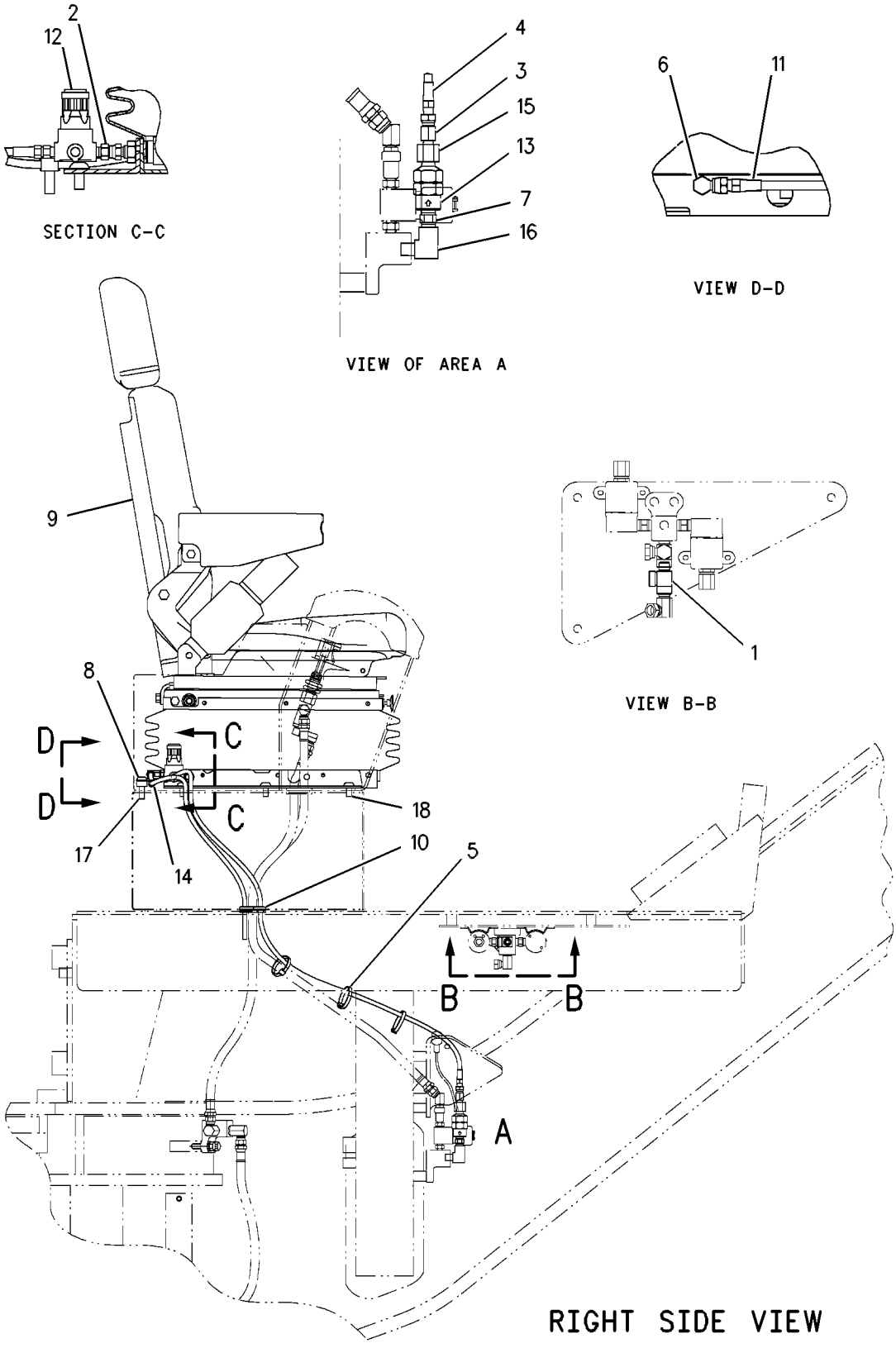

GRAPHIC #1 g00618801

OPERATOR STATION

174-4546 SUPPORT GP-SEAT

S/N: ASE1-UP

PART OF 162-5606 GENERAL AR

SMCS-7321 **i01506348**

NOTE	REF NO	GRAPHIC REF	PART NUMBER	QTY	PART NAME 1 2 3 4 5 6 (PRODUCT LEVEL)	SEE PAGE
	1	1	**5P-7803**	2	PLUG-BUTTON	
	2	1	**7G-4824**	1	STRAP	
	4	1	**8E-7791**	1	STRAP	
	5	1	**8X-5536**	1	COVER	
	6	1	**8X-5538**	1	COVER AS	
M		1	**8T-3490**	4	NUT-WELD (M10X1.5 THD)	
	7	1	**8X-5540**	1	COVER	
	8	1	**123-4618**	1	COVER	
	9	1	**123-4701**	1	SEAL	
	10	1	**174-4492**	1	COVER	
	11	1	**174-6051**	1	SUPPORT AS	
		1	**5P-1075**	8	WASHER-HARD (10.2X22.5X3MM THK)	
M		1	**6V-9632**	6	NUT-WELD (M6X1 THD)	
M		1	**8T-3490**	13	NUT-WELD (M10X1.5 THD)	
M		1	**9T-6001**	2	BOSS (M10X1.5X25MM)	
		1	**123-8408**	2	TUBE AS	
	12	1	**174-6353**	1	PLATE	
	13	1	**176-5507**	1	PAD	
	14	1	**191-0027**	1	PAD	
	15	1	**5P-1075**	8	WASHER-HARD (10.2X22.5X3MM THK)	
	16	1	**6V-8801**	8	NUT (3/8-16 THD)	
	17	1	**7X-0591**	2	WASHER-HARD (17X29X3MM THK)	
M	18	1	**9X-2040**	4	SCREW-TRUSS HEAD (M10X1.5X25MM)	
M	19	1	**9X-2041**	5	SCREW-TRUSS HEAD (M10X1.5X20MM)	
M	20	1	**9X-2045**	6	SCREW-TRUSS HEAD (M6X1X20MM)	

M-METRIC PART

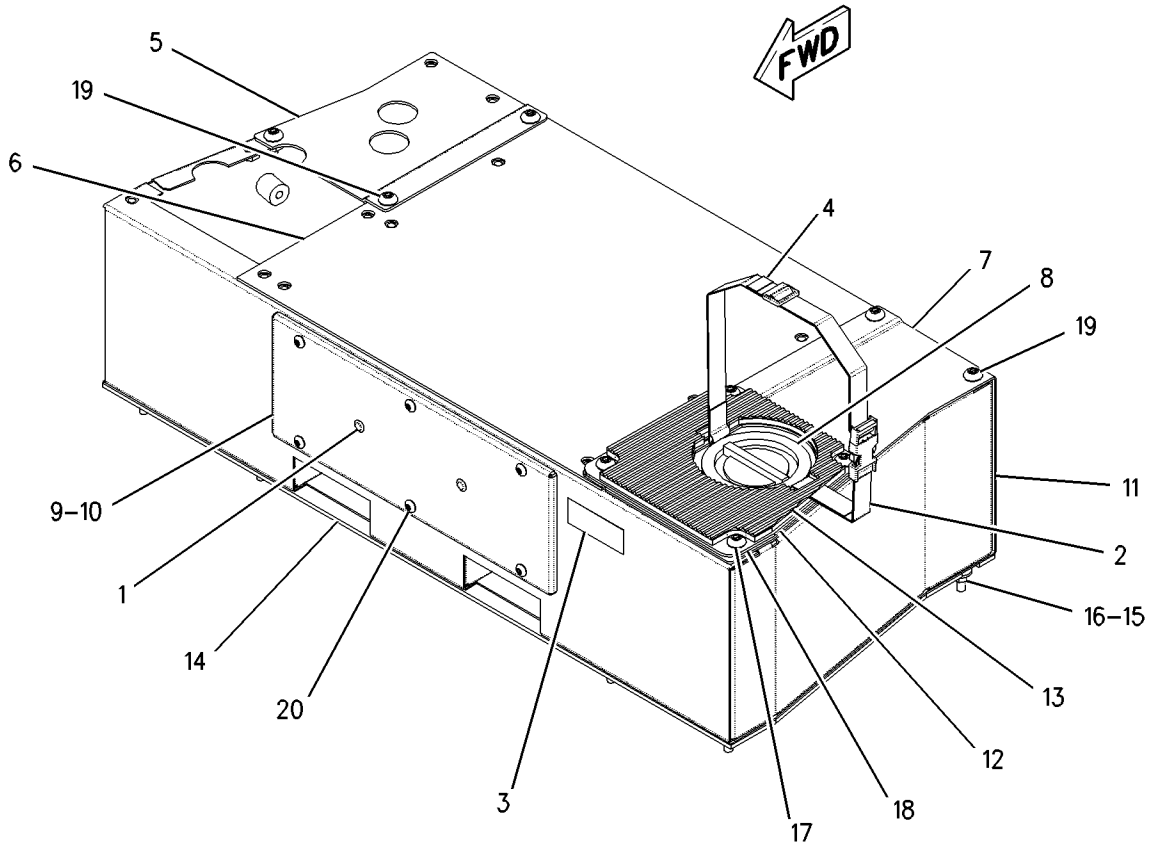

GRAPHIC #1 g00792019

OPERATOR STATION

113-5800 SUSPENSION GP-SEAT

S/N: ASE1-UP

PART OF 112-9104, 112-9105 SEAT GP-SUSPENSION

ALSO AN ATTACHMENT

SMCS-7324 **i01485167**

NOTE	REF NO	GRAPHIC REF	PART NUMBER	QTY	PART NAME 1 2 3 4 5 6 (PRODUCT LEVEL)	SEE PAGE
	1	1	**8Y-6022**	1	PLATE-SLIDE	
	2	1	**8Y-6023**	1	PLATE-SLIDE	
	3	1	**5M-3062**	2	BOLT (3/8-16X0.75 IN)	
	4	1	**5P-1075**	4	WASHER-HARD (10.2X22.5X3MM THK)	
	5	1	**2K-4973**	6	LOCKNUT (3/8-16 THD)	
	6	1	**113-5804**	1	HOUSING AS-LOWER	
Y	7	1	**113-5808**	1	HOUSING GP-SEAT SUSPENSION	680
	8	1	**8Y-6012**	1	ARM AS-SUSPENSION	
	9	1	**1D-4677**	4	BOLT-ROUND HEAD (3/8-16X1 IN)	
J	10	1	**101-0003**	20	FASTENER	
J	11	1	**163-1146**	3	FASTENER	
J	12	1	**166-6781**	6	FASTENER	
	13	1	**5V-1497**	1	RETAINER	
	14	1	**4V-7884**	2	BEARING	
	15	1	**4V-8577**	4	BEARING	
	16	1	**8Y-6024**	2	SHAFT AS	
	17	1	**124-0507**	1	ABSORBER-SHOCK	
	18	1	**145-0326**	1	FILM-INSTRUCTION (SEAT ADJUSTMENT)	
JZ	19	1		2	RETAINER	
LZ	20	1		2	BELT	
PZ	21	1		4	ROLLER	
JZ	22	1		1	BOOT	
	23	1	**197-7689**	3	FASTENER	
					AVAILABLE REPAIR KIT(S):	
J			**8Y-5944**	1	KIT-SUSPENSION BOOT	
L			**101-4194**	1	KIT-BELT TETHER	
P			**101-4195**	1	KIT-SUSPENSION ROLLER	

J-KIT MARKED J INCLUDES PARTS MARKED J
L-KIT MARKED L INCLUDES PARTS MARKED L
P-KIT MARKED P INCLUDES PARTS MARKED P
Y-SEPARATE ILLUSTRATION
Z-NOT SERVICED SEPARATELY

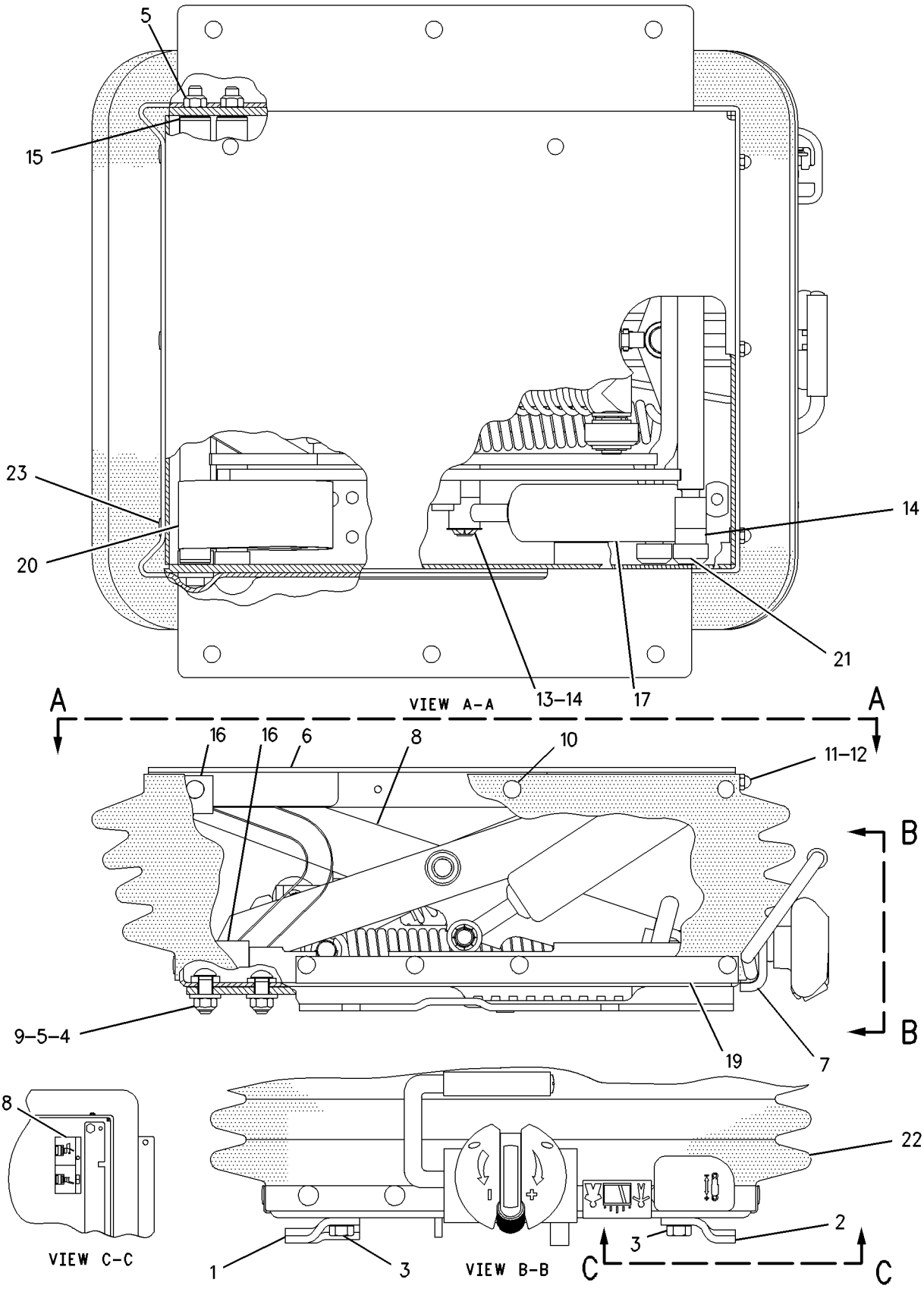

GRAPHIC #1

g00772424

OPERATOR STATION

155-5959 SUSPENSION GP-SEAT—AIR

S/N: ASE1-UP
PART OF 154-5732 SEAT GP-SUSPENSION
AN ATTACHMENT

SMCS-7324 **i01604736**

NOTE	REF NO	GRAPHIC REF	PART NUMBER	QTY	PART NAME 1 2 3 4 5 6 (PRODUCT LEVEL)	SEE PAGE
	1	1	**3J-4818**	4	LOCKWASHER	
	2	1	**102-6317**	4	BUMPER	
	3	1	**123-8157**	2	SHAFT	
	4	1	**128-0686**	2	SPACER (9.78X15.88X27.8MM THK)	
	5	1	**128-5082**	1	BOOT	
	6	1	**128-5084**	1	ABSORBER-SHOCK	
	7	1	**128-5085**	1	KNOB-DAMPER (SEAT)	
	8	1	**147-4549**	2	FITTING-ELBOW	
	9	1	**147-6522**	1	SPRING	
	10	1	**148-3749**	1	SCISSORS AS	
	11	1	**149-2400**	1	FITTING	
	12	1	**149-2402**	1	VALVE AS (SEAT)	
	13	1	**158-3198**	1	HOUSING AS	
	14	1	**160-3662**	2	FITTING-BULKHEAD	
B	15	1	**160-7765**	1	WASHER (16.26X22.23X1.97MM THK)	
B	16	1	**160-7766**	6	WASHER (16.26X22.23X0.51MM THK)	
B	17	1	**160-7767**	6	WASHER (3.68X12.57X0.51MM THK)	
	18	1	**166-7224**	1	HOUSING AS	
	19	1	**1B-4430**	4	NUT-JAM (1/2-20 THD)	
	20	1	**2K-4973**	3	LOCKNUT (3/8-16 THD)	
	21	1	**4V-7884**	2	BEARING	
	22	1	**4V-8556**	1	BOLT (3/8-16X2.34 IN)	
	23	1	**5P-8167**	1	BOLT (3/8-16X0.625 IN)	
	24	1	**8L-8413**	3	STRAP-CABLE	
	25	1	**7X-7739**	1	WASHER (9.7X25.4 X4MM THK)	
	26	1	**8M-3267**	1	SCREW-HEX SOCKET (3/8-16X0.75 IN)	
	27	1	**8T-2501**	2	BOLT (3/8-16X2 IN)	
BE	28	1	**147-6541**		TUBE	
	29	1	**145-0326**	1	FILM-INSTRUCTION (SEAT ADJUSTMENT)	
F		1	**4F-4879**	1	BOLT (3/8-16X.5 IN)	
					AVAILABLE REPAIR KIT(S):	
			8Y-6928	1	KIT-FASTENER (SEAT)	
					(INCLUDES CLIPS-RACHET)	
			123-9128	1	KIT-ROLLER (SEAT)	
					(INCLUDES BEARINGS, ROLLERS, TIE WRAP)	
			128-0613	1	KIT-TETHER (SEAT)	
					(INCLUDES TETHERS)	
			132-3439	1	KIT-INDICATOR (SEAT)	
					(INCLUDES MAGNET, CAM, INDICATOR, NUT, SPRING, LABEL)	

B-USE AS REQUIRED
E-ORDER BY THE CENTIMETER
F-NOT SHOWN

155-5959 SUSPENSION GP-SEAT *(contd.)* i01604736

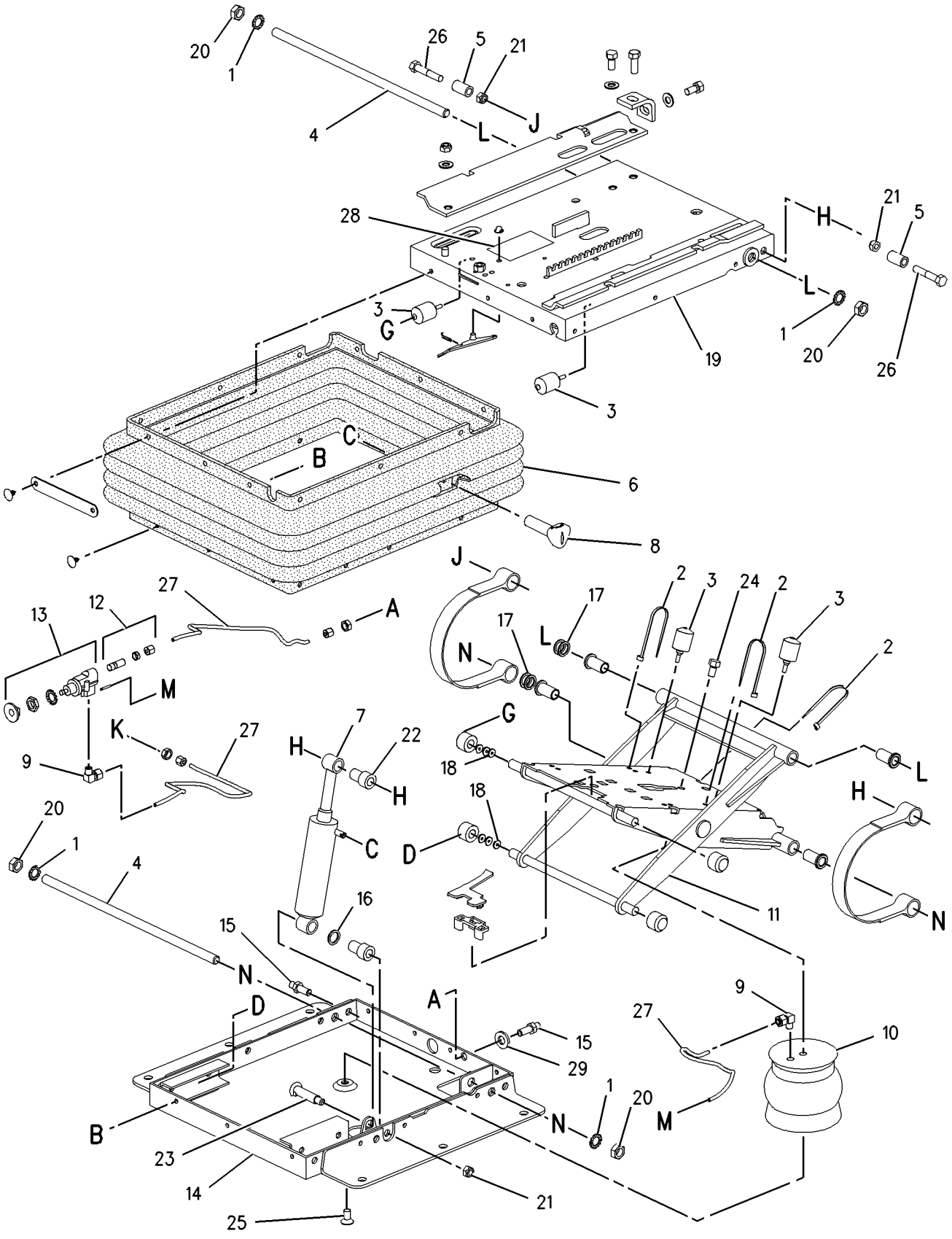

GRAPHIC #1 g00773707

OPERATOR STATION

8X-9675 WASHER GP-WINDOW—FRONT

S/N: ASE1-UP
PART OF 161-1141, 179-3581 ROPS AR-ENCLOSED
ALSO AN ATTACHMENT

SMCS-7306 **i01179092**

NOTE	REF NO	GRAPHIC REF	PART NUMBER	QTY	PART NAME 1 2 3 4 5 6 (PRODUCT LEVEL)	SEE PAGE
BE	1	1	**144-0195**		HOSE	
	2	1	**8W-0935**	1	GASKET	
	3	1	**8W-0934**	1	BRACKET	
	4	1	**9P-2369**	1	JET AS-WASHER	
	5	1	**8T-2901**	1	NOZZLE AS	
M	7	1	**5C-2890**	2	NUT (M6X1.00 THD)	
	8	1	**5P-4115**	2	WASHER (2MM THK)	
	9	1	**3S-2093**	3	STRAP-CABLE	
	10	1	**102-3645**	1	COVER	
M	11	1	**9X-2045**	5	SCREW-TRUSS HEAD (M6X1X20MM)	
	12	1	**4D-7388**	2	CLIP (34.92MM ID)	
	13	1	**5M-3062**	1	BOLT (3/8-16X.75IN)	
	14	1	**8T-4896**	2	WASHER-HARD (2.5MM THK)	
	15	1	**7T-8891**	2	PUMP AS-WASHER	
	16	1	**8X-9405**	1	RESERVOIR AS	
	17	1	**8X-5280**	2	CONNECTOR	
	18	1	**6W-5698**	2	GROMMET	
	19	1	**7T-1961**	1	CAP	
	20	1	**8X-1135**	1	GASKET	
	21	1	**8X-9349**	1	PAD	
	22	1	**107-4865**	1	PAD	
		1	**8X-7743**	1	RESERVOIR	
	24	1	**4L-6454**	1	BOLT (3/8-16X1.0IN)	
	25	1	**6V-8801**	1	NUT (3/8-16 THD)	
	26	1	**7G-4326**	1	PLATE	

B-USE AS REQUIRED
E-ORDER BY THE CENTIMETER
M-METRIC PART

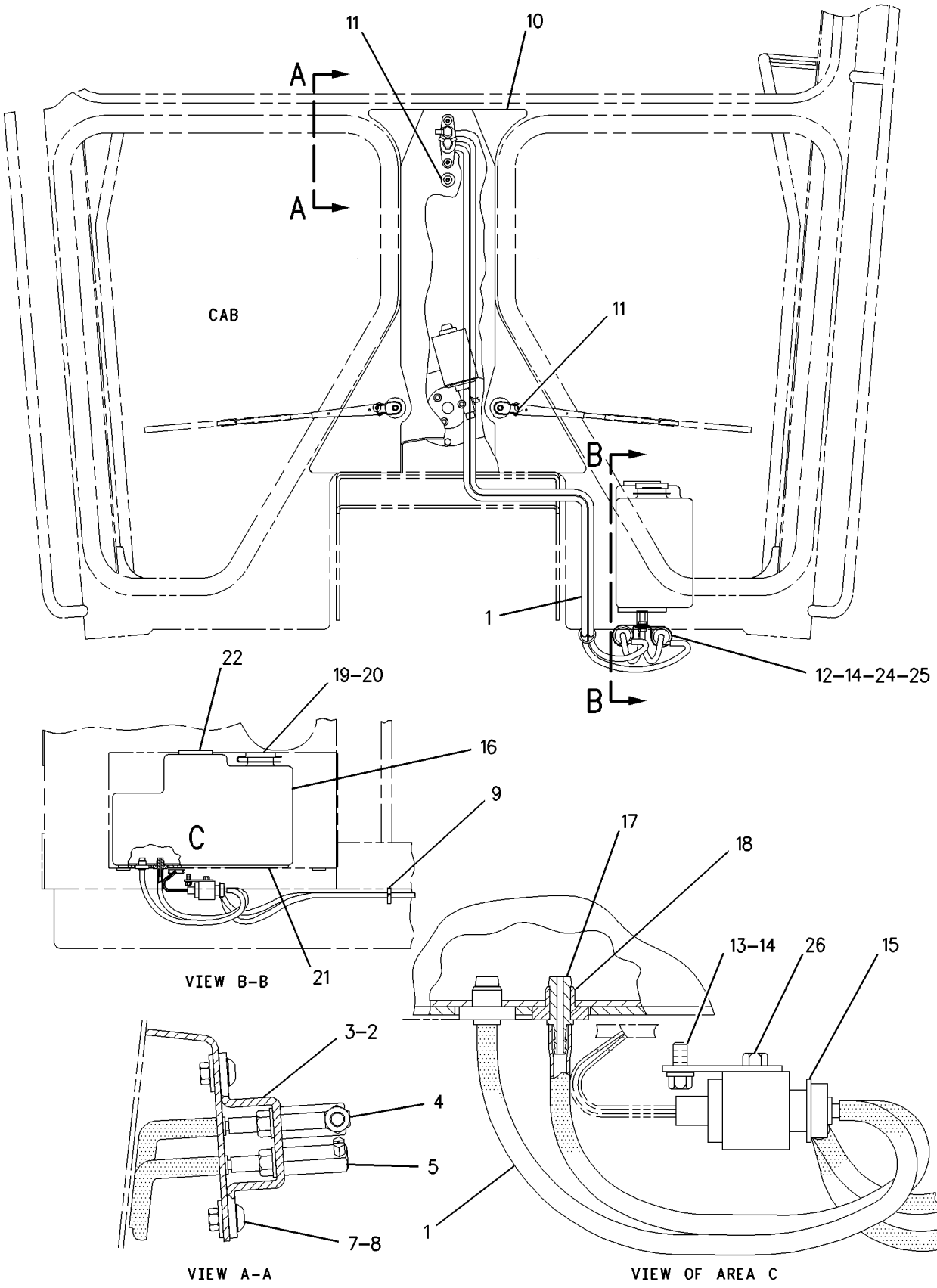

GRAPHIC #1

g00631358

OPERATOR STATION

8X-9680 WASHER GP-WINDOW–REAR

S/N: ASE1-UP
PART OF 177-8830, 177-8831 WIPER AR-WINDOW
AN ATTACHMENT

SMCS-7306 **i01327300**

NOTE	REF NO	GRAPHIC REF	PART NUMBER	QTY	PART NAME 1 2 3 4 5 6 (PRODUCT LEVEL)	SEE PAGE
	1	1	**4D-7794**	1	CLIP (10.0MM ID)	
	2	1	**7T-8891**	1	PUMP AS-WASHER	
	3	1	**8T-4896**	2	WASHER-HARD (10.2X18.5X2.5MM THK)	
	4	1	**5P-8167**	2	BOLT (3/8-16X.625 IN)	
	5	1	**4D-7388**	1	CLIP (34.92MM ID)	
	6	1	**3V-3816**	1	NOZZLE AS	
	7	1	**6K-9632**	1	TEE	
E	8	1	**144-0195**		HOSE (200 CM)	

E-ORDER BY THE CENTIMETER

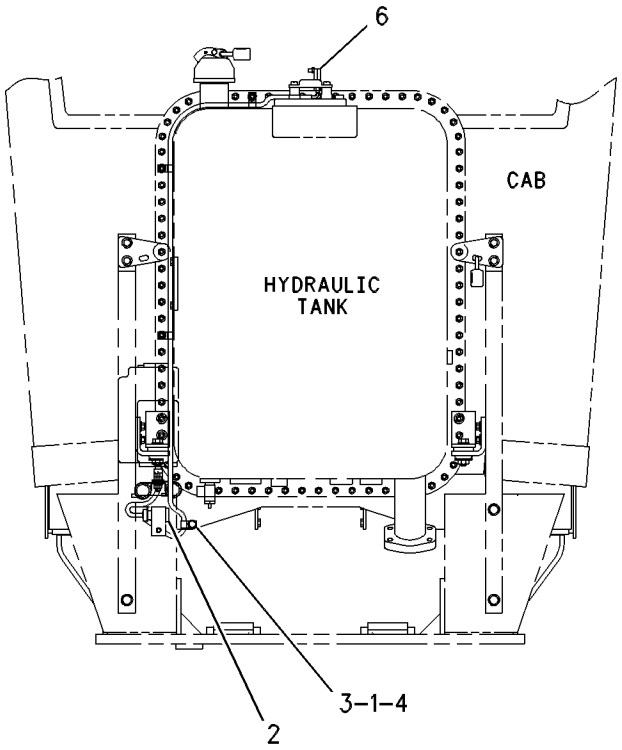

REAR VIEW

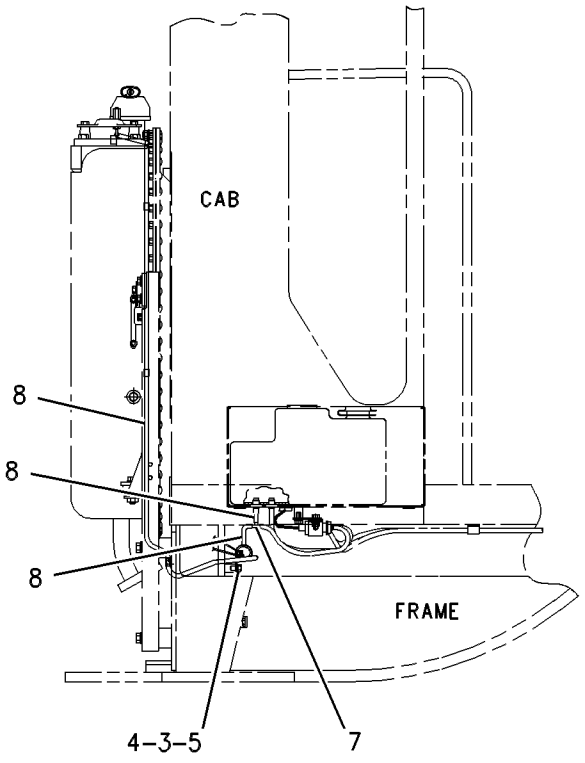

RIGHT SIDE VIEW

GRAPHIC #1 g00638832

OPERATOR STATION

126-0961 WINDOW GP–VENT–CAB

S/N: ASE1-UP
AN ATTACHMENT

SMCS-7310, 7340 **i01655308**

NOTE	REF NO	GRAPHIC REF	PART NUMBER	QTY	PART NAME 1 2 3 4 5 6 (PRODUCT LEVEL)	SEE PAGE
CY	1	1	**150-5107**	1	PANEL GP-WINDOW (LH)	738
CY	2	1	**150-5106**	1	PANEL GP-WINDOW (RH)	736
	3	1	**5T-3093**	2	HANDLE	
BD	4	1	**5P-5969**		SEAL	
M	5	1	**8T-0352**	4	BOLT (M5X0.8X45MM)	
	6	1	**8T-0328**	56	WASHER-HARD (5.5X10X1MM THK)	
M	7	1	**7Y-5226**	28	NUT (M5X0.8 THD)	
M	8	1	**8T-0335**	24	BOLT (M5X0.8X40MM)	
	9	1	**6V-8255**	2	BLADE AS-WIPER (VENT FRONT LOWER)	

B-USE AS REQUIRED
C-CHANGE FROM PREVIOUS TYPE
D-ORDER BY THE METER
M-METRIC PART
Y-SEPARATE ILLUSTRATION

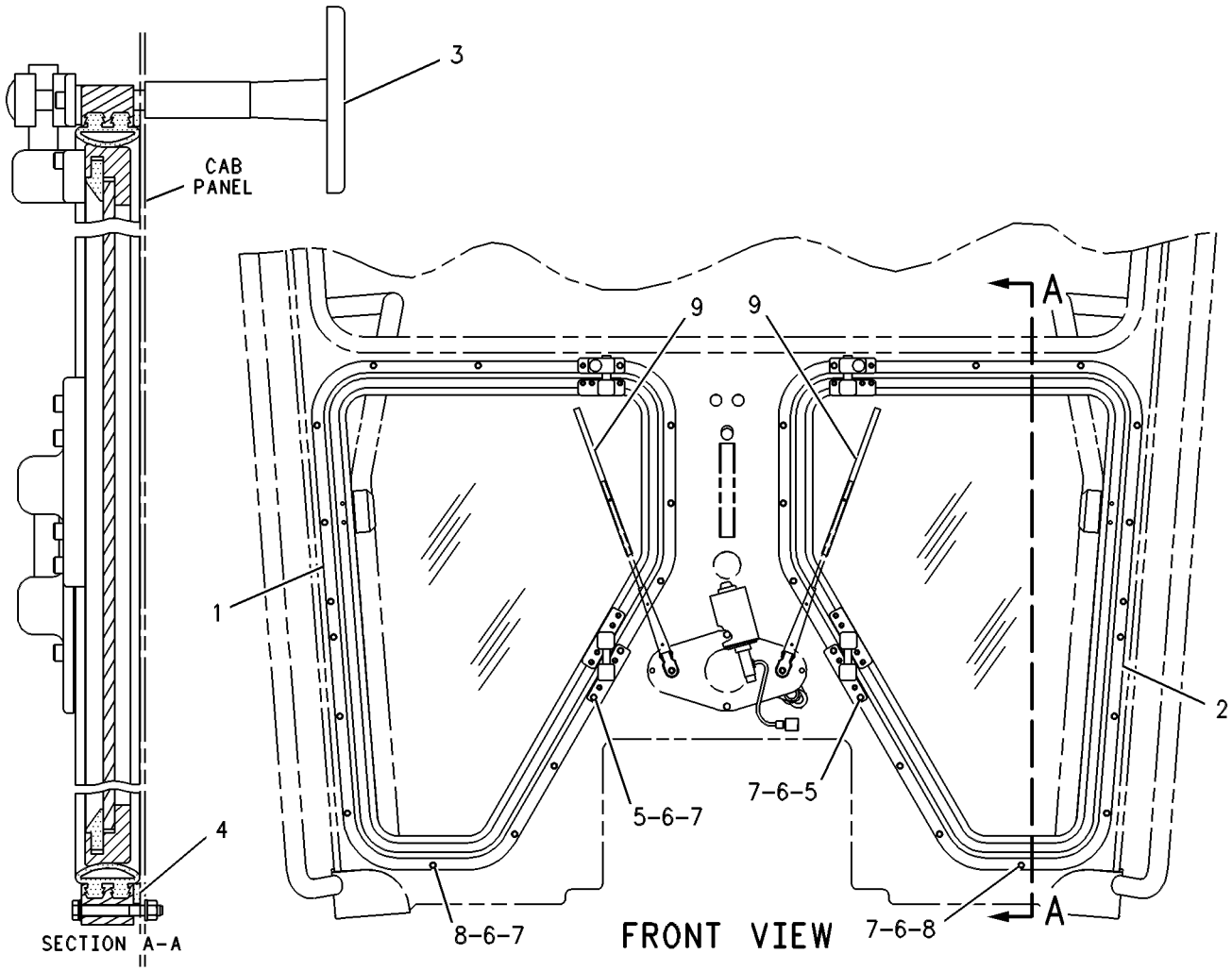

GRAPHIC #1 g00108855

OPERATOR STATION

134-8232 WINDOW GP—SIDE SLIDING HIGH PROFILE

S/N: ASE1-UP
PART OF 139-6129 WINDOW GP
AN ATTACHMENT

SMCS-7310, 7340 **i01063098**

NOTE	REF NO	GRAPHIC REF	PART NUMBER	QTY	PART NAME 1 2 3 4 5 6 (PRODUCT LEVEL)	SEE PAGE
	1	1	**5M-9695**	4	SCREW	
	2	1	**5P-7162**	2	SCREW-MACHINE (10-32 THD)	
	3	1	**8C-6738**	2	SCREW-PAN HEAD	
	4	1	**9X-6019**	4	LOCKSCREW	
	5	1	**104-5958**	2	NUT	
	6	1	**109-0146**	2	STOP-SLIDE	
	7	1	**139-9132**	1	LATCH AS	
	8	1	**139-9138**	1	GLASS-SLIDING	
	9	1	**139-9134**	1	POST-CENTER	
	10	1	**139-9135**	1	GLASS-FIXED	
	11	1	**139-9137**	1	CATCH	
E	12	1	**8Y-6981**		SEAL (21 CM)	
E	13	1	**139-9136**		SEAL-WEATHER (285 CM)	
D	14	1	**5P-5627**		SEAL (1 M)	
E	15	1	**8Y-6982**		SEAL (188 CM)	

D-ORDER BY THE METER
E-ORDER BY THE CENTIMETER

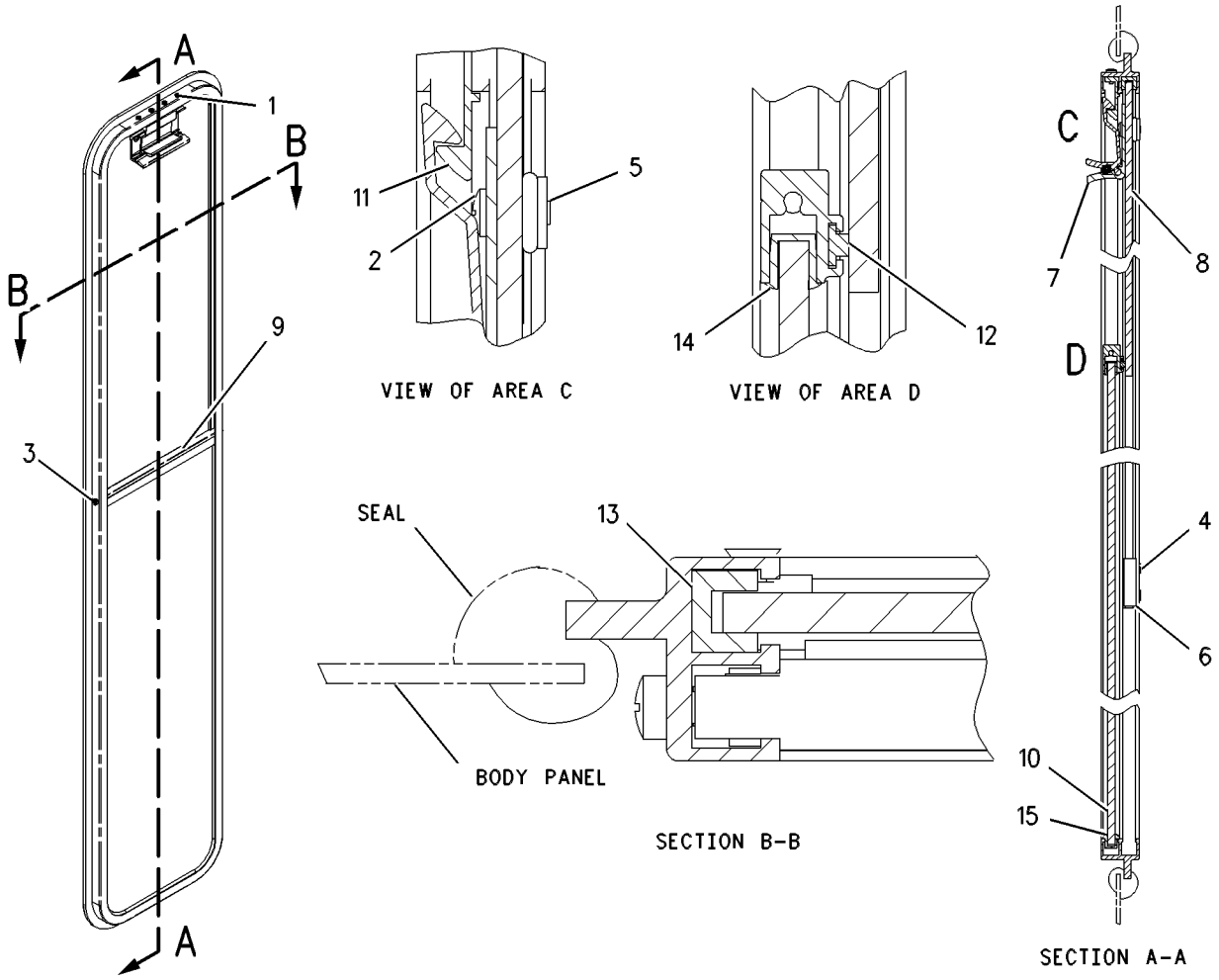

GRAPHIC #1 g00552811

OPERATOR STATION

134-8233 WINDOW GP—SIDE SLIDING LOW PROFILE

S/N: ASE1-UP
PART OF 139-6128 WINDOW GP
AN ATTACHMENT

SMCS-7310, 7340 **i01063096**

NOTE	REF NO	GRAPHIC REF	PART NUMBER	QTY	PART NAME 1 2 3 4 5 6 (PRODUCT LEVEL)	SEE PAGE
	1	1	**5M-9695**	4	SCREW	
	2	1	**5P-7162**	2	SCREW-MACHINE (10-32 THD)	
	3	1	**8C-6738**	2	SCREW-PAN HEAD	
	4	1	**9X-6019**	4	LOCKSCREW	
	5	1	**104-5958**	2	NUT	
	6	1	**109-0146**	2	STOP-SLIDE	
	7	1	**139-9132**	1	LATCH AS	
	8	1	**139-9133**	1	GLASS-SLIDING	
	9	1	**139-9134**	1	POST-CENTER	
	10	1	**139-9135**	1	GLASS-FIXED	
	11	1	**139-9137**	1	CATCH	
E	12	1	**8Y-6981**		SEAL (21 CM)	
E	13	1	**139-9136**		SEAL-WEATHER (194 CM)	
D	14	1	**5P-5627**		SEAL (1 M)	
E	15	1	**8Y-6982**		SEAL (188 CM)	

D-ORDER BY THE METER
E-ORDER BY THE CENTIMETER

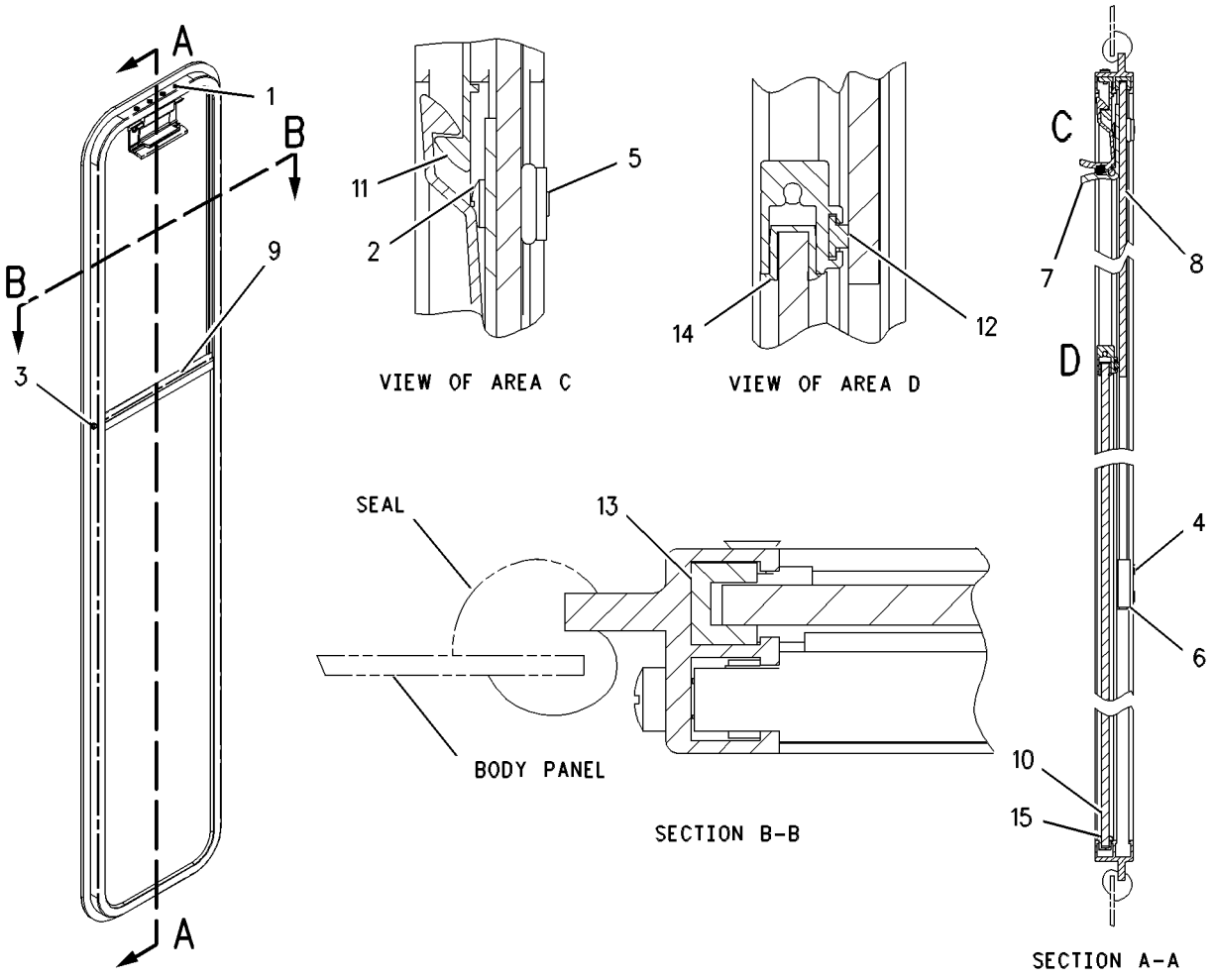

GRAPHIC #1 g00552809

OPERATOR STATION

139-6128 WINDOW GP—SIDE SLIDING —LOW PROFILE

S/N: ASE1-UP

AN ATTACHMENT

SMCS-7310, 7340 **i01650502**

NOTE	REF NO	GRAPHIC REF	PART NUMBER	QTY	PART NAME 1 2 3 4 5 6 (PRODUCT LEVEL)	SEE PAGE
Y	1	1	**134-8233**	2	WINDOW GP (SIDE SLIDE LOW PROFILE)	773

Y-SEPARATE ILLUSTRATION

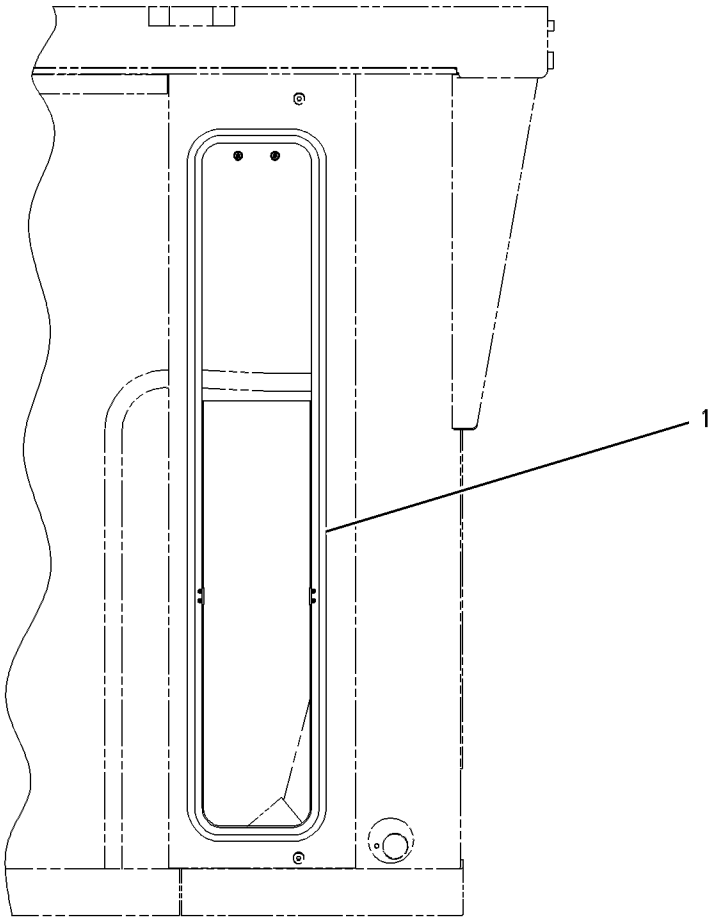

GRAPHIC #1 g00301642

OPERATOR STATION

139-6129 WINDOW GP—SIDE SLIDING—HIGH PROFILE

S/N: ASE1-UP
AN ATTACHMENT

SMCS-7310, 7340 **i01650505**

NOTE	REF NO	GRAPHIC REF	PART NUMBER	QTY	PART NAME 1 2 3 4 5 6 (PRODUCT LEVEL)	SEE PAGE
Y	1	1	**134-8232**	2	WINDOW GP (SIDE SLIDE HIGH PROFILE)	772

Y-SEPARATE ILLUSTRATION

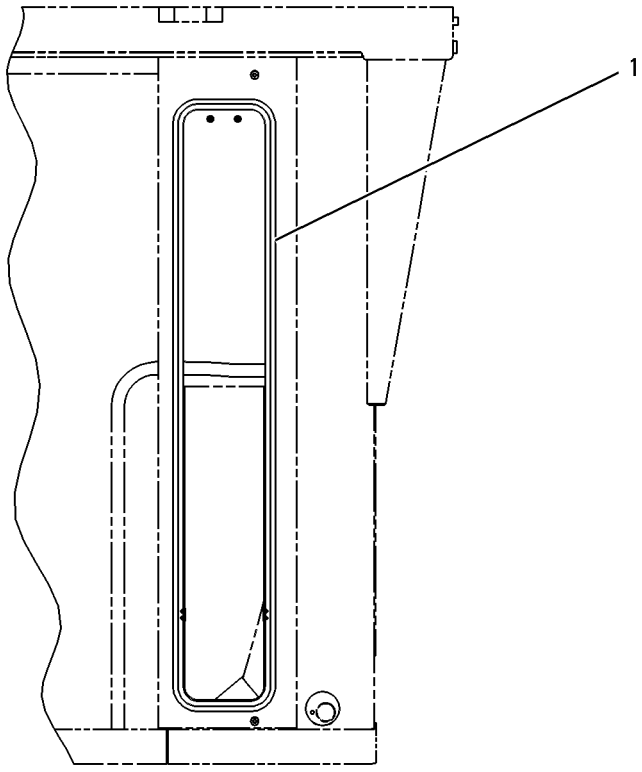

LEFT SIDE VIEW

GRAPHIC #1 g00301585

OPERATOR STATION

177-8830 WIPER AR-WINDOW—REAR—LOW PROFILE

S/N: ASE1-UP

AN ATTACHMENT

SMCS-7305, 7306 **i01506898**

NOTE	PART NUMBER	QTY	PART NAME 1 2 3 4 5 6 (PRODUCT LEVEL)	SEE PAGE
Y	*8X-9680*	1	WASHER GP-WINDOW (REAR)	770
Y	**173-5320**	1	WIPER GP-WINDOW (REAR)	784

Y-SEPARATE ILLUSTRATION

OPERATOR STATION

177-8831 WIPER AR-WINDOW—REAR—HIGH PROFILE

S/N: ASE1-UP

AN ATTACHMENT

SMCS-7305, 7306 **i01650519**

NOTE	PART NUMBER	QTY	PART NAME 1 2 3 4 5 6 (PRODUCT LEVEL)	SEE PAGE
Y	*8X-9680*	1	WASHER GP-WINDOW (REAR)	770
Y	*173-5321*	1	WIPER GP-WINDOW (REAR)	786

Y-SEPARATE ILLUSTRATION

OPERATOR STATION

114-6685 WIPER GP-WINDOW

S/N: ASE1-UP

PART OF 172-6830, 172-6831, 173-5320, 173-5321 WIPER GP-WINDOW

ALSO AN ATTACHMENT

SMCS-7305 **i01536204**

NOTE	REF NO	GRAPHIC REF	PART NUMBER	QTY	PART NAME 1 2 3 4 5 6 (PRODUCT LEVEL)	SEE PAGE
	1	1	**3T-7059**	1	BRACKET	
M	2	1	**5C-9553**	3	BOLT (M6X1X16MM)	
	3	1	**3T-7086**	1	CRANK AS	
M	4	1	**6V-6889**	2	NUT (M8X1.25 THD)	
	5	1	**6V-6888**	1	WASHER-SPRING	
	6	1	**6V-6219**	1	LINK-CONNECTING	
M	7	1	**3C-1884**	4	SCREW-MACHINE (M5X0.8 BG THD)	
	8	1	**6T-2770**	1	SHAFT AS-DRIVE	
	9	1	**6V-6209**	1	CAP	
M	10	1	**6V-6213**	1	NUT (M20X1 THD)	
	11	1	**6V-6214**	1	WASHER (20.15X29.6X1MM THK)	
	12	1	**5P-0537**	3	WASHER-HARD (7.2X14.5X2MM THK)	
	13	1	**6A-9718**	1	WASHER (8.1X12.5X1MM THK)	
	14	1	**3E-6388**	1	MOTOR AS-WINDOW WIPER	
		1	**102-8805**	1	KIT-RECEPTACLE (6 PIN)	
					(INCLUDES RECEPTACLE AS & WEDGE)	
		1	**102-8805**	1	KIT-RECEPTACLE (6 PIN)	
					(INCLUDES RECEPTACLE AS & WEDGE)	
		1	**3E-3383**	1	WEDGE-RECEPTACLE LOCK	
		1	**186-3735**	5	PIN-CONNECTOR	
		1	**8T-8737**	1	PLUG-SEAL	

M-METRIC PART

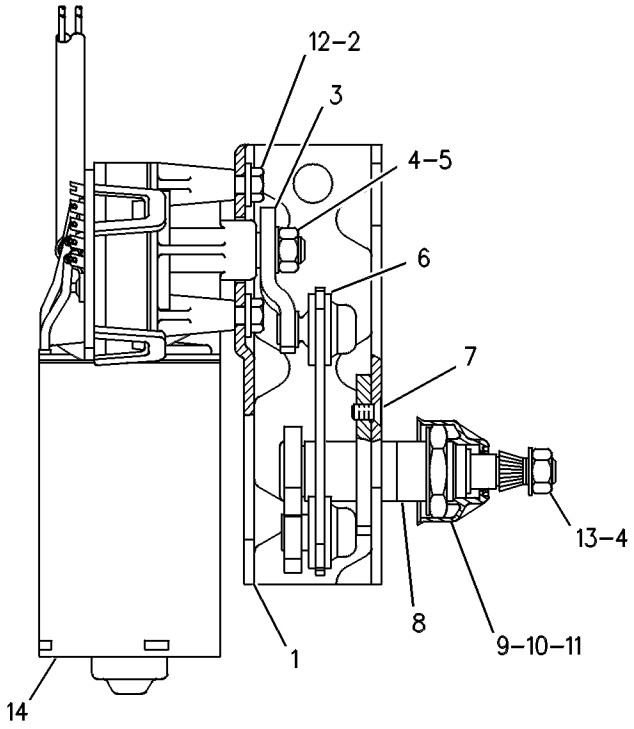

GRAPHIC #1 g00245521

MEMORANDA

OPERATOR STATION

172-6830 WIPER GP-WINDOW—FRONT—LOW PROFILE

S/N: ASE1-UP

PART OF 172-5377 ROPS GP-ENCLOSED

SMCS-7305 **i01655311**

NOTE	REF NO	GRAPHIC REF	PART NUMBER	QTY	PART NAME 1 2 3 4 5 6 (PRODUCT LEVEL)	SEE PAGE
	1	1	**2A-6926**	1	LEVER AS	
	2	1	**2A-6928**	1	LINK	
	3	1	**2A-6929**	1	LINK	
	4	1	**3E-6388**	1	MOTOR AS-WINDOW WIPER	
		1	**102-8805**	1	KIT-RECEPTACLE (6 PIN) (WINDOW WIPER MOTOR)	
		1	**3E-3383**	1	WEDGE-RECEPTACLE LOCK	
		1	**186-3735**	5	PIN-CONNECTOR	
		1	**8T-8737**	1	PLUG-SEAL	
	5	1	**4B-4283**	4	WASHER (20.6X37.5X3.5MM THK)	
	6	1	**6V-5853**	1	BLADE AS-WIPER (LOW PROFILE FRONT LOWER)	
	7	1	**6V-6888**	1	WASHER-SPRING (8.31X15.54X1.07MM THK)	
M	8	1	**6V-6889**	1	NUT (M8X1.25 THD)	
	9	1	**6V-8258**	1	ARM AS-WIPER	
	10	1	**8X-2556**	1	FLANGE	
	11	1	**8X-2663**	1	GASKET	
Y	12	1	**114-6685**	1	WIPER GP-WINDOW (FRONT)	778
	13	1	**123-4354**	2	ARM AS-WIPER	
	14	1	**123-4355**	2	BLADE AS-WIPER	
	15	1	**125-7003**	1	SHAFT AS	
	16	1	**125-7004**	1	SHAFT AS	
M	17	1	**5C-7423**	3	SCREW (M6X1X16MM)	
	18	1	**5P-4115**	2	WASHER-HARD (7.2X19X2MM THK)	
	19	1	**7X-3182**	2	BOLT (1/4-28X0.5 IN)	
M	20	1	**8T-4138**	2	BOLT (M6X1X20MM)	

M-METRIC PART
Y-SEPARATE ILLUSTRATION

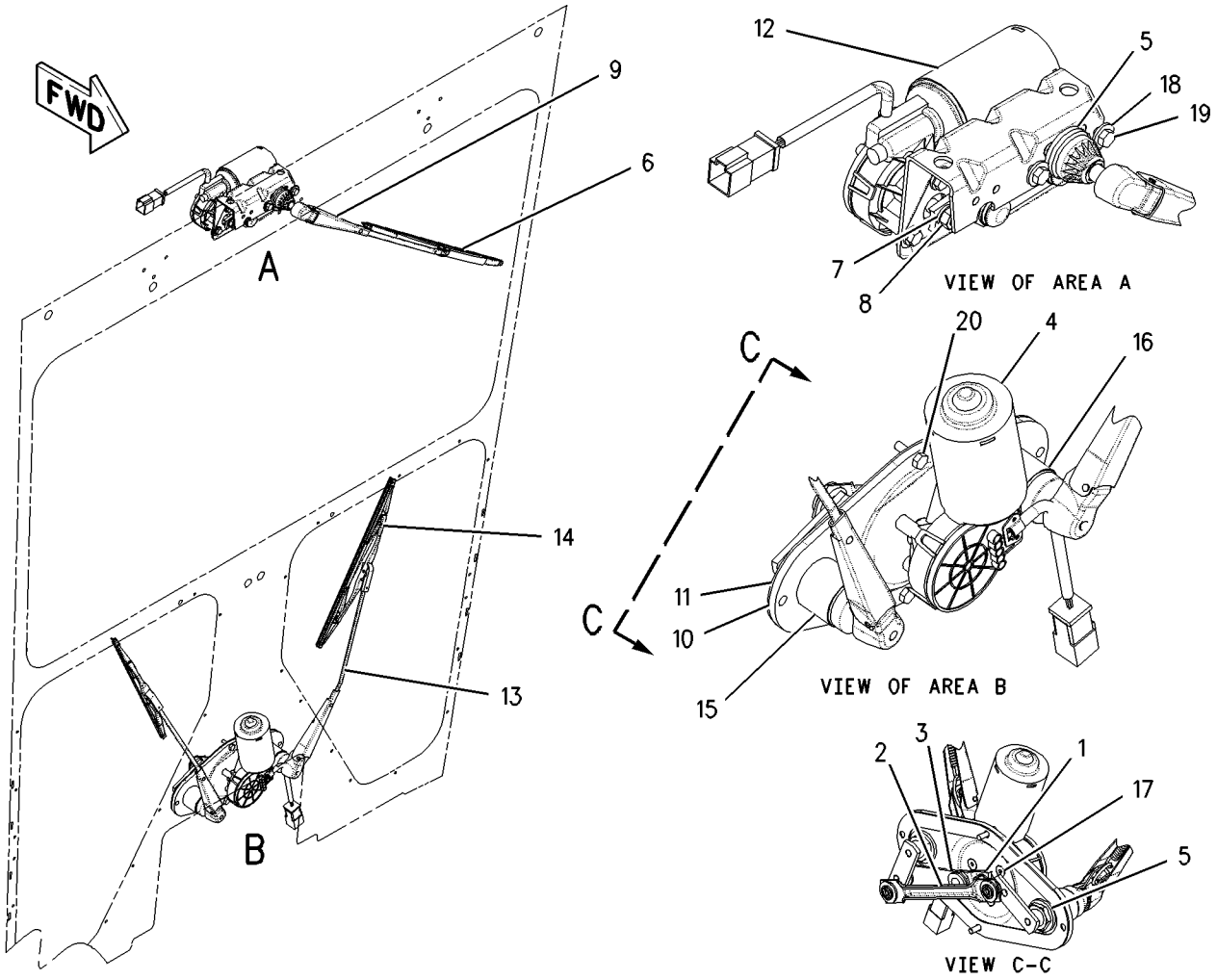

GRAPHIC #1 g00801826

OPERATOR STATION

172-6831 WIPER GP-WINDOW—FRONT—HIGH PROFILE

S/N: ASE1-UP

PART OF 177-8779 ROPS GP-ENCLOSED

AN ATTACHMENT

SMCS-7305 **i01655309**

NOTE	REF NO	GRAPHIC REF	PART NUMBER	QTY	PART NAME 1 2 3 4 5 6 (PRODUCT LEVEL)	SEE PAGE
	1	1	**2A-6926**	1	LEVER AS	
	2	1	**2A-6928**	1	LINK	
	3	1	**2A-6929**	1	LINK	
	4	1	**3E-6388**	1	MOTOR AS-WINDOW WIPER	
		1	**102-8805**	1	KIT-RECEPTACLE (6 PIN) (WINDOW WIPER MOTOR)	
		1	**3E-3383**	1	WEDGE-RECEPTACLE LOCK	
		1	**186-3735**	5	PIN-CONNECTOR	
		1	**8T-8737**	1	PLUG-SEAL	
	5	1	**4B-4283**	4	WASHER (20.6X37.5X3.5MM THK)	
	6	1	**6V-5853**	1	BLADE AS-WIPER (HIGH PROFILE FRONT LOWER)	
	7	1	**6V-6888**	1	WASHER-SPRING (8.31X15.54X1.07MM THK)	
M	8	1	**6V-6889**	1	NUT (M8X1.25 THD)	
	9	1	**6V-8259**	1	ARM AS-WIPER	
	10	1	**8X-2556**	1	FLANGE	
	11	1	**8X-2663**	1	GASKET	
Y	12	1	**114-6685**	1	WIPER GP-WINDOW (FRONT)	778
	13	1	**123-4354**	2	ARM AS-WIPER	
	14	1	**123-4355**	2	BLADE AS-WIPER	
	15	1	**125-7003**	1	SHAFT AS	
	16	1	**125-7004**	1	SHAFT AS	
M	17	1	**5C-7423**	3	SCREW (M6X1X16MM)	
	18	1	**5P-4115**	2	WASHER-HARD (7.2X19X2MM THK)	
	19	1	**7X-3182**	2	BOLT (1/4-28X0.5 IN)	
M	20	1	**8T-4138**	2	BOLT (M6X1X20MM)	

M-METRIC PART
Y-SEPARATE ILLUSTRATION

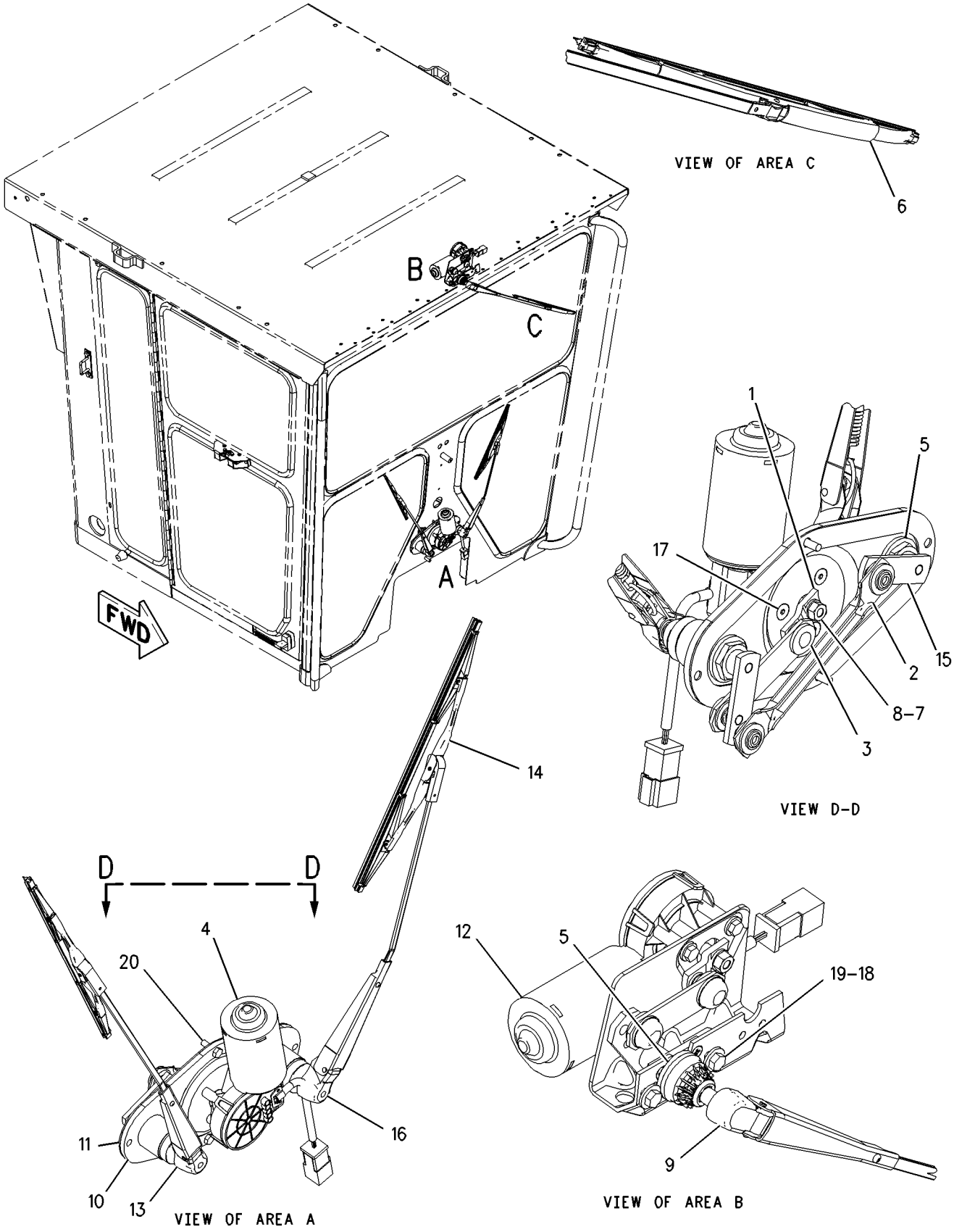

GRAPHIC #1 g00845739

OPERATOR STATION

173-5320 WIPER GP-WINDOW—REAR—LOW PROFILE

S/N: ASE1-UP

PART OF 177-8830 WIPER AR-WINDOW

AN ATTACHMENT

SMCS-7305 **i01674259**

NOTE	REF NO	GRAPHIC REF	PART NUMBER	QTY	PART NAME 1 2 3 4 5 6 (PRODUCT LEVEL)	SEE PAGE
	1	1	**4B-4283**	2	WASHER (20.6X37.5X3.5MM THK)	
	2	1	**6V-5849**	1	BLADE AS-WIPER (LOW PROFILE REAR)	
		1	**8C-5060**	1	KIT-WIPER BLADE (REAR)	
	3	1	**6V-8258**	1	ARM AS-WIPER	
	4	1	**9W-1442**	1	FUSE (10 AMP) (INTERMITTANT WIPER)	
	5	1	**110-7885**	1	KNOB-WIPER SWITCH (REAR)	
	6	1	**110-7886**	1	SWITCH AS-WIPER (INTERMITTANT)	
		1	**186-3735**	3	PIN-CONNECTOR	
		1	**2H-3920**	1	LOCKWASHER	
		1	**3E-3389**	1	WEDGE-RECEPTACLE LOCK	
		1	**6V-8369**	1	NUT (7/16-28 THD)	
		1	**8T-8737**	1	PLUG-SEAL	
		1	**9W-0852**	4	PIN-CONNECTOR	
		1	**102-8806**	1	KIT-RECEPTACLE (8 PIN) (REAR WIPER SWITCH)	
Y	7	1	**114-6685**	1	WIPER GP-WINDOW (REAR)	778
	8	1	**5P-4115**	2	WASHER-HARD (7.2X19X2MM THK)	
	9	1	**7X-3182**	2	BOLT (1/4-28X0.5 IN)	
					AVAILABLE REPLACEMENT PART(S):	
			8C-5060	1	KIT-WIPER BLADE	

Y-SEPARATE ILLUSTRATION

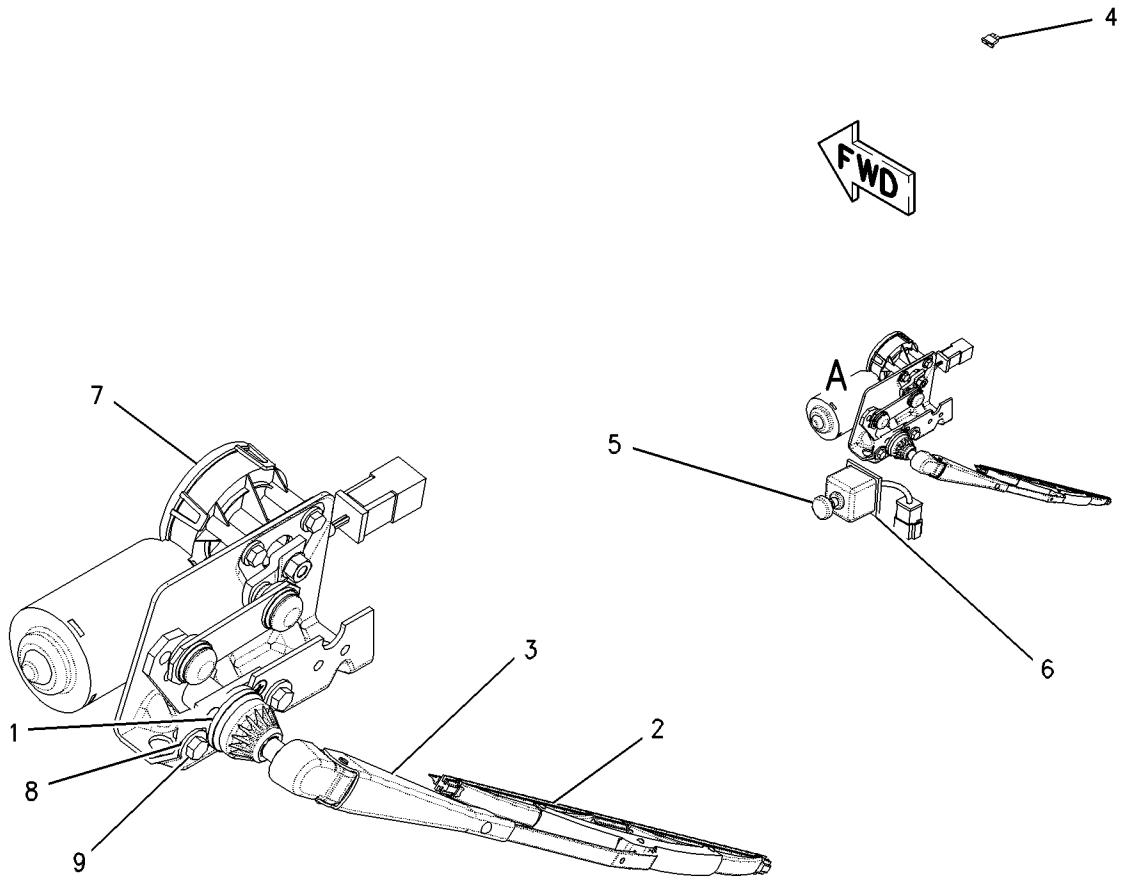

VIEW OF AREA A

GRAPHIC #1 g00844032

OPERATOR STATION

173-5321 WIPER GP-WINDOW—REAR—HIGH PROFILE

S/N: ASE1-UP

PART OF 177-8831 WIPER AR-WINDOW

AN ATTACHMENT

SMCS-7305 **i01674273**

NOTE	REF NO	GRAPHIC REF	PART NUMBER	QTY	PART NAME 1 2 3 4 5 6 (PRODUCT LEVEL)	SEE PAGE
B	1	1	**4B-4283**	2	WASHER (20.6X37.5X3.5MM THK)	
	2	1	**6V-5853**	1	BLADE AS-WIPER (HIGH PROFILE REAR)	
	3	1	**6V-8258**	1	ARM AS-WIPER	
	4	1	**9W-1442**	1	FUSE (10 AMP) (WIPER)	
	5	1	**110-7885**	1	KNOB-WIPER SWITCH (REAR WINDOW)	
	6	1	**110-7886**	1	SWITCH AS-WIPER (REAR)	
		1	**2H-3920**	1	LOCKWASHER	
		1	**3E-3389**	1	WEDGE-RECEPTACLE LOCK	
		1	**6V-8369**	1	NUT (7/16-28 THD)	
		1	**186-3735**	3	PIN-CONNECTOR	
		1	**8T-8737**	1	PLUG-SEAL	
		1	**9W-0852**	4	PIN-CONNECTOR	
		1	**102-8806**	1	KIT-RECEPTACLE (8 PIN) (REAR WIPER SWITCH)	
Y	7	1	**114-6685**	1	WIPER GP-WINDOW (REAR)	778
	8	1	**5P-4115**	2	WASHER-HARD (7.2X19X2MM THK)	
	9	1	**7X-3182**	2	BOLT (1/4-28X0.5 IN)	

B-USE AS REQUIRED
Y-SEPARATE ILLUSTRATION

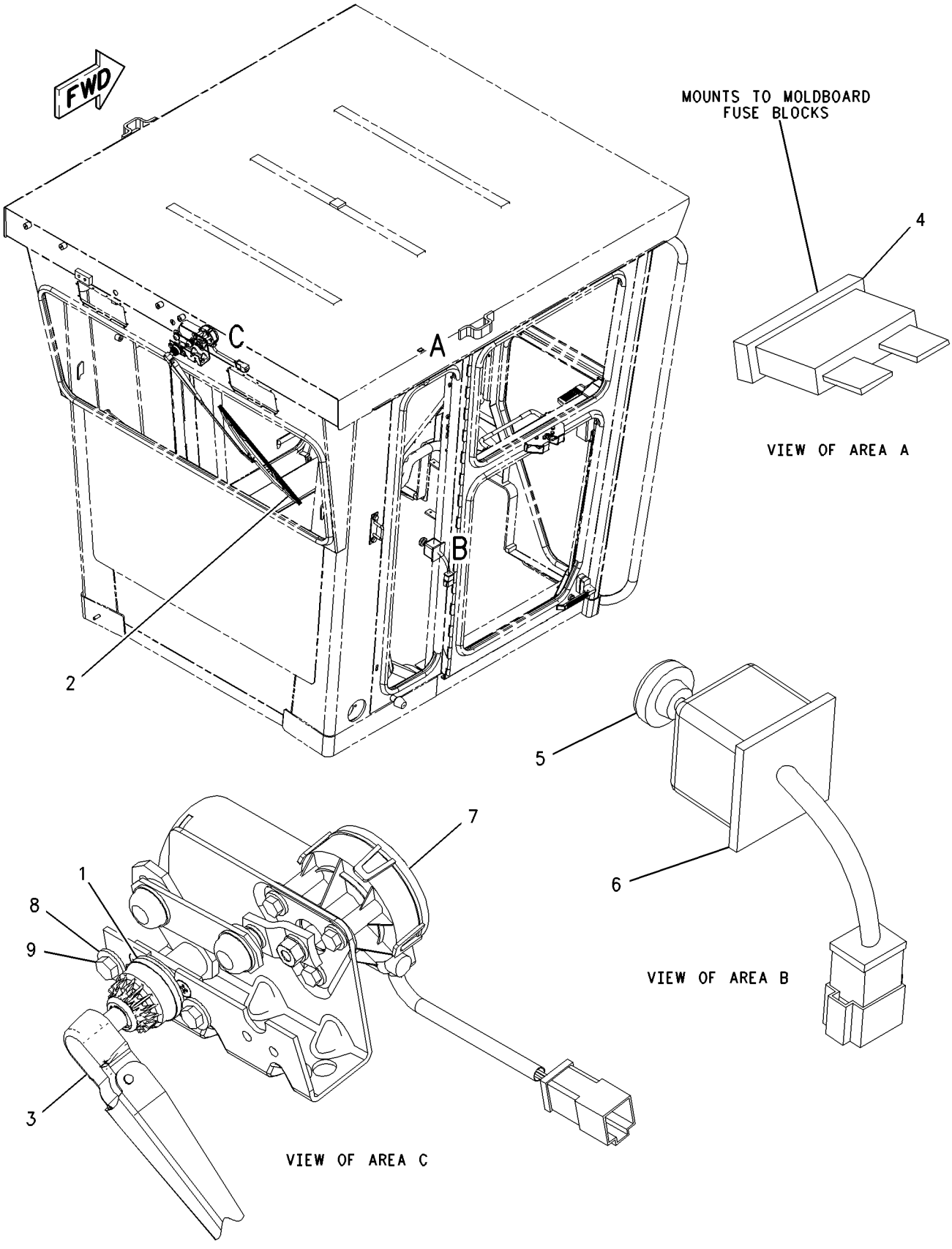

GRAPHIC #1 g00846638

OPERATOR STATION

177-8784 WIPER GP-WINDOW—FRONT—INTERMITTENT

S/N: ASE1-UP

PART OF 211-1769 CONVERSION AR-CERTIFICATION, 197-5959 SNOW AR-MOTOR GRADER AN ATTACHMENT

SMCS-7305 **i01624013**

NOTE	REF NO	GRAPHIC REF	PART NUMBER	QTY	PART NAME 1 2 3 4 5 6 (PRODUCT LEVEL)	SEE PAGE
Y	1	1	**3E-0155**	2	SWITCH GP-WIPER	223

Y-SEPARATE ILLUSTRATION

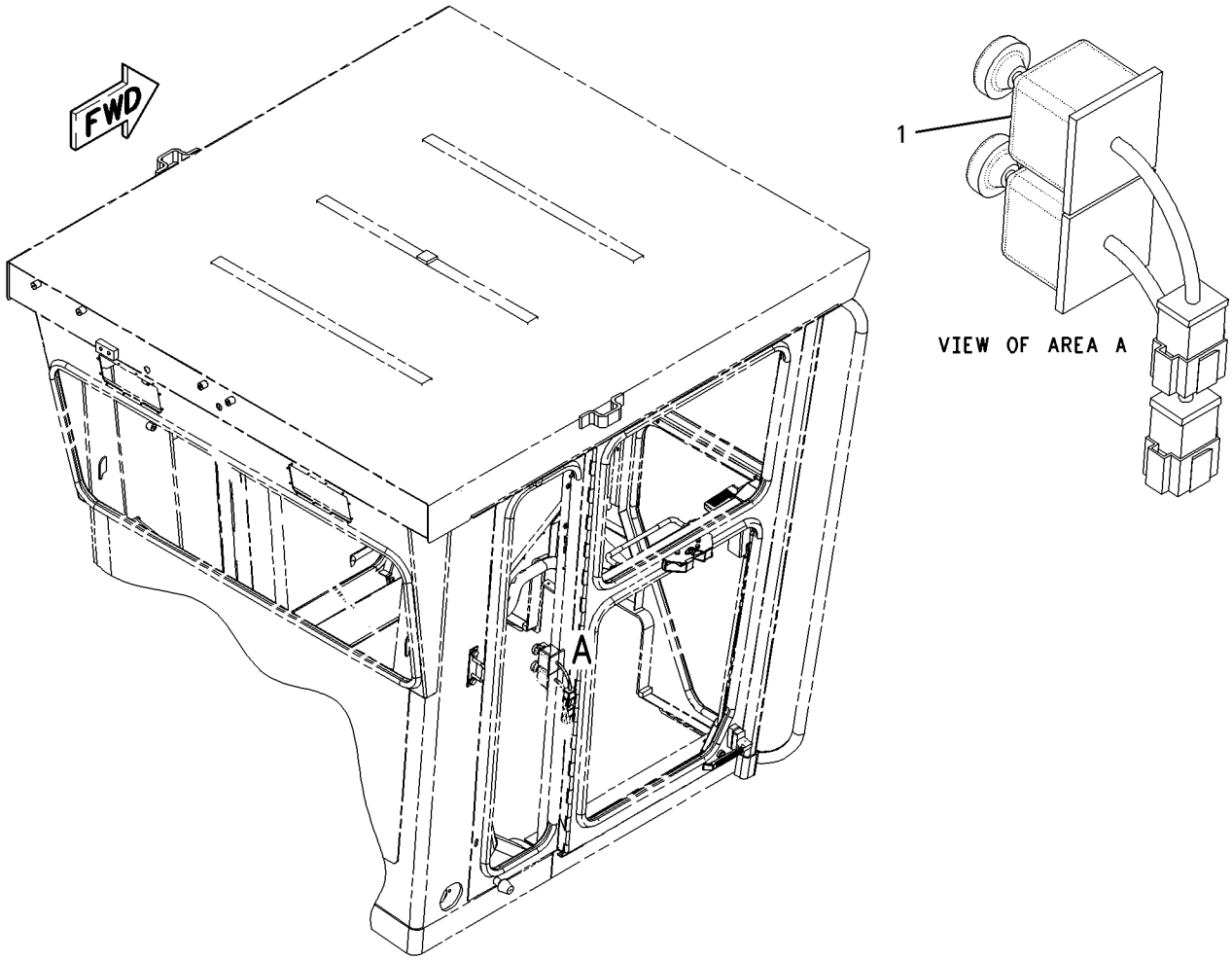

GRAPHIC #1 g00847324

SERVICE EQUIPMENT AND SUPPLIES

115-5852 PLATE & FILM GP—ENGINE

S/N: ASE1-UP

PART OF 162-5606 GENERAL AR, 197-6436 PLATE & FILM GP

ALSO AN ATTACHMENT

SMCS-7405, 7557 **i01376109**

NOTE	PART NUMBER	QTY	PART NAME 1 2 3 4 5 6 (PRODUCT LEVEL)	SEE PAGE
	122-9760	1	FILM-INFORMATION (SILVER ULTRAPLATE)	
			INSTALL VERTICALLY ON RH REAR VALVE COVER IN FRONT OF RECESS OR BOSS, READABLE FROM REAR OF ENGINE	
	122-9761	1	FILM-INFORMATION (LAMINATE)	
			APPLY LAMINANT OVER SILVER FILM	

SERVICE EQUIPMENT AND SUPPLIES

171-5837 PLATE & FILM GP

S/N: ASE1-UP

PART OF 162-5606 GENERAL AR

SMCS-7405, 7557 **i01674278**

NOTE	PART NUMBER	QTY	PART NAME 1 2 3 4 5 6 (PRODUCT LEVEL)	SEE PAGE
	1P-2807	2	FILM (LIFT EYE LOCATION)	
			(LOCATE ON OUTBOARD SIDE OF RH & LH BLADE LIFT ARMS)	
	5P-1175	1	FILM (ENGINE OIL FILL)	
			(LOCATE ON ENGINE OIL FILLER CAP)	
	215-5648	1	FILM (TILT STEERING WHEEL CONTROL)	
			(LOCATE NEAR TILT KNOB ON STEERING CONSOLE)	
	209-5776	1	FILM (ENGINE COOLANT)	
			(LOCATE NEAR RADIATOR SIGHT GAGE ON LH RADIATOR SUPPORT)	
	183-5811	1	FILM GP	
	201-1055	1	FILM (CATERPILLAR)	
	124-5807	2	FILM-STRIPE (14H)	
	184-5073	2	FILM-STRIPE (CAT)	
	184-5074	1	FILM-STRIPE (LH)	
	184-5075	2	FILM-STRIPE (RH & LH)	
	184-5076	11	FILM-STRIPE (RH)	
	195-1146	1	FILM-STRIPE (LH)	
	8C-8902	1	FILM-IDENTIFICATION (ENGINE OIL FILTER)	
			(LOCATE ON ENGINE OIL FILTER)	
	8C-5897	1	FILM-IDENTIFICATION (SIGHT GAUGE)	
			(LOCATE ON HYDRAULIC TANK ABOVE THE SIGHT GAGE)	
	141-1511	1	FILM-INFORMATION (FUEL FILTER)	
			(LOCATE ON SECONDARY FUEL FILTER)	
	144-1641	1	FILM-INFORMATION (FUEL FILTER/WATER SEPARATOR)	
			(LOCATE ON WATER SEPARATOR ELEMENT	
	9X-8372	1	FILM-INSTRUCTION (WASHER FILL)	
			(LOCATE ON COVER FOR THE WINDOW WASHER FLUID BOTTLE)	
	129-7679	1	FILM-INSTRUCTION (ENGINE OIL DRAIN)	
			(LOCATE ON LH SIDE OF CASE NEAR ARTICULATION PIN)	
	7X-3229	2	FILM-LIFT & TIE DOWN	
			(LOCATE BY CENTERING ON OUTSIDE OF RH & LH REAR FRAME RAILS FORWARD OF THE LIFTING EYES)	
	8C-8923	1	FILM-NOTICE (SHIPPING LIFT TIE DOWN)	
			(LOCATE BY CENTERING ON OUTSIDE OF LH REAR FRAME RAIL IN FRONT OF LIFTING EYE)	
	190-5386	2	FILM-REFLECTOR (RED)	
			LOCATE NEAR LIGHTING EYES ON REAR PLATE OF CASE AND FRAME)	
	7X-7644	2	FILM-TIE DOWN	
			(LOCATE TOWARD FRONT OF LH & RH SIDE OF AXLE TUBE IN BOLSTER)	
	5P-4077	1	FILM-WARNING (GROUND BLADE)	
			(LOCATE ON THE SHIFT CONSOLE BELOW THE CS PIN PULLER SWITCH)	
	5P-4114	1	FILM-WARNING (SPRING LOADED PIN)	
			(LOCATE ON RH SIDE OF CENTERSHIFT LOCK PIN HOUSING)	
	8T-1363	1	FILM-WARNING (HIGH COMPRESSED SPRING)	
			(LOCATE ON REAR OF ROTOCHAMBER)	
	190-2938	1	FILM-WARNING (PRESSURIZED COOLANT)	
			(POSITION UNDER RADIATOR FILL LID TO BE READ FROM LH SIDE OF MACHINE)	
	212-2162	1	FILM-WARNING (JUMPER CABLE)	
			(LOCATE ON SERVICE CENTER ACCESS DOOR BETWEEN LOUVERS)	

171-5837 **PLATE & FILM GP** ***(contd.)*** **i01674278**

NOTE	PART NUMBER	QTY	PART NAME 1 2 3 4 5 6 (PRODUCT LEVEL)	SEE PAGE
	194-0856	1	PLATE (PRODUCT IDENTIFICATION)	
			(LOCATE ON LH SIDE OF MAIN FRAME IN FRONT OF LIFT CYLINDER BRACKET BELOW MAIN FRAME PLATE	
	5T-4361	1	PLATE-INDICATOR (BLADE CENTERSHIFT)	
			(LOCATE ON RH BLADE LIFT PIN)	
	5P-3999	1	PLATE-MAIN FRAME (DO NOT DRILL OR WELD)	
			(LOCATE ON LH SIDE OF FRONT FRAME IN FRONT OF LIFT CYLINDER BRACKET)	
	8T-1191	1	PLATE-WARNING (MACHINE OPERATION)	
			(LOCATE ON RH GLOVE BOX DOOR)	
	201-7603	2	PLATE-WARNING (NO CLEARANCE)	
			(LOCATE ON RH & LH REAR PLATFORM SUPPORTS)	
	3F-5535	2	SCREW-DRIVE	
			(LOCATE ON RH BLADE LIFT PIN)	
	8T-9530	8	TACK-FASTENER	
A	**4W-1413**	1	PLATE-SERIAL NUMBER (ENGINE)	

A-NOT PART OF THIS GROUP

SERVICE EQUIPMENT AND SUPPLIES

192-1434 PLATE & FILM GP–EU

S/N: ASE1-UP
PART OF 211-1769, 211-1770 CONVERSION AR-CERTIFICATION
AN ATTACHMENT

SMCS-7405, 7557 **i01626417**

NOTE	REF NO	GRAPHIC REF	PART NUMBER	QTY	PART NAME 1 2 3 4 5 6 (PRODUCT LEVEL)	SEE PAGE
	1	1	**190-5386**	2	FILM-REFLECTOR (RED-EXTENDED LIFE COOLANT)	
	2	1	**195-2274**	6	FILM (YELLOW REFLECTIVE)	
	3	1	**197-5867**	2	PLATE	

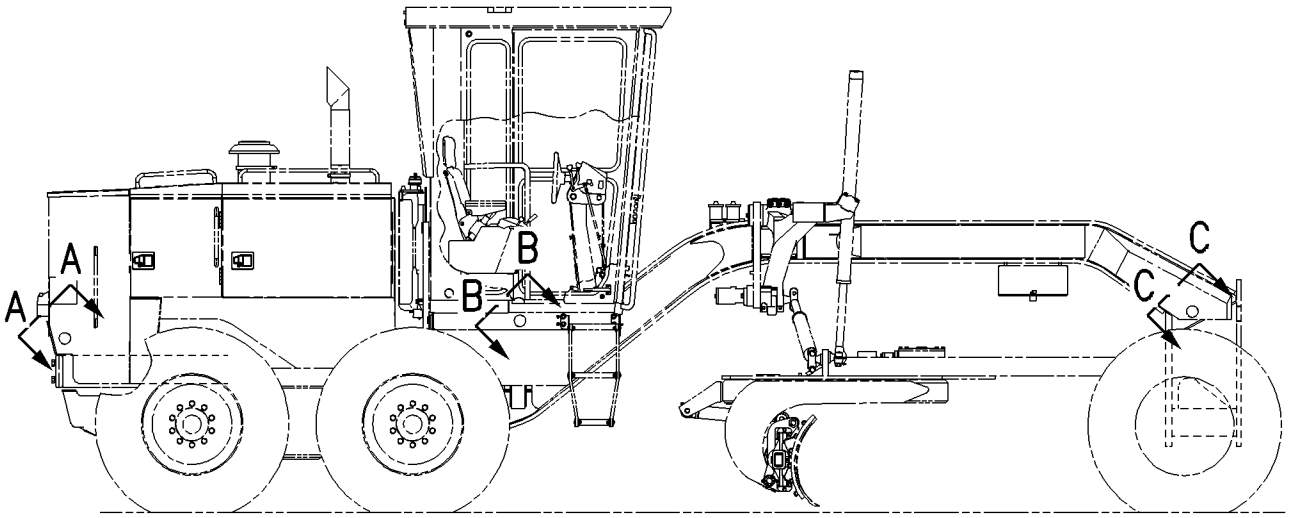

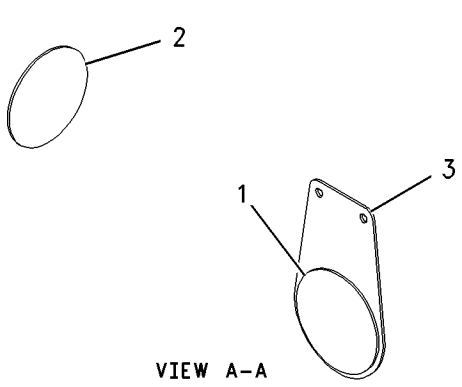

VIEW A-A

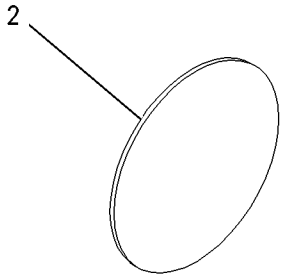

VIEW B-B

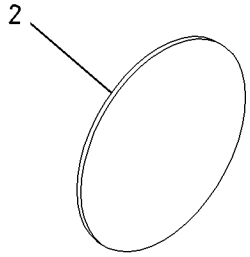

VIEW C-C

GRAPHIC #1 g00844040

SERVICE EQUIPMENT AND SUPPLIES

197-6436 PLATE & FILM GP–VHP

S/N: ASE1-UP

PART OF 211-1769 CONVERSION AR-CERTIFICATION, 197-5959 SNOW AR-MOTOR GRADER AN ATTACHMENT

SMCS-7405, 7557 **i01660251**

NOTE	PART NUMBER	QTY	PART NAME 1 2 3 4 5 6 (PRODUCT LEVEL)	SEE PAGE
Y	**115-5852**	1	PLATE & FILM GP	789
	114-5224	2	FILM (VARIABLE HORSE POWER)	
			ON BOTH SIDES OF THE PLATFORM ON THE OUTSIDE SURFACE UP FROM THE BOTTOM EDGE AND TO THE FRONT OF THR REAR EDGE	

Y-SEPARATE ILLUSTRATION

SERVICE EQUIPMENT AND SUPPLIES

206-1404 PLATE & FILM GP—FRENCH

S/N: ASE1-UP

AN ATTACHMENT

SMCS-7405, 7557 **i01661396**

NOTE	PART NUMBER	QTY	PART NAME 1 2 3 4 5 6 (PRODUCT LEVEL)	SEE PAGE
	5P-4118	1	FILM-WARNING (SPRING LOADED PIN)	
			ON RH SIDE OF CENTERSHIFT LOCK PIN HOUSING	
	213-0430	1	FILM-WARNING (JUMPER CABLE)	
			ON SERVICE CENTER ACCESS DOOR BETWEEN LOUVERS	
	7X-0943	1	FILM-WARNING (HIGH PRESS CYLINDER)	
			NEAR TILT KNOB ON STEERING CONSOLE	
	5P-4000	1	PLATE-MAIN FRAME (DO NOT DRILL OR WELD)	
			ON LH SIDE OF FRONT FRAME IN FRONT OF LIFT CYLINDER BRACKET	
	8T-1192	1	PLATE-WARNING (MACHINE OPERATION)	
			ON RH GLOVE BOX DOOR	
	201-7626	2	PLATE-WARNING (NO CLEARANCE)	
			ON RH & LH REAR PLATFORM SUPPORTS	

SERVICE EQUIPMENT AND SUPPLIES

206-1405 PLATE & FILM GP—SPANISH

S/N: ASE1-UP
AN ATTACHMENT

SMCS-7405, 7557 **i01660328**

NOTE	PART NUMBER	QTY	PART NAME 1 2 3 4 5 6 (PRODUCT LEVEL)	SEE PAGE
	5P-4119	1	FILM-WARNING (CENTERSHIFT PIN)	
			LOCATE ON RH SIDE OF CENTERSHIFT LOCK PIN HOUSING	
	7X-0944	1	FILM-WARNING (HIGH PRESS. CYLINDER)	
			LOCATE ON STEERING ACCUMULATOR UNDER PLATFORM	
	213-0437	1	FILM-WARNING (JUMPER CABLE)	
			LOCATE ON SERVICE CENTER ACCESS DOOR BETWEEN LOUVERS	
	5P-4001	1	PLATE-MAIN FRAME (DO NOT DRILL OR WELD)	
			LOCATE ON LH SIDE OF FRONT FRAME IN FRONT OF LIFT CYLINDER BRACKET	
	201-7633	2	PLATE-WARNING (NO CLEARANCE)	
			LOCATE ON RH AND LH REAR PLATFORM SUPPORTS	
	8T-1193	1	PLATE-WARNING (MACHINE OPERATION)	
			LOCATE ON RH GLOVE BOX DOOR	

SERVICE EQUIPMENT AND SUPPLIES

206-1406 PLATE & FILM GP—PORTUGUESE

S/N: ASE1-UP

AN ATTACHMENT

SMCS-7405, 7557 **i01661399**

NOTE	PART NUMBER	QTY	PART NAME 1 2 3 4 5 6 (PRODUCT LEVEL)	SEE PAGE
	5P-4086	1	FILM-WARNING (GROUND BLADE)	
			ON THE SHIFT CONSOLE BELOW THE CENTERSHIFT PIN PULLER SWITCH	
	5P-4120	1	FILM-WARNING (SPRING LOADED PIN)	
			ON RH SIDE OF CENTERSHIFT LOCK PIN HOUSING	
	213-0435	1	FILM-WARNING (JUMPER CABLE)	
			ON SERVICE CENTER ACCESS DOOR BETWEEN LOUVERS	
	7X-0945	1	FILM-WARNING (HIGH PRESS. CYLINDER)	
			NEAR TILT KNOB ON STEERING CONSOLE	
	8T-1194	1	PLATE-WARNING (MACHINE OPERATION)	
			ON RH GLOVE BOX DOOR	
	201-7631	2	PLATE-WARNING (NO CLEARANCE)	
			ON RH & LH REAR PLATFORM SUPPORTS	

SERVICE EQUIPMENT AND SUPPLIES

206-1407 PLATE & FILM GP—GERMAN

S/N: ASE1-UP

AN ATTACHMENT

SMCS-7405, 7557 **i01660336**

NOTE	PART NUMBER	QTY	PART NAME 1 2 3 4 5 6 (PRODUCT LEVEL)	SEE PAGE
	5P-4121	1	FILM-WARNING (CENTERSHIFT PIN)	
			LOCATE ON RH SIDE OF CENTERSHIFT LOCK PIN HOUSING	
	7X-0946	1	FILM-WARNING (HIGH PRESS. CYLINDER)	
			LOCATE ON STEERING ACCUMULATOR UNDER PLATFORM	
	213-0431	1	FILM-WARNING (JUMPER CABLE)	
			LOCATE ON SERVICE CENTER ACCESS DOOR BETWEEM LOUVERS	
	5P-4003	1	PLATE-MAIN FRAME (DO NOT DRILL OR WELD)	
			LOCATE ON LH SIDE OF FRONT FRAME IN FRONT OF LIFT CYLINDER BRACKET	
	201-7627	2	PLATE-WARNING (NO CLEARANCE)	
			LOCATE ON RH AND LH REAR PLATFORM SUPPORTS	
	8T-1195	1	PLATE-WARNING (MACHINE OPERATION)	
			LOCATE ON RH GLOVE BOX DOOR	

SERVICE EQUIPMENT AND SUPPLIES

136-4831 TOOL BOX GP

S/N: ASE1-UP

PART OF 162-5606 GENERAL AR

SMCS-7259 **i00609808**

NOTE	REF NO	GRAPHIC REF	PART NUMBER	QTY	PART NAME 1 2 3 4 5 6 (PRODUCT LEVEL)	SEE PAGE
	1	1	**8W-0791**	1	TOOL BOX AS	
	2	1	**5P-8502**	1	PADLOCK GP	
					(EACH INCLUDES)	
A		1	**5P-8500**		KEY	
A		1	**8Y-6364**		SLEEVE	
	3	1	**4L-6454**	4	BOLT (3/8-16X1.0IN)	
	4	1	**5P-1075**	6	WASHER-HARD (3MM THK)	
	5	1	**6V-8801**	2	NUT (3/8-16 THD)	

A-NOT PART OF THIS GROUP

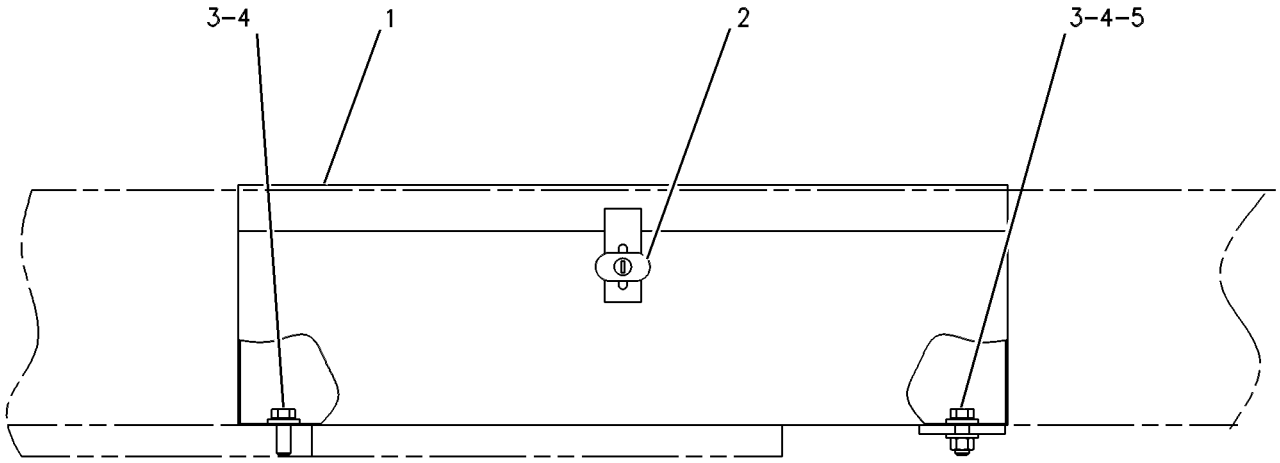

GRAPHIC #1 g00272495

PART NUMBER INDEX

Part	Page
0	
0A-3721	382
	384
0A-4664	322
0L-1178	360
0L-1351	278
0L-1352	8
	272
0L-2061	259
0L-2315	288
0S-0484	446
0S-0509	276
0S-1566	388
0S-1571	286
0S-1573	294
0S-1579	258
0S-1585	288
	366
	442
	606
0S-1587	288
	294
	366
0S-1588	78
	294
	299
0S-1589	18
	289
	366
0S-1590	289
	294
0S-1591	90
	93
0S-1592	344
	424
0S-1594	289
	294
	304
	475
	624
	625
0S-1595	289
0S-1608	304
0S-1617	8
0S-1621	290
	606
0S-1625	286
	390
0S-1627	590
0S-1756	278
0T-0055	299
0T-0065	93
	100
0T-0102	276
	300
0T-0200	40
0T-0329	475
0T-0573	276
0T-0768	258
0V-0375	294
	344

Part	Page
1	
1A-1135	418
	598
1A-1415	442
1A-1460	290
1A-2029	288
	294
	312
1A-2170	60
1A-2209	485
1A-4350	748
1A-5405	598
1A-8063	368
1A-8537	418
1B-0676	104
	262
	393
1B-2578	104
	262
	392
1B-2713	658
	660
1B-3867	86
1B-4038	442
1B-4046	442
1B-4332	447
1B-4367	370
1B-4430	766
1B-5174	442
1B-5355	93
	100
1B-7182	118
1B-8704	104
	262
	268
1B-8705	14
1B-8736	304
1B-8741	446
1C-0569	750
	752
1D-0906	370
	423
1D-1313	262
1D-4569	282
1D-4585	276
1D-4590	419
1D-4593	606
1D-4599	606
1D-4609	282
1D-4614	598
1D-4626	422
1D-4627	442
1D-4629	419
	421
1D-4630	447
1D-4634	590
1D-4638	42
1D-4677	764
1D-4689	377
1D-4691	377
1D-4719	288
	442
1D-4720	276
1D-5976	590
1D-6306	590
1F-0748	500
	502
	504
	506
	510
	512
	514
	518
	520
1F-0750	250
	356
	392
1F-1651	392
	414
	760
1F-4622	262
	268
	392
1F-5339	350
1F-6726	288
1F-7854	110
1F-8488	306
1H-0337	534
1H-1023	400
	486
1H-3244	128
	242
1H-3337	268
1H-3338	640
	642
	646
	648
1H-3340	736
	738
1H-3937	488
1H-4478	422
1H-6227	288
1H-7339	16
	304
	442
1H-7724	393
1H-8456	736
	738
1J-2315	602
1J-2859	598
1J-2860	278
1J-4757	278
1J-6762	595
1J-9671	406
	534
1K-3113	710
1K-4649	628
1K-6872	344
	377
	422
	588
	602
	606
1K-6986	288
1K-6995	298
1L-3162	312
1L-3769	316
1L-4349	498
1L-5072	498
1L-8497	289
1L-8793	590
1L-9080	748
1M-1230	658
	660
1M-3150	299
1M-3151	299
1M-4543	398
1M-6119	131
	132
	242
1M-6120	131
	132
	242
1M-6718	584
1M-8651	299
1N-4403	92
1N-5999	24
	432
	434
1N-6002	578
1P-0436	118
1P-0451	102
1P-0561	318
1P-0562	312
1P-1367	60
1P-2378	715
1P-2636	288
1P-2662	288
1P-2807	790
1P-3705	463
1P-3934	344
1P-3935	344
1P-3958	286
1P-4278	398
1P-4577	78
1P-4693	344
	388
1P-4694	344
1P-5274	309
1P-5411	710
1P-6356	94
	704
1P-7297	82
	358
	374
1P-7919	68
1P-8594	259
1P-8654	289
1P-9005	475
1P-9216	299
1P-9252	299
1P-9261	288
1P-9328	398
1P-9685	314
1R-0716	64
1R-0762	106
1R-0774	498
1S-0994	243
	252
	451
	457
1S-0996	239
1S-1015	243
1S-1636	316

► **PRIMARY REFERENCE**

PART NUMBER INDEX

Part	Page
1S-1638	316
1S-2121	316
1S-2342	234
1S-7251	196
	238
	242
	243
1S-7252	242
	250
1S-8947	620
1S-9292	289
1S-9593	137
	320
	414
	585
1T-0068	288
1T-0414	299
1T-0416	272
	314
	316
	318
1U-2761	268
1U-8846	36
1V-6688	243
1V-8230	44
1W-0428	10
1W-2431	100
1W-3011	350
1W-3306	732
	734
1Y-7927	680

2

Part	Page
2A-1162	36
2A-1420	592
2A-3211	580
	581
2A-3348	38
2A-3398	278
	348
2A-3746	298
2A-4429	29
2A-6684	684
2A-6908	636
2A-6926	780
	782
2A-6928	780
	782
2A-6929	780
	782
2A-6985	►724
	743
	745
2A-7090	268
2A-7184	636
2B-0858	314
2B-0941	450
	454
2B-0947	422
	446
2B-2006	366
2B-2254	299
2B-2695	10
2B-7410	442
2B-9373	304
2D-2508	324
	325
	326
	327
	328
	329
	330
	331
	332
	333
	334
	335
	336
	337
	338
	339
	340
	341
	342
2D-2509	324
	325
	326
	327
	328
	329
	330
	331
	332
	333
	334
	335
	336
	337
	338
	339
	340
	341
	342
2D-2565	324
	325
	326
	327
	328
	329
	341
2D-2654	324
	325
	326
	327
	328
	329
	341
2D-4202	498
2D-5238	348
2D-6006	401
2D-6235	658
	660
	680
2D-6386	392
2D-6533	442
2D-6642	52
	278
	282
2D-8009	304
2D-8154	442
2D-8426	289
2D-8652	432
	434
2F-7306	727
	752
2G-0339	442
2G-0478	442
2G-0617	176
	178
	182
	186
2G-0659	178
2G-0988	176
	178
	182
	186
2G-1034	398
2G-1074	388
2G-1314	278
2G-2945	588
2G-2946	588
2G-3765	390
2G-3867	344
2G-3985	598
2G-3988	278
2G-5584	598
2G-5585	598
2G-5667	344
	424
2G-5671	344
2G-5672	344
2G-5876	442
2G-6285	401
2G-6595	330
	331
	332
	333
	334
	335
	336
	337
	338
	339
	340
	342
2G-6695	442
2G-6740	500
	502
	506
	512
	514
	518
2G-6747	500
	502
	504
	506
	510
	512
	514
	518
	520
2G-6748	500
	502
	504
	506
	510
	512
	514
	518
	520
2G-6749	500
	502
	504
	506
	510
	512
	514
	518
	520
2G-6751	500
	502
	504
	506
	510
	512
	514
	518
	520
2G-6752	500
	502
	504
	506
	510
	512
	514
	518
	520
2G-6754	500
	506
	514
	518
	520
2G-6755	500
	502
	504
	506
	510
	512
	514
	518
	520
2G-6756	500
	502
	504
	506
	510
	512
	514
	518
	520
2G-6757	500
	502
	504
	506
	510

► **PRIMARY REFERENCE**

PART NUMBER INDEX

Part	Page	Part	Page	Part	Page	Part	Page
	512		318		570	2P-4511	299
	514	2H-3934	8	2L-0043	286	2P-4522	298
	518	2H-3940	97	2L-0273	242	2P-4523	298
	520		384		250	2P-4529	314
2G-7097	724		398	2L-3331	392	2P-4534	289
2G-7098	724	2H-5549	38	2L-8050	242	2P-4542	298
2G-7107	506	2H-6265	310	2M-0849	55	2P-4548	►309
	518	2H-7254	78		282		312
	520	2H-9247	442		288	2P-4549	272
2G-7108	506	2H-9889	451		299	2P-5677	312
	518		455		588	2P-5694	298
	520	2J-0157	272		598	2P-5700	314
2G-7387	344	2J-3505	344	2M-1168	318	2P-5701	314
2G-7388	344		590	2M-1656	312	2P-5719	259
2G-8241	715	2J-3506	286	2M-5407	284	2P-5720	259
	721		442	2M-7077	230	2P-5721	259
2G-8242	715		595	2M-7819	680	2P-5771	304
2G-8572	636		598	2M-9780	306	2P-5780	259
	690	2J-3507	592		440	2P-5800	►298
	694	2J-6089	580		450		307
	700		581		468	2P-5803	314
	715	2J-6356	285		470	2P-5814	►314
2G-8573	636	2J-7761	498		534		322
	690	2K-0703	606		708	2P-5816	►316
	694	2K-4096	430	2N-0475	274		322
	700	2K-4160	418	2N-0931	289	2P-5820	289
	715	2K-4309	606	2N-3479	414	2P-5860	299
2G-8576	388	2K-4310	606	2N-7609	289	2P-6578	68
2G-8609	424	2K-4315	606	2N-8037	82	2P-6897	259
2G-8615	345	2K-4507	430	2N-9421	104	2P-6898	259
2G-8626	345	2K-4973	498	2P-1097	298	2P-6899	►259
2G-8630	344		624	2P-1098	298		288
2G-8631	344		625	2P-1279	580	2P-6928	259
	436		750		581	2P-6929	259
2G-8639	344		752	2P-2975	196	2P-7032	288
2G-8671	344		764	2P-4304	60	2P-7033	288
2G-8741	344		766		64	2P-7034	288
2G-8742	344	2K-5830	636	2P-4339	616	2P-7035	288
2G-8767	344	2K-5986	298		620	2P-7044	272
	684		352		672	2P-7045	272
	690	2K-6061	624		676	2P-7069	294
	694		625	2P-4363	298	2P-8540	605
	700	2K-6413	608	2P-4372	316		►712
2G-8777	345	2K-6830	427	2P-4396	316	2P-9186	316
2G-8793	344		431	2P-4397	316	2P-9858	268
2G-9042	590	2K-6921	299	2P-4423	288	2R-0098	278
2G-9099	419	2K-7979	636	2P-4426	298		286
	421	2K-8199	440	2P-4429	298	2R-0694	401
2G-9104	419		536	2P-4431	298	2R-0719	401
	421		538	2P-4433	298	2R-0724	401
	447		540	2P-4435	298	2R-1600	348
2G-9792	306		542	2P-4443	258	2R-1922	760
2G-9793	306		544	2P-4468	288	2R-6806	116
2G-9794	306		546	2P-4484	318	2S-0115	282
2H-3740	344		548	2P-4486	316		286
2H-3920	223		550		318	2S-0607	300
	226		552	2P-4498	316	2S-1413	312
	784		554	2P-4500	316	2S-1914	278
	786		556	2P-4501	316	2S-2053	10
2H-3922	218		558		318		109
	732		560	2P-4502	316	2S-2923	398
2H-3924	702		562	2P-4504	318	2S-4078	462
2H-3928	495		564	2P-4506	318		534
2H-3932	272		566	2P-4507	318	2S-4615	590
	289		568	2P-4510	299	2S-5100	498

► **PRIMARY REFERENCE**

PART NUMBER INDEX

Part	Page
2S-5658	32
	278
	475
2S-8439	285
2U-9766	458
2V-0099	616
	620
	672
	676
2V-3216	248
	257
2V-4332	366
2V-8259	252
2Y-2881	706
2Y-5429	243
2Y-5829	72
3	
3B-0623	24
	26
	50
	60
3B-1915	299
3B-4501	616
	621
3B-4505	8
3B-4506	272
	312
3B-4507	258
3B-4510	475
3B-4514	447
3B-4607	401
	636
3B-4610	401
3B-4615	120
3B-4617	390
3B-4628	451
3B-4629	345
	423
3B-4647	422
3B-5301	248
3B-5320	588
3B-5325	608
3B-6553	289
3B-6769	369
3B-7721	393
3B-7733	369
3B-8485	419
	421
3B-8489	344
	369
	424
	590
	606
3B-8822	390
3C-1884	778
3C-6969	254
3C-8727	104
3D-2824	44
	68
	74
	78
	109
	276
	285
	448
	451
	455
	458
	460
	462
	463
	470
	472
	488
	708
3D-2975	680
3D-2992	262
	268
3D-4004	262
	268
3D-4245	316
	318
3D-5279	248
3D-6509	282
3D-7587	398
3D-8422	288
3D-8439	278
3D-8747	658
	660
3D-8748	658
	660
3D-8749	658
	660
3D-8752	658
	660
3D-8913	398
3D-8942	390
3D-9125	288
3D-9126	288
3D-9253	760
3E-0109	168
	174
	226
	228
	252
	254
	700
	718
3E-0125	210
3E-0127	210
3E-0128	210
3E-0129	210
3E-0130	210
3E-0131	210
3E-0132	210
3E-0133	210
3E-0134	210
3E-0135	210
3E-0136	210
3E-0137	210
3E-0138	210
3E-0139	210
3E-0140	210
3E-0141	210
3E-0142	210
3E-0144	210
3E-0145	210
3E-0146	210
	▶222
	250
3E-0154	788
3E-0155	▶223
	788
3E-0400	617
	620
	672
	676
3E-0443	94
3E-1906	▶626
	628
3E-2026	234
3E-2310	458
3E-3365	94
	127
	194
	204
	206
	224
	234
	238
	242
	250
	320
	403
	585
	617
	621
	634
	658
	672
	676
	704
	718
	732
3E-3368	200
	201
	202
3E-3371	149
	158
	159
	170
	190
	198
	238
	250
3E-3377	197
	238
3E-3383	152
	154
	722
	723
	778
	780
	782
3E-3389	223
	226
	784
	786
3E-3535	94
3E-3584	587
3E-3636	238
3E-3890	616
	620
3E-4039	16
3E-4048	724
	726
3E-4051	94
	704
3E-4052	94
3E-4054	94
3E-4057	94
	704
3E-4058	94
3E-4067	94
3E-4302	488
3E-4335	727
	752
3E-4336	727
	752
3E-4352	24
	58
	66
	70
	80
	274
	710
3E-4353	10
	130
	230
3E-4362	727
	752
3E-5169	239
3E-5180	137
3E-5239	168
	204
	206
	242
	634
3E-5458	128
3E-5464	616
	620
3E-6328	▶127
	252
3E-6332	204
	206
3E-6388	778
	780
	782
3E-6389	▶149
	226
3E-6450	250
3E-6477	254
3E-6575	727
	752
3E-7417	488
3E-7448	230
3E-7775	212
	216
3E-7842	250
3E-7996	252
3E-8016	38
	44
	70
3E-8017	98
	102
3E-8020	732

▶ **PRIMARY REFERENCE**

PART NUMBER INDEX

Part	Page	Part	Page	Part	Page	Part	Page
	734	3E-9413	730		472		708
3E-8043	636		731		534	3K-0835	732
3E-8646	141	3E-9763	178		572	3K-2559	288
3E-8763	225	3E-9865	636		577	3K-2889	370
	254	3F-0379	212		580		602
3E-8764	179		216		581		606
	182	3F-1396	286		582	3K-4025	475
3E-8766	174	3F-1523	278		583	3K-4897	290
	228	3F-1547	498		584		728
	718	3F-3442	299	3J-4818	766	3K-6060	393
3E-8768	209	3F-5535	791	3J-5390	388		636
	254	3F-7514	636	3J-6956	322	3K-7928	708
3E-8772	172	3F-9556	500	3J-7354	50	3K-8106	133
	176		502		64		134
	178		504		78		243
	182		506		230	3K-8280	262
	186		510		266		393
	220		512		458	3K-8460	36
3E-8776	209		514		462	3K-8510	606
	254		518		470	3K-9520	176
3E-8782	174		520		472		178
	228	3G-0361	498		534		182
3E-8783	254	3G-2580	606		574		186
3E-8812	225	3G-2582	606		579	3K-9957	455
3E-8814	179	3G-3265	690	3J-8281	296	3L-3313	286
	182		694	3K-0360	50	3L-8187	254
3E-8815	172		700		110	3L-8855	64
3E-8816	250	3G-3498	498		250	3N-9371	268
3E-8817	252	3G-3726	577		288	3P-0208	322
3E-8821	662	3G-6659	369		306	3P-0229	259
	663	3G-6891	486		310	3P-0322	288
3E-8822	147	3G-6906	486		450	3P-0647	66
	191	3G-6907	486		451	3P-0800	299
	192	3G-7444	578		454	3P-0801	299
3E-8825	147	3G-7875	760		455	3P-0814	299
	168	3G-8175	585		457	3P-0815	299
	172	3G-8592	578		458	3P-0817	299
	174	3H-0107	272		462	3P-0860	299
	176		288		466	3P-0862	298
	178		495		470	3P-0864	322
	179	3H-0976	38		472	3P-0866	322
	182	3H-1118	318		473	3P-0867	322
	186	3H-1156	309		490	3P-0884	294
	191	3H-1461	312		534	3P-0887	285
	192	3H-2900	617		536	3P-0888	298
	209		621		538	3P-0894	299
	220		673		540	3P-0895	298
	225		676		542	3P-0896	298
	228	3H-7654	38		544	3P-0898	299
	250	3J-1907	48		546	3P-1461	598
	252		50		548	3P-1600	298
	254		78		550	3P-1601	299
	662		99		552	3P-1603	298
	663		110		554	3P-1609	298
	718		114		556	3P-1616	299
3E-8860	252		116		558	3P-1626	299
3E-9323	254		266		560	3P-1651	299
3E-9324	254		272		562	3P-1652	298
3E-9326	176		276		564	3P-1656	288
	178		285		566	3P-1666	298
	182		288		568	3P-1691	299
	186		312		570	3P-1798	316
	220		458		576	3P-1896	60
3E-9330	662		462		578	3P-2373	298
	663		470		579	3P-2672	299

► **PRIMARY REFERENCE**

PART NUMBER INDEX

Part	Page
3P-2692	299
3P-2706	314
3P-2777	272
3P-2781	272
3P-2852	288
3P-2854	289
3P-2855	288
3P-2856	288
3P-2865	289
3P-2870	322
3P-3251	289
3P-3252	289
3P-3287	288
3P-3424	289
3P-3426	290
3P-3427	289
3P-3440	288
3P-3839	362
	364
3P-4362	310
3P-5639	276
3P-5640	276
3P-5955	299
3P-6669	318
3P-6880	298
3P-6881	318
3P-7009	289
3P-7019	289
3P-7041	299
3P-7042	299
3P-7160	289
3P-7685	309
3P-7686	309
3P-7731	276
3P-7834	318
3P-8006	309
3P-8042	318
3P-8067	310
3P-9498	534
3P-9554	170
	718
3P-9847	82
3P-9900	352
3R-0451	498
3S-0004	304
3S-0036	299
3S-0391	392
3S-1349	296
	360
	446
3S-2093	141
	143
	168
	174
	176
	178
	182
	186
	189
	191
	192
	206
	225
	226
	228
	230
	234
	238
	242
	246
	248
	250
	252
	254
	392
	414
	454
	472
	617
	620
	634
	672
	676
	684
	702
	704
	718
	760
	768
3S-2708	298
3S-2713	392
3S-6049	242
3S-6050	242
3S-6605	52
3S-7023	427
3S-7781	289
3S-8029	299
3S-8652	285
3S-8665	110
3S-9643	76
3S-9949	318
3S-9951	318
3T-0049	62
3T-0050	392
3T-0688	285
3T-2542	318
3T-2543	318
3T-2662	133
	134
	178
3T-3197	616
	620
3T-3198	616
	620
3T-3422	212
	216
3T-3434	212
	216
3T-4965	448
	472
3T-6354	128
3T-6774	658
	660
3T-7059	778
3T-7086	778
3T-8236	534
3V-0409	97
3V-3816	770
3V-4694	700
3V-5305	592
3V-8376	254
3V-9244	726
3W-6485	476
3Y-2806	636

4

Part	Page
4B-0418	66
	110
4B-1280	254
4B-2047	128
	254
	414
4B-2049	210
	732
4B-4158	447
4B-4274	243
	254
	414
4B-4279	388
4B-4281	276
4B-4283	780
	782
	784
	786
4B-4314	636
4B-4863	122
	124
	243
4B-4909	352
4B-5059	680
4B-6060	393
4B-7270	388
4B-9302	708
	710
4B-9782	314
4B-9880	318
4C-8449	617
4D-0298	427
4D-0577	393
4D-0582	393
4D-1135	400
4D-1138	400
4D-1212	254
4D-1322	322
4D-1326	222
4D-1577	276
	278
4D-2297	564
	577
	580
	581
	582
	583
4D-2560	97
4D-3704	18
	286
	289
	344
	388
	419
	424
4D-4064	104
4D-4895	262
4D-6419	442
4D-6432	748
	750
	752
4D-6585	390
4D-7246	442
4D-7388	234
	768
	770
4D-7735	110
	398
	458
4D-7794	176
	178
	182
	189
	204
	206
	225
	234
	239
	243
	252
	369
	496
	704
	760
	770
4D-8148	348
4D-8318	590
4D-8948	243
4D-9517	188
	239
4D-9986	536
	538
	540
	542
	544
	546
	548
	550
	552
	554
	556
	558
	560
	562
	564
	566
	568
	570
4E-2392	472
4E-4454	226
4E-9628	460
4F-0411	272
4F-2294	242
4F-4097	488
4F-4879	756
	757
	758
	766
4F-5695	23
4F-7390	442
4F-7507	278
4F-7952	62

PART NUMBER INDEX

Part	Page	Part	Page	Part	Page	Part	Page
	276		564		182	4P-9485	76
	278		566		186	4P-9537	257
	289		568		196	4S-1936	239
	294		570		234	4S-1962	94
	300	4J-8524	400		262		704
4F-8946	276	4J-8527	400		269		706
	278	4J-8622	447		350		708
	300	4J-8922	262		356		710
4F-9029	288		393		362	4S-4455	234
4F-9653	288	4J-9224	425		364		473
4G-4972	24		426		371	4S-5824	258
4H-2558	196		428		393		288
	204		436		414	4S-5845	322
	206	4J-9225	432		473	4S-5924	388
	243		434		768	4S-5982	312
4H-2633	87	4J-9964	495		798	4S-6668	94
4H-5440	289	4K-0149	259	4L-6459	225	4S-7529	390
4H-6147	414	4K-0367	278		234	4S-7560	398
4H-6996	442		390		500	4S-7606	390
4J-0520	78		598		506		398
4J-0521	463		724		514	4S-8287	727
	578		726		518		752
4J-2667	262	4K-1388	289		520	4S-8537	298
4J-3914	390		534	4L-9337	628	4S-8598	289
	393	4K-1540	390	4M-0061	414	4S-8603	289
4J-3915	644	4K-3004	606		660	4S-8670	298
	650	4K-3128	430	4M-0189	288	4S-9191	88
4J-3957	400	4K-4881	330	4M-0200	617		358
4J-4630	430		331	4M-1641	298		374
4J-5468	454		332	4M-1831	212	4T-1700	579
4J-5477	90		333		216	4T-1860	534
	266		334	4M-2381	316		▶584
	458		335	4M-3915	298	4T-2069	290
	462		336	4M-5281	362	4T-2236	597
	463		337		364	4T-4509	579
	470		338		688	4T-4935	534
	472		339	4M-5282	269		▶576
	534		340	4M-5893	289	4T-4942	576
4J-7533	440		342	4M-6921	498	4T-5070	584
	522	4K-5824	67	4M-9592	299	4T-5071	584
	523	4K-6558	366	4N-1059	195	4T-5074	579
	524	4K-6760	366	4N-1114	18	4T-5613	425
	525	4K-6761	366	4N-2514	33		427
	526	4K-6780	366	4N-2927	680		436
	527	4K-6781	366	4N-5091	404	4T-6907	432
	528	4K-7461	366	4N-7335	628		434
	529	4K-7462	366	4N-7431	82	4T-7520	268
	530	4K-7463	366	4N-7521	210	4T-7571	576
	531	4K-7464	366	4P-0659	93	4T-8054	425
	532	4K-7465	366		100		426
	534	4K-7467	366	4P-1650	16		428
	536	4K-8659	366	4P-1659	47		436
	538	4K-8734	366	4P-2945	628	4T-9336	578
	540	4K-8864	110	4P-3966	8	4T-9337	578
	542		176	4P-3977	8	4V-0015	366
	544		230	4P-4369	98	4V-4548	632
	546		234	4P-5524	92	4V-7875	680
	548	4K-9097	750	4P-5918	230	4V-7884	764
	550		752	4P-6587	16		766
	552	4K-9841	14	4P-7581	252	4V-8116	248
	554	4L-5966	620	4P-8134	230	4V-8556	766
	556		672		234	4V-8577	764
	558		676	4P-8279	98	4V-9803	377
	560	4L-6454	46	4P-8280	98	4V-9804	377
	562		176	4P-8525	117	4V-9809	377

▶ **PRIMARY REFERENCE**

PART NUMBER INDEX

Part	Page
4W-1413	791
4W-7356	478
4W-7627	710
4Z-6358	520
	▶530
5	
5B-8978	470
5B-9079	582
	583
5B-9318	438
	440
	536
	538
	540
	542
	544
	546
	548
	550
	552
	554
	556
	558
	560
	562
	564
	566
	568
	570
5C-2890	170
	176
	178
	182
	186
	190
	220
	242
	246
	248
	250
	393
	616
	621
	634
	654
	673
	677
	768
5C-6266	78
5C-7261	170
	172
	176
	178
	182
	184
	188
	248
5C-7423	780
	782
5C-8312	226
	636
5C-9553	124
	243
	246
	460
	617
	747
	778
5C-9584	248
5C-9930	248
5C-9931	248
5D-0269	732
	734
	760
5D-0353	286
	344
5D-0470	390
	▶402
5D-0768	401
5D-1026	82
	358
	374
	706
	708
	710
5D-1911	498
5D-2643	590
5D-2645	450
	454
5D-3636	401
5D-4281	590
5D-4382	390
	▶400
5D-4661	42
5D-4822	680
5D-4988	454
5D-7688	384
5D-7778	400
5D-9344	36
5F-0304	36
5F-3715	588
5F-4250	298
5F-5434	398
5F-6044	272
5F-6199	299
5F-7403	278
5F-7404	278
5F-8000	294
5F-9144	486
	620
5H-0255	617
5H-2767	294
5H-3252	475
5H-4778	390
	398
	414
5H-5672	598
5H-7826	369
5H-8848	288
	463
5H-8936	760
5H-8985	298
	299
5J-1246	495
5J-4773	593
	594
	595
	597
5J-4857	238
	578
5J-5402	427
	431
5J-5731	430
5J-7333	592
5J-9105	374
5J-9631	578
5K-0292	390
5K-1078	344
5K-2408	390
	414
	760
5K-3294	184
	239
5K-5068	90
5K-5129	388
5K-7577	732
5K-8330	606
5K-8451	414
5K-8454	442
5K-9090	78
	462
	463
5K-9107	498
5K-9238	392
5L-1100	486
5L-2952	62
5L-4507	243
5L-4758	620
5L-7200	176
	178
	182
	186
	220
5M-1932	289
5M-2055	298
5M-2057	534
5M-2504	316
5M-2894	78
	93
	100
	272
	276
	278
	286
	288
	294
	299
	304
5M-3062	94
	142
	176
	178
	182
	186
	189
	225
	234
	239
	250
	252
	269
	350
	356
	393
	406
	414
	451
	458
	466
	612
	632
	644
	650
	702
	704
	706
	764
	768
5M-3492	312
	316
5M-5018	298
5M-6213	382
	384
	390
5M-6214	318
5M-6687	238
5M-7087	64
5M-7878	299
5M-7937	298
5M-8009	316
5M-8500	636
5M-9548	312
5M-9695	772
	773
5P-0537	38
	54
	118
	160
	257
	658
	660
	778
5P-0599	90
	454
5P-0721	392
5P-0747	196
	238
	242
5P-0761	131
	196
	242
	243
5P-0767	82
	358
	374
	393
	708
	710
5P-1064	710
5P-1075	94
	104
	262
	269
	344
	350
	356
	362

▶ **PRIMARY REFERENCE**

PART NUMBER INDEX

Part	Page	Part	Page	Part	Page	Part	Page
	364	5P-3454	243		746	5P-8245	10
	390	5P-3456	114	5P-5824	690		12
	393	5P-3490	388		694		36
	500	5P-3723	278	5P-5908	617		41
	502	5P-3903	578		621		44
	504	5P-3948	94		673		74
	506	5P-3999	791		677		274
	510	5P-4000	794	5P-5923	352		278
	512	5P-4001	795	5P-5924	269		290
	514	5P-4003	797		634		294
	518	5P-4077	790	5P-5969	476		306
	520	5P-4086	796		644		366
	616	5P-4114	790		650		424
	617	5P-4115	43		688		442
	621		230		691		478
	634		269		695		482
	636		362		714	5P-8247	22
	644		364		771		30
	650		688	5P-6129	617		33
	673		690		621		269
	677		694	5P-6459	174		366
	704		768	5P-6652	360		390
	715		780	5P-6712	388		418
	762		782	5P-6871	716		598
	764		784	5P-6882	688	5P-8248	278
	798		786	5P-6944	458		286
5P-1076	74	5P-4116	64	5P-7162	772		368
	104		82		773		442
	120		110	5P-7213	446		590
	248		239	5P-7464	468		598
	352		274	5P-7465	468	5P-8249	419
	376		414	5P-7602	298		421
	377	5P-4118	794	5P-7701	36		422
	404	5P-4119	795		64		590
	500	5P-4120	796	5P-7704	262	5P-8250	368
	502	5P-4121	797	5P-7803	620	5P-8347	84
	504	5P-4401	382		672		135
	506		384		676	5P-8394	178
	510	5P-4424	382		690	5P-8439	120
	512		384		694	5P-8441	634
	514	5P-4426	382		700	5P-8445	680
	518		384		762	5P-8500	496
	520	5P-4478	414	5P-7813	24		639
5P-1175	790	5P-4868	462	5P-7814	36		713
5P-1262	82	5P-4906	708	5P-7854	62		742
5P-1291	120	5P-4961	110		234		798
5P-1295	462	5P-5454	690		448	5P-8502	496
5P-1465	398		694		458		639
5P-1895	475	5P-5627	772		473		742
5P-2228	420		773	5P-7958	713		798
	632	5P-5637	616	5P-7970	16	5P-8525	147
5P-2424	500		621		67		174
	502		637		274		191
	504		673	5P-8066	67		192
	506		677	5P-8068	70		663
	510	5P-5639	637	5P-8167	188		684
	512	5P-5672	616		239	5P-8842	344
	514		634		284		424
	518	5P-5677	224		356	5P-8843	344
	520	5P-5678	43		636	5P-8845	344
5P-2566	364	5P-5680	736		766	5P-8874	470
	495		738		770	5P-8890	344
5P-3236	672	5P-5689	242	5P-8197	639	5P-9085	362
5P-3418	128	5P-5768	730		742		364
5P-3419	128		731	5P-8211	44		634

► **PRIMARY REFERENCE**

PART NUMBER INDEX

Part	Page
5P-9135	617
	621
	672
	676
5P-9209	104
5P-9262	574
5P-9297	116
5P-9299	398
5P-9617	50
	78
	472
5P-9810	448
	472
5R-7137	12
5S-0003	10
5S-4246	252
5S-7349	128
	212
	216
5S-7379	176
	182
	186
	344
	442
	448
	451
	455
	458
	473
	636
	715
5S-7382	78
	104
5S-7383	262
	624
	625
	628
	636
5S-7906	314
	316
	318
5S-9134	16
5T-0907	344
5T-1958	736
5T-1959	738
5T-1964	736
	738
5T-1969	736
5T-1972	736
	738
5T-2354	588
5T-3093	771
5T-3144	736
5T-3145	738
5T-3146	736
5T-3147	738
5T-4361	791
5T-5119	324
	325
	326
	327
	328
	329
	341
5T-7126	286
5T-7130	286
5T-7134	286
5T-7157	4
	▶286
5T-7486	640
	642
	646
	648
5T-8285	390
	414
5T-8365	588
5T-8417	422
5T-9313	176
	182
5T-9686	450
5T-9739	450
5T-9808	448
5V-0354	588
5V-0770	680
5V-1474	680
5V-1497	764
5V-1498	624
	625
5Y-0254	485

6

Part	Page
6A-5591	274
6A-9718	778
6B-0933	500
	502
	504
	506
	510
	512
	514
	518
	520
6B-4540	252
6B-4661	706
6B-5072	306
6B-5262	278
	348
6B-6683	390
6B-6684	74
	478
6B-9081	706
6C-0109	248
6C-0110	248
6C-3247	336
6C-5233	248
6C-5234	248
6C-7367	337
6D-0692	299
6D-1004	116
6D-1432	390
6D-1641	466
	706
	708
	710
6D-3402	632
6D-3479	243
6D-4244	10
	82
	234
	239
	254
	350
	451
	455
	466
	473
6D-4246	239
6D-4247	455
6D-6581	640
	642
	646
	648
6D-7146	69
	482
6D-7690	278
6D-9853	390
6E-0775	427
6E-1047	431
6E-1049	427
6E-1835	576
6E-1923	534
6E-1924	534
6E-1925	534
6E-1926	462
6E-2266	498
6E-2314	430
6E-3007	536
	538
	540
	542
	544
	546
	548
	550
	552
	554
	556
	558
	560
	562
	564
	566
	568
	570
6E-3019	536
	538
	540
	542
	544
	546
	548
	550
	552
	554
	556
	558
	560
	562
	564
	566
	568
	570
6E-3030	523
	525
	527
	529
	▶536
6E-3043	546
	554
6E-3044	536
	542
	550
	552
6E-3058	544
6E-3059	538
	570
6E-3268	574
6E-3269	574
6E-3272	574
6E-3273	574
6E-3274	574
6E-3275	574
6E-3276	574
6E-4213	488
6E-4214	488
6E-4215	488
6E-4216	488
	▶492
6E-4217	492
6E-4218	492
6E-4219	492
6E-4224	488
6E-4225	488
6E-4227	488
6E-4228	572
6E-4230	572
6E-4234	488
6E-4236	488
6E-4237	488
6E-4239	572
6E-4502	536
	538
	540

▶ **PRIMARY REFERENCE**

PART NUMBER INDEX

Part	Page	Part	Page	Part	Page	Part	Page
	542		327	6G-5537	442		384
	544		328	6G-5538	442		704
	546		329	6G-5539	442	6K-8420	68
	548		330	6G-5542	442	6K-9632	770
	550		331	6G-5543	442	6L-1962	500
	552		332	6G-5544	442		502
	554		333	6G-5547	442		504
	556		334	6G-5548	442		506
	558		335	6G-5874	260		510
	560		336	6G-5979	308		512
	562		337		320		514
	564		338	6G-5987	658		518
	566		339		660		520
	568		340	6G-6122	442	6L-2609	62
	570		341	6G-6238	442	6L-4783	316
6E-4581	425		342	6G-6245	442	6L-7751	268
6E-4599	540	6F-6405	64	6G-6264	388	6L-8617	87
	548	6F-6673	272	6G-6273	278	6L-8797	488
	556		294	6G-6910	5	6L-9952	708
6E-4703	534		312		▶376	6M-5062	582
	▶577		316	6G-7187	424		583
6E-4725	425	6F-7045	218	6G-7222	690		620
6E-4974	425	6F-7058	423	6G-8814	636	6M-5218	388
	436	6G-0417	366	6G-8831	716	6M-7476	10
6E-4975	426	6G-0865	447		718	6N-3826	212
	428	6G-0905	388		720		216
6E-5047	306	6G-1545	▶447	6G-9333	284	6N-6033	67
6E-5153	536	6G-1667	260	6H-1717	424	6N-8863	44
	538	6G-1670	260		442	6N-9995	209
	540	6G-1750	4	6H-9691	400	6P-0205	609
	542		▶260	6I-0273	92		610
	544	6G-1958	286	6I-0274	92		690
	546	6G-2395	690	6I-0275	92		694
	548		694	6I-1418	135	6P-1736	290
	550		700	6I-1638	29	6P-2090	285
	552	6G-2396	690	6I-1661	40	6P-3223	318
	554		694	6I-2662	29	6P-3236	616
	556		700	6I-2663	29		620
	558	6G-2636	390	6I-2720	47		676
	560	6G-2751	690	6I-8286	288	6P-4700	316
	562		694	6I-9107	294	6P-4917	312
	564	6G-2914	636	6I-9108	294	6P-5096	272
	566		690	6I-9851	▶294	6P-5442	262
	568		694		307	6P-6641	382
	570	6G-2959	738	6J-0488	254		384
6E-5200	579	6G-3207	286	6J-1536	590	6S-1061	238
6E-5884	486	6G-3213	286	6J-1881	388	6S-7826	486
6E-5885	486	6G-3529	598	6J-1882	388	6S-7827	486
6E-5887	486	6G-4173	590	6J-2797	427	6T-1233	289
6E-6140	572	6G-4322	376		431	6T-1235	289
6E-6141	572	6G-4323	376	6J-5773	588	6T-2770	778
6E-6142	572	6G-4642	590	6J-6439	576	6T-3118	259
6E-6419	572	6G-4643	590	6J-7929	414	6T-3631	238
6E-6420	572	6G-4680	590	6J-9944	590	6T-3632	238
6E-6527	574	6G-4681	590	6K-0715	602	6T-3633	238
6E-6528	574	6G-4703	278	6K-3273	690	6T-3643	243
6E-6536	574	6G-4704	278		694	6T-5345	616
6E-6537	574	6G-4831	588		700		620
6E-6538	574	6G-4832	422	6K-4186	278		672
6E-6539	574	6G-4896	590	6K-6826	392		676
6E-6540	574	6G-4911	588	6K-7917	278	6T-6708	620
6F-0253	732	6G-4970	4	6K-8079	708		672
6F-3930	324		▶588		710		676
	325	6G-4985	4	6K-8178	243	6T-7695	684
	326		▶590		382	6T-9196	288

▶ **PRIMARY REFERENCE**

PART NUMBER INDEX

Part	Page	Part	Page	Part	Page	Part	Page
6V-0292	690		172	6V-5582	►210		677
	694		184		214	6V-7742	10
6V-0505	665		234	6V-5586	584	6V-7744	716
	666	6V-3536	20	6V-5645	226		718
	691	6V-3537	40	6V-5651	706		720
	695	6V-3538	24	6V-5686	33	6V-7981	99
	700		38	6V-5696	55		230
6V-0852	50	6V-3821	84		463	6V-8004	12
	78	6V-3822	62		631	6V-8149	12
	82	6V-3831	64	6V-5722	440	6V-8183	262
	266	6V-3834	70	6V-5782	269		637
	458	6V-3908	64	6V-5834	684	6V-8185	254
	462	6V-3918	80	6V-5839	10		269
	534		81		12	6V-8186	242
6V-1228	473		274		16		500
6V-1249	468	6V-3928	690		30		502
6V-1250	16		694		62		504
6V-1322	250		700		64		506
	284	6V-3940	38		66		510
6V-1572	120		60		72		512
6V-1573	120		67		98		514
6V-1581	82		86		99		518
6V-1582	82	6V-3965	78		116		520
6V-1668	617		266		230	6V-8187	128
	621		458		276		242
	673		534		417		262
	677	6V-4245	393	6V-5842	30		268
6V-1720	298	6V-4248	10		99	6V-8188	210
6V-1820	16		72	6V-5849	784		212
	88		417	6V-5853	780		216
	130	6V-4367	60		782		364
	358	6V-4589	50		786		500
	374		114	6V-6209	778		502
6V-1889	458	6V-5048	24	6V-6213	778		504
6V-1970	4		48	6V-6214	778		506
	►713		230	6V-6219	778		510
6V-2313	104	6V-5049	50	6V-6317	62		512
6V-2315	43		230		116		514
6V-2317	16	6V-5063	10		230		518
	64	6V-5134	70	6V-6578	226		520
	69	6V-5158	644	6V-6609	10		628
	70		650		230	6V-8189	269
	96	6V-5163	644	6V-6888	778		393
	118		650		780	6V-8197	10
	274		691		782		36
6V-2369	242		695	6V-6889	708		41
	243	6V-5164	700		778		44
6V-2480	252	6V-5192	44		780	6V-8214	230
6V-2610	382		492		782		257
	384	6V-5215	66	6V-6893	239		358
6V-2686	204		230	6V-6923	126		374
	206	6V-5217	14	6V-6959	122	6V-8225	38
	209		16		124		160
6V-2687	362		58	6V-7350	85	6V-8255	771
	364	6V-5218	64	6V-7420	708	6V-8258	780
	714		67	6V-7604	26		784
6V-2722	148		114	6V-7636	640		786
	196		274		642	6V-8259	782
6V-2773	640	6V-5219	36		646	6V-8336	74
	642		38		648	6V-8337	488
	646	6V-5221	70	6V-7687	74	6V-8352	574
	648		85	6V-7692	416	6V-8359	60
6V-3251	10	6V-5230	44	6V-7728	617	6V-8362	616
6V-3259	680		534		621		620
6V-3265	78	6V-5556	579		673	6V-8369	223

► **PRIMARY REFERENCE**

PART NUMBER INDEX

Part	Page
	226
	784
	786
6V-8376	133
	134
	178
	243
6V-8378	212
	216
	222
6V-8384	286
6V-8397	50
	78
	110
	450
	451
	454
	455
	457
	458
	462
	463
6V-8398	110
	448
	450
	451
	454
	455
	466
	468
	470
	472
	473
	534
6V-8556	448
	463
6V-8624	450
6V-8625	450
	454
	466
	470
	473
6V-8627	458
	462
6V-8628	266
6V-8634	110
	450
	454
	457
6V-8636	78
6V-8637	68
	109
	460
6V-8639	110
	450
	454
	470
	472
6V-8640	470
6V-8641	266
	458
6V-8647	462
	472
	534
6V-8675	482
6V-8676	114
6V-8721	468
6V-8723	110
	450
	455
6V-8724	458
6V-8731	110
6V-8765	482
6V-8777	448
	463
6V-8784	448
6V-8801	93
	104
	141
	176
	182
	186
	196
	222
	225
	226
	234
	239
	250
	254
	262
	269
	289
	350
	393
	414
	451
	455
	473
	477
	616
	621
	628
	632
	673
	677
	706
	762
	768
	798
6V-8837	230
	488
6V-8918	393
6V-8928	690
	694
	700
6V-8941	463
6V-8942	448
6V-9001	458
6V-9002	110
	450
	454
6V-9004	74
	463
6V-9005	64
6V-9007	448
	460
	462
6V-9008	64
6V-9027	274
6V-9162	78
6V-9169	466
6V-9189	174
6V-9200	458
6V-9607	28
6V-9632	268
	364
	617
	636
	640
	642
	646
	648
	654
	688
	690
	732
	747
	762
6V-9746	68
	74
	78
	109
	448
	458
	460
	462
	463
	470
	472
6V-9835	463
6V-9836	455
6V-9839	460
6V-9840	463
6V-9844	470
6V-9849	470
	472
6V-9853	78
	460
6V-9874	472
6V-9875	462
6V-9876	462
6W-4749	289
6W-4750	289
6W-5698	768
6W-5817	392
6W-9168	602
6Y-0303	299
6Y-0306	289
	299
6Y-0309	608
6Y-0576	289
6Y-0578	298
6Y-0579	299
6Y-0580	298
6Y-0583	299
6Y-1148	289
6Y-1149	288
6Y-1152	289
6Y-2027	298
6Y-2803	596
6Y-2805	595
6Y-2932	480
6Y-2933	480
6Y-2934	480
6Y-2935	480
6Y-4339	593
	594
6Y-5914	299
6Y-7917	388
6Y-7953	442
6Y-7954	282

7

Part	Page
7B-3028	68
	289
	298
7B-3235	294
7B-7501	284
7B-7525	750
	752
7B-9323	401
7C-0752	96
7C-1445	16
	36
7C-1583	54
7C-1728	54
7C-1798	52
7C-1821	70
7C-1822	70
7C-2891	60
7C-3081	60
7C-3082	60
7C-3083	60
7C-3095	76
7C-3953	60
7C-3954	60
7C-4354	234
	239
7C-4993	118
7C-5736	41
7C-6178	8
7C-6921	66
7C-7851	34
7C-7852	34
7C-8292	58
7C-8296	44
7C-8434	628
7C-8581	29
7C-8639	47
7C-8851	117
7C-9532	103
7C-9538	103
7C-9542	16
7D-0028	286
7D-0035	286
7D-0215	382
	384
7D-1151	356
7D-1158	595
7D-1195	498
7D-3668	393
7D-4903	382
	384
7D-4922	390
7D-5252	324
	325
	326

► **PRIMARY REFERENCE**

PART NUMBER INDEX

Part	Page
	327
	328
	329
	330
	331
	332
	333
	334
	335
	336
	337
	338
	339
	340
	341
	342
7D-7026	82
	358
	374
	706
	710
7D-7496	360
7D-8185	282
7D-8225	282
7D-8226	282
7D-8636	289
7D-8983	442
7D-8984	442
7D-9212	262
7D-9708	390
7E-1226	350
7E-3369	44
7E-4043	24
7E-5346	118
7E-5555	80
7E-6508	257
7E-7912	76
7E-8629	96
7E-8923	8
7E-8925	8
7E-8926	8
7E-8928	8
7E-9578	29
7E-9710	613
	▶628
7F-0192	104
7F-0560	148
7F-3400	712
7F-3425	294
7F-6289	706
7F-8267	294
	475
	486
7F-8268	276
	278
	284
	289
	294
	300
7F-8607	118
7F-9223	352
7G-1060	238
7G-3453	299
7G-3454	298
7G-3455	298
7G-3456	299
7G-4326	768
7G-4824	616
	620
	672
	676
	690
	694
	700
	762
7G-7053	252
7G-7920	362
	364
7H-1447	498
7H-3641	268
	500
	502
	504
	506
	510
	512
	514
	518
	520
7I-4609	326
7I-4719	4
	▶416
7I-4756	▶484
	494
7I-4870	410
	▶500
7I-4871	407
	▶502
7I-4890	636
7I-4941	632
7I-5015	613
	614
	▶654
	669
7I-5405	472
7J-0204	432
	434
	460
7J-6839	486
7J-8009	486
7J-8611	382
	384
	393
	398
	414
	760
7J-8893	289
7J-8894	289
7J-9885	425
	426
	428
	436
7J-9933	536
	538
	540
	542
	544
	546
	548
	550
	552
	554
	556
	558
	560
	562
	564
	566
	568
	570
	576
7K-1181	82
	186
	234
	362
	364
	472
7K-2135	262
7K-3176	702
7K-3304	702
7K-4201	652
	653
7K-4743	242
7K-5448	288
7K-5449	288
7K-6117	418
7K-8876	488
7K-8877	488
7L-0811	238
7L-2894	212
	216
7L-6580	80
7L-8316	658
	660
7L-9061	488
7M-0706	268
7M-1199	299
7M-1396	312
	316
7M-1397	312
	316
7M-7219	680
7M-7410	393
7N-0296	204
	206
7N-0718	▶218
	243
7N-2043	47
7N-2059	204
	206
7N-3718	243
	246
	248
7N-3725	209
7N-5274	242
7N-5352	268
7N-5683	24
7N-5876	252
	723
	732
	734
7N-7688	82
7N-7779	94
7N-7780	94
7N-9737	94
7N-9801	204
	206
7N-9943	149
7P-7705	588
7S-2962	289
7S-4607	310
7S-6745	285
7S-9396	90
	93
7T-0020	149
7T-0582	658
	660
7T-1099	374
	616
	617
	620
	636
	672
	676
7T-1961	768
7T-3267	212
	216
7T-3268	212
	216
7T-3271	212
	216
7T-3276	212
	216
7T-3277	212
	216
7T-3278	212
	216
7T-3279	212
	216
7T-3451	212
	216
7T-3454	212
	216
7T-3974	212
	216
7T-4003	662
	663
7T-4532	626
	630
7T-5856	634
7T-7358	664
7T-8891	768
	770
7T-9302	223
	226
7T-9647	299
7T-9793	617
	620
7U-4898	750
	752
7V-0446	104
	262
	392
7V-5191	680
7V-9275	242
7W-4975	628
7W-4978	628
7W-5164	99
7W-5499	10
7W-5672	451

▶ **PRIMARY REFERENCE**

PART NUMBER INDEX

Part	Page
	455
7W-6390	60
7W-7082	29
7W-7083	29
7W-7235	52
7X-0269	197
7X-0288	455
7X-0289	451
	455
7X-0290	473
7X-0291	262
	350
	506
	518
	520
7X-0326	451
	628
7X-0328	364
7X-0332	344
7X-0333	404
7X-0337	628
7X-0338	602
7X-0343	82
7X-0350	482
7X-0354	724
	726
7X-0358	602
7X-0359	602
7X-0375	724
	726
7X-0399	348
7X-0403	602
7X-0404	602
7X-0456	624
	625
7X-0492	90
7X-0550	197
7X-0562	210
	212
	216
7X-0576	602
7X-0578	634
7X-0579	122
	124
7X-0591	617
	621
	673
	677
	762
7X-0608	222
	477
7X-0620	222
7X-0632	352
7X-0909	43
7X-0943	794
7X-0944	795
7X-0945	796
7X-0946	797
7X-1387	120
	624
	625
7X-1804	620
7X-1805	620
7X-1806	702
7X-1807	620
7X-1809	702
7X-1815	702
7X-1816	702
7X-2049	704
7X-2393	248
7X-2468	257
7X-2533	43
	243
7X-2537	82
7X-2538	631
7X-2540	440
7X-2546	522
	523
	524
	525
	526
	527
	528
	529
	530
	531
	532
7X-3182	780
	782
	784
	786
7X-3229	790
7X-3327	284
7X-3373	212
	216
7X-3376	268
7X-4733	480
7X-4736	390
7X-4776	534
7X-6312	145
7X-6315	136
7X-7644	790
7X-7661	736
	738
7X-7729	88
	90
	96
	100
	352
	358
	631
7X-7731	81
	86
	274
	344
7X-7732	76
7X-7739	766
7X-7877	141
	226
	358
7X-7958	109
7Y-3058	482
7Y-5226	736
	738
	771
7Y-7388	732
	734
7Y-8169	243

8

Part	Page
8C-0569	458
8C-0573	131
	132
8C-3085	584
8C-3089	488
8C-3100	86
8C-3121	239
8C-3309	462
8C-3334	239
8C-3425	482
8C-3442	636
8C-3445	64
8C-3446	50
	64
	78
	473
8C-3447	78
8C-3451	473
8C-3655	212
	216
8C-3756	616
	634
8C-4436	197
	376
	455
8C-4586	617
	620
	672
	676
8C-5060	784
8C-5223	620
8C-5230	64
8C-5897	790
8C-5917	131
	132
8C-6162	586
8C-6354	252
8C-6358	148
8C-6738	772
	773
8C-6872	110
8C-6959	110
8C-7507	254
8C-8400	462
8C-8454	644
	650
8C-8902	790
8C-8923	790
8C-9788	611
	▶616
8C-9987	320
	585
8D-1429	616
	620
	672
	676
8D-1642	388
8D-1643	388
8D-1648	388
8D-1802	306
8D-1993	306
8D-2116	282
8D-2125	388
8D-2180	4
	▶388
8D-2452	286
8D-2459	286
8D-2461	286
8D-2519	286
8D-2528	286
8D-2531	286
8D-2532	286
8D-2534	286
8D-2667	286
8D-3308	598
8D-3508	450
8D-3614	344
8D-3615	344
8D-3791	356
8D-3946	278
8D-3993	423
8D-3997	423
8D-4038	278
8D-4114	419
8D-4137	598
8D-4138	598
8D-4198	598
8D-4203	598
8D-4204	598
8D-4207	598
8D-4208	598
8D-4217	598
8D-4223	598
8D-4224	598
8D-4225	598
8D-4235	598
8D-4282	282
8D-4291	282
8D-4302	598
8D-4316	598
8D-4317	598
8D-4321	598
8D-4332	598
8D-4336	598
8D-4337	598
8D-4496	419
8D-4578	446
8D-4673	418
8D-4811	590
8D-4812	590
8D-4813	590
8D-4942	282
8D-5061	475
8D-5063	475
8D-5106	278
8D-5291	268
8D-5293	262
	268
8D-5294	262
8D-5295	262
8D-5343	282
8D-5362	282
8D-5377	282
8D-5378	282
8D-5379	278
8D-5384	278
8D-5396	278
8D-5405	278

▶ **PRIMARY REFERENCE**

PART NUMBER INDEX

Part	Page
	▶282
8D-5415	4
	▶278
8D-5434	278
8D-5632	500
	502
	504
	506
	507
	510
	512
	514
	518
	520
8D-5633	500
	502
	504
	506
	510
	512
	514
	518
	520
8D-5634	500
	502
	504
	506
	507
	510
	512
	514
	518
	520
8D-5636	500
	502
	504
	506
	510
	512
	514
	518
	520
8D-5637	500
	502
	504
	506
	510
	512
	514
	518
	520
8D-5640	500
	502
	504
	506
	510
	512
	514
	518
	520
8D-5641	248
	269
	500
	502
	504
8D-5970	4
	▶598
8D-6185	4
	▶475
8D-6541	388
8D-7026	392
8D-7305	447
8D-7685	418
8D-7960	636
8D-8231	286
8D-8931	344
	423
8D-9092	451
8D-9159	356
8D-9309	278
8D-9479	282
8D-9480	282
8D-9482	282
8D-9652	598
8D-9969	262
8D-9973	262
8D-9974	262
8E-1118	684
8E-1204	288
8E-4129	310
8E-4130	▶310
	322
8E-4131	272
	▶322
8E-4132	▶272
	307
8E-5529	595
8E-7791	616
	620
	672
	676
	690
	694
	700
	762
8E-8297	298
8E-8304	298
8E-8307	299
8E-8847	304
8E-8850	304
8E-8904	304
8F-0492	690
	694
	700
8F-1434	128
	210
	212
	216
	222
	732
8F-1462	727
	752
8F-5340	486
8F-6437	358
	374
	500
	502
	504
	506
	510
	512
	514
	518
	520
8F-6711	258
	286
8F-9516	344
8H-1141	212
	216
8H-1728	715
8H-5244	314
	316
	318
8H-5303	218
8H-5306	218
8H-8830	298
8H-9208	289
8H-9789	38
8I-1362	382
	384
8J-0377	495
8J-1256	230
	254
8J-1434	606
	▶608
8J-2331	495
8J-4351	70
8J-6018	426
8J-6212	432
	434
8J-6213	432
	434
8J-6273	478
8J-6572	606
8J-6575	605
	▶606
8J-6815	534
8J-9092	602
8J-9607	606
8J-9608	602
	606
8K-0530	360
8K-8467	390
8L-2777	52
8L-2786	36
	60
	67
	230
8L-5008	97
8L-6005	392
8L-6521	254
8L-6557	10
8L-7905	636
8L-8413	132
	680
	766
8M-0456	613
8M-0505	67
8M-0903	289
8M-2537	312
8M-2770	10
	186
	188
	230
	243
	252
8M-2771	230
8M-2772	243
8M-2773	114
	186
	239
	458
	612
8M-3175	534
8M-3267	766
8M-4389	272
8M-4437	536
	538
	540
	542
	544
	546
	548
	550
	552
	554
	556
	558
	560
	562
	564
	566
	568
	570
8M-4438	266
8M-6521	289
8M-7065	10
8M-7640	278
8M-8489	304
	310
	318
	322
8M-8948	611
8N-0869	196
	242
	243
	250
8N-1546	242
8N-1548	242
8N-1725	242
8N-2694	90
8N-4617	92
8N-6854	44
8N-8846	87
8N-9071	82
8N-9072	82
8P-0492	288
8P-1096	318
8P-1098	318
8P-1100	▶318
	322
8P-1257	294
8P-1656	298

▶ **PRIMARY REFERENCE**

PART NUMBER INDEX

Part	Page	Part	Page	Part	Page	Part	Page
8P-2893	312		130	8T-4121	12		650
8P-5141	616	8T-0646	463		64		684
	620	8T-0785	430		74		690
	672		431		78		694
	676	8T-0788	78		82		700
8P-6363	634	8T-1159	116		97		704
8R-1778	664	8T-1174	637		100		708
8R-3393	94	8T-1191	791		104		710
	704	8T-1192	794		109		716
8S-2332	195	8T-1193	795		110		718
8S-2634	196	8T-1194	796		114		720
8S-3426	299	8T-1195	797		120	8T-4122	78
8S-6109	94	8T-1363	390		130		82
	704		790		131		131
8S-6110	94	8T-1683	451		132		248
	704		455		141		262
8S-7566	652	8T-1686	454		147		482
	653		466		170		724
8S-7803	680	8T-1687	450		172		726
8S-9075	286		454		176	8T-4128	90
8S-9076	286	8T-1688	254		178	8T-4133	104
8S-9093	368	8T-1698	480		182		178
8S-9129	289	8T-1715	472		184		209
8S-9130	289	8T-1905	110		191		210
8S-9191	304	8T-2275	498		192		239
8T-0076	110	8T-2353	266		204		243
	454	8T-2501	140		206		248
	457		266		209		250
8T-0100	24		451		210		252
	58		766		234		262
8T-0119	250	8T-2502	390		239		352
8T-0249	470		451		243		634
8T-0275	58		628		246		637
8T-0276	67	8T-2561	637		248		644
	114	8T-2901	768		250		650
	135	8T-3282	10		252		716
8T-0281	34		432		352		718
8T-0285	140		434		358		720
	142	8T-3426	691		361	8T-4136	104
8T-0292	76		695		362		110
8T-0293	243		700		364		147
8T-0328	104	8T-3490	16		374		172
	128		62		382		176
	210		64		384		178
	212		82		390		182
	216		90		393		184
	736		170		398		191
	738		184		458		192
	771		248		463		239
8T-0335	771		374		496		243
8T-0336	442		616		498		248
8T-0343	38		617		500		250
8T-0352	736		620		502		352
	738		640		504		358
	771		642		506		374
8T-0358	30		646		510		500
8T-0384	52		648		512		502
8T-0389	131		672		514		504
	132		676		518		506
	152		762		520		510
	154	8T-3518	148		640		512
8T-0640	54	8T-3519	148		642		514
	118	8T-3597	74		644		518
8T-0642	230	8T-3647	209		646		520
8T-0643	12	8T-3957	463		648		631

► **PRIMARY REFERENCE**

PART NUMBER INDEX

Part	Page
	708
8T-4137	78
	82
	109
	141
	170
	184
	206
	209
	239
	244
	250
	252
	361
	362
	364
	382
	384
	398
	458
	634
	640
	642
	646
	648
	684
	704
	710
	716
	718
	720
8T-4138	64
	393
	536
	538
	540
	542
	544
	546
	548
	550
	552
	554
	556
	558
	560
	562
	564
	566
	568
	570
	616
	780
	782
8T-4139	248
	352
	379
8T-4140	378
8T-4171	248
	617
	621
	673
	677
8T-4173	248
8T-4178	72
8T-4179	239
	348
	352
8T-4181	640
	642
	646
	648
8T-4182	104
	132
	352
	690
	694
	700
	716
	718
	720
8T-4183	74
8T-4185	66
	97
	239
	398
	458
8T-4186	64
	114
	358
	374
	522
	523
	524
	525
	716
	718
	720
8T-4189	122
	124
	204
	206
	239
	244
	382
	384
	536
	538
	540
	542
	544
	546
	548
	550
	552
	554
	556
	558
	560
	562
	564
	566
	568
	570
8T-4191	204
	206
	234
	244
	393
	398
	496
	708
	718
8T-4192	634
8T-4195	64
	74
	90
	96
	100
	120
	262
	352
	358
	374
	393
	498
	500
	502
	504
	506
	510
	512
	514
	518
	520
	644
	650
	691
	694
	700
	710
8T-4196	90
	100
	239
	352
	358
	374
8T-4198	130
	246
	248
8T-4199	390
8T-4205	128
	182
	186
	197
	212
	216
	239
	242
	244
	248
	250
	254
	269
	284
	616
	621
	634
	654
	673
	677
8T-4222	72
8T-4223	74
	178
	239
	244
	248
	284
	348
	358
	364
	374
	377
	379
	404
	420
	451
	455
	463
	495
	496
	628
	631
	632
	634
8T-4224	124
	170
	172
	174
	176
	178
	182
	184
	188
	190
	204
	206
	209
	244
	246
	248
	262
	269
	284
	382
	384
	390
	393
	440
	536
	538
	540
	542
	544
	546
	548
	550
	552
	554
	556
	558
	560
	562
	564
	566
	568
	570
	631
8T-4226	104
	239

► **PRIMARY REFERENCE**

PART NUMBER INDEX

Part	Page	Part	Page	Part	Page	Part	Page
	262		274		570	8T-9636	141
	393	8T-4994	352	8T-6870	710	8T-9655	135
8T-4244	178		451	8T-6974	398	8T-9757	131
	358	8T-5004	352	8T-7008	451		132
	374	8T-5005	12	8T-7044	98	8T-9834	732
	631		110	8T-7525	490		734
8T-4647	234		152	8T-7547	110	8T-9884	212
8T-4778	248		154	8T-7566	269		216
8T-4835	404	8T-5082	472	8T-7876	488	8V-0622	131
	496	8T-5093	284	8T-8441	488		132
8T-4896	78	8T-5360	748	8T-8442	574	8W-0220	454
	94	8T-5361	348	8T-8566	212	8W-0456	500
	140		602		216		506
	141	8T-5390	104	8T-8569	212		514
	142		262		216		518
	176		393	8T-8729	94		520
	178	8T-5401	690		137	8W-0791	798
	182		694		149	8W-0934	768
	186	8T-5412	178		160	8W-0935	768
	188	8T-5429	451		198	8W-1028	736
	189		455		204	8W-1029	738
	196	8T-5436	88		206	8W-1614	97
	225		710		223		268
	226	8T-6466	64		585	8W-2624	462
	234		710		723	8W-3044	450
	239	8T-6468	306	8T-8737	137		454
	250	8T-6469	286		152	8W-3045	450
	252	8T-6472	388		154		454
	255	8T-6473	388		223	8W-3166	462
	262	8T-6631	616		226	8W-3252	4
	266		621		230		►424
	269	8T-6663	78		362	8W-3253	4
	284	8T-6684	78		364		►423
	390	8T-6685	634		778	8W-3254	4
	393	8T-6703	120		780		►419
	414	8T-6757	76		782	8W-3255	4
	423		398		784		►420
	442	8T-6761	44		786	8W-3256	4
	448		274	8T-8748	732		►421
	451	8T-6762	8	8T-8915	350	8W-3257	4
	455		48	8T-8919	377		►422
	458		76	8T-8987	534	8W-3642	238
	466		86	8T-9006	636	8W-3686	330
	473	8T-6763	36	8T-9023	470		331
	612		475	8T-9043	262		332
	628	8T-6764	8		500		333
	632	8T-6765	96		502		334
	702		99		504		335
	706	8T-6766	76		506		336
	724	8T-6767	76		510		337
	726		99		512		338
	768		274		514		339
	770	8T-6868	358		518		340
8T-4897	46		374		520		342
	371	8T-6869	170	8T-9056	393	8W-3902	364
8T-4908	390		172	8T-9364	239	8W-3989	450
8T-4910	120		174	8T-9383	376	8W-3990	450
	358		176	8T-9389	628	8W-3991	450
	374		178	8T-9471	252	8W-4053	450
8T-4956	379		182		269	8W-4167	588
	463		184	8T-9515	86	8W-4342	369
8T-4958	426		188		490	8W-4516	454
	428		538	8T-9530	791	8W-4654	344
8T-4984	82		546	8T-9597	490	8W-4655	344
	120		554	8T-9598	86	8W-5293	344

► **PRIMARY REFERENCE**

PART NUMBER INDEX

Part	Page	Part	Page	Part	Page	Part	Page
8W-5518	344	8X-1914	636		512		506
8W-5519	344	8X-1915	636		514		512
8W-5651	401	8X-1921	636		518		514
8W-5954	598	8X-2160	636		520		518
8W-5955	598	8X-2161	636	8X-4277	500		520
8W-6061	688	8X-2226	362		502	8X-5536	617
8W-6334	450		688		504		620
	454	8X-2228	731	8X-4317	▶640		672
8W-6429	472	8X-2375	▶730		644		676
8W-6477	344		743	8X-4318	▶642		762
8W-6495	344	8X-2385	▶731		644	8X-5538	616
8W-6496	344		745	8X-4413	▶644		620
8W-6591	482	8X-2556	780		745		672
8W-6598	482		782	8X-4446	646		676
8W-6626	360	8X-2646	401		648		762
8W-7386	377	8X-2650	392	8X-4448	640	8X-5540	616
8W-7646	▶611		▶401		642		620
	613	8X-2663	780		646		672
8W-7653	613		782		648		676
	▶652	8X-2680	392	8X-4525	▶646		762
8W-8089	595	8X-2795	4		650	8X-6131	724
8W-8146	442		▶715	8X-4526	▶648	8X-6296	176
8W-8167	388	8X-2893	636		650		178
8W-8332	286	8X-2913	362	8X-4527	▶650		179
8W-8333	286		364		743		182
8W-8334	388		688	8X-4879	268		186
8W-8425	4	8X-2925	613	8X-4892	588		220
	▶595		614	8X-5102	654	8X-6328	268
8W-8511	420		▶664	8X-5123	636	8X-6419	364
8W-8512	420		669	8X-5153	176	8X-6420	▶592
8W-8513	420	8X-3200	356		178	8X-6450	592
8W-8527	110	8X-3244	268		182	8X-6475	362
	238	8X-3247	268		186		364
	392	8X-3248	268		220	8X-6618	268
	704	8X-3249	268	8X-5154	176	8X-6619	268
8W-8528	97	8X-3252	268		178	8X-6998	690
	238	8X-3261	104		182	8X-6999	694
	390	8X-3406	268		186		700
	704	8X-3789	636		220	8X-7152	616
8W-8532	392	8X-3805	262	8X-5160	390		620
8W-8903	392	8X-3806	640	8X-5280	768	8X-7153	616
8W-8909	239		642	8X-5302	4		620
	262	8X-3938	640		▶442	8X-7277	268
	269		642	8X-5303	442	8X-7603	392
8W-8956	462	8X-3951	636	8X-5304	442	8X-7743	768
8W-9227	46	8X-3965	636	8X-5310	613	8X-7845	690
8W-9228	46	8X-3988	262		▶706		694
8W-9566	324	8X-4066	646	8X-5312	588	8X-7973	462
	325		648	8X-5313	588	8X-7974	462
	326	8X-4243	640	8X-5317	590	8X-7975	472
	327		646	8X-5395	97	8X-7992	613
	328	8X-4244	642	8X-5414	690		▶632
	329		648		694	8X-7993	613
	341	8X-4245	640		700		▶702
8X-0674	724		642	8X-5425	450	8X-7995	702
	726		646	8X-5428	588	8X-7996	702
8X-1035	5		648	8X-5429	588	8X-7997	702
	▶377	8X-4262	640	8X-5456	730	8X-7998	702
8X-1135	768		646	8X-5489	250	8X-7999	632
8X-1853	140	8X-4263	642	8X-5490	5	8X-8055	688
8X-1904	636		648		▶504	8X-8096	268
8X-1907	637	8X-4276	500	8X-5498	504	8X-8351	688
8X-1908	636		502		510	8X-8352	268
8X-1911	636		506	8X-5499	500	8X-8353	268
8X-1913	636		510		502	8X-8361	268

▶ **PRIMARY REFERENCE**

PART NUMBER INDEX

Part	Page
8X-8377	286
8X-8450	392
	393
8X-8451	392
	393
8X-8452	328
8X-8505	362
	364
8X-8796	94
8X-8797	94
8X-8812	462
8X-9091	702
8X-9311	1
	2
	▶360
8X-9349	768
8X-9405	768
8X-9464	364
8X-9539	360
8X-9545	371
8X-9546	371
8X-9675	740
	741
	▶768
8X-9680	▶770
	776
	777
8X-9884	684
8X-9943	590
8Y-4194	5
	▶754
8Y-4398	640
	642
	646
	648
8Y-4399	642
	648
8Y-4400	640
	646
8Y-4401	640
	642
	646
	648
8Y-4512	715
8Y-4619	640
	642
	646
	648
8Y-4620	640
	642
	646
	648
8Y-4801	640
	642
	646
	648
8Y-4951	639
	742
	▶755
8Y-5874	▶655
	756
	759
8Y-5877	655
	656
8Y-5891	750
8Y-5903	727
	752
8Y-5928	750
	752
8Y-5929	750
	752
8Y-5932	750
	752
8Y-5936	750
	752
8Y-5937	750
	752
8Y-5938	750
	752
8Y-5943	655
8Y-5944	764
8Y-5947	655
	656
	750
	752
8Y-5957	752
8Y-5959	▶656
	757
8Y-5960	656
8Y-5972	727
	752
8Y-5979	752
8Y-5981	750
	752
8Y-5999	728
8Y-6006	727
	752
8Y-6010	727
	752
8Y-6012	764
8Y-6022	764
8Y-6023	764
8Y-6024	764
8Y-6041	680
8Y-6045	680
8Y-6046	680
8Y-6047	680
8Y-6051	624
	625
	750
	752
8Y-6060	680
8Y-6062	680
8Y-6063	680
8Y-6064	680
8Y-6066	680
8Y-6067	680
8Y-6068	680
8Y-6069	680
8Y-6277	624
	625
8Y-6364	496
	639
	798
8Y-6379	665
	666
8Y-6388	617
	620
	652
	653
	654
	672
	714
8Y-6833	750
	752
8Y-6834	750
	752
8Y-6859	681
8Y-6860	681
8Y-6928	766
8Y-6933	750
	752
8Y-6981	772
	773
8Y-6982	772
	773
	9
9B-0347	404
9B-2596	92
9B-7233	133
	134
	176
	178
	179
	182
	186
	220
	243
	254
	616
	620
9B-7237	94
	262
	423
	451
	455
	500
	502
	504
	510
	512
	514
	704
9C-5344	64
	114
9C-5928	716
	718
	720
9D-0145	262
9D-0244	356
9D-0384	475
9D-0386	475
9D-0701	286
9D-0953	450
	454
9D-1117	598
9D-1491	442
9D-1586	388
9D-1589	724
	726
9D-2170	▶596
9D-2252	419
9D-3312	598
9D-3334	598
9D-3583	598
9D-3767	358
	374
	639
	742
9D-4075	475
9D-5043	475
9D-5044	475
9D-5046	475
9D-5047	475
9D-5048	475
9D-5506	262
9D-5659	350
9D-5941	442
9D-5942	442
9D-5943	442
9D-6164	176
	182
	186
9D-6583	418
9D-6584	606
9D-6585	606
9D-6586	598
9D-6589	356
9D-8121	401
9D-8508	192
9D-8799	278
9D-9840	4
	▶258
9F-1399	288
9F-2247	286
	322
9F-2978	624
	625
	632
9F-5644	218
9F-6580	118
9F-6705	534
9F-8477	298
9F-8885	628
9G-0003	131
	132
9G-0004	131
	132
9G-1950	617
	620
	672
	676
9G-3695	718
9G-4343	242
	243
9G-5127	289
9G-7101	458
9G-8661	67
9G-8909	238
9G-9152	94
	632
9G-9154	239
	390
9G-9155	617
9H-0846	258
	276

▶ **PRIMARY REFERENCE**

PART NUMBER INDEX

Part	Page
9H-1031	344
	447
9H-2910	269
9H-3452	299
9H-6454	498
9J-0268	606
9J-0269	606
9J-0403	536
	538
	540
	542
	544
	546
	548
	550
	552
	554
	556
	558
	560
	562
	564
	566
	568
	570
9J-0404	536
	538
	540
	542
	544
	546
	548
	550
	552
	554
	556
	558
	560
	562
	564
	566
	568
	570
9J-1979	498
9J-1985	498
9J-1988	498
9J-2935	486
9J-3047	498
9J-4963	480
9J-5442	486
9J-5498	388
9J-5686	486
9J-6586	608
9J-8076	486
9J-8783	262
	392
9K-4848	268
9K-7951	324
	325
	326
	327
	328
	329
	330
	331
	332
	333
	334
	335
	336
	337
	338
	339
	340
	341
	342
9L-0672	309
9L-1566	234
	238
	242
	250
	706
9L-2303	268
9L-3059	238
9L-5650	286
9L-6331	234
	252
9L-6770	128
9L-7469	750
	752
9M-0164	90
	462
9M-0402	398
9M-1853	500
	502
	504
	506
	510
	512
	514
	518
	520
9M-1974	10
	14
	16
	36
	38
	44
	58
	60
	64
	67
	69
	70
	76
	81
	84
	85
	86
	96
	114
	118
	135
	230
	274
	299
	322
	658
	660
	708
9M-1986	285
9M-2092	345
9M-2904	10
9M-4007	259
9M-4289	322
9M-4313	312
9M-4355	298
9M-4594	238
9M-5501	706
9M-5590	82
	637
9M-5732	374
9M-5733	727
	728
	752
9M-6166	299
9M-6803	322
9M-7394	498
9M-8406	196
	235
	239
	250
	266
	398
	616
	621
	673
	677
9M-8662	732
9N-0869	10
	135
9N-0943	128
9N-1995	73
	690
	694
9P-0356	446
9P-2369	768
9P-4857	289
9P-8120	318
9R-2613	374
9R-2620	691
	694
9R-2672	361
9R-7240	122
9R-8870	454
9R-9232	450
	454
9S-1018	304
9S-1302	392
9S-1316	248
9S-1354	262
	269
	390
9S-1366	288
	598
	606
9S-1374	588
9S-2302	128
9S-2390	128
9S-4167	114
9S-4180	522
	523
	524
	525
	526
	527
	528
	529
	530
	531
	532
	558
	560
	562
9S-4182	48
	274
9S-4183	44
	276
	488
9S-4185	36
	60
	110
	288
9S-4189	534
9S-4190	306
9S-4191	48
	50
	99
	114
	230
	272
	276
	285
	288
	312
	572
9S-4368	299
9S-7706	392
9S-8001	440
	534
9S-8002	24
	534
	574
9S-8003	534
9S-8004	114
	285
9S-8005	312
	490
	536
	538
	540
	542
	544
	546
	548
	550
	552
	554
	556
	558
	560
	562
	564
	566
	568
	570
	578
9S-8006	50
	440
9S-8008	285

► **PRIMARY REFERENCE**

PART NUMBER INDEX

Part	Page
9S-8009	289
	534
9S-8752	276
	498
9S-8892	590
9S-9272	68
9S-9334	36
9T-1013	470
9T-1636	488
9T-1652	488
9T-1699	488
9T-1710	488
9T-1857	572
9T-2186	572
9T-2659	582
	583
9T-2803	432
	434
9T-3051	431
9T-3133	427
9T-3206	422
	▶431
9T-4906	492
9T-5241	660
9T-5603	495
9T-5934	534
9T-5935	534
9T-5957	462
	▶534
9T-5977	442
	▶480
9T-6001	762
9T-6129	472
	▶578
9T-6146	470
9T-7750	572
9T-8043	426
	428
9T-8052	480
9T-8053	480
9T-8055	480
9T-8057	480
9T-8058	480
9T-8059	480
9T-8061	480
9T-8062	480
9T-8065	480
9T-8067	480
9T-8069	480
9T-8070	480
9T-8071	470
9T-8431	486
9T-8445	492
9T-8446	492
9T-8448	492
9T-8450	492
9T-8452	492
9T-8560	486
9T-8943	427
9T-8944	420
	▶427
9T-9040	436
9T-9071	480
9T-9072	480
9U-2277	238
9U-8263	684
9U-8660	289
9U-8661	288
9U-8876	288
9U-9693	486
9V-7447	624
	625
9W-0335	252
9W-0742	▶148
	244
9W-0749	472
9W-0852	194
	223
	617
	621
	634
	658
	672
	676
	784
	786
9W-1441	226
	612
	667
	668
9W-1442	142
	147
	168
	172
	174
	176
	178
	182
	186
	191
	192
	220
	225
	228
	250
	254
	662
	663
	718
	784
	786
9W-1951	252
9W-1991	235
9W-3073	684
9W-6645	388
	442
9W-6646	442
9W-9320	250
9X-0141	239
9X-0262	230
9X-1046	226
	255
	637
	662
	663
9X-1054	168
	204
	243
	634
9X-1343	234
9X-1813	199
	200
	202
	224
	238
	242
9X-2022	54
9X-2027	30
9X-2039	760
9X-2040	252
	616
	621
	673
	677
	762
9X-2041	269
	616
	621
	673
	676
	691
	694
	700
	754
	755
	760
	762
9X-2042	141
	226
	255
	269
	637
	640
	642
	646
	648
9X-2043	168
	174
	176
	179
	182
	186
	192
	220
	228
	269
	362
	364
	476
	652
	653
	654
	688
	691
	695
	700
	718
	732
9X-2045	250
	269
	616
	621
	644
	650
	663
9X-2046	691
	695
	715
	721
9X-2097	16
	60
9X-2126	616
	621
	673
	677
9X-2185	617
	620
	672
	676
9X-2388	87
	702
9X-2389	702
9X-2488	617
	620
	672
	676
9X-2492	470
9X-2546	640
	642
	646
9X-2646	96
9X-2647	96
9X-3402	199
9X-3452	634
9X-3463	150
	156
	157
	170
9X-3465	152
	154
9X-4006	620
9X-4244	152
	154
9X-4493	152
	154
9X-4824	212
	216
9X-4986	664
9X-6019	772
	773
9X-6395	576
	579
9X-6650	50
9X-7264	430
9X-7317	108
9X-7373	634
9X-7378	94
	630
	704
9X-7380	94
	702
	704

▶ **PRIMARY REFERENCE**

PART NUMBER INDEX

Part	Page
9X-7381	94
	616
	621
	702
	704
9X-7382	94
	616
	621
	704
9X-7383	94
	702
	704
9X-7385	94
	626
	630
	704
9X-7547	488
9X-7557	108
9X-7680	572
	574
9X-7849	160
9X-8121	160
9X-8122	664
9X-8139	160
9X-8256	43
	64
	124
	168
	170
	176
	179
	220
	244
	250
	352
	398
	460
	609
	610
	617
	640
	642
	644
	646
	648
	650
	691
	695
	747
9X-8257	378
9X-8267	58
	230
	358
9X-8372	790
9X-8399	425
	426
	428
	431
	436
9X-8600	124
9X-8606	392
9X-8873	366
9X-8893	344
9X-9365	184
9X-9633	250
9X-9653	616
	620
9X-9654	616
	620
	672
	676
9X-9688	732
	734
9X-9689	658
	660
9X-9825	250
9X-9865	152
	154
9X-9911	268
9Y-0810	20
9Y-0821	20
9Y-1116	10
9Y-1758	58
9Y-3513	86
9Y-3520	34
9Y-4357	58
9Y-4580	43
9Y-5631	12
9Y-6089	18
9Y-7215	58
9Y-8073	▶69
	70
9Y-8075	69
9Y-8076	69
9Y-9236	87
0	
001-7043	10
002-6453	306
002-6454	122
	124
003-9514	82
	358
	374
005-0469	488
005-0471	488
005-0658	10
009-0008	104
009-3681	728
	752
014-0816	223
021-9791	446
030-0060	278
030-0061	278
030-7947	114
030-8535	278
	286
	298
	636
	724
	726
031-2666	636
031-4155	660
032-3631	10
033-6027	572
033-6033	126
033-6036	488
	572
033-6043	574
033-8248	94
	188
	189
	204
	206
	225
	243
034-1994	636
036-9823	212
	216
038-3987	724
061-7540	274
061-8561	70
061-9455	16
	36
065-1153	486
065-1176	486
068-4860	593
	594
069-5688	640
	642
	646
	648
085-8091	94
	100
	462
	704
086-0507	498
090-8635	10
090-9019	398
091-0081	760
092-2570	116
092-3200	416
092-9741	178
095-0673	488
095-0705	488
095-0878	680
	750
	752
095-0888	488
095-1314	750
096-0014	52
096-3218	476
	574
096-5962	254
096-6166	140
	142
	226
	234
	636
098-1290	268
099-3047	490
099-3095	478
1	
100-3224	681
100-3245	152
	154
100-3248	152
	154
100-3250	152
	154
100-3251	152
	154
100-3253	152
	154
100-3254	152
	154
100-3255	152
	154
100-4318	587
100-5179	681
100-5612	665
	666
100-6021	534
	▶579
100-6531	128
100-8150	29
100-8525	274
101-0003	764
101-0509	522
	523
	524
	525
	526
	527
	528
	529
	530
	531
	532
101-1147	538
	558
	570
101-1154	536
101-1635	81
101-1970	536
	538
	550
	552
	554
	558
	560
101-1971	536
	538
	540
	542
	544
	546
	548
	550
	552
	554
	556
	558
	560
	562
	564
	566
	568
	570
101-1972	538
	546
	554
	558
	560
	562

▶ **PRIMARY REFERENCE**

PART NUMBER INDEX

Part	Page	Part	Page	Part	Page	Part	Page
	570		570		524		186
101-1973	536	101-1984	536		525		226
	538		538		526		228
	540		540		527		234
	542		542		528		243
	544		544		529		246
	546		546		530		248
	548		548		531		252
	550		550		532		254
	552		552	102-2804	486		362
	554		554	102-3645	768		364
	556		556	102-4569	540		718
	558		558	102-4571	544		732
	560		560	102-4572	548		734
	562		562		556	102-8802	94
	564		564	102-4573	542		127
	566		566	102-4574	550		141
	568		568	102-4575	546		160
	570		570		554		168
101-1974	438	101-2042	47		560		174
	440	101-2457	500		562		184
101-1975	438		502	102-4577	564		188
101-1978	536		504	102-4578	566		189
	540		506		568		194
	542		510	102-5828	64		204
	544		512	102-5829	64		206
	548		514	102-5842	58		224
	550		518	102-6238	523		225
	552		520		525		226
	556	101-2458	500		527		228
	564		502		529		230
	566		504	102-6317	766		234
	568		506	102-7412	536		238
101-1980	538		510		538		239
	546		512		540		242
	554		514		542		243
	570		518		544		250
101-1982	540		520		546		252
	542	101-2480	536		548		320
	544		538		550		403
	546		540		552		414
	548		542		554		585
	556		544		556		609
	562		546		558		610
	564		548		560		617
	566		550		562		621
	568		552		564		630
	570		554		566		634
101-1983	536		556		568		658
	538		558		570		672
	540		560	102-7423	438		676
	542		562	102-8385	522		704
	544		564		524		718
	546		566		526		732
	548		568		528	102-8803	149
	550		570		530		158
	552	101-2850	92		531		159
	554	101-3055	690		532		170
	556		694	102-8785	81		188
	558	101-3125	96	102-8801	137		189
	560	101-4194	764		168		190
	562	101-4195	764		174		198
	564	101-5113	373		176		225
	566	101-9346	522		178		226
	568		523		182		230

► **PRIMARY REFERENCE**

PART NUMBER INDEX

Part	Page
	234
	238
	239
	246
	248
	250
	254
102-8804	168
	174
	192
	197
	204
	206
	226
	228
	234
	238
	243
	252
	254
	718
102-8805	152
	154
	226
	234
	239
	252
	362
	364
	621
	672
	676
	722
	723
	732
	734
	778
	780
	782
102-8806	168
	174
	223
	226
	228
	718
	732
	734
	784
	786
102-9372	731
	746
102-9381	730
102-9383	254
102-9862	147
	191
	192
103-1592	176
103-1597	506
	518
	520
103-1743	110
103-2006	124
103-2236	306
103-4771	724
	726
103-4953	724
	726
103-5515	724
	726
103-5516	724
	726
103-5678	176
	178
	182
	186
	220
103-5689	488
103-5691	488
103-5962	289
103-6100	94
	704
103-6216	8
103-6263	690
103-6282	488
103-8519	632
	▶634
103-9425	694
104-2091	616
	621
	654
	673
	732
104-3122	488
	▶572
104-3560	23
104-3567	58
104-3568	58
104-5478	94
104-5958	772
	773
104-7041	195
	▶212
104-7238	588
104-7419	500
	502
	504
	506
	510
	512
	514
	518
	520
104-7429	500
	502
	504
	506
	510
	512
	514
	518
	520
104-7740	500
	502
	504
	506
	510
	512
	514
	518
	520
104-7995	64
104-8653	504
	▶522
104-8654	500
	502
	▶526
104-8656	506
	▶531
104-8674	502
	504
	▶523
104-8675	500
	506
	520
	▶527
105-2145	574
105-2508	118
105-3484	74
105-4208	80
105-4210	86
105-4728	195
105-4849	▶152
	186
105-4850	▶154
	186
106-3658	536
	538
	540
	542
	544
	546
	548
	550
	552
	554
	556
	558
	560
	562
	564
	566
	568
	570
106-3659	536
	540
	542
	544
	548
	550
	552
	554
	556
	558
	560
	562
	564
	566
	568
106-3660	538
	546
	554
	558
	560
	562
	570
106-4127	628
106-4496	654
106-4885	4
	▶366
106-5840	616
106-6553	644
	650
106-7995	552
106-8704	94
	238
	704
106-8715	462
106-9586	64
107-0547	527
	▶538
107-0554	522
	524
	526
	528
	530
	531
	532
	▶540
107-0555	522
	524
	526
	528
	530
	531
	532
	▶542
107-0556	522
	524
	526
	528
	530
	531
	532
	▶544
107-0557	522
	526
	530
	531
	▶546
107-0559	526
	530
	531
	▶548
107-0560	523
	525
	527
	529
	▶550
107-0561	523
	525
	527
	529
	▶552
107-0564	523
	527
	▶554
107-1983	732
	734
107-3424	▶597
107-3427	▶593
107-3428	▶594
107-4865	768
107-4932	147
	191

▶ **PRIMARY REFERENCE**

PART NUMBER INDEX

Part	Page
	192
107-5014	476
	690
	694
107-5795	80
107-6280	54
107-6813	644
	650
107-7090	617
107-8142	454
107-9641	640
	642
	646
	648
107-9662	412
	▶506
108-0358	176
	178
	182
	186
	220
108-0702	472
108-0712	470
108-0713	470
108-1610	450
	454
108-2187	536
	538
	540
	542
	544
	546
	548
	550
	552
	554
	556
	558
	560
	562
	564
	566
	568
	570
108-3519	176
	182
	186
108-4086	681
108-4087	680
108-4103	681
108-4814	572
108-4815	572
108-4816	572
108-4818	488
108-4916	▶438
	538
	546
	554
	570
108-5157	579
108-5949	642
	648
108-5950	640
	646
108-5951	642
	648
108-5952	640
	646
108-8421	▶727
	750
	752
108-8423	727
	752
108-8424	727
	752
108-8425	752
108-8426	750
109-0146	772
	773
109-0361	239
109-1004	268
109-2804	690
	694
109-3204	488
109-5308	44
109-5309	58
109-5313	98
109-5318	47
109-5319	47
109-5679	278
109-8176	103
110-0015	718
110-2445	122
	124
110-3326	392
110-6241	636
110-6393	617
	620
110-6924	312
110-7002	356
110-7003	356
110-7885	784
	786
110-7886	784
	786
110-7887	252
110-9471	▶613
111-0343	320
	585
111-0490	416
	▶486
111-2645	60
111-4921	390
111-4922	390
111-8208	282
111-8233	536
	540
	542
	544
	548
	550
	552
	556
	564
	566
	568
111-8234	538
	546
	554
	558
	560
	562
	570
111-9110	406
112-2240	448
	▶586
112-4428	242
112-4785	356
112-5555	248
112-6174	226
112-6175	254
112-6329	392
112-9104	754
	▶756
112-9105	755
	▶757
112-9434	462
112-9555	664
113-4240	624
113-4242	▶624
	756
	757
	759
113-4243	625
113-4245	▶625
	756
	757
	759
113-4251	616
113-5264	▶430
	605
113-5800	756
	757
	▶764
113-5801	680
113-5804	764
113-5805	680
113-5806	680
113-5807	680
113-5808	▶680
	764
113-5809	728
113-5810	▶728
	750
	752
113-7149	472
113-7916	390
113-8218	716
	718
	720
113-8457	120
113-9005	41
113-9098	344
113-9099	344
113-9100	4
	▶344
113-9533	462
114-0026	457
114-0359	608
114-1067	728
114-1068	728
114-1069	728
114-1070	728
114-1081	728
114-1082	728
114-1083	728
114-1183	▶750
	756
	759
114-1185	▶752
	757
114-2687	67
114-2702	617
114-2882	448
114-2890	448
114-3469	630
114-4776	430
114-4781	430
114-5132	486
114-5164	486
114-5180	486
114-5190	486
114-5224	793
114-5334	94
114-6537	402
114-6635	580
	581
114-6685	▶778
	780
	782
	784
	786
114-9110	488
114-9190	640
	642
	646
	648
114-9281	234
115-1375	272
	▶312
115-1748	732
	734
115-2982	7
	▶24
115-3003	70
115-3070	192
115-3072	362
	364
115-3073	239
115-4517	274
115-5593	242
115-5852	5
	▶789
	793
115-6806	731
115-6807	690
	694
	700
115-7957	338
115-8497	▶94
	613
115-9391	40
115-9397	▶52
	58
115-9398	52
115-9399	52
115-9400	52
115-9402	52
115-9403	52
115-9424	38

▶ **PRIMARY REFERENCE**

PART NUMBER INDEX

Part	Page
115-9923	690
	694
116-1083	▶32
	43
116-1085	7
	▶28
116-1091	7
	▶54
116-1102	26
116-1107	20
116-1108	20
116-1109	20
116-3211	462
116-3715	98
116-5405	7
	▶99
116-5406	99
116-5408	7
	▶43
116-5416	114
116-5418	114
116-5428	7
	▶116
116-5435	50
116-5436	7
	▶106
116-5438	7
	▶118
116-5460	7
	▶80
116-5710	104
	170
	184
116-7089	470
117-0166	22
117-0221	10
117-0228	98
117-1385	230
117-2311	609
	610
117-2674	7
	▶85
117-2746	7
	▶70
117-2748	7
	▶41
117-2749	7
	▶58
117-2750	7
	▶34
117-2760	7
	▶257
117-2927	276
117-3036	274
117-3915	▶477
	485
117-4698	746
117-5061	262
117-8810	700
117-9966	732
118-0459	14
118-2557	730
118-2558	694
118-2797	84
118-2800	76
118-2808	7
	▶81
118-3534	242
118-4660	486
118-4728	10
119-2107	448
119-2942	67
119-3782	47
119-5030	268
119-7995	454
119-7996	454
119-7997	454
119-7998	450
	454
119-7999	450
119-8000	450
119-8001	450
119-8784	108
120-9870	602
120-9875	602
121-3395	430
121-7137	12
121-9243	424
	▶436
121-9246	436
122-0760	70
122-0763	274
122-7045	732
122-8146	732
122-8154	654
122-8155	654
122-8677	690
122-8795	690
	694
122-9760	789
122-9761	789
123-0764	12
123-0790	12
123-0871	611
123-0872	611
	612
	668
123-1076	436
123-3688	238
123-3689	238
123-3692	238
123-3698	377
123-3699	377
123-3827	88
	358
	374
123-4354	780
	782
123-4355	780
	782
123-4358	6
	▶716
123-4511	76
123-4586	716
	718
	720
123-4587	716
	718
	720
123-4618	616
	620
	672
	676
	762
123-4701	616
	620
	672
	676
	762
123-5857	718
123-5861	254
123-6449	▶224
	246
	248
123-6661	579
123-6806	724
123-8157	766
123-8408	762
123-8914	485
123-8915	484
	▶485
123-9128	766
124-0507	764
124-1429	616
124-1431	617
	620
	672
	676
124-1432	616
	620
	672
	676
124-1433	617
124-2655	44
124-2887	440
124-2888	440
124-2889	440
124-2890	440
124-2891	440
124-3137	617
	620
	672
	676
124-3138	616
	620
	672
	676
124-3241	366
124-3455	528
	532
	▶556
124-4196	▶510
124-4197	408
	▶512
124-4198	411
	▶514
124-4200	409
	▶518
124-5043	274
124-5572	8
124-5807	790
124-8843	644
	650
124-9006	616
	620
124-9007	616
	620
	672
	676
	762
125-0438	616
	621
125-0439	672
	676
125-0440	616
125-0442	672
	676
125-5321	401
125-6807	238
125-7003	780
	782
125-7004	780
	782
126-0146	10
126-0179	114
126-0208	736
	738
126-0209	736
	738
126-0210	736
	738
126-0228	736
	738
126-0961	▶771
126-1135	714
126-1136	714
126-1167	736
	738
126-1539	736
	738
126-1774	143
126-4966	644
	650
126-6929	350
126-6930	350
126-6933	1
	2
	▶350
126-7168	352
126-8306	472
127-0606	73
127-4038	352
127-5483	238
	254
127-5484	242
	243
	254
	362
	364
127-5485	238
127-5486	243
127-5728	7
	▶18
127-8609	146
128-0037	640
	642
	646
	648
128-0331	10

▶ **PRIMARY REFERENCE**

PART NUMBER INDEX

Part	Page	Part	Page	Part	Page	Part	Page
128-0382	20	130-0872	22		700		621
128-0383	20	130-3111	529	131-6645	274		673
128-0384	20		▶558	131-6679	▶8		677
128-0385	20	130-3112	525		10	136-3845	152
128-0390	47		529	131-8126	6	136-3846	154
128-0391	47		▶560		▶145	136-3848	152
128-0400	20	130-3113	524	131-8350	534		154
128-0401	20		528	131-8627	145	136-4183	30
128-0402	20		532	131-8777	580	136-4831	5
128-0403	20		▶562		581		▶798
128-0411	14	130-3125	510		582	136-6330	472
128-0416	22		▶524		583	136-6331	472
128-0417	22	130-3126	512	132-1225	128	136-8308	608
128-0420	10		514	132-3065	462	136-8423	490
128-0613	766		▶528	132-3203	7	137-4367	107
128-0686	766	130-3127	518		▶47	137-4515	500
128-5082	766		▶532	132-3210	7		502
128-5084	766	130-3128	510		▶20		504
128-5085	766		512	132-3439	766		506
128-5162	331		▶525	132-4354	352		510
128-5163	332	130-3132	514	132-5789	230		512
128-5164	330		518		704		514
128-5165	334		▶529	132-6640	▶137		518
128-5166	335	130-3535	▶440		250		520
128-5167	333		558	132-6938	243	137-4516	500
128-5209	468		560	132-8875	285		502
128-5924	94		562	132-9496	708		504
	704	130-4926	472		710		506
128-6944	392	130-5300	104	133-5671	▶107		510
128-6983	▶160		147		110		512
	191		170	133-5673	107		514
	192		176	133-6047	268		518
128-8643	440		191	133-6090	268		520
128-8644	440		192	133-6517	145	137-5503	747
128-8645	560		204		146	137-6719	526
	562		206	133-6578	490		527
128-8646	558		225	133-7029	29		528
128-9654	590		234	133-7031	7		529
128-9655	590		239		▶10	137-6720	522
129-0375	107		243	133-7068	14		523
129-1240	457		246	133-7075	7		524
129-2181	10		248		▶38		525
129-2861	274		250	133-7083	34		526
129-3173	104		252	133-7086	34		527
	262		254	133-7098	47		528
	392		617	133-7100	14		529
129-3178	352		621	133-7613	664		530
	609		673	134-3355	250		531
	610		676	134-4126	136		532
	617		718	134-5245	64	137-6783	690
	621	130-5301	239	134-8232	▶772		694
	644	130-5372	266		775	137-8065	690
	650	130-5997	8	134-8233	▶773		694
	673	130-7084	472		774	137-8104	531
	677	130-9432	683	134-8273	616		532
	690		▶684	135-0426	▶158		▶564
	694	130-9811	230		246	137-8106	530
129-3184	32	131-0353	274	135-0427	▶159		531
129-4935	617	131-2171	10		170		▶566
	621	131-4135	234		176	137-8107	568
	672	131-4242	680		190	137-9410	176
	676	131-5167	680	135-1979	660		178
129-5049	350	131-5492	664	135-3894	364		182
129-7632	572	131-6009	690	135-7123	406		186
129-7679	790		694	136-1953	617	138-2006	26

▶ **PRIMARY REFERENCE**

PART NUMBER INDEX

Part	Page
138-2028	7
	▶48
138-3094	201
138-4054	644
	650
138-7026	690
	694
138-7065	609
138-7828	339
138-9910	690
	694
139-1117	690
139-1118	694
139-1153	610
139-2116	238
139-2120	254
139-2944	352
139-3593	690
	694
	700
139-3595	652
	653
139-4605	747
139-4612	▶747
139-6128	▶774
139-6129	▶775
139-8472	540
	544
	548
	564
	566
	▶580
139-8474	538
	546
	554
	570
	▶581
139-8476	556
	568
	▶582
139-8477	558
	560
	562
	▶583
139-9132	772
	773
139-9133	773
139-9134	772
	773
139-9135	772
	773
139-9136	772
	773
139-9137	772
	773
139-9138	772
140-8864	250
140-9810	▶73
	373
140-9857	73
141-0284	107
141-1480	100
141-1511	790
141-4043	377
141-4702	373
141-6136	370
	423
141-6137	370
141-6140	344
	▶370
141-6141	370
141-6142	370
141-6787	320
141-9661	498
141-9784	617
	621
	673
	677
142-0308	432
	434
142-0350	320
142-2011	12
142-4433	197
142-4940	617
	621
	672
	676
142-6133	324
142-6134	325
142-6205	4
	▶296
142-6231	324
	325
	326
	327
	328
	329
	341
142-6232	330
	331
	332
	333
	334
	335
	336
	337
	338
	339
	340
	342
142-6397	324
142-6398	325
142-6401	326
142-6402	327
142-6403	328
142-6405	330
142-6406	331
142-6407	332
142-6408	333
142-6409	334
142-6410	335
142-6411	336
142-6412	337
142-6414	338
142-6415	339
142-8620	634
143-9290	268
144-0195	768
	770
144-1636	238
144-1641	790
144-4004	413
	▶520
144-4107	690
	694
144-5611	12
144-6695	416
145-0326	764
	766
145-0457	414
145-1297	▶140
	683
145-1300	▶683
145-1780	114
145-3350	168
	174
	228
	718
145-7214	700
145-7217	700
146-0835	8
146-7453	109
146-8952	613
147-3311	388
147-3401	344
147-4549	766
147-5088	86
147-6522	766
147-6541	766
147-9666	373
148-2063	▶40
	58
148-2064	40
148-2065	40
148-2125	23
148-2149	28
	▶29
148-2407	341
148-2412	▶341
148-2431	342
148-2432	▶342
148-2516	308
148-3749	766
148-5653	329
148-8305	78
	472
148-8307	470
148-8311	472
148-8312	448
	472
148-8313	458
148-8316	462
	472
148-8318	450
	454
	457
148-8322	470
148-8323	462
148-8324	472
148-8325	266
	458
148-8327	68
	109
	460
148-8336	78
148-8340	450
	454
	470
	472
148-8344	78
148-8346	454
	466
148-8347	448
	460
	462
148-8351	470
	472
148-8353	458
148-8354	450
	454
148-8358	450
148-8361	458
148-8362	78
148-8363	462
148-8364	450
	454
	466
	470
	473
148-8368	458
	462
148-8369	266
148-8374	450
	454
148-8378	458
148-8381	450
	455
148-8383	451
	455
148-8392	78
	460
148-8417	462
148-8418	448
148-8429	463
148-8433	455
148-8440	458
148-8449	460
149-2400	766
149-2402	766
149-2610	▶585
	586
149-2611	585
149-3409	730
	731
149-4745	750
	752
	756
	757
149-7226	680
150-4027	458
150-4037	470
150-4047	266
150-4050	78
150-5105	736
	738
150-5106	▶736
	771
150-5107	▶738
	771
150-5146	8

▶ **PRIMARY REFERENCE**

PART NUMBER INDEX

Part	Page
150-5968	463
150-6649	532
	▶568
151-0360	▶324
151-0390	▶325
151-2900	12
151-4957	254
151-5349	432
	434
151-5715	714
152-3001	117
152-3927	▶326
152-3928	▶327
152-3929	▶328
152-3933	329
152-3938	▶329
152-3940	▶330
152-3941	▶331
152-3942	▶332
152-3943	▶333
152-3944	▶334
152-3945	▶335
152-3946	▶336
152-3947	▶337
152-3949	▶338
152-3950	▶339
152-5430	476
152-5431	476
152-5436	476
152-7903	1
	2
	▶476
153-2073	▶150
	172
	174
	178
	184
	188
	189
153-2147	168
	174
	228
	718
153-5700	132
153-5710	131
153-6237	74
	463
153-6248	78
153-6259	448
	463
153-7062	10
153-7410	590
153-7645	327
153-8907	530
	▶570
153-9480	250
154-2881	146
154-3064	308
	▶320
154-3998	90
154-5732	▶758
	760
154-7246	▶146
154-8290	650
154-8291	650
154-8292	644
154-8293	644
154-9025	82
155-2255	168
	174
	176
	178
	182
	186
	226
	228
	230
	234
	238
	239
	252
	254
	362
	364
	718
	732
	734
155-2260	176
	199
	200
	201
	202
	226
	234
	239
	246
	254
155-2261	242
155-2265	168
	174
	226
	228
	234
	718
155-2270	168
	174
	176
	178
	182
	184
	188
	189
	192
	204
	206
	225
	226
	228
	230
	234
	238
	239
	242
	243
	246
	252
	254
	616
	621
	634
	672
	676
	704
	718
	734
155-2271	168
	174
	228
	234
	239
	243
	252
	254
	718
155-2274	186
	226
	234
	243
	252
	734
155-2629	107
155-4098	665
	666
155-5958	758
	▶759
155-5959	758
	▶766
155-6629	47
155-6642	20
155-7970	274
155-9112	493
155-9115	493
155-9116	493
155-9117	493
155-9125	490
155-9127	490
155-9136	493
156-0283	248
156-1148	▶748
	756
	757
	759
156-3680	7
	▶98
156-5783	114
	▶126
156-7778	▶760
156-8352	700
156-8644	702
156-8646	702
156-8650	702
157-0305	170
157-1206	107
157-2528	243
157-4693	428
157-6129	760
158-0248	150
158-0249	157
	170
158-0250	150
	156
	157
	170
158-0252	150
	156
	157
	158-3198 766
	159-0313 593
	159-0314 593
	594
	159-1013 392
	159-3759 743
	745
	746
	159-3959 186
	159-5438 ▶374
	159-5843 5
	▶252
	159-5855 5
	▶254
	159-5867 5
	▶234
	159-5878 5
	▶226
	159-5935 4
	▶104
	159-7364 4
	▶90
	159-7366 4
	▶93
	159-7368 4
	▶100
	160-1744 248
	160-2323 54
	160-2353 760
	160-2443 104
	▶198
	160-3662 766
	160-6382 226
	362
	364
	160-6543 398
	160-6567 732
	734
	160-7689 239
	160-7703 462
	160-7760 6
	▶380
	160-7765 766
	160-7766 766
	160-7767 766
	160-8220 33
	160-9413 404
	▶406
	161-0770 ▶164
	161-0772 164
	165
	166
	▶170
	161-0773 ▶191
	161-0774 ▶192
	161-0776 ▶138
	161-0777 ▶139
	161-0778 161
	▶172
	161-0908 170
	161-1018 164
	▶220
	161-1021 6

▶ **PRIMARY REFERENCE**

PART NUMBER INDEX

Part	Page
	▶174
161-1121	4
	▶352
161-1125	5
	▶120
161-1128	▶371
161-1129	4
	▶348
161-1141	▶740
161-1180	4
	▶356
161-1417	168
161-1418	168
161-1747	4
	▶7
161-1921	6
	▶147
161-1922	167
	▶176
161-1924	▶165
161-1928	5
	▶238
161-1930	▶225
	405
161-2316	4
	▶42
161-2444	760
161-2445	760
161-3509	▶156
	176
	182
161-5967	680
161-7062	104
161-7065	262
162-2077	156
	170
162-2933	248
162-2934	248
162-5606	▶4
162-7449	404
162-8218	104
162-8219	104
162-9523	120
163-0310	71
	72
	▶88
163-0872	▶630
	631
163-0905	4
	▶262
163-1146	764
163-4239	356
163-9322	7
	▶274
164-2465	724
	726
164-2490	7
	▶64
164-4858	124
164-5567	266
	458
	462
164-5574	448
164-5605	454
	457
164-5608	450
	454
164-8474	653
164-9609	230
164-9618	290
165-0002	288
165-2495	423
	▶432
165-2496	423
	▶434
165-4632	458
165-7014	462
166-0939	358
	374
166-0940	374
166-1328	60
166-1329	▶60
	64
166-1997	724
	726
166-1999	724
	726
166-2829	730
166-2830	731
166-3333	▶470
	494
166-3334	1
	2
	▶494
166-3367	▶404
	405
166-3368	405
	▶448
166-3369	▶405
166-3407	▶407
166-3408	407
	408
	409
	410
	411
	412
	413
	▶466
166-6352	10
166-6358	12
166-6781	764
166-7064	▶362
	742
166-7065	▶364
	639
166-7224	766
166-7225	758
167-0017	7
	▶12
167-0138	242
167-0960	454
167-1709	▶199
	460
167-1801	488
167-2191	432
	434
167-2195	425
	427
	436
167-2200	426
	428
167-2201	430
	431
167-2300	432
	434
167-2304	425
	427
	436
167-2307	426
	428
167-2312	430
	431
167-2452	432
	434
167-2457	425
	427
	436
167-2459	426
	428
167-2463	430
	431
167-3809	71
	72
	▶87
167-3911	88
167-7504	226
167-7505	226
167-8053	4
	▶636
167-8068	6
	▶614
167-8125	30
167-8382	▶141
167-8394	1
	2
	▶669
167-8396	670
	▶708
167-8422	▶670
167-9003	4
	▶268
167-9671	103
168-1899	74
	▶478
168-2210	490
	▶574
168-3504	490
168-4490	7
	▶135
168-4594	135
168-7276	47
168-7363	23
168-7364	23
168-7365	23
168-7366	23
168-7861	490
168-7863	490
168-7932	634
168-7961	4
	▶368
168-8233	141
168-8235	141
168-8243	168
	174
	228
168-8248	226
168-8683	104
169-0921	104
	262
	392
169-0922	104
	262
169-2620	268
169-3147	188
169-3181	182
169-3230	192
169-3264	609
	610
169-3283	254
169-3520	184
169-3523	141
169-4166	38
169-4170	38
169-4172	38
169-4187	20
169-4657	130
169-5414	234
	242
	252
	362
	364
169-7224	378
	▶398
169-8938	226
170-0412	434
170-0414	432
	434
170-0493	406
170-0503	406
170-0967	708
170-1217	7
	▶143
170-1564	708
	710
170-4820	▶658
	663
170-4847	432
170-5240	▶108
	117
170-5334	▶660
	662
170-5335	▶194
	658
	660
171-1103	7
	▶230
171-1108	230
171-2121	268
171-2210	242
171-2865	4
	▶392
171-3062	7
	▶14
171-3063	14
171-5837	5
	▶790
171-6165	688
171-6175	174
171-6330	178

▶ **PRIMARY REFERENCE**

PART NUMBER INDEX

Part	Page
171-6332	178
171-6438	4
	▶462
171-6446	4
	▶472
171-6466	448
	472
171-6467	472
171-6728	470
171-6957	348
171-7096	▶168
171-7185	138
	▶609
171-7186	139
	▶610
172-0165	104
172-1239	690
	694
172-4211	104
	262
	392
172-4662	▶285
	307
172-4702	10
172-5376	▶690
	743
172-5377	741
	▶743
172-5378	▶688
	740
	741
172-5655	6
	▶131
172-5761	472
172-6540	103
172-6555	226
172-6556	168
	174
	228
	718
172-6830	743
	▶780
172-6831	745
	▶782
172-6834	6
	▶662
172-6835	6
	▶663
172-7105	268
172-7106	268
172-8641	226
172-9316	226
172-9981	431
173-1007	495
173-1008	495
173-1009	495
173-1011	450
	▶495
173-1498	12
173-1500	12
173-1885	192
173-2018	124
173-2751	742
	▶746
173-3064	176
	178
	182
	186
	220
173-3882	358
	374
173-3924	358
	374
173-3942	358
	374
173-5304	▶204
	208
173-5306	4
	▶266
173-5313	▶612
	614
173-5320	776
	▶784
173-5321	777
	▶786
173-5322	668
	▶672
173-5360	▶667
	670
173-6754	743
173-6756	▶744
	745
173-7375	4
	▶414
173-9683	425
	426
	427
	428
	431
	436
173-9685	432
	434
174-1494	617
	621
	672
	676
174-1495	634
174-1539	7
174-1574	7
	▶44
174-1575	44
174-1576	7
	▶66
174-1577	66
174-1578	66
174-1579	7
	▶62
174-1580	62
174-1593	30
174-1602	96
174-1604	7
	▶102
174-1610	90
174-1612	90
	▶92
174-1613	90
174-1614	90
174-1622	55
174-1625	7
	▶55
174-1637	274
174-1639	7
	▶30
174-1640	30
174-1644	102
	▶103
174-1760	7
	▶50
174-1762	7
	▶16
174-1766	7
	▶33
174-2104	74
174-2475	38
174-2863	358
	374
174-3705	266
	▶308
174-4140	694
174-4141	690
174-4492	621
	672
	676
	762
174-4546	5
	▶762
174-4547	667
	▶676
174-4548	612
	▶620
174-4552	▶668
	669
174-4971	621
	672
174-5636	204
174-5692	120
174-5907	243
174-6051	676
	762
174-6353	621
	672
	676
	762
174-9690	614
175-0403	382
	384
175-0447	460
175-0454	22
175-1343	732
	734
175-1367	209
175-2603	419
	▶426
175-2606	426
175-2942	426
175-3588	110
175-5480	352
175-6980	4
	▶458
175-6983	71
	72
	▶460
175-7049	460
175-7162	704
175-7314	30
175-7453	274
175-7882	431
175-7895	432
	434
175-7898	425
	426
	428
	436
175-7900	427
	431
175-7904	430
176-0209	478
176-2918	352
176-2922	352
176-2945	392
176-4168	43
176-5507	621
	672
	676
	762
176-5760	352
176-5765	352
176-5767	352
176-5770	352
176-5775	352
176-6391	209
176-6994	86
176-6995	86
176-6997	86
176-6998	86
176-6999	86
176-7000	85
	▶86
177-0279	382
	384
	398
177-0581	96
177-0717	96
177-1713	392
177-2932	352
177-4118	352
177-4119	352
	358
	374
177-4120	352
177-4142	97
177-4255	478
177-4292	110
177-4311	64
177-4394	110
177-5303	74
177-7448	636
177-7449	636
177-7517	482
	▶488
177-7858	621
	672
	676
177-7875	614
	669
	▶710
177-7876	614
	▶704
177-7891	614
	▶653

▶ **PRIMARY REFERENCE**

PART NUMBER INDEX

Part	Page
	669
177-8779	740
	▶745
177-8781	▶694
	745
177-8784	1
	6
	▶788
177-8802	242
177-8830	▶776
177-8831	▶777
177-9741	686
	▶723
177-9812	204
	206
177-9813	242
177-9814	242
178-0131	352
178-0160	242
178-0162	242
178-0555	243
178-3091	135
	▶136
178-3643	14
178-4190	688
178-4626	380
	386
178-4875	12
178-5252	12
178-5253	12
178-6267	168
178-8067	172
	176
	178
	182
	184
178-8481	4
178-8603	670
	▶714
178-8993	74
178-9175	304
178-9176	304
178-9178	▶304
	307
178-9527	1
	2
	▶56
179-0092	30
179-1319	304
179-1549	178
179-1550	178
179-2138	688
179-2139	688
179-2140	688
179-2173	690
179-2176	700
179-2177	690
179-2179	694
	700
179-2509	74
179-3261	71
	72
	▶74
179-3581	5
	▶741
179-5774	330
	331
	332
	333
	334
	335
	336
	337
	338
	339
	340
	342
179-6143	▶372
179-6588	▶46
179-6851	12
179-6852	12
179-6853	12
179-7269	40
179-7272	40
179-8701	178
179-8725	7
	▶195
179-9453	26
179-9459	▶26
	29
179-9563	67
179-9564	67
179-9565	7
	▶67
179-9850	136
180-0054	4
	▶418
180-0368	468
180-1300	▶157
	176
180-1538	52
180-1680	▶604
180-3491	4
	▶446
180-3493	4
	▶82
180-3558	206
180-4027	392
180-4028	254
180-4643	138
	139
	▶142
180-5446	5
	▶482
180-5462	704
180-6153	243
180-7033	254
180-7147	262
	392
180-9285	▶722
	732
	734
180-9340	200
	201
	202
183-1406	78
183-1425	636
183-2136	252
183-2302	56
183-2303	56
183-2304	56
183-2305	56
183-2306	56
183-3072	110
183-4008	404
183-4070	166
	▶178
183-4191	16
183-4365	52
183-4386	110
183-5504	4
	▶109
183-5811	790
183-6189	▶196
183-6452	4
	▶78
183-6453	4
	▶284
183-6614	5
	▶307
183-6933	358
	374
183-7595	587
183-7913	358
	374
183-7971	4
	▶96
183-8482	5
	▶378
183-9606	170
	188
	189
184-0793	4
	▶71
184-0871	72
184-0903	170
184-1476	4
	▶110
184-1527	488
184-2472	136
184-2515	52
184-2524	16
184-3266	42
184-3267	42
184-4322	732
	734
184-4467	196
184-5073	790
184-5074	790
184-5075	790
184-5076	790
184-5160	378
184-5465	340
184-6026	▶340
184-6027	340
184-6044	▶250
	494
184-6804	418
	▶425
184-6805	425
184-7448	482
	▶490
184-9854	62
185-0050	324
	325
	326
	327
	328
	329
	341
185-0159	284
185-0160	284
185-1122	392
185-1712	462
185-1717	64
185-1718	64
185-2271	470
185-2274	268
185-2287	268
185-2936	82
185-3205	82
185-3632	710
185-4412	78
185-4413	78
185-4461	52
185-6362	732
185-6517	110
185-6644	466
185-6645	466
185-6660	165
	▶182
185-7967	▶197
	686
185-7968	1
	6
	▶686
185-8648	458
185-8649	458
185-9404	234
185-9542	368
185-9815	462
186-0357	189
186-1659	197
186-1714	254
186-1728	▶206
	378
186-1729	348
186-2508	176
	178
	182
	186
186-2722	462
186-2784	462
186-2863	458
186-3060	96
186-3705	64
186-3735	127
	152
	154
	158
	159
	170
	190
	197
	224
	226
	234
	238
	242
	250

▶ **PRIMARY REFERENCE**

PART NUMBER INDEX

Part	Page
	320
	403
	414
	704
	732
	778
	780
	782
	784
	786
186-3736	242
	704
186-4154	466
186-4840	176
186-4873	▶288
	307
186-4874	288
186-4875	288
186-4957	▶166
186-6098	93
	100
187-0745	392
187-0975	268
187-0976	352
187-1008	238
187-1499	446
187-1597	446
187-2018	482
187-2034	128
187-3178	238
187-3188	5
	▶732
187-3307	28
187-3490	68
187-3616	▶68
187-4642	392
187-4645	392
187-4672	4
	▶390
187-4947	▶408
187-4948	▶409
187-4949	▶410
187-4950	▶411
187-4952	▶412
187-6269	732
	734
187-8028	▶132
	378
187-8137	▶242
	378
187-8359	243
187-8370	243
187-8546	238
187-9051	▶605
187-9058	▶602
	605
187-9062	▶468
	605
187-9087	189
	225
187-9380	252
187-9647	238
188-0576	704
188-1321	262
188-1636	392
188-1995	252
188-1996	252
188-2461	414
188-2682	250
188-2683	250
188-3115	284
188-3541	268
188-3543	268
188-3586	239
188-3862	168
	174
	228
	718
188-3958	131
	132
188-6126	67
188-6361	254
188-7252	4
	▶450
188-7253	4
	▶454
188-7493	704
188-7494	704
188-7511	230
188-8735	390
188-8849	150
	156
	157
	170
188-9013	602
188-9250	390
	▶403
188-9321	6
	▶161
188-9324	161
	▶184
188-9329	▶167
188-9331	164
	165
	166
	167
	▶190
188-9366	5
	▶306
188-9367	306
	361
188-9368	306
	361
188-9369	▶361
	372
188-9370	361
188-9371	361
188-9390	406
	472
189-0146	131
	132
189-0189	585
189-3127	124
189-9801	230
190-0370	252
190-0649	12
190-1680	174
190-2938	790
190-3443	116
190-3482	723
190-5386	790
	792
190-6017	7
	▶117
190-6535	122
	124
190-9775	124
190-9841	276
190-9842	▶276
	307
191-0027	621
	672
	676
	762
191-2314	398
191-3031	392
191-3032	392
191-3033	392
191-3645	382
	384
191-5236	612
	668
191-6012	120
	▶122
191-6013	120
	▶124
191-6303	96
191-7581	490
191-7582	490
191-7583	490
191-8692	▶726
	746
191-8695	▶700
	746
191-9413	▶718
192-0229	1
	2
	▶186
192-1434	1
	2
	▶792
192-3266	▶457
192-4972	▶413
192-4984	472
192-5629	352
192-5638	352
192-6492	64
192-7135	64
193-1036	574
193-1758	90
193-3982	116
193-5765	458
	▶587
193-7416	170
193-8570	212
	216
193-9147	379
194-0856	791
194-1854	243
194-1855	243
194-2612	122
	124
194-2615	110
194-2903	250
194-3845	746
194-4181	254
194-4226	454
194-4679	379
194-4863	358
194-4939	352
194-5140	90
194-5141	631
194-6158	352
194-6523	124
194-6722	▶200
	230
194-6724	▶201
	230
194-6725	▶202
	230
194-7982	71
	▶246
194-8535	124
194-9453	490
	▶493
194-9461	490
194-9471	490
194-9472	490
194-9473	490
194-9474	490
194-9478	493
194-9479	493
194-9480	493
194-9481	493
195-0434	250
195-0852	110
195-1122	330
	331
	332
	333
	334
	335
	336
	337
	338
	339
	340
	342
195-1146	790
195-2097	133
195-2274	792
195-4990	243
195-7616	144
195-7617	144
196-0180	732
	734
196-1323	78
196-2036	470
196-4150	732
196-7268	252
196-8532	162
	▶188
196-9295	379
196-9521	20
196-9642	▶373
196-9991	5
	▶379
197-0579	▶208
197-0580	5
	208

▶ **PRIMARY REFERENCE**

PART NUMBER INDEX

Part	Page
	▶209
197-1444	358
197-1448	71
	72
	▶358
197-1459	250
197-1705	82
197-1708	122
197-2054	721
197-2055	720
197-2064	▶720
197-2066	1
	▶721
197-3616	44
197-4568	614
	▶631
197-4569	631
197-4637	120
197-4638	120
197-5475	82
	710
197-5476	82
197-5867	792
197-5959	▶6
197-5964	732
	734
197-5966	732
	734
197-6218	704
197-6436	1
	6
	▶793
197-7155	639
	▶734
	742
197-7659	▶417
	614
197-7689	764
197-8611	690
	694
197-8624	690
	694
197-8627	690
197-8628	690
197-8629	694
197-8630	694
198-0151	109
198-4777	100
198-5438	392
198-6068	67
198-7332	▶144
	235
198-7380	377
198-8277	78
198-8588	362
	364
198-9872	704
198-9942	358
	374
199-1018	708
199-1019	708
199-1472	488
199-2585	▶665
199-2586	665
199-2677	640
199-2711	72
	88
199-2712	640
	642
	646
	648
199-2737	646
199-2738	648
199-2739	640
199-2740	642
199-2756	358
	374
199-4317	478
199-4320	478
199-4321	478
199-4322	478
199-7819	423
199-8382	252
199-9014	417
199-9907	124
199-9951	120
199-9952	120
199-9955	56
199-9956	56
199-9959	130
199-9968	379
199-9983	352
199-9984	124
199-9985	124
199-9986	122
199-9987	124
2	
200-0765	7
	▶36
200-0769	36
200-2054	▶22
	23
200-2232	▶128
	130
200-3967	362
	364
200-4983	72
	▶248
200-7933	666
200-7934	▶666
200-8623	690
	694
200-8817	243
201-0727	361
201-0728	361
201-0780	574
201-1036	▶133
	164
	165
	166
201-1038	1
	▶134
	167
201-1053	1
	2
	▶72
201-1055	790
201-5244	234
201-5688	634
201-5894	700
201-7603	350
	791
201-7626	794
201-7627	797
201-7631	796
201-7633	795
201-8328	482
201-8424	133
	134
202-1138	732
202-1454	4
	▶369
202-2703	128
202-2708	128
202-2783	128
202-2784	128
202-2785	128
202-2786	128
202-2787	128
202-7711	128
202-7713	128
202-8647	128
202-9897	128
203-2070	634
203-6536	▶162
203-6551	162
	163
	▶228
203-6642	▶742
203-6643	▶639
203-8471	246
	248
203-9177	186
203-9807	124
203-9808	124
204-0638	7
	▶114
204-0712	38
204-3435	163
	▶189
204-3450	▶23
	24
204-4376	620
	672
	677
204-6488	636
204-8730	392
204-8731	392
204-8732	392
204-8733	392
204-8734	392
204-8735	392
204-9017	379
204-9018	379
204-9530	634
204-9531	634
204-9532	634
204-9840	358
	374
205-4285	140
	142
205-7187	398
206-1404	▶794
206-1405	▶795
206-1406	▶796
206-1407	▶797
206-3599	104
206-3600	104
206-4097	636
206-4669	109
206-5154	621
	672
	677
206-6538	▶163
206-9651	636
207-1556	▶214
207-1557	214
	▶216
207-2409	5
	▶496
207-2410	496
	▶498
207-2411	498
207-4922	262
207-4924	392
207-4927	104
207-7112	356
208-0014	380
	▶382
208-0520	398
208-0800	124
208-1512	382
	384
208-1535	382
208-5155	290
208-5157	290
208-5159	290
208-6055	96
208-7448	96
208-7782	140
	142
208-7933	248
208-7934	248
208-7936	248
208-9611	498
209-1743	274
209-3332	100
209-3334	100
209-5773	421
	▶428
209-5774	428
209-5776	790
209-7309	66
209-7389	274
209-7827	4
	▶97
211-1769	▶1
211-1770	▶2
211-2822	38
211-4772	268
212-0615	7
	▶130
212-2162	790
212-3266	82

▶ **PRIMARY REFERENCE**

PART NUMBER INDEX

Part	Page	Part	Page	Part	Page	Part	Page
212-3590	352						
212-3591	352						
212-4174	109						
212-4626	124						
212-6961	100						
212-6962	100						
212-6963	100						
212-7039	100						
212-9510	352						
212-9511	352						
212-9947	352						
212-9948	352						
213-0430	794						
213-0431	797						
213-0435	796						
213-0437	795						
213-2061	268						
213-2264	100						
213-4558	704						
213-9337	398						
214-1102	704						
214-6598	122						
	124						
214-6867	358						
215-2062	▶76						
	84						
215-2063	7						
	▶84						
215-3005	382						
	384						
215-3646	▶384						
	386						
215-3647	▶386						
215-5648	790						
217-2661	498						

▶ **PRIMARY REFERENCE**

MEMORANDA



© 2002 Caterpillar
All Rights Reserved

Printed in U.S.A.